# SPC

## Spare Parts Catalogue

## Tetra Pak A3/Flex

**648575-0200**

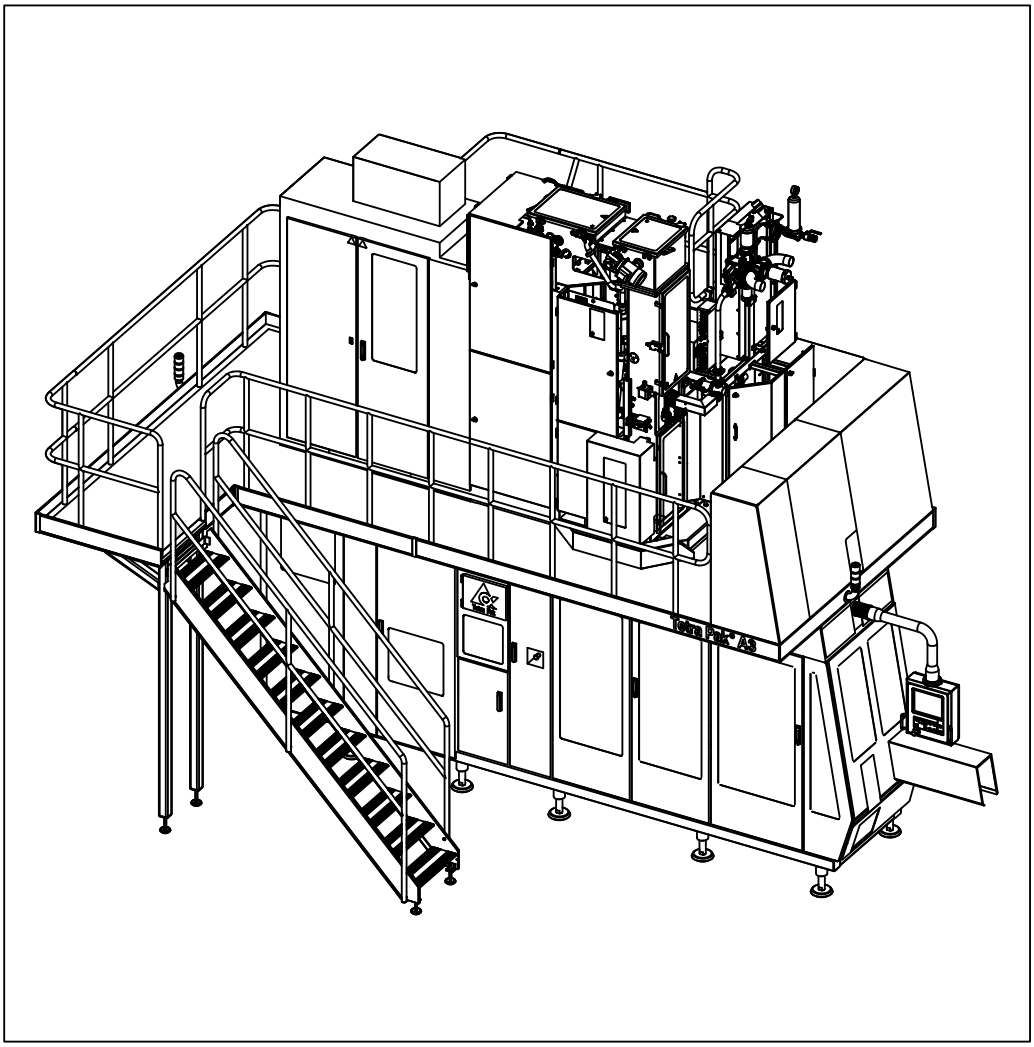

Tetra Pak

Doc. No: SPC-2819201-0103

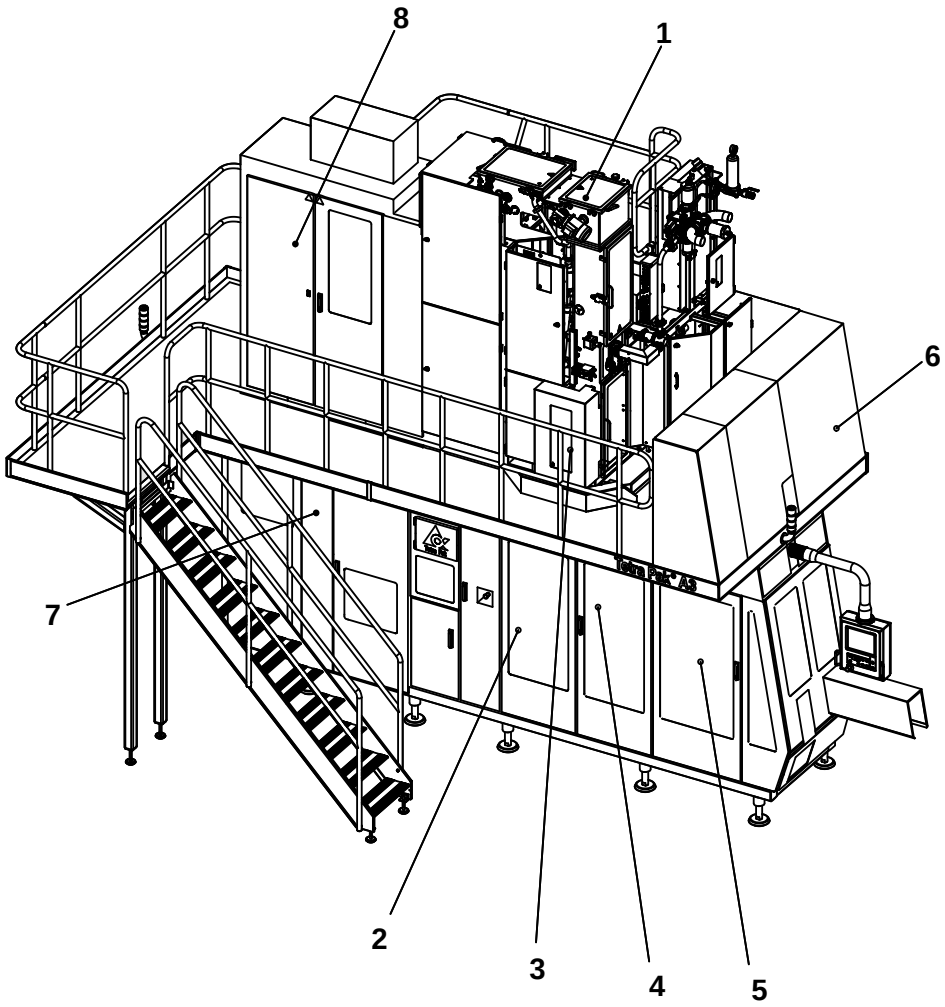


The position numbers in the illustration correspond with the chapter numbers listed on the next page.

Copyright © 2008 Tetra Pak Group

All rights reserved. No part of this document may be reproduced or copied in any form or by any means without written permission from Tetra Pak Packaging Solutions .

Tetra Pak and all Tetra Pak products are trademarks belonging to the Tetra Pak Group.

The content of this manual is in accordance with the design and construction of the machine or equipment at the time of publishing. Tetra Pak reserves the right to introduce design modifications without prior notice.

This document was produced by:

Tetra Pak Packaging Solutions
Via Delfini 1
411 00 Modena
ITALY

Additional copies can be ordered from Tetra Pak. When ordering additional copies, always provide the document number.

Doc. No. SPC-2819201-0103

Issue 2008-10

This document is valid for:

21208/00014

Series No/Machine No Sign.

# SPC

## Spare Parts Catalogue

Tetra Pak A3/Flex
648575-0200


BINDER 1

i Introduction

1 Superstructure

2 Machine Body

3 Drive Unit

4 Jaw System

5 Final Folder

BINDER 2

6 Service Unit

7 Automatic Splicing Unit

8 Electrical Cabinet

9 Regular Accessories

10 Electric Equipment

ii Part Number Index

iii Ref. Des. Parts Index


Machine or equipment configurations that this catalogue is valid for are described on the next page.


Doc. No: SPC-2819201-0103

Issue 2008-10


Tetra Pak

**Tetra Pak Packaging Solutions**

# Valid for:

| Name | Drawing Specification and Development Step | Additional Information |
|---|---|---|
| Tetra Pak A3/Flex | 648575-0200 | Valid for T-Order 21208/00014 |

# Update Log for Doc. No. SPC-2819201-0103

This table shows all changes made to this catalogue, including installed rebuilding kits, added or removed pages.

| Date | Installed Kit | Added Pages (Doc. No.) | Removed Pages | Signature |
|---|---|---|---|---|
| | | | | |
| | | | | |
| | | | | |
| | | | | |
| | | | | |
| | | | | |
| | | | | |
| | | | | |
| | | | | |
| | | | | |
| | | | | |
| | | | | |
| | | | | |
| | | | | |
| | | | | |
| | | | | |
| | | | | |
| | | | | |
| | | | | |
| | | | | |
| | | | | |

| Date | Installed Kit | Added Pages (Doc. No.) | Removed Pages | Signature |
|---|---|---|---|---|
| | | | | |
| | | | | |
| | | | | |
| | | | | |
| | | | | |
| | | | | |
| | | | | |
| | | | | |
| | | | | |
| | | | | |
| | | | | |
| | | | | |
| | | | | |
| | | | | |
| | | | | |
| | | | | |
| | | | | |
| | | | | |
| | | | | |
| | | | | |
| | | | | |
| | | | | |
| | | | | |
| | | | | |

# i Introduction

**en** About the Introduction Chapter
This chapter contains basic information about this catalogue and related Tetra Pak equipment.

**bg** За уводната глава
Тази глава съдържа основна информация за този каталог и приложимото Tetra Pak оборудване.

**cs** O kapitole Úvod
Tato kapitola obsahuje základní informace o této příručce a souvisejícím zařízení Tetra Pak.

**da** Om indledningen
Kapitlet indeholder grundlæggende oplysninger om dette katalog og tilhørende Tetra Pak-udstyr.

**de** Über das Einleitungskapitel
Diese Kapitel enthält grundlegende Informationen über diesen Katalog und die zugehörige Tetra Pak-Ausrüstung

**el** Σχετικά με το Κεφάλαιο 'Εισαγωγή'
Αυτό το κεφάλαιο περιέχει βασικές πληροφορίες για τον παρόντα κατάλογο και τον σχετικό εξοπλισμό της Tetra Pak.

**es** Acerca del capítulo Introducción
Este capítulo contiene información básica sobre este catálogo y el equipo Tetra Pak relacionado.

**et** Sissejuhatava peatüki kohta
See peatükk sisaldab teavet käesoleva kataloogi ja sellega seonduva Tetra Paki seadme kohta.

**fi** Tietoja Johdanto-luvusta
Tässä luvussa on perustietoja tästä luettelosta ja Tetra Pak -laitteesta.

**fr** À propos du chapitre Introduction
Ce chapitre contient les informations de base à propos de ce catalogue et de l'équipement Tetra Pak concerné.

**hu** A Bevezetés fejezetről
Ez a fejezet alapvető információkat tartalmaz a katalógusról és a hozzá tartozó Tetra Pak berendezésről.

**is** Um inngangskaflann
Þessi kafli inniheldur grundvallarupplýsingar um þennan vörulista og tengdan Tetra Pak búnað.

**it** Informazioni sul capitolo Introduzione
Questo capitolo contiene informazioni generali sul presente catalogo e sulla relativa macchina Tetra Pak.

**lt** Apie įvadinį skyrių
Šiame skyriuje pateikta pagrindinė informacija apie šį katalogą ir su juo susijusią "Tetra Pak" įrangą.

**lv** Par Ievada nodaļu
Šī nodaļa ietver galveno informāciju par šo katalogu un saistītajām Tetra Pak iekārtām.

**nl** Over de inleiding
Dit hoofdstuk bevat basisinformatie omtrent deze catalogus en aanverwante Tetra Pak-installatie.

**no** Om kapitlet Introduksjon
Dette kapitlet inneholder grunnleggende informasjon om denne katalogen og relatert Tetra Pak-utstyr.

**pl** Informacje na temat rozdziału wprowadzającego
Rozdział wprowadzający zawiera podstawowe informacje dotyczące niniejszego katalogu i związanej z nim maszyny Tetra Pak.

**pt** Acerca do Capítulo de Introdução
Este capítulo contém informações básicas sobre este catálogo e os equipamentos relacionados da Tetra Pak.

**ro** Despre capitolul introductiv
Acest capitol conține informații de bază despre acest catalog și despre echipamentul Tetra Pak corelat.

**sk** O kapitole Úvod
Táto kapitola obsahuje základné informácie o tomto návode a informácie súvisiace so zariadením Tetra Pak.

**sl** O uvodnem poglavju
To poglavje vsebuje osnovne informacije o tem katalogu in opremi Tetra Pak.

**sv** Om inledningskapitlet
Det här kapitlet innehåller grundläggande information om katalogen och Tetra Pak-utrustningen.

## Introduction

Illustrations . . . . . i - 5
English Text . . . . . i - 7

## Увод

Илюстрации . . . . . i - 5
Текст на български език . . . . . i -11

## Úvod

Obrázky . . . . . i -5
Český text . . . . . i - 15

## Indledning

Illustrationer . . . . . i - 5
Dansk tekst . . . . . i - 19

## Einleitung

Abbildungen . . . . . i - 5
Deutscher Text . . . . . i - 23

## Εισαγωγή

Εικόνες . . . . . i - 5
Ελληνικό Κείμενο . . . . . i - 27

## Introducción

Ilustraciones . . . . . i - 5
Texto en español . . . . . i - 31

## Sissejuhatus

Joonised . . . . . i - 5
Eestikeelne tekst . . . . . i - 35

## Johdanto

Kuvat . . . . . i - 5
Suomenkielinen teksti . . . . . i - 39

## Introduction

Illustrations . . . . . i - 5
Texte français . . . . . i - 43

## Bevezetés

Ábrák . . . . . i - 5
Magyar szöveg . . . . . i - 47

## Inngangur

Skýringarmyndir . . . . . i - 5
Íslenskur texti . . . . . i - 51

## Introduzione

Figure . . . . . i - 5
Testo in italiano . . . . . i - 55

## Įvadas

Paveikslėliai . . . . . i - 5
Lietuviškas tekstas . . . . . i - 59

## Ievads

Ilustrācijas . . . . . i - 5
Teksts latviešu valodā . . . . . i - 63

## Inleiding

Afbeeldingen . . . . . i - 5
Nederlands tekst . . . . . i - 67

## Introduksjon

Illustrasjoner . . . . . i - 5
Norsk tekst . . . . . i - 71

## Wprowadzenie

Rysunki . . . . . i - 5
Tekst polski . . . . . i - 75

## Introdução

Ilustrações . . . . . i - 5
Texto em português . . . . . i - 79

## Introducere

Ilustrații . . . . . i - 5
Text în limba română . . . . . i - 83

## Úvod

Ilustrácie . . . . . i – 5
Slovenský text . . . . . i - 87

## Uvod

Slike . . . . . i - 5
Slovensko besedilo . . . . . i - 91

## Inledning

Bilder . . . . . i - 5
Svensk text . . . . . i - 95

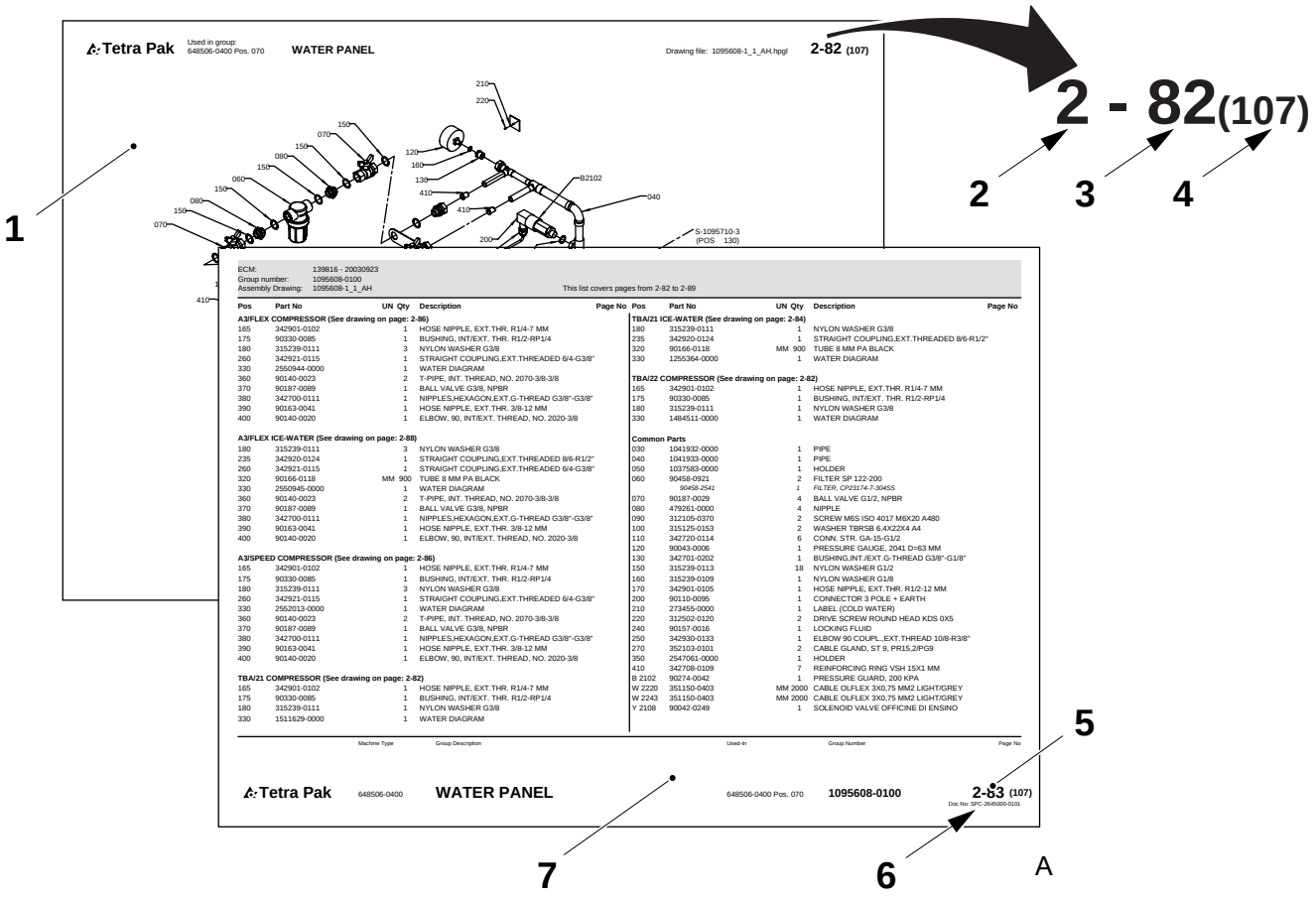
Tetra Pak
Used in group: 648506-0400 Pos. 070
WATER PANEL
Drawing file: 1095608-1_1_AH.hpgl
2-82 (107)
2 - 82(107)
1
2
3
4
5
6
7
A
ECM: 139816 - 20030923
Group number: 1095608-0100
Assembly Drawing: 1095608-1_1_AH
This list covers pages from 2-82 to 2-89
Tetra Pak
648506-0400
WATER PANEL
648506-0400 Pos. 070
1095608-0100
2-83 (107)

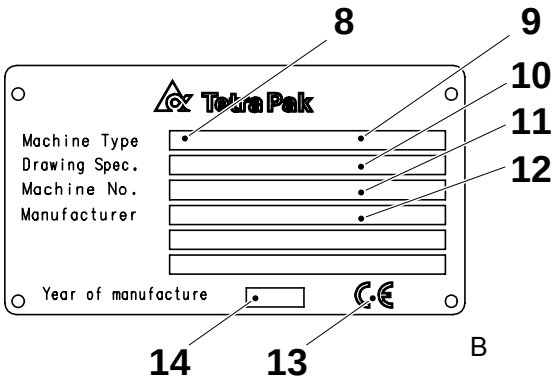
8
9
10
11
12
Tetra Pak
Machine Type
Drawing Spec.
Machine No.
Manufacturer
Year of manufacture
14
13
B

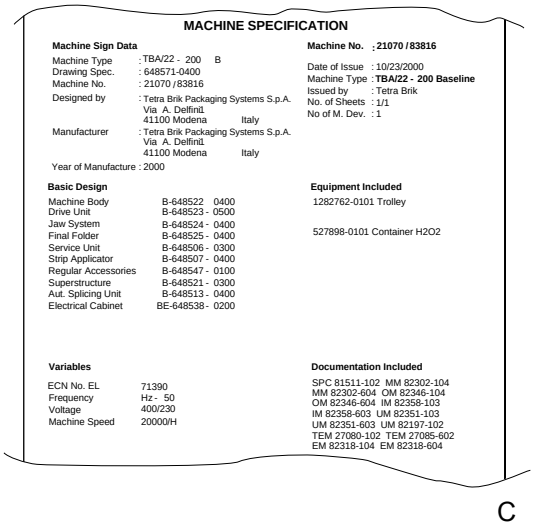
MACHINE SPECIFICATION
Machine Sign Data
Machine Type : TBA/22 - 200 B
Drawing Spec. : 648571-0400
Machine No. : 21070 / 83816
Designed by : Tetra Brik Packaging Systems S.p.A. Via A. Delfini1 41100 Modena Italy
Manufacturer : Tetra Brik Packaging Systems S.p.A. Via A. Delfini1 41100 Modena Italy
Year of Manufacture : 2000
Machine No. ; 21070 / 83816
Date of Issue : 10/23/2000
Machine Type : TBA/22 - 200 Baseline
Issued by : Tetra Brik
No. of Sheets : 1/1
No of M. Dev. : 1
Basic Design
Machine Body B-648522 0400
Drive Unit B-648523 - 0500
Jaw System B-648524 - 0400
Final Folder B-648525 - 0400
Service Unit B-648506 - 0300
Strip Applicator B-648507 - 0400
Regular Accessories B-648547 - 0100
Superstructure B-648521 - 0300
Aut. Splicing Unit B-648513 - 0400
Electrical Cabinet BE-648538 - 0200
Equipment Included
1282762-0101 Trolley
527898-0101 Container H2O2
Variables
ECN No. EL 71390
Frequency Hz - 50
Voltage 400/230
Machine Speed 20000/H
Documentation Included
SPC 81511-102 MM 82302-104
MM 82302-604 OM 82346-104
OM 82346-604 IM 82358-103
IM 82358-603 UM 82351-103
UM 82351-603 UM 82197-102
TEM 27080-102 TEM 27085-602
EM 82318-104 EM 82318-604
C

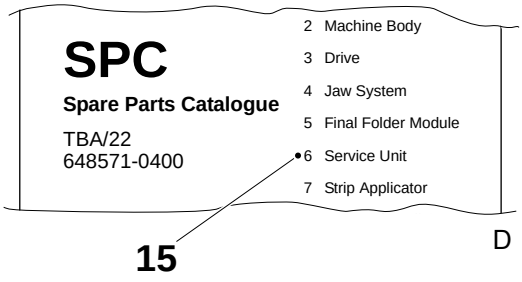
SPC
Spare Parts Catalogue
TBA/22
648571-0400
2 Machine Body
3 Drive
4 Jaw System
5 Final Folder Module
6 Service Unit
7 Strip Applicator
15
D

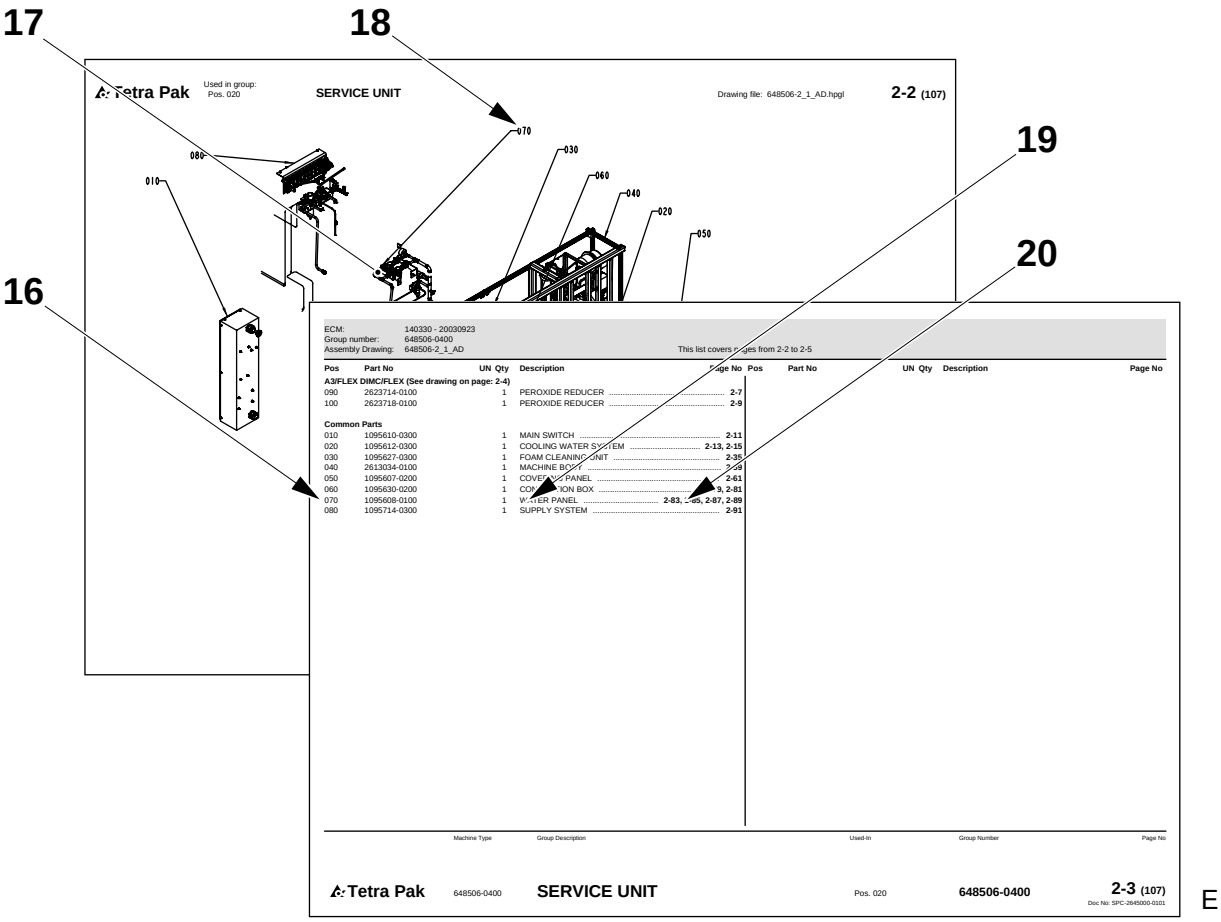
17
18
19
20
16
Tetra Pak
Used in group:
Pos. 020
SERVICE UNIT
Drawing file: 648506-2_1_AD.hpgl
2-2 (107)
070
030
080
060
010
040
020
050
ECM: 140330 - 20030923
Group number: 648506-0400
Assembly Drawing: 648506-2_1_AD
This list covers pages from 2-2 to 2-5
Pos Part No UN Qty Description Page No
A3/FLEX DIMC/FLEX (See drawing on page: 2-4)
090 2623714-0100 1 PEROXIDE REDUCER 2-7
100 2623718-0100 1 PEROXIDE REDUCER 2-9
Common Parts
010 1095610-0300 1 MAIN SWITCH 2-11
020 1095612-0300 1 COOLING WATER SYSTEM 2-13, 2-15
030 1095627-0300 1 FOAM CLEANING UNIT 2-35
040 2613034-0100 1 MACHINE BODY 2-39
050 1095607-0200 1 COVERING PANEL 2-61
060 1095630-0200 1 CONNECTION BOX 2-79, 2-81
070 1095608-0100 1 WATER PANEL 2-83, 2-85, 2-87, 2-89
080 1095714-0300 1 SUPPLY SYSTEM 2-91
Pos Part No UN Qty Description Page No
Machine Type Group Description Used-In Group Number Page No
Tetra Pak 648506-0400 SERVICE UNIT Pos. 020 648506-0400 2-3 (107)
Doc No: SPC-2645000-0101
E

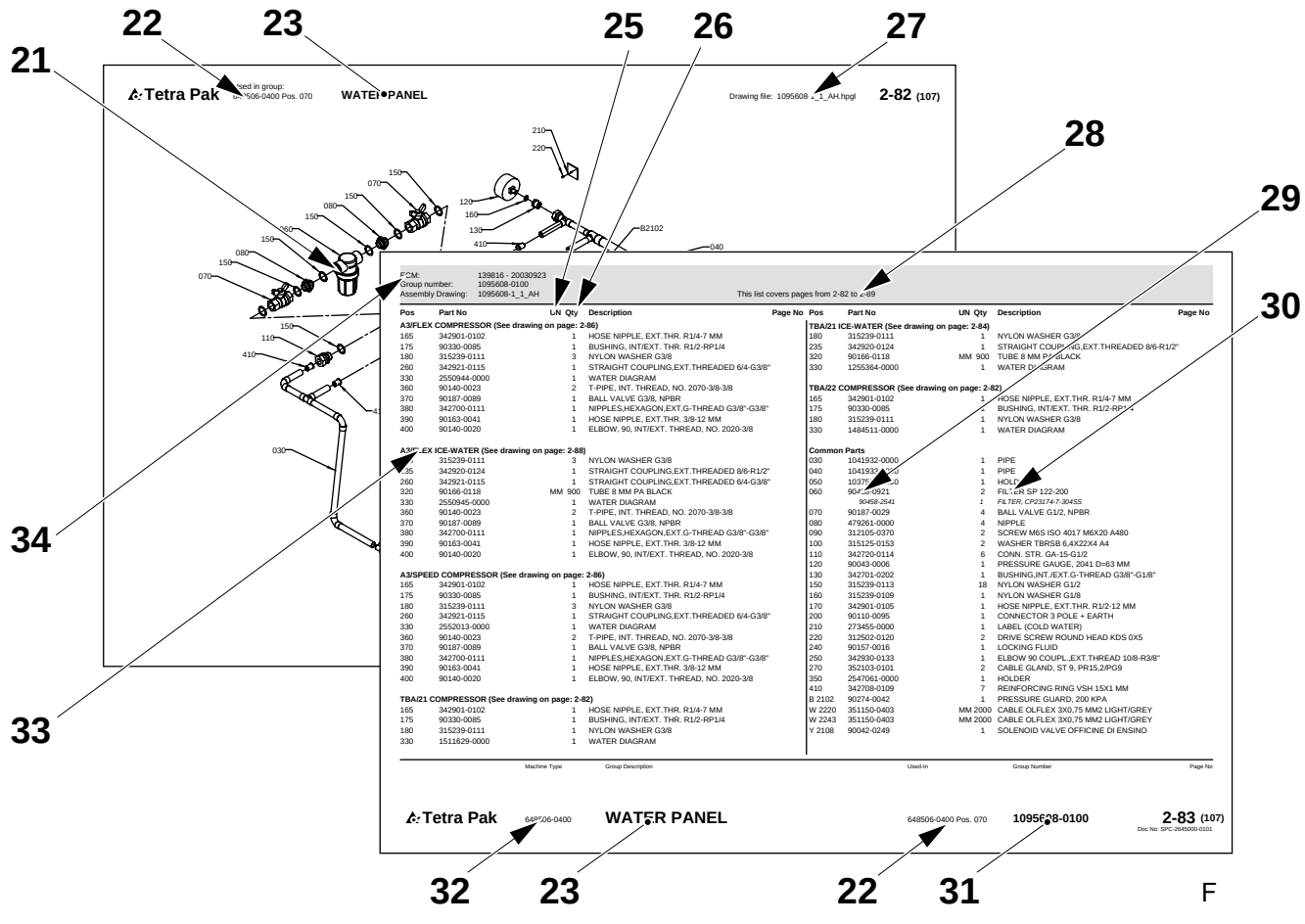
22
23
25
26
27
21
28
29
30
34
33
Tetra Pak
Used in group:
Pos. 070
WATER PANEL
Drawing file: 1095608-1_1_AH.hpgl
2-82 (107)
210
220
150
070
080
150
150
080
150
070
120
160
130
410
B2102
040
030
110
410
ECM: 139816 - 20030923
Group number: 1095608-0100
Assembly Drawing: 1095608-1_1_AH
This list covers pages from 2-82 to 2-89
Pos Part No UN Qty Description Page No
A3/FLEX COMPRESSOR (See drawing on page: 2-86)
165 342901-0102 1 HOSE NIPPLE, EXT.THR. R1/4-7 MM
175 90330-0085 1 BUSHING, INT/EXT. THR. R1/2-RP1/4
180 315239-0111 3 NYLON WASHER G3/8
260 342921-0115 1 STRAIGHT COUPLING,EXT.THREADED 6/4-G3/8"
330 2550944-0000 1 WATER DIAGRAM
360 90140-0023 2 T-PIPE, INT. THREAD, NO. 2070-3/8-3/8
370 90187-0089 1 BALL VALVE G3/8, NPBR
380 342700-0111 1 NIPPLES,HEXAGON,EXT.G-THREAD G3/8"-G3/8"
390 90163-0041 1 HOSE NIPPLE, EXT.THR. 3/8-12 MM
400 90140-0020 1 ELBOW, 90, INT/EXT. THREAD, NO. 2020-3/8
A3/FLEX ICE-WATER (See drawing on page: 2-88)
235 315239-0111 3 NYLON WASHER G3/8
235 342920-0124 1 STRAIGHT COUPLING,EXT.THREADED 8/6-R1/2"
260 342921-0115 1 STRAIGHT COUPLING,EXT.THREADED 6/4-G3/8"
320 90166-0118 MM 900 TUBE 8 MM PA BLACK
330 2550945-0000 1 WATER DIAGRAM
360 90140-0023 2 T-PIPE, INT. THREAD, NO. 2070-3/8-3/8
370 90187-0089 1 BALL VALVE G3/8, NPBR
380 342700-0111 1 NIPPLES,HEXAGON,EXT.G-THREAD G3/8"-G3/8"
390 90163-0041 1 HOSE NIPPLE, EXT.THR. 3/8-12 MM
400 90140-0020 1 ELBOW, 90, INT/EXT. THREAD, NO. 2020-3/8
A3/SPEED COMPRESSOR (See drawing on page: 2-86)
165 342901-0102 1 HOSE NIPPLE, EXT.THR. R1/4-7 MM
175 90330-0085 1 BUSHING, INT/EXT. THR. R1/2-RP1/4
180 315239-0111 3 NYLON WASHER G3/8
260 342921-0115 1 STRAIGHT COUPLING,EXT.THREADED 6/4-G3/8"
330 2552013-0000 1 WATER DIAGRAM
360 90140-0023 2 T-PIPE, INT. THREAD, NO. 2070-3/8-3/8
370 90187-0089 1 BALL VALVE G3/8, NPBR
380 342700-0111 1 NIPPLES,HEXAGON,EXT.G-THREAD G3/8"-G3/8"
390 90163-0041 1 HOSE NIPPLE, EXT.THR. 3/8-12 MM
400 90140-0020 1 ELBOW, 90, INT/EXT. THREAD, NO. 2020-3/8
TBA/21 COMPRESSOR (See drawing on page: 2-82)
165 342901-0102 1 HOSE NIPPLE, EXT.THR. R1/4-7 MM
175 90330-0085 1 BUSHING, INT/EXT. THR. R1/2-RP1/4
180 315239-0111 1 NYLON WASHER G3/8
330 1511629-0000 1 WATER DIAGRAM
TBA/21 ICE-WATER (See drawing on page: 2-84)
180 315239-0111 1 NYLON WASHER G3/8
235 342920-0124 1 STRAIGHT COUPLING,EXT.THREADED 8/6-R1/2"
320 90166-0118 MM 900 TUBE 8 MM PA BLACK
330 1255364-0000 1 WATER DIAGRAM
TBA/22 COMPRESSOR (See drawing on page: 2-82)
165 342901-0102 1 HOSE NIPPLE, EXT.THR. R1/4-7 MM
175 90330-0085 1 BUSHING, INT/EXT. THR. R1/2-RP1/4
180 315239-0111 1 NYLON WASHER G3/8
330 1484511-0000 1 WATER DIAGRAM
Common Parts
030 1041932-0000 1 PIPE
040 1041933-0000 1 PIPE
050 1037[illegible]-0000 1 HOLDER
060 90458-0921 2 FILTER SP 122-200
90458-2541 FILTER, CP23174-7-304SS
070 90187-0029 4 BALL VALVE G1/2, NPBR
080 479261-0000 4 NIPPLE
090 312105-0370 2 SCREW M6S ISO 4017 M6X20 A480
100 315125-0153 2 WASHER TBRSB 6,4X22X4 A4
110 342720-0114 6 CONN. STR. GA-15-G1/2
120 90043-0006 1 PRESSURE GAUGE, 2041 D=63 MM
130 342701-0202 1 BUSHING,INT./EXT.G-THREAD G3/8"-G1/8"
150 315239-0113 18 NYLON WASHER G1/2
160 315239-0109 1 NYLON WASHER G1/8
170 342901-0105 1 HOSE NIPPLE, EXT.THR. R1/2-12 MM
200 90110-0095 1 CONNECTOR 3 POLE + EARTH
210 273455-0000 1 LABEL (COLD WATER)
220 312502-0120 2 DRIVE SCREW ROUND HEAD KDS 0X5
240 90157-0016 1 LOCKING FLUID
250 342930-0133 1 ELBOW 90 COUPL.,EXT.THREAD 10/8-R3/8"
270 352103-0101 2 CABLE GLAND, ST 9, PR15,2/PG9
350 2547061-0000 1 HOLDER
410 342708-0109 7 REINFORCING RING VSH 15X1 MM
B 2102 90274-0042 1 PRESSURE GUARD, 200 KPA
W 2220 351150-0403 MM 2000 CABLE OLFLEX 3X0,75 MM2 LIGHT/GREY
W 2243 351150-0403 MM 2000 CABLE OLFLEX 3X0,75 MM2 LIGHT/GREY
Y 2108 90042-0249 1 SOLENOID VALVE OFFICINE DI ENSINO
Pos Part No UN Qty Description Page No
Machine Type Group Description Used-In Group Number Page No
Tetra Pak 648506-0400 WATER PANEL 648506-0400 Pos. 070 1095608-0100 2-83 (107)
Doc No: SPC-2645000-0101
32 23 22 31
F

# Introduction

## Manual Information

Tetra Pak recommends reading all delivered manuals carefully. Make sure that the delivered manuals are available to personnel who operate or maintain the equipment.

It is important to keep this catalogue for the lifetime of the equipment and to pass the catalogue on to any subsequent holder or user.

Tetra Pak will not be held responsible for any damage to the equipment caused by not following the instructions given in the manuals that accompany this equipment.

### Delivered Manuals

Manuals delivered with this equipment may include

- CM
  The Conversion Manual provides technicians with information on converting the equipment between different production modes.
- EM
  The Electrical Manual provides technicians with information about the equipment's electrical system.
- IM
  The Installation Manual provides technicians with information required to safely install the equipment.
- MM
  The Maintenance Manual provides technicians with information on maintaining the equipment.
- OM
  The Operation Manual manual provides the operator with information on handling and operating the equipment before, during, and after production.
- SPC
  The Spare Parts Catalogue provides the information necessary to order spare parts from Tetra Pak
- TeM
  The Technical Manual
  - provides technicians with information required to safely install the equipment
  - provides technicians with information on maintaining the equipment
  - provides technicians with information about the machine's/ equipment's electrical system
  - provides the information necessary to order spare parts from Tetra Pak.

### Page Layout

Refer to the illustration (A) on page i-5: The main pages in a Spare Parts Catalogue consist of an illustration page (1) and a corresponding list page (7). The page number (5) is shown in the header of an illustration page and in the footer of a list page. The document number (6) is shown in the footer of a list page.

### Page Numbering

Refer to the illustration (A) on page i-5: A page number (5) has three parts:

- chapter number (2)
- consecutive page number within the chapter (3)
- total number of pages in the chapter (4)

## Machine Introduction

### Manufacturer

For the manufacturer's name and address, see the second page of this catalogue.

### Service

To order spare parts for this machine, or to report problems associated with operating this machine, contact the nearest Tetra Pak office.

Contact the Liaison with other inquiries, comments, or suggestions for improvement regarding the equipment and its documentation.

## Identification

### CE Classification

This equipment complies with the basic health and safety regulations of the European Economic Area (EEA).

### Machine Plate

The illustration (B) on page i-5 shows an example of a machine plate. An illustration of the valid machine plate and its location on the equipment is shown in the Introduction chapter of the manuals delivered with this equipment. The machine plate contains the data listed below, needed when contacting Tetra Pak concerning this specific equipment.

- Machine type (8)
- Volume (9)
- Drawing specifications (10)
- Machine serial number (11)
- Manufacturer (12)
- CE mark (13)
- Year of manufacture (14)

The illustration (C) on page i-5 shows an example of a machine specification. Make sure that the equipment data listed in the front pages of this manual corresponds to the machine plate data and the machine specification.

## How to Use This Spare Parts Catalogue

### Locate a Spare Part Number

a) Refer to the illustration (D) on page i-5: Go to the chapter number (15) indicated beside the main group that contains the part you want to locate.

Items b) and c) refer to the illustration (E) on page i-6.

b) On the main group illustration, look for the machine subgroup (17) that contains the part or subgroup you are looking for. Note the position number (18) and go to the list page that follows the illustration.

c) Look for the position number/reference designation (16) or the subgroup name (19). Go to the corresponding page number (20) listed in the right-hand column. Tetra Pak has chosen to always use the function oriented structure for reference designation. The prefix indicating function oriented structure (=) is not shown in the reference designation.

Items d) and e) refer to the illustration (F) on page i-6.

d) Locate the part (21) that you are looking for on the subgroup illustration and note the part's position number.

e) The part number (29) and part description (30) are listed beside the position number on the list page.

## Information Listed in a Spare Parts Catalogue

The list below refers to the illustration (F) on page i-6. A Spare Parts Catalogue contains the following information about groups, subgroups, and spare parts for the equipment:

- Group structure reference (22). Indicates the next higher group in the equipment list structure.
- Group name (23)
- Unit of measure (25)
- Quantity (26)
- Assembly drawing number (27)
- List page range (28). Included if there are multiple pages in the group illustration or list.
- Part or subgroup number (29)
- Subgroup name or part description (30)
- Group number (31)
- Equipment number (32)
- Group information heading (33). Indicates if the section below the heading is for a specific machine variant or if it is a list of common parts. If a list has more than one variant and each variant has its own assembly drawing, a page reference to the variant's assembly drawing is shown.
- Internal information (34)

# Увод

## Информация за ръководството

Tetra Pak Ви препоръчва да прочетете внимателно всички доставени ръководства. Проверете дали доставените ръководства са достъпни за служителите, които поддържат или работят с оборудването.

Важно е да запазите този каталог през целия живот на оборудването и да го предадете на трети лица, които ще използват или съхраняват оборудването.

Tetra Pak не може да бъде държана под отговорност за щети върху оборудването, причинени от неспазване на даденте инструкции в ръководствата, които съпровождат оборудването.

### Доставени ръководства

Ръководствата, доставени с това оборудване, могат да включват

- CM
  Ръководството за приспособяване осигурява на техническите лица информация за приспособяването на оборудване към различни производствени режими.
- EM
  Електрическото ръководство осигурява на техническите лица информация за електрическата система на оборудването.
- IM
  Ръководството за инсталиране предоставя на техническите лица информацията, която е необходима за безопасно инсталиране на оборудването.
- MM
  Ръководството за поддръжка предоставя на техническите лица информация относно поддържането на оборудването.
- OM
  Ръководството за операции предоставя на операторите информация за това, как да боравят и функционират с оборудването преди, по време на и след производство.
- SPC
  Каталогът с резервни части предоставя необходимата информация за поръчка на резервни части от Tetra Pak
- TeM
  Техническото ръководство
  - предоставя на техническите лица необходимата информация за безопасно инсталиране на оборудването
  - предоставя на техническите лица информация за поддръжка на оборудването
  - предоставя на техническите лица информация за електрическата система на машината/оборудването
  - предоставя необходимата информация за поръчка на резервни части от Tetra Pak.





### Формат на страниците

Разгледайте илюстрация (A) на страница i-5: Главните страници в Каталога с резервни части се състоят от страница с илюстрация (1) и прилежаща страница със списък (7). Номерът на страницата (5) е посочен в горната част на страницата с илюстрация и в долната част на страницата със списъка. Номерът на документа (6) е показан в долната част на страницата със списъка.

### Номериране на страници

Разгледайте илюстрация (A) на страница i-5: Един номер на страница (5) има три части:

- номер на глава (2)
- последователен номер на страница в една глава (3)
- общ брой страници в главата (4)

## Машини Увод

### Производител

Вижте втората страница на този каталог, за да проверите името и адреса на производителя.

### Обслужване

За да поръчате резервни части за тази машина или да докладвате за проблеми, свързани с работата с тази машина, се свържете с най-близкия офис на Tetra Pak.

Свържете се с отдела за контакти с клиенти за други запитвания, коментари и предложения за подобрение по отношение на оборудването и прилежащата му документация.

## Идентификация

### Класификация на ЦЕ

Това оборудване отговаря на основните наредби, свързани с опазване на здравето и безопасността на Европейската Икономическа Общност (ЕИО).





### Табелка на машина

Илюстрация (B) на страница i-5 показва пример с табелка на машина. В уводната глава на ръководствата, доставени с това оборудване, е показана илюстрация с валидната табелка на машината и нейното положение върху оборудването. Табелката на машината съдържа посочените по-долу данни, които Ви трябват, когато се свързвате с Tetra Pak относно това специфично оборудване.

- Тип машина (8)
- Обем (9)
- Спесификации за чертане (10)
- Сериен номер на машината (11)
- Производител (12)
- CE печат (13)
- Година на производство (14)

Илюстрация (C) на страница i-5 показва пример със спесификация за машина. Проверете дали данните за оборудването, изброени на предните страници в това ръководство отговарят на данните от табелката на машината и на спесификацията на машината.

## Как да използвате този Каталог за резервни части

### Намерете Номер на резервна част

a) Разгледайте илюстрация (D) на страница i-5: Отидете в глава номер (15) посочена до главната група, която съдържа частта, която искате да намерите.

Артикули b) и c) се отнасят до илюстрация (E) на страница i-6.

b) На главната обща илюстрация вижте подгрупата на машината (17), която съдържа частта или подгрупата, която търсите. Намерете номера на позицията (18) и отворете на страницата със списъка, която е след илюстрацията.

c) Намерете номера на позицията/референцията (16) или името на подгрупата (19). Отворете съответстващия номер на страница (20) в дясната колона. Tetra Pak е избрала да използва винаги функционално-ориентирана структура при обозначаване на референциите. Префиксът, който показва функционално-ориентирана структура (=) не е посочен в обозначаването на референциите.

Артикули d) и e) се отнасят до илюстрация (F) на страница i-6.

d) Намерете частта (21), която търсите в илюстрацията на подгрупата и запомнете номера на частта.

e) Номерът на частта (29) и описанието на частта (30) са изброени до номера на позицията на страницата със списъка.





### Изброена информация в Каталога с резервни части

По-долу посоченият списък се отнася до илюстрация (F) на страница i-6. Каталогът с резервни части съдържа следната информация за групи, подгрупи и резервни части за оборудването:

- Референция за структурата (22). Показва следващата по-голяма група в структурата със списъка на оборудването.
- Име на група (23)
- Единица мярка (25)
- Количество (26)
- Номер за монтажен чертеж (27)
- Обхват на страницата със списък (28). Включен, ако има няколко страници в илюстрацията на групата или списъка.
- Номер на част или подгрупа (29)
- Име на подгрупа или описание на част (30)
- Номер на група (31)
- Номер на оборудване (32)
- Референция за информацията за групата (33). Показва дали частта под заглавието е за специфична версия на машината или е списък с общи части. Ако един списък има повече от един вариант и всеки вариант има собствен монтажен чертеж, се показва референцията на страницата към монтажния чертеж на варианта.
- Вътрешна информация (34)

# Úvod

## Informace o manuálu

Tetra Pak doporučuje, abyste si pozorně přečetli všechny dodané příručky. Přesvědčte se, že dodané manuály jsou k dispozici personálu, který obsluhuje nebo provádí údržbu zařízení.

Je důležité ponechat si tuto příručku po celou dobu životnosti zařízení a předat ho jakémukoliv následujícímu vlastníkovi nebo uživateli.

Tetra Pak nebude odpovídat za žádné škody zařízení, způsobené nedodržováním pokynů uvedených v této příručce.

### Dodané příručky

Příručky dodané s tímto zařízením mohou obsahovat

- CM
  Konverzní manuál (CM) poskytuje technikům informace o konverzi zařízení mezi různými výrobními režimy.
- EM
  Elektrický manuál (EM) poskytuje technikům informace o elektrickém systému tohoto zařízení.
- IM
  Instalační manuál (IM) poskytuje technikům informace potřebné k bezpečné instalaci zařízení.
- MM
  Údržbový manuál (MM) poskytuje technikům informace o údržbě tohoto zařízení.
- OM
  Provozní manuál (OM) poskytuje operátorovi informace o manipulaci s tímto zařízením a provozu před, během a po výrobě.
- SPC
  Katalog náhradních dílů (SPC) poskytuje informace potřebné pro objednávání náhradních dílů od společnosti Tetra Pak
- TeM
  Technický manuál
  - poskytuje technikům informace potřebné k bezpečné instalaci tohoto zařízení
  - poskytuje technikům informace o údržbě tohoto zařízení
  - poskytuje technikům informace o elektrickém systému tohoto zařízení
  - poskytuje informace potřebné pro objednávání náhradních dílů od společnosti Tetra Pak





### Rozvržení stránky

Viz obrázek (A) na straně i-5: Hlavní strany Katalogu náhradních dílů obsahují stranu s obrázky (1) a odpovídající stranu seznamu (7). Číslo strany (5) je uvedeno v záhlaví strany s obrázky a v zápatí strany seznamu. Číslo dokumentu (6) je uvedeno v zápatí strany seznamu.

### Číslování stran

Viz obrázek (A) na straně i-5: Číslo strany (5) sestává ze tří částí:

- číslo kapitoly (2)
- pořadové číslo strany (3) v kapitole
- celkový počet stránek (4) v kapitole

## Úvod ke stroji

### Výrobce

Název a adresa výrobce je uvedena na druhé straně tohoto katalogu.

### Servis

Chcete-li objednat náhradní díly nebo ohlásit problémy související s provozem tohoto stroje, kontaktujte nejbližší kancelář Tetra Pak.

S dalšími dotazy, připomínkami nebo náměty na vylepšení ohledně zařízení a této dokumentace se obracejte na kontaktní osobu.

## Identifikace

### Klasifikace CE

Toto zařízení splňuje základní zdravotní a bezpečnostní předpisy Evropského hospodářského prostoru (EEA).





### Štítek na stroji

Obrázek (B) na straně i-5 znázorňuje příklad štítku na stroji. Obrázek platného štítku na stroji a jeho umístění na zařízení je uveden v příručkách dodaných s tímto strojem v kapitole Úvod. Na štítku jsou uvedeny údaje potřebné při kontaktování společnosti Tetra Pak, týkající se tohoto specifického zařízení.

- Typ stroje (8)
- Objem (9)
- Výkresové specifikace (10)
- Výrobní číslo stroje (11)
- Výrobce (12)
- Označení CE (13)
- Rok výroby (14)

Obrázek (C) na straně i-5 zobrazuje příklad specifikace stroje. Přesvědčte se, že údaje o zařízení uvedená v seznamu na předních stranách tohoto manuálu odpovídají údajům štítku na stroji a specifikaci stroje.

## Jak používat tento Katalog náhradních dílů

### Vyhledejte číslo náhradního dílu

a) Viz obrázek (D) na straně i-5: Přejděte na číslo kapitoly (15) uvedené vedle hlavní skupiny, která obsahuje hledaný díl.

Položky b) a c) odkazují na obrázek (E) na straně i-6.

b) Na vyobrazení hlavní skupiny vyhledejte strojní podskupinu (17), která obsahuje hledaný díl nebo podskupinu. Poznamenejte si číslo pozice (18) a přejděte na stranu seznamu vyplývající z obrázku.

c) Vyhledejte číslo pozice/označení odkazu (16) nebo název podskupiny (19). Přejděte na odpovídající číslo strany (20) v seznamu v pravém sloupci. Tetra Pak zvolil pro označování odkazu používat vždy uspořádání orientované na funkci. Prefix indikující uspořádání orientované na funkci (=) není uveden v označení odkazu.

Položky d) a e) odkazují na obrázek (F) na straně i-6.

d) Vyhledejte díl (21), který hledáte na vyobrazení podskupiny a poznamenejte si číslo pozice dílu.

e) Číslo dílu (29) a popis dílu (30) jsou uvedeny v seznamu vedle čísla pozice na straně seznamu.





### Informace uvedené v seznamu v Katalogu náhradních dílů

Níže uvedený seznam odkazuje na obrázek (F) na straně i-6. Katalog náhradních dílů obsahuje následující informace o skupinách, podskupinách a náhradních dílech pro toto zařízení:

- Odkaz na uspořádání skupiny (22). Indikuje další vyšší skupinu v uspořádání seznamu zařízení.
- Název skupiny (23)
- Měrná jednotka (25)
- Množství (26)
- Číslo montážního výkresu (27)
- Rozsah stran seznamu (28). Včetně toho, zda existuje více stran v obrázku skupiny nebo seznamu.
- Díl nebo číslo podskupiny (29)
- Název podskupiny nebo popis dílu (30)
- Číslo skupiny (31)
- Číslo zařízení (32)
- Záhlaví informace o skupině (33). Indikuje, že oddíl pod záhlavím je pro specifickou variantu stroje nebo jde-li o seznam běžných dílů. Jestliže seznam obsahuje více než jednu variantu a každá varianta má svůj vlastní montážní výkres, pak je uveden odkaz na stranu montážního výkresu této varianty.
- Interní informace (34)

# Indledning

## Oplysninger om manualen

Tetra Pak anbefaler, at alle leverede manualer læses omhyggeligt. Sørg for, at de udleverede manualer er til rådighed for personale, som arbejder med eller vedligeholder udstyret.

Det er vigtigt at opbevare dette katalog hele udstyrets levetid og give kataloget videre til eventuelt kommende ejere eller brugere.

Tetra Pak kan ikke holdes ansvarlig for eventuel beskadigelse af udstyr, der opstår, fordi instruktionerne i manualerne til dette udstyr ikke følges.

### Udleverede manualer

De manualer, der leveres sammen med dette udstyr, kan omfatte

- CM
  Denne konverteringsmanual forsyner teknikere med oplysninger om konvertering af udstyret mellem forskellige produktionstilstande.
- EM
  Denne elektriske manual forsyner teknikere med informationer om udstyrets elektriske system.
- IM
  Denne installationsmanual forsyner teknikere med nødvendig information i forbindelse med sikker installation af udstyret.
- MM
  Denne vedligeholdelsesmanual forsyner teknikere med information om vedligeholdelse af udstyret.
- OM
  Denne betjeningsmanual giver operatøren oplysninger om betjening af udstyret før, under og efter produktion.
- SPC
  Denne reservedelskatalog indeholder oplysninger, der er nødvendig for at bestille reservedele fra Tetra Pak
- TeM
  Den tekniske manual
  – forsyner teknikere med information, der er nødvendig for en sikker installation af udstyret.
  – forsyner teknikere med information om vedligeholdelse af udstyret.
  – forsyner teknikere med information om maskinens/udstyrets elektriske system.
  – indeholder de informationer, der er nødvendige for at kunne bestille reservedele fra Tetra Pak.





### Sidelayout

Se illustration (A) på side i-5: Hovedsiderne i et reservedelskatalog består af en illustrationsside (1) og en tilsvarende listeside (7). Sidenummeret (5) vises i sidehovedet på en illlustrationsside og i sidefoden på en listeside. Dokumentnummeret (6) vises i sidefoden på en listeside.

### Sidenummerering

Se illustrationen (A) på side i-5: Et sidenummer (5) har tre dele:

- kapitelnummer (2)
- fortløbende sidenummer i kapitlet (3)
- samlet sideantal i kapitlet (4)

## Præsentation af maskinen

### Producent

Producentens navn og adresse findes på side to i dette katalog.

### Service

Kontakt nærmeste Tetra Pak-kontor for at bestille reservedele eller rapportere problemer i forbindelse med betjening af denne maskine.

Henvendelse til vores kontaktperson med andre forespørgsler, kommentarer eller forslag til forbedring angående udstyr og dokumentation.

## Identificering

### CE-klassificering

Dette udstyr lever op til de grundlæggende regulativer for sundhed og sikkerhed indenfor den Europæiske Økonomiske Samarbejdsområde (EØS).





### Maskinskilt

Illustrationen (B) på side i-5 viser et eksempel på et maskinskilt.
En illustration af et gyldigt maskinskilt og dets placering på udstyret er vist i indledningskapitlet i de manualer, der leveres med dette udstyr. Maskinskiltet indeholder nedennævnte data. Disse er nødvendige ved kontakt med Tetra Pak vedrørende dette specifikke udstyr.

- Maskintype (8)
- Volumen (9)
- Tegningsspecifikationer (10)
- Maskinens serienummer (11)
- Producent (12)
- CE-mærke (13)
- Produktionsår (14)

Illustrationen (C) på side i-5 viser et eksempel på en maskinspecifikation. Kontroller, at de udstyrsdata, der er anført på de første sider i denne manual, svarer til maskinskiltsdataene og maskinspecifikationen.

## Sådan bruges dette reservedelskatalog.

### Find et reservedelsnummer

a) Se illustrationen (D) på side i-5: Gå til kapitelnummeret (15), der er angivet ved siden af hovedgruppen, der indeholder den del, der ønskes fundet.

Punkterne b) og c) refererer til illustrationen (E) på side i-6.

b) I hovedgruppeillustrationen skal man se efter maskinundergruppen (17), som indeholder den del eller undergruppe, der søges. Bemærk placeringsnummeret (18), og gå til listesiden, som følger illustrationen.

c) Se efter placeringsnummeret/henvisningsbetegnelse (16) eller undergruppens navn (19). Gå til det tilsvarende sidenummer (20) angivet i den højre kolonne. Tetra Pak har valgt altid at anvende den funktionsorienterede struktur til henvisningsbetegnelse. Præfikset angiver funktionsorienteret struktur (=) ikke vist i henvisningsbetegnelsen.

Punkterne d) og e) refererer til illustrationen (F) på side i-6.

d) Find den del (21), du søger i undergruppeillustrationen, og notér delens placeringsnummer.

e) Reservedelsnummeret (29) og -beskrivelsen (30) er angivet ved siden af placeringsnummeret på listesiden.





### Informationer der er angivet i et reservedelskatalog

Listen nedenfor refererer til illustrationen (F) på side i-6. Et reservedelskatalog indeholder følgende informationer om grupper, undergrupper og reservedele til udstyret:

- Gruppestrukturreference (22). Angiver næste overordnede gruppe i udstyrslistestrukturen.
- Gruppenavn (23)
- Måleenhed (25)
- Antal (26)
- Samletegningsnummer (27)
- Listens sideområde (28). Er angivet, hvis gruppeillustrationen eller -listen inkluderer mange sider.
- Del- eller undergruppenummer (29)
- Undergruppens navn eller delsbeskrivelse (30)
- Gruppenummer (31)
- Udstyrsnummer (32)
- Overskrift for gruppeinformation (33). Angiver, om afsnittet under overskriften er for en specifik maskinvariant, eller om det er en liste over fælles dele. Hvis en liste har mere end én variant, og hver variant har sin egen samletegning, vises en sidereference til variantens samletegning.
- Intern information (34)

# Einleitung

## Informationen über das Handbuch

Tetra Pak empfiehlt, alle mitgelieferten Handbücher sorgfältig durchzulesen. Stellen Sie sicher, dass die Handbücher dem Personal, das die Ausrüstung betreibt oder wartet, zur Verfügung steht.

Es ist wichtig, dass Sie diesen Katalog für die gesamte Lebensdauer der Ausrüstung vorliegen haben und einem etwaigen Nachbesitzer oder -betreiber übergeben.

Tetra Pak haftet nicht für Schäden an der Ausrüstung, die aufgrund von Nichtbeachtung der Anweisungen aus den Handbüchern, die mit diesem Gerät geliefert werden, entstehen.

### Gelieferte Handbücher

Die Handbücher, die mit dieser Ausrüstung geliefert wird, können Folgendes beinhalten

- CM
  Das Umbauhandbuch gibt den Technikern Informationen über den Umbau der Ausrüstung zwischen verschiedenen Produktionsweisen.
- EM
  Das Elektrohandbuch gibt den Technikern Informationen zum Elektrosystem der Ausrüstung.
- IM
  Das Installationshandbuch gibt den Technikern Informationen für die sichere Installation der Ausrüstung.
- MM
  Das Wartungshandbuch gibt den Technikern Informationen für die Wartung der Ausrüstung.
- OM
  Das Betriebshandbuch gibt dem Bediener Informationen über die Bedienung und den Betrieb der Ausrüstung vor, während und nach der Produktion.
- SPC
  Der Ersatzteilkatalog liefert die Informationen, die für die Bestellung von Ersatzteilen bei Tetra Pak erforderlich sind.
- TeM
  Das technische Handbuch
  - gibt den Technikern Informationen für die sichere Installation der Ausrüstung
  - gibt den Technikern Informationen für die Wartung der Ausrüstung
  - gibt den Techniker Informationen zum Elektrosystem der Ausrüstung/der Maschine
  - liefert die Informationen, die für die Bestellung von Ersatzteilen bei Tetra Pak erforderlich sind.





### Seitenlayout

Bezugnahme auf Abbildung (A) auf Seite i-5: Die Hauptseiten in einem Ersatzteilkatalog bestehen aus einer Abbildungsseite (1) und einer entsprechenden Listenseite (7). Die Seitennummer (5) wird in der Kopfzeile einer Abbildungsseite und in der Fußzeile einer Listenseite aufgeführt. Die Dokumentennummer (6) wird in der Fußzeile einer Listenseite aufgeführt.

### Seitennummerierung

Bezugnahme auf Abbildung (A) auf Seite i-5: Eine Seitennummer (5) besteht aus drei Teilen:

- Kapitelnummer (2)
- Fortlaufende Seitennummer innerhalb des Kapitels (3)
- Gesamtzahl der Seiten im Kapitel (4)

## Einführung zur Maschine

### Hersteller

Bitte entnehmen Sie den Namen und die Adresse des Herstellers der zweiten Seite dieses Katalogs.

### Service

Zur Bestellung von Ersatzteilen für diese Maschine oder um Probleme im Zusammenhang mit dem Betrieb dieser Maschine zu melden, wenden Sie sich bitte an das nächstgelegene Büro von Tetra Pak.

Wenden Sie sich bei anderen Anfragen, Kommentaren oder Verbesserungsvorschlägen mit Bezug auf die Ausrüstung und seine Dokumentation an die Verbindungsstelle.

## Identifizierung

### CE-Klassifizierung

Diese Ausrüstung erfüllt die wesentlichen Anforderungen des Europäischen Wirtschaftsraum (EWR) für Gesundheitsschutz und die Sicherheit.





### Maschinenschild

Die Abbildung (B) auf Seite i-5 zeigt ein Beispiel eines Maschinenschilds. Die Abbildung eines gültigen Maschinenschildes und seine Position auf der Ausrüstung wird im Einleitungskapitel der mit dieser Ausrüstung gelieferten Handbücher gezeigt. Das Maschinenschild enthält die Daten, die erforderlich sind, wenn Sie sich bezüglich dieser speziallen Ausrüstung an Tetra Pak wenden.

- Maschinentyp (8)
- Volumen (9)
- Zeichnungsspezifikationen (10)
- Seriennummer der Maschine (11)
- Hersteller (12)
- CE-Zeichen (13)
- Baujahr (14)

Die Abbildung (C) auf Seite i-5 zeigt ein Beispiel einer Maschinenspezifikation. Stellen Sie sicher, dass die Ausrüstungsdaten, die in den vorderen Seiten dieses Handbuchs aufgelistet sind, mit den Maschinenschilddaten und der Maschinenspezifikation übereinstimmen.

## Benutzung dieses Ersatzteilkatalogs

### Finden einer Ersatzteilnummer

a) Bezugnahme auf Abbildung (D) auf Seite i-5: Weiter zur Kapitel nummer (15), die neben der Hauptgruppe angegeben ist, die das entsprechende Teil enthält.

Die Positionen b) und c) beziehen sich auf die Abbildung (E) auf Seite i-6.

b) Suchen Sie auf der Hauptgruppenillustration nach der Maschinen-Untergruppe (17), die das gesuchte Teil oder die Untergruppe enthält. Notieren Sie die Positionsnummer (18) und gehen Sie dann zur Listenseite, die der Abbildung folgt.

c) Suchen Sie nach der Positionsnummer/Referenzbezeichnung (16) oder dem Namen der Untergruppe (19). Gehen Sie zur entsprechenden Seitennummer (20), die in der rechten Spalte aufgelistet ist. Tetra Pak hat sich dazu entschieden, stets eine funktionsorientierte Struktur für die Referenzbezeichnung zu verwenden. Die vorangestellte Kennzeichnung, welche die funktionsorientierte Struktur angibt (=), wird in der Referenzbezeichnung nicht angezeigt.

Die Positionen d) und e) beziehen sich auf die Abbildung (F) auf Seite i-6.

d) Finden Sie das gesuchte Teil (21) auf der Abbildung der Untergruppe und notieren Sie die Positionsnummer des Teils.

e) Die Teilenummer (29) und die Teilebeschreibung (30) werden neben der Positionsnummer auf der Listenseite aufgelistet.





### In einem Ersatzteilkatalog aufgelistete Informationen

Die folgende Liste bezieht sich auf die Abbildung (F) auf Seite i-6. Ein Ersatzteilkatalog enthält folgende Informationen über Gruppen, Untergruppen und Ersatzteile für die Ausrüstung:

- Gruppenstrukturreferenz (22). Sie gibt die nächst höhere Gruppe in der Ausrüstungslistenstruktur an.
- Gruppenname (23)
- Maßeinheit (25)
- Menge (26)
- Nummer der Zusammenbauzeichnung (27)
- Listenseitenbereich (28). Enthalten, wenn es mehrere Seiten in der Gruppenabbildung oder Liste gibt.
- Teile- oder Untergruppennummer (29)
- Untergruppenname oder Teilebeschreibung (30)
- Gruppennummer (31)
- Ausrüstungsnummer (32)
- Gruppeninformationsüberschrift (33). Gibt an, ob sich der Abschnitt unter der Überschrift auf eine spezifische Maschinenvariante bezieht oder ob es sich um eine Liste der allgemeinen Teile handelt. Wenn eine Liste mehr als eine Variante hat und jede Variante über eine eigene Zusammenbauzeichnung verfügt, wird eine Seitenreferenz zur Zusammenbauzeichnung angezeigt.
- Interne Informationen (34)

# Εισαγωγή

## Πληροφορίες για το Εγχειρίδιο

Η Tetra Pak σάς συνιστά να διαβάζετε προσεκτικά όλα τα παρεχόμενα εγχειρίδια. Εξασφαλίζετε ότι όλα τα παρεχόμενα εγχειρίδια διατίθενται στο προσωπικό που χειρίζεται ή συντηρεί τον εξοπλισμό.

Είναι σημαντικό να διατηρείτε αυτό τον κατάλογο καθ' όλη τη διάρκεια ζωής του εξοπλισμού καθώς και να παραδίδετε τον κατάλογο στον τυχόν επόμενο ιδιοκτήτη ή χρήστη του εξοπλισμού.

Η Tetra Pak δεν πρόκειται να αναλάβει καμία ευθύνη για οποιαδήποτε ζημιά που μπορεί να προκληθεί στον εξοπλισμό εξαιτίας της μη τήρησης των οδηγιών οι οποίες παρέχονται στα εγχειρίδια που συνοδεύουν αυτό τον εξοπλισμό.

### Παρεχόμενα Εγχειρίδια

Στα εγχειρίδια που παρέχονται μαζί μ' αυτό τον εξοπλισμό, μπορεί να περιλαμβάνονται τα εξής:

- CM
  Αυτό το Εγχειρίδιο Μετατροπής παρέχει στους τεχνικούς πληροφορίες για τη μετατροπή του εξοπλισμού μεταξύ των διάφορων λειτουργιών παραγωγής.
- EM
  Αυτό το Ηλεκτρικό Εγχειρίδιο παρέχει στους τεχνικούς πληροφορίες για το ηλεκτρικό σύστημα του εξοπλισμού.
- IM
  Αυτό το Εγχειρίδιο Εγκατάστασης παρέχει στους τεχνικούς τις απαιτούμενες πληροφορίες για την ασφαλή εγκατάσταση του εξοπλισμού.
- MM
  Αυτό το Εγχειρίδιο Συντήρησης παρέχει στους τεχνικούς πληροφορίες για τη συντήρηση του εξοπλισμού.
- OM
  Αυτό το Εγχειρίδιο Χειρισμού παρέχει στο χειριστή πληροφορίες για το χειρισμό και τη λειτουργία του εξοπλισμού πριν, κατά τη διάρκεια και μετά την παραγωγή.
- SPC
  Αυτός ο Κατάλογος Ανταλλακτικών παρέχει τις απαραίτητες πληροφορίες για την παραγγελία ανταλλακτικών από την Tetra Pak.
- TeM
  Το Τεχνικό Εγχειρίδιο
  - παρέχει στους τεχνικούς τις απαιτούμενες πληροφορίες για την ασφαλή εγκατάσταση του εξοπλισμού
  - παρέχει στους τεχνικούς πληροφορίες για τη συντήρηση του εξοπλισμού
  - παρέχει στους τεχνικούς πληροφορίες για το ηλεκτρικό σύστημα του εξοπλισμού/μηχανής
  - παρέχει τις απαραίτητες πληροφορίες για την παραγγελία ανταλλακτικών από την Tetra Pak.





### Διάταξη Σελίδων

Ανατρέξτε στην εικόν (A) της σελίδας i-5: Οι κύριες σελίδες ενός Καταλόγου Ανταλλακτικών αποτελούνται από μία εικονογραφημένη σελίδα (1) και από μία αντίστοιχη σελίδα λίστας (7). Ο αριθμός σελίδας (5) εμφανίζεται στην κεφαλίδα μιας εικονογραφημένης σελίδας και στο υποσέλιδο μιας σελίδας λίστας. Ο αριθμός εγγράφου (6) εμφανίζεται στο υποσέλιδο μιας σελίδας λίστας.

### Αρίθμηση Σελίδων

Ανατρέξτε στην εικόνα (A) της σελίδας i-5: Ένας αριθμός σελίδας (5) αποτελείται από τα εξής τρία μέρη:

- αριθμός κεφαλαίου (2)
- αύξων αριθμός σελίδας του κεφαλαίου (3)
- συνολικός αριθμός σελίδων του κεφαλαίου (4)

## Παρουσίαση Μηχανής

### Κατασκευαστής

Για το όνομα και τη διεύθυνση του κατασκευαστή, ανατρέξτε στη δεύτερη σελίδα αυτού του καταλόγου.

### Τεχνική Εξυπηρέτηση

Για να παραγγείλετε ανταλλακτικά για τη συγκεκριμένη μηχανή ή για να αναφέρετε προβλήματα που σχετίζονται με τη λειτουργία αυτής της μηχανής, επικοινωνήστε με το πλησιέστερο γραφείο της Tetra Pak.

Εάν έχετε άλλου είδους ερωτήσεις, σχόλια ή προτάσεις βελτίωσης σχετικά με τον εξοπλισμό και την έγγραφη τεκμηρίωσή του, επικοινωνήστε με το Τμήμα Σχέσεων.

## Στοιχεία Ταυτότητας

### Σήμανση CE

Αυτός ο εξοπλισμός συμμορφώνεται με τους βασικούς κανονισμούς υγείας και ασφάλειας του Ευρωπαϊκού Οικονομικού Χώρου (ΕΟΧ).





### Πινακίδα Αναγνώρισης Μηχανής

Η εικόνα (B) της σελίδας i-5 δείχνει ένα παράδειγμα μιας πινακίδας αναγνώρισης μηχανής.
Μια εικόνα που δείχνει την ενδεδειγμένη μορφή και θέση της πινακίδας αναγνώρισης μηχανής στον εξοπλισμό, παρουσιάζεται στο κεφάλαιο 'Εισαγωγή' των εγχειριδίων που παρέχονται μ' αυτόν τον εξοπλισμό.
Η πινακίδα αναγνώρισης μηχανής αναγράφει τα δεδομένα που παρατίθενται στη συνέχεια, τα οποία είναι απαραίτητα όταν επικοινωνείτε με την Tetra Pak για θέματα που αφορούν αυτό το συγκεκριμένο εξοπλισμό.

- Τύπος μηχανής (8)
- Χωρητικότητα (9)
- Στοιχεία σχεδίου (10)
- Αριθμός σειράς μηχανής (11)
- Κατασκευαστής (12)
- Σήμανση CE (13)
- Έτος κατασκευής (14)

Η εικόνα (Γ) της σελίδας i-5 δείχνει ένα παράδειγμα τεχνικών χαρακτηριστικών μηχανής. Βεβαιωθείτε ότι τα δεδομένα εξοπλισμού που παρατίθενται στις πρώτες σελίδες αυτού του εγχειριδίου συμφωνούν με τα δεδομένα της πινακίδας αναγνώρισης μηχανής και των τεχνικών χαρακτηριστικών μηχανής.

## Πώς Χρησιμοποιείται Αυτός ο Κατάλογος Ανταλλακτικών

### Εύρεση ενός Αριθμού Ανταλλακτικού

a) Ανατρέξτε στην εικόνα (Δ) της σελίδας i-5: Πηγαίνετε στον αριθμό κεφαλαίου (15) που υποδεικνύεται δίπλα από την κύρια ομάδα της μηχανής η οποία περιλαμβάνει το εξάρτημα που θέλετε να βρείτε.

Τα βήματα b) και c) αναφέρονται στην εικόνα (Ε) της σελίδας i-6.

b) Στην εικόνα της κύριας ομάδας μηχανής, αναζητήστε την υποομάδα μηχανής (17) η οποία περιλαμβάνει το εξάρτημα ή την υποομάδα που αναζητάτε. Σημειώστε τον αριθμό θέσης (18) και πηγαίνετε στη σελίδα λίστας που ακολουθεί την εικόνα.

c) Αναζητήστε τον αριθμό θέσης/ονομασία αναφοράς (16) ή το όνομα υποομάδας (19). Πηγαίνετε στον αντίστοιχο αριθμό σελίδας (20) που αναγράφεται στη δεξιά στήλη. Η Tetra Pak έχει επιλέξει να χρησιμοποιεί πάντα δομή ονομασίας αναφοράς με βάση τη λειτουργία. Το πρόθεμα που υποδεικνύει τη δομή με βάση τη λειτουργία (=) δε φαίνεται στο διάγραμμα αναφοράς.

Τα βήματα d) και e) αναφέρονται στην εικόνα (ΣΤ) της σελίδας i-6.

d) Βρείτε το εξάρτημα (21) που αναζητάτε στην εικόνα υποομάδας μηχανής και σημειώστε τον αριθμό θέσης του εξαρτήματος.

e) Ο αριθμός του εξαρτήματος (29) και η περιγραφή του εξαρτήματος (30) παρατίθενται δίπλα στον αριθμό θέσης στη σελίδα λίστας.





### Πληροφορίες που Περιέχονται σε έναν Κατάλογο Ανταλλακτικών

Η λίστα που ακολουθεί αναφέρεται στην εικόνα (F) της σελίδας i-6. Ένας Κατάλογος Ανταλλακτικών περιέχει τις παρακάτω πληροφορίες σχετικά με τις ομάδες, τις υποομάδες και τα ανταλλακτικά του εξοπλισμού:

- Αναφορά δομής ομάδας (22). Υποδηλώνει την επόμενη μεγαλύτερη ομάδα στη δομή λίστας του εξοπλισμού.
- Όνομα ομάδας (23)
- Μονάδα μέτρησης (25)
- Ποσότητα (26)
- Αριθμός σχεδίου συγκροτήματος (27)
- Περιοχή σελίδων λίστας (28). Περιλαμβάνεται εφόσον η εικόνα ή η λίστα μιας ομάδας εκτίθεται σε περισσότερες από μία σελίδες.
- Αριθμός εξαρτήματος ή υποομάδας (29)
- Αριθμός υποομάδας ή περιγραφή εξαρτήματος (30)
- Αριθμός ομάδας (31)
- Αριθμός εξοπλισμού (32)
- Επικεφαλίδα πληροφοριών ομάδας (33). Υποδεικνύει εάν η ενότητα κάτω από την επικεφαλίδα αφορά μια συγκεκριμένη παραλλαγή μηχανής ή αποτελεί μια λίστα κοινών εξαρτημάτων. Σε περίπτωση που μια λίστα περιέχει περισσότερες από μία παραλλαγές και κάθε παραλλαγή έχει ξεχωριστό σχέδιο συγκροτήματος, εμφανίζεται μια παραπομπή προς τη σελίδα όπου βρίσκεται το σχέδιο συγκροτήματος της παραλλαγής.
- Εσωτερικές πληροφορίες (34)

# Introducción

## Información sobre el manual

Tetra Pak recomienda leer atentamente todos los manuales suministrados. Asegúrese de que los manuales están disponibles para el personal que opera o mantiene el equipo.

Es importante conservar este catálogo durante la vida útil del equipo, así como facilitárselo a cualquier propietario o usuario posterior.

Tetra Pak no se responsabilizará de daños en el equipo por no seguir las instrucciones proporcionadas en los manuales que acompañan este equipo.

### Manuales entregados

Los manuales entregados con este equipo pueden incluir:

- CM
  El Manual de conversión proporciona a los técnicos información sobre cómo convertir el equipo a diferentes modos de producción.
- EM
  El Manual eléctrico proporciona a los técnicos información sobre el sistema eléctrico del equipo.
- IM
  El Manual de instalación proporciona a los técnicos la información necesaria para instalar el equipo de manera segura.
- MM
  El Manual de mantenimiento proporciona a los técnicos información sobre el mantenimiento del equipo.
- OM
  El Manual de funcionamiento proporciona al operador información sobre el manejo y el funcionamiento del equipo antes, durante y después de la producción.
- SPC
  El Catálogo de recambios proporciona la información necesaria para pedir las piezas de recambio a Tetra Pak.
- TeM
  El Manual técnico
  - proporciona a los técnicos la información necesaria para instalar de manera segura el equipo
  - proporciona a los técnicos información sobre el mantenimiento del equipo
  - proporciona a los técnicos información sobre el sistema eléctrico de la máquina/equipo
  - proporciona la información necesaria para pedir las piezas de recambio a Tetra Pak.





### Organización de las páginas

Consultar la ilustración (A) en la página i-5: Las páginas principales en un Catálogo de recambios se componen de una página de ilustración (1) y una página de lista correspondiente (7). El número de la página (5) se muestra en el encabezado de una página de ilustración y en el pie de página de una página de lista. El número del documento (6) se muestra en el pie de página de una página de lista.

### Numeración de las páginas

Consulte la ilustración (A) en la página i-5: Un número de página (5) consta de tres partes:

- número de capítulo (2)
- número de página consecutivo dentro del capítulo (3)
- número total de páginas del capítulo (4)

## Introducción a la máquina

### Fabricante

Para obtener el nombre y la dirección del fabricante, véase la segunda página de este catálogo.

### Servicio

Para pedir recambios para esta máquina o informar de problemas asociados con el funcionamiento de la misma, póngase en contacto con la oficina de Tetra Pak más cercana.

Póngase en contacto con el representante para otras consultas, comentarios o consejos sobre mejoras referidos al equipo y su documentación.

## Identificación

### Clasificación de la CE

Este equipo cumple con la normativa básica sobre salud y seguridad del Espacio Económico Europeo (EEE).





### Placa de máquina

La ilustración (B) en la página i-5 muestra un ejemplo de una placa de máquina.
En el capítulo Introducción de los manuales entregados con este equipo, se muestra una ilustración de la placa de máquina válida y su ubicación en el equipo. La placa de máquina contiene los datos que se enumeran a continuación, requeridos al ponerse en contacto con Tetra Pak en relación con este equipo específico.

- Tipo de máquina (8)
- Volumen (9)
- Especificaciones de plano (10)
- Número de serie de la máquina (11)
- Fabricante (12)
- Marca de la CE (13)
- Año de fabricación (14)

La ilustración (C) en la página i-5 muestra un ejemplo de especificación de la máquina. Asegúrese de que los datos de equipo que se enumeran en las páginas de la cubierta de este manual corresponden a los datos de la placa y las especificaciones de la máquina.

## Cómo utilizar este Catálogo de recambios

### Localizar un número de recambio

a) Consulte la ilustración (D) en la página i-5: Vaya al número de capítulo (15) indicado junto al grupo principal que contiene la pieza que desea localizar.

Los puntos b) y c) hacen referencia a la ilustración (E) en la página i-6.

b) En la ilustración del grupo principal, busque el subgrupo de la máquina (17) que contiene la pieza o el subgrupo que busca. Anote el número de posición (18) y vaya a la página de lista que sigue a la ilustración.

c) Busque el número de posición/denominación de referencia (16) o el nombre del subgrupo (19). Vaya al número de página correspondiente (20) que aparece en la columna de la derecha. Tetra Pak ha elegido utilizar siempre la estructura orientada a la función para la denominación de referencia. El prefijo que indica la estructura orientada a la función (=) no aparece en la denominación de referencia.

Los puntos d) y e) hacen referencia a la ilustración (F) en la página i-6.

d) Localice la pieza (21) que busca en la ilustración del subgrupo y anote el número de posición de la pieza.

e) El número de pieza (29) y la descripción de la misma (30) aparecen junto al número de posición en la página de lista.





### Información que contiene un Catálogo de recambios

La lista que aparece a continuación hace referencia a la ilustración (F) en la página i-6. Un Catálogo de recambios contiene la siguiente información sobre grupos, subgrupos y recambios para el equipo:

- Referencia de estructura de grupo (22). Indica el siguiente grupo más alto en la estructura de lista del equipo.
- Nombre del grupo (23)
- Unidad de medida (25)
- Cantidad (26)
- Número de dibujo del conjunto (27)
- Intervalo de página de lista (28). Incluido si hay varias páginas en la ilustración o lista de grupo.
- Número de pieza o subgrupo (29)
- Nombre de subgrupo o descripción de pieza (30)
- Número de grupo (31)
- Número de equipo (32)
- Encabezado de información de grupo (33). Indica si la sección que aparece debajo del encabezado corresponde a una variante específica de la máquina o si es una lista de piezas comunes. Si la lista tiene más de una variante y cada variante tiene su propio dibujo de conjunto, se muestra una referencia de página al dibujo de conjunto de la variante.
- Información interna (34)

# Sissejuhatus

## Juhendi teave

Tetra Pak soovitab kõik juhendid hoolikalt läbi lugeda. Kontrollige, et juhendid oleksid seadmetega töötavatele ja neid hooldavatele isikutele kättesaadavad.

Kataloog tuleb seadme kasutusaja vältel alles hoida ning järgmisele omanikule või kasutajale edasi anda.

Tetra Pak ei vastuta seadme vigastuste eest, mis on tekkinud seadmega kaasnevate juhendite mittejärgimise tõttu.

### Kaasaolevad juhendid

Seadmega kaasasolevad juhendid võivad sisaldada järgmist:

- CM
  Ümberseadistusjuhend annab tehnikutele teavet seadme ümber seadistamise kohta eri tootmisrežiimide korral.
- EM
  Elektrijuhend annab tehnikutele informatsiooni seadme elektrisüsteemi kohta.
- IM
  Paigaldusjuhend annab tehnikutele vajalikku teavet seadme ohutu paigaldamise kohta.
- MM
  Hooldusjuhend annab tehnikutele teavet seadme hoolduse kohta.
- OM
  Kasutusjuhend annab operaatorile teavet seadme käsitsemise ja kasutamise kohta enne tootmist, selle ajal ja pärast seda.
- SPC
  Varuosade kataloog annab vajalikku teavet Tetra Pakilt varuosade tellimiseks
- TeM
  Tehniline juhend
  - annab tehnikutele vajalikku teavet seadme ohutuks paigaldamiseks
  - annab tehnikutele teavet seadme hooldamise kohta
  - annab tehnikutele teavet masina/seadme elektrisüsteemi kohta
  - annab vajalikku teavet Tetra Pakilt varuosade tellimiseks.





### Lehekülje kujundus

Vt joonist (A) lk i-5: Varuosade kataloogi põhilehtedeks on jooniste lehekülg (1) ja vastav loeteluleht (7). Lehekülje number (5) on toodud joonistelehe päises ja loetelulehe jaluses. Dokumendi number (6) on toodud loetelulehe jaluses.

### Lehekülje nummerdus

Vt joonist (A) lk i-5: Lehekülje number (5) koosneb kolmest osast:

- peatüki number (2)
- järgneva lehekülje number (3) peatükis
- lehekülgede koguarv peatükis (4)

## Sissejuhatus masina kohta

### Tootja

Tootja nimi ja aadress on toodud kataloogi teisel lehel.

### Teenindus

Masina varuosade tellimiseks või masina kasutamisega seonduvate probleemide teatamiseks võtke ühendust lähima Tetra Pak kontoriga.

Seadme ja dokumendiga seonduvate küsimuste, kommentaaride ja parandusettepanekute puhul võtke ühendust ettevõtte esindajaga.

## Identifikatsioon

### CE klassifikatsioon

Seade on kooskõlas Euroopa Majanduspiirkonna (EEA) tervishoiu- ja ohutusnõuetega.





### Masina andmeplaat

Joonisel (B) leheküljel i-5 on kujutatud masina andmeplaati. Masina andmeplaadi joonis ja selle asukoht seadmel on toodud seadmega kaasasoleva juhendi sissejuhatavas peatükis. Masina andmeplaadil on toodud allpool loetletud andmed, mida vajate antud konkreetse seadmega seoses Tetra Paki poole pöördudes.

- Masina tüüp (8)
- Maht (9)
- Joonisspetsifikatsioonid (10)
- Masina seerianumber (11)
- Tootja (12)
- CE tähis (13)
- Tootmisaasta (14)

Joonisel (C) leheküljel i-5 on kujutatud näide masina spetsifikatsioonist. Veenduge, et juhendi esimestel lehekülgedel toodud andmed seadme kohta vastavad masina andmesildil olevatele andmetele ja masina spetsifikatsioonile.

## Kuidas varuosade kataloogi kasutada

### Leidke varuosa number

a) Vt joonist (D) lk i-5: Leidke peatükk, mille number (15) on toodud selle põhirühma juures, mis sisaldab otsitavat varuosa.

Punktid b) ja c) viitavad joonisele (E) lk i-6.

b) Põhirühma joonisel leidke masina alamrühm (17), mis sisaldab otsitavat osa või alamrühma. Leidke positsiooninumber (18) ja avage joonisele järgnev loeteluleht.

c) Leidke positsiooninumber/viite tähis (16) või alamgrupi nimetus (19). Avage parempoolses veerus loetletud vastav lehekülje number (20). Tetra Pak on valinud viite tähise puhul alatiseks kasutamiseks funktsioonile suunatud struktuuri. Funktsioonile suunatud struktuuri prefiks (=) pole viite tähises näidatud.

Punktid d) ja e) viitavad jooniselerefer (F) lk i-6.

d) Leidke otsitav osa (21) alamrühma joonisel ja seejärel osa positsioonnumber.

e) Osa number (29) ja osa kirjeldus (30) on toodud loetelulehel positsioonnumbri kõrval.





### Varuosade kataloogis toodud teave

Allpool toodud loetelui viitab joonisele (F) lk i-6. Varuosade kataloog sisaldab järgmist teavet seadme rühmade, alamrühmade ja varuosade kohta:

- Rühmastruktuuri viide (22). Märgib seadme loetelu struktuuris järgmist kõrgemat rühma.
- Rühma nimetus (23)
- Mõõtühik (25)
- Kogus (26)
- Koostejoonise number (27)
- Loetelu lehekülgede vahemik (28). Kaasatud kui rühma joonised või loetelu on toodud mitmel lehel.
- Osa või alamrühma number (29)
- Alamrühma nimetus või osa kirjeldus (30)
- Rühma number (31)
- Seadme number (32)
- Rühma teabe pealkiri (33). Näitab, kas pealkirja all toodud jaotis on konkreetse masinavariandi kohta või on tegemist tavaliste varuosade loeteluga. Kui loetelus on toodud rohkem kui üks variant ja iga variandi jaoks on oma koostejoonis, esitatakse viide selle variandi koostejoonise leheküljele.
- Siseteave (34)

# Johdanto

## Tietoja käsikirjasta

Tetra Pak suosittelee kaikkien toimitettavien oppaiden lukemista huolellisesti. Varmista, että toimitetut oppaat ovat laitetta käyttävän tai huoltavan henkilökunnan saatavilla.

Tämä luettelo on säilytettävä laitteen käyttöiän ajan ja toimitettava edelleen mahdolliselle seuraavalle omistajalle tai käyttäjälle.

Tetra Pak ei vastaa laitevaurioista, jotka aiheutuvat laitteen mukana tulevissa oppaissa annettujen ohjeiden noudattamatta jättämisestä.

### Toimitettavat ohjeet

Tämän laitteen mukana toimitettaviin ohjeisiin kuuluvat:

- CM
  Muunnoskirjassa on teknikoille tarkoitettuja ohjeita laitteiston muuttamisesta eri tuotantotiloihin.
- EM
  Sähkökirjassa on teknikoille tarkoitettuja tietoja laitteen sähköjärjestelmästä.
- IM
  Asennuskäsikirjassa on teknikoille tarkoitettuja tietoja, jotka tarvitaan laitteen turvallista asentamista varten.
- MM
  Huoltokäsikirjassa on teknikoille tarkoitettuja tietoja tämän laitteen huoltamisesta.
- OM
  Käyttäjän käsikirjassa on käyttäjälle tarkoitettuja tietoja laitteen käsittelystä ja käyttämisestä ennen tuotantoa, tuotannon aikana ja sen jälkeen.
- SPC
  Varaosaluettelossa on tietoja, joita tarvitaan varaosien tilaamiseen Tetra Pakilta.
- TeM
  Tekninen käsikirja
  - sisältää teknikoille tarkoitettuja tietoja, joita tarvitaan laitteen turvallista asentamista varten
  - sisältää teknikoille tarkoitettuja tietoja laitteen huoltamisesta
  - sisältää teknikoille tarkoitettuja tietoja koneen/laitteen sähköjärjestelmästä
  - sisältää tietoja, joita tarvitaan varaosien tilaamiseen Tetra Pakilta.





### Sivujen asettelu

Katso kuva (A) sivulla i-5: Varaosaluettelon pääsivut koostuvat kuvasivusta (1) ja sitä vastaavasta luettelosivusta (7). Sivunumero (5) näytetään kuvasivun ylätunnisteessa ja luettelosivun alatunnisteessa. Asiakirjan numero (6) näytetään luettelosivun alatunnisteessa.

### Sivunumerointi

Katso kuva (A) sivulla i-5: Sivunumerossa (5) on kolme osaa:

- luvun numero (2)
- perättäinen sivunumero (3) luvun sisällä
- luvun kokonaissivumäärä (4).

## Koneen esittely

### Valmistaja

Valmistajan nimi ja osoite on ilmoitettu tämän luettelon toisella sivulla.

### Huolto

Jos haluat tilata tähän koneeseen varaosia tai jos tämän koneen käytössä ilmenee ongelmia, jotka haluat raportoida, ota yhteyttä lähimpään Tetra Pakin toimistoon.

Jos sinulla on muuta kysyttävää, huomautettavaa tai ehdotuksia ja sen asiakirjoja koskevista parannuksista, ota yhteys yhteyshenkilöön.

## Tunnistetiedot

### CE-luokitus

Tämä laite vastaa Euroopan talousalueen (ETA) terveyttä ja turvallisuutta koskevia perusvaatimuksia.





### Koneen tyyppikilpi

Kuvassa (B) sivulla i-5 on esimerkki koneen tyyppikilvestä. Voimassa olevan tyyppikilven kuva ja sen sijainti koneessa käy ilmi laitteiston mukana tulleiden ohjeiden Johdanto-luvusta. Tyyppikilvessä on tarvitsemasi Tetra Pakin voimassa olevat yhteystiedot, kun on kyseessä tämä nimenomainen laite.

- Konetyyppi (8)
- Tilavuus (9)
- Piirustuserittely (10)
- Koneen sarjanumero (11)
- Valmistaja (12)
- CE-merkki (13)
- Valmistusvuosi (14)

Kuvassa (C) sivulla i-5 on esimerkki koneen erittelystä. Varmista, että tämän ohjeen etusivuilla ilmoitetut laitetiedot vastaavat tyyppikilven ja kone-erittelyn tietoja.

## Tämän varaosaluettelon käyttäminen

### Etsi varaosan numero

a) Katso kuva (D) sivulla i-5: Siirry lukuun (15), joka on ilmoitettu etsittävän osan pääryhmän vieressä.

Kohdat b) ja c) viittaavat kuvaan (E) sivulla i-6.

b) Etsi pääryhmän kuvasta koneen alaryhmä (17), joka sisältää etsimäsi osan tai alaryhmän. Merkitse muistiin paikkanumero (18) ja siirry luettelosivulle, joka seuraa kuvaa.

c) Etsi paikkanumero (16) tai alaryhmän nimi (19). Siirry vastaavalle sivunumerolle (20), joka on ilmoitettu oikeassa sarakkeessa. Tetra Pak on päättänyt aina noudattaa toimintoperusteista rakennetta viitemerkinnöissä. Viitemerkinnässä ei esitetä toimintoperusteisen rakenteen osoittavaa etuliitettä (=).

Kohdat d) ja e) viittaavat kuvaan (F) sivulla i-6.

d) Hae etsittävä osa (21) alaryhmän kuvasta ja merkitse osan paikkanumero muistiin.

e) Osanumero (29) ja osan kuvaus (30) on annettu paikkanumeron vieressä luettelosivulla.





### Varaosaluettelossa olevat tiedot

Alla oleva luettelo viittaa kuvaan (F) sivulla i-6. Varaosaluettelo sisältää seuraavat tiedot ryhmistä, alaryhmistä ja laitteen varaosista:

- Ryhmärakenneviite (22). Osoittaa seuraavaksi ylemmän ryhmän laiteluettelorakenteessa.
- Ryhmän nimi (23)
- Mittayksikkö (25)
- Määrä (26)
- Kokoonpanopiirustuksen numero (27)
- Luettelon sivualue (28). Tämä on mukana, jos ryhmäkuvassa tai luettelossa on useita sivuja.
- Osan tai alaryhmän numero (29)
- Alaryhmän nimi tai osan kuvaus (30)
- Ryhmän numero (31)
- Laitteen numero (32)
- Ryhmätietojen otsikko (33). Osoittaa, koskeeko alla oleva osio tiettyä koneversiota vai onko kyseessä yhteisten osien luettelo. Jos luettelolla on useampi kuin yksi versio ja kullakin versiolla on oma kokoonpanopiirustuksensa, näytetään version kokoonpanopiirustuksen sivuviittaus.
- Sisäiset tiedot (34)

# Introduction

## Informations sur ce manuel

Tetra Pak recommande de lire attentivement tous les manuels remis. S'assurer que ceux-ci sont accessibles au personnel d'exploitation et de maintenance de l'équipement.

Il est important de conserver ce catalogue pendant la durée de vie de l'équipement et de le transmettre à tout détenteur ou à tout utilisateur ultérieur de l'équipement.

Tetra Pak ne pourra être tenu responsable d'aucun dommage causé à l'équipement suite au non respect des instructions fournies dans les manuels remis avec cet équipement.

### Manuels remis

Les manuels remis avec cet équipement peuvent comprendre

- CM
  Le Manuel de Conversion contient les informations destinées aux techniciens pour la conversion de l'équipement en vue des différents modes de production.
- EM
  Le Manuel Electrique fournit aux techniciens des informations sur le système électrique de l'équipement.
- IM
  Le Manuel d'Installation fournit les informations nécessaires aux techniciens pour installer l'équipement en toute sécurité.
- MM
  Le Manuel d'Entretien contient les informations nécessaires aux techniciens pour la maintenance de l'équipement.
- OM
  Le Manuel d'Utilisation fournit à l'opérateur les informations nécessaires à la manutention et à l'exploitation de l'équipement, avant, pendant et après la production.
- SPC
  Le Catalogue des Pièces de Rechange contient les informations permettant de commander des pièces de rechange auprès de Tetra Pak
- TeM
  Le Manuel Technique
  - contient les informations nécessaires aux techniciens pour installer l'équipement en toute sécurité.
  - contient les informations nécessaires aux techniciens pour la maintenance de l'équipement.
  - fournit aux techniciens des informations sur le système électrique de la machine/de l'équipement.
  - fournit les informations permettant de commander des pièces de rechange auprès de Tetra Pak.





### Mise en page

Reportez-vous au schéma (A) page i-5 : Dans un catalogue de Pièces de Rechange, les pages principales sont les pages de schémas (1) et les pages de listes correspondantes (7). Le numéro de page (5) est indiqué en en-tête sur une page de schéma et en bas de page sur une page de liste. Le numéro de document (6) est indiqué au bas d'une page de liste.

### Numérotation des pages

Reportez-vous au schéma (A) page i-5 : Un numéro de page (5) se compose de trois éléments :

- numéro du chapitre (2)
- numéro de page séquentiel à l'intérieur du chapitre (3)
- nombre total de pages du chapitre (4)

## Présentation de la machine

### Fabricant

Les nom et adresse du fabricant sont donnés en deuxième page de ce catalogue.

### Assistance technique

Pour commander des pièces de rechange pour cette machine ou signaler un problème lié à son fonctionnement, contactez l'agence Tetra Pak la plus proche.

Contactez le responsable de liaison pour tout autre renseignement, commentaire ou suggestion d'amélioration relatifs à l'équipement et à sa documentation.

## Identification

### Certification CE

Cet équipement est conforme aux réglementations essentielles en matière d'hygiène et de sécurité de l'Espace économique européen (EEE).





### Plaque signalétique de la machine

Le schéma (B) de la page i-5 reproduit un exemple de plaque signalétique de la machine.
Le chapitre Introduction des manuels remis avec cet équipement comprend une reproduction de la plaque signalétique valide de la machine et indique son emplacement sur l'équipement. La plaque comporte les caractéristiques indiquées ci-dessous, nécessaires pour prendre contact avec Tetra Pak à propos de cet équipement spécifique.

- Type de la machine (8)
- Volume (9)
- Caractéristiques schéma (10)
- Numéro de série de la machine (11)
- Fabricant (12)
- Marquage CE (13)
- Année de fabrication (14)

Le schéma (C) de la page i-5 reproduit un exemple de plaque signalétique de la machine. Assurez-vous que les données relatives à l'équipement qui se trouvent au début de ce manuel correspondent bien aux données figurant sur la plaque signalétique de la machine et à ses spécifications.

## Comment utiliser ce Catalogue des Pièces de Rechange

### Trouver un numéro de pièce de rechange

a) Reportez-vous au schéma (D) page i-5 : Allez au numéro de chapitre (15) indiqué à côté du groupe principal contenant la pièce que vous recherchez.

Les éléments b) et c) se rapportent au schéma (E) de la page i-6.

b) Sur le schéma du groupe principal, recherchez le sous-groupe de la machine (17) contenant la pièce ou le sous-groupe que vous recherchez. Notez le numéro de position (18) et reportez-vous à la page de liste suivant le schéma.

c) Recherchez le numéro de position/la désignation de référence (16) ou le nom du sous-groupe (19). Allez au numéro de page correspondant (20) figurant dans la liste de la colonne de droite. Tetra Pak a pris le parti de toujours utiliser la structure de la fonction pour la désignation de la référence. Le préfixe indiquant la structure de la fonction (=) ne figure pas dans la désignation de la référence.

Les éléments d) et e) se rapportent au schéma (F) de la page i-6.

d) Repérez la pièce (21) que vous recherchez dans le schéma du sous-groupe et notez le numéro de position de la pièce.

e) Le numéro de la pièce (29) et sa description (30) figurent à côté du numéro de position sur la page de liste.





### Informations données dans un Catalogue de Pièces de Rechange

La liste ci-dessous se rapporte au schéma (F) de la page i-6. Un Catalogue de Pièces de Rechange contient les informations suivantes concernant les groupes, sous-groupes et pièces de rechange de l'équipement :

- Référence de structure de groupe (22). Indique le groupe immédiatement supérieur dans la structure de liste de l'équipement.
- Nom du groupe (23)
- Unité de mesure (25)
- Quantité (26)
- Numéro de plan de montage (27)
- Groupe de pages de liste (28). Indiqué si la liste ou l'illustration du groupe comporte plusieurs pages.
- Numéro de pièce ou de sous-groupe (29)
- Nom du sous-groupe ou description de la pièce (30)
- Numéro de groupe (31)
- Numéro de l'équipement (32)
- Titre information du groupe (33) Indique si la section en-dessous du titre est destinée à une variante spécifique de la machine ou s'il s'agit d'une liste de pièces communes. Si une liste comprend plus d'une variante et que chaque variante a son propre plan de montage, une référence de page est donnée pour le plan de montage de la variante.
- Information interne (34)

# Bevezetés

## Kézikönyvre vonatkozó információk

A Tetra Pak javasolja, hogy az összes kapott kézikönyvet gondosan olvassa el. Gondoskodjon róla, hogy a kézikönyvek a berendezést üzemeltető és karbantartó személyzet számára elérhetők legyenek.

Fontos, hogy megőrizzék ezt a katalógust a berendezés élettartama alatt, és átadják a következő tulajdonosoknak és felhasználóknak.

A Tetra Pak nem vállal felelősséget a berendezés semmilyen megrongálódása esetén, ha nem követték a berendezéshez tartozó kézikönyvekben leírt utasításokat.

### Szállított kézikönyvek

A berendezéssel szállított kézikönyvek az alábbiak lehetnek

- CM
  Az Átállási kézikönyv a műszaki szakemberek számára a berendezés különböző gyártási módjai közötti átállásra vonatkozó információkat tartalmaz.
- EM
  A Villamossági kézikönyv a berendezés elektronikai rendszerére vonatkozó információkat szolgáltat a műszaki szakemberek részére.
- IM
  Az Üzembe helyezési kézikönyv a berendezés biztonságos üzembe helyezésére vonatkozó információkat biztosít a technikai szakemberek részére.
- MM
  A Karbantartási kézikönyv a berendezés karbantartására vonatkozó információkat biztosít a technikai szakemberek részére.
- OM
  Az Üzemeltetési kézikönyv az üzemeltető személyzetnek szolgáltat a berendezés kezelésére és üzemeltetésére, a feldolgozás előtti, közbeni és utáni teendőkre vonatkozó információkat.
- SPC
  A Tartalékalkatrész-katalógus információt biztosít a pótalkatrészek Tetra Pak-tól történő megrendeléséhez.
- TeM
  A Technikai kézikönyv
  – a berendezés biztonságos üzembe helyezésére vonatkozó információkat biztosít a technikai szakemberek részére.
  – a berendezés karbantartására vonatkozó információkat biztosít a technikai szakemberek részére.
  – a gép/berendezés elektromos rendszerére vonatkotó információkat szolgáltat a technikai szakemberek számára.
  – információkat biztosít a pótalkatrészek Tetra Pak-tól történő megrendeléséhez.





### Oldalelrendezés

Tekintse meg az i-5 oldalon lévő (A) ábrát: A Tartalékalkatrész-katalógus főoldalai egy rajzoldalból (1) és egy hozzá tartozó listaoldalból (7) állnak. Az oldalszám (5) a rajzoldal fejlécében és a listaoldal láblécében látható. A dokumentum száma (6) a listaoldal láblécében jelenik meg.

### Oldalszámozás

Tekintse meg az i-5 oldalon lévő (A) ábrát: Az oldalszám (5) három részből áll:

- fejezetszám (2)
- folyamatos oldalszám (3) a fejezeten belül
- összes oldalszám (4) a fejezeten belül.

## Bevezetés

### Gyártó

A gyártó neve és címe a katalógus második oldalán található.

### Szerviz

A gép valamely pótalkatrészének megrendelése vagy a berendezés működésével kapcsolatos zavarok bejelentése végett forduljon a legközelebbi Tetra Pak képviselethez.

Bármilyen más, a berendezésre illetve a dokumentációra vonatkozó kérdéseivel, megjegyzéseivel vagy javaslataival forduljon területi képviselőjéhez.

## Azonosítás

### CE besorolás

Ez a berendezés megfelel az Európai Gazdasági Régió (EEA) alapvető egészségügyi és biztonsági előírásainak.





### Gépcímke

A(z) i-5 oldalon található (B) ábra a gépcímke egy példáját mutatja be. Egy érvényes gépcímkét és megfelelő elhelyezését ábrázoló rajz látható a berendezéssel szállított kézikönyv Bevezetés fejezetében. A gépcímke azokat az alább felsorolt adatokat tartalmazza, amelyek a Tetra Pak-kal történő, a berendezésre vonatkozó kommunikációhoz szükségesek.

- Géptípus (8)
- Térfogat (9)
- Tervrajzok (10)
- A gép sorozatszáma (11)
- Gyártó (12)
- CE jelzés (13)
- Gyártási év (14)

A(z) i-5 oldalon található (C) ábra a gép műszaki specifikációjának egy példáját mutatja be. Győződjön meg róla, hogy a kézikönyv első lapjain közölt berendezésadatok megegyeznek a gép adattábláján és a gép műszaki leírásában megjelenő információkkal.

## A Tartalékalkatrész-katalógus használata

### A tartalékalkatrész számának kikeresése

a) Tekintse meg a(z) i-5 oldalon lévő (D) ábrát: Lapozzon a keresett alkatrészt tartalmazó főcsoport mellett feltüntetett (15) számú fejezetre.

A b) és c) elemek az i-6 oldalon található ábrára vonatkoznak.

b) A főcsoport-ábrán keresse meg azt az alcsoportot (17), amelyik a keresett alkatrészt vagy alcsoportot tartalmazza. Jegyezze meg a pozíciószámot (18), majd lapozzon az ábrát követő listaoldalra.

c) Keresse meg a lejegyzett pozíciószámot/hivatkozási megjelölést (16) vagy a keresett alcsoport nevét (19). Lapozzon a jobb oldali oszlopban feltüntetett számú (20) oldalra. A Tetra Pak a hivatkozási jelöléseket mindig funkció-orientált struktúra alapján végzi el. Az előtaggal jelölt funkció-orientált struktúra (=) nem jelenik meg a hivatkozási jelölésben.

A d) és e) elemek az i-6 oldalon található (F) ábrára vonatkoznak.

d) Az alcsoport ábrán keresse meg a kívánt alkatrészt (21), és jegyezze meg az alkatrész pozíciószámát.

e) Az alkatrész száma (29) és leírása (30) a listaoldalon, a pozíciószám mellett látható.





### A Tartalékalkatrész-katalógusban megtalálható információk

Az alábbi lista az i-6 oldalon található (F) ábrára vonatkozik.
A Tartalékalkatrész-katalógus a következő, csoportokra, alcsoportokra és pótalkatrészekre vonatkozó adatokat tartalmazza:

- Csoportstruktúra-hivatkozás (22). A berendezés listás struktúrájában közvetlenül az aktuális csoport fölött álló csoportot jelöli.
- Csoportnév (23)
- Mértékegység (25)
- Mennyiség (26)
- Összeszerelési rajzszám (27)
- Lista oldaltartománya (28). Abban az esetben jelenik meg, ha a csoport ábrája vagy listája többoldalas.
- Alkatrész vagy alcsoport száma (29)
- Alcsoport neve vagy alkatrész leírása (30)
- Csoportszám (31)
- Berendezésszám (32)
- Csoportinformáció fejléce (33). Azt mutatja, hogy a fejléc után következő rész egy speciális gépváltozatra vonatkozik vagy az általános pótalkatrészek listája. Ha a listának több változata van, és mindegyikhez saját összeszerelési rajz tartozik, az illető összeszerelési rajz oldalhivatkozása is megjelenik.
- Belső információ (34)

# Inngangur

## Upplýsingar um handbók

Tetra Pak mælir með því að allar handbækur sem afhentar eru séu lesnar vandlega. Gætið þess að afhentar handbækur séu tiltækar fyrir starfsfólk sem vinnur við eða viðheldur tækjabúnaðinum.

Það er mikilvægt að halda upp á þennan vörulista allan líftíma tækjabúnaðarins og að láta síðari eiganda eða notanda hafa vörulistann.

Ekki er hægt að gera Tetra Pak ábyrgt fyrir neinum skemmdum sem verða á tækjabúnaðinum vegna þess að ekki er farið eftir leiðbeiningunum í þeim handbókum sem fylgja tækjabúnaðinum.

### Afhentar handbækur

Handbækur sem afhentar eru með þessum tækjabúnaði geta verið

- CM
  Breytingahandbók, sem veitir tæknimönnum upplýsingar um breytingar á tækjabúnaðinum milli mismunandi framleiðsluhama.
- EM
  Rafmagnshandbók, sem veitir tæknimönnum upplýsingar um rafkerfi tækjabúnaðarins.
- IM
  Uppsetningarhandbók, sem veitir tæknimönnum nauðsynlegar upplýsingar til að setja tækjabúnaðinn upp á öruggan hátt.
- MM
  Viðhaldshandbók, sem eitir tæknimönnum upplýsingar um viðhald tækjabúnaðarins.
- OM
  Notkunarhandbók, sem veitir stjórnandanum upplýsingar um meðhöndlun og notkun tækjabúnaðarins, fyrir, eftir og meðan á framleiðslu stendur.
- SPC
  Varahlutavörulisti, sem veitir nauðsynlegar upplýsingar til pöntunar varahluta frá Tetra Pak.
- TeM
  Tæknihandbók
  - sem veitir tæknimönnum nauðsynlegar upplýsingar til að setja tækjabúnaðinn upp á öruggan hátt
  - sem veitir tæknimönnum upplýsingar um viðhald tækjabúnaðarins
  - sem veitir tæknimönnum upplýsingar um rafkerfi vélarinnar/ tækjabúnaðarins
  - sem veitir nauðsynlegar upplýsingar til pöntunar varahluta frá Tetra Pak.





### Umbrot

Sjá skýringarmynd (A) á síðu i-5: Aðalsíðurnar í Varahlutavörulistanum samanstanda af skýringarsíðu (1) og samsvarandi listasíðu (7). Síðunúmerið (5) er sýnt í haus síðunnar með skýringarmyndinni og í fæti listasíðunnar. Skjalnúmerið (6) er sýnt í fæti listasíðunnar.

### Númerun síðu

Sjá skýringarmynd (A) á síðu i-5: Síðunúmer (5) er í þremur hlutum:

- kaflanúmer (2)
- samfellt síðunúmer innan kaflans (3)
- heildarfjölda blaðsíðna í kaflanum (4)

## Kynning á vél

### Framleiðandi

Fyrir nafn og heimilisfang framleiðanda, sjá síðu tvö í þessum vörulista.

### Þjónusta

Til að panta varahluti fyrir þessa vél, eða til að tilkynna vandamál sem tengjast notkun þessarar vélar, skal hafa samband við næstu Tetra Pak skrifstofu.

Hafðu samband við Samskiptatengsl með aðrar fyrirspurnir, athugasemdir eða uppástungur varðandi tækjabúnaðinn og fylgiskjöl hans.

## Kennsl

### CE flokkun

Þessi tækjabúnaður er í samræmi við grundvallar heilbrigðis- og öryggisreglugerðir á Evrópska efnahags svæðinu (EES).





### Nafnplata

Skýringarmynd (B) á síðu i-5 sýnir dæmi um nafnplötu.
Skýringarmynd af gildri nafnplötu og staðsetningu hennar á tækjabúnaðinum er sýnd í Inngangskafla handbókanna sem afhentar eru með þessum tækjabúnaði. Á nafnplötunni eru upplýsingarnar sem taldar eru upp hér að neðan, sem þörf er á þegar haft er samband við Tetra Pak varðandi þennan tiltekna tækjabúnað.

- Vélartegund (8)
- Fjöldi (9)
- Teikniupplýsingar (10)
- Raðnúmer vélar (11)
- Framleiðandi (12)
- CE merki (13)
- Framleiðsluár (14)

Skýringarmynd (C) á síðu i-5 sýnir dæmi um tæknilýsingu vélar. Gættu þess að upplýsingar um tækjabúnað sem talinn er upp á fremstu síðum þessarar handbóka samsvari upplýsingum á nafnplötu og tæknilýsingu vélar.

## Hvernig nota á þennan Varahlutavörulista

### Finndu varahlutarnúmer

a) Sjá skýringarmynd (D) á síðu i-5: Farðu í kaflanúmerið (15) sem gefið er til kynna við hlið aðalflokksins sem inniheldur hlutinn sem þú vilt finna.

Atriði b) og c) vísa til skýringarmyndar (E) á síðu i-6:

b) Á skýringarmynd aðalflokksins skaltu leita að undirflokki (17) vélarinnar, sem inniheldur hlutinn eða undirflokkinn sem þú ert að leita að. Taktu eftir stöðunúmerinu (18) og farðu á listasíðuna sem fylgir skýringarmyndinni.

c) Leitaðu að stöðunúmeri/tilvísunartitli (16) eða heiti undirflokksins (19). Farðu á samsvarandi síðunúmer (20) sem sýnt er í hægri dálkinum. Tetra Pak hefur kosið að nota alltaf sérhæfða skipan fyrir tilvísunartitla. Forskeytið sem gefur til kynna sérhæfða skipan (=) er ekki sýnt í tilvísunartitlinum.

Atriði d) og e) vísa til skýringarmyndar (F) á síðu i-6:

d) Finndu hlutinn (21) sem þú ert að leita að á undirflokksskýringarmyndinni og taktu eftir stöðunúmeri hlutarins.

e) Hlutarnúmerið (29) og lýsing hlutar (30) eru skráð hjá stöðunúmerinu á listasíðunni.





### Upplýsingar skráðar í Varahlutavörulista

Listinn að neðan vísar til skýringarmyndar (F) á síðu i-6: Varahlutavörulisti inniheldur eftirfarandi upplýsingar um flokka, undirflokka og varahluti fyrir tækjabúnaðinn:

- Tilvísun flokkaskipunar (22). Gefur til kynna næsta flokk fyrir ofan í listaskipan tækjabúnaðarins.
- Heiti flokks (23)
- Mælieining (25)
- Magn (26)
- Númer samsetningarteikningar (27)
- Röð listasíðu (28). Fylgir með ef það eru margar blaðsíður í skýringarmynd eða lista flokksins.
- Númer hlutar eða undirflokks (29)
- Heiti undirflokks eða lýsing hlutar (30)
- Númer flokks (31)
- Númer tækjabúnaðar (32)
- Fyrirsögn flokkaskipunar (33). Gefur til kynna ef kaflinn fyrir neðan fyrirsögnina er fyrir sérstakt afbrigði vélar eða ef hann er listi yfir algenga hluti. Ef listi er með meira en eitt afbrigði og hvert afbrigði á sína eigin samsetningarteikningu, er sýnd blaðsíðutilvísun til samsetningarteikningar afbrigðisins.
- Innri upplýsingar (34)

# Introduzione

## Informazioni sul manuale

Tetra Pak consiglia di leggere con attenzione tutti i manuali forniti in dotazione. Assicurarsi che tutti i manuali in dotazione siano disponibili per il personale addetto al funzionamento o alla manutenzione della macchina.

È importante conservare il presente catalogo per tutta la durata della macchina e consegnarlo al successivo proprietario o utilizzatore.

Tetra Pak non sarà da ritenersi responsabile per eventuali danni alla macchina causati dal mancato rispetto delle istruzioni fornite nei manuali che accompagnano questa macchina.

### Manuali in dotazione

I manuali consegnati con la presente macchina possono comprendere:

- CM (Manuale di conversione)
  Questo manuale fornisce ai tecnici le informazioni necessarie per la conversione della macchina da una modalità di produzione a un'altra.
- EM (Manuale elettrico)
  Questo manuale fornisce ai tecnici informazioni sull'impianto elettrico della macchina.
- IM (Manuale d'installazione)
  Questo manuale fornisce ai tecnici le informazioni necessarie per installare in sicurezza la macchina.
- MM (Manuale di manutenzione)
  Questo manuale fornisce ai tecnici le informazioni sulla manutenzione della macchina.
- OM (Manuale operativo)
  Questo manuale fornisce all'operatore le informazioni sull'utilizzo e il funzionamento della macchina prima, durante e dopo la produzione.
- SPC (Catalogo dei pezzi di ricambio)
  Questo catalogo fornisce le informazioni necessarie per ordinare i pezzi di ricambio a Tetra Pak.
- TeM (Manuale tecnico)
  Questo manuale:
  - fornisce ai tecnici le informazioni necessarie per installare in sicurezza la macchina
  - fornisce ai tecnici le informazioni sulla manutenzione della macchina
  - fornisce ai tecnici informazioni sull'impianto elettrico della macchina
  - fornisce le informazioni necessarie per ordinare i pezzi di ricambio a Tetra Pak.





### Schema delle pagine

Consultare la figura (A) a pagina i-5: Le pagine principali di un Catalogo dei pezzi di ricambio sono costituite da una pagina con la figura (1) e una pagina elenco corrispondente (7). Il numero di pagina (5) è indicato nell'intestazione delle pagine con le figure e nel piè di pagina delle pagine elenco. Il codice del documento (6) è indicato nel piè di pagina delle pagine elenco.

### Numerazione delle pagine

Consultare la figura (A) a pagina i-5: Il numero di pagina (5) è suddiviso in tre parti:

- numero del capitolo (2)
- numero progressivo di pagina all'interno del capitolo (3)
- numero totale di pagine nel capitolo (4)

## Introduzione alla macchina

### Fabbricante

Il nome e l'indirizzo del fabbricante sono riportati sulla seconda pagina del presente catalogo.

### Assistenza

Per ordinare i pezzi di ricambio per questa macchina oppure per riferire problemi associati al funzionamento della macchina, contattare l'ufficio Tetra Pak più vicino.

Per tutte le altre richieste, commenti o suggerimenti per eventuali miglioramenti da apportare alla macchina e alla relativa documentazione, contattare il responsabile di collegamento.

## Identificazione

### Classificazione CE

Questa macchina è conforme alle principali norme sanitarie e di sicurezza dell'Area Economica Europea (EEA).





### Targhetta della macchina

La figura (B) a pagina i-5 mostra un esempio di targhetta della macchina. Il capitolo Introduzione di tutti i manuali consegnati con la presente macchina contiene invece la figura della targhetta della macchina valida e la sua posizione sulla macchina. La targhetta riporta i dati elencati qui sotto, che sono necessari per contattare Tetra Pak in relazione a questa macchina specifica.

- Tipo di macchina (8)
- Volume (9)
- Specifiche disegno (10)
- Numero di matricola della macchina (11)
- Fabbricante (12)
- Marchio CE (13)
- Anno di fabbricazione (14)

La figura (C) a pagina i-5 mostra un esempio delle specifiche di una macchina. Verificare che i dati relativi alla macchina elencati nelle pagine iniziali del presente manuale corrispondano ai dati riportati sulla targhetta della macchina e nelle specifiche della macchina.

## Come usare questo Catalogo dei pezzi di ricambio

### Individuare il numero del pezzo di ricambio

a) Consultare la figura (D) a pagina i-5: andare al numero del capitolo (15) indicato accanto al gruppo principale che contiene il pezzo che si desidera individuare.

I punti b) e c) fanno riferimento alla figura (E) a pagina i-6.

b) Nella figura del gruppo principale, identificare il sottogruppo della macchina (17) che contiene il pezzo o il sottogruppo cercato. Annotare il numero di posizione (18) e andare alla pagina elenco che segue la figura.

c) Identificare il numero di posizione/l'indicazione di riferimento (16) o il nome del sottogruppo (19). Andare al numero di pagina corrispondente (20) indicato nella colonna di destra. Per le indicazioni di riferimento, Tetra Pak ha scelto di usare sempre la struttura "function-oriented". Il prefisso che indica la struttura "function-oriented" (=) non è mostrato nell'indicazione di riferimento.

I punti d) e e) fanno riferimento alla figura (F) a pagina i-6.

d) Individuare il pezzo (21) cercato sulla figura del sottogruppo e annotare il numero di posizione del pezzo.

e) Il numero del pezzo (29) e la descrizione del pezzo (30) sono indicati accanto al numero di posizione sulla pagina elenco.





### Informazioni contenute nel Catalogo dei pezzi di ricambio

L'elenco seguente fa riferimento alla figura (F) a pagina i-6. Il Catalogo dei pezzi di ricambio contiene le seguenti informazioni sui gruppi, i sottogruppi e i pezzi di ricambio della macchina:

- Riferimento struttura gruppo (22). Indica il gruppo superiore successivo nella struttura elenco della macchina.
- Nome gruppo (23)
- Unità di misura (25)
- Quantità (26)
- Numero disegno di assemblaggio (27)
- Intervallo delle pagine elenco (28). Questa informazione è presente se la figura o l'elenco relativi al gruppo occupano più di una pagina del manuale.
- Numero pezzo o sottogruppo (29)
- Nome sottogruppo o descrizione pezzo (30)
- Numero gruppo (31)
- Numero macchina (32)
- Intestazione informazioni gruppo (33). Indica se la sezione che segue l'intestazione si riferisce a una variante di macchina specifica oppure se si tratta di un elenco di parti comuni. Se un elenco contiene più di una variante ed esiste un disegno di assemblaggio specifico per ogni variante, viene fornito il riferimento alla pagina in cui è mostrato il disegno di assemblaggio relativo alla variante.
- Informazioni interne (34)

# Įvadas

## Informacija apie instrukciją

"Tetra Pak" rekomenduoja atidžiai perskaityti visas pateiktas instrukcijas. Pasirūpinkite, kad instrukcijos būtų prieinamos darbuotojams, kurie eksploatuoja arba prižiūri įrangą.

Svarbu šį katalogą išsaugoti visą įrangos tarnavimo laiką ir perduoti jį kitam įrangos savininkui arba naudotojui.

"Tetra Pak" neprisiima atsakomybės už įrangos sugadinimą, jei nesilaikoma nurodymų, pateiktų prie šios įrangos pridedamuose kataloguose.

### Pateikiamos instrukcijos

Su šia įranga pateikiamose instrukcijose gali būti

- CM
  Transformacijos instrukcija, suteikianti technikams informaciją apie įrangos transformavimą skirtingiems gamybos režimams.
- EM
  Elektrinės dalies instrukcija, suteikianti technikams informaciją apie įrangos elektros sistemą.
- IM
  Įrengimo instrukcija, suteikianti technikams informaciją, reikalingą norint saugiai sumontuoti įrangą.
- MM
  Techninės priežiūros instrukcija, suteikianti technikams informaciją apie įrangos priežiūrą.
- OM
  Eksploatavimo instrukcijos paskirtis yra suteikti informaciją operatoriui, kaip naudoti ir valdyti įrangą prieš gamybos procesą, jo metu ir po jo.
- SPC
  Atsarginių dalių katalogas, kuriame yra informacija, reikalinga atsarginėms dalims iš "Tetra Pak" užsakyti
- TeM
  Techninė instrukcija
  – suteikia technikams informaciją, reikalingą saugiai sumontuoti įrangą
  – suteikia technikams informaciją apie įrangos priežiūrą
  – suteikia technikams informaciją apie įrangos elektros sistemą
  – suteikia informaciją, reikalingą užsakyti iš "Tetra Pak" atsargines dalis





### Puslapių išdėstymas

Žr. paveikslėlį (A) puslapyje i-5. Pagrindiniai atsarginių dalių katalogo puslapiai sudaryti iš paveikslėlio puslapio (1) ir atitinkamo sąrašo puslapio (7). Puslapio numeris (5) nurodomas paveikslėlio puslapio viršuje ir sąrašo puslapio apačioje. Dokumento numeris (6) nurodomas sąrašo puslapio apačioje.

### Puslapių numeravimas

Žr. iliustraciją (A) puslapyje i-5. Puslapio numerį (5) sudaro trys dalys:

- skyriaus numeris (2)
- puslapio eilės numeris (3) skyriuje
- bendras puslapių skaičius (4) skyriuje

## Įrenginio pristatymas

### Gamintojas

Gamintojo pavadinimas ir adresas pateikti antrajame šio katalogo puslapyje.

### Aptarnavimas

Jei reikia šiai įrangai užsakyti atsarginių dalių arba pranešti apie jos eksploatavimo nesklandumus, kreipkitės į artimiausią "Tetra Pak" biurą.

Su kitais klausimais, pastabomis ar įrangos ir jos dokumentacijos tobulinimo pasiūlymais kreipkitės į savo kontaktinį asmenį.

## Identifikavimas

### CE klasifikacija

Šis įrenginys atitinka esminius Europos ekonominės erdvės (EEE) sveikatos ir saugumo reikalavimus.





### Vardinė plokštelė

Puslapyje i-5 pateiktame paveikslėlyje (B) parodytas įrangos vardinės plokštelės pavyzdys.
Atitinkamos įrangos vardinė plokštelė ir jos vieta ant įrangos parodoma su šia įranga pateikiamų instrukcijų įvade. Įrangos vardinėje plokštelėje pateikiami žemiau nurodyti duomenys, kurie reikalingi kreipiantis į "Tetra Pak" dėl konkretaus įrenginio.

- Mašinos tipas (8)
- Tomas (9)
- Brėžinių specifikacijos (10)
- Įrangos serijos numeris (11)
- Gamintojas (12)
- CE ženklas (13)
- Pagaminimo metai (14)

Paveikslėlyje (C) puslapyje i-5 parodytas įrangos specifikacijos pavyzdys. Patikrinkite, ar šios instrukcijos pirmuosiuose puslapiuose nurodyti duomenys atitinka duomenis vardinėje plokštelėje ir įrangos specifikaciją.

## Kaip naudotis atsarginių dalių katalogu

### Atsarginės dalies numerio suradimas

a) Žr. iliustraciją (D) puslapyje i-5. Atsiverskite skyrių (15), nurodytą šalia pagrindinio mazgo, kuriame yra jūsų ieškoma dalis.

Punktai b) ir c) atitinka paveikslėlį (E) puslapyje i-6.

b) Pagrindinio mazgo paveikslėlyje suraskite smulkesnį įrangos mazgą (17), kuriame yra jūsų ieškoma dalis arba mazgas. Pasižiūrėkite pozicijos numerį (18) ir suraskite jį toliau pateiktame sąraše.

c) Suraskite pozicijos numerį/pavadinimą (16) arba smulkesnio mazgo pavadinimą (19). Atsiverskite dešiniajame stulpelyje nurodytą puslapį (20). "Tetra Pak" nusprendė pavadinimuose visada naudoti paskirtį atitinkančią struktūrą. Pavadinimuose nepateikiamas paskirtį atitinkančios struktūros prefiksas (=).

Punktai d) ir e) atitinka paveikslėlį (F) puslapyje i-6.

d) Suraskite ieškomą dalį (21) smulkesnio mazgo paveikslėlyje ir pasižiūrėkite dalies pozicijos numerį.

e) Dalies numeris (29) ir dalies aprašymas (30) sąrašo puslapyje nurodyti šalia pozicijos numerio.





### Atsarginių dalių kataloge pateikiama informacija

Žemiau pateiktas sąrašas atitinka paveikslėlį (F) puslapyje i-6. Atsarginių dalių kataloge apie įrangos mazgus, smulkesnius mazgus ir atsargines dalis pateikiama tokia informacija:

- Struktūrinė mazgo nuoroda (22). Nurodo stambesnį mazgą įrangos sąrašo struktūroje.
- Mazgo pavadinimas (23)
- Matavimo vienetai (25)
- Kiekis (26)
- Surinkimo brėžinio numeris (27)
- Sąrašo puslapių intervalas (28) Pateikiamas, jei mazgo paveikslėlis arba sąrašas užima kelis puslapius.
- Dalies arba smulkesnio mazgo numeris (29)
- Smulkesnio mazgo arba dalies aprašymas (30)
- Mazgo numeris (31)
- Įrangos numeris (32)
- Informacijos apie mazgą puslapio antraštė (33). Nurodo, ar po antrašte pateikta informacija yra specifinio įrangos varianto, ar tai paprastų dalių sąrašas. Jei yra daugiau kaip vienas sąrašo variantas ir kiekvienam variantui yra atskiras surinkimo brėžinys, nurodomas puslapis, kuriame pateiktas konkretaus varianto surinkimo brėžinys.
- Vidinė informacija (34)

# Ievads

## Informācija par rokasgrāmatu

Tetra Pak iesaka rūpīgi izlasīt visas piegādātās rokasgrāmatas. Jānodrošina, lai piegādātas rokasgrāmatas būtu pieejamas personālam, kas apkalpo iekārtas vai veic to apkopi.

Šo katalogu ir nepieciešams saglabāt visu laiku, kamēr iekārtas tiek izmantotas, un nodot katalogu nākamajam īpašniekam vai lietotājam.

Tetra Pak neatbild par jebkuriem iekārtas bojājumiem, kuri rodas līdz ar iekārtu piegādāto instrukciju neievērošanas rezultātā.

### Piegādātas rokasgrāmatas

Līdz ar iekārtu var tikt piegādātas šādas rokasgrāmatas

- CM
  Pārslēgšanas rokasgrāmata sniedz tehniķiem informāciju par iekārtas pārslēgšanu dažādos atšķirīgos ražošanas režīmos.
- EM
  Elektriskās instalācijas rokasgrāmata sniedz tehniķiem informāciju par iekārtas elektriskās instalācijas sistēmu.
- IM
  Uzstādīšanas rokasgrāmata sniedz tehniķiem informāciju, kas nepieciešama drošai iekārtas uzstādīšanai.
- MM
  Apkopes rokasgrāmata sniedz tehniķiem informāciju par iekārtas apkopi.
- OM
  Ekspluatācijas rokasgrāmata sniedz apkalpojošajam personālam informāciju par iekārtas apkalpošanu un ekspluatēšanu pirms darba sākuma, darba laikā un pēc darba beigām.
- SPC
  Rezerves daļu katalogs sniedz informāciju, kas nepieciešama, lai pasūtītu rezerves daļas no Tetra Pak
- TeM
  Tehniskā rokasgrāmata
  - sniedz tehniķiem informāciju, kas nepieciešama drošai iekārtas uzstādīšanai
  - sniedz tehniķiem informāciju par iekārtas apkopi
  - sniedz tehniķiem informāciju par mašīnas/iekārtas elektrisko instalāciju
  - sniedz informāciju, kas nepieciešama, lai pasūtītu rezerves daļas no Tetra Pak.





### Lappuses izkārtojums

Skatīt ilustrāciju (A) i-5 lappusē: Galvenās lappuses Rezerves daļu katalogā sastāv no ilustrāciju lapas (1) un atbilstīgās saraksta lapas (7). Lappuses numurs (5) ir norādīts ilustrāciju lapas galvenē un saraksta lapas kājenē. Dokumenta numurs (6) ir norādīts saraksta lapas kājenē.

### Lappušu numerācija

Skatīt ilustrāciju (A) lappusē i-5: Lappuses numurs (5) sastāv no trim daļām:

- nodaļas numura (2)
- secīga lappuses numura nodaļas ietvaros (3)
- kopējā lappušu skaita nodaļā (3)

## Iepazīstināšana ar iekārtu

### Ražotājs

Ražotāja nosaukumu un adresi skatīt šī kataloga otrajā lappusē.

### Serviss

Lai pasūtītu rezerves daļas šai mašīnai vai lai ziņotu par problēmām saistībā ar šīs mašīnas ekspluatāciju, sazinieties ar tuvāko Tetra Pak pārstāvniecību.

Ja Jums ir citi jautājumi, piezīmes vai ieteikumi par iekārtas un tās dokumentācijas uzlabošanu, tad lūdzam sazināties ar Sakaru biroju.

## Identifikācija

### EK klasifikācija

Šī iekārta atbilst galvenajām Eiropas Ekonomiskās Zonas (EEA) regulām, kuras attiecas uz veselību un drošību.





### Mašīnas tipa plāksnīte

Ilustrācijā (B) i-5 lappusē ir redzams mašīnas tipa plāksnītes paraugs. Aktuālās mašīnas tipa plāksnīte un tās atrašanās vieta uz iekārtas ir parādīta līdz ar šo iekārtu piegādāto rokasgrāmatu Ievada nodaļā. Mašīnas tipa plāksnīte ietver turpmāk uzskaitīto informāciju, kura ir nepieciešama, sazinoties ar Tetra Pak par šo konkrēto iekārtu.

- Mašīnas tips (8)
- Daudzums (9)
- Rasējuma specifikācijas (10)
- Mašīnas sērijas numurs (11)
- Ražotājs (12)
- CE apzīmējums (13)
- Izgatavošanas gads (14)

Ilustrācijā (C) lappusē i-5 ir parādīts mašīnas specifikācijas paraugs. Pārliecinieties, ka šīs rokasgrāmatas titullapās minētā informācija par iekārtu atbilst tai, kas norādīta uz mašīnas tipa plāksnītes un mašīnas specifikācijā.

## Rezerves daļu kataloga lietošana

### Vajadzīgās rezerves daļas numura atrašana

a) Skatiet ilustrāciju (D) lappusē i-5: Atrodiet nodaļas numuru (15), kas norādīts līdzās galvenajai grupai, kurā ietilpst Jūsu meklētā rezerves daļa.

Pozīcijas b) un c) skatiet ilustrāciju (E) lappusē i-6.

b) Galvenās grupas ilustrācijā atrodiet mašīnas apakšgrupu (17), kurā ietilpst Jūsu meklētā detaļa vai apakšgrupa. Atzīmējiet pozīcijas numuru (18) un pievērsieties saraksta lappusei, kura seko šai ilustrācijai.

c) Sameklējiet atbilstīgo pozīcijas numuru (16) vai apakšgrupas nosaukumu (19). Pievērsieties atbilstīgajam lappuses numuram (20), kas norādīts ailē pa labi. Tetra Pak norādes apzīmēšanai ir izvēlējies vienmēr izmantot uz funkciju orientētu struktūru. Priedēklis, kas norāda uz funkciju orientētu struktūru (=), norādes apzīmējumā nav parādīts.

Pozīcijas d) un e) skatiet ilustrāciju (F) lappusē i-6.

d) Atrodiet vajadzīgo rezerves daļu (21) apakšgrupas ilustrācijā un atzīmējiet šīs detaļas pozīcijas numuru.

e) Šīs detaļas numurs (29) un apraksts (30) atrodas saraksta lapā līdzās pozīcijas numuram.





### Rezerves daļu katalogā sniegtā informācija

Šis saraksts attiecas uz ilustrāciju (F) lappusē i-6. Rezerves daļu katalogs satur šādu informāciju par grupām, apakšgrupām un iekārtas rezerves daļām:

- Grupas struktūras norāde (22). Norāda nākamo augstāko grupu iekārtas saraksta struktūrā.
- Grupas nosaukums (23)
- Mērvienība (25)
- Skaits (26)
- Montāžas rasējuma numurs (27)
- Saraksta lappuses zona (28). Tiek izmantota tad, ja grupas ilustrācija vai saraksts ir uz vairākām lappusēm.
- Daļas vai apakšgrupas numurs (29)
- Apakšgrupas nosaukums vai daļas apraksts (30)
- Grupas numurs (31)
- Iekārtas numurs (32)
- Grupas informācijas iedaļas apzīmējums (33). Norāda, vai iedaļa zem šī apzīmējuma attiecas uz noteiktu mašīnas variantu, vai arī tas ir kopējo rezerves daļu saraksts. Ja sarakstam ir vairāk nekā viens variants un katram variantam ir savs montāžas rasējums, tad tiek dota atsauce uz lappusi, kur atrodams katra varianta montāžas rasējums.
- Iekšējā informācija (34)

# Inleiding

## Informatiehandboek

Tetra Pak adviseert alle meegeleverde handboeken zorgvuldig te lezen. Controleer of het bedienende of onderhoudspersoneel van de machine de beschikking heeft over de meegeleverde handboeken

Het is belangrijk deze catalogus tijdens de levensduur van de machine te bewaren en de catalogus door te geven aan iedere volgende eigenaar of gebruiker.

Tetra Pak stelt zich niet aansprakelijk voor eventuele schade aan de installatie als gevolg van het niet naleven van de instructies die in de meegeleverde handboeken worden gegeven.

### Meegeleverde handboeken

De bij deze installatie meegeleverde handboeken omvatten

- CM
  Het conversiehandboek geeft technici informatie met betrekking tot de ombouw van de installatie tussen verschillende productiemodi.
- EM
  Het elektriciteitshandboek informeerttechnici omtrent het elektrischesysteem van de installatie.
- IM
  Het installatiehandboek informeert technici hoe men de installatie op veilige wijze installeert.
- MM
  Het onderhoudshandboek geeft technici informatie over het onderhoud van de installatie.
- OM
  Het bedieningshandboek informeert de operator betreffende het omgaan met en het bedienen van de installatie voor, tijdens en na de productie.
- SPC
  De reserveonderdelencatalogus geeft de nodige informatie omtrent het bestellen van reserveonderdelen bij Tetra Pak
- TeM
  Het technische handboek
  - informeert technici hoe men de installatie op veilige wijze installeert
  - informeert technici omtrent het onderhoud van de installatie
  - informeert technici omtrent het elektrische systeem van de machine/ installatie
  - informeert over welke informatie men nodig heeft om reserveonderdelen bij Tetra Pak te bestellen.





### Pagina layout

Zie afbeelding (A) op pagina i-5: De belangrijkste bladzijden van een reserveonderdelencatalogus bestaan uit een bladzijde met afbeeldingen (1) en een bladzijde met een corresponderende lijst (7). Het bladzijde-nummer (5) is te vinden in de kop van een bladzijde met een afbeelding en in de voetnoot van een lijstbladzijde. Het documentennummer (6) is te vinden in de voetnoot van een lijstbladzijde.

### Bladzijdenummering

Zie afbeelding (A) op pagina: i-5: Een bladzijdenummer (5) bestaat uit drie delen:

- hoofdstuknummer (2)
- opeenvolgend bladzijdenummer in het hoofdstuk (3)
- totaal aantal bladzijden in het hoofdstuk (4)

## Introductie van de machine

### Fabrikant

Zie de tweede bladzijde van deze catalogus voor naam en adres van de fabrikant.

### Service

Neem voor het bestellen van reserveonderdelen voor deze machine, of om bedieningsproblemen met betrekking tot deze machine te melden, contact op met de dichtstbijzijnde Tetra Pak vestiging.

Neem contact op met de contactpersoon voor verdere informatie, opmerkingen of suggesties ter verbetering van de installatie en de bijbehorende documentatie.

## Identificatie

### CE-classificatie

Deze installatie voldoet aan de basisvoorschriften voor gezondheid en veiligheid voor het Europese Economische Gebied (EEG).





### Machineplaatje

Afbeelding (B) op bladzijde i-5 toont een voorbeeld van een machineplaatje. Een afbeelding van het geldige machineplaatje en de plaatsing ervan worden getoond in de Inleiding van de handboeken, die bij deze installatie worden meegeleverd. Het machineplaatje bevat onderstaande gegevens, die men nodig heeft wanneer men omtrent de desbetreffende installatie contact opneemt met Tetra Pak.

- Machinetype (8)
- Volume (9)
- Specificatietekeningen (10)
- Serienummer van de machine (11)
- Fabrikant (12)
- CE-markering (13)
- Jaar van fabrikage (14)

Afbeelding (C) op pagina i-5 toont een voorbeeld van een machinespecificatie. Controleer of de gegevens betreffende de installatie op de eerste bladzijden van dit handboek overeenkomen met de gegevens op het machineplaatje en de machinespecificatie.

## Gebruik van de reserveonderdelencatalogus

### Vinden van het bestelnummer van een reserveonderdeel

a) Zie afbeelding (D) op pagina i-5: Ga naar het hoofdstuknummer (15) dat wordt aangeven naast de hoofdgroep waarin zich het door u gezochte onderdeel bevindt.

Items b) en c) verwijzen naar afbeelding (E) op pagina i-6.

b) Op de afbeelding van de hoofdgroep zoekt u de machinesubgroep (17), die het gezochte onderdeel of de gezochte subgroep bevat. Noteer het positienummer (18) en ga naar de lijstbladzijde die op de afbeelding volgt.

c) Zoek naar het positienummer/de referentie (16) of de subgroep-naam (19). Ga naar de corresponderende bladzijde (20) die in de rechterkolom staat vermeld. Tetra Pak heeft voor de benoeming van de referenties gekozen voor de functiegeoriënteerde structuur. De prefixaanduidende functiegeoriënteerde structuur (=) wordt niet in de referentie getoond.

Items d) en e) verwijzen naar afbeelding (F) op pagina i-6.

d) Zoek het gewenste deel (21) op de subgroepafbeelding en noteer het positienummer van het onderdeel.

e) Het bestelnummer (29) en de omschrijving (30) van het onderdeel staan naast het positienummer op de lijstbladzijde.





### Informatie die in een reserveonderdelencatalogus wordt gegeven

De onderstaande lijst verwijst naar afbeelding (F) op bladzijde i-6. Een reserveonderdelencatalogus bevat de volgende informatie over groepen, subgroepen en reserveronderdelen voor de installatie:

- Referentie groepstructuur (22). Geeft de volgende hogere groep in de lijststructuur van de installatie aan.
- Groepsnaam (23)
- Meeteenheid (25)
- Hoeveelheid (26)
- Nummer montagetekening (27)
- Lijst bladzijdenreeks (28). Wordt vermeld wanneer er meerdere bladzijden in de groepsafbeelding of -lijst voorkomen.
- Deel- of subgroepnummer (29)
- Subgroepnaam of onderdeelbeschrijving (30)
- Groepsnummer (31)
- Machinenummer (32)
- Titel groepsinformatie (33). Geeft aan of het gedeelte onder de titel voor een specifieke machinesoort is of dat het een lijst met gebruikelijke onderdelen is. Indien een lijst meer dan één type bevat en ieder type zijn eigen montagetekening heeft, wordt een bladzijdereferentie getoond voor de montagetekening van het type.
- Interne informatie (34)

# Introduksjon

## Informasjon om manualen

Tetra Pak anbefaler at du leser nøye gjennom alle leverte manualer. Sørg for at manualene er tilgjengelige for alle som betjener eller vedlikeholder utstyret.

Det er viktig at du tar vare på denne katalogen under hele levetiden til utstyret og at du gir den videre til eventuelle nye eiere eller brukere.

Tetra Pak vil ikke være ansvarlig for skader på utstyret som oppstår fordi brukeren ikke følger instruksjonene i manualene som følger med utstyret.

### Leverte manualer

Manualene som leveres med dette utstyret, kan inkludere

- CM
  Konverteringsmanualen gir teknikere informasjon om hvordan de konverterer utstyret mellom ulike produksjonsmodi.
- EM
  Den elektriske manualen gir teknikere informasjon om utstyrets elektriske system.
- IM
  Installasjonsmanualen gir teknikere informasjon som kreves for å kunne installere utstyret på en sikker måte.
- MM
  Vedlikeholdsmanualen gir teknikere informasjon om vedlikehold av utstyret.
- OM
  Driftsmanualen gir operatøren informasjon om hvordan han håndterer og bruker utstyret før, under og etter produksjon.
- SPC
  Reservedelskatalogen inneholder informasjon som du trenger for å bestille reservedeler fra Tetra Pak
- TeM
  Den tekniske manualen
  – gir teknikere informasjon om sikker installasjon av utstyret
  – gir teknikere informasjon om vedlikehold av utstyret
  – gir teknikere informasjon om maskinens/utstyrets elektriske system
  – inneholder informasjon som du trenger for å bestille reservedeler fra Tetra Pak.





### Sideoppsett

Se illustrasjonen (A) på side i-5: Hovedsidene i reservedelskatalogen består av en illustrasjonsside (1) og en korresponderende listeside (7). Sidenummeret (5) vises i topteksten på illustrasjonssiden og i bunnteksten på listesiden. Dokumentnummeret (6) vises i bunnteksten på listesiden.

### Sidenummerering

Se illustrasjonen (A) på side i-5: Et sidenummer (5) består av tre deler:

- kapittelnummer (2)
- etterfølgende sidenummer i kapitlet (3)
- det totale antall sider i kapitlet (4)

## Introduksjon av maskinen

### Produsent

Hvis du ønsker produsentens navn og adresse, kan du se side to i denne katalogen.

### Service

Når du skal bestille reservedeler til denne maskinen eller rapportere problemer forbundet med driften av denne maskinen, må du kontakte ditt nærmeste Tetra Pak-kontor.

Når det gjelder andre forespørsler, kommentarer eller forslag til forbedringer av utstyret og dets dokumentasjon, kan du ta kontakt med din kontaktperson.

## Identifisering

### CE-klassifisering

Dette utstyret er i overensstemmelse med de grunnleggende helse- og sikkerhetsforskriftene i Det europeiske økonomiske samarbeidsområdet (EØS).





### Maskinplate

Illustrasjonen (B) på side i-5 viser et eksempel på en maskinplate.
En illustrasjon av en gyldig maskinplate og hvor denne er plassert på utstyret, er vist i introduksjonskapitlet i manualene som følger med dette utstyret. Maskinplaten inneholder nedenstående data, som du trenger når du skal kontakte Tetra Pak angående dette bestemte utstyret.

- Maskintype (8)
- Volum (9)
- Tegningsspesifikasjoner (10)
- Maskin-serienummer (11)
- Produsent (12)
- CE-merke (13)
- Produksjonsår (14)

Illustrasjonen (C) på side i-5 viser et eksempel på en maskinspesifikasjon. Sørg for at utstyrsdataene som står oppført foran i denne manualen, samsvarer med dataene på maskinplaten og maskinspesifikasjonen.

## Hvordan bruke denne reservedelskatalogen

### Finn et reservedelsnummer

a) Se illustrasjonen (D) på side i-5: Gå til kapittelnummeret (15) som er angitt ved siden av hovedgruppen som inneholder delen du vil finne.

Punkt b) og c) viser til illustrasjonen (E) på side i-6.

b) På hovedgruppeillustrasjonen ser du etter maskinundergruppen (17) som inneholder delen eller undergruppen du ser etter. Merk deg posisjonsnummeret (18), og gå til listesiden som kommer etter illustrasjonen.

c) Se etter posisjonsnummeret/referansebetegnelsen (16) eller undergruppenavnet (19). Gå til det korresponderende sidenummeret (20) som står oppført i høyre kolonne. Tetra Pak har valgt å alltid bruke den funksjonsorienterte inndelingen for referansebetegnelse. Prefiksen som angir funksjonsorientert inndeling (=), er ikke vist i referansebetegnelsen.

Punkt d) og e) viser til illustrasjonen (F) på side i-6.

d) Finn delen (21) du ser etter på undergruppeillustrasjonen, og merk deg delens posisjonsnummer.

e) Delenummeret (29) og delebeskrivelsen (30) finner du ved siden av posisjonsnummeret på listesiden.





### Informasjon i en reservedelskatalog

Listen nedenfor viser til illustrasjonen (F) på side i-6. En reservedelskatalog inneholder følgende informasjon om grupper, undergrupper og reservedeler for utstyret:

- Gruppeinndelingsreferanse (22). Angir den neste gruppen opp i inndelingen av utstyrslisten.
- Gruppenavn (23)
- Målenhet (25)
- Antall (26)
- Tegningsnummer (27)
- Listesideområde (28). Inkludert hvis det er flere sider i gruppe-illustrasjonen eller listen.
- Dele- eller undergruppenummer (29)
- Undergruppenavn eller delebeskrivelse (30)
- Gruppenummer (31)
- Utstyrsnummer (32)
- Gruppeinformasjonsoverskrift (33). Angir om avsnittet under overskriften er for en bestemt maskinvariant eller om det er en liste over vanlige deler. Hvis en liste har flere varianter og hver variant har sin egen sammenstillingstegning, vises det en sidereferanse til variantens sammenstillingstegning.
- Intern informasjon (34)

# Wprowadzenie

## Informacje na temat instrukcji

Firma Tetra Pak zaleca dokładne przeczytanie wszystkich dostarczonych instrukcji. Należy upewnić się, że dostarczone instrukcje są dostępne dla personelu, który obsługuje lub konserwuje maszynę.

Należy przechowywać ten katalog przez cały okres użytkowania maszyny i przekazać go kolejnemu właścicielowi lub użytkownikowi.

Firma Tetra Pak nie będzie ponosić odpowiedzialności za jakiekolwiek uszkodzenia maszyny spowodowane niestosowaniem się do zaleceń zawartych w instrukcjach dostarczonych z maszyną.

### Dostarczone instrukcje

W skład dokumentacji dostarczonej z maszyną wchodzą:

- Instrukcja konwersji (CM)
  W tej instrukcji zawarte są informacje dotyczące dostosowania maszyny do różnych trybów produkcji.
- Instrukcja dotycząca wyposażenia elektrycznego (EM)
  W tej instrukcji zawarte są informacje dotyczące układu elektrycznego maszyny.
- Instrukcja instalacji (IM)
  W tej instrukcji zawarte są informacje niezbędne do bezpiecznego zainstalowania maszyny.
- Instrukcja konserwacji (MM)
  W tej instrukcji zawarte są informacje dotyczące konserwacji maszyny.
- Instrukcja obsługi (OM)
  W tej instrukcji zawarte są informacje dotyczące obsługi maszyny przed rozpoczęciem produkcji, w jej trakcie oraz po jej zakończeniu.
- Katalog części zamiennych (SPC)
  W katalogu zawarte są informacje dotyczące zamawiania części zamiennych w firmie Tetra Pak.
- Instrukcja techniczna (TeM)
  Instrukcja techniczna zawiera informacje:
  - dotyczące bezpiecznego instalowania maszyny,
  - dotyczące konserwacji maszyny,
  - dotyczące układu elektrycznego maszyny,
  - dotyczące zamawiania części zamiennych w firmie Tetra Pak.





### Układ strony

Patrz rysunek (A) na stronie i-5: Główne strony w Katalogu części zamiennych składają się ze strony zawierającej rysunek (1) i odpowiadającej jej strony zawierającej listę (7). Numer strony (5) znajduje się w nagłówku strony zawierającej rysunek i w stopce strony zawierającej listę. Numer dokumentu (6) znajduje się w stopce strony zawierającej listę.

### Numeracja stron

Patrz rysunek (A) na stronie i-5: Numer strony (5) składa się z trzech części:

- numeru rozdziału (2),
- kolejnego numeru strony w rozdziale (3),
- całkowitej liczby stron w rozdziale (4).

## Ogólne informacje o maszynie

### Producent

Nazwę i adres producenta można znaleźć na drugiej stronie niniejszego katalogu.

### Serwis

Aby zamówić części zapasowe do tej maszyny lub zgłosić problemy związane z jej pracą, należy skontaktować się z najbliższym biurem Tetra Pak.

Można kontaktować się także w przypadku innych zapytań, uwag lub sugestii dotyczących udoskonalenia urządzenia i dokumentacji.

## Identyfikacja

### Klasyfikacja CE

Maszyna spełnia podstawowe wymogi z zakresu bezpieczeństwa i ochrony zdrowia obowiązujące w Europejskiej Strefie Ekonomicznej (EEA).





### Tabliczka znamionowa

Na rysunku (B), znajdującym się na stronie i-5, pokazano przykładową tabliczkę znamionową.
Rysunek prawidłowej tabliczki znamionowej oraz jej umiejscowienie na maszynie pokazano w rozdziale Wprowadzenie zawartym w instrukcjach dostarczonych z maszyną. Tabliczka znamionowa zawiera następujące dane potrzebne w przypadku kontaktowania się z firmą Tetra Pak w sprawie dotyczącej danej maszyny:

- typ maszyny (8),
- objętość (9),
- specyfikacje rysunkowe (10),
- numer seryjny maszyny (11),
- nazwę producenta (12),
- oznaczenie CE (13),
- rok produkcji (14).

Na rysunku (C) zamieszczonym na stronie i-5 pokazano przykład specyfikacji maszyny. Należy sprawdzić, czy dane dotyczące maszyny przedstawione na pierwszej stronie tej instrukcji odpowiadają danym zawartym na tabliczce znamionowej maszyny oraz specyfikacji maszyny.

## Jak korzystać z niniejszego Katalogu części zamiennych

### Należy odnaleźć numer części zamiennej

a) Zapoznaj się z rysunkiem (D) na stronie i-5: przejdź do numeru rozdziału (15) pokazanego obok głównej grupy zawierającej część, którą chcesz odszukać.

Punkty b) i c) odnoszą się do rysunku (E) na stronie i-6.

b) Na rysunku grupy głównej odszukaj podgrupę maszyny (17), która zawiera odpowiednią część lub podgrupę, której szukasz. Zanotuj numer pozycji (18) i przejdź do strony z listą odpowiadającą rysunkowi.

c) Odszukaj numer pozycji/oznaczenie odnośnika (16) lub nazwę podgrupy (19). Przejdź do odpowiedniego numeru strony (20) podanego w kolumnie umieszczonej po prawej stronie. Firma Tetra Pak w przypadku oznaczenia odnośnika korzysta ze struktury ukierunkowanej na funkcję. Przedrostek wskazujący strukturę ukierunkowaną na funkcję (=) nie jest pokazany w oznaczeniu odnośnika.

Punkty d) i e) odnoszą się do rysunku (F) na stronie i-6.

d) Na rysunku podgrupyodszukaj odpowiednią część (21) i zanotuj numer pozycji części.

e) Numer części (29) oraz jej opis (30) podano na stronie zawierającej listę obok numeru pozycji.





### Informacje zawarte w Katalogu części zamiennych

Poniższa lista odnosi się do rysunku (F), znajdującego się na stronie i-6. Katalog części zamiennych zawiera następujące informacje o grupach, podgrupach oraz częściach zamiennych maszyny:

- Odnośnik struktury grup (22). Wskazuje następną wyższą grupę zawartą w strukturze listy maszyny.
- Nazwa grupy (23).
- Jednostka miary (25).
- Liczba (26).
- Numer rysunku złożeniowego (27).
- Zakres stron zawierających listę (28). Podany w przypadku występowania wielu stron zawierających rysunek grupy lub listę.
- Numer części lub podgrupy (29).
- Nazwa podgrupy lub opis części (30).
- Numer grupy (31).
- Numer maszyny (32).
- Nagłówek informacyjny grupy (33). Wskazuje, czy sekcja umieszczona pod nagłówkiem dotyczy określonego wariantu maszyny, czy też jest to lista wspólna dla wszystkich wariantów. Jeśli lista występuje w wielu wariantach i dla każdego z nich dostępny jest osobny rysunek złożeniowy, podany jest odnośnik strony do rysunku złożeniowego dla danego wariantu.
- Informacje wewnętrzne (34).

# Introdução

## Informações sobre o Manual

A Tetra Pak recomenda que leia atentamente todos os manuais incluídos. Certifique-se de que os manuais incluídos estão disponíveis para o pessoal que utiliza ou faz a manutenção do equipamento.

É importante que mantenha este catálogo durante toda a vida útil do equipamento, devendo ainda ser fornecido a quaisquer proprietários e operadores subsequentes do mesmo.

A Tetra Pak não será responsável por quaisquer danos no equipamento provocados pelo não seguimento das instruções fornecidas nos manuais que acompanham este equipamento.

### Manuais Fornecidos

Os manuais fornecidos com este equipamento podem incluir

- CM
  O Manual de Conversão (Conversion Manual) fornece aos técnicos informações sobre a conversão do equipamento entre modos de produção diferentes.
- EM
  O Manual Eléctrico (Electrical Manual) fornece aos técnicos informações sobre o sistema eléctrico do equipamento.
- IM
  O Manual de Instalação (Installation Manual) fornece aos técnicos as informações necessárias à instalação do equipamento em segurança.
- MM
  O Manual de Manutenção (Maintenance Manual) fornece aos técnicos informações sobre como realizar a manutenção do equipamento.
- OM
  O Manual de Funcionamento (Operation Manual) fornece ao operador informações sobre o manuseamento e funcionamento do equipamento antes, durante e após a produção.
- SPC
  O Spare Parts Catalogue (Catálogo das Peças Sobressalentes) fornece as informações necessárias para encomendar peças sobressalentes à Tetra Pak
- TeM
  O Manual Técnico (Technical Manual)
  - fornece aos técnicos as informações necessárias à instalação do equipamento em segurança
  - fornece aos técnicos informações sobre a manutenção do equipamento
  - fornece aos técnicos informações sobre o sistema eléctrico da máquina/equipamento
  - fornece as informações necessárias para encomendar peças sobressalentes à Tetra Pak.





### Desenho da Página

Consulte a ilustração (A) na página i-5: As páginas principais num Catálogo de Peças Sobressalentes são constituídas por uma página de ilustração (1) e uma página de lista correspondente (7). O número de página (5) é apresentado no cabeçalho de uma página de ilustração e no rodapé de uma página de lista. O número do documento (6) é apresentado no rodapé de uma página de lista.

### Numeração das Páginas

Consulte a ilustração (A) na página i-5: Um número de página (5) tem três partes:

- número do capítulo (2)
- número das páginas consecutivas dentro do capítulo (3)
- número de páginas total no capítulo (4)

## Introdução da Máquina

### Fabricante

Quanto ao nome e endereço do fabricante, consulte a segunda página deste catálogo.

### Manutenção

Para encomendar peças sobressalentes para esta máquina ou para apresentar relatórios de problemas associados com o funcionamento desta máquina, contacte os escritórios mais próximos da Tetra Pak.

Contacte a Ligação com outras questões, comentários ou sugestões para melhoria referentes ao equipamento e à sua documentação.

## Identificação

### Classificação da CE

Este equipamento está em conformidade com as regulamentações básicas da saúde e segurança da Área Económica Europeia (AEE).





### Chapa de Identificação da Máquina

A ilustração (B) na página i-5 mostra um exemplo de uma chapa de identificação da máquina.
No capítulo Introdução dos manuais entregues com este equipamento é apresentada uma ilustração da chapa de identificação válida da máquina e a sua localização no equipamento. A chapa de identificação da máquina contém os dados listados em baixo, necessários quando contactar a Tetra Pak em relação a este equipamento específico.

- Tipo de máquina (8)
- Volume (9)
- Especificações do desenho (10)
- Número de série da máquina (11)
- Fabricante (12)
- Marca da CE (13)
- Ano de fabricação (14)

A ilustração (C) na página i-5 mostra um exemplo de uma especificação da máquina. Certifique-se de que os dados do equipamento listados nas primeiras páginas deste manual correspondem aos dados indicados na chapa de identificação da máquina e às especificações da máquina.

## Como utilizar este Catálogo de Peças Sobressalentes

### Localize o Número da Peça Sobressalente

a) Consulte a ilustração (D) na página i-5: Vá para o número do capítulo (15) indicado no grupo principal que contém a peça que pretende localizar.

Os itens b) e c) referem-se à ilustração (E) na página i-6:

b) Na ilustração do grupo principal, procure o subgrupo da máquina (17) que contém a peça ou o subgrupo que procura. Tome nota do número de posição (18) e vá para a página de lista a seguir à ilustração.

c) Procure o número de posição/designação de referência (16) ou o nome do subgrupo (19). Vá para o número de página correspondente (20) indicado na coluna do lado direito. A Tetra Pak preferiu utilizar sempre a estrutura orientada para a função como designação de referência. O prefixo que inicia a estrutura orientada para a função (=) não está indicada na designação de referência.

Os itens d) e e) referem-se à ilustração (F) na página i-6:

d) Localize a peça (21) que procura na ilustração do subgrupo e tome nota do número de posição da peça.

e) O número de peça (29) e a descrição da peça (30) são apresentados ao lado do número da posição na página de lista.





### Informações listadas num Catálogo de Peças Sobressalentes

A lista em baixo refere-se à ilustração (F) na página i-6: Um Catálogo de Peças Sobressalentes contém as seguintes informações sobre grupos, subgrupos e peças sobressalentes para o equipamento:

- Referência da estrutura do grupo (22). Indica o grupo mais elevado seguinte na estrutura da lista do equipamento.
- Nome do grupo (23)
- Unidade de medida (25)
- Quantidade (26)
- Número de série do conjunto (27)
- Intervalo de páginas da lista (28). Incluído se existirem várias páginas na ilustração ou na lista do grupo.
- Número de peça ou subgrupo (29)
- Nome do subgrupo ou descrição da peça (30)
- Número do grupo (31)
- Número do equipamento (32)
- Cabeçalho das informações do grupo (33). Indica se a secção em baixo do cabeçalho é de uma variante específica da máquina ou se é uma lista de peças comuns. Se uma lista tiver mais de uma variante e cada variante tiver o seu próprio desenho de conjunto, é apresentada uma referência de página ao desenho do conjunto da variante.
- Informações internas (34)

# Introducere

## Informații despre manual

Tetra Pak recomandă citirea cu atenție a tuturor manualelor livrate. Asigurați-vă că manualele livrate sunt puse la îndemâna personalului care exploatează sau întreține echipamentul.

Este important să păstrați acest catalog pe întreaga durată de viață a echipamentului și să transmiteți catalogul deținătorilor sau utilizatorilor ulteriori.

Tetra Pak nu va fi răspunzător pentru niciun defect al echipamentului cauzat prin nerespectarea instrucțiunilor date în manualele care însoțesc acest echipament.

### Manuale livrate

Manualele livrate cu acest echipament pot include

- CM
  Manualul de conversie furnizează tehnicienilor informații despre conversia echipamentului între diferite moduri de producție.
- EM
  Manualul electric furnizează tehnicienilor informații despre sistemul electric al echipamentului.
- IM
  Manualul de instalare furnizează tehnicienilor informații necesare pentru instalarea în siguranță a echipamentului.
- MM
  Manualul de întreținere furnizează tehnicienilor informații cu privire la întreținerea echipamentului.
- OM
  Manualul de exploatare pune la dispoziție operatorilor informații despre manevrarea și exploatarea echipamentului înainte, în timpul și după producție.
- SPC
  Catalogul pieselor de schimb furnizează informații necesare pentru comandarea pieselor de schimb de la Tetra Pak.
- TeM
  Manualul tehnic
  – furnizează tehnicienilor informații necesare pentru instalarea în siguranță a echipamentului
  – furnizează tehnicienilor informații necesare cu privire la întreținerea echipamentului
  – furnizează tehnicienilor informații despre sistemul electric al mașinii/echipamentului
  – furnizează informații necesare pentru comandarea pieselor de schimb de la Tetra Pak.





### Configurația paginilor

Examinați ilustrația (A) de pe pagina i-5: Paginile principale dintr-un catalog de piese de schimb constau dintr-o pagină de ilustrare (1) și o pagină de liste corespunzătoare (7). Numărul paginii (5) apare în antetul unei pagini de ilustrare și în subsolul unei pagini de liste. Numărul documentului (6) apare în subsolul unei pagini de liste.

### Numerotarea paginilor

Examinați ilustrația (A) de la pagina i-5: Un număr de pagină (5) are trei părți:

- numărul capitolului (2)
- numărul paginii consecutive din cadrul capitolului (3)
- număr total de pagini din capitol (4)

## Prezentare introductivă a mașinii

### Producător

Pentru numele și adresa producătorului, consultați pagina a doua a acestui catalog.

### Service

Pentru comandarea pieselor de schimb pentru această mașină sau pentru a raporta problemele asociate cu exploatarea acestei mașini, contactați cel mai apropiat birou Tetra Pak.

Contactați Liaison cu privire la alte întrebări, comentarii sau sugestii legate de îmbunătățirea echipamentului și a documentației acestuia.

## Identificare

### Clasificare CE

Acest echipament este fabricat în conformitate cu reglementările de bază cu privire la sănătate și siguranță din Zona economică europeană (EEA).





### Plăcuța mașinii

Ilustrația (B) de la pagina i-5 arată un exemplu al unei plăcuțe de mașină. O ilustrație a plăcuței valide a mașinii și a poziției acesteia pe echipament este arătată în capitolul introductiv al manualelor livrate împreună cu acest echipament. Plăcuța mașinii conține datele listate mai jos, necesare în cazul în care contactați Tetra Pak în legătură cu acest echipament specific.

- Tip mașină (8)
- Volum (9)
- Specificații de desen (10)
- Număr de serie al mașinii (11)
- Producător (12)
- Marcaj CE (13)
- Anul fabricației (14)

Ilustrația (C) de la pagina i-5 arată un exemplu al unei specificații de mașină. Asigurați-vă că datele specifice echipamentului, listate în paginile din față ale acestui manual, corespund cu datele de pe plăcuța mașinii și cu specificațiile mașinii.

## Cum se utilizează acest catalog de piese de schimb

### Localizarea unui număr de piesă de schimb

a) Examinați ilustrația (D) de la pagina i-5: Treceți la numărul de capitol (15) indicat lângă grupa principală care conține piesa pe care doriți să o localizați.

Articolele b) și c) se referă la ilustrația (E) de la pagina i-6.

b) Pe ilustrația grupei principale, căutați subgrupa aferentă mașinii (17) care conține piesa sau subgrupa pe care o căutați. Notați numărul poziției (18) și treceți la pagina de liste care urmează după ilustrație.

c) Căutați numărul poziției/marcarea de referință (16) sau numele subgrupei (19). Treceți la numărul de pagină corespunzător (20) listat în coloana din partea dreaptă. Tetra Pak a optat ca întotdeauna să utilizeze structura orientată pe funcție pentru marcarea de referință. Prefixul care indică structura orientată pe funcție (=) nu este arătat în marcarea de referință.

Articolele d) și e) se referă la ilustrația (F) de la pagina i-6.

d) Localizați piesa (21) pe care o căutați pe ilustrația subgrupei și notați numărul de poziție al piesei.

e) Numărul piesei (29) și descrierea piesei (30) sunt listate lângă numărul de poziție de pe pagina de liste.





### Informațiile listate într-un catalog de piese de schimb

Lista de mai jos se referă la ilustrația (F) de la pagina i-6. Un catalog de piese de schimb conține următoarele informații despre grupe, subgrupe și piese de schimb pentru echipament:

- Referința despre structura grupelor (22). Indică următoarea grupă superioară din structura de liste a echipamentului.
- Numele grupei (23)
- Unitatea de măsură (25)
- Cantitatea (26)
- Numărul de desen de ansamblu (27)
- Intervalul de pagini de liste (28). Inclus dacă există mai multe pagini în ilustrația sau lista grupei.
- Numărul piesei sau al subgrupei (29)
- Numele subgrupei sau descrierea piesei (30)
- Numărul grupei (31)
- Numărul echipamentului (32)
- Antet cu informații despre grupă (33). Indică dacă secțiunea de sub antet se referă la o anumită variantă de mașină sau este o listă de piese comune. Dacă o listă are mai multe variante și fiecare variantă are propriul său desen de ansamblu, este arătată o referință de pagină pentru desenul de ansamblu al variantei.
- Informații interne (34)

# Úvod

## Informácie o návode

Spoločnosť Tetra Pak odporúča, starostlivo si prečítať všetky dodané návody. Dbajte, aby pracovníci, obsluhujúci zariadenie alebo zabezpečujúci jeho údržbu, mali vždy dodané návody k dispozícii.

Je dôležité, aby bol tento katalóg k dispozícii počas celého času životnosti zariadenia, a aby sa katalóg dostal aj k jeho prípadnému ďalšiemu držiteľovi alebo používateľovi.

Spoločnosť Tetra Pak nepreberá zodpovednosť za akékoľvek poškodenie zariadenia spôsobené nedodržaním pokynov uvedených v návodoch dodávaných s týmto zariadením.

### Dodané návody

S týmto zariadením vám mohli byť dodané nasledujúce návody:

- CM
  Návod na prestavovanie poskytuje technikom informácie o prestavovaní zariadenia do rôznych výrobných režimov.
- EM
  Elektrotechnický návod poskytujetechnikom informácie o elektrickom systéme zariadenia.
- IM
  Návod na inštaláciu poskytuje technikom informácie potrebné na bezpečnú inštaláciu zariadenia.
- MM
  Návod na údržbu poskytujetechnikom informácie o údržbe zariadenia.
- OM
  Návod na obsluhu poskytuje obsluhe informácie o zaobchádzaní a obsluhe zariadenia pred, počas a po prevádzke.
- SPC
  Katalóg náhradných dielcov poskytuje informácie potrebné na objednávanie náhradných dielcov od spoločnosti Tetra Pak
- TeM
  Technický návod
  - poskytuje technikom informácie potrebné na bezpečnú inštaláciu zariadenia
  - poskytuje technikom informácie o údržbe zariadenia
  - poskytuje technikom informácie o elektrickom systéme stroja/ zariadenia
  - poskytuje informácie potrebné na objednávanie náhradných dielcov od spoločnosti Tetra Pak.





### Rozloženie strany

Pozri ilustráciu (A) na strane i-5: Hlavné strany Katalógu náhradných dielcov obsahujú stránku s ilustráciami (1) a príslušnú stranu so zoznamom (7). Číslo strany (5) sa uvádza v záhlaví na strane s ilustráciami a v päte strany so zoznamom. Číslo dokumentu (6) sa uvádza v päte strany so zoznamom.

### Číslovanie strán

Pozri ilustráciu (A) na strane i-5: Číslo strany (5) má tri časti:

- číslo kapitoly (2)
- poradové číslo strany v rámci kapitoly (3)
- celkový počet strán v kapitole (4)

## Základné informácie o stroji

### Výrobca

Meno a adresa výrobcu sa uvádza na druhej strane tohto katalógu.

### Servis

Pri objednávaní náhradných dielcov pre tento stroj alebo na nahlasovanie problémov súvisiacich s prevádzkou tohto stroja sa obráťte na najbližšie zastúpenie spoločnosti Tetra Pak.

S ostatnými otázkami, pripomienkami a podnetmi na vylepšenie stroja alebo zariadenia a jeho dokumentácie sa obracajte na kontaktnú osobu.

## Identifikácia

### Klasifikácia CE

Toto zariadenie spĺňa základné predpisy o ochrane zdravia a bezpečnosti Európskeho hospodárskeho priestoru (EEA).





### Typový štítok stroja

Na ilustrácii (B) na strane i-5 uvádzame príklad typového štítku. Ilustrácia platného typového štítku stroja a jeho umiestnenia na zariadení sa uvádza v kapitole Úvod v návodoch, dodaných s týmto zariadením. Typový štítok obsahuje dolu údaje uvedené, potrebné pri kontaktoch so spoločnosťou Tetra Pak ohľadom tohto špecifického zariadenia.

- Typ stroja (8)
- Objem (9)
- Údaje o výkrese (10)
- Výrobné číslo stroja (11)
- Výrobca (12)
- Značka CE (13)
- Rok výroby (14)

Ilustrácia (C) na strane i-5 zobrazuje príklad špecifikácie stroja. Presvedčite sa, že údaje zariadenia uvedené na predných stranách tohto návodu zodpovedajú údajom na typovom štítku a v špecifikácii stroja.

## Ako sa tento Katalóg náhradných dielcov používa

### Vyhľadanie čísla náhradného dielca

a) Pozri ilustráciu (D) na strane i-5: Prejdite na číslo kapitoly (15) uvedené vedľa hlavnej skupiny obsahujúcej dielec, ktorý chcete vyhľadať.

Položky b) a c) odkazujú na ilustráciu (E) na strane i-6.

b) Na ilustrácii hlavnej skupiny hľadajte podskupinu stroja (17), ktorý obsahuje dielec alebo podskupinu, ktorú hľadáte. Poznamenajte si číslo položky (18) a prejdite stranu so zoznamom nasledujúcu po ilustrácii.

c) Vyhľadajte číslo položky/referenčné označenie (16) alebo názov podskupiny (19). Prejdite na príslušné číslo strany (20) uvedené v zozname v pravom stĺpci. Spoločnosť Tetra Pak sa rozhodla vždy používať funkčne zameranú štruktúru na referenčné označovanie. Predčíslie udávajúce funkčne orientovanú štruktúra (=) sa v referenčnom označení nezobrazuje.

Položky d) a e) odkazujú na ilustráciu (F) na strane i-6.

d) Nájdite dielec (21), ktorý hľadáte, na ilustrácii podskupiny a poznamenajte si číslo položky daného dielca.

e) Číslo dielca (29) a popis dielca (30) sa uvádza vedľa čísla položky na stránke so zoznamom.





### Informácie uvádzané v Katalógu náhradných dielcov

Dolu uvedený zoznam odkazuje na ilustráciu (F) na strane i-6. Katalóg náhradných dielcov obsahuje nasledujúce informácia o skupinách, podskupinách a náhradných dielcov zariadenia:

- Referenčná štruktúrna skupina (22). Označuje najbližšiu vyššiu skupinu v štruktúre zoznamu zariadenia.
- Názobv skupiny (23)
- Jednotka merania (25)
- Množstvo (26)
- Číslo výkresu celkovej zostavy (27)
- Rozsah strán zoznamu (28). Uvádza sa, ak má ilustrácia alebo zoznam skupiny viac strán.
- Číslo dielca alebo podskupiny (29)
- Názov podskupiny alebo popis dielca (30)
- Číslo skupiny (31)
- Číslo zariadenia (32)
- Záhlavie informácií o skupine (33). Uvádza, či je časť nasledujúca pod záhlavím určená pre špecifický variant stroja, alebo či ide o zoznam spoločných dielcov. Ak má zoznam viac ako jeden variant a každý z variantov má vlastný výkres celkovej zostavy, uvádza sa odkaz na stranu s výkresom zostavy daného variantu.
- Interné informácie (34)

# Uvod

## Informacije o priročnikih

Tetra Pak priporoča, da natančno preberete vse priložene priročnike. Osebje, ki upravlja in vzdržuje opremo mora imeti dostop do priloženih priročnikov.

Katalog hranite v celotnem času uporabe opreme. V primeru, ko opremo pridobi drug imetnik ali uporabnik, mu obenem izročite tudi katalog.

Podjetje Tetra Pak ne prevzema odgovornosti za poškodbe na opremi, ki nastanejo zaradi neupoštevanja navodil iz priročnikov, ki so priloženi opremi.

### Priloženi priročniki

Priročniki, ki so priloženi tej opremi, lahko vključujejo

- Priročnik za zamenjavo (CM)
  V tem priročniku so podatki, ki tehnikom omogočajo izvesti zamenjavo opreme med različnimi načini proizvodnje.
- Elektrotehnični priročnik (EM)
  Priročnik vsebuje podatke za tehnike o električnem sistemu opreme.
- Priročnik za montažo (IM)
  Priročnik vsebuje podatke, ki jih tehniki potrebujejo za varno montažo opreme.
- Priročnik za vzdrževanje (MM)
  Priročnik vsebuje podatke za tehnike o vzdrževanju opreme.
- Priročnik za obratovanje (OM)
  Priročnik je namenjen informiranju za pravilno rokovanje in upravljanje s strojem pred, med in po proizvodnem postopku.
- Katalog nadomestnih delov (SPC)
  Katalog vsebuje potrebne podatke za naročilo nadomestnih delov pri podjetju Tetra Pak.
- Tehnični priročnik (TeM)
  Priročnik
  - vsebuje podatke, ki jih tehniki potrebujejo za varno montažo opreme;
  - vsebuje podatke za tehnike o vzdrževanju opreme;
  - vsebuje podatke za tehnike o električnem sistemu stroja/opreme;
  - vsebuje potrebne podatke za naročilo nadomestnih delov pri podjetju Tetra Pak.





### Postavitev strani

Poglejte sliko (A) na strani i-5: Glavne strani v Katalogu nadomestnih delov sestavljata stran s sliko (1) in ustrezna stran s seznamom (7). Številka strani (5) je prikazana na vrhu strani s sliko in na dnu strani s seznamom. Številka dokumenta (6) je prikazana na dnu strani s seznamom.

### Številčenje strani

Oglejte si sliko (A) na strani i-5: Številka strani (5) ima tri dele:

- številko poglavja (2);
- zaporedno številko strani v poglavju (3);
- število vseh strani v poglavju (4).

## Predstavitev stroja

### Proizvajalec

Ime in naslov proizvajalca najdete na drugi strani kataloga.

### Servisiranje

Za naročanje nadomestnih delov za stroj ter za sporočanje motenj pri delovanju stroja se obrnite na najbližjo servisno službo podjetja Tetra Pak.

V primeru drugih zahtev, komentarjev, predlogov za izboljšavo opreme ali dokumentacije se obrnite na odgovorno osebo.

## Identifikacijska oznaka

### CE-klasifikacija

Oprema je izdelana v skladu z osnovnimi zdravstvenimi in varnostnimi predpisi Evropskega gospodarskega prostora (EGS).





### Napisna ploščica

Slika (B) na strani i-5 prikazuje primer napisne ploščice.
Sliko veljavne napisne ploščice in njeno mesto na opremi najdete v uvodnem poglavju priloženih priročnikov. Ploščica vsebuje spodaj navedene podatke, ki jih potrebujete, ko se v zvezi z določeno opremo obrnete na podjetje Tetra Pak:

- tip stroja (8);
- prostornino (9);
- specifikacije risbe (10);
- serijsko številko stroja (11);
- proizvajalca (12);
- oznako CE (13);
- leto izdelave (14).

Slika (C) na strani i-5 prikazuje primer specifikacije stroja. Podatki o opremi, navedeni na prvih straneh tega priročnika, se morajo ujemati s podatki o stroju, navedenimi na napisni ploščici in v specifikacijah.

## Uporaba Kataloga nadomestnih delov

### Iskanje številke nadomestnega dela

a) Oglejte si sliko (D) na strani i-5: Poiščite številko poglavja (15), navedeno poleg glavne skupine, ki vsebuje iskani del.

Točki b) in c) se nanašata na sliko (E) na strani i-6.

b) Na sliki glavne skupine poiščite podskupino stroja (17), ki vsebuje iskani del ali podskupino. Zapomnite si pozicijsko številko (18) in poiščite stran s seznamom, ki pripada sliki.

c) Poiščite pozicijsko številko/referenčno oznako (16) ali ime podskupine (19). Pojdite na stran (20), navedeno v desnem stolpcu. Tetra Pak za referenčno označevanje vedno uporablja funkcijsko strukturo. Predpona, ki označuje funkcijsko strukturo (=), ni prikazana v referenčni oznaki.

Točki d) in e) se nanašata na sliko (F) na strani i-6.

d) Na sliki podskupine poiščite del (21), ki ga iščete, in si zapomnite njegovo pozicijsko številko.

e) Številka (29) in opis dela (30) sta navedena poleg pozicijske številke na strani s seznamom.





### Informacije v Katalogu nadomestnih delov

Spodnji seznam se nanaša na sliko (F) na strani i-6. Katalog nadomestnih delov vsebuje naslednje informacije o skupinah, podskupinah in nadomestnih delih za opremo:

- referenco strukture skupine (22); Označuje naslednjo višjo skupino v strukturi seznamov opreme.
- ime skupine (23);
- mersko enoto (25);
- količino (26);
- številko sestavne risbe (27);
- število strani seznama (28); Če je slika ali seznam skupine sestavljen iz več strani.
- številko dela ali podskupine (29);
- ime podskupine ali opis dela (30);
- številko skupine (31);
- številko opreme (32);
- naslov z informacijami o skupini (33). Označuje, ali je razdelek pod naslovom namenjen specifični izvedbi stroja ali gre za seznam skupnih delov. Če ima seznam več izvedb in če ima vsaka od njih svojo sestavno risbo, je ob vsaki izvedbi navedena referenčna stran s sestavno risbo.
- interne informacije (34).

# Inledning

## Information om manualen

Tetra Pak rekommenderar att alla manualer läses noggrant. Se till att manualerna är tillgängliga för personalen som använder eller underhåller utrustningen.

Det är viktigt att denna katalog behålls under utrustningens livslängd, och att den överlämnas till varje efterföljande innehavare eller användare av utrustningen.

Tetra Pak tar inte ansvar för någon skada på utrustningen som orsakats av att instruktionerna i medföljande manualer inte har följts.

### Medföljande manualer

Följande manualer kan levereras tillsammans med utrustningen:

- CM
  Konverteringsmanualen (CM) innehåller information för tekniker om hur man konverterar utrustningen mellan olika produktionslägen.
- EM
  Den elektriska manualen (EM) innehåller information för tekniker om utrustningens elektriska system.
- IM
  Installationsmanualen (IM) innehåller information för tekniker om hur utrustningen installeras på ett säkert sätt.
- MM
  Underhållsmanualen (MM) innehåller information för tekniker om hur utrustningen underhålls.
- OM
  Driftsmanualen (OM) innehåller information för operatören om hur utrustningen ska hanteras före, under och efter produktion.
- SPC
  Reservdelskatalogen (SPC) innehåller den information som behövs för att beställa reservdelar från Tetra Pak.
- TeM
  Den tekniska manualen (TeM)
  - innehåller information för tekniker om hur utrustningen installeras på ett säkert sätt.
  - innehåller information för tekniker om hur utrustningen underhålls.
  - innehåller information för tekniker om maskinens/utrustningens elektriska system.
  - innehåller den information som behövs för att beställa reservdelar från Tetra Pak.





### Sidlayout

Se bild (A) på sidan i-5: Huvudsidorna i reservdelskatalogen består av en bildsida (1) och en motsvarande listsida (7). Sidnumret (5) visas i sidhuvudet på bildsidan och i sidfoten på listsidan. Dokumentnumret (6) visas i sidfoten på listsidan.

### Sidnumrering

Se bild (A) på sidan i-5: Ett sidnummer (5) består av tre delar:

- kapitlets nummer (2)
- löpande sidnummer inom kapitlet (3)
- totalt sidantal i kapitlet (4)

## Introduktion till maskinen

### Tillverkare

Tillverkarens namn och adress finns på sidan 2 i katalogen.

### Service

För att beställa reservdelar till denna maskin eller för att rapportera problem som uppstått i samband med driften kontaktar du närmaste Tetra Pak-kontor.

Om du har andra frågor, kommentarer eller förslag till förbättringar av utrustningen och dokumentationen vänder du dig till din kontaktperson på Tetra Pak.

## Identifiering

### CE-märkning

Denna utrustning överensstämmer med den grundläggande hälso- och säkerhetslagstiftningen inom Europeiska ekonomiska samarbetsområdet (EES).





### Maskinskylt

Bild (B) på sidan i-5 visar ett exempel på en maskinskylt.
En bild på giltig maskinskylt och dess placering på utrustningen visas i inledningskapitlet som medföljer utrustningen. Skylten innehåller de uppgifter som listas nedan och som behövs vid kontakt med Tetra Pak angående utrustningen.

- Maskintyp (8)
- Volym (9)
- Ritningsspecifikationer (10)
- Maskinnummer (11)
- Tillverkare (12)
- CE-märkning (13)
- Tillverkningsår (14)

Bild (C) på sidan i-5 visar ett exempel på en maskinspecifikation. Kontrollera att informationen om utrustningen som listas på de första sidorna i manualen motsvarar informationen på maskinskylten och i maskinspecifikationen.

## Använda reservdelskatalogen

### Hitta ett reservdelsnummer

a) Se bild (D) på sidan i-5: Gå till kapitelnumret (15) som står vid sidan om huvudgruppen som innehåller den del du vill hitta.

Punkt b) och c) hänvisar till bild (E) på sidan i-6.

b) På huvudgruppsbilden letar du efter den maskinundergrupp (17) som innehåller delen eller undergruppen du letar efter. Notera positionsnumret (18) och gå till listsidan som anges efter bilden.

c) Leta efter positionsnumret/referensbeteckningen (16) eller undergruppsnamnet (19). Gå till motsvarande sidnummer (20) som listas i den högra kolumnen. Tetra Pak har valt allt alltid använda en funktionsorienterad struktur för referensbeteckningarna. Prefixet för funktionsorienterad struktur (=) visas inte i referensbeteckningen.

Punkt d) och e) hänvisar till bild (F) på sidan i-6.

d) Leta reda på delen (21) i undergruppsbilden och notera delens positionsnummer.

e) Reservdelsnumret (29) och reservdelsbeskrivningen (30) står bredvid positionsnumret på listsidan.





### Information i reservdelskatalogen

Listan nedan hänvisar till bild (F) på sidan i-6. Reservdelskatalogen innehåller följande information om grupper, undergrupper och reservdelar för utrustningen:

- Gruppstrukturreferens (22). Anger nästa högre grupp i utrustningslistans struktur.
- Gruppnamn (23)
- Måttenhet (25)
- Kvantitet (26)
- Monteringsritningsnummer (27)
- Listsideintervall (28). Anges om det finns flera sidor i gruppbilden eller grupplistan.
- Reservdels- eller undergruppsnummer (29)
- Undergruppsnamn eller reservdelsbeskrivning (30)
- Gruppnummer (31)
- Utrustningsnummer (32)
- Gruppinformationsrubrik (33). Anger om avsnittet under rubriken gäller en viss maskinvariant eller om det är en lista över allmänna delar. Om en lista har fler än en variant och varje variant har sin egen monteringsritning visas en sidhänvisning till variantens monteringsritning.
- Intern information (34)

# SPC
## Spare Parts Catalogue

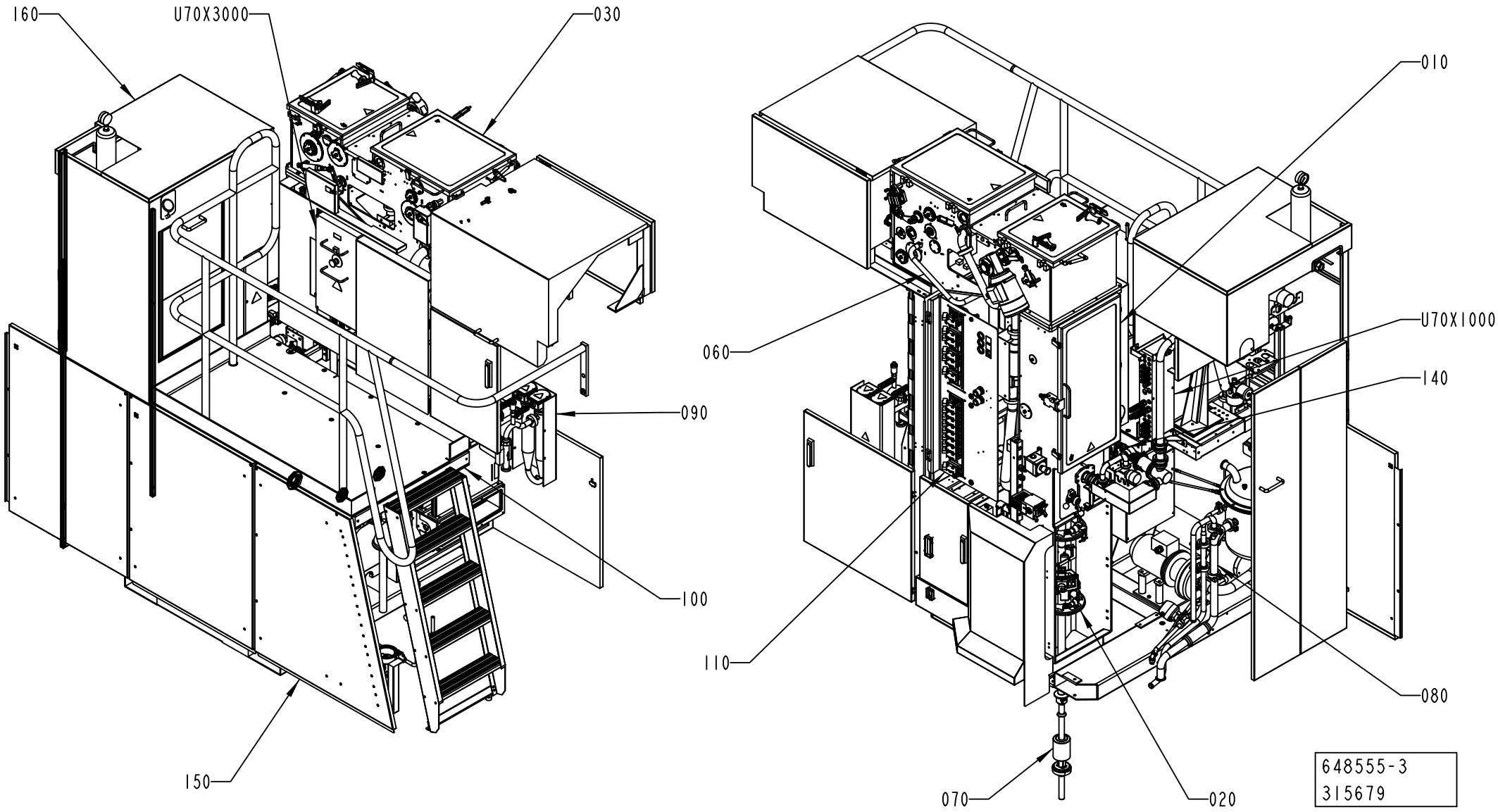
160
U70X3000
030
090
100
150
010
060
U70X1000
140
110
080
070
020
648555-3
315679

ECM: 353514 - 20080706
Group number: 648555-0200
Assembly Drawing: 648555-3_1_AA

| Pos | Part No | UN | Qty | Description | Page No |
|---|---|---|---|---|---|
| **A3/FLEX** | | | | | |
| 030 | 2539450-0300 | | 1 | DRYING CHAMBER | **1-5, 1-7, 1-9** |
| **Common Parts** | | | | | |
| 010 | 2539440-0200 | | 1 | ASEPTIC CHAMBER | **1-69** |
| 020 | 2544850-0200 | | 1 | FORMING SECTION | **1-87** |
| 060 | 2528076-0200 | | 1 | STERILE AIR SYSTEM | **1-167, 1-169, 1-171** |
| 070 | 2501290-0300 | | 1 | FILLING SYSTEM | **1-195** |
| 080 | 2512910-0400 | | 1 | CLEANING SYSTEM | **1-247** |
| 090 | 2541680-0200 | | 1 | HYDROGEN PEROXIDE | **1-263** |
| 100 | 1558497-0300 | | 1 | FRAME SECTION,UPPER | **1-287** |
| 110 | 2528079-0400 | | 1 | PNEUMATIC SYSTEM | **1-309** |
| 140 | 2504502-0200 | | 1 | CABLE TRENCH | **1-327** |
| 150 | 2533766-0100 | | 1 | COVERING PANEL | **1-335** |
| 160 | 2532909-0300 | | 1 | COVERING PANEL | **1-337** |
| 170 | 2504496-0200 | | 1 | TRANSPORT EQUIPMENT | **1-343** |
| U70X1000 | 2785238-0100 | | 1 | CONNECTION BOX | **1-345** |
| U70X3000 | 2785246-0100 | | 1 | CONNECTION BOX | **1-349, 1-351** |

| Pos | Part No | UN | Qty | Description | Page No |
|---|---|---|---|---|---|

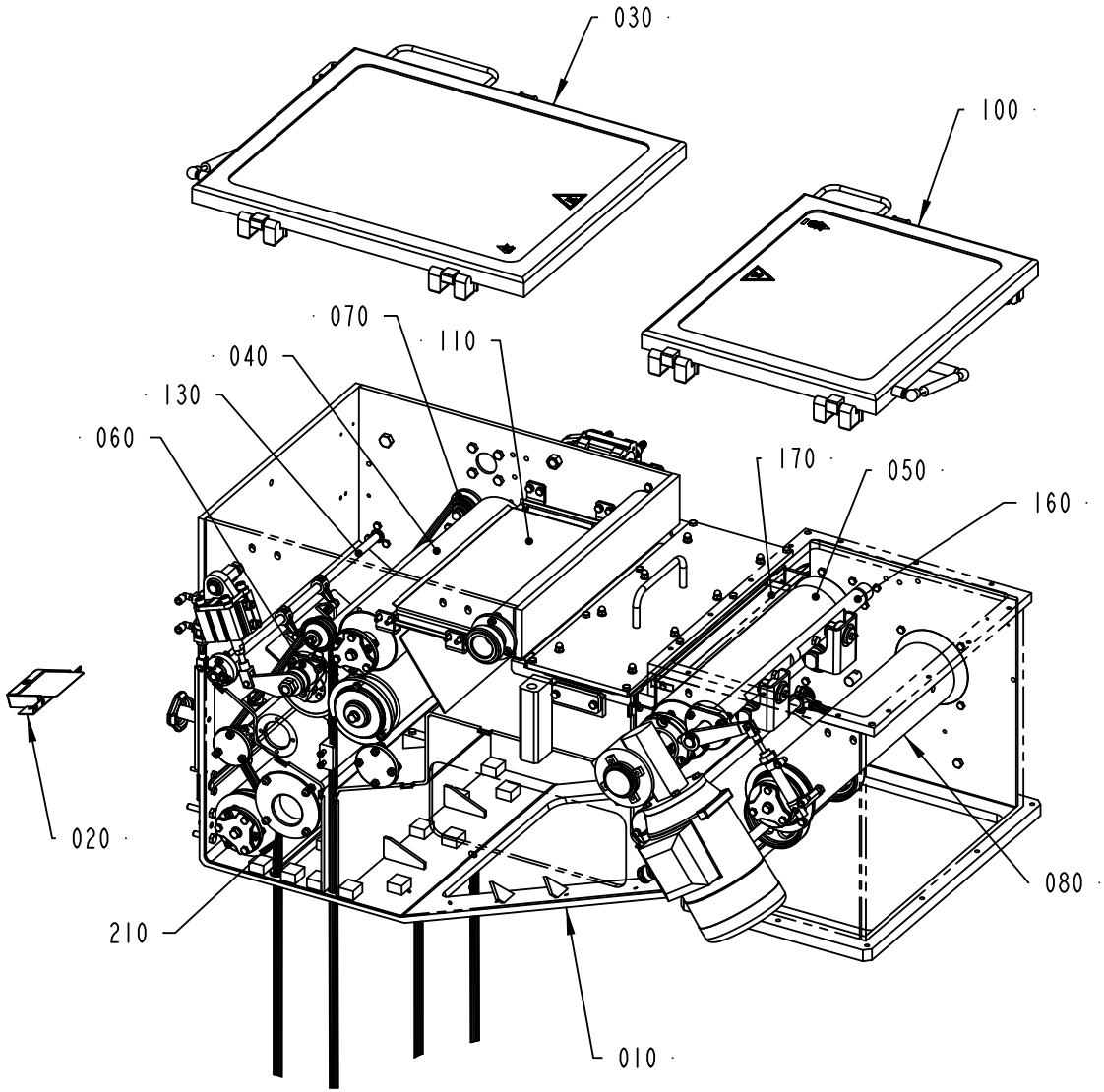


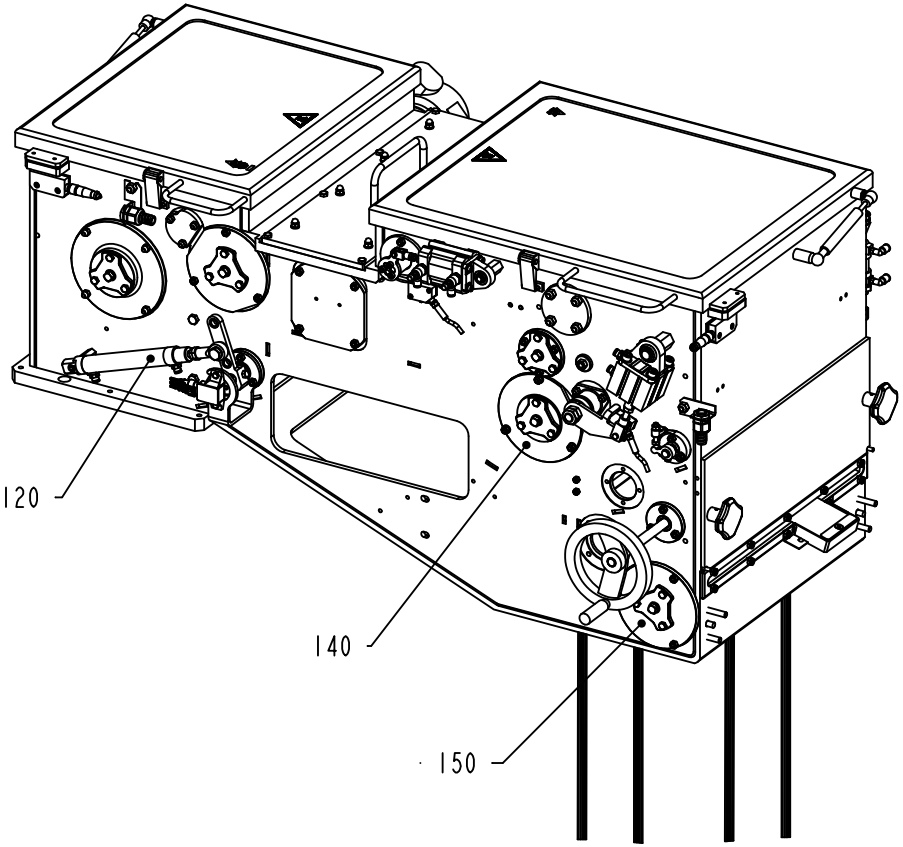


2539450-16
329600

ECM: 353197 - 20081003
Group number: 2539450-0300
Assembly Drawing: 2539450-16_1_AB

This list covers pages from 1-4 to 1-9

| Pos | Part No | UN | Qty | Description | Page No |
|---|---|---|---|---|---|
| **LIGHTCAP** | | | | | |
| 020 | 1528746-0100 | | 1 | GUIDE | **1-11** |
| 080 | 2763999-0100 | | 1 | BENDING ROLLER | **1-13, 1-15** |
| 090 | 2528101-0200 | | 1 | BLOWING DEVICE | **1-17** |
| 100 | 2528146-0200 | | 1 | DOOR | **1-21** |
| **NO DIMC NO PT (See drawing on page: 1-8)** | | | | | |
| 080 | 2763999-0100 | | 1 | BENDING ROLLER | **1-13, 1-15** |
| 100 | 2528146-0200 | | 1 | DOOR | **1-21** |
| **STDA7 CAP (See drawing on page: 1-6)** | | | | | |
| 020 | 1528746-0100 | | 1 | GUIDE | **1-11** |
| 080 | 2763999-0100 | | 1 | BENDING ROLLER | **1-13, 1-15** |
| 090 | 2528101-0200 | | 1 | BLOWING DEVICE | **1-17** |
| 100 | 2528146-0200 | | 1 | DOOR | **1-21** |
| **TBA 1000B PT/FLEX, TBA 1000S PT/FLEX, TBA 1000SQ PT/FLEX, TBA 0500B QC PT/FLEX, TPA 1000SQ PT/FLEX, TBA 1500S PT/FLEX, TPA 0750SQ PT/FLEX (See drawing on page: 1-4)** | | | | | |
| 020 | 1528746-0100 | | 1 | GUIDE | **1-11** |
| 080 | 2763999-0100 | | 1 | BENDING ROLLER | **1-13, 1-15** |
| 100 | 2528146-0200 | | 1 | DOOR | **1-21** |
| **Common Parts** | | | | | |
| 010 | 2777982-0100 | | 1 | FRAME HOUSING | **1-23, 1-25** |
| 030 | 1539746-0300 | | 1 | DOOR | **1-27** |
| 040 | 1548736-0100 | | 1 | BENDING ROLLER | **1-29, 1-31, 1-33, 1-35** |
| 050 | 1548753-0200 | | 1 | DRIVE ROLLER | **1-37** |
| 060 | 1548892-0200 | | 1 | CALENDER ROLLER | **1-39, 1-41** |
| 070 | 1549573-0200 | | 1 | CRANK | **1-43, 1-45** |
| 110 | 2532934-0200 | | 1 | AIR KNIFE | **1-47, 1-49, 1-51** |
| 120 | 2539445-0300 | | 1 | PENDULUM ROLLER | **1-53** |
| 130 | 2539455-0200 | | 1 | VALVE | **1-55** |
| 140 | 2758064-0100 | | 1 | SQUEE-GEE ROLLER | **1-57, 1-59** |
| 150 | 2745337-0100 | | 1 | BENDING ROLLER | **1-61** |
| 160 | 2826414-0300 | | 1 | COUNTER ROLLER | **1-63** |
| 170 | 2783102-0100 | | 1 | PLATE | **1-65** |
| 210 | 2550890-0100 | | 1 | VALVE | **1-67** |

| Pos | Part No | UN | Qty | Description | Page No |
|---|---|---|---|---|---|

# DRYING CHAMBER



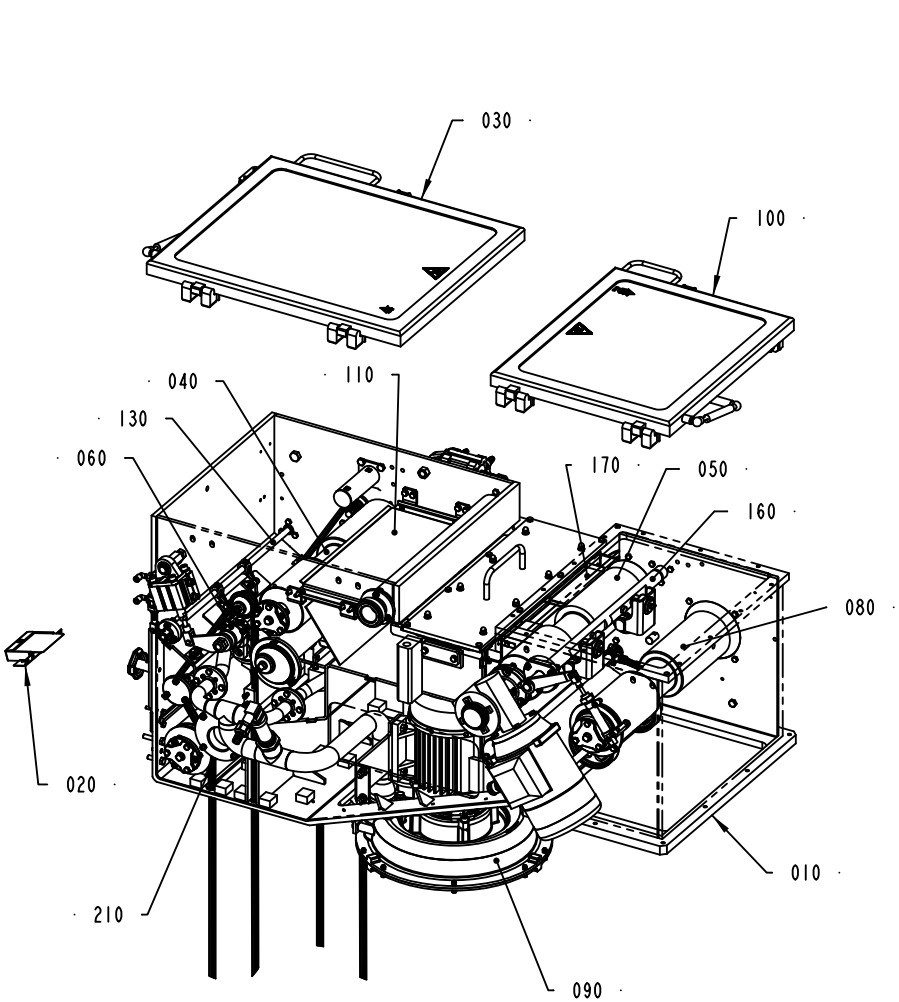


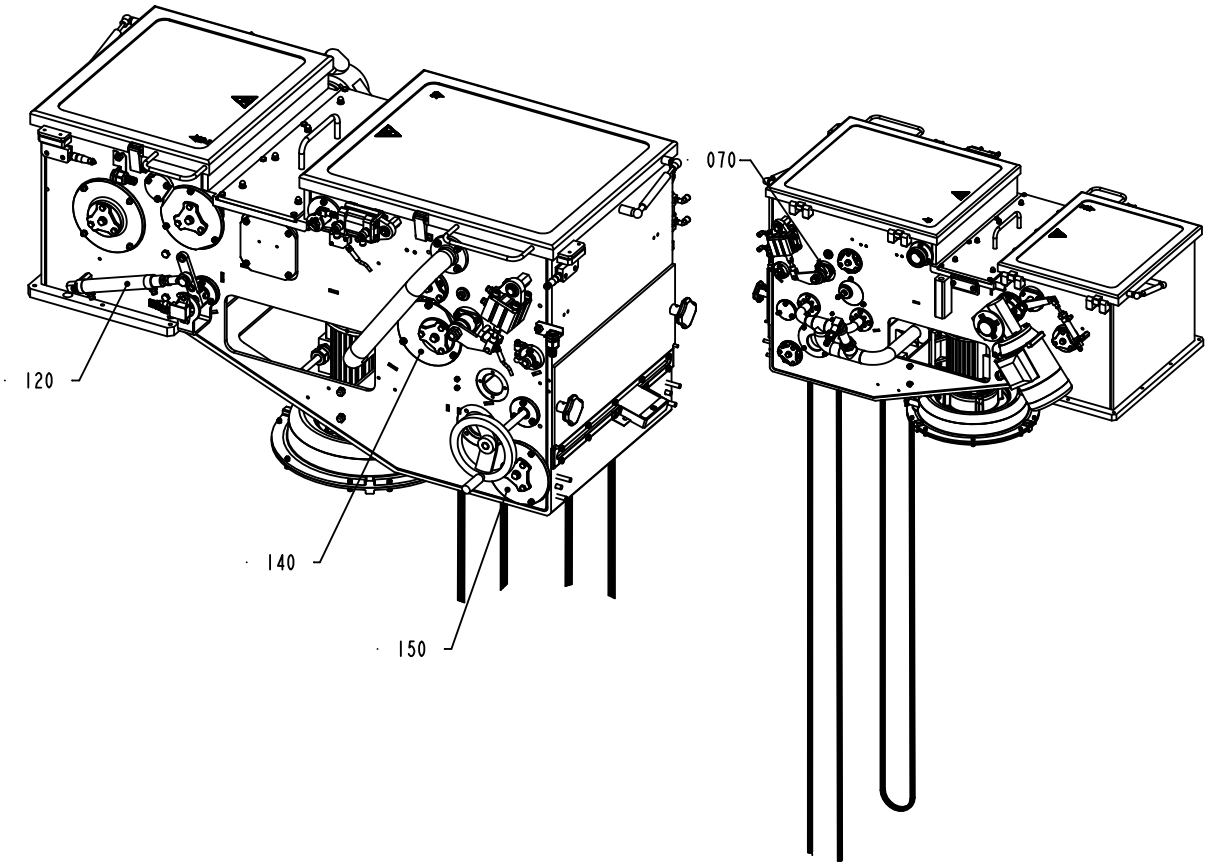


2539450-17
329600

| Pos | Part No | UN | Qty | Description | Page No |
|---|---|---|---|---|---|
| **LIGHTCAP** | | | | | |
| 020 | 1528746-0100 | | 1 | GUIDE | **1-11** |
| 080 | 2763999-0100 | | 1 | BENDING ROLLER | **1-13, 1-15** |
| 090 | 2528101-0200 | | 1 | BLOWING DEVICE | **1-17** |
| 100 | 2528146-0200 | | 1 | DOOR | **1-21** |
| **NO DIMC NO PT (See drawing on page: 1-8)** | | | | | |
| 080 | 2763999-0100 | | 1 | BENDING ROLLER | **1-13, 1-15** |
| 100 | 2528146-0200 | | 1 | DOOR | **1-21** |
| **STDA7 CAP (See drawing on page: 1-6)** | | | | | |
| 020 | 1528746-0100 | | 1 | GUIDE | **1-11** |
| 080 | 2763999-0100 | | 1 | BENDING ROLLER | **1-13, 1-15** |
| 090 | 2528101-0200 | | 1 | BLOWING DEVICE | **1-17** |
| 100 | 2528146-0200 | | 1 | DOOR | **1-21** |
| **TBA 1000B PT/FLEX, TBA 1000S PT/FLEX, TBA 1000SQ PT/FLEX, TBA 0500B QC PT/FLEX, TPA 1000SQ PT/FLEX, TBA 1500S PT/FLEX, TPA 0750SQ PT/FLEX (See drawing on page: 1-4)** | | | | | |
| 020 | 1528746-0100 | | 1 | GUIDE | **1-11** |
| 080 | 2763999-0100 | | 1 | BENDING ROLLER | **1-13, 1-15** |
| 100 | 2528146-0200 | | 1 | DOOR | **1-21** |
| **Common Parts** | | | | | |
| 010 | 2777982-0100 | | 1 | FRAME HOUSING | **1-23, 1-25** |
| 030 | 1539746-0300 | | 1 | DOOR | **1-27** |
| 040 | 1548736-0100 | | 1 | BENDING ROLLER | **1-29, 1-31, 1-33, 1-35** |
| 050 | 1548753-0200 | | 1 | DRIVE ROLLER | **1-37** |
| 060 | 1548892-0200 | | 1 | CALENDER ROLLER | **1-39, 1-41** |
| 070 | 1549573-0200 | | 1 | CRANK | **1-43, 1-45** |
| 110 | 2532934-0200 | | 1 | AIR KNIFE | **1-47, 1-49, 1-51** |
| 120 | 2539445-0300 | | 1 | PENDULUM ROLLER | **1-53** |
| 130 | 2539455-0200 | | 1 | VALVE | **1-55** |
| 140 | 2758064-0100 | | 1 | SQUEE-GEE ROLLER | **1-57, 1-59** |
| 150 | 2745337-0100 | | 1 | BENDING ROLLER | **1-61** |
| 160 | 2826414-0300 | | 1 | COUNTER ROLLER | **1-63** |
| 170 | 2783102-0100 | | 1 | PLATE | **1-65** |
| 210 | 2550890-0100 | | 1 | VALVE | **1-67** |

| Pos | Part No | UN | Qty | Description | Page No |
|---|---|---|---|---|---|

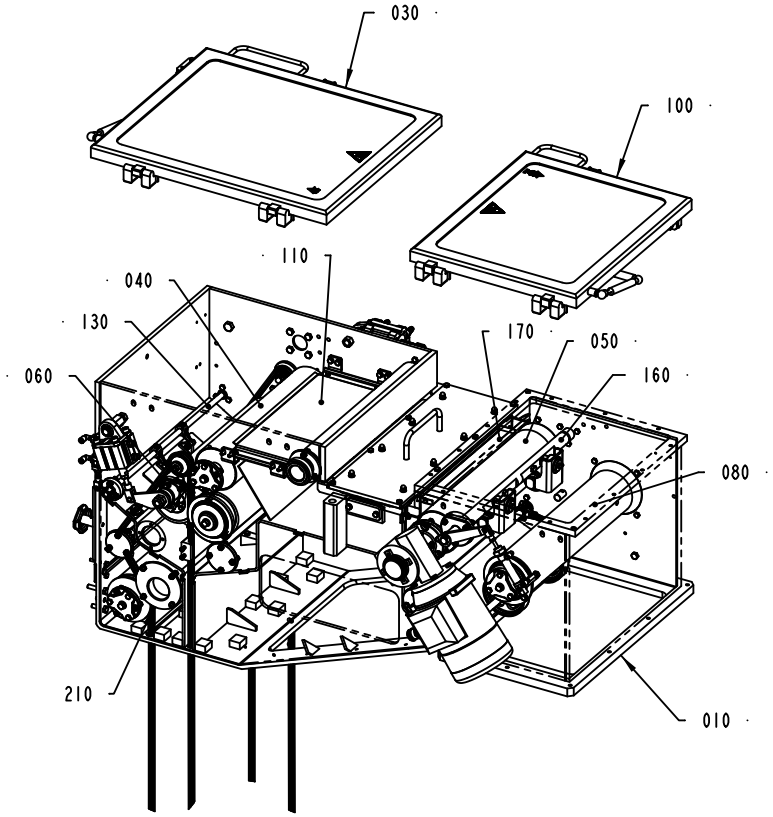


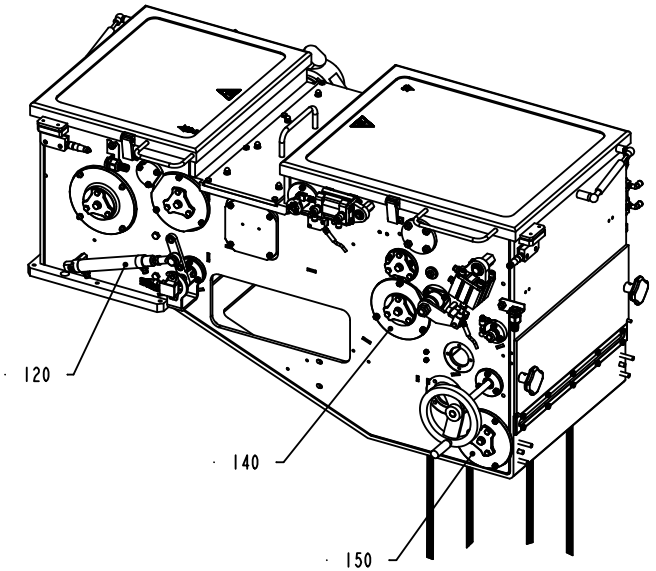


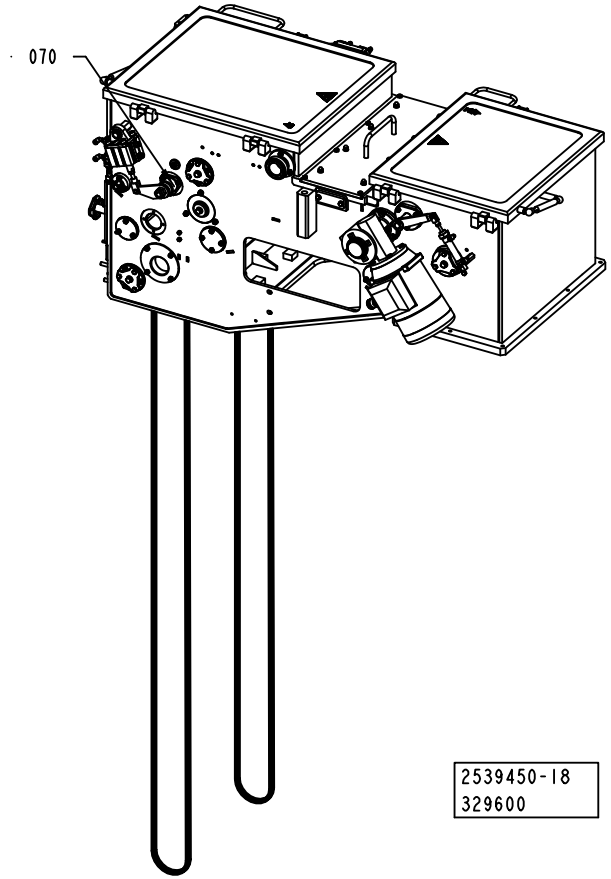


2539450-18
329600

ECM: 353197 - 20081003
Group number: 2539450-0300
Assembly Drawing: 2539450-18_1_AB

This list covers pages from 1-4 to 1-9

| Pos | Part No | UN | Qty | Description | Page No |
|---|---|---|---|---|---|
| **LIGHTCAP** | | | | | |
| 020 | 1528746-0100 | | 1 | GUIDE | **1-11** |
| 080 | 2763999-0100 | | 1 | BENDING ROLLER | **1-13, 1-15** |
| 090 | 2528101-0200 | | 1 | BLOWING DEVICE | **1-17** |
| 100 | 2528146-0200 | | 1 | DOOR | **1-21** |
| **NO DIMC NO PT (See drawing on page: 1-8)** | | | | | |
| 080 | 2763999-0100 | | 1 | BENDING ROLLER | **1-13, 1-15** |
| 100 | 2528146-0200 | | 1 | DOOR | **1-21** |
| **STDA7 CAP (See drawing on page: 1-6)** | | | | | |
| 020 | 1528746-0100 | | 1 | GUIDE | **1-11** |
| 080 | 2763999-0100 | | 1 | BENDING ROLLER | **1-13, 1-15** |
| 090 | 2528101-0200 | | 1 | BLOWING DEVICE | **1-17** |
| 100 | 2528146-0200 | | 1 | DOOR | **1-21** |
| **TBA 1000B PT/FLEX, TBA 1000S PT/FLEX, TBA 1000SQ PT/FLEX, TBA 0500B QC PT/FLEX, TPA 1000SQ PT/FLEX, TBA 1500S PT/FLEX, TPA 0750SQ PT/FLEX (See drawing on page: 1-4)** | | | | | |
| 020 | 1528746-0100 | | 1 | GUIDE | **1-11** |
| 080 | 2763999-0100 | | 1 | BENDING ROLLER | **1-13, 1-15** |
| 100 | 2528146-0200 | | 1 | DOOR | **1-21** |
| **Common Parts** | | | | | |
| 010 | 2777982-0100 | | 1 | FRAME HOUSING | **1-23, 1-25** |
| 030 | 1539746-0300 | | 1 | DOOR | **1-27** |
| 040 | 1548736-0100 | | 1 | BENDING ROLLER | **1-29, 1-31, 1-33, 1-35** |
| 050 | 1548753-0200 | | 1 | DRIVE ROLLER | **1-37** |
| 060 | 1548892-0200 | | 1 | CALENDER ROLLER | **1-39, 1-41** |
| 070 | 1549573-0200 | | 1 | CRANK | **1-43, 1-45** |
| 110 | 2532934-0200 | | 1 | AIR KNIFE | **1-47, 1-49, 1-51** |
| 120 | 2539445-0300 | | 1 | PENDULUM ROLLER | **1-53** |
| 130 | 2539455-0200 | | 1 | VALVE | **1-55** |
| 140 | 2758064-0100 | | 1 | SQUEE-GEE ROLLER | **1-57, 1-59** |
| 150 | 2745337-0100 | | 1 | BENDING ROLLER | **1-61** |
| 160 | 2826414-0300 | | 1 | COUNTER ROLLER | **1-63** |
| 170 | 2783102-0100 | | 1 | PLATE | **1-65** |
| 210 | 2550890-0100 | | 1 | VALVE | **1-67** |

| Pos | Part No | UN | Qty | Description | Page No |
|---|---|---|---|---|---|

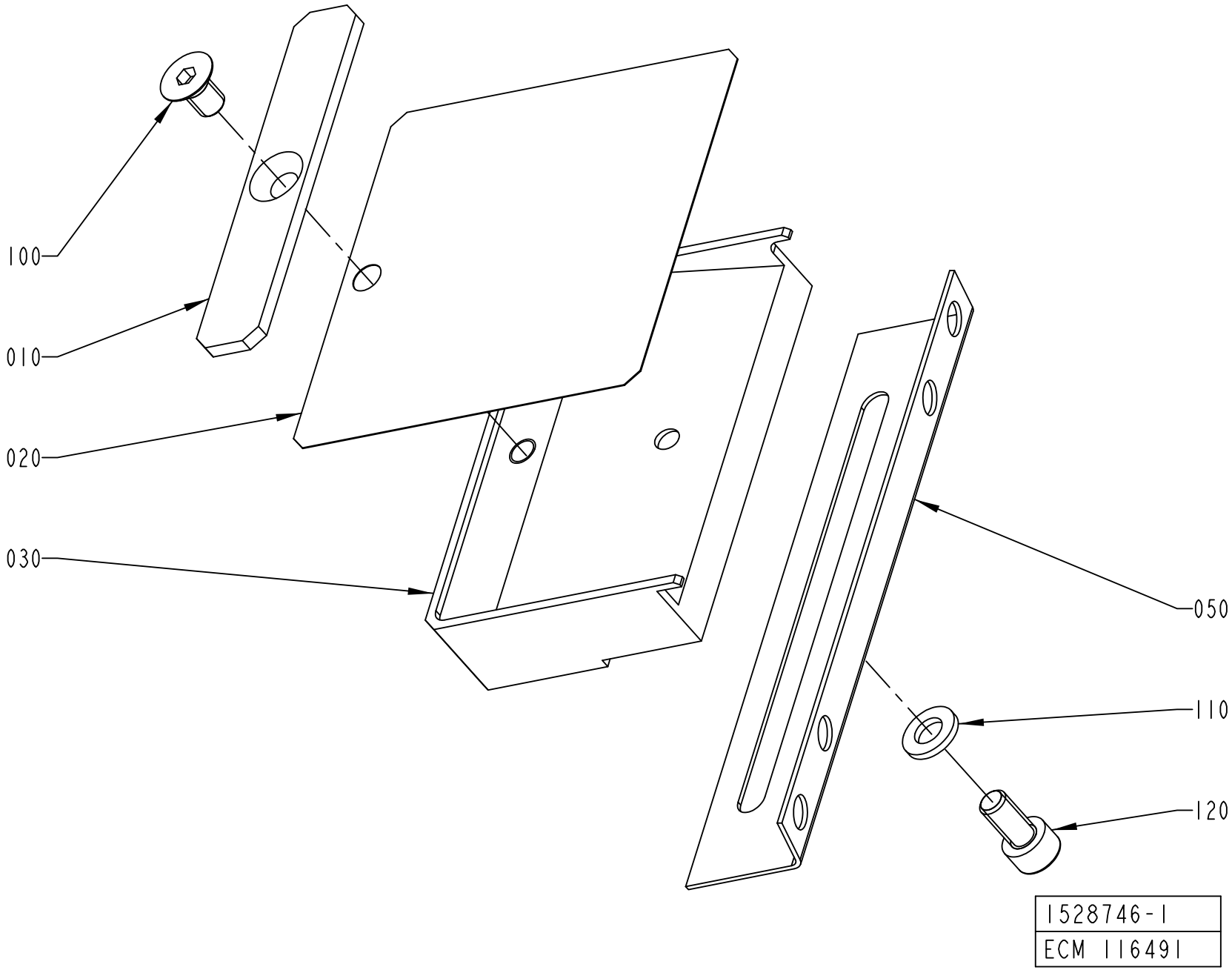
100
010
020
030
050
110
120
1528746-1
ECM 116491

ECM: 326046 - 20080103
Group number: 1528746-0100
Assembly Drawing: 1528746-1_1_AA

| Pos | Part No | UN | Qty | Description | Page No |
|---|---|---|---|---|---|
| - | | | | | |
| 010 | 1490715-0000 | | 1 | DOLLY | |
| 020 | 1490714-0000 | | 1 | GUIDE | |
| 030 | 1490713-0000 | | 1 | SPRING HOLDER | |
| 050 | 1519799-0000 | | 1 | ANGLE BRACKET | |
| 100 | 312155-0364 | | 1 | SCREW DIN 7991 MF6S M6X10 A4 70 | |
| 110 | 315105-0153 | | 1 | WASHER BRB 6,4X12 RFR | |
| 120 | 312115-0366 | | 1 | SCREW ISO4762 M6X12 A4 80 | |

| Pos | Part No | UN | Qty | Description | Page No |
|---|---|---|---|---|---|

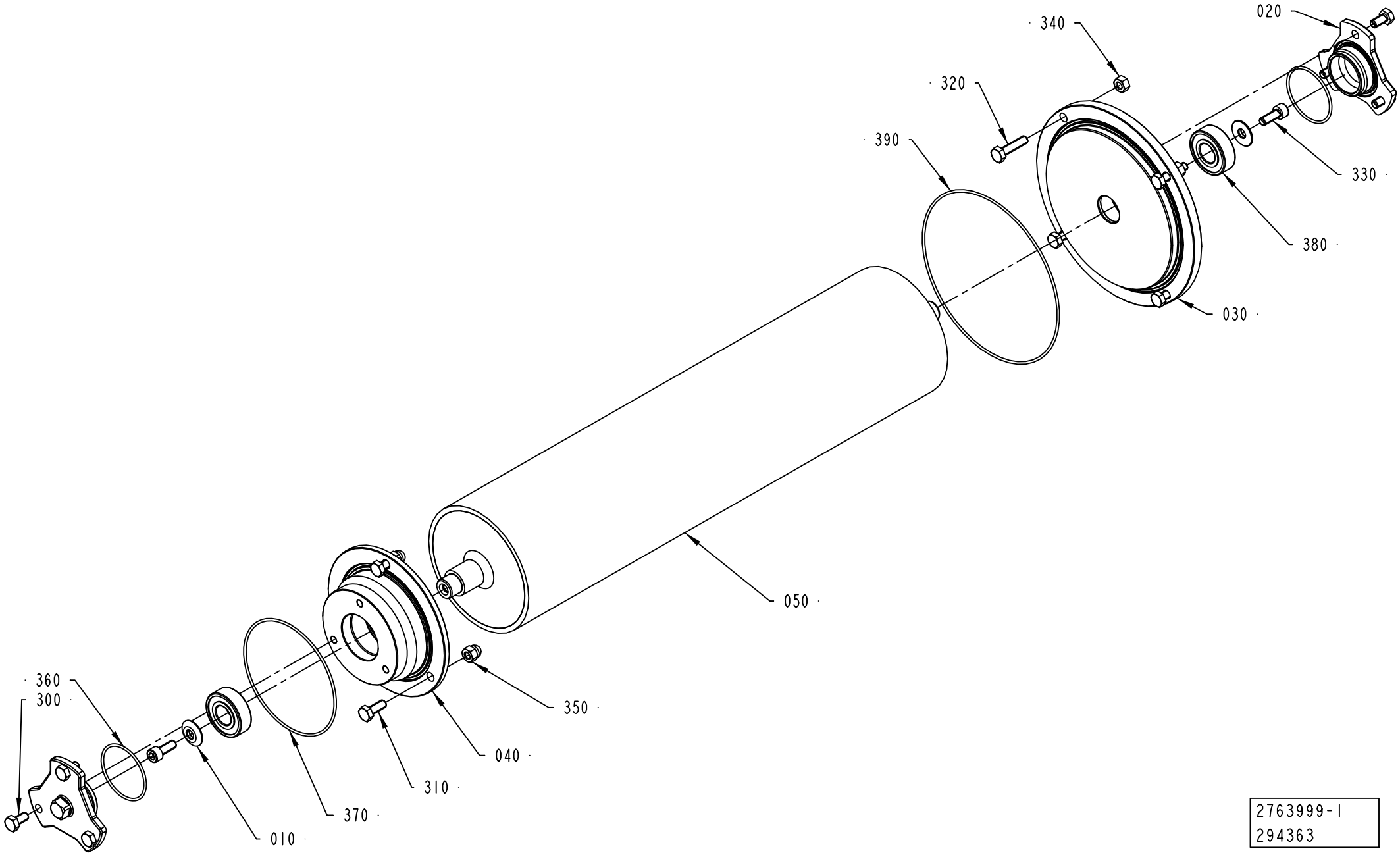


2763999-1
294363

ECM: 350776 - 20080410
Group number: 2763999-0100
Assembly Drawing: 2763999-1_1_AA

This list covers pages from 1-12 to 1-15

| Pos | Part No | UN | Qty | Description | Page No |
|---|---|---|---|---|---|
| **A3/FLEX DIMC/FLEX (See drawing on page: 1-14)** | | | | | |
| 010 | 1558768-0000 | | 2 | WASHER | |
| 020 | 2541639-0000 | | 2 | LID | |
| 030 | 2685386-0000 | | 1 | FLANGE | |
| 040 | 2685387-0000 | | 1 | FLANGE | |
| 050 | 2788602-0000 | | 1 | BENDING ROLLER | |
| 300 | 312105-0366 | | 6 | SCREW M6S ISO 4017 M6X12 A480 | |
| 320 | 312105-0372 | | 4 | SCREW M6S ISO 4017 M6X25 A480 | |
| 330 | 312115-0368 | | 2 | SCREW ISO4762 M6X16 A4 80 | |
| 340 | 312605-0316 | | 4 | HEXAGON NUT, M6M M6 A280 | |
| 360 | 315205-0802 | | 2 | O-RING 41,0X1,78 MM | |
| 370 | 90458-0640 | | 1 | O-RING 88,62X1,78 MM | |
| 380 | 90458-1704 | | 2 | BALL BEARING, 15X35X11 MM | |
| 390 | 90459-0094 | | 1 | O-RING 133,07X1,78 MM | |
| **A3/FLEX NODIMC (See drawing on page: 1-12)** | | | | | |
| 010 | 1558768-0000 | | 2 | WASHER | |
| 020 | 2541639-0000 | | 2 | LID | |
| 030 | 2685386-0000 | | 1 | FLANGE | |
| 040 | 2685387-0000 | | 1 | FLANGE | |
| 050 | 2763996-0000 | | 1 | BENDING ROLLER | |
| 300 | 312105-0366 | | 6 | SCREW M6S ISO 4017 M6X12 A480 | |
| 320 | 312105-0372 | | 4 | SCREW M6S ISO 4017 M6X25 A480 | |
| 330 | 312115-0368 | | 2 | SCREW ISO4762 M6X16 A4 80 | |
| 340 | 312605-0316 | | 4 | HEXAGON NUT, M6M M6 A280 | |
| 360 | 315205-0802 | | 2 | O-RING 41,0X1,78 MM | |
| 370 | 90458-0640 | | 1 | O-RING 88,62X1,78 MM | |
| 380 | 90458-1704 | | 2 | BALL BEARING, 15X35X11 MM | |
| 390 | 90459-0094 | | 1 | O-RING 133,07X1,78 MM | |
| **Common Parts** | | | | | |
| 310 | 312105-0368 | | 3 | SCREW M6S ISO 4017 M6X16 A480 | |
| 350 | 312705-0316 | | 3 | NUT HEX. DOMED CAP MHM-6 M6 A280 | |

| Pos | Part No | UN | Qty | Description | Page No |
|---|---|---|---|---|---|

Machine Type | Group Description | Used-In | Group Number | Page No

# BENDING ROLLER



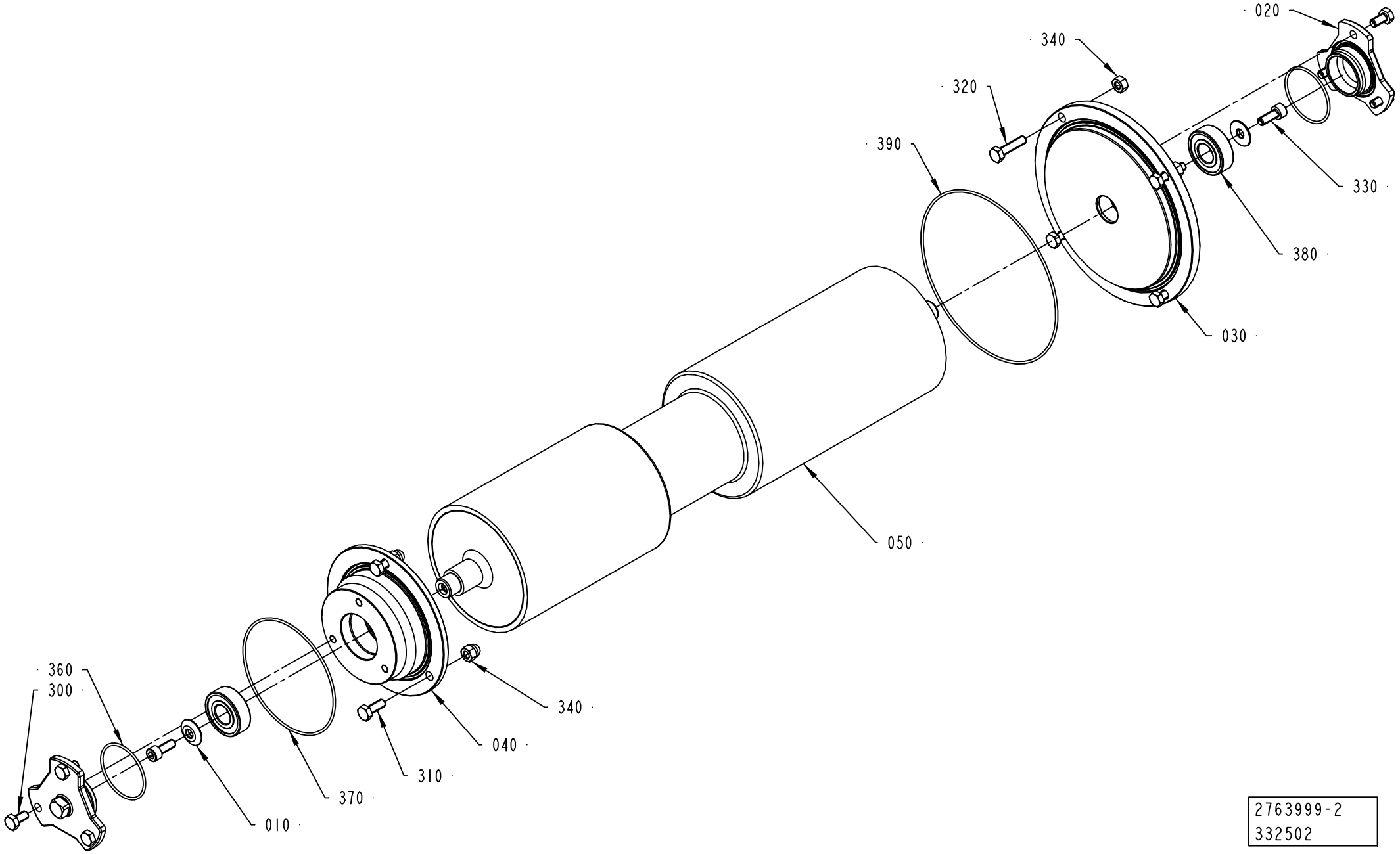


2763999-2
332502

ECM: 350776 - 20080410
Group number: 2763999-0100
Assembly Drawing: 2763999-2_1_AA

This list covers pages from 1-12 to 1-15

| Pos | Part No | UN | Qty | Description | Page No |
|---|---|---|---|---|---|
| **A3/FLEX DIMC/FLEX (See drawing on page: 1-14)** | | | | | |
| 010 | 1558768-0000 | | 2 | WASHER | |
| 020 | 2541639-0000 | | 2 | LID | |
| 030 | 2685386-0000 | | 1 | FLANGE | |
| 040 | 2685387-0000 | | 1 | FLANGE | |
| 050 | 2788602-0000 | | 1 | BENDING ROLLER | |
| 300 | 312105-0366 | | 6 | SCREW M6S ISO 4017 M6X12 A480 | |
| 320 | 312105-0372 | | 4 | SCREW M6S ISO 4017 M6X25 A480 | |
| 330 | 312115-0368 | | 2 | SCREW ISO4762 M6X16 A4 80 | |
| 340 | 312605-0316 | | 4 | HEXAGON NUT, M6M M6 A280 | |
| 360 | 315205-0802 | | 2 | O-RING 41,0X1,78 MM | |
| 370 | 90458-0640 | | 1 | O-RING 88,62X1,78 MM | |
| 380 | 90458-1704 | | 2 | BALL BEARING, 15X35X11 MM | |
| 390 | 90459-0094 | | 1 | O-RING 133,07X1,78 MM | |
| **A3/FLEX NODIMC (See drawing on page: 1-12)** | | | | | |
| 010 | 1558768-0000 | | 2 | WASHER | |
| 020 | 2541639-0000 | | 2 | LID | |
| 030 | 2685386-0000 | | 1 | FLANGE | |
| 040 | 2685387-0000 | | 1 | FLANGE | |
| 050 | 2763996-0000 | | 1 | BENDING ROLLER | |
| 300 | 312105-0366 | | 6 | SCREW M6S ISO 4017 M6X12 A480 | |
| 320 | 312105-0372 | | 4 | SCREW M6S ISO 4017 M6X25 A480 | |
| 330 | 312115-0368 | | 2 | SCREW ISO4762 M6X16 A4 80 | |
| 340 | 312605-0316 | | 4 | HEXAGON NUT, M6M M6 A280 | |
| 360 | 315205-0802 | | 2 | O-RING 41,0X1,78 MM | |
| 370 | 90458-0640 | | 1 | O-RING 88,62X1,78 MM | |
| 380 | 90458-1704 | | 2 | BALL BEARING, 15X35X11 MM | |
| 390 | 90459-0094 | | 1 | O-RING 133,07X1,78 MM | |
| **Common Parts** | | | | | |
| 310 | 312105-0368 | | 3 | SCREW M6S ISO 4017 M6X16 A480 | |
| 350 | 312705-0316 | | 3 | NUT HEX. DOMED CAP MHM-6 M6 A280 | |

| Pos | Part No | UN | Qty | Description | Page No |
|---|---|---|---|---|---|

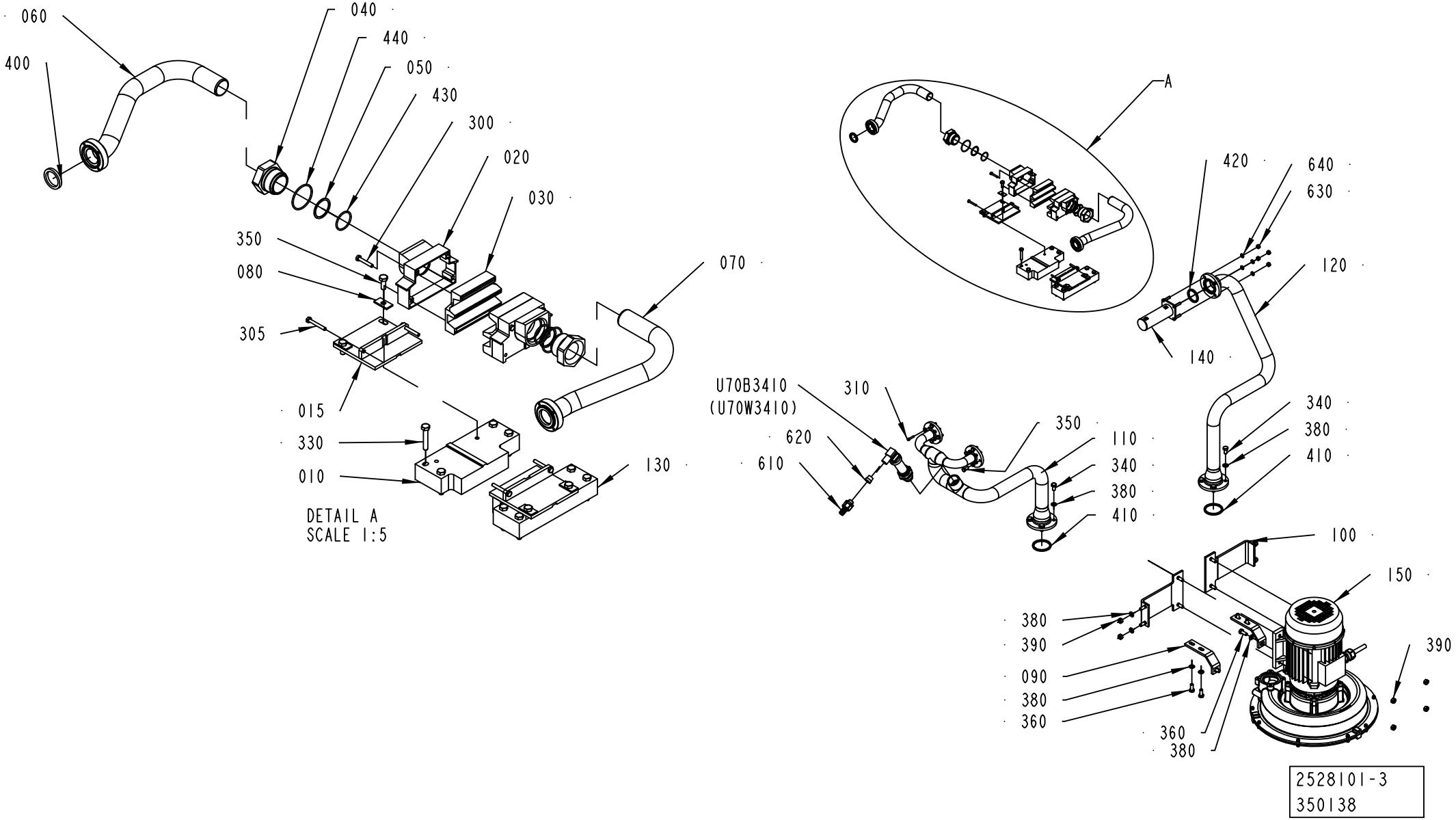
060
400
040
440
050
430
300
020
030
350
080
305
015
330
010
070
130
DETAIL A
SCALE 1:5
A
420
640
630
120
140
340
380
410
U70B3410
(U70W3410)
310
620
610
350
110
340
380
410
100
150
380
390
090
380
360
390
360
380
2528101-3
350138

ECM: 353196 - 20081003
Group number: 2528101-0200
Assembly Drawing: 2528101-3_1_AB

| Pos | Part No | UN | Qty | Description | Page No |
|---|---|---|---|---|---|
| **LIGHTCAP** | | | | | |
| 030 | 2811776-0000 | | 2 | NOZZLE | |
| **STDA7 CAP** | | | | | |
| 030 | 2565483-0000 | | 2 | NOZZLE | |
| **Common Parts** | | | | | |
| 010 | 2805966-0000 | | 1 | PLATE | |
| 015 | 2815344-0000 | | 2 | HOLDER | |
| 020 | 2805980-0000 | | 2 | BOX | |
| 040 | 2805982-0000 | | 2 | SLEEVE | |
| 050 | 2805981-0000 | | 2 | CONNECTION | |
| 060 | 2833129-0000 | | 1 | PIPE | |
| 070 | 2833128-0000 | | 1 | PIPE | |
| 080 | 2616236-0000 | | 4 | WASHER | |
| 090 | 2616238-0000 | | 2 | HOLDER | |
| 100 | 2616239-0000 | | 2 | HOLDER | |
| 110 | 2846554-0000 | | 1 | PIPE | |
| 120 | 2837107-0000 | | 1 | PIPE | |
| 130 | 2805965-0000 | | 1 | PLATE | |
| 140 | 2808422-0000 | | 1 | FILTER | |
| 150 | 1523691-0200 | | 1 | BLOWING DEVICE ..... | **1-19** |
| 300 | 312105-0297 | | 4 | SCREW M6S ISO 4017 M4X25 A470 | |
| 305 | 312105-0299 | | 4 | SCREW M6S ISO 4017 M4X30 A470 | |
| 310 | 312115-0295 | | 8 | SCREW ISO4762 M4X20 A4 80 | |
| 330 | 312105-0376 | | 8 | SCREW M6S ISO 4014 M6X35 A480 | |
| 340 | 312105-0449 | | 8 | SCREW M6S ISO 4017 M8X16 A480 | |
| 350 | 312105-0368 | | 12 | SCREW M6S ISO 4017 M6X16 A480 | |
| 360 | 312105-0451 | | 6 | SCREW M6S ISO 4017 M8X20 A480 | |
| 380 | 315105-0165 | | 22 | WASHER BRB 8,4X16 RFR | |
| 390 | 312605-0318 | | 8 | HEXAGON NUT, M6M M8 A280 | |
| 400 | 315229-0103 | | 2 | GASKETS, 23,1X30,1X3,7 MM 1" FDA | |
| 410 | 315229-0105 | | 2 | GASKETS, 48,5X55,5X3,7 MM 2" FDA | |
| 420 | 315229-0104 | | 1 | GASKETS, 35,8X42,8X3,7 MM 1"1/2 FD | |
| 430 | 315207-0710 | | 2 | O-RING 25,12X1,78 MM | |
| 440 | 315207-0716 | | 2 | O-RING 34,65X1,78 MM | |
| 610 | 353243-0001 | | 1 | HOSE GLAND W/O INSERT PG9 EXTENDED | |
| 620 | 353249-0009 | | 1 | INSERT, SINGLE HOLE, EK 152/9 | |
| 630 | 312605-0316 | | 4 | HEXAGON NUT, M6M M6 A280 | |
| 640 | 315105-0153 | | 4 | WASHER BRB 6,4X12 RFR | |
| U70B3410 | 90459-0689 | | 1 | PRESSURE TRANSMITTER 0 - 0,6 BAR | |
| U70W3410 | 351150-0403 | MM | 2500 | CABLE OLFLEX 3X0,75 MM2 LIGHT/GREY | |

| Pos | Part No | UN | Qty | Description | Page No |
|---|---|---|---|---|---|

Machine Type | Group Description | Used-In | Group Number | Page No

# BLOWING DEVICE



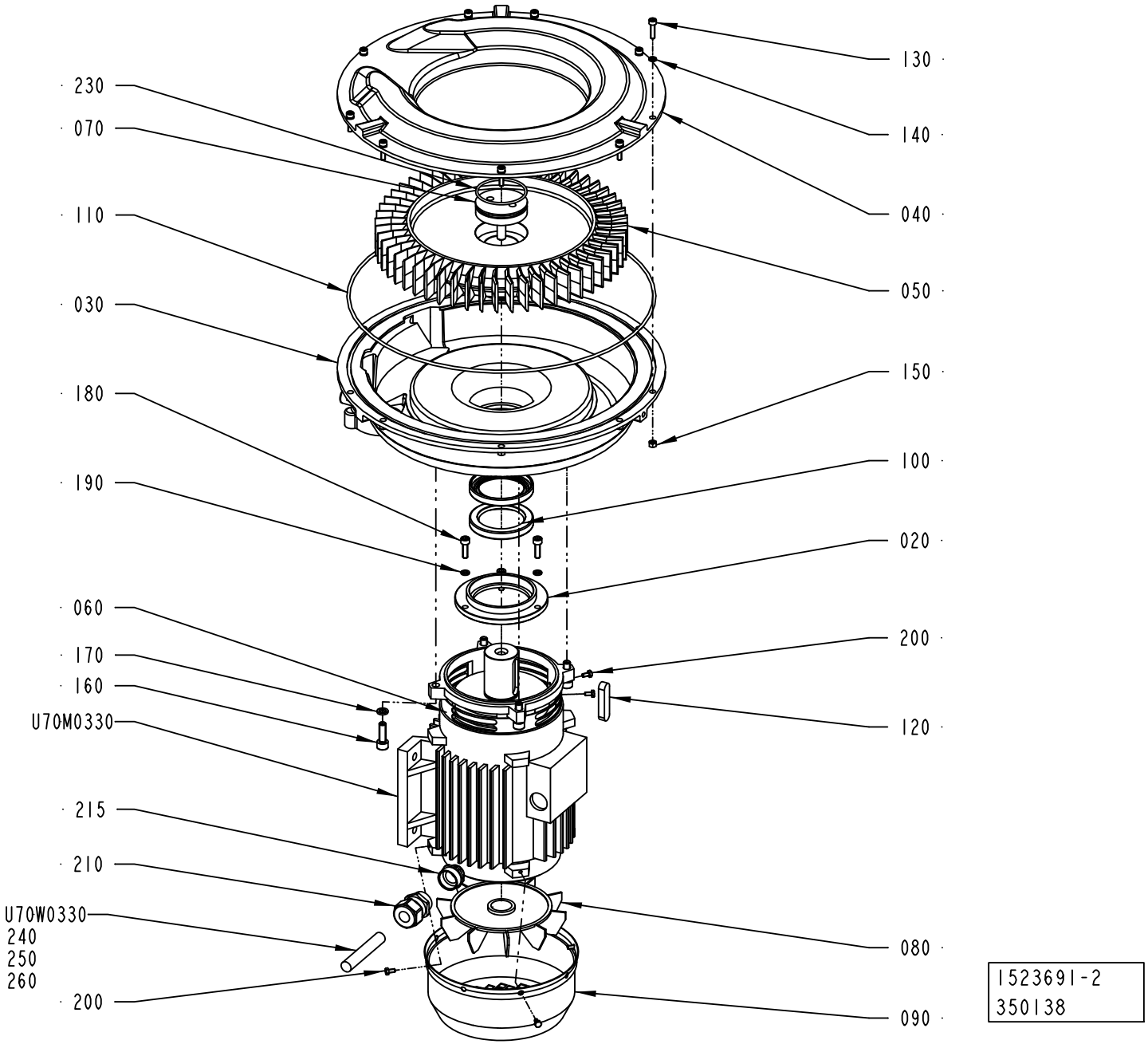

ECM: 359329 - 20081003
Group number: 1523691-0200
Assembly Drawing: 1523691-2_1_AA

| Pos | Part No | UN | Qty | Description | Page No |
|---|---|---|---|---|---|
| - | | | | | |
| 020 | 2503634-0000 | | 1 | BEARING FLANGE | |
| 030 | 1523687-0000 | | 1 | PUMP BODY | |
| 040 | 1523686-0000 | | 1 | LID | |
| 050 | 1523685-0000 | | 1 | IMPELLER | |
| 060 | 2503635-0000 | | 1 | SHIELD | |
| 070 | 2503636-0000 | | 1 | STOP SCREW | |
| 080 | 2503637-0000 | | 1 | FAN | |
| 090 | 2503638-0000 | | 1 | FAN HOUSING | |
| 100 | 90459-0802 | | 2 | RADIAL SEAL 55X75X10 MM | |
| 110 | 90459-0803 | | 1 | O-RING 355,19X3,53 MM | |
| 120 | 315705-0334 | | 1 | PARALLEL KEY W. ROUND ENDS 12X8X50 MM | |
| 130 | 312115-0331 | | 9 | SCREW ISO4762 M5X20 A4 80 | |
| 140 | 90062-0029 | | 9 | LOCK WASHER 5,1X 8,6, T= 1,5 DIN 7980 | |
| 150 | 312605-0314 | | 9 | HEXAGON NUT, M6M M5 A280 | |
| 160 | 312115-0453 | | 4 | SCREW ISO4762 M8X25 A4 80 | |
| 170 | 90062-0031 | | 4 | LOCK WASHER 8,2X12,8; T=2 DIN 7980 | |
| 180 | 312115-0370 | | 3 | SCREW ISO4762 M6X20 A4 80 | |
| 190 | 90062-0030 | | 3 | LOCK WASHER 6,1X9,7; T=1,5 DIN 7980 | |
| 200 | 312105-0287 | | 6 | SCREW M6S ISO 4017 M4X8 A470 | |
| 210 | 90458-0440 | | 1 | GLAND, EXTENDED WITH INSERT, M25X1,5 | |
| 215 | 90459-2323 | | 1 | REDUCER, M25/M20 | |
| 230 | 315202-0739 | | 1 | O-RING 55,25X2,62 MM | |
| 240 | 90600-3817 | | 1 | HOOD TOP ENTRY, 19 30 006 0446 | |
| 250 | 90110-0052 | | 1 | MALE INSERT HAN 6E 09 33 006 2601 | |
| 260 | 90458-0308 | | 1 | CABLE GLAND, M25X1,5, NO.5311 1030 | |
| U70M0330 | 90459-0804 | | 1 | MOTOR B3/B5 CE CODE: 159353 | |
| | *90459-3854* | | *1* | *ANG. BALL BEAR, 45X85X30,2 MM* | |
| U70W0330 | 90220-0105 | M | 6 | SCR. CABLE 4X2,5MM2 | |

| Pos | Part No | UN | Qty | Description | Page No |
|---|---|---|---|---|---|

| Machine Type | Group Description | Used-In | Group Number | Page No |
|---|---|---|---|---|

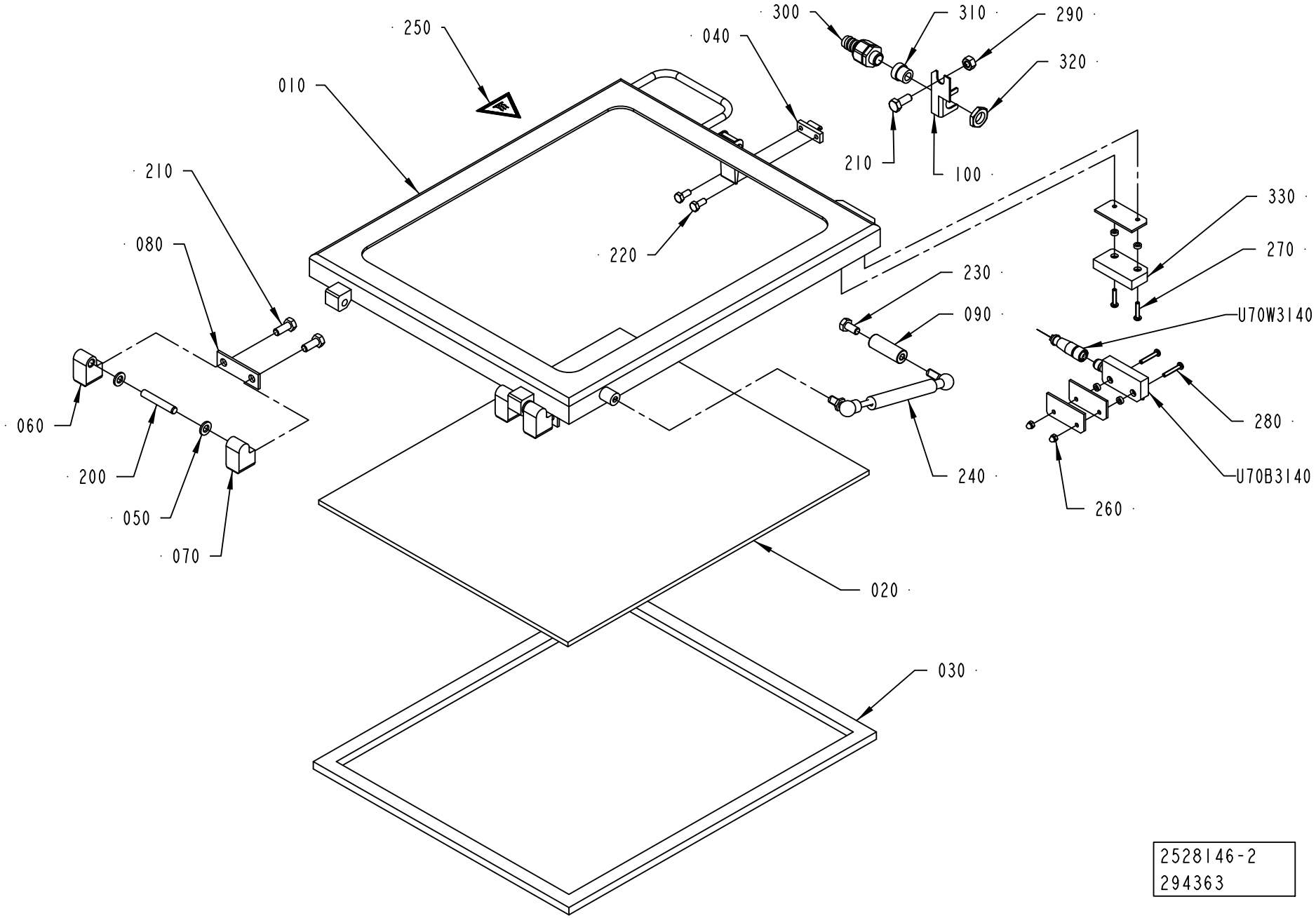
250
010
040
300
310
290
320
210
100
210
080
220
330
270
230
090
U70W3140
060
200
050
070
240
280
U70B3140
260
020
030
2528146-2
294363

ECM: 294363 - 20070704
Group number: 2528146-0200
Assembly Drawing: 2528146-2_1_AA

| Pos | Part No | UN | Qty | Description | Page No |
|---|---|---|---|---|---|
| - | | | | | |
| 010 | 2783060-0000 | | 1 | WINDOW FRAME | |
| 020 | 2874749-0000 | | 1 | GLASS PANE | |
| 030 | 2531045-0000 | | 1 | GASKET | |
| 040 | 271860-0000 | | 1 | CLAMP BLOCK | |
| 050 | 441739-0000 | | 4 | WASHER | |
| 060 | 1041979-0000 | | 2 | HINGE FLANGE | |
| 070 | 1041978-0000 | | 2 | HINGE FLANGE | |
| 080 | 441737-0000 | | 2 | WASHER | |
| 090 | 1548877-0000 | | 1 | SPACER | |
| 100 | 1036610-0000 | | 1 | BRACKET | |
| 200 | 311103-0413 | | 2 | PARALLEL PIN ISO 2338 8M6X50 A1 | |
| 210 | 312105-0451 | | 5 | SCREW M6S ISO 4017 M8X20 A480 | |
| 220 | 312105-0368 | | 2 | SCREW M6S ISO 4017 M6X16 A480 | |
| 230 | 312105-0449 | | 2 | SCREW M6S ISO 4017 M8X16 A480 | |
| 240 | 90347-0039 | | 2 | DAMPER | |
| 250 | 359705-0007 | | 1 | WARNING SIGN ISO, HOT SURFACE | |
| 260 | 312705-0312 | | 2 | NUT HEX. DOMED CAP MHM-6 M4 A280 | |
| 270 | 90459-4164 | | 2 | SAFETY SCREW SM4X20, 20-053-42 | |
| 280 | 90459-4165 | | 2 | SAFETY SCREW, 20-053-43 SM4X25 | |
| 290 | 312605-0318 | | 1 | HEXAGON NUT, M6M M8 A280 | |
| 300 | 353243-0001 | | 1 | HOSE GLAND W/O INSERT PG9 EXTENDED | |
| 310 | 353249-0009 | | 1 | INSERT, SINGLE HOLE, EK 152/9 | |
| 320 | 90099-0104 | | 1 | NUT, PR 15,2 (PG9) | |
| 330 | 90458-2794 | | 1 | SAFETY SENSOR, NON-CONTACT EVA | |
| U70B3140 | 90459-4142 | | 1 | SAFETY SENSOR, 20-051-00 ADAM | |
| U70W3140 | 90459-4252 | | 1 | CABLE M12-C101, 20-056-10 | |

| Pos | Part No | UN | Qty | Description | Page No |
|---|---|---|---|---|---|

# FRAME HOUSING



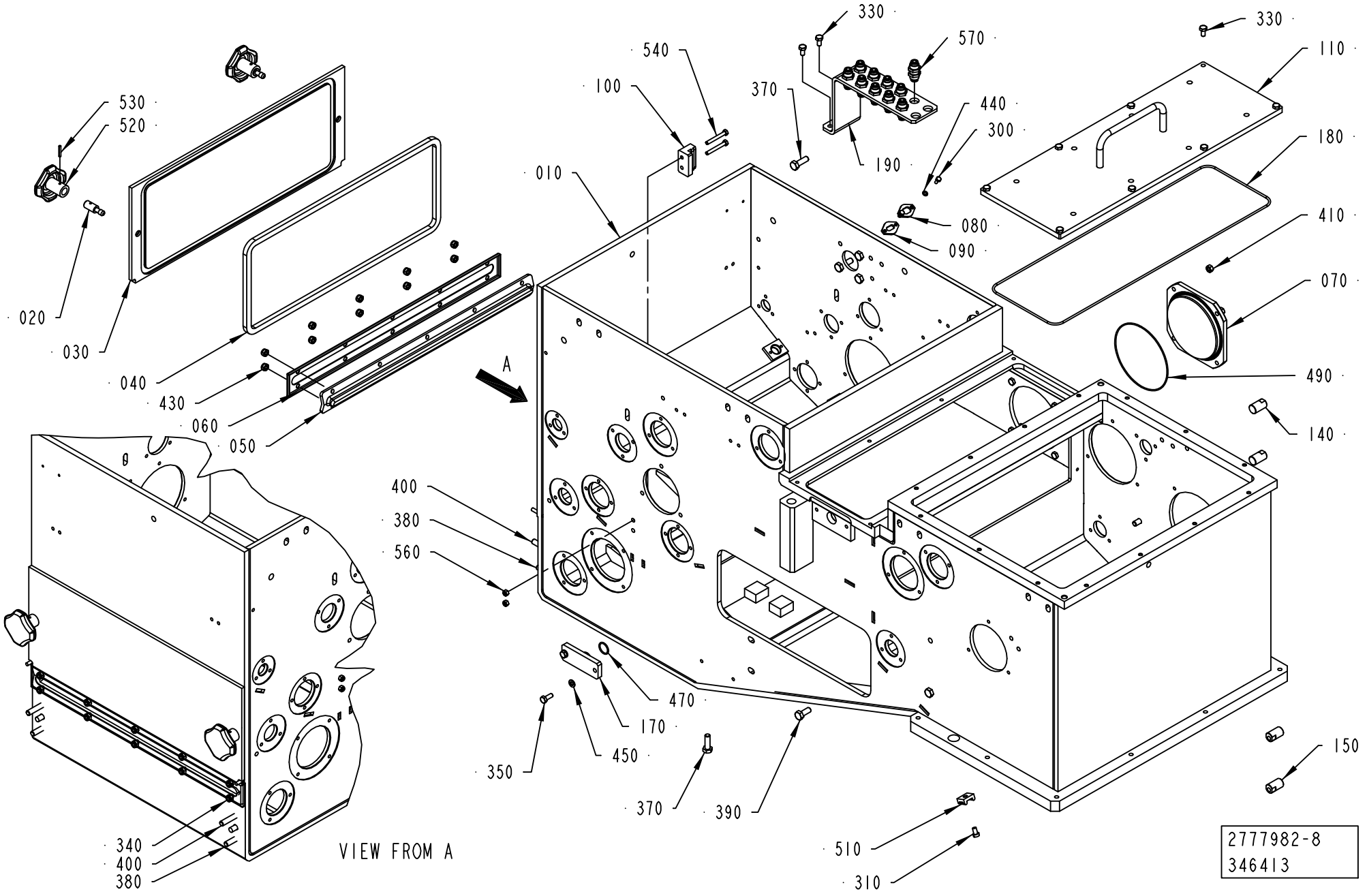

ECM: 353201 - 20081003
Group number: 2777982-0100
Assembly Drawing: 2777982-8_1_AB

This list covers pages from 1-22 to 1-25

| Pos | Part No | UN | Qty | Description | Page No |
|---|---|---|---|---|---|
| **LIGHTCAP (See drawing on page: 1-22)** | | | | | |
| 100 | 2946898-0000 | | 2 | CHAIN GUIDE | |
| 340 | 312105-0370 | | 14 | SCREW M6S ISO 4017 M6X20 A480 | |
| 410 | 312605-0316 | | 4 | HEXAGON NUT, M6M M6 A280 | |
| **NOMOLDEDCAP (See drawing on page: 1-24)** | | | | | |
| 100 | 2894568-0000 | | 2 | CHAIN GUIDE | |
| 130 | 2531055-0000 | | 1 | PLUG | |
| 160 | 2531054-0000 | | 1 | PLUG | |
| 320 | 312105-0362 | | 8 | SCREW M6S ISO 4017 M6X8 A480 | |
| 340 | 312105-0370 | | 18 | SCREW M6S ISO 4017 M6X20 A480 | |
| 410 | 312605-0316 | | 8 | HEXAGON NUT, M6M M6 A280 | |
| 420 | 312605-0318 | | 4 | HEXAGON NUT, M6M M8 A280 | |
| 480 | 315205-0802 | | 1 | O-RING 41,0X1,78 MM | |
| 500 | 315229-0104 | | 1 | GASKETS, 35,8X42,8X3,7 MM 1"1/2 FD | |
| **STDA7 CAP (See drawing on page: 1-22)** | | | | | |
| 100 | 2894568-0000 | | 2 | CHAIN GUIDE | |
| 340 | 312105-0370 | | 14 | SCREW M6S ISO 4017 M6X20 A480 | |
| 410 | 312605-0316 | | 4 | HEXAGON NUT, M6M M6 A280 | |
| **Common Parts** | | | | | |
| 010 | 2867460-0000 | | 1 | HOUSING | |
| 020 | 1036475-0000 | | 2 | PIN | |
| 030 | 1499168-0000 | | 1 | LID | |
| 040 | 1499169-0000 | | 1 | GASKET | |
| 050 | 1499170-0000 | | 1 | GASKET | |
| 060 | 1499171-0000 | | 1 | LID | |
| 070 | 2867461-0000 | | 1 | LID | |
| 080 | 2528133-0000 | | 2 | WASHER | |
| 090 | 2528134-0000 | | 2 | GASKET | |
| 110 | 2874770-0000 | | 1 | COVER PLATE | |
| 140 | 2758079-0000 | | 2 | BLOCK | |
| 150 | 2758080-0000 | | 2 | BLOCK | |
| 170 | 2874691-0000 | | 1 | BLANK PLATE | |
| 180 | 90600-2726 | | 1 | O-RING 385X3 MM | |
| 190 | 2957452-0000 | | 1 | BRACKET | |
| 300 | 312105-0289 | | 4 | SCREW M6S H4X10 A4 70 ISO4017/DIN933 | |
| 310 | 312125-0364 | | 6 | SCREW ISO 1207 M6X10 A4 | |
| 330 | 312105-0366 | | 10 | SCREW M6S ISO 4017 M6X12 A480 | |
| 350 | 312105-0368 | | 2 | SCREW M6S ISO 4017 M6X16 A480 | |
| 370 | 312105-0453 | | 7 | SCREW M6S ISO 4017 M8X25 A480 | |
| 380 | 312105-0455 | | 2 | SCREW M6S ISO 4017 M8X30 A480 | |
| 390 | 312105-0451 | | 4 | SCREW M6S ISO 4017 M8X20 A480 | |
| 400 | 312109-0459 | | 2 | SCREW M6S ISO 4017 M8X40 A480 | |
| 430 | 312812-0316 | | 10 | HEXAGON NUT, NY-LOCK M6 A480 | |
| 440 | 315105-0136 | | 4 | WASHER BRB 4,3X8 RFR | |
| 450 | 315105-0153 | | 2 | WASHER BRB 6,4X12 RFR | |
| 470 | 315205-0705 | | 1 | O-RING 17,17X1,78 MM | |
| 490 | 90459-1627 | | 1 | O-RING 114,02X1,78 MM | |
| 510 | 352113-0204 | | 6 | ANCHOR PLATES FOR STRIPS, TYPE TM3S25-M | |
| 520 | 90051-0045 | | 2 | STELLAR KNOB, NO. 8323-257 | |
| 530 | 90258-0031 | | 2 | PIN, STRAIGHT SLOTTED SPRING FRP 3X20 | |
| 540 | 312105-0339 | | 4 | SCREW M6S ISO 4014 M5X40 A480 | |
| 560 | 312605-0314 | | 4 | HEXAGON NUT, M6M M5 A280 | |
| 570 | 350010-0002 | | 10 | PUSH-IN BULKHEAD FITTING QSS-F-6 | |

Machine Type | Group Description | Used-In | Group Number | Page No

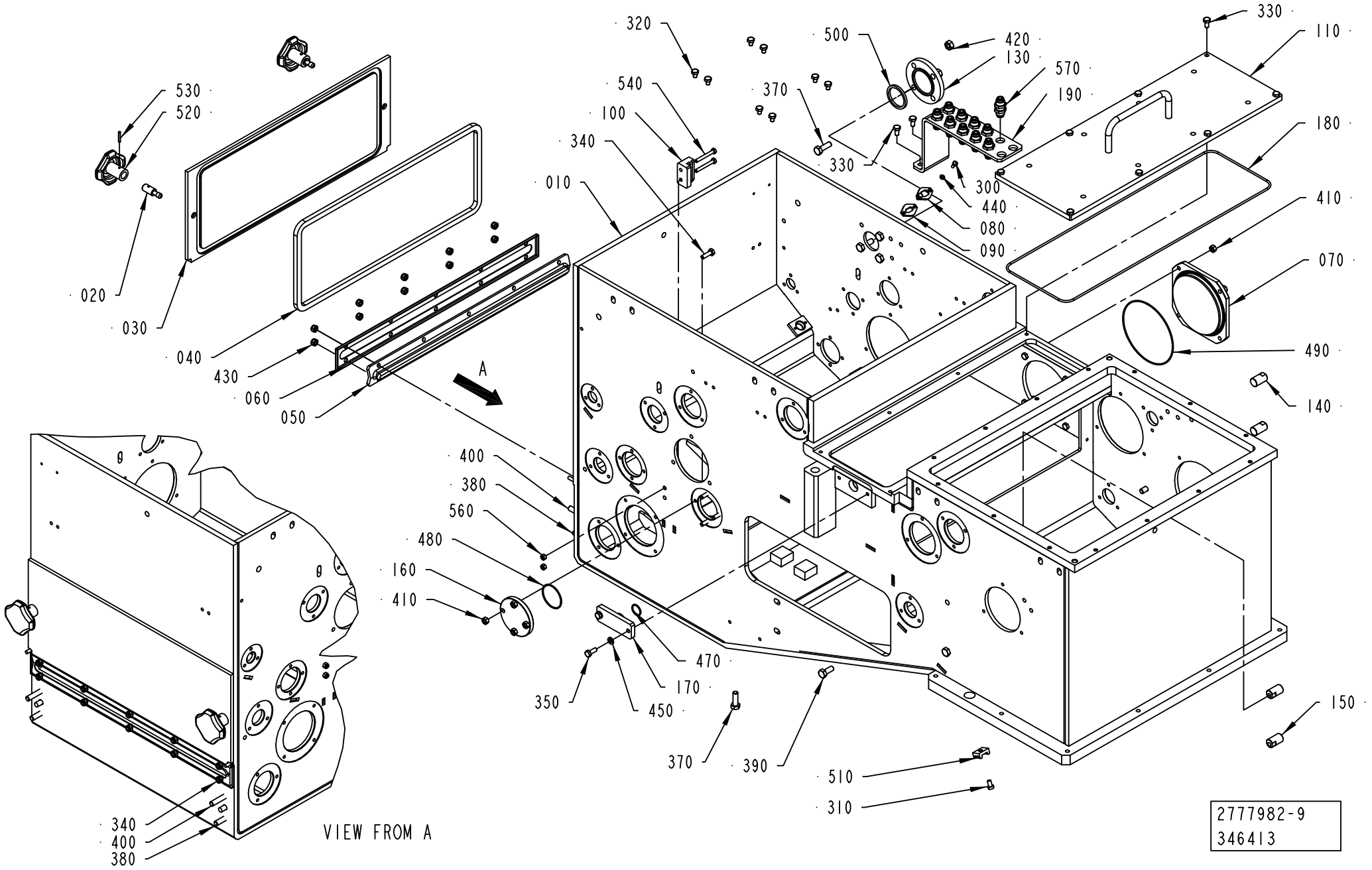
530
520
020
030
040
430
060
050
320
540
100
340
010
500
420
130
570
190
370
330
300
440
080
090
330
110
180
410
070
490
140
150
400
380
560
480
160
410
470
170
450
350
370
390
510
310
A
VIEW FROM A
340
400
380
2777982-9
346413

ECM: 353201 - 20081003
Group number: 2777982-0100
Assembly Drawing: 2777982-9_1_AB

This list covers pages from 1-22 to 1-25

| Pos | Part No | UN | Qty | Description | Page No |
|---|---|---|---|---|---|
| **LIGHTCAP (See drawing on page: 1-22)** | | | | | |
| 100 | 2946898-0000 | | 2 | CHAIN GUIDE | |
| 340 | 312105-0370 | | 14 | SCREW M6S ISO 4017 M6X20 A480 | |
| 410 | 312605-0316 | | 4 | HEXAGON NUT, M6M M6 A280 | |
| **NOMOLDEDCAP (See drawing on page: 1-24)** | | | | | |
| 100 | 2894568-0000 | | 2 | CHAIN GUIDE | |
| 130 | 2531055-0000 | | 1 | PLUG | |
| 160 | 2531054-0000 | | 1 | PLUG | |
| 320 | 312105-0362 | | 8 | SCREW M6S ISO 4017 M6X8 A480 | |
| 340 | 312105-0370 | | 18 | SCREW M6S ISO 4017 M6X20 A480 | |
| 410 | 312605-0316 | | 8 | HEXAGON NUT, M6M M6 A280 | |
| 420 | 312605-0318 | | 4 | HEXAGON NUT, M6M M8 A280 | |
| 480 | 315205-0802 | | 1 | O-RING 41,0X1,78 MM | |
| 500 | 315229-0104 | | 1 | GASKETS, 35,8X42,8X3,7 MM 1"1/2 FD | |
| **STDA7 CAP (See drawing on page: 1-22)** | | | | | |
| 100 | 2894568-0000 | | 2 | CHAIN GUIDE | |
| 340 | 312105-0370 | | 14 | SCREW M6S ISO 4017 M6X20 A480 | |
| 410 | 312605-0316 | | 4 | HEXAGON NUT, M6M M6 A280 | |
| **Common Parts** | | | | | |
| 010 | 2867460-0000 | | 1 | HOUSING | |
| 020 | 1036475-0000 | | 2 | PIN | |
| 030 | 1499168-0000 | | 1 | LID | |
| 040 | 1499169-0000 | | 1 | GASKET | |
| 050 | 1499170-0000 | | 1 | GASKET | |
| 060 | 1499171-0000 | | 1 | LID | |
| 070 | 2867461-0000 | | 1 | LID | |
| 080 | 2528133-0000 | | 2 | WASHER | |
| 090 | 2528134-0000 | | 2 | GASKET | |
| 110 | 2874770-0000 | | 1 | COVER PLATE | |
| 140 | 2758079-0000 | | 2 | BLOCK | |
| 150 | 2758080-0000 | | 2 | BLOCK | |
| 170 | 2874691-0000 | | 1 | BLANK PLATE | |
| 180 | 90600-2726 | | 1 | O-RING 385X3 MM | |
| 190 | 2957452-0000 | | 1 | BRACKET | |
| 300 | 312105-0289 | | 4 | SCREW M6S H4X10 A4 70 ISO4017/DIN933 | |
| 310 | 312125-0364 | | 6 | SCREW ISO 1207 M6X10 A4 | |
| 330 | 312105-0366 | | 10 | SCREW M6S ISO 4017 M6X12 A480 | |
| 350 | 312105-0368 | | 2 | SCREW M6S ISO 4017 M6X16 A480 | |
| 370 | 312105-0453 | | 7 | SCREW M6S ISO 4017 M8X25 A480 | |
| 380 | 312105-0455 | | 2 | SCREW M6S ISO 4017 M8X30 A480 | |
| 390 | 312105-0451 | | 4 | SCREW M6S ISO 4017 M8X20 A480 | |
| 400 | 312109-0459 | | 2 | SCREW M6S ISO 4017 M8X40 A480 | |
| 430 | 312812-0316 | | 10 | HEXAGON NUT, NY-LOCK M6 A480 | |
| 440 | 315105-0136 | | 4 | WASHER BRB 4,3X8 RFR | |
| 450 | 315105-0153 | | 2 | WASHER BRB 6,4X12 RFR | |
| 470 | 315205-0705 | | 1 | O-RING 17,17X1,78 MM | |
| 490 | 90459-1627 | | 1 | O-RING 114,02X1,78 MM | |
| 510 | 352113-0204 | | 6 | ANCHOR PLATES FOR STRIPS, TYPE TM3S25-M | |
| 520 | 90051-0045 | | 2 | STELLAR KNOB, NO. 8323-257 | |
| 530 | 90258-0031 | | 2 | PIN, STRAIGHT SLOTTED SPRING FRP 3X20 | |
| 540 | 312105-0339 | | 4 | SCREW M6S ISO 4014 M5X40 A480 | |
| 560 | 312605-0314 | | 4 | HEXAGON NUT, M6M M5 A280 | |
| 570 | 350010-0002 | | 10 | PUSH-IN BULKHEAD FITTING QSS-F-6 | |

| Machine Type | Group Description | Used-In | Group Number | Page No |
|---|---|---|---|---|

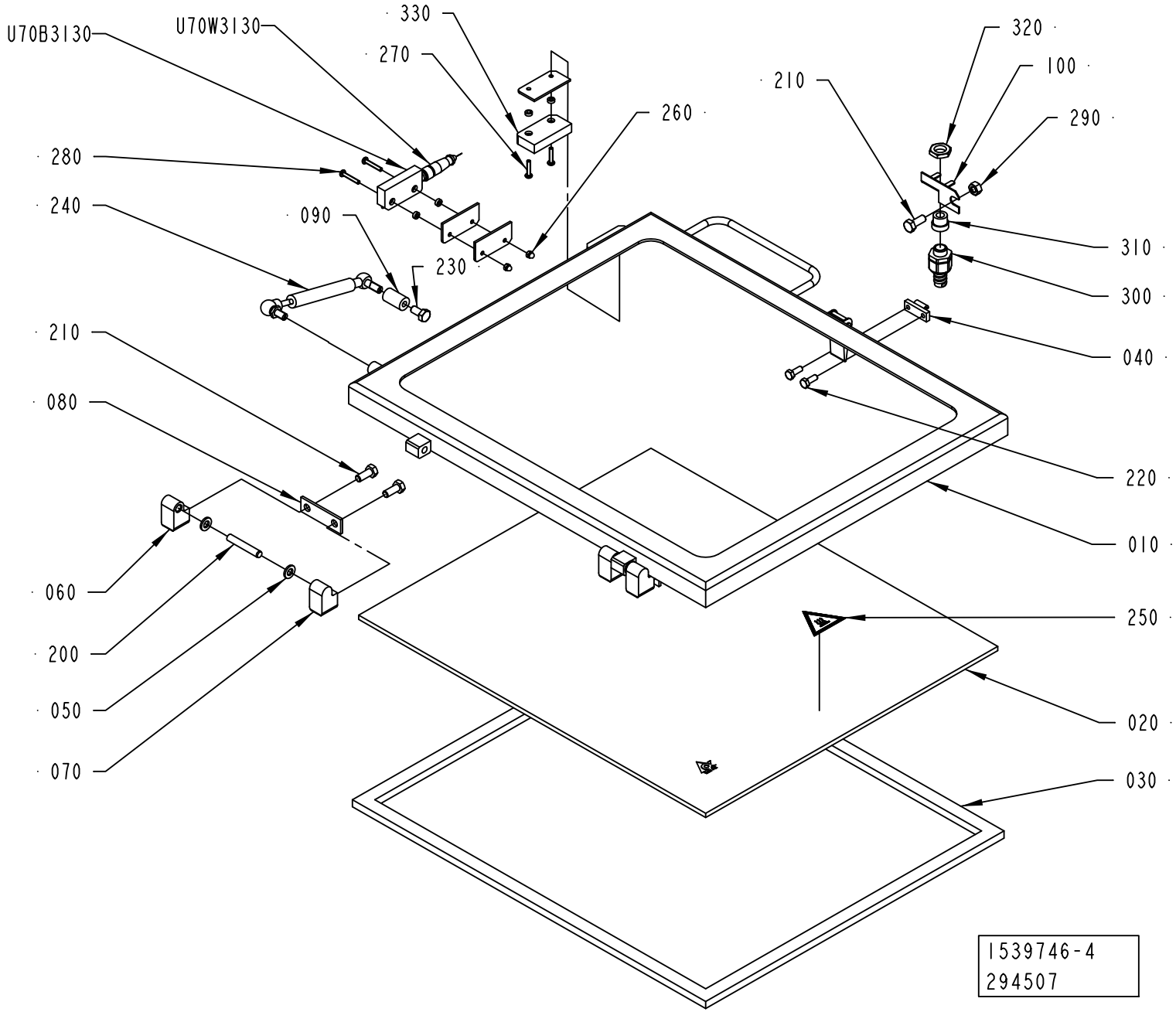
U70B3130
U70W3130
330
270
260
320
100
290
210
280
240
090
230
310
300
040
210
080
220
010
060
250
200
050
020
070
030
1539746-4
294507

ECM: 294563 - 20070704
Group number: 1539746-0300
Assembly Drawing: 1539746-4_1_AA

| Pos | Part No | UN | Qty | Description | Page No |
|---|---|---|---|---|---|
| - | | | | | |
| 010 | 2867472-0000 | | 1 | FRAME | |
| 020 | 2867473-0000 | | 1 | GLASS PANE | |
| 030 | 2867474-0000 | | 1 | GASKET | |
| 040 | 271860-0000 | | 1 | CLAMP BLOCK | |
| 050 | 441739-0000 | | 4 | WASHER | |
| 060 | 1041979-0000 | | 2 | HINGE FLANGE | |
| 070 | 1041978-0000 | | 2 | HINGE FLANGE | |
| 080 | 441737-0000 | | 2 | WASHER | |
| 090 | 1037089-0000 | | 1 | SPACER | |
| 100 | 1036610-0000 | | 1 | BRACKET | |
| 200 | 311103-0413 | | 2 | PARALLEL PIN ISO 2338 8M6X50 A1 | |
| 210 | 312105-0451 | | 5 | SCREW M6S ISO 4017 M8X20 A480 | |
| 220 | 312105-0368 | | 2 | SCREW M6S ISO 4017 M6X16 A480 | |
| 230 | 312105-0449 | | 1 | SCREW M6S ISO 4017 M8X16 A480 | |
| 240 | 90347-0039 | | 1 | DAMPER | |
| 250 | 359705-0007 | | 1 | WARNING SIGN ISO, HOT SURFACE | |
| 260 | 312705-0312 | | 2 | NUT HEX. DOMED CAP MHM-6 M4 A280 | |
| 270 | 90459-4164 | | 2 | SAFETY SCREW SM4X20, 20-053-42 | |
| 280 | 90459-4165 | | 2 | SAFETY SCREW, 20-053-43 SM4X25 | |
| 290 | 312605-0318 | | 1 | HEXAGON NUT, M6M M8 A280 | |
| 300 | 353243-0001 | | 1 | HOSE GLAND W/O INSERT PG9 EXTENDED | |
| 310 | 353249-0009 | | 1 | INSERT, SINGLE HOLE, EK 152/9 | |
| 320 | 90099-0104 | | 1 | NUT, PR 15,2 (PG9) | |
| 330 | 90458-2794 | | 1 | SAFETY SENSOR, NON-CONTACT EVA | |
| U70B3130 | 90459-4142 | | 1 | SAFETY SENSOR, 20-051-00 ADAM | |
| U70W3130 | 90459-4252 | | 1 | CABLE M12-C101, 20-056-10 | |

| Pos | Part No | UN | Qty | Description | Page No |
|---|---|---|---|---|---|

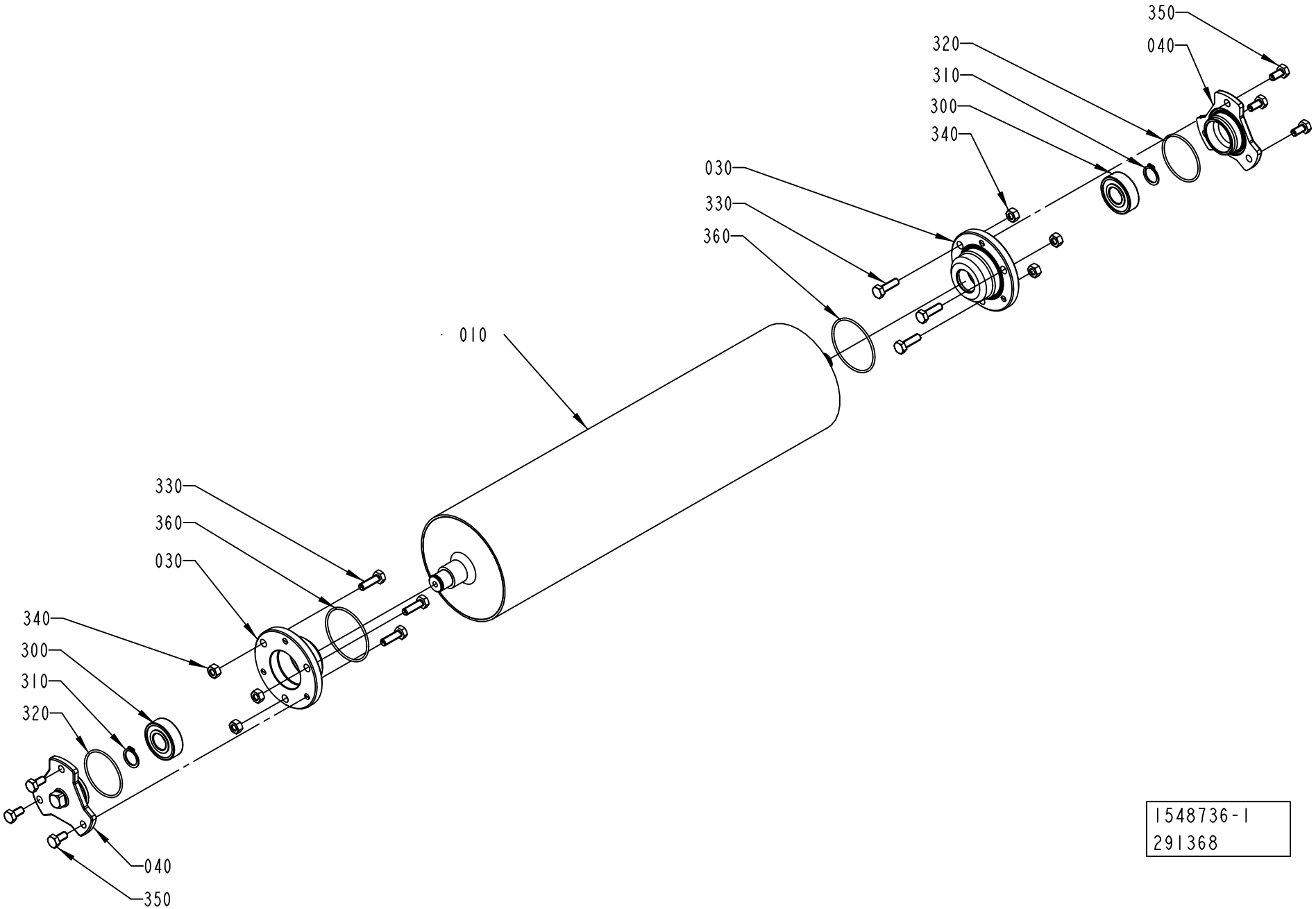
350
040
320
310
300
340
030
330
360
010
330
360
030
340
300
310
320
040
350
1548736-1
291368

ECM: 359120 - 20081002
Group number: 1548736-0100
Assembly Drawing: 1548736-1_1_AC

This list covers pages from 1-28 to 1-35

| Pos | Part No | UN | Qty | Description | Page No |
|---|---|---|---|---|---|
| **NOMOLDEDCAP (See drawing on page: 1-28)** | | | | | |
| 010 | 2826445-0000 | | 1 | BENDING ROLLER | |
| 030 | 2552127-0000 | | 2 | FLANGE | |
| 040 | 2541639-0000 | | 2 | LID | |
| 340 | 312605-0316 | | 6 | HEXAGON NUT, M6M M6 A280 | |
| 350 | 312105-0366 | | 6 | SCREW M6S ISO 4017 M6X12 A480 | |
| **TBA 1000S LIGHTCAP (See drawing on pages: 1-32, 1-34)** | | | | | |
| 010 | 2826477-0000 | | 1 | BENDING ROLLER | |
| 030 | 2709210-0000 | | 2 | FLANGE | |
| 040 | 2709212-0000 | | 2 | LID | |
| **TBA 1000S STDA7, TBA 1000B STDA7 (See drawing on page: 1-30)** | | | | | |
| 010 | 2826477-0000 | | 1 | BENDING ROLLER | |
| 030 | 2552127-0000 | | 2 | FLANGE | |
| 040 | 2541639-0000 | | 2 | LID | |
| 340 | 312605-0316 | | 6 | HEXAGON NUT, M6M M6 A280 | |
| 350 | 312105-0366 | | 6 | SCREW M6S ISO 4017 M6X12 A480 | |
| **Common Parts** | | | | | |
| 300 | 90458-1704 | | 2 | BALL BEARING, 15X35X11 MM | |
| 310 | 315751-0112 | | 2 | RETAINING RING FOR SHAFT DIN 471 15 SS | |
| 320 | 315205-0802 | | 2 | O-RING 41,0X1,78 MM | |
| 330 | 312105-0370 | | 6 | SCREW M6S ISO 4017 M6X20 A480 | |
| 360 | 315205-0804 | | 2 | O-RING 47,35X1,78 MM | |

| Pos | Part No | UN | Qty | Description | Page No |
|---|---|---|---|---|---|

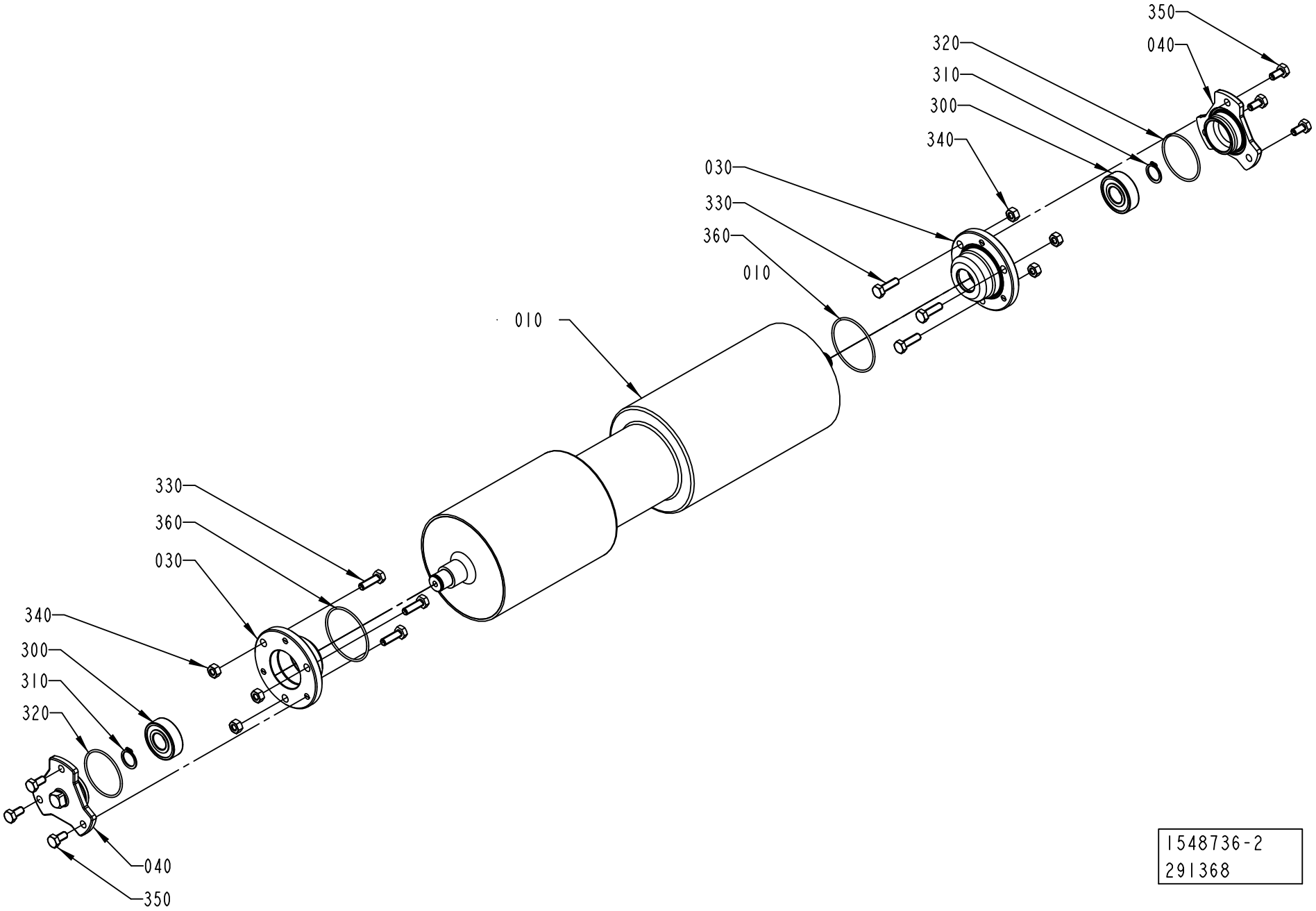


1548736-2
291368

ECM: 359120 - 20081002
Group number: 1548736-0100
Assembly Drawing: 1548736-2_1_AC

This list covers pages from 1-28 to 1-35

| Pos | Part No | UN | Qty | Description | Page No |
|---|---|---|---|---|---|
| **NOMOLDEDCAP (See drawing on page: 1-28)** | | | | | |
| 010 | 2826445-0000 | | 1 | BENDING ROLLER | |
| 030 | 2552127-0000 | | 2 | FLANGE | |
| 040 | 2541639-0000 | | 2 | LID | |
| 340 | 312605-0316 | | 6 | HEXAGON NUT, M6M M6 A280 | |
| 350 | 312105-0366 | | 6 | SCREW M6S ISO 4017 M6X12 A480 | |
| **TBA 1000S LIGHTCAP (See drawing on pages: 1-32, 1-34)** | | | | | |
| 010 | 2826477-0000 | | 1 | BENDING ROLLER | |
| 030 | 2709210-0000 | | 2 | FLANGE | |
| 040 | 2709212-0000 | | 2 | LID | |
| **TBA 1000S STDA7, TBA 1000B STDA7 (See drawing on page: 1-30)** | | | | | |
| 010 | 2826477-0000 | | 1 | BENDING ROLLER | |
| 030 | 2552127-0000 | | 2 | FLANGE | |
| 040 | 2541639-0000 | | 2 | LID | |
| 340 | 312605-0316 | | 6 | HEXAGON NUT, M6M M6 A280 | |
| 350 | 312105-0366 | | 6 | SCREW M6S ISO 4017 M6X12 A480 | |
| **Common Parts** | | | | | |
| 300 | 90458-1704 | | 2 | BALL BEARING, 15X35X11 MM | |
| 310 | 315751-0112 | | 2 | RETAINING RING FOR SHAFT DIN 471 15 SS | |
| 320 | 315205-0802 | | 2 | O-RING 41,0X1,78 MM | |
| 330 | 312105-0370 | | 6 | SCREW M6S ISO 4017 M6X20 A480 | |
| 360 | 315205-0804 | | 2 | O-RING 47,35X1,78 MM | |

| Pos | Part No | UN | Qty | Description | Page No |
|---|---|---|---|---|---|

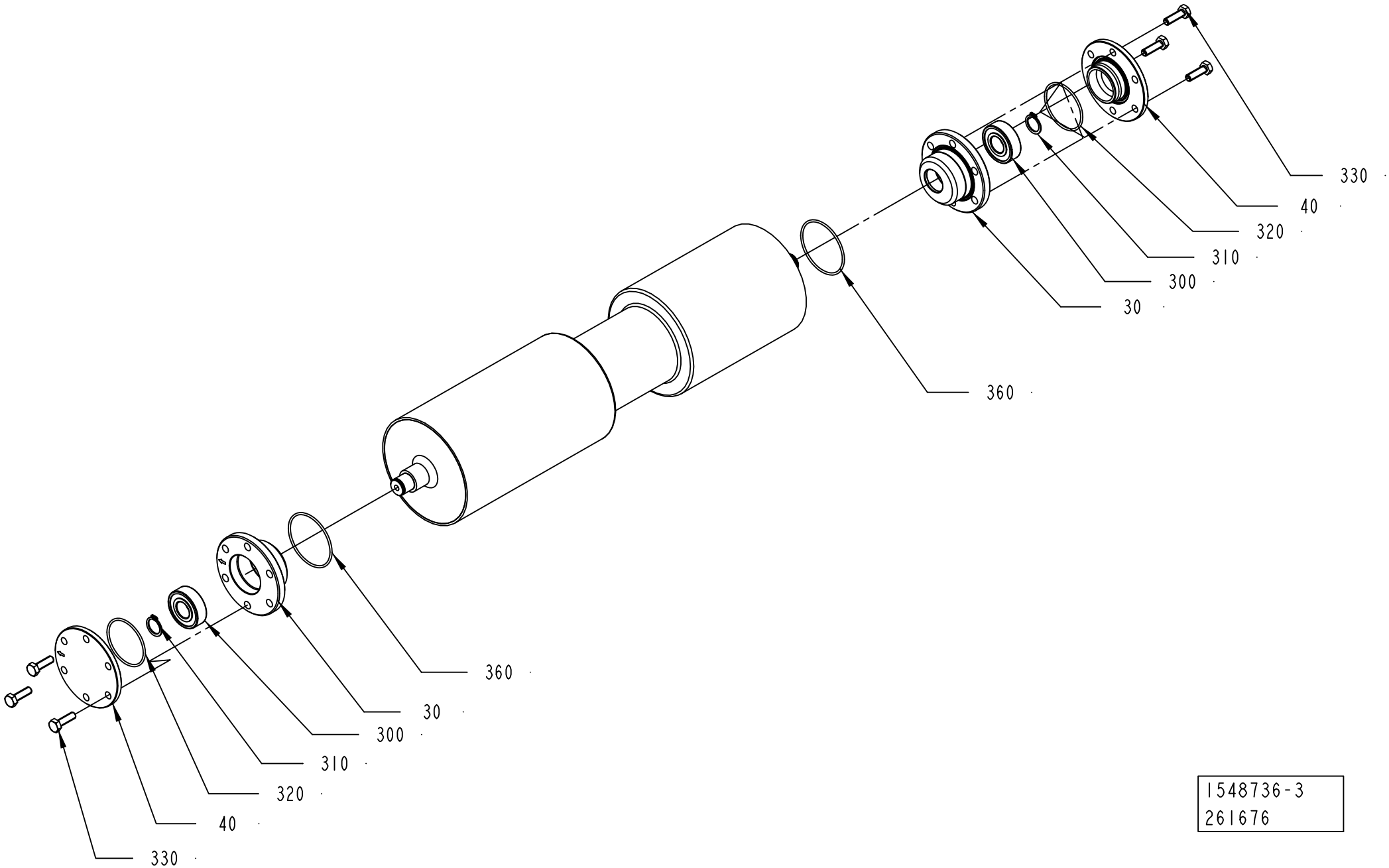
330
40
320
310
300
30
360
360
30
300
310
320
40
330
1548736-3
261676

ECM: 359120 - 20081002
Group number: 1548736-0100
Assembly Drawing: 1548736-3_1_AB

This list covers pages from 1-28 to 1-35

| Pos | Part No | UN | Qty | Description | Page No |
|---|---|---|---|---|---|
| **NOMOLDEDCAP (See drawing on page: 1-28)** | | | | | |
| 010 | 2826445-0000 | | 1 | BENDING ROLLER | |
| 030 | 2552127-0000 | | 2 | FLANGE | |
| 040 | 2541639-0000 | | 2 | LID | |
| 340 | 312605-0316 | | 6 | HEXAGON NUT, M6M M6 A280 | |
| 350 | 312105-0366 | | 6 | SCREW M6S ISO 4017 M6X12 A480 | |
| **TBA 1000S LIGHTCAP (See drawing on pages: 1-32, 1-34)** | | | | | |
| 010 | 2826477-0000 | | 1 | BENDING ROLLER | |
| 030 | 2709210-0000 | | 2 | FLANGE | |
| 040 | 2709212-0000 | | 2 | LID | |
| **TBA 1000S STDA7, TBA 1000B STDA7 (See drawing on page: 1-30)** | | | | | |
| 010 | 2826477-0000 | | 1 | BENDING ROLLER | |
| 030 | 2552127-0000 | | 2 | FLANGE | |
| 040 | 2541639-0000 | | 2 | LID | |
| 340 | 312605-0316 | | 6 | HEXAGON NUT, M6M M6 A280 | |
| 350 | 312105-0366 | | 6 | SCREW M6S ISO 4017 M6X12 A480 | |
| **Common Parts** | | | | | |
| 300 | 90458-1704 | | 2 | BALL BEARING, 15X35X11 MM | |
| 310 | 315751-0112 | | 2 | RETAINING RING FOR SHAFT DIN 471 15 SS | |
| 320 | 315205-0802 | | 2 | O-RING 41,0X1,78 MM | |
| 330 | 312105-0370 | | 6 | SCREW M6S ISO 4017 M6X20 A480 | |
| 360 | 315205-0804 | | 2 | O-RING 47,35X1,78 MM | |

| Pos | Part No | UN | Qty | Description | Page No |
|---|---|---|---|---|---|

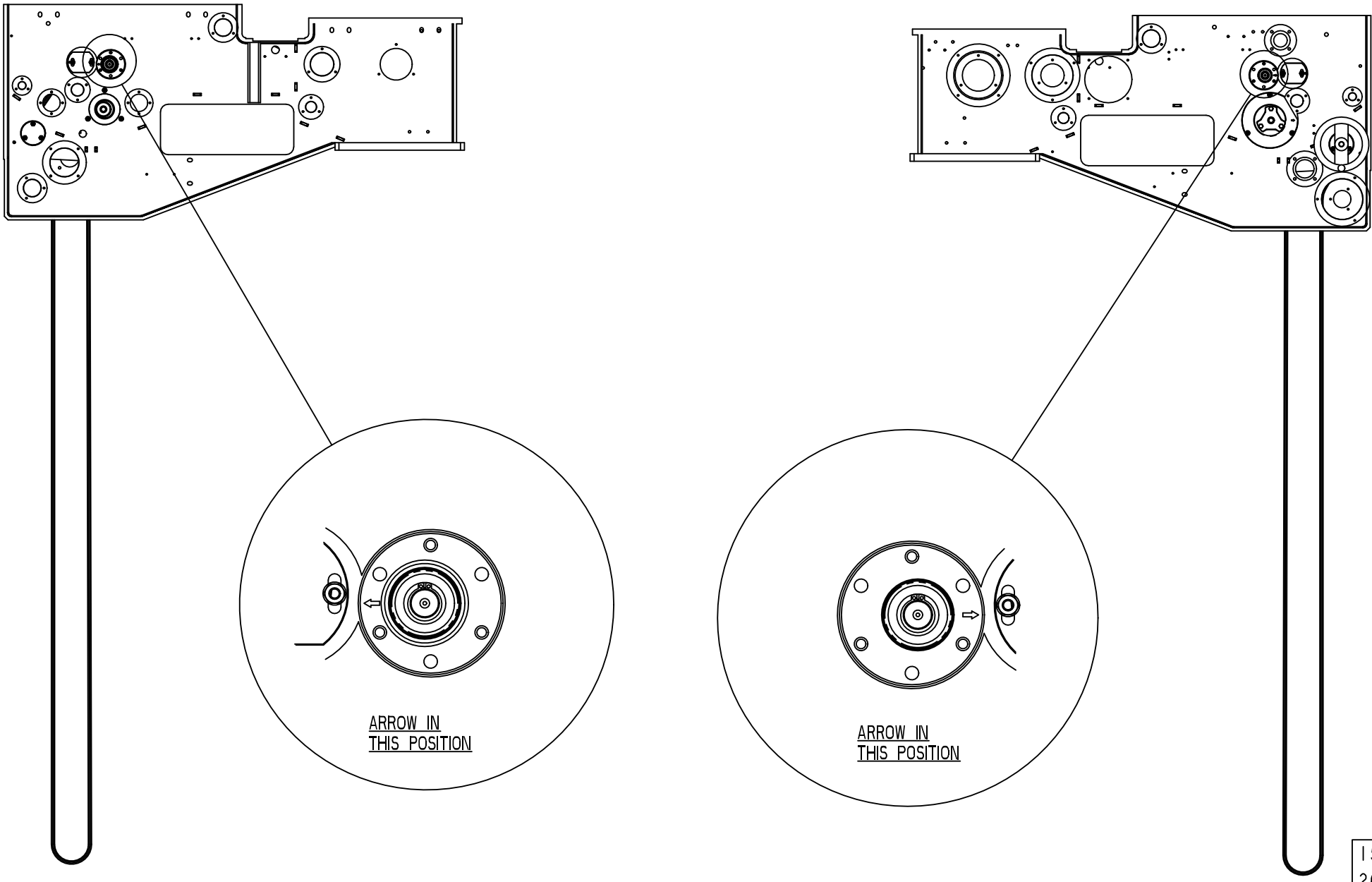
ARROW IN
THIS POSITION
ARROW IN
THIS POSITION
1548736-3
261676

ECM: 359120 - 20081002
Group number: 1548736-0100
Assembly Drawing: 1548736-3_2_AB

This list covers pages from 1-28 to 1-35

| Pos | Part No | UN | Qty | Description | Page No |
|---|---|---|---|---|---|
| **NOMOLDEDCAP (See drawing on page: 1-28)** | | | | | |
| 010 | 2826445-0000 | | 1 | BENDING ROLLER | |
| 030 | 2552127-0000 | | 2 | FLANGE | |
| 040 | 2541639-0000 | | 2 | LID | |
| 340 | 312605-0316 | | 6 | HEXAGON NUT, M6M M6 A280 | |
| 350 | 312105-0366 | | 6 | SCREW M6S ISO 4017 M6X12 A480 | |
| **TBA 1000S LIGHTCAP (See drawing on pages: 1-32, 1-34)** | | | | | |
| 010 | 2826477-0000 | | 1 | BENDING ROLLER | |
| 030 | 2709210-0000 | | 2 | FLANGE | |
| 040 | 2709212-0000 | | 2 | LID | |
| **TBA 1000S STDA7, TBA 1000B STDA7 (See drawing on page: 1-30)** | | | | | |
| 010 | 2826477-0000 | | 1 | BENDING ROLLER | |
| 030 | 2552127-0000 | | 2 | FLANGE | |
| 040 | 2541639-0000 | | 2 | LID | |
| 340 | 312605-0316 | | 6 | HEXAGON NUT, M6M M6 A280 | |
| 350 | 312105-0366 | | 6 | SCREW M6S ISO 4017 M6X12 A480 | |
| **Common Parts** | | | | | |
| 300 | 90458-1704 | | 2 | BALL BEARING, 15X35X11 MM | |
| 310 | 315751-0112 | | 2 | RETAINING RING FOR SHAFT DIN 471 15 SS | |
| 320 | 315205-0802 | | 2 | O-RING 41,0X1,78 MM | |
| 330 | 312105-0370 | | 6 | SCREW M6S ISO 4017 M6X20 A480 | |
| 360 | 315205-0804 | | 2 | O-RING 47,35X1,78 MM | |

| Pos | Part No | UN | Qty | Description | Page No |
|---|---|---|---|---|---|

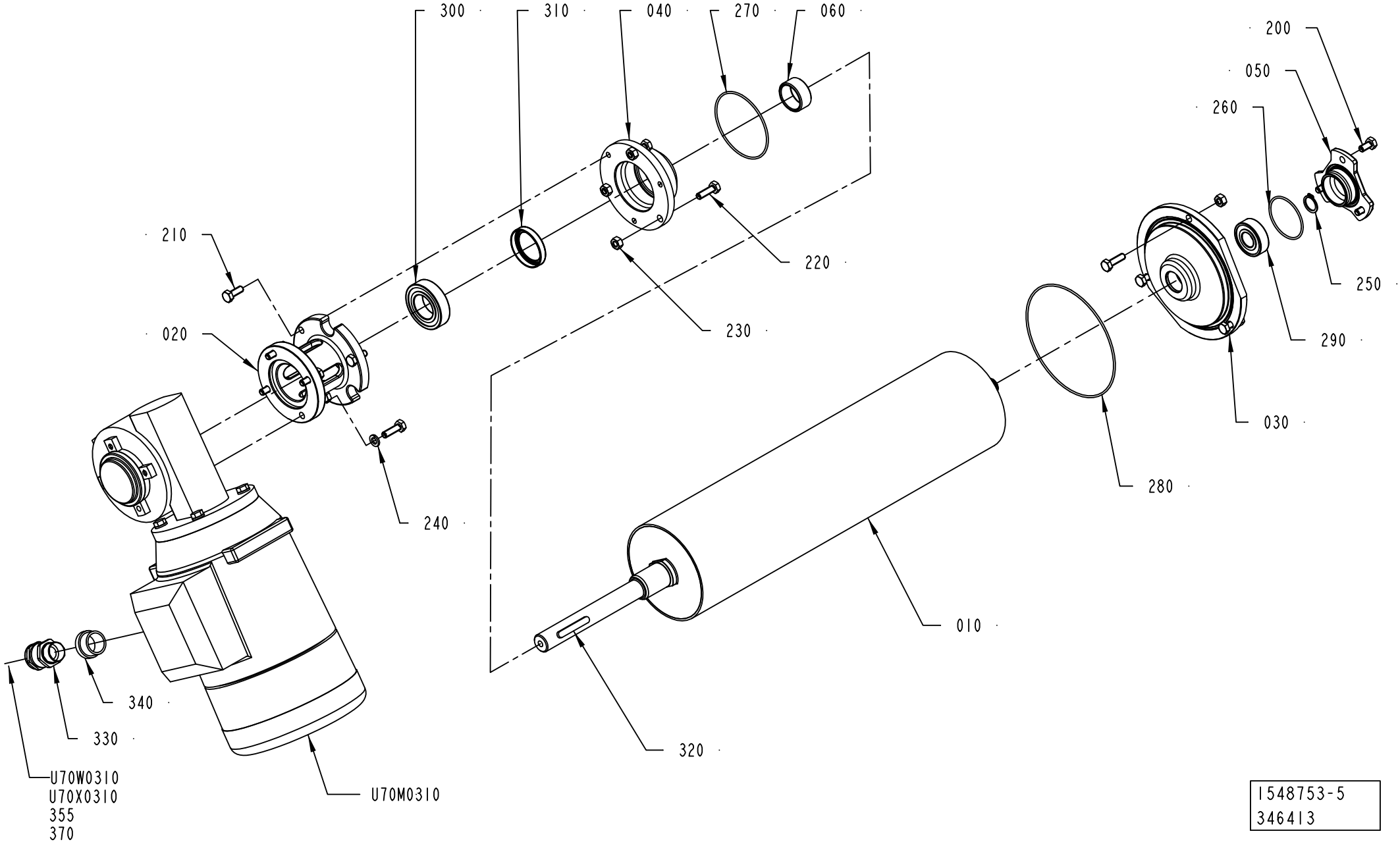


1548753-5
346413

ECM: 352791 - 20080711
Group number: 1548753-0200
Assembly Drawing: 1548753-5_1_AC

| Pos | Part No | UN | Qty | Description | Page No |
|---|---|---|---|---|---|
| **A3/FLEX DIMC/FLEX (See drawing on page: 1-36)** | | | | | |
| 010 | 2552139-0000 | | 1 | BENDING ROLLER | |
| 020 | 2532931-0000 | | 1 | FLANGE | |
| 040 | 1548882-0000 | | 1 | FLANGE | |
| 210 | 312105-0368 | | 3 | SCREW M6S ISO 4017 M6X16 A480 | |
| 220 | 312105-0370 | | 10 | SCREW M6S ISO 4017 M6X20 A480 | |
| 230 | 312605-0316 | | 6 | HEXAGON NUT, M6M M6 A280 | |
| 270 | 90459-1623 | | 1 | O-RING 66,40X1,78 MM | |
| 370 | 90458-0307 | | 1 | CABLE GLAND, M20X1,5, NO.5311 1020 | |
| U70M0310 | 90459-1226 | | 1 | GEARS, WORM MOTOR VF 44P-10+BN71B 0.37KW | |
| U70W0310 | 90220-0104 | MM | 7000 | SCR. CABLE 4X1,5MM2 | |
| **A3/FLEX NODIMC (See drawing on page: 1-36)** | | | | | |
| 010 | 2552135-0000 | | 1 | BENDING ROLLER | |
| 020 | 2532931-0000 | | 1 | FLANGE | |
| 040 | 1548882-0000 | | 1 | FLANGE | |
| 210 | 312105-0368 | | 3 | SCREW M6S ISO 4017 M6X16 A480 | |
| 220 | 312105-0370 | | 10 | SCREW M6S ISO 4017 M6X20 A480 | |
| 230 | 312605-0316 | | 6 | HEXAGON NUT, M6M M6 A280 | |
| 270 | 90459-1623 | | 1 | O-RING 66,40X1,78 MM | |
| 370 | 90458-0307 | | 1 | CABLE GLAND, M20X1,5, NO.5311 1020 | |
| U70M0310 | 90459-1226 | | 1 | GEARS, WORM MOTOR VF 44P-10+BN71B 0.37KW | |
| U70W0310 | 90220-0104 | MM | 7000 | SCR. CABLE 4X1,5MM2 | |
| **Common Parts** | | | | | |
| 030 | 2751509-0000 | | 1 | FLANGE | |
| 050 | 2541639-0000 | | 1 | LID | |
| 060 | 1548751-0000 | | 1 | BUSHING | |
| 200 | 312105-0366 | | 3 | SCREW M6S ISO 4017 M6X12 A480 | |
| 240 | 315402-0156 | | 4 | LOCK WASHER FBB 6,5 | |
| 250 | 315751-0112 | | 1 | RETAINING RING FOR SHAFT DIN 471 15 SS | |
| 260 | 315205-0802 | | 1 | O-RING 41,0X1,78 MM | |
| 280 | 90459-1627 | | 1 | O-RING 114,02X1,78 MM | |
| 290 | 90458-1704 | | 1 | BALL BEARING, 15X35X11 MM | |
| 300 | 90214-0165 | | 1 | BALL BEARING, 25X47X12 MM | |
| 310 | 90459-1650 | | 1 | VARILIP 30X40X7 MM | |
| 320 | 315705-0239 | | 1 | PARALLEL KEY W. ROUND ENDS 6X6X40 MM | |
| 330 | 90012-0137 | | 1 | GLAND, EXTENDED WITH INSERT, PG11 | |
| 340 | 90089-0003 | | 1 | REDUCING SLEEVE, PR22,5/PR18,6 | |
| 355 | 90459-6632 | | 1 | HOOD 6 B TOP ENTRY,  19 30 006 1440 | |
| U70X0310 | 90110-0052 | | 1 | MALE INSERT HAN 6E 09 33 006 2601 | |

| Pos | Part No | UN | Qty | Description | Page No |
|---|---|---|---|---|---|

Machine Type | Group Description | Used-In | Group Number | Page No

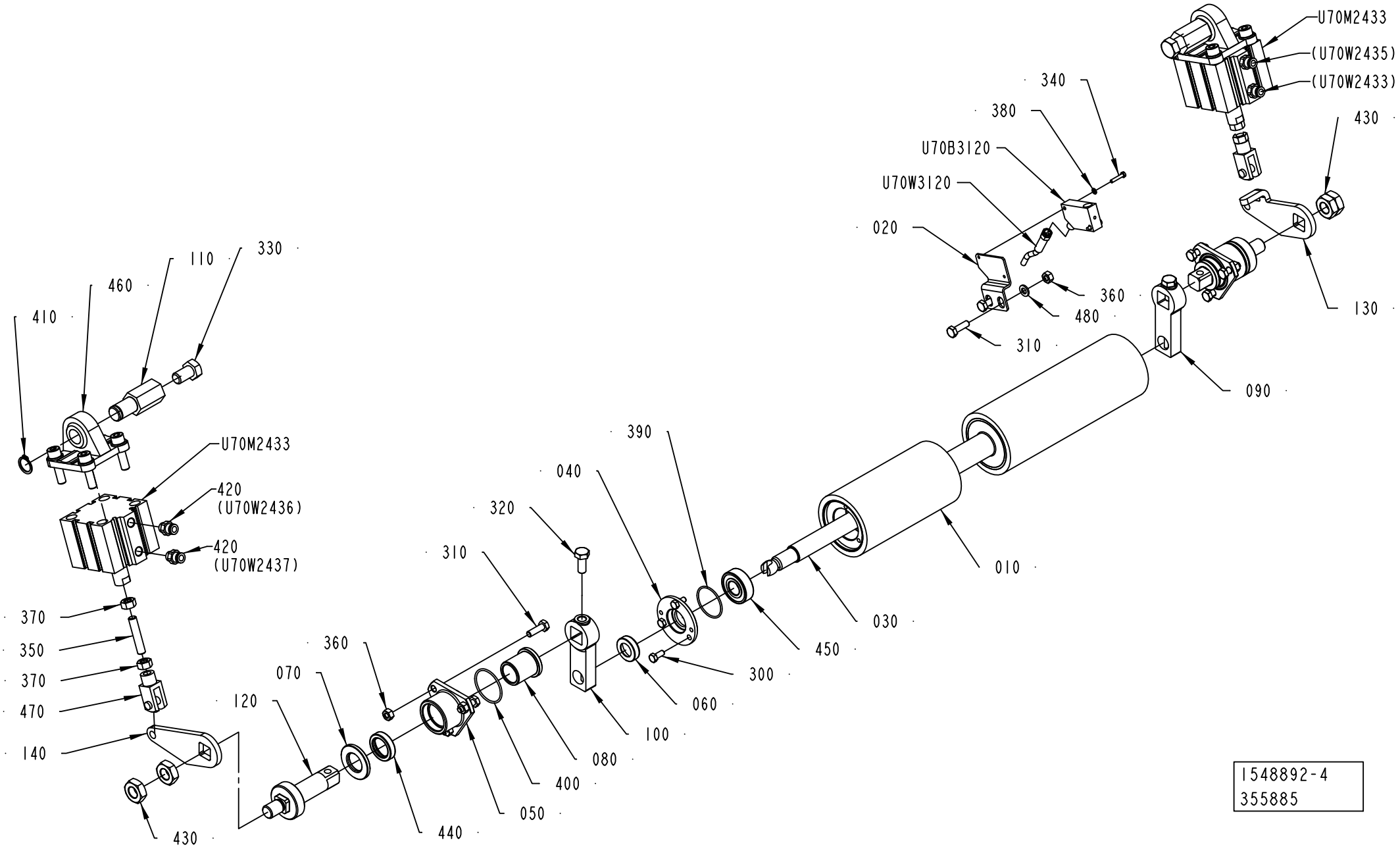


1548892-4
355885

ECM: 355887 - 20081001
Group number: 1548892-0200
Assembly Drawing: 1548892-4_1_AD

This list covers pages from 1-38 to 1-41

| Pos | Part No | UN | Qty | Description | Page No |
|---|---|---|---|---|---|
| **DIMC/FLEX (See drawing on page: 1-38)** | | | | | |
| 010 | 2528136-0000 | | 1 | SQUEE-GEE ROLLER | |
| 090 | 1498133-0000 | | 1 | ARM | |
| 100 | 1498135-0000 | | 1 | ARM | |
| 130 | 2946870-0000 | | 1 | PLATE | |
| 140 | 2788628-0000 | | 1 | PLATE | |
| **NODIMC (See drawing on page: 1-40)** | | | | | |
| 010 | 2547406-0000 | | 1 | ROLLER | |
| 090 | 2544885-0000 | | 1 | ARM | |
| 100 | 2544886-0000 | | 1 | ARM | |
| 130 | 2946869-0000 | | 1 | PLATE | |
| 140 | 2788631-0000 | | 1 | PLATE | |
| **Common Parts** | | | | | |
| 020 | 2946871-0000 | | 1 | BRACKET | |
| 030 | 1498790-0000 | | 1 | SHAFT | |
| 040 | 1498791-0000 | | 2 | FLANGE | |
| 050 | 2541643-0000 | | 2 | FLANGE | |
| 060 | 2541650-0000 | | 2 | LID | |
| 070 | 2541681-0000 | | 2 | WASHER | |
| 080 | 2541682-0000 | | 2 | BUSHING | |
| 110 | 2788625-0000 | | 2 | SHAFT | |
| 120 | 2788626-0000 | | 2 | SHAFT | |
| 300 | 312105-0327 | | 6 | SCREW M6S ISO 4017 M5X12 A480 | |
| 310 | 312105-0370 | | 8 | SCREW M6S ISO 4017 M6X20 A480 | |
| 320 | 312105-0451 | | 2 | SCREW M6S ISO 4017 M8X20 A480 | |
| 330 | 312105-0532 | | 2 | SCREW M6S ISO 4017 M12X20 A480 | |
| 340 | 312125-0228 | | 2 | SCREW ISO 1207 M3X16 A4 | |
| 350 | 312318-0459 | | 2 | SCREW ISO4029 M8X40 A4 | |
| 360 | 312605-0316 | | 8 | HEXAGON NUT, M6M M6 A280 | |
| 370 | 312605-0318 | | 4 | HEXAGON NUT, M6M M8 A280 | |
| 380 | 315105-0124 | | 2 | WASHER BRB 3,2X6 RFR | |
| 390 | 315204-0122 | | 2 | O-RING 32,1X1,6 MM | |
| 400 | 315205-0716 | | 2 | O-RING 34,65X1,78 MM | |
| 410 | 315751-0113 | | 2 | RETAINING RING FOR SHAFT DIN 471 16 SS | |
| 420 | 342722-0202 | | 4 | PIPE COUPLING 1/8" D=6MM | |
| 430 | 90099-0027 | | 4 | HEXAGON NUT, M14, DIN936 | |
| 440 | 90458-0639 | | 2 | VARILIP 20X30X7 MM | |
| 450 | 90458-1704 | | 2 | BALL BEARING, 15X35X11 MM | |
| 460 | 90459-0586 | | 2 | SWIVEL FLANGE 50 | |
| 470 | 90459-2590 | | 2 | ROD END, CLEVIS WITH AXLE M8 | |
| 480 | 315105-0153 | | 2 | WASHER BRB 6,4X12 RFR | |
| U70B3120 | 90459-2409 | | 1 | INDUCTIVE SWITCH IN-3002-BPKG/AS | |
| U70M2432 | 90459-7086 | | 1 | DOUBLE ACTING, COMPACT, 50-25 | |
| U70M2433 | 90459-7086 | | 1 | DOUBLE ACTING, COMPACT, 50-25 | |
| U70W3120 | 351301-0050 | | 1 | ACTUATOR/SENSOR CABLE PRKMV 3-06/5M | |

| Machine Type | Group Description | Used-In | Group Number | Page No |
|---|---|---|---|---|

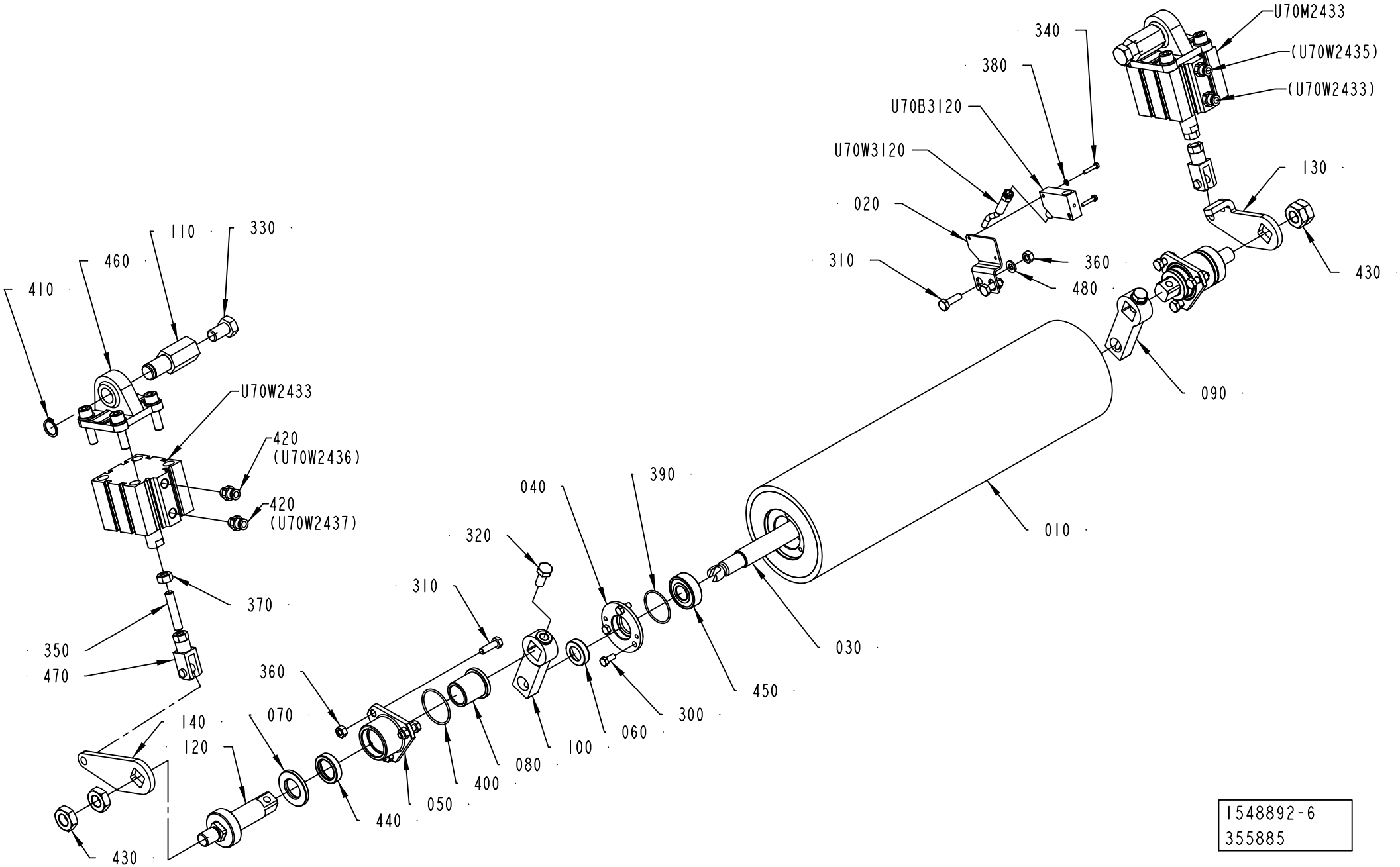


1548892-6
355885

ECM: 355887 - 20081001
Group number: 1548892-0200
Assembly Drawing: 1548892-6_1_AC

This list covers pages from 1-38 to 1-41

| Pos | Part No | UN | Qty | Description | Page No |
|---|---|---|---|---|---|
| **DIMC/FLEX (See drawing on page: 1-38)** | | | | | |
| 010 | 2528136-0000 | | 1 | SQUEE-GEE ROLLER | |
| 090 | 1498133-0000 | | 1 | ARM | |
| 100 | 1498135-0000 | | 1 | ARM | |
| 130 | 2946870-0000 | | 1 | PLATE | |
| 140 | 2788628-0000 | | 1 | PLATE | |
| **NODIMC (See drawing on page: 1-40)** | | | | | |
| 010 | 2547406-0000 | | 1 | ROLLER | |
| 090 | 2544885-0000 | | 1 | ARM | |
| 100 | 2544886-0000 | | 1 | ARM | |
| 130 | 2946869-0000 | | 1 | PLATE | |
| 140 | 2788631-0000 | | 1 | PLATE | |
| **Common Parts** | | | | | |
| 020 | 2946871-0000 | | 1 | BRACKET | |
| 030 | 1498790-0000 | | 1 | SHAFT | |
| 040 | 1498791-0000 | | 2 | FLANGE | |
| 050 | 2541643-0000 | | 2 | FLANGE | |
| 060 | 2541650-0000 | | 2 | LID | |
| 070 | 2541681-0000 | | 2 | WASHER | |
| 080 | 2541682-0000 | | 2 | BUSHING | |
| 110 | 2788625-0000 | | 2 | SHAFT | |
| 120 | 2788626-0000 | | 2 | SHAFT | |
| 300 | 312105-0327 | | 6 | SCREW M6S ISO 4017 M5X12 A480 | |
| 310 | 312105-0370 | | 8 | SCREW M6S ISO 4017 M6X20 A480 | |
| 320 | 312105-0451 | | 2 | SCREW M6S ISO 4017 M8X20 A480 | |
| 330 | 312105-0532 | | 2 | SCREW M6S ISO 4017 M12X20 A480 | |
| 340 | 312125-0228 | | 2 | SCREW ISO 1207 M3X16 A4 | |
| 350 | 312318-0459 | | 2 | SCREW ISO4029 M8X40 A4 | |
| 360 | 312605-0316 | | 8 | HEXAGON NUT, M6M M6 A280 | |
| 370 | 312605-0318 | | 4 | HEXAGON NUT, M6M M8 A280 | |
| 380 | 315105-0124 | | 2 | WASHER BRB 3,2X6 RFR | |
| 390 | 315204-0122 | | 2 | O-RING 32,1X1,6 MM | |
| 400 | 315205-0716 | | 2 | O-RING 34,65X1,78 MM | |
| 410 | 315751-0113 | | 2 | RETAINING RING FOR SHAFT DIN 471 16 SS | |
| 420 | 342722-0202 | | 4 | PIPE COUPLING 1/8" D=6MM | |
| 430 | 90099-0027 | | 4 | HEXAGON NUT, M14, DIN936 | |
| 440 | 90458-0639 | | 2 | VARILIP 20X30X7 MM | |
| 450 | 90458-1704 | | 2 | BALL BEARING, 15X35X11 MM | |
| 460 | 90459-0586 | | 2 | SWIVEL FLANGE 50 | |
| 470 | 90459-2590 | | 2 | ROD END, CLEVIS WITH AXLE M8 | |
| 480 | 315105-0153 | | 2 | WASHER BRB 6,4X12 RFR | |
| U70B3120 | 90459-2409 | | 1 | INDUCTIVE SWITCH IN-3002-BPKG/AS | |
| U70M2432 | 90459-7086 | | 1 | DOUBLE ACTING, COMPACT, 50-25 | |
| U70M2433 | 90459-7086 | | 1 | DOUBLE ACTING, COMPACT, 50-25 | |
| U70W3120 | 351301-0050 | | 1 | ACTUATOR/SENSOR CABLE PRKMV 3-06/5M | |

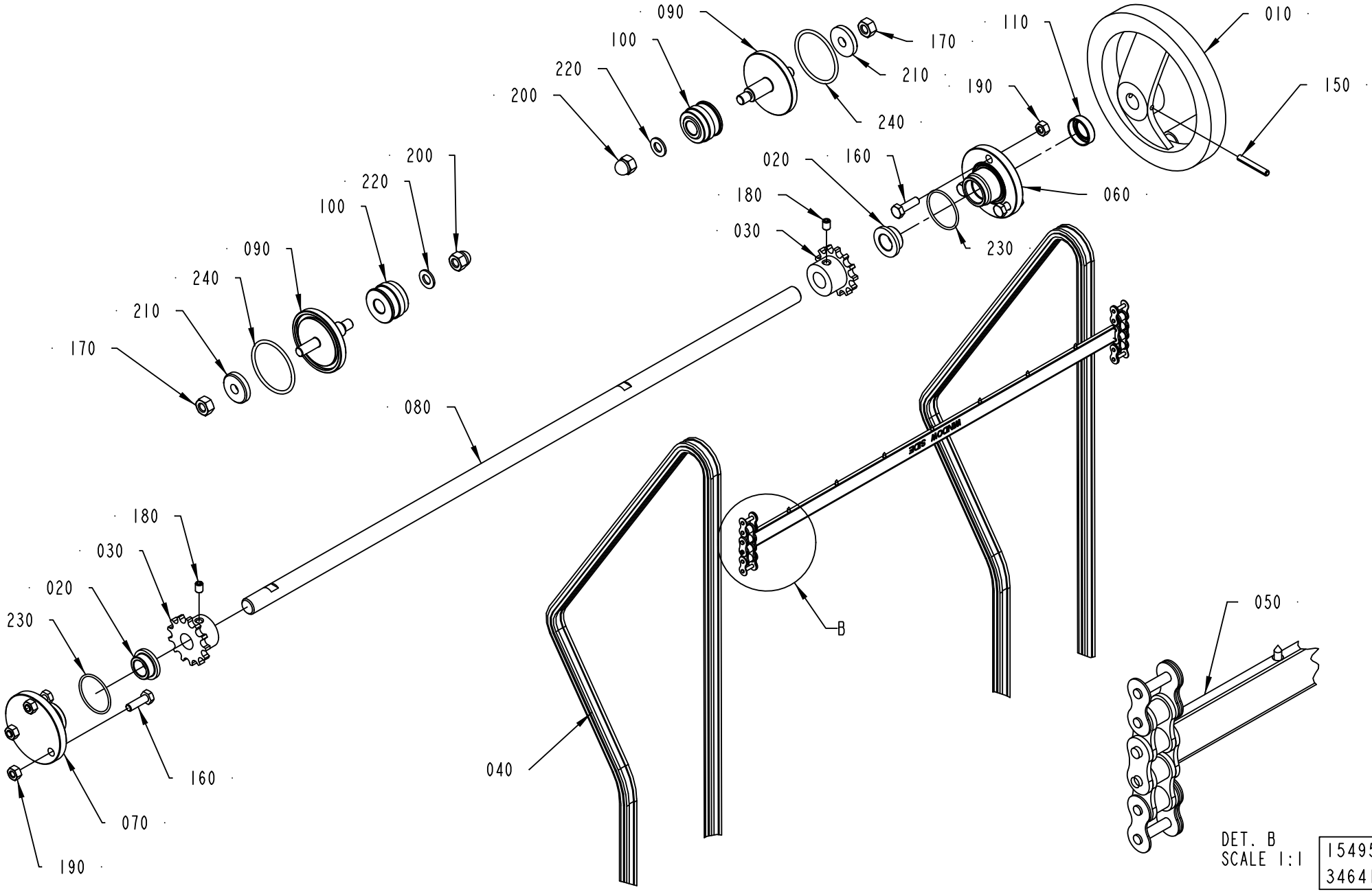
090
100
220
200
170
210
240
110
190
010
150
020
160
180
030
060
230
080
040
050
B
DET. B
SCALE 1:1
1549573-6
346413

ECM: 353195 - 20081003
Group number: 1549573-0200
Assembly Drawing: 1549573-6_1_AB

This list covers pages from 1-42 to 1-45

| Pos | Part No | UN | Qty | Description | Page No |
|---|---|---|---|---|---|
| **LIGHTCAP (See drawing on page: 1-44)** | | | | | |
| 040 | 2957434-0000 | | 2 | CHAIN | |
| 090 | 2946895-0000 | | 2 | SHAFT | |
| 100 | 2874674-0000 | | 2 | WHEEL | |
| 170 | 312605-0318 | | 2 | HEXAGON NUT, M6M M8 A280 | |
| 200 | 312705-0318 | | 2 | NUT HEX. DOMED CAP MHM-6 M8 A280 | |
| 220 | 315105-0165 | | 2 | WASHER BRB 8,4X16 RFR | |
| **STDA7 CAP, NOMOLDEDCAP (See drawing on page: 1-42)** | | | | | |
| 040 | 2957434-0000 | | 2 | CHAIN | |
| 090 | 2874673-0000 | | 2 | SHAFT | |
| 100 | 2874674-0000 | | 2 | WHEEL | |
| 170 | 312605-0318 | | 2 | HEXAGON NUT, M6M M8 A280 | |
| 200 | 312705-0318 | | 2 | NUT HEX. DOMED CAP MHM-6 M8 A280 | |
| 220 | 315105-0165 | | 2 | WASHER BRB 8,4X16 RFR | |
| **Common Parts** | | | | | |
| 010 | 247358-0000 | | 1 | SHIFTER HANDLE | |
| 020 | 279008-0000 | | 2 | BUSHING | |
| 030 | 1038464-0000 | | 2 | SPROCKET | |
| 050 | 2957418-0000 | | 1 | CARRIER | |
| 060 | 1549982-0000 | | 1 | FLANGE | |
| 070 | 1549981-0000 | | 1 | FLANGE | |
| 080 | 1523190-0000 | | 1 | SHAFT | |
| 110 | 90459-1148 | | 1 | VARILIP 14X24X7 MM | |
| 150 | 311112-0262 | | 1 | SPRING PIN, ISO 8752 4X32-C | |
| 160 | 312105-0370 | | 6 | SCREW M6S ISO 4017 M6X20 A480 | |
| 180 | 312318-0362 | | 2 | SCREW ISO4029 M6X8 A4 | |
| 190 | 312605-0316 | | 6 | HEXAGON NUT, M6M M6 A280 | |
| 210 | 315125-0165 | | 2 | WASHER TBRSB 8,4X26X5 A4 | |
| 230 | 315205-0714 | | 2 | O-RING 31,47X1,78 MM | |
| 240 | 315205-0731 | | 2 | O-RING 42,52X2,62 MM | |

| Pos | Part No | UN | Qty | Description | Page No |
|---|---|---|---|---|---|

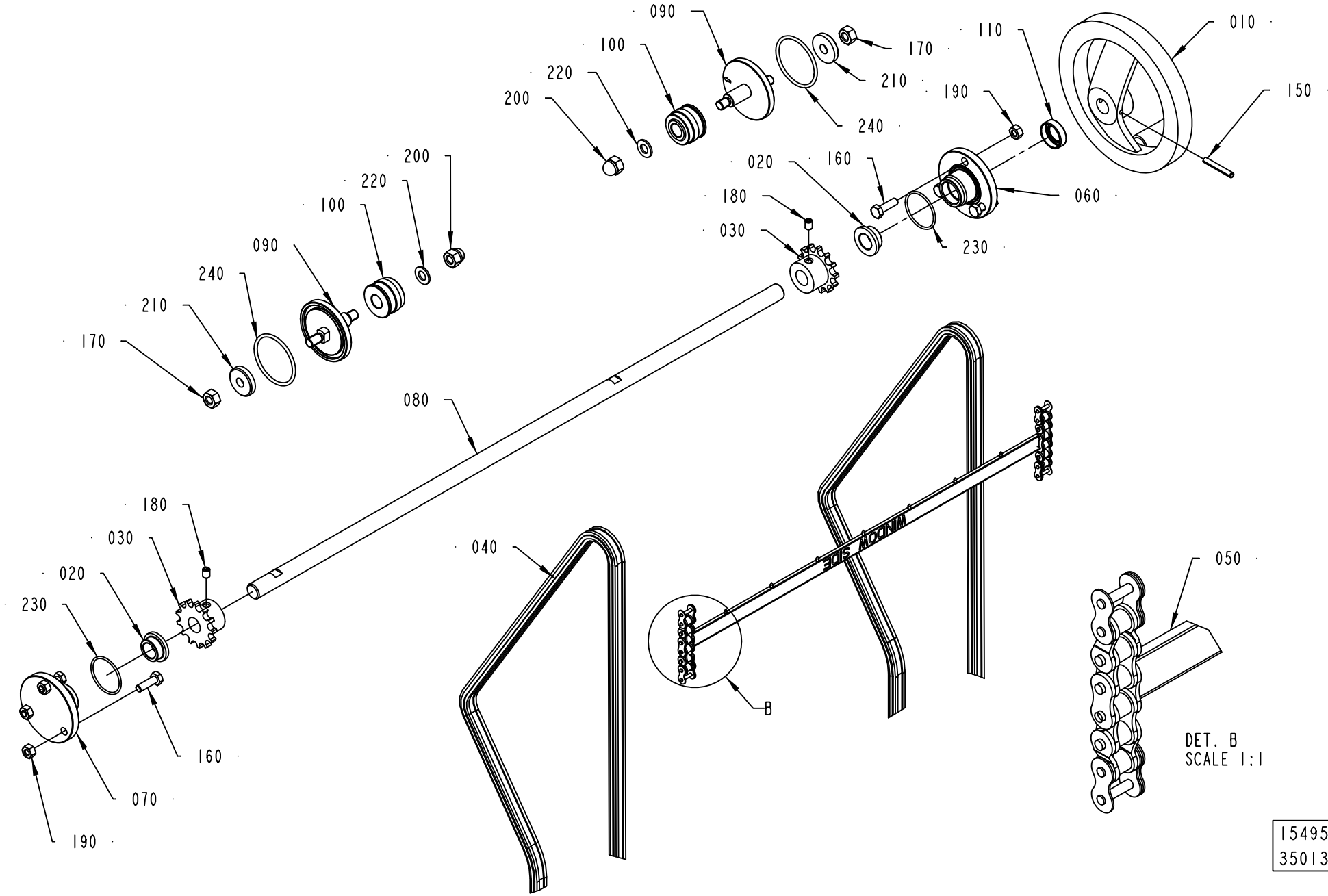
090
100
220
200
170
210
240
110
190
010
150
020
160
180
030
060
230
200
220
100
090
240
210
170
080
180
030
020
230
160
070
190
040
B
050
DET. B
SCALE 1:1
1549573-7
350138

ECM: 353195 - 20081003
Group number: 1549573-0200
Assembly Drawing: 1549573-7_1_AA

This list covers pages from 1-42 to 1-45

| Pos | Part No | UN | Qty | Description | Page No |
|---|---|---|---|---|---|
| **LIGHTCAP (See drawing on page: 1-44)** | | | | | |
| 040 | 2957434-0000 | | 2 | CHAIN | |
| 090 | 2946895-0000 | | 2 | SHAFT | |
| 100 | 2874674-0000 | | 2 | WHEEL | |
| 170 | 312605-0318 | | 2 | HEXAGON NUT, M6M M8 A280 | |
| 200 | 312705-0318 | | 2 | NUT HEX. DOMED CAP MHM-6 M8 A280 | |
| 220 | 315105-0165 | | 2 | WASHER BRB 8,4X16 RFR | |
| **STDA7 CAP, NOMOLDEDCAP (See drawing on page: 1-42)** | | | | | |
| 040 | 2957434-0000 | | 2 | CHAIN | |
| 090 | 2874673-0000 | | 2 | SHAFT | |
| 100 | 2874674-0000 | | 2 | WHEEL | |
| 170 | 312605-0318 | | 2 | HEXAGON NUT, M6M M8 A280 | |
| 200 | 312705-0318 | | 2 | NUT HEX. DOMED CAP MHM-6 M8 A280 | |
| 220 | 315105-0165 | | 2 | WASHER BRB 8,4X16 RFR | |
| **Common Parts** | | | | | |
| 010 | 247358-0000 | | 1 | SHIFTER HANDLE | |
| 020 | 279008-0000 | | 2 | BUSHING | |
| 030 | 1038464-0000 | | 2 | SPROCKET | |
| 050 | 2957418-0000 | | 1 | CARRIER | |
| 060 | 1549982-0000 | | 1 | FLANGE | |
| 070 | 1549981-0000 | | 1 | FLANGE | |
| 080 | 1523190-0000 | | 1 | SHAFT | |
| 110 | 90459-1148 | | 1 | VARILIP 14X24X7 MM | |
| 150 | 311112-0262 | | 1 | SPRING PIN, ISO 8752 4X32-C | |
| 160 | 312105-0370 | | 6 | SCREW M6S ISO 4017 M6X20 A480 | |
| 180 | 312318-0362 | | 2 | SCREW ISO4029 M6X8 A4 | |
| 190 | 312605-0316 | | 6 | HEXAGON NUT, M6M M6 A280 | |
| 210 | 315125-0165 | | 2 | WASHER TBRSB 8,4X26X5 A4 | |
| 230 | 315205-0714 | | 2 | O-RING 31,47X1,78 MM | |
| 240 | 315205-0731 | | 2 | O-RING 42,52X2,62 MM | |

| Pos | Part No | UN | Qty | Description | Page No |
|---|---|---|---|---|---|

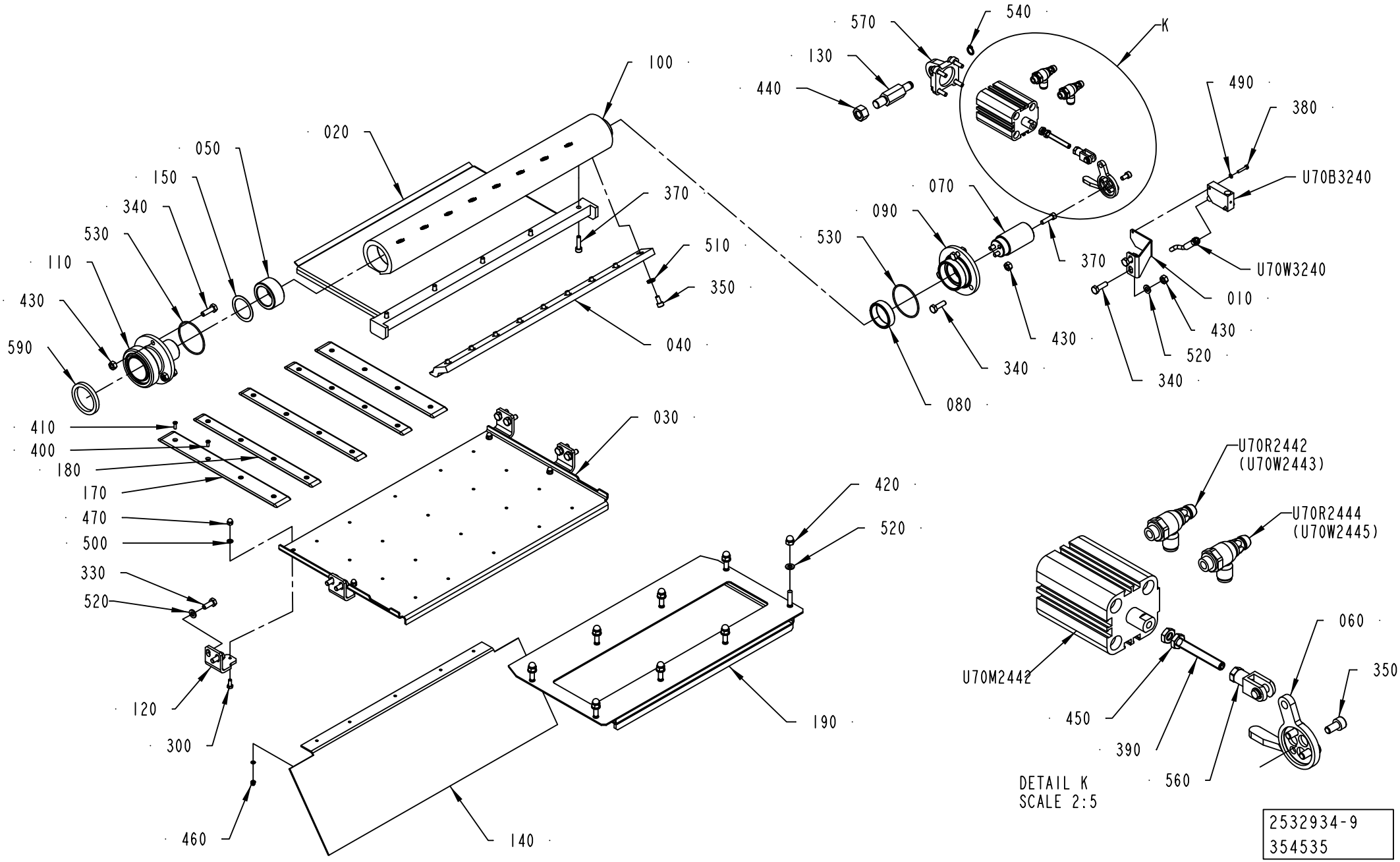
100
020
050
150
340
530
110
430
590
370
510
350
040
410
400
180
170
470
500
330
520
120
300
460
140
030
420
520
190
570
540
K
130
440
490
380
U70B3240
070
090
530
370
U70W3240
010
430
520
340
430
340
080
U70R2442
(U70W2443)
U70R2444
(U70W2445)
060
350
U70M2442
450
390
560
DETAIL K
SCALE 2:5
2532934-9
354535

ECM: 359328 - 20081001
Group number: 2532934-0200
Assembly Drawing: 2532934-9_1_AD

This list covers pages from 1-46 to 1-51

| Pos | Part No | UN | Qty | Description | Page No |
|---|---|---|---|---|---|
| **A3/FLEX TBA 1000SQ NODIMC, A3/FLEX TBA 1000S NODIMC, A3/FLEX TBA 1000B NODIMC, A3/FLEX TBA 0500B NODIMC, A3/FLEX TPA 1000SQ NODIMC, A3/FLEX TBA 1500S NODIMC, A3/FLEX TPA 0750SQ NODIMC, A3/FLEX TBA 0500SQ NODIMC (See drawing on page: 1-46)** | | | | | |
| 020 | 2867470-0000 | | 1 | AIR GUIDE | |
| 030 | 2874772-0000 | | 1 | PLATE | |
| 040 | 2509681-0000 | | 1 | RAIL | |
| 120 | 2532918-0000 | | 4 | HOLDER | |
| 140 | 2532919-0000 | | 1 | PLATE | |
| 180 | 2894560-0000 | | 3 | SLIDE PLATE | |
| 190 | 2874771-0000 | | 1 | PLATE | |
| 400 | 312145-0222 | | 15 | SCREW ISO 2009 MFS M3X8 A4 | |
| 410 | 312145-0224 | | 5 | SCREW ISO 2009 MFS M3X10 A4 | |
| 460 | 312705-0310 | | 20 | NUT HEX. DOMED CAP MHM-6 M3 A2 | |
| 490 | 315105-0124 | | 22 | WASHER BRB 3,2X6 RFR | |
| **A3/FLEX TBA 2000S NODIMC (See drawing on page: 1-50)** | | | | | |
| 020 | 2894606-0000 | | 1 | AIR GUIDE | |
| 030 | 2894605-0000 | | 1 | BOTTOM PLATE | |
| 040 | 2594601-0000 | | 1 | RAIL | |
| 120 | 2582655-0000 | | 4 | HOLDER | |
| 140 | 2582654-0000 | | 1 | PLATE | |
| 180 | 2894560-0000 | | 3 | SLIDE PLATE | |
| 190 | 2894604-0000 | | 1 | PLATE | |
| 400 | 312145-0222 | | 15 | SCREW ISO 2009 MFS M3X8 A4 | |
| 410 | 312145-0224 | | 5 | SCREW ISO 2009 MFS M3X10 A4 | |
| 460 | 312705-0310 | | 20 | NUT HEX. DOMED CAP MHM-6 M3 A2 | |
| 490 | 315105-0124 | | 22 | WASHER BRB 3,2X6 RFR | |
| **DIMC/FLEX (See drawing on page: 1-48)** | | | | | |
| 020 | 2867470-0000 | | 1 | AIR GUIDE | |
| 030 | 2894567-0000 | | 1 | PLATE | |
| 040 | 2509681-0000 | | 1 | RAIL | |
| 120 | 2532918-0000 | | 4 | HOLDER | |
| 140 | 2874687-0000 | | 1 | PLATE | |
| 180 | 2894560-0000 | | 2 | SLIDE PLATE | |
| 190 | 2894566-0000 | | 1 | PLATE | |
| 400 | 312145-0222 | | 12 | SCREW ISO 2009 MFS M3X8 A4 | |
| 410 | 312145-0224 | | 4 | SCREW ISO 2009 MFS M3X10 A4 | |
| 460 | 312705-0310 | | 16 | NUT HEX. DOMED CAP MHM-6 M3 A2 | |
| 490 | 315105-0124 | | 18 | WASHER BRB 3,2X6 RFR | |
| **Common Parts** | | | | | |
| 010 | 2936344-0000 | | 1 | BRACKET | |
| 050 | 1519166-0000 | | 1 | BUSHING | |
| 060 | 2936343-0000 | | 1 | ARM | |
| 070 | 1519160-0000 | | 1 | SHAFT | |
| 080 | 1519159-0000 | | 1 | BUSHING | |
| 090 | 1519158-0000 | | 1 | LID | |
| 100 | 1519156-0000 | | 1 | AIR DISTRIBUTOR | |
| 110 | 1532231-0000 | | 1 | CONNECTION | |
| 130 | 1498132-0000 | | 1 | SHAFT | |
| 150 | 2532915-0000 | | 1 | WASHER | |
| 170 | 2894561-0000 | | 2 | SLIDE PLATE | |
| 300 | 312105-0289 | | 4 | SCREW M6S H4X10 A4 70 ISO4017/DIN933 | |
| 330 | 312105-0368 | | 8 | SCREW M6S ISO 4017 M6X16 A480 | |
| 340 | 312105-0370 | | 8 | SCREW M6S ISO 4017 M6X20 A480 | |
| 350 | 312115-0325 | | 12 | SCREW ISO4762 M5X10 A4 80 | |
| 370 | 312115-0331 | | 12 | SCREW ISO4762 M5X20 A4 80 | |
| 380 | 312125-0228 | | 2 | SCREW ISO 1207 M3X16 A4 | |
| 390 | 90459-1728 | | 1 | SCREW ISO4029 M6X45 A4 | |
| 420 | 312705-0316 | | 8 | NUT HEX. DOMED CAP MHM-6 M6 A280 | |
| 430 | 312605-0316 | | 8 | HEXAGON NUT, M6M M6 A280 | |
| 440 | 312605-0322 | | 1 | HEXAGON NUT, M6M M12 A280 | |
| 450 | 312625-0316 | | 2 | HEXAGON THIN NUT, EN 24035 ML6M M6 A4 | |
| 470 | 312705-0312 | | 4 | NUT HEX. DOMED CAP MHM-6 M4 A280 | |
| 500 | 315105-0136 | | 4 | WASHER BRB 4,3X8 RFR | |
| 510 | 90062-0061 | | 9 | LOCK WASHER NORD-LOCK,6,5/10,8, T=2,2 | |
| 520 | 315105-0153 | | 22 | WASHER BRB 6,4X12 RFR | |
| 530 | 315205-0804 | | 2 | O-RING 47,35X1,78 MM | |
| 540 | 90141-0016 | | 1 | RETAINING RING FOR SHAFT DIN 471 10 SS | |
| 560 | 90239-0489 | | 1 | ROD END, CLEVIS WITH AXLE M6X1,25 | |
| 570 | 90459-2650 | | 1 | SWIVEL FLANGE 32 | |
| 590 | 12242-0003 | | 1 | GASKET 48X38X5,5 | |
| U70B3240 | 90459-2409 | | 1 | INDUCTIVE SWITCH IN-3002-BPKG/AS | |
| U70M2442 | 90457-1038 | | 1 | DOUBLE ACTING, COMPACT, 32-25 | |
| U70R2442 | 90235-0846 | | 1 | THROTTLE CHECK VALVE G1/8", MANUAL, 6 | |
| U70R2444 | 90235-0846 | | 1 | THROTTLE CHECK VALVE G1/8", MANUAL, 6 | |
| U70W3240 | 351301-0050 | | 1 | ACTUATOR/SENSOR CABLE PRKMV 3-06/5M | |

Machine Type | Group Description | Used-In | Group Number | Page No

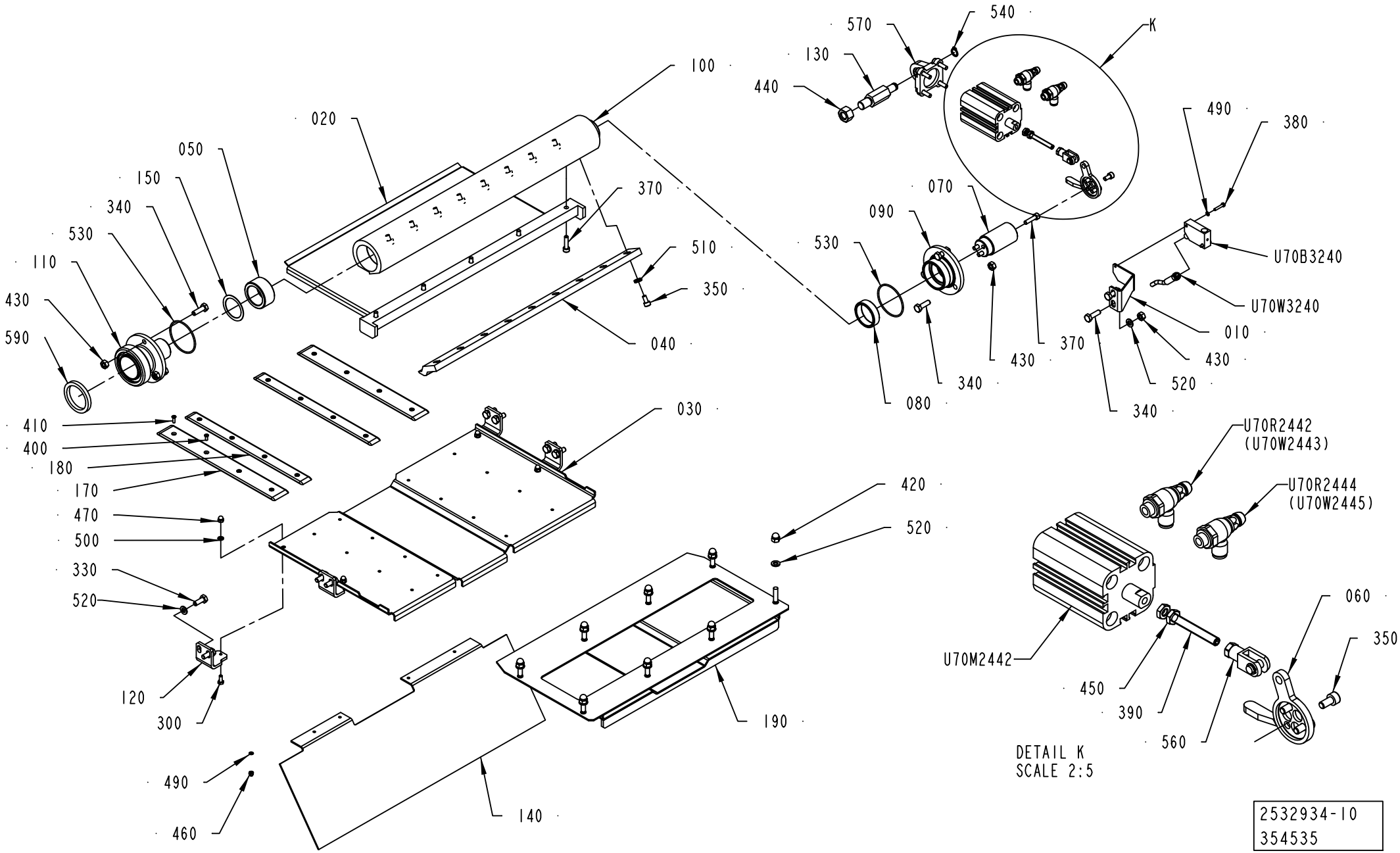
100
020
050
150
340
530
110
430
590
370
510
350
040
030
410
400
180
170
470
500
330
520
120
300
490
460
140
420
520
190
570
540
130
440
K
070
090
530
080
340
430
370
490
380
U70B3240
U70W3240
010
430
520
340
U70R2442
(U70W2443)
U70R2444
(U70W2445)
U70M2442
060
350
450
390
560
DETAIL K
SCALE 2:5
2532934-10
354535

ECM: 359328 - 20081001
Group number: 2532934-0200
Assembly Drawing: 2532934-10_1_AD

This list covers pages from 1-46 to 1-51

| Pos | Part No | UN | Qty | Description | Page No |
|---|---|---|---|---|---|
| **A3/FLEX TBA 1000SQ NODIMC, A3/FLEX TBA 1000S NODIMC, A3/FLEX TBA 1000B NODIMC, A3/FLEX TBA 0500B NODIMC, A3/FLEX TPA 1000SQ NODIMC, A3/FLEX TBA 1500S NODIMC, A3/FLEX TPA 0750SQ NODIMC, A3/FLEX TBA 0500SQ NODIMC (See drawing on page: 1-46)** | | | | | |
| 020 | 2867470-0000 | | 1 | AIR GUIDE | |
| 030 | 2874772-0000 | | 1 | PLATE | |
| 040 | 2509681-0000 | | 1 | RAIL | |
| 120 | 2532918-0000 | | 4 | HOLDER | |
| 140 | 2532919-0000 | | 1 | PLATE | |
| 180 | 2894560-0000 | | 3 | SLIDE PLATE | |
| 190 | 2874771-0000 | | 1 | PLATE | |
| 400 | 312145-0222 | | 15 | SCREW ISO 2009 MFS M3X8 A4 | |
| 410 | 312145-0224 | | 5 | SCREW ISO 2009 MFS M3X10 A4 | |
| 460 | 312705-0310 | | 20 | NUT HEX. DOMED CAP MHM-6 M3 A2 | |
| 490 | 315105-0124 | | 22 | WASHER BRB 3,2X6 RFR | |
| **A3/FLEX TBA 2000S NODIMC (See drawing on page: 1-50)** | | | | | |
| 020 | 2894606-0000 | | 1 | AIR GUIDE | |
| 030 | 2894605-0000 | | 1 | BOTTOM PLATE | |
| 040 | 2594601-0000 | | 1 | RAIL | |
| 120 | 2582655-0000 | | 4 | HOLDER | |
| 140 | 2582654-0000 | | 1 | PLATE | |
| 180 | 2894560-0000 | | 3 | SLIDE PLATE | |
| 190 | 2894604-0000 | | 1 | PLATE | |
| 400 | 312145-0222 | | 15 | SCREW ISO 2009 MFS M3X8 A4 | |
| 410 | 312145-0224 | | 5 | SCREW ISO 2009 MFS M3X10 A4 | |
| 460 | 312705-0310 | | 20 | NUT HEX. DOMED CAP MHM-6 M3 A2 | |
| 490 | 315105-0124 | | 22 | WASHER BRB 3,2X6 RFR | |
| **DIMC/FLEX (See drawing on page: 1-48)** | | | | | |
| 020 | 2867470-0000 | | 1 | AIR GUIDE | |
| 030 | 2894567-0000 | | 1 | PLATE | |
| 040 | 2509681-0000 | | 1 | RAIL | |
| 120 | 2532918-0000 | | 4 | HOLDER | |
| 140 | 2874687-0000 | | 1 | PLATE | |
| 180 | 2894560-0000 | | 2 | SLIDE PLATE | |
| 190 | 2894566-0000 | | 1 | PLATE | |
| 400 | 312145-0222 | | 12 | SCREW ISO 2009 MFS M3X8 A4 | |
| 410 | 312145-0224 | | 4 | SCREW ISO 2009 MFS M3X10 A4 | |
| 460 | 312705-0310 | | 16 | NUT HEX. DOMED CAP MHM-6 M3 A2 | |
| 490 | 315105-0124 | | 18 | WASHER BRB 3,2X6 RFR | |
| **Common Parts** | | | | | |
| 010 | 2936344-0000 | | 1 | BRACKET | |
| 050 | 1519166-0000 | | 1 | BUSHING | |
| 060 | 2936343-0000 | | 1 | ARM | |
| 070 | 1519160-0000 | | 1 | SHAFT | |
| 080 | 1519159-0000 | | 1 | BUSHING | |
| 090 | 1519158-0000 | | 1 | LID | |
| 100 | 1519156-0000 | | 1 | AIR DISTRIBUTOR | |
| 110 | 1532231-0000 | | 1 | CONNECTION | |
| 130 | 1498132-0000 | | 1 | SHAFT | |
| 150 | 2532915-0000 | | 1 | WASHER | |
| 170 | 2894561-0000 | | 2 | SLIDE PLATE | |
| 300 | 312105-0289 | | 4 | SCREW M6S H4X10 A4 70 ISO4017/DIN933 | |
| 330 | 312105-0368 | | 8 | SCREW M6S ISO 4017 M6X16 A480 | |
| 340 | 312105-0370 | | 8 | SCREW M6S ISO 4017 M6X20 A480 | |
| 350 | 312115-0325 | | 12 | SCREW ISO4762 M5X10 A4 80 | |
| 370 | 312115-0331 | | 12 | SCREW ISO4762 M5X20 A4 80 | |
| 380 | 312125-0228 | | 2 | SCREW ISO 1207 M3X16 A4 | |
| 390 | 90459-1728 | | 1 | SCREW ISO4029 M6X45 A4 | |
| 420 | 312705-0316 | | 8 | NUT HEX. DOMED CAP MHM-6 M6 A280 | |
| 430 | 312605-0316 | | 8 | HEXAGON NUT, M6M M6 A280 | |
| 440 | 312605-0322 | | 1 | HEXAGON NUT, M6M M12 A280 | |
| 450 | 312625-0316 | | 2 | HEXAGON THIN NUT, EN 24035 ML6M M6 A4 | |
| 470 | 312705-0312 | | 4 | NUT HEX. DOMED CAP MHM-6 M4 A280 | |
| 500 | 315105-0136 | | 4 | WASHER BRB 4,3X8 RFR | |
| 510 | 90062-0061 | | 9 | LOCK WASHER NORD-LOCK,6,5/10,8, T=2,2 | |
| 520 | 315105-0153 | | 22 | WASHER BRB 6,4X12 RFR | |
| 530 | 315205-0804 | | 2 | O-RING 47,35X1,78 MM | |
| 540 | 90141-0016 | | 1 | RETAINING RING FOR SHAFT DIN 471 10 SS | |
| 560 | 90239-0489 | | 1 | ROD END, CLEVIS WITH AXLE M6X1,25 | |
| 570 | 90459-2650 | | 1 | SWIVEL FLANGE 32 | |
| 590 | 12242-0003 | | 1 | GASKET 48X38X5,5 | |
| U70B3240 | 90459-2409 | | 1 | INDUCTIVE SWITCH IN-3002-BPKG/AS | |
| U70M2442 | 90457-1038 | | 1 | DOUBLE ACTING, COMPACT, 32-25 | |
| U70R2442 | 90235-0846 | | 1 | THROTTLE CHECK VALVE G1/8", MANUAL, 6 | |
| U70R2444 | 90235-0846 | | 1 | THROTTLE CHECK VALVE G1/8", MANUAL, 6 | |
| U70W3240 | 351301-0050 | | 1 | ACTUATOR/SENSOR CABLE PRKMV 3-06/5M | |

Machine Type | Group Description | Used-In | Group Number | Page No

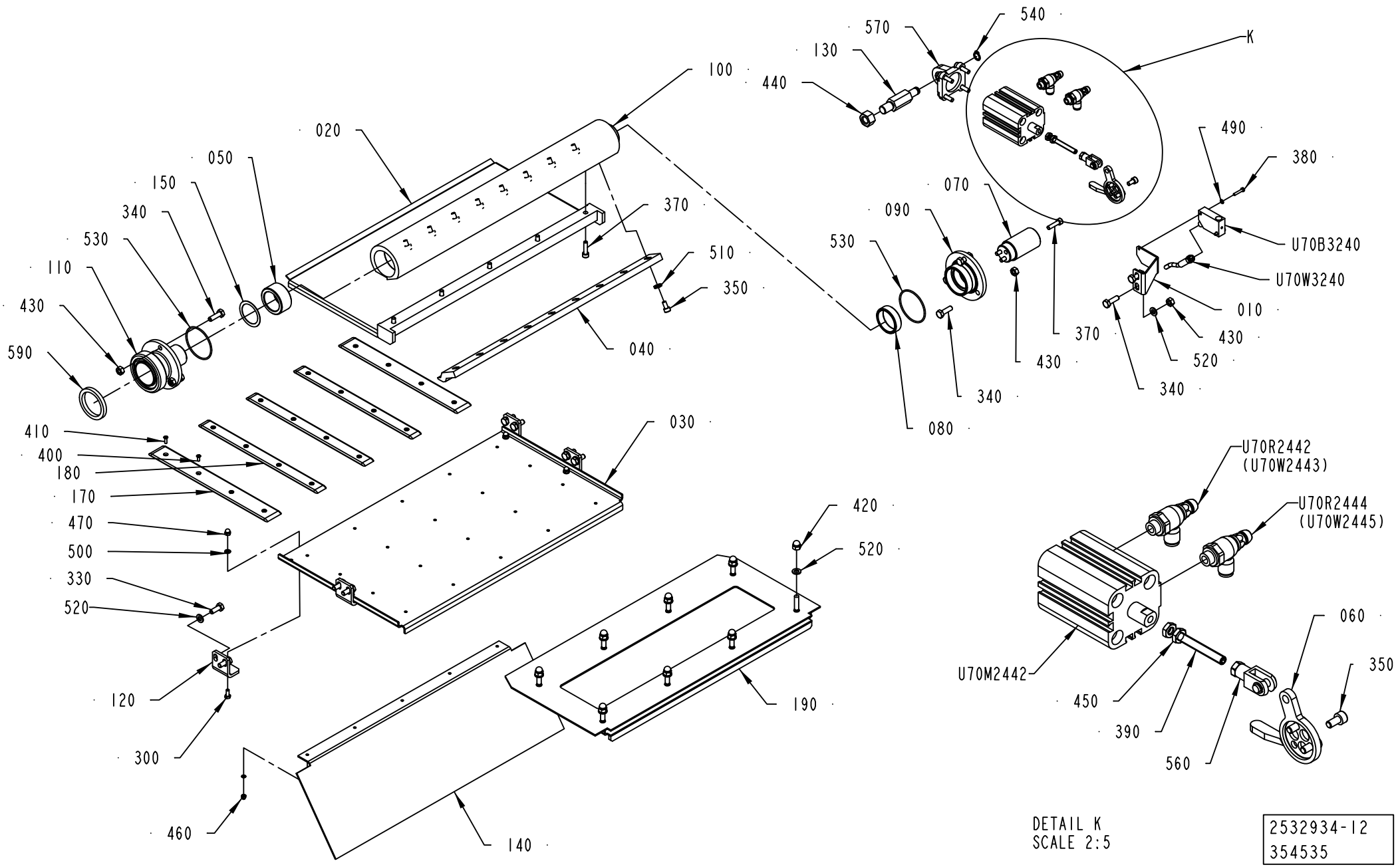
100
020
050
150
340
530
110
430
590
370
510
350
040
030
410
400
180
170
470
500
330
520
120
300
460
140
420
520
190
570
130
440
540
K
490
380
070
090
530
U70B3240
U70W3240
010
430
520
340
370
430
340
080
U70R2442
(U70W2443)
U70R2444
(U70W2445)
U70M2442
060
350
450
390
560
DETAIL K
SCALE 2:5
2532934-12
354535

ECM: 359328 - 20081001
Group number: 2532934-0200
Assembly Drawing: 2532934-12_1_AB

This list covers pages from 1-46 to 1-51

| Pos | Part No | UN | Qty | Description | Page No |
|---|---|---|---|---|---|
| **A3/FLEX TBA 1000SQ NODIMC, A3/FLEX TBA 1000S NODIMC, A3/FLEX TBA 1000B NODIMC, A3/FLEX TBA 0500B NODIMC, A3/FLEX TPA 1000SQ NODIMC, A3/FLEX TBA 1500S NODIMC, A3/FLEX TPA 0750SQ NODIMC, A3/FLEX TBA 0500SQ NODIMC (See drawing on page: 1-46)** | | | | | |
| 020 | 2867470-0000 | | 1 | AIR GUIDE | |
| 030 | 2874772-0000 | | 1 | PLATE | |
| 040 | 2509681-0000 | | 1 | RAIL | |
| 120 | 2532918-0000 | | 4 | HOLDER | |
| 140 | 2532919-0000 | | 1 | PLATE | |
| 180 | 2894560-0000 | | 3 | SLIDE PLATE | |
| 190 | 2874771-0000 | | 1 | PLATE | |
| 400 | 312145-0222 | | 15 | SCREW ISO 2009 MFS M3X8 A4 | |
| 410 | 312145-0224 | | 5 | SCREW ISO 2009 MFS M3X10 A4 | |
| 460 | 312705-0310 | | 20 | NUT HEX. DOMED CAP MHM-6 M3 A2 | |
| 490 | 315105-0124 | | 22 | WASHER BRB 3,2X6 RFR | |
| **A3/FLEX TBA 2000S NODIMC (See drawing on page: 1-50)** | | | | | |
| 020 | 2894606-0000 | | 1 | AIR GUIDE | |
| 030 | 2894605-0000 | | 1 | BOTTOM PLATE | |
| 040 | 2594601-0000 | | 1 | RAIL | |
| 120 | 2582655-0000 | | 4 | HOLDER | |
| 140 | 2582654-0000 | | 1 | PLATE | |
| 180 | 2894560-0000 | | 3 | SLIDE PLATE | |
| 190 | 2894604-0000 | | 1 | PLATE | |
| 400 | 312145-0222 | | 15 | SCREW ISO 2009 MFS M3X8 A4 | |
| 410 | 312145-0224 | | 5 | SCREW ISO 2009 MFS M3X10 A4 | |
| 460 | 312705-0310 | | 20 | NUT HEX. DOMED CAP MHM-6 M3 A2 | |
| 490 | 315105-0124 | | 22 | WASHER BRB 3,2X6 RFR | |
| **DIMC/FLEX (See drawing on page: 1-48)** | | | | | |
| 020 | 2867470-0000 | | 1 | AIR GUIDE | |
| 030 | 2894567-0000 | | 1 | PLATE | |
| 040 | 2509681-0000 | | 1 | RAIL | |
| 120 | 2532918-0000 | | 4 | HOLDER | |
| 140 | 2874687-0000 | | 1 | PLATE | |
| 180 | 2894560-0000 | | 2 | SLIDE PLATE | |
| 190 | 2894566-0000 | | 1 | PLATE | |
| 400 | 312145-0222 | | 12 | SCREW ISO 2009 MFS M3X8 A4 | |
| 410 | 312145-0224 | | 4 | SCREW ISO 2009 MFS M3X10 A4 | |
| 460 | 312705-0310 | | 16 | NUT HEX. DOMED CAP MHM-6 M3 A2 | |
| 490 | 315105-0124 | | 18 | WASHER BRB 3,2X6 RFR | |
| **Common Parts** | | | | | |
| 010 | 2936344-0000 | | 1 | BRACKET | |
| 050 | 1519166-0000 | | 1 | BUSHING | |
| 060 | 2936343-0000 | | 1 | ARM | |
| 070 | 1519160-0000 | | 1 | SHAFT | |
| 080 | 1519159-0000 | | 1 | BUSHING | |
| 090 | 1519158-0000 | | 1 | LID | |
| 100 | 1519156-0000 | | 1 | AIR DISTRIBUTOR | |
| 110 | 1532231-0000 | | 1 | CONNECTION | |
| 130 | 1498132-0000 | | 1 | SHAFT | |
| 150 | 2532915-0000 | | 1 | WASHER | |
| 170 | 2894561-0000 | | 2 | SLIDE PLATE | |
| 300 | 312105-0289 | | 4 | SCREW M6S H4X10 A4 70 ISO4017/DIN933 | |
| 330 | 312105-0368 | | 8 | SCREW M6S ISO 4017 M6X16 A480 | |
| 340 | 312105-0370 | | 8 | SCREW M6S ISO 4017 M6X20 A480 | |
| 350 | 312115-0325 | | 12 | SCREW ISO4762 M5X10 A4 80 | |
| 370 | 312115-0331 | | 12 | SCREW ISO4762 M5X20 A4 80 | |
| 380 | 312125-0228 | | 2 | SCREW ISO 1207 M3X16 A4 | |
| 390 | 90459-1728 | | 1 | SCREW ISO4029 M6X45 A4 | |
| 420 | 312705-0316 | | 8 | NUT HEX. DOMED CAP MHM-6 M6 A280 | |
| 430 | 312605-0316 | | 8 | HEXAGON NUT, M6M M6 A280 | |
| 440 | 312605-0322 | | 1 | HEXAGON NUT, M6M M12 A280 | |
| 450 | 312625-0316 | | 2 | HEXAGON THIN NUT, EN 24035 ML6M M6 A4 | |
| 470 | 312705-0312 | | 4 | NUT HEX. DOMED CAP MHM-6 M4 A280 | |
| 500 | 315105-0136 | | 4 | WASHER BRB 4,3X8 RFR | |
| 510 | 90062-0061 | | 9 | LOCK WASHER NORD-LOCK,6,5/10,8, T=2,2 | |
| 520 | 315105-0153 | | 22 | WASHER BRB 6,4X12 RFR | |
| 530 | 315205-0804 | | 2 | O-RING 47,35X1,78 MM | |
| 540 | 90141-0016 | | 1 | RETAINING RING FOR SHAFT DIN 471 10 SS | |
| 560 | 90239-0489 | | 1 | ROD END, CLEVIS WITH AXLE M6X1,25 | |
| 570 | 90459-2650 | | 1 | SWIVEL FLANGE 32 | |
| 590 | 12242-0003 | | 1 | GASKET 48X38X5,5 | |
| U70B3240 | 90459-2409 | | 1 | INDUCTIVE SWITCH IN-3002-BPKG/AS | |
| U70M2442 | 90457-1038 | | 1 | DOUBLE ACTING, COMPACT, 32-25 | |
| U70R2442 | 90235-0846 | | 1 | THROTTLE CHECK VALVE G1/8", MANUAL, 6 | |
| U70R2444 | 90235-0846 | | 1 | THROTTLE CHECK VALVE G1/8", MANUAL, 6 | |
| U70W3240 | 351301-0050 | | 1 | ACTUATOR/SENSOR CABLE PRKMV 3-06/5M | |

| Machine Type | Group Description | Used-In | Group Number | Page No |
|---|---|---|---|---|

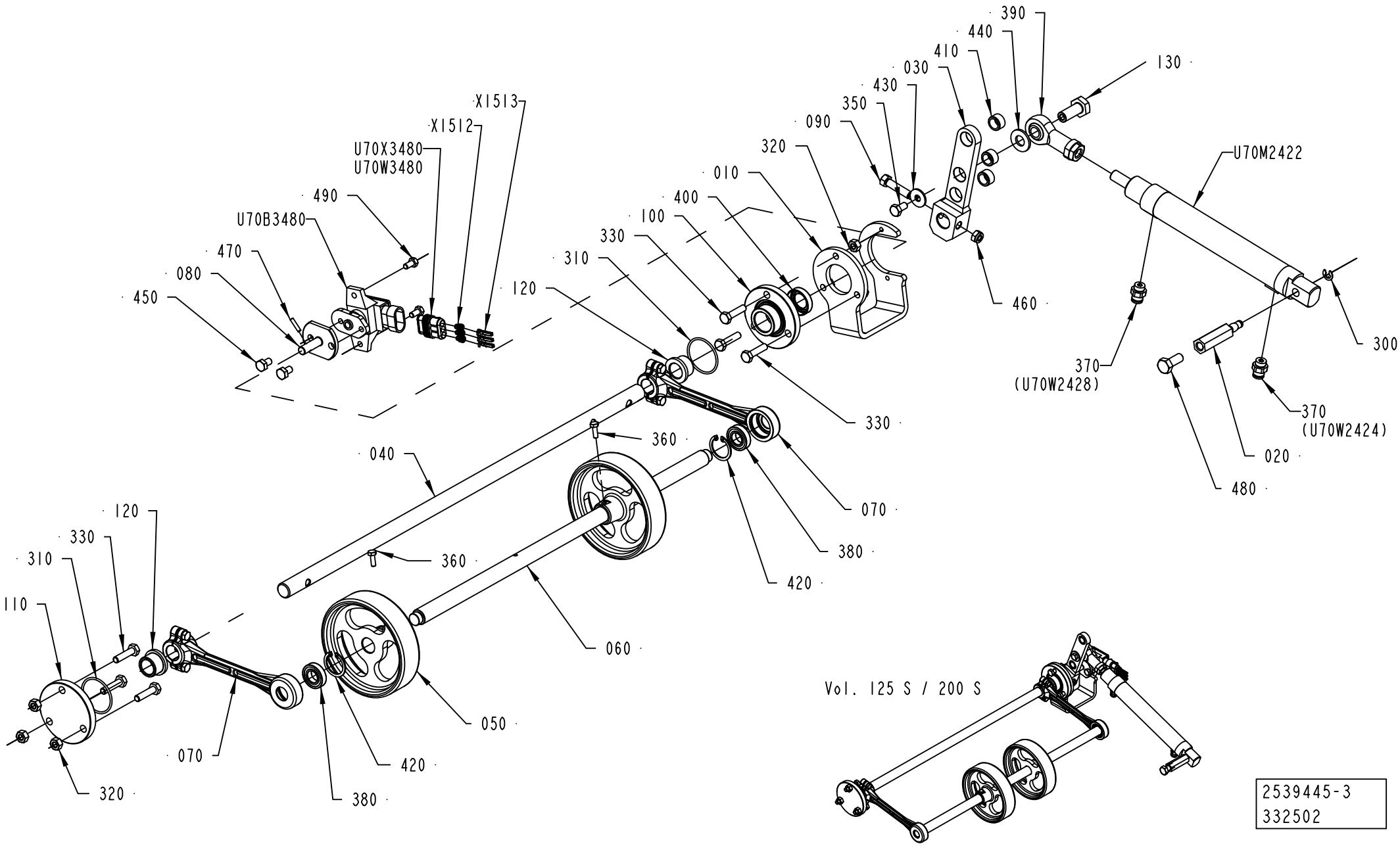
X1513
X1512
U70X3480
U70W3480
490
U70B3480
470
080
450
120
310
330
100
400
010
320
090
350
430
030
410
440
390
130
U70M2422
460
370
(U70W2428)
300
370
(U70W2424)
020
480
330
360
040
070
380
420
060
120
330
310
110
360
050
070
420
380
320
Vol. 125 S / 200 S
2539445-3
332502

ECM: 348491 - 20080410
Group number: 2539445-0300
Assembly Drawing: 2539445-3_1_AC

| Pos | Part No | UN | Qty | Description | Page No |
|---|---|---|---|---|---|
| - | | | | | |
| 010 | 2758083-0000 | | 1 | SUPPORT | |
| 020 | 2658077-0000 | | 1 | SHAFT | |
| 030 | 2758082-0000 | | 1 | LEVER | |
| 040 | 2691184-0000 | | 1 | SHAFT | |
| 050 | 1558358-0000 | | 2 | WHEEL | |
| 060 | 2763957-0000 | | 1 | SHAFT | |
| 070 | 2763956-0000 | | 2 | LEVER | |
| 080 | 2691183-0000 | | 1 | FLANGED SHAFT | |
| 090 | 2653607-0000 | | 1 | SCREW | |
| 100 | 1549548-0000 | | 1 | FLANGE | |
| 110 | 1549545-0000 | | 1 | FLANGE | |
| 120 | 1511512-0000 | | 2 | BEARING BUSHING | |
| 130 | 2611009-0000 | | 1 | SHAFT | |
| 300 | 315755-0107 | | 1 | RETAINING RING SHAFT DIN 6799 5 A2 | |
| 310 | 315205-0715 | | 2 | O-RING 33,05X1,78 MM | |
| 320 | 312605-0316 | | 6 | HEXAGON NUT, M6M M6 A280 | |
| 330 | 312105-0372 | | 6 | SCREW M6S ISO 4017 M6X25 A480 | |
| 350 | 312105-0366 | | 1 | SCREW M6S ISO 4017 M6X12 A480 | |
| 360 | 312105-0291 | | 2 | SCREW M6S ISO 4017 M4X12 A470 | |
| 370 | 342722-0202 | | 2 | PIPE COUPLING 1/8" D=6MM | |
| 380 | 90214-0112 | | 2 | BALL BEARING, 12X24X6 MM | |
| 390 | 90459-1018 | | 1 | ROD END,BALL JOINT EYE M10X1,25 | |
| 400 | 90091-0429 | | 1 | VARILIP 15X26X7 MM | |
| 410 | 90459-0805 | | 3 | BUSHING, 10X14X8 MM | |
| 420 | 90458-2071 | | 2 | RETAINING RING FOR BORE DIN 472 24 A2 | |
| 430 | 90005-0060 | | 1 | WASHER PLAIN, RBS 6,4/M6)/18,H=1,5 | |
| 440 | 315105-0173 | | 1 | WASHER BRB 10,5X22 RFR | |
| 450 | 312105-0364 | | 2 | SCREW M6S ISO 4017 M6X10 A480 | |
| 460 | 312812-0316 | | 1 | HEXAGON NUT, NY-LOCK M6 A480 | |
| 470 | 311103-0235 | | 1 | PARALLEL PIN ISO 2338 3M6X14 A1 | |
| 480 | 312105-0451 | | 1 | SCREW M6S ISO 4017 M8X20 A480 | |
| 490 | 312105-0325 | | 2 | SCREW M6S ISO 4017 M5X10 A480 | |
| U70B3480 | 90459-3682 | | 1 | ROTARY POSITION SENSOR RPN1A111 | |
| U70M2422 | 90600-0805 | | 1 | DOUBLE ACTING, MINI-ISO, CYL. 25-62 MM | |
| U70W3480 | 90220-0165 | MM | 1700 | SCR. CABLE 5X0,34MM2 | |
| U70X3480 | 90459-3709 | | 1 | CONNECTOR 3-POLE AMP 282087-1 | |
| X1512 | 90459-4077 | | 3 | WIRE SEAL , AMP 281934 | |
| X1513 | 90459-4079 | | 3 | MINI MIC SRS, AMP 183035-1 | |

| Pos | Part No | UN | Qty | Description | Page No |
|---|---|---|---|---|---|

| Machine Type | Group Description | Used-In | Group Number | Page No |
|---|---|---|---|---|

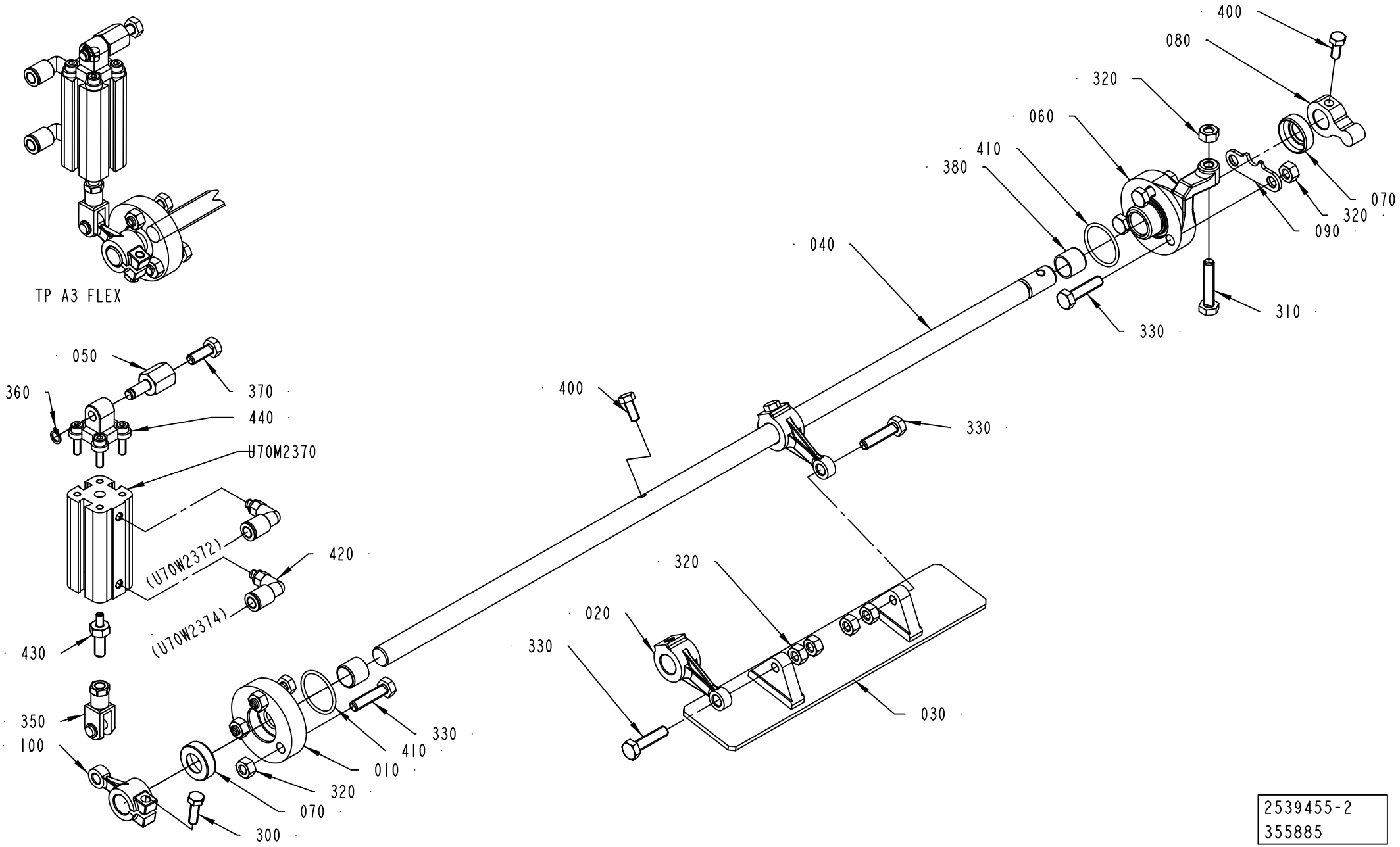


2539455-2
355885

ECM: 355885 - 20081001
Group number: 2539455-0200
Assembly Drawing: 2539455-2_1_AB

| Pos | Part No | UN | Qty | Description | Page No |
|---|---|---|---|---|---|
| **A3/FLEX** | | | | | |
| 040 | 2526850-0000 | | 1 | SHAFT | |
| **Common Parts** | | | | | |
| 010 | 1523179-0000 | | 1 | FLANGE | |
| 020 | 2526842-0000 | | 2 | LINK | |
| 030 | 2685303-0000 | | 1 | SHUTTER | |
| 050 | 1523185-0000 | | 1 | AXLE PIN | |
| 060 | 2522258-0000 | | 1 | FLANGE | |
| 070 | 2541661-0000 | | 2 | LID | |
| 080 | 1538163-0000 | | 1 | LEVER | |
| 090 | 2526849-0000 | | 1 | PLATE | |
| 100 | 2526820-0000 | | 1 | LINK | |
| 300 | 312105-0329 | | 1 | SCREW M6S ISO 4017 M5X16 A480 | |
| 310 | 312109-0374 | | 1 | SCREW M6S ISO 4017 M6X30 A480 | |
| 320 | 312605-0316 | | 11 | HEXAGON NUT, M6M M6 A280 | |
| 330 | 312105-0372 | | 8 | SCREW M6S ISO 4017 M6X25 A480 | |
| 350 | 90239-0489 | | 1 | ROD END, CLEVIS WITH AXLE M6X1,25 | |
| 360 | 315751-0103 | | 1 | RETAINING RING FOR SHAFT DIN 471 6 SS | |
| 370 | 312105-0368 | | 1 | SCREW M6S ISO 4017 M6X16 A480 | |
| 380 | 321133-0180 | | 2 | BUSHING, 12X14X12 MM | |
| 400 | 312105-0327 | | 3 | SCREW M6S ISO 4017 M5X12 A480 | |
| 410 | 315205-0709 | | 2 | O-RING 23,52X1,78 MM | |
| 420 | 350002-0002 | | 2 | PUSH-IN L-FITTING QSL-F-M5-6 | |
| 430 | 2986276-0000 | | 1 | AXLE PIN | |
| 440 | 90600-3964 | | 1 | SWIVEL FLANGE 16 | |
| U70M2370 | 90600-5541 | | 1 | DOUBLE ACTING, COMPACT, CYL 16-25 | |

| Pos | Part No | UN | Qty | Description | Page No |
|---|---|---|---|---|---|

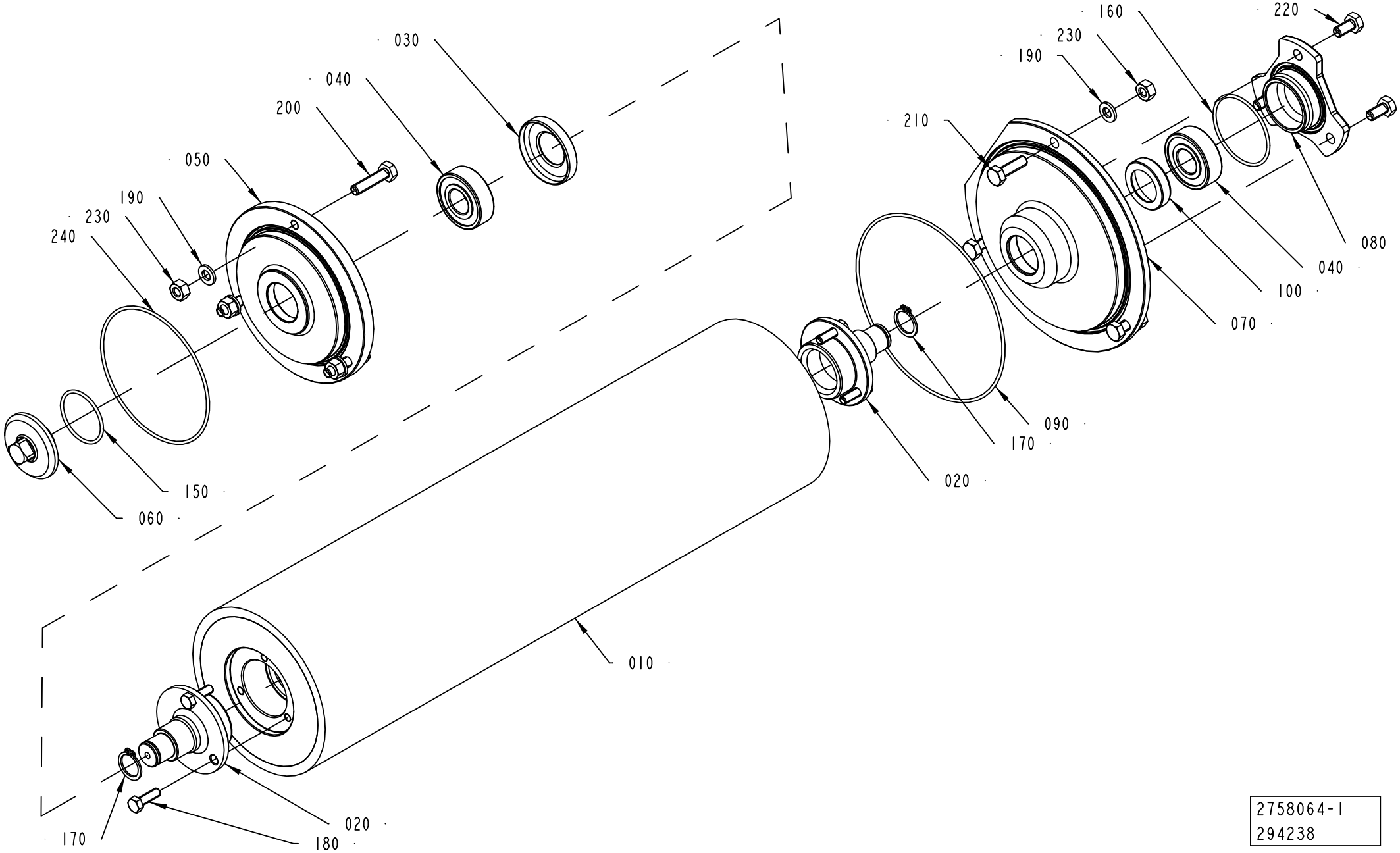


2758064-1
294238

ECM: 353200 - 20081003
Group number: 2758064-0100
Assembly Drawing: 2758064-1_1_AA

This list covers pages from 1-56 to 1-59

| Pos | Part No | UN | Qty | Description | Page No |
|---|---|---|---|---|---|
| **LIGHTCAP** | | | | | |
| 010 | 2528136-0000 | | 1 | SQUEE-GEE ROLLER | |
| 050 | 2946897-0000 | | 1 | FLANGE | |
| 070 | 2946896-0000 | | 1 | FLANGE | |
| **NOMOLDEDCAP (See drawing on page: 1-56)** | | | | | |
| 010 | 2547406-0000 | | 1 | ROLLER | |
| 050 | 2541633-0000 | | 1 | FLANGE | |
| 070 | 2532984-0000 | | 1 | FLANGE | |
| **STDA7 CAP (See drawing on page: 1-58)** | | | | | |
| 010 | 2528136-0000 | | 1 | SQUEE-GEE ROLLER | |
| 050 | 2798531-0000 | | 1 | FLANGE | |
| 070 | 2798530-0000 | | 1 | FLANGE | |
| **Common Parts** | | | | | |
| 020 | 2541637-0000 | | 2 | SHAFT | |
| 030 | 2541647-0000 | | 1 | LID | |
| 040 | 90458-1704 | | 2 | BALL BEARING, 15X35X11 MM | |
| 060 | 2532983-0000 | | 1 | FLANGE | |
| 080 | 2541639-0000 | | 1 | LID | |
| 090 | 90459-1627 | | 1 | O-RING 114,02X1,78 MM | |
| 100 | 2541648-0000 | | 1 | LID | |
| 150 | 315205-0713 | | 1 | O-RING 29,87X1,78 MM | |
| 160 | 315205-0802 | | 1 | O-RING 41,0X1,78 MM | |
| 170 | 315751-0112 | | 2 | RETAINING RING FOR SHAFT DIN 471 15 SS | |
| 180 | 312105-0329 | | 6 | SCREW M6S ISO 4017 M5X16 A480 | |
| 190 | 315105-0153 | | 6 | WASHER BRB 6,4X12 RFR | |
| 200 | 312105-0372 | | 3 | SCREW M6S ISO 4017 M6X25 A480 | |
| 210 | 312105-0370 | | 3 | SCREW M6S ISO 4017 M6X20 A480 | |
| 220 | 312105-0366 | | 3 | SCREW M6S ISO 4017 M6X12 A480 | |
| 230 | 312605-0316 | | 6 | HEXAGON NUT, M6M M6 A280 | |
| 240 | 90242-0126 | | 1 | O-RING 82,27X1,78 MM | |

| Pos | Part No | UN | Qty | Description | Page No |
|---|---|---|---|---|---|

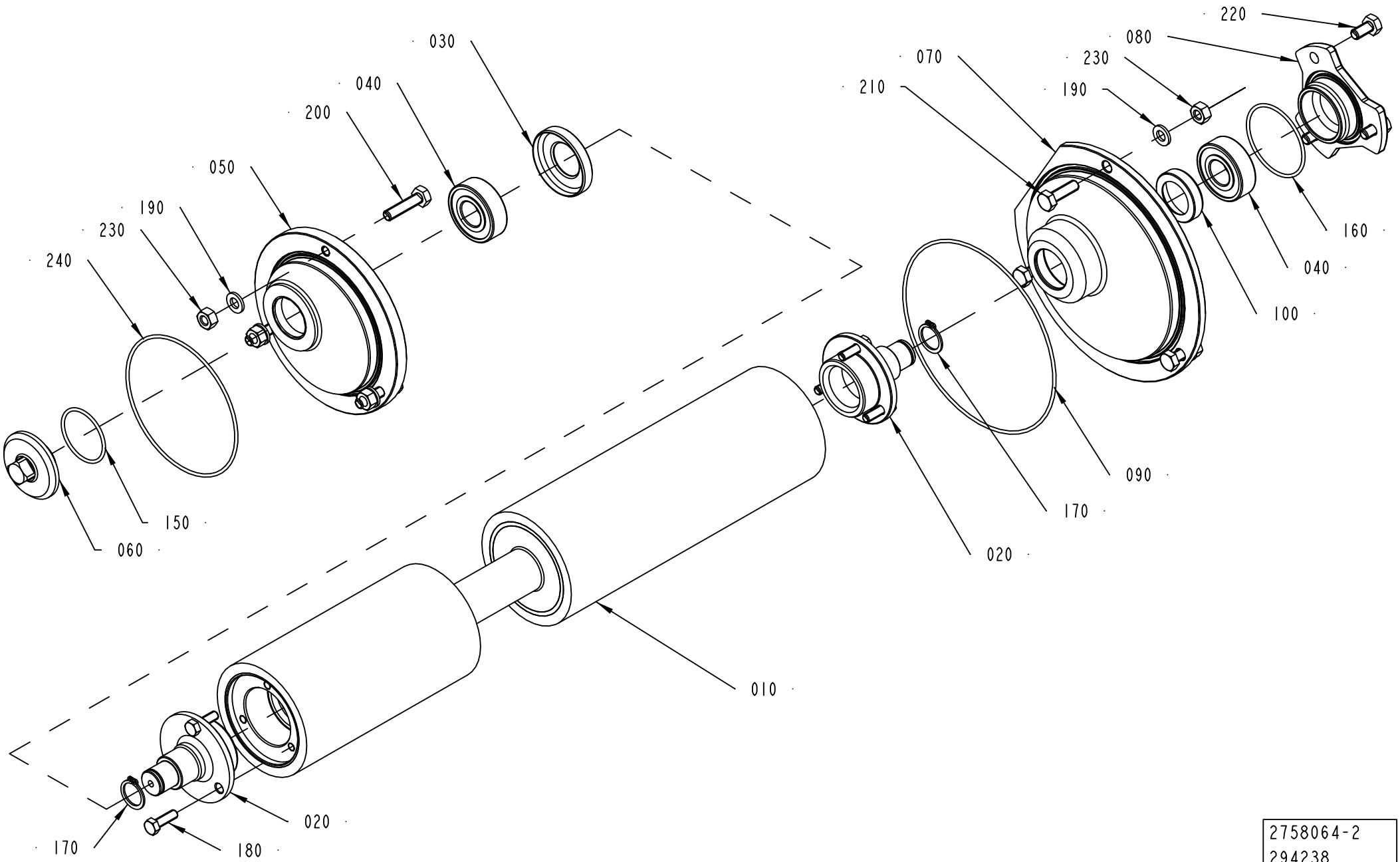


2758064-2
294238

ECM: 353200 - 20081003
Group number: 2758064-0100
Assembly Drawing: 2758064-2_1_AA

This list covers pages from 1-56 to 1-59

| Pos | Part No | UN | Qty | Description | Page No |
|---|---|---|---|---|---|
| **LIGHTCAP** | | | | | |
| 010 | 2528136-0000 | | 1 | SQUEE-GEE ROLLER | |
| 050 | 2946897-0000 | | 1 | FLANGE | |
| 070 | 2946896-0000 | | 1 | FLANGE | |
| **NOMOLDEDCAP (See drawing on page: 1-56)** | | | | | |
| 010 | 2547406-0000 | | 1 | ROLLER | |
| 050 | 2541633-0000 | | 1 | FLANGE | |
| 070 | 2532984-0000 | | 1 | FLANGE | |
| **STDA7 CAP (See drawing on page: 1-58)** | | | | | |
| 010 | 2528136-0000 | | 1 | SQUEE-GEE ROLLER | |
| 050 | 2798531-0000 | | 1 | FLANGE | |
| 070 | 2798530-0000 | | 1 | FLANGE | |
| **Common Parts** | | | | | |
| 020 | 2541637-0000 | | 2 | SHAFT | |
| 030 | 2541647-0000 | | 1 | LID | |
| 040 | 90458-1704 | | 2 | BALL BEARING, 15X35X11 MM | |
| 060 | 2532983-0000 | | 1 | FLANGE | |
| 080 | 2541639-0000 | | 1 | LID | |
| 090 | 90459-1627 | | 1 | O-RING 114,02X1,78 MM | |
| 100 | 2541648-0000 | | 1 | LID | |
| 150 | 315205-0713 | | 1 | O-RING 29,87X1,78 MM | |
| 160 | 315205-0802 | | 1 | O-RING 41,0X1,78 MM | |
| 170 | 315751-0112 | | 2 | RETAINING RING FOR SHAFT DIN 471 15 SS | |
| 180 | 312105-0329 | | 6 | SCREW M6S ISO 4017 M5X16 A480 | |
| 190 | 315105-0153 | | 6 | WASHER BRB 6,4X12 RFR | |
| 200 | 312105-0372 | | 3 | SCREW M6S ISO 4017 M6X25 A480 | |
| 210 | 312105-0370 | | 3 | SCREW M6S ISO 4017 M6X20 A480 | |
| 220 | 312105-0366 | | 3 | SCREW M6S ISO 4017 M6X12 A480 | |
| 230 | 312605-0316 | | 6 | HEXAGON NUT, M6M M6 A280 | |
| 240 | 90242-0126 | | 1 | O-RING 82,27X1,78 MM | |

| Pos | Part No | UN | Qty | Description | Page No |
|---|---|---|---|---|---|

# BENDING ROLLER



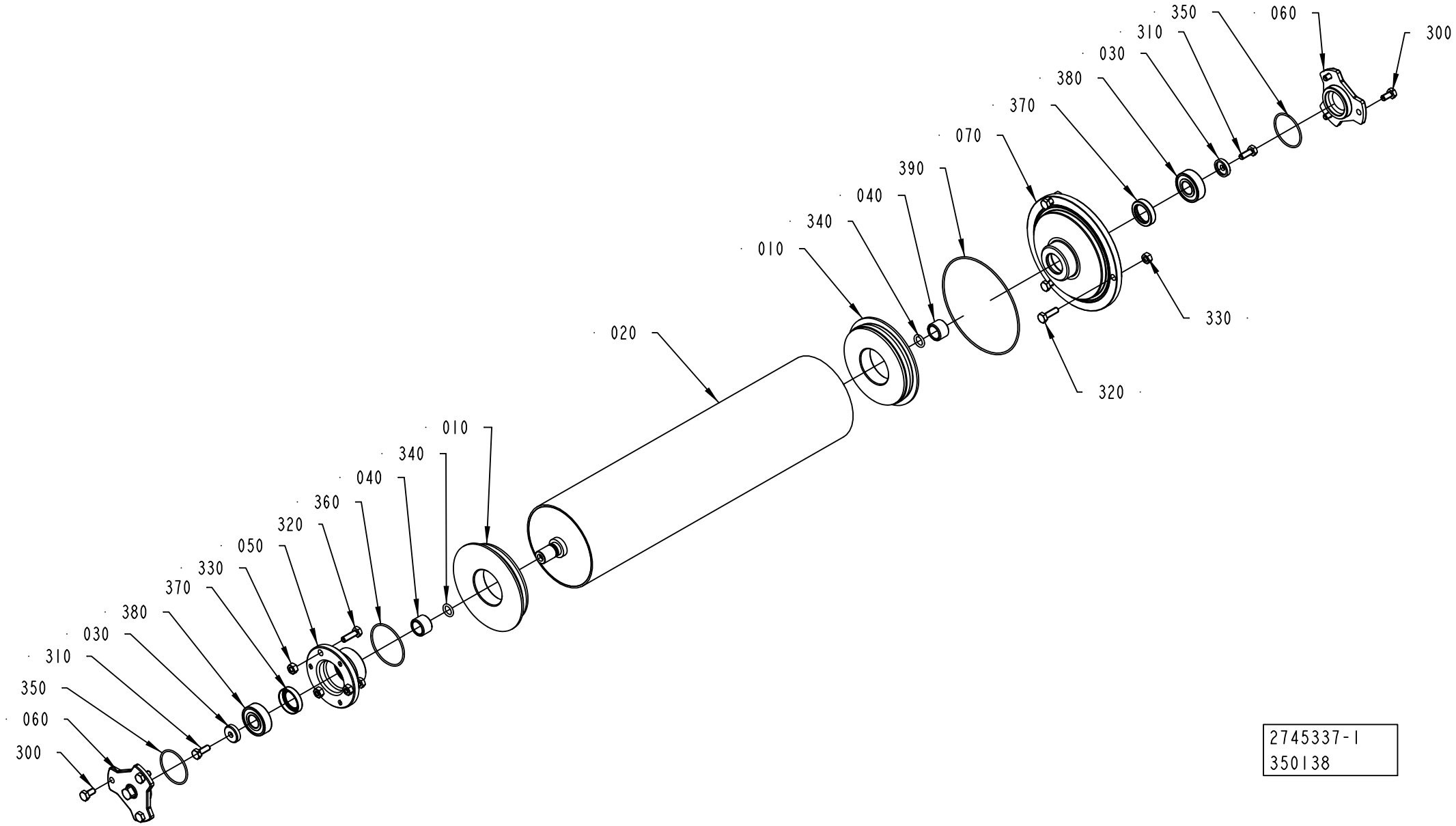

ECM: 353199 - 20081003
Group number: 2745337-0100
Assembly Drawing: 2745337-1_1_AB

| Pos | Part No | UN | Qty | Description | Page No |
|---|---|---|---|---|---|
| **LIGHTCAP** | | | | | |
| 010 | 2725564-0000 | | 2 | WHEEL | |
| 020 | 2715553-0000 | | 1 | BENDING ROLLER | |
| **NOMOLDEDCAP** | | | | | |
| 010 | 1498783-0000 | | 2 | WHEEL | |
| 020 | 2833041-0000 | | 1 | BENDING ROLLER | |
| **STDA7 CAP** | | | | | |
| 010 | 1498783-0000 | | 2 | WHEEL | |
| 020 | 2833042-0000 | | 1 | BENDING ROLLER | |
| **Common Parts** | | | | | |
| 030 | 1538725-0000 | | 2 | WASHER | |
| 040 | 1538726-0000 | | 2 | BUSHING | |
| 050 | 1548734-0000 | | 1 | FLANGE | |
| 060 | 1548735-0000 | | 2 | LID | |
| 070 | 1548739-0000 | | 1 | FLANGE | |
| 300 | 312105-0366 | | 6 | SCREW M6S ISO 4017 M6X12 A480 | |
| 310 | 312105-0368 | | 2 | SCREW M6S ISO 4017 M6X16 A480 | |
| 320 | 312105-0370 | | 6 | SCREW M6S ISO 4017 M6X20 A480 | |
| 330 | 312605-0316 | | 6 | HEXAGON NUT, M6M M6 A280 | |
| 340 | 315204-0209 | | 2 | O-RING 10,3X2,4 MM | |
| 350 | 315205-0801 | | 2 | O-RING 37,82X1,78 MM | |
| 360 | 315205-0804 | | 1 | O-RING 47,35X1,78 MM | |
| 370 | 90458-0639 | | 2 | VARILIP 20X30X7 MM | |
| 380 | 90458-1704 | | 2 | BALL BEARING, 15X35X11 MM | |
| 390 | 90459-1627 | | 1 | O-RING 114,02X1,78 MM | |

| Pos | Part No | UN | Qty | Description | Page No |
|---|---|---|---|---|---|

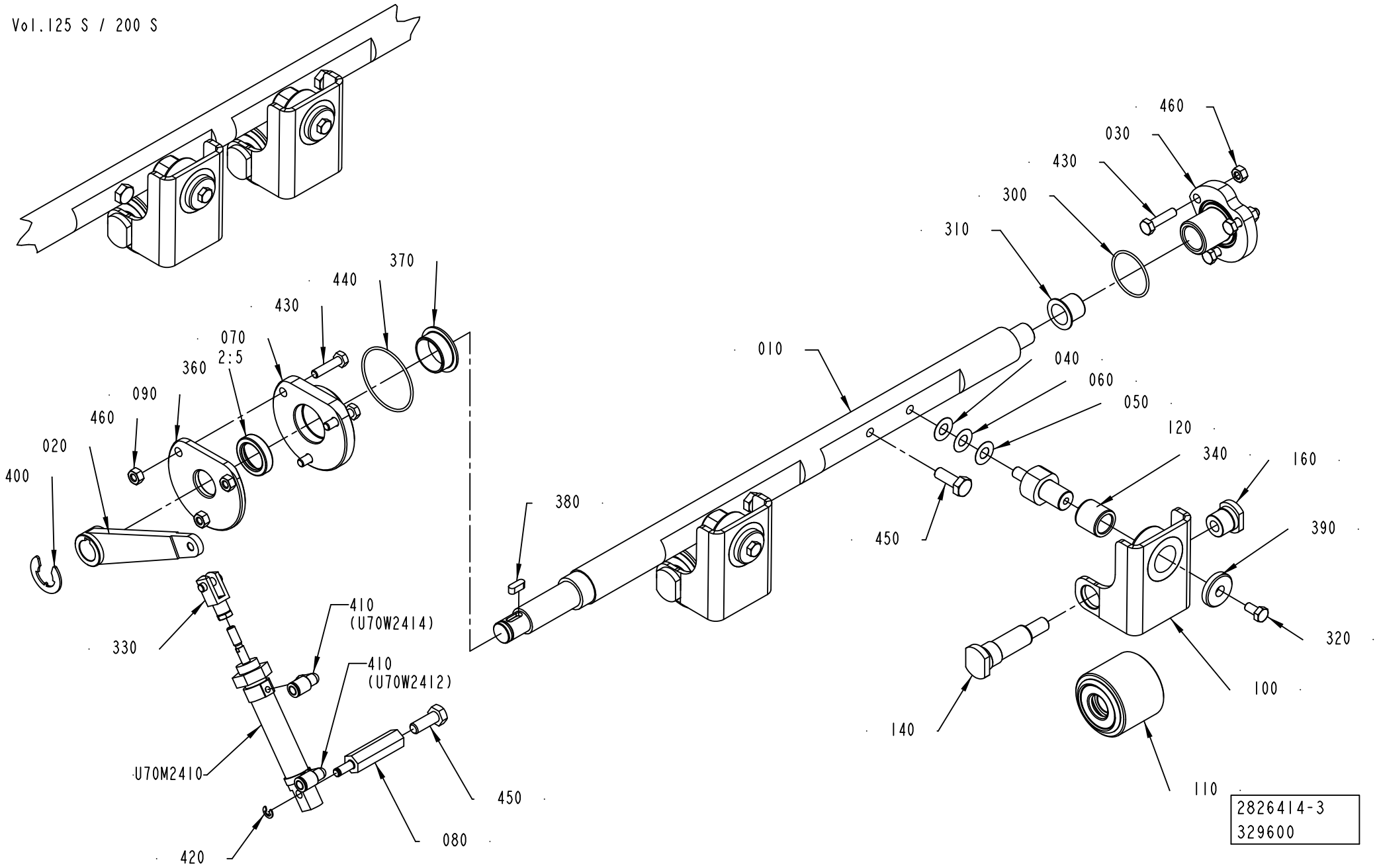
Vol.125 S / 200 S
460
030
430
300
310
370
440
430
070
2:5
360
090
460
020
400
010
040
060
050
120
340
160
380
450
390
320
410
(U70W2414)
330
410
(U70W2412)
100
140
U70M2410
450
080
420
110
2826414-3
329600

ECM: 342774 - 20080706
Group number: 2826414-0300
Assembly Drawing: 2826414-3_1_AA

| Pos | Part No | UN | Qty | Description | Page No |
|---|---|---|---|---|---|
| - | | | | | |
| 010 | 2783091-0000 | | 1 | ROD | |
| 020 | 2910374-0000 | | 1 | LEVER | |
| 030 | 2878384-0000 | | 1 | LID | |
| 040 | 2033-0008 | | 2 | WASHER | |
| 050 | 2033-0007 | | 2 | WASHER | |
| 060 | 2033-0011 | | 2 | WASHER | |
| 070 | 2878566-0000 | | 1 | FLANGE | |
| 080 | 2783089-0000 | | 1 | SHAFT | |
| 090 | 2878567-0000 | | 1 | LID | |
| 100 | 2923889-0000 | | 2 | BRACKET | |
| 110 | 2918380-0000 | | 2 | ROLLER | |
| 120 | 2910377-0000 | | 2 | PIN | |
| 140 | 2910375-0000 | | 2 | SHAFT | |
| 160 | 2910376-0000 | | 2 | NUT | |
| 300 | 315205-0715 | | 1 | O-RING 33,05X1,78 MM | |
| 310 | 321158-0221 | | 1 | FLANGE BUSHING, 16X18X17 MM | |
| 320 | 312105-0366 | | 2 | SCREW M6S ISO 4017 M6X12 A480 | |
| 330 | 90450-0725 | | 1 | ROD END, CLEVIS WITH AXLE M6 | |
| 340 | 90600-3677 | | 2 | BUSHING, 15X21X20 MM | |
| 360 | 90458-0639 | | 1 | VARILIP 20X30X7 MM | |
| 370 | 90459-1058 | | 1 | FLANGE BUSHING, 25X28X11,5 MM | |
| 380 | 315705-0198 | | 1 | PARALLEL KEY W. ROUND ENDS 5X5X14 MM | |
| 390 | 315125-0165 | | 2 | WASHER TBRSB 8,4X26X5 A4 | |
| 400 | 315755-0113 | | 1 | RETAINING RING SHAFT DIN 6799 15 A2 | |
| 410 | 350002-0002 | | 2 | PUSH-IN L-FITTING QSL-F-M5-6 | |
| 420 | 315755-0106 | | 1 | RETAINING RING SHAFT DIN 6799 4 A2 | |
| 430 | 312105-0372 | | 6 | SCREW M6S ISO 4017 M6X25 A480 | |
| 440 | 315205-0804 | | 1 | O-RING 47,35X1,78 MM | |
| 450 | 312105-0372 | | 3 | SCREW M6S ISO 4017 M6X25 A480 | |
| 460 | 312605-0316 | | 6 | HEXAGON NUT, M6M M6 A280 | |
| U70M2410 | 90457-0871 | | 1 | DOUBLE ACTING, MINI-ISO, CYL. 16-25 | |

| Pos | Part No | UN | Qty | Description | Page No |
|---|---|---|---|---|---|

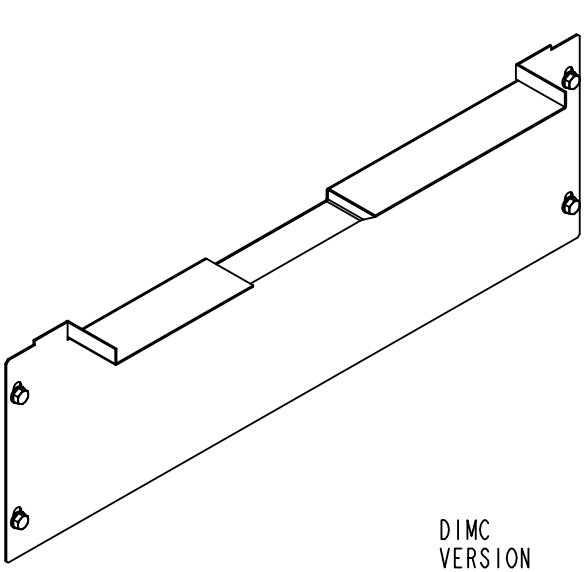

DIMC
VERSION

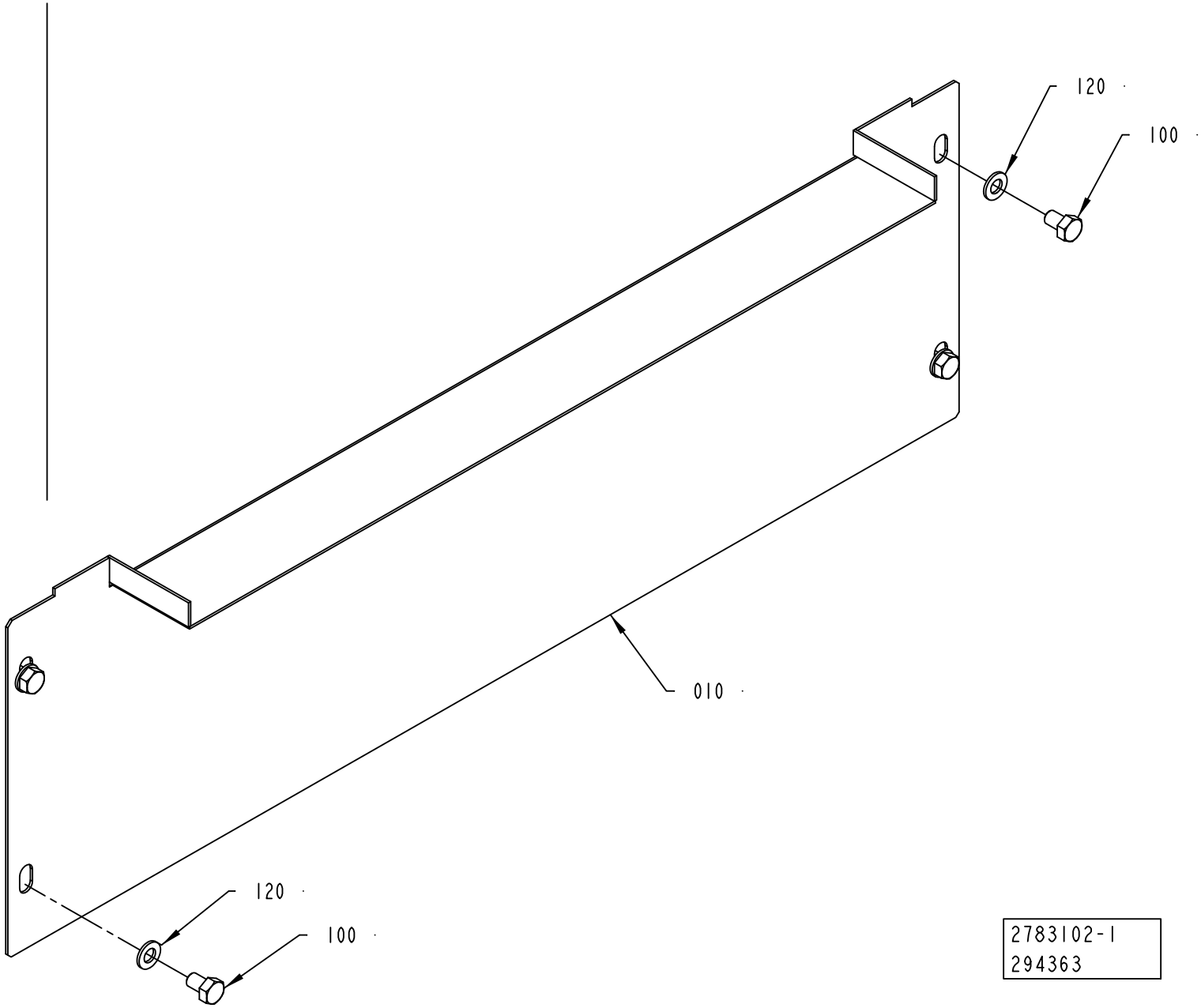


2783102-1
294363

ECM: 343282 - 20080428
Group number: 2783102-0100
Assembly Drawing: 2783102-1_1_AA

| Pos | Part No | UN | Qty | Description | Page No |
|---|---|---|---|---|---|
| **A3/FLEX TBA 1000SQ NODIMC, A3/FLEX TBA 1000S NODIMC, A3/FLEX TBA 1000B NODIMC, A3/FLEX TBA 0500B NODIMC, A3/FLEX TPA 1000SQ NODIMC, A3/FLEX TBA 1500S NODIMC, A3/FLEX TPA 0750SQ NODIMC, A3/FLEX TBA 0500SQ NODIMC** | | | | | |
| 010 | 2867482-0000 | | 1 | PLATE | |
| **A3/FLEX TBA 2000S NODIMC** | | | | | |
| 010 | 2894609-0000 | | 1 | PLATE | |
| **DIMC/FLEX** | | | | | |
| 010 | 2874692-0000 | | 1 | PLATE | |
| **Common Parts** | | | | | |
| 100 | 312105-0323 | | 4 | SCREW M6S ISO 4017 M5X8 A480 | |
| 120 | 315105-0146 | | 4 | WASHER BRB 5,3X10 RFR | |

| Pos | Part No | UN | Qty | Description | Page No |
|---|---|---|---|---|---|

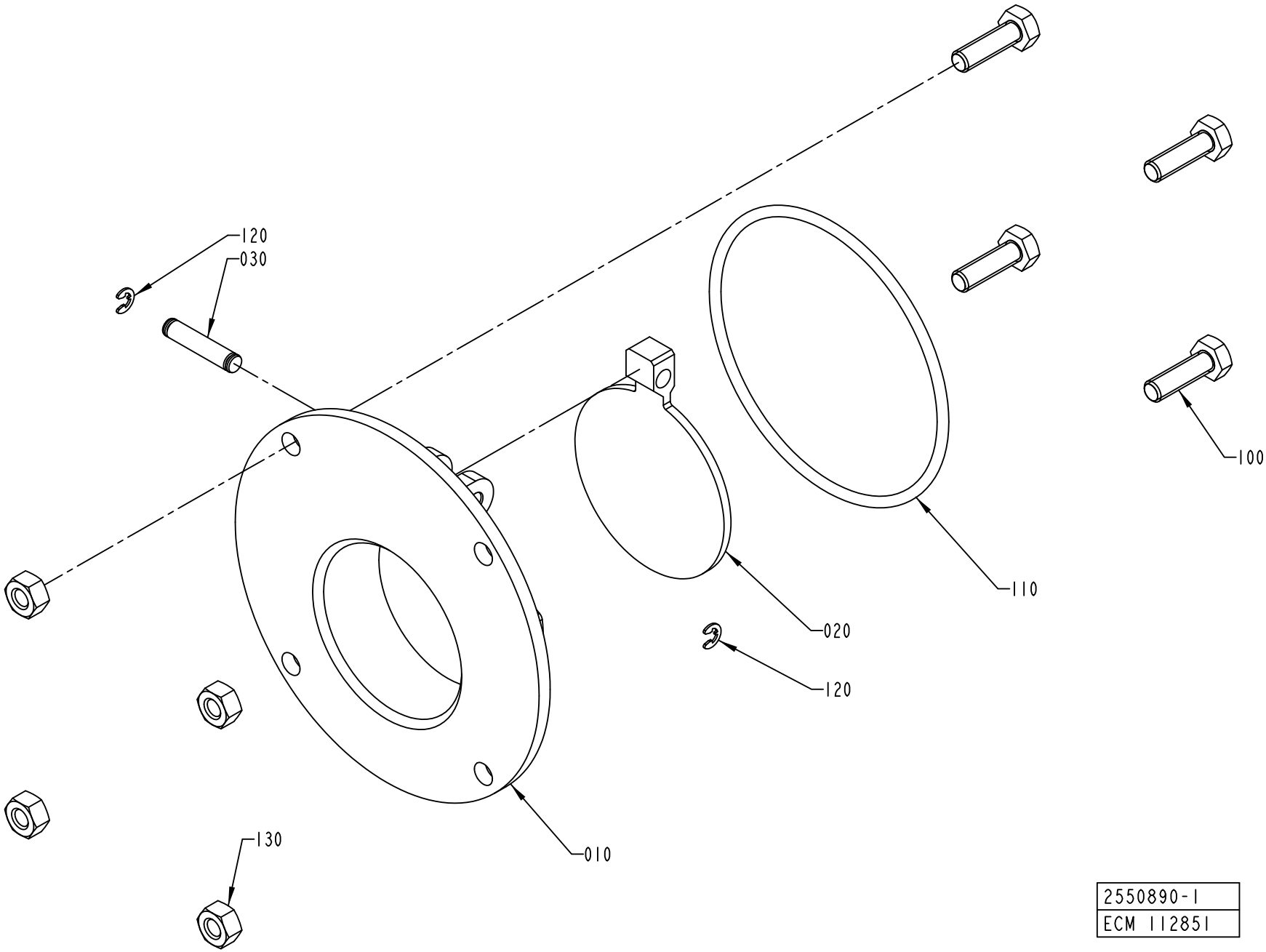


| 2550890-1 |
| --- |
| ECM 112851 |

ECM: 188395 - 20041117
Group number: 2550890-0100
Assembly Drawing: 2550890-1_1_AA

| Pos | Part No | UN | Qty | Description | Page No |
|---|---|---|---|---|---|
| - | | | | | |
| 010 | 1558417-0000 | | 1 | FLANGE | |
| 020 | 1538494-0000 | | 1 | LID | |
| 030 | 1558418-0000 | | 1 | SHAFT | |
| 100 | 312105-0370 | | 4 | SCREW M6S ISO 4017 M6X20 A480 | |
| 110 | 315204-0307 | | 1 | O-RING 79,5X3 MM | |
| 120 | 315755-0105 | | 2 | RETAINING RING SHAFT DIN 6799 3,2 A2 | |
| 130 | 312605-0316 | | 4 | HEXAGON NUT, M6M M6 A280 | |

| Pos | Part No | UN | Qty | Description | Page No |
|---|---|---|---|---|---|

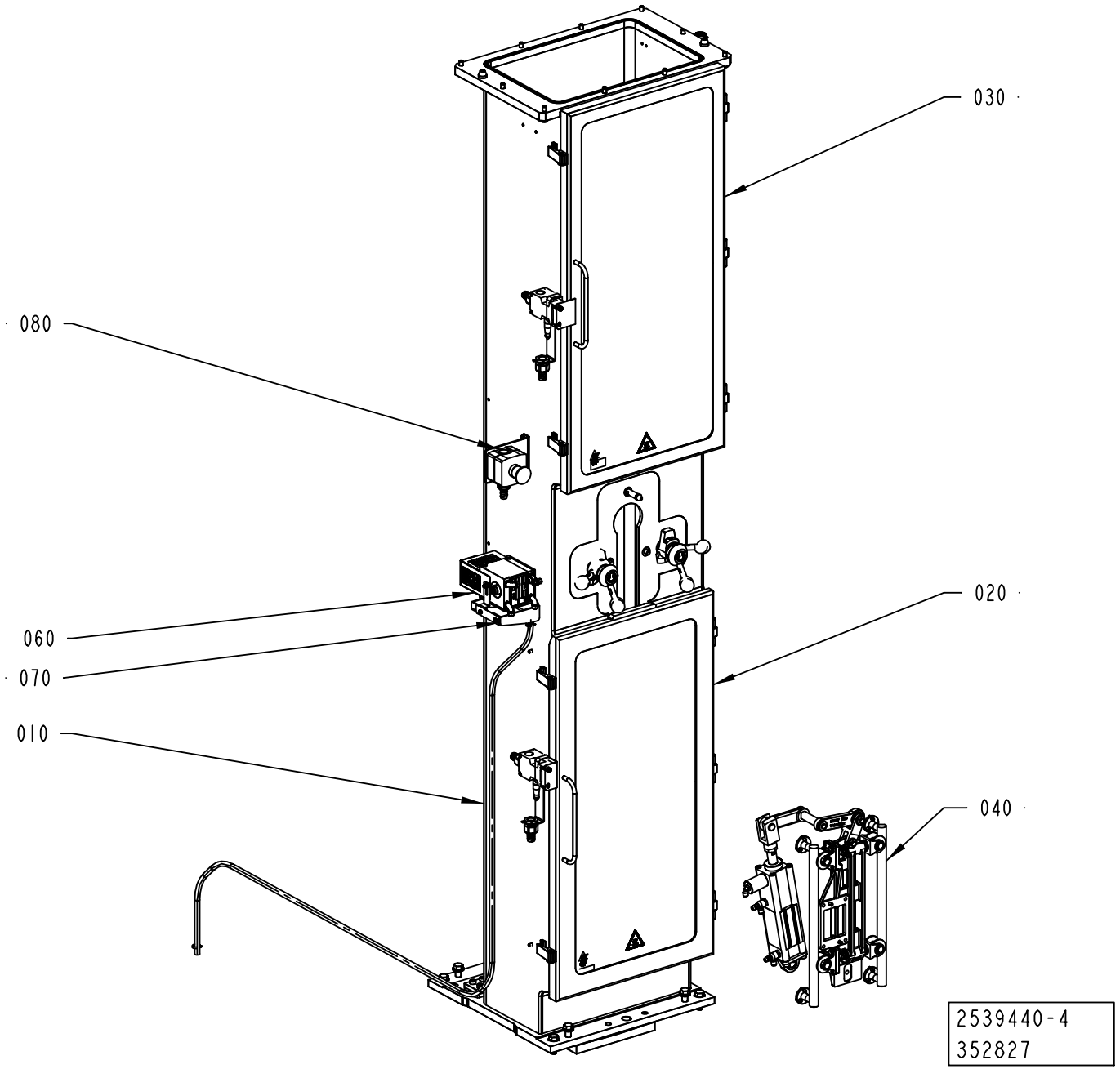
030
080
020
060
070
010
040
2539440-4
352827

ECM: 362405 - 20081001
Group number: 2539440-0200
Assembly Drawing: 2539440-4_1_AB

| Pos | Part No | UN | Qty | Description | Page No |
|---|---|---|---|---|---|
| **A3/FLEX** | | | | | |
| 020 | 2508283-0300 | | 1 | DOOR | **1-71** |
| 030 | 2508279-0200 | | 1 | DOOR | **1-73** |
| **Common Parts** | | | | | |
| 010 | 1548872-0200 | | 1 | PILLAR | **1-75, 1-77** |
| 040 | 2512930-0300 | | 1 | SUPPORT RAIL | **1-79** |
| 060 | 1548876-0200 | | 1 | IH EQUIPMENT | **1-81** |
| 070 | 2937284-0100 | | 1 | DRAINING CONDENSE | **1-83** |
| 080 | 2528087-0200 | | 1 | EMERGENCY STOP | **1-85** |

| Pos | Part No | UN | Qty | Description | Page No |
|---|---|---|---|---|---|

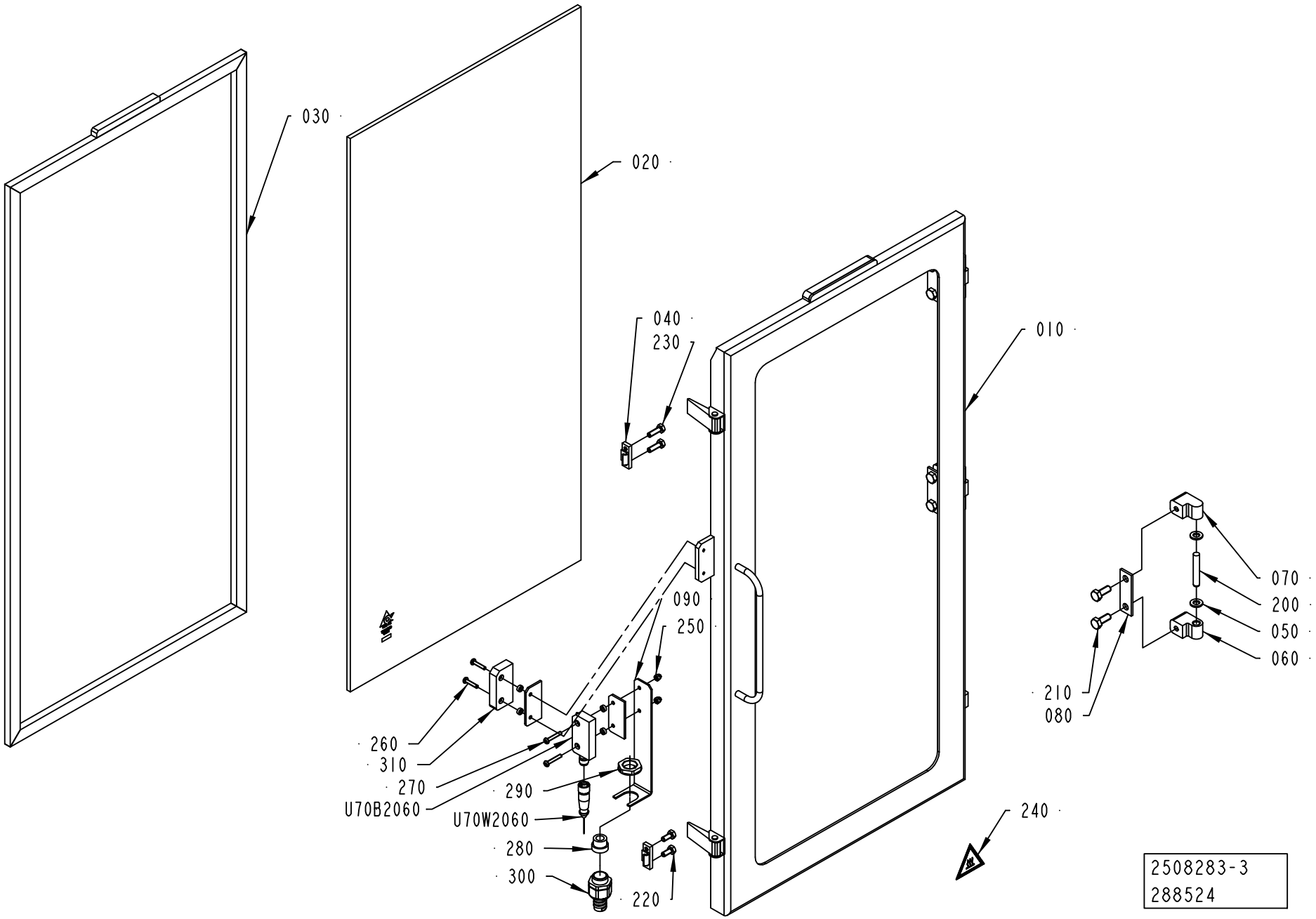
030
020
040
230
010
090
250
070
200
050
060
210
080
260
310
270
U70B2060
290
U70W2060
280
300
220
240
2508283-3
288524

ECM: 288528 - 20070704
Group number: 2508283-0300
Assembly Drawing: 2508283-3_1_AA

| Pos | Part No | UN | Qty | Description | Page No |
|---|---|---|---|---|---|
| - | | | | | |
| 010 | 2783052-0000 | | 1 | FRAME | |
| 020 | 2874752-0000 | | 1 | GLASS PANE | |
| 030 | 2508285-0000 | | 1 | GASKET | |
| 040 | 271860-0000 | | 2 | CLAMP BLOCK | |
| 050 | 441739-0000 | | 6 | WASHER | |
| 060 | 1041979-0000 | | 3 | HINGE FLANGE | |
| 070 | 1041978-0000 | | 3 | HINGE FLANGE | |
| 080 | 441737-0000 | | 3 | WASHER | |
| 090 | 2793365-0000 | | 1 | PLATE | |
| 200 | 311103-0413 | | 3 | PARALLEL PIN ISO 2338 8M6X50 A1 | |
| 210 | 312105-0451 | | 6 | SCREW M6S ISO 4017 M8X20 A480 | |
| 220 | 312105-0368 | | 2 | SCREW M6S ISO 4017 M6X16 A480 | |
| 230 | 312105-0370 | | 2 | SCREW M6S ISO 4017 M6X20 A480 | |
| 240 | 359705-0007 | | 1 | WARNING SIGN ISO, HOT SURFACE | |
| 250 | 312705-0312 | | 2 | NUT HEX. DOMED CAP MHM-6 M4 A280 | |
| 260 | 90459-4164 | | 2 | SAFETY SCREW SM4X20, 20-053-42 | |
| 270 | 90459-4165 | | 2 | SAFETY SCREW, 20-053-43 SM4X25 | |
| 280 | 353249-0011 | | 1 | INSERT, SINGLE HOLE, EK 153/11 | |
| 290 | 90458-0323 | | 1 | NUT, M20X1,5 | |
| 300 | 90458-0429 | | 1 | HOSE GLAND W/O INSERT M20 EXTENDED | |
| 310 | 90458-2794 | | 1 | SAFETY SENSOR, NON-CONTACT EVA | |
| U70B2060 | 90459-4142 | | 1 | SAFETY SENSOR, 20-051-00 ADAM | |
| U70W2060 | 90459-4252 | | 1 | CABLE M12-C101, 20-056-10 | |

| Pos | Part No | UN | Qty | Description | Page No |
|---|---|---|---|---|---|

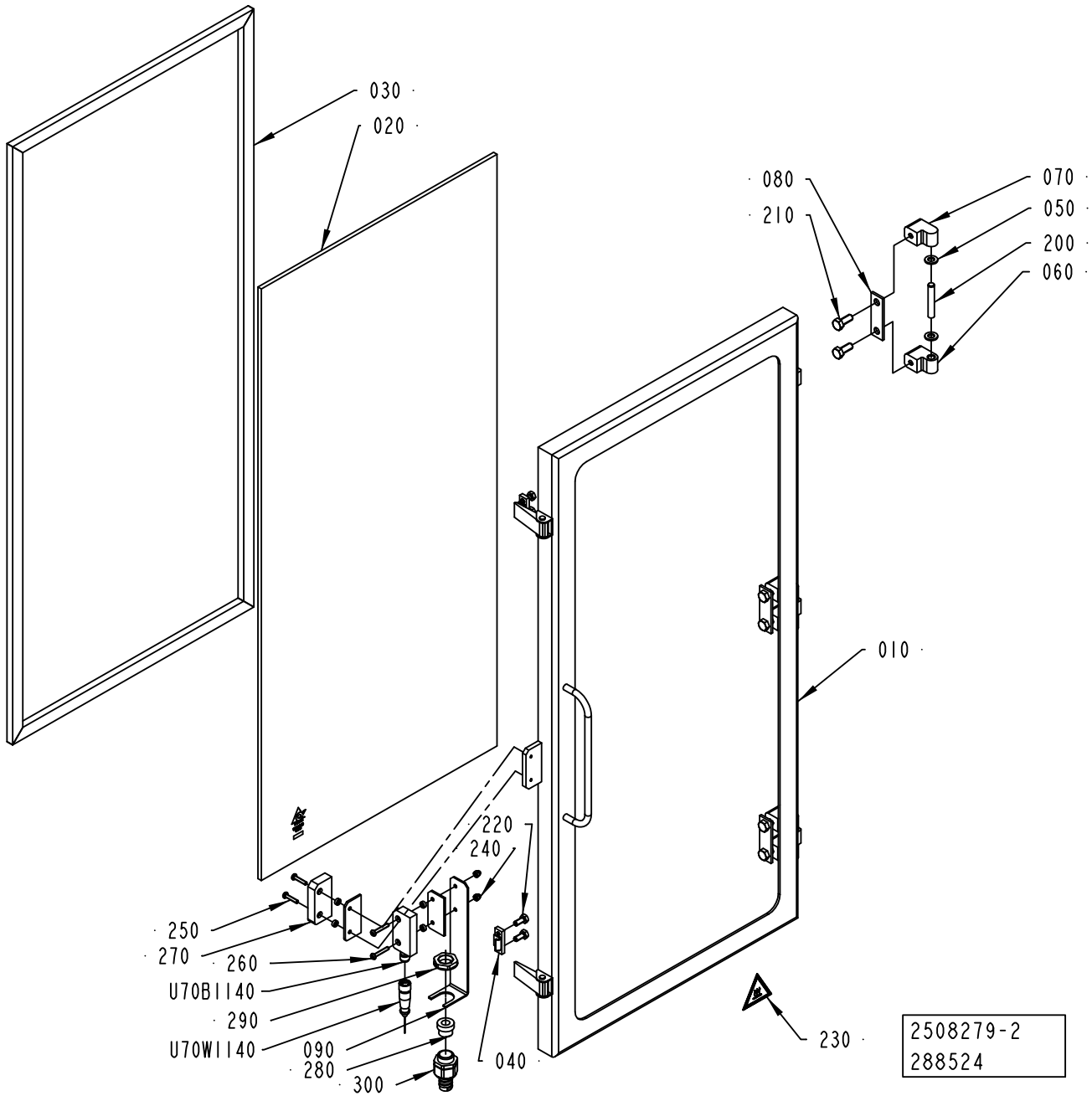
030
020
080
210
070
050
200
060
010
220
240
250
270
260
U70B1140
290
U70W1140
090
280
300
040
230
2508279-2
288524

ECM: 288530 - 20070704
Group number: 2508279-0200
Assembly Drawing: 2508279-2_1_AA

| Pos | Part No | UN | Qty | Description | Page No |
|---|---|---|---|---|---|
| - | | | | | |
| 010 | 2783051-0000 | | 1 | FRAME | |
| 020 | 2874751-0000 | | 1 | GLASS PANE | |
| 030 | 2508281-0000 | | 1 | GASKET | |
| 040 | 271860-0000 | | 2 | CLAMP BLOCK | |
| 050 | 441739-0000 | | 6 | WASHER | |
| 060 | 1041979-0000 | | 3 | HINGE FLANGE | |
| 070 | 1041978-0000 | | 3 | HINGE FLANGE | |
| 080 | 441737-0000 | | 3 | WASHER | |
| 090 | 2793365-0000 | | 1 | PLATE | |
| 200 | 311103-0413 | | 3 | PARALLEL PIN ISO 2338 8M6X50 A1 | |
| 210 | 312105-0451 | | 6 | SCREW M6S ISO 4017 M8X20 A480 | |
| 220 | 312105-0368 | | 4 | SCREW M6S ISO 4017 M6X16 A480 | |
| 230 | 359705-0007 | | 1 | WARNING SIGN ISO, HOT SURFACE | |
| 240 | 312705-0312 | | 2 | NUT HEX. DOMED CAP MHM-6 M4 A280 | |
| 250 | 90459-4164 | | 2 | SAFETY SCREW SM4X20, 20-053-42 | |
| 260 | 90459-4165 | | 2 | SAFETY SCREW, 20-053-43 SM4X25 | |
| 270 | 90458-2794 | | 1 | SAFETY SENSOR, NON-CONTACT EVA | |
| 280 | 353249-0011 | | 1 | INSERT, SINGLE HOLE, EK 153/11 | |
| 290 | 90458-0323 | | 1 | NUT, M20X1,5 | |
| 300 | 90458-0429 | | 1 | HOSE GLAND W/O INSERT M20 EXTENDED | |
| U70B1140 | 90459-4142 | | 1 | SAFETY SENSOR, 20-051-00 ADAM | |
| U70W1140 | 90459-4252 | | 1 | CABLE M12-C101, 20-056-10 | |

| Pos | Part No | UN | Qty | Description | Page No |
|---|---|---|---|---|---|

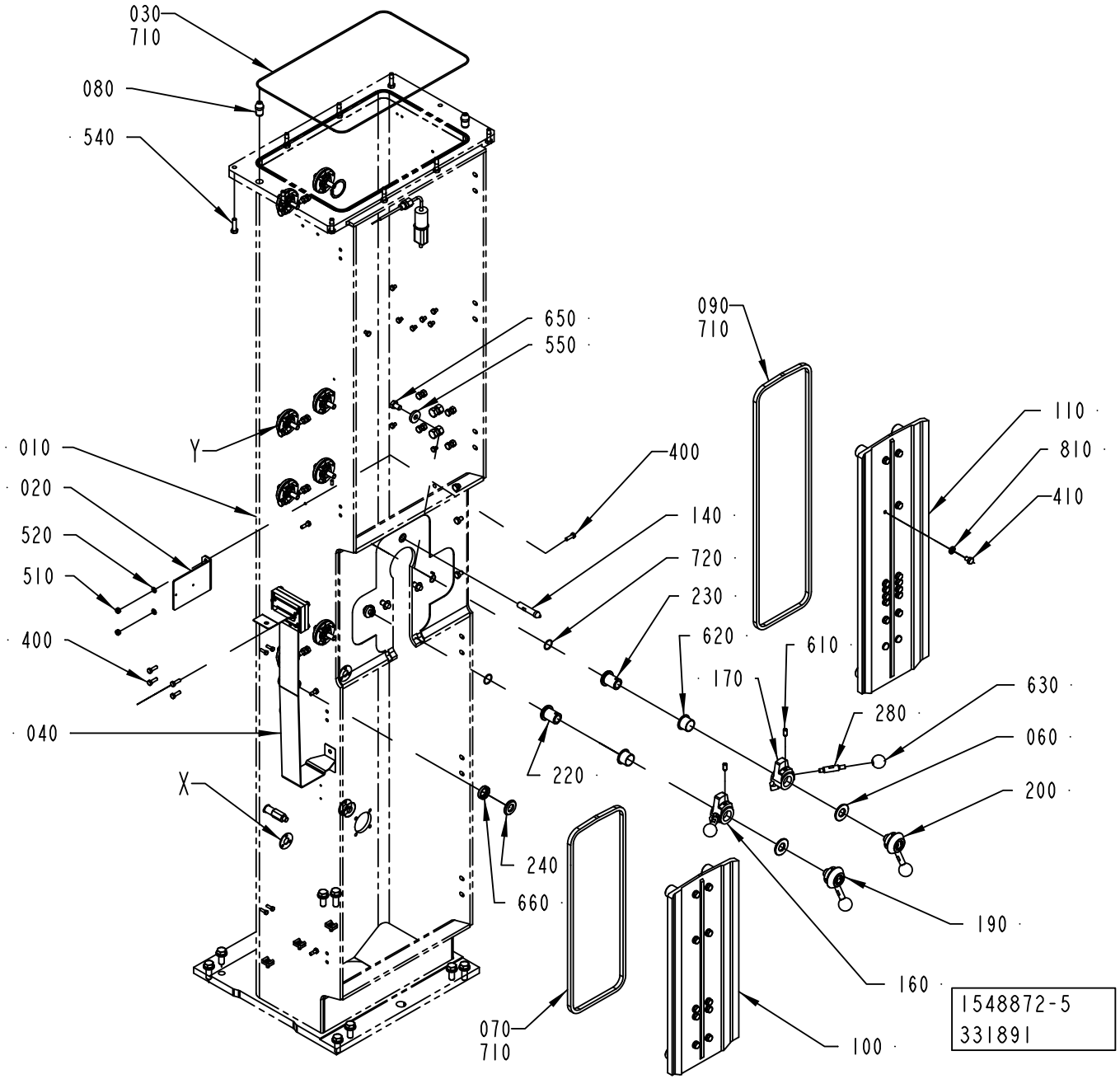
030
710
080
540
650
550
090
710
110
810
410
010
020
520
510
400
040
Y
X
400
140
720
230
620
610
170
630
280
060
200
190
160
220
240
660
070
710
100
1548872-5
331891

ECM: 363079 - 20081001
Group number: 1548872-0200
Assembly Drawing: 1548872-5_1_AD

This list covers pages from 1-74 to 1-77

| Pos | Part No | UN | Qty | Description | Page No |
|---|---|---|---|---|---|
| **A3/FLEX (See drawing on pages: 1-74, 1-76)** | | | | | |
| 010 | 2709284-0000 | | 1 | PILLAR | |
| 040 | 2863174-0000 | | 1 | BUSBAR | |
| 090 | 2709276-0000 | | 1 | GASKET | |
| 110 | 2835472-0000 | | 1 | PLATE | |
| 320 | 2532978-0000 | | 1 | PLATE | |
| 340 | 2532977-0000 | | 1 | BRACKET | |
| 410 | 312105-0447 | | 26 | SCREW M6S ISO 4017 M8X12 A480 | |
| 640 | 312105-0327 | | 2 | SCREW M6S ISO 4017 M5X12 A480 | |
| 730 | 315105-0146 | | 2 | WASHER BRB 5,3X10 RFR | |
| 790 | 312105-0329 | | 4 | SCREW M6S ISO 4017 M5X16 A480 | |
| 800 | 312105-0368 | | 2 | SCREW M6S ISO 4017 M6X16 A480 | |
| 810 | 315115-0165 | | 26 | WASHER PLAIN, TBRB 8,4/16 H=3 | |
| **Common Parts** | | | | | |
| 020 | 2528088-0000 | | 1 | HOLDER | |
| 030 | 90459-1175 | | 1 | O-RING 418X3,0 MM | |
| 050 | 90459-1174 | | 2 | O-RING 75,87X2,62 MM | |
| 060 | 2562677-0000 | | 2 | WASHER | |
| 070 | 2709275-0000 | | 1 | GASKET | |
| 080 | 1519150-0000 | | 2 | PIN | |
| 100 | 2835471-0000 | | 1 | PLATE | |
| 120 | 2544865-0000 | | 1 | BUSHING | |
| 140 | 2506283-0000 | | 1 | PIN | |
| 160 | 2526859-0000 | | 1 | CAM | |
| 170 | 2528068-0000 | | 1 | CAM | |
| 190 | 2528070-0000 | | 1 | LOCKING LEVER | |
| 200 | 2528102-0000 | | 1 | LOCKING LEVER | |
| 220 | 2512769-0000 | | 1 | SHAFT | |
| 230 | 2512768-0000 | | 1 | SHAFT | |
| 240 | 2544866-0000 | | 1 | WASHER | |
| 250 | 2512774-0000 | | 4 | SHIM | |
| 260 | 2547386-0000 | | 1 | SHAFT | |
| 270 | 2533628-0000 | | 1 | SUPPORT BLOCK | |
| 280 | 2526858-0000 | | 2 | DOWEL | |
| 290 | 2533627-0000 | | 1 | SUPPORT BLOCK | |
| 300 | 2709274-0000 | | 8 | FLANGE | |
| 310 | 2709281-0000 | | 16 | SHIM | |
| 380 | 312125-0366 | | 3 | SCREW ISO 1207 M6X12 A4 | |
| 400 | 312105-0370 | | 42 | SCREW M6S ISO 4017 M6X20 A480 | |
| 415 | 312105-0449 | | 4 | SCREW M6S ISO 4017 M8X16 A480 | |
| 420 | 312105-0453 | | 8 | SCREW M6S ISO 4017 M8X25 A480 | |
| 430 | 312109-0500 | | 8 | SCREW M6S ISO 4017 M10X45 A480 | |
| 440 | 312605-0318 | | 12 | HEXAGON NUT, M6M M8 A280 | |
| 450 | 312105-0532 | | 2 | SCREW M6S ISO 4017 M12X20 A480 | |
| 460 | 90459-6881 | | 16 | SPHERICAL WASHER M10 DIN 6319 C SHAPE | |
| 470 | 90459-6882 | | 16 | CONICAL WASHER M10 DIN 6319 D SHAPE | |
| 480 | 312105-0536 | | 4 | SCREW M6S ISO 4017 M12X30 A480 | |
| 490 | 312105-0538 | | 4 | SCREW M6S ISO 4017 M12X35 A480 | |
| 510 | 312605-0316 | | 2 | HEXAGON NUT, M6M M6 A280 | |
| 520 | 315105-0153 | | 2 | WASHER BRB 6,4X12 RFR | |
| 530 | 315115-0178 | | 8 | WASHER PLAIN, TBRB 13/24 H=4 | |
| 540 | 312105-0455 | | 10 | SCREW M6S ISO 4017 M8X30 A480 | |
| 550 | 315125-0173 | | 2 | WASHER TBRSB 10,5X28X6 A4 | |
| 590 | 90326-0012 | | 1 | PROTECTIVE COVER, T31A4618 | |
| 600 | 315237-0110 | | 1 | WASHER,PL.RND.AL.13,5/18,H=1,5 | |
| 610 | 90287-0112 | | 2 | SCREW SPRINGLOAD. SLOTTED HEAD M8X16 | |
| 620 | 90240-0293 | | 2 | FLANGE BUSHING, 25X28X21 MM | |
| 630 | 318800-0104 | | 2 | HANDLE,SPHERICAL KNOB,INT.THRE.,D.30-M8 | |
| 650 | 312105-0489 | | 2 | SCREW M6S ISO 4017 M10X16 A480 | |
| 660 | 90459-0871 | | 1 | SEALING RING 18X30X7 MM | |
| 670 | 312605-0322 | | 2 | HEXAGON NUT, M6M M12 A280 | |
| 680 | 315751-0113 | | 1 | RETAINING RING FOR SHAFT DIN 471 16 SS | |
| 710 | 90153-0023 | | 1 | ADHESIVE, SILICON 251470 TUB 90CC(UN1993 | |
| 720 | 315205-0707 | | 2 | O-RING 20,35X1,78 MM | |
| 740 | 312105-0362 | | 9 | SCREW M6S ISO 4017 M6X8 A480 | |
| 780 | 90330-0066 | | 1 | PLUG, EXT. G-THREAD, G1/8 | |
| 820 | 352113-0204 | | 3 | ANCHOR PLATES FOR STRIPS, TYPE TM3S25-M | |
| U70B3540 | 90458-0341 | | 1 | THERMOCOUPLE, 5130050-001 | |
| U70W3540 | 90220-0034 | MM | 1000 | THERMOCABLE TEX/SITW-20F-KX 2X0,5MM2 | |
| U70X3540 | 90326-0020 | | 1 | PLUG, FEMALE YELLOW CR-AL | |

| Machine Type | Group Description | Used-In | Group Number | Page No |
|---|---|---|---|---|

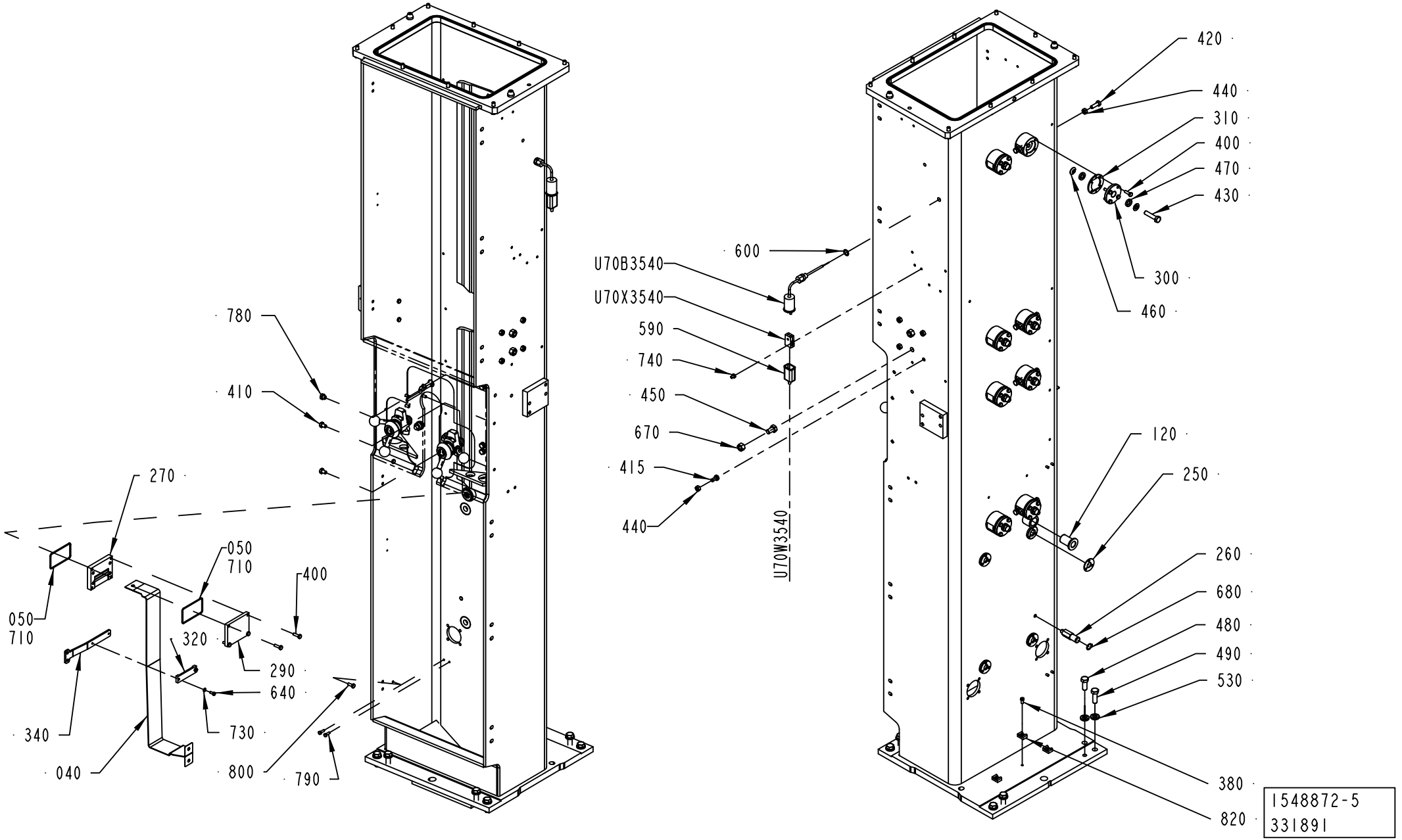
780
410
270
050
710
400
050
710
320
290
640
340
730
040
800
790
420
440
310
400
470
430
600
U70B3540
U70X3540
590
740
450
670
415
440
U70W3540
300
460
120
250
260
680
480
490
530
380
820
1548872-5
331891

ECM: 363079 - 20081001
Group number: 1548872-0200
Assembly Drawing: 1548872-5_2_AD

This list covers pages from 1-74 to 1-77

| Pos | Part No | UN | Qty | Description | Page No |
|---|---|---|---|---|---|
| **A3/FLEX (See drawing on pages: 1-74, 1-76)** | | | | | |
| 010 | 2709284-0000 | | 1 | PILLAR | |
| 040 | 2863174-0000 | | 1 | BUSBAR | |
| 090 | 2709276-0000 | | 1 | GASKET | |
| 110 | 2835472-0000 | | 1 | PLATE | |
| 320 | 2532978-0000 | | 1 | PLATE | |
| 340 | 2532977-0000 | | 1 | BRACKET | |
| 410 | 312105-0447 | | 26 | SCREW M6S ISO 4017 M8X12 A480 | |
| 640 | 312105-0327 | | 2 | SCREW M6S ISO 4017 M5X12 A480 | |
| 730 | 315105-0146 | | 2 | WASHER BRB 5,3X10 RFR | |
| 790 | 312105-0329 | | 4 | SCREW M6S ISO 4017 M5X16 A480 | |
| 800 | 312105-0368 | | 2 | SCREW M6S ISO 4017 M6X16 A480 | |
| 810 | 315115-0165 | | 26 | WASHER PLAIN, TBRB 8,4/16 H=3 | |
| **Common Parts** | | | | | |
| 020 | 2528088-0000 | | 1 | HOLDER | |
| 030 | 90459-1175 | | 1 | O-RING 418X3,0 MM | |
| 050 | 90459-1174 | | 2 | O-RING 75,87X2,62 MM | |
| 060 | 2562677-0000 | | 2 | WASHER | |
| 070 | 2709275-0000 | | 1 | GASKET | |
| 080 | 1519150-0000 | | 2 | PIN | |
| 100 | 2835471-0000 | | 1 | PLATE | |
| 120 | 2544865-0000 | | 1 | BUSHING | |
| 140 | 2506283-0000 | | 1 | PIN | |
| 160 | 2526859-0000 | | 1 | CAM | |
| 170 | 2528068-0000 | | 1 | CAM | |
| 190 | 2528070-0000 | | 1 | LOCKING LEVER | |
| 200 | 2528102-0000 | | 1 | LOCKING LEVER | |
| 220 | 2512769-0000 | | 1 | SHAFT | |
| 230 | 2512768-0000 | | 1 | SHAFT | |
| 240 | 2544866-0000 | | 1 | WASHER | |
| 250 | 2512774-0000 | | 4 | SHIM | |
| 260 | 2547386-0000 | | 1 | SHAFT | |
| 270 | 2533628-0000 | | 1 | SUPPORT BLOCK | |
| 280 | 2526858-0000 | | 2 | DOWEL | |
| 290 | 2533627-0000 | | 1 | SUPPORT BLOCK | |
| 300 | 2709274-0000 | | 8 | FLANGE | |
| 310 | 2709281-0000 | | 16 | SHIM | |
| 380 | 312125-0366 | | 3 | SCREW ISO 1207 M6X12 A4 | |
| 400 | 312105-0370 | | 42 | SCREW M6S ISO 4017 M6X20 A480 | |
| 415 | 312105-0449 | | 4 | SCREW M6S ISO 4017 M8X16 A480 | |
| 420 | 312105-0453 | | 8 | SCREW M6S ISO 4017 M8X25 A480 | |
| 430 | 312109-0500 | | 8 | SCREW M6S ISO 4017 M10X45 A480 | |
| 440 | 312605-0318 | | 12 | HEXAGON NUT, M6M M8 A280 | |
| 450 | 312105-0532 | | 2 | SCREW M6S ISO 4017 M12X20 A480 | |
| 460 | 90459-6881 | | 16 | SPHERICAL WASHER M10 DIN 6319 C SHAPE | |
| 470 | 90459-6882 | | 16 | CONICAL WASHER M10 DIN 6319 D SHAPE | |
| 480 | 312105-0536 | | 4 | SCREW M6S ISO 4017 M12X30 A480 | |
| 490 | 312105-0538 | | 4 | SCREW M6S ISO 4017 M12X35 A480 | |
| 510 | 312605-0316 | | 2 | HEXAGON NUT, M6M M6 A280 | |
| 520 | 315105-0153 | | 2 | WASHER BRB 6,4X12 RFR | |
| 530 | 315115-0178 | | 8 | WASHER PLAIN, TBRB 13/24 H=4 | |
| 540 | 312105-0455 | | 10 | SCREW M6S ISO 4017 M8X30 A480 | |
| 550 | 315125-0173 | | 2 | WASHER TBRSB 10,5X28X6 A4 | |
| 590 | 90326-0012 | | 1 | PROTECTIVE COVER, T31A4618 | |
| 600 | 315237-0110 | | 1 | WASHER,PL.RND.AL.13,5/18,H=1,5 | |
| 610 | 90287-0112 | | 2 | SCREW SPRINGLOAD. SLOTTED HEAD M8X16 | |
| 620 | 90240-0293 | | 2 | FLANGE BUSHING, 25X28X21 MM | |
| 630 | 318800-0104 | | 2 | HANDLE,SPHERICAL KNOB,INT.THRE.,D.30-M8 | |
| 650 | 312105-0489 | | 2 | SCREW M6S ISO 4017 M10X16 A480 | |
| 660 | 90459-0871 | | 1 | SEALING RING 18X30X7 MM | |
| 670 | 312605-0322 | | 2 | HEXAGON NUT, M6M M12 A280 | |
| 680 | 315751-0113 | | 1 | RETAINING RING FOR SHAFT DIN 471 16 SS | |
| 710 | 90153-0023 | | 1 | ADHESIVE, SILICON 251470 TUB 90CC(UN1993 | |
| 720 | 315205-0707 | | 2 | O-RING 20,35X1,78 MM | |
| 740 | 312105-0362 | | 9 | SCREW M6S ISO 4017 M6X8 A480 | |
| 780 | 90330-0066 | | 1 | PLUG, EXT. G-THREAD, G1/8 | |
| 820 | 352113-0204 | | 3 | ANCHOR PLATES FOR STRIPS, TYPE TM3S25-M | |
| U70B3540 | 90458-0341 | | 1 | THERMOCOUPLE, 5130050-001 | |
| U70W3540 | 90220-0034 | MM | 1000 | THERMOCABLE TEX/SITW-20F-KX 2X0,5MM2 | |
| U70X3540 | 90326-0020 | | 1 | PLUG, FEMALE YELLOW CR-AL | |

| Machine Type | Group Description | Used-In | Group Number | Page No |
|---|---|---|---|---|

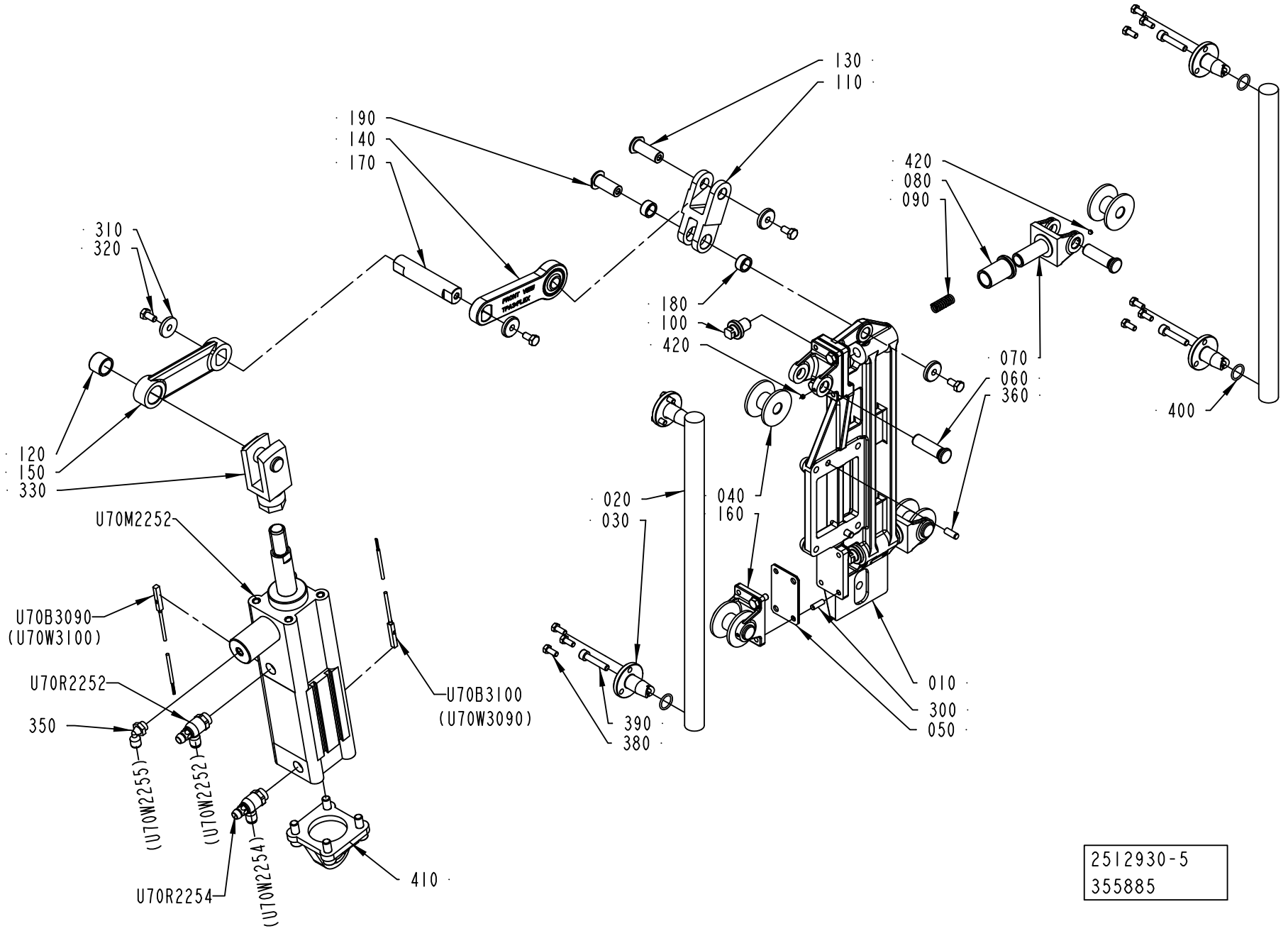
130
110
190
140
170
310
320
420
080
090
180
100
420
070
060
360
400
120
150
330
020
030
040
160
U70M2252
U70B3090
(U70W3100)
U70R2252
350
U70B3100
(U70W3090)
010
300
050
390
380
(U70W2255)
(U70W2252)
U70R2254
(U70W2254)
410
2512930-5
355885

ECM: 359068 - 20081001
Group number: 2512930-0300
Assembly Drawing: 2512930-5_1_AD

| Pos | Part No | UN | Qty | Description | Page No |
|---|---|---|---|---|---|
| **A3/FLEX** | | | | | |
| 110 | 2731434-0000 | | 1 | LEVER | |
| 140 | 2715618-0000 | | 1 | LEVER | |
| 330 | 2547387-0000 | | 1 | ROD END | |
| **Common Parts** | | | | | |
| 010 | 2547401-0000 | | 1 | SUPPORT PLATE | |
| 020 | 2793359-0000 | | 2 | SLIDE BAR | |
| 030 | 2504523-0000 | | 4 | CENTERING | |
| 040 | 2547403-0000 | | 4 | WHEEL | |
| 050 | 2547419-0000 | | 2 | SHIM | |
| 060 | 2526841-0000 | | 4 | SHAFT | |
| 070 | 2552121-0000 | | 2 | BRACKET | |
| 080 | 2522233-0000 | | 2 | BUSHING | |
| 090 | 2522235-0000 | | 2 | COMPRESSION SPRING | |
| 100 | 2541658-0000 | | 2 | SCREW | |
| 120 | 2506269-0000 | | 1 | BUSHING | |
| 130 | 2709262-0000 | | 1 | SHAFT | |
| 150 | 2506273-0000 | | 1 | LEVER | |
| 160 | 2547402-0000 | | 2 | BRACKET | |
| 170 | 2715601-0000 | | 1 | SHAFT | |
| 180 | 2506291-0000 | | 2 | BUSHING | |
| 190 | 2751466-0000 | | 1 | SHAFT | |
| 300 | 311103-0308 | | 4 | PARALLEL PIN ISO 2338 5M6X16 A1 | |
| 310 | 315125-0153 | | 4 | WASHER TBRSB 6,4X22X4 A4 | |
| 320 | 312105-0366 | | 4 | SCREW M6S ISO 4017 M6X12 A480 | |
| 350 | 90458-2956 | | 1 | ELBOW PIPE JOINT, EXT.THREAD, D=6MM-G1/8 | |
| 360 | 311103-0351 | | 2 | PARALLEL PIN ISO 2338 6M6X16 A1 | |
| 370 | 312105-0368 | | 4 | SCREW M6S ISO 4017 M6X16 A480 | |
| 380 | 312105-0327 | | 12 | SCREW M6S ISO 4017 M5X12 A480 | |
| 390 | 312115-0374 | | 4 | SCREW ISO4762 M6X30 A4 80 | |
| 400 | 315205-0703 | | 4 | O-RING 14,0X1,78 MM | |
| 410 | 90459-0586 | | 1 | SWIVEL FLANGE 50 | |
| 420 | 90459-1395 | | 4 | SCREW HEX.SOCK.SET CONEPT.MS6SS M4X4 A2 | |
| U70B3090 | 90600-3272 | | 1 | PROX.SENSOR SMT-8M-PS-24V-K-5,0-OE | |
| U70B3100 | 90600-3272 | | 1 | PROX.SENSOR SMT-8M-PS-24V-K-5,0-OE | |
| U70M2252 | 90459-0587 | | 1 | DOUBLE ACTING, PROFILE, CYL 50-50 | |
| U70R2252 | 90235-0847 | | 1 | THROTTLE CHECK VALVE, G1/4", MANUAL,6 | |
| U70R2254 | 90235-0847 | | 1 | THROTTLE CHECK VALVE, G1/4", MANUAL,6 | |

| Pos | Part No | UN | Qty | Description | Page No |
|---|---|---|---|---|---|

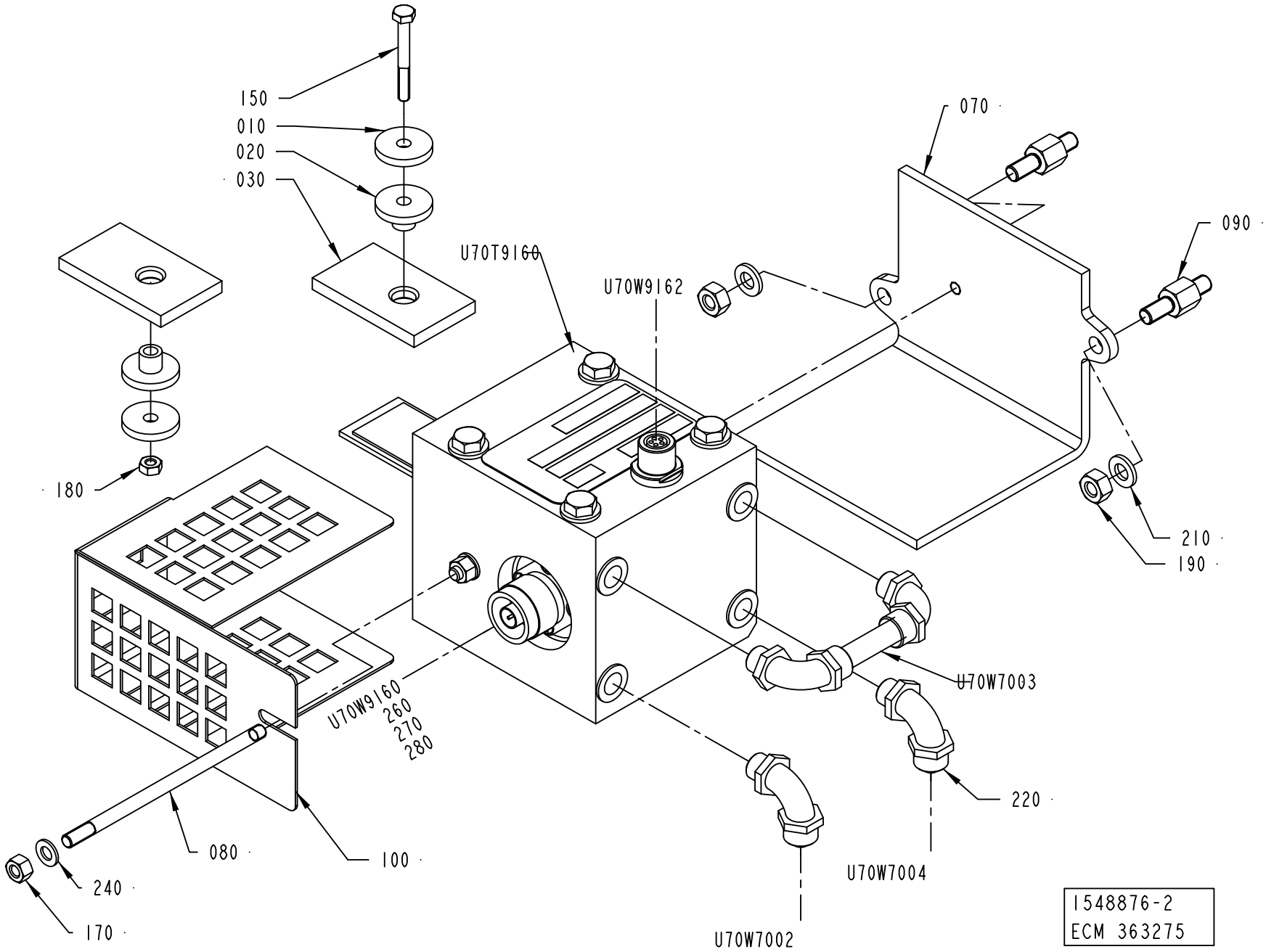
150
010
020
030
070
090
U70T9160
U70W9162
180
210
190
U70W9160
260
270
280
U70W7003
220
080
100
240
170
U70W7004
U70W7002
1548876-2
ECM 363275

ECM: 365345 - 20081001
Group number: 1548876-0200
Assembly Drawing: 1548876-2_1_AC

| Pos | Part No | UN | Qty | Description | Page No |
|---|---|---|---|---|---|
| **A3/FLEX TBA 1000S, A3/FLEX TPA 1000SQ, A3/FLEX TBA 2000S, A3/FLEX TBA 1000B STDA7** | | | | | |
| U70T9160 | 2888970-0524 | | 1 | TRANSFORMER VMN | |
| U70W9160 | 90458-2895 | MM | 8200 | COAXIAL CABLE RG 400/U BROWN | |
| **A3/FLEX TBA 1000SQ** | | | | | |
| U70T9160 | 2888970-0438 | | 1 | TRANSFORMER VMN | |
| U70W9160 | 90458-2895 | MM | 8200 | COAXIAL CABLE RG 400/U BROWN | |
| **Common Parts** | | | | | |
| 010 | 263311-0000 | | 2 | WASHER | |
| 020 | 1539174-0000 | | 2 | BUSHING | |
| 030 | 1539175-0000 | | 2 | PLATE | |
| 070 | 1558441-0000 | | 1 | BRACKET | |
| 080 | 2559066-0000 | | 1 | STUD SCREW | |
| 090 | 2532979-0000 | | 2 | SPACER | |
| 100 | 2541664-0000 | | 1 | COVER | |
| 150 | 312105-0301 | | 1 | SCREW M6S ISO 4017 M4X35 A470 | |
| 170 | 312605-0314 | | 1 | HEXAGON NUT, M6M M5 A280 | |
| 180 | 312605-0312 | | 1 | HEXAGON NUT, M6M M4 A280 | |
| 190 | 312605-0316 | | 2 | HEXAGON NUT, M6M M6 A280 | |
| 210 | 315105-0153 | | 2 | WASHER BRB 6,4X12 RFR | |
| 220 | 342931-0121 | | 4 | ELBOW 90 COUPL.,EXT.THREAD 8/6-G1/8" | |
| 240 | 315105-0146 | | 1 | WASHER BRB 5,3X10 RFR | |
| 250 | 90157-0037 | | 1 | THREAD SEALANT LOCTITE 542 | |
| 260 | 90458-2890 | | 1 | CONNECTOR, 21N-50N12N133NE | |
| 270 | 90458-2892 | | 1 | CONNECTOR, 11 N-50-3-31/133 NE | |
| 280 | 90458-2893 | | 2 | SLEEVE, 78 Z-0-3-4 | |
| U70W7002 | 90166-0118 | MM | 2000 | TUBE 8 MM PA BLACK | |
| U70W7003 | 90166-0118 | MM | 50 | TUBE 8 MM PA BLACK | |
| U70W7004 | 90166-0118 | MM | 2000 | TUBE 8 MM PA BLACK | |
| U70W9162 | 2957417-0000 | | 1 | CABLE | |

| Pos | Part No | UN | Qty | Description | Page No |
|---|---|---|---|---|---|

# DRAINING CONDENSE



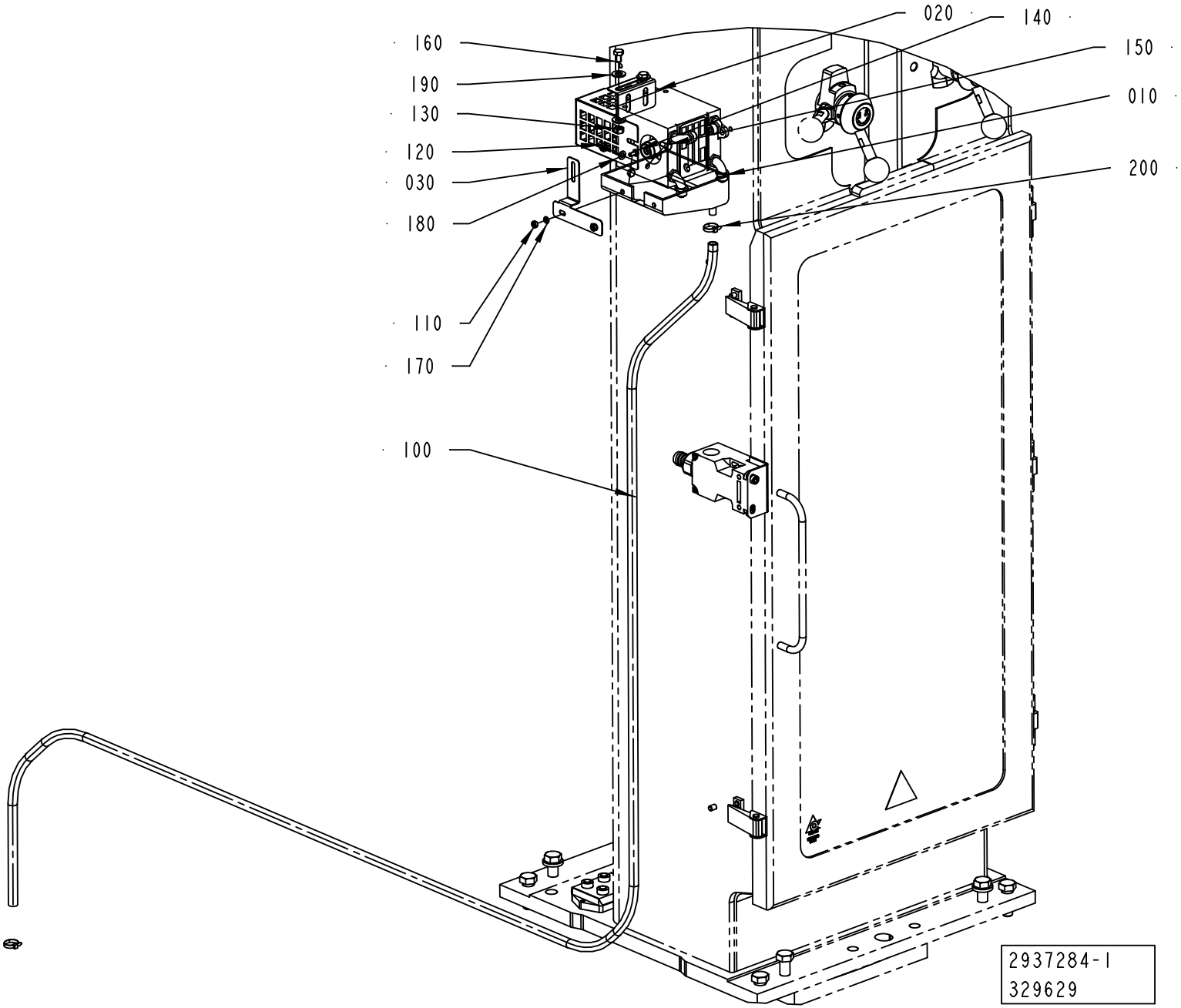

ECM: 339112 - 20080703
Group number: 2937284-0100
Assembly Drawing: 2937284-1_1_AA

| Pos | Part No | UN | Qty | Description | Page No |
|---|---|---|---|---|---|
| - | | | | | |
| 010 | 2934368-0000 | | 1 | PROTECTION | |
| 020 | 2934366-0000 | | 1 | BRACKET | |
| 030 | 2934367-0000 | | 1 | BRACKET | |
| 100 | 90166-0008 | MM | 3000 | HOSE 7/10 PVC TRANSP. | |
| 110 | 312605-0312 | | 2 | HEXAGON NUT, M6M M4 A280 | |
| 120 | 312605-0314 | | 2 | HEXAGON NUT, M6M M5 A280 | |
| 130 | 312605-0316 | | 2 | HEXAGON NUT, M6M M6 A280 | |
| 140 | 312105-0287 | | 2 | SCREW M6S ISO 4017 M4X8 A470 | |
| 150 | 312105-0325 | | 2 | SCREW M6S ISO 4017 M5X10 A480 | |
| 160 | 312105-0364 | | 2 | SCREW M6S ISO 4017 M6X10 A480 | |
| 170 | 315105-0136 | | 2 | WASHER BRB 4,3X8 RFR | |
| 180 | 315105-0146 | | 2 | WASHER BRB 5,3X10 RFR | |
| 190 | 315105-0165 | | 4 | WASHER BRB 8,4X16 RFR | |
| 200 | 352113-0101 | | 2 | CABLE TIE, BLACK 92X2,5 MM | |

| Pos | Part No | UN | Qty | Description | Page No |
|---|---|---|---|---|---|

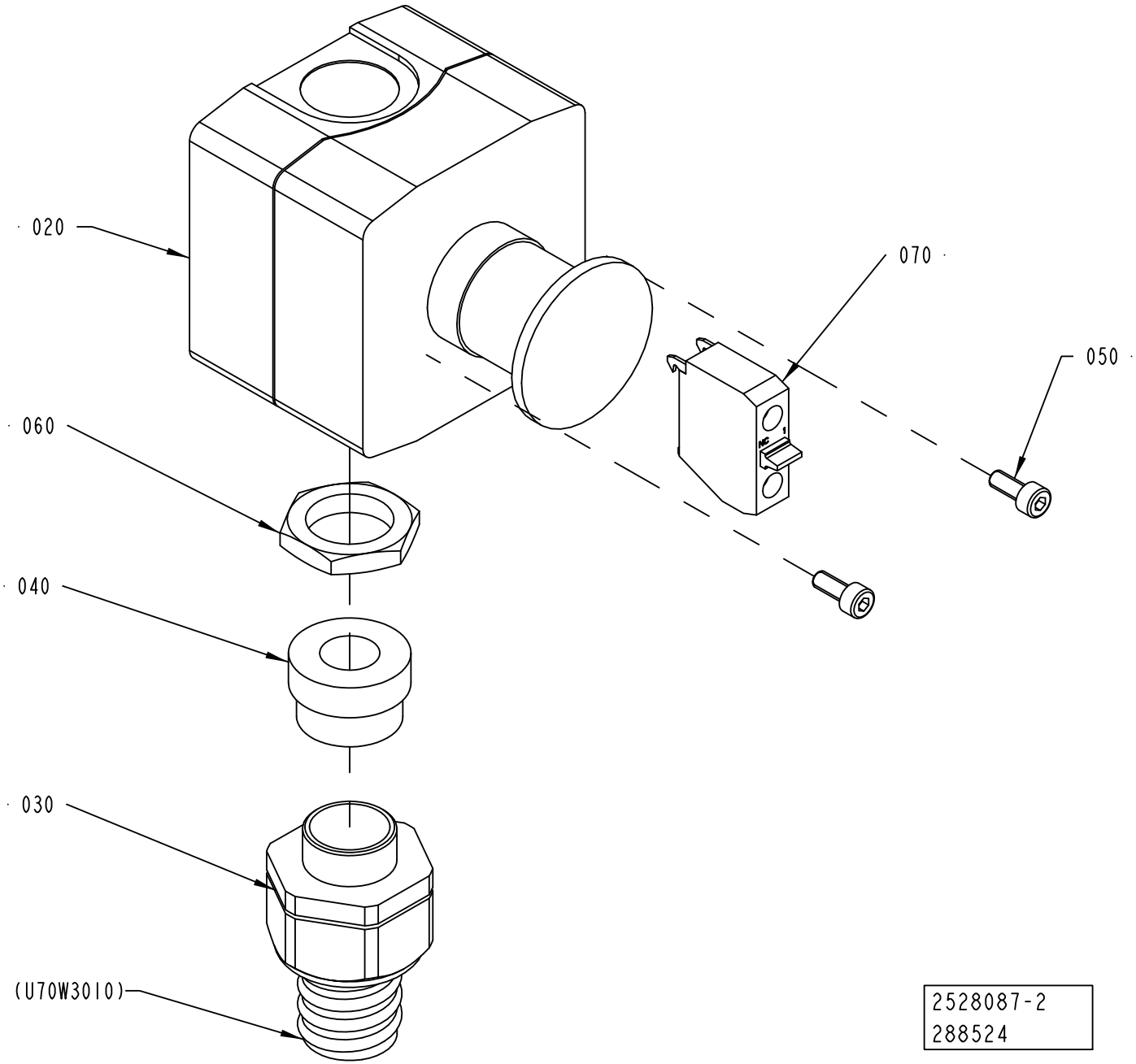
020
070
050
060
040
030
(U70W3010)
2528087-2
288524

ECM: 319935 - 20070803
Group number: 2528087-0200
Assembly Drawing: 2528087-2_1_AA

| Pos | Part No | UN | Qty | Description | Page No |
|---|---|---|---|---|---|
| - | | | | | |
| 020 | 90459-1130 | | 1 | EM. STOP XAL-K178F | |
| 030 | 353243-0004 | | 1 | HOSE GLAND W/O INSERT PG13,5 EXTENDED | |
| 040 | 353249-0013 | | 1 | INSERT, SINGLE HOLE, EK 154/13 | |
| 050 | 312115-0289 | | 2 | SCREW ISO4762 M4X10 A4 80 | |
| 060 | 90099-0118 | | 1 | NUT, PR 20,4 (PG13,5) | |
| 070 | 90600-1949 | | 1 | CONTACT BLOCK 1NC, ZEN L1121 | |
| U70W3010 | 351150-0406 | MM | 3700 | CABLE OLFLEX 7X0,75 MM2 LIGHT/GREY | |

| Pos | Part No | UN | Qty | Description | Page No |
|---|---|---|---|---|---|

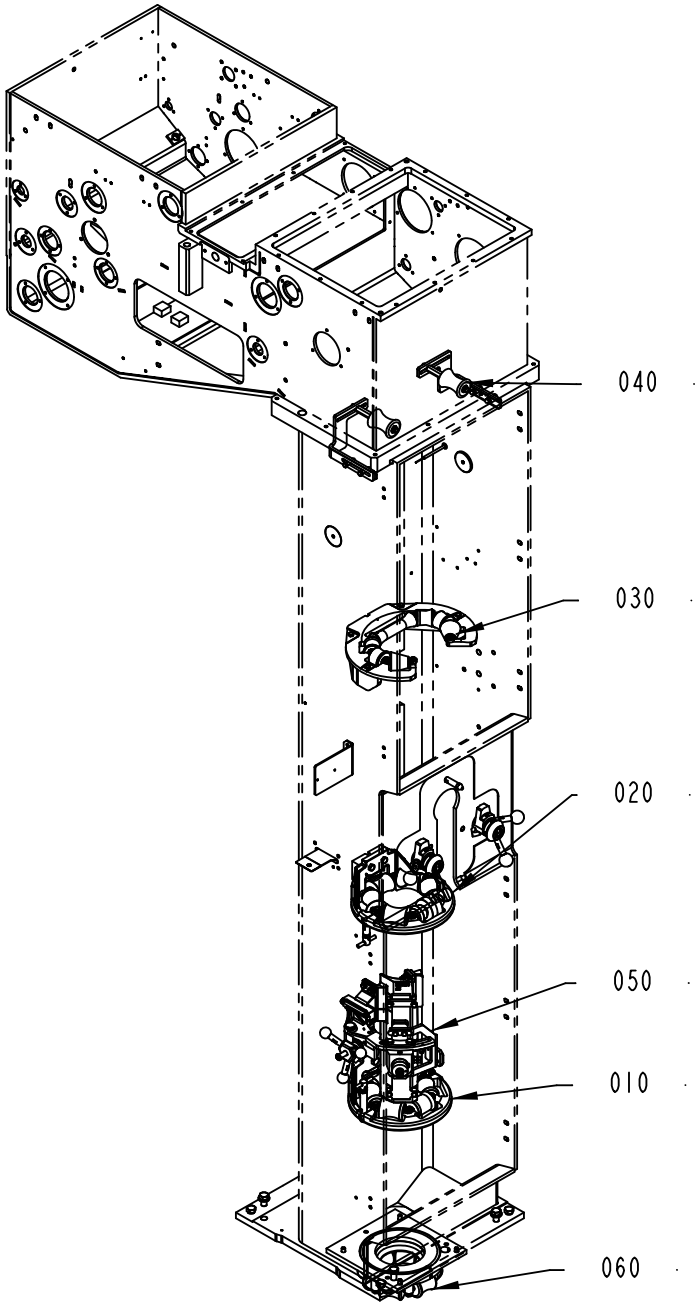


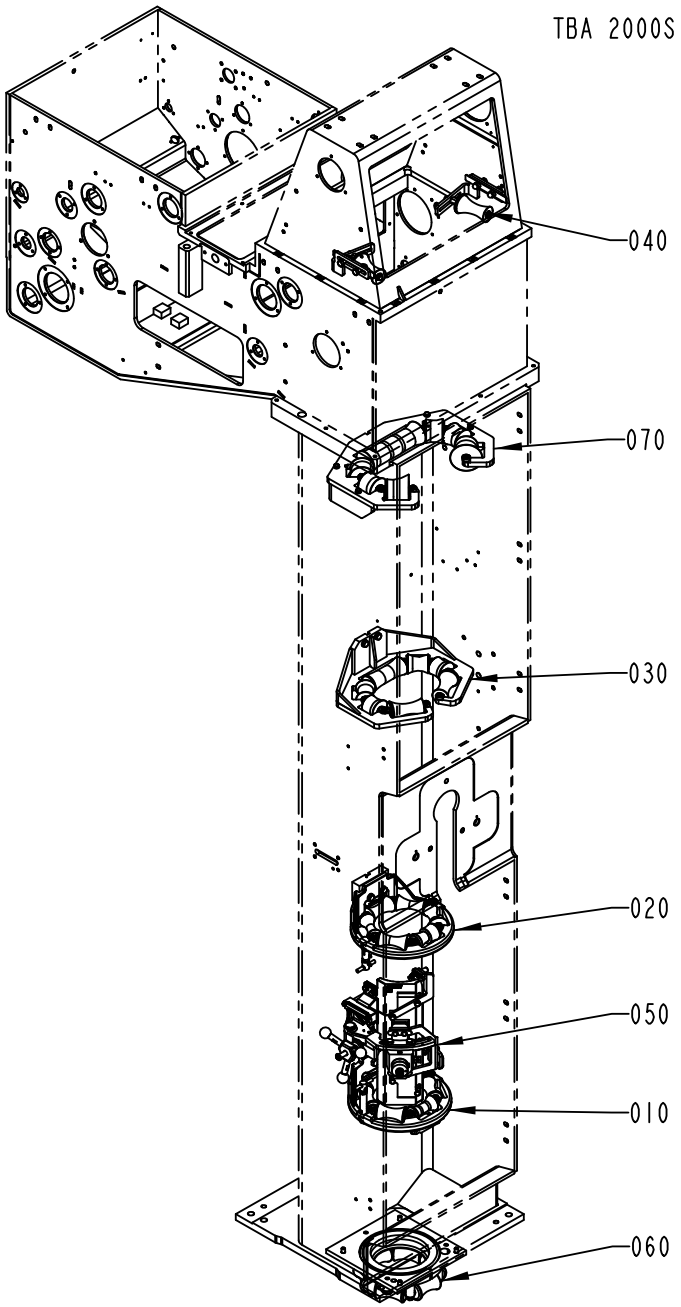


2544850-20
369139

ECM: 369139 - 20081001
Group number: 2544850-0200
Assembly Drawing: 2544850-20_1_AD

| Pos | Part No | UN | Qty | Description | Page No |
|---|---|---|---|---|---|
| **A3/FLEX** | | | | | |
| 010 | 2912699-0100 | | 1 | LOWER FORMING RING | **1-89, 1-91** |
| 020 | 2912700-0100 | | 1 | UPPER FORMING RING | **1-113** |
| 030 | 2912702-0100 | | 1 | FORMING RING | **1-131** |
| 060 | 2912704-0100 | | 1 | SEAL | **1-141** |
| **Common Parts** | | | | | |
| 040 | 2912703-0100 | | 1 | EDGE ROLLER | **1-151** |
| 050 | 2657873-0200 | | 1 | LONGITUDINAL SEALING | **1-161, 1-163** |

| Pos | Part No | UN | Qty | Description | Page No |
|---|---|---|---|---|---|

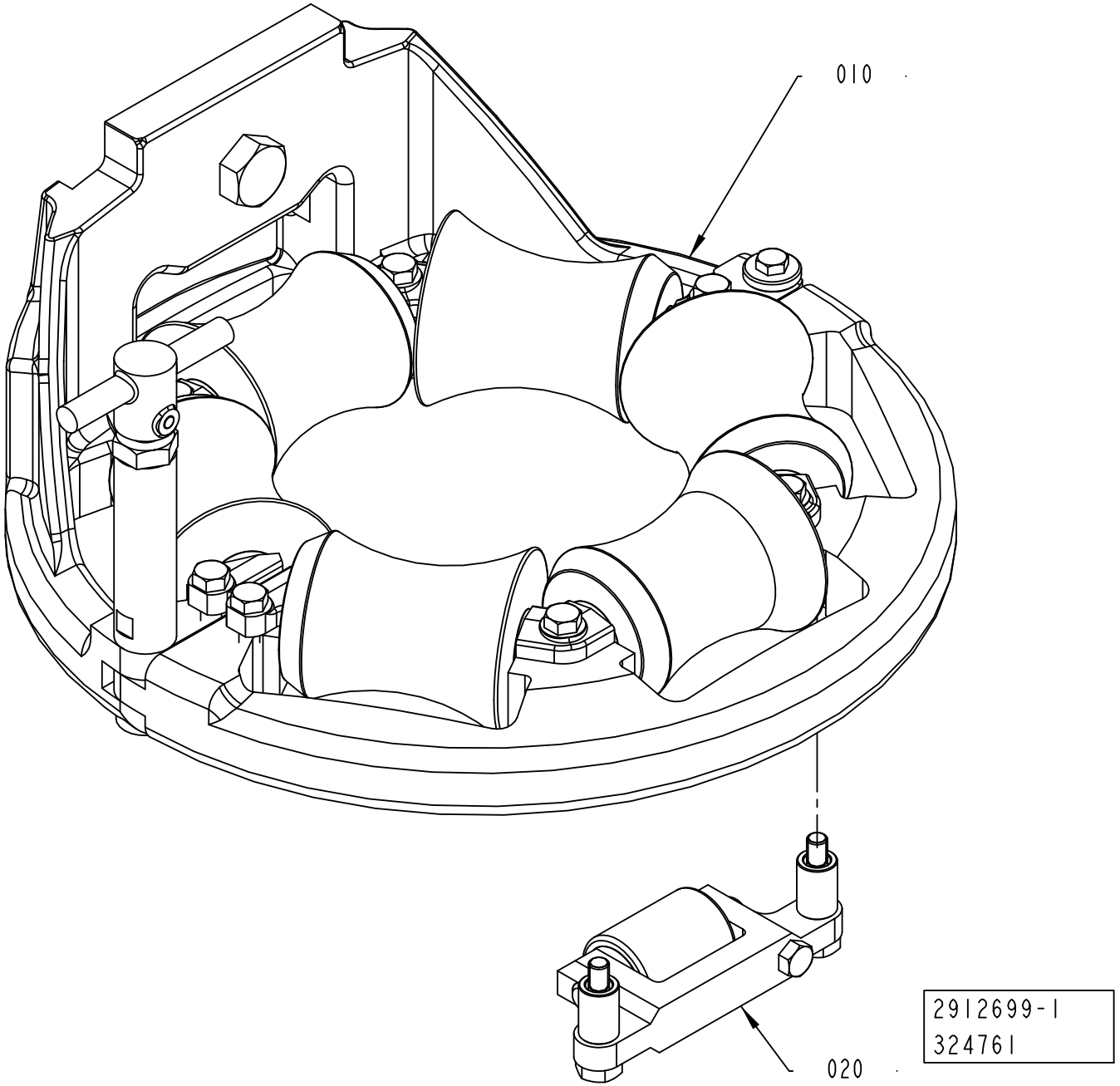
010
020
2912699-1
324761

ECM: 369141 - 20081001
Group number: 2912699-0100
Assembly Drawing: 2912699-1_1_AB

This list covers pages from 1-88 to 1-91

| Pos | Part No | UN | Qty | Description | Page No |
|---|---|---|---|---|---|
| **DIMC (See drawing on page: 1-90)** | | | | | |
| 010 | 2559062-0200 | | 1 | LOWER FORMING RING | **1-93, 1-95, 1-97, 1-99** |
| **NODIMC (See drawing on page: 1-88)** | | | | | |
| 010 | 2559062-0300 | | 1 | LOWER FORMING RING | **1-101, 1-103, 1-105, 1-107, 1-109** |
| 020 | 2555627-0200 | | 1 | PRESSURE ROLLER | **1-111** |

| Pos | Part No | UN | Qty | Description | Page No |
|---|---|---|---|---|---|

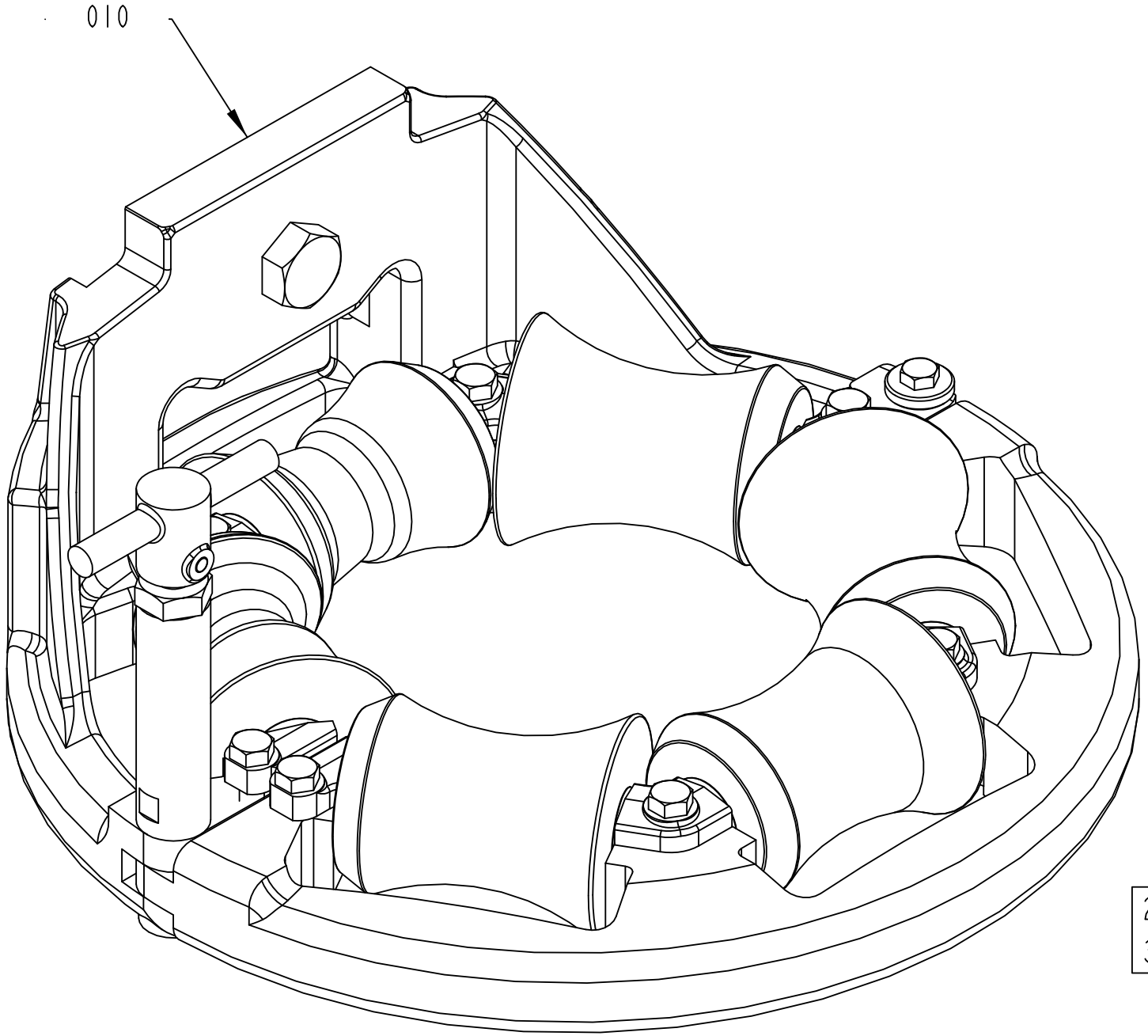


2912699-2
369139

ECM: 369141 - 20081001
Group number: 2912699-0100
Assembly Drawing: 2912699-2_1_AA

This list covers pages from 1-88 to 1-91

| Pos | Part No | UN | Qty | Description | Page No |
|---|---|---|---|---|---|
| **DIMC (See drawing on page: 1-90)** | | | | | |
| 010 | 2559062-0200 | | 1 | LOWER FORMING RING | **1-93, 1-95, 1-97, 1-99** |
| **NODIMC (See drawing on page: 1-88)** | | | | | |
| 010 | 2559062-0300 | | 1 | LOWER FORMING RING | **1-101, 1-103, 1-105, 1-107, 1-109** |
| 020 | 2555627-0200 | | 1 | PRESSURE ROLLER | **1-111** |

| Pos | Part No | UN | Qty | Description | Page No |
|---|---|---|---|---|---|

# LOWER FORMING RING



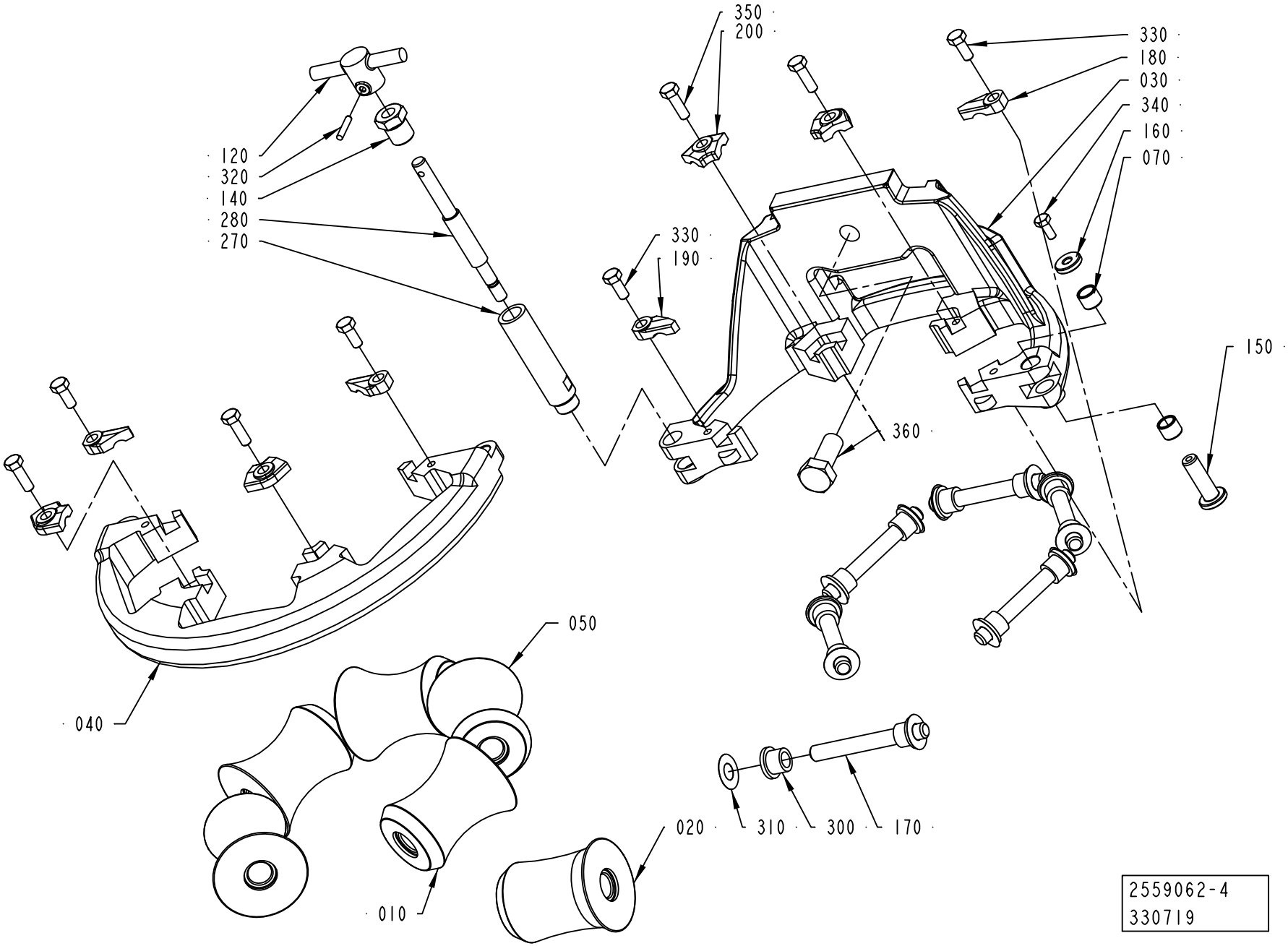

ECM: 352067 - 20080701
Group number: 2559062-0200
Assembly Drawing: 2559062-4_1_AA

This list covers pages from 1-92 to 1-99

| Pos | Part No | UN | Qty | Description | Page No |
|---|---|---|---|---|---|
| **TBA 0500B, TBA 1000B (See drawing on page: 1-92)** | | | | | |
| 010 | 1349851-0000 | | 3 | ROLL | |
| | *Remark : PLUS ROLLER 1349853-0000* | | | | |
| | *MINUS ROLLER 1349852-0000* | | | | |
| 020 | 2876664-0000 | | 1 | COUNTER ROLLER | |
| 030 | 2764026-0000 | | 1 | LOWER FORMING RING | |
| 040 | 2700546-0000 | | 1 | FRONT RING | |
| 050 | 1349853-0000 | | 2 | ROLL | |
| 170 | 752186-0014 | | 6 | SHAFT | |
| 180 | 2528119-0004 | | 2 | LOCK PLATE | |
| 190 | 2528118-0004 | | 2 | LOCK PLATE | |
| 200 | 2528123-0004 | | 4 | LOCK PLATE | |
| **TBA 0500SQ, TBA 1000SQ (See drawing on pages: 1-96, 1-102)** | | | | | |
| 010 | 1490765-0000 | | 5 | ROLLER | |
| 020 | 1499411-0000 | | 1 | COUNTER ROLLER | |
| 030 | 2764023-0000 | | 1 | LOWER FORMING RING | |
| 040 | 2736705-0000 | | 1 | LOWER FORMING RING | |
| 170 | 752186-0016 | | 6 | SHAFT | |
| 180 | 2528119-0004 | | 2 | LOCK PLATE | |
| 190 | 2528118-0004 | | 2 | LOCK PLATE | |
| 200 | 2528123-0004 | | 4 | LOCK PLATE | |
| **TBA 1000S (See drawing on pages: 1-96, 1-102)** | | | | | |
| 010 | 567746-0001 | | 5 | ROLLER (STANDARD SIZE) | |
| | *Remark : PLUS ROLLER 3-567746-2* | | | | |
| | *MINUS ROLLER 3-567746-3* | | | | |
| 020 | 1334856-0000 | | 1 | COUNTER ROLLER | |
| 030 | 2764027-0000 | | 1 | LOWER FORMING RING | |
| 040 | 2721423-0000 | | 1 | FORMING RING | |
| 170 | 752186-0016 | | 6 | SHAFT | |
| 180 | 2528119-0005 | | 2 | LOCK PLATE | |
| 190 | 2528118-0005 | | 2 | LOCK PLATE | |
| 200 | 2528123-0004 | | 4 | LOCK PLATE | |
| **TBA 1500S (See drawing on pages: 1-96, 1-102)** | | | | | |
| 010 | 1349851-0000 | | 5 | ROLL | |
| | *Remark : PLUS ROLLER 1349853-0000* | | | | |
| | *MINUS ROLLER 1349852-0000* | | | | |
| 020 | 2518098-0000 | | 1 | COUNTER ROLLER | |
| 030 | 2764026-0000 | | 1 | LOWER FORMING RING | |
| 040 | 2700546-0000 | | 1 | FRONT RING | |
| 170 | 752186-0014 | | 6 | SHAFT | |
| 180 | 2528119-0004 | | 2 | LOCK PLATE | |
| 190 | 2528118-0004 | | 2 | LOCK PLATE | |
| 200 | 2528123-0004 | | 4 | LOCK PLATE | |
| **TBA 2000S (See drawing on pages: 1-94, 1-100)** | | | | | |
| 010 | 2565513-0000 | | 5 | ROLLER | |
| | *Remark : PLUS ROLLER 2601311-0000* | | | | |
| | *MINUS ROLLER 2601310-0000* | | | | |
| 020 | 2657923-0000 | | 1 | COUNTER ROLLER | |
| 030 | 2764029-0000 | | 1 | LOWER FORMING RING | |
| 040 | 2673023-0000 | | 1 | LOWER FORMING RING | |
| 170 | 752186-0015 | | 6 | SHAFT | |
| 180 | 2528119-0004 | | 2 | LOCK PLATE | |
| 190 | 2528118-0004 | | 2 | LOCK PLATE | |
| 200 | 2528123-0004 | | 4 | LOCK PLATE | |
| **TPA 1000SQ, TPA 0750SQ (See drawing on page: 1-98)** | | | | | |
| 010 | 1524156-0000 | | 2 | ROLLER | |
| 020 | 1524547-0000 | | 1 | COUNTER ROLLER | |
| 025 | 2833215-0000 | | 1 | ROLLER | |
| 030 | 2764025-0000 | | 1 | LOWER FORMING RING | |
| 040 | 2731503-0000 | | 1 | LOWER FORMING RING | |
| 050 | 2833085-0000 | | 1 | ROLLER | |
| 060 | 2833086-0000 | | 1 | ROLLER | |
| 170 | 2522213-0006 | | 6 | SHAFT | |
| 180 | 2528119-0005 | | 2 | LOCK PLATE | |
| 190 | 2528118-0005 | | 2 | LOCK PLATE | |
| 200 | 2528123-0004 | | 4 | LOCK PLATE | |
| **Common Parts** | | | | | |
| 070 | 2526826-0000 | | 2 | BUSHING | |
| 120 | 2764036-0000 | | 1 | KNOB | |
| 140 | 2731428-0000 | | 1 | NUT | |
| 150 | 2526827-0000 | | 1 | SHAFT | |
| 160 | 2526825-0000 | | 1 | WASHER | |
| 270 | 2764032-0000 | | 1 | SHAFT | |
| 280 | 2764033-0000 | | 1 | SHAFT | |
| 300 | 90240-0172 | | 12 | FLANGE BUSHING, 8X12X10 MM | |
| 310 | 2033-0011 | | 12 | WASHER | |
| 320 | 311103-0236 | | 1 | PARALLEL PIN ISO 2338 3M6X16 A1 | |
| 330 | 312105-0327 | | 4 | SCREW M6S ISO 4017 M5X12 A480 | |
| 340 | 312105-0289 | | 1 | SCREW M6S H4X10 A4 70 ISO4017/DIN933 | |
| 350 | 312105-0329 | | 4 | SCREW M6S ISO 4017 M5X16 A480 | |
| 360 | 312105-0493 | | 1 | SCREW M6S ISO 4017 M10X25 A480 | |

# LOWER FORMING RING



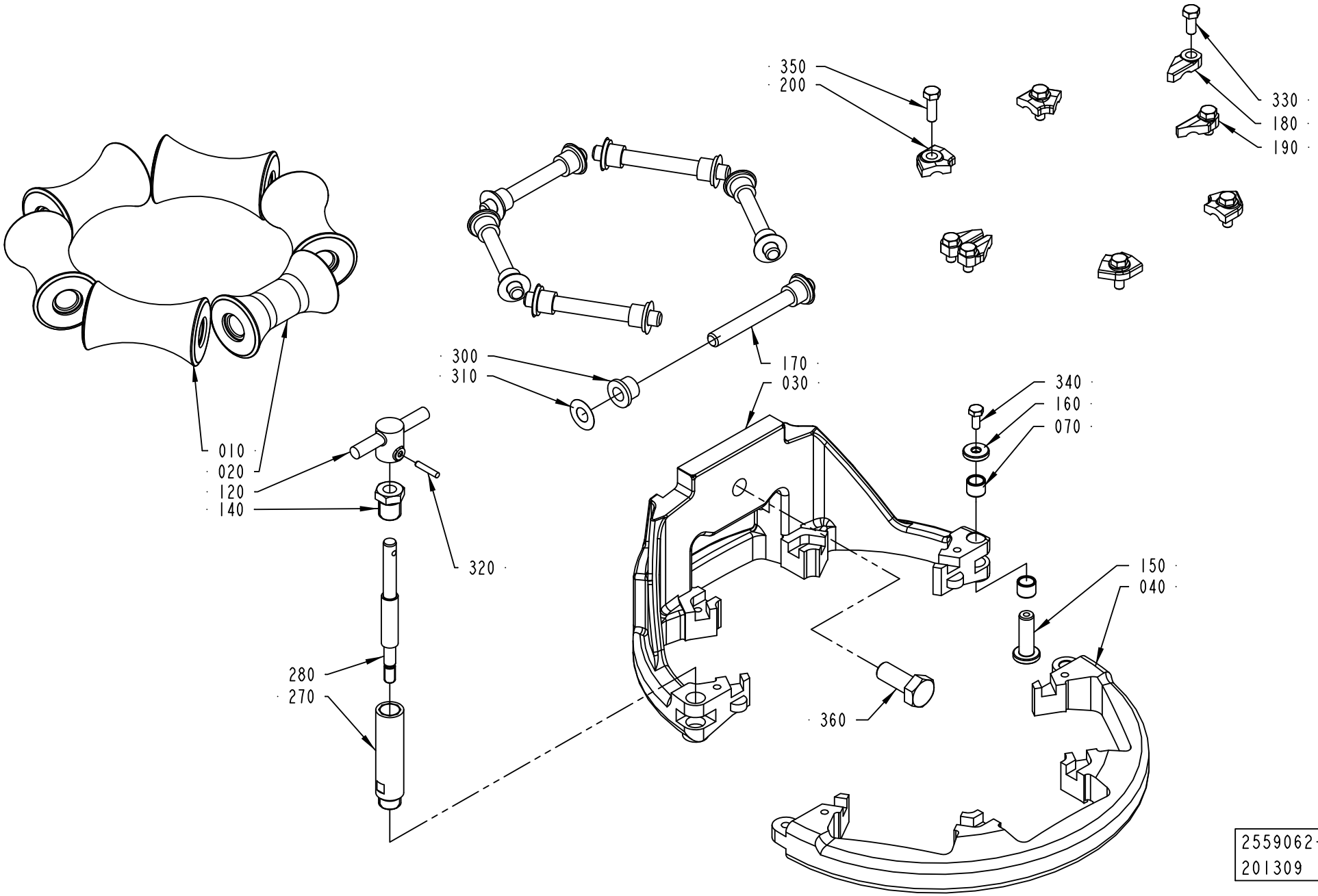

ECM: 352067 - 20080701
Group number: 2559062-0200
Assembly Drawing: 2559062-6_1_AA

This list covers pages from 1-92 to 1-99

| Pos | Part No | UN | Qty | Description | Page No |
|---|---|---|---|---|---|
| **TBA 0500B, TBA 1000B (See drawing on page: 1-92)** | | | | | |
| 010 | 1349851-0000 | | 3 | ROLL | |
| | *Remark : PLUS ROLLER 1349853-0000* | | | | |
| | *MINUS ROLLER 1349852-0000* | | | | |
| 020 | 2876664-0000 | | 1 | COUNTER ROLLER | |
| 030 | 2764026-0000 | | 1 | LOWER FORMING RING | |
| 040 | 2700546-0000 | | 1 | FRONT RING | |
| 050 | 1349853-0000 | | 2 | ROLL | |
| 170 | 752186-0014 | | 6 | SHAFT | |
| 180 | 2528119-0004 | | 2 | LOCK PLATE | |
| 190 | 2528118-0004 | | 2 | LOCK PLATE | |
| 200 | 2528123-0004 | | 4 | LOCK PLATE | |
| **TBA 0500SQ, TBA 1000SQ (See drawing on pages: 1-96, 1-102)** | | | | | |
| 010 | 1490765-0000 | | 5 | ROLLER | |
| 020 | 1499411-0000 | | 1 | COUNTER ROLLER | |
| 030 | 2764023-0000 | | 1 | LOWER FORMING RING | |
| 040 | 2736705-0000 | | 1 | LOWER FORMING RING | |
| 170 | 752186-0016 | | 6 | SHAFT | |
| 180 | 2528119-0004 | | 2 | LOCK PLATE | |
| 190 | 2528118-0004 | | 2 | LOCK PLATE | |
| 200 | 2528123-0004 | | 4 | LOCK PLATE | |
| **TBA 1000S (See drawing on pages: 1-96, 1-102)** | | | | | |
| 010 | 567746-0001 | | 5 | ROLLER (STANDARD SIZE) | |
| | *Remark : PLUS ROLLER 3-567746-2* | | | | |
| | *MINUS ROLLER 3-567746-3* | | | | |
| 020 | 1334856-0000 | | 1 | COUNTER ROLLER | |
| 030 | 2764027-0000 | | 1 | LOWER FORMING RING | |
| 040 | 2721423-0000 | | 1 | FORMING RING | |
| 170 | 752186-0016 | | 6 | SHAFT | |
| 180 | 2528119-0005 | | 2 | LOCK PLATE | |
| 190 | 2528118-0005 | | 2 | LOCK PLATE | |
| 200 | 2528123-0004 | | 4 | LOCK PLATE | |
| **TBA 1500S (See drawing on pages: 1-96, 1-102)** | | | | | |
| 010 | 1349851-0000 | | 5 | ROLL | |
| | *Remark : PLUS ROLLER 1349853-0000* | | | | |
| | *MINUS ROLLER 1349852-0000* | | | | |
| 020 | 2518098-0000 | | 1 | COUNTER ROLLER | |
| 030 | 2764026-0000 | | 1 | LOWER FORMING RING | |
| 040 | 2700546-0000 | | 1 | FRONT RING | |
| 170 | 752186-0014 | | 6 | SHAFT | |
| 180 | 2528119-0004 | | 2 | LOCK PLATE | |
| 190 | 2528118-0004 | | 2 | LOCK PLATE | |
| 200 | 2528123-0004 | | 4 | LOCK PLATE | |
| **TBA 2000S (See drawing on pages: 1-94, 1-100)** | | | | | |
| 010 | 2565513-0000 | | 5 | ROLLER | |
| | *Remark : PLUS ROLLER 2601311-0000* | | | | |
| | *MINUS ROLLER 2601310-0000* | | | | |
| 020 | 2657923-0000 | | 1 | COUNTER ROLLER | |
| 030 | 2764029-0000 | | 1 | LOWER FORMING RING | |
| 040 | 2673023-0000 | | 1 | LOWER FORMING RING | |
| 170 | 752186-0015 | | 6 | SHAFT | |
| 180 | 2528119-0004 | | 2 | LOCK PLATE | |
| 190 | 2528118-0004 | | 2 | LOCK PLATE | |
| 200 | 2528123-0004 | | 4 | LOCK PLATE | |
| **TPA 1000SQ, TPA 0750SQ (See drawing on page: 1-98)** | | | | | |
| 010 | 1524156-0000 | | 2 | ROLLER | |
| 020 | 1524547-0000 | | 1 | COUNTER ROLLER | |
| 025 | 2833215-0000 | | 1 | ROLLER | |
| 030 | 2764025-0000 | | 1 | LOWER FORMING RING | |
| 040 | 2731503-0000 | | 1 | LOWER FORMING RING | |
| 050 | 2833085-0000 | | 1 | ROLLER | |
| 060 | 2833086-0000 | | 1 | ROLLER | |
| 170 | 2522213-0006 | | 6 | SHAFT | |
| 180 | 2528119-0005 | | 2 | LOCK PLATE | |
| 190 | 2528118-0005 | | 2 | LOCK PLATE | |
| 200 | 2528123-0004 | | 4 | LOCK PLATE | |
| **Common Parts** | | | | | |
| 070 | 2526826-0000 | | 2 | BUSHING | |
| 120 | 2764036-0000 | | 1 | KNOB | |
| 140 | 2731428-0000 | | 1 | NUT | |
| 150 | 2526827-0000 | | 1 | SHAFT | |
| 160 | 2526825-0000 | | 1 | WASHER | |
| 270 | 2764032-0000 | | 1 | SHAFT | |
| 280 | 2764033-0000 | | 1 | SHAFT | |
| 300 | 90240-0172 | | 12 | FLANGE BUSHING, 8X12X10 MM | |
| 310 | 2033-0011 | | 12 | WASHER | |
| 320 | 311103-0236 | | 1 | PARALLEL PIN ISO 2338 3M6X16 A1 | |
| 330 | 312105-0327 | | 4 | SCREW M6S ISO 4017 M5X12 A480 | |
| 340 | 312105-0289 | | 1 | SCREW M6S H4X10 A4 70 ISO4017/DIN933 | |
| 350 | 312105-0329 | | 4 | SCREW M6S ISO 4017 M5X16 A480 | |
| 360 | 312105-0493 | | 1 | SCREW M6S ISO 4017 M10X25 A480 | |

# LOWER FORMING RING



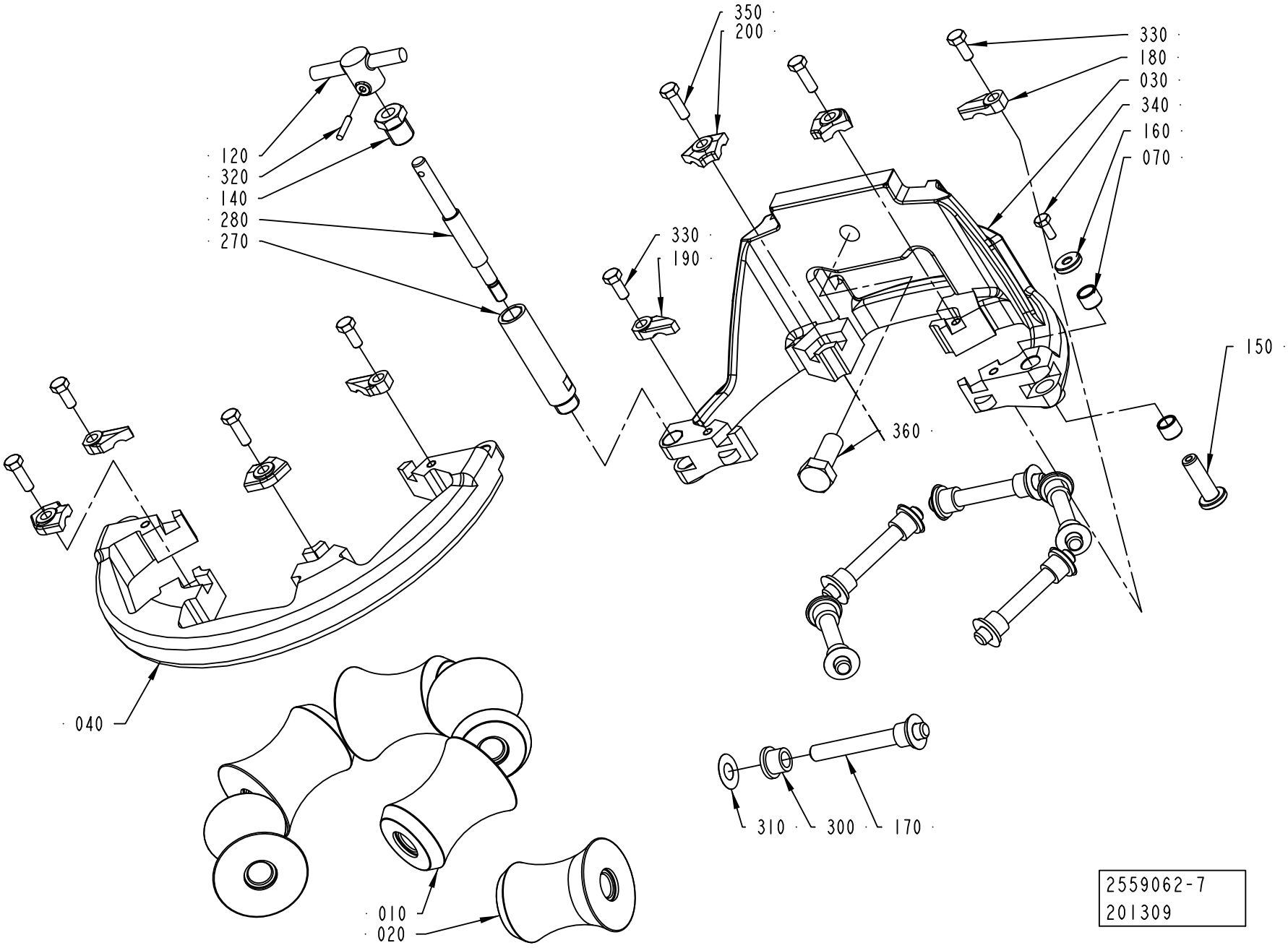

ECM: 352067 - 20080701
Group number: 2559062-0200
Assembly Drawing: 2559062-7_1_AA

This list covers pages from 1-92 to 1-99

| Pos | Part No | UN | Qty | Description | Page No |
|---|---|---|---|---|---|
| **TBA 0500B, TBA 1000B (See drawing on page: 1-92)** | | | | | |
| 010 | 1349851-0000 | | 3 | ROLL | |
| | *Remark : PLUS ROLLER 1349853-0000* | | | | |
| | *MINUS ROLLER 1349852-0000* | | | | |
| 020 | 2876664-0000 | | 1 | COUNTER ROLLER | |
| 030 | 2764026-0000 | | 1 | LOWER FORMING RING | |
| 040 | 2700546-0000 | | 1 | FRONT RING | |
| 050 | 1349853-0000 | | 2 | ROLL | |
| 170 | 752186-0014 | | 6 | SHAFT | |
| 180 | 2528119-0004 | | 2 | LOCK PLATE | |
| 190 | 2528118-0004 | | 2 | LOCK PLATE | |
| 200 | 2528123-0004 | | 4 | LOCK PLATE | |
| **TBA 0500SQ, TBA 1000SQ (See drawing on pages: 1-96, 1-102)** | | | | | |
| 010 | 1490765-0000 | | 5 | ROLLER | |
| 020 | 1499411-0000 | | 1 | COUNTER ROLLER | |
| 030 | 2764023-0000 | | 1 | LOWER FORMING RING | |
| 040 | 2736705-0000 | | 1 | LOWER FORMING RING | |
| 170 | 752186-0016 | | 6 | SHAFT | |
| 180 | 2528119-0004 | | 2 | LOCK PLATE | |
| 190 | 2528118-0004 | | 2 | LOCK PLATE | |
| 200 | 2528123-0004 | | 4 | LOCK PLATE | |
| **TBA 1000S (See drawing on pages: 1-96, 1-102)** | | | | | |
| 010 | 567746-0001 | | 5 | ROLLER (STANDARD SIZE) | |
| | *Remark : PLUS ROLLER 3-567746-2* | | | | |
| | *MINUS ROLLER 3-567746-3* | | | | |
| 020 | 1334856-0000 | | 1 | COUNTER ROLLER | |
| 030 | 2764027-0000 | | 1 | LOWER FORMING RING | |
| 040 | 2721423-0000 | | 1 | FORMING RING | |
| 170 | 752186-0016 | | 6 | SHAFT | |
| 180 | 2528119-0005 | | 2 | LOCK PLATE | |
| 190 | 2528118-0005 | | 2 | LOCK PLATE | |
| 200 | 2528123-0004 | | 4 | LOCK PLATE | |
| **TBA 1500S (See drawing on pages: 1-96, 1-102)** | | | | | |
| 010 | 1349851-0000 | | 5 | ROLL | |
| | *Remark : PLUS ROLLER 1349853-0000* | | | | |
| | *MINUS ROLLER 1349852-0000* | | | | |
| 020 | 2518098-0000 | | 1 | COUNTER ROLLER | |
| 030 | 2764026-0000 | | 1 | LOWER FORMING RING | |
| 040 | 2700546-0000 | | 1 | FRONT RING | |
| 170 | 752186-0014 | | 6 | SHAFT | |
| 180 | 2528119-0004 | | 2 | LOCK PLATE | |
| 190 | 2528118-0004 | | 2 | LOCK PLATE | |
| 200 | 2528123-0004 | | 4 | LOCK PLATE | |
| **TBA 2000S (See drawing on pages: 1-94, 1-100)** | | | | | |
| 010 | 2565513-0000 | | 5 | ROLLER | |
| | *Remark : PLUS ROLLER 2601311-0000* | | | | |
| | *MINUS ROLLER 2601310-0000* | | | | |
| 020 | 2657923-0000 | | 1 | COUNTER ROLLER | |
| 030 | 2764029-0000 | | 1 | LOWER FORMING RING | |
| 040 | 2673023-0000 | | 1 | LOWER FORMING RING | |
| 170 | 752186-0015 | | 6 | SHAFT | |
| 180 | 2528119-0004 | | 2 | LOCK PLATE | |
| 190 | 2528118-0004 | | 2 | LOCK PLATE | |
| 200 | 2528123-0004 | | 4 | LOCK PLATE | |
| **TPA 1000SQ, TPA 0750SQ (See drawing on page: 1-98)** | | | | | |
| 010 | 1524156-0000 | | 2 | ROLLER | |
| 020 | 1524547-0000 | | 1 | COUNTER ROLLER | |
| 025 | 2833215-0000 | | 1 | ROLLER | |
| 030 | 2764025-0000 | | 1 | LOWER FORMING RING | |
| 040 | 2731503-0000 | | 1 | LOWER FORMING RING | |
| 050 | 2833085-0000 | | 1 | ROLLER | |
| 060 | 2833086-0000 | | 1 | ROLLER | |
| 170 | 2522213-0006 | | 6 | SHAFT | |
| 180 | 2528119-0005 | | 2 | LOCK PLATE | |
| 190 | 2528118-0005 | | 2 | LOCK PLATE | |
| 200 | 2528123-0004 | | 4 | LOCK PLATE | |
| **Common Parts** | | | | | |
| 070 | 2526826-0000 | | 2 | BUSHING | |
| 120 | 2764036-0000 | | 1 | KNOB | |
| 140 | 2731428-0000 | | 1 | NUT | |
| 150 | 2526827-0000 | | 1 | SHAFT | |
| 160 | 2526825-0000 | | 1 | WASHER | |
| 270 | 2764032-0000 | | 1 | SHAFT | |
| 280 | 2764033-0000 | | 1 | SHAFT | |
| 300 | 90240-0172 | | 12 | FLANGE BUSHING, 8X12X10 MM | |
| 310 | 2033-0011 | | 12 | WASHER | |
| 320 | 311103-0236 | | 1 | PARALLEL PIN ISO 2338 3M6X16 A1 | |
| 330 | 312105-0327 | | 4 | SCREW M6S ISO 4017 M5X12 A480 | |
| 340 | 312105-0289 | | 1 | SCREW M6S H4X10 A4 70 ISO4017/DIN933 | |
| 350 | 312105-0329 | | 4 | SCREW M6S ISO 4017 M5X16 A480 | |
| 360 | 312105-0493 | | 1 | SCREW M6S ISO 4017 M10X25 A480 | |

# LOWER FORMING RING



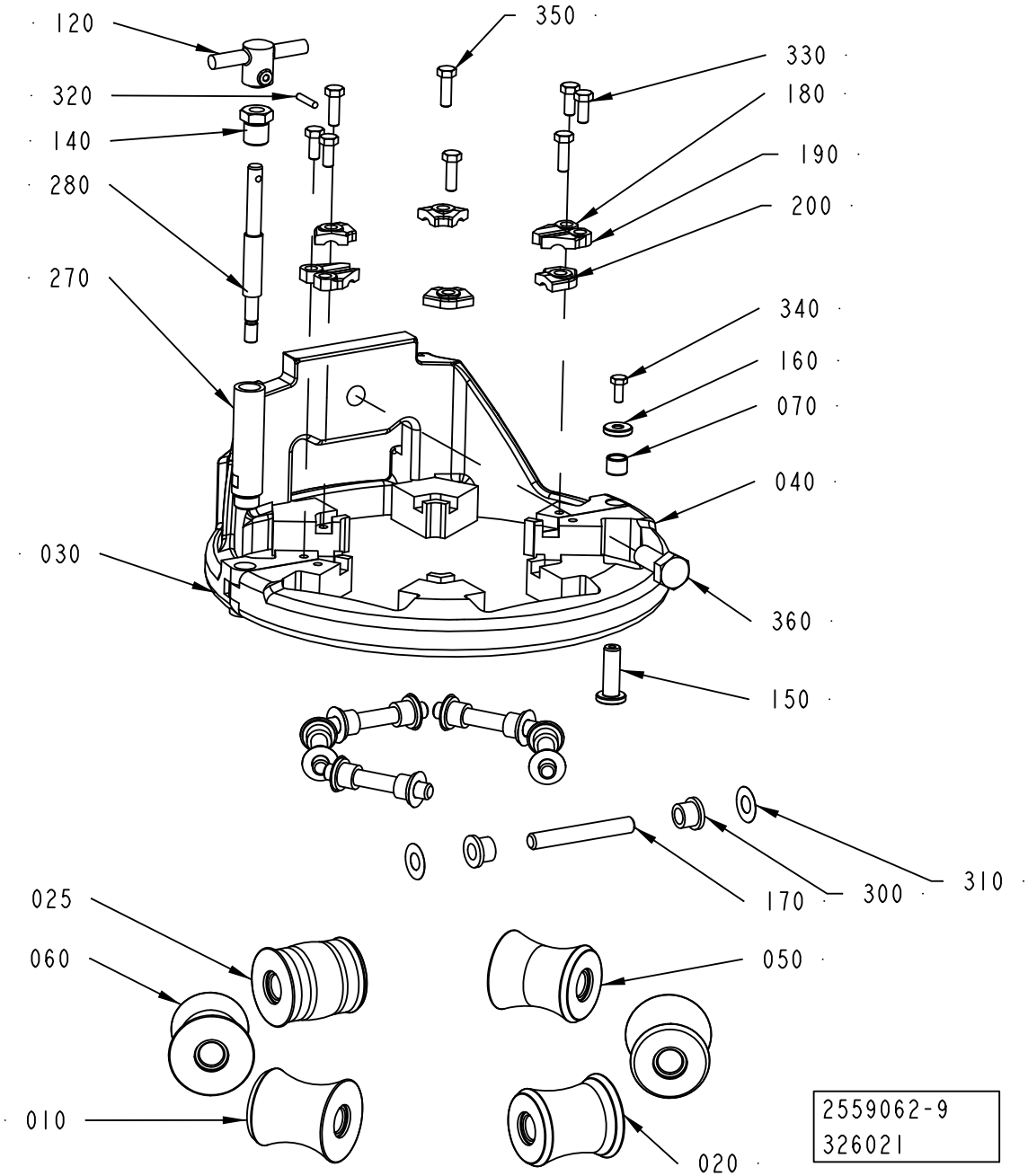

ECM: 352067 - 20080701
Group number: 2559062-0200
Assembly Drawing: 2559062-9_1_AA

This list covers pages from 1-92 to 1-99

| Pos | Part No | UN | Qty | Description | Page No |
|---|---|---|---|---|---|
| **TBA 0500B, TBA 1000B (See drawing on page: 1-92)** | | | | | |
| 010 | 1349851-0000 | | 3 | ROLL | |
| | *Remark : PLUS ROLLER 1349853-0000* | | | | |
| | *MINUS ROLLER 1349852-0000* | | | | |
| 020 | 2876664-0000 | | 1 | COUNTER ROLLER | |
| 030 | 2764026-0000 | | 1 | LOWER FORMING RING | |
| 040 | 2700546-0000 | | 1 | FRONT RING | |
| 050 | 1349853-0000 | | 2 | ROLL | |
| 170 | 752186-0014 | | 6 | SHAFT | |
| 180 | 2528119-0004 | | 2 | LOCK PLATE | |
| 190 | 2528118-0004 | | 2 | LOCK PLATE | |
| 200 | 2528123-0004 | | 4 | LOCK PLATE | |
| **TBA 0500SQ, TBA 1000SQ (See drawing on pages: 1-96, 1-102)** | | | | | |
| 010 | 1490765-0000 | | 5 | ROLLER | |
| 020 | 1499411-0000 | | 1 | COUNTER ROLLER | |
| 030 | 2764023-0000 | | 1 | LOWER FORMING RING | |
| 040 | 2736705-0000 | | 1 | LOWER FORMING RING | |
| 170 | 752186-0016 | | 6 | SHAFT | |
| 180 | 2528119-0004 | | 2 | LOCK PLATE | |
| 190 | 2528118-0004 | | 2 | LOCK PLATE | |
| 200 | 2528123-0004 | | 4 | LOCK PLATE | |
| **TBA 1000S (See drawing on pages: 1-96, 1-102)** | | | | | |
| 010 | 567746-0001 | | 5 | ROLLER (STANDARD SIZE) | |
| | *Remark : PLUS ROLLER 3-567746-2* | | | | |
| | *MINUS ROLLER 3-567746-3* | | | | |
| 020 | 1334856-0000 | | 1 | COUNTER ROLLER | |
| 030 | 2764027-0000 | | 1 | LOWER FORMING RING | |
| 040 | 2721423-0000 | | 1 | FORMING RING | |
| 170 | 752186-0016 | | 6 | SHAFT | |
| 180 | 2528119-0005 | | 2 | LOCK PLATE | |
| 190 | 2528118-0005 | | 2 | LOCK PLATE | |
| 200 | 2528123-0004 | | 4 | LOCK PLATE | |
| **TBA 1500S (See drawing on pages: 1-96, 1-102)** | | | | | |
| 010 | 1349851-0000 | | 5 | ROLL | |
| | *Remark : PLUS ROLLER 1349853-0000* | | | | |
| | *MINUS ROLLER 1349852-0000* | | | | |
| 020 | 2518098-0000 | | 1 | COUNTER ROLLER | |
| 030 | 2764026-0000 | | 1 | LOWER FORMING RING | |
| 040 | 2700546-0000 | | 1 | FRONT RING | |
| 170 | 752186-0014 | | 6 | SHAFT | |
| 180 | 2528119-0004 | | 2 | LOCK PLATE | |
| 190 | 2528118-0004 | | 2 | LOCK PLATE | |
| 200 | 2528123-0004 | | 4 | LOCK PLATE | |
| **TBA 2000S (See drawing on pages: 1-94, 1-100)** | | | | | |
| 010 | 2565513-0000 | | 5 | ROLLER | |
| | *Remark : PLUS ROLLER 2601311-0000* | | | | |
| | *MINUS ROLLER 2601310-0000* | | | | |
| 020 | 2657923-0000 | | 1 | COUNTER ROLLER | |
| 030 | 2764029-0000 | | 1 | LOWER FORMING RING | |
| 040 | 2673023-0000 | | 1 | LOWER FORMING RING | |
| 170 | 752186-0015 | | 6 | SHAFT | |
| 180 | 2528119-0004 | | 2 | LOCK PLATE | |
| 190 | 2528118-0004 | | 2 | LOCK PLATE | |
| 200 | 2528123-0004 | | 4 | LOCK PLATE | |
| **TPA 1000SQ, TPA 0750SQ (See drawing on page: 1-98)** | | | | | |
| 010 | 1524156-0000 | | 2 | ROLLER | |
| 020 | 1524547-0000 | | 1 | COUNTER ROLLER | |
| 025 | 2833215-0000 | | 1 | ROLLER | |
| 030 | 2764025-0000 | | 1 | LOWER FORMING RING | |
| 040 | 2731503-0000 | | 1 | LOWER FORMING RING | |
| 050 | 2833085-0000 | | 1 | ROLLER | |
| 060 | 2833086-0000 | | 1 | ROLLER | |
| 170 | 2522213-0006 | | 6 | SHAFT | |
| 180 | 2528119-0005 | | 2 | LOCK PLATE | |
| 190 | 2528118-0005 | | 2 | LOCK PLATE | |
| 200 | 2528123-0004 | | 4 | LOCK PLATE | |
| **Common Parts** | | | | | |
| 070 | 2526826-0000 | | 2 | BUSHING | |
| 120 | 2764036-0000 | | 1 | KNOB | |
| 140 | 2731428-0000 | | 1 | NUT | |
| 150 | 2526827-0000 | | 1 | SHAFT | |
| 160 | 2526825-0000 | | 1 | WASHER | |
| 270 | 2764032-0000 | | 1 | SHAFT | |
| 280 | 2764033-0000 | | 1 | SHAFT | |
| 300 | 90240-0172 | | 12 | FLANGE BUSHING, 8X12X10 MM | |
| 310 | 2033-0011 | | 12 | WASHER | |
| 320 | 311103-0236 | | 1 | PARALLEL PIN ISO 2338 3M6X16 A1 | |
| 330 | 312105-0327 | | 4 | SCREW M6S ISO 4017 M5X12 A480 | |
| 340 | 312105-0289 | | 1 | SCREW M6S H4X10 A4 70 ISO4017/DIN933 | |
| 350 | 312105-0329 | | 4 | SCREW M6S ISO 4017 M5X16 A480 | |
| 360 | 312105-0493 | | 1 | SCREW M6S ISO 4017 M10X25 A480 | |

# LOWER FORMING RING



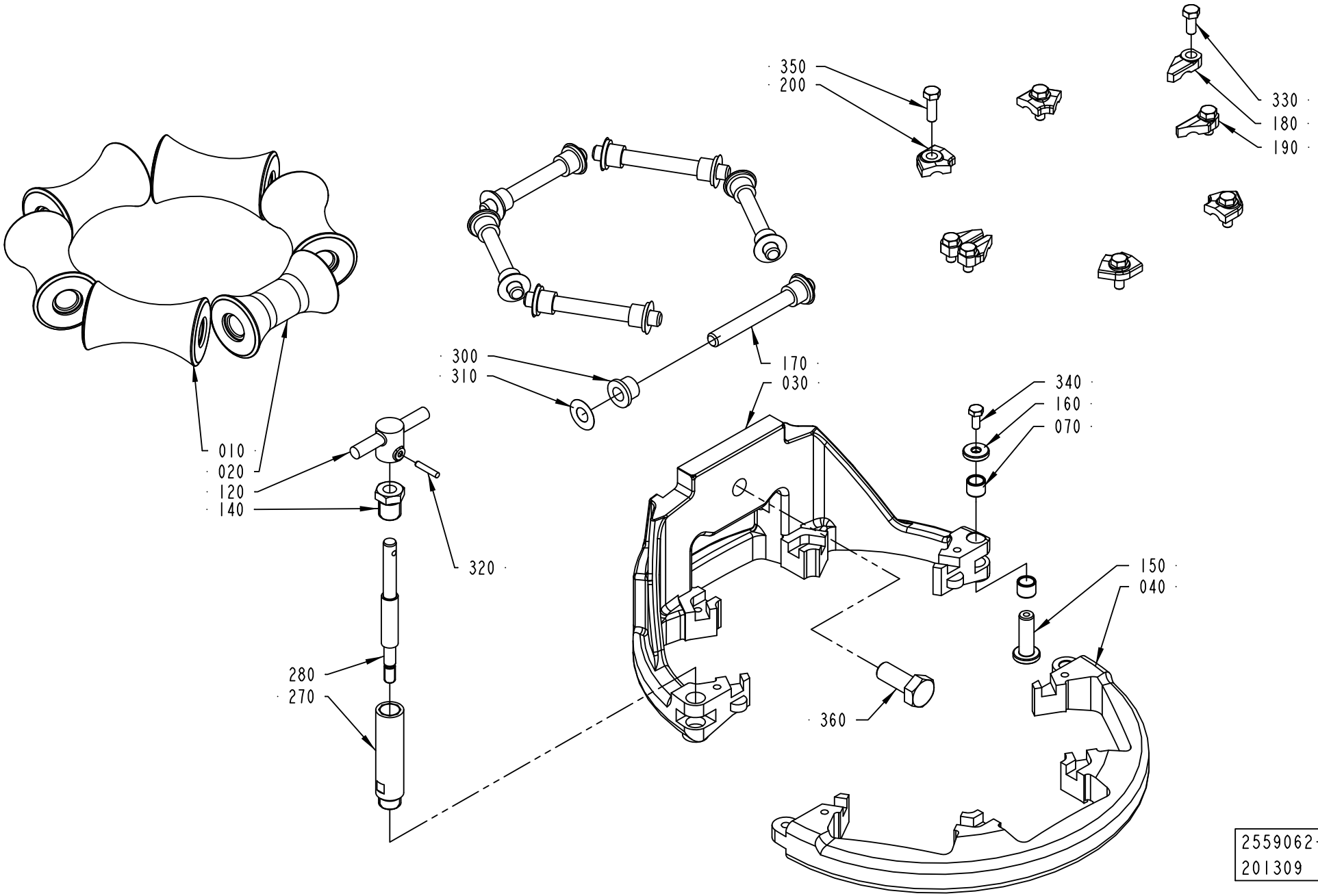

ECM: 365348 - 20081001
Group number: 2559062-0300
Assembly Drawing: 2559062-6_1_AA

This list covers pages from 1-100 to 1-109

| Pos | Part No | UN | Qty | Description | Page No |
|---|---|---|---|---|---|
| **TBA 0500B, TBA 1000B, TBA 1500S (See drawing on page: 1-106)** | | | | | |
| 010 | 1349851-0000 | | 3 | ROLL | |
| | *Remark : PLUS ROLLER 1349853-0000* | | | | |
| | *MINUS ROLLER 1349852-0000* | | | | |
| 020 | 2876664-0000 | | 1 | COUNTER ROLLER | |
| 030 | 2764026-0000 | | 1 | LOWER FORMING RING | |
| 040 | 2700546-0000 | | 1 | FRONT RING | |
| 050 | 1349853-0000 | | 2 | ROLL | |
| 170 | 752186-0014 | | 6 | SHAFT | |
| 180 | 2528119-0004 | | 2 | LOCK PLATE | |
| 190 | 2528118-0004 | | 2 | LOCK PLATE | |
| 200 | 2528123-0004 | | 4 | LOCK PLATE | |
| **TBA 0500SQ, TBA 1000SQ (See drawing on page: 1-104)** | | | | | |
| 010 | 2897901-0000 | | 1 | ROLLER | |
| 020 | 2898309-0000 | | 1 | ROLLER | |
| 030 | 2764023-0000 | | 1 | LOWER FORMING RING | |
| 040 | 2736705-0000 | | 1 | LOWER FORMING RING | |
| 050 | 2898310-0000 | | 1 | ROLLER | |
| 060 | 1490763-0000 | | 3 | ROLLER | |
| 170 | 752186-0016 | | 6 | SHAFT | |
| 180 | 2528119-0004 | | 2 | LOCK PLATE | |
| 190 | 2528118-0004 | | 2 | LOCK PLATE | |
| 200 | 2528123-0004 | | 4 | LOCK PLATE | |
| **TBA 1000S (See drawing on pages: 1-96, 1-102)** | | | | | |
| 010 | 567746-0001 | | 5 | ROLLER (STANDARD SIZE) | |
| | *Remark : PLUS ROLLER 3-567746-2* | | | | |
| | *MINUS ROLLER 3-567746-3* | | | | |
| 020 | 1334856-0000 | | 1 | COUNTER ROLLER | |
| 030 | 2764027-0000 | | 1 | LOWER FORMING RING | |
| 040 | 2721423-0000 | | 1 | FORMING RING | |
| 170 | 752186-0016 | | 6 | SHAFT | |
| 180 | 2528119-0005 | | 2 | LOCK PLATE | |
| 190 | 2528118-0005 | | 2 | LOCK PLATE | |
| 200 | 2528123-0004 | | 4 | LOCK PLATE | |
| **TBA 2000S (See drawing on pages: 1-94, 1-100)** | | | | | |
| 010 | 2565513-0000 | | 5 | ROLLER | |
| | *Remark : PLUS ROLLER 2601311-0000* | | | | |
| | *MINUS ROLLER 2601310-0000* | | | | |
| 020 | 2657923-0000 | | 1 | COUNTER ROLLER | |
| 030 | 2764029-0000 | | 1 | LOWER FORMING RING | |
| 040 | 2673023-0000 | | 1 | LOWER FORMING RING | |
| 170 | 752186-0015 | | 6 | SHAFT | |
| 180 | 2528119-0004 | | 2 | LOCK PLATE | |
| 190 | 2528118-0004 | | 2 | LOCK PLATE | |
| 200 | 2528123-0004 | | 4 | LOCK PLATE | |
| **TPA 1000SQ, TPA 0750SQ (See drawing on page: 1-108)** | | | | | |
| 010 | 1524156-0000 | | 2 | ROLLER | |
| 020 | 1524547-0000 | | 1 | COUNTER ROLLER | |
| 025 | 2833215-0000 | | 1 | ROLLER | |
| 030 | 2764025-0000 | | 1 | LOWER FORMING RING | |
| 040 | 2731503-0000 | | 1 | LOWER FORMING RING | |
| 050 | 2833085-0000 | | 1 | ROLLER | |
| 060 | 2833086-0000 | | 1 | ROLLER | |
| 170 | 2522213-0006 | | 6 | SHAFT | |
| 180 | 2528119-0005 | | 2 | LOCK PLATE | |
| 190 | 2528118-0005 | | 2 | LOCK PLATE | |
| 200 | 2528123-0004 | | 4 | LOCK PLATE | |
| **Common Parts** | | | | | |
| 070 | 2526826-0000 | | 2 | BUSHING | |
| 120 | 2764036-0000 | | 1 | KNOB | |
| 140 | 2731428-0000 | | 1 | NUT | |
| 150 | 2526827-0000 | | 1 | SHAFT | |
| 160 | 2526825-0000 | | 1 | WASHER | |
| 270 | 2764032-0000 | | 1 | SHAFT | |
| 280 | 2764033-0000 | | 1 | SHAFT | |
| 300 | 90240-0172 | | 12 | FLANGE BUSHING, 8X12X10 MM | |
| 310 | 2033-0011 | | 12 | WASHER | |
| 320 | 311103-0236 | | 1 | PARALLEL PIN ISO 2338 3M6X16 A1 | |
| 330 | 312105-0327 | | 4 | SCREW M6S ISO 4017 M5X12 A480 | |
| 340 | 312105-0289 | | 1 | SCREW M6S H4X10 A4 70 ISO4017/DIN933 | |
| 350 | 312105-0329 | | 4 | SCREW M6S ISO 4017 M5X16 A480 | |
| 360 | 312105-0493 | | 1 | SCREW M6S ISO 4017 M10X25 A480 | |

Machine Type | Group Description | Used-In | Group Number | Page No

# LOWER FORMING RING



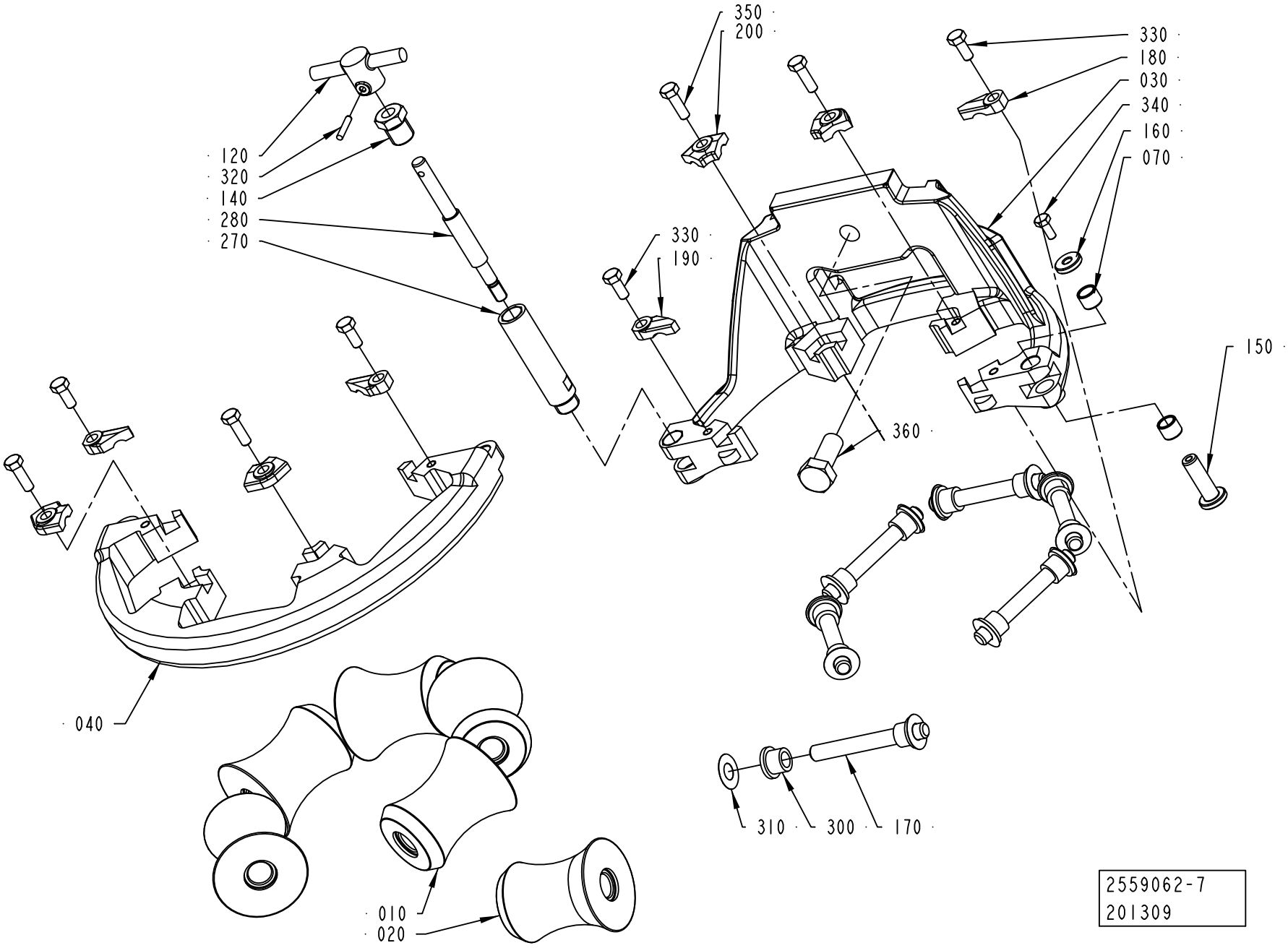

ECM: 365348 - 20081001
Group number: 2559062-0300
Assembly Drawing: 2559062-7_1_AA

This list covers pages from 1-100 to 1-109

| Pos | Part No | UN | Qty | Description | Page No |
|---|---|---|---|---|---|
| **TBA 0500B, TBA 1000B, TBA 1500S (See drawing on page: 1-106)** | | | | | |
| 010 | 1349851-0000 | | 3 | ROLL | |
| | *Remark : PLUS ROLLER 1349853-0000* | | | | |
| | *MINUS ROLLER 1349852-0000* | | | | |
| 020 | 2876664-0000 | | 1 | COUNTER ROLLER | |
| 030 | 2764026-0000 | | 1 | LOWER FORMING RING | |
| 040 | 2700546-0000 | | 1 | FRONT RING | |
| 050 | 1349853-0000 | | 2 | ROLL | |
| 170 | 752186-0014 | | 6 | SHAFT | |
| 180 | 2528119-0004 | | 2 | LOCK PLATE | |
| 190 | 2528118-0004 | | 2 | LOCK PLATE | |
| 200 | 2528123-0004 | | 4 | LOCK PLATE | |
| **TBA 0500SQ, TBA 1000SQ (See drawing on page: 1-104)** | | | | | |
| 010 | 2897901-0000 | | 1 | ROLLER | |
| 020 | 2898309-0000 | | 1 | ROLLER | |
| 030 | 2764023-0000 | | 1 | LOWER FORMING RING | |
| 040 | 2736705-0000 | | 1 | LOWER FORMING RING | |
| 050 | 2898310-0000 | | 1 | ROLLER | |
| 060 | 1490763-0000 | | 3 | ROLLER | |
| 170 | 752186-0016 | | 6 | SHAFT | |
| 180 | 2528119-0004 | | 2 | LOCK PLATE | |
| 190 | 2528118-0004 | | 2 | LOCK PLATE | |
| 200 | 2528123-0004 | | 4 | LOCK PLATE | |
| **TBA 1000S (See drawing on pages: 1-96, 1-102)** | | | | | |
| 010 | 567746-0001 | | 5 | ROLLER (STANDARD SIZE) | |
| | *Remark : PLUS ROLLER 3-567746-2* | | | | |
| | *MINUS ROLLER 3-567746-3* | | | | |
| 020 | 1334856-0000 | | 1 | COUNTER ROLLER | |
| 030 | 2764027-0000 | | 1 | LOWER FORMING RING | |
| 040 | 2721423-0000 | | 1 | FORMING RING | |
| 170 | 752186-0016 | | 6 | SHAFT | |
| 180 | 2528119-0005 | | 2 | LOCK PLATE | |
| 190 | 2528118-0005 | | 2 | LOCK PLATE | |
| 200 | 2528123-0004 | | 4 | LOCK PLATE | |
| **TBA 2000S (See drawing on pages: 1-94, 1-100)** | | | | | |
| 010 | 2565513-0000 | | 5 | ROLLER | |
| | *Remark : PLUS ROLLER 2601311-0000* | | | | |
| | *MINUS ROLLER 2601310-0000* | | | | |
| 020 | 2657923-0000 | | 1 | COUNTER ROLLER | |
| 030 | 2764029-0000 | | 1 | LOWER FORMING RING | |
| 040 | 2673023-0000 | | 1 | LOWER FORMING RING | |
| 170 | 752186-0015 | | 6 | SHAFT | |
| 180 | 2528119-0004 | | 2 | LOCK PLATE | |
| 190 | 2528118-0004 | | 2 | LOCK PLATE | |
| 200 | 2528123-0004 | | 4 | LOCK PLATE | |
| **TPA 1000SQ, TPA 0750SQ (See drawing on page: 1-108)** | | | | | |
| 010 | 1524156-0000 | | 2 | ROLLER | |
| 020 | 1524547-0000 | | 1 | COUNTER ROLLER | |
| 025 | 2833215-0000 | | 1 | ROLLER | |
| 030 | 2764025-0000 | | 1 | LOWER FORMING RING | |
| 040 | 2731503-0000 | | 1 | LOWER FORMING RING | |
| 050 | 2833085-0000 | | 1 | ROLLER | |
| 060 | 2833086-0000 | | 1 | ROLLER | |
| 170 | 2522213-0006 | | 6 | SHAFT | |
| 180 | 2528119-0005 | | 2 | LOCK PLATE | |
| 190 | 2528118-0005 | | 2 | LOCK PLATE | |
| 200 | 2528123-0004 | | 4 | LOCK PLATE | |
| **Common Parts** | | | | | |
| 070 | 2526826-0000 | | 2 | BUSHING | |
| 120 | 2764036-0000 | | 1 | KNOB | |
| 140 | 2731428-0000 | | 1 | NUT | |
| 150 | 2526827-0000 | | 1 | SHAFT | |
| 160 | 2526825-0000 | | 1 | WASHER | |
| 270 | 2764032-0000 | | 1 | SHAFT | |
| 280 | 2764033-0000 | | 1 | SHAFT | |
| 300 | 90240-0172 | | 12 | FLANGE BUSHING, 8X12X10 MM | |
| 310 | 2033-0011 | | 12 | WASHER | |
| 320 | 311103-0236 | | 1 | PARALLEL PIN ISO 2338 3M6X16 A1 | |
| 330 | 312105-0327 | | 4 | SCREW M6S ISO 4017 M5X12 A480 | |
| 340 | 312105-0289 | | 1 | SCREW M6S H4X10 A4 70 ISO4017/DIN933 | |
| 350 | 312105-0329 | | 4 | SCREW M6S ISO 4017 M5X16 A480 | |
| 360 | 312105-0493 | | 1 | SCREW M6S ISO 4017 M10X25 A480 | |

Machine Type | Group Description | Used-In | Group Number | Page No

# LOWER FORMING RING



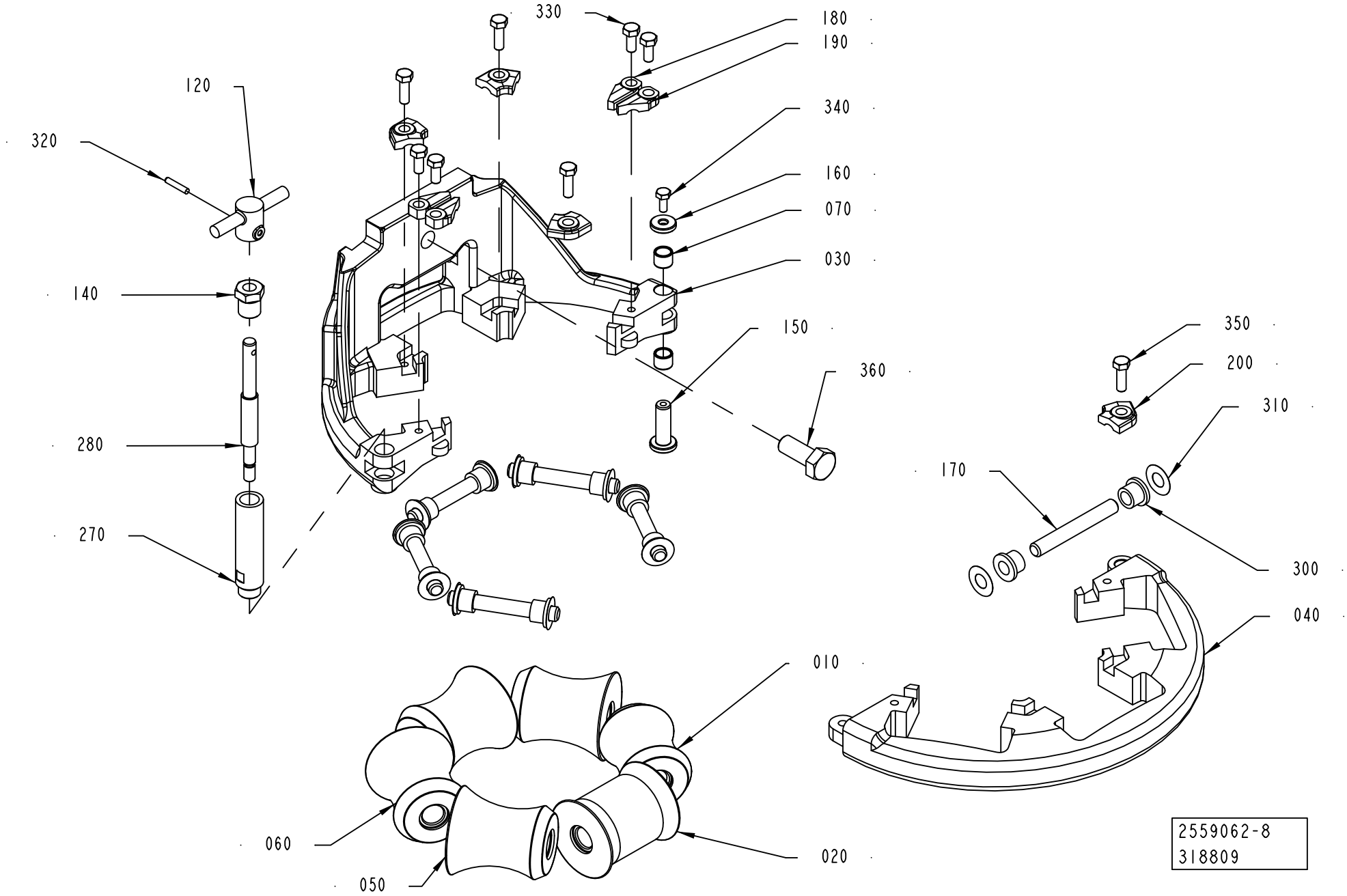

ECM: 365348 - 20081001
Group number: 2559062-0300
Assembly Drawing: 2559062-8_1_AA

This list covers pages from 1-100 to 1-109

| Pos | Part No | UN | Qty | Description | Page No |
|---|---|---|---|---|---|
| **TBA 0500B, TBA 1000B, TBA 1500S (See drawing on page: 1-106)** | | | | | |
| 010 | 1349851-0000 | | 3 | ROLL | |
| | *Remark : PLUS ROLLER 1349853-0000* | | | | |
| | *MINUS ROLLER 1349852-0000* | | | | |
| 020 | 2876664-0000 | | 1 | COUNTER ROLLER | |
| 030 | 2764026-0000 | | 1 | LOWER FORMING RING | |
| 040 | 2700546-0000 | | 1 | FRONT RING | |
| 050 | 1349853-0000 | | 2 | ROLL | |
| 170 | 752186-0014 | | 6 | SHAFT | |
| 180 | 2528119-0004 | | 2 | LOCK PLATE | |
| 190 | 2528118-0004 | | 2 | LOCK PLATE | |
| 200 | 2528123-0004 | | 4 | LOCK PLATE | |
| **TBA 0500SQ, TBA 1000SQ (See drawing on page: 1-104)** | | | | | |
| 010 | 2897901-0000 | | 1 | ROLLER | |
| 020 | 2898309-0000 | | 1 | ROLLER | |
| 030 | 2764023-0000 | | 1 | LOWER FORMING RING | |
| 040 | 2736705-0000 | | 1 | LOWER FORMING RING | |
| 050 | 2898310-0000 | | 1 | ROLLER | |
| 060 | 1490763-0000 | | 3 | ROLLER | |
| 170 | 752186-0016 | | 6 | SHAFT | |
| 180 | 2528119-0004 | | 2 | LOCK PLATE | |
| 190 | 2528118-0004 | | 2 | LOCK PLATE | |
| 200 | 2528123-0004 | | 4 | LOCK PLATE | |
| **TBA 1000S (See drawing on pages: 1-96, 1-102)** | | | | | |
| 010 | 567746-0001 | | 5 | ROLLER (STANDARD SIZE) | |
| | *Remark : PLUS ROLLER 3-567746-2* | | | | |
| | *MINUS ROLLER 3-567746-3* | | | | |
| 020 | 1334856-0000 | | 1 | COUNTER ROLLER | |
| 030 | 2764027-0000 | | 1 | LOWER FORMING RING | |
| 040 | 2721423-0000 | | 1 | FORMING RING | |
| 170 | 752186-0016 | | 6 | SHAFT | |
| 180 | 2528119-0005 | | 2 | LOCK PLATE | |
| 190 | 2528118-0005 | | 2 | LOCK PLATE | |
| 200 | 2528123-0004 | | 4 | LOCK PLATE | |
| **TBA 2000S (See drawing on pages: 1-94, 1-100)** | | | | | |
| 010 | 2565513-0000 | | 5 | ROLLER | |
| | *Remark : PLUS ROLLER 2601311-0000* | | | | |
| | *MINUS ROLLER 2601310-0000* | | | | |
| 020 | 2657923-0000 | | 1 | COUNTER ROLLER | |
| 030 | 2764029-0000 | | 1 | LOWER FORMING RING | |
| 040 | 2673023-0000 | | 1 | LOWER FORMING RING | |
| 170 | 752186-0015 | | 6 | SHAFT | |
| 180 | 2528119-0004 | | 2 | LOCK PLATE | |
| 190 | 2528118-0004 | | 2 | LOCK PLATE | |
| 200 | 2528123-0004 | | 4 | LOCK PLATE | |
| **TPA 1000SQ, TPA 0750SQ (See drawing on page: 1-108)** | | | | | |
| 010 | 1524156-0000 | | 2 | ROLLER | |
| 020 | 1524547-0000 | | 1 | COUNTER ROLLER | |
| 025 | 2833215-0000 | | 1 | ROLLER | |
| 030 | 2764025-0000 | | 1 | LOWER FORMING RING | |
| 040 | 2731503-0000 | | 1 | LOWER FORMING RING | |
| 050 | 2833085-0000 | | 1 | ROLLER | |
| 060 | 2833086-0000 | | 1 | ROLLER | |
| 170 | 2522213-0006 | | 6 | SHAFT | |
| 180 | 2528119-0005 | | 2 | LOCK PLATE | |
| 190 | 2528118-0005 | | 2 | LOCK PLATE | |
| 200 | 2528123-0004 | | 4 | LOCK PLATE | |
| **Common Parts** | | | | | |
| 070 | 2526826-0000 | | 2 | BUSHING | |
| 120 | 2764036-0000 | | 1 | KNOB | |
| 140 | 2731428-0000 | | 1 | NUT | |
| 150 | 2526827-0000 | | 1 | SHAFT | |
| 160 | 2526825-0000 | | 1 | WASHER | |
| 270 | 2764032-0000 | | 1 | SHAFT | |
| 280 | 2764033-0000 | | 1 | SHAFT | |
| 300 | 90240-0172 | | 12 | FLANGE BUSHING, 8X12X10 MM | |
| 310 | 2033-0011 | | 12 | WASHER | |
| 320 | 311103-0236 | | 1 | PARALLEL PIN ISO 2338 3M6X16 A1 | |
| 330 | 312105-0327 | | 4 | SCREW M6S ISO 4017 M5X12 A480 | |
| 340 | 312105-0289 | | 1 | SCREW M6S H4X10 A4 70 ISO4017/DIN933 | |
| 350 | 312105-0329 | | 4 | SCREW M6S ISO 4017 M5X16 A480 | |
| 360 | 312105-0493 | | 1 | SCREW M6S ISO 4017 M10X25 A480 | |

Machine Type | Group Description | Used-In | Group Number | Page No

# LOWER FORMING RING



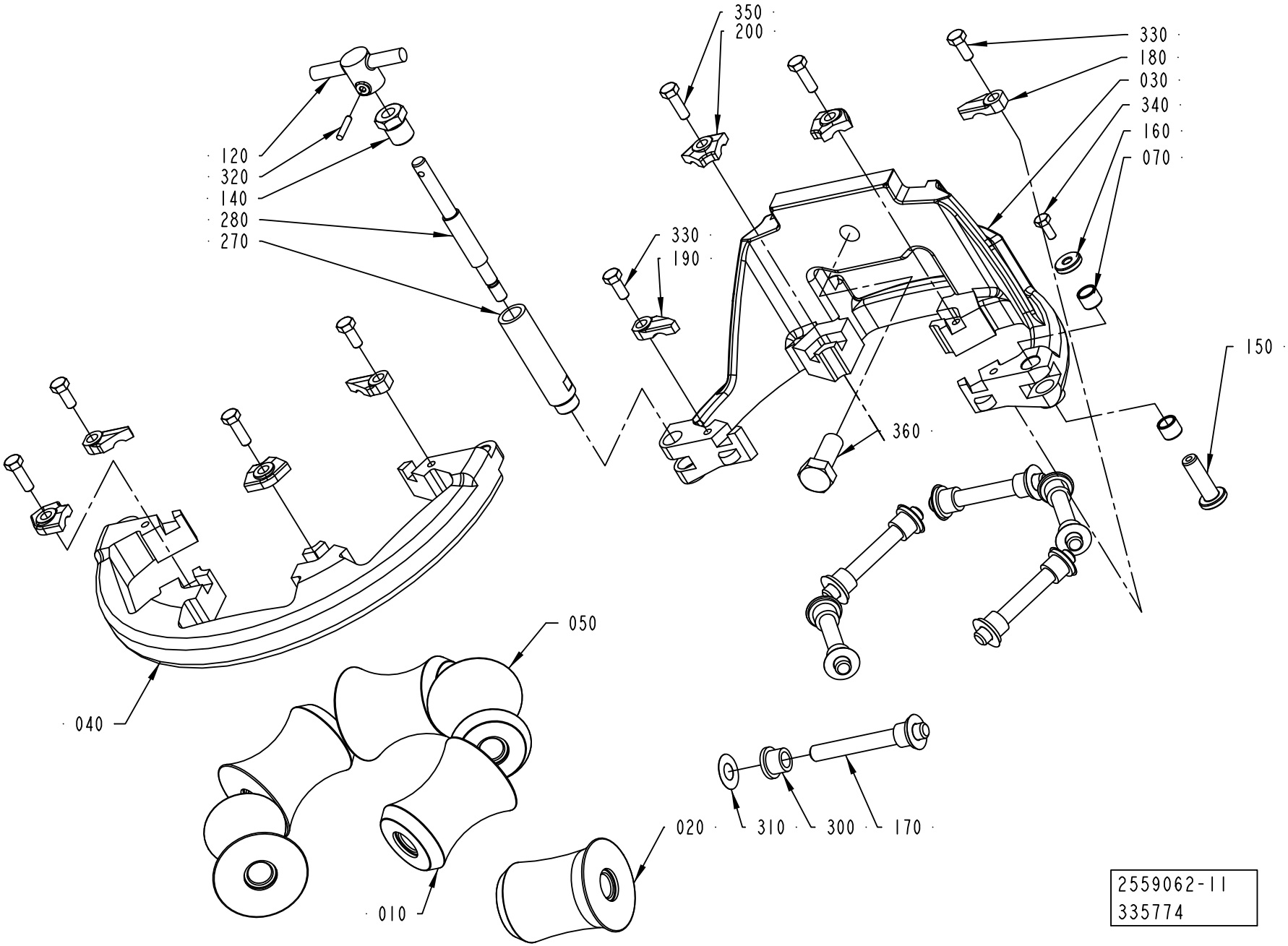

ECM: 365348 - 20081001
Group number: 2559062-0300
Assembly Drawing: 2559062-11_1_AA

This list covers pages from 1-100 to 1-109

| Pos | Part No | UN | Qty | Description | Page No |
|---|---|---|---|---|---|
| **TBA 0500B, TBA 1000B, TBA 1500S (See drawing on page: 1-106)** | | | | | |
| 010 | 1349851-0000 | | 3 | ROLL | |
| | *Remark : PLUS ROLLER 1349853-0000* | | | | |
| | *MINUS ROLLER 1349852-0000* | | | | |
| 020 | 2876664-0000 | | 1 | COUNTER ROLLER | |
| 030 | 2764026-0000 | | 1 | LOWER FORMING RING | |
| 040 | 2700546-0000 | | 1 | FRONT RING | |
| 050 | 1349853-0000 | | 2 | ROLL | |
| 170 | 752186-0014 | | 6 | SHAFT | |
| 180 | 2528119-0004 | | 2 | LOCK PLATE | |
| 190 | 2528118-0004 | | 2 | LOCK PLATE | |
| 200 | 2528123-0004 | | 4 | LOCK PLATE | |
| **TBA 0500SQ, TBA 1000SQ (See drawing on page: 1-104)** | | | | | |
| 010 | 2897901-0000 | | 1 | ROLLER | |
| 020 | 2898309-0000 | | 1 | ROLLER | |
| 030 | 2764023-0000 | | 1 | LOWER FORMING RING | |
| 040 | 2736705-0000 | | 1 | LOWER FORMING RING | |
| 050 | 2898310-0000 | | 1 | ROLLER | |
| 060 | 1490763-0000 | | 3 | ROLLER | |
| 170 | 752186-0016 | | 6 | SHAFT | |
| 180 | 2528119-0004 | | 2 | LOCK PLATE | |
| 190 | 2528118-0004 | | 2 | LOCK PLATE | |
| 200 | 2528123-0004 | | 4 | LOCK PLATE | |
| **TBA 1000S (See drawing on pages: 1-96, 1-102)** | | | | | |
| 010 | 567746-0001 | | 5 | ROLLER (STANDARD SIZE) | |
| | *Remark : PLUS ROLLER 3-567746-2* | | | | |
| | *MINUS ROLLER 3-567746-3* | | | | |
| 020 | 1334856-0000 | | 1 | COUNTER ROLLER | |
| 030 | 2764027-0000 | | 1 | LOWER FORMING RING | |
| 040 | 2721423-0000 | | 1 | FORMING RING | |
| 170 | 752186-0016 | | 6 | SHAFT | |
| 180 | 2528119-0005 | | 2 | LOCK PLATE | |
| 190 | 2528118-0005 | | 2 | LOCK PLATE | |
| 200 | 2528123-0004 | | 4 | LOCK PLATE | |
| **TBA 2000S (See drawing on pages: 1-94, 1-100)** | | | | | |
| 010 | 2565513-0000 | | 5 | ROLLER | |
| | *Remark : PLUS ROLLER 2601311-0000* | | | | |
| | *MINUS ROLLER 2601310-0000* | | | | |
| 020 | 2657923-0000 | | 1 | COUNTER ROLLER | |
| 030 | 2764029-0000 | | 1 | LOWER FORMING RING | |
| 040 | 2673023-0000 | | 1 | LOWER FORMING RING | |
| 170 | 752186-0015 | | 6 | SHAFT | |
| 180 | 2528119-0004 | | 2 | LOCK PLATE | |
| 190 | 2528118-0004 | | 2 | LOCK PLATE | |
| 200 | 2528123-0004 | | 4 | LOCK PLATE | |
| **TPA 1000SQ, TPA 0750SQ (See drawing on page: 1-108)** | | | | | |
| 010 | 1524156-0000 | | 2 | ROLLER | |
| 020 | 1524547-0000 | | 1 | COUNTER ROLLER | |
| 025 | 2833215-0000 | | 1 | ROLLER | |
| 030 | 2764025-0000 | | 1 | LOWER FORMING RING | |
| 040 | 2731503-0000 | | 1 | LOWER FORMING RING | |
| 050 | 2833085-0000 | | 1 | ROLLER | |
| 060 | 2833086-0000 | | 1 | ROLLER | |
| 170 | 2522213-0006 | | 6 | SHAFT | |
| 180 | 2528119-0005 | | 2 | LOCK PLATE | |
| 190 | 2528118-0005 | | 2 | LOCK PLATE | |
| 200 | 2528123-0004 | | 4 | LOCK PLATE | |
| **Common Parts** | | | | | |
| 070 | 2526826-0000 | | 2 | BUSHING | |
| 120 | 2764036-0000 | | 1 | KNOB | |
| 140 | 2731428-0000 | | 1 | NUT | |
| 150 | 2526827-0000 | | 1 | SHAFT | |
| 160 | 2526825-0000 | | 1 | WASHER | |
| 270 | 2764032-0000 | | 1 | SHAFT | |
| 280 | 2764033-0000 | | 1 | SHAFT | |
| 300 | 90240-0172 | | 12 | FLANGE BUSHING, 8X12X10 MM | |
| 310 | 2033-0011 | | 12 | WASHER | |
| 320 | 311103-0236 | | 1 | PARALLEL PIN ISO 2338 3M6X16 A1 | |
| 330 | 312105-0327 | | 4 | SCREW M6S ISO 4017 M5X12 A480 | |
| 340 | 312105-0289 | | 1 | SCREW M6S H4X10 A4 70 ISO4017/DIN933 | |
| 350 | 312105-0329 | | 4 | SCREW M6S ISO 4017 M5X16 A480 | |
| 360 | 312105-0493 | | 1 | SCREW M6S ISO 4017 M10X25 A480 | |

Machine Type | Group Description | Used-In | Group Number | Page No

# LOWER FORMING RING



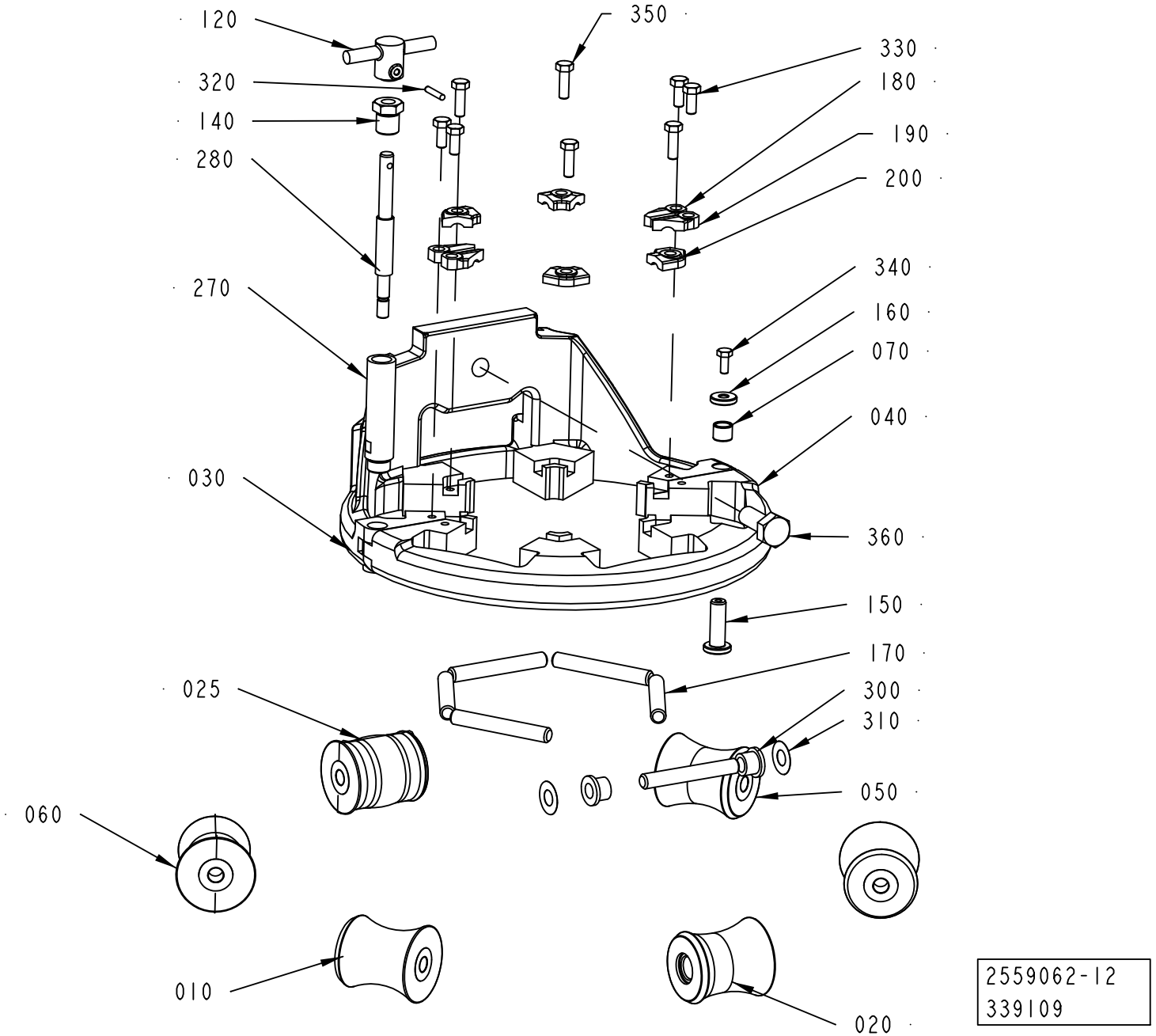

ECM: 365348 - 20081001
Group number: 2559062-0300
Assembly Drawing: 2559062-12_1_AB

This list covers pages from 1-100 to 1-109

| Pos | Part No | UN | Qty | Description | Page No |
|---|---|---|---|---|---|
| **TBA 0500B, TBA 1000B, TBA 1500S (See drawing on page: 1-106)** | | | | | |
| 010 | 1349851-0000 | | 3 | ROLL | |
| | *Remark : PLUS ROLLER 1349853-0000* | | | | |
| | *MINUS ROLLER 1349852-0000* | | | | |
| 020 | 2876664-0000 | | 1 | COUNTER ROLLER | |
| 030 | 2764026-0000 | | 1 | LOWER FORMING RING | |
| 040 | 2700546-0000 | | 1 | FRONT RING | |
| 050 | 1349853-0000 | | 2 | ROLL | |
| 170 | 752186-0014 | | 6 | SHAFT | |
| 180 | 2528119-0004 | | 2 | LOCK PLATE | |
| 190 | 2528118-0004 | | 2 | LOCK PLATE | |
| 200 | 2528123-0004 | | 4 | LOCK PLATE | |
| **TBA 0500SQ, TBA 1000SQ (See drawing on page: 1-104)** | | | | | |
| 010 | 2897901-0000 | | 1 | ROLLER | |
| 020 | 2898309-0000 | | 1 | ROLLER | |
| 030 | 2764023-0000 | | 1 | LOWER FORMING RING | |
| 040 | 2736705-0000 | | 1 | LOWER FORMING RING | |
| 050 | 2898310-0000 | | 1 | ROLLER | |
| 060 | 1490763-0000 | | 3 | ROLLER | |
| 170 | 752186-0016 | | 6 | SHAFT | |
| 180 | 2528119-0004 | | 2 | LOCK PLATE | |
| 190 | 2528118-0004 | | 2 | LOCK PLATE | |
| 200 | 2528123-0004 | | 4 | LOCK PLATE | |
| **TBA 1000S (See drawing on pages: 1-96, 1-102)** | | | | | |
| 010 | 567746-0001 | | 5 | ROLLER (STANDARD SIZE) | |
| | *Remark : PLUS ROLLER 3-567746-2* | | | | |
| | *MINUS ROLLER 3-567746-3* | | | | |
| 020 | 1334856-0000 | | 1 | COUNTER ROLLER | |
| 030 | 2764027-0000 | | 1 | LOWER FORMING RING | |
| 040 | 2721423-0000 | | 1 | FORMING RING | |
| 170 | 752186-0016 | | 6 | SHAFT | |
| 180 | 2528119-0005 | | 2 | LOCK PLATE | |
| 190 | 2528118-0005 | | 2 | LOCK PLATE | |
| 200 | 2528123-0004 | | 4 | LOCK PLATE | |
| **TBA 2000S (See drawing on pages: 1-94, 1-100)** | | | | | |
| 010 | 2565513-0000 | | 5 | ROLLER | |
| | *Remark : PLUS ROLLER 2601311-0000* | | | | |
| | *MINUS ROLLER 2601310-0000* | | | | |
| 020 | 2657923-0000 | | 1 | COUNTER ROLLER | |
| 030 | 2764029-0000 | | 1 | LOWER FORMING RING | |
| 040 | 2673023-0000 | | 1 | LOWER FORMING RING | |
| 170 | 752186-0015 | | 6 | SHAFT | |
| 180 | 2528119-0004 | | 2 | LOCK PLATE | |
| 190 | 2528118-0004 | | 2 | LOCK PLATE | |
| 200 | 2528123-0004 | | 4 | LOCK PLATE | |
| **TPA 1000SQ, TPA 0750SQ (See drawing on page: 1-108)** | | | | | |
| 010 | 1524156-0000 | | 2 | ROLLER | |
| 020 | 1524547-0000 | | 1 | COUNTER ROLLER | |
| 025 | 2833215-0000 | | 1 | ROLLER | |
| 030 | 2764025-0000 | | 1 | LOWER FORMING RING | |
| 040 | 2731503-0000 | | 1 | LOWER FORMING RING | |
| 050 | 2833085-0000 | | 1 | ROLLER | |
| 060 | 2833086-0000 | | 1 | ROLLER | |
| 170 | 2522213-0006 | | 6 | SHAFT | |
| 180 | 2528119-0005 | | 2 | LOCK PLATE | |
| 190 | 2528118-0005 | | 2 | LOCK PLATE | |
| 200 | 2528123-0004 | | 4 | LOCK PLATE | |
| **Common Parts** | | | | | |
| 070 | 2526826-0000 | | 2 | BUSHING | |
| 120 | 2764036-0000 | | 1 | KNOB | |
| 140 | 2731428-0000 | | 1 | NUT | |
| 150 | 2526827-0000 | | 1 | SHAFT | |
| 160 | 2526825-0000 | | 1 | WASHER | |
| 270 | 2764032-0000 | | 1 | SHAFT | |
| 280 | 2764033-0000 | | 1 | SHAFT | |
| 300 | 90240-0172 | | 12 | FLANGE BUSHING, 8X12X10 MM | |
| 310 | 2033-0011 | | 12 | WASHER | |
| 320 | 311103-0236 | | 1 | PARALLEL PIN ISO 2338 3M6X16 A1 | |
| 330 | 312105-0327 | | 4 | SCREW M6S ISO 4017 M5X12 A480 | |
| 340 | 312105-0289 | | 1 | SCREW M6S H4X10 A4 70 ISO4017/DIN933 | |
| 350 | 312105-0329 | | 4 | SCREW M6S ISO 4017 M5X16 A480 | |
| 360 | 312105-0493 | | 1 | SCREW M6S ISO 4017 M10X25 A480 | |

Machine Type | Group Description | Used-In | Group Number | Page No

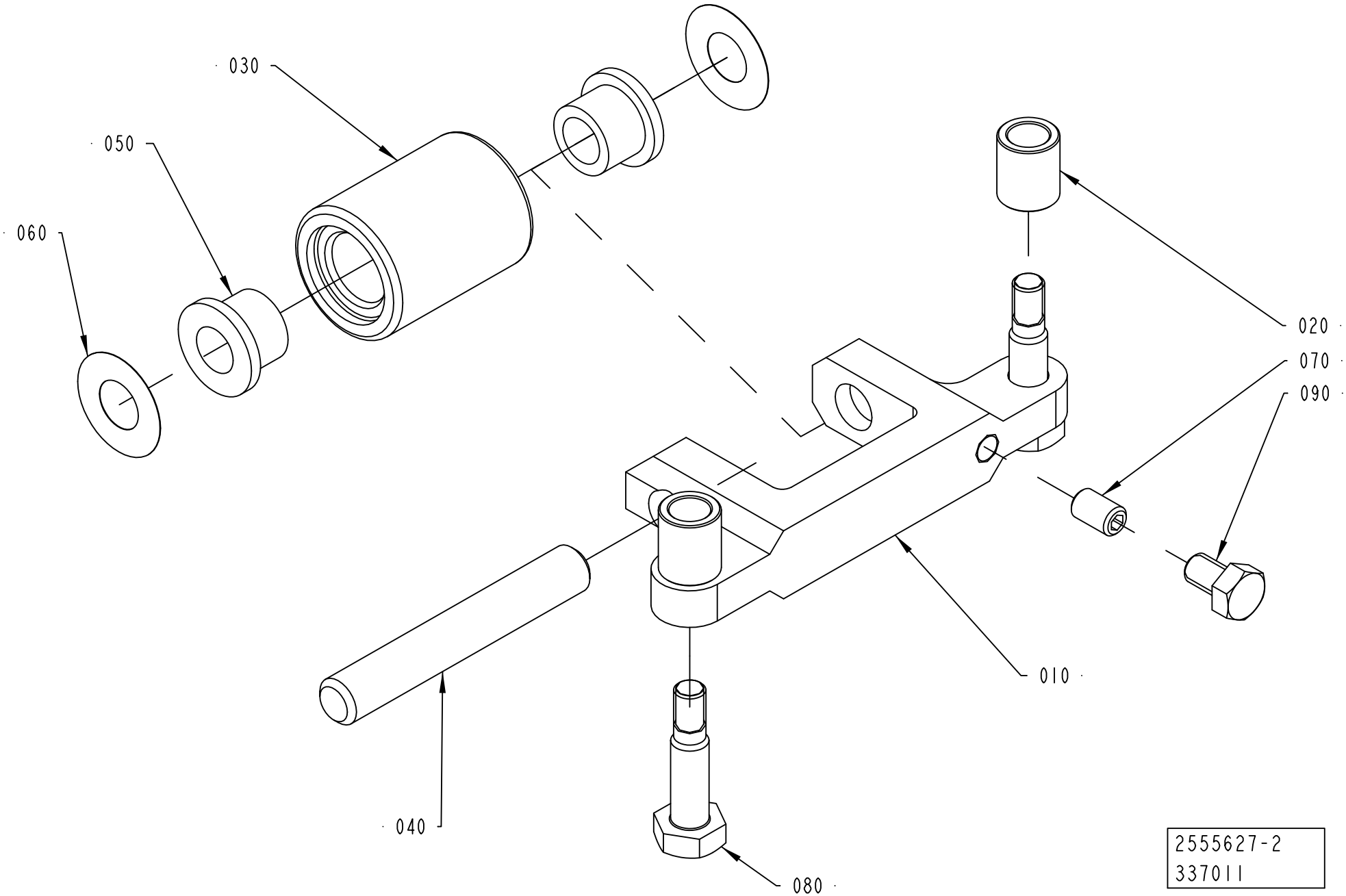
030
050
060
020
070
090
010
040
080
2555627-2
337011

ECM: 365347 - 20081001
Group number: 2555627-0200
Assembly Drawing: 2555627-2_1_AA

| Pos | Part No | UN | Qty | Description | Page No |
|---|---|---|---|---|---|
| **A3/FLEX TBA 0500B, A3/FLEX TBA 1000B, A3/FLEX TBA 1500S** | | | | | |
| 010 | 2764009-0000 | | 1 | BRACKET | |
| 020 | 2715649-0005 | | 2 | SPACER | |
| 030 | 2826410-0000 | | 1 | ROLLER | |
| 080 | 2715650-0003 | | 2 | SCREW | |
| **A3/FLEX TBA 1000S** | | | | | |
| 010 | 2611052-0000 | | 1 | BRACKET | |
| 020 | 2715649-0003 | | 2 | SPACER | |
| 030 | 1538950-0000 | | 1 | ROLLER | |
| 080 | 2715650-0002 | | 2 | SCREW | |
| **A3/FLEX TBA 1000SQ** | | | | | |
| 010 | 2659361-0000 | | 1 | BRACKET | |
| 020 | 2715649-0005 | | 2 | SPACER | |
| 030 | 2715570-0000 | | 1 | ROLLER | |
| 080 | 2715650-0009 | | 2 | SCREW | |
| **A3/FLEX TBA 2000S** | | | | | |
| 010 | 2594596-0000 | | 1 | BRACKET | |
| 020 | 2715649-0004 | | 2 | SPACER | |
| 030 | 2657925-0000 | | 1 | ROLLER | |
| 080 | 2715650-0002 | | 2 | SCREW | |
| **A3/FLEX TPA 1000SQ, A3/FLEX TPA 0750SQ** | | | | | |
| 010 | 2715567-0000 | | 1 | BRACKET | |
| 020 | 2715649-0005 | | 2 | SPACER | |
| 030 | 2715570-0000 | | 1 | ROLLER | |
| 080 | 2715650-0006 | | 2 | SCREW | |
| **Common Parts** | | | | | |
| 040 | 2522213-0015 | | 1 | SHAFT | |
| 050 | 90240-0172 | | 2 | FLANGE BUSHING, 8X12X10 MM | |
| 060 | 2033-0011 | | 2 | WASHER | |
| 070 | 312318-0323 | | 1 | SCREW ISO4029 M5X8 A4 | |
| 090 | 312105-0323 | | 1 | SCREW M6S ISO 4017 M5X8 A480 | |

| Pos | Part No | UN | Qty | Description | Page No |
|---|---|---|---|---|---|

**This page is intentionally left blank.**

ECM: 369142 - 20081001
Group number: 2912700-0100
Assembly Drawing:

| Pos | Part No | UN | Qty | Description | Page No |
|---|---|---|---|---|---|
| **DIMC** | | | | | |
| 010 | 2559061-0200 | | 1 | UPPER FORMING RING | **1-115, 1-117, 1-119** |
| **NODIMC** | | | | | |
| 010 | 2547422-0300 | | 1 | UPPER FORMING RING | **1-121, 1-123, 1-125, 1-127, 1-129** |

| Pos | Part No | UN | Qty | Description | Page No |
|---|---|---|---|---|---|

# UPPER FORMING RING



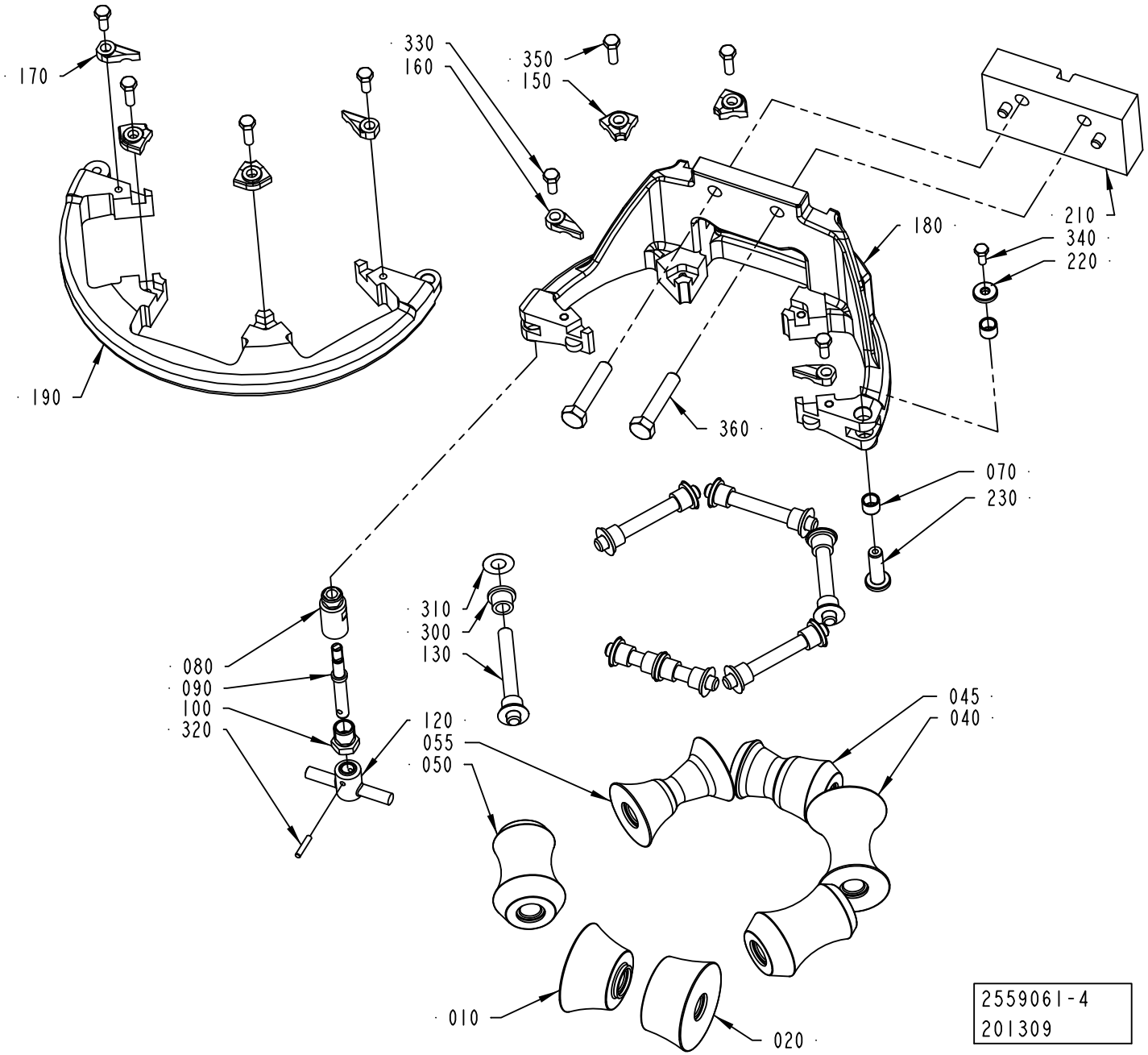

ECM: 360107 - 20081002
Group number: 2559061-0200
Assembly Drawing: 2559061-4_1_AA

This list covers pages from 1-114 to 1-119

| Pos | Part No | UN | Qty | Description | Page No |
|---|---|---|---|---|---|
| **TBA 1000B STDA7 (See drawing on page: 1-116)** | | | | | |
| 010 | 2751479-0000 | | 1 | ROLLER | |
| 020 | 2751478-0000 | | 1 | ROLLER | |
| 030 | 2751483-0000 | | 1 | ROLLER | |
| 040 | 2751481-0000 | | 1 | ROLLER | |
| 045 | 2758084-0000 | | 1 | ROLLER | |
| 055 | 2758085-0000 | | 1 | ROLLER | |
| 060 | 2751482-0000 | | 1 | ROLLER | |
| 130 | 752186-0015 | | 3 | SHAFT | |
| 135 | 752186-0007 | | 3 | SHAFT | |
| 150 | 2528123-0004 | | 2 | LOCK PLATE | |
| 155 | 2528123-0008 | | 2 | LOCK PLATE | |
| 160 | 2528118-0005 | | 1 | LOCK PLATE | |
| 165 | 2528118-0001 | | 1 | LOCK PLATE | |
| 170 | 2528119-0005 | | 1 | LOCK PLATE | |
| 175 | 2528119-0001 | | 1 | LOCK PLATE | |
| 180 | 2764022-0000 | | 1 | UPPER FORMING RING | |
| 190 | 2736677-0000 | | 1 | UPPER FORMING RING | |
| 210 | 2532914-0000 | | 1 | SPACER | |
| 300 | 90240-0172 | | 14 | FLANGE BUSHING, 8X12X10 MM | |
| 360 | 312109-0460 | | 2 | SCREW M6S ISO 4017 M8X45 A480 | |
| 380 | 315115-0165 | | 2 | WASHER PLAIN, TBRB 8,4/16 H=3 | |
| **TBA 1000S LIGHTCAP (See drawing on page: 1-118)** | | | | | |
| 010 | 2512737-0000 | | 1 | ROLLER | |
| 020 | 2846393-0000 | | 1 | ROLLER | |
| 040 | 2846395-0000 | | 1 | ROLLER | |
| 045 | 2716540-0000 | | 1 | ROLLER | |
| 050 | 2512742-0000 | | 1 | ROLLER | |
| 052 | 2846394-0000 | | 1 | ROLLER | |
| 055 | 2716539-0000 | | 1 | ROLLER | |
| 130 | 752186-0007 | | 6 | SHAFT | |
| 150 | 2528123-0001 | | 4 | LOCK PLATE | |
| 160 | 2528118-0001 | | 2 | LOCK PLATE | |
| 170 | 2528119-0001 | | 2 | LOCK PLATE | |
| 180 | 2764014-0000 | | 1 | UPPER FORMING RING | |
| 190 | 2736676-0000 | | 1 | UPPER FORMING RING | |
| 210 | 2532914-0000 | | 1 | SPACER | |
| 300 | 90240-0172 | | 10 | FLANGE BUSHING, 8X12X10 MM | |
| 305 | 2740795-0000 | | 4 | FLANGE BUSHING | |
| 360 | 312109-0459 | | 2 | SCREW M6S ISO 4017 M8X40 A480 | |
| **TBA 1000S STDA7 (See drawing on page: 1-114)** | | | | | |
| 010 | 2512737-0000 | | 1 | ROLLER | |
| 020 | 2512738-0000 | | 1 | ROLLER | |
| 040 | 2512741-0000 | | 1 | ROLLER | |
| 045 | 2555622-0000 | | 1 | ROLLER | |
| 050 | 2512742-0000 | | 2 | ROLLER | |
| 055 | 2555621-0000 | | 1 | ROLLER | |
| 130 | 752186-0007 | | 6 | SHAFT | |
| 150 | 2528123-0001 | | 4 | LOCK PLATE | |
| 160 | 2528118-0001 | | 2 | LOCK PLATE | |
| 170 | 2528119-0001 | | 2 | LOCK PLATE | |
| 180 | 2764014-0000 | | 1 | UPPER FORMING RING | |
| 190 | 2736676-0000 | | 1 | UPPER FORMING RING | |
| 210 | 2532914-0000 | | 1 | SPACER | |
| 300 | 90240-0172 | | 14 | FLANGE BUSHING, 8X12X10 MM | |
| 360 | 312109-0459 | | 2 | SCREW M6S ISO 4017 M8X40 A480 | |
| **Common Parts** | | | | | |
| 070 | 2526826-0000 | | 2 | BUSHING | |
| 080 | 2764034-0000 | | 1 | SHAFT | |
| 090 | 2764035-0000 | | 1 | SHAFT | |
| 100 | 2731428-0000 | | 1 | NUT | |
| 120 | 2764036-0000 | | 1 | KNOB | |
| 220 | 2526825-0000 | | 1 | WASHER | |
| 230 | 2526827-0000 | | 1 | SHAFT | |
| 310 | 2033-0011 | | 14 | WASHER | |
| 320 | 311103-0236 | | 1 | PARALLEL PIN ISO 2338 3M6X16 A1 | |
| 330 | 312105-0327 | | 4 | SCREW M6S ISO 4017 M5X12 A480 | |
| 340 | 312105-0289 | | 1 | SCREW M6S H4X10 A4 70 ISO4017/DIN933 | |
| 350 | 312105-0329 | | 4 | SCREW M6S ISO 4017 M5X16 A480 | |

# UPPER FORMING RING



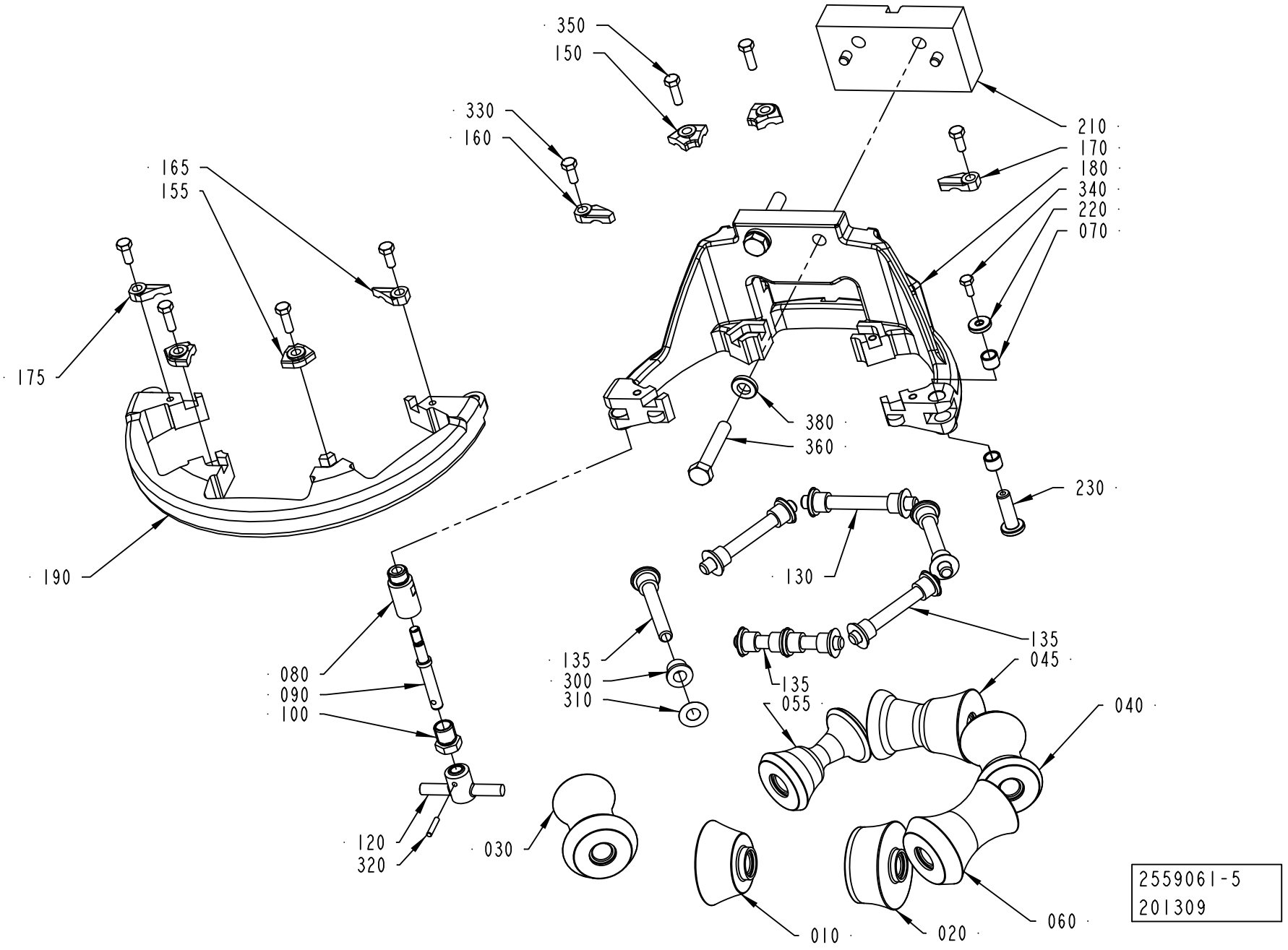

ECM: 360107 - 20081002
Group number: 2559061-0200
Assembly Drawing: 2559061-5_1_AA

This list covers pages from 1-114 to 1-119

| Pos | Part No | UN | Qty | Description | Page No |
|---|---|---|---|---|---|
| **TBA 1000B STDA7 (See drawing on page: 1-116)** | | | | | |
| 010 | 2751479-0000 | | 1 | ROLLER | |
| 020 | 2751478-0000 | | 1 | ROLLER | |
| 030 | 2751483-0000 | | 1 | ROLLER | |
| 040 | 2751481-0000 | | 1 | ROLLER | |
| 045 | 2758084-0000 | | 1 | ROLLER | |
| 055 | 2758085-0000 | | 1 | ROLLER | |
| 060 | 2751482-0000 | | 1 | ROLLER | |
| 130 | 752186-0015 | | 3 | SHAFT | |
| 135 | 752186-0007 | | 3 | SHAFT | |
| 150 | 2528123-0004 | | 2 | LOCK PLATE | |
| 155 | 2528123-0008 | | 2 | LOCK PLATE | |
| 160 | 2528118-0005 | | 1 | LOCK PLATE | |
| 165 | 2528118-0001 | | 1 | LOCK PLATE | |
| 170 | 2528119-0005 | | 1 | LOCK PLATE | |
| 175 | 2528119-0001 | | 1 | LOCK PLATE | |
| 180 | 2764022-0000 | | 1 | UPPER FORMING RING | |
| 190 | 2736677-0000 | | 1 | UPPER FORMING RING | |
| 210 | 2532914-0000 | | 1 | SPACER | |
| 300 | 90240-0172 | | 14 | FLANGE BUSHING, 8X12X10 MM | |
| 360 | 312109-0460 | | 2 | SCREW M6S ISO 4017 M8X45 A480 | |
| 380 | 315115-0165 | | 2 | WASHER PLAIN, TBRB 8,4/16 H=3 | |
| **TBA 1000S LIGHTCAP (See drawing on page: 1-118)** | | | | | |
| 010 | 2512737-0000 | | 1 | ROLLER | |
| 020 | 2846393-0000 | | 1 | ROLLER | |
| 040 | 2846395-0000 | | 1 | ROLLER | |
| 045 | 2716540-0000 | | 1 | ROLLER | |
| 050 | 2512742-0000 | | 1 | ROLLER | |
| 052 | 2846394-0000 | | 1 | ROLLER | |
| 055 | 2716539-0000 | | 1 | ROLLER | |
| 130 | 752186-0007 | | 6 | SHAFT | |
| 150 | 2528123-0001 | | 4 | LOCK PLATE | |
| 160 | 2528118-0001 | | 2 | LOCK PLATE | |
| 170 | 2528119-0001 | | 2 | LOCK PLATE | |
| 180 | 2764014-0000 | | 1 | UPPER FORMING RING | |
| 190 | 2736676-0000 | | 1 | UPPER FORMING RING | |
| 210 | 2532914-0000 | | 1 | SPACER | |
| 300 | 90240-0172 | | 10 | FLANGE BUSHING, 8X12X10 MM | |
| 305 | 2740795-0000 | | 4 | FLANGE BUSHING | |
| 360 | 312109-0459 | | 2 | SCREW M6S ISO 4017 M8X40 A480 | |
| **TBA 1000S STDA7 (See drawing on page: 1-114)** | | | | | |
| 010 | 2512737-0000 | | 1 | ROLLER | |
| 020 | 2512738-0000 | | 1 | ROLLER | |
| 040 | 2512741-0000 | | 1 | ROLLER | |
| 045 | 2555622-0000 | | 1 | ROLLER | |
| 050 | 2512742-0000 | | 2 | ROLLER | |
| 055 | 2555621-0000 | | 1 | ROLLER | |
| 130 | 752186-0007 | | 6 | SHAFT | |
| 150 | 2528123-0001 | | 4 | LOCK PLATE | |
| 160 | 2528118-0001 | | 2 | LOCK PLATE | |
| 170 | 2528119-0001 | | 2 | LOCK PLATE | |
| 180 | 2764014-0000 | | 1 | UPPER FORMING RING | |
| 190 | 2736676-0000 | | 1 | UPPER FORMING RING | |
| 210 | 2532914-0000 | | 1 | SPACER | |
| 300 | 90240-0172 | | 14 | FLANGE BUSHING, 8X12X10 MM | |
| 360 | 312109-0459 | | 2 | SCREW M6S ISO 4017 M8X40 A480 | |
| **Common Parts** | | | | | |
| 070 | 2526826-0000 | | 2 | BUSHING | |
| 080 | 2764034-0000 | | 1 | SHAFT | |
| 090 | 2764035-0000 | | 1 | SHAFT | |
| 100 | 2731428-0000 | | 1 | NUT | |
| 120 | 2764036-0000 | | 1 | KNOB | |
| 220 | 2526825-0000 | | 1 | WASHER | |
| 230 | 2526827-0000 | | 1 | SHAFT | |
| 310 | 2033-0011 | | 14 | WASHER | |
| 320 | 311103-0236 | | 1 | PARALLEL PIN ISO 2338 3M6X16 A1 | |
| 330 | 312105-0327 | | 4 | SCREW M6S ISO 4017 M5X12 A480 | |
| 340 | 312105-0289 | | 1 | SCREW M6S H4X10 A4 70 ISO4017/DIN933 | |
| 350 | 312105-0329 | | 4 | SCREW M6S ISO 4017 M5X16 A480 | |

# UPPER FORMING RING



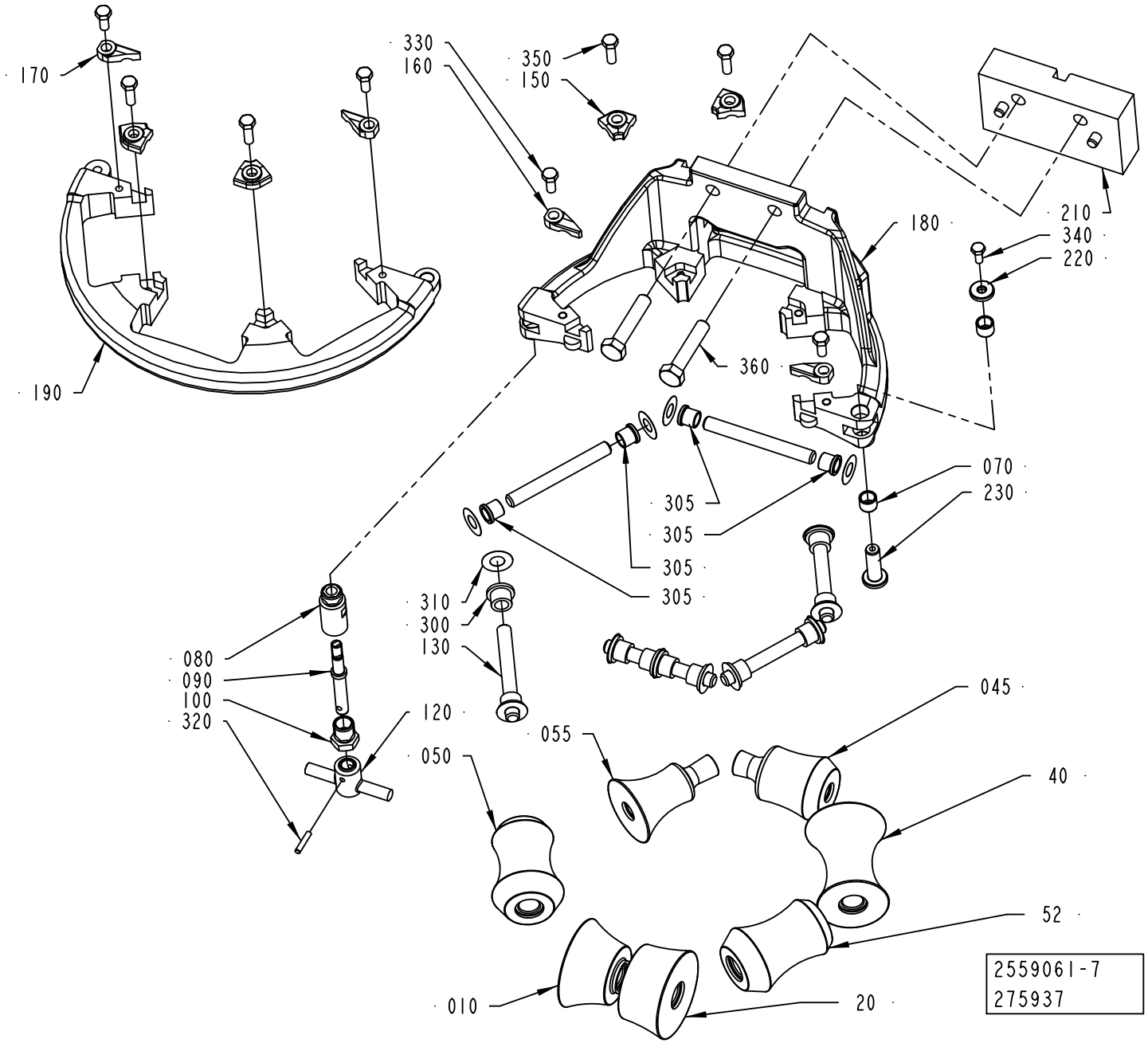

ECM: 360107 - 20081002
Group number: 2559061-0200
Assembly Drawing: 2559061-7_1_AB

This list covers pages from 1-114 to 1-119

| Pos | Part No | UN | Qty | Description | Page No |
|---|---|---|---|---|---|
| **TBA 1000B STDA7 (See drawing on page: 1-116)** | | | | | |
| 010 | 2751479-0000 | | 1 | ROLLER | |
| 020 | 2751478-0000 | | 1 | ROLLER | |
| 030 | 2751483-0000 | | 1 | ROLLER | |
| 040 | 2751481-0000 | | 1 | ROLLER | |
| 045 | 2758084-0000 | | 1 | ROLLER | |
| 055 | 2758085-0000 | | 1 | ROLLER | |
| 060 | 2751482-0000 | | 1 | ROLLER | |
| 130 | 752186-0015 | | 3 | SHAFT | |
| 135 | 752186-0007 | | 3 | SHAFT | |
| 150 | 2528123-0004 | | 2 | LOCK PLATE | |
| 155 | 2528123-0008 | | 2 | LOCK PLATE | |
| 160 | 2528118-0005 | | 1 | LOCK PLATE | |
| 165 | 2528118-0001 | | 1 | LOCK PLATE | |
| 170 | 2528119-0005 | | 1 | LOCK PLATE | |
| 175 | 2528119-0001 | | 1 | LOCK PLATE | |
| 180 | 2764022-0000 | | 1 | UPPER FORMING RING | |
| 190 | 2736677-0000 | | 1 | UPPER FORMING RING | |
| 210 | 2532914-0000 | | 1 | SPACER | |
| 300 | 90240-0172 | | 14 | FLANGE BUSHING, 8X12X10 MM | |
| 360 | 312109-0460 | | 2 | SCREW M6S ISO 4017 M8X45 A480 | |
| 380 | 315115-0165 | | 2 | WASHER PLAIN, TBRB 8,4/16 H=3 | |
| **TBA 1000S LIGHTCAP (See drawing on page: 1-118)** | | | | | |
| 010 | 2512737-0000 | | 1 | ROLLER | |
| 020 | 2846393-0000 | | 1 | ROLLER | |
| 040 | 2846395-0000 | | 1 | ROLLER | |
| 045 | 2716540-0000 | | 1 | ROLLER | |
| 050 | 2512742-0000 | | 1 | ROLLER | |
| 052 | 2846394-0000 | | 1 | ROLLER | |
| 055 | 2716539-0000 | | 1 | ROLLER | |
| 130 | 752186-0007 | | 6 | SHAFT | |
| 150 | 2528123-0001 | | 4 | LOCK PLATE | |
| 160 | 2528118-0001 | | 2 | LOCK PLATE | |
| 170 | 2528119-0001 | | 2 | LOCK PLATE | |
| 180 | 2764014-0000 | | 1 | UPPER FORMING RING | |
| 190 | 2736676-0000 | | 1 | UPPER FORMING RING | |
| 210 | 2532914-0000 | | 1 | SPACER | |
| 300 | 90240-0172 | | 10 | FLANGE BUSHING, 8X12X10 MM | |
| 305 | 2740795-0000 | | 4 | FLANGE BUSHING | |
| 360 | 312109-0459 | | 2 | SCREW M6S ISO 4017 M8X40 A480 | |
| **TBA 1000S STDA7 (See drawing on page: 1-114)** | | | | | |
| 010 | 2512737-0000 | | 1 | ROLLER | |
| 020 | 2512738-0000 | | 1 | ROLLER | |
| 040 | 2512741-0000 | | 1 | ROLLER | |
| 045 | 2555622-0000 | | 1 | ROLLER | |
| 050 | 2512742-0000 | | 2 | ROLLER | |
| 055 | 2555621-0000 | | 1 | ROLLER | |
| 130 | 752186-0007 | | 6 | SHAFT | |
| 150 | 2528123-0001 | | 4 | LOCK PLATE | |
| 160 | 2528118-0001 | | 2 | LOCK PLATE | |
| 170 | 2528119-0001 | | 2 | LOCK PLATE | |
| 180 | 2764014-0000 | | 1 | UPPER FORMING RING | |
| 190 | 2736676-0000 | | 1 | UPPER FORMING RING | |
| 210 | 2532914-0000 | | 1 | SPACER | |
| 300 | 90240-0172 | | 14 | FLANGE BUSHING, 8X12X10 MM | |
| 360 | 312109-0459 | | 2 | SCREW M6S ISO 4017 M8X40 A480 | |
| **Common Parts** | | | | | |
| 070 | 2526826-0000 | | 2 | BUSHING | |
| 080 | 2764034-0000 | | 1 | SHAFT | |
| 090 | 2764035-0000 | | 1 | SHAFT | |
| 100 | 2731428-0000 | | 1 | NUT | |
| 120 | 2764036-0000 | | 1 | KNOB | |
| 220 | 2526825-0000 | | 1 | WASHER | |
| 230 | 2526827-0000 | | 1 | SHAFT | |
| 310 | 2033-0011 | | 14 | WASHER | |
| 320 | 311103-0236 | | 1 | PARALLEL PIN ISO 2338 3M6X16 A1 | |
| 330 | 312105-0327 | | 4 | SCREW M6S ISO 4017 M5X12 A480 | |
| 340 | 312105-0289 | | 1 | SCREW M6S H4X10 A4 70 ISO4017/DIN933 | |
| 350 | 312105-0329 | | 4 | SCREW M6S ISO 4017 M5X16 A480 | |

# UPPER FORMING RING



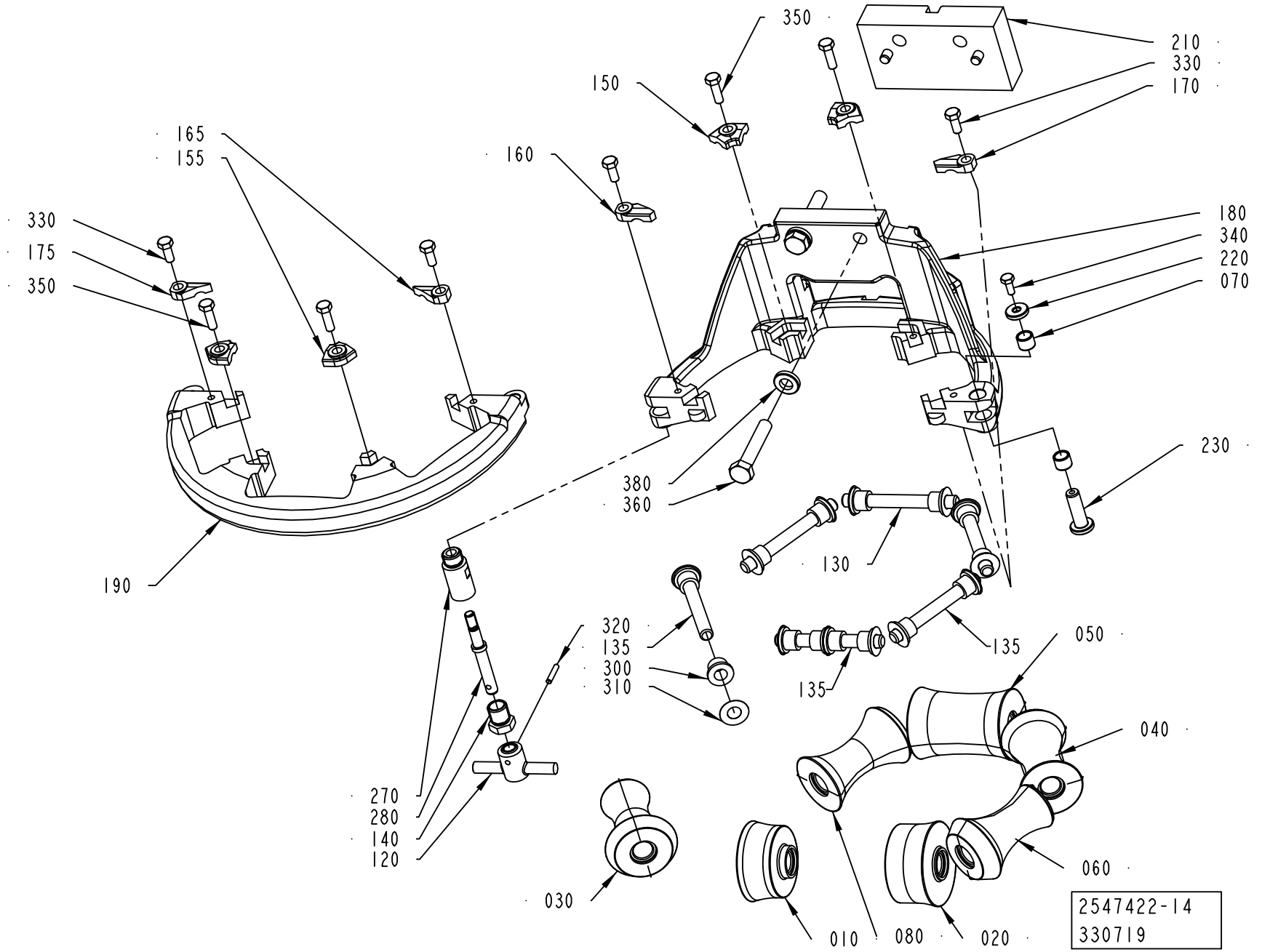

ECM: 365349 - 20081001
Group number: 2547422-0300
Assembly Drawing: 2547422-14_1_AA

This list covers pages from 1-120 to 1-129

| Pos | Part No | UN | Qty | Description | Page No |
|---|---|---|---|---|---|
| **TBA 0500B, TBA 1000B, TBA 1500S (See drawing on page: 1-120)** | | | | | |
| 010 | 2895460-0000 | | 1 | ROLLER | |
| 020 | 2895463-0000 | | 1 | ROLLER | |
| 030 | 2895459-0000 | | 1 | ROLLER | |
| 040 | 2895461-0000 | | 1 | ROLLER | |
| 050 | 2895457-0000 | | 1 | ROLLER | |
| 060 | 2895462-0000 | | 1 | ROLLER | |
| 080 | 2895458-0000 | | 1 | ROLLER | |
| 130 | 752186-0015 | | 3 | SHAFT | |
| 135 | 752186-0007 | | 3 | SHAFT | |
| 150 | 2528123-0004 | | 2 | LOCK PLATE | |
| 155 | 2528123-0008 | | 2 | LOCK PLATE | |
| 160 | 2528118-0005 | | 1 | LOCK PLATE | |
| 165 | 2528118-0001 | | 1 | LOCK PLATE | |
| 170 | 2528119-0005 | | 1 | LOCK PLATE | |
| 175 | 2528119-0001 | | 1 | LOCK PLATE | |
| 180 | 2764022-0000 | | 1 | UPPER FORMING RING | |
| 190 | 2736677-0000 | | 1 | UPPER FORMING RING | |
| 210 | 2696412-0000 | | 1 | SPACER | |
| 300 | 90240-0172 | | 14 | FLANGE BUSHING, 8X12X10 MM | |
| 360 | 312109-0460 | | 2 | SCREW M6S ISO 4017 M8X45 A480 | |
| 380 | 315115-0165 | | 2 | WASHER PLAIN, TBRB 8,4/16 H=3 | |
| **TBA 0500SQ, TBA 1000SQ (See drawing on page: 1-126)** | | | | | |
| 010 | 2532965-0000 | | 1 | ROLLER | |
| 020 | 1548541-0000 | | 1 | ROLLER | |
| 030 | 1548531-0000 | | 4 | ROLLER | |
| 060 | 1548540-0000 | | 1 | ROLLER | |
| 130 | 752186-0007 | | 6 | SHAFT | |
| 150 | 2528123-0004 | | 4 | LOCK PLATE | |
| 160 | 2528118-0004 | | 2 | LOCK PLATE | |
| 170 | 2528119-0004 | | 2 | LOCK PLATE | |
| 180 | 2764013-0000 | | 1 | UPPER FORMING RING | |
| 190 | 2736697-0000 | | 1 | UPPER FORMING RING | |
| 210 | 2532914-0000 | | 1 | SPACER | |
| 300 | 90240-0172 | | 14 | FLANGE BUSHING, 8X12X10 MM | |
| 360 | 312109-0459 | | 2 | SCREW M6S ISO 4017 M8X40 A480 | |
| **TBA 1000S (See drawing on page: 1-128)** | | | | | |
| 010 | 2512737-0000 | | 1 | ROLLER | |
| 020 | 2512738-0000 | | 1 | ROLLER | |
| 030 | 2512740-0000 | | 1 | ROLLER | |
| 040 | 2512741-0000 | | 2 | ROLLER | |
| 050 | 2512742-0000 | | 2 | ROLLER | |
| 130 | 752186-0007 | | 6 | SHAFT | |
| 150 | 2528123-0001 | | 4 | LOCK PLATE | |
| 160 | 2528118-0001 | | 2 | LOCK PLATE | |
| 170 | 2528119-0001 | | 2 | LOCK PLATE | |
| 180 | 2764014-0000 | | 1 | UPPER FORMING RING | |
| 190 | 2736676-0000 | | 1 | UPPER FORMING RING | |
| 210 | 2532914-0000 | | 1 | SPACER | |
| 300 | 90240-0172 | | 14 | FLANGE BUSHING, 8X12X10 MM | |
| 360 | 312109-0459 | | 2 | SCREW M6S ISO 4017 M8X40 A480 | |
| **TBA 2000S (See drawing on page: 1-124)** | | | | | |
| 010 | 2634958-0000 | | 1 | ROLLER | |
| 020 | 2634957-0000 | | 1 | ROLLER | |
| 030 | 2634956-0000 | | 1 | ROLLER | |
| 040 | 2634954-0000 | | 2 | ROLLER | |
| 050 | 2634953-0000 | | 1 | ROLLER | |
| 060 | 2634955-0000 | | 1 | ROLLER | |
| 130 | 752186-0015 | | 6 | SHAFT | |
| 150 | 2528123-0002 | | 4 | LOCK PLATE | |
| 160 | 2528118-0003 | | 2 | LOCK PLATE | |
| 170 | 2528119-0003 | | 2 | LOCK PLATE | |
| 180 | 2764019-0000 | | 1 | UPPER FORMING RING | |
| 190 | 2736633-0000 | | 1 | UPPER FORMING RING | |
| 210 | 2946883-0000 | | 1 | SPACER | |
| 300 | 90240-0172 | | 14 | FLANGE BUSHING, 8X12X10 MM | |
| 360 | 312109-0459 | | 2 | SCREW M6S ISO 4017 M8X40 A480 | |
| 380 | 315105-0165 | | 2 | WASHER BRB 8,4X16 RFR | |
| **TPA 1000SQ, TPA 0750SQ (See drawing on page: 1-122)** | | | | | |
| 010 | 2851583-0000 | | 1 | ROLLER | |
| 020 | 2851586-0000 | | 1 | ROLLER | |
| 030 | 1524151-0000 | | 2 | ROLLER | |
| 040 | 2833088-0000 | | 2 | ROLLER | |
| 050 | 2833212-0000 | | 1 | ROLLER | |
| 130 | 2522213-0007 | | 6 | SHAFT | |
| 150 | 2528123-0005 | | 4 | LOCK PLATE | |
| 160 | 2528118-0005 | | 2 | LOCK PLATE | |
| 170 | 2528119-0005 | | 2 | LOCK PLATE | |
| 180 | 2764015-0000 | | 1 | UPPER FORMING RING | |
| 190 | 2736631-0000 | | 1 | UPPER FORMING RING | |
| 210 | 2696411-0000 | | 1 | SPACER | |
| 300 | 90240-0172 | | 14 | FLANGE BUSHING, 8X12X10 MM | |
| 360 | 312109-0459 | | 2 | SCREW M6S ISO 4017 M8X40 A480 | |
| **Common Parts** | | | | | |

Machine Type | Group Description | Used-In | Group Number | Page No

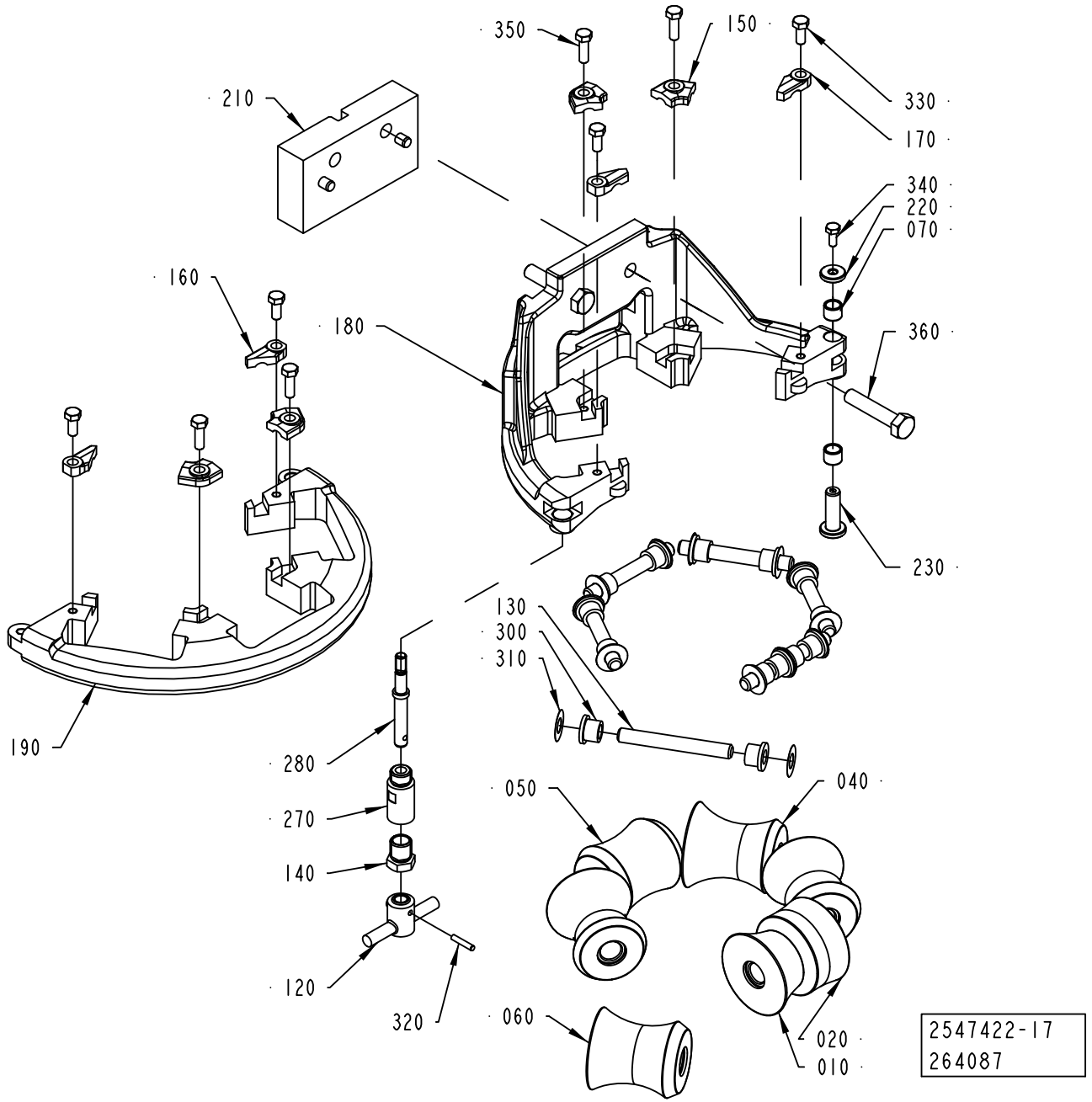
350
150
210
330
170
340
220
070
160
180
360
230
130
300
310
190
280
270
140
120
320
050
040
060
020
010
2547422-17
264087

| Pos | Part No | UN | Qty | Description | Page No |
|---|---|---|---|---|---|
| **Common Parts (Cont'd)** | | | | | |
| 070 | 2526826-0000 | | 2 | BUSHING | |
| 120 | 2764036-0000 | | 1 | KNOB | |
| 140 | 2731428-0000 | | 1 | NUT | |
| 220 | 2526825-0000 | | 1 | WASHER | |
| 230 | 2526827-0000 | | 1 | SHAFT | |
| 270 | 2764034-0000 | | 1 | SHAFT | |
| 280 | 2764035-0000 | | 1 | SHAFT | |
| 310 | 2033-0011 | | 14 | WASHER | |
| 320 | 311103-0236 | | 1 | PARALLEL PIN ISO 2338 3M6X16 A1 | |
| 330 | 312105-0327 | | 4 | SCREW M6S ISO 4017 M5X12 A480 | |
| 340 | 312105-0289 | | 1 | SCREW M6S H4X10 A4 70 ISO4017/DIN933 | |
| 350 | 312105-0329 | | 4 | SCREW M6S ISO 4017 M5X16 A480 | |

| Pos | Part No | UN | Qty | Description | Page No |
|---|---|---|---|---|---|

# UPPER FORMING RING



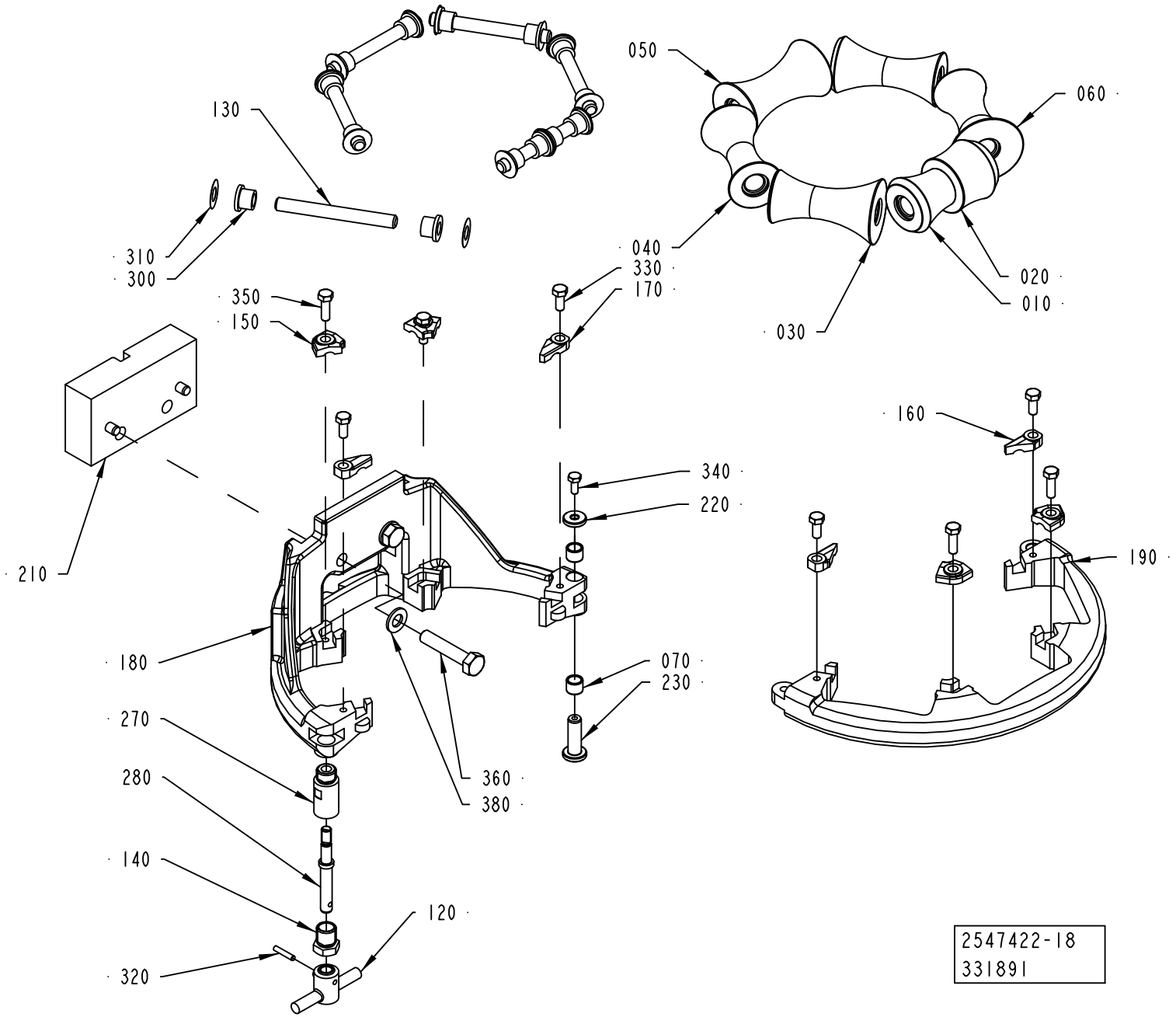

ECM: 365349 - 20081001
Group number: 2547422-0300
Assembly Drawing: 2547422-18_1_AB

This list covers pages from 1-120 to 1-129

| Pos | Part No | UN | Qty | Description | Page No |
|---|---|---|---|---|---|
| **SEE PREVIOUS LISTS PAGES: 1-121, 1-123.** | | | | | |

| Pos | Part No | UN | Qty | Description | Page No |
|---|---|---|---|---|---|

# UPPER FORMING RING



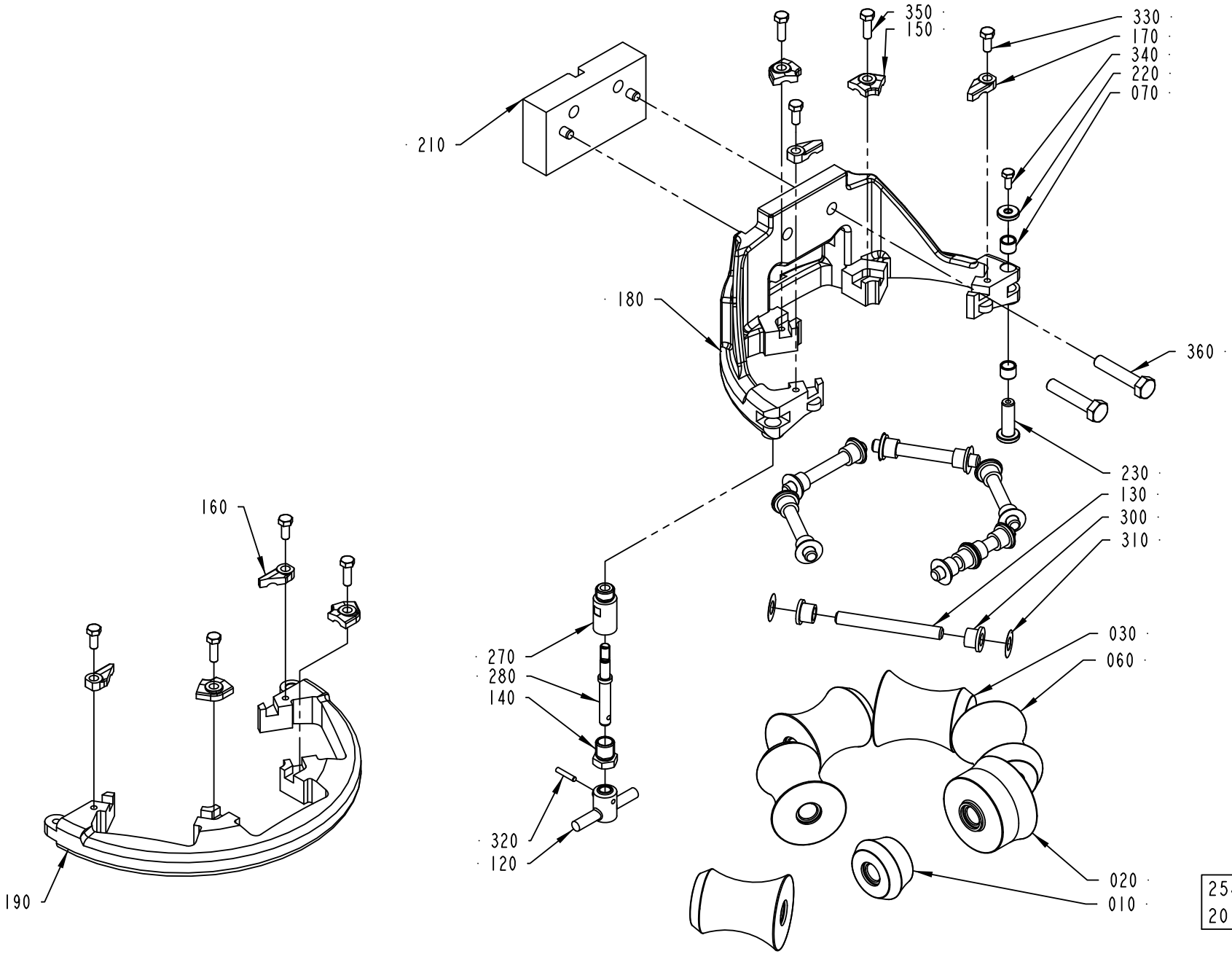

ECM: 365349 - 20081001
Group number: 2547422-0300
Assembly Drawing: 2547422-19_1_AA

This list covers pages from 1-120 to 1-129

| Pos | Part No | UN | Qty | Description | Page No |
|---|---|---|---|---|---|
| **SEE PREVIOUS LISTS PAGES: 1-121, 1-123.** | | | | | |

| Pos | Part No | UN | Qty | Description | Page No |
|---|---|---|---|---|---|

# UPPER FORMING RING



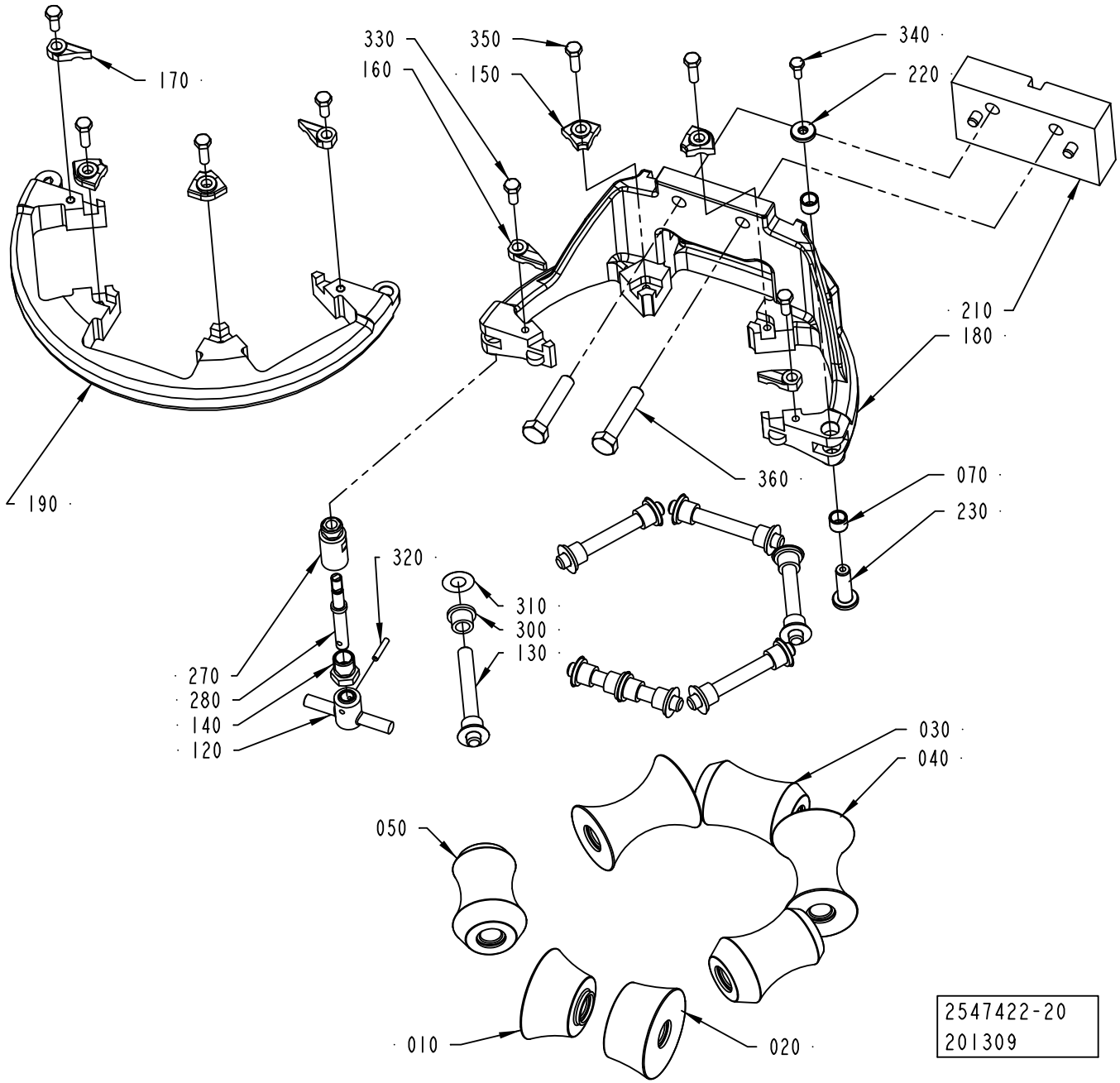

ECM: 365349 - 20081001
Group number: 2547422-0300
Assembly Drawing: 2547422-20_1_AA

This list covers pages from 1-120 to 1-129

| Pos | Part No | UN | Qty | Description | Page No |
|---|---|---|---|---|---|
| **SEE PREVIOUS LISTS PAGES: 1-121, 1-123.** | | | | | |

| Pos | Part No | UN | Qty | Description | Page No |
|---|---|---|---|---|---|

**This page is intentionally left blank.**

ECM: 369143 - 20081001
Group number: 2912702-0100
Assembly Drawing:

| Pos | Part No | UN | Qty | Description | Page No |
|---|---|---|---|---|---|
| **DIMC** | | | | | |
| 010 | 2592550-0100 | | 1 | FORMING RING | **1-133** |
| **NODIMC** | | | | | |
| 010 | 2547421-0200 | | 1 | FORMING RING | **1-135, 1-137, 1-139** |

| Pos | Part No | UN | Qty | Description | Page No |
|---|---|---|---|---|---|

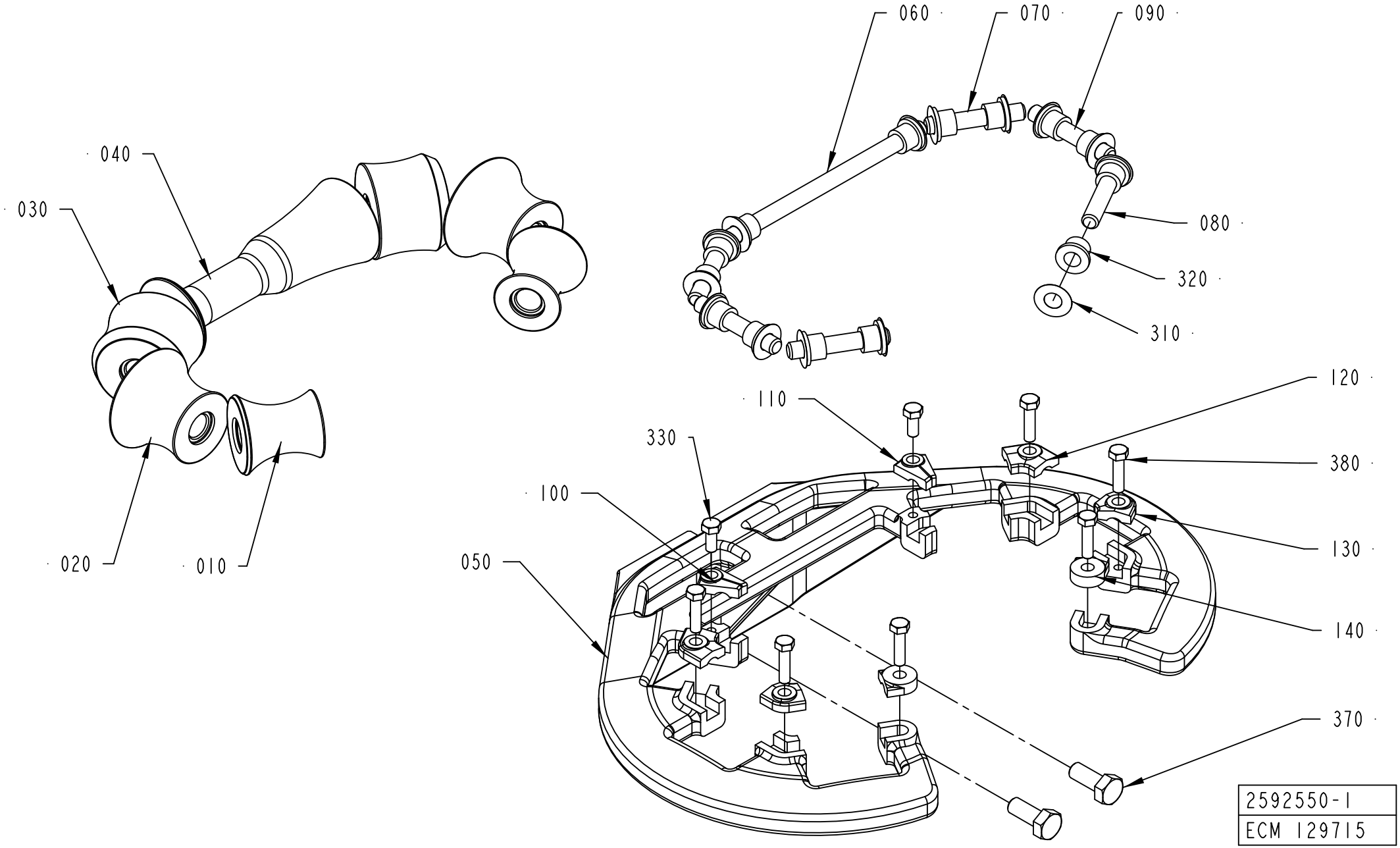
060
070
090
080
320
310
040
030
020
010
120
110
330
380
100
130
050
140
370
2592550-1
ECM 129715

ECM: 359130 - 20081002
Group number: 2592550-0100
Assembly Drawing: 2592550-1_1_AA

| Pos | Part No | UN | Qty | Description | Page No |
|---|---|---|---|---|---|
| **TBA 1000B STDA7 (See drawing on page: 1-132)** | | | | | |
| 010 | 2552206-0000 | | 2 | ROLLER | |
| 020 | 2552205-0000 | | 2 | ROLLER | |
| 030 | 2552188-0000 | | 2 | ROLLER | |
| 040 | 2601240-0000 | | 1 | ROLLER | |
| 050 | 2552160-0000 | | 1 | SUPPORT RING | |
| 060 | 2522213-0005 | | 1 | SHAFT | |
| 070 | 752186-0005 | | 2 | SHAFT | |
| 080 | 2522213-0004 | | 2 | SHAFT | |
| 090 | 752186-0019 | | 2 | SHAFT | |
| 100 | 2552176-0001 | | 1 | LOCK PLATE | |
| 110 | 2552177-0001 | | 1 | LOCK PLATE | |
| 120 | 2528123-0002 | | 2 | LOCK PLATE | |
| 130 | 2528123-0008 | | 2 | LOCK PLATE | |
| 140 | 2532895-0004 | | 2 | LOCK PLATE | |
| 320 | 90240-0172 | | 14 | FLANGE BUSHING, 8X12X10 MM | |
| 330 | 312105-0327 | | 2 | SCREW M6S ISO 4017 M5X12 A480 | |
| 370 | 312105-0451 | | 2 | SCREW M6S ISO 4017 M8X20 A480 | |
| 380 | 312105-0331 | | 6 | SCREW M6S ISO 4017 M5X20 A480 | |
| **TBA 1000S LIGHTCAP (See drawing on page: 1-132)** | | | | | |
| 010 | 2512748-0000 | | 2 | ROLLER | |
| 020 | 2512749-0000 | | 2 | ROLLER | |
| 030 | 2512746-0000 | | 2 | ROLLER | |
| 040 | 2716443-0000 | | 1 | ROLLER | |
| 050 | 2552161-0000 | | 1 | SUPPORT RING | |
| 060 | 2522213-0005 | | 1 | SHAFT | |
| 070 | 752186-0005 | | 2 | SHAFT | |
| 080 | 2522213-0004 | | 2 | SHAFT | |
| 090 | 752186-0019 | | 2 | SHAFT | |
| 100 | 2552176-0003 | | 1 | LOCK PLATE | |
| 110 | 2552177-0003 | | 1 | LOCK PLATE | |
| 120 | 2528123-0007 | | 2 | LOCK PLATE | |
| 130 | 2528123-0001 | | 2 | LOCK PLATE | |
| 140 | 2532895-0003 | | 2 | LOCK PLATE | |
| 320 | 90240-0172 | | 14 | FLANGE BUSHING, 8X12X10 MM | |
| 330 | 312105-0327 | | 2 | SCREW M6S ISO 4017 M5X12 A480 | |
| 370 | 312105-0451 | | 2 | SCREW M6S ISO 4017 M8X20 A480 | |
| 380 | 312105-0331 | | 6 | SCREW M6S ISO 4017 M5X20 A480 | |
| **TBA 1000S STDA7 (See drawing on page: 1-132)** | | | | | |
| 010 | 2512748-0000 | | 2 | ROLLER | |
| 020 | 2512749-0000 | | 2 | ROLLER | |
| 030 | 2512746-0000 | | 2 | ROLLER | |
| 040 | 2592545-0000 | | 1 | ROLLER | |
| 050 | 2552161-0000 | | 1 | SUPPORT RING | |
| 060 | 2522213-0005 | | 1 | SHAFT | |
| 070 | 752186-0005 | | 2 | SHAFT | |
| 080 | 2522213-0004 | | 2 | SHAFT | |
| 090 | 752186-0019 | | 2 | SHAFT | |
| 100 | 2552176-0003 | | 1 | LOCK PLATE | |
| 110 | 2552177-0003 | | 1 | LOCK PLATE | |
| 120 | 2528123-0007 | | 2 | LOCK PLATE | |
| 130 | 2528123-0001 | | 2 | LOCK PLATE | |
| 140 | 2532895-0003 | | 2 | LOCK PLATE | |
| 320 | 90240-0172 | | 14 | FLANGE BUSHING, 8X12X10 MM | |
| 330 | 312105-0327 | | 2 | SCREW M6S ISO 4017 M5X12 A480 | |
| 370 | 312105-0451 | | 2 | SCREW M6S ISO 4017 M8X20 A480 | |
| 380 | 312105-0331 | | 6 | SCREW M6S ISO 4017 M5X20 A480 | |
| **Common Parts** | | | | | |
| 310 | 2033-0011 | | 14 | WASHER | |

Machine Type | Group Description | Used-In | Group Number | Page No

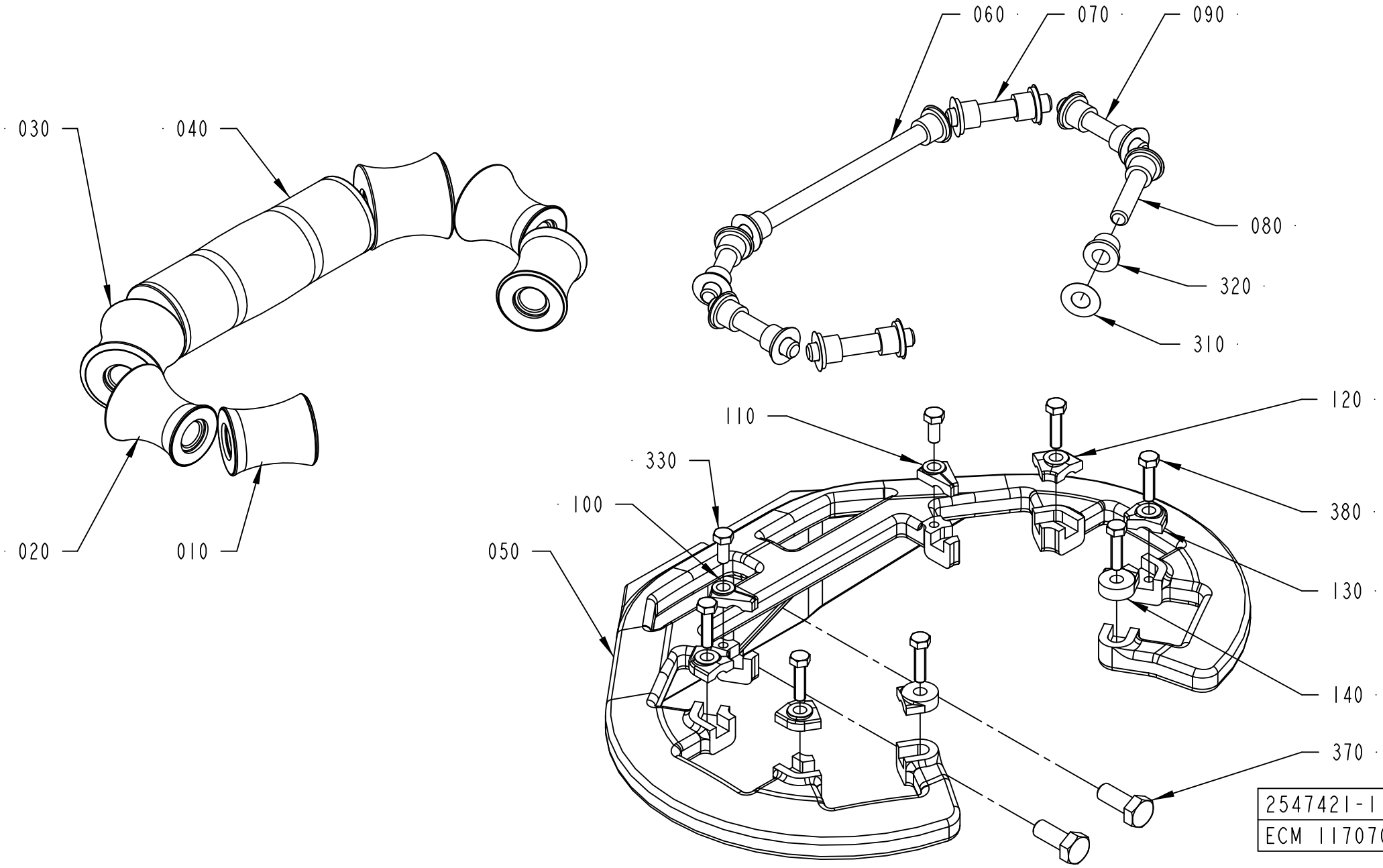
060
070
090
080
320
310
030
040
020
010
110
330
100
050
120
380
130
140
370
2547421-1
ECM 117070

ECM: 355888 - 20081001
Group number: 2547421-0200
Assembly Drawing: 2547421-1_1_AA

This list covers pages from 1-134 to 1-139

| Pos | Part No | UN | Qty | Description | Page No |
|---|---|---|---|---|---|
| **A3/FLEX TBA 1000S (See drawing on page: 1-134)** | | | | | |
| 010 | 2512748-0000 | | 2 | ROLLER | |
| 020 | 2512749-0000 | | 2 | ROLLER | |
| 030 | 2512746-0000 | | 2 | ROLLER | |
| 040 | 2514521-0000 | | 2 | ROLLER | |
| 050 | 2552161-0000 | | 1 | SUPPORT RING | |
| 060 | 2522213-0005 | | 1 | SHAFT | |
| 070 | 752186-0005 | | 2 | SHAFT | |
| 080 | 2522213-0004 | | 2 | SHAFT | |
| 090 | 752186-0019 | | 2 | SHAFT | |
| 100 | 2552176-0003 | | 1 | LOCK PLATE | |
| 110 | 2552177-0003 | | 1 | LOCK PLATE | |
| 120 | 2528123-0007 | | 2 | LOCK PLATE | |
| 130 | 2528123-0001 | | 2 | LOCK PLATE | |
| 140 | 2532895-0003 | | 2 | LOCK PLATE | |
| 310 | 2033-0011 | | 16 | WASHER | |
| 320 | 90240-0172 | | 16 | FLANGE BUSHING, 8X12X10 MM | |
| 330 | 312105-0327 | | 2 | SCREW M6S ISO 4017 M5X12 A480 | |
| 370 | 312105-0451 | | 2 | SCREW M6S ISO 4017 M8X20 A480 | |
| 380 | 312105-0331 | | 6 | SCREW M6S ISO 4017 M5X20 A480 | |
| **TBA 0500B, TBA 1000B, TBA 1500S (See drawing on page: 1-134)** | | | | | |
| 010 | 2552206-0000 | | 2 | ROLLER | |
| 020 | 2552205-0000 | | 2 | ROLLER | |
| 030 | 2552188-0000 | | 2 | ROLLER | |
| 040 | 2552187-0000 | | 1 | ROLLER | |
| 050 | 2552160-0000 | | 1 | SUPPORT RING | |
| 060 | 2522213-0005 | | 1 | SHAFT | |
| 070 | 752186-0005 | | 2 | SHAFT | |
| 080 | 2522213-0004 | | 2 | SHAFT | |
| 090 | 752186-0019 | | 2 | SHAFT | |
| 100 | 2552176-0001 | | 1 | LOCK PLATE | |
| 110 | 2552177-0001 | | 1 | LOCK PLATE | |
| 120 | 2528123-0002 | | 2 | LOCK PLATE | |
| 130 | 2528123-0008 | | 2 | LOCK PLATE | |
| 140 | 2532895-0004 | | 2 | LOCK PLATE | |
| 310 | 2033-0011 | | 14 | WASHER | |
| 320 | 90240-0172 | | 14 | FLANGE BUSHING, 8X12X10 MM | |
| 330 | 312105-0327 | | 2 | SCREW M6S ISO 4017 M5X12 A480 | |
| 370 | 312105-0451 | | 2 | SCREW M6S ISO 4017 M8X20 A480 | |
| 380 | 312105-0331 | | 6 | SCREW M6S ISO 4017 M5X20 A480 | |
| **TBA 0500SQ, TBA 1000SQ (See drawing on page: 1-138)** | | | | | |
| 010 | 2896520-0000 | | 2 | ROLLER | |
| 020 | 2634970-0000 | | 2 | ROLLER | |
| 030 | 2634969-0000 | | 2 | ROLLER | |
| 040 | 2634968-0000 | | 1 | ROLLER | |
| 050 | 2909791-0000 | | 1 | SUPPORT | |
| 060 | 2522213-0008 | | 1 | SHAFT | |
| 070 | 752186-0005 | | 2 | SHAFT | |
| 080 | 2522213-0009 | | 2 | SHAFT | |
| 090 | 752186-0013 | | 2 | SHAFT | |
| 120 | 2532895-0007 | | 2 | LOCK PLATE | |
| 130 | 2562667-0009 | | 6 | LOCK PLATE | |
| 160 | 2916867-0000 | | 1 | SUPPORT RING | |
| 310 | 2033-0011 | | 14 | WASHER | |
| 320 | 90240-0172 | | 14 | FLANGE BUSHING, 8X12X10 MM | |
| 370 | 312105-0451 | | 2 | SCREW M6S ISO 4017 M8X20 A480 | |
| 380 | 312105-0329 | | 8 | SCREW M6S ISO 4017 M5X16 A480 | |
| 390 | 312105-0329 | | 2 | SCREW M6S ISO 4017 M5X16 A480 | |
| 400 | 312109-0374 | | 4 | SCREW M6S ISO 4017 M6X30 A480 | |
| **TBA 2000S (See drawing on page: 1-136)** | | | | | |
| 010 | 2601286-0000 | | 2 | ROLLER | |
| 020 | 2601285-0000 | | 2 | ROLLER | |
| 030 | 2601279-0000 | | 2 | ROLLER | |
| 040 | 2601278-0000 | | 1 | ROLLER | |
| 050 | 2634926-0000 | | 1 | SUPPORT ROLLER | |
| 060 | 2522213-0019 | | 1 | SHAFT | |
| 070 | 752186-0006 | | 2 | SHAFT | |
| 080 | 2522213-0020 | | 2 | SHAFT | |
| 090 | 752186-0019 | | 2 | SHAFT | |
| 120 | 2562667-0008 | | 4 | LOCK PLATE | |
| 130 | 2528123-0007 | | 2 | LOCK PLATE | |
| 140 | 2532895-0002 | | 2 | LOCK PLATE | |
| 310 | 2033-0011 | | 14 | WASHER | |
| 320 | 90240-0172 | | 14 | FLANGE BUSHING, 8X12X10 MM | |
| 350 | 315105-0165 | | 2 | WASHER BRB 8,4X16 RFR | |
| 370 | 312105-0453 | | 2 | SCREW M6S ISO 4017 M8X25 A480 | |
| 380 | 312105-0329 | | 8 | SCREW M6S ISO 4017 M5X16 A480 | |
| **TPA 1000SQ, TPA 0750SQ (See drawing on page: 1-138)** | | | | | |
| 010 | 2889461-0000 | | 2 | ROLLER | |
| 020 | 2901229-0000 | | 2 | ROLLER | |
| 030 | 2901228-0000 | | 2 | ROLLER | |
| 040 | 2901291-0000 | | 1 | ROLLER | |
| 050 | 2907975-0000 | | 1 | BRACKET | |
| 060 | 2889464-0000 | | 1 | SHAFT | |

Machine Type | Group Description | Used-In | Group Number | Page No

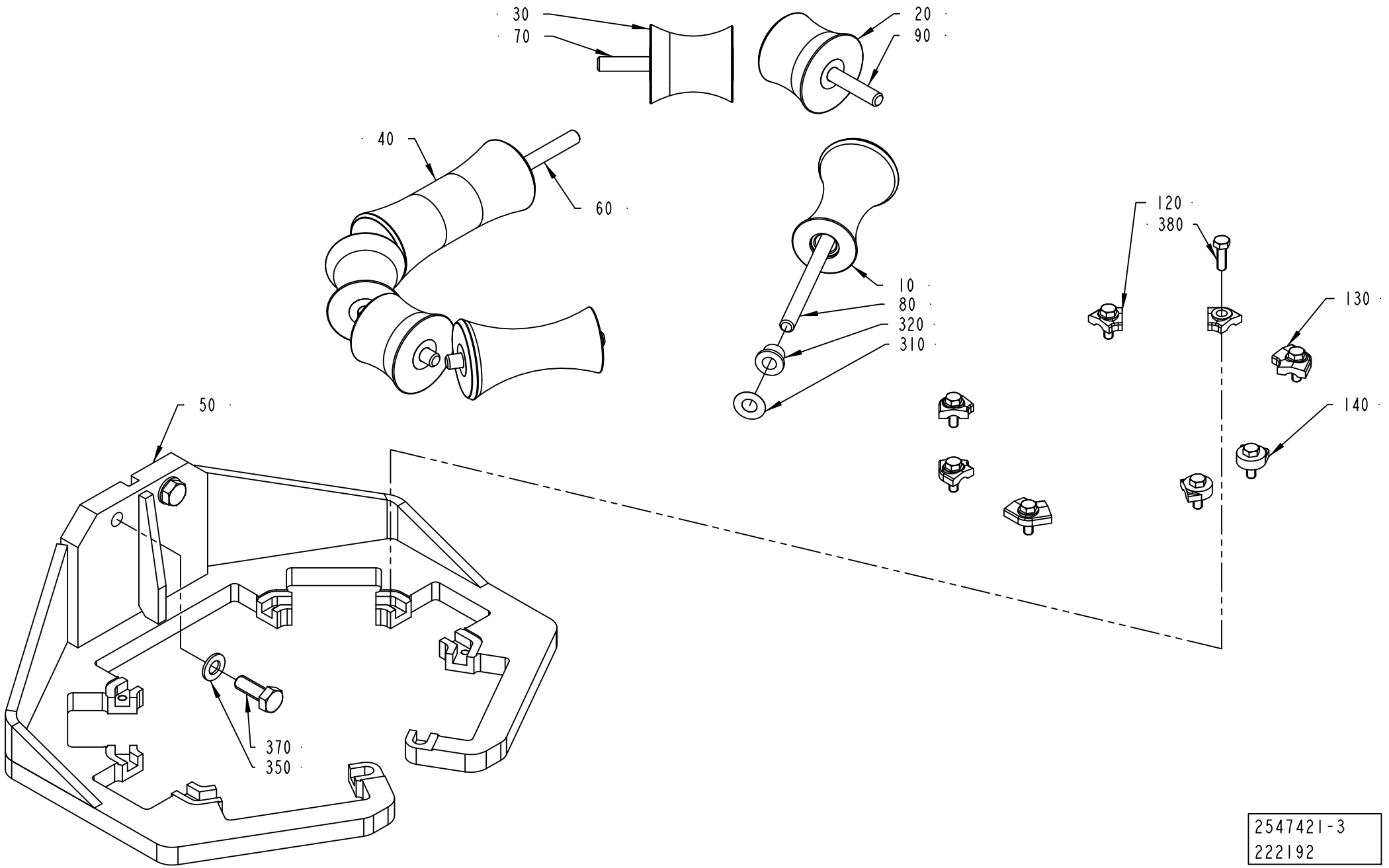


2547421-3
222192

| Pos | Part No | UN | Qty | Description | Page No |
|---|---|---|---|---|---|
| **TPA 1000SQ, TPA 0750SQ (Cont'd) (See drawing on page: 1-138)** | | | | | |
| 070 | 752186-0006 | | 2 | SHAFT | |
| 080 | 752186-0001 | | 2 | SHAFT | |
| 090 | 752186-0004 | | 2 | SHAFT | |
| 120 | 2889463-0000 | | 2 | LOCK PLATE | |
| 130 | 2889462-0000 | | 6 | PLATE | |
| 160 | 2907974-0000 | | 1 | FRAME | |
| 310 | 2033-0011 | | 14 | WASHER | |
| 320 | 90240-0172 | | 14 | FLANGE BUSHING, 8X12X10 MM | |
| 370 | 312105-0449 | | 2 | SCREW M6S ISO 4017 M8X16 A480 | |
| 380 | 312105-0325 | | 6 | SCREW M6S ISO 4017 M5X10 A480 | |
| 390 | 312105-0329 | | 2 | SCREW M6S ISO 4017 M5X16 A480 | |
| 400 | 312109-0374 | | 4 | SCREW M6S ISO 4017 M6X30 A480 | |

| Pos | Part No | UN | Qty | Description | Page No |
|---|---|---|---|---|---|

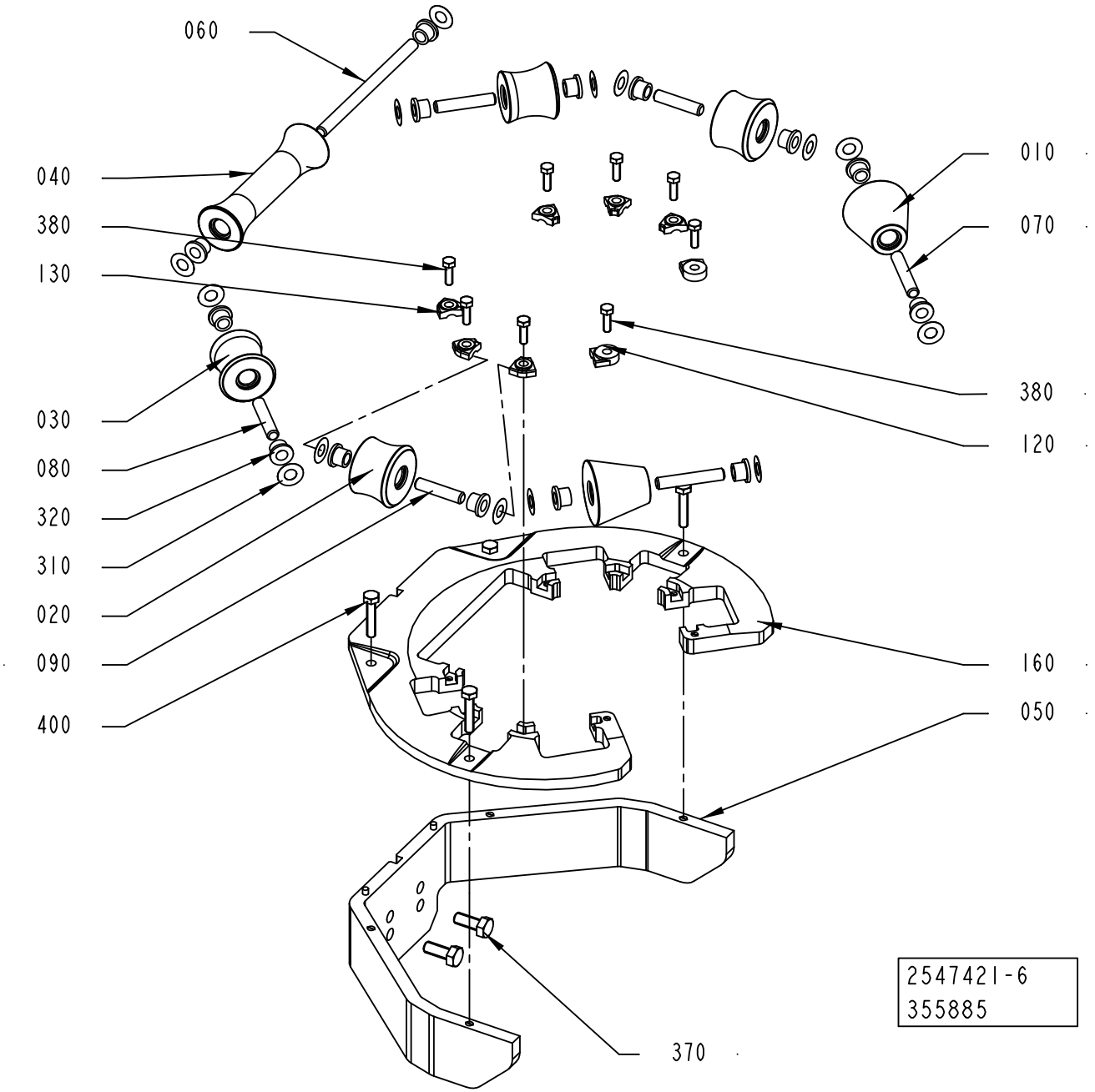
060
040
380
130
030
080
320
310
020
090
400
010
070
380
120
160
050
370
2547421-6
355885

ECM: 355888 - 20081001
Group number: 2547421-0200
Assembly Drawing: 2547421-6_1_AC

This list covers pages from 1-134 to 1-139

| Pos | Part No | UN | Qty | Description | Page No |
|---|---|---|---|---|---|
| **SEE PREVIOUS LISTS PAGES: 1-135, 1-137.** | | | | | |

| Pos | Part No | UN | Qty | Description | Page No |
|---|---|---|---|---|---|

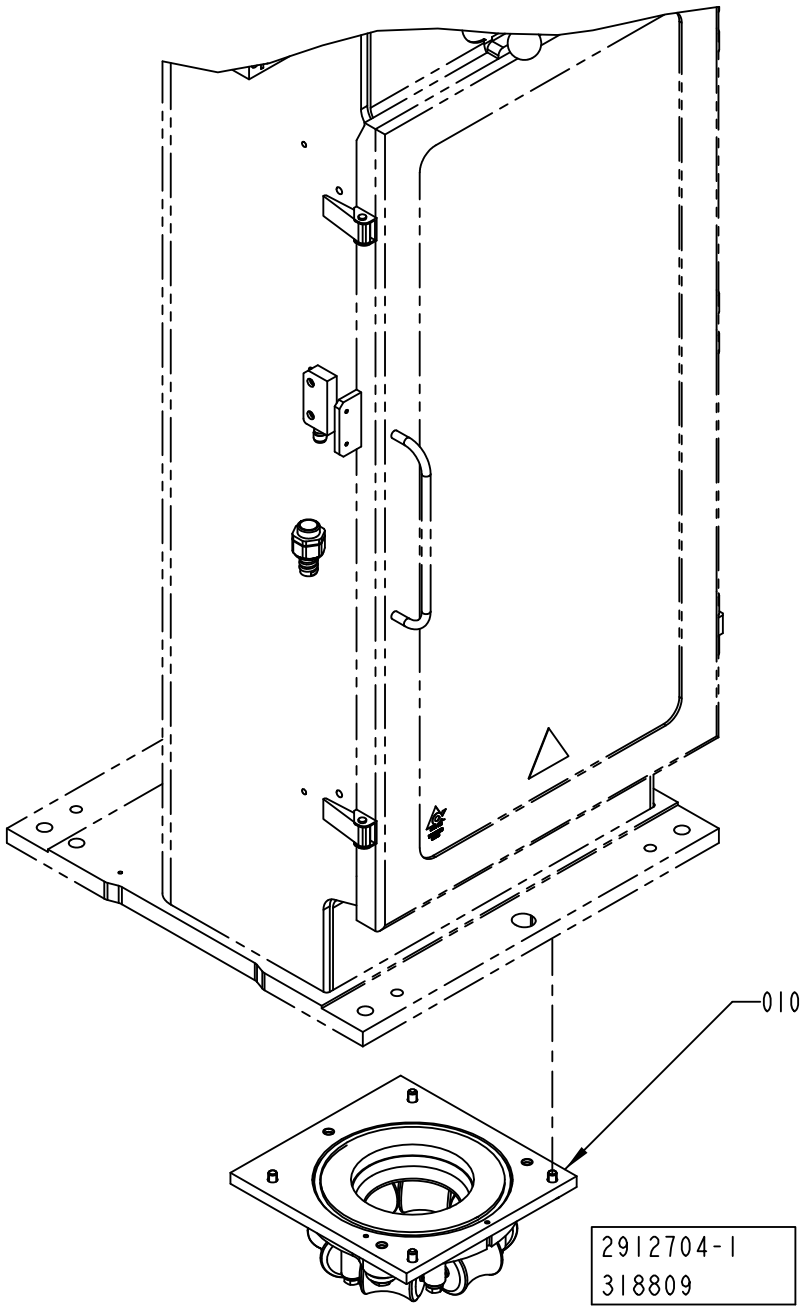
010
2912704-1
318809

ECM: 369144 - 20081001
Group number: 2912704-0100
Assembly Drawing: 2912704-1_1_AA

| Pos | Part No | UN | Qty | Description | Page No |
|---|---|---|---|---|---|
| **DIMC** | | | | | |
| 010 | 2559064-0100 | | 1 | SEAL | **1-143, 1-145, 1-147** |
| **NODIMC** | | | | | |
| 010 | 2512780-0100 | | 1 | SEAL | **1-149** |

| Pos | Part No | UN | Qty | Description | Page No |
|---|---|---|---|---|---|

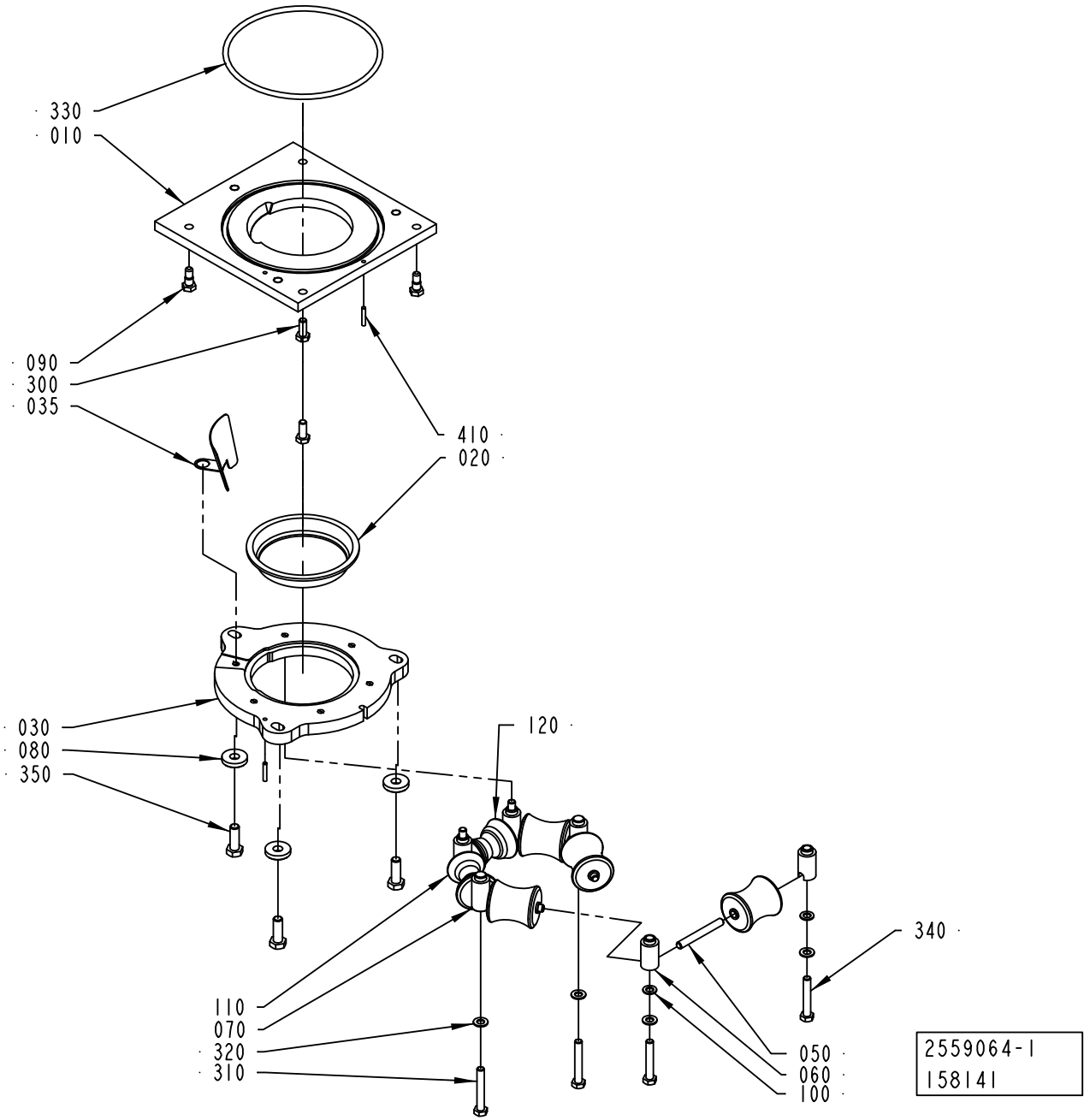
330
010
090
300
035
410
020
030
080
350
120
110
070
320
310
340
050
060
100
2559064-1
158141

ECM: 359129 - 20081002
Group number: 2559064-0100
Assembly Drawing: 2559064-1_1_AB

This list covers pages from 1-142 to 1-147

| Pos | Part No | UN | Qty | Description | Page No |
|---|---|---|---|---|---|
| **TBA 1000B STDA7 (See drawing on page: 1-144)** | | | | | |
| 010 | 2562687-0000 | | 1 | PLATE | |
| 020 | 466042-0000 | | 1 | SEAL | |
| 030 | 2562688-0000 | | 1 | RING | |
| 035 | 1539454-0000 | | 1 | GUIDE | |
| 040 | 466046-0000 | | 4 | ROLLER | |
| 050 | 263655-0009 | | 6 | SHAFT | |
| 110 | 2592548-0000 | | 1 | ROLLER | |
| 120 | 2592549-0000 | | 1 | ROLLER | |
| **TBA 1000S LIGHTCAP (See drawing on page: 1-146)** | | | | | |
| 010 | 2794725-0000 | | 1 | PLATE | |
| 020 | 2811775-0000 | | 1 | SEAL | |
| 030 | 2794726-0000 | | 1 | RING | |
| 040 | 573504-0000 | | 4 | ROLLER | |
| 050 | 263655-0009 | | 6 | SHAFT | |
| 110 | 2716548-0000 | | 1 | ROLLER | |
| 120 | 2716547-0000 | | 1 | ROLLER | |
| **TBA 1000S STDA7 (See drawing on page: 1-142)** | | | | | |
| 010 | 2562687-0000 | | 1 | PLATE | |
| 020 | 567743-0000 | | 1 | SEAL | |
| 030 | 2562688-0000 | | 1 | RING | |
| 035 | 1523696-0000 | | 1 | GUIDE | |
| 040 | 573504-0000 | | 4 | ROLLER | |
| 050 | 263655-0009 | | 6 | SHAFT | |
| 110 | 2592546-0000 | | 1 | ROLLER | |
| 120 | 2592547-0000 | | 1 | ROLLER | |
| **Common Parts** | | | | | |
| 060 | 1036954-0000 | | 4 | AXLE SUPPORT | |
| 070 | 1036955-0000 | | 2 | AXLE SUPPORT | |
| 080 | 315125-0173 | | 3 | WASHER TBRSB 10,5X28X6 A4 | |
| 090 | 1037885-0000 | | 2 | REAMED BOLT | |
| 100 | 1129431-0000 | | 4 | WASHER | |
| 300 | 312105-0451 | | 2 | SCREW M6S ISO 4017 M8X20 A480 | |
| 310 | 312105-0462 | | 2 | SCREW M6S ISO 4014 M8X55 A480 | |
| 320 | 315115-0165 | | 6 | WASHER PLAIN, TBRB 8,4/16 H=3 | |
| 330 | 315204-0324 | | 1 | O-RING 164,3X5,7 MM | |
| 340 | 312109-0461 | | 4 | SCREW M6S ISO 4017 M8X50 A480 | |
| 350 | 312105-0495 | | 3 | SCREW M6S ISO 4017 M10X30 A480 | |
| 370 | 311103-1274 | | 2 | PARALLEL PIN ISO 2338 4M6X24 A1 | |

| Pos | Part No | UN | Qty | Description | Page No |
|---|---|---|---|---|---|

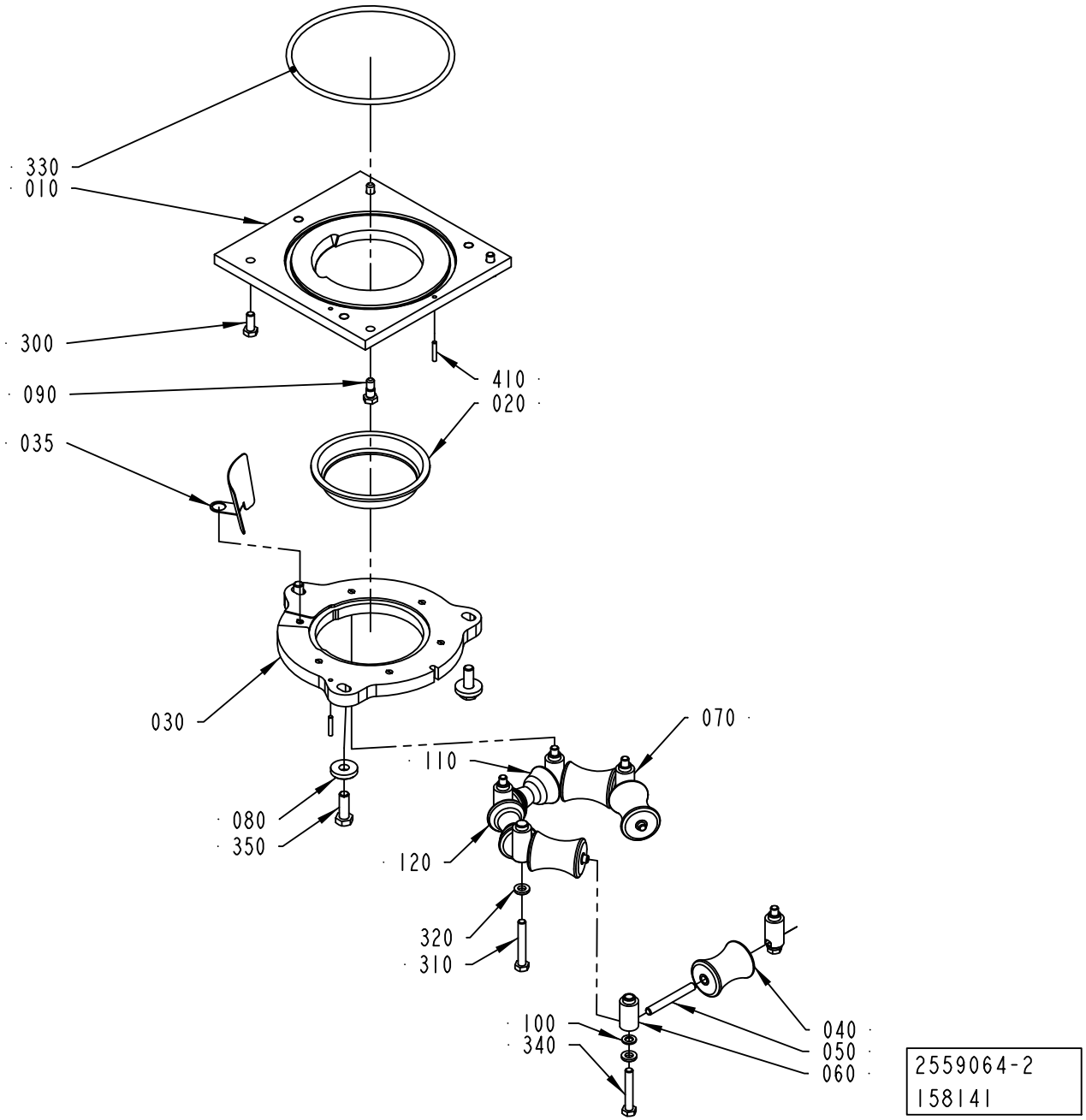
330
010
300
090
035
030
080
350
410
020
070
110
120
320
310
100
340
040
050
060
2559064-2
158141

ECM: 359129 - 20081002
Group number: 2559064-0100
Assembly Drawing: 2559064-2_1_AB

This list covers pages from 1-142 to 1-147

| Pos | Part No | UN | Qty | Description | Page No |
|---|---|---|---|---|---|
| **TBA 1000B STDA7 (See drawing on page: 1-144)** | | | | | |
| 010 | 2562687-0000 | | 1 | PLATE | |
| 020 | 466042-0000 | | 1 | SEAL | |
| 030 | 2562688-0000 | | 1 | RING | |
| 035 | 1539454-0000 | | 1 | GUIDE | |
| 040 | 466046-0000 | | 4 | ROLLER | |
| 050 | 263655-0009 | | 6 | SHAFT | |
| 110 | 2592548-0000 | | 1 | ROLLER | |
| 120 | 2592549-0000 | | 1 | ROLLER | |
| **TBA 1000S LIGHTCAP (See drawing on page: 1-146)** | | | | | |
| 010 | 2794725-0000 | | 1 | PLATE | |
| 020 | 2811775-0000 | | 1 | SEAL | |
| 030 | 2794726-0000 | | 1 | RING | |
| 040 | 573504-0000 | | 4 | ROLLER | |
| 050 | 263655-0009 | | 6 | SHAFT | |
| 110 | 2716548-0000 | | 1 | ROLLER | |
| 120 | 2716547-0000 | | 1 | ROLLER | |
| **TBA 1000S STDA7 (See drawing on page: 1-142)** | | | | | |
| 010 | 2562687-0000 | | 1 | PLATE | |
| 020 | 567743-0000 | | 1 | SEAL | |
| 030 | 2562688-0000 | | 1 | RING | |
| 035 | 1523696-0000 | | 1 | GUIDE | |
| 040 | 573504-0000 | | 4 | ROLLER | |
| 050 | 263655-0009 | | 6 | SHAFT | |
| 110 | 2592546-0000 | | 1 | ROLLER | |
| 120 | 2592547-0000 | | 1 | ROLLER | |
| **Common Parts** | | | | | |
| 060 | 1036954-0000 | | 4 | AXLE SUPPORT | |
| 070 | 1036955-0000 | | 2 | AXLE SUPPORT | |
| 080 | 315125-0173 | | 3 | WASHER TBRSB 10,5X28X6 A4 | |
| 090 | 1037885-0000 | | 2 | REAMED BOLT | |
| 100 | 1129431-0000 | | 4 | WASHER | |
| 300 | 312105-0451 | | 2 | SCREW M6S ISO 4017 M8X20 A480 | |
| 310 | 312105-0462 | | 2 | SCREW M6S ISO 4014 M8X55 A480 | |
| 320 | 315115-0165 | | 6 | WASHER PLAIN, TBRB 8,4/16 H=3 | |
| 330 | 315204-0324 | | 1 | O-RING 164,3X5,7 MM | |
| 340 | 312109-0461 | | 4 | SCREW M6S ISO 4017 M8X50 A480 | |
| 350 | 312105-0495 | | 3 | SCREW M6S ISO 4017 M10X30 A480 | |
| 370 | 311103-1274 | | 2 | PARALLEL PIN ISO 2338 4M6X24 A1 | |

| Pos | Part No | UN | Qty | Description | Page No |
|---|---|---|---|---|---|

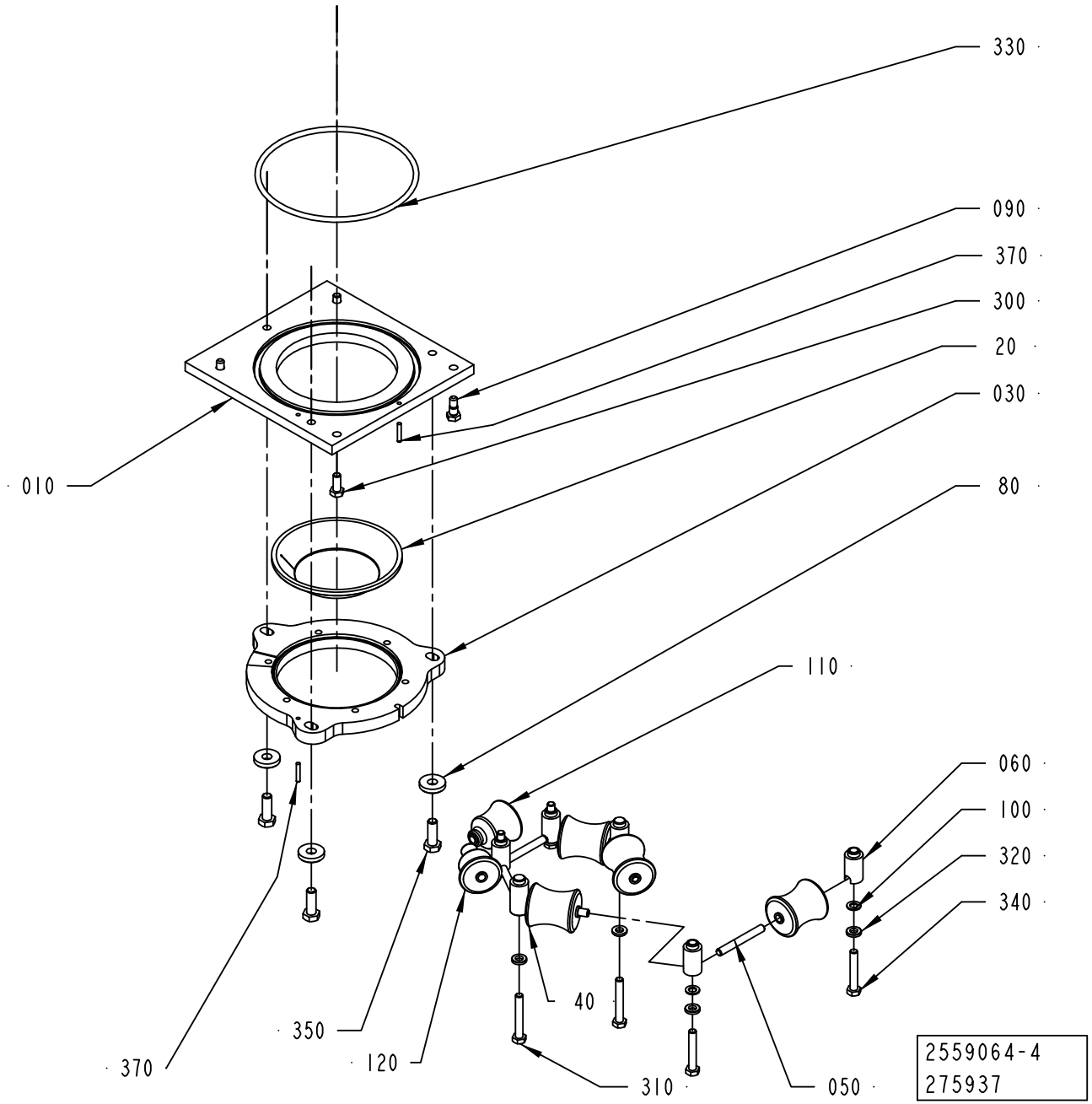
330
090
370
300
20
030
80
010
110
060
100
320
340
40
350
120
370
310
050
2559064-4
275937

ECM: 359129 - 20081002
Group number: 2559064-0100
Assembly Drawing: 2559064-4_1_AB

This list covers pages from 1-142 to 1-147

| Pos | Part No | UN | Qty | Description | Page No |
|---|---|---|---|---|---|
| **TBA 1000B STDA7 (See drawing on page: 1-144)** | | | | | |
| 010 | 2562687-0000 | | 1 | PLATE | |
| 020 | 466042-0000 | | 1 | SEAL | |
| 030 | 2562688-0000 | | 1 | RING | |
| 035 | 1539454-0000 | | 1 | GUIDE | |
| 040 | 466046-0000 | | 4 | ROLLER | |
| 050 | 263655-0009 | | 6 | SHAFT | |
| 110 | 2592548-0000 | | 1 | ROLLER | |
| 120 | 2592549-0000 | | 1 | ROLLER | |
| **TBA 1000S LIGHTCAP (See drawing on page: 1-146)** | | | | | |
| 010 | 2794725-0000 | | 1 | PLATE | |
| 020 | 2811775-0000 | | 1 | SEAL | |
| 030 | 2794726-0000 | | 1 | RING | |
| 040 | 573504-0000 | | 4 | ROLLER | |
| 050 | 263655-0009 | | 6 | SHAFT | |
| 110 | 2716548-0000 | | 1 | ROLLER | |
| 120 | 2716547-0000 | | 1 | ROLLER | |
| **TBA 1000S STDA7 (See drawing on page: 1-142)** | | | | | |
| 010 | 2562687-0000 | | 1 | PLATE | |
| 020 | 567743-0000 | | 1 | SEAL | |
| 030 | 2562688-0000 | | 1 | RING | |
| 035 | 1523696-0000 | | 1 | GUIDE | |
| 040 | 573504-0000 | | 4 | ROLLER | |
| 050 | 263655-0009 | | 6 | SHAFT | |
| 110 | 2592546-0000 | | 1 | ROLLER | |
| 120 | 2592547-0000 | | 1 | ROLLER | |
| **Common Parts** | | | | | |
| 060 | 1036954-0000 | | 4 | AXLE SUPPORT | |
| 070 | 1036955-0000 | | 2 | AXLE SUPPORT | |
| 080 | 315125-0173 | | 3 | WASHER TBRSB 10,5X28X6 A4 | |
| 090 | 1037885-0000 | | 2 | REAMED BOLT | |
| 100 | 1129431-0000 | | 4 | WASHER | |
| 300 | 312105-0451 | | 2 | SCREW M6S ISO 4017 M8X20 A480 | |
| 310 | 312105-0462 | | 2 | SCREW M6S ISO 4014 M8X55 A480 | |
| 320 | 315115-0165 | | 6 | WASHER PLAIN, TBRB 8,4/16 H=3 | |
| 330 | 315204-0324 | | 1 | O-RING 164,3X5,7 MM | |
| 340 | 312109-0461 | | 4 | SCREW M6S ISO 4017 M8X50 A480 | |
| 350 | 312105-0495 | | 3 | SCREW M6S ISO 4017 M10X30 A480 | |
| 370 | 311103-1274 | | 2 | PARALLEL PIN ISO 2338 4M6X24 A1 | |

| Pos | Part No | UN | Qty | Description | Page No |
|---|---|---|---|---|---|

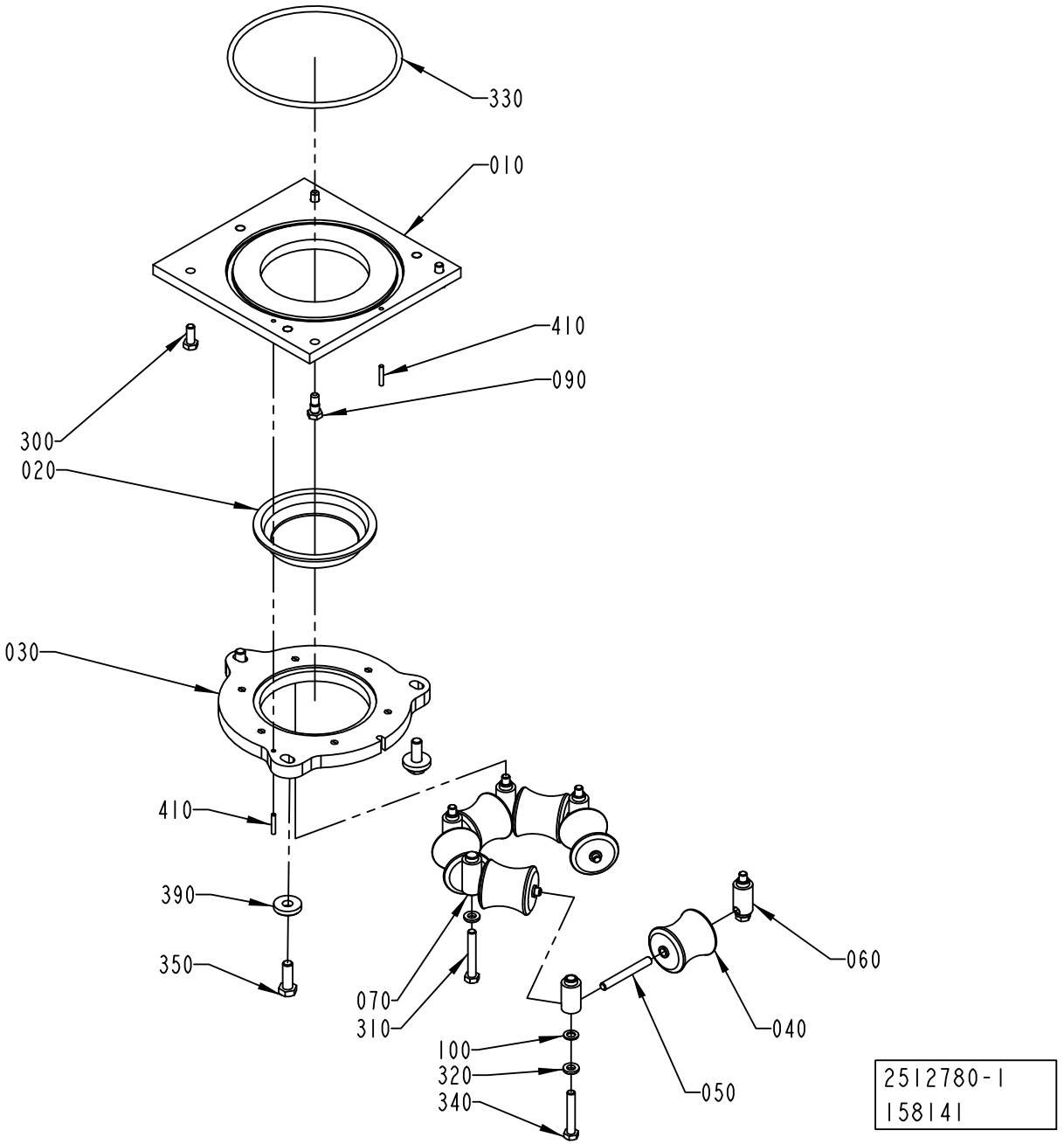
330
010
410
090
300
020
030
410
390
350
070
310
100
320
340
060
040
050
2512780-1
158141

ECM: 347417 - 20080702
Group number: 2512780-0100
Assembly Drawing: 2512780-1_1_AB

| Pos | Part No | UN | Qty | Description | Page No |
|---|---|---|---|---|---|
| **TBA 0500B, TBA 1000B, TBA 1500S (See drawing on page: 1-148)** | | | | | |
| 010 | 2559104-0000 | | 1 | PLATE | |
| 020 | 466042-0000 | | 1 | SEAL | |
| 030 | 2512779-0000 | | 1 | RING | |
| 040 | 466046-0000 | | 6 | ROLLER | |
| 050 | 263655-0009 | | 6 | SHAFT | |
| 060 | 1036954-0000 | | 4 | AXLE SUPPORT | |
| 070 | 1036955-0000 | | 2 | AXLE SUPPORT | |
| 100 | 1129431-0000 | | 4 | WASHER | |
| 310 | 312105-0462 | | 2 | SCREW M6S ISO 4014 M8X55 A480 | |
| 320 | 315115-0165 | | 6 | WASHER PLAIN, TBRB 8,4/16 H=3 | |
| 340 | 312109-0461 | | 4 | SCREW M6S ISO 4017 M8X50 A480 | |
| 350 | 312105-0495 | | 3 | SCREW M6S ISO 4017 M10X30 A480 | |
| 390 | 315125-0173 | | 3 | WASHER TBRSB 10,5X28X6 A4 | |
| 410 | 311103-1274 | | 2 | PARALLEL PIN ISO 2338 4M6X24 A1 | |
| **TBA 0500SQ, TBA 1000SQ (See drawing on page: 1-148)** | | | | | |
| 010 | 2559104-0000 | | 1 | PLATE | |
| 020 | 579318-0000 | | 1 | SEAL | |
| 030 | 2512779-0000 | | 1 | RING | |
| 040 | 1490762-0000 | | 6 | ROLLER | |
| 050 | 263655-0009 | | 6 | SHAFT | |
| 060 | 1036954-0000 | | 4 | AXLE SUPPORT | |
| 070 | 1036955-0000 | | 2 | AXLE SUPPORT | |
| 100 | 1129431-0000 | | 4 | WASHER | |
| 310 | 312105-0462 | | 2 | SCREW M6S ISO 4014 M8X55 A480 | |
| 320 | 315115-0165 | | 6 | WASHER PLAIN, TBRB 8,4/16 H=3 | |
| 340 | 312109-0461 | | 4 | SCREW M6S ISO 4017 M8X50 A480 | |
| 350 | 312105-0495 | | 3 | SCREW M6S ISO 4017 M10X30 A480 | |
| 390 | 315125-0173 | | 3 | WASHER TBRSB 10,5X28X6 A4 | |
| 410 | 311103-1274 | | 2 | PARALLEL PIN ISO 2338 4M6X24 A1 | |
| **TBA 1000S (See drawing on page: 1-148)** | | | | | |
| 010 | 2559104-0000 | | 1 | PLATE | |
| 020 | 567743-0000 | | 1 | SEAL | |
| 030 | 2512779-0000 | | 1 | RING | |
| 040 | 573504-0000 | | 6 | ROLLER | |
| 050 | 263655-0009 | | 6 | SHAFT | |
| 060 | 1036954-0000 | | 4 | AXLE SUPPORT | |
| 070 | 1036955-0000 | | 2 | AXLE SUPPORT | |
| 100 | 1129431-0000 | | 4 | WASHER | |
| 310 | 312105-0462 | | 2 | SCREW M6S ISO 4014 M8X55 A480 | |
| 320 | 315115-0165 | | 6 | WASHER PLAIN, TBRB 8,4/16 H=3 | |
| 340 | 312109-0461 | | 4 | SCREW M6S ISO 4017 M8X50 A480 | |
| 350 | 312105-0495 | | 3 | SCREW M6S ISO 4017 M10X30 A480 | |
| 390 | 315125-0173 | | 3 | WASHER TBRSB 10,5X28X6 A4 | |
| 410 | 311103-1274 | | 2 | PARALLEL PIN ISO 2338 4M6X24 A1 | |
| **TBA 2000S (See drawing on page: 1-148)** | | | | | |
| 010 | 2582616-0000 | | 1 | PLATE | |
| 020 | 2582623-0000 | | 1 | SEAL | |
| 030 | 2582629-0000 | | 1 | RING | |
| 040 | 2582630-0000 | | 6 | ROLLER | |
| 050 | 263655-0015 | | 6 | SHAFT | |
| 060 | 1036954-0000 | | 4 | AXLE SUPPORT | |
| 070 | 1036955-0000 | | 2 | AXLE SUPPORT | |
| 100 | 1129431-0000 | | 4 | WASHER | |
| 310 | 312105-0462 | | 2 | SCREW M6S ISO 4014 M8X55 A480 | |
| 320 | 315115-0165 | | 6 | WASHER PLAIN, TBRB 8,4/16 H=3 | |
| 340 | 312109-0461 | | 4 | SCREW M6S ISO 4017 M8X50 A480 | |
| 350 | 312105-0495 | | 3 | SCREW M6S ISO 4017 M10X30 A480 | |
| 390 | 315125-0173 | | 3 | WASHER TBRSB 10,5X28X6 A4 | |
| 410 | 311103-1274 | | 2 | PARALLEL PIN ISO 2338 4M6X24 A1 | |
| **TPA 1000SQ, TPA 0750SQ (See drawing on page: 1-148)** | | | | | |
| 010 | 2559103-0000 | | 1 | PLATE | |
| 020 | 1524414-0000 | | 1 | SEAL | |
| 030 | 2559102-0000 | | 1 | RING | |
| 040 | 1524416-0000 | | 6 | ROLLER | |
| 050 | 263655-0007 | | 6 | SHAFT | |
| 060 | 1036954-0000 | | 4 | AXLE SUPPORT | |
| 070 | 1036955-0000 | | 2 | AXLE SUPPORT | |
| 100 | 1129431-0000 | | 4 | WASHER | |
| 310 | 312105-0462 | | 2 | SCREW M6S ISO 4014 M8X55 A480 | |
| 320 | 315115-0165 | | 6 | WASHER PLAIN, TBRB 8,4/16 H=3 | |
| 340 | 312109-0461 | | 4 | SCREW M6S ISO 4017 M8X50 A480 | |
| 350 | 312105-0495 | | 3 | SCREW M6S ISO 4017 M10X30 A480 | |
| 390 | 315125-0173 | | 3 | WASHER TBRSB 10,5X28X6 A4 | |
| 410 | 311103-1274 | | 2 | PARALLEL PIN ISO 2338 4M6X24 A1 | |
| **Common Parts** | | | | | |
| 090 | 1037885-0000 | | 2 | REAMED BOLT | |
| 300 | 312105-0451 | | 2 | SCREW M6S ISO 4017 M8X20 A480 | |
| 330 | 315204-0324 | | 1 | O-RING 164,3X5,7 MM | |

Machine Type Group Description Used-In Group Number Page No

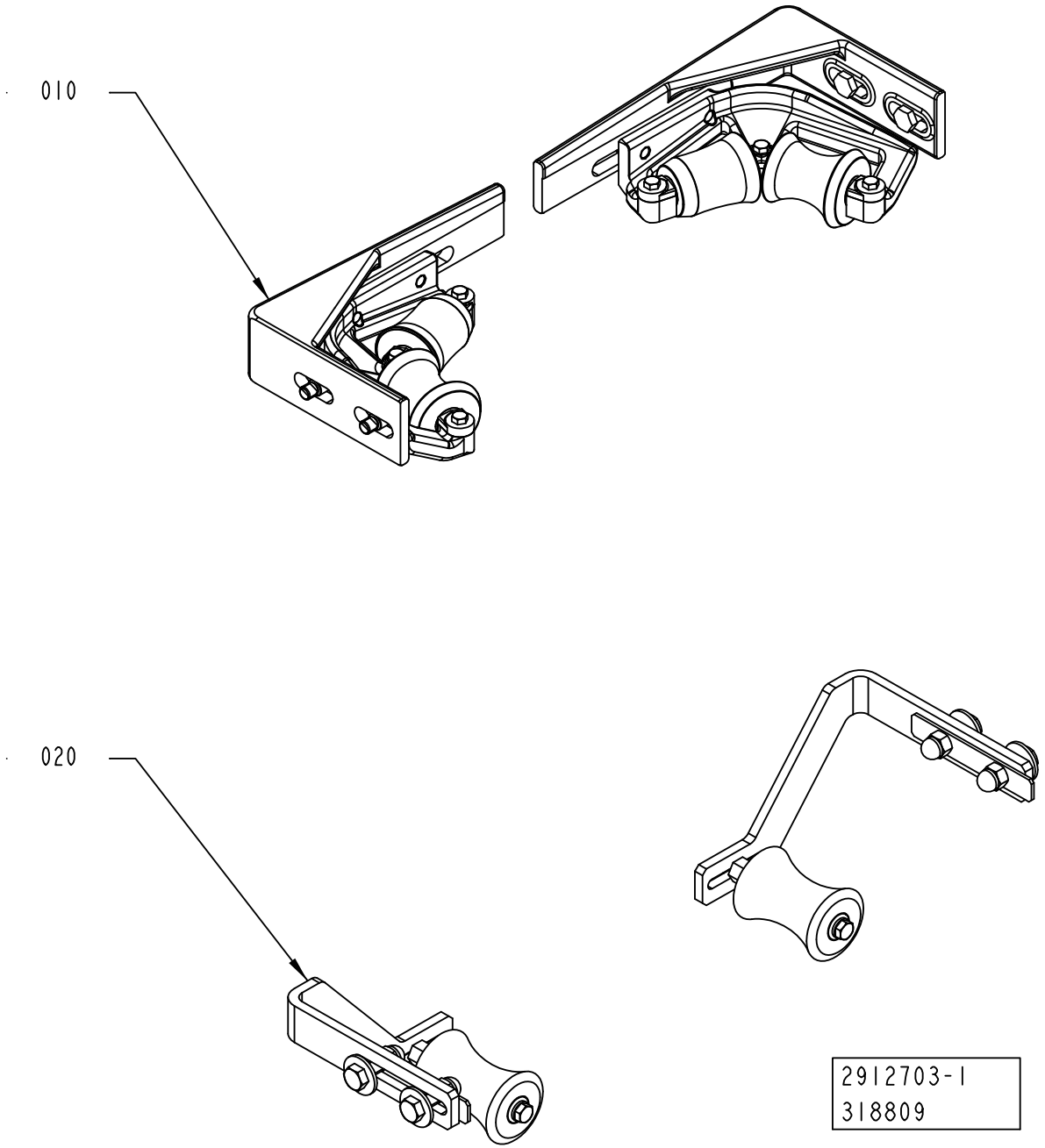
010
020
2912703-1
318809

ECM: 350861 - 20080428
Group number: 2912703-0100
Assembly Drawing: 2912703-1_1_AA

| Pos | Part No | UN | Qty | Description | Page No |
|---|---|---|---|---|---|
| **A3/FLEX TBA 0500B, A3/FLEX TBA 1000B, A3/FLEX TBA 1000S, A3/FLEX TBA 1000SQ, A3/FLEX TPA 1000SQ, A3/FLEX TBA 1500S, A3/FLEX TPA 0750SQ, A3/FLEX TBA 0500SQ (See drawing on page: 1-150)** | | | | | |
| 020 | 2541634-0200 | | 1 | EDGE ROLLER | **1-153, 1-155** |
| **A3/FLEX TBA 2000S (See drawing on page: 1-150)** | | | | | |
| 010 | 2547420-0200 | | 1 | EDGE ROLLER | **1-157, 1-159** |
| 020 | 2541634-0200 | | 1 | EDGE ROLLER | **1-153, 1-155** |

| Pos | Part No | UN | Qty | Description | Page No |
|---|---|---|---|---|---|

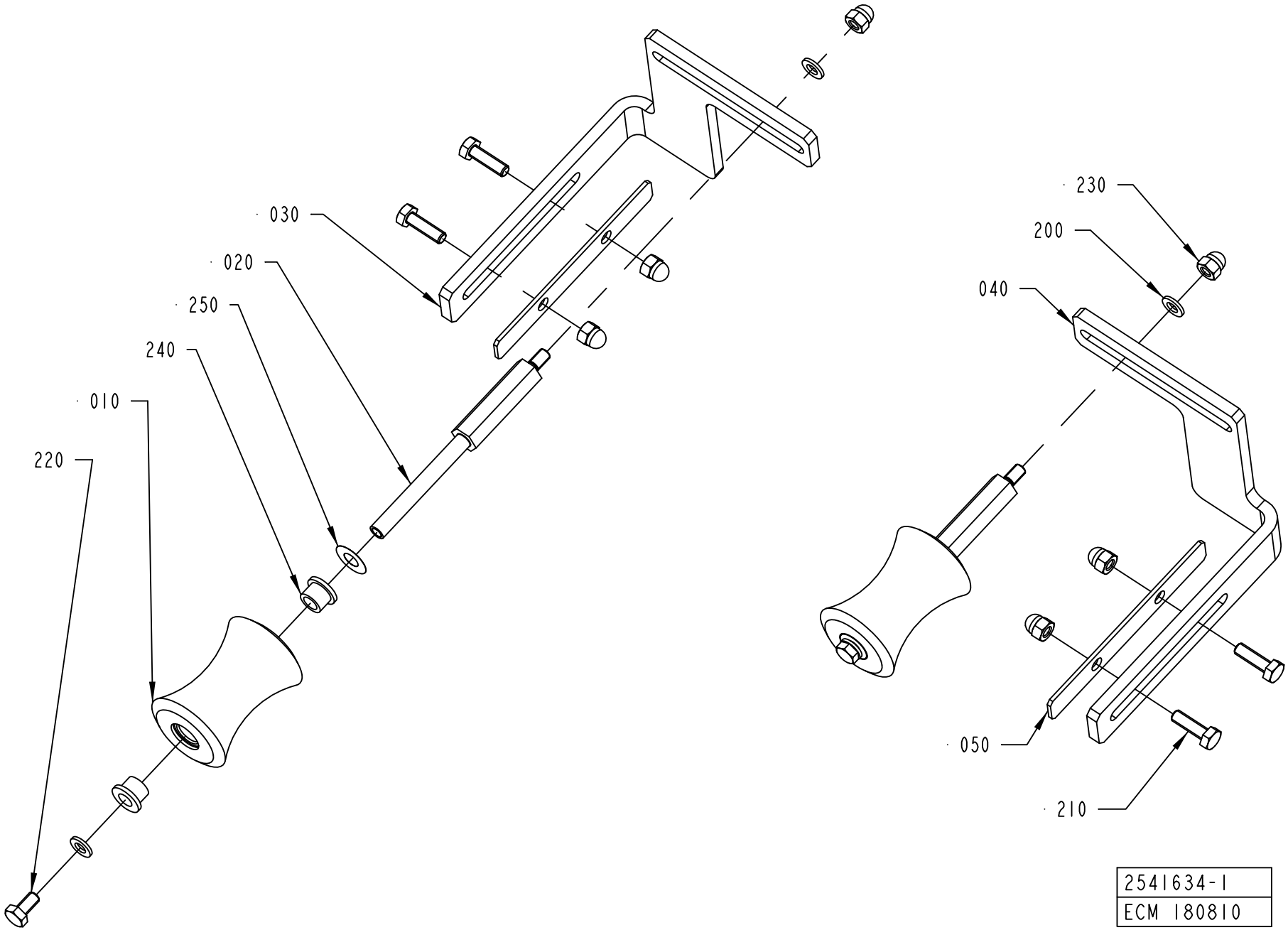


| 2541634-1 |
| --- |
| ECM 180810 |

ECM: 323907 - 20070913
Group number: 2541634-0200
Assembly Drawing: 2541634-1_1_AB

This list covers pages from 1-152 to 1-155

| Pos | Part No | UN | Qty | Description | Page No |
|---|---|---|---|---|---|
| **A3/FLEX TBA 0500B, A3/FLEX TBA 1000B, A3/FLEX TBA 1000S, A3/FLEX TBA 1000SQ, A3/FLEX TBA 1500S, A3/FLEX TBA 0500SQ (See drawing on page: 1-152)** | | | | | |
| 010 | 1478359-0000 | | 2 | ROLLER | |
| 020 | 1511492-0000 | | 2 | SHAFT | |
| 030 | 2528112-0000 | | 1 | BRACKET | |
| 040 | 2528113-0000 | | 1 | BRACKET | |
| 050 | 2528114-0000 | | 2 | COVER PLATE | |
| 200 | 315105-0153 | | 4 | WASHER BRB 6,4X12 RFR | |
| 210 | 312105-0370 | | 4 | SCREW M6S ISO 4017 M6X20 A480 | |
| 220 | 312105-0366 | | 2 | SCREW M6S ISO 4017 M6X12 A480 | |
| 230 | 312705-0316 | | 6 | NUT HEX. DOMED CAP MHM-6 M6 A280 | |
| 240 | 90240-0172 | | 4 | FLANGE BUSHING, 8X12X10 MM | |
| **A3/FLEX TBA 2000S (See drawing on page: 1-154)** | | | | | |
| 010 | 2601286-0000 | | 2 | ROLLER | |
| 020 | 2634934-0000 | | 2 | SHAFT | |
| 030 | 2634932-0000 | | 1 | BRACKET | |
| 040 | 2634933-0000 | | 1 | BRACKET | |
| 050 | 2651695-0000 | | 2 | COVER PLATE | |
| 200 | 315105-0153 | | 4 | WASHER BRB 6,4X12 RFR | |
| 210 | 312105-0453 | | 4 | SCREW M6S ISO 4017 M8X25 A480 | |
| 220 | 312105-0366 | | 2 | SCREW M6S ISO 4017 M6X12 A480 | |
| 230 | 312705-0316 | | 2 | NUT HEX. DOMED CAP MHM-6 M6 A280 | |
| 240 | 90240-0172 | | 4 | FLANGE BUSHING, 8X12X10 MM | |
| 260 | 312705-0318 | | 4 | NUT HEX. DOMED CAP MHM-6 M8 A280 | |
| **A3/FLEX TPA 1000SQ, A3/FLEX TPA 0750SQ (See drawing on page: 1-152)** | | | | | |
| 010 | 2885029-0000 | | 2 | ROLLER | |
| 020 | 1511492-0000 | | 2 | SHAFT | |
| 030 | 2528112-0000 | | 1 | BRACKET | |
| 040 | 2528113-0000 | | 1 | BRACKET | |
| 050 | 2528114-0000 | | 2 | COVER PLATE | |
| 200 | 315105-0153 | | 4 | WASHER BRB 6,4X12 RFR | |
| 210 | 312105-0370 | | 4 | SCREW M6S ISO 4017 M6X20 A480 | |
| 220 | 312105-0366 | | 2 | SCREW M6S ISO 4017 M6X12 A480 | |
| 230 | 312705-0316 | | 6 | NUT HEX. DOMED CAP MHM-6 M6 A280 | |
| 240 | 90240-0172 | | 4 | FLANGE BUSHING, 8X12X10 MM | |
| **Common Parts** | | | | | |
| 250 | 2033-0011 | | 2 | WASHER | |

| Pos | Part No | UN | Qty | Description | Page No |
|---|---|---|---|---|---|

Machine Type | Group Description | Used-In | Group Number | Page No

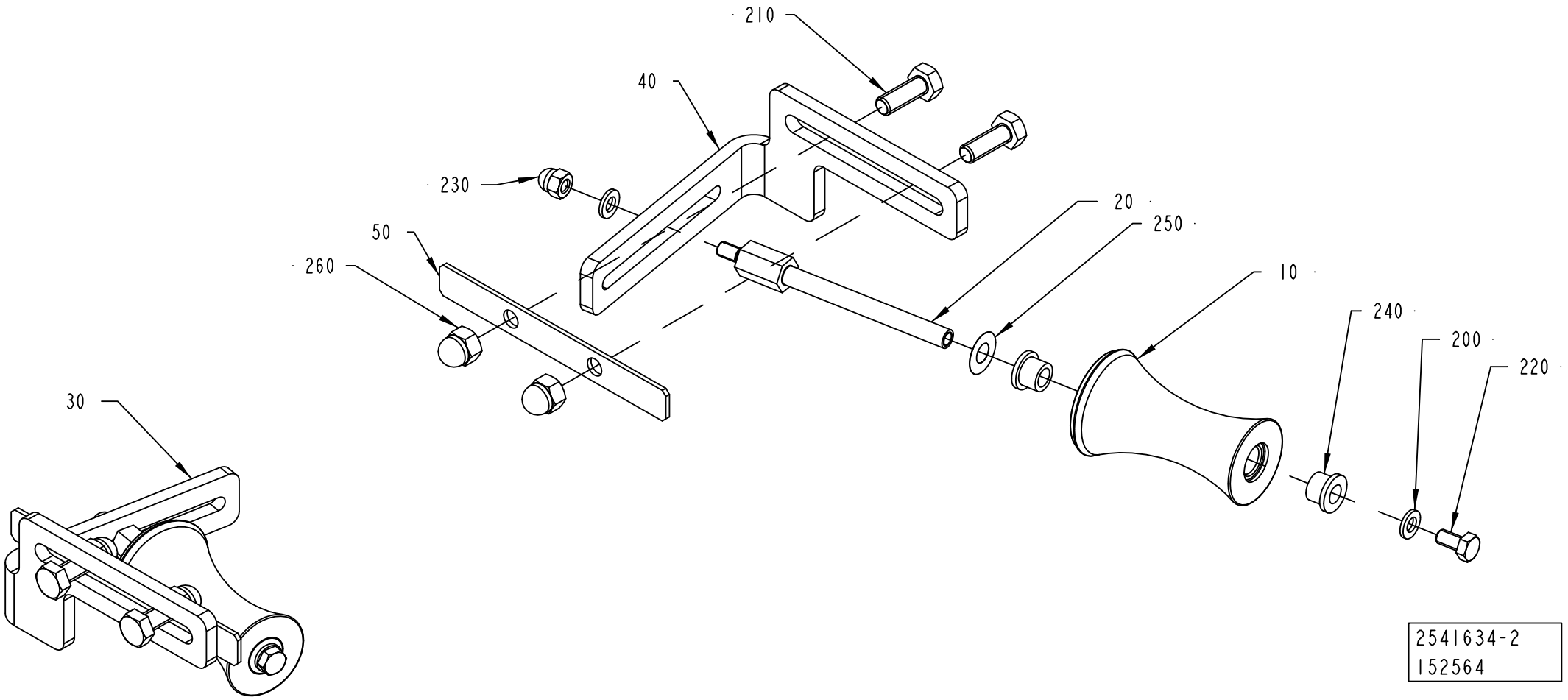
210
40
230
20
250
50
260
10
240
200
220
30
2541634-2
152564

ECM: 323907 - 20070913
Group number: 2541634-0200
Assembly Drawing: 2541634-2_1_AA

This list covers pages from 1-152 to 1-155

| Pos | Part No | UN | Qty | Description | Page No |
|---|---|---|---|---|---|
| **A3/FLEX TBA 0500B, A3/FLEX TBA 1000B, A3/FLEX TBA 1000S, A3/FLEX TBA 1000SQ, A3/FLEX TBA 1500S, A3/FLEX TBA 0500SQ (See drawing on page: 1-152)** | | | | | |
| 010 | 1478359-0000 | | 2 | ROLLER | |
| 020 | 1511492-0000 | | 2 | SHAFT | |
| 030 | 2528112-0000 | | 1 | BRACKET | |
| 040 | 2528113-0000 | | 1 | BRACKET | |
| 050 | 2528114-0000 | | 2 | COVER PLATE | |
| 200 | 315105-0153 | | 4 | WASHER BRB 6,4X12 RFR | |
| 210 | 312105-0370 | | 4 | SCREW M6S ISO 4017 M6X20 A480 | |
| 220 | 312105-0366 | | 2 | SCREW M6S ISO 4017 M6X12 A480 | |
| 230 | 312705-0316 | | 6 | NUT HEX. DOMED CAP MHM-6 M6 A280 | |
| 240 | 90240-0172 | | 4 | FLANGE BUSHING, 8X12X10 MM | |
| **A3/FLEX TBA 2000S (See drawing on page: 1-154)** | | | | | |
| 010 | 2601286-0000 | | 2 | ROLLER | |
| 020 | 2634934-0000 | | 2 | SHAFT | |
| 030 | 2634932-0000 | | 1 | BRACKET | |
| 040 | 2634933-0000 | | 1 | BRACKET | |
| 050 | 2651695-0000 | | 2 | COVER PLATE | |
| 200 | 315105-0153 | | 4 | WASHER BRB 6,4X12 RFR | |
| 210 | 312105-0453 | | 4 | SCREW M6S ISO 4017 M8X25 A480 | |
| 220 | 312105-0366 | | 2 | SCREW M6S ISO 4017 M6X12 A480 | |
| 230 | 312705-0316 | | 2 | NUT HEX. DOMED CAP MHM-6 M6 A280 | |
| 240 | 90240-0172 | | 4 | FLANGE BUSHING, 8X12X10 MM | |
| 260 | 312705-0318 | | 4 | NUT HEX. DOMED CAP MHM-6 M8 A280 | |
| **A3/FLEX TPA 1000SQ, A3/FLEX TPA 0750SQ (See drawing on page: 1-152)** | | | | | |
| 010 | 2885029-0000 | | 2 | ROLLER | |
| 020 | 1511492-0000 | | 2 | SHAFT | |
| 030 | 2528112-0000 | | 1 | BRACKET | |
| 040 | 2528113-0000 | | 1 | BRACKET | |
| 050 | 2528114-0000 | | 2 | COVER PLATE | |
| 200 | 315105-0153 | | 4 | WASHER BRB 6,4X12 RFR | |
| 210 | 312105-0370 | | 4 | SCREW M6S ISO 4017 M6X20 A480 | |
| 220 | 312105-0366 | | 2 | SCREW M6S ISO 4017 M6X12 A480 | |
| 230 | 312705-0316 | | 6 | NUT HEX. DOMED CAP MHM-6 M6 A280 | |
| 240 | 90240-0172 | | 4 | FLANGE BUSHING, 8X12X10 MM | |
| **Common Parts** | | | | | |
| 250 | 2033-0011 | | 2 | WASHER | |

| Pos | Part No | UN | Qty | Description | Page No |
|---|---|---|---|---|---|

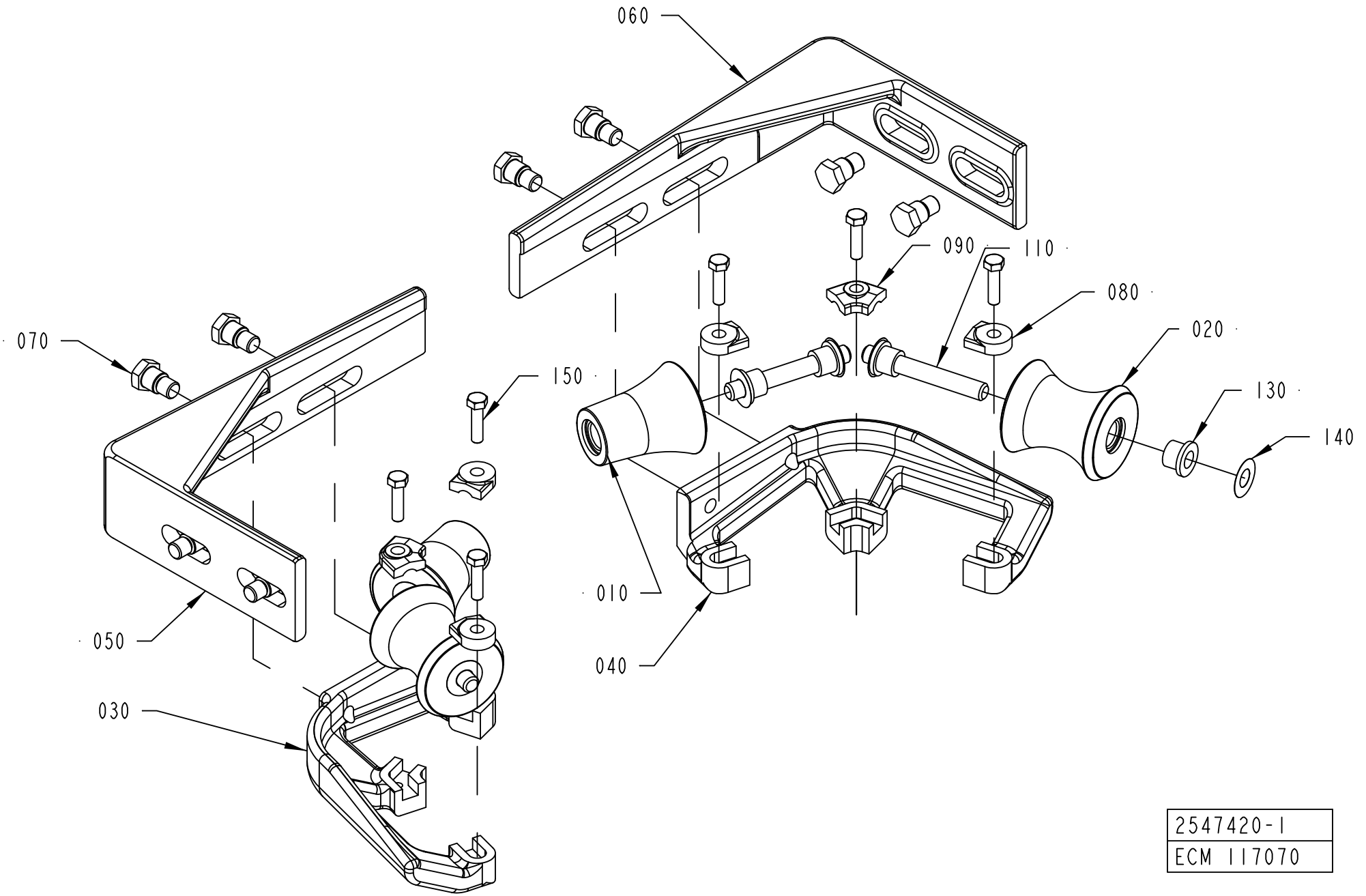
060
090
110
080
020
070
150
130
140
010
050
040
030
2547420-1
ECM 117070

ECM: 343283 - 20080428
Group number: 2547420-0200
Assembly Drawing: 2547420-1_1_AA

This list covers pages from 1-156 to 1-159

| Pos | Part No | UN | Qty | Description | Page No |
|---|---|---|---|---|---|
| **TBA 0500B, TBA 1000B (See drawing on page: 1-156)** | | | | | |
| 010 | 2651790-0000 | | 2 | ROLLER | |
| 020 | 2651789-0000 | | 2 | ROLLER | |
| 030 | 2552140-0000 | | 1 | BRACKET | |
| 040 | 2552141-0000 | | 1 | BRACKET | |
| 050 | 2552142-0000 | | 1 | BRACKET | |
| 060 | 2552143-0000 | | 1 | BRACKET | |
| 070 | 2552158-0000 | | 8 | SCREW | |
| 080 | 2532895-0008 | | 4 | LOCK PLATE | |
| 090 | 2528123-0006 | | 2 | LOCK PLATE | |
| 110 | 752186-0016 | | 4 | SHAFT | |
| 130 | 90240-0172 | | 8 | FLANGE BUSHING, 8X12X10 MM | |
| 140 | 2033-0011 | | 8 | WASHER | |
| 150 | 312105-0331 | | 6 | SCREW M6S ISO 4017 M5X20 A480 | |
| **TBA 1000S, TBA 1500S (See drawing on page: 1-156)** | | | | | |
| 010 | 2552144-0000 | | 2 | ROLL | |
| 020 | 2562664-0000 | | 2 | ROLL | |
| 030 | 2552140-0000 | | 1 | BRACKET | |
| 040 | 2552141-0000 | | 1 | BRACKET | |
| 050 | 2552142-0000 | | 1 | BRACKET | |
| 060 | 2552143-0000 | | 1 | BRACKET | |
| 070 | 2552158-0000 | | 8 | SCREW | |
| 080 | 2532895-0008 | | 4 | LOCK PLATE | |
| 090 | 2528123-0006 | | 2 | LOCK PLATE | |
| 110 | 752186-0016 | | 4 | SHAFT | |
| 130 | 90240-0172 | | 8 | FLANGE BUSHING, 8X12X10 MM | |
| 140 | 2033-0011 | | 8 | WASHER | |
| 150 | 312105-0331 | | 6 | SCREW M6S ISO 4017 M5X20 A480 | |
| **TBA 1000SQ (See drawing on page: 1-156)** | | | | | |
| 010 | 2552155-0000 | | 2 | ROLL | |
| 020 | 2562684-0000 | | 2 | ROLL | |
| 030 | 2552140-0000 | | 1 | BRACKET | |
| 040 | 2552141-0000 | | 1 | BRACKET | |
| 050 | 2552142-0000 | | 1 | BRACKET | |
| 060 | 2552143-0000 | | 1 | BRACKET | |
| 070 | 2552158-0000 | | 8 | SCREW | |
| 080 | 2532895-0008 | | 4 | LOCK PLATE | |
| 090 | 2528123-0006 | | 2 | LOCK PLATE | |
| 110 | 752186-0016 | | 4 | SHAFT | |
| 130 | 90240-0172 | | 8 | FLANGE BUSHING, 8X12X10 MM | |
| 140 | 2033-0011 | | 8 | WASHER | |
| 150 | 312105-0331 | | 6 | SCREW M6S ISO 4017 M5X20 A480 | |

| Pos | Part No | UN | Qty | Description | Page No |
|---|---|---|---|---|---|
| **TBA 2000S (See drawing on page: 1-158)** | | | | | |
| 010 | 2601269-0000 | | 1 | ROLLER | |
| 015 | 2601272-0000 | | 2 | ROLLER | |
| 020 | 2601271-0000 | | 2 | ROLLER | |
| 025 | 2601273-0000 | | 2 | ROLLER | |
| 040 | 2946885-0000 | | 1 | BRACKET | |
| 050 | 2946884-0000 | | 1 | SUPPORT ROLLER | |
| 080 | 2532895-0004 | | 2 | LOCK PLATE | |
| 090 | 2562667-0002 | | 6 | LOCK PLATE | |
| 100 | 2522213-0016 | | 1 | SHAFT | |
| 110 | 2522213-0015 | | 4 | SHAFT | |
| 120 | 2522213-0017 | | 2 | SHAFT | |
| 130 | 90240-0172 | | 14 | FLANGE BUSHING, 8X12X10 MM | |
| 140 | 2033-0011 | | 14 | WASHER | |
| 150 | 312105-0329 | | 8 | SCREW M6S ISO 4017 M5X16 A480 | |
| 160 | 312105-0451 | | 2 | SCREW M6S ISO 4017 M8X20 A480 | |
| 170 | 312105-0372 | | 4 | SCREW M6S ISO 4017 M6X25 A480 | |
| 180 | 315105-0153 | | 4 | WASHER BRB 6,4X12 RFR | |
| 190 | 311103-0306 | | 2 | PARALLEL PIN ISO 2338 5M6X12 A1 | |
| 240 | 315105-0165 | | 2 | WASHER BRB 8,4X16 RFR | |
| **TPA 1000SQ, TPA 0750SQ (See drawing on page: 1-156)** | | | | | |
| 010 | 2562694-0000 | | 2 | ROLLER | |
| 020 | 2562695-0000 | | 2 | ROLLER | |
| 030 | 2562696-0000 | | 1 | BRACKET | |
| 040 | 2562697-0000 | | 1 | BRACKET | |
| 050 | 2562692-0000 | | 1 | BRACKET | |
| 060 | 2562693-0000 | | 1 | BRACKET | |
| 070 | 2552158-0000 | | 8 | SCREW | |
| 080 | 2532895-0008 | | 4 | LOCK PLATE | |
| 090 | 2528123-0009 | | 2 | LOCK PLATE | |
| 110 | 752186-0016 | | 4 | SHAFT | |
| 130 | 90240-0172 | | 8 | FLANGE BUSHING, 8X12X10 MM | |
| 140 | 2033-0011 | | 8 | WASHER | |
| 150 | 312105-0331 | | 6 | SCREW M6S ISO 4017 M5X20 A480 | |

| Machine Type | Group Description | Used-In | Group Number | Page No |
|---|---|---|---|---|

# EDGE ROLLER



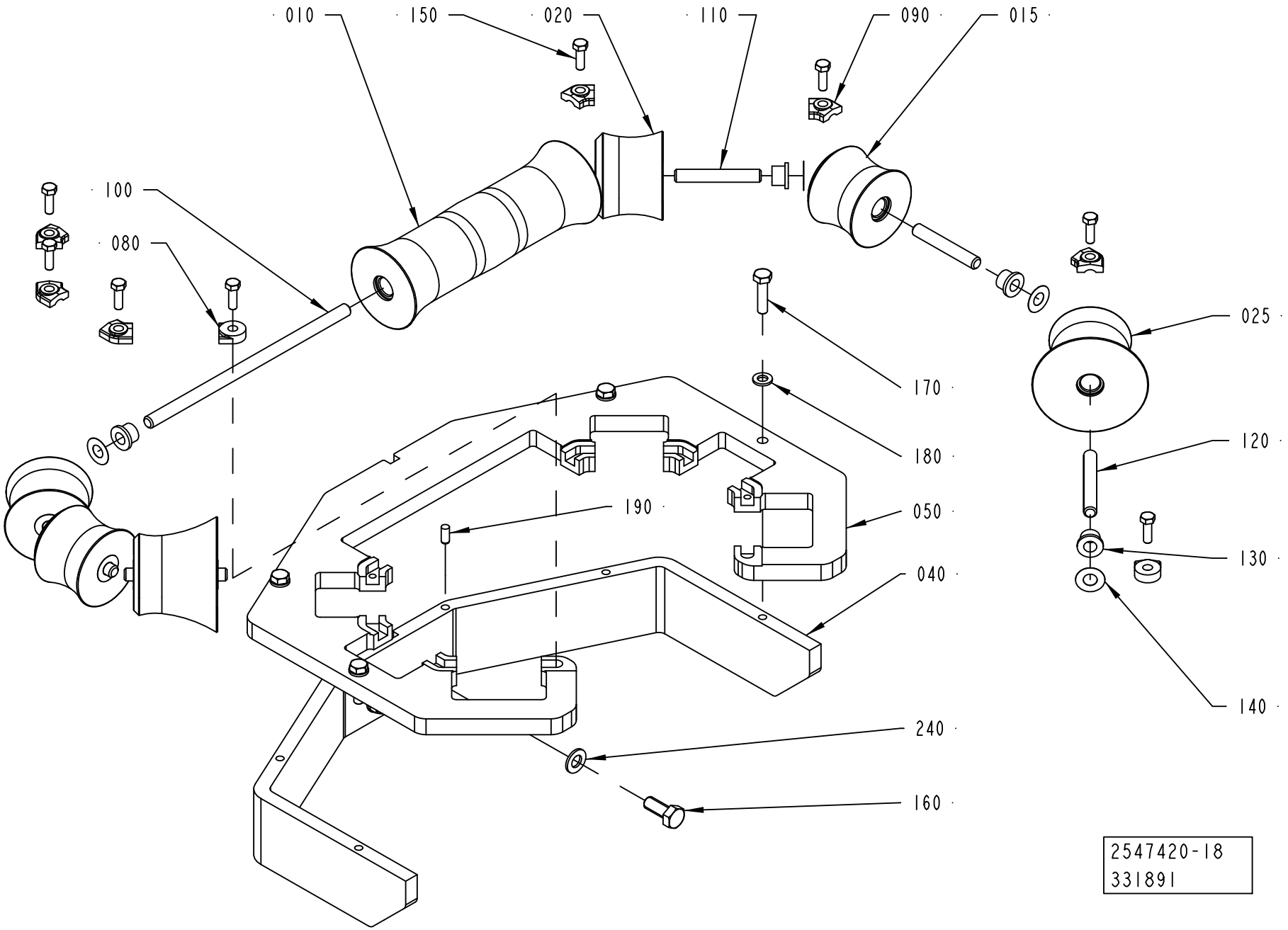
010
150
020
110
090
015
100
080
025
170
180
120
190
050
130
040
140
240
160
2547420-18
331891

ECM: 343283 - 20080428
Group number: 2547420-0200
Assembly Drawing: 2547420-18_1_AA

This list covers pages from 1-156 to 1-159

| Pos | Part No | UN | Qty | Description | Page No |
|---|---|---|---|---|---|
| **TBA 0500B, TBA 1000B (See drawing on page: 1-156)** | | | | | |
| 010 | 2651790-0000 | | 2 | ROLLER | |
| 020 | 2651789-0000 | | 2 | ROLLER | |
| 030 | 2552140-0000 | | 1 | BRACKET | |
| 040 | 2552141-0000 | | 1 | BRACKET | |
| 050 | 2552142-0000 | | 1 | BRACKET | |
| 060 | 2552143-0000 | | 1 | BRACKET | |
| 070 | 2552158-0000 | | 8 | SCREW | |
| 080 | 2532895-0008 | | 4 | LOCK PLATE | |
| 090 | 2528123-0006 | | 2 | LOCK PLATE | |
| 110 | 752186-0016 | | 4 | SHAFT | |
| 130 | 90240-0172 | | 8 | FLANGE BUSHING, 8X12X10 MM | |
| 140 | 2033-0011 | | 8 | WASHER | |
| 150 | 312105-0331 | | 6 | SCREW M6S ISO 4017 M5X20 A480 | |
| **TBA 1000S, TBA 1500S (See drawing on page: 1-156)** | | | | | |
| 010 | 2552144-0000 | | 2 | ROLL | |
| 020 | 2562664-0000 | | 2 | ROLL | |
| 030 | 2552140-0000 | | 1 | BRACKET | |
| 040 | 2552141-0000 | | 1 | BRACKET | |
| 050 | 2552142-0000 | | 1 | BRACKET | |
| 060 | 2552143-0000 | | 1 | BRACKET | |
| 070 | 2552158-0000 | | 8 | SCREW | |
| 080 | 2532895-0008 | | 4 | LOCK PLATE | |
| 090 | 2528123-0006 | | 2 | LOCK PLATE | |
| 110 | 752186-0016 | | 4 | SHAFT | |
| 130 | 90240-0172 | | 8 | FLANGE BUSHING, 8X12X10 MM | |
| 140 | 2033-0011 | | 8 | WASHER | |
| 150 | 312105-0331 | | 6 | SCREW M6S ISO 4017 M5X20 A480 | |
| **TBA 1000SQ (See drawing on page: 1-156)** | | | | | |
| 010 | 2552155-0000 | | 2 | ROLL | |
| 020 | 2562684-0000 | | 2 | ROLL | |
| 030 | 2552140-0000 | | 1 | BRACKET | |
| 040 | 2552141-0000 | | 1 | BRACKET | |
| 050 | 2552142-0000 | | 1 | BRACKET | |
| 060 | 2552143-0000 | | 1 | BRACKET | |
| 070 | 2552158-0000 | | 8 | SCREW | |
| 080 | 2532895-0008 | | 4 | LOCK PLATE | |
| 090 | 2528123-0006 | | 2 | LOCK PLATE | |
| 110 | 752186-0016 | | 4 | SHAFT | |
| 130 | 90240-0172 | | 8 | FLANGE BUSHING, 8X12X10 MM | |
| 140 | 2033-0011 | | 8 | WASHER | |
| 150 | 312105-0331 | | 6 | SCREW M6S ISO 4017 M5X20 A480 | |

| Pos | Part No | UN | Qty | Description | Page No |
|---|---|---|---|---|---|
| **TBA 2000S (See drawing on page: 1-158)** | | | | | |
| 010 | 2601269-0000 | | 1 | ROLLER | |
| 015 | 2601272-0000 | | 2 | ROLLER | |
| 020 | 2601271-0000 | | 2 | ROLLER | |
| 025 | 2601273-0000 | | 2 | ROLLER | |
| 040 | 2946885-0000 | | 1 | BRACKET | |
| 050 | 2946884-0000 | | 1 | SUPPORT ROLLER | |
| 080 | 2532895-0004 | | 2 | LOCK PLATE | |
| 090 | 2562667-0002 | | 6 | LOCK PLATE | |
| 100 | 2522213-0016 | | 1 | SHAFT | |
| 110 | 2522213-0015 | | 4 | SHAFT | |
| 120 | 2522213-0017 | | 2 | SHAFT | |
| 130 | 90240-0172 | | 14 | FLANGE BUSHING, 8X12X10 MM | |
| 140 | 2033-0011 | | 14 | WASHER | |
| 150 | 312105-0329 | | 8 | SCREW M6S ISO 4017 M5X16 A480 | |
| 160 | 312105-0451 | | 2 | SCREW M6S ISO 4017 M8X20 A480 | |
| 170 | 312105-0372 | | 4 | SCREW M6S ISO 4017 M6X25 A480 | |
| 180 | 315105-0153 | | 4 | WASHER BRB 6,4X12 RFR | |
| 190 | 311103-0306 | | 2 | PARALLEL PIN ISO 2338 5M6X12 A1 | |
| 240 | 315105-0165 | | 2 | WASHER BRB 8,4X16 RFR | |
| **TPA 1000SQ, TPA 0750SQ (See drawing on page: 1-156)** | | | | | |
| 010 | 2562694-0000 | | 2 | ROLLER | |
| 020 | 2562695-0000 | | 2 | ROLLER | |
| 030 | 2562696-0000 | | 1 | BRACKET | |
| 040 | 2562697-0000 | | 1 | BRACKET | |
| 050 | 2562692-0000 | | 1 | BRACKET | |
| 060 | 2562693-0000 | | 1 | BRACKET | |
| 070 | 2552158-0000 | | 8 | SCREW | |
| 080 | 2532895-0008 | | 4 | LOCK PLATE | |
| 090 | 2528123-0009 | | 2 | LOCK PLATE | |
| 110 | 752186-0016 | | 4 | SHAFT | |
| 130 | 90240-0172 | | 8 | FLANGE BUSHING, 8X12X10 MM | |
| 140 | 2033-0011 | | 8 | WASHER | |
| 150 | 312105-0331 | | 6 | SCREW M6S ISO 4017 M5X20 A480 | |

| Machine Type | Group Description | Used-In | Group Number | Page No |
|---|---|---|---|---|

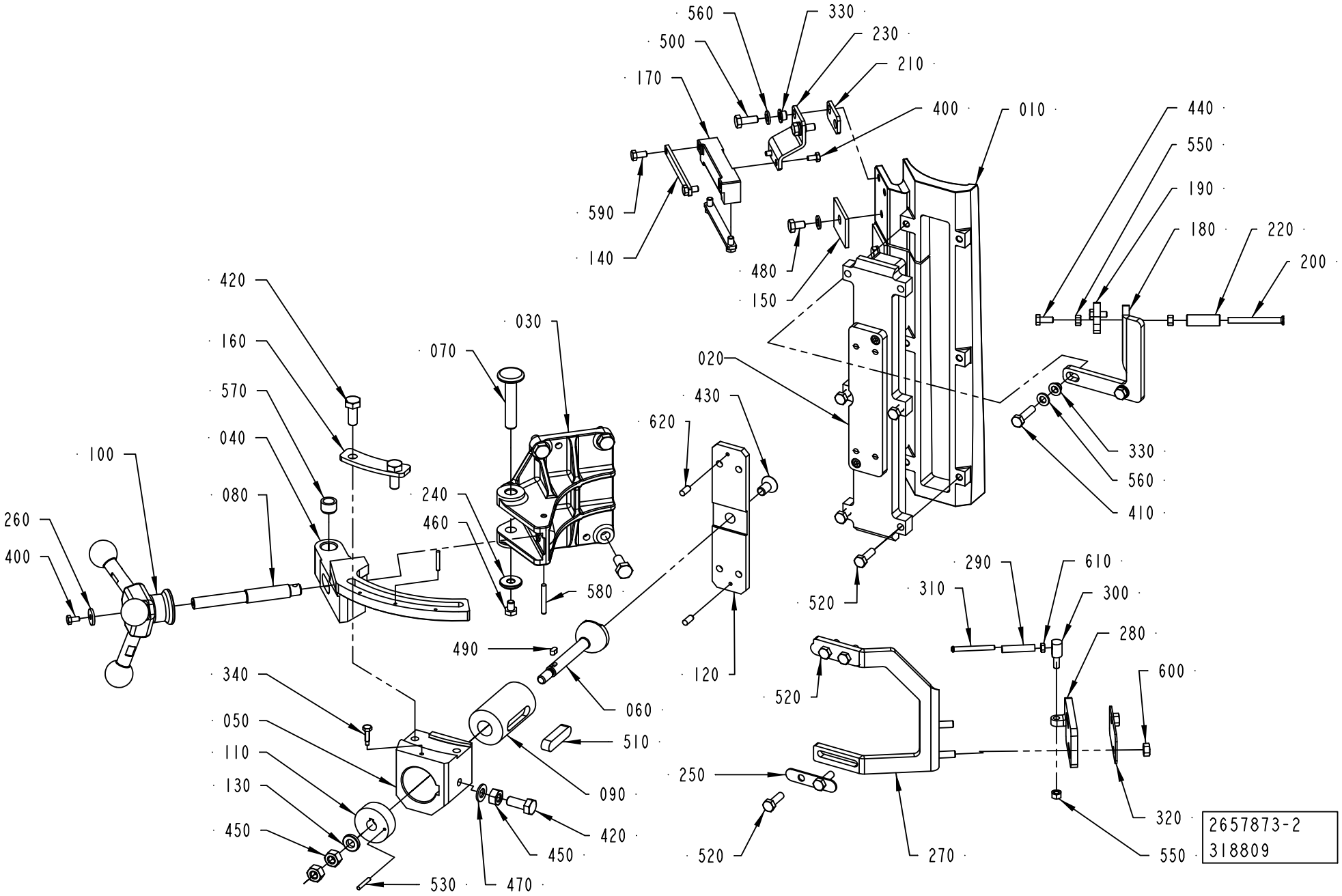
560
330
500
230
210
170
400
010
440
550
590
190
180
220
140
480
200
150
420
030
160
070
020
570
430
040
620
100
330
240
080
560
460
260
410
400
580
290
610
490
310
300
520
280
340
120
600
050
060
520
110
510
130
090
250
320
450
420
450
520
270
550
530
470
2657873-2
318809

ECM: 351310 - 20080705
Group number: 2657873-0200
Assembly Drawing: 2657873-2_1_AA

This list covers pages from 1-160 to 1-163

| Pos | Part No | UN | Qty | Description | Page No |
|---|---|---|---|---|---|
| **TBA 0500B, TBA 1000B, TBA 1500S (See drawing on pages: 1-160, 1-162)** | | | | | |
| 010 | 2514514-0000 | | 1 | INDUCTOR | |
| 020 | 2862742-0000 | | 1 | INSULATING PLATE | |
| 180 | 2547404-0000 | | 1 | BRACKET | |
| 190 | 2547405-0000 | | 1 | BRACKET | |
| 270 | 2555614-0000 | | 1 | BRACKET | |
| 280 | 2555615-0000 | | 1 | BRACKET | |
| 330 | 2508292-0000 | | 4 | BUSHING | |
| 410 | 312105-0372 | | 2 | SCREW M6S ISO 4017 M6X25 A480 | |
| 520 | 312105-0370 | | 8 | SCREW M6S ISO 4017 M6X20 A480 | |
| **TBA 0500SQ, TBA 1000SQ (See drawing on pages: 1-160, 1-162)** | | | | | |
| 010 | 2532925-0000 | | 1 | INDUCTOR | |
| 020 | 2862744-0000 | | 1 | INSULATING PLATE | |
| 180 | 2547404-0000 | | 1 | BRACKET | |
| 190 | 2547405-0000 | | 1 | BRACKET | |
| 270 | 2555614-0000 | | 1 | BRACKET | |
| 280 | 2555615-0000 | | 1 | BRACKET | |
| 330 | 2508292-0000 | | 4 | BUSHING | |
| 410 | 312105-0372 | | 2 | SCREW M6S ISO 4017 M6X25 A480 | |
| 520 | 312105-0370 | | 8 | SCREW M6S ISO 4017 M6X20 A480 | |
| **TBA 1000S (See drawing on pages: 1-160, 1-162)** | | | | | |
| 010 | 2514522-0000 | | 1 | INDUCTOR | |
| 020 | 2862745-0000 | | 1 | INSULATING PLATE | |
| 180 | 2547404-0000 | | 1 | BRACKET | |
| 190 | 2547405-0000 | | 1 | BRACKET | |
| 270 | 2555614-0000 | | 1 | BRACKET | |
| 280 | 2555615-0000 | | 1 | BRACKET | |
| 330 | 2508292-0000 | | 4 | BUSHING | |
| 410 | 312105-0374 | | 2 | SCREW M6S ISO 4014 M6X30 A480 | |
| 520 | 312105-0370 | | 4 | SCREW M6S ISO 4017 M6X20 A480 | |
| 525 | 312105-0372 | | 4 | SCREW M6S ISO 4017 M6X25 A480 | |
| **TBA 2000S (See drawing on pages: 1-160, 1-162)** | | | | | |
| 010 | 2601247-0000 | | 1 | INDUCTOR | |
| 020 | 2862746-0000 | | 1 | INSULATING PLATE | |
| 180 | 2601249-0000 | | 1 | BRACKET | |
| 190 | 2547405-0000 | | 1 | BRACKET | |
| 270 | 2594636-0000 | | 1 | BRACKET | |
| 280 | 2555615-0000 | | 1 | BRACKET | |
| 330 | 2508292-0000 | | 4 | BUSHING | |
| 410 | 312105-0372 | | 2 | SCREW M6S ISO 4017 M6X25 A480 | |
| 520 | 312105-0370 | | 7 | SCREW M6S ISO 4017 M6X20 A480 | |
| **TPA 1000SQ, TPA 0750SQ (See drawing on pages: 1-160, 1-162)** | | | | | |
| 010 | 2601289-0000 | | 1 | INDUCTOR | |
| 020 | 2862748-0000 | | 1 | INSULATING PLATE | |
| 180 | 2547404-0000 | | 1 | BRACKET | |
| 190 | 2547405-0000 | | 1 | BRACKET | |
| 270 | 2555614-0000 | | 1 | BRACKET | |
| 280 | 2555615-0000 | | 1 | BRACKET | |
| 330 | 2508292-0000 | | 4 | BUSHING | |
| 410 | 312105-0372 | | 2 | SCREW M6S ISO 4017 M6X25 A480 | |
| 520 | 312105-0370 | | 8 | SCREW M6S ISO 4017 M6X20 A480 | |
| **Common Parts** | | | | | |
| 030 | 2544897-0000 | | 1 | BRACKET | |
| 040 | 2694714-0000 | | 1 | GUIDE | |
| 050 | 2694715-0000 | | 1 | SUPPORT | |
| 060 | 2641000-0000 | | 1 | SHAFT | |
| 070 | 2547388-0000 | | 1 | AXLE PIN | |
| 080 | 2544898-0000 | | 1 | SHAFT | |
| 090 | 2640991-0000 | | 1 | SLIDE | |
| 100 | 2547376-0200 | | 1 | KNOB ..... | **1-165** |
| 110 | 2640992-0000 | | 1 | SLIDE | |
| 120 | 2640993-0000 | | 1 | PLATE | |
| 130 | 315115-0165 | | 1 | WASHER PLAIN, TBRB 8,4/16 H=3 | |
| 140 | 2508309-0000 | | 2 | PLATE | |
| 150 | 2508311-0000 | | 2 | PLATE | |
| 160 | 2694716-0000 | | 1 | PLATE | |
| 170 | 2531060-0000 | | 1 | BRACKET | |
| 200 | 269151-0000 | | 1 | SHAFT | |
| 210 | 2532898-0000 | | 1 | BRACKET | |
| 220 | 2555625-0000 | | 1 | ROLL | |
| 230 | 2532899-0000 | | 1 | BRACKET | |
| 240 | 2508297-0000 | | 1 | WASHER | |
| 250 | 2555623-0000 | | 2 | COVER | |
| 260 | 2547377-0000 | | 1 | WASHER | |
| 290 | 2555616-0000 | | 1 | ROLLER | |
| 300 | 2555617-0000 | | 1 | PIN | |
| 310 | 2555618-0000 | | 1 | SHAFT | |
| 320 | 2555620-0000 | | 1 | COVER | |
| 340 | 2725526-0000 | | 1 | SCREW | |
| 400 | 312105-0287 | | 3 | SCREW M6S ISO 4017 M4X8 A470 | |
| 420 | 312105-0451 | | 7 | SCREW M6S ISO 4017 M8X20 A480 | |
| 430 | 312155-0449 | | 1 | SCREW DIN 7991 MF6S M8X16 A4 70 | |
| 440 | 312105-0327 | | 2 | SCREW M6S ISO 4017 M5X12 A480 | |
| 450 | 312605-0318 | | 3 | HEXAGON NUT, M6M M8 A280 | |

Machine Type | Group Description | Used-In | Group Number | Page No

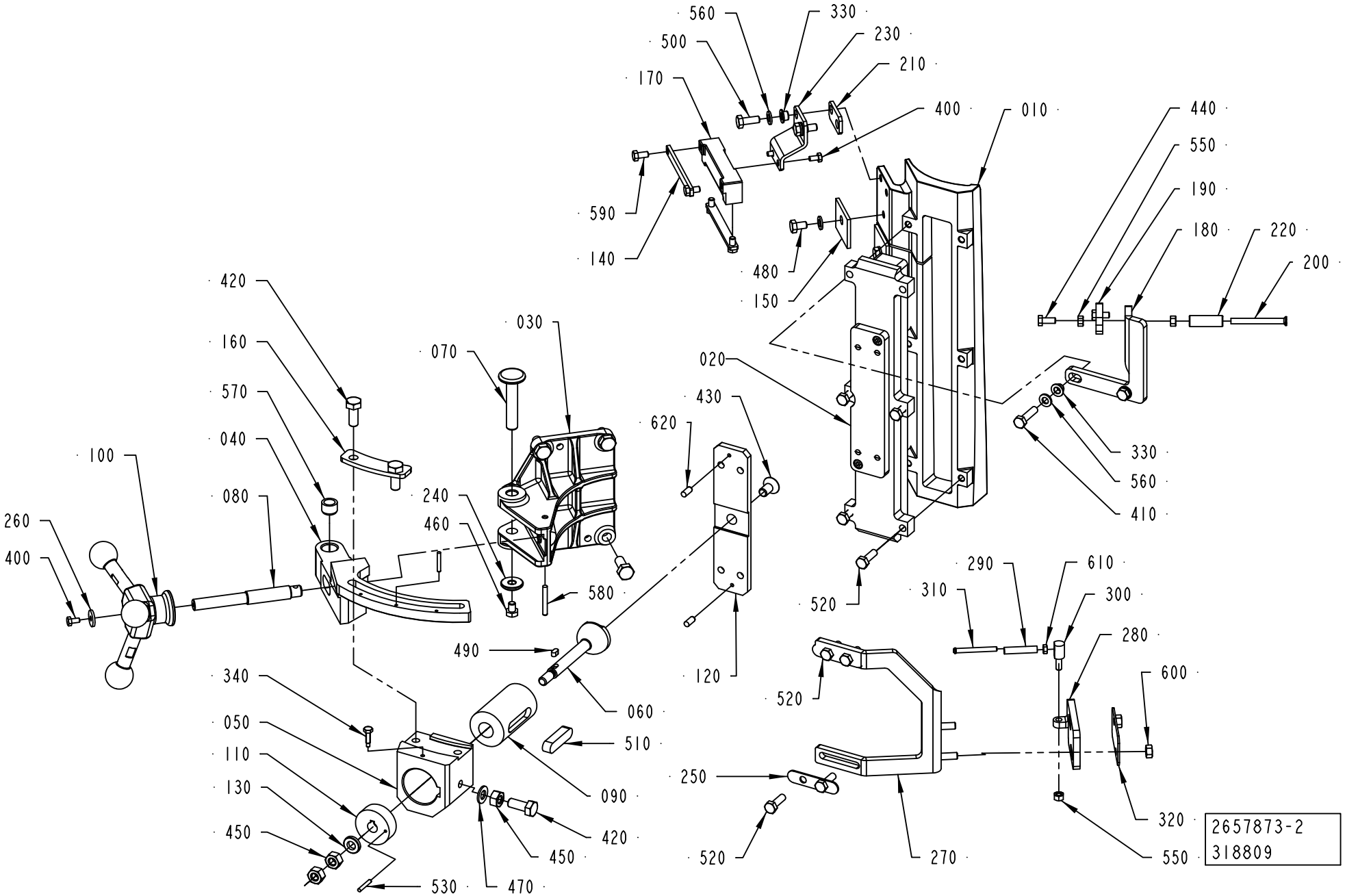
560
330
500
230
210
170
400
010
440
550
590
190
180
220
140
200
480
150
420
030
160
070
020
570
430
040
620
100
330
240
080
560
460
260
410
400
580
290
610
490
310
300
520
280
340
120
600
050
060
520
110
510
250
130
090
320
420
450
520
270
450
550
530
470
2657873-2
318809

| Pos | Part No | UN | Qty | Description | Page No |
|---|---|---|---|---|---|
| **Common Parts (Cont'd)** | | | | | |
| 460 | 312105-0362 | | 1 | SCREW M6S ISO 4017 M6X8 A480 | |
| 470 | 315105-0165 | | 1 | WASHER BRB 8,4X16 RFR | |
| 480 | 312105-0364 | | 2 | SCREW M6S ISO 4017 M6X10 A480 | |
| 490 | 315705-0164 | | 1 | PARALLEL KEY W. ROUND ENDS 4X4X8 MM | |
| 500 | 312105-0368 | | 2 | SCREW M6S ISO 4017 M6X16 A480 | |
| 510 | 315705-0301 | | 1 | PARALLEL KEY W. ROUND ENDS 10X8X40 MM | |
| 530 | 311103-0238 | | 2 | PARALLEL PIN ISO 2338 3M6X20 A1 | |
| 550 | 312605-0314 | | 3 | HEXAGON NUT, M6M M5 A280 | |
| 560 | 315105-0153 | | 6 | WASHER BRB 6,4X12 RFR | |
| 570 | 90600-3313 | | 2 | BUSHING, 10X14X10 MM | |
| 580 | 311103-0276 | | 1 | PARALLEL PIN ISO 2338 4M6X30 A1 | |
| 590 | 312105-0325 | | 4 | SCREW M6S ISO 4017 M5X10 A480 | |
| 600 | 312605-0316 | | 2 | HEXAGON NUT, M6M M6 A280 | |
| 610 | 312605-0312 | | 1 | HEXAGON NUT, M6M M4 A280 | |
| 620 | 311103-0306 | | 2 | PARALLEL PIN ISO 2338 5M6X12 A1 | |

| Pos | Part No | UN | Qty | Description | Page No |
|---|---|---|---|---|---|

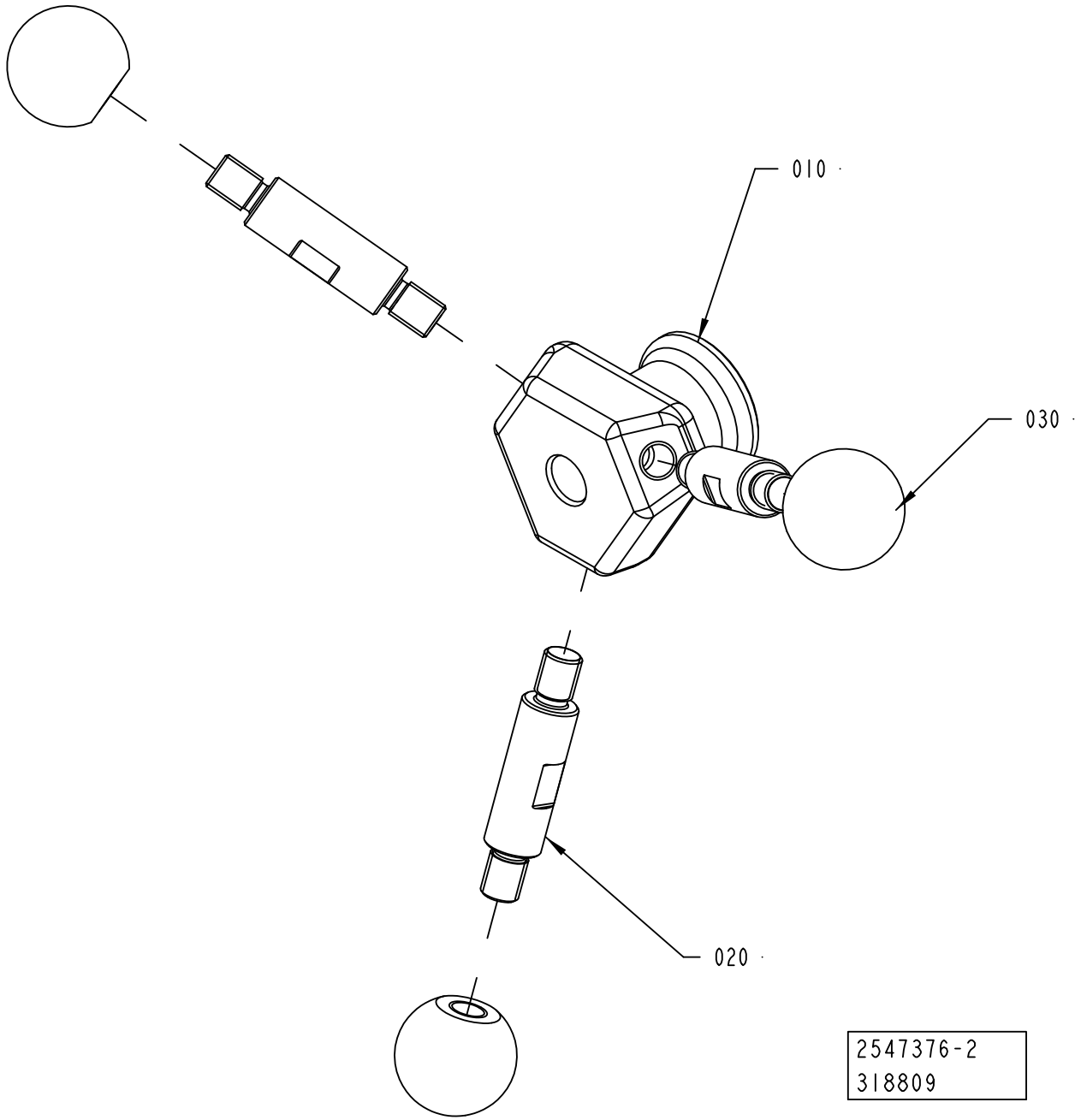
010
030
020
2547376-2
318809

ECM: 318865 - 20070913
Group number: 2547376-0200
Assembly Drawing: 2547376-2_1_AA

| Pos | Part No | UN | Qty | Description | Page No |
|---|---|---|---|---|---|
| - | | | | | |
| 010 | 2874716-0000 | | 1 | BODY | |
| 020 | 2874715-0000 | | 3 | STUD SCREW | |
| 030 | 2874717-0000 | | 3 | KNOB | |

| Pos | Part No | UN | Qty | Description | Page No |
|---|---|---|---|---|---|

# STERILE AIR SYSTEM



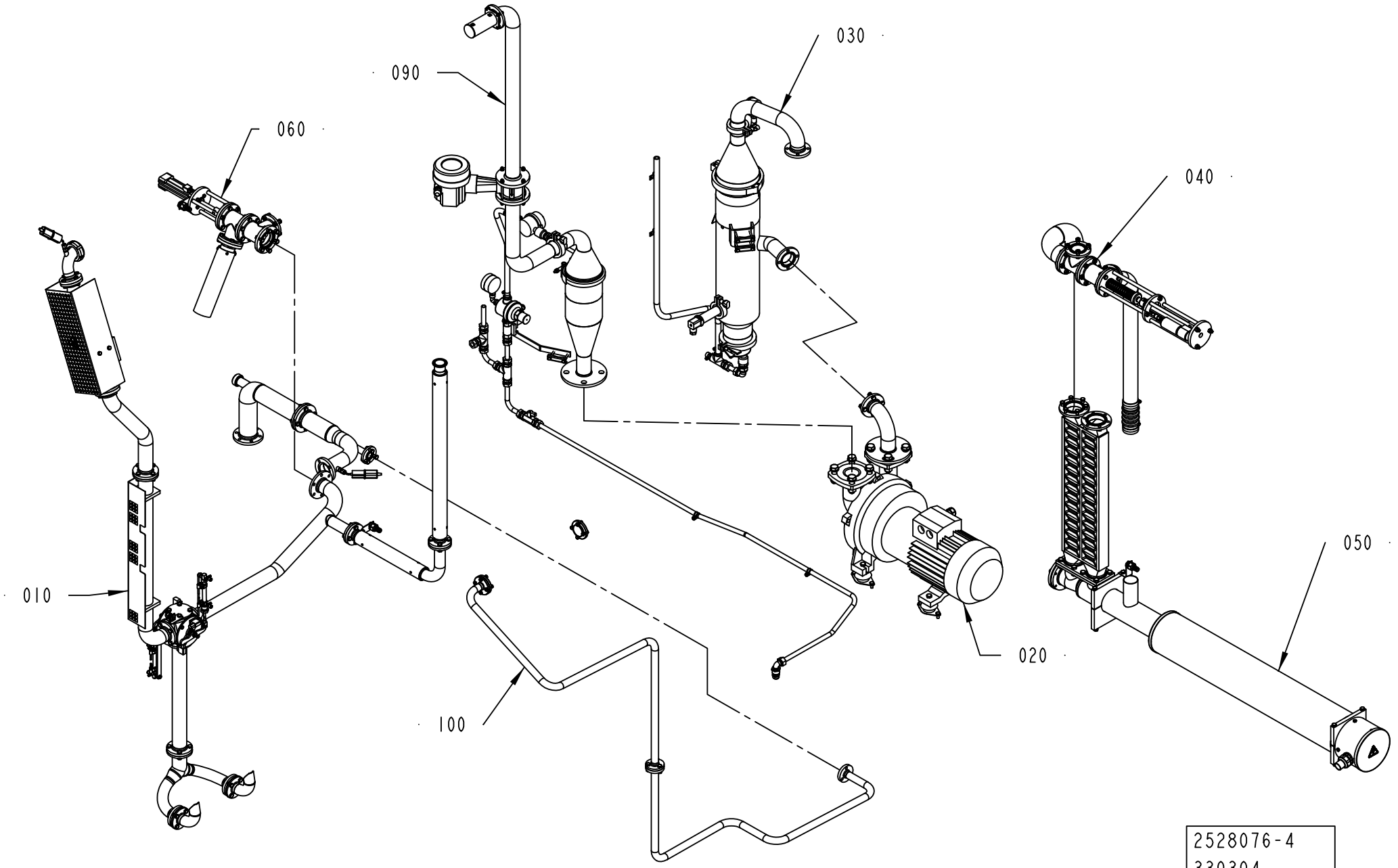

ECM: 369139 - 20081001
Group number: 2528076-0200
Assembly Drawing: 2528076-4_1_AB

This list covers pages from 1-166 to 1-171


| Pos | Part No | UN | Qty | Description | Page No |
|---|---|---|---|---|---|
| **A3/FLEX DIMC/FLEX (See drawing on page: 1-170)** | | | | | |
| 100 | 2968936-0100 | | 1 | STERILE AIR PIPE | **1-173** |
| **A3/FLEX NOPT (See drawing on page: 1-166)** | | | | | |
| 100 | 2783047-0100 | | 1 | STERILE AIR PIPE | **1-175** |
| **A3/FLEX PT/FLEX (See drawing on page: 1-168)** | | | | | |
| 100 | 2783088-0100 | | 1 | STERILE AIR PIPE | **1-177** |
| **Common Parts** | | | | | |
| 010 | 1558511-0300 | | 1 | PIPE WORK-AIR | **1-179** |
| 020 | 2700059-0200 | | 1 | COMPRESSOR UNIT | **1-183** |
| 030 | 1558769-0300 | | 1 | SEPARATOR | **1-185** |
| 040 | 1532250-0200 | | 1 | HEAT EXCHANGER VALVE | **1-187** |
| 050 | 1499158-0200 | | 1 | AIR SUPER-HEATER | **1-189** |
| 060 | 1538166-0200 | | 1 | AIR VALVE | **1-191** |
| 090 | 1499160-0300 | | 1 | SCRUBBER | **1-193** |

# STERILE AIR SYSTEM



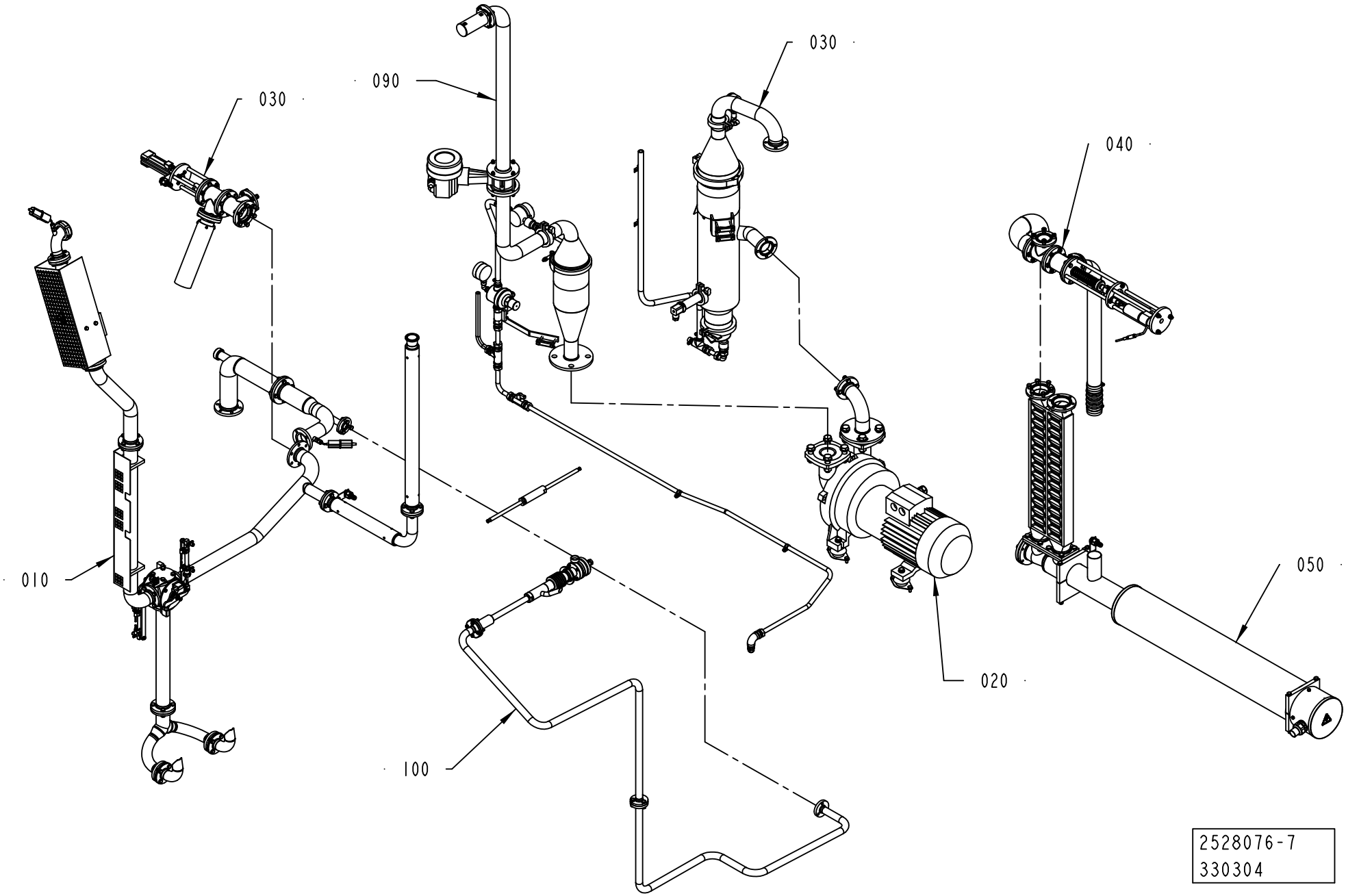

ECM: 369139 - 20081001
Group number: 2528076-0200
Assembly Drawing: 2528076-7_1_AA

This list covers pages from 1-166 to 1-171

| Pos | Part No | UN | Qty | Description | Page No |
|---|---|---|---|---|---|
| **A3/FLEX DIMC/FLEX (See drawing on page: 1-170)** | | | | | |
| 100 | 2968936-0100 | | 1 | STERILE AIR PIPE | **1-173** |
| **A3/FLEX NOPT (See drawing on page: 1-166)** | | | | | |
| 100 | 2783047-0100 | | 1 | STERILE AIR PIPE | **1-175** |
| **A3/FLEX PT/FLEX (See drawing on page: 1-168)** | | | | | |
| 100 | 2783088-0100 | | 1 | STERILE AIR PIPE | **1-177** |
| **Common Parts** | | | | | |
| 010 | 1558511-0300 | | 1 | PIPE WORK-AIR | **1-179** |
| 020 | 2700059-0200 | | 1 | COMPRESSOR UNIT | **1-183** |
| 030 | 1558769-0300 | | 1 | SEPARATOR | **1-185** |
| 040 | 1532250-0200 | | 1 | HEAT EXCHANGER VALVE | **1-187** |
| 050 | 1499158-0200 | | 1 | AIR SUPER-HEATER | **1-189** |
| 060 | 1538166-0200 | | 1 | AIR VALVE | **1-191** |
| 090 | 1499160-0300 | | 1 | SCRUBBER | **1-193** |

| Pos | Part No | UN | Qty | Description | Page No |
|---|---|---|---|---|---|

# STERILE AIR SYSTEM



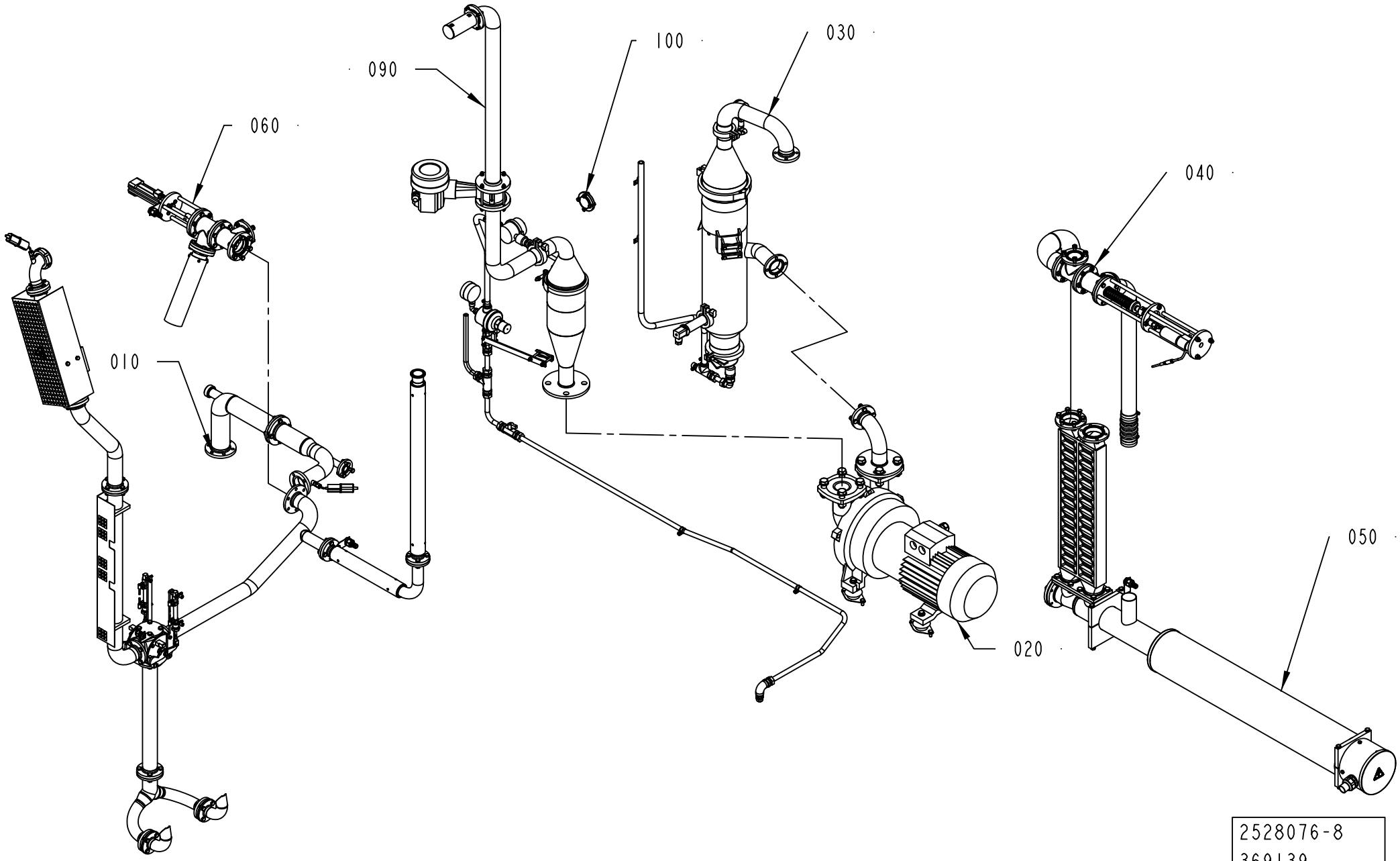

ECM: 369139 - 20081001
Group number: 2528076-0200
Assembly Drawing: 2528076-8_1_AA

This list covers pages from 1-166 to 1-171


| Pos | Part No | UN | Qty | Description | Page No |
|---|---|---|---|---|---|
| **A3/FLEX DIMC/FLEX (See drawing on page: 1-170)** | | | | | |
| 100 | 2968936-0100 | | 1 | STERILE AIR PIPE | **1-173** |
| **A3/FLEX NOPT (See drawing on page: 1-166)** | | | | | |
| 100 | 2783047-0100 | | 1 | STERILE AIR PIPE | **1-175** |
| **A3/FLEX PT/FLEX (See drawing on page: 1-168)** | | | | | |
| 100 | 2783088-0100 | | 1 | STERILE AIR PIPE | **1-177** |
| **Common Parts** | | | | | |
| 010 | 1558511-0300 | | 1 | PIPE WORK-AIR | **1-179** |
| 020 | 2700059-0200 | | 1 | COMPRESSOR UNIT | **1-183** |
| 030 | 1558769-0300 | | 1 | SEPARATOR | **1-185** |
| 040 | 1532250-0200 | | 1 | HEAT EXCHANGER VALVE | **1-187** |
| 050 | 1499158-0200 | | 1 | AIR SUPER-HEATER | **1-189** |
| 060 | 1538166-0200 | | 1 | AIR VALVE | **1-191** |
| 090 | 1499160-0300 | | 1 | SCRUBBER | **1-193** |

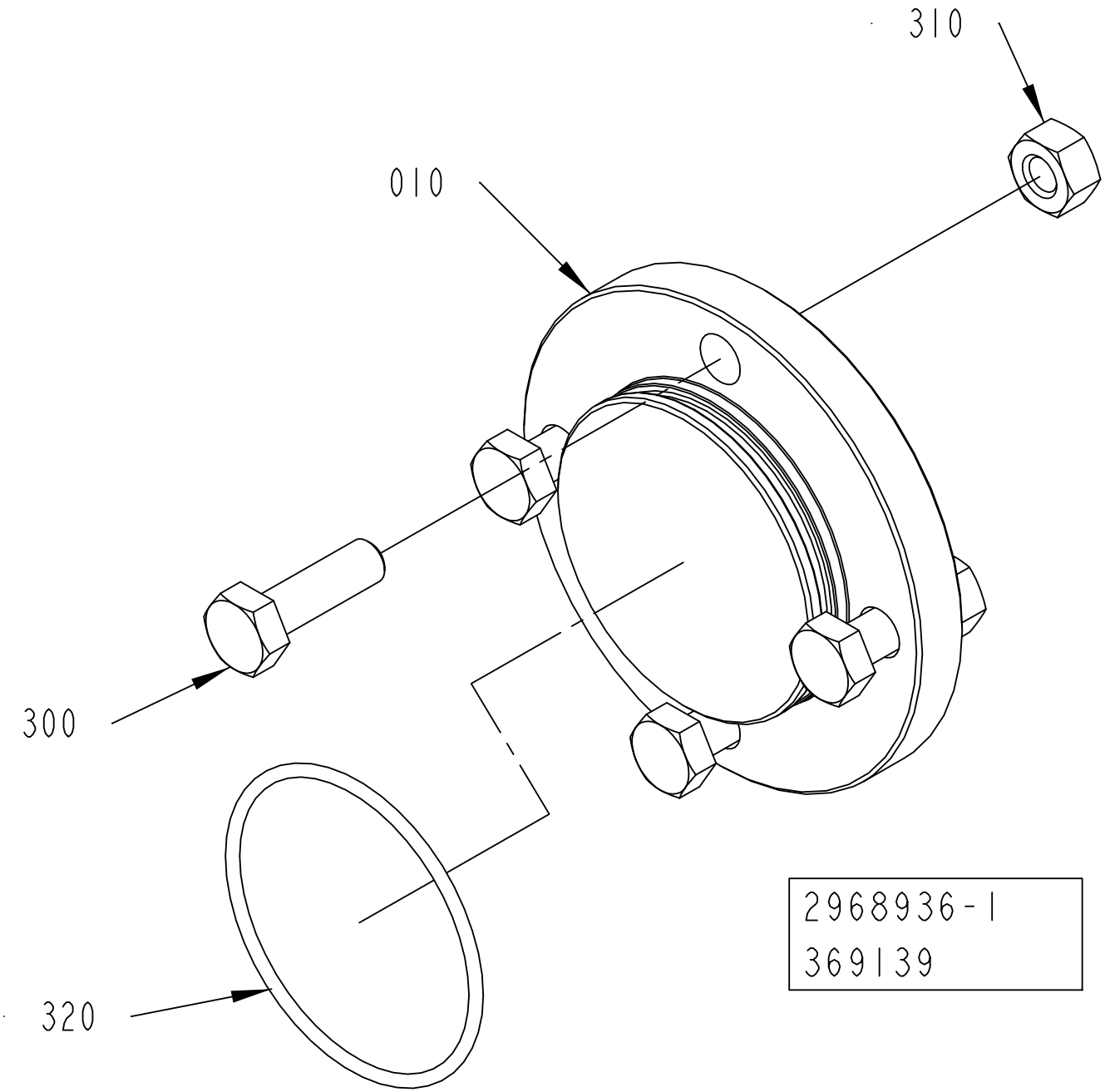
310
010
300
320
2968936-1
369139

ECM: 369139 - 20081001
Group number: 2968936-0100
Assembly Drawing: 2968936-1_1_AA

| Pos | Part No | UN | Qty | Description | Page No |
|---|---|---|---|---|---|
| - | | | | | |
| 010 | 2531054-0000 | | 1 | PLUG | |
| 300 | 312105-0370 | | 4 | SCREW M6S ISO 4017 M6X20 A480 | |
| 310 | 312605-0316 | | 4 | HEXAGON NUT, M6M M6 A280 | |
| 320 | 315205-0802 | | 1 | O-RING 41,0X1,78 MM | |

| Pos | Part No | UN | Qty | Description | Page No |
|---|---|---|---|---|---|

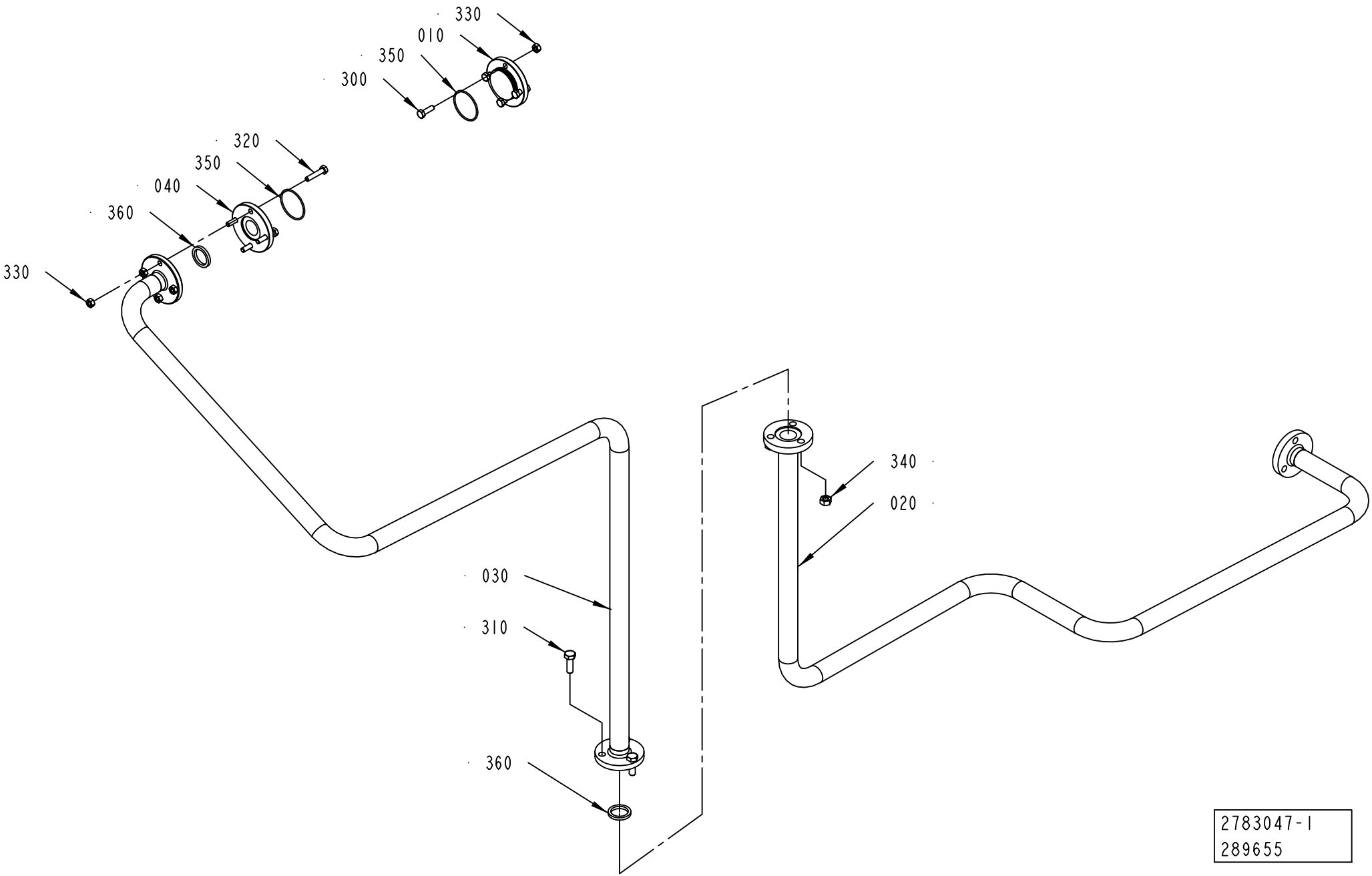
330
010
350
300
320
350
040
360
330
340
020
030
310
360
2783047-1
289655

ECM: 289709 - 20070704
Group number: 2783047-0100
Assembly Drawing: 2783047-1_1_AA

| Pos | Part No | UN | Qty | Description | Page No |
|---|---|---|---|---|---|
| **A3/FLEX** | | | | | |
| 010 | 2531054-0000 | | 1 | PLUG | |
| 020 | 2641298-0000 | | 1 | PIPE | |
| 030 | 2783095-0000 | | 1 | PIPE | |
| 040 | 2783046-0000 | | 1 | PLUG | |
| 300 | 312105-0370 | | 4 | SCREW M6S ISO 4017 M6X20 A480 | |
| 310 | 312105-0453 | | 3 | SCREW M6S ISO 4017 M8X25 A480 | |
| 320 | 312109-0374 | | 4 | SCREW M6S ISO 4017 M6X30 A480 | |
| 340 | 312605-0318 | | 3 | HEXAGON NUT, M6M M8 A280 | |
| 360 | 315229-0103 | | 2 | GASKETS, 23,1X30,1X3,7 MM 1" FDA | |
| **Common Parts** | | | | | |
| 330 | 312605-0316 | | 8 | HEXAGON NUT, M6M M6 A280 | |
| 350 | 315205-0802 | | 2 | O-RING 41,0X1,78 MM | |

| Pos | Part No | UN | Qty | Description | Page No |
|---|---|---|---|---|---|

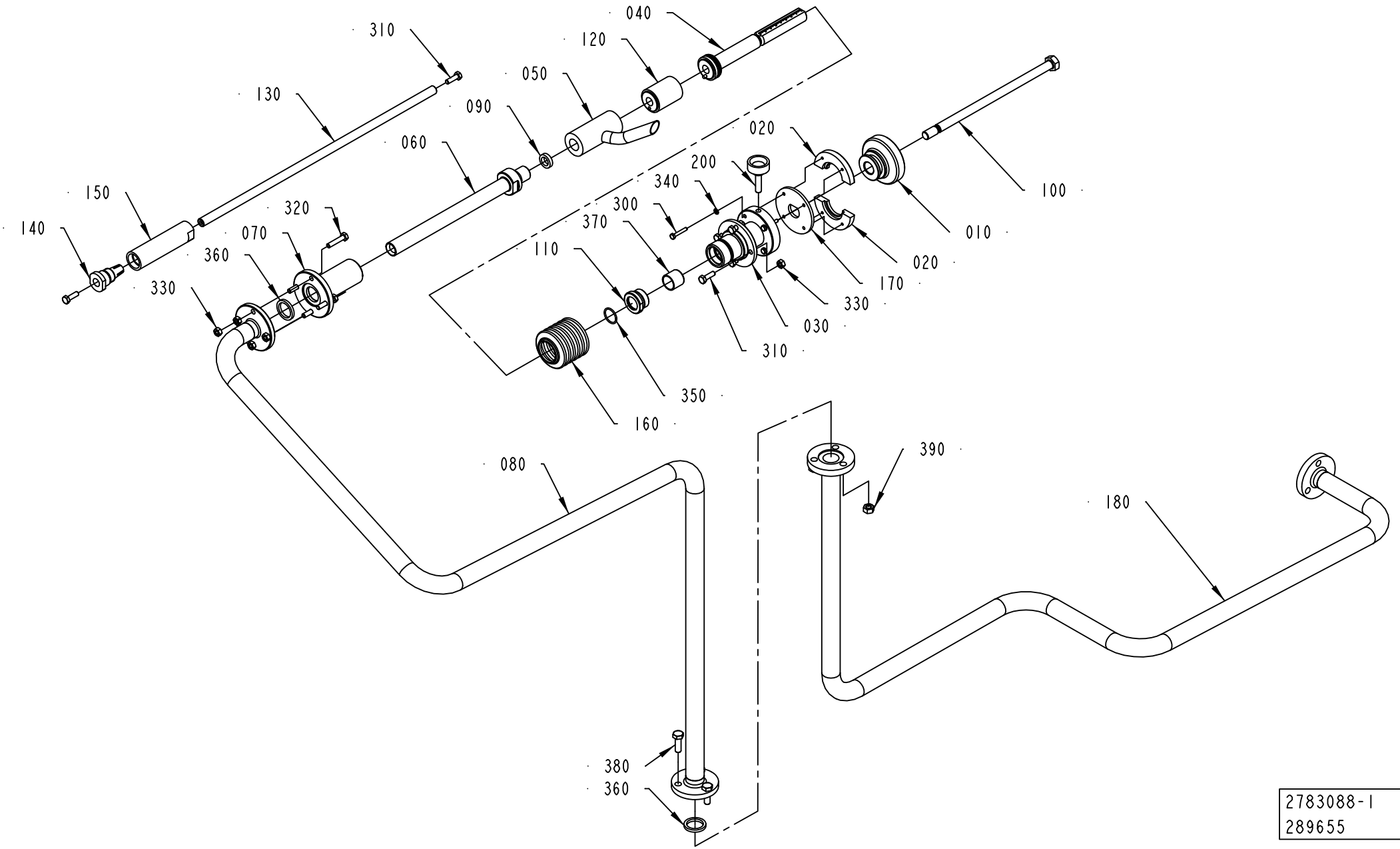


2783088-1
289655

ECM: 315581 - 20070704
Group number: 2783088-0100
Assembly Drawing: 2783088-1_1_AA

| Pos | Part No | UN | Qty | Description | Page No |
|---|---|---|---|---|---|
| **TBA 1000S** | | | | | |
| 060 | 2758733-0002 | | 1 | AIR PIPE | |
| 100 | 2758738-0002 | | 1 | SCREW | |
| 120 | 2758740-0001 | | 1 | SPACER | |
| **TBA 1000SQ, TPA 1000SQ, TPA 0750SQ** | | | | | |
| 060 | 2758733-0003 | | 1 | AIR PIPE | |
| 100 | 2758738-0003 | | 1 | SCREW | |
| 120 | 2758740-0002 | | 1 | SPACER | |
| **TBA 1000B, TBA 1500S, TBA 2000S** | | | | | |
| 060 | 2758733-0001 | | 1 | AIR PIPE | |
| 100 | 2758738-0001 | | 1 | SCREW | |
| **Common Parts** | | | | | |
| 010 | 2758728-0000 | | 1 | HANDLE | |
| 020 | 2758729-0000 | | 2 | CLAMPING LINK | |
| 030 | 2758730-0000 | | 1 | HUB | |
| 040 | 2758731-0000 | | 1 | ADJUSTING SCREW | |
| 050 | 2758732-0000 | | 1 | AIR NOZZLE | |
| 070 | 2758734-0000 | | 1 | HUB | |
| 080 | 2783095-0000 | | 1 | PIPE | |
| 090 | 2758737-0000 | | 1 | SEAL | |
| 110 | 2758739-0000 | | 1 | PLUG | |
| 130 | 2763959-0000 | | 1 | SHAFT | |
| 140 | 2793317-0000 | | 1 | PLUG | |
| 150 | 2793318-0000 | | 1 | SLIDE | |
| 160 | 2763963-0000 | | 1 | SLEEVE | |
| 170 | 2764007-0000 | | 1 | SPACER | |
| 180 | 2641298-0000 | | 1 | PIPE | |
| 200 | 90051-0059 | | 1 | KNOB, EXTERNAL THREAD. NO. 8308-1550 | |
| 300 | 312105-0297 | | 4 | SCREW M6S ISO 4017 M4X25 A470 | |
| 310 | 312105-0370 | | 6 | SCREW M6S ISO 4017 M6X20 A480 | |
| 320 | 312109-0374 | | 4 | SCREW M6S ISO 4017 M6X30 A480 | |
| 330 | 312605-0316 | | 8 | HEXAGON NUT, M6M M6 A280 | |
| 340 | 315105-0136 | | 4 | WASHER BRB 4,3X8 RFR | |
| 350 | 315205-0707 | | 1 | O-RING 20,35X1,78 MM | |
| 360 | 315229-0203 | | 2 | GASKET 22,1X30,1X3,7 MM 1" | |
| 370 | 321134-0260 | | 1 | BUSHING, 20X23X20 MM | |
| 380 | 312105-0453 | | 3 | SCREW M6S ISO 4017 M8X25 A480 | |
| 390 | 312605-0318 | | 3 | HEXAGON NUT, M6M M8 A280 | |

| Pos | Part No | UN | Qty | Description | Page No |
|---|---|---|---|---|---|

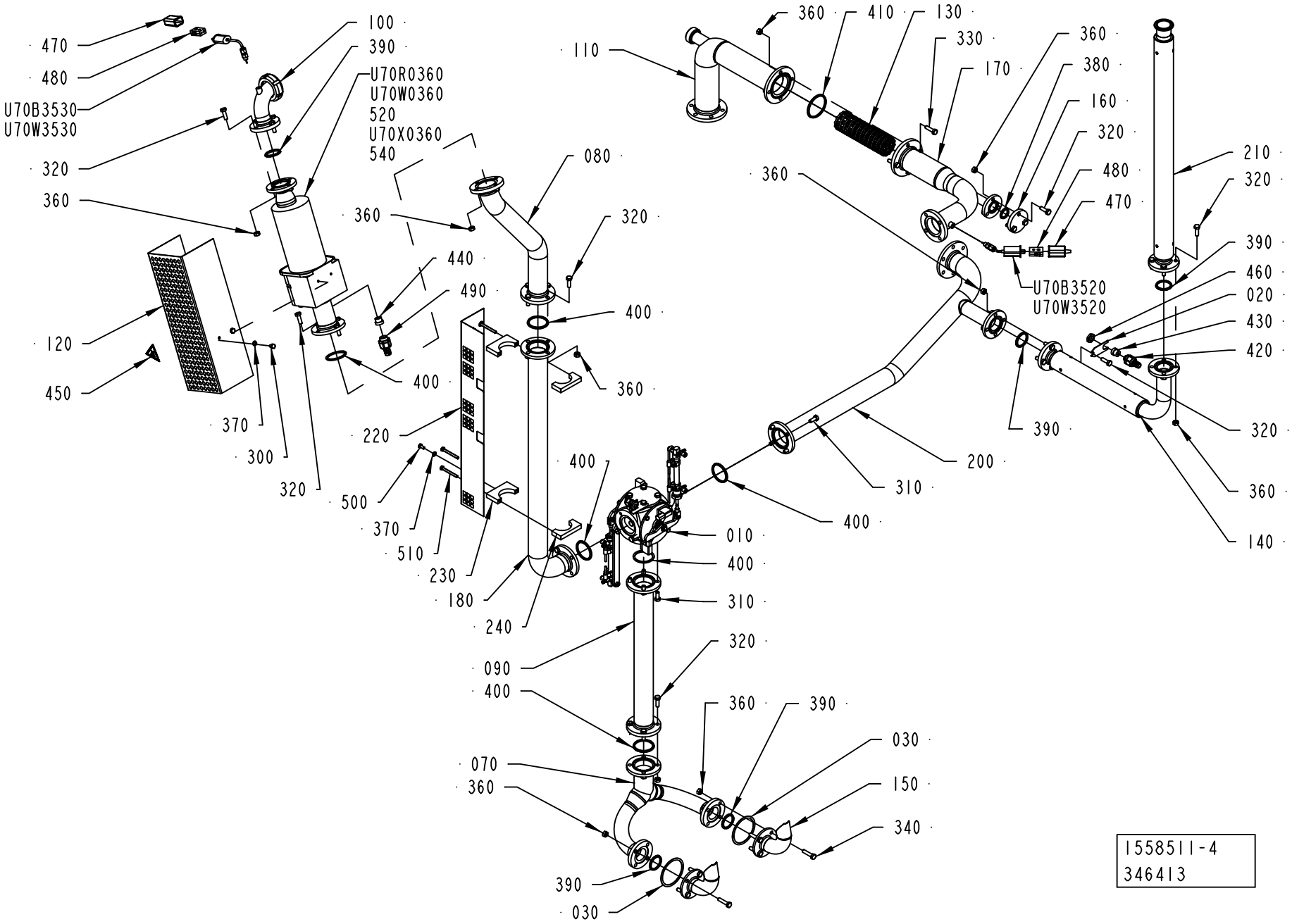
470
480
U70B3530
U70W3530
320
360
120
450
370
300
320
100
390
U70R0360
U70W0360
520
U70X0360
540
360
440
490
400
220
500
370
510
230
180
240
080
320
400
360
400
090
400
070
360
390
030
110
360
410
130
330
170
360
380
160
320
480
470
U70B3520
U70W3520
360
210
320
390
460
020
430
420
390
320
200
310
400
010
400
310
320
360
390
030
150
340
140
1558511-4
346413

ECM: 352792 - 20080711
Group number: 1558511-0300
Assembly Drawing: 1558511-4_1_AD

| Pos | Part No | UN | Qty | Description | Page No |
|---|---|---|---|---|---|
| **A3/FLEX DIMC/FLEX (See drawing on page: 1-178)** | | | | | |
| 080 | 2874721-0000 | | 1 | PIPE | |
| 090 | 1538183-0000 | | 1 | PIPE | |
| 100 | 1538474-0000 | | 1 | PIPE | |
| 160 | 2565467-0000 | | 1 | FLANGE | |
| 320 | 312105-0453 | | 27 | SCREW M6S ISO 4017 M8X25 A480 | |
| 360 | 312605-0318 | | 39 | HEXAGON NUT, M6M M8 A280 | |
| 400 | 315229-0205 | | 6 | GASKET 47,5X55,5X3,7 MM 2 INCH | |
| 440 | 353249-0011 | | 1 | INSERT, SINGLE HOLE, EK 153/11 | |
| 490 | 90458-0429 | | 1 | HOSE GLAND W/O INSERT M20 EXTENDED | |
| 540 | 90458-0307 | | 1 | CABLE GLAND, M20X1,5, NO.5311 1020 | |
| U70W0360 | 351120-0264 | MM | 7700 | CABLE SILFLEX SIHF 4X1,5 00460153 | |
| **A3/FLEX NODIMC (See drawing on page: 1-178)** | | | | | |
| 080 | 2874721-0000 | | 1 | PIPE | |
| 090 | 1538183-0000 | | 1 | PIPE | |
| 100 | 1538474-0000 | | 1 | PIPE | |
| 320 | 312105-0453 | | 27 | SCREW M6S ISO 4017 M8X25 A480 | |
| 360 | 312605-0318 | | 39 | HEXAGON NUT, M6M M8 A280 | |
| 400 | 315229-0205 | | 6 | GASKET 47,5X55,5X3,7 MM 2 INCH | |
| 440 | 353249-0011 | | 1 | INSERT, SINGLE HOLE, EK 153/11 | |
| 490 | 90458-0429 | | 1 | HOSE GLAND W/O INSERT M20 EXTENDED | |
| 540 | 90458-0307 | | 1 | CABLE GLAND, M20X1,5, NO.5311 1020 | |
| U70W0360 | 351120-0264 | MM | 7700 | CABLE SILFLEX SIHF 4X1,5 00460153 | |
| **Common Parts** | | | | | |
| 010 | 2550895-0200 | | 1 | CHANGE-OVER VALVE ..... | **1-181** |
| 020 | 1036293-0000 | | 1 | HOLDER | |
| 030 | 1036294-0000 | | 2 | GASKET | |
| 070 | 1538154-0000 | | 1 | DRAIN PIPE | |
| 110 | 1538487-0000 | | 1 | PIPE | |
| 120 | 2829288-0000 | | 1 | COVERING PLATE | |
| 130 | 1549526-0000 | | 1 | CONTAINER | |
| 140 | 1558510-0000 | | 1 | PIPE | |
| 150 | 2829717-0000 | | 2 | HORN | |
| 170 | 2641296-0000 | | 1 | PIPE | |
| 180 | 2783015-0000 | | 1 | PIPE | |
| 200 | 2695997-0000 | | 1 | PIPE | |
| 210 | 2695998-0000 | | 1 | PIPE | |
| 220 | 2874718-0000 | | 1 | TOUCH GUARD | |
| 230 | 2874719-0000 | | 2 | CLAMP | |
| 240 | 2874720-0000 | | 2 | CLAMP | |
| 300 | 90600-0657 | | 2 | SCREW UNC 1/4-20 X10 | |
| 310 | 312105-0451 | | 12 | SCREW M6S ISO 4017 M8X20 A480 | |
| 330 | 312105-0455 | | 4 | SCREW M6S ISO 4017 M8X30 A480 | |
| 340 | 312109-0457 | | 8 | SCREW M6S ISO 4017 M8X35 A480 | |
| 370 | 315105-0153 | | 4 | WASHER BRB 6,4X12 RFR | |
| 380 | 315229-0203 | | 1 | GASKET 22,1X30,1X3,7 MM 1" | |
| 390 | 315229-0204 | | 5 | GASKET 34,8X42,8X3,7 MM 1"1/2 | |
| 410 | 315229-0206 | | 1 | GASKET 60,2X68,2X3,7 MM 2"1/2 | |
| 420 | 353243-0001 | | 1 | HOSE GLAND W/O INSERT PG9 EXTENDED | |
| 430 | 353249-0008 | | 1 | INSERT, SINGLE HOLE, EK 152/7 | |
| 450 | 359705-0007 | | 1 | WARNING SIGN ISO, HOT SURFACE | |
| 460 | 90099-0104 | | 1 | NUT, PR 15,2 (PG9) | |
| 470 | 90326-0012 | | 2 | PROTECTIVE COVER, T31A4618 | |
| 480 | 90326-0020 | | 2 | PLUG, FEMALE YELLOW CR-AL | |
| 500 | 312105-0366 | | 2 | SCREW M6S ISO 4017 M6X12 A480 | |
| 510 | 312109-0381 | | 4 | SCREW M6S ISO 4017 M6X55 A480 | |
| 520 | 90459-6632 | | 1 | HOOD 6 B TOP ENTRY, 19 30 006 1440 | |
| U70B3520 | 90326-0057 | | 1 | THERMOCOUPLE, CR-AL | |
| U70B3530 | 90326-0089 | | 1 | THERMOCOUPLE, 5110-089-000 | |
| U70R0360 | 2793360-0000 | | 1 | HEATER | |
| U70W3520 | 90220-0034 | MM | 8000 | THERMOCABLE TEX/SITW-20F-KX 2X0,5MM2 | |
| U70W3530 | 90220-0034 | MM | 8000 | THERMOCABLE TEX/SITW-20F-KX 2X0,5MM2 | |
| U70X0360 | 90110-0052 | | 1 | MALE INSERT HAN 6E 09 33 006 2601 | |

Machine Type | Group Description | Used-In | Group Number | Page No

# CHANGE-OVER VALVE



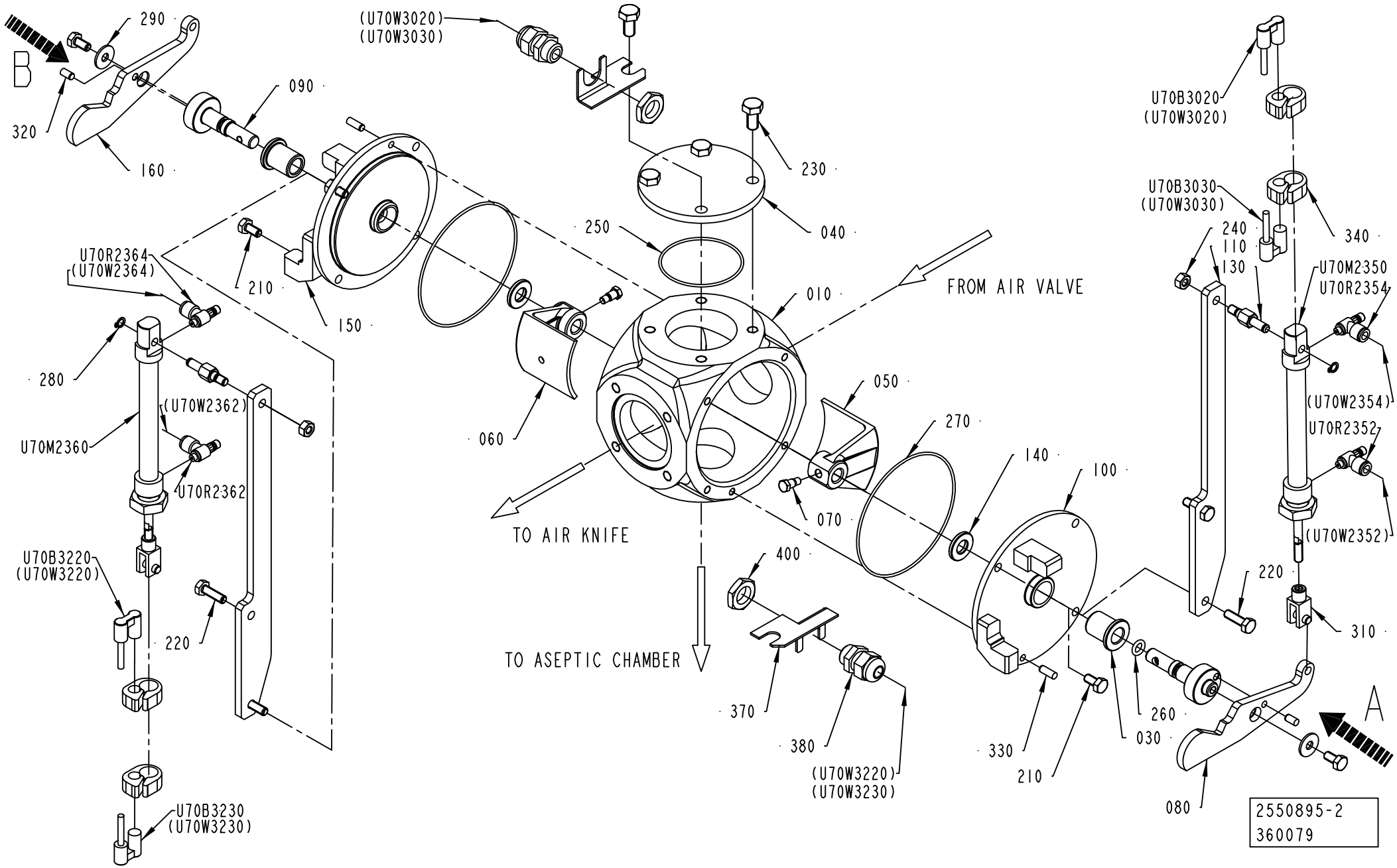

ECM: 368809 - 20081001
Group number: 2550895-0200
Assembly Drawing: 2550895-2_1_AB

| Pos | Part No | UN | Qty | Description | Page No |
|---|---|---|---|---|---|
| **A3/FLEX** | | | | | |
| 080 | 2957442-0000 | | 1 | LEVER | |
| 100 | 2957438-0000 | | 1 | COVER | |
| **Common Parts** | | | | | |
| 010 | 1524236-0000 | | 1 | VALVE HOUSING | |
| 030 | 2883295-0000 | | 2 | BUSHING | |
| 040 | 1539741-0000 | | 1 | COVER | |
| 050 | 2922729-0000 | | 1 | SHUTTER | |
| 060 | 2957437-0000 | | 1 | SHUTTER | |
| 070 | 2922731-0000 | | 2 | SHOULDER SCREW | |
| 090 | 2957445-0000 | | 2 | SHAFT | |
| 110 | 2957436-0000 | | 2 | BRACKET | |
| 130 | 1548742-0000 | | 2 | SPACER | |
| 140 | 2890041-0000 | | 2 | WASHER | |
| 150 | 2957439-0000 | | 1 | COVER | |
| 160 | 2957443-0000 | | 1 | LEVER | |
| 210 | 312105-0366 | | 6 | SCREW M6S ISO 4017 M6X12 A480 | |
| 220 | 312105-0370 | | 4 | SCREW M6S ISO 4017 M6X20 A480 | |
| 230 | 312105-0449 | | 4 | SCREW M6S ISO 4017 M8X16 A480 | |
| 240 | 312605-0316 | | 4 | HEXAGON NUT, M6M M6 A280 | |
| 250 | 90459-1189 | | 1 | O-RING 56,87X1,78 MM | |
| 260 | 315204-0206 | | 2 | O-RING 7,3X2,4 MM | |
| 270 | 315205-0807 | | 2 | O-RING 94,97X1,78 MM | |
| 280 | 315751-0103 | | 2 | RETAINING RING FOR SHAFT DIN 471 6 SS | |
| 290 | 90005-0060 | | 2 | WASHER PLAIN, RBS 6,4/M6)/18,H=1,5 | |
| 310 | 90450-0725 | | 2 | ROD END, CLEVIS WITH AXLE M6 | |
| 320 | 311103-0305 | | 2 | PARALLEL PIN ISO 2338 5M6X10 A1 | |
| 330 | 311103-0307 | | 2 | PARALLEL PIN ISO 2338 5M6X14 A1 | |
| 340 | 90459-0799 | | 4 | SENSOR BRACKET SMBR-12 FOR CYL 12 | |
| 370 | 1036610-0000 | | 2 | BRACKET | |
| 380 | 352103-0101 | | 2 | CABLE GLAND, ST 9, PR15,2/PG9 | |
| 400 | 90099-0104 | | 2 | NUT, PR 15,2 (PG9) | |
| U70B3020 | 90459-0829 | | 1 | PROX.SENSOR SMTO-4U-PS-K-LED-24 | |
| U70B3030 | 90459-0829 | | 1 | PROX.SENSOR SMTO-4U-PS-K-LED-24 | |
| U70B3220 | 90459-0829 | | 1 | PROX.SENSOR SMTO-4U-PS-K-LED-24 | |
| U70B3230 | 90459-0829 | | 1 | PROX.SENSOR SMTO-4U-PS-K-LED-24 | |
| U70M2350 | 90459-0713 | | 1 | DOUBLE ACTING, MINI-ISO, CYL 12-80 | |
| U70M2360 | 90459-0713 | | 1 | DOUBLE ACTING, MINI-ISO, CYL 12-80 | |
| U70R2352 | 90235-0844 | | 1 | THROTTLE CHECK VALVE, M5, MANUAL, 6MM | |
| U70R2354 | 90235-0844 | | 1 | THROTTLE CHECK VALVE, M5, MANUAL, 6MM | |
| U70R2362 | 90235-0844 | | 1 | THROTTLE CHECK VALVE, M5, MANUAL, 6MM | |
| U70R2364 | 90235-0844 | | 1 | THROTTLE CHECK VALVE, M5, MANUAL, 6MM | |

| Pos | Part No | UN | Qty | Description | Page No |
|---|---|---|---|---|---|

| Machine Type | Group Description | Used-In | Group Number | Page No |
|---|---|---|---|---|

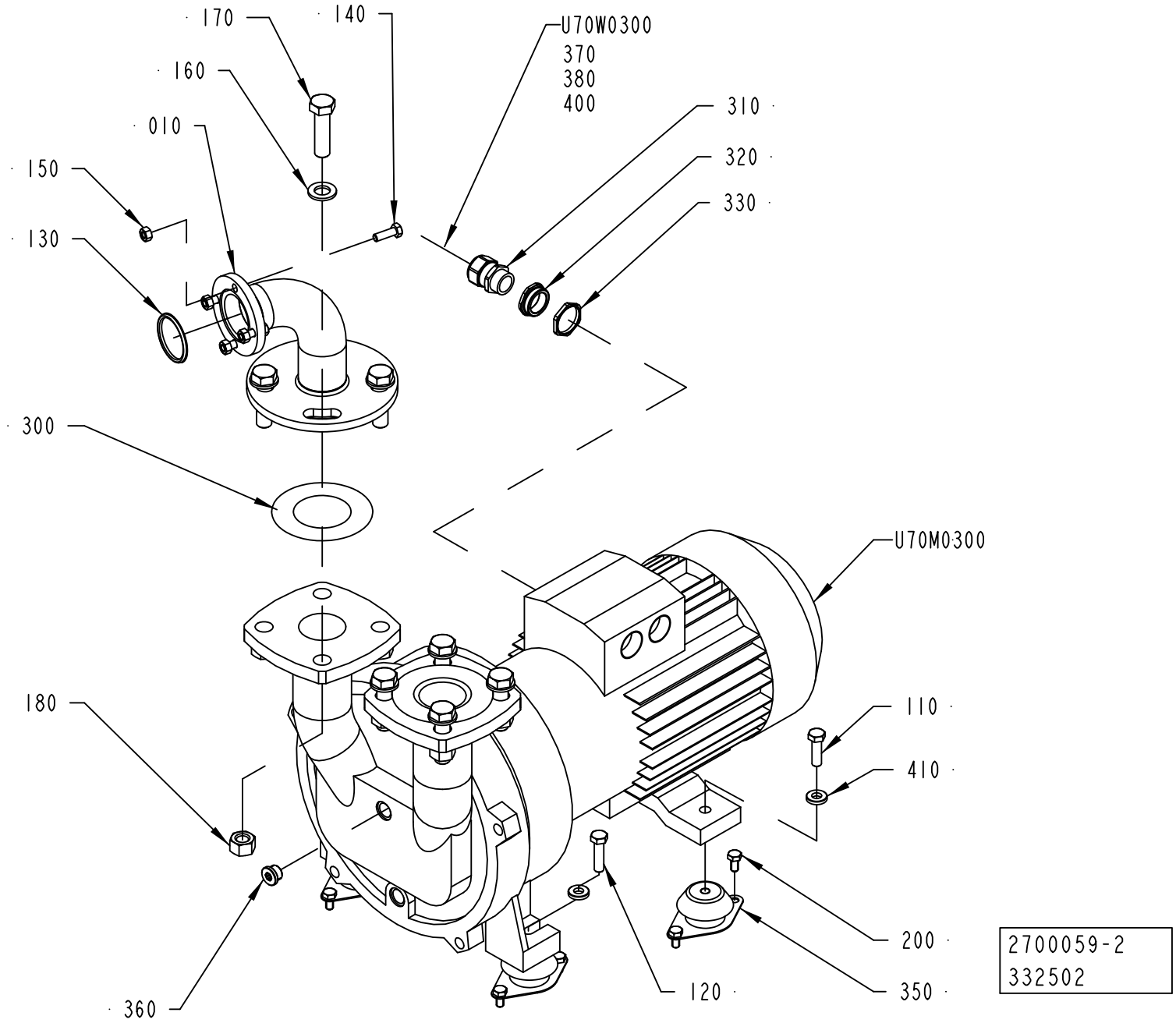
170
140
U70W0300
370
380
400
160
310
010
320
150
330
130
300
U70M0300
180
110
410
200
120
350
360
2700059-2
332502

ECM: 343133 - 20080410
Group number: 2700059-0200
Assembly Drawing: 2700059-2_1_AC

| Pos | Part No | UN | Qty | Description | Page No |
|---|---|---|---|---|---|
| - | | | | | |
| 010 | 2783030-0000 | | 1 | PIPE | |
| 110 | 312105-0497 | | 2 | SCREW M6S ISO 4017 M10X35 A480 | |
| 120 | 312105-0499 | | 2 | SCREW M6S ISO 4014 M10X40 A480 | |
| 130 | 315229-0205 | | 1 | GASKET 47,5X55,5X3,7 MM 2 INCH | |
| 140 | 312105-0453 | | 4 | SCREW M6S ISO 4017 M8X25 A480 | |
| 150 | 312605-0318 | | 4 | HEXAGON NUT, M6M M8 A280 | |
| 160 | 315105-0186 | | 16 | WASHER BRB 17X30 RFR | |
| 170 | 312105-0632 | | 8 | SCREW M6S ISO 4014 M16X60 A480 | |
| 180 | 312605-0324 | | 8 | HEXAGON NUT, M6M M16 A280 | |
| 200 | 312105-0449 | | 8 | SCREW M6S ISO 4017 M8X16 A480 | |
| 300 | 90459-4090 | | 2 | GASKET FPM 61X107X4, KLINGER 6080.1925 | |
| 310 | 90458-0440 | | 1 | GLAND, EXTENDED WITH INSERT, M25X1,5 | |
| 320 | 90459-4186 | | 1 | REDUCER, M32/M25 | |
| 330 | 353250-0032 | | 1 | GLAND, LOCK NUT M32X1,5 | |
| 350 | 90347-0144 | | 4 | VIBRATION DAMPER, NO. RA 40EM-A | |
| 360 | 90600-1712 | | 1 | PLUG, EXT. THREAD HEX. SOCKET 09190017 | |
| 370 | 90110-0159 | | 1 | MALE INSERT 70.310.0640.0 | |
| 380 | 90600-3817 | | 1 | HOOD TOP ENTRY, 19 30 006 0446 | |
| 400 | 90458-0308 | | 1 | CABLE GLAND, M25X1,5, NO.5311 1030 | |
| 410 | 315115-0173 | | 4 | WASHER PLAIN, TBRB 10,5/22 H=4 | |
| U70M0300 | 90459-6661 | | 1 | COMPRESSOR, 2BV5410-8FP02-6S | |
| U70W0300 | 90220-0105 | MM | 5500 | SCR. CABLE 4X2,5MM2 | |

| Pos | Part No | UN | Qty | Description | Page No |
|---|---|---|---|---|---|

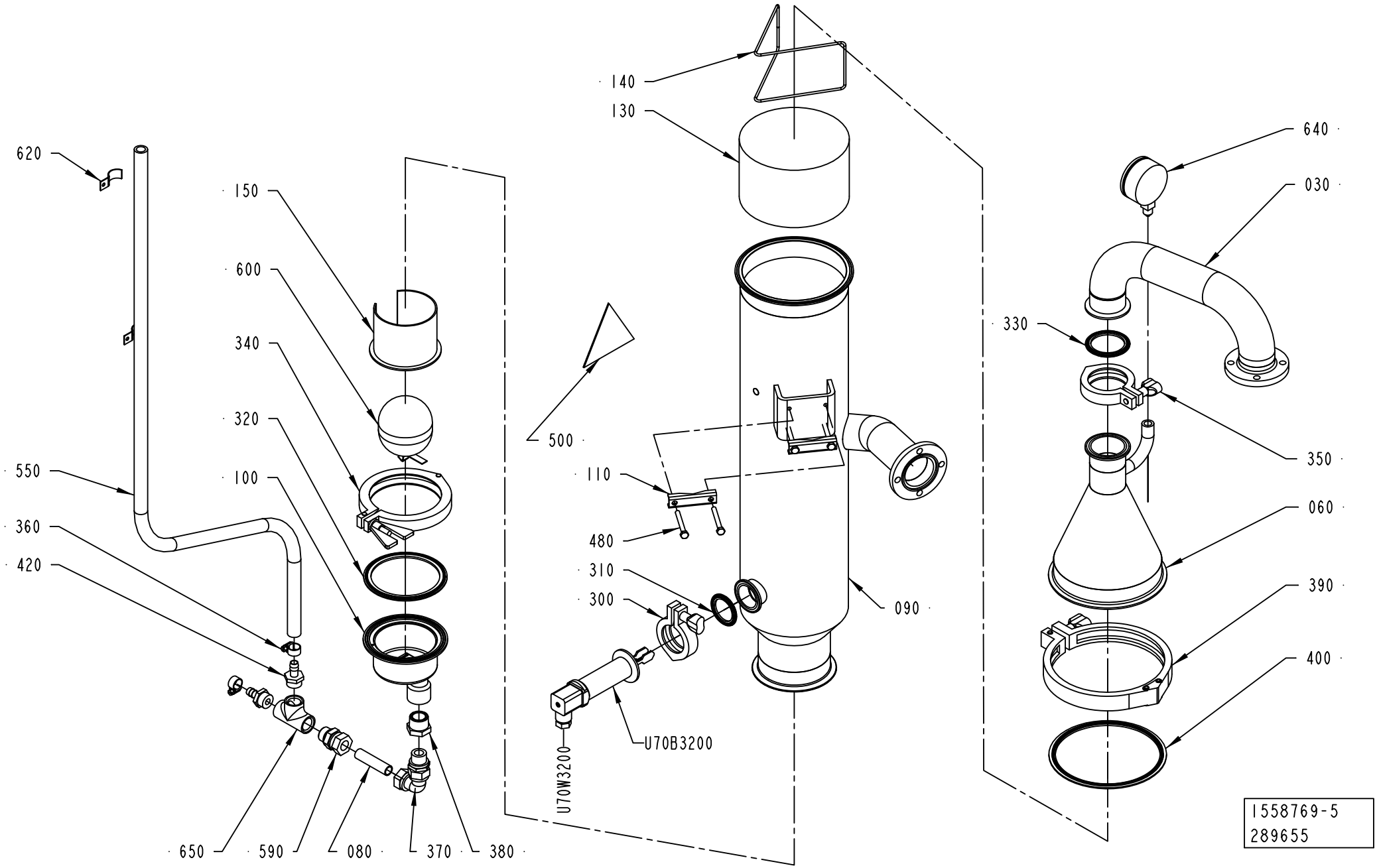
620
150
600
340
320
100
550
360
420
650
590
080
370
380
140
130
500
110
480
310
300
U70W3200
U70B3200
090
640
030
330
350
060
390
400
1558769-5
289655

ECM: 289706 - 20070704
Group number: 1558769-0300
Assembly Drawing: 1558769-5_1_AA

| Pos | Part No | UN | Qty | Description | Page No |
|---|---|---|---|---|---|
| - | | | | | |
| 030 | 2685246-0000 | | 1 | PIPE | |
| 060 | 2755071-0000 | | 1 | UPPER SECTION | |
| 080 | 1490963-0000 | | 1 | PIPE | |
| 090 | 2874713-0000 | | 1 | INTERMEDIARY SECTION | |
| 100 | 1038634-0000 | | 1 | DRAINING | |
| 110 | 1036811-0000 | | 2 | CLAMP | |
| 130 | 2709234-0000 | | 1 | FILTER | |
| 140 | 2736680-0000 | | 1 | RETAINING RING | |
| 150 | 568828-0000 | | 1 | FLOAT GUARD | |
| 300 | 342840-0103 | | 1 | CLAMPING PIECE | |
| 310 | 342850-0404 | | 1 | GASKET 35,4X49,1X5,2 MM 1"1/2 FDA | |
| 320 | 342850-0408 | | 1 | GASKET 97X117,7X5,2 MM 4" FDA | |
| 330 | 342850-0405 | | 1 | GASKET 47,8X62,6X5,2 MM 2" FDA | |
| 340 | 90600-0260 | | 1 | CLAMPING PIECE, 10503.000.400.14 | |
| 350 | 342840-0105 | | 1 | CLAMPING PIECE | |
| 360 | 342991-0101 | | 2 | HOSE CLIP,WORM DRIVE TYPE (13)-16 | |
| 370 | 342738-0221 | | 1 | ADJUSTABLE ELBOW CONNECTION,EXT 15-G1/2 | |
| 380 | 342206-0109 | | 1 | BUSHING, TAPERED, INT/EXT.  THR NO. R211 | |
| 390 | 90459-4728 | | 1 | CLAMPING PIECE 6", C.025 DN 150 | |
| 400 | 342850-0209 | | 1 | GASKET 147,57X165,61X5,182 MM 6" | |
| 420 | 342901-0105 | | 2 | HOSE NIPPLE, EXT.THR. R1/2-12 MM | |
| 480 | 312105-0381 | | 4 | SCREW M6S ISO 4014 M6X55 A480 | |
| 500 | 359705-0008 | | 1 | WARNING SIGN ISO, HOT SURFACE | |
| 550 | 90166-0121 | MM | 1500 | HOSE | |
| 590 | 90030-0188 | | 1 | CONN. STR. GA-15-G1/2 | |
| 600 | 90360-0305 | | 1 | FLOAT, ART NO 10739920 | |
| 610 | 90157-0037 | | 1 | THREAD SEALANT LOCTITE 542 | |
| 620 | 90074-0011 | | 2 | CABLE CLIPS, D=14 MM | |
| 640 | 90043-0095 | | 1 | PRESSURE GAUGE, 2740, D=63 MM, GLYC. | |
| 650 | 90330-0049 | | 1 | T-PIPE, INT. THREAD, R-221R1/2 | |
| 700 | 90144-0073 | | 1 | TREBOFLON-TAPE W=13MM | |
| U70B3200 | 90600-2107 | | 1 | LEVEL SWITCH, FTL20H-0TCJ2B | |
| U70W3200 | 351150-0404 | MM | 5000 | CABLE OLFLEX 4X0,75 MM2 LIGHT/GREY | |

| Pos | Part No | UN | Qty | Description | Page No |
|---|---|---|---|---|---|

# HEAT EXCHANGER VALVE



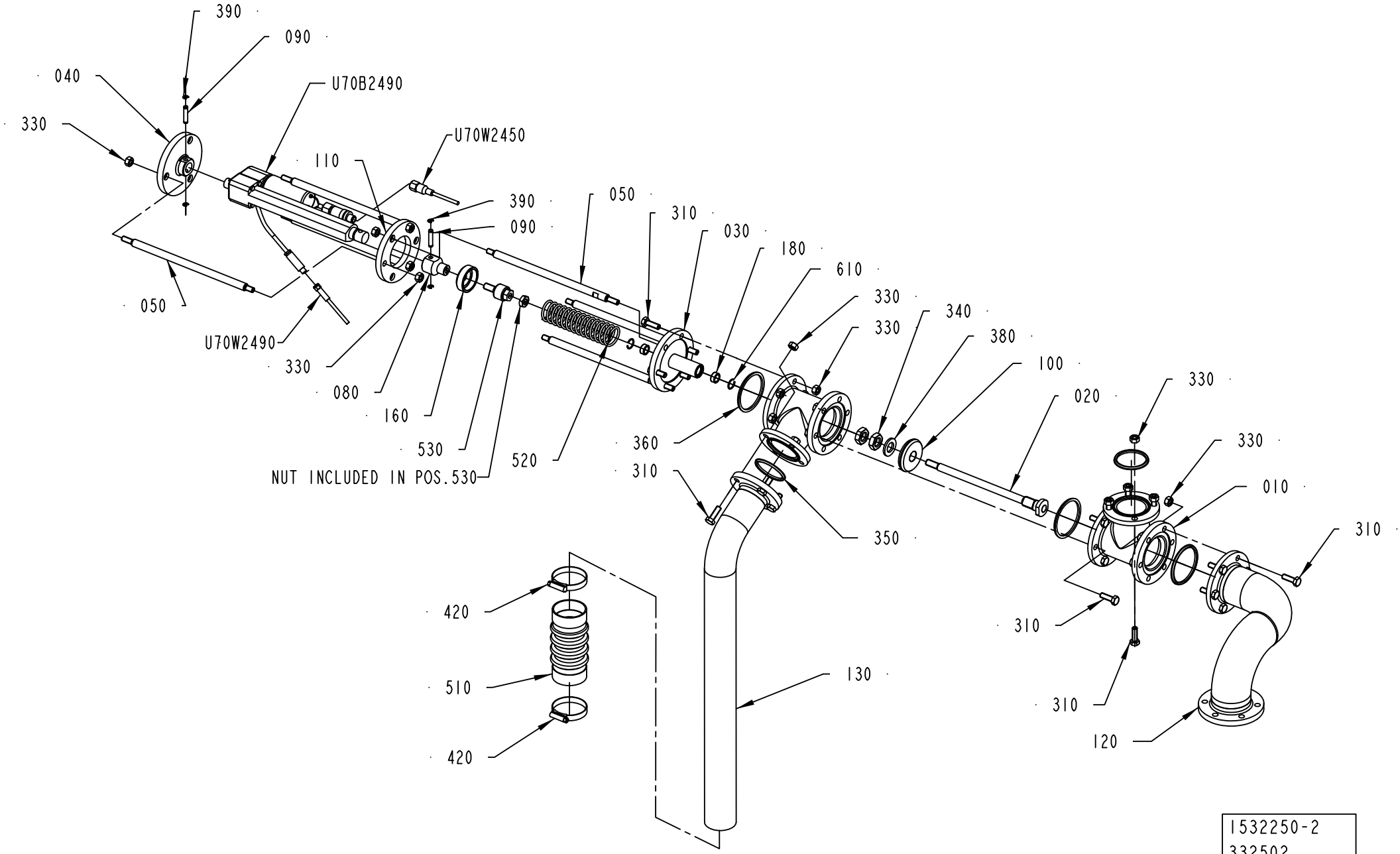

ECM: 362884 - 20081001
Group number: 1532250-0200
Assembly Drawing: 1532250-2_1_AB

| Pos | Part No | UN | Qty | Description | Page No |
|---|---|---|---|---|---|
| - | | | | | |
| 010 | 1036187-0000 | | 2 | T-PIPE | |
| 020 | 2874732-0000 | | 1 | VALVE SPINDLE | |
| 030 | 2874743-0000 | | 1 | SPINDLE GUIDE | |
| 040 | 2874736-0000 | | 1 | BEARING FLANGE | |
| 050 | 2874734-0000 | | 6 | SPACER ROD | |
| 080 | 2874733-0000 | | 1 | JOINT | |
| 090 | 2720852-0000 | | 2 | PIN | |
| 100 | 2874731-0000 | | 1 | SHUTTER | |
| 110 | 2874735-0000 | | 1 | FLANGE | |
| 120 | 1538157-0000 | | 1 | PIPE | |
| 130 | 1538158-0000 | | 1 | PIPE | |
| 160 | 2874741-0000 | | 1 | SPRING COLLAR | |
| 180 | 532349-0000 | | 2 | PLAIN BEARING | |
| 310 | 312105-0453 | | 23 | SCREW M6S ISO 4017 M8X25 A480 | |
| 330 | 312605-0318 | | 35 | HEXAGON NUT, M6M M8 A280 | |
| 340 | 312625-0324 | | 2 | HEXAGON THIN NUT, EN 24035 ML6M M16 A4 | |
| 350 | 315229-0205 | | 2 | GASKET 47,5X55,5X3,7 MM 2 INCH | |
| 360 | 315229-0206 | | 3 | GASKET 60,2X68,2X3,7 MM 2"1/2 | |
| 380 | 315105-0186 | | 1 | WASHER BRB 17X30 RFR | |
| 390 | 315755-0106 | | 4 | RETAINING RING SHAFT DIN 6799 4 A2 | |
| 400 | 312631-0321 | | 1 | HEX.NUT FINE, EN 24032 M6M M10X1,25 FZB8 | |
| 420 | 342991-0109 | | 2 | HOSE CLIP,WORM DRIVE TYPE (48)-50 | |
| 510 | 90342-0022 | | 1 | BELLOWS | |
| 520 | 90459-6255 | | 1 | COMP. SPRING 23460, 3,2X35,2X190 | |
| 530 | 90600-2522 | | 1 | FLOATING JOINT, JS32-10-125 | |
| 610 | 90141-0022 | | 2 | SNAP RING B 16 | |
| U70B2490 | 90459-4977 | | 1 | LINEAR ACTUATOR LA 1 SP - SP36 17A16 - 0 | |
| U70W2450 | 351301-0050 | | 1 | ACTUATOR/SENSOR CABLE PRKMV 3-06/5M | |
| U70W2490 | 90459-5578 | | 1 | ACTUATOR/SENSOR CABLE PRKT 5-56/5M | |

| Pos | Part No | UN | Qty | Description | Page No |
|---|---|---|---|---|---|

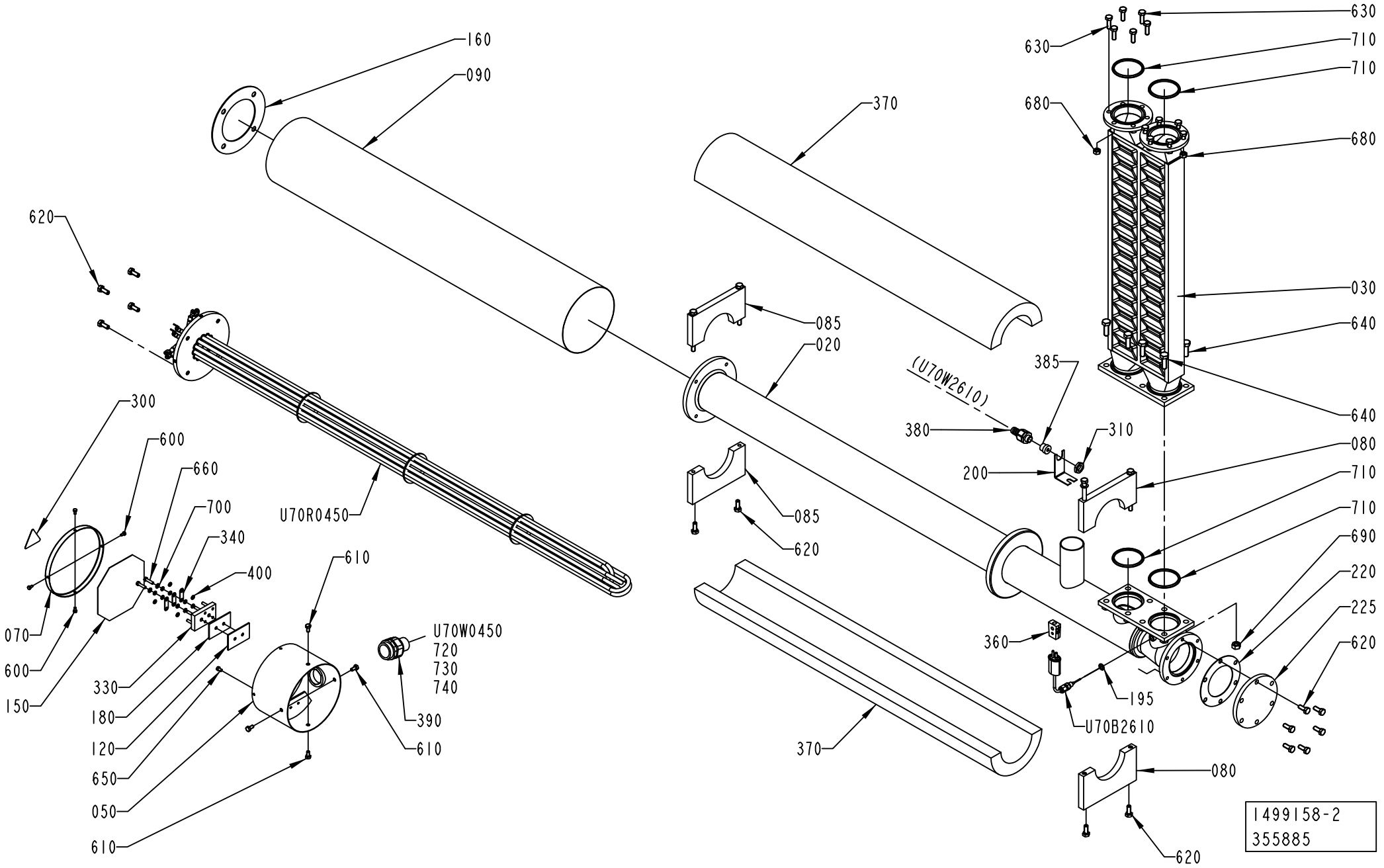
160
090
620
300
600
660
700
340
400
610
U70R0450
070
600
150
330
180
120
650
050
610
U70W0450
720
730
740
390
610
370
085
020
085
620
370
630
630
710
710
680
680
030
640
640
385
(U70W2610)
380
310
200
080
710
710
690
220
225
620
360
195
U70B2610
080
620
1499158-2
355885

ECM: 355885 - 20081001
Group number: 1499158-0200
Assembly Drawing: 1499158-2_1_AC

| Pos | Part No | UN | Qty | Description | Page No |
|---|---|---|---|---|---|
| - | | | | | |
| 020 | 1499157-0000 | | 1 | HEATING PIPE | |
| 030 | 2685283-0000 | | 1 | HEAT EXCHANGER | |
| 050 | 451430-0000 | | 1 | CONNECTION HOUS.(MINOR) | |
| 070 | 29876-0000 | | 1 | COVER | |
| 080 | 456123-0000 | | 1 | SUPPORT | |
| | *315105-0165* | | *2* | *WASHER BRB 8,4X16 RFR* | |
| | *312105-0471* | | *2* | *SCREW M6S ISO 4014 M8X100 A480* | |
| 085 | 1484080-0000 | | 1 | SUPPORT | |
| 090 | 1036372-0000 | | 1 | PIPE | |
| 120 | 30298-0000 | | 1 | INSULATION | |
| 150 | 491305-0000 | | 1 | CONN.DIAGRAM AIR SUPERH. | |
| 160 | 531731-0000 | | 1 | GASKET | |
| 180 | 751009-0000 | | 1 | INSULATION | |
| 195 | 273429-0000 | | 1 | WASHER | |
| 200 | 1036373-0000 | | 1 | HOLDER | |
| 220 | 927454-0000 | | 1 | GASKET | |
| 225 | 1490962-0000 | | 1 | LID | |
| 300 | 359705-0015 | | 1 | WARNING SIGN ISO, RISK OF ELECTRIC SHOCK | |
| 310 | 90099-0104 | | 1 | NUT, PR 15,2 (PG9) | |
| 320 | 90153-0020 | | 1 | ADHESIVE, BOSTIK 1782 125ML | |
| 330 | 90195-0028 | | 1 | TERM.BLOCK 6-POLE STEATIT | |
| 340 | 90195-0029 | | 3 | CONN. LINK NO324 FOR -28 | |
| 360 | 90326-0020 | | 1 | PLUG, FEMALE YELLOW CR-AL | |
| 370 | 90411-0005 | MM | 900 | 90411-0005 1200MM SERIE 21 89/154X30 | |
| 380 | 353243-0001 | | 1 | HOSE GLAND W/O INSERT PG9 EXTENDED | |
| 385 | 353249-0008 | | 1 | INSERT, SINGLE HOLE, EK 152/7 | |
| 390 | 90012-0126 | | 1 | HOSE GLAND W/O INSERT PG29 NORMAL | |
| 400 | 315402-0146 | | 12 | LOCK WASHER FBB 5,1 | |
| 600 | 312105-0287 | | 4 | SCREW M6S ISO 4017 M4X8 A470 | |
| 610 | 312105-0366 | | 4 | SCREW M6S ISO 4017 M6X12 A480 | |
| 620 | 312105-0451 | | 14 | SCREW M6S ISO 4017 M8X20 A480 | |
| 630 | 312105-0453 | | 12 | SCREW M6S ISO 4017 M8X25 A480 | |
| 640 | 312105-0495 | | 8 | SCREW M6S ISO 4017 M10X30 A480 | |
| 650 | 312125-0323 | | 1 | SCREW ISO 1207 M5X8 A4 | |
| 660 | 312125-0331 | | 2 | SCREW ISO 1207 M5X20 A4 | |
| 680 | 312605-0318 | | 12 | HEXAGON NUT, M6M M8 A280 | |
| 690 | 312605-0320 | | 8 | HEXAGON NUT, M6M M10 A280 | |
| 700 | 315105-0146 | | 2 | WASHER BRB 5,3X10 RFR | |
| 710 | 315229-0206 | | 4 | GASKET 60,2X68,2X3,7 MM 2"1/2 | |
| 720 | 90459-6634 | | 1 | HOOD 16 B TOP ENTRY, 19 30 016 1421 | |
| 730 | 90458-0308 | | 1 | CABLE GLAND, M25X1,5, NO.5311 1030 | |
| 740 | 90110-0054 | | 1 | MALE INSERT HAN 6 HSB 09 31 006 2601 | |
| U70B2610 | 90326-0051 | | 1 | THERMOCOUPLE, 12826-33 | |
| U70R0450 | 90600-2007 | | 1 | HEATING ELEM.15KW 3X230/400V,T90600-2007 | |
| U70W0450 | 351120-0267 | MM | 5500 | CABLE SILFLEX SIHF 4X6 00460333 | |
| U70W2610 | 90220-0034 | MM | 6000 | THERMOCABLE TEX/SITW-20F-KX 2X0,5MM2 | |

Machine Type | Group Description | Used-In | Group Number | Page No

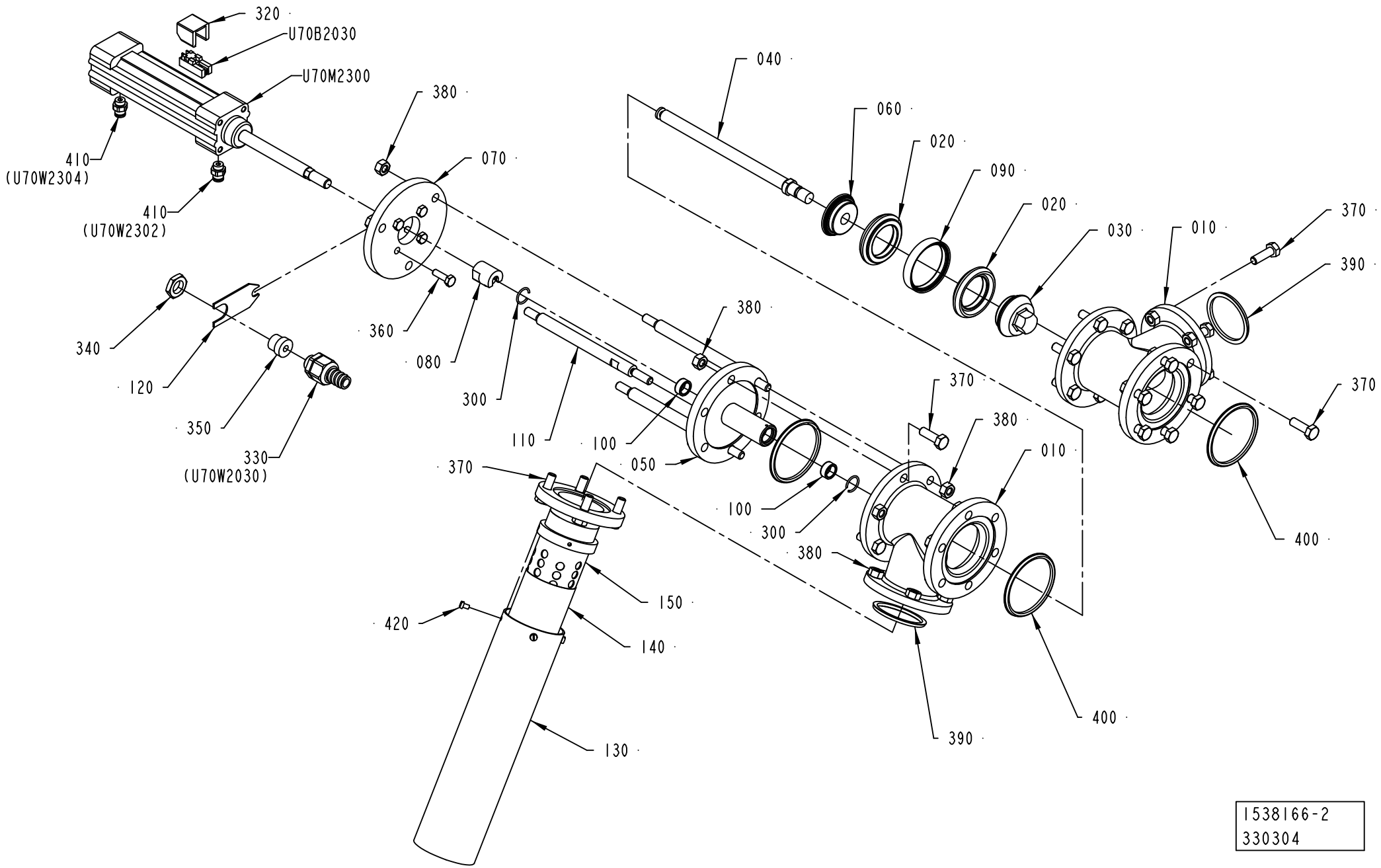
320
U70B2030
U70M2300
380
070
040
060
020
090
020
030
010
370
390
410
(U70W2304)
410
(U70W2302)
340
120
350
330
(U70W2030)
360
080
300
110
100
050
380
370
380
010
370
370
100
300
380
400
150
420
140
130
390
400
1538166-2
330304

ECM: 333774 - 20080408
Group number: 1538166-0200
Assembly Drawing: 1538166-2_1_AA

| Pos | Part No | UN | Qty | Description | Page No |
|---|---|---|---|---|---|
| - | | | | | |
| 010 | 1036187-0000 | | 2 | T-PIPE | |
| 020 | 530589-0000 | | 2 | SEAL RING | |
| 030 | 2826442-0000 | | 1 | VALVE CONE | |
| 040 | 1036188-0000 | | 1 | SHAFT | |
| 050 | 1036189-0000 | | 1 | SPINDEL GUIDE | |
| 060 | 1036191-0000 | | 1 | SEAL HOLDER | |
| 070 | 1036193-0000 | | 1 | CYLINDER BRACKET | |
| 080 | 441871-0000 | | 1 | PENDULUM SUSPENSION | |
| 090 | 530599-0000 | | 1 | RING | |
| 100 | 532349-0000 | | 2 | PLAIN BEARING | |
| 110 | 1036192-0000 | | 3 | SPACER ROD | |
| 120 | 1036293-0000 | | 1 | HOLDER | |
| 130 | 1511503-0000 | | 1 | PIPE | |
| 140 | 1511755-0000 | | 1 | NET | |
| 150 | 1517482-0000 | | 1 | TUBE | |
| 300 | 90141-0022 | | 2 | SNAP RING B 16 | |
| 320 | 90450-0669 | | 1 | SENSOR, BRACKET SERIES 168 | |
| 330 | 353243-0001 | | 1 | HOSE GLAND W/O INSERT PG9 EXTENDED | |
| 340 | 90099-0104 | | 1 | NUT, PR 15,2 (PG9) | |
| 350 | 353249-0008 | | 1 | INSERT, SINGLE HOLE, EK 152/7 | |
| 360 | 312105-0370 | | 4 | SCREW M6S ISO 4017 M6X20 A480 | |
| 370 | 312105-0453 | | 23 | SCREW M6S ISO 4017 M8X25 A480 | |
| 380 | 312605-0318 | | 29 | HEXAGON NUT, M6M M8 A280 | |
| 390 | 315229-0205 | | 2 | GASKET 47,5X55,5X3,7 MM 2 INCH | |
| 400 | 315229-0206 | | 3 | GASKET 60,2X68,2X3,7 MM 2"1/2 | |
| 410 | 342722-0202 | | 2 | PIPE COUPLING 1/8" D=6MM | |
| 420 | 312125-0285 | | 4 | SCREW ISO 1207 M4X6 A4 | |
| U70B2030 | 90457-0047 | | 1 | SENSOR 2750-1-5111-1 W.ADAPTER PNP | |
| U70M2300 | 90450-0281 | | 1 | DOUBLE ACTING,PROF.CYL 32-80 | |

| Pos | Part No | UN | Qty | Description | Page No |
|---|---|---|---|---|---|

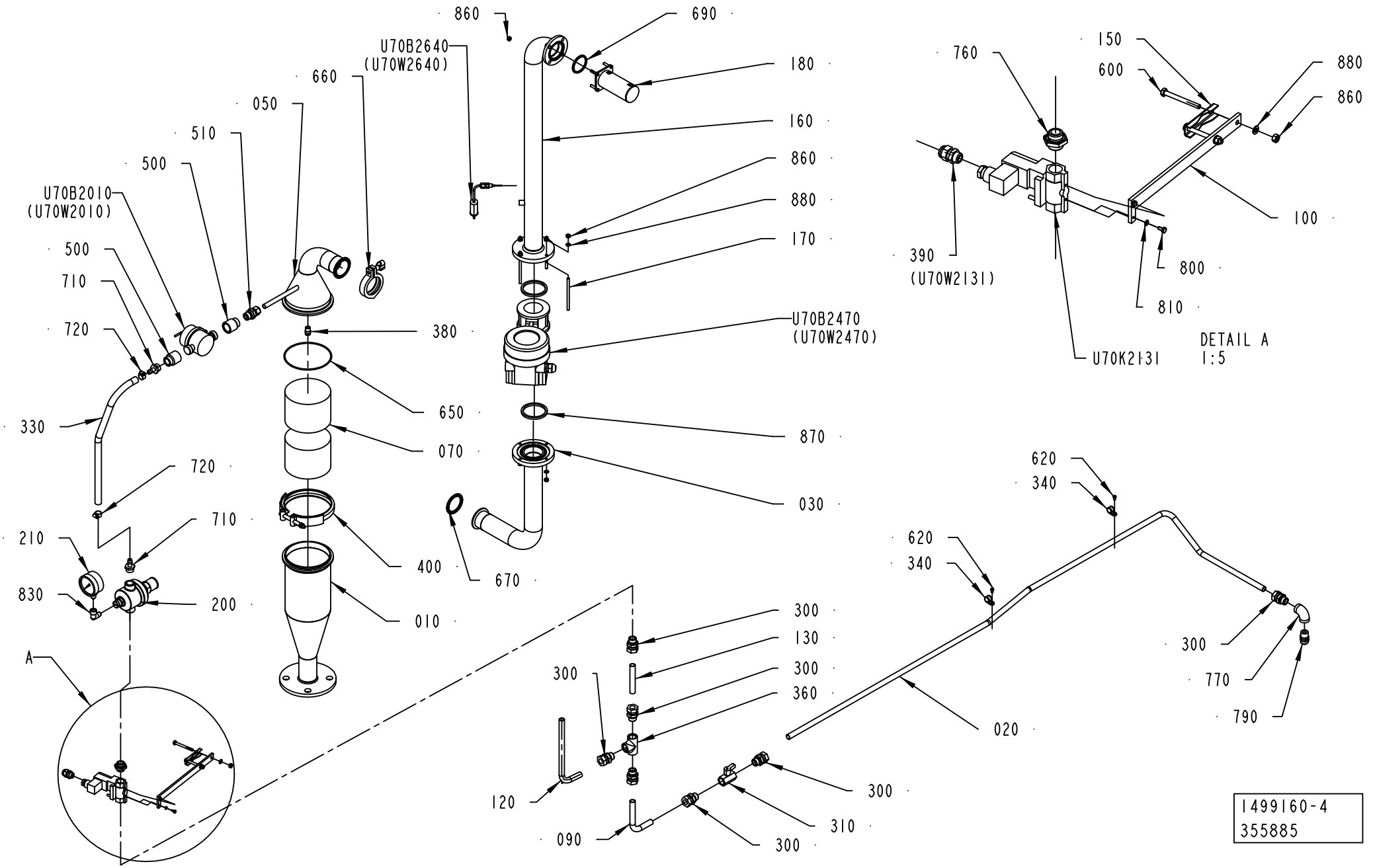
860
690
U70B2640
(U70W2640)
180
660
050
160
510
860
500
880
U70B2010
(U70W2010)
170
500
710
720
380
U70B2470
(U70W2470)
650
330
870
720
070
710
030
210
400
670
830
200
010
A
300
130
300
360
300
120
310
090
300
300
150
600
760
880
860
100
390
(U70W2131)
800
810
U70K2131
DETAIL A
1:5
620
340
620
340
300
770
790
020
1499160-4
355885

ECM: 363081 - 20081001
Group number: 1499160-0300
Assembly Drawing: 1499160-4_1_AD

| Pos | Part No | UN | Qty | Description | Page No |
|---|---|---|---|---|---|
| - | | | | | |
| 010 | 2691499-0000 | | 1 | CONTAINER | |
| 020 | 2851885-0000 | | 1 | PIPE | |
| 030 | 2790904-0000 | | 1 | PIPE | |
| 050 | 2691501-0000 | | 1 | UPPER SECTION | |
| 070 | 546929-0000 | | 2 | FILTER | |
| 090 | 2519437-0000 | | 1 | TUBE | |
| 100 | 2833224-0000 | | 1 | HOLDER | |
| 120 | 2936350-0000 | | 1 | TUBE | |
| 130 | 2519440-0000 | | 1 | TUBE | |
| 150 | 1036811-0000 | | 1 | CLAMP | |
| 160 | 2790905-0000 | | 1 | PIPE | |
| 170 | 2685350-0000 | | 4 | THREADED ROD | |
| 180 | 2685284-0000 | | 1 | FILTER | |
| 200 | 90459-2804 | | 1 | REDUCING VALVE G1/2", 51.04.70 | |
| 210 | 90043-0082 | | 1 | PRESSURE GAUGE, 2740, D=63 MM | |
| 300 | 90030-0188 | | 7 | CONN. STR. GA-15-G1/2 | |
| 310 | 90187-0062 | | 1 | BALL VALVE G1/2, NPBR | |
| 330 | 90166-0121 | MM | 550 | HOSE | |
| 340 | 90165-0039 | | 2 | PIPE CLAMP D=15 MM, GSK15/12 | |
| 360 | 90330-0049 | | 1 | T-PIPE, INT. THREAD, R-221R1/2 | |
| 380 | 90459-0106 | | 1 | SPRAY NOZZLE 103 DEG B1/4 HH - SS 14W | |
| 390 | 352103-0101 | | 1 | CABLE GLAND, ST 9, PR15,2/PG9 | |
| 400 | 90132-0030 | | 1 | SUPORTE MV 87177 KS 580T | |
| 410 | 90144-0073 | | 1 | TREBOFLON-TAPE W=13MM | |
| 420 | 90157-0037 | | 1 | THREAD SEALANT LOCTITE 542 | |
| 500 | 90330-0022 | | 2 | SLEEVE, REDUCTION, INT, R-202 3/4X1/2 | |
| 510 | 90458-2006 | | 1 | CONN. STR., 12-R1/2 | |
| 600 | 312105-0382 | | 2 | SCREW M6S ISO 4014 M6X60 A480 | |
| 620 | 312125-0323 | | 2 | SCREW ISO 1207 M5X8 A4 | |
| 650 | 315204-0317 | | 1 | O-RING 129,5X3 MM | |
| 660 | 342840-0105 | | 1 | CLAMPING PIECE | |
| 670 | 342850-0405 | | 1 | GASKET 47,8X62,6X5,2 MM 2" FDA | |
| 690 | 315229-0205 | | 1 | GASKET 47,5X55,5X3,7 MM 2 INCH | |
| 710 | 342901-0105 | | 2 | HOSE NIPPLE, EXT.THR. R1/2-12 MM | |
| 720 | 342991-0101 | | 2 | HOSE CLIP,WORM DRIVE TYPE (13)-16 | |
| 760 | 479261-0000 | | 1 | NIPPLE | |
| 770 | 90330-0020 | | 1 | ELBOW, 90 INT. THREAD, R-2221/2 | |
| 790 | 342920-0151 | | 1 | STRAIGHT COUPL.,EXT.THREAD.15/12,5-R1/2" | |
| 800 | 312105-0287 | | 2 | SCREW M6S ISO 4017 M4X8 A470 | |
| 810 | 315105-0136 | | 2 | WASHER BRB 4,3X8 RFR | |
| 830 | 90140-0013 | | 1 | ELBOW, 90 INT/EXT, 2020-1/4-1/4 | |
| 850 | 315105-0153 | | 12 | WASHER BRB 6,4X12 RFR | |
| 860 | 312605-0316 | | 12 | HEXAGON NUT, M6M M6 A280 | |
| 870 | 12242-0004 | | 2 | WASHER 73,5X63,5X5,5 | |
| 880 | 315105-0153 | | 2 | WASHER BRB 6,4X12 RFR | |
| 890 | 312605-0316 | | 2 | HEXAGON NUT, M6M M6 A280 | |
| U70B2010 | 90243-0245 | | 1 | MEASURING INSTRUMENT | |
| U70B2470 | 90459-5180 | | 1 | FLOW METER, PROWIRL 72W50-SD0BA1AAA0AW | |
| U70B2640 | 90326-0051 | | 1 | THERMOCOUPLE, 12826-33 | |
| U70K2131 | 90042-0172 | | 1 | SOLENOID VALVE 4023/1005/1032 24VDC | |
| | *90042-0467* | | *1* | *COIL 24VDC GSR* | |
| U70W2131 | 351150-0403 | MM | 5100 | CABLE OLFLEX 3X0,75 MM2 LIGHT/GREY | |
| U70W2470 | 351150-0403 | MM | 3000 | CABLE OLFLEX 3X0,75 MM2 LIGHT/GREY | |
| U70W2640 | 90220-0034 | MM | 7200 | THERMOCABLE TEX/SITW-20F-KX 2X0,5MM2 | |

| Machine Type | Group Description | Used-In | Group Number | Page No |
|---|---|---|---|---|

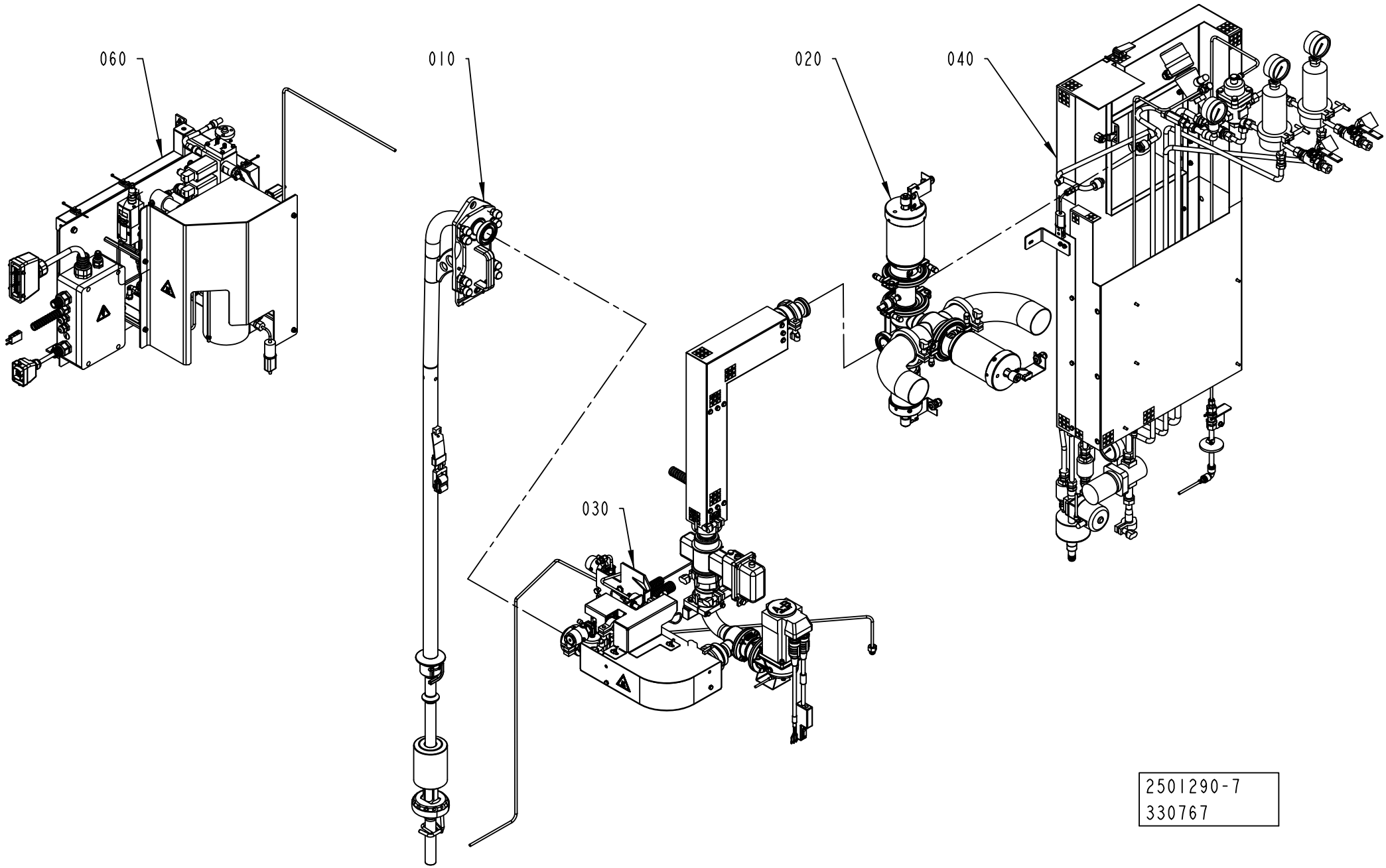
060
010
020
040
030
2501290-7
330767

ECM: 353983 - 20080706
Group number: 2501290-0300
Assembly Drawing: 2501290-7_1_AB

| Pos | Part No | UN | Qty | Description | Page No |
|---|---|---|---|---|---|
| **A3/FLEX HI (See drawing on page: 1-194)** | | | | | |
| 010 | 2501310-0200 | | 1 | FILLING PIPE | **1-197, 1-199, 1-201** |
| 060 | 2656910-0300 | | 1 | HEAD SPACE BY INJECTION | **1-203** |
| **A3/FLEX NOHI (See drawing on page: 1-194)** | | | | | |
| 010 | 2501310-0200 | | 1 | FILLING PIPE | **1-197, 1-199, 1-201** |
| **Common Parts** | | | | | |
| 020 | 1558494-0200 | | 1 | PRODUCT VALVE | **1-215** |
| 030 | 2507060-0300 | | 1 | PRODUCT LINES | **1-229, 1-231** |
| 040 | 2545651-0400 | | 1 | STEAM SYSTEM | **1-239** |

| Pos | Part No | UN | Qty | Description | Page No |
|---|---|---|---|---|---|

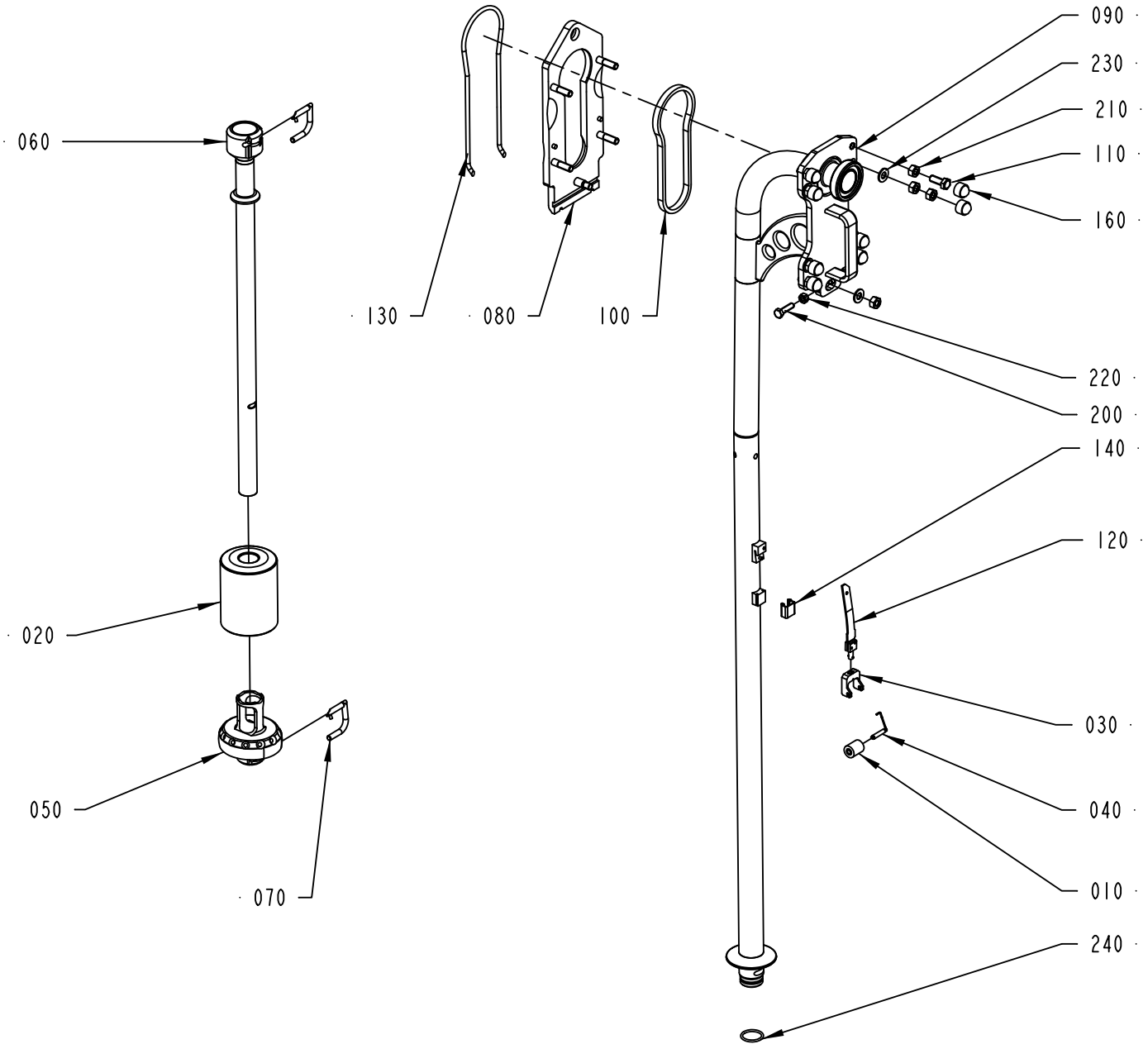


| 2501310-1 |
| --- |
| ECM 113330 |

ECM: 360062 - 20081001
Group number: 2501310-0200
Assembly Drawing: 2501310-1_1_AA

This list covers pages from 1-196 to 1-201

| Pos | Part No | UN | Qty | Description | Page No |
|---|---|---|---|---|---|
| **TBA 0500B, TBA 1000B NODIMC (See drawing on page: 1-200)** | | | | | |
| 010 | 232979-0000 | | 2 | PRESSURE ROLLER (PAK OF 10) | |
| 020 | 2597531-0000 | | 1 | 5019011FLOAT | |
| | *2878907-0000* | | *1* | *CUTTING ARM* | |
| 030 | 2846311-0000 | | 1 | FORK | |
| 040 | 1538953-0000 | | 1 | SHAFT | |
| 050 | 2563294-0000 | | 1 | PRESSURE FLANGE | |
| 060 | 2826464-0000 | | 1 | FILLING PIPE | |
| 070 | 2809846-0000 | | 1 | STOP PIN | |
| 090 | 2826478-0000 | | 1 | FILLING PIPE | |
| 120 | 2946917-0000 | | 1 | SPRING | |
| 140 | 2572071-0000 | | 1 | HOOD | |
| 170 | 24928-0000 | | 4 | LOCKING RUBBER | |
| 185 | 2638077-0000 | | 2 | SHAFT | |
| 190 | 2846309-0000 | | 1 | BRACKET | |
| 240 | 315204-0219 | | 1 | O-RING 29,2X3 MM | |
| 250 | 2803986-0000 | | 1 | STOP PIN | |
| 260 | 2803987-0000 | | 1 | STOP PIN | |
| 270 | 2886173-0000 | | 1 | LOCKING RING | |
| **TBA 0500SQ, TBA 1000SQ (See drawing on page: 1-200)** | | | | | |
| 010 | 257330-0000 | | 2 | PRESSURE ROLLER (10 PCS) | |
| 020 | 2826452-0000 | | 1 | FLOAT | |
| 030 | 2887735-0000 | | 1 | FORK | |
| 040 | 2634972-0000 | | 1 | SHAFT | |
| 050 | 2601469-0000 | | 1 | PRESSURE FLANGE | |
| 060 | 2826463-0000 | | 1 | FILLING PIPE | |
| 070 | 2809846-0000 | | 1 | STOP PIN | |
| 090 | 2826478-0000 | | 1 | FILLING PIPE | |
| 120 | 2826398-0000 | | 1 | SPRING | |
| 140 | 2787568-0000 | | 1 | HOOD | |
| 170 | 24928-0000 | | 4 | LOCKING RUBBER | |
| 185 | 499011-0000 | | 2 | SHAFT | |
| 190 | 2887736-0000 | | 1 | BRACKET | |
| 240 | 315204-0219 | | 1 | O-RING 29,2X3 MM | |
| 250 | 2803986-0000 | | 1 | STOP PIN | |
| 260 | 2803987-0000 | | 1 | STOP PIN | |
| 270 | 2886173-0000 | | 1 | LOCKING RING | |
| **TBA 1000B DIMC/FLEX (See drawing on page: 1-196)** | | | | | |
| 010 | 232979-0000 | | 1 | PRESSURE ROLLER (PAK OF 10) | |
| 020 | 2597531-0000 | | 1 | 5019011FLOAT | |
| | *2878907-0000* | | *1* | *CUTTING ARM* | |
| 030 | 1348048-0000 | | 1 | FORK | |
| 040 | 2523268-0000 | | 1 | SHAFT | |
| 050 | 2563294-0000 | | 1 | PRESSURE FLANGE | |
| 060 | 2826464-0000 | | 1 | FILLING PIPE | |
| 070 | 2809846-0000 | | 1 | STOP PIN | |
| 090 | 2826478-0000 | | 1 | FILLING PIPE | |
| 120 | 2826393-0000 | | 1 | SPRING | |
| 140 | 14600-0000 | | 1 | HOOD | |
| 240 | 315204-0219 | | 1 | O-RING 29,2X3 MM | |
| 250 | 2803986-0000 | | 1 | STOP PIN | |
| 260 | 2803987-0000 | | 1 | STOP PIN | |
| 270 | 2886173-0000 | | 1 | LOCKING RING | |
| **TBA 1000S (See drawing on page: 1-200)** | | | | | |
| 010 | 257330-0000 | | 2 | PRESSURE ROLLER (10 PCS) | |
| 020 | 2597531-0000 | | 1 | 5019011FLOAT | |
| | *2878907-0000* | | *1* | *CUTTING ARM* | |
| 030 | 2659364-0000 | | 1 | FORK | |
| 040 | 2634972-0000 | | 1 | SHAFT | |
| 050 | 2826458-0000 | | 1 | PRESSURE FLANGE | |
| 060 | 2826463-0000 | | 1 | FILLING PIPE | |
| 070 | 2809846-0000 | | 1 | STOP PIN | |
| 090 | 2826478-0000 | | 1 | FILLING PIPE | |
| 120 | 2826399-0000 | | 1 | SPRING | |
| 140 | 2572071-0000 | | 1 | HOOD | |
| 170 | 24928-0000 | | 4 | LOCKING RUBBER | |
| 185 | 499011-0000 | | 2 | SHAFT | |
| 190 | 2672995-0000 | | 1 | BRACKET | |
| 240 | 315204-0219 | | 1 | O-RING 29,2X3 MM | |
| 250 | 2803986-0000 | | 1 | STOP PIN | |
| 260 | 2803987-0000 | | 1 | STOP PIN | |
| 270 | 2886173-0000 | | 1 | LOCKING RING | |
| **TBA 1500S (See drawing on page: 1-198)** | | | | | |
| 010 | 232979-0000 | | 1 | PRESSURE ROLLER (PAK OF 10) | |
| 020 | 2597531-0000 | | 1 | 5019011FLOAT | |
| | *2878907-0000* | | *1* | *CUTTING ARM* | |
| 030 | 1348048-0000 | | 1 | FORK | |
| 040 | 2523268-0000 | | 1 | SHAFT | |
| 050 | 2598017-0000 | | 1 | PRESSURE FLANGE | |
| 060 | 2974013-0000 | | 1 | FILLING PIPE | |
| 070 | 2809846-0000 | | 1 | STOP PIN | |
| 090 | 2826478-0000 | | 1 | FILLING PIPE | |
| 120 | 2826393-0000 | | 1 | SPRING | |
| 140 | 14600-0000 | | 1 | HOOD | |

Machine Type | Group Description | Used-In | Group Number | Page No

# FILLING PIPE



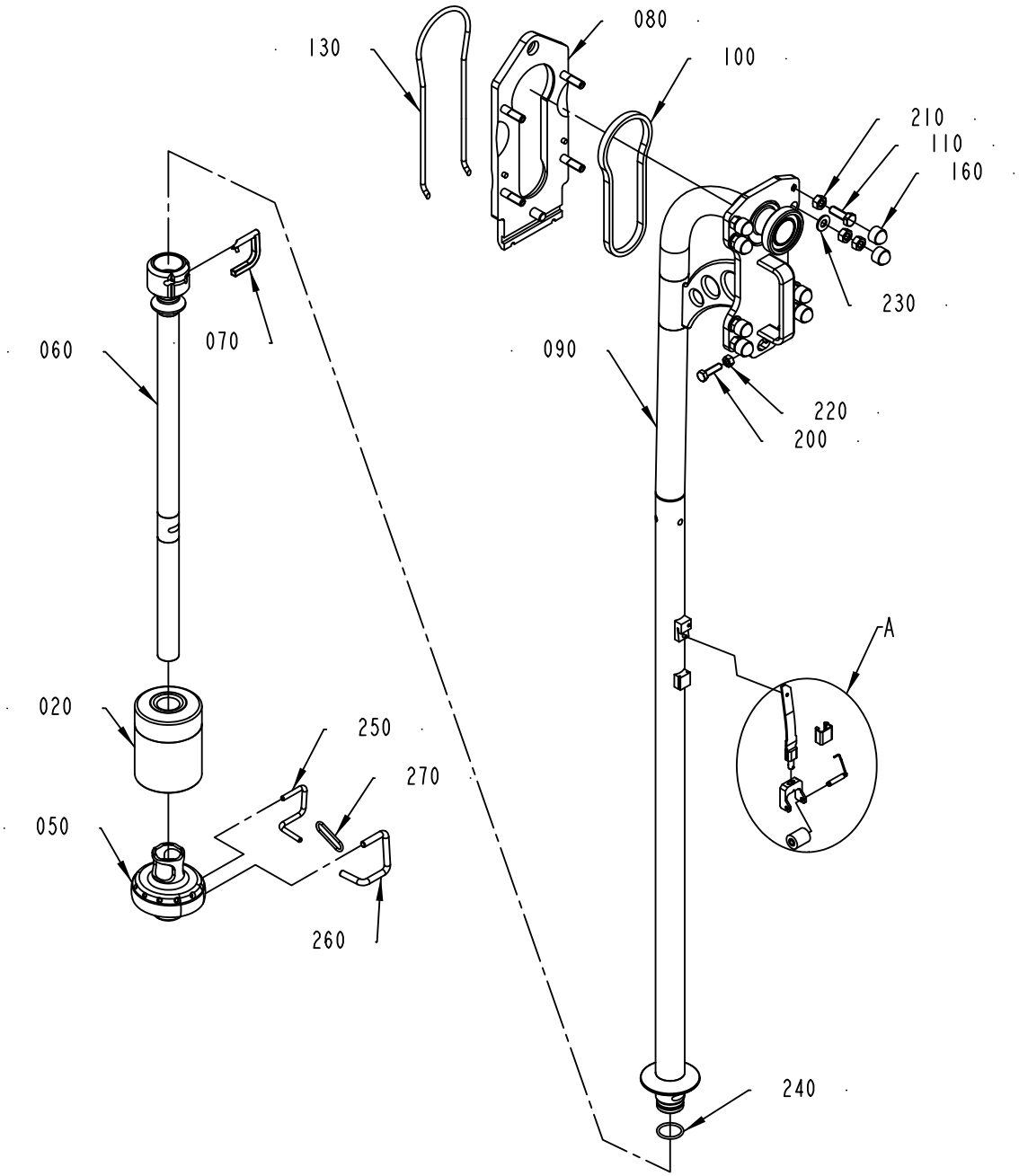


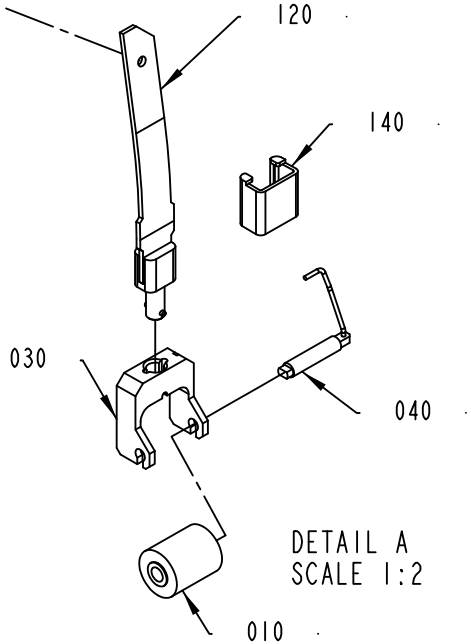


2501310-7
324761

ECM: 360062 - 20081001
Group number: 2501310-0200
Assembly Drawing: 2501310-7_1_AA

This list covers pages from 1-196 to 1-201

| Pos | Part No | UN | Qty | Description | Page No |
|---|---|---|---|---|---|
| **TBA 1500S (Cont'd) (See drawing on page: 1-198)** | | | | | |
| 240 | 315204-0219 | | 1 | O-RING 29,2X3 MM | |
| 250 | 2803986-0000 | | 1 | STOP PIN | |
| 260 | 2803987-0000 | | 1 | STOP PIN | |
| 270 | 2886173-0000 | | 1 | LOCKING RING | |
| **TBA 2000S (See drawing on page: 1-200)** | | | | | |
| 010 | 232979-0000 | | 2 | PRESSURE ROLLER (PAK OF 10) | |
| 020 | 2634995-0000 | | 1 | FLOAT | |
| 030 | 1538952-0000 | | 1 | FORK | |
| 040 | 1538953-0000 | | 1 | SHAFT | |
| 050 | 2641297-0000 | | 1 | PRESSURE FLANGE | |
| 060 | 2974014-0000 | | 1 | FILLING PIPE | |
| 070 | 2809849-0000 | | 1 | STOP PIN | |
| 090 | 2961246-0000 | | 1 | FILLING PIPE | |
| 120 | 2826397-0000 | | 1 | SPRING | |
| 140 | 2672994-0000 | | 1 | HOOD | |
| 170 | 24928-0000 | | 4 | LOCKING RUBBER | |
| 185 | 2638077-0000 | | 2 | SHAFT | |
| 190 | 2685285-0000 | | 1 | BRACKET | |
| 240 | 315204-0223 | | 1 | O-RING 39,2X3 MM | |
| 250 | 2878600-0000 | | 1 | PIN | |
| 260 | 2878601-0000 | | 1 | PIN | |
| 270 | 2852104-0000 | | 1 | LOCKING RING | |
| **TPA 1000SQ, TPA 0750SQ (See drawing on page: 1-200)** | | | | | |
| 010 | 2607089-0000 | | 2 | PRESSURE ROLLER | |
| 020 | 2826457-0000 | | 1 | FLOAT | |
| 030 | 2715652-0000 | | 1 | FORK | |
| 040 | 2634972-0000 | | 1 | SHAFT | |
| 050 | 2570017-0000 | | 1 | PRESSURE FLANGE | |
| 060 | 2974012-0000 | | 1 | FILLING PIPE | |
| 070 | 2809846-0000 | | 1 | STOP PIN | |
| 090 | 2832553-0000 | | 1 | FILLING PIPE | |
| 120 | 2826390-0000 | | 1 | SPRING | |
| 140 | 2572071-0000 | | 1 | HOOD | |
| 170 | 24928-0000 | | 4 | LOCKING RUBBER | |
| 185 | 499011-0000 | | 2 | SHAFT | |
| 190 | 2715569-0000 | | 1 | BRACKET | |
| 240 | 315204-0219 | | 1 | O-RING 29,2X3 MM | |
| 250 | 2803986-0000 | | 1 | STOP PIN | |
| 260 | 2803987-0000 | | 1 | STOP PIN | |
| 270 | 2886173-0000 | | 1 | LOCKING RING | |
| **Common Parts** | | | | | |
| 080 | 2500082-0000 | | 1 | MOUNTING PLATE | |
| 100 | 2507048-0000 | | 1 | GASKET | |
| 110 | 312105-0495 | | 4 | SCREW M6S ISO 4017 M10X30 A480 | |
| 130 | 2500071-0000 | | 1 | O-RING | |
| 160 | 90459-0729 | | 8 | HEXAGONAL PROTECTIVE CAP GPN 1000 | |
| 200 | 312105-0455 | | 2 | SCREW M6S ISO 4017 M8X30 A480 | |
| 210 | 312605-0320 | | 12 | HEXAGON NUT, M6M M10 A280 | |
| 220 | 312605-0318 | | 2 | HEXAGON NUT, M6M M8 A280 | |
| 230 | 315105-0173 | | 4 | WASHER BRB 10,5X22 RFR | |

# FILLING PIPE



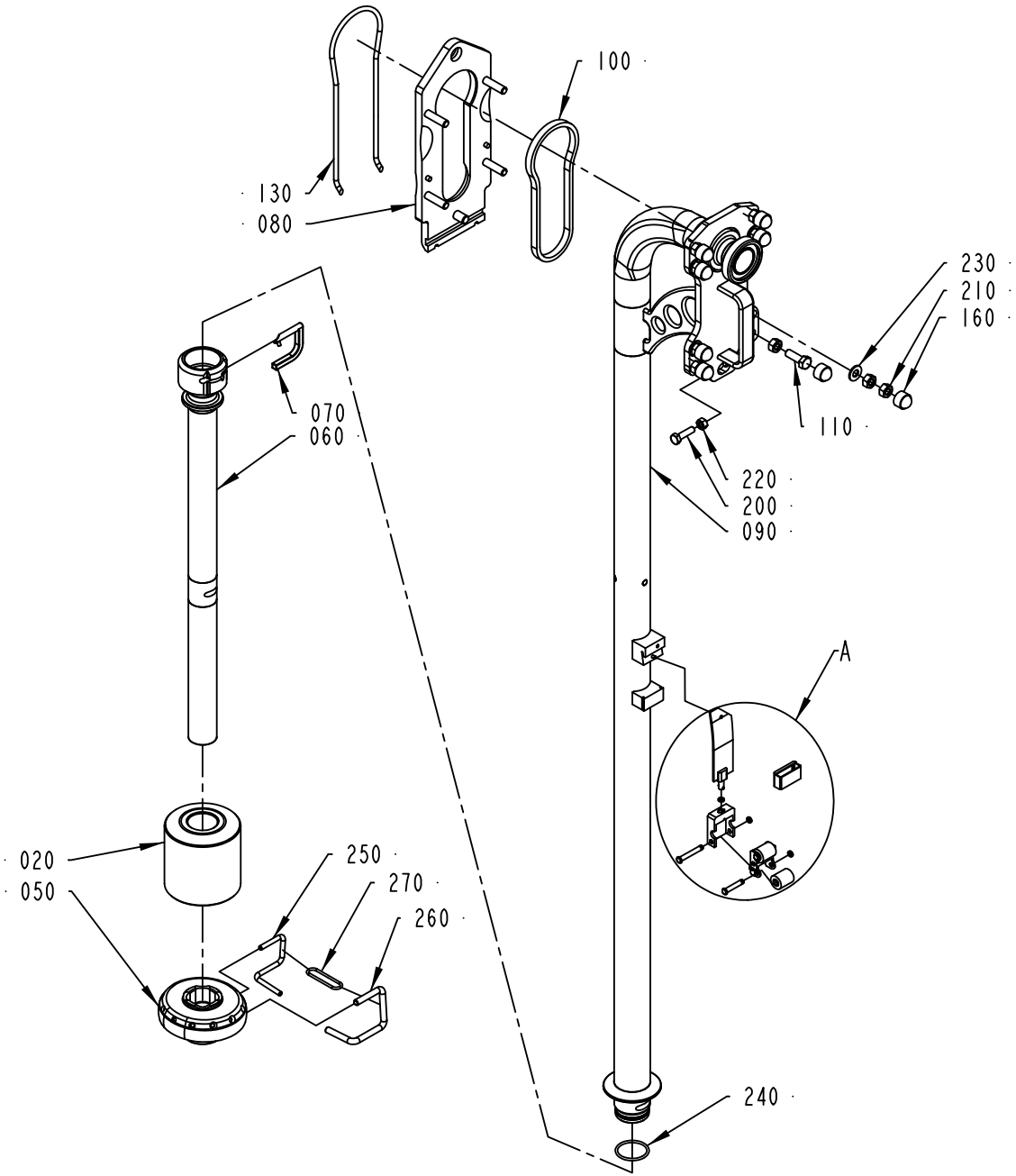


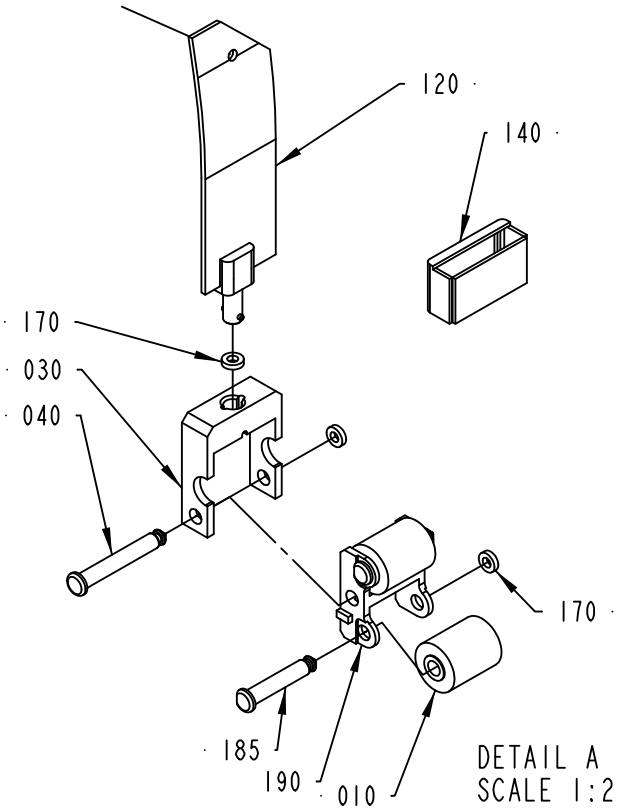


2501310-9
324761

ECM: 360062 - 20081001
Group number: 2501310-0200
Assembly Drawing: 2501310-9_1_AA

This list covers pages from 1-196 to 1-201

| Pos | Part No | UN | Qty | Description | Page No |
|---|---|---|---|---|---|
| **SEE PREVIOUS LISTS PAGES: 1-197, 1-199.** | | | | | |

| Pos | Part No | UN | Qty | Description | Page No |
|---|---|---|---|---|---|

# HEAD SPACE BY INJECTION



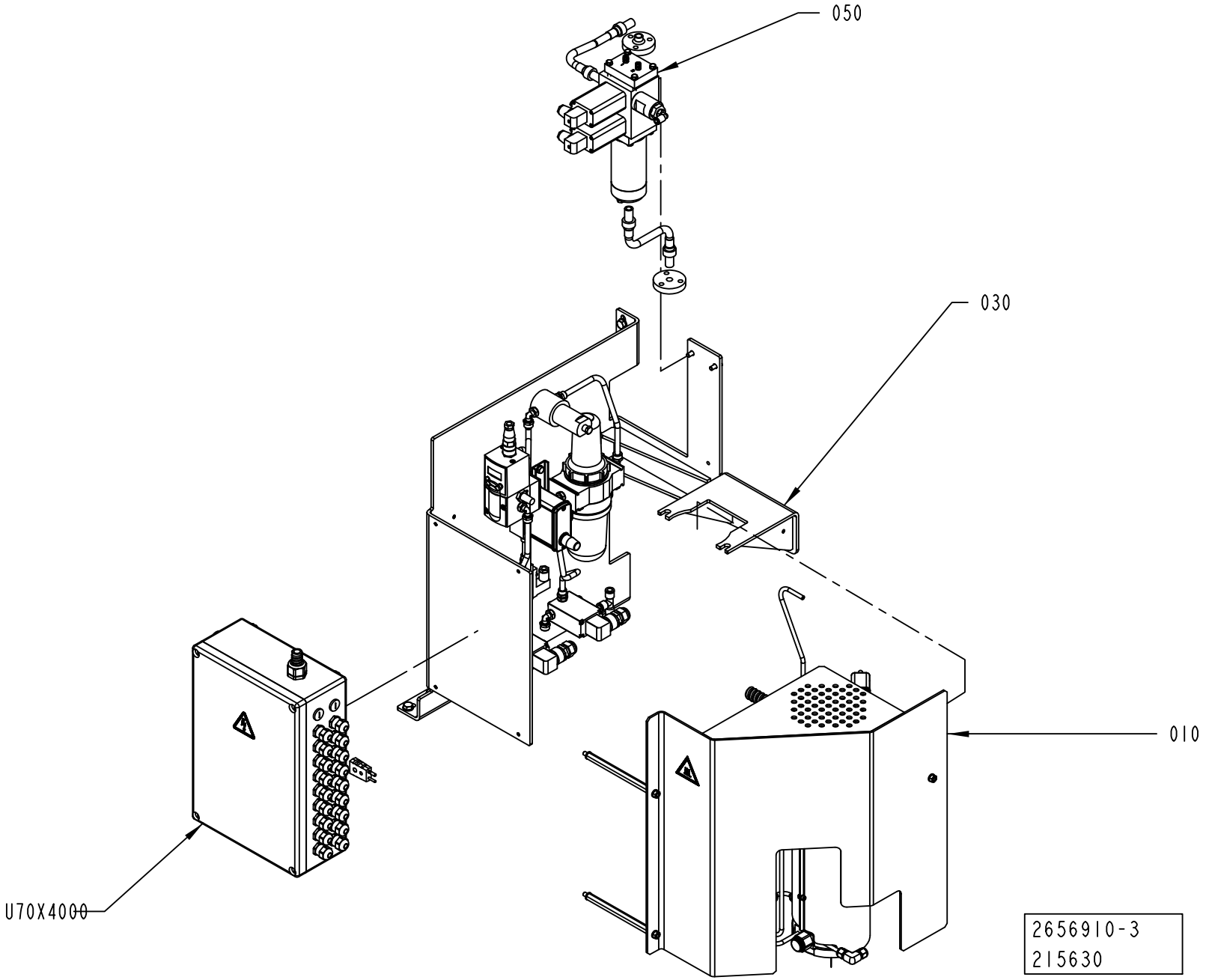

ECM: 317701 - 20070713
Group number: 2656910-0300
Assembly Drawing: 2656910-3_1_AA

| Pos | Part No | UN | Qty | Description | Page No |
|---|---|---|---|---|---|
| - | | | | | |
| 005 | 2895150-0000 | | 1 | PNEUMATIC DIAGRAM | |
| 010 | 2696118-0200 | | 1 | HEATER ..... | **1-205** |
| 030 | 2696120-0200 | | 1 | PNEUMATIC PANEL ..... | **1-207** |
| 050 | 2539458-0200 | | 1 | SPRAY TANK ..... | **1-209** |
| U70X4000 | 2847233-0100 | | 1 | CONNECTION BOX ..... | **1-211** |

| Pos | Part No | UN | Qty | Description | Page No |
|---|---|---|---|---|---|

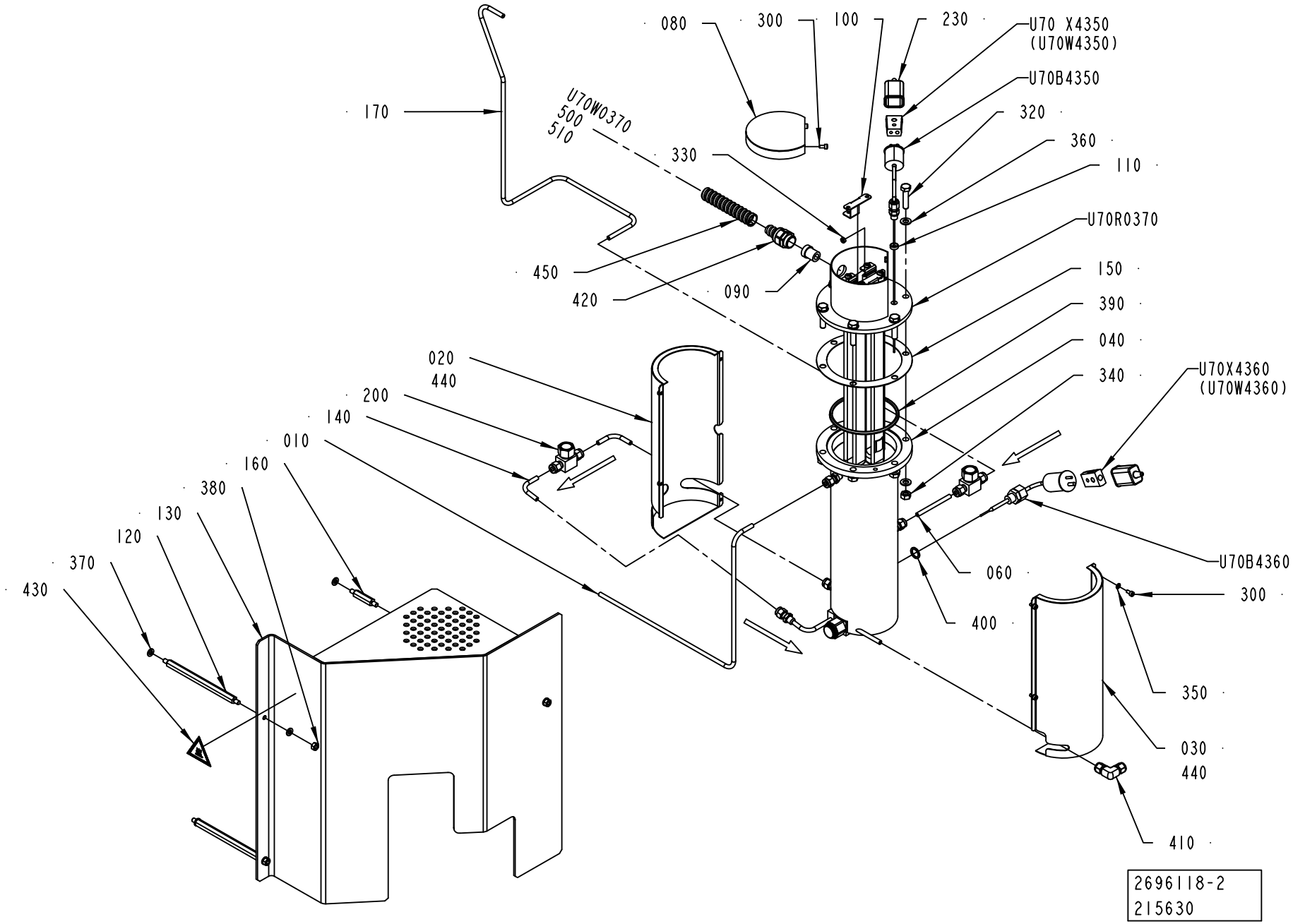
080
300
100
230
U70 X4350
(U70W4350)
U70B4350
320
360
110
U70R0370
150
390
040
340
U70X4360
(U70W4360)
U70B4360
300
350
030
440
410
060
400
170
U70W0370
500
510
330
450
420
090
020
440
200
140
010
160
380
130
120
370
430
2696118-2
215630

ECM: 317700 - 20070713
Group number: 2696118-0200
Assembly Drawing: 2696118-2_1_AA

| Pos | Part No | UN | Qty | Description | Page No |
|---|---|---|---|---|---|
| - | | | | | |
| 010 | 2696119-0000 | | 1 | PIPE | |
| 020 | 2685340-0000 | | 1 | COVER | |
| 030 | 2685341-0000 | | 1 | COVER | |
| 040 | 2685314-0000 | | 1 | COIL | |
| | *90277-0407* | | *1* | *FILTER ELEMENT 60µ, SS-4F-K4-60* | |
| 060 | 2562307-0000 | | 1 | PIPE | |
| 080 | 2562315-0000 | | 1 | PLUG | |
| 090 | 90600-0976 | | 1 | INSERT, SINGLE HOLE, HI.TEMP, EK153I9 | |
| 100 | 2598084-0000 | | 2 | PLATE | |
| 110 | 2598085-0000 | | 1 | SPACER | |
| 120 | 2672975-0000 | | 2 | SPACER | |
| 130 | 2709219-0000 | | 1 | COVER | |
| 140 | 2736707-0000 | | 2 | PIPE | |
| 150 | 2685339-0000 | | 1 | GASKET | |
| 160 | 2709220-0000 | | 1 | SPACER | |
| 170 | 2685346-0000 | | 1 | PIPE | |
| 200 | 90230-0064 | | 2 | CHECK VALVE, 6 MM HIGH TEMP. | |
| 230 | 90326-0012 | | 2 | PROTECTIVE COVER, T31A4618 | |
| 300 | 312115-0287 | | 6 | SCREW ISO4762 M4X8 A4 80 | |
| 320 | 312109-0457 | | 6 | SCREW M6S ISO 4017 M8X35 A480 | |
| 330 | 312605-0312 | | 1 | HEXAGON NUT, M6M M4 A280 | |
| 340 | 312605-0318 | | 6 | HEXAGON NUT, M6M M8 A280 | |
| 350 | 315105-0136 | | 4 | WASHER BRB 4,3X8 RFR | |
| 360 | 315105-0165 | | 12 | WASHER BRB 8,4X16 RFR | |
| 370 | 315105-0153 | | 6 | WASHER BRB 6,4X12 RFR | |
| 380 | 312605-0316 | | 3 | HEXAGON NUT, M6M M6 A280 | |
| 390 | 315229-0208 | | 1 | GASKET 97,4X105,4X3,7 MM 4" | |
| 400 | 315234-0110 | | 1 | WASHER,PL.RND.CU.13,5/18 H=1,5 | |
| 410 | 90459-4511 | | 1 | CONN. ELBOW, 6 | |
| 420 | 90600-0975 | | 1 | HOSE GLAND W/O INSERT PG13,5 EXTENDED | |
| 430 | 359705-0007 | | 1 | WARNING SIGN ISO, HOT SURFACE | |
| 440 | 90411-0001 | M | 1 | INSULATING MAT | |
| 500 | 90459-3165 | M | 1 | CABLE OLFLON PTFE 1X4,72 MM² BLACK | |
| 510 | 90459-3154 | M | 1 | CABLE OLFLONPTFE 1X4,72 MM² YELLOW-GREEN | |
| U70B4350 | 90459-2122 | | 1 | THERMOCOUPLE, EN-5130060-0001 | |
| U70B4360 | 90326-0053 | | 1 | THERMOCOUPLE, 12826-35 | |
| U70R0370 | 2685342-0000 | | 1 | HEATING ELEMENT | |
| U70W0370 | 90459-3165 | M | 1 | CABLE OLFLON PTFE 1X4,72 MM² BLACK | |
| U70X4350 | 90326-0020 | | 1 | PLUG, FEMALE YELLOW CR-AL | |
| U70X4360 | 90326-0020 | | 1 | PLUG, FEMALE YELLOW CR-AL | |

| Pos | Part No | UN | Qty | Description | Page No |
|---|---|---|---|---|---|

Machine Type | Group Description | Used-In | Group Number | Page No

# PNEUMATIC PANEL



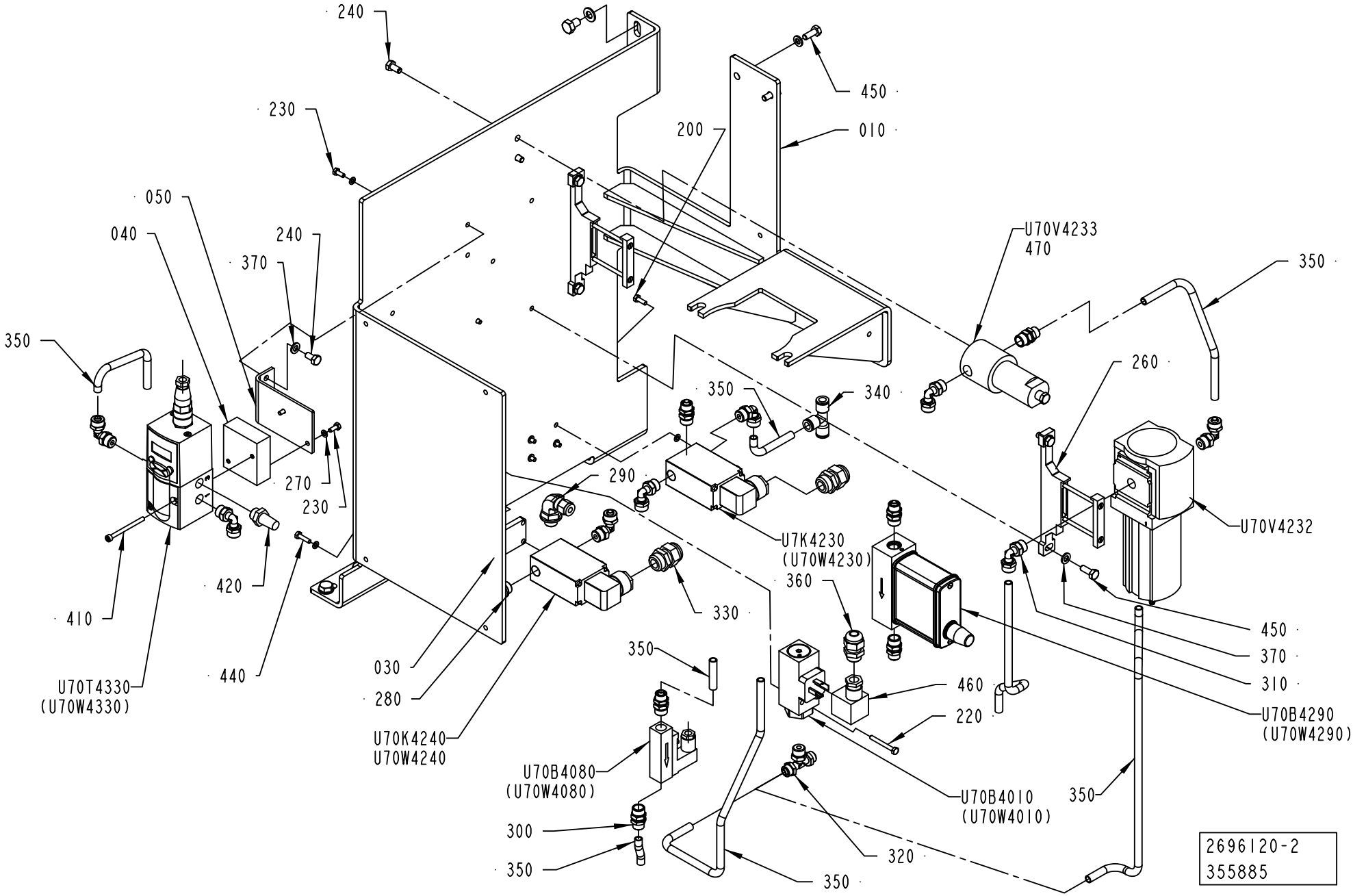

ECM: 365236 - 20081001
Group number: 2696120-0200
Assembly Drawing: 2696120-2_1_AB

| Pos | Part No | UN | Qty | Description | Page No |
|---|---|---|---|---|---|
| - | | | | | |
| 010 | 2847236-0000 | | 1 | BRACKET | |
| 030 | 2777968-0000 | | 1 | SPACER | |
| 040 | 2511330-0000 | | 1 | SPACER | |
| 050 | 2564606-0000 | | 1 | SUPPORT PLATE | |
| 200 | 312105-0291 | | 4 | SCREW M6S ISO 4017 M4X12 A470 | |
| 220 | 312105-0301 | | 2 | SCREW M6S ISO 4017 M4X35 A470 | |
| 230 | 312105-0289 | | 4 | SCREW M6S H4X10 A4 70 ISO4017/DIN933 | |
| 240 | 312105-0366 | | 4 | SCREW M6S ISO 4017 M6X12 A480 | |
| 260 | 90459-1858 | | 2 | BRACKET, MS6-WP | |
| 270 | 315105-0136 | | 16 | WASHER BRB 4,3X8 RFR | |
| 280 | 342713-0210 | | 1 | PLUG, EXT THREAD HEX SOCKET | |
| 290 | 90600-0731 | | 1 | ADJUSTABLE ELBOW CONNECTION,EXT 6-G1/4 | |
| 300 | 342921-0122 | | 6 | STRAIGHT COUPLING,EXT.THREADED 8/6-G1/4" | |
| 310 | 342931-0122 | | 8 | ELBOW 90 COUPL.,EXT.THREAD 8/6-G1/4" | |
| 320 | 342941-0122 | | 1 | T-COUPLING,EXT.THREAD 8/6-G1/4" | |
| 330 | 352103-0106 | | 2 | CABLE GLAND, ST 11, PR18,6/PG11 | |
| 340 | 342748-0103 | | 1 | T-CONNECTION 8MM | |
| 350 | 90166-0013 | MM | 2000 | TUBE 8 MM PA BLUE | |
| 360 | 352103-0101 | | 1 | CABLE GLAND, ST 9, PR15,2/PG9 | |
| 370 | 315105-0153 | | 8 | WASHER BRB 6,4X12 RFR | |
| 410 | 312115-0305 | | 2 | SCREW ISO4762 M4X50 A4 80 | |
| 420 | 346800-0110 | | 1 | SILENCER FILTER R1/4" | |
| 440 | 312105-0293 | | 4 | SCREW M6S ISO 4017 M4X16 A470 | |
| 450 | 312105-0368 | | 6 | SCREW M6S ISO 4017 M6X16 A480 | |
| 460 | 90110-0095 | | 1 | CONNECTOR 3 POLE + EARTH | |
| 470 | 90277-0324 | | 1 | FILTER CARTRIDGE 050-11-A | |
| U70B4010 | 90458-2241 | | 1 | PRESSURE SWITCH 0,5-10 BAR ADJUSTABLE | |
| U70B4080 | 90459-6215 | | 1 | FLOW SWITCH BFS-10-N-G1/4-MS-NO-ST | |
| U70B4290 | 90600-1154 | | 1 | FLOW METER,D-6230-HGB-BB-AV-99-0-N2/IP65 | |
| U70K4230 | 90042-0171 | | 1 | SOLENOID VALVE BURKERT | |
| | *90042-0466* | | *1* | *DIAPHRAGM 330.95.2 VITON* | |
| U70K4240 | 90042-0171 | | 1 | SOLENOID VALVE BURKERT | |
| | *90042-0466* | | *1* | *DIAPHRAGM 330.95.2 VITON* | |
| U70T4330 | 90459-1420 | | 1 | PROPORTIONAL VALVE 0 - 10V/0-6 BAR | |
| | *90458-1262* | | *1* | *CONNECTOR 131028001 FOR PROP. VALVE* | |
| U70V4232 | 90600-5548 | | 1 | FILTER, MS6-LFM-1/4-AUV | |
| U70V4233 | 90277-0323 | | 1 | FILTER HOUSING / ART.NO 95S6-1/4 S 5430 | |

| Pos | Part No | UN | Qty | Description | Page No |
|---|---|---|---|---|---|

Machine Type | Group Description | Used-In | Group Number | Page No

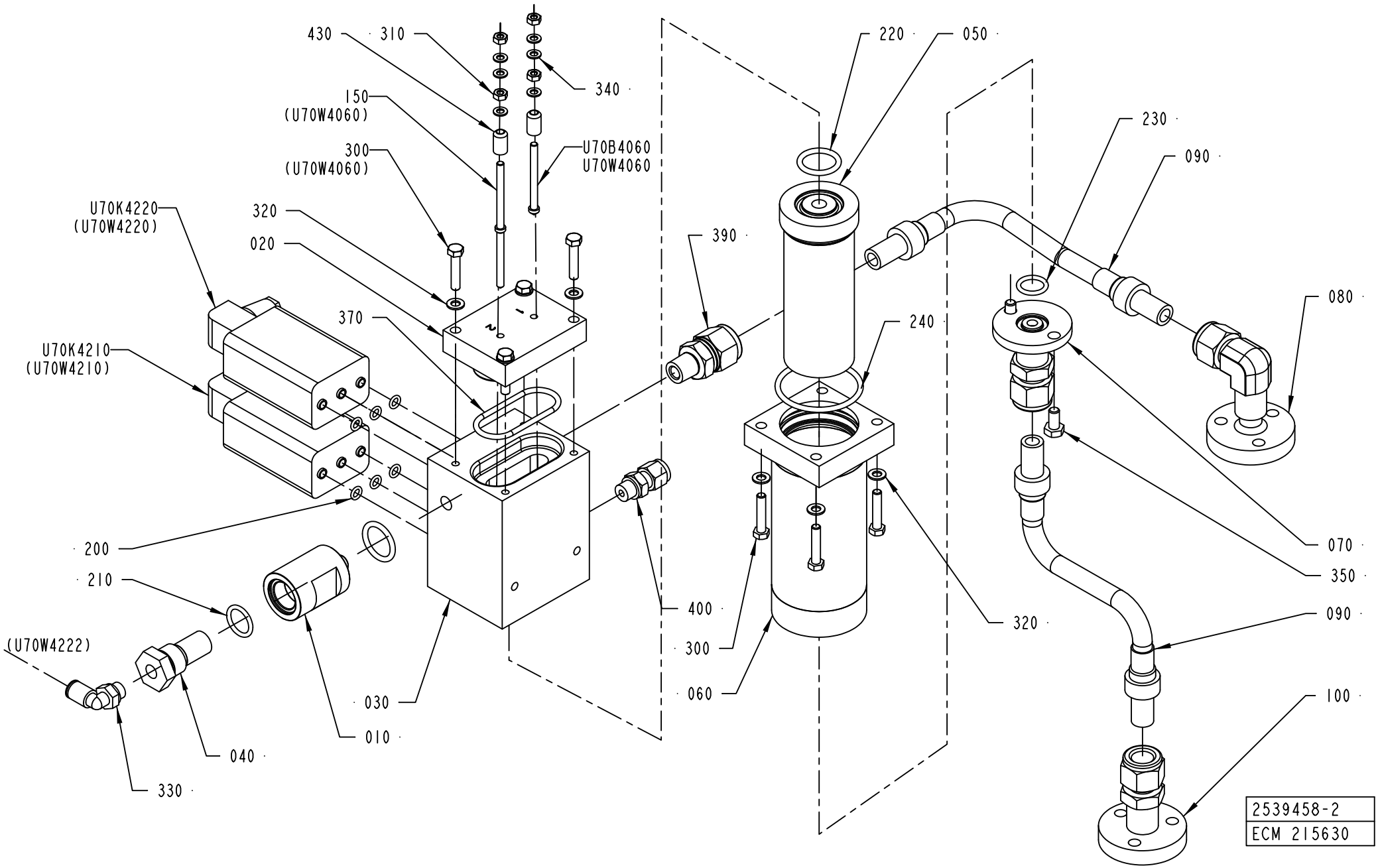
430
310
340
150
(U70W4060)
300
(U70W4060)
U70B4060
U70W4060
U70K4220
(U70W4220)
320
020
370
U70K4210
(U70W4210)
200
210
(U70W4222)
330
040
030
010
390
220
050
230
090
080
240
070
350
400
300
060
320
090
100
2539458-2
ECM 215630

ECM: 318218 - 20070713
Group number: 2539458-0200
Assembly Drawing: 2539458-2_1_AA

| Pos | Part No | UN | Qty | Description | Page No |
|---|---|---|---|---|---|
| - | | | | | |
| 010 | 1519486-0000 | | 1 | FILTER HOUSING | |
| 020 | 2553167-0000 | | 1 | LID | |
| 030 | 2512939-0000 | | 1 | DISTRIBUTOR BLOCK | |
| 040 | 450833-0000 | | 1 | FILTER | |
| 050 | 554141-0000 | | 1 | FILTER | |
| 060 | 554142-0000 | | 1 | FILTER HOUSING | |
| 070 | 2657865-0000 | | 1 | PIPE CONNECTION | |
| 080 | 2657863-0000 | | 1 | PIPE CONNECTION | |
| 090 | 90459-4151 | | 2 | HOSE ASSEMBLY 12,7 X 304,8 MM | |
| 100 | 2657864-0000 | | 1 | PIPE CONNECTION | |
| 150 | 2672973-0000 | | 1 | ELECTRODE | |
| 200 | 927420-0001 | | 6 | O-RING 5.1X1.6 SILICONE | |
| 210 | 927421-0004 | | 1 | O-RING 15.3X2.4 SILICONE | |
| 220 | 927422-0001 | | 2 | O-RING 19.2X3 SILICONE | |
| 230 | 927421-0003 | | 1 | O-RING 13.3X2.4 SILICONE | |
| 240 | 927422-0007 | | 1 | O-RING 44.2X3 SILICONE | |
| 300 | 312105-0333 | | 8 | SCREW M6S ISO 4017 M5X25 A480 | |
| 310 | 312605-0312 | | 4 | HEXAGON NUT, M6M M4 A280 | |
| 320 | 315105-0146 | | 8 | WASHER BRB 5,3X10 RFR | |
| 330 | 350002-0006 | | 1 | PUSH-IN L-FITTING QSL-F-G1/8-6 | |
| 340 | 315105-0136 | | 6 | WASHER BRB 4,3X8 RFR | |
| 350 | 312105-0366 | | 2 | SCREW M6S ISO 4017 M6X12 A480 | |
| 370 | 927422-0006 | | 1 | O-RING 42.2X3 SILICONE | |
| 390 | 90459-4148 | | 1 | CONN. STR., 1/2"-1/4 ISO 7/1, EXT. THREA | |
| 400 | 90459-1424 | | 1 | CONN. STR., 6-G1/8, EXT. THREAD | |
| 430 | 2672974-0000 | | 2 | BUSHING | |
| U70B4060 | 2672972-0000 | | 1 | ELECTRODE | |
| U70K4210 | 90042-0203 | | 1 | SOLENOID VALVE BüRKERT | |
| U70K4220 | 90042-0203 | | 1 | SOLENOID VALVE BüRKERT | |
| U70W4060 | 351150-0404 | MM | 5000 | CABLE OLFLEX 4X0,75 MM2 LIGHT/GREY | |

| Pos | Part No | UN | Qty | Description | Page No |
|---|---|---|---|---|---|

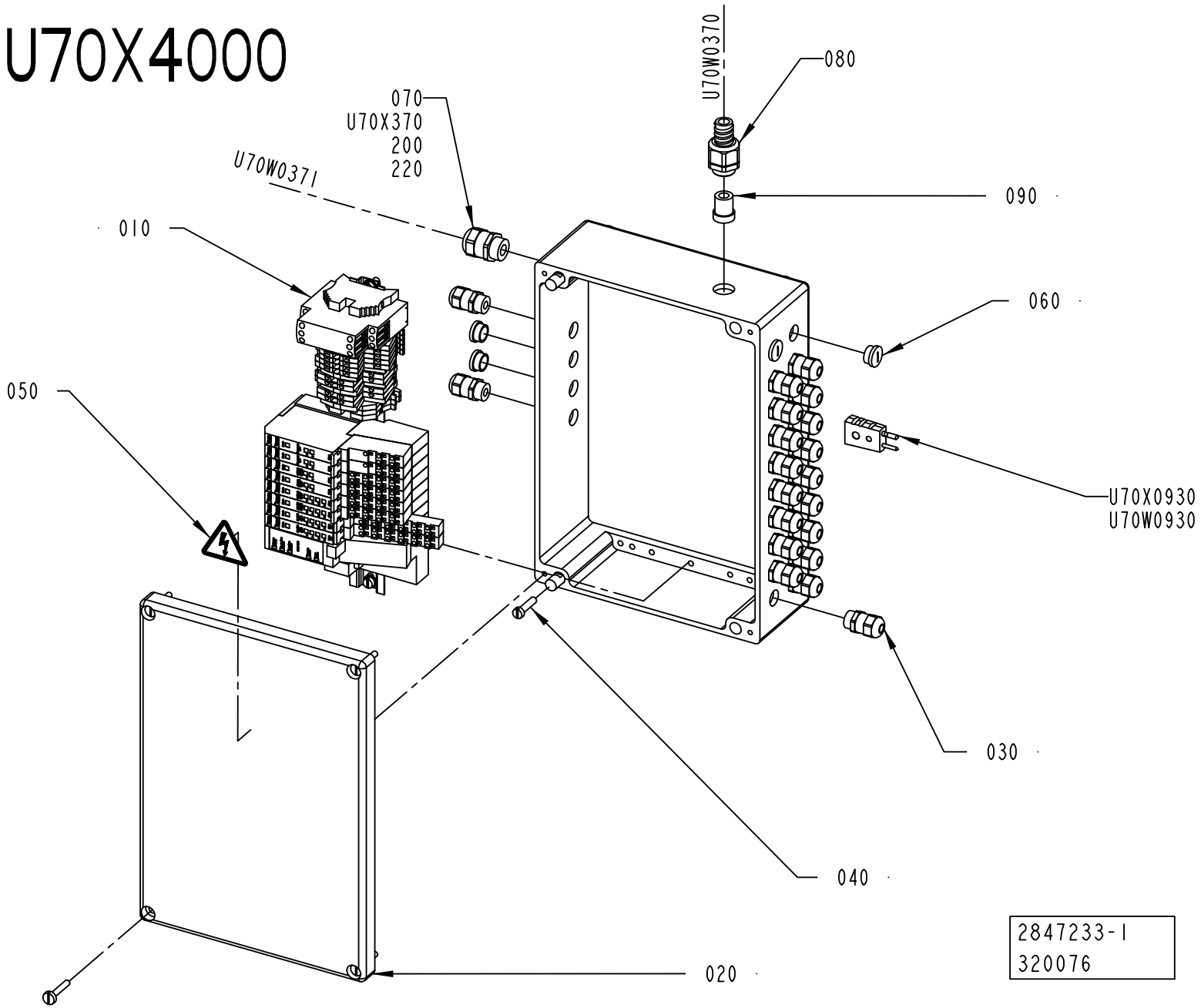
U70X4000
070
U70X370
200
220
U70W0371
U70W0370
080
090
060
010
050
U70X0930
U70W0930
030
040
020
2847233-1
320076

ECM: 329014 - 20071114
Group number: 2847233-0100
Assembly Drawing: 2847233-1_1_AB

| Pos | Part No | UN | Qty | Description | Page No |
|---|---|---|---|---|---|
| - | | | | | |
| 010 | 2851533-0100 | | 1 | TERMINAL BLOCK ..... | **1-213** |
| 020 | 2847234-0000 | | 1 | CONNECTION BOX | |
| 030 | 90458-0306 | | 20 | CABLE GLAND, M16X1,5, NO.5311 1010 | |
| 040 | 312122-0372 | | 4 | SCREW ISO 1207 M6X25 NI PL BRASS | |
| 050 | 359705-0015 | | 1 | WARNING SIGN ISO, RISK OF ELECTRIC SHOCK | |
| 060 | 90458-1307 | | 4 | BLIND PLUG CIRCULAR, M16X1,5 514GFK/216 | |
| 070 | 90458-0307 | | 1 | CABLE GLAND, M20X1,5, NO.5311 1020 | |
| 080 | 90458-0429 | | 1 | HOSE GLAND W/O INSERT M20 EXTENDED | |
| 090 | 90600-0976 | | 1 | INSERT, SINGLE HOLE, HI.TEMP, EK153I9 | |
| 200 | 90458-0307 | | 1 | CABLE GLAND, M20X1,5, NO.5311 1020 | |
| 220 | 90459-6632 | | 1 | HOOD 6 B TOP ENTRY, 19 30 006 1440 | |
| U70W0371 | 351150-0417 | MM | 5600 | CABLE OLFLEX 3X2,5 MM2 LIGHT/GREY | |
| U70W0930 | 90220-0034 | MM | 6000 | THERMOCABLE TEX/SITW-20F-KX 2X0,5MM2 | |
| U70W4001 | 351150-0406 | MM | 2000 | CABLE OLFLEX 7X0,75 MM2 LIGHT/GREY | |
| U70W4010 | 351150-0403 | MM | 2300 | CABLE OLFLEX 3X0,75 MM2 LIGHT/GREY | |
| U70W4060 | 351150-0404 | MM | 1400 | CABLE OLFLEX 4X0,75 MM2 LIGHT/GREY | |
| U70W4080 | 351150-0403 | MM | 1300 | CABLE OLFLEX 3X0,75 MM2 LIGHT/GREY | |
| U70W4210 | 351150-0403 | MM | 1100 | CABLE OLFLEX 3X0,75 MM2 LIGHT/GREY | |
| U70W4220 | 351150-0403 | MM | 1200 | CABLE OLFLEX 3X0,75 MM2 LIGHT/GREY | |
| U70W4230 | 351150-0403 | MM | 1300 | CABLE OLFLEX 3X0,75 MM2 LIGHT/GREY | |
| U70W4240 | 351150-0403 | MM | 2300 | CABLE OLFLEX 3X0,75 MM2 LIGHT/GREY | |
| U70W4290 | 90220-0165 | MM | 1300 | SCR. CABLE 5X0,34MM2 | |
| U70W4330 | 90220-0165 | MM | 1000 | SCR. CABLE 5X0,34MM2 | |
| U70W4350 | 90220-0034 | MM | 1400 | THERMOCABLE TEX/SITW-20F-KX 2X0,5MM2 | |
| U70W4360 | 90220-0034 | MM | 2200 | THERMOCABLE TEX/SITW-20F-KX 2X0,5MM2 | |
| U70X0370 | 90110-0052 | | 1 | MALE INSERT HAN 6E 09 33 006 2601 | |
| U70X0930 | 90326-0022 | | 1 | PLUG, MALE YELLOW CR-AL | |

| Pos | Part No | UN | Qty | Description | Page No |
|---|---|---|---|---|---|

Machine Type | Group Description | Used-In | Group Number | Page No

# TERMINAL BLOCK



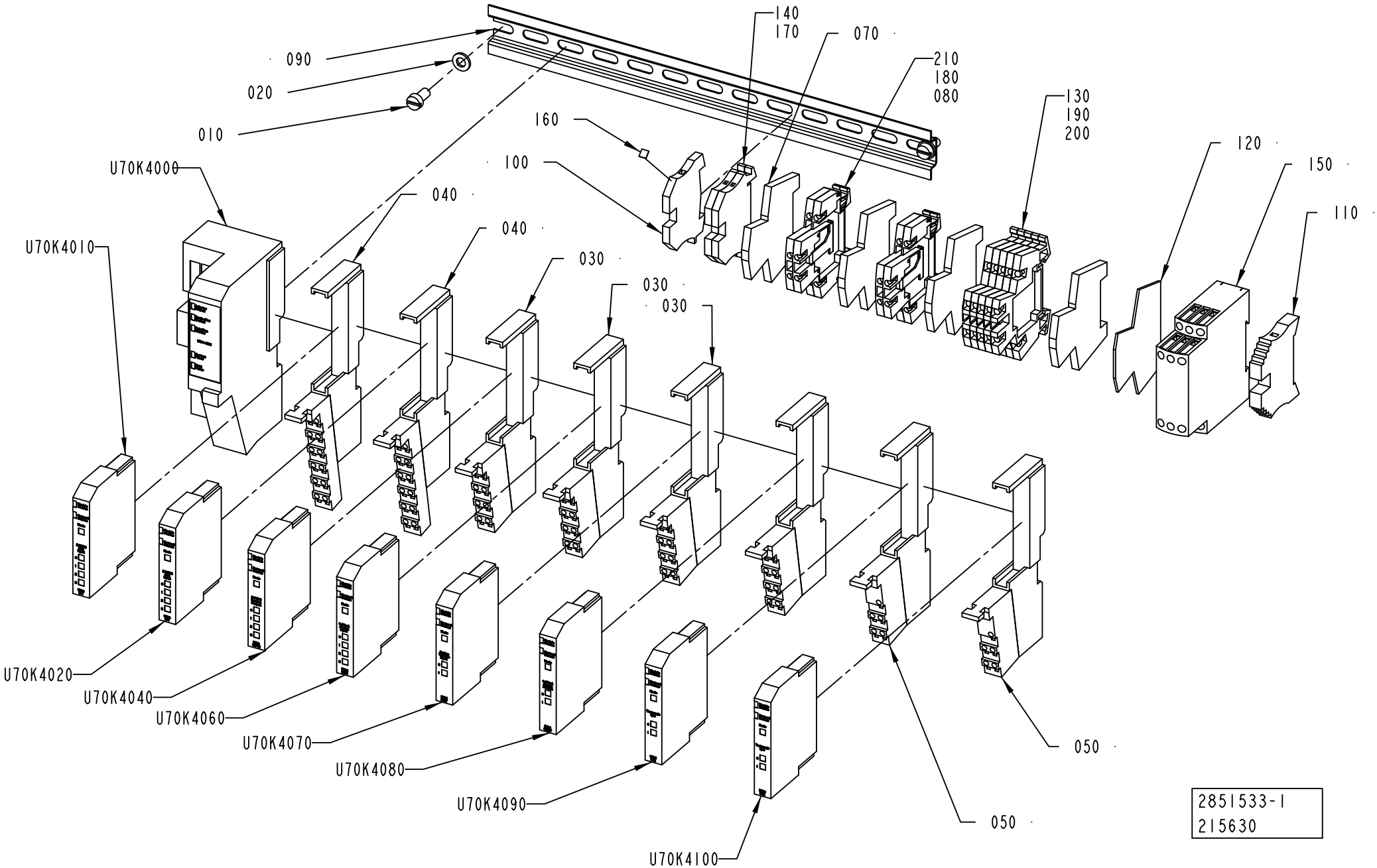

ECM: 317697 - 20070713
Group number: 2851533-0100
Assembly Drawing: 2851533-1_1_AA

| Pos | Part No | UN | Qty | Description | Page No |
|---|---|---|---|---|---|
| - | | | | | |
| 010 | 312125-0366 | | 2 | SCREW ISO 1207 M6X12 A4 | |
| 020 | 315105-0153 | | 2 | WASHER BRB 6,4X12 RFR | |
| 030 | 90459-2526 | | 4 | REMOTE I/O BASE MODULE 8 POINTS, 1734-TB | |
| 040 | 90459-2527 | | 2 | REMOTE I/O BASE MODULE 12 POINTS | |
| 050 | 90459-2528 | | 2 | REMOTE I/O BASE MODULE FOR THERMOCOUPLE | |
| 070 | 353024-0212 | | 4 | EARTH TERMINAL, 10363.0 | |
| 080 | 353034-0030 | | 2 | BRIDGE CONNECTOR WQV 2,5/10, 10544.6 | |
| 090 | 2847235-0000 | | 1 | RAIL | |
| 100 | 353024-0204 | | 1 | EARTH TERMINAL WPE 2,5 | |
| 110 | 353031-0203 | | 1 | END SUPPORT, WEW 35/2 | |
| 120 | 90077-0114 | | 1 | END PLATE, WAP/WDK 2,5 | |
| 130 | 90077-0113 | | 5 | FEED THROUGH TERMINAL, 10-00102150-1 | |
| 140 | 353021-0212 | | 2 | FEED THROUGH TERMINAL, 10200.0 | |
| 150 | 90459-2742 | | 1 | LEVEL CONTROL RELAY, RM4-LA32MW | |
| 160 | 359011-0819 | | 1 | MARKING PLATES 5-GW (EARTH) | |
| 170 | 359011-0807 | | 1 | MARKING PLATES 5-FW 1-50 | |
| 180 | 359011-0808 | | 1 | MARKING PLATES 5-FW 51-100 | |
| 190 | 359011-0809 | | 1 | MARKING PLATES 5-FW 101-150 | |
| 200 | 359011-0810 | | 1 | MARKING PLATES 5-FW 151-200 | |
| 210 | 90457-0049 | | 4 | TERMINAL BLOCK WDK 2.5V, 102230 | |
| U70K4000 | 90459-2494 | | 1 | DEVICENET I/O ADAPTER MODULE, 1734-ADN | |
| U70K4010 | 90459-2503 | | 1 | DIGITAL INPUT 4 PTS SINK, 1734-IB4 | |
| U70K4020 | 90459-2503 | | 1 | DIGITAL INPUT 4 PTS SINK, 1734-IB4 | |
| U70K4040 | 90459-2505 | | 1 | DIGITAL OUTPUT 4 PTS, 1734-OB4E | |
| U70K4060 | 90459-2509 | | 1 | REMOTE I/O ANALOG INPUT CURRENT 2 PTS | |
| U70K4070 | 90459-2508 | | 1 | REMOTE I/O ANALOG INPUT VOLTAGE 2 PTS | |
| U70K4080 | 90459-2510 | | 1 | ANALOG OUTP. VOLT. 2PTS, 1734-OE2V SER.C | |
| U70K4090 | 90459-2512 | | 1 | REMOTE I/O THERMOCOUPLE INPUT 2 PTS | |
| U70K4100 | 90459-2512 | | 1 | REMOTE I/O THERMOCOUPLE INPUT 2 PTS | |

| Pos | Part No | UN | Qty | Description | Page No |
|---|---|---|---|---|---|

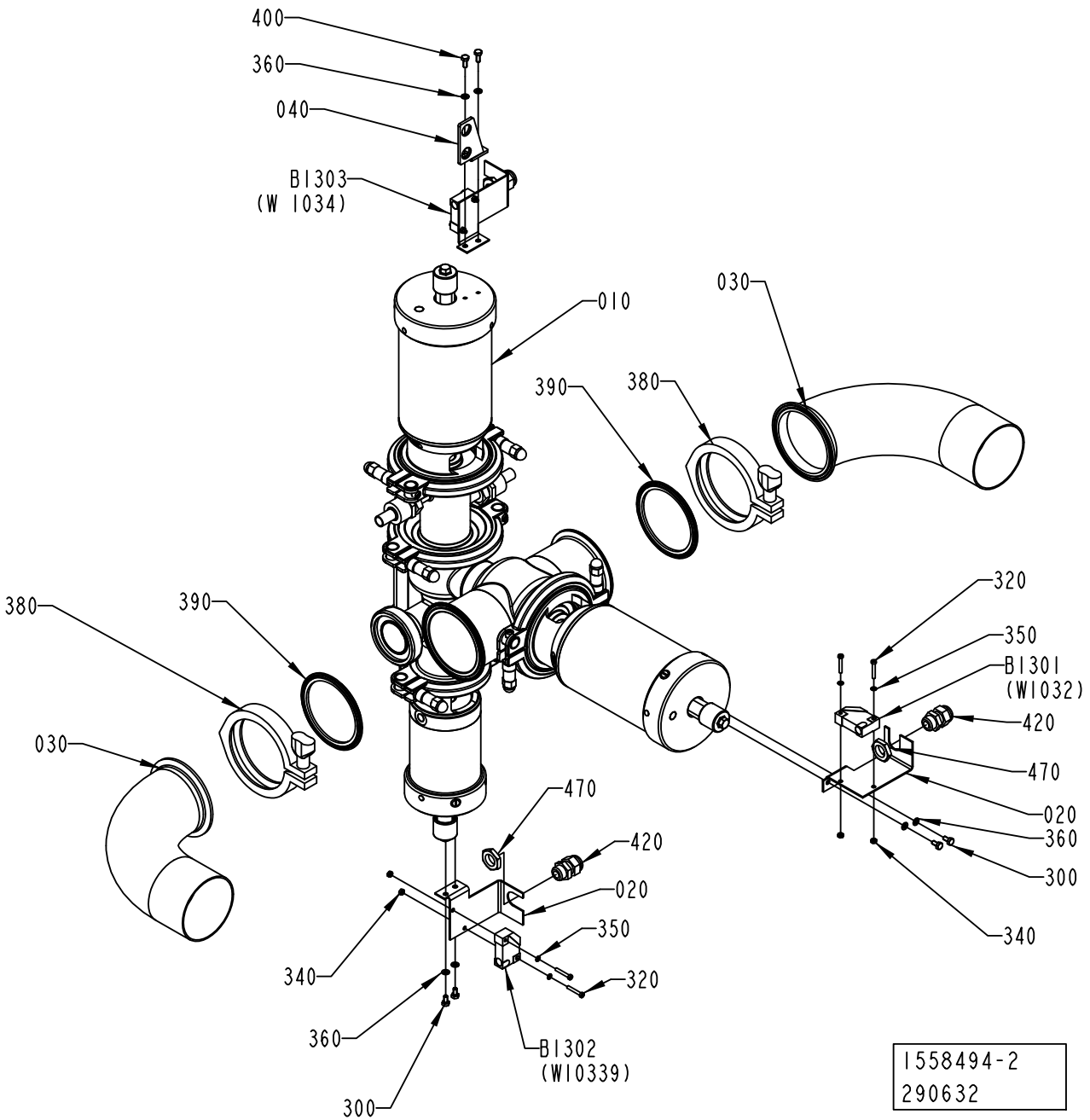
400
360
040
B1303
(W 1034)
010
030
390
380
320
350
B1301
(W1032)
420
470
020
360
300
340
380
390
030
470
420
020
350
320
340
360
300
B1302
(W10339)
1558494-2
290632

ECM: 301750 - 20070402
Group number: 1558494-0200
Assembly Drawing: 1558494-2_1_AD

| Pos | Part No | UN | Qty | Description | Page No |
|---|---|---|---|---|---|
| **2"** | | | | | |
| 030 | 2833039-0000 | | 2 | PIPE | |
| 380 | 342840-0105 | | 2 | CLAMPING PIECE | |
| 390 | 342850-0305 | | 2 | GASKET 47,8X62,6X5,2 MM 2" FDA | |
| **3"** | | | | | |
| 030 | 2826436-0000 | | 2 | PIPE | |
| 380 | 342840-0107 | | 2 | CLAMP 3" | |
| 390 | 342850-0307 | | 2 | GASKET 72,9X89,6X5,2 MM 3" FDA 3-A | |
| **Common Parts** | | | | | |
| 010 | 2547410-0100 | | 1 | PRODUCT VALVE ..... | **1-217** |
| 020 | 1037093-0000 | | 3 | SENSOR BRACKET | |
| 040 | 2559095-0000 | | 1 | BRACKET | |
| 300 | 312105-0287 | | 4 | SCREW M6S ISO 4017 M4X8 A470 | |
| 320 | 312125-0230 | | 6 | SCREW ISO 1207 M3X20 A4 | |
| 340 | 312605-0310 | | 6 | HEXAGON NUT, M6M M3 A280 | |
| 350 | 315105-0124 | | 6 | WASHER BRB 3,2X6 RFR | |
| 360 | 315105-0136 | | 6 | WASHER BRB 4,3X8 RFR | |
| 400 | 312105-0289 | | 2 | SCREW M6S H4X10 A4 70 ISO4017/DIN933 | |
| 420 | 352103-0101 | | 3 | CABLE GLAND, ST 9, PR15,2/PG9 | |
| 470 | 90099-0104 | | 3 | NUT, PR 15,2 (PG9) | |
| B1301 | 90044-0194 | | 1 | PROX.SW. IN5329/IN3002-BPKG(EX90044-104) | |
| B1302 | 90044-0194 | | 1 | PROX.SW. IN5329/IN3002-BPKG(EX90044-104) | |
| B1303 | 90044-0194 | | 1 | PROX.SW. IN5329/IN3002-BPKG(EX90044-104) | |

| Pos | Part No | UN | Qty | Description | Page No |
|---|---|---|---|---|---|

| Machine Type | Group Description | Used-In | Group Number | Page No |
|---|---|---|---|---|

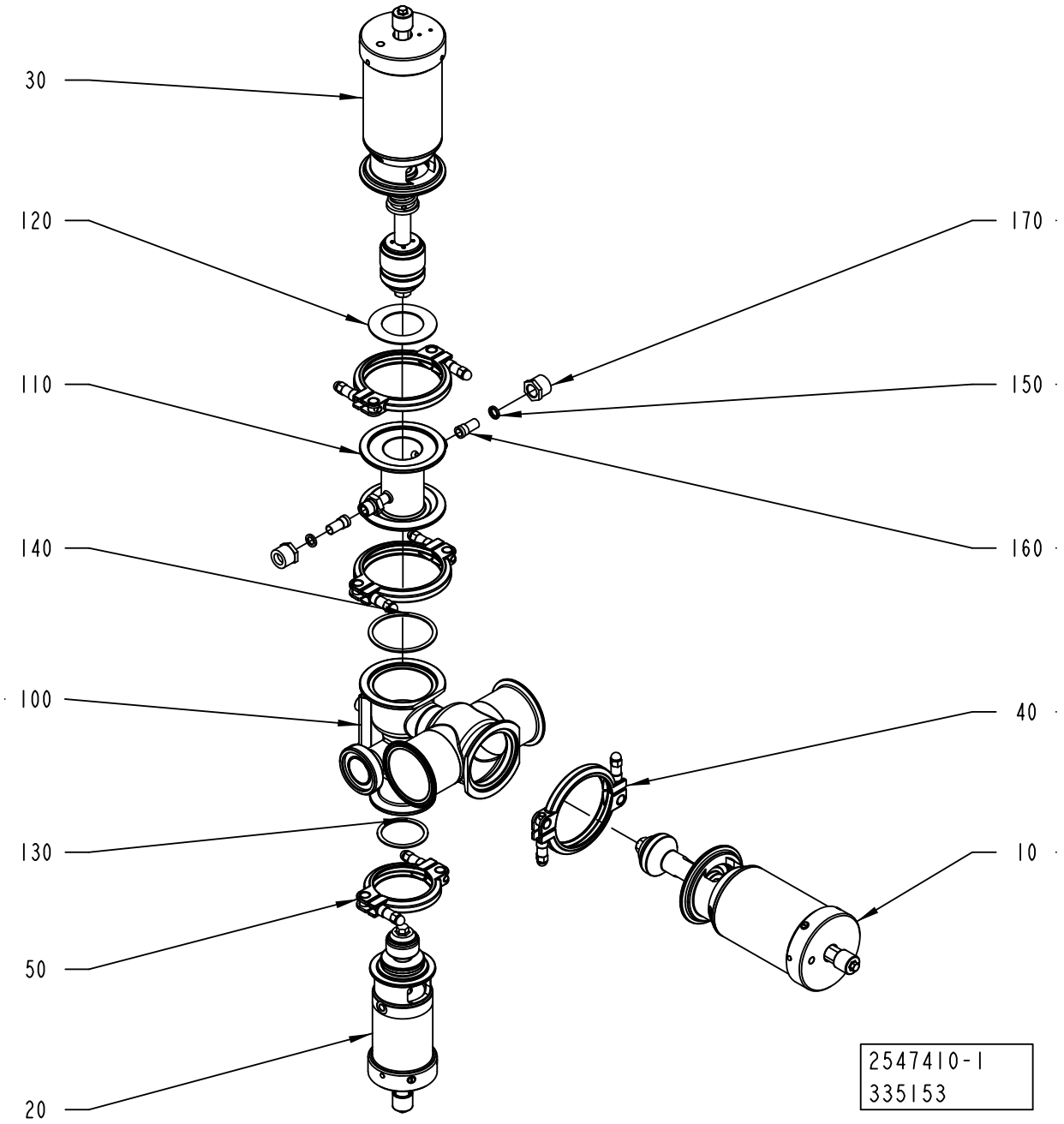
30
120
110
140
100
130
50
20
170
150
160
40
10
2547410-1
335153

ECM: 337248 - 20080104
Group number: 2547410-0100
Assembly Drawing: 2547410-1_1_AC

| Pos | Part No | UN | Qty | Description | Page No |
|---|---|---|---|---|---|
| **2"** | | | | | |
| 100 | 2833038-0000 | | 1 | BODY | |
| **3"** | | | | | |
| 100 | 2826438-0000 | | 1 | BODY | |
| **Common Parts** | | | | | |
| 010 | 576436-0100 | | 1 | A-CYLINDER ..... | **1-219** |
| 020 | 576438-0100 | | 1 | B-CYLINDER ..... | **1-221** |
| 030 | 576437-0100 | | 1 | C-CYLINDER ..... | **1-223** |
| 040 | 541163-0200 | | 3 | CLAMP RING ..... | **1-225** |
| 050 | 541164-0200 | | 1 | CLAMP RING ..... | **1-227** |
| 110 | 567018-0000 | | 1 | STEAM HOUSE | |
| 120 | 539212-0000 | | 1 | GASKET | |
| 130 | 90207-0365 | | 1 | GASKET 53X63X1,8 MM 2,5" FDA 3-A | |
| 140 | 90207-0363 | | 1 | GASKET 75X85X1,8 MM 3" FDA 3-A | |
| 150 | 90091-0266 | | 2 | SEAL RING 10,4X16,3X2,5 MM | |
| 160 | 90030-0336 | | 2 | CONN. STRAIGHT, 316L-12M-BVCO-3 | |
| 170 | 90030-0338 | | 2 | NUT, PIPE & CONNECTORS, SS-8-BVCO-4 | |

| Pos | Part No | UN | Qty | Description | Page No |
|---|---|---|---|---|---|

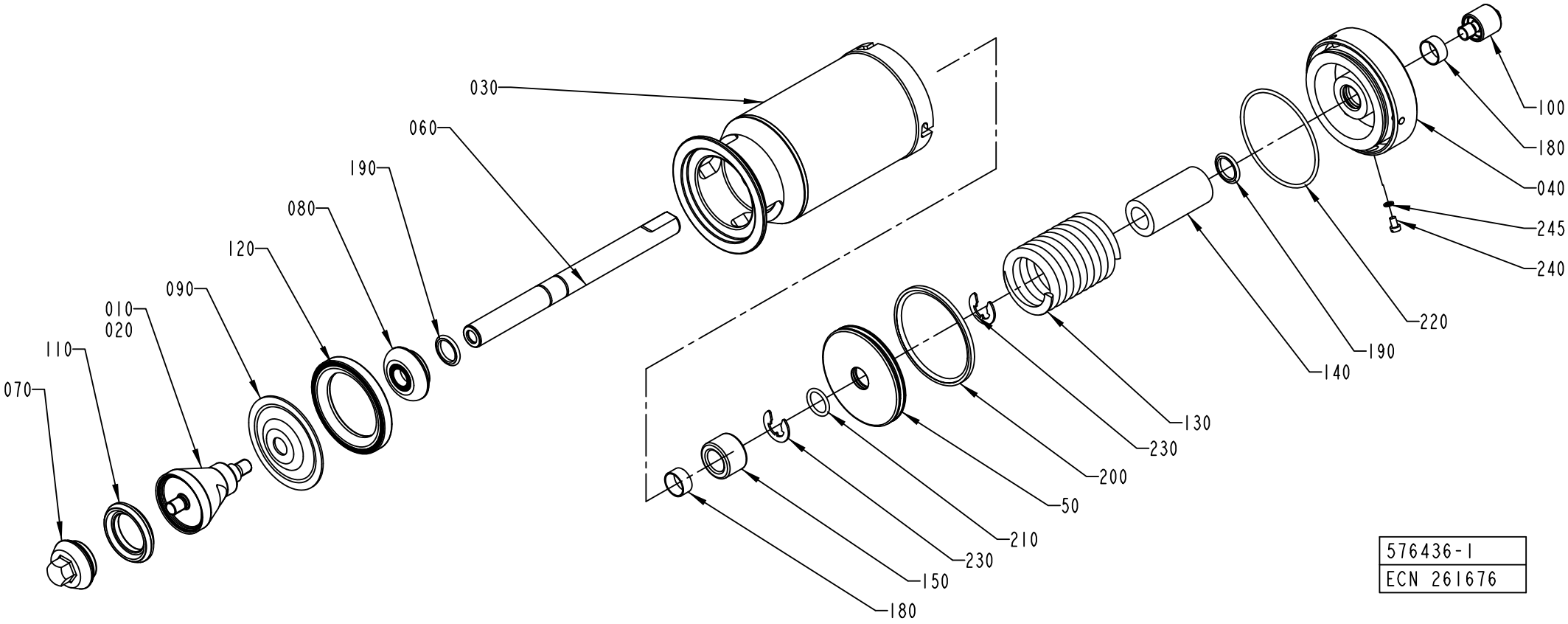
030
060
190
080
120
090
010
020
110
070
100
180
040
245
240
220
190
140
130
230
200
50
210
230
150
180
576436-1
ECN 261676

ECM: 343604 - 20080402
Group number: 576436-0100
Assembly Drawing: 576436-1_1_AC

| Pos | Part No | UN | Qty | Description | Page No |
|---|---|---|---|---|---|
| **2"** | | | | | |
| 010 | 2833037-0000 | | 1 | SEAL RING | |
| **3"** | | | | | |
| 010 | 530595-0000 | | 1 | SEAL RING HOLDER | |
| **HVA** | | | | | |
| 070 | 2898203-0000 | | 1 | VALVE CONE | |
| **NOHVA** | | | | | |
| 070 | 2826442-0000 | | 1 | VALVE CONE | |
| **Common Parts** | | | | | |
| 030 | 576439-0000 | | 1 | CYLINDER HOUSING | |
| 040 | 576440-0000 | | 1 | END SECTION | |
| 050 | 576441-0000 | | 1 | PISTON | |
| 060 | 576446-0000 | | 1 | PISTON ROD | |
| 080 | 541166-0000 | | 1 | WASHER | |
| 090 | 533169-0000 | | 1 | DIAPHRAGM | |
| 100 | 553607-0000 | | 1 | SLEEVE | |
| 110 | 2826441-0000 | | 1 | SEAL RING | |
| 120 | 440655-0000 | | 1 | RING | |
| 130 | 440663-0000 | | 1 | COMPRESSION SPRING | |
| 140 | 576448-0000 | | 1 | SPACER | |
| 150 | 576449-0000 | | 1 | SPACER | |
| 180 | 90091-0238 | | 2 | WEAR RING 20X22X10 MM | |
| 190 | 90091-0237 | | 2 | ROD SEAL, GLIDORING 20X27,5X3 MM | |
| 200 | 90091-0336 | | 1 | PISTON SEAL GLIDE RING 79X90X4 MM | |
| 210 | 315204-0215 | | 1 | O-RING 19,2X3 MM | |
| 220 | 315202-0308 | | 1 | O-RING 84,5X3 MM | |
| 230 | 315754-0113 | | 2 | LOCKING WAE 15 | |
| 240 | 312125-0323 | | 1 | SCREW ISO 1207 M5X8 A4 | |
| 245 | 315233-0101 | | 1 | WASHER CAPTIVE SEALING M5(NEW315239-101) | |

| Pos | Part No | UN | Qty | Description | Page No |
|---|---|---|---|---|---|

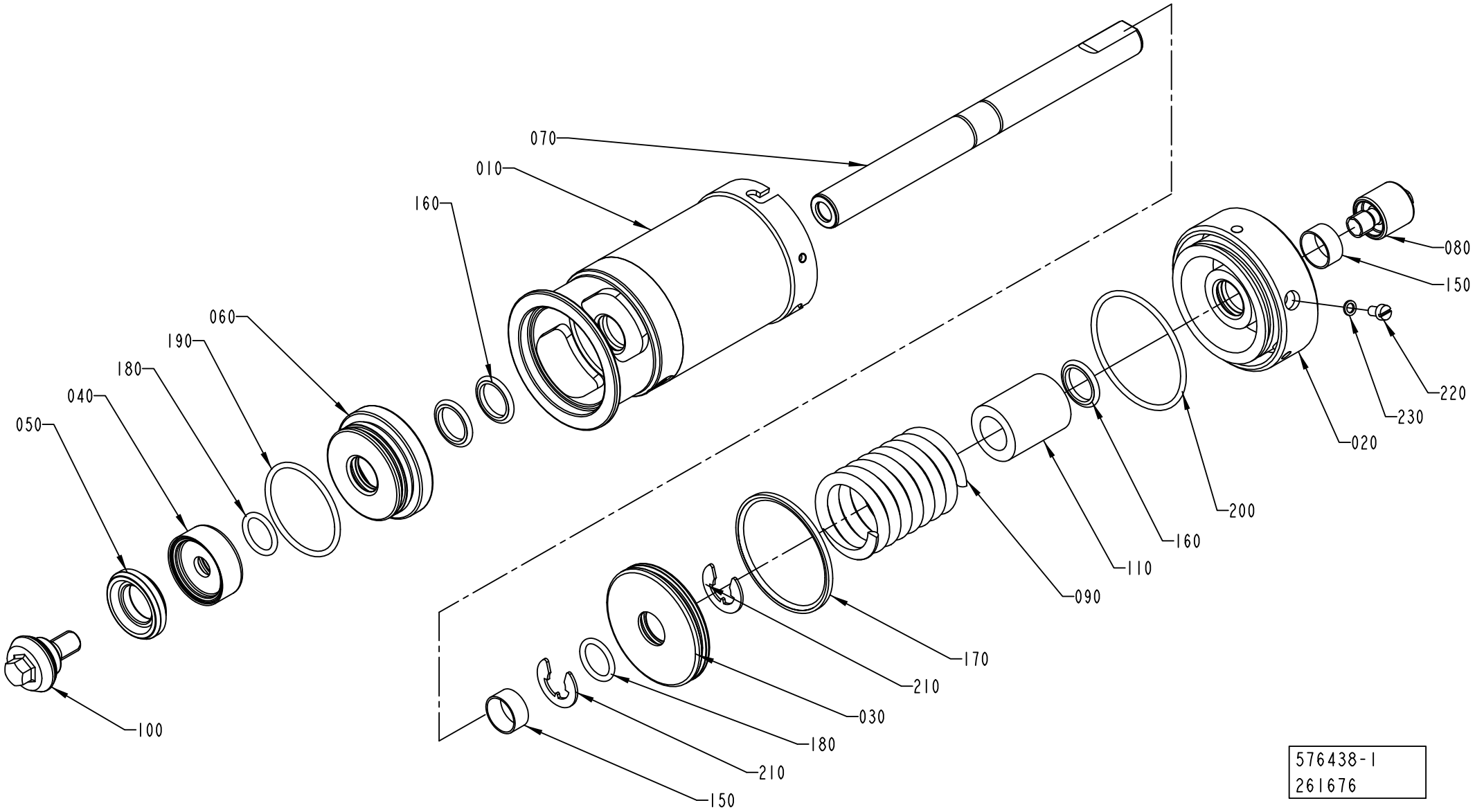
070
010
160
060
190
180
040
050
100
080
150
220
230
020
200
160
110
090
170
210
030
180
210
150
576438-1
261676

ECM: 274697 - 20070101
Group number: 576438-0100
Assembly Drawing: 576438-1_1_AC

| Pos | Part No | UN | Qty | Description | Page No |
|---|---|---|---|---|---|
| - | | | | | |
| 010 | 576443-0000 | | 1 | CYLINDER HOUSING | |
| 020 | 576444-0000 | | 1 | END SECTION | |
| 030 | 576445-0000 | | 1 | PISTON | |
| 040 | 530587-0000 | | 1 | WASHER | |
| 050 | 2826440-0000 | | 1 | SEAL RING | |
| 060 | 556133-0000 | | 1 | SEALING WASHER | |
| 070 | 576447-0000 | | 1 | PISTON ROD | |
| 080 | 553607-0000 | | 1 | SLEEVE | |
| 090 | 440662-0000 | | 1 | COMPRESSION SPRING | |
| 100 | 2826439-0000 | | 1 | VALVE CONE | |
| 110 | 576451-0000 | | 1 | SPACER | |
| 150 | 90091-0238 | | 2 | WEAR RING 20X22X10 MM | |
| 160 | 90091-0237 | | 3 | ROD SEAL, GLIDORING 20X27,5X3 MM | |
| 170 | 90091-0335 | | 1 | PISTON SEAL GLIDE RING 62,5X70X3 MM | |
| 180 | 315204-0215 | | 2 | O-RING 19,2X3 MM | |
| 190 | 315204-0301 | | 1 | O-RING 49,5X3 MM | |
| 200 | 315202-0304 | | 1 | O-RING 64,5X3 MM | |
| 210 | 315754-0113 | | 2 | LOCKING WAE 15 | |
| 220 | 312125-0323 | | 1 | SCREW ISO 1207 M5X8 A4 | |
| 230 | 315233-0101 | | 1 | WASHER CAPTIVE SEALING M5(NEW315239-101) | |

| Pos | Part No | UN | Qty | Description | Page No |
|---|---|---|---|---|---|

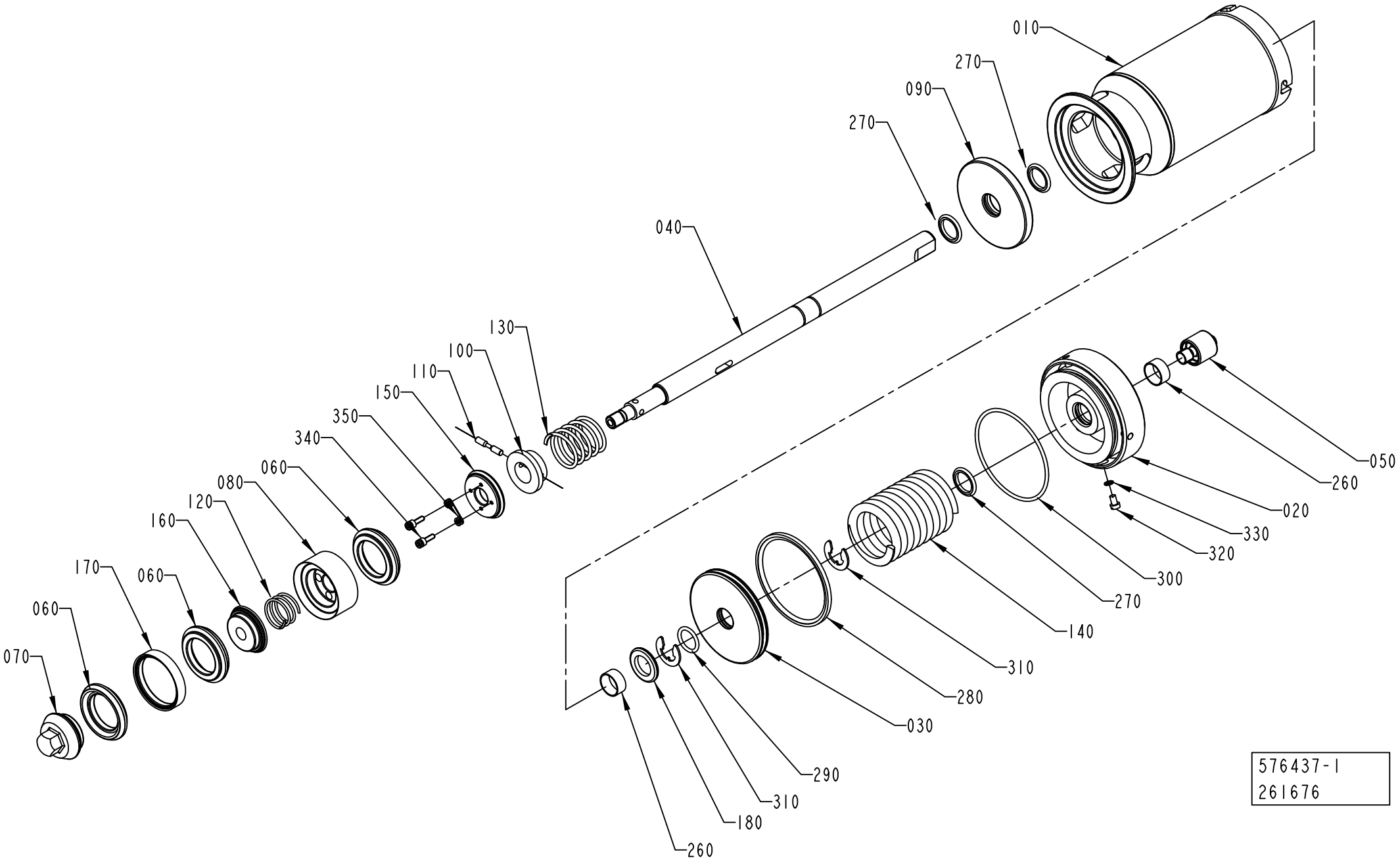
010
270
090
270
040
130
100
110
150
350
340
060
080
120
160
170
060
060
070
050
260
020
330
320
300
270
140
310
280
030
290
310
180
260
576437-1
261676

ECM: 274695 - 20070101
Group number: 576437-0100
Assembly Drawing: 576437-1_1_AC

| Pos | Part No | UN | Qty | Description | Page No |
|---|---|---|---|---|---|
| - | | | | | |
| 010 | 576439-0000 | | 1 | CYLINDER HOUSING | |
| 020 | 576440-0000 | | 1 | END SECTION | |
| 030 | 576441-0000 | | 1 | PISTON | |
| 040 | 576442-0000 | | 1 | PISTON ROD | |
| 050 | 553607-0000 | | 1 | SLEEVE | |
| 060 | 2826441-0000 | | 3 | SEAL RING | |
| 070 | 2826442-0000 | | 1 | VALVE CONE | |
| 080 | 530591-0000 | | 1 | HOLDER | |
| 090 | 555458-0000 | | 1 | SEALING WASHER | |
| 100 | 440650-0000 | | 1 | WASHER | |
| 110 | 440659-0000 | | 1 | CYLINDRICAL PIN | |
| 120 | 440660-0000 | | 1 | COMPRESSION SPRING | |
| 130 | 440661-0000 | | 1 | COMPRESSION SPRING | |
| 140 | 440663-0000 | | 1 | COMPRESSION SPRING | |
| 150 | 530597-0000 | | 1 | WASHER | |
| 160 | 530598-0000 | | 1 | WASHER | |
| 170 | 530599-0000 | | 2 | RING | |
| 180 | 576450-0000 | | 1 | SPACER | |
| 260 | 90091-0238 | | 2 | WEAR RING 20X22X10 MM | |
| 270 | 90091-0237 | | 3 | ROD SEAL, GLIDORING 20X27,5X3 MM | |
| 280 | 90091-0336 | | 1 | PISTON SEAL GLIDE RING 79X90X4 MM | |
| 290 | 315204-0215 | | 1 | O-RING 19,2X3 MM | |
| 300 | 315202-0308 | | 1 | O-RING 84,5X3 MM | |
| 310 | 315754-0113 | | 2 | LOCKING WAE 15 | |
| 320 | 312125-0323 | | 1 | SCREW ISO 1207 M5X8 A4 | |
| 330 | 315233-0101 | | 1 | WASHER CAPTIVE SEALING M5(NEW315239-101) | |
| 340 | 312115-0291 | | 4 | SCREW ISO4762 M4X12 A4 80 | |
| 350 | 315402-0136 | | 4 | LOCK WASHER FBB 4,1 | |

| Pos | Part No | UN | Qty | Description | Page No |
|---|---|---|---|---|---|

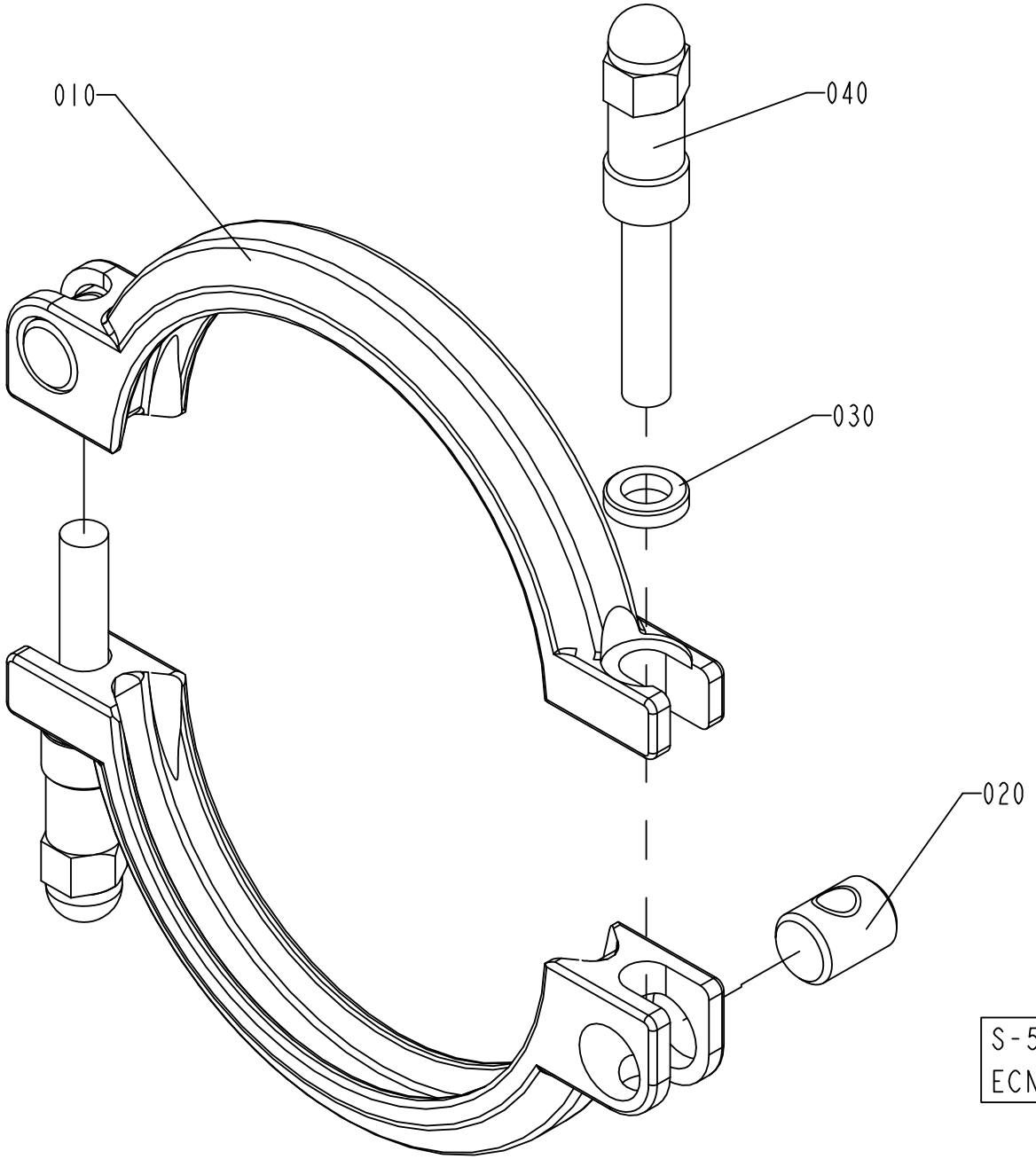
010
040
030
020
S-541163-2
ECN 71956

ECM: 343597 - 20080402
Group number: 541163-0200
Assembly Drawing: 541163-2_1_AB

| Pos | Part No | UN | Qty | Description | Page No |
|---|---|---|---|---|---|
| - | | | | | |
| 010 | 532117-0000 | | 2 | CLAMP RING | |
| 020 | 497748-0000 | | 2 | PIN | |
| 030 | 541165-0000 | | 2 | WASHER | |
| 040 | 554162-0000 | | 2 | SCREW | |

| Pos | Part No | UN | Qty | Description | Page No |
|---|---|---|---|---|---|

# CLAMP RING



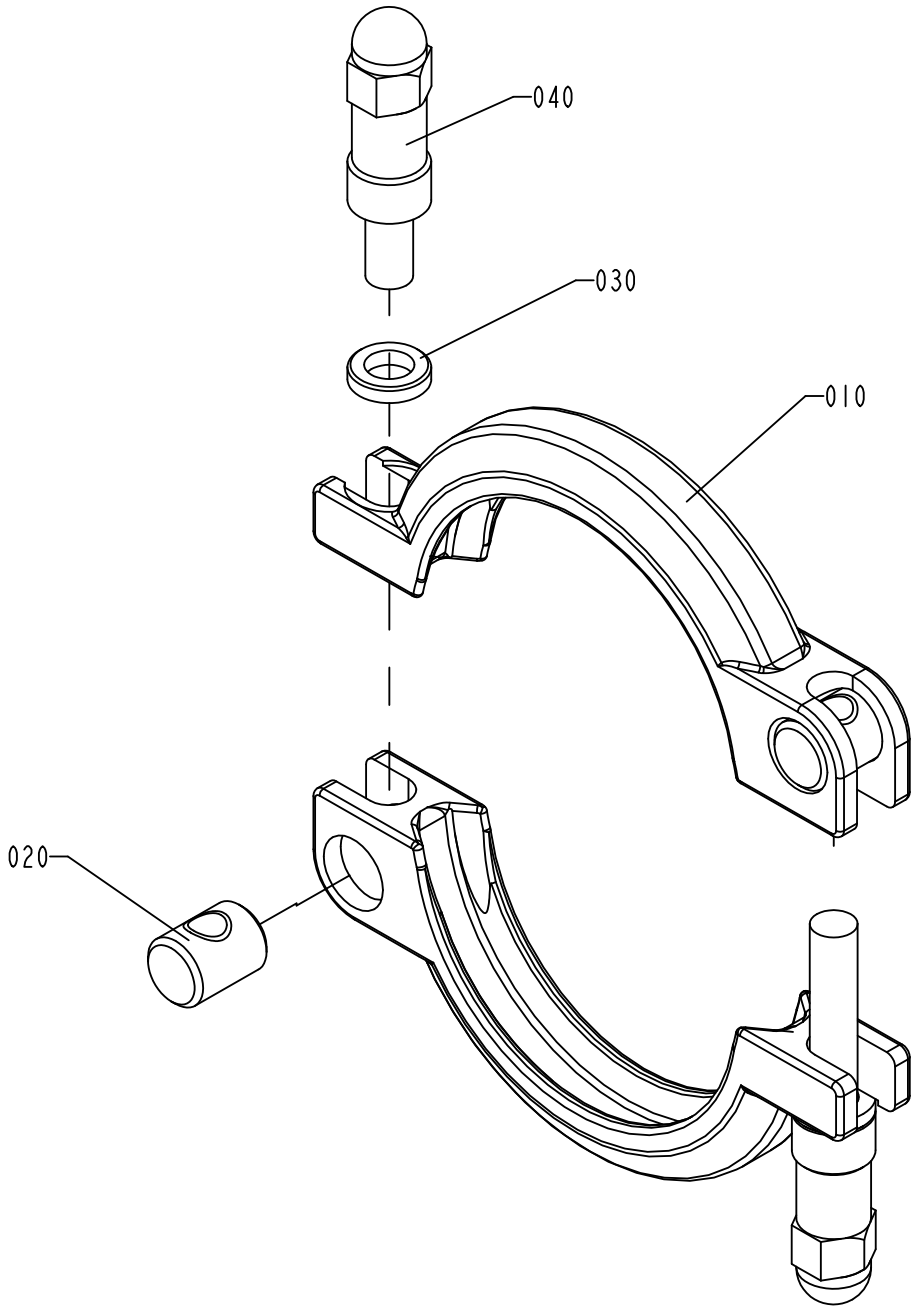


S-541164-2
ECN 71956

ECM: 343598 - 20080402
Group number: 541164-0200
Assembly Drawing: 541164-2_1_AB

| Pos | Part No | UN | Qty | Description | Page No |
|---|---|---|---|---|---|
| - | | | | | |
| 010 | 532118-0000 | | 2 | CLAMP RING | |
| 020 | 497748-0000 | | 2 | PIN | |
| 030 | 541165-0000 | | 2 | WASHER | |
| 040 | 554162-0000 | | 2 | SCREW | |

| Pos | Part No | UN | Qty | Description | Page No |
|---|---|---|---|---|---|

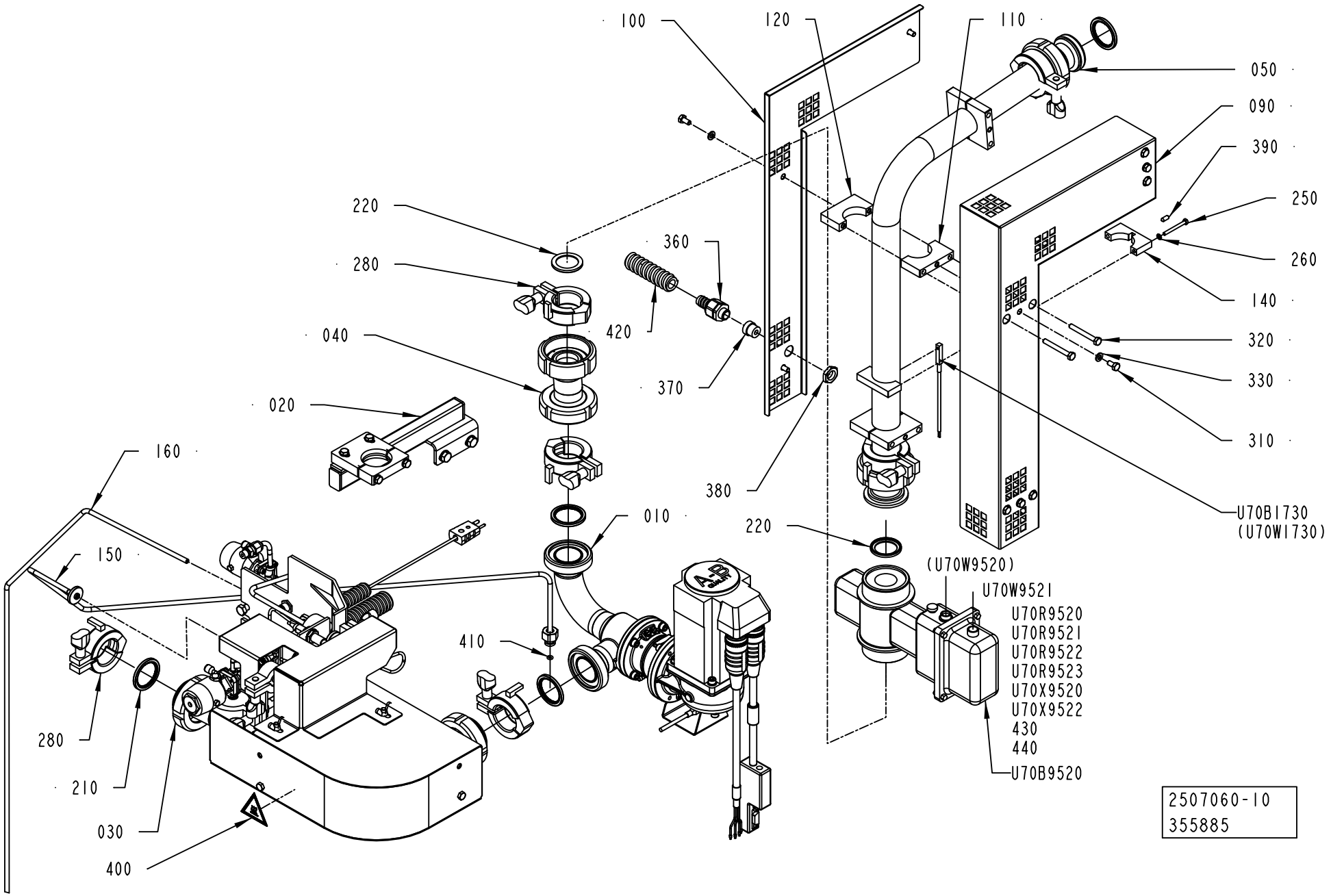
100
120
110
050
090
390
250
260
140
320
330
310
U70B1730
(U70W1730)
220
280
040
020
160
150
280
210
030
400
360
420
370
380
010
410
220
(U70W9520)
U70W9521
U70R9520
U70R9521
U70R9522
U70R9523
U70X9520
U70X9522
430
440
U70B9520
2507060-10
355885

ECM: 359584 - 20081001
Group number: 2507060-0300
Assembly Drawing: 2507060-10_1_AD

This list covers pages from 1-228 to 1-231

| Pos | Part No | UN | Qty | Description | Page No |
|---|---|---|---|---|---|
| **A3/FLEX HI (See drawing on page: 1-228)** | | | | | |
| 030 | 2632642-0300 | | 1 | NOZZLE UNIT | **1-233** |
| 050 | 2745332-0000 | | 1 | PIPE | |
| 090 | 2763973-0000 | | 1 | TOUCH GUARD | |
| 100 | 2763974-0000 | | 1 | TOUCH GUARD | |
| 110 | 2788620-0000 | | 3 | CLAMP | |
| 120 | 2788621-0000 | | 3 | CLAMP | |
| 150 | 2867486-0000 | | 1 | PIPE | |
| 160 | 2834329-0000 | | 1 | PIPE | |
| 310 | 312105-0366 | | 6 | SCREW M6S ISO 4017 M6X12 A480 | |
| 320 | 312109-0380 | | 6 | SCREW M6S ISO 4017 M6X50 A480 | |
| 330 | 315105-0153 | | 6 | WASHER BRB 6,4X12 RFR | |
| 410 | 90600-0495 | | 1 | O-RING 4X2 MM | |
| 420 | 90152-0050 | MM | 2000 | SPIRAL CONDUIT, 20X13, UL 1313 | |
| **A3/FLEX NOHI (See drawing on page: 1-230)** | | | | | |
| 030 | 2745328-0000 | | 1 | PIPE | |
| 050 | 2745332-0000 | | 1 | PIPE | |
| 060 | 2874684-0000 | | 1 | TOUCH GUARD | |
| 070 | 1140480-0000 | | 1 | CLAMP | |
| 080 | 1041988-0000 | | 1 | CLAMP | |
| 090 | 2763973-0000 | | 1 | TOUCH GUARD | |
| 100 | 2763974-0000 | | 1 | TOUCH GUARD | |
| 110 | 2788620-0000 | | 3 | CLAMP | |
| 120 | 2788621-0000 | | 3 | CLAMP | |
| 290 | 312105-0362 | | 2 | SCREW M6S ISO 4017 M6X8 A480 | |
| 300 | 312109-0376 | | 2 | SCREW M6S ISO 4017 M6X35 A480 | |
| 310 | 312105-0366 | | 6 | SCREW M6S ISO 4017 M6X12 A480 | |
| 320 | 312109-0380 | | 6 | SCREW M6S ISO 4017 M6X50 A480 | |
| 330 | 315105-0153 | | 6 | WASHER BRB 6,4X12 RFR | |
| 420 | 90152-0050 | MM | 2000 | SPIRAL CONDUIT, 20X13, UL 1313 | |
| **Common Parts** | | | | | |
| 010 | 2611454-0100 | | 1 | REGULATING VALVE | **1-235** |
| 020 | 2726570-0100 | | 1 | TUBE HOLDER | **1-237** |
| 040 | 2745325-0000 | | 1 | ECCENTRIC | |
| 140 | 2799892-0000 | | 1 | CLAMP | |
| 210 | 90217-0348 | | 4 | GASKET 35,4X46,8X4 MM | |
| 220 | 90459-4179 | | 2 | GASKET 30,5X42X4 MM FDA | |
| 250 | 312105-0303 | | 2 | SCREW M6S ISO 4017 M4X40 A470 | |
| 260 | 315105-0136 | | 2 | WASHER BRB 4,3X8 RFR | |
| 280 | 2552201-0000 | | 6 | LOCKING DEVICE | |
| 360 | 353243-0001 | | 1 | HOSE GLAND W/O INSERT PG9 EXTENDED | |
| 370 | 353249-0008 | | 1 | INSERT, SINGLE HOLE, EK 152/7 | |
| 380 | 90099-0104 | | 1 | NUT, PR 15,2 (PG9) | |
| 390 | 90459-7283 | | 1 | SCREW HEX.SOCK.SET CONEPT.MS6SS M5X12 A2 | |
| 400 | 359705-0007 | | 1 | WARNING SIGN ISO, HOT SURFACE | |
| 430 | 90110-0144 | | 1 | COVER D-SUB 9, 8655MH0911LF | |
| 440 | 90110-0381 | | 1 | COVER, 310601-33 CYR24.4 | |
| U70B1730 | 90459-6178 | | 1 | TEMPERATURE SENSOR, , 902522/10-386-1003 | |
| U70B9520 | 90458-0806 | | 1 | FLOW METER, NO. XF DF23-DN32 | |
| U70R9520 | 90121-0132 | | 1 | RESISTANCE FIXED, 0,51 KOHM, 0,25 W | |
| U70R9521 | 90121-0132 | | 1 | RESISTANCE FIXED, 0,51 KOHM, 0,25 W | |
| U70R9522 | 90459-1297 | | 1 | RESISTANCE FIXED, 120 OHM, 0,25 W | |
| U70R9523 | 90459-1297 | | 1 | RESISTANCE FIXED, 120 OHM, 0,25 W | |
| U70W9521 | 90220-0091 | M | 10 | PAIR TWISTED CABLE 2X2X0,25MM2 | |
| U70X9520 | 90459-2106 | | 1 | CABLE CONNECTOR, C091 31D004 100 2 | |
| U70X9522 | 90110-0147 | | 1 | PLUG D-SUB 9 FEMALE, DE09S064TLF | |

Machine Type | Group Description | Used-In | Group Number | Page No

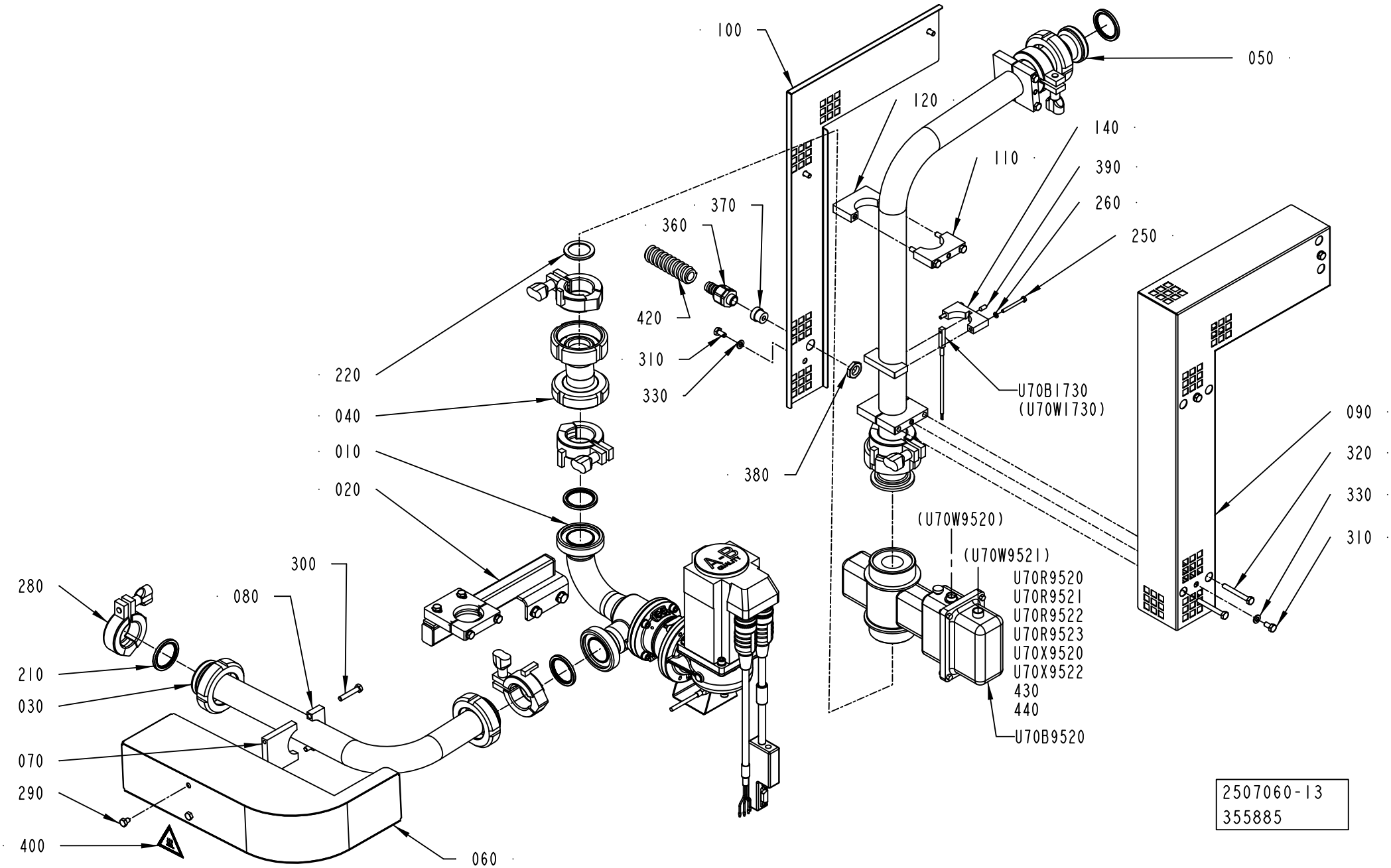
100
050
120
140
110
390
260
250
370
360
420
310
330
220
040
010
020
380
U70B1730
(U70W1730)
090
320
330
310
(U70W9520)
(U70W9521)
U70R9520
U70R9521
U70R9522
U70R9523
U70X9520
U70X9522
430
440
U70B9520
300
280
080
210
030
070
290
400
060
2507060-13
355885

ECM: 359584 - 20081001
Group number: 2507060-0300
Assembly Drawing: 2507060-13_1_AC

This list covers pages from 1-228 to 1-231

| Pos | Part No | UN | Qty | Description | Page No |
|---|---|---|---|---|---|
| **A3/FLEX HI (See drawing on page: 1-228)** | | | | | |
| 030 | 2632642-0300 | | 1 | NOZZLE UNIT | **1-233** |
| 050 | 2745332-0000 | | 1 | PIPE | |
| 090 | 2763973-0000 | | 1 | TOUCH GUARD | |
| 100 | 2763974-0000 | | 1 | TOUCH GUARD | |
| 110 | 2788620-0000 | | 3 | CLAMP | |
| 120 | 2788621-0000 | | 3 | CLAMP | |
| 150 | 2867486-0000 | | 1 | PIPE | |
| 160 | 2834329-0000 | | 1 | PIPE | |
| 310 | 312105-0366 | | 6 | SCREW M6S ISO 4017 M6X12 A480 | |
| 320 | 312109-0380 | | 6 | SCREW M6S ISO 4017 M6X50 A480 | |
| 330 | 315105-0153 | | 6 | WASHER BRB 6,4X12 RFR | |
| 410 | 90600-0495 | | 1 | O-RING 4X2 MM | |
| 420 | 90152-0050 | MM | 2000 | SPIRAL CONDUIT, 20X13, UL 1313 | |
| **A3/FLEX NOHI (See drawing on page: 1-230)** | | | | | |
| 030 | 2745328-0000 | | 1 | PIPE | |
| 050 | 2745332-0000 | | 1 | PIPE | |
| 060 | 2874684-0000 | | 1 | TOUCH GUARD | |
| 070 | 1140480-0000 | | 1 | CLAMP | |
| 080 | 1041988-0000 | | 1 | CLAMP | |
| 090 | 2763973-0000 | | 1 | TOUCH GUARD | |
| 100 | 2763974-0000 | | 1 | TOUCH GUARD | |
| 110 | 2788620-0000 | | 3 | CLAMP | |
| 120 | 2788621-0000 | | 3 | CLAMP | |
| 290 | 312105-0362 | | 2 | SCREW M6S ISO 4017 M6X8 A480 | |
| 300 | 312109-0376 | | 2 | SCREW M6S ISO 4017 M6X35 A480 | |
| 310 | 312105-0366 | | 6 | SCREW M6S ISO 4017 M6X12 A480 | |
| 320 | 312109-0380 | | 6 | SCREW M6S ISO 4017 M6X50 A480 | |
| 330 | 315105-0153 | | 6 | WASHER BRB 6,4X12 RFR | |
| 420 | 90152-0050 | MM | 2000 | SPIRAL CONDUIT, 20X13, UL 1313 | |
| **Common Parts** | | | | | |
| 010 | 2611454-0100 | | 1 | REGULATING VALVE | **1-235** |
| 020 | 2726570-0100 | | 1 | TUBE HOLDER | **1-237** |
| 040 | 2745325-0000 | | 1 | ECCENTRIC | |
| 140 | 2799892-0000 | | 1 | CLAMP | |
| 210 | 90217-0348 | | 4 | GASKET 35,4X46,8X4 MM | |
| 220 | 90459-4179 | | 2 | GASKET 30,5X42X4 MM FDA | |
| 250 | 312105-0303 | | 2 | SCREW M6S ISO 4017 M4X40 A470 | |
| 260 | 315105-0136 | | 2 | WASHER BRB 4,3X8 RFR | |
| 280 | 2552201-0000 | | 6 | LOCKING DEVICE | |
| 360 | 353243-0001 | | 1 | HOSE GLAND W/O INSERT PG9 EXTENDED | |
| 370 | 353249-0008 | | 1 | INSERT, SINGLE HOLE, EK 152/7 | |
| 380 | 90099-0104 | | 1 | NUT, PR 15,2 (PG9) | |
| 390 | 90459-7283 | | 1 | SCREW HEX.SOCK.SET CONEPT.MS6SS M5X12 A2 | |
| 400 | 359705-0007 | | 1 | WARNING SIGN ISO, HOT SURFACE | |
| 430 | 90110-0144 | | 1 | COVER D-SUB 9, 8655MH0911LF | |
| 440 | 90110-0381 | | 1 | COVER, 310601-33 CYR24.4 | |
| U70B1730 | 90459-6178 | | 1 | TEMPERATURE SENSOR, , 902522/10-386-1003 | |
| U70B9520 | 90458-0806 | | 1 | FLOW METER, NO. XF DF23-DN32 | |
| U70R9520 | 90121-0132 | | 1 | RESISTANCE FIXED, 0,51 KOHM, 0,25 W | |
| U70R9521 | 90121-0132 | | 1 | RESISTANCE FIXED, 0,51 KOHM, 0,25 W | |
| U70R9522 | 90459-1297 | | 1 | RESISTANCE FIXED, 120 OHM, 0,25 W | |
| U70R9523 | 90459-1297 | | 1 | RESISTANCE FIXED, 120 OHM, 0,25 W | |
| U70W9521 | 90220-0091 | M | 10 | PAIR TWISTED CABLE 2X2X0,25MM2 | |
| U70X9520 | 90459-2106 | | 1 | CABLE CONNECTOR, C091 31D004 100 2 | |
| U70X9522 | 90110-0147 | | 1 | PLUG D-SUB 9 FEMALE, DE09S064TLF | |

Machine Type | Group Description | Used-In | Group Number | Page No

# NOZZLE UNIT



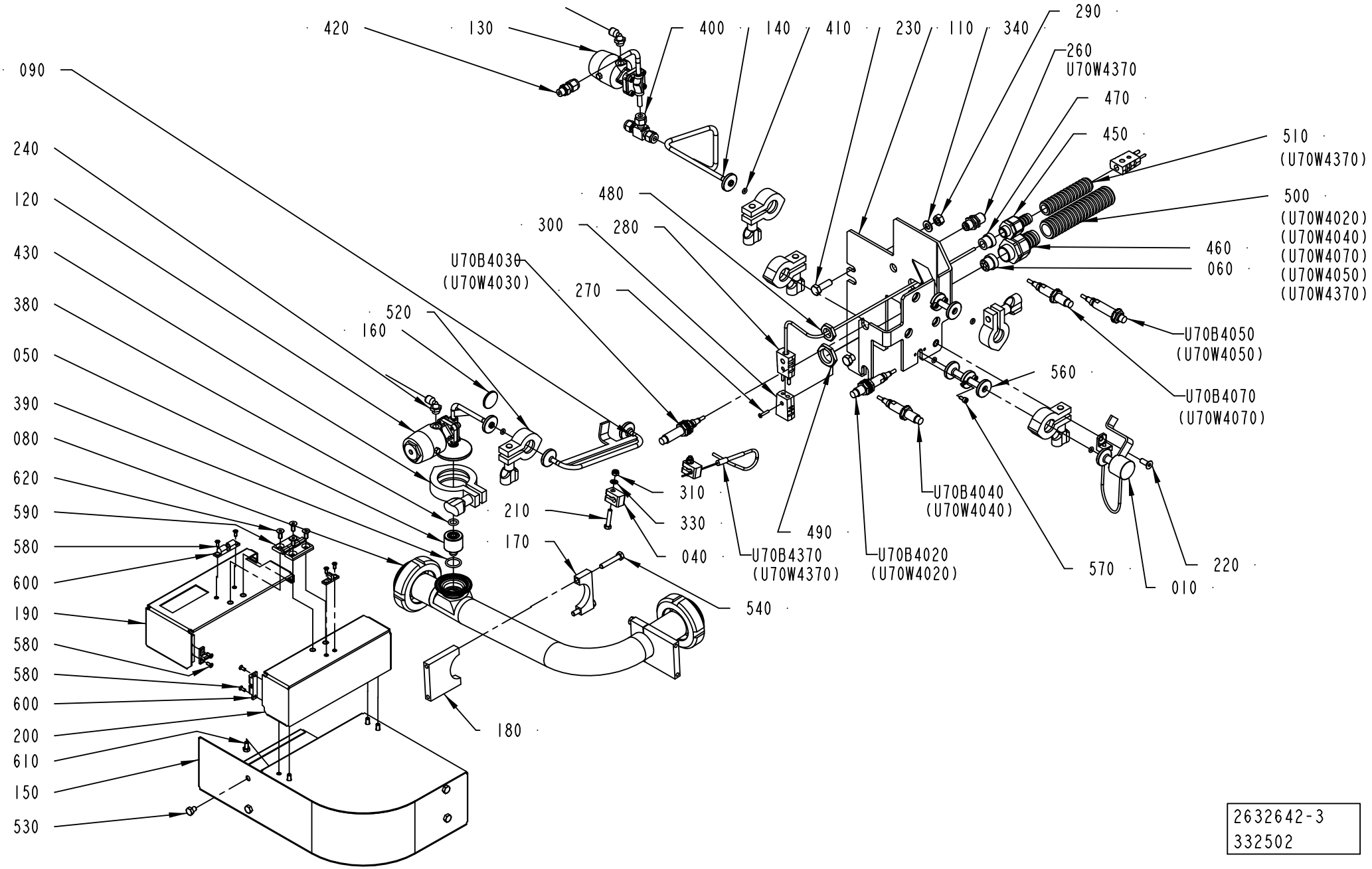


2632642-3
332502

ECM: 343132 - 20080410
Group number: 2632642-0300
Assembly Drawing: 2632642-3_1_AB

| Pos | Part No | UN | Qty | Description | Page No |
|---|---|---|---|---|---|
| - | | | | | |
| 010 | 2696109-0000 | | 1 | PLUG | |
| 040 | 978440-0000 | | 2 | CRAMP | |
| 050 | 1523154-0005 | | 1 | SPRAY NOZZLE | |
| 050 | 1523154-0006 | | 1 | SPRAY NOZZLE | |
| 050 | 1523154-0004 | | 1 | SPRAY NOZZLE | |
| 050 | 1523154-0003 | | 1 | SPRAY NOZZLE | |
| 060 | 2559051-0000 | | 1 | INSERT | |
| 070 | 2763994-0000 | | 1 | COVER | |
| 080 | 2846304-0000 | | 1 | PIPE | |
| 090 | 2715602-0000 | | 1 | PIPE | |
| 110 | 2696106-0000 | | 1 | BRACKET | |
| 120 | 2696112-0000 | | 1 | VALVE BODY | |
| | *90600-0500* | | *1* | *DIAPHRAGM VALVE, 650.004.D.0.34.5A.1.U30* | |
| | *90600-0491* | | *1* | *ACTUATOR, 9650-0089-Z-I-OTI* | |
| | *90600-0493* | | *1* | *DIAPHRAGM 3A, 600-008-M5A* | |
| 130 | 2696111-0000 | | 1 | VALVE BODY | |
| | *90600-0500* | | *1* | *DIAPHRAGM VALVE, 650.004.D.0.34.5A.1.U30* | |
| | *90600-0491* | | *1* | *ACTUATOR, 9650-0089-Z-I-OTI* | |
| | *90600-0493* | | *1* | *DIAPHRAGM 3A, 600-008-M5A* | |
| 140 | 2696108-0000 | | 1 | PIPE | |
| 150 | 2846305-0000 | | 1 | TOUCH GUARD | |
| 160 | 90600-0614 | | 1 | BLANK PLUG, 16AMP-316-1/2"-3/4"-AR | |
| 170 | 1041988-0000 | | 2 | CLAMP | |
| 180 | 1140480-0000 | | 2 | CLAMP | |
| 210 | 312105-0333 | | 2 | SCREW M6S ISO 4017 M5X25 A480 | |
| 220 | 312155-0368 | | 1 | SCREW DIN 7991 MF6S M6X16 A4 70 | |
| 230 | 312105-0453 | | 2 | SCREW M6S ISO 4017 M8X25 A480 | |
| 240 | 90458-2956 | | 2 | ELBOW PIPE JOINT, EXT.THREAD, D=6MM-G1/8 | |
| 260 | 342768-0102 | | 1 | BULKHEAD CONNECTOR, 6 MM | |
| 270 | 312145-0228 | | 1 | SCREW ISO 2009 MFS M3X16 A4 | |
| 280 | 90326-0022 | | 2 | PLUG, MALE YELLOW CR-AL | |
| 290 | 312605-0318 | | 2 | HEXAGON NUT, M6M M8 A280 | |
| 300 | 90326-0020 | | 1 | PLUG, FEMALE YELLOW CR-AL | |
| 310 | 312812-0314 | | 2 | HEXAGON NUT, NY-LOCK M5 A480 | |
| 330 | 315105-0146 | | 2 | WASHER BRB 5,3X10 RFR | |
| 340 | 315105-0165 | | 2 | WASHER BRB 8,4X16 RFR | |
| 380 | 315204-0208 | | 1 | O-RING 9,3X2,4 MM | |
| 390 | 315204-0214 | | 1 | O-RING 17,3X2,4 MM | |
| 400 | 90030-0571 | | 1 | CONN. T-PIPE 6 | |
| 410 | 90600-0495 | | 5 | O-RING 4X2 MM | |
| 420 | 90459-1424 | | 1 | CONN. STR., 6-G1/8, EXT. THREAD | |
| 430 | 342840-0103 | | 1 | CLAMPING PIECE | |
| 450 | 353243-0001 | | 1 | HOSE GLAND W/O INSERT PG9 EXTENDED | |
| 460 | 353243-0005 | | 1 | HOSE GLAND W/O INSERT PG16 EXTENDED | |
| 470 | 353249-0009 | | 1 | INSERT, SINGLE HOLE, EK 152/9 | |
| 480 | 90099-0104 | | 1 | NUT, PR 15,2 (PG9) | |
| 490 | 90099-0110 | | 1 | NUT, PR 22,5 (PG16) | |
| 500 | 90152-0051 | MM | 2100 | SPIRAL CONDUIT, 25X18, UL 1816 | |
| 510 | 90152-0059 | MM | 700 | SPIRAL CONDUIT, 18X12, UL 1211 | |
| 520 | 342840-0101 | | 5 | CLAMP, 12,7 AND 19,1 MM 3-A PCS+PMCS | |
| 530 | 312105-0362 | | 4 | SCREW M6S ISO 4017 M6X8 A480 | |
| 540 | 312109-0376 | | 4 | SCREW M6S ISO 4017 M6X35 A480 | |
| 550 | 312715-0116 | | 2 | WING NUT DIN 315 A2 MVM-K M6 | |
| 560 | 2847310-0000 | | 2 | CONNECTION | |
| 570 | 312115-0287 | | 4 | SCREW ISO4762 M4X8 A4 80 | |
| U70B4020 | 90600-0463 | | 1 | INDUCTIVE SWITCH,E2A-M12LN05-WP-B1-TP 5M | |
| U70B4030 | 90600-0463 | | 1 | INDUCTIVE SWITCH,E2A-M12LN05-WP-B1-TP 5M | |
| U70B4040 | 90600-0463 | | 1 | INDUCTIVE SWITCH,E2A-M12LN05-WP-B1-TP 5M | |
| U70B4050 | 90600-0463 | | 1 | INDUCTIVE SWITCH,E2A-M12LN05-WP-B1-TP 5M | |
| U70B4070 | 90600-0463 | | 1 | INDUCTIVE SWITCH,E2A-M12LN05-WP-B1-TP 5M | |
| U70B4370 | 90326-0060 | | 1 | THERMOCOUPLE, CR-AL | |
| U70W4370 | 90220-0034 | MM | 700 | THERMOCABLE TEX/SITW-20F-KX 2X0,5MM2 | |

| Machine Type | Group Description | Used-In | Group Number | Page No |
|---|---|---|---|---|

# REGULATING VALVE



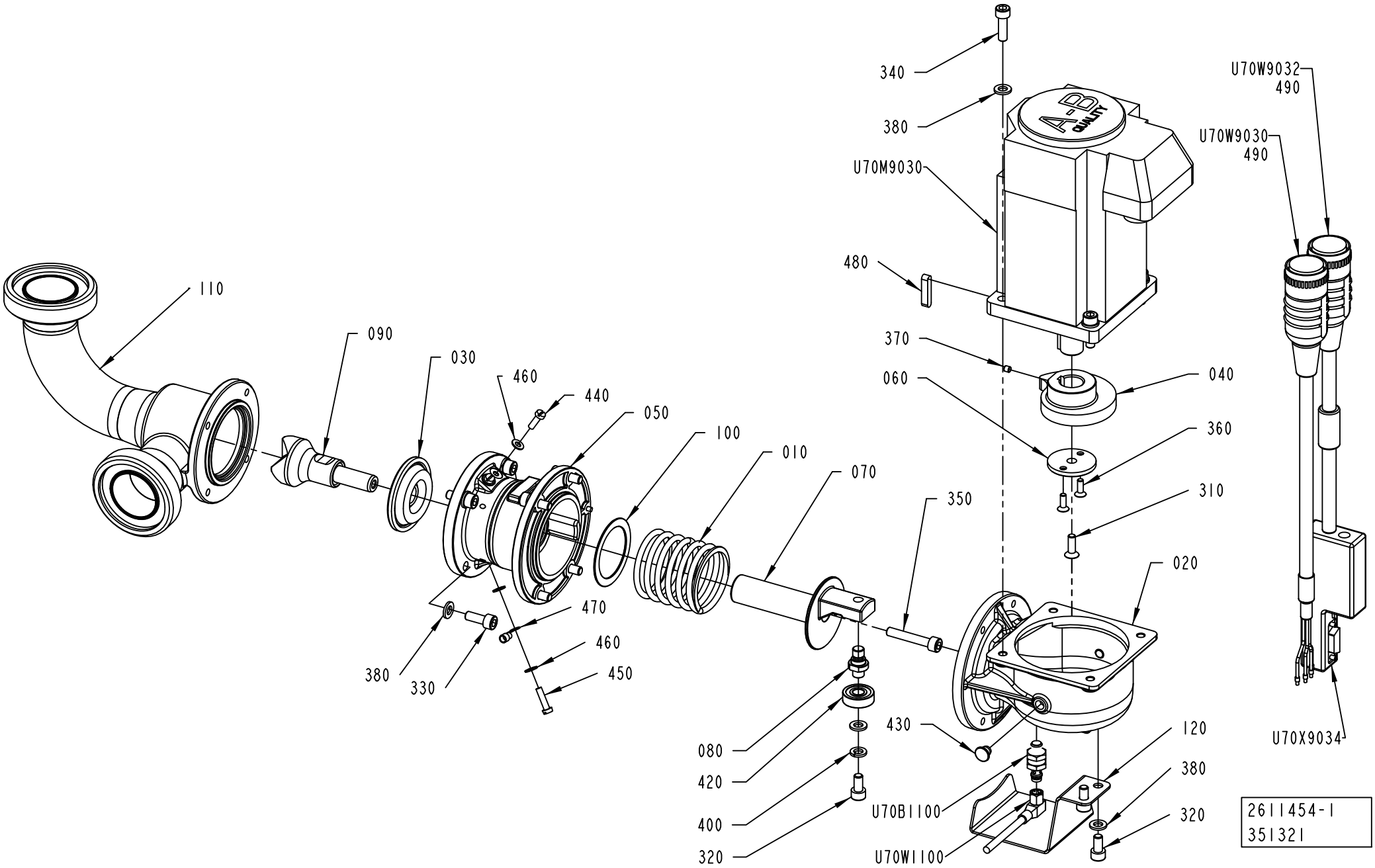

ECM: 351323 - 20080428
Group number: 2611454-0100
Assembly Drawing: 2611454-1_1_AC

| Pos | Part No | UN | Qty | Description | Page No |
|---|---|---|---|---|---|
| - | | | | | |
| 010 | 2514546-0000 | | 1 | COMPRESSION SPRING | |
| 020 | 2611106-0000 | | 1 | HOUSING | |
| 030 | 2725145-0000 | | 1 | DIAPHRAGM | |
| 040 | 2611108-0000 | | 1 | CAM | |
| 050 | 2737825-0000 | | 1 | VALVE HOUSING | |
| 060 | 2611110-0000 | | 1 | WASHER | |
| 070 | 2725313-0000 | | 1 | SHAFT | |
| 080 | 2611113-0000 | | 1 | SPINDLE | |
| 090 | 2725216-0000 | | 1 | SHUTTER | |
| 100 | 2613975-0000 | | 1 | SPRING CUSHION | |
| 110 | 2728238-0000 | | 1 | VALVE BODY | |
| 120 | 2826325-0000 | | 1 | COVER | |
| 310 | 312155-0329 | | 1 | SCREW DIN 7991 MF6S M5X16 A4 70 | |
| 320 | 312115-0366 | | 3 | SCREW ISO4762 M6X12 A4 80 | |
| 330 | 312115-0368 | | 8 | SCREW ISO4762 M6X16 A4 80 | |
| 340 | 312115-0370 | | 4 | SCREW ISO4762 M6X20 A4 80 | |
| 350 | 312115-0376 | | 1 | SCREW ISO4762 M6X35 A4 80 | |
| 360 | 312155-0291 | | 2 | SCREW DIN 7991 MF6S M4X12 A4 70 | |
| 370 | 312318-0283 | | 1 | SCREW ISO4029 M4X4 A4 | |
| 380 | 315105-0153 | | 15 | WASHER BRB 6,4X12 RFR | |
| 400 | 315402-0156 | | 1 | LOCK WASHER FBB 6,5 | |
| 420 | 321302-0298 | | 1 | BALL BEARING, 8X22X7 MM | |
| 430 | 90459-3198 | | 2 | PLUG, LD-PE Ø 7.2 | |
| 440 | 312125-0291 | | 2 | SCREW ISO 1207 M4X12 A4 | |
| 450 | 312125-0293 | | 2 | SCREW ISO 1207 M4X16 A4 | |
| 460 | 315106-0136 | | 6 | WASHER ISO 7089-4-200 HV A4 | |
| 470 | 353101-0130 | | 2 | CABLE SHOE 1,5-2,5MM2 M4 BLUE | |
| 480 | 315705-0202 | | 1 | PARALLEL KEY W ROUND ENDS 5X5X25MM | |
| 490 | 90110-0381 | | 2 | COVER, 310601-33 CYR24.4 | |
| U70B1100 | 90600-4631 | | 1 | PROXIMITY SWITCH | |
| U70M9030 | 90459-2579 | | 1 | SERVO MOTOR MPL-B320P-SJ22AA | |
| U70W1100 | 351302-0050 | | 1 | ACTUATOR/SENSOR CABLE PRKMWV 3-06/5M | |
| U70W9030 | 90459-2565 | | 1 | MOTOR CABLE 16 AWG 2090-XXNPMP-16S09 | |
| U70W9032 | 90459-2568 | | 1 | MOTOR FEEDBACK CABLE 2090-XXNFMP-S09 | |
| U70X9034 | 90459-2551 | | 1 | CONNECTOR, MOTOR FEEDBACK 15 PIN MALE | |

| Pos | Part No | UN | Qty | Description | Page No |
|---|---|---|---|---|---|

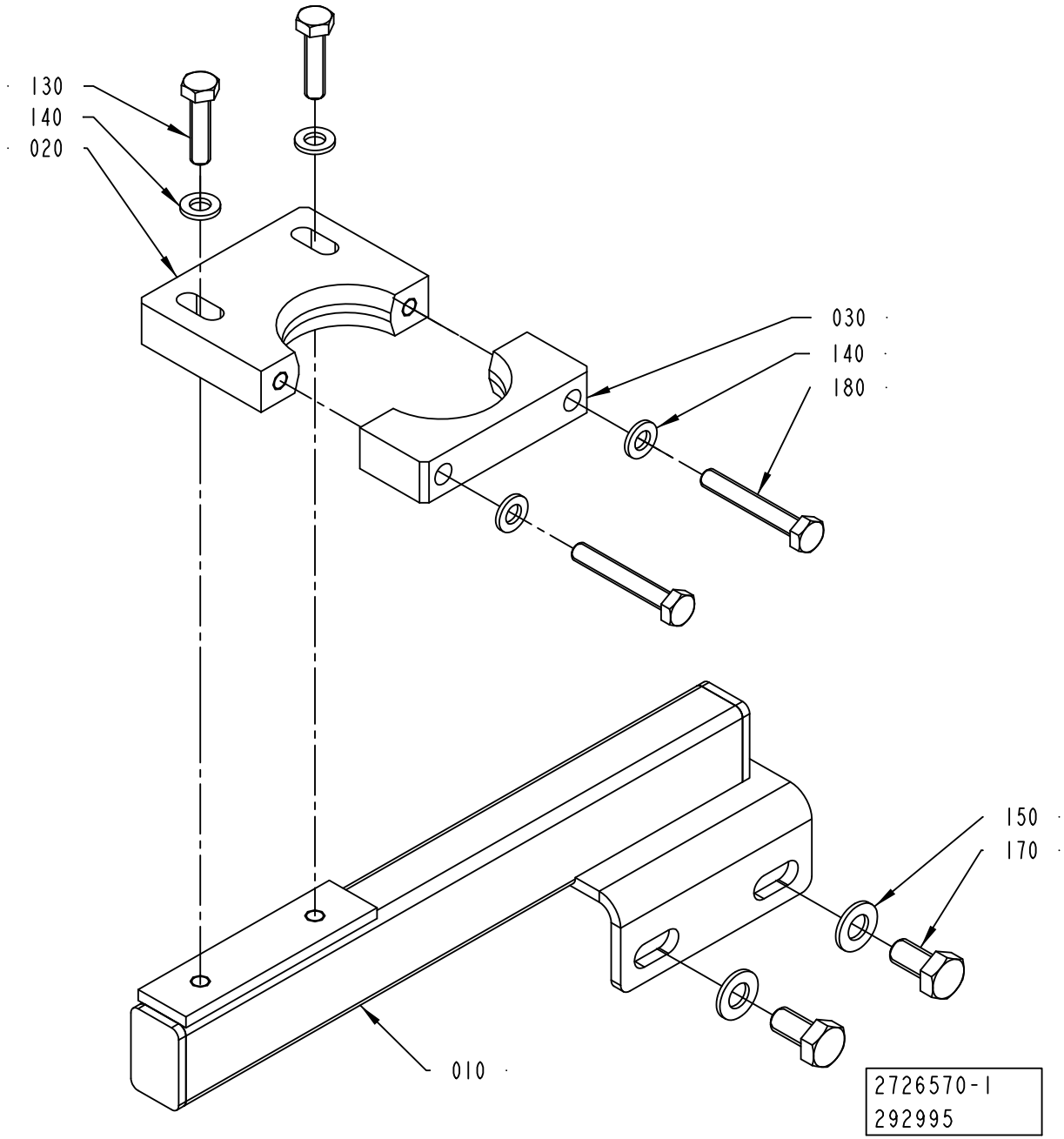
130
140
020
030
140
180
150
170
010
2726570-1
292995

ECM: 292995 - 20070704
Group number: 2726570-0100
Assembly Drawing: 2726570-1_1_AA

| Pos | Part No | UN | Qty | Description | Page No |
|---|---|---|---|---|---|
| **A3/FLEX** | | | | | |
| 010 | 2777986-0000 | | 1 | SUPPORT | |
| **Common Parts** | | | | | |
| 020 | 2788618-0000 | | 1 | CLAMP | |
| 030 | 2788619-0000 | | 1 | CLAMP | |
| 130 | 312105-0372 | | 2 | SCREW M6S ISO 4017 M6X25 A480 | |
| 140 | 315105-0153 | | 4 | WASHER BRB 6,4X12 RFR | |
| 150 | 315105-0165 | | 2 | WASHER BRB 8,4X16 RFR | |
| 170 | 312105-0449 | | 2 | SCREW M6S ISO 4017 M8X16 A480 | |
| 180 | 312109-0378 | | 2 | SCREW M6S ISO 4017 M6X40 A480 | |

| Pos | Part No | UN | Qty | Description | Page No |
|---|---|---|---|---|---|

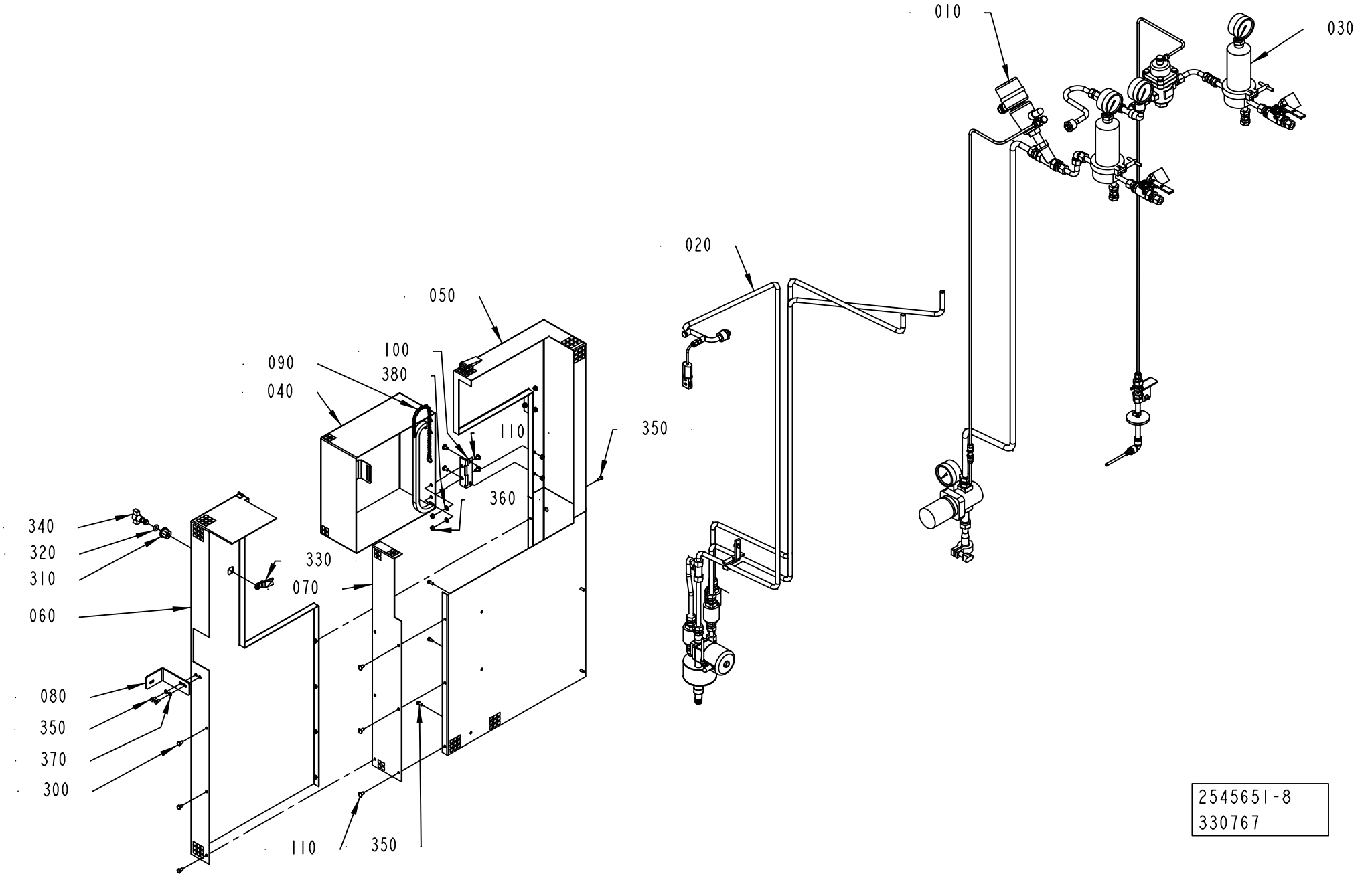
010
030
020
050
100
090
380
040
110
350
360
340
320
310
330
070
060
080
350
370
300
110
350
2545651-8
330767

ECM: 342782 - 20080706
Group number: 2545651-0400
Assembly Drawing: 2545651-8_1_AA

| Pos | Part No | UN | Qty | Description | Page No |
|---|---|---|---|---|---|
| - | | | | | |
| 010 | 2874694-0100 | | 1 | STEAM PIPE ..... | **1-241** |
| 020 | 2552215-0500 | | 1 | STEAM TRAP ..... | **1-243** |
| 030 | 2544199-0400 | | 1 | STEAM PIPE ..... | **1-245** |
| 040 | 2894654-0000 | | 1 | COVER | |
| 050 | 2894655-0000 | | 1 | COVER | |
| 060 | 2894656-0000 | | 1 | COVER | |
| 070 | 2894657-0000 | | 1 | PLATE | |
| 080 | 2894658-0000 | | 1 | HANGER | |
| 090 | 2936335-0000 | | 1 | CHAIN | |
| 100 | 2711251-0000 | | 2 | HINGE | |
| 110 | 927354-0000 | | 11 | SCREW | |
| 300 | 312105-0364 | | 3 | SCREW M6S ISO 4017 M6X10 A480 | |
| 310 | 90237-0319 | | 1 | LOCK HOUSING, 1000-U134 | |
| 320 | 90237-0323 | | 1 | LOCK O-RING, 1000-24 | |
| 330 | 90237-0335 | | 1 | LOCKING CATCH | |
| 340 | 90237-0337 | | 1 | LOCK HANDLE FOR 90237-319 | |
| 350 | 312105-0327 | | 11 | SCREW M6S ISO 4017 M5X12 A480 | |
| 360 | 312605-0316 | | 4 | HEXAGON NUT, M6M M6 A280 | |
| 370 | 315105-0146 | | 2 | WASHER BRB 5,3X10 RFR | |
| 380 | 315105-0153 | | 4 | WASHER BRB 6,4X12 RFR | |

| Pos | Part No | UN | Qty | Description | Page No |
|---|---|---|---|---|---|

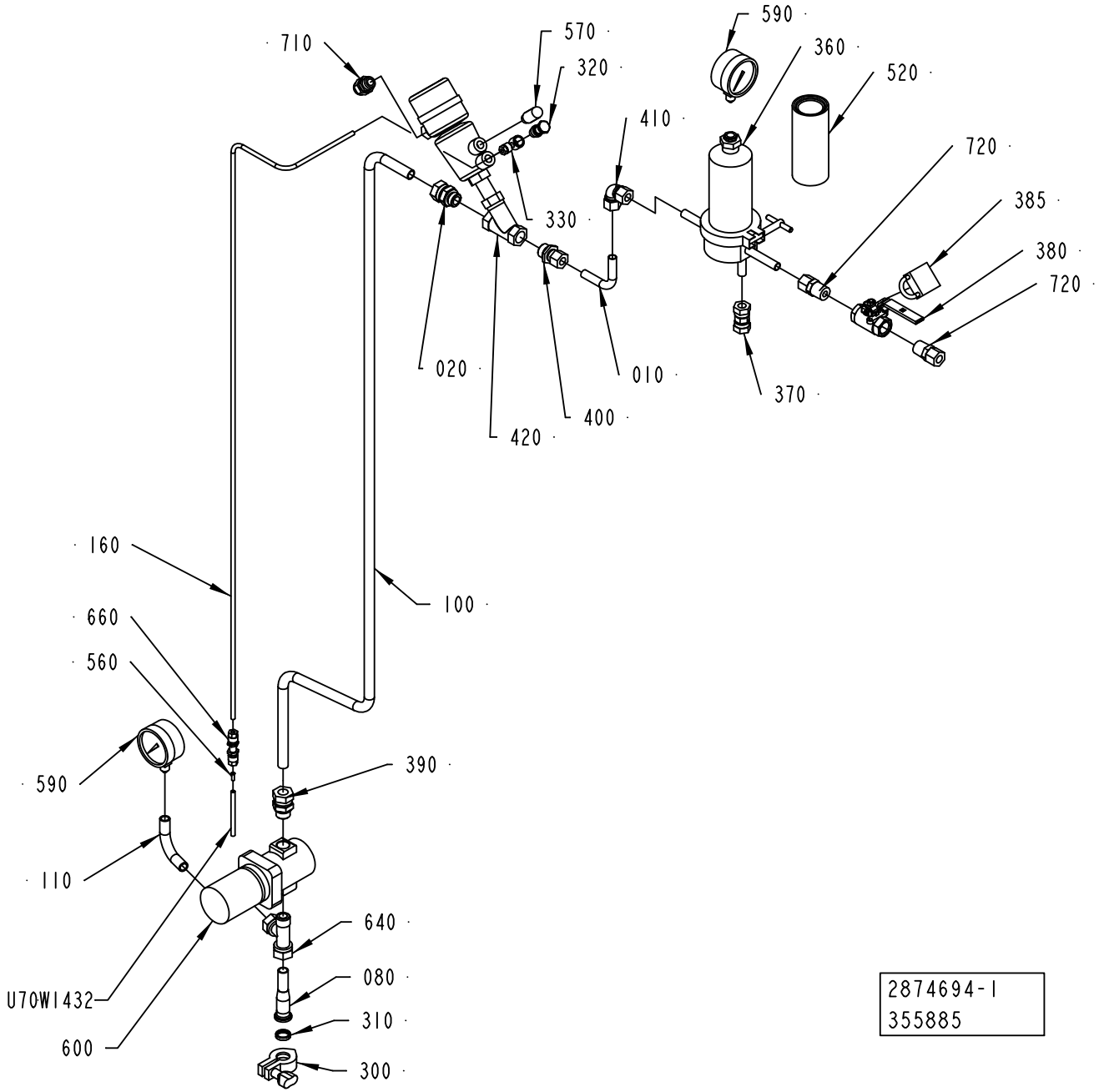


2874694-1
355885

ECM: 360063 - 20081001
Group number: 2874694-0100
Assembly Drawing: 2874694-1_1_AC

| Pos | Part No | UN | Qty | Description | Page No |
|---|---|---|---|---|---|
| - | | | | | |
| 010 | 2874701-0000 | | 1 | PIPE | |
| 020 | 2522195-0000 | | 2 | CONNECTION | |
| 080 | 2868043-0000 | | 1 | PIPE | |
| 100 | 2874695-0000 | | 1 | PIPE | |
| 110 | 2582590-0000 | | 1 | PIPE | |
| 160 | 2874708-0000 | | 1 | PIPE | |
| 300 | 90600-3559 | | 1 | CLAMPING PIECE, 211290 | |
| 310 | 90600-3558 | | 1 | GASKET 16,2X21,8X4,45 MM 3/4" | |
| 320 | 342980-0304 | | 1 | BANJO-HOLLOW BOLT COUPL,EXT.THR.01-G1/4 | |
| 330 | 342797-0122 | | 1 | CONN. BANJO, RINGPIECE 6-1/4 | |
| 360 | 90600-3159 | | 1 | FILTER HOUSING, MDS4463G58383 | |
| 370 | 90030-0106 | | 1 | CONN. PIPE G-12 | |
| 380 | 90600-3701 | | 1 | BALL VALVE 1/2NPT | |
| 385 | 779910-0101 | | 1 | PADLOCK, 250/40 W 2 KEYS | |
| 390 | 90030-0188 | | 1 | CONN. STR. GA-15-G1/2 | |
| 400 | 90030-0109 | | 1 | STRAIGHT PIPE CONN. GE12LR1/271 | |
| 410 | 90030-0096 | | 2 | CONN. ELBOW W12L71 | |
| 420 | 90459-1235 | | 1 | ANGLE SEAT VALVE, N.C. DN13 TYPE 2002 | |
| 520 | 90337-0315 | | 1 | FILTER INSERT / MCS 4463 | |
| | *90458-2549* | | *1* | *O-RING 72,69X2,62 MM* | |
| 560 | 342706-0130 | | 1 | ACCESSORIES, INSERT SLEEVE 6 MM | |
| 570 | 90328-0026 | | 1 | SILENCER G1/4" | |
| 590 | 90043-0082 | | 2 | PRESSURE GAUGE, 2740, D=63 MM | |
| 600 | 90113-0064 | | 1 | PRESSURE REGULATOR | |
| | *90458-2654* | | *1* | *GASKET KIT FOR ARC-30-1/2"* | |
| 640 | 342751-0221 | | 1 | CONN. L-PIPE, EXT. LE-15-R1/2 | |
| 660 | 90224-0349 | | 1 | CONN. BULKHEAD. 1250-6 | |
| 710 | 352103-0106 | | 1 | CABLE GLAND, ST 11, PR18,6/PG11 | |
| 720 | 90030-0180 | | 2 | CONN. STR. GE12L1/2NPT71 | |
| U70W1432 | 315400-0001 | MM | 2000 | TUBE PUN-H-6X1-BL | |

| Pos | Part No | UN | Qty | Description | Page No |
|---|---|---|---|---|---|

| Machine Type | Group Description | Used-In | Group Number | Page No |
|---|---|---|---|---|

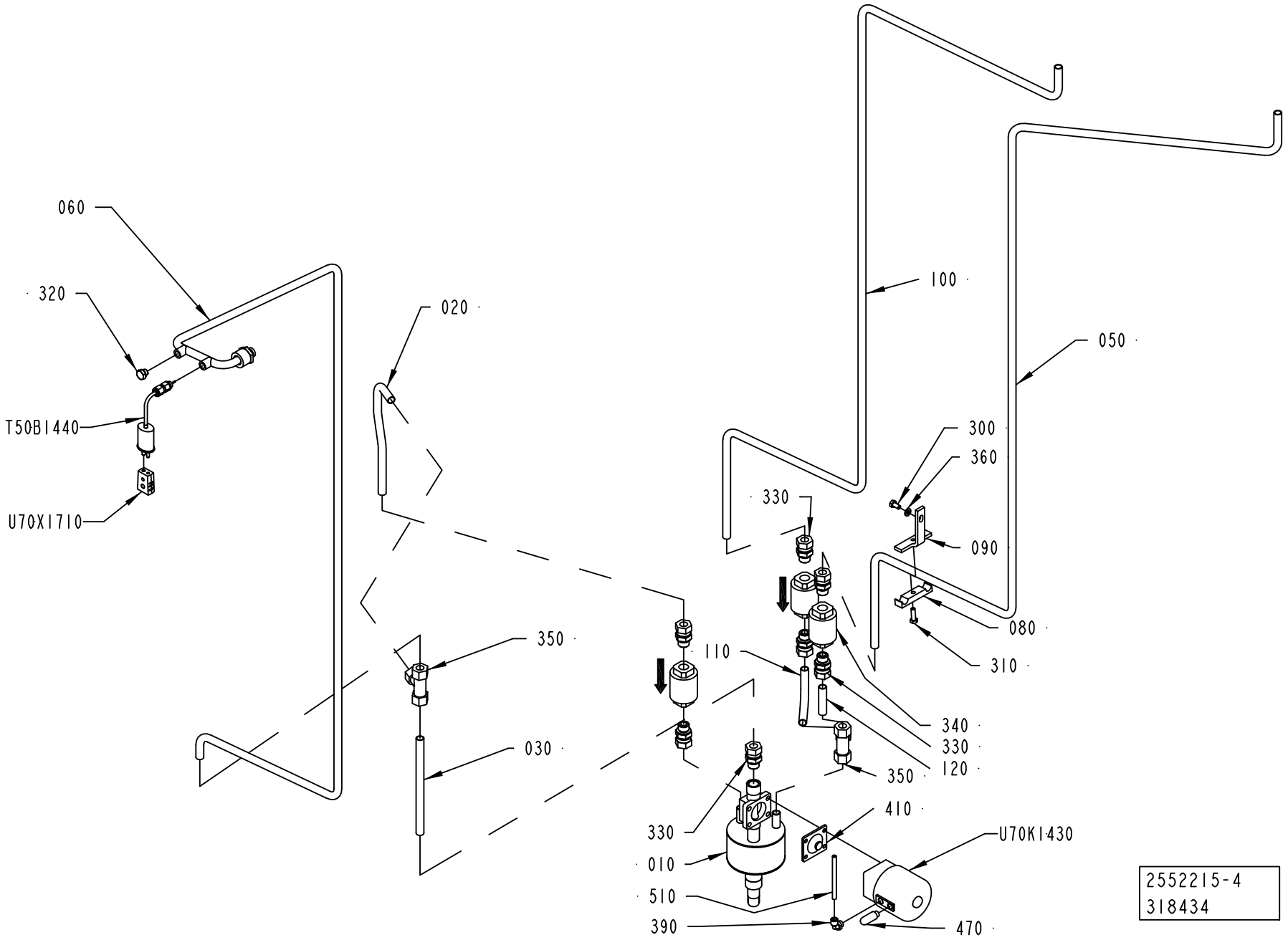
060
320
T50B1440
U70X1710
020
100
050
300
360
330
090
080
310
350
110
340
330
120
350
030
330
410
U70K1430
010
510
390
470
2552215-4
318434

ECM: 323855 - 20070910
Group number: 2552215-0500
Assembly Drawing: 2552215-4_1_AA

| Pos | Part No | UN | Qty | Description | Page No |
|---|---|---|---|---|---|
| - | | | | | |
| 010 | 2695994-0000 | | 1 | ATTACHMENT PIPE | |
| 020 | 2696037-0000 | | 1 | PIPE | |
| 030 | 2696025-0000 | | 1 | PIPE | |
| 050 | 2874705-0000 | | 1 | PIPE | |
| 060 | 2867481-0000 | | 1 | PIPE | |
| 080 | 2517371-0000 | | 1 | CLAMP | |
| 090 | 2867485-0000 | | 1 | BRACKET | |
| 100 | 2874706-0000 | | 1 | PIPE | |
| 110 | 2874701-0000 | | 1 | PIPE | |
| 120 | 2874702-0000 | | 1 | PIPE | |
| 300 | 312105-0366 | | 1 | SCREW M6S ISO 4017 M6X12 A480 | |
| 310 | 312105-0370 | | 1 | SCREW M6S ISO 4017 M6X20 A480 | |
| 320 | 90330-0066 | | 1 | PLUG, EXT. G-THREAD, G1/8 | |
| 330 | 90030-0187 | | 7 | CONN. STR. GA-12-G3/8 | |
| 340 | 90360-0020 | | 3 | STEAM TRAP / MK36/51 3/8 INCH | |
| | *90360-0309* | | *1* | *STRAINER, FOR STEAM TRAP 90360-20* | |
| | *90360-0310* | | *1* | *CAPSULE, FOR STEAM TRAP 90360-20* | |
| 350 | 90030-0058 | | 2 | CONN. T-PIPE T-12 | |
| 360 | 315105-0153 | | 1 | WASHER BRB 6,4X12 RFR | |
| 390 | 90458-2956 | | 1 | ELBOW PIPE JOINT, EXT.THREAD, D=6MM-G1/8 | |
| 410 | 90459-5901 | | 1 | DIAPHRAGM, 425 EPM SIZE 15 | |
| 470 | 90328-0047 | | 1 | SILENCER G1/8" | |
| 510 | 315400-0001 | MM | 1000 | TUBE PUN-H-6X1-BL | |
| T50B1440 | 90326-0089 | | 1 | THERMOCOUPLE, 5110-089-000 | |
| U70K1430 | 90187-0110 | | 1 | DIAPHRAGM VALVE DN15, NC WELD CONN. | |
| U70X1710 | 90326-0020 | | 1 | PLUG, FEMALE YELLOW CR-AL | |

| Pos | Part No | UN | Qty | Description | Page No |
|---|---|---|---|---|---|

Machine Type | Group Description | Used-In | Group Number | Page No

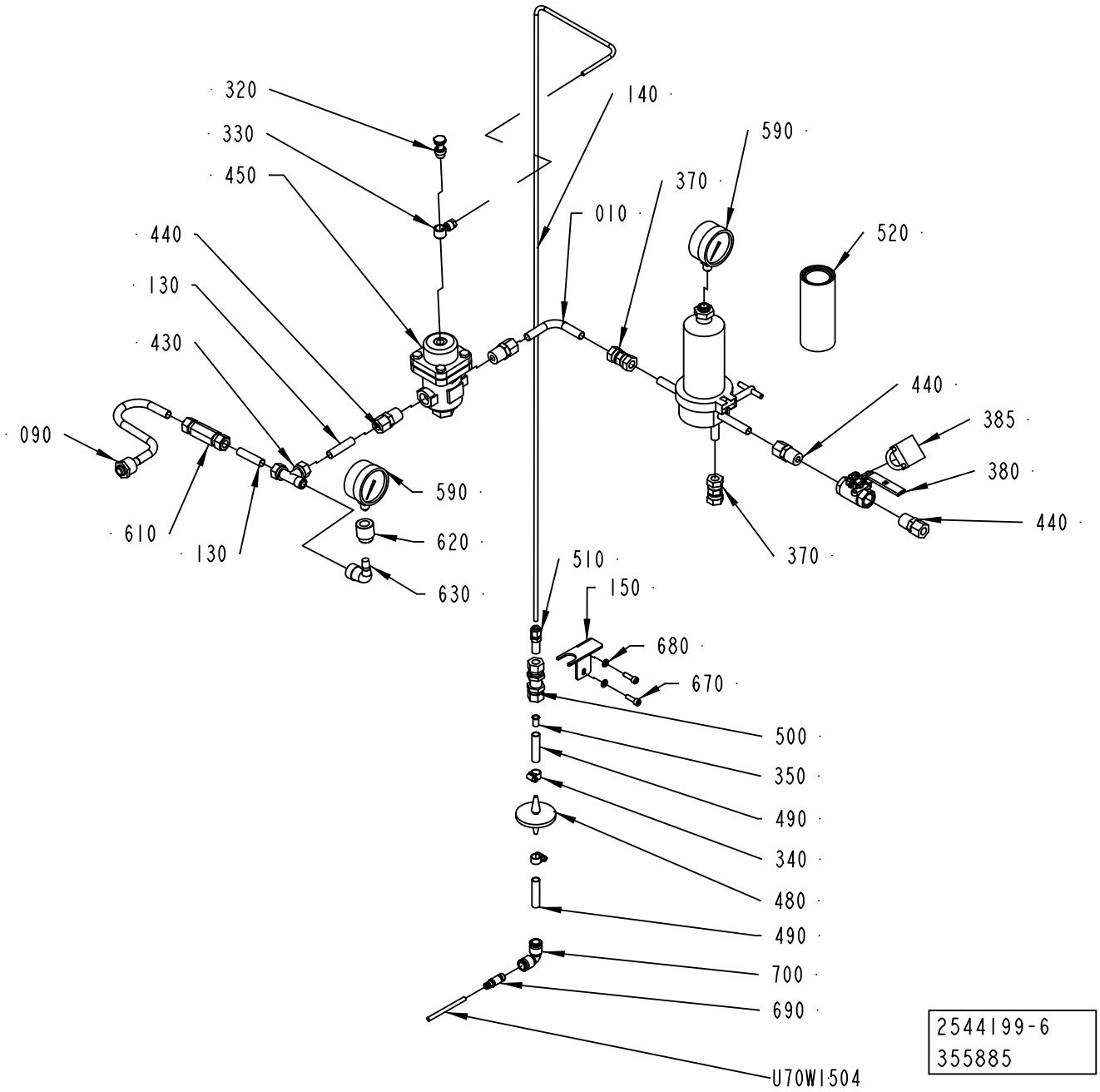
320
330
450
440
130
430
090
610
130
590
620
630
140
010
370
590
520
440
385
380
440
370
510
150
680
670
500
350
490
340
480
490
700
690
U70W1504
2544199-6
355885

ECM: 360064 - 20081001
Group number: 2544199-0400
Assembly Drawing: 2544199-6_1_AC

| Pos | Part No | UN | Qty | Description | Page No |
|---|---|---|---|---|---|
| - | | | | | |
| 010 | 2874701-0000 | | 1 | PIPE | |
| 090 | 2874700-0000 | | 1 | PIPE | |
| 130 | 2874702-0000 | | 2 | PIPE | |
| 140 | 2874703-0000 | | 1 | PIPE | |
| 150 | 2616298-0000 | | 1 | BRACKET | |
| 320 | 342980-0304 | | 1 | BANJO-HOLLOW BOLT COUPL,EXT.THR.01-G1/4 | |
| 330 | 342797-0122 | | 1 | CONN. BANJO, RINGPIECE 6-1/4 | |
| 340 | 342991-0100 | | 2 | HOSE CLIP,WORM DRIVE TYPE 10-13 | |
| 350 | 342706-0195 | | 1 | ACCESSORIES, INSERT SLEEVE 12 MM | |
| 360 | 90600-3159 | | 1 | FILTER HOUSING, MDS4463G58383 | |
| 370 | 90030-0106 | | 2 | CONN. PIPE G-12 | |
| 380 | 90600-3701 | | 1 | BALL VALVE 1/2NPT | |
| 385 | 779910-0101 | | 1 | PADLOCK, 250/40 W 2 KEYS | |
| 430 | 342751-0215 | | 1 | CONN. L-PIPE, EXT. LE-12-R3/8 | |
| 440 | 90030-0180 | | 4 | CONN. STR. GE12L1/2NPT71 | |
| 450 | 90458-2264 | | 1 | PRESSURE REGULATOR ARC-30-1/2" | |
| | *90458-2655* | | *1* | *STRAINER FOR ARC-30-1/2"* | |
| | *90458-2654* | | *1* | *GASKET KIT FOR ARC-30-1/2"* | |
| | *90458-2653* | | *1* | *BELLOWS AISI 316L FOR ARC-30-1/2"* | |
| 480 | 90458-2554 | | 1 | STERILE GRADE MEMBRANE FILTER 0,2µM | |
| 490 | 90166-0195 | MM | 50 | TUBE 12 MM PA BLUE | |
| 500 | 90030-0030 | | 1 | CONN. BULKHEAD SV12L71 | |
| 510 | 90030-0481 | | 1 | REDUCER M12TURM6-316 | |
| 520 | 90337-0315 | | 1 | FILTER INSERT / MCS 4463 | |
| | *90458-2549* | | *1* | *O-RING 72,69X2,62 MM* | |
| 550 | 90166-0195 | MM | 50 | TUBE 12 MM PA BLUE | |
| 590 | 90043-0082 | | 2 | PRESSURE GAUGE, 2740, D=63 MM | |
| 610 | 90459-4686 | | 1 | NON-RETURN VALVE, M12A-C6L-1-EPR-SS | |
| 620 | 90330-0011 | | 1 | SLEEVE, REDUCTION, INT, R-2023/8X1/4 | |
| 630 | 90330-0172 | | 1 | ELBOW, 90 INT/EXT, SS-6-SE | |
| 670 | 312115-0370 | | 2 | SCREW ISO4762 M6X20 A4 80 | |
| 680 | 315105-0153 | | 2 | WASHER BRB 6,4X12 RFR | |
| 690 | 342716-0210 | | 1 | REDUCER 6-12 | |
| 700 | 342735-0109 | | 1 | ELBOW PIPE JOINT | |
| U70W1504 | 315400-0001 | MM | 1000 | TUBE PUN-H-6X1-BL | |

| Pos | Part No | UN | Qty | Description | Page No |
|---|---|---|---|---|---|

Machine Type | Group Description | Used-In | Group Number | Page No

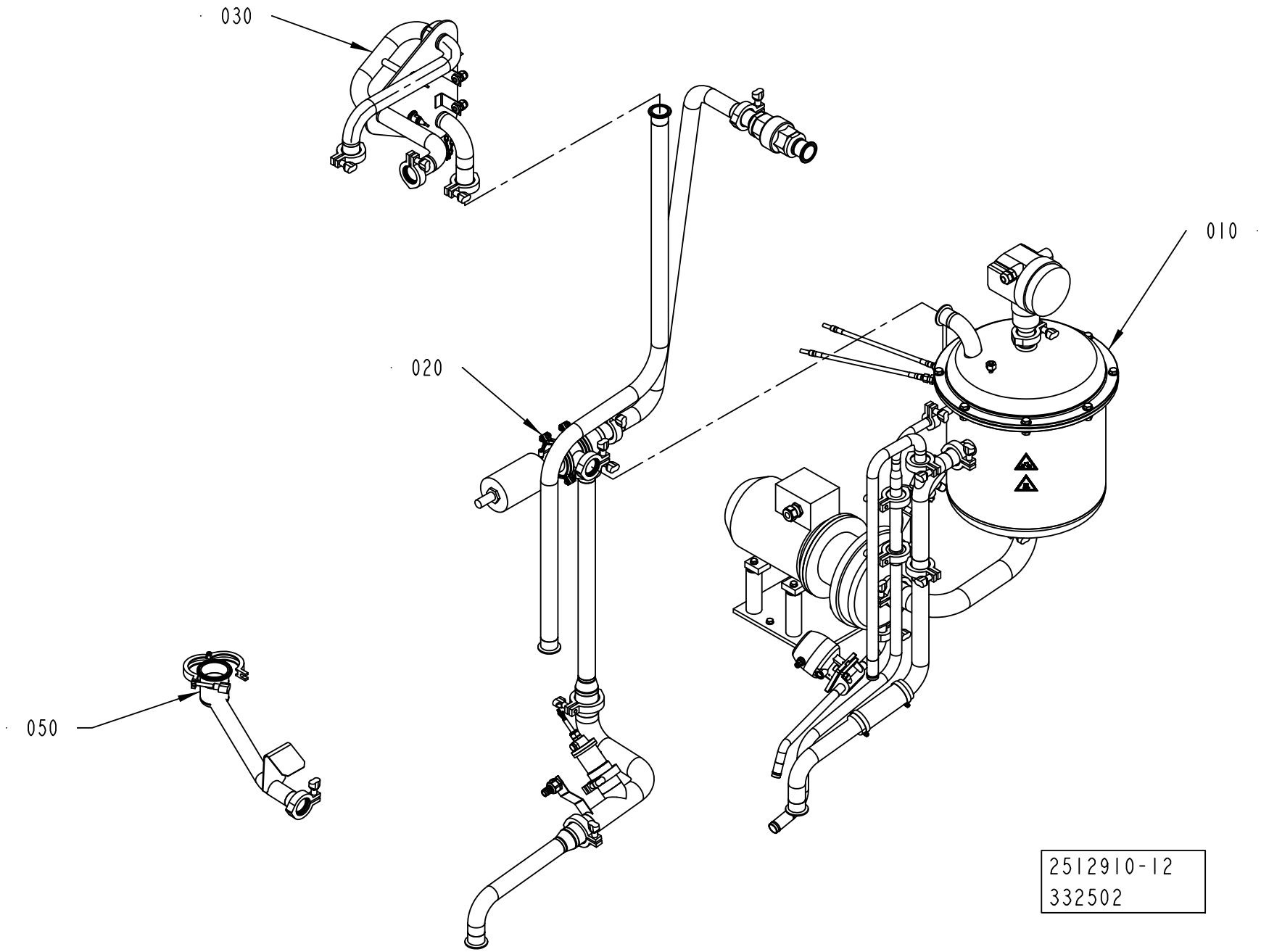
030
020
010
050
2512910-12
332502

ECM: 343129 - 20080410
Group number: 2512910-0400
Assembly Drawing: 2512910-12_1_AA

| Pos | Part No | UN | Qty | Description | Page No |
|---|---|---|---|---|---|
| **A3/FLEX** | | | | | |
| 050 | 2512936-0100 | | 1 | CLEANING CUP | **1-249** |
| **Common Parts** | | | | | |
| 010 | 2775100-0200 | | 1 | INTEGRATED CLEANING UNIT | **1-251** |
| 020 | 2833350-0200 | | 1 | PIPE WORK | **1-259** |
| 030 | 2539452-0300 | | 1 | FLOW SWITCH | **1-261** |

| Pos | Part No | UN | Qty | Description | Page No |
|---|---|---|---|---|---|

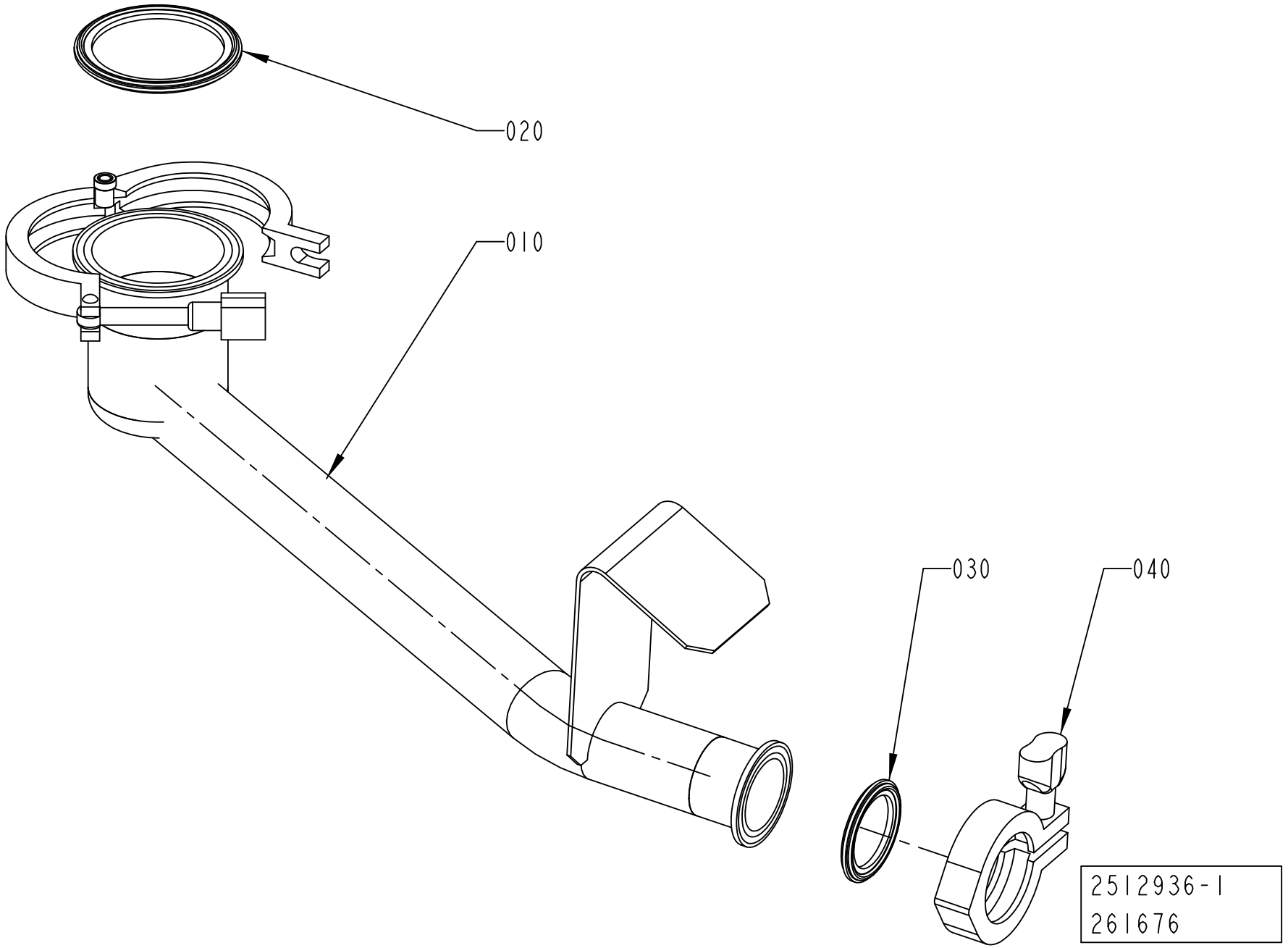
020
010
030
040
2512936-1
261676

ECM: 348929 - 20080703
Group number: 2512936-0100
Assembly Drawing: 2512936-1_1_AB

| Pos | Part No | UN | Qty | Description | Page No |
|---|---|---|---|---|---|
| **TPA 1000SQ, TPA 0750SQ (See drawing on page: 1-248)** | | | | | |
| 010 | 2833036-0000 | | 1 | CLEANING CUP | |
| 020 | 342850-0305 | | 1 | GASKET 47,8X62,6X5,2 MM 2" FDA | |
| 030 | 342850-0304 | | 1 | GASKET 35,4X49,1X5,2 1"1/2 FDA | |
| **TBA 0500SQ, TBA 1000B, TBA 1000SQ, TBA 1000S, TBA 1500S, TBA 2000S (See drawing on page: 1-248)** | | | | | |
| 010 | 2832620-0000 | | 1 | CLEANING CUP | |
| 020 | 342850-0306 | | 1 | GASKET 60,3X76,1X5,2 MM 2"1/2 FDA 3-A | |
| 030 | 342850-0304 | | 1 | GASKET 35,4X49,1X5,2 1"1/2 FDA | |
| **Common Parts** | | | | | |
| 040 | 342840-0103 | | 1 | CLAMPING PIECE | |

| Pos | Part No | UN | Qty | Description | Page No |
|---|---|---|---|---|---|

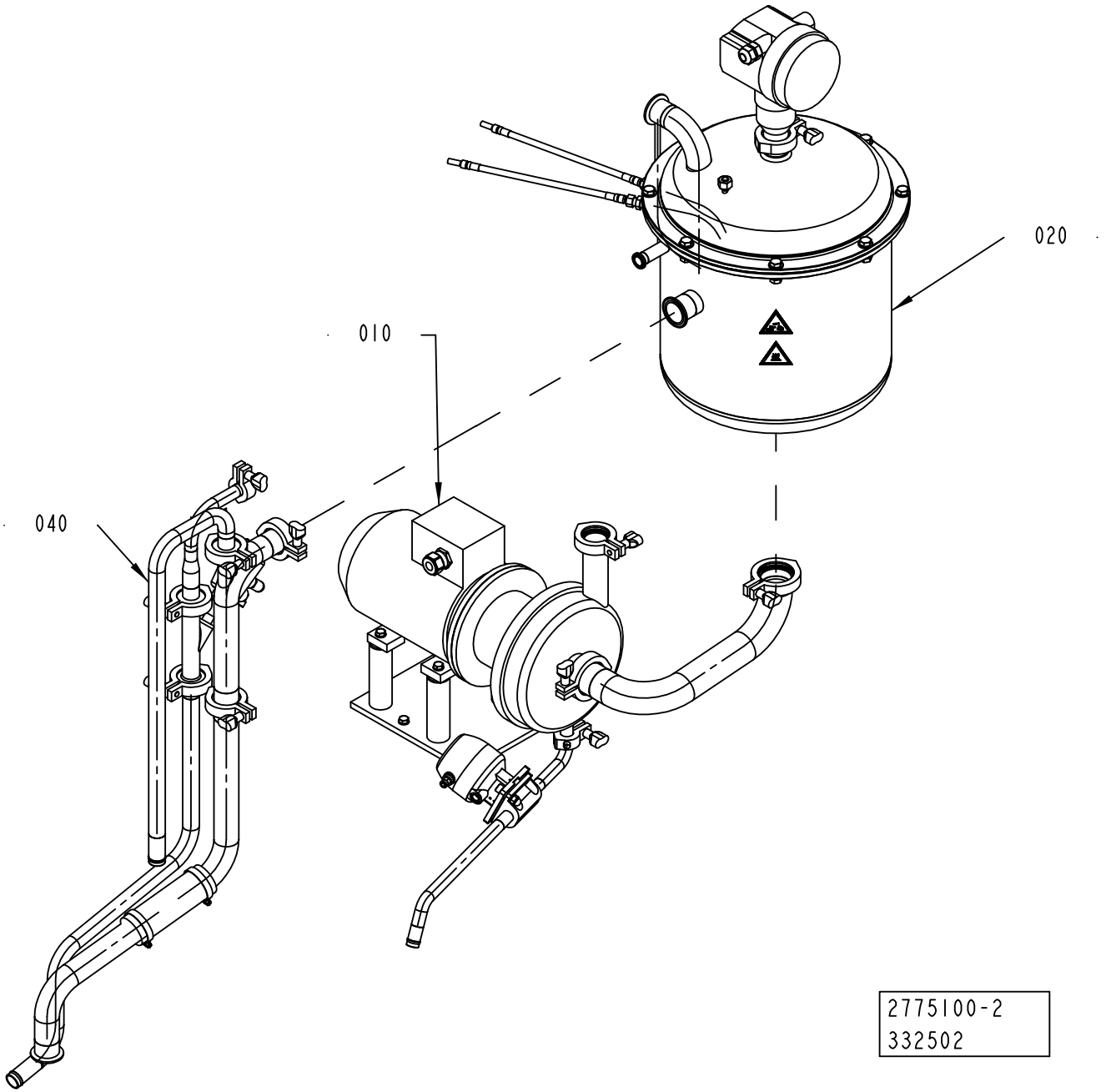
020
010
040
2775100-2
332502

ECM: 343134 - 20080410
Group number: 2775100-0200
Assembly Drawing: 2775100-2_1_AA


| Pos | Part No | UN | Qty | Description | Page No |
|---|---|---|---|---|---|
| - | | | | | |
| 010 | 2829770-0200 | | 1 | CENTRIFUGAL PUMP | **1-253** |
| 020 | 2837100-0200 | | 1 | CLEANING TANK | **1-255** |
| 040 | 2833354-0200 | | 1 | PIPE-LINE | **1-257** |

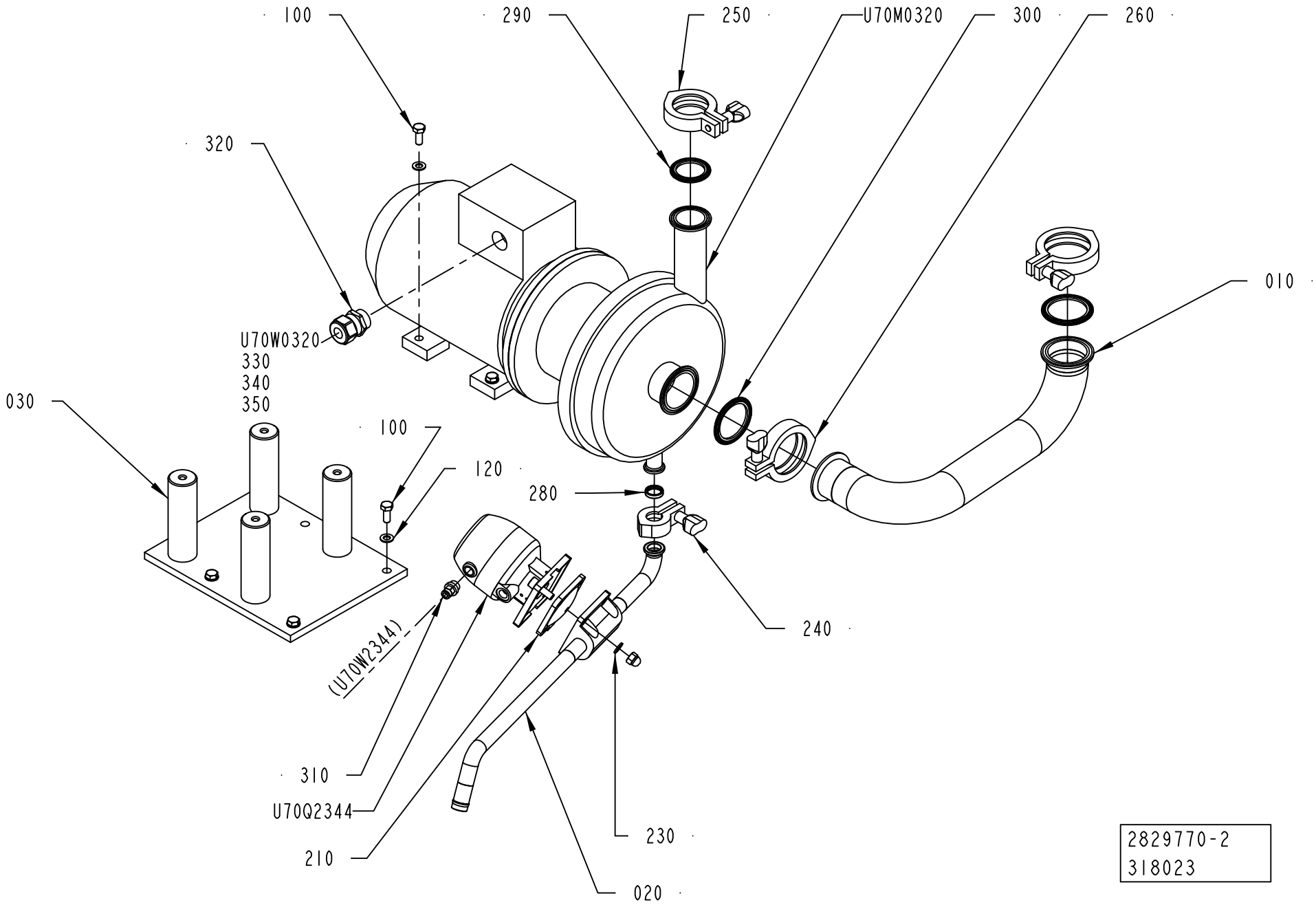
100
290
250
U70M0320
300
260
320
010
U70W0320
330
340
350
030
100
120
280
240
(U70W2344)
310
U70Q2344
210
230
020
2829770-2
318023

ECM: 342775 - 20080706
Group number: 2829770-0200
Assembly Drawing: 2829770-2_1_AB

| Pos | Part No | UN | Qty | Description | Page No |
|---|---|---|---|---|---|
| **A3/FLEX** | | | | | |
| 020 | 2833348-0000 | | 1 | DRAIN PIPE | |
| **Common Parts** | | | | | |
| 010 | 2829769-0000 | | 1 | PIPE | |
| 030 | 2833351-0000 | | 1 | SUPPORT | |
| 100 | 312105-0451 | | 7 | SCREW M6S ISO 4017 M8X20 A480 | |
| 120 | 315105-0165 | | 7 | WASHER BRB 8,4X16 RFR | |
| 210 | 342800-1103 | | 1 | DIAPHRAGM FDA PTFE/EPDM 5E, SEAT S. 25 | |
| 230 | 342800-1503 | | 1 | VALVE ASSEMBLING KIT, SEAT S. 25 | |
| 240 | 90600-3559 | | 1 | CLAMPING PIECE, 211290 | |
| 250 | 342840-0103 | | 1 | CLAMPING PIECE | |
| 260 | 342840-0105 | | 2 | CLAMPING PIECE | |
| 280 | 90600-3558 | | 1 | GASKET 16,2X21,8X4,45 MM 3/4" | |
| 290 | 342850-0304 | | 1 | GASKET 35,4X49,1X5,2 1"1/2 FDA | |
| 300 | 342850-0305 | | 2 | GASKET 47,8X62,6X5,2 MM 2" FDA | |
| 310 | 350001-0008 | | 1 | PUSH-IN FITTING QS-F-G1/4-6 | |
| 320 | 90458-0440 | | 1 | GLAND, EXTENDED WITH INSERT, M25X1,5 | |
| 330 | 90459-6632 | | 1 | HOOD 6 B TOP ENTRY,  19 30 006 1440 | |
| 340 | 90110-0052 | | 1 | MALE INSERT HAN 6E 09 33 006 2601 | |
| 350 | 90458-0307 | | 1 | CABLE GLAND, M20X1,5, NO.5311 1020 | |
| U70M0320 | 2851886-0000 | | 1 | CENTRIFUGAL PUMP | |
| | *6-9611 92 2454* | | *1* | *SERVICE KIT SOLIDC-1 EPDM SSS* | |
| U70Q2344 | 342800-1303 | | 1 | ACTUATOR, SS, N.O. SEAT S. 25 | |
| U70W0320 | 90220-0104 | MM | 6300 | SCR. CABLE 4X1,5MM2 | |

| Pos | Part No | UN | Qty | Description | Page No |
|---|---|---|---|---|---|

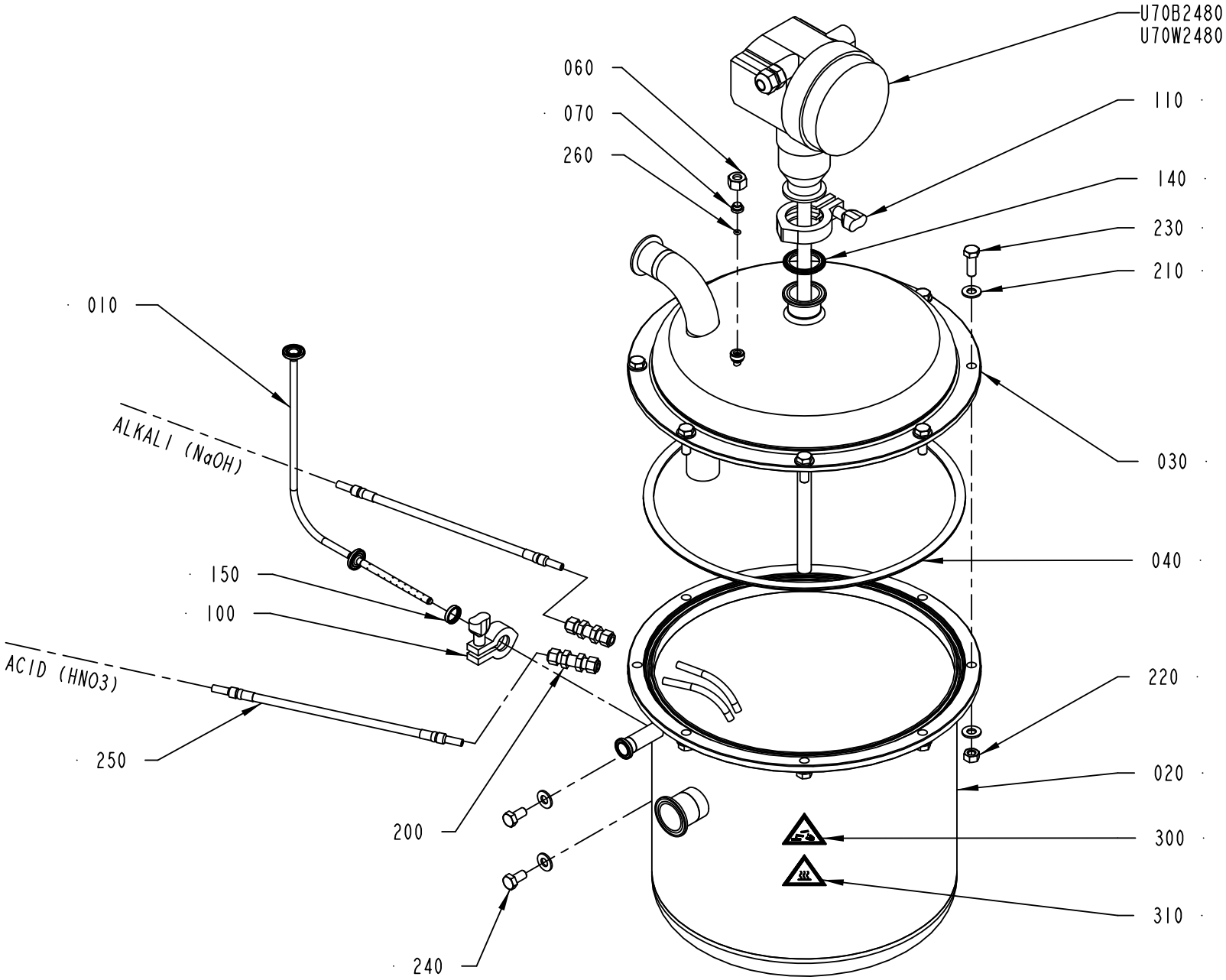


2837100-2
329600

ECM: 342777 - 20080706
Group number: 2837100-0200
Assembly Drawing: 2837100-2_1_AC

| Pos | Part No | UN | Qty | Description | Page No |
|---|---|---|---|---|---|
| **NOHI** | | | | | |
| 060 | 2847313-0000 | | 1 | NUT | |
| 070 | 2869175-0000 | | 1 | PLUG | |
| **Common Parts** | | | | | |
| 010 | 2895158-0000 | | 1 | STEAM PIPE | |
| 020 | 2799899-0000 | | 1 | CLEANING TANK | |
| 030 | 2829764-0000 | | 1 | LID | |
| 040 | 2829766-0000 | | 1 | SEALING | |
| 100 | 90600-3559 | | 1 | CLAMPING PIECE, 211290 | |
| 110 | 342840-0103 | | 1 | CLAMPING PIECE | |
| 140 | 342850-0304 | | 1 | GASKET 35,4X49,1X5,2 1"1/2 FDA | |
| 150 | 90600-3558 | | 1 | GASKET 16,2X21,8X4,45 MM 3/4" | |
| 200 | 90030-0485 | | 2 | CONN. BULKHEAD SV 8- | |
| 210 | 315105-0173 | | 18 | WASHER BRB 10,5X22 RFR | |
| 220 | 312605-0320 | | 8 | HEXAGON NUT, M6M M10 A280 | |
| 230 | 312105-0495 | | 8 | SCREW M6S ISO 4017 M10X30 A480 | |
| 240 | 312105-0491 | | 2 | SCREW M6S ISO 4017 M10X20 A480 | |
| 250 | 90459-4169 | | 2 | HOSE ASSEMBLY 919-1D-1D-8-8-5C-3800 | |
| 260 | 90600-0495 | | 1 | O-RING 4X2 MM | |
| 300 | 359705-0003 | | 1 | WARNING SIGN ISO, DANGEROUS CHEMICALS | |
| 310 | 359705-0007 | | 1 | WARNING SIGN ISO, HOT SURFACE | |
| U70B2480 | 90600-0821 | | 1 | LEVEL PR.,LEVELFLEX-M FMP41C-AKTJKB11A2Y | |
| U70W2480 | 90459-4274 | MM | 4500 | SCR. CABLE 2X0,5MM2 | |

| Pos | Part No | UN | Qty | Description | Page No |
|---|---|---|---|---|---|

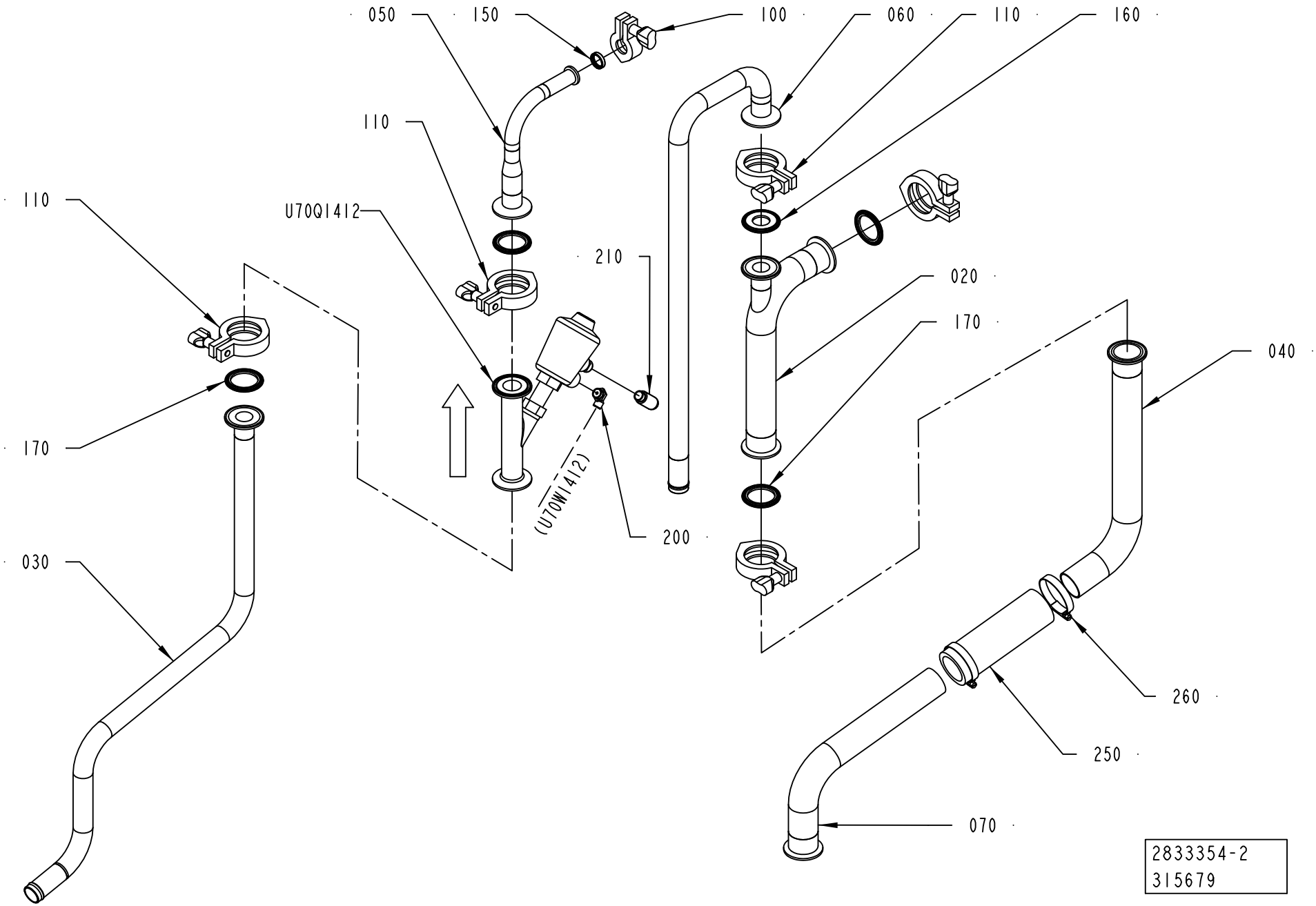
050
150
100
060
110
160
110
U70Q1412
210
020
110
170
170
040
030
(U70W1412)
200
260
250
070
2833354-2
315679

ECM: 342776 - 20080706
Group number: 2833354-0200
Assembly Drawing: 2833354-2_1_AA

| Pos | Part No | UN | Qty | Description | Page No |
|---|---|---|---|---|---|
| - | | | | | |
| 020 | 2696005-0000 | | 1 | PIPE | |
| 030 | 2866004-0000 | | 1 | PIPE | |
| 040 | 2890594-0000 | | 1 | PIPE | |
| 050 | 2833345-0000 | | 1 | PIPE | |
| 060 | 2851883-0000 | | 1 | PIPE | |
| 070 | 2890593-0000 | | 1 | PIPE | |
| 100 | 90600-3559 | | 1 | CLAMPING PIECE, 211290 | |
| 110 | 342840-0103 | | 5 | CLAMPING PIECE | |
| 150 | 90600-3558 | | 1 | GASKET 16,2X21,8X4,45 MM 3/4" | |
| 160 | 342850-0303 | | 1 | GASKET 22,7X49,1X5,2 MM 1" FDA | |
| 170 | 342850-0304 | | 4 | GASKET 35,4X49,1X5,2 1"1/2 FDA | |
| 200 | 90458-2957 | | 1 | ELBOW PIPE JOINT, EXT.THREAD, D=6MM-G1/4 | |
| 210 | 90328-0026 | | 1 | SILENCER G1/4" | |
| 250 | 90166-0236 | MM | 150 | HOSE, 38/51 REINFORCED RUBBER | |
| 260 | 342991-0109 | | 2 | HOSE CLIP,WORM DRIVE TYPE (48)-50 | |
| U70Q1412 | 90459-1241 | | 1 | ANGLE SEAT VALVE, TRI-CLAMP, N.C. DN20 | |

| Pos | Part No | UN | Qty | Description | Page No |
|---|---|---|---|---|---|

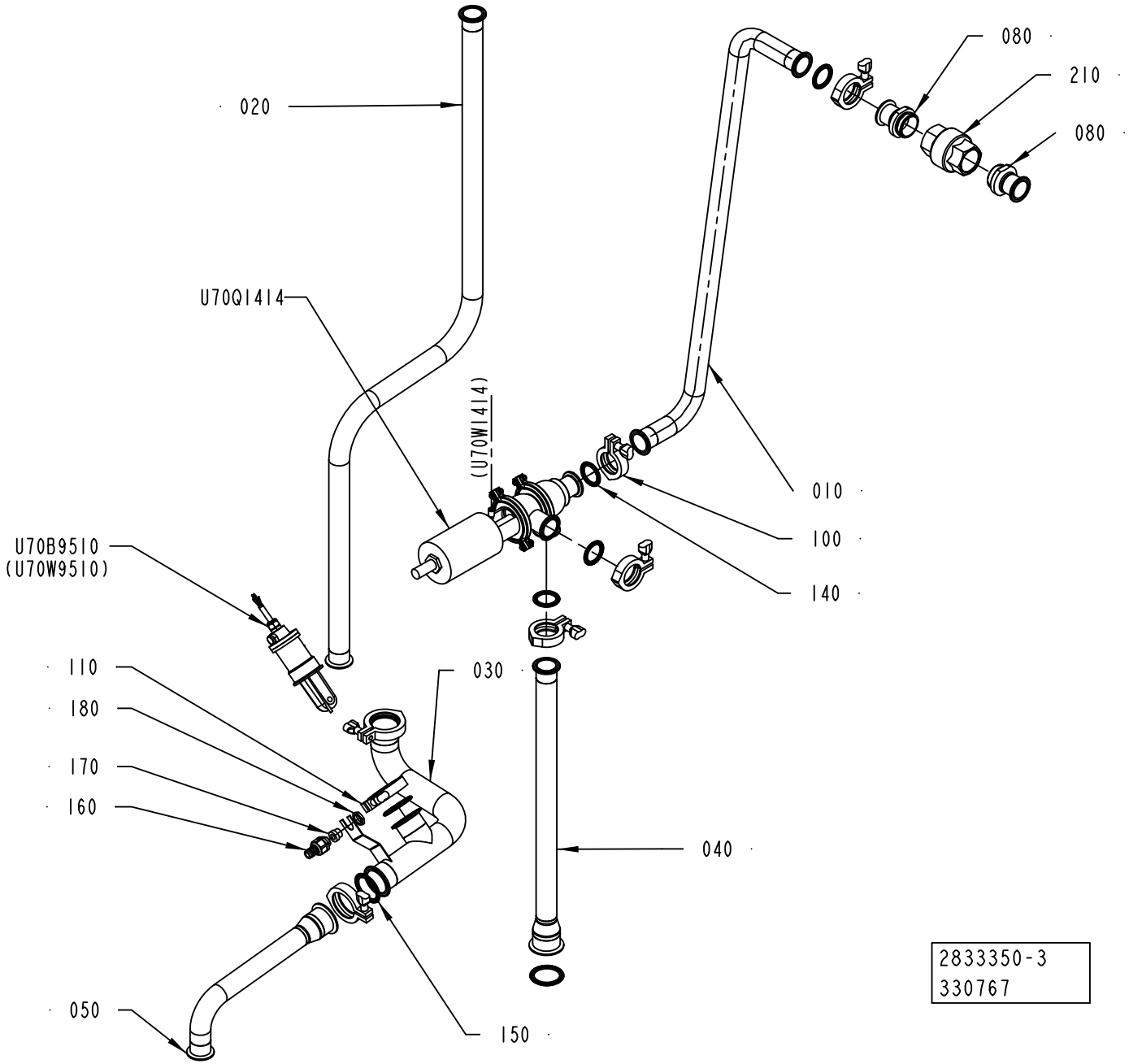
020
080
210
080
U70Q1414
(U70W1414)
010
100
140
U70B9510
(U70W9510)
110
180
170
160
030
040
050
150
2833350-3
330767

ECM: 343049 - 20080706
Group number: 2833350-0200
Assembly Drawing: 2833350-3_1_AB

| Pos | Part No | UN | Qty | Description | Page No |
|---|---|---|---|---|---|
| **A3/FLEX** | | | | | |
| 030 | 2869172-0000 | | 1 | PIPE | |
| 040 | 2869173-0000 | | 1 | PIPE | |
| 050 | 2869171-0000 | | 1 | ELBOW PIPE | |
| 160 | 353243-0003 | | 1 | HOSE GLAND W/O INSERT PG11 EXTENDED | |
| 170 | 353249-0011 | | 1 | INSERT, SINGLE HOLE, EK 153/11 | |
| **Common Parts** | | | | | |
| 010 | 2936336-0000 | | 1 | PIPE | |
| 020 | 2829767-0000 | | 1 | PIPE | |
| 080 | 2531083-0000 | | 2 | SLEEVE | |
| 100 | 342840-0103 | | 4 | CLAMPING PIECE | |
| 110 | 342840-0105 | | 3 | CLAMPING PIECE | |
| 140 | 342850-0304 | | 4 | GASKET 35,4X49,1X5,2 1"1/2 FDA | |
| 150 | 342850-0305 | | 3 | GASKET 47,8X62,6X5,2 MM 2" FDA | |
| 180 | 90099-0117 | | 1 | NUT, PR 18,6 (PG11) | |
| 210 | 90230-0045 | | 1 | NON-RETURN VALVE 1 1/2" | |
| | *90230-0309* | | *1* | *GASKET KIT* | |
| U70B9510 | 90600-3924 | | 1 | CONDUCTIVITY SENSOR CLS 54-ACS1022 | |
| U70Q1414 | 90600-1946 | | 1 | VALVE, SEAT, 3A. 9613320304 | |

| Pos | Part No | UN | Qty | Description | Page No |
|---|---|---|---|---|---|

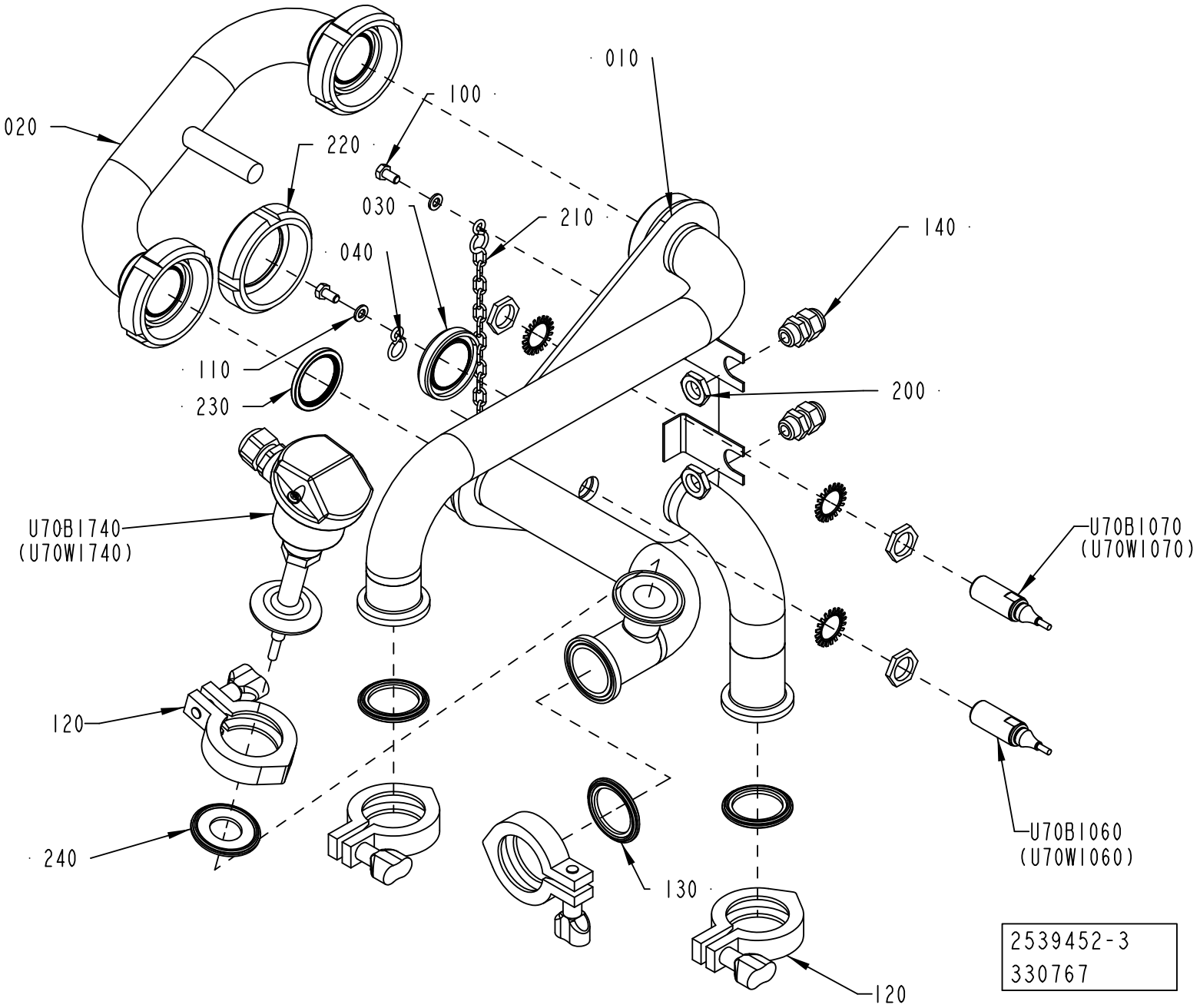
010
100
020
220
030
210
040
140
110
200
230
U70B1740
(U70W1740)
U70B1070
(U70W1070)
120
240
U70B1060
(U70W1060)
130
120
2539452-3
330767

ECM: 342781 - 20080706
Group number: 2539452-0300
Assembly Drawing: 2539452-3_1_AB

| Pos | Part No | UN | Qty | Description | Page No |
|---|---|---|---|---|---|
| - | | | | | |
| 010 | 2936337-0000 | | 1 | PIPE SUPPORT | |
| 020 | 2696029-0000 | | 1 | CONNECTING PIPE | |
| 030 | 2525338-0000 | | 1 | PLUG | |
| 040 | 209183-0000 | | 2 | RING | |
| 100 | 312105-0366 | | 2 | SCREW M6S ISO 4017 M6X12 A480 | |
| 110 | 315105-0153 | | 2 | WASHER BRB 6,4X12 RFR | |
| 120 | 342840-0103 | | 4 | CLAMPING PIECE | |
| 130 | 342850-0304 | | 3 | GASKET 35,4X49,1X5,2 1"1/2 FDA | |
| 140 | 352103-0101 | | 2 | CABLE GLAND, ST 9, PR15,2/PG9 | |
| 200 | 90099-0104 | | 2 | NUT, PR 15,2 (PG9) | |
| 210 | 90155-0008 | MM | 500 | HANGER CHAIN, 18 | |
| 220 | 90217-0206 | | 1 | UNION NUT, 1 1/2 APV, 07-01-376/17 | |
| 230 | 90217-0348 | | 3 | GASKET 35,4X46,8X4 MM | |
| 240 | 342850-0303 | | 1 | GASKET 22,7X49,1X5,2 MM 1" FDA | |
| U70B1060 | 90600-0467 | | 1 | INDUCTIVE SWITCH,E2A-M18KS05-WP-B1-TP 6M | |
| U70B1070 | 90600-0467 | | 1 | INDUCTIVE SWITCH,E2A-M18KS05-WP-B1-TP 6M | |
| U70B1740 | 90600-4392 | | 1 | TEMPERATURE SENSOR, TR45-BF5A1Q3MA0000 | |
| U70W1740 | 351150-0404 | MM | 1000 | CABLE OLFLEX 4X0,75 MM2 LIGHT/GREY | |

| Pos | Part No | UN | Qty | Description | Page No |
|---|---|---|---|---|---|

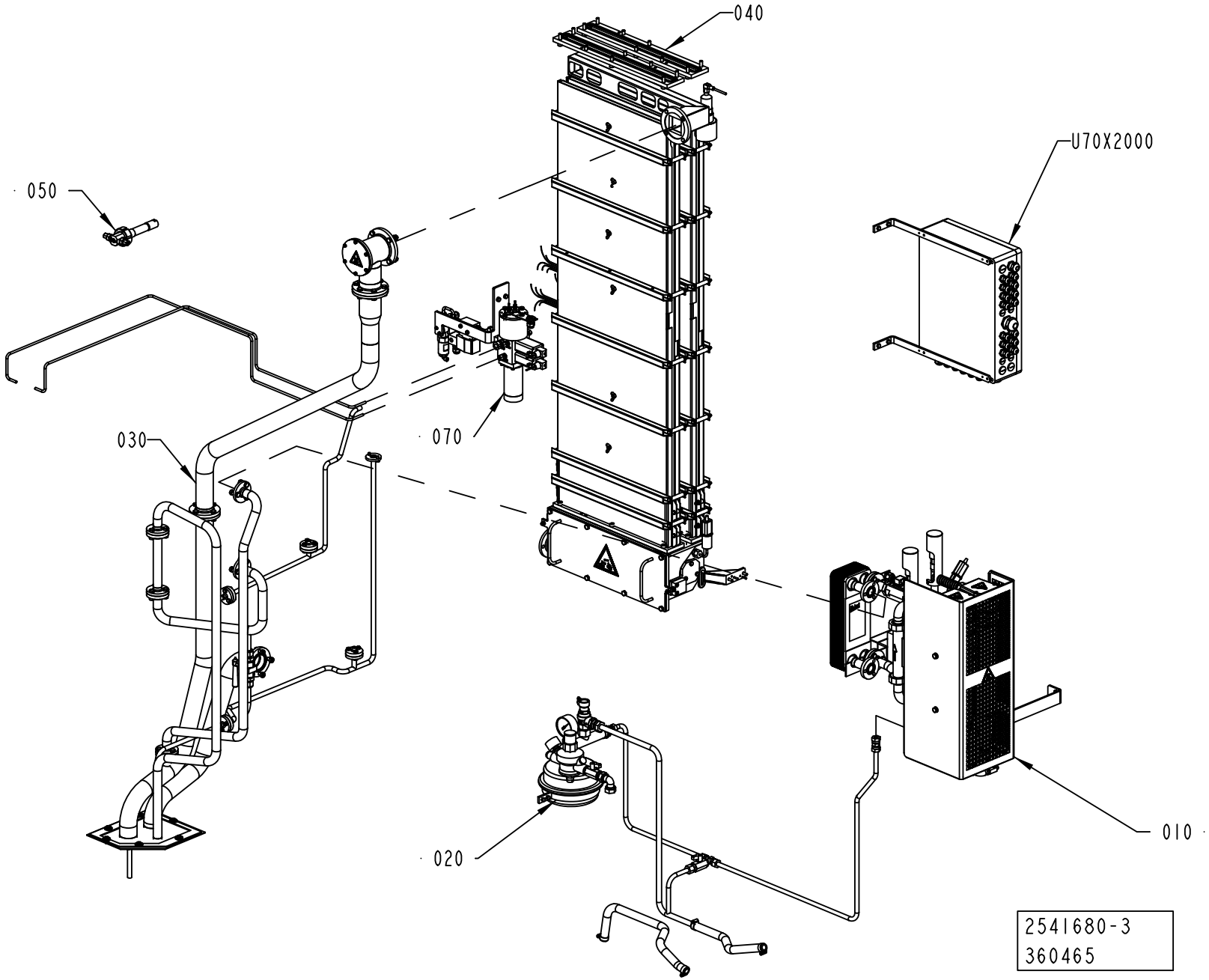
040
U70X2000
050
030
070
010
020
2541680-3
360465

ECM: 360465 - 20080711
Group number: 2541680-0200
Assembly Drawing: 2541680-3_1_AB

| Pos | Part No | UN | Qty | Description | Page No |
|---|---|---|---|---|---|
| - | | | | | |
| 010 | 1558495-0200 | | 1 | HEATING UNIT | **1-265** |
| 020 | 2531052-0200 | | 1 | PRESSURE UNIT | **1-267** |
| 030 | 2529484-0300 | | 1 | PEROXIDE PIPE | **1-269** |
| 040 | 2715556-0300 | | 1 | BATH | **1-271, 1-273** |
| 050 | 2547391-0100 | | 1 | NOZZLE | **1-275** |
| 070 | 2529485-0300 | | 1 | SPRAY SYSTEM | **1-277** |
| U70X2000 | 2780203-0200 | | 1 | CONNECTION BOX | **1-279, 1-281** |

| Pos | Part No | UN | Qty | Description | Page No |
|---|---|---|---|---|---|

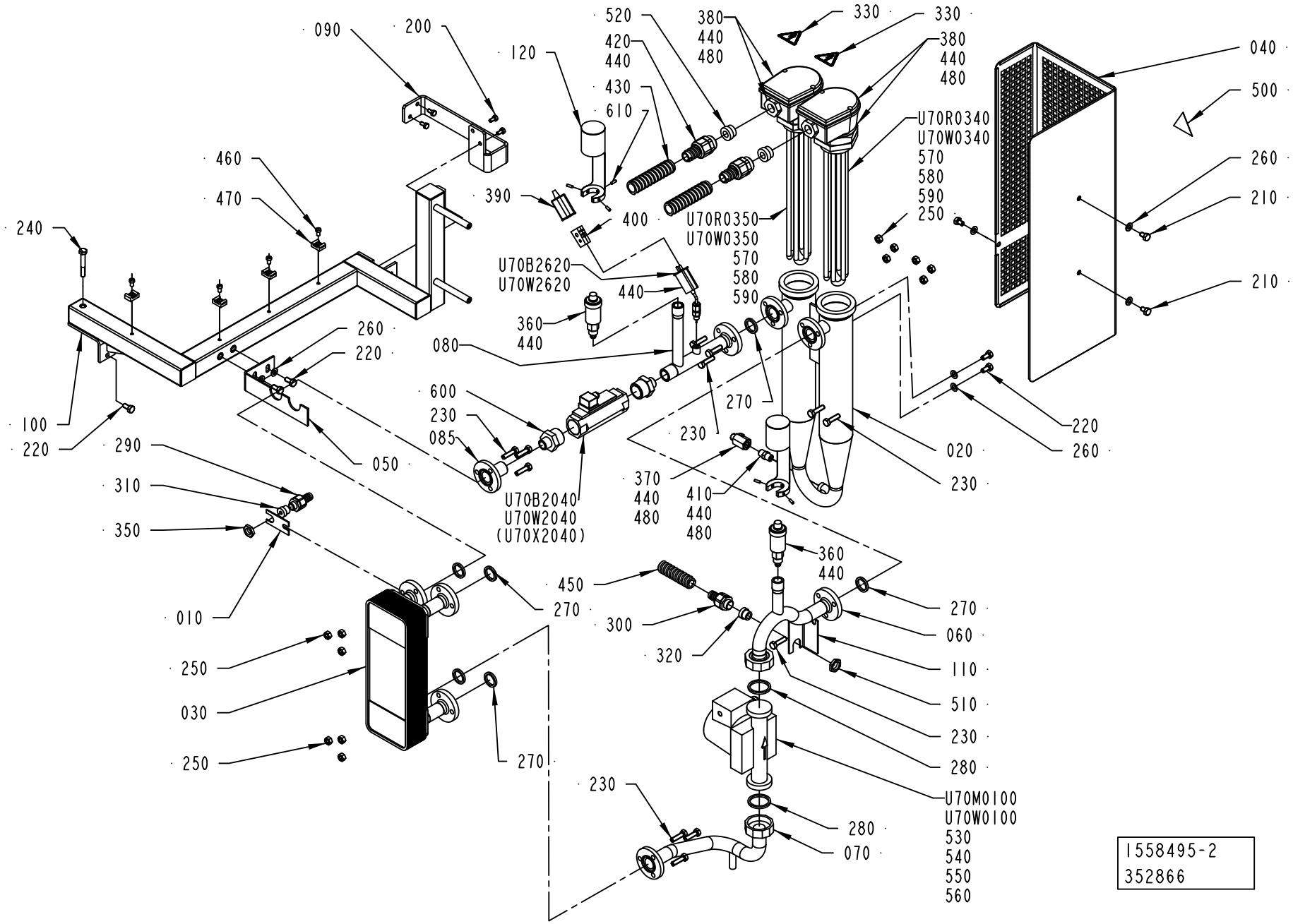
090
200
120
520
420
440
430
610
380
440
480
330
330
380
440
480
040
500
260
210
210
U70R0340
U70W0340
570
580
590
250
460
470
240
390
400
U70R0350
U70W0350
570
580
590
U70B2620
U70W2620
440
360
440
080
260
220
600
230
085
270
230
020
220
260
100
220
290
310
350
050
U70B2040
U70W2040
(U70X2040)
370
440
480
410
440
480
230
010
250
030
250
270
450
300
320
360
440
270
060
110
510
230
280
U70M0100
U70W0100
530
540
550
560
230
280
070
1558495-2
352866

ECM: 360081 - 20081001
Group number: 1558495-0200
Assembly Drawing: 1558495-2_1_AF

| Pos | Part No | UN | Qty | Description | Page No |
|---|---|---|---|---|---|
| **50HZ** | | | | | |
| U70M0100 | 90321-0134 | | 1 | CIRC. PUMP TCB25-6LV.230 HZ 50 | |
| **60HZ** | | | | | |
| U70M0100 | 90321-0135 | | 1 | CIRC. PUMP TMB 40/2 230V60HZ | |
| **Common Parts** | | | | | |
| 010 | 1040970-0000 | | 1 | BRACKET | |
| 020 | 1334507-0000 | | 1 | TUBE | |
| 030 | 1346568-0000 | | 1 | HEAT EXCHANGER | |
| 040 | 2966771-0000 | | 1 | PROTECTION | |
| 050 | 1349608-0000 | | 1 | HOLDER | |
| 060 | 1538049-0000 | | 1 | PIPE | |
| 070 | 1538503-0000 | | 1 | PIPE | |
| 080 | 2936351-0000 | | 1 | PIPE | |
| 085 | 2936352-0000 | | 1 | PIPE | |
| 090 | 2916427-0000 | | 1 | BRACKET | |
| 100 | 2894635-0000 | | 1 | FRAME | |
| 110 | 1517707-0000 | | 1 | BRACKET | |
| 120 | 2898459-0000 | | 2 | PROTECTION | |
| 200 | 312105-0366 | | 4 | SCREW M6S ISO 4017 M6X12 A480 | |
| 210 | 312105-0447 | | 3 | SCREW M6S ISO 4017 M8X12 A480 | |
| 220 | 312105-0449 | | 5 | SCREW M6S ISO 4017 M8X16 A480 | |
| 230 | 312105-0455 | | 12 | SCREW M6S ISO 4017 M8X30 A480 | |
| 240 | 312105-0462 | | 1 | SCREW M6S ISO 4014 M8X55 A480 | |
| 250 | 312605-0318 | | 12 | HEXAGON NUT, M6M M8 A280 | |
| 260 | 315105-0165 | | 7 | WASHER BRB 8,4X16 RFR | |
| 270 | 315229-0103 | | 6 | GASKETS, 23,1X30,1X3,7 MM 1" FDA | |
| 280 | 315229-0104 | | 2 | GASKETS, 35,8X42,8X3,7 MM 1"1/2 FD | |
| 290 | 353243-0001 | | 1 | HOSE GLAND W/O INSERT PG9 EXTENDED | |
| 300 | 353243-0003 | | 1 | HOSE GLAND W/O INSERT PG11 EXTENDED | |
| 310 | 353249-0008 | | 1 | INSERT, SINGLE HOLE, EK 152/7 | |
| 320 | 353249-0011 | | 1 | INSERT, SINGLE HOLE, EK 153/11 | |
| 330 | 359705-0015 | | 2 | WARNING SIGN ISO, RISK OF ELECTRIC SHOCK | |
| 350 | 90099-0104 | | 1 | NUT, PR 15,2 (PG9) | |
| 360 | 90187-0105 | | 2 | PURGING VALVE, G3/8 FOR WATER | |
| | *315205-0506* | | *1* | *O-RING 7,65X1,78 MM* | |
| | *90600-4412* | | *1* | *O-RING 22X2 MM* | |
| | *90600-4411* | | *1* | *O-RING 13,46X2,08 MM* | |
| 370 | 90600-0775 | | 1 | BALL VALVE G1/4, 406F-1/4" | |
| 380 | 90206-0326 | | 2 | CONNECTION BOX K2 FOR 90206-56 AND -70 | |
| 390 | 90326-0012 | | 1 | PROTECTIVE COVER, T31A4618 | |
| 400 | 90326-0020 | | 1 | PLUG, FEMALE YELLOW CR-AL | |
| 410 | 90330-0043 | | 1 | NIPPLES, EXT. THREAD. R-207R1/4 | |
| 420 | 90012-0131 | | 2 | HOSE GLAND W/O INSERT PG21 NORMAL | |
| 430 | 90152-0051 | M | 4 | SPIRAL CONDUIT, 25X18, UL 1816 | |
| 440 | 90144-0073 | | 1 | TREBOFLON-TAPE W=13MM | |
| 450 | 90152-0050 | M | 3.5 | SPIRAL CONDUIT, 20X13, UL 1313 | |
| 460 | 312125-0364 | | 4 | SCREW ISO 1207 M6X10 A4 | |
| 470 | 352113-0204 | | 4 | ANCHOR PLATES FOR STRIPS, TYPE TM3S25-M | |
| 480 | 90157-0037 | | 1 | THREAD SEALANT LOCTITE 542 | |
| 500 | 359705-0007 | | 1 | WARNING SIGN ISO, HOT SURFACE | |
| 510 | 90099-0117 | | 1 | NUT, PR 18,6 (PG11) | |
| 520 | 353249-0013 | | 2 | INSERT, SINGLE HOLE, EK 154/13 | |
| 530 | 90459-3080 | | 1 | HOOD HAN-BRID 3A 19 20 003 1443 | |
| 540 | 90459-6821 | | 1 | MALE INSERT HAN 4A, 09 20 004 2611 | |
| 550 | 90458-0307 | | 1 | CABLE GLAND, M20X1,5, NO.5311 1020 | |
| 560 | 312125-0220 | | 1 | SCREW ISO 1207 M3X6 A4 | |
| 570 | 90459-6632 | | 2 | HOOD 6 B TOP ENTRY, 19 30 006 1440 | |
| 580 | 90110-0052 | | 2 | MALE INSERT HAN 6E 09 33 006 2601 | |
| 590 | 90458-0307 | | 2 | CABLE GLAND, M20X1,5, NO.5311 1020 | |
| 600 | 90330-0133 | | 2 | NIPPLES, EXT. THREAD. R-209 1-1/2 | |
| 610 | 312318-0291 | | 6 | SCREW ISO4029 M4X12 A4 | |
| U70B2040 | 90600-4326 | | 1 | FLOW SWITCH | |
| U70B2620 | 90326-0057 | | 1 | THERMOCOUPLE, CR-AL | |
| U70R0340 | 90206-0070 | | 1 | HEATING ELEMENT 6000W 380/220V | |
| | *90206-0326* | | *1* | *CONNECTION BOX K2 FOR 90206-56 AND -70* | |
| | *90269-0308* | | *1* | *GASKET 59X68X3 MM* | |
| U70R0350 | 90206-0070 | | 1 | HEATING ELEMENT 6000W 380/220V | |
| | *90206-0326* | | *1* | *CONNECTION BOX K2 FOR 90206-56 AND -70* | |
| | *90269-0308* | | *1* | *GASKET 59X68X3 MM* | |
| U70W0100 | 351150-0412 | M | 4 | CABLE OLFLEX 3X1,5 MM2 LIGHT/GREY | |
| U70W0340 | 351120-0264 | M | 4 | CABLE SILFLEX SIHF 4X1,5 00460153 | |
| U70W0350 | 351120-0264 | M | 4 | CABLE SILFLEX SIHF 4X1,5 00460153 | |
| U70W2040 | 351150-0431 | M | 6 | CABLE OLFLEX 2X0,75 MM2 LIGHT/GREY | |
| U70W2620 | 90220-0034 | M | 5 | THERMOCABLE TEX/SITW-20F-KX 2X0,5MM2 | |

Machine Type | Group Description | Used-In | Group Number | Page No

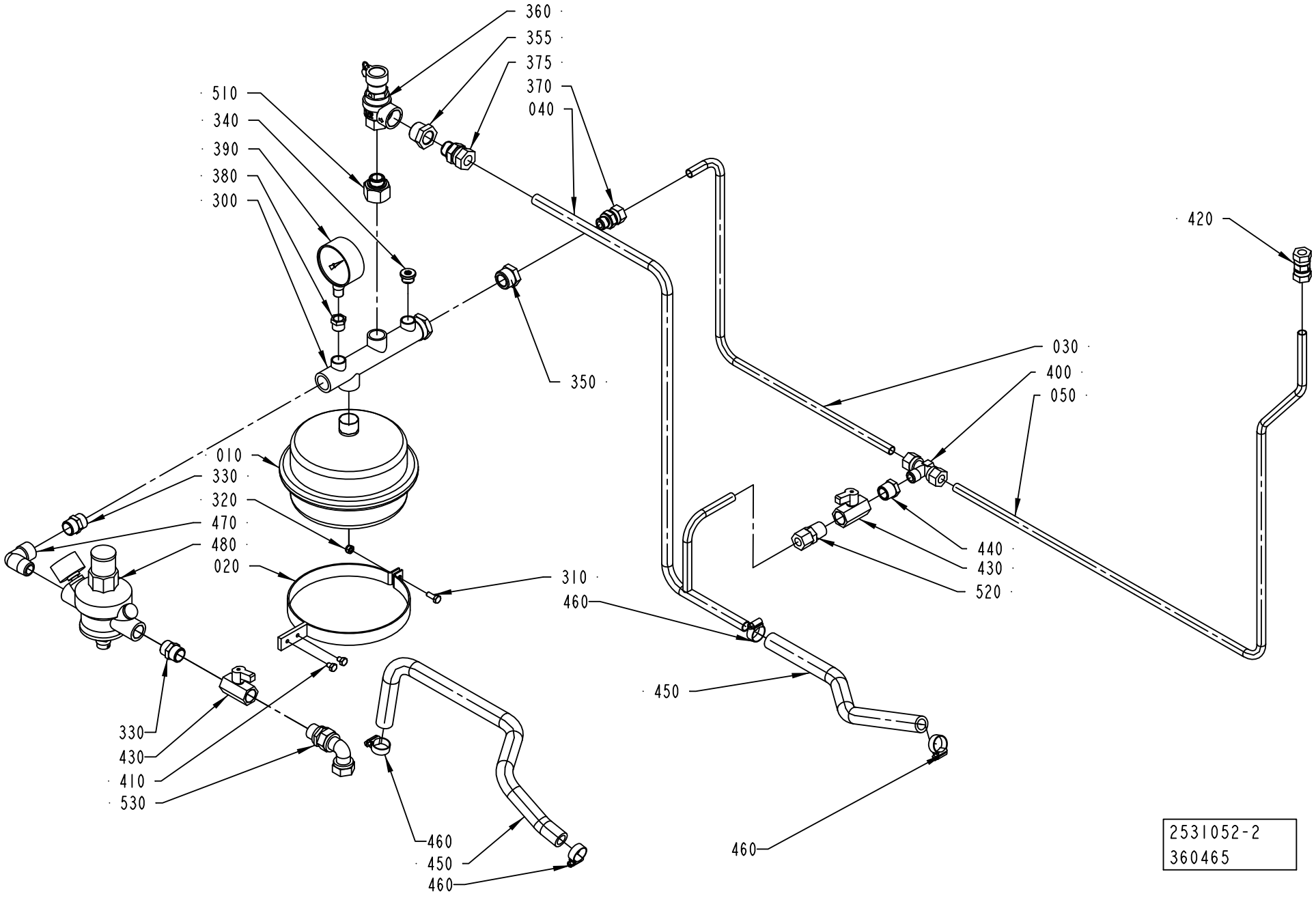
360
355
375
370
040
510
340
390
380
300
420
030
400
050
350
010
330
320
470
480
020
310
460
440
430
520
450
330
430
410
530
460
450
460
460
2531052-2
360465

ECM: 360465 - 20080711
Group number: 2531052-0200
Assembly Drawing: 2531052-2_1_AA

| Pos | Part No | UN | Qty | Description | Page No |
|---|---|---|---|---|---|
| - | | | | | |
| 010 | 1511497-0000 | | 1 | CONTAINER | |
| 020 | 1484081-0000 | | 1 | BRACKET | |
| 030 | 1499166-0000 | | 1 | PIPE | |
| 040 | 2936349-0000 | | 1 | PIPE | |
| 050 | 1538502-0000 | | 1 | PIPE | |
| 300 | 90304-0307 | | 1 | ATTACHMENT PIPE | |
| 310 | 312105-0368 | | 1 | SCREW M6S ISO 4017 M6X16 A480 | |
| 320 | 312812-0316 | | 1 | HEXAGON NUT, NY-LOCK M6 A480 | |
| 330 | 342700-0113 | | 2 | NIPPLES,HEXAGON,EXT.G-THREAD G1/2"-G1/2" | |
| 340 | 90600-1712 | | 1 | PLUG, EXT. THREAD HEX. SOCKET 09190017 | |
| 350 | 342701-0209 | | 1 | BUSHING,INT./EXT.G-THREAD G3/4"-G3/8" | |
| 355 | 342206-0109 | | 1 | BUSHING, TAPERED, INT/EXT. THR NO. R211 | |
| 360 | 90458-0200 | | 1 | PEROX. SAFETY VALVE, NO. 527-430 1/2X3/4 | |
| 370 | 90030-0187 | | 1 | CONN. STR. GA-12-G3/8 | |
| 375 | 90030-0188 | | 1 | CONN. STR. GA-15-G1/2 | |
| 380 | 342701-0203 | | 1 | BUSHING, INT/EXT. G-THREAD NO. 3/8-1/4 | |
| 390 | 90043-0002 | | 1 | PRESSURE GAUGE, 2040 D=63 MM | |
| 400 | 342741-0209 | | 1 | CONN. T-PIPE TE-12-R3/8 | |
| 410 | 312105-0362 | | 2 | SCREW M6S ISO 4017 M6X8 A480 | |
| 420 | 90030-0106 | | 1 | CONN. PIPE G-12 | |
| 430 | 90187-0062 | | 2 | BALL VALVE G1/2, NPBR | |
| 440 | 90330-0048 | | 1 | BUSHING, INT/EXT. THR. R1/2-RP3/8 | |
| 450 | 90166-0087 | MM | 1200 | HOSE 15/23 REINF.PVC TRANSP. | |
| 460 | 342991-0103 | | 4 | HOSE CLIP,WORM DRIVE TYPE (19)-23 | |
| 470 | 90140-0012 | | 1 | ELBOW, 90 INT/EXT, 2020-1/2-1/2 | |
| 480 | 90458-0201 | | 1 | FLUID AUT. FEEDER, ALINOX 1/2 46.04.00 | |
| 490 | 90144-0073 | MM | 1 | TREBOFLON-TAPE W=13MM | |
| 500 | 90157-0037 | ML | 1 | THREAD SEALANT LOCTITE 542 | |
| 510 | 90458-0751 | | 1 | BUSHING,INT./EXT.G-THREAD G3/4"-G1/2" | |
| 520 | 90030-0180 | | 1 | CONN. STR. GE12L1/2NPT71 | |
| 530 | 342738-0221 | | 1 | ADJUSTABLE ELBOW CONNECTION,EXT 15-G1/2 | |

| Pos | Part No | UN | Qty | Description | Page No |
|---|---|---|---|---|---|

Machine Type | Group Description | Used-In | Group Number | Page No

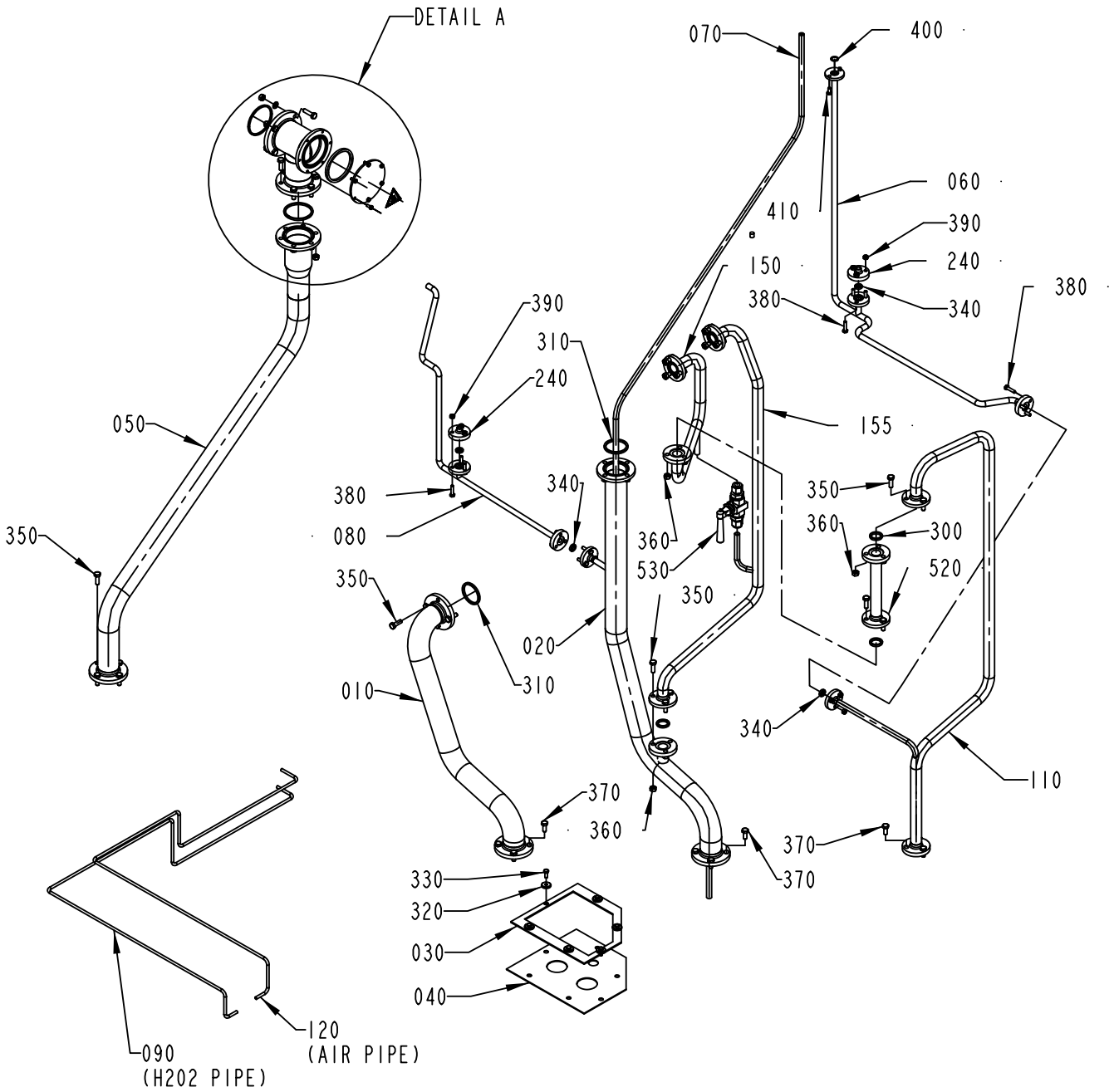


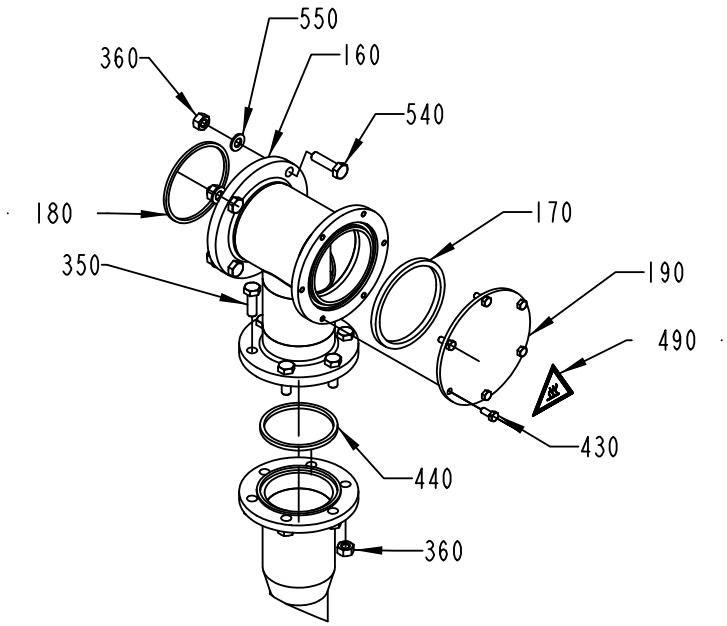


DETAIL A
1:5

2529484-3
360465

ECM: 360465 - 20080711
Group number: 2529484-0300
Assembly Drawing: 2529484-3_1_AA

| Pos | Part No | UN | Qty | Description | Page No |
|---|---|---|---|---|---|
| - | | | | | |
| 010 | 1558842-0000 | | 1 | PIPE | |
| 020 | 2790902-0000 | | 1 | PIPE | |
| 030 | 1038688-0000 | | 1 | HOLDER | |
| 040 | 1255551-0000 | | 1 | SEAL CLOTH | |
| 050 | 2974798-0000 | | 1 | PIPE | |
| 060 | 2529073-0000 | | 1 | PIPE | |
| 070 | 2833050-0000 | | 1 | PLASTIC HOSE | |
| 080 | 2790903-0000 | | 1 | PIPE | |
| 090 | 2563279-0000 | | 1 | PIPE | |
| 110 | 2936345-0000 | | 1 | PIPE | |
| 120 | 2563281-0000 | | 1 | PIPE | |
| 150 | 2936346-0000 | | 1 | PIPE | |
| 155 | 2936347-0000 | | 1 | PIPE | |
| 160 | 2974799-0000 | | 1 | CONNECTION PIPE | |
| 170 | 436781-0000 | | 1 | GASKET | |
| 180 | 1523808-0000 | | 1 | GASKET | |
| 190 | 1558427-0000 | | 1 | LID | |
| 240 | 2564107-0000 | | 2 | LID | |
| 300 | 315229-0103 | | 4 | GASKETS, 23,1X30,1X3,7 MM 1" FDA | |
| 310 | 315229-0105 | | 2 | GASKETS, 48,5X55,5X3,7 MM 2" FDA | |
| 320 | 315125-0153 | | 6 | WASHER TBRSB 6,4X22X4 A4 | |
| 330 | 312105-0368 | | 6 | SCREW M6S ISO 4017 M6X16 A480 | |
| 340 | 315229-0101 | | 4 | GASKETS, 10,4X17,4X3,7 MM 1/2" FDA | |
| 350 | 312105-0453 | | 29 | SCREW M6S ISO 4017 M8X25 A480 | |
| 360 | 312605-0318 | | 33 | HEXAGON NUT, M6M M8 A280 | |
| 370 | 312105-0451 | | 11 | SCREW M6S ISO 4017 M8X20 A480 | |
| 380 | 312105-0372 | | 12 | SCREW M6S ISO 4017 M6X25 A480 | |
| 390 | 312605-0316 | | 12 | HEXAGON NUT, M6M M6 A280 | |
| 400 | 927421-0003 | | 1 | O-RING 13.3X2.4 SILICONE | |
| 410 | 312105-0366 | | 2 | SCREW M6S ISO 4017 M6X12 A480 | |
| 430 | 312105-0327 | | 6 | SCREW M6S ISO 4017 M5X12 A480 | |
| 440 | 315229-0106 | | 1 | GASKETS, 61,2X68,2X3,7 MM 2"1/2 FD | |
| 490 | 359705-0007 | | 1 | WARNING SIGN ISO, HOT SURFACE | |
| 520 | 2957451-0000 | | 1 | PIPE | |
| 530 | 90459-5179 | | 1 | BALL VALVE 12MM, M12A-B8LJ-SSP-ST | |
| 540 | 312105-0455 | | 4 | SCREW M6S ISO 4017 M8X30 A480 | |
| 550 | 315105-0165 | | 4 | WASHER BRB 8,4X16 RFR | |

| Pos | Part No | UN | Qty | Description | Page No |
|---|---|---|---|---|---|

Machine Type | Group Description | Used-In | Group Number | Page No

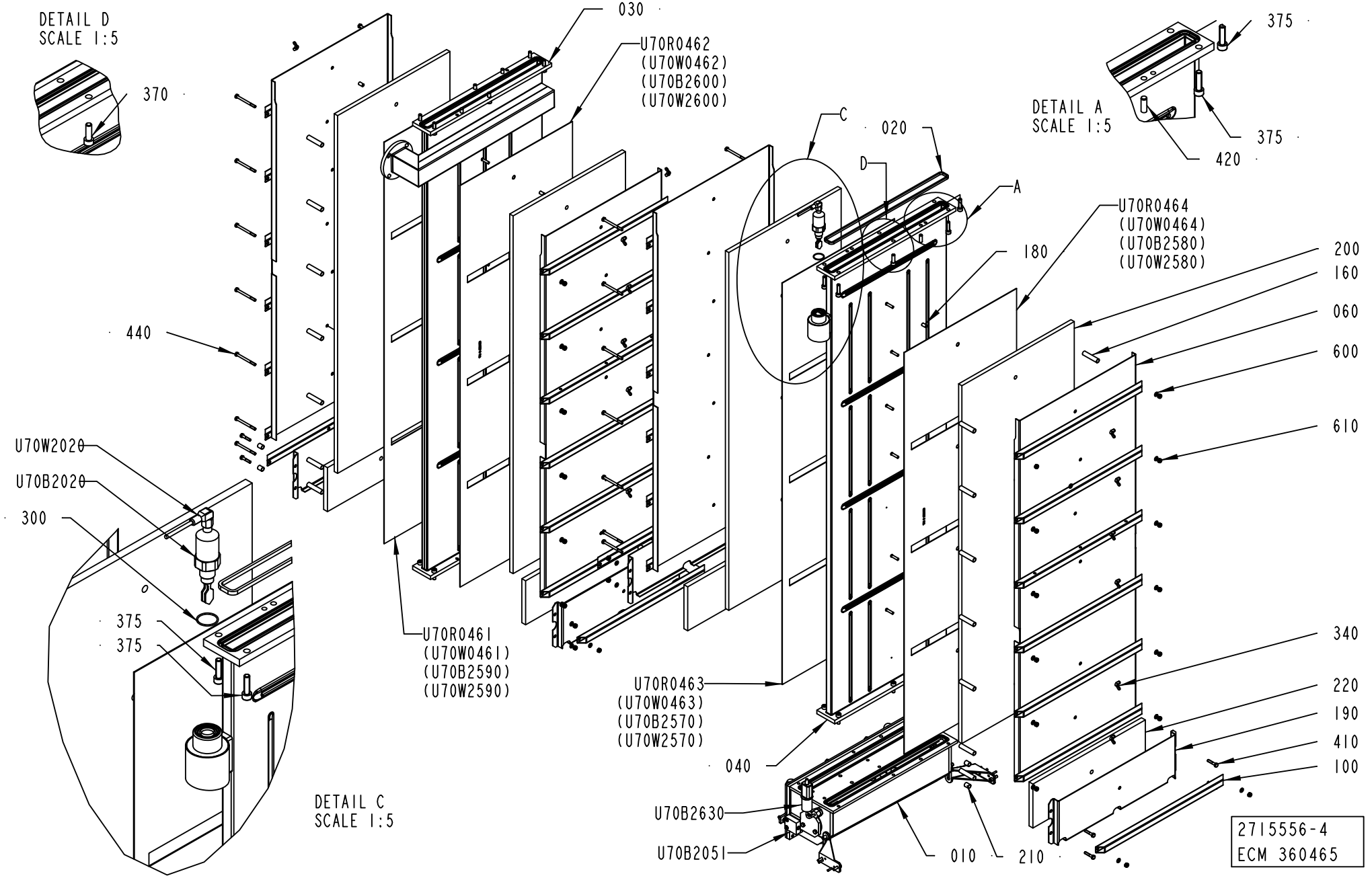
DETAIL D
SCALE 1:5
370
030
U70R0462
(U70W0462)
(U70B2600)
(U70W2600)
C
020
D
A
DETAIL A
SCALE 1:5
375
375
420
U70R0464
(U70W0464)
(U70B2580)
(U70W2580)
180
200
160
060
600
610
440
U70W2020
U70B2020
300
375
375
U70R0461
(U70W0461)
(U70B2590)
(U70W2590)
U70R0463
(U70W0463)
(U70B2570)
(U70W2570)
340
220
190
410
100
040
U70B2630
U70B2051
010
210
DETAIL C
SCALE 1:5
2715556-4
ECM 360465

ECM: 360465 - 20081003
Group number: 2715556-0300
Assembly Drawing: 2715556-4_1_AA

This list covers pages from 1-270 to 1-273

| Pos | Part No | UN | Qty | Description | Page No |
|---|---|---|---|---|---|
| **LIGHTCAP** | | | | | |
| 140 | 2709224-0000 | | 2 | WHEEL | |
| 150 | 2946894-0000 | | 1 | BENDING ROLLER | |
| **STDA7 CAP, NOMOLDEDCAP** | | | | | |
| 140 | 1539727-0000 | | 2 | WHEEL | |
| 150 | 2788624-0000 | | 1 | BENDING ROLLER | |
| U70R0461 | 2528056-0000 | | 1 | RESISTANCE | |
| U70R0462 | 2528056-0000 | | 1 | RESISTANCE | |
| **Common Parts** | | | | | |
| 010 | 2778562-0000 | | 1 | BOTTOM SECTION | |
| 020 | 1538735-0000 | | 4 | GASKET | |
| 030 | 2971938-0000 | | 1 | PEROXIDE CHAMBER | |
| 040 | 2895153-0000 | | 1 | PEROXIDE CHAMBER | |
| 050 | 1528639-0000 | | 1 | GASKET | |
| 060 | 2914801-0000 | | 4 | COVER | |
| 090 | 1523805-0000 | | 2 | PIN | |
| 100 | 2899090-0000 | | 4 | SQUARE TUBE | |
| 110 | 2528059-0000 | | 2 | BRACKET | |
| 120 | 1539729-0000 | | 2 | BRACKET | |
| 130 | 1538742-0000 | | 1 | LID | |
| 160 | 2899089-0000 | | 28 | SPACER | |
| 170 | 1539726-0000 | | 2 | SHAFT | |
| 180 | 2895156-0000 | | 24 | SPACER | |
| 190 | 2914802-0000 | | 4 | COVER | |
| 200 | 2895155-0000 | | 4 | INSULATING MAT | |
| 210 | 2914952-0000 | | 8 | SPACER | |
| 220 | 2915909-0000 | | 4 | INSULATING MAT | |
| 300 | 315206-0711 | | 1 | O-RING 26,70X1,78 MM | |
| 310 | 359705-0004 | | 1 | WARNING SIGN ISO, DANGEROUS CHEMICALS | |
| 330 | 315237-0110 | | 1 | WASHER,PL.RND.AL.13,5/18,H=1,5 | |
| 340 | 312715-0116 | | 24 | WING NUT DIN 315 A2 MVM-K M6 | |
| 350 | 312605-0316 | | 2 | HEXAGON NUT, M6M M6 A280 | |
| 370 | 312115-0453 | | 16 | SCREW ISO4762 M8X25 A4 80 | |
| 375 | 312115-0455 | | 8 | SCREW ISO4762 M8X30 A4 80 | |
| 380 | 312105-0370 | | 8 | SCREW M6S ISO 4017 M6X20 A480 | |
| 390 | 312115-0329 | | 4 | SCREW ISO4762 M5X16 A4 80 | |
| 400 | 312105-0449 | | 8 | SCREW M6S ISO 4017 M8X16 A480 | |
| 410 | 312105-0374 | | 8 | SCREW M6S ISO 4014 M6X30 A480 | |
| 420 | 311103-1403 | | 8 | PARALLEL PIN ISO 2338 8M6X24 A1 | |
| 430 | 311103-0270 | | 4 | PARALLEL PIN ISO 2338 4M6X16 A1 | |
| 440 | 312105-0384 | | 28 | SCREW M6S ISO 4014 M6X70 A480 | |
| 450 | 90144-0073 | MM | 1 | TREBOFLON-TAPE W=13MM | |
| 470 | 90326-0020 | | 1 | PLUG, FEMALE YELLOW CR-AL | |
| 480 | 90326-0012 | | 1 | PROTECTIVE COVER, T31A4618 | |
| 490 | 315205-0802 | | 2 | O-RING 41,0X1,78 MM | |
| 500 | 90240-0146 | | 2 | FLANGE BUSHING, 15X21X20 MM | |
| 560 | 312115-0370 | | 4 | SCREW ISO4762 M6X20 A4 80 | |
| 600 | 315105-0153 | | 36 | WASHER BRB 6,4X12 RFR | |
| 610 | 312812-0316 | | 36 | HEXAGON NUT, NY-LOCK M6 A480 | |
| U70B2020 | 90600-2862 | | 1 | LEVEL SWITCH, LIQUIPHANT FTL20-0025 | |
| U70B2050 | 90044-0084 | | 1 | LIMIT SW. 14 CE1-4 | |
| U70B2051 | 90044-0084 | | 1 | LIMIT SW. 14 CE1-4 | |
| U70B2630 | 90326-0053 | | 1 | THERMOCOUPLE, 12826-35 | |
| U70R0463 | 2528056-0000 | | 1 | RESISTANCE | |
| U70R0464 | 2528056-0000 | | 1 | RESISTANCE | |
| U70W2020 | 351310-0050 | | 1 | ACTUATOR/SENSOR CABLE PRKWT 4-07/5M | |

Machine Type | Group Description | Used-In | Group Number | Page No

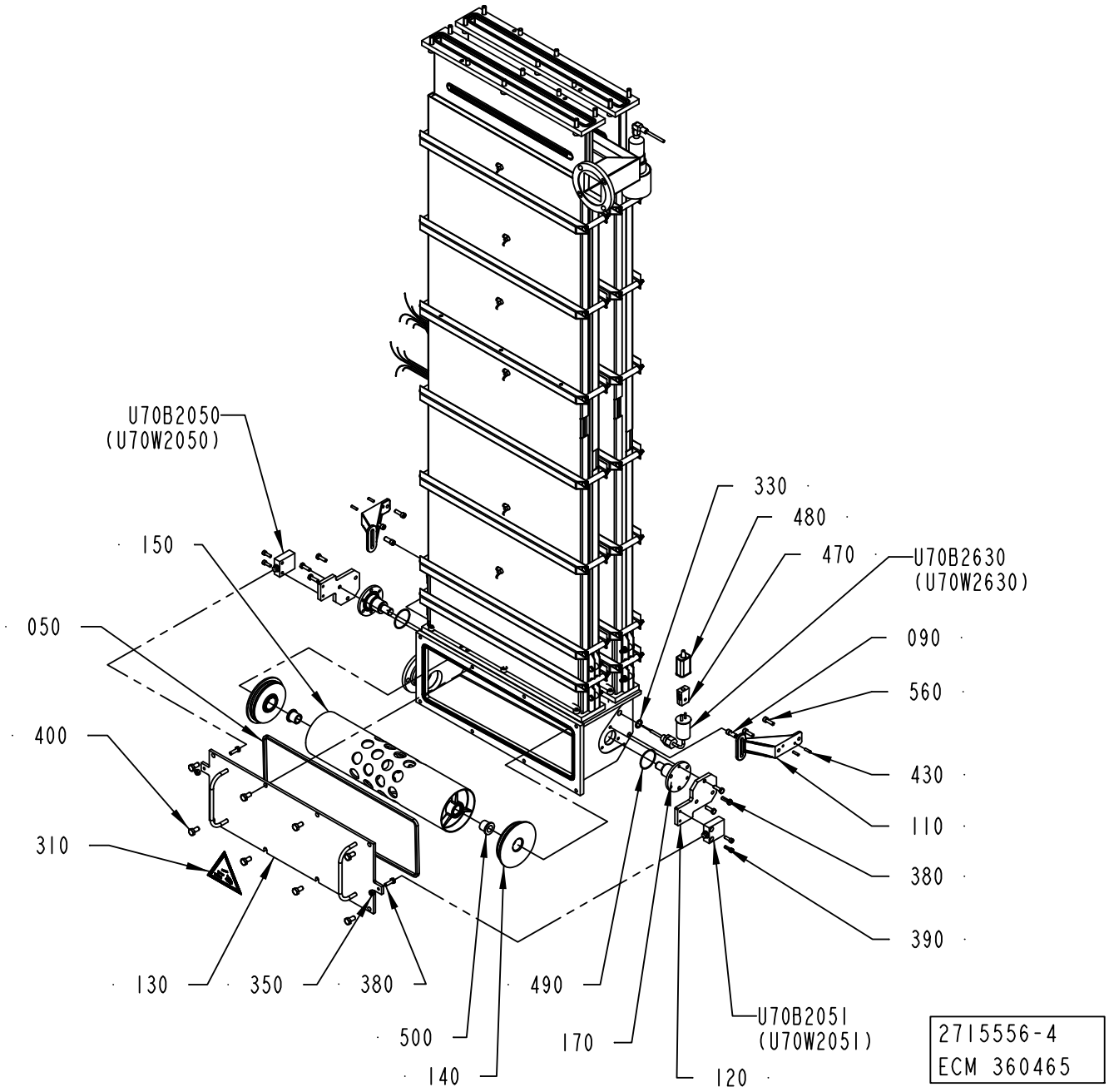
U70B2050
(U70W2050)
150
050
400
310
130
350
380
500
140
490
170
120
U70B2051
(U70W2051)
330
480
470
U70B2630
(U70W2630)
090
560
430
110
380
390
2715556-4
ECM 360465

ECM: 360465 - 20081003
Group number: 2715556-0300
Assembly Drawing: 2715556-4_2_AA

This list covers pages from 1-270 to 1-273

| Pos | Part No | UN | Qty | Description | Page No |
|---|---|---|---|---|---|
| **LIGHTCAP** | | | | | |
| 140 | 2709224-0000 | | 2 | WHEEL | |
| 150 | 2946894-0000 | | 1 | BENDING ROLLER | |
| **STDA7 CAP, NOMOLDEDCAP** | | | | | |
| 140 | 1539727-0000 | | 2 | WHEEL | |
| 150 | 2788624-0000 | | 1 | BENDING ROLLER | |
| U70R0461 | 2528056-0000 | | 1 | RESISTANCE | |
| U70R0462 | 2528056-0000 | | 1 | RESISTANCE | |
| **Common Parts** | | | | | |
| 010 | 2778562-0000 | | 1 | BOTTOM SECTION | |
| 020 | 1538735-0000 | | 4 | GASKET | |
| 030 | 2971938-0000 | | 1 | PEROXIDE CHAMBER | |
| 040 | 2895153-0000 | | 1 | PEROXIDE CHAMBER | |
| 050 | 1528639-0000 | | 1 | GASKET | |
| 060 | 2914801-0000 | | 4 | COVER | |
| 090 | 1523805-0000 | | 2 | PIN | |
| 100 | 2899090-0000 | | 4 | SQUARE TUBE | |
| 110 | 2528059-0000 | | 2 | BRACKET | |
| 120 | 1539729-0000 | | 2 | BRACKET | |
| 130 | 1538742-0000 | | 1 | LID | |
| 160 | 2899089-0000 | | 28 | SPACER | |
| 170 | 1539726-0000 | | 2 | SHAFT | |
| 180 | 2895156-0000 | | 24 | SPACER | |
| 190 | 2914802-0000 | | 4 | COVER | |
| 200 | 2895155-0000 | | 4 | INSULATING MAT | |
| 210 | 2914952-0000 | | 8 | SPACER | |
| 220 | 2915909-0000 | | 4 | INSULATING MAT | |
| 300 | 315206-0711 | | 1 | O-RING 26,70X1,78 MM | |
| 310 | 359705-0004 | | 1 | WARNING SIGN ISO, DANGEROUS CHEMICALS | |
| 330 | 315237-0110 | | 1 | WASHER,PL.RND.AL.13,5/18,H=1,5 | |
| 340 | 312715-0116 | | 24 | WING NUT DIN 315 A2 MVM-K M6 | |
| 350 | 312605-0316 | | 2 | HEXAGON NUT, M6M M6 A280 | |
| 370 | 312115-0453 | | 16 | SCREW ISO4762 M8X25 A4 80 | |
| 375 | 312115-0455 | | 8 | SCREW ISO4762 M8X30 A4 80 | |
| 380 | 312105-0370 | | 8 | SCREW M6S ISO 4017 M6X20 A480 | |
| 390 | 312115-0329 | | 4 | SCREW ISO4762 M5X16 A4 80 | |
| 400 | 312105-0449 | | 8 | SCREW M6S ISO 4017 M8X16 A480 | |
| 410 | 312105-0374 | | 8 | SCREW M6S ISO 4014 M6X30 A480 | |
| 420 | 311103-1403 | | 8 | PARALLEL PIN ISO 2338 8M6X24 A1 | |
| 430 | 311103-0270 | | 4 | PARALLEL PIN ISO 2338 4M6X16 A1 | |
| 440 | 312105-0384 | | 28 | SCREW M6S ISO 4014 M6X70 A480 | |
| 450 | 90144-0073 | MM | 1 | TREBOFLON-TAPE W=13MM | |
| 470 | 90326-0020 | | 1 | PLUG, FEMALE YELLOW CR-AL | |
| 480 | 90326-0012 | | 1 | PROTECTIVE COVER, T31A4618 | |
| 490 | 315205-0802 | | 2 | O-RING 41,0X1,78 MM | |
| 500 | 90240-0146 | | 2 | FLANGE BUSHING, 15X21X20 MM | |
| 560 | 312115-0370 | | 4 | SCREW ISO4762 M6X20 A4 80 | |
| 600 | 315105-0153 | | 36 | WASHER BRB 6,4X12 RFR | |
| 610 | 312812-0316 | | 36 | HEXAGON NUT, NY-LOCK M6 A480 | |
| U70B2020 | 90600-2862 | | 1 | LEVEL SWITCH, LIQUIPHANT FTL20-0025 | |
| U70B2050 | 90044-0084 | | 1 | LIMIT SW. 14 CE1-4 | |
| U70B2051 | 90044-0084 | | 1 | LIMIT SW. 14 CE1-4 | |
| U70B2630 | 90326-0053 | | 1 | THERMOCOUPLE, 12826-35 | |
| U70R0463 | 2528056-0000 | | 1 | RESISTANCE | |
| U70R0464 | 2528056-0000 | | 1 | RESISTANCE | |
| U70W2020 | 351310-0050 | | 1 | ACTUATOR/SENSOR CABLE PRKWT 4-07/5M | |

Machine Type | Group Description | Used-In | Group Number | Page No

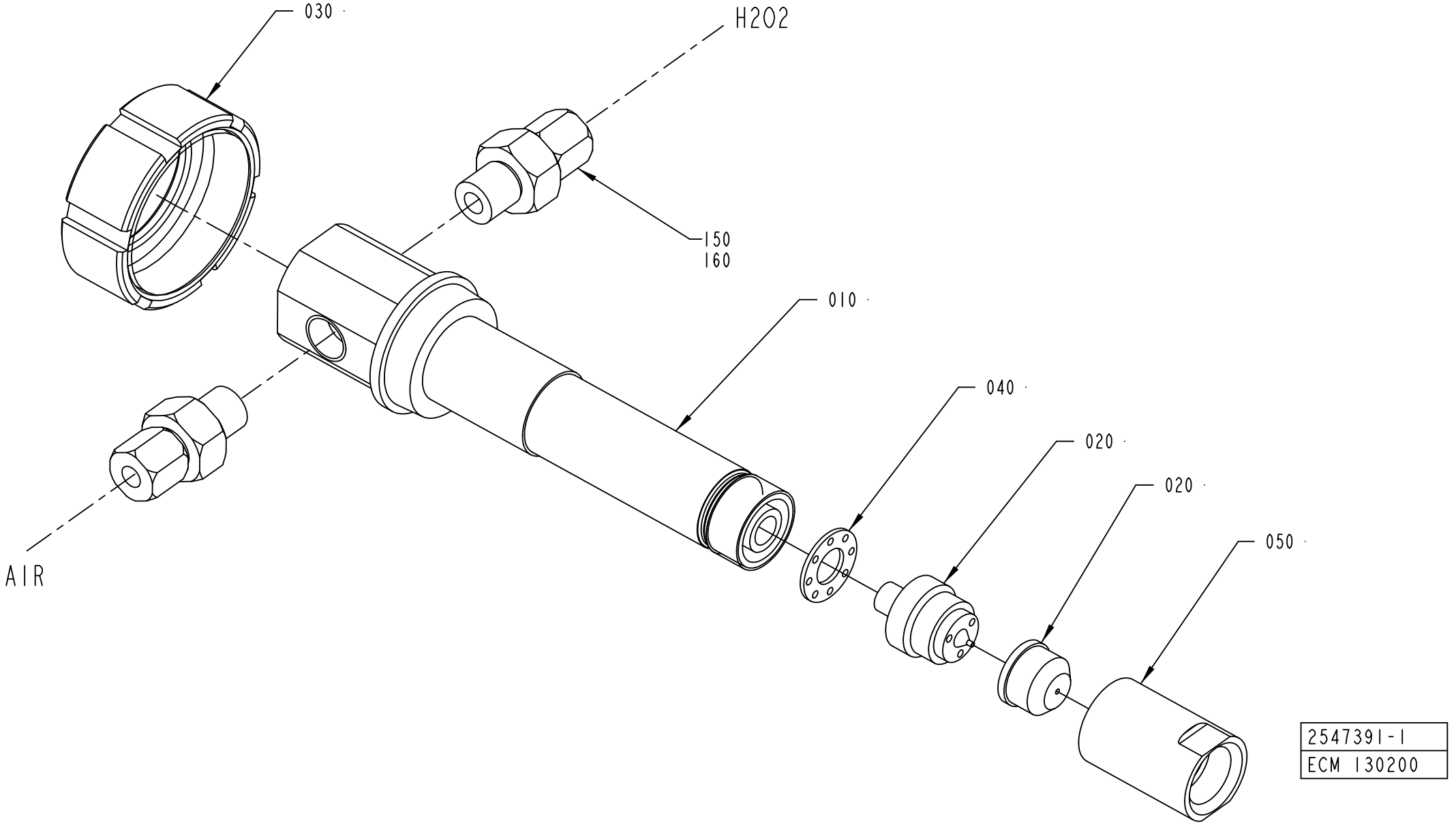
030
H2O2
150
160
010
040
020
020
050
AIR
2547391-1
ECM 130200

ECM: 344003 - 20080402
Group number: 2547391-0100
Assembly Drawing: 2547391-1_1_AB

| Pos | Part No | UN | Qty | Description | Page No |
|---|---|---|---|---|---|
| - | | | | | |
| 010 | 2563760-0000 | | 1 | EXTENSION | |
| 020 | 2563759-0000 | | 1 | SPRAY SYSTEM | |
| 030 | 1512405-0000 | | 1 | NUT | |
| 040 | 2563762-0000 | | 1 | SPACER | |
| 050 | 2563761-0000 | | 1 | NUT | |
| 150 | 90030-0202 | | 2 | CONN. STR., 6-G1/4, EXT. THREAD | |
| 160 | 90144-0007 | | 1 | TAPE | |

| Pos | Part No | UN | Qty | Description | Page No |
|---|---|---|---|---|---|

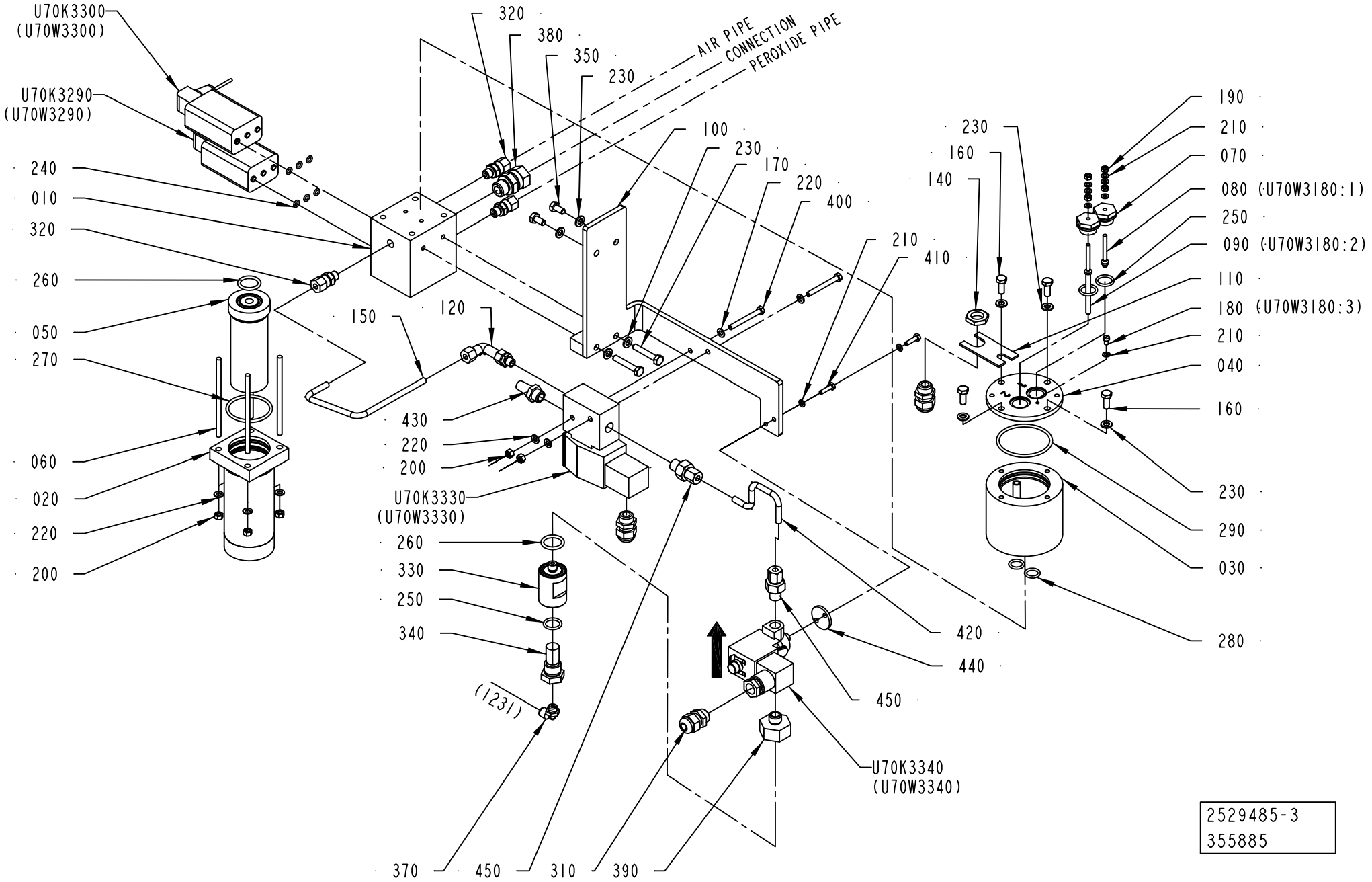
U70K3300
(U70W3300)
U70K3290
(U70W3290)
240
010
320
260
050
270
060
020
220
200
320
380
350
230
AIR PIPE
CONNECTION
PEROXIDE PIPE
100
230
170
220
400
210
410
150
120
430
220
200
U70K3330
(U70W3330)
260
330
250
340
(1231)
370
450
310
390
230
160
140
190
210
070
080 (U70W3180:1)
250
090 (U70W3180:2)
110
180 (U70W3180:3)
210
040
160
230
290
030
280
420
440
450
U70K3340
(U70W3340)
2529485-3
355885

ECM: 360065 - 20081001
Group number: 2529485-0300
Assembly Drawing: 2529485-3_1_AC

| Pos | Part No | UN | Qty | Description | Page No |
|---|---|---|---|---|---|
| - | | | | | |
| 010 | 1532223-0000 | | 1 | BLOCK | |
| 020 | 554142-0000 | | 1 | FILTER HOUSING | |
| 030 | 1478170-0000 | | 1 | CONTAINER | |
| 040 | 549267-0000 | | 1 | LID | |
| 050 | 554141-0000 | | 1 | FILTER | |
| 060 | 554585-0000 | | 4 | STUD SCREW | |
| 070 | 2578486-0000 | | 2 | BRACKET | |
| 080 | 2559045-0004 | | 1 | ELECTRODE | |
| 090 | 2559045-0003 | | 1 | ELECTRODE | |
| 100 | 2763962-0000 | | 1 | BRACKET | |
| 110 | 1040970-0000 | | 1 | BRACKET | |
| 120 | 90030-0203 | | 1 | ADJUSTABLE ELBOW CONNECTION,EXT 6-G1/4 | |
| 140 | 90099-0104 | | 1 | NUT, PR 15,2 (PG9) | |
| 150 | 2763966-0000 | | 1 | PIPE | |
| 160 | 312105-0368 | | 4 | SCREW M6S ISO 4017 M6X16 A480 | |
| 170 | 312109-0376 | | 2 | SCREW M6S ISO 4017 M6X35 A480 | |
| 180 | 312125-0285 | | 1 | SCREW ISO 1207 M4X6 A4 | |
| 190 | 312605-0312 | | 4 | HEXAGON NUT, M6M M4 A280 | |
| 200 | 312605-0314 | | 6 | HEXAGON NUT, M6M M5 A280 | |
| 210 | 315105-0136 | | 9 | WASHER BRB 4,3X8 RFR | |
| 220 | 315105-0146 | | 8 | WASHER BRB 5,3X10 RFR | |
| 230 | 315105-0153 | | 8 | WASHER BRB 6,4X12 RFR | |
| 240 | 927420-0001 | | 6 | O-RING 5.1X1.6 SILICONE | |
| 250 | 927421-0004 | | 3 | O-RING 15.3X2.4 SILICONE | |
| 260 | 927422-0001 | | 2 | O-RING 19.2X3 SILICONE | |
| 270 | 927422-0007 | | 1 | O-RING 44.2X3 SILICONE | |
| 280 | 927421-0002 | | 2 | O-RING 12.3X2.4 SILICONE | |
| 290 | 927422-0009 | | 1 | O-RING 54.5X3 SILICONE | |
| 310 | 352103-0101 | | 3 | CABLE GLAND, ST 9, PR15,2/PG9 | |
| 320 | 90030-0184 | | 3 | CONN. STR. GE06LRED71 | |
| 330 | 1519486-0000 | | 1 | FILTER HOUSING | |
| 340 | 450833-0000 | | 1 | FILTER | |
| 350 | 312105-0366 | | 2 | SCREW M6S ISO 4017 M6X12 A480 | |
| 370 | 90458-2956 | | 1 | ELBOW PIPE JOINT, EXT.THREAD, D=6MM-G1/8 | |
| 380 | 90030-0187 | | 1 | CONN. STR. GA-12-G3/8 | |
| 390 | 2763969-0000 | | 1 | REDUCER | |
| 400 | 312105-0340 | | 2 | SCREW M6S ISO 4014 M5X45 A480 | |
| 410 | 312105-0293 | | 2 | SCREW M6S ISO 4017 M4X16 A470 | |
| 420 | 2763967-0000 | | 1 | PIPE | |
| 430 | 346800-0110 | | 1 | SILENCER FILTER R1/4" | |
| 440 | 2763968-0000 | | 1 | SPACER | |
| 450 | 90030-0202 | | 2 | CONN. STR., 6-G1/4, EXT. THREAD | |
| U70K3290 | 90042-0203 | | 1 | SOLENOID VALVE BüRKERT | |
| U70K3330 | 90459-6975 | | 1 | SOLENOID VALVE G1/4, 2401186082702400 | |
| U70K3340 | 90459-6977 | | 1 | SOLENOID VALVE G1/4, V04B286N-B423A | |
| U70W3180 | 351150-0404 | MM | 2100 | CABLE OLFLEX 4X0,75 MM2 LIGHT/GREY | |
| U70W3290 | 351150-0403 | MM | 2500 | CABLE OLFLEX 3X0,75 MM2 LIGHT/GREY | |
| U70W3300 | 351150-0403 | MM | 2500 | CABLE OLFLEX 3X0,75 MM2 LIGHT/GREY | |
| U70W3330 | 351150-0403 | MM | 2500 | CABLE OLFLEX 3X0,75 MM2 LIGHT/GREY | |
| U70W3340 | 351150-0403 | MM | 2500 | CABLE OLFLEX 3X0,75 MM2 LIGHT/GREY | |
| Y70K3300 | 90042-0203 | | 1 | SOLENOID VALVE BüRKERT | |

| Machine Type | Group Description | Used-In | Group Number | Page No |
|---|---|---|---|---|

# U70X2000

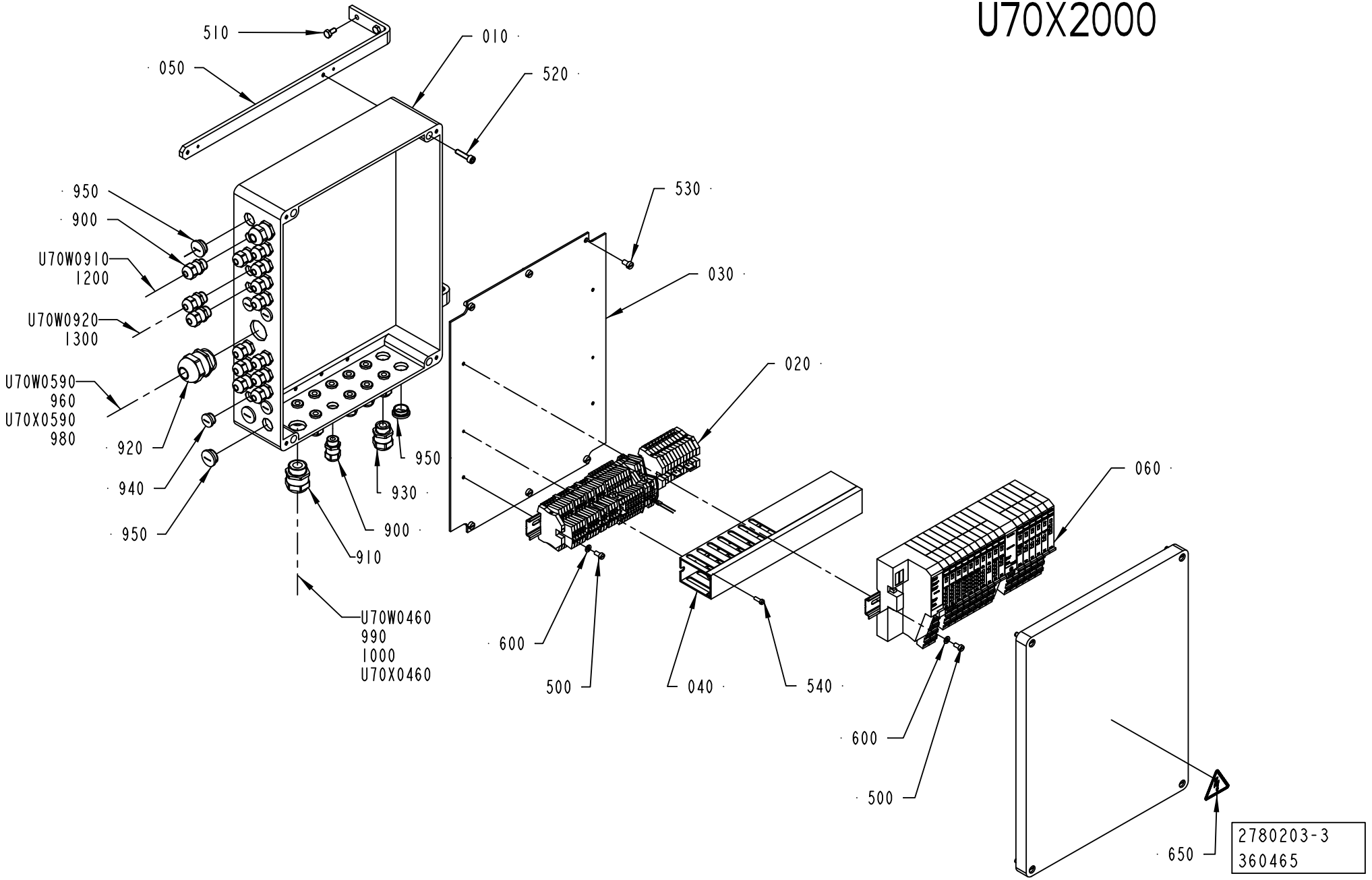
510
050
010
520
950
900
U70W0910
1200
U70W0920
1300
U70W0590
960
U70X0590
980
920
940
950
910
900
930
950
530
030
020
060
600
500
040
540
600
500
650
2780203-3
360465
U70W0460
990
1000
U70X0460

ECM: 360465 - 20080711
Group number: 2780203-0200
Assembly Drawing: 2780203-3_1_AD

This list covers pages from 1-278 to 1-281

| Pos | Part No | UN | Qty | Description | Page No |
|---|---|---|---|---|---|
| **HI (See drawing on page: 1-280)** | | | | | |
| 930 | 90458-0307 | | 3 | CABLE GLAND, M20X1,5, NO.5311 1020 | |
| 950 | 90458-1308 | | 3 | BLIND PLUG CIRCULAR, M20X1,5 514GFK/220 | |
| **NOHI (See drawing on page: 1-278)** | | | | | |
| 930 | 90458-0307 | | 2 | CABLE GLAND, M20X1,5, NO.5311 1020 | |
| 950 | 90458-1308 | | 4 | BLIND PLUG CIRCULAR, M20X1,5 514GFK/220 | |
| **Common Parts** | | | | | |
| 010 | 2883086-0000 | | 1 | CONNECTION BOX | |
| 020 | 2780205-0200 | | 1 | TERMINAL BLOCK ..... | **1-283** |
| 030 | 2883087-0000 | | 1 | MOUNTING PLATE | |
| 040 | 2883084-0000 | | 1 | CABLE DUCT | |
| 050 | 2780633-0000 | | 2 | SUPPORT | |
| 060 | 2790900-0200 | | 1 | BLOCK ..... | **1-285** |
| 1000 | 90458-0308 | | 1 | CABLE GLAND, M25X1,5, NO.5311 1030 | |
| 1200 | 90326-0022 | | 1 | PLUG, MALE YELLOW CR-AL | |
| 1300 | 90326-0022 | | 1 | PLUG, MALE YELLOW CR-AL | |
| 500 | 312125-0325 | | 4 | SCREW ISO 1207 M5X10 A4 | |
| 510 | 312105-0366 | | 4 | SCREW M6S ISO 4017 M6X12 A480 | |
| 520 | 312115-0372 | | 4 | SCREW ISO4762 M6X25 A4 80 | |
| 530 | 312125-0364 | | 6 | SCREW ISO 1207 M6X10 A4 | |
| 540 | 90287-0124 | | 2 | SCREW PAN HEAD MSCS M4X12 NYLON | |
| 600 | 315105-0146 | | 4 | WASHER BRB 5,3X10 RFR | |
| 650 | 359705-0015 | | 1 | WARNING SIGN ISO, RISK OF ELECTRIC SHOCK | |
| 900 | 90458-0306 | | 24 | CABLE GLAND, M16X1,5, NO.5311 1010 | |
| 910 | 90458-0308 | | 1 | CABLE GLAND, M25X1,5, NO.5311 1030 | |
| 920 | 90458-0309 | | 1 | CABLE GLAND, M32X1,5, NO.5311 1040 | |
| 940 | 90458-1307 | | 4 | BLIND PLUG CIRCULAR, M16X1,5 514GFK/216 | |
| 960 | 90459-6636 | | 1 | HOOD 24 B TOP ENTRY, 19 30 024 0427 | |
| 980 | 90458-0309 | | 1 | CABLE GLAND, M32X1,5, NO.5311 1040 | |
| 990 | 90459-6634 | | 1 | HOOD 16 B TOP ENTRY, 19 30 016 1421 | |
| U70W0460 | 351150-0196 | MM | 4300 | CABLE OLFLEX 7X4 MM2 LIGHT/GREY | |
| U70W0590 | 351150-0425 | MM | 6000 | CABLE OLFLEX 25X0,75 MM2 LIGHT/GREY | |
| U70W0910 | 90220-0034 | MM | 7200 | THERMOCABLE TEX/SITW-20F-KX 2X0,5MM2 | |
| U70W0920 | 90220-0034 | MM | 7200 | THERMOCABLE TEX/SITW-20F-KX 2X0,5MM2 | |
| U70X0460 | 90110-0054 | | 1 | MALE INSERT HAN 6 HSB 09 31 006 2601 | |
| U70X0590 | 90110-0056 | | 1 | MALE INSERT HAN 24 E 09 33 024 2601 | |

| Pos | Part No | UN | Qty | Description | Page No |
|---|---|---|---|---|---|

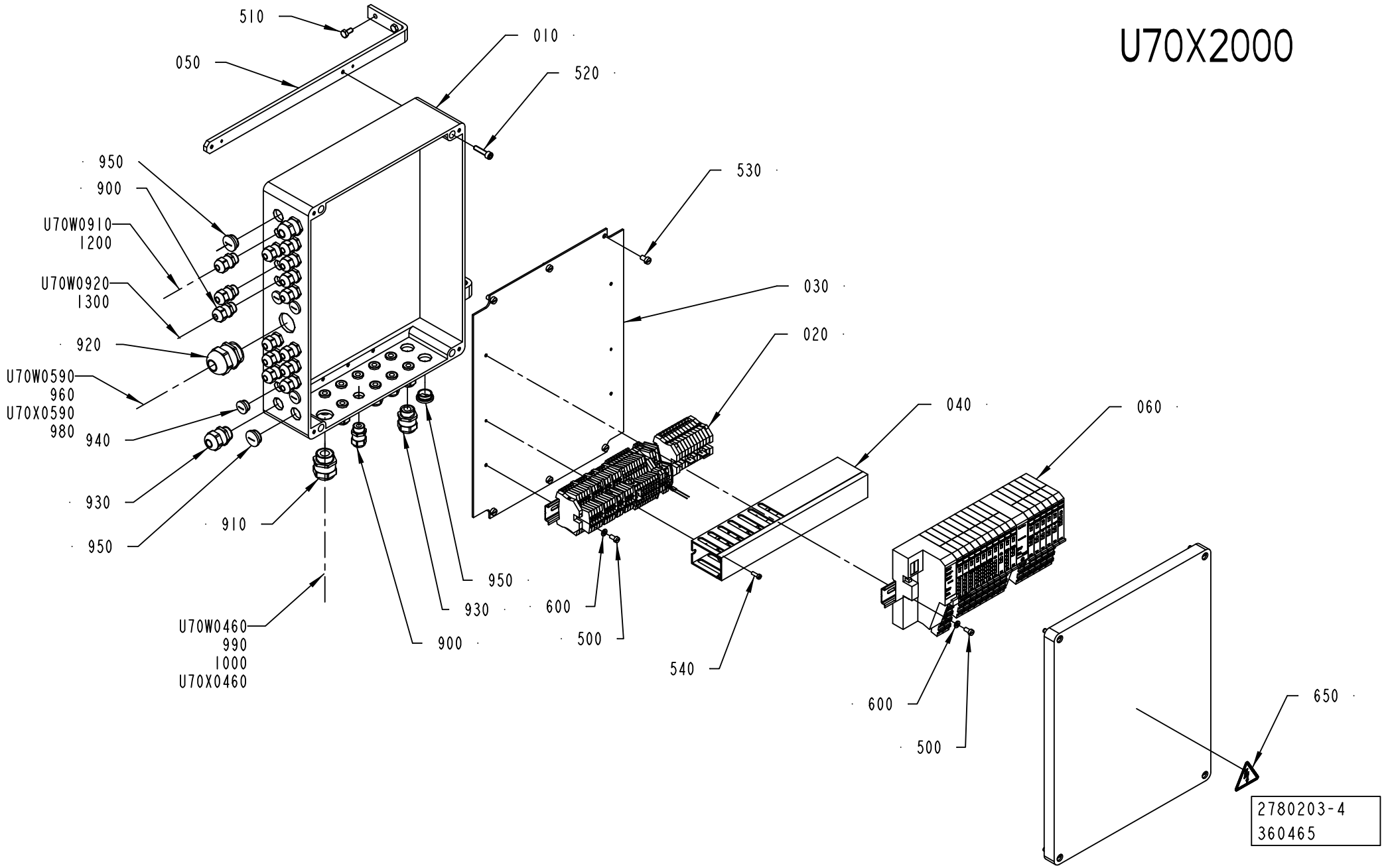
U70X2000
510
050
010
520
950
900
U70W0910
1200
U70W0920
1300
920
U70W0590
960
U70X0590
980
940
930
950
910
U70W0460
990
1000
U70X0460
900
930
950
530
030
020
600
500
540
040
060
600
500
650
2780203-4
360465

ECM: 360465 - 20080711
Group number: 2780203-0200
Assembly Drawing: 2780203-4_1_AD

This list covers pages from 1-278 to 1-281

| Pos | Part No | UN | Qty | Description | Page No |
|---|---|---|---|---|---|
| **HI (See drawing on page: 1-280)** | | | | | |
| 930 | 90458-0307 | | 3 | CABLE GLAND, M20X1,5, NO.5311 1020 | |
| 950 | 90458-1308 | | 3 | BLIND PLUG CIRCULAR, M20X1,5 514GFK/220 | |
| **NOHI (See drawing on page: 1-278)** | | | | | |
| 930 | 90458-0307 | | 2 | CABLE GLAND, M20X1,5, NO.5311 1020 | |
| 950 | 90458-1308 | | 4 | BLIND PLUG CIRCULAR, M20X1,5 514GFK/220 | |
| **Common Parts** | | | | | |
| 010 | 2883086-0000 | | 1 | CONNECTION BOX | |
| 020 | 2780205-0200 | | 1 | TERMINAL BLOCK ..... | **1-283** |
| 030 | 2883087-0000 | | 1 | MOUNTING PLATE | |
| 040 | 2883084-0000 | | 1 | CABLE DUCT | |
| 050 | 2780633-0000 | | 2 | SUPPORT | |
| 060 | 2790900-0200 | | 1 | BLOCK ..... | **1-285** |
| 1000 | 90458-0308 | | 1 | CABLE GLAND, M25X1,5, NO.5311 1030 | |
| 1200 | 90326-0022 | | 1 | PLUG, MALE YELLOW CR-AL | |
| 1300 | 90326-0022 | | 1 | PLUG, MALE YELLOW CR-AL | |
| 500 | 312125-0325 | | 4 | SCREW ISO 1207 M5X10 A4 | |
| 510 | 312105-0366 | | 4 | SCREW M6S ISO 4017 M6X12 A480 | |
| 520 | 312115-0372 | | 4 | SCREW ISO4762 M6X25 A4 80 | |
| 530 | 312125-0364 | | 6 | SCREW ISO 1207 M6X10 A4 | |
| 540 | 90287-0124 | | 2 | SCREW PAN HEAD MSCS M4X12 NYLON | |
| 600 | 315105-0146 | | 4 | WASHER BRB 5,3X10 RFR | |
| 650 | 359705-0015 | | 1 | WARNING SIGN ISO, RISK OF ELECTRIC SHOCK | |
| 900 | 90458-0306 | | 24 | CABLE GLAND, M16X1,5, NO.5311 1010 | |
| 910 | 90458-0308 | | 1 | CABLE GLAND, M25X1,5, NO.5311 1030 | |
| 920 | 90458-0309 | | 1 | CABLE GLAND, M32X1,5, NO.5311 1040 | |
| 940 | 90458-1307 | | 4 | BLIND PLUG CIRCULAR, M16X1,5 514GFK/216 | |
| 960 | 90459-6636 | | 1 | HOOD 24 B TOP ENTRY, 19 30 024 0427 | |
| 980 | 90458-0309 | | 1 | CABLE GLAND, M32X1,5, NO.5311 1040 | |
| 990 | 90459-6634 | | 1 | HOOD 16 B TOP ENTRY, 19 30 016 1421 | |
| U70W0460 | 351150-0196 | MM | 4300 | CABLE OLFLEX 7X4 MM2 LIGHT/GREY | |
| U70W0590 | 351150-0425 | MM | 6000 | CABLE OLFLEX 25X0,75 MM2 LIGHT/GREY | |
| U70W0910 | 90220-0034 | MM | 7200 | THERMOCABLE TEX/SITW-20F-KX 2X0,5MM2 | |
| U70W0920 | 90220-0034 | MM | 7200 | THERMOCABLE TEX/SITW-20F-KX 2X0,5MM2 | |
| U70X0460 | 90110-0054 | | 1 | MALE INSERT HAN 6 HSB 09 31 006 2601 | |
| U70X0590 | 90110-0056 | | 1 | MALE INSERT HAN 24 E 09 33 024 2601 | |

| Pos | Part No | UN | Qty | Description | Page No |
|---|---|---|---|---|---|

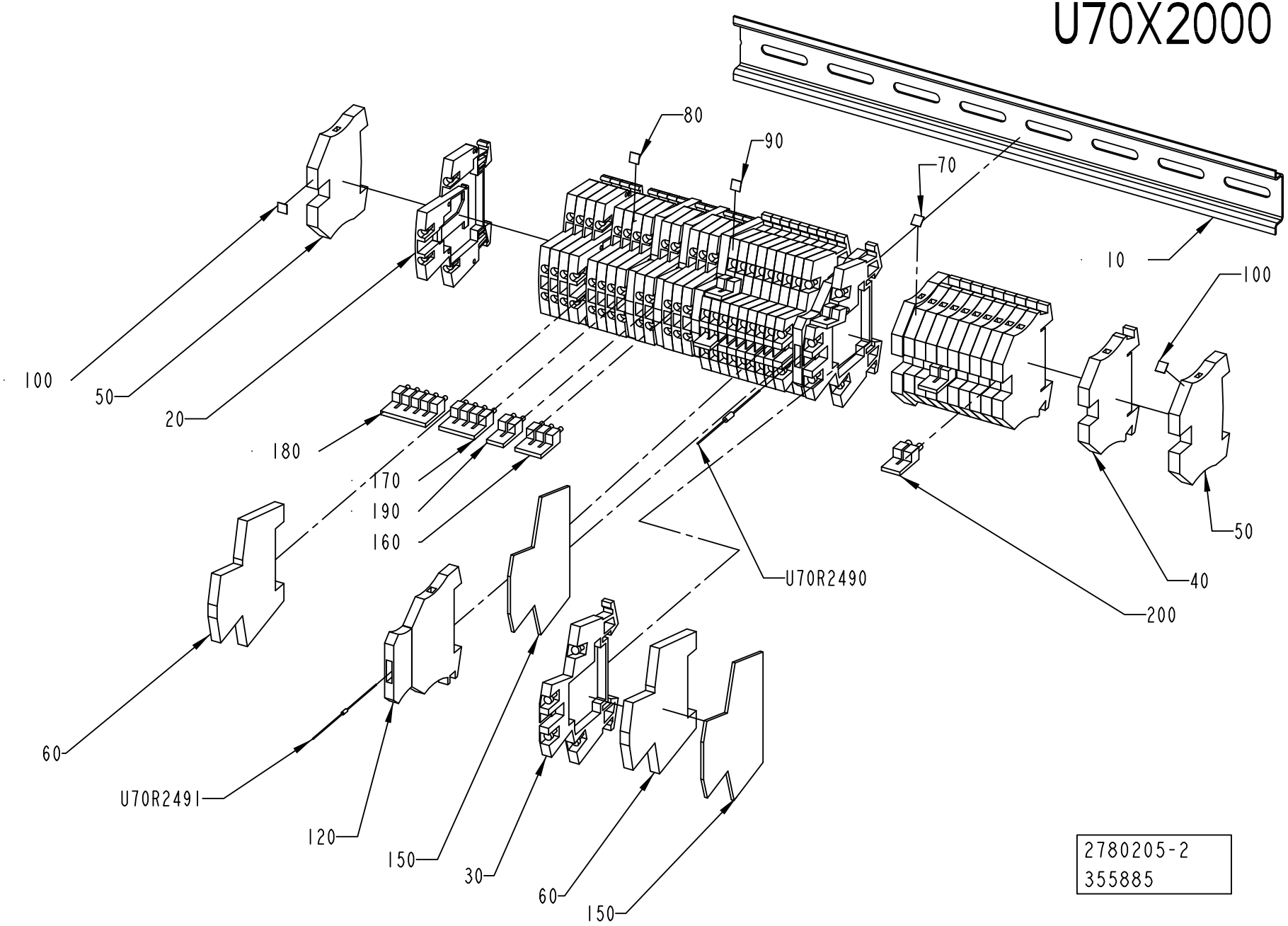
U70X2000
80
90
70
10
100
100
50
20
180
170
190
160
U70R2490
50
40
200
60
U70R2491
120
150
30
60
150
2780205-2
355885

ECM: 355889 - 20081001
Group number: 2780205-0200
Assembly Drawing: 2780205-2_1_AB

| Pos | Part No | UN | Qty | Description | Page No |
|---|---|---|---|---|---|
| - | | | | | |
| 010 | 2883085-0000 | | 1 | RAIL | |
| 020 | 90457-0049 | | 14 | TERMINAL BLOCK WDK 2.5V, 102230 | |
| 030 | 90077-0113 | | 11 | FEED THROUGH TERMINAL, 10-00102150-1 | |
| 040 | 353021-0213 | | 10 | FEED THROUGH TERMINAL, 10201.0 | |
| 050 | 353024-0205 | | 3 | EARTH TERMINAL, 1010.1 | |
| 060 | 353024-0212 | | 5 | EARTH TERMINAL, 10363.0 | |
| 070 | 359011-0807 | | 1 | MARKING PLATES 5-FW 1-50 | |
| 080 | 359011-0808 | | 1 | MARKING PLATES 5-FW 51-100 | |
| 090 | 359011-0809 | | 1 | MARKING PLATES 5-FW 101-150 | |
| 100 | 359011-0819 | | 1 | MARKING PLATES 5-GW (EARTH) | |
| 120 | 90600-2134 | | 2 | TERMINAL DISCONNECATBLE, WTR 2,5/O.TNHE | |
| 150 | 90077-0114 | | 2 | END PLATE, WAP/WDK 2,5 | |
| 160 | 353034-0030 | | 1 | BRIDGE CONNECTOR WQV 2,5/10, 10544.6 | |
| 170 | 353034-0030 | | 1 | BRIDGE CONNECTOR WQV 2,5/10, 10544.6 | |
| 180 | 353034-0030 | | 1 | BRIDGE CONNECTOR WQV 2,5/10, 10544.6 | |
| 190 | 353034-0030 | | 4 | BRIDGE CONNECTOR WQV 2,5/10, 10544.6 | |
| 200 | 90459-0828 | | 2 | BRIDGE CONNECTOR WQV 4/2, 105196 | |
| 220 | 90600-2133 | | 2 | MODULE CONNECTOR 250V, BEST 1833100000 | |
| U70R2490 | 90121-0127 | | 1 | RESISTANCE FIXED, 1,5 KOHM, 0,25 W | |
| U70R2491 | 90038-0049 | | 1 | DIODE | |

| Pos | Part No | UN | Qty | Description | Page No |
|---|---|---|---|---|---|

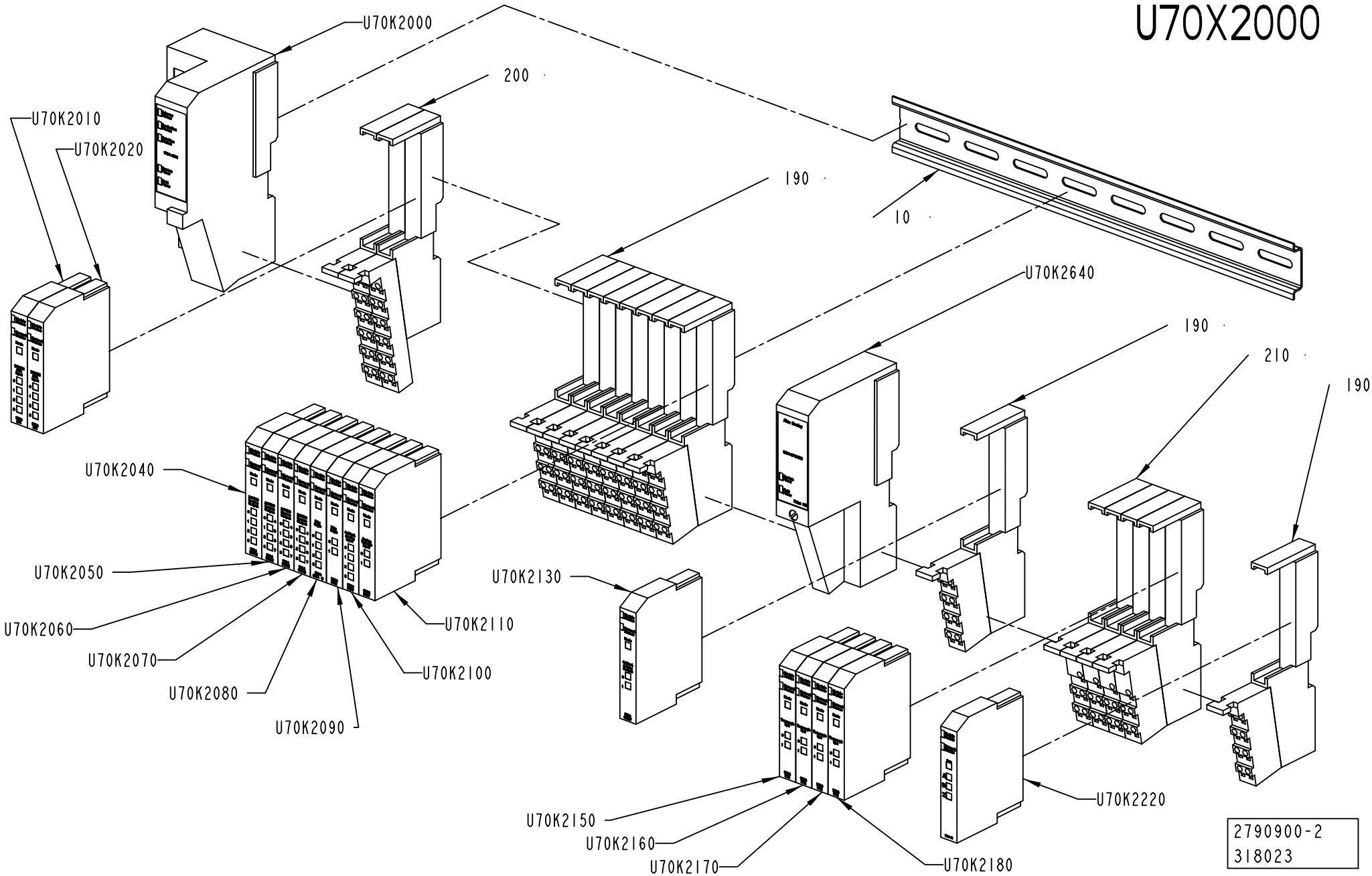
U70X2000
U70K2000
200
U70K2010
U70K2020
190
10
U70K2640
190
210
190
U70K2040
U70K2050
U70K2060
U70K2070
U70K2080
U70K2090
U70K2110
U70K2100
U70K2130
U70K2150
U70K2160
U70K2170
U70K2180
U70K2220
2790900-2
318023

ECM: 320333 - 20070803
Group number: 2790900-0200
Assembly Drawing: 2790900-2_1_AA

| Pos | Part No | UN | Qty | Description | Page No |
|---|---|---|---|---|---|
| - | | | | | |
| 010 | 2883085-0000 | | 1 | RAIL | |
| 190 | 90459-2526 | | 10 | REMOTE I/O BASE MODULE 8 POINTS, 1734-TB | |
| 200 | 90459-2527 | | 2 | REMOTE I/O BASE MODULE 12 POINTS | |
| 210 | 90459-2528 | | 4 | REMOTE I/O BASE MODULE FOR THERMOCOUPLE | |
| U70K2000 | 90459-2494 | | 1 | DEVICENET I/O ADAPTER MODULE, 1734-ADN | |
| U70K2010 | 90459-2503 | | 1 | DIGITAL INPUT 4 PTS SINK, 1734-IB4 | |
| U70K2020 | 90459-2503 | | 1 | DIGITAL INPUT 4 PTS SINK, 1734-IB4 | |
| U70K2040 | 90459-2505 | | 1 | DIGITAL OUTPUT 4 PTS, 1734-OB4E | |
| U70K2050 | 90459-6560 | | 1 | DIGITAL OUTPUT 8 PTS, 1734-OB8E/C | |
| U70K2060 | 90459-6560 | | 1 | DIGITAL OUTPUT 8 PTS, 1734-OB8E/C | |
| U70K2070 | 90459-6560 | | 1 | DIGITAL OUTPUT 8 PTS, 1734-OB8E/C | |
| U70K2080 | 90459-5261 | | 1 | REMOTE I/O, RELAY OUTP. 4 PTS,1734-OW4/C | |
| U70K2090 | 90459-4055 | | 1 | REMOTE I/O RELAY OUTPUT 2 PTS | |
| U70K2100 | 90459-2509 | | 1 | REMOTE I/O ANALOG INPUT CURRENT 2 PTS | |
| U70K2110 | 90459-2508 | | 1 | REMOTE I/O ANALOG INPUT VOLTAGE 2 PTS | |
| U70K2130 | 90459-2510 | | 1 | ANALOG OUTP. VOLT. 2PTS, 1734-OE2V SER.C | |
| U70K2150 | 90459-2512 | | 1 | REMOTE I/O THERMOCOUPLE INPUT 2 PTS | |
| U70K2160 | 90459-2512 | | 1 | REMOTE I/O THERMOCOUPLE INPUT 2 PTS | |
| U70K2170 | 90459-2512 | | 1 | REMOTE I/O THERMOCOUPLE INPUT 2 PTS | |
| U70K2180 | 90459-2512 | | 1 | REMOTE I/O THERMOCOUPLE INPUT 2 PTS | |
| U70K2220 | 90459-6731 | | 1 | ENCODER/COUNTER MODULE, 1734-IK SERIES C | |
| U70K2640 | 90459-2500 | | 1 | EXPANSION POWER SUPPLY MODULE | |

| Pos | Part No | UN | Qty | Description | Page No |
|---|---|---|---|---|---|

Machine Type | Group Description | Used-In | Group Number | Page No

# FRAME SECTION,UPPER



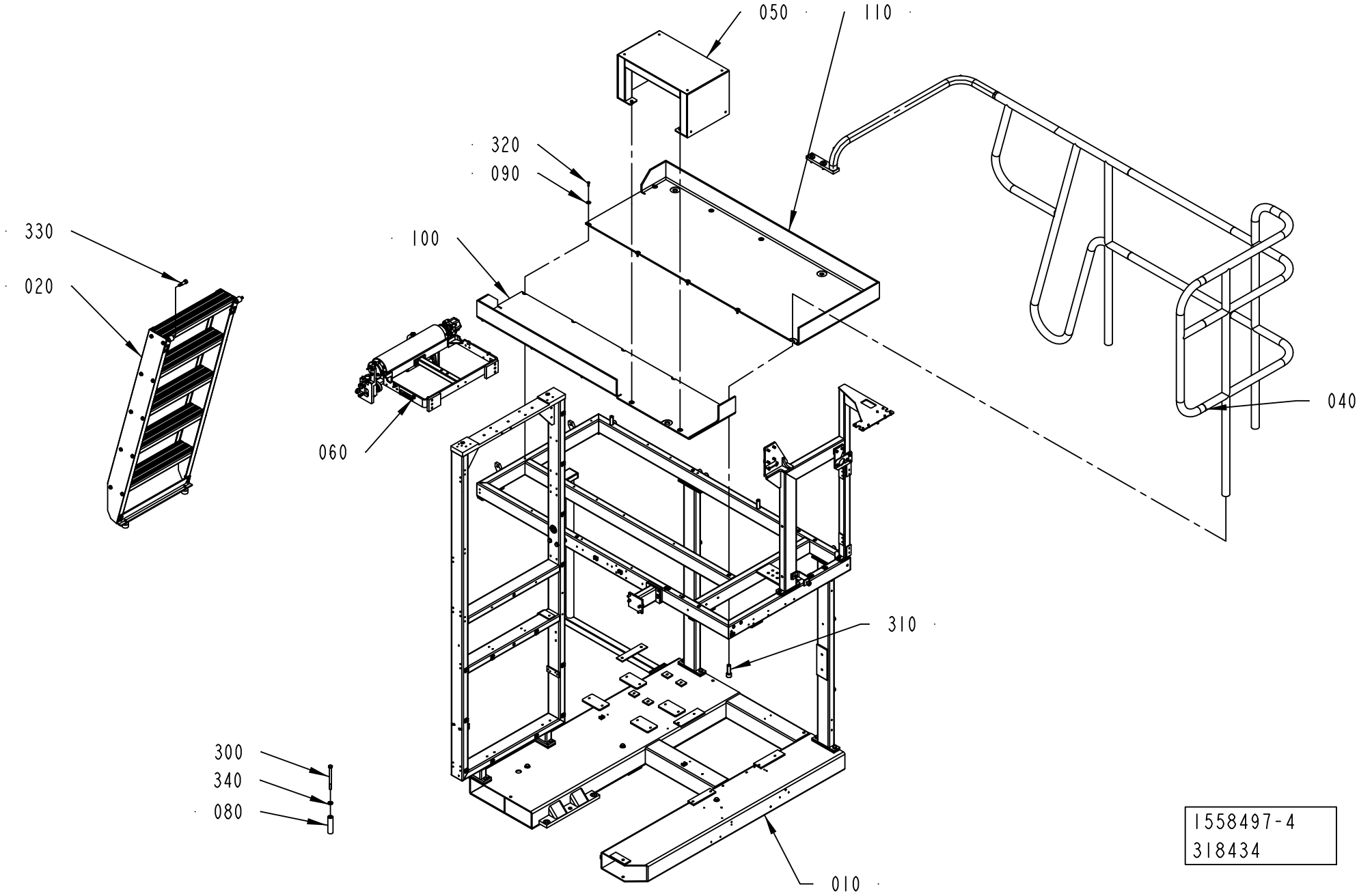

ECM: 319582 - 20070910
Group number: 1558497-0300
Assembly Drawing: 1558497-4_1_AB

| Pos | Part No | UN | Qty | Description | Page No |
|---|---|---|---|---|---|
| **A3/FLEX NOPT, A3/FLEX PT/FLEX** | | | | | |
| 090 | 2541673-0000 | | 11 | WASHER | |
| 100 | 1558438-0000 | | 1 | CHECKER PLATE | |
| 110 | 1558439-0000 | | 1 | CHECKER PLATE | |
| 320 | 312155-0370 | | 11 | SCREW DIN 7991 MF6S M6X20 A4 70 | |
| **Common Parts** | | | | | |
| 010 | 1549980-0400 | | 1 | FRAME ..... | **1-289, 1-291** |
| 020 | 1095862-0100 | | 1 | LADDER ..... | **1-293** |
| 040 | 2529991-0200 | | 1 | RAILING ..... | **1-295** |
| 050 | 2530188-0100 | | 1 | STEP ..... | **1-297** |
| 060 | 2552125-0100 | | 1 | BENDING ROLLER ..... | **1-299, 1-301** |
| 080 | 1511504-0000 | | 3 | SPACER | |
| 300 | 312105-0517 | | 4 | SCREW M6S ISO 4014 M10X130 A480 | |
| 310 | 312115-0630 | | 3 | SCREW ISO4762 M16X50 A4 80 | |
| 330 | 312180-0534 | | 2 | SCREW ISO7379 H12X25 | |
| 340 | 315115-0173 | | 4 | WASHER PLAIN, TBRB 10,5/22 H=4 | |

| Pos | Part No | UN | Qty | Description | Page No |
|---|---|---|---|---|---|

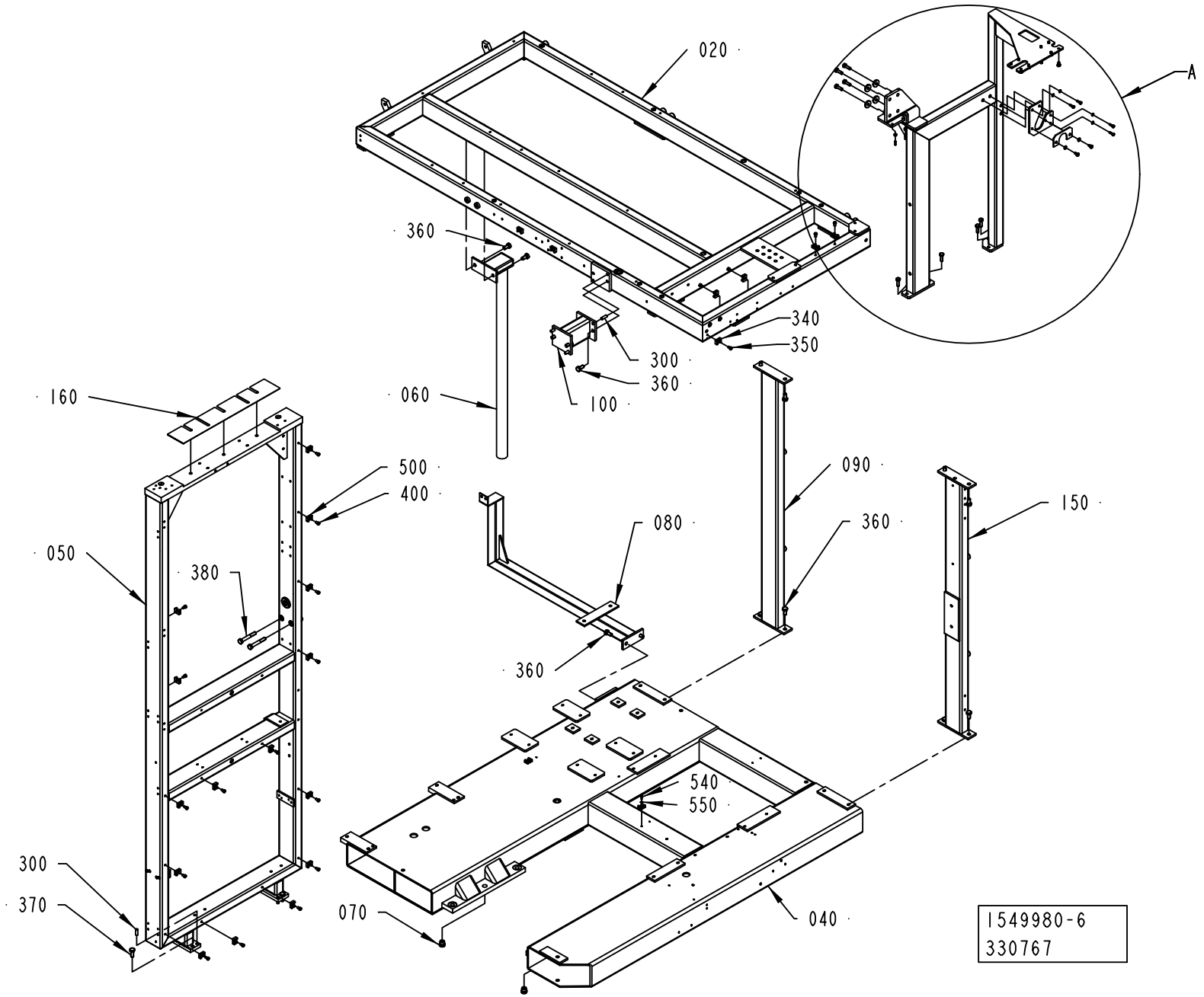
020
A
360
340
350
300
360
100
060
160
500
400
090
150
080
360
050
380
360
300
370
540
550
070
040
1549980-6
330767

ECM: 352799 - 20080711
Group number: 1549980-0400
Assembly Drawing: 1549980-6_1_AB

This list covers pages from 1-288 to 1-291

| Pos | Part No | UN | Qty | Description | Page No |
|---|---|---|---|---|---|
| - | | | | | |
| 010 | 2894653-0000 | | 1 | FRAME | |
| 020 | 2777988-0000 | | 1 | FRAME UPPER | |
| 040 | 2783096-0000 | | 1 | BASE PLATE | |
| 050 | 2783098-0000 | | 1 | FRAME | |
| 060 | 2833225-0000 | | 1 | BRACKET | |
| 070 | 1490046-0000 | | 2 | PIN | |
| 080 | 1498782-0000 | | 1 | TANK BRACKET | |
| 090 | 1498787-0000 | | 1 | BRACKET | |
| 100 | 1558440-0000 | | 1 | BRACKET | |
| 110 | 2545658-0000 | | 1 | PLATE | |
| 120 | 2696034-0000 | | 1 | HOLDER | |
| 140 | 2696036-0000 | | 1 | HOLDER | |
| 150 | 2696104-0000 | | 1 | BRACKET | |
| 160 | 2894612-0000 | | 1 | SHIM | |
| 300 | 311103-0404 | | 6 | PARALLEL PIN ISO 2338 8M6X28 A1 | |
| 310 | 312105-0329 | | 5 | SCREW M6S ISO 4017 M5X16 A480 | |
| 320 | 312105-0364 | | 2 | SCREW M6S ISO 4017 M6X10 A480 | |
| 330 | 90600-0657 | | 8 | SCREW UNC 1/4-20 X10 | |
| 340 | 312105-0453 | | 8 | SCREW M6S ISO 4017 M8X25 A480 | |
| 360 | 312105-0491 | | 16 | SCREW M6S ISO 4017 M10X20 A480 | |
| 370 | 312105-0493 | | 4 | SCREW M6S ISO 4017 M10X25 A480 | |
| 380 | 312105-0505 | | 2 | SCREW M6S ISO 4014 M10X70 A480 | |
| 400 | 312125-0364 | | 26 | SCREW ISO 1207 M6X10 A4 | |
| 410 | 312311-0329 | | 2 | SCREW ISO4028 M5X16 FZB | |
| 430 | 312605-0314 | | 2 | HEXAGON NUT, M6M M5 A280 | |
| 450 | 315105-0146 | | 5 | WASHER BRB 5,3X10 RFR | |
| 460 | 315105-0153 | | 2 | WASHER BRB 6,4X12 RFR | |
| 480 | 315125-0165 | | 4 | WASHER TBRSB 8,4X26X5 A4 | |
| 500 | 352113-0204 | | 26 | ANCHOR PLATES FOR STRIPS, TYPE TM3S25-M | |
| 530 | 90051-0035 | | 1 | KNOB, EXTERNAL THREAD. NO. 8308-1135 | |
| 540 | 312125-0289 | | 2 | SCREW ISO 1207 M4X10 A4 | |
| 550 | 315105-0136 | | 2 | WASHER BRB 4,3X8 RFR | |

| Pos | Part No | UN | Qty | Description | Page No |
|---|---|---|---|---|---|

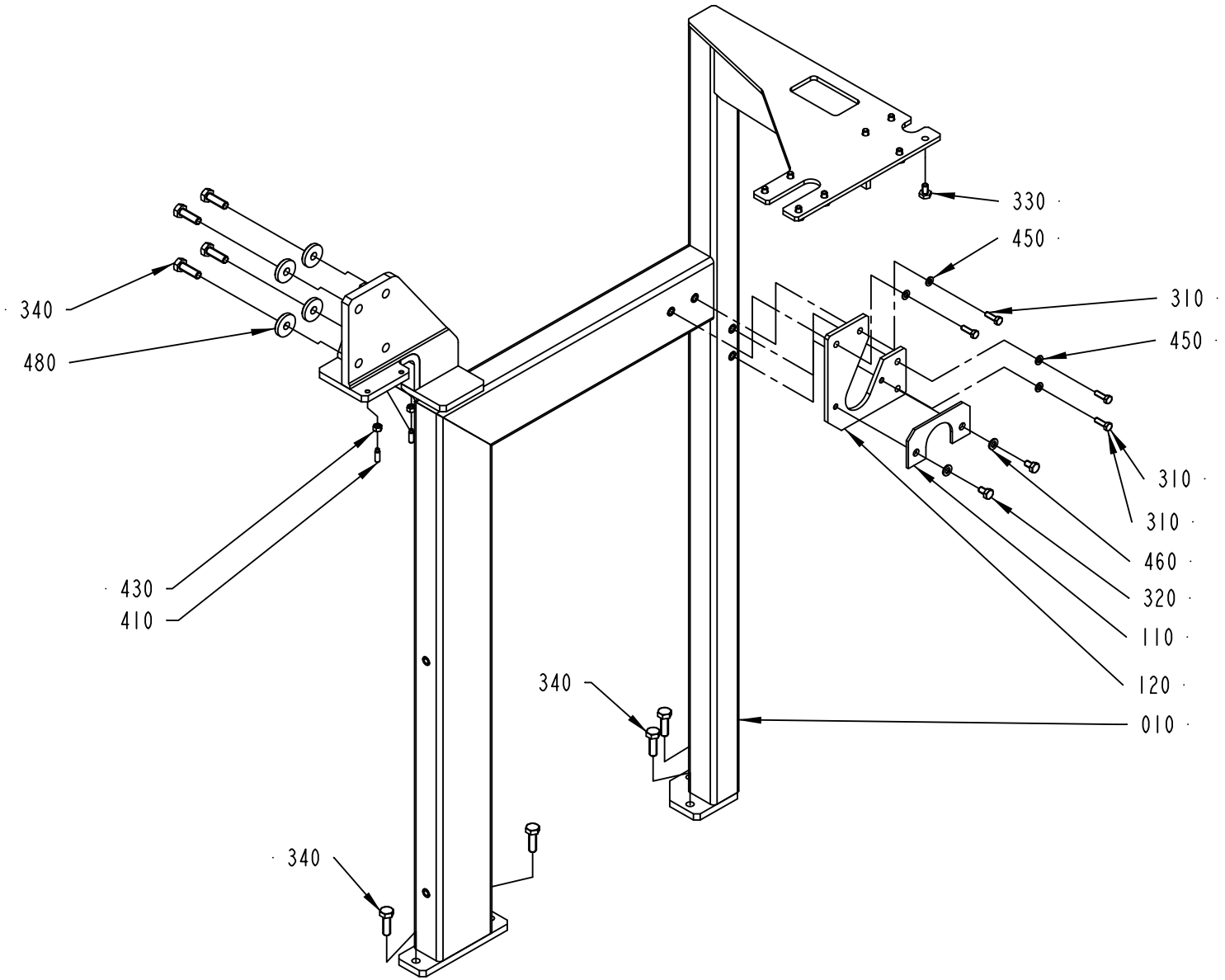


DETAIL A
SCALE 1:5

1549980-6
330767

ECM: 352799 - 20080711
Group number: 1549980-0400
Assembly Drawing: 1549980-6_2_AB

This list covers pages from 1-288 to 1-291

| Pos | Part No | UN | Qty | Description | Page No |
|---|---|---|---|---|---|
| - | | | | | |
| 010 | 2894653-0000 | | 1 | FRAME | |
| 020 | 2777988-0000 | | 1 | FRAME UPPER | |
| 040 | 2783096-0000 | | 1 | BASE PLATE | |
| 050 | 2783098-0000 | | 1 | FRAME | |
| 060 | 2833225-0000 | | 1 | BRACKET | |
| 070 | 1490046-0000 | | 2 | PIN | |
| 080 | 1498782-0000 | | 1 | TANK BRACKET | |
| 090 | 1498787-0000 | | 1 | BRACKET | |
| 100 | 1558440-0000 | | 1 | BRACKET | |
| 110 | 2545658-0000 | | 1 | PLATE | |
| 120 | 2696034-0000 | | 1 | HOLDER | |
| 140 | 2696036-0000 | | 1 | HOLDER | |
| 150 | 2696104-0000 | | 1 | BRACKET | |
| 160 | 2894612-0000 | | 1 | SHIM | |
| 300 | 311103-0404 | | 6 | PARALLEL PIN ISO 2338 8M6X28 A1 | |
| 310 | 312105-0329 | | 5 | SCREW M6S ISO 4017 M5X16 A480 | |
| 320 | 312105-0364 | | 2 | SCREW M6S ISO 4017 M6X10 A480 | |
| 330 | 90600-0657 | | 8 | SCREW UNC 1/4-20 X10 | |
| 340 | 312105-0453 | | 8 | SCREW M6S ISO 4017 M8X25 A480 | |
| 360 | 312105-0491 | | 16 | SCREW M6S ISO 4017 M10X20 A480 | |
| 370 | 312105-0493 | | 4 | SCREW M6S ISO 4017 M10X25 A480 | |
| 380 | 312105-0505 | | 2 | SCREW M6S ISO 4014 M10X70 A480 | |
| 400 | 312125-0364 | | 26 | SCREW ISO 1207 M6X10 A4 | |
| 410 | 312311-0329 | | 2 | SCREW ISO4028 M5X16 FZB | |
| 430 | 312605-0314 | | 2 | HEXAGON NUT, M6M M5 A280 | |
| 450 | 315105-0146 | | 5 | WASHER BRB 5,3X10 RFR | |
| 460 | 315105-0153 | | 2 | WASHER BRB 6,4X12 RFR | |
| 480 | 315125-0165 | | 4 | WASHER TBRSB 8,4X26X5 A4 | |
| 500 | 352113-0204 | | 26 | ANCHOR PLATES FOR STRIPS, TYPE TM3S25-M | |
| 530 | 90051-0035 | | 1 | KNOB, EXTERNAL THREAD. NO. 8308-1135 | |
| 540 | 312125-0289 | | 2 | SCREW ISO 1207 M4X10 A4 | |
| 550 | 315105-0136 | | 2 | WASHER BRB 4,3X8 RFR | |

| Pos | Part No | UN | Qty | Description | Page No |
|---|---|---|---|---|---|

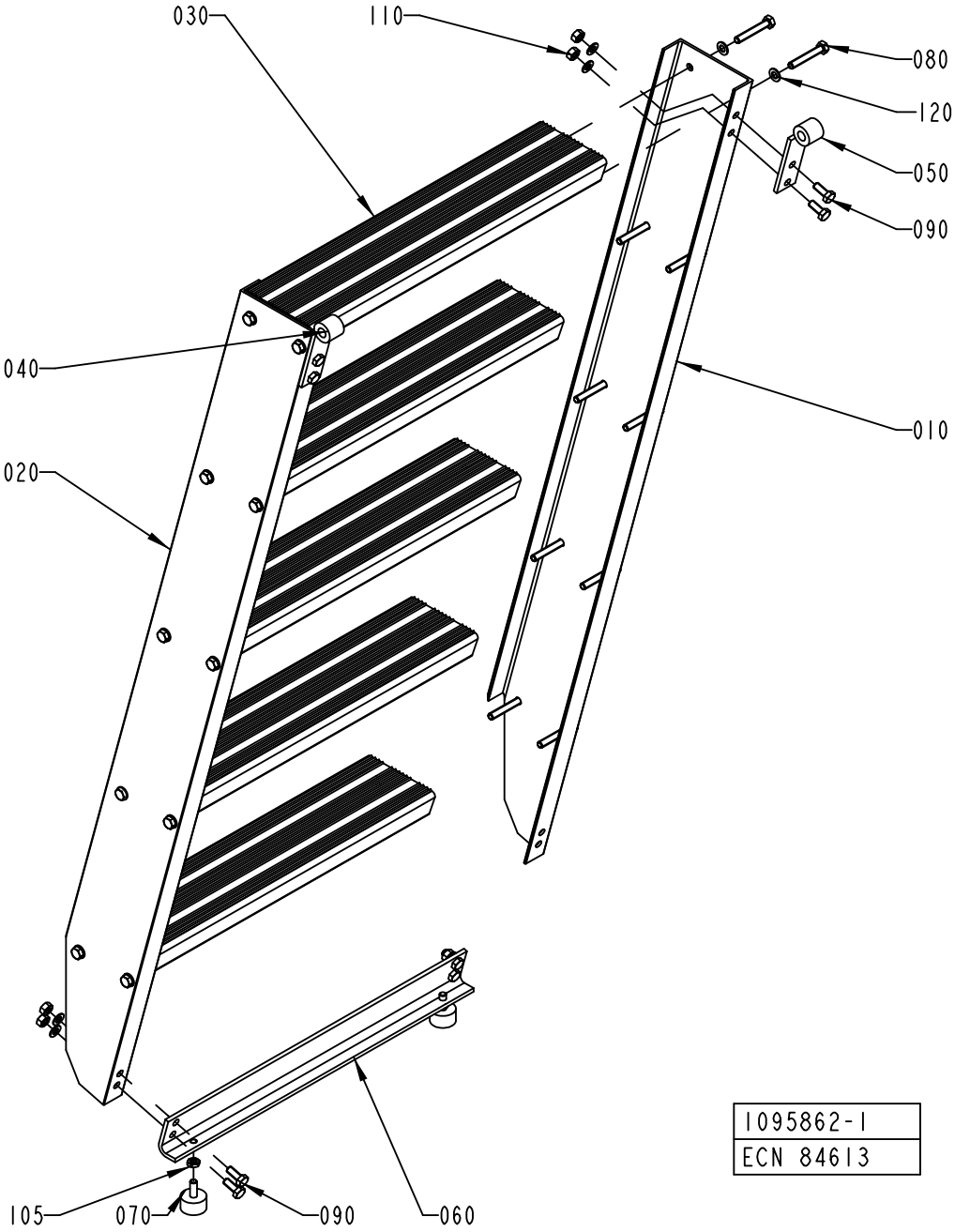
030
110
080
120
050
090
040
010
020
105
070
090
060
1095862-1
ECN 84613

ECM: 358935 - 20081001
Group number: 1095862-0100
Assembly Drawing: 1095862-1_1_AB

| Pos | Part No | UN | Qty | Description | Page No |
|---|---|---|---|---|---|
| - | | | | | |
| 010 | 1036939-0000 | | 1 | SIDE PIECE | |
| 020 | 1036940-0000 | | 1 | SIDE PIECE | |
| 030 | 1129643-0000 | | 5 | STAIR | |
| 040 | 1036963-0000 | | 1 | HOOK HOLDER | |
| 050 | 1036965-0000 | | 1 | HOOK HOLDER | |
| 060 | 1129644-0000 | | 2 | BRACKET | |
| 070 | 90347-0004 | | 2 | VIBRATION DAMPER D=30 TH=M8 H=17 H2=21MM | |
| 080 | 312104-0461 | | 20 | SCREW M6S M8X50H FZB | |
| 090 | 312105-0451 | | 8 | SCREW M6S ISO 4017 M8X20 A480 | |
| 105 | 312625-0318 | | 2 | HEXAGON THIN NUT, EN 24035 ML6M M8 A4 | |
| 110 | 312605-0318 | | 8 | HEXAGON NUT, M6M M8 A280 | |
| 120 | 315101-0165 | | 28 | WASHER PLAIN, BRB, 8,4/16 H=1,5 | |

| Pos | Part No | UN | Qty | Description | Page No |
|---|---|---|---|---|---|

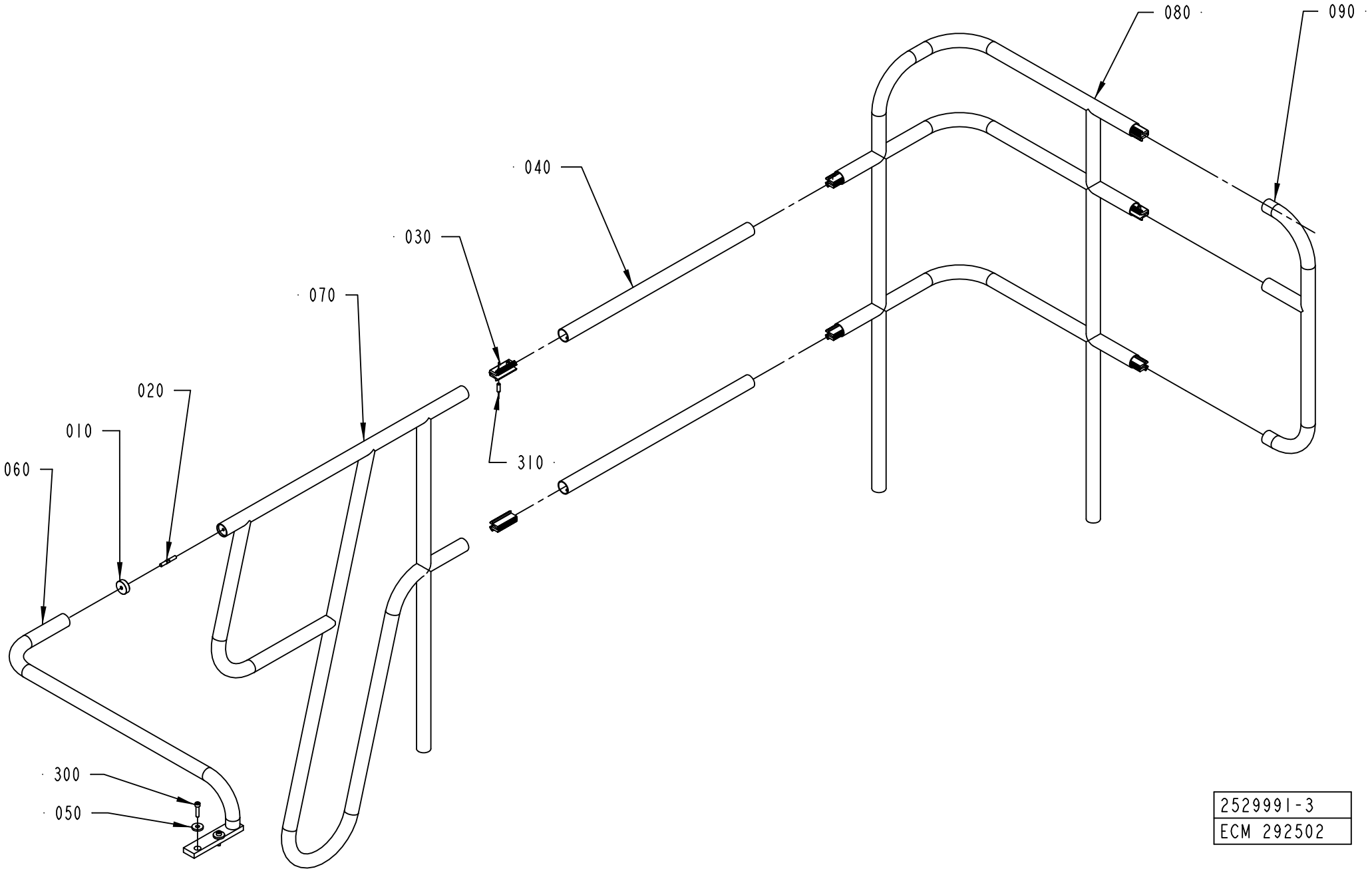


| 2529991-3 |
| --- |
| ECM 292502 |

ECM: 292718 - 20070704
Group number: 2529991-0200
Assembly Drawing: 2529991-3_1_AA

| Pos | Part No | UN | Qty | Description | Page No |
|---|---|---|---|---|---|
| **A3/FLEX** | | | | | |
| 030 | 1035654-0000 | | 7 | CONNECTION | |
| 040 | 1037044-0000 | | 2 | RAILING | |
| 070 | 2767107-0000 | | 1 | RAILING | |
| 080 | 2530096-0000 | | 1 | RAILING | |
| 090 | 2529926-0000 | | 1 | RAILING | |
| 310 | 312318-0453 | | 14 | SCREW ISO4029 M8X25 A4 | |
| **Common Parts** | | | | | |
| 010 | 578640-0000 | | 1 | CLAMPING RING | |
| 020 | 751485-0000 | | 1 | SCREW | |
| 050 | 1254410-0000 | | 2 | WASHER | |
| 060 | 2863744-0000 | | 1 | RAILING | |
| 300 | 312115-0457 | | 2 | SCREW ISO4762 M8X35 A4 80 | |

| Pos | Part No | UN | Qty | Description | Page No |
|---|---|---|---|---|---|

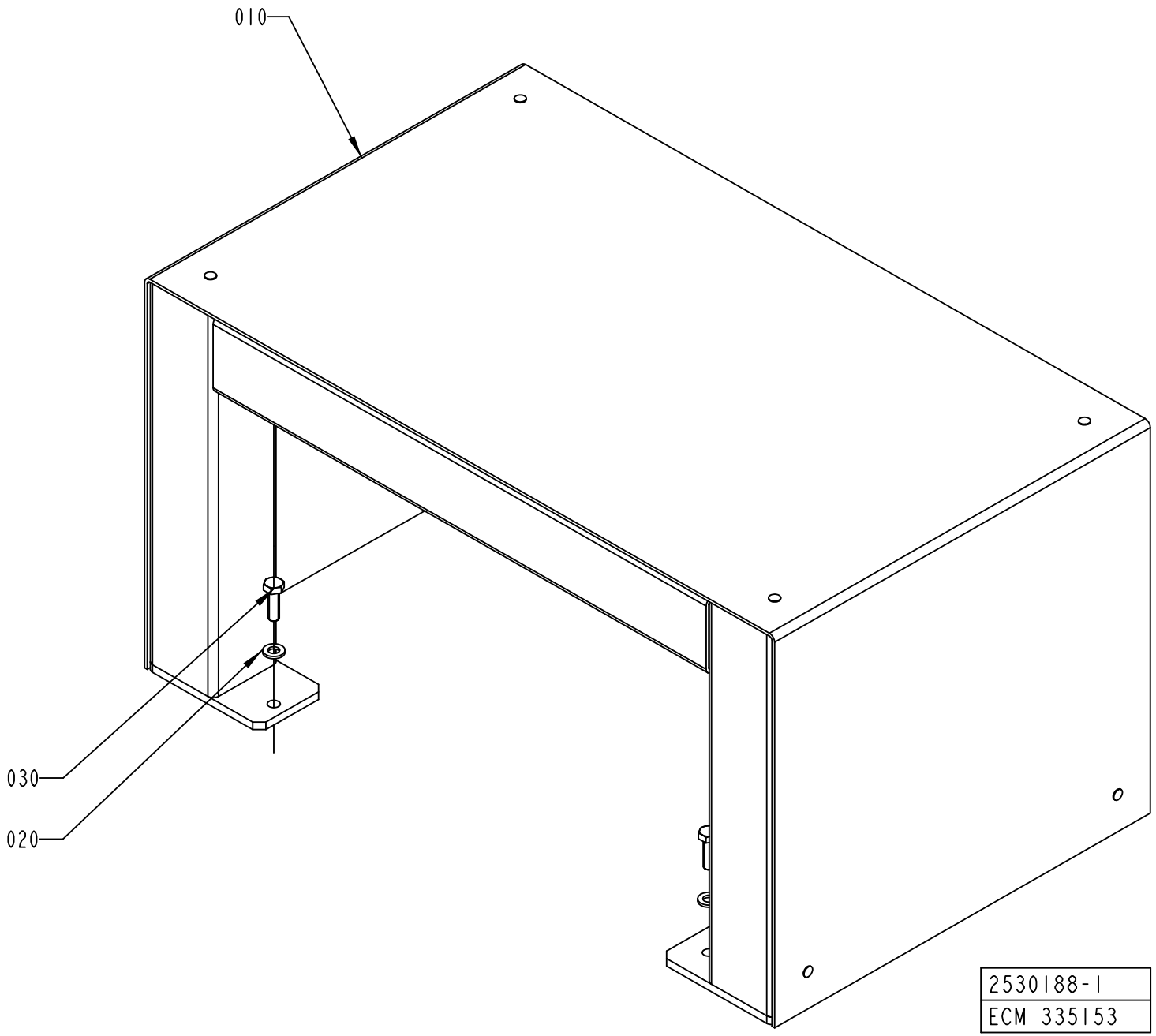
010
030
020
2530188-1
ECM 335153

ECM: 337250 - 20080104
Group number: 2530188-0100
Assembly Drawing: 2530188-1_1_AB

| Pos | Part No | UN | Qty | Description | Page No |
|---|---|---|---|---|---|
| - | | | | | |
| 010 | 2529925-0000 | | 1 | STEP | |
| 020 | 315105-0153 | | 2 | WASHER BRB 6,4X12 RFR | |
| 030 | 312105-0370 | | 2 | SCREW M6S ISO 4017 M6X20 A480 | |

| Pos | Part No | UN | Qty | Description | Page No |
|---|---|---|---|---|---|

# BENDING ROLLER



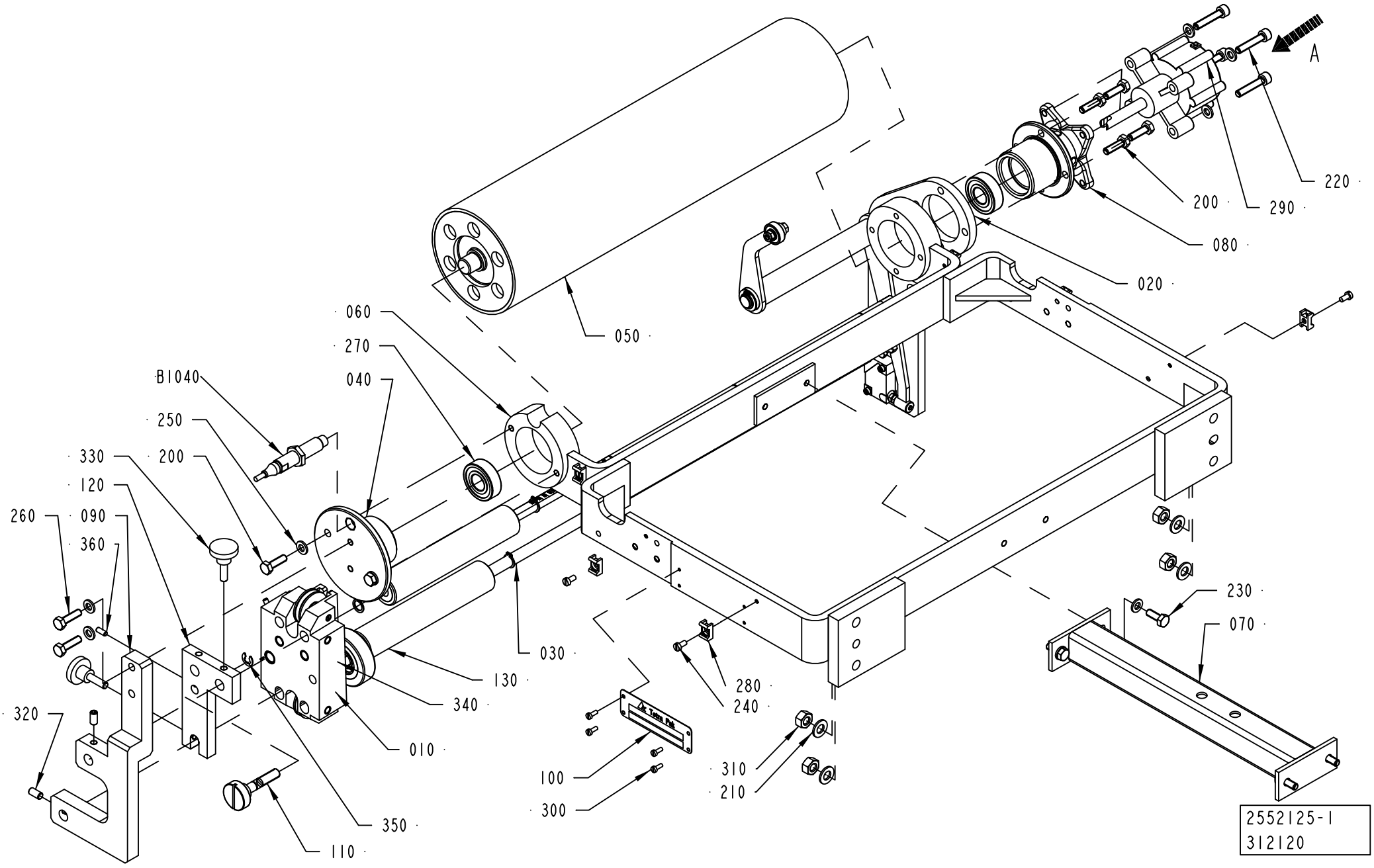

| Pos | Part No | UN | Qty | Description | Page No |
|---|---|---|---|---|---|
| **A3/FLEX DIMC/FLEX (See drawing on page: 1-300)** | | | | | |
| 040 | 1558352-0000 | | 1 | FLANGE | |
| 050 | 2532908-0000 | | 1 | ROLLER | |
| 270 | 321313-0102 | | 2 | BALL BEARING, 15X35X11 MM | |
| **A3/FLEX TBA 2000S NODIMC (See drawing on page: 1-298)** | | | | | |
| 040 | 1558352-0000 | | 1 | FLANGE | |
| 050 | 2662639-0000 | | 1 | ROLLER | |
| 270 | 321313-0102 | | 2 | BALL BEARING, 15X35X11 MM | |
| **A3/FLEX TBA 1000SQ NODIMC, A3/FLEX TBA 1000S NODIMC, A3/FLEX TBA 1000B NODIMC, A3/FLEX TBA 0500B NODIMC, A3/FLEX TPA 1000SQ NODIMC, A3/FLEX TBA 1500S NODIMC, A3/FLEX TPA 0750SQ NODIMC, A3/FLEX TBA 0500SQ NODIMC (See drawing on page: 1-298)** | | | | | |
| 040 | 1558352-0000 | | 1 | FLANGE | |
| 050 | 2532911-0000 | | 1 | ROLLER | |
| 270 | 321313-0102 | | 2 | BALL BEARING, 15X35X11 MM | |
| **Common Parts** | | | | | |
| 010 | 2601483-0100 | | 1 | PAPER GUIDE | **1-303** |
| 020 | 1558356-0100 | | 1 | SPLICE DETECTOR | **1-305, 1-307** |
| 030 | 2891969-0000 | | 2 | ROD | |
| 060 | 2547425-0000 | | 1 | BRACKET | |
| 070 | 2552124-0000 | | 1 | BRACKET | |
| 080 | 2528110-0000 | | 1 | HOUSING | |
| 090 | 2547568-0000 | | 1 | PLATE | |
| 100 | 979548-0000 | | 1 | MACHINE PLATE | |
| 130 | 2833054-0000 | | 2 | ROLLER | |
| 140 | 2891970-0000 | | 1 | KNOB | |
| 150 | 2891971-0000 | | 1 | PLUG | |
| 200 | 312105-0370 | | 8 | SCREW M6S ISO 4017 M6X20 A480 | |
| 210 | 315105-0165 | | 4 | WASHER BRB 8,4X16 RFR | |
| 220 | 312115-0374 | | 4 | SCREW ISO4762 M6X30 A4 80 | |
| 230 | 312105-0368 | | 4 | SCREW M6S ISO 4017 M6X16 A480 | |
| 240 | 312125-0287 | | 6 | SCREW ISO 1207 M4X8 A4 | |
| 250 | 315105-0153 | | 12 | WASHER BRB 6,4X12 RFR | |
| 260 | 312105-0372 | | 2 | SCREW M6S ISO 4017 M6X25 A480 | |
| 280 | 352113-0205 | | 6 | ANCHOR PLATES FOR STRIPS, TYPE TM2S8-C10 | |
| 290 | 90347-0054 | | 1 | ROTARY DASHPOT, S-CRD-P277 | |
| 300 | 312125-0222 | | 4 | SCREW ISO 1207 M3X8 A4 | |
| 310 | 312605-0318 | | 4 | HEXAGON NUT, M6M M8 A280 | |
| 340 | 90141-0016 | | 4 | RETAINING RING FOR SHAFT DIN 471 10 SS | |
| 350 | 315755-0108 | | 1 | RETAINING RING SHAFT DIN 6799 6 A2 | |
| B1040 | 90600-0463 | | 1 | INDUCTIVE SWITCH,E2A-M12LN05-WP-B1-TP 5M | |

| Pos | Part No | UN | Qty | Description | Page No |
|---|---|---|---|---|---|

# BENDING ROLLER



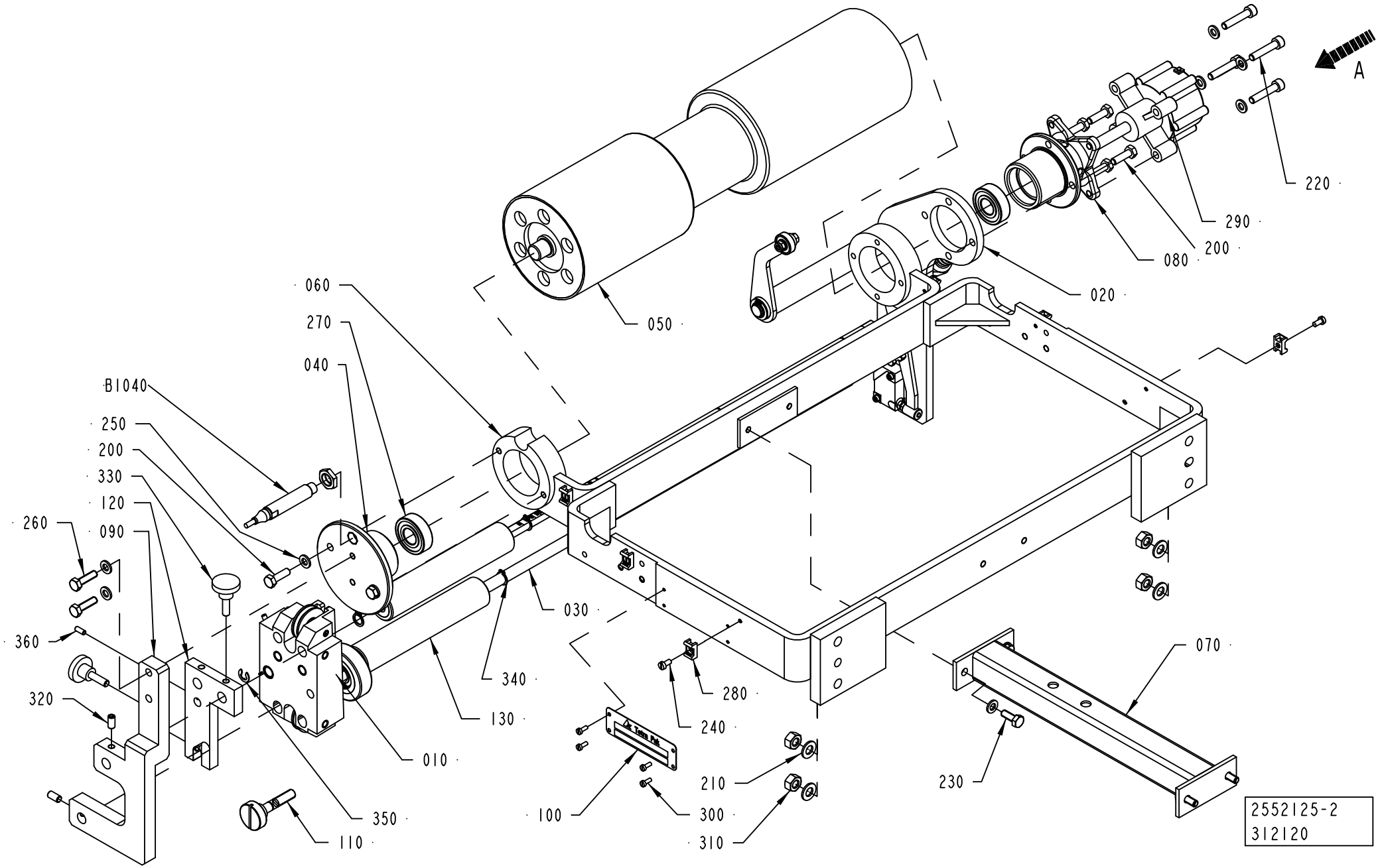

| Pos | Part No | UN | Qty | Description | Page No |
|---|---|---|---|---|---|
| **A3/FLEX DIMC/FLEX (See drawing on page: 1-300)** | | | | | |
| 040 | 1558352-0000 | | 1 | FLANGE | |
| 050 | 2532908-0000 | | 1 | ROLLER | |
| 270 | 321313-0102 | | 2 | BALL BEARING, 15X35X11 MM | |
| **A3/FLEX TBA 2000S NODIMC (See drawing on page: 1-298)** | | | | | |
| 040 | 1558352-0000 | | 1 | FLANGE | |
| 050 | 2662639-0000 | | 1 | ROLLER | |
| 270 | 321313-0102 | | 2 | BALL BEARING, 15X35X11 MM | |
| **A3/FLEX TBA 1000SQ NODIMC, A3/FLEX TBA 1000S NODIMC, A3/FLEX TBA 1000B NODIMC, A3/FLEX TBA 0500B NODIMC, A3/FLEX TPA 1000SQ NODIMC, A3/FLEX TBA 1500S NODIMC, A3/FLEX TPA 0750SQ NODIMC, A3/FLEX TBA 0500SQ NODIMC (See drawing on page: 1-298)** | | | | | |
| 040 | 1558352-0000 | | 1 | FLANGE | |
| 050 | 2532911-0000 | | 1 | ROLLER | |
| 270 | 321313-0102 | | 2 | BALL BEARING, 15X35X11 MM | |
| **Common Parts** | | | | | |
| 010 | 2601483-0100 | | 1 | PAPER GUIDE | **1-303** |
| 020 | 1558356-0100 | | 1 | SPLICE DETECTOR | **1-305, 1-307** |
| 030 | 2891969-0000 | | 2 | ROD | |
| 060 | 2547425-0000 | | 1 | BRACKET | |
| 070 | 2552124-0000 | | 1 | BRACKET | |
| 080 | 2528110-0000 | | 1 | HOUSING | |
| 090 | 2547568-0000 | | 1 | PLATE | |
| 100 | 979548-0000 | | 1 | MACHINE PLATE | |
| 130 | 2833054-0000 | | 2 | ROLLER | |
| 140 | 2891970-0000 | | 1 | KNOB | |
| 150 | 2891971-0000 | | 1 | PLUG | |
| 200 | 312105-0370 | | 8 | SCREW M6S ISO 4017 M6X20 A480 | |
| 210 | 315105-0165 | | 4 | WASHER BRB 8,4X16 RFR | |
| 220 | 312115-0374 | | 4 | SCREW ISO4762 M6X30 A4 80 | |
| 230 | 312105-0368 | | 4 | SCREW M6S ISO 4017 M6X16 A480 | |
| 240 | 312125-0287 | | 6 | SCREW ISO 1207 M4X8 A4 | |
| 250 | 315105-0153 | | 12 | WASHER BRB 6,4X12 RFR | |
| 260 | 312105-0372 | | 2 | SCREW M6S ISO 4017 M6X25 A480 | |
| 280 | 352113-0205 | | 6 | ANCHOR PLATES FOR STRIPS, TYPE TM2S8-C10 | |
| 290 | 90347-0054 | | 1 | ROTARY DASHPOT, S-CRD-P277 | |
| 300 | 312125-0222 | | 4 | SCREW ISO 1207 M3X8 A4 | |
| 310 | 312605-0318 | | 4 | HEXAGON NUT, M6M M8 A280 | |
| 340 | 90141-0016 | | 4 | RETAINING RING FOR SHAFT DIN 471 10 SS | |
| 350 | 315755-0108 | | 1 | RETAINING RING SHAFT DIN 6799 6 A2 | |
| B1040 | 90600-0463 | | 1 | INDUCTIVE SWITCH,E2A-M12LN05-WP-B1-TP 5M | |

| Pos | Part No | UN | Qty | Description | Page No |
|---|---|---|---|---|---|

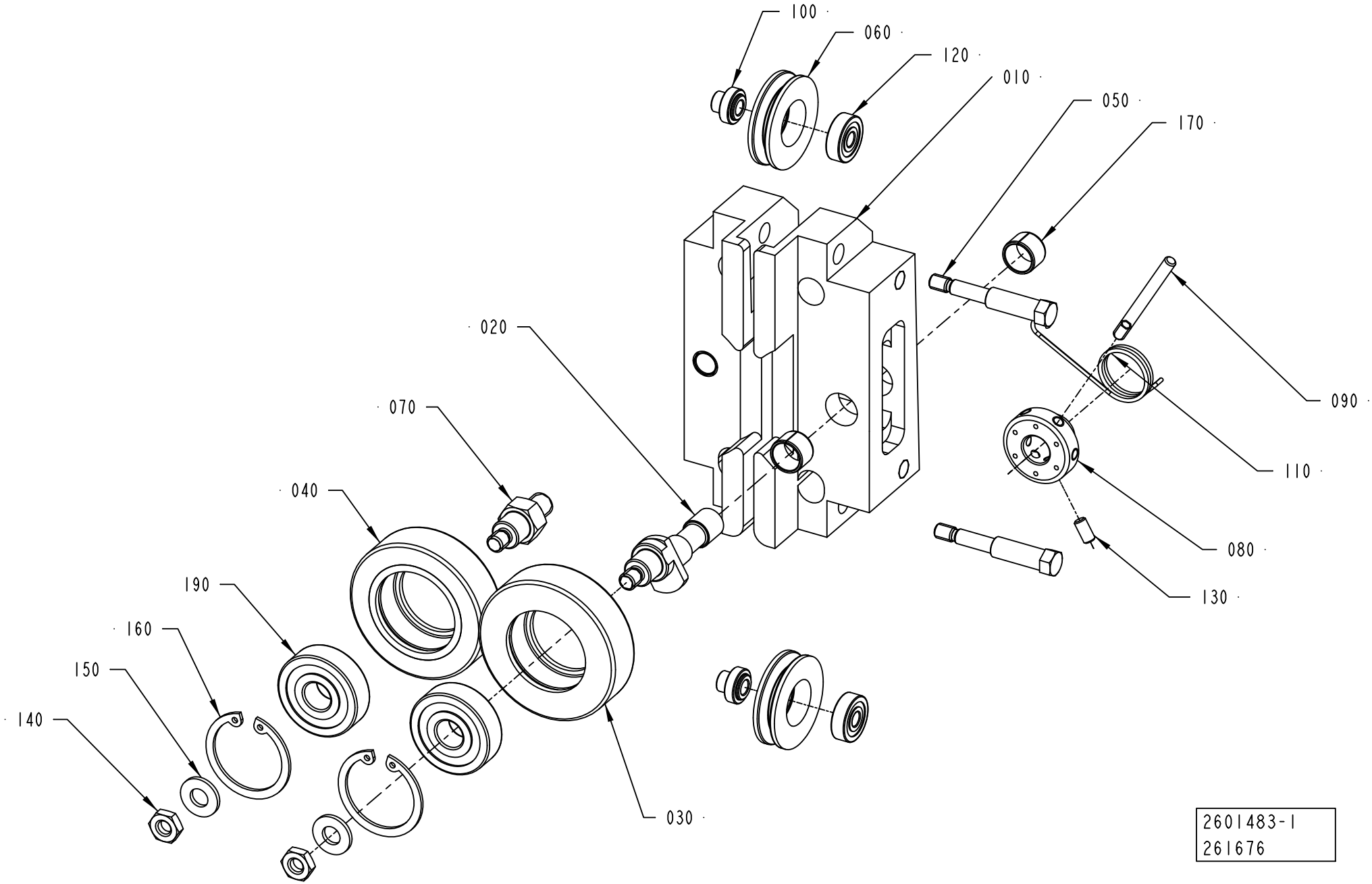
100
060
120
010
050
170
020
090
070
110
040
080
190
130
160
150
140
030
2601483-1
261676

ECM: 272264 - 20070101
Group number: 2601483-0100
Assembly Drawing: 2601483-1_1_AB

| Pos | Part No | UN | Qty | Description | Page No |
|---|---|---|---|---|---|
| - | | | | | |
| 010 | 2832463-0000 | | 1 | SUPPORT | |
| 020 | 2503436-0000 | | 1 | SHAFT | |
| 030 | 2594126-0000 | | 1 | GUIDE ROLLER | |
| 040 | 1036623-0000 | | 1 | GUIDE ROLLER | |
| 050 | 2533671-0000 | | 2 | SCREW | |
| 060 | 2533673-0000 | | 2 | ROLLER | |
| 070 | 1558254-0000 | | 1 | SHAFT | |
| 080 | 2594125-0000 | | 1 | SLEEVE | |
| 090 | 2503438-0000 | | 1 | LEVER | |
| 100 | 2533672-0000 | | 2 | SHAFT | |
| 110 | 2591782-0000 | | 1 | SPRING | |
| 120 | 90214-0037 | | 2 | BALL BEARING, 5X16X5 MM | |
| 130 | 312318-0287 | | 1 | SCREW ISO4029 M4X8 A4 | |
| 140 | 312625-0316 | | 2 | HEXAGON THIN NUT, EN 24035 ML6M M6 A4 | |
| 150 | 315105-0156 | | 2 | WASHER BRB 6,7X14 RFR | |
| 160 | 315753-0122 | | 2 | RETAINING RING FOR BORE DIN 472 30 A2 | |
| 170 | 321141-0138 | | 2 | BEARING BUSH W/O FLANGE, 10X12X8 MM | |
| 190 | 321313-0100 | | 2 | BALL BEARING, 10X30X9 MM | |

| Pos | Part No | UN | Qty | Description | Page No |
|---|---|---|---|---|---|

# SPLICE DETECTOR



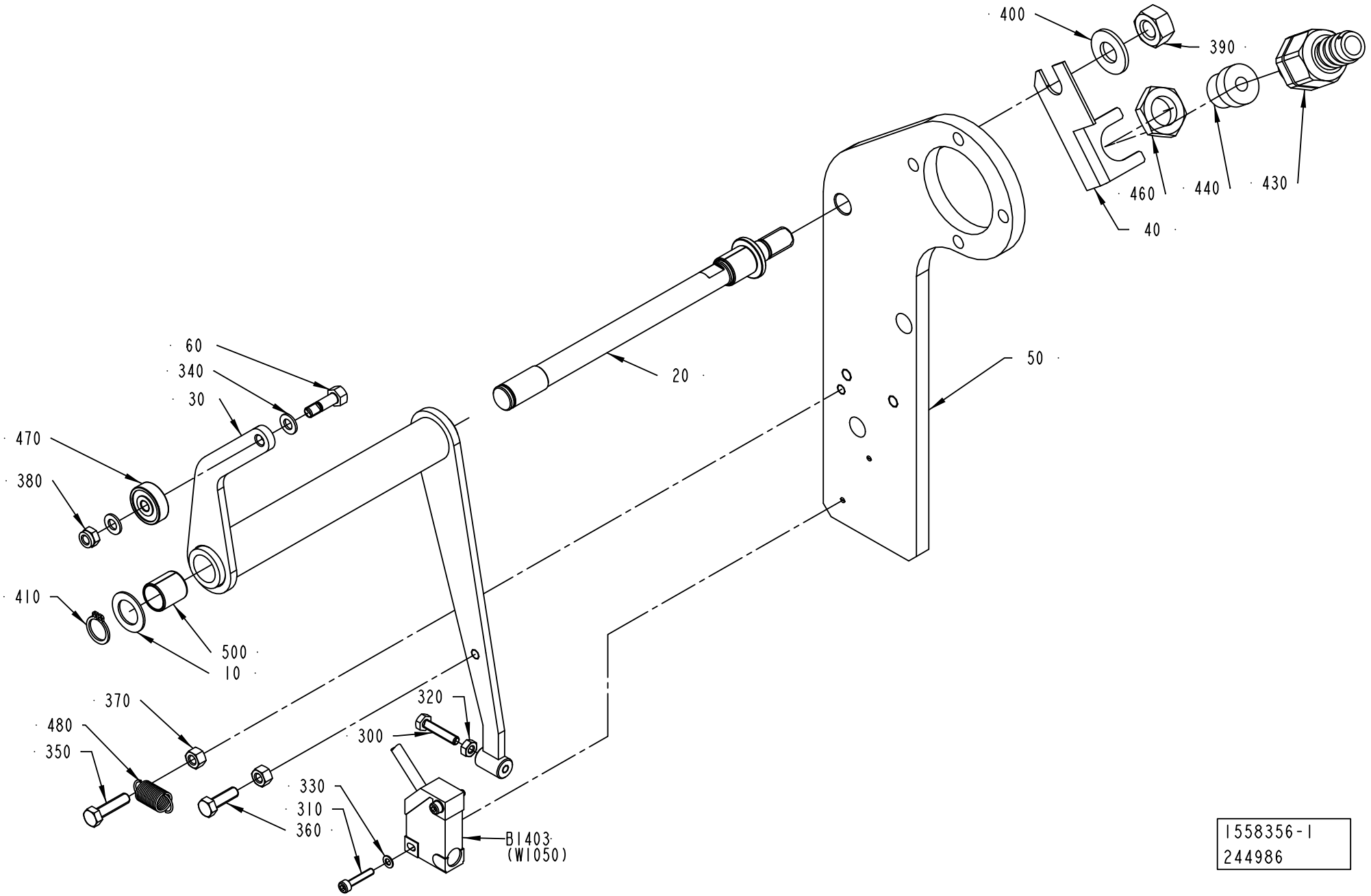

ECM: 323472 - 20080101
Group number: 1558356-0100
Assembly Drawing: 1558356-1_1_AB

This list covers pages from 1-304 to 1-307

| Pos | Part No | UN | Qty | Description | Page No |
|---|---|---|---|---|---|
| **A3/FLEX TBA 0500B, A3/FLEX TBA 1000B, A3/FLEX TBA 1000S, A3/FLEX TBA 1000SQ, A3/FLEX TPA 1000SQ, A3/FLEX TBA 1500S, A3/FLEX TPA 0750SQ, A3/FLEX TBA 0500SQ (See drawing on page: 1-304)** | | | | | |
| 020 | 2528128-0000 | | 1 | SHAFT | |
| 030 | 2528127-0000 | | 1 | BRACKET | |
| 060 | 2528135-0000 | | 1 | SHAFT | |
| 340 | 315105-0146 | | 2 | WASHER BRB 5,3X10 RFR | |
| 470 | 90214-0138 | | 1 | BALL BEARING, 5X19X6 MM | |
| 480 | 90335-0089 | | 1 | TENSION SPRING 41490, 0,9X10X23 | |
| **A3/FLEX TBA 2000S (See drawing on page: 1-306)** | | | | | |
| 020 | 2528128-0000 | | 1 | SHAFT | |
| 030 | 2528127-0000 | | 1 | BRACKET | |
| 060 | 2721434-0000 | | 1 | SHAFT | |
| 340 | 315105-0146 | | 4 | WASHER BRB 5,3X10 RFR | |
| 470 | 90214-0138 | | 2 | BALL BEARING, 5X19X6 MM | |
| 480 | 90459-5581 | | 1 | TENSION SPRING 1,2X23X8,5 | |
| **Common Parts** | | | | | |
| 010 | 266737-0000 | | 1 | WASHER | |
| 040 | 1036610-0000 | | 1 | BRACKET | |
| 050 | 2528105-0000 | | 1 | PLATE | |
| 300 | 312105-0295 | | 1 | SCREW M6S ISO 4017 M4X20 A470 | |
| 310 | 312115-0228 | | 2 | SCREW ISO4762 M3X16 A4 80 | |
| 320 | 312605-0312 | | 1 | HEXAGON NUT, M6M M4 A280 | |
| 330 | 315105-0124 | | 2 | WASHER BRB 3,2X6 RFR | |
| 350 | 312105-0331 | | 1 | SCREW M6S ISO 4017 M5X20 A480 | |
| 360 | 312105-0329 | | 1 | SCREW M6S ISO 4017 M5X16 A480 | |
| 370 | 312605-0314 | | 2 | HEXAGON NUT, M6M M5 A280 | |
| 380 | 312812-0314 | | 1 | HEXAGON NUT, NY-LOCK M5 A480 | |
| 390 | 312605-0320 | | 1 | HEXAGON NUT, M6M M10 A280 | |
| 400 | 315105-0173 | | 1 | WASHER BRB 10,5X22 RFR | |
| 410 | 315751-0109 | | 1 | RETAINING RING FOR SHAFT DIN 471 12 SS | |
| 430 | 353243-0001 | | 1 | HOSE GLAND W/O INSERT PG9 EXTENDED | |
| 440 | 353249-0008 | | 1 | INSERT, SINGLE HOLE, EK 152/7 | |
| 460 | 90099-0104 | | 1 | NUT, PR 15,2 (PG9) | |
| 500 | 321141-0183 | | 2 | BEARING BUSH W/O FLANGE, 12X14X15 MM | |
| B1403 | 90044-0194 | | 1 | PROX.SW. IN5329/IN3002-BPKG(EX90044-104) | |

| Pos | Part No | UN | Qty | Description | Page No |
|---|---|---|---|---|---|

# SPLICE DETECTOR



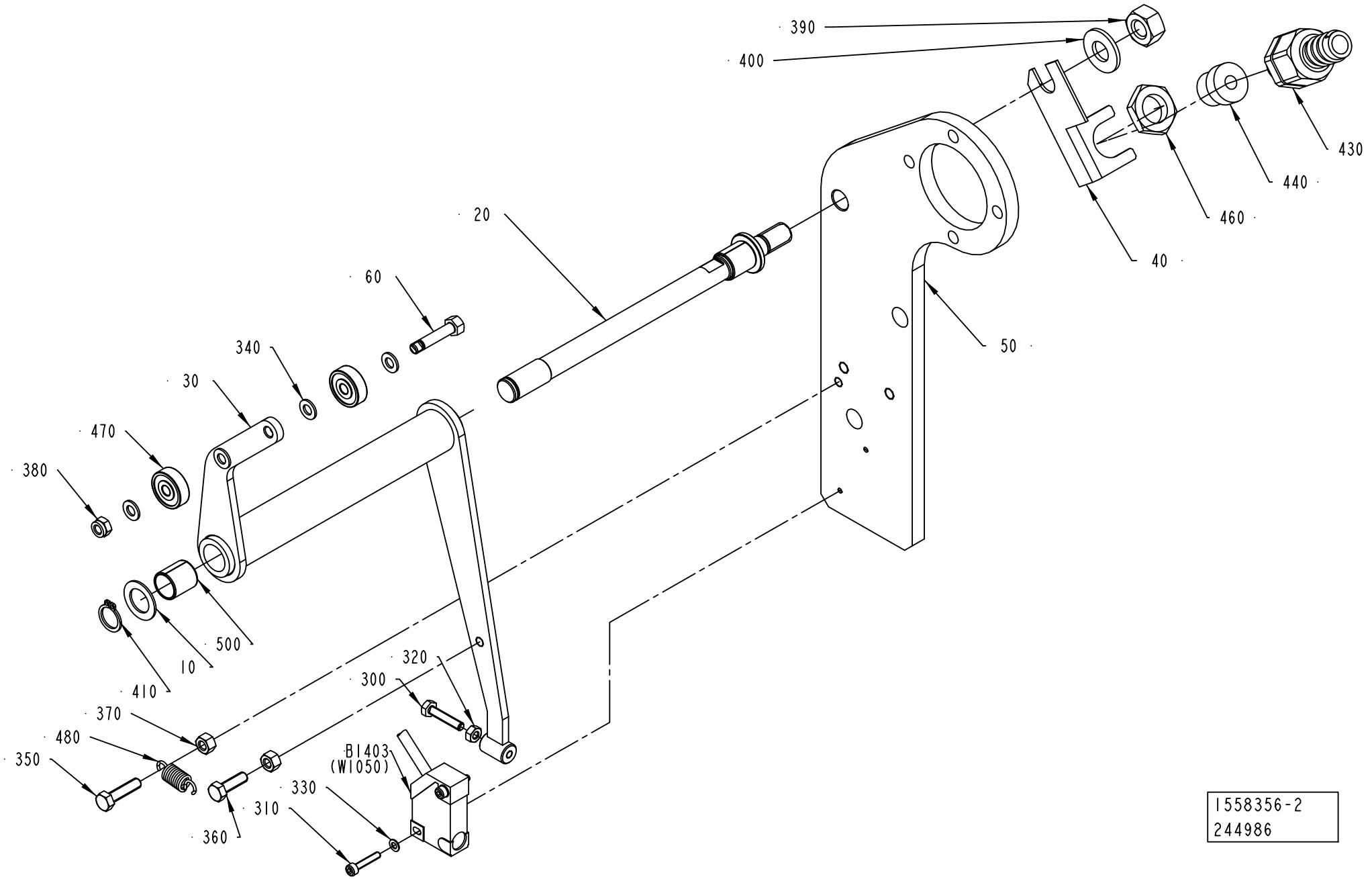


1558356-2
244986

| Pos | Part No | UN | Qty | Description | Page No |
|---|---|---|---|---|---|
| **A3/FLEX TBA 0500B, A3/FLEX TBA 1000B, A3/FLEX TBA 1000S, A3/FLEX TBA 1000SQ, A3/FLEX TPA 1000SQ, A3/FLEX TBA 1500S, A3/FLEX TPA 0750SQ, A3/FLEX TBA 0500SQ (See drawing on page: 1-304)** | | | | | |
| 020 | 2528128-0000 | | 1 | SHAFT | |
| 030 | 2528127-0000 | | 1 | BRACKET | |
| 060 | 2528135-0000 | | 1 | SHAFT | |
| 340 | 315105-0146 | | 2 | WASHER BRB 5,3X10 RFR | |
| 470 | 90214-0138 | | 1 | BALL BEARING, 5X19X6 MM | |
| 480 | 90335-0089 | | 1 | TENSION SPRING 41490, 0,9X10X23 | |
| **A3/FLEX TBA 2000S (See drawing on page: 1-306)** | | | | | |
| 020 | 2528128-0000 | | 1 | SHAFT | |
| 030 | 2528127-0000 | | 1 | BRACKET | |
| 060 | 2721434-0000 | | 1 | SHAFT | |
| 340 | 315105-0146 | | 4 | WASHER BRB 5,3X10 RFR | |
| 470 | 90214-0138 | | 2 | BALL BEARING, 5X19X6 MM | |
| 480 | 90459-5581 | | 1 | TENSION SPRING 1,2X23X8,5 | |
| **Common Parts** | | | | | |
| 010 | 266737-0000 | | 1 | WASHER | |
| 040 | 1036610-0000 | | 1 | BRACKET | |
| 050 | 2528105-0000 | | 1 | PLATE | |
| 300 | 312105-0295 | | 1 | SCREW M6S ISO 4017 M4X20 A470 | |
| 310 | 312115-0228 | | 2 | SCREW ISO4762 M3X16 A4 80 | |
| 320 | 312605-0312 | | 1 | HEXAGON NUT, M6M M4 A280 | |
| 330 | 315105-0124 | | 2 | WASHER BRB 3,2X6 RFR | |
| 350 | 312105-0331 | | 1 | SCREW M6S ISO 4017 M5X20 A480 | |
| 360 | 312105-0329 | | 1 | SCREW M6S ISO 4017 M5X16 A480 | |
| 370 | 312605-0314 | | 2 | HEXAGON NUT, M6M M5 A280 | |
| 380 | 312812-0314 | | 1 | HEXAGON NUT, NY-LOCK M5 A480 | |
| 390 | 312605-0320 | | 1 | HEXAGON NUT, M6M M10 A280 | |
| 400 | 315105-0173 | | 1 | WASHER BRB 10,5X22 RFR | |
| 410 | 315751-0109 | | 1 | RETAINING RING FOR SHAFT DIN 471 12 SS | |
| 430 | 353243-0001 | | 1 | HOSE GLAND W/O INSERT PG9 EXTENDED | |
| 440 | 353249-0008 | | 1 | INSERT, SINGLE HOLE, EK 152/7 | |
| 460 | 90099-0104 | | 1 | NUT, PR 15,2 (PG9) | |
| 500 | 321141-0183 | | 2 | BEARING BUSH W/O FLANGE, 12X14X15 MM | |
| B1403 | 90044-0194 | | 1 | PROX.SW. IN5329/IN3002-BPKG(EX90044-104) | |

| Pos | Part No | UN | Qty | Description | Page No |
|---|---|---|---|---|---|

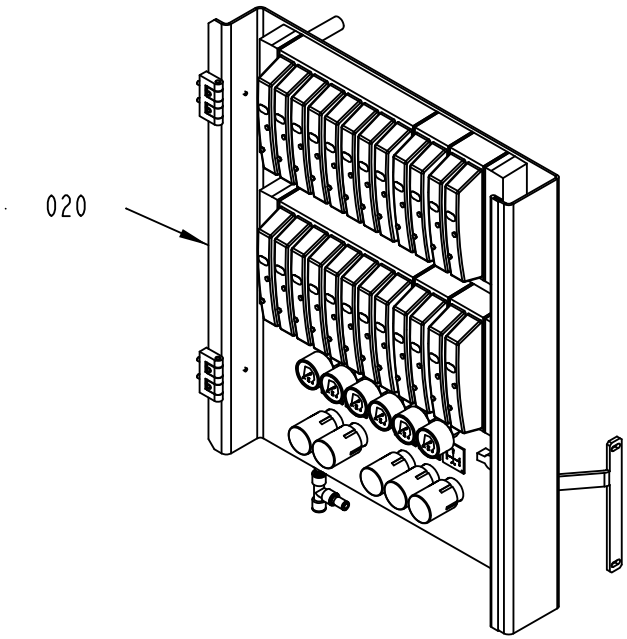


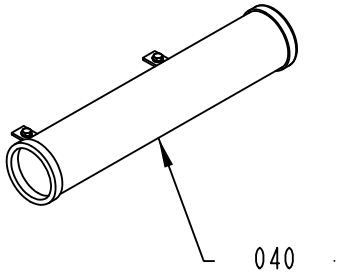


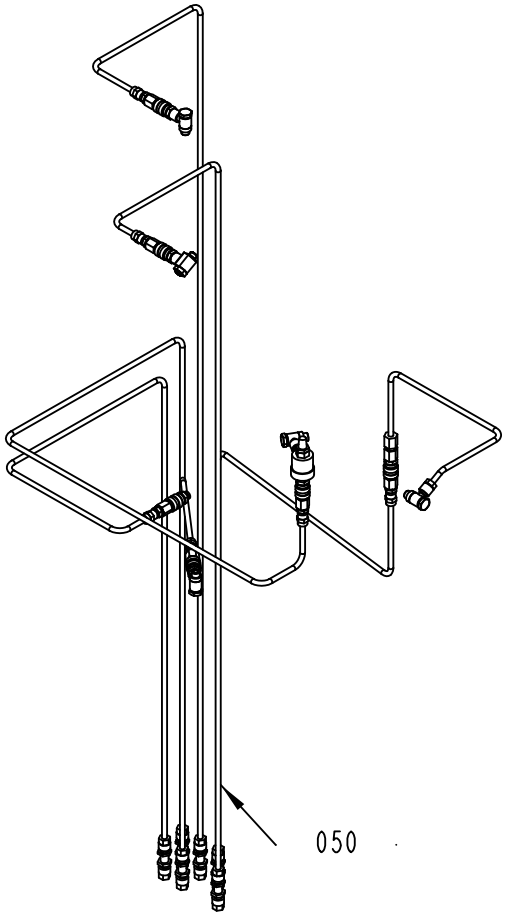


2528079-4
355885

ECM: 368512 - 20081001
Group number: 2528079-0400
Assembly Drawing: 2528079-4_1_AC

| Pos | Part No | UN | Qty | Description | Page No |
|---|---|---|---|---|---|
| - | | | | | |
| 010 | 2528080-0400 | | 1 | HOSE INSTALLATION | **1-311** |
| 020 | 2914523-0100 | | 1 | VALVE PANEL | **1-313, 1-315** |
| 040 | 2528081-0300 | | 1 | HOSE HOLDER | **1-323** |
| 050 | 2957450-0100 | | 1 | PNEUMATIC COMPONENT | **1-325** |

| Pos | Part No | UN | Qty | Description | Page No |
|---|---|---|---|---|---|

**This page is intentionally left blank.**

ECM: 363080 - 20081001
Group number: 2528080-0400
Assembly Drawing:

| Pos | Part No | UN | Qty | Description | Page No |
|---|---|---|---|---|---|
| **A3/FLEX HI** | | | | | |
| 050 | 350013-0003 | | 1 | PLUG QSC-8H | |
| 060 | 350015-0005 | | 2 | Y-FITTING QSY-F-10 | |
| U70W1452 | 315400-0001 | MM | 2500 | TUBE PUN-H-6X1-BL | |
| U70W1454 | 315400-0001 | MM | 2500 | TUBE PUN-H-6X1-BL | |
| U70W2443 | 315400-0001 | MM | 2000 | TUBE PUN-H-6X1-BL | |
| U70W2445 | 315400-0001 | MM | 2000 | TUBE PUN-H-6X1-BL | |
| U70W4222 | 315400-0001 | MM | 2500 | TUBE PUN-H-6X1-BL | |
| **A3/FLEX NOHI** | | | | | |
| 060 | 350015-0005 | | 2 | Y-FITTING QSY-F-10 | |
| U70W2443 | 315400-0001 | MM | 2000 | TUBE PUN-H-6X1-BL | |
| U70W2445 | 315400-0001 | MM | 2000 | TUBE PUN-H-6X1-BL | |
| **Common Parts** | | | | | |
| 010 | 350005-0004 | | 3 | PUSH-IN T-FITTING QST-F-10 | |
| 020 | 350006-0005 | | 2 | PUSH-IN FITTING QS-F-10H-6 | |
| 030 | 350006-0006 | | 2 | PUSH-IN FITTING QS-F-10H-8 | |
| 040 | 350012-0004 | | 2 | SLEEVE QSH-F-10 | |
| 050 | 350013-0002 | | 1 | PLUG QSC-6H | |
| U70W1412 | 315400-0001 | MM | 5000 | TUBE PUN-H-6X1-BL | |
| U70W1414 | 315400-0001 | MM | 5000 | TUBE PUN-H-6X1-BL | |
| U70W1432 | 315400-0001 | MM | 4500 | TUBE PUN-H-6X1-BL | |
| U70W1434 | 315400-0001 | MM | 4500 | TUBE PUN-H-6X1-BL | |
| U70W1472 | 315400-0001 | MM | 4500 | TUBE PUN-H-6X1-BL | |
| U70W1474 | 315400-0001 | MM | 4500 | TUBE PUN-H-6X1-BL | |
| U70W1503 | 315400-0001 | MM | 3500 | TUBE PUN-H-6X1-BL | |
| U70W1522 | 315400-0001 | MM | 4500 | TUBE PUN-H-6X1-BL | |
| U70W1524 | 315400-0001 | MM | 4500 | TUBE PUN-H-6X1-BL | |
| U70W1532 | 315400-0001 | MM | 4500 | TUBE PUN-H-6X1-BL | |
| U70W1534 | 315400-0001 | MM | 4500 | TUBE PUN-H-6X1-BL | |
| U70W2252 | 315400-0001 | MM | 3800 | TUBE PUN-H-6X1-BL | |
| U70W2254 | 315400-0001 | MM | 3800 | TUBE PUN-H-6X1-BL | |
| U70W2255 | 315400-0001 | MM | 3300 | TUBE PUN-H-6X1-BL | |
| U70W2302 | 315400-0001 | MM | 3100 | TUBE PUN-H-6X1-BL | |
| U70W2304 | 315400-0001 | MM | 3100 | TUBE PUN-H-6X1-BL | |
| U70W2344 | 315400-0001 | MM | 3500 | TUBE PUN-H-6X1-BL | |
| U70W2352 | 315400-0001 | MM | 3100 | TUBE PUN-H-6X1-BL | |
| U70W2354 | 315400-0001 | MM | 3100 | TUBE PUN-H-6X1-BL | |
| U70W2362 | 315400-0001 | MM | 3600 | TUBE PUN-H-6X1-BL | |
| U70W2364 | 315400-0001 | MM | 3600 | TUBE PUN-H-6X1-BL | |
| U70W2372 | 315400-0001 | MM | 3500 | TUBE PUN-H-6X1-BL | |
| U70W2374 | 315400-0001 | MM | 3500 | TUBE PUN-H-6X1-BL | |
| U70W2412 | 315400-0001 | MM | 3500 | TUBE PUN-H-6X1-BL | |
| U70W2414 | 315400-0001 | MM | 3500 | TUBE PUN-H-6X1-BL | |
| U70W2424 | 315400-0001 | MM | 3500 | TUBE PUN-H-6X1-BL | |
| U70W2428 | 315400-0001 | MM | 3500 | TUBE PUN-H-6X1-BL | |
| U70W2432 | 315400-0001 | MM | 3500 | TUBE PUN-H-6X1-BL | |
| U70W2433 | 315400-0001 | MM | 2500 | TUBE PUN-H-6X1-BL | |
| U70W2434 | 315400-0001 | MM | 3500 | TUBE PUN-H-6X1-BL | |
| U70W2435 | 315400-0001 | MM | 2500 | TUBE PUN-H-6X1-BL | |
| U70W2436 | 315400-0001 | MM | 2500 | TUBE PUN-H-6X1-BL | |
| U70W2437 | 315400-0001 | MM | 2500 | TUBE PUN-H-6X1-BL | |
| U70W2442 | 315400-0001 | MM | 3500 | TUBE PUN-H-6X1-BL | |
| U70W2444 | 315400-0001 | MM | 3500 | TUBE PUN-H-6X1-BL | |
| U70W3302 | 315400-0001 | MM | 3300 | TUBE PUN-H-6X1-BL | |
| U70W4372 | 315400-0001 | MM | 2500 | TUBE PUN-H-6X1-BL | |
| U70W4374 | 315400-0001 | MM | 2500 | TUBE PUN-H-6X1-BL | |
| U70W4412 | 315400-0001 | MM | 2500 | TUBE PUN-H-6X1-BL | |
| U70W4414 | 315400-0001 | MM | 2500 | TUBE PUN-H-6X1-BL | |
| U70W4424 | 315400-0001 | MM | 2500 | TUBE PUN-H-6X1-BL | |
| U70W4428 | 315400-0001 | MM | 2500 | TUBE PUN-H-6X1-BL | |
| U70W4432 | 315400-0001 | MM | 1000 | TUBE PUN-H-6X1-BL | |
| U70W4434 | 315400-0001 | MM | 1000 | TUBE PUN-H-6X1-BL | |
| U70W6005 | 315400-0007 | MM | 2000 | TUBE PUN-H-10X1,5-BL | |
| U70W6006 | 315400-0001 | MM | 2000 | TUBE PUN-H-6X1-BL | |
| U70W6007 | 315400-0007 | MM | 2000 | TUBE PUN-H-10X1,5-BL | |
| U70W6008 | 315400-0007 | MM | 300 | TUBE PUN-H-10X1,5-BL | |

Machine Type | Group Description | Used-In | Group Number | Page No

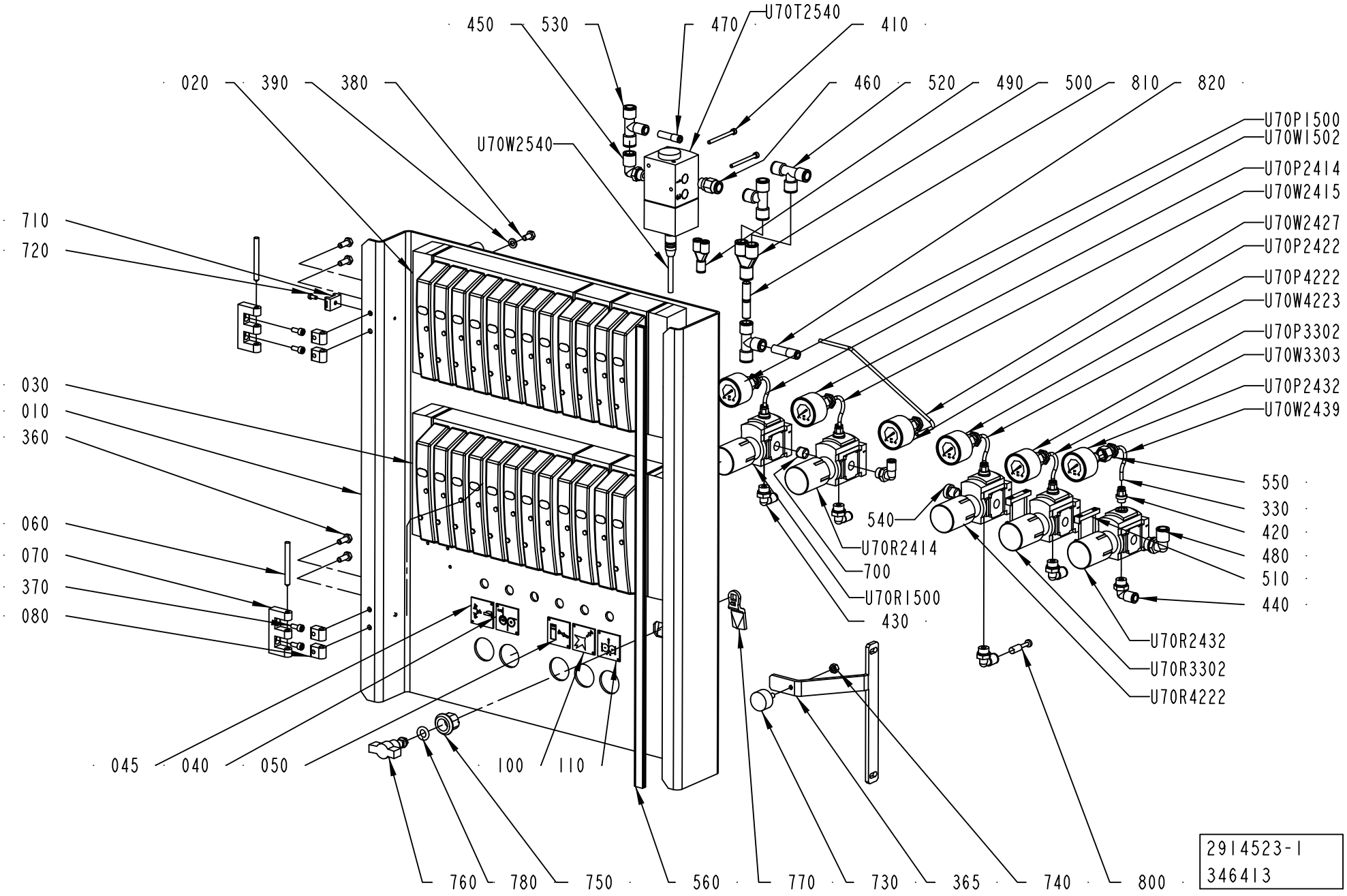
450
530
470
U70T2540
410
020
390
380
460
520
490
500
810
820
U70W2540
U70P1500
U70W1502
U70P2414
U70W2415
U70W2427
U70P2422
U70P4222
U70W4223
U70P3302
U70W3303
U70P2432
U70W2439
710
720
030
010
360
060
070
370
080
550
330
420
480
510
440
540
U70R2414
700
U70R1500
430
U70R2432
U70R3302
U70R4222
045
040
050
100
110
760
780
750
560
770
730
365
740
800
2914523-1
346413

ECM: 359066 - 20080711
Group number: 2914523-0100
Assembly Drawing: 2914523-1_1_AB

This list covers pages from 1-312 to 1-315

| Pos | Part No | UN | Qty | Description | Page No |
|---|---|---|---|---|---|
| **A3/FLEX HI** | | | | | |
| 005 | 2979715-0000 | | 1 | PNEUMATIC DIAGRAM | |
| **A3/FLEX NOHI** | | | | | |
| 005 | 2979714-0000 | | 1 | PNEUMATIC DIAGRAM | |
| **Common Parts** | | | | | |
| 010 | 2914526-0000 | | 1 | PLATE | |
| 020 | 2914524-0100 | | 1 | VALVE RAMP ..... | **1-317** |
| 030 | 2914525-0100 | | 1 | VALVE RAMP ..... | **1-319, 1-321** |
| 040 | 1041937-0000 | | 1 | SIGN | |
| 045 | 2634917-0000 | | 1 | SIGN | |
| 050 | 2640822-0000 | | 1 | SIGN | |
| 060 | 988685-0000 | | 2 | PIN | |
| 070 | 1035792-0000 | | 2 | E-HINGE | |
| 080 | 1129770-0000 | | 4 | BLOCKING PIECE | |
| 100 | 273450-0000 | | 1 | SIGN, AIR SPRAY | |
| 110 | 273452-0000 | | 1 | SIGN, ROLLING MACHINE FOR FABRICS | |
| 360 | 312105-0368 | | 4 | SCREW M6S ISO 4017 M6X16 A480 | |
| 365 | 2936342-0000 | | 1 | STOP PLATE | |
| 370 | 312115-0327 | | 4 | SCREW ISO4762 M5X12 A4 80 | |
| 380 | 312105-0366 | | 8 | SCREW M6S ISO 4017 M6X12 A480 | |
| 390 | 315105-0153 | | 8 | WASHER BRB 6,4X12 RFR | |
| 410 | 312115-0305 | | 2 | SCREW ISO4762 M4X50 A4 80 | |
| 420 | 350001-0005 | | 5 | PUSH-IN FITTING QS-F-G1/8-4 | |
| 430 | 350002-0008 | | 4 | PUSH-IN L-FITTING QSL-F-G1/4-6 | |
| 440 | 350002-0009 | | 3 | PUSH-IN L-FITTING QSL-F-G1/4-8 | |
| 450 | 350002-0010 | | 1 | PUSH-IN L-FITTING QSL-F-G1/4-10 | |
| 460 | 350001-0010 | | 1 | PUSH-IN FITTING QS-F-G1/4-10 | |
| 470 | 350006-0002 | | 1 | PUSH-IN FITTING QS-F-8H-4 | |
| 480 | 350002-0013 | | 1 | PUSH-IN L-FITTING QSL-F-G3/8-10 | |
| 490 | 350015-0001 | | 1 | Y-FITTING QSY-F-6 | |
| 500 | 350015-0005 | | 1 | Y-FITTING QSY-F-10 | |
| 510 | 90459-2248 | | 2 | BRACKET, MS4-MV | |
| 520 | 350005-0004 | | 2 | PUSH-IN T-FITTING QST-F-10 | |
| 530 | 350011-0003 | | 1 | PUSH-IN T-FITTING QS-F-10-8 | |
| 540 | 90600-1167 | | 1 | PLUG, EXT. R-THREAD, R1/4 | |
| 550 | 90600-1168 | | 6 | PUSH-IN FITTING QSSF-1/4-4-B | |
| 560 | 90143-0097 | MM | 630 | SELF GRIPPING GASKET, 1011-24 | |
| 700 | 90600-1169 | | 1 | PLUG G1/4, B-1/4-NPT | |
| 710 | 352113-0203 | | 2 | ANCHOR PLATES FOR STRIPS, TYPE TM3S8-M0 | |
| 720 | 312125-0287 | | 2 | SCREW ISO 1207 M4X8 A4 | |
| 730 | 90347-0034 | | 1 | VIBRATION DAMPER | |
| 740 | 312605-0316 | | 1 | HEXAGON NUT, M6M M6 A280 | |
| 750 | 90237-0319 | | 1 | LOCK HOUSING, 1000-U134 | |
| 760 | 90237-0337 | | 1 | LOCK HANDLE FOR 90237-319 | |
| 770 | 90237-0335 | | 1 | LOCKING CATCH | |
| 780 | 90237-0323 | | 1 | LOCK O-RING, 1000-24 | |
| 800 | 350013-0003 | | 1 | PLUG QSC-8H | |
| 810 | 350012-0004 | | 1 | SLEEVE QSH-F-10 | |
| 820 | 350006-0005 | | 1 | PUSH-IN FITTING QS-F-10H-6 | |
| A70W6003 | 315400-0001 | MM | 200 | TUBE PUN-H-6X1-BL | |
| U70P1500 | 90459-7344 | | 1 | PRESSURE GAUGE, MA-40-6-R1/4-EN | |
| U70P2414 | 90459-7344 | | 1 | PRESSURE GAUGE, MA-40-6-R1/4-EN | |
| U70P2422 | 90459-7344 | | 1 | PRESSURE GAUGE, MA-40-6-R1/4-EN | |
| U70P2432 | 90459-7344 | | 1 | PRESSURE GAUGE, MA-40-6-R1/4-EN | |
| U70P3302 | 90459-7344 | | 1 | PRESSURE GAUGE, MA-40-6-R1/4-EN | |
| U70P4222 | 90459-7344 | | 1 | PRESSURE GAUGE, MA-40-6-R1/4-EN | |
| U70R1500 | 90459-4554 | | 1 | REGULATOR, MS4-LRB-1/4-D7-A8-AS | |
| U70R2414 | 90459-4554 | | 1 | REGULATOR, MS4-LRB-1/4-D7-A8-AS | |
| U70R2432 | 90459-4554 | | 1 | REGULATOR, MS4-LRB-1/4-D7-A8-AS | |
| U70R3302 | 90459-4554 | | 1 | REGULATOR, MS4-LRB-1/4-D7-A8-AS | |
| U70R4222 | 90459-4554 | | 1 | REGULATOR, MS4-LRB-1/4-D7-A8-AS | |
| U70T2540 | 90458-1092 | | 1 | PROPORTIONAL VALVE 0 - 10V/0-6 BAR | |
| | *90458-1262* | | *1* | *CONNECTOR 131028001 FOR PROP. VALVE* | |
| U70W1502 | 315400-0016 | MM | 70 | TUBE PUN-H-4X0,75-BL | |
| U70W1504 | 315400-0001 | MM | 300 | TUBE PUN-H-6X1-BL | |
| U70W2414 | 315400-0001 | MM | 500 | TUBE PUN-H-6X1-BL | |
| U70W2415 | 315400-0016 | MM | 70 | TUBE PUN-H-4X0,75-BL | |
| U70W2425 | 315400-0007 | MM | 100 | TUBE PUN-H-10X1,5-BL | |
| U70W2426 | 315400-0007 | MM | 100 | TUBE PUN-H-10X1,5-BL | |
| U70W2427 | 315400-0016 | MM | 250 | TUBE PUN-H-4X0,75-BL | |
| U70W2438 | 315400-0004 | MM | 350 | TUBE PUN-H-8X1,25-BL | |
| U70W2439 | 315400-0016 | MM | 70 | TUBE PUN-H-4X0,75-BL | |
| U70W2540 | 90220-0165 | MM | 6000 | SCR. CABLE 5X0,34MM2 | |
| U70W3303 | 315400-0016 | MM | 70 | TUBE PUN-H-4X0,75-BL | |
| U70W4223 | 315400-0016 | MM | 70 | TUBE PUN-H-4X0,75-BL | |
| U70W6103 | 315400-0007 | MM | 350 | TUBE PUN-H-10X1,5-BL | |
| U70W6104 | 315400-0007 | MM | 250 | TUBE PUN-H-10X1,5-BL | |
| U70W6105 | 315400-0007 | MM | 150 | TUBE PUN-H-10X1,5-BL | |
| U70W6106 | 315400-0007 | MM | 300 | TUBE PUN-H-10X1,5-BL | |

| Machine Type | Group Description | Used-In | Group Number | Page No |
|---|---|---|---|---|

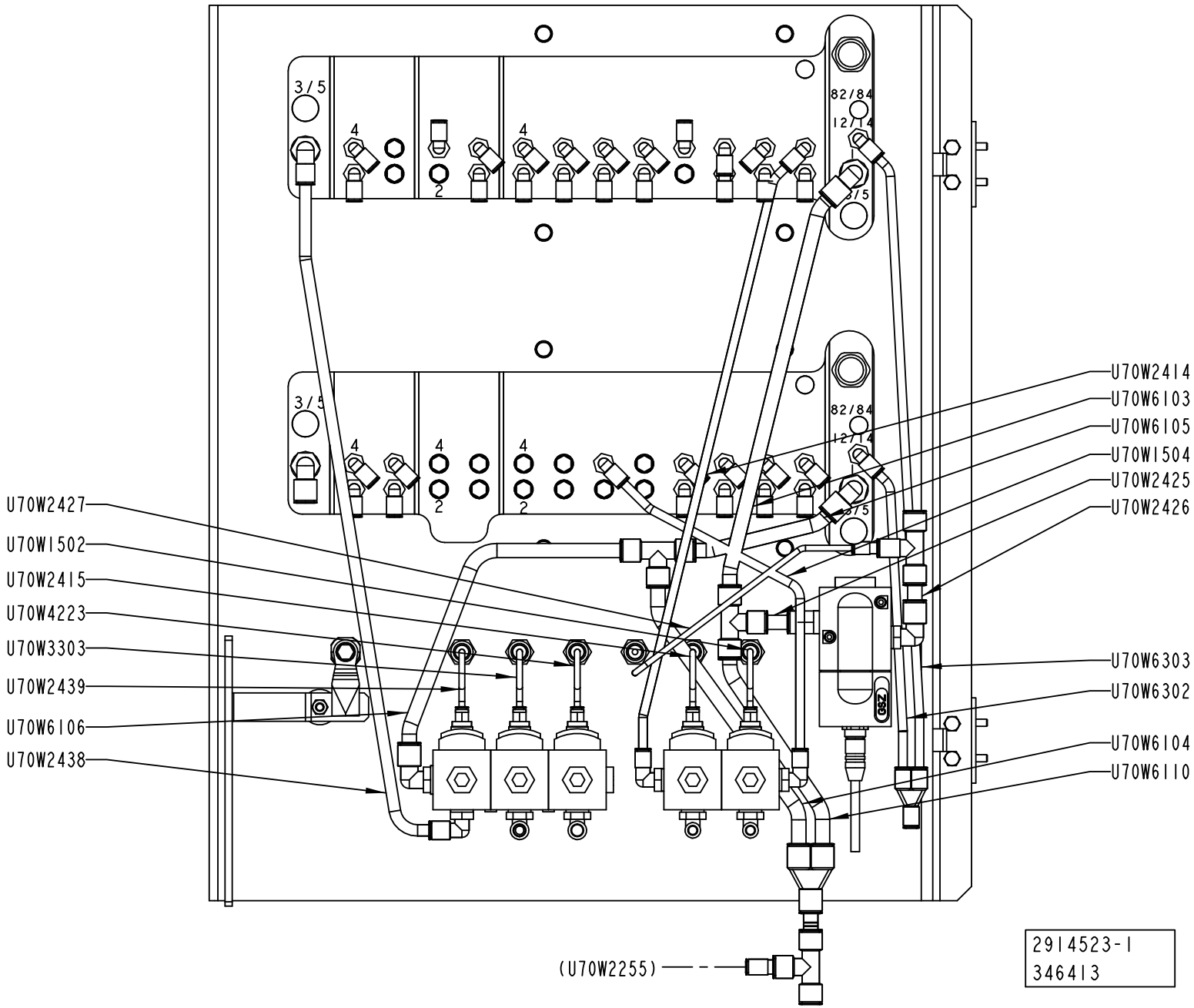
U70W2414
U70W6103
U70W6105
U70W1504
U70W2425
U70W2426
U70W2427
U70W1502
U70W2415
U70W4223
U70W3303
U70W2439
U70W6106
U70W2438
U70W6303
U70W6302
U70W6104
U70W6110
(U70W2255)
3/5
82/84
12/14
4
2
2914523-1
346413

ECM: 359066 - 20080711
Group number: 2914523-0100
Assembly Drawing: 2914523-1_2_AB

This list covers pages from 1-312 to 1-315

| Pos | Part No | UN | Qty | Description | Page No |
|---|---|---|---|---|---|
| **A3/FLEX HI** | | | | | |
| 005 | 2979715-0000 | | 1 | PNEUMATIC DIAGRAM | |
| **A3/FLEX NOHI** | | | | | |
| 005 | 2979714-0000 | | 1 | PNEUMATIC DIAGRAM | |
| **Common Parts** | | | | | |
| 010 | 2914526-0000 | | 1 | PLATE | |
| 020 | 2914524-0100 | | 1 | VALVE RAMP ..... | **1-317** |
| 030 | 2914525-0100 | | 1 | VALVE RAMP ..... | **1-319, 1-321** |
| 040 | 1041937-0000 | | 1 | SIGN | |
| 045 | 2634917-0000 | | 1 | SIGN | |
| 050 | 2640822-0000 | | 1 | SIGN | |
| 060 | 988685-0000 | | 2 | PIN | |
| 070 | 1035792-0000 | | 2 | E-HINGE | |
| 080 | 1129770-0000 | | 4 | BLOCKING PIECE | |
| 100 | 273450-0000 | | 1 | SIGN, AIR SPRAY | |
| 110 | 273452-0000 | | 1 | SIGN, ROLLING MACHINE FOR FABRICS | |
| 360 | 312105-0368 | | 4 | SCREW M6S ISO 4017 M6X16 A480 | |
| 365 | 2936342-0000 | | 1 | STOP PLATE | |
| 370 | 312115-0327 | | 4 | SCREW ISO4762 M5X12 A4 80 | |
| 380 | 312105-0366 | | 8 | SCREW M6S ISO 4017 M6X12 A480 | |
| 390 | 315105-0153 | | 8 | WASHER BRB 6,4X12 RFR | |
| 410 | 312115-0305 | | 2 | SCREW ISO4762 M4X50 A4 80 | |
| 420 | 350001-0005 | | 5 | PUSH-IN FITTING QS-F-G1/8-4 | |
| 430 | 350002-0008 | | 4 | PUSH-IN L-FITTING QSL-F-G1/4-6 | |
| 440 | 350002-0009 | | 3 | PUSH-IN L-FITTING QSL-F-G1/4-8 | |
| 450 | 350002-0010 | | 1 | PUSH-IN L-FITTING QSL-F-G1/4-10 | |
| 460 | 350001-0010 | | 1 | PUSH-IN FITTING QS-F-G1/4-10 | |
| 470 | 350006-0002 | | 1 | PUSH-IN FITTING QS-F-8H-4 | |
| 480 | 350002-0013 | | 1 | PUSH-IN L-FITTING QSL-F-G3/8-10 | |
| 490 | 350015-0001 | | 1 | Y-FITTING QSY-F-6 | |
| 500 | 350015-0005 | | 1 | Y-FITTING QSY-F-10 | |
| 510 | 90459-2248 | | 2 | BRACKET, MS4-MV | |
| 520 | 350005-0004 | | 2 | PUSH-IN T-FITTING QST-F-10 | |
| 530 | 350011-0003 | | 1 | PUSH-IN T-FITTING QS-F-10-8 | |
| 540 | 90600-1167 | | 1 | PLUG, EXT. R-THREAD, R1/4 | |
| 550 | 90600-1168 | | 6 | PUSH-IN FITTING QSSF-1/4-4-B | |
| 560 | 90143-0097 | MM | 630 | SELF GRIPPING GASKET, 1011-24 | |
| 700 | 90600-1169 | | 1 | PLUG G1/4, B-1/4-NPT | |
| 710 | 352113-0203 | | 2 | ANCHOR PLATES FOR STRIPS, TYPE TM3S8-M0 | |
| 720 | 312125-0287 | | 2 | SCREW ISO 1207 M4X8 A4 | |
| 730 | 90347-0034 | | 1 | VIBRATION DAMPER | |
| 740 | 312605-0316 | | 1 | HEXAGON NUT, M6M M6 A280 | |
| 750 | 90237-0319 | | 1 | LOCK HOUSING, 1000-U134 | |
| 760 | 90237-0337 | | 1 | LOCK HANDLE FOR 90237-319 | |
| 770 | 90237-0335 | | 1 | LOCKING CATCH | |
| 780 | 90237-0323 | | 1 | LOCK O-RING, 1000-24 | |
| 800 | 350013-0003 | | 1 | PLUG QSC-8H | |
| 810 | 350012-0004 | | 1 | SLEEVE QSH-F-10 | |
| 820 | 350006-0005 | | 1 | PUSH-IN FITTING QS-F-10H-6 | |
| A70W6003 | 315400-0001 | MM | 200 | TUBE PUN-H-6X1-BL | |
| U70P1500 | 90459-7344 | | 1 | PRESSURE GAUGE, MA-40-6-R1/4-EN | |
| U70P2414 | 90459-7344 | | 1 | PRESSURE GAUGE, MA-40-6-R1/4-EN | |
| U70P2422 | 90459-7344 | | 1 | PRESSURE GAUGE, MA-40-6-R1/4-EN | |
| U70P2432 | 90459-7344 | | 1 | PRESSURE GAUGE, MA-40-6-R1/4-EN | |
| U70P3302 | 90459-7344 | | 1 | PRESSURE GAUGE, MA-40-6-R1/4-EN | |
| U70P4222 | 90459-7344 | | 1 | PRESSURE GAUGE, MA-40-6-R1/4-EN | |
| U70R1500 | 90459-4554 | | 1 | REGULATOR, MS4-LRB-1/4-D7-A8-AS | |
| U70R2414 | 90459-4554 | | 1 | REGULATOR, MS4-LRB-1/4-D7-A8-AS | |
| U70R2432 | 90459-4554 | | 1 | REGULATOR, MS4-LRB-1/4-D7-A8-AS | |
| U70R3302 | 90459-4554 | | 1 | REGULATOR, MS4-LRB-1/4-D7-A8-AS | |
| U70R4222 | 90459-4554 | | 1 | REGULATOR, MS4-LRB-1/4-D7-A8-AS | |
| U70T2540 | 90458-1092 | | 1 | PROPORTIONAL VALVE 0 - 10V/0-6 BAR | |
| | *90458-1262* | | *1* | *CONNECTOR 131028001 FOR PROP. VALVE* | |
| U70W1502 | 315400-0016 | MM | 70 | TUBE PUN-H-4X0,75-BL | |
| U70W1504 | 315400-0001 | MM | 300 | TUBE PUN-H-6X1-BL | |
| U70W2414 | 315400-0001 | MM | 500 | TUBE PUN-H-6X1-BL | |
| U70W2415 | 315400-0016 | MM | 70 | TUBE PUN-H-4X0,75-BL | |
| U70W2425 | 315400-0007 | MM | 100 | TUBE PUN-H-10X1,5-BL | |
| U70W2426 | 315400-0007 | MM | 100 | TUBE PUN-H-10X1,5-BL | |
| U70W2427 | 315400-0016 | MM | 250 | TUBE PUN-H-4X0,75-BL | |
| U70W2438 | 315400-0004 | MM | 350 | TUBE PUN-H-8X1,25-BL | |
| U70W2439 | 315400-0016 | MM | 70 | TUBE PUN-H-4X0,75-BL | |
| U70W2540 | 90220-0165 | MM | 6000 | SCR. CABLE 5X0,34MM2 | |
| U70W3303 | 315400-0016 | MM | 70 | TUBE PUN-H-4X0,75-BL | |
| U70W4223 | 315400-0016 | MM | 70 | TUBE PUN-H-4X0,75-BL | |
| U70W6103 | 315400-0007 | MM | 350 | TUBE PUN-H-10X1,5-BL | |
| U70W6104 | 315400-0007 | MM | 250 | TUBE PUN-H-10X1,5-BL | |
| U70W6105 | 315400-0007 | MM | 150 | TUBE PUN-H-10X1,5-BL | |
| U70W6106 | 315400-0007 | MM | 300 | TUBE PUN-H-10X1,5-BL | |

| Machine Type | Group Description | Used-In | Group Number | Page No |
|---|---|---|---|---|

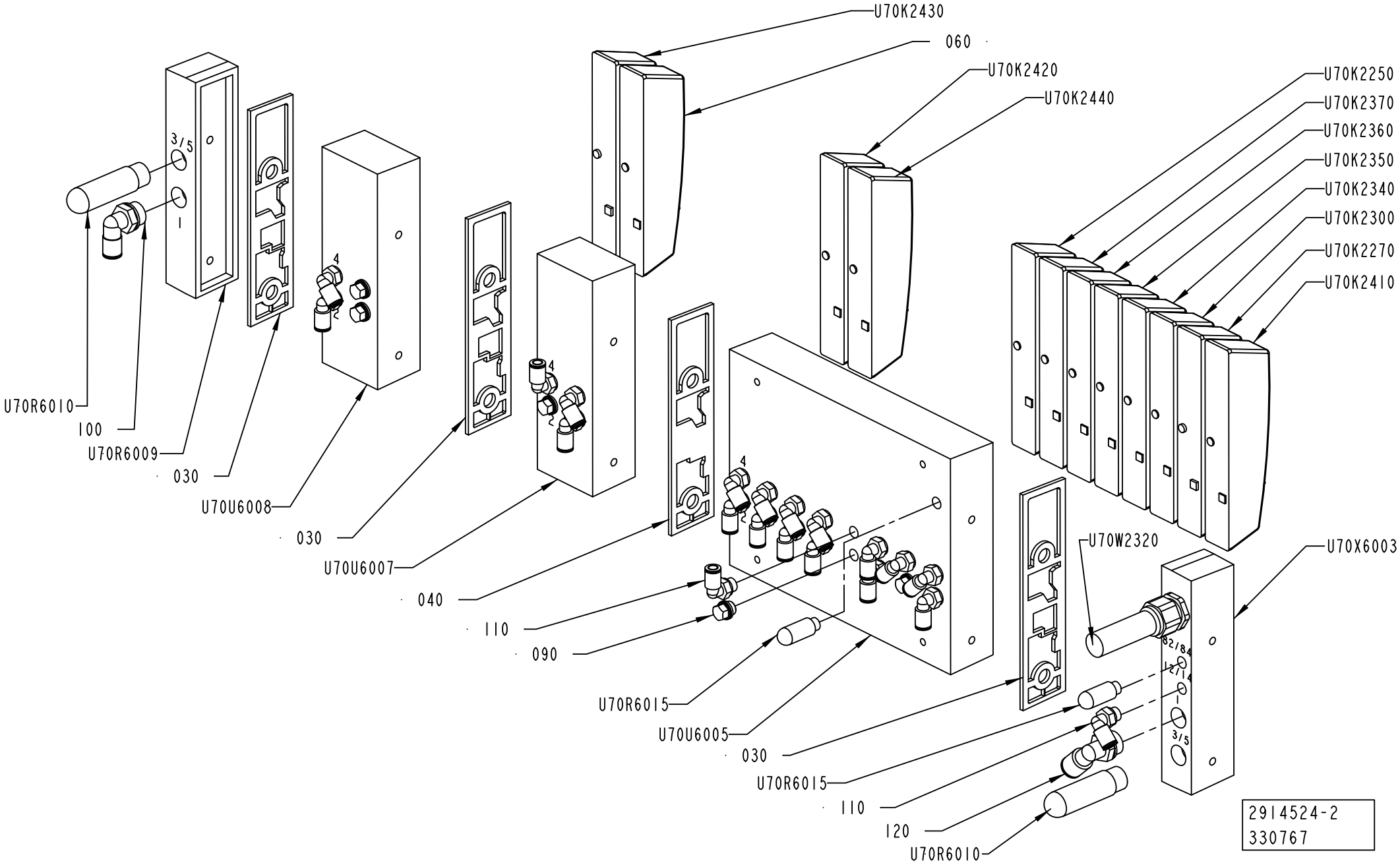
U70K2430
060
U70K2420
U70K2440
U70K2250
U70K2370
U70K2360
U70K2350
U70K2340
U70K2300
U70K2270
U70K2410
U70R6010
100
U70R6009
030
U70U6008
030
U70U6007
040
110
090
U70R6015
U70U6005
030
U70R6015
110
120
U70R6010
U70W2320
U70X6003
2914524-2
330767

ECM: 352644 - 20080706
Group number: 2914524-0100
Assembly Drawing: 2914524-2_1_AA

| Pos | Part No | UN | Qty | Description | Page No |
|---|---|---|---|---|---|
| **A3/FLEX** | | | | | |
| 090 | 90459-0698 | | 5 | PLUG, EXT. G-THREAD, G1/8 | |
| 110 | 350002-0006 | | 20 | PUSH-IN L-FITTING QSL-F-G1/8-6 | |
| **Common Parts** | | | | | |
| 030 | 90458-1207 | | 3 | SEALING, STANDARD | |
| 040 | 90458-1208 | | 1 | SEALING, CHANNEL 1 BLOCKED | |
| 060 | 90458-1215 | | 1 | COVER PLATE FOR EMPTY VALVE POSITION | |
| 100 | 350002-0012 | | 1 | PUSH-IN L-FITTING QSL-F-G3/8-8 | |
| 120 | 350002-0013 | | 1 | PUSH-IN L-FITTING QSL-F-G3/8-10 | |
| U70K2250 | 90458-1194 | | 1 | MONOSTABLE VALVE 5/2 | |
| U70K2270 | 90458-1202 | | 1 | VALVES 2X3/2, CLOSED | |
| U70K2300 | 90458-1194 | | 1 | MONOSTABLE VALVE 5/2 | |
| U70K2340 | 90458-1194 | | 1 | MONOSTABLE VALVE 5/2 | |
| U70K2350 | 90458-1194 | | 1 | MONOSTABLE VALVE 5/2 | |
| U70K2360 | 90458-1194 | | 1 | MONOSTABLE VALVE 5/2 | |
| U70K2370 | 90458-1194 | | 1 | MONOSTABLE VALVE 5/2 | |
| U70K2410 | 90458-1194 | | 1 | MONOSTABLE VALVE 5/2 | |
| U70K2420 | 90458-1194 | | 1 | MONOSTABLE VALVE 5/2 | |
| U70K2430 | 90458-1202 | | 1 | VALVES 2X3/2, CLOSED | |
| U70K2440 | 90458-1194 | | 1 | MONOSTABLE VALVE 5/2 | |
| U70R6009 | 90458-1214 | | 1 | RIGHT ENDPL EXT. PILOT AIR,CDVI5.0-EPR-S | |
| U70R6010 | 90328-0024 | | 1 | SILENCER G3/8" | |
| U70R6011 | 90328-0047 | | 1 | SILENCER G1/8" | |
| U70R6012 | 90328-0024 | | 1 | SILENCER G3/8" | |
| U70R6015 | 90328-0047 | | 1 | SILENCER G1/8" | |
| U70U6005 | 90458-1205 | | 1 | BASIC SUB-BASE 8 VALVES, CDVI5.0-GB8-MP | |
| U70U6007 | 90458-1206 | | 1 | EXP. SUB-BASE 2 VALVES, CDVI5.0-EB | |
| U70U6008 | 90458-1206 | | 1 | EXP. SUB-BASE 2 VALVES, CDVI5.0-EB | |
| U70X6003 | 90458-1212 | | 1 | LEFT ENDPLATE INCL. 10M CABLE | |

| Pos | Part No | UN | Qty | Description | Page No |
|---|---|---|---|---|---|

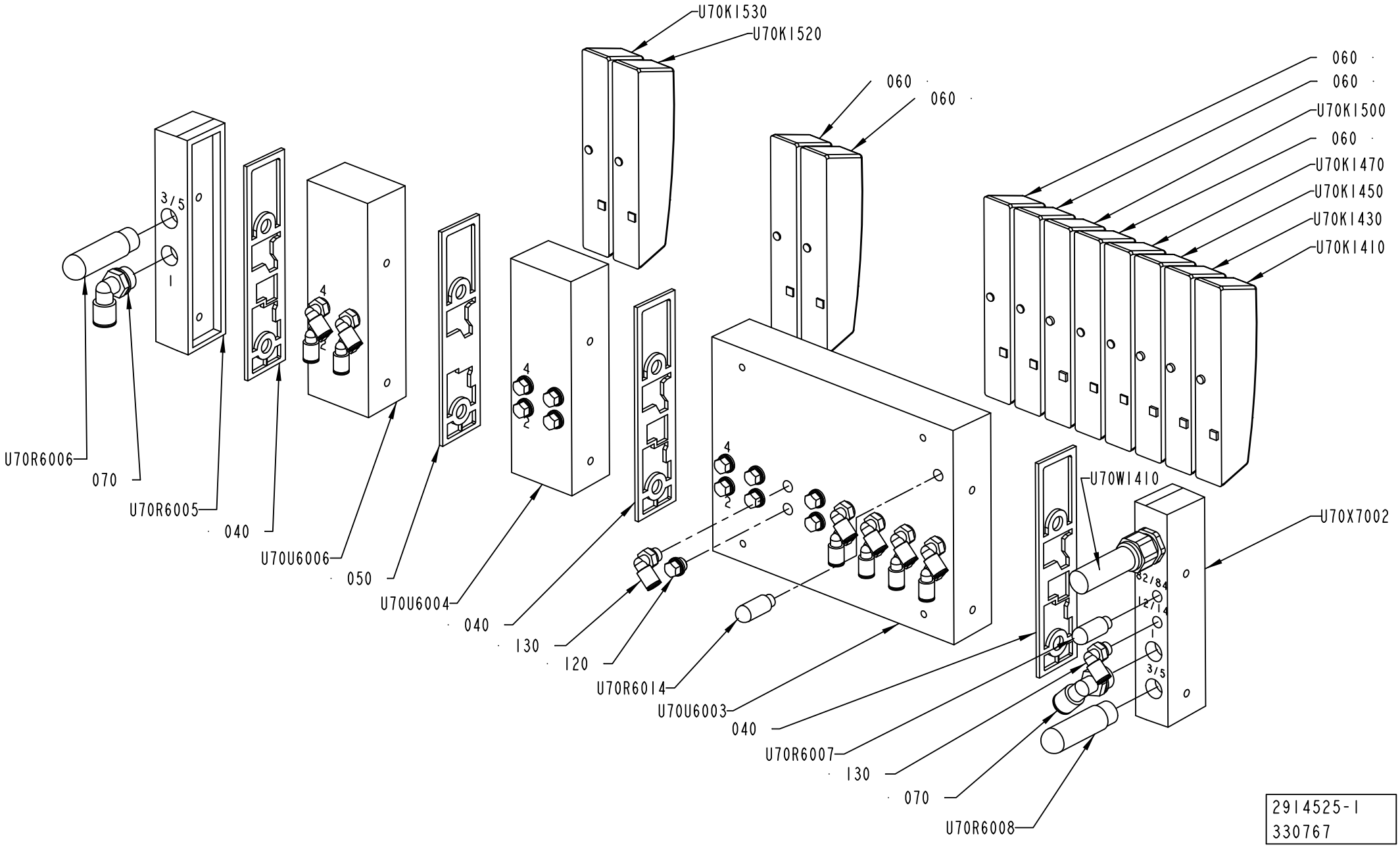
U70K1530
U70K1520
060
060
060
060
U70K1500
060
U70K1470
U70K1450
U70K1430
U70K1410
U70W1410
U70X7002
U70R6006
070
U70R6005
040
U70U6006
050
U70U6004
040
130
120
U70R6014
U70U6003
040
U70R6007
130
070
U70R6008
3/5
1
4
2
82/84
2/4
1
3/5
2914525-1
330767

ECM: 352645 - 20080706
Group number: 2914525-0100
Assembly Drawing: 2914525-1_1_AA

This list covers pages from 1-318 to 1-321

| Pos | Part No | UN | Qty | Description | Page No |
|---|---|---|---|---|---|
| **HI (See drawing on page: 1-318)** | | | | | |
| 060 | 90458-1215 | | 5 | COVER PLATE FOR EMPTY VALVE POSITION | |
| 120 | 90459-0698 | | 11 | PLUG, EXT. G-THREAD, G1/8 | |
| 130 | 350002-0006 | | 14 | PUSH-IN L-FITTING QSL-F-G1/8-6 | |
| U70K1450 | 90458-1202 | | 1 | VALVES 2X3/2, CLOSED | |
| **NOHI (See drawing on page: 1-320)** | | | | | |
| 060 | 90458-1215 | | 6 | COVER PLATE FOR EMPTY VALVE POSITION | |
| 120 | 90459-0698 | | 13 | PLUG, EXT. G-THREAD, G1/8 | |
| 130 | 350002-0006 | | 12 | PUSH-IN L-FITTING QSL-F-G1/8-6 | |
| **Common Parts** | | | | | |
| 040 | 90458-1207 | | 3 | SEALING, STANDARD | |
| 050 | 90458-1208 | | 1 | SEALING, CHANNEL 1 BLOCKED | |
| 070 | 350002-0013 | | 2 | PUSH-IN L-FITTING QSL-F-G3/8-10 | |
| 080 | 350001-0009 | | 1 | PUSH-IN FITTING QS-F-G1/4-8 | |
| U70K1410 | 90458-1202 | | 1 | VALVES 2X3/2, CLOSED | |
| U70K1430 | 90458-1202 | | 1 | VALVES 2X3/2, CLOSED | |
| U70K1470 | 90458-1194 | | 1 | MONOSTABLE VALVE 5/2 | |
| U70K1500 | 90458-1202 | | 1 | VALVES 2X3/2, CLOSED | |
| U70K1520 | 90458-1194 | | 1 | MONOSTABLE VALVE 5/2 | |
| U70K1530 | 90458-1194 | | 1 | MONOSTABLE VALVE 5/2 | |
| U70R6002 | 90328-0047 | | 1 | SILENCER G1/8" | |
| U70R6005 | 90458-1214 | | 1 | RIGHT ENDPL EXT. PILOT AIR,CDVI5.0-EPR-S | |
| U70R6006 | 90328-0024 | | 1 | SILENCER G3/8" | |
| U70R6007 | 90328-0047 | | 1 | SILENCER G1/8" | |
| U70R6008 | 90328-0024 | | 1 | SILENCER G3/8" | |
| U70R6014 | 90328-0047 | | 1 | SILENCER G1/8" | |
| U70R7003 | 90328-0047 | | 1 | SILENCER G1/8" | |
| U70U6003 | 90458-1205 | | 1 | BASIC SUB-BASE 8 VALVES, CDVI5.0-GB8-MP | |
| U70U6004 | 90458-1206 | | 1 | EXP. SUB-BASE 2 VALVES, CDVI5.0-EB | |
| U70U6006 | 90458-1206 | | 1 | EXP. SUB-BASE 2 VALVES, CDVI5.0-EB | |
| U70X6002 | 90458-1212 | | 1 | LEFT ENDPLATE INCL. 10M CABLE | |

| Pos | Part No | UN | Qty | Description | Page No |
|---|---|---|---|---|---|

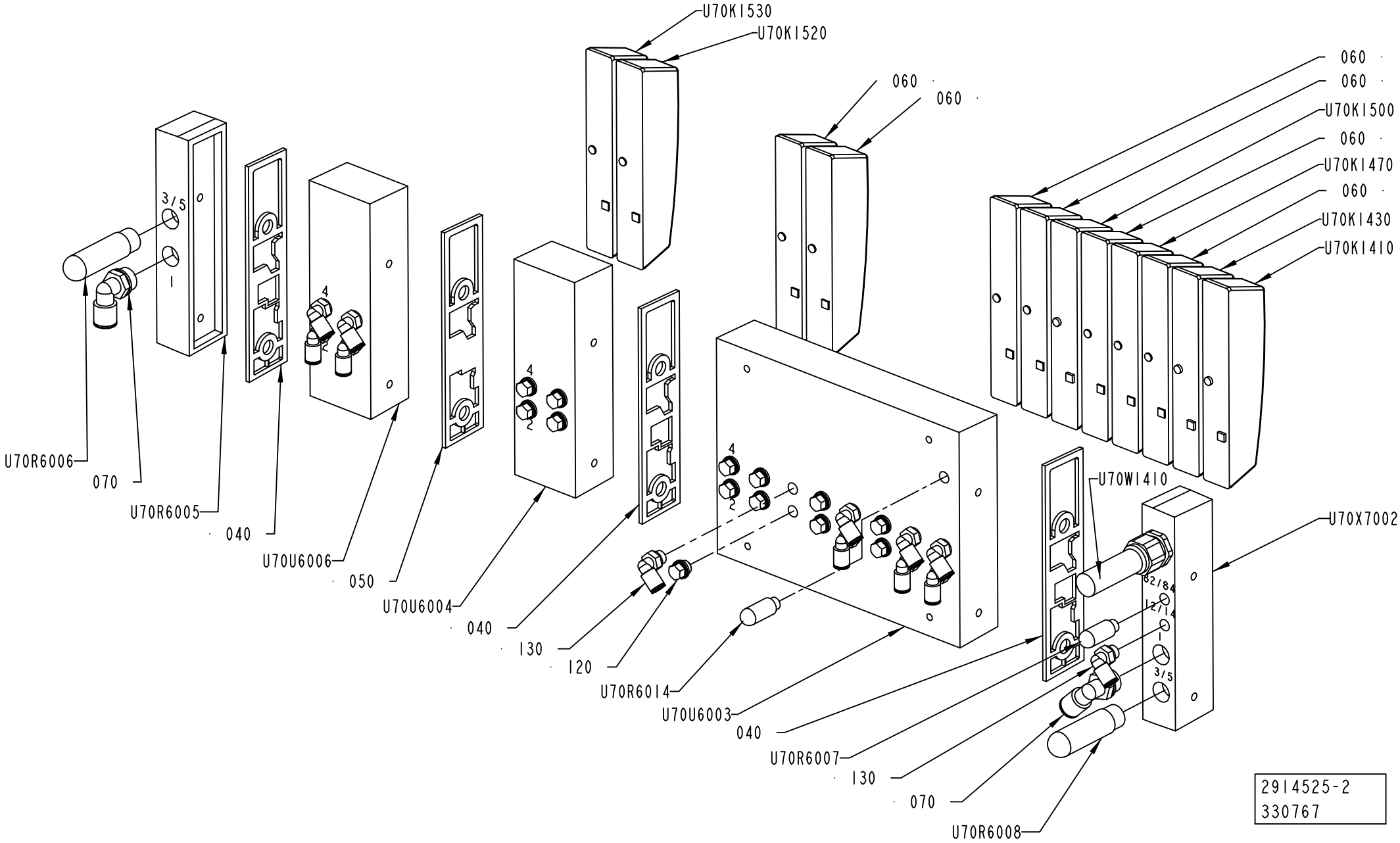
U70K1530
U70K1520
060
060
060
060
U70K1500
060
U70K1470
060
U70K1430
U70K1410
U70R6006
070
U70R6005
040
U70U6006
050
U70U6004
040
130
120
U70R6014
U70U6003
040
U70R6007
130
070
U70R6008
U70W1410
U70X7002
2914525-2
330767

ECM: 352645 - 20080706
Group number: 2914525-0100
Assembly Drawing: 2914525-2_1_AA

This list covers pages from 1-318 to 1-321

| Pos | Part No | UN | Qty | Description | Page No |
|---|---|---|---|---|---|
| **HI (See drawing on page: 1-318)** | | | | | |
| 060 | 90458-1215 | | 5 | COVER PLATE FOR EMPTY VALVE POSITION | |
| 120 | 90459-0698 | | 11 | PLUG, EXT. G-THREAD, G1/8 | |
| 130 | 350002-0006 | | 14 | PUSH-IN L-FITTING QSL-F-G1/8-6 | |
| U70K1450 | 90458-1202 | | 1 | VALVES 2X3/2, CLOSED | |
| **NOHI (See drawing on page: 1-320)** | | | | | |
| 060 | 90458-1215 | | 6 | COVER PLATE FOR EMPTY VALVE POSITION | |
| 120 | 90459-0698 | | 13 | PLUG, EXT. G-THREAD, G1/8 | |
| 130 | 350002-0006 | | 12 | PUSH-IN L-FITTING QSL-F-G1/8-6 | |
| **Common Parts** | | | | | |
| 040 | 90458-1207 | | 3 | SEALING, STANDARD | |
| 050 | 90458-1208 | | 1 | SEALING, CHANNEL 1 BLOCKED | |
| 070 | 350002-0013 | | 2 | PUSH-IN L-FITTING QSL-F-G3/8-10 | |
| 080 | 350001-0009 | | 1 | PUSH-IN FITTING QS-F-G1/4-8 | |
| U70K1410 | 90458-1202 | | 1 | VALVES 2X3/2, CLOSED | |
| U70K1430 | 90458-1202 | | 1 | VALVES 2X3/2, CLOSED | |
| U70K1470 | 90458-1194 | | 1 | MONOSTABLE VALVE 5/2 | |
| U70K1500 | 90458-1202 | | 1 | VALVES 2X3/2, CLOSED | |
| U70K1520 | 90458-1194 | | 1 | MONOSTABLE VALVE 5/2 | |
| U70K1530 | 90458-1194 | | 1 | MONOSTABLE VALVE 5/2 | |
| U70R6002 | 90328-0047 | | 1 | SILENCER G1/8" | |
| U70R6005 | 90458-1214 | | 1 | RIGHT ENDPL EXT. PILOT AIR,CDVI5.0-EPR-S | |
| U70R6006 | 90328-0024 | | 1 | SILENCER G3/8" | |
| U70R6007 | 90328-0047 | | 1 | SILENCER G1/8" | |
| U70R6008 | 90328-0024 | | 1 | SILENCER G3/8" | |
| U70R6014 | 90328-0047 | | 1 | SILENCER G1/8" | |
| U70R7003 | 90328-0047 | | 1 | SILENCER G1/8" | |
| U70U6003 | 90458-1205 | | 1 | BASIC SUB-BASE 8 VALVES, CDVI5.0-GB8-MP | |
| U70U6004 | 90458-1206 | | 1 | EXP. SUB-BASE 2 VALVES, CDVI5.0-EB | |
| U70U6006 | 90458-1206 | | 1 | EXP. SUB-BASE 2 VALVES, CDVI5.0-EB | |
| U70X6002 | 90458-1212 | | 1 | LEFT ENDPLATE INCL. 10M CABLE | |

| Pos | Part No | UN | Qty | Description | Page No |
|---|---|---|---|---|---|

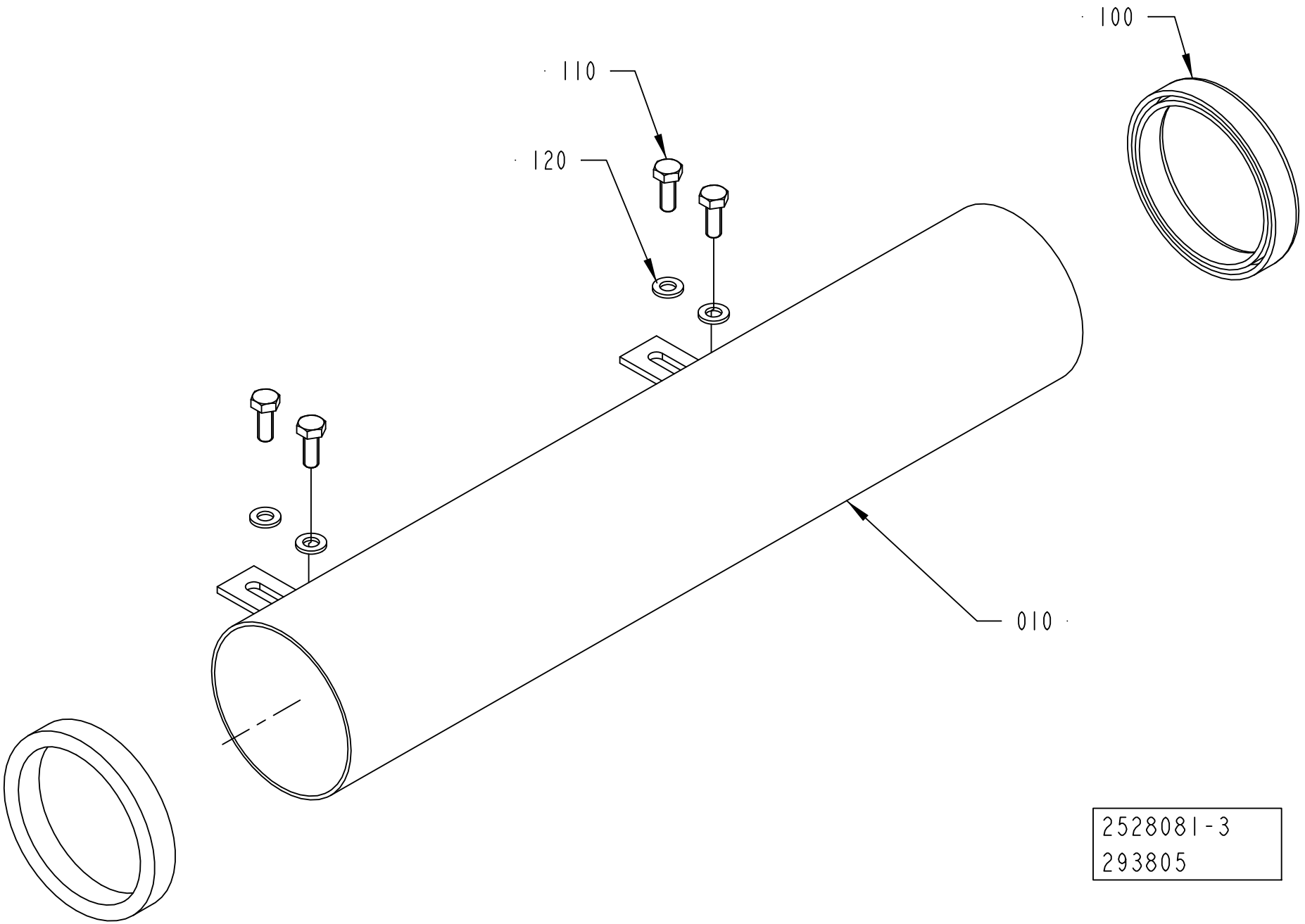
100
110
120
010
2528081-3
293805

ECM: 294069 - 20070704
Group number: 2528081-0300
Assembly Drawing: 2528081-3_1_AA

| Pos | Part No | UN | Qty | Description | Page No |
|---|---|---|---|---|---|
| - | | | | | |
| 010 | 2528082-0000 | | 1 | PIPE | |
| 100 | 90143-0097 | M | 1000 | SELF GRIPPING GASKET, 1011-24 | |
| 110 | 312105-0368 | | 4 | SCREW M6S ISO 4017 M6X16 A480 | |
| 120 | 315105-0153 | | 4 | WASHER BRB 6,4X12 RFR | |

| Pos | Part No | UN | Qty | Description | Page No |
|---|---|---|---|---|---|

# PNEUMATIC COMPONENT



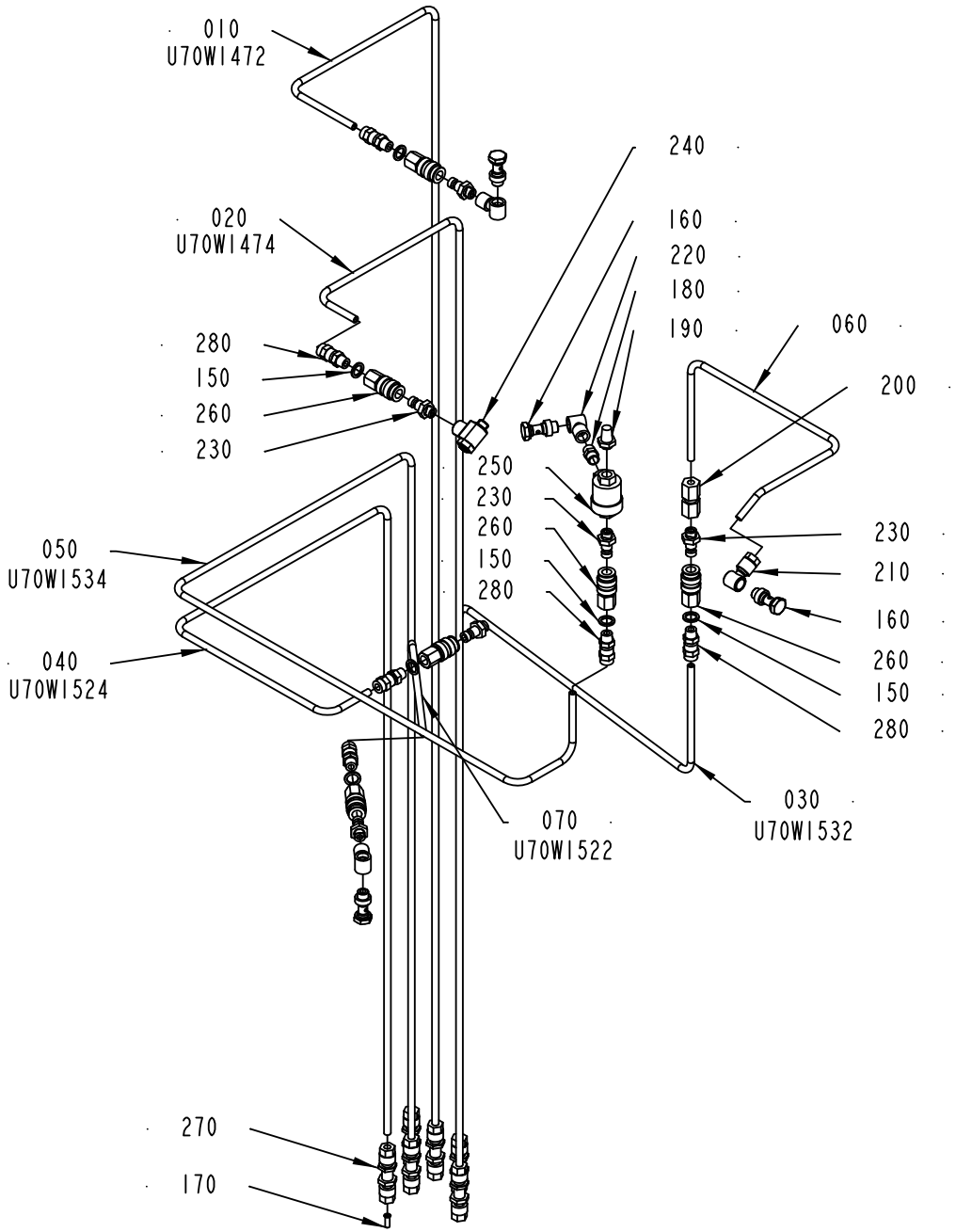


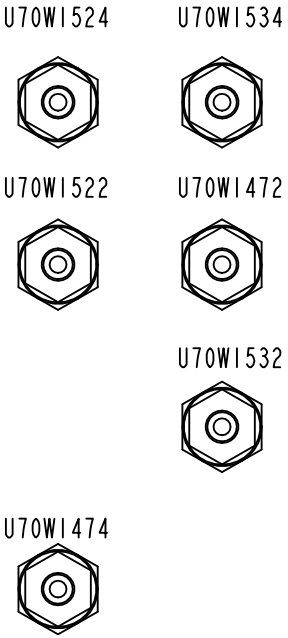


VIEW TOP PLATE
2777988

2957450-1
355885

ECM: 363082 - 20081001
Group number: 2957450-0100
Assembly Drawing: 2957450-1_1_AB

| Pos | Part No | UN | Qty | Description | Page No |
|---|---|---|---|---|---|
| - | | | | | |
| 010 | 1524237-0000 | | 1 | PIPE | |
| 020 | 2695999-0000 | | 1 | PIPE | |
| 030 | 2696000-0000 | | 1 | PIPE | |
| 040 | 2696001-0000 | | 1 | PIPE | |
| 050 | 2894562-0000 | | 1 | PIPE | |
| 060 | 2894563-0000 | | 1 | PIPE | |
| 070 | 2894611-0000 | | 1 | PIPE | |
| 150 | 315237-0109 | | 6 | WASHER,PL.RND.AL.10/14,H=1,5 | |
| 160 | 342980-0303 | | 4 | BANJO-HOLLOW BOLT COUPL,EXT.THR.01-G1/8 | |
| 170 | 342706-0130 | | 6 | ACCESSORIES, INSERT SLEEVE 6 MM | |
| 180 | 342700-0109 | | 1 | NIPPLES,HEXAGON,EXT.G-THREAD G1/8"-G1/8" | |
| 190 | 346800-0109 | | 1 | SILENCER FILTER R1/8" | |
| 200 | 342724-0102 | | 1 | CONN. STR. PIPE GI 6-G1/8 | |
| 210 | 342797-0121 | | 1 | CONN. BANJO, RINGPIECE 6-1/8 | |
| 220 | 90224-0308 | | 3 | CONN. BANJO, ART. NO. 2023-1/8-1/8 | |
| 230 | 90163-0057 | | 6 | QUICK COUPLING, (M) 5150-1/8 | |
| 240 | 90458-2738 | | 1 | THROTTLE CHECK VALVE, GRLA-1/8-B | |
| 250 | 90235-0259 | | 1 | VALVE | |
| 260 | 90163-0062 | | 6 | QUICK COUPLING, (F) 5053-1/8 | |
| 270 | 90224-0349 | | 6 | CONN. BULKHEAD. 1250-6 | |
| 280 | 90458-1849 | | 6 | CONN. STR., 6-R1/8, EXT. THREAD | |

| Pos | Part No | UN | Qty | Description | Page No |
|---|---|---|---|---|---|

# CABLE TRENCH



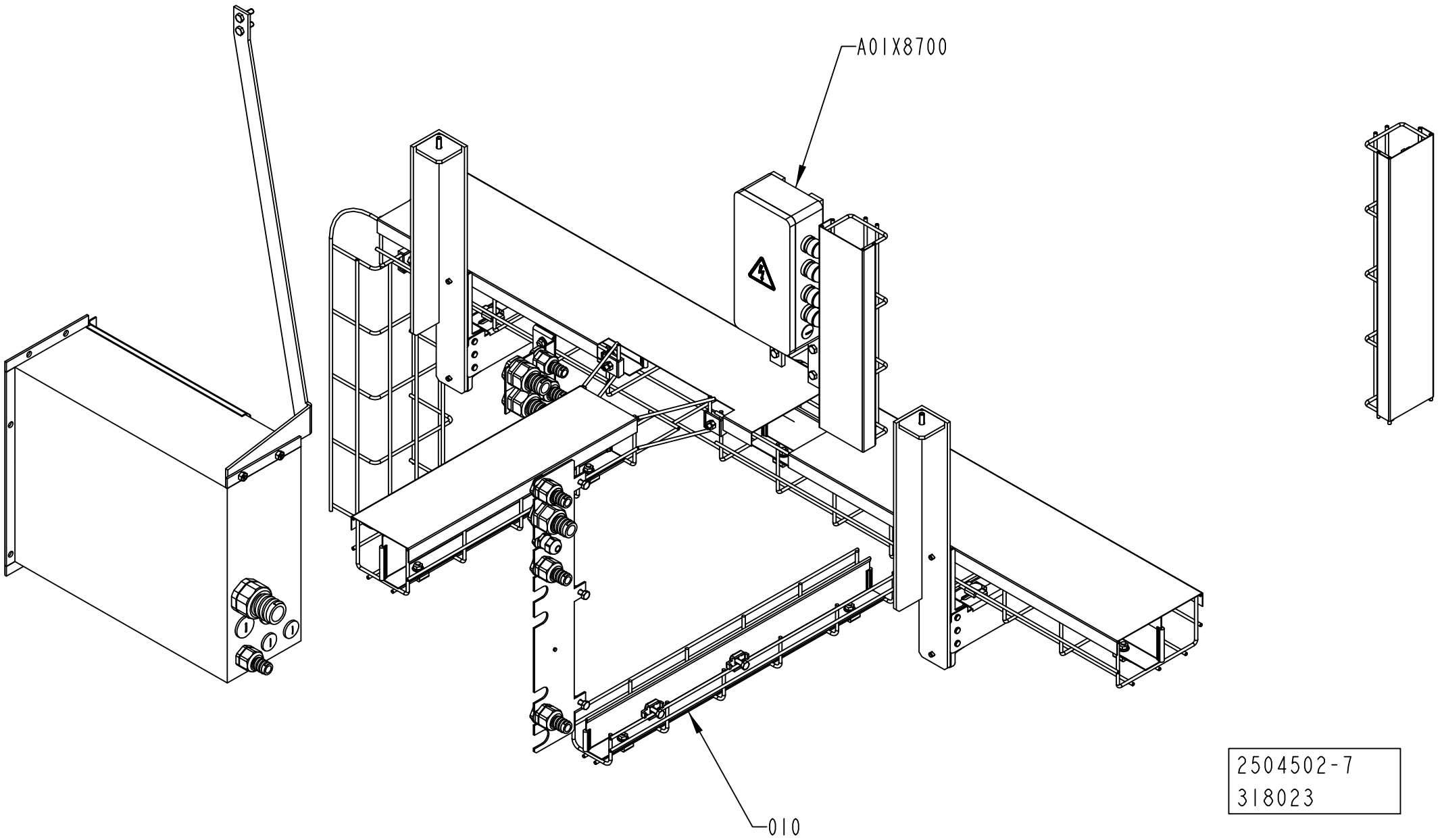


2504502-7
318023

ECM: 320320 - 20070803
Group number: 2504502-0200
Assembly Drawing: 2504502-7_1_AA

| Pos | Part No | UN | Qty | Description | Page No |
|---|---|---|---|---|---|
| - | | | | | |
| 010 | 2783010-0200 | | 1 | CABLE DUCT | **1-329** |
| A01X8700 | 2866426-0100 | | 1 | CONNECTION BOX | **1-331, 1-333** |

| Pos | Part No | UN | Qty | Description | Page No |
|---|---|---|---|---|---|

# CABLE DUCT



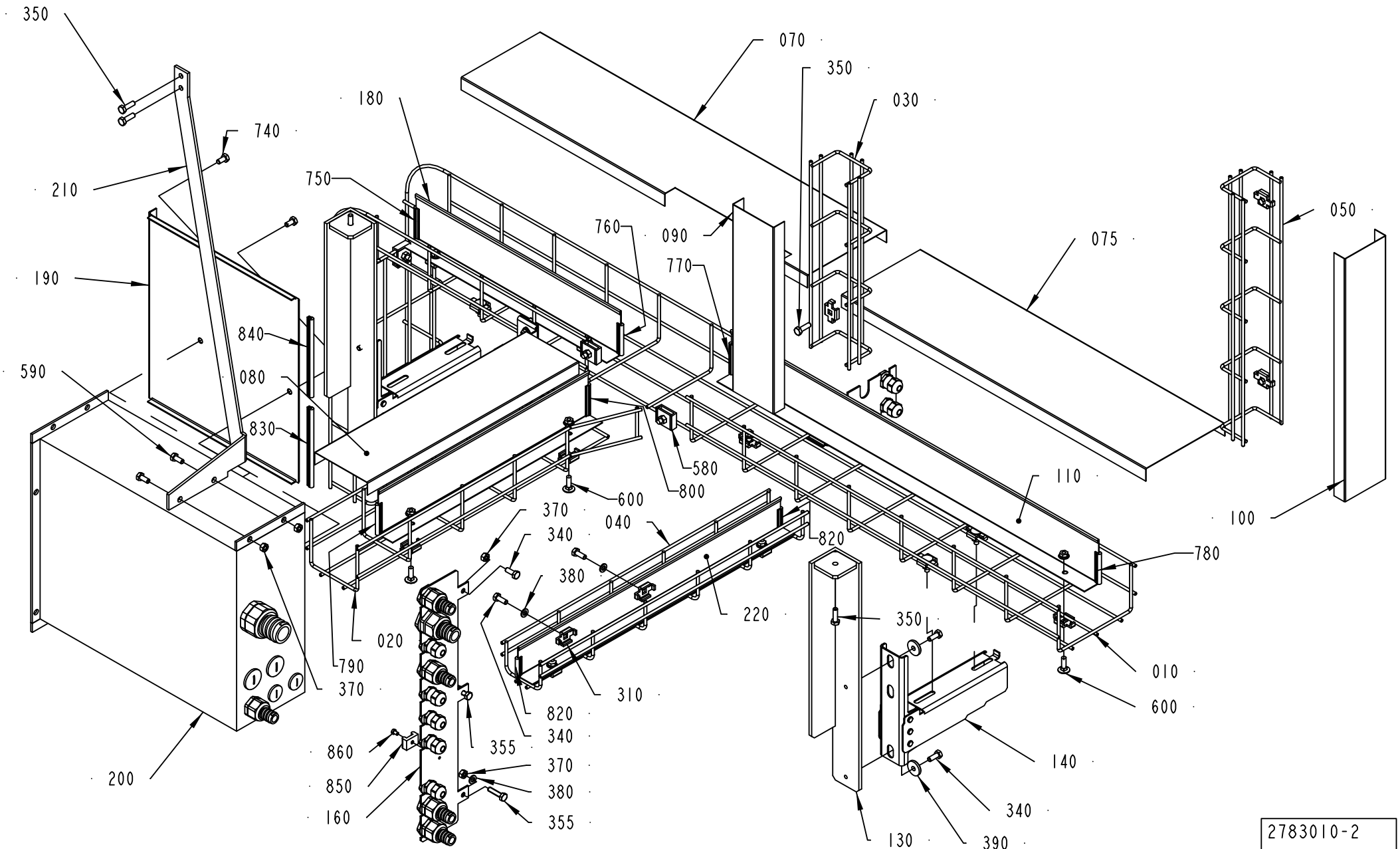


2783010-2
332502

ECM: 363078 - 20081001
Group number: 2783010-0200
Assembly Drawing: 2783010-2_1_AD

| Pos | Part No | UN | Qty | Description | Page No |
|---|---|---|---|---|---|
| - | | | | | |
| 010 | 2867487-0000 | | 1 | CABLE TRENCH | |
| 020 | 2867488-0000 | | 1 | CABLE DUCT | |
| 030 | 2867489-0000 | | 1 | CABLE DUCT | |
| 040 | 2867490-0000 | | 1 | CABLE DUCT | |
| 050 | 2867491-0000 | | 1 | CABLE DUCT | |
| 060 | 2874676-0000 | | 1 | PLATE | |
| 070 | 2867492-0000 | | 1 | COVER | |
| 075 | 2867508-0000 | | 1 | COVER | |
| 080 | 2867493-0000 | | 1 | COVER | |
| 090 | 2867494-0000 | | 1 | COVER | |
| 100 | 2867495-0000 | | 1 | COVER | |
| 110 | 2867497-0000 | | 1 | SEPARATOR | |
| 120 | 2867498-0000 | | 1 | SEPARATOR | |
| 130 | 2867499-0000 | | 2 | BRACKET | |
| 140 | 2867500-0000 | | 2 | BRACKET | |
| 160 | 2874678-0000 | | 1 | PLATE | |
| 170 | 2874677-0000 | | 1 | PLATE | |
| 180 | 2867496-0000 | | 1 | SEPARATOR | |
| 190 | 2793366-0000 | | 1 | LID | |
| 200 | 2874679-0000 | | 1 | CABLE DUCT | |
| 210 | 2793368-0000 | | 1 | BRACKET | |
| 220 | 2874675-0000 | | 1 | SEPARATOR | |
| 310 | 90600-1448 | | 21 | CLAMP, 6016 82 0 | |
| 330 | 90458-0429 | | 6 | HOSE GLAND W/O INSERT M20 EXTENDED | |
| 340 | 312105-0368 | | 7 | SCREW M6S ISO 4017 M6X16 A480 | |
| 350 | 312105-0370 | | 6 | SCREW M6S ISO 4017 M6X20 A480 | |
| 355 | 312105-0372 | | 2 | SCREW M6S ISO 4017 M6X25 A480 | |
| 370 | 312605-0316 | | 5 | HEXAGON NUT, M6M M6 A280 | |
| 380 | 315105-0153 | | 4 | WASHER BRB 6,4X12 RFR | |
| 390 | 315125-0153 | | 4 | WASHER TBRSB 6,4X22X4 A4 | |
| 400 | 90458-0323 | | 11 | NUT, M20X1,5 | |
| 420 | 353249-0011 | | 6 | INSERT, SINGLE HOLE, EK 153/11 | |
| 430 | 353249-0013 | | 3 | INSERT, SINGLE HOLE, EK 154/13 | |
| 580 | 90181-0184 | | 3 | CABLE TRENCH PARTS | |
| 590 | 312105-0367 | | 2 | SCREW M6S ISO 4017 M6X14 A480 | |
| 600 | 90181-0314 | | 14 | CABLE TRENCH PARTS | |
| 610 | 90458-0413 | | 3 | HOSE GLAND W/O INSERT M20 NORMAL | |
| 620 | 90458-0431 | | 3 | HOSE GLAND W/O INSERT M25 EXTENDED | |
| 630 | 90458-0433 | | 1 | HOSE GLAND W/O INSERT M32 EXTENDED | |
| 640 | 90458-0306 | | 8 | CABLE GLAND, M16X1,5, NO.5311 1010 | |
| 660 | 90458-1308 | | 2 | BLIND PLUG CIRCULAR, M20X1,5 514GFK/220 | |
| 670 | 90458-1309 | | 2 | BLIND PLUG CIRCULAR, M25X1,5 514GFK/225 | |
| 680 | 353249-0008 | | 3 | INSERT, SINGLE HOLE, EK 152/7 | |
| 690 | 353249-0061 | | 1 | INSERT, SINGLE HOLE, EK 155/20 | |
| 700 | 90458-0322 | | 8 | NUT, M16X1,5 | |
| 710 | 90458-0324 | | 5 | NUT, M25X1,5 | |
| 720 | 90458-0325 | | 1 | NUT, M32X1,5 | |
| 730 | 312105-0329 | | 2 | SCREW M6S ISO 4017 M5X16 A480 | |
| 740 | 312105-0366 | | 2 | SCREW M6S ISO 4017 M6X12 A480 | |
| 750 | 90143-0060 | MM | 50 | EDGE STRIP 9,5X6,3MM BLACK PVC | |
| 760 | 90143-0060 | MM | 50 | EDGE STRIP 9,5X6,3MM BLACK PVC | |
| 770 | 90143-0060 | MM | 50 | EDGE STRIP 9,5X6,3MM BLACK PVC | |
| 780 | 90143-0060 | MM | 50 | EDGE STRIP 9,5X6,3MM BLACK PVC | |
| 790 | 90143-0060 | MM | 50 | EDGE STRIP 9,5X6,3MM BLACK PVC | |
| 800 | 90143-0060 | MM | 50 | EDGE STRIP 9,5X6,3MM BLACK PVC | |
| 810 | 90143-0060 | MM | 30 | EDGE STRIP 9,5X6,3MM BLACK PVC | |
| 820 | 90143-0060 | MM | 30 | EDGE STRIP 9,5X6,3MM BLACK PVC | |
| 830 | 90143-0060 | MM | 130 | EDGE STRIP 9,5X6,3MM BLACK PVC | |
| 840 | 90143-0060 | MM | 130 | EDGE STRIP 9,5X6,3MM BLACK PVC | |
| 850 | 352113-0203 | | 1 | ANCHOR PLATES FOR STRIPS, TYPE TM3S8-M0 | |
| 860 | 312125-0285 | | 1 | SCREW ISO 1207 M4X6 A4 | |

Machine Type | Group Description | Used-In | Group Number | Page No

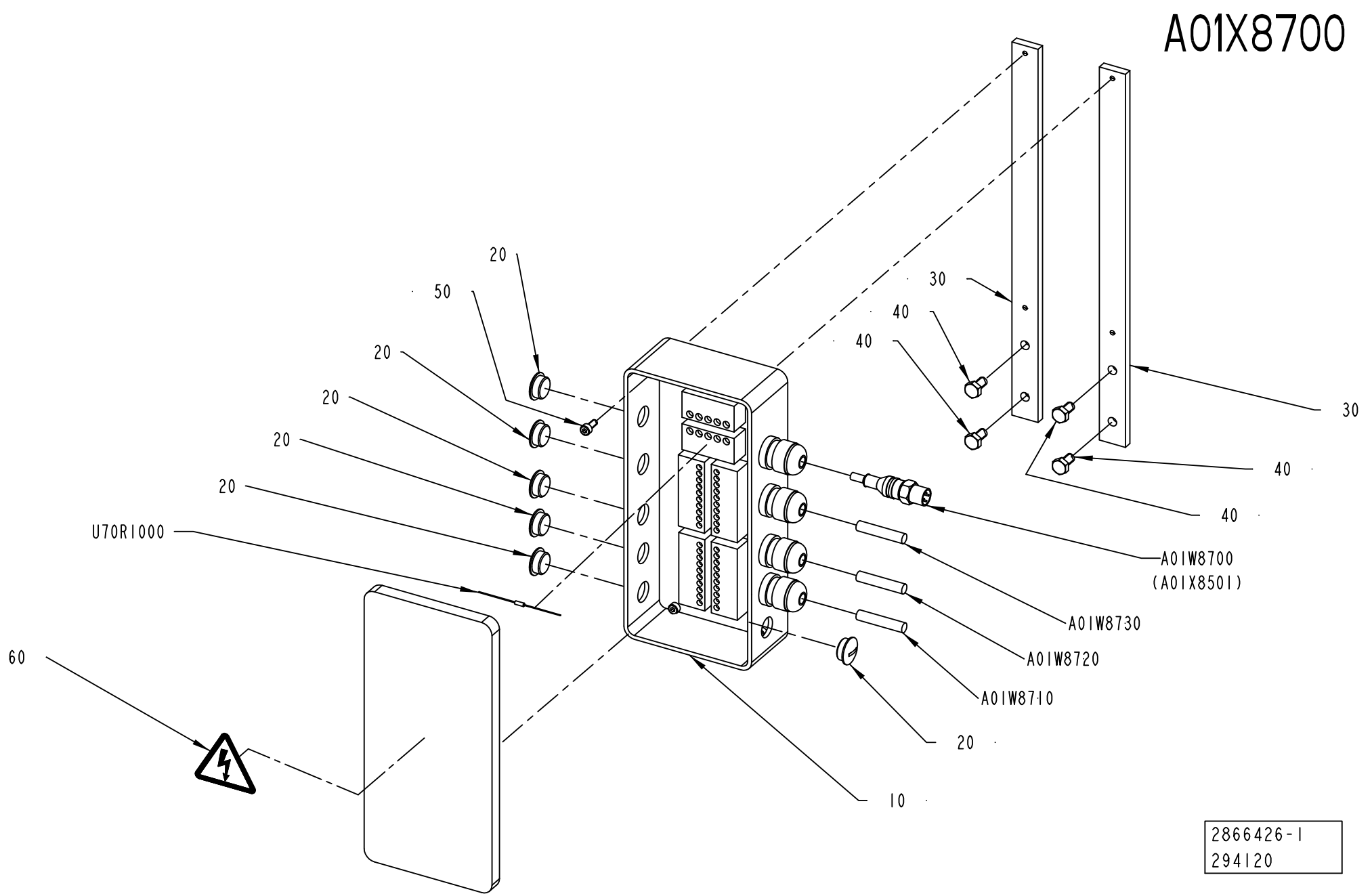
A01X8700
20
50
20
20
20
20
U70R1000
60
30
40
40
30
40
40
A01W8700
(A01X8501)
A01W8730
A01W8720
A01W8710
20
10
2866426-1
294120

ECM: 343201 - 20080410
Group number: 2866426-0100
Assembly Drawing: 2866426-1_1_AA

This list covers pages from 1-330 to 1-333

| Pos | Part No | UN | Qty | Description | Page No |
|---|---|---|---|---|---|
| **A3/FLEX HI (See drawing on page: 1-332)** | | | | | |
| 020 | 90002-0013 | | 5 | BLANK-OFF PLUG, PR 15,2 SKINDICHT-BLK9 | |
| A01W8740 | 90459-2530 | MM | 4000 | DEVICENET CABLE THIN | |
| **A3/FLEX NOHI (See drawing on page: 1-330)** | | | | | |
| 020 | 90002-0013 | | 6 | BLANK-OFF PLUG, PR 15,2 SKINDICHT-BLK9 | |
| **Common Parts** | | | | | |
| 010 | 90459-2517 | | 1 | DEVICE BOX 8 PORT THIN CABLE | |
| 030 | 2793364-0000 | | 2 | SUPPORT | |
| 040 | 312105-0366 | | 4 | SCREW M6S ISO 4017 M6X12 A480 | |
| 050 | 312115-0289 | | 4 | SCREW ISO4762 M4X10 A4 80 | |
| 060 | 359705-0015 | | 1 | WARNING SIGN ISO, RISK OF ELECTRIC SHOCK | |
| A01W8700 | 351414-0050 | | 1 | DEVICENET CONN. CABLE, 0935 361 104/5M | |
| A01W8710 | 90459-2530 | MM | 2500 | DEVICENET CABLE THIN | |
| A01W8720 | 90459-2530 | MM | 3000 | DEVICENET CABLE THIN | |
| A01W8730 | 90459-2530 | MM | 2000 | DEVICENET CABLE THIN | |
| U70R1000 | 90459-1297 | | 1 | RESISTANCE FIXED, 120 OHM, 0,25 W | |

| Pos | Part No | UN | Qty | Description | Page No |
|---|---|---|---|---|---|

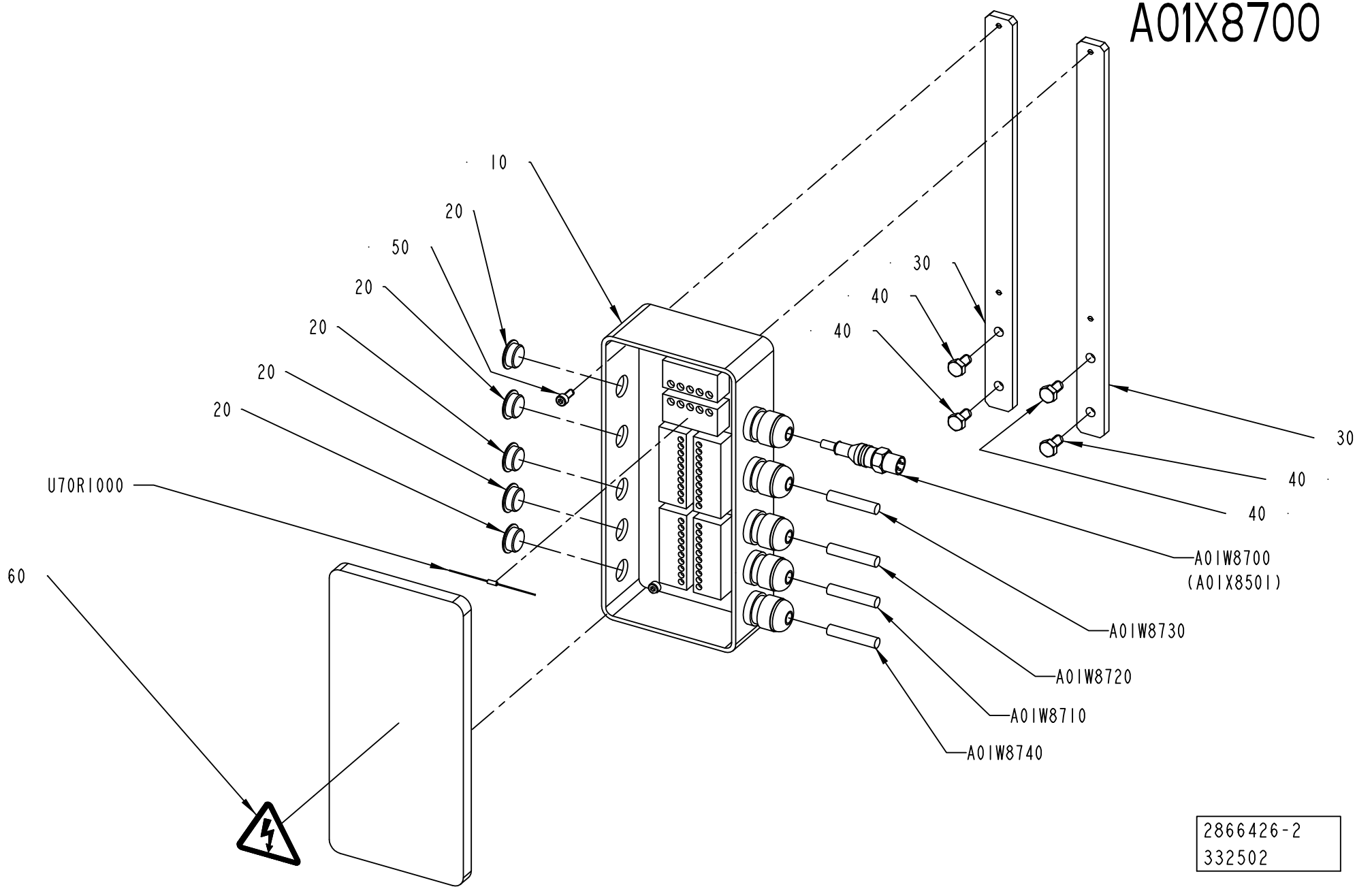
A01X8700
10
20
50
20
20
20
20
U70R1000
60
30
40
40
30
40
40
A01W8700
(A01X8501)
A01W8730
A01W8720
A01W8710
A01W8740
2866426-2
332502

ECM: 343201 - 20080410
Group number: 2866426-0100
Assembly Drawing: 2866426-2_1_AC

This list covers pages from 1-330 to 1-333

| Pos | Part No | UN | Qty | Description | Page No |
|---|---|---|---|---|---|
| **A3/FLEX HI (See drawing on page: 1-332)** | | | | | |
| 020 | 90002-0013 | | 5 | BLANK-OFF PLUG, PR 15,2 SKINDICHT-BLK9 | |
| A01W8740 | 90459-2530 | MM | 4000 | DEVICENET CABLE THIN | |
| **A3/FLEX NOHI (See drawing on page: 1-330)** | | | | | |
| 020 | 90002-0013 | | 6 | BLANK-OFF PLUG, PR 15,2 SKINDICHT-BLK9 | |
| **Common Parts** | | | | | |
| 010 | 90459-2517 | | 1 | DEVICE BOX 8 PORT THIN CABLE | |
| 030 | 2793364-0000 | | 2 | SUPPORT | |
| 040 | 312105-0366 | | 4 | SCREW M6S ISO 4017 M6X12 A480 | |
| 050 | 312115-0289 | | 4 | SCREW ISO4762 M4X10 A4 80 | |
| 060 | 359705-0015 | | 1 | WARNING SIGN ISO, RISK OF ELECTRIC SHOCK | |
| A01W8700 | 351414-0050 | | 1 | DEVICENET CONN. CABLE, 0935 361 104/5M | |
| A01W8710 | 90459-2530 | MM | 2500 | DEVICENET CABLE THIN | |
| A01W8720 | 90459-2530 | MM | 3000 | DEVICENET CABLE THIN | |
| A01W8730 | 90459-2530 | MM | 2000 | DEVICENET CABLE THIN | |
| U70R1000 | 90459-1297 | | 1 | RESISTANCE FIXED, 120 OHM, 0,25 W | |

| Pos | Part No | UN | Qty | Description | Page No |
|---|---|---|---|---|---|

# COVERING PANEL



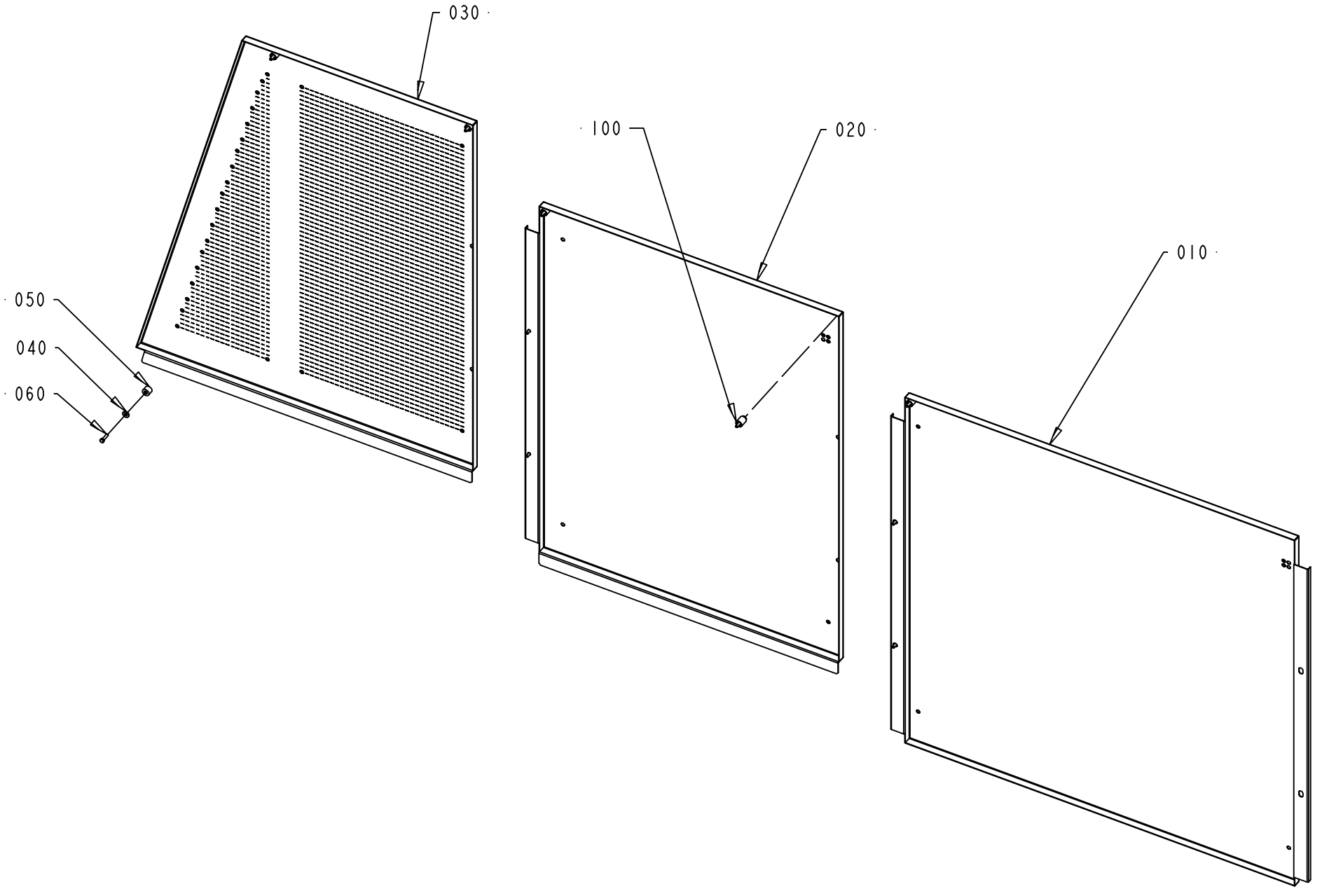

ECM: 344919 - 20080701
Group number: 2533766-0100
Assembly Drawing: 2533766-1_1_AB

| Pos | Part No | UN | Qty | Description | Page No |
|---|---|---|---|---|---|
| **A3/FLEX TBA, A3/FLEX TPA** | | | | | |
| 010 | 2533763-0000 | | 1 | COVERING PANEL | |
| **Common Parts** | | | | | |
| 020 | 2533768-0000 | | 1 | COVERING PLATE | |
| 030 | 2539471-0000 | | 1 | COVERING PLATE | |
| 040 | 1260303-0000 | | 1 | WASHER | |
| 050 | 1037552-0000 | | 1 | SPACER | |
| 060 | 312105-0372 | | 1 | SCREW M6S ISO 4017 M6X25 A480 | |
| 100 | 90226-0458 | | 9 | MOUNTING SCREW | |

| Pos | Part No | UN | Qty | Description | Page No |
|---|---|---|---|---|---|

# COVERING PANEL



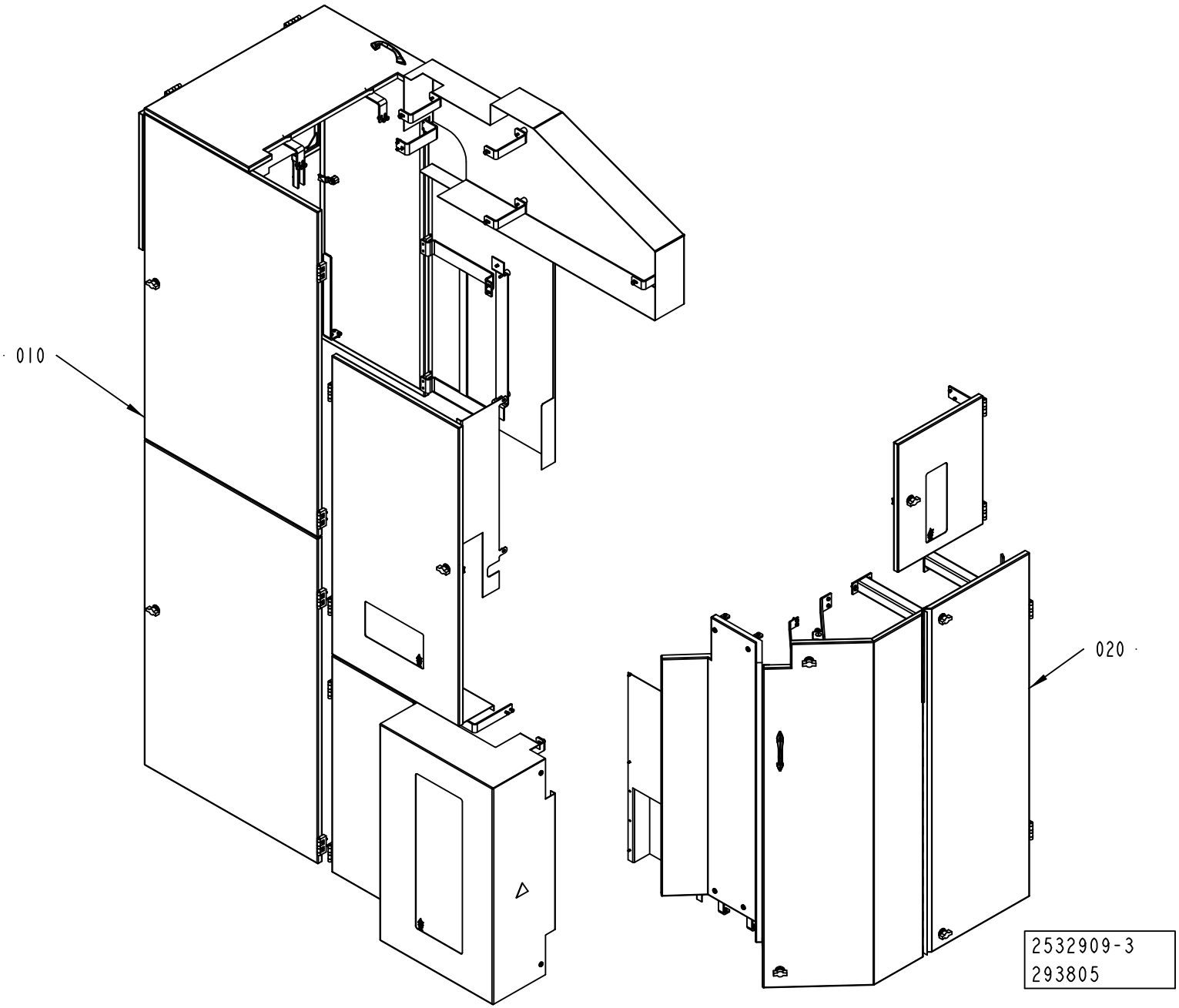

ECM: 293805 - 20070704
Group number: 2532909-0300
Assembly Drawing: 2532909-3_1_AA

| Pos | Part No | UN | Qty | Description | Page No |
|---|---|---|---|---|---|
| - | | | | | |
| 010 | 2529760-0300 | | 1 | COVERING PANEL | **1-339** |
| 020 | 2545639-0300 | | 1 | COVERING PANEL | **1-341** |

| Pos | Part No | UN | Qty | Description | Page No |
|---|---|---|---|---|---|

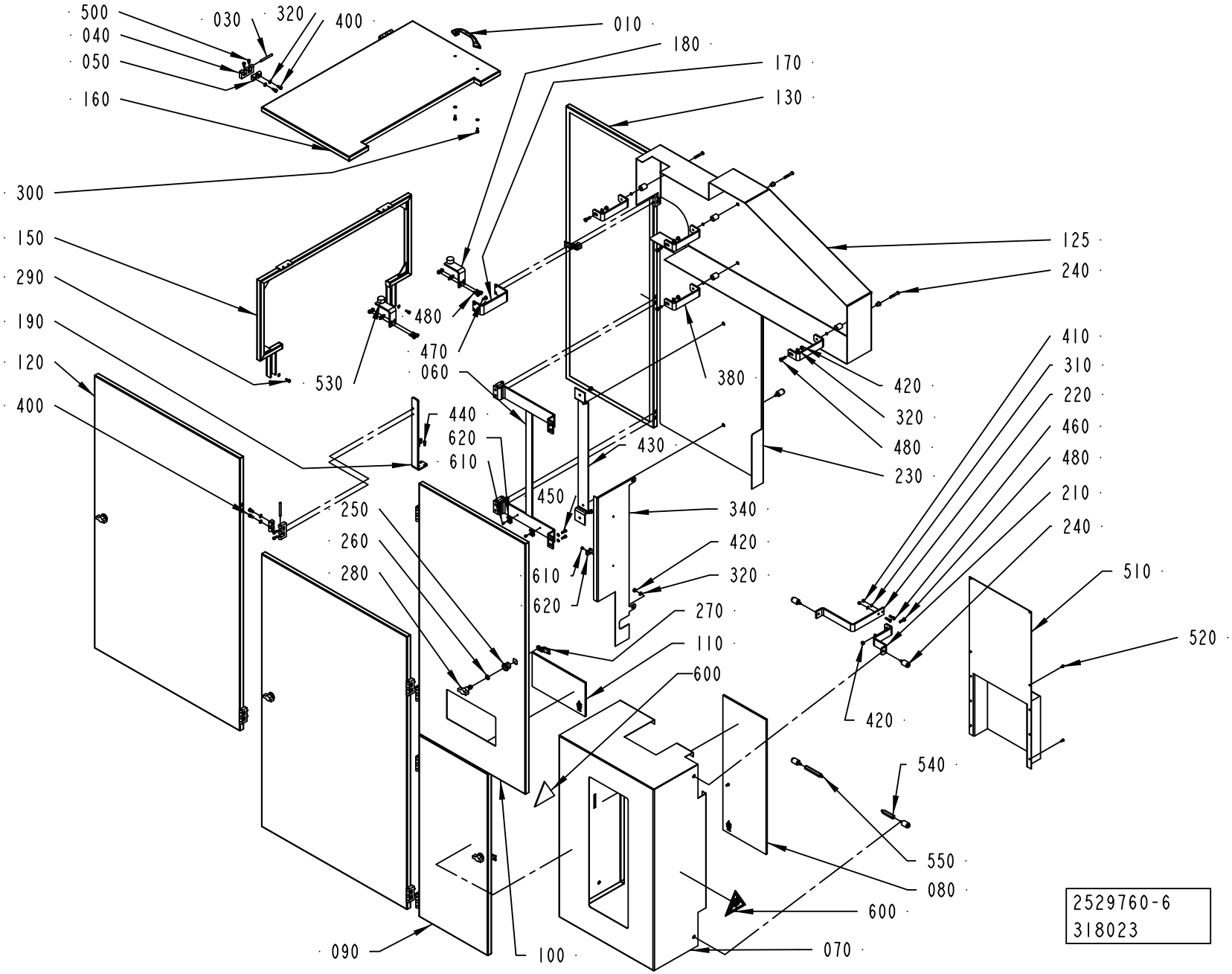
500
040
050
160
030
320
400
010
180
170
130
300
150
290
190
120
400
530
480
470
060
380
125
240
420
320
480
230
410
310
220
460
480
210
240
440
620
610
430
450
340
420
320
250
260
280
610
620
270
110
600
510
520
420
540
550
080
600
070
090
100
2529760-6
318023

ECM: 329033 - 20071114
Group number: 2529760-0300
Assembly Drawing: 2529760-6_1_AB

| Pos | Part No | UN | Qty | Description | Page No |
|---|---|---|---|---|---|
| **A3/FLEX** | | | | | |
| 070 | 2710561-0000 | | 1 | COVERING PANEL | |
| 080 | 2874763-0000 | | 1 | GLASS PANE | |
| 090 | 2710564-0000 | | 1 | DOOR | |
| 120 | 2711246-0000 | | 2 | COVERING PANEL | |
| 125 | 2833124-0000 | | 1 | COVER | |
| 130 | 2711248-0000 | | 1 | DOOR | |
| 150 | 2894620-0000 | | 1 | FRAME | |
| 160 | 2711255-0000 | | 1 | COVERING PANEL | |
| 180 | 2711262-0000 | | 2 | BRACKET | |
| 210 | 2711266-0000 | | 1 | BRACKET | |
| 220 | 2711267-0000 | | 1 | BRACKET | |
| 230 | 2712433-0000 | | 1 | COVERING PANEL | |
| 240 | 90226-0458 | | 10 | MOUNTING SCREW | |
| 290 | 312105-0329 | | 4 | SCREW M6S ISO 4017 M5X16 A480 | |
| 300 | 312115-0327 | | 24 | SCREW ISO4762 M5X12 A4 80 | |
| 310 | 315105-0146 | | 12 | WASHER BRB 5,3X10 RFR | |
| 320 | 315105-0153 | | 39 | WASHER BRB 6,4X12 RFR | |
| 410 | 312605-0314 | | 2 | HEXAGON NUT, M6M M5 A280 | |
| 420 | 312605-0316 | | 11 | HEXAGON NUT, M6M M6 A280 | |
| 430 | 2509659-0000 | | 1 | PLATE | |
| 440 | 312105-0327 | | 3 | SCREW M6S ISO 4017 M5X12 A480 | |
| 450 | 312105-0329 | | 4 | SCREW M6S ISO 4017 M5X16 A480 | |
| 460 | 312105-0331 | | 2 | SCREW M6S ISO 4017 M5X20 A480 | |
| 470 | 312105-0366 | | 2 | SCREW M6S ISO 4017 M6X12 A480 | |
| 480 | 312105-0370 | | 9 | SCREW M6S ISO 4017 M6X20 A480 | |
| 510 | 2619607-0000 | | 1 | COVER | |
| 520 | 312105-0287 | | 6 | SCREW M6S ISO 4017 M4X8 A470 | |
| 540 | 2743319-0000 | | 1 | SUPPORT | |
| 550 | 2743320-0000 | | 1 | SUPPORT | |
| 600 | 90459-6084 | | 2 | WARNING SIGN ISO, HAZARDOUS ROTATING BEL | |
| **Common Parts** | | | | | |
| 010 | 7309-0000 | | 1 | HANDLE | |
| 030 | 988685-0000 | | 13 | PIN | |
| 040 | 1035792-0000 | | 13 | E-HINGE | |
| 050 | 1129770-0000 | | 26 | BLOCKING PIECE | |
| 060 | 2509658-0000 | | 1 | BRACKET | |
| 100 | 2874746-0000 | | 1 | COVERING PANEL | |
| 110 | 2874747-0000 | | 1 | GLASS PANE | |
| 170 | 2711261-0000 | | 1 | BRACKET | |
| 190 | 2711263-0000 | | 1 | BRACKET | |
| 250 | 90237-0319 | | 5 | LOCK HOUSING, 1000-U134 | |
| 260 | 90237-0323 | | 5 | LOCK O-RING, 1000-24 | |
| 270 | 90237-0335 | | 5 | LOCKING CATCH | |
| 280 | 90237-0337 | | 5 | LOCK HANDLE FOR 90237-319 | |
| 340 | 2833186-0000 | | 1 | PANEL | |
| 380 | 2833122-0000 | | 4 | BRACKET | |
| 400 | 312115-0366 | | 26 | SCREW ISO4762 M6X12 A4 80 | |
| 500 | 312115-0323 | | 4 | SCREW ISO4762 M5X8 A4 80 | |
| 530 | 90347-0034 | | 2 | VIBRATION DAMPER | |
| 610 | 312125-0285 | | 6 | SCREW ISO 1207 M4X6 A4 | |
| 620 | 352113-0203 | | 6 | ANCHOR PLATES FOR STRIPS, TYPE TM3S8-M0 | |

Machine Type | Group Description | Used-In | Group Number | Page No

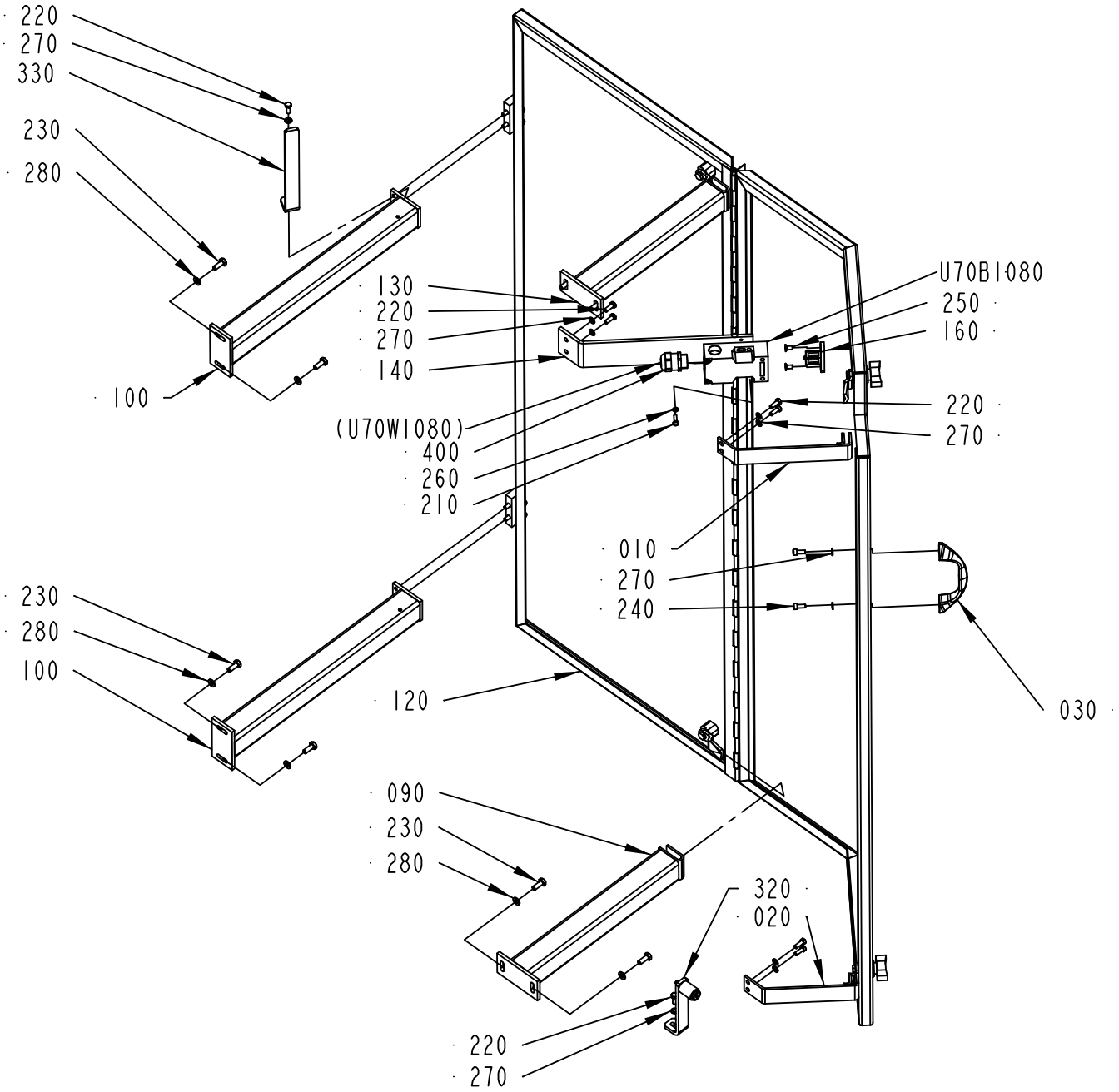
220
270
330
230
280
100
130
220
270
140
(U70W1080)
400
260
210
U70B1080
250
160
220
270
010
270
240
030
230
280
100
120
090
230
280
320
020
220
270

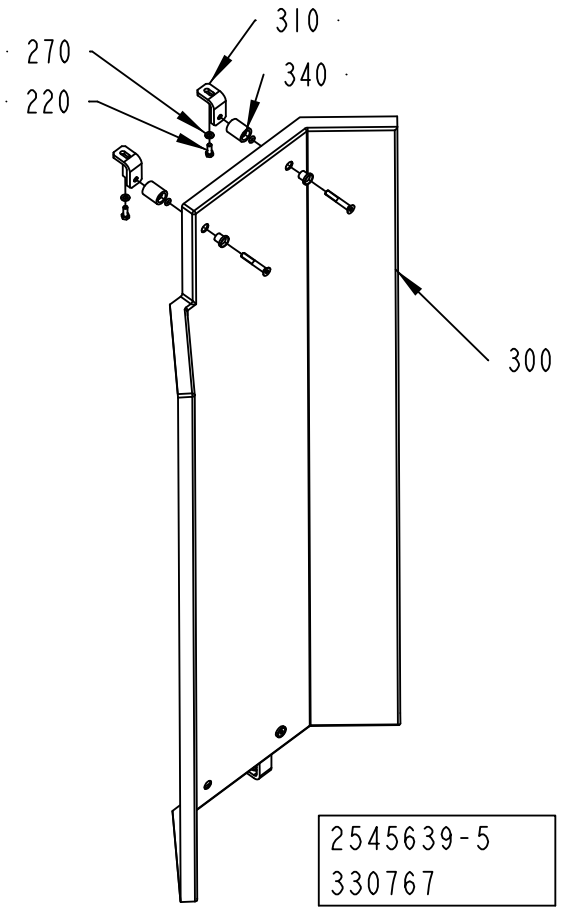
270
220
310
340
300
2545639-5
330767

ECM: 352076 - 20080706
Group number: 2545639-0300
Assembly Drawing: 2545639-5_1_AC

| Pos | Part No | UN | Qty | Description | Page No |
|---|---|---|---|---|---|
| **A3/FLEX** | | | | | |
| 010 | 2793381-0000 | | 1 | BRACKET | |
| 120 | 2793382-0000 | | 1 | DOOR | |
| 140 | 2793383-0000 | | 1 | BRACKET | |
| **Common Parts** | | | | | |
| 020 | 2711257-0000 | | 1 | BRACKET | |
| 030 | 7309-0000 | | 1 | HANDLE | |
| 040 | 988685-0000 | | 2 | PIN | |
| 050 | 1035792-0000 | | 2 | E-HINGE | |
| 060 | 1129770-0000 | | 4 | BLOCKING PIECE | |
| 090 | 2711258-0000 | | 1 | FRAME | |
| 100 | 2711259-0000 | | 2 | FRAME | |
| 130 | 2712434-0000 | | 1 | FRAME | |
| 160 | 90044-0310 | | 1 | KEY FOR SAFETY SWITCH AZ 15/16 B1 | |
| 170 | 90237-0319 | | 4 | LOCK HOUSING, 1000-U134 | |
| 180 | 90237-0323 | | 4 | LOCK O-RING, 1000-24 | |
| 190 | 90237-0335 | | 4 | LOCKING CATCH | |
| 200 | 90237-0337 | | 4 | LOCK  HANDLE FOR 90237-319 | |
| 210 | 312105-0293 | | 2 | SCREW M6S ISO 4017 M4X16 A470 | |
| 220 | 312105-0329 | | 11 | SCREW M6S ISO 4017 M5X16 A480 | |
| 230 | 312105-0368 | | 8 | SCREW M6S ISO 4017 M6X16 A480 | |
| 240 | 312115-0327 | | 6 | SCREW ISO4762 M5X12 A4 80 | |
| 250 | 312155-0325 | | 2 | SCREW DIN 7991 MF6S M5X10 A4 70 | |
| 260 | 315105-0136 | | 2 | WASHER BRB 4,3X8 RFR | |
| 270 | 315105-0146 | | 13 | WASHER BRB 5,3X10 RFR | |
| 280 | 315105-0153 | | 12 | WASHER BRB 6,4X12 RFR | |
| 290 | 312115-0366 | | 4 | SCREW ISO4762 M6X12 A4 80 | |
| 300 | 2710560-0000 | | 1 | COVER | |
| 310 | 2710563-0000 | | 2 | BRACKET | |
| 320 | 2711240-0000 | | 2 | BRACKET | |
| 330 | 2711242-0000 | | 1 | BRACKET | |
| 340 | 90226-0458 | | 4 | MOUNTING SCREW | |
| 400 | 90458-0429 | | 1 | HOSE GLAND W/O INSERT M20 EXTENDED | |
| U70B1080 | 90459-0472 | | 1 | KEY SAF.SW. AZ 16 02ZVRK-M20-2152-2254 | |
| U70W1080 | 351150-0405 | MM | 2300 | CABLE OLFLEX 5X0,75 MM2 LIGHT/GREY | |

| Pos | Part No | UN | Qty | Description | Page No |
|---|---|---|---|---|---|

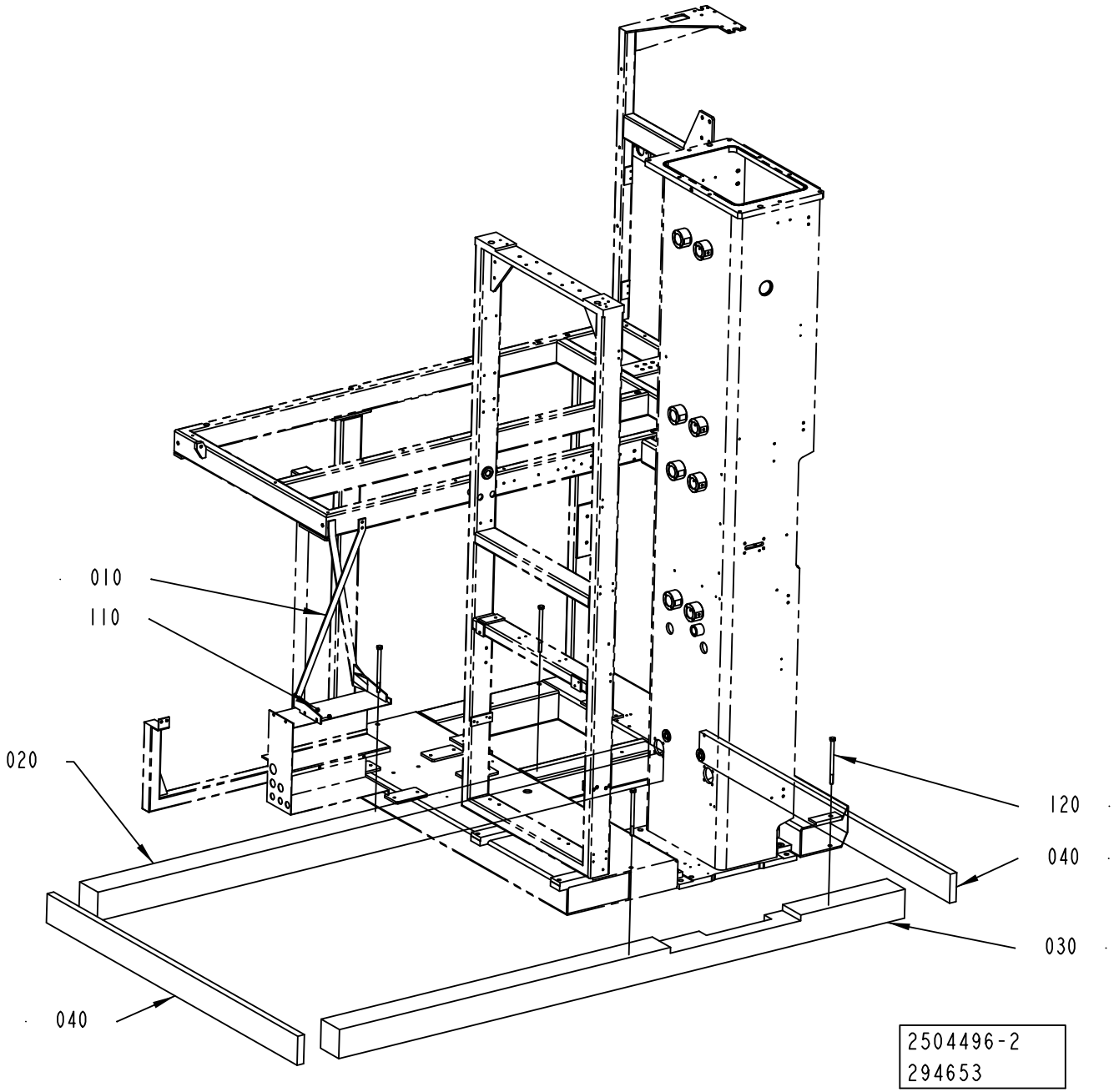
010
110
020
040
120
040
030
2504496-2
294653

ECM: 352801 - 20080711
Group number: 2504496-0200
Assembly Drawing: 2504496-2_1_AA

| Pos | Part No | UN | Qty | Description | Page No |
|---|---|---|---|---|---|
| - | | | | | |
| 010 | 1558845-0000 | | 1 | BRACKET | |
| 110 | 312605-0316 | | 2 | HEXAGON NUT, M6M M6 A280 | |

| Pos | Part No | UN | Qty | Description | Page No |
|---|---|---|---|---|---|

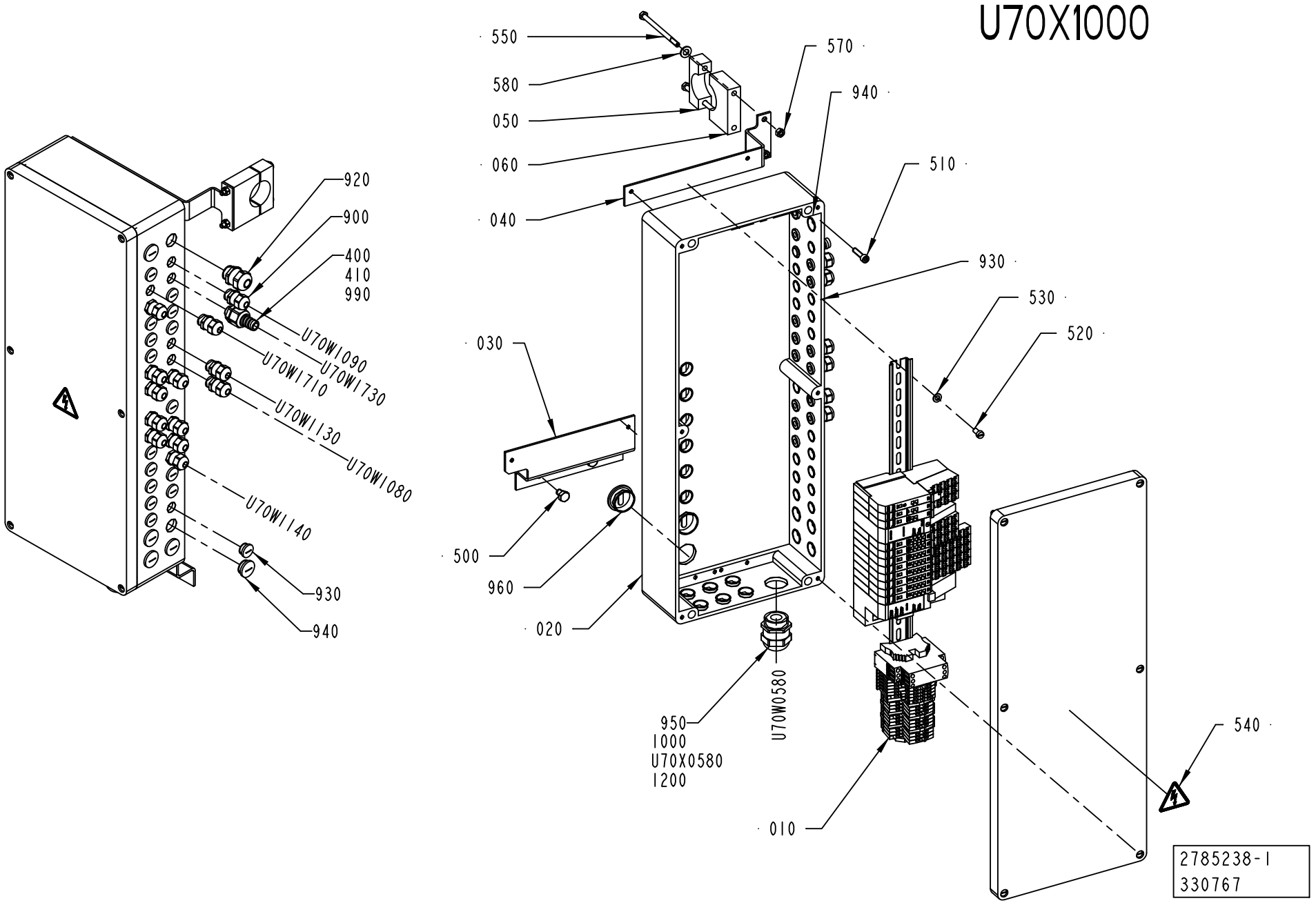
U70X1000
550
580
050
060
040
570
940
510
930
530
520
030
500
960
020
950
1000
U70X0580
1200
U70W0580
010
540
920
900
400
410
990
U70W1090
U70W1710
U70W1730
U70W1130
U70W1080
U70W1140
930
940
2785238-1
330767

ECM: 352088 - 20080706
Group number: 2785238-0100
Assembly Drawing: 2785238-1_1_AD

| Pos | Part No | UN | Qty | Description | Page No |
|---|---|---|---|---|---|
| **A3/FLEX** | | | | | |
| 900 | 90458-0306 | | 13 | CABLE GLAND, M16X1,5, NO.5311 1010 | |
| 920 | 90458-0307 | | 1 | CABLE GLAND, M20X1,5, NO.5311 1020 | |
| 930 | 90458-1307 | | 16 | BLIND PLUG CIRCULAR, M16X1,5 514GFK/216 | |
| 940 | 90458-1308 | | 17 | BLIND PLUG CIRCULAR, M20X1,5 514GFK/220 | |
| **Common Parts** | | | | | |
| 010 | 2696978-0100 | | 1 | TERMINAL BLOCK ..... | **1-347** |
| 020 | 2785236-0000 | | 1 | CONNECTION BOX | |
| 030 | 2775101-0000 | | 1 | HOLDER | |
| 040 | 2788927-0000 | | 1 | HOLDER | |
| 050 | 735041-0000 | | 1 | CONNECTION CLAMP | |
| 060 | 2529742-0000 | | 1 | CLAMP | |
| 1000 | 90459-6636 | | 1 | HOOD 24 B TOP ENTRY, 19 30 024 0427 | |
| 1200 | 90458-0309 | | 1 | CABLE GLAND, M32X1,5, NO.5311 1040 | |
| 400 | 90458-0427 | | 1 | HOSE GLAND W/O INSERT M16 EXTENDED | |
| 500 | 312105-0447 | | 2 | SCREW M6S ISO 4017 M8X12 A480 | |
| 510 | 312115-0372 | | 4 | SCREW ISO4762 M6X25 A4 80 | |
| 520 | 312125-0366 | | 2 | SCREW ISO 1207 M6X12 A4 | |
| 530 | 315105-0153 | | 2 | WASHER BRB 6,4X12 RFR | |
| 540 | 359705-0015 | | 1 | WARNING SIGN ISO, RISK OF ELECTRIC SHOCK | |
| 550 | 312105-0388 | | 2 | SCREW M6S ISO 4014 M6X90 A480 | |
| 570 | 312605-0316 | | 2 | HEXAGON NUT, M6M M6 A280 | |
| 580 | 315105-0165 | | 2 | WASHER BRB 8,4X16 RFR | |
| 950 | 90458-0309 | | 1 | CABLE GLAND, M32X1,5, NO.5311 1040 | |
| 960 | 90458-1310 | | 2 | BLIND PLUG CIRCULAR, M32X1,5 514GFK/232 | |
| 990 | 353249-0008 | | 1 | INSERT, SINGLE HOLE, EK 152/7 | |
| U70W0580 | 351150-0425 | MM | 6000 | CABLE OLFLEX 25X0,75 MM2 LIGHT/GREY | |
| U70X0580 | 90110-0056 | | 1 | MALE INSERT HAN 24 E 09 33 024 2601 | |

| Pos | Part No | UN | Qty | Description | Page No |
|---|---|---|---|---|---|

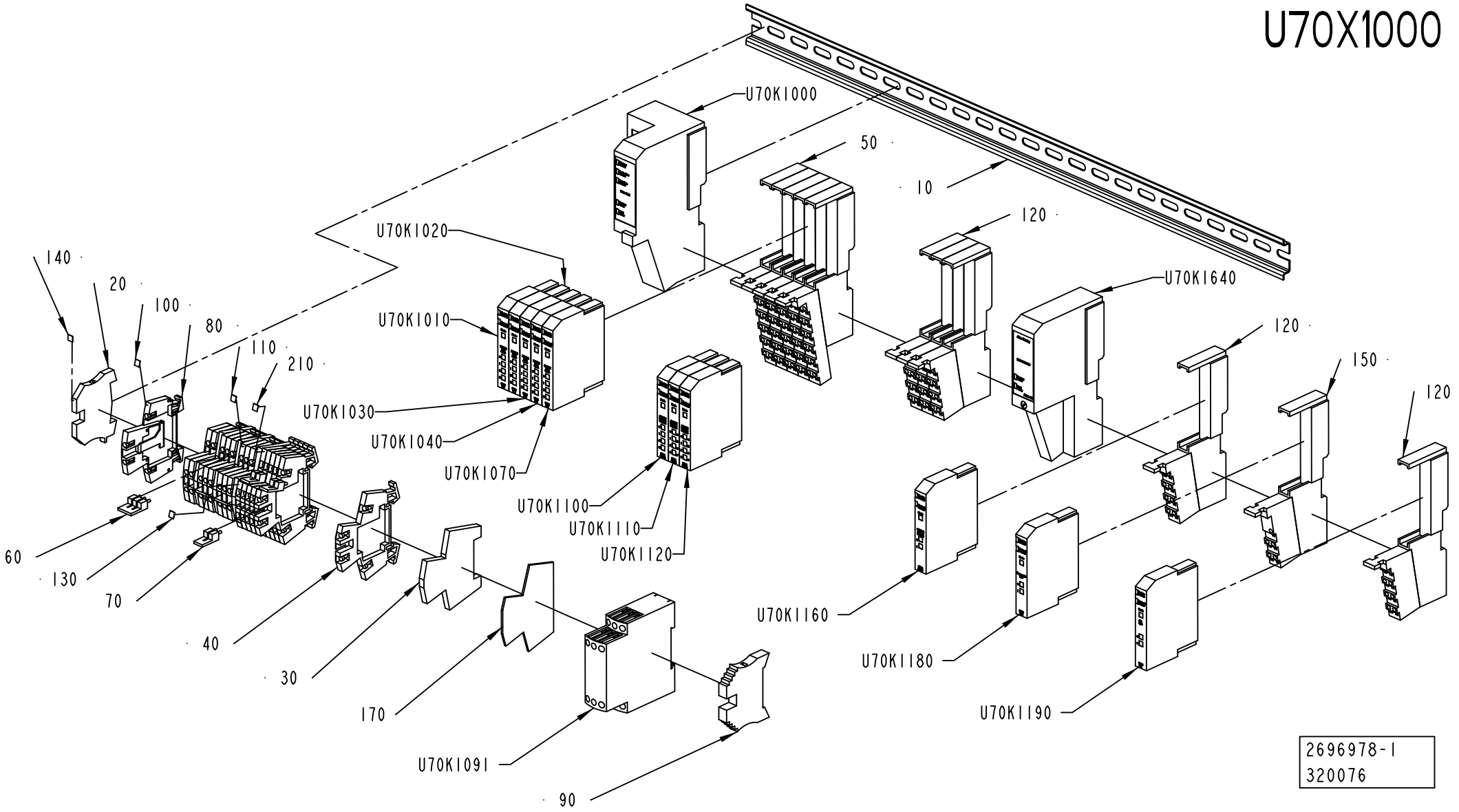
U70X1000
U70K1000
50
10
120
U70K1020
140
20
100
80
110
210
U70K1010
U70K1640
120
150
120
U70K1030
U70K1040
U70K1070
U70K1100
U70K1110
U70K1120
60
130
70
40
30
170
U70K1091
90
U70K1160
U70K1180
U70K1190
2696978-1
320076

ECM: 329059 - 20071114
Group number: 2696978-0100
Assembly Drawing: 2696978-1_1_AB

| Pos | Part No | UN | Qty | Description | Page No |
|---|---|---|---|---|---|
| - | | | | | |
| 010 | 2696979-0000 | | 1 | RAIL | |
| 020 | 353024-0204 | | 2 | EARTH TERMINAL WPE 2,5 | |
| 030 | 353024-0212 | | 4 | EARTH TERMINAL, 10363.0 | |
| 040 | 90077-0113 | | 6 | FEED THROUGH TERMINAL, 10-00102150-1 | |
| 050 | 90459-2527 | | 5 | REMOTE I/O BASE MODULE 12 POINTS | |
| 060 | 353034-0030 | | 3 | BRIDGE CONNECTOR WQV 2,5/10, 10544.6 | |
| 070 | 353034-0030 | | 3 | BRIDGE CONNECTOR WQV 2,5/10, 10544.6 | |
| 080 | 90457-0049 | | 9 | TERMINAL BLOCK WDK 2.5V, 102230 | |
| 090 | 353031-0203 | | 1 | END SUPPORT, WEW 35/2 | |
| 100 | 359011-0807 | | 1 | MARKING PLATES 5-FW 1-50 | |
| 110 | 359011-0808 | | 1 | MARKING PLATES 5-FW 51-100 | |
| 120 | 90459-2526 | | 5 | REMOTE I/O BASE MODULE 8 POINTS, 1734-TB | |
| 130 | 359011-0810 | | 2 | MARKING PLATES 5-FW 151-200 | |
| 140 | 359011-0819 | | 1 | MARKING PLATES 5-GW (EARTH) | |
| 150 | 90459-2528 | | 1 | REMOTE I/O BASE MODULE FOR THERMOCOUPLE | |
| 170 | 90077-0114 | | 1 | END PLATE, WAP/WDK 2,5 | |
| 210 | 359011-0809 | | 2 | MARKING PLATES 5-FW 101-150 | |
| U70K1000 | 90459-2494 | | 1 | DEVICENET I/O ADAPTER MODULE, 1734-ADN | |
| U70K1010 | 90459-2503 | | 1 | DIGITAL INPUT 4 PTS SINK, 1734-IB4 | |
| U70K1020 | 90459-2503 | | 1 | DIGITAL INPUT 4 PTS SINK, 1734-IB4 | |
| U70K1030 | 90459-2503 | | 1 | DIGITAL INPUT 4 PTS SINK, 1734-IB4 | |
| U70K1040 | 90459-2503 | | 1 | DIGITAL INPUT 4 PTS SINK, 1734-IB4 | |
| U70K1070 | 90459-2503 | | 1 | DIGITAL INPUT 4 PTS SINK, 1734-IB4 | |
| U70K1091 | 90459-2742 | | 1 | LEVEL CONTROL RELAY, RM4-LA32MW | |
| U70K1100 | 90459-2505 | | 1 | DIGITAL OUTPUT 4 PTS, 1734-OB4E | |
| U70K1110 | 90459-6560 | | 1 | DIGITAL OUTPUT 8 PTS, 1734-OB8E/C | |
| U70K1120 | 90459-6560 | | 1 | DIGITAL OUTPUT 8 PTS, 1734-OB8E/C | |
| U70K1160 | 90459-2510 | | 1 | ANALOG OUTP. VOLT. 2PTS, 1734-OE2V SER.C | |
| U70K1180 | 90459-2512 | | 1 | REMOTE I/O THERMOCOUPLE INPUT 2 PTS | |
| U70K1190 | 90459-4056 | | 1 | REMOTE I/O RTD INPUT 2PTS | |
| U70K1640 | 90459-2500 | | 1 | EXPANSION POWER SUPPLY MODULE | |

| Pos | Part No | UN | Qty | Description | Page No |
|---|---|---|---|---|---|

| Machine Type | Group Description | Used-In | Group Number | Page No |
|---|---|---|---|---|

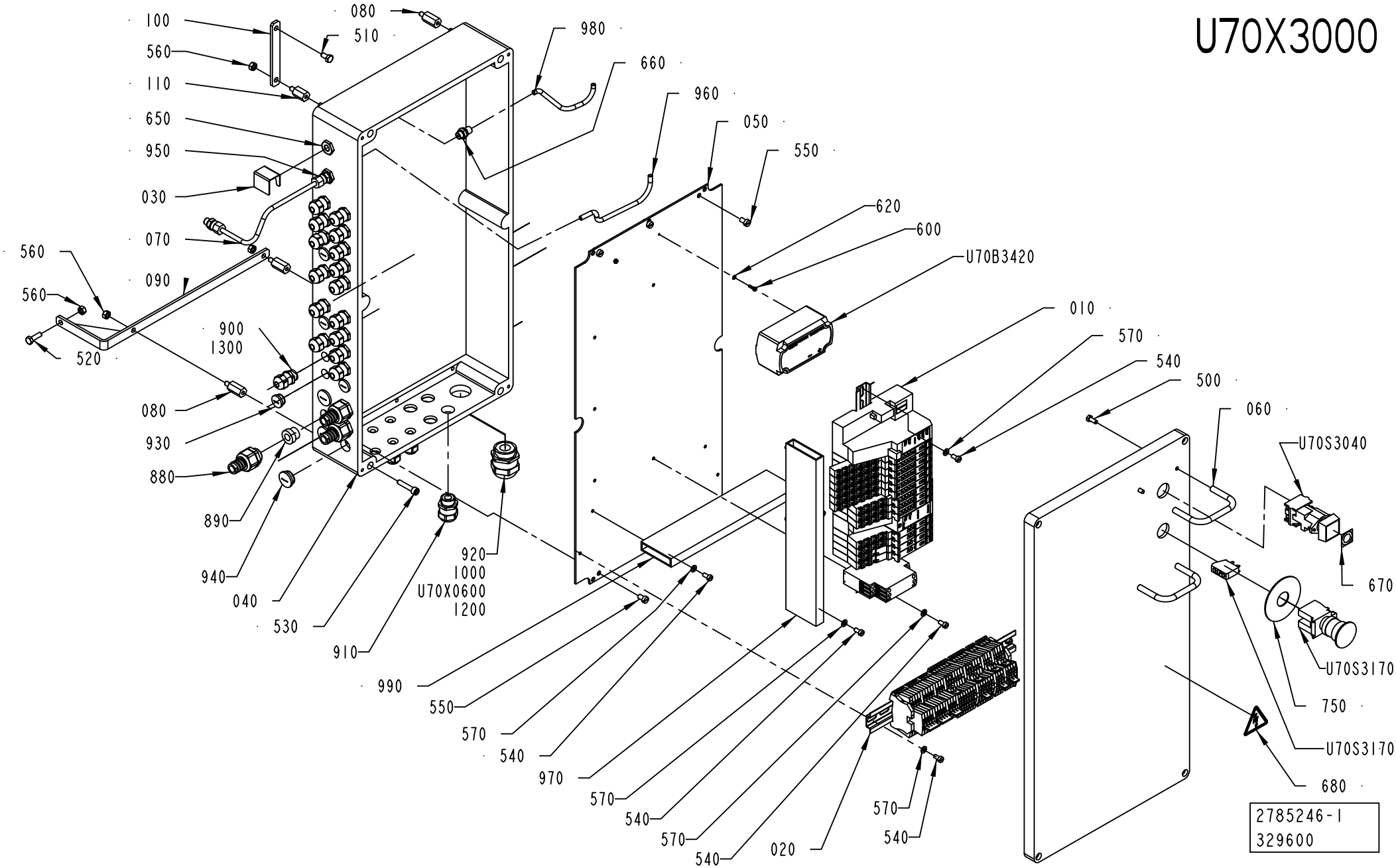
U70X3000
100
560
110
650
950
030
070
090
560
560
520
080
510
980
660
960
050
550
620
600
U70B3420
010
570
540
500
060
U70S3040
670
U70S3170
750
U70S3170
680
900
1300
080
930
880
890
940
040
530
910
920
1000
U70X0600
1200
990
550
570
540
970
570
540
570
540
020
570
540
2785246-1
329600

ECM: 367730 - 20081001
Group number: 2785246-0100
Assembly Drawing: 2785246-1_1_AC

This list covers pages from 1-348 to 1-351

| Pos | Part No | UN | Qty | Description | Page No |
|---|---|---|---|---|---|
| **A3/FLEX DIMC/FLEX (See drawing on page: 1-350)** | | | | | |
| 070 | 1548749-0000 | | 1 | PIPE | |
| 080 | 1548869-0000 | | 3 | SPACER | |
| 100 | 1519790-0000 | | 1 | PLATE | |
| 110 | 1548870-0000 | | 1 | SPACER | |
| 510 | 312105-0366 | | 1 | SCREW M6S ISO 4017 M6X12 A480 | |
| 520 | 312105-0370 | | 1 | SCREW M6S ISO 4017 M6X20 A480 | |
| 560 | 312605-0316 | | 4 | HEXAGON NUT, M6M M6 A280 | |
| 880 | 90458-0429 | | 3 | HOSE GLAND W/O INSERT M20 EXTENDED | |
| 890 | 353249-0011 | | 3 | INSERT, SINGLE HOLE, EK 153/11 | |
| 900 | 90458-0306 | | 22 | CABLE GLAND, M16X1,5, NO.5311 1010 | |
| 930 | 90458-1307 | | 4 | BLIND PLUG CIRCULAR, M16X1,5 514GFK/216 | |
| 940 | 90458-1308 | | 6 | BLIND PLUG CIRCULAR, M20X1,5 514GFK/220 | |
| **A3/FLEX NODIMC (See drawing on page: 1-348)** | | | | | |
| 070 | 1548749-0000 | | 1 | PIPE | |
| 080 | 1548869-0000 | | 3 | SPACER | |
| 100 | 1519790-0000 | | 1 | PLATE | |
| 110 | 1548870-0000 | | 1 | SPACER | |
| 510 | 312105-0366 | | 1 | SCREW M6S ISO 4017 M6X12 A480 | |
| 520 | 312105-0370 | | 1 | SCREW M6S ISO 4017 M6X20 A480 | |
| 560 | 312605-0316 | | 4 | HEXAGON NUT, M6M M6 A280 | |
| 880 | 90458-0429 | | 3 | HOSE GLAND W/O INSERT M20 EXTENDED | |
| 890 | 353249-0011 | | 3 | INSERT, SINGLE HOLE, EK 153/11 | |
| 900 | 90458-0306 | | 21 | CABLE GLAND, M16X1,5, NO.5311 1010 | |
| 930 | 90458-1307 | | 5 | BLIND PLUG CIRCULAR, M16X1,5 514GFK/216 | |
| 940 | 90458-1308 | | 6 | BLIND PLUG CIRCULAR, M20X1,5 514GFK/220 | |
| **Common Parts** | | | | | |
| 010 | 2785249-0100 | | 1 | TERMINAL BLOCK ..... | **1-353** |
| 020 | 2785250-0100 | | 1 | TERMINAL BLOCK ..... | **1-355** |
| 030 | 2877756-0000 | | 1 | PROTECTION | |
| 040 | 2785247-0000 | | 1 | CONNECTION BOX | |
| 050 | 2785248-0000 | | 1 | MOUNTING PLATE | |
| 060 | 2701350-0000 | | 2 | HANDLE | |
| 090 | 1519789-0000 | | 1 | BRACKET | |
| 1000 | 90459-6636 | | 1 | HOOD 24 B TOP ENTRY, 19 30 024 0427 | |
| 1200 | 90458-0309 | | 1 | CABLE GLAND, M32X1,5, NO.5311 1040 | |
| 1300 | 90326-0022 | | 1 | PLUG, MALE YELLOW CR-AL | |
| 500 | 312105-0327 | | 4 | SCREW M6S ISO 4017 M5X12 A480 | |
| 530 | 312115-0374 | | 4 | SCREW ISO4762 M6X30 A4 80 | |
| 540 | 312125-0325 | | 9 | SCREW ISO 1207 M5X10 A4 | |
| 550 | 312125-0364 | | 6 | SCREW ISO 1207 M6X10 A4 | |
| 570 | 315105-0146 | | 9 | WASHER BRB 5,3X10 RFR | |
| 600 | 312125-0224 | | 2 | SCREW ISO 1207 M3X10 A4 | |
| 620 | 315105-0124 | | 2 | WASHER BRB 3,2X6 RFR | |
| 650 | 342767-0100 | | 2 | CONN. BULKHEAD G1/8 | |
| 660 | 342921-0113 | | 2 | STRAIGHT COUPLING,EXT.THREADED 6/4-G1/8" | |
| 670 | 359301-0110 | | 1 | BUTTON SIGN, SHORT STOP | |
| 680 | 359705-0015 | | 1 | WARNING SIGN ISO, RISK OF ELECTRIC SHOCK | |
| 750 | 486826-0001 | | 1 | SIGN "EMERGENCY STOP" | |
| 910 | 90458-0307 | | 1 | CABLE GLAND, M20X1,5, NO.5311 1020 | |
| 920 | 90458-0309 | | 1 | CABLE GLAND, M32X1,5, NO.5311 1040 | |
| 950 | 90030-0184 | | 2 | CONN. STR. GE06LRED71 | |
| 960 | 90166-0176 | MM | 180 | RUBBER HOSE | |
| 970 | 90181-0043 | MM | 290 | CABLE DUCT 15X60MM | |
| 980 | 90166-0176 | MM | 210 | RUBBER HOSE | |
| 990 | 90181-0043 | MM | 250 | CABLE DUCT 15X60MM | |
| U70B3420 | 90459-4810 | | 1 | PRESS TRANSD (DIFF) 0 - 2000PA, 2681-20C | |
| U70S3040 | 90064-0084 | | 1 | PUSH BUTTON, YELLOW | |
| U70S3170 | 90459-1917 | | 1 | CONTACT BLOCK ZBE-102 NC | |
| U70S3170 | 90458-1651 | | 1 | EMERGENCY STOP, ZB4-BS-844 ZB4-BZ-104 | |
| U70W0600 | 351150-0425 | MM | 7000 | CABLE OLFLEX 25X0,75 MM2 LIGHT/GREY | |
| U70W0900 | 90220-0034 | MM | 8000 | THERMOCABLE TEX/SITW-20F-KX 2X0,5MM2 | |
| U70W3131 | 90220-0091 | M | 8 | PAIR TWISTED CABLE 2X2X0,25MM2 | |
| U70X0600 | 90110-0056 | | 1 | MALE INSERT HAN 24 E 09 33 024 2601 | |

| Machine Type | Group Description | Used-In | Group Number | Page No |
|---|---|---|---|---|

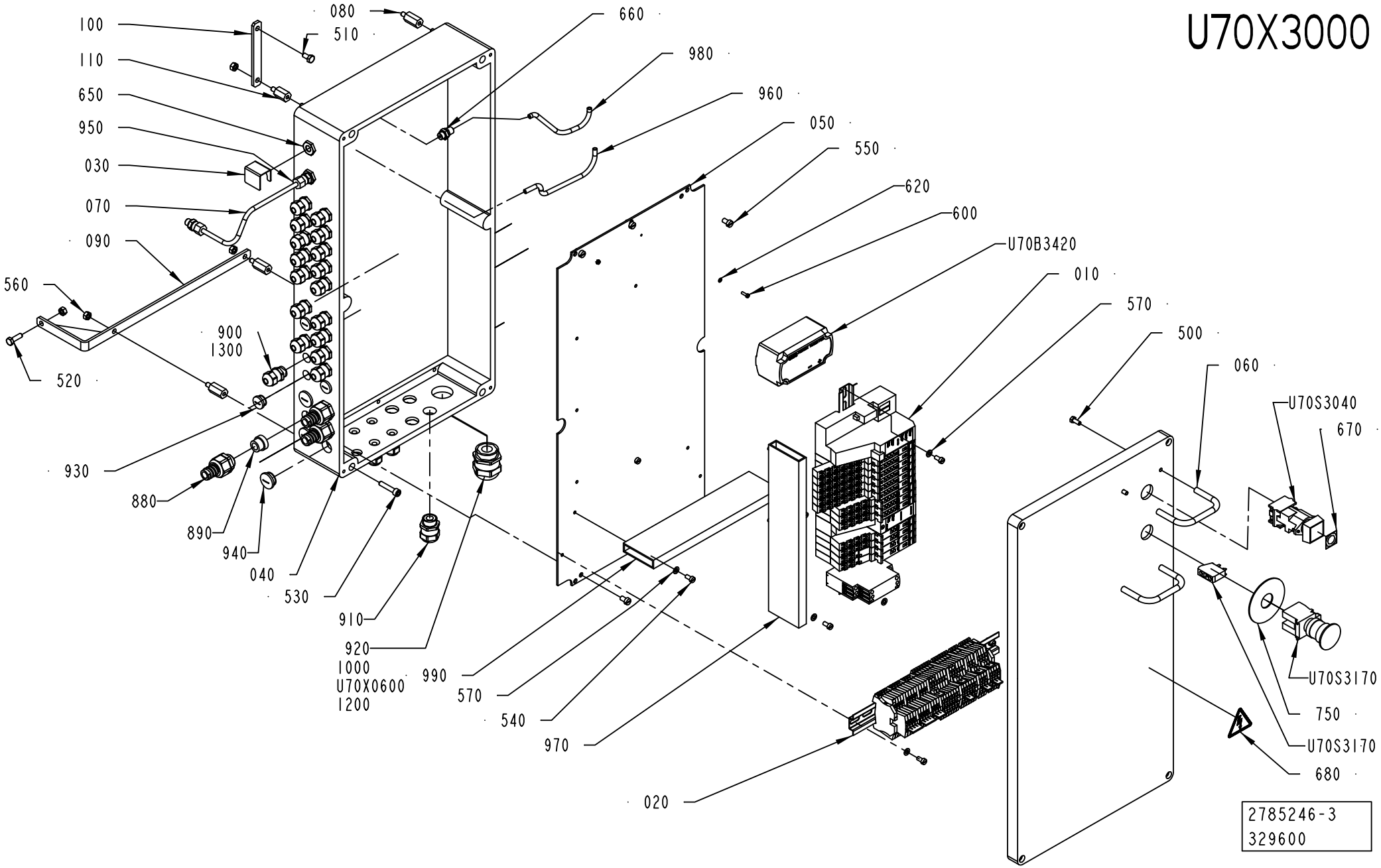
U70X3000
080
510
660
980
960
050
550
620
600
U70B3420
010
570
500
060
U70S3040
670
100
110
650
950
030
070
090
560
520
900
1300
930
880
890
940
040
530
910
920
1000
U70X0600
1200
990
570
540
970
020
U70S3170
750
U70S3170
680
2785246-3
329600

ECM: 367730 - 20081001
Group number: 2785246-0100
Assembly Drawing: 2785246-3_1_AC

This list covers pages from 1-348 to 1-351

| Pos | Part No | UN | Qty | Description | Page No |
|---|---|---|---|---|---|
| **A3/FLEX DIMC/FLEX (See drawing on page: 1-350)** | | | | | |
| 070 | 1548749-0000 | | 1 | PIPE | |
| 080 | 1548869-0000 | | 3 | SPACER | |
| 100 | 1519790-0000 | | 1 | PLATE | |
| 110 | 1548870-0000 | | 1 | SPACER | |
| 510 | 312105-0366 | | 1 | SCREW M6S ISO 4017 M6X12 A480 | |
| 520 | 312105-0370 | | 1 | SCREW M6S ISO 4017 M6X20 A480 | |
| 560 | 312605-0316 | | 4 | HEXAGON NUT, M6M M6 A280 | |
| 880 | 90458-0429 | | 3 | HOSE GLAND W/O INSERT M20 EXTENDED | |
| 890 | 353249-0011 | | 3 | INSERT, SINGLE HOLE, EK 153/11 | |
| 900 | 90458-0306 | | 22 | CABLE GLAND, M16X1,5, NO.5311 1010 | |
| 930 | 90458-1307 | | 4 | BLIND PLUG CIRCULAR, M16X1,5 514GFK/216 | |
| 940 | 90458-1308 | | 6 | BLIND PLUG CIRCULAR, M20X1,5 514GFK/220 | |
| **A3/FLEX NODIMC (See drawing on page: 1-348)** | | | | | |
| 070 | 1548749-0000 | | 1 | PIPE | |
| 080 | 1548869-0000 | | 3 | SPACER | |
| 100 | 1519790-0000 | | 1 | PLATE | |
| 110 | 1548870-0000 | | 1 | SPACER | |
| 510 | 312105-0366 | | 1 | SCREW M6S ISO 4017 M6X12 A480 | |
| 520 | 312105-0370 | | 1 | SCREW M6S ISO 4017 M6X20 A480 | |
| 560 | 312605-0316 | | 4 | HEXAGON NUT, M6M M6 A280 | |
| 880 | 90458-0429 | | 3 | HOSE GLAND W/O INSERT M20 EXTENDED | |
| 890 | 353249-0011 | | 3 | INSERT, SINGLE HOLE, EK 153/11 | |
| 900 | 90458-0306 | | 21 | CABLE GLAND, M16X1,5, NO.5311 1010 | |
| 930 | 90458-1307 | | 5 | BLIND PLUG CIRCULAR, M16X1,5 514GFK/216 | |
| 940 | 90458-1308 | | 6 | BLIND PLUG CIRCULAR, M20X1,5 514GFK/220 | |
| **Common Parts** | | | | | |
| 010 | 2785249-0100 | | 1 | TERMINAL BLOCK ..... | **1-353** |
| 020 | 2785250-0100 | | 1 | TERMINAL BLOCK ..... | **1-355** |
| 030 | 2877756-0000 | | 1 | PROTECTION | |
| 040 | 2785247-0000 | | 1 | CONNECTION BOX | |
| 050 | 2785248-0000 | | 1 | MOUNTING PLATE | |
| 060 | 2701350-0000 | | 2 | HANDLE | |
| 090 | 1519789-0000 | | 1 | BRACKET | |
| 1000 | 90459-6636 | | 1 | HOOD 24 B TOP ENTRY, 19 30 024 0427 | |
| 1200 | 90458-0309 | | 1 | CABLE GLAND, M32X1,5, NO.5311 1040 | |
| 1300 | 90326-0022 | | 1 | PLUG, MALE YELLOW CR-AL | |
| 500 | 312105-0327 | | 4 | SCREW M6S ISO 4017 M5X12 A480 | |
| 530 | 312115-0374 | | 4 | SCREW ISO4762 M6X30 A4 80 | |
| 540 | 312125-0325 | | 9 | SCREW ISO 1207 M5X10 A4 | |
| 550 | 312125-0364 | | 6 | SCREW ISO 1207 M6X10 A4 | |
| 570 | 315105-0146 | | 9 | WASHER BRB 5,3X10 RFR | |
| 600 | 312125-0224 | | 2 | SCREW ISO 1207 M3X10 A4 | |
| 620 | 315105-0124 | | 2 | WASHER BRB 3,2X6 RFR | |
| 650 | 342767-0100 | | 2 | CONN. BULKHEAD G1/8 | |
| 660 | 342921-0113 | | 2 | STRAIGHT COUPLING,EXT.THREADED 6/4-G1/8" | |
| 670 | 359301-0110 | | 1 | BUTTON SIGN, SHORT STOP | |
| 680 | 359705-0015 | | 1 | WARNING SIGN ISO, RISK OF ELECTRIC SHOCK | |
| 750 | 486826-0001 | | 1 | SIGN "EMERGENCY STOP" | |
| 910 | 90458-0307 | | 1 | CABLE GLAND, M20X1,5, NO.5311 1020 | |
| 920 | 90458-0309 | | 1 | CABLE GLAND, M32X1,5, NO.5311 1040 | |
| 950 | 90030-0184 | | 2 | CONN. STR. GE06LRED71 | |
| 960 | 90166-0176 | MM | 180 | RUBBER HOSE | |
| 970 | 90181-0043 | MM | 290 | CABLE DUCT 15X60MM | |
| 980 | 90166-0176 | MM | 210 | RUBBER HOSE | |
| 990 | 90181-0043 | MM | 250 | CABLE DUCT 15X60MM | |
| U70B3420 | 90459-4810 | | 1 | PRESS TRANSD (DIFF) 0 - 2000PA, 2681-20C | |
| U70S3040 | 90064-0084 | | 1 | PUSH BUTTON, YELLOW | |
| U70S3170 | 90459-1917 | | 1 | CONTACT BLOCK ZBE-102 NC | |
| U70S3170 | 90458-1651 | | 1 | EMERGENCY STOP, ZB4-BS-844 ZB4-BZ-104 | |
| U70W0600 | 351150-0425 | MM | 7000 | CABLE OLFLEX 25X0,75 MM2 LIGHT/GREY | |
| U70W0900 | 90220-0034 | MM | 8000 | THERMOCABLE TEX/SITW-20F-KX 2X0,5MM2 | |
| U70W3131 | 90220-0091 | M | 8 | PAIR TWISTED CABLE 2X2X0,25MM2 | |
| U70X0600 | 90110-0056 | | 1 | MALE INSERT HAN 24 E 09 33 024 2601 | |

| Machine Type | Group Description | Used-In | Group Number | Page No |
|---|---|---|---|---|

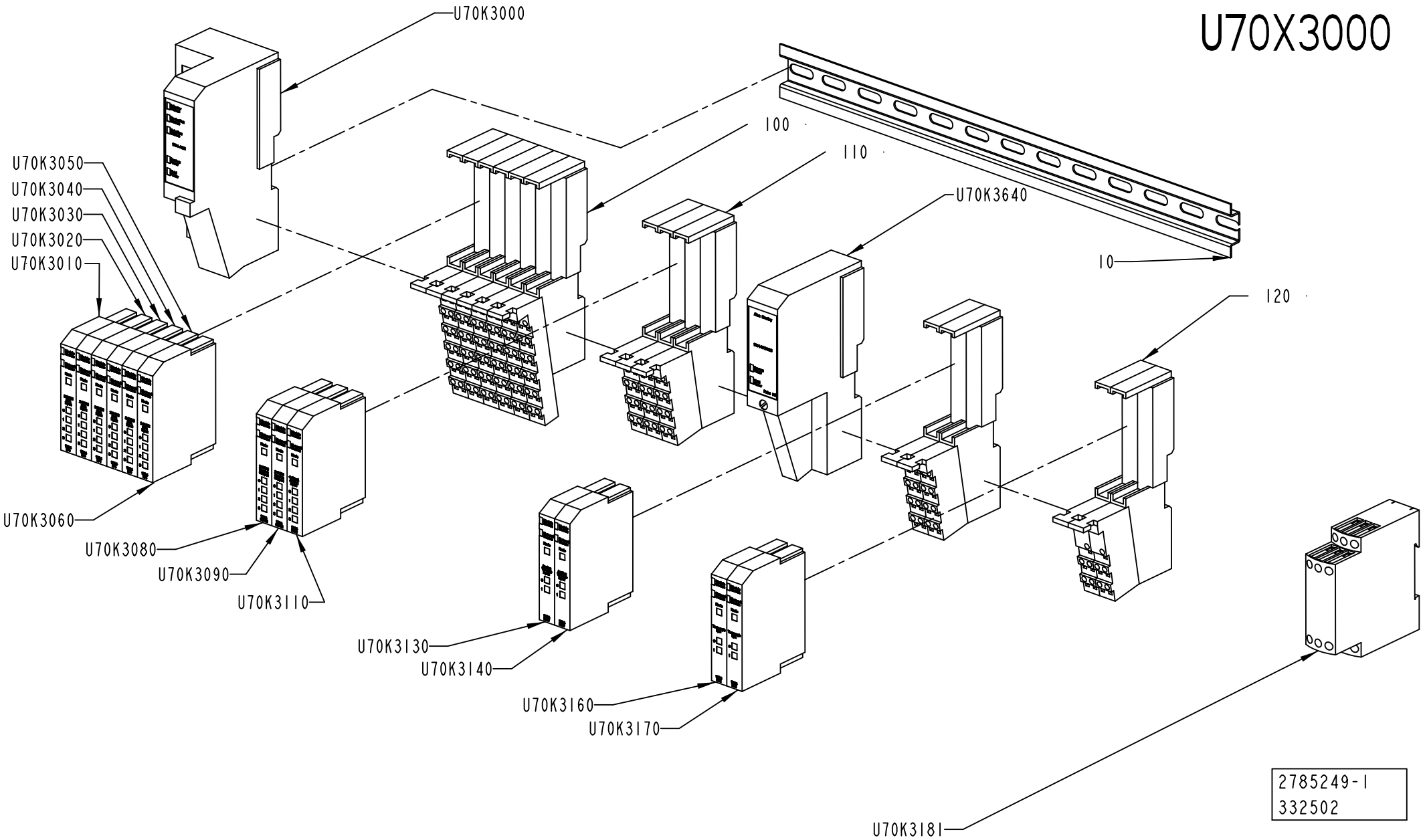
U70X3000
U70K3000
100
110
U70K3640
10
120
U70K3050
U70K3040
U70K3030
U70K3020
U70K3010
U70K3060
U70K3080
U70K3090
U70K3110
U70K3130
U70K3140
U70K3160
U70K3170
U70K3181
2785249-1
332502

ECM: 343136 - 20080410
Group number: 2785249-0100
Assembly Drawing: 2785249-1_1_AB

| Pos | Part No | UN | Qty | Description | Page No |
|---|---|---|---|---|---|
| - | | | | | |
| 010 | 353042-0005 | MM | 350 | RAIL TS 35/7.5 | |
| 100 | 90459-2527 | | 6 | REMOTE I/O BASE MODULE 12 POINTS | |
| 110 | 90459-2526 | | 5 | REMOTE I/O BASE MODULE 8 POINTS, 1734-TB | |
| 120 | 90459-2528 | | 2 | REMOTE I/O BASE MODULE FOR THERMOCOUPLE | |
| U70K3000 | 90459-2494 | | 1 | DEVICENET I/O ADAPTER MODULE, 1734-ADN | |
| U70K3010 | 90459-2503 | | 1 | DIGITAL INPUT 4 PTS SINK, 1734-IB4 | |
| U70K3020 | 90459-2503 | | 1 | DIGITAL INPUT 4 PTS SINK, 1734-IB4 | |
| U70K3030 | 90459-2503 | | 1 | DIGITAL INPUT 4 PTS SINK, 1734-IB4 | |
| U70K3040 | 90459-2503 | | 1 | DIGITAL INPUT 4 PTS SINK, 1734-IB4 | |
| U70K3050 | 90459-2503 | | 1 | DIGITAL INPUT 4 PTS SINK, 1734-IB4 | |
| U70K3060 | 90459-2503 | | 1 | DIGITAL INPUT 4 PTS SINK, 1734-IB4 | |
| U70K3080 | 90459-2505 | | 1 | DIGITAL OUTPUT 4 PTS, 1734-OB4E | |
| U70K3090 | 90459-2505 | | 1 | DIGITAL OUTPUT 4 PTS, 1734-OB4E | |
| U70K3110 | 90459-2509 | | 1 | REMOTE I/O ANALOG INPUT CURRENT 2 PTS | |
| U70K3130 | 90459-2508 | | 1 | REMOTE I/O ANALOG INPUT VOLTAGE 2 PTS | |
| U70K3140 | 90459-2508 | | 1 | REMOTE I/O ANALOG INPUT VOLTAGE 2 PTS | |
| U70K3160 | 90459-2512 | | 1 | REMOTE I/O THERMOCOUPLE INPUT 2 PTS | |
| U70K3170 | 90459-2512 | | 1 | REMOTE I/O THERMOCOUPLE INPUT 2 PTS | |
| U70K3181 | 90459-2742 | | 1 | LEVEL CONTROL RELAY, RM4-LA32MW | |
| U70K3640 | 90459-2500 | | 1 | EXPANSION POWER SUPPLY MODULE | |

| Pos | Part No | UN | Qty | Description | Page No |
|---|---|---|---|---|---|

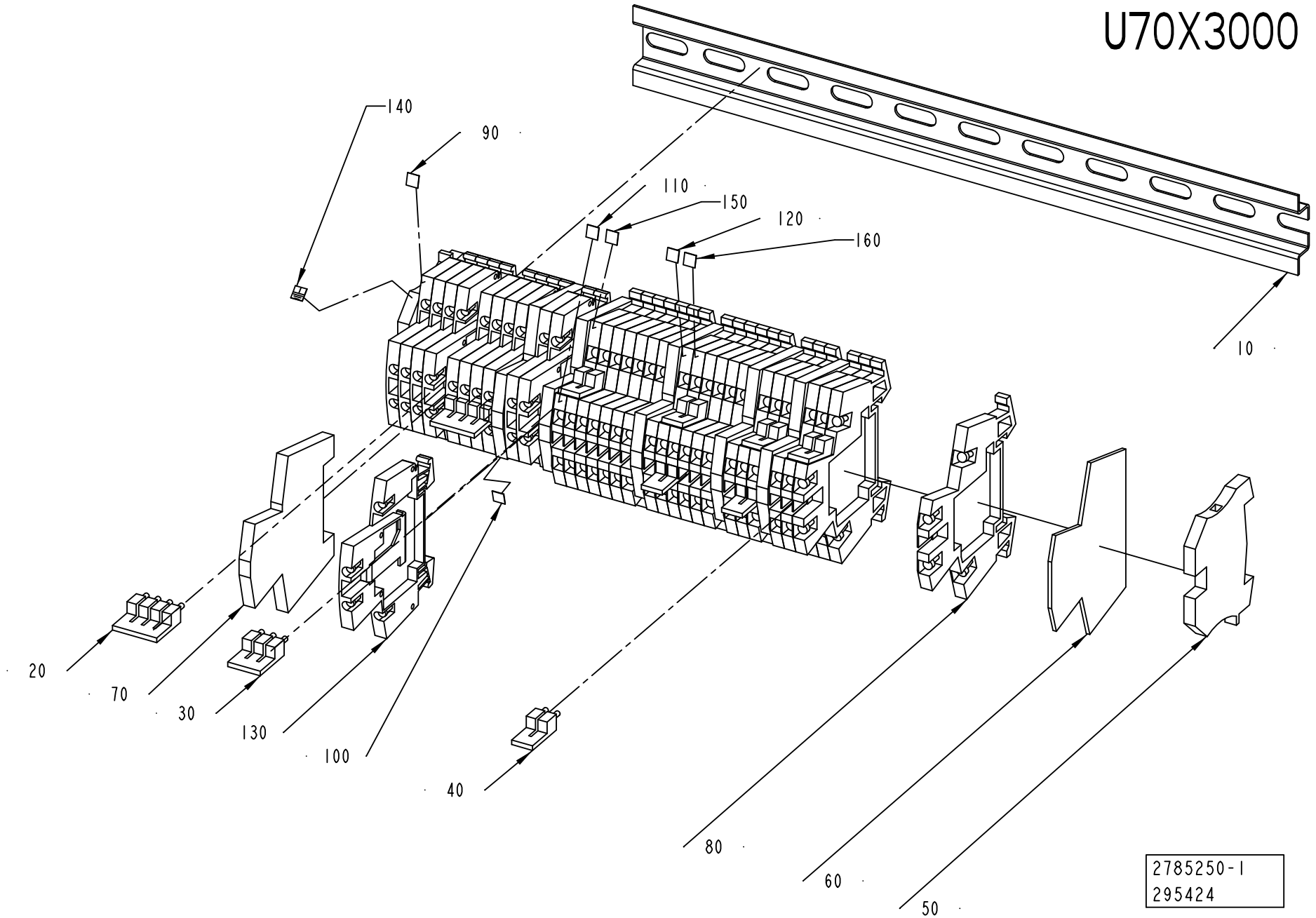
U70X3000
140
90
110
150
120
160
10
20
70
30
130
100
40
80
60
50
2785250-1
295424

ECM: 295485 - 20070704
Group number: 2785250-0100
Assembly Drawing: 2785250-1_1_AA

| Pos | Part No | UN | Qty | Description | Page No |
|---|---|---|---|---|---|
| - | | | | | |
| 010 | 353042-0005 | MM | 290 | RAIL TS 35/7.5 | |
| 020 | 353034-0030 | | 2 | BRIDGE CONNECTOR WQV 2,5/10, 10544.6 | |
| 030 | 353034-0030 | | 1 | BRIDGE CONNECTOR WQV 2,5/10, 10544.6 | |
| 040 | 353034-0030 | | 7 | BRIDGE CONNECTOR WQV 2,5/10, 10544.6 | |
| 050 | 353024-0204 | | 2 | EARTH TERMINAL WPE 2,5 | |
| 060 | 90077-0114 | | 1 | END PLATE, WAP/WDK 2,5 | |
| 070 | 353024-0212 | | 6 | EARTH TERMINAL, 10363.0 | |
| 080 | 90077-0113 | | 20 | FEED THROUGH TERMINAL, 10-00102150-1 | |
| 090 | 359011-0807 | | 1 | MARKING PLATES 5-FW 1-50 | |
| 100 | 359011-0808 | | 1 | MARKING PLATES 5-FW 51-100 | |
| 110 | 359011-0810 | | 2 | MARKING PLATES 5-FW 151-200 | |
| 120 | 359011-0812 | | 2 | SET OF SIGNS 5-FW 251-300 | |
| 130 | 90457-0049 | | 11 | TERMINAL BLOCK WDK 2.5V, 102230 | |
| 150 | 359011-0809 | | 2 | MARKING PLATES 5-FW 101-150 | |
| 160 | 359011-0811 | | 2 | MARKING PLATES 5-FW 201-2 | |

| Pos | Part No | UN | Qty | Description | Page No |
|---|---|---|---|---|---|

Tetra Pak

# SPC
## Spare Parts Catalogue

# MACHINE BODY



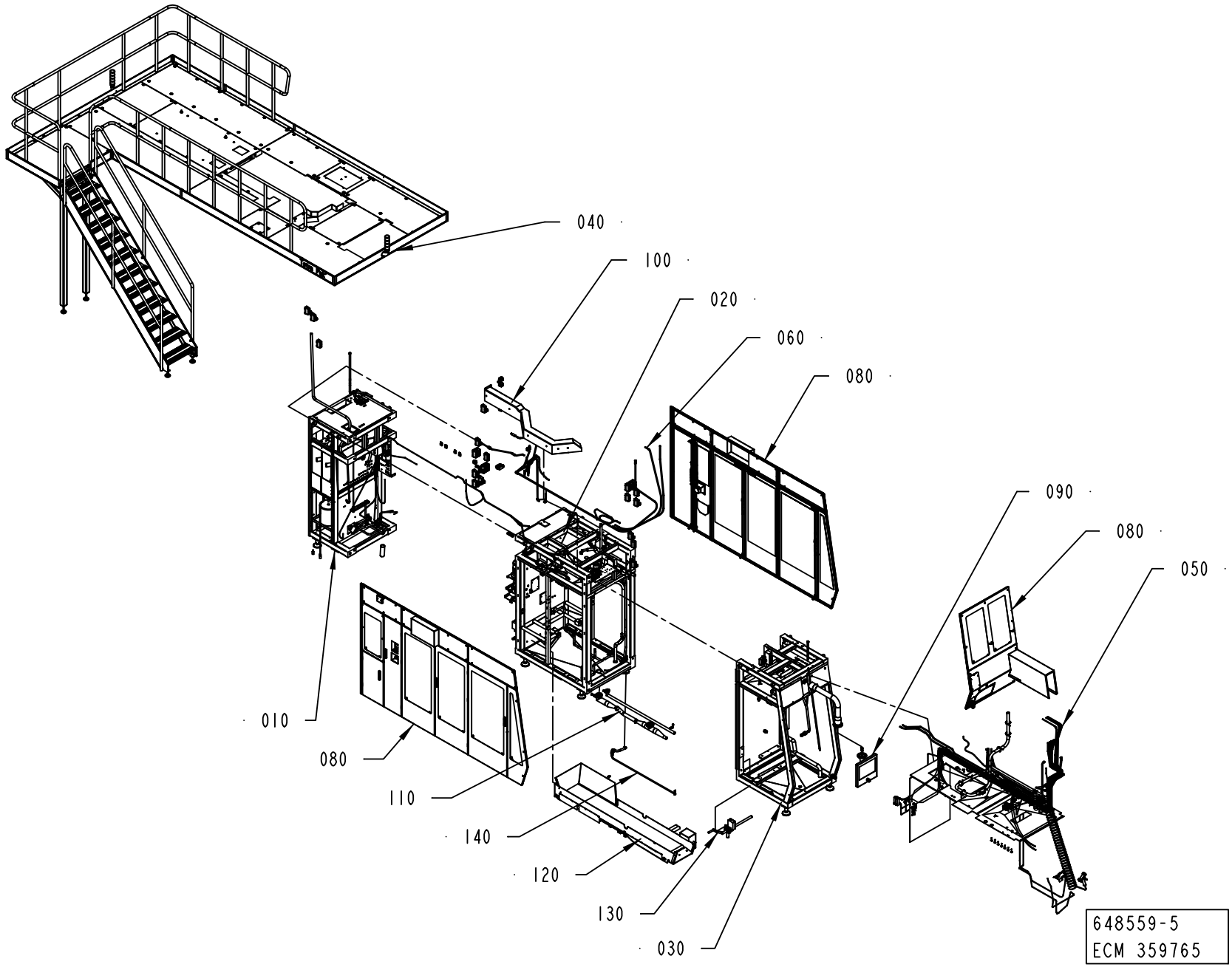

ECM: 360866 - 20080624
Group number: 648559-0300
Assembly Drawing: 648559-5_1_AC

| Pos | Part No | UN | Qty | Description | Page No |
|---|---|---|---|---|---|
| - | | | | | |
| 010 | 2504779-0200 | | 1 | REAR MODULE | **2-5, 2-7** |
| 020 | 2504785-0300 | | 1 | CENTRAL MODULE | **2-65** |
| 030 | 2504793-0200 | | 1 | FRONT MODULE | **2-115** |
| 040 | 2550139-0200 | | 1 | PLATFORM | **2-149, 2-151, 2-153, 2-155** |
| 050 | 2504917-0200 | | 1 | PIPE WORK-WATER | **2-181** |
| 060 | 2504918-0200 | | 1 | PNEUMATIC SYSTEM | **2-197** |
| 080 | 2504920-0200 | | 1 | DOORS AND COVERS | **2-199** |
| 090 | 2980539-0100 | | 1 | TPOP PANEL 15 INCH | **2-239** |
| 100 | 2504791-0200 | | 1 | CABLE DUCT | **2-241** |
| 110 | 2786750-0200 | | 1 | DRAINING | **2-243** |
| 120 | 2930255-0100 | | 1 | WASTE CONVEYOR | **2-245** |
| 130 | 2932047-0100 | | 1 | HAND CRANK | **2-247** |
| 140 | 2968215-0100 | | 1 | DRAINING | **2-249** |

| Pos | Part No | UN | Qty | Description | Page No |
|---|---|---|---|---|---|

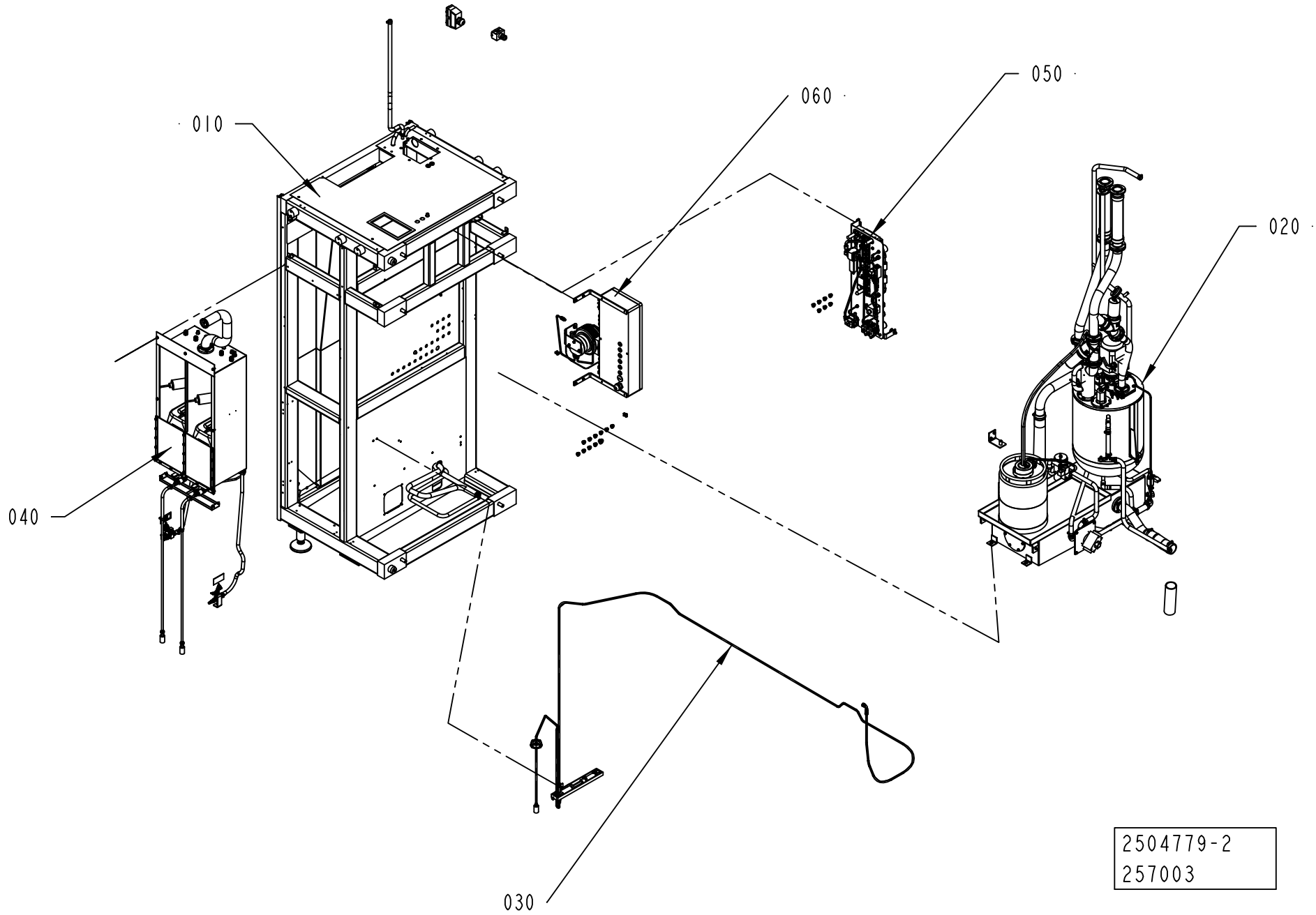
010
020
030
040
050
060
2504779-2
257003

ECM: 257016 - 20070628
Group number: 2504779-0200
Assembly Drawing: 2504779-2_1_AA

This list covers pages from 2-4 to 2-7

| Pos | Part No | UN | Qty | Description | Page No |
|---|---|---|---|---|---|
| - | | | | | |
| 010 | 2504780-0200 | | 1 | MACHINE BODY | **2-9** |
| 020 | 2504781-0200 | | 1 | HYDROGEN PEROXIDE | **2-15** |
| 030 | 2504782-0200 | | 1 | CHEMICALS | **2-37** |
| 040 | 2544326-0200 | | 1 | INTEGRATED CLEANING UNIT | **2-39** |
| 050 | 2528457-0200 | | 1 | PNEUMATIC SYSTEM | **2-43** |
| 070 | 2528455-0200 | | 1 | ELECTRIC EQUIPMENT | **2-53** |

| Pos | Part No | UN | Qty | Description | Page No |
|---|---|---|---|---|---|

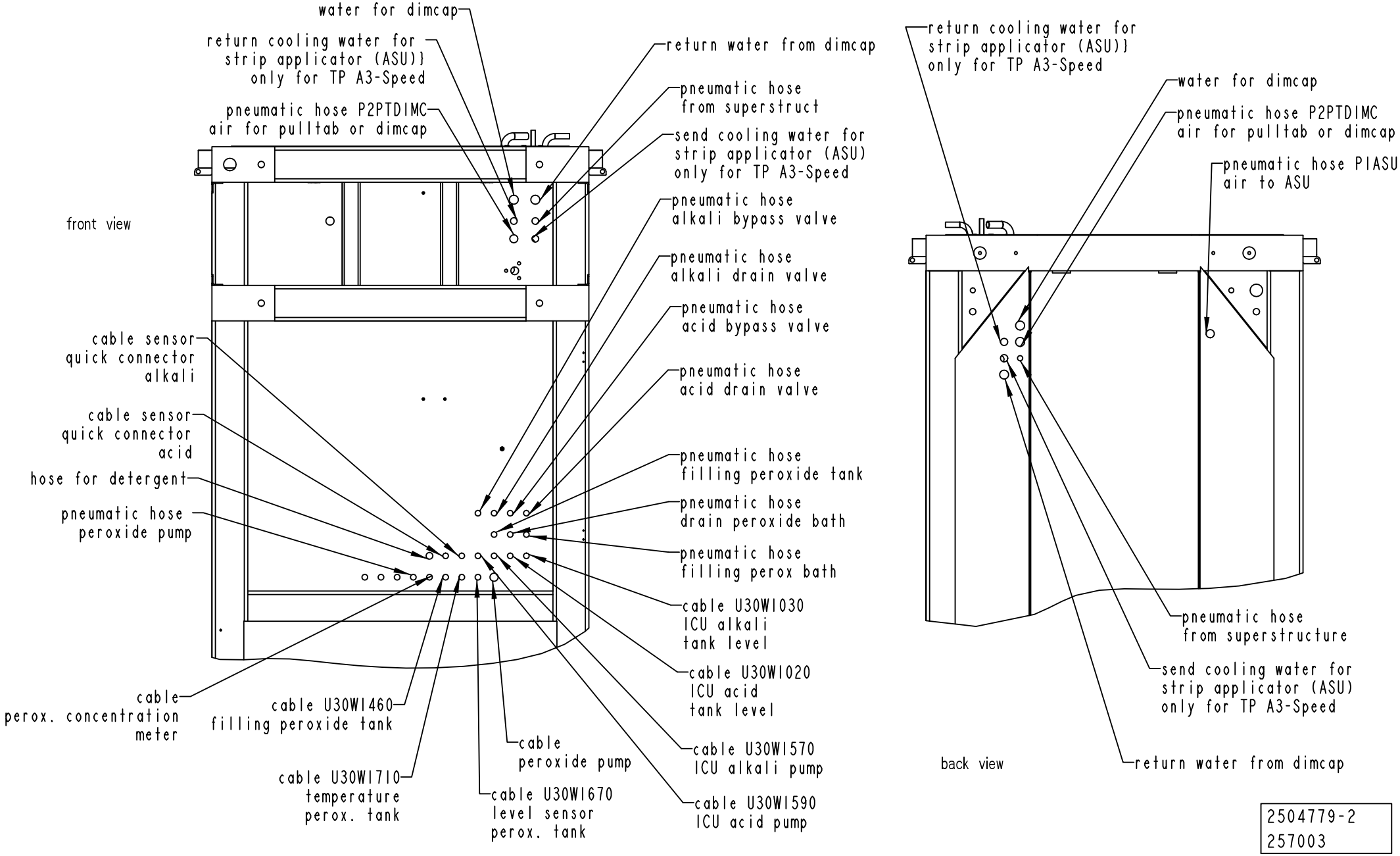


2504779-2
257003

ECM: 257016 - 20070628
Group number: 2504779-0200
Assembly Drawing: 2504779-2_2_AA

This list covers pages from 2-4 to 2-7

| Pos | Part No | UN | Qty | Description | Page No |
|---|---|---|---|---|---|
| - | | | | | |
| 010 | 2504780-0200 | | 1 | MACHINE BODY | **2-9** |
| 020 | 2504781-0200 | | 1 | HYDROGEN PEROXIDE | **2-15** |
| 030 | 2504782-0200 | | 1 | CHEMICALS | **2-37** |
| 040 | 2544326-0200 | | 1 | INTEGRATED CLEANING UNIT | **2-39** |
| 050 | 2528457-0200 | | 1 | PNEUMATIC SYSTEM | **2-43** |
| 070 | 2528455-0200 | | 1 | ELECTRIC EQUIPMENT | **2-53** |

| Pos | Part No | UN | Qty | Description | Page No |
|---|---|---|---|---|---|

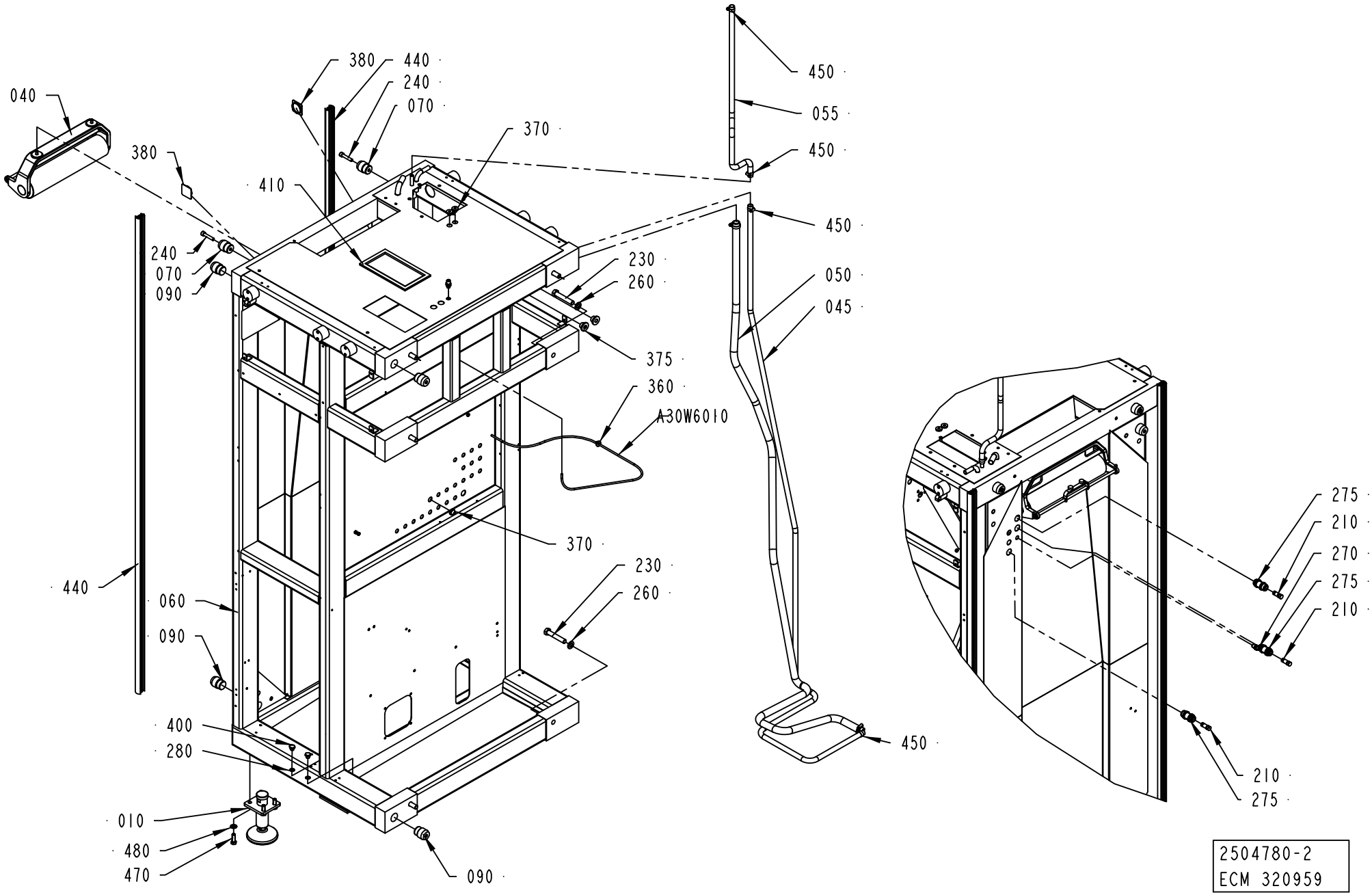
040
380
440
240
070
370
410
450
055
450
450
240
070
090
230
260
050
045
375
360
A30W6010
370
230
260
440
060
090
400
280
010
480
470
090
450
275
210
270
275
210
210
275
2504780-2
ECM 320959

ECM: 356859 - 20080528
Group number: 2504780-0200
Assembly Drawing: 2504780-2_1_AB

| Pos | Part No | UN | Qty | Description | Page No |
|---|---|---|---|---|---|
| - | | | | | |
| 010 | 90600-0725 | | 2 | FOOT 25000N, R0772 611223 | |
| 040 | 2504784-0200 | | 1 | BENDING ROLLER | **2-11** |
| 045 | 90166-0121 | MM | 3200 | HOSE | |
| 050 | 2514204-0100 | | 1 | DRAINING | **2-13** |
| 055 | 90166-0121 | MM | 2100 | HOSE | |
| 060 | 2806368-0000 | | 1 | MACHINE BODY | |
| 070 | 591341-0000 | | 2 | PIN | |
| 090 | 2506636-0000 | | 4 | PIN | |
| 100 | 90015-0023 | | 2 | LEAD-IN, TET7-10, E-1458019 | |
| 210 | 342715-0106 | | 3 | BLIND PLUG 14 MM | |
| 230 | 312105-0638 | | 6 | SCREW M6S ISO 4014 M16X90 A480 | |
| 240 | 312115-0501 | | 2 | SCREW ISO4762 M10X50 A4 80 | |
| 260 | 315105-0186 | | 6 | WASHER BRB 17X30 RFR | |
| 270 | 342768-0102 | | 2 | BULKHEAD CONNECTOR, 6 MM | |
| 275 | 342768-0110 | | 3 | BULKHEAD CONNECTOR, 14 MM | |
| 280 | 315237-0110 | | 2 | WASHER,PL.RND.AL.13,5/18,H=1,5 | |
| 360 | 90015-0020 | | 1 | LEAD-IN, TET5-7, E-1458016 | |
| 370 | 90015-0023 | | 1 | LEAD-IN, TET7-10, E-1458019 | |
| 375 | 90015-0022 | | 2 | LEAD-IN, TET14-20, E-1458029 | |
| 380 | 90261-0070 | | 2 | PLASTIC PLUG SS 0082.31 | |
| 400 | 90330-0026 | | 2 | PLUG, EXT. G-THREAD, G1/4 | |
| 410 | 90143-0097 | MM | 700 | SELF GRIPPING GASKET, 1011-24 | |
| 440 | 90459-1009 | MM | 4500 | RUBBER STRIP, 1025088988 | |
| 450 | 342991-0102 | | 4 | HOSE CLIP,WORM DRIVE TYPE (16)-19 | |
| 470 | 312105-0538 | | 8 | SCREW M6S ISO 4017 M12X35 A480 | |
| 480 | 315105-0178 | | 8 | WASHER BRB 13X24 RFR | |
| A30W6010 | 90166-0081 | MM | 1320 | TUBE 6 MM PA BLUE | |

| Pos | Part No | UN | Qty | Description | Page No |
|---|---|---|---|---|---|

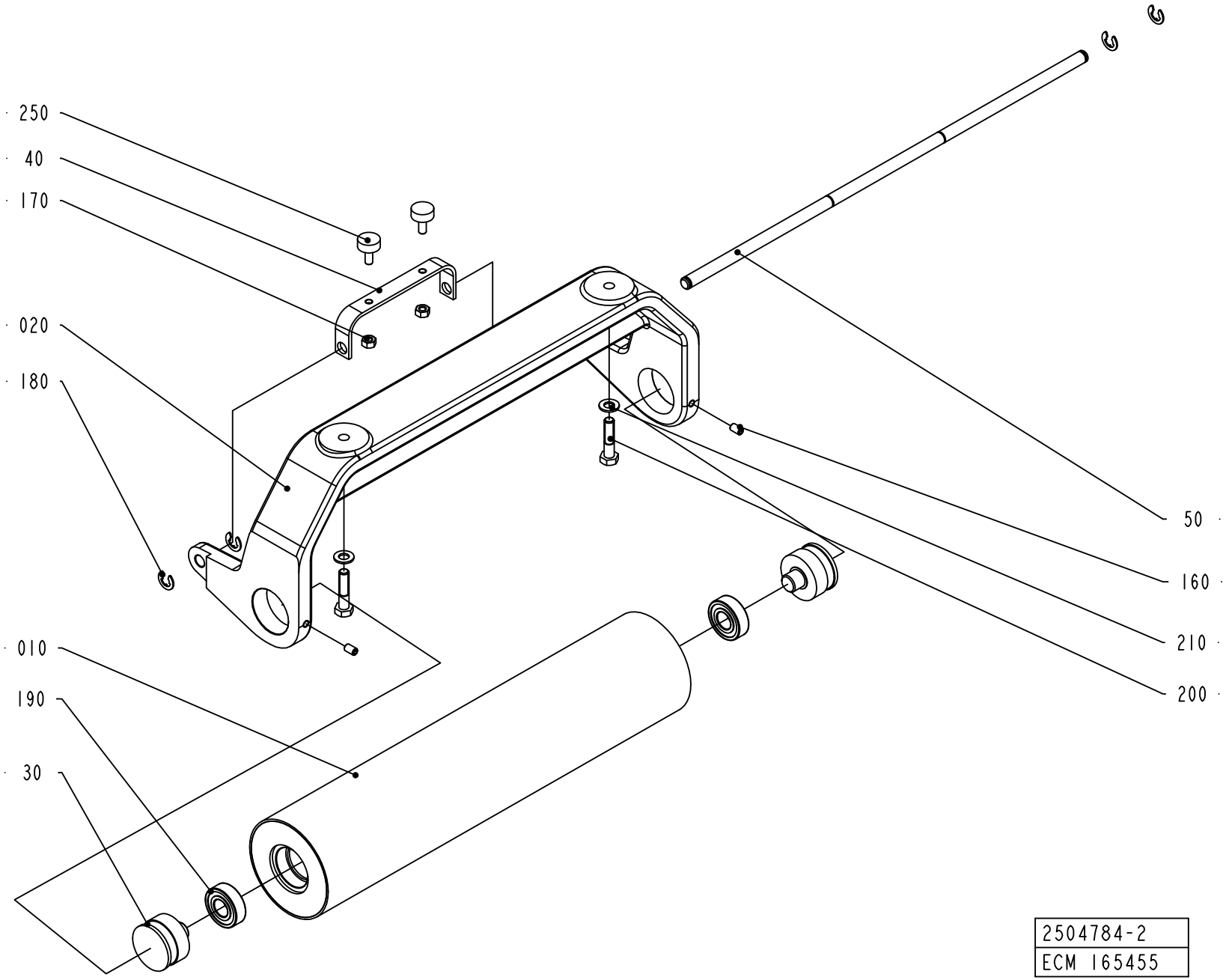
250
40
170
020
180
010
190
30
50
160
210
200
2504784-2
ECM 165455

ECM: 272523 - 20080403
Group number: 2504784-0200
Assembly Drawing: 2504784-2_1_AA

| Pos | Part No | UN | Qty | Description | Page No |
|---|---|---|---|---|---|
| - | | | | | |
| 010 | 2605877-0000 | | 1 | BENDING ROLLER | |
| 020 | 2605879-0000 | | 1 | CANTILEVER | |
| 030 | 1037012-0000 | | 2 | AXLE PIN | |
| 040 | 1041603-0000 | | 1 | BRACKET | |
| 050 | 2605880-0000 | | 1 | SHAFT | |
| 160 | 312318-0364 | | 2 | SCREW ISO4029 M6X10 A4 | |
| 170 | 312605-0316 | | 2 | HEXAGON NUT, M6M M6 A280 | |
| 180 | 315755-0801 | | 4 | RETAINING RING SHAFT DIN 6799 8 A2 | |
| 190 | 321313-0102 | | 2 | BALL BEARING, 15X35X11 MM | |
| 200 | 312105-0457 | | 2 | SCREW M6S ISO 4014 M8X35 A480 | |
| 210 | 315105-0165 | | 2 | WASHER BRB 8,4X16 RFR | |
| 250 | 90347-0007 | | 2 | VIBRATION DAMPER | |

| Pos | Part No | UN | Qty | Description | Page No |
|---|---|---|---|---|---|

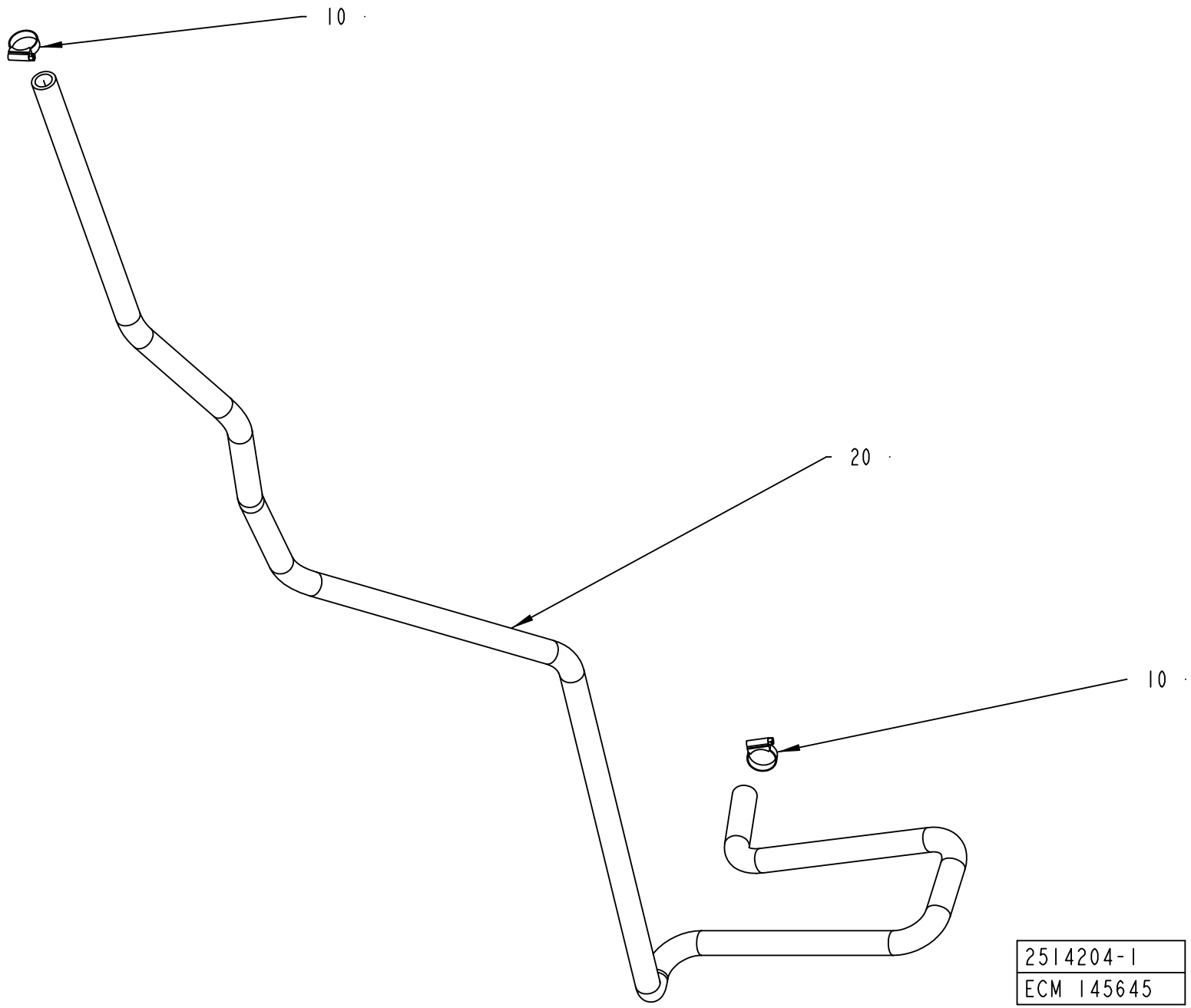
10
20
10
2514204-1
ECM 145645

ECM: 189743 - 20041104
Group number: 2514204-0100
Assembly Drawing: 2514204-1_1_AB

| Pos | Part No | UN | Qty | Description | Page No |
|---|---|---|---|---|---|
| **A3/FLEX** | | | | | |
| 020 | 90166-0060 | MM | 2450 | HOSE 19/26-27 REINF.PVC | |
| **Common Parts** | | | | | |
| 010 | 342991-0105 | | 2 | HOSE CLIP,WORM DRIVE TYPE (27)-30 | |

| Pos | Part No | UN | Qty | Description | Page No |
|---|---|---|---|---|---|

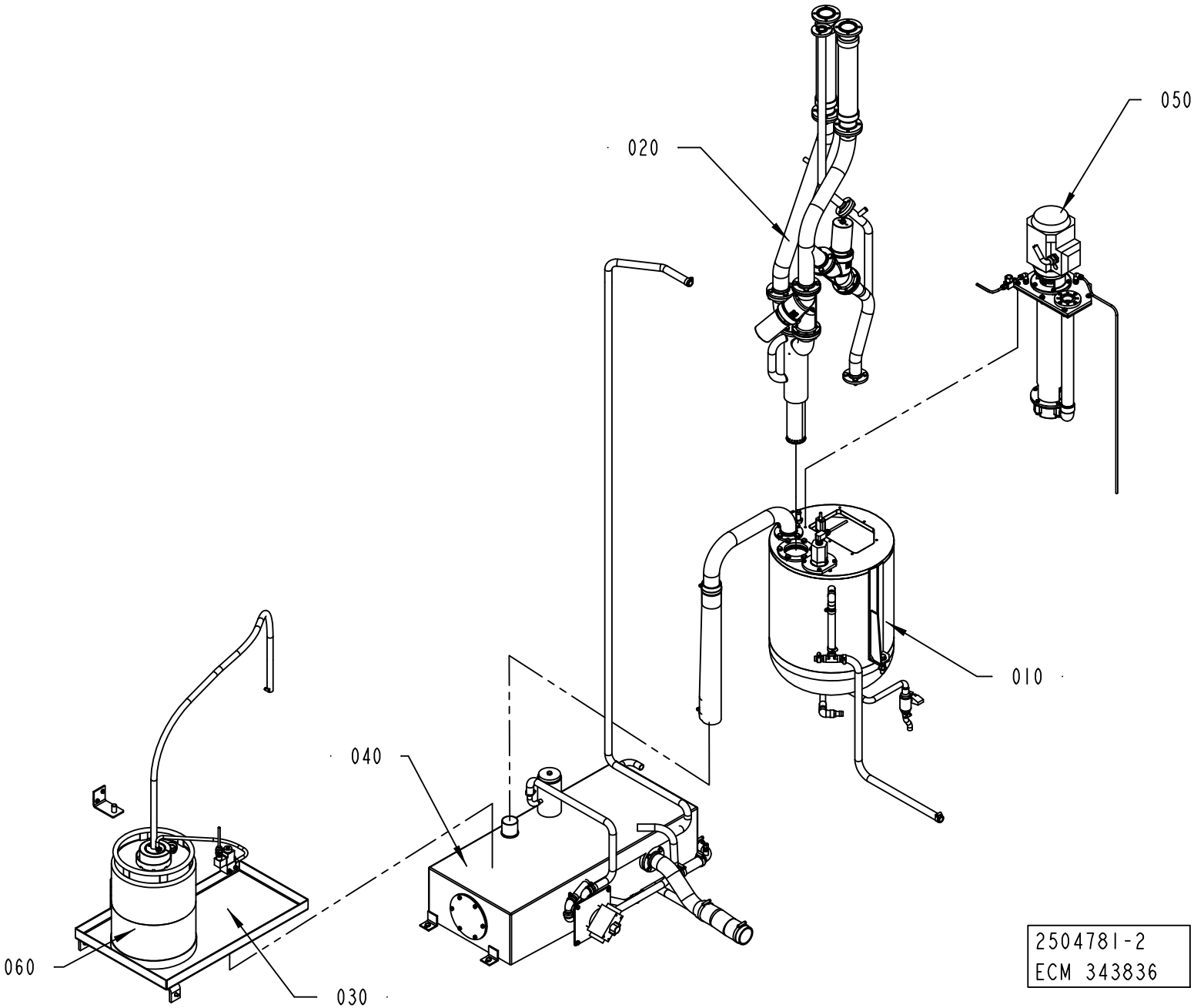
020
050
010
040
060
030
2504781-2
ECM 343836

ECM: 343842 - 20080307
Group number: 2504781-0200
Assembly Drawing: 2504781-2_1_AB

| Pos | Part No | UN | Qty | Description | Page No |
|---|---|---|---|---|---|
| - | | | | | |
| 010 | 1282894-0200 | | 1 | PEROXIDE TANK | **2-17, 2-19** |
| 020 | 1282895-0300 | | 1 | PEROXIDE PIPE | **2-23** |
| 030 | 2506637-0200 | | 1 | AIR PIPE-LINE | **2-25** |
| 040 | 1282896-0200 | | 1 | TANK | **2-27** |
| 050 | 996388-0700 | | 1 | PEROXIDE PUMP | **2-33** |
| 060 | 527898-0100 | | 1 | MKS CONTAINER H2O2 | **2-35** |

| Pos | Part No | UN | Qty | Description | Page No |
|---|---|---|---|---|---|

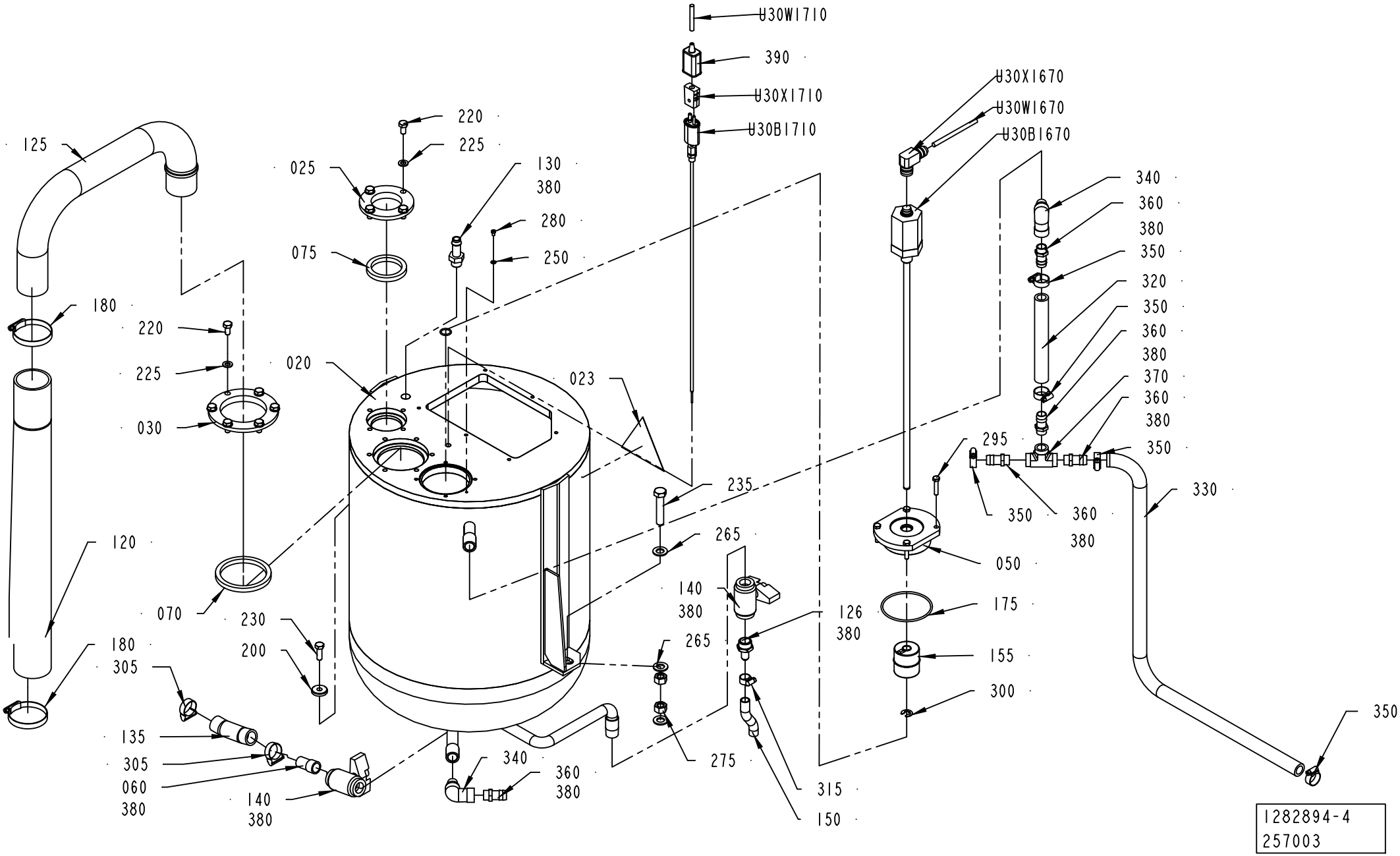
U30W1710
390
U30X1710
U30B1710
U30X1670
U30W1670
U30B1670
220
225
025
130
380
280
250
075
125
180
220
225
030
020
023
340
360
380
350
320
350
360
380
370
360
380
350
295
330
235
265
120
070
230
200
140
380
265
126
380
050
175
155
300
180
305
135
305
060
380
140
380
340
360
380
275
315
150
350
1282894-4
257003

ECM: 355847 - 20080528
Group number: 1282894-0200
Assembly Drawing: 1282894-4_1_AA

This list covers pages from 2-16 to 2-19

| Pos | Part No | UN | Qty | Description | Page No |
|---|---|---|---|---|---|
| **A3/FLEX NO PEROXIDE DILUTION (See drawing on page: 2-16)** | | | | | |
| 130 | 90055-0051 | | 1 | HOSE NIPPLE, EXT.THR. R3/8X13 MM | |
| **A3/FLEX PEROXIDE DILUTION (See drawing on page: 2-18)** | | | | | |
| 127 | 2623721-0200 | | 1 | PEROXIDE REDUCER ..... | **2-21** |
| **Common Parts** | | | | | |
| 020 | 2862301-0000 | | 1 | PEROXIDE TANK | |
| 023 | 359705-0004 | | 1 | WARNING SIGN ISO, DANGEROUS CHEMICALS | |
| 025 | 1040840-0000 | | 1 | FLANGE | |
| 030 | 1040841-0000 | | 1 | FLANGE | |
| 050 | 1558327-0000 | | 1 | LID | |
| 060 | 1037102-0000 | | 1 | SPACER PIPE | |
| 070 | 1040852-0000 | | 1 | SEALING RING | |
| 075 | 1040853-0000 | | 1 | SEALING RING | |
| 120 | 1282899-0000 | | 1 | HOSE | |
| 125 | 1282891-0000 | | 1 | PIPE | |
| 126 | 1282906-0000 | | 1 | NIPPLE | |
| 135 | 90166-0151 | MM | 140 | HOSE | |
| 140 | 90187-0059 | | 2 | BALL VALVE FOR HYDR.PER. G1/2 3MM HOLE | |
| 150 | 90166-0138 | MM | 85 | HOSE | |
| 155 | 90458-2358 | | 1 | FLOAT, BTL2-S-4414-4Z | |
| 175 | 927422-0016 | | 1 | O-RING 79.5X3 SILICONE | |
| 180 | 342991-0110 | | 2 | HOSE CLIP,WORM DRIVE TYPE (54)-63 | |
| 200 | 315125-0165 | | 1 | WASHER TBRSB 8,4X26X5 A4 | |
| 220 | 312105-0449 | | 10 | SCREW M6S ISO 4017 M8X16 A480 | |
| 225 | 315105-0165 | | 10 | WASHER BRB 8,4X16 RFR | |
| 230 | 312105-0453 | | 1 | SCREW M6S ISO 4017 M8X25 A480 | |
| 235 | 312109-0544 | | 1 | SCREW M6S ISO 4017 M12X60 A480 | |
| 250 | 315105-0136 | | 1 | WASHER BRB 4,3X8 RFR | |
| 265 | 315105-0178 | | 3 | WASHER BRB 13X24 RFR | |
| 275 | 312605-0322 | | 2 | HEXAGON NUT, M6M M12 A280 | |
| 280 | 312125-0285 | | 1 | SCREW ISO 1207 M4X6 A4 | |
| 295 | 312109-0374 | | 4 | SCREW M6S ISO 4017 M6X30 A480 | |
| 300 | 315755-0110 | | 1 | RETAINING RING SHAFT DIN 6799 9 A2 | |
| 305 | 342991-0104 | | 2 | HOSE CLIP,WORM DRIVE TYPE (23)-27 | |
| 315 | 342991-0101 | | 1 | HOSE CLIP,WORM DRIVE TYPE (13)-16 | |
| 320 | 90166-0087 | MM | 170 | HOSE 15/23 REINF.PVC TRANSP. | |
| 330 | 90166-0087 | MM | 950 | HOSE 15/23 REINF.PVC TRANSP. | |
| 340 | 90330-0172 | | 2 | ELBOW, 90 INT/EXT, SS-6-SE | |
| 350 | 342991-0103 | | 5 | HOSE CLIP,WORM DRIVE TYPE (19)-23 | |
| 360 | 342901-0106 | | 5 | HOSE NIPPLE, EXT.THR. R3/8-17 MM | |
| 370 | 90330-0144 | | 1 | T-PIPE, INT. THREAD, 3/8MMO-SS | |
| 380 | 90144-0073 | MM | 1 | TREBOFLON-TAPE W=13MM | |
| 390 | 90326-0012 | | 1 | PROTECTIVE COVER, T31A4618 | |
| U30B1670 | 90459-0951 | | 1 | TRANSDUCER, BTL5-A11-M0400-B-S32 | |
| U30B1710 | 1347704-0000 | | 1 | THERMOCOUPLE | |
| | *90326-0306* | | *1* | *GLAND FITTING 9041-45-KS-KR.1/8" D=4,5MM* | |
| | *1040890-0000* | | *1* | *THERMOCOUPLE* | |
| U30W1670 | 90220-0072 | MM | 2000 | SCR. CABLE 4X0,34MM2 | |
| U30W1710 | 90220-0034 | MM | 7500 | THERMOCABLE TEX/SITW-20F-KX 2X0,5MM2 | |
| U30X1670 | 90458-1595 | | 1 | CONNECTION, BKS-S 33M-00 | |
| U30X1710 | 90326-0020 | | 1 | PLUG, FEMALE YELLOW CR-AL | |

Machine Type | Group Description | Used-In | Group Number | Page No

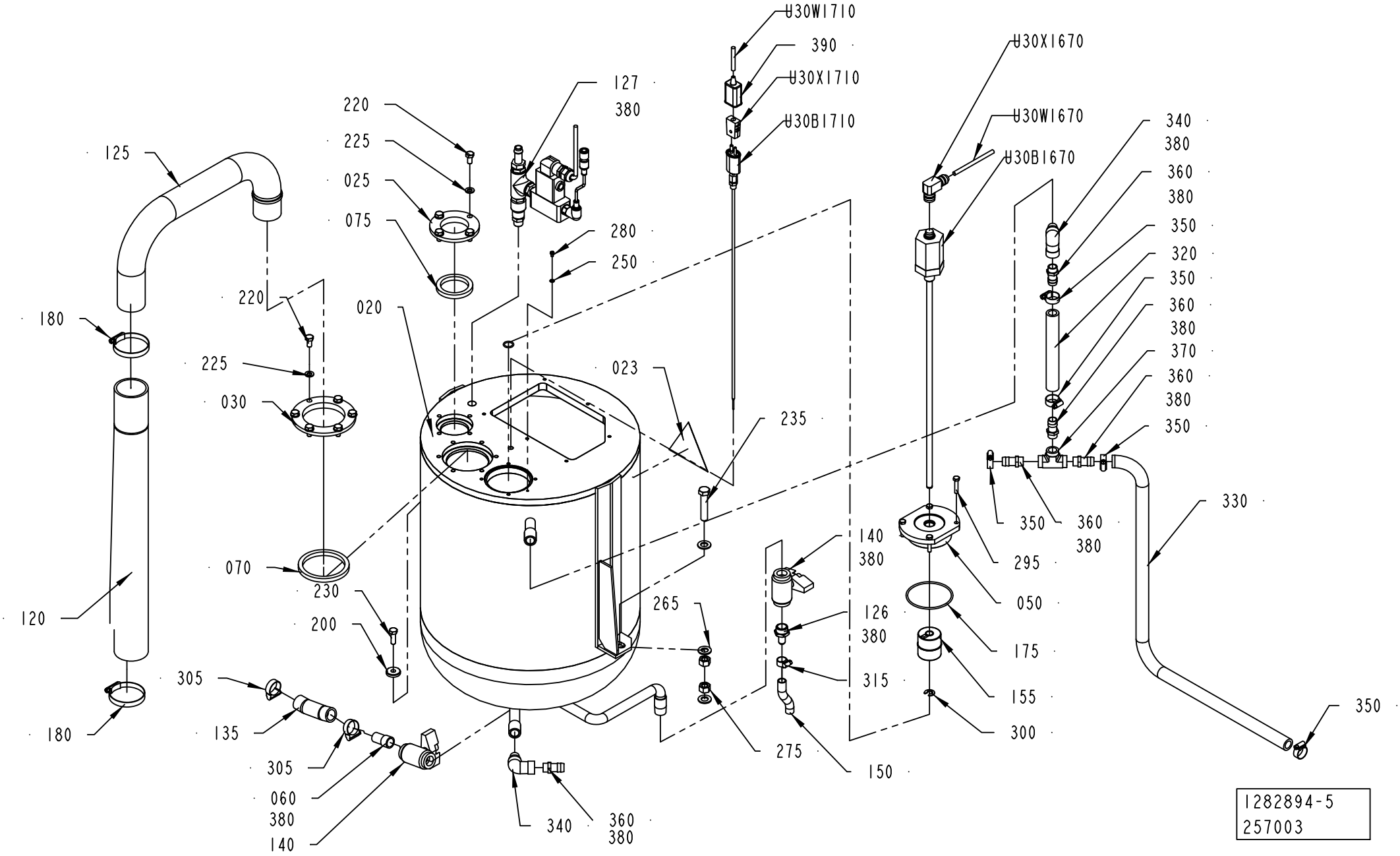
U30W1710
390
U30X1710
U30B1710
U30X1670
U30W1670
U30B1670
127
380
220
225
025
075
280
250
125
180
220
225
030
020
023
235
070
230
200
120
265
140
380
126
380
315
295
050
175
155
300
340
380
360
380
350
320
350
360
380
370
360
380
350
350
360
380
330
350
305
135
305
060
380
140
340
360
380
275
150
180
1282894-5
257003

ECM: 355847 - 20080528
Group number: 1282894-0200
Assembly Drawing: 1282894-5_1_AA

This list covers pages from 2-16 to 2-19

| Pos | Part No | UN | Qty | Description | Page No |
|---|---|---|---|---|---|
| **A3/FLEX NO PEROXIDE DILUTION (See drawing on page: 2-16)** | | | | | |
| 130 | 90055-0051 | | 1 | HOSE NIPPLE, EXT.THR. R3/8X13 MM | |
| **A3/FLEX PEROXIDE DILUTION (See drawing on page: 2-18)** | | | | | |
| 127 | 2623721-0200 | | 1 | PEROXIDE REDUCER ..... | **2-21** |
| **Common Parts** | | | | | |
| 020 | 2862301-0000 | | 1 | PEROXIDE TANK | |
| 023 | 359705-0004 | | 1 | WARNING SIGN ISO, DANGEROUS CHEMICALS | |
| 025 | 1040840-0000 | | 1 | FLANGE | |
| 030 | 1040841-0000 | | 1 | FLANGE | |
| 050 | 1558327-0000 | | 1 | LID | |
| 060 | 1037102-0000 | | 1 | SPACER PIPE | |
| 070 | 1040852-0000 | | 1 | SEALING RING | |
| 075 | 1040853-0000 | | 1 | SEALING RING | |
| 120 | 1282899-0000 | | 1 | HOSE | |
| 125 | 1282891-0000 | | 1 | PIPE | |
| 126 | 1282906-0000 | | 1 | NIPPLE | |
| 135 | 90166-0151 | MM | 140 | HOSE | |
| 140 | 90187-0059 | | 2 | BALL VALVE FOR HYDR.PER. G1/2 3MM HOLE | |
| 150 | 90166-0138 | MM | 85 | HOSE | |
| 155 | 90458-2358 | | 1 | FLOAT, BTL2-S-4414-4Z | |
| 175 | 927422-0016 | | 1 | O-RING 79.5X3 SILICONE | |
| 180 | 342991-0110 | | 2 | HOSE CLIP,WORM DRIVE TYPE (54)-63 | |
| 200 | 315125-0165 | | 1 | WASHER TBRSB 8,4X26X5 A4 | |
| 220 | 312105-0449 | | 10 | SCREW M6S ISO 4017 M8X16 A480 | |
| 225 | 315105-0165 | | 10 | WASHER BRB 8,4X16 RFR | |
| 230 | 312105-0453 | | 1 | SCREW M6S ISO 4017 M8X25 A480 | |
| 235 | 312109-0544 | | 1 | SCREW M6S ISO 4017 M12X60 A480 | |
| 250 | 315105-0136 | | 1 | WASHER BRB 4,3X8 RFR | |
| 265 | 315105-0178 | | 3 | WASHER BRB 13X24 RFR | |
| 275 | 312605-0322 | | 2 | HEXAGON NUT, M6M M12 A280 | |
| 280 | 312125-0285 | | 1 | SCREW ISO 1207 M4X6 A4 | |
| 295 | 312109-0374 | | 4 | SCREW M6S ISO 4017 M6X30 A480 | |
| 300 | 315755-0110 | | 1 | RETAINING RING SHAFT DIN 6799 9 A2 | |
| 305 | 342991-0104 | | 2 | HOSE CLIP,WORM DRIVE TYPE (23)-27 | |
| 315 | 342991-0101 | | 1 | HOSE CLIP,WORM DRIVE TYPE (13)-16 | |
| 320 | 90166-0087 | MM | 170 | HOSE 15/23 REINF.PVC TRANSP. | |
| 330 | 90166-0087 | MM | 950 | HOSE 15/23 REINF.PVC TRANSP. | |
| 340 | 90330-0172 | | 2 | ELBOW, 90 INT/EXT, SS-6-SE | |
| 350 | 342991-0103 | | 5 | HOSE CLIP,WORM DRIVE TYPE (19)-23 | |
| 360 | 342901-0106 | | 5 | HOSE NIPPLE, EXT.THR. R3/8-17 MM | |
| 370 | 90330-0144 | | 1 | T-PIPE, INT. THREAD, 3/8MMO-SS | |
| 380 | 90144-0073 | MM | 1 | TREBOFLON-TAPE W=13MM | |
| 390 | 90326-0012 | | 1 | PROTECTIVE COVER, T31A4618 | |
| U30B1670 | 90459-0951 | | 1 | TRANSDUCER, BTL5-A11-M0400-B-S32 | |
| U30B1710 | 1347704-0000 | | 1 | THERMOCOUPLE | |
| | *90326-0306* | | *1* | *GLAND FITTING 9041-45-KS-KR.1/8" D=4,5MM* | |
| | *1040890-0000* | | *1* | *THERMOCOUPLE* | |
| U30W1670 | 90220-0072 | MM | 2000 | SCR. CABLE 4X0,34MM2 | |
| U30W1710 | 90220-0034 | MM | 7500 | THERMOCABLE TEX/SITW-20F-KX 2X0,5MM2 | |
| U30X1670 | 90458-1595 | | 1 | CONNECTION, BKS-S 33M-00 | |
| U30X1710 | 90326-0020 | | 1 | PLUG, FEMALE YELLOW CR-AL | |

Machine Type | Group Description | Used-In | Group Number | Page No

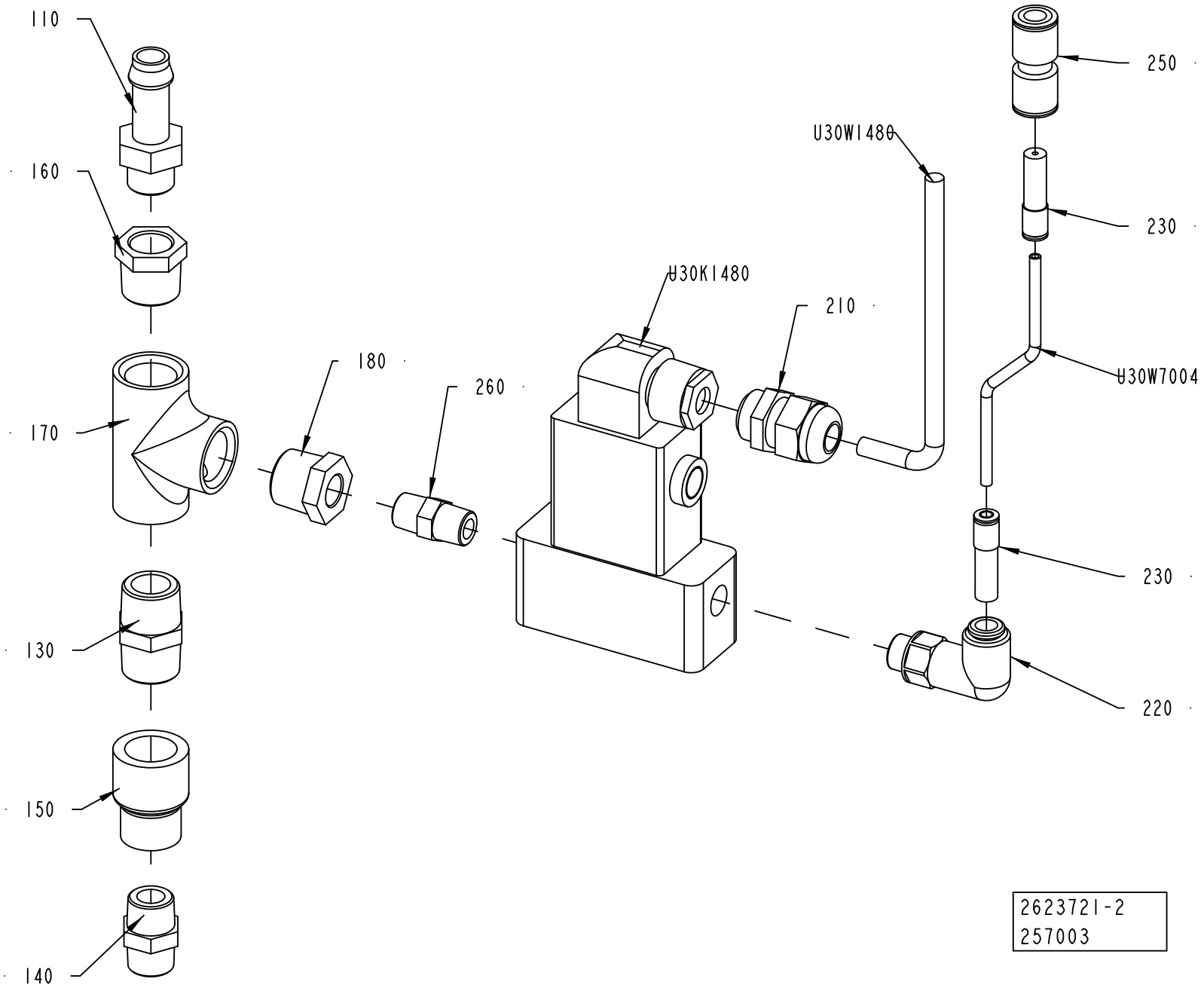
110
160
170
130
150
140
180
260
U30K1480
210
U30W1480
250
230
U30W7004
230
220
2623721-2
257003

ECM: 257015 - 20070628
Group number: 2623721-0200
Assembly Drawing: 2623721-2_1_AA

| Pos | Part No | UN | Qty | Description | Page No |
|---|---|---|---|---|---|
| - | | | | | |
| 110 | 90055-0051 | | 1 | HOSE NIPPLE, EXT.THR. R3/8X13 MM | |
| 130 | 90330-0021 | | 1 | NIPPLES, EXT. THREAD. R-207R1/2 | |
| 140 | 90330-0028 | | 1 | NIPPLES, EXT. THREAD. R-207R3/8 | |
| 150 | 90330-0047 | | 1 | SLEEVE, REDUCTION, INT, R-2021/2X3/8 | |
| 160 | 90330-0048 | | 1 | BUSHING, INT/EXT. THR. R1/2-RP3/8 | |
| 170 | 90330-0049 | | 1 | T-PIPE, INT. THREAD, R-221R1/2 | |
| 180 | 90330-0085 | | 1 | BUSHING, INT/EXT. THR. R1/2-RP1/4 | |
| 210 | 352103-0106 | | 1 | CABLE GLAND, ST 11, PR18,6/PG11 | |
| 220 | 90055-0267 | | 1 | ELBOW PIPE JOINT,EXT.THREAD,D=8 MM G1/4 | |
| 230 | 350006-0002 | | 2 | PUSH-IN FITTING QS-F-8H-4 | |
| 250 | 350009-0003 | | 1 | PUSH-IN FITTING QS-F-8 | |
| 260 | 90330-0043 | | 1 | NIPPLES, EXT. THREAD. R-207R1/4 | |
| U30K1480 | 90042-0170 | | 1 | SOLENOID VALVE BüRKERT | |
| U30W1480 | 351150-0403 | MM | 3500 | CABLE OLFLEX 3X0,75 MM2 LIGHT/GREY | |
| U30W7004 | 315400-0018 | MM | 100 | TUBE PUN-H-4X0,75-SW | |

| Pos | Part No | UN | Qty | Description | Page No |
|---|---|---|---|---|---|

# PEROXIDE PIPE



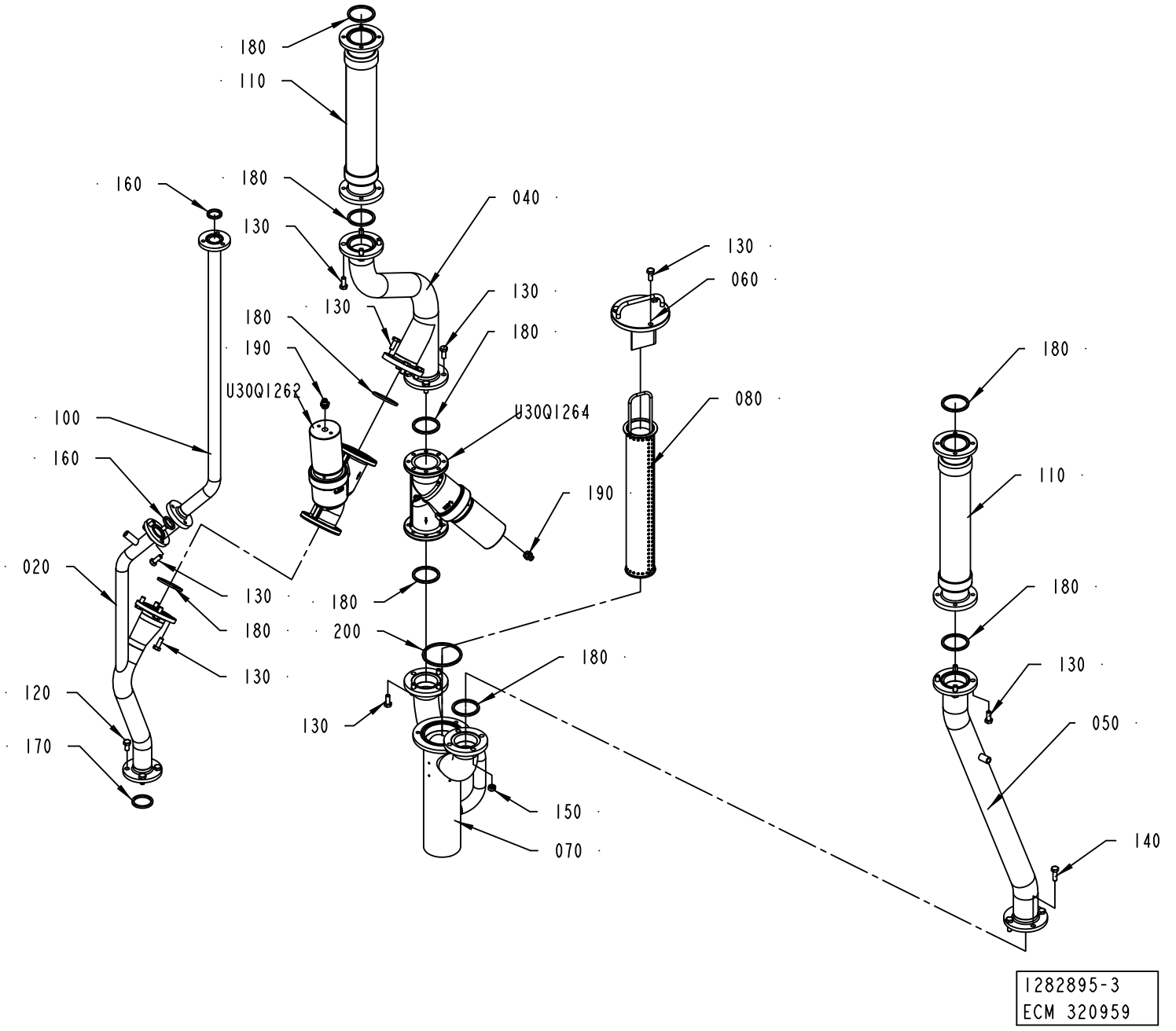

ECM: 327308 - 20080102
Group number: 1282895-0300
Assembly Drawing: 1282895-3_1_AB

| Pos | Part No | UN | Qty | Description | Page No |
|---|---|---|---|---|---|
| - | | | | | |
| 020 | 2519554-0000 | | 1 | PIPE | |
| 040 | 1282876-0000 | | 1 | PIPE | |
| 050 | 2519555-0000 | | 1 | PIPE | |
| 060 | 1348530-0000 | | 1 | LID | |
| 070 | 1282879-0000 | | 1 | CONNECTING PIPE | |
| 080 | 1348529-0000 | | 1 | STRAINER | |
| 100 | 1282901-0000 | | 1 | PIPE | |
| 110 | 2598689-0000 | | 2 | HOSE | |
| 120 | 312105-0449 | | 4 | SCREW M6S ISO 4017 M8X16 A480 | |
| 130 | 312105-0451 | | 30 | SCREW M6S ISO 4017 M8X20 A480 | |
| 140 | 312105-0453 | | 4 | SCREW M6S ISO 4017 M8X25 A480 | |
| 150 | 312605-0318 | | 4 | HEXAGON NUT, M6M M8 A280 | |
| 160 | 315229-0103 | | 2 | GASKETS, 23,1X30,1X3,7 MM 1" FDA | |
| 170 | 315229-0104 | | 1 | GASKETS, 35,8X42,8X3,7 MM 1"1/2 FD | |
| 180 | 315229-0105 | | 9 | GASKETS, 48,5X55,5X3,7 MM 2" FDA | |
| 190 | 342722-0203 | | 2 | STRAIGHT COUPLING | |
| 200 | 315229-0107 | | 1 | GASKETS, 73,9X80,9X3,7 MM 2"1/2 FD | |
| U30Q1262 | 90459-5178 | | 1 | ANGLE SEAT VALVE W. FLANGES, N.O.8498669 | |
| U30Q1264 | 90459-5177 | | 1 | ANGLE SEAT VALVE W. FLANGES, N.O.8498668 | |

| Pos | Part No | UN | Qty | Description | Page No |
|---|---|---|---|---|---|

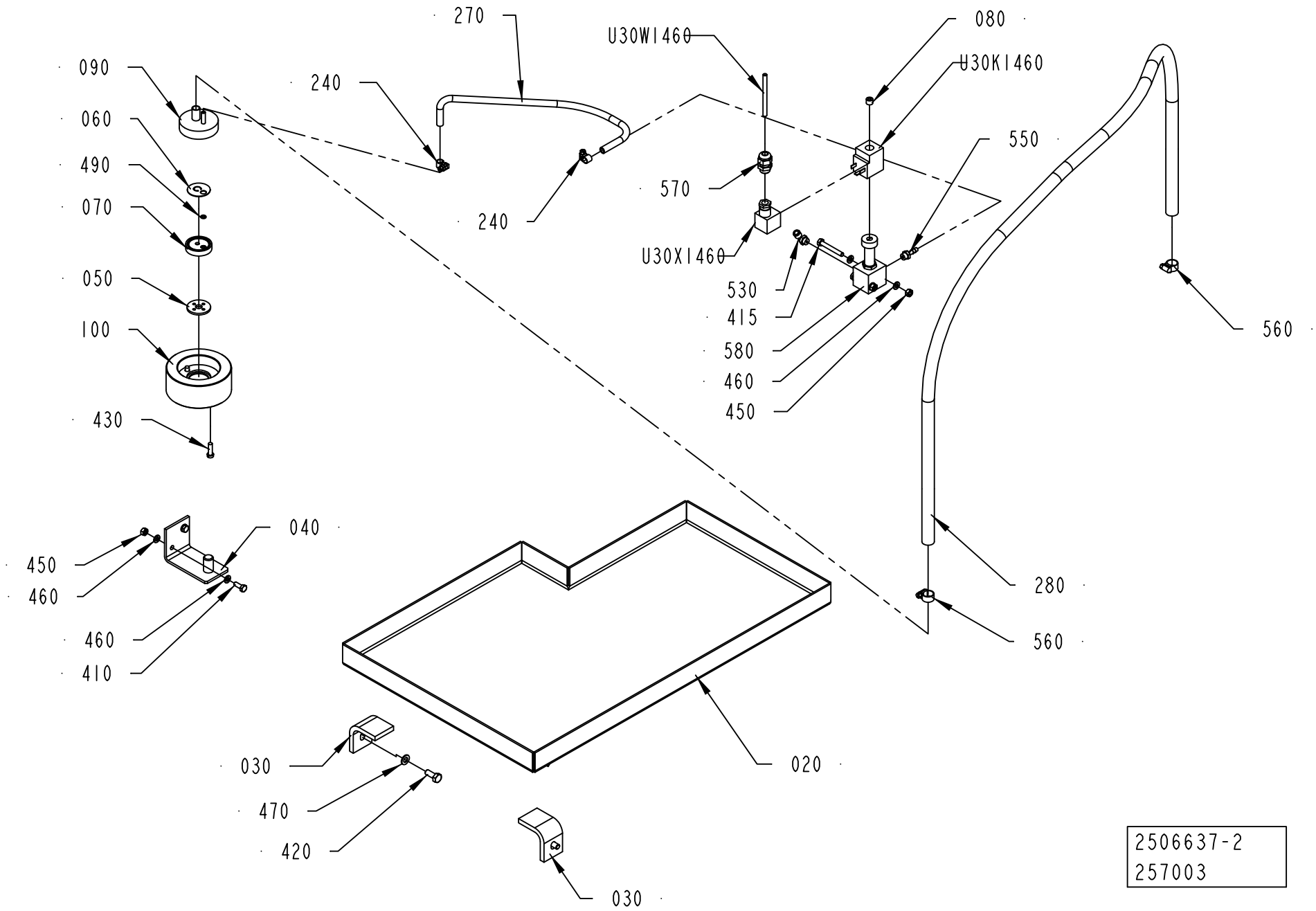


2506637-2
257003

ECM: 335936 - 20080205
Group number: 2506637-0200
Assembly Drawing: 2506637-2_1_AA

| Pos | Part No | UN | Qty | Description | Page No |
|---|---|---|---|---|---|
| - | | | | | |
| 020 | 1490950-0000 | | 1 | SPLASH PLATE | |
| 030 | 1037539-0000 | | 2 | BRACKET | |
| 040 | 1317784-0000 | | 1 | BRACKET | |
| 050 | 273981-0000 | | 1 | GASKET | |
| 060 | 527912-0000 | | 1 | NON-RETURN VALVE | |
| 070 | 530551-0000 | | 1 | WASHER | |
| 080 | 563285-0000 | | 1 | BLIND PLUG | |
| 090 | 1129328-0000 | | 1 | ATTACHMENT | |
| 100 | 1317226-0000 | | 1 | WEIGHT | |
| 240 | 90132-0021 | | 2 | HOSE CLIP 6-10MM | |
| 270 | 90166-0101 | MM | 700 | HOSE, SILICONE, 60 SHORE, 6/10 MM | |
| 280 | 90166-0161 | MM | 1600 | HOSE | |
| 410 | 312105-0368 | | 2 | SCREW M6S ISO 4017 M6X16 A480 | |
| 415 | 312105-0379 | | 2 | SCREW M6S ISO 4014 M6X45 A480 | |
| 420 | 312105-0451 | | 2 | SCREW M6S ISO 4017 M8X20 A480 | |
| 430 | 312125-0370 | | 2 | SCREW ISO 1207 M6X20 A4 | |
| 450 | 312605-0316 | | 4 | HEXAGON NUT, M6M M6 A280 | |
| 460 | 315105-0153 | | 8 | WASHER BRB 6,4X12 RFR | |
| 470 | 315105-0165 | | 2 | WASHER BRB 8,4X16 RFR | |
| 490 | 315204-0103 | | 1 | O-RING 5,1X1,6 MM | |
| 530 | 90458-2956 | | 1 | ELBOW PIPE JOINT, EXT.THREAD, D=6MM-G1/8 | |
| 550 | 342901-0101 | | 1 | HOSE NIPPLE, EXT.THR. R1/8-7 MM | |
| 560 | 342991-0101 | | 2 | HOSE CLIP,WORM DRIVE TYPE (13)-16 | |
| 570 | 352103-0101 | | 1 | CABLE GLAND, ST 9, PR15,2/PG9 | |
| 580 | 90042-0206 | | 1 | SOLENOID VALVE G1/8, 444-111-000-1 | |
| U30K1460 | 90042-0487 | | 1 | COIL 24 VDC/15W, 04983 197 18 | |
| U30W1460 | 351150-0403 | MM | 2300 | CABLE OLFLEX 3X0,75 MM2 LIGHT/GREY | |
| U30X1460 | 90110-0095 | | 1 | CONNECTOR 3 POLE + EARTH | |

| Pos | Part No | UN | Qty | Description | Page No |
|---|---|---|---|---|---|

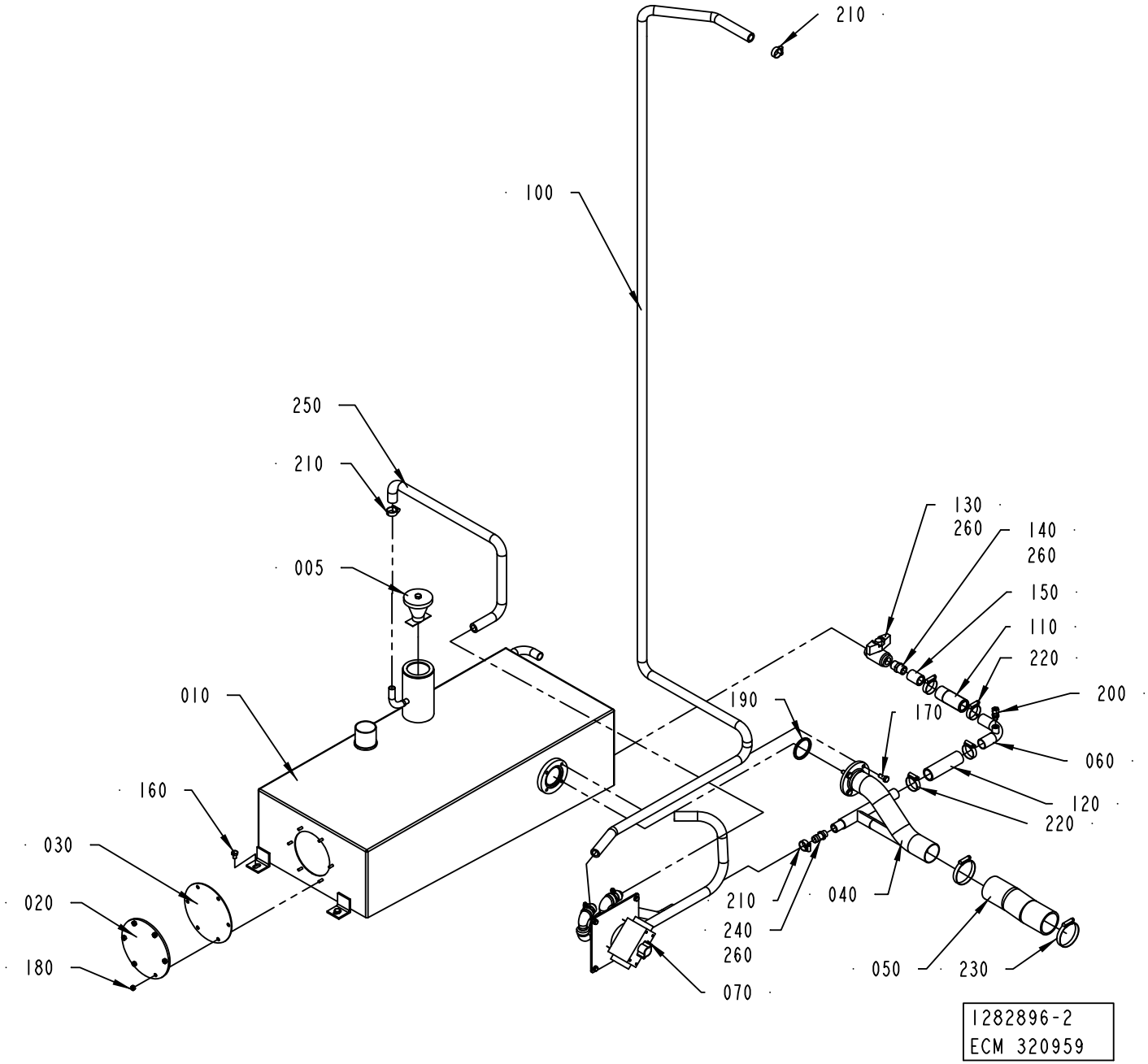
210
100
250
210
005
010
160
030
020
180
130
260
140
260
150
110
220
200
190
170
060
120
220
210
240
260
070
040
050
230
1282896-2
ECM 320959

ECM: 327307 - 20080102
Group number: 1282896-0200
Assembly Drawing: 1282896-2_1_AB

| Pos | Part No | UN | Qty | Description | Page No |
|---|---|---|---|---|---|
| - | | | | | |
| 005 | 566196-0100 | | 1 | LID WITH WEIGHT ..... | **2-29** |
| 010 | 1282892-0000 | | 1 | TANK | |
| 020 | 1040807-0000 | | 1 | LID | |
| 030 | 1040808-0000 | | 1 | GASKET | |
| 040 | 2806963-0000 | | 1 | PIPE | |
| 050 | 1282898-0000 | | 1 | HOSE | |
| 060 | 2574421-0000 | | 1 | PIPE | |
| 070 | 2877593-0100 | | 1 | VALVE ..... | **2-31** |
| 100 | 90166-0087 | MM | 3700 | HOSE 15/23 REINF.PVC TRANSP. | |
| 110 | 90166-0158 | MM | 85 | HOSE | |
| 120 | 90166-0158 | MM | 105 | HOSE | |
| 130 | 90187-0059 | | 1 | BALL VALVE FOR HYDR.PER. G1/2 3MM HOLE | |
| 140 | 90330-0021 | | 1 | NIPPLES, EXT. THREAD. R-207R1/2 | |
| 150 | 90330-0054 | | 1 | SLEEVE, INT. THREAD, NO. R-201R1/2 | |
| 160 | 312105-0447 | | 4 | SCREW M6S ISO 4017 M8X12 A480 | |
| 170 | 312105-0451 | | 4 | SCREW M6S ISO 4017 M8X20 A480 | |
| 180 | 312605-0316 | | 6 | HEXAGON NUT, M6M M6 A280 | |
| 190 | 315229-0105 | | 1 | GASKETS, 48,5X55,5X3,7 MM 2" FDA | |
| 200 | 90030-0184 | | 1 | CONN. STR. GE06LRED71 | |
| 210 | 342991-0103 | | 3 | HOSE CLIP,WORM DRIVE TYPE (19)-23 | |
| 220 | 342991-0106 | | 4 | HOSE CLIP,WORM DRIVE TYPE (30)-36 | |
| 230 | 342991-0110 | | 2 | HOSE CLIP,WORM DRIVE TYPE (54)-63 | |
| 240 | 342901-0106 | | 1 | HOSE NIPPLE, EXT.THR. R3/8-17 MM | |
| 250 | 90166-0087 | MM | 750 | HOSE 15/23 REINF.PVC TRANSP. | |
| 260 | 90144-0073 | | 1 | TREBOFLON-TAPE W=13MM | |

| Pos | Part No | UN | Qty | Description | Page No |
|---|---|---|---|---|---|

Machine Type | Group Description | Used-In | Group Number | Page No

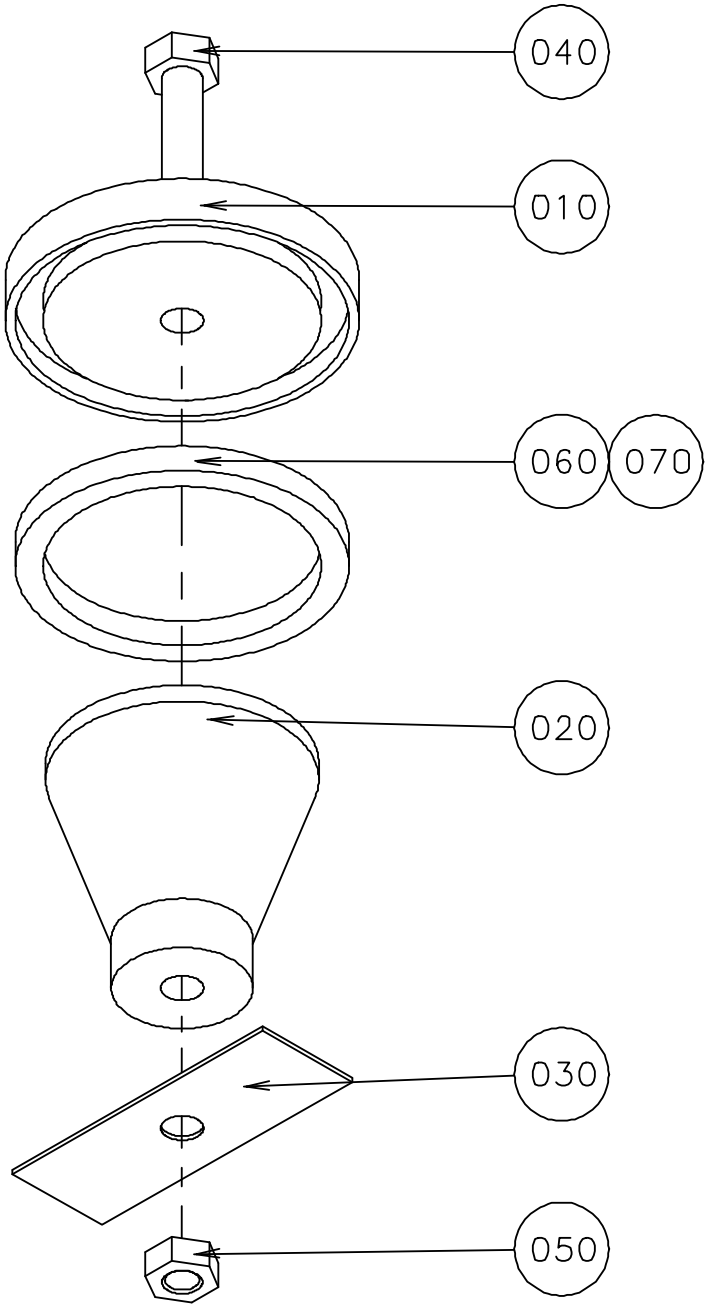


S-566196-1
ECN 70662

ECM: 189748 - 20041104
Group number: 566196-0100
Assembly Drawing: 566196-1_1_AA

| Pos | Part No | UN | Qty | Description | Page No |
|---|---|---|---|---|---|
| - | | | | | |
| 010 | 566195-0000 | | 1 | LID | |
| 020 | 566194-0000 | | 1 | WEIGHT | |
| 030 | 566171-0000 | | 1 | CUP SPRING | |
| 040 | 312105-0466 | | 1 | SCREW M6S ISO 4014 M8X75 A480 | |
| 050 | 312605-0318 | | 1 | HEXAGON NUT, M6M M8 A280 | |
| 060 | 90143-0020 | MM | 190 | STRIP | |
| 070 | 90153-0023 | | 1 | ADHESIVE, SILICON 251470 TUB 90CC(UN1993 | |

| Pos | Part No | UN | Qty | Description | Page No |
|---|---|---|---|---|---|

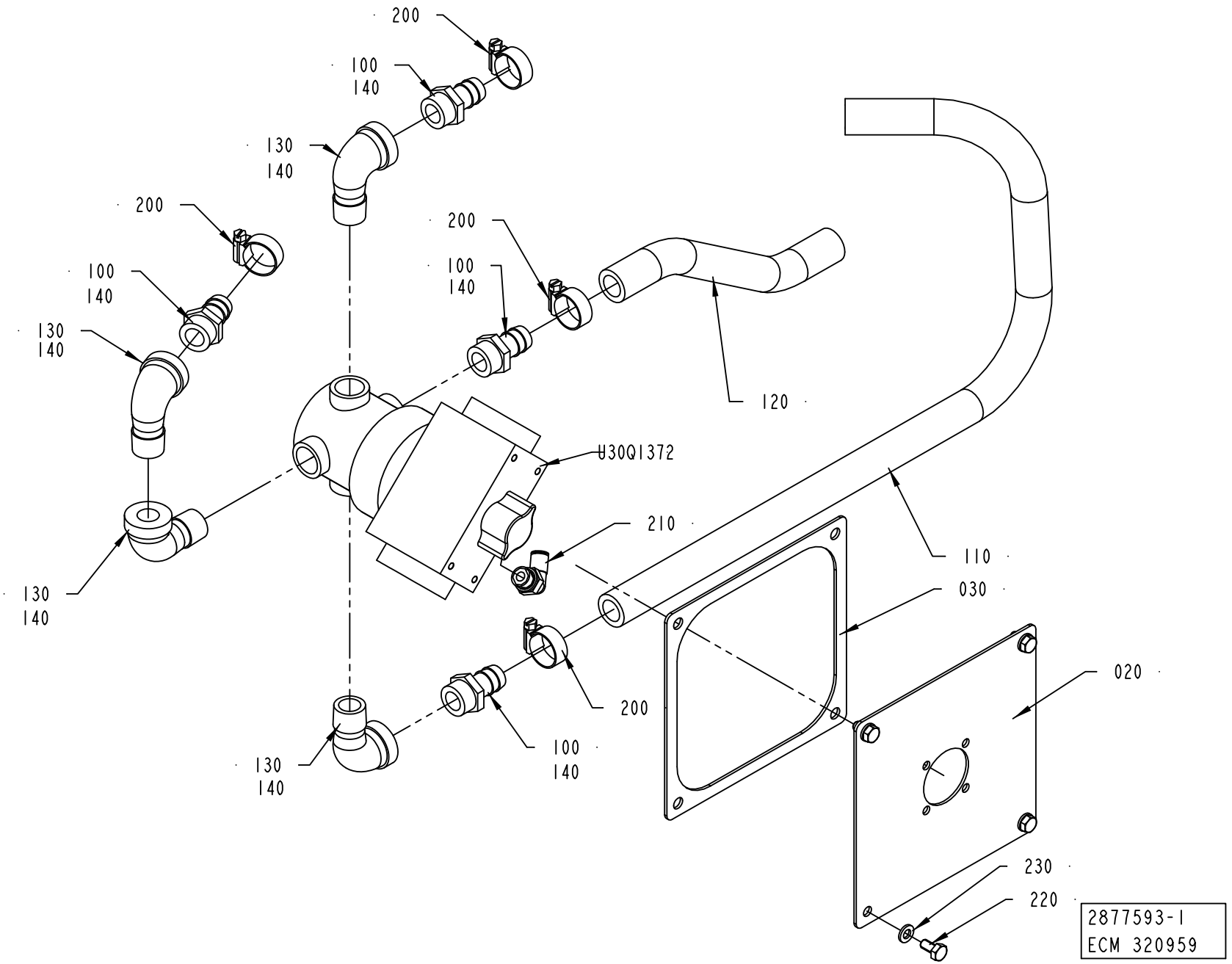
200
100
140
130
140
200
100
140
130
140
130
140
200
100
140
120
U30Q1372
210
110
030
020
200
100
140
130
140
230
220
2877593-1
ECM 320959

ECM: 327306 - 20080102
Group number: 2877593-0100
Assembly Drawing: 2877593-1_1_AB

| Pos | Part No | UN | Qty | Description | Page No |
|---|---|---|---|---|---|
| - | | | | | |
| 020 | 2879073-0000 | | 1 | PLATE | |
| 030 | 2879536-0000 | | 1 | GASKET | |
| 100 | 90163-0039 | | 4 | HOSE NIPPLE EXT.THR. R1/2 2601-17 MM | |
| 110 | 90166-0087 | MM | 600 | HOSE 15/23 REINF.PVC TRANSP. | |
| 120 | 90166-0087 | MM | 250 | HOSE 15/23 REINF.PVC TRANSP. | |
| 130 | 90330-0171 | | 4 | ELBOW, 90 INT/EXT, 1/2NPT | |
| 140 | 90144-0073 | | 1 | TREBOFLON-TAPE W=13MM | |
| 200 | 342991-0103 | | 4 | HOSE CLIP,WORM DRIVE TYPE (19)-23 | |
| 210 | 350002-0008 | | 2 | PUSH-IN L-FITTING QSL-F-G1/4-6 | |
| 220 | 312105-0366 | | 4 | SCREW M6S ISO 4017 M6X12 A480 | |
| 230 | 315105-0153 | | 4 | WASHER BRB 6,4X12 RFR | |
| U30Q1372 | 2878261-0000 | | 1 | VALVE | |

| Pos | Part No | UN | Qty | Description | Page No |
|---|---|---|---|---|---|

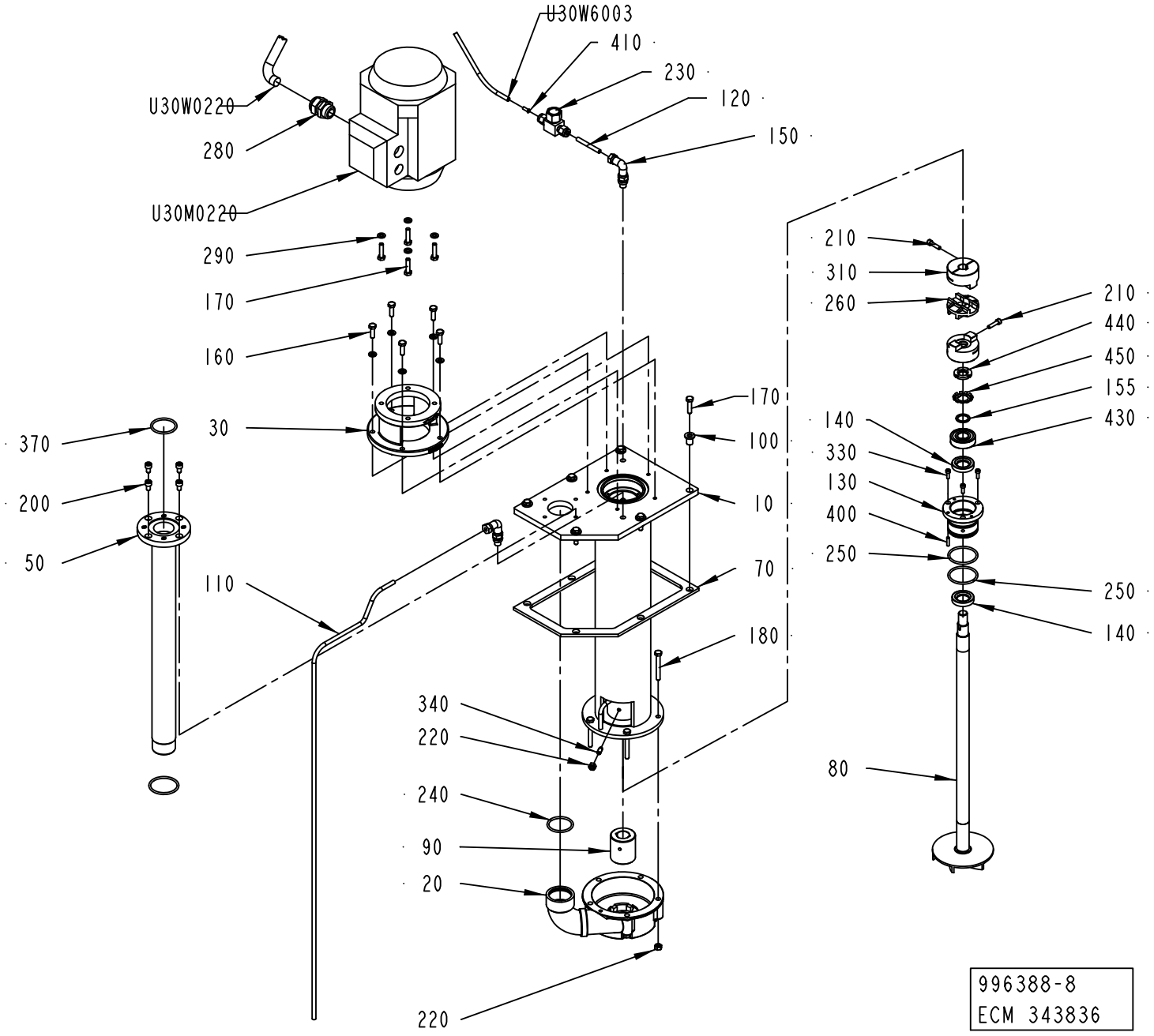
U30W6003
410
230
120
150
U30W0220
280
U30M0220
290
170
160
30
370
200
50
110
170
100
10
70
180
340
220
240
90
20
220
210
310
260
210
440
450
155
430
140
330
130
400
250
250
140
80
996388-8
ECM 343836

ECM: 343843 - 20080307
Group number: 996388-0700
Assembly Drawing: 996388-8_1_AA

| Pos | Part No | UN | Qty | Description | Page No |
|---|---|---|---|---|---|
| - | | | | | |
| 010 | 2734101-0000 | | 1 | EXTENSION PIPE | |
| 020 | 2529412-0000 | | 1 | PUMP HOUSING | |
| 030 | 751395-0000 | | 1 | FLANGE | |
| 050 | 1040796-0000 | | 1 | PIPE | |
| 070 | 1255557-0000 | | 1 | GASKET | |
| 080 | 2931192-0000 | | 1 | IMPELLER WHEEL | |
| 090 | 2734102-0000 | | 1 | BUSHING | |
| 100 | 2564342-0000 | | 6 | SPACER | |
| 110 | 2564561-0000 | | 1 | PIPE | |
| 120 | 2564978-0000 | | 1 | PIPE | |
| 130 | 2734104-0000 | | 1 | BUSHING | |
| 140 | 90091-0412 | | 2 | SEAL RING | |
| 150 | 90030-0171 | | 2 | ADJUSTABLE ELBOW CONNECTION, EVW06LR71 | |
| 155 | 2744234-0000 | | 1 | SPACER | |
| 160 | 312105-0370 | | 5 | SCREW M6S ISO 4017 M6X20 A480 | |
| 170 | 312105-0372 | | 10 | SCREW M6S ISO 4017 M6X25 A480 | |
| 180 | 312109-0380 | | 5 | SCREW M6S ISO 4017 M6X50 A480 | |
| 200 | 312115-0364 | | 4 | SCREW ISO4762 M6X10 A4 80 | |
| 210 | 312115-0331 | | 2 | SCREW ISO4762 M5X20 A4 80 | |
| 220 | 312605-0316 | | 7 | HEXAGON NUT, M6M M6 A280 | |
| 230 | 90230-0064 | | 1 | CHECK VALVE, 6 MM HIGH TEMP. | |
| 240 | 927422-0005 | | 1 | O-RING 36.2X3 SILICONE | |
| 250 | 927422-0006 | | 3 | O-RING 42.2X3 SILICONE | |
| 260 | 90458-0274 | | 1 | DISC FOR COUPLING, HUCO 236.50T | |
| 280 | 352103-0110 | | 1 | CABLE GLAND, STR 16, PR22,5/PG16 | |
| 290 | 315105-0153 | | 9 | WASHER BRB 6,4X12 RFR | |
| 310 | 90459-1536 | | 2 | FLEXIBLE COUPLING DISC, 14 MM | |
| 330 | 312115-0291 | | 3 | SCREW ISO4762 M4X12 A4 80 | |
| 340 | 90287-0159 | | 2 | SCREW, SOCK.SET DOGPOINT M6X16 | |
| 370 | 315204-0222 | | 1 | O-RING 36,2X3 MM | |
| 400 | 311103-0270 | | 1 | PARALLEL PIN ISO 2338 4M6X16 A1 | |
| 410 | 342706-0130 | | 1 | ACCESSORIES, INSERT SLEEVE 6 MM | |
| 430 | 321313-0103 | | 1 | BALL BEARING, 17X40X12MM | |
| 440 | 312805-0103 | | 1 | NUT ROUND WITH SLOTS M17X1 FE | |
| 450 | 315410-0103 | | 1 | LOCK WASHER MB 3 D=17 H=1 | |
| U30M0220 | 351150-0418 | M | 1 | CABLE OLFLEX 4X2,5 MM2 LIGHT/GREY | |
| U30W0220 | 90458-2466 | | 1 | MOTOR 3GVA071002-CSC-M2VA71B2 | |
| U30W6003 | 90166-0132 | M | 1 | TUBE 6 MM PA,TRANSP. | |

| Pos | Part No | UN | Qty | Description | Page No |
|---|---|---|---|---|---|

Machine Type | Group Description | Used-In | Group Number | Page No

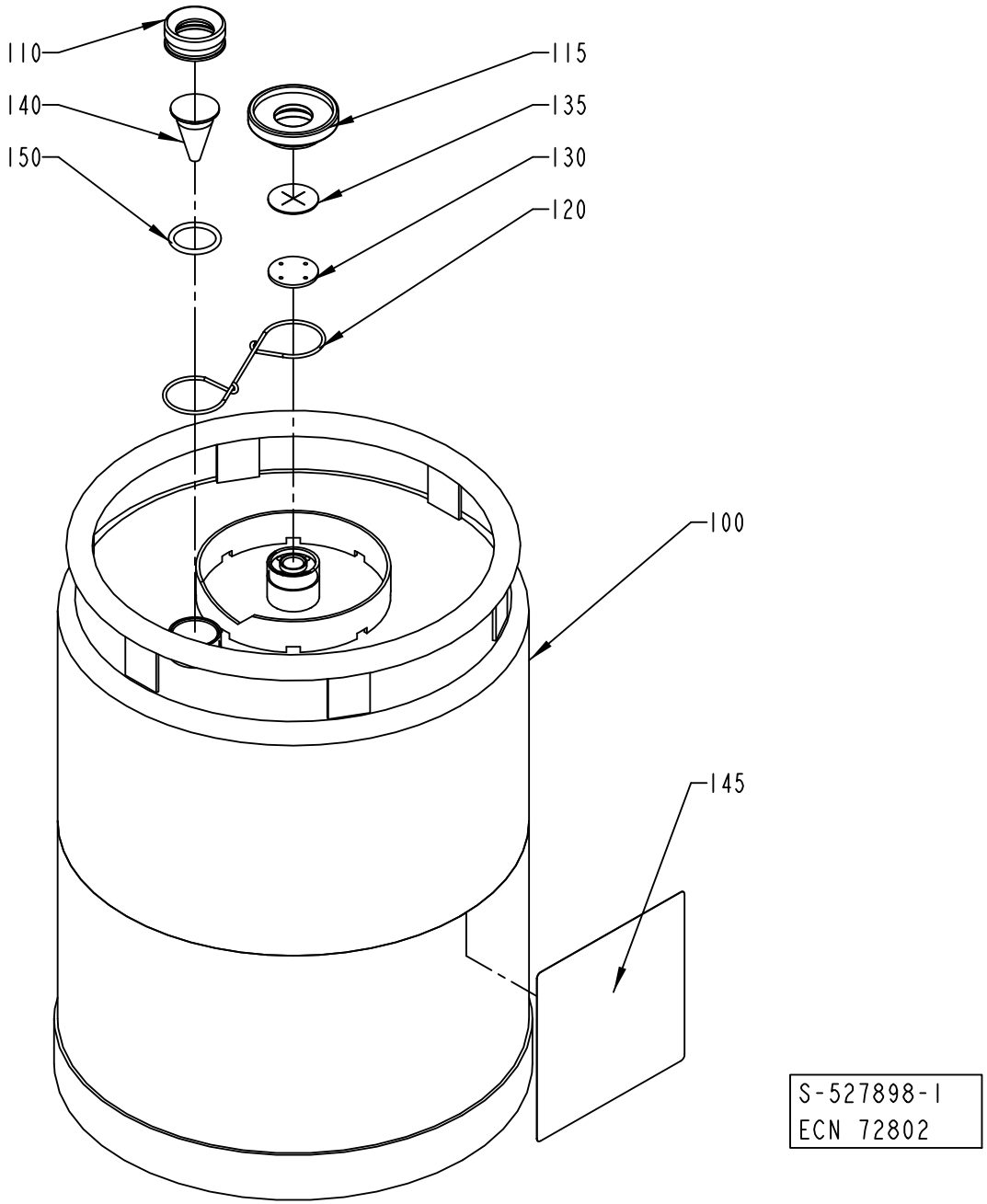
110
140
150
115
135
130
120
100
145
S-527898-1
ECN 72802

ECM: 224840 - 20050831
Group number: 527898-0100
Assembly Drawing: 527898-1_1_AB

| Pos | Part No | UN | Qty | Description | Page No |
|---|---|---|---|---|---|
| - | | | | | |
| 100 | 561427-0000 | | 1 | CONTAINER | |
| 110 | 273977-0000 | | 1 | NUT | |
| 115 | 273996-0000 | | 1 | NUT | |
| 120 | 273980-0000 | | 1 | SPRING | |
| 130 | 565250-0000 | | 1 | WASHER | |
| 135 | 565251-0000 | | 1 | VALVE | |
| 140 | 273978-0000 | | 1 | LEVEL GLAS | |
| 145 | 532655-0000 | | 1 | CAUTION SIGN | |
| 150 | 927422-0003 | | 1 | O.RING 24.2X3 SILICONE | |

| Pos | Part No | UN | Qty | Description | Page No |
|---|---|---|---|---|---|

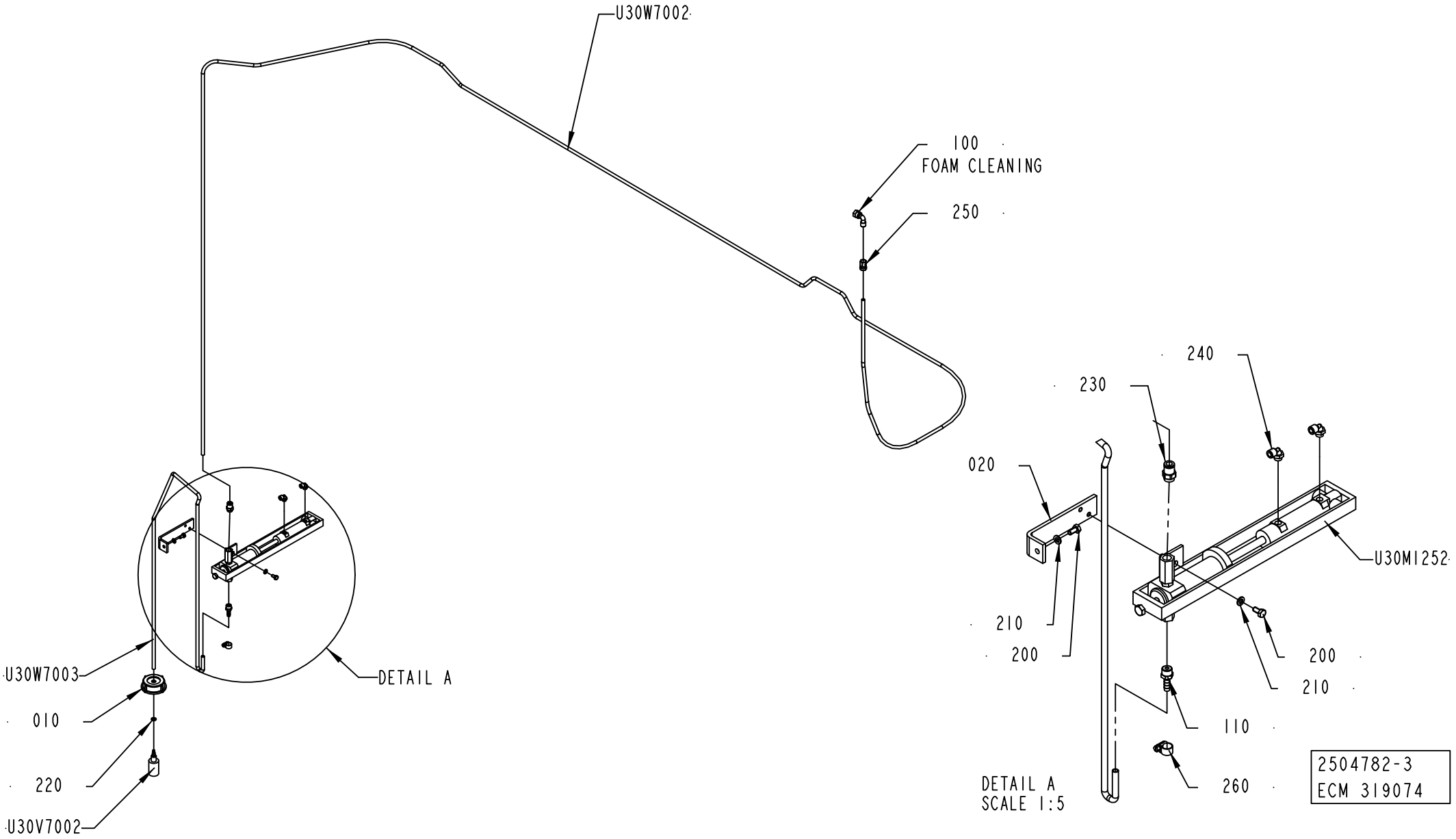
U30W7002
100
FOAM CLEANING
250
U30W7003
010
220
U30V7002
DETAIL A
240
230
020
U30M1252
210
200
200
210
110
260
DETAIL A
SCALE 1:5
2504782-3
ECM 319074

ECM: 327345 - 20070705
Group number: 2504782-0200
Assembly Drawing: 2504782-3_1_AB

| Pos | Part No | UN | Qty | Description | Page No |
|---|---|---|---|---|---|
| **A3/FLEX** | | | | | |
| 200 | 312105-0366 | | 2 | SCREW M6S ISO 4017 M6X12 A480 | |
| 210 | 312105-0153 | | 2 | SCREW EN 10642 MF6S M5X25 A480 | |
| **Common Parts** | | | | | |
| 010 | 1129432-0000 | | 1 | LID | |
| 100 | 90030-0071 | | 1 | CONN. ELBOW WE08LR71 | |
| 110 | 90055-0132 | | 1 | HOSE NIPPLE, EXT.THR. R1/4X7,8 MM | |
| 220 | 315204-0207 | | 1 | O-RING 8,3X2,4 MM | |
| 230 | 342722-0205 | | 1 | STRAIGHT COUPLING D=8-G1/4" | |
| 240 | 90458-2956 | | 2 | ELBOW PIPE JOINT, EXT.THREAD, D=6MM-G1/8 | |
| 250 | 342923-0122 | | 1 | STRAIGHT COUPL.,INT.THREADED 8/6-G1/4" | |
| 260 | 342991-0100 | | 1 | HOSE CLIP,WORM DRIVE TYPE 10-13 | |
| U30M1252 | 90321-0128 | | 1 | CHEM. PUMP 081778 | |
| U30V7002 | 90415-0052 | | 1 | FILTER ART NO 12565 C-340-6E FOTVENTI EP | |
| U30W7002 | 90166-0118 | MM | 5700 | TUBE 8 MM PA BLACK | |
| U30W7003 | 90166-0008 | MM | 1750 | HOSE 7/10 PVC TRANSP. | |

| Pos | Part No | UN | Qty | Description | Page No |
|---|---|---|---|---|---|

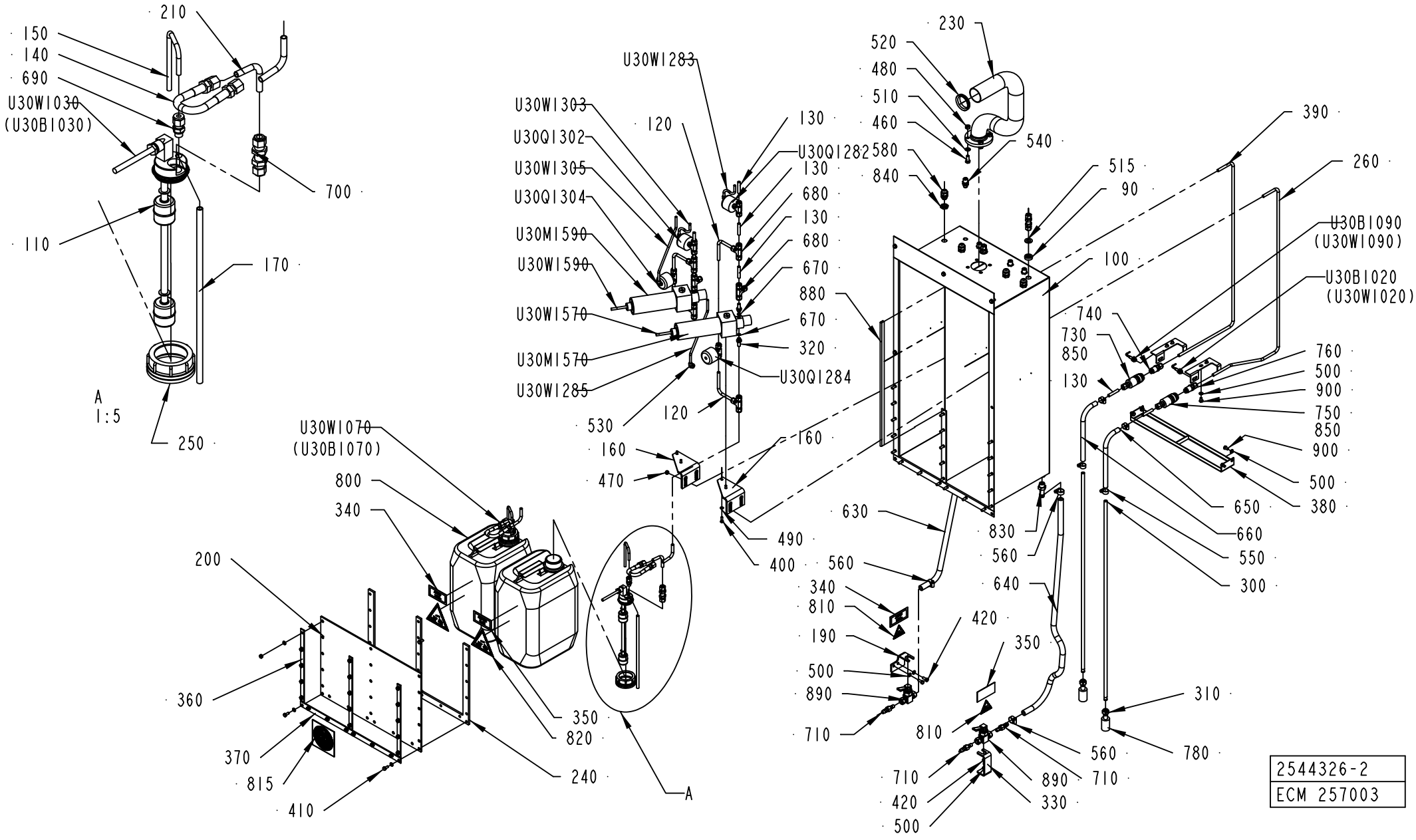


| 2544326-2 |
| --- |
| ECM 257003 |

ECM: 257009 - 20070628
Group number: 2544326-0200
Assembly Drawing: 2544326-2_1_AA

| Pos | Part No | UN | Qty | Description | Page No |
|---|---|---|---|---|---|
| - | | | | | |
| 090 | 2603387-0000 | | 2 | SPACER | |
| 100 | 2813205-0000 | | 1 | BOX | |
| 110 | 2544312-0000 | | 2 | FLOAT | |
| 120 | 2544313-0000 | | 4 | PIPE | |
| 130 | 2544314-0000 | | 8 | PIPE | |
| 140 | 2559977-0000 | | 2 | HOSE | |
| 150 | 2544316-0000 | | 2 | PIPE | |
| 160 | 2559976-0000 | | 2 | BRACKET | |
| 170 | 2544318-0000 | | 2 | PIPE | |
| 190 | 2608104-0000 | | 1 | BRACKET | |
| 200 | 2544321-0000 | | 1 | COVER | |
| 210 | 2559978-0000 | | 4 | PIPE | |
| 230 | 2544324-0000 | | 1 | PIPE | |
| 240 | 2544325-0000 | | 1 | GASKET | |
| 250 | 2544330-0000 | | 2 | PLUG | |
| 260 | 2813203-0000 | | 1 | PIPE | |
| 300 | 927262-0000 | | 2 | PIPE | |
| 310 | 928025-0000 | | 2 | PLUG | |
| 320 | 2559461-0000 | | 4 | SPACER | |
| 330 | 2608103-0000 | | 1 | BRACKET | |
| 340 | 2566211-0000 | | 2 | LABEL | |
| 350 | 2566212-0000 | | 2 | LABEL | |
| 360 | 2566209-0000 | | 3 | PLATE | |
| 370 | 2566210-0000 | | 1 | PLATE | |
| 380 | 2813204-0000 | | 1 | TANK | |
| 390 | 2846319-0000 | | 1 | PIPE | |
| 400 | 312105-0329 | | 4 | SCREW M6S ISO 4017 M5X16 A480 | |
| 410 | 312105-0367 | | 7 | SCREW M6S ISO 4017 M6X14 A480 | |
| 420 | 312105-0368 | | 3 | SCREW M6S ISO 4017 M6X16 A480 | |
| 460 | 312105-0451 | | 4 | SCREW M6S ISO 4017 M8X20 A480 | |
| 470 | 312605-0316 | | 25 | HEXAGON NUT, M6M M6 A280 | |
| 480 | 312605-0318 | | 4 | HEXAGON NUT, M6M M8 A280 | |
| 490 | 315105-0146 | | 4 | WASHER BRB 5,3X10 RFR | |
| 500 | 315105-0153 | | 39 | WASHER BRB 6,4X12 RFR | |
| 510 | 315105-0165 | | 4 | WASHER BRB 8,4X16 RFR | |
| 515 | 315105-0178 | | 2 | WASHER BRB 13X24 RFR | |
| 520 | 315220-0198 | | 1 | V-RINGS 45X55X13 MM V-50S | |
| 530 | 90458-2956 | | 4 | ELBOW PIPE JOINT, EXT.THREAD, D=6MM-G1/8 | |
| 540 | 342768-0102 | | 4 | BULKHEAD CONNECTOR, 6 MM | |
| 550 | 342991-0101 | | 4 | HOSE CLIP,WORM DRIVE TYPE (13)-16 | |
| 560 | 342991-0102 | | 4 | HOSE CLIP,WORM DRIVE TYPE (16)-19 | |
| 580 | 352103-0101 | | 4 | CABLE GLAND, ST 9, PR15,2/PG9 | |
| 630 | 90166-0198 | MM | 700 | RUBBER HOSE | |
| 640 | 90166-0198 | MM | 950 | RUBBER HOSE | |
| 650 | 90166-0225 | MM | 680 | HOSE | |
| 660 | 90166-0225 | MM | 680 | HOSE | |
| 670 | 315206-0506 | | 4 | O-RING 7,65X1,78 MM | |
| 680 | 90459-1425 | | 6 | CONN. T-PIPE 8 | |
| 690 | 90459-1424 | | 2 | CONN. STR., 6-G1/8, EXT. THREAD | |
| 700 | 90030-0485 | | 4 | CONN. BULKHEAD SV 8- | |
| 710 | 90459-2615 | | 4 | HOSE NIPPLE SS-6-HC-A-601 | |
| 730 | 90163-0172 | | 1 | QUICK-RELEASE COUPLING SS-QTM2A-B-8M0-K4 | |
| 740 | 90459-1430 | | 1 | QUICK-RELEASE COUPLING, SS-QTM2-D-8M0-K4 | |
| 750 | 90163-0141 | | 1 | QUICK-RELEASE COUPLING SS-QTM2A-B-8M0-K2 | |
| 760 | 90459-1427 | | 1 | QUICK-RELEASE COUPLING, SS-QTM2-D-8M0-K2 | |
| 780 | 90415-0052 | | 2 | FILTER ART NO 12565 C-340-6E FOTVENTI EP | |
| 800 | 90459-0462 | | 2 | CANISTER LY 500-10 | |
| 810 | 359705-0003 | | 2 | WARNING SIGN ISO, DANGEROUS CHEMICALS | |
| 815 | 359605-0002 | | 1 | MANDATORY SIGN ISO, EYE PROTECTION | |
| 820 | 359705-0004 | | 2 | WARNING SIGN ISO, DANGEROUS CHEMICALS | |
| 830 | 90055-0051 | | 2 | HOSE NIPPLE, EXT.THR. R3/8X13 MM | |
| 840 | 90099-0104 | | 4 | NUT, PR 15,2 (PG9) | |
| 850 | 90144-0073 | | 1 | TREBOFLON-TAPE W=13MM | |
| 880 | 90143-0059 | MM | 495 | SELF GRIPPING GASKET, 4610069 | |
| 890 | 90459-2609 | | 2 | BALL VALVE 3/8", 6A-V6LQ-SI-SSP-ALH | |
| 900 | 312105-0364 | | 8 | SCREW M6S ISO 4017 M6X10 A480 | |
| U30B1020 | 90600-0473 | | 1 | INDUCTIVE SWITCH E2A-S08KS01-WP-B1-TP 5M | |
| U30B1090 | 90600-0473 | | 1 | INDUCTIVE SWITCH E2A-S08KS01-WP-B1-TP 5M | |
| U30M1570 | 927244-0100 | | 1 | PUMP ..... | **2-41** |
| U30M1590 | 927244-0100 | | 1 | PUMP ..... | **2-41** |
| U30Q1282 | 90458-2333 | | 1 | VALVE, M8A-V4LQ-KZ-11AO-SS PNEUM. OPER. | |
| U30Q1284 | 90458-2333 | | 1 | VALVE, M8A-V4LQ-KZ-11AO-SS PNEUM. OPER. | |
| U30Q1302 | 90458-2333 | | 1 | VALVE, M8A-V4LQ-KZ-11AO-SS PNEUM. OPER. | |
| U30Q1304 | 90458-2333 | | 1 | VALVE, M8A-V4LQ-KZ-11AO-SS PNEUM. OPER. | |
| U30W1030 | 351150-0403 | MM | 3500 | CABLE OLFLEX 3X0,75 MM2 LIGHT/GREY | |
| U30W1070 | 351150-0404 | MM | 2500 | CABLE OLFLEX 4X0,75 MM2 LIGHT/GREY | |
| U30W1283 | 90166-0081 | MM | 150 | TUBE 6 MM PA BLUE | |
| U30W1285 | 90166-0081 | MM | 300 | TUBE 6 MM PA BLUE | |
| U30W1303 | 90166-0081 | MM | 150 | TUBE 6 MM PA BLUE | |
| U30W1305 | 90166-0081 | MM | 300 | TUBE 6 MM PA BLUE | |
| U30W1570 | 351150-0403 | MM | 3500 | CABLE OLFLEX 3X0,75 MM2 LIGHT/GREY | |
| U30W1590 | 351150-0404 | MM | 2500 | CABLE OLFLEX 4X0,75 MM2 LIGHT/GREY | |

| Machine Type | Group Description | Used-In | Group Number | Page No |
|---|---|---|---|---|

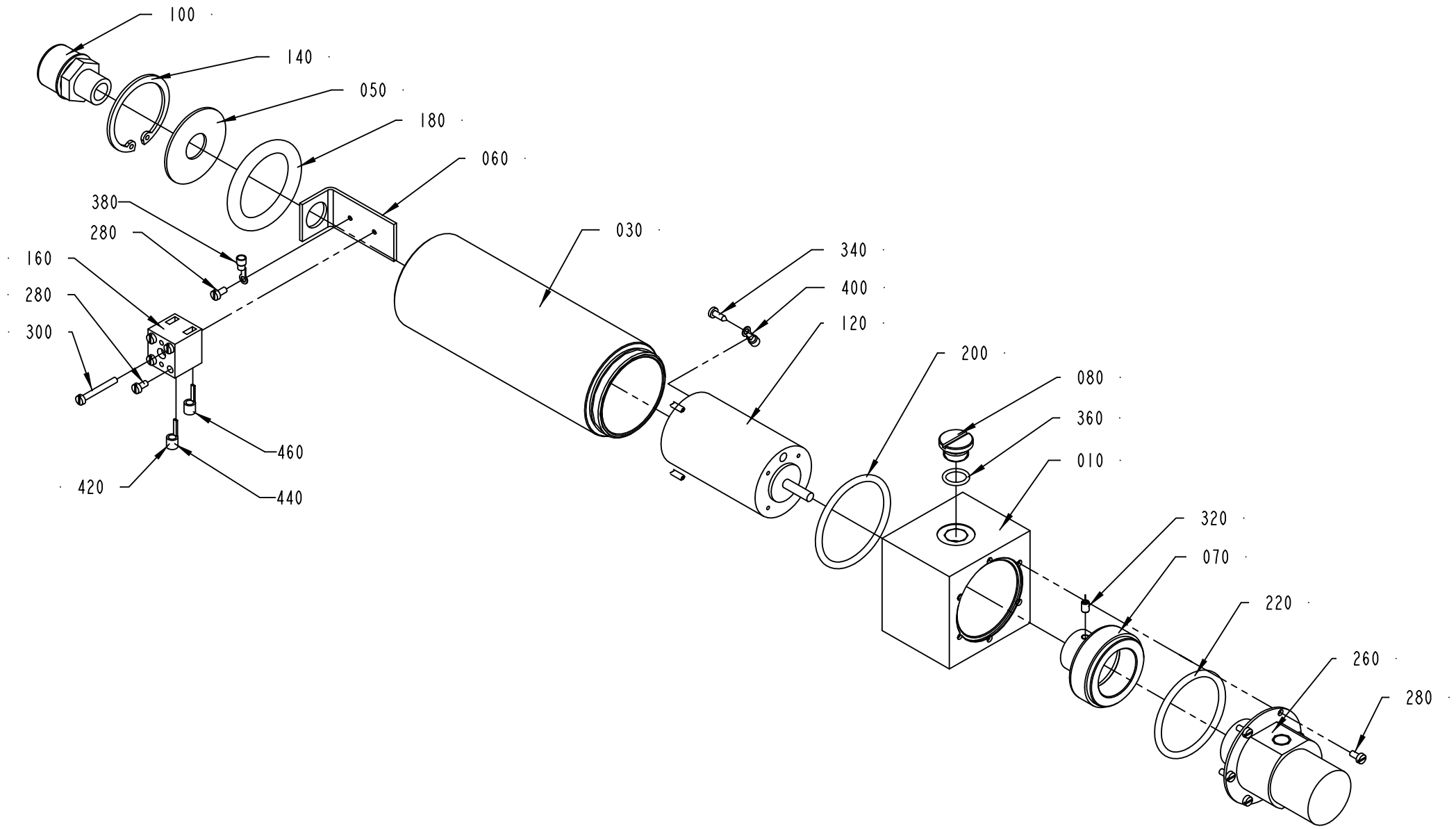


| 927244-1 |
| --- |
| ECN 313511 |

ECM: 339752 - 20080402
Group number: 927244-0100
Assembly Drawing: 927244-1_1_AB

| Pos | Part No | UN | Qty | Description | Page No |
|---|---|---|---|---|---|
| - | | | | | |
| 010 | 927339-0000 | | 1 | ADAPTER | |
| 030 | 927342-0000 | | 1 | CYLINDER | |
| 050 | 927340-0000 | | 1 | DISC | |
| 060 | 927341-0000 | | 1 | HOLDER | |
| 070 | 927362-0000 | | 1 | MAGNET | |
| 080 | 927363-0000 | | 1 | PLUG | |
| 100 | 90012-0063 | | 1 | CABLE GLAND PR 15,2 | |
| 120 | 90045-0162 | | 1 | MOTOR M42X30/I | |
| 140 | 90141-0020 | | 1 | RETAINING RING FOR BORE DIN 472 42 A2 | |
| 160 | 90195-0020 | | 1 | TERMINAL BLOCK, BK 2CRN; 0624720000 | |
| 180 | 90242-0222 | | 1 | O-RING 45,36X3,53 MM | |
| 200 | 90242-0223 | | 1 | O-RING 47,35X1,78 MM | |
| 220 | 90242-0224 | | 1 | O-RING 44,17X1,78 MM | |
| 260 | 90321-0102 | | 1 | PUMP, MG209XTS37 | |
| 280 | 312125-0220 | | 11 | SCREW ISO 1207 M3X6 A4 | |
| 300 | 312125-0232 | | 1 | SCREW ISO 1207 M3X25 A4 | |
| 320 | 312318-0285 | | 1 | SCREW ISO4029 M4X6 A4 | |
| 340 | 312503-0225 | | 1 | TAPPING SCREW ISO 7049-ST2,9X9,5-C-Z | |
| 360 | 315202-0701 | | 1 | O-RING 10,82X1,78 MM | |
| 380 | 351162-0102 | MM | 300 | WIRE AWM 1X0,75 MM2 YELLOW-GREEN | |
| 400 | 353101-0118 | | 2 | CABLE SHOE 0,5-1,5MM2 M3 RED | |
| 420 | 353105-0117 | | 2 | PIN CABLE SHOE 0,75-1,5MM2 RED A1519SR | |
| 440 | 359000-0101 | | 1 | WIRE MARKING, YELLOW, PY01/3"1" | |
| 460 | 359000-0102 | | 1 | WIRE MARKING, YELLOW, PY01/3"2" | |

| Pos | Part No | UN | Qty | Description | Page No |
|---|---|---|---|---|---|

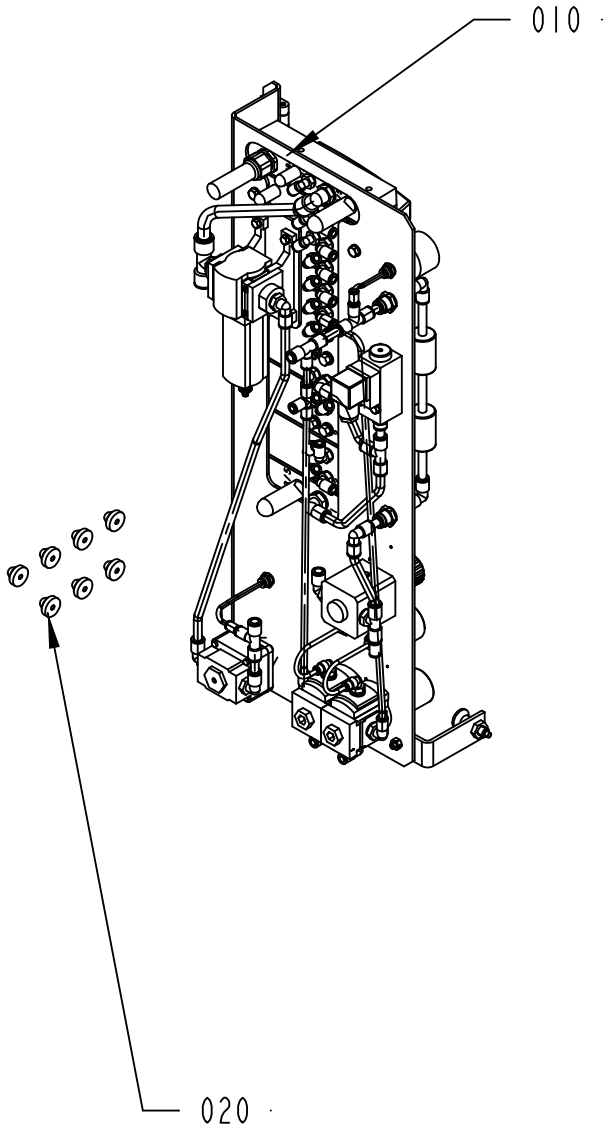




2528457-3
257003

ECM: 343846 - 20080307
Group number: 2528457-0200
Assembly Drawing: 2528457-3_1_AA

| Pos | Part No | UN | Qty | Description | Page No |
|---|---|---|---|---|---|
| **A3/FLEX** | | | | | |
| 020 | 2552931-0200 | | 1 | HOSE INSTALLATION | **2-45, 2-47** |
| **Common Parts** | | | | | |
| 010 | 2774463-0100 | | 1 | VALVE PANEL | **2-49** |

| Pos | Part No | UN | Qty | Description | Page No |
|---|---|---|---|---|---|

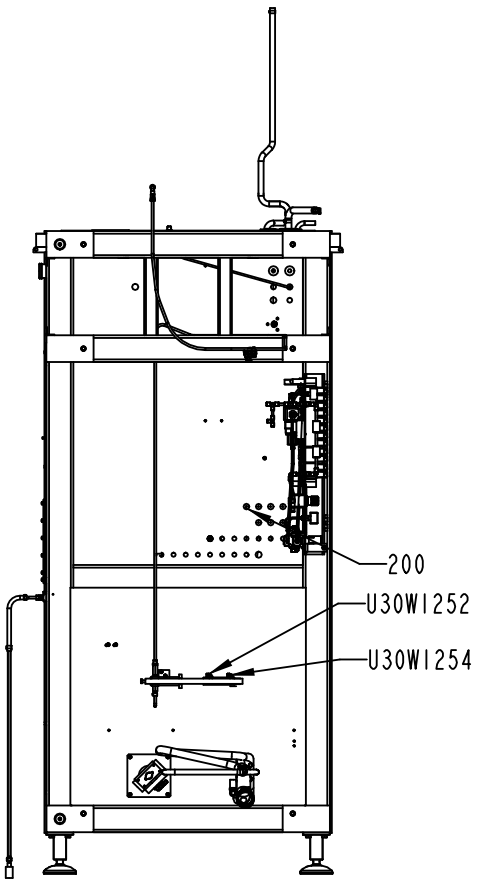


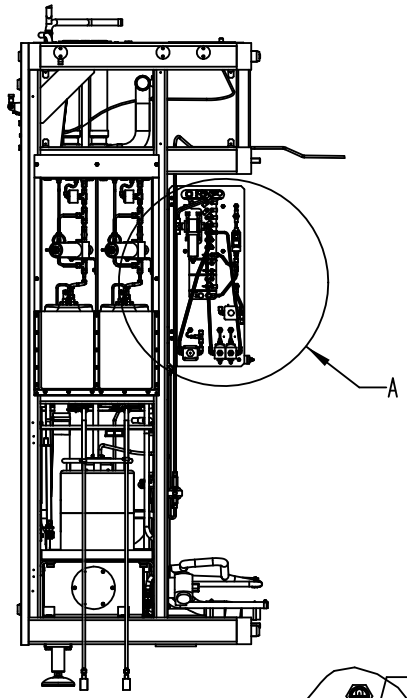


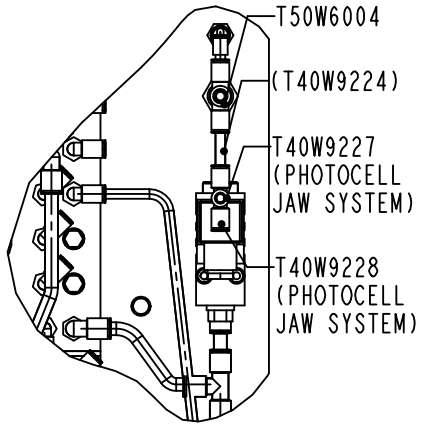


3:10

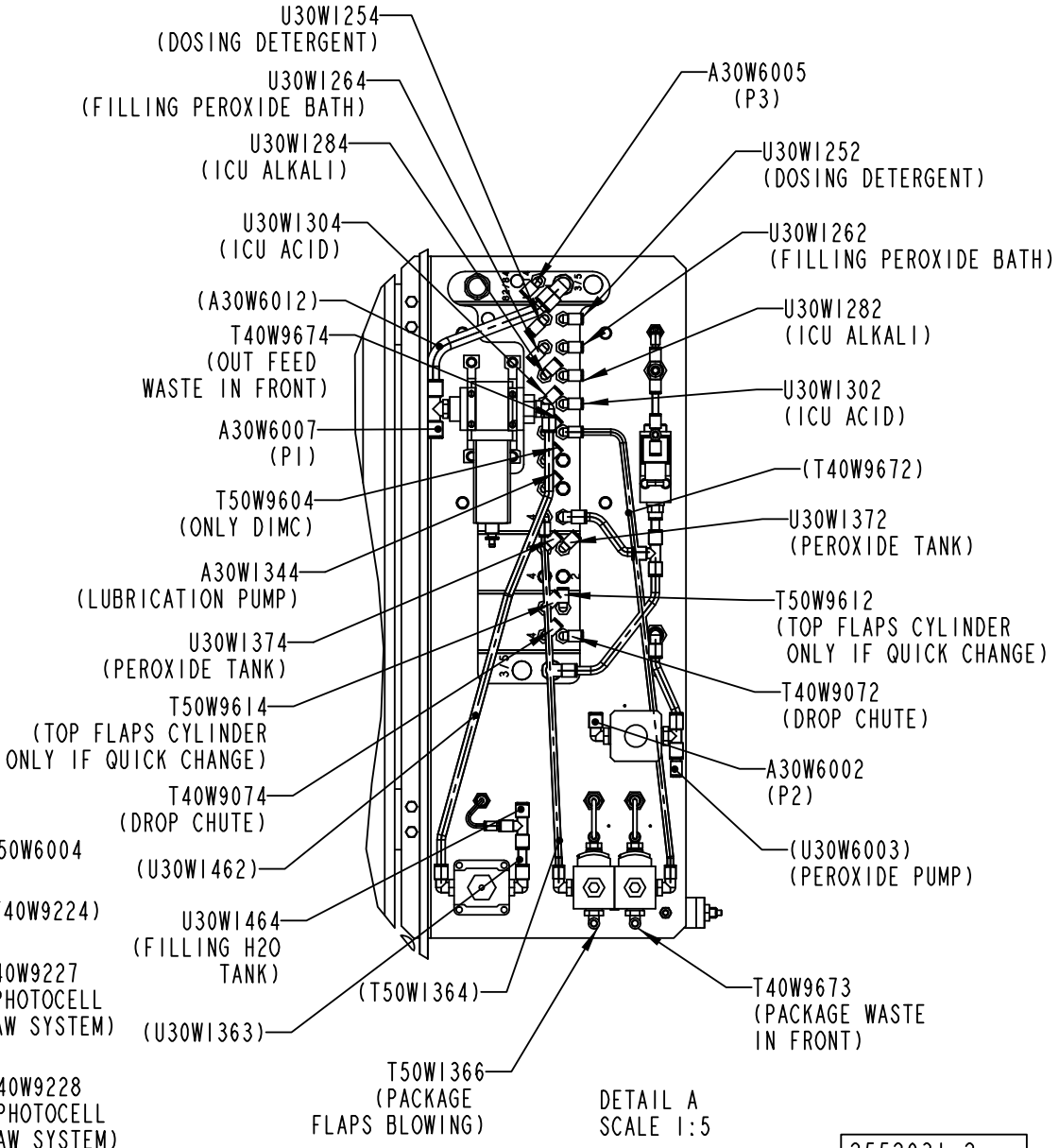


DETAIL A
SCALE 1:5

2552931-2
257003

ECM: 257017 - 20070628
Group number: 2552931-0200
Assembly Drawing: 2552931-2_1_AA

This list covers pages from 2-44 to 2-47

| Pos | Part No | UN | Qty | Description | Page No |
|---|---|---|---|---|---|
| - | | | | | |
| 200 | 90015-0020 | | 7 | LEAD-IN, TET5-7, E-1458016 | |
| 210 | 350010-0002 | | 3 | PUSH-IN BULKHEAD FITTING QSS-F-6 | |
| 220 | 350013-0002 | | 2 | PLUG QSC-6H | |
| 230 | 350005-0003 | | 1 | PUSH-IN T-FITTING QST-F-8 | |
| 240 | 350006-0003 | | 2 | PUSH-IN FITTING QS-F-8H-6 | |
| 250 | 350006-0002 | | 1 | PUSH-IN FITTING QS-F-8H-4 | |
| 260 | 350006-0001 | | 2 | PUSH-IN FITTING QS-F-6H-4 | |
| A30W1344 | 90166-0081 | MM | 2800 | TUBE 6 MM PA BLUE | |
| A30W6002 | 90166-0013 | MM | 1500 | TUBE 8 MM PA BLUE | |
| A30W6005 | 90166-0081 | MM | 1500 | TUBE 6 MM PA BLUE | |
| A30W6007 | 90166-0195 | MM | 1500 | TUBE 12 MM PA BLUE | |
| T40W9072 | 90166-0081 | MM | 2500 | TUBE 6 MM PA BLUE | |
| T40W9074 | 90166-0081 | MM | 2700 | TUBE 6 MM PA BLUE | |
| T40W9227 | 90166-0081 | MM | 2500 | TUBE 6 MM PA BLUE | |
| T40W9228 | 90166-0081 | MM | 2500 | TUBE 6 MM PA BLUE | |
| T40W9673 | 90166-0081 | MM | 8000 | TUBE 6 MM PA BLUE | |
| T40W9674 | 90166-0081 | MM | 8000 | TUBE 6 MM PA BLUE | |
| T50W1366 | 90166-0081 | MM | 4000 | TUBE 6 MM PA BLUE | |
| T50W1367 | 90166-0081 | MM | 1000 | TUBE 6 MM PA BLUE | |
| T50W6002 | 90166-0081 | MM | 500 | TUBE 6 MM PA BLUE | |
| T50W6003 | 90166-0081 | MM | 500 | TUBE 6 MM PA BLUE | |
| T50W6004 | 90166-0013 | MM | 7000 | TUBE 8 MM PA BLUE | |
| T50W9003 | 90166-0095 | MM | 300 | TUBE 4 MM PA BLUE (50M) | |
| T50W9013 | 90166-0095 | MM | 300 | TUBE 4 MM PA BLUE (50M) | |
| T50W9604 | 90166-0081 | MM | 5000 | TUBE 6 MM PA BLUE | |
| T50W9612 | 90166-0081 | MM | 5500 | TUBE 6 MM PA BLUE | |
| T50W9614 | 90166-0081 | MM | 5500 | TUBE 6 MM PA BLUE | |
| U30W1252 | 90166-0081 | MM | 1300 | TUBE 6 MM PA BLUE | |
| U30W1254 | 90166-0081 | MM | 1400 | TUBE 6 MM PA BLUE | |
| U30W1262 | 90166-0081 | MM | 2100 | TUBE 6 MM PA BLUE | |
| U30W1264 | 90166-0081 | MM | 2100 | TUBE 6 MM PA BLUE | |
| U30W1282 | 90166-0081 | MM | 2300 | TUBE 6 MM PA BLUE | |
| U30W1284 | 90166-0081 | MM | 2400 | TUBE 6 MM PA BLUE | |
| U30W1302 | 90166-0081 | MM | 2300 | TUBE 6 MM PA BLUE | |
| U30W1304 | 90166-0081 | MM | 2400 | TUBE 6 MM PA BLUE | |
| U30W1372 | 90166-0081 | MM | 1500 | TUBE 6 MM PA BLUE | |
| U30W1374 | 90166-0081 | MM | 1500 | TUBE 6 MM PA BLUE | |
| U30W1464 | 90166-0013 | MM | 1800 | TUBE 8 MM PA BLUE | |

| Pos | Part No | UN | Qty | Description | Page No |
|---|---|---|---|---|---|

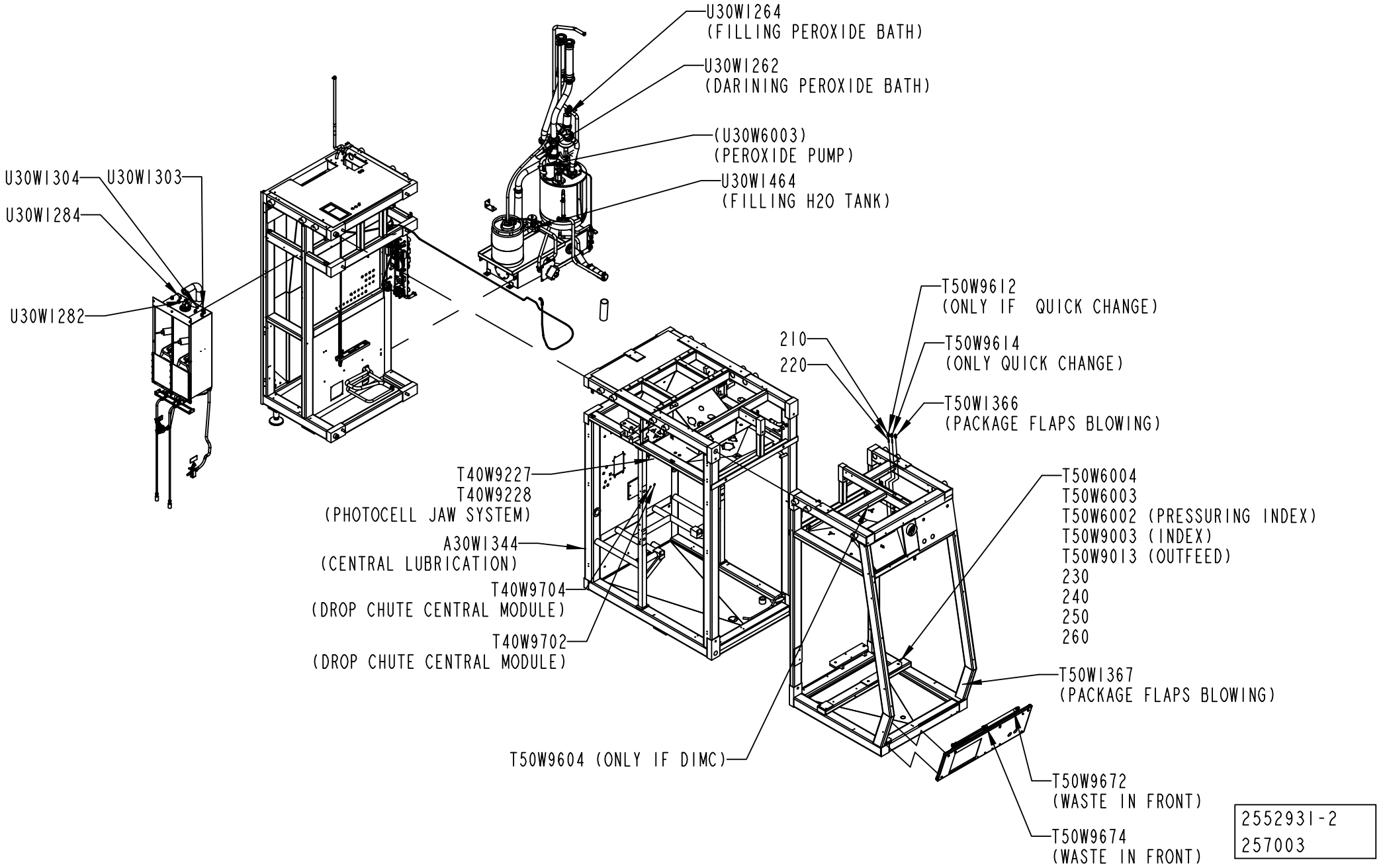
U30WI264
(FILLING PEROXIDE BATH)
U30WI262
(DARINING PEROXIDE BATH)
(U30W6003)
(PEROXIDE PUMP)
U30WI464
(FILLING H2O TANK)
U30WI304
U30WI303
U30WI284
U30WI282
T50W9612
(ONLY IF QUICK CHANGE)
210
220
T50W9614
(ONLY QUICK CHANGE)
T50WI366
(PACKAGE FLAPS BLOWING)
T40W9227
T40W9228
(PHOTOCELL JAW SYSTEM)
A30WI344
(CENTRAL LUBRICATION)
T40W9704
(DROP CHUTE CENTRAL MODULE)
T40W9702
(DROP CHUTE CENTRAL MODULE)
T50W6004
T50W6003
T50W6002 (PRESSURING INDEX)
T50W9003 (INDEX)
T50W9013 (OUTFEED)
230
240
250
260
T50WI367
(PACKAGE FLAPS BLOWING)
T50W9604 (ONLY IF DIMC)
T50W9672
(WASTE IN FRONT)
T50W9674
(WASTE IN FRONT)
2552931-2
257003

ECM: 257017 - 20070628
Group number: 2552931-0200
Assembly Drawing: 2552931-2_2_AA

This list covers pages from 2-44 to 2-47

| Pos | Part No | UN | Qty | Description | Page No |
|---|---|---|---|---|---|
| - | | | | | |
| 200 | 90015-0020 | | 7 | LEAD-IN, TET5-7, E-1458016 | |
| 210 | 350010-0002 | | 3 | PUSH-IN BULKHEAD FITTING QSS-F-6 | |
| 220 | 350013-0002 | | 2 | PLUG QSC-6H | |
| 230 | 350005-0003 | | 1 | PUSH-IN T-FITTING QST-F-8 | |
| 240 | 350006-0003 | | 2 | PUSH-IN FITTING QS-F-8H-6 | |
| 250 | 350006-0002 | | 1 | PUSH-IN FITTING QS-F-8H-4 | |
| 260 | 350006-0001 | | 2 | PUSH-IN FITTING QS-F-6H-4 | |
| A30W1344 | 90166-0081 | MM | 2800 | TUBE 6 MM PA BLUE | |
| A30W6002 | 90166-0013 | MM | 1500 | TUBE 8 MM PA BLUE | |
| A30W6005 | 90166-0081 | MM | 1500 | TUBE 6 MM PA BLUE | |
| A30W6007 | 90166-0195 | MM | 1500 | TUBE 12 MM PA BLUE | |
| T40W9072 | 90166-0081 | MM | 2500 | TUBE 6 MM PA BLUE | |
| T40W9074 | 90166-0081 | MM | 2700 | TUBE 6 MM PA BLUE | |
| T40W9227 | 90166-0081 | MM | 2500 | TUBE 6 MM PA BLUE | |
| T40W9228 | 90166-0081 | MM | 2500 | TUBE 6 MM PA BLUE | |
| T40W9673 | 90166-0081 | MM | 8000 | TUBE 6 MM PA BLUE | |
| T40W9674 | 90166-0081 | MM | 8000 | TUBE 6 MM PA BLUE | |
| T50W1366 | 90166-0081 | MM | 4000 | TUBE 6 MM PA BLUE | |
| T50W1367 | 90166-0081 | MM | 1000 | TUBE 6 MM PA BLUE | |
| T50W6002 | 90166-0081 | MM | 500 | TUBE 6 MM PA BLUE | |
| T50W6003 | 90166-0081 | MM | 500 | TUBE 6 MM PA BLUE | |
| T50W6004 | 90166-0013 | MM | 7000 | TUBE 8 MM PA BLUE | |
| T50W9003 | 90166-0095 | MM | 300 | TUBE 4 MM PA BLUE (50M) | |
| T50W9013 | 90166-0095 | MM | 300 | TUBE 4 MM PA BLUE (50M) | |
| T50W9604 | 90166-0081 | MM | 5000 | TUBE 6 MM PA BLUE | |
| T50W9612 | 90166-0081 | MM | 5500 | TUBE 6 MM PA BLUE | |
| T50W9614 | 90166-0081 | MM | 5500 | TUBE 6 MM PA BLUE | |
| U30W1252 | 90166-0081 | MM | 1300 | TUBE 6 MM PA BLUE | |
| U30W1254 | 90166-0081 | MM | 1400 | TUBE 6 MM PA BLUE | |
| U30W1262 | 90166-0081 | MM | 2100 | TUBE 6 MM PA BLUE | |
| U30W1264 | 90166-0081 | MM | 2100 | TUBE 6 MM PA BLUE | |
| U30W1282 | 90166-0081 | MM | 2300 | TUBE 6 MM PA BLUE | |
| U30W1284 | 90166-0081 | MM | 2400 | TUBE 6 MM PA BLUE | |
| U30W1302 | 90166-0081 | MM | 2300 | TUBE 6 MM PA BLUE | |
| U30W1304 | 90166-0081 | MM | 2400 | TUBE 6 MM PA BLUE | |
| U30W1372 | 90166-0081 | MM | 1500 | TUBE 6 MM PA BLUE | |
| U30W1374 | 90166-0081 | MM | 1500 | TUBE 6 MM PA BLUE | |
| U30W1464 | 90166-0013 | MM | 1800 | TUBE 8 MM PA BLUE | |

| Pos | Part No | UN | Qty | Description | Page No |
|---|---|---|---|---|---|

Machine Type | Group Description | Used-In | Group Number | Page No

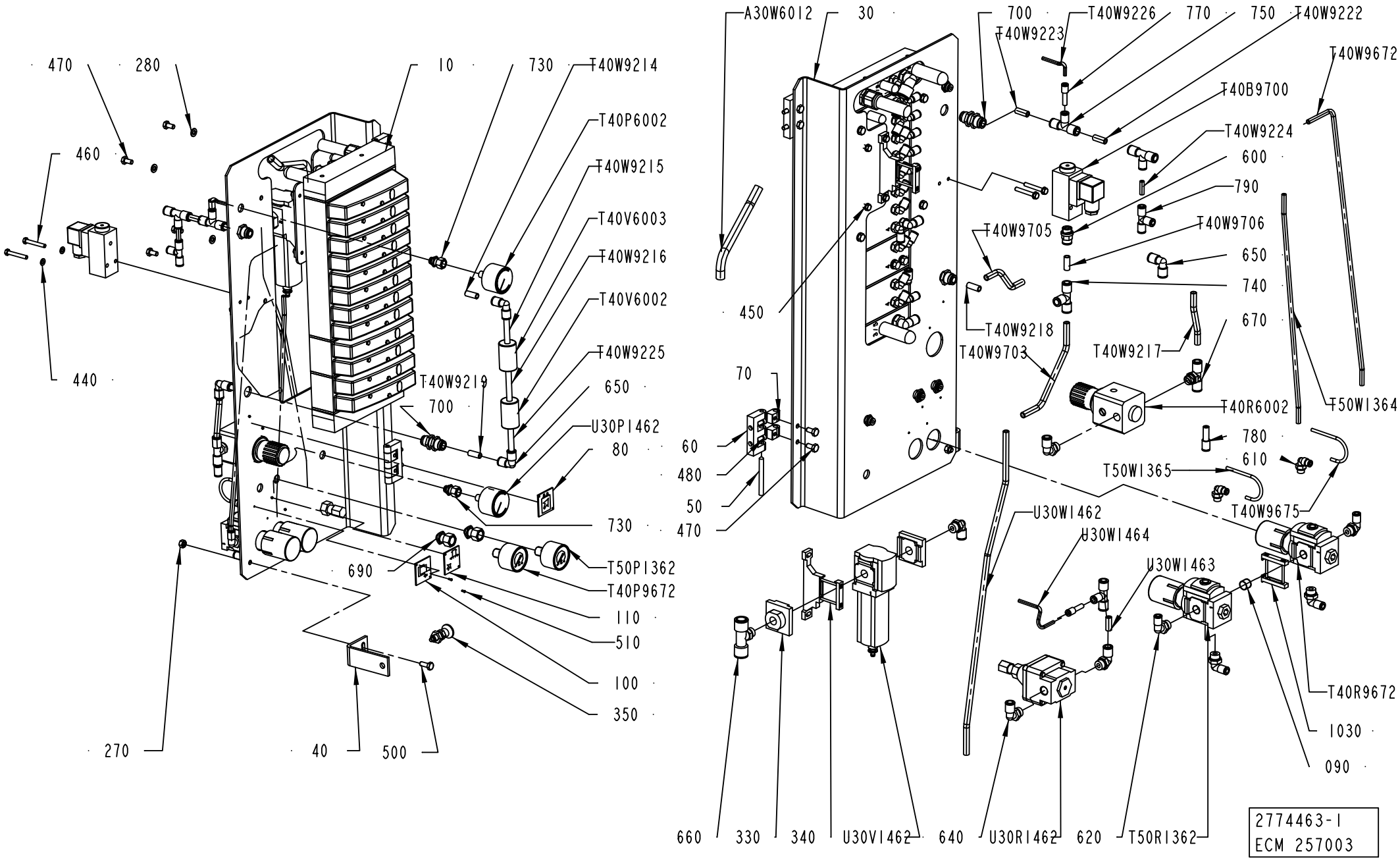
A30W6012
30
700
T40W9226
770
750
T40W9222
T40W9223
T40W9672
T40B9700
T40W9224
600
790
T40W9705
T40W9706
650
740
670
T40W9218
T40W9703
T40W9217
T40R6002
T50W1364
780
610
T50W1365
T40W9675
U30W1462
U30W1464
U30W1463
T40R9672
1030
090
450
70
60
480
50
470
470
280
10
730
T40W9214
T40P6002
460
T40W9215
T40V6003
T40W9216
T40V6002
T40W9225
650
440
T40W9219
700
U30P1462
80
730
T50P1362
690
T40P9672
110
510
100
350
270
40
500
660
330
340
U30V1462
640
U30R1462
620
T50R1362
2774463-1
ECM 257003

ECM: 257013 - 20070628
Group number: 2774463-0100
Assembly Drawing: 2774463-1_1_AA

| Pos | Part No | UN | Qty | Description | Page No |
|---|---|---|---|---|---|
| **A3/FLEX** | | | | | |
| 030 | 2776370-0000 | | 1 | PANEL | |
| 750 | 350011-0002 | | 3 | PUSH-IN T-FITTING QS-F-8-6 | |
| 770 | 350006-0001 | | 2 | PUSH-IN FITTING QS-F-6H-4 | |
| **Common Parts** | | | | | |
| 010 | 2776368-0100 | | 1 | VALVE GROUP ..... | **2-51** |
| 040 | 2546319-0000 | | 1 | HOLDER | |
| 050 | 988685-0000 | | 2 | PIN | |
| 060 | 1035792-0000 | | 2 | E-HINGE | |
| 070 | 1129770-0000 | | 2 | BLOCKING PIECE | |
| 080 | 978603-0000 | | 1 | SIGN | |
| 090 | 90600-1169 | | 1 | PLUG G1/4, B-1/4-NPT | |
| 100 | 2598025-0000 | | 1 | SIGN | |
| 1030 | 90459-2248 | | 1 | BRACKET, MS4-MV | |
| 110 | 1129370-0000 | | 1 | SIGN | |
| 270 | 312605-0316 | | 1 | HEXAGON NUT, M6M M6 A280 | |
| 280 | 315105-0153 | | 4 | WASHER BRB 6,4X12 RFR | |
| 330 | 90459-2246 | | 1 | END PLATE, MS4-AGB | |
| 340 | 90459-2247 | | 2 | BRACKET, MS4-WP | |
| 350 | 90051-0112 | | 1 | LOCK KNOB, NO. GN 617 NIK5 | |
| 440 | 315106-0146 | | 6 | WASHER ISO 7089-5-200 HV A4 | |
| 450 | 312105-0325 | | 4 | SCREW M6S ISO 4017 M5X10 A480 | |
| 460 | 312105-0337 | | 2 | SCREW M6S ISO 4014 M5X35 A480 | |
| 470 | 312105-0366 | | 8 | SCREW M6S ISO 4017 M6X12 A480 | |
| 480 | 312115-0327 | | 4 | SCREW ISO4762 M5X12 A4 80 | |
| 500 | 312105-0368 | | 1 | SCREW M6S ISO 4017 M6X16 A480 | |
| 510 | 312502-0120 | | 6 | DRIVE SCREW ROUND HEAD KDS 0X5 | |
| 600 | 350001-0009 | | 2 | PUSH-IN FITTING QS-F-G1/4-8 | |
| 610 | 350002-0005 | | 2 | PUSH-IN L-FITTING QSL-F-G1/8-4 | |
| 620 | 350002-0008 | | 4 | PUSH-IN L-FITTING QSL-F-G1/4-6 | |
| 640 | 350002-0009 | | 2 | PUSH-IN L-FITTING QSL-F-G1/4-8 | |
| 650 | 350004-0003 | | 3 | PUSH-IN L-FITTING QSL-F-8 | |
| 660 | 350007-0011 | | 1 | PUSH-IN T-FITTING QST-F-G1/4-12 | |
| 670 | 350007-0009 | | 1 | PUSH-IN T-FITTING QST-F-G1/4-8 | |
| 690 | 90459-7333 | | 2 | PUSH-IN FITTING QSSF-1/4-4-B | |
| 700 | 350010-0003 | | 2 | PUSH-IN BULKHEAD FITTING QSS-F-8 | |
| 730 | 90459-7332 | | 2 | PUSH-IN FITTING QSSF-1/8-4-B | |
| 740 | 350005-0003 | | 1 | PUSH-IN T-FITTING QST-F-8 | |
| 780 | 350006-0003 | | 1 | PUSH-IN FITTING QS-F-8H-6 | |
| 790 | 350005-0002 | | 1 | PUSH-IN T-FITTING QST-F-6 | |
| A30W6012 | 315400-0010 | MM | 200 | TUBE PUN-H-12X2-BL | |
| T40B9700 | 90274-0103 | | 1 | PRESSURE GUARD PEV-1/4-B (10773 | |
| T40P6002 | 90458-2969 | | 1 | PRESSURE GAUGE, MAP-40-1-1/8-EN | |
| T40P9672 | 90459-7344 | | 1 | PRESSURE GAUGE, MA-40-6-R1/4-EN | |
| T40R6002 | 90458-0254 | | 1 | PRECISION PRESSURE REGULATOR,LRP-1/4-0,7 | |
| T40R9672 | 90459-4554 | | 1 | REGULATOR, MS4-LRB-1/4-D7-A8-AS | |
| T40V6002 | 90277-0046 | | 1 | FILTER / 9933-05-101 | |
| T40V6003 | 90277-0045 | | 1 | FILTER / 9900-05-BK | |
| T40W9214 | 315400-0004 | MM | 100 | TUBE PUN-H-8X1,25-BL | |
| T40W9215 | 315400-0004 | MM | 100 | TUBE PUN-H-8X1,25-BL | |
| T40W9216 | 315400-0004 | MM | 100 | TUBE PUN-H-8X1,25-BL | |
| T40W9217 | 315400-0004 | MM | 100 | TUBE PUN-H-8X1,25-BL | |
| T40W9218 | 315400-0004 | MM | 100 | TUBE PUN-H-8X1,25-BL | |
| T40W9219 | 315400-0004 | MM | 100 | TUBE PUN-H-8X1,25-BL | |
| T40W9222 | 315400-0004 | MM | 100 | TUBE PUN-H-8X1,25-BL | |
| T40W9223 | 315400-0004 | MM | 100 | TUBE PUN-H-8X1,25-BL | |
| T40W9224 | 315400-0001 | MM | 100 | TUBE PUN-H-6X1-BL | |
| T40W9225 | 315400-0004 | MM | 100 | TUBE PUN-H-8X1,25-BL | |
| T40W9226 | 315400-0016 | MM | 100 | TUBE PUN-H-4X0,75-BL | |
| T40W9672 | 315400-0001 | MM | 100 | TUBE PUN-H-6X1-BL | |
| T40W9675 | 315400-0016 | MM | 100 | TUBE PUN-H-4X0,75-BL | |
| T40W9703 | 315400-0004 | MM | 100 | TUBE PUN-H-8X1,25-BL | |
| T40W9705 | 315400-0004 | MM | 100 | TUBE PUN-H-8X1,25-BL | |
| T40W9706 | 315400-0004 | MM | 100 | TUBE PUN-H-8X1,25-BL | |
| T50P1362 | 90459-7344 | | 1 | PRESSURE GAUGE, MA-40-6-R1/4-EN | |
| T50R1362 | 90459-4554 | | 1 | REGULATOR, MS4-LRB-1/4-D7-A8-AS | |
| T50W1364 | 315400-0001 | MM | 100 | TUBE PUN-H-6X1-BL | |
| T50W1365 | 315400-0016 | MM | 100 | TUBE PUN-H-4X0,75-BL | |
| U30P1462 | 90458-2969 | | 1 | PRESSURE GAUGE, MAP-40-1-1/8-EN | |
| U30R1462 | 90113-0056 | | 1 | REGULATOR, 11-818-998 | |
| U30V1462 | 90459-2338 | | 1 | FILTER, MS4-LF-1/4-CRV | |
| | *90459-3818* | | *1* | *FILTER CARTRIDGE, MS4-LFP-C* | |
| U30W1462 | 315400-0004 | MM | 100 | TUBE PUN-H-8X1,25-BL | |
| U30W1463 | 315400-0004 | MM | 100 | TUBE PUN-H-8X1,25-BL | |
| U30W1464 | 315400-0016 | MM | 100 | TUBE PUN-H-4X0,75-BL | |

Machine Type | Group Description | Used-In | Group Number | Page No

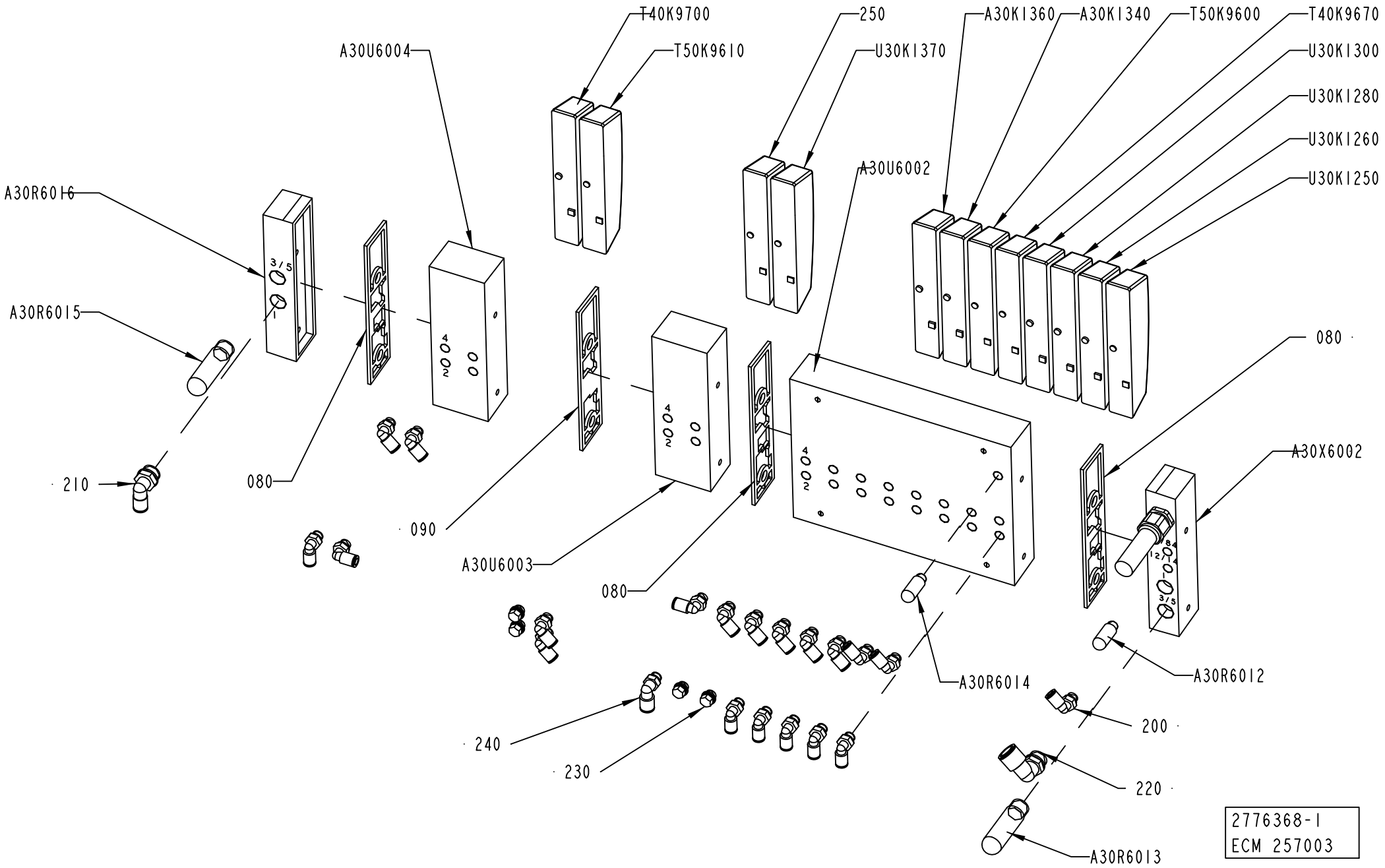
T40K9700
T50K9610
250
U30K1370
A30K1360
A30K1340
T50K9600
T40K9670
U30K1300
U30K1280
U30K1260
U30K1250
A30U6004
A30U6002
A30R6016
A30R6015
080
210
090
A30U6003
080
A30X6002
A30R6014
A30R6012
200
240
230
220
A30R6013
2776368-1
ECM 257003

ECM: 257012 - 20070628
Group number: 2776368-0100
Assembly Drawing: 2776368-1_1_AA

| Pos | Part No | UN | Qty | Description | Page No |
|---|---|---|---|---|---|
| **A3/FLEX** | | | | | |
| 200 | 350002-0006 | | 20 | PUSH-IN L-FITTING QSL-F-G1/8-6 | |
| 230 | 90459-0698 | | 4 | PLUG, EXT. G-THREAD, G1/8 | |
| 240 | 350002-0007 | | 1 | PUSH-IN L-FITTING QSL-F-G1/8-8 | |
| 250 | 90458-1215 | | 1 | COVER PLATE FOR EMPTY VALVE POSITION | |
| T50K9600 | 90458-1194 | | 1 | MONOSTABLE VALVE 5/2 | |
| T50K9610 | 90458-1194 | | 1 | MONOSTABLE VALVE 5/2 | |
| U30K1360 | 90458-1202 | | 1 | VALVES 2X3/2, CLOSED | |
| **Common Parts** | | | | | |
| 080 | 90458-1207 | | 3 | SEALING, STANDARD | |
| 090 | 90458-1208 | | 1 | SEALING, CHANNEL 1 BLOCKED | |
| 210 | 350002-0012 | | 1 | PUSH-IN L-FITTING QSL-F-G3/8-8 | |
| 220 | 350002-0014 | | 1 | PUSH-IN L-FITTING QSL-F-G3/8-12 | |
| A30K1340 | 90458-1202 | | 1 | VALVES 2X3/2, CLOSED | |
| A30R6012 | 90328-0047 | | 1 | SILENCER G1/8" | |
| A30R6013 | 90328-0024 | | 1 | SILENCER G3/8" | |
| A30R6014 | 90328-0047 | | 1 | SILENCER G1/8" | |
| A30R6015 | 90328-0024 | | 1 | SILENCER G3/8" | |
| A30R6016 | 90458-1213 | | 1 | RIGHT ENDPLATE INTERNAL PILOT AIR | |
| A30U6002 | 90458-1205 | | 1 | BASIC SUB-BASE 8 VALVES, CDVI5.0-GB8-MP | |
| A30U6003 | 90458-1206 | | 1 | EXP. SUB-BASE 2 VALVES, CDVI5.0-EB | |
| A30U6004 | 90458-1206 | | 1 | EXP. SUB-BASE 2 VALVES, CDVI5.0-EB | |
| A30X6002 | 90458-1212 | | 1 | LEFT ENDPLATE INCL. 10M CABLE | |
| T40K9670 | 90458-1194 | | 1 | MONOSTABLE VALVE 5/2 | |
| T40K9700 | 90458-1200 | | 1 | VALVE OPEN IN MID-POSITION 5/3 | |
| U30K1250 | 90458-1194 | | 1 | MONOSTABLE VALVE 5/2 | |
| U30K1260 | 90458-1202 | | 1 | VALVES 2X3/2, CLOSED | |
| U30K1280 | 90458-1202 | | 1 | VALVES 2X3/2, CLOSED | |
| U30K1300 | 90458-1202 | | 1 | VALVES 2X3/2, CLOSED | |
| U30K1370 | 90458-1194 | | 1 | MONOSTABLE VALVE 5/2 | |

| Pos | Part No | UN | Qty | Description | Page No |
|---|---|---|---|---|---|

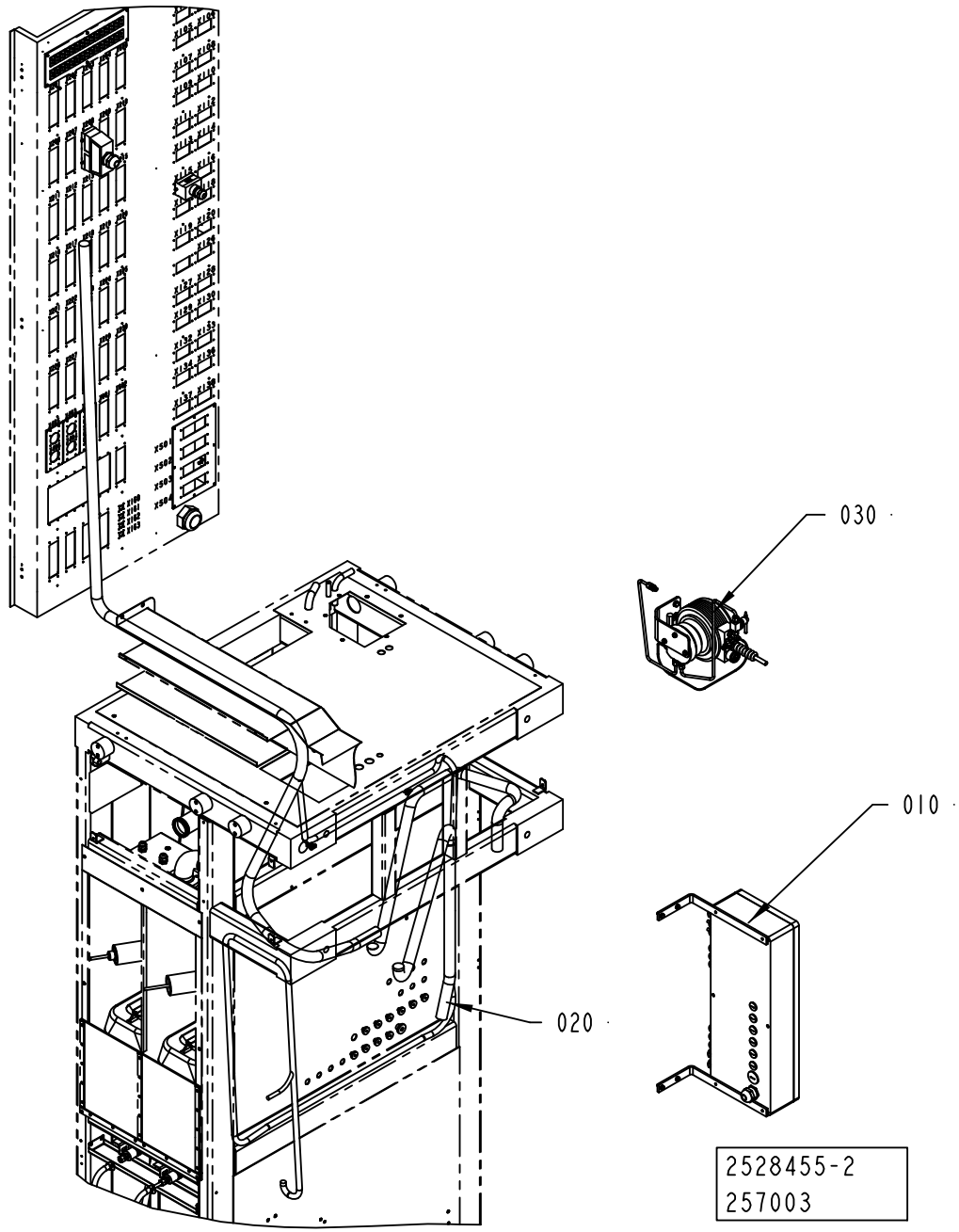
030
010
020
2528455-2
257003

ECM: 257008 - 20070628
Group number: 2528455-0200
Assembly Drawing: 2528455-2_1_AA

| Pos | Part No | UN | Qty | Description | Page No |
|---|---|---|---|---|---|
| - | | | | | |
| 010 | 2785239-0100 | | 1 | CONNECTION BOX | **2-55, 2-57** |
| 020 | 2529499-0200 | | 1 | CABLE HARNESS | **2-61** |
| 030 | 2519574-0200 | | 1 | HYDROGEN PEROXIDE | **2-63** |

| Pos | Part No | UN | Qty | Description | Page No |
|---|---|---|---|---|---|

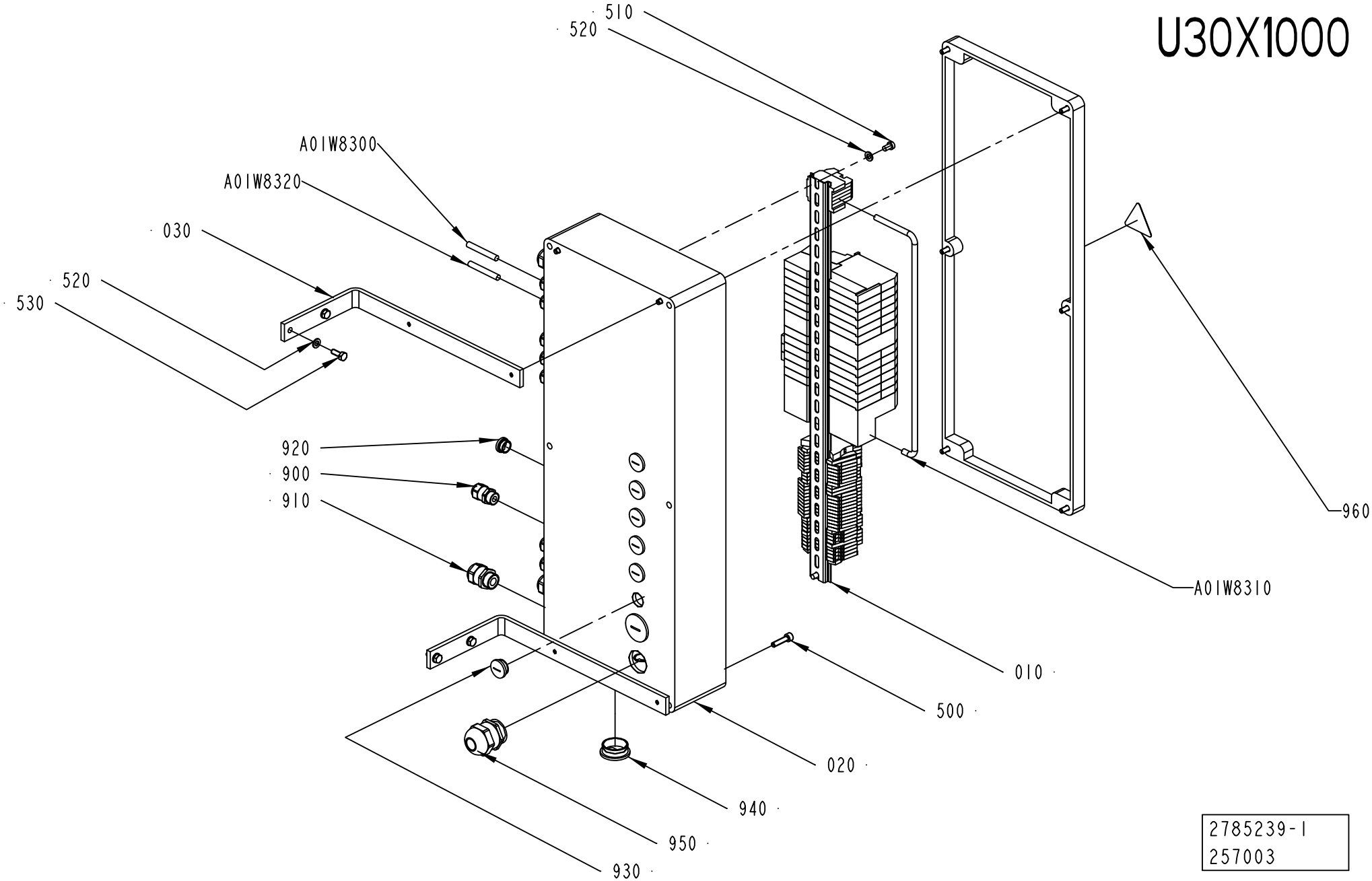
U30X1000
510
520
A01W8300
A01W8320
030
520
530
920
900
910
960
A01W8310
010
500
020
940
950
930
2785239-1
257003

ECM: 257007 - 20070628
Group number: 2785239-0100
Assembly Drawing: 2785239-1_1_AA

This list covers pages from 2-54 to 2-57

| Pos | Part No | UN | Qty | Description | Page No |
|---|---|---|---|---|---|
| **A3/FLEX NODIMC (See drawing on page: 2-54)** | | | | | |
| 900 | 90458-0306 | | 13 | CABLE GLAND, M16X1,5, NO.5311 1010 | |
| 920 | 90458-1307 | | 17 | BLIND PLUG CIRCULAR, M16X1,5 514GFK/216 | |
| **A3/FLEX DIMC/FLEX (See drawing on page: 2-56)** | | | | | |
| 900 | 90458-0306 | | 14 | CABLE GLAND, M16X1,5, NO.5311 1010 | |
| 920 | 90458-1307 | | 16 | BLIND PLUG CIRCULAR, M16X1,5 514GFK/216 | |
| **Common Parts** | | | | | |
| 010 | 2702944-0100 | | 1 | TERMINAL BLOCK ..... | **2-59** |
| 020 | 2785236-0000 | | 1 | CONNECTION BOX | |
| 030 | 2790687-0000 | | 2 | SUPPORT | |
| 500 | 312115-0372 | | 4 | SCREW ISO4762 M6X25 A4 80 | |
| 510 | 312125-0364 | | 2 | SCREW ISO 1207 M6X10 A4 | |
| 520 | 315105-0153 | | 6 | WASHER BRB 6,4X12 RFR | |
| 530 | 312105-0368 | | 4 | SCREW M6S ISO 4017 M6X16 A480 | |
| 910 | 90458-0307 | | 4 | CABLE GLAND, M20X1,5, NO.5311 1020 | |
| 930 | 90458-1308 | | 14 | BLIND PLUG CIRCULAR, M20X1,5 514GFK/220 | |
| 940 | 90458-1310 | | 2 | BLIND PLUG CIRCULAR, M32X1,5 514GFK/232 | |
| 950 | 90458-0309 | | 1 | CABLE GLAND, M32X1,5, NO.5311 1040 | |
| 960 | 359705-0015 | | 1 | WARNING SIGN ISO, RISK OF ELECTRIC SHOCK | |
| A01W8300 | 90459-2530 | MM | 6500 | DEVICENET CABLE THIN | |
| A01W8310 | 90459-2530 | MM | 500 | DEVICENET CABLE THIN | |
| A01W8320 | 90459-2530 | MM | 3500 | DEVICENET CABLE THIN | |

| Pos | Part No | UN | Qty | Description | Page No |
|---|---|---|---|---|---|

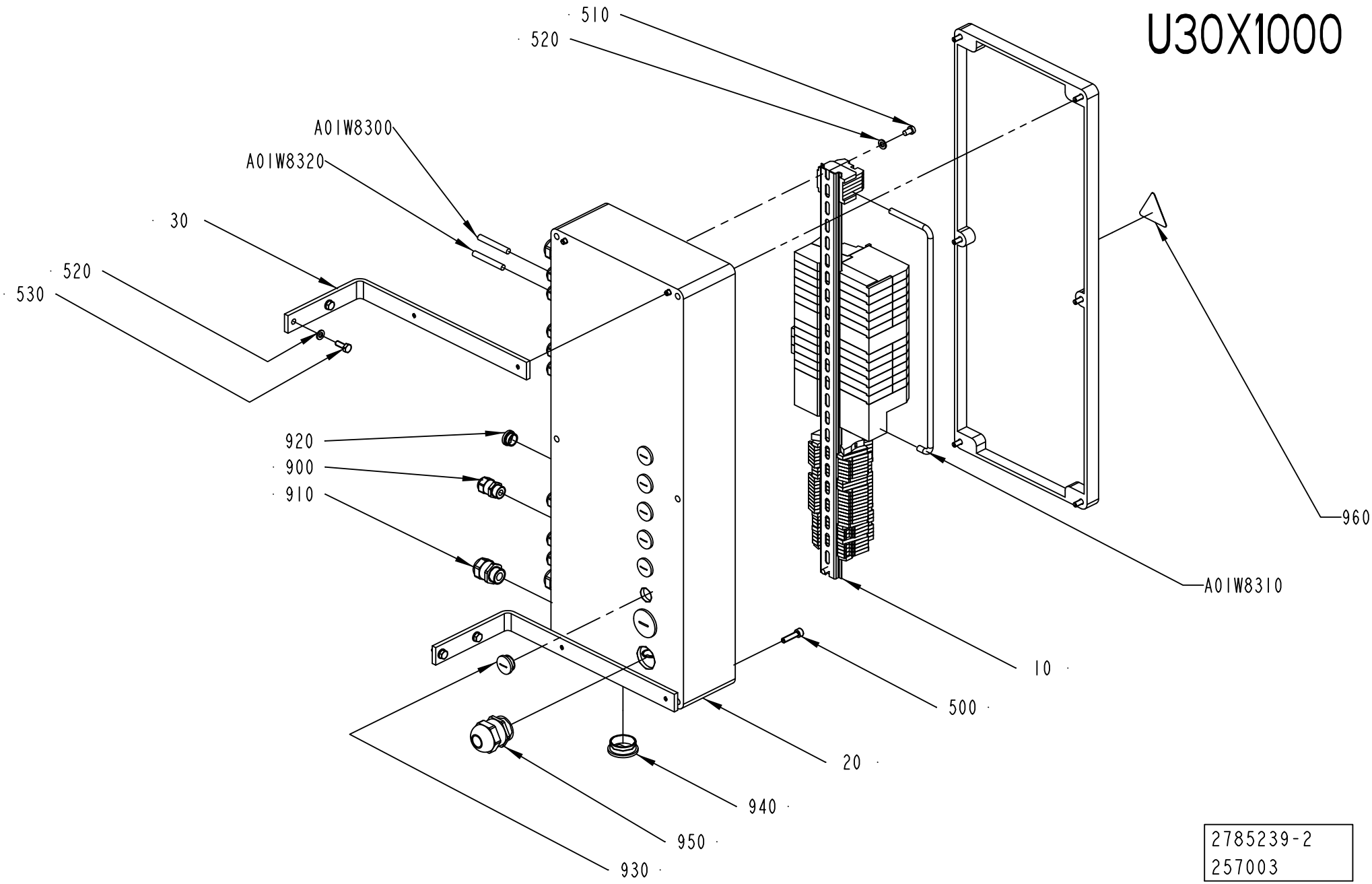
U30X1000
510
520
A01W8300
A01W8320
30
520
530
920
900
910
960
A01W8310
10
500
20
940
950
930
2785239-2
257003

ECM: 257007 - 20070628
Group number: 2785239-0100
Assembly Drawing: 2785239-2_1_AA

This list covers pages from 2-54 to 2-57

| Pos | Part No | UN | Qty | Description | Page No |
|---|---|---|---|---|---|
| **A3/FLEX NODIMC (See drawing on page: 2-54)** | | | | | |
| 900 | 90458-0306 | | 13 | CABLE GLAND, M16X1,5, NO.5311 1010 | |
| 920 | 90458-1307 | | 17 | BLIND PLUG CIRCULAR, M16X1,5 514GFK/216 | |
| **A3/FLEX DIMC/FLEX (See drawing on page: 2-56)** | | | | | |
| 900 | 90458-0306 | | 14 | CABLE GLAND, M16X1,5, NO.5311 1010 | |
| 920 | 90458-1307 | | 16 | BLIND PLUG CIRCULAR, M16X1,5 514GFK/216 | |
| **Common Parts** | | | | | |
| 010 | 2702944-0100 | | 1 | TERMINAL BLOCK ..... | **2-59** |
| 020 | 2785236-0000 | | 1 | CONNECTION BOX | |
| 030 | 2790687-0000 | | 2 | SUPPORT | |
| 500 | 312115-0372 | | 4 | SCREW ISO4762 M6X25 A4 80 | |
| 510 | 312125-0364 | | 2 | SCREW ISO 1207 M6X10 A4 | |
| 520 | 315105-0153 | | 6 | WASHER BRB 6,4X12 RFR | |
| 530 | 312105-0368 | | 4 | SCREW M6S ISO 4017 M6X16 A480 | |
| 910 | 90458-0307 | | 4 | CABLE GLAND, M20X1,5, NO.5311 1020 | |
| 930 | 90458-1308 | | 14 | BLIND PLUG CIRCULAR, M20X1,5 514GFK/220 | |
| 940 | 90458-1310 | | 2 | BLIND PLUG CIRCULAR, M32X1,5 514GFK/232 | |
| 950 | 90458-0309 | | 1 | CABLE GLAND, M32X1,5, NO.5311 1040 | |
| 960 | 359705-0015 | | 1 | WARNING SIGN ISO, RISK OF ELECTRIC SHOCK | |
| A01W8300 | 90459-2530 | MM | 6500 | DEVICENET CABLE THIN | |
| A01W8310 | 90459-2530 | MM | 500 | DEVICENET CABLE THIN | |
| A01W8320 | 90459-2530 | MM | 3500 | DEVICENET CABLE THIN | |

| Pos | Part No | UN | Qty | Description | Page No |
|---|---|---|---|---|---|

# U30X1000

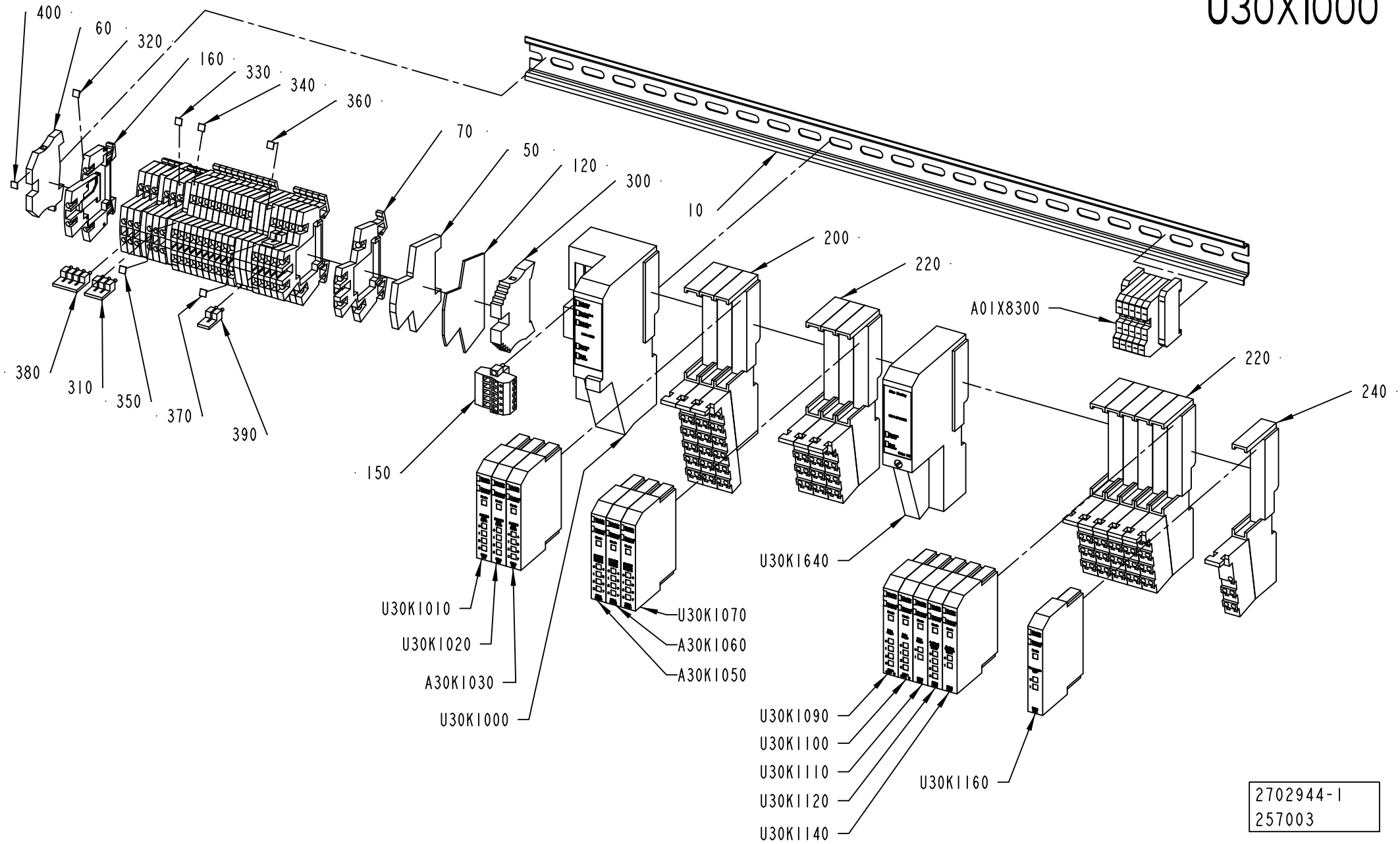
400
60
320
160
330
340
360
70
50
120
300
10
200
220
A01X8300
220
240
380
310
350
370
390
150
U30K1010
U30K1020
A30K1030
U30K1000
U30K1070
A30K1060
A30K1050
U30K1640
U30K1090
U30K1100
U30K1110
U30K1120
U30K1140
U30K1160
2702944-1
257003

ECM: 257006 - 20070628
Group number: 2702944-0100
Assembly Drawing: 2702944-1_1_AA

| Pos | Part No | UN | Qty | Description | Page No |
|---|---|---|---|---|---|
| - | | | | | |
| 010 | 2696979-0000 | | 1 | RAIL | |
| 050 | 353024-0212 | | 6 | EARTH TERMINAL, 10363.0 | |
| 060 | 353024-0204 | | 1 | EARTH TERMINAL WPE 2,5 | |
| 070 | 90077-0113 | | 16 | FEED THROUGH TERMINAL, 10-00102150-1 | |
| 120 | 90077-0114 | | 1 | END PLATE, WAP/WDK 2,5 | |
| 150 | 90459-5574 | | 1 | DEVICENET OPEN STYLE CONN, 1787-PLUG10R | |
| 160 | 90457-0049 | | 7 | TERMINAL BLOCK WDK 2.5V, 102230 | |
| 200 | 90459-2527 | | 3 | REMOTE I/O BASE MODULE 12 POINTS | |
| 220 | 90459-2526 | | 8 | REMOTE I/O BASE MODULE 8 POINTS, 1734-TB | |
| 240 | 90459-2528 | | 1 | REMOTE I/O BASE MODULE FOR THERMOCOUPLE | |
| 300 | 353031-0203 | | 1 | END SUPPORT, WEW 35/2 | |
| 310 | 353034-0030 | | 1 | BRIDGE CONNECTOR WQV 2,5/10, 10544.6 | |
| 320 | 359011-0807 | | 1 | MARKING PLATES 5-FW 1-50 | |
| 330 | 359011-0808 | | 1 | MARKING PLATES 5-FW 51-100 | |
| 340 | 359011-0809 | | 2 | MARKING PLATES 5-FW 101-150 | |
| 350 | 359011-0810 | | 2 | MARKING PLATES 5-FW 151-200 | |
| 360 | 359011-0811 | | 2 | MARKING PLATES 5-FW 201-2 | |
| 370 | 359011-0812 | | 2 | SET OF SIGNS 5-FW 251-300 | |
| 380 | 353034-0030 | | 1 | BRIDGE CONNECTOR WQV 2,5/10, 10544.6 | |
| 390 | 353034-0030 | | 2 | BRIDGE CONNECTOR WQV 2,5/10, 10544.6 | |
| 400 | 359011-0819 | | 1 | MARKING PLATES 5-GW (EARTH) | |
| A01X8300 | 90459-2519 | | 1 | OPEN STYLE TAP | |
| A30K1030 | 90459-6561 | | 1 | DIGITAL INPUT 8 PTS SINK, 1734-IB8/C | |
| A30K1050 | 90459-6560 | | 1 | DIGITAL OUTPUT 8 PTS, 1734-OB8E/C | |
| A30K1060 | 90459-6560 | | 1 | DIGITAL OUTPUT 8 PTS, 1734-OB8E/C | |
| U30K1000 | 90459-2494 | | 1 | DEVICENET I/O ADAPTER MODULE, 1734-ADN | |
| U30K1010 | 90459-2503 | | 1 | DIGITAL INPUT 4 PTS SINK, 1734-IB4 | |
| U30K1020 | 90459-2503 | | 1 | DIGITAL INPUT 4 PTS SINK, 1734-IB4 | |
| U30K1070 | 90459-6560 | | 1 | DIGITAL OUTPUT 8 PTS, 1734-OB8E/C | |
| U30K1090 | 90459-5261 | | 1 | REMOTE I/O, RELAY OUTP. 4 PTS,1734-OW4/C | |
| U30K1100 | 90459-5261 | | 1 | REMOTE I/O, RELAY OUTP. 4 PTS,1734-OW4/C | |
| U30K1110 | 90459-4055 | | 1 | REMOTE I/O RELAY OUTPUT 2 PTS | |
| U30K1120 | 90459-2509 | | 1 | REMOTE I/O ANALOG INPUT CURRENT 2 PTS | |
| U30K1140 | 90459-2508 | | 1 | REMOTE I/O ANALOG INPUT VOLTAGE 2 PTS | |
| U30K1160 | 90459-2512 | | 1 | REMOTE I/O THERMOCOUPLE INPUT 2 PTS | |
| U30K1640 | 90459-2500 | | 1 | EXPANSION POWER SUPPLY MODULE | |

| Pos | Part No | UN | Qty | Description | Page No |
|---|---|---|---|---|---|

Machine Type | Group Description | Used-In | Group Number | Page No

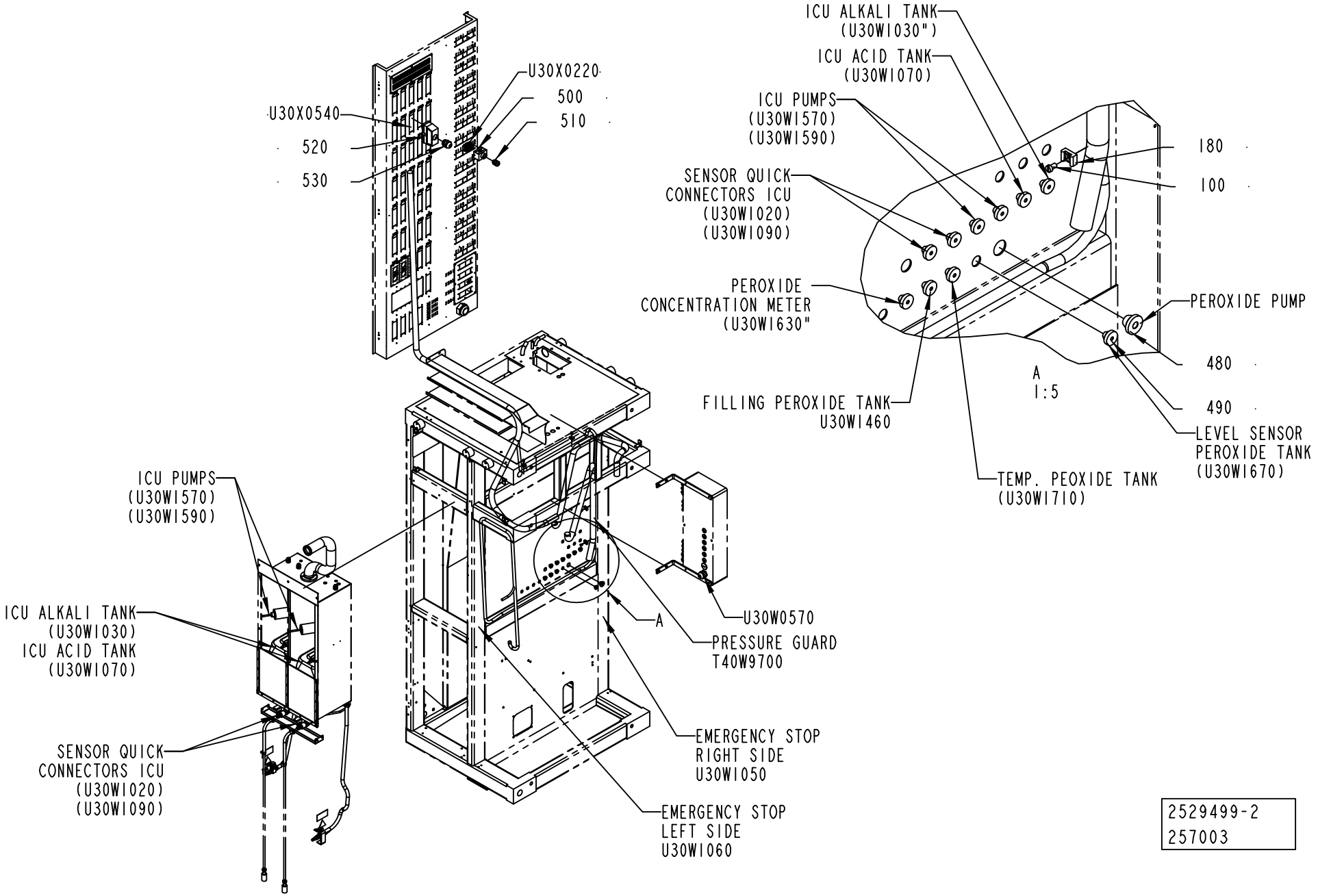


2529499-2
257003

ECM: 257005 - 20070628
Group number: 2529499-0200
Assembly Drawing: 2529499-2_1_AA

| Pos | Part No | UN | Qty | Description | Page No |
|---|---|---|---|---|---|
| - | | | | | |
| 100 | 312125-0364 | | 12 | SCREW ISO 1207 M6X10 A4 | |
| 180 | 352113-0204 | | 12 | ANCHOR PLATES FOR STRIPS, TYPE TM3S25-M | |
| 480 | 90015-0021 | | 1 | LEAD-IN, TET10-14, E-1458023 | |
| 490 | 90015-0020 | | 10 | LEAD-IN, TET5-7, E-1458016 | |
| 500 | 90459-6632 | | 1 | HOOD 6 B TOP ENTRY, 19 30 006 1440 | |
| 510 | 90458-0307 | | 1 | CABLE GLAND, M20X1,5, NO.5311 1020 | |
| 520 | 90459-6636 | | 1 | HOOD 24 B TOP ENTRY, 19 30 024 0427 | |
| 530 | 90458-0309 | | 1 | CABLE GLAND, M32X1,5, NO.5311 1040 | |
| T40W9700 | 351150-0403 | M | 4 | CABLE OLFLEX 3X0,75 MM2 LIGHT/GREY | |
| U30W0570 | 351150-0425 | MM | 8000 | CABLE OLFLEX 25X0,75 MM2 LIGHT/GREY | |
| U30W1050 | 351150-0406 | MM | 5000 | CABLE OLFLEX 7X0,75 MM2 LIGHT/GREY | |
| U30W1060 | 351150-0406 | MM | 5000 | CABLE OLFLEX 7X0,75 MM2 LIGHT/GREY | |
| U30X0220 | 90110-0052 | | 1 | MALE INSERT HAN 6E 09 33 006 2601 | |
| U30X0540 | 90110-0056 | | 1 | MALE INSERT HAN 24 E 09 33 024 2601 | |

| Pos | Part No | UN | Qty | Description | Page No |
|---|---|---|---|---|---|

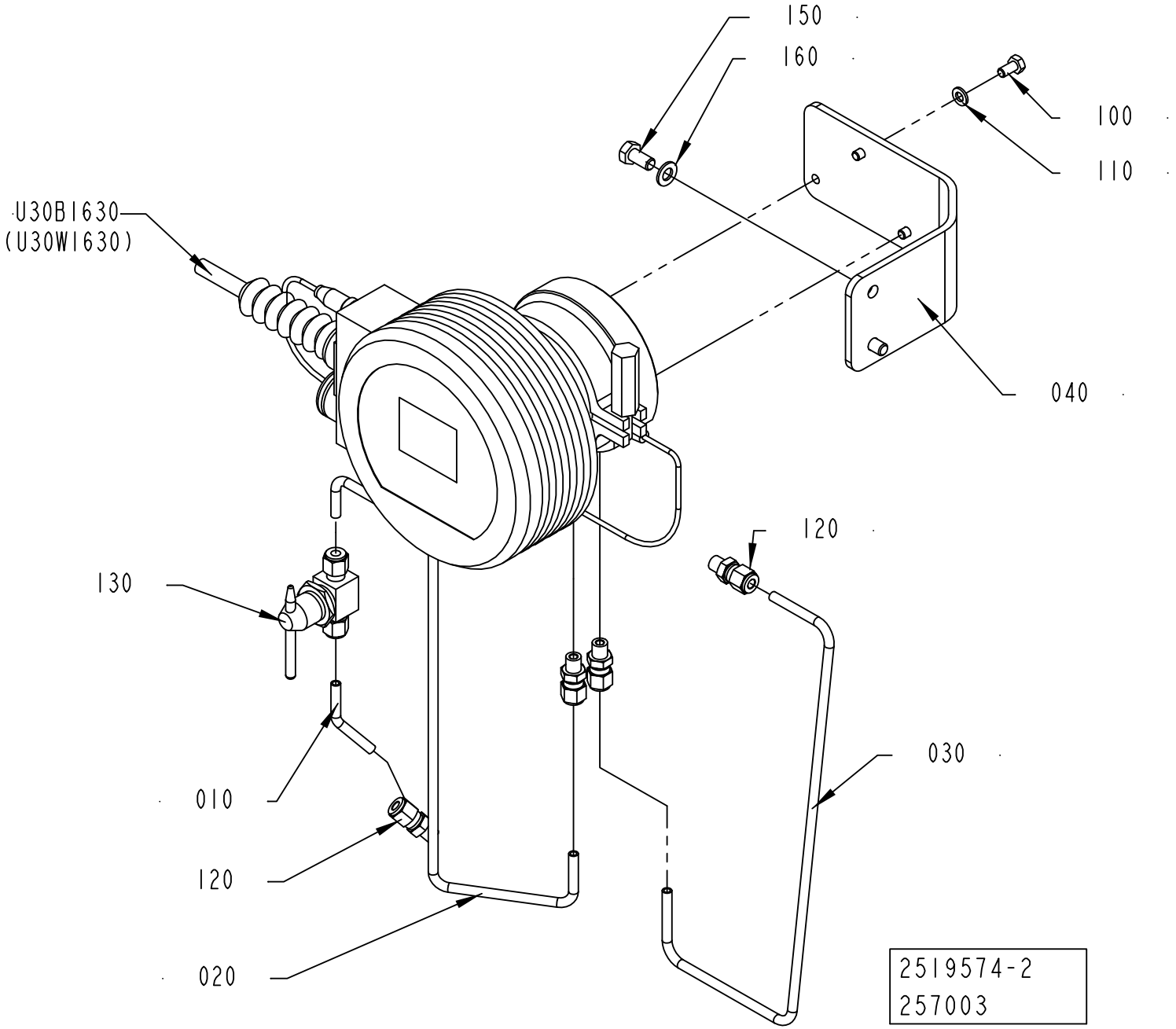
150
160
100
110
U30B1630
(U30W1630)
040
120
130
030
010
120
020
2519574-2
257003

ECM: 314493 - 20070628
Group number: 2519574-0200
Assembly Drawing: 2519574-2_1_AA

| Pos | Part No | UN | Qty | Description | Page No |
|---|---|---|---|---|---|
| - | | | | | |
| 010 | 2501378-0000 | | 1 | PIPE | |
| 020 | 2531500-0000 | | 1 | PIPE | |
| 030 | 2531501-0000 | | 1 | PIPE | |
| 040 | 2519556-0000 | | 1 | BRACKET | |
| 100 | 312105-0366 | | 3 | SCREW M6S ISO 4017 M6X12 A480 | |
| 110 | 315105-0153 | | 3 | WASHER BRB 6,4X12 RFR | |
| 120 | 90458-1477 | | 4 | CONNECTOR 6-1/8 NPT, EXT. TAPERED | |
| 130 | 90458-1478 | | 1 | BALL VALVE SS-43T6MM-SH-10147 | |
| 150 | 312105-0449 | | 2 | SCREW M6S ISO 4017 M8X16 A480 | |
| 160 | 315105-0153 | | 2 | WASHER BRB 6,4X12 RFR | |
| U30B1630 | 90458-1977 | | 1 | REFRACTOMETER SET DA15FC15A DFTP A | |
| | *90458-2269* | | *1* | *DEFLECTOR A0808137* | |
| | *90458-1980* | | *1* | *REFRACTOMETER DA16FC16B* | |
| | *90458-1979* | | *1* | *BELLOWS A0710020* | |
| | *90458-1976* | | *1* | *CABLE A0804273* | |
| | *90458-1950* | | *1* | *PROBE A0803021 IPT100 1/8" GAS TRIC-B* | |
| | *90458-1943* | | *1* | *O-RING A0701145 53,65X2,62 MM* | |
| | *90458-1941* | | *1* | *O-RING A0701180 10,82X1,78 MM* | |
| | *90458-1940* | | *1* | *CLAMP A0515170 3" AISI 304* | |
| | *90458-1893* | | *1* | *CARTRIDGE A0111004* | |
| | *90458-1892* | | *1* | *GASKET A0539066 80,5X90,5X2 MM* | |

| Pos | Part No | UN | Qty | Description | Page No |
|---|---|---|---|---|---|

Machine Type | Group Description | Used-In | Group Number | Page No

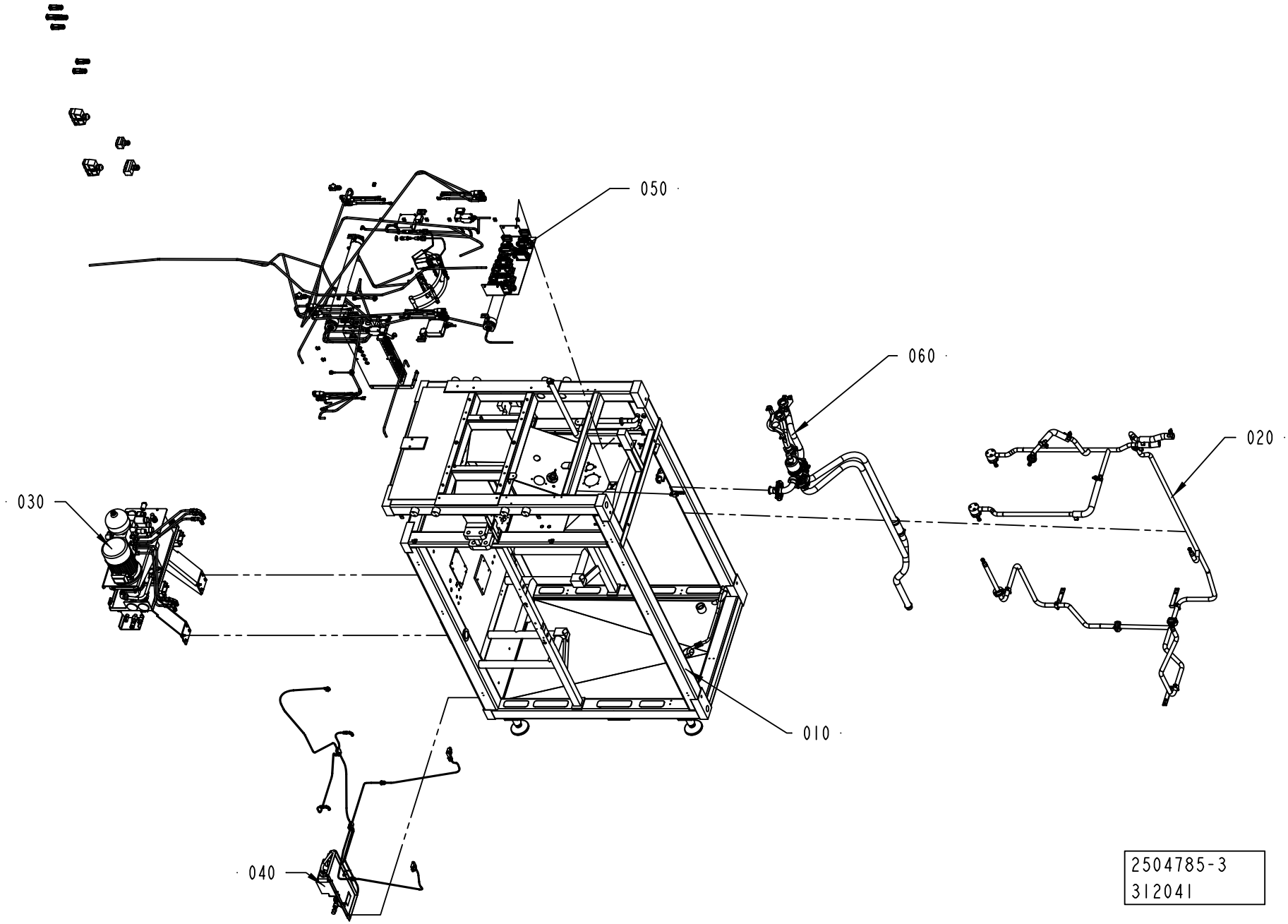
050
060
020
030
010
040
2504785-3
312041

ECM: 312045 - 20070704
Group number: 2504785-0300
Assembly Drawing: 2504785-3_1_AA

| Pos | Part No | UN | Qty | Description | Page No |
|---|---|---|---|---|---|
| - | | | | | |
| 010 | 2504786-0300 | | 1 | MACHINE BODY | **2-67** |
| 020 | 2504787-0200 | | 1 | CLEANING SYSTEM | **2-69** |
| 030 | 2546500-0200 | | 1 | HYDRAULIC SYSTEM | **2-71** |
| 040 | 2529167-0300 | | 1 | LUBRICATING SYSTEM | **2-81** |
| 050 | 2529116-0200 | | 1 | ELECTRICAL SYSTEM | **2-87** |
| 070 | 2504792-0200 | | 1 | DRAINING | **2-109** |

| Pos | Part No | UN | Qty | Description | Page No |
|---|---|---|---|---|---|

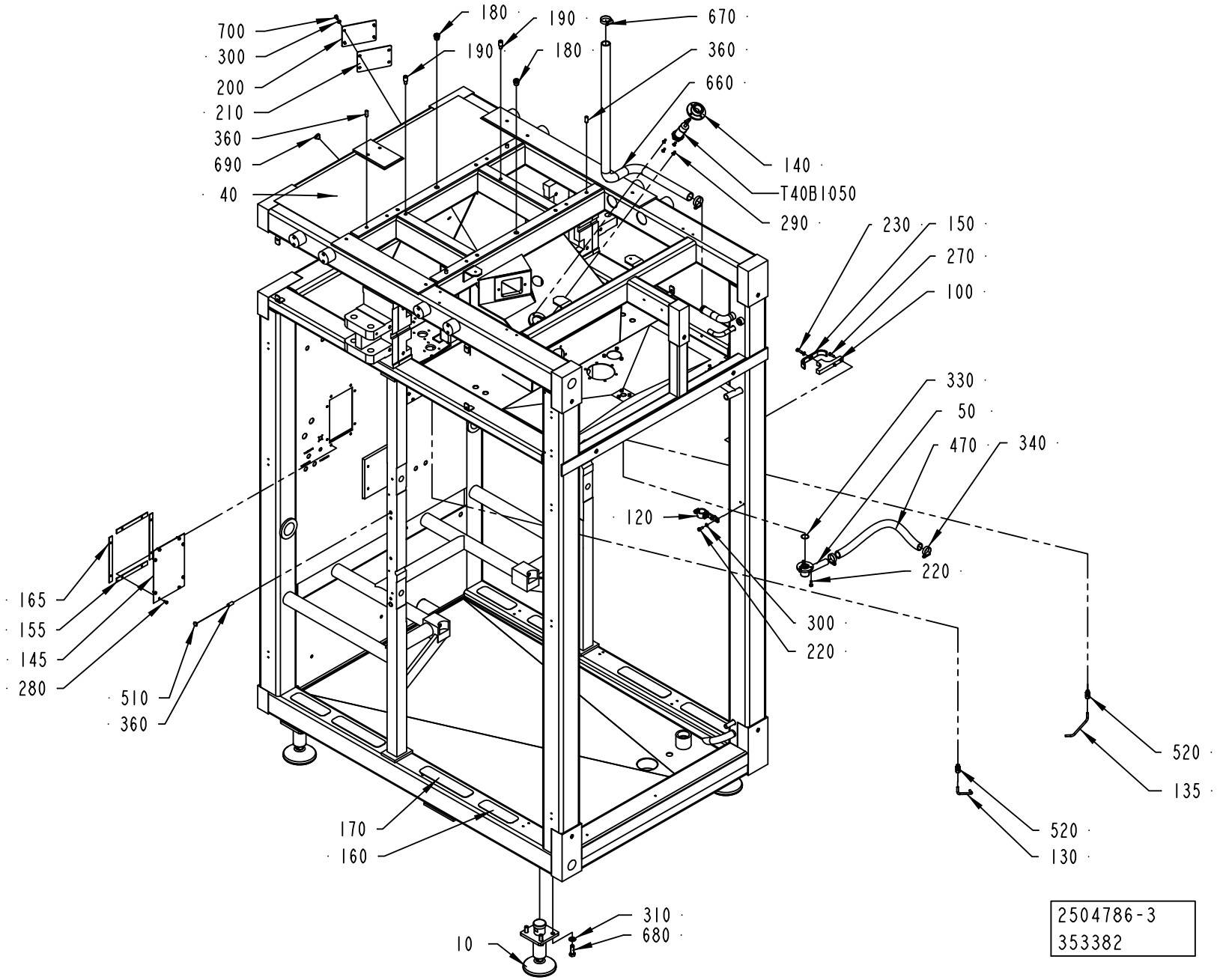
700
300
200
210
360
690
40
180
190
190
180
670
360
660
140
T40B1050
290
230
150
270
100
330
50
470
340
120
220
300
220
165
155
145
280
510
360
170
160
310
680
10
520
135
520
130
2504786-3
353382

ECM: 356307 - 20080528
Group number: 2504786-0300
Assembly Drawing: 2504786-3_1_AC

| Pos | Part No | UN | Qty | Description | Page No |
|---|---|---|---|---|---|
| - | | | | | |
| 10 | 90600-0725 | | 4 | FOOT 25000N, R0772 611223 | |
| 100 | 2510901-0000 | | 1 | BRACKET | |
| 120 | 2510904-0000 | | 1 | HOLDER | |
| 130 | 2542341-0000 | | 1 | DRAINING | |
| 135 | 2543349-0000 | | 1 | DRAINING | |
| 140 | 450457-0000 | | 1 | FLANGE | |
| 145 | 2598844-0000 | | 2 | COVER | |
| 150 | 2537120-0000 | | 1 | BRACKET | |
| 155 | 2529341-0000 | | 4 | GASKET | |
| 160 | 1103298-0000 | | 4 | NON-SKID | |
| 165 | 2529342-0000 | | 4 | GASKET | |
| 170 | 1103300-0000 | | 4 | NON-SKID | |
| 180 | 1490046-0000 | | 2 | PIN | |
| 190 | 2514804-0000 | | 2 | PIN | |
| 200 | 2977927-0000 | | 1 | PLATE | |
| 210 | 2977928-0000 | | 1 | GASKET | |
| 220 | 312105-0368 | | 5 | SCREW M6S ISO 4017 M6X16 A480 | |
| 230 | 312105-0370 | | 1 | SCREW M6S ISO 4017 M6X20 A480 | |
| 270 | 312115-0368 | | 2 | SCREW ISO4762 M6X16 A4 80 | |
| 280 | 312105-0325 | | 16 | SCREW M6S ISO 4017 M5X10 A480 | |
| 290 | 312155-0329 | | 4 | SCREW DIN 7991 MF6S M5X16 A4 70 | |
| 300 | 315105-0153 | | 7 | WASHER BRB 6,4X12 RFR | |
| 310 | 315105-0178 | | 16 | WASHER BRB 13X24 RFR | |
| 330 | 315202-0709 | | 1 | O-RING 23,52X1,78 MM | |
| 340 | 342991-0105 | | 2 | HOSE CLIP,WORM DRIVE TYPE (27)-30 | |
| 360 | 311103-1456 | | 8 | PARALLEL PIN ISO 2338 10M6X24 A1 | |
| 40 | 2809237-0000 | | 1 | FRAME | |
| 470 | 90166-0151 | MM | 440 | HOSE | |
| 50 | 2509552-0000 | | 1 | DRAINING | |
| 510 | 90261-0057 | | 4 | PLUG, BLIND, PLASTIC | |
| 520 | 90030-0184 | | 2 | CONN. STR. GE06LRED71 | |
| 600 | 90157-0016 | ML | 1 | LOCKING FLUID LOCTITE 242 50 ML | |
| 660 | 90166-0158 | MM | 1200 | HOSE | |
| 670 | 342991-0106 | | 2 | HOSE CLIP,WORM DRIVE TYPE (30)-36 | |
| 680 | 312105-0538 | | 16 | SCREW M6S ISO 4017 M12X35 A480 | |
| 690 | 90015-0020 | | 1 | LEAD-IN, TET5-7, E-1458016 | |
| 700 | 312105-0366 | | 4 | SCREW M6S ISO 4017 M6X12 A480 | |
| T40B1050 | 90458-0256 | | 1 | PROX.SWITCH IIA 3010-BPKG/6M | |

| Pos | Part No | UN | Qty | Description | Page No |
|---|---|---|---|---|---|

Machine Type | Group Description | Used-In | Group Number | Page No

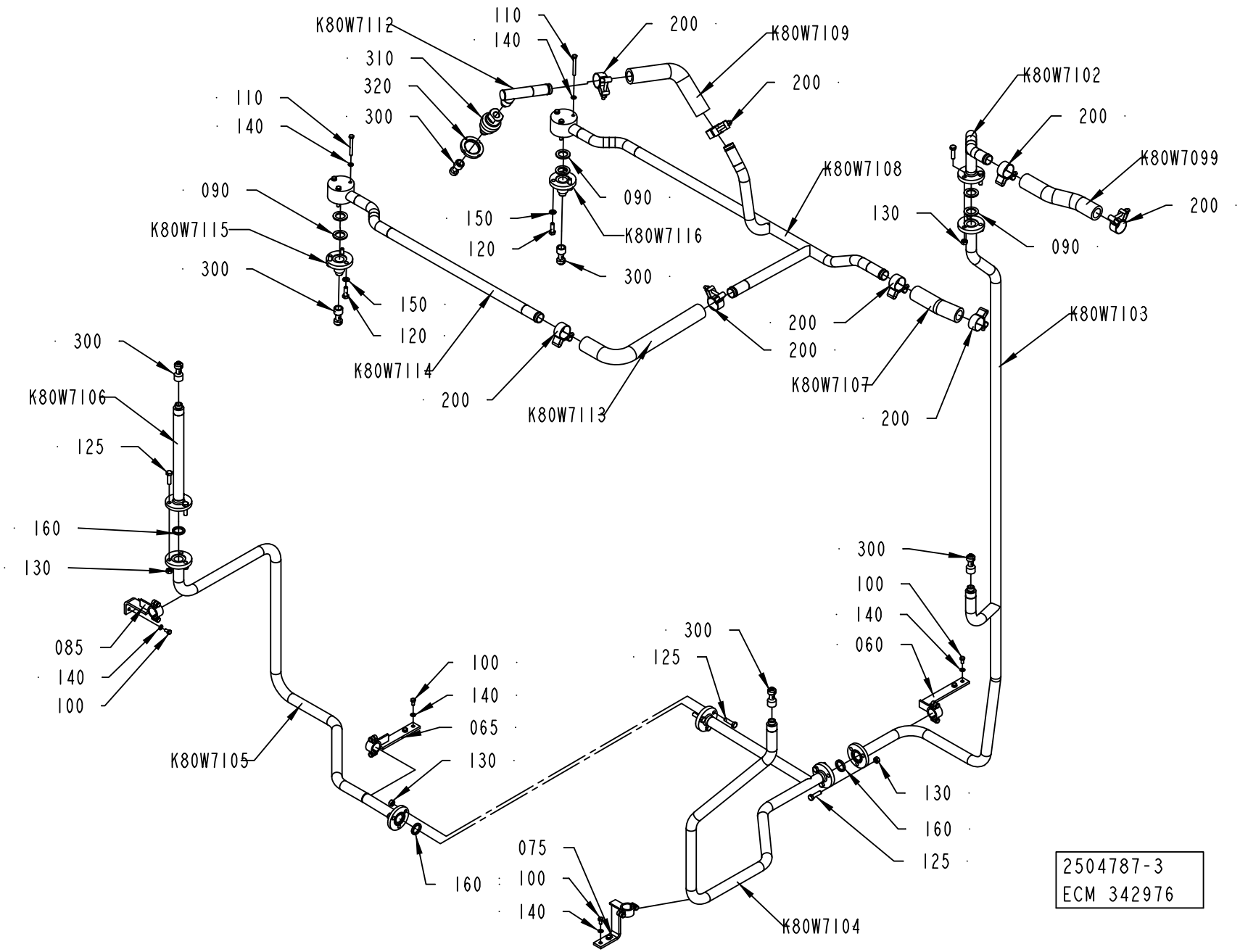
K80W7112
110
140
310
320
300
200
K80W7109
200
K80W7102
200
K80W7099
200
K80W7108
130
090
110
140
090
K80W7115
300
150
120
090
150
120
K80W7116
300
K80W7114
200
K80W7113
200
200
K80W7107
200
K80W7103
300
K80W7106
125
160
130
085
140
100
K80W7105
100
140
065
130
160
300
125
300
100
140
060
130
160
125
075
100
140
K80W7104
2504787-3
ECM 342976

ECM: 351664 - 20080103
Group number: 2504787-0200
Assembly Drawing: 2504787-3_1_AB

| Pos | Part No | UN | Qty | Description | Page No |
|---|---|---|---|---|---|
| - | | | | | |
| 060 | 2508427-0000 | | 1 | BRACKET | |
| 065 | 2529110-0000 | | 1 | BRACKET | |
| 075 | 2948770-0000 | | 1 | BRACKET | |
| 085 | 2544213-0000 | | 1 | BRACKET | |
| 090 | 1037443-0000 | | 6 | GASKET | |
| 100 | 312105-0366 | | 8 | SCREW M6S ISO 4017 M6X12 A480 | |
| 110 | 312105-0381 | | 6 | SCREW M6S ISO 4014 M6X55 A480 | |
| 120 | 312105-0453 | | 6 | SCREW M6S ISO 4017 M8X25 A480 | |
| 125 | 312105-0455 | | 9 | SCREW M6S ISO 4017 M8X30 A480 | |
| 130 | 312602-0318 | | 12 | HEXAGON NUT, EN 24032 M6M M8 NIPLBR | |
| 140 | 315105-0153 | | 14 | WASHER BRB 6,4X12 RFR | |
| 150 | 315105-0165 | | 6 | WASHER BRB 8,4X16 RFR | |
| 160 | 315229-0103 | | 3 | GASKETS, 23,1X30,1X3,7 MM 1" FDA | |
| 200 | 90459-2366 | | 8 | HOSE CLIP, (32)-35 | |
| 300 | 90600-2646 | | 6 | ROT.SPRAY NOZZLE, 599.186.1Y.AF.00.0 | |
| 310 | 2870893-0000 | | 1 | ADAPTER | |
| 320 | 2894048-0000 | | 1 | ROUND NUT | |
| K80W7099 | 90166-0233 | MM | 260 | HOSE | |
| K80W7102 | 2506934-0000 | | 1 | PIPE | |
| K80W7103 | 2506933-0000 | | 1 | PIPE | |
| K80W7104 | 2508424-0000 | | 1 | PIPE | |
| K80W7105 | 2529069-0000 | | 1 | PIPE | |
| K80W7106 | 2544214-0000 | | 1 | PIPE | |
| K80W7107 | 90166-0233 | MM | 175 | HOSE | |
| K80W7108 | 2508428-0000 | | 1 | PIPE | |
| K80W7109 | 90166-0233 | MM | 300 | HOSE | |
| K80W7112 | 2510833-0000 | | 1 | PIPE | |
| K80W7113 | 90166-0233 | MM | 430 | HOSE | |
| K80W7114 | 2506653-0000 | | 1 | PIPE | |
| K80W7115 | 1511203-0000 | | 1 | PIPE | |
| K80W7116 | 1511203-0000 | | 1 | PIPE | |

| Pos | Part No | UN | Qty | Description | Page No |
|---|---|---|---|---|---|

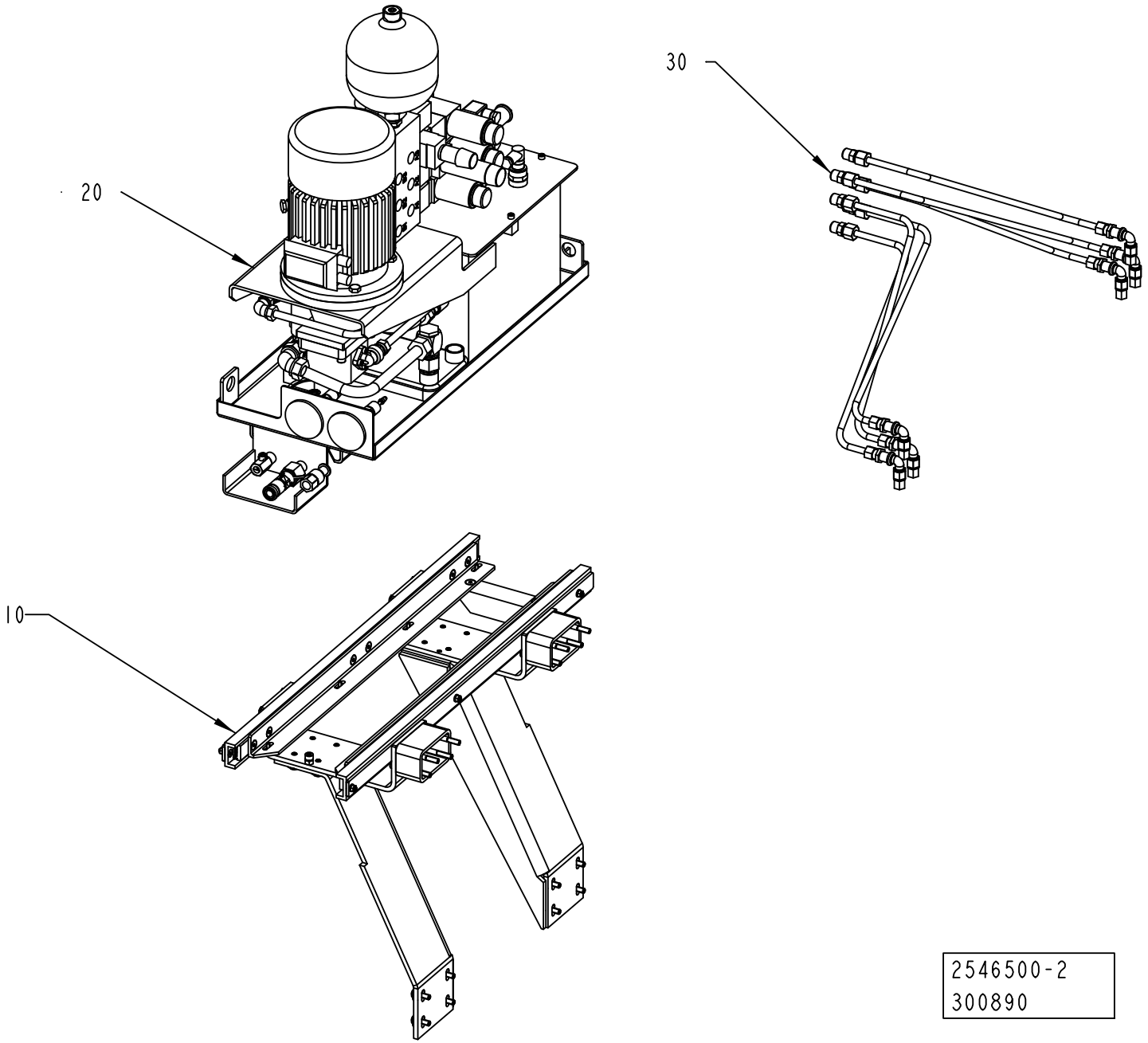
20
30
10
2546500-2
300890

ECM: 306123 - 20070704
Group number: 2546500-0200
Assembly Drawing: 2546500-2_1_AA

| Pos | Part No | UN | Qty | Description | Page No |
|---|---|---|---|---|---|
| - | | | | | |
| 005 | 2874312-0000 | | 1 | DIAGRAM | |
| 010 | 2546499-0300 | | 1 | GUIDE | **2-73** |
| 020 | 2764890-0100 | | 1 | HYDRAULIC UNIT | **2-75, 2-77** |
| 030 | 2868546-0100 | | 1 | PIPE WORK-HYDRAULIC | **2-79** |

| Pos | Part No | UN | Qty | Description | Page No |
|---|---|---|---|---|---|

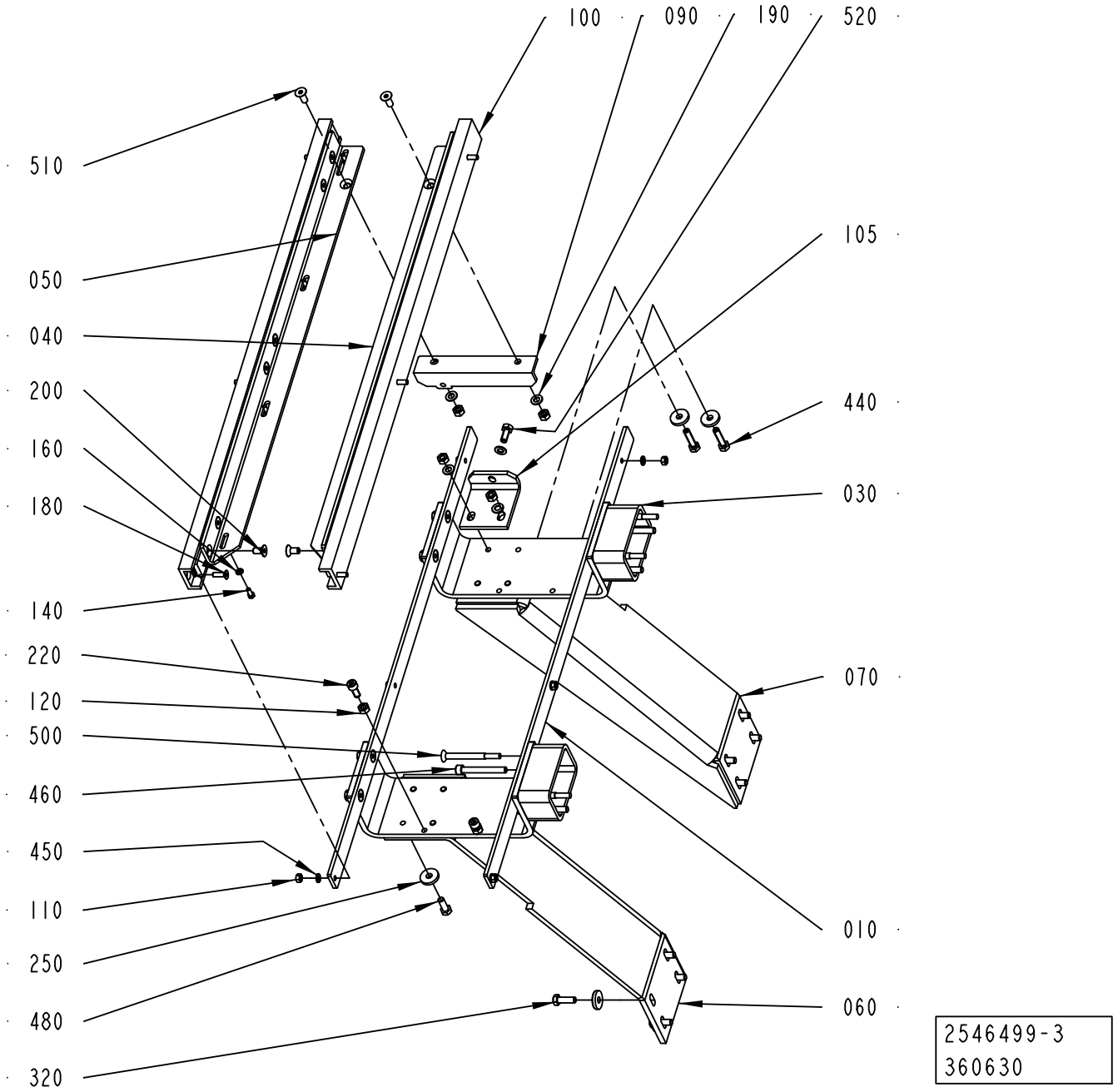
100
090
190
520
510
105
050
040
440
200
160
030
180
140
070
220
120
500
460
010
450
110
060
250
480
320
2546499-3
360630

ECM: 360630 - 20080625
Group number: 2546499-0300
Assembly Drawing: 2546499-3_1_AB

| Pos | Part No | UN | Qty | Description | Page No |
|---|---|---|---|---|---|
| - | | | | | |
| 010 | 2905300-0000 | | 2 | PLATE | |
| 030 | 2907814-0000 | | 2 | BRACKET | |
| 040 | 2905298-0000 | | 1 | ANGLE | |
| 050 | 2905299-0000 | | 1 | ANGLE | |
| 060 | 2686317-0000 | | 1 | SUPPORT | |
| 070 | 2770115-0000 | | 1 | SUPPORT | |
| 090 | 2905297-0000 | | 1 | ANGLE | |
| 100 | 2891551-0000 | | 2 | GUIDE | |
| 105 | 2978813-0000 | | 1 | ANGLE | |
| 110 | 312605-0316 | | 6 | HEXAGON NUT, M6M M6 A280 | |
| 120 | 312605-0318 | | 10 | HEXAGON NUT, M6M M8 A280 | |
| 140 | 312105-0327 | | 8 | SCREW M6S ISO 4017 M5X12 A480 | |
| 160 | 315105-0146 | | 8 | WASHER BRB 5,3X10 RFR | |
| 180 | 312155-0370 | | 6 | SCREW DIN 7991 MF6S M6X20 A4 70 | |
| 190 | 315105-0165 | | 7 | WASHER BRB 8,4X16 RFR | |
| 200 | 312155-0449 | | 12 | SCREW DIN 7991 MF6S M8X16 A4 70 | |
| 220 | 312115-0451 | | 2 | SCREW ISO4762 M8X20 A4 80 | |
| 250 | 315125-0165 | | 10 | WASHER TBRSB 8,4X26X5 A4 | |
| 320 | 312105-0453 | | 8 | SCREW M6S ISO 4017 M8X25 A480 | |
| 440 | 315125-0165 | | 6 | WASHER TBRSB 8,4X26X5 A4 | |
| 440 | 312105-0457 | | 2 | SCREW M6S ISO 4014 M8X35 A480 | |
| 450 | 315106-0153 | | 6 | WASHER ISO 7089-6-200 HV A4 | |
| 460 | 312115-0464 | | 4 | SCREW ISO4762 M8X65 A4 80 | |
| 480 | 312105-0452 | | 6 | SCREW M6S ISO 4017 M8X22 A480 | |
| 500 | 90287-0264 | | 4 | SCREW | |
| 510 | 312155-0451 | | 6 | SCREW DIN 7991 MF6S M8X20 A4 70 | |
| 520 | 312105-0451 | | 1 | SCREW M6S ISO 4017 M8X20 A480 | |

| Pos | Part No | UN | Qty | Description | Page No |
|---|---|---|---|---|---|

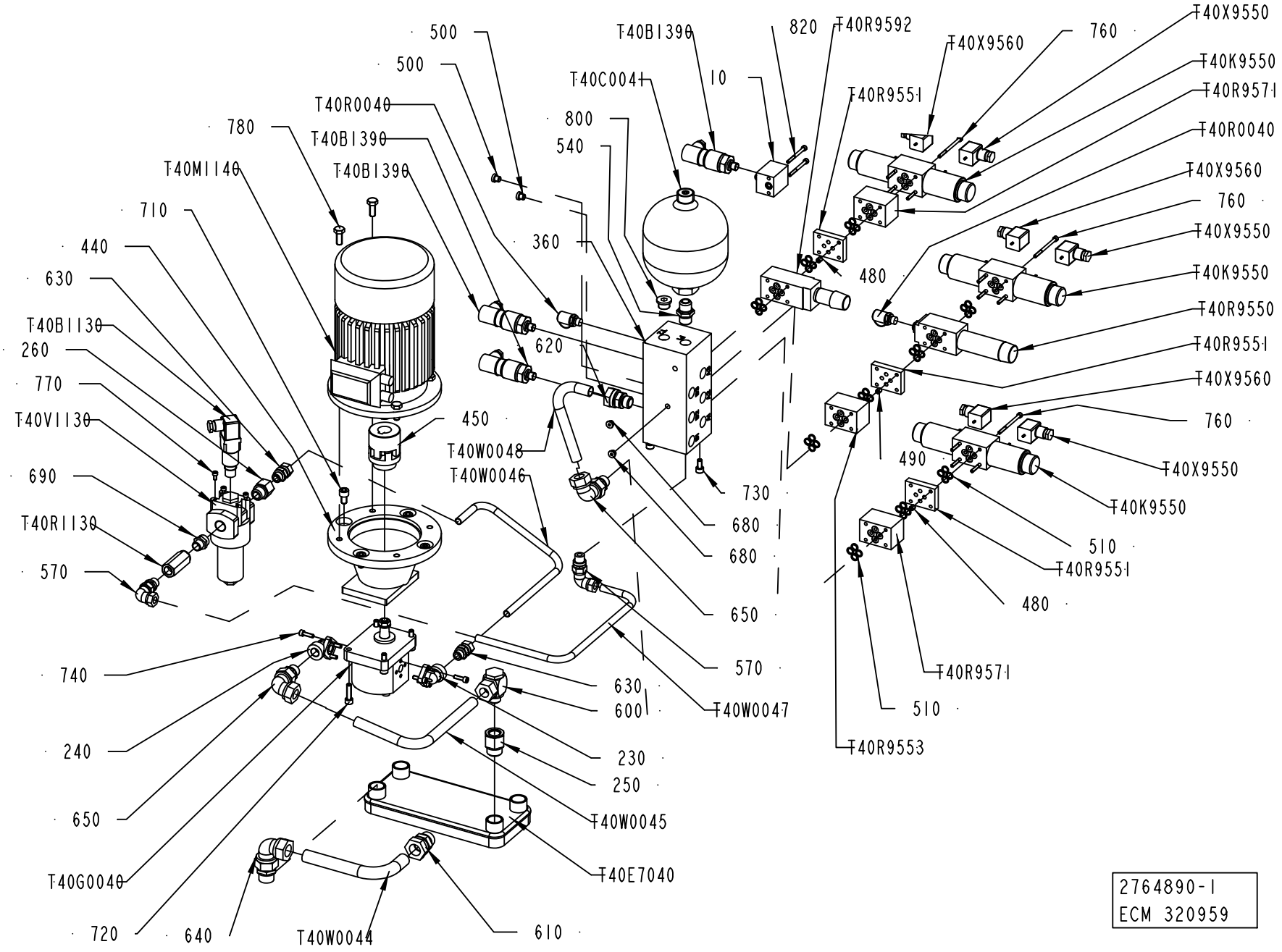


2764890-1
ECM 320959

ECM: 327286 - 20080102
Group number: 2764890-0100
Assembly Drawing: 2764890-1_1_AB

This list covers pages from 2-74 to 2-77

| Pos | Part No | UN | Qty | Description | Page No |
|---|---|---|---|---|---|
| **A3/FLEX (See drawing on pages: 2-74, 2-76)** | | | | | |
| 480 | 90600-1892 | | 2 | FLOW RESTRICTOR 158547, D=2,0 MM | |
| 490 | 90600-1891 | | 1 | FLOW RESTRICTOR 156476, D=4,6 MM | |
| T40K9570 | 90201-0129 | | 1 | SOL.COIL, 24VDC, NO. 4WE6J6X/EG24N9K4 | |
| T40K9590 | 90201-0129 | | 1 | SOL.COIL, 24VDC, NO. 4WE6J6X/EG24N9K4 | |
| T40M0040 | 90600-1881 | | 1 | MOTOR KW 1,5 4P 220/380 50 HZ B5 "MOT AS | |
| T40X9570 | 90600-1296 | | 1 | CONNECTOR 2 POLE + PE, Z4-A GRIG | |
| T40X9590 | 90600-1297 | | 1 | CONNECTOR | |
| T40X9600 | 90600-1297 | | 1 | CONNECTOR | |
| **Common Parts** | | | | | |
| 010 | 2838347-0000 | | 1 | BLOCK | |
| 080 | 2764892-0000 | | 1 | LID | |
| 210 | 90600-1307 | | 2 | MEASURING HOSE, AB20-11/1000 | |
| 220 | 90600-1306 | | 2 | MANOMETER GAUGE CONN., AB20-11 M 1/4" | |
| 230 | 90600-1305 | | 1 | PUMP ELBOW W. FIXING HOLES, RP901038 | |
| 240 | 90600-1304 | | 1 | PUMP ELBOW W. FIXING HOLES, RP901012 | |
| 250 | 90600-1303 | | 1 | REDUCER, RI3/4EDX1/2 | |
| 260 | 90600-1302 | | 1 | REDUCER, RI1/2EDX3/8 | |
| 280 | 90600-1298 | | 1 | CONNECTOR | |
| 440 | 90600-1281 | | 1 | BELLHOUSING, PL 200/02/03 | |
| 450 | 90600-1280 | | 1 | FLEXIBLE COUPLING, 17,29X24 MM | |
| 500 | 90459-2738 | | 2 | PLUG, EXT. THR. HEX. SOCK. VSTI1/8EDA3C | |
| 510 | 90201-0442 | | 45 | GASKET, NO. 313162 | |
| 530 | 90091-0159 | | 1 | GASKET 330X308X9 MM | |
| 540 | 90030-0340 | | 1 | NIPPLES, EXT. THREAD, HEXAGON, RA-G1/2A3 | |
| 560 | 90030-0147 | | 2 | ADJUSTABLE ELBOW CONNECTION,EXT 10-G1/4 | |
| 570 | 90030-0241 | | 2 | ADJUSTABLE ELBOW CONNECTION,EXT 12-G3/8 | |
| 580 | 90163-0304 | | 1 | QUICK COUPLING, LP-006-5-74-KU (DUST CAP | |
| 590 | 90600-2724 | | 1 | REDUCER, G 1/4- G 1/2 X40,0SW30-A3C | |
| 600 | 342796-0118 | | 1 | CONN. BANJO,WH 18-G1/2 | |
| 610 | 342752-0119 | | 1 | CONN. STR. GA-22-G3/4 | |
| 620 | 342752-0118 | | 1 | CONN. STR. GA-18-G1/2 | |
| 630 | 342752-0110 | | 2 | CONN. STR. GA-12-G3/8 | |
| 640 | 342738-0228 | | 1 | ADJUSTABLE ELBOW CONNECTION,EXT 22-G3/4 | |
| 650 | 342738-0125 | | 2 | ADJUSTABLE ELBOW CONNECTION,EXT 18-G1/2 | |
| 680 | 342713-0209 | | 2 | PLUG (QUANT.MINIMA= 10PC). | |
| 690 | 342700-0206 | | 1 | NIPPLES,HEXAGON,EXT.G-THREAD G1/2"-G3/8" | |
| 710 | 312115-0489 | | 4 | SCREW ISO4762 M10X16 A4 80 | |
| 720 | 312115-0455 | | 4 | SCREW ISO4762 M8X30 A4 80 | |
| 730 | 312115-0449 | | 2 | SCREW ISO4762 M8X16 A4 80 | |
| 740 | 312115-0370 | | 6 | SCREW ISO4762 M6X20 A4 80 | |
| 750 | 312115-0367 | | 4 | SCREW ISO4762 M6X14 A4 80 | |
| 760 | 312115-0345 | | 12 | SCREW ISO4762 M5X70 A4 70 | |
| 770 | 312115-0325 | | 6 | SCREW ISO4762 M5X10 A4 80 | |
| 780 | 312105-0493 | | 4 | SCREW M6S ISO 4017 M10X25 A480 | |
| 790 | 342752-0104 | | 2 | CONN. STR. GA-10-G1/4 | |
| 800 | 342713-0313 | | 1 | PLUG, EXT. THREAD HEX. SOCKET. BPS12 | |
| 810 | 315234-0110 | | 1 | WASHER,PL.RND.CU.13,5/18 H=1,5 | |
| 820 | 90287-0261 | | 2 | SCREW MC6S M5X55 A270 | |
| T40B1130 | 90600-1288 | | 1 | PRESSURE SENSOR 0-420 BAR VD 5/420C X DF | |
| T40B1150 | 90600-1301 | | 1 | LEVEL INDICATOR | |
| T40B1370 | 2834035-0000 | | 1 | THERMOCOUPLE | |
| T40B1390 | 90600-1295 | | 1 | SENSOR | |
| T40B9510 | 90600-1295 | | 1 | SENSOR | |
| T40B9520 | 90600-1295 | | 1 | SENSOR | |
| T40C0040 | 2764891-0000 | | 1 | TANK | |
| T40C0041 | 90459-4032 | | 1 | HYDR.ACC., SBO-210-1.4E1/112U-210AK | |
| T40E7040 | 90600-1269 | | 1 | HEAT EXCHANGER M18-10 | |
| T40G0040 | 90600-1283 | | 1 | PUMP, AZPF -12-004RH030KB | |
| T40K9550 | 90201-0129 | | 1 | SOL.COIL, 24VDC, NO. 4WE6J6X/EG24N9K4 | |
| T40P0040 | 90600-1284 | | 1 | PRESSURE GAUGE, D=63 MM AB31-13/063-0160 | |
| T40P9550 | 90600-1284 | | 1 | PRESSURE GAUGE, D=63 MM AB31-13/063-0160 | |
| T40Q0040 | 90600-0775 | | 1 | BALL VALVE G1/4, 406F-1/4" | |
| T40R0040 | 90600-1308 | | 1 | HOSE ATTACHMENT, AB20-11/K1 1/4G | |
| T40R1130 | 90600-1282 | | 1 | NON-RETURN VALVE, NO. S8 A1,X/ | |
| T40R9550 | 90600-1292 | | 1 | PRESSURE RED. VALVE, ZDR 6 DP2-4X/150YM | |
| T40R9551 | 90600-1882 | | 1 | VALVE PLATE, 757234 | |
| T40R9552 | 90600-1308 | | 1 | HOSE ATTACHMENT, AB20-11/K1 1/4G | |
| T40R9553 | 90600-1294 | | 1 | NON-RETURN VALVE, NO. Z1S 6 T05-4X/V | |
| T40R9570 | 90600-1882 | | 1 | VALVE PLATE, 757234 | |
| T40R9571 | 90600-1293 | | 1 | CHECK VALVE, NO. Z1S 6 F05-4X/V | |
| T40R9590 | 90600-1293 | | 1 | CHECK VALVE, NO. Z1S 6 F05-4X/V | |
| T40R9591 | 90600-1882 | | 1 | VALVE PLATE, 757234 | |
| T40R9592 | 90600-1291 | | 1 | PRESSURE RELIEF VALVE,ZDBK 6 VP2-1X/210V | |
| T40V0040 | 90600-1287 | | 1 | BREATHER FILTER, ELFP 3-F10W1.0 | |
| T40V1130 | 90600-1286 | | 1 | FILTER, 97713047 | |
| T40W0042 | 2764900-0000 | | 1 | PIPE | |
| T40W0043 | 2764899-0000 | | 1 | PIPE | |
| T40W0044 | 2764897-0000 | | 1 | PIPE | |
| T40W0045 | 2764898-0000 | | 1 | PIPE | |
| T40W0046 | 2764895-0000 | | 1 | PIPE | |
| T40W0047 | 2764894-0000 | | 1 | PIPE | |
| T40W0048 | 2764896-0000 | | 1 | PIPE | |
| T40X0040 | 90163-0076 | | 1 | QUICK COUPLING, (F) LP-006-0-WR021 | |

Machine Type | Group Description | Used-In | Group Number | Page No

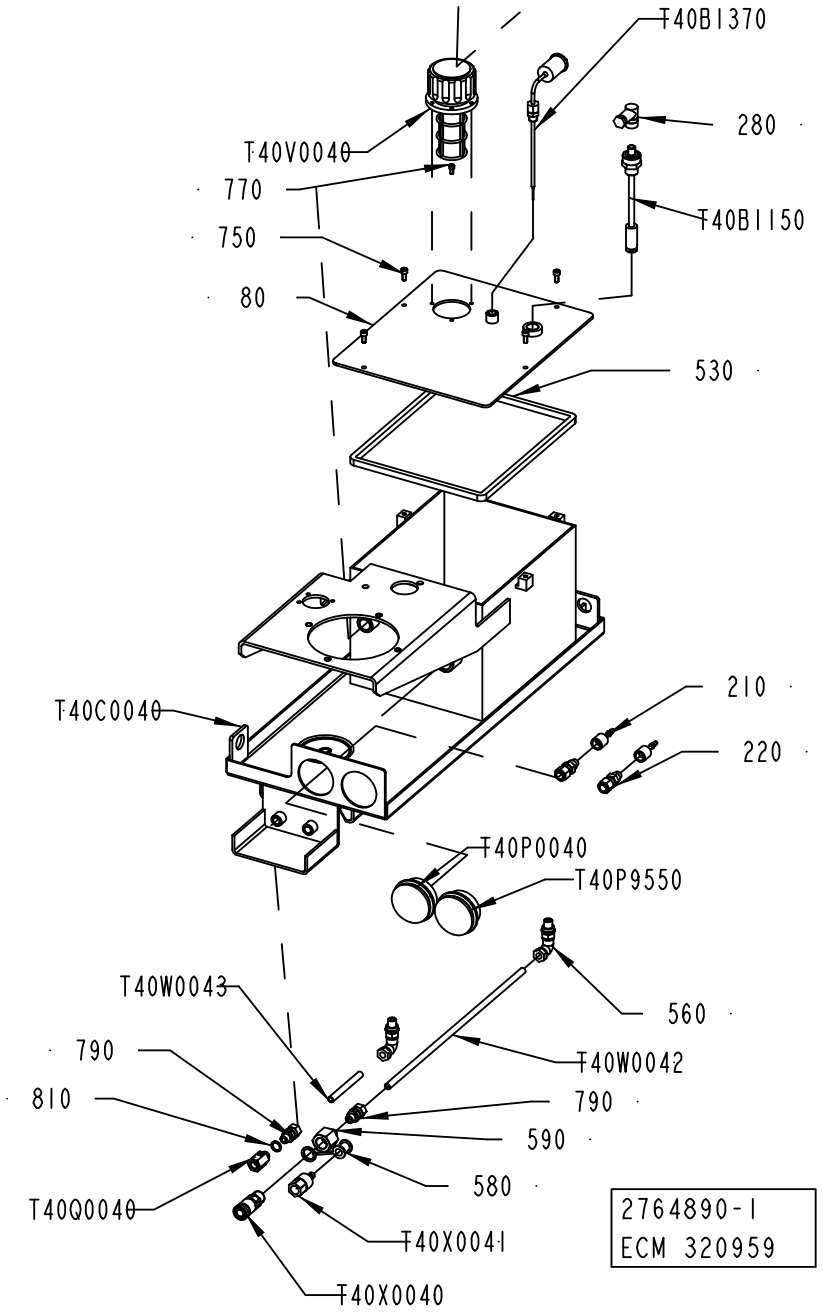
T40B1370
280
T40V0040
770
T40B1150
750
80
530
T40C0040
210
220
T40P0040
T40P9550
T40W0043
560
790
T40W0042
810
790
590
580
T40Q0040
T40X0041
T40X0040
2764890-1
ECM 320959

| Pos | Part No | UN | Qty | Description | Page No |
|---|---|---|---|---|---|
| **Common Parts (Cont'd)** | | | | | |
| T40X0041 | 90163-0064 | | 1 | QUICK COUPLING, (M) LP-006-2-WR517 | |
| T40X0042 | 90600-1289 | | 1 | HYDRAULIC VALVE, HMBF-PK-30-M1-K342-02 | |
| T40X9550 | 90600-1296 | | 1 | CONNECTOR 2 POLE + PE, Z4-A GRIG | |
| T40X9560 | 90600-1297 | | 1 | CONNECTOR | |
| T40X9580 | 90600-1296 | | 1 | CONNECTOR 2 POLE + PE, Z4-A GRIG | |

| Pos | Part No | UN | Qty | Description | Page No |
|---|---|---|---|---|---|

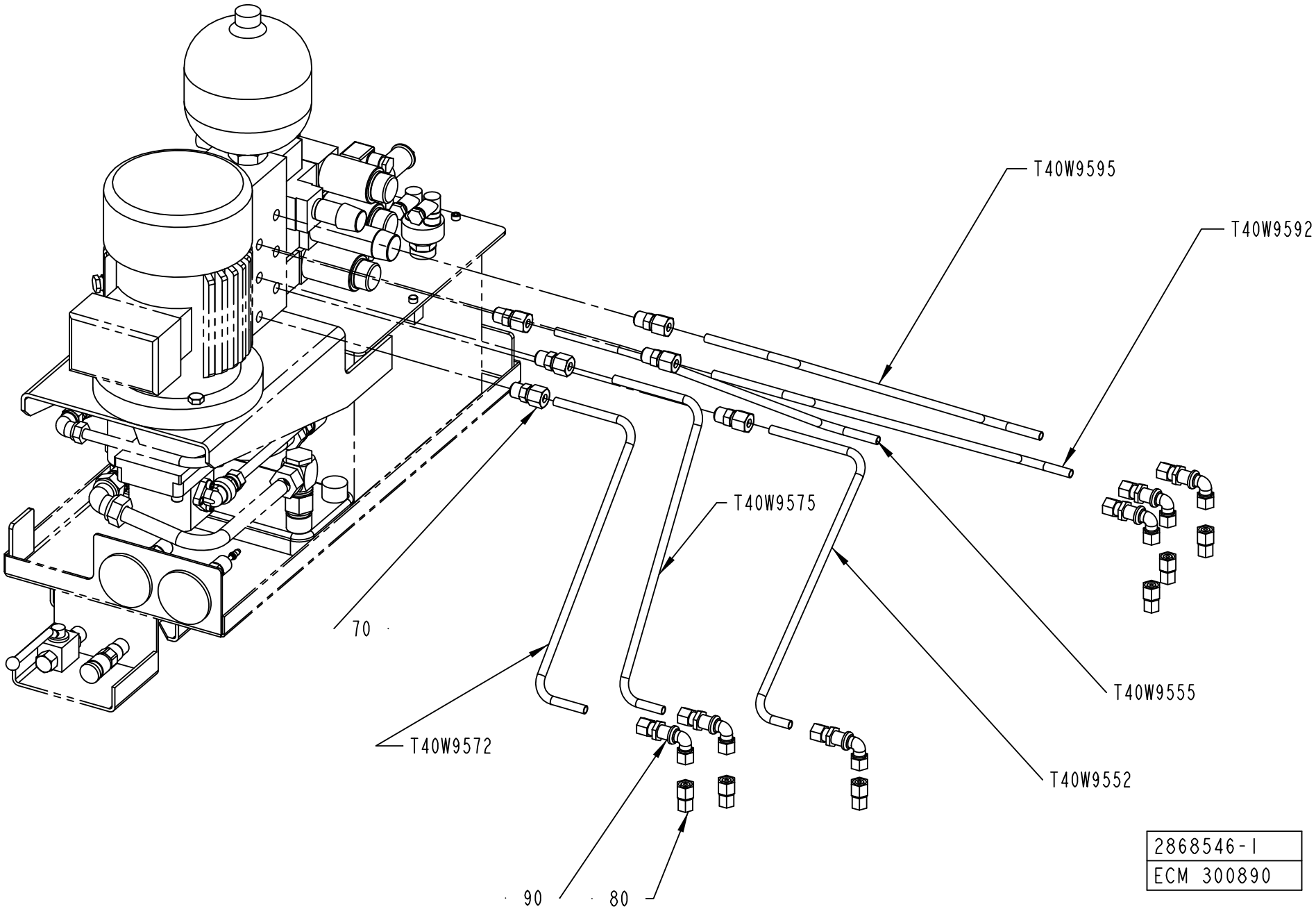
T40W9595
T40W9592
T40W9575
T40W9555
T40W9572
T40W9552
70
90
80
2868546-1
ECM 300890

ECM: 306094 - 20070704
Group number: 2868546-0100
Assembly Drawing: 2868546-1_1_AA

| Pos | Part No | UN | Qty | Description | Page No |
|---|---|---|---|---|---|
| - | | | | | |
| 010 | 2869816-0000 | | 1 | PIPE | |
| 020 | 2869817-0000 | | 1 | PIPE | |
| 030 | 2869818-0000 | | 1 | PIPE | |
| 040 | 2869819-0000 | | 1 | PIPE | |
| 050 | 2869820-0000 | | 1 | PIPE | |
| 060 | 2869821-0000 | | 1 | PIPE | |
| 070 | 90600-1989 | | 6 | CONN. STR. 10-G3/8, EXT. THREAD | |
| 080 | 90600-1988 | | 6 | REDUCTION, GZR10/08L71 | |
| 090 | 90600-1987 | | 6 | BULKHEAD, WSV10ZL71 | |

| Pos | Part No | UN | Qty | Description | Page No |
|---|---|---|---|---|---|

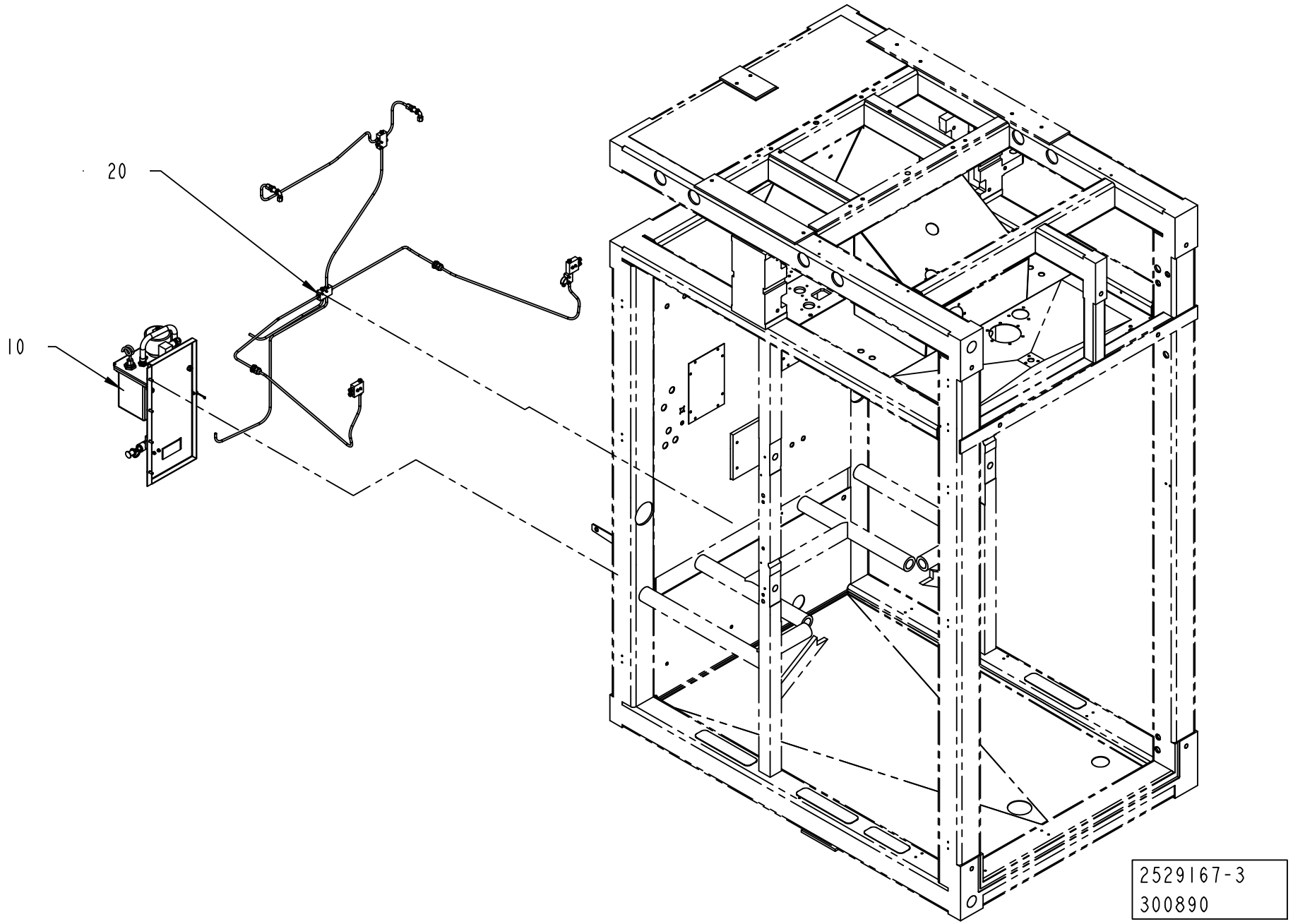
20
10
2529167-3
300890

ECM: 306093 - 20070704
Group number: 2529167-0300
Assembly Drawing: 2529167-3_1_AA

| Pos | Part No | UN | Qty | Description | Page No |
|---|---|---|---|---|---|
| - | | | | | |
| 010 | 2506776-0300 | | 1 | CENTRAL LUBRICATION | **2-83** |
| 020 | 2504789-0200 | | 1 | LUBRICATION UNIT | **2-85** |

| Pos | Part No | UN | Qty | Description | Page No |
|---|---|---|---|---|---|

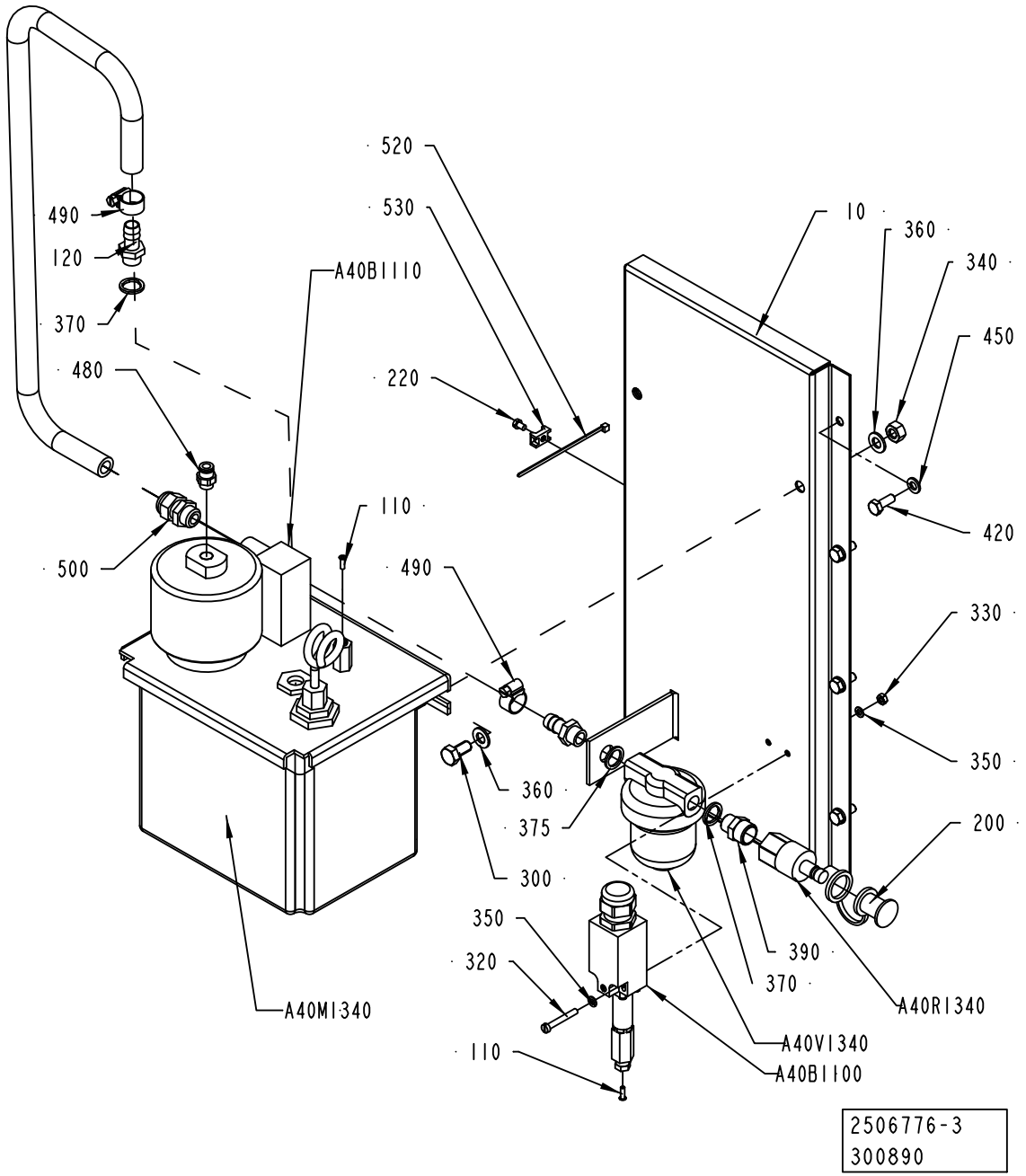
520
530
10
360
340
450
490
120
370
480
A40B1110
220
420
110
500
490
330
350
360
375
300
200
350
320
390
370
A40R1340
A40M1340
A40V1340
110
A40B1100
2506776-3
300890

ECM: 306092 - 20070704
Group number: 2506776-0300
Assembly Drawing: 2506776-3_1_AA

| Pos | Part No | UN | Qty | Description | Page No |
|---|---|---|---|---|---|
| - | | | | | |
| 010 | 2814401-0000 | | 1 | MOUNTING SHEET | |
| 110 | 90134-0030 | | 2 | SLEEVE FOR PLASTIC TUBE | |
| 120 | 90163-0052 | | 2 | HOSE NIPPLE, EXT.THR. 1/4-12 MM | |
| 170 | 90166-0113 | MM | 850 | HOSE | |
| 200 | 90163-0304 | | 1 | QUICK COUPLING, LP-006-5-74-KU (DUST CAP | |
| 220 | 312125-0285 | | 1 | SCREW ISO 1207 M4X6 A4 | |
| 300 | 312105-0449 | | 2 | SCREW M6S ISO 4017 M8X16 A480 | |
| 320 | 312125-0299 | | 2 | SCREW ISO 1207 M4X30 A4 | |
| 330 | 312605-0312 | | 2 | HEXAGON NUT, M6M M4 A280 | |
| 340 | 312605-0318 | | 2 | HEXAGON NUT, M6M M8 A280 | |
| 350 | 315105-0136 | | 4 | WASHER BRB 4,3X8 RFR | |
| 360 | 315105-0165 | | 4 | WASHER BRB 8,4X16 RFR | |
| 370 | 315239-0110 | | 2 | NYLON WASHER G1/4, 1/4RRP | |
| 375 | 315237-0110 | | 1 | WASHER,PL.RND.AL.13,5/18,H=1,5 | |
| 390 | 342700-0203 | | 1 | NIPPLES,HEXAGON,EXT.G-THREAD G3/8"-G1/4" | |
| 420 | 312105-0368 | | 4 | SCREW M6S ISO 4017 M6X16 A480 | |
| 450 | 315105-0153 | | 4 | WASHER BRB 6,4X12 RFR | |
| 480 | 342722-0202 | | 1 | PIPE COUPLING 1/8" D=6MM | |
| 490 | 342991-0101 | | 2 | HOSE CLIP,WORM DRIVE TYPE (13)-16 | |
| 500 | 352103-0101 | | 1 | CABLE GLAND, ST 9, PR15,2/PG9 | |
| 520 | 352113-0101 | | 1 | CABLE TIE, BLACK 92X2,5 MM | |
| 530 | 352113-0205 | | 1 | ANCHOR PLATES FOR STRIPS, TYPE TM2S8-C10 | |
| A40B1100 | 90274-0084 | | 1 | PRESSURE GUARD, 1800 KPA | |
| A40M1340 | 90459-5481 | | 1 | OIL PUMP 3L, 10P-P3 | |
| | *90048-0450* | | *1* | *SPARE PARTS KIT* | |
| | *90274-0052* | | *1* | *LEVEL GUARD, 10VA/250VDC/0,5A* | |
| A40R1340 | 90163-0064 | | 1 | QUICK COUPLING, (M) LP-006-2-WR517 | |
| A40V1340 | 90415-0033 | | 1 | OIL FILTER REFILLING UC-HP-1229-25 | |
| | *90415-0330* | | *1* | *FILTER INSERT ART.NO. HR-1229-25UCC* | |

| Pos | Part No | UN | Qty | Description | Page No |
|---|---|---|---|---|---|

Machine Type | Group Description | Used-In | Group Number | Page No

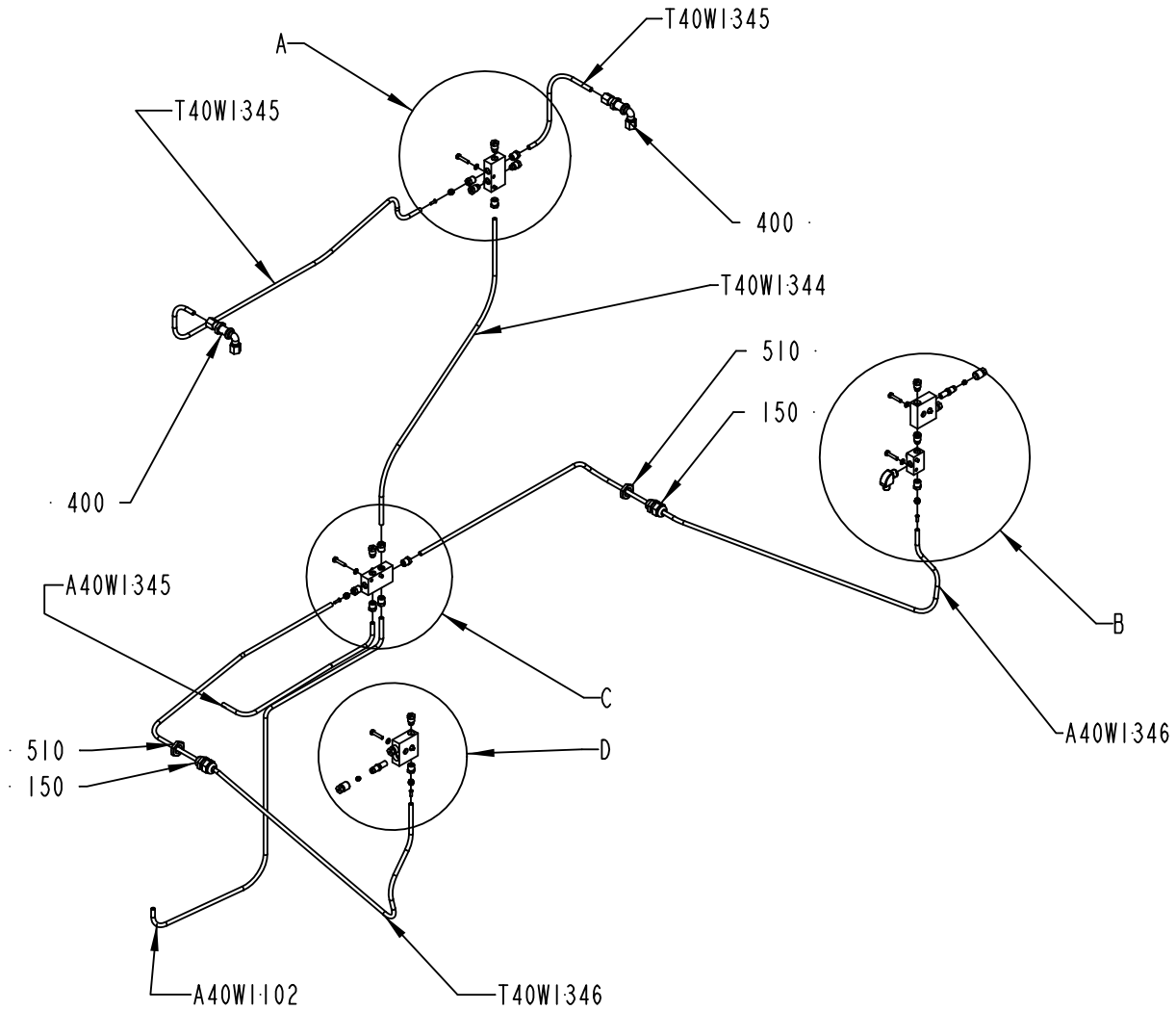


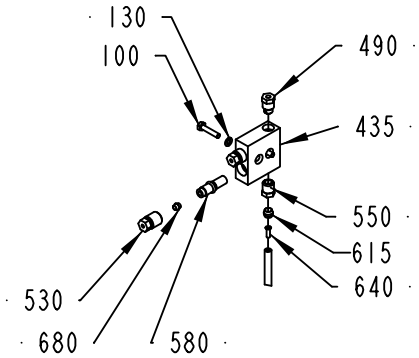


DETAIL D
SCALE 1:5

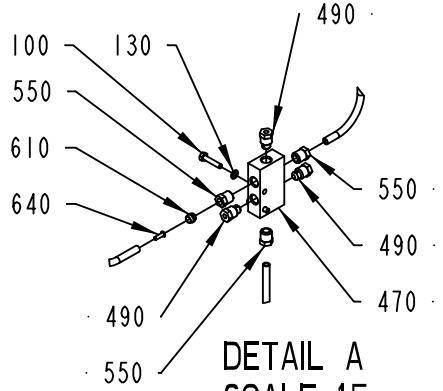


DETAIL A
SCALE 1:5

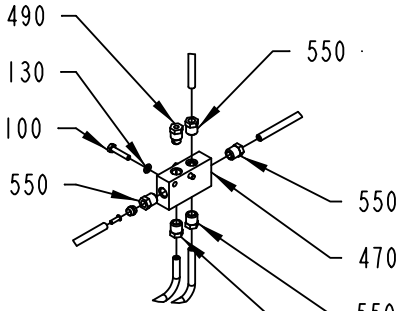


DETAIL C
SCALE 1:5

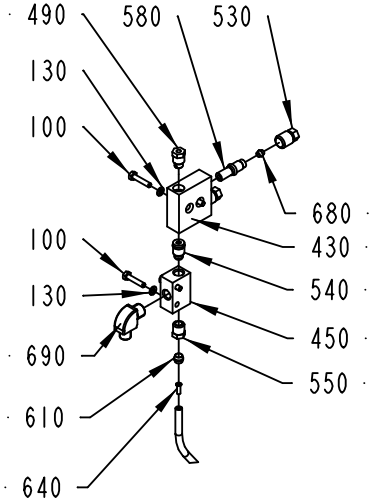


DETAIL B
SCALE 1:5

2504789-2
300890

ECM: 306091 - 20070704
Group number: 2504789-0200
Assembly Drawing: 2504789-2_1_AA

| Pos | Part No | UN | Qty | Description | Page No |
|---|---|---|---|---|---|
| - | | | | | |
| 100 | 312105-0295 | | 10 | SCREW M6S ISO 4017 M4X20 A470 | |
| 130 | 315105-0136 | | 10 | WASHER BRB 4,3X8 RFR | |
| 150 | 352103-0101 | | 2 | CABLE GLAND, ST 9, PR15,2/PG9 | |
| 400 | 90030-0219 | | 2 | CONN. ELBOW BULKHEAD WSV 6 | |
| 430 | 90032-0038 | | 1 | BLOCK 2 WAYS | |
| 435 | 90459-5650 | | 1 | LUBRICATION BLOCK, HFS4662 | |
| 450 | 90032-0043 | | 1 | DISTRIBUTION BLOCK 3 WAYS | |
| 470 | 90032-0046 | | 2 | DISTRIBUTION BLOCK 6 WAYS | |
| 490 | 90087-0019 | | 6 | PLUG M10X1 STAINLESS | |
| 510 | 90099-0104 | | 2 | NUT, PR 15,2 (PG9) | |
| 530 | 90134-0040 | | 4 | BUSHING VALVE CONNECTION 4 MM | |
| 540 | 90134-0054 | | 1 | BLOCK CONNECTION M10X1 | |
| 550 | 90134-0055 | | 11 | BUSHING/NUT INLET/OUTLET 6 MM | |
| 580 | 90092-0053 | | 4 | METERING VALVE 30 MM3 | |
| 610 | 90028-0022 | | 9 | CONE TUBE 6 MM | |
| 615 | 90028-0025 | | 2 | CONE TUBE 6 MM | |
| 640 | 90134-0030 | | 11 | SLEEVE FOR PLASTIC TUBE | |
| 680 | 90028-0021 | | 4 | CONE TUBE 4 MM | |
| 690 | 90600-0845 | | 1 | ELBOW FITTING WE06ZLM71 | |
| A40W1102 | 90166-0108 | MM | 1000 | TUBE 6 MM PA TRANSP. | |
| A40W1345 | 90166-0108 | MM | 500 | TUBE 6 MM PA TRANSP. | |
| A40W1346 | 90166-0108 | MM | 1100 | TUBE 6 MM PA TRANSP. | |
| T40W1344 | 90166-0108 | MM | 550 | TUBE 6 MM PA TRANSP. | |
| T40W1345 | 90166-0108 | MM | 400 | TUBE 6 MM PA TRANSP. | |
| T40W1346 | 90166-0108 | MM | 1700 | TUBE 6 MM PA TRANSP. | |
| T40W1347 | 90166-0108 | MM | 1000 | TUBE 6 MM PA TRANSP. | |

| Pos | Part No | UN | Qty | Description | Page No |
|---|---|---|---|---|---|

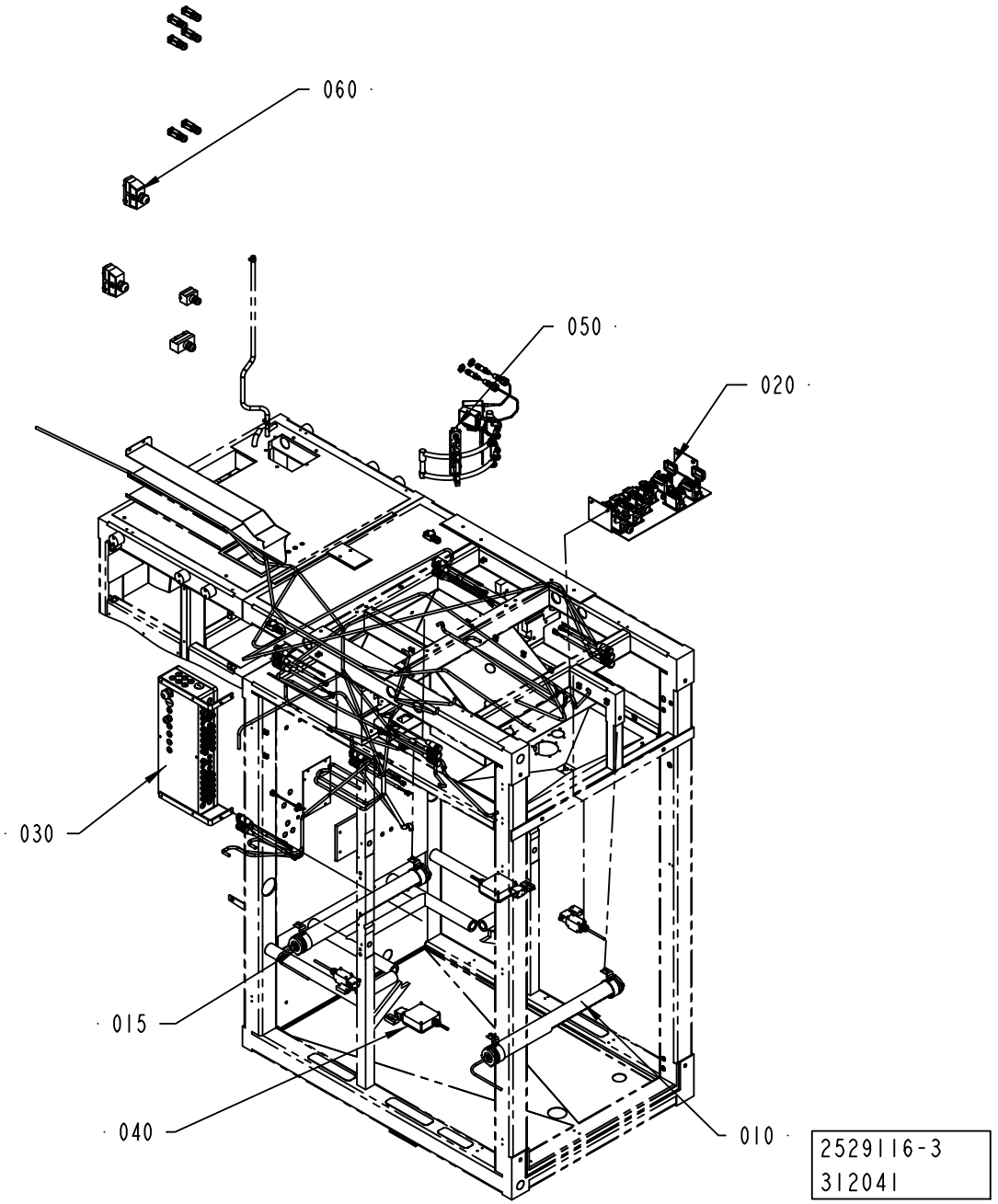
060
050
020
030
015
040
010
2529116-3
312041

ECM: 312048 - 20070704
Group number: 2529116-0200
Assembly Drawing: 2529116-3_1_AA

| Pos | Part No | UN | Qty | Description | Page No |
|---|---|---|---|---|---|
| - | | | | | |
| 010 | 2909294-0100 | | 1 | LIGHT FIXTURE | **2-89** |
| 015 | 2909295-0100 | | 1 | LIGHT FIXTURE | **2-91** |
| 020 | 2506796-0200 | | 1 | CABLE CONNECTION | **2-93** |
| 030 | 2785243-0100 | | 1 | CONNECTION BOX | **2-95** |
| 040 | 2529117-0300 | | 1 | DOOR SAFETY SWITCH | **2-99** |
| 050 | 1523216-0300 | | 1 | LEVEL CONTROL DEVICE | **2-101** |
| 060 | 2529410-0200 | | 1 | CABLE HARNESS | **2-105, 2-107** |

| Pos | Part No | UN | Qty | Description | Page No |
|---|---|---|---|---|---|

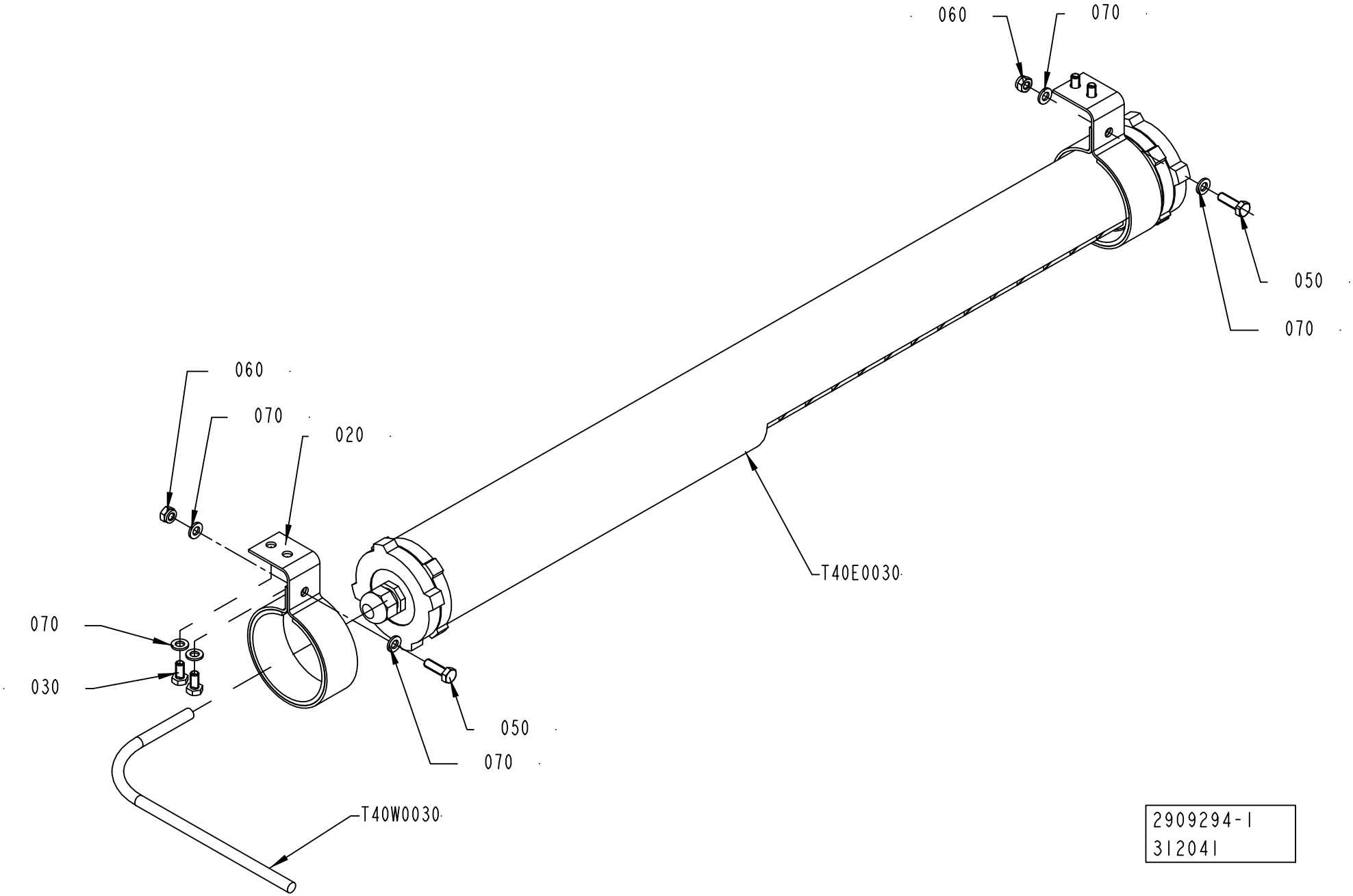
060
070
050
070
060
070
020
T40E0030
070
030
050
070
T40W0030
2909294-1
312041

ECM: 312049 - 20070704
Group number: 2909294-0100
Assembly Drawing: 2909294-1_1_AA

| Pos | Part No | UN | Qty | Description | Page No |
|---|---|---|---|---|---|
| - | | | | | |
| 020 | 1140129-0000 | | 2 | HOLDER | |
| 030 | 312105-0366 | | 4 | SCREW M6S ISO 4017 M6X12 A480 | |
| 050 | 312105-0370 | | 2 | SCREW M6S ISO 4017 M6X20 A480 | |
| 060 | 312812-0316 | | 2 | HEXAGON NUT, NY-LOCK M6 A480 | |
| 070 | 315105-0153 | | 8 | WASHER BRB 6,4X12 RFR | |
| T40E0030 | 90459-1000 | | 1 | LIGHT FIXTURE, RL 70CV-136/230V 50HZ | |
| T40W0030 | 351150-0412 | MM | 6000 | CABLE OLFLEX 3X1,5 MM2 LIGHT/GREY | |

| Pos | Part No | UN | Qty | Description | Page No |
|---|---|---|---|---|---|

# LIGHT FIXTURE



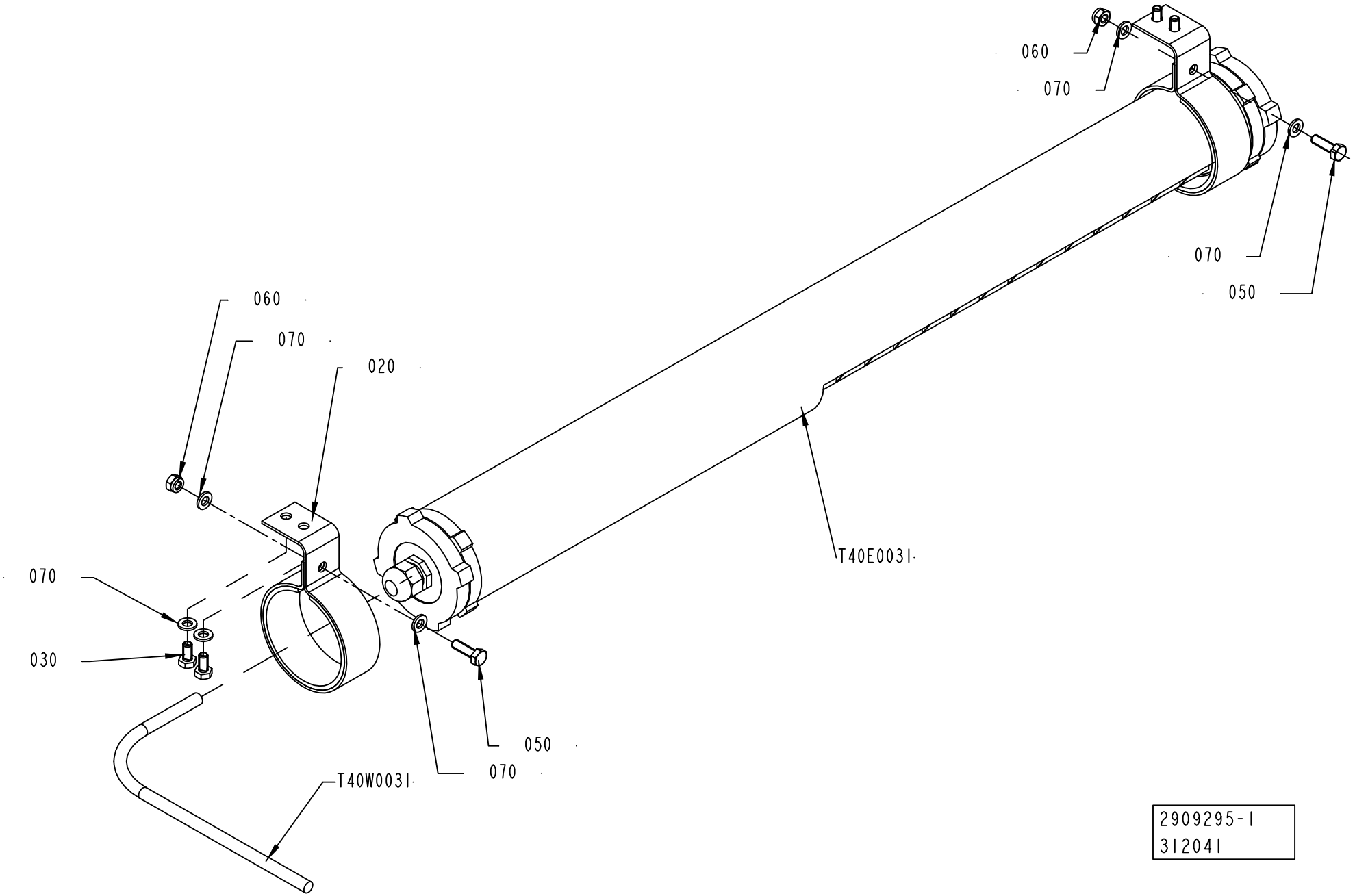

ECM: 312050 - 20070704
Group number: 2909295-0100
Assembly Drawing: 2909295-1_1_AA

| Pos | Part No | UN | Qty | Description | Page No |
|---|---|---|---|---|---|
| - | | | | | |
| 020 | 1140129-0000 | | 2 | HOLDER | |
| 030 | 312105-0366 | | 4 | SCREW M6S ISO 4017 M6X12 A480 | |
| 050 | 312105-0370 | | 2 | SCREW M6S ISO 4017 M6X20 A480 | |
| 060 | 312812-0316 | | 2 | HEXAGON NUT, NY-LOCK M6 A480 | |
| 070 | 315105-0153 | | 8 | WASHER BRB 6,4X12 RFR | |
| T40E0031 | 90459-1000 | | 1 | LIGHT FIXTURE, RL 70CV-136/230V 50HZ | |
| T40W0031 | 351150-0412 | MM | 6000 | CABLE OLFLEX 3X1,5 MM2 LIGHT/GREY | |

| Pos | Part No | UN | Qty | Description | Page No |
|---|---|---|---|---|---|

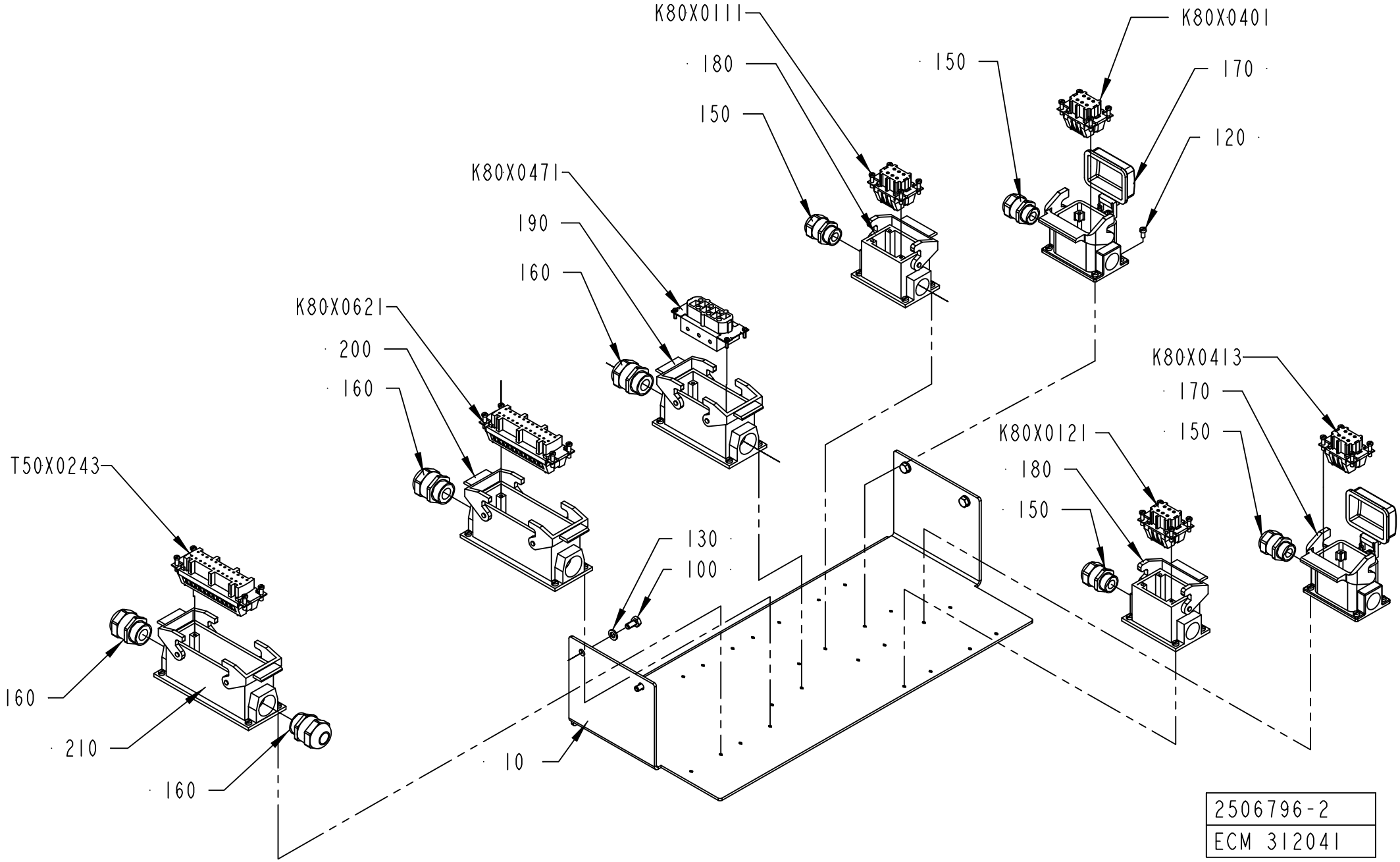
K80X0111
180
150
K80X0401
150
170
120
K80X0471
190
160
K80X0621
200
160
K80X0413
170
150
K80X0121
180
150
T50X0243
160
210
160
130
100
10
2506796-2
ECM 312041

ECM: 312051 - 20070704
Group number: 2506796-0200
Assembly Drawing: 2506796-2_1_AA

| Pos | Part No | UN | Qty | Description | Page No |
|---|---|---|---|---|---|
| - | | | | | |
| 010 | 2792850-0000 | | 1 | CANTILEVER | |
| 100 | 312105-0366 | | 4 | SCREW M6S ISO 4017 M6X12 A480 | |
| 120 | 312125-0287 | | 28 | SCREW ISO 1207 M4X8 A4 | |
| 130 | 315105-0153 | | 4 | WASHER BRB 6,4X12 RFR | |
| 150 | 90458-0307 | | 4 | CABLE GLAND, M20X1,5, NO.5311 1020 | |
| 160 | 90458-0308 | | 4 | CABLE GLAND, M25X1,5, NO.5311 1030 | |
| 170 | 90459-1461 | | 2 | HOUSING HAN 6 E 19 30 006 1255 | |
| 180 | 90459-6640 | | 2 | HOUSING 6B SURF MOUNT, 19 30 006 1250 | |
| 190 | 90459-6642 | | 1 | HOUSING 16B SURF MOUNT, 19 30 016 1231 | |
| 200 | 90459-6643 | | 1 | HOUSING 24B SURF MOUNT, 19 30 024 1231 | |
| 210 | 90459-7432 | | 1 | HOUSING 24B SURF MOUNT, 19 30 024 1271 | |
| K80X0111 | 90110-0053 | | 1 | FEMALE INSERT HAN 6 E 09 33 006 2701 | |
| K80X0121 | 90110-0053 | | 1 | FEMALE INSERT HAN 6 E 09 33 006 2701 | |
| K80X0401 | 90110-0053 | | 1 | FEMALE INSERT HAN 6 E 09 33 006 2701 | |
| K80X0413 | 90110-0053 | | 1 | FEMALE INSERT HAN 6 E 09 33 006 2701 | |
| K80X0471 | 90110-0055 | | 1 | FEMALE INSERT HAN 6 HSB 09 31 006 2701 | |
| K80X0621 | 90110-0057 | | 1 | FEMALE INSERT HAN 24 E 09 33 002 4201 | |
| T50X0243 | 90110-0057 | | 1 | FEMALE INSERT HAN 24 E 09 33 002 4201 | |

| Pos | Part No | UN | Qty | Description | Page No |
|---|---|---|---|---|---|

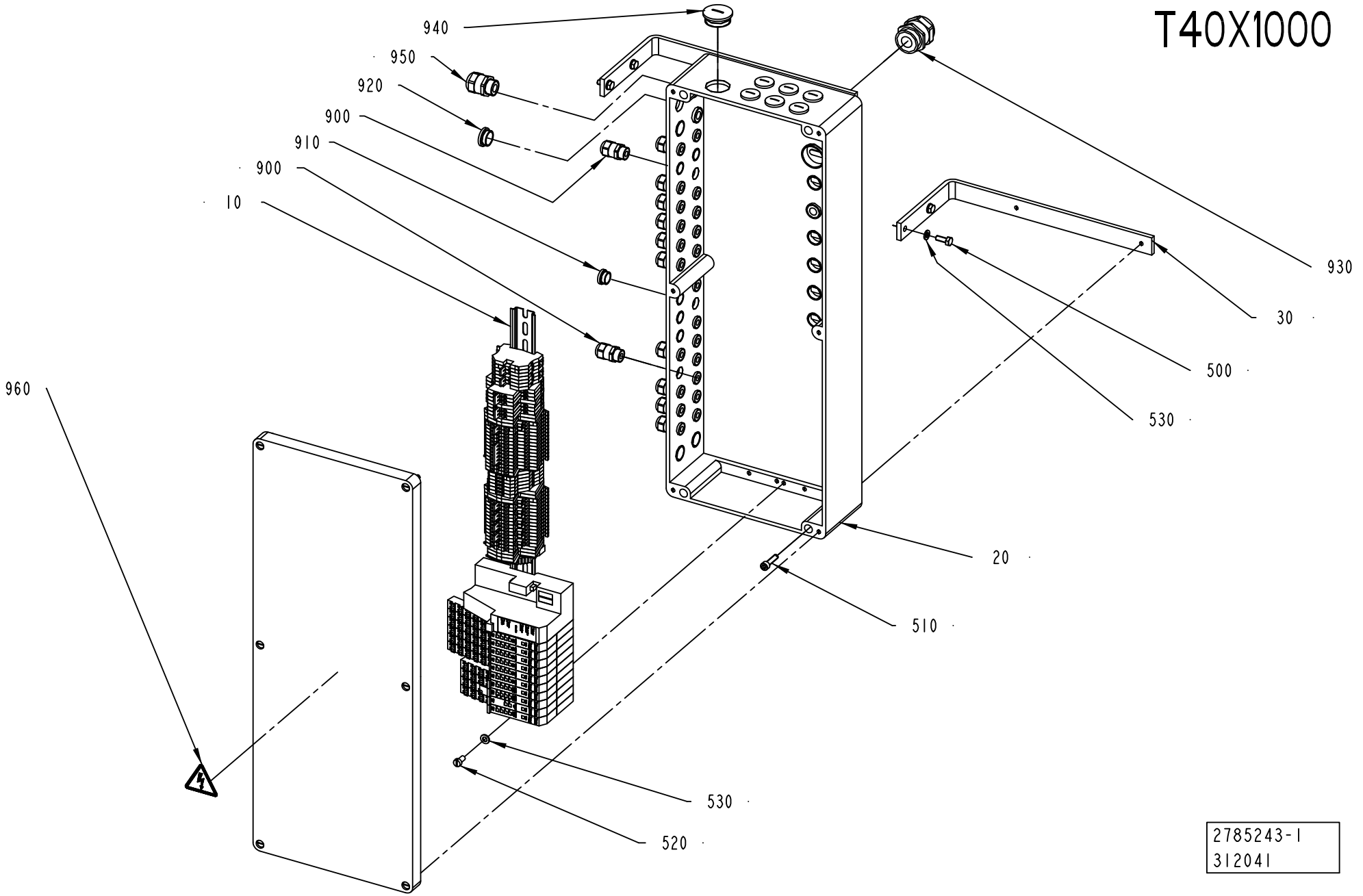
T40X1000
940
950
920
900
910
900
10
930
30
500
530
960
20
510
530
520
2785243-1
312041

ECM: 328597 - 20070705
Group number: 2785243-0100
Assembly Drawing: 2785243-1_1_AA

| Pos | Part No | UN | Qty | Description | Page No |
|---|---|---|---|---|---|
| **A3/FLEX** | | | | | |
| 030 | 2790687-0000 | | 2 | SUPPORT | |
| 900 | 90458-0306 | | 24 | CABLE GLAND, M16X1,5, NO.5311 1010 | |
| 910 | 90458-1307 | | 6 | BLIND PLUG CIRCULAR, M16X1,5 514GFK/216 | |
| 920 | 90458-1308 | | 15 | BLIND PLUG CIRCULAR, M20X1,5 514GFK/220 | |
| 930 | 90458-0309 | | 1 | CABLE GLAND, M32X1,5, NO.5311 1040 | |
| 940 | 90458-1310 | | 2 | BLIND PLUG CIRCULAR, M32X1,5 514GFK/232 | |
| 950 | 90458-0307 | | 3 | CABLE GLAND, M20X1,5, NO.5311 1020 | |
| **Common Parts** | | | | | |
| 010 | 2701232-0100 | | 1 | TERMINAL BLOCK ..... | **2-97** |
| 020 | 2785236-0000 | | 1 | CONNECTION BOX | |
| 500 | 312105-0368 | | 4 | SCREW M6S ISO 4017 M6X16 A480 | |
| 510 | 312115-0372 | | 4 | SCREW ISO4762 M6X25 A4 80 | |
| 520 | 312125-0366 | | 2 | SCREW ISO 1207 M6X12 A4 | |
| 530 | 315105-0153 | | 6 | WASHER BRB 6,4X12 RFR | |
| 960 | 359705-0015 | | 1 | WARNING SIGN ISO, RISK OF ELECTRIC SHOCK | |

| Pos | Part No | UN | Qty | Description | Page No |
|---|---|---|---|---|---|

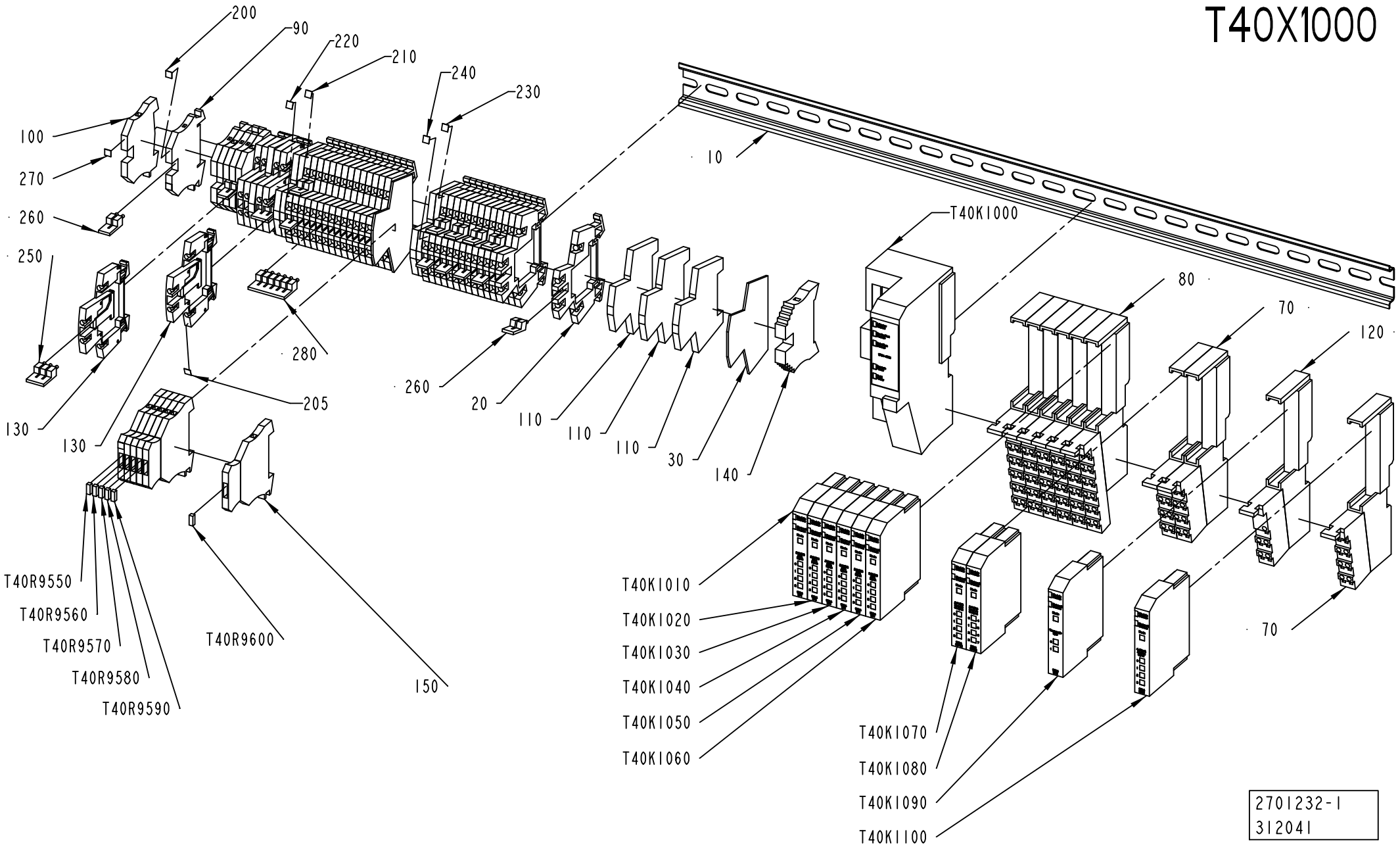
T40X1000
200
90
220
210
240
230
100
270
260
250
10
T40K1000
80
70
120
280
205
130
130
260
20
110
110
110
30
140
T40R9550
T40R9560
T40R9570
T40R9580
T40R9590
T40R9600
150
T40K1010
T40K1020
T40K1030
T40K1040
T40K1050
T40K1060
T40K1070
T40K1080
T40K1090
T40K1100
70
2701232-1
312041

ECM: 312053 - 20070704
Group number: 2701232-0100
Assembly Drawing: 2701232-1_1_AA

| Pos | Part No | UN | Qty | Description | Page No |
|---|---|---|---|---|---|
| **A3/FLEX** | | | | | |
| 030 | 90077-0114 | | 2 | END PLATE, WAP/WDK 2,5 | |
| 150 | 353021-0127 | | 6 | TERMINAL DISCONNECTABLE, WTR 2,5+WSD 2,5 | |
| 230 | 359011-0811 | | 3 | MARKING PLATES 5-FW 201-2 | |
| T40R9550 | 90600-1199 | | 1 | VARISTOR MOV, 390KD07 | |
| T40R9560 | 90600-1199 | | 1 | VARISTOR MOV, 390KD07 | |
| T40R9570 | 90600-1199 | | 1 | VARISTOR MOV, 390KD07 | |
| T40R9580 | 90600-1199 | | 1 | VARISTOR MOV, 390KD07 | |
| T40R9590 | 90600-1199 | | 1 | VARISTOR MOV, 390KD07 | |
| T40R9600 | 90600-1199 | | 1 | VARISTOR MOV, 390KD07 | |
| **Common Parts** | | | | | |
| 010 | 1347878-0000 | | 1 | RAIL | |
| 020 | 90077-0113 | | 28 | FEED THROUGH TERMINAL, 10-00102150-1 | |
| 070 | 90459-2526 | | 3 | REMOTE I/O BASE MODULE 8 POINTS, 1734-TB | |
| 080 | 90459-2527 | | 6 | REMOTE I/O BASE MODULE 12 POINTS | |
| 090 | 353021-0212 | | 4 | FEED THROUGH TERMINAL, 10200.0 | |
| 100 | 353024-0204 | | 3 | EARTH TERMINAL WPE 2,5 | |
| 110 | 353024-0212 | | 8 | EARTH TERMINAL, 10363.0 | |
| 120 | 90459-2528 | | 1 | REMOTE I/O BASE MODULE FOR THERMOCOUPLE | |
| 130 | 90457-0049 | | 6 | TERMINAL BLOCK WDK 2.5V, 102230 | |
| 140 | 353031-0203 | | 1 | END SUPPORT, WEW 35/2 | |
| 200 | 359011-0807 | | 2 | MARKING PLATES 5-FW 1-50 | |
| 205 | 359011-0808 | | 1 | MARKING PLATES 5-FW 51-100 | |
| 210 | 359011-0809 | | 2 | MARKING PLATES 5-FW 101-150 | |
| 220 | 359011-0810 | | 2 | MARKING PLATES 5-FW 151-200 | |
| 240 | 359011-0812 | | 2 | SET OF SIGNS 5-FW 251-300 | |
| 250 | 353034-0030 | | 2 | BRIDGE CONNECTOR WQV 2,5/10, 10544.6 | |
| 260 | 353034-0030 | | 13 | BRIDGE CONNECTOR WQV 2,5/10, 10544.6 | |
| 270 | 359011-0819 | | 1 | MARKING PLATES 5-GW (EARTH) | |
| 280 | 353034-0030 | | 1 | BRIDGE CONNECTOR WQV 2,5/10, 10544.6 | |
| T40K1000 | 90459-2494 | | 1 | DEVICENET I/O ADAPTER MODULE, 1734-ADN | |
| T40K1010 | 90459-2503 | | 1 | DIGITAL INPUT 4 PTS SINK, 1734-IB4 | |
| T40K1020 | 90459-2503 | | 1 | DIGITAL INPUT 4 PTS SINK, 1734-IB4 | |
| T40K1030 | 90459-2503 | | 1 | DIGITAL INPUT 4 PTS SINK, 1734-IB4 | |
| T40K1040 | 90459-2503 | | 1 | DIGITAL INPUT 4 PTS SINK, 1734-IB4 | |
| T40K1050 | 90459-2503 | | 1 | DIGITAL INPUT 4 PTS SINK, 1734-IB4 | |
| T40K1060 | 90459-2503 | | 1 | DIGITAL INPUT 4 PTS SINK, 1734-IB4 | |
| T40K1070 | 90459-2505 | | 1 | DIGITAL OUTPUT 4 PTS, 1734-OB4E | |
| T40K1080 | 90459-6560 | | 1 | DIGITAL OUTPUT 8 PTS, 1734-OB8E/C | |
| T40K1090 | 90459-2512 | | 1 | REMOTE I/O THERMOCOUPLE INPUT 2 PTS | |
| T40K1100 | 90459-2509 | | 1 | REMOTE I/O ANALOG INPUT CURRENT 2 PTS | |

| Pos | Part No | UN | Qty | Description | Page No |
|---|---|---|---|---|---|

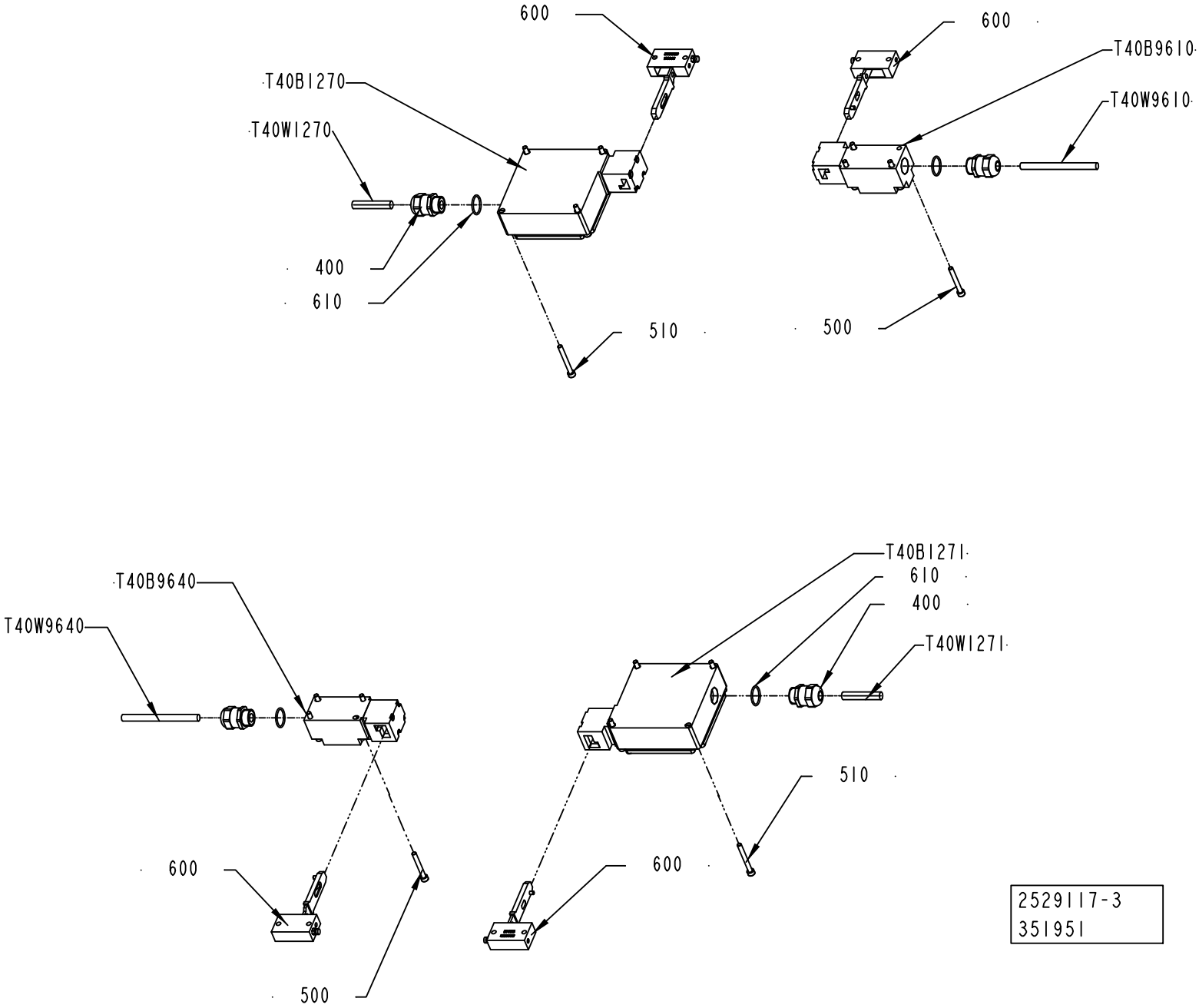


2529117-3
351951

ECM: 360669 - 20080625
Group number: 2529117-0300
Assembly Drawing: 2529117-3_1_AB

| Pos | Part No | UN | Qty | Description | Page No |
|---|---|---|---|---|---|
| - | | | | | |
| 400 | 90458-0307 | | 4 | CABLE GLAND, M20X1,5, NO.5311 1020 | |
| 500 | 312115-0339 | | 8 | SCREW ISO4762 M5X40 A4 80 | |
| 510 | 312115-0340 | | 8 | SCREW ISO4762 M5X45 A4 80 | |
| 600 | 90600-5274 | | 4 | KEY FOR SAF.SW.TZRE024PG RC1635-103845 Z | |
| 610 | 315206-0707 | | 4 | O-RING 20,35X1,78 MM | |
| T40B1270 | 90457-0196 | | 1 | KEY SAF.SW. TZ2RE024PG RC1635 | |
| T40B1271 | 90457-0196 | | 1 | KEY SAF.SW. TZ2RE024PG RC1635 | |
| T40B9610 | 90044-0204 | | 1 | KEY SAF.SW. NZIVZ-538-E | |
| T40B9640 | 90044-0204 | | 1 | KEY SAF.SW. NZIVZ-538-E | |
| T40W1270 | 351150-0406 | M | 1 | CABLE OLFLEX 7X0,75 MM2 LIGHT/GREY | |
| T40W1271 | 351150-0406 | M | 1 | CABLE OLFLEX 7X0,75 MM2 LIGHT/GREY | |
| T40W9610 | 351150-0405 | M | 1 | CABLE OLFLEX 5X0,75 MM2 LIGHT/GREY | |
| T40W9640 | 351150-0405 | M | 1 | CABLE OLFLEX 5X0,75 MM2 LIGHT/GREY | |

| Pos | Part No | UN | Qty | Description | Page No |
|---|---|---|---|---|---|

# LEVEL CONTROL DEVICE



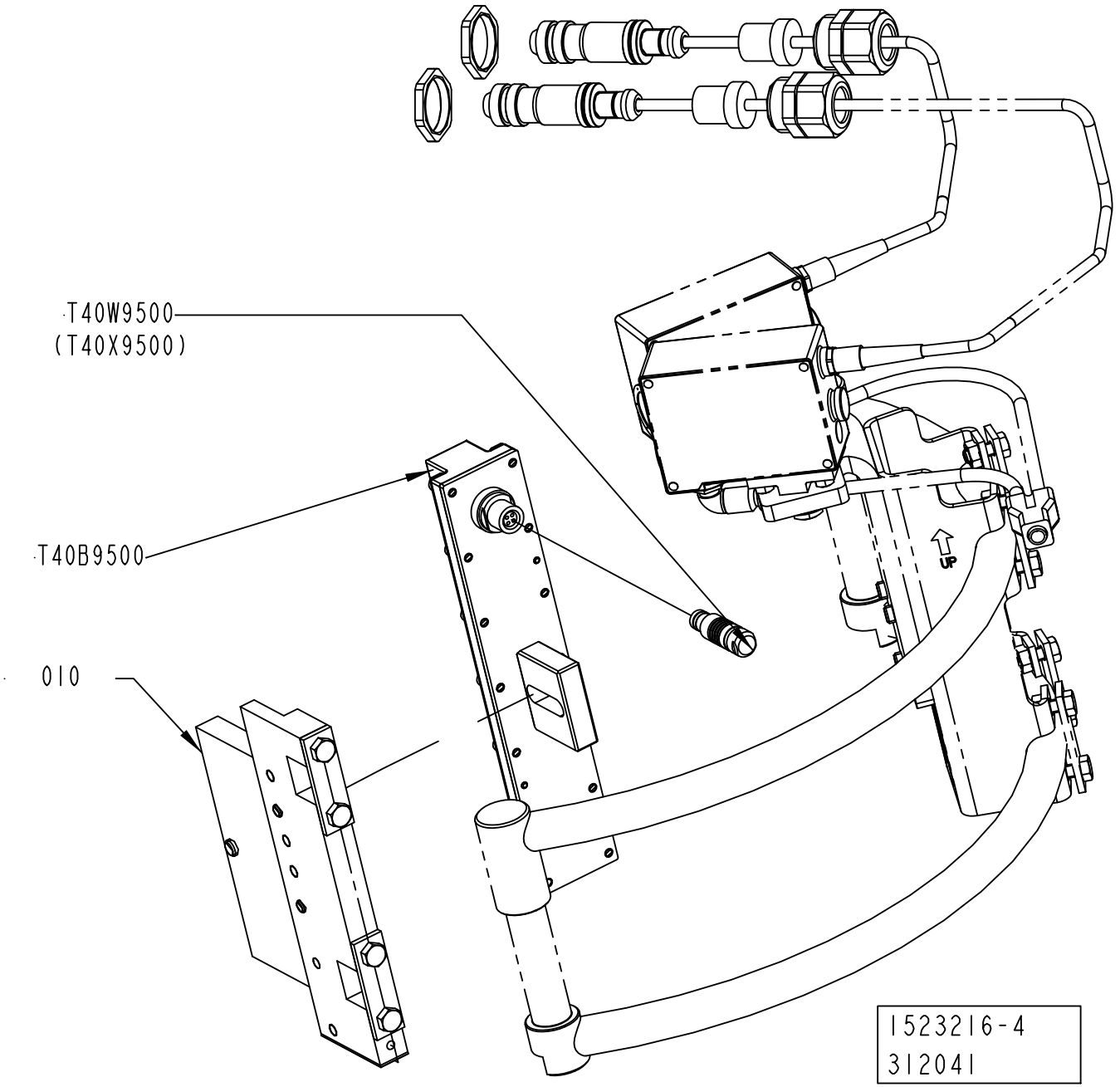

ECM: 312055 - 20070704
Group number: 1523216-0300
Assembly Drawing: 1523216-4_1_AA

| Pos | Part No | UN | Qty | Description | Page No |
|---|---|---|---|---|---|
| - | | | | | |
| 010 | 1487338-0200 | | 1 | SUPPORT LEVEL DETECTOR ..... | **2-103** |
| T40B9500 | 2697704-0000 | | 1 | LEVEL PROBE | |
| T40W9500 | 90459-4705 | | 1 | LOCKING PLUG, S 103 A 053-130+ AND 90220 | |
| | *90459-4707* | | *1* | *RECEPTACLE, MOD.DBEE 103 A 053-130* | |

| Pos | Part No | UN | Qty | Description | Page No |
|---|---|---|---|---|---|

# SUPPORT LEVEL DETECTOR



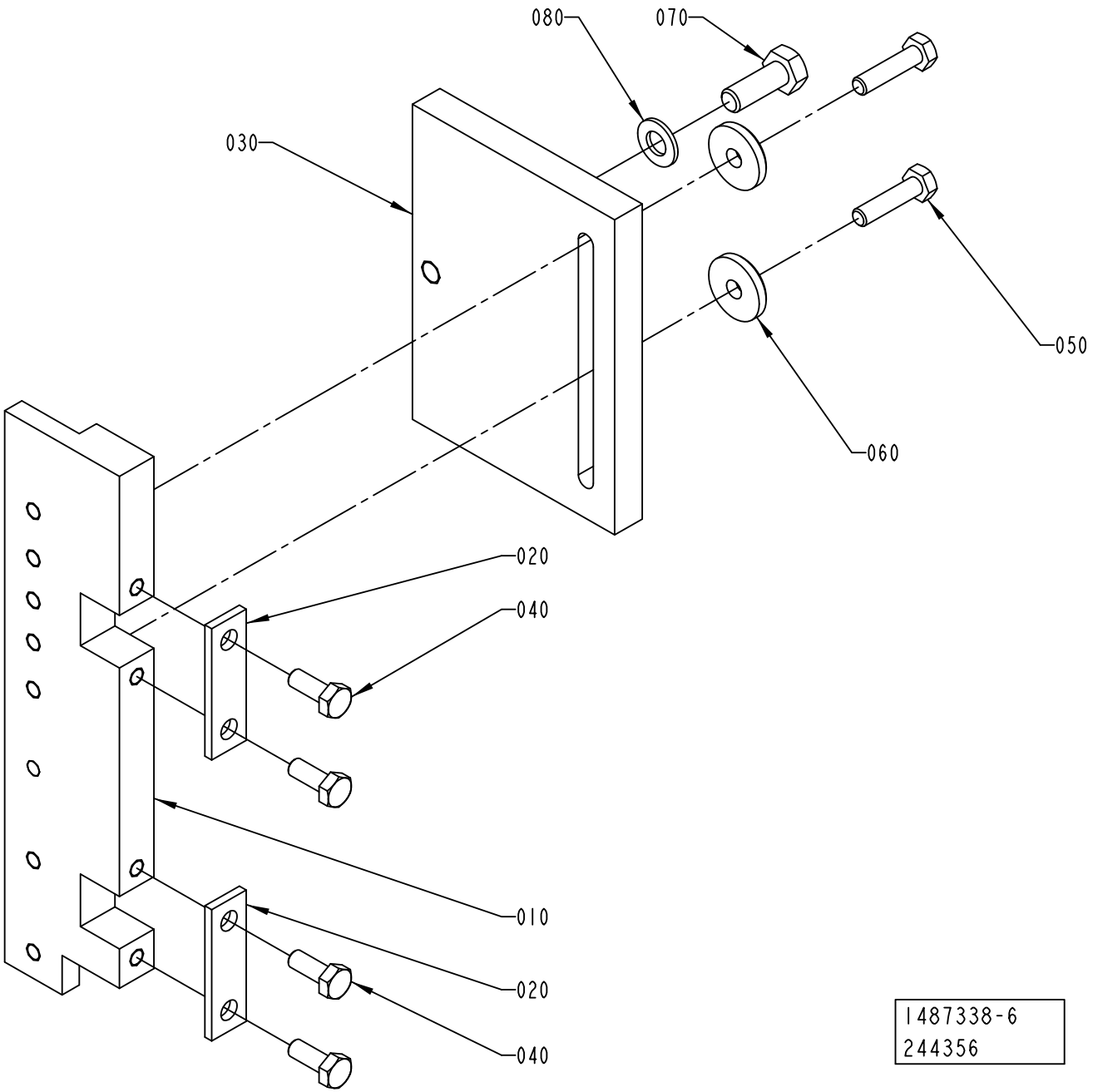

ECM: 323456 - 20080101
Group number: 1487338-0200
Assembly Drawing: 1487338-6_1_AA

| Pos | Part No | UN | Qty | Description | Page No |
|---|---|---|---|---|---|
| **TBA 0500SQ, TBA 0500B, TBA 1000B, TBA 1000SQ, TBA 1000S, TBA 1500S, TPA 1000SQ NOQC (See drawing on page: 2-102)** | | | | | |
| 010 | 2715298-0000 | | 1 | BRACKET | |
| 030 | 1317475-0000 | | 1 | BRACKET | |
| **TBA 2000S (See drawing on page: 2-102)** | | | | | |
| 010 | 2715299-0000 | | 1 | BRACKET | |
| 030 | 2656899-0000 | | 1 | BRACKET | |
| **TPA 1000SQ QC, TPA 0750SQ QC (See drawing on page: 2-102)** | | | | | |
| 010 | 2715299-0000 | | 1 | BRACKET | |
| 030 | 1317475-0000 | | 1 | BRACKET | |
| **Common Parts** | | | | | |
| 020 | 1036673-0000 | | 2 | WASHER | |
| 040 | 312105-0368 | | 4 | SCREW M6S ISO 4017 M6X16 A480 | |
| 050 | 312105-0372 | | 2 | SCREW M6S ISO 4017 M6X25 A480 | |
| 060 | 315125-0153 | | 2 | WASHER TBRSB 6,4X22X4 A4 | |
| 070 | 312105-0452 | | 1 | SCREW M6S ISO 4017 M8X22 A480 | |
| 080 | 315105-0165 | | 1 | WASHER BRB 8,4X16 RFR | |

| Pos | Part No | UN | Qty | Description | Page No |
|---|---|---|---|---|---|

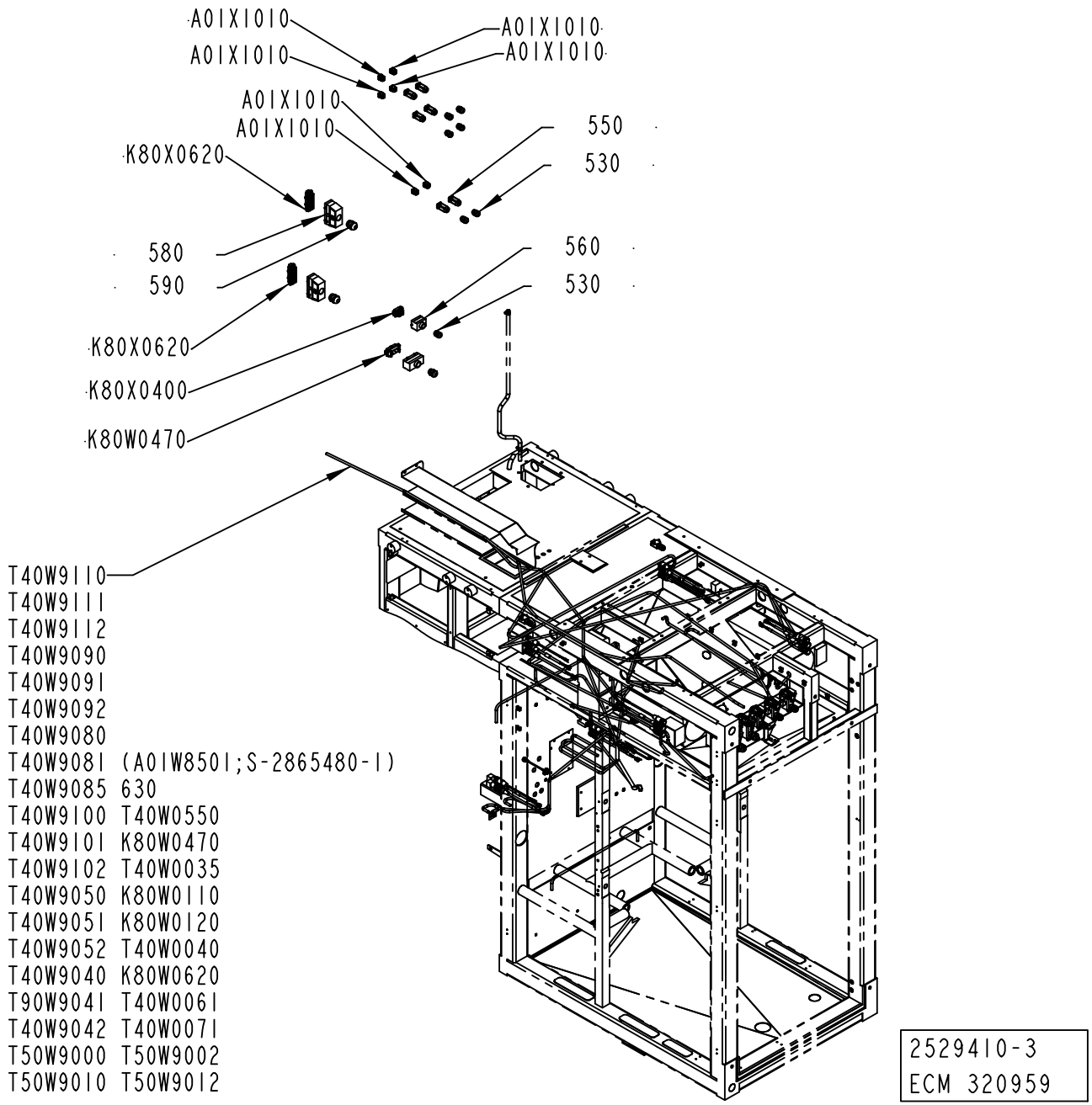
A01X1010
A01X1010
A01X1010
A01X1010
A01X1010
A01X1010
550
530
K80X0620
580
590
560
530
K80X0620
K80X0400
K80W0470
T40W9110
T40W9111
T40W9112
T40W9090
T40W9091
T40W9092
T40W9080
T40W9081 (A01W8501;S-2865480-1)
T40W9085 630
T40W9100 T40W0550
T40W9101 K80W0470
T40W9102 T40W0035
T40W9050 K80W0110
T40W9051 K80W0120
T40W9052 T40W0040
T40W9040 K80W0620
T90W9041 T40W0061
T40W9042 T40W0071
T50W9000 T50W9002
T50W9010 T50W9012
2529410-3
ECM 320959

ECM: 327285 - 20080102
Group number: 2529410-0200
Assembly Drawing: 2529410-3_1_AB

This list covers pages from 2-104 to 2-107

| Pos | Part No | UN | Qty | Description | Page No |
|---|---|---|---|---|---|
| - | | | | | |
| 100 | 312125-0226 | | 12 | SCREW ISO 1207 M3X12 A4 | |
| 110 | 312125-0364 | | 13 | SCREW ISO 1207 M6X10 A4 | |
| 200 | 315105-0124 | | 12 | WASHER BRB 3,2X6 RFR | |
| 250 | 315202-0211 | | 2 | O-RING 13,3X2,4 MM | |
| 280 | 352103-0106 | | 2 | CABLE GLAND, ST 11, PR18,6/PG11 | |
| 350 | 352113-0204 | | 13 | ANCHOR PLATES FOR STRIPS, TYPE TM3S25-M | |
| 500 | 90110-0296 | | 2 | FEMALE INSERT HDC-HA-4BS 149840-B/2 | |
| 520 | 90110-0370 | | 2 | BASE HOUSING | |
| 530 | 90458-0307 | | 7 | CABLE GLAND, M20X1,5, NO.5311 1020 | |
| 540 | 90458-0308 | | 1 | CABLE GLAND, M25X1,5, NO.5311 1030 | |
| 550 | 90459-3080 | | 6 | HOOD HAN-BRID 3A 19 20 003 1443 | |
| 560 | 90459-6632 | | 1 | HOOD 6 B TOP ENTRY, 19 30 006 1440 | |
| 570 | 90459-6634 | | 1 | HOOD 16 B TOP ENTRY, 19 30 016 1421 | |
| 580 | 90459-6636 | | 2 | HOOD 24 B TOP ENTRY, 19 30 024 0427 | |
| 590 | 90458-0309 | | 1 | CABLE GLAND, M32X1,5, NO.5311 1040 | |
| A01X1010 | 90459-6821 | | 1 | MALE INSERT HAN 4A, 09 20 004 2611 | |
| A01X1020 | 90459-6821 | | 1 | MALE INSERT HAN 4A, 09 20 004 2611 | |
| A01X1031 | 90459-6821 | | 1 | MALE INSERT HAN 4A, 09 20 004 2611 | |
| A01X1040 | 90459-6821 | | 1 | MALE INSERT HAN 4A, 09 20 004 2611 | |
| K80W0470 | 90110-0054 | | 1 | MALE INSERT HAN 6 HSB 09 31 006 2601 | |
| K80X0400 | 90110-0052 | | 1 | MALE INSERT HAN 6E 09 33 006 2601 | |
| K80X6020 | 90110-0056 | | 1 | MALE INSERT HAN 24 E 09 33 024 2601 | |
| T40W9040 | 90459-2566 | | 1 | MOTOR CABLE 16 AWG 2090-XXNPMP-16S15 | |
| T40W9041 | 90459-2577 | | 1 | MOTOR BRAKE CABLE 2090-UXNBMP-18S15 | |
| T40W9042 | 90459-7208 | | 1 | MOTOR FEEDBACK CABLE 2090-XXNFMP-S15/C | |
| T40W9050 | 90459-2566 | | 1 | MOTOR CABLE 16 AWG 2090-XXNPMP-16S15 | |
| T40W9051 | 90459-2577 | | 1 | MOTOR BRAKE CABLE 2090-UXNBMP-18S15 | |
| T40W9052 | 90459-7208 | | 1 | MOTOR FEEDBACK CABLE 2090-XXNFMP-S15/C | |
| T40W9080 | 90459-7174 | | 1 | MOTOR POWER CABLE 2090-XXNPMP-10S15 | |
| T40W9081 | 90459-2577 | | 1 | MOTOR BRAKE CABLE 2090-UXNBMP-18S15 | |
| T40W9082 | 90459-7208 | | 1 | MOTOR FEEDBACK CABLE 2090-XXNFMP-S15/C | |
| T40W9090 | 90459-7174 | | 1 | MOTOR POWER CABLE 2090-XXNPMP-10S15 | |
| T40W9091 | 90459-2577 | | 1 | MOTOR BRAKE CABLE 2090-UXNBMP-18S15 | |
| T40W9092 | 90459-7208 | | 1 | MOTOR FEEDBACK CABLE 2090-XXNFMP-S15/C | |
| T40W9100 | 90459-7174 | | 1 | MOTOR POWER CABLE 2090-XXNPMP-10S15 | |
| T40W9101 | 90459-2577 | | 1 | MOTOR BRAKE CABLE 2090-UXNBMP-18S15 | |
| T40W9102 | 90459-7208 | | 1 | MOTOR FEEDBACK CABLE 2090-XXNFMP-S15/C | |
| T40W9110 | 90459-7174 | | 1 | MOTOR POWER CABLE 2090-XXNPMP-10S15 | |
| T40W9111 | 90459-2577 | | 1 | MOTOR BRAKE CABLE 2090-UXNBMP-18S15 | |
| T40W9112 | 90459-7208 | | 1 | MOTOR FEEDBACK CABLE 2090-XXNFMP-S15/C | |
| T40W9152 | 2540596-0007 | | 1 | COAXIAL CABLE | |
| T40W9153 | 2540596-0007 | | 1 | COAXIAL CABLE | |
| T40X0060 | 90459-6821 | | 1 | MALE INSERT HAN 4A, 09 20 004 2611 | |
| T40X0070 | 90459-6821 | | 1 | MALE INSERT HAN 4A, 09 20 004 2611 | |
| T40X0550 | 90110-0056 | | 1 | MALE INSERT HAN 24 E 09 33 024 2601 | |

Machine Type | Group Description | Used-In | Group Number | Page No

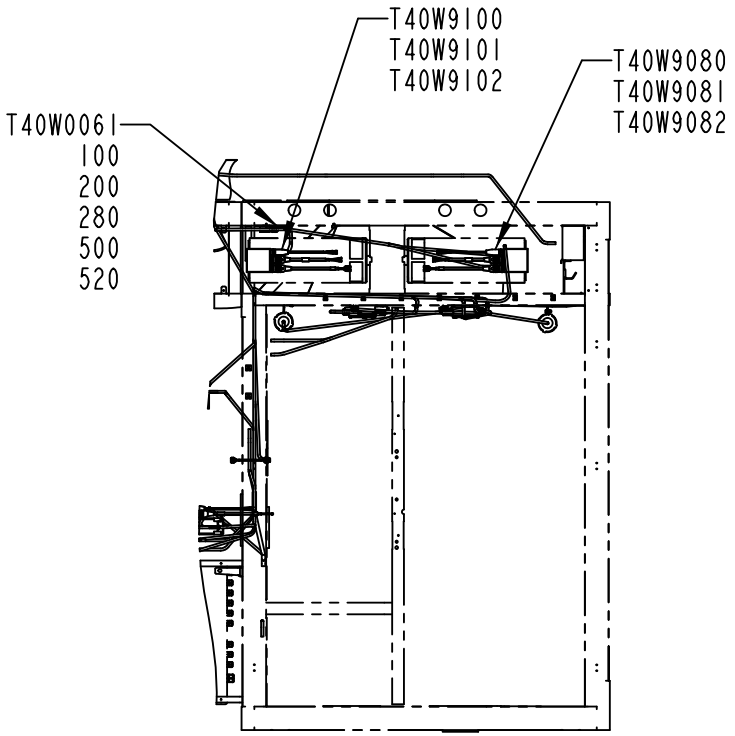


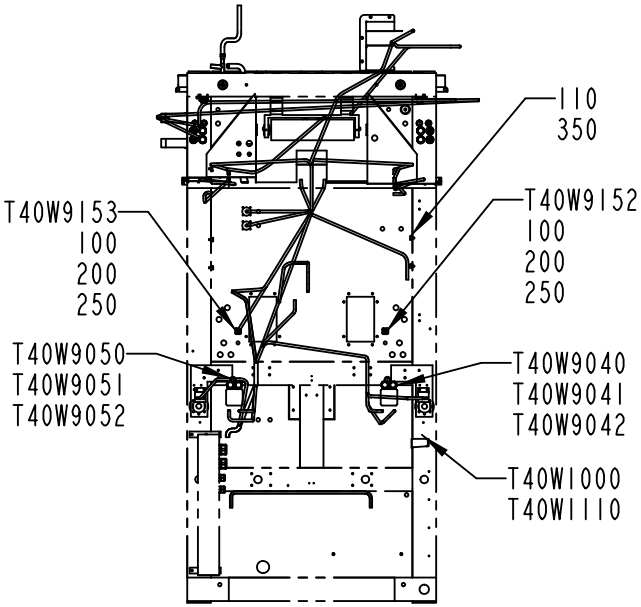


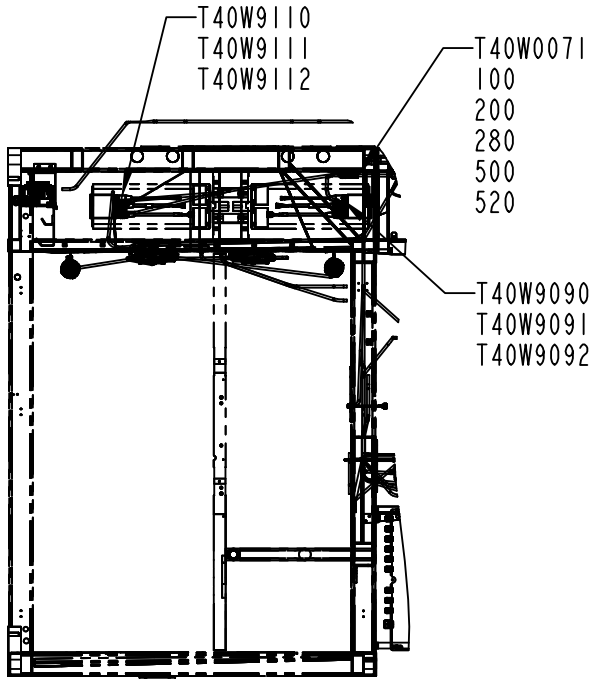


2529410-3
ECM 320959

ECM: 327285 - 20080102
Group number: 2529410-0200
Assembly Drawing: 2529410-3_2_AB

This list covers pages from 2-104 to 2-107

| Pos | Part No | UN | Qty | Description | Page No |
|---|---|---|---|---|---|
| - | | | | | |
| 100 | 312125-0226 | | 12 | SCREW ISO 1207 M3X12 A4 | |
| 110 | 312125-0364 | | 13 | SCREW ISO 1207 M6X10 A4 | |
| 200 | 315105-0124 | | 12 | WASHER BRB 3,2X6 RFR | |
| 250 | 315202-0211 | | 2 | O-RING 13,3X2,4 MM | |
| 280 | 352103-0106 | | 2 | CABLE GLAND, ST 11, PR18,6/PG11 | |
| 350 | 352113-0204 | | 13 | ANCHOR PLATES FOR STRIPS, TYPE TM3S25-M | |
| 500 | 90110-0296 | | 2 | FEMALE INSERT HDC-HA-4BS 149840-B/2 | |
| 520 | 90110-0370 | | 2 | BASE HOUSING | |
| 530 | 90458-0307 | | 7 | CABLE GLAND, M20X1,5, NO.5311 1020 | |
| 540 | 90458-0308 | | 1 | CABLE GLAND, M25X1,5, NO.5311 1030 | |
| 550 | 90459-3080 | | 6 | HOOD HAN-BRID 3A 19 20 003 1443 | |
| 560 | 90459-6632 | | 1 | HOOD 6 B TOP ENTRY, 19 30 006 1440 | |
| 570 | 90459-6634 | | 1 | HOOD 16 B TOP ENTRY, 19 30 016 1421 | |
| 580 | 90459-6636 | | 2 | HOOD 24 B TOP ENTRY, 19 30 024 0427 | |
| 590 | 90458-0309 | | 1 | CABLE GLAND, M32X1,5, NO.5311 1040 | |
| A01X1010 | 90459-6821 | | 1 | MALE INSERT HAN 4A, 09 20 004 2611 | |
| A01X1020 | 90459-6821 | | 1 | MALE INSERT HAN 4A, 09 20 004 2611 | |
| A01X1031 | 90459-6821 | | 1 | MALE INSERT HAN 4A, 09 20 004 2611 | |
| A01X1040 | 90459-6821 | | 1 | MALE INSERT HAN 4A, 09 20 004 2611 | |
| K80W0470 | 90110-0054 | | 1 | MALE INSERT HAN 6 HSB 09 31 006 2601 | |
| K80X0400 | 90110-0052 | | 1 | MALE INSERT HAN 6E 09 33 006 2601 | |
| K80X6020 | 90110-0056 | | 1 | MALE INSERT HAN 24 E 09 33 024 2601 | |
| T40W9040 | 90459-2566 | | 1 | MOTOR CABLE 16 AWG 2090-XXNPMP-16S15 | |
| T40W9041 | 90459-2577 | | 1 | MOTOR BRAKE CABLE 2090-UXNBMP-18S15 | |
| T40W9042 | 90459-7208 | | 1 | MOTOR FEEDBACK CABLE 2090-XXNFMP-S15/C | |
| T40W9050 | 90459-2566 | | 1 | MOTOR CABLE 16 AWG 2090-XXNPMP-16S15 | |
| T40W9051 | 90459-2577 | | 1 | MOTOR BRAKE CABLE 2090-UXNBMP-18S15 | |
| T40W9052 | 90459-7208 | | 1 | MOTOR FEEDBACK CABLE 2090-XXNFMP-S15/C | |
| T40W9080 | 90459-7174 | | 1 | MOTOR POWER CABLE 2090-XXNPMP-10S15 | |
| T40W9081 | 90459-2577 | | 1 | MOTOR BRAKE CABLE 2090-UXNBMP-18S15 | |
| T40W9082 | 90459-7208 | | 1 | MOTOR FEEDBACK CABLE 2090-XXNFMP-S15/C | |
| T40W9090 | 90459-7174 | | 1 | MOTOR POWER CABLE 2090-XXNPMP-10S15 | |
| T40W9091 | 90459-2577 | | 1 | MOTOR BRAKE CABLE 2090-UXNBMP-18S15 | |
| T40W9092 | 90459-7208 | | 1 | MOTOR FEEDBACK CABLE 2090-XXNFMP-S15/C | |
| T40W9100 | 90459-7174 | | 1 | MOTOR POWER CABLE 2090-XXNPMP-10S15 | |
| T40W9101 | 90459-2577 | | 1 | MOTOR BRAKE CABLE 2090-UXNBMP-18S15 | |
| T40W9102 | 90459-7208 | | 1 | MOTOR FEEDBACK CABLE 2090-XXNFMP-S15/C | |
| T40W9110 | 90459-7174 | | 1 | MOTOR POWER CABLE 2090-XXNPMP-10S15 | |
| T40W9111 | 90459-2577 | | 1 | MOTOR BRAKE CABLE 2090-UXNBMP-18S15 | |
| T40W9112 | 90459-7208 | | 1 | MOTOR FEEDBACK CABLE 2090-XXNFMP-S15/C | |
| T40W9152 | 2540596-0007 | | 1 | COAXIAL CABLE | |
| T40W9153 | 2540596-0007 | | 1 | COAXIAL CABLE | |
| T40X0060 | 90459-6821 | | 1 | MALE INSERT HAN 4A, 09 20 004 2611 | |
| T40X0070 | 90459-6821 | | 1 | MALE INSERT HAN 4A, 09 20 004 2611 | |
| T40X0550 | 90110-0056 | | 1 | MALE INSERT HAN 24 E 09 33 024 2601 | |

Machine Type | Group Description | Used-In | Group Number | Page No

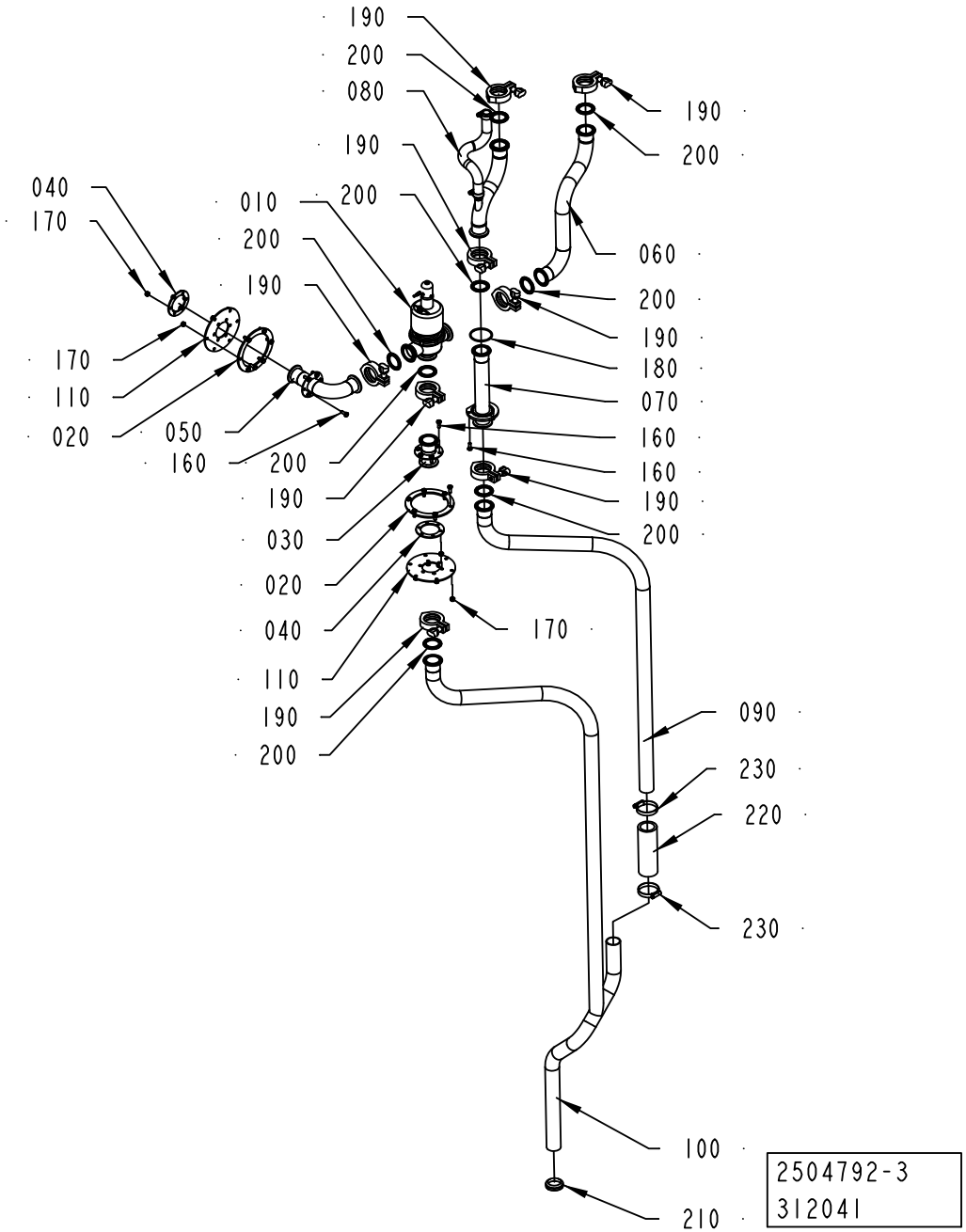
190
200
080
190
040
170
010
200
200
190
170
110
020
050
160
200
190
030
020
040
110
190
200
190
200
060
200
190
180
070
160
160
190
200
170
090
230
220
230
100
210
2504792-3
312041

ECM: 312057 - 20070704
Group number: 2504792-0200
Assembly Drawing: 2504792-3_1_AA

| Pos | Part No | UN | Qty | Description | Page No |
|---|---|---|---|---|---|
| - | | | | | |
| 010 | 2500088-0200 | | 1 | 3-WAY VALVE ..... | **2-111** |
| 020 | 1498856-0000 | | 2 | FLANGE | |
| 030 | 1498857-0000 | | 1 | CONNECTION | |
| 040 | 1498858-0000 | | 2 | FLANGE | |
| 050 | 2509544-0000 | | 1 | PIPE | |
| 060 | 2509545-0000 | | 1 | PIPE | |
| 070 | 2509546-0000 | | 1 | CONNECTION | |
| 080 | 2869180-0100 | | 1 | DRAIN PIPE ..... | **2-113** |
| 090 | 2594647-0000 | | 1 | PIPE | |
| 100 | 2594646-0000 | | 1 | PIPE | |
| 110 | 1498855-0000 | | 2 | GASKET | |
| 160 | 312105-0368 | | 27 | SCREW M6S ISO 4017 M6X16 A480 | |
| 170 | 312812-0316 | | 24 | HEXAGON NUT, NY-LOCK M6 A480 | |
| 180 | 315202-0302 | | 1 | O-RING 54,5X3 MM | |
| 190 | 342840-0103 | | 8 | CLAMPING PIECE | |
| 200 | 342850-0304 | | 8 | GASKET 35,4X49,1X5,2 1"1/2 FDA | |
| 210 | 315220-0183 | | 1 | V-RINGS 36X46X13 MM V-40S | |
| 220 | 90166-0236 | MM | 200 | HOSE, 38/51 REINFORCED RUBBER | |
| 230 | 342991-0109 | | 2 | HOSE CLIP,WORM DRIVE TYPE (48)-50 | |

| Pos | Part No | UN | Qty | Description | Page No |
|---|---|---|---|---|---|

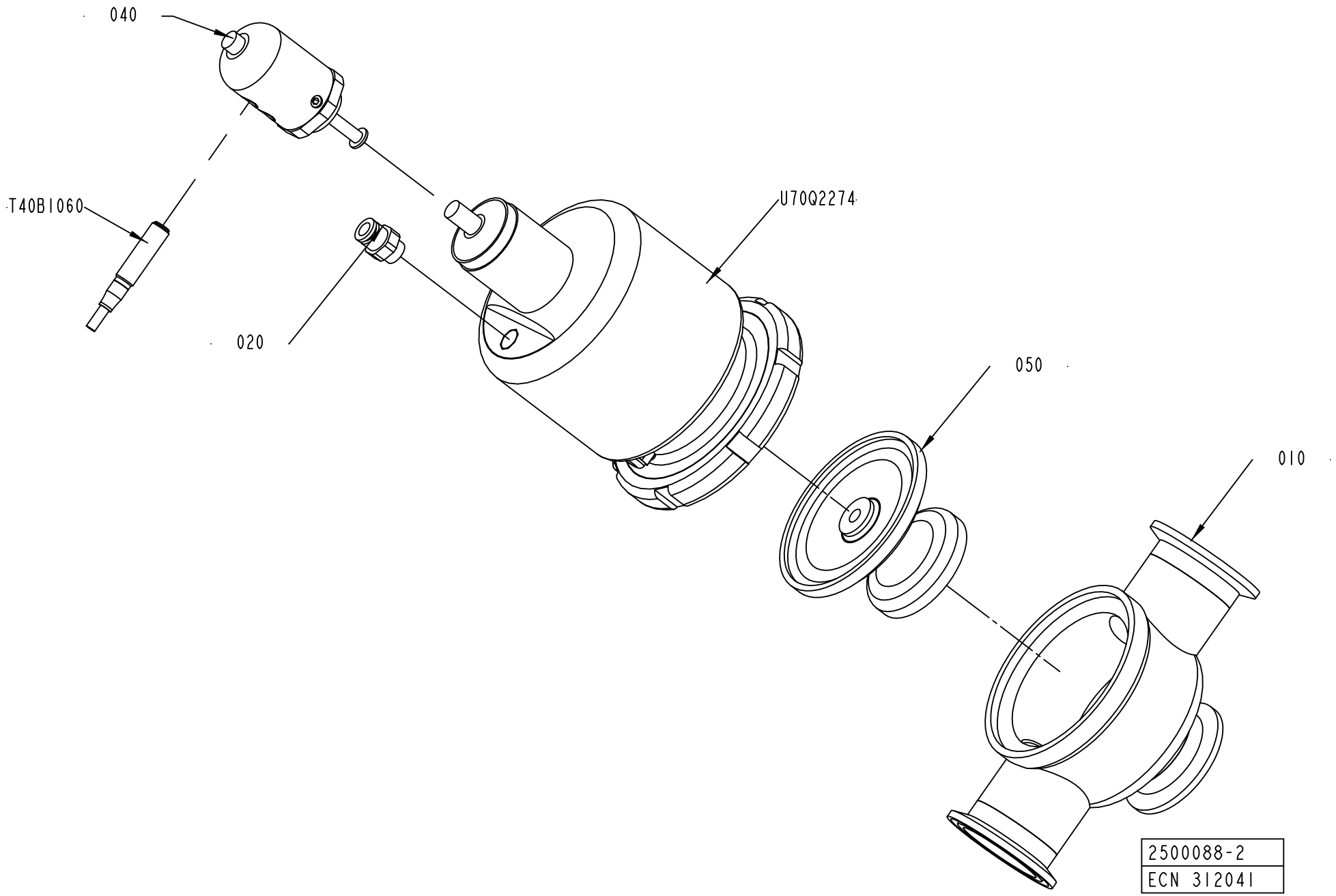
040
T40B1060
020
U70Q2274
050
010
2500088-2
ECN 312041

ECM: 312058 - 20070704
Group number: 2500088-0200
Assembly Drawing: 2500088-2_1_AA

| Pos | Part No | UN | Qty | Description | Page No |
|---|---|---|---|---|---|
| - | | | | | |
| 010 | 2501292-0000 | | 1 | VALVE HOUSING | |
| 020 | 342722-0202 | | 1 | PIPE COUPLING 1/8" D=6MM | |
| 040 | 90458-1537 | | 1 | HOLDER, FOR INDUCTIVE SENSORS | |
| 050 | 90458-1541 | | 1 | DIAPHRAGM, NA 38/25 PFTE | |
| | *90458-1542* | | *1* | *SUPPORT FOR NA 38/25 DIAPHRAGM* | |
| T40B1060 | 90600-0473 | | 1 | INDUCTIVE SWITCH E2A-S08KS01-WP-B1-TP 5M | |
| U70Q2274 | 90458-1531 | | 1 | ACTUATOR, N.O., PA 38/100 | |
| | *90458-1533* | | *1* | *LOCK RING N7-29, FOR PA 38* | |
| | *90458-1534* | | *1* | *SILENCER N4-23, FOR PA 38/100* | |

| Pos | Part No | UN | Qty | Description | Page No |
|---|---|---|---|---|---|

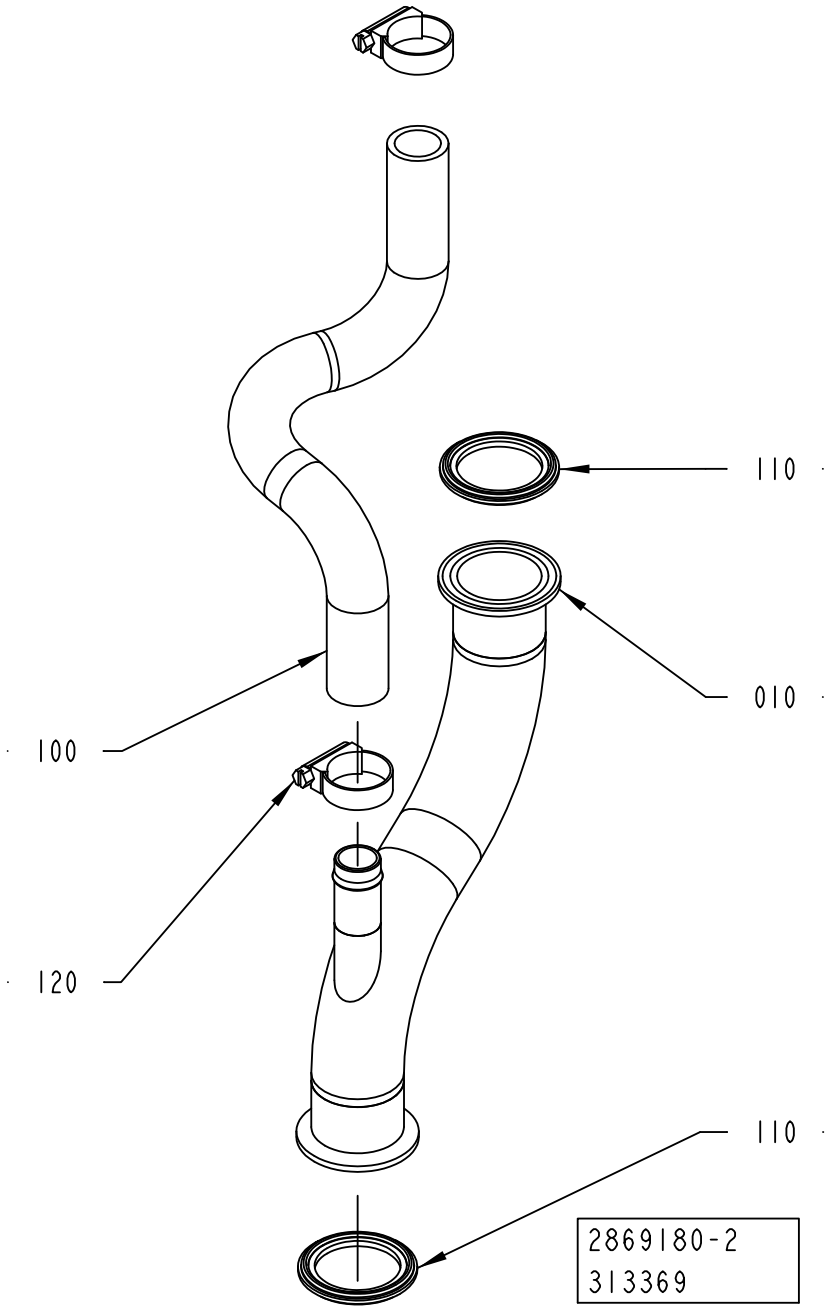
110
010
100
120
110
2869180-2
313369

ECM: 313369 - 20070628
Group number: 2869180-0100
Assembly Drawing: 2869180-2_1_AA

| Pos | Part No | UN | Qty | Description | Page No |
|---|---|---|---|---|---|
| **A3/FLEX** | | | | | |
| 010 | 2833352-0000 | | 1 | PIPE | |
| **Common Parts** | | | | | |
| 100 | 90458-2752 | MM | 500 | PLASTIC HOSE, 3/4"X1" | |
| 110 | 342850-0304 | | 2 | GASKET 35,4X49,1X5,2 1"1/2 FDA | |
| 120 | 342991-0104 | | 2 | HOSE CLIP,WORM DRIVE TYPE (23)-27 | |

| Pos | Part No | UN | Qty | Description | Page No |
|---|---|---|---|---|---|

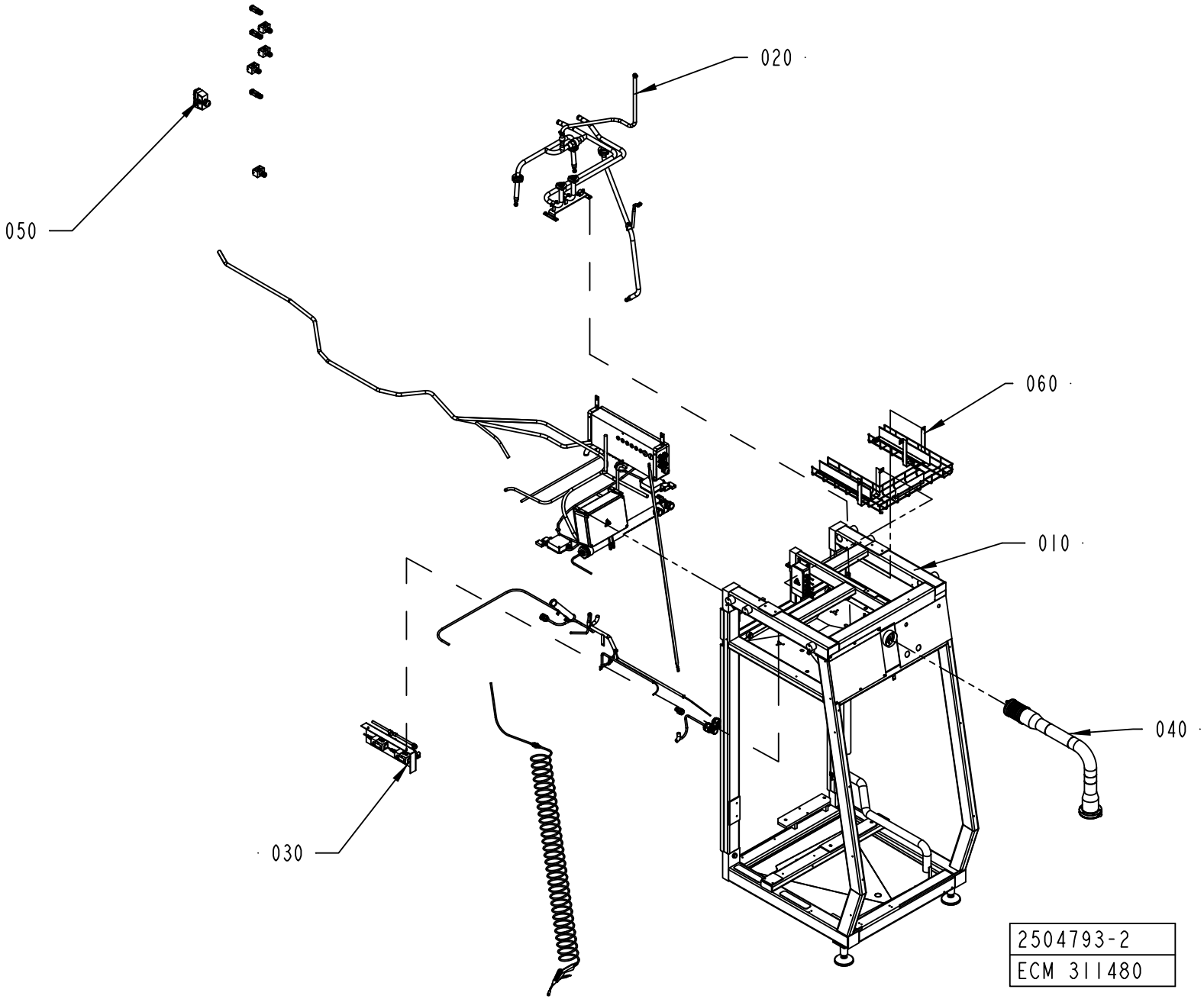
020
050
060
010
040
030
2504793-2
ECM 311480

ECM: 360869 - 20080624
Group number: 2504793-0200
Assembly Drawing: 2504793-2_1_AA

| Pos | Part No | UN | Qty | Description | Page No |
|---|---|---|---|---|---|
| - | | | | | |
| 010 | 2504794-0200 | | 1 | MACHINE BODY | **2-117** |
| 020 | 2504795-0200 | | 1 | CLEANING SYSTEM | **2-121** |
| 030 | 2528044-0200 | | 1 | PNEUMATIC SYSTEM | **2-123** |
| 040 | 1095863-0400 | | 1 | PIVOT ARM | **2-129** |
| 050 | 2527300-0200 | | 1 | ELECTRIC EQUIPMENT | **2-133** |
| 060 | 2813403-0100 | | 1 | BASKET | **2-147** |

| Pos | Part No | UN | Qty | Description | Page No |
|---|---|---|---|---|---|

# MACHINE BODY



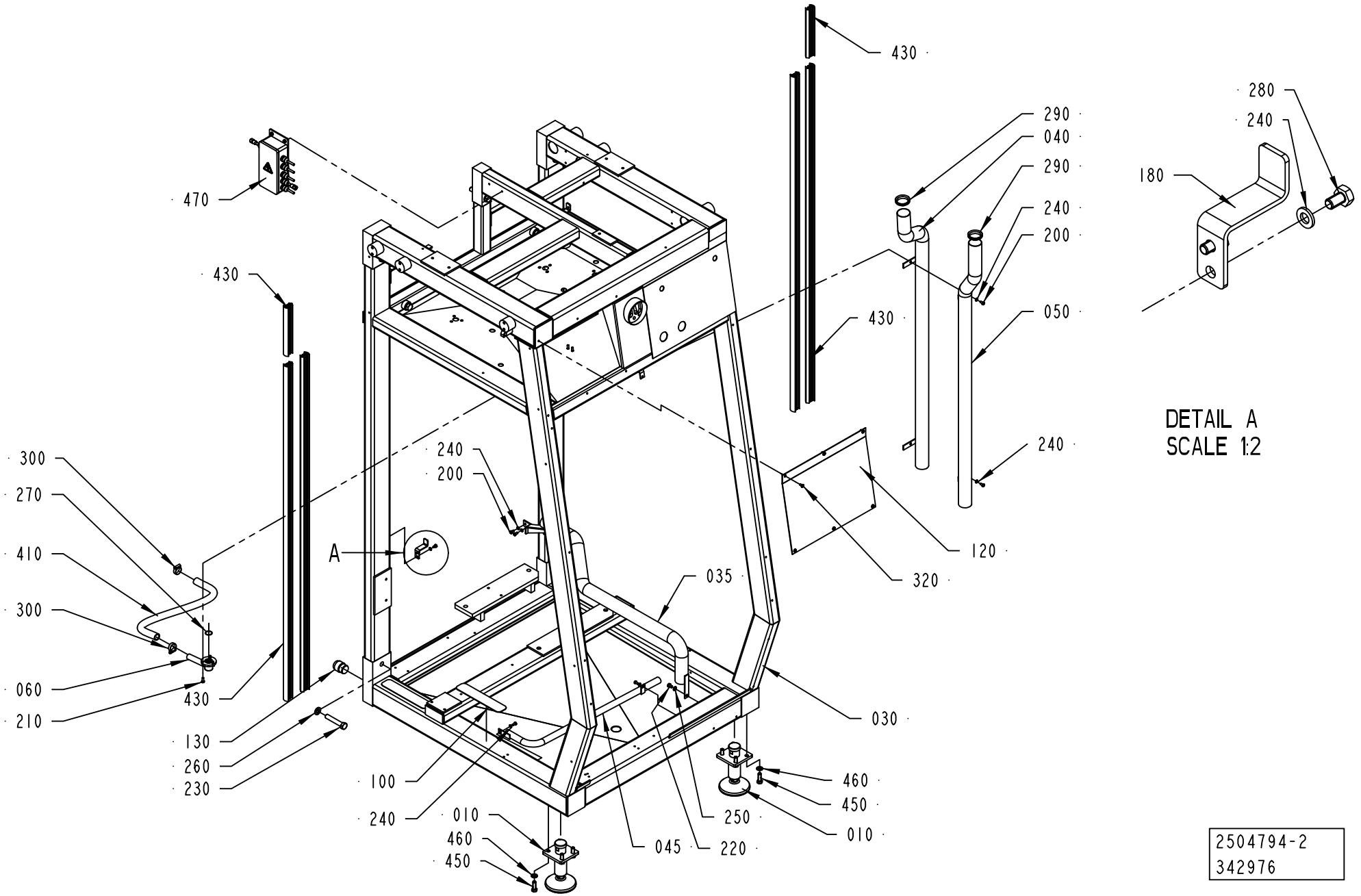

ECM: 348374 - 20080103
Group number: 2504794-0200
Assembly Drawing: 2504794-2_1_AB

| Pos | Part No | UN | Qty | Description | Page No |
|---|---|---|---|---|---|
| **A3/FLEX** | | | | | |
| 180 | 2948771-0000 | | 1 | HOLDER | |
| 210 | 312105-0368 | | 2 | SCREW M6S ISO 4017 M6X16 A480 | |
| 240 | 315105-0153 | | 4 | WASHER BRB 6,4X12 RFR | |
| 280 | 312105-0364 | | 2 | SCREW M6S ISO 4017 M6X10 A480 | |
| **Common Parts** | | | | | |
| 010 | 90600-0725 | | 2 | FOOT 25000N, R0772 611223 | |
| 030 | 2806108-0000 | | 1 | FRAME | |
| 035 | 2530300-0000 | | 1 | PIPE | |
| 040 | 2530301-0000 | | 1 | PIPE | |
| 045 | 2530303-0000 | | 1 | PIPE | |
| 050 | 2530302-0000 | | 1 | PIPE | |
| 060 | 2509552-0000 | | 1 | DRAINING | |
| 100 | 1103300-0000 | | 3 | NON-SKID | |
| 120 | 2510785-0000 | | 1 | COVER PLATE | |
| 130 | 2506636-0000 | | 2 | PIN | |
| 200 | 312105-0366 | | 6 | SCREW M6S ISO 4017 M6X12 A480 | |
| 220 | 312105-0447 | | 1 | SCREW M6S ISO 4017 M8X12 A480 | |
| 230 | 312105-0638 | | 7 | SCREW M6S ISO 4014 M16X90 A480 | |
| 250 | 315105-0165 | | 1 | WASHER BRB 8,4X16 RFR | |
| 260 | 315105-0186 | | 7 | WASHER BRB 17X30 RFR | |
| 270 | 315202-0709 | | 1 | O-RING 23,52X1,78 MM | |
| 290 | 315220-0198 | | 2 | V-RINGS 45X55X13 MM V-50S | |
| 300 | 342991-0105 | | 2 | HOSE CLIP,WORM DRIVE TYPE (27)-30 | |
| 320 | 90287-0075 | | 6 | SCREW SLOT. PAN HEAD LKCS M6X12 | |
| 410 | 90166-0151 | MM | 610 | HOSE | |
| 430 | 90459-1009 | MM | 7000 | RUBBER STRIP, 1025088988 | |
| 450 | 312105-0538 | | 8 | SCREW M6S ISO 4017 M12X35 A480 | |
| 460 | 315105-0178 | | 8 | WASHER BRB 13X24 RFR | |
| 470 | 2865480-0100 | | 1 | CONNECTION BOX ..... | **2-119** |

| Pos | Part No | UN | Qty | Description | Page No |
|---|---|---|---|---|---|

Machine Type | Group Description | Used-In | Group Number | Page No

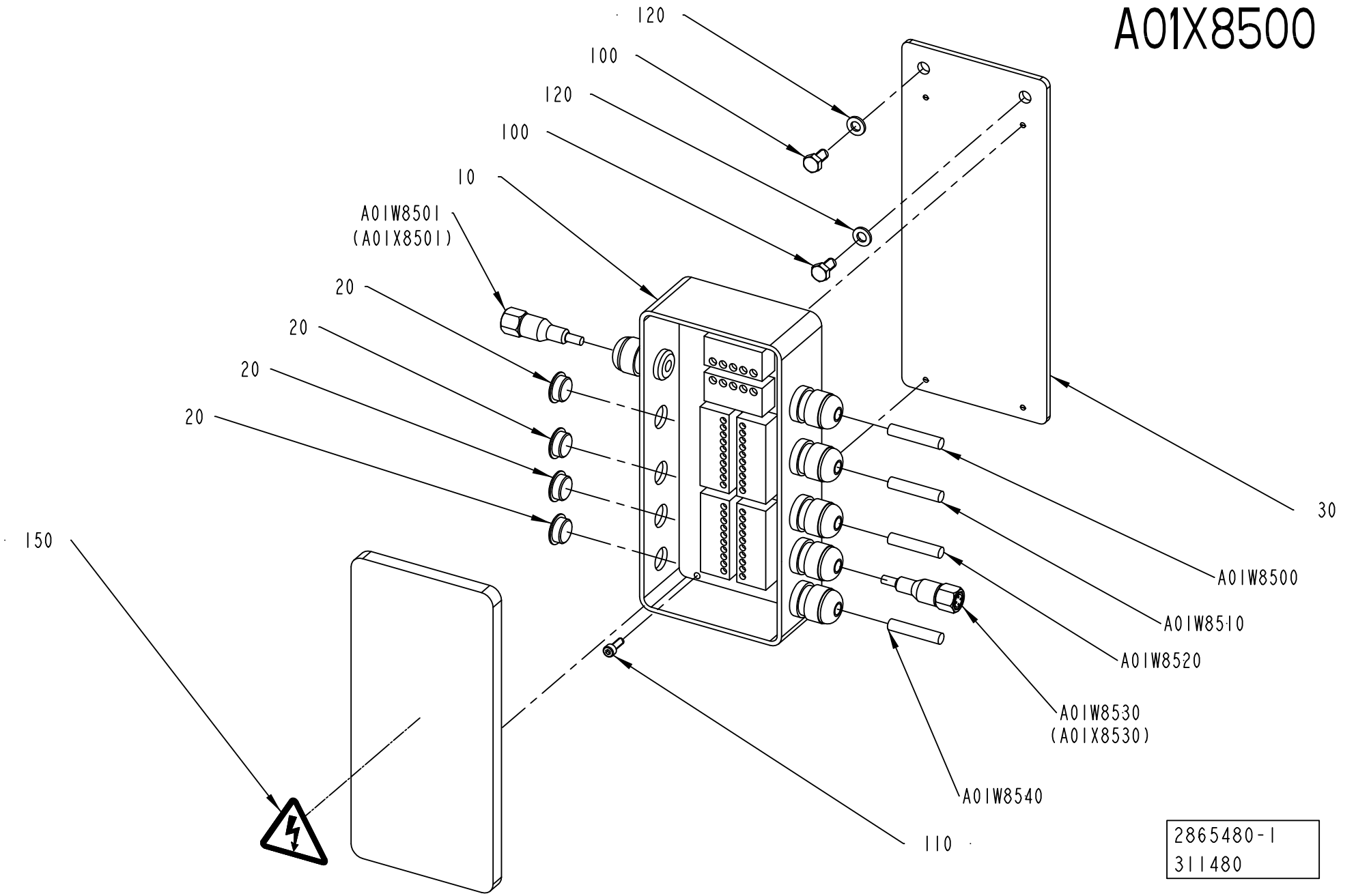
A01X8500
120
100
120
100
10
A01W8501
(A01X8501)
20
20
20
20
150
30
A01W8500
A01W8510
A01W8520
A01W8530
(A01X8530)
A01W8540
110
2865480-1
311480

ECM: 311484 - 20070629
Group number: 2865480-0100
Assembly Drawing: 2865480-1_1_AA

| Pos | Part No | UN | Qty | Description | Page No |
|---|---|---|---|---|---|
| - | | | | | |
| 010 | 90459-2517 | | 1 | DEVICE BOX 8 PORT THIN CABLE | |
| 020 | 90002-0013 | | 4 | BLANK-OFF PLUG, PR 15,2 SKINDICHT-BLK9 | |
| 030 | 2814591-0000 | | 1 | SUPPORT | |
| 100 | 312105-0366 | | 2 | SCREW M6S ISO 4017 M6X12 A480 | |
| 110 | 312115-0291 | | 4 | SCREW ISO4762 M4X12 A4 80 | |
| 120 | 315105-0153 | | 2 | WASHER BRB 6,4X12 RFR | |
| 150 | 359705-0015 | | 1 | WARNING SIGN ISO, RISK OF ELECTRIC SHOCK | |
| A01W8500 | 90459-2530 | M | 5 | DEVICENET CABLE THIN | |
| A01W8501 | 351415-0050 | | 1 | DEVICENET CONN. CABLE, 0935 361 105/5M | |
| A01W8510 | 90459-2530 | M | 2 | DEVICENET CABLE THIN | |
| A01W8520 | 90459-2530 | M | 2 | DEVICENET CABLE THIN | |
| A01W8530 | 351415-0020 | | 1 | DEVICENET CONN. CABLE, 0935 361 105/2M | |
| A01W8540 | 90459-2530 | M | 3.5 | DEVICENET CABLE THIN | |

| Pos | Part No | UN | Qty | Description | Page No |
|---|---|---|---|---|---|

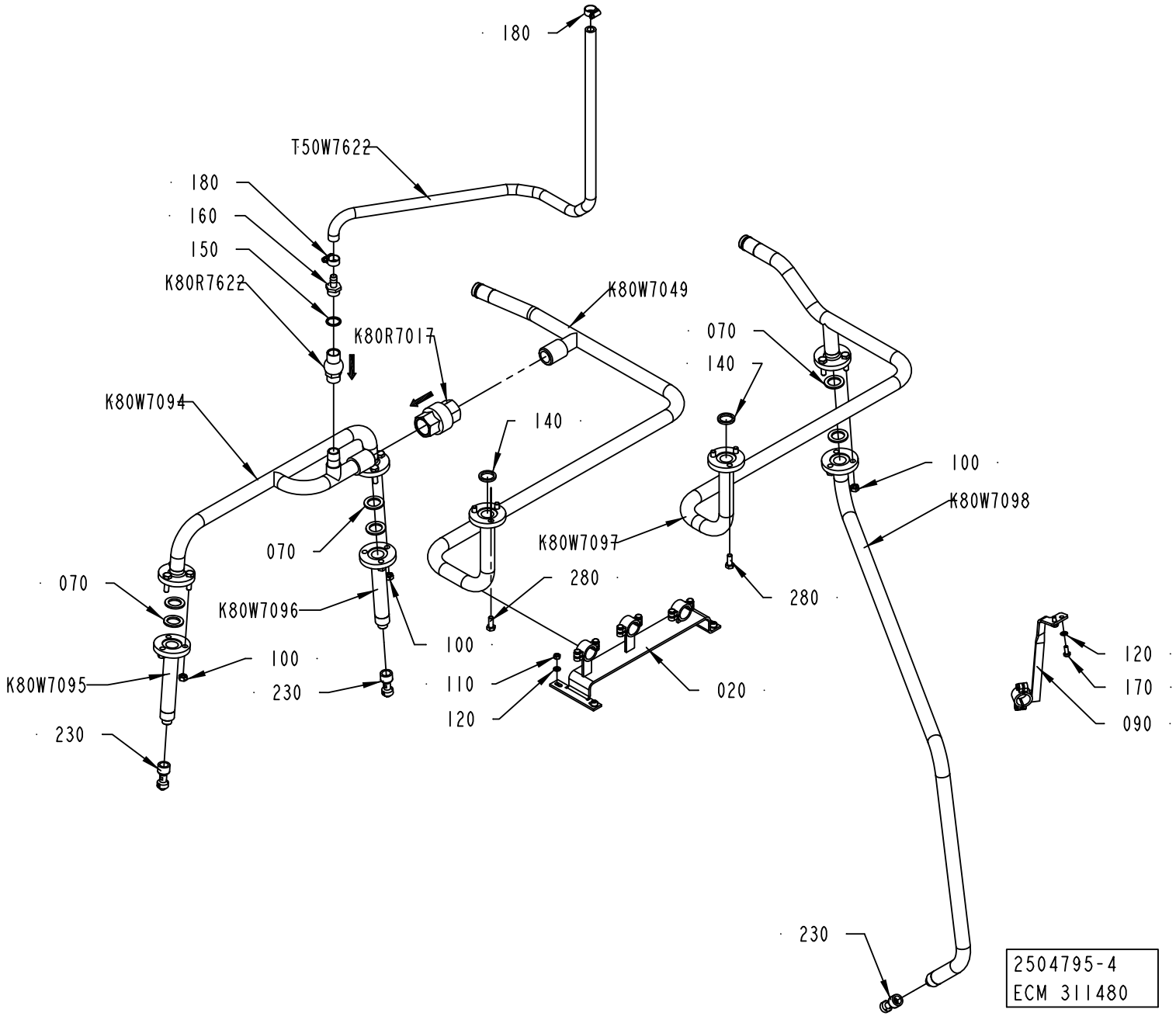
180
T50W7622
180
160
150
K80R7622
K80R7017
K80W7049
K80W7094
140
070
070
K80W7096
100
K80W7095
100
230
230
110
120
280
020
070
140
100
K80W7098
K80W7097
280
120
170
090
230
2504795-4
ECM 311480

ECM: 327283 - 20080102
Group number: 2504795-0200
Assembly Drawing: 2504795-4_1_AA

| Pos | Part No | UN | Qty | Description | Page No |
|---|---|---|---|---|---|
| **A3/FLEX** | | | | | |
| 150 | 315239-0113 | | 1 | NYLON WASHER G1/2, 1/2RRP | |
| 160 | 342901-0105 | | 1 | HOSE NIPPLE, EXT.THR. R1/2-12 MM | |
| 180 | 342991-0102 | | 2 | HOSE CLIP,WORM DRIVE TYPE (16)-19 | |
| K80R7622 | 90230-0042 | | 1 | NON-RETURN VALVE 1/2" | |
| T50W7622 | 90166-0121 | MM | 2000 | HOSE | |
| **Common Parts** | | | | | |
| 020 | 2508426-0000 | | 1 | BRACKET | |
| 070 | 1037443-0000 | | 6 | GASKET | |
| 090 | 2519430-0000 | | 1 | BRACKET | |
| 100 | 312605-0318 | | 9 | HEXAGON NUT, M6M M8 A280 | |
| 110 | 312605-0316 | | 4 | HEXAGON NUT, M6M M6 A280 | |
| 120 | 315105-0153 | | 6 | WASHER BRB 6,4X12 RFR | |
| 140 | 315229-0103 | | 2 | GASKETS, 23,1X30,1X3,7 MM 1" FDA | |
| 170 | 312105-0367 | | 2 | SCREW M6S ISO 4017 M6X14 A480 | |
| 230 | 90600-2646 | | 3 | ROT.SPRAY NOZZLE, 599.186.1Y.AF.00.0 | |
| 280 | 312105-0451 | | 6 | SCREW M6S ISO 4017 M8X20 A480 | |
| K80R7017 | 90230-0044 | | 1 | NON-RETURN VALVE 1" | |
| | *90230-0308* | | *1* | *GASKET KIT* | |
| K80W7049 | 2506922-0000 | | 1 | PIPE | |
| K80W7094 | 2506925-0000 | | 1 | PIPE | |
| K80W7095 | 2508425-0000 | | 1 | PIPE | |
| K80W7096 | 2508425-0000 | | 1 | PIPE | |
| K80W7097 | 2506923-0000 | | 1 | PIPE | |
| K80W7098 | 2506924-0000 | | 1 | PIPE | |

| Pos | Part No | UN | Qty | Description | Page No |
|---|---|---|---|---|---|

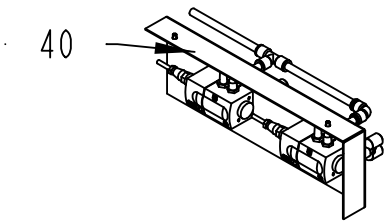


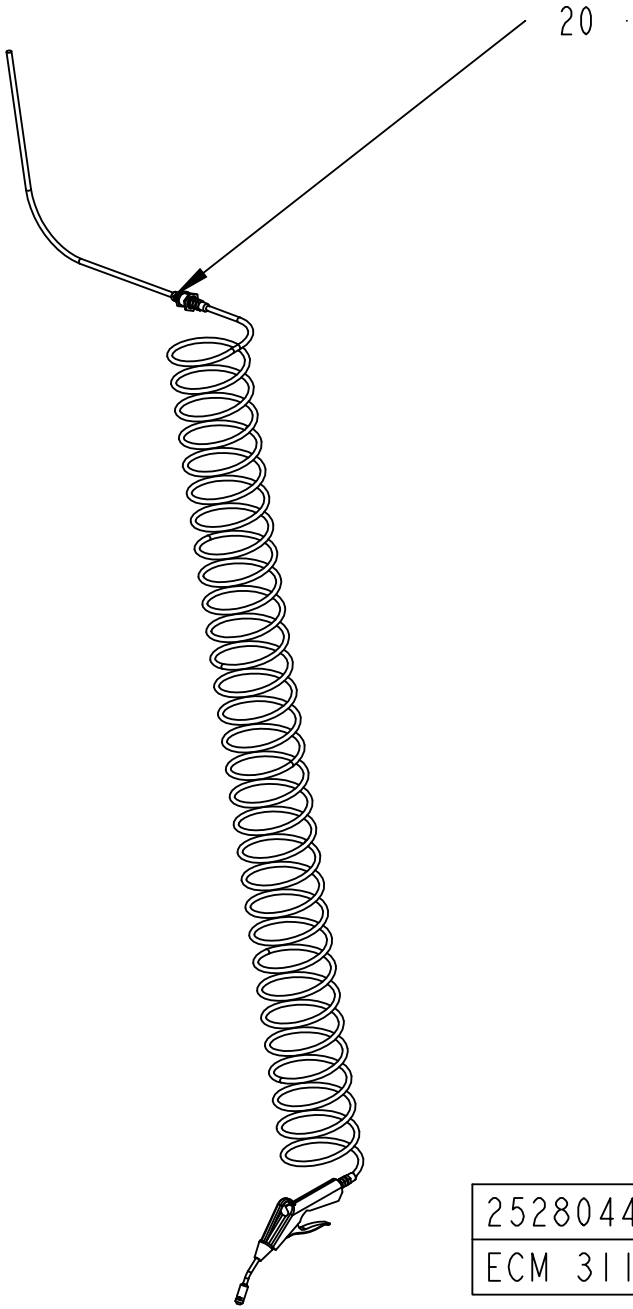


| 2528044-3 |
| --- |
| ECM 311480 |

ECM: 327310 - 20080102
Group number: 2528044-0200
Assembly Drawing: 2528044-3_1_AA

| Pos | Part No | UN | Qty | Description | Page No |
|---|---|---|---|---|---|
| - | | | | | |
| 005 | 2887587-0000 | | 1 | PNEUMATIC DIAGRAM | |
| 020 | 1095682-0200 | | 1 | AIR JET GUN ..... | **2-125** |
| 040 | 2843394-0100 | | 1 | TRANSDUCER HEAD ..... | **2-127** |

| Pos | Part No | UN | Qty | Description | Page No |
|---|---|---|---|---|---|

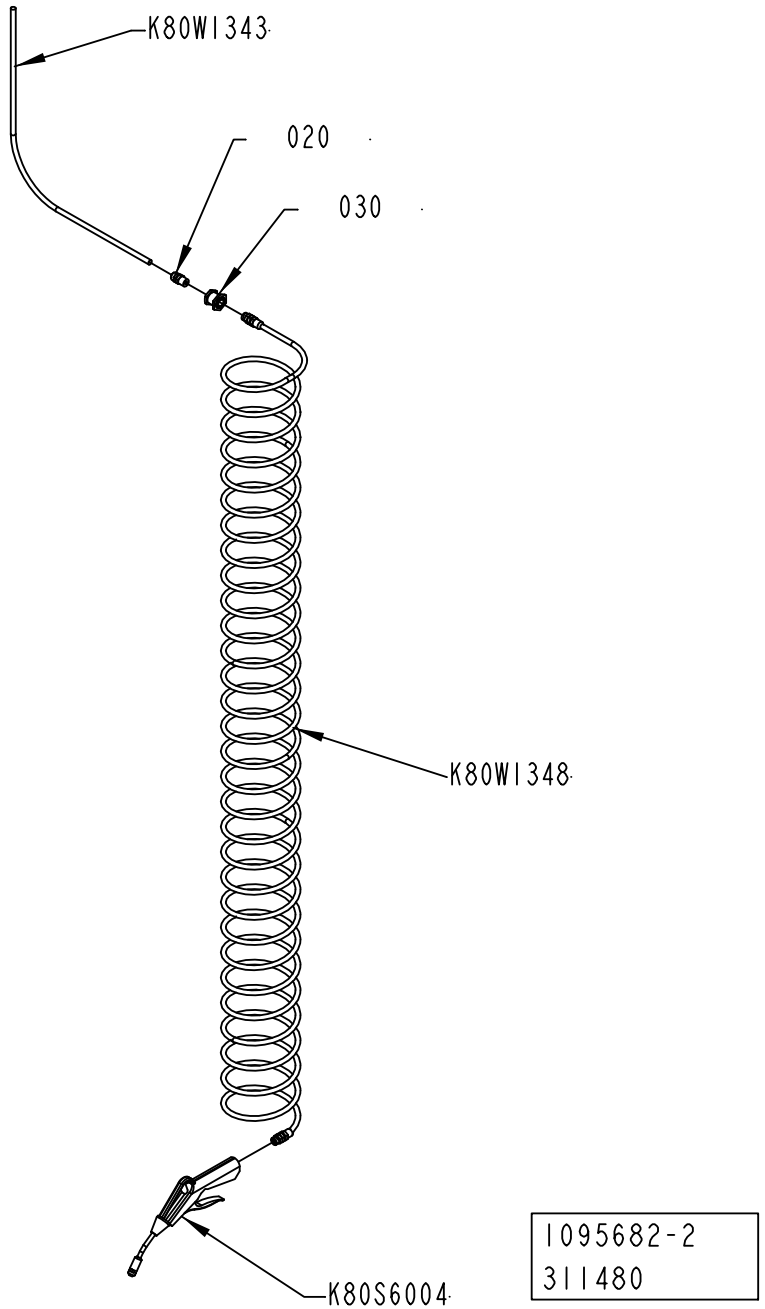
K80WI343
020
030
K80WI348
K80S6004
1095682-2
311480

ECM: 311486 - 20070629
Group number: 1095682-0200
Assembly Drawing: 1095682-2_1_AA

| Pos | Part No | UN | Qty | Description | Page No |
|---|---|---|---|---|---|
| - | | | | | |
| 020 | 342920-0122 | | 1 | STRAIGHT COUPLING,EXT.THREADED 8/6-R1/4" | |
| 030 | 342767-0104 | | 1 | CONN. BULKHEAD G1/4 | |
| K80S6004 | 90459-0173 | | 1 | AIR GUN ASSEMBLY, CEJN SERIE 208 | |
| K80W1343 | 90166-0013 | MM | 1800 | TUBE 8 MM PA BLUE | |
| K80W1348 | 90152-0016 | | 1 | HOSE (SPIRAL) | |

| Pos | Part No | UN | Qty | Description | Page No |
|---|---|---|---|---|---|

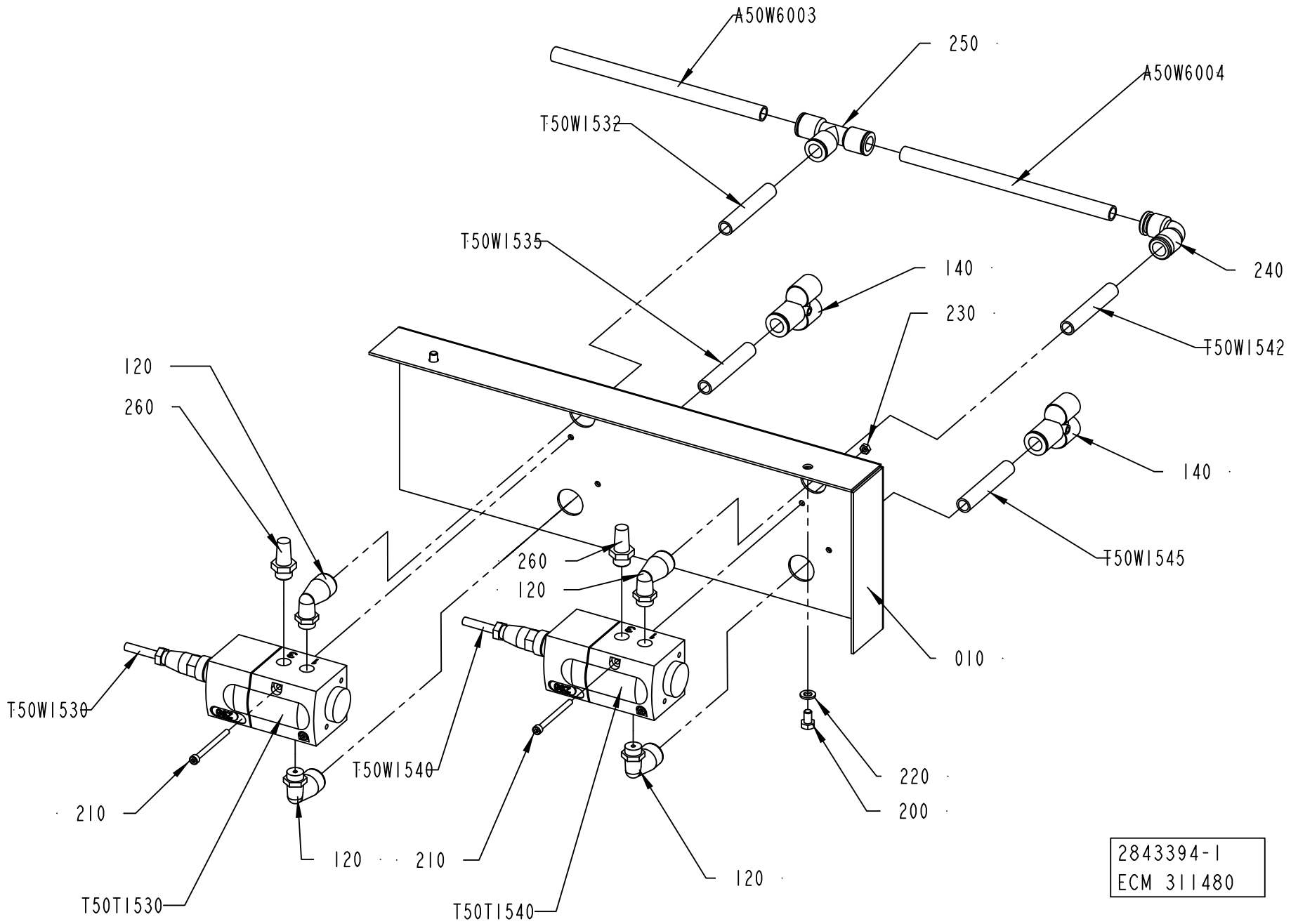
A50W6003
250
A50W6004
T50W1532
T50W1535
140
230
240
T50W1542
120
260
140
T50W1545
260
120
010
T50W1530
T50W1540
210
220
200
120
210
120
T50T1530
T50T1540
2843394-1
ECM 311480

ECM: 311487 - 20070629
Group number: 2843394-0100
Assembly Drawing: 2843394-1_1_AA

| Pos | Part No | UN | Qty | Description | Page No |
|---|---|---|---|---|---|
| - | | | | | |
| 010 | 2843395-0000 | | 1 | MOUNTING SHEET | |
| 120 | 90458-2959 | | 4 | ELBOW PIPE JOINT, EXT.THREAD,D=12MM-G1/4 | |
| 140 | 90459-6065 | | 2 | Y-FITTING QSY-12-8 | |
| 200 | 312105-0364 | | 2 | SCREW M6S ISO 4017 M6X10 A480 | |
| 210 | 312115-0305 | | 4 | SCREW ISO4762 M4X50 A4 80 | |
| 220 | 315105-0153 | | 2 | WASHER BRB 6,4X12 RFR | |
| 230 | 312605-0312 | | 4 | HEXAGON NUT, M6M M4 A280 | |
| 240 | 342735-0109 | | 1 | ELBOW PIPE JOINT | |
| 250 | 342748-0109 | | 1 | T-CONNECTION 12MM | |
| 260 | 346800-0110 | | 2 | SILENCER FILTER R1/4" | |
| T50T1530 | 90458-1092 | | 1 | PROPORTIONAL VALVE 0 - 10V/0-6 BAR | |
| | *90458-1262* | | *1* | *CONNECTOR 131028001 FOR PROP. VALVE* | |
| T50T1540 | 90458-1092 | | 1 | PROPORTIONAL VALVE 0 - 10V/0-6 BAR | |
| | *90458-1262* | | *1* | *CONNECTOR 131028001 FOR PROP. VALVE* | |
| T50W1530 | 90220-0165 | M | 15 | SCR. CABLE 5X0,34MM2 | |
| T50W1532 | 90166-0068 | MM | 70 | TUBE 12 MM PA BLUE | |
| T50W1535 | 90166-0068 | MM | 70 | TUBE 12 MM PA BLUE | |
| T50W1540 | 90220-0165 | M | 15 | SCR. CABLE 5X0,34MM2 | |
| T50W1542 | 90166-0068 | MM | 70 | TUBE 12 MM PA BLUE | |
| T50W1545 | 90166-0068 | MM | 70 | TUBE 12 MM PA BLUE | |

| Pos | Part No | UN | Qty | Description | Page No |
|---|---|---|---|---|---|

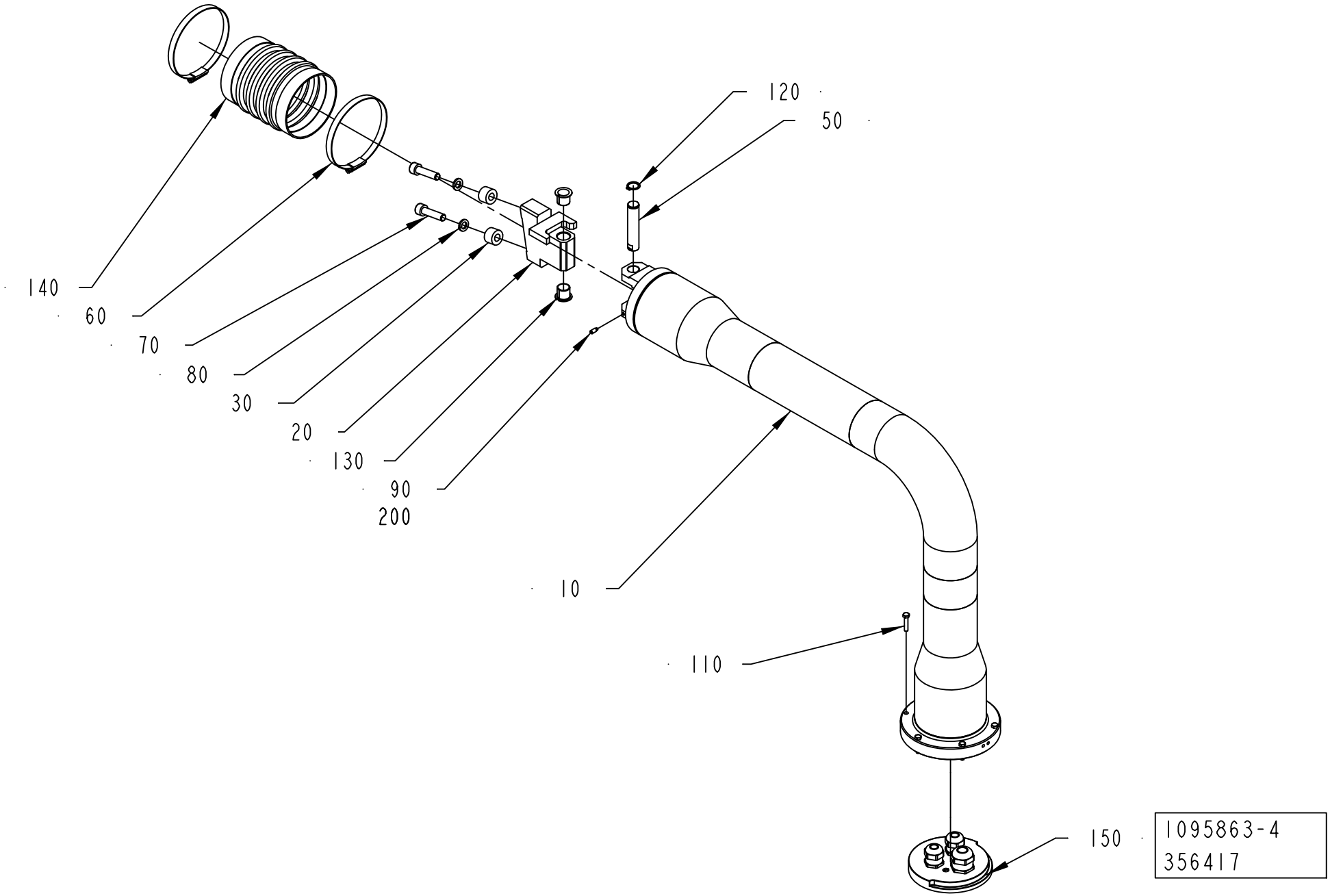
120
50
140
60
70
80
30
20
130
90
200
10
110
150
1095863-4
356417

ECM: 359760 - 20080624
Group number: 1095863-0400
Assembly Drawing: 1095863-4_1_AA

| Pos | Part No | UN | Qty | Description | Page No |
|---|---|---|---|---|---|
| - | | | | | |
| 010 | 1558974-0000 | | 1 | PIPE BRACKET | |
| 020 | 1558975-0000 | | 1 | BLOCKING PIECE | |
| 030 | 1254494-0000 | | 1 | SPACER | |
| 050 | 1558945-0000 | | 1 | PIVOT PIN | |
| 060 | 342991-0114 | | 2 | HOSE CLIP,WORM DRIVE TYPE (93)-110 | |
| 070 | 312115-0499 | | 2 | SCREW ISO4762 M10X40 A4 80 | |
| 080 | 315402-0173 | | 2 | LOCK WASHER FBB 10,2 | |
| 110 | 312105-0333 | | 6 | SCREW M6S ISO 4017 M5X25 A480 | |
| 120 | 315751-0113 | | 1 | RETAINING RING FOR SHAFT DIN 471 16 SS | |
| 130 | 321161-0221 | | 2 | FLANGE BUSHING, 16X18X17 MM | |
| 140 | 90342-0024 | | 1 | RUBBER BELLOWS, 100X100 MM | |
| 150 | 2790041-0100 | | 1 | FASTENING PLATE ..... | **2-131** |
| 200 | 90157-0021 | KG | 1 | LOCKING FLUID LOCTITE 270 | |

| Pos | Part No | UN | Qty | Description | Page No |
|---|---|---|---|---|---|

Machine Type | Group Description | Used-In | Group Number | Page No

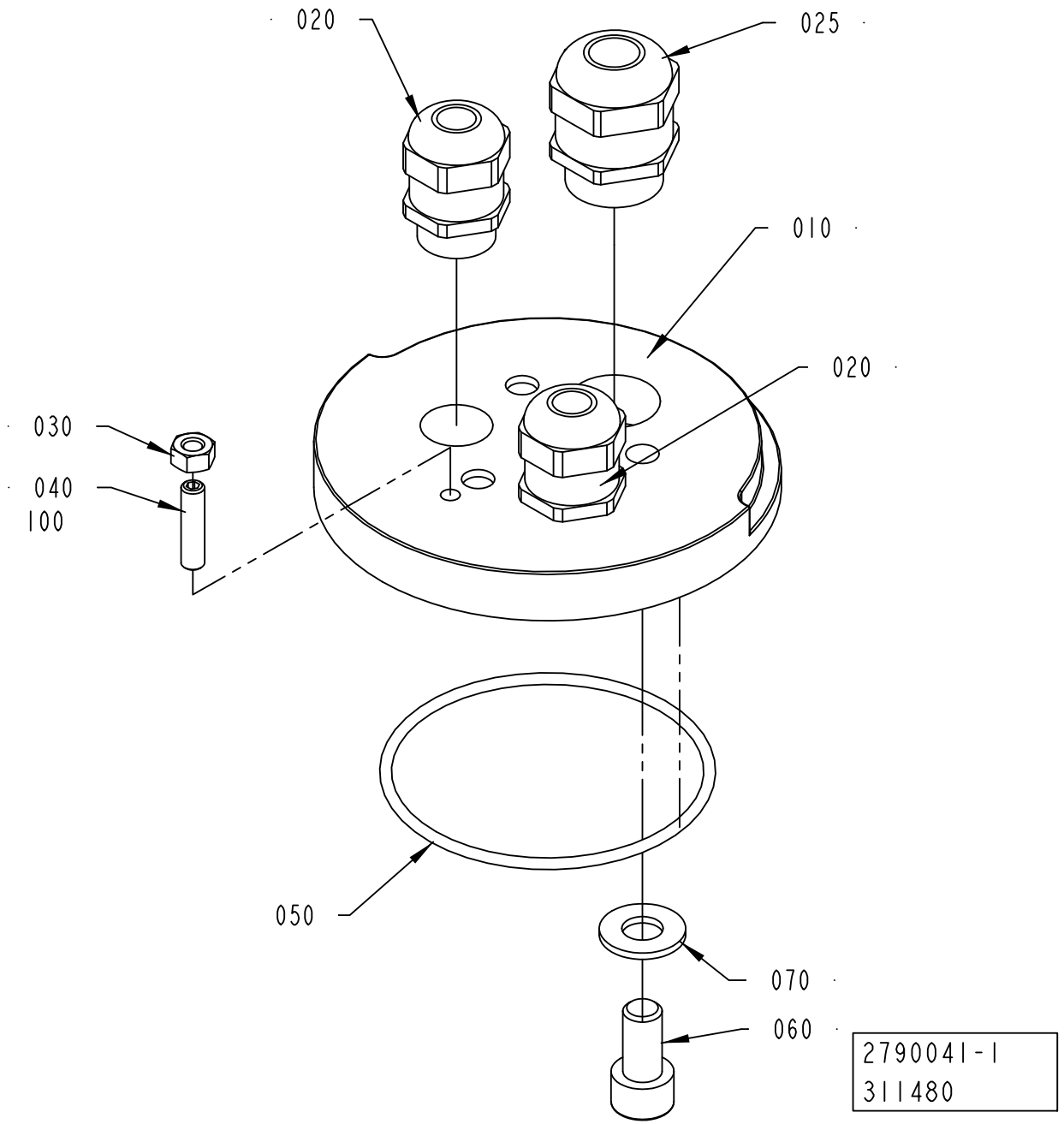
020
025
010
020
030
040
100
050
070
060
2790041-1
311480

ECM: 311480 - 20070629
Group number: 2790041-0100
Assembly Drawing: 2790041-1_1_AA

| Pos | Part No | UN | Qty | Description | Page No |
|---|---|---|---|---|---|
| - | | | | | |
| 010 | 2790042-0000 | | 1 | PLATE | |
| 020 | 90458-0307 | | 2 | CABLE GLAND, M20X1,5, NO.5311 1020 | |
| 025 | 90458-0308 | | 1 | CABLE GLAND, M25X1,5, NO.5311 1030 | |
| 030 | 312605-0316 | | 1 | HEXAGON NUT, M6M M6 A280 | |
| 040 | 312318-0372 | | 1 | SCREW ISO4029 M6X25 A4 | |
| 050 | 315202-0307 | | 1 | O-RING 79,5X3 MM | |
| 060 | 315105-0173 | | 3 | WASHER BRB 10,5X22 RFR | |
| 070 | 312115-0491 | | 3 | SCREW ISO4762 M10X20 A4 80 | |
| 100 | 90157-0021 | KG | 1 | LOCKING FLUID LOCTITE 270 | |

| Pos | Part No | UN | Qty | Description | Page No |
|---|---|---|---|---|---|

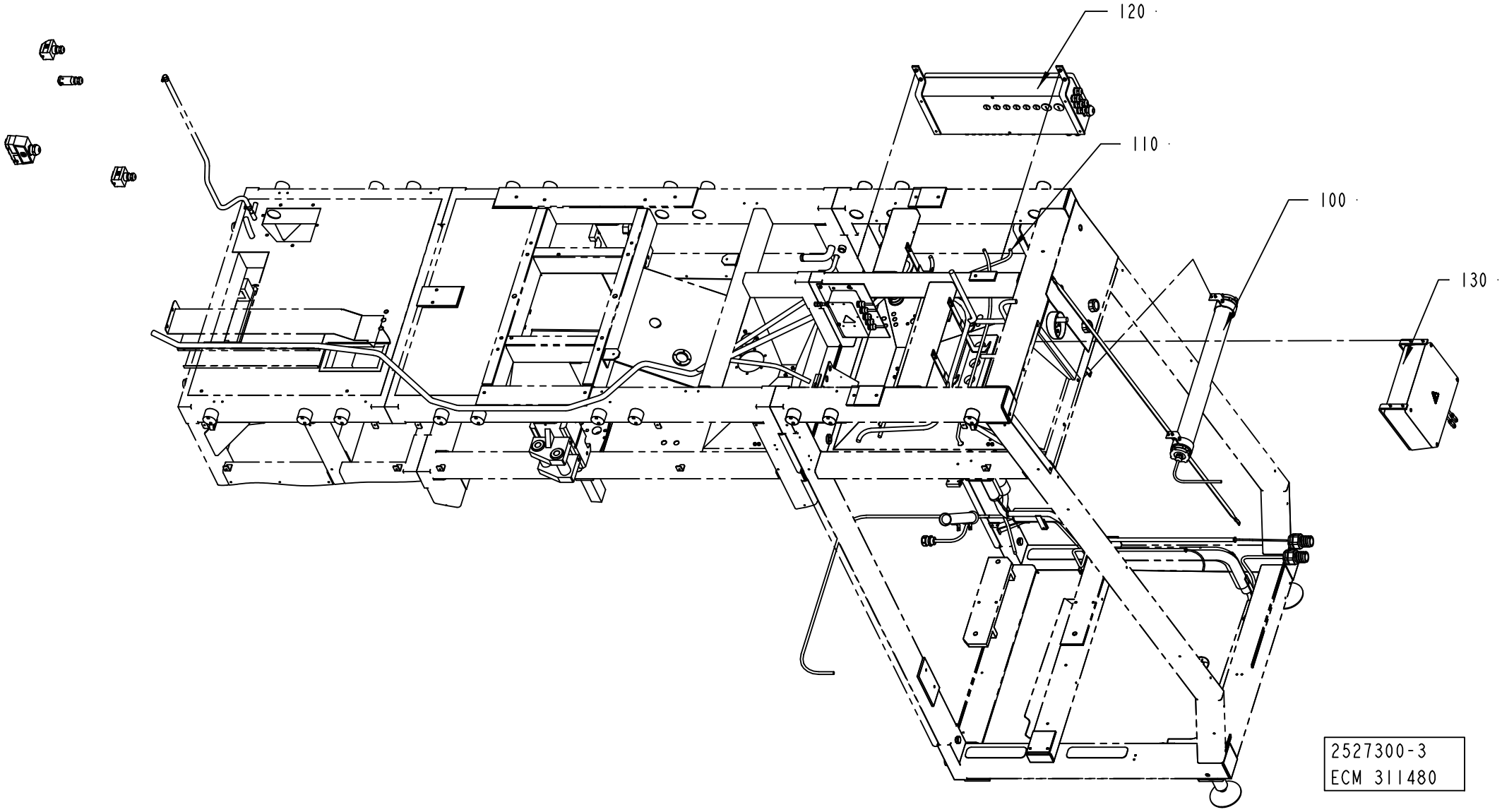
120
110
100
130
2527300-3
ECM 311480

ECM: 311488 - 20070629
Group number: 2527300-0200
Assembly Drawing: 2527300-3_1_AA

| Pos | Part No | UN | Qty | Description | Page No |
|---|---|---|---|---|---|
| **A3/FLEX** | | | | | |
| 110 | 2527295-0200 | | 1 | CABLE HARNESS | **2-135** |
| **Common Parts** | | | | | |
| 100 | 2504790-0200 | | 1 | LIGHT FIXTURE | **2-137** |
| 120 | 2785235-0100 | | 1 | CONNECTION BOX | **2-139** |
| 130 | 2785233-0100 | | 1 | CONNECTION BOX | **2-143** |

| Pos | Part No | UN | Qty | Description | Page No |
|---|---|---|---|---|---|

Machine Type | Group Description | Used-In | Group Number | Page No

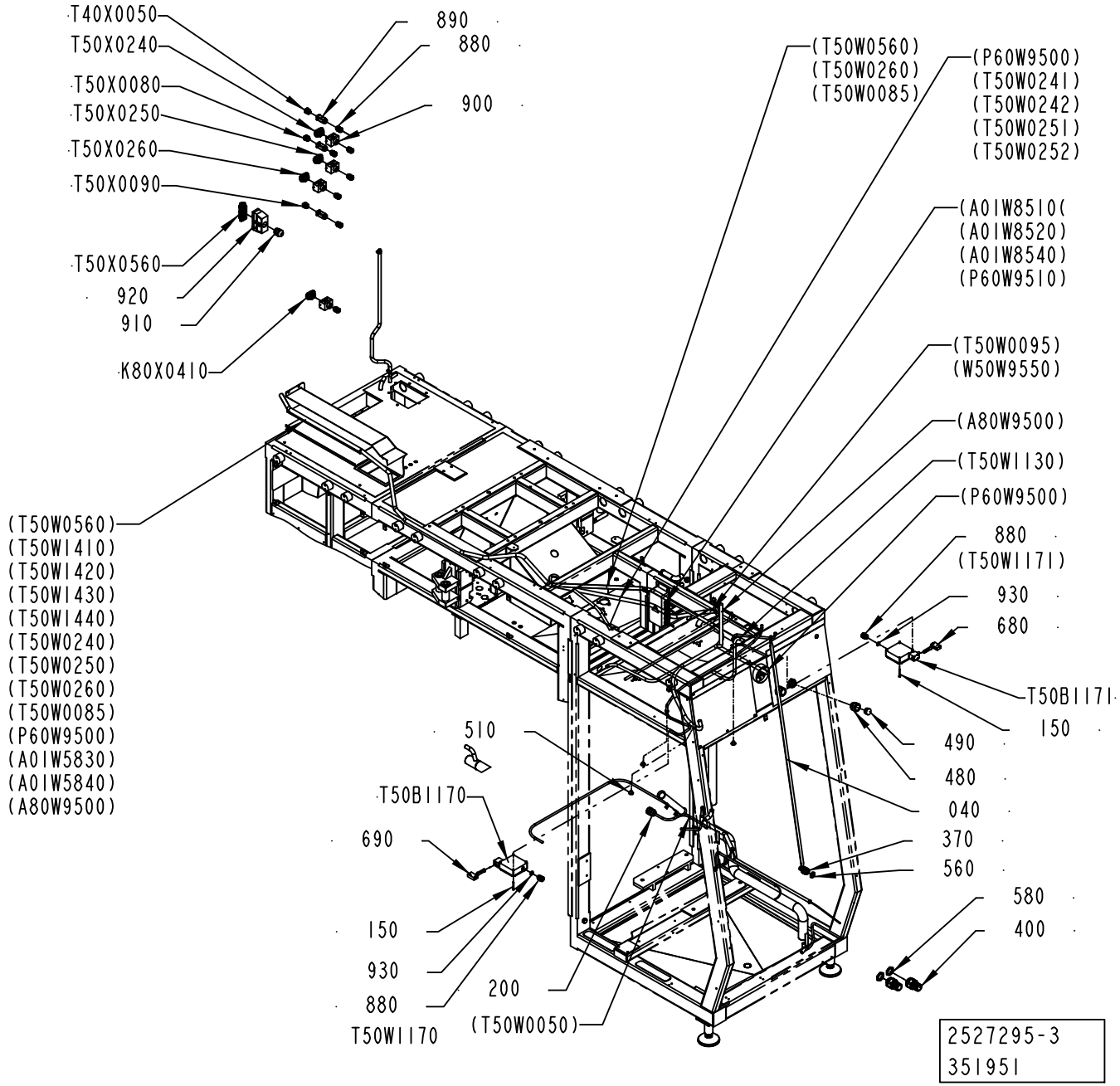
T40X0050
T50X0240
T50X0080
T50X0250
T50X0260
T50X0090
T50X0560
920
910
K80X0410
890
880
900
(T50W0560)
(T50W0260)
(T50W0085)
(P60W9500)
(T50W0241)
(T50W0242)
(T50W0251)
(T50W0252)
(A01W8510(
(A01W8520)
(A01W8540)
(P60W9510)
(T50W0095)
(W50W9550)
(A80W9500)
(T50W1130)
(P60W9500)
880
(T50W1171)
930
680
T50B1171
150
490
480
040
370
560
580
400
(T50W0560)
(T50W1410)
(T50W1420)
(T50W1430)
(T50W1440)
(T50W0240)
(T50W0250)
(T50W0260)
(T50W0085)
(P60W9500)
(A01W5830)
(A01W5840)
(A80W9500)
510
T50B1170
690
150
930
880
T50W1170
200
(T50W0050)
2527295-3
351951

ECM: 360668 - 20080625
Group number: 2527295-0200
Assembly Drawing: 2527295-3_1_AB

| Pos | Part No | UN | Qty | Description | Page No |
|---|---|---|---|---|---|
| - | | | | | |
| 040 | 1129600-0000 | | 1 | BRAID | |
| 150 | 312115-0340 | | 8 | SCREW ISO4762 M5X45 A4 80 | |
| 200 | 353245-0006 | | 1 | GLAND, EXTENDED WITH INSERT, PG21/PR28,3 | |
| 370 | 353243-0005 | | 1 | HOSE GLAND W/O INSERT PG16 EXTENDED | |
| 400 | 353243-0008 | | 2 | HOSE GLAND W/O INSERT PG29 EXTENDED | |
| 480 | 353240-0006 | | 2 | GLAND W/O INSERT PG29 NORMAL | |
| 490 | 353249-0049 | | 2 | INSERT, SOLID, EK155G | |
| 510 | 90015-0023 | | 3 | LEAD-IN, TET7-10, E-1458019 | |
| 560 | 90099-0110 | | 1 | NUT, PR 22,5 (PG16) | |
| 580 | 90099-0120 | | 4 | NUT, PR 37 (PG29) | |
| 680 | 90600-5274 | | 1 | KEY FOR SAF.SW.TZRE024PG RC1635-103845 Z | |
| 690 | 90600-5275 | | 1 | KEY FOR SAF.SW.TZRE024PG RC1635-104068 Z | |
| 880 | 90458-0307 | | 9 | CABLE GLAND, M20X1,5, NO.5311 1020 | |
| 890 | 90459-3080 | | 3 | HOOD HAN-BRID 3A 19 20 003 1443 | |
| 900 | 90459-6632 | | 4 | HOOD 6 B TOP ENTRY, 19 30 006 1440 | |
| 910 | 90458-0309 | | 1 | CABLE GLAND, M32X1,5, NO.5311 1040 | |
| 920 | 90459-6636 | | 1 | HOOD 24 B TOP ENTRY, 19 30 024 0427 | |
| 930 | 315206-0707 | | 2 | O-RING 20,35X1,78 MM | |
| K80X0410 | 90110-0052 | | 1 | MALE INSERT HAN 6E 09 33 006 2601 | |
| T40X0050 | 90459-6821 | | 1 | MALE INSERT HAN 4A, 09 20 004 2611 | |
| T50B1170 | 90457-0196 | | 1 | KEY SAF.SW. TZ2RE024PG RC1635 | |
| T50B1171 | 90457-0196 | | 1 | KEY SAF.SW. TZ2RE024PG RC1635 | |
| T50X0080 | 90459-6821 | | 1 | MALE INSERT HAN 4A, 09 20 004 2611 | |
| T50X0090 | 90459-6821 | | 1 | MALE INSERT HAN 4A, 09 20 004 2611 | |
| T50X0240 | 90110-0052 | | 1 | MALE INSERT HAN 6E 09 33 006 2601 | |
| T50X0250 | 90110-0052 | | 1 | MALE INSERT HAN 6E 09 33 006 2601 | |
| T50X0260 | 90110-0052 | | 1 | MALE INSERT HAN 6E 09 33 006 2601 | |
| T50X0560 | 90110-0056 | | 1 | MALE INSERT HAN 24 E 09 33 024 2601 | |

| Pos | Part No | UN | Qty | Description | Page No |
|---|---|---|---|---|---|

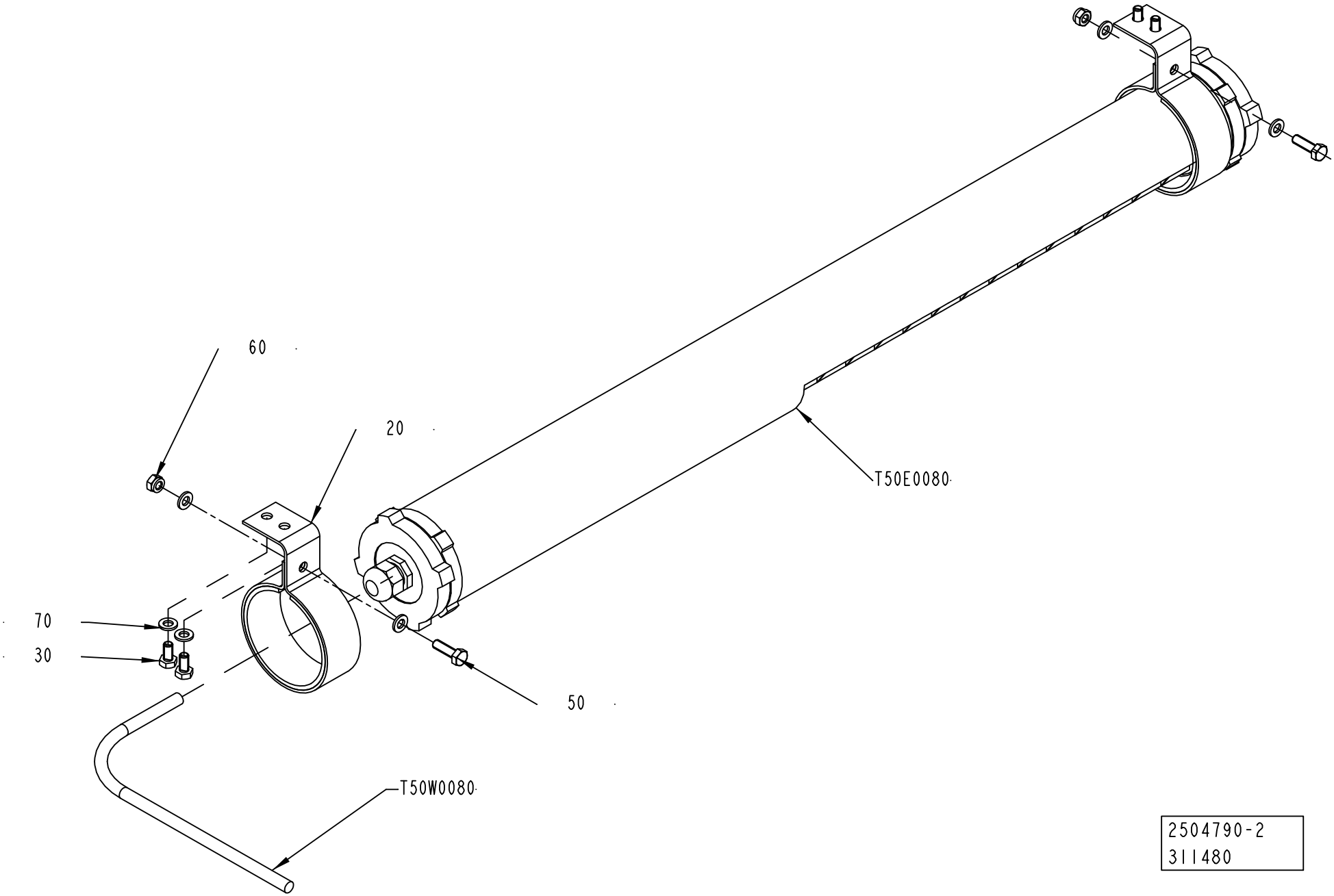
60
20
T50E0080
70
30
50
T50W0080
2504790-2
311480

ECM: 311489 - 20070629
Group number: 2504790-0200
Assembly Drawing: 2504790-2_1_AA

| Pos | Part No | UN | Qty | Description | Page No |
|---|---|---|---|---|---|
| - | | | | | |
| 020 | 1140129-0000 | | 2 | HOLDER | |
| 030 | 312105-0366 | | 4 | SCREW M6S ISO 4017 M6X12 A480 | |
| 050 | 312105-0370 | | 2 | SCREW M6S ISO 4017 M6X20 A480 | |
| 060 | 312812-0316 | | 2 | HEXAGON NUT, NY-LOCK M6 A480 | |
| 070 | 315105-0153 | | 8 | WASHER BRB 6,4X12 RFR | |
| T50E0080 | 90459-1000 | | 1 | LIGHT FIXTURE, RL 70CV-136/230V 50HZ | |
| T50W0080 | 351150-0413 | M | 14 | CABLE OLFLEX 4GX1,5 MM2 LIGHT/GREY | |

| Pos | Part No | UN | Qty | Description | Page No |
|---|---|---|---|---|---|

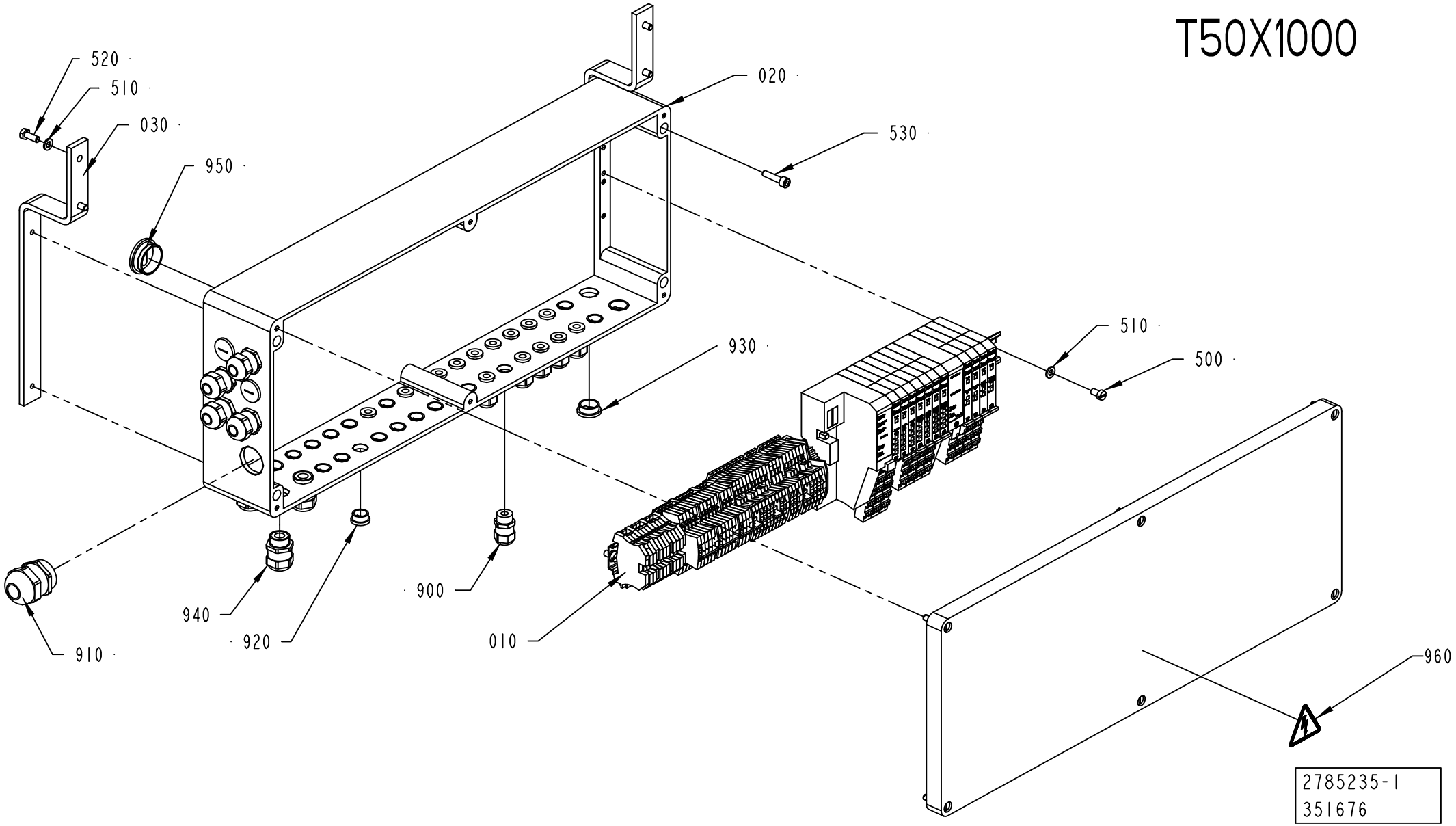
T50X1000
520
510
030
950
020
530
930
510
500
900
940
920
910
010
960
2785235-1
351676

ECM: 352926 - 20080103
Group number: 2785235-0100
Assembly Drawing: 2785235-1_1_AB

| Pos | Part No | UN | Qty | Description | Page No |
|---|---|---|---|---|---|
| **A3/FLEX** | | | | | |
| 900 | 90458-0306 | | 15 | CABLE GLAND, M16X1,5, NO.5311 1010 | |
| 920 | 90458-1307 | | 15 | BLIND PLUG CIRCULAR, M16X1,5 514GFK/216 | |
| **Common Parts** | | | | | |
| 010 | 2701355-0100 | | 1 | TERMINAL BLOCK ..... | **2-141** |
| 020 | 2785236-0000 | | 1 | CONNECTION BOX | |
| 030 | 2785237-0000 | | 2 | SUPPORT | |
| 500 | 312125-0364 | | 2 | SCREW ISO 1207 M6X10 A4 | |
| 510 | 315105-0153 | | 6 | WASHER BRB 6,4X12 RFR | |
| 520 | 312105-0368 | | 4 | SCREW M6S ISO 4017 M6X16 A480 | |
| 530 | 312115-0372 | | 4 | SCREW ISO4762 M6X25 A4 80 | |
| 910 | 90458-0309 | | 1 | CABLE GLAND, M32X1,5, NO.5311 1040 | |
| 930 | 90458-1308 | | 11 | BLIND PLUG CIRCULAR, M20X1,5 514GFK/220 | |
| 940 | 90458-0307 | | 7 | CABLE GLAND, M20X1,5, NO.5311 1020 | |
| 950 | 90458-1310 | | 2 | BLIND PLUG CIRCULAR, M32X1,5 514GFK/232 | |
| 960 | 359705-0015 | | 1 | WARNING SIGN ISO, RISK OF ELECTRIC SHOCK | |

| Pos | Part No | UN | Qty | Description | Page No |
|---|---|---|---|---|---|

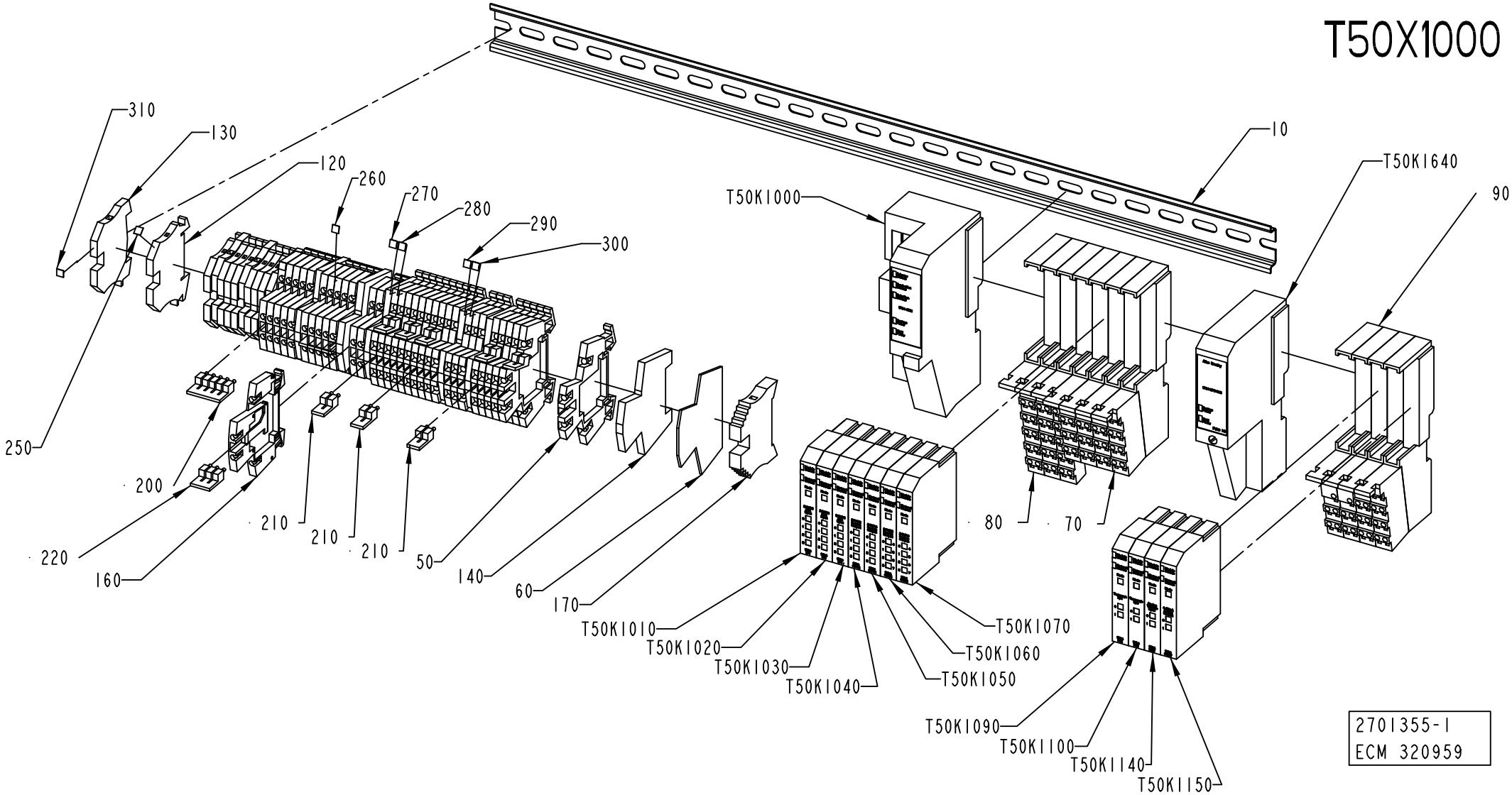
T50X1000
310
130
120
260
270
280
290
300
10
T50K1640
90
T50K1000
250
200
220
160
210
210
210
50
140
60
170
80
70
T50K1010
T50K1020
T50K1030
T50K1040
T50K1050
T50K1060
T50K1070
T50K1090
T50K1100
T50K1140
T50K1150
2701355-1
ECM 320959

ECM: 327309 - 20080102
Group number: 2701355-0100
Assembly Drawing: 2701355-1_1_AB

| Pos | Part No | UN | Qty | Description | Page No |
|---|---|---|---|---|---|
| - | | | | | |
| 010 | 1347878-0000 | | 1 | RAIL | |
| 050 | 90077-0113 | | 19 | FEED THROUGH TERMINAL, 10-00102150-1 | |
| 060 | 90077-0114 | | 1 | END PLATE, WAP/WDK 2,5 | |
| 070 | 90459-2526 | | 6 | REMOTE I/O BASE MODULE 8 POINTS, 1734-TB | |
| 080 | 90459-2527 | | 3 | REMOTE I/O BASE MODULE 12 POINTS | |
| 090 | 90459-2528 | | 2 | REMOTE I/O BASE MODULE FOR THERMOCOUPLE | |
| 120 | 353021-0212 | | 8 | FEED THROUGH TERMINAL, 10200.0 | |
| 130 | 353024-0204 | | 4 | EARTH TERMINAL WPE 2,5 | |
| 140 | 353024-0212 | | 6 | EARTH TERMINAL, 10363.0 | |
| 160 | 90457-0049 | | 13 | TERMINAL BLOCK WDK 2.5V, 102230 | |
| 170 | 353031-0203 | | 1 | END SUPPORT, WEW 35/2 | |
| 200 | 353034-0030 | | 2 | BRIDGE CONNECTOR WQV 2,5/10, 10544.6 | |
| 210 | 353034-0030 | | 8 | BRIDGE CONNECTOR WQV 2,5/10, 10544.6 | |
| 220 | 353034-0030 | | 1 | BRIDGE CONNECTOR WQV 2,5/10, 10544.6 | |
| 250 | 359011-0807 | | 2 | MARKING PLATES 5-FW 1-50 | |
| 260 | 359011-0808 | | 1 | MARKING PLATES 5-FW 51-100 | |
| 270 | 359011-0809 | | 2 | MARKING PLATES 5-FW 101-150 | |
| 280 | 359011-0810 | | 2 | MARKING PLATES 5-FW 151-200 | |
| 290 | 359011-0811 | | 2 | MARKING PLATES 5-FW 201-2 | |
| 300 | 359011-0812 | | 2 | SET OF SIGNS 5-FW 251-300 | |
| 310 | 359011-0819 | | 1 | MARKING PLATES 5-GW (EARTH) | |
| T50K1000 | 90459-2494 | | 1 | DEVICENET I/O ADAPTER MODULE, 1734-ADN | |
| T50K1010 | 90459-2503 | | 1 | DIGITAL INPUT 4 PTS SINK, 1734-IB4 | |
| T50K1020 | 90459-2503 | | 1 | DIGITAL INPUT 4 PTS SINK, 1734-IB4 | |
| T50K1030 | 90459-2503 | | 1 | DIGITAL INPUT 4 PTS SINK, 1734-IB4 | |
| T50K1040 | 90459-2505 | | 1 | DIGITAL OUTPUT 4 PTS, 1734-OB4E | |
| T50K1050 | 90459-2505 | | 1 | DIGITAL OUTPUT 4 PTS, 1734-OB4E | |
| T50K1060 | 90459-6560 | | 1 | DIGITAL OUTPUT 8 PTS, 1734-OB8E/C | |
| T50K1070 | 90459-6560 | | 1 | DIGITAL OUTPUT 8 PTS, 1734-OB8E/C | |
| T50K1090 | 90459-2512 | | 1 | REMOTE I/O THERMOCOUPLE INPUT 2 PTS | |
| T50K1100 | 90459-2512 | | 1 | REMOTE I/O THERMOCOUPLE INPUT 2 PTS | |
| T50K1140 | 90459-2508 | | 1 | REMOTE I/O ANALOG INPUT VOLTAGE 2 PTS | |
| T50K1150 | 90459-2510 | | 1 | ANALOG OUTP. VOLT. 2PTS, 1734-OE2V SER.C | |
| T50K1640 | 90459-2500 | | 1 | EXPANSION POWER SUPPLY MODULE | |

| Pos | Part No | UN | Qty | Description | Page No |
|---|---|---|---|---|---|

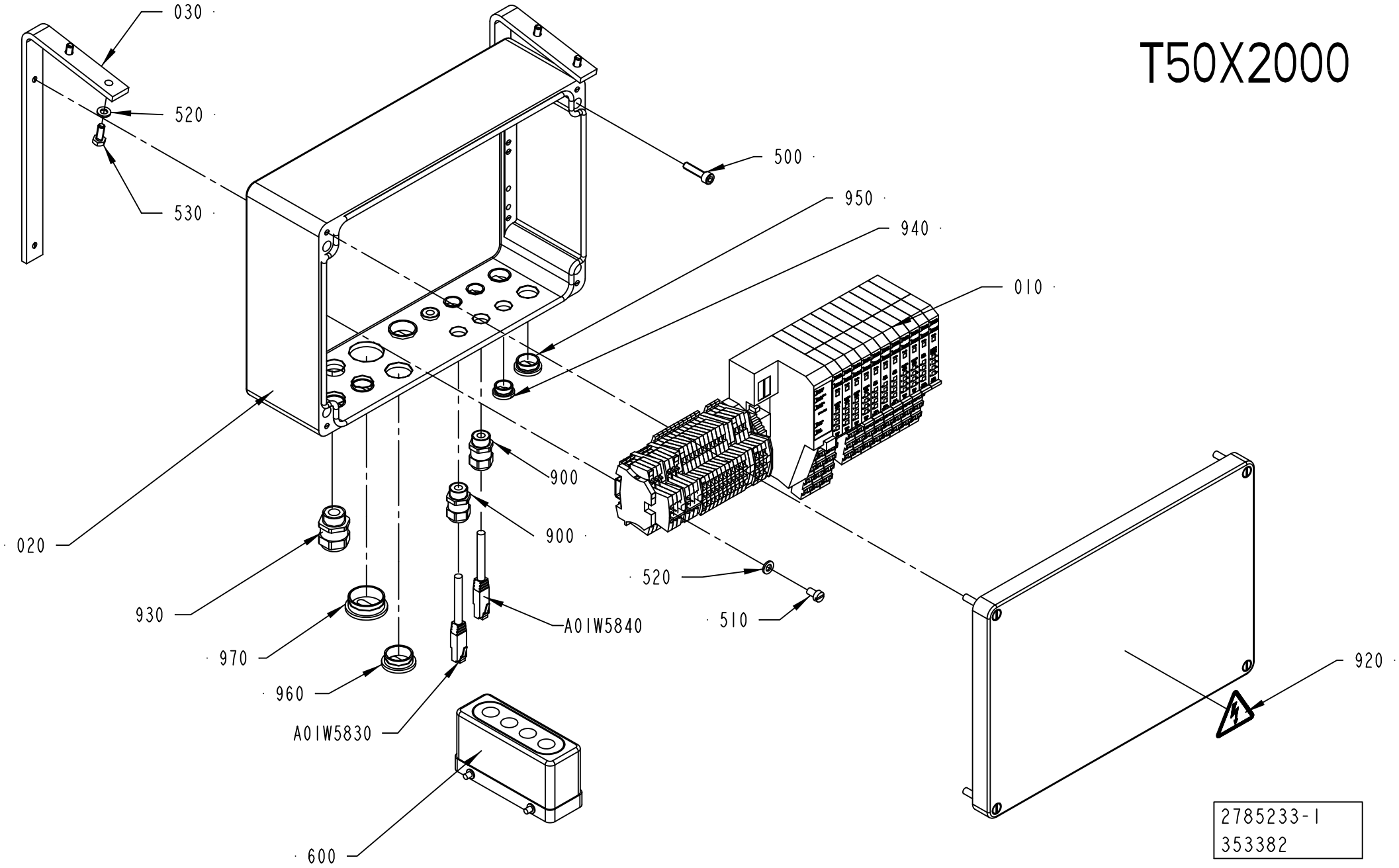
T50X2000
030
520
530
500
950
940
010
900
900
020
520
930
510
A01W5840
970
920
960
A01W5830
600
2785233-1
353382

ECM: 355894 - 20080528
Group number: 2785233-0100
Assembly Drawing: 2785233-1_1_AB

| Pos | Part No | UN | Qty | Description | Page No |
|---|---|---|---|---|---|
| - | | | | | |
| 010 | 2701352-0100 | | 1 | TERMINAL BLOCK ..... | **2-145** |
| 020 | 2785234-0000 | | 1 | CONNECTION BOX | |
| 030 | 2702947-0000 | | 2 | HOLDER | |
| 500 | 312115-0372 | | 4 | SCREW ISO4762 M6X25 A4 80 | |
| 510 | 312121-0364 | | 2 | SCREW ISO 1207 M6X10 4.8-5.8 Z.PL. | |
| 520 | 315105-0153 | | 6 | WASHER BRB 6,4X12 RFR | |
| 530 | 312105-0368 | | 4 | SCREW M6S ISO 4017 M6X16 A480 | |
| 600 | 90110-0381 | | 1 | COVER, 310601-33 CYR24.4 | |
| 900 | 90458-0306 | | 3 | CABLE GLAND, M16X1,5, NO.5311 1010 | |
| 920 | 359705-0015 | | 1 | WARNING SIGN ISO, RISK OF ELECTRIC SHOCK | |
| 930 | 90458-0307 | | 1 | CABLE GLAND, M20X1,5, NO.5311 1020 | |
| 940 | 90458-1307 | | 3 | BLIND PLUG CIRCULAR, M16X1,5 514GFK/216 | |
| 950 | 90458-1308 | | 5 | BLIND PLUG CIRCULAR, M20X1,5 514GFK/220 | |
| 960 | 90458-1309 | | 2 | BLIND PLUG CIRCULAR, M25X1,5 514GFK/225 | |
| 970 | 90458-1310 | | 1 | BLIND PLUG CIRCULAR, M32X1,5 514GFK/232 | |
| A01W5830 | 351501-0075 | | 1 | ETHERNET PATCH CABLE, FL CAT5 PATCH 7,5 | |
| A01W5840 | 351501-0075 | | 1 | ETHERNET PATCH CABLE, FL CAT5 PATCH 7,5 | |

| Pos | Part No | UN | Qty | Description | Page No |
|---|---|---|---|---|---|

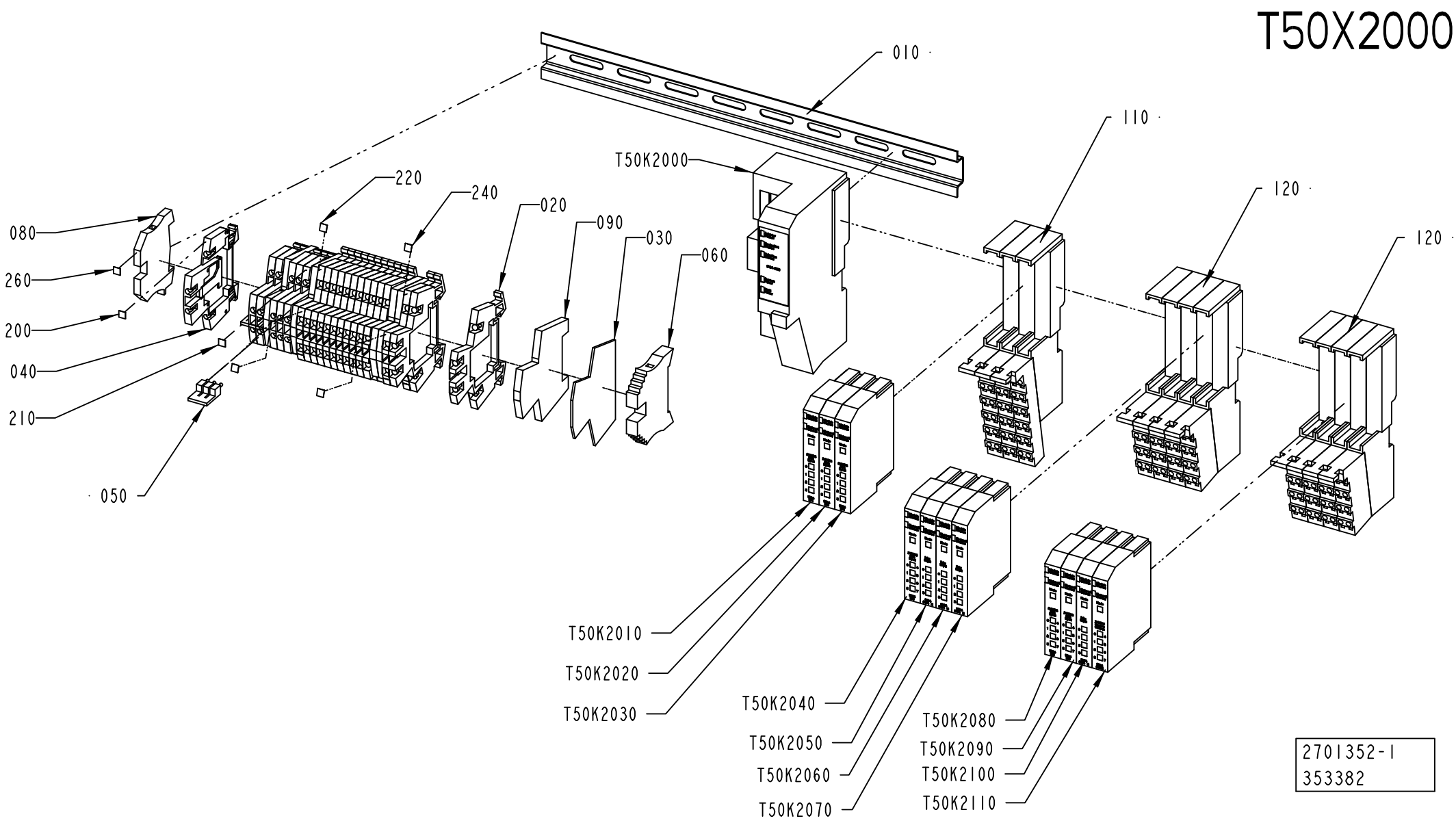
T50X2000
010
110
120
120
T50K2000
220
240
020
090
030
060
080
260
200
040
210
050
T50K2010
T50K2020
T50K2030
T50K2040
T50K2050
T50K2060
T50K2070
T50K2080
T50K2090
T50K2100
T50K2110
2701352-1
353382

ECM: 355893 - 20080528
Group number: 2701352-0100
Assembly Drawing: 2701352-1_1_AB

| Pos | Part No | UN | Qty | Description | Page No |
|---|---|---|---|---|---|
| - | | | | | |
| 010 | 353042-0004 | MM | 315 | RAIL TS 35/7,5 | |
| 020 | 90077-0113 | | 14 | FEED THROUGH TERMINAL, 10-00102150-1 | |
| 030 | 90077-0114 | | 1 | END PLATE, WAP/WDK 2,5 | |
| 040 | 90457-0049 | | 6 | TERMINAL BLOCK WDK 2.5V, 102230 | |
| 050 | 353034-0030 | | 2 | BRIDGE CONNECTOR WQV 2,5/10, 10544.6 | |
| 060 | 353031-0203 | | 1 | END SUPPORT, WEW 35/2 | |
| 080 | 353024-0204 | | 1 | EARTH TERMINAL WPE 2,5 | |
| 090 | 353024-0212 | | 5 | EARTH TERMINAL, 10363.0 | |
| 110 | 90459-2527 | | 3 | REMOTE I/O BASE MODULE 12 POINTS | |
| 120 | 90459-2526 | | 8 | REMOTE I/O BASE MODULE 8 POINTS, 1734-TB | |
| 200 | 359011-0807 | | 1 | MARKING PLATES 5-FW 1-50 | |
| 210 | 359011-0808 | | 1 | MARKING PLATES 5-FW 51-100 | |
| 220 | 359011-0809 | | 2 | MARKING PLATES 5-FW 101-150 | |
| 230 | 359011-0810 | | 2 | MARKING PLATES 5-FW 151-200 | |
| 240 | 359011-0811 | | 2 | MARKING PLATES 5-FW 201-2 | |
| 250 | 359011-0812 | | 2 | SET OF SIGNS 5-FW 251-300 | |
| 260 | 359011-0819 | | 1 | MARKING PLATES 5-GW (EARTH) | |
| T50K2000 | 90459-2494 | | 1 | DEVICENET I/O ADAPTER MODULE, 1734-ADN | |
| T50K2010 | 90459-2503 | | 1 | DIGITAL INPUT 4 PTS SINK, 1734-IB4 | |
| T50K2020 | 90459-2503 | | 1 | DIGITAL INPUT 4 PTS SINK, 1734-IB4 | |
| T50K2030 | 90459-2503 | | 1 | DIGITAL INPUT 4 PTS SINK, 1734-IB4 | |
| T50K2040 | 90459-6561 | | 1 | DIGITAL INPUT 8 PTS SINK, 1734-IB8/C | |
| T50K2050 | 90459-5261 | | 1 | REMOTE I/O, RELAY OUTP. 4 PTS,1734-OW4/C | |
| T50K2060 | 90459-5261 | | 1 | REMOTE I/O, RELAY OUTP. 4 PTS,1734-OW4/C | |
| T50K2070 | 90459-5261 | | 1 | REMOTE I/O, RELAY OUTP. 4 PTS,1734-OW4/C | |
| T50K2080 | 90459-6561 | | 1 | DIGITAL INPUT 8 PTS SINK, 1734-IB8/C | |
| T50K2090 | 90459-6561 | | 1 | DIGITAL INPUT 8 PTS SINK, 1734-IB8/C | |
| T50K2100 | 90459-5261 | | 1 | REMOTE I/O, RELAY OUTP. 4 PTS,1734-OW4/C | |
| T50K2110 | 90459-6560 | | 1 | DIGITAL OUTPUT 8 PTS, 1734-OB8E/C | |

| Pos | Part No | UN | Qty | Description | Page No |
|---|---|---|---|---|---|

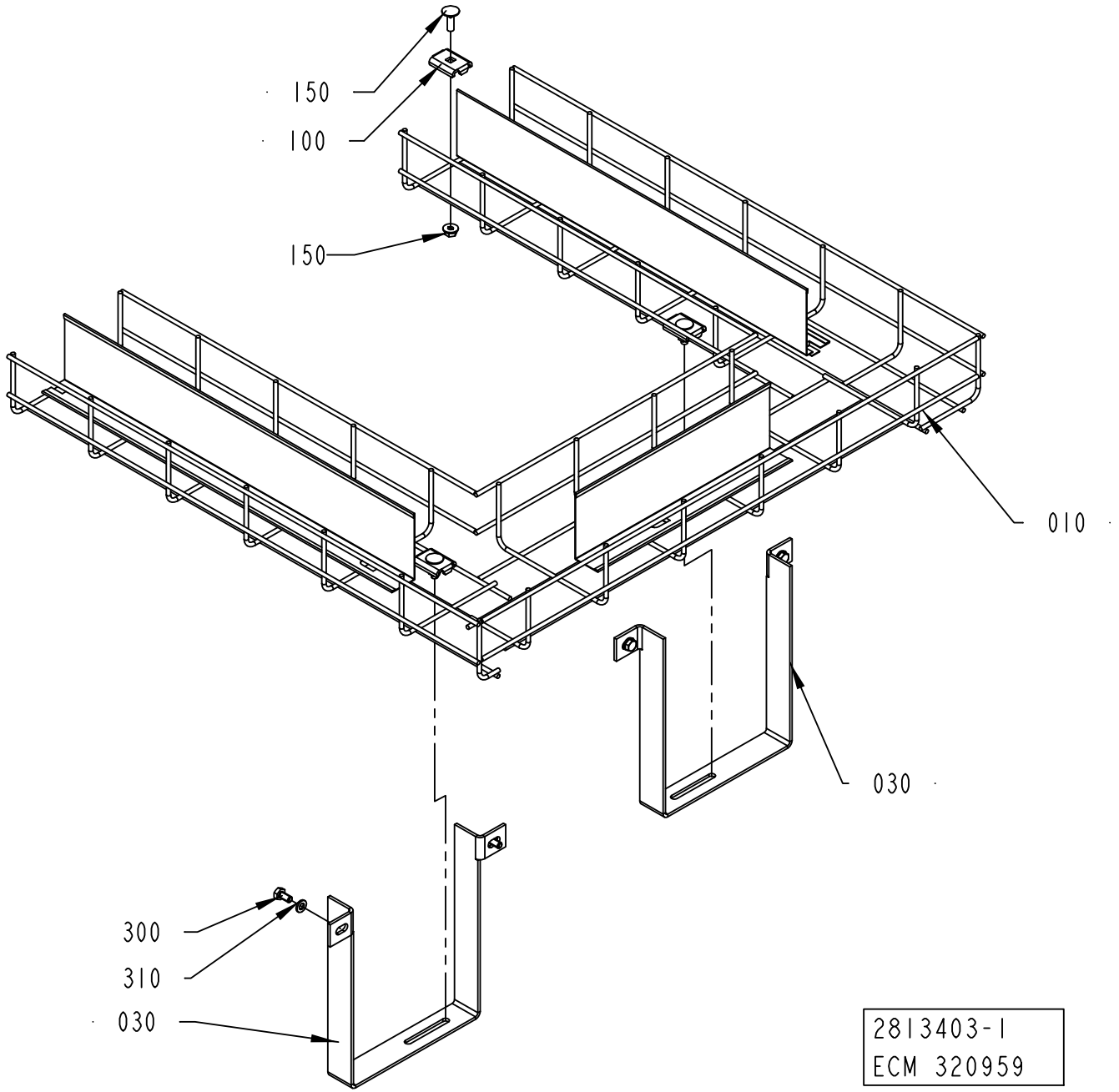
150
100
150
010
030
300
310
030
2813403-1
ECM 320959

ECM: 328421 - 20080102
Group number: 2813403-0100
Assembly Drawing: 2813403-1_1_AB

| Pos | Part No | UN | Qty | Description | Page No |
|---|---|---|---|---|---|
| **A3/FLEX** | | | | | |
| 100 | 90181-0183 | | 4 | JOINING FITTING | |
| 150 | 90181-0314 | | 4 | CABLE TRENCH PARTS | |
| **Common Parts** | | | | | |
| 010 | 2894521-0000 | | 1 | CABLE DUCT | |
| 030 | 2813668-0000 | | 2 | HOLDER | |
| 300 | 312105-0366 | | 4 | SCREW M6S ISO 4017 M6X12 A480 | |
| 310 | 315105-0153 | | 4 | WASHER BRB 6,4X12 RFR | |

| Pos | Part No | UN | Qty | Description | Page No |
|---|---|---|---|---|---|

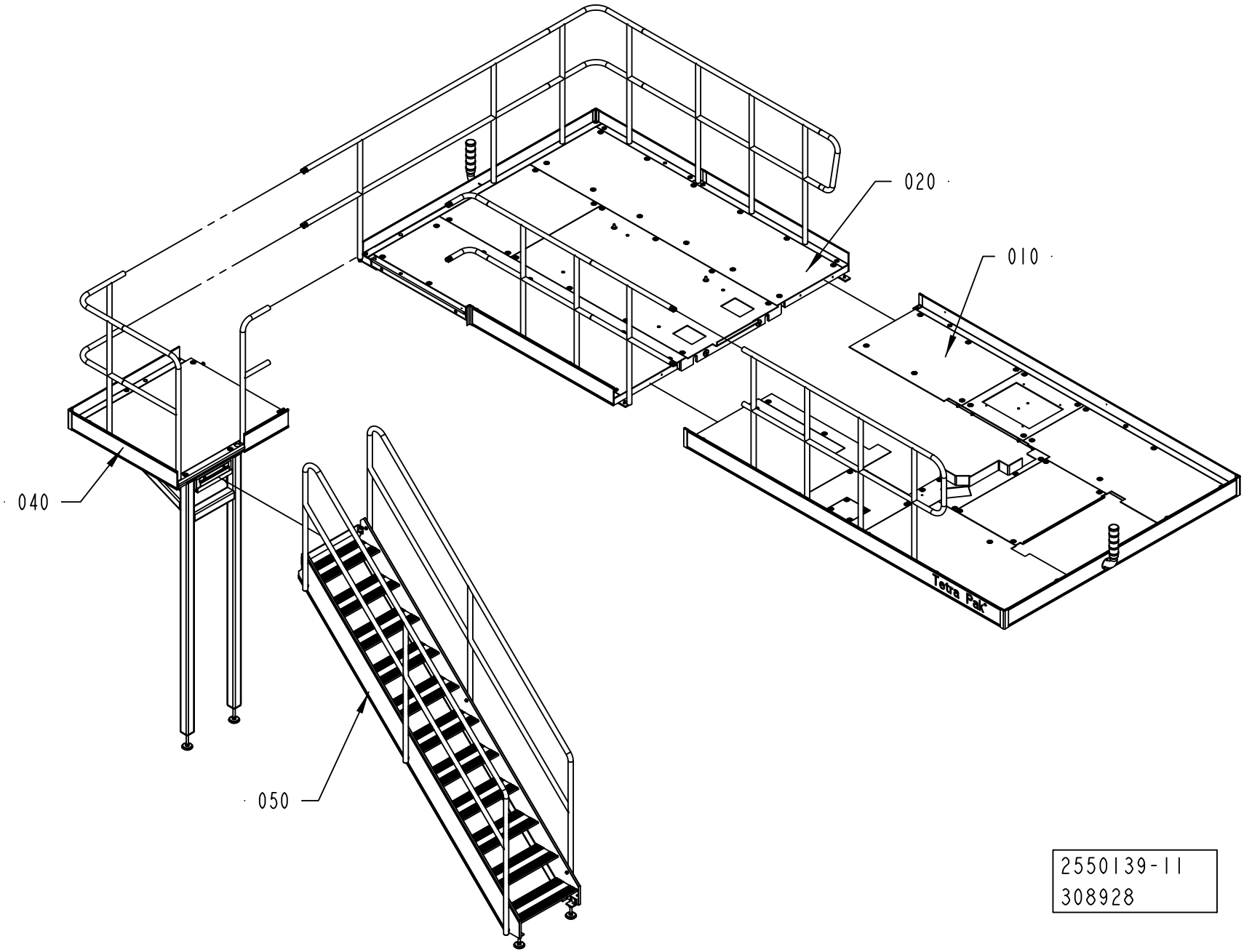
020
010
040
050
Tetra Pak
2550139-11
308928

ECM: 335937 - 20080205
Group number: 2550139-0200
Assembly Drawing: 2550139-11_1_AA

This list covers pages from 2-148 to 2-155

| Pos | Part No | UN | Qty | Description | Page No |
|---|---|---|---|---|---|
| - | | | | | |
| 010 | 2508369-0300 | | 1 | PLATFORM | **2-157** |
| 020 | 2550138-0200 | | 1 | PLATFORM | **2-161, 2-163, 2-165, 2-167, 2-169, 2-171** |
| 040 | 2564546-0100 | | 1 | PLATFORM | **2-175, 2-177** |
| 050 | 1523777-0100 | | 1 | STAIR CASE | **2-179** |

| Pos | Part No | UN | Qty | Description | Page No |
|---|---|---|---|---|---|

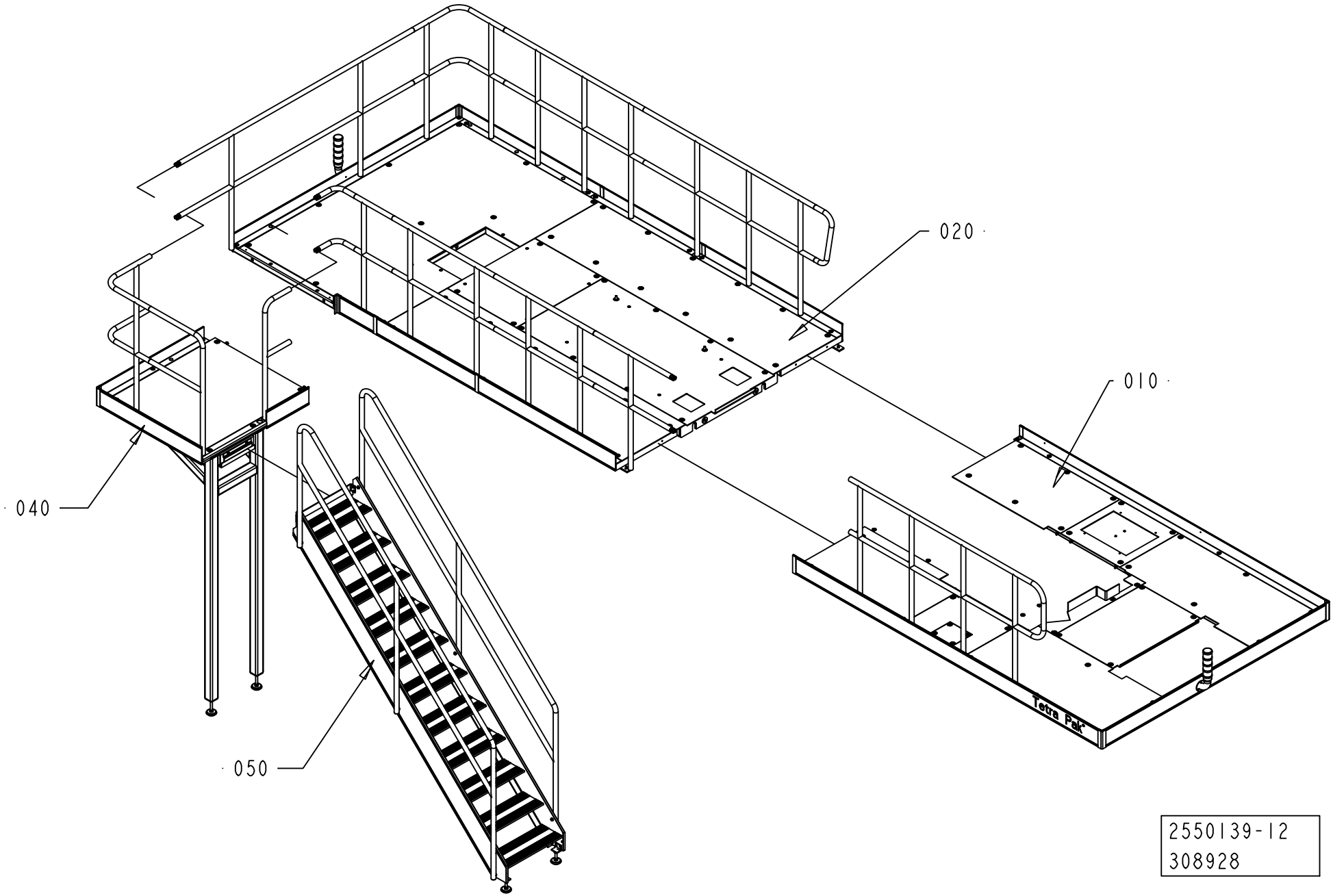
020
010
040
050
Tetra Pak
2550139-12
308928

ECM: 335937 - 20080205
Group number: 2550139-0200
Assembly Drawing: 2550139-12_1_AA

This list covers pages from 2-148 to 2-155

| Pos | Part No | UN | Qty | Description | Page No |
|---|---|---|---|---|---|
| - | | | | | |
| 010 | 2508369-0300 | | 1 | PLATFORM | **2-157** |
| 020 | 2550138-0200 | | 1 | PLATFORM | **2-161, 2-163, 2-165, 2-167, 2-169, 2-171** |
| 040 | 2564546-0100 | | 1 | PLATFORM | **2-175, 2-177** |
| 050 | 1523777-0100 | | 1 | STAIR CASE | **2-179** |

| Pos | Part No | UN | Qty | Description | Page No |
|---|---|---|---|---|---|

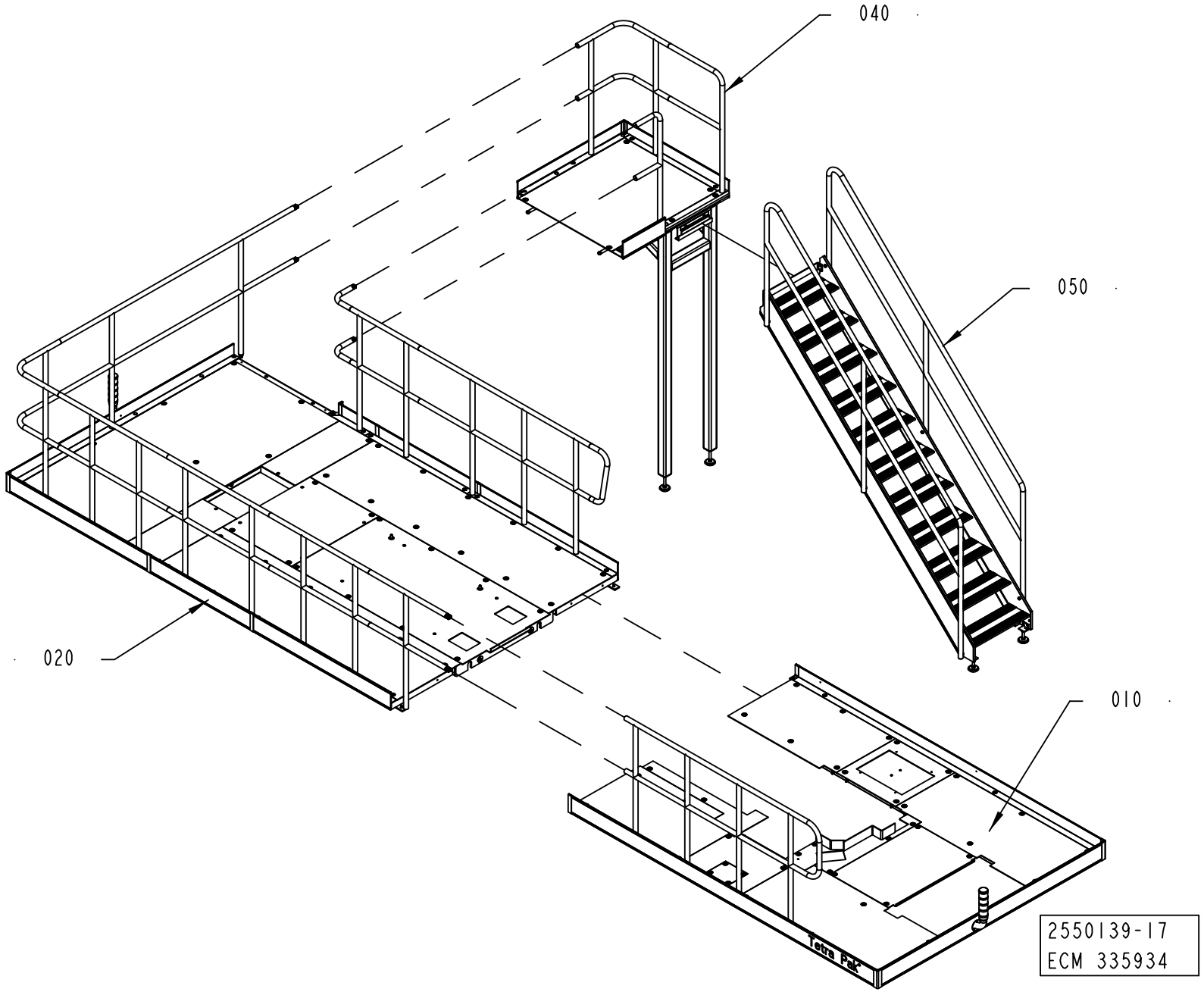
040
050
020
010
2550139-17
ECM 335934
Tetra Pak

ECM: 335937 - 20080205
Group number: 2550139-0200
Assembly Drawing: 2550139-17_1_AA

This list covers pages from 2-148 to 2-155

| Pos | Part No | UN | Qty | Description | Page No |
|---|---|---|---|---|---|
| - | | | | | |
| 010 | 2508369-0300 | | 1 | PLATFORM | **2-157** |
| 020 | 2550138-0200 | | 1 | PLATFORM | **2-161, 2-163, 2-165, 2-167, 2-169, 2-171** |
| 040 | 2564546-0100 | | 1 | PLATFORM | **2-175, 2-177** |
| 050 | 1523777-0100 | | 1 | STAIR CASE | **2-179** |

| Pos | Part No | UN | Qty | Description | Page No |
|---|---|---|---|---|---|

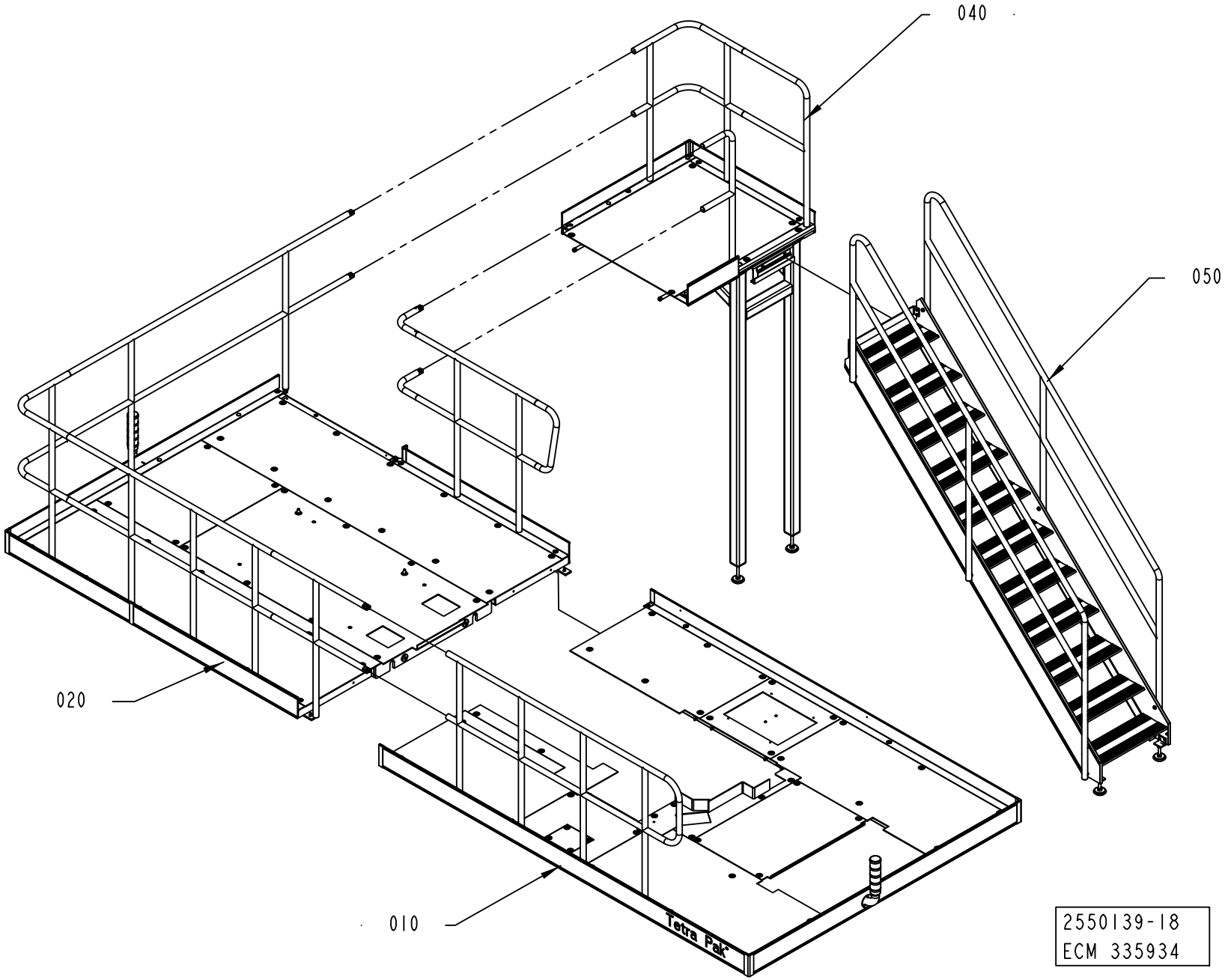
040
050
020
010
Tetra Pak
2550139-18
ECM 335934

ECM: 335937 - 20080205
Group number: 2550139-0200
Assembly Drawing: 2550139-18_1_AA

This list covers pages from 2-148 to 2-155

| Pos | Part No | UN | Qty | Description | Page No |
|---|---|---|---|---|---|
| - | | | | | |
| 010 | 2508369-0300 | | 1 | PLATFORM | **2-157** |
| 020 | 2550138-0200 | | 1 | PLATFORM | **2-161, 2-163, 2-165, 2-167, 2-169, 2-171** |
| 040 | 2564546-0100 | | 1 | PLATFORM | **2-175, 2-177** |
| 050 | 1523777-0100 | | 1 | STAIR CASE | **2-179** |

| Pos | Part No | UN | Qty | Description | Page No |
|---|---|---|---|---|---|

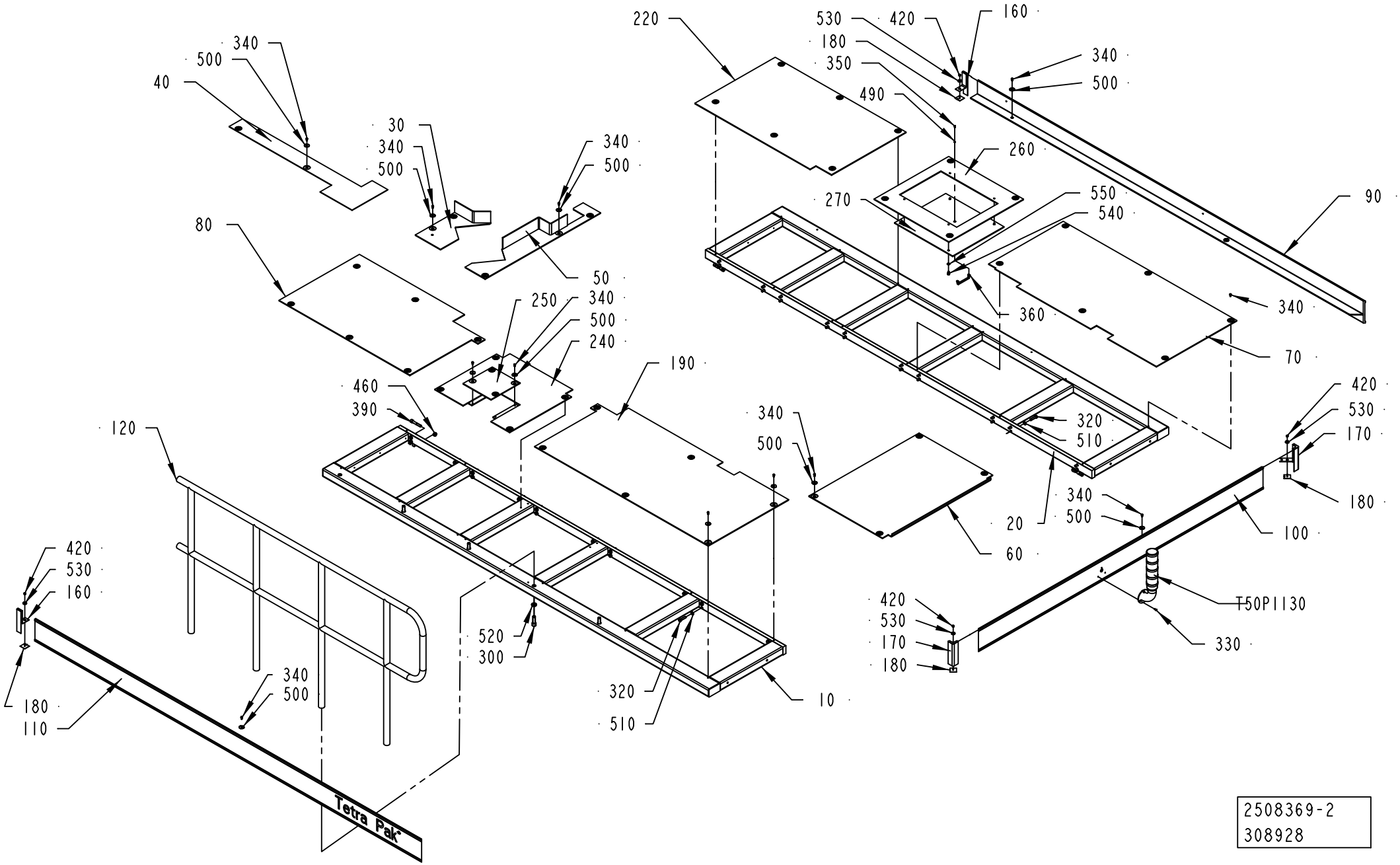
220
530
420
160
180
350
490
340
500
260
270
550
540
90
360
340
70
40
340
500
30
340
500
340
500
80
50
250
340
500
240
190
460
390
120
340
500
320
510
20
60
420
530
170
180
100
340
500
T50P1130
330
420
530
160
180
110
340
500
520
300
320
510
10
420
530
170
180
Tetra Pak
2508369-2
308928

ECM: 308928 - 20070627
Group number: 2508369-0300
Assembly Drawing: 2508369-2_1_AA

| Pos | Part No | UN | Qty | Description | Page No |
|---|---|---|---|---|---|
| **A3/FLEX** | | | | | |
| 010 | 2508370-0000 | | 1 | PLATFORM | |
| 020 | 2508371-0000 | | 1 | PLATFORM | |
| 030 | 2508385-0000 | | 1 | CHECKER PLATE | |
| 040 | 2508380-0000 | | 1 | CHECKER PLATE | |
| 050 | 2746712-0000 | | 1 | CHECKER PLATE | |
| 080 | 2508379-0000 | | 1 | CHECKER PLATE | |
| 090 | 2564565-0000 | | 1 | TOE PLATE | |
| 110 | 2564566-0000 | | 1 | TOE PLATE | |
| 120 | 1524870-0000 | | 1 | RAILING | |
| 220 | 2508384-0000 | | 1 | CHECKER PLATE | |
| 240 | 2587289-0000 | | 1 | CHECKER PLATE | |
| 250 | 2587290-0000 | | 1 | CHECKER PLATE | |
| 260 | 2587291-0000 | | 1 | CHECKER PLATE | |
| 270 | 2587292-0000 | | 1 | CHECKER PLATE | |
| 300 | 312111-0630 | | 4 | SCREW HEX.SOCK.HD.MC6S-TT 16X50 88 FZB | |
| 340 | 90458-0072 | | 51 | SCREW ISO 7380 S M6X12 A2 | |
| 350 | 312105-0289 | | 2 | SCREW M6S H4X10 A4 70 ISO4017/DIN933 | |
| 360 | 90458-2633 | | 1 | HANDLE, 1045-05 | |
| 490 | 315105-0136 | | 2 | WASHER BRB 4,3X8 RFR | |
| 500 | 90458-0073 | | 51 | WASHER 6,4/30, H=1,5 | |
| 520 | 315111-0186 | | 4 | WASHER PLAIN, TBRB 17/30 H=6 | |
| 540 | 312115-0447 | | 4 | SCREW ISO4762 M8X12 A4 80 | |
| 550 | 315105-0165 | | 4 | WASHER BRB 8,4X16 RFR | |
| **Common Parts** | | | | | |
| 060 | 1254030-0000 | | 1 | CHECKER PLATE | |
| 070 | 2508374-0000 | | 1 | CHECKER PLATE | |
| 100 | 1523784-0000 | | 1 | TOE PLATE | |
| 160 | 1254025-0000 | | 2 | STRIP | |
| 170 | 1254027-0000 | | 2 | CORNER STRIP | |
| 180 | 1254028-0000 | | 4 | FASTENING PLATE | |
| 190 | 2508375-0000 | | 1 | CHECKER PLATE | |
| 320 | 90458-2845 | | 40 | SCREW,HEXAGON HEAD M6S ISO 4017 M10X45 | |
| 330 | 312115-0327 | | 3 | SCREW ISO4762 M5X12 A4 80 | |
| 390 | 312115-0546 | | 4 | SCREW ISO4762 M12X70 A4 80 | |
| 420 | 312605-0316 | | 4 | HEXAGON NUT, M6M M6 A280 | |
| 460 | 312812-0322 | | 4 | HEXAGON NUT, NY-LOCK M12 A480 | |
| 510 | 315105-0173 | | 40 | WASHER BRB 10,5X22 RFR | |
| 530 | 315125-0153 | | 4 | WASHER TBRSB 6,4X22X4 A4 | |
| T50P1130 | 2540716-0200 | | 1 | SIGNAL LAMP ..... | **2-159** |

| Pos | Part No | UN | Qty | Description | Page No |
|---|---|---|---|---|---|

Machine Type | Group Description | Used-In | Group Number | Page No

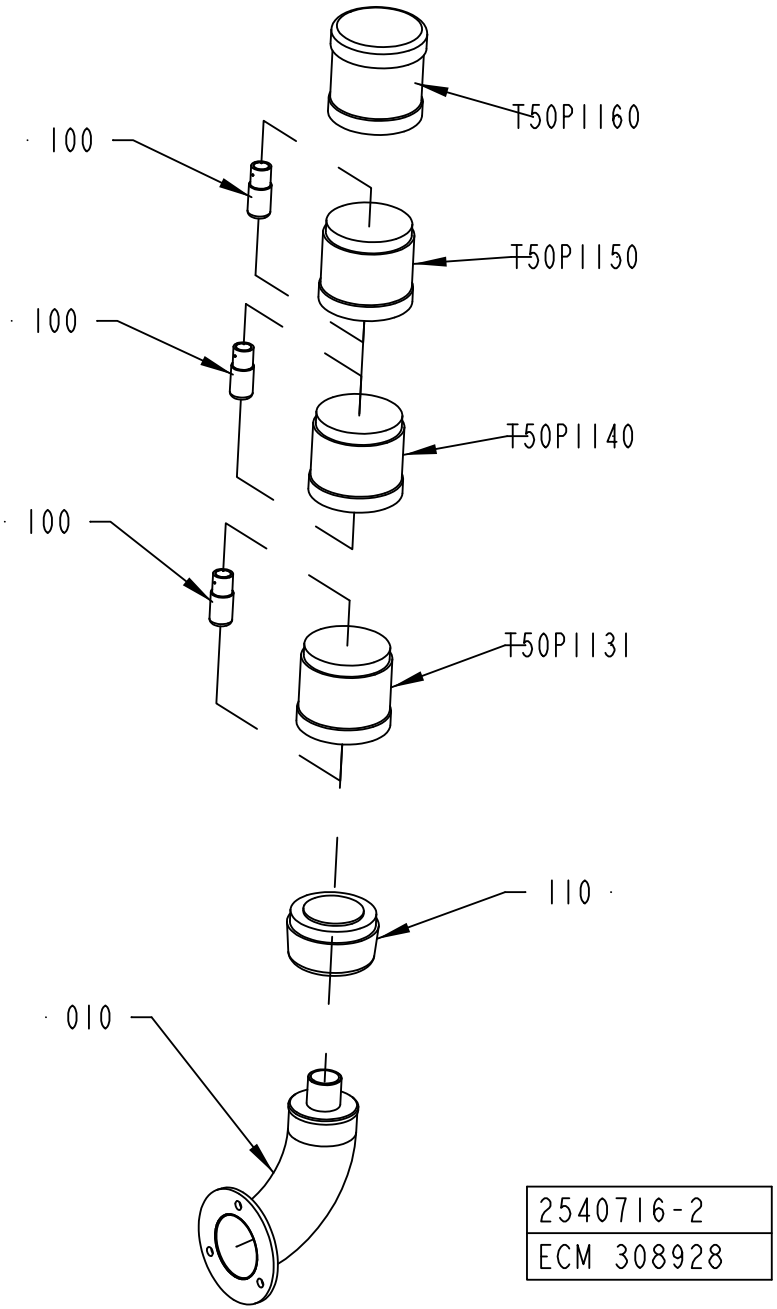
T50P1160
100
T50P1150
100
T50P1140
100
T50P1131
110
010
2540716-2
ECM 308928

ECM: 308928 - 20070627
Group number: 2540716-0200
Assembly Drawing: 2540716-2_1_AA

| Pos | Part No | UN | Qty | Description | Page No |
|---|---|---|---|---|---|
| - | | | | | |
| 010 | 2540767-0000 | | 1 | PIPE | |
| 100 | 90036-0068 | | 3 | BULB 6.5W 24V | |
| 110 | 90458-0292 | | 1 | BASE, KT70-1001 | |
| T50P1131 | 90458-0295 | | 1 | LIGHT ELEMENT, BLUE, KL70-401L | |
| T50P1140 | 90458-0294 | | 1 | LIGHT ELEMENT, YELLOW, KL70-401Y | |
| T50P1150 | 90458-0293 | | 1 | LIGHT ELEMENT, RED, KL70-401R | |
| T50P1160 | 90458-0302 | | 1 | SIREN WITH ADJUSTABLE VOLUME KS 70-3004 | |

| Pos | Part No | UN | Qty | Description | Page No |
|---|---|---|---|---|---|

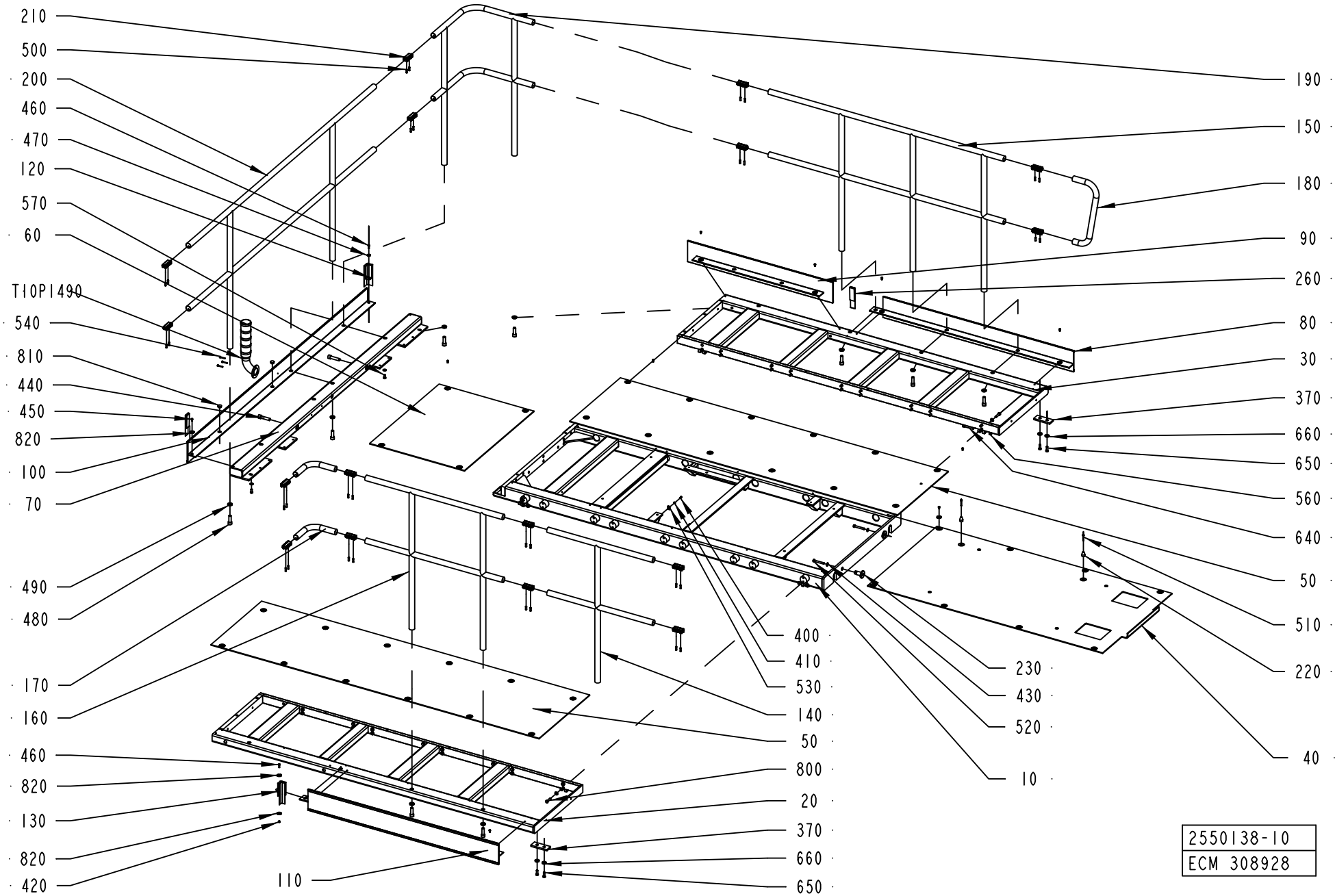
210
500
200
460
470
120
570
60
T10P1490
540
810
440
450
820
100
70
490
480
170
160
460
820
130
820
420
110
190
150
180
90
260
80
30
370
660
650
560
640
50
510
220
40
400
410
530
140
50
800
20
370
660
650
230
430
520
10
2550138-10
ECM 308928

ECM: 367877 - 20081009
Group number: 2550138-0200
Assembly Drawing: 2550138-10_1_AA

This list covers pages from 2-160 to 2-171

| Pos | Part No | UN | Qty | Description | Page No |
|---|---|---|---|---|---|
| **A3/FLEX DIMC/FLEX LEFTSTAIR, A3/FLEX PT/FLEX LEFTSTAIR (See drawing on pages: 2-162, 2-164)** | | | | | |
| 010 | 2878193-0000 | | 1 | PLATFORM | |
| 090 | 2566258-0000 | | 1 | TOE PLATE | |
| 210 | 985328-0000 | | 22 | CONNECTION | |
| 260 | 1558947-0000 | | 4 | STRIP | |
| 270 | 2817484-0000 | | 1 | PLATFORM | |
| 275 | 2758236-0000 | | 2 | BRACKET | |
| 280 | 2991030-0000 | | 1 | CHECKER PLATE | |
| 290 | 2553118-0000 | | 1 | TOE PLATE | |
| 300 | 2553119-0000 | | 1 | RAILING | |
| 310 | 2817481-0000 | | 1 | RAILING | |
| 330 | 2817483-0000 | | 1 | TOE PLATE | |
| 350 | 2553124-0000 | | 2 | PIN | |
| 360 | 2878206-0000 | | 1 | CHECKER PLATE | |
| 380 | 2817480-0000 | | 1 | TOE PLATE | |
| 390 | 2817482-0000 | | 1 | RAILING | |
| 395 | 2991031-0000 | | 1 | CHECKER PLATE | |
| 430 | 315105-0173 | | 38 | WASHER BRB 10,5X22 RFR | |
| 450 | 90458-0072 | | 64 | SCREW ISO 7380 S M6X12 A2 | |
| 480 | 312111-0630 | | 12 | SCREW HEX.SOCK.HD.MC6S-TT 16X50 88 FZB | |
| 490 | 315111-0186 | | 12 | WASHER PLAIN, TBRB 17/30 H=6 | |
| 500 | 312318-0453 | | 44 | SCREW ISO4029 M8X25 A4 | |
| 590 | 312109-0541 | | 4 | SCREW M6S ISO 4017 M12X45 A480 | |
| 600 | 312105-0633 | | 14 | SCREW M6S ISO 4014 M16X65 A480 | |
| 610 | 312105-0674 | | 4 | SCREW M6S ISO 4017 M20X50 A480 | |
| 620 | 312625-0326 | | 4 | HEXAGON THIN NUT, EN 24035 ML6M M20 A4 | |
| 630 | 315105-0186 | | 14 | WASHER BRB 17X30 RFR | |
| 670 | 315105-0178 | | 4 | WASHER BRB 13X24 RFR | |
| 810 | 90261-0033 | | 5 | PLUG, BLIND, PLASTIC GPN300F182 | |
| 820 | 90458-0073 | | 64 | WASHER 6,4/30, H=1,5 | |
| 830 | 312105-0447 | | 4 | SCREW M6S ISO 4017 M8X12 A480 | |
| 840 | 315105-0165 | | 4 | WASHER BRB 8,4X16 RFR | |
| 850 | 90143-0060 | M | 1 | EDGE STRIP 9,5X6,3MM BLACK PVC | |
| **A3/FLEX DIMC/FLEX RIGHTSTAIR, A3/FLEX PT/FLEX RIGHTSTAIR (See drawing on pages: 2-168, 2-170)** | | | | | |
| 010 | 2878193-0000 | | 1 | PLATFORM | |
| 090 | 2566258-0000 | | 1 | TOE PLATE | |
| 210 | 985328-0000 | | 22 | CONNECTION | |
| 260 | 1558947-0000 | | 4 | STRIP | |
| 270 | 2817484-0000 | | 1 | PLATFORM | |
| 275 | 2758236-0000 | | 2 | BRACKET | |
| 280 | 2991030-0000 | | 1 | CHECKER PLATE | |
| 290 | 2553118-0000 | | 1 | TOE PLATE | |
| 300 | 2553119-0000 | | 1 | RAILING | |
| 310 | 2937960-0000 | | 1 | RAILING | |
| 330 | 2817483-0000 | | 1 | TOE PLATE | |
| 350 | 2553124-0000 | | 2 | PIN | |
| 360 | 2878206-0000 | | 1 | CHECKER PLATE | |
| 380 | 2937961-0000 | | 1 | TOE PLATE | |
| 390 | 2937887-0000 | | 1 | RAILING | |
| 395 | 2991031-0000 | | 1 | CHECKER PLATE | |
| 430 | 315105-0173 | | 38 | WASHER BRB 10,5X22 RFR | |
| 450 | 90458-0072 | | 64 | SCREW ISO 7380 S M6X12 A2 | |
| 480 | 312111-0630 | | 12 | SCREW HEX.SOCK.HD.MC6S-TT 16X50 88 FZB | |
| 490 | 315111-0186 | | 12 | WASHER PLAIN, TBRB 17/30 H=6 | |
| 500 | 312318-0453 | | 44 | SCREW ISO4029 M8X25 A4 | |
| 590 | 312109-0541 | | 4 | SCREW M6S ISO 4017 M12X45 A480 | |
| 600 | 312105-0633 | | 14 | SCREW M6S ISO 4014 M16X65 A480 | |
| 610 | 312105-0674 | | 4 | SCREW M6S ISO 4017 M20X50 A480 | |
| 620 | 312625-0326 | | 4 | HEXAGON THIN NUT, EN 24035 ML6M M20 A4 | |
| 630 | 315105-0186 | | 14 | WASHER BRB 17X30 RFR | |
| 810 | 90261-0033 | | 5 | PLUG, BLIND, PLASTIC GPN300F182 | |
| 820 | 90458-0073 | | 64 | WASHER 6,4/30, H=1,5 | |
| 830 | 312105-0447 | | 4 | SCREW M6S ISO 4017 M8X12 A480 | |
| 840 | 315105-0165 | | 4 | WASHER BRB 8,4X16 RFR | |
| 850 | 90143-0060 | M | 1 | EDGE STRIP 9,5X6,3MM BLACK PVC | |
| **A3/FLEX NOPT LEFTSTAIR (See drawing on page: 2-160)** | | | | | |
| 010 | 2795889-0000 | | 1 | PLATFORM | |
| 060 | 2550145-0000 | | 1 | RAILING | |
| 070 | 1524854-0000 | | 1 | BEAM | |
| 090 | 2550193-0000 | | 1 | TOE PLATE | |
| 210 | 985328-0000 | | 16 | CONNECTION | |
| 260 | 1558947-0000 | | 2 | STRIP | |
| 400 | 312125-0366 | | 4 | SCREW ISO 1207 M6X12 A4 | |
| 410 | 315105-0153 | | 4 | WASHER BRB 6,4X12 RFR | |
| 420 | 312812-0316 | | 1 | HEXAGON NUT, NY-LOCK M6 A480 | |
| 430 | 315105-0173 | | 40 | WASHER BRB 10,5X22 RFR | |
| 440 | 312115-0634 | | 2 | SCREW ISO4762 M16X70 A4 80 | |
| 450 | 90458-0072 | | 43 | SCREW ISO 7380 S M6X12 A2 | |
| 460 | 312105-0370 | | 2 | SCREW M6S ISO 4017 M6X20 A480 | |
| 470 | 315125-0153 | | 1 | WASHER TBRSB 6,4X22X4 A4 | |
| 480 | 312111-0630 | | 9 | SCREW HEX.SOCK.HD.MC6S-TT 16X50 88 FZB | |
| 490 | 315111-0186 | | 9 | WASHER PLAIN, TBRB 17/30 H=6 | |
| 500 | 312318-0453 | | 32 | SCREW ISO4029 M8X25 A4 | |
| 530 | 352113-0204 | | 4 | ANCHOR PLATES FOR STRIPS, TYPE TM3S25-M | |

Machine Type | Group Description | Used-In | Group Number | Page No

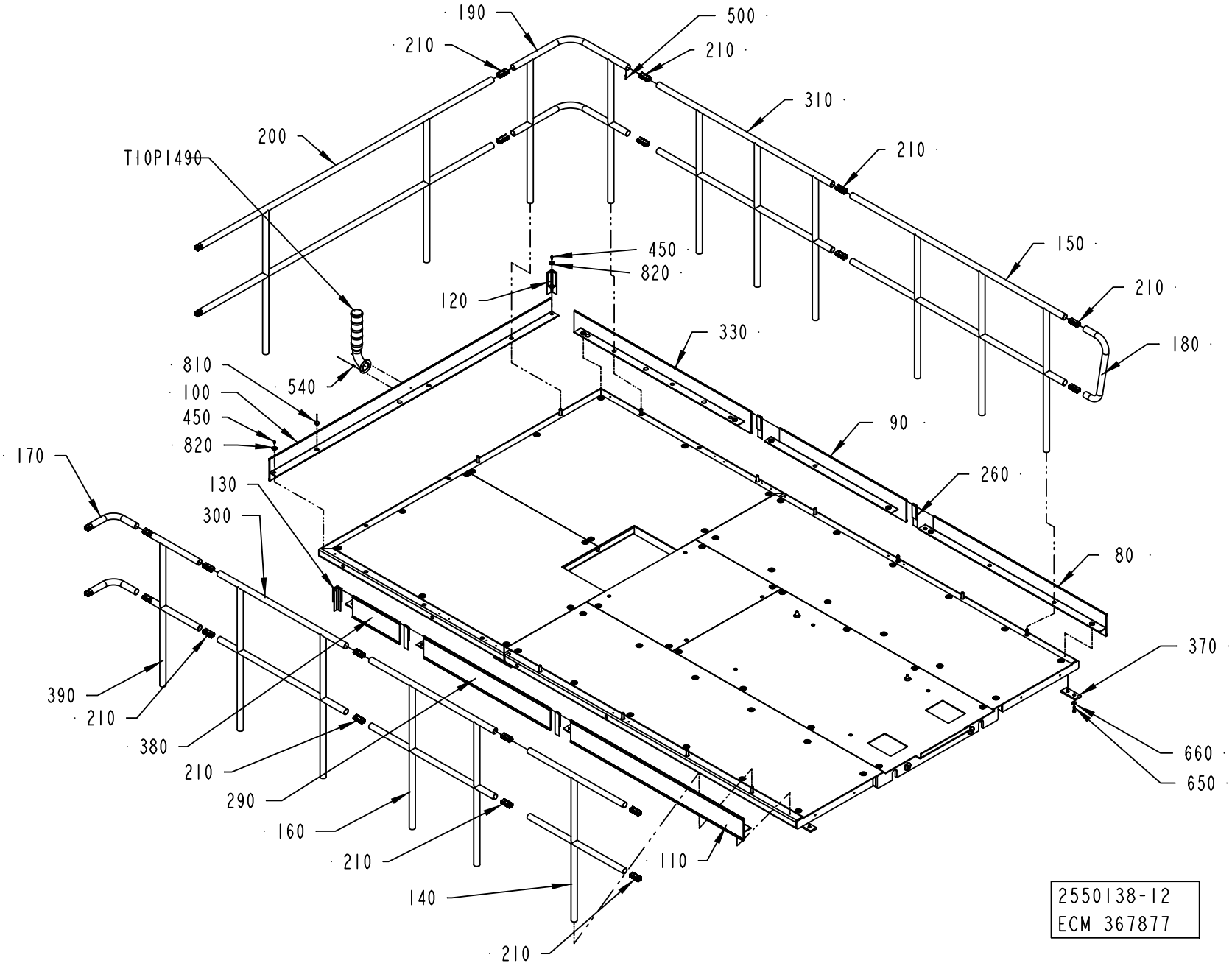
190
500
210
210
310
200
210
T10P1490
450
820
150
210
120
330
180
810
540
100
450
820
90
170
260
130
300
80
370
390
210
380
210
660
650
290
160
210
110
140
210
2550138-12
ECM 367877

ECM: 367877 - 20081009
Group number: 2550138-0200
Assembly Drawing: 2550138-12_1_AD

This list covers pages from 2-160 to 2-171

| Pos | Part No | UN | Qty | Description | Page No |
|---|---|---|---|---|---|
| **A3/FLEX NOPT LEFTSTAIR (Cont'd) (See drawing on page: 2-160)** | | | | | |
| 570 | 312105-0491 | | 2 | SCREW M6S ISO 4017 M10X20 A480 | |
| 810 | 90261-0033 | | 2 | PLUG, BLIND, PLASTIC GPN300F182 | |
| 820 | 90458-0073 | | 45 | WASHER 6,4/30, H=1,5 | |
| **A3/FLEX NOPT RIGHTSTAIR (See drawing on page: 2-166)** | | | | | |
| 010 | 2795889-0000 | | 1 | PLATFORM | |
| 060 | 2550145-0000 | | 1 | RAILING | |
| 070 | 1524854-0000 | | 1 | BEAM | |
| 090 | 2550193-0000 | | 1 | TOE PLATE | |
| 210 | 985328-0000 | | 16 | CONNECTION | |
| 260 | 1558947-0000 | | 2 | STRIP | |
| 400 | 312125-0366 | | 4 | SCREW ISO 1207 M6X12 A4 | |
| 410 | 315105-0153 | | 4 | WASHER BRB 6,4X12 RFR | |
| 420 | 312812-0316 | | 1 | HEXAGON NUT, NY-LOCK M6 A480 | |
| 430 | 315105-0173 | | 40 | WASHER BRB 10,5X22 RFR | |
| 440 | 312115-0634 | | 2 | SCREW ISO4762 M16X70 A4 80 | |
| 450 | 90458-0072 | | 43 | SCREW ISO 7380 S M6X12 A2 | |
| 460 | 312105-0370 | | 2 | SCREW M6S ISO 4017 M6X20 A480 | |
| 470 | 315125-0153 | | 1 | WASHER TBRSB 6,4X22X4 A4 | |
| 480 | 312111-0630 | | 9 | SCREW HEX.SOCK.HD.MC6S-TT 16X50 88 FZB | |
| 490 | 315111-0186 | | 9 | WASHER PLAIN, TBRB 17/30 H=6 | |
| 500 | 312318-0453 | | 32 | SCREW ISO4029 M8X25 A4 | |
| 530 | 352113-0204 | | 4 | ANCHOR PLATES FOR STRIPS, TYPE TM3S25-M | |
| 570 | 312105-0491 | | 2 | SCREW M6S ISO 4017 M10X20 A480 | |
| 810 | 90261-0033 | | 2 | PLUG, BLIND, PLASTIC GPN300F182 | |
| 820 | 90458-0073 | | 45 | WASHER 6,4/30, H=1,5 | |
| **Common Parts** | | | | | |
| 020 | 2550142-0000 | | 1 | PLATFORM | |
| 030 | 2550143-0000 | | 1 | PLATFORM | |
| 040 | 2795887-0000 | | 1 | CHECKER PLATE | |
| 050 | 2550141-0000 | | 2 | CHECKER PLATE | |
| 080 | 2550192-0000 | | 1 | TOE PLATE | |
| 100 | 1523793-0000 | | 1 | TOE PLATE | |
| 110 | 2550191-0000 | | 1 | TOE PLATE | |
| 120 | 1524167-0000 | | 1 | CORNER STRIP | |
| 130 | 1524168-0000 | | 1 | CORNER STRIP | |
| 140 | 2550146-0000 | | 1 | RAILING | |
| 150 | 2550189-0000 | | 1 | RAILING | |
| 160 | 2550147-0000 | | 1 | RAILING | |
| 170 | 2551951-0000 | | 2 | RAILING | |
| 180 | 1558795-0000 | | 1 | RAILING | |
| 190 | 1010822-0000 | | 1 | RAILING | |
| 200 | 1548211-0000 | | 1 | RAILING | |
| 220 | 1037571-0000 | | 2 | GUIDE BUSHING | |
| 230 | 2599941-0000 | | 2 | SPACER | |
| 370 | 1535036-0000 | | 2 | PLATE | |
| 510 | 312109-0378 | | 2 | SCREW M6S ISO 4017 M6X40 A480 | |
| 520 | 312105-0506 | | 2 | SCREW M6S ISO 4014 M10X75 A480 | |
| 540 | 312115-0337 | | 3 | SCREW ISO4762 M5X35 A4 80 | |
| 560 | 312812-0322 | | 4 | HEXAGON NUT, NY-LOCK M12 A480 | |
| 640 | 312115-0546 | | 4 | SCREW ISO4762 M12X70 A4 80 | |
| 650 | 312105-0495 | | 4 | SCREW M6S ISO 4017 M10X30 A480 | |
| 660 | 315125-0173 | | 4 | WASHER TBRSB 10,5X28X6 A4 | |
| 800 | 90458-2845 | | 36 | SCREW,HEXAGON HEAD M6S ISO 4017 M10X45 | |
| T10P1490 | 2903813-0100 | | 1 | SIGNAL LAMP ..... | **2-173** |

Machine Type | Group Description | Used-In | Group Number | Page No

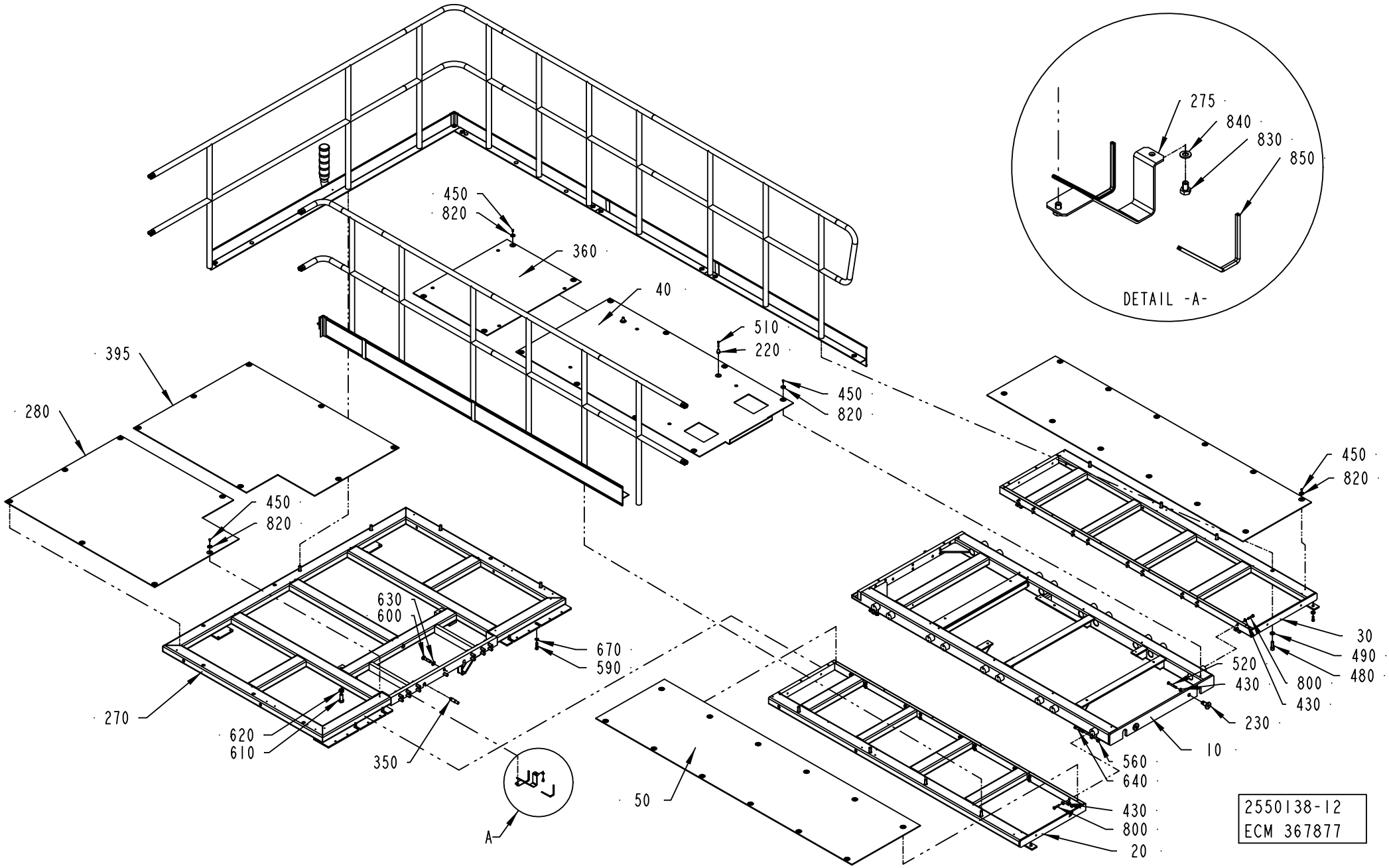
275
840
830
850
DETAIL -A-
450
820
360
40
510
220
395
280
630
600
670
590
270
620
610
350
A
50
560
640
430
800
20
10
230
520
430
800
430
30
490
480
2550138-12
ECM 367877

| Pos | Part No | UN | Qty | Description | Page No |
|---|---|---|---|---|---|
| **SEE PREVIOUS LISTS PAGES: 2-161, 2-163.** | | | | | |

| Pos | Part No | UN | Qty | Description | Page No |
|---|---|---|---|---|---|

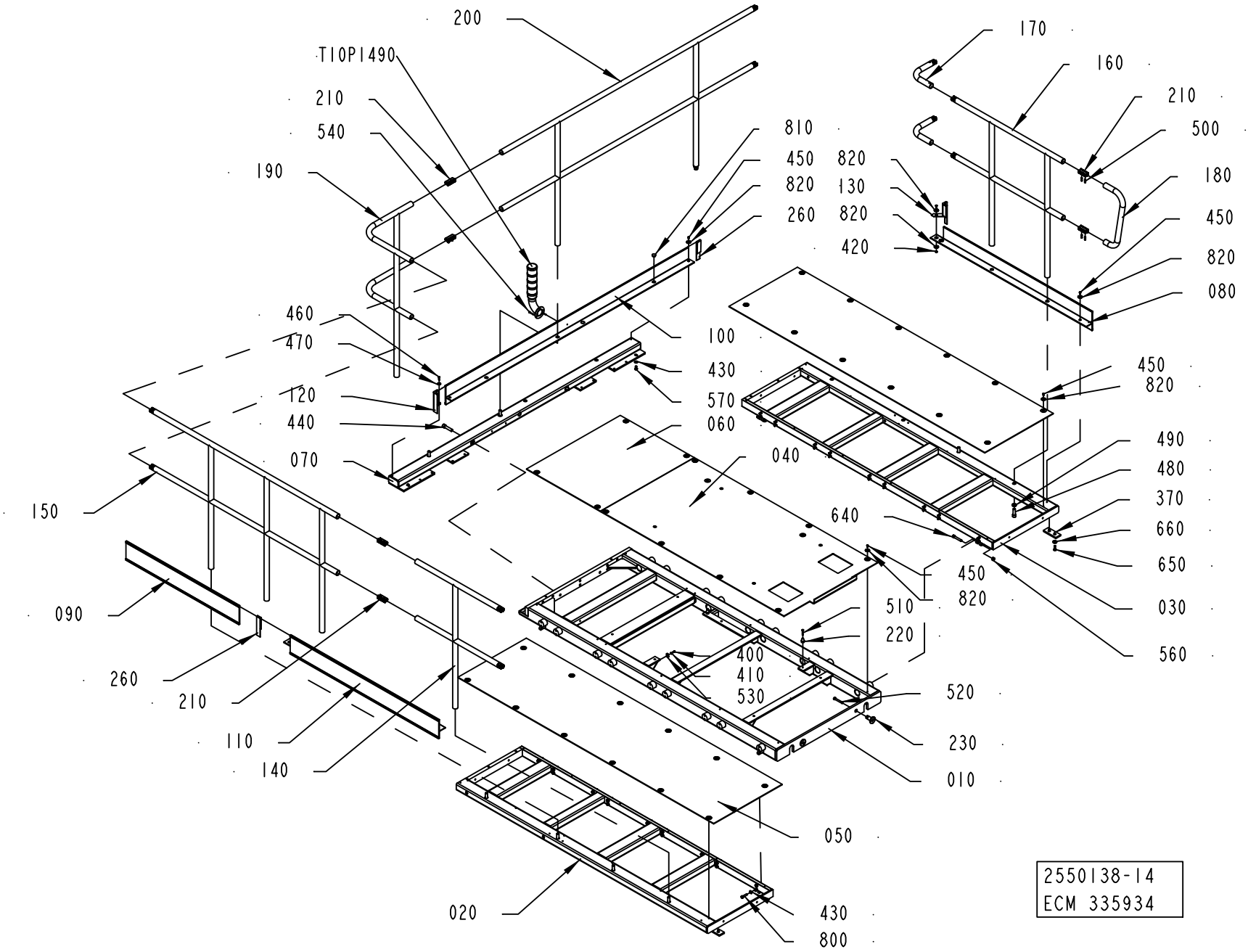
200
T10P1490
210
540
190
460
470
120
440
070
150
090
260
210
110
140
020
810
450 820
820 130
260 820
420
100
430
570
060
040
170
160
210
500
180
450
820
080
450
820
490
480
370
660
650
030
560
640
450
820
510
220
400
410
530
520
230
010
050
430
800
2550138-14
ECM 335934

| Pos | Part No | UN | Qty | Description | Page No |
|---|---|---|---|---|---|
| **SEE PREVIOUS LISTS PAGES: 2-161, 2-163.** | | | | | |

| Pos | Part No | UN | Qty | Description | Page No |
|---|---|---|---|---|---|

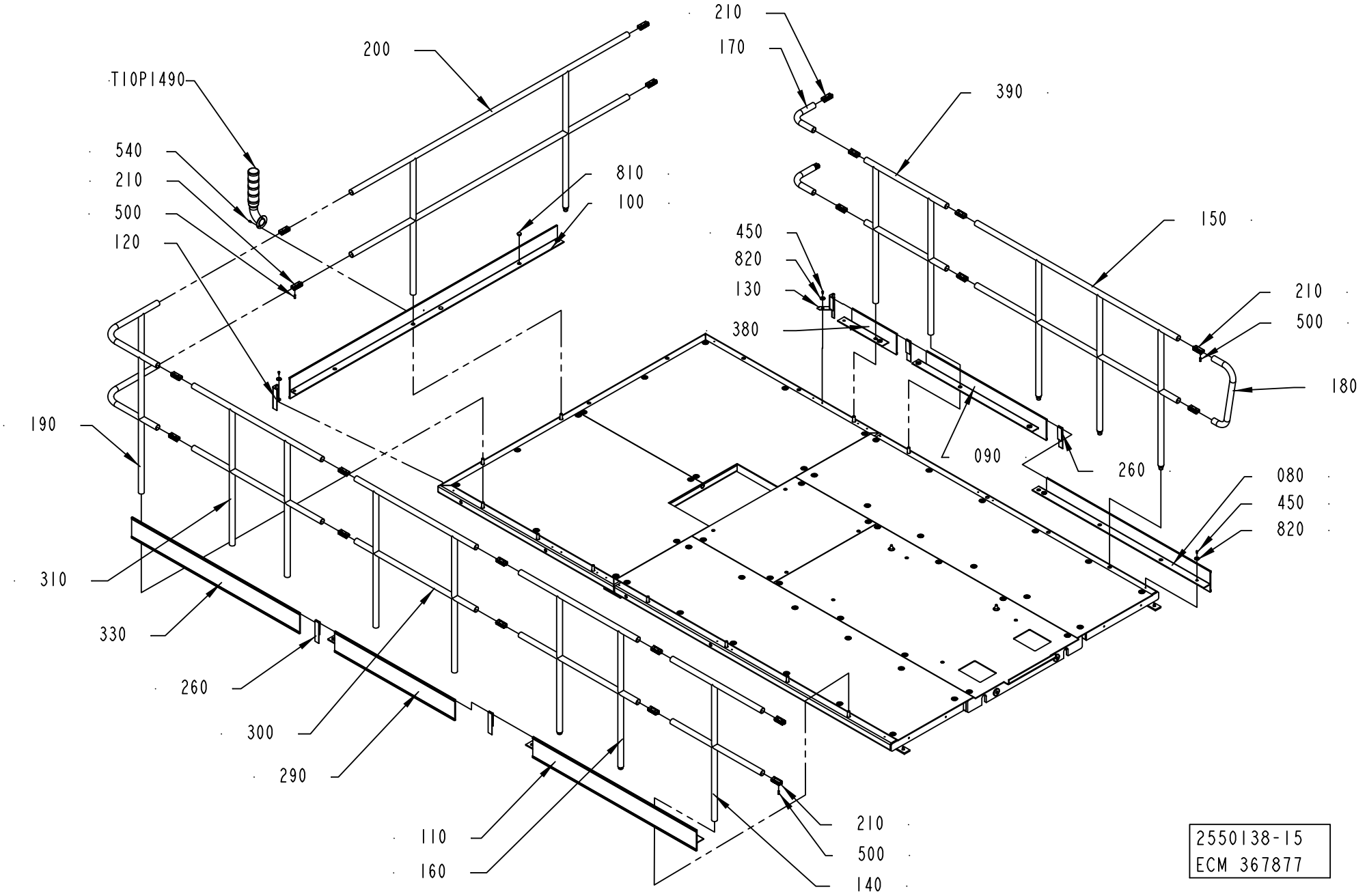
210
170
200
390
T10P1490
540
210
500
120
810
100
450
820
130
380
150
210
500
180
190
090
260
080
450
820
310
330
260
300
290
110
160
210
500
140
2550138-15
ECM 367877

ECM: 367877 - 20081009
Group number: 2550138-0200
Assembly Drawing: 2550138-15_1_AB

This list covers pages from 2-160 to 2-171

| Pos | Part No | UN | Qty | Description | Page No |
|---|---|---|---|---|---|
| **SEE PREVIOUS LISTS PAGES: 2-161, 2-163.** | | | | | |

| Pos | Part No | UN | Qty | Description | Page No |
|---|---|---|---|---|---|

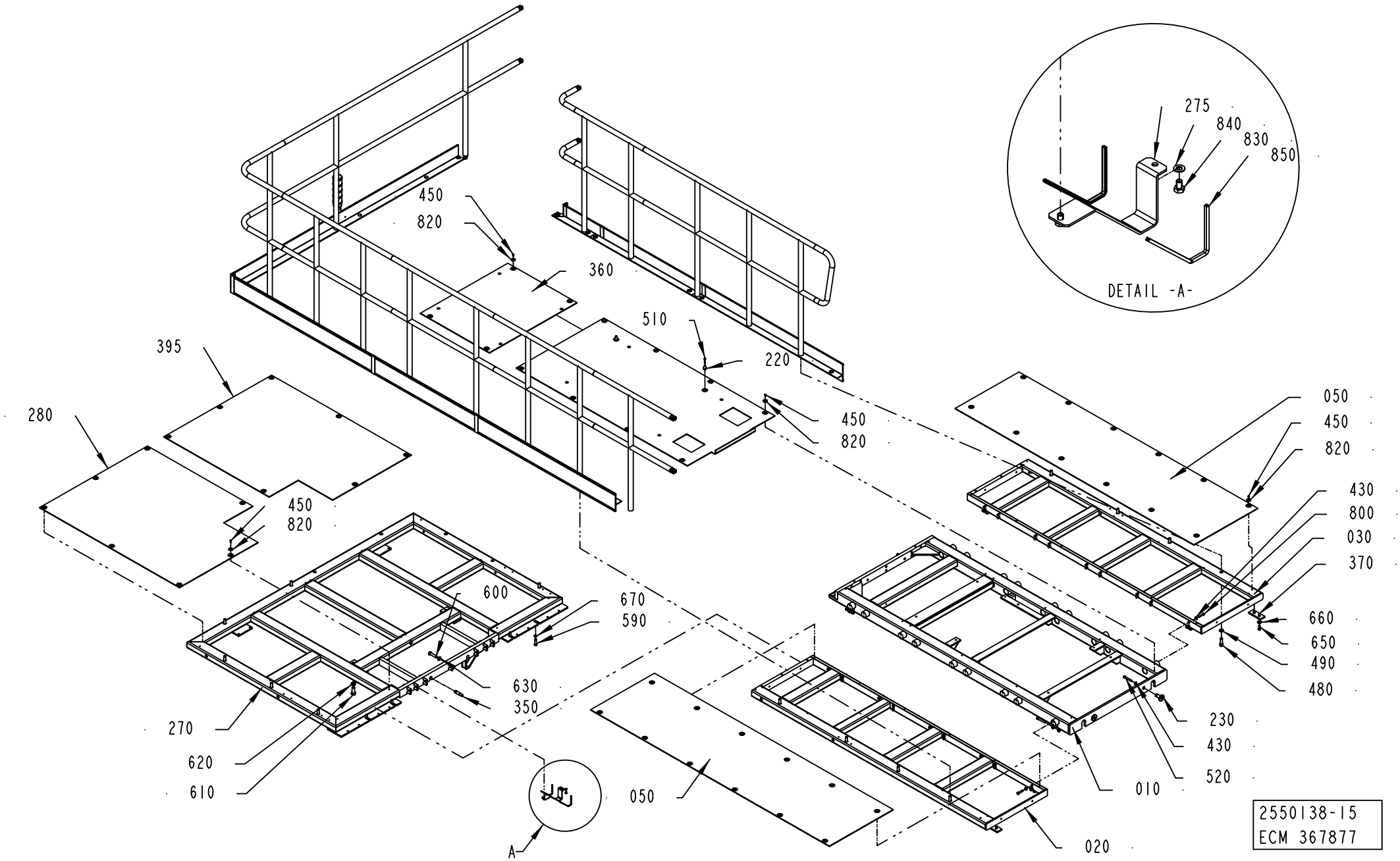
DETAIL -A-
275
840
830
850
450
820
360
510
220
395
280
450
820
600
670
590
630
350
270
620
610
A
050
450
820
430
800
030
370
660
650
490
480
230
430
520
010
020
2550138-15
ECM 367877

| Pos | Part No | UN | Qty | Description | Page No |
|---|---|---|---|---|---|
| **SEE PREVIOUS LISTS PAGES: 2-161, 2-163.** | | | | | |

| Pos | Part No | UN | Qty | Description | Page No |
|---|---|---|---|---|---|

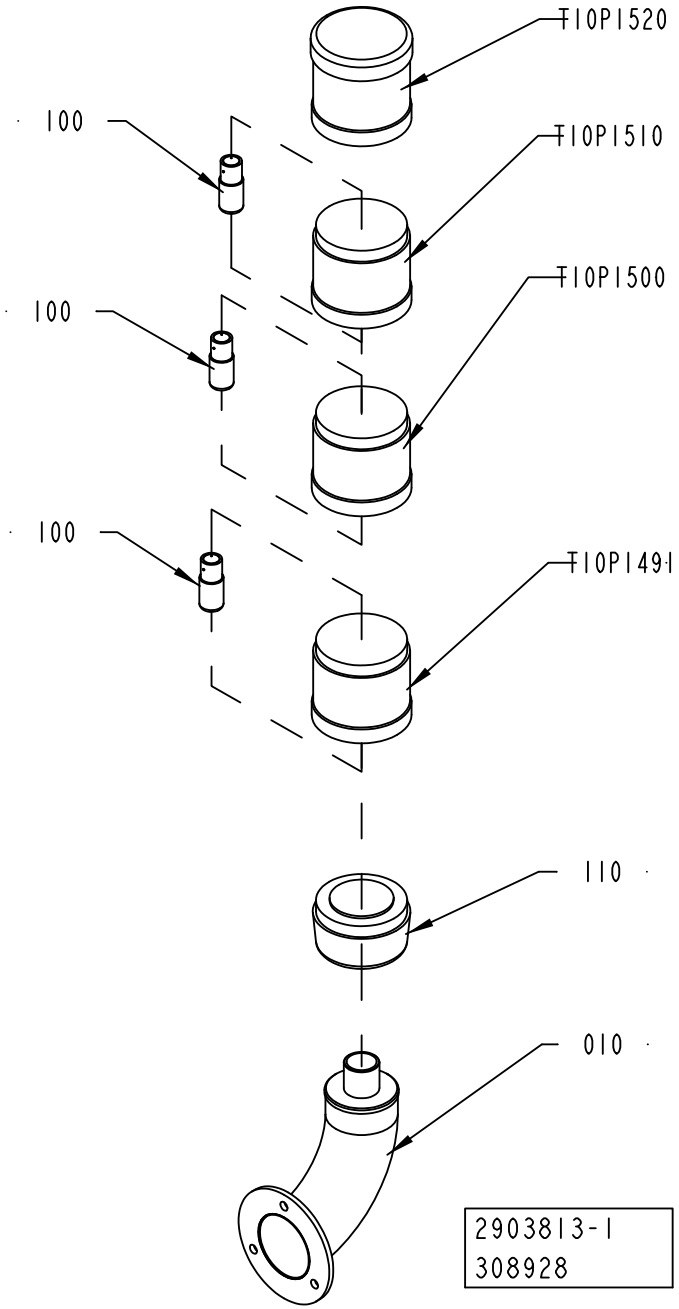
T10P1520
100
T10P1510
T10P1500
100
100
T10P1491
110
010
2903813-1
308928

ECM: 313574 - 20070627
Group number: 2903813-0100
Assembly Drawing: 2903813-1_1_AA

| Pos | Part No | UN | Qty | Description | Page No |
|---|---|---|---|---|---|
| - | | | | | |
| 010 | 2540767-0000 | | 1 | PIPE | |
| 100 | 90036-0068 | | 3 | BULB 6.5W 24V | |
| 110 | 90458-0292 | | 1 | BASE, KT70-1001 | |
| T50P1131 | 90458-0295 | | 1 | LIGHT ELEMENT, BLUE, KL70-401L | |
| T50P1140 | 90458-0294 | | 1 | LIGHT ELEMENT, YELLOW, KL70-401Y | |
| T50P1150 | 90458-0293 | | 1 | LIGHT ELEMENT, RED, KL70-401R | |
| T50P1160 | 90458-0302 | | 1 | SIREN WITH ADJUSTABLE VOLUME KS 70-3004 | |

| Pos | Part No | UN | Qty | Description | Page No |
|---|---|---|---|---|---|

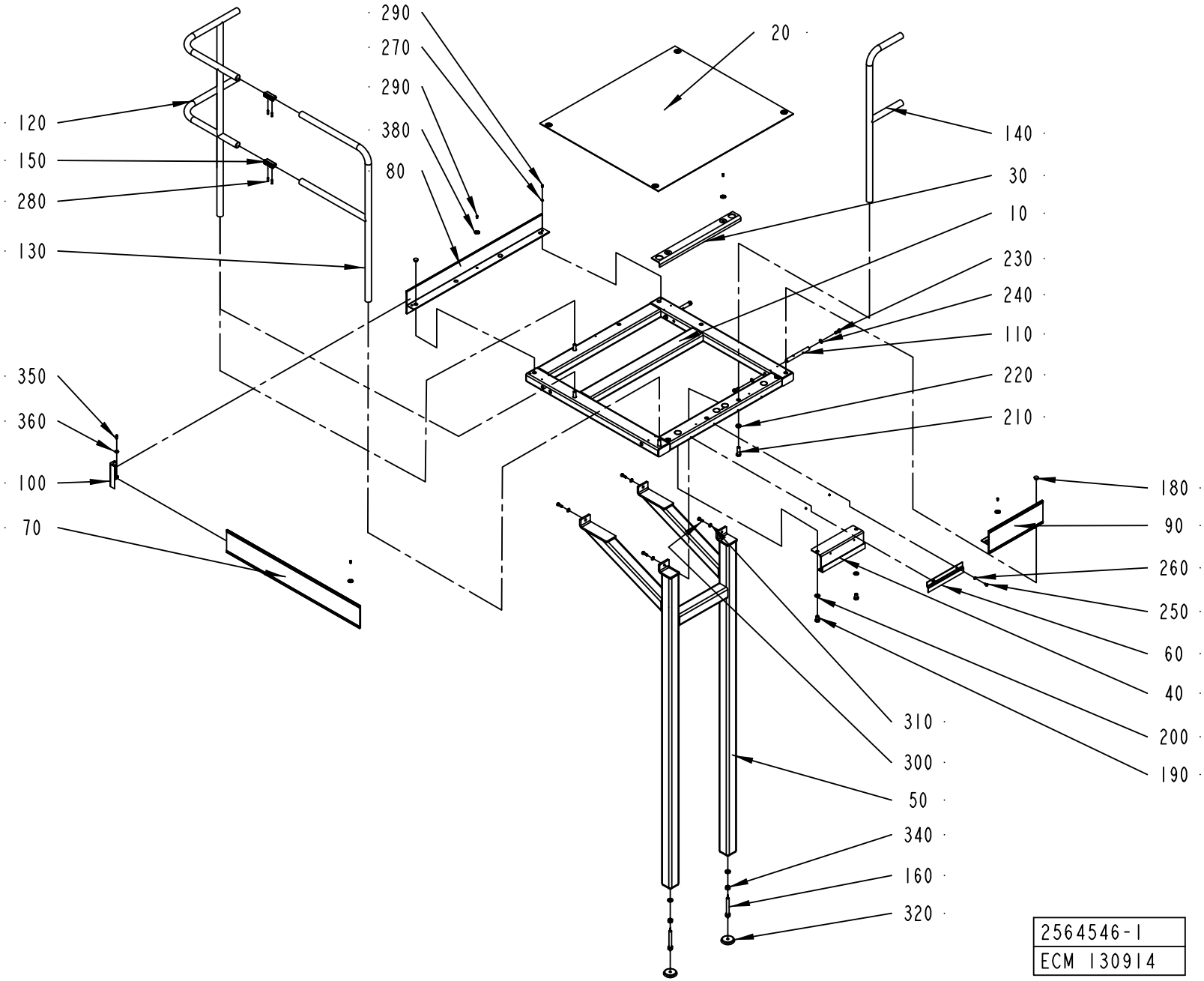
290
270
290
380
80
20
120
150
280
130
140
30
10
230
240
110
220
210
350
360
100
70
180
90
260
250
60
40
200
190
310
300
50
340
160
320
2564546-1
ECM 130914

ECM: 189874 - 20041104
Group number: 2564546-0100
Assembly Drawing: 2564546-1_1_AB

This list covers pages from 2-174 to 2-177

| Pos | Part No | UN | Qty | Description | Page No |
|---|---|---|---|---|---|
| **LEFTSTAIR (See drawing on page: 2-174)** | | | | | |
| 070 | 1524177-0000 | | 1 | TOE PLATE | |
| **RIGHTSTAIR (See drawing on page: 2-176)** | | | | | |
| 070 | 1524180-0000 | | 1 | TOE PLATE | |
| **Common Parts** | | | | | |
| 010 | 1524171-0000 | | 1 | FRAME | |
| 020 | 1524172-0000 | | 1 | CHECKER PLATE | |
| 030 | 1524173-0000 | | 1 | CHECKER PLATE | |
| 040 | 1524174-0000 | | 1 | HOOK | |
| 050 | 1524175-0000 | | 1 | LEG | |
| 060 | 1524176-0000 | | 1 | CLAMP | |
| 080 | 2564545-0000 | | 1 | PLATE | |
| 090 | 1524179-0000 | | 1 | TOE PLATE | |
| 100 | 1524167-0000 | | 1 | CORNER STRIP | |
| 110 | 1524181-0000 | | 2 | PIN | |
| 120 | 1010822-0000 | | 1 | RAILING | |
| 130 | 1524182-0000 | | 1 | RAILING | |
| 140 | 1524864-0000 | | 1 | RAILING | |
| 150 | 985328-0000 | | 2 | CONNECTION | |
| 160 | 1524185-0000 | | 2 | EXTENSION PIECE | |
| 180 | 90261-0033 | | 3 | PLUG, BLIND, PLASTIC GPN300F182 | |
| 190 | 312105-0622 | | 2 | SCREW M6S ISO 4017 M16X25 A480 | |
| 200 | 315105-0186 | | 2 | WASHER BRB 17X30 RFR | |
| 210 | 312111-0630 | | 4 | SCREW HEX.SOCK.HD.MC6S-TT 16X50 88 FZB | |
| 220 | 315111-0186 | | 6 | WASHER PLAIN, TBRB 17/30 H=6 | |
| 230 | 312105-0536 | | 4 | SCREW M6S ISO 4017 M12X30 A480 | |
| 240 | 315105-0178 | | 4 | WASHER BRB 13X24 RFR | |
| 250 | 312105-0447 | | 2 | SCREW M6S ISO 4017 M8X12 A480 | |
| 260 | 315101-0165 | | 2 | WASHER PLAIN, BRB, 8,4/16 H=1,5 | |
| 270 | 315101-0153 | | 1 | WASHER PLAIN, BRB, 6,4/12 H=1,5 | |
| 280 | 312318-0453 | | 4 | SCREW ISO4029 M8X25 A4 | |
| 290 | 90458-0072 | | 12 | SCREW ISO 7380 S M6X12 A2 | |
| 300 | 312105-0495 | | 4 | SCREW M6S ISO 4017 M10X30 A480 | |
| 310 | 315105-0173 | | 4 | WASHER BRB 10,5X22 RFR | |
| 320 | 90347-0009 | | 2 | FLOOR PLATE, NO 1256730 | |
| 340 | 312605-0324 | | 2 | HEXAGON NUT, M6M M16 A280 | |
| 350 | 312105-0370 | | 1 | SCREW M6S ISO 4017 M6X20 A480 | |
| 360 | 315125-0153 | | 1 | WASHER TBRSB 6,4X22X4 A4 | |
| 380 | 90458-0073 | | 11 | WASHER 6,4/30, H=1,5 | |

| Pos | Part No | UN | Qty | Description | Page No |
|---|---|---|---|---|---|

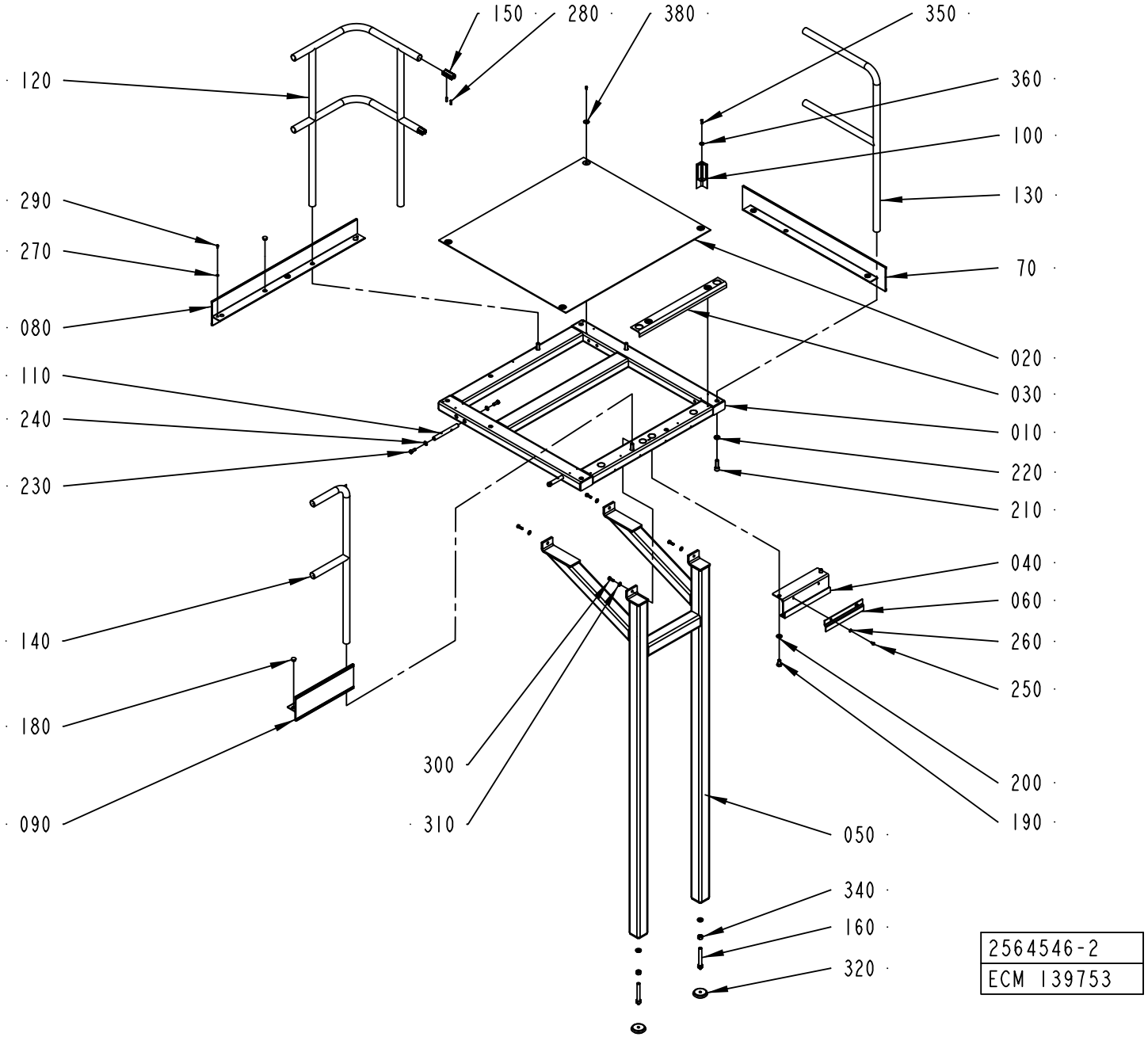
150
280
380
350
120
360
100
290
130
270
70
080
020
110
030
240
010
230
220
210
040
140
060
260
250
180
300
200
310
190
090
050
340
160
320
2564546-2
ECM 139753

ECM: 189874 - 20041104
Group number: 2564546-0100
Assembly Drawing: 2564546-2_1_AA

This list covers pages from 2-174 to 2-177

| Pos | Part No | UN | Qty | Description | Page No |
|---|---|---|---|---|---|
| **LEFTSTAIR (See drawing on page: 2-174)** | | | | | |
| 070 | 1524177-0000 | | 1 | TOE PLATE | |
| **RIGHTSTAIR (See drawing on page: 2-176)** | | | | | |
| 070 | 1524180-0000 | | 1 | TOE PLATE | |
| **Common Parts** | | | | | |
| 010 | 1524171-0000 | | 1 | FRAME | |
| 020 | 1524172-0000 | | 1 | CHECKER PLATE | |
| 030 | 1524173-0000 | | 1 | CHECKER PLATE | |
| 040 | 1524174-0000 | | 1 | HOOK | |
| 050 | 1524175-0000 | | 1 | LEG | |
| 060 | 1524176-0000 | | 1 | CLAMP | |
| 080 | 2564545-0000 | | 1 | PLATE | |
| 090 | 1524179-0000 | | 1 | TOE PLATE | |
| 100 | 1524167-0000 | | 1 | CORNER STRIP | |
| 110 | 1524181-0000 | | 2 | PIN | |
| 120 | 1010822-0000 | | 1 | RAILING | |
| 130 | 1524182-0000 | | 1 | RAILING | |
| 140 | 1524864-0000 | | 1 | RAILING | |
| 150 | 985328-0000 | | 2 | CONNECTION | |
| 160 | 1524185-0000 | | 2 | EXTENSION PIECE | |
| 180 | 90261-0033 | | 3 | PLUG, BLIND, PLASTIC GPN300F182 | |
| 190 | 312105-0622 | | 2 | SCREW M6S ISO 4017 M16X25 A480 | |
| 200 | 315105-0186 | | 2 | WASHER BRB 17X30 RFR | |
| 210 | 312111-0630 | | 4 | SCREW HEX.SOCK.HD.MC6S-TT 16X50 88 FZB | |
| 220 | 315111-0186 | | 6 | WASHER PLAIN, TBRB 17/30 H=6 | |
| 230 | 312105-0536 | | 4 | SCREW M6S ISO 4017 M12X30 A480 | |
| 240 | 315105-0178 | | 4 | WASHER BRB 13X24 RFR | |
| 250 | 312105-0447 | | 2 | SCREW M6S ISO 4017 M8X12 A480 | |
| 260 | 315101-0165 | | 2 | WASHER PLAIN, BRB, 8,4/16 H=1,5 | |
| 270 | 315101-0153 | | 1 | WASHER PLAIN, BRB, 6,4/12 H=1,5 | |
| 280 | 312318-0453 | | 4 | SCREW ISO4029 M8X25 A4 | |
| 290 | 90458-0072 | | 12 | SCREW ISO 7380 S M6X12 A2 | |
| 300 | 312105-0495 | | 4 | SCREW M6S ISO 4017 M10X30 A480 | |
| 310 | 315105-0173 | | 4 | WASHER BRB 10,5X22 RFR | |
| 320 | 90347-0009 | | 2 | FLOOR PLATE, NO 1256730 | |
| 340 | 312605-0324 | | 2 | HEXAGON NUT, M6M M16 A280 | |
| 350 | 312105-0370 | | 1 | SCREW M6S ISO 4017 M6X20 A480 | |
| 360 | 315125-0153 | | 1 | WASHER TBRSB 6,4X22X4 A4 | |
| 380 | 90458-0073 | | 11 | WASHER 6,4/30, H=1,5 | |

| Pos | Part No | UN | Qty | Description | Page No |
|---|---|---|---|---|---|

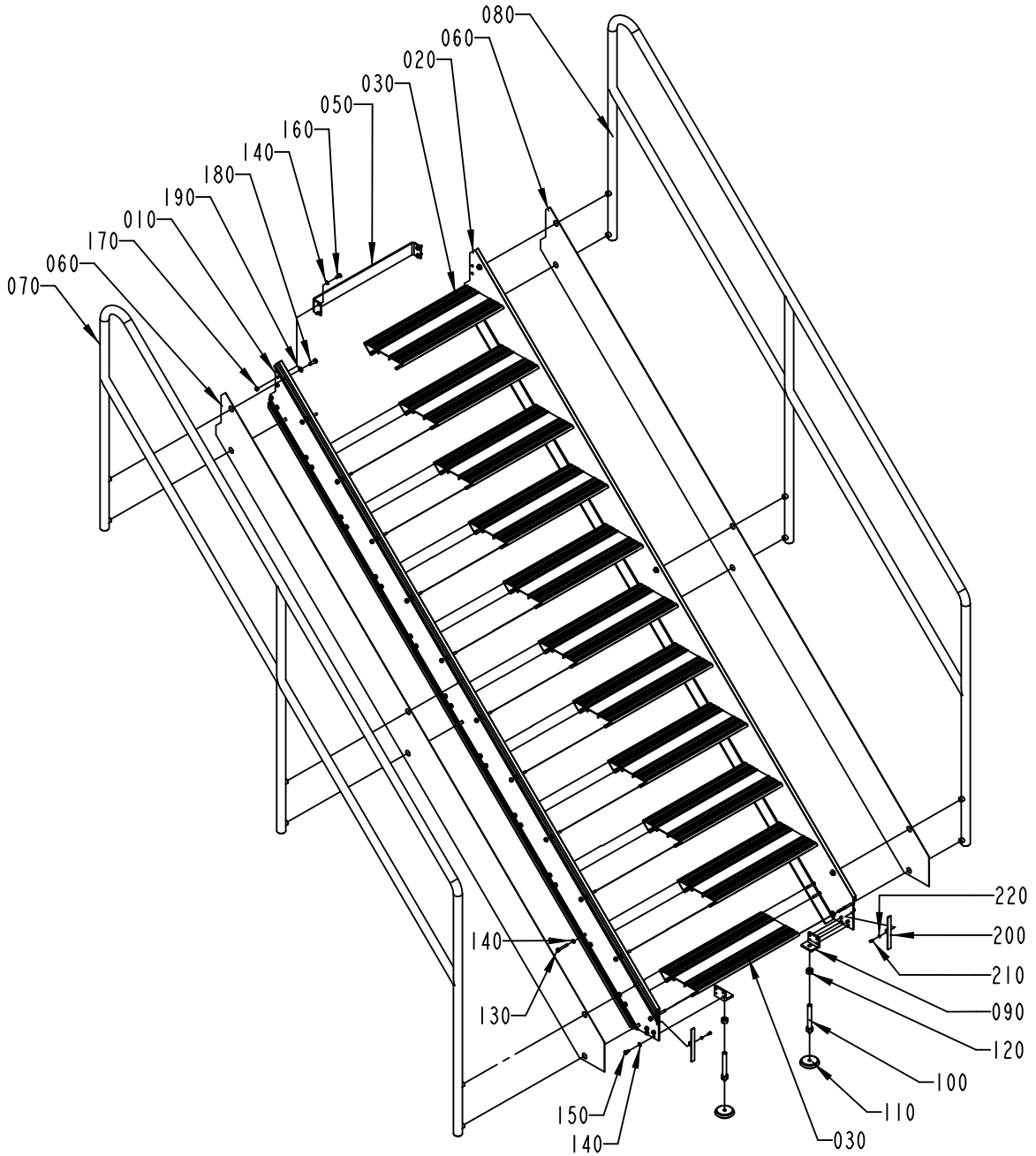


| 1523777-1 |
| --- |
| ECN 93149 |

ECM: 189875 - 20041104
Group number: 1523777-0100
Assembly Drawing: 1523777-1_1_AB

| Pos | Part No | UN | Qty | Description | Page No |
|---|---|---|---|---|---|
| - | | | | | |
| 010 | 1524186-0000 | | 1 | PROFILE | |
| 020 | 1524187-0000 | | 1 | PROFILE | |
| 030 | 1524188-0000 | | 10 | STAIR | |
| 050 | 1524190-0000 | | 1 | BRACKET | |
| 060 | 1524191-0000 | | 2 | RIM | |
| 070 | 1524192-0000 | | 1 | RAILING | |
| 080 | 1524193-0000 | | 1 | RAILING | |
| 090 | 1037391-0000 | | 2 | CANTILEVER | |
| 100 | 1524185-0000 | | 2 | EXTENSION PIECE | |
| 110 | 90347-0009 | | 2 | FLOOR PLATE, NO 1256730 | |
| 120 | 312605-0324 | | 2 | HEXAGON NUT, M6M M16 A280 | |
| 130 | 312104-0461 | | 88 | SCREW M6S M8X50H FZB | |
| 140 | 315105-0165 | | 94 | WASHER BRB 8,4X16 RFR | |
| 150 | 312105-0449 | | 8 | SCREW M6S ISO 4017 M8X16 A480 | |
| 160 | 312105-0451 | | 6 | SCREW M6S ISO 4017 M8X20 A480 | |
| 170 | 312605-0318 | | 4 | HEXAGON NUT, M6M M8 A280 | |
| 180 | 312105-0495 | | 12 | SCREW M6S ISO 4017 M10X30 A480 | |
| 190 | 315105-0173 | | 12 | WASHER BRB 10,5X22 RFR | |
| 200 | 1558946-0000 | | 2 | PLUG | |
| 210 | 312115-0327 | | 2 | SCREW ISO4762 M5X12 A4 80 | |
| 220 | 315105-0146 | | 2 | WASHER BRB 5,3X10 RFR | |

| Pos | Part No | UN | Qty | Description | Page No |
|---|---|---|---|---|---|

# PIPE WORK-WATER



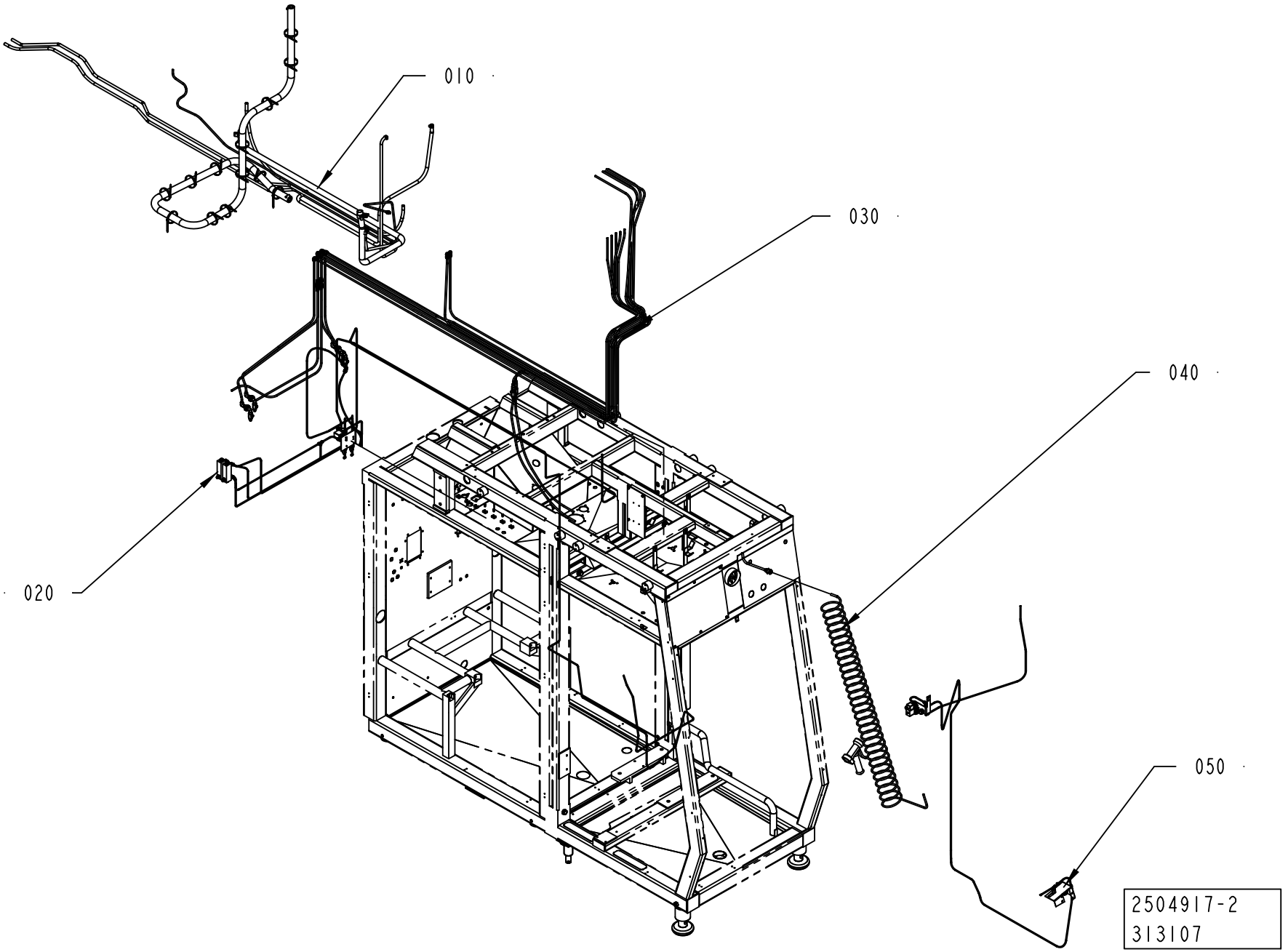

ECM: 313109 - 20070704
Group number: 2504917-0200
Assembly Drawing: 2504917-2_1_AA

| Pos | Part No | UN | Qty | Description | Page No |
|---|---|---|---|---|---|
| **A3/FLEX DIMC/FLEX** | | | | | |
| 050 | 2615463-0200 | | 1 | FLUSHING DEVICE | **2-183, 2-185** |
| **Common Parts** | | | | | |
| 010 | 2514205-0200 | | 1 | PIPE WORK-WATER | **2-187** |
| 020 | 2514254-0200 | | 1 | TUBE FLUSHING | **2-189** |
| 030 | 2514255-0200 | | 1 | PIPE WORK-WATER | **2-191, 2-193** |
| 040 | 1095681-0200 | | 1 | SPRAY GUN | **2-195** |

| Pos | Part No | UN | Qty | Description | Page No |
|---|---|---|---|---|---|

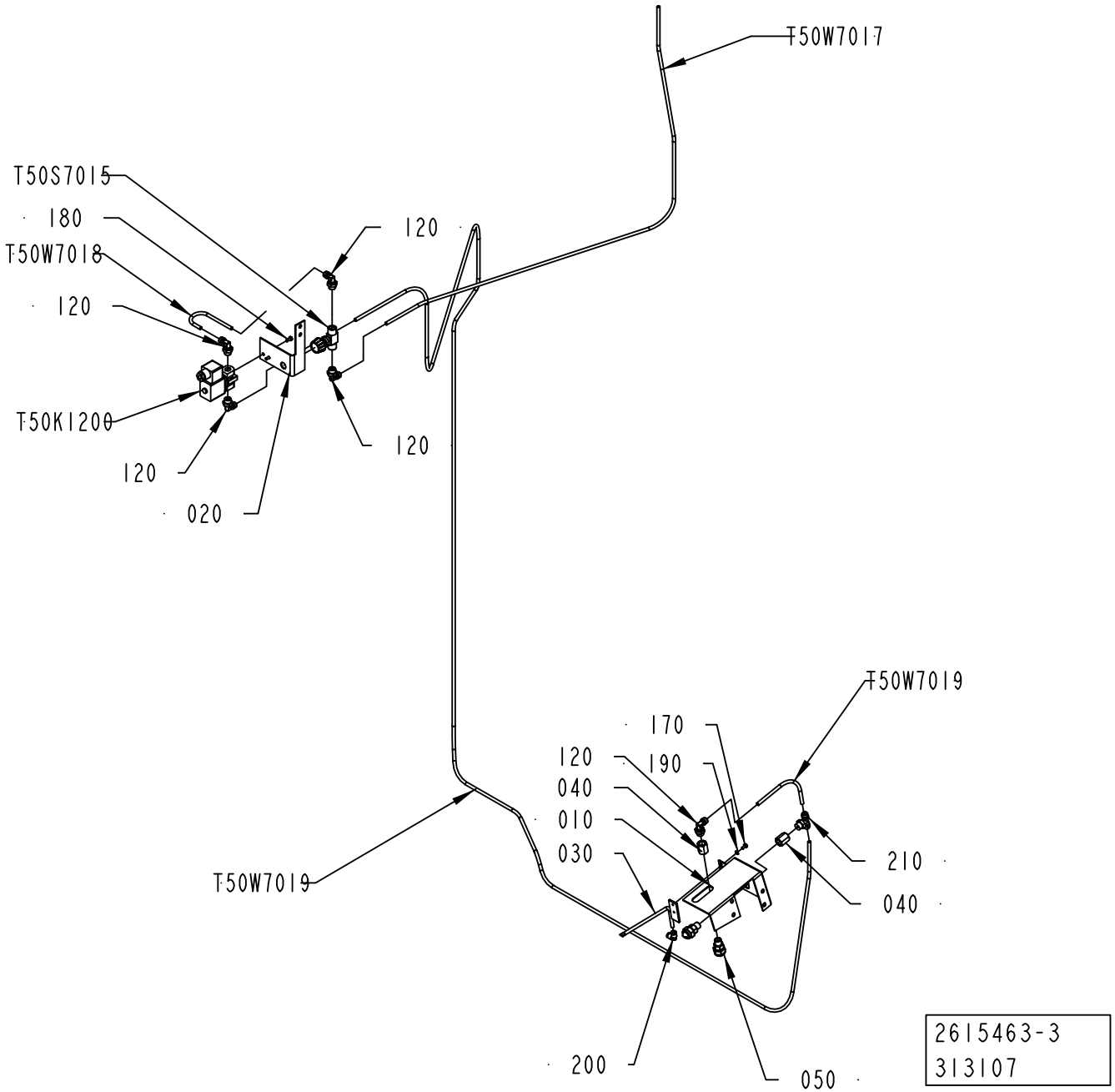
T50W7017
T50S7015
180
120
T50W7018
120
T50K1200
120
020
120
T50W7019
170
120
190
040
010
030
T50W7019
210
040
200
050
2615463-3
313107

ECM: 313113 - 20070704
Group number: 2615463-0200
Assembly Drawing: 2615463-3_1_AA

This list covers pages from 2-182 to 2-185

| Pos | Part No | UN | Qty | Description | Page No |
|---|---|---|---|---|---|
| **LIGHTCAP (See drawing on page: 2-184)** | | | | | |
| 040 | 1523641-0000 | | 1 | SPACER | |
| 050 | 1523645-0000 | | 1 | AIR NOZZLE | |
| 220 | 90459-0180 | | 1 | FLOW SWITCH, 0,1 - 2,5 L/MIN | |
| 230 | 350001-0008 | | 2 | PUSH-IN FITTING QS-F-G1/4-6 | |
| 235 | 2863211-0000 | | 1 | PLATE | |
| 240 | 1020637-0000 | | 1 | HOLDER | |
| 250 | 2842918-0000 | | 1 | HOLDER | |
| 260 | 2863210-0000 | | 1 | BLOCK | |
| 275 | 2764404-0000 | | 1 | SPACER | |
| 290 | 90459-7280 | | 1 | AIR NOZZLE, 011 | |
| 340 | 312105-0340 | | 2 | SCREW M6S ISO 4014 M5X45 A480 | |
| 350 | 350002-0007 | | 1 | PUSH-IN L-FITTING QSL-F-G1/8-8 | |
| 360 | 312105-0327 | | 1 | SCREW M6S ISO 4017 M5X12 A480 | |
| 370 | 312605-0314 | | 2 | HEXAGON NUT, M6M M5 A280 | |
| 380 | 315105-0146 | | 5 | WASHER BRB 5,3X10 RFR | |
| **STDA7 CAP (See drawing on page: 2-182)** | | | | | |
| 010 | 2638981-0000 | | 1 | HOLDER | |
| 030 | 2638982-0000 | | 1 | PIPE | |
| 040 | 1523641-0000 | | 2 | SPACER | |
| 050 | 1523645-0000 | | 2 | AIR NOZZLE | |
| 170 | 312105-0287 | | 2 | SCREW M6S ISO 4017 M4X8 A470 | |
| 190 | 315105-0136 | | 2 | WASHER BRB 4,3X8 RFR | |
| 200 | 342735-0102 | | 1 | ELBOW PIPE JOINT | |
| **Common Parts** | | | | | |
| 020 | 2609365-0000 | | 1 | HOLDER | |
| 120 | 90224-0329 | | 5 | ELBOW 90 COUPL.,EXT.THREAD 6/4-G1/4" | |
| 180 | 312105-0289 | | 2 | SCREW M6S H4X10 A4 70 ISO4017/DIN933 | |
| 210 | 342941-0114 | | 1 | T-COUPLING,EXT.THREAD 6/4-G1/4" | |
| T50K1200 | 90042-0248 | | 1 | SOLENOID VALVE OFFICIENE DI ENSINO | |
| T50S7015 | 90187-0149 | | 1 | THROTTLE VALVE, G1/4, G1/4, MALE | |
| T50W7017 | 90166-0266 | MM | 1200 | TUBE 6 MM PA BLACK | |
| T50W7018 | 90166-0266 | MM | 200 | TUBE 6 MM PA BLACK | |
| T50W7019 | 90166-0266 | MM | 4000 | TUBE 6 MM PA BLACK | |

| Pos | Part No | UN | Qty | Description | Page No |
|---|---|---|---|---|---|

# FLUSHING DEVICE



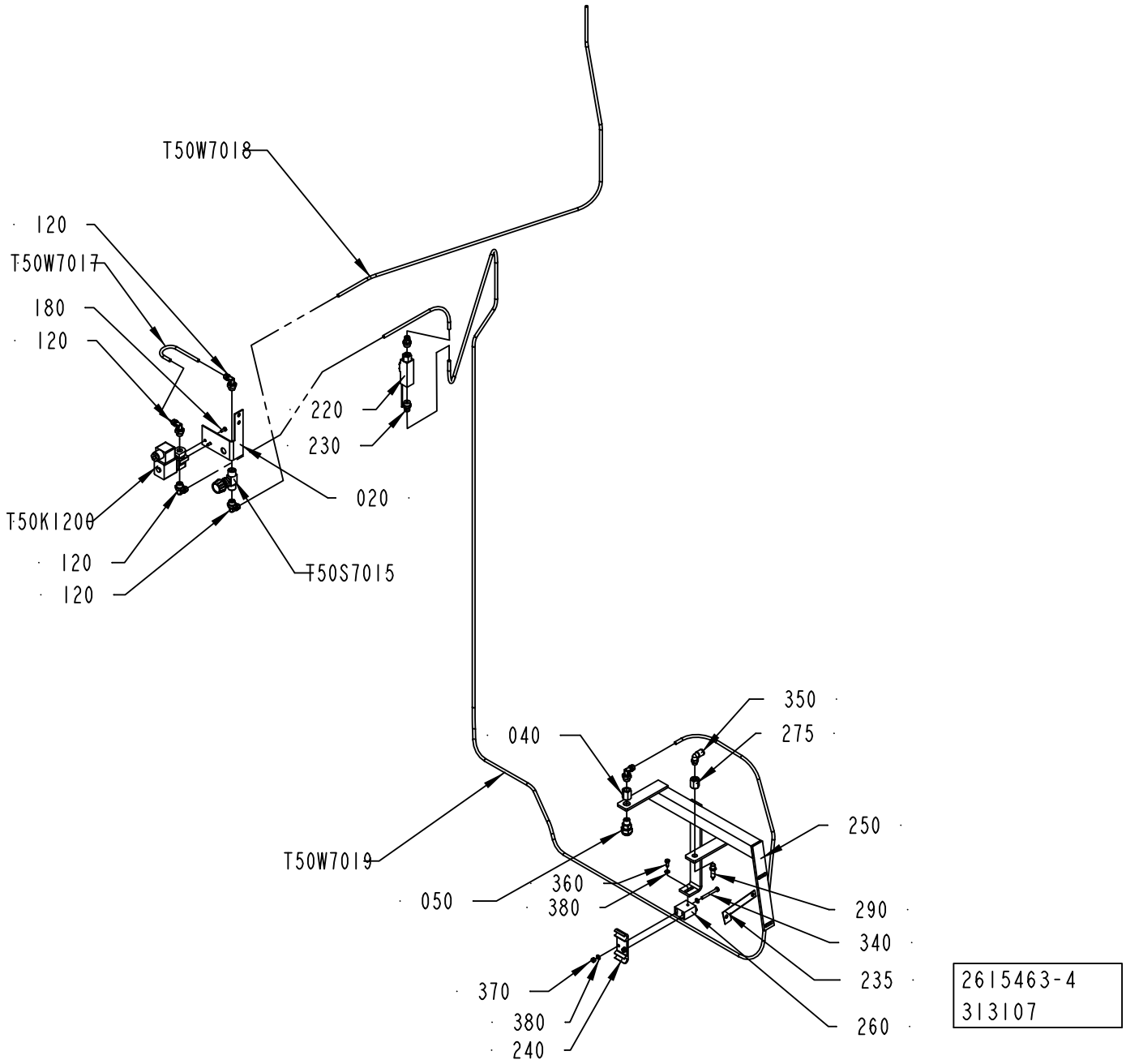

ECM: 313113 - 20070704
Group number: 2615463-0200
Assembly Drawing: 2615463-4_1_AA

This list covers pages from 2-182 to 2-185

| Pos | Part No | UN | Qty | Description | Page No |
|---|---|---|---|---|---|
| **LIGHTCAP (See drawing on page: 2-184)** | | | | | |
| 040 | 1523641-0000 | | 1 | SPACER | |
| 050 | 1523645-0000 | | 1 | AIR NOZZLE | |
| 220 | 90459-0180 | | 1 | FLOW SWITCH, 0,1 - 2,5 L/MIN | |
| 230 | 350001-0008 | | 2 | PUSH-IN FITTING QS-F-G1/4-6 | |
| 235 | 2863211-0000 | | 1 | PLATE | |
| 240 | 1020637-0000 | | 1 | HOLDER | |
| 250 | 2842918-0000 | | 1 | HOLDER | |
| 260 | 2863210-0000 | | 1 | BLOCK | |
| 275 | 2764404-0000 | | 1 | SPACER | |
| 290 | 90459-7280 | | 1 | AIR NOZZLE, 011 | |
| 340 | 312105-0340 | | 2 | SCREW M6S ISO 4014 M5X45 A480 | |
| 350 | 350002-0007 | | 1 | PUSH-IN L-FITTING QSL-F-G1/8-8 | |
| 360 | 312105-0327 | | 1 | SCREW M6S ISO 4017 M5X12 A480 | |
| 370 | 312605-0314 | | 2 | HEXAGON NUT, M6M M5 A280 | |
| 380 | 315105-0146 | | 5 | WASHER BRB 5,3X10 RFR | |
| **STDA7 CAP (See drawing on page: 2-182)** | | | | | |
| 010 | 2638981-0000 | | 1 | HOLDER | |
| 030 | 2638982-0000 | | 1 | PIPE | |
| 040 | 1523641-0000 | | 2 | SPACER | |
| 050 | 1523645-0000 | | 2 | AIR NOZZLE | |
| 170 | 312105-0287 | | 2 | SCREW M6S ISO 4017 M4X8 A470 | |
| 190 | 315105-0136 | | 2 | WASHER BRB 4,3X8 RFR | |
| 200 | 342735-0102 | | 1 | ELBOW PIPE JOINT | |
| **Common Parts** | | | | | |
| 020 | 2609365-0000 | | 1 | HOLDER | |
| 120 | 90224-0329 | | 5 | ELBOW 90 COUPL.,EXT.THREAD 6/4-G1/4" | |
| 180 | 312105-0289 | | 2 | SCREW M6S H4X10 A4 70 ISO4017/DIN933 | |
| 210 | 342941-0114 | | 1 | T-COUPLING,EXT.THREAD 6/4-G1/4" | |
| T50K1200 | 90042-0248 | | 1 | SOLENOID VALVE OFFICIENE DI ENSINO | |
| T50S7015 | 90187-0149 | | 1 | THROTTLE VALVE, G1/4, G1/4, MALE | |
| T50W7017 | 90166-0266 | MM | 1200 | TUBE 6 MM PA BLACK | |
| T50W7018 | 90166-0266 | MM | 200 | TUBE 6 MM PA BLACK | |
| T50W7019 | 90166-0266 | MM | 4000 | TUBE 6 MM PA BLACK | |

| Pos | Part No | UN | Qty | Description | Page No |
|---|---|---|---|---|---|

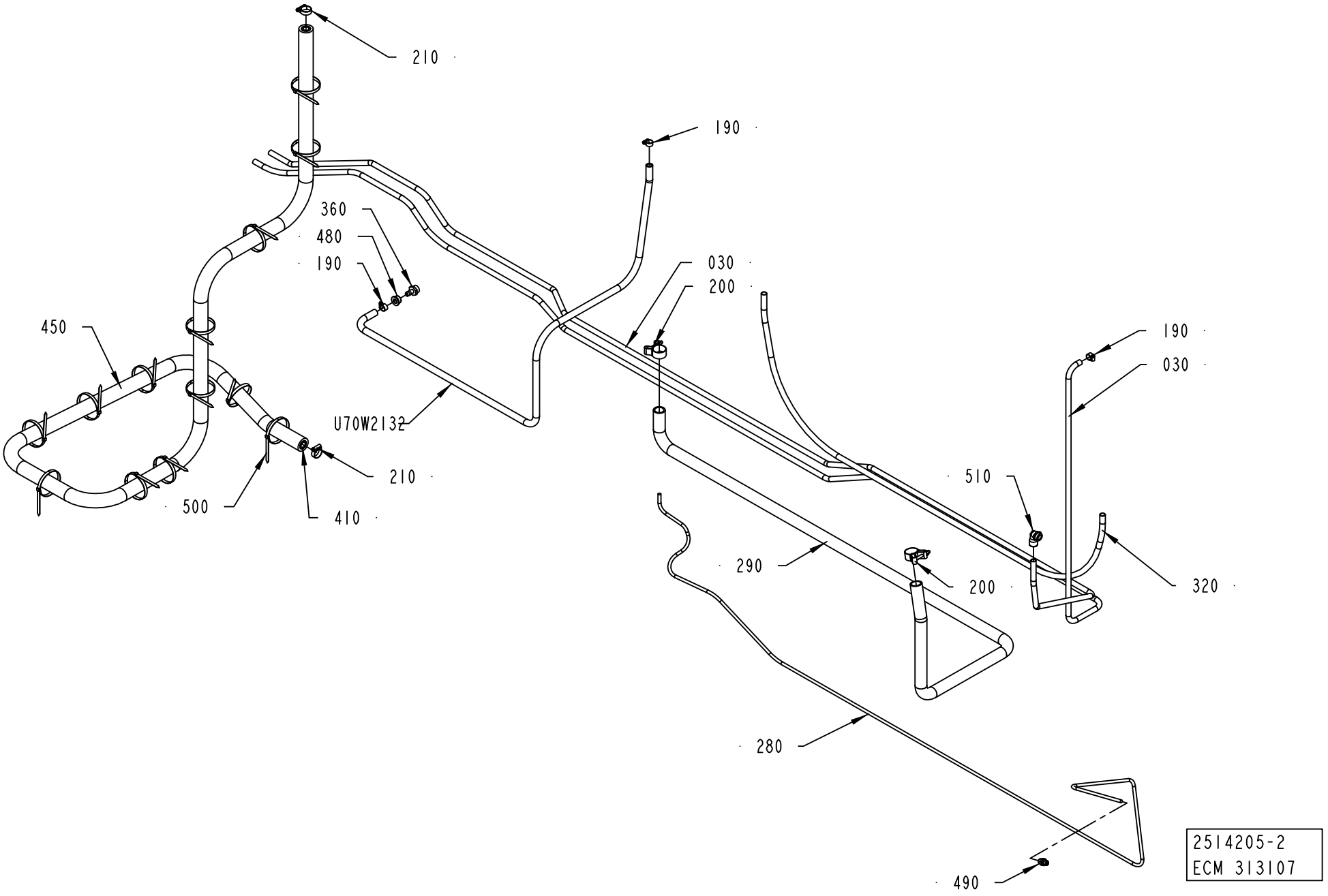
210
190
360
480
190
030
200
450
190
030
U70W2132
210
510
500
410
290
200
320
280
490
2514205-2
ECM 313107

ECM: 313110 - 20070704
Group number: 2514205-0200
Assembly Drawing: 2514205-2_1_AA

| Pos | Part No | UN | Qty | Description | Page No |
|---|---|---|---|---|---|
| - | | | | | |
| 030 | 90459-3164 | MM | 5000 | TUBE 14MM PA BLACK | |
| 190 | 342991-0101 | | 3 | HOSE CLIP,WORM DRIVE TYPE (13)-16 | |
| 200 | 90459-2366 | | 2 | HOSE CLIP, (32)-35 | |
| 210 | 342991-0104 | | 2 | HOSE CLIP,WORM DRIVE TYPE (23)-27 | |
| 280 | 90166-0013 | MM | 5000 | TUBE 8 MM PA BLUE | |
| 290 | 90166-0049 | MM | 2500 | HOSE PVC 25/33-34 | |
| 320 | 90166-0110 | MM | 2200 | TUBE 15 MM PA,TRANSP. | |
| 360 | 342901-0105 | | 1 | HOSE NIPPLE, EXT.THR. R1/2-12 MM | |
| 410 | 90166-0260 | MM | 3300 | HOSE | |
| 450 | 90411-0020 | MM | 3300 | INSULATING TUBE | |
| 480 | 342713-0213 | | 1 | PLUG, EXT THREAD HEX SOCKET 8638-00-120 | |
| 490 | 342921-0122 | | 1 | STRAIGHT COUPLING,EXT.THREADED 8/6-G1/4" | |
| 500 | 352113-0104 | | 13 | CABLE TIE, BLACK 300X4,8 MM | |
| W70W2132 | 90166-0121 | MM | 1850 | HOSE | |

| Pos | Part No | UN | Qty | Description | Page No |
|---|---|---|---|---|---|

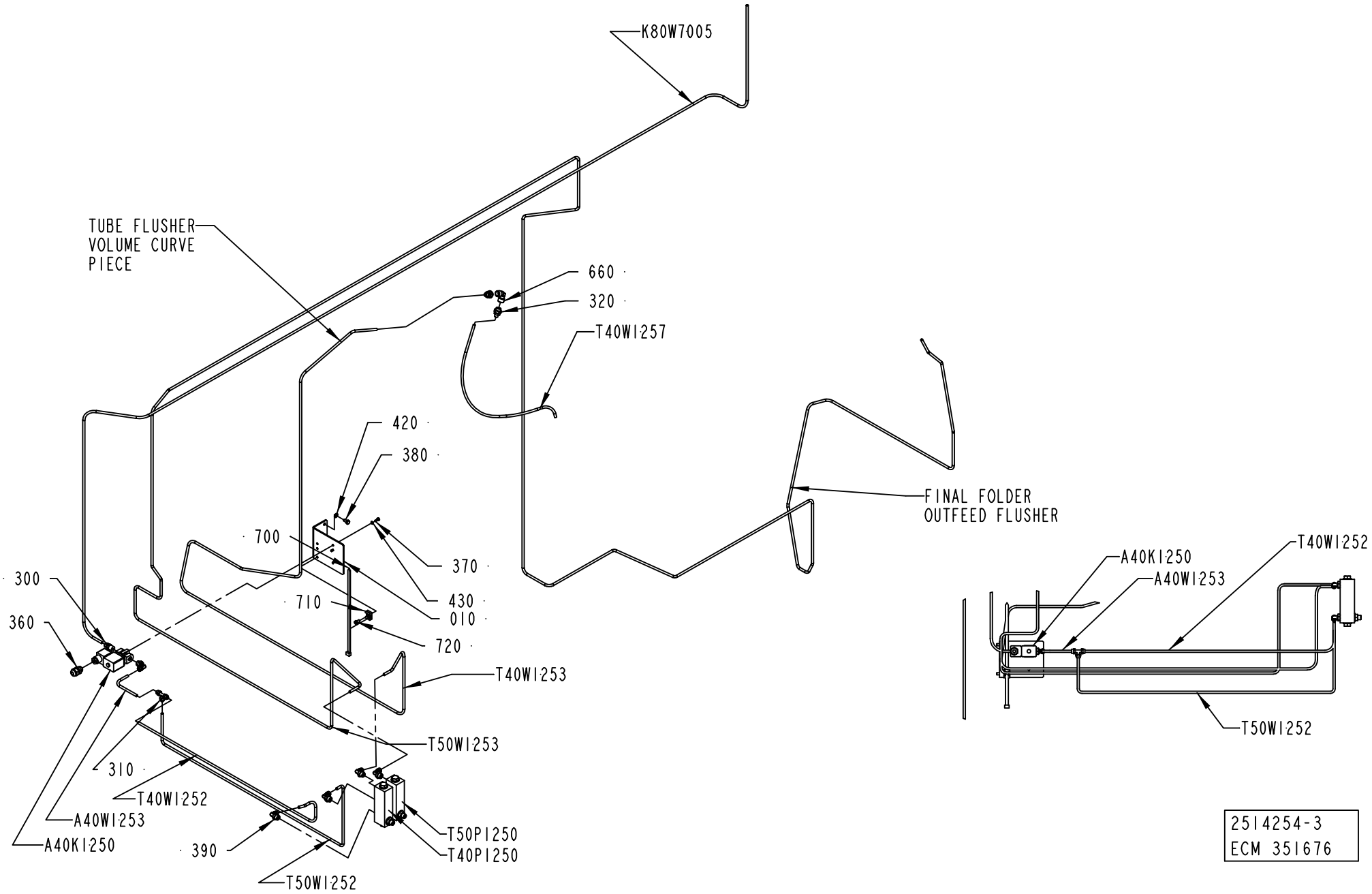
K80W7005
TUBE FLUSHER VOLUME CURVE PIECE
660
320
T40W1257
420
380
700
370
430
010
710
720
300
360
T40W1253
T50W1253
310
T40W1252
A40W1253
A40K1250
390
T50W1252
T50P1250
T40P1250
FINAL FOLDER OUTFEED FLUSHER
A40K1250
A40W1253
T40W1252
T50W1252
2514254-3
ECM 351676

ECM: 352925 - 20080103
Group number: 2514254-0200
Assembly Drawing: 2514254-3_1_AC

| Pos | Part No | UN | Qty | Description | Page No |
|---|---|---|---|---|---|
| - | | | | | |
| 010 | 2680417-0000 | | 1 | SUPPORT | |
| 300 | 342920-0114 | | 1 | STRAIGHT COUPLING,EXT.THREADED 6/4-R1/4" | |
| 310 | 342946-0112 | | 1 | T-COUPLING,UNION 6/4 | |
| 320 | 342921-0114 | | 2 | STRAIGHT COUPLING,EXT.THREADED 6/4-G1/4" | |
| 360 | 352103-0101 | | 1 | CABLE GLAND, ST 9, PR15,2/PG9 | |
| 370 | 312105-0289 | | 2 | SCREW M6S H4X10 A4 70 ISO4017/DIN933 | |
| 380 | 312105-0366 | | 2 | SCREW M6S ISO 4017 M6X12 A480 | |
| 390 | 90224-0329 | | 5 | ELBOW 90 COUPL.,EXT.THREAD 6/4-G1/4" | |
| 420 | 315105-0153 | | 2 | WASHER BRB 6,4X12 RFR | |
| 430 | 315105-0136 | | 2 | WASHER BRB 4,3X8 RFR | |
| 660 | 90140-0019 | | 1 | ELBOW, 90, INT. THREAD, NO. 2013-1/4 | |
| 700 | 352113-0103 | | 1 | CABLE TIE, BLACK 290X7,6 MM | |
| 710 | 352113-0204 | | 1 | ANCHOR PLATES FOR STRIPS, TYPE TM3S25-M | |
| 720 | 312125-0364 | | 1 | SCREW ISO 1207 M6X10 A4 | |
| A40K1250 | 90042-0248 | | 1 | SOLENOID VALVE OFFICIENE DI ENSINO | |
| A40W1253 | 90166-0132 | MM | 140 | TUBE 6 MM PA,TRANSP. | |
| K80W7005 | 90166-0132 | MM | 5000 | TUBE 6 MM PA,TRANSP. | |
| T40P1250 | 90243-0112 | | 1 | FLOW METER | |
| T40W1252 | 90166-0132 | MM | 750 | TUBE 6 MM PA,TRANSP. | |
| T40W1253 | 90166-0132 | MM | 2900 | TUBE 6 MM PA,TRANSP. | |
| T40W1257 | 90166-0132 | MM | 500 | TUBE 6 MM PA,TRANSP. | |
| T50P1250 | 90243-0112 | | 1 | FLOW METER | |
| T50W1252 | 90166-0132 | MM | 1050 | TUBE 6 MM PA,TRANSP. | |
| T50W1253 | 90166-0132 | MM | 8800 | TUBE 6 MM PA,TRANSP. | |

| Pos | Part No | UN | Qty | Description | Page No |
|---|---|---|---|---|---|

Machine Type | Group Description | Used-In | Group Number | Page No

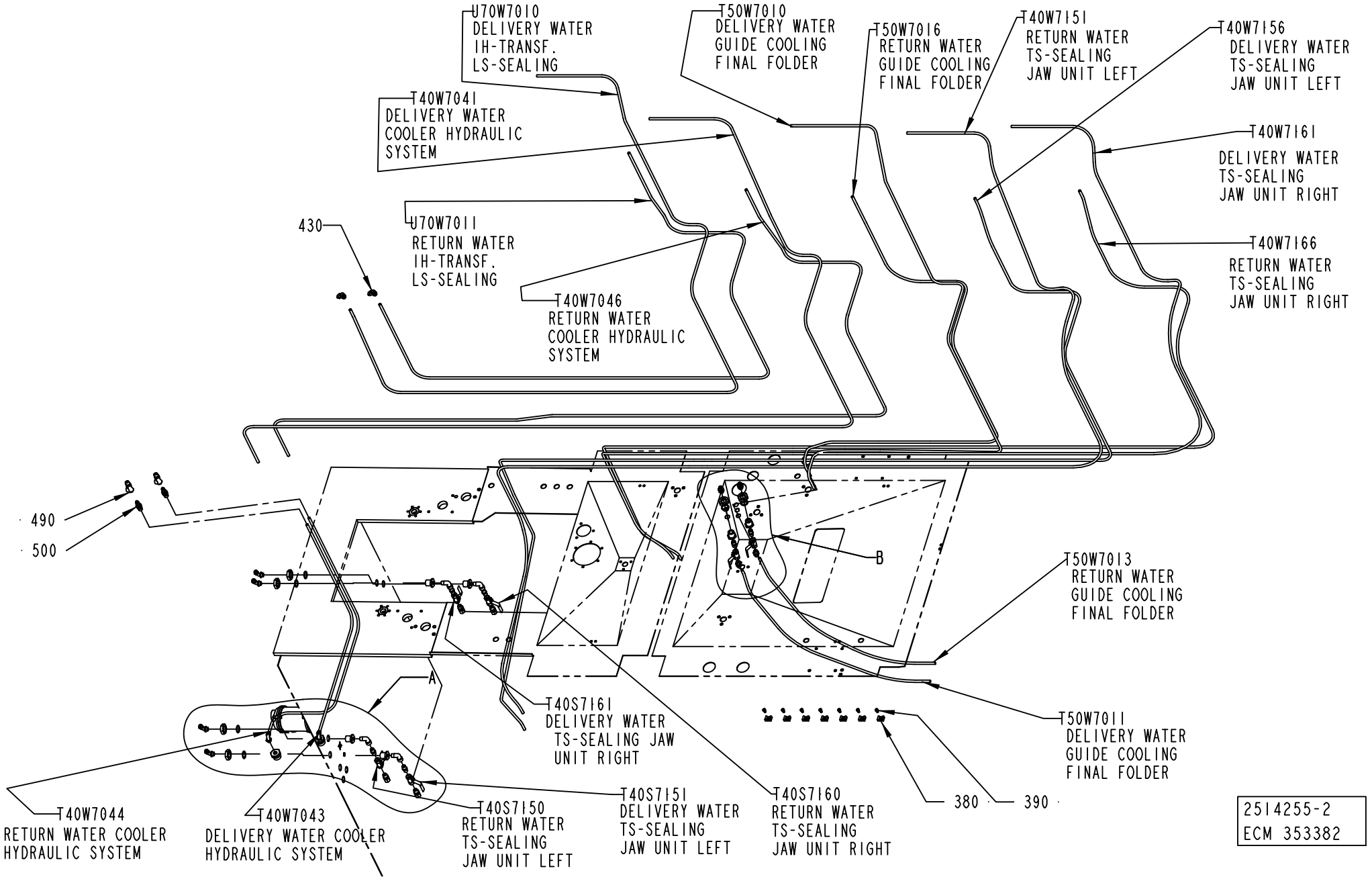
U70W7010
DELIVERY WATER
IH-TRANSF.
LS-SEALING
T50W7010
DELIVERY WATER
GUIDE COOLING
FINAL FOLDER
T50W7016
RETURN WATER
GUIDE COOLING
FINAL FOLDER
T40W7151
RETURN WATER
TS-SEALING
JAW UNIT LEFT
T40W7156
DELIVERY WATER
TS-SEALING
JAW UNIT LEFT
T40W7041
DELIVERY WATER
COOLER HYDRAULIC
SYSTEM
T40W7161
DELIVERY WATER
TS-SEALING
JAW UNIT RIGHT
430
U70W7011
RETURN WATER
IH-TRANSF.
LS-SEALING
T40W7166
RETURN WATER
TS-SEALING
JAW UNIT RIGHT
T40W7046
RETURN WATER
COOLER HYDRAULIC
SYSTEM
490
500
B
T50W7013
RETURN WATER
GUIDE COOLING
FINAL FOLDER
A
T40S7161
DELIVERY WATER
TS-SEALING JAW
UNIT RIGHT
T50W7011
DELIVERY WATER
GUIDE COOLING
FINAL FOLDER
T40W7044
RETURN WATER COOLER
HYDRAULIC SYSTEM
T40W7043
DELIVERY WATER COOLER
HYDRAULIC SYSTEM
T40S7150
RETURN WATER
TS-SEALING
JAW UNIT LEFT
T40S7151
DELIVERY WATER
TS-SEALING
JAW UNIT LEFT
T40S7160
RETURN WATER
TS-SEALING
JAW UNIT RIGHT
380
390
2514255-2
ECM 353382

ECM: 355488 - 20080528
Group number: 2514255-0200
Assembly Drawing: 2514255-2_1_AC

This list covers pages from 2-190 to 2-193

| Pos | Part No | UN | Qty | Description | Page No |
|---|---|---|---|---|---|
| - | | | | | |
| 010 | 276398-0000 | | 6 | HEXAGON NIPPLE | |
| 100 | 90140-0013 | | 4 | ELBOW, 90 INT/EXT, 2020-1/4-1/4 | |
| 270 | 90330-0093 | | 6 | NUT, HEXAGON, G1/2 | |
| 380 | 352113-0204 | | 7 | ANCHOR PLATES FOR STRIPS, TYPE TM3S25-M | |
| 390 | 312125-0364 | | 7 | SCREW ISO 1207 M6X10 A4 | |
| 410 | 315239-0113 | | 6 | NYLON WASHER G1/2, 1/2RRP | |
| 420 | 342931-0122 | | 6 | ELBOW 90 COUPL.,EXT.THREAD 8/6-G1/4" | |
| 430 | 342936-0122 | | 2 | ELBOW 90 COUPL.,UNION 8/6 | |
| 440 | 342921-0122 | | 4 | STRAIGHT COUPLING,EXT.THREADED 8/6-G1/4" | |
| 450 | 90600-1990 | | 4 | CONN. STR. 6-R1/4, EXT. TAPERED | |
| 490 | 90459-0941 | | 2 | QUICK COUPLING, PLCD 130-M8 | |
| 500 | 90459-0960 | | 2 | QUICK COUPLING, PLCD 200-M8 | |
| 510 | 90330-0043 | | 6 | NIPPLES, EXT. THREAD. R-207R1/4 | |
| 520 | 90600-2002 | | 2 | REDUCER, INT/EXT. G-THREAD 1/4X3/4 | |
| T40S7150 | 90600-1986 | | 1 | BALL VALVE RP1/4 | |
| T40S7151 | 90600-1986 | | 1 | BALL VALVE RP1/4 | |
| T40S7160 | 90600-1986 | | 1 | BALL VALVE RP1/4 | |
| T40S7161 | 90600-1986 | | 1 | BALL VALVE RP1/4 | |
| T40W7041 | 90166-0118 | MM | 4600 | TUBE 8 MM PA BLACK | |
| T40W7043 | 90166-0118 | MM | 1100 | TUBE 8 MM PA BLACK | |
| T40W7044 | 90166-0118 | MM | 1300 | TUBE 8 MM PA BLACK | |
| T40W7046 | 90166-0118 | MM | 4200 | TUBE 8 MM PA BLACK | |
| T40W7151 | 90166-0118 | MM | 6600 | TUBE 8 MM PA BLACK | |
| T40W7156 | 90166-0118 | MM | 5500 | TUBE 8 MM PA BLACK | |
| T40W7161 | 90166-0118 | MM | 5280 | TUBE 8 MM PA BLACK | |
| T40W7166 | 90166-0118 | MM | 4700 | TUBE 8 MM PA BLACK | |
| T50S7010 | 90600-1986 | | 1 | BALL VALVE RP1/4 | |
| T50S7011 | 90600-1986 | | 1 | BALL VALVE RP1/4 | |
| T50W7010 | 90166-0118 | MM | 3370 | TUBE 8 MM PA BLACK | |
| T50W7011 | 90166-0118 | MM | 980 | TUBE 8 MM PA BLACK | |
| T50W7013 | 90166-0118 | MM | 940 | TUBE 8 MM PA BLACK | |
| T50W7016 | 90166-0118 | MM | 2840 | TUBE 8 MM PA BLACK | |
| U70W7010 | 90166-0118 | MM | 3300 | TUBE 8 MM PA BLACK | |
| U70W7011 | 90166-0118 | MM | 3900 | TUBE 8 MM PA BLACK | |

| Pos | Part No | UN | Qty | Description | Page No |
|---|---|---|---|---|---|

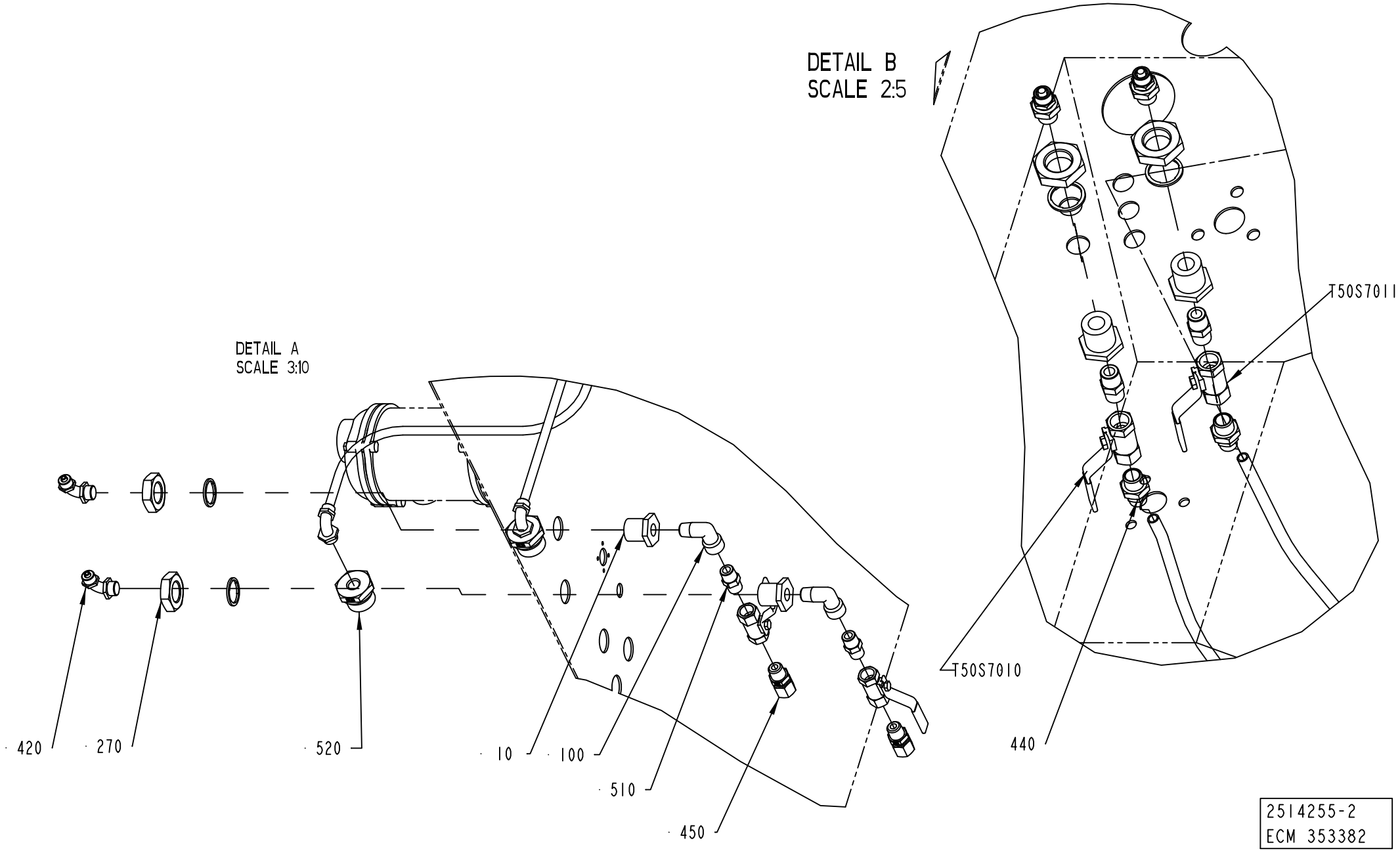


2514255-2
ECM 353382

ECM: 355488 - 20080528
Group number: 2514255-0200
Assembly Drawing: 2514255-2_2_AC

This list covers pages from 2-190 to 2-193

| Pos | Part No | UN | Qty | Description | Page No |
|---|---|---|---|---|---|
| - | | | | | |
| 010 | 276398-0000 | | 6 | HEXAGON NIPPLE | |
| 100 | 90140-0013 | | 4 | ELBOW, 90 INT/EXT, 2020-1/4-1/4 | |
| 270 | 90330-0093 | | 6 | NUT, HEXAGON, G1/2 | |
| 380 | 352113-0204 | | 7 | ANCHOR PLATES FOR STRIPS, TYPE TM3S25-M | |
| 390 | 312125-0364 | | 7 | SCREW ISO 1207 M6X10 A4 | |
| 410 | 315239-0113 | | 6 | NYLON WASHER G1/2, 1/2RRP | |
| 420 | 342931-0122 | | 6 | ELBOW 90 COUPL.,EXT.THREAD 8/6-G1/4" | |
| 430 | 342936-0122 | | 2 | ELBOW 90 COUPL.,UNION 8/6 | |
| 440 | 342921-0122 | | 4 | STRAIGHT COUPLING,EXT.THREADED 8/6-G1/4" | |
| 450 | 90600-1990 | | 4 | CONN. STR. 6-R1/4, EXT. TAPERED | |
| 490 | 90459-0941 | | 2 | QUICK COUPLING, PLCD 130-M8 | |
| 500 | 90459-0960 | | 2 | QUICK COUPLING, PLCD 200-M8 | |
| 510 | 90330-0043 | | 6 | NIPPLES, EXT. THREAD. R-207R1/4 | |
| 520 | 90600-2002 | | 2 | REDUCER, INT/EXT. G-THREAD 1/4X3/4 | |
| T40S7150 | 90600-1986 | | 1 | BALL VALVE RP1/4 | |
| T40S7151 | 90600-1986 | | 1 | BALL VALVE RP1/4 | |
| T40S7160 | 90600-1986 | | 1 | BALL VALVE RP1/4 | |
| T40S7161 | 90600-1986 | | 1 | BALL VALVE RP1/4 | |
| T40W7041 | 90166-0118 | MM | 4600 | TUBE 8 MM PA BLACK | |
| T40W7043 | 90166-0118 | MM | 1100 | TUBE 8 MM PA BLACK | |
| T40W7044 | 90166-0118 | MM | 1300 | TUBE 8 MM PA BLACK | |
| T40W7046 | 90166-0118 | MM | 4200 | TUBE 8 MM PA BLACK | |
| T40W7151 | 90166-0118 | MM | 6600 | TUBE 8 MM PA BLACK | |
| T40W7156 | 90166-0118 | MM | 5500 | TUBE 8 MM PA BLACK | |
| T40W7161 | 90166-0118 | MM | 5280 | TUBE 8 MM PA BLACK | |
| T40W7166 | 90166-0118 | MM | 4700 | TUBE 8 MM PA BLACK | |
| T50S7010 | 90600-1986 | | 1 | BALL VALVE RP1/4 | |
| T50S7011 | 90600-1986 | | 1 | BALL VALVE RP1/4 | |
| T50W7010 | 90166-0118 | MM | 3370 | TUBE 8 MM PA BLACK | |
| T50W7011 | 90166-0118 | MM | 980 | TUBE 8 MM PA BLACK | |
| T50W7013 | 90166-0118 | MM | 940 | TUBE 8 MM PA BLACK | |
| T50W7016 | 90166-0118 | MM | 2840 | TUBE 8 MM PA BLACK | |
| U70W7010 | 90166-0118 | MM | 3300 | TUBE 8 MM PA BLACK | |
| U70W7011 | 90166-0118 | MM | 3900 | TUBE 8 MM PA BLACK | |

| Pos | Part No | UN | Qty | Description | Page No |
|---|---|---|---|---|---|

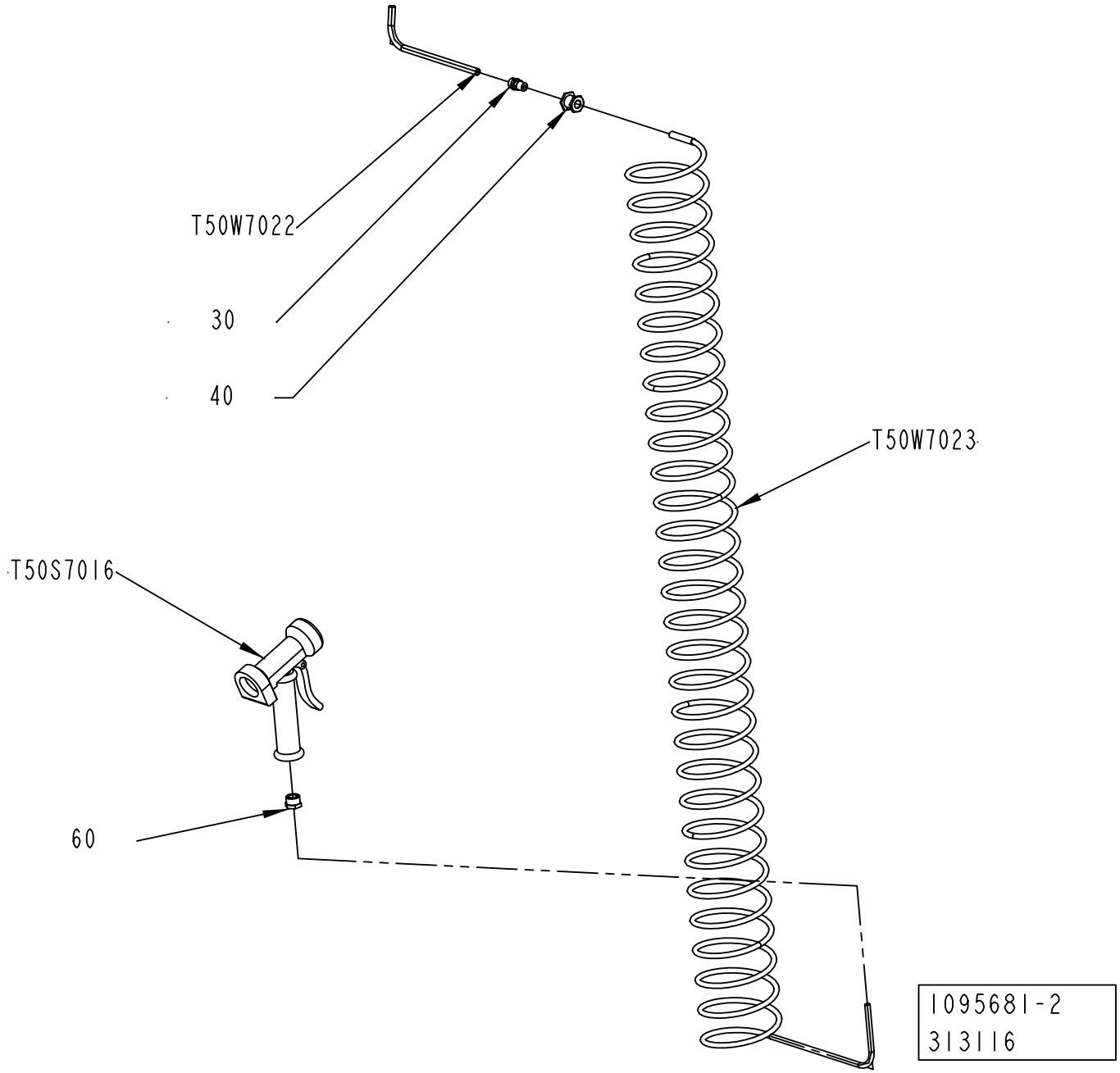
T50W7022
30
40
T50W7023
T50S7016
60
1095681-2
313116

ECM: 313121 - 20070628
Group number: 1095681-0200
Assembly Drawing: 1095681-2_1_AA

| Pos | Part No | UN | Qty | Description | Page No |
|---|---|---|---|---|---|
| - | | | | | |
| 030 | 342920-0132 | | 1 | STRAIGHT COUPL.,EXT.THREADED 10/8-R1/4" | |
| 040 | 342767-0104 | | 1 | CONN. BULKHEAD G1/4 | |
| 060 | 342701-0205 | | 1 | BUSHING,INT./EXT.G-THREAD G1/2"-G1/4" | |
| T50S7016 | 90426-0003 | | 1 | HAND SHOWER | |
| T50W7022 | 90166-0141 | MM | 1600 | TUBE 10 MM PA,TRANSP. MIN.50M | |
| T50W7023 | 90152-0017 | | 1 | HOSE (SPIRAL) | |

| Pos | Part No | UN | Qty | Description | Page No |
|---|---|---|---|---|---|

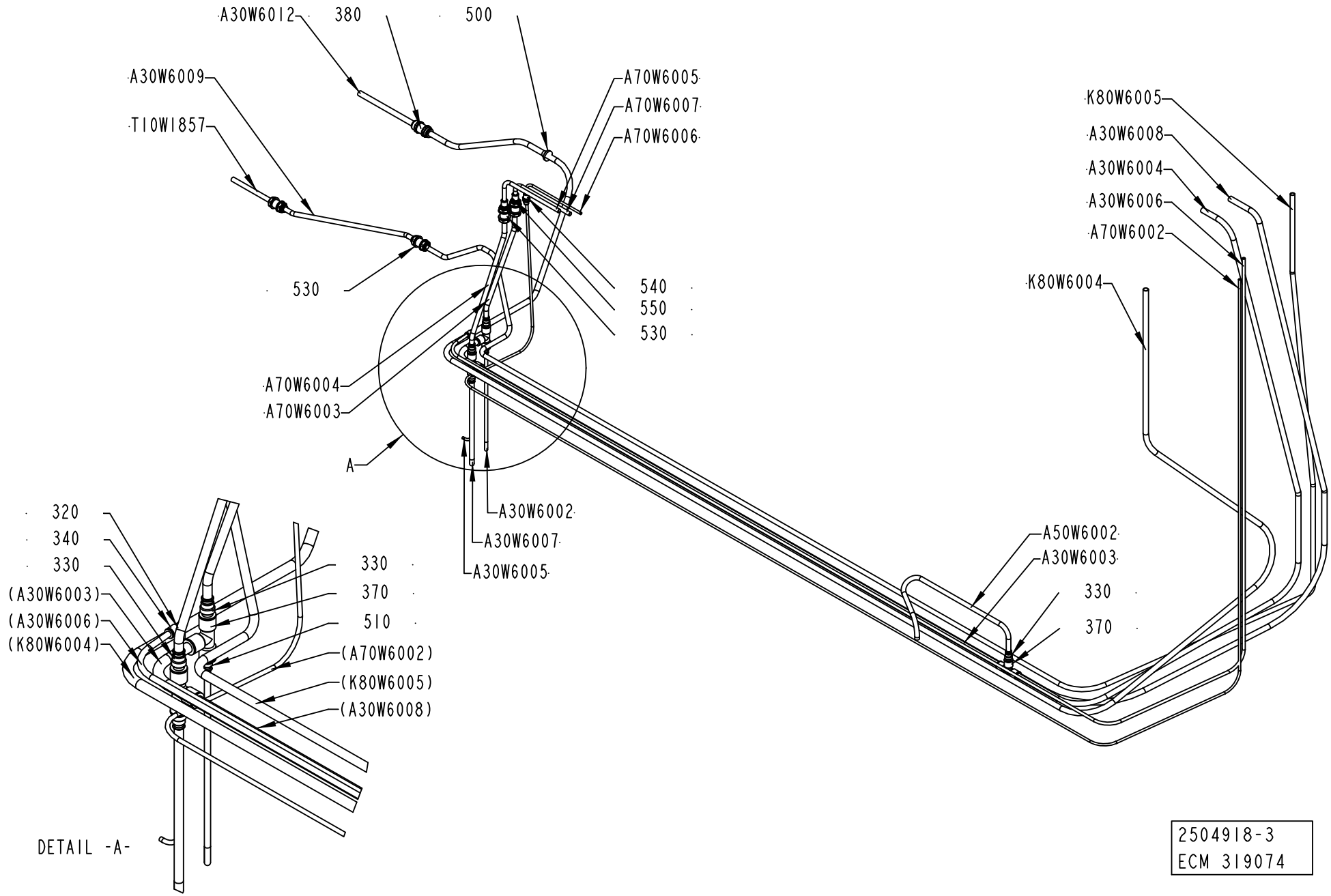
A30W6012
380
500
A30W6009
T10W1857
A70W6005
A70W6007
A70W6006
530
540
550
530
A70W6004
A70W6003
A
K80W6005
A30W6008
A30W6004
A30W6006
A70W6002
K80W6004
A30W6002
A30W6007
A30W6005
A50W6002
A30W6003
330
370
320
340
330
(A30W6003)
(A30W6006)
(K80W6004)
330
370
510
(A70W6002)
(K80W6005)
(A30W6008)
DETAIL -A-
2504918-3
ECM 319074

ECM: 319088 - 20070705
Group number: 2504918-0200
Assembly Drawing: 2504918-3_1_AB

| Pos | Part No | UN | Qty | Description | Page No |
|---|---|---|---|---|---|
| - | | | | | |
| 320 | 342716-0203 | | 1 | REDUCER 6-8 | |
| 330 | 342716-0211 | | 5 | REDUCER 12-14 | |
| 340 | 342735-0103 | | 1 | ELBOW PIPE JOINT | |
| 350 | 342735-0109 | | 1 | ELBOW PIPE JOINT | |
| 360 | 342735-0110 | | 2 | ELBOW PIPE | |
| 370 | 342748-0110 | | 3 | T-CONNECTION 14MM | |
| 380 | 342768-0110 | | 3 | BULKHEAD CONNECTOR, 14 MM | |
| 500 | 90015-0021 | | 1 | LEAD-IN, TET10-14, E-1458023 | |
| 510 | 90055-0129 | | 1 | REDUCER 8-14 | |
| 520 | 90157-0034 | L | 1 | THREAD SEALANT LOCTITE 572 50 ML | |
| 530 | 90458-2602 | | 4 | BULKHEAD CONNECTOR, 12 MM | |
| 540 | 342768-0102 | | 1 | BULKHEAD CONNECTOR, 6 MM | |
| 550 | 350006-0009 | | 2 | PUSH-IN FITTING QS-F-12H-10 | |
| A30W6002 | 90166-0013 | MM | 1700 | TUBE 8 MM PA BLUE | |
| A30W6003 | 90166-0196 | MM | 2600 | TUBE 14MM PA BLUE | |
| A30W6004 | 90166-0195 | MM | 3500 | TUBE 12 MM PA BLUE | |
| A30W6005 | 90166-0081 | MM | 500 | TUBE 6 MM PA BLUE | |
| A30W6006 | 90166-0013 | MM | 4800 | TUBE 8 MM PA BLUE | |
| A30W6007 | 90166-0195 | MM | 1300 | TUBE 12 MM PA BLUE | |
| A30W6008 | 90166-0196 | MM | 5000 | TUBE 14MM PA BLUE | |
| A30W6009 | 90166-0196 | MM | 510 | TUBE 14MM PA BLUE | |
| A30W6012 | 90166-0196 | MM | 510 | TUBE 14MM PA BLUE | |
| A50W6002 | 90166-0195 | MM | 710 | TUBE 12 MM PA BLUE | |
| A70W6002 | 90166-0081 | MM | 5500 | TUBE 6 MM PA BLUE | |
| A70W6003 | 90166-0195 | MM | 370 | TUBE 12 MM PA BLUE | |
| A70W6004 | 90166-0195 | MM | 370 | TUBE 12 MM PA BLUE | |
| A70W6005 | 315400-0007 | MM | 3000 | TUBE PUN-H-10X1,5-BL | |
| A70W6006 | 90166-0081 | MM | 3000 | TUBE 6 MM PA BLUE | |
| A70W6007 | 315400-0007 | MM | 3000 | TUBE PUN-H-10X1,5-BL | |
| K80W6004 | 90166-0196 | MM | 6200 | TUBE 14MM PA BLUE | |
| K80W6005 | 90166-0195 | MM | 5400 | TUBE 12 MM PA BLUE | |
| T10W1857 | 90166-0195 | MM | 510 | TUBE 12 MM PA BLUE | |

| Pos | Part No | UN | Qty | Description | Page No |
|---|---|---|---|---|---|

Machine Type | Group Description | Used-In | Group Number | Page No

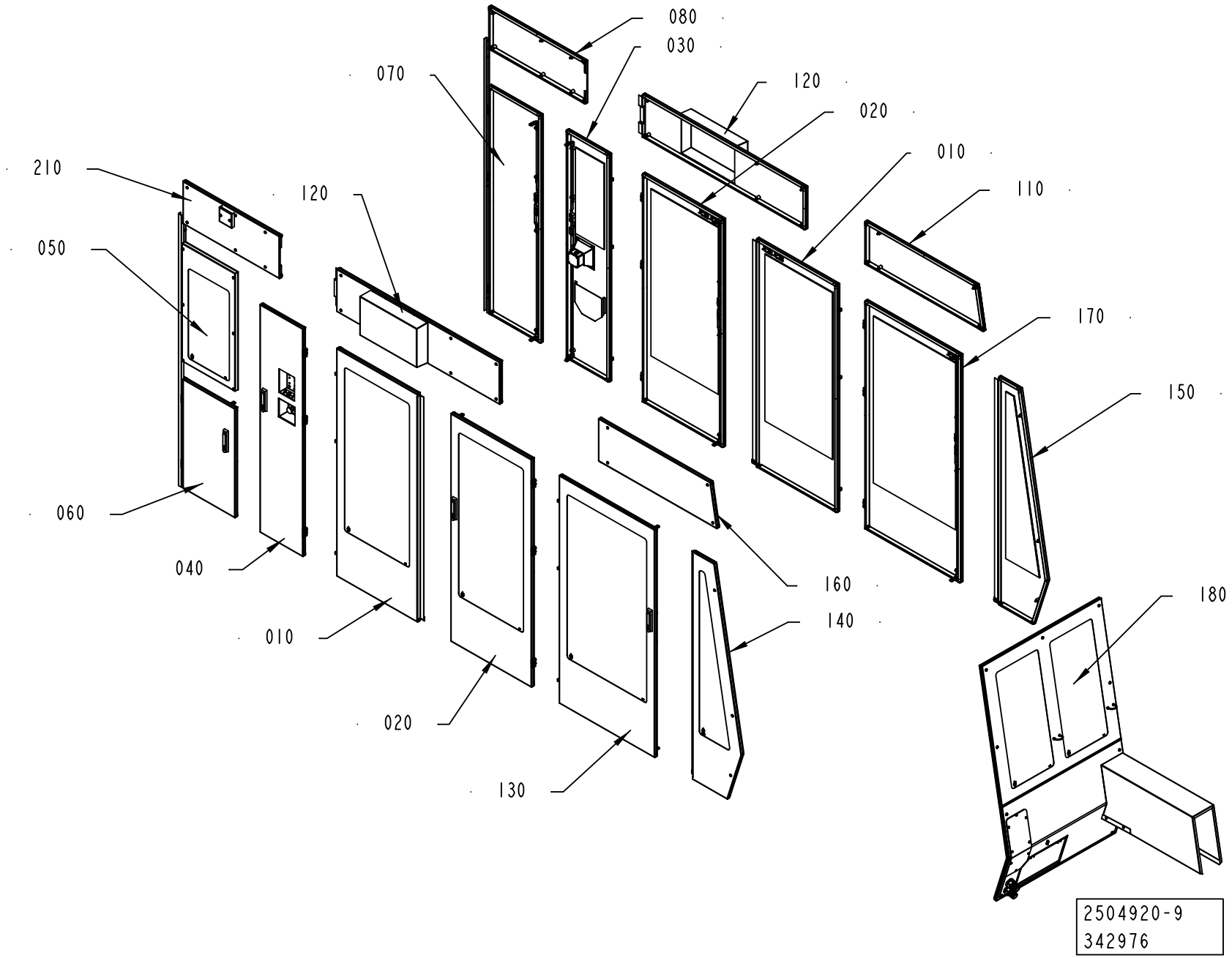
080
030
070
120
020
010
210
120
110
050
170
150
060
040
160
010
140
180
020
130
2504920-9
342976

ECM: 351666 - 20080103
Group number: 2504920-0200
Assembly Drawing: 2504920-9_1_AA

| Pos | Part No | UN | Qty | Description | Page No |
|---|---|---|---|---|---|
| **A3/FLEX** | | | | | |
| 010 | 2508129-0200 | | 2 | DOOR | **2-201** |
| 020 | 2508135-0200 | | 2 | DOOR | **2-203** |
| 090 | 2508159-0100 | | 1 | COVER | **2-205** |
| 120 | 2508168-0100 | | 2 | COVER | **2-207** |
| 180 | 2941770-0100 | | 1 | FRONT COVER | **2-209** |
| **Common Parts** | | | | | |
| 030 | 2508138-0200 | | 1 | DOOR | **2-211** |
| 040 | 2541703-0200 | | 1 | DOOR | **2-215** |
| 050 | 2544310-0200 | | 1 | PROTECTIVE COVER | **2-219** |
| 060 | 2508149-0200 | | 1 | DOOR | **2-221** |
| 070 | 2529597-0200 | | 1 | DOOR | **2-223** |
| 110 | 2508165-0100 | | 1 | COVER | **2-225** |
| 130 | 2508175-0200 | | 1 | DOOR | **2-227** |
| 140 | 2508177-0100 | | 1 | DOOR | **2-229** |
| 150 | 2508181-0100 | | 1 | DOOR | **2-231** |
| 160 | 2848495-0100 | | 1 | COVER | **2-233** |
| 170 | 2530080-0200 | | 1 | DOOR | **2-235** |
| 210 | 2544333-0100 | | 1 | DOOR | **2-237** |

| Pos | Part No | UN | Qty | Description | Page No |
|---|---|---|---|---|---|

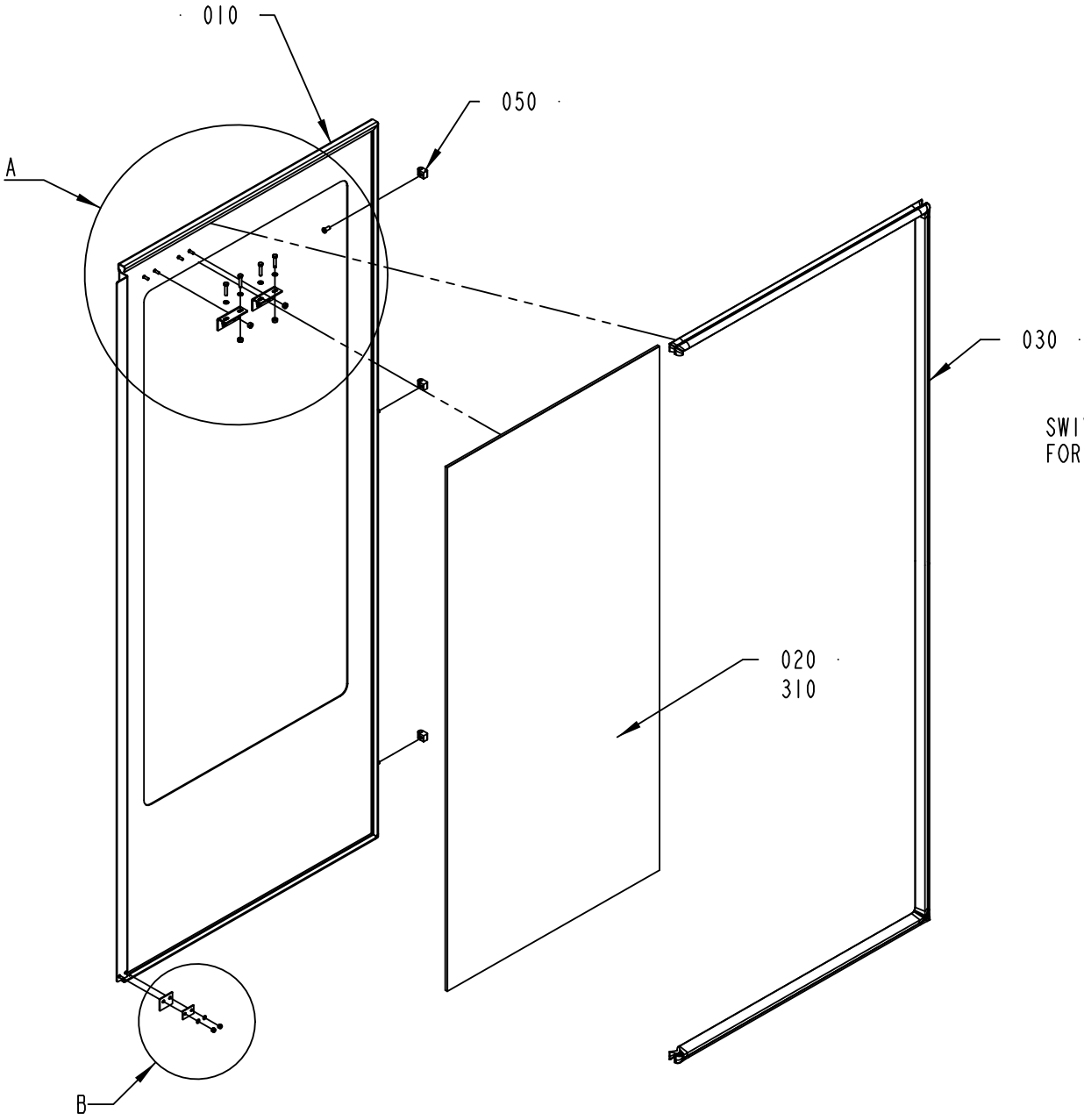


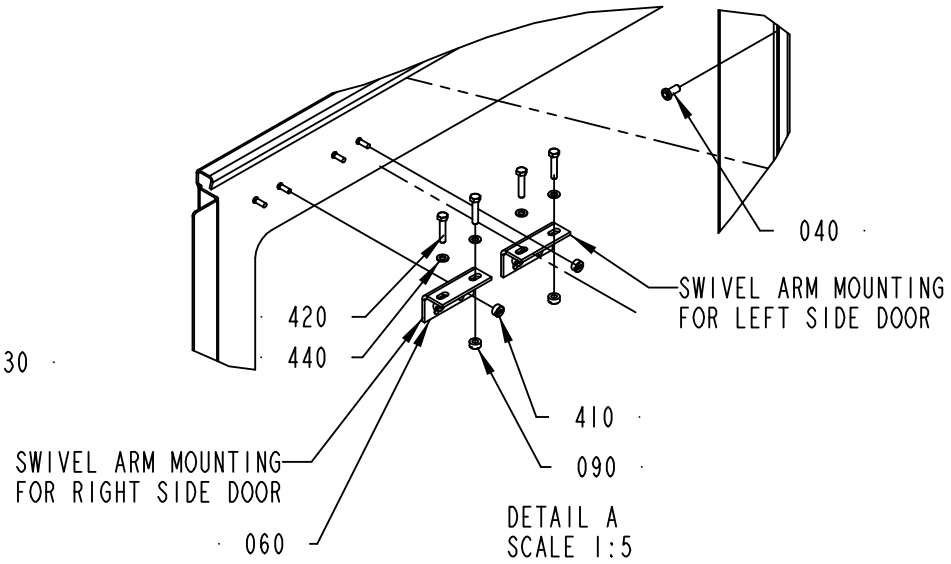


DETAIL A
SCALE 1:5

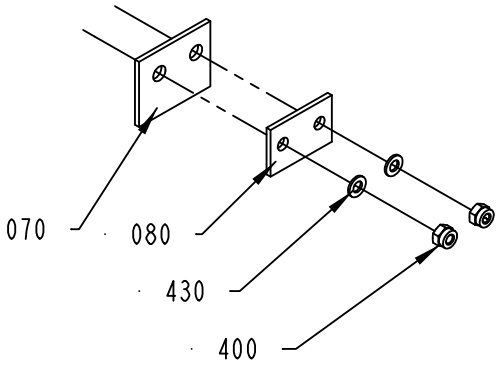


DETAIL B
SCALE 1:2

2508129-3
288295

ECM: 308671 - 20070628
Group number: 2508129-0200
Assembly Drawing: 2508129-3_1_AA

| Pos | Part No | UN | Qty | Description | Page No |
|---|---|---|---|---|---|
| - | | | | | |
| 010 | 2508130-0000 | | 1 | DOOR | |
| 020 | 2508131-0000 | | 1 | GLASS PANE | |
| 030 | 2508132-0000 | | 1 | RUBBER SEAL | |
| 040 | 1129767-0000 | | 3 | SCREW | |
| 050 | 1129770-0000 | | 3 | BLOCKING PIECE | |
| 060 | 1346885-0000 | | 1 | SUPPORT | |
| 070 | 1129325-0000 | | 1 | SEALING FLANGE | |
| 080 | 1129324-0000 | | 1 | WASHER | |
| 090 | 575034-0000 | | 2 | ROUND NUT | |
| 310 | 90157-0041 | L | 1 | SEALING COMPOUND, RHODORSEAL 5651 | |
| 400 | 312812-0312 | | 2 | HEXAGON NUT, NY-LOCK M4 A480 | |
| 410 | 1539391-0000 | | 2 | ROUND NUT | |
| 420 | 312105-0333 | | 2 | SCREW M6S ISO 4017 M5X25 A480 | |
| 430 | 315105-0136 | | 2 | WASHER BRB 4,3X8 RFR | |
| 440 | 315105-0146 | | 2 | WASHER BRB 5,3X10 RFR | |

| Pos | Part No | UN | Qty | Description | Page No |
|---|---|---|---|---|---|

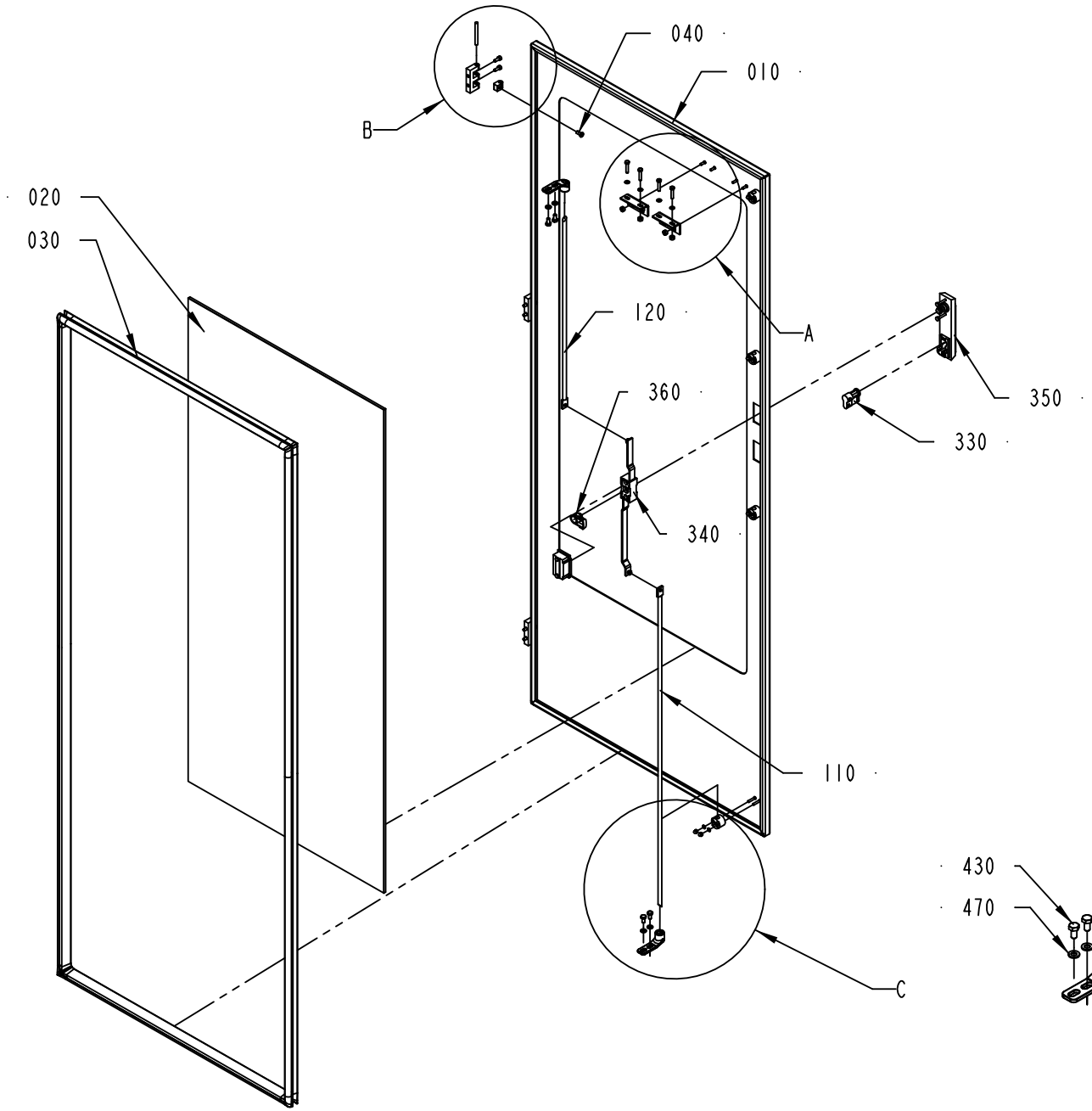


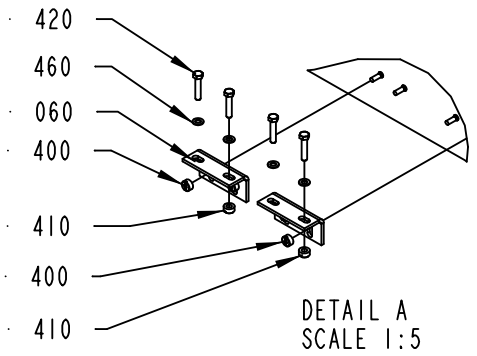


DETAIL A
SCALE 1:5

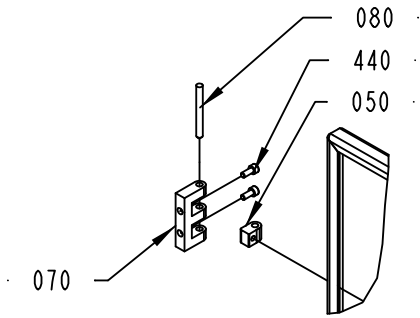


DETAIL B
SCALE 1:5

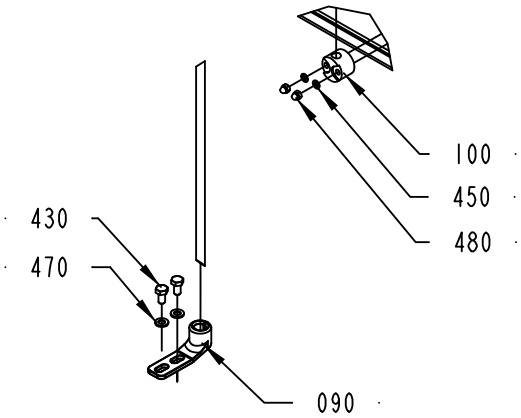


DETAIL C
SCALE 1:5

2508135-2
288295

ECM: 308672 - 20070628
Group number: 2508135-0200
Assembly Drawing: 2508135-2_1_AA

| Pos | Part No | UN | Qty | Description | Page No |
|---|---|---|---|---|---|
| - | | | | | |
| 010 | 2508136-0000 | | 1 | DOOR | |
| 020 | 2508131-0000 | | 1 | GLASS PANE | |
| 030 | 2508137-0000 | | 1 | RUBBER SEAL | |
| 040 | 1129767-0000 | | 3 | SCREW | |
| 050 | 1129770-0000 | | 3 | BLOCKING PIECE | |
| 060 | 1346885-0000 | | 1 | SUPPORT | |
| 070 | 1035792-0000 | | 3 | E-HINGE | |
| 080 | 988685-0000 | | 3 | PIN | |
| 090 | 1538868-0000 | | 2 | BRACKET | |
| 100 | 1129274-0000 | | 4 | GUIDE LUG | |
| 110 | 2508133-0000 | | 1 | LOCKING ARM | |
| 120 | 2508134-0000 | | 1 | LOCKING ARM | |
| 310 | 90157-0041 | L | 1 | SEALING COMPOUND, RHODORSEAL 5651 | |
| 330 | 90237-0128 | | 1 | LOCK CYLINDER, 1109-SU125 | |
| 340 | 90237-0153 | | 1 | LOCK HOUSING, 1121-U26-0B | |
| 350 | 90237-0176 | | 1 | TURNING HANDLE, 1125-U190-A | |
| 360 | 90237-0165 | | 1 | LATCH | |
| 400 | 1539391-0000 | | 2 | ROUND NUT | |
| 410 | 575034-0000 | | 2 | ROUND NUT | |
| 420 | 312105-0333 | | 2 | SCREW M6S ISO 4017 M5X25 A480 | |
| 430 | 312105-0366 | | 4 | SCREW M6S ISO 4017 M6X12 A480 | |
| 440 | 312115-0327 | | 6 | SCREW ISO4762 M5X12 A4 80 | |
| 450 | 315105-0136 | | 8 | WASHER BRB 4,3X8 RFR | |
| 460 | 315105-0146 | | 2 | WASHER BRB 5,3X10 RFR | |
| 470 | 315105-0153 | | 4 | WASHER BRB 6,4X12 RFR | |
| 480 | 312705-0312 | | 8 | NUT HEX. DOMED CAP MHM-6 M4 A280 | |

| Pos | Part No | UN | Qty | Description | Page No |
|---|---|---|---|---|---|

| Machine Type | Group Description | Used-In | Group Number | Page No |
|---|---|---|---|---|

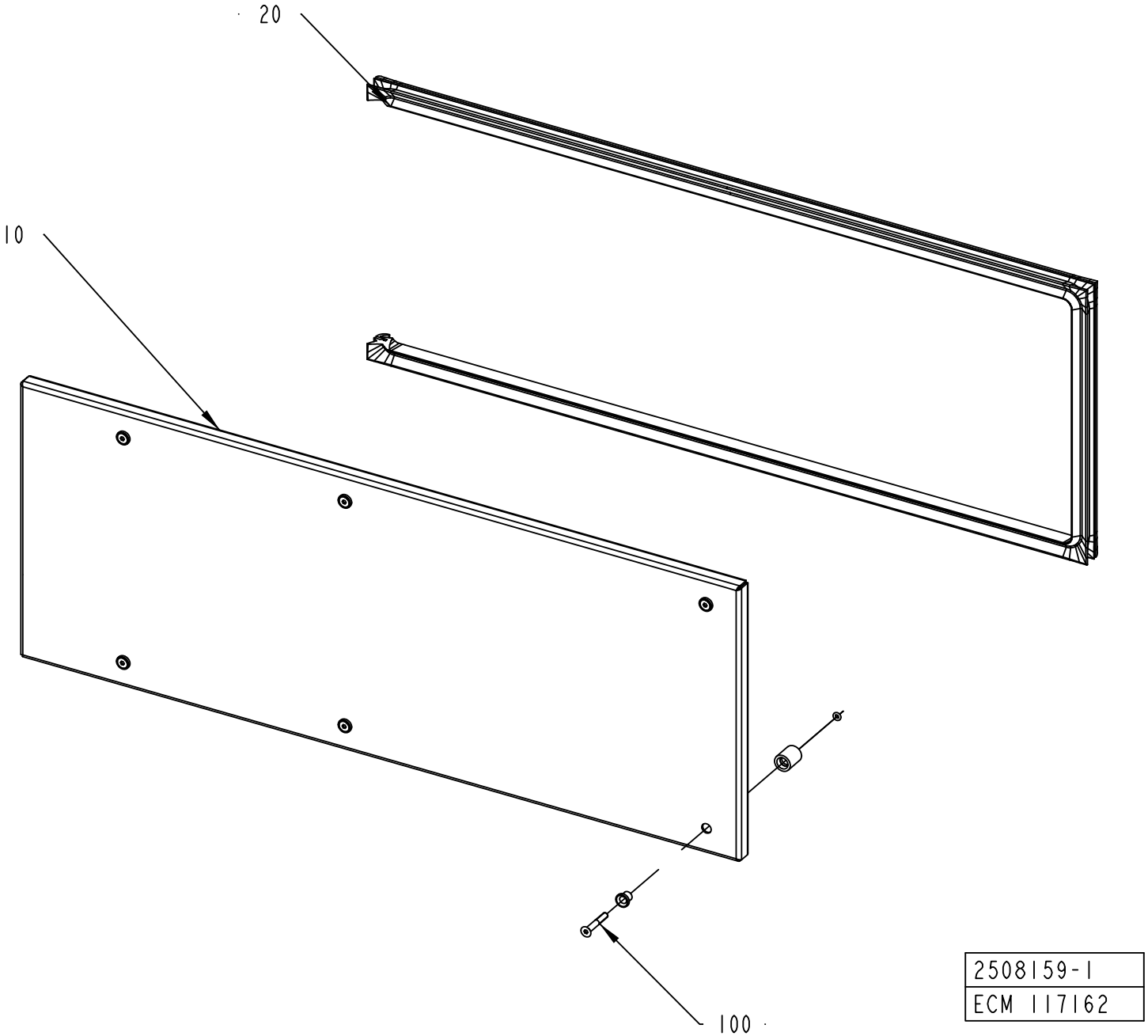
20
10
100
2508159-1
ECM 117162

ECM: 189915 - 20041104
Group number: 2508159-0100
Assembly Drawing: 2508159-1_1_AA

| Pos | Part No | UN | Qty | Description | Page No |
|---|---|---|---|---|---|
| - | | | | | |
| 010 | 2508160-0000 | | 1 | COVER | |
| 020 | 2508161-0000 | | 1 | RUBBER SEAL | |
| 100 | 90226-0458 | | 6 | MOUNTING SCREW | |

| Pos | Part No | UN | Qty | Description | Page No |
|---|---|---|---|---|---|

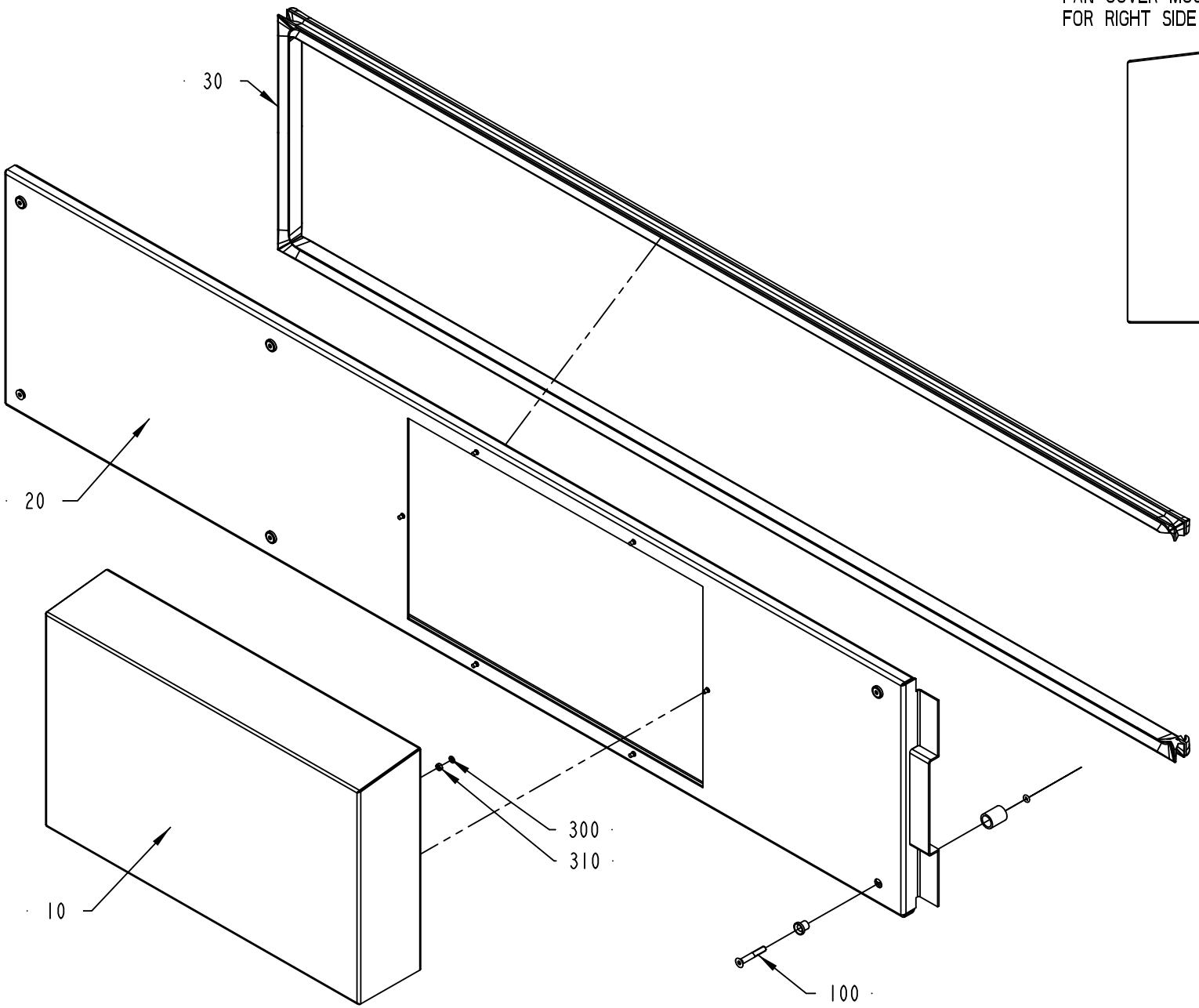


FAN COVER MOUNTING
FOR RIGHT SIDE COVER



FAN COVER MOUNTING
FOR LEFT SIDE COVER

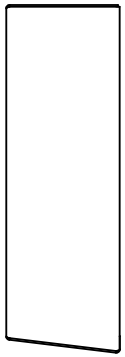

| 2508168-1 |
| --- |
| ECM 205029 |

ECM: 224422 - 20060701
Group number: 2508168-0100
Assembly Drawing: 2508168-1_1_AB

| Pos | Part No | UN | Qty | Description | Page No |
|---|---|---|---|---|---|
| - | | | | | |
| 010 | 2746721-0000 | | 1 | COVER | |
| 020 | 2508169-0000 | | 1 | COVER | |
| 030 | 2508171-0000 | | 1 | RUBBER SEAL | |
| 100 | 90226-0458 | | 6 | MOUNTING SCREW | |
| 300 | 315105-0136 | | 4 | WASHER BRB 4,3X8 RFR | |
| 310 | 312605-0312 | | 4 | HEXAGON NUT, M6M M4 A280 | |

| Pos | Part No | UN | Qty | Description | Page No |
|---|---|---|---|---|---|

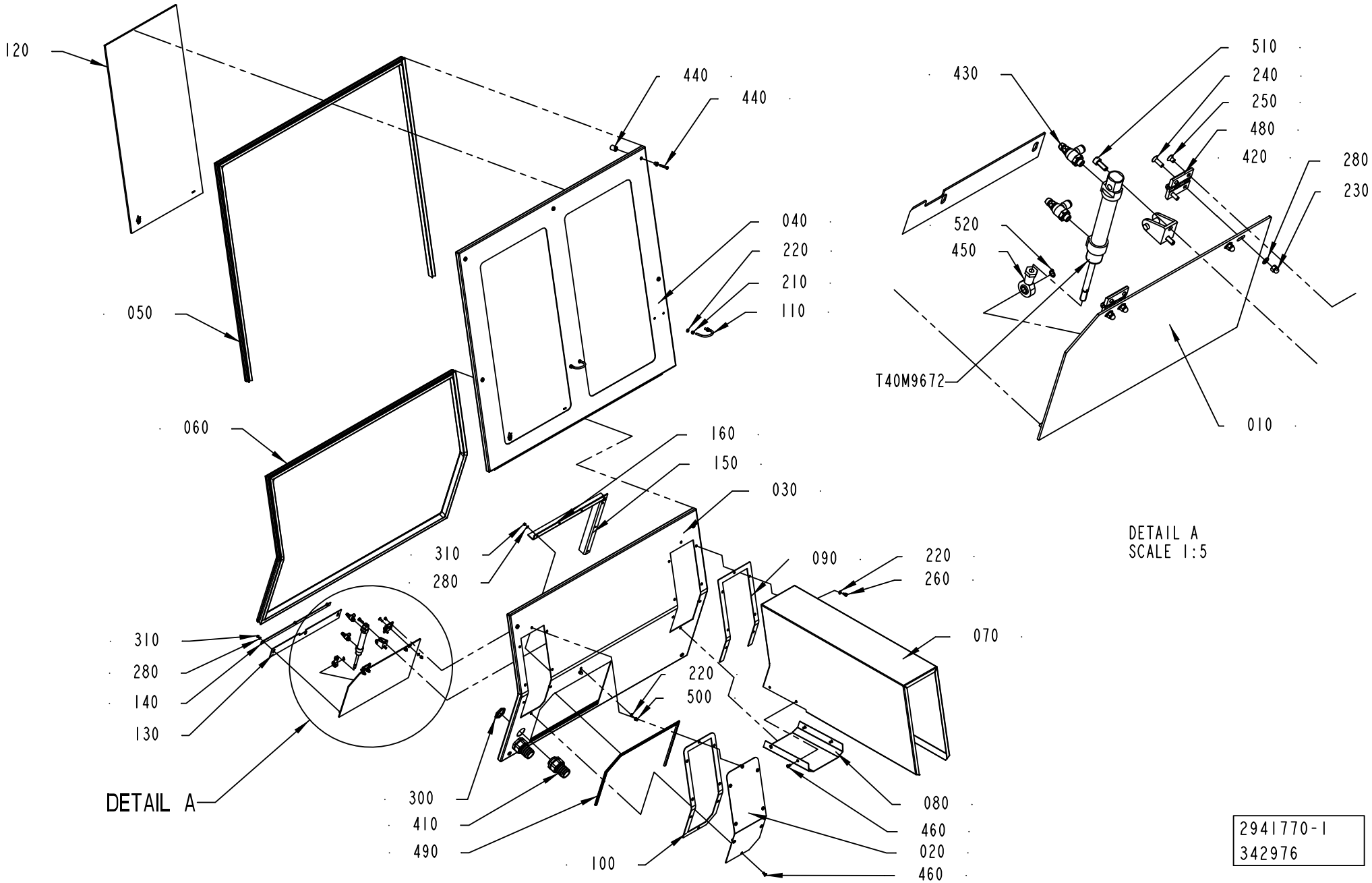
120
440
440
040
220
210
110
050
060
160
150
030
310
280
090
220
260
070
310
280
140
130
DETAIL A
220
500
300
410
490
100
080
460
020
460
430
510
240
250
480
420
280
230
520
450
T40M9672
010
DETAIL A
SCALE 1:5
2941770-1
342976

ECM: 351667 - 20080103
Group number: 2941770-0100
Assembly Drawing: 2941770-1_1_AA

| Pos | Part No | UN | Qty | Description | Page No |
|---|---|---|---|---|---|
| - | | | | | |
| 010 | 2941759-0000 | | 1 | COVER | |
| 020 | 2941760-0000 | | 1 | PROTECTION | |
| 030 | 2941761-0000 | | 1 | COVER | |
| 040 | 2941762-0000 | | 1 | FRONT COVER | |
| 050 | 2941763-0000 | | 1 | SEALING STRIP | |
| 060 | 2941764-0000 | | 1 | SEALING STRIP | |
| 070 | 2941765-0000 | | 1 | TUNNEL | |
| 080 | 2941766-0000 | | 1 | COVERING PLATE | |
| 090 | 2941767-0000 | | 1 | GASKET | |
| 100 | 2941768-0000 | | 1 | GASKET | |
| 110 | 531616-0000 | | 2 | HOLDER | |
| 120 | 2514832-0000 | | 2 | GLASS PANE | |
| 130 | 2948765-0000 | | 1 | LIP | |
| 140 | 2948766-0000 | | 1 | PLATE | |
| 150 | 2948767-0000 | | 1 | BRACKET | |
| 160 | 2948768-0000 | | 1 | BRACKET | |
| 210 | 312605-0316 | | 7 | HEXAGON NUT, M6M M6 A280 | |
| 220 | 315105-0153 | | 17 | WASHER BRB 6,4X12 RFR | |
| 230 | 312705-0314 | | 4 | NUT HEX. DOMED CAP MHM-6 M5 A280 | |
| 240 | 312155-0329 | | 4 | SCREW DIN 7991 MF6S M5X16 A4 70 | |
| 250 | 312155-0323 | | 4 | SCREW DIN 7991 MF6S M5X8 A4 70 | |
| 260 | 312105-0366 | | 7 | SCREW M6S ISO 4017 M6X12 A480 | |
| 280 | 315105-0146 | | 14 | WASHER BRB 5,3X10 RFR | |
| 300 | 353250-0040 | | 2 | GLAND, LOCK NUT M40X1,5 | |
| 310 | 312812-0314 | | 10 | HEXAGON NUT, NY-LOCK M5 A480 | |
| 400 | 90157-0041 | L | 1 | SEALING COMPOUND, RHODORSEAL 5651 | |
| 410 | 90458-0434 | | 2 | HOSE GLAND W/O INSERT M40 EXTENDED | |
| 420 | 90459-4932 | | 1 | REAR CLEVIS FOOT MOUNTING , CRLBN-20/25 | |
| 430 | 90235-0846 | | 2 | THROTTLE CHECK VALVE G1/8", MANUAL, 6 | |
| 440 | 90226-0458 | | 9 | MOUNTING SCREW | |
| 450 | 90115-0139 | | 1 | ROD END, ID=8 MM, M8X1,25 | |
| 460 | 90287-0075 | | 13 | SCREW SLOT. PAN HEAD LKCS M6X12 | |
| 480 | 90459-0075 | | 2 | HINGE, 1056-U30 | |
| 490 | 90143-0060 | MM | 950 | EDGE STRIP 9,5X6,3MM BLACK PVC | |
| 500 | 312705-0316 | | 2 | NUT HEX. DOMED CAP MHM-6 M6 A280 | |
| 510 | 312105-0368 | | 2 | SCREW M6S ISO 4017 M6X16 A480 | |
| 520 | 90141-0015 | | 1 | RETAINING RING FOR SHAFT DIN 471 8 SS | |
| T40M9672 | 90459-4766 | | 1 | DOUBLE ACTING, MINI-ISO, CYL. 20-60 | |

| Pos | Part No | UN | Qty | Description | Page No |
|---|---|---|---|---|---|

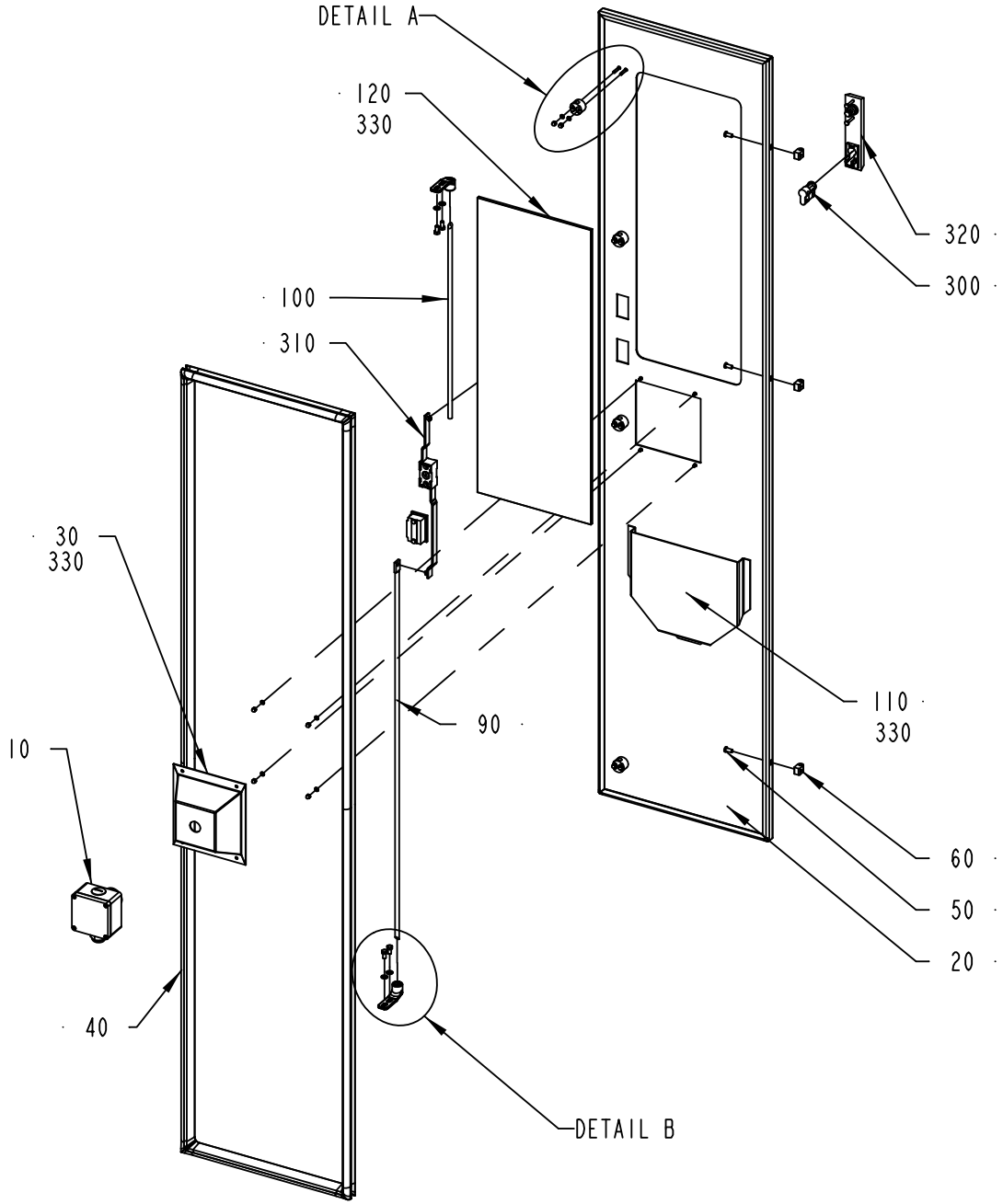


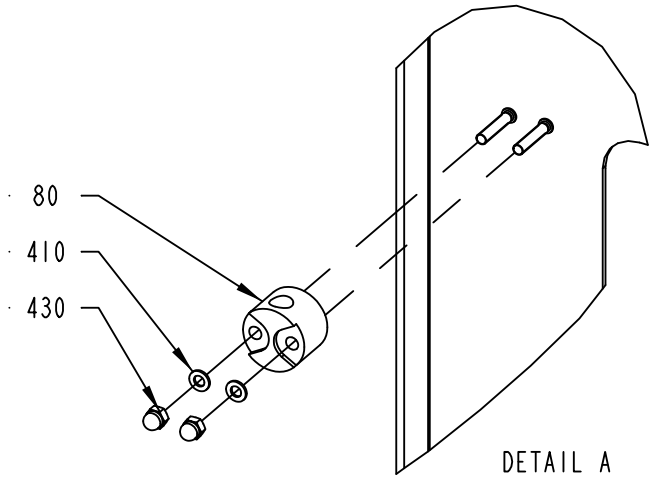


DETAIL A
1:2

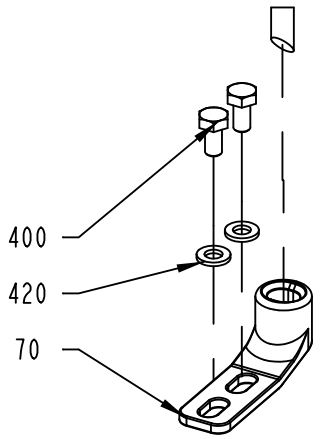


DETAIL B
1:2

2508138-2
ECM 335934

ECM: 339105 - 20080205
Group number: 2508138-0200
Assembly Drawing: 2508138-2_1_AB

| Pos | Part No | UN | Qty | Description | Page No |
|---|---|---|---|---|---|
| - | | | | | |
| 010 | 2593851-0200 | | 1 | EMERGENCY STOP ..... | **2-213** |
| 020 | 2847388-0000 | | 1 | DOOR | |
| 030 | 2532619-0000 | | 1 | COVER | |
| 040 | 2508186-0000 | | 1 | RUBBER SEAL | |
| 050 | 1129767-0000 | | 3 | SCREW | |
| 060 | 1129770-0000 | | 3 | BLOCKING PIECE | |
| 070 | 1538868-0000 | | 2 | BRACKET | |
| 080 | 1129274-0000 | | 4 | GUIDE LUG | |
| 090 | 2508133-0000 | | 1 | LOCKING ARM | |
| 100 | 2508140-0000 | | 1 | LOCKING ARM | |
| 110 | 1129275-0000 | | 1 | BOX FOR DIAGRAM | |
| 120 | 2847387-0000 | | 1 | GLASS PANE | |
| 300 | 90237-0128 | | 1 | LOCK CYLINDER, 1109-SU125 | |
| 310 | 90237-0153 | | 1 | LOCK HOUSING, 1121-U26-0B | |
| 320 | 90237-0176 | | 1 | TURNING HANDLE, 1125-U190-A | |
| 330 | 90157-0041 | | 1 | SEALING COMPOUND, RHODORSEAL 5651 | |
| 400 | 312105-0366 | | 4 | SCREW M6S ISO 4017 M6X12 A480 | |
| 410 | 315105-0136 | | 12 | WASHER BRB 4,3X8 RFR | |
| 420 | 315105-0153 | | 4 | WASHER BRB 6,4X12 RFR | |
| 430 | 312705-0312 | | 12 | NUT HEX. DOMED CAP MHM-6 M4 A280 | |

| Pos | Part No | UN | Qty | Description | Page No |
|---|---|---|---|---|---|

Machine Type | Group Description | Used-In | Group Number | Page No

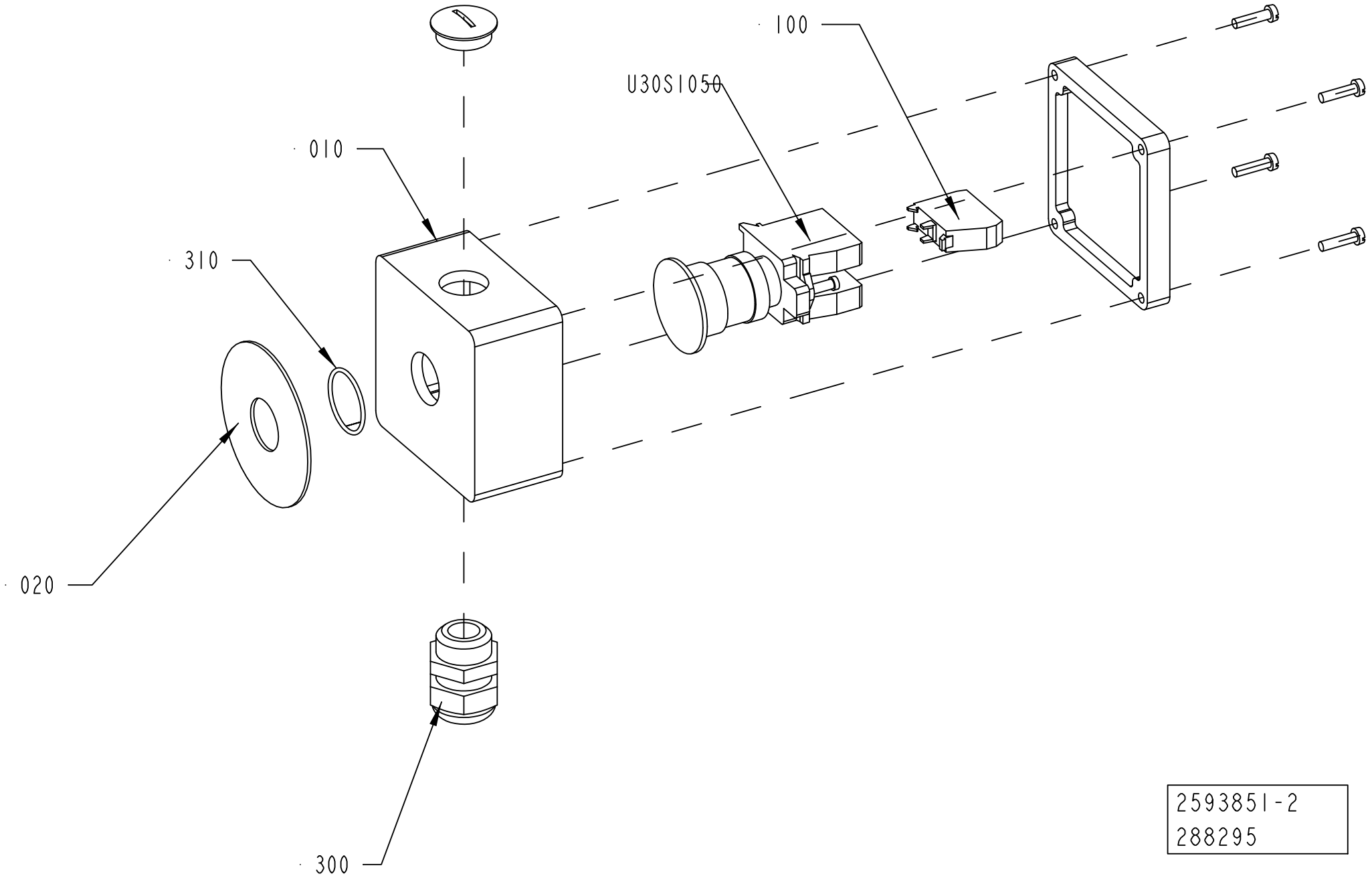


2593851-2
288295

ECM: 288301 - 20070628
Group number: 2593851-0200
Assembly Drawing: 2593851-2_1_AA

| Pos | Part No | UN | Qty | Description | Page No |
|---|---|---|---|---|---|
| - | | | | | |
| 010 | 1037130-0000 | | 1 | CONNECTION BOX | |
| 020 | 486826-0001 | | 1 | SIGN "EMERGENCY STOP" | |
| 100 | 90459-1917 | | 1 | CONTACT BLOCK ZBE-102 NC | |
| 300 | 352103-0110 | | 1 | CABLE GLAND, STR 16, PR22,5/PG16 | |
| 310 | 315202-0119 | | 1 | O-RING 25,1X1,6 MM | |
| U30S1050 | 90458-1651 | | 1 | EMERGENCY STOP, ZB4-BS-844 ZB4-BZ-104 | |

| Pos | Part No | UN | Qty | Description | Page No |
|---|---|---|---|---|---|

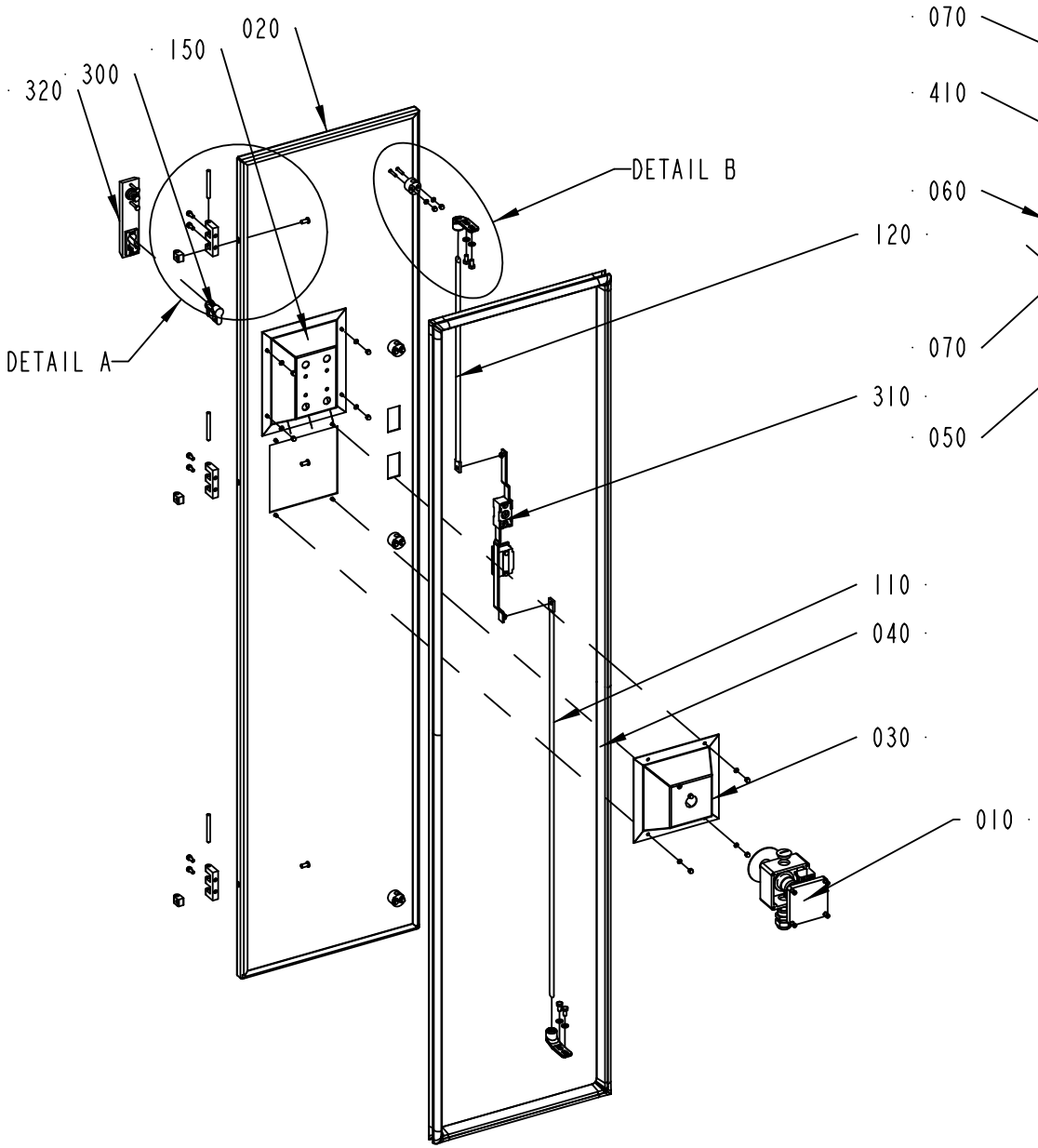


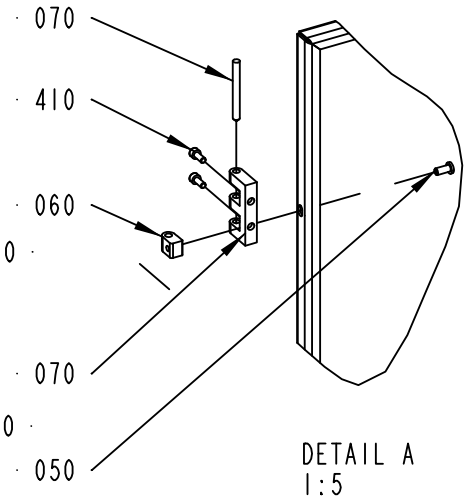


DETAIL A
1:5

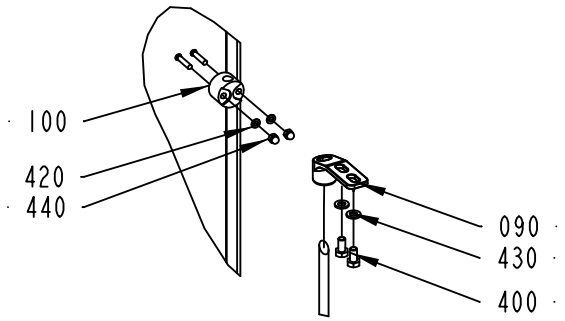


DETAIL B
1:5

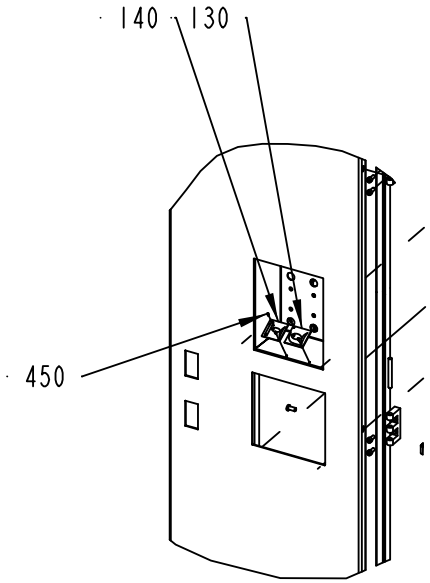


2541703-2
ECM 320485

ECM: 355597 - 20080528
Group number: 2541703-0200
Assembly Drawing: 2541703-2_1_AB

| Pos | Part No | UN | Qty | Description | Page No |
|---|---|---|---|---|---|
| **A3/FLEX** | | | | | |
| 020 | 2541704-0000 | | 1 | DOOR | |
| 130 | 1347766-0000 | | 1 | SIGN | |
| 140 | 1347767-0000 | | 1 | SIGN | |
| 150 | 2541702-0000 | | 1 | COVER | |
| 420 | 315105-0136 | | 16 | WASHER BRB 4,3X8 RFR | |
| 440 | 312705-0312 | | 16 | NUT HEX. DOMED CAP MHM-6 M4 A280 | |
| 450 | 312502-0120 | | 4 | DRIVE SCREW ROUND HEAD KDS 0X5 | |
| **Common Parts** | | | | | |
| 010 | 2902078-0100 | | 1 | EMERGENCY STOP ..... | **2-217** |
| 030 | 1484363-0000 | | 1 | COVER | |
| 040 | 2508186-0000 | | 1 | RUBBER SEAL | |
| 050 | 1129767-0000 | | 3 | SCREW | |
| 060 | 1129770-0000 | | 3 | BLOCKING PIECE | |
| 070 | 1035792-0000 | | 3 | E-HINGE | |
| 080 | 988685-0000 | | 3 | PIN | |
| 090 | 1538868-0000 | | 2 | BRACKET | |
| 100 | 1129274-0000 | | 4 | GUIDE LUG | |
| 110 | 2508133-0000 | | 1 | LOCKING ARM | |
| 120 | 2508140-0000 | | 1 | LOCKING ARM | |
| 300 | 90237-0128 | | 1 | LOCK CYLINDER, 1109-SU125 | |
| 310 | 90237-0153 | | 1 | LOCK HOUSING, 1121-U26-0B | |
| 320 | 90237-0176 | | 1 | TURNING HANDLE, 1125-U190-A | |
| 400 | 312105-0366 | | 4 | SCREW M6S ISO 4017 M6X12 A480 | |
| 410 | 312115-0327 | | 6 | SCREW ISO4762 M5X12 A4 80 | |
| 430 | 315105-0153 | | 4 | WASHER BRB 6,4X12 RFR | |

| Pos | Part No | UN | Qty | Description | Page No |
|---|---|---|---|---|---|

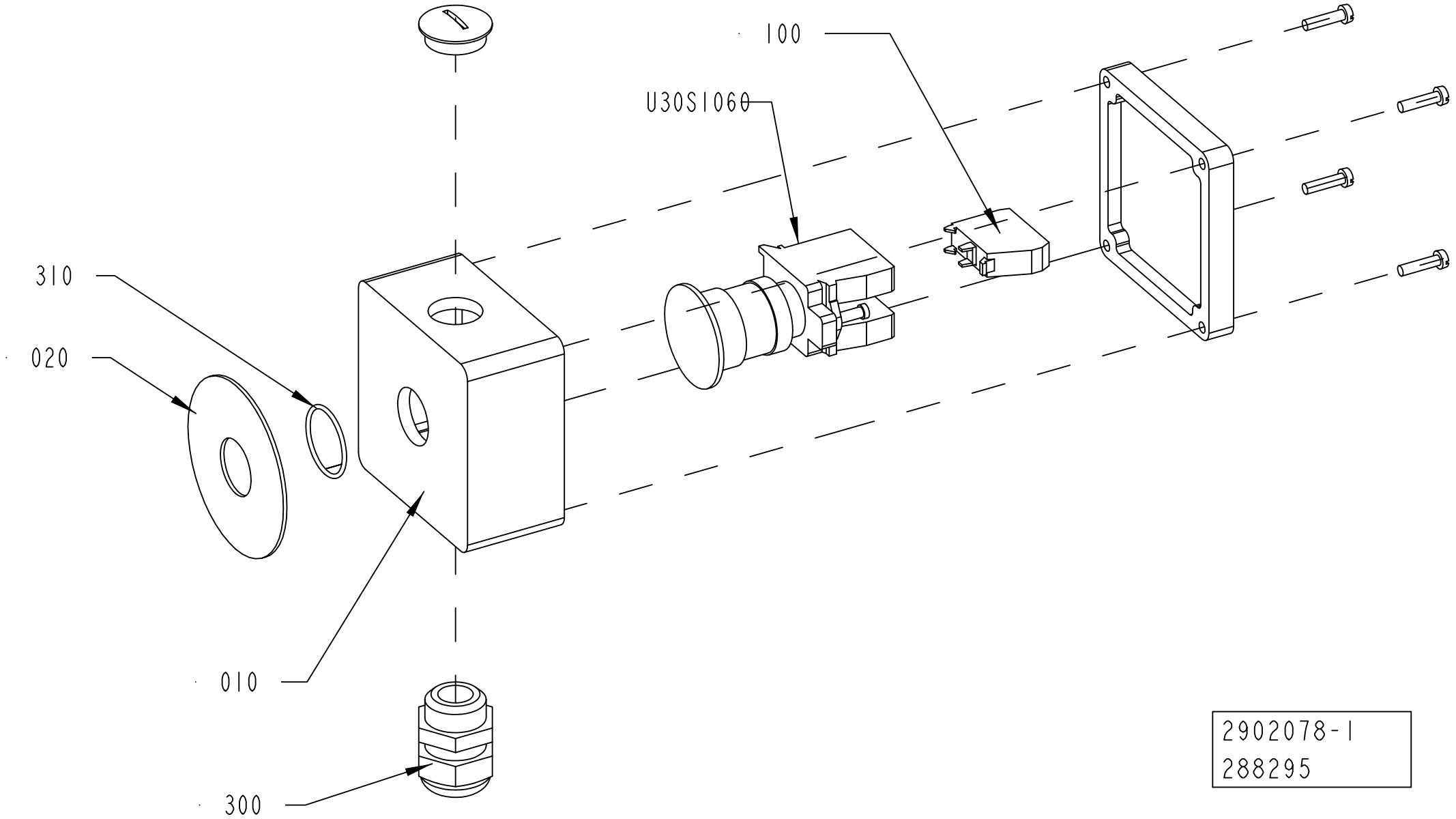
100
U30S1060
310
020
010
300
2902078-1
288295

ECM: 308673 - 20070628
Group number: 2902078-0100
Assembly Drawing: 2902078-1_1_AA

| Pos | Part No | UN | Qty | Description | Page No |
|---|---|---|---|---|---|
| - | | | | | |
| 010 | 1037130-0000 | | 1 | CONNECTION BOX | |
| 020 | 486826-0001 | | 1 | SIGN "EMERGENCY STOP" | |
| 100 | 90459-1917 | | 1 | CONTACT BLOCK ZBE-102 NC | |
| 300 | 352103-0110 | | 1 | CABLE GLAND, STR 16, PR22,5/PG16 | |
| 310 | 315202-0119 | | 1 | O-RING 25,1X1,6 MM | |
| U30S1060 | 90458-1651 | | 1 | EMERGENCY STOP, ZB4-BS-844 ZB4-BZ-104 | |

| Pos | Part No | UN | Qty | Description | Page No |
|---|---|---|---|---|---|

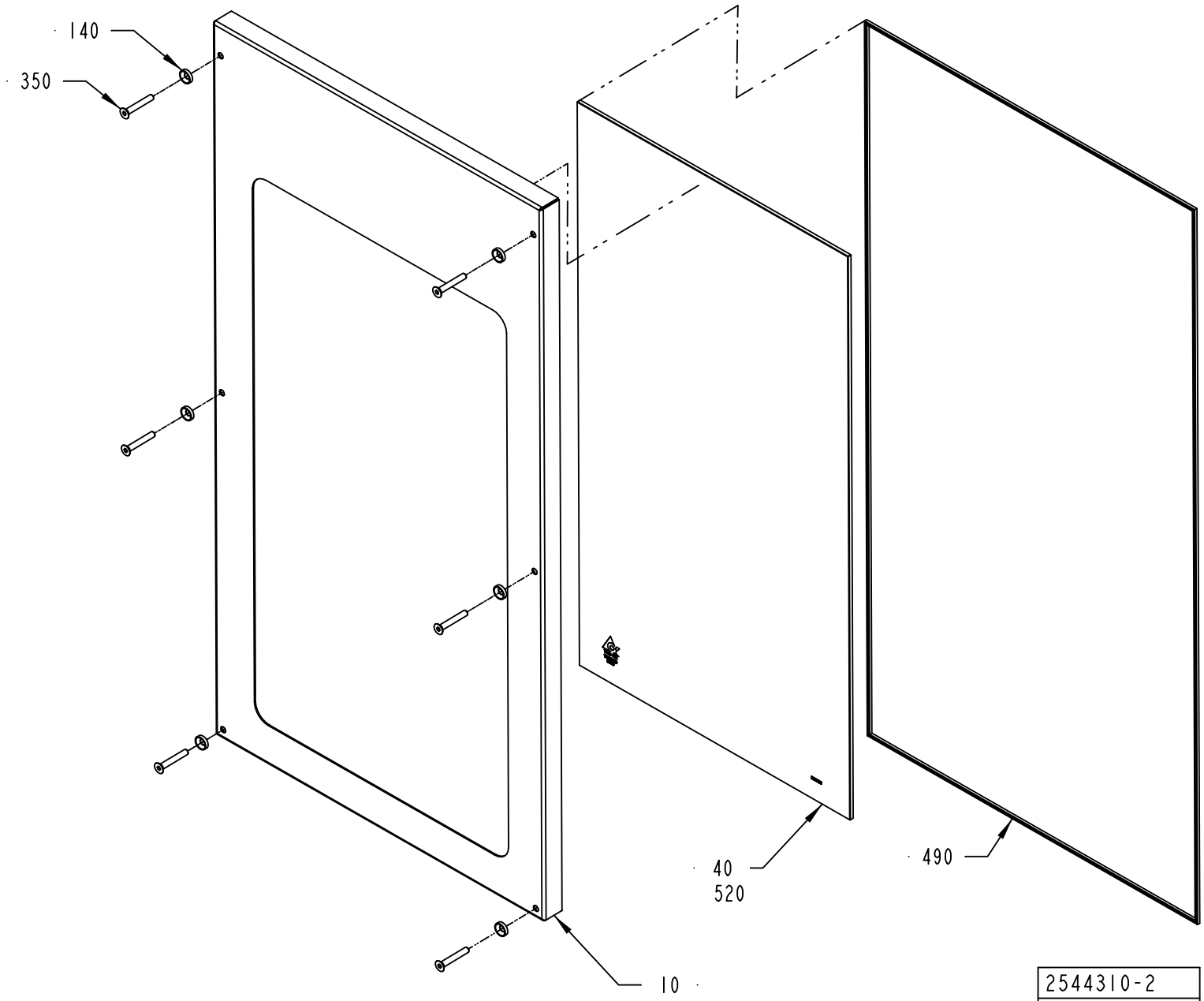
140
350
40
520
490
10
2544310-2
ECM 288295

ECM: 288300 - 20070628
Group number: 2544310-0200
Assembly Drawing: 2544310-2_1_AA

| Pos | Part No | UN | Qty | Description | Page No |
|---|---|---|---|---|---|
| - | | | | | |
| 010 | 2795149-0000 | | 1 | PROTECTION | |
| 040 | 2795150-0000 | | 1 | GLASS PANE | |
| 140 | 1317228-0000 | | 6 | WASHER | |
| 350 | 312155-0378 | | 6 | SCREW DIN 7991 MF6S M6X40 A4 70 | |
| 490 | 90143-0054 | MM | 2740 | STRIP | |
| 520 | 90157-0041 | | 1 | SEALING COMPOUND, RHODORSEAL 5651 | |

| Pos | Part No | UN | Qty | Description | Page No |
|---|---|---|---|---|---|

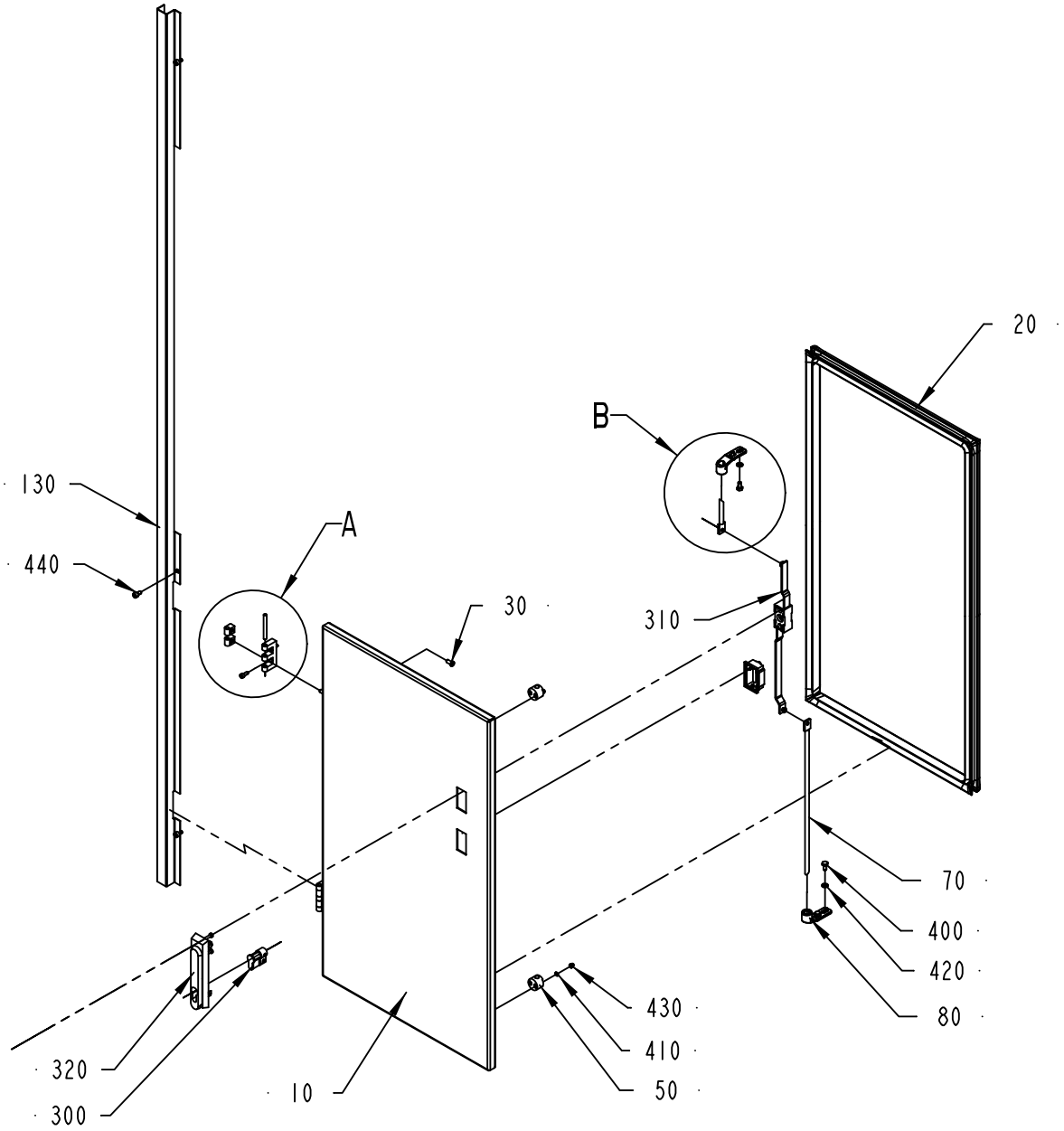


DETAIL A
SCALE 1:2

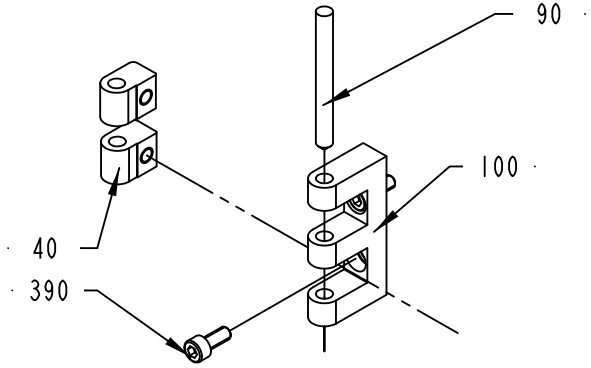


DETAIL B
SCALE 1:2

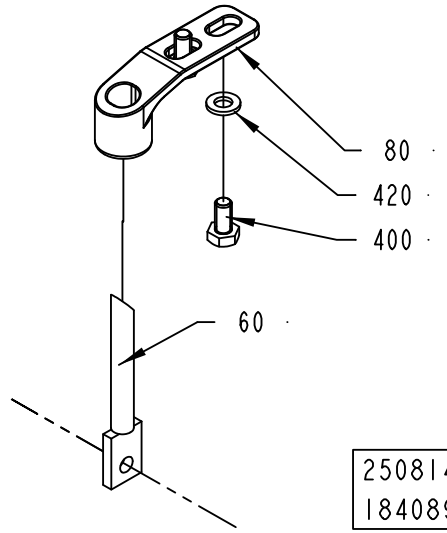


2508149-2
184089

ECM: 272528 - 20080403
Group number: 2508149-0200
Assembly Drawing: 2508149-2_1_AA

| Pos | Part No | UN | Qty | Description | Page No |
|---|---|---|---|---|---|
| **A3/FLEX DIMC/FLEX, A3/FLEX PT/FLEX** | | | | | |
| 130 | 2726296-0000 | | 1 | COVER STRIP | |
| **A3/FLEX NOPT, A3/FLEX NODIMC** | | | | | |
| 130 | 2728140-0000 | | 1 | COVER STRIP | |
| **Common Parts** | | | | | |
| 010 | 2508150-0000 | | 1 | DOOR | |
| 020 | 2508151-0000 | | 1 | RUBBER SEAL | |
| 030 | 1129767-0000 | | 2 | SCREW | |
| 040 | 1129770-0000 | | 2 | BLOCKING PIECE | |
| 050 | 1129274-0000 | | 3 | GUIDE LUG | |
| 060 | 2508147-0000 | | 1 | LOCKING ARM | |
| 070 | 2508152-0000 | | 1 | LOCKING ARM | |
| 080 | 1538868-0000 | | 2 | BRACKET | |
| 090 | 988685-0000 | | 2 | PIN | |
| 100 | 1035792-0000 | | 2 | E-HINGE | |
| 110 | 1129767-0000 | | 2 | SCREW | |
| 120 | 1129770-0000 | | 2 | BLOCKING PIECE | |
| 300 | 90237-0128 | | 1 | LOCK CYLINDER, 1109-SU125 | |
| 310 | 90237-0153 | | 1 | LOCK HOUSING, 1121-U26-0B | |
| 320 | 90237-0176 | | 1 | TURNING HANDLE, 1125-U190-A | |
| 390 | 312115-0327 | | 4 | SCREW ISO4762 M5X12 A4 80 | |
| 400 | 312105-0366 | | 4 | SCREW M6S ISO 4017 M6X12 A480 | |
| 410 | 315105-0136 | | 6 | WASHER BRB 4,3X8 RFR | |
| 420 | 315105-0153 | | 4 | WASHER BRB 6,4X12 RFR | |
| 430 | 312705-0312 | | 6 | NUT HEX. DOMED CAP MHM-6 M4 A280 | |
| 440 | 312115-0362 | | 3 | SCREW ISO4762 M6X8 A4 80 | |

| Pos | Part No | UN | Qty | Description | Page No |
|---|---|---|---|---|---|

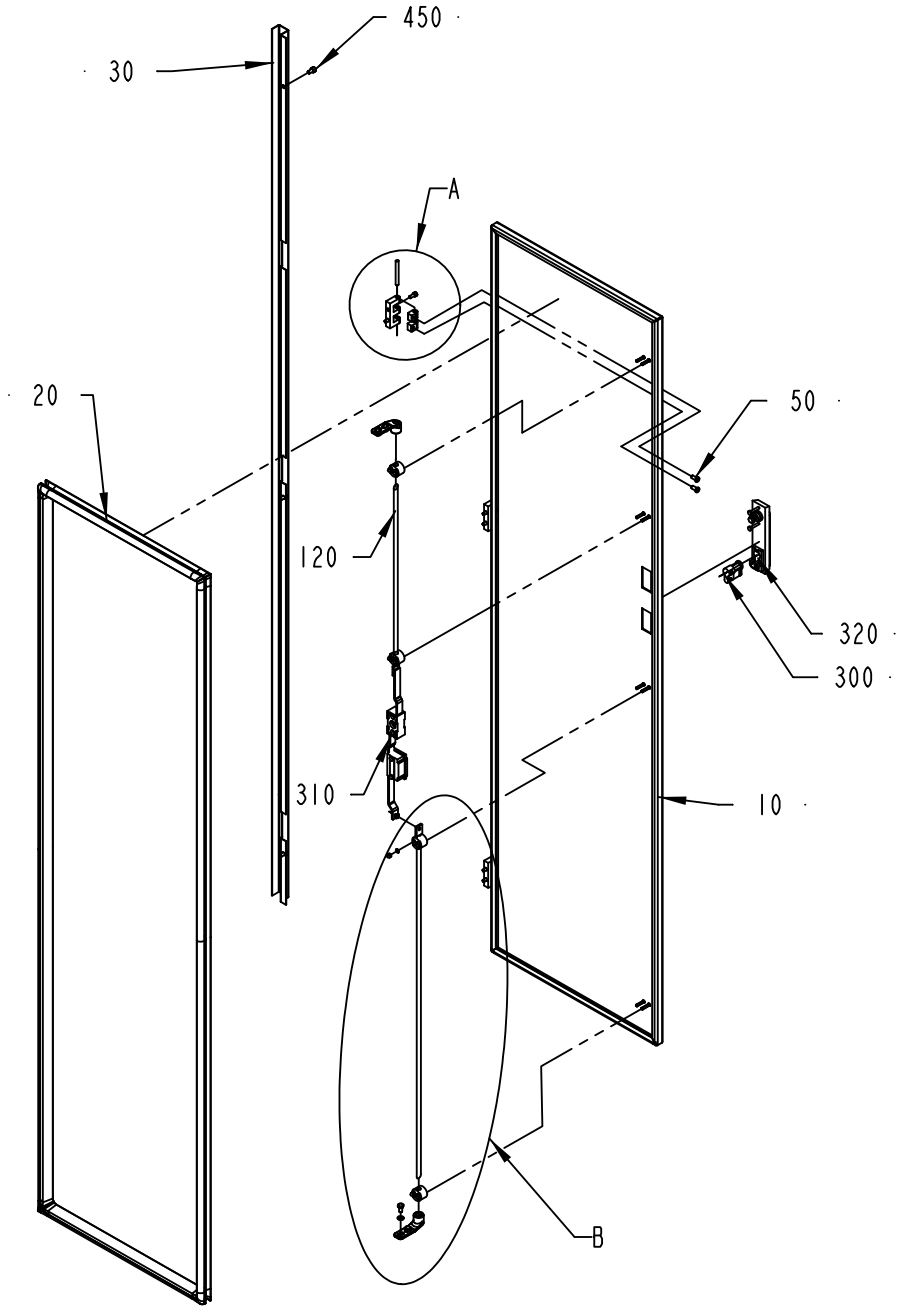


DETAIL A
SCALE 1:2

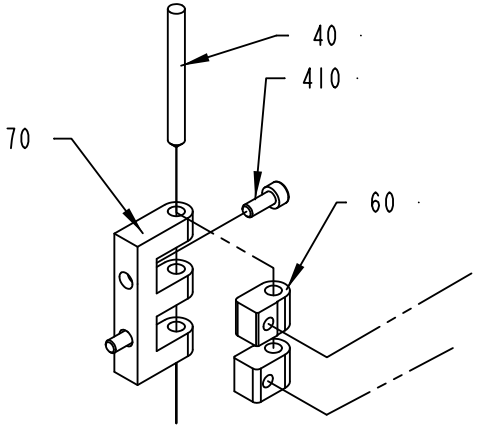


DETAIL B
SCALE 1:5

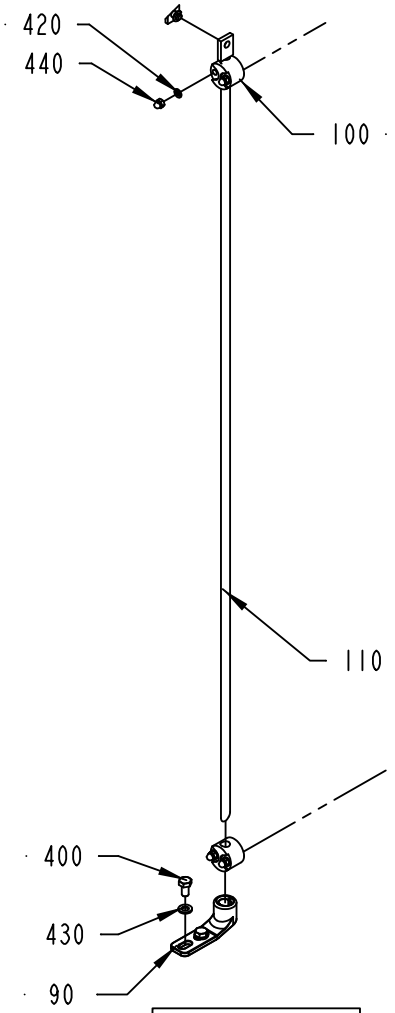


2529597-2
184089

ECM: 272734 - 20080403
Group number: 2529597-0200
Assembly Drawing: 2529597-2_1_AA

| Pos | Part No | UN | Qty | Description | Page No |
|---|---|---|---|---|---|
| **A3/FLEX DIMC/FLEX, A3/FLEX PT/FLEX** | | | | | |
| 030 | 2726295-0000 | | 1 | COVER STRIP | |
| **A3/FLEX NOPT, A3/FLEX NODIMC** | | | | | |
| 030 | 2728139-0000 | | 1 | COVER STRIP | |
| **Common Parts** | | | | | |
| 010 | 2529598-0000 | | 1 | DOOR | |
| 020 | 2529599-0000 | | 1 | RUBBER SEAL | |
| 040 | 988685-0000 | | 3 | PIN | |
| 050 | 1129767-0000 | | 6 | SCREW | |
| 060 | 1129770-0000 | | 6 | BLOCKING PIECE | |
| 070 | 1035792-0000 | | 3 | E-HINGE | |
| 090 | 1538868-0000 | | 2 | BRACKET | |
| 100 | 1129274-0000 | | 4 | GUIDE LUG | |
| 110 | 2508133-0000 | | 1 | LOCKING ARM | |
| 120 | 2508140-0000 | | 1 | LOCKING ARM | |
| 300 | 90237-0128 | | 1 | LOCK CYLINDER, 1109-SU125 | |
| 310 | 90237-0153 | | 1 | LOCK HOUSING, 1121-U26-0B | |
| 320 | 90237-0176 | | 1 | TURNING HANDLE, 1125-U190-A | |
| 400 | 312115-0327 | | 4 | SCREW ISO4762 M5X12 A4 80 | |
| 410 | 312105-0366 | | 6 | SCREW M6S ISO 4017 M6X12 A480 | |
| 420 | 315105-0136 | | 8 | WASHER BRB 4,3X8 RFR | |
| 430 | 315105-0153 | | 4 | WASHER BRB 6,4X12 RFR | |
| 440 | 312705-0312 | | 8 | NUT HEX. DOMED CAP MHM-6 M4 A280 | |
| 450 | 312115-0362 | | 3 | SCREW ISO4762 M6X8 A4 80 | |

| Pos | Part No | UN | Qty | Description | Page No |
|---|---|---|---|---|---|

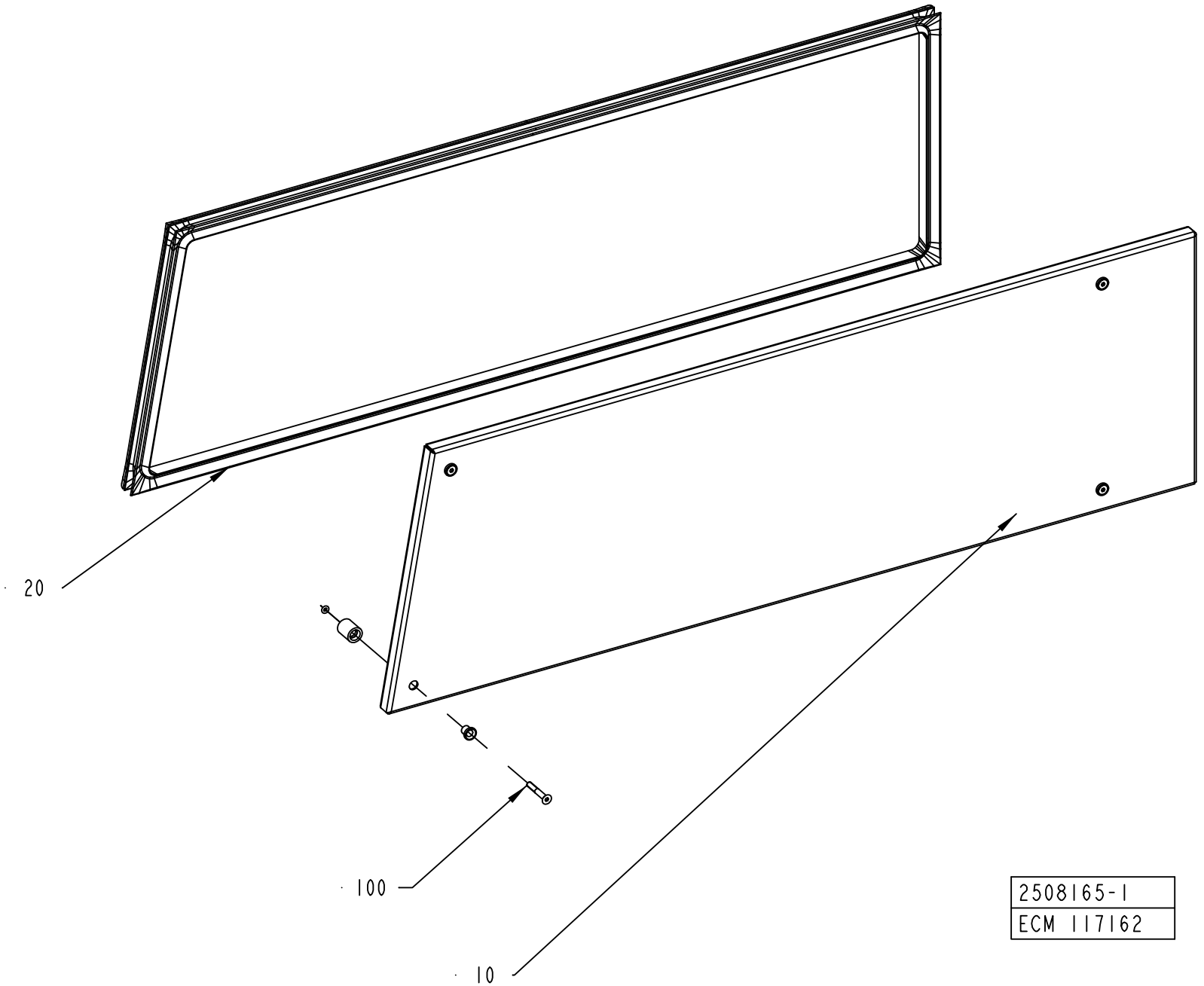
20
100
10
2508165-1
ECM 117162

ECM: 189919 - 20041104
Group number: 2508165-0100
Assembly Drawing: 2508165-1_1_AA

| Pos | Part No | UN | Qty | Description | Page No |
|---|---|---|---|---|---|
| - | | | | | |
| 010 | 2508166-0000 | | 1 | COVER | |
| 020 | 2508167-0000 | | 1 | RUBBER SEAL | |
| 100 | 90226-0458 | | 4 | MOUNTING SCREW | |

| Pos | Part No | UN | Qty | Description | Page No |
|---|---|---|---|---|---|

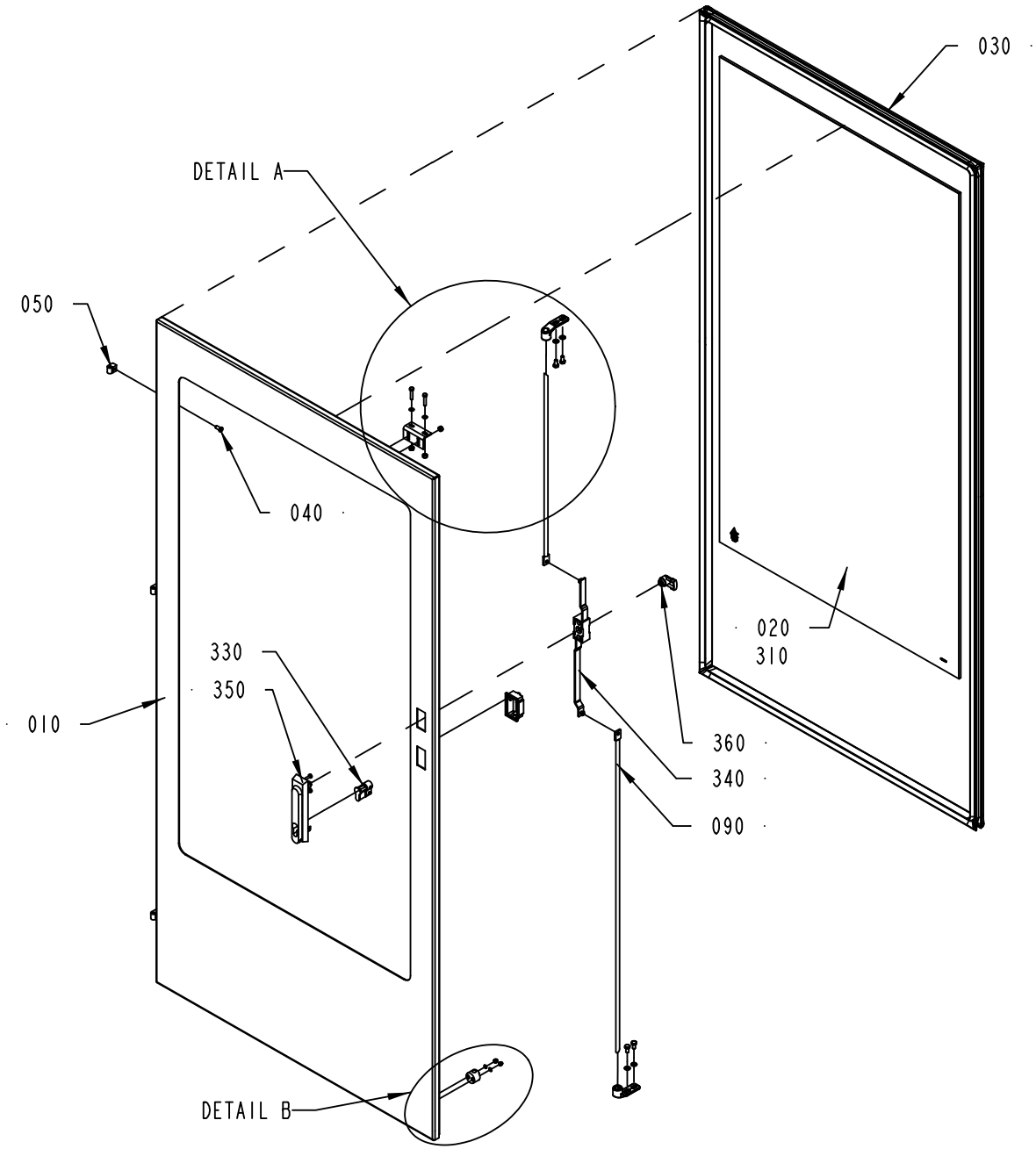


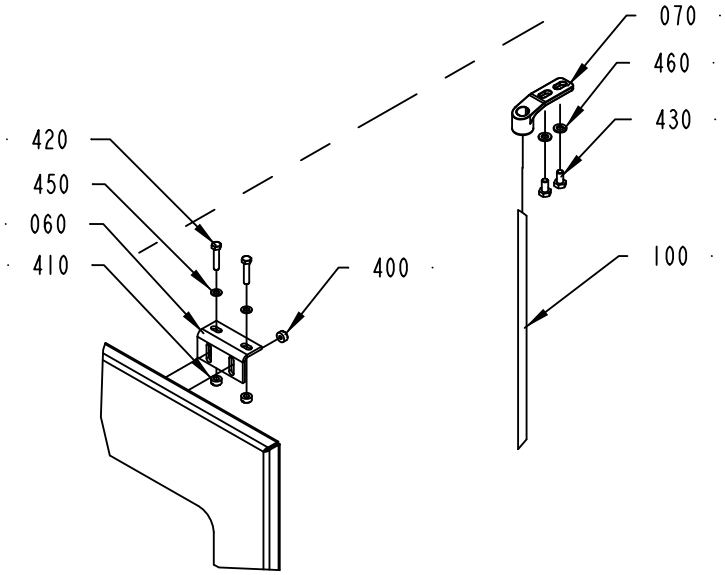


DETAIL A
SCALE 1:5

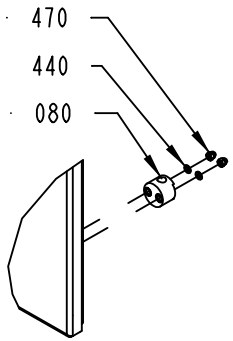


DETAIL B
SCALE 1:5

2508175-2
288295

ECM: 308674 - 20070628
Group number: 2508175-0200
Assembly Drawing: 2508175-2_1_AA

| Pos | Part No | UN | Qty | Description | Page No |
|---|---|---|---|---|---|
| - | | | | | |
| 010 | 2508176-0000 | | 1 | DOOR | |
| 020 | 2526740-0000 | | 1 | BRACKET | |
| 030 | 2527639-0000 | | 1 | RUBBER SEAL | |
| 040 | 1129767-0000 | | 3 | SCREW | |
| 050 | 1129770-0000 | | 3 | BLOCKING PIECE | |
| 060 | 1346885-0000 | | 1 | SUPPORT | |
| 070 | 1538868-0000 | | 2 | BRACKET | |
| 080 | 1129274-0000 | | 4 | GUIDE LUG | |
| 090 | 2508133-0000 | | 1 | LOCKING ARM | |
| 100 | 2508134-0000 | | 1 | LOCKING ARM | |
| 310 | 90157-0041 | L | 1 | SEALING COMPOUND, RHODORSEAL 5651 | |
| 330 | 90237-0128 | | 1 | LOCK CYLINDER, 1109-SU125 | |
| 340 | 90237-0153 | | 1 | LOCK HOUSING, 1121-U26-0B | |
| 350 | 90237-0176 | | 1 | TURNING HANDLE, 1125-U190-A | |
| 360 | 90237-0165 | | 1 | LATCH | |
| 400 | 1539391-0000 | | 2 | ROUND NUT | |
| 410 | 575034-0000 | | 2 | ROUND NUT | |
| 420 | 312105-0333 | | 2 | SCREW M6S ISO 4017 M5X25 A480 | |
| 430 | 312105-0366 | | 4 | SCREW M6S ISO 4017 M6X12 A480 | |
| 440 | 315105-0136 | | 8 | WASHER BRB 4,3X8 RFR | |
| 450 | 315105-0146 | | 2 | WASHER BRB 5,3X10 RFR | |
| 460 | 315105-0153 | | 4 | WASHER BRB 6,4X12 RFR | |
| 470 | 312705-0312 | | 8 | NUT HEX. DOMED CAP MHM-6 M4 A280 | |

| Pos | Part No | UN | Qty | Description | Page No |
|---|---|---|---|---|---|

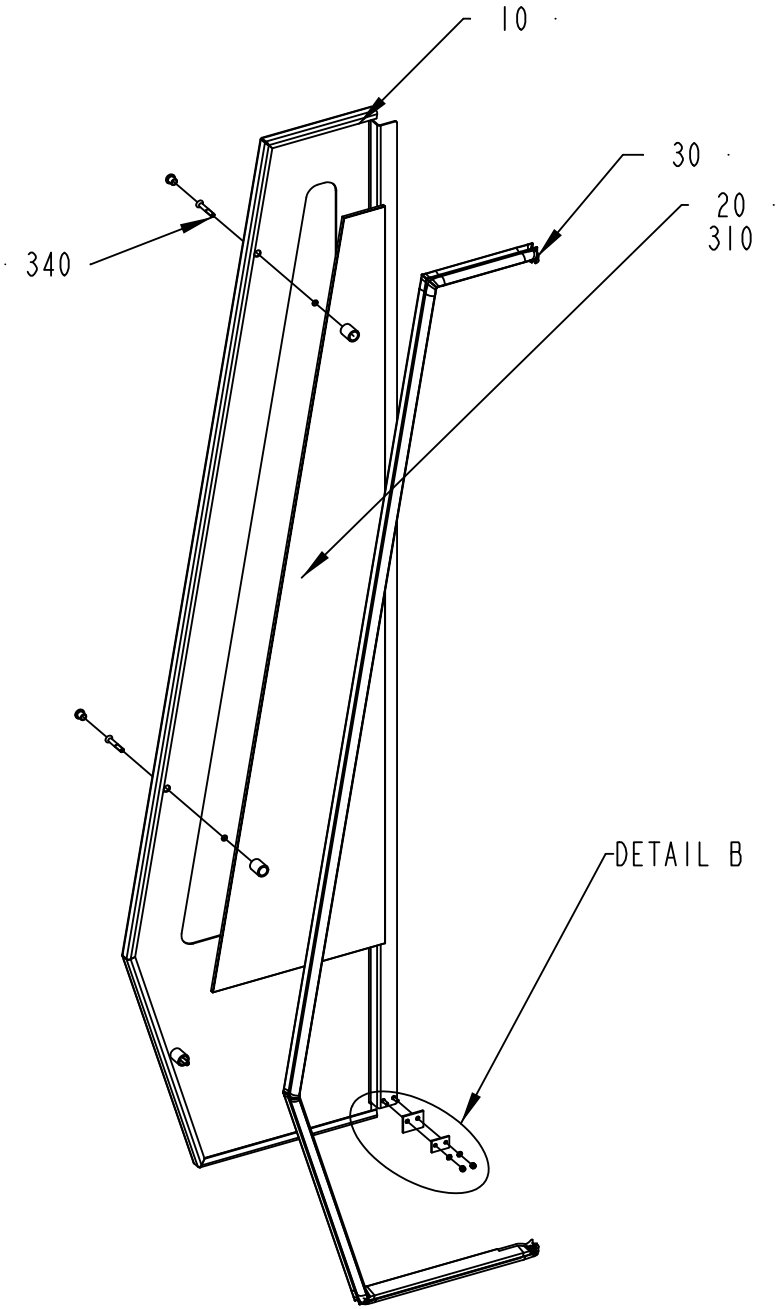


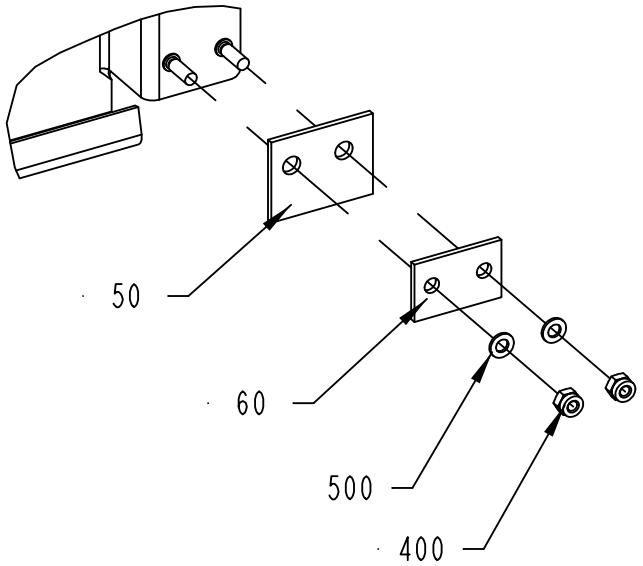


DETAIL B
1:2

2508177-1
313511

ECM: 339759 - 20080402
Group number: 2508177-0100
Assembly Drawing: 2508177-1_1_AC

| Pos | Part No | UN | Qty | Description | Page No |
|---|---|---|---|---|---|
| **A3/FLEX** | | | | | |
| 010 | 2508178-0000 | | 1 | DOOR | |
| 020 | 2508180-0001 | | 1 | GLASS PANE | |
| 030 | 2508179-0000 | | 1 | RUBBER SEAL | |
| **Common Parts** | | | | | |
| 050 | 1129325-0000 | | 1 | SEALING FLANGE | |
| 060 | 1129324-0000 | | 1 | WASHER | |
| 310 | 90157-0041 | | 1 | SEALING COMPOUND, RHODORSEAL 5651 | |
| 340 | 90226-0458 | | 3 | MOUNTING SCREW | |
| 400 | 312812-0312 | | 2 | HEXAGON NUT, NY-LOCK M4 A480 | |
| 500 | 315105-0136 | | 2 | WASHER BRB 4,3X8 RFR | |

| Pos | Part No | UN | Qty | Description | Page No |
|---|---|---|---|---|---|

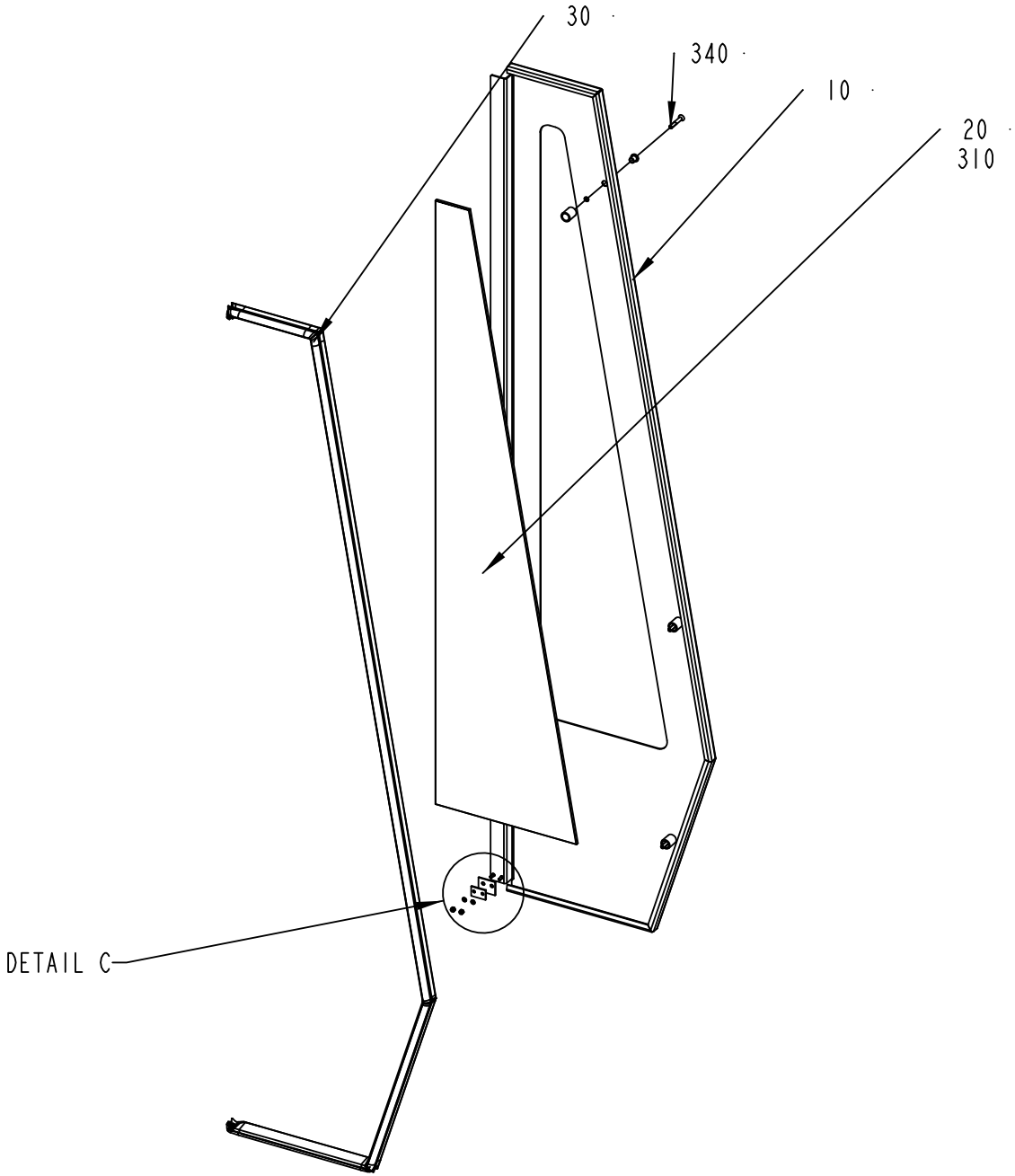


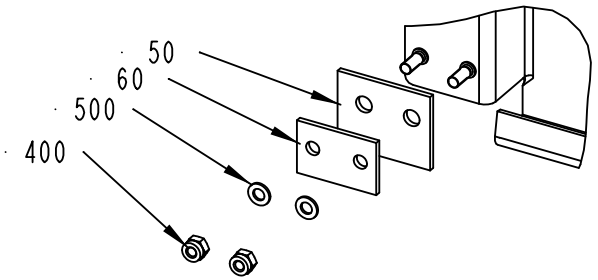


DETAIL C
1:2

2508181-1
313511

ECM: 339761 - 20080402
Group number: 2508181-0100
Assembly Drawing: 2508181-1_1_AC

| Pos | Part No | UN | Qty | Description | Page No |
|---|---|---|---|---|---|
| **A3/FLEX** | | | | | |
| 010 | 2508182-0000 | | 1 | DOOR | |
| 020 | 2508180-0002 | | 1 | GLASS PANE | |
| 030 | 2508183-0000 | | 1 | RUBBER SEAL | |
| **Common Parts** | | | | | |
| 050 | 1129325-0000 | | 1 | SEALING FLANGE | |
| 060 | 1129324-0000 | | 1 | WASHER | |
| 310 | 90157-0041 | | 1 | SEALING COMPOUND, RHODORSEAL 5651 | |
| 340 | 90226-0458 | | 3 | MOUNTING SCREW | |
| 400 | 312812-0312 | | 2 | HEXAGON NUT, NY-LOCK M4 A480 | |
| 500 | 315105-0136 | | 2 | WASHER BRB 4,3X8 RFR | |

| Pos | Part No | UN | Qty | Description | Page No |
|---|---|---|---|---|---|

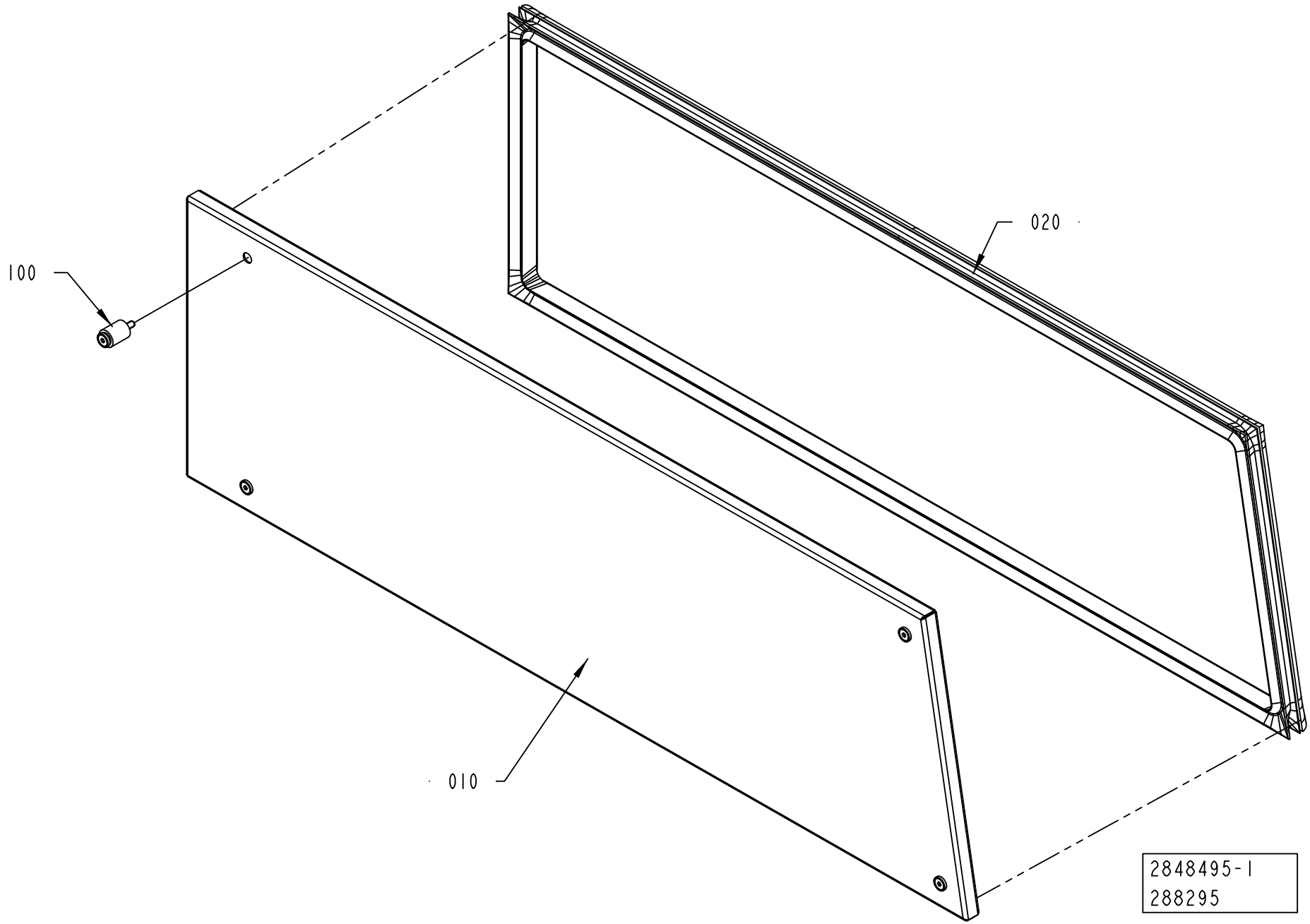
100
020
010
2848495-1
288295

ECM: 288299 - 20070628
Group number: 2848495-0100
Assembly Drawing: 2848495-1_1_AA

| Pos | Part No | UN | Qty | Description | Page No |
|---|---|---|---|---|---|
| - | | | | | |
| 010 | 2848494-0000 | | 1 | COVER | |
| 020 | 2760964-0000 | | 1 | RUBBER SEAL | |
| 100 | 90226-0458 | | 4 | MOUNTING SCREW | |

| Pos | Part No | UN | Qty | Description | Page No |
|---|---|---|---|---|---|

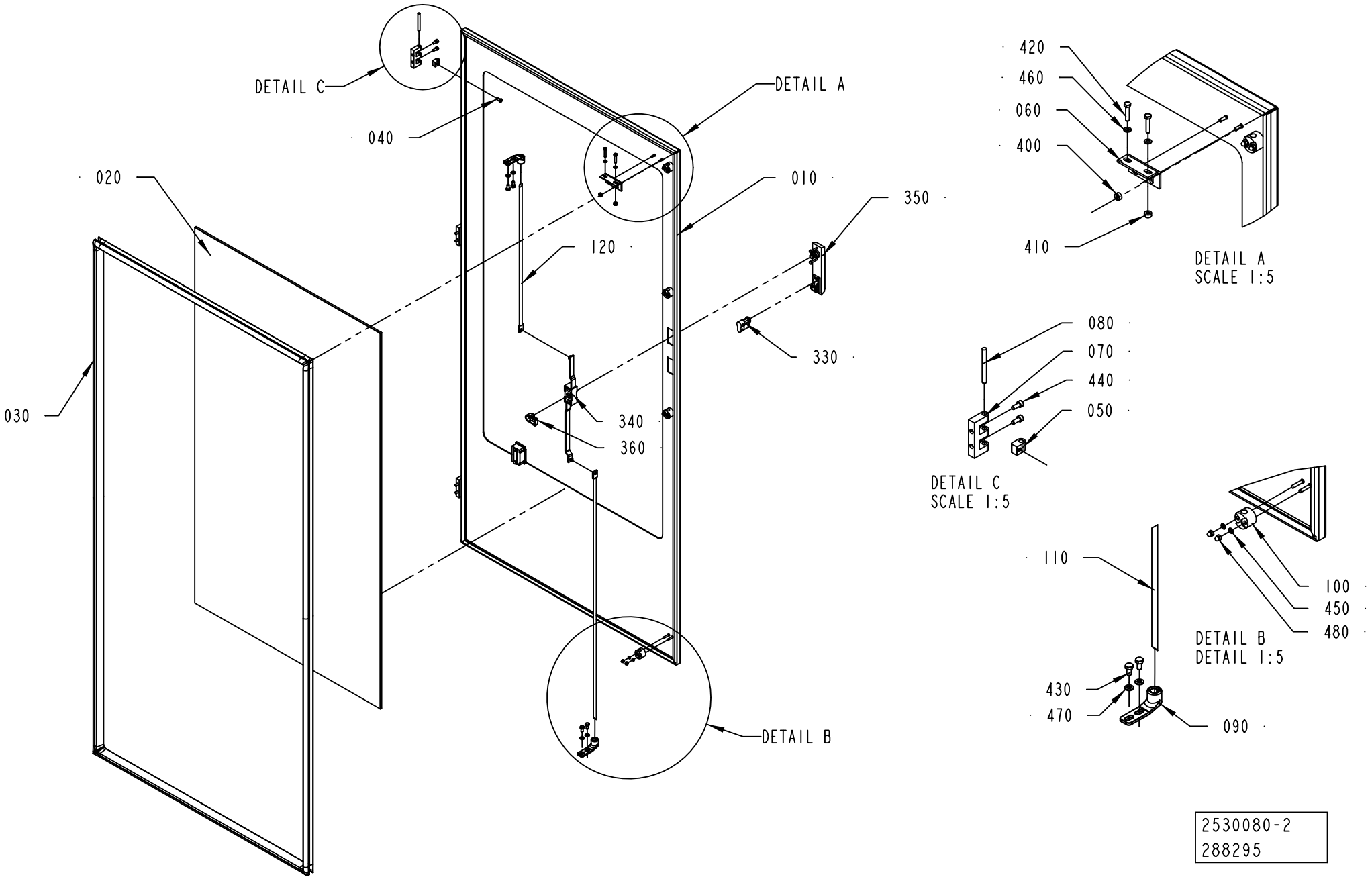
DETAIL C
040
020
DETAIL A
010
350
120
330
030
340
360
DETAIL B
420
460
060
400
410
DETAIL A
SCALE 1:5
080
070
440
050
DETAIL C
SCALE 1:5
110
100
450
480
DETAIL B
DETAIL 1:5
430
470
090
2530080-2
288295

ECM: 308677 - 20070628
Group number: 2530080-0200
Assembly Drawing: 2530080-2_1_AA

| Pos | Part No | UN | Qty | Description | Page No |
|---|---|---|---|---|---|
| - | | | | | |
| 010 | 2530087-0000 | | 1 | DOOR | |
| 020 | 2526740-0000 | | 1 | BRACKET | |
| 030 | 2527639-0000 | | 1 | RUBBER SEAL | |
| 040 | 1129767-0000 | | 3 | SCREW | |
| 050 | 1129770-0000 | | 3 | BLOCKING PIECE | |
| 060 | 1346885-0000 | | 1 | SUPPORT | |
| 070 | 1035792-0000 | | 3 | E-HINGE | |
| 080 | 988685-0000 | | 3 | PIN | |
| 090 | 1538868-0000 | | 2 | BRACKET | |
| 100 | 1129274-0000 | | 4 | GUIDE LUG | |
| 110 | 2508133-0000 | | 1 | LOCKING ARM | |
| 120 | 2508134-0000 | | 1 | LOCKING ARM | |
| 310 | 90157-0041 | L | 1 | SEALING COMPOUND, RHODORSEAL 5651 | |
| 330 | 90237-0128 | | 1 | LOCK CYLINDER, 1109-SU125 | |
| 340 | 90237-0153 | | 1 | LOCK HOUSING, 1121-U26-0B | |
| 350 | 90237-0176 | | 1 | TURNING HANDLE, 1125-U190-A | |
| 360 | 90237-0165 | | 1 | LATCH | |
| 400 | 1539391-0000 | | 2 | ROUND NUT | |
| 410 | 575034-0000 | | 2 | ROUND NUT | |
| 420 | 312105-0333 | | 2 | SCREW M6S ISO 4017 M5X25 A480 | |
| 430 | 312105-0366 | | 4 | SCREW M6S ISO 4017 M6X12 A480 | |
| 440 | 312115-0327 | | 6 | SCREW ISO4762 M5X12 A4 80 | |
| 450 | 315105-0136 | | 8 | WASHER BRB 4,3X8 RFR | |
| 460 | 315105-0146 | | 2 | WASHER BRB 5,3X10 RFR | |
| 470 | 315105-0153 | | 4 | WASHER BRB 6,4X12 RFR | |
| 480 | 312705-0312 | | 8 | NUT HEX. DOMED CAP MHM-6 M4 A280 | |

| Pos | Part No | UN | Qty | Description | Page No |
|---|---|---|---|---|---|

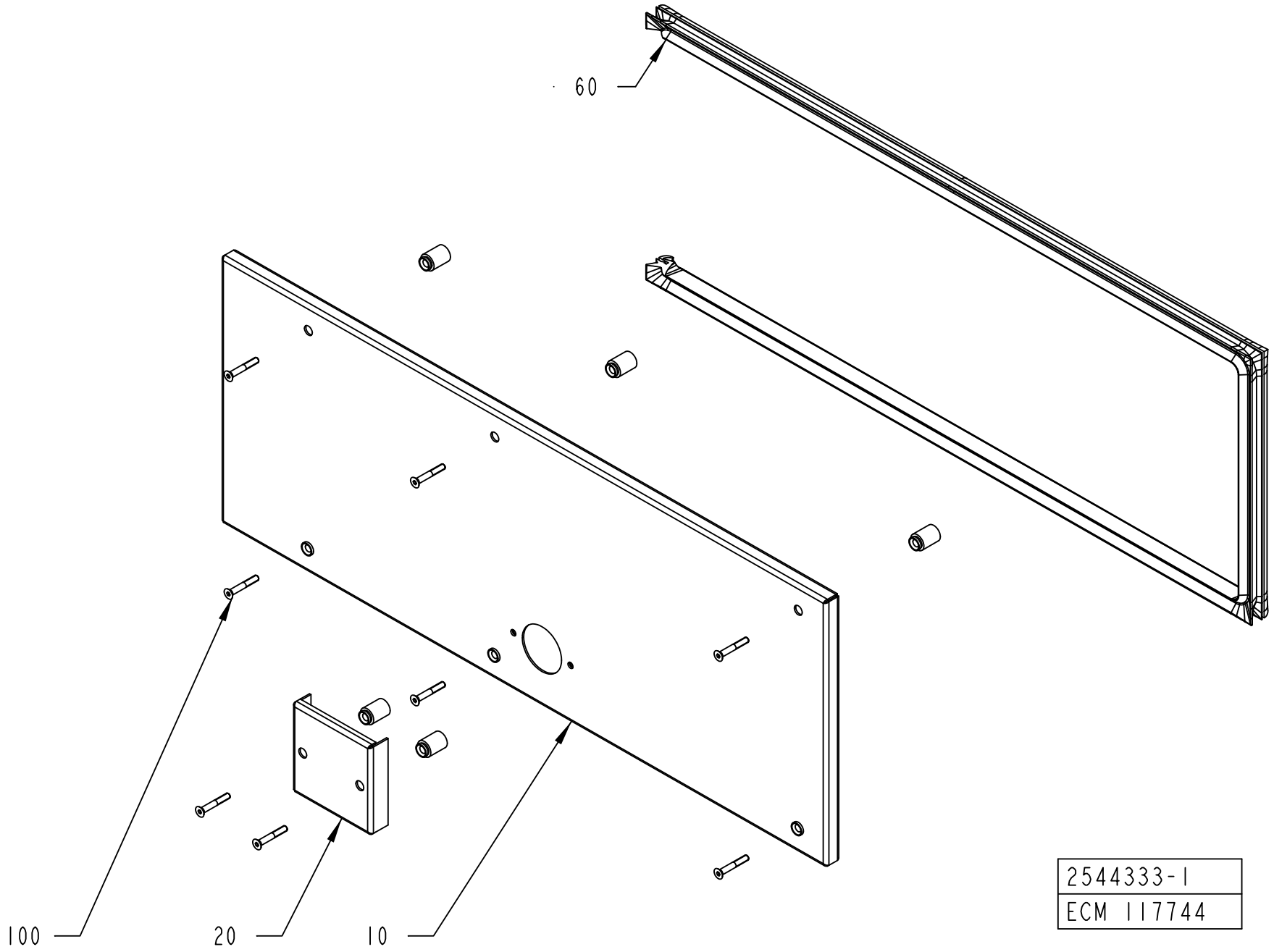
60
100
20
10
2544333-1
ECM 117744

ECM: 117744 - 20030403
Group number: 2544333-0100
Assembly Drawing: 2544333-1_1_AA

| Pos | Part No | UN | Qty | Description | Page No |
|---|---|---|---|---|---|
| - | | | | | |
| 010 | 2544331-0000 | | 1 | COVER | |
| 020 | 2544332-0000 | | 1 | PROTECTION | |
| 060 | 2508161-0000 | | 1 | RUBBER SEAL | |
| 100 | 90226-0458 | | 8 | MOUNTING SCREW | |

| Pos | Part No | UN | Qty | Description | Page No |
|---|---|---|---|---|---|

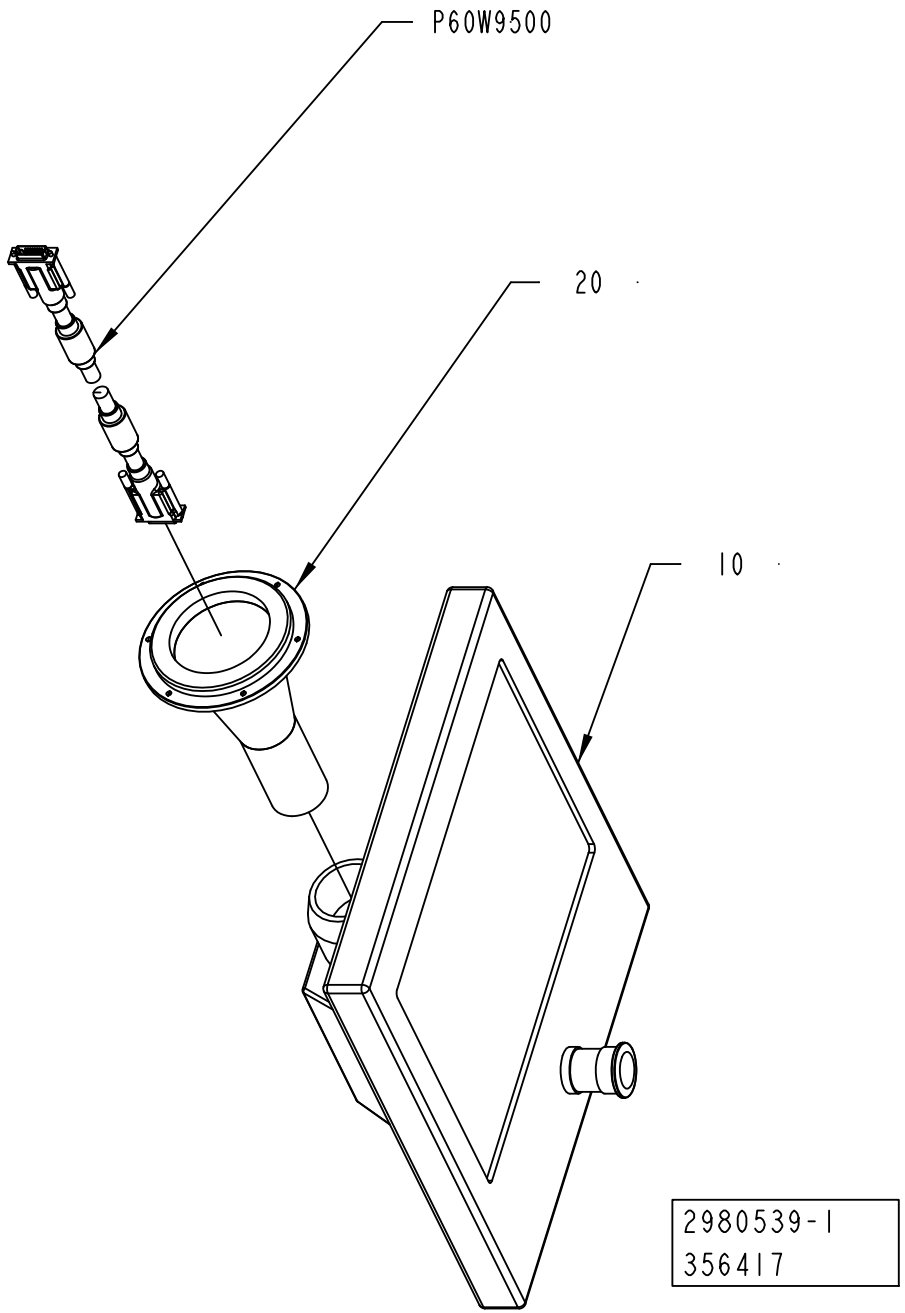
P60W9500
20
10
2980539-1
356417

ECM: 359761 - 20080624
Group number: 2980539-0100
Assembly Drawing: 2980539-1_1_AA

| Pos | Part No | UN | Qty | Description | Page No |
|---|---|---|---|---|---|
| - | | | | | |
| 010 | 90600-3695 | | 1 | CONTROL PANEL 1, 5AP920_1505-K42 | |
| 020 | 2902296-0000 | | 1 | ADAPTER | |
| P60W9500 | 90600-3697 | | 1 | SDL FLEX CABLE 10M, 5CASDL.0100-03 | |

| Pos | Part No | UN | Qty | Description | Page No |
|---|---|---|---|---|---|

# CABLE DUCT



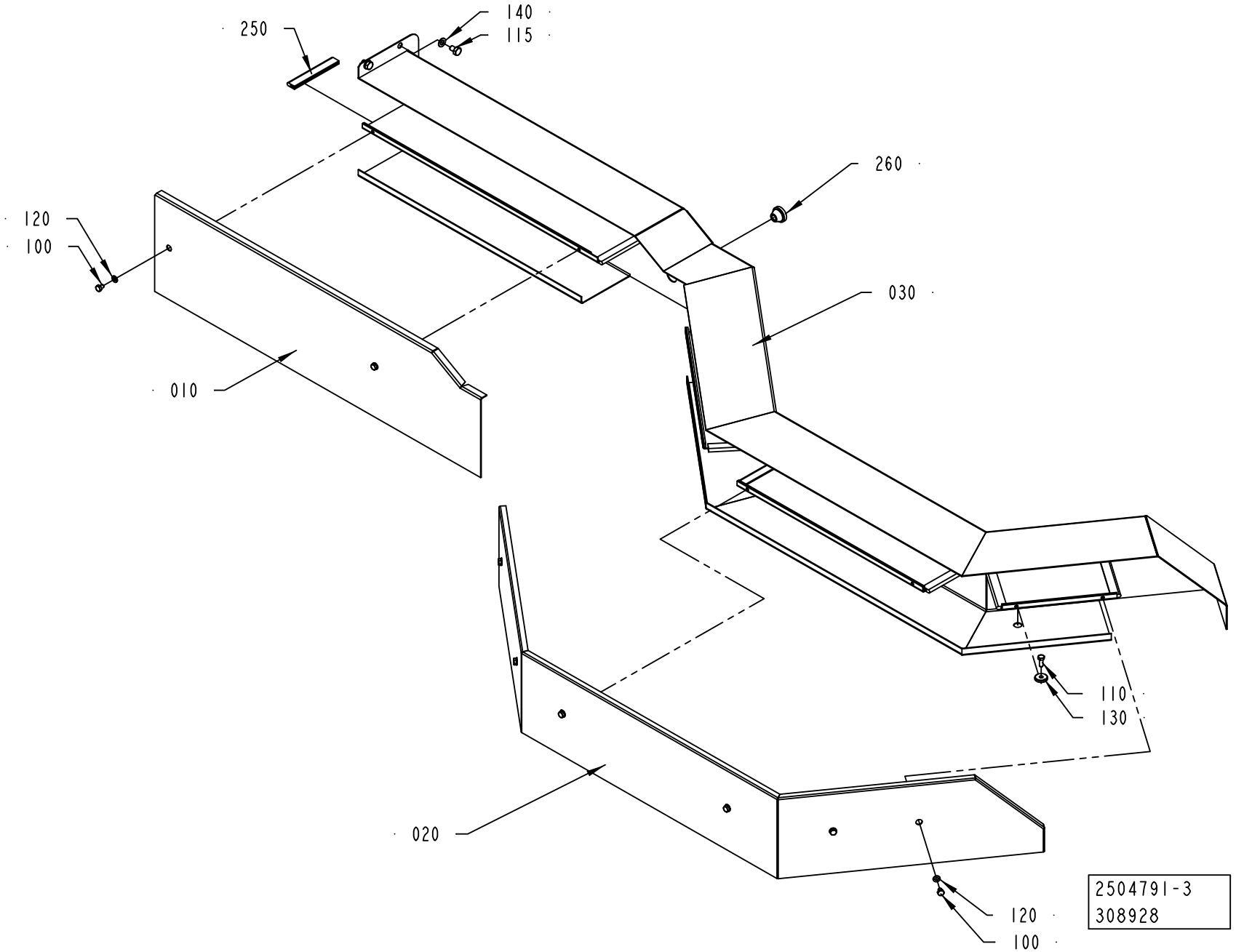
250
140
115
260
120
100
030
010
110
130
020
120
100
2504791-3
308928

ECM: 308928 - 20070627
Group number: 2504791-0200
Assembly Drawing: 2504791-3_1_AA

| Pos | Part No | UN | Qty | Description | Page No |
|---|---|---|---|---|---|
| - | | | | | |
| 010 | 2520181-0000 | | 1 | LID | |
| 020 | 1512145-0000 | | 1 | LID | |
| 030 | 2901591-0000 | | 1 | CABLE DUCT | |
| 100 | 312105-0362 | | 8 | SCREW M6S ISO 4017 M6X8 A480 | |
| 110 | 312105-0368 | | 1 | SCREW M6S ISO 4017 M6X16 A480 | |
| 115 | 312105-0447 | | 4 | SCREW M6S ISO 4017 M8X12 A480 | |
| 120 | 315105-0153 | | 8 | WASHER BRB 6,4X12 RFR | |
| 130 | 315125-0153 | | 1 | WASHER TBRSB 6,4X22X4 A4 | |
| 140 | 315105-0165 | | 4 | WASHER BRB 8,4X16 RFR | |
| 250 | 90143-0097 | MM | 1200 | SELF GRIPPING GASKET, 1011-24 | |
| 260 | 90015-0021 | | 1 | LEAD-IN, TET10-14, E-1458023 | |

| Pos | Part No | UN | Qty | Description | Page No |
|---|---|---|---|---|---|

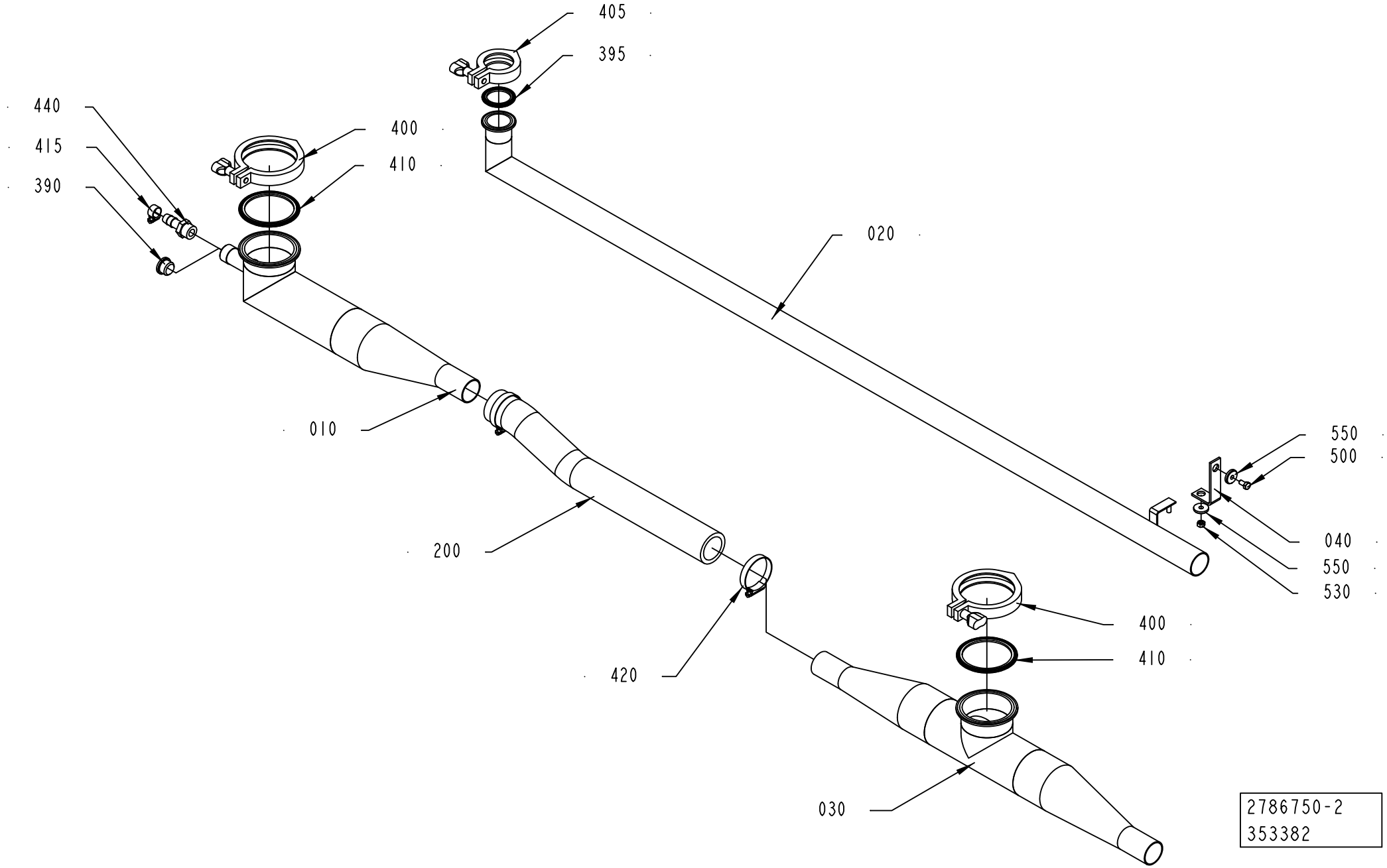
405
395
440
415
390
400
410
020
010
200
550
500
040
550
530
400
410
420
030
2786750-2
353382

ECM: 353386 - 20080528
Group number: 2786750-0200
Assembly Drawing: 2786750-2_1_AA

| Pos | Part No | UN | Qty | Description | Page No |
|---|---|---|---|---|---|
| **A3/FLEX** | | | | | |
| 200 | 90166-0236 | MM | 650 | HOSE, 38/51 REINFORCED RUBBER | |
| **Common Parts** | | | | | |
| 010 | 2786751-0000 | | 1 | PIPE | |
| 020 | 2786752-0000 | | 1 | PIPE | |
| 030 | 2948764-0000 | | 1 | PIPE | |
| 040 | 2786754-0000 | | 1 | BRACKET | |
| 390 | 342713-0213 | | 1 | PLUG, EXT THREAD HEX SOCKET 8638-00-120 | |
| 395 | 342850-0304 | | 1 | GASKET 35,4X49,1X5,2 1"1/2 FDA | |
| 400 | 342840-0107 | | 2 | CLAMP 3" | |
| 405 | 342840-0103 | | 1 | CLAMPING PIECE | |
| 410 | 342850-0107 | | 2 | GASKET, FDA, 3-A, 3 | |
| 415 | 342991-0101 | | 1 | HOSE CLIP,WORM DRIVE TYPE (13)-16 | |
| 420 | 342991-0109 | | 2 | HOSE CLIP,WORM DRIVE TYPE (48)-50 | |
| 440 | 90055-0033 | | 1 | HOSE NIPPLE, EXT.THR. R1/2-13 MM | |
| 500 | 312105-0366 | | 1 | SCREW M6S ISO 4017 M6X12 A480 | |
| 530 | 312605-0316 | | 1 | HEXAGON NUT, M6M M6 A280 | |
| 550 | 315125-0153 | | 2 | WASHER TBRSB 6,4X22X4 A4 | |

| Pos | Part No | UN | Qty | Description | Page No |
|---|---|---|---|---|---|

# WASTE CONVEYOR



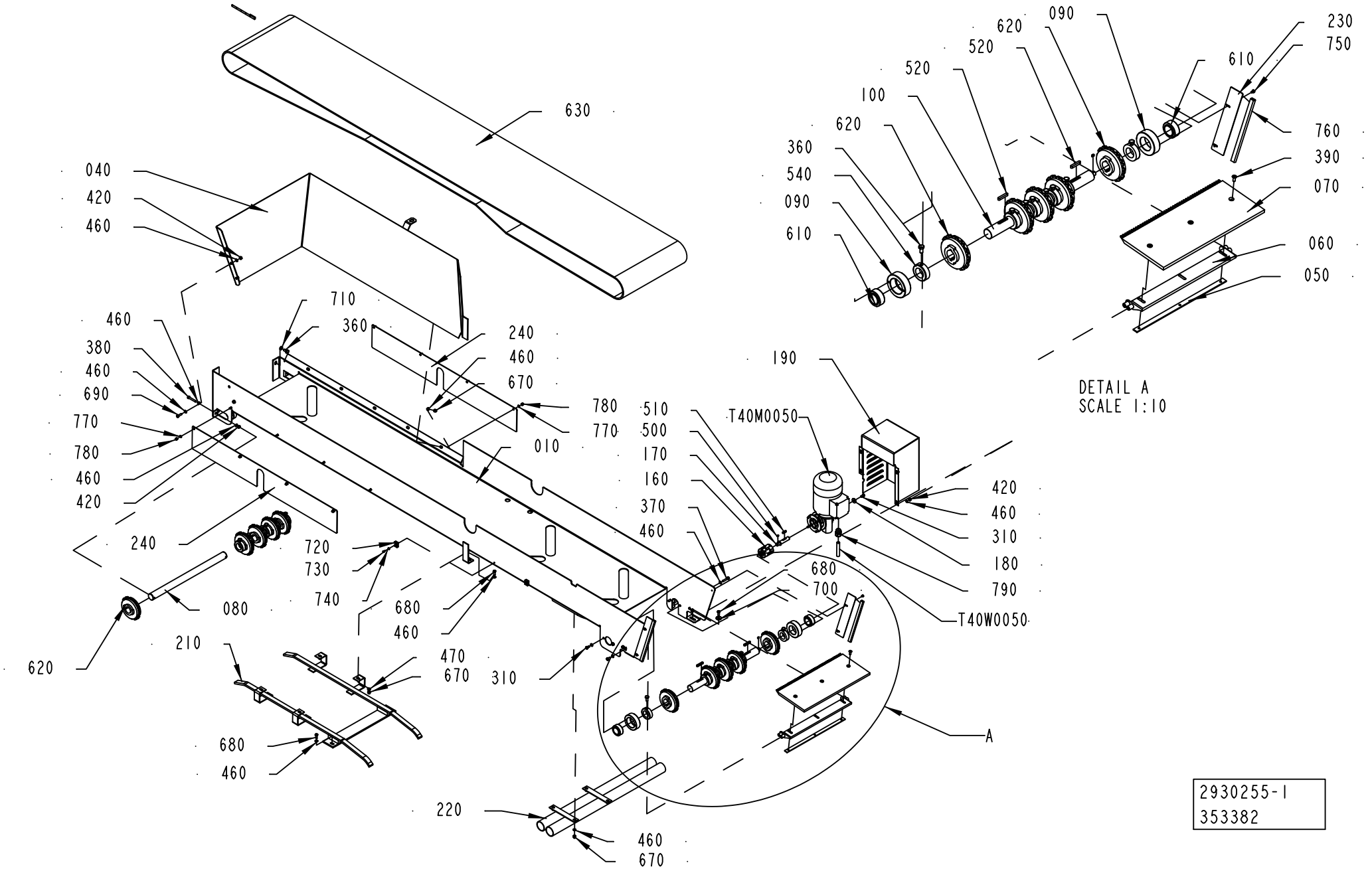


2930255-1
353382

ECM: 353387 - 20080528
Group number: 2930255-0100
Assembly Drawing: 2930255-1_1_AB

| Pos | Part No | UN | Qty | Description | Page No |
|---|---|---|---|---|---|
| - | | | | | |
| 010 | 2930256-0000 | | 1 | CHUTE | |
| 040 | 2930263-0000 | | 1 | PLATE | |
| 050 | 2930265-0000 | | 1 | FASTENING PLATE | |
| 060 | 2930260-0000 | | 1 | BRACKET | |
| 070 | 2930262-0000 | | 1 | GUARD PLATE | |
| 080 | 2930257-0000 | | 1 | SHAFT | |
| 090 | 1348386-0000 | | 2 | BEARING HOUSING | |
| 100 | 2930258-0000 | | 1 | DRIVE SHAFT | |
| 160 | 90600-4782 | | 1 | FLEXIBLE COUPLING, 12X12 MM | |
| 170 | 2508200-0000 | | 1 | SHAFT | |
| 180 | 2529670-0000 | | 1 | WASHER | |
| 190 | 2930259-0000 | | 1 | COVER | |
| 210 | 2930268-0000 | | 1 | BRACKET | |
| 220 | 2936480-0000 | | 1 | CABLE DUCT | |
| 230 | 2941769-0000 | | 2 | PLATE | |
| 240 | 2901594-0000 | | 2 | COVER PLATE | |
| 310 | 312105-0366 | | 7 | SCREW M6S ISO 4017 M6X12 A480 | |
| 360 | 312105-0449 | | 17 | SCREW M6S ISO 4017 M8X16 A480 | |
| 370 | 312105-0374 | | 2 | SCREW M6S ISO 4014 M6X30 A480 | |
| 380 | 312109-0378 | | 2 | SCREW M6S ISO 4017 M6X40 A480 | |
| 390 | 312155-0368 | | 3 | SCREW DIN 7991 MF6S M6X16 A4 70 | |
| 420 | 312605-0316 | | 8 | HEXAGON NUT, M6M M6 A280 | |
| 460 | 315105-0153 | | 37 | WASHER BRB 6,4X12 RFR | |
| 470 | 315115-0153 | | 4 | WASHER PLAIN, TBRB 6,4/12 H=3 | |
| 500 | 315705-0164 | | 2 | PARALLEL KEY W. ROUND ENDS 4X4X8 MM | |
| 510 | 315705-0201 | | 1 | PARALLEL KEY W. ROUND ENDS 5X5X20 MM | |
| 520 | 315705-0238 | | 5 | PARALLEL KEY W. ROUND ENDS 6X6X36 MM | |
| 540 | 315742-0122 | | 15 | RETAINING RING 30 SMS 199 | |
| 610 | 90240-0315 | | 2 | SPHER. BEARING, 30X47X22 PLASTIC MM | |
| 620 | 90344-0073 | | 10 | TOOTHED WHEEL | |
| 630 | 2930264-0000 | | 1 | CONVEYOR CHAIN | |
| 670 | 312705-0316 | | 13 | NUT HEX. DOMED CAP MHM-6 M6 A280 | |
| 680 | 312105-0368 | | 6 | SCREW M6S ISO 4017 M6X16 A480 | |
| 690 | 312105-0370 | | 6 | SCREW M6S ISO 4017 M6X20 A480 | |
| 700 | 315125-0153 | | 2 | WASHER TBRSB 6,4X22X4 A4 | |
| 710 | 315105-0165 | | 2 | WASHER BRB 8,4X16 RFR | |
| 720 | 352113-0203 | | 2 | ANCHOR PLATES FOR STRIPS, TYPE TM3S8-M0 | |
| 730 | 312125-0287 | | 2 | SCREW ISO 1207 M4X8 A4 | |
| 740 | 315105-0136 | | 2 | WASHER BRB 4,3X8 RFR | |
| 750 | 312105-0285 | | 4 | SCREW M6S ISO 4017 M4X6 A470 | |
| 760 | 90143-0097 | MM | 500 | SELF GRIPPING GASKET, 1011-24 | |
| 770 | 315105-0146 | | 8 | WASHER BRB 5,3X10 RFR | |
| 780 | 312705-0314 | | 8 | NUT HEX. DOMED CAP MHM-6 M5 A280 | |
| 790 | 353240-0002 | | 1 | GLAND W/O INSERT PG11 NORMAL | |
| T40M0050 | 90459-1147 | | 1 | GEARS, WORM MOTOR VF30 F1-10 P63 B14 V6 | |
| T40W0050 | 351150-0418 | MM | 7000 | CABLE OLFLEX 4X2,5 MM2 LIGHT/GREY | |

| Machine Type | Group Description | Used-In | Group Number | Page No |
|---|---|---|---|---|

# HAND CRANK



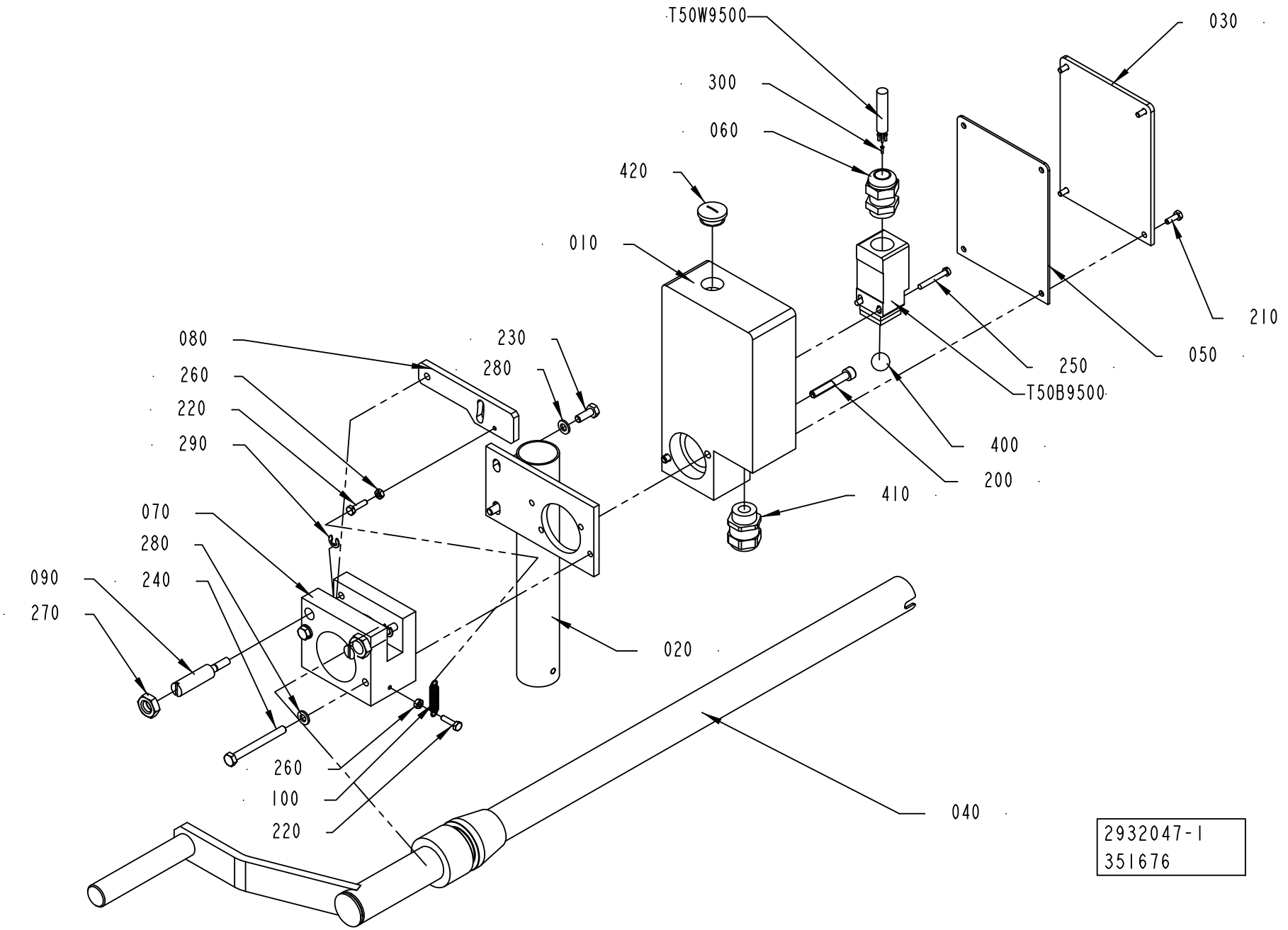
T50W9500
030
300
060
420
010
210
080
230
280
260
220
290
250
050
T50B9500
400
200
410
070
280
090
240
270
020
260
100
220
040
2932047-1
351676

ECM: 351676 - 20080103
Group number: 2932047-0100
Assembly Drawing: 2932047-1_1_AA

| Pos | Part No | UN | Qty | Description | Page No |
|---|---|---|---|---|---|
| - | | | | | |
| 010 | 2930278-0000 | | 1 | HOLDER | |
| 020 | 2930277-0000 | | 1 | SUPPORT | |
| 030 | 2932048-0000 | | 1 | PLATE | |
| 040 | 2932046-0000 | | 1 | CRANK | |
| 050 | 2932049-0000 | | 1 | RUBBER SEAL | |
| 060 | 1349020-0000 | | 1 | GLAND FITTING | |
| 070 | 2508203-0000 | | 1 | HOLDER | |
| 080 | 1346313-0000 | | 1 | PLATE | |
| 090 | 1346312-0000 | | 2 | SCREW | |
| 100 | 1349187-0000 | | 1 | SPRING | |
| 200 | 312155-0378 | | 2 | SCREW DIN 7991 MF6S M6X40 A4 70 | |
| 210 | 312105-0291 | | 4 | SCREW M6S ISO 4017 M4X12 A470 | |
| 220 | 312105-0293 | | 2 | SCREW M6S ISO 4017 M4X16 A470 | |
| 230 | 312105-0368 | | 2 | SCREW M6S ISO 4017 M6X16 A480 | |
| 240 | 312105-0382 | | 2 | SCREW M6S ISO 4014 M6X60 A480 | |
| 250 | 312125-0299 | | 2 | SCREW ISO 1207 M4X30 A4 | |
| 260 | 312605-0312 | | 2 | HEXAGON NUT, M6M M4 A280 | |
| 270 | 312625-0322 | | 2 | HEXAGON THIN NUT, EN 24035 ML6M M12 A4 | |
| 280 | 315105-0153 | | 4 | WASHER BRB 6,4X12 RFR | |
| 290 | 315755-0107 | | 2 | RETAINING RING SHAFT DIN 6799 5 A2 | |
| 300 | 353001-0103 | | 4 | END SLEEVE 0,75 MM2 | |
| 400 | 321390-0145 | | 1 | STEEL BALL 15MM, RB-15 RS | |
| 410 | 90458-0307 | | 1 | CABLE GLAND, M20X1,5, NO.5311 1020 | |
| 420 | 90458-1308 | | 1 | BLIND PLUG CIRCULAR, M20X1,5 514GFK/220 | |
| T50B9500 | 1144653-0000 | | 1 | SWITCH | |
| T50W9500 | 351150-0405 | MM | 7000 | CABLE OLFLEX 5X0,75 MM2 LIGHT/GREY | |

| Pos | Part No | UN | Qty | Description | Page No |
|---|---|---|---|---|---|

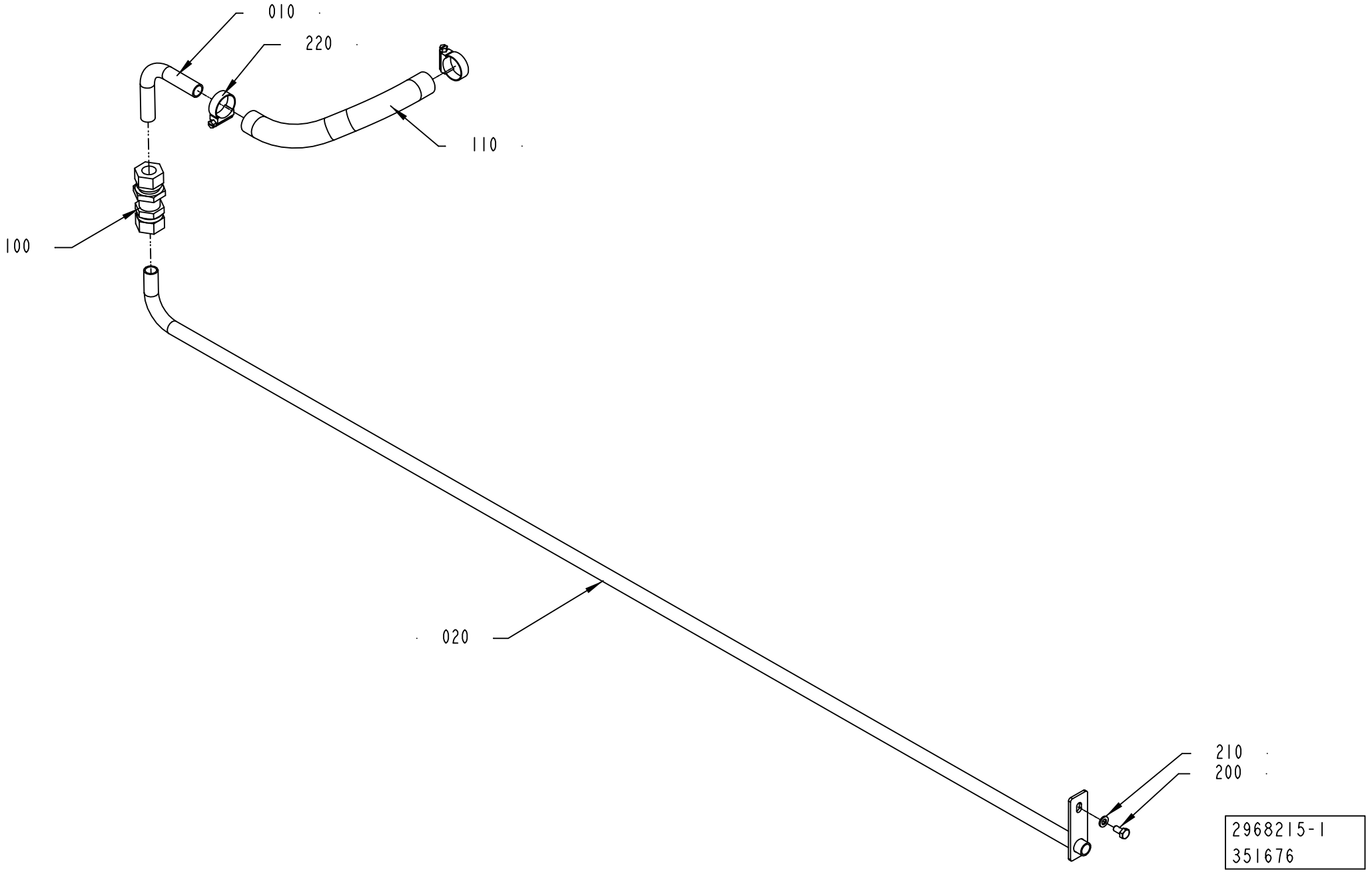
010
220
110
100
020
210
200
2968215-1
351676

ECM: 351676 - 20080103
Group number: 2968215-0100
Assembly Drawing: 2968215-1_1_AA

| Pos | Part No | UN | Qty | Description | Page No |
|---|---|---|---|---|---|
| - | | | | | |
| 010 | 2968216-0000 | | 1 | PIPE | |
| 020 | 2968217-0000 | | 1 | DRAIN PIPE | |
| 100 | 90030-0159 | | 1 | CONN. BULKHEAD SV15L71 | |
| 110 | 90166-0260 | MM | 300 | HOSE | |
| 200 | 312105-0366 | | 1 | SCREW M6S ISO 4017 M6X12 A480 | |
| 210 | 315105-0153 | | 1 | WASHER BRB 6,4X12 RFR | |
| 220 | 342991-0104 | | 2 | HOSE CLIP,WORM DRIVE TYPE (23)-27 | |

| Pos | Part No | UN | Qty | Description | Page No |
|---|---|---|---|---|---|

Tetra Pak

# SPC
## Spare Parts Catalogue

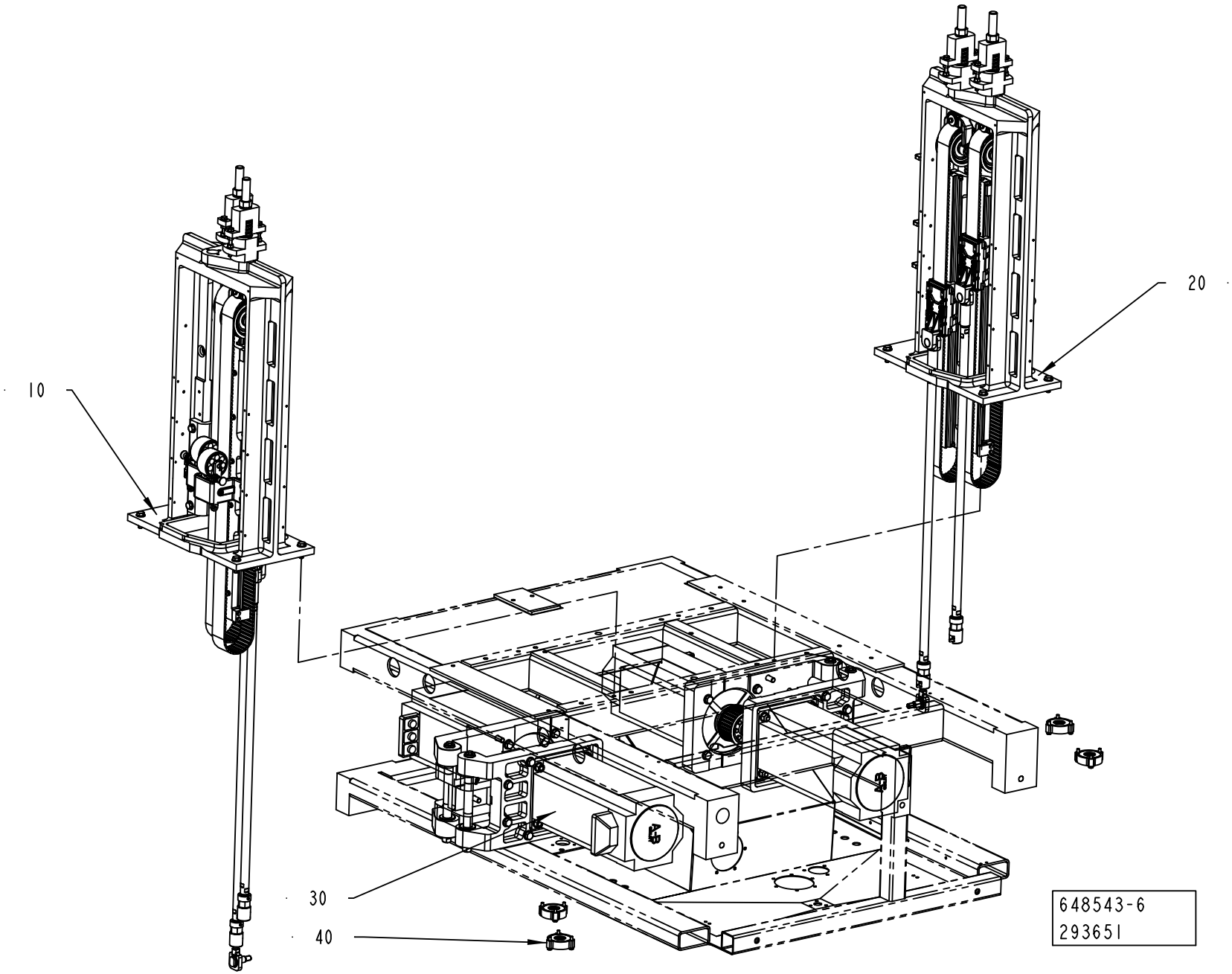
10
20
30
40
648543-6
293651

ECM: 320472 - 20070906
Group number: 648543-0500
Assembly Drawing: 648543-6_1_AA

| Pos | Part No | UN | Qty | Description | Page No |
|---|---|---|---|---|---|
| - | | | | | |
| 010 | 2872688-0100 | | 1 | SUPPORT | **3-5** |
| 020 | 2872689-0100 | | 1 | SUPPORT | **3-19** |
| 030 | 2877148-0100 | | 1 | MOTOR UNIT | **3-27** |
| 040 | 2651990-0100 | | 4 | LINK SYSTEM GASKET | **3-29** |

| Pos | Part No | UN | Qty | Description | Page No |
|---|---|---|---|---|---|

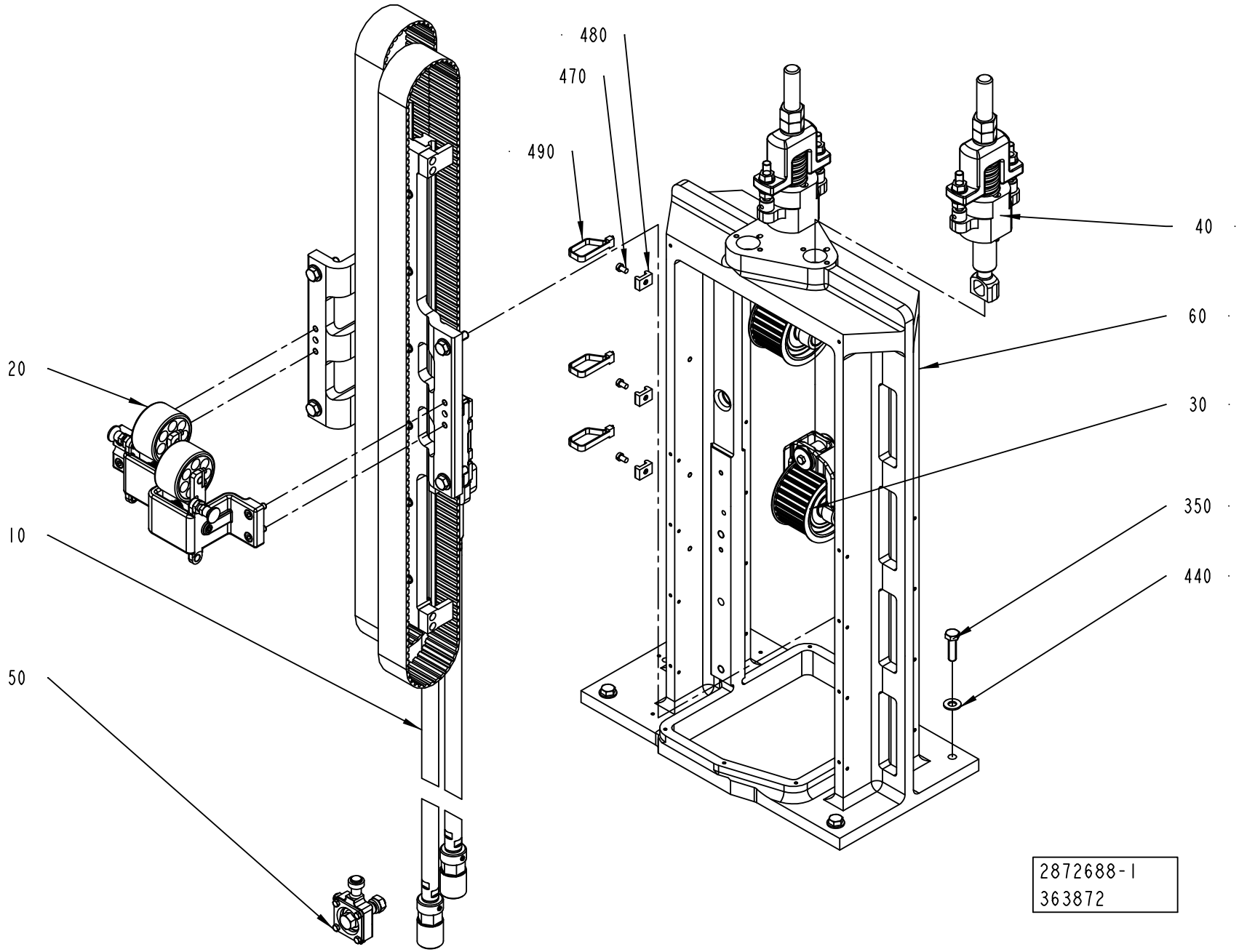
480
470
490
40
60
20
30
10
350
440
50
2872688-1
363872

ECM: 365392 - 20080828
Group number: 2872688-0100
Assembly Drawing: 2872688-1_1_AB

| Pos | Part No | UN | Qty | Description | Page No |
|---|---|---|---|---|---|
| - | | | | | |
| 010 | 2872690-0100 | | 1 | GUIDE | **3-7** |
| 020 | 1487629-0100 | | 1 | DAMPER | **3-11** |
| 030 | 2803072-0100 | | 2 | PULLEY | **3-13** |
| 040 | 2872687-0100 | | 2 | BELT TENSIONER | **3-15** |
| 050 | 2970441-0100 | | 1 | LINK | **3-17** |
| 060 | 1255222-0000 | | 1 | FRAME | |
| 350 | 312105-0497 | | 4 | SCREW M6S ISO 4017 M10X35 A480 | |
| 440 | 315105-0173 | | 4 | WASHER BRB 10,5X22 RFR | |
| 470 | 312125-0364 | | 3 | SCREW ISO 1207 M6X10 A4 | |
| 480 | 352113-0204 | | 3 | ANCHOR PLATES FOR STRIPS, TYPE TM3S25-M | |
| 490 | 352113-0103 | | 3 | CABLE TIE, BLACK 290X7,6 MM | |

| Pos | Part No | UN | Qty | Description | Page No |
|---|---|---|---|---|---|

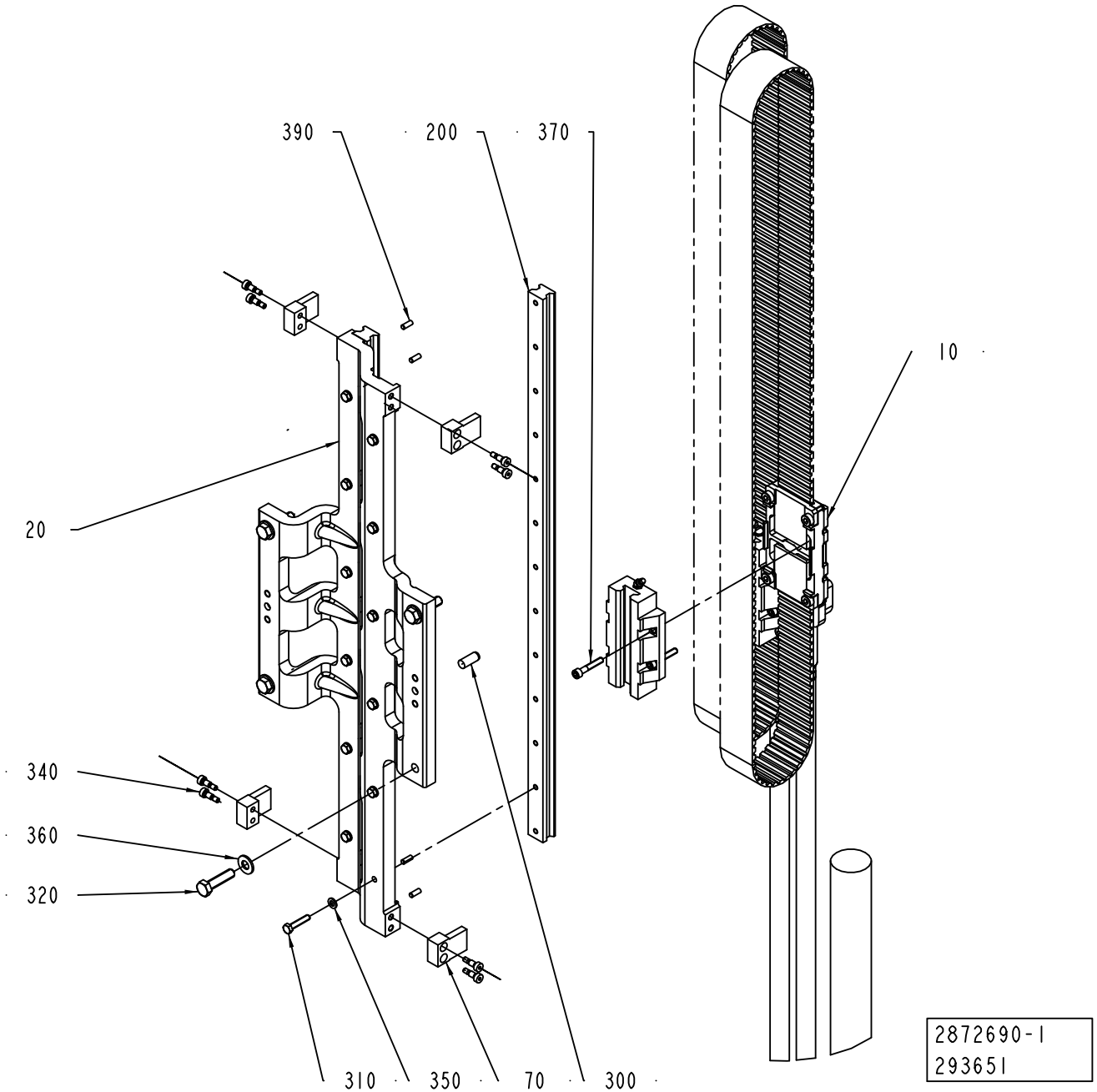
390
200
370
10
20
340
360
320
310
350
70
300
2872690-1
293651

ECM: 293966 - 20070701
Group number: 2872690-0100
Assembly Drawing: 2872690-1_1_AA

| Pos | Part No | UN | Qty | Description | Page No |
|---|---|---|---|---|---|
| - | | | | | |
| 010 | 2872692-0100 | | 2 | RUNNER BLOCK UNIT ..... | **3-9** |
| 020 | 1255223-0000 | | 1 | HOLDER | |
| 070 | 2878186-0000 | | 4 | SETTING STOPPER | |
| 200 | 90600-2004 | | 2 | LINEAR UNIT, SHS25LC1QZSSFME+740LKF | |
| 300 | 311103-1456 | | 2 | PARALLEL PIN ISO 2338 10M6X24 A1 | |
| 310 | 312109-0374 | | 12 | SCREW M6S ISO 4017 M6X30 A480 | |
| 320 | 312109-0499 | | 4 | SCREW M6S ISO 4017 M10X40 A480 | |
| 340 | 312180-0364 | | 8 | SCREW ISO7379 H6X10 | |
| 350 | 315105-0153 | | 12 | WASHER BRB 6,4X12 RFR | |
| 360 | 315105-0173 | | 4 | WASHER BRB 10,5X22 RFR | |
| 370 | 312115-0376 | | 8 | SCREW ISO4762 M6X35 A4 80 | |
| 390 | 311103-0307 | | 4 | PARALLEL PIN ISO 2338 5M6X14 A1 | |

| Pos | Part No | UN | Qty | Description | Page No |
|---|---|---|---|---|---|

# RUNNER BLOCK UNIT



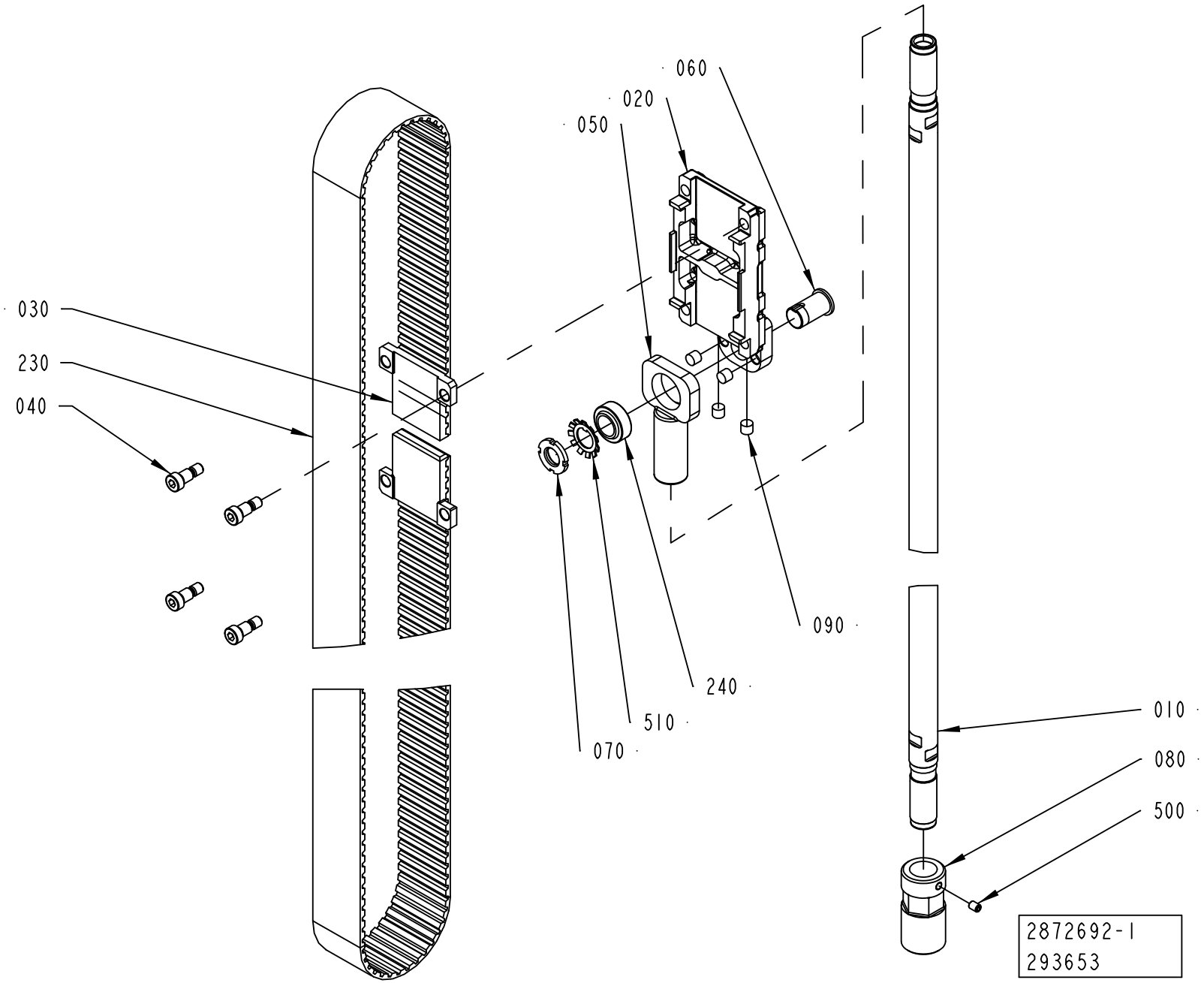

ECM: 293961 - 20070701
Group number: 2872692-0100
Assembly Drawing: 2872692-1_1_AA

| Pos | Part No | UN | Qty | Description | Page No |
|---|---|---|---|---|---|
| - | | | | | |
| 010 | 2847935-0000 | | 1 | LINK ROD | |
| 020 | 2847931-0000 | | 1 | PLATE | |
| 030 | 2847933-0000 | | 2 | BELT HOLDER | |
| 040 | 2644623-0000 | | 4 | SHOULDER SCREW | |
| 050 | 2847934-0000 | | 1 | LINK HEAD | |
| 060 | 2847932-0000 | | 1 | SHAFT | |
| 070 | 2871128-0000 | | 1 | ROUND NUT | |
| 080 | 2847936-0000 | | 1 | CONNECTION CLAMP | |
| 090 | 2847941-0000 | | 4 | DAMPER | |
| 230 | 90458-2306 | | 1 | TIMING BELT ATL10 2020X50 MM | |
| 240 | 90600-2005 | | 1 | PLAIN BEAR,SELF ADJ.SPHER.17X30X14 MM | |
| 500 | 312318-0362 | | 1 | SCREW ISO4029 M6X8 A4 | |
| 510 | 315410-0103 | | 1 | LOCK WASHER MB 3 D=17 H=1 | |

| Pos | Part No | UN | Qty | Description | Page No |
|---|---|---|---|---|---|

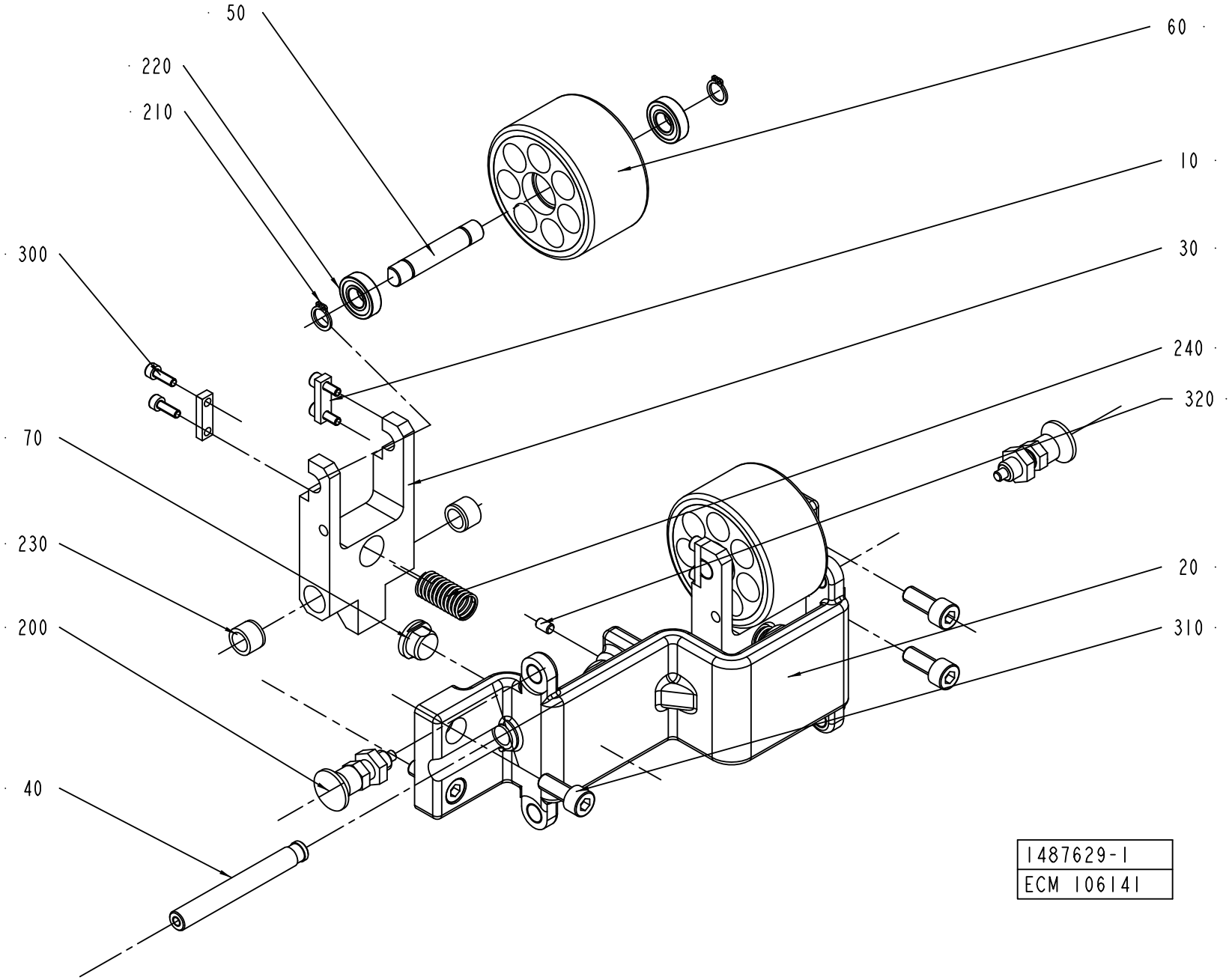
50
220
210
300
70
230
200
40
60
10
30
240
320
20
310
1487629-1
ECM 106141

ECM: 293969 - 20070701
Group number: 1487629-0100
Assembly Drawing: 1487629-1_1_AA

| Pos | Part No | UN | Qty | Description | Page No |
|---|---|---|---|---|---|
| - | | | | | |
| 010 | 1349266-0000 | | 4 | PLATE | |
| 020 | 1487631-0000 | | 1 | BRACKET | |
| 030 | 1487632-0000 | | 2 | FORK | |
| 040 | 1487633-0000 | | 2 | AXLE PIN | |
| 050 | 1487634-0000 | | 2 | AXLE PIN | |
| 060 | 1487635-0000 | | 2 | WHEEL | |
| 070 | 1487636-0000 | | 2 | STOPPER | |
| 200 | 90051-0112 | | 2 | LOCK KNOB, NO. GN 617 NIK5 | |
| 210 | 90141-0016 | | 4 | RETAINING RING FOR SHAFT DIN 471 10 SS | |
| 220 | 90214-0036 | | 4 | BALL BEARING, 10X22X6 MM | |
| 230 | 90240-0119 | | 4 | BEAR. BUSHING WITHOUT FL | |
| 240 | 90458-2305 | | 2 | COMP. SPRING D22280 | |
| 300 | 312115-0291 | | 8 | SCREW ISO4762 M4X12 A4 80 | |
| 310 | 312115-0451 | | 4 | SCREW ISO4762 M8X20 A4 80 | |
| 320 | 312318-0323 | | 2 | SCREW ISO4029 M5X8 A4 | |

| Pos | Part No | UN | Qty | Description | Page No |
|---|---|---|---|---|---|

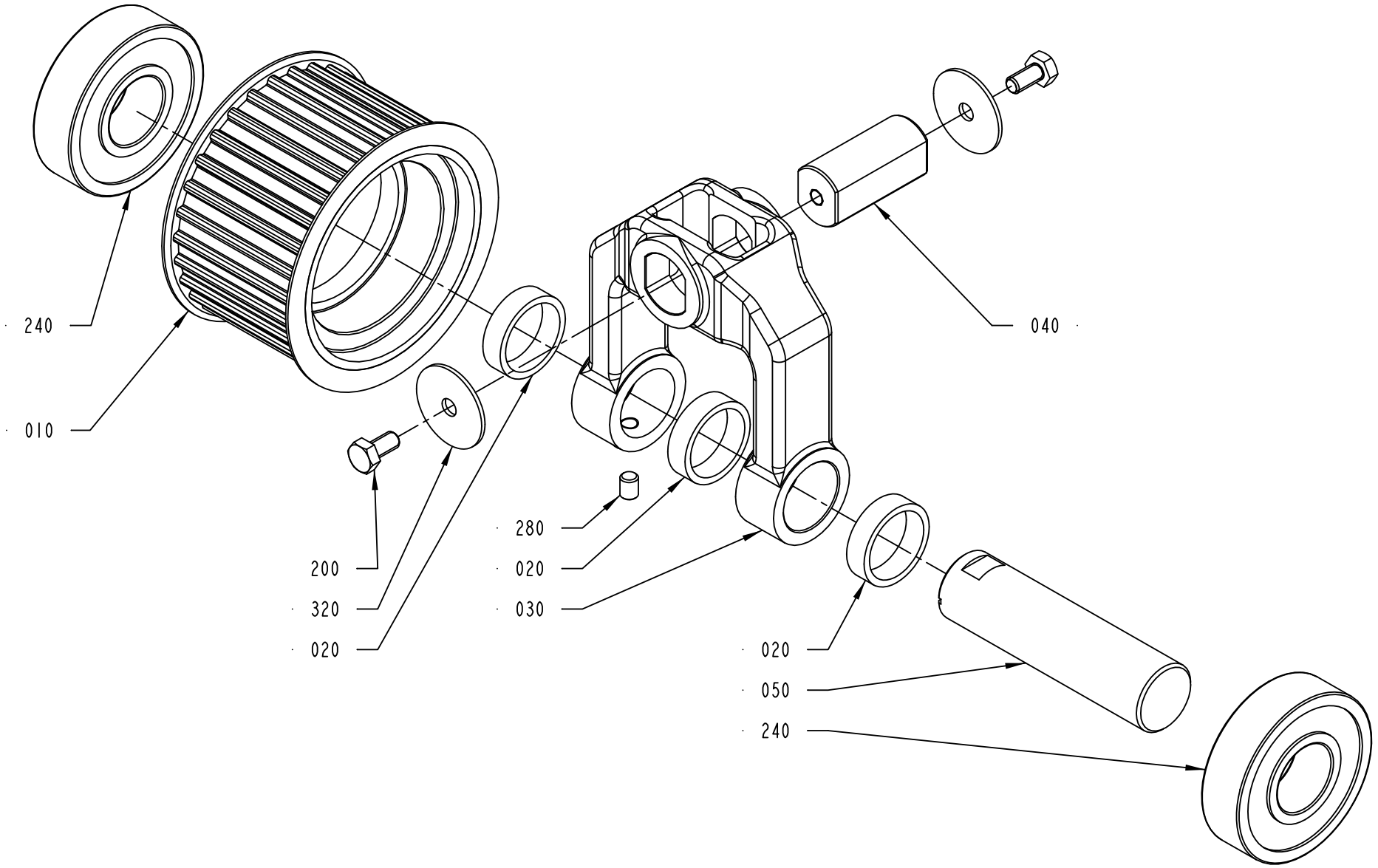
240
010
200
320
020
280
020
030
040
020
050
240
2803072-1
293653

ECM: 342877 - 20080215
Group number: 2803072-0100
Assembly Drawing: 2803072-1_1_AA

| Pos | Part No | UN | Qty | Description | Page No |
|---|---|---|---|---|---|
| - | | | | | |
| 010 | 2802756-0000 | | 1 | PULLEY | |
| 020 | 1346890-0000 | | 3 | SPACER | |
| 030 | 2802611-0000 | | 1 | SUPPORT PULLEY | |
| 040 | 2802624-0000 | | 1 | AXLE PIN | |
| 050 | 1511195-0000 | | 1 | SHAFT | |
| 200 | 312105-0366 | | 2 | SCREW M6S ISO 4017 M6X12 A480 | |
| 240 | 321316-0205 | | 2 | BALL BEARING, 25X62X17 MM | |
| 280 | 312318-0362 | | 1 | SCREW ISO4029 M6X8 A4 | |
| 320 | 90458-0073 | | 2 | WASHER 6,4/30, H=1,5 | |

| Pos | Part No | UN | Qty | Description | Page No |
|---|---|---|---|---|---|

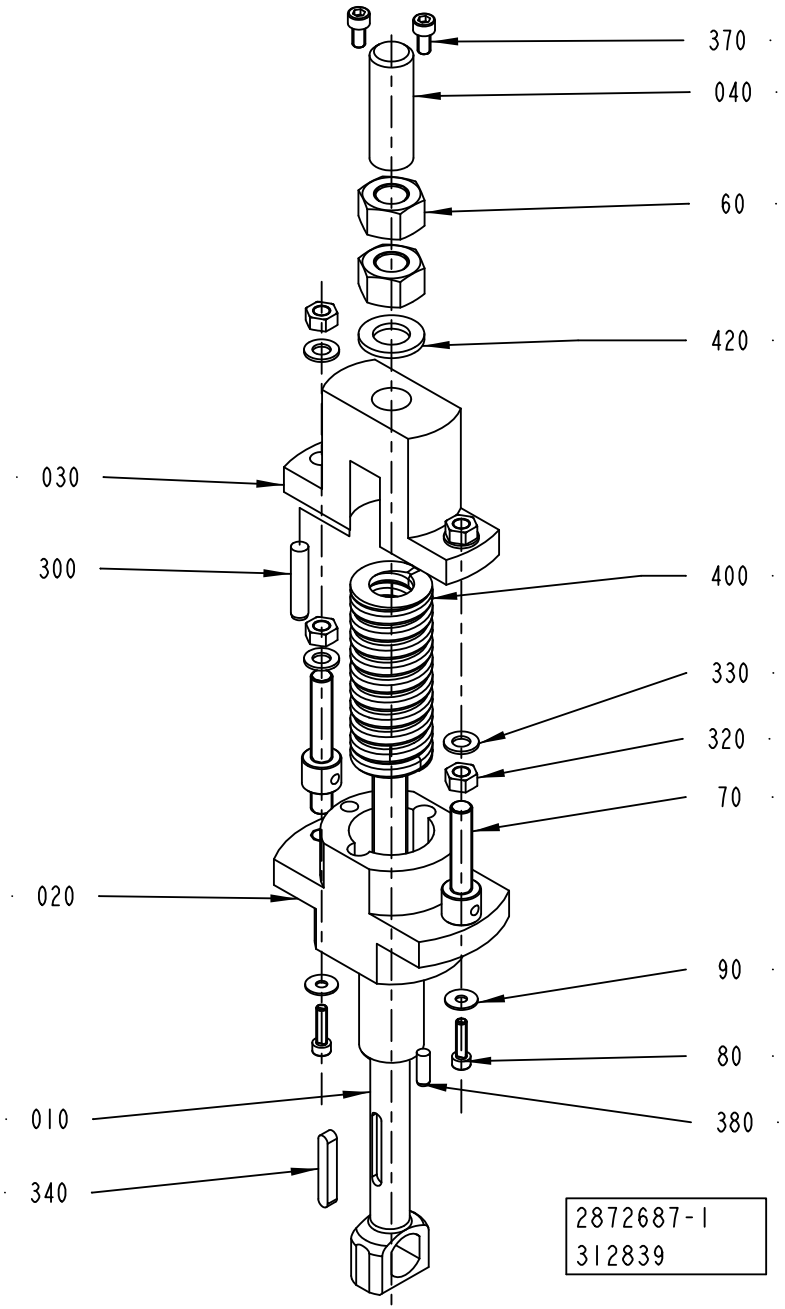
370
040
60
420
030
300
400
330
320
70
020
90
80
010
380
340
2872687-1
312839

ECM: 337148 - 20080102
Group number: 2872687-0100
Assembly Drawing: 2872687-1_1_AB

| Pos | Part No | UN | Qty | Description | Page No |
|---|---|---|---|---|---|
| - | | | | | |
| 010 | 2802625-0000 | | 1 | SHAFT | |
| 020 | 2909504-0000 | | 1 | BUSHING | |
| 030 | 2909505-0000 | | 1 | ROCKER | |
| 040 | 2525570-0000 | | 1 | COVER | |
| 060 | 2640826-0000 | | 2 | NUT | |
| 070 | 2890567-0000 | | 2 | SHAFT | |
| 080 | 312115-0323 | | 2 | SCREW ISO4762 M5X8 A4 80 | |
| 090 | 315125-0146 | | 2 | WASHER TBRSB 5.3X15X1 A4 | |
| 300 | 311103-0409 | | 1 | PARALLEL PIN ISO 2338 8M6X40 A1 | |
| 320 | 312607-0320 | | 4 | HEXAGON NUT, EN 24032 M6M M10 A480 | |
| 330 | 315106-0173 | | 4 | WASHER ISO 7089-10-200 HV A4 | |
| 340 | 315705-0239 | | 1 | PARALLEL KEY W. ROUND ENDS 6X6X40 MM | |
| 370 | 312115-0366 | | 2 | SCREW ISO4762 M6X12 A4 80 | |
| 380 | 311103-0352 | | 1 | PARALLEL PIN ISO 2338 6M6X18 A1 | |
| 400 | 90458-2301 | | 1 | SPRING, YELLOW SPRING G40X115 | |
| 420 | 315105-0186 | | 1 | WASHER BRB 17X30 RFR | |

| Pos | Part No | UN | Qty | Description | Page No |
|---|---|---|---|---|---|

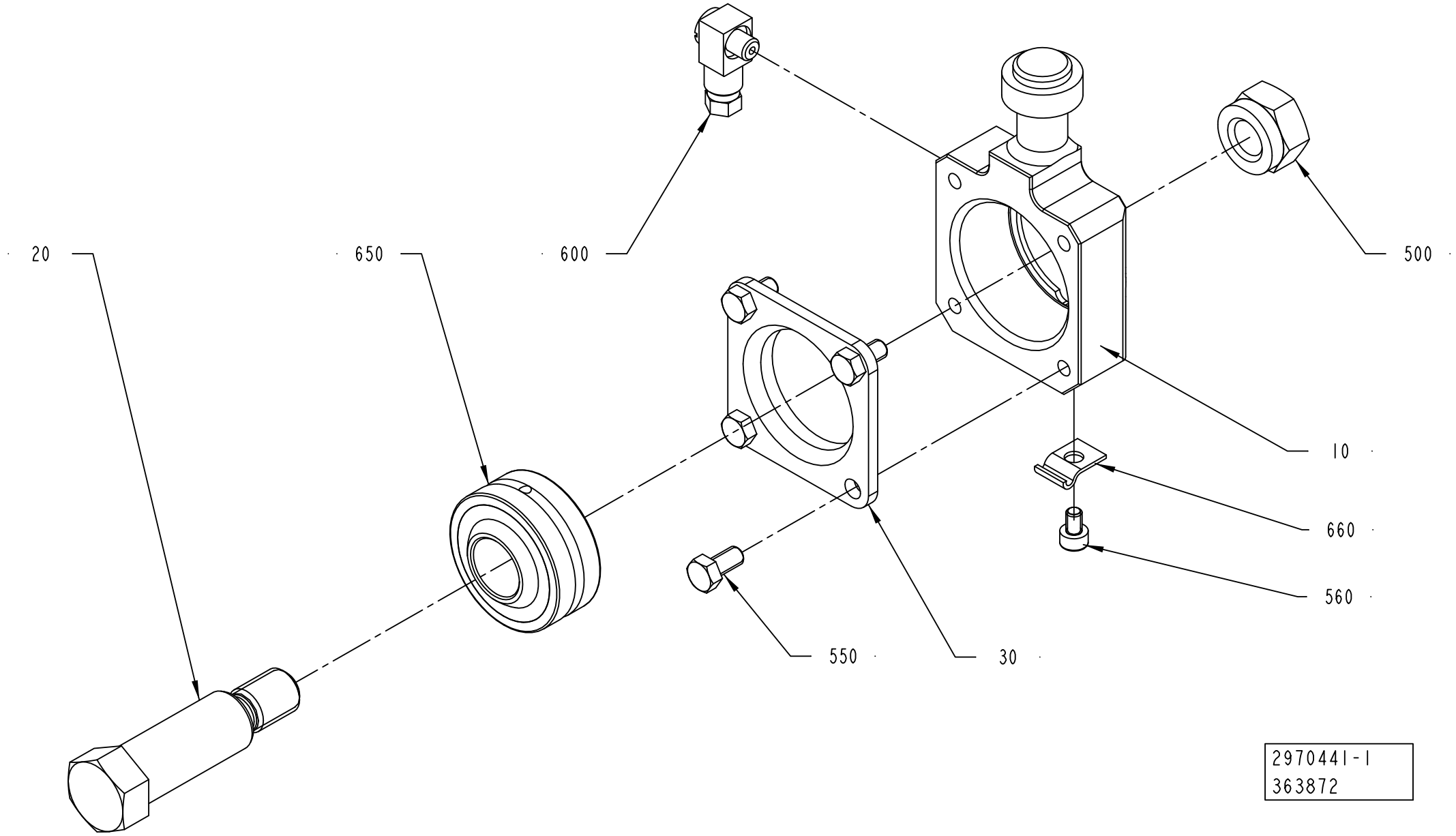
20
650
600
500
10
660
560
550
30
2970441-1
363872

ECM: 365389 - 20080828
Group number: 2970441-0100
Assembly Drawing: 2970441-1_1_AA

| Pos | Part No | UN | Qty | Description | Page No |
|---|---|---|---|---|---|
| - | | | | | |
| 010 | 2970438-0000 | | 1 | LINK HEAD | |
| 020 | 2969941-0000 | | 1 | AXLE PIN | |
| 030 | 2970440-0000 | | 1 | FLANGE | |
| 500 | 312812-0322 | | 1 | HEXAGON NUT, NY-LOCK M12 A480 | |
| 550 | 312105-0325 | | 4 | SCREW M6S ISO 4017 M5X10 A480 | |
| 560 | 312115-0285 | | 1 | SCREW ISO4762 M4X6 A4 80 | |
| 600 | 90134-0058 | | 1 | CONNECTION | |
| 650 | 90600-5006 | | 1 | PLAIN BEAR,SELF ADJ.SPHER. 16X38X21 | |
| 660 | 90165-0058 | | 1 | PIPE CLIP FOR TUBE D=2,5 MM | |

| Pos | Part No | UN | Qty | Description | Page No |
|---|---|---|---|---|---|

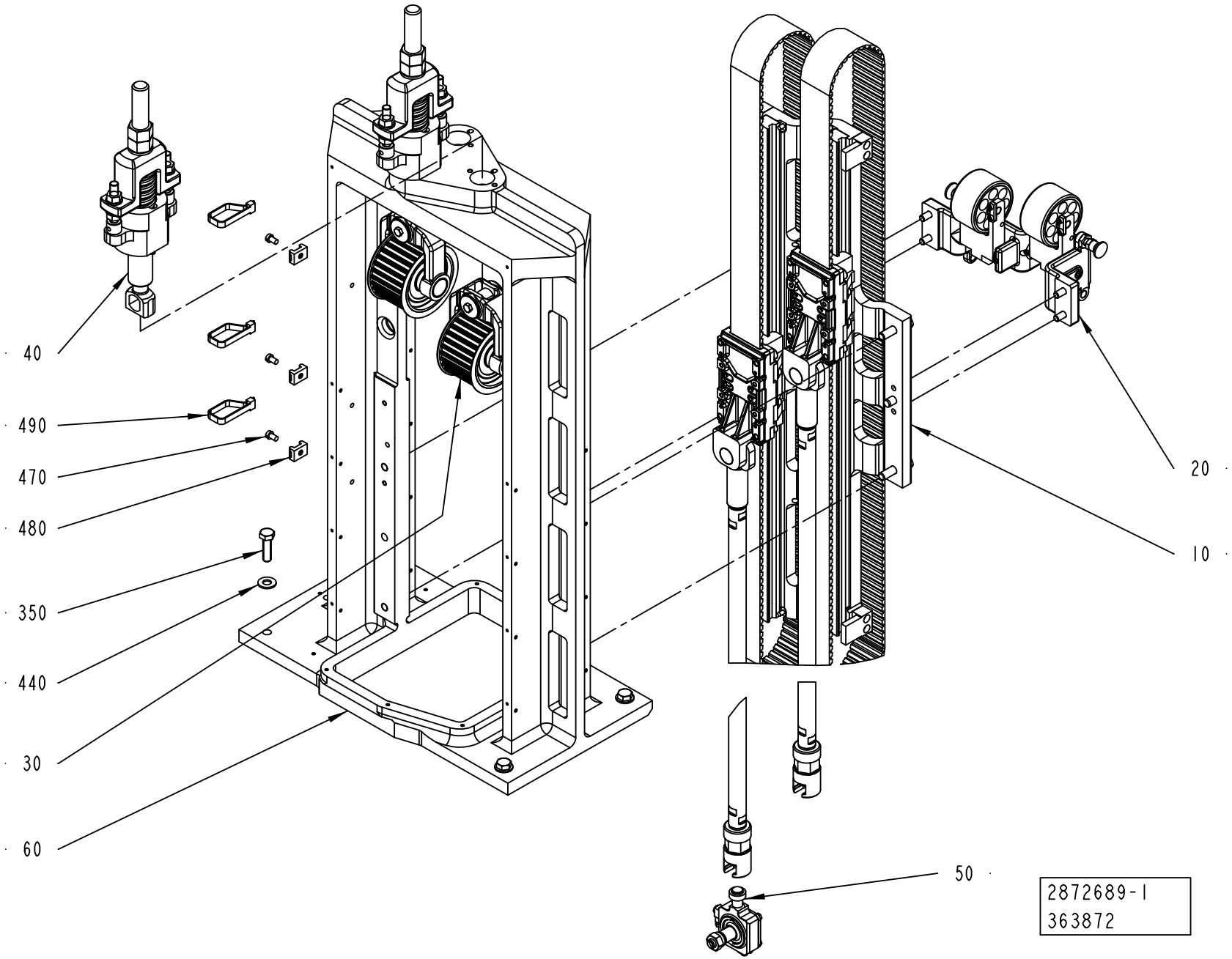
40
490
470
480
350
440
30
60
20
10
50
2872689-1
363872

ECM: 365391 - 20080828
Group number: 2872689-0100
Assembly Drawing: 2872689-1_1_AB

| Pos | Part No | UN | Qty | Description | Page No |
|---|---|---|---|---|---|
| - | | | | | |
| 010 | 2872691-0100 | | 1 | GUIDE ..... | **3-21** |
| 020 | 1487630-0100 | | 1 | DAMPER ..... | **3-23** |
| 030 | 2803072-0100 | | 2 | PULLEY ..... | **3-13** |
| 040 | 2872687-0100 | | 2 | BELT TENSIONER ..... | **3-15** |
| 050 | 2970442-0100 | | 1 | LINK ..... | **3-25** |
| 060 | 1255222-0000 | | 1 | FRAME | |
| 350 | 312105-0497 | | 4 | SCREW M6S ISO 4017 M10X35 A480 | |
| 440 | 315105-0173 | | 4 | WASHER BRB 10,5X22 RFR | |
| 470 | 312125-0364 | | 3 | SCREW ISO 1207 M6X10 A4 | |
| 480 | 352113-0204 | | 3 | ANCHOR PLATES FOR STRIPS, TYPE TM3S25-M | |
| 490 | 352113-0103 | | 3 | CABLE TIE, BLACK 290X7,6 MM | |

| Pos | Part No | UN | Qty | Description | Page No |
|---|---|---|---|---|---|

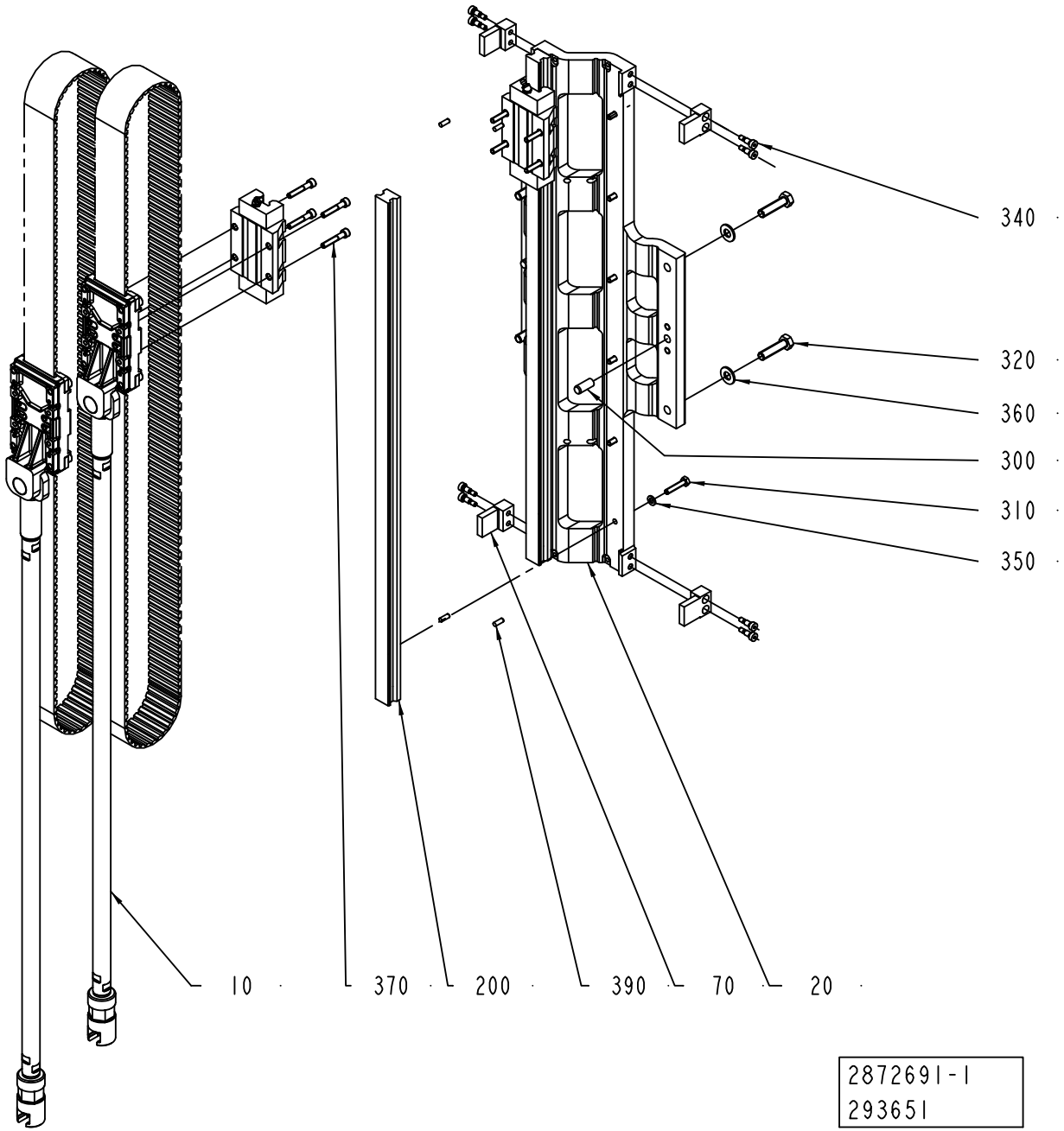
340
320
360
300
310
350
10
370
200
390
70
20
2872691-1
293651

ECM: 293964 - 20070701
Group number: 2872691-0100
Assembly Drawing: 2872691-1_1_AA

| Pos | Part No | UN | Qty | Description | Page No |
|---|---|---|---|---|---|
| - | | | | | |
| 010 | 2872692-0100 | | 2 | RUNNER BLOCK UNIT ..... | **3-9** |
| 020 | 1255233-0000 | | 1 | BUSHING | |
| 070 | 2878186-0000 | | 4 | SETTING STOPPER | |
| 200 | 90600-2004 | | 2 | LINEAR UNIT, SHS25LC1QZSSFME+740LKF | |
| 300 | 311103-1456 | | 2 | PARALLEL PIN ISO 2338 10M6X24 A1 | |
| 310 | 312109-0374 | | 12 | SCREW M6S ISO 4017 M6X30 A480 | |
| 320 | 312109-0499 | | 4 | SCREW M6S ISO 4017 M10X40 A480 | |
| 340 | 312180-0364 | | 8 | SCREW ISO7379 H6X10 | |
| 350 | 315105-0153 | | 12 | WASHER BRB 6,4X12 RFR | |
| 360 | 315105-0173 | | 4 | WASHER BRB 10,5X22 RFR | |
| 370 | 312115-0376 | | 8 | SCREW ISO4762 M6X35 A4 80 | |
| 390 | 311103-0307 | | 4 | PARALLEL PIN ISO 2338 5M6X14 A1 | |

| Pos | Part No | UN | Qty | Description | Page No |
|---|---|---|---|---|---|

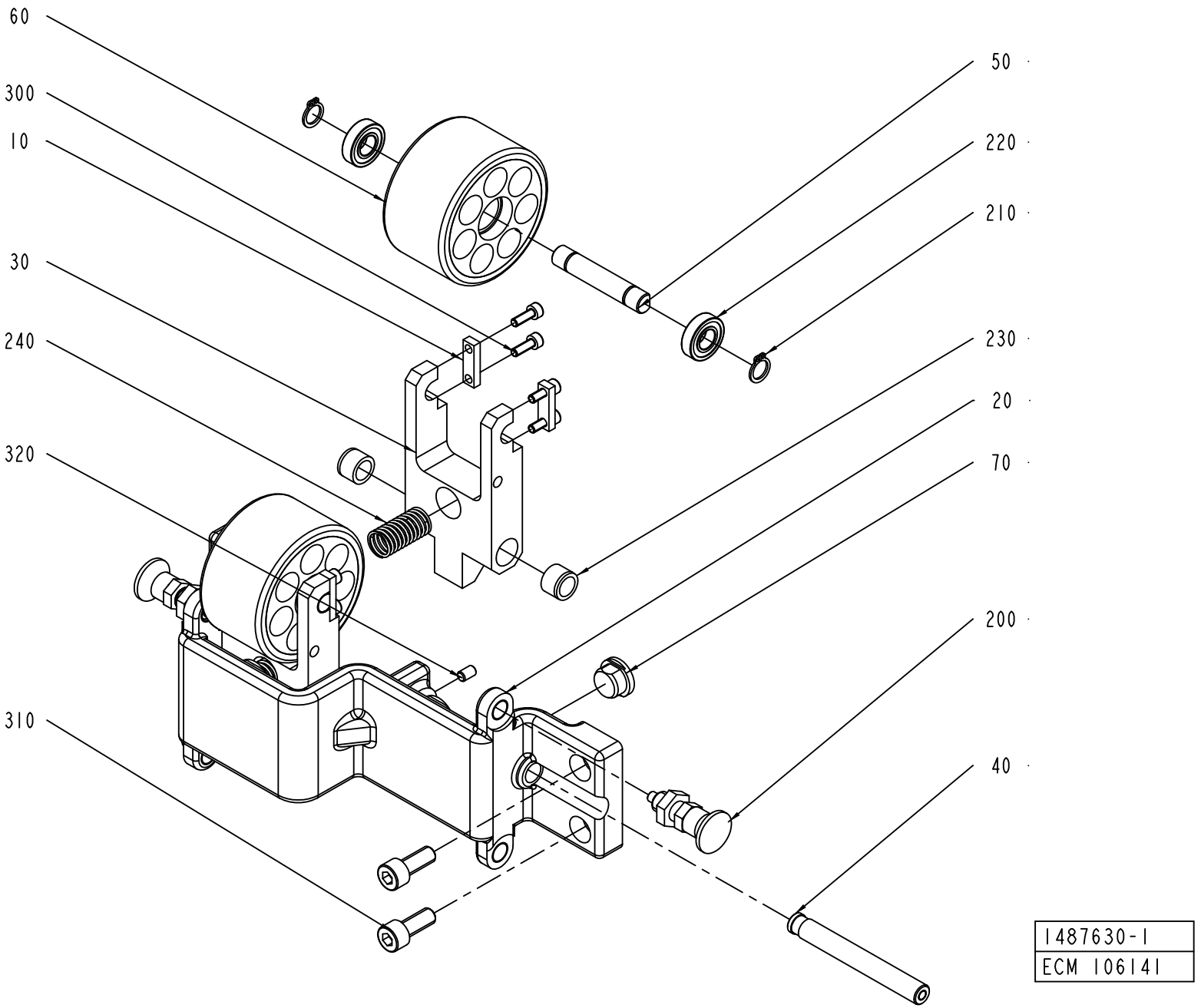
60
300
10
30
240
320
310
50
220
210
230
20
70
200
40
1487630-1
ECM 106141

ECM: 306204 - 20070701
Group number: 1487630-0100
Assembly Drawing: 1487630-1_1_AA

| Pos | Part No | UN | Qty | Description | Page No |
|---|---|---|---|---|---|
| - | | | | | |
| 010 | 1349266-0000 | | 4 | PLATE | |
| 020 | 1487631-0000 | | 1 | BRACKET | |
| 030 | 1487632-0000 | | 2 | FORK | |
| 040 | 1487633-0000 | | 2 | AXLE PIN | |
| 050 | 1487634-0000 | | 2 | AXLE PIN | |
| 060 | 1487635-0000 | | 2 | WHEEL | |
| 070 | 1487636-0000 | | 2 | STOPPER | |
| 200 | 90051-0112 | | 2 | LOCK KNOB, NO. GN 617 NIK5 | |
| 210 | 90141-0016 | | 4 | RETAINING RING FOR SHAFT DIN 471 10 SS | |
| 220 | 90214-0036 | | 4 | BALL BEARING, 10X22X6 MM | |
| 230 | 90240-0119 | | 4 | BEAR. BUSHING WITHOUT FL | |
| 240 | 90458-2305 | | 2 | COMP. SPRING D22280 | |
| 300 | 312115-0291 | | 8 | SCREW ISO4762 M4X12 A4 80 | |
| 310 | 312115-0451 | | 4 | SCREW ISO4762 M8X20 A4 80 | |
| 320 | 312318-0323 | | 2 | SCREW ISO4029 M5X8 A4 | |

| Pos | Part No | UN | Qty | Description | Page No |
|---|---|---|---|---|---|

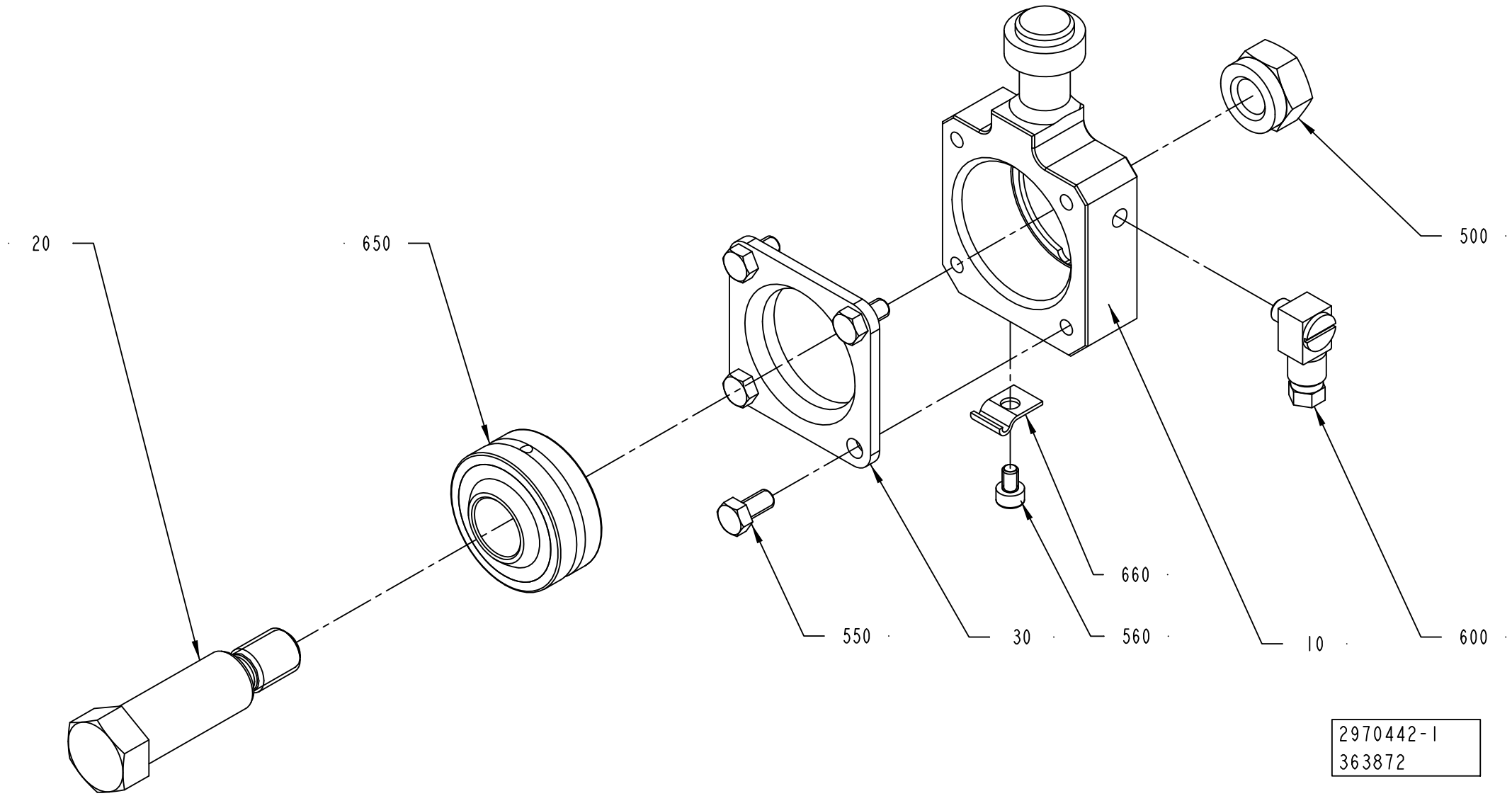
20
650
500
660
550
30
560
10
600
2970442-1
363872

ECM: 365390 - 20080828
Group number: 2970442-0100
Assembly Drawing: 2970442-1_1_AA

| Pos | Part No | UN | Qty | Description | Page No |
|---|---|---|---|---|---|
| - | | | | | |
| 010 | 2970439-0000 | | 1 | LINK HEAD | |
| 020 | 2969941-0000 | | 1 | AXLE PIN | |
| 030 | 2970440-0000 | | 1 | FLANGE | |
| 500 | 312812-0322 | | 1 | HEXAGON NUT, NY-LOCK M12 A480 | |
| 550 | 312105-0325 | | 4 | SCREW M6S ISO 4017 M5X10 A480 | |
| 560 | 312115-0285 | | 1 | SCREW ISO4762 M4X6 A4 80 | |
| 600 | 90134-0058 | | 1 | CONNECTION | |
| 650 | 90600-5006 | | 1 | PLAIN BEAR,SELF ADJ.SPHER. 16X38X21 | |
| 660 | 90165-0058 | | 1 | PIPE CLIP FOR TUBE D=2,5 MM | |

| Pos | Part No | UN | Qty | Description | Page No |
|---|---|---|---|---|---|

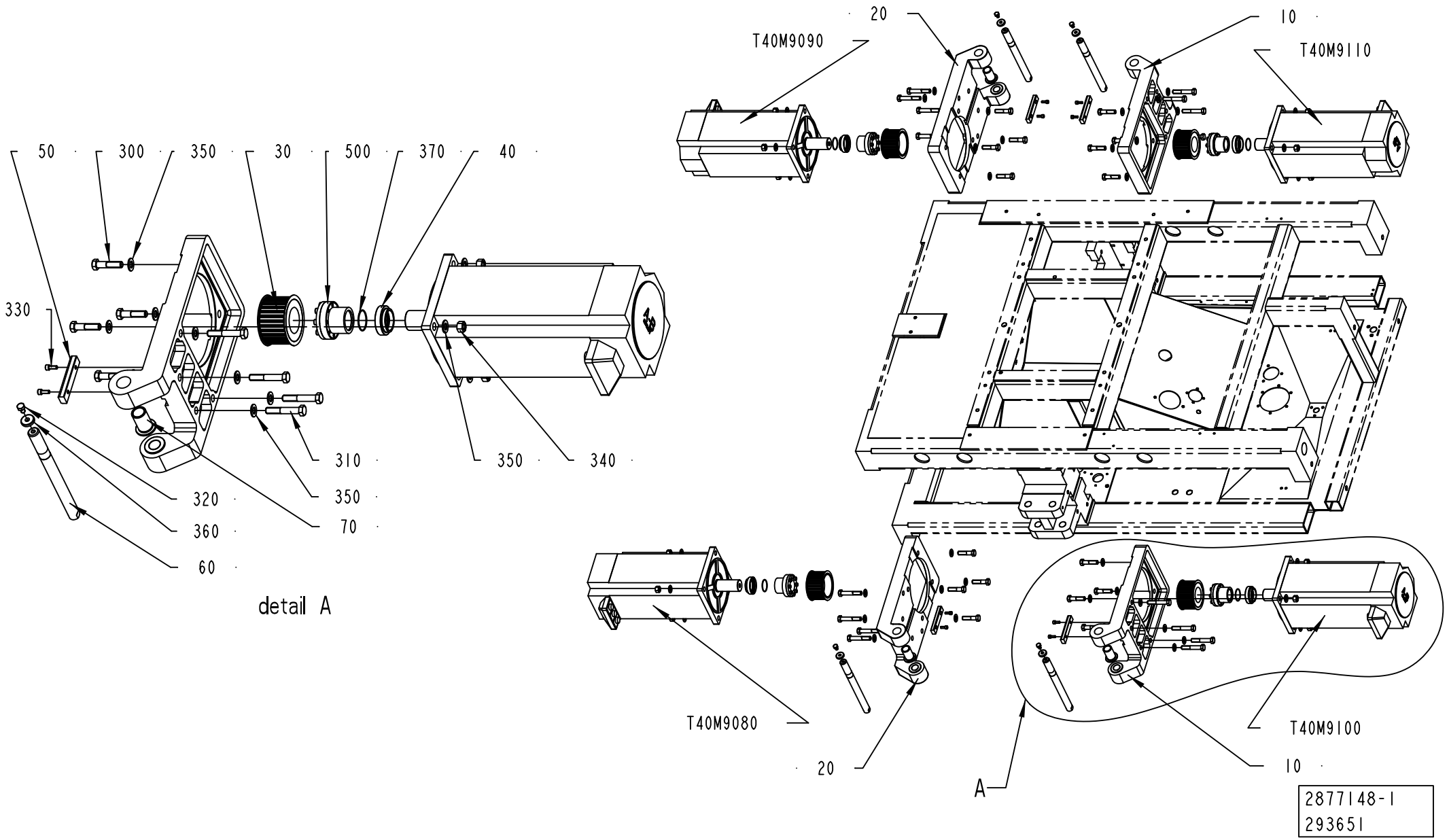
20
T40M9090
10
T40M9110
50
300
350
30
500
370
40
330
310
350
340
320
350
360
70
60
detail A
T40M9080
20
A
T40M9100
10
2877148-1
293651

ECM: 320473 - 20070906
Group number: 2877148-0100
Assembly Drawing: 2877148-1_1_AA

| Pos | Part No | UN | Qty | Description | Page No |
|---|---|---|---|---|---|
| - | | | | | |
| 010 | 1255261-0000 | | 2 | FLANGE | |
| 020 | 2686316-0000 | | 2 | FLANGE | |
| 030 | 1347839-0000 | | 4 | PULLEY | |
| 040 | 2730770-0000 | | 4 | SPACER | |
| 050 | 2545017-0000 | | 4 | PARALLEL KEYS WITH ROUND ENDS | |
| 060 | 2533638-0000 | | 4 | AXLE PIN | |
| 070 | 1255233-0000 | | 8 | BUSHING | |
| 300 | 312105-0542 | | 16 | SCREW M6S ISO 4014 M12X50 A480 | |
| 310 | 312105-0546 | | 16 | SCREW M6S ISO 4014 M12X70 A480 | |
| 320 | 312105-0447 | | 4 | SCREW M6S ISO 4017 M8X12 A480 | |
| 330 | 312115-0368 | | 8 | SCREW ISO4762 M6X16 A4 80 | |
| 340 | 312601-0322 | | 16 | HEXAGON NUT, DIN 934 M12 8 FZB | |
| 350 | 315105-0178 | | 48 | WASHER BRB 13X24 RFR | |
| 360 | 315125-0165 | | 4 | WASHER TBRSB 8,4X26X5 A4 | |
| 370 | 315202-0124 | | 4 | O-RING 37,1X1,6 MM | |
| 500 | 90458-2303 | | 4 | CLAMPING ELEMENT WITH SLEEVE, 38X50 MM | |
| T40M9080 | 90459-2594 | | 1 | SERVO MOTOR MPL-B680B-MX141 | |
| T40M9090 | 90459-2594 | | 1 | SERVO MOTOR MPL-B680B-MX141 | |
| T40M9100 | 90459-2594 | | 1 | SERVO MOTOR MPL-B680B-MX141 | |
| T40M9110 | 90459-2594 | | 1 | SERVO MOTOR MPL-B680B-MX141 | |

| Pos | Part No | UN | Qty | Description | Page No |
|---|---|---|---|---|---|

# LINK SYSTEM GASKET



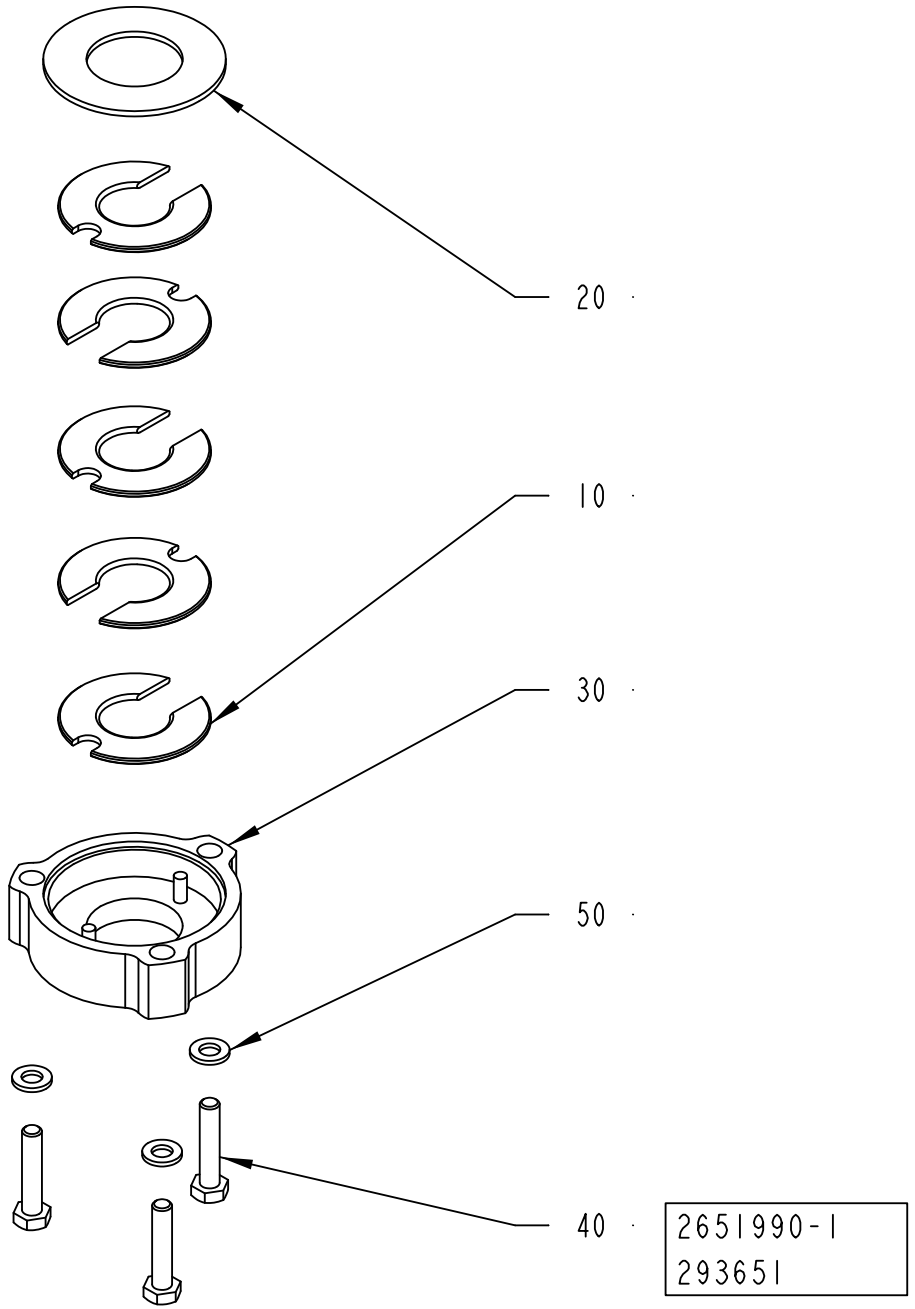

ECM: 293962 - 20070701
Group number: 2651990-0100
Assembly Drawing: 2651990-1_1_AA

| Pos | Part No | UN | Qty | Description | Page No |
|---|---|---|---|---|---|
| - | | | | | |
| 010 | 2651988-0000 | | 5 | GASKET | |
| 020 | 2651989-0000 | | 1 | LID | |
| 030 | 2651987-0000 | | 1 | LID | |
| 040 | 312109-0374 | | 3 | SCREW M6S ISO 4017 M6X30 A480 | |
| 050 | 315105-0153 | | 3 | WASHER BRB 6,4X12 RFR | |

| Pos | Part No | UN | Qty | Description | Page No |
|---|---|---|---|---|---|

Tetra Pak

# SPC
## Spare Parts Catalogue

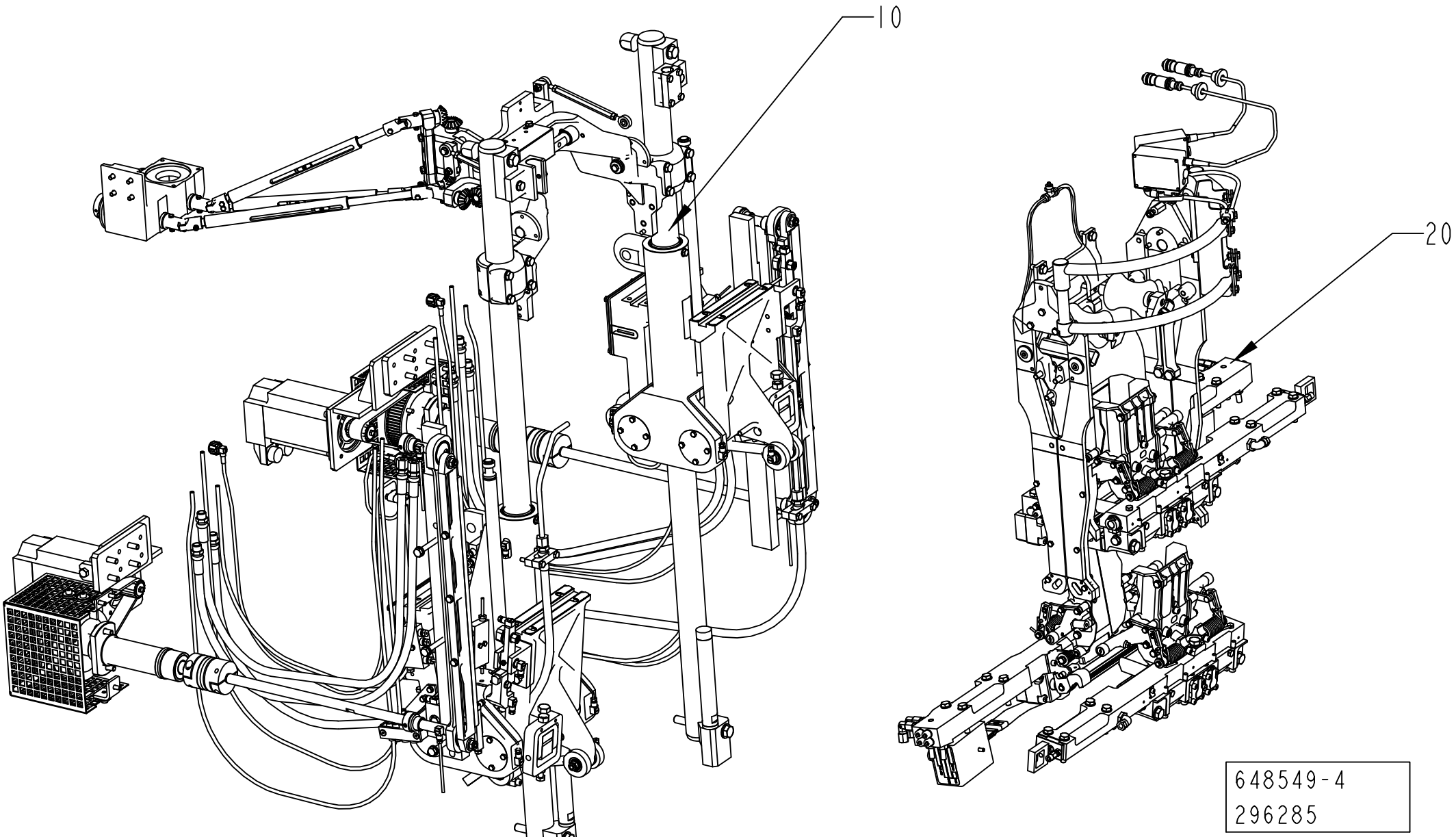
10
20
648549-4
296285

ECM: 296736 - 20070701
Group number: 648549-0400
Assembly Drawing: 648549-4_1_AA

| Pos | Part No | UN | Qty | Description | Page No |
|---|---|---|---|---|---|
| - | | | | | |
| 010 | 2552002-0300 | | 1 | BASE UNIT | **4-5** |
| 020 | 2552003-0200 | | 1 | FORMING UNIT | **4-51** |

| Pos | Part No | UN | Qty | Description | Page No |
|---|---|---|---|---|---|

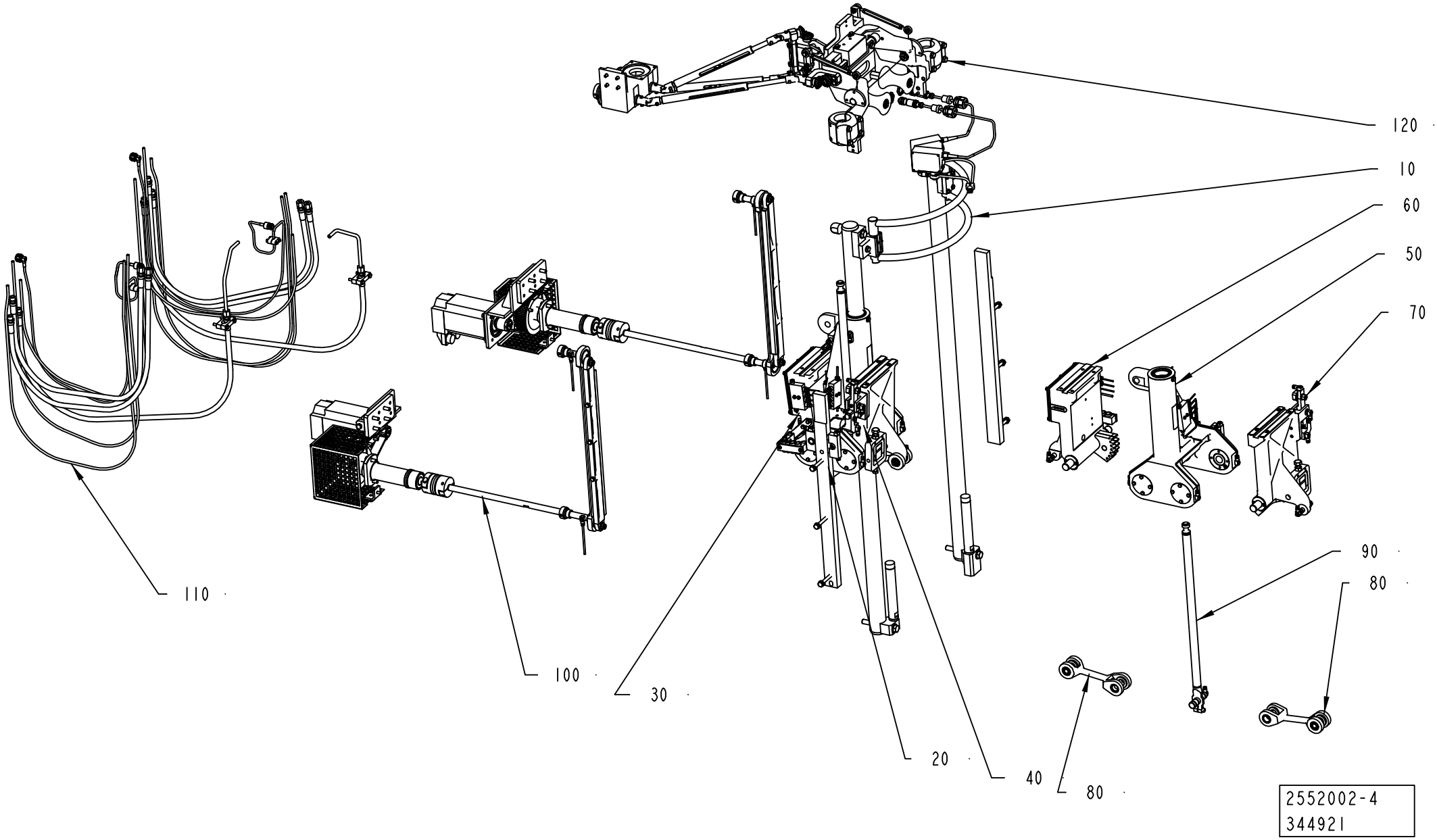
120
10
60
50
70
90
80
110
100
30
20
40
80
2552002-4
344921

ECM: 348004 - 20070705
Group number: 2552002-0300
Assembly Drawing: 2552002-4_1_AB

| Pos | Part No | UN | Qty | Description | Page No |
|---|---|---|---|---|---|
| - | | | | | |
| 010 | 2542489-0300 | | 1 | GUIDE | **4-7** |
| 020 | 1348455-0300 | | 1 | YOKE LEFT | **4-11** |
| 030 | 1348456-0300 | | 1 | PRESSURE ARM LEFT | **4-13** |
| 040 | 2791163-0100 | | 1 | CUTTING ARM LEFT | **4-15** |
| 050 | 1348460-0300 | | 1 | YOKE RIGHT | **4-17** |
| 060 | 1348461-0300 | | 1 | PRESSURE ARM RIGHT | **4-19** |
| 070 | 2791164-0100 | | 1 | CUTTING ARM RIGHT | **4-21** |
| 080 | 1348466-0100 | | 4 | SCISSOR ARM LINK | **4-23** |
| 090 | 2878927-0100 | | 2 | LINK | **4-25** |
| 100 | 2792300-0200 | | 1 | DESIGN CORRECTION | **4-27** |
| 110 | 2872698-0100 | | 1 | CABLE CONNECTION | **4-37, 4-39** |
| 120 | 2613646-0100 | | 1 | VOLUME ADJUSTER | **4-41** |

| Pos | Part No | UN | Qty | Description | Page No |
|---|---|---|---|---|---|

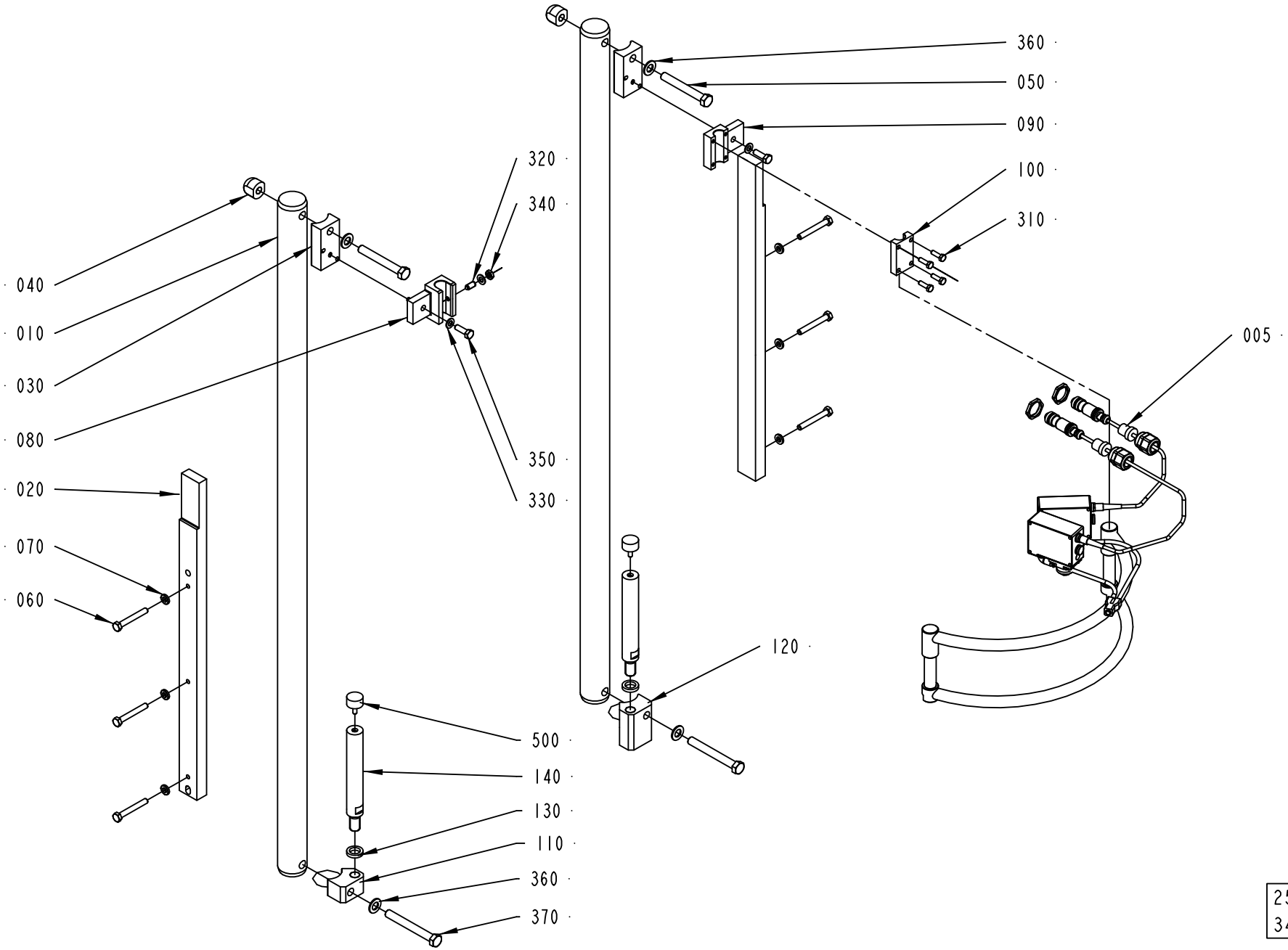


2542489-3
341002

ECM: 348003 - 20070705
Group number: 2542489-0300
Assembly Drawing: 2542489-3_1_AB

| Pos | Part No | UN | Qty | Description | Page No |
|---|---|---|---|---|---|
| - | | | | | |
| 005 | 2958876-0100 | | 1 | PHOTOCELL UNIT ..... | **4-9** |
| 010 | 2640831-0000 | | 2 | GUIDE | |
| 020 | 2698628-0000 | | 2 | RULER | |
| 030 | 2616225-0000 | | 2 | CLAMP | |
| 040 | 2542488-0000 | | 2 | NUT | |
| 050 | 312105-0550 | | 2 | SCREW M6S ISO 4014 M12X90 A480 | |
| 060 | 312105-0463 | | 6 | SCREW M6S ISO 4014 M8X60 A480 | |
| 070 | 315115-0165 | | 6 | WASHER PLAIN, TBRB 8,4/16 H=3 | |
| 080 | 2616221-0000 | | 1 | BRACKET | |
| 090 | 2715300-0000 | | 1 | BRACKET | |
| 100 | 2715301-0000 | | 1 | SUPPORT | |
| 110 | 2542493-0000 | | 1 | BLOCK | |
| 120 | 2542494-0000 | | 1 | BLOCK | |
| 130 | 2878988-0000 | | 2 | SPACER | |
| 140 | 2852227-0000 | | 2 | COLUMN | |
| 310 | 312105-0370 | | 4 | SCREW M6S ISO 4017 M6X20 A480 | |
| 320 | 90287-0112 | | 1 | SCREW SPRINGLOAD. SLOTTED HEAD M8X16 | |
| 330 | 315105-0165 | | 3 | WASHER BRB 8,4X16 RFR | |
| 340 | 312625-0318 | | 1 | HEXAGON THIN NUT, EN 24035 ML6M M8 A4 | |
| 350 | 312105-0453 | | 2 | SCREW M6S ISO 4017 M8X25 A480 | |
| 360 | 315105-0178 | | 4 | WASHER BRB 13X24 RFR | |
| 370 | 312105-0552 | | 2 | SCREW M6S ISO 4014 M12X100 A480 | |
| 500 | 90347-0034 | | 2 | VIBRATION DAMPER | |

| Pos | Part No | UN | Qty | Description | Page No |
|---|---|---|---|---|---|

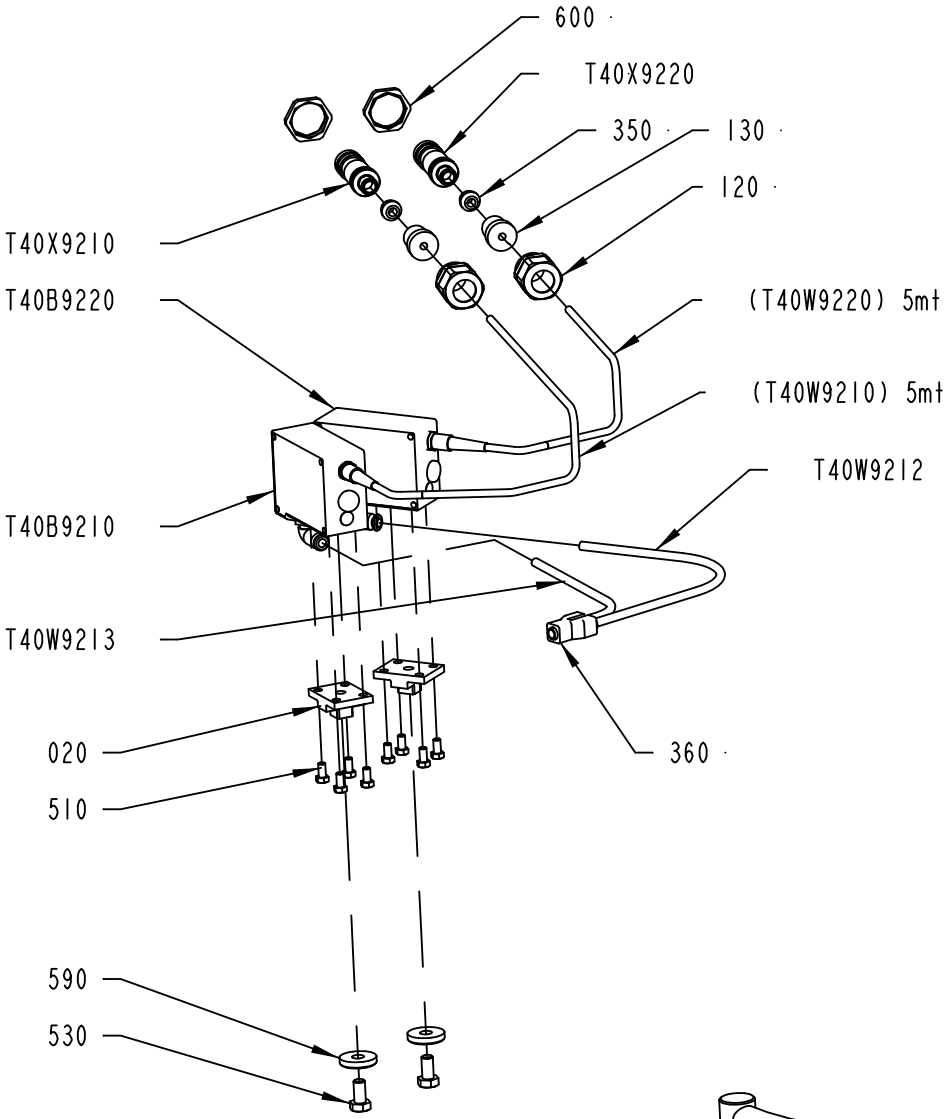


mount the gland fitting pos. 120 , the cable insert pos. 130 and the cable sealing pos. 350 on the photocell cable T40W9210/T40W9220 before connecting the cable contact T40X9210/T40X9220

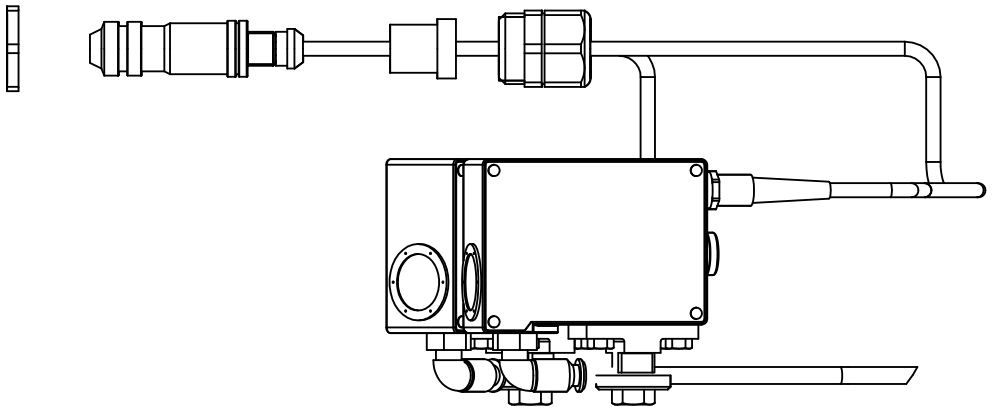

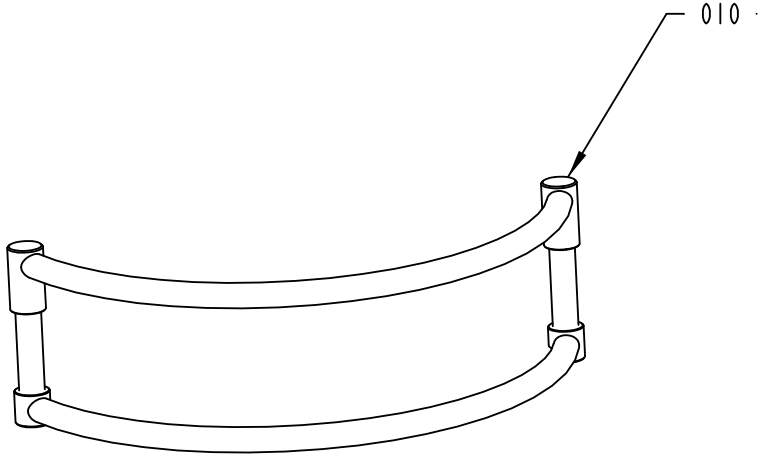


2958876-1
377908

ECM: 381573 - 20081218
Group number: 2958876-0100
Assembly Drawing: 2958876-1_1_AB

| Pos | Part No | UN | Qty | Description | Page No |
|---|---|---|---|---|---|
| - | | | | | |
| 010 | 2715297-0000 | | 1 | BOW CLAMP | |
| 020 | 1036674-0000 | | 2 | FASTENING PLATE | |
| 120 | 90458-0407 | | 2 | GLAND W/O INSERT M25 NORMAL | |
| 130 | 2897947-0000 | | 2 | INSERT | |
| 350 | 90459-1501 | | 2 | CABLE SEALING, 12023/I, ELFA. 44-625-78 | |
| 360 | 90055-0100 | | 1 | Y-CONNECTION, 6-6 | |
| 510 | 312105-0325 | | 8 | SCREW M6S ISO 4017 M5X10 A480 | |
| 530 | 312105-0449 | | 2 | SCREW M6S ISO 4017 M8X16 A480 | |
| 590 | 315125-0165 | | 2 | WASHER TBRSB 8,4X26X5 A4 | |
| 600 | 353250-0025 | | 2 | GLAND, LOCK NUT M25X1,5 | |
| T40B9210 | 90458-0601 | | 1 | CONTRAST SCANNER, KT15W-P2110S01 | |
| | *342732-0102* | | *1* | *ELBOW PIPE JOINT, EXT.THREAD, D=6MM-G1/8* | |
| T40B9220 | 90458-0601 | | 1 | CONTRAST SCANNER, KT15W-P2110S01 | |
| | *342732-0102* | | *1* | *ELBOW PIPE JOINT, EXT.THREAD, D=6MM-G1/8* | |
| T40W9212 | 90166-0081 | MM | 800 | TUBE 6 MM PA BLUE | |
| T40W9213 | 90166-0081 | MM | 800 | TUBE 6 MM PA BLUE | |
| T40X9210 | 90459-6387 | | 1 | CONNECTOR 5-POL M12, RSCS 5/9 | |
| T40X9220 | 90459-6387 | | 1 | CONNECTOR 5-POL M12, RSCS 5/9 | |

| Pos | Part No | UN | Qty | Description | Page No |
|---|---|---|---|---|---|

Machine Type | Group Description | Used-In | Group Number | Page No

# YOKE LEFT



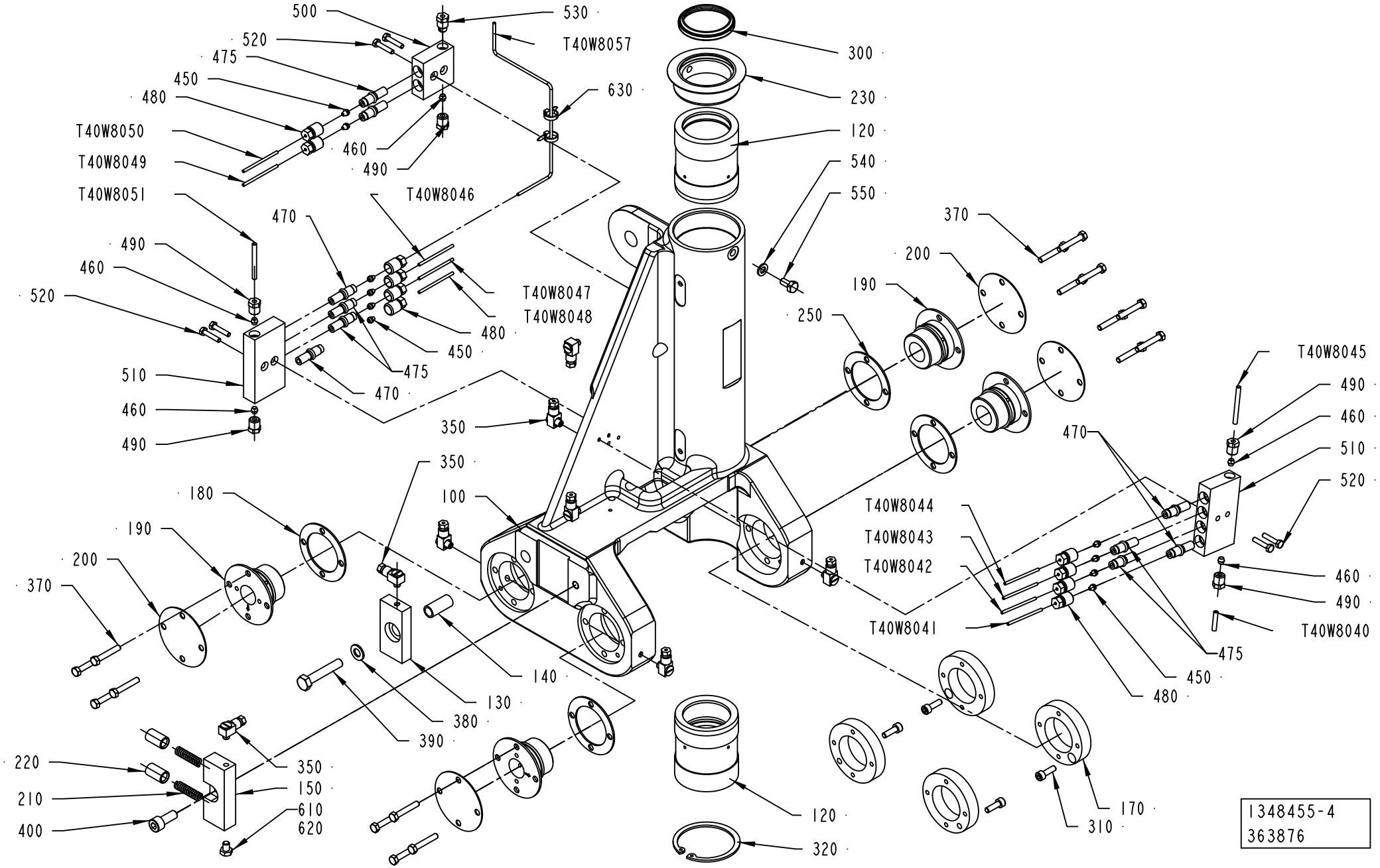
500
520
475
450
480
T40W8050
T40W8049
T40W8051
490
460
520
510
460
490
530
T40W8057
630
460
490
T40W8046
470
T40W8047
T40W8048
480
450
475
470
350
350
180
190
200
370
100
140
130
380
390
220
210
400
350
150
610
620
300
230
120
540
550
370
200
190
250
T40W8045
490
460
510
520
470
T40W8044
T40W8043
T40W8042
T40W8041
460
490
T40W8040
475
450
480
120
320
170
310
1348455-4
363876

ECM: 364945 - 20080828
Group number: 1348455-0300
Assembly Drawing: 1348455-4_1_AB

| Pos | Part No | UN | Qty | Description | Page No |
|---|---|---|---|---|---|
| - | | | | | |
| 100 | 1195360-0000 | | 1 | YOKE LEFT | |
| 120 | 2981828-0000 | | 2 | BUSHING | |
| | *315259-0102* | | *1* | *FELT SEAL 22-47 MM* | |
| 130 | 1037104-0000 | | 1 | LOCATING PIECE | |
| 140 | 1037106-0000 | | 1 | SLEEVE | |
| 150 | 1349972-0000 | | 1 | SPRING HOUSING | |
| 170 | 36753-0000 | | 4 | RING | |
| 180 | 29886-0000 | | 2 | LACE | |
| 190 | 246513-0000 | | 4 | BEARING | |
| 200 | 239874-0000 | | 4 | WASHER | |
| 210 | 20494-0000 | | 2 | COMPRESSION SPRING | |
| 220 | 31838-0000 | | 2 | PLUNGER | |
| 230 | 1349780-0000 | | 1 | LID | |
| 250 | 1038509-0000 | | 2 | WASHER | |
| 300 | 90600-5307 | | 1 | SCRAPER, 45X53X7 MM | |
| 310 | 312115-0329 | | 4 | SCREW ISO4762 M5X16 A4 80 | |
| 320 | 315753-0135 | | 1 | RETAINING RING FOR BORE DIN 472 60 A2 | |
| 350 | 90134-0058 | | 8 | CONNECTION | |
| 370 | 312105-0335 | | 16 | SCREW M6S ISO 4014 M5X30 A480 | |
| 380 | 315105-0165 | | 1 | WASHER BRB 8,4X16 RFR | |
| 390 | 312109-0460 | | 1 | SCREW M6S ISO 4017 M8X45 A480 | |
| 400 | 312115-0451 | | 1 | SCREW ISO4762 M8X20 A4 80 | |
| 450 | 90028-0020 | | 10 | CONE TUBE 2,5MM | |
| 460 | 90028-0021 | | 5 | CONE TUBE 4 MM | |
| 470 | 90092-0052 | | 4 | METERING VALVE 10 MM3 | |
| 475 | 90092-0054 | | 6 | METERING VALVE 50 MM3 | |
| 480 | 90134-0039 | | 10 | BUSHING VALVE CONNECTION 2,5 MM | |
| 490 | 90134-0038 | | 5 | BUSHING/NUT INLET/OUTLET 4 MM | |
| 500 | 90032-0038 | | 1 | BLOCK 2 WAYS | |
| 510 | 90032-0039 | | 2 | BLOCK 4 WAYS | |
| 520 | 312105-0295 | | 6 | SCREW M6S ISO 4017 M4X20 A470 | |
| 530 | 90087-0019 | | 1 | PLUG M10X1 STAINLESS | |
| 540 | 315105-0153 | | 1 | WASHER BRB 6,4X12 RFR | |
| 550 | 312105-0366 | | 1 | SCREW M6S ISO 4017 M6X12 A480 | |
| 610 | 312105-0362 | | 1 | SCREW M6S ISO 4017 M6X8 A480 | |
| 620 | 90157-0021 | | 1 | LOCKING FLUID LOCTITE 270 | |
| 630 | 352113-0101 | | 2 | CABLE TIE, BLACK 92X2,5 MM | |
| T40W8027 | 90166-0143 | MM | 350 | TUBE 2,5 MM PA TRANSP. | |
| T40W8040 | 90166-0109 | MM | 500 | TUBE 4 MM PA TRANSP. | |
| T40W8041 | 90266-0019 | MM | 300 | PIPE | |
| T40W8042 | 90266-0019 | MM | 500 | PIPE | |
| T40W8043 | 90266-0019 | MM | 330 | PIPE | |
| T40W8044 | 90266-0019 | MM | 350 | PIPE | |
| T40W8045 | 90266-0165 | MM | 400 | BRASS PIPE | |
| T40W8046 | 90266-0019 | MM | 300 | PIPE | |
| T40W8047 | 90266-0019 | MM | 400 | PIPE | |
| T40W8048 | 90266-0019 | MM | 350 | PIPE | |
| T40W8049 | 90266-0019 | MM | 200 | PIPE | |
| T40W8050 | 90266-0019 | MM | 350 | PIPE | |
| T40W8051 | 90266-0165 | MM | 200 | BRASS PIPE | |

Machine Type | Group Description | Used-In | Group Number | Page No

# PRESSURE ARM LEFT



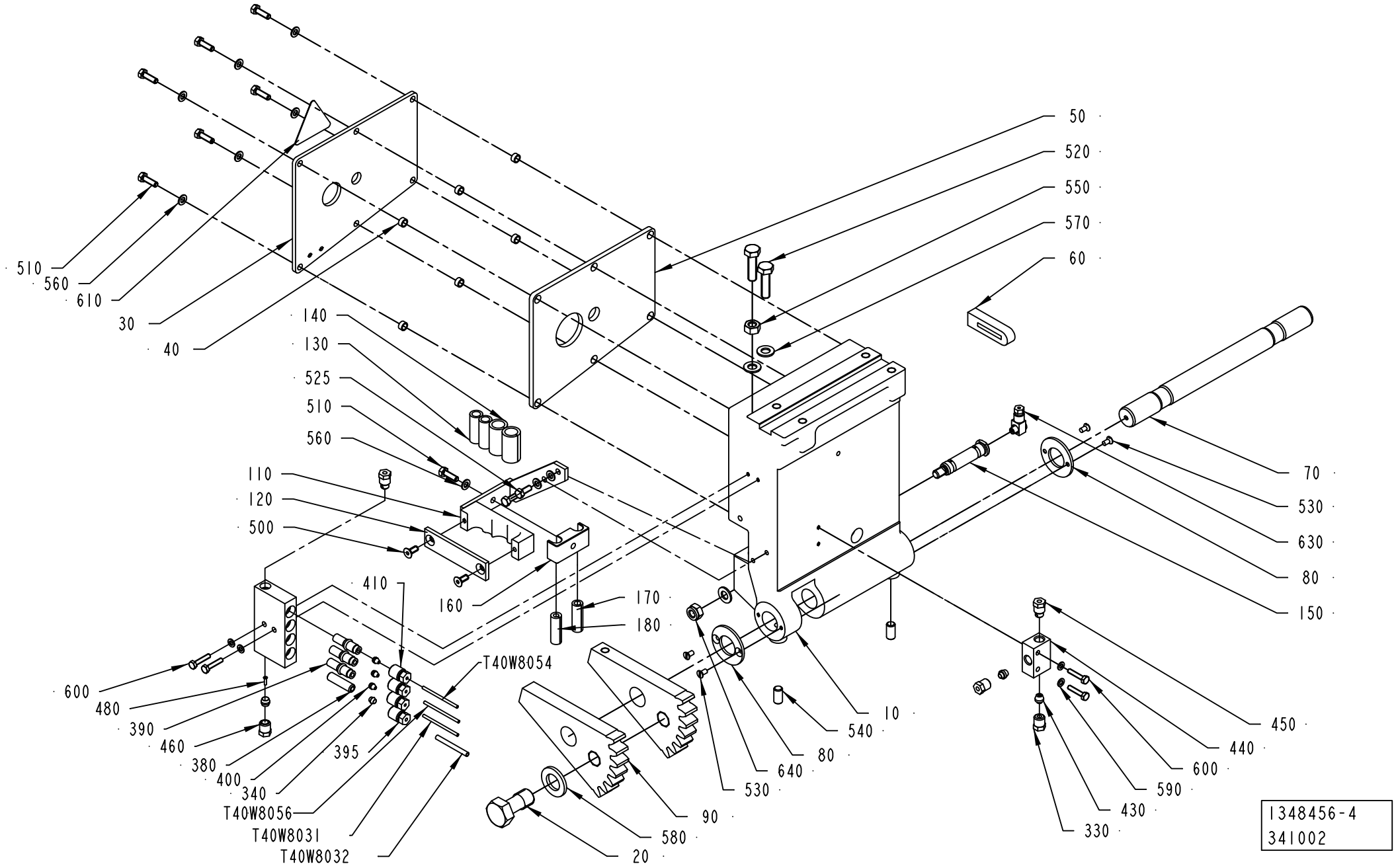

ECM: 341753 - 20070705
Group number: 1348456-0300
Assembly Drawing: 1348456-4_1_AB

| Pos | Part No | UN | Qty | Description | Page No |
|---|---|---|---|---|---|
| - | | | | | |
| 010 | 1035877-0000 | | 1 | ARM LEFT | |
| 020 | 1037069-0000 | | 1 | SCREW | |
| 030 | 1036485-0000 | | 1 | COVERING PLATE | |
| 040 | 1036501-0000 | | 6 | SPACER | |
| 050 | 1036484-0000 | | 1 | GASKET | |
| 060 | 1036483-0000 | | 1 | SEAL | |
| 070 | 1035788-0000 | | 1 | SHAFT | |
| 080 | 536704-0000 | | 2 | WASHER | |
| 090 | 1036156-0000 | | 2 | TOOTH PART | |
| 110 | 1349867-0000 | | 1 | FASTENING PLATE | |
| 120 | 1349868-0000 | | 1 | FASTENING PLATE | |
| 130 | 1478000-0000 | | 2 | HOSE | |
| 140 | 1478001-0000 | | 2 | HOSE | |
| 150 | 1037853-0000 | | 1 | SHAFT | |
| 160 | 2889885-0000 | | 1 | BLOCK | |
| 170 | 2889946-0000 | | 1 | HOSE | |
| 180 | 2889947-0000 | | 1 | HOSE | |
| 330 | 90134-0038 | | 2 | BUSHING/NUT INLET/OUTLET 4 MM | |
| 340 | 90028-0021 | | 1 | CONE TUBE 4 MM | |
| 350 | 90459-5651 | | 1 | LUBRICATION BLOCK, HFS4664 | |
| 380 | 90134-0051 | | 1 | SPACING COLLAR DOSING BLOCK | |
| 390 | 90092-0052 | | 3 | METERING VALVE 10 MM3 | |
| 395 | 90134-0040 | | 1 | BUSHING VALVE CONNECTION 4 MM | |
| 400 | 90028-0020 | | 3 | CONE TUBE 2,5MM | |
| 410 | 90134-0039 | | 3 | BUSHING VALVE CONNECTION 2,5 MM | |
| 430 | 90028-0024 | | 2 | CONE TUBE 4 MM | |
| 440 | 90032-0043 | | 1 | DISTRIBUTION BLOCK 3 WAYS | |
| 450 | 90087-0019 | | 2 | PLUG M10X1 STAINLESS | |
| 460 | 90134-0055 | | 1 | BUSHING/NUT INLET/OUTLET 6 MM | |
| 470 | 90028-0022 | | 1 | CONE TUBE 6 MM | |
| 480 | 90134-0031 | | 1 | SLEEVE FOR PLASTIC TUBE | |
| 500 | 312155-0327 | | 2 | SCREW DIN 7991 MF6S M5X12 A4 70 | |
| 510 | 312105-0329 | | 7 | SCREW M6S ISO 4017 M5X16 A480 | |
| 520 | 312105-0455 | | 2 | SCREW M6S ISO 4017 M8X30 A480 | |
| 525 | 312105-0327 | | 2 | SCREW M6S ISO 4017 M5X12 A480 | |
| 530 | 312145-0287 | | 4 | SCREW ISO 2009 MFS M4X8 A4 | |
| 540 | 312318-0449 | | 2 | SCREW ISO4029 M8X16 A4 | |
| 550 | 312605-0318 | | 1 | HEXAGON NUT, M6M M8 A280 | |
| 560 | 315105-0146 | | 9 | WASHER BRB 5,3X10 RFR | |
| 570 | 315105-0165 | | 1 | WASHER BRB 8,4X16 RFR | |
| 580 | 315105-0186 | | 1 | WASHER BRB 17X30 RFR | |
| 590 | 315105-0136 | | 4 | WASHER BRB 4,3X8 RFR | |
| 600 | 312105-0295 | | 4 | SCREW M6S ISO 4017 M4X20 A470 | |
| 610 | 359705-0015 | | 1 | WARNING SIGN ISO, RISK OF ELECTRIC SHOCK | |
| 630 | 90134-0058 | | 1 | CONNECTION | |
| 640 | 312812-0318 | | 1 | HEXAGON NUT, NY-LOCK M8 A480 | |
| T40W8031 | 90266-0019 | MM | 500 | PIPE | |
| T40W8032 | 90266-0165 | MM | 200 | BRASS PIPE | |
| T40W8054 | 90166-0143 | MM | 550 | TUBE 2,5 MM PA TRANSP. | |
| T40W8056 | 90166-0143 | MM | 550 | TUBE 2,5 MM PA TRANSP. | |

| Machine Type | Group Description | Used-In | Group Number | Page No |
|---|---|---|---|---|

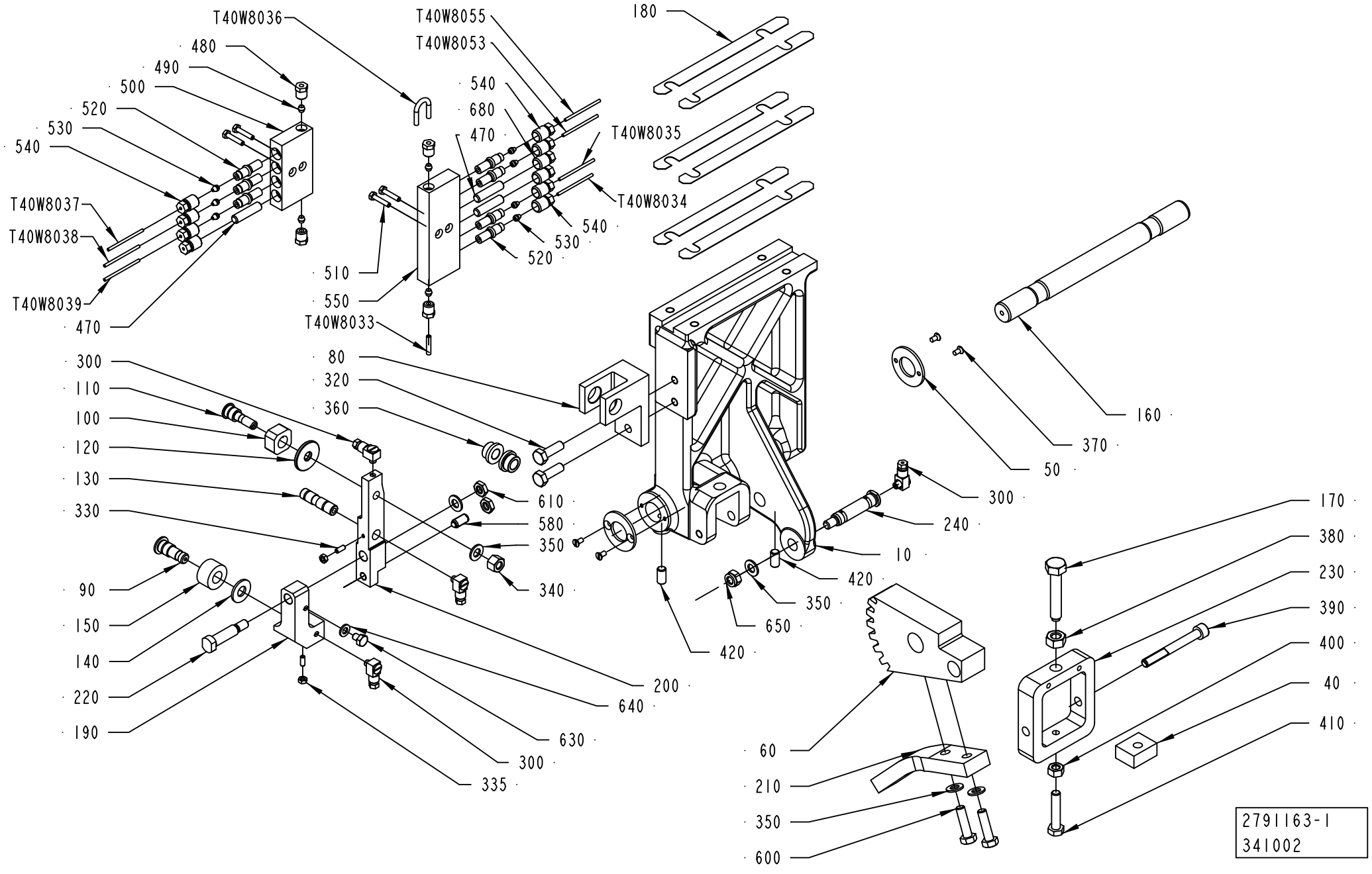
T40W8036
480
490
500
520
530
540
T40W8037
T40W8038
T40W8039
470
T40W8055
T40W8053
540
680
470
T40W8035
T40W8034
540
530
520
510
550
T40W8033
180
80
320
360
300
110
100
120
130
330
610
580
350
340
90
150
140
220
190
200
640
630
300
335
160
370
50
300
240
10
420
350
650
420
170
380
230
390
400
40
410
60
210
350
600
2791163-1
341002

ECM: 341751 - 20070705
Group number: 2791163-0100
Assembly Drawing: 2791163-1_1_AB

| Pos | Part No | UN | Qty | Description | Page No |
|---|---|---|---|---|---|
| - | | | | | |
| 010 | 2536048-0000 | | 1 | ARM | |
| 040 | 14729-0000 | | 1 | NUT | |
| 050 | 536704-0000 | | 2 | WASHER | |
| 060 | 1036155-0000 | | 1 | TOOTH PART | |
| 080 | 1338793-0000 | | 1 | BRACKET | |
| 090 | 1036620-0000 | | 1 | SHAFT | |
| 100 | 256628-0000 | | 1 | PIECE | |
| 110 | 256629-0001 | | 1 | AXLE PIN | |
| 120 | 441706-0000 | | 1 | WASHER | |
| 130 | 1036615-0000 | | 1 | SHAFT | |
| 140 | 1036616-0000 | | 1 | WASHER | |
| 150 | 1036618-0000 | | 1 | ROLL | |
| 160 | 1035788-0000 | | 1 | SHAFT | |
| 170 | 32957-0000 | | 1 | SCREW | |
| 180 | 1037254-0000 | | 6 | SHIM | |
| 190 | 2774809-0000 | | 1 | JOINT | |
| 200 | 2774808-0000 | | 1 | ARM | |
| 210 | 1484320-0000 | | 1 | ROD | |
| 220 | 1348669-0000 | | 1 | SCREW | |
| 230 | 1038867-0000 | | 1 | BOW CLAMP | |
| 240 | 1037853-0000 | | 1 | SHAFT | |
| 300 | 90134-0058 | | 4 | CONNECTION | |
| 320 | 312105-0453 | | 2 | SCREW M6S ISO 4017 M8X25 A480 | |
| 330 | 312318-0289 | | 2 | SCREW ISO4029 M4X10 A4 | |
| 335 | 312605-0312 | | 2 | HEXAGON NUT, M6M M4 A280 | |
| 340 | 312811-0318 | | 1 | NUT HEX.LOCK HELI COIL M8 SS | |
| 350 | 315105-0165 | | 5 | WASHER BRB 8,4X16 RFR | |
| 360 | 321101-0163 | | 2 | FLANGE BUSHING, 10X16X10 MM | |
| 370 | 312145-0287 | | 4 | SCREW ISO 2009 MFS M4X8 A4 | |
| 380 | 312635-0320 | | 1 | NUT M6M 10X1 STAINLESS A2 80 | |
| 390 | 312115-0465 | | 1 | SCREW ISO4762 M8X70 A4 80 | |
| 400 | 312605-0318 | | 1 | HEXAGON NUT, M6M M8 A280 | |
| 410 | 312109-0459 | | 1 | SCREW M6S ISO 4017 M8X40 A480 | |
| 420 | 312318-0449 | | 2 | SCREW ISO4029 M8X16 A4 | |
| 470 | 90134-0052 | | 3 | PLUG DOSING BLOCK | |
| 480 | 90134-0038 | | 4 | BUSHING/NUT INLET/OUTLET 4 MM | |
| 490 | 90028-0021 | | 4 | CONE TUBE 4 MM | |
| 500 | 90032-0039 | | 1 | BLOCK 4 WAYS | |
| 510 | 312105-0295 | | 4 | SCREW M6S ISO 4017 M4X20 A470 | |
| 520 | 90092-0052 | | 7 | METERING VALVE 10 MM3 | |
| 530 | 90028-0020 | | 7 | CONE TUBE 2,5MM | |
| 540 | 90134-0039 | | 9 | BUSHING VALVE CONNECTION 2,5 MM | |
| 550 | 90032-0040 | | 1 | BLOCK 6 WAYS | |
| 580 | 90287-0112 | | 1 | SCREW SPRINGLOAD. SLOTTED HEAD M8X16 | |
| 600 | 312105-0455 | | 2 | SCREW M6S ISO 4017 M8X30 A480 | |
| 610 | 312625-0318 | | 2 | HEXAGON THIN NUT, EN 24035 ML6M M8 A4 | |
| 630 | 312105-0362 | | 1 | SCREW M6S ISO 4017 M6X8 A480 | |
| 640 | 315105-0153 | | 1 | WASHER BRB 6,4X12 RFR | |
| 650 | 312812-0318 | | 1 | HEXAGON NUT, NY-LOCK M8 A480 | |
| 680 | 90134-0040 | | 1 | BUSHING VALVE CONNECTION 4 MM | |
| T40W8033 | 90166-0109 | MM | 600 | TUBE 4 MM PA TRANSP. | |
| T40W8034 | 90266-0019 | MM | 200 | PIPE | |
| T40W8035 | 90166-0143 | MM | 600 | TUBE 2,5 MM PA TRANSP. | |
| T40W8036 | 90266-0165 | MM | 100 | BRASS PIPE | |
| T40W8037 | 90166-0143 | MM | 600 | TUBE 2,5 MM PA TRANSP. | |
| T40W8038 | 90166-0143 | MM | 600 | TUBE 2,5 MM PA TRANSP. | |
| T40W8039 | 90166-0143 | MM | 600 | TUBE 2,5 MM PA TRANSP. | |
| T40W8053 | 90166-0143 | MM | 425 | TUBE 2,5 MM PA TRANSP. | |
| T40W8055 | 90166-0143 | MM | 425 | TUBE 2,5 MM PA TRANSP. | |

| Machine Type | Group Description | Used-In | Group Number | Page No |
|---|---|---|---|---|

# YOKE RIGHT



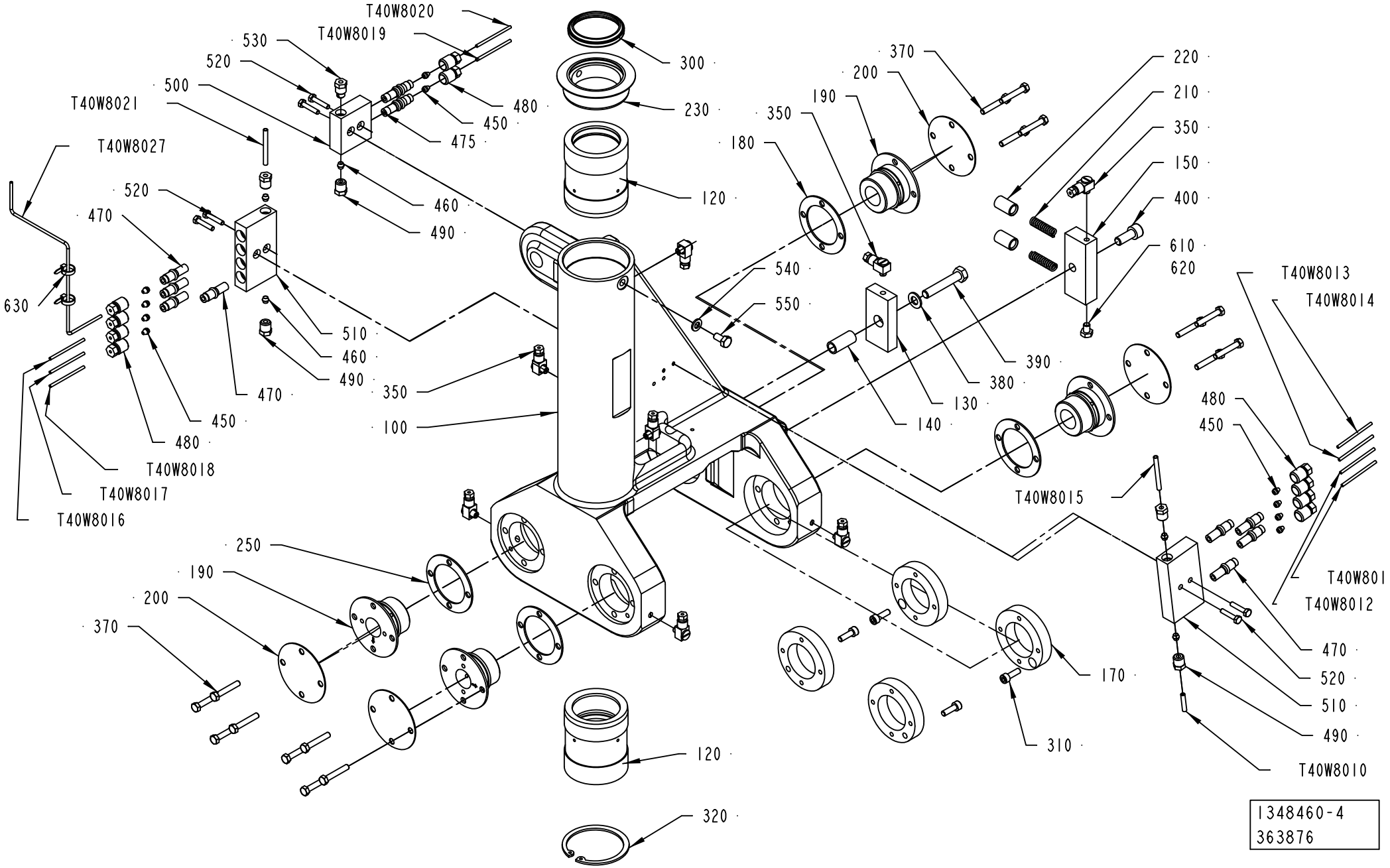
T40W8020
T40W8019
530
520
500
T40W8021
T40W8027
520
470
630
T40W8018
T40W8017
T40W8016
480
450
470
510
460
490
475
460
490
300
230
120
350
100
540
550
370
200
190
350
180
220
210
350
150
400
610
620
390
380
130
140
T40W8013
T40W8014
480
450
T40W8015
T40W8011
T40W8012
470
520
510
490
T40W8010
250
190
200
370
170
310
120
320
1348460-4
363876

ECM: 364946 - 20080828
Group number: 1348460-0300
Assembly Drawing: 1348460-4_1_AB

| Pos | Part No | UN | Qty | Description | Page No |
|---|---|---|---|---|---|
| - | | | | | |
| 100 | 1195361-0000 | | 1 | YOKE RIGHT | |
| 120 | 2981828-0000 | | 2 | BUSHING | |
| | *315259-0102* | | *1* | *FELT SEAL 22-47 MM* | |
| 130 | 1037104-0000 | | 1 | LOCATING PIECE | |
| 140 | 1037106-0000 | | 1 | SLEEVE | |
| 150 | 1349972-0000 | | 1 | SPRING HOUSING | |
| 170 | 36753-0000 | | 4 | RING | |
| 180 | 29886-0000 | | 2 | LACE | |
| 190 | 246513-0000 | | 4 | BEARING | |
| 210 | 20494-0000 | | 2 | COMPRESSION SPRING | |
| 220 | 31838-0000 | | 2 | PLUNGER | |
| 230 | 1349780-0000 | | 1 | LID | |
| 250 | 1038509-0000 | | 2 | WASHER | |
| 300 | 90600-5307 | | 1 | SCRAPER, 45X53X7 MM | |
| 310 | 312115-0329 | | 4 | SCREW ISO4762 M5X16 A4 80 | |
| 320 | 315753-0135 | | 1 | RETAINING RING FOR BORE DIN 472 60 A2 | |
| 350 | 90134-0058 | | 8 | CONNECTION | |
| 370 | 312105-0335 | | 16 | SCREW M6S ISO 4014 M5X30 A480 | |
| 380 | 315105-0165 | | 1 | WASHER BRB 8,4X16 RFR | |
| 390 | 312109-0460 | | 1 | SCREW M6S ISO 4017 M8X45 A480 | |
| 400 | 312115-0451 | | 1 | SCREW ISO4762 M8X20 A4 80 | |
| 450 | 90028-0020 | | 10 | CONE TUBE 2,5MM | |
| 460 | 90028-0021 | | 5 | CONE TUBE 4 MM | |
| 470 | 90092-0052 | | 4 | METERING VALVE 10 MM3 | |
| 475 | 90092-0054 | | 6 | METERING VALVE 50 MM3 | |
| 480 | 90134-0039 | | 10 | BUSHING VALVE CONNECTION 2,5 MM | |
| 490 | 90134-0038 | | 5 | BUSHING/NUT INLET/OUTLET 4 MM | |
| 500 | 90032-0038 | | 1 | BLOCK 2 WAYS | |
| 510 | 90032-0039 | | 2 | BLOCK 4 WAYS | |
| 520 | 312105-0295 | | 6 | SCREW M6S ISO 4017 M4X20 A470 | |
| 530 | 90087-0019 | | 1 | PLUG M10X1 STAINLESS | |
| 540 | 315105-0153 | | 1 | WASHER BRB 6,4X12 RFR | |
| 550 | 312105-0366 | | 1 | SCREW M6S ISO 4017 M6X12 A480 | |
| 610 | 312105-0362 | | 1 | SCREW M6S ISO 4017 M6X8 A480 | |
| 620 | 90157-0021 | | 1 | LOCKING FLUID LOCTITE 270 | |
| 630 | 352113-0101 | | 2 | CABLE TIE, BLACK 92X2,5 MM | |
| T40W8010 | 90166-0109 | MM | 500 | TUBE 4 MM PA TRANSP. | |
| T40W8011 | 90266-0019 | MM | 300 | PIPE | |
| T40W8012 | 90266-0019 | MM | 500 | PIPE | |
| T40W8013 | 90266-0019 | MM | 330 | PIPE | |
| T40W8014 | 90266-0019 | MM | 350 | PIPE | |
| T40W8015 | 90266-0165 | MM | 400 | BRASS PIPE | |
| T40W8016 | 90266-0019 | MM | 300 | PIPE | |
| T40W8017 | 90266-0019 | MM | 400 | PIPE | |
| T40W8018 | 90266-0019 | MM | 350 | PIPE | |
| T40W8019 | 90266-0019 | MM | 200 | PIPE | |
| T40W8020 | 90266-0019 | MM | 350 | PIPE | |
| T40W8021 | 90266-0165 | MM | 200 | BRASS PIPE | |
| T40W8027 | 90166-0143 | MM | 350 | TUBE 2,5 MM PA TRANSP. | |

Machine Type | Group Description | Used-In | Group Number | Page No

# PRESSURE ARM RIGHT



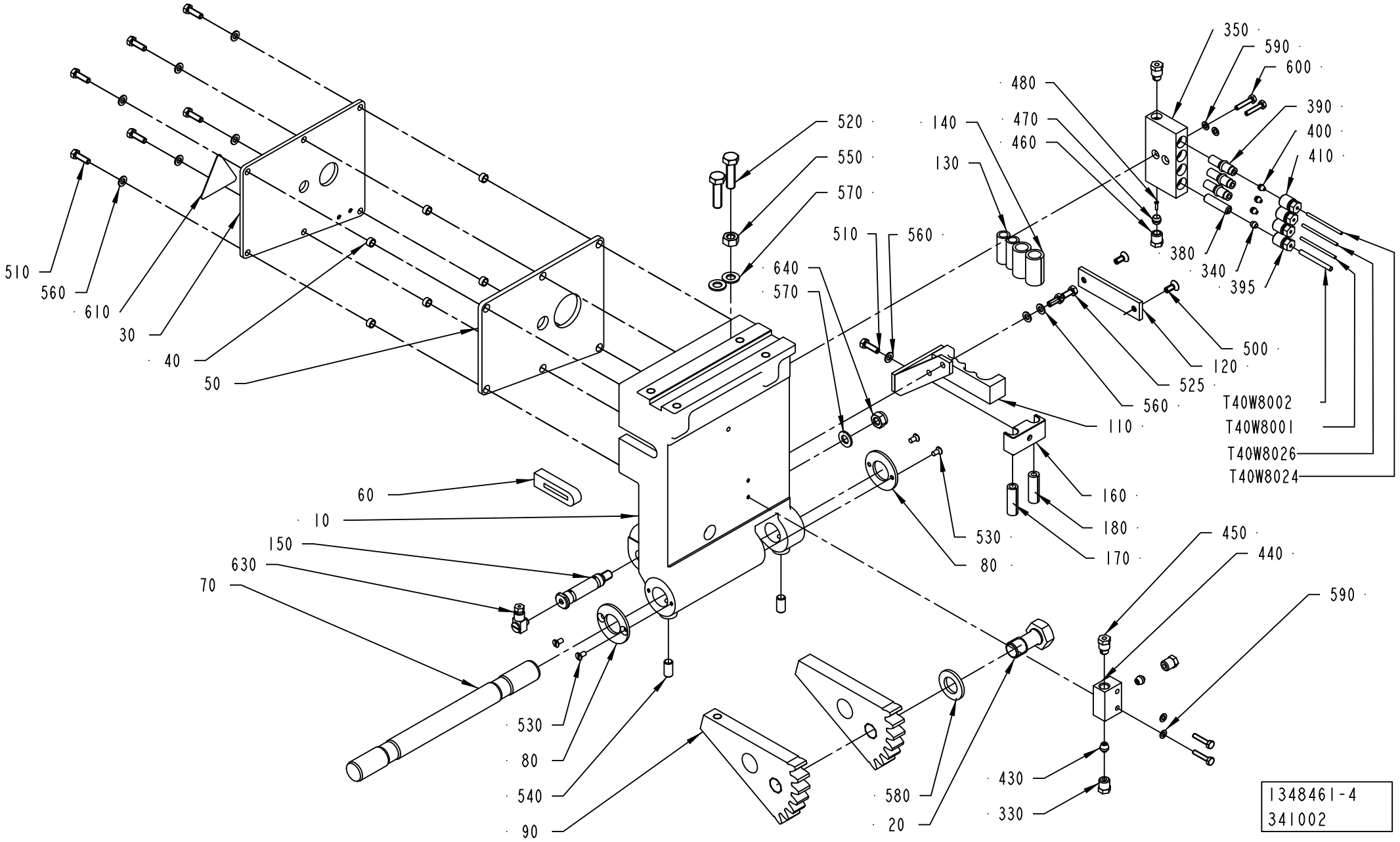

ECM: 341754 - 20070705
Group number: 1348461-0300
Assembly Drawing: 1348461-4_1_AB

| Pos | Part No | UN | Qty | Description | Page No |
|---|---|---|---|---|---|
| - | | | | | |
| 010 | 1035878-0000 | | 1 | ARM RIGHT | |
| 020 | 1037069-0000 | | 1 | SCREW | |
| 030 | 1036485-0000 | | 1 | COVERING PLATE | |
| 040 | 1036501-0000 | | 6 | SPACER | |
| 050 | 1036484-0000 | | 1 | GASKET | |
| 060 | 1036483-0000 | | 1 | SEAL | |
| 070 | 1035788-0000 | | 1 | SHAFT | |
| 080 | 536704-0000 | | 2 | WASHER | |
| 090 | 1036156-0000 | | 2 | TOOTH PART | |
| 110 | 1348196-0000 | | 1 | FASTENING PLATE | |
| 120 | 1349868-0000 | | 1 | FASTENING PLATE | |
| 130 | 1478000-0000 | | 2 | HOSE | |
| 140 | 1478001-0000 | | 2 | HOSE | |
| 150 | 1037853-0000 | | 1 | SHAFT | |
| 160 | 2889885-0000 | | 1 | BLOCK | |
| 170 | 2889946-0000 | | 1 | HOSE | |
| 180 | 2889947-0000 | | 1 | HOSE | |
| 330 | 90134-0038 | | 2 | BUSHING/NUT INLET/OUTLET 4 MM | |
| 340 | 90028-0021 | | 1 | CONE TUBE 4 MM | |
| 350 | 90459-5651 | | 1 | LUBRICATION BLOCK, HFS4664 | |
| 380 | 90134-0051 | | 1 | SPACING COLLAR DOSING BLOCK | |
| 390 | 90092-0052 | | 3 | METERING VALVE 10 MM3 | |
| 395 | 90134-0040 | | 1 | BUSHING VALVE CONNECTION 4 MM | |
| 400 | 90028-0020 | | 3 | CONE TUBE 2,5MM | |
| 410 | 90134-0039 | | 3 | BUSHING VALVE CONNECTION 2,5 MM | |
| 430 | 90028-0024 | | 2 | CONE TUBE 4 MM | |
| 440 | 90032-0043 | | 1 | DISTRIBUTION BLOCK 3 WAYS | |
| 450 | 90087-0019 | | 2 | PLUG M10X1 STAINLESS | |
| 460 | 90134-0055 | | 1 | BUSHING/NUT INLET/OUTLET 6 MM | |
| 470 | 90028-0022 | | 1 | CONE TUBE 6 MM | |
| 480 | 90134-0031 | | 1 | SLEEVE FOR PLASTIC TUBE | |
| 500 | 312155-0327 | | 2 | SCREW DIN 7991 MF6S M5X12 A4 70 | |
| 510 | 312105-0329 | | 7 | SCREW M6S ISO 4017 M5X16 A480 | |
| 520 | 312105-0455 | | 2 | SCREW M6S ISO 4017 M8X30 A480 | |
| 525 | 312105-0327 | | 2 | SCREW M6S ISO 4017 M5X12 A480 | |
| 530 | 312145-0287 | | 4 | SCREW ISO 2009 MFS M4X8 A4 | |
| 540 | 312318-0449 | | 2 | SCREW ISO4029 M8X16 A4 | |
| 550 | 312605-0318 | | 1 | HEXAGON NUT, M6M M8 A280 | |
| 560 | 315105-0146 | | 9 | WASHER BRB 5,3X10 RFR | |
| 570 | 315105-0165 | | 1 | WASHER BRB 8,4X16 RFR | |
| 580 | 315105-0186 | | 1 | WASHER BRB 17X30 RFR | |
| 590 | 315105-0136 | | 4 | WASHER BRB 4,3X8 RFR | |
| 600 | 312105-0295 | | 4 | SCREW M6S ISO 4017 M4X20 A470 | |
| 610 | 359705-0015 | | 1 | WARNING SIGN ISO, RISK OF ELECTRIC SHOCK | |
| 630 | 90134-0058 | | 1 | CONNECTION | |
| 640 | 312812-0318 | | 1 | HEXAGON NUT, NY-LOCK M8 A480 | |
| T40W8001 | 90266-0019 | MM | 500 | PIPE | |
| T40W8002 | 90266-0165 | MM | 200 | BRASS PIPE | |
| T40W8024 | 90166-0143 | MM | 550 | TUBE 2,5 MM PA TRANSP. | |
| T40W8026 | 90166-0143 | MM | 550 | TUBE 2,5 MM PA TRANSP. | |

| Machine Type | Group Description | Used-In | Group Number | Page No |
|---|---|---|---|---|

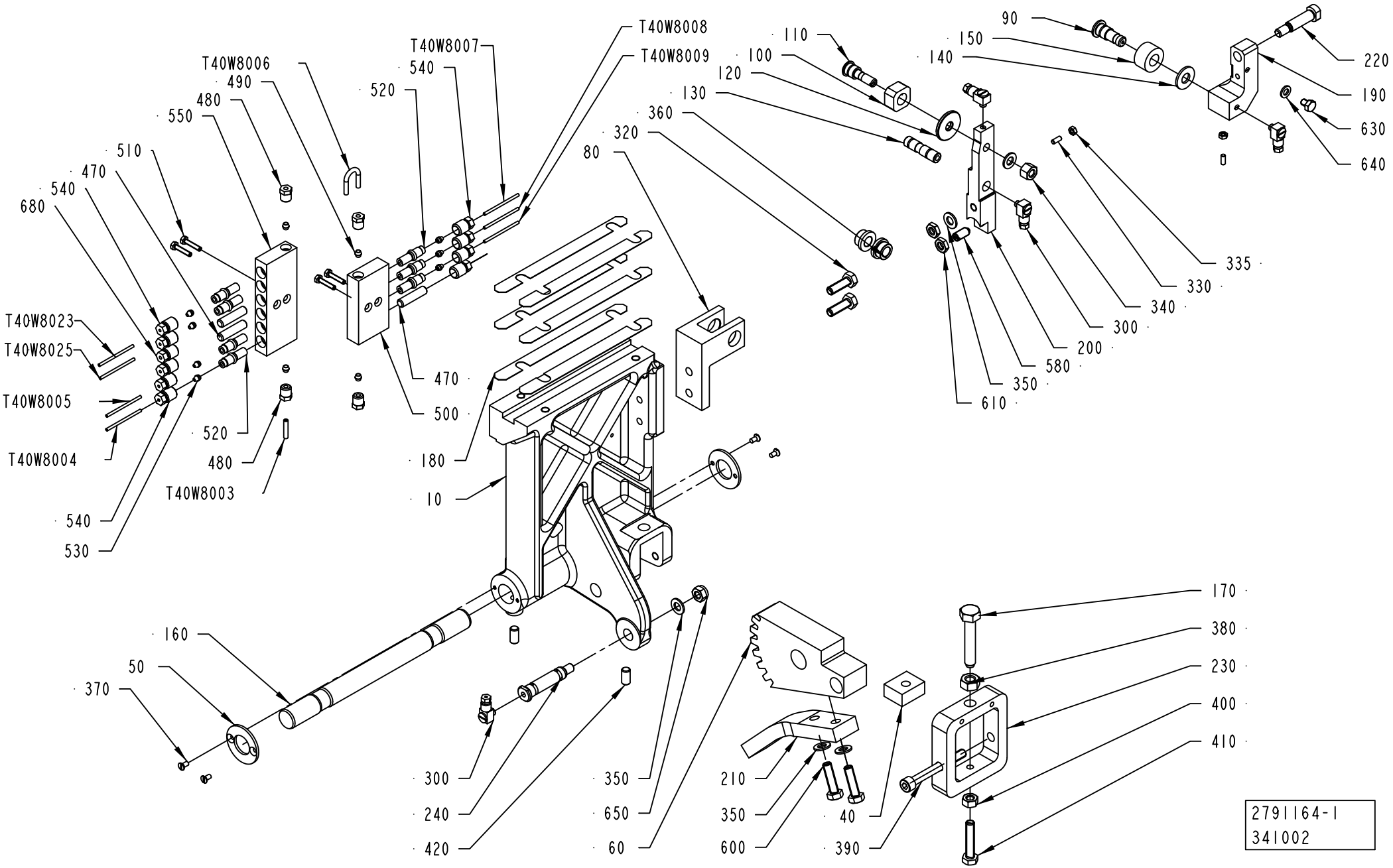
T40W8008
T40W8009
T40W8007
T40W8006
90
150
140
110
100
120
130
360
320
80
540
520
490
480
550
510
470
540
680
220
190
630
640
335
330
340
300
200
580
350
610
T40W8023
T40W8025
T40W8005
T40W8004
520
480
T40W8003
540
530
470
500
180
10
160
50
370
300
240
420
350
650
60
210
350
600
40
390
170
380
230
400
410
2791164-1
341002

ECM: 341752 - 20070705
Group number: 2791164-0100
Assembly Drawing: 2791164-1_1_AB

| Pos | Part No | UN | Qty | Description | Page No |
|---|---|---|---|---|---|
| - | | | | | |
| 010 | 2536047-0000 | | 1 | ARM | |
| 040 | 14729-0000 | | 1 | NUT | |
| 050 | 536704-0000 | | 2 | WASHER | |
| 060 | 1036155-0000 | | 1 | TOOTH PART | |
| 080 | 1338793-0000 | | 1 | BRACKET | |
| 090 | 1036620-0000 | | 1 | SHAFT | |
| 100 | 256628-0000 | | 1 | PIECE | |
| 110 | 256629-0001 | | 1 | AXLE PIN | |
| 120 | 441706-0000 | | 1 | WASHER | |
| 130 | 1036615-0000 | | 1 | SHAFT | |
| 140 | 1036616-0000 | | 1 | WASHER | |
| 150 | 1036618-0000 | | 1 | ROLL | |
| 160 | 1035788-0000 | | 1 | SHAFT | |
| 170 | 32957-0000 | | 1 | SCREW | |
| 180 | 1037254-0000 | | 6 | SHIM | |
| 190 | 2775357-0000 | | 1 | JOINT | |
| 200 | 2775358-0000 | | 1 | ARM | |
| 210 | 1484320-0000 | | 1 | ROD | |
| 220 | 1348669-0000 | | 1 | SCREW | |
| 230 | 1038867-0000 | | 1 | BOW CLAMP | |
| 240 | 1037853-0000 | | 1 | SHAFT | |
| 300 | 90134-0058 | | 4 | CONNECTION | |
| 320 | 312105-0453 | | 2 | SCREW M6S ISO 4017 M8X25 A480 | |
| 330 | 312318-0289 | | 2 | SCREW ISO4029 M4X10 A4 | |
| 335 | 312605-0312 | | 2 | HEXAGON NUT, M6M M4 A280 | |
| 340 | 312811-0318 | | 1 | NUT HEX.LOCK HELI COIL M8 SS | |
| 350 | 315105-0165 | | 5 | WASHER BRB 8,4X16 RFR | |
| 360 | 321101-0163 | | 2 | FLANGE BUSHING, 10X16X10 MM | |
| 370 | 312145-0287 | | 4 | SCREW ISO 2009 MFS M4X8 A4 | |
| 380 | 312635-0320 | | 1 | NUT M6M 10X1 STAINLESS A2 80 | |
| 390 | 312115-0465 | | 1 | SCREW ISO4762 M8X70 A4 80 | |
| 400 | 312605-0318 | | 1 | HEXAGON NUT, M6M M8 A280 | |
| 410 | 312109-0459 | | 1 | SCREW M6S ISO 4017 M8X40 A480 | |
| 420 | 312318-0449 | | 2 | SCREW ISO4029 M8X16 A4 | |
| 470 | 90134-0052 | | 3 | PLUG DOSING BLOCK | |
| 480 | 90134-0038 | | 4 | BUSHING/NUT INLET/OUTLET 4 MM | |
| 490 | 90028-0021 | | 4 | CONE TUBE 4 MM | |
| 500 | 90032-0039 | | 1 | BLOCK 4 WAYS | |
| 510 | 312105-0295 | | 4 | SCREW M6S ISO 4017 M4X20 A470 | |
| 520 | 90092-0052 | | 7 | METERING VALVE 10 MM3 | |
| 530 | 90028-0020 | | 7 | CONE TUBE 2,5MM | |
| 540 | 90134-0039 | | 9 | BUSHING VALVE CONNECTION 2,5 MM | |
| 550 | 90032-0040 | | 1 | BLOCK 6 WAYS | |
| 580 | 90287-0112 | | 1 | SCREW SPRINGLOAD. SLOTTED HEAD M8X16 | |
| 600 | 312105-0455 | | 2 | SCREW M6S ISO 4017 M8X30 A480 | |
| 610 | 312625-0318 | | 2 | HEXAGON THIN NUT, EN 24035 ML6M M8 A4 | |
| 630 | 312105-0362 | | 1 | SCREW M6S ISO 4017 M6X8 A480 | |
| 640 | 315105-0153 | | 1 | WASHER BRB 6,4X12 RFR | |
| 650 | 312812-0318 | | 1 | HEXAGON NUT, NY-LOCK M8 A480 | |
| 680 | 90134-0040 | | 1 | BUSHING VALVE CONNECTION 4 MM | |
| T40W8003 | 90166-0109 | MM | 600 | TUBE 4 MM PA TRANSP. | |
| T40W8004 | 90266-0019 | MM | 200 | PIPE | |
| T40W8005 | 90166-0143 | MM | 600 | TUBE 2,5 MM PA TRANSP. | |
| T40W8006 | 90266-0165 | MM | 100 | BRASS PIPE | |
| T40W8007 | 90166-0143 | MM | 600 | TUBE 2,5 MM PA TRANSP. | |
| T40W8008 | 90166-0143 | MM | 600 | TUBE 2,5 MM PA TRANSP. | |
| T40W8009 | 90166-0143 | MM | 600 | TUBE 2,5 MM PA TRANSP. | |
| T40W8023 | 90166-0143 | MM | 425 | TUBE 2,5 MM PA TRANSP. | |
| T40W8025 | 90166-0143 | MM | 425 | TUBE 2,5 MM PA TRANSP. | |

Machine Type Group Description Used-In Group Number Page No

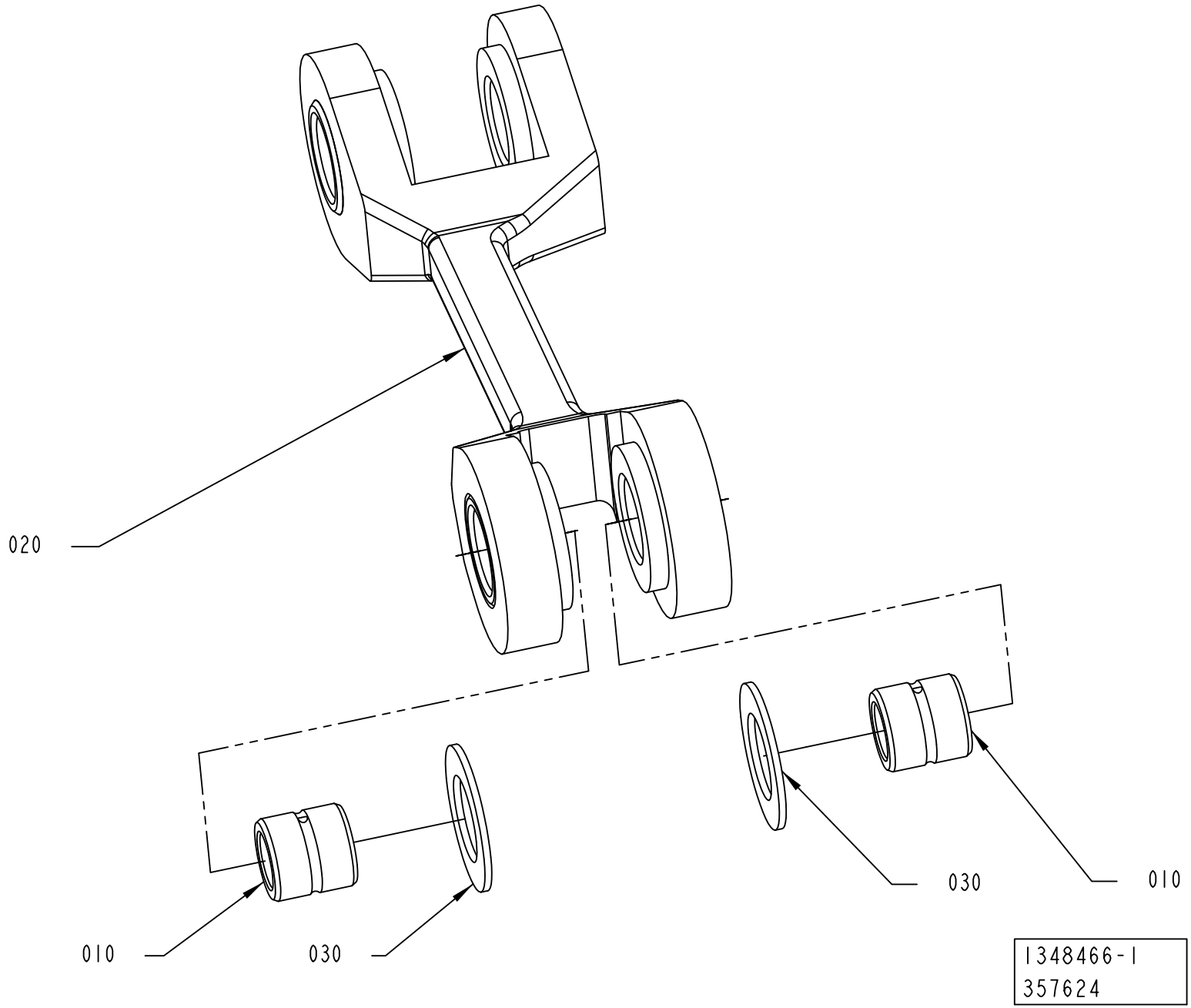
020
010
030
030
010
1348466-1
357624

ECM: 361256 - 20081001
Group number: 1348466-0100
Assembly Drawing: 1348466-1_1_AB

| Pos | Part No | UN | Qty | Description | Page No |
|---|---|---|---|---|---|
| - | | | | | |
| 010 | 2983172-0000 | | 2 | SLEEVE | |
| 020 | 2961956-0000 | | 1 | LINK | |
| 030 | 1038021-0000 | | 2 | WASHER | |

| Pos | Part No | UN | Qty | Description | Page No |
|---|---|---|---|---|---|

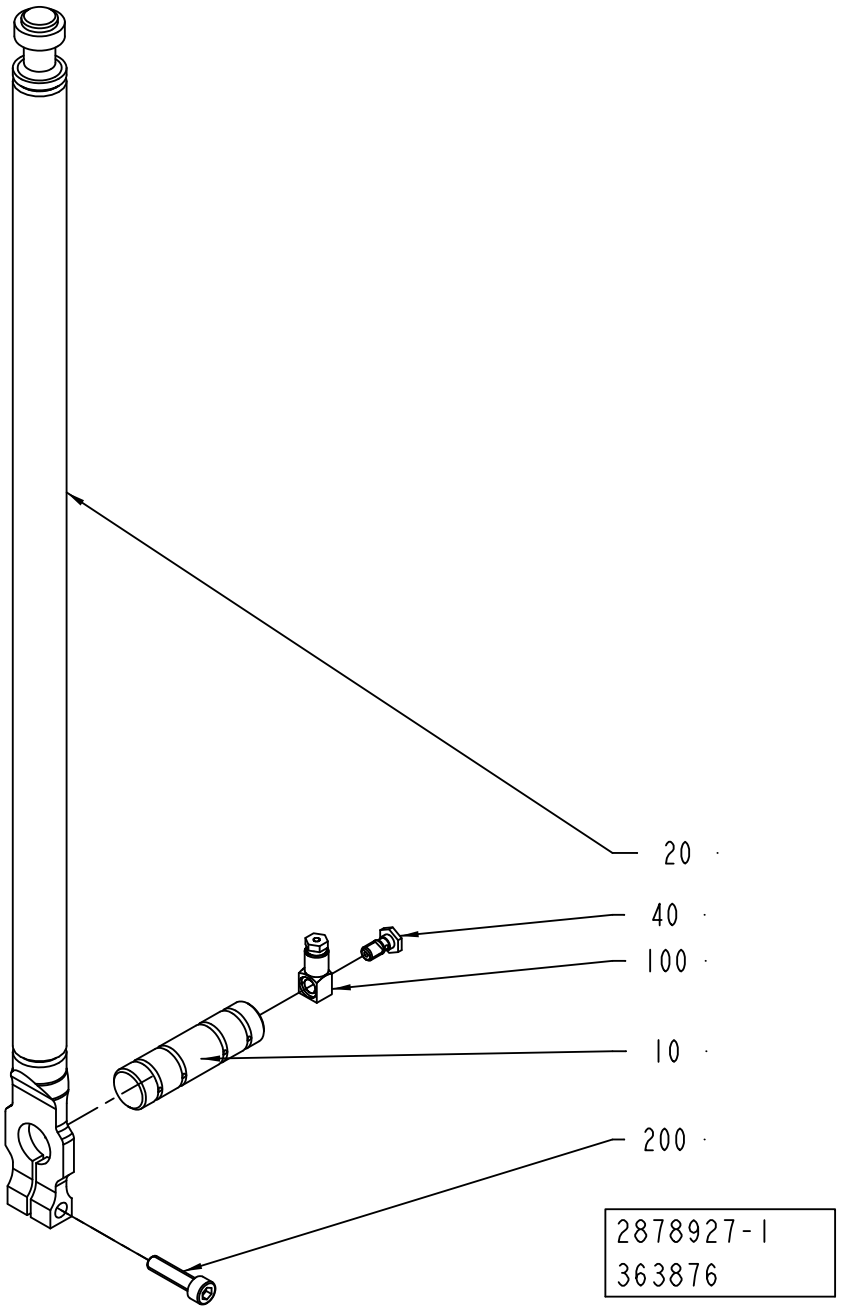
20
40
100
10
200
2878927-1
363876

ECM: 364944 - 20080828
Group number: 2878927-0100
Assembly Drawing: 2878927-1_1_AB

| Pos | Part No | UN | Qty | Description | Page No |
|---|---|---|---|---|---|
| - | | | | | |
| 010 | 2983173-0000 | | 1 | SHAFT | |
| 020 | 2847937-0000 | | 1 | LINK | |
| 040 | 1334659-0000 | | 1 | SCREW | |
| 100 | 90134-0058 | | 1 | CONNECTION | |
| 200 | 312115-0372 | | 1 | SCREW ISO4762 M6X25 A4 80 | |

| Pos | Part No | UN | Qty | Description | Page No |
|---|---|---|---|---|---|

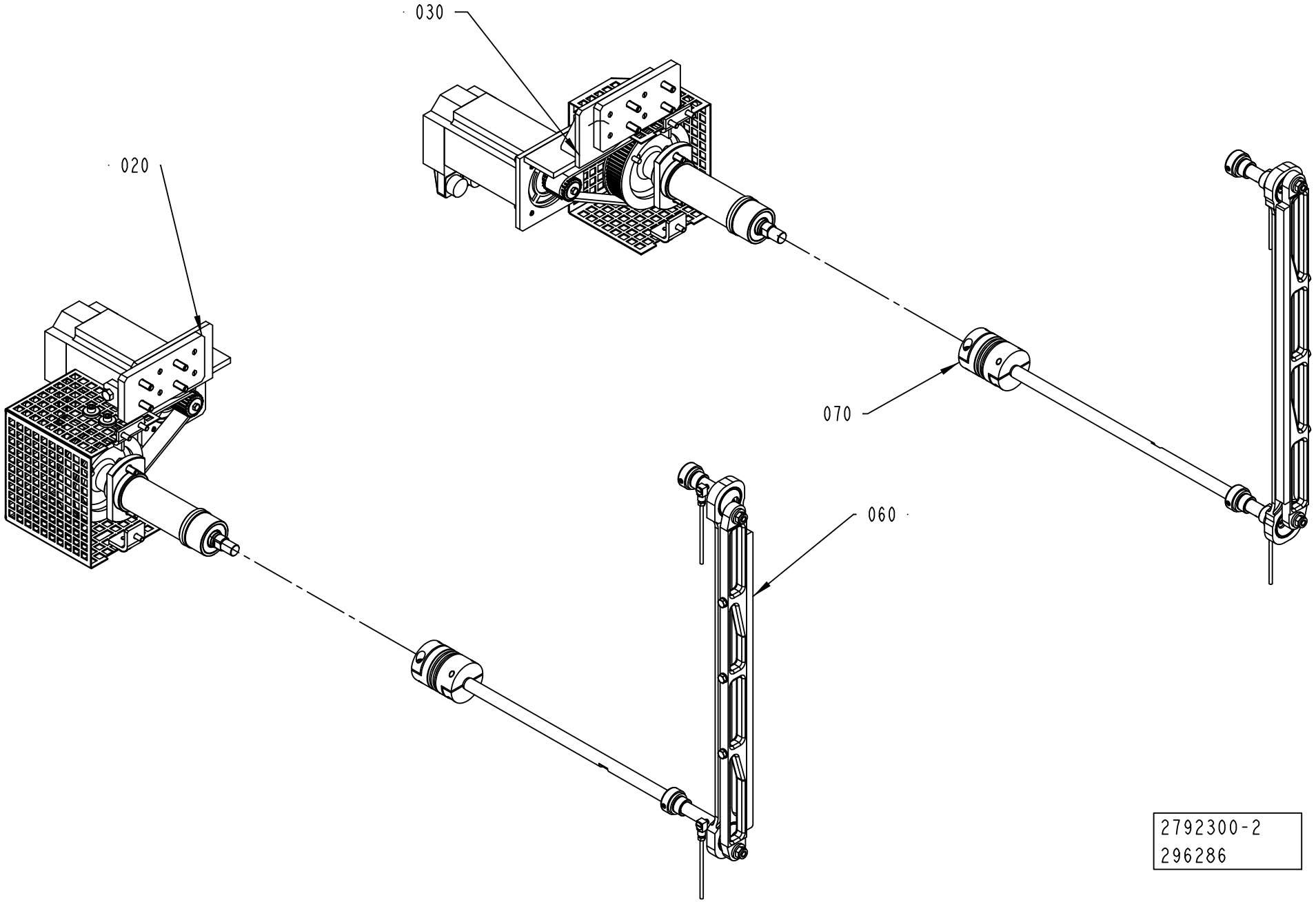
030
020
070
060
2792300-2
296286

ECM: 296579 - 20070701
Group number: 2792300-0200
Assembly Drawing: 2792300-2_1_AA

| Pos | Part No | UN | Qty | Description | Page No |
|---|---|---|---|---|---|
| - | | | | | |
| 020 | 2792301-0200 | | 1 | DRIVE UNIT LEFT | **4-29** |
| 030 | 2792302-0200 | | 1 | DRIVE UNIT RIGHT | **4-31** |
| 060 | 2503665-0200 | | 1 | DESIGN CORRECTION DEVICE LEFT | **4-33** |
| 070 | 2503666-0200 | | 1 | DESIGN CORRECTION DEVICE RIGHT | **4-35** |

| Pos | Part No | UN | Qty | Description | Page No |
|---|---|---|---|---|---|

# DRIVE UNIT LEFT



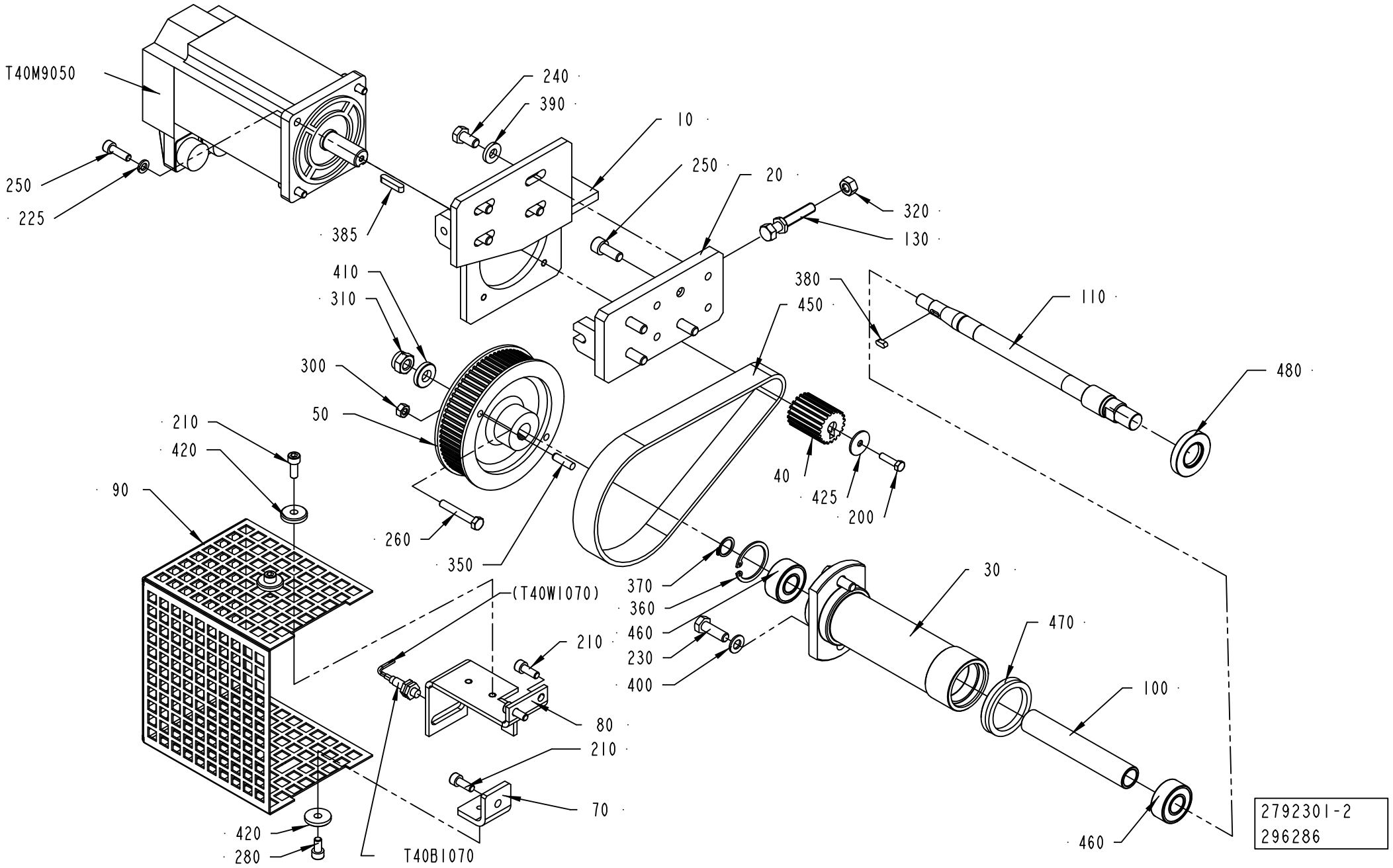

ECM: 296578 - 20070701
Group number: 2792301-0200
Assembly Drawing: 2792301-2_1_AA

| Pos | Part No | UN | Qty | Description | Page No |
|---|---|---|---|---|---|
| - | | | | | |
| 010 | 2792304-0000 | | 1 | PLATE | |
| 020 | 2650713-0000 | | 1 | PLATE | |
| 030 | 2506334-0000 | | 1 | SUPPORT | |
| 040 | 2792306-0000 | | 1 | TOOTHED PULLEY | |
| 050 | 2652891-0000 | | 1 | TOOTHED PULLEY | |
| 070 | 2506337-0000 | | 1 | ANGLE BRACKET | |
| 080 | 2683976-0000 | | 1 | SUPPORT | |
| 090 | 2506336-0000 | | 1 | PROTECTIVE COVER | |
| 100 | 2506392-0000 | | 1 | SPACER | |
| 110 | 2506338-0000 | | 1 | SHAFT | |
| 130 | 2650717-0000 | | 1 | SCREW | |
| 200 | 312105-0331 | | 1 | SCREW M6S ISO 4017 M5X20 A480 | |
| 210 | 312115-0368 | | 5 | SCREW ISO4762 M6X16 A4 80 | |
| 225 | 315402-0156 | | 4 | LOCK WASHER FBB 6,5 | |
| 230 | 312105-0453 | | 2 | SCREW M6S ISO 4017 M8X25 A480 | |
| 240 | 312105-0449 | | 8 | SCREW M6S ISO 4017 M8X16 A480 | |
| 250 | 312115-0370 | | 4 | SCREW ISO4762 M6X20 A4 80 | |
| 260 | 312109-0378 | | 1 | SCREW M6S ISO 4017 M6X40 A480 | |
| 280 | 312115-0366 | | 2 | SCREW ISO4762 M6X12 A4 80 | |
| 300 | 312605-0316 | | 1 | HEXAGON NUT, M6M M6 A280 | |
| 310 | 312812-0320 | | 1 | HEXAGON NUT, NY-LOCK M10 A480 | |
| 320 | 312605-0318 | | 1 | HEXAGON NUT, M6M M8 A280 | |
| 350 | 311103-0354 | | 1 | PARALLEL PIN ISO 2338 6M6X22 A1 | |
| 360 | 315753-0124 | | 1 | RETAINING RING FOR BORE DIN 472 35 A2 | |
| 370 | 315751-0112 | | 1 | RETAINING RING FOR SHAFT DIN 471 15 SS | |
| 380 | 315701-0165 | | 1 | PARALLEL KEY W. ROUND ENDS 4X4X10 MM | |
| 385 | 315701-0205 | | 1 | PARALLEL KEY W. ROUND ENDS 5X5X30 MM | |
| 390 | 1558447-0000 | | 4 | SPACER | |
| 400 | 315105-0165 | | 2 | WASHER BRB 8,4X16 RFR | |
| 410 | 315115-0173 | | 1 | WASHER PLAIN, TBRB 10,5/22 H=4 | |
| 420 | 315125-0153 | | 3 | WASHER TBRSB 6,4X22X4 A4 | |
| 425 | 90005-0125 | | 1 | WASHER PLAIN ROUND 5,5/22, H=1,5 FZB | |
| 450 | 90459-3759 | | 1 | TIMING BELT 5MR-550-25 | |
| 460 | 90214-0194 | | 2 | SPHERICAL BALL BEARING, 15X35X1 MM | |
| 470 | 90091-0138 | | 1 | V-RINGS 40X50X9 MM V-45A | |
| 480 | 90091-0436 | | 1 | RADIAL SEAL 20X40X7 MM DUST LIP | |
| T40B1070 | 90600-0473 | | 1 | INDUCTIVE SWITCH E2A-S08KS01-WP-B1-TP 5M | |
| T40M9050 | 90459-7178 | | 1 | SERVO MOTOR MPL-B330P-SJ24AA | |

| Pos | Part No | UN | Qty | Description | Page No |
|---|---|---|---|---|---|

Machine Type | Group Description | Used-In | Group Number | Page No

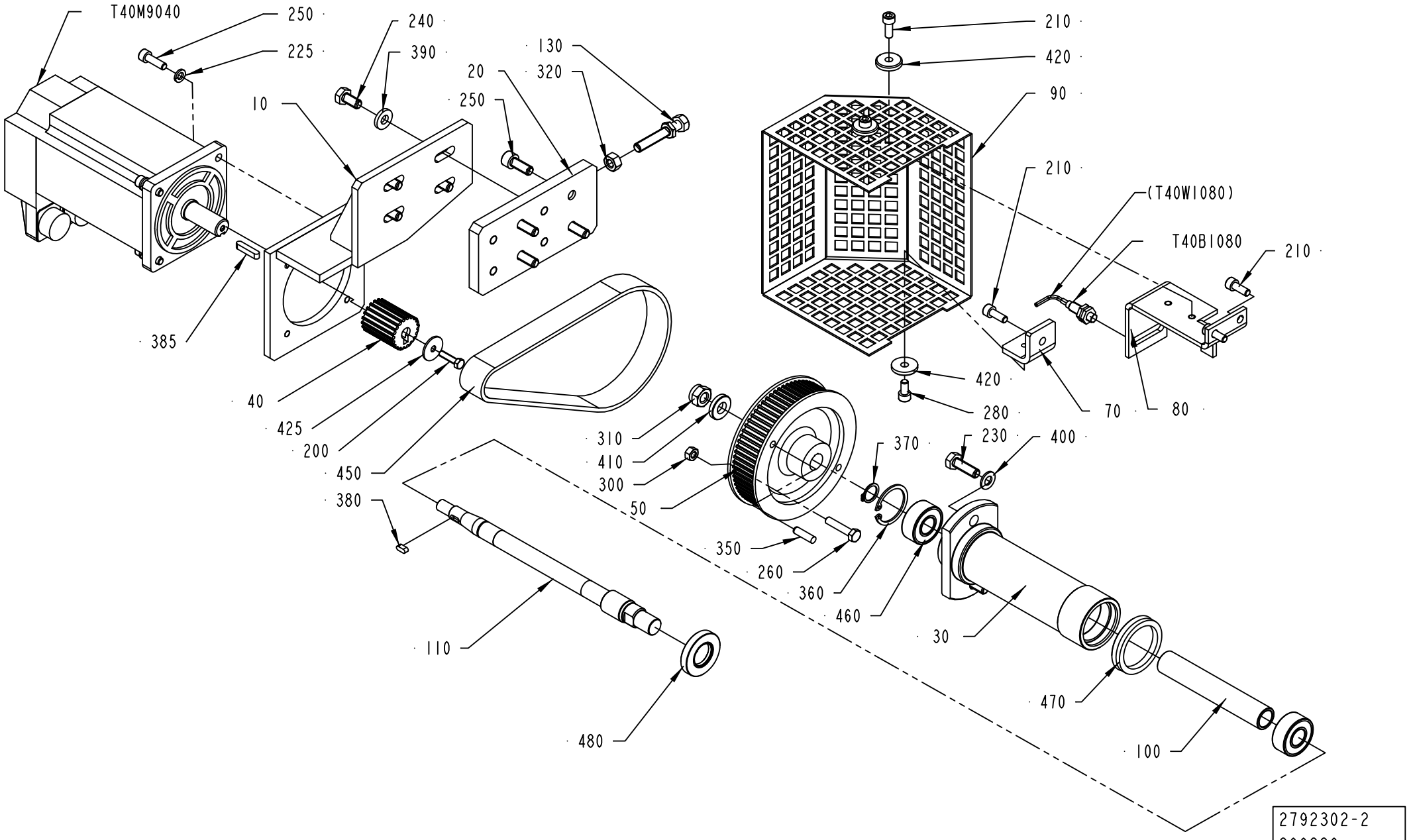
T40M9040
250
225
240
390
130
320
20
250
10
385
40
425
200
450
380
110
480
310
410
300
50
350
260
360
460
370
230
400
30
470
100
210
420
90
210
(T40W1080)
T40B1080
210
420
280
70
80
2792302-2
296286

ECM: 296577 - 20070701
Group number: 2792302-0200
Assembly Drawing: 2792302-2_1_AA

| Pos | Part No | UN | Qty | Description | Page No |
|---|---|---|---|---|---|
| - | | | | | |
| 010 | 2792305-0000 | | 1 | PLATE | |
| 020 | 2650713-0000 | | 1 | PLATE | |
| 030 | 2506334-0000 | | 1 | SUPPORT | |
| 040 | 2792306-0000 | | 1 | TOOTHED PULLEY | |
| 050 | 2652891-0000 | | 1 | TOOTHED PULLEY | |
| 070 | 2506337-0000 | | 1 | ANGLE BRACKET | |
| 080 | 2683976-0000 | | 1 | SUPPORT | |
| 090 | 2876320-0000 | | 1 | PROTECTIVE COVER | |
| 100 | 2506392-0000 | | 1 | SPACER | |
| 110 | 2506338-0000 | | 1 | SHAFT | |
| 130 | 2650717-0000 | | 1 | SCREW | |
| 200 | 312105-0331 | | 1 | SCREW M6S ISO 4017 M5X20 A480 | |
| 210 | 312115-0368 | | 5 | SCREW ISO4762 M6X16 A4 80 | |
| 225 | 315402-0156 | | 4 | LOCK WASHER FBB 6,5 | |
| 230 | 312105-0453 | | 2 | SCREW M6S ISO 4017 M8X25 A480 | |
| 240 | 312105-0449 | | 4 | SCREW M6S ISO 4017 M8X16 A480 | |
| 250 | 312115-0370 | | 8 | SCREW ISO4762 M6X20 A4 80 | |
| 260 | 312105-0374 | | 1 | SCREW M6S ISO 4014 M6X30 A480 | |
| 280 | 312115-0366 | | 2 | SCREW ISO4762 M6X12 A4 80 | |
| 300 | 312605-0316 | | 1 | HEXAGON NUT, M6M M6 A280 | |
| 310 | 312812-0320 | | 1 | HEXAGON NUT, NY-LOCK M10 A480 | |
| 320 | 312605-0318 | | 1 | HEXAGON NUT, M6M M8 A280 | |
| 350 | 311103-0354 | | 1 | PARALLEL PIN ISO 2338 6M6X22 A1 | |
| 360 | 315753-0124 | | 1 | RETAINING RING FOR BORE DIN 472 35 A2 | |
| 370 | 315751-0112 | | 1 | RETAINING RING FOR SHAFT DIN 471 15 SS | |
| 380 | 315701-0165 | | 1 | PARALLEL KEY W. ROUND ENDS 4X4X10 MM | |
| 385 | 315701-0203 | | 1 | PARALLEL KEY W. ROUND ENDS 5X5X25 MM | |
| 390 | 1558447-0000 | | 4 | SPACER | |
| 400 | 315105-0165 | | 2 | WASHER BRB 8,4X16 RFR | |
| 410 | 315115-0173 | | 1 | WASHER PLAIN, TBRB 10,5/22 H=4 | |
| 420 | 315125-0153 | | 3 | WASHER TBRSB 6,4X22X4 A4 | |
| 425 | 90005-0125 | | 1 | WASHER PLAIN ROUND 5,5/22, H=1,5 FZB | |
| 450 | 90459-3759 | | 1 | TIMING BELT 5MR-550-25 | |
| 460 | 90214-0194 | | 2 | SPHERICAL BALL BEARING, 15X35X1 MM | |
| 470 | 90091-0138 | | 1 | V-RINGS 40X50X9 MM V-45A | |
| 480 | 90091-0436 | | 1 | RADIAL SEAL 20X40X7 MM DUST LIP | |
| T40B1080 | 90600-0473 | | 1 | INDUCTIVE SWITCH E2A-S08KS01-WP-B1-TP 5M | |
| T40M9040 | 90459-7178 | | 1 | SERVO MOTOR MPL-B330P-SJ24AA | |

| Pos | Part No | UN | Qty | Description | Page No |
|---|---|---|---|---|---|

Machine Type | Group Description | Used-In | Group Number | Page No

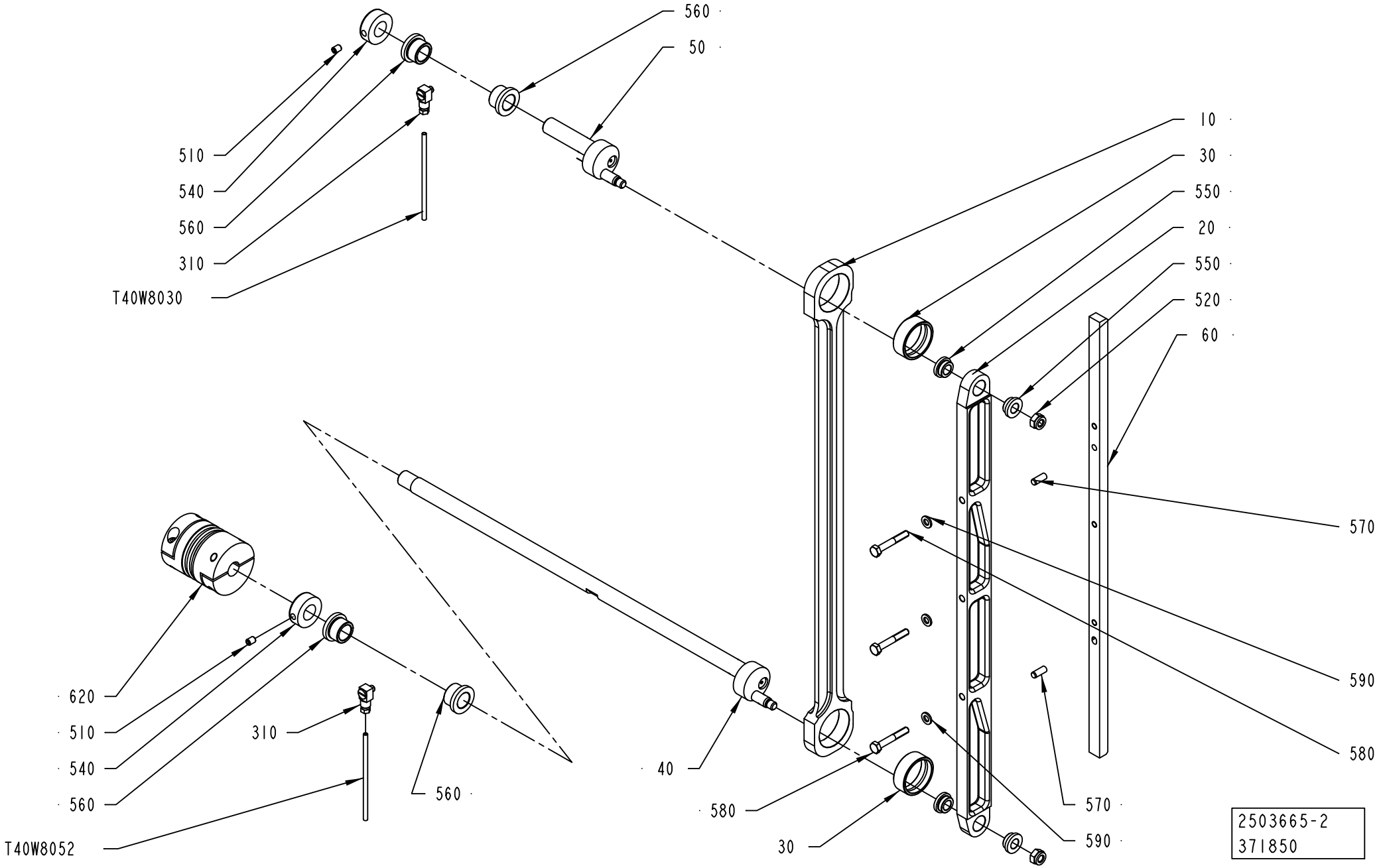
560
50
510
540
560
310
T40W8030
10
30
550
20
550
520
60
570
590
580
620
510
540
560
T40W8052
310
560
40
580
30
570
590
2503665-2
371850

ECM: 378261 - 20081127
Group number: 2503665-0200
Assembly Drawing: 2503665-2_1_AB

| Pos | Part No | UN | Qty | Description | Page No |
|---|---|---|---|---|---|
| - | | | | | |
| 010 | 2508406-0000 | | 1 | STRUT | |
| 020 | 2534851-0000 | | 1 | BAR | |
| 030 | 1255117-0000 | | 2 | PLAIN BEARING | |
| 040 | 2503669-0000 | | 1 | ECCENTRIC SHAFT | |
| 050 | 2506340-0000 | | 1 | ECCENTRIC SHAFT | |
| 060 | 2976263-0000 | | 1 | FOLDING FLAP CAM | |
| 310 | 90134-0068 | | 2 | CONNECTION | |
| 510 | 312318-0362 | | 2 | SCREW ISO4029 M6X8 A4 | |
| 520 | 312812-0318 | | 2 | HEXAGON NUT, NY-LOCK M8 A480 | |
| 540 | 315742-0112 | | 2 | RETAINING RING 16 SMS 199 RFR | |
| 550 | 321101-0162 | | 4 | FLANGE BUSHING, 10X16X8 MM | |
| 560 | 321101-0203 | | 4 | FLANGE BUSHING, 16X22X16 MM | |
| 570 | 311103-0351 | | 2 | PARALLEL PIN ISO 2338 6M6X16 A1 | |
| 580 | 312105-0378 | | 3 | SCREW M6S ISO 4014 M6X40 A480 | |
| 590 | 315105-0153 | | 3 | WASHER BRB 6,4X12 RFR | |
| 620 | 90459-1733 | | 1 | BELLOW COUPLING, 15X15 MM | |
| T40W8030 | 90266-0165 | MM | 700 | BRASS PIPE | |
| T40W8052 | 90266-0165 | MM | 180 | BRASS PIPE | |

| Pos | Part No | UN | Qty | Description | Page No |
|---|---|---|---|---|---|

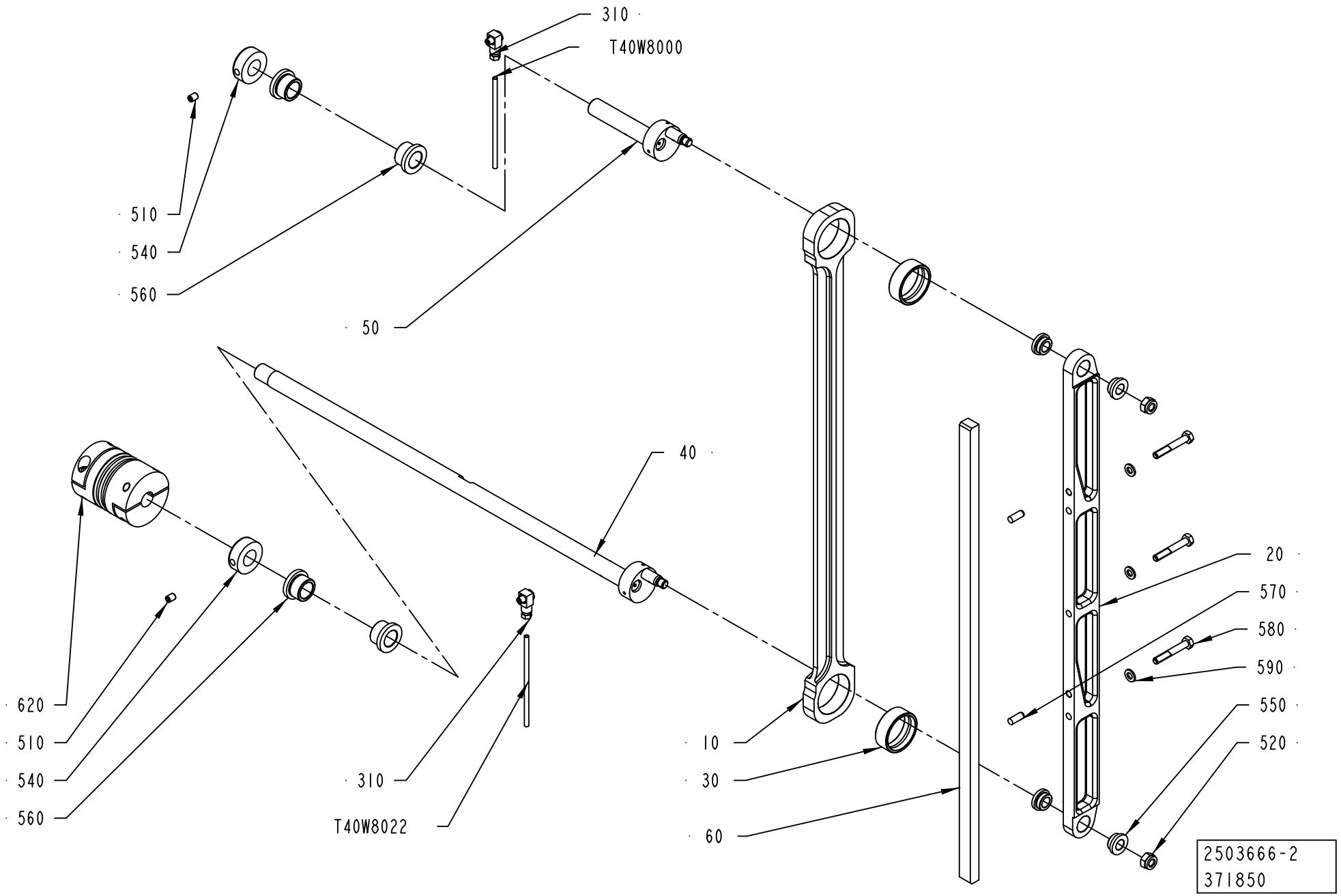
310
T40W8000
510
540
560
50
40
620
510
540
560
310
T40W8022
10
30
60
20
570
580
590
550
520
2503666-2
371850

ECM: 378262 - 20081127
Group number: 2503666-0200
Assembly Drawing: 2503666-2_1_AB

| Pos | Part No | UN | Qty | Description | Page No |
|---|---|---|---|---|---|
| - | | | | | |
| 010 | 2508406-0000 | | 1 | STRUT | |
| 020 | 2534851-0000 | | 1 | BAR | |
| 030 | 1255117-0000 | | 2 | PLAIN BEARING | |
| 040 | 2503669-0000 | | 1 | ECCENTRIC SHAFT | |
| 050 | 2506340-0000 | | 1 | ECCENTRIC SHAFT | |
| 060 | 2976263-0000 | | 1 | FOLDING FLAP CAM | |
| 310 | 90134-0068 | | 2 | CONNECTION | |
| 510 | 312318-0362 | | 2 | SCREW ISO4029 M6X8 A4 | |
| 520 | 312812-0318 | | 2 | HEXAGON NUT, NY-LOCK M8 A480 | |
| 540 | 315742-0112 | | 2 | RETAINING RING 16 SMS 199 RFR | |
| 550 | 321101-0162 | | 4 | FLANGE BUSHING, 10X16X8 MM | |
| 560 | 321101-0203 | | 4 | FLANGE BUSHING, 16X22X16 MM | |
| 570 | 311103-0351 | | 2 | PARALLEL PIN ISO 2338 6M6X16 A1 | |
| 580 | 312105-0378 | | 3 | SCREW M6S ISO 4014 M6X40 A480 | |
| 590 | 315105-0153 | | 3 | WASHER BRB 6,4X12 RFR | |
| 620 | 90459-1733 | | 1 | BELLOW COUPLING, 15X15 MM | |
| T40W8000 | 90266-0165 | MM | 700 | BRASS PIPE | |
| T40W8022 | 90266-0165 | MM | 180 | BRASS PIPE | |

| Pos | Part No | UN | Qty | Description | Page No |
|---|---|---|---|---|---|

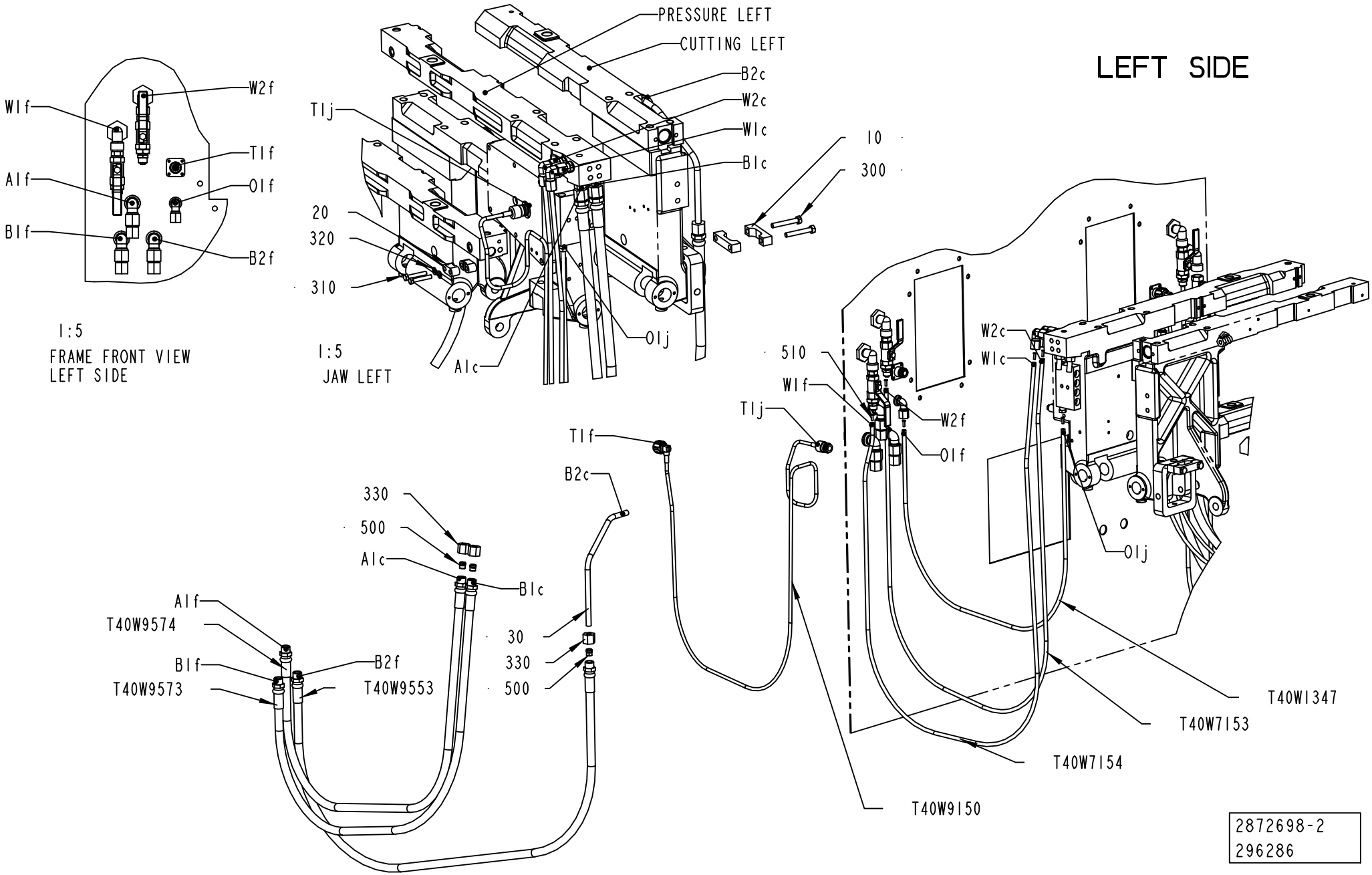
LEFT SIDE
PRESSURE LEFT
CUTTING LEFT
B2c
W2c
W1c
B1c
T1j
20
320
310
O1j
A1c
1:5
JAW LEFT
W1f
W2f
T1f
A1f
O1f
B1f
B2f
1:5
FRAME FRONT VIEW
LEFT SIDE
10
300
510
W1f
T1j
T1f
B2c
330
500
A1c
B1c
A1f
T40W9574
B1f
T40W9573
B2f
T40W9553
30
330
500
W2c
W1c
W2f
O1f
O1j
T40W1347
T40W7153
T40W7154
T40W9150
2872698-2
296286

ECM: 296574 - 20070701
Group number: 2872698-0100
Assembly Drawing: 2872698-2_1_AA

This list covers pages from 4-36 to 4-39

| Pos | Part No | UN | Qty | Description | Page No |
|---|---|---|---|---|---|
| - | | | | | |
| 010 | 1129599-0000 | | 4 | CRAMP | |
| 020 | 464368-0000 | | 4 | CRAMP | |
| 030 | 2774806-0000 | | 1 | TUBE | |
| 040 | 2775282-0000 | | 1 | TUBE | |
| 300 | 312105-0378 | | 4 | SCREW M6S ISO 4014 M6X40 A480 | |
| 310 | 312109-0335 | | 4 | SCREW M6S ISO 4017 M5X30 A480 | |
| 320 | 315105-0146 | | 4 | WASHER BRB 5,3X10 RFR | |
| 330 | 342703-0208 | | 6 | NUT, PIPES & CONNECTORS,NUT M-8 SS | |
| 340 | 352113-0101 | | 12 | CABLE TIE, BLACK 92X2,5 MM | |
| 500 | 90030-0098 | | 6 | ACCESSORIES, FERRULE 8 | |
| 510 | 90134-0030 | | 12 | SLEEVE FOR PLASTIC TUBE | |
| T40W1345 | 90166-0108 | MM | 960 | TUBE 6 MM PA TRANSP. | |
| T40W1347 | 90166-0108 | MM | 960 | TUBE 6 MM PA TRANSP. | |
| T40W7153 | 90166-0108 | MM | 1390 | TUBE 6 MM PA TRANSP. | |
| T40W7154 | 90166-0108 | MM | 1440 | TUBE 6 MM PA TRANSP. | |
| T40W7163 | 90166-0108 | MM | 1390 | TUBE 6 MM PA TRANSP. | |
| T40W7164 | 90166-0108 | MM | 1440 | TUBE 6 MM PA TRANSP. | |
| T40W9150 | 2562736-0001 | | 1 | COAXIAL CABLE | |
| T40W9151 | 2562736-0001 | | 1 | COAXIAL CABLE | |
| T40W9553 | 2510787-0000 | | 1 | HOSE | |
| T40W9554 | 2510787-0000 | | 1 | HOSE | |
| T40W9573 | 1517348-0000 | | 1 | HOSE | |
| T40W9574 | 1517348-0000 | | 1 | HOSE | |
| T40W9593 | 1517348-0000 | | 1 | HOSE | |
| T40W9594 | 1517348-0000 | | 1 | HOSE | |

| Pos | Part No | UN | Qty | Description | Page No |
|---|---|---|---|---|---|

# RIGHT SIDE

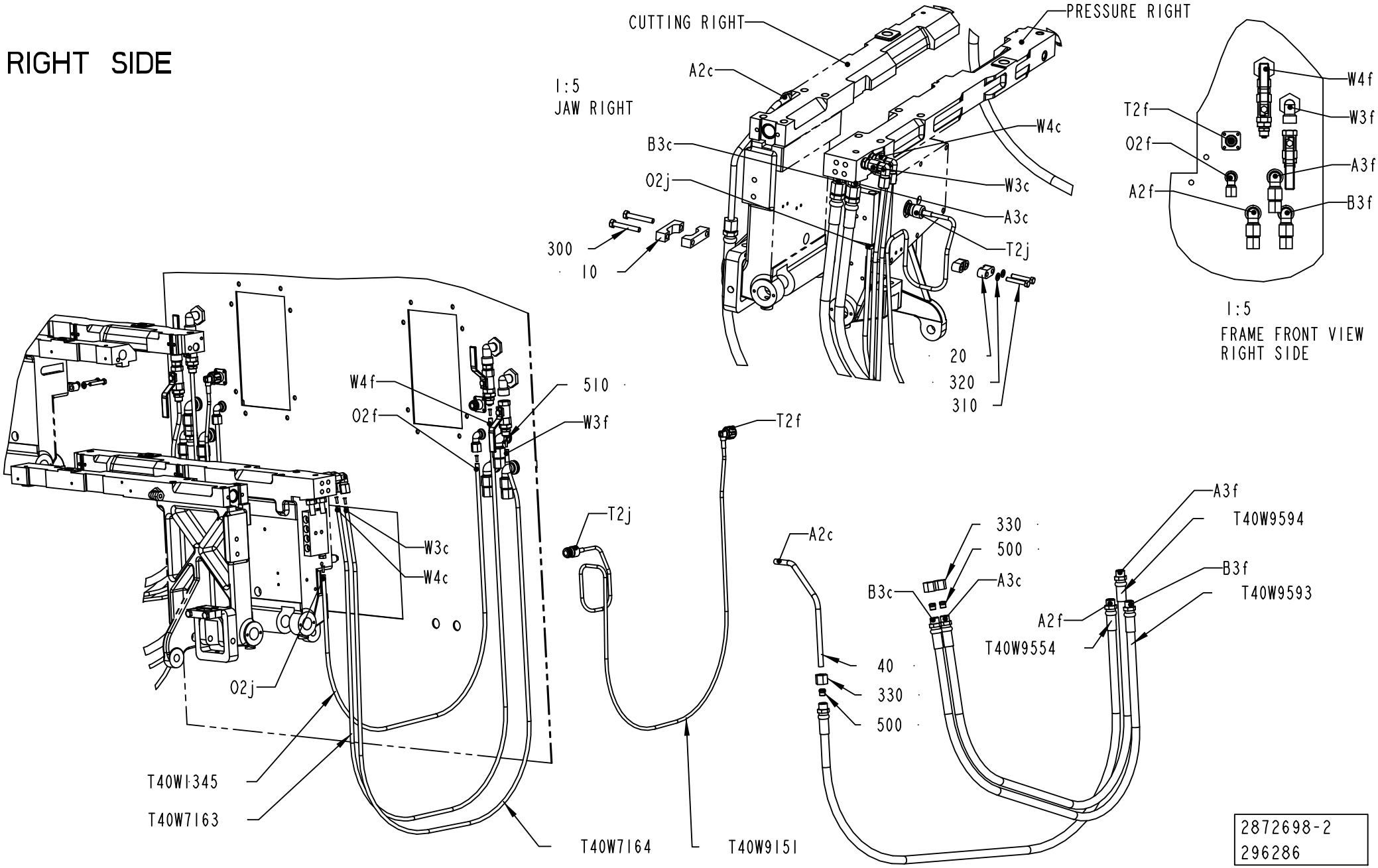
CUTTING RIGHT
PRESSURE RIGHT
A2c
1:5
JAW RIGHT
W4c
B3c
W3c
O2j
A3c
T2j
300
10
20
320
310
T2f
O2f
A2f
W4f
W3f
A3f
B3f
1:5
FRAME FRONT VIEW
RIGHT SIDE
W4f
O2f
510
W3f
T2f
T2j
W3c
W4c
O2j
T40W1345
T40W7163
T40W7164
T40W9151
A2c
330
500
A3c
B3c
A3f
T40W9594
B3f
T40W9593
A2f
T40W9554
40
330
500
2872698-2
296286

ECM: 296574 - 20070701
Group number: 2872698-0100
Assembly Drawing: 2872698-2_2_AA

This list covers pages from 4-36 to 4-39

| Pos | Part No | UN | Qty | Description | Page No |
|---|---|---|---|---|---|
| - | | | | | |
| 010 | 1129599-0000 | | 4 | CRAMP | |
| 020 | 464368-0000 | | 4 | CRAMP | |
| 030 | 2774806-0000 | | 1 | TUBE | |
| 040 | 2775282-0000 | | 1 | TUBE | |
| 300 | 312105-0378 | | 4 | SCREW M6S ISO 4014 M6X40 A480 | |
| 310 | 312109-0335 | | 4 | SCREW M6S ISO 4017 M5X30 A480 | |
| 320 | 315105-0146 | | 4 | WASHER BRB 5,3X10 RFR | |
| 330 | 342703-0208 | | 6 | NUT, PIPES & CONNECTORS,NUT M-8 SS | |
| 340 | 352113-0101 | | 12 | CABLE TIE, BLACK 92X2,5 MM | |
| 500 | 90030-0098 | | 6 | ACCESSORIES, FERRULE 8 | |
| 510 | 90134-0030 | | 12 | SLEEVE FOR PLASTIC TUBE | |
| T40W1345 | 90166-0108 | MM | 960 | TUBE 6 MM PA TRANSP. | |
| T40W1347 | 90166-0108 | MM | 960 | TUBE 6 MM PA TRANSP. | |
| T40W7153 | 90166-0108 | MM | 1390 | TUBE 6 MM PA TRANSP. | |
| T40W7154 | 90166-0108 | MM | 1440 | TUBE 6 MM PA TRANSP. | |
| T40W7163 | 90166-0108 | MM | 1390 | TUBE 6 MM PA TRANSP. | |
| T40W7164 | 90166-0108 | MM | 1440 | TUBE 6 MM PA TRANSP. | |
| T40W9150 | 2562736-0001 | | 1 | COAXIAL CABLE | |
| T40W9151 | 2562736-0001 | | 1 | COAXIAL CABLE | |
| T40W9553 | 2510787-0000 | | 1 | HOSE | |
| T40W9554 | 2510787-0000 | | 1 | HOSE | |
| T40W9573 | 1517348-0000 | | 1 | HOSE | |
| T40W9574 | 1517348-0000 | | 1 | HOSE | |
| T40W9593 | 1517348-0000 | | 1 | HOSE | |
| T40W9594 | 1517348-0000 | | 1 | HOSE | |

| Pos | Part No | UN | Qty | Description | Page No |
|---|---|---|---|---|---|

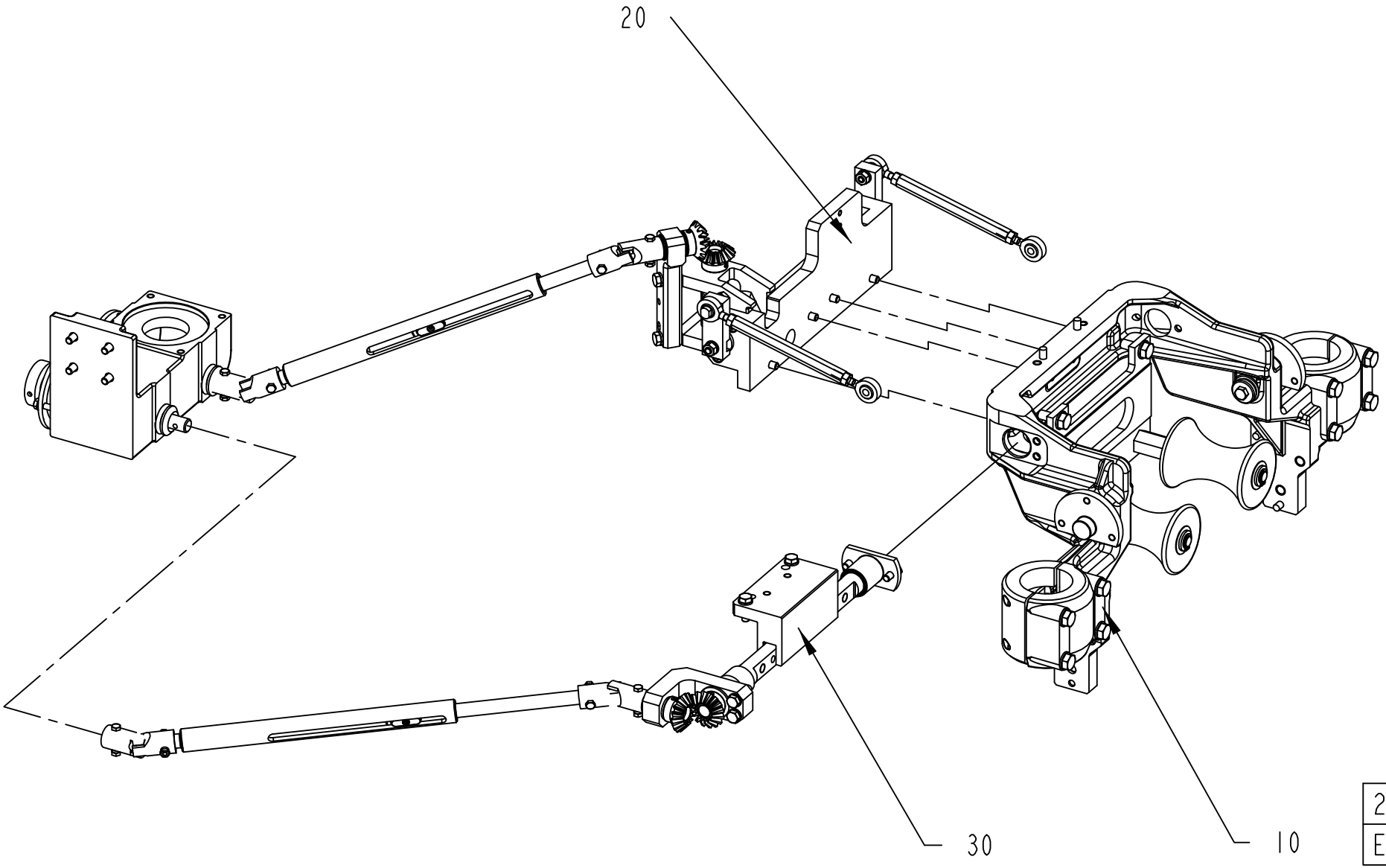
20
30
10
2613646-1
ECM 163206

ECM: 163211 - 20050101
Group number: 2613646-0100
Assembly Drawing: 2613646-1_1_AB

| Pos | Part No | UN | Qty | Description | Page No |
|---|---|---|---|---|---|
| - | | | | | |
| 10 | 2613644-0100 | | 1 | CANTILEVER | **4-43** |
| 20 | 2597330-0100 | | 1 | CONTROL UNIT | **4-45, 4-47** |
| 30 | 2597331-0100 | | 1 | CENTERING UNIT | **4-49** |

| Pos | Part No | UN | Qty | Description | Page No |
|---|---|---|---|---|---|

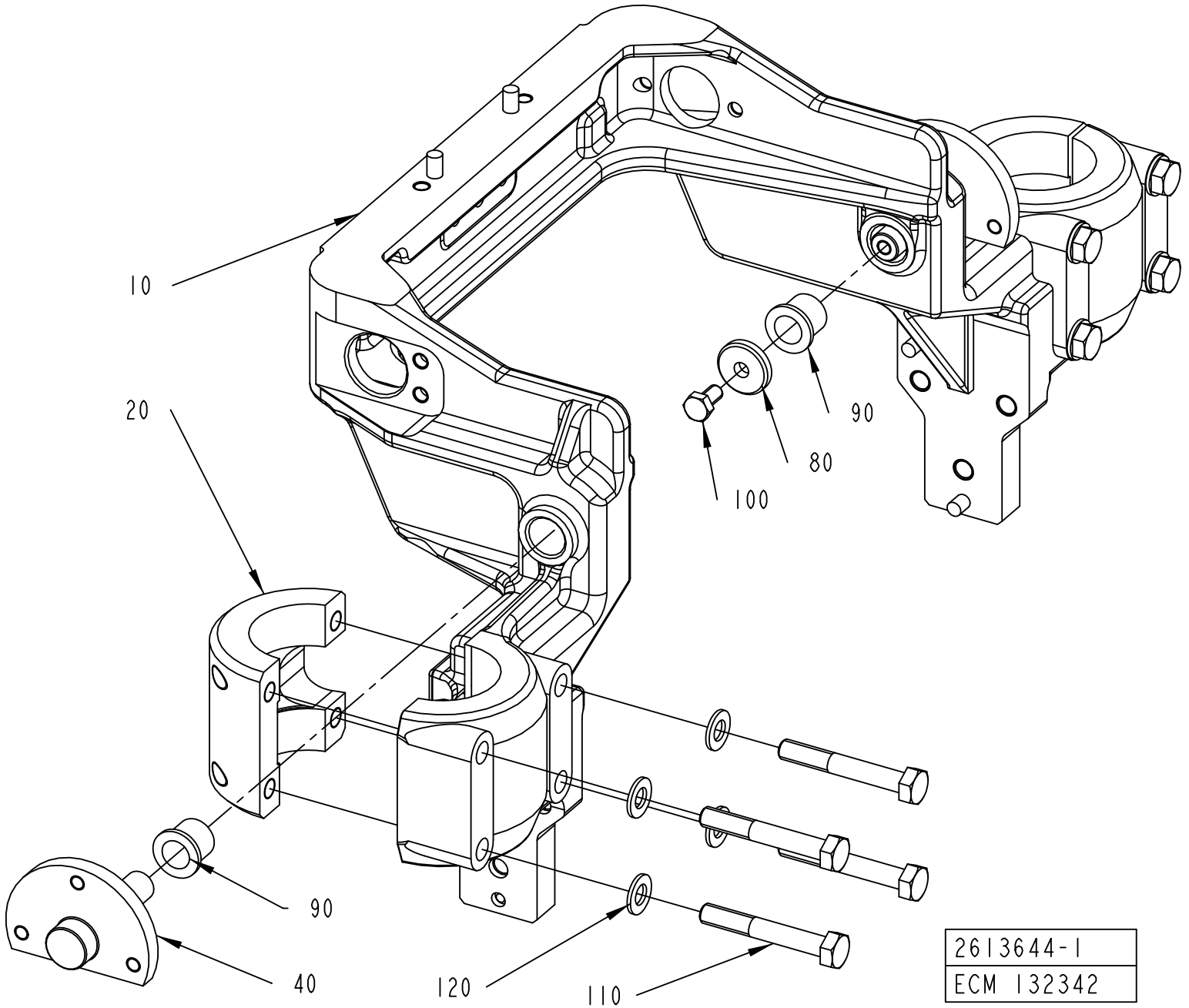
10
20
90
80
100
90
40
120
110
2613644-1
ECM 132342

ECM: 189482 - 20050103
Group number: 2613644-0100
Assembly Drawing: 2613644-1_1_AA

| Pos | Part No | UN | Qty | Description | Page No |
|---|---|---|---|---|---|
| - | | | | | |
| 010 | 2587464-0000 | | 1 | CANTILEVER | |
| 020 | 2614039-0000 | | 2 | CLAMP | |
| 040 | 2598065-0000 | | 2 | SUPPORT | |
| 080 | 315125-0153 | | 2 | WASHER TBRSB 6,4X22X4 A4 | |
| 090 | 90458-1404 | | 4 | FLANGE BUSHING, 12X16X16 MM | |
| 100 | 312105-0366 | | 2 | SCREW M6S ISO 4017 M6X12 A480 | |
| 110 | 312105-0462 | | 8 | SCREW M6S ISO 4014 M8X55 A480 | |
| 120 | 315105-0165 | | 8 | WASHER BRB 8,4X16 RFR | |

| Pos | Part No | UN | Qty | Description | Page No |
|---|---|---|---|---|---|

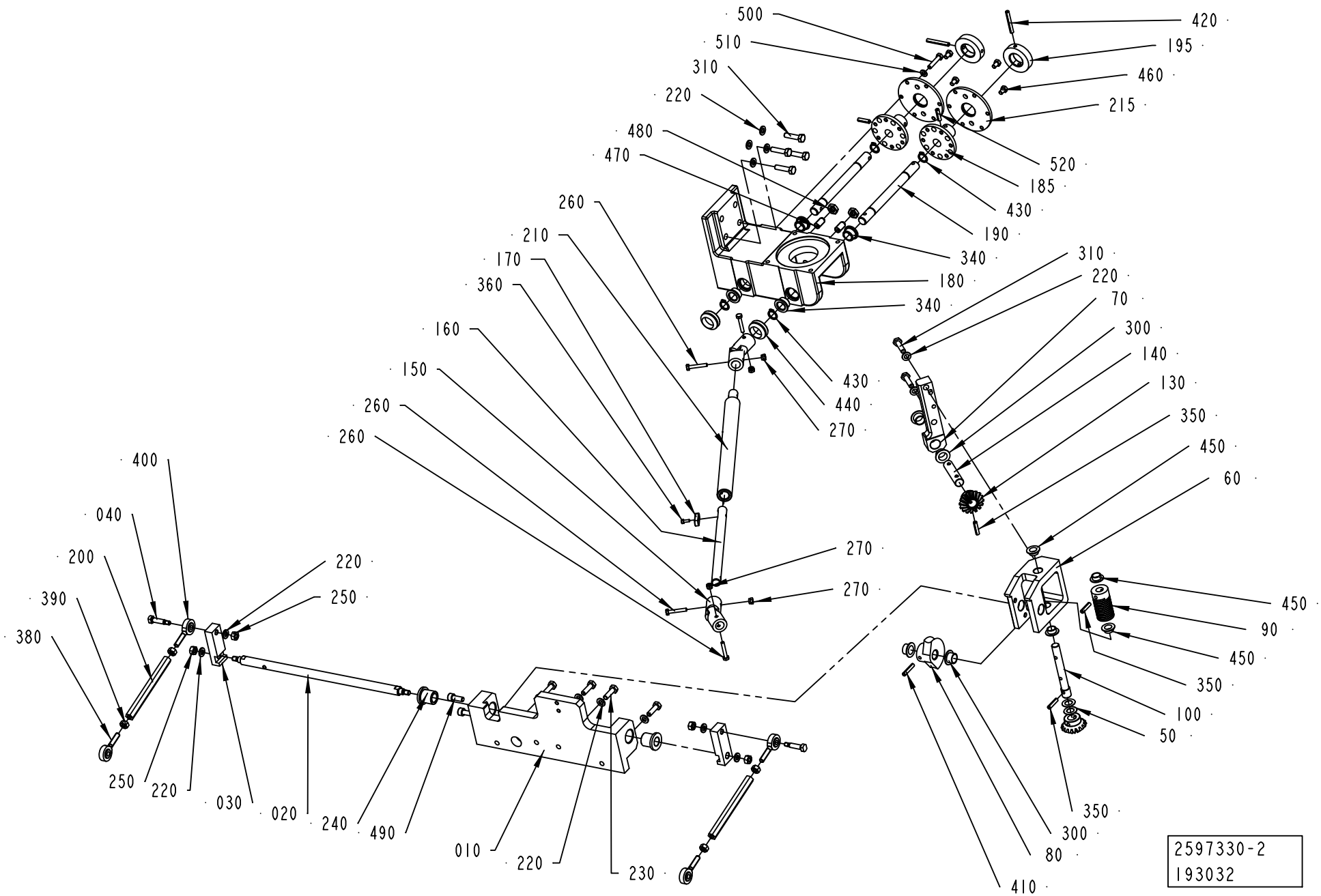
500
510
310
220
480
470
260
210
170
360
160
150
260
260
400
040
200
390
380
250
220
250
220
030
020
240
490
010
220
230
420
195
460
215
520
185
430
190
340
180
340
310
220
70
300
140
130
350
450
60
430
440
270
270
270
450
90
450
350
100
50
350
300
80
410
2597330-2
193032

ECM: 210185 - 20060509
Group number: 2597330-0100
Assembly Drawing: 2597330-2_1_AB

This list covers pages from 4-44 to 4-47

| Pos | Part No | UN | Qty | Description | Page No |
|---|---|---|---|---|---|
| - | | | | | |
| 010 | 2602657-0000 | | 1 | LOCK PLATE | |
| 020 | 2602658-0000 | | 1 | SHAFT | |
| 030 | 2535441-0000 | | 2 | LEVER | |
| 040 | 2535442-0000 | | 2 | PIVOT PIN | |
| 050 | 2691421-0000 | | 2 | SHIM | |
| 060 | 2665720-0000 | | 1 | SUPPORT | |
| 070 | 2665722-0000 | | 1 | SUPPORT | |
| 080 | 2681618-0000 | | 1 | WORM WHEEL | |
| 090 | 2681619-0000 | | 1 | WORM GEAR | |
| 100 | 2665721-0000 | | 1 | SHAFT | |
| 130 | 2681617-0000 | | 2 | GEAR WHEEL | |
| 140 | 2599742-0000 | | 1 | SHAFT | |
| 150 | 2535455-0000 | | 2 | LINK | |
| 160 | 2602652-0000 | | 1 | SHAFT | |
| 170 | 2535457-0000 | | 1 | WOODRUFF KEY | |
| 180 | 2598502-0000 | | 1 | SUPPORT | |
| 185 | 2618333-0000 | | 2 | PLATE | |
| 190 | 2618332-0000 | | 2 | SHAFT | |
| 195 | 2618330-0000 | | 2 | HANDLE | |
| 200 | 2535461-0000 | | 2 | CONNECTING ROD | |
| 210 | 2535458-0000 | | 1 | SHAFT | |
| 215 | 2618329-0000 | | 2 | PLATE | |
| 220 | 315105-0153 | | 14 | WASHER BRB 6,4X12 RFR | |
| 230 | 312105-0370 | | 4 | SCREW M6S ISO 4017 M6X20 A480 | |
| 240 | 321111-0163 | | 2 | FLANGE BUSHING, 12X18X20 MM | |
| 250 | 312605-0316 | | 6 | HEXAGON NUT, M6M M6 A280 | |
| 260 | 312105-0297 | | 4 | SCREW M6S ISO 4017 M4X25 A470 | |
| 270 | 312812-0312 | | 4 | HEXAGON NUT, NY-LOCK M4 A480 | |
| 300 | 90240-0261 | | 4 | FLANGE BUSHING, 12X14X9 MM | |
| 310 | 312105-0372 | | 6 | SCREW M6S ISO 4017 M6X25 A480 | |
| 340 | 90240-0165 | | 4 | FLANGE BUSHING, 12X16X10 MM | |
| 350 | 311112-0256 | | 3 | SPRING PIN, ISO 8752 4X20-C | |
| 360 | 312115-0222 | | 1 | SCREW ISO4762 M3X8 A4 80 | |
| 380 | 90459-4505 | | 2 | ROD END, ID=6MM, M6X1 LH | |
| 390 | 312902-0316 | | 2 | NUT HEX. LEFT THREAD, M6 A280 | |
| 400 | 90459-4504 | | 2 | ROD END, ID=6MM, M6X1 | |
| 410 | 311112-0258 | | 1 | SPRING PIN, ISO 8752 4X24-C | |
| 420 | 311112-0263 | | 2 | SPRING PIN, ISO 8752 4X35-C | |
| 430 | 315751-0109 | | 4 | RETAINING RING FOR SHAFT DIN 471 12 SS | |
| 440 | 315220-0143 | | 2 | V-RINGS 18X26X10,5 MM V-20S | |
| 450 | 90240-0289 | | 4 | FLANGE BUSHING, 10X12X6 MM | |
| 460 | 312105-0323 | | 4 | SCREW M6S ISO 4017 M5X8 A480 | |
| 470 | 90287-0112 | | 2 | SCREW SPRINGLOAD. SLOTTED HEAD M8X16 | |
| 480 | 312625-0318 | | 2 | HEXAGON THIN NUT, EN 24035 ML6M M8 A4 | |
| 490 | 312115-0368 | | 2 | SCREW ISO4762 M6X16 A4 80 | |
| 500 | 312105-0333 | | 1 | SCREW M6S ISO 4017 M5X25 A480 | |
| 510 | 315105-0146 | | 1 | WASHER BRB 5,3X10 RFR | |
| 520 | 311112-0255 | | 2 | SPRING PIN, ISO 8752 4X18-C | |

Machine Type | Group Description | Used-In | Group Number | Page No

STANDARD MOUNTING SOLUTION

A-A
1:1

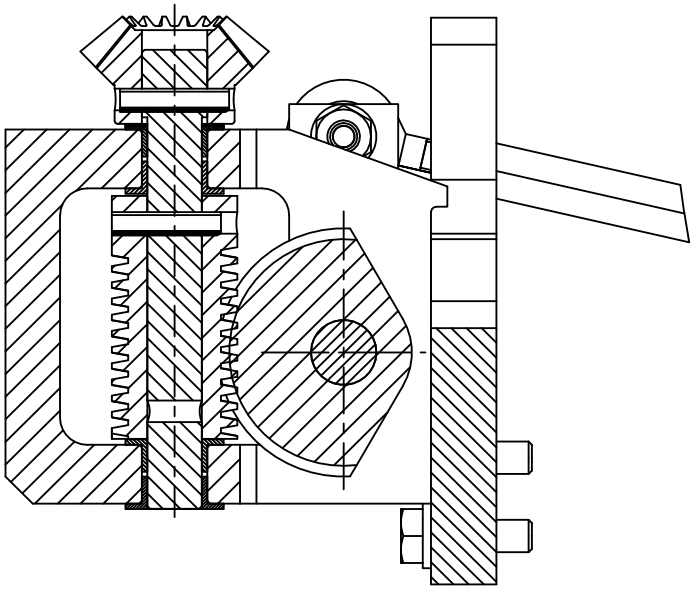

MOUNTING SOLUTION ONLY
FOR :
TBA 2000S QC
TBA 1890S QC
TBA 1500S

A-A
1:1

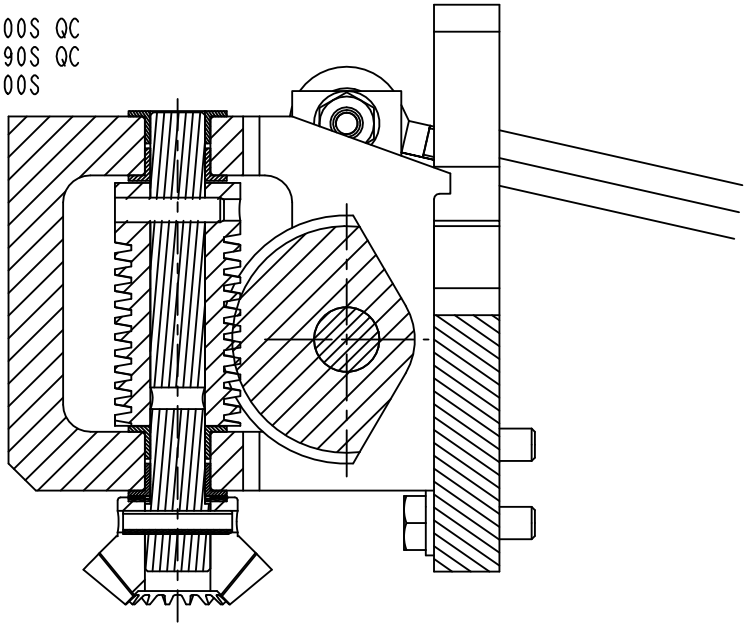

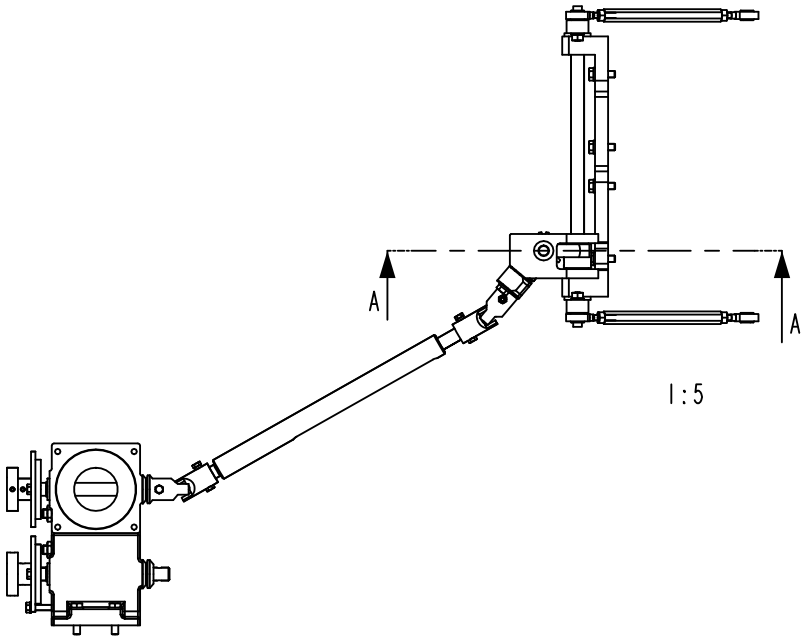


1:5

2597330-2
193032

ECM: 210185 - 20060509
Group number: 2597330-0100
Assembly Drawing: 2597330-2_2_AB

This list covers pages from 4-44 to 4-47

| Pos | Part No | UN | Qty | Description | Page No |
|---|---|---|---|---|---|
| - | | | | | |
| 010 | 2602657-0000 | | 1 | LOCK PLATE | |
| 020 | 2602658-0000 | | 1 | SHAFT | |
| 030 | 2535441-0000 | | 2 | LEVER | |
| 040 | 2535442-0000 | | 2 | PIVOT PIN | |
| 050 | 2691421-0000 | | 2 | SHIM | |
| 060 | 2665720-0000 | | 1 | SUPPORT | |
| 070 | 2665722-0000 | | 1 | SUPPORT | |
| 080 | 2681618-0000 | | 1 | WORM WHEEL | |
| 090 | 2681619-0000 | | 1 | WORM GEAR | |
| 100 | 2665721-0000 | | 1 | SHAFT | |
| 130 | 2681617-0000 | | 2 | GEAR WHEEL | |
| 140 | 2599742-0000 | | 1 | SHAFT | |
| 150 | 2535455-0000 | | 2 | LINK | |
| 160 | 2602652-0000 | | 1 | SHAFT | |
| 170 | 2535457-0000 | | 1 | WOODRUFF KEY | |
| 180 | 2598502-0000 | | 1 | SUPPORT | |
| 185 | 2618333-0000 | | 2 | PLATE | |
| 190 | 2618332-0000 | | 2 | SHAFT | |
| 195 | 2618330-0000 | | 2 | HANDLE | |
| 200 | 2535461-0000 | | 2 | CONNECTING ROD | |
| 210 | 2535458-0000 | | 1 | SHAFT | |
| 215 | 2618329-0000 | | 2 | PLATE | |
| 220 | 315105-0153 | | 14 | WASHER BRB 6,4X12 RFR | |
| 230 | 312105-0370 | | 4 | SCREW M6S ISO 4017 M6X20 A480 | |
| 240 | 321111-0163 | | 2 | FLANGE BUSHING, 12X18X20 MM | |
| 250 | 312605-0316 | | 6 | HEXAGON NUT, M6M M6 A280 | |
| 260 | 312105-0297 | | 4 | SCREW M6S ISO 4017 M4X25 A470 | |
| 270 | 312812-0312 | | 4 | HEXAGON NUT, NY-LOCK M4 A480 | |
| 300 | 90240-0261 | | 4 | FLANGE BUSHING, 12X14X9 MM | |
| 310 | 312105-0372 | | 6 | SCREW M6S ISO 4017 M6X25 A480 | |
| 340 | 90240-0165 | | 4 | FLANGE BUSHING, 12X16X10 MM | |
| 350 | 311112-0256 | | 3 | SPRING PIN, ISO 8752 4X20-C | |
| 360 | 312115-0222 | | 1 | SCREW ISO4762 M3X8 A4 80 | |
| 380 | 90459-4505 | | 2 | ROD END, ID=6MM, M6X1 LH | |
| 390 | 312902-0316 | | 2 | NUT HEX. LEFT THREAD, M6 A280 | |
| 400 | 90459-4504 | | 2 | ROD END, ID=6MM, M6X1 | |
| 410 | 311112-0258 | | 1 | SPRING PIN, ISO 8752 4X24-C | |
| 420 | 311112-0263 | | 2 | SPRING PIN, ISO 8752 4X35-C | |
| 430 | 315751-0109 | | 4 | RETAINING RING FOR SHAFT DIN 471 12 SS | |
| 440 | 315220-0143 | | 2 | V-RINGS 18X26X10,5 MM V-20S | |
| 450 | 90240-0289 | | 4 | FLANGE BUSHING, 10X12X6 MM | |
| 460 | 312105-0323 | | 4 | SCREW M6S ISO 4017 M5X8 A480 | |
| 470 | 90287-0112 | | 2 | SCREW SPRINGLOAD. SLOTTED HEAD M8X16 | |
| 480 | 312625-0318 | | 2 | HEXAGON THIN NUT, EN 24035 ML6M M8 A4 | |
| 490 | 312115-0368 | | 2 | SCREW ISO4762 M6X16 A4 80 | |
| 500 | 312105-0333 | | 1 | SCREW M6S ISO 4017 M5X25 A480 | |
| 510 | 315105-0146 | | 1 | WASHER BRB 5,3X10 RFR | |
| 520 | 311112-0255 | | 2 | SPRING PIN, ISO 8752 4X18-C | |

Machine Type | Group Description | Used-In | Group Number | Page No

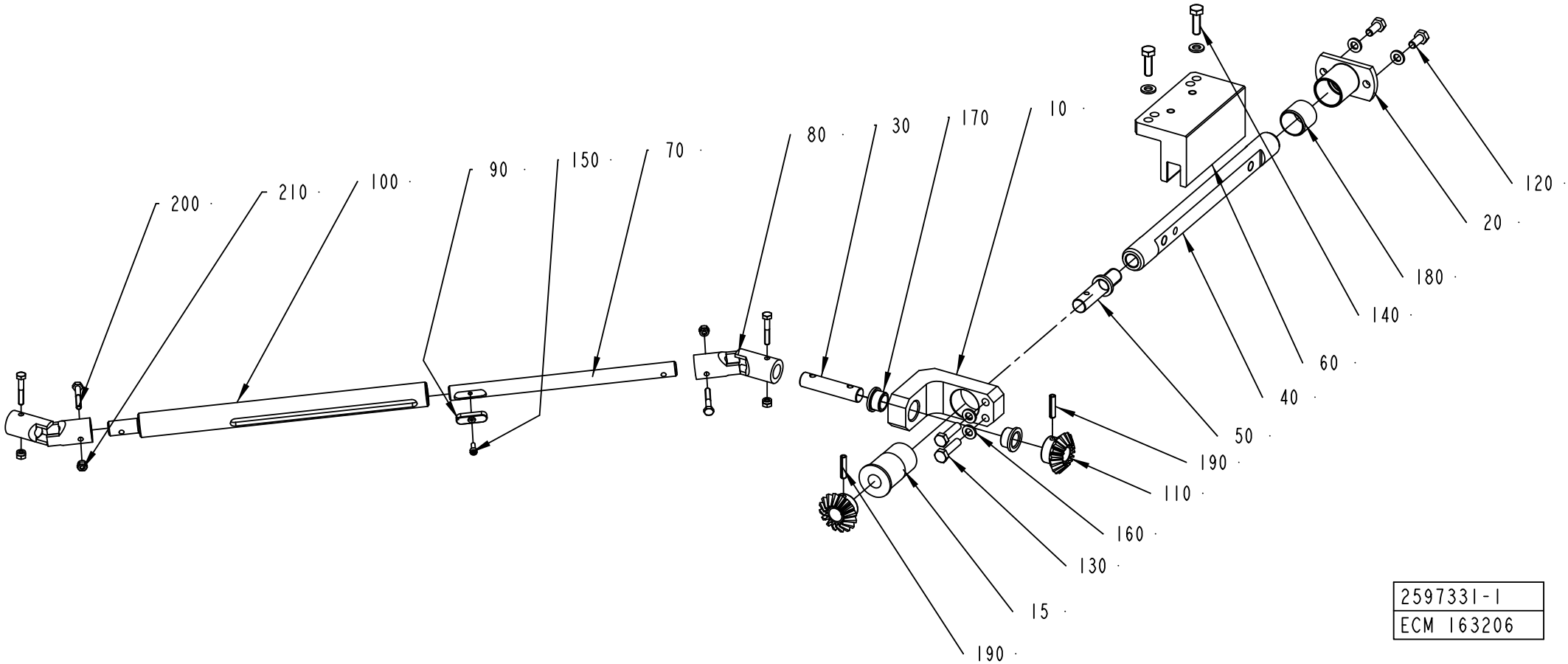
200
210
100
90
150
70
80
30
170
10
120
20
180
140
60
40
50
190
110
160
130
15
190
2597331-1
ECM 163206

ECM: 210186 - 20060509
Group number: 2597331-0100
Assembly Drawing: 2597331-1_1_AC

| Pos | Part No | UN | Qty | Description | Page No |
|---|---|---|---|---|---|
| - | | | | | |
| 010 | 2711289-0000 | | 1 | SUPPORT | |
| 015 | 2623513-0000 | | 1 | BUSHING | |
| 020 | 2599741-0000 | | 1 | SUPPORT | |
| 030 | 2599742-0000 | | 1 | SHAFT | |
| 040 | 2599743-0000 | | 1 | SHAFT | |
| 050 | 2598067-0000 | | 1 | SHAFT | |
| 060 | 2614038-0000 | | 1 | SPACER | |
| 070 | 2602652-0000 | | 1 | SHAFT | |
| 080 | 2535455-0000 | | 2 | LINK | |
| 090 | 2535457-0000 | | 1 | WOODRUFF KEY | |
| 100 | 2535458-0000 | | 1 | SHAFT | |
| 110 | 2681617-0000 | | 2 | GEAR WHEEL | |
| 120 | 312105-0367 | | 2 | SCREW M6S ISO 4017 M6X14 A480 | |
| 130 | 312105-0372 | | 2 | SCREW M6S ISO 4017 M6X25 A480 | |
| 140 | 312105-0370 | | 2 | SCREW M6S ISO 4017 M6X20 A480 | |
| 150 | 312115-0222 | | 1 | SCREW ISO4762 M3X8 A4 80 | |
| 160 | 315105-0153 | | 6 | WASHER BRB 6,4X12 RFR | |
| 170 | 90240-0261 | | 2 | FLANGE BUSHING, 12X14X9 MM | |
| 180 | 321133-0260 | | 1 | BUSHING, 20X23X20 MM | |
| 190 | 311112-0256 | | 2 | SPRING PIN, ISO 8752 4X20-C | |
| 200 | 312105-0297 | | 4 | SCREW M6S ISO 4017 M4X25 A470 | |
| 210 | 312812-0312 | | 4 | HEXAGON NUT, NY-LOCK M4 A480 | |

| Pos | Part No | UN | Qty | Description | Page No |
|---|---|---|---|---|---|

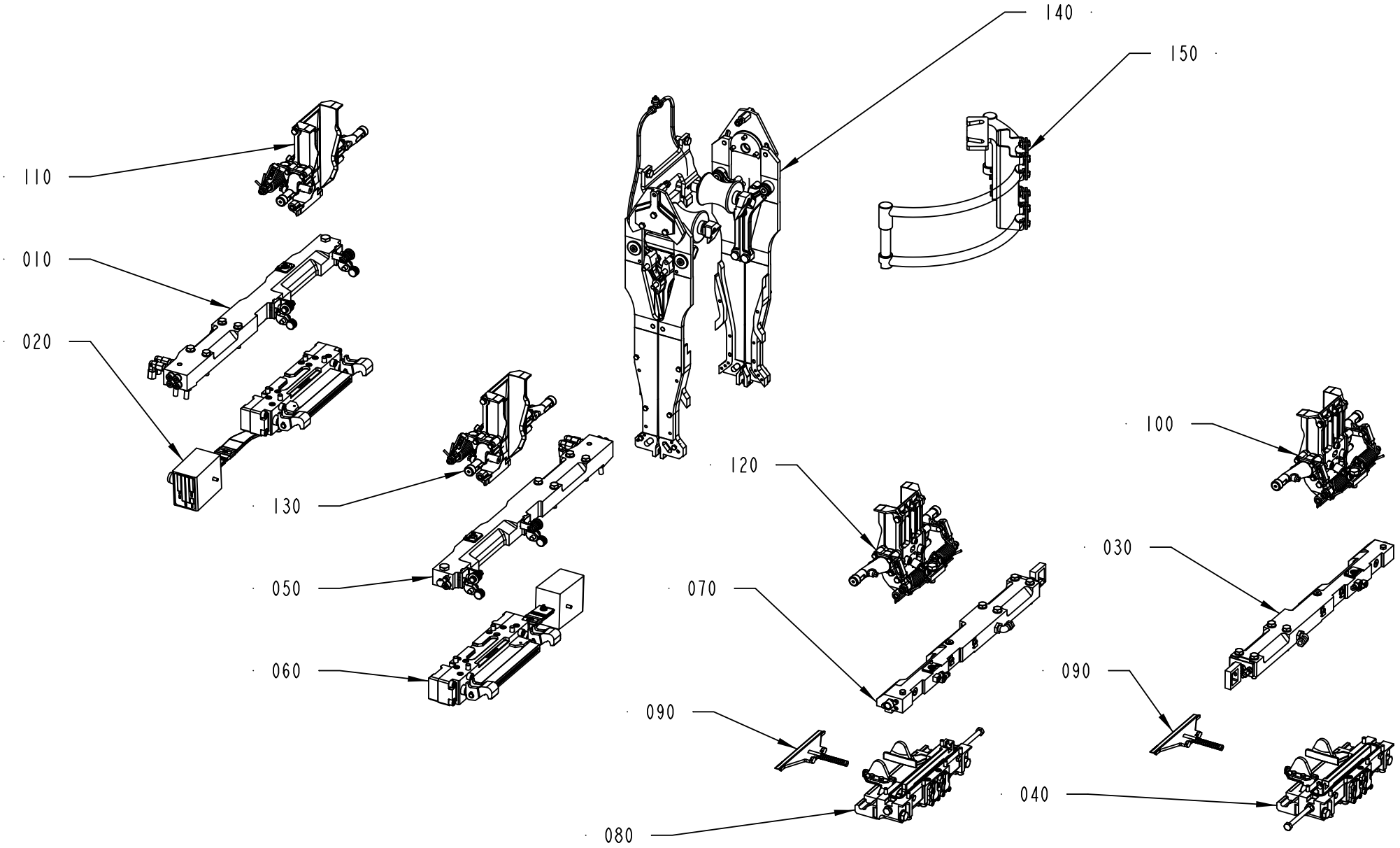
140
150
110
010
020
130
120
100
050
070
030
060
090
090
080
040
2552003-2
371850

ECM: 376674 - 20081127
Group number: 2552003-0200
Assembly Drawing: 2552003-2_1_AC

| Pos | Part No | UN | Qty | Description | Page No |
|---|---|---|---|---|---|
| **TBA 0500B, TBA 1000B STDA7, TBA 1000B NOMOLDEDCAP** | | | | | |
| 020 | 2832241-0100 | | 1 | PRESSURE JAW LEFT | **4-53** |
| 060 | 2832242-0100 | | 1 | PRESSURE JAW RIGHT | **4-63** |
| 090 | 2588317-0100 | | 2 | KNIFE | **4-71** |
| 150 | 2876313-0100 | | 1 | PHOTOCELL BRACKET | **4-73, 4-75** |
| **TBA 0500SQ, TBA 1000SQ** | | | | | |
| 020 | 2832241-0100 | | 1 | PRESSURE JAW LEFT | **4-53** |
| 060 | 2832242-0100 | | 1 | PRESSURE JAW RIGHT | **4-63** |
| 090 | 2588317-0100 | | 2 | KNIFE | **4-71** |
| 150 | 2876313-0100 | | 1 | PHOTOCELL BRACKET | **4-73, 4-75** |
| **TBA 1000S** | | | | | |
| 020 | 2832241-0100 | | 1 | PRESSURE JAW LEFT | **4-53** |
| 060 | 2832242-0100 | | 1 | PRESSURE JAW RIGHT | **4-63** |
| 090 | 2588317-0100 | | 2 | KNIFE | **4-71** |
| 150 | 2876313-0100 | | 1 | PHOTOCELL BRACKET | **4-73, 4-75** |
| **TBA 1500S** | | | | | |
| 020 | 2832241-0100 | | 1 | PRESSURE JAW LEFT | **4-53** |
| 060 | 2832242-0100 | | 1 | PRESSURE JAW RIGHT | **4-63** |
| 090 | 2588317-0100 | | 2 | KNIFE | **4-71** |
| 150 | 2876313-0100 | | 1 | PHOTOCELL BRACKET | **4-73, 4-75** |
| **TBA 2000S** | | | | | |
| 020 | 2832241-0100 | | 1 | PRESSURE JAW LEFT | **4-53** |
| 060 | 2832242-0100 | | 1 | PRESSURE JAW RIGHT | **4-63** |
| 090 | 2588317-0100 | | 2 | KNIFE | **4-71** |
| 150 | 2876313-0100 | | 1 | PHOTOCELL BRACKET | **4-73, 4-75** |
| **TPA 1000SQ, TPA 0750SQ** | | | | | |
| 020 | 2832241-0100 | | 1 | PRESSURE JAW LEFT | **4-53** |
| 060 | 2832242-0100 | | 1 | PRESSURE JAW RIGHT | **4-63** |
| 090 | 2588317-0100 | | 2 | KNIFE | **4-71** |
| 150 | 2876313-0100 | | 1 | PHOTOCELL BRACKET | **4-73, 4-75** |
| **Common Parts** | | | | | |
| 010 | 2775114-0100 | | 1 | CARRIER PRESSURE LEFT | **4-77, 4-79** |
| 030 | 2774800-0100 | | 1 | CARRIER CUTTING LEFT | **4-81, 4-83** |
| 040 | 2832818-0100 | | 1 | CUTTING JAW LEFT | **4-87** |
| 050 | 2775115-0100 | | 1 | CARRIER PRESSURE RIGHT | **4-99, 4-101** |
| 070 | 2775118-0100 | | 1 | CARRIER CUTTING RIGHT | **4-103, 4-105** |
| 080 | 2832819-0100 | | 1 | CUTTING JAW RIGHT | **4-107** |
| 100 | 2810640-0100 | | 1 | SUPPORT FLAP CUTTING | **4-113** |
| 110 | 2810641-0100 | | 1 | SUPPORT FLAP PRESSURE | **4-133** |
| 120 | 2993980-0100 | | 1 | SUPPORT FLAP CUTTING | **4-151** |
| 130 | 2993981-0100 | | 1 | SUPPORT FLAP PRESSURE | **4-159** |
| 140 | 2855528-0100 | | 1 | VOLUME CURVE PIECE | **4-167** |

| Machine Type | Group Description | Used-In | Group Number | Page No |
|---|---|---|---|---|

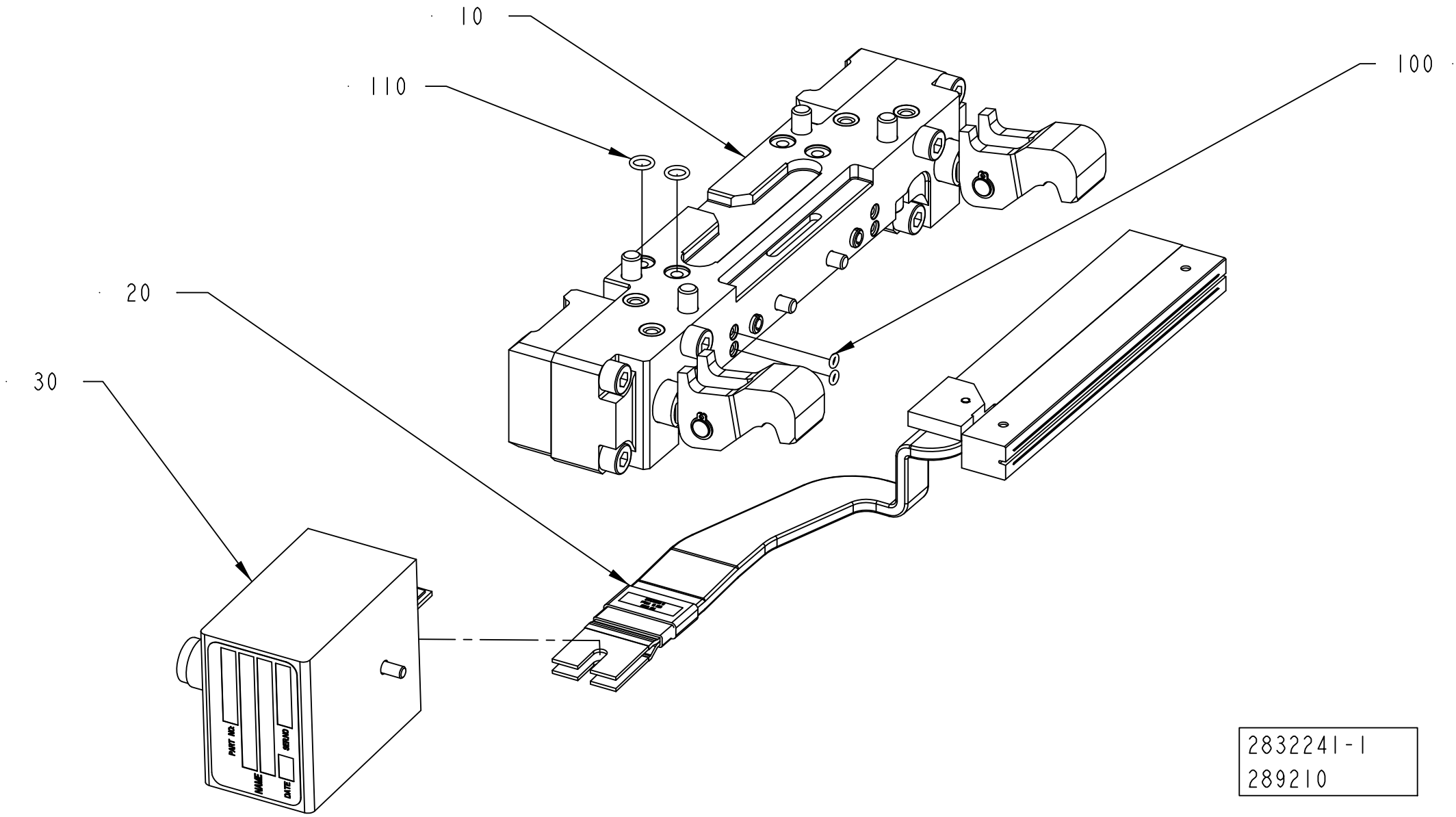


2832241-1
289210

ECM: 381093 - 20081218
Group number: 2832241-0100
Assembly Drawing: 2832241-1_1_AA

| Pos | Part No | UN | Qty | Description | Page No |
|---|---|---|---|---|---|
| - | | | | | |
| 010 | 2832243-0100 | | 1 | PRESSURE JAW | **4-55** |
| 020 | 2832244-0100 | | 1 | INDUCTOR LEFT | **4-57, 4-59** |
| 030 | 2875994-0100 | | 1 | ADAPTION TRANSFORMER | **4-61** |
| 100 | 315202-0101 | | 2 | O-RING 3,1X1,6 MM | |
| 110 | 315202-0105 | | 2 | O-RING 7,1X1,6 MM | |

| Pos | Part No | UN | Qty | Description | Page No |
|---|---|---|---|---|---|

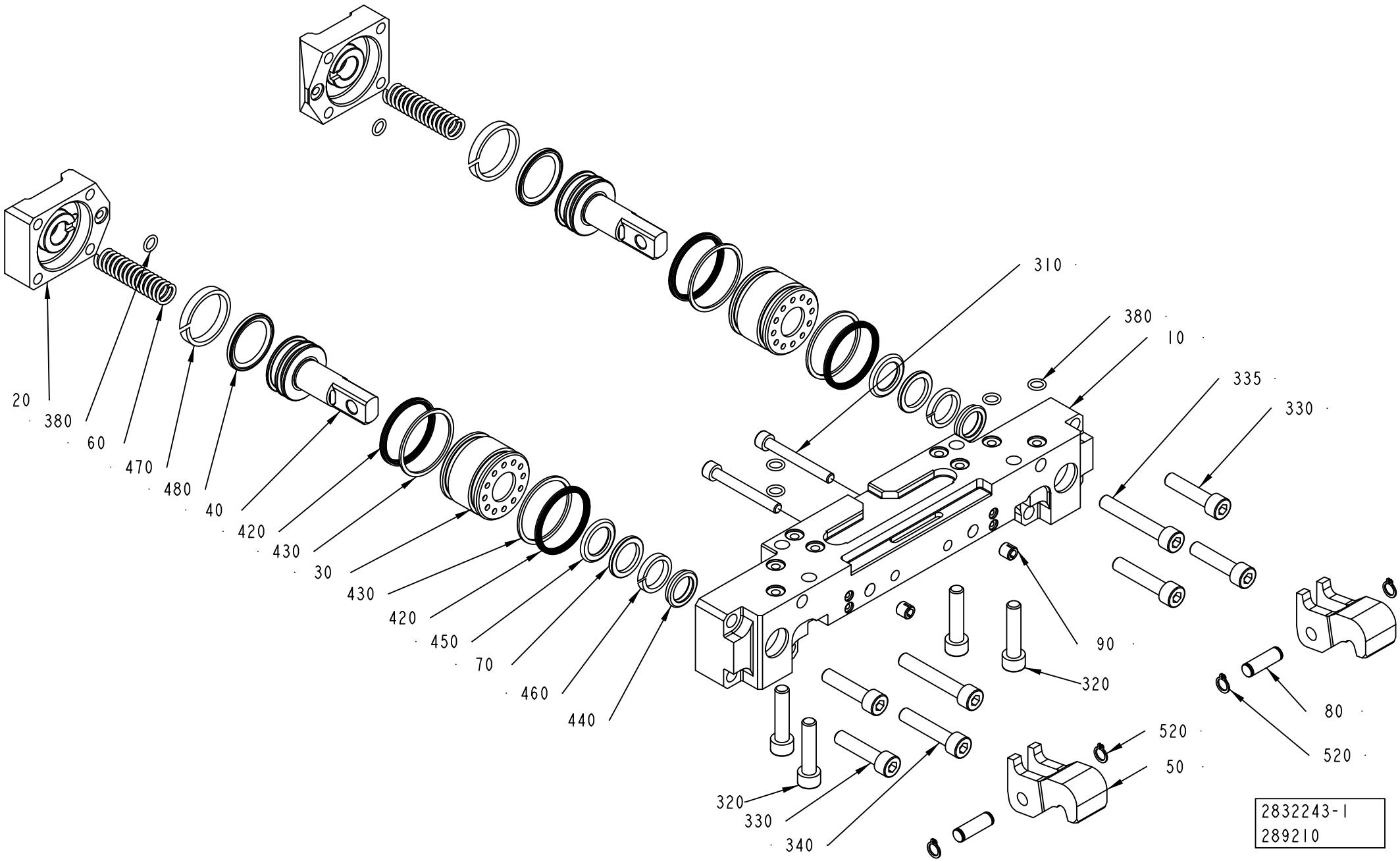
20
380
60
470
480
40
420
430
30
430
420
450
70
460
440
310
380
10
335
330
90
320
80
520
520
50
320
330
340
2832243-1
289210

ECM: 381094 - 20081218
Group number: 2832243-0100
Assembly Drawing: 2832243-1_1_AA

| Pos | Part No | UN | Qty | Description | Page No |
|---|---|---|---|---|---|
| **TBA 0500SQ, TBA 0500B, TBA 1000B, TBA 1000SQ, TBA 1000S, TBA 1500S, TPA 1000SQ, TPA 0750SQ** | | | | | |
| 010 | 2813731-0000 | | 1 | BEARING HOUSING | |
| 020 | 2813730-0000 | | 2 | LID | |
| 030 | 1348504-0000 | | 2 | SLEEVE | |
| 040 | 1349612-0000 | | 2 | PISTON | |
| 050 | 1538349-0000 | | 2 | CATCH | |
| 060 | 1260328-0000 | | 2 | SPRING | |
| 080 | 950351-0000 | | 2 | SHAFT | |
| 300 | 312115-0372 | | 2 | SCREW ISO4762 M6X25 A4 80 | |
| 310 | 312115-0380 | | 2 | SCREW ISO4762 M6X50 A4 80 | |
| 320 | 312115-0457 | | 4 | SCREW ISO4762 M8X35 A4 80 | |
| 420 | 90091-0359 | | 4 | X-SEAL 36,17X2,62 MM | |
| 430 | 90091-0360 | | 4 | BACK-UP RING 37,5X1,4 MM | |
| 470 | 90091-0368 | | 2 | WEAR RING 30X45X5,3 MM | |
| 480 | 90091-0428 | | 2 | PISTON SEAL GLIDE RING T 27,5X34,5X3,2 M | |
| **TBA 2000S** | | | | | |
| 010 | 3002560-0000 | | 1 | BEARING HOUSING | |
| 020 | 2907795-0000 | | 2 | LID | |
| 030 | 2588295-0000 | | 2 | SLEEVE | |
| 040 | 2588296-0000 | | 2 | PISTON | |
| 050 | 2566338-0000 | | 2 | CATCH | |
| 060 | 2594892-0000 | | 2 | SPRING | |
| 080 | 2588297-0000 | | 2 | SHAFT | |
| 310 | 312115-0376 | | 3 | SCREW ISO4762 M6X35 A4 80 | |
| 320 | 312115-0455 | | 4 | SCREW ISO4762 M8X30 A4 80 | |
| 420 | 90459-2146 | | 4 | X-SEAL 42,52X2,62 MM | |
| 430 | 90459-2145 | | 4 | BACK-UP RING 43,5X1,4 MM | |
| 470 | 90091-0074 | | 2 | WEAR RING 35X40X5,3 MM | |
| 480 | 90459-2173 | | 2 | SEAL GLYDRING 32,5X40X3,2 MM | |
| **Common Parts** | | | | | |
| 070 | 1038240-0000 | | 2 | SPACER | |
| 090 | 107426-0000 | | 2 | GUIDE SLEEVE | |
| 330 | 312115-0457 | | 4 | SCREW ISO4762 M8X35 A4 80 | |
| 335 | 312115-0461 | | 2 | SCREW ISO4762 M8X50 A4 80 | |
| 340 | 312115-0459 | | 2 | SCREW ISO4762 M8X40 A4 80 | |
| 380 | 315202-0105 | | 6 | O-RING 7,1X1,6 MM | |
| 440 | 90091-0362 | | 2 | SCRAPER, EXCLUDER2 18X22,8X3,7 MM | |
| 450 | 90091-0364 | | 2 | ROD SEAL, STEPSEAL 18X25,3X3,2 MM | |
| 460 | 90091-0366 | | 2 | WEAR RING 18X23X3.9 | |
| 520 | 90141-0015 | | 4 | RETAINING RING FOR SHAFT DIN 471 8 SS | |

| Pos | Part No | UN | Qty | Description | Page No |
|---|---|---|---|---|---|

Machine Type | Group Description | Used-In | Group Number | Page No

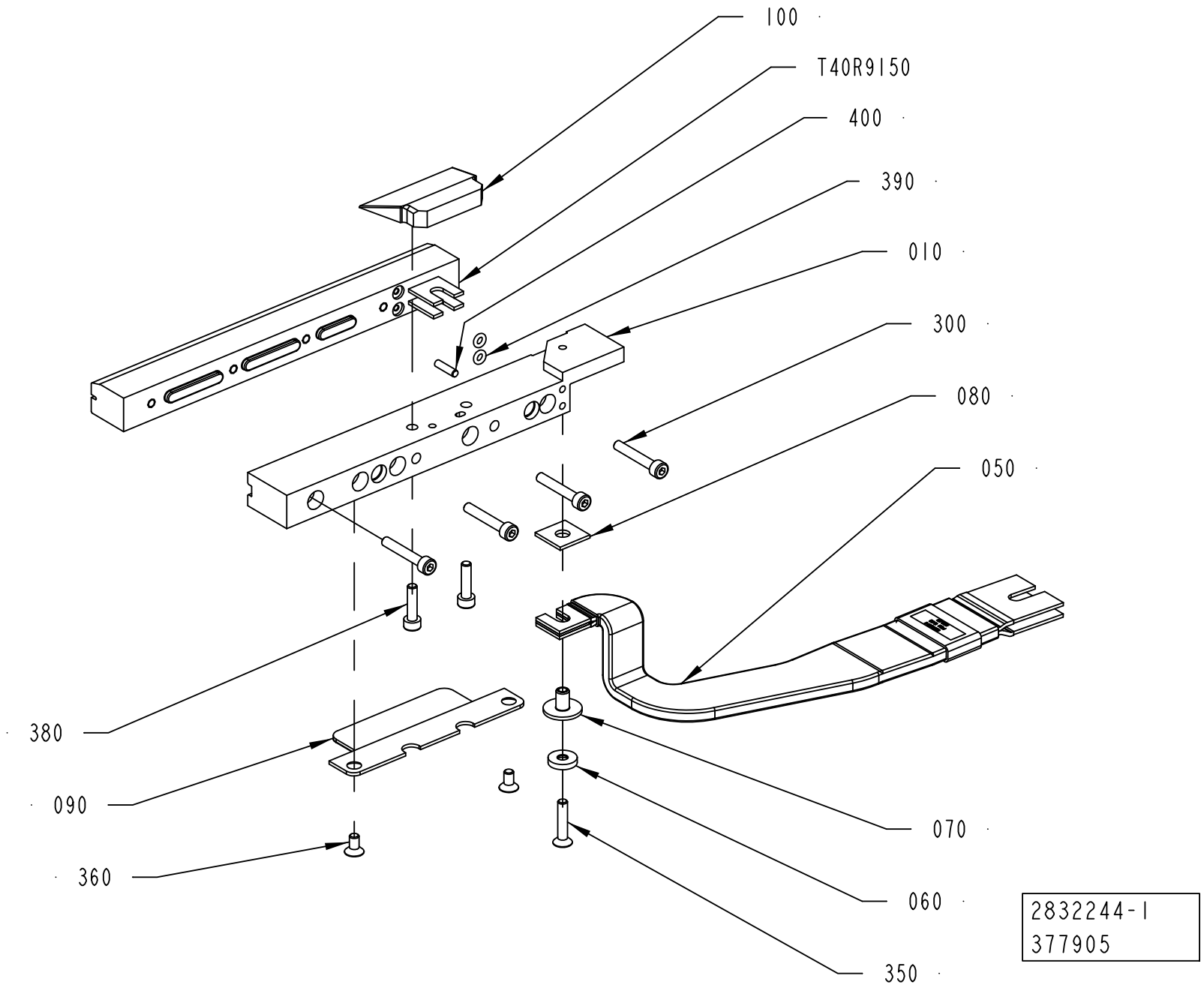
100
T40R9150
400
390
010
300
080
050
380
090
360
070
060
350
2832244-1
377905

ECM: 381095 - 20081218
Group number: 2832244-0100
Assembly Drawing: 2832244-1_1_AC

This list covers pages from 4-56 to 4-59

| Pos | Part No | UN | Qty | Description | Page No |
|---|---|---|---|---|---|
| **TBA 0500B, TBA 1000B NOMOLDEDCAP** | | | | | |
| 010 | 2903761-0000 | | 1 | RAIL | |
| 050 | 2830430-0000 | | 1 | BUSBAR | |
| 060 | 2836239-0000 | | 1 | WASHER | |
| 070 | 2836238-0000 | | 1 | INSULATION NUT | |
| 080 | 1036584-0000 | | 1 | WASHER | |
| 090 | 1558734-0000 | | 1 | VOLUME BULGE | |
| 300 | 312115-0297 | | 4 | SCREW ISO4762 M4X25 A4 80 | |
| 360 | 312155-0287 | | 2 | SCREW DIN 7991 MF6S M4X8 A4 70 | |
| T40R9150 | 1110938-0000 | | 1 | INDUCTOR | |
| **TBA 0500SQ, TBA 1000SQ** | | | | | |
| 010 | 2815964-0000 | | 1 | RAIL | |
| 050 | 2830430-0000 | | 1 | BUSBAR | |
| 060 | 2836239-0000 | | 1 | WASHER | |
| 070 | 2836238-0000 | | 1 | INSULATION NUT | |
| 080 | 1036584-0000 | | 1 | WASHER | |
| 300 | 312115-0297 | | 4 | SCREW ISO4762 M4X25 A4 80 | |
| T40R9150 | 1110936-0000 | | 1 | INDUCTOR | |
| **TBA 1000B STDA7** | | | | | |
| 010 | 2940879-0000 | | 1 | RAIL | |
| 050 | 2830430-0000 | | 1 | BUSBAR | |
| 060 | 2836239-0000 | | 1 | WASHER | |
| 070 | 2836238-0000 | | 1 | INSULATION NUT | |
| 080 | 1036584-0000 | | 1 | WASHER | |
| 090 | 1558734-0000 | | 1 | VOLUME BULGE | |
| 300 | 312115-0297 | | 4 | SCREW ISO4762 M4X25 A4 80 | |
| 360 | 312155-0287 | | 2 | SCREW DIN 7991 MF6S M4X8 A4 70 | |
| T40R9150 | 2610956-0000 | | 1 | INDUCTOR | |
| **TBA 1000S LIGHTCAP** | | | | | |
| 010 | 2843413-0000 | | 1 | RAIL | |
| 050 | 2830430-0000 | | 1 | BUSBAR | |
| 060 | 2836239-0000 | | 1 | WASHER | |
| 070 | 2836238-0000 | | 1 | INSULATION NUT | |
| 080 | 1036584-0000 | | 1 | WASHER | |
| 300 | 312115-0297 | | 3 | SCREW ISO4762 M4X25 A4 80 | |
| T40R9150 | 1566843-0000 | | 1 | INDUCTOR | |
| **TBA 1000S NOMOLDEDCAP** | | | | | |
| 010 | 2815964-0000 | | 1 | RAIL | |
| 050 | 2830430-0000 | | 1 | BUSBAR | |
| 060 | 2836239-0000 | | 1 | WASHER | |
| 070 | 2836238-0000 | | 1 | INSULATION NUT | |
| 080 | 1036584-0000 | | 1 | WASHER | |
| 300 | 312115-0297 | | 4 | SCREW ISO4762 M4X25 A4 80 | |
| T40R9150 | 1110937-0000 | | 1 | INDUCTOR | |
| **TBA 1000S STDA7** | | | | | |
| 010 | 2843411-0000 | | 1 | RAIL | |
| 050 | 2830430-0000 | | 1 | BUSBAR | |
| 060 | 2836239-0000 | | 1 | WASHER | |
| 070 | 2836238-0000 | | 1 | INSULATION NUT | |
| 080 | 1036584-0000 | | 1 | WASHER | |
| 300 | 312115-0297 | | 4 | SCREW ISO4762 M4X25 A4 80 | |
| T40R9150 | 2546474-0000 | | 1 | INDUCTOR | |
| **TBA 1500S** | | | | | |
| 010 | 2815964-0000 | | 1 | RAIL | |
| 050 | 2830430-0000 | | 1 | BUSBAR | |
| 060 | 2836239-0000 | | 1 | WASHER | |
| 070 | 2836238-0000 | | 1 | INSULATION NUT | |
| 080 | 1036584-0000 | | 1 | WASHER | |
| 300 | 312115-0297 | | 4 | SCREW ISO4762 M4X25 A4 80 | |
| T40R9150 | 1110938-0000 | | 1 | INDUCTOR | |
| **TBA 2000S** | | | | | |
| 010 | 3002559-0000 | | 1 | RAIL | |
| 050 | 2909301-0000 | | 1 | BUSBAR | |
| 060 | 3002499-0000 | | 1 | WASHER | |
| 070 | 3002497-0000 | | 1 | INSULATION NUT | |
| 080 | 3002498-0000 | | 1 | WASHER | |
| 300 | 312115-0295 | | 5 | SCREW ISO4762 M4X20 A4 80 | |
| 400 | 311103-0267 | | 1 | PARALLEL PIN ISO 2338 4M6X10 A1 | |
| T40R9150 | 1533046-0000 | | 1 | INDUCTOR | |
| **TPA 1000SQ, TPA 0750SQ** | | | | | |
| 010 | 2903761-0000 | | 1 | RAIL | |
| 050 | 2830430-0000 | | 1 | BUSBAR | |
| 060 | 2836239-0000 | | 1 | WASHER | |
| 070 | 2836238-0000 | | 1 | INSULATION NUT | |
| 080 | 1036584-0000 | | 1 | WASHER | |
| 090 | 2944194-0000 | | 1 | VOLUME BULGE | |
| 100 | 2944193-0000 | | 1 | VOLUME BULGE | |
| 300 | 312115-0297 | | 4 | SCREW ISO4762 M4X25 A4 80 | |
| 360 | 312155-0287 | | 2 | SCREW DIN 7991 MF6S M4X8 A4 70 | |
| 380 | 312115-0293 | | 2 | SCREW ISO4762 M4X16 A4 80 | |
| 400 | 311103-0234 | | 1 | PARALLEL PIN ISO 2338 3M6X12 A1 | |
| T40R9150 | 2663378-0000 | | 1 | INDUCTOR | |
| **Common Parts** | | | | | |
| 350 | 312155-0295 | | 1 | SCREW DIN 7991 MF6S M4X20 A4 70 | |

Machine Type | Group Description | Used-In | Group Number | Page No

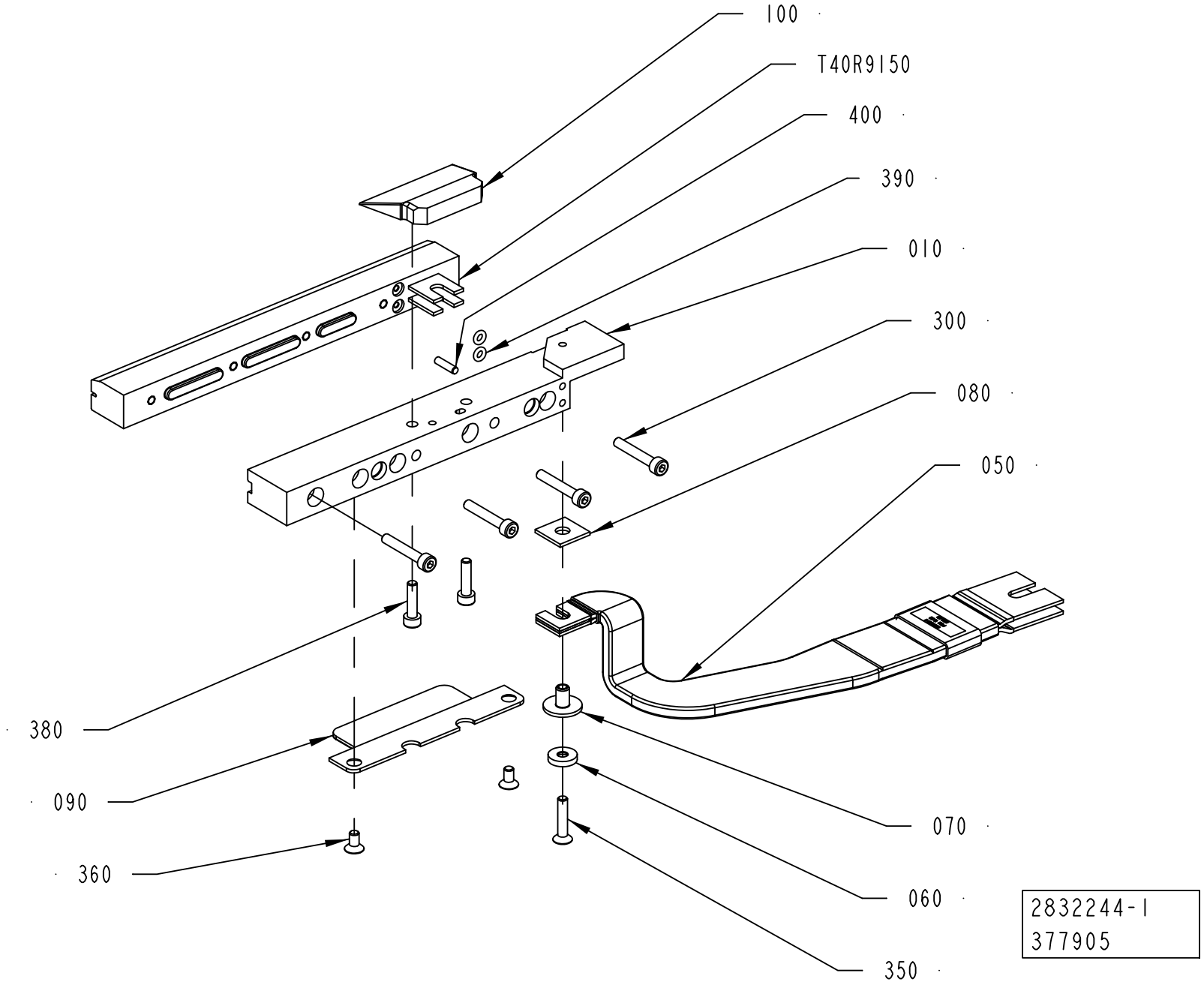
100
T40R9150
400
390
010
300
080
050
380
090
360
070
060
350
2832244-1
377905

| Pos | Part No | UN | Qty | Description | Page No |
|---|---|---|---|---|---|
| **Common Parts (Cont'd)** | | | | | |
| 390 | 315202-0101 | | 2 | O-RING 3,1X1,6 MM | |

| Pos | Part No | UN | Qty | Description | Page No |
|---|---|---|---|---|---|

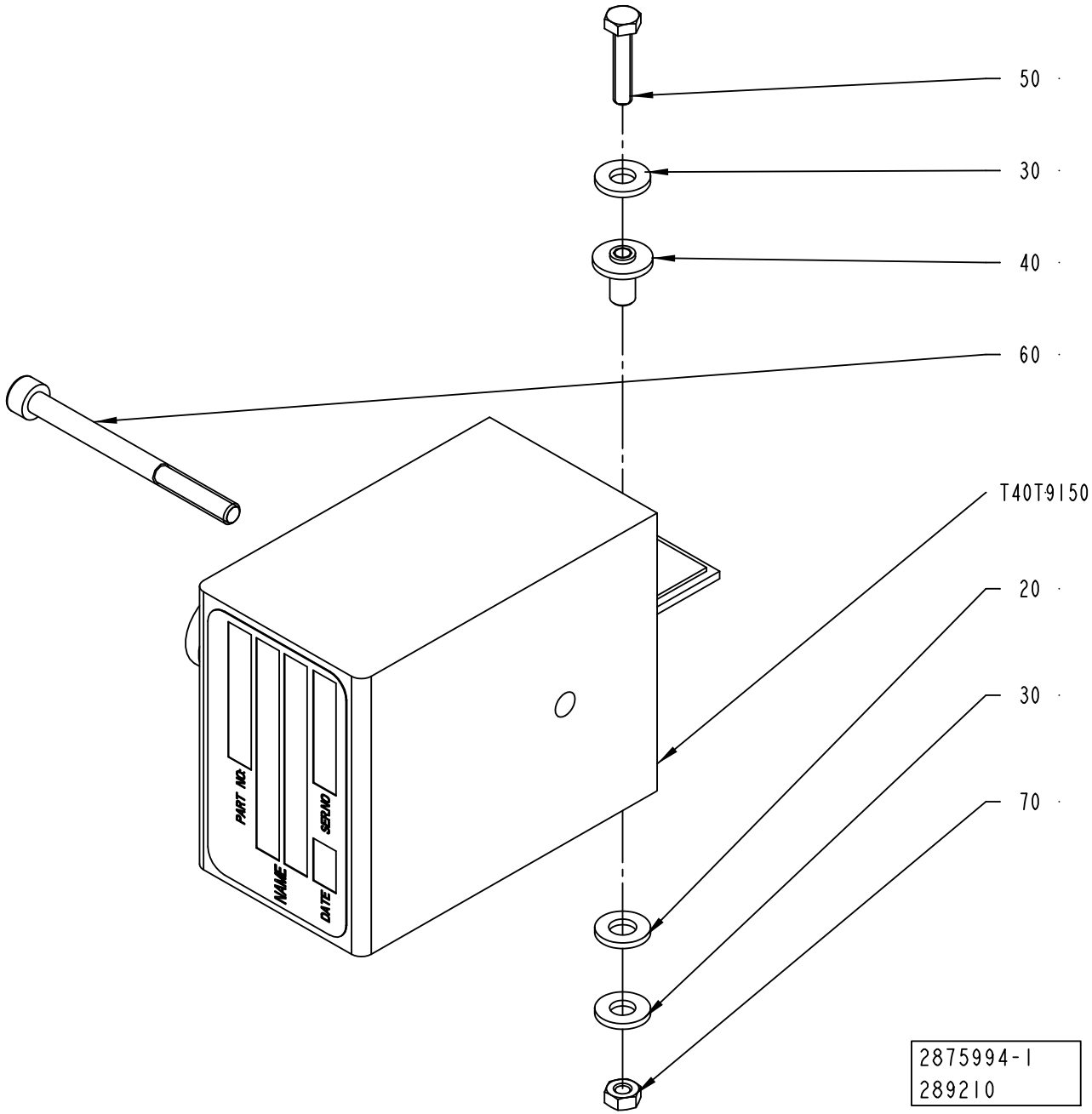
50
30
40
60
T40T9150
20
30
70
PART NO.
SERNO
NAME
DATE
2875994-1
289210

ECM: 375713 - 20081127
Group number: 2875994-0100
Assembly Drawing: 2875994-1_1_AA

| Pos | Part No | UN | Qty | Description | Page No |
|---|---|---|---|---|---|
| **TBA 0500SQ, TBA 0500B, TBA 1000B, TBA 1000SQ, TBA 1000S, TBA 1500S** | | | | | |
| T40T9150 | 67379-0101 | | 1 | TRANSFORMER | |
| **TPA 1000SQ, TBA 2000S, TPA 0750SQ** | | | | | |
| T40T9150 | 67379-0106 | | 1 | TRANSFORMER | |
| **Common Parts** | | | | | |
| 020 | 32079-0000 | | 1 | WASHER | |
| 030 | 28509-0000 | | 2 | WASHER | |
| 040 | 32544-0000 | | 2 | INSULATION NUT | |
| 050 | 312105-0295 | | 1 | SCREW M6S ISO 4017 M4X20 A470 | |
| 060 | 90458-0058 | | 1 | SCREW M5X60 A280 | |
| 070 | 312605-0312 | | 2 | HEXAGON NUT, M6M M4 A280 | |

| Pos | Part No | UN | Qty | Description | Page No |
|---|---|---|---|---|---|

Machine Type | Group Description | Used-In | Group Number | Page No

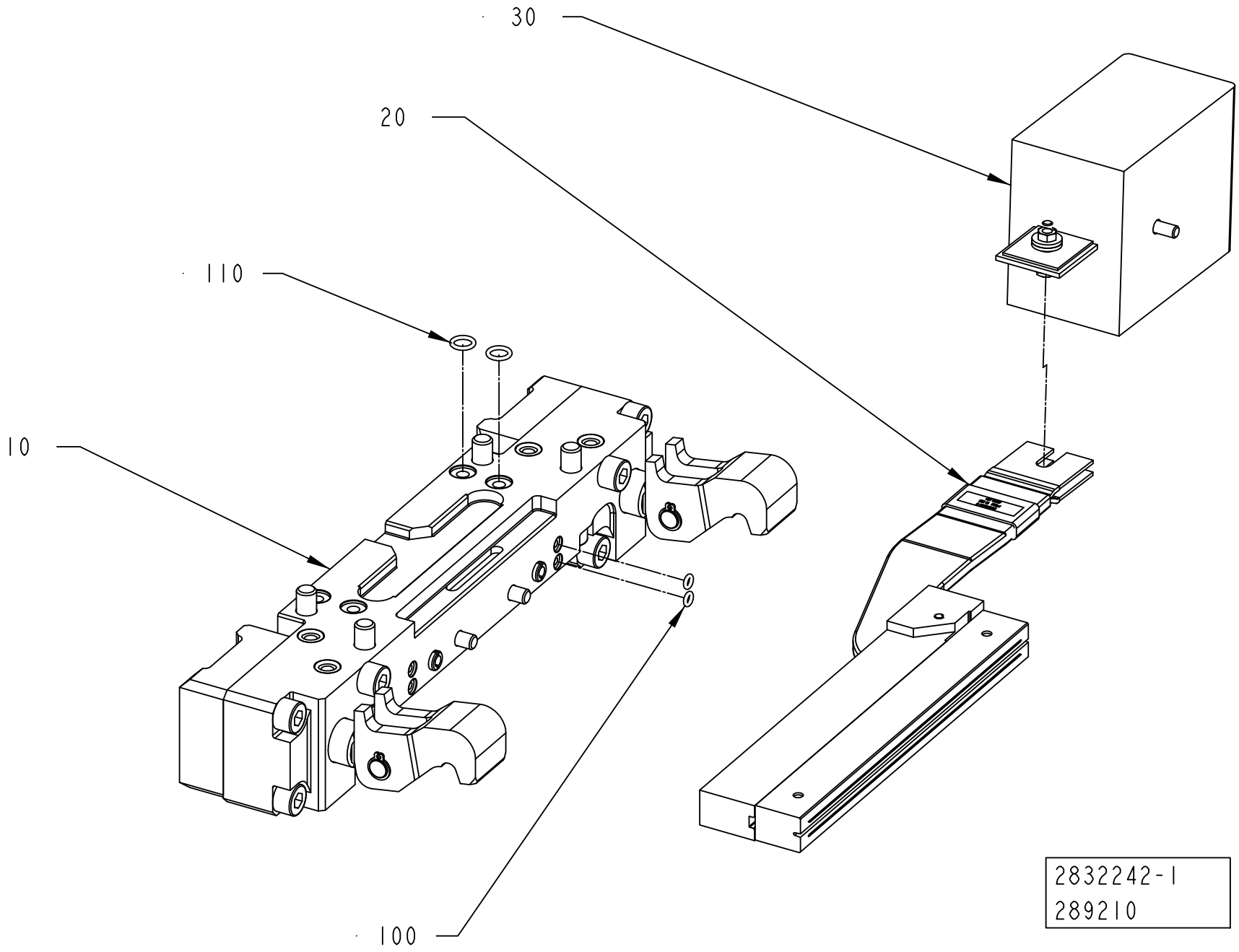
30
20
110
10
100
2832242-1
289210

ECM: 381092 - 20081218
Group number: 2832242-0100
Assembly Drawing: 2832242-1_1_AA

| Pos | Part No | UN | Qty | Description | Page No |
|---|---|---|---|---|---|
| - | | | | | |
| 010 | 2832243-0100 | | 1 | PRESSURE JAW | **4-55** |
| 020 | 2832245-0100 | | 1 | INDUCTOR RIGHT | **4-65, 4-67** |
| 030 | 2875995-0100 | | 1 | ADAPTION TRANSFORMER | **4-69** |
| 100 | 315202-0101 | | 2 | O-RING 3,1X1,6 MM | |
| 110 | 315202-0105 | | 2 | O-RING 7,1X1,6 MM | |

| Pos | Part No | UN | Qty | Description | Page No |
|---|---|---|---|---|---|

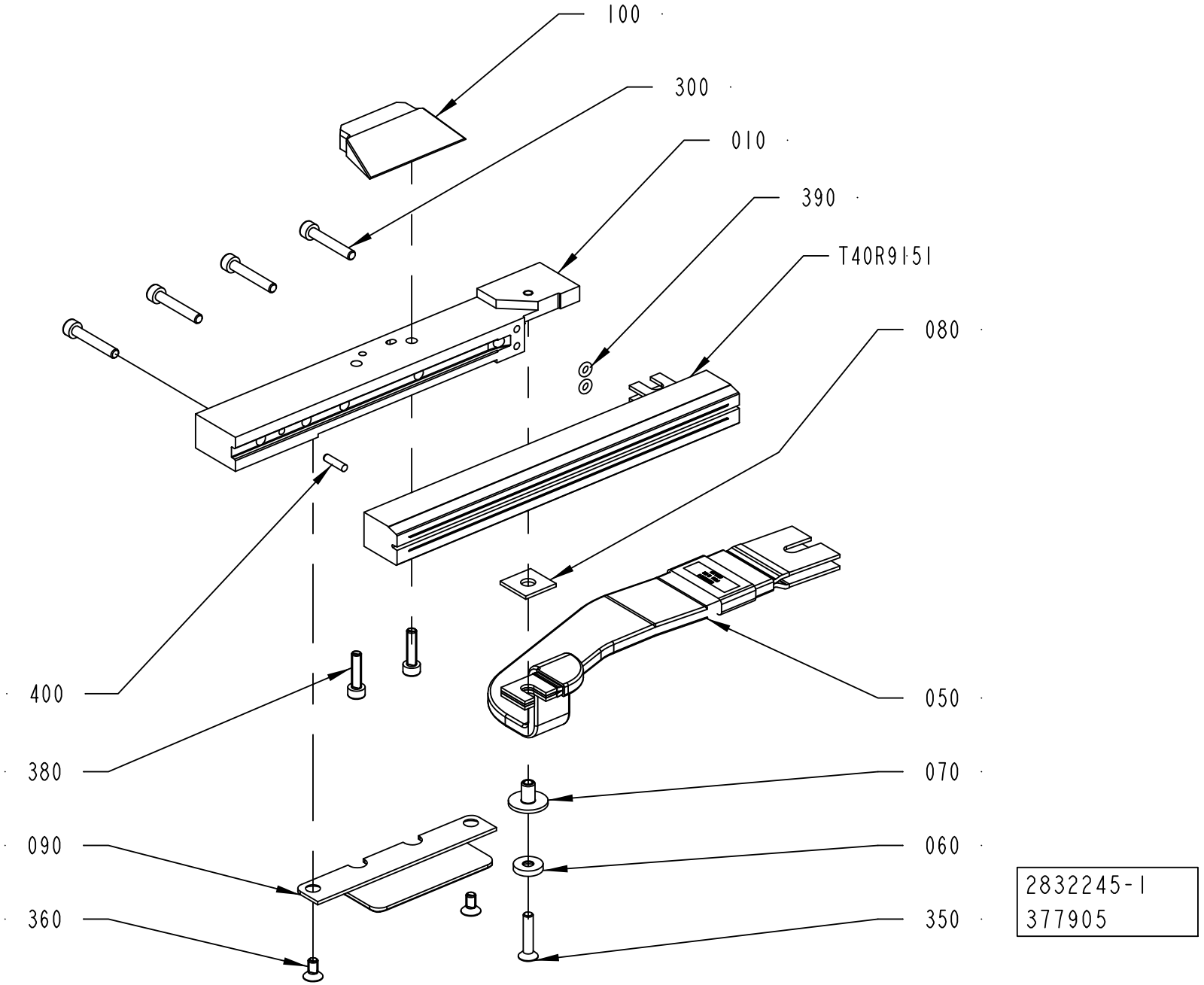
100
300
010
390
T40R9151
080
400
050
380
070
090
060
360
350
2832245-1
377905

ECM: 381096 - 20081218
Group number: 2832245-0100
Assembly Drawing: 2832245-1_1_AD

This list covers pages from 4-64 to 4-67

| Pos | Part No | UN | Qty | Description | Page No |
|---|---|---|---|---|---|
| **TBA 0500B, TBA 1000B NOMOLDEDCAP (See drawing on pages: 4-64, 4-66)** | | | | | |
| 010 | 2903762-0000 | | 1 | RAIL | |
| 050 | 2831048-0000 | | 1 | BUSBAR | |
| 060 | 2836239-0000 | | 1 | WASHER | |
| 070 | 2836238-0000 | | 1 | INSULATION NUT | |
| 080 | 1036584-0000 | | 1 | WASHER | |
| 090 | 1558734-0000 | | 1 | VOLUME BULGE | |
| 300 | 312115-0297 | | 4 | SCREW ISO4762 M4X25 A4 80 | |
| 360 | 312155-0287 | | 2 | SCREW DIN 7991 MF6S M4X8 A4 70 | |
| T40R9151 | 1110938-0000 | | 1 | INDUCTOR | |
| **TBA 0500SQ, TBA 1000SQ (See drawing on pages: 4-64, 4-66)** | | | | | |
| 010 | 2832076-0000 | | 1 | RAIL | |
| 050 | 2831048-0000 | | 1 | BUSBAR | |
| 060 | 2836239-0000 | | 1 | WASHER | |
| 070 | 2836238-0000 | | 1 | INSULATION NUT | |
| 080 | 1036584-0000 | | 1 | WASHER | |
| 300 | 312115-0297 | | 4 | SCREW ISO4762 M4X25 A4 80 | |
| T40R9151 | 1110936-0000 | | 1 | INDUCTOR | |
| **TBA 1000B STDA7 (See drawing on pages: 4-64, 4-66)** | | | | | |
| 010 | 2940880-0000 | | 1 | RAIL | |
| 050 | 2831048-0000 | | 1 | BUSBAR | |
| 060 | 2836239-0000 | | 1 | WASHER | |
| 070 | 2836238-0000 | | 1 | INSULATION NUT | |
| 080 | 1036584-0000 | | 1 | WASHER | |
| 090 | 1558734-0000 | | 1 | VOLUME BULGE | |
| 300 | 312115-0297 | | 4 | SCREW ISO4762 M4X25 A4 80 | |
| 360 | 312155-0287 | | 2 | SCREW DIN 7991 MF6S M4X8 A4 70 | |
| T40R9151 | 2610956-0000 | | 1 | INDUCTOR | |
| **TBA 1000S LIGHTCAP (See drawing on pages: 4-64, 4-66)** | | | | | |
| 010 | 2843414-0000 | | 1 | RAIL | |
| 050 | 2831048-0000 | | 1 | BUSBAR | |
| 060 | 2836239-0000 | | 1 | WASHER | |
| 070 | 2836238-0000 | | 1 | INSULATION NUT | |
| 080 | 1036584-0000 | | 1 | WASHER | |
| 300 | 312115-0297 | | 3 | SCREW ISO4762 M4X25 A4 80 | |
| T40R9151 | 1566843-0000 | | 1 | INDUCTOR | |
| **TBA 1000S NOMOLDEDCAP (See drawing on pages: 4-64, 4-66)** | | | | | |
| 010 | 2832076-0000 | | 1 | RAIL | |
| 050 | 2831048-0000 | | 1 | BUSBAR | |
| 060 | 2836239-0000 | | 1 | WASHER | |
| 070 | 2836238-0000 | | 1 | INSULATION NUT | |
| 080 | 1036584-0000 | | 1 | WASHER | |
| 300 | 312115-0297 | | 4 | SCREW ISO4762 M4X25 A4 80 | |
| T40R9151 | 1110937-0000 | | 1 | INDUCTOR | |
| **TBA 1000S STDA7 (See drawing on pages: 4-64, 4-66)** | | | | | |
| 010 | 2843412-0000 | | 1 | RAIL | |
| 050 | 2831048-0000 | | 1 | BUSBAR | |
| 060 | 2836239-0000 | | 1 | WASHER | |
| 070 | 2836238-0000 | | 1 | INSULATION NUT | |
| 080 | 1036584-0000 | | 1 | WASHER | |
| 300 | 312115-0297 | | 4 | SCREW ISO4762 M4X25 A4 80 | |
| T40R9151 | 2546474-0000 | | 1 | INDUCTOR | |
| **TBA 1500S (See drawing on pages: 4-64, 4-66)** | | | | | |
| 010 | 2832076-0000 | | 1 | RAIL | |
| 050 | 2831048-0000 | | 1 | BUSBAR | |
| 060 | 2836239-0000 | | 1 | WASHER | |
| 070 | 2836238-0000 | | 1 | INSULATION NUT | |
| 080 | 1036584-0000 | | 1 | WASHER | |
| 300 | 312115-0297 | | 4 | SCREW ISO4762 M4X25 A4 80 | |
| T40R9151 | 1110938-0000 | | 1 | INDUCTOR | |
| **TBA 2000S (See drawing on pages: 4-64, 4-66)** | | | | | |
| 010 | 3002561-0000 | | 1 | RAIL | |
| 050 | 2909302-0000 | | 1 | BUSBAR | |
| 060 | 3002499-0000 | | 1 | WASHER | |
| 070 | 3002497-0000 | | 1 | INSULATION NUT | |
| 080 | 3002498-0000 | | 1 | WASHER | |
| 300 | 312115-0295 | | 5 | SCREW ISO4762 M4X20 A4 80 | |
| 400 | 311103-0267 | | 1 | PARALLEL PIN ISO 2338 4M6X10 A1 | |
| T40R9151 | 1533046-0000 | | 1 | INDUCTOR | |
| **TPA 1000SQ, TPA 0750SQ (See drawing on pages: 4-64, 4-66)** | | | | | |
| 010 | 2903762-0000 | | 1 | RAIL | |
| 050 | 2831048-0000 | | 1 | BUSBAR | |
| 060 | 2836239-0000 | | 1 | WASHER | |
| 070 | 2836238-0000 | | 1 | INSULATION NUT | |
| 080 | 1036584-0000 | | 1 | WASHER | |
| 090 | 2944194-0000 | | 1 | VOLUME BULGE | |
| 100 | 2944193-0000 | | 1 | VOLUME BULGE | |
| 300 | 312115-0297 | | 4 | SCREW ISO4762 M4X25 A4 80 | |
| 360 | 312155-0287 | | 2 | SCREW DIN 7991 MF6S M4X8 A4 70 | |
| 380 | 312115-0293 | | 2 | SCREW ISO4762 M4X16 A4 80 | |
| 400 | 311103-0234 | | 1 | PARALLEL PIN ISO 2338 3M6X12 A1 | |
| T40R9151 | 2663377-0000 | | 1 | INDUCTOR | |
| **Common Parts** | | | | | |
| 350 | 312155-0295 | | 1 | SCREW DIN 7991 MF6S M4X20 A4 70 | |

Machine Type | Group Description | Used-In | Group Number | Page No

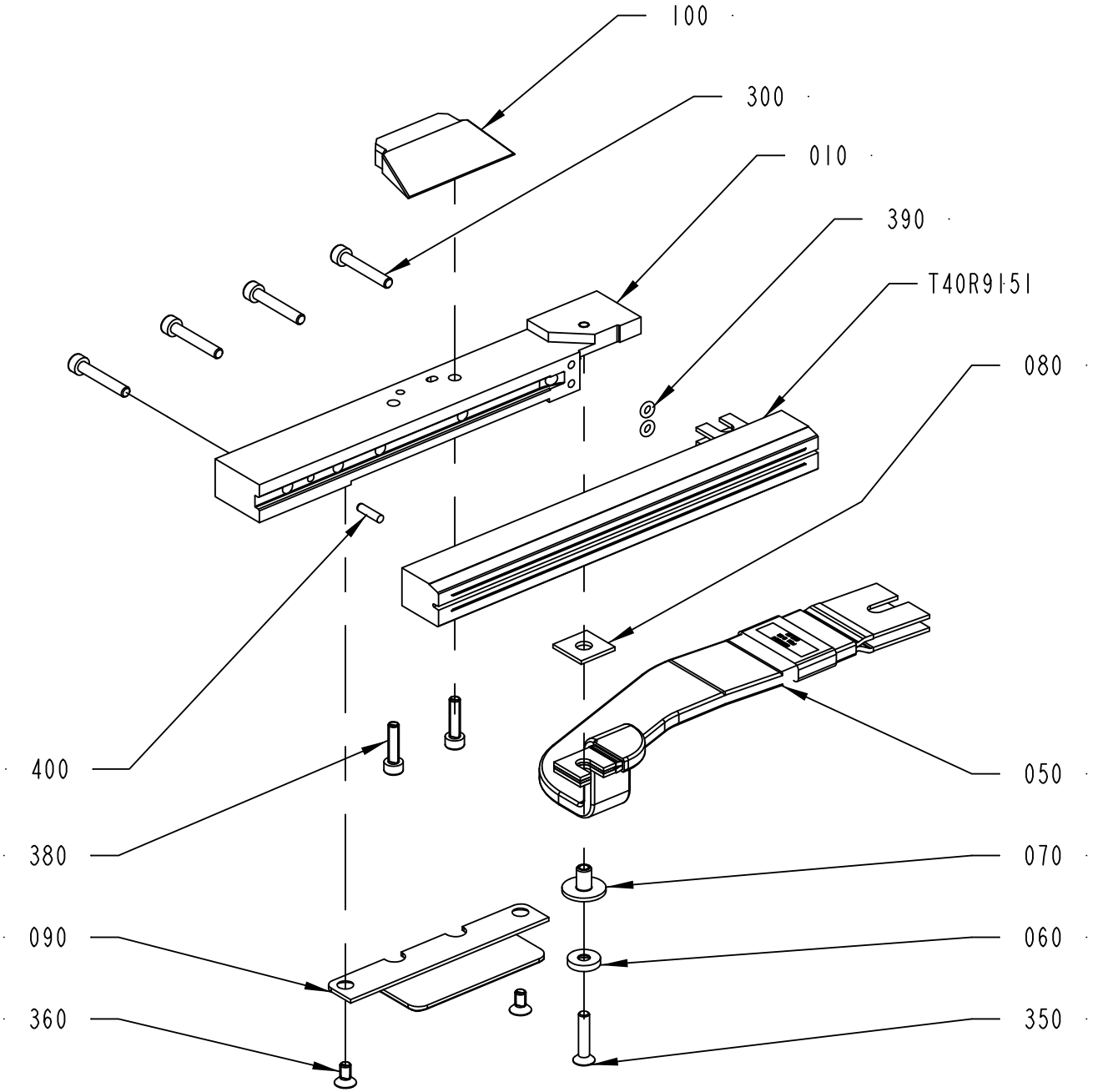
100
300
010
390
T40R9151
080
400
050
380
070
090
060
360
350
2832245-1
377905

| Pos | Part No | UN | Qty | Description | Page No |
|---|---|---|---|---|---|
| **Common Parts (Cont'd)** | | | | | |
| 390 | 315202-0101 | | 2 | O-RING 3,1X1,6 MM | |

| Pos | Part No | UN | Qty | Description | Page No |
|---|---|---|---|---|---|

# ADAPTION TRANSFORMER



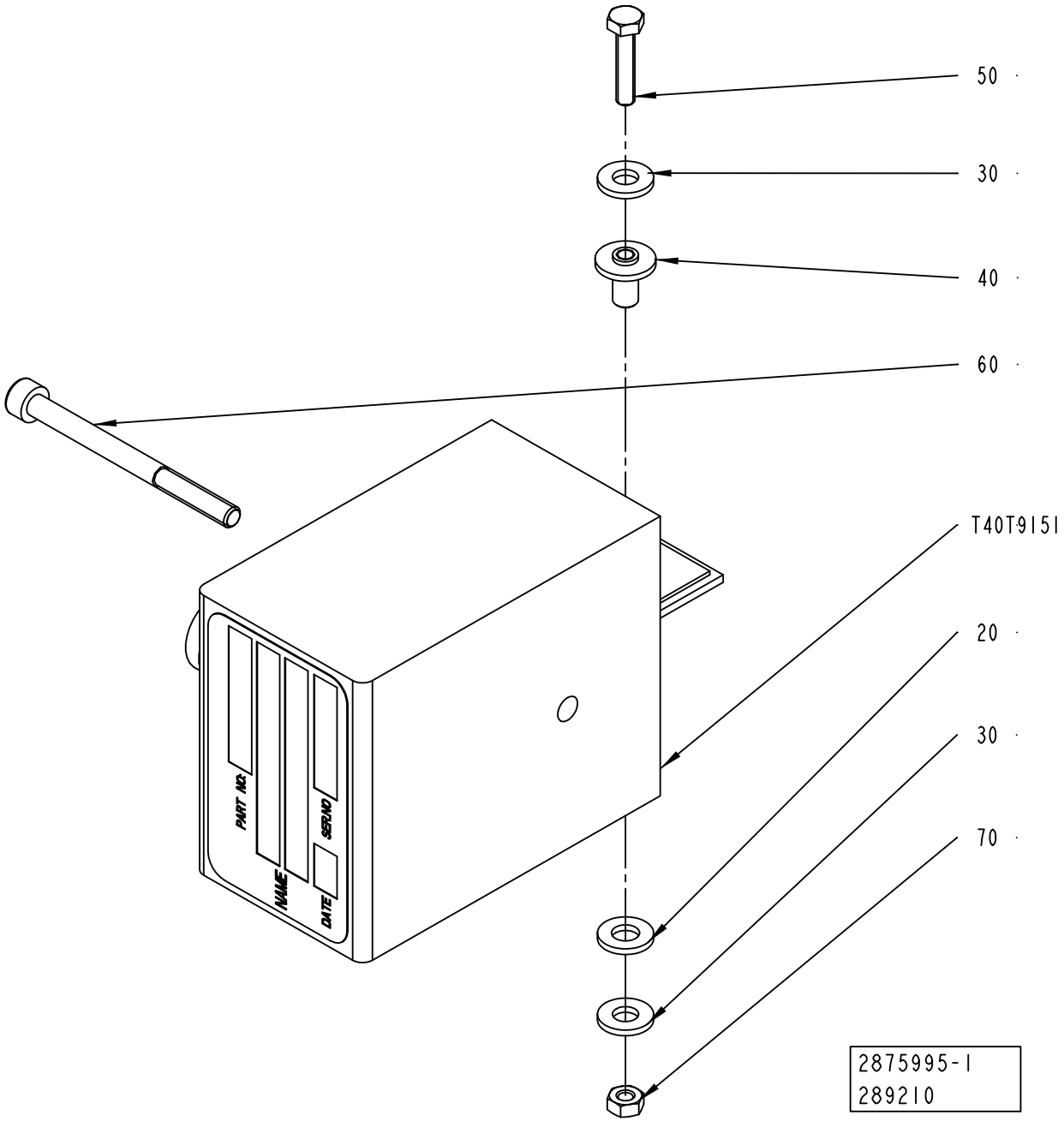

ECM: 378214 - 20081127
Group number: 2875995-0100
Assembly Drawing: 2875995-1_1_AA

| Pos | Part No | UN | Qty | Description | Page No |
|---|---|---|---|---|---|
| **TBA 0500SQ, TBA 0500B, TBA 1000B, TBA 1000SQ, TBA 1000S, TBA 1500S** | | | | | |
| T40T9151 | 67379-0101 | | 1 | TRANSFORMER | |
| **TPA 1000SQ, TBA 2000S, TPA 0750SQ** | | | | | |
| T40T9151 | 67379-0106 | | 1 | TRANSFORMER | |
| **Common Parts** | | | | | |
| 020 | 32079-0000 | | 1 | WASHER | |
| 030 | 28509-0000 | | 2 | WASHER | |
| 040 | 32544-0000 | | 2 | INSULATION NUT | |
| 050 | 312105-0295 | | 1 | SCREW M6S ISO 4017 M4X20 A470 | |
| 060 | 90458-0058 | | 1 | SCREW M5X60 A280 | |
| 070 | 312605-0312 | | 2 | HEXAGON NUT, M6M M4 A280 | |

| Pos | Part No | UN | Qty | Description | Page No |
|---|---|---|---|---|---|

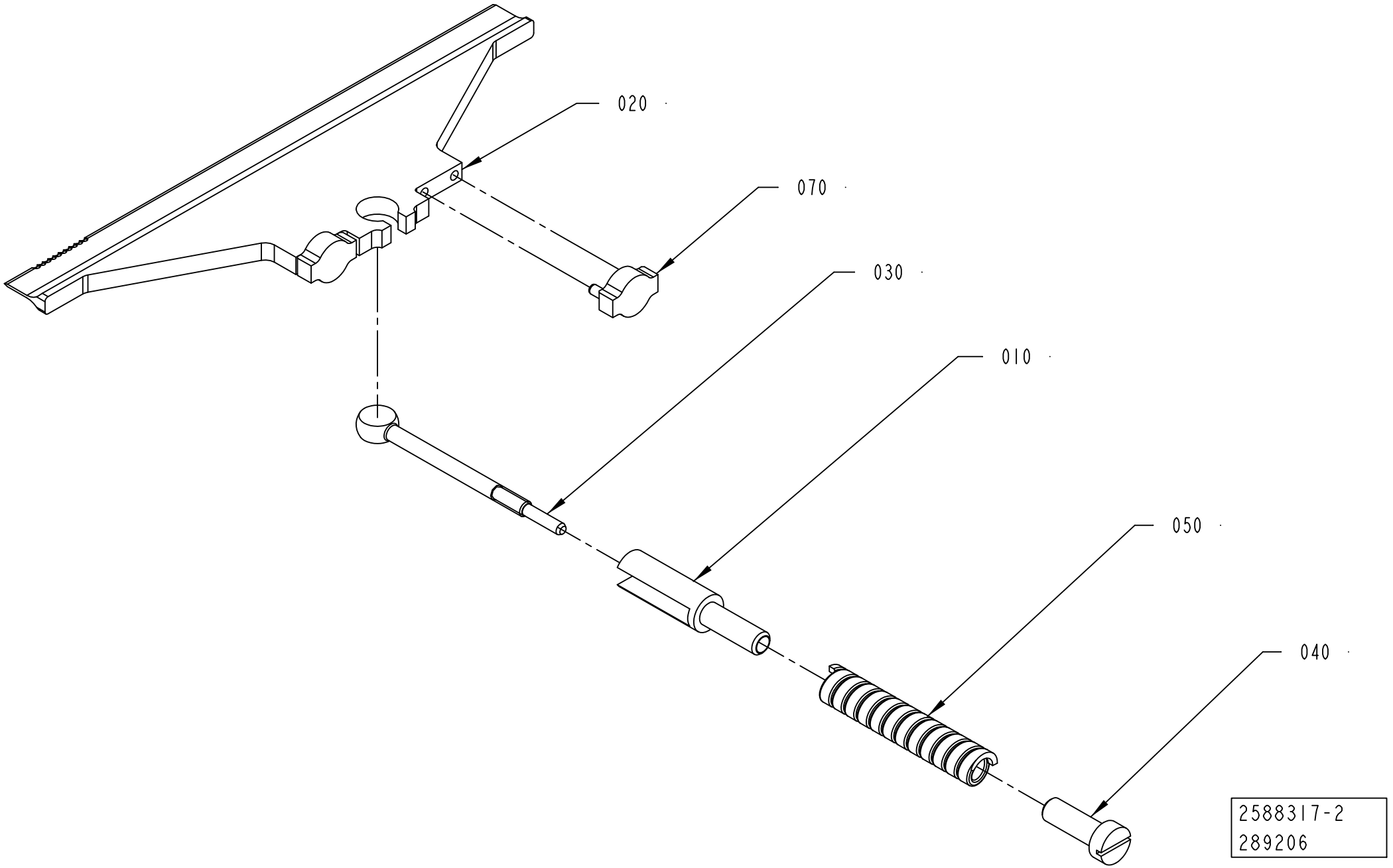
020
070
030
010
050
040
2588317-2
289206

ECM: 378241 - 20081127
Group number: 2588317-0100
Assembly Drawing: 2588317-2_1_AA

| Pos | Part No | UN | Qty | Description | Page No |
|---|---|---|---|---|---|
| **TBA 0500SQ, TBA 0500B, TBA 1000B, TBA 1000SQ, TBA 1000S, TBA 1500S** | | | | | |
| 020 | 2774798-0000 | | 1 | KNIFE | |
| 070 | 2774799-0000 | | 2 | BLOCK | |
| **TBA 2000S** | | | | | |
| 020 | 2909311-0000 | | 1 | KNIFE | |
| **TPA 1000SQ, TPA 0750SQ** | | | | | |
| 020 | 2912006-0000 | | 1 | KNIFE | |
| 070 | 2774799-0000 | | 2 | BLOCK | |
| **Common Parts** | | | | | |
| 010 | 1285006-0000 | | 1 | SPACER | |
| 030 | 1285003-0000 | | 1 | LINK | |
| 040 | 1285005-0000 | | 1 | NUT | |
| 050 | 1538109-0000 | | 1 | COMPRESSION SPRING | |

| Pos | Part No | UN | Qty | Description | Page No |
|---|---|---|---|---|---|

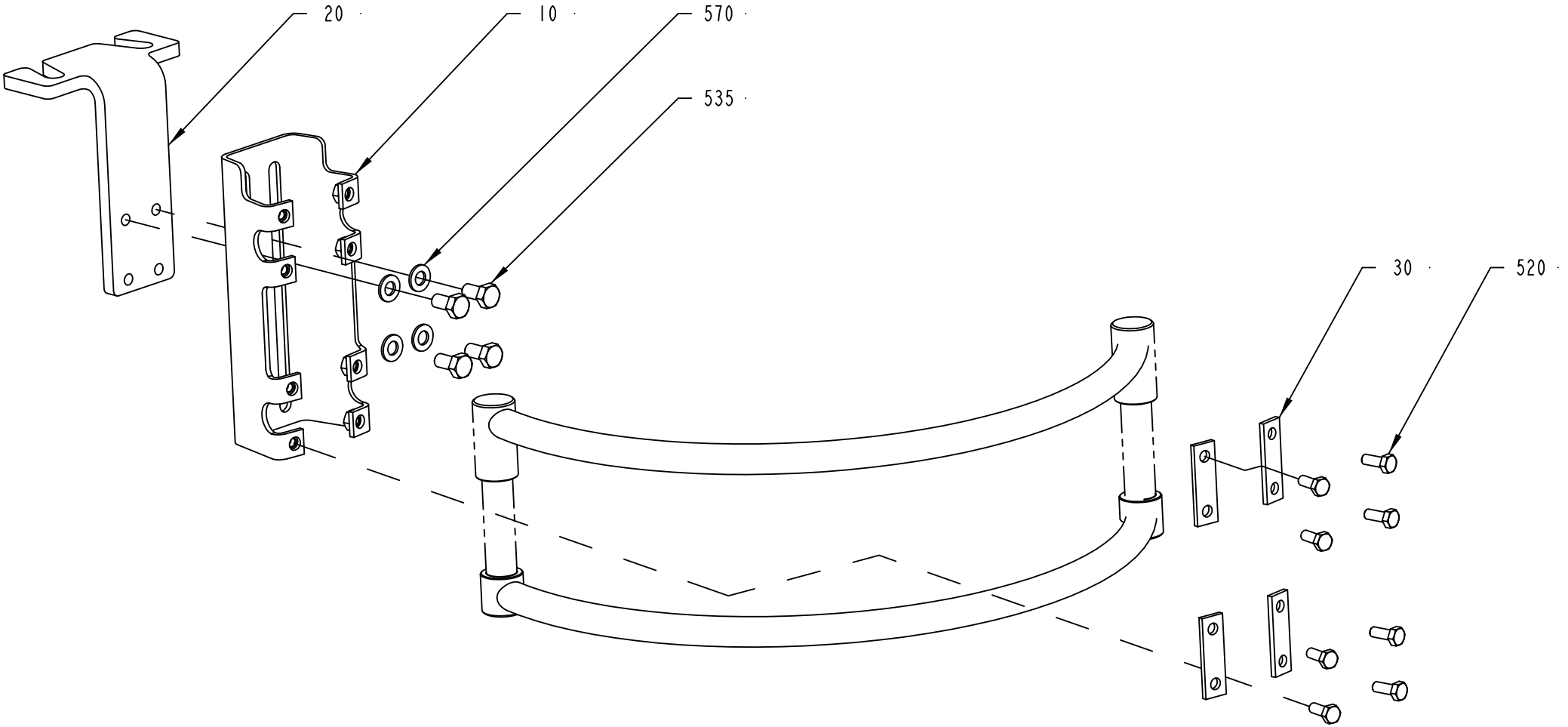


2876313-1
341002

ECM: 381091 - 20081218
Group number: 2876313-0100
Assembly Drawing: 2876313-1_1_AB

This list covers pages from 4-72 to 4-75

| Pos | Part No | UN | Qty | Description | Page No |
|---|---|---|---|---|---|
| **TBA 0500B, TBA 1000B (See drawing on page: 4-72)** | | | | | |
| 010 | 2715295-0000 | | 1 | BRACKET | |
| 020 | 1254109-0000 | | 1 | BRACKET | |
| 030 | 1036673-0000 | | 4 | WASHER | |
| 520 | 312105-0368 | | 8 | SCREW M6S ISO 4017 M6X16 A480 | |
| 535 | 312105-0449 | | 4 | SCREW M6S ISO 4017 M8X16 A480 | |
| 570 | 315105-0165 | | 4 | WASHER BRB 8,4X16 RFR | |
| **TBA 0500SQ, TBA 1000SQ, TBA 1000S (See drawing on page: 4-72)** | | | | | |
| 010 | 2715295-0000 | | 1 | BRACKET | |
| 020 | 2694095-0000 | | 1 | BRACKET | |
| 030 | 1036673-0000 | | 4 | WASHER | |
| 520 | 312105-0368 | | 8 | SCREW M6S ISO 4017 M6X16 A480 | |
| 535 | 312105-0449 | | 4 | SCREW M6S ISO 4017 M8X16 A480 | |
| 570 | 315105-0165 | | 4 | WASHER BRB 8,4X16 RFR | |
| **TBA 1500S (See drawing on page: 4-72)** | | | | | |
| 010 | 2955548-0000 | | 1 | BRACKET | |
| 020 | 1254109-0000 | | 1 | BRACKET | |
| 030 | 2797439-0000 | | 2 | FASTENING PLATE | |
| 520 | 312105-0368 | | 4 | SCREW M6S ISO 4017 M6X16 A480 | |
| 535 | 312105-0449 | | 4 | SCREW M6S ISO 4017 M8X16 A480 | |
| 570 | 315105-0165 | | 4 | WASHER BRB 8,4X16 RFR | |
| **TBA 2000S (See drawing on page: 4-72)** | | | | | |
| 010 | 2795023-0000 | | 1 | BRACKET | |
| 020 | 2930867-0000 | | 1 | BRACKET | |
| 030 | 2797439-0000 | | 2 | FASTENING PLATE | |
| 520 | 312105-0368 | | 4 | SCREW M6S ISO 4017 M6X16 A480 | |
| 535 | 312105-0368 | | 4 | SCREW M6S ISO 4017 M6X16 A480 | |
| 570 | 315105-0153 | | 4 | WASHER BRB 6,4X12 RFR | |
| **TPA 1000SQ, TPA 0750SQ (See drawing on page: 4-74)** | | | | | |
| 010 | 2715295-0000 | | 1 | BRACKET | |
| 020 | 2986655-0000 | | 1 | BRACKET | |
| 030 | 1036673-0000 | | 4 | WASHER | |
| 040 | 2986656-0000 | | 1 | SLIDE | |
| 060 | 2724929-0000 | | 1 | KNOB | |
| 065 | 2993210-0000 | | 1 | NUT | |
| 070 | 2993209-0000 | | 1 | SCREW | |
| 080 | 90335-0024 | | 1 | COMP. SPRING 22250, 1,25X13,75X27 | |
| 100 | 90287-0148 | | 4 | SCREW SPRINGLOAD. SLOTTED HEAD M5X12 | |
| 110 | 312318-0323 | | 4 | SCREW ISO4029 M5X8 A4 | |
| 520 | 312105-0368 | | 8 | SCREW M6S ISO 4017 M6X16 A480 | |
| 535 | 312105-0449 | | 4 | SCREW M6S ISO 4017 M8X16 A480 | |
| 535 | 312105-0447 | | 4 | SCREW M6S ISO 4017 M8X12 A480 | |
| 570 | 315105-0165 | | 4 | WASHER BRB 8,4X16 RFR | |

Machine Type | Group Description | Used-In | Group Number | Page No

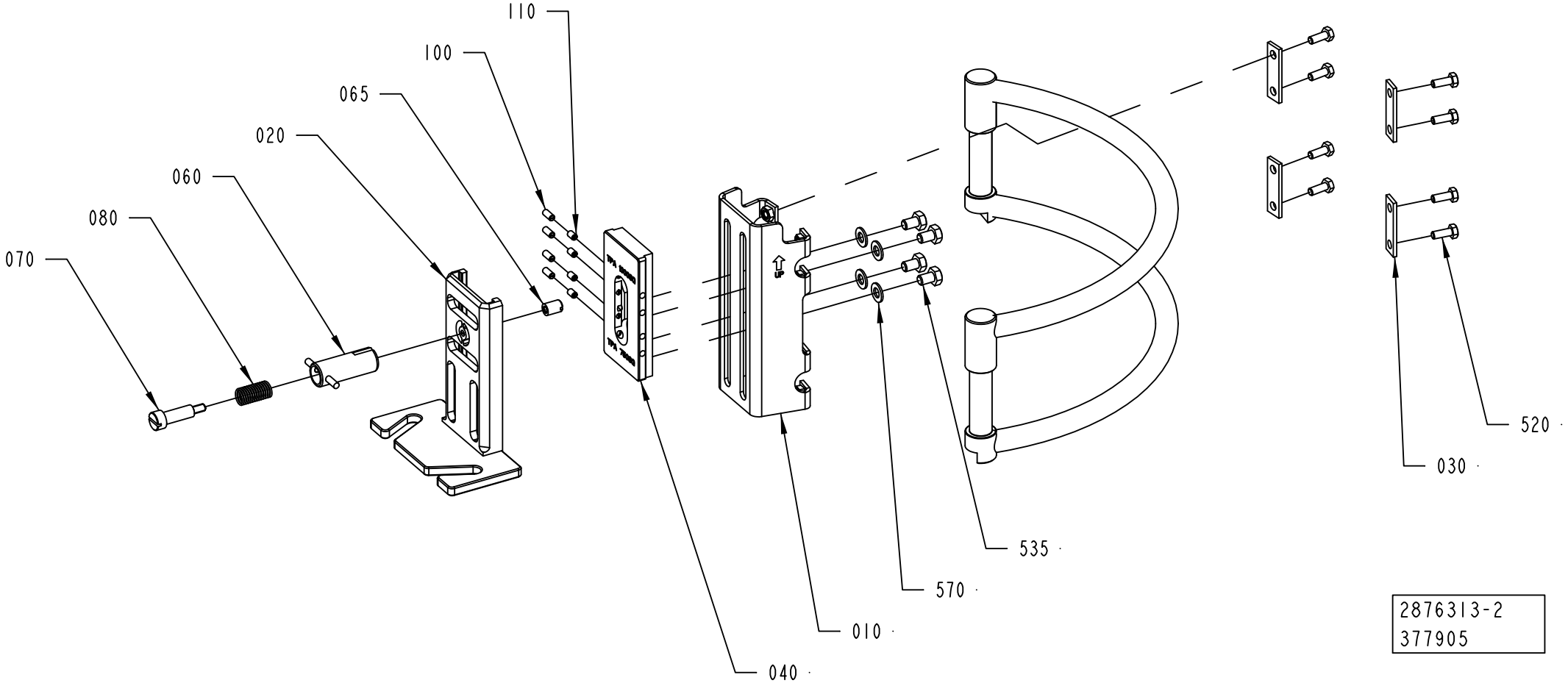
110
100
065
020
060
080
070
520
030
535
570
010
040
2876313-2
377905

ECM: 381091 - 20081218
Group number: 2876313-0100
Assembly Drawing: 2876313-2_1_AA

This list covers pages from 4-72 to 4-75

| Pos | Part No | UN | Qty | Description | Page No |
|---|---|---|---|---|---|
| **TBA 0500B, TBA 1000B (See drawing on page: 4-72)** | | | | | |
| 010 | 2715295-0000 | | 1 | BRACKET | |
| 020 | 1254109-0000 | | 1 | BRACKET | |
| 030 | 1036673-0000 | | 4 | WASHER | |
| 520 | 312105-0368 | | 8 | SCREW M6S ISO 4017 M6X16 A480 | |
| 535 | 312105-0449 | | 4 | SCREW M6S ISO 4017 M8X16 A480 | |
| 570 | 315105-0165 | | 4 | WASHER BRB 8,4X16 RFR | |
| **TBA 0500SQ, TBA 1000SQ, TBA 1000S (See drawing on page: 4-72)** | | | | | |
| 010 | 2715295-0000 | | 1 | BRACKET | |
| 020 | 2694095-0000 | | 1 | BRACKET | |
| 030 | 1036673-0000 | | 4 | WASHER | |
| 520 | 312105-0368 | | 8 | SCREW M6S ISO 4017 M6X16 A480 | |
| 535 | 312105-0449 | | 4 | SCREW M6S ISO 4017 M8X16 A480 | |
| 570 | 315105-0165 | | 4 | WASHER BRB 8,4X16 RFR | |
| **TBA 1500S (See drawing on page: 4-72)** | | | | | |
| 010 | 2955548-0000 | | 1 | BRACKET | |
| 020 | 1254109-0000 | | 1 | BRACKET | |
| 030 | 2797439-0000 | | 2 | FASTENING PLATE | |
| 520 | 312105-0368 | | 4 | SCREW M6S ISO 4017 M6X16 A480 | |
| 535 | 312105-0449 | | 4 | SCREW M6S ISO 4017 M8X16 A480 | |
| 570 | 315105-0165 | | 4 | WASHER BRB 8,4X16 RFR | |
| **TBA 2000S (See drawing on page: 4-72)** | | | | | |
| 010 | 2795023-0000 | | 1 | BRACKET | |
| 020 | 2930867-0000 | | 1 | BRACKET | |
| 030 | 2797439-0000 | | 2 | FASTENING PLATE | |
| 520 | 312105-0368 | | 4 | SCREW M6S ISO 4017 M6X16 A480 | |
| 535 | 312105-0368 | | 4 | SCREW M6S ISO 4017 M6X16 A480 | |
| 570 | 315105-0153 | | 4 | WASHER BRB 6,4X12 RFR | |
| **TPA 1000SQ, TPA 0750SQ (See drawing on page: 4-74)** | | | | | |
| 010 | 2715295-0000 | | 1 | BRACKET | |
| 020 | 2986655-0000 | | 1 | BRACKET | |
| 030 | 1036673-0000 | | 4 | WASHER | |
| 040 | 2986656-0000 | | 1 | SLIDE | |
| 060 | 2724929-0000 | | 1 | KNOB | |
| 065 | 2993210-0000 | | 1 | NUT | |
| 070 | 2993209-0000 | | 1 | SCREW | |
| 080 | 90335-0024 | | 1 | COMP. SPRING 22250, 1,25X13,75X27 | |
| 100 | 90287-0148 | | 4 | SCREW SPRINGLOAD. SLOTTED HEAD M5X12 | |
| 110 | 312318-0323 | | 4 | SCREW ISO4029 M5X8 A4 | |
| 520 | 312105-0368 | | 8 | SCREW M6S ISO 4017 M6X16 A480 | |
| 535 | 312105-0449 | | 4 | SCREW M6S ISO 4017 M8X16 A480 | |
| 535 | 312105-0447 | | 4 | SCREW M6S ISO 4017 M8X12 A480 | |
| 570 | 315105-0165 | | 4 | WASHER BRB 8,4X16 RFR | |

Machine Type | Group Description | Used-In | Group Number | Page No

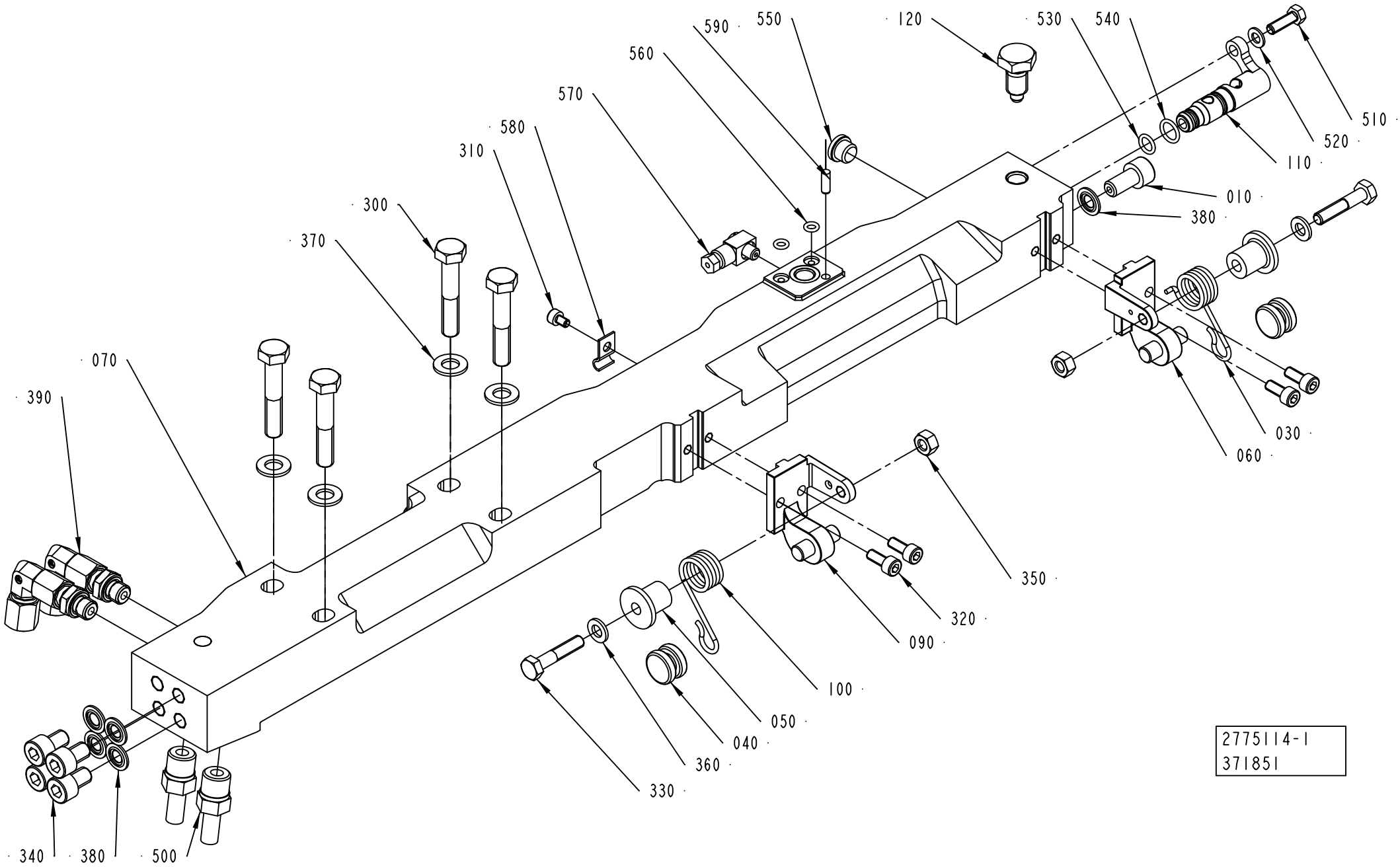
590
550
120
530
540
560
570
580
310
300
370
510
520
110
010
380
070
390
030
060
350
320
090
100
050
040
360
330
340
380
500
2775114-1
371851

| Pos | Part No | UN | Qty | Description | Page No |
|---|---|---|---|---|---|
| **TBA 0500SQ, TBA 0500B, TBA 1000B, TBA 1000SQ, TBA 1000S, TBA 1500S, TPA 1000SQ, TPA 0750SQ** | | | | | |
| **(See drawing on page: 4-76)** | | | | | |
| 010 | 1036343-0000 | | 1 | SCREW | |
| 070 | 2803810-0000 | | 1 | CARRIER | |
| 110 | 2803812-0000 | | 1 | SHAFT | |
| 120 | 2803813-0000 | | 1 | SCREW | |
| 340 | 312115-0447 | | 4 | SCREW ISO4762 M8X12 A4 80 | |
| 380 | 315211-0104 | | 5 | BONDED SEAL SS/NBR90 M8 | |
| 550 | 342713-0209 | | 1 | PLUG (QUANT.MINIMA= 10PC). | |
| **TBA 2000S (See drawing on page: 4-78)** | | | | | |
| 010 | 1036343-0000 | | 2 | SCREW | |
| 070 | 2907794-0000 | | 1 | CARRIER PRESSURE LEFT | |
| 110 | 2922436-0000 | | 1 | SHAFT | |
| 120 | 2922437-0000 | | 1 | SCREW | |
| 340 | 312115-0447 | | 2 | SCREW ISO4762 M8X12 A4 80 | |
| 380 | 315211-0104 | | 4 | BONDED SEAL SS/NBR90 M8 | |
| **Common Parts** | | | | | |
| 030 | 2547589-0000 | | 1 | SPRING | |
| 040 | 2530296-0000 | | 2 | ROLLER | |
| 050 | 2532531-0000 | | 2 | ROLLER | |
| 060 | 2530293-0000 | | 1 | BRACKET | |
| 090 | 2530292-0000 | | 1 | BRACKET | |
| 100 | 2547588-0000 | | 1 | SPRING | |
| 300 | 312105-0460 | | 4 | SCREW M6S ISO 4014 M8X45 A480 | |
| 310 | 312115-0285 | | 3 | SCREW ISO4762 M4X6 A4 80 | |
| 320 | 312115-0327 | | 4 | SCREW ISO4762 M5X12 A4 80 | |
| 330 | 312105-0374 | | 2 | SCREW M6S ISO 4014 M6X30 A480 | |
| 350 | 312605-0316 | | 2 | HEXAGON NUT, M6M M6 A280 | |
| 360 | 315105-0153 | | 2 | WASHER BRB 6,4X12 RFR | |
| 370 | 315105-0165 | | 4 | WASHER BRB 8,4X16 RFR | |
| 390 | 90600-1991 | | 2 | ADJUSTABLE ELBOW CONNECTION,EXT 4-G1/8 | |
| 500 | 2833413-0000 | | 2 | PIPE CONNECTION | |
| 510 | 312105-0329 | | 1 | SCREW M6S ISO 4017 M5X16 A480 | |
| 520 | 315105-0146 | | 1 | WASHER BRB 5,3X10 RFR | |
| 530 | 315202-0105 | | 1 | O-RING 7,1X1,6 MM | |
| 540 | 315202-0107 | | 1 | O-RING 9,1X1,6 MM | |
| 560 | 315202-0102 | | 2 | O-RING 4,1X1,6 MM | |
| 570 | 90134-0058 | | 2 | CONNECTION | |
| 580 | 90165-0056 | | 3 | PIPE CLIP FOR TUBE D=4 MM | |
| 590 | 311103-0268 | | 1 | PARALLEL PIN ISO 2338 4M6X12 A1 | |

| Pos | Part No | UN | Qty | Description | Page No |
|---|---|---|---|---|---|

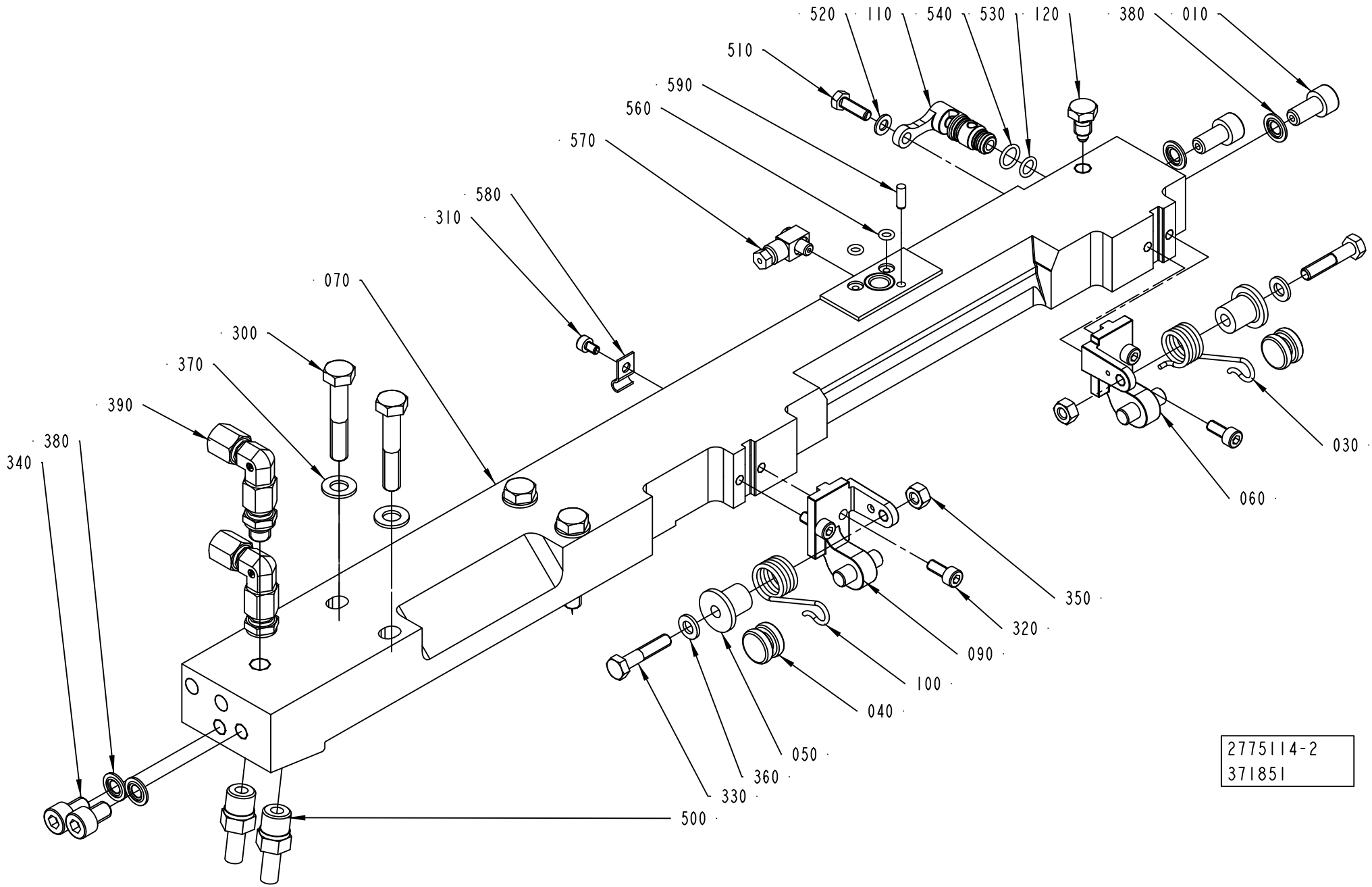
520
110
540
530
120
380
010
510
590
560
570
580
310
070
300
370
390
380
340
030
060
350
320
090
100
040
050
360
330
500
2775114-2
371851

| Pos | Part No | UN | Qty | Description | Page No |
|---|---|---|---|---|---|
| **TBA 0500SQ, TBA 0500B, TBA 1000B, TBA 1000SQ, TBA 1000S, TBA 1500S, TPA 1000SQ, TPA 0750SQ** | | | | | |
| **(See drawing on page: 4-76)** | | | | | |
| 010 | 1036343-0000 | | 1 | SCREW | |
| 070 | 2803810-0000 | | 1 | CARRIER | |
| 110 | 2803812-0000 | | 1 | SHAFT | |
| 120 | 2803813-0000 | | 1 | SCREW | |
| 340 | 312115-0447 | | 4 | SCREW ISO4762 M8X12 A4 80 | |
| 380 | 315211-0104 | | 5 | BONDED SEAL SS/NBR90 M8 | |
| 550 | 342713-0209 | | 1 | PLUG (QUANT.MINIMA= 10PC). | |
| **TBA 2000S (See drawing on page: 4-78)** | | | | | |
| 010 | 1036343-0000 | | 2 | SCREW | |
| 070 | 2907794-0000 | | 1 | CARRIER PRESSURE LEFT | |
| 110 | 2922436-0000 | | 1 | SHAFT | |
| 120 | 2922437-0000 | | 1 | SCREW | |
| 340 | 312115-0447 | | 2 | SCREW ISO4762 M8X12 A4 80 | |
| 380 | 315211-0104 | | 4 | BONDED SEAL SS/NBR90 M8 | |
| **Common Parts** | | | | | |
| 030 | 2547589-0000 | | 1 | SPRING | |
| 040 | 2530296-0000 | | 2 | ROLLER | |
| 050 | 2532531-0000 | | 2 | ROLLER | |
| 060 | 2530293-0000 | | 1 | BRACKET | |
| 090 | 2530292-0000 | | 1 | BRACKET | |
| 100 | 2547588-0000 | | 1 | SPRING | |
| 300 | 312105-0460 | | 4 | SCREW M6S ISO 4014 M8X45 A480 | |
| 310 | 312115-0285 | | 3 | SCREW ISO4762 M4X6 A4 80 | |
| 320 | 312115-0327 | | 4 | SCREW ISO4762 M5X12 A4 80 | |
| 330 | 312105-0374 | | 2 | SCREW M6S ISO 4014 M6X30 A480 | |
| 350 | 312605-0316 | | 2 | HEXAGON NUT, M6M M6 A280 | |
| 360 | 315105-0153 | | 2 | WASHER BRB 6,4X12 RFR | |
| 370 | 315105-0165 | | 4 | WASHER BRB 8,4X16 RFR | |
| 390 | 90600-1991 | | 2 | ADJUSTABLE ELBOW CONNECTION,EXT 4-G1/8 | |
| 500 | 2833413-0000 | | 2 | PIPE CONNECTION | |
| 510 | 312105-0329 | | 1 | SCREW M6S ISO 4017 M5X16 A480 | |
| 520 | 315105-0146 | | 1 | WASHER BRB 5,3X10 RFR | |
| 530 | 315202-0105 | | 1 | O-RING 7,1X1,6 MM | |
| 540 | 315202-0107 | | 1 | O-RING 9,1X1,6 MM | |
| 560 | 315202-0102 | | 2 | O-RING 4,1X1,6 MM | |
| 570 | 90134-0058 | | 2 | CONNECTION | |
| 580 | 90165-0056 | | 3 | PIPE CLIP FOR TUBE D=4 MM | |
| 590 | 311103-0268 | | 1 | PARALLEL PIN ISO 2338 4M6X12 A1 | |

| Pos | Part No | UN | Qty | Description | Page No |
|---|---|---|---|---|---|

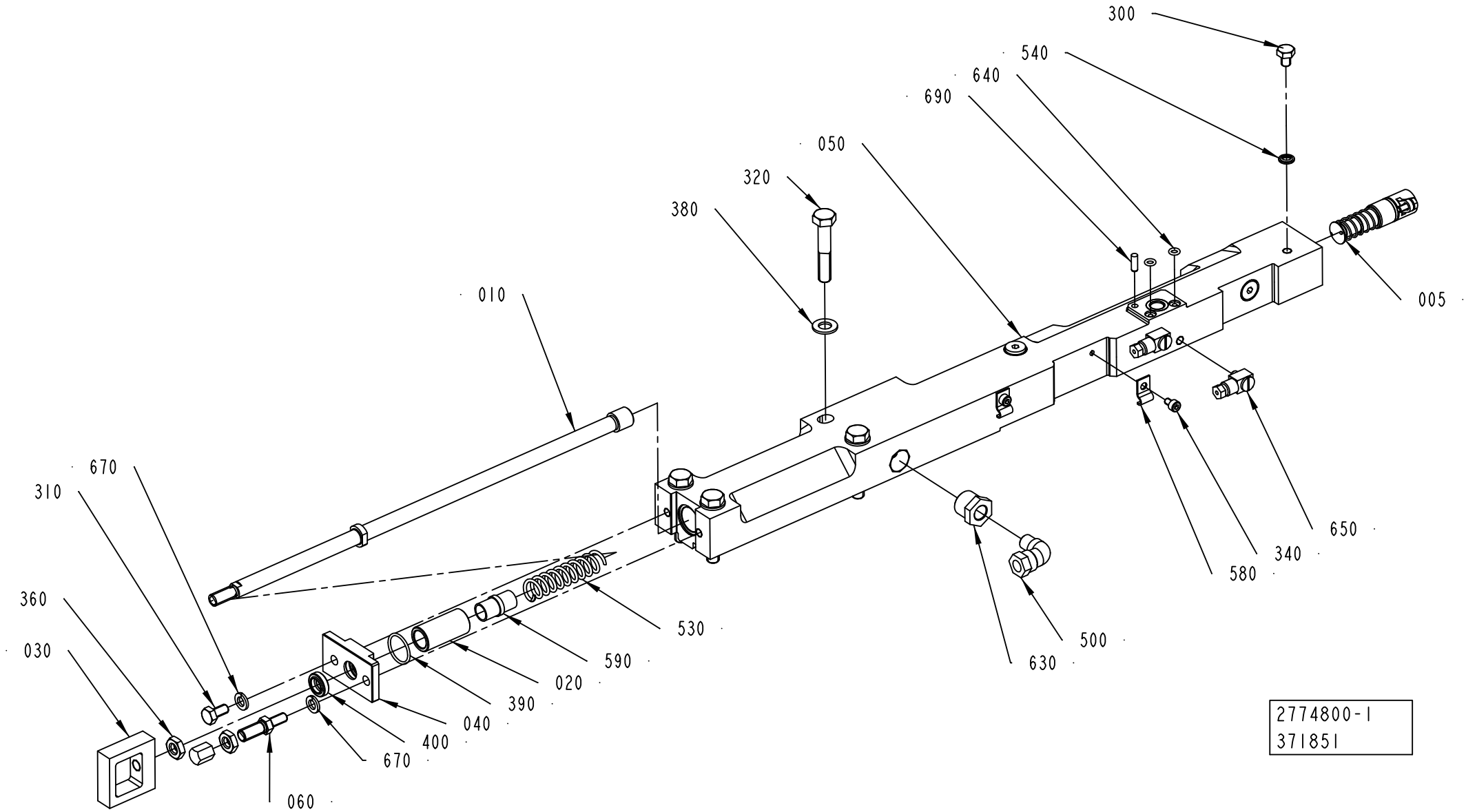
300
540
640
690
050
320
380
010
005
670
310
360
030
530
590
020
390
040
400
670
060
500
630
650
340
580
2774800-1
371851

ECM: 376672 - 20081127
Group number: 2774800-0100
Assembly Drawing: 2774800-1_1_AE

This list covers pages from 4-80 to 4-83

| Pos | Part No | UN | Qty | Description | Page No |
|---|---|---|---|---|---|
| **TBA 0500SQ, TBA 0500B, TBA 1000B, TBA 1000SQ, TBA 1000S, TBA 1500S, TPA 1000SQ, TPA 0750SQ** | | | | | |
| **(See drawing on page: 4-80)** | | | | | |
| 050 | 2803171-0000 | | 1 | CARRIER | |
| **TBA 2000S (See drawing on page: 4-82)** | | | | | |
| 050 | 2909303-0000 | | 1 | CARRIER CUTTING LEFT | |
| 080 | 2922439-0000 | | 1 | SHIM | |
| 090 | 2922438-0000 | | 1 | PLATE | |
| 660 | 312155-0287 | | 3 | SCREW DIN 7991 MF6S M4X8 A4 70 | |
| **Common Parts** | | | | | |
| 005 | 2854078-0100 | | 1 | PISTON ..... | **4-85** |
| 010 | 2803174-0000 | | 1 | TIE ROD | |
| 020 | 2774803-0000 | | 1 | SEAT | |
| 030 | 2986941-0000 | | 1 | EAR | |
| 040 | 2774802-0000 | | 1 | COVER | |
| 060 | 2997340-0000 | | 1 | SCREW | |
| 065 | 2997337-0000 | | 1 | STOP SCREW | |
| 070 | 2774805-0000 | | 1 | DAMPER | |
| 300 | 312105-0362 | | 1 | SCREW M6S ISO 4017 M6X8 A480 | |
| 310 | 312105-0366 | | 1 | SCREW M6S ISO 4017 M6X12 A480 | |
| 320 | 312105-0460 | | 4 | SCREW M6S ISO 4014 M8X45 A480 | |
| 340 | 312115-0285 | | 2 | SCREW ISO4762 M4X6 A4 80 | |
| 360 | 312625-0318 | | 2 | HEXAGON THIN NUT, EN 24035 ML6M M8 A4 | |
| 380 | 315105-0165 | | 4 | WASHER BRB 8,4X16 RFR | |
| 390 | 315202-0116 | | 1 | O-RING 18,1X1,6 MM | |
| 400 | 90459-3388 | | 1 | SCRAPER, 10X16X4,7 MM | |
| 500 | 90030-0257 | | 1 | CONN. ELBOW, 8-R1/8, EXT.THREAD | |
| 530 | 1548940-0000 | | 1 | SPRING | |
| 540 | 315211-0103 | | 1 | BONDED SEAL SS/NBR90 M6 | |
| 580 | 90165-0056 | | 2 | PIPE CLIP FOR TUBE D=4 MM | |
| 590 | 90600-2011 | | 1 | BUSHING INSERT, JUM-02-10 | |
| 630 | 342701-0202 | | 1 | BUSHING,INT./EXT.G-THREAD G3/8"-G1/8" | |
| 640 | 315202-0102 | | 2 | O-RING 4,1X1,6 MM | |
| 650 | 90134-0058 | | 2 | CONNECTION | |
| 670 | 315402-0156 | | 2 | LOCK WASHER FBB 6,5 | |
| 680 | 342713-0209 | | 2 | PLUG (QUANT.MINIMA= 10PC). | |
| 690 | 311103-0268 | | 1 | PARALLEL PIN ISO 2338 4M6X12 A1 | |

| Pos | Part No | UN | Qty | Description | Page No |
|---|---|---|---|---|---|

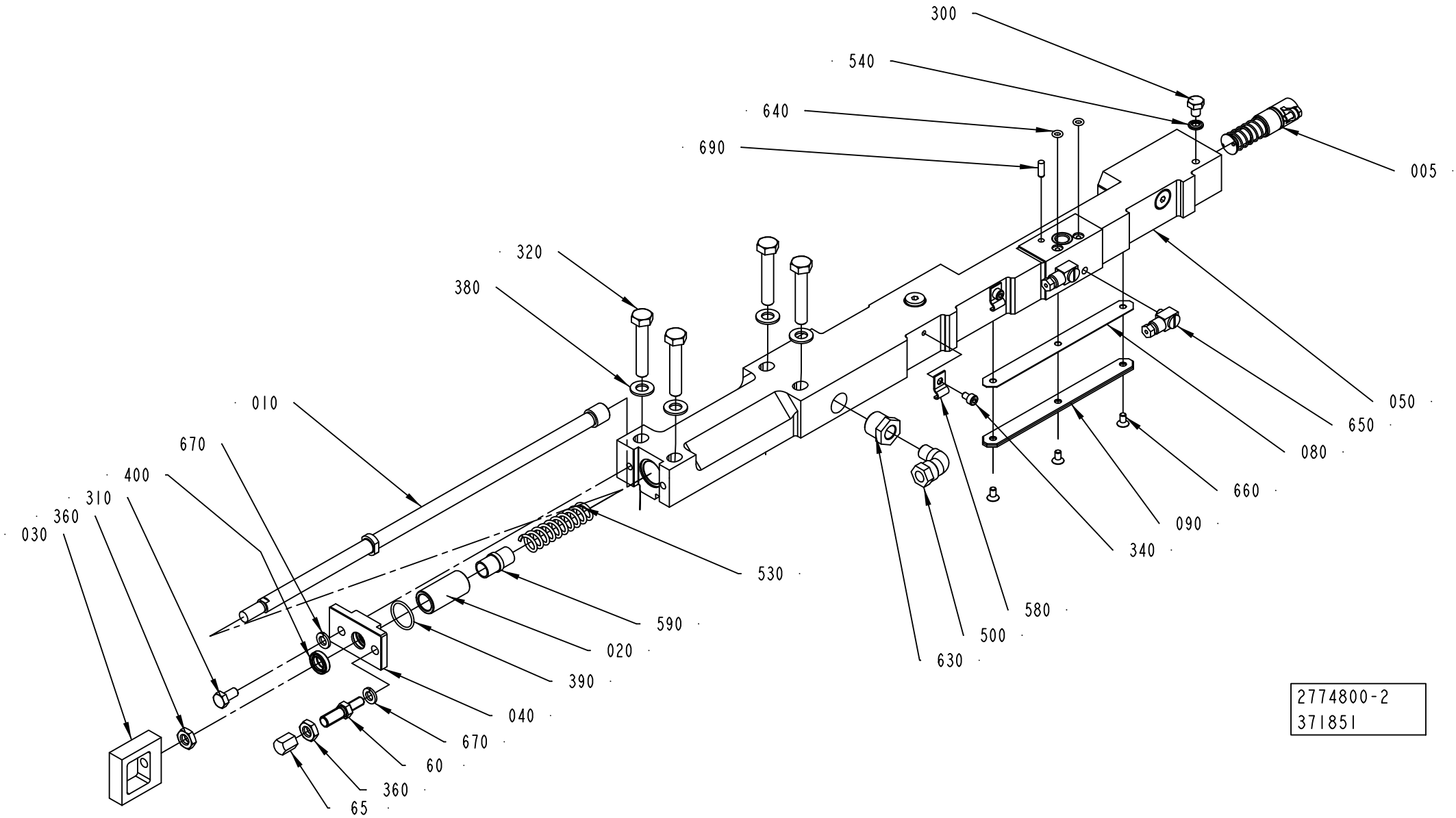
300
540
640
690
005
320
380
010
670
400
310
360
030
050
650
080
660
090
340
530
590
020
390
040
670
60
360
65
580
500
630
2774800-2
371851

| Pos | Part No | UN | Qty | Description | Page No |
|---|---|---|---|---|---|
| **TBA 0500SQ, TBA 0500B, TBA 1000B, TBA 1000SQ, TBA 1000S, TBA 1500S, TPA 1000SQ, TPA 0750SQ** | | | | | |
| **(See drawing on page: 4-80)** | | | | | |
| 050 | 2803171-0000 | | 1 | CARRIER | |
| **TBA 2000S (See drawing on page: 4-82)** | | | | | |
| 050 | 2909303-0000 | | 1 | CARRIER CUTTING LEFT | |
| 080 | 2922439-0000 | | 1 | SHIM | |
| 090 | 2922438-0000 | | 1 | PLATE | |
| 660 | 312155-0287 | | 3 | SCREW DIN 7991 MF6S M4X8 A4 70 | |
| **Common Parts** | | | | | |
| 005 | 2854078-0100 | | 1 | PISTON ..... | **4-85** |
| 010 | 2803174-0000 | | 1 | TIE ROD | |
| 020 | 2774803-0000 | | 1 | SEAT | |
| 030 | 2986941-0000 | | 1 | EAR | |
| 040 | 2774802-0000 | | 1 | COVER | |
| 060 | 2997340-0000 | | 1 | SCREW | |
| 065 | 2997337-0000 | | 1 | STOP SCREW | |
| 070 | 2774805-0000 | | 1 | DAMPER | |
| 300 | 312105-0362 | | 1 | SCREW M6S ISO 4017 M6X8 A480 | |
| 310 | 312105-0366 | | 1 | SCREW M6S ISO 4017 M6X12 A480 | |
| 320 | 312105-0460 | | 4 | SCREW M6S ISO 4014 M8X45 A480 | |
| 340 | 312115-0285 | | 2 | SCREW ISO4762 M4X6 A4 80 | |
| 360 | 312625-0318 | | 2 | HEXAGON THIN NUT, EN 24035 ML6M M8 A4 | |
| 380 | 315105-0165 | | 4 | WASHER BRB 8,4X16 RFR | |
| 390 | 315202-0116 | | 1 | O-RING 18,1X1,6 MM | |
| 400 | 90459-3388 | | 1 | SCRAPER, 10X16X4,7 MM | |
| 500 | 90030-0257 | | 1 | CONN. ELBOW, 8-R1/8, EXT.THREAD | |
| 530 | 1548940-0000 | | 1 | SPRING | |
| 540 | 315211-0103 | | 1 | BONDED SEAL SS/NBR90 M6 | |
| 580 | 90165-0056 | | 2 | PIPE CLIP FOR TUBE D=4 MM | |
| 590 | 90600-2011 | | 1 | BUSHING INSERT, JUM-02-10 | |
| 630 | 342701-0202 | | 1 | BUSHING,INT./EXT.G-THREAD G3/8"-G1/8" | |
| 640 | 315202-0102 | | 2 | O-RING 4,1X1,6 MM | |
| 650 | 90134-0058 | | 2 | CONNECTION | |
| 670 | 315402-0156 | | 2 | LOCK WASHER FBB 6,5 | |
| 680 | 342713-0209 | | 2 | PLUG (QUANT.MINIMA= 10PC). | |
| 690 | 311103-0268 | | 1 | PARALLEL PIN ISO 2338 4M6X12 A1 | |

| Pos | Part No | UN | Qty | Description | Page No |
|---|---|---|---|---|---|

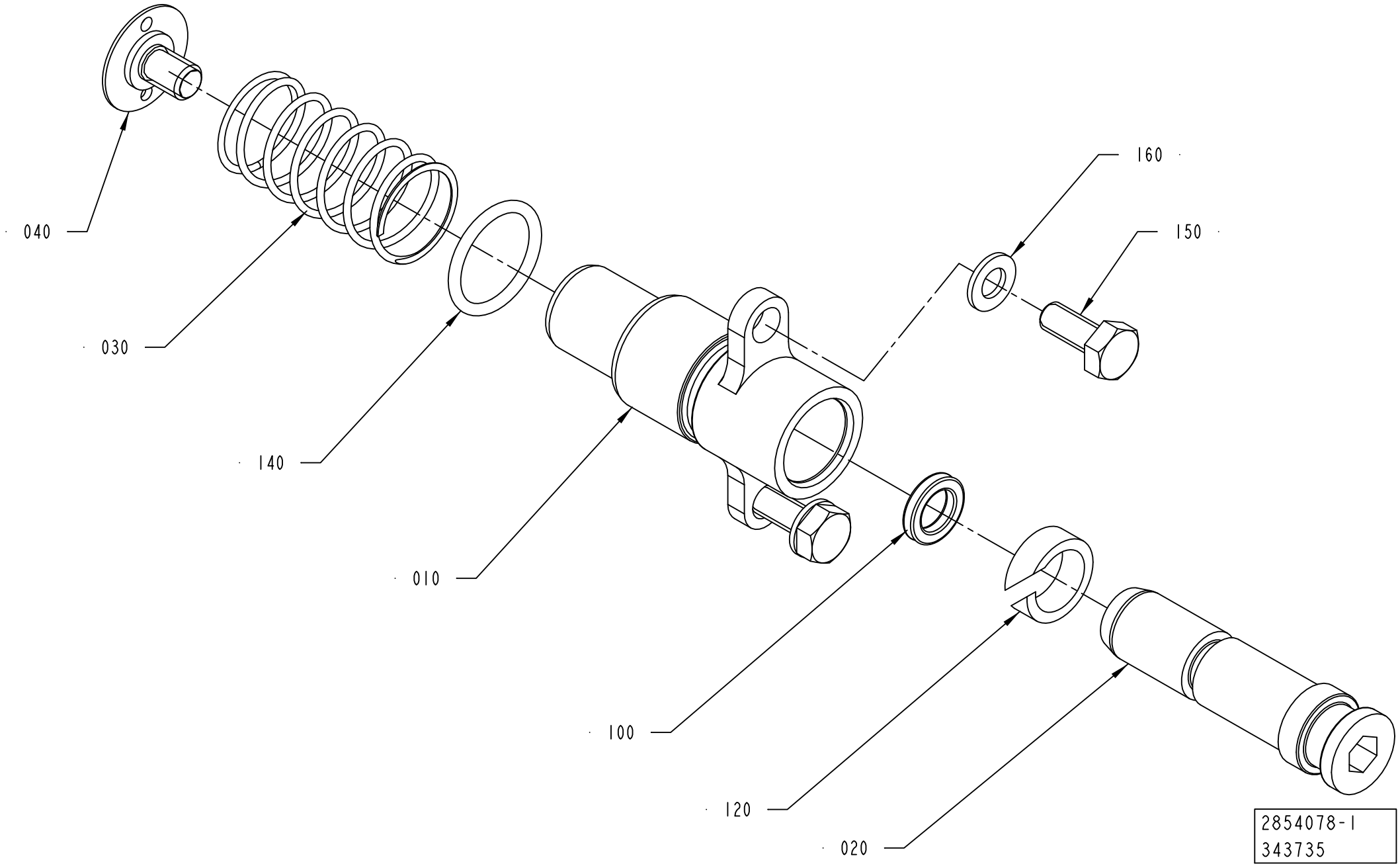
040
030
140
010
160
150
100
120
020
2854078-1
343735

ECM: 344332 - 20080505
Group number: 2854078-0100
Assembly Drawing: 2854078-1_1_AC

| Pos | Part No | UN | Qty | Description | Page No |
|---|---|---|---|---|---|
| - | | | | | |
| 010 | 2955605-0000 | | 1 | SLEEVE | |
| 020 | 2955606-0000 | | 1 | PISTON | |
| 030 | 2845139-0000 | | 1 | COMPRESSION SPRING | |
| 040 | 2845142-0000 | | 1 | STOP | |
| 100 | 90459-1861 | | 1 | X-SEAL 6,07X2,62 MM | |
| 120 | 90600-2014 | | 1 | WEAR RING 8,9X12X4 MM | |
| 130 | 90157-0016 | ML | 1 | LOCKING FLUID LOCTITE 242 50 ML | |
| 140 | 315202-0111 | | 1 | O-RING 13,1X1,6 MM | |
| 150 | 312105-0289 | | 2 | SCREW M6S H4X10 A4 70 ISO4017/DIN933 | |
| 160 | 315105-0136 | | 2 | WASHER BRB 4,3X8 RFR | |

| Pos | Part No | UN | Qty | Description | Page No |
|---|---|---|---|---|---|

Machine Type | Group Description | Used-In | Group Number | Page No

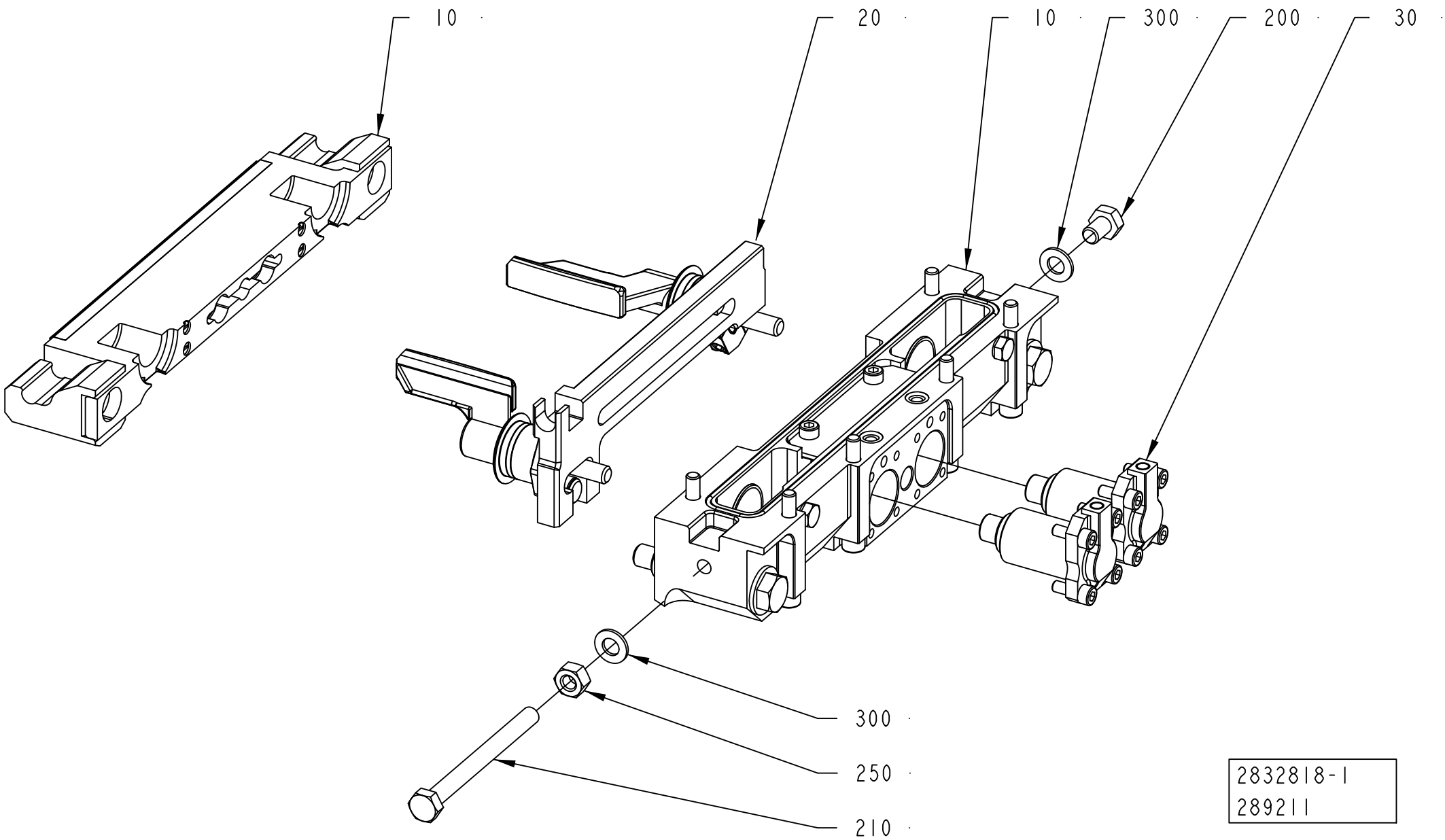
10
20
10
300
200
30
300
250
210
2832818-1
289211

ECM: 375719 - 20081127
Group number: 2832818-0100
Assembly Drawing: 2832818-1_1_AA

| Pos | Part No | UN | Qty | Description | Page No |
|---|---|---|---|---|---|
| - | | | | | |
| 010 | 2832935-0100 | | 1 | CUTTING JAW | **4-89, 4-91** |
| 020 | 2832936-0100 | | 1 | FOLDING FLAP LEFT | **4-93, 4-95** |
| 030 | 2772645-0100 | | 2 | PISTON | **4-97** |
| 200 | 312105-0447 | | 1 | SCREW M6S ISO 4017 M8X12 A480 | |
| 210 | 312105-0469 | | 1 | SCREW M6S ISO 4014 M8X90 A480 | |
| 250 | 312605-0318 | | 1 | HEXAGON NUT, M6M M8 A280 | |
| 300 | 315105-0165 | | 2 | WASHER BRB 8,4X16 RFR | |

| Pos | Part No | UN | Qty | Description | Page No |
|---|---|---|---|---|---|

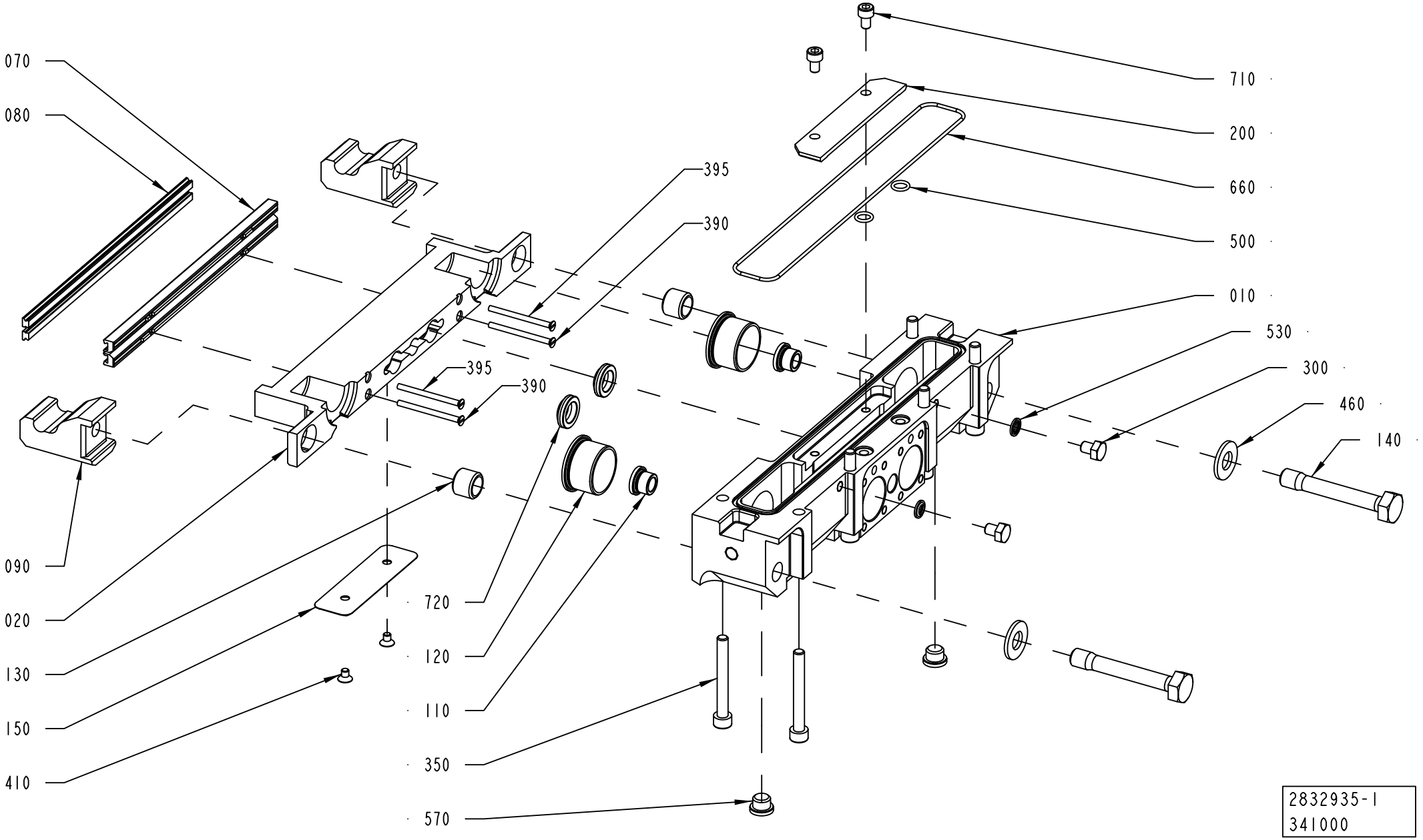
070
080
090
020
130
150
410
395
390
395
390
720
120
110
350
570
710
200
660
500
010
530
300
460
140
2832935-1
341000

ECM: 375717 - 20081127
Group number: 2832935-0100
Assembly Drawing: 2832935-1_1_AB

This list covers pages from 4-88 to 4-91

| Pos | Part No | UN | Qty | Description | Page No |
|---|---|---|---|---|---|
| **TBA 0500B, TBA 1000B (See drawing on page: 4-88)** | | | | | |
| 010 | 2898564-0000 | | 1 | BEARING HOUSING | |
| 020 | 2898565-0000 | | 1 | CUTTING JAW | |
| 070 | 1520455-0000 | | 2 | CUTTING RAIL | |
| 080 | 1110083-0002 | | 2 | DOLLY | |
| 090 | 1538348-0000 | | 2 | CATCH | |
| 120 | 2815967-0000 | | 2 | BUSHING | |
| 140 | 2798473-0000 | | 2 | SCREW | |
| 150 | 1558733-0000 | | 1 | VOLUME BULGE | |
| 200 | 2784290-0000 | | 1 | PLATE | |
| 300 | 312105-0362 | | 2 | SCREW M6S ISO 4017 M6X8 A480 | |
| 350 | 312115-0380 | | 6 | SCREW ISO4762 M6X50 A4 80 | |
| 390 | 312145-0238 | | 2 | SCREW ISO 2009 MFS M3X40 A4 | |
| 395 | 312145-0238 | | 2 | SCREW ISO 2009 MFS M3X40 A4 | |
| 410 | 312155-0285 | | 2 | SCREW DIN 7991 MF6S M4X6 A4 70 | |
| 500 | 315202-0105 | | 2 | O-RING 7,1X1,6 MM | |
| 710 | 312115-0323 | | 2 | SCREW ISO4762 M5X8 A4 80 | |
| 720 | 90600-2018 | | 2 | SCRAPER, 12X18,6X5,4 MM | |
| **TBA 1000SQ, TBA 0500SQ (See drawing on page: 4-88)** | | | | | |
| 010 | 2847228-0000 | | 1 | BEARING HOUSING | |
| 020 | 2847229-0000 | | 1 | CUTTING JAW | |
| 070 | 1520494-0000 | | 2 | CUTTING RAIL | |
| 080 | 1520633-0002 | | 2 | DOLLY | |
| 090 | 1538348-0000 | | 2 | CATCH | |
| 120 | 2815967-0000 | | 2 | BUSHING | |
| 140 | 2798473-0000 | | 2 | SCREW | |
| 200 | 2759019-0000 | | 1 | PLATE | |
| 300 | 312105-0362 | | 2 | SCREW M6S ISO 4017 M6X8 A480 | |
| 350 | 312115-0380 | | 6 | SCREW ISO4762 M6X50 A4 80 | |
| 390 | 312145-0238 | | 2 | SCREW ISO 2009 MFS M3X40 A4 | |
| 395 | 312145-0238 | | 2 | SCREW ISO 2009 MFS M3X40 A4 | |
| 500 | 315202-0105 | | 2 | O-RING 7,1X1,6 MM | |
| 710 | 312115-0323 | | 2 | SCREW ISO4762 M5X8 A4 80 | |
| 720 | 90600-2018 | | 2 | SCRAPER, 12X18,6X5,4 MM | |
| **TBA 1000S (See drawing on page: 4-88)** | | | | | |
| 010 | 2813723-0000 | | 1 | BEARING HOUSING | |
| 020 | 2813725-0000 | | 1 | CUTTING JAW | |
| 070 | 1520455-0000 | | 2 | CUTTING RAIL | |
| 080 | 1110083-0002 | | 2 | DOLLY | |
| 090 | 1538348-0000 | | 2 | CATCH | |
| 120 | 2815967-0000 | | 2 | BUSHING | |
| 140 | 2798473-0000 | | 2 | SCREW | |
| 200 | 2813724-0000 | | 1 | PLATE | |
| 300 | 312105-0362 | | 2 | SCREW M6S ISO 4017 M6X8 A480 | |
| 350 | 312115-0380 | | 6 | SCREW ISO4762 M6X50 A4 80 | |
| 390 | 312145-0238 | | 2 | SCREW ISO 2009 MFS M3X40 A4 | |
| 395 | 312145-0238 | | 2 | SCREW ISO 2009 MFS M3X40 A4 | |
| 500 | 315202-0105 | | 2 | O-RING 7,1X1,6 MM | |
| 710 | 312115-0323 | | 2 | SCREW ISO4762 M5X8 A4 80 | |
| 720 | 90600-2018 | | 2 | SCRAPER, 12X18,6X5,4 MM | |
| **TBA 1500S (See drawing on page: 4-88)** | | | | | |
| 010 | 2898564-0000 | | 1 | BEARING HOUSING | |
| 020 | 2898565-0000 | | 1 | CUTTING JAW | |
| 070 | 1520455-0000 | | 2 | CUTTING RAIL | |
| 080 | 1110083-0002 | | 2 | DOLLY | |
| 090 | 1538348-0000 | | 2 | CATCH | |
| 120 | 2815967-0000 | | 2 | BUSHING | |
| 140 | 2798473-0000 | | 2 | SCREW | |
| 200 | 2784290-0000 | | 1 | PLATE | |
| 300 | 312105-0362 | | 2 | SCREW M6S ISO 4017 M6X8 A480 | |
| 350 | 312115-0380 | | 6 | SCREW ISO4762 M6X50 A4 80 | |
| 390 | 312145-0238 | | 2 | SCREW ISO 2009 MFS M3X40 A4 | |
| 395 | 312145-0238 | | 2 | SCREW ISO 2009 MFS M3X40 A4 | |
| 500 | 315202-0105 | | 2 | O-RING 7,1X1,6 MM | |
| 710 | 312115-0323 | | 2 | SCREW ISO4762 M5X8 A4 80 | |
| 720 | 90600-2018 | | 2 | SCRAPER, 12X18,6X5,4 MM | |
| **TBA 2000S (See drawing on page: 4-90)** | | | | | |
| 010 | 2909304-0000 | | 1 | BEARING HOUSING | |
| 020 | 2909305-0000 | | 1 | CUTTING JAW | |
| 070 | 1533051-0000 | | 2 | CUTTING RAIL | |
| 080 | 1520633-0005 | | 2 | DOLLY | |
| 090 | 2566339-0000 | | 2 | CATCH | |
| 120 | 2588299-0000 | | 2 | BUSHING | |
| 140 | 2588303-0000 | | 2 | SCREW | |
| 300 | 312105-0362 | | 2 | SCREW M6S ISO 4017 M6X8 A480 | |
| 350 | 312115-0379 | | 7 | SCREW ISO4762 M6X45 A4 80 | |
| 390 | 312145-0238 | | 2 | SCREW ISO 2009 MFS M3X40 A4 | |
| 395 | 312145-0238 | | 2 | SCREW ISO 2009 MFS M3X40 A4 | |
| 500 | 315204-0105 | | 2 | O-RING 7,1X1,6 MM | |
| **TPA 1000SQ, TPA 0750SQ (See drawing on page: 4-88)** | | | | | |
| 010 | 2912355-0000 | | 1 | BEARING HOUSING | |
| 020 | 2912356-0000 | | 1 | CUTTING JAW | |
| 070 | 1520494-0000 | | 2 | CUTTING RAIL | |
| 080 | 1520633-0002 | | 2 | DOLLY | |

Machine Type | Group Description | Used-In | Group Number | Page No

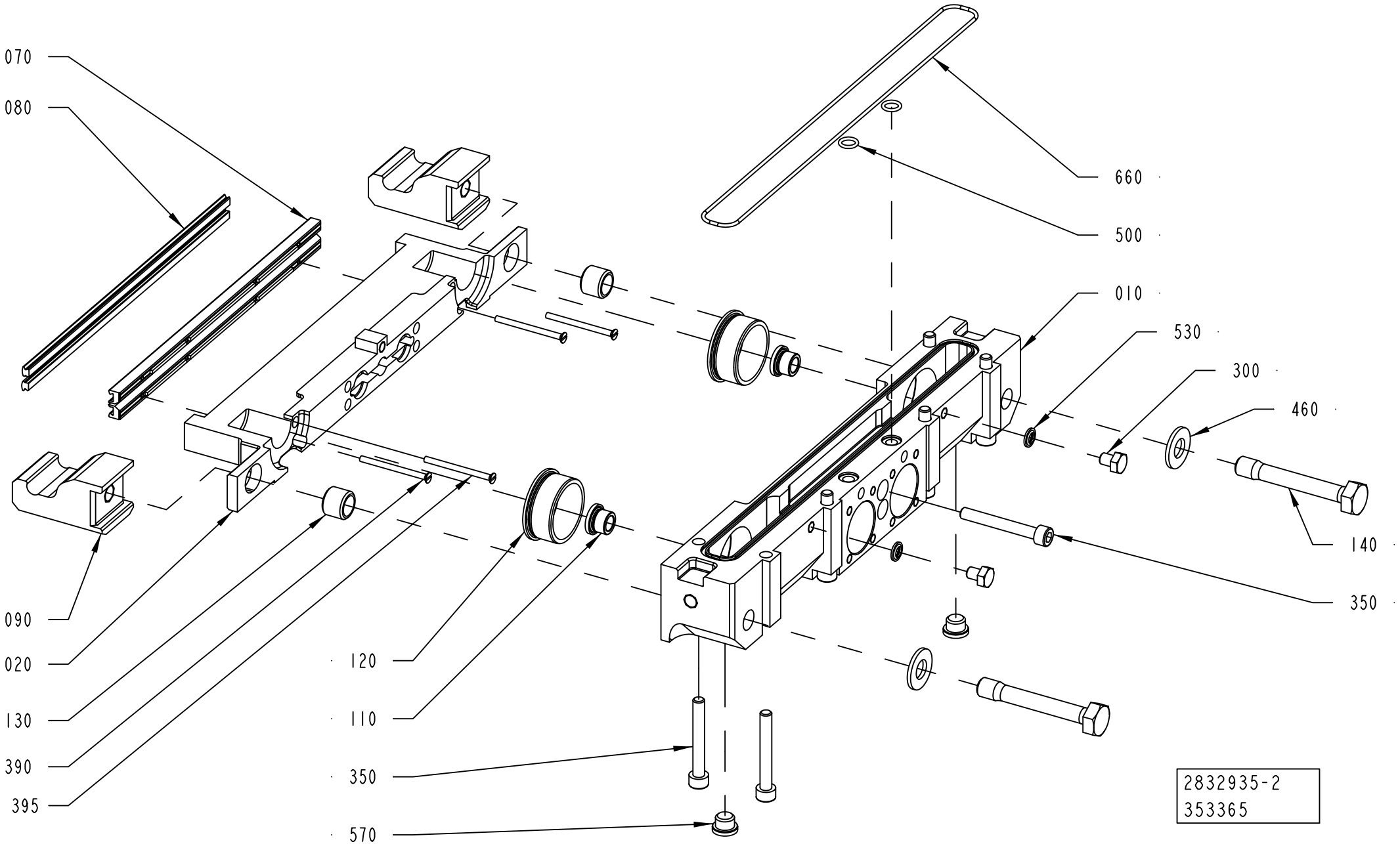
070
080
660
500
010
530
300
460
140
350
090
020
130
390
395
120
110
350
570
2832935-2
353365

ECM: 375717 - 20081127
Group number: 2832935-0100
Assembly Drawing: 2832935-2_1_AA

This list covers pages from 4-88 to 4-91

| Pos | Part No | UN | Qty | Description | Page No |
|---|---|---|---|---|---|
| **TPA 1000SQ, TPA 0750SQ (Cont'd) (See drawing on page: 4-88)** | | | | | |
| 090 | 1538348-0000 | | 2 | CATCH | |
| 120 | 2912007-0000 | | 2 | BUSHING | |
| 140 | 2798473-0000 | | 2 | SCREW | |
| 150 | 2503699-0000 | | 1 | VOLUME BULGE | |
| 200 | 2912354-0000 | | 1 | PLATE | |
| 300 | 312105-0362 | | 2 | SCREW M6S ISO 4017 M6X8 A480 | |
| 350 | 312115-0380 | | 6 | SCREW ISO4762 M6X50 A4 80 | |
| 390 | 312145-0238 | | 2 | SCREW ISO 2009 MFS M3X40 A4 | |
| 395 | 312145-0236 | | 2 | SCREW ISO 2009 MFS M3X35 A4 | |
| 410 | 312155-0287 | | 2 | SCREW DIN 7991 MF6S M4X8 A4 70 | |
| 500 | 315202-0105 | | 2 | O-RING 7,1X1,6 MM | |
| 710 | 312115-0323 | | 2 | SCREW ISO4762 M5X8 A4 80 | |
| 720 | 90600-2018 | | 2 | SCRAPER, 12X18,6X5,4 MM | |
| **Common Parts** | | | | | |
| 110 | 1255390-0000 | | 2 | BUSHING | |
| 130 | 1036494-0000 | | 2 | GUIDE BUSHING | |
| 460 | 315105-0173 | | 2 | WASHER BRB 10,5X22 RFR | |
| 530 | 315211-0103 | | 2 | BONDED SEAL SS/NBR90 M6 | |
| 570 | 342713-0209 | | 2 | PLUG (QUANT.MINIMA= 10PC). | |
| 660 | 90459-2363 | | 1 | O-RING MATERIAL 1,78 MM | |
| 700 | 90153-0015 | | 1 | ADHESIVE,LOCTITE IS 496/CYANOLOT 303 | |

| Pos | Part No | UN | Qty | Description | Page No |
|---|---|---|---|---|---|

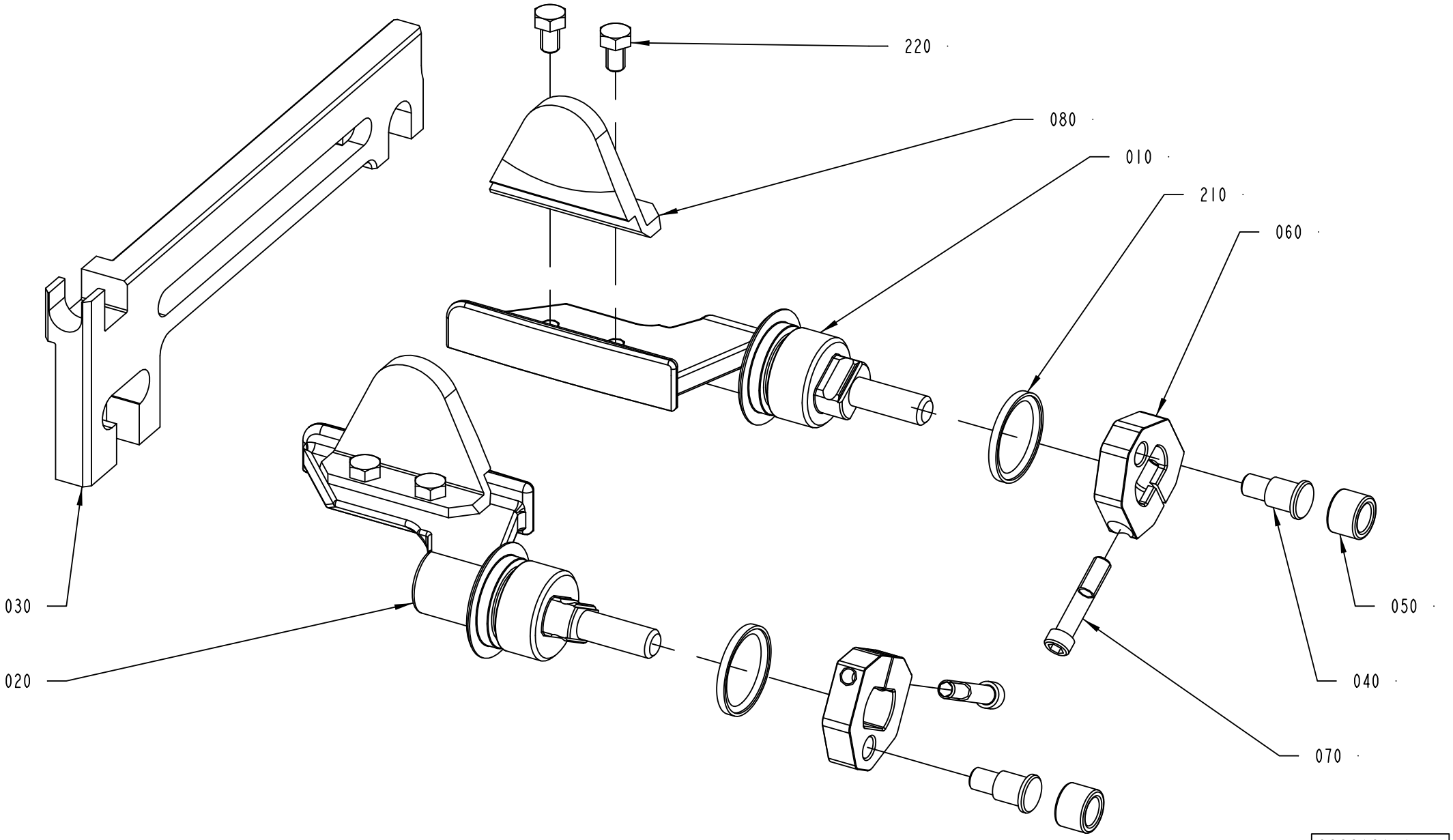
220
080
010
210
060
030
020
050
040
070
2832936-1
341000

ECM: 375716 - 20081127
Group number: 2832936-0100
Assembly Drawing: 2832936-1_1_AB

This list covers pages from 4-92 to 4-95

| Pos | Part No | UN | Qty | Description | Page No |
|---|---|---|---|---|---|
| **TBA 0500B, TBA 1000B (See drawing on page: 4-92)** | | | | | |
| 010 | 2898569-0000 | | 1 | FOLDING FLAP | |
| 020 | 2898568-0000 | | 1 | FOLDING FLAP | |
| 030 | 2948633-0000 | | 1 | CARRIER RULER | |
| 040 | 2948627-0000 | | 2 | SHAFT | |
| 050 | 2948626-0000 | | 2 | ROLLER | |
| 060 | 2948628-0000 | | 2 | CARRIER | |
| 070 | 2833952-0000 | | 2 | SCREW | |
| 210 | 90600-2017 | | 2 | SEAL GLYDRING 20,1X25X2,2 MM | |
| **TBA 1000SQ, TBA 0500SQ (See drawing on page: 4-92)** | | | | | |
| 010 | 2847230-0000 | | 1 | FOLDING FLAP | |
| 020 | 2847231-0000 | | 1 | FOLDING FLAP | |
| 030 | 2948629-0000 | | 1 | CARRIER RULER | |
| 040 | 2948627-0000 | | 2 | SHAFT | |
| 050 | 2948626-0000 | | 2 | ROLLER | |
| 060 | 2948628-0000 | | 2 | CARRIER | |
| 070 | 2833952-0000 | | 2 | SCREW | |
| 080 | 2843780-0000 | | 2 | PLATE | |
| 210 | 90600-2017 | | 2 | SEAL GLYDRING 20,1X25X2,2 MM | |
| 220 | 312105-0323 | | 4 | SCREW M6S ISO 4017 M5X8 A480 | |
| 230 | 90157-0016 | ML | 1 | LOCKING FLUID LOCTITE 242 50 ML | |
| **TBA 1000S (See drawing on page: 4-92)** | | | | | |
| 010 | 2813728-0000 | | 1 | FOLDING FLAP | |
| 020 | 2813729-0000 | | 1 | FOLDING FLAP | |
| 030 | 2948631-0000 | | 1 | CARRIER RULER | |
| 040 | 2948627-0000 | | 2 | SHAFT | |
| 050 | 2948626-0000 | | 2 | ROLLER | |
| 060 | 2948628-0000 | | 2 | CARRIER | |
| 070 | 2833952-0000 | | 2 | SCREW | |
| 210 | 90600-2017 | | 2 | SEAL GLYDRING 20,1X25X2,2 MM | |
| **TBA 1500S (See drawing on page: 4-92)** | | | | | |
| 010 | 2928342-0000 | | 1 | FOLDING FLAP | |
| 020 | 2928343-0000 | | 1 | FOLDING FLAP | |
| 030 | 2948633-0000 | | 1 | CARRIER RULER | |
| 040 | 2948627-0000 | | 2 | SHAFT | |
| 050 | 2948626-0000 | | 2 | ROLLER | |
| 060 | 2948628-0000 | | 2 | CARRIER | |
| 070 | 2833952-0000 | | 2 | SCREW | |
| 210 | 90600-2017 | | 2 | SEAL GLYDRING 20,1X25X2,2 MM | |
| **TBA 2000S (See drawing on page: 4-94)** | | | | | |
| 010 | 2566319-0000 | | 1 | FOLDING FLAP | |
| 020 | 2566320-0000 | | 1 | FOLDING FLAP | |
| 030 | 2948637-0000 | | 1 | CARRIER RULER | |
| 040 | 22462-0000 | | 2 | SHAFT | |
| 050 | 22463-0000 | | 2 | ROLL | |
| 200 | 90141-0029 | | 2 | CIRCLIP | |
| 210 | 90459-2258 | | 2 | SEAL GLYDRING 25,1X30X2,2 MM | |
| **TPA 1000SQ, TPA 0750SQ (See drawing on page: 4-92)** | | | | | |
| 010 | 2912359-0000 | | 1 | FOLDING FLAP | |
| 020 | 2912360-0000 | | 1 | FOLDING FLAP | |
| 030 | 2948635-0000 | | 1 | CARRIER RULER | |
| 040 | 2948627-0000 | | 2 | SHAFT | |
| 050 | 2948626-0000 | | 2 | ROLLER | |
| 060 | 2948628-0000 | | 2 | CARRIER | |
| 070 | 2833952-0000 | | 2 | SCREW | |
| 210 | 90600-2017 | | 2 | SEAL GLYDRING 20,1X25X2,2 MM | |

Machine Type | Group Description | Used-In | Group Number | Page No

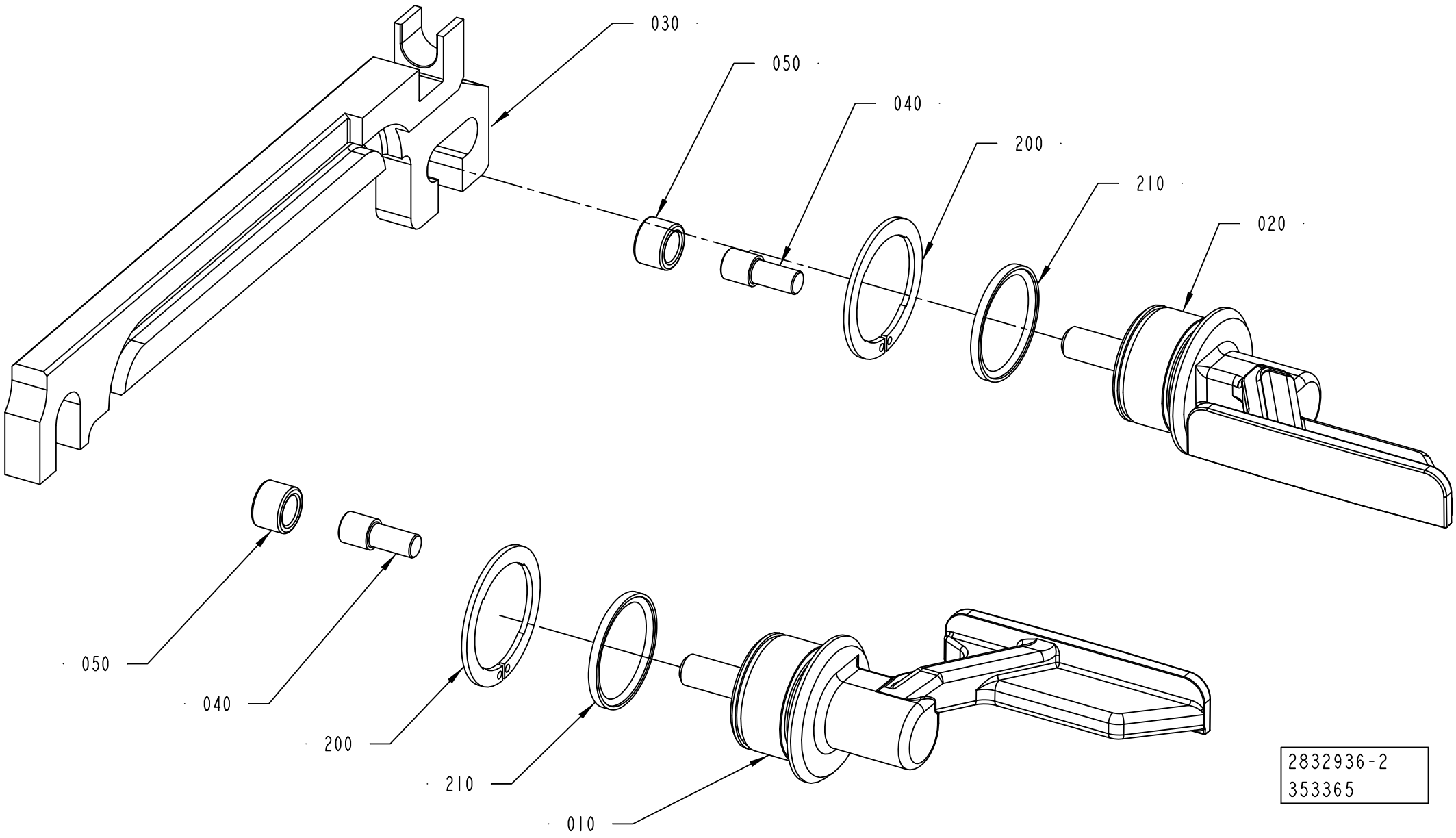
030
050
040
200
210
020
050
040
200
210
010
2832936-2
353365

ECM: 375716 - 20081127
Group number: 2832936-0100
Assembly Drawing: 2832936-2_1_AA

This list covers pages from 4-92 to 4-95

| Pos | Part No | UN | Qty | Description | Page No |
|---|---|---|---|---|---|
| **TBA 0500B, TBA 1000B (See drawing on page: 4-92)** | | | | | |
| 010 | 2898569-0000 | | 1 | FOLDING FLAP | |
| 020 | 2898568-0000 | | 1 | FOLDING FLAP | |
| 030 | 2948633-0000 | | 1 | CARRIER RULER | |
| 040 | 2948627-0000 | | 2 | SHAFT | |
| 050 | 2948626-0000 | | 2 | ROLLER | |
| 060 | 2948628-0000 | | 2 | CARRIER | |
| 070 | 2833952-0000 | | 2 | SCREW | |
| 210 | 90600-2017 | | 2 | SEAL GLYDRING 20,1X25X2,2 MM | |
| **TBA 1000SQ, TBA 0500SQ (See drawing on page: 4-92)** | | | | | |
| 010 | 2847230-0000 | | 1 | FOLDING FLAP | |
| 020 | 2847231-0000 | | 1 | FOLDING FLAP | |
| 030 | 2948629-0000 | | 1 | CARRIER RULER | |
| 040 | 2948627-0000 | | 2 | SHAFT | |
| 050 | 2948626-0000 | | 2 | ROLLER | |
| 060 | 2948628-0000 | | 2 | CARRIER | |
| 070 | 2833952-0000 | | 2 | SCREW | |
| 080 | 2843780-0000 | | 2 | PLATE | |
| 210 | 90600-2017 | | 2 | SEAL GLYDRING 20,1X25X2,2 MM | |
| 220 | 312105-0323 | | 4 | SCREW M6S ISO 4017 M5X8 A480 | |
| 230 | 90157-0016 | ML | 1 | LOCKING FLUID LOCTITE 242 50 ML | |
| **TBA 1000S (See drawing on page: 4-92)** | | | | | |
| 010 | 2813728-0000 | | 1 | FOLDING FLAP | |
| 020 | 2813729-0000 | | 1 | FOLDING FLAP | |
| 030 | 2948631-0000 | | 1 | CARRIER RULER | |
| 040 | 2948627-0000 | | 2 | SHAFT | |
| 050 | 2948626-0000 | | 2 | ROLLER | |
| 060 | 2948628-0000 | | 2 | CARRIER | |
| 070 | 2833952-0000 | | 2 | SCREW | |
| 210 | 90600-2017 | | 2 | SEAL GLYDRING 20,1X25X2,2 MM | |
| **TBA 1500S (See drawing on page: 4-92)** | | | | | |
| 010 | 2928342-0000 | | 1 | FOLDING FLAP | |
| 020 | 2928343-0000 | | 1 | FOLDING FLAP | |
| 030 | 2948633-0000 | | 1 | CARRIER RULER | |
| 040 | 2948627-0000 | | 2 | SHAFT | |
| 050 | 2948626-0000 | | 2 | ROLLER | |
| 060 | 2948628-0000 | | 2 | CARRIER | |
| 070 | 2833952-0000 | | 2 | SCREW | |
| 210 | 90600-2017 | | 2 | SEAL GLYDRING 20,1X25X2,2 MM | |
| **TBA 2000S (See drawing on page: 4-94)** | | | | | |
| 010 | 2566319-0000 | | 1 | FOLDING FLAP | |
| 020 | 2566320-0000 | | 1 | FOLDING FLAP | |
| 030 | 2948637-0000 | | 1 | CARRIER RULER | |
| 040 | 22462-0000 | | 2 | SHAFT | |
| 050 | 22463-0000 | | 2 | ROLL | |
| 200 | 90141-0029 | | 2 | CIRCLIP | |
| 210 | 90459-2258 | | 2 | SEAL GLYDRING 25,1X30X2,2 MM | |
| **TPA 1000SQ, TPA 0750SQ (See drawing on page: 4-92)** | | | | | |
| 010 | 2912359-0000 | | 1 | FOLDING FLAP | |
| 020 | 2912360-0000 | | 1 | FOLDING FLAP | |
| 030 | 2948635-0000 | | 1 | CARRIER RULER | |
| 040 | 2948627-0000 | | 2 | SHAFT | |
| 050 | 2948626-0000 | | 2 | ROLLER | |
| 060 | 2948628-0000 | | 2 | CARRIER | |
| 070 | 2833952-0000 | | 2 | SCREW | |
| 210 | 90600-2017 | | 2 | SEAL GLYDRING 20,1X25X2,2 MM | |

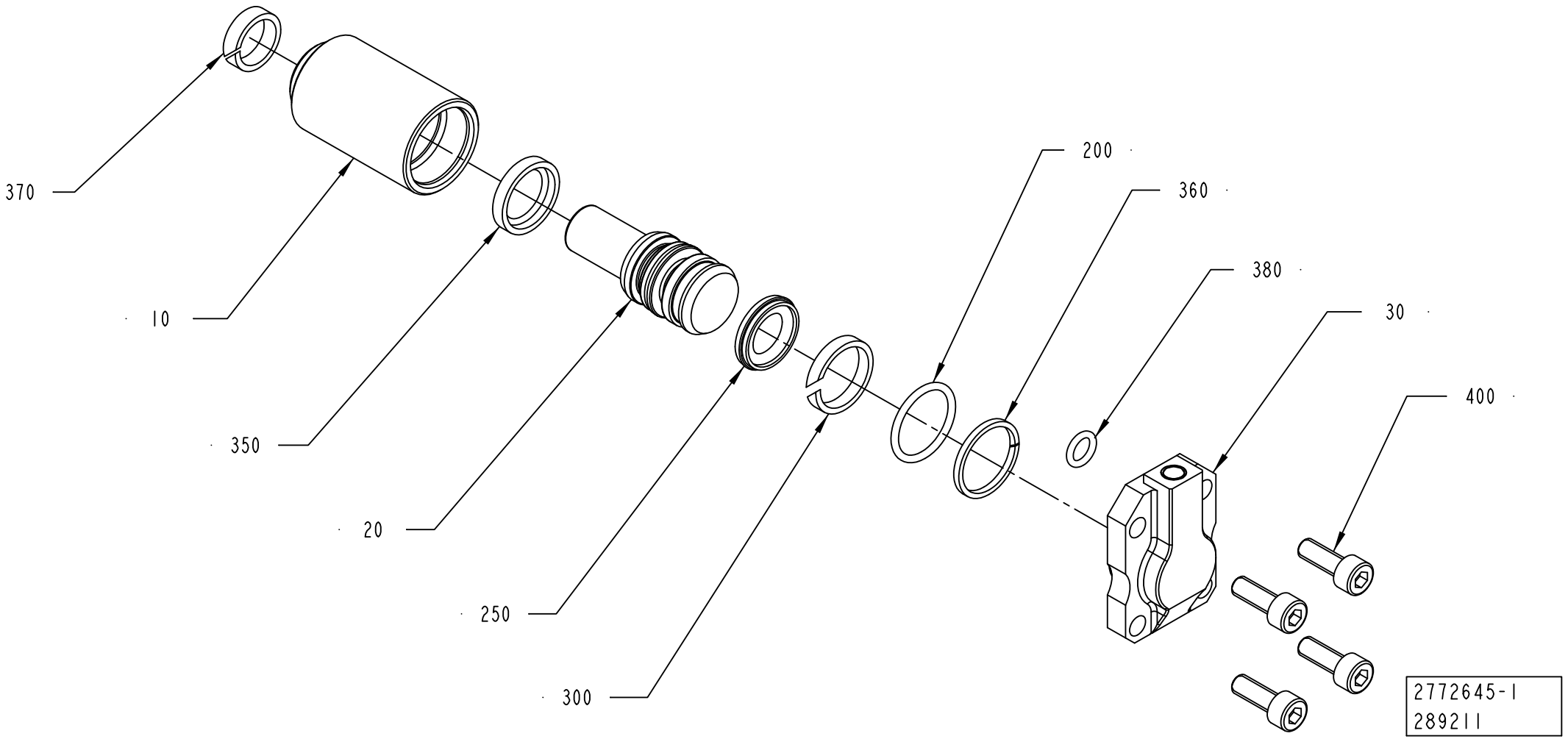
370
10
350
20
250
300
200
360
380
30
400
2772645-1
289211

ECM: 376673 - 20081127
Group number: 2772645-0100
Assembly Drawing: 2772645-1_1_AA

| Pos | Part No | UN | Qty | Description | Page No |
|---|---|---|---|---|---|
| **TBA 0500SQ, TBA 0500B, TBA 1000B, TBA 1000SQ, TBA 1000S, TPA 1000SQ, TPA 0750SQ** | | | | | |
| 010 | 2772647-0000 | | 1 | SLEEVE | |
| 020 | 2772646-0000 | | 1 | PLUNGER | |
| 030 | 2772648-0000 | | 1 | COVER | |
| 200 | 315202-0705 | | 1 | O-RING 17,17X1,78 MM | |
| 250 | 90459-6019 | | 1 | PISTON SEAL STEPSEAL 11,5X19X3,2 MM | |
| 300 | 90459-6026 | | 1 | WEAR RING 16X19X3,2 MM | |
| 350 | 90459-6023 | | 1 | PISTON SEAL 13X19X3,2 MM | |
| 360 | 90600-2016 | | 1 | BACK-UP RING 17,4X1,4 MM | |
| 370 | 90600-2015 | | 1 | WEAR RING 12X15,1X4 MM | |
| 380 | 315202-0104 | | 1 | O-RING 6,1X1,6 MM | |
| **TBA 2000S** | | | | | |
| 010 | 2909308-0000 | | 1 | SLEEVE | |
| 020 | 2909309-0000 | | 1 | PLUNGER | |
| 030 | 2909310-0000 | | 1 | COVER | |
| 200 | 315202-0706 | | 1 | O-RING 18,77X1,78 MM | |
| 250 | 90459-6022 | | 1 | PISTON SEAL STEPSEAL 14,5X22X3,2 MM | |
| 300 | 90459-5968 | | 1 | WEAR RING 19X22X3,2 MM | |
| 350 | 90459-6024 | | 1 | PISTON SEAL 16X22X3,2 MM | |
| 360 | 90600-5087 | | 1 | BACK-UP RING 19,4X1,4 MM | |
| 370 | 90600-2018 | | 1 | SCRAPER, 12X18,6X5,4 MM | |
| 380 | 315202-0105 | | 1 | O-RING 7,1X1,6 MM | |
| **Common Parts** | | | | | |
| 400 | 312115-0328 | | 4 | SCREW ISO4762 M5X14 A4 80 | |

| Pos | Part No | UN | Qty | Description | Page No |
|---|---|---|---|---|---|

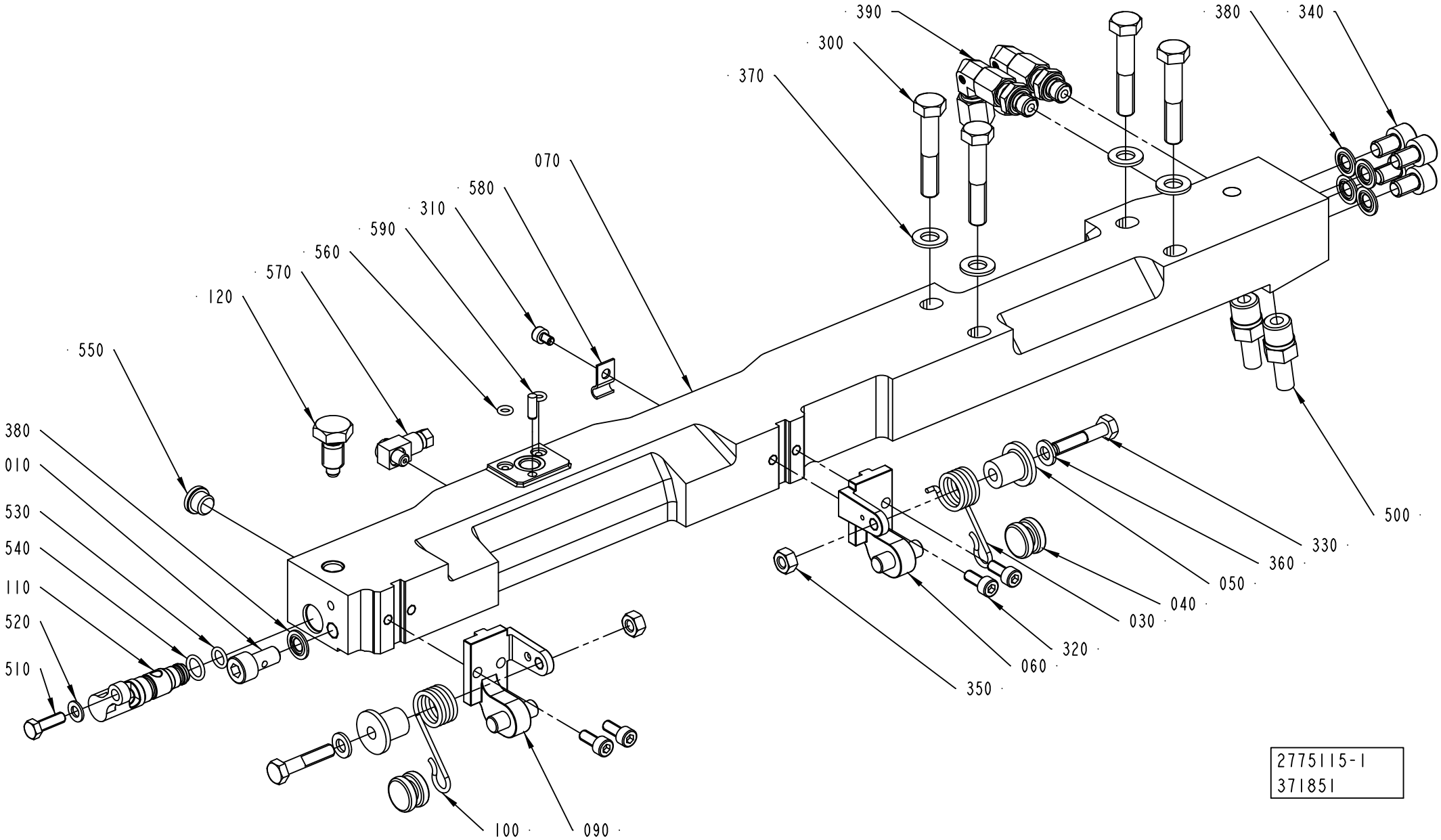
390
300
370
380
340
070
580
310
590
560
570
120
550
380
010
530
540
110
520
510
500
330
360
050
040
030
320
060
350
100
090
2775115-1
371851

ECM: 375726 - 20081127
Group number: 2775115-0100
Assembly Drawing: 2775115-1_1_AD

This list covers pages from 4-98 to 4-101

| Pos | Part No | UN | Qty | Description | Page No |
|---|---|---|---|---|---|
| **TBA 0500SQ, TBA 0500B, TBA 1000B, TBA 1000SQ, TBA 1000S, TBA 1500S, TPA 1000SQ, TPA 0750SQ** | | | | | |
| **(See drawing on page: 4-98)** | | | | | |
| 010 | 1036343-0000 | | 1 | SCREW | |
| 070 | 2803811-0000 | | 1 | CARRIER | |
| 110 | 2803812-0000 | | 1 | SHAFT | |
| 120 | 2803813-0000 | | 1 | SCREW | |
| 340 | 312115-0447 | | 4 | SCREW ISO4762 M8X12 A4 80 | |
| 380 | 315211-0104 | | 5 | BONDED SEAL SS/NBR90 M8 | |
| 550 | 342713-0209 | | 1 | PLUG (QUANT.MINIMA= 10PC). | |
| **TBA 2000S (See drawing on page: 4-100)** | | | | | |
| 010 | 1036343-0000 | | 2 | SCREW | |
| 070 | 2922435-0000 | | 1 | CARRIER PRESSURE RIGHT | |
| 110 | 2922436-0000 | | 1 | SHAFT | |
| 120 | 2922437-0000 | | 1 | SCREW | |
| 340 | 312115-0447 | | 2 | SCREW ISO4762 M8X12 A4 80 | |
| 380 | 315211-0104 | | 4 | BONDED SEAL SS/NBR90 M8 | |
| **Common Parts** | | | | | |
| 030 | 2547589-0000 | | 1 | SPRING | |
| 040 | 2530296-0000 | | 2 | ROLLER | |
| 050 | 2532531-0000 | | 2 | ROLLER | |
| 060 | 2530293-0000 | | 1 | BRACKET | |
| 090 | 2530292-0000 | | 1 | BRACKET | |
| 100 | 2547588-0000 | | 1 | SPRING | |
| 300 | 312105-0460 | | 4 | SCREW M6S ISO 4014 M8X45 A480 | |
| 310 | 312115-0285 | | 3 | SCREW ISO4762 M4X6 A4 80 | |
| 320 | 312115-0327 | | 4 | SCREW ISO4762 M5X12 A4 80 | |
| 330 | 312105-0374 | | 2 | SCREW M6S ISO 4014 M6X30 A480 | |
| 350 | 312605-0316 | | 2 | HEXAGON NUT, M6M M6 A280 | |
| 360 | 315105-0153 | | 2 | WASHER BRB 6,4X12 RFR | |
| 370 | 315105-0165 | | 4 | WASHER BRB 8,4X16 RFR | |
| 390 | 90600-1991 | | 2 | ADJUSTABLE ELBOW CONNECTION,EXT 4-G1/8 | |
| 500 | 2833413-0000 | | 2 | PIPE CONNECTION | |
| 510 | 312105-0329 | | 1 | SCREW M6S ISO 4017 M5X16 A480 | |
| 520 | 315105-0146 | | 1 | WASHER BRB 5,3X10 RFR | |
| 530 | 315202-0105 | | 1 | O-RING 7,1X1,6 MM | |
| 540 | 315202-0107 | | 1 | O-RING 9,1X1,6 MM | |
| 560 | 315202-0102 | | 2 | O-RING 4,1X1,6 MM | |
| 570 | 90134-0058 | | 2 | CONNECTION | |
| 580 | 90165-0056 | | 3 | PIPE CLIP FOR TUBE D=4 MM | |
| 590 | 311103-0268 | | 1 | PARALLEL PIN ISO 2338 4M6X12 A1 | |

| Pos | Part No | UN | Qty | Description | Page No |
|---|---|---|---|---|---|

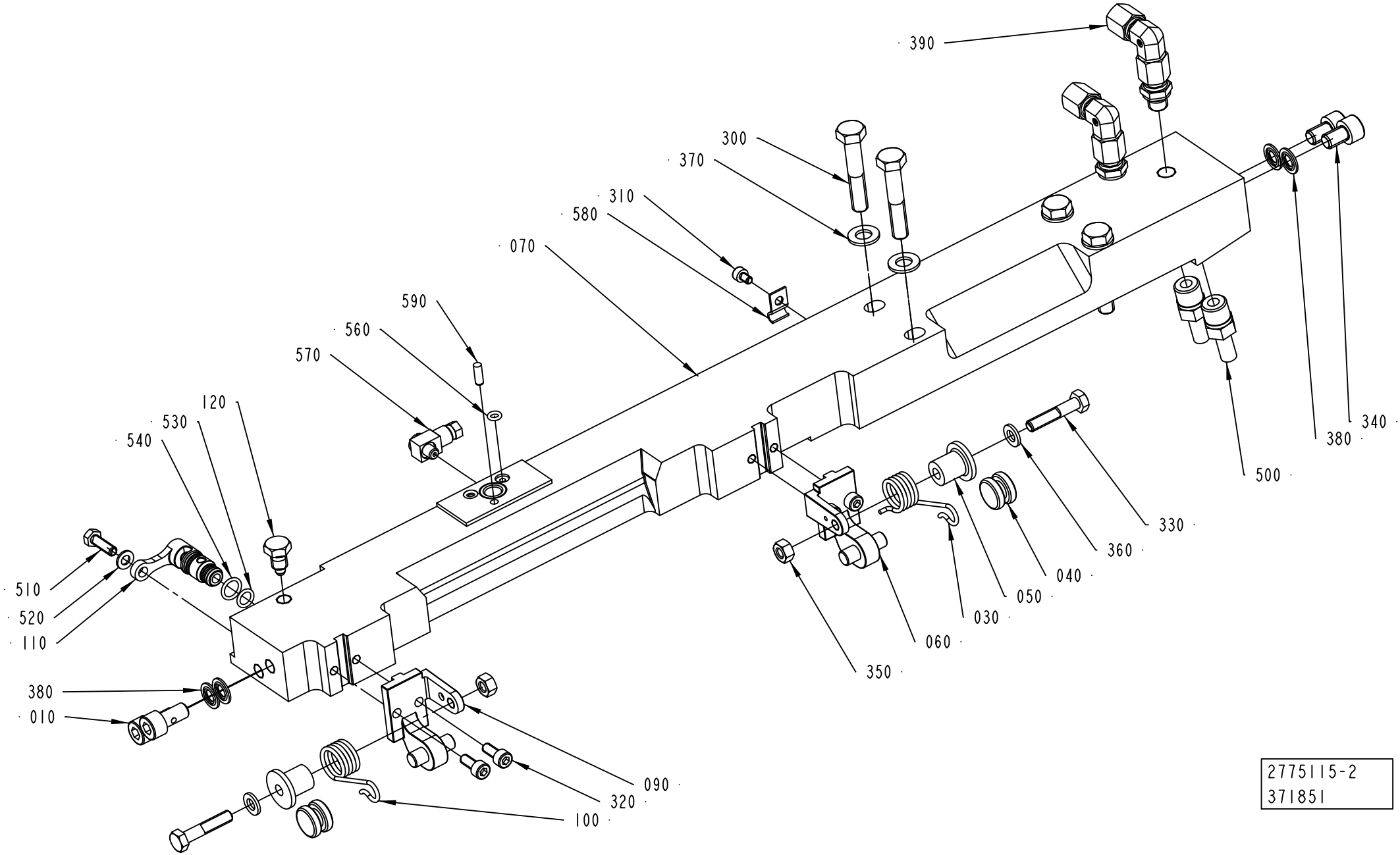


2775115-2
371851

ECM: 375726 - 20081127
Group number: 2775115-0100
Assembly Drawing: 2775115-2_1_AB

This list covers pages from 4-98 to 4-101

| Pos | Part No | UN | Qty | Description | Page No |
|---|---|---|---|---|---|
| **TBA 0500SQ, TBA 0500B, TBA 1000B, TBA 1000SQ, TBA 1000S, TBA 1500S, TPA 1000SQ, TPA 0750SQ** | | | | | |
| **(See drawing on page: 4-98)** | | | | | |
| 010 | 1036343-0000 | | 1 | SCREW | |
| 070 | 2803811-0000 | | 1 | CARRIER | |
| 110 | 2803812-0000 | | 1 | SHAFT | |
| 120 | 2803813-0000 | | 1 | SCREW | |
| 340 | 312115-0447 | | 4 | SCREW ISO4762 M8X12 A4 80 | |
| 380 | 315211-0104 | | 5 | BONDED SEAL SS/NBR90 M8 | |
| 550 | 342713-0209 | | 1 | PLUG (QUANT.MINIMA= 10PC). | |
| **TBA 2000S (See drawing on page: 4-100)** | | | | | |
| 010 | 1036343-0000 | | 2 | SCREW | |
| 070 | 2922435-0000 | | 1 | CARRIER PRESSURE RIGHT | |
| 110 | 2922436-0000 | | 1 | SHAFT | |
| 120 | 2922437-0000 | | 1 | SCREW | |
| 340 | 312115-0447 | | 2 | SCREW ISO4762 M8X12 A4 80 | |
| 380 | 315211-0104 | | 4 | BONDED SEAL SS/NBR90 M8 | |
| **Common Parts** | | | | | |
| 030 | 2547589-0000 | | 1 | SPRING | |
| 040 | 2530296-0000 | | 2 | ROLLER | |
| 050 | 2532531-0000 | | 2 | ROLLER | |
| 060 | 2530293-0000 | | 1 | BRACKET | |
| 090 | 2530292-0000 | | 1 | BRACKET | |
| 100 | 2547588-0000 | | 1 | SPRING | |
| 300 | 312105-0460 | | 4 | SCREW M6S ISO 4014 M8X45 A480 | |
| 310 | 312115-0285 | | 3 | SCREW ISO4762 M4X6 A4 80 | |
| 320 | 312115-0327 | | 4 | SCREW ISO4762 M5X12 A4 80 | |
| 330 | 312105-0374 | | 2 | SCREW M6S ISO 4014 M6X30 A480 | |
| 350 | 312605-0316 | | 2 | HEXAGON NUT, M6M M6 A280 | |
| 360 | 315105-0153 | | 2 | WASHER BRB 6,4X12 RFR | |
| 370 | 315105-0165 | | 4 | WASHER BRB 8,4X16 RFR | |
| 390 | 90600-1991 | | 2 | ADJUSTABLE ELBOW CONNECTION,EXT 4-G1/8 | |
| 500 | 2833413-0000 | | 2 | PIPE CONNECTION | |
| 510 | 312105-0329 | | 1 | SCREW M6S ISO 4017 M5X16 A480 | |
| 520 | 315105-0146 | | 1 | WASHER BRB 5,3X10 RFR | |
| 530 | 315202-0105 | | 1 | O-RING 7,1X1,6 MM | |
| 540 | 315202-0107 | | 1 | O-RING 9,1X1,6 MM | |
| 560 | 315202-0102 | | 2 | O-RING 4,1X1,6 MM | |
| 570 | 90134-0058 | | 2 | CONNECTION | |
| 580 | 90165-0056 | | 3 | PIPE CLIP FOR TUBE D=4 MM | |
| 590 | 311103-0268 | | 1 | PARALLEL PIN ISO 2338 4M6X12 A1 | |

| Pos | Part No | UN | Qty | Description | Page No |
|---|---|---|---|---|---|

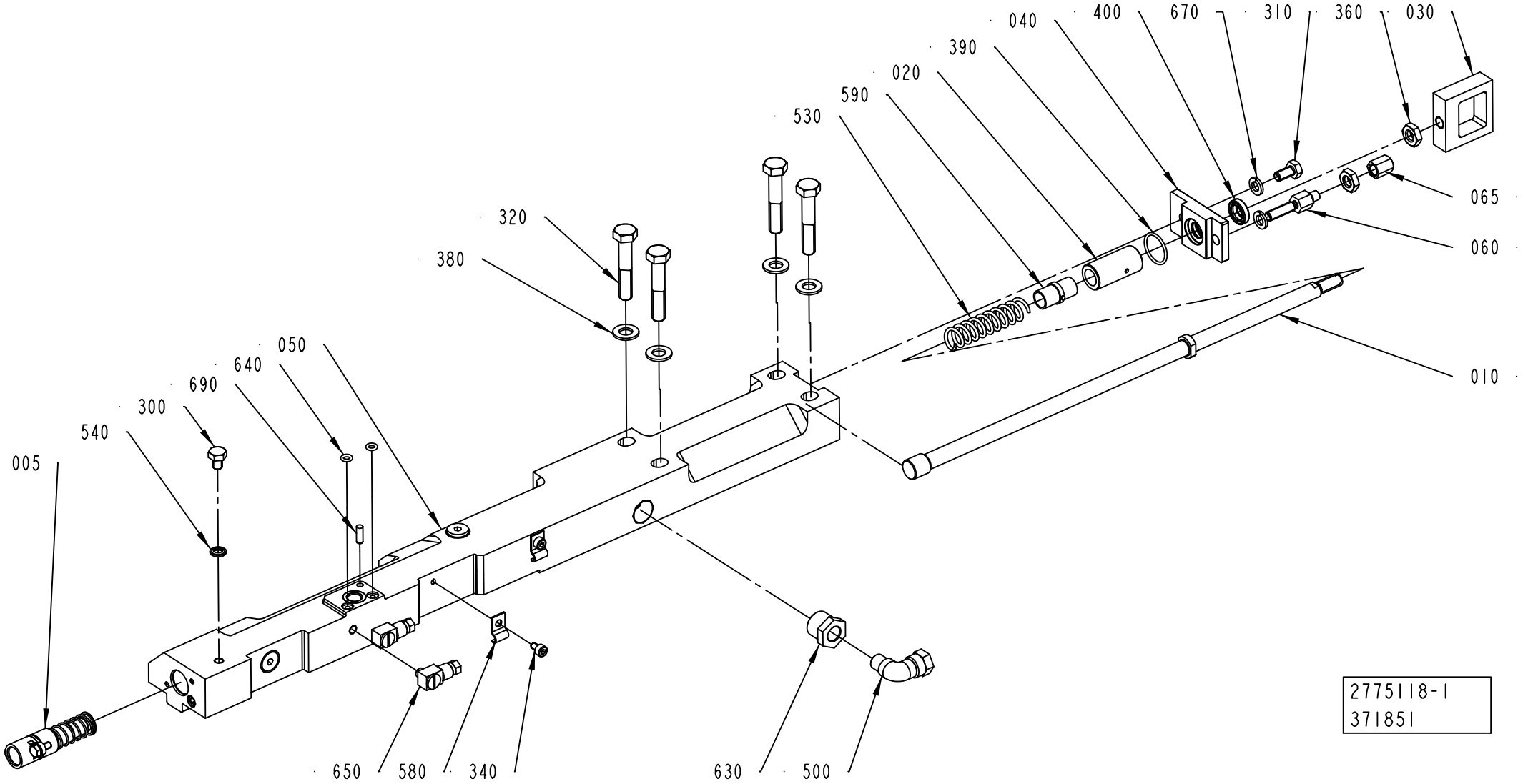
040
400
670
310
360
030
390
020
590
530
065
060
320
380
010
050
640
690
300
540
005
650
580
340
630
500
2775118-1
371851

ECM: 375725 - 20081127
Group number: 2775118-0100
Assembly Drawing: 2775118-1_1_AE

This list covers pages from 4-102 to 4-105

| Pos | Part No | UN | Qty | Description | Page No |
|---|---|---|---|---|---|
| **TBA 0500SQ, TBA 0500B, TBA 1000B, TBA 1000SQ, TBA 1000S, TBA 1500S, TPA 1000SQ, TPA 0750SQ** | | | | | |
| **(See drawing on page: 4-102)** | | | | | |
| 050 | 2803170-0000 | | 1 | CARRIER | |
| **TBA 2000S (See drawing on page: 4-104)** | | | | | |
| 050 | 2922434-0000 | | 1 | CARRIER CUTTING RIGHT | |
| 080 | 2922439-0000 | | 1 | SHIM | |
| 090 | 2922438-0000 | | 1 | PLATE | |
| 660 | 312155-0287 | | 3 | SCREW DIN 7991 MF6S M4X8 A4 70 | |
| **Common Parts** | | | | | |
| 005 | 2854078-0100 | | 1 | PISTON ..... | **4-85** |
| 010 | 2803174-0000 | | 1 | TIE ROD | |
| 020 | 2774803-0000 | | 1 | SEAT | |
| 030 | 2986941-0000 | | 1 | EAR | |
| 040 | 2774802-0000 | | 1 | COVER | |
| 060 | 2997340-0000 | | 1 | SCREW | |
| 065 | 2997337-0000 | | 1 | STOP SCREW | |
| 070 | 2774805-0000 | | 1 | DAMPER | |
| 300 | 312105-0362 | | 1 | SCREW M6S ISO 4017 M6X8 A480 | |
| 310 | 312105-0366 | | 1 | SCREW M6S ISO 4017 M6X12 A480 | |
| 320 | 312105-0460 | | 4 | SCREW M6S ISO 4014 M8X45 A480 | |
| 340 | 312115-0285 | | 2 | SCREW ISO4762 M4X6 A4 80 | |
| 360 | 312625-0318 | | 2 | HEXAGON THIN NUT, EN 24035 ML6M M8 A4 | |
| 380 | 315105-0165 | | 4 | WASHER BRB 8,4X16 RFR | |
| 390 | 315202-0116 | | 1 | O-RING 18,1X1,6 MM | |
| 400 | 90459-3388 | | 1 | SCRAPER, 10X16X4,7 MM | |
| 500 | 90030-0257 | | 1 | CONN. ELBOW, 8-R1/8, EXT.THREAD | |
| 530 | 1548940-0000 | | 1 | SPRING | |
| 540 | 315211-0103 | | 1 | BONDED SEAL SS/NBR90 M6 | |
| 580 | 90165-0056 | | 2 | PIPE CLIP FOR TUBE D=4 MM | |
| 590 | 90600-2011 | | 1 | BUSHING INSERT, JUM-02-10 | |
| 630 | 342701-0202 | | 1 | BUSHING,INT./EXT.G-THREAD G3/8"-G1/8" | |
| 640 | 315202-0102 | | 1 | O-RING 4,1X1,6 MM | |
| 650 | 90134-0058 | | 2 | CONNECTION | |
| 670 | 315402-0156 | | 2 | LOCK WASHER FBB 6,5 | |
| 680 | 342713-0209 | | 2 | PLUG (QUANT.MINIMA= 10PC). | |
| 690 | 311103-0268 | | 1 | PARALLEL PIN ISO 2338 4M6X12 A1 | |

| Pos | Part No | UN | Qty | Description | Page No |
|---|---|---|---|---|---|

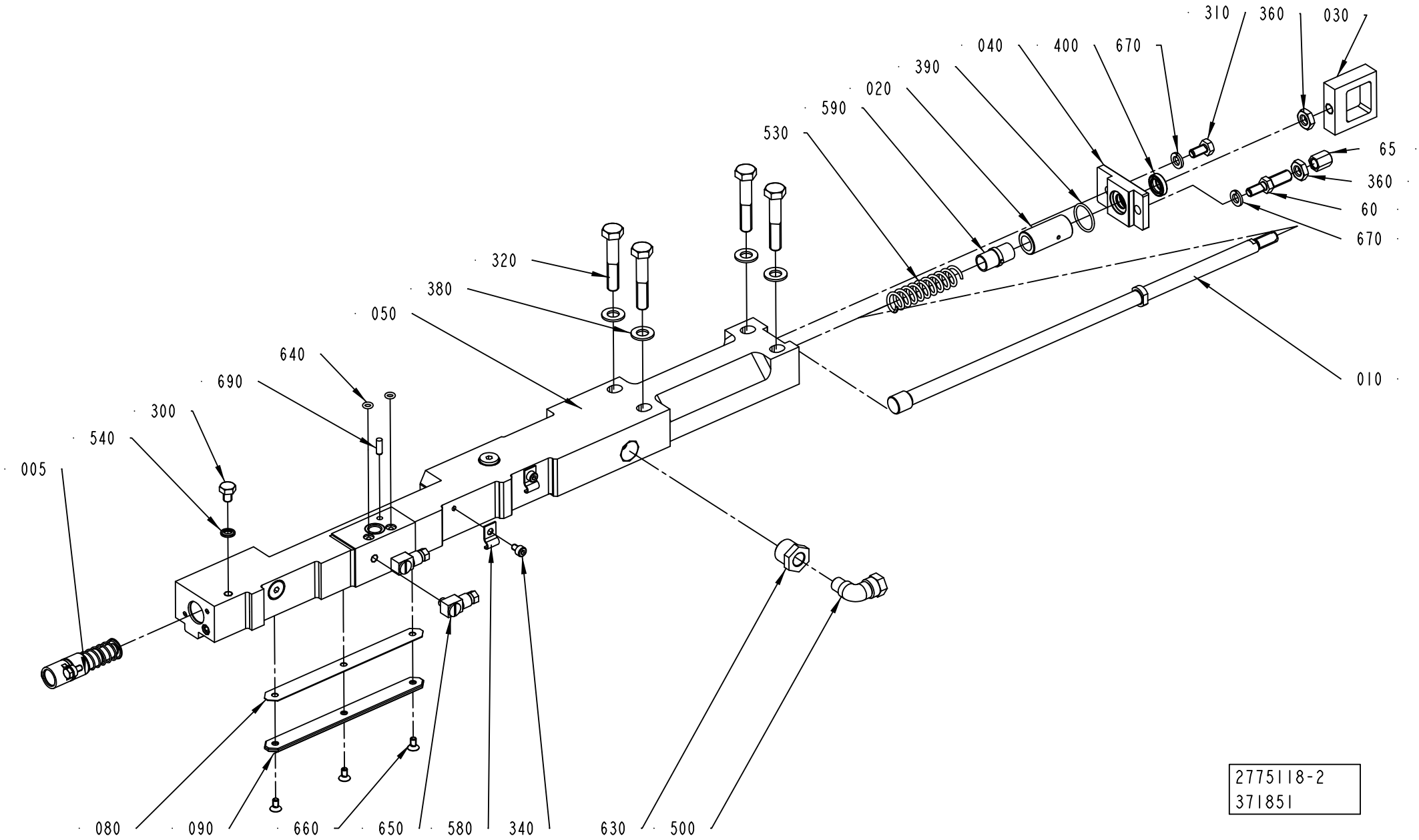
310
360
030
040
400
670
390
020
590
530
65
360
60
670
320
380
050
640
690
300
540
005
010
080
090
660
650
580
340
630
500
2775118-2
371851

| Pos | Part No | UN | Qty | Description | Page No |
|---|---|---|---|---|---|
| **TBA 0500SQ, TBA 0500B, TBA 1000B, TBA 1000SQ, TBA 1000S, TBA 1500S, TPA 1000SQ, TPA 0750SQ** | | | | | |
| **(See drawing on page: 4-102)** | | | | | |
| 050 | 2803170-0000 | | 1 | CARRIER | |
| **TBA 2000S (See drawing on page: 4-104)** | | | | | |
| 050 | 2922434-0000 | | 1 | CARRIER CUTTING RIGHT | |
| 080 | 2922439-0000 | | 1 | SHIM | |
| 090 | 2922438-0000 | | 1 | PLATE | |
| 660 | 312155-0287 | | 3 | SCREW DIN 7991 MF6S M4X8 A4 70 | |
| **Common Parts** | | | | | |
| 005 | 2854078-0100 | | 1 | PISTON ..... | **4-85** |
| 010 | 2803174-0000 | | 1 | TIE ROD | |
| 020 | 2774803-0000 | | 1 | SEAT | |
| 030 | 2986941-0000 | | 1 | EAR | |
| 040 | 2774802-0000 | | 1 | COVER | |
| 060 | 2997340-0000 | | 1 | SCREW | |
| 065 | 2997337-0000 | | 1 | STOP SCREW | |
| 070 | 2774805-0000 | | 1 | DAMPER | |
| 300 | 312105-0362 | | 1 | SCREW M6S ISO 4017 M6X8 A480 | |
| 310 | 312105-0366 | | 1 | SCREW M6S ISO 4017 M6X12 A480 | |
| 320 | 312105-0460 | | 4 | SCREW M6S ISO 4014 M8X45 A480 | |
| 340 | 312115-0285 | | 2 | SCREW ISO4762 M4X6 A4 80 | |
| 360 | 312625-0318 | | 2 | HEXAGON THIN NUT, EN 24035 ML6M M8 A4 | |
| 380 | 315105-0165 | | 4 | WASHER BRB 8,4X16 RFR | |
| 390 | 315202-0116 | | 1 | O-RING 18,1X1,6 MM | |
| 400 | 90459-3388 | | 1 | SCRAPER, 10X16X4,7 MM | |
| 500 | 90030-0257 | | 1 | CONN. ELBOW, 8-R1/8, EXT.THREAD | |
| 530 | 1548940-0000 | | 1 | SPRING | |
| 540 | 315211-0103 | | 1 | BONDED SEAL SS/NBR90 M6 | |
| 580 | 90165-0056 | | 2 | PIPE CLIP FOR TUBE D=4 MM | |
| 590 | 90600-2011 | | 1 | BUSHING INSERT, JUM-02-10 | |
| 630 | 342701-0202 | | 1 | BUSHING,INT./EXT.G-THREAD G3/8"-G1/8" | |
| 640 | 315202-0102 | | 1 | O-RING 4,1X1,6 MM | |
| 650 | 90134-0058 | | 2 | CONNECTION | |
| 670 | 315402-0156 | | 2 | LOCK WASHER FBB 6,5 | |
| 680 | 342713-0209 | | 2 | PLUG (QUANT.MINIMA= 10PC). | |
| 690 | 311103-0268 | | 1 | PARALLEL PIN ISO 2338 4M6X12 A1 | |

| Pos | Part No | UN | Qty | Description | Page No |
|---|---|---|---|---|---|

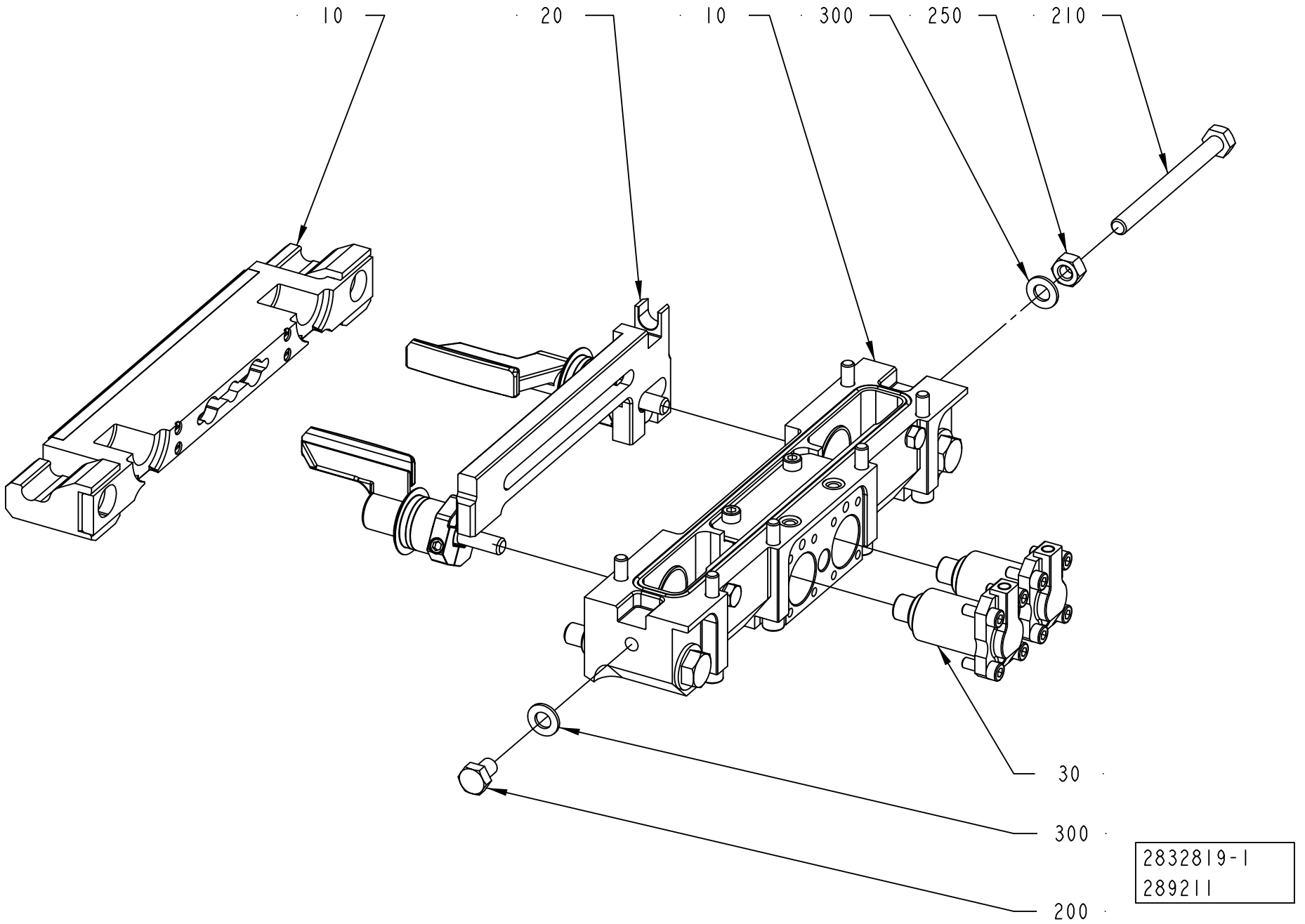
10
20
10
300
250
210
30
300
200
2832819-1
289211

ECM: 375718 - 20081127
Group number: 2832819-0100
Assembly Drawing: 2832819-1_1_AA

| Pos | Part No | UN | Qty | Description | Page No |
|---|---|---|---|---|---|
| - | | | | | |
| 010 | 2832935-0100 | | 1 | CUTTING JAW | **4-89, 4-91** |
| 020 | 2832937-0100 | | 1 | FOLDING FLAP RIGHT | **4-109, 4-111** |
| 030 | 2772645-0100 | | 2 | PISTON | **4-97** |
| 200 | 312105-0447 | | 1 | SCREW M6S ISO 4017 M8X12 A480 | |
| 210 | 312105-0469 | | 1 | SCREW M6S ISO 4014 M8X90 A480 | |
| 250 | 312605-0318 | | 1 | HEXAGON NUT, M6M M8 A280 | |
| 300 | 315105-0165 | | 2 | WASHER BRB 8,4X16 RFR | |

| Pos | Part No | UN | Qty | Description | Page No |
|---|---|---|---|---|---|

# FOLDING FLAP RIGHT



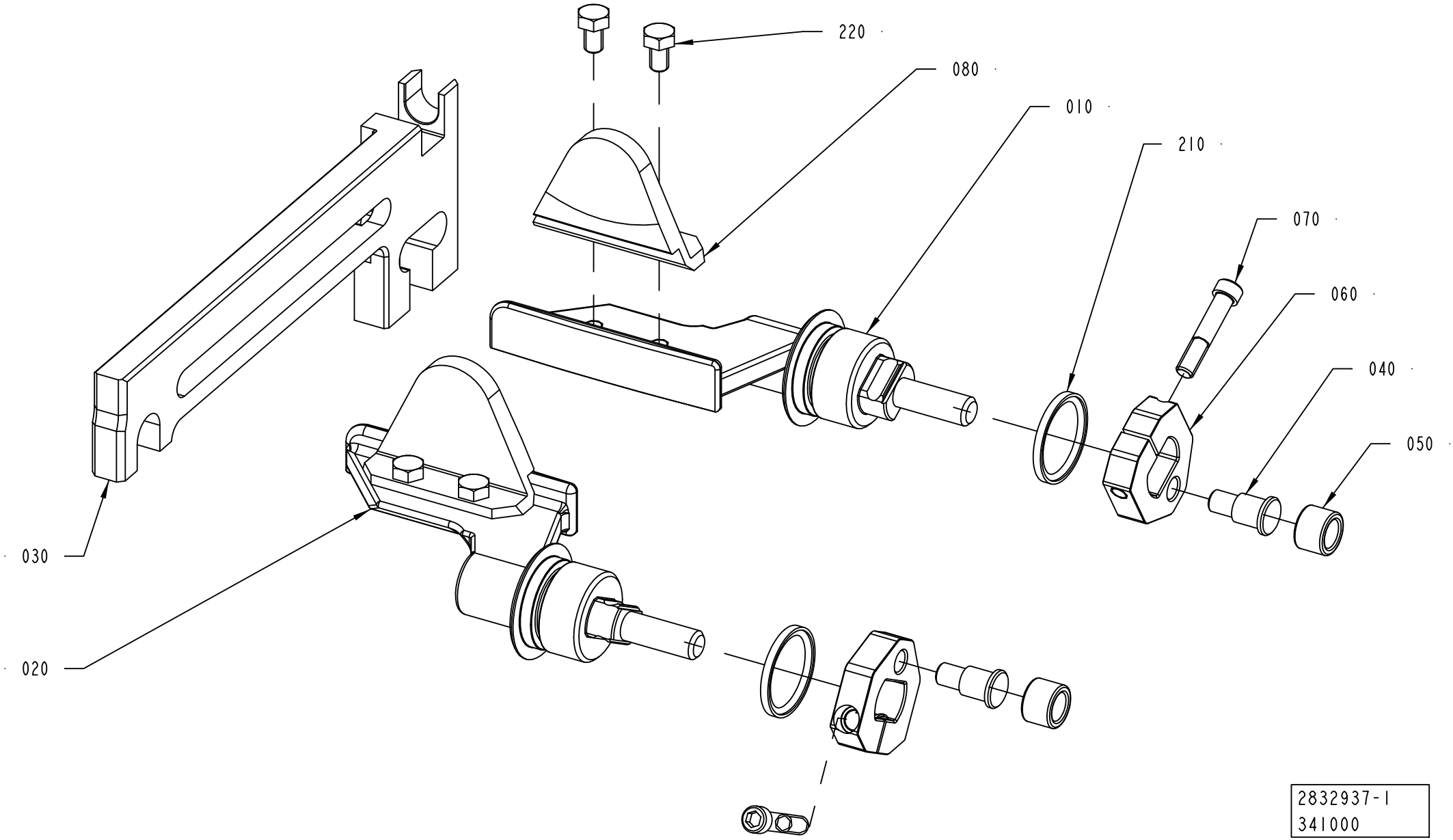

ECM: 375715 - 20081127
Group number: 2832937-0100
Assembly Drawing: 2832937-1_1_AB

This list covers pages from 4-108 to 4-111

| Pos | Part No | UN | Qty | Description | Page No |
|---|---|---|---|---|---|
| **TBA 0500B, TBA 1000B (See drawing on page: 4-108)** | | | | | |
| 010 | 2898569-0000 | | 1 | FOLDING FLAP | |
| 020 | 2898568-0000 | | 1 | FOLDING FLAP | |
| 030 | 2948634-0000 | | 1 | CARRIER RULER | |
| 040 | 2948627-0000 | | 2 | SHAFT | |
| 050 | 2948626-0000 | | 2 | ROLLER | |
| 060 | 2948628-0000 | | 2 | CARRIER | |
| 070 | 2833952-0000 | | 2 | SCREW | |
| 210 | 90600-2017 | | 2 | SEAL GLYDRING 20,1X25X2,2 MM | |
| **TBA 1000SQ, TBA 0500SQ (See drawing on page: 4-108)** | | | | | |
| 010 | 2847230-0000 | | 1 | FOLDING FLAP | |
| 020 | 2847231-0000 | | 1 | FOLDING FLAP | |
| 030 | 2948630-0000 | | 1 | CARRIER RULER | |
| 040 | 2948627-0000 | | 2 | SHAFT | |
| 050 | 2948626-0000 | | 2 | ROLLER | |
| 060 | 2948628-0000 | | 2 | CARRIER | |
| 070 | 2833952-0000 | | 2 | SCREW | |
| 080 | 2843780-0000 | | 2 | PLATE | |
| 210 | 90600-2017 | | 2 | SEAL GLYDRING 20,1X25X2,2 MM | |
| 220 | 312105-0323 | | 4 | SCREW M6S ISO 4017 M5X8 A480 | |
| 230 | 90157-0016 | | 1 | LOCKING FLUID LOCTITE 242 50 ML | |
| **TBA 1000S (See drawing on page: 4-108)** | | | | | |
| 010 | 2813728-0000 | | 1 | FOLDING FLAP | |
| 020 | 2813729-0000 | | 1 | FOLDING FLAP | |
| 030 | 2948632-0000 | | 1 | CARRIER RULER | |
| 040 | 2948627-0000 | | 2 | SHAFT | |
| 050 | 2948626-0000 | | 2 | ROLLER | |
| 060 | 2948628-0000 | | 2 | CARRIER | |
| 070 | 2833952-0000 | | 2 | SCREW | |
| 210 | 90600-2017 | | 2 | SEAL GLYDRING 20,1X25X2,2 MM | |
| **TBA 1500S (See drawing on page: 4-108)** | | | | | |
| 010 | 2928342-0000 | | 1 | FOLDING FLAP | |
| 020 | 2928343-0000 | | 1 | FOLDING FLAP | |
| 030 | 2948634-0000 | | 1 | CARRIER RULER | |
| 040 | 2948627-0000 | | 2 | SHAFT | |
| 050 | 2948626-0000 | | 2 | ROLLER | |
| 060 | 2948628-0000 | | 2 | CARRIER | |
| 070 | 2833952-0000 | | 2 | SCREW | |
| 210 | 90600-2017 | | 2 | SEAL GLYDRING 20,1X25X2,2 MM | |
| **TBA 2000S (See drawing on page: 4-110)** | | | | | |
| 010 | 2566319-0000 | | 1 | FOLDING FLAP | |
| 020 | 2566320-0000 | | 1 | FOLDING FLAP | |
| 030 | 2948638-0000 | | 1 | CARRIER RULER | |
| 040 | 22462-0000 | | 2 | SHAFT | |
| 050 | 22463-0000 | | 2 | ROLL | |
| 200 | 90141-0029 | | 2 | CIRCLIP | |
| 210 | 90459-2258 | | 2 | SEAL GLYDRING 25,1X30X2,2 MM | |
| **TPA 1000SQ, TPA 0750SQ (See drawing on page: 4-108)** | | | | | |
| 010 | 2912359-0000 | | 1 | FOLDING FLAP | |
| 020 | 2912360-0000 | | 1 | FOLDING FLAP | |
| 030 | 2948636-0000 | | 1 | CARRIER RULER | |
| 040 | 2948627-0000 | | 2 | SHAFT | |
| 050 | 2948626-0000 | | 2 | ROLLER | |
| 060 | 2948628-0000 | | 2 | CARRIER | |
| 070 | 2833952-0000 | | 2 | SCREW | |
| 210 | 90600-2017 | | 2 | SEAL GLYDRING 20,1X25X2,2 MM | |

Machine Type | Group Description | Used-In | Group Number | Page No

# FOLDING FLAP RIGHT



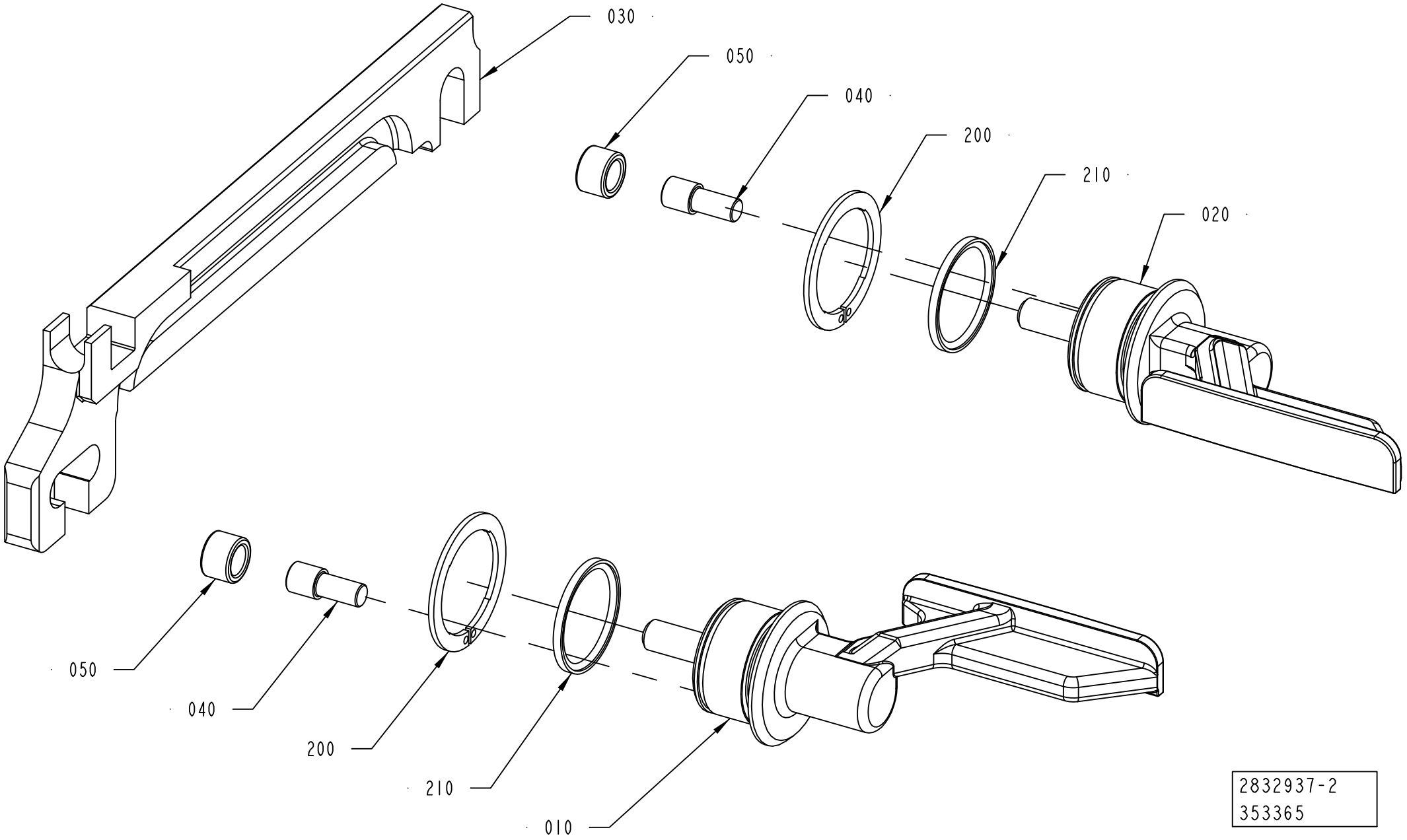


2832937-2
353365

ECM: 375715 - 20081127
Group number: 2832937-0100
Assembly Drawing: 2832937-2_1_AA

This list covers pages from 4-108 to 4-111

| Pos | Part No | UN | Qty | Description | Page No |
|---|---|---|---|---|---|
| **TBA 0500B, TBA 1000B (See drawing on page: 4-108)** | | | | | |
| 010 | 2898569-0000 | | 1 | FOLDING FLAP | |
| 020 | 2898568-0000 | | 1 | FOLDING FLAP | |
| 030 | 2948634-0000 | | 1 | CARRIER RULER | |
| 040 | 2948627-0000 | | 2 | SHAFT | |
| 050 | 2948626-0000 | | 2 | ROLLER | |
| 060 | 2948628-0000 | | 2 | CARRIER | |
| 070 | 2833952-0000 | | 2 | SCREW | |
| 210 | 90600-2017 | | 2 | SEAL GLYDRING 20,1X25X2,2 MM | |
| **TBA 1000SQ, TBA 0500SQ (See drawing on page: 4-108)** | | | | | |
| 010 | 2847230-0000 | | 1 | FOLDING FLAP | |
| 020 | 2847231-0000 | | 1 | FOLDING FLAP | |
| 030 | 2948630-0000 | | 1 | CARRIER RULER | |
| 040 | 2948627-0000 | | 2 | SHAFT | |
| 050 | 2948626-0000 | | 2 | ROLLER | |
| 060 | 2948628-0000 | | 2 | CARRIER | |
| 070 | 2833952-0000 | | 2 | SCREW | |
| 080 | 2843780-0000 | | 2 | PLATE | |
| 210 | 90600-2017 | | 2 | SEAL GLYDRING 20,1X25X2,2 MM | |
| 220 | 312105-0323 | | 4 | SCREW M6S ISO 4017 M5X8 A480 | |
| 230 | 90157-0016 | | 1 | LOCKING FLUID LOCTITE 242 50 ML | |
| **TBA 1000S (See drawing on page: 4-108)** | | | | | |
| 010 | 2813728-0000 | | 1 | FOLDING FLAP | |
| 020 | 2813729-0000 | | 1 | FOLDING FLAP | |
| 030 | 2948632-0000 | | 1 | CARRIER RULER | |
| 040 | 2948627-0000 | | 2 | SHAFT | |
| 050 | 2948626-0000 | | 2 | ROLLER | |
| 060 | 2948628-0000 | | 2 | CARRIER | |
| 070 | 2833952-0000 | | 2 | SCREW | |
| 210 | 90600-2017 | | 2 | SEAL GLYDRING 20,1X25X2,2 MM | |
| **TBA 1500S (See drawing on page: 4-108)** | | | | | |
| 010 | 2928342-0000 | | 1 | FOLDING FLAP | |
| 020 | 2928343-0000 | | 1 | FOLDING FLAP | |
| 030 | 2948634-0000 | | 1 | CARRIER RULER | |
| 040 | 2948627-0000 | | 2 | SHAFT | |
| 050 | 2948626-0000 | | 2 | ROLLER | |
| 060 | 2948628-0000 | | 2 | CARRIER | |
| 070 | 2833952-0000 | | 2 | SCREW | |
| 210 | 90600-2017 | | 2 | SEAL GLYDRING 20,1X25X2,2 MM | |
| **TBA 2000S (See drawing on page: 4-110)** | | | | | |
| 010 | 2566319-0000 | | 1 | FOLDING FLAP | |
| 020 | 2566320-0000 | | 1 | FOLDING FLAP | |
| 030 | 2948638-0000 | | 1 | CARRIER RULER | |
| 040 | 22462-0000 | | 2 | SHAFT | |
| 050 | 22463-0000 | | 2 | ROLL | |
| 200 | 90141-0029 | | 2 | CIRCLIP | |
| 210 | 90459-2258 | | 2 | SEAL GLYDRING 25,1X30X2,2 MM | |
| **TPA 1000SQ, TPA 0750SQ (See drawing on page: 4-108)** | | | | | |
| 010 | 2912359-0000 | | 1 | FOLDING FLAP | |
| 020 | 2912360-0000 | | 1 | FOLDING FLAP | |
| 030 | 2948636-0000 | | 1 | CARRIER RULER | |
| 040 | 2948627-0000 | | 2 | SHAFT | |
| 050 | 2948626-0000 | | 2 | ROLLER | |
| 060 | 2948628-0000 | | 2 | CARRIER | |
| 070 | 2833952-0000 | | 2 | SCREW | |
| 210 | 90600-2017 | | 2 | SEAL GLYDRING 20,1X25X2,2 MM | |

Machine Type | Group Description | Used-In | Group Number | Page No

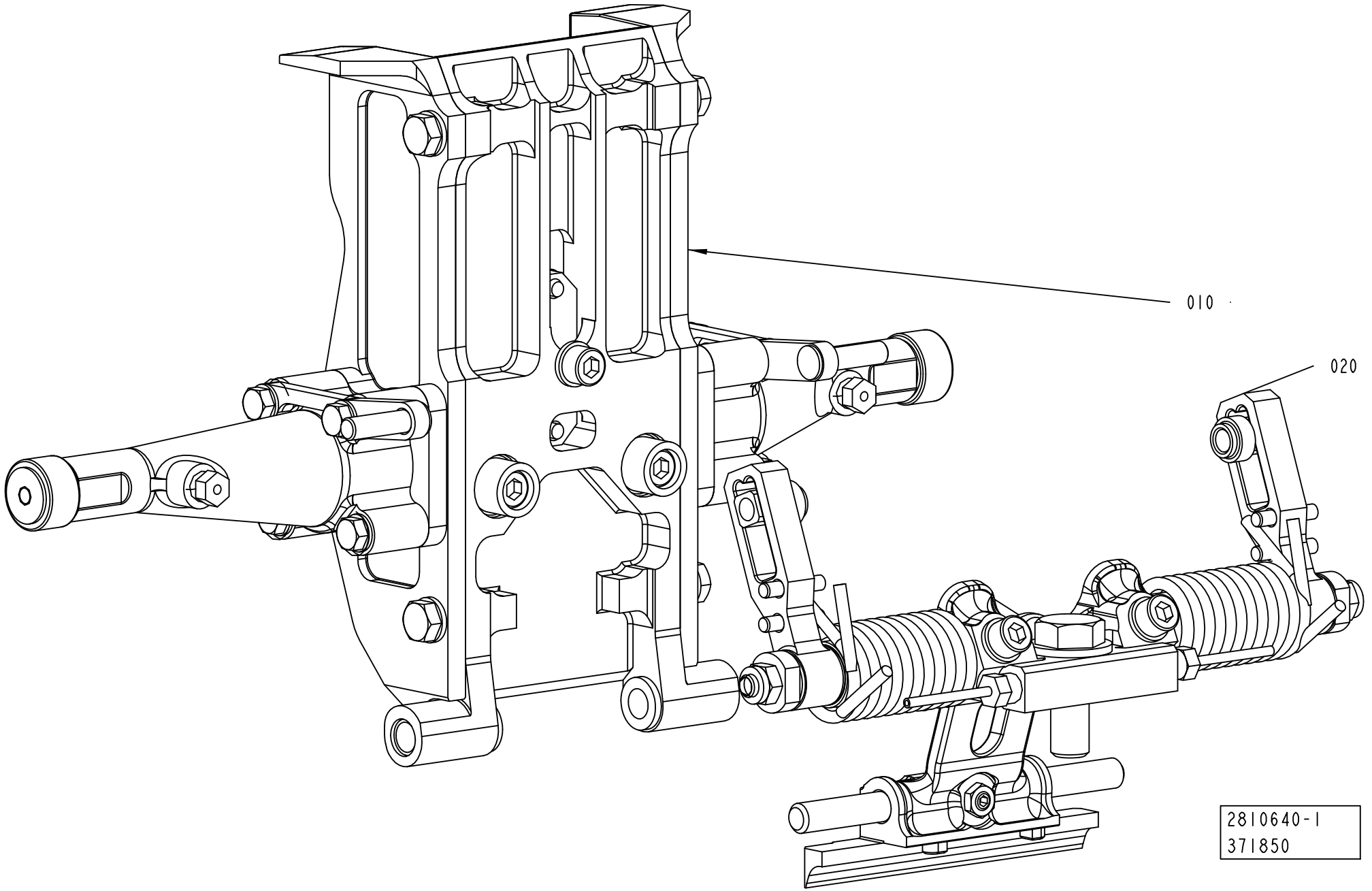
010
020
2810640-1
371850

ECM: 375724 - 20081127
Group number: 2810640-0100
Assembly Drawing: 2810640-1_1_AB

| Pos | Part No | UN | Qty | Description | Page No |
|---|---|---|---|---|---|
| **TBA 0500B** | | | | | |
| 010 | 2808800-0100 | | 1 | VOLUME FLAP CUTTING | **4-115, 4-117, 4-119, 4-121, 4-123** |
| 020 | 2842772-0100 | | 1 | SHOCK ABSORBER CUTTING | **4-127, 4-129, 4-131** |
| **TBA 0500SQ** | | | | | |
| 010 | 2808800-0100 | | 1 | VOLUME FLAP CUTTING | **4-115, 4-117, 4-119, 4-121, 4-123** |
| 020 | 2842772-0100 | | 1 | SHOCK ABSORBER CUTTING | **4-127, 4-129, 4-131** |
| **TBA 1000B** | | | | | |
| 010 | 2808800-0100 | | 1 | VOLUME FLAP CUTTING | **4-115, 4-117, 4-119, 4-121, 4-123** |
| 020 | 2842772-0100 | | 1 | SHOCK ABSORBER CUTTING | **4-127, 4-129, 4-131** |
| **TBA 1000S** | | | | | |
| 010 | 2808800-0100 | | 1 | VOLUME FLAP CUTTING | **4-115, 4-117, 4-119, 4-121, 4-123** |
| 020 | 2842772-0100 | | 1 | SHOCK ABSORBER CUTTING | **4-127, 4-129, 4-131** |
| **TBA 1000SQ** | | | | | |
| 010 | 2808800-0100 | | 1 | VOLUME FLAP CUTTING | **4-115, 4-117, 4-119, 4-121, 4-123** |
| 020 | 2842772-0100 | | 1 | SHOCK ABSORBER CUTTING | **4-127, 4-129, 4-131** |
| **TBA 1500S** | | | | | |
| 010 | 2808800-0100 | | 1 | VOLUME FLAP CUTTING | **4-115, 4-117, 4-119, 4-121, 4-123** |
| 020 | 2842772-0100 | | 1 | SHOCK ABSORBER CUTTING | **4-127, 4-129, 4-131** |
| **TBA 2000S** | | | | | |
| 010 | 2808800-0100 | | 1 | VOLUME FLAP CUTTING | **4-115, 4-117, 4-119, 4-121, 4-123** |
| 020 | 2842772-0100 | | 1 | SHOCK ABSORBER CUTTING | **4-127, 4-129, 4-131** |
| **TPA 0750SQ** | | | | | |
| 010 | 2808800-0100 | | 1 | VOLUME FLAP CUTTING | **4-115, 4-117, 4-119, 4-121, 4-123** |
| 020 | 2842772-0100 | | 1 | SHOCK ABSORBER CUTTING | **4-127, 4-129, 4-131** |
| **TPA 1000SQ** | | | | | |
| 010 | 2808800-0100 | | 1 | VOLUME FLAP CUTTING | **4-115, 4-117, 4-119, 4-121, 4-123** |
| 020 | 2842772-0100 | | 1 | SHOCK ABSORBER CUTTING | **4-127, 4-129, 4-131** |

| Pos | Part No | UN | Qty | Description | Page No |
|---|---|---|---|---|---|

# VOLUME FLAP CUTTING



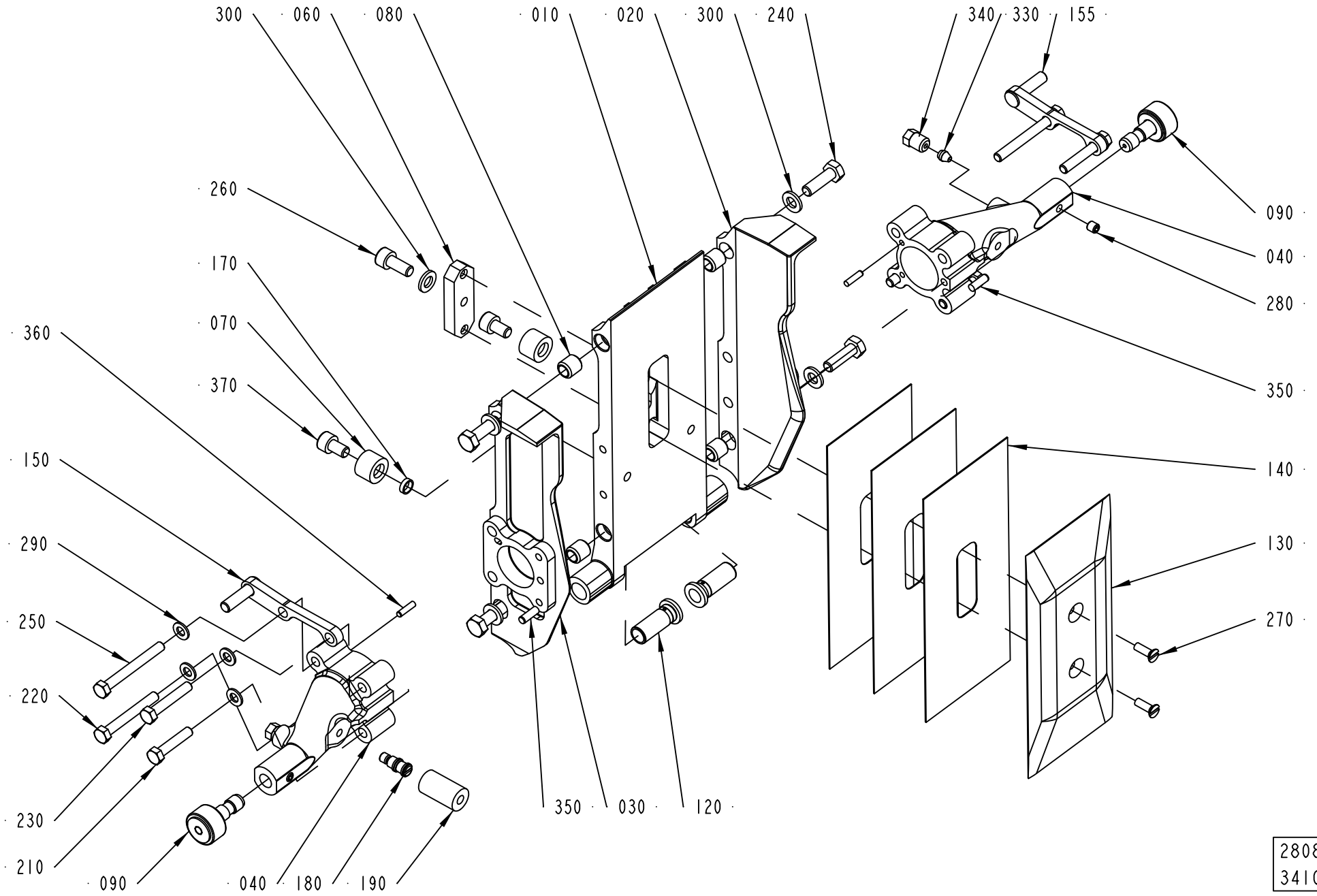


2808800-1
341004

ECM: 381089 - 20081218
Group number: 2808800-0100
Assembly Drawing: 2808800-1_1_AC

This list covers pages from 4-114 to 4-123

| Pos | Part No | UN | Qty | Description | Page No |
|---|---|---|---|---|---|
| **TBA 0500B (See drawing on page: 4-118)** | | | | | |
| 010 | 2902007-0000 | | 1 | VOLUME FLAP | |
| 040 | 2905200-0000 | | 1 | ARM | |
| 045 | 2906172-0000 | | 1 | ARM | |
| 120 | 1558701-0000 | | 2 | BUSHING | |
| 130 | 2786059-0000 | | 1 | VOLUME BULGE | |
| 140 | 2790818-0000 | | 3 | VOLUME SHIM | |
| 150 | 2905201-0000 | | 2 | SPACER SCREW | |
| 160 | 2905199-0000 | | 2 | HOLDER | |
| 180 | 2872048-0000 | | 1 | PIN | |
| 185 | 2872091-0000 | | 1 | PIN | |
| 210 | 312105-0327 | | 4 | SCREW M6S ISO 4017 M5X12 A480 | |
| 260 | 312115-0325 | | 1 | SCREW ISO4762 M5X10 A4 80 | |
| 290 | 315105-0146 | | 11 | WASHER BRB 5,3X10 RFR | |
| 300 | 315106-0136 | | 2 | WASHER ISO 7089-4-200 HV A4 | |
| 360 | 311103-0234 | | 4 | PARALLEL PIN ISO 2338 3M6X12 A1 | |
| 370 | 312115-0364 | | 2 | SCREW ISO4762 M6X10 A4 80 | |
| 380 | 312105-0285 | | 2 | SCREW M6S ISO 4017 M4X6 A470 | |
| 390 | 312812-0314 | | 2 | HEXAGON NUT, NY-LOCK M5 A480 | |
| **TBA 0500SQ (See drawing on page: 4-116)** | | | | | |
| 010 | 2860036-0000 | | 1 | VOLUME FLAP | |
| 040 | 2872047-0000 | | 2 | ARM | |
| 045 | 2952710-0000 | | 1 | ARM | |
| 120 | 1558701-0000 | | 2 | BUSHING | |
| 130 | 2860037-0000 | | 1 | VOLUME BULGE | |
| 140 | 2860038-0000 | | 3 | VOLUME SHIM | |
| 150 | 2959867-0000 | | 2 | SPACER SCREW | |
| 160 | 2905199-0000 | | 2 | HOLDER | |
| 180 | 2872048-0000 | | 1 | PIN | |
| 185 | 2872091-0000 | | 1 | PIN | |
| 210 | 312105-0327 | | 2 | SCREW M6S ISO 4017 M5X12 A480 | |
| 220 | 312105-0329 | | 4 | SCREW M6S ISO 4017 M5X16 A480 | |
| 230 | 312105-0285 | | 2 | SCREW M6S ISO 4017 M4X6 A470 | |
| 260 | 312115-0325 | | 1 | SCREW ISO4762 M5X10 A4 80 | |
| 290 | 315105-0146 | | 11 | WASHER BRB 5,3X10 RFR | |
| 300 | 315106-0136 | | 2 | WASHER ISO 7089-4-200 HV A4 | |
| 360 | 311103-0234 | | 4 | PARALLEL PIN ISO 2338 3M6X12 A1 | |
| 370 | 312115-0364 | | 2 | SCREW ISO4762 M6X10 A4 80 | |
| 380 | 312105-0285 | | 2 | SCREW M6S ISO 4017 M4X6 A470 | |
| 390 | 312812-0314 | | 2 | HEXAGON NUT, NY-LOCK M5 A480 | |
| **TBA 1000B (See drawing on page: 4-114)** | | | | | |
| 010 | 2902008-0000 | | 1 | VOLUME FLAP | |
| 020 | 2902009-0000 | | 1 | SIDE PLATE | |
| 030 | 2902010-0000 | | 1 | SIDE PLATE | |
| 040 | 2809061-0006 | | 2 | ARM | |
| 080 | 2778960-0000 | | 4 | BUSHING | |
| 120 | 1558701-0000 | | 2 | BUSHING | |
| 130 | 2795078-0000 | | 1 | VOLUME BULGE | |
| 140 | 2795079-0000 | | 3 | VOLUME SHIM | |
| 150 | 2902011-0000 | | 1 | BRACKET | |
| 155 | 2902012-0000 | | 1 | 01BRACKET | |
| 180 | 2842776-0000 | | 1 | PIN | |
| 210 | 312105-0329 | | 2 | SCREW M6S ISO 4017 M5X16 A480 | |
| 220 | 312105-0335 | | 2 | SCREW M6S ISO 4014 M5X30 A480 | |
| 230 | 312105-0331 | | 2 | SCREW M6S ISO 4017 M5X20 A480 | |
| 240 | 312105-0370 | | 4 | SCREW M6S ISO 4017 M6X20 A480 | |
| 250 | 312105-0337 | | 2 | SCREW M6S ISO 4014 M5X35 A480 | |
| 260 | 312115-0328 | | 1 | SCREW ISO4762 M5X14 A4 80 | |
| 290 | 315105-0146 | | 9 | WASHER BRB 5,3X10 RFR | |
| 300 | 315105-0153 | | 4 | WASHER BRB 6,4X12 RFR | |
| 350 | 311103-0268 | | 2 | PARALLEL PIN ISO 2338 4M6X12 A1 | |
| 360 | 311103-0234 | | 2 | PARALLEL PIN ISO 2338 3M6X12 A1 | |
| 370 | 312115-0364 | | 2 | SCREW ISO4762 M6X10 A4 80 | |
| **TBA 1000S (See drawing on page: 4-114)** | | | | | |
| 010 | 2814896-0000 | | 1 | VOLUME FLAP | |
| 020 | 2814897-0000 | | 1 | SIDE PLATE | |
| 030 | 2814898-0000 | | 1 | SIDE PLATE | |
| 040 | 2809061-0002 | | 2 | ARM | |
| 060 | 1040756-0000 | | 1 | WEDGE | |
| 080 | 2778960-0000 | | 4 | BUSHING | |
| 120 | 1558701-0000 | | 2 | BUSHING | |
| 130 | 1040754-0000 | | 1 | VOLUME BULGE | |
| 140 | 1040755-0000 | | 3 | VOLUME SHIM | |
| 150 | 2916134-0000 | | 1 | BRACKET | |
| 155 | 2916135-0000 | | 1 | BRACKET | |
| 180 | 2842776-0000 | | 1 | PIN | |
| 210 | 312105-0329 | | 2 | SCREW M6S ISO 4017 M5X16 A480 | |
| 220 | 312105-0335 | | 2 | SCREW M6S ISO 4014 M5X30 A480 | |
| 230 | 312105-0331 | | 2 | SCREW M6S ISO 4017 M5X20 A480 | |
| 240 | 312105-0370 | | 4 | SCREW M6S ISO 4017 M6X20 A480 | |
| 250 | 312105-0337 | | 2 | SCREW M6S ISO 4014 M5X35 A480 | |
| 260 | 312115-0367 | | 1 | SCREW ISO4762 M6X14 A4 80 | |
| 270 | 312145-0291 | | 2 | SCREW ISO 2009 MFS M4X12 A4 | |
| 290 | 315105-0146 | | 8 | WASHER BRB 5,3X10 RFR | |

Machine Type | Group Description | Used-In | Group Number | Page No

# VOLUME FLAP CUTTING



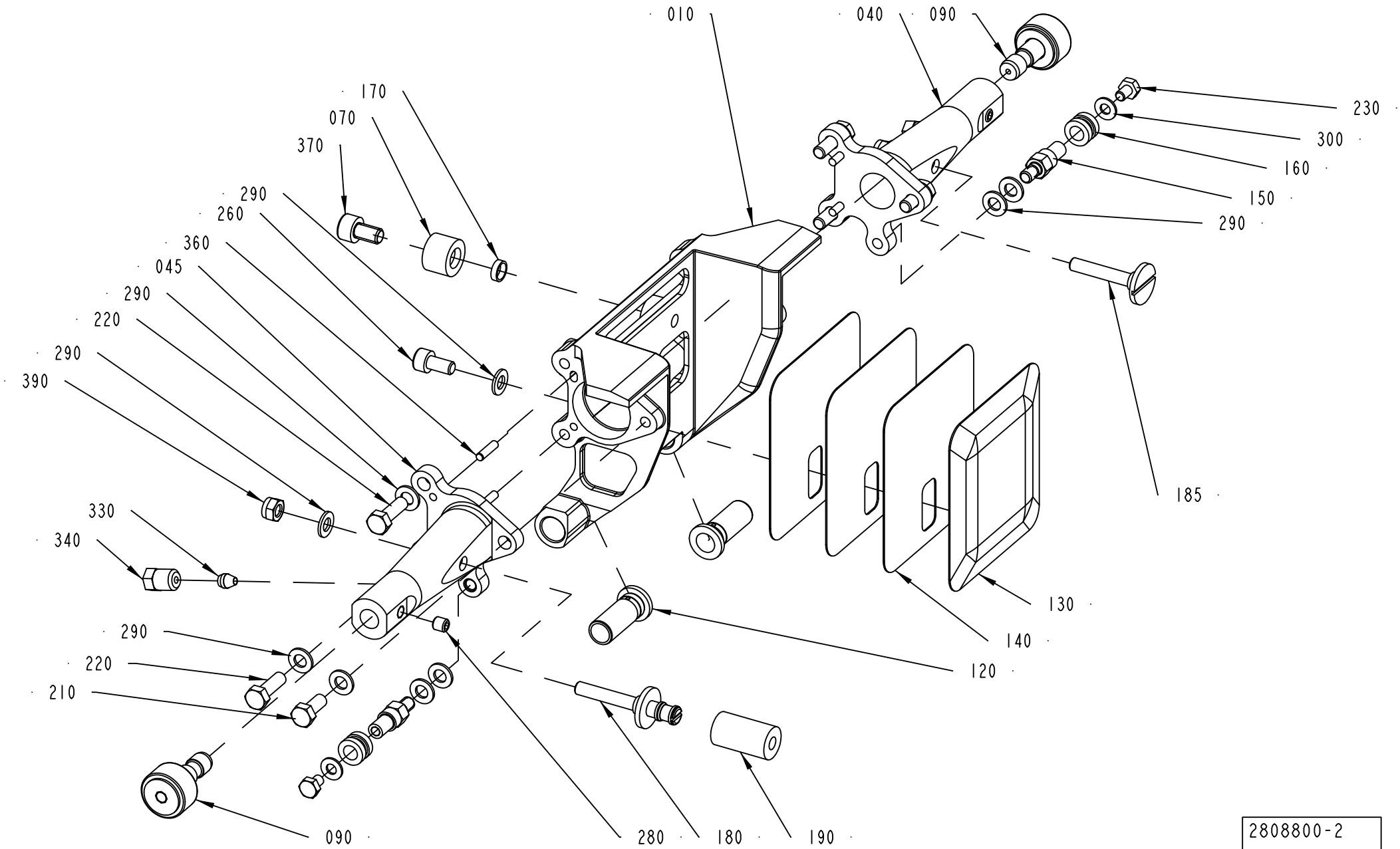


2808800-2
341004

| Pos | Part No | UN | Qty | Description | Page No |
|---|---|---|---|---|---|
| **TBA 1000S (Cont'd) (See drawing on page: 4-114)** | | | | | |
| 300 | 315105-0153 | | 5 | WASHER BRB 6,4X12 RFR | |
| 350 | 311103-0268 | | 2 | PARALLEL PIN ISO 2338 4M6X12 A1 | |
| 360 | 311103-0234 | | 2 | PARALLEL PIN ISO 2338 3M6X12 A1 | |
| 370 | 312115-0364 | | 2 | SCREW ISO4762 M6X10 A4 80 | |
| **TBA 1000SQ (See drawing on page: 4-114)** | | | | | |
| 010 | 2808802-0000 | | 1 | VOLUME FLAP | |
| 020 | 2808803-0000 | | 1 | SIDE PLATE | |
| 030 | 2808804-0000 | | 1 | SIDE PLATE | |
| 040 | 2809061-0001 | | 2 | ARM | |
| 060 | 1040756-0000 | | 1 | WEDGE | |
| 080 | 2778960-0000 | | 4 | BUSHING | |
| 120 | 1558701-0000 | | 2 | BUSHING | |
| 130 | 1487626-0000 | | 1 | VOLUME BULGE | |
| 140 | 1487627-0000 | | 3 | VOLUME SHIM | |
| 150 | 2916133-0000 | | 1 | BRACKET | |
| 155 | 2916132-0000 | | 1 | BRACKET | |
| 180 | 2842776-0000 | | 1 | PIN | |
| 210 | 312105-0333 | | 2 | SCREW M6S ISO 4017 M5X25 A480 | |
| 220 | 312105-0339 | | 2 | SCREW M6S ISO 4014 M5X40 A480 | |
| 230 | 312105-0335 | | 2 | SCREW M6S ISO 4014 M5X30 A480 | |
| 240 | 312105-0370 | | 4 | SCREW M6S ISO 4017 M6X20 A480 | |
| 250 | 312105-0340 | | 2 | SCREW M6S ISO 4014 M5X45 A480 | |
| 260 | 312115-0367 | | 1 | SCREW ISO4762 M6X14 A4 80 | |
| 270 | 312145-0291 | | 2 | SCREW ISO 2009 MFS M4X12 A4 | |
| 290 | 315105-0146 | | 8 | WASHER BRB 5,3X10 RFR | |
| 300 | 315105-0153 | | 5 | WASHER BRB 6,4X12 RFR | |
| 350 | 311103-0268 | | 2 | PARALLEL PIN ISO 2338 4M6X12 A1 | |
| 360 | 311103-0234 | | 2 | PARALLEL PIN ISO 2338 3M6X12 A1 | |
| 370 | 312115-0364 | | 2 | SCREW ISO4762 M6X10 A4 80 | |
| **TBA 1500S (See drawing on page: 4-120)** | | | | | |
| 010 | 2969141-0000 | | 1 | VOLUME FLAP | |
| 015 | 2969139-0000 | | 1 | VOLUME FLAP | |
| 120 | 1558701-0000 | | 2 | BUSHING | |
| 130 | 2969142-0000 | | 1 | VOLUME BULGE | |
| 140 | 2987038-0000 | | 3 | VOLUME SHIM | |
| 150 | 2969143-0000 | | 2 | BRACKET | |
| 200 | 312105-0366 | | 2 | SCREW M6S ISO 4017 M6X12 A480 | |
| 270 | 312155-0329 | | 2 | SCREW DIN 7991 MF6S M5X16 A4 70 | |
| 275 | 312155-0327 | | 4 | SCREW DIN 7991 MF6S M5X12 A4 70 | |
| 290 | 315105-0146 | | 4 | WASHER BRB 5,3X10 RFR | |
| 370 | 312115-0362 | | 2 | SCREW ISO4762 M6X8 A4 80 | |
| 390 | 312812-0314 | | 4 | HEXAGON NUT, NY-LOCK M5 A480 | |
| **TBA 2000S (See drawing on page: 4-122)** | | | | | |
| 010 | 2978341-0000 | | 1 | VOLUME FLAP | |
| 015 | 2978340-0000 | | 1 | VOLUME FLAP | |
| 040 | 2809061-0011 | | 2 | ARM | |
| 120 | 2917307-0000 | | 2 | BUSHING | |
| 130 | 2978344-0000 | | 1 | VOLUME BULGE | |
| 140 | 2978343-0000 | | 3 | VOLUME SHIM | |
| 150 | 2907809-0000 | | 1 | BRACKET | |
| 155 | 2907808-0000 | | 1 | BRACKET | |
| 180 | 2842776-0000 | | 1 | PIN | |
| 190 | 2846667-0000 | | 1 | DAMPER | |
| 210 | 312105-0329 | | 4 | SCREW M6S ISO 4017 M5X16 A480 | |
| 230 | 312105-0331 | | 4 | SCREW M6S ISO 4017 M5X20 A480 | |
| 270 | 312155-0329 | | 2 | SCREW DIN 7991 MF6S M5X16 A4 70 | |
| 275 | 312155-0327 | | 4 | SCREW DIN 7991 MF6S M5X12 A4 70 | |
| 290 | 315105-0146 | | 12 | WASHER BRB 5,3X10 RFR | |
| 350 | 311103-0267 | | 2 | PARALLEL PIN ISO 2338 4M6X10 A1 | |
| 360 | 311103-0233 | | 2 | PARALLEL PIN ISO 2338 3M6X10 A1 | |
| 370 | 312115-0362 | | 2 | SCREW ISO4762 M6X8 A4 80 | |
| 390 | 312812-0314 | | 4 | HEXAGON NUT, NY-LOCK M5 A480 | |
| **Common Parts** | | | | | |
| 070 | 2842778-0000 | | 2 | DAMPER | |
| 090 | 2952691-0100 | | 2 | ROLLER | **4-125** |
| 170 | 2842779-0000 | | 2 | SPACER | |
| 280 | 312318-0320 | | 2 | SCREW ISO4029 M5X5 A4 | |
| 330 | 90028-0020 | | 2 | CONE TUBE 2,5MM | |
| 340 | 90134-0063 | | 2 | BUSHING/NUT M8X1, D=2,5 MM | |

| Machine Type | Group Description | Used-In | Group Number | Page No |
|---|---|---|---|---|

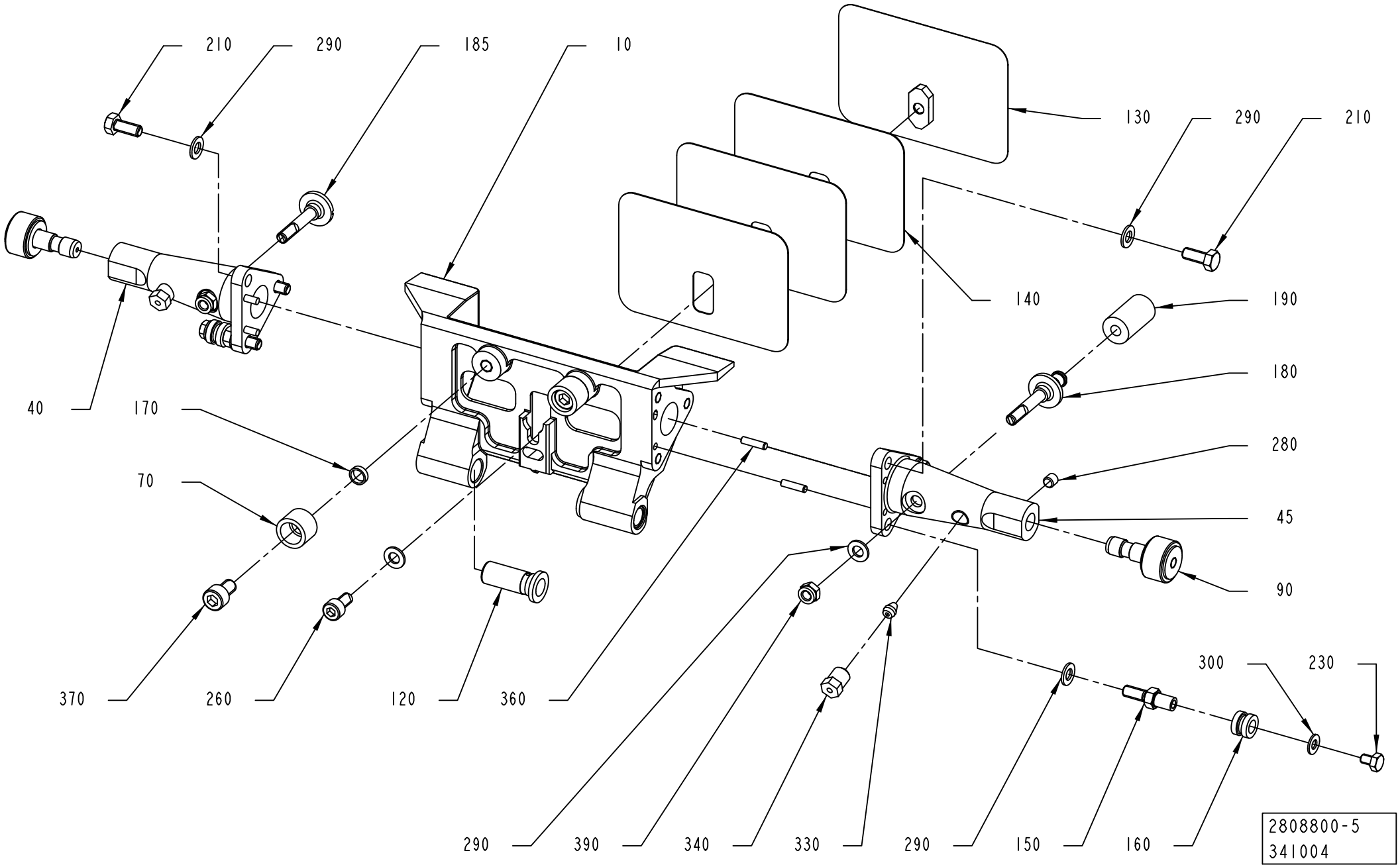
210
290
185
10
130
290
210
140
190
180
280
45
90
40
170
70
370
260
120
360
300
230
290
390
340
330
290
150
160
2808800-5
341004

| Pos | Part No | UN | Qty | Description | Page No |
|---|---|---|---|---|---|
| **SEE PREVIOUS LISTS PAGES: 4-115, 4-117.** | | | | | |

| Pos | Part No | UN | Qty | Description | Page No |
|---|---|---|---|---|---|

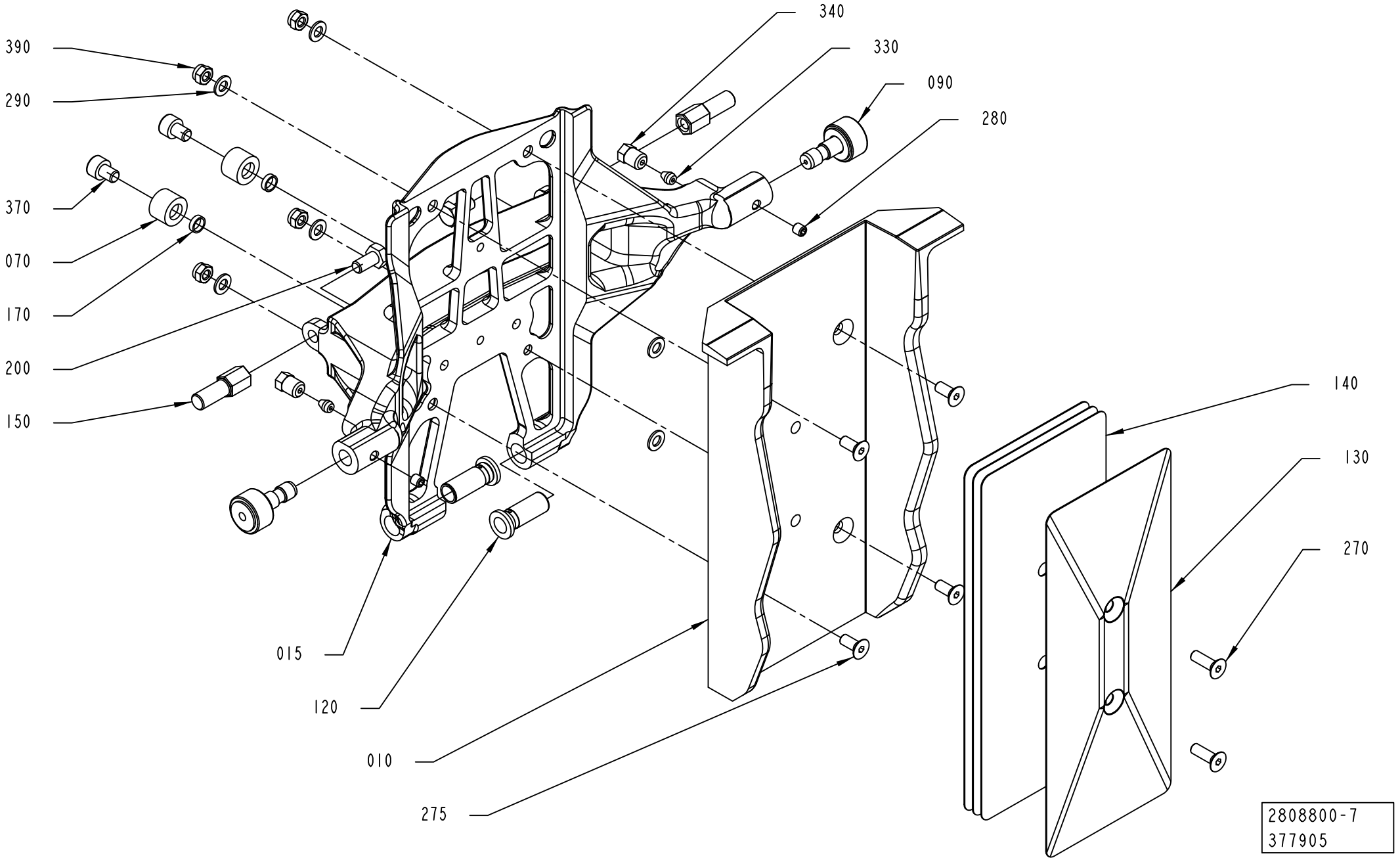
340
330
090
280
390
290
370
070
170
200
150
140
130
270
015
120
010
275
2808800-7
377905

ECM: 381089 - 20081218
Group number: 2808800-0100
Assembly Drawing: 2808800-7_1_AA

This list covers pages from 4-114 to 4-123

| Pos | Part No | UN | Qty | Description | Page No |
|---|---|---|---|---|---|
| **SEE PREVIOUS LISTS PAGES: 4-115, 4-117.** | | | | | |

| Pos | Part No | UN | Qty | Description | Page No |
|---|---|---|---|---|---|

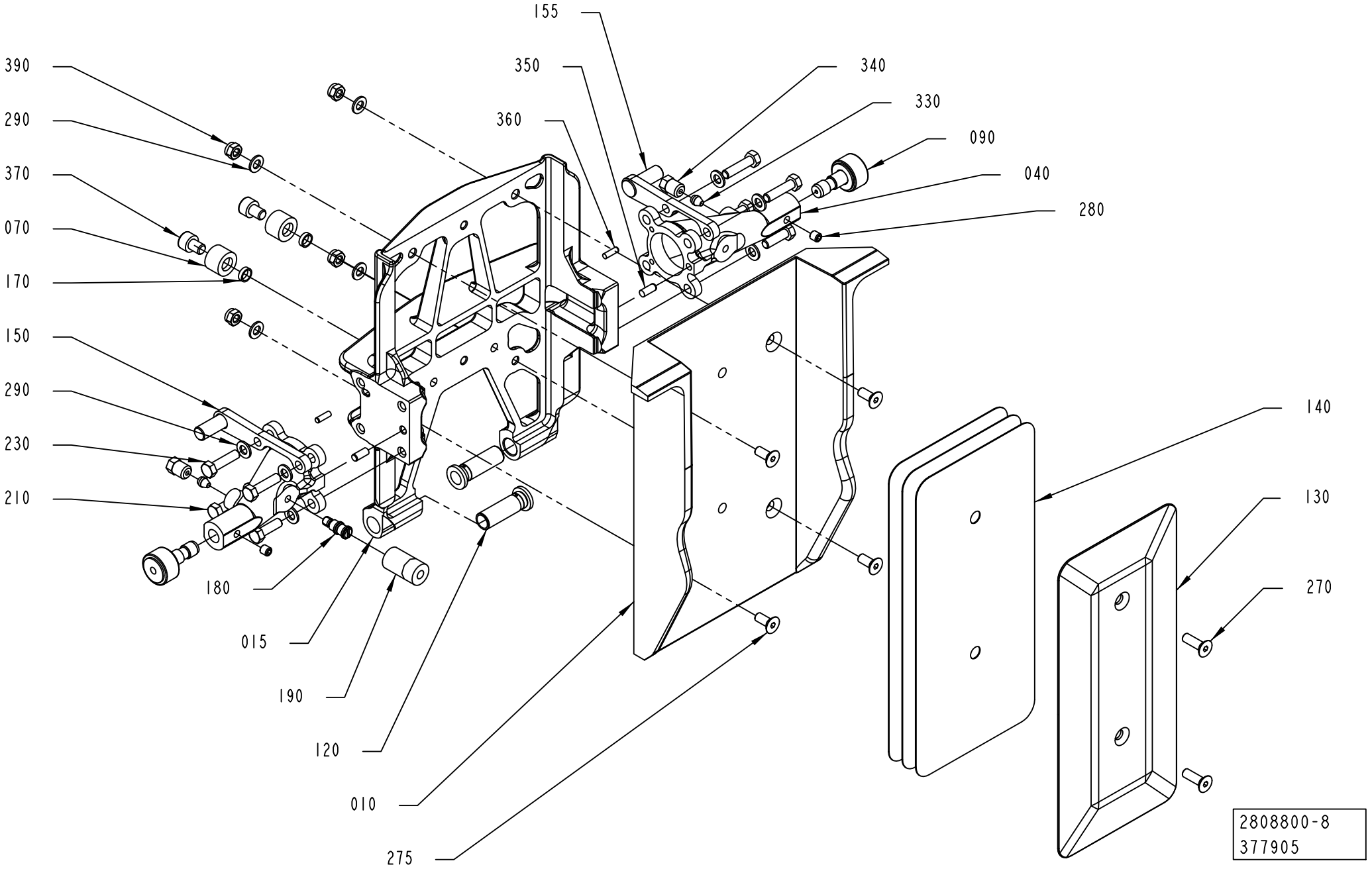
155
390
350
340
290
360
330
090
370
040
070
280
170
150
140
290
130
230
270
210
180
015
190
120
010
275
2808800-8
377905

| Pos | Part No | UN | Qty | Description | Page No |
|---|---|---|---|---|---|
| **SEE PREVIOUS LISTS PAGES: 4-115, 4-117.** | | | | | |

| Pos | Part No | UN | Qty | Description | Page No |
|---|---|---|---|---|---|

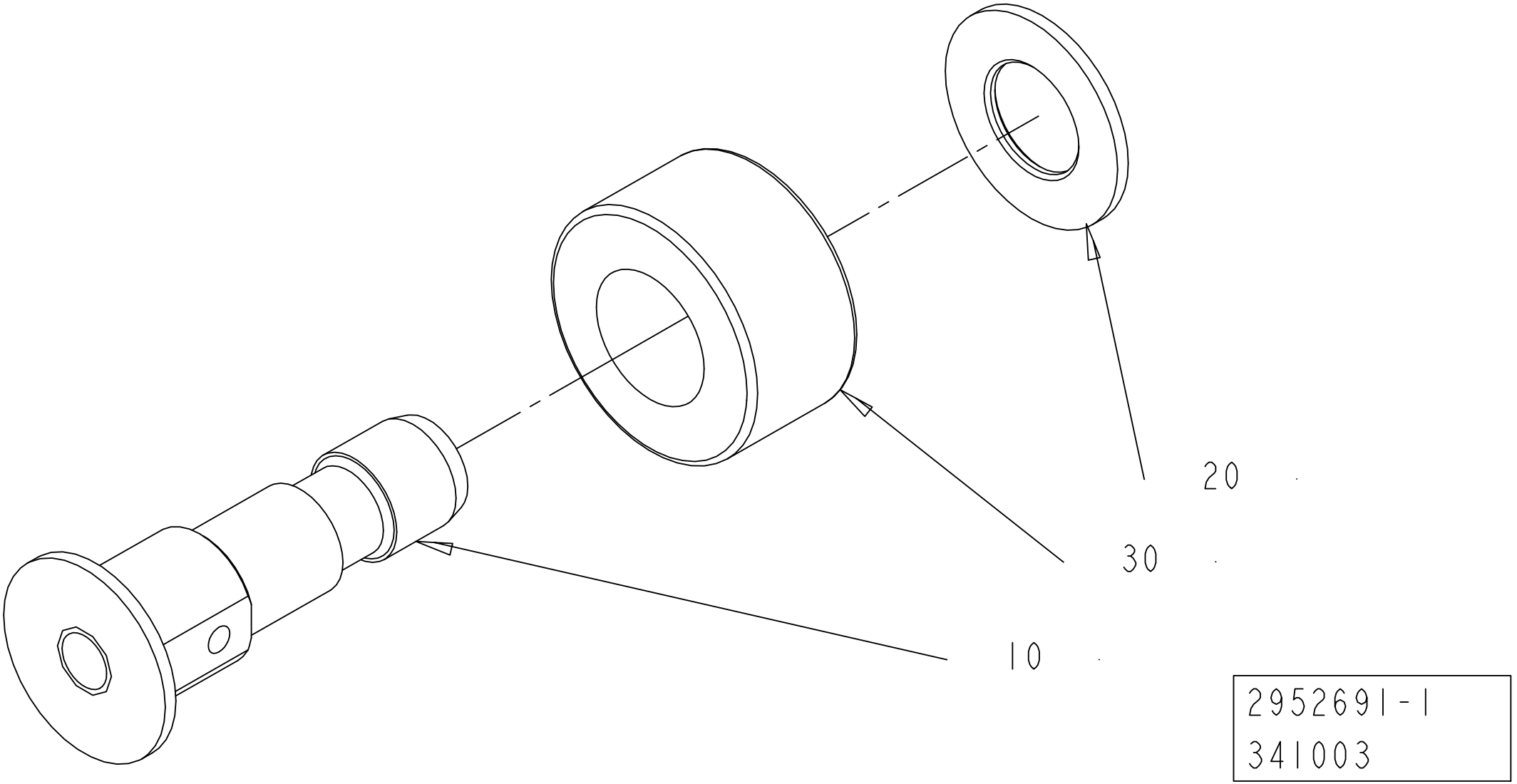
20
30
10
2952691-1
341003

ECM: 341909 - 20070705
Group number: 2952691-0100
Assembly Drawing: 2952691-1_1_AA

| Pos | Part No | UN | Qty | Description | Page No |
|---|---|---|---|---|---|
| - | | | | | |
| 010 | 2909137-0000 | | 1 | AXLE PIN | |
| 020 | 19972-0000 | | 1 | WASHER | |
| 030 | 2909138-0000 | | 1 | ROLLER | |

| Pos | Part No | UN | Qty | Description | Page No |
|---|---|---|---|---|---|

# SHOCK ABSORBER CUTTING



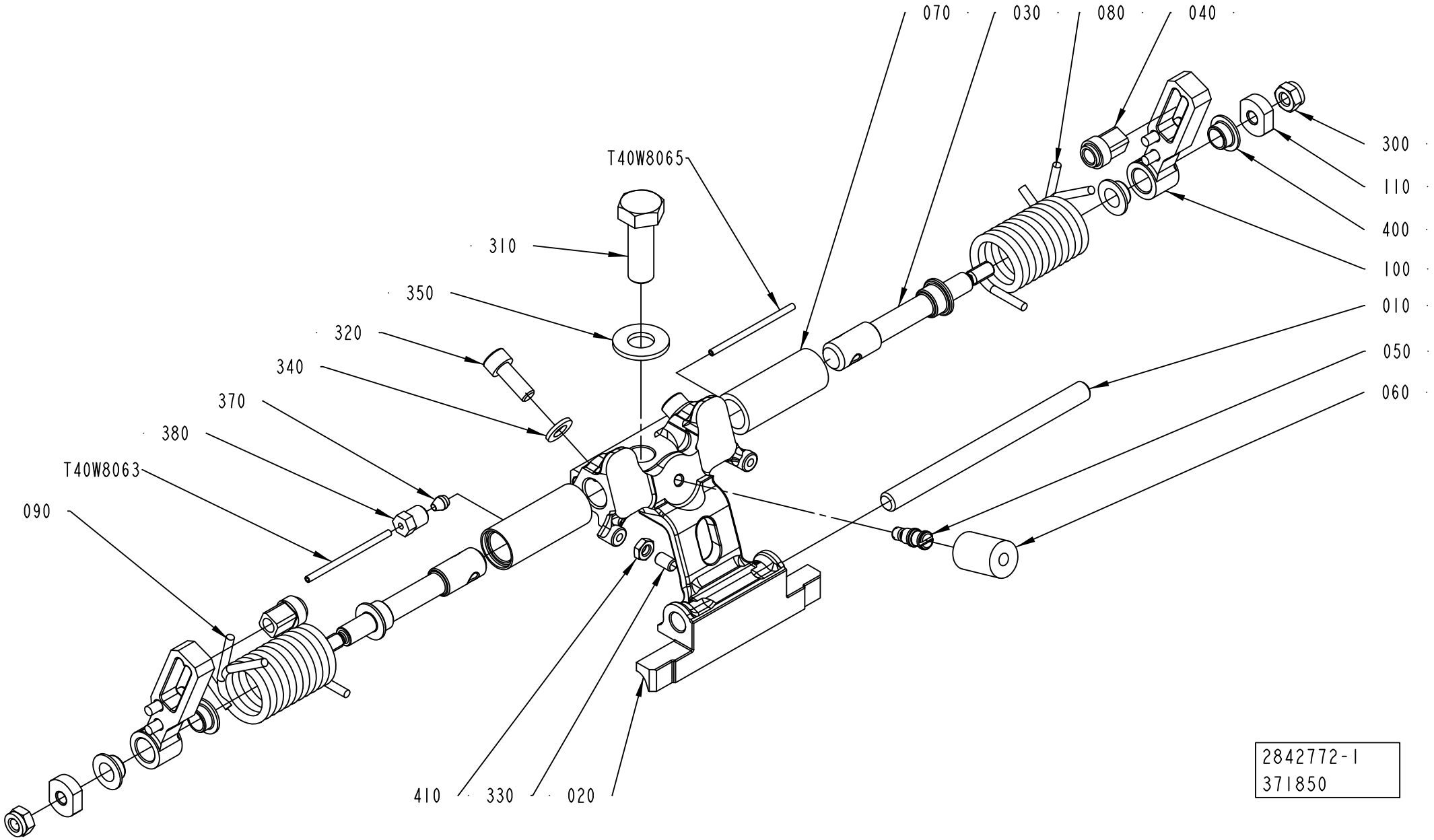

ECM: 375712 - 20081127
Group number: 2842772-0100
Assembly Drawing: 2842772-1_1_AD

This list covers pages from 4-126 to 4-131

| Pos | Part No | UN | Qty | Description | Page No |
|---|---|---|---|---|---|
| **TBA 0500B (See drawing on page: 4-128)** | | | | | |
| 010 | 2773510-0000 | | 1 | SHAFT | |
| 020 | 2922530-0001 | | 1 | HOLDER | |
| 030 | 2902006-0000 | | 2 | SHAFT | |
| 050 | 2842776-0000 | | 1 | PIN | |
| 060 | 2842777-0001 | | 1 | DAMPER | |
| 080 | 2961953-0000 | | 2 | TENSION SPRING | |
| 120 | 2905199-0000 | | 2 | HOLDER | |
| 300 | 312105-0285 | | 2 | SCREW M6S ISO 4017 M4X6 A470 | |
| 310 | 312105-0495 | | 1 | SCREW M6S ISO 4017 M10X30 A480 | |
| 320 | 312115-0368 | | 2 | SCREW ISO4762 M6X16 A4 80 | |
| 330 | 312318-0325 | | 1 | SCREW ISO4029 M5X10 A4 | |
| 360 | 315106-0136 | | 2 | WASHER ISO 7089-4-200 HV A4 | |
| 370 | 90028-0020 | | 2 | CONE TUBE 2,5MM | |
| 380 | 90134-0063 | | 2 | BUSHING/NUT M8X1, D=2,5 MM | |
| 410 | 312625-0314 | | 1 | HEXAGON THIN NUT, EN 24035 ML6M M5 A4 | |
| T40W8062 | 90166-0143 | MM | 220 | TUBE 2,5 MM PA TRANSP. | |
| T40W8064 | 90166-0143 | MM | 220 | TUBE 2,5 MM PA TRANSP. | |
| **TBA 0500SQ (See drawing on page: 4-128)** | | | | | |
| 010 | 2773510-0000 | | 1 | SHAFT | |
| 020 | 2922526-0001 | | 1 | HOLDER | |
| 030 | 2863119-0000 | | 2 | SHAFT | |
| 050 | 2842776-0000 | | 1 | PIN | |
| 060 | 2842777-0001 | | 1 | DAMPER | |
| 080 | 2959868-0000 | | 2 | TENSION SPRING | |
| 120 | 2905199-0000 | | 2 | HOLDER | |
| 300 | 312105-0285 | | 2 | SCREW M6S ISO 4017 M4X6 A470 | |
| 310 | 312105-0495 | | 1 | SCREW M6S ISO 4017 M10X30 A480 | |
| 320 | 312115-0368 | | 2 | SCREW ISO4762 M6X16 A4 80 | |
| 330 | 312318-0323 | | 1 | SCREW ISO4029 M5X8 A4 | |
| 360 | 315106-0136 | | 2 | WASHER ISO 7089-4-200 HV A4 | |
| 370 | 90028-0020 | | 2 | CONE TUBE 2,5MM | |
| 380 | 90134-0063 | | 2 | BUSHING/NUT M8X1, D=2,5 MM | |
| 410 | 312625-0314 | | 1 | HEXAGON THIN NUT, EN 24035 ML6M M5 A4 | |
| T40W8062 | 90166-0143 | MM | 220 | TUBE 2,5 MM PA TRANSP. | |
| T40W8064 | 90166-0143 | MM | 220 | TUBE 2,5 MM PA TRANSP. | |
| **TBA 1000B (See drawing on page: 4-126)** | | | | | |
| 010 | 2773510-0000 | | 1 | SHAFT | |
| 020 | 2922530-0001 | | 1 | HOLDER | |
| 030 | 2911622-0000 | | 2 | SHAFT | |
| 040 | 2916130-0000 | | 2 | SLIDER | |
| 050 | 2842776-0000 | | 1 | PIN | |
| 060 | 2842777-0001 | | 1 | DAMPER | |
| 070 | 2842780-0000 | | 2 | BUSHING | |
| 080 | 2842781-0000 | | 1 | SPRING | |
| 090 | 2842782-0000 | | 1 | SPRING | |
| 100 | 2916131-0000 | | 2 | LEVER | |
| 110 | 2911623-0000 | | 2 | WASHER | |
| 300 | 312812-0316 | | 2 | HEXAGON NUT, NY-LOCK M6 A480 | |
| 310 | 312105-0495 | | 1 | SCREW M6S ISO 4017 M10X30 A480 | |
| 320 | 312115-0368 | | 2 | SCREW ISO4762 M6X16 A4 80 | |
| 330 | 312318-0325 | | 1 | SCREW ISO4029 M5X10 A4 | |
| 370 | 90028-0020 | | 2 | CONE TUBE 2,5MM | |
| 380 | 90134-0063 | | 2 | BUSHING/NUT M8X1, D=2,5 MM | |
| 400 | 90600-2013 | | 4 | FLANGE BUSHING, 8X10X5,5 MM | |
| 410 | 312625-0314 | | 1 | HEXAGON THIN NUT, EN 24035 ML6M M5 A4 | |
| T40W8062 | 90166-0143 | MM | 220 | TUBE 2,5 MM PA TRANSP. | |
| T40W8064 | 90166-0143 | MM | 220 | TUBE 2,5 MM PA TRANSP. | |
| **TBA 1000S (See drawing on page: 4-126)** | | | | | |
| 010 | 2773510-0000 | | 1 | SHAFT | |
| 020 | 2922528-0001 | | 1 | HOLDER | |
| 030 | 2911622-0000 | | 2 | SHAFT | |
| 040 | 2916130-0000 | | 2 | SLIDER | |
| 050 | 2842776-0000 | | 1 | PIN | |
| 060 | 2842777-0001 | | 1 | DAMPER | |
| 070 | 2842780-0000 | | 2 | BUSHING | |
| 080 | 2842781-0000 | | 1 | SPRING | |
| 090 | 2842782-0000 | | 1 | SPRING | |
| 100 | 2916131-0000 | | 2 | LEVER | |
| 110 | 2911623-0000 | | 2 | WASHER | |
| 300 | 312812-0316 | | 2 | HEXAGON NUT, NY-LOCK M6 A480 | |
| 310 | 312105-0495 | | 1 | SCREW M6S ISO 4017 M10X30 A480 | |
| 320 | 312115-0368 | | 2 | SCREW ISO4762 M6X16 A4 80 | |
| 330 | 312318-0325 | | 1 | SCREW ISO4029 M5X10 A4 | |
| 370 | 90028-0020 | | 2 | CONE TUBE 2,5MM | |
| 380 | 90134-0063 | | 2 | BUSHING/NUT M8X1, D=2,5 MM | |
| 400 | 90600-2013 | | 4 | FLANGE BUSHING, 8X10X5,5 MM | |
| 410 | 312625-0314 | | 1 | HEXAGON THIN NUT, EN 24035 ML6M M5 A4 | |
| T40W8062 | 90166-0143 | MM | 220 | TUBE 2,5 MM PA TRANSP. | |
| T40W8064 | 90166-0143 | MM | 220 | TUBE 2,5 MM PA TRANSP. | |
| **TBA 1000SQ (See drawing on page: 4-126)** | | | | | |
| 010 | 2773510-0000 | | 1 | SHAFT | |
| 020 | 2922526-0001 | | 1 | HOLDER | |
| 030 | 2911622-0000 | | 2 | SHAFT | |

Machine Type | Group Description | Used-In | Group Number | Page No

# SHOCK ABSORBER CUTTING



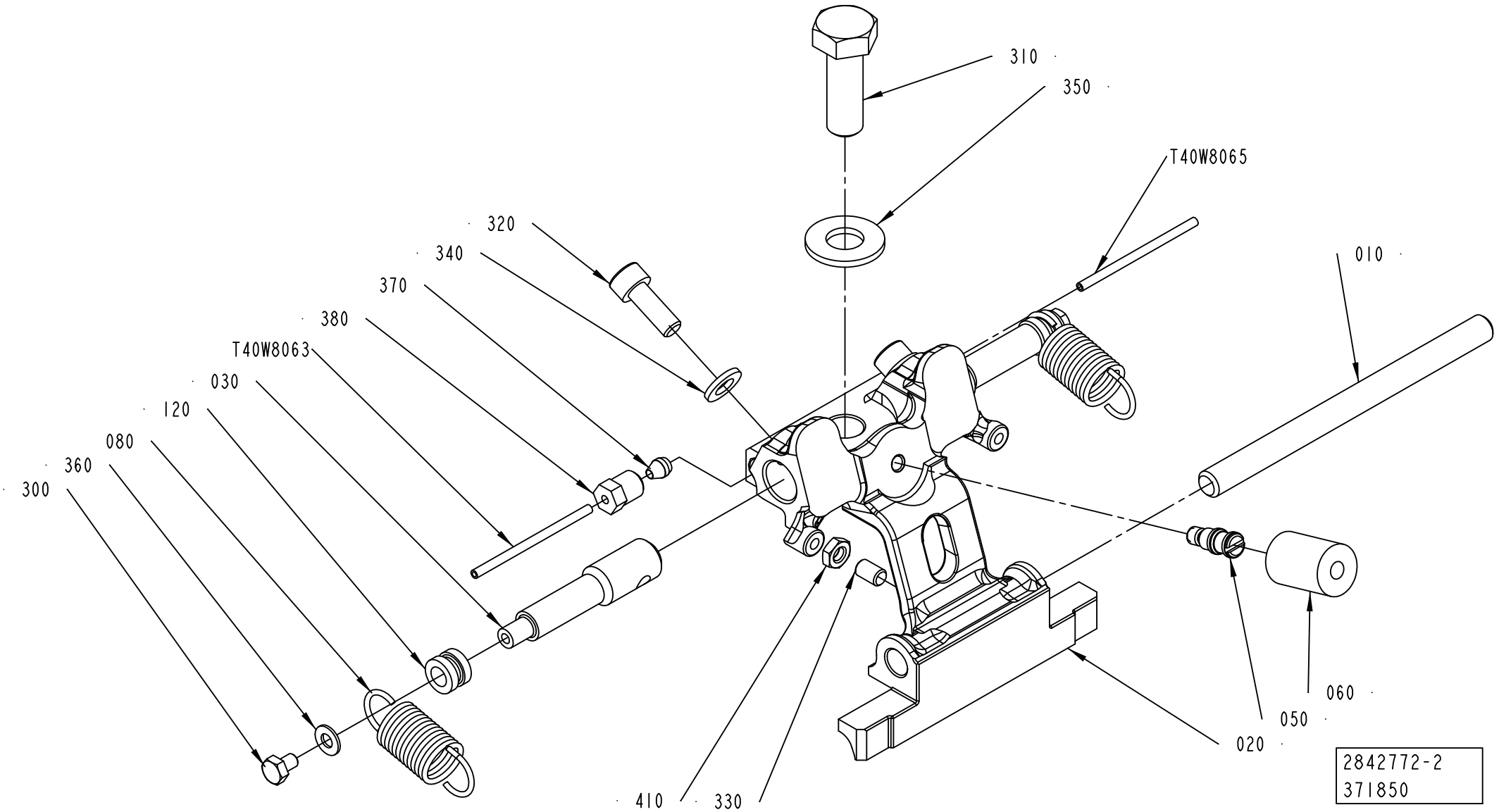

ECM: 375712 - 20081127
Group number: 2842772-0100
Assembly Drawing: 2842772-2_1_AC

This list covers pages from 4-126 to 4-131

| Pos | Part No | UN | Qty | Description | Page No |
|---|---|---|---|---|---|
| **TBA 1000SQ (Cont'd) (See drawing on page: 4-126)** | | | | | |
| 040 | 2916130-0000 | | 2 | SLIDER | |
| 050 | 2842776-0000 | | 1 | PIN | |
| 060 | 2842777-0001 | | 1 | DAMPER | |
| 070 | 2842780-0000 | | 2 | BUSHING | |
| 080 | 2842781-0000 | | 1 | SPRING | |
| 090 | 2842782-0000 | | 1 | SPRING | |
| 100 | 2916131-0000 | | 2 | LEVER | |
| 110 | 2911623-0000 | | 2 | WASHER | |
| 300 | 312812-0316 | | 2 | HEXAGON NUT, NY-LOCK M6 A480 | |
| 310 | 312105-0495 | | 1 | SCREW M6S ISO 4017 M10X30 A480 | |
| 320 | 312115-0368 | | 2 | SCREW ISO4762 M6X16 A4 80 | |
| 330 | 312318-0323 | | 1 | SCREW ISO4029 M5X8 A4 | |
| 370 | 90028-0020 | | 2 | CONE TUBE 2,5MM | |
| 380 | 90134-0063 | | 2 | BUSHING/NUT M8X1, D=2,5 MM | |
| 400 | 90600-2013 | | 4 | FLANGE BUSHING, 8X10X5,5 MM | |
| 410 | 312625-0314 | | 1 | HEXAGON THIN NUT, EN 24035 ML6M M5 A4 | |
| T40W8062 | 90166-0143 | MM | 220 | TUBE 2,5 MM PA TRANSP. | |
| T40W8064 | 90166-0143 | MM | 220 | TUBE 2,5 MM PA TRANSP. | |
| **TBA 1500S (See drawing on page: 4-126)** | | | | | |
| 010 | 2773510-0000 | | 1 | SHAFT | |
| 020 | 2930284-0001 | | 1 | HOLDER | |
| 030 | 2907800-0000 | | 2 | SHAFT | |
| 040 | 2907807-0000 | | 2 | SLIDER | |
| 050 | 2907797-0000 | | 1 | PIN | |
| 060 | 2842777-0005 | | 1 | DAMPER | |
| 070 | 2916984-0000 | | 2 | BUSHING | |
| 080 | 2907805-0000 | | 1 | SPRING | |
| 090 | 2907804-0000 | | 1 | SPRING | |
| 100 | 2907806-0000 | | 2 | LEVER | |
| 110 | 2911623-0000 | | 2 | WASHER | |
| 300 | 312812-0316 | | 2 | HEXAGON NUT, NY-LOCK M6 A480 | |
| 310 | 312105-0499 | | 1 | SCREW M6S ISO 4014 M10X40 A480 | |
| 320 | 312115-0368 | | 2 | SCREW ISO4762 M6X16 A4 80 | |
| 330 | 312318-0325 | | 1 | SCREW ISO4029 M5X10 A4 | |
| 370 | 90028-0020 | | 2 | CONE TUBE 2,5MM | |
| 380 | 90134-0063 | | 2 | BUSHING/NUT M8X1, D=2,5 MM | |
| 400 | 90600-2013 | | 4 | FLANGE BUSHING, 8X10X5,5 MM | |
| 410 | 312625-0314 | | 1 | HEXAGON THIN NUT, EN 24035 ML6M M5 A4 | |
| T40W8062 | 90166-0143 | MM | 220 | TUBE 2,5 MM PA TRANSP. | |
| T40W8064 | 90166-0143 | MM | 220 | TUBE 2,5 MM PA TRANSP. | |
| **TBA 2000S (See drawing on page: 4-126)** | | | | | |
| 010 | 2907798-0000 | | 1 | SHAFT | |
| 020 | 2917310-0001 | | 1 | HOLDER | |
| 030 | 2907800-0000 | | 2 | SHAFT | |
| 040 | 2907807-0000 | | 2 | SLIDER | |
| 050 | 2907797-0000 | | 1 | PIN | |
| 060 | 2842777-0005 | | 1 | DAMPER | |
| 070 | 2916984-0000 | | 2 | BUSHING | |
| 080 | 2907805-0000 | | 1 | SPRING | |
| 090 | 2907804-0000 | | 1 | SPRING | |
| 100 | 2907806-0000 | | 2 | LEVER | |
| 110 | 2911623-0000 | | 2 | WASHER | |
| 300 | 312812-0316 | | 2 | HEXAGON NUT, NY-LOCK M6 A480 | |
| 310 | 312105-0499 | | 1 | SCREW M6S ISO 4014 M10X40 A480 | |
| 320 | 312115-0368 | | 2 | SCREW ISO4762 M6X16 A4 80 | |
| 330 | 312318-0325 | | 1 | SCREW ISO4029 M5X10 A4 | |
| 370 | 90028-0020 | | 2 | CONE TUBE 2,5MM | |
| 380 | 90134-0063 | | 2 | BUSHING/NUT M8X1, D=2,5 MM | |
| 400 | 90600-2013 | | 4 | FLANGE BUSHING, 8X10X5,5 MM | |
| 410 | 312625-0314 | | 1 | HEXAGON THIN NUT, EN 24035 ML6M M5 A4 | |
| T40W8062 | 90166-0143 | MM | 220 | TUBE 2,5 MM PA TRANSP. | |
| T40W8064 | 90166-0143 | MM | 220 | TUBE 2,5 MM PA TRANSP. | |
| **TPA 1000SQ, TPA 0750SQ (See drawing on page: 4-126)** | | | | | |
| 010 | 2916971-0000 | | 1 | SHAFT | |
| 020 | 2921236-0001 | | 1 | HOLDER | |
| 030 | 2907800-0000 | | 2 | SHAFT | |
| 040 | 2907807-0000 | | 2 | SLIDER | |
| 050 | 2907797-0000 | | 1 | PIN | |
| 060 | 2842777-0004 | | 1 | DAMPER | |
| 070 | 2916984-0000 | | 2 | BUSHING | |
| 080 | 2907805-0000 | | 1 | SPRING | |
| 090 | 2907804-0000 | | 1 | SPRING | |
| 100 | 2907806-0000 | | 2 | LEVER | |
| 110 | 2911623-0000 | | 2 | WASHER | |
| 300 | 312812-0316 | | 2 | HEXAGON NUT, NY-LOCK M6 A480 | |
| 310 | 312105-0499 | | 1 | SCREW M6S ISO 4014 M10X40 A480 | |
| 320 | 312115-0368 | | 2 | SCREW ISO4762 M6X16 A4 80 | |
| 330 | 312318-0325 | | 1 | SCREW ISO4029 M5X10 A4 | |
| 370 | 90028-0020 | | 2 | CONE TUBE 2,5MM | |
| 380 | 90134-0063 | | 2 | BUSHING/NUT M8X1, D=2,5 MM | |
| 400 | 90600-2013 | | 4 | FLANGE BUSHING, 8X10X5,5 MM | |
| 410 | 312625-0314 | | 1 | HEXAGON THIN NUT, EN 24035 ML6M M5 A4 | |
| T40W8062 | 90166-0143 | MM | 220 | TUBE 2,5 MM PA TRANSP. | |

**See previous drawings pages: 4-126, 4-128.**

| Pos | Part No | UN | Qty | Description | Page No |
|---|---|---|---|---|---|
| **TPA 1000SQ, TPA 0750SQ (Cont'd) (See drawing on page: 4-126)** | | | | | |
| T40W8064 | 90166-0143 | MM | 220 | TUBE 2,5 MM PA TRANSP. | |
| **Common Parts** | | | | | |
| 340 | 315105-0153 | | 2 | WASHER BRB 6,4X12 RFR | |
| 350 | 315105-0173 | | 1 | WASHER BRB 10,5X22 RFR | |

| Pos | Part No | UN | Qty | Description | Page No |
|---|---|---|---|---|---|

# SUPPORT FLAP PRESSURE



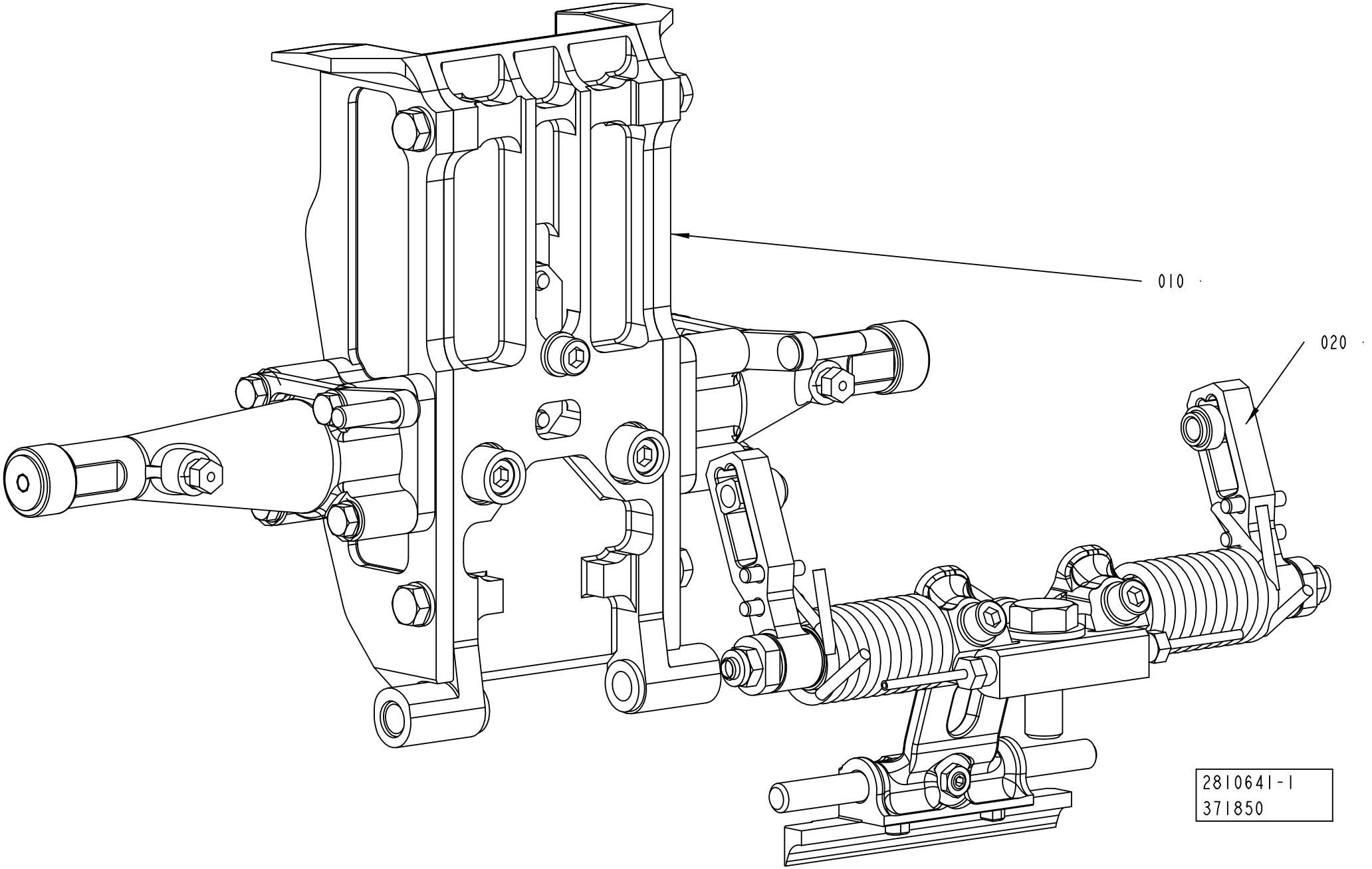

ECM: 375723 - 20081127
Group number: 2810641-0100
Assembly Drawing: 2810641-1_1_AB

| Pos | Part No | UN | Qty | Description | Page No |
|---|---|---|---|---|---|
| **TBA 0500B** | | | | | |
| 010 | 2810637-0100 | | 1 | VOLUME FLAP PRESSURE | **4-135, 4-137, 4-139, 4-141, 4-143** |
| 020 | 2842862-0100 | | 1 | SHOCK ABSORBER PRESSURE | **4-145, 4-147, 4-149** |
| **TBA 0500SQ** | | | | | |
| 010 | 2810637-0100 | | 1 | VOLUME FLAP PRESSURE | **4-135, 4-137, 4-139, 4-141, 4-143** |
| 020 | 2842862-0100 | | 1 | SHOCK ABSORBER PRESSURE | **4-145, 4-147, 4-149** |
| **TBA 1000B** | | | | | |
| 010 | 2810637-0100 | | 1 | VOLUME FLAP PRESSURE | **4-135, 4-137, 4-139, 4-141, 4-143** |
| 020 | 2842862-0100 | | 1 | SHOCK ABSORBER PRESSURE | **4-145, 4-147, 4-149** |
| **TBA 1000S** | | | | | |
| 010 | 2810637-0100 | | 1 | VOLUME FLAP PRESSURE | **4-135, 4-137, 4-139, 4-141, 4-143** |
| 020 | 2842862-0100 | | 1 | SHOCK ABSORBER PRESSURE | **4-145, 4-147, 4-149** |
| **TBA 1000SQ** | | | | | |
| 010 | 2810637-0100 | | 1 | VOLUME FLAP PRESSURE | **4-135, 4-137, 4-139, 4-141, 4-143** |
| 020 | 2842862-0100 | | 1 | SHOCK ABSORBER PRESSURE | **4-145, 4-147, 4-149** |
| **TBA 1500S** | | | | | |
| 010 | 2810637-0100 | | 1 | VOLUME FLAP PRESSURE | **4-135, 4-137, 4-139, 4-141, 4-143** |
| 020 | 2842862-0100 | | 1 | SHOCK ABSORBER PRESSURE | **4-145, 4-147, 4-149** |
| **TBA 2000S** | | | | | |
| 010 | 2810637-0100 | | 1 | VOLUME FLAP PRESSURE | **4-135, 4-137, 4-139, 4-141, 4-143** |
| 020 | 2842862-0100 | | 1 | SHOCK ABSORBER PRESSURE | **4-145, 4-147, 4-149** |
| **TPA 0750SQ** | | | | | |
| 010 | 2810637-0100 | | 1 | VOLUME FLAP PRESSURE | **4-135, 4-137, 4-139, 4-141, 4-143** |
| 020 | 2842862-0100 | | 1 | SHOCK ABSORBER PRESSURE | **4-145, 4-147, 4-149** |
| **TPA 1000SQ** | | | | | |
| 010 | 2810637-0100 | | 1 | VOLUME FLAP PRESSURE | **4-135, 4-137, 4-139, 4-141, 4-143** |
| 020 | 2842862-0100 | | 1 | SHOCK ABSORBER PRESSURE | **4-145, 4-147, 4-149** |

| Pos | Part No | UN | Qty | Description | Page No |
|---|---|---|---|---|---|

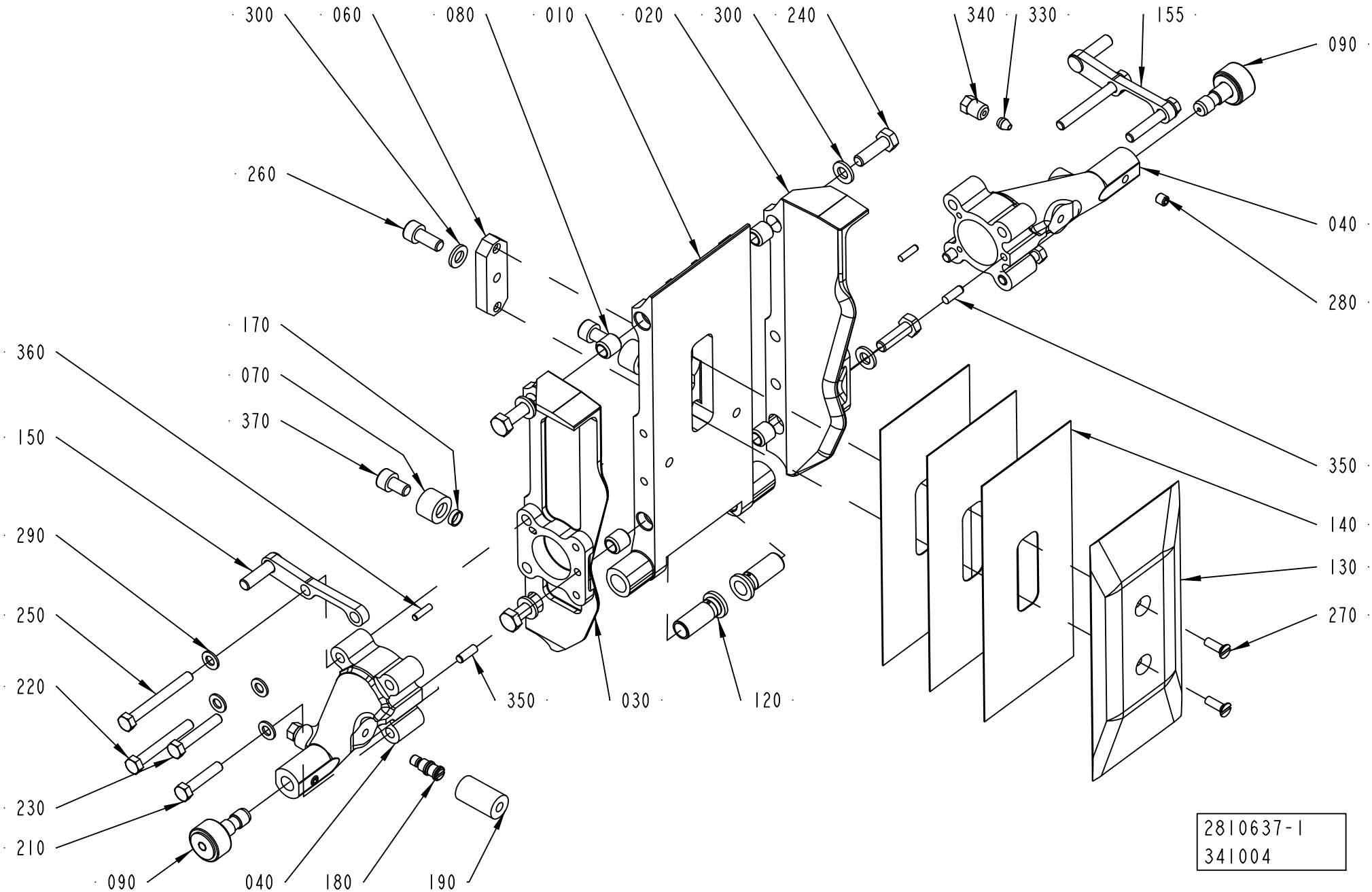
300
060
080
010
020
300
240
340
330
155
090
260
040
280
170
070
370
360
150
290
250
220
230
210
090
040
180
190
350
030
120
350
140
130
270
2810637-1
341004

ECM: 381090 - 20081218
Group number: 2810637-0100
Assembly Drawing: 2810637-1_1_AC

This list covers pages from 4-134 to 4-143

| Pos | Part No | UN | Qty | Description | Page No |
|---|---|---|---|---|---|
| **TBA 0500B (See drawing on page: 4-138)** | | | | | |
| 010 | 2902007-0000 | | 1 | VOLUME FLAP | |
| 040 | 2905200-0000 | | 1 | ARM | |
| 045 | 2906172-0000 | | 1 | ARM | |
| 120 | 1558701-0000 | | 2 | BUSHING | |
| 130 | 2786059-0000 | | 1 | VOLUME BULGE | |
| 140 | 2790818-0000 | | 3 | VOLUME SHIM | |
| 150 | 2905201-0000 | | 2 | SPACER SCREW | |
| 160 | 2905199-0000 | | 2 | HOLDER | |
| 180 | 2872048-0000 | | 1 | PIN | |
| 185 | 2872091-0000 | | 1 | PIN | |
| 190 | 2846667-0000 | | 1 | DAMPER | |
| 210 | 312105-0327 | | 4 | SCREW M6S ISO 4017 M5X12 A480 | |
| 260 | 312115-0325 | | 1 | SCREW ISO4762 M5X10 A4 80 | |
| 290 | 315105-0146 | | 11 | WASHER BRB 5,3X10 RFR | |
| 300 | 315106-0136 | | 2 | WASHER ISO 7089-4-200 HV A4 | |
| 360 | 311103-0234 | | 4 | PARALLEL PIN ISO 2338 3M6X12 A1 | |
| 370 | 312115-0364 | | 2 | SCREW ISO4762 M6X10 A4 80 | |
| 380 | 312105-0285 | | 2 | SCREW M6S ISO 4017 M4X6 A470 | |
| 390 | 312812-0314 | | 2 | HEXAGON NUT, NY-LOCK M5 A480 | |
| **TBA 0500SQ (See drawing on page: 4-136)** | | | | | |
| 010 | 2860036-0000 | | 1 | VOLUME FLAP | |
| 040 | 2872047-0000 | | 2 | ARM | |
| 045 | 2952710-0000 | | 1 | ARM | |
| 120 | 1558701-0000 | | 2 | BUSHING | |
| 130 | 2860037-0000 | | 1 | VOLUME BULGE | |
| 140 | 2860038-0000 | | 3 | VOLUME SHIM | |
| 150 | 2959867-0000 | | 2 | SPACER SCREW | |
| 160 | 2905199-0000 | | 2 | HOLDER | |
| 180 | 2872048-0000 | | 1 | PIN | |
| 185 | 2872091-0000 | | 1 | PIN | |
| 190 | 2846667-0000 | | 1 | DAMPER | |
| 210 | 312105-0327 | | 2 | SCREW M6S ISO 4017 M5X12 A480 | |
| 220 | 312105-0329 | | 4 | SCREW M6S ISO 4017 M5X16 A480 | |
| 230 | 312105-0285 | | 2 | SCREW M6S ISO 4017 M4X6 A470 | |
| 260 | 312115-0325 | | 1 | SCREW ISO4762 M5X10 A4 80 | |
| 290 | 315105-0146 | | 11 | WASHER BRB 5,3X10 RFR | |
| 300 | 315106-0136 | | 2 | WASHER ISO 7089-4-200 HV A4 | |
| 360 | 311103-0234 | | 4 | PARALLEL PIN ISO 2338 3M6X12 A1 | |
| 370 | 312115-0364 | | 2 | SCREW ISO4762 M6X10 A4 80 | |
| 380 | 312105-0285 | | 2 | SCREW M6S ISO 4017 M4X6 A470 | |
| 390 | 312812-0314 | | 2 | HEXAGON NUT, NY-LOCK M5 A480 | |

| Pos | Part No | UN | Qty | Description | Page No |
|---|---|---|---|---|---|
| **TBA 1000B (See drawing on page: 4-134)** | | | | | |
| 010 | 2902008-0000 | | 1 | VOLUME FLAP | |
| 020 | 2902009-0000 | | 1 | SIDE PLATE | |
| 030 | 2902010-0000 | | 1 | SIDE PLATE | |
| 040 | 2809061-0006 | | 2 | ARM | |
| 080 | 2778960-0000 | | 4 | BUSHING | |
| 120 | 1558701-0000 | | 2 | BUSHING | |
| 130 | 2795078-0000 | | 1 | VOLUME BULGE | |
| 140 | 2795079-0000 | | 3 | VOLUME SHIM | |
| 150 | 2902011-0000 | | 1 | BRACKET | |
| 155 | 2902012-0000 | | 1 | 01BRACKET | |
| 180 | 2842776-0000 | | 1 | PIN | |
| 190 | 2846667-0000 | | 1 | DAMPER | |
| 210 | 312105-0329 | | 2 | SCREW M6S ISO 4017 M5X16 A480 | |
| 220 | 312105-0335 | | 2 | SCREW M6S ISO 4014 M5X30 A480 | |
| 230 | 312105-0331 | | 2 | SCREW M6S ISO 4017 M5X20 A480 | |
| 240 | 312105-0370 | | 4 | SCREW M6S ISO 4017 M6X20 A480 | |
| 250 | 312105-0337 | | 2 | SCREW M6S ISO 4014 M5X35 A480 | |
| 260 | 312115-0328 | | 1 | SCREW ISO4762 M5X14 A4 80 | |
| 290 | 315105-0146 | | 9 | WASHER BRB 5,3X10 RFR | |
| 300 | 315105-0153 | | 4 | WASHER BRB 6,4X12 RFR | |
| 350 | 311103-0268 | | 2 | PARALLEL PIN ISO 2338 4M6X12 A1 | |
| 360 | 311103-0234 | | 2 | PARALLEL PIN ISO 2338 3M6X12 A1 | |
| 370 | 312115-0364 | | 2 | SCREW ISO4762 M6X10 A4 80 | |
| **TBA 1000S (See drawing on page: 4-134)** | | | | | |
| 010 | 2814896-0000 | | 1 | VOLUME FLAP | |
| 020 | 2814899-0000 | | 1 | SIDE PLATE | |
| 030 | 2814900-0000 | | 1 | SIDE PLATE | |
| 040 | 2809061-0002 | | 2 | ARM | |
| 060 | 1040756-0000 | | 1 | WEDGE | |
| 080 | 2778960-0000 | | 4 | BUSHING | |
| 120 | 1558701-0000 | | 2 | BUSHING | |
| 130 | 1040754-0000 | | 1 | VOLUME BULGE | |
| 140 | 1040755-0000 | | 3 | VOLUME SHIM | |
| 150 | 2916135-0000 | | 1 | BRACKET | |
| 155 | 2916134-0000 | | 1 | BRACKET | |
| 180 | 2842776-0000 | | 1 | PIN | |
| 190 | 2846667-0000 | | 1 | DAMPER | |
| 210 | 312105-0329 | | 2 | SCREW M6S ISO 4017 M5X16 A480 | |
| 220 | 312105-0335 | | 2 | SCREW M6S ISO 4014 M5X30 A480 | |
| 230 | 312105-0331 | | 2 | SCREW M6S ISO 4017 M5X20 A480 | |
| 240 | 312105-0370 | | 4 | SCREW M6S ISO 4017 M6X20 A480 | |

Machine Type | Group Description | Used-In | Group Number | Page No

# VOLUME FLAP PRESSURE



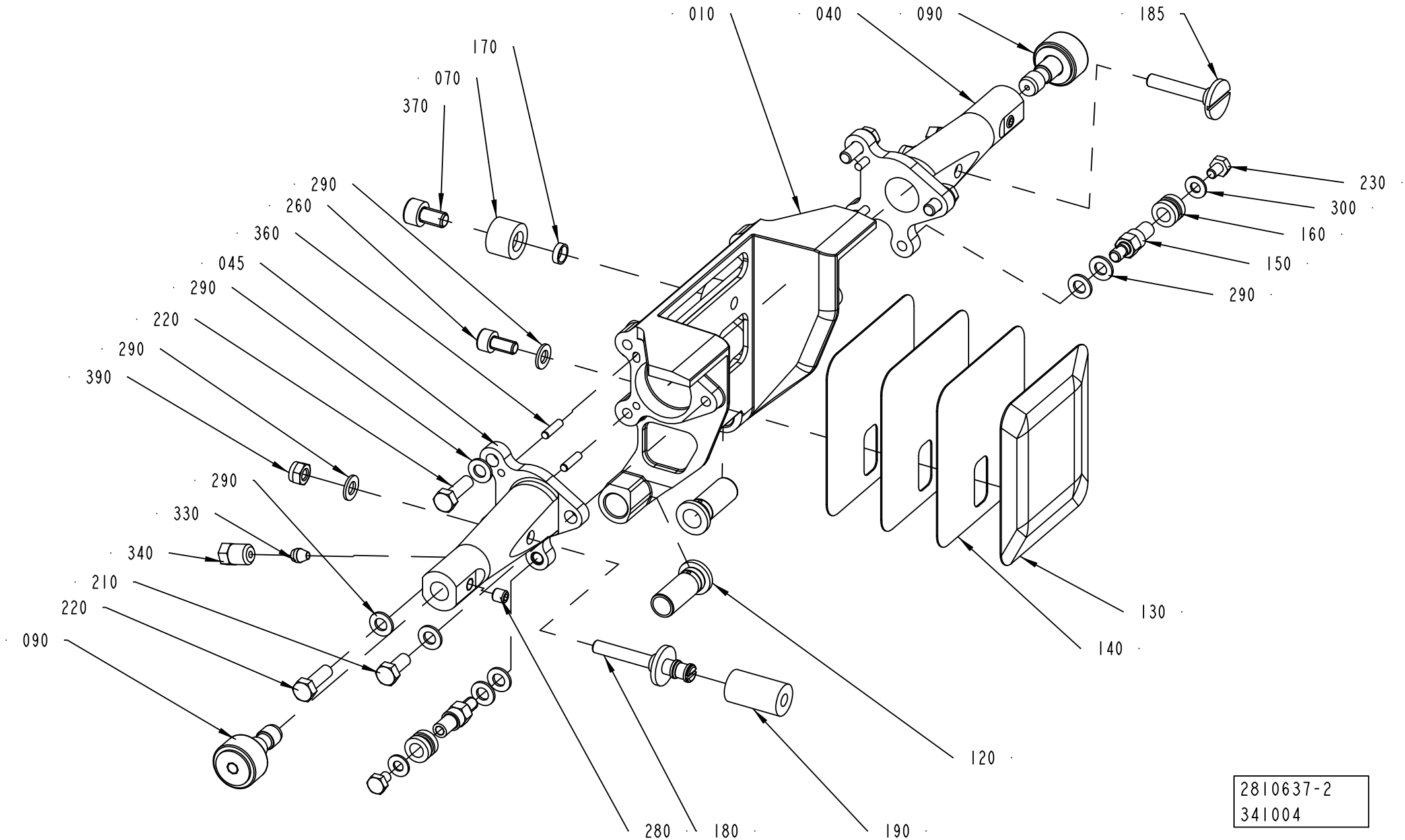

| Pos | Part No | UN | Qty | Description | Page No |
|---|---|---|---|---|---|
| **TBA 1000S (Cont'd) (See drawing on page: 4-134)** | | | | | |
| 250 | 312105-0337 | | 2 | SCREW M6S ISO 4014 M5X35 A480 | |
| 260 | 312115-0367 | | 1 | SCREW ISO4762 M6X14 A4 80 | |
| 270 | 312145-0291 | | 2 | SCREW ISO 2009 MFS M4X12 A4 | |
| 290 | 315105-0146 | | 8 | WASHER BRB 5,3X10 RFR | |
| 300 | 315105-0153 | | 5 | WASHER BRB 6,4X12 RFR | |
| 350 | 311103-0268 | | 2 | PARALLEL PIN ISO 2338 4M6X12 A1 | |
| 360 | 311103-0234 | | 2 | PARALLEL PIN ISO 2338 3M6X12 A1 | |
| 370 | 312115-0364 | | 2 | SCREW ISO4762 M6X10 A4 80 | |
| **TBA 1000SQ (See drawing on page: 4-134)** | | | | | |
| 010 | 2808802-0000 | | 1 | VOLUME FLAP | |
| 020 | 2810642-0000 | | 1 | SIDE PLATE | |
| 030 | 2810643-0000 | | 1 | SIDE PLATE | |
| 040 | 2809061-0001 | | 2 | ARM | |
| 060 | 1040756-0000 | | 1 | WEDGE | |
| 080 | 2778960-0000 | | 4 | BUSHING | |
| 120 | 1558701-0000 | | 2 | BUSHING | |
| 130 | 1487626-0000 | | 1 | VOLUME BULGE | |
| 140 | 1487627-0000 | | 3 | VOLUME SHIM | |
| 150 | 2916133-0000 | | 1 | BRACKET | |
| 155 | 2916132-0000 | | 1 | BRACKET | |
| 180 | 2842776-0000 | | 1 | PIN | |
| 190 | 2846667-0000 | | 1 | DAMPER | |
| 210 | 312105-0333 | | 2 | SCREW M6S ISO 4017 M5X25 A480 | |
| 220 | 312105-0339 | | 2 | SCREW M6S ISO 4014 M5X40 A480 | |
| 230 | 312105-0335 | | 2 | SCREW M6S ISO 4014 M5X30 A480 | |
| 240 | 312105-0370 | | 4 | SCREW M6S ISO 4017 M6X20 A480 | |
| 250 | 312105-0340 | | 2 | SCREW M6S ISO 4014 M5X45 A480 | |
| 260 | 312115-0367 | | 1 | SCREW ISO4762 M6X14 A4 80 | |
| 270 | 312145-0291 | | 2 | SCREW ISO 2009 MFS M4X12 A4 | |
| 290 | 315105-0146 | | 8 | WASHER BRB 5,3X10 RFR | |
| 300 | 315105-0153 | | 5 | WASHER BRB 6,4X12 RFR | |
| 350 | 311103-0268 | | 2 | PARALLEL PIN ISO 2338 4M6X12 A1 | |
| 360 | 311103-0234 | | 2 | PARALLEL PIN ISO 2338 3M6X12 A1 | |
| 370 | 312115-0364 | | 2 | SCREW ISO4762 M6X10 A4 80 | |
| **TBA 1500S (See drawing on page: 4-140)** | | | | | |
| 010 | 2969140-0000 | | 1 | VOLUME FLAP | |
| 015 | 2969139-0000 | | 1 | VOLUME FLAP | |
| 120 | 1558701-0000 | | 2 | BUSHING | |
| 130 | 2969142-0000 | | 1 | VOLUME BULGE | |
| 140 | 2987038-0000 | | 3 | VOLUME SHIM | |
| 150 | 2969143-0000 | | 2 | BRACKET | |
| 200 | 312105-0366 | | 2 | SCREW M6S ISO 4017 M6X12 A480 | |
| 270 | 312155-0329 | | 2 | SCREW DIN 7991 MF6S M5X16 A4 70 | |
| 275 | 312155-0327 | | 4 | SCREW DIN 7991 MF6S M5X12 A4 70 | |
| 290 | 315105-0146 | | 4 | WASHER BRB 5,3X10 RFR | |
| 370 | 312115-0362 | | 2 | SCREW ISO4762 M6X8 A4 80 | |
| 390 | 312812-0314 | | 4 | HEXAGON NUT, NY-LOCK M5 A480 | |
| **TBA 2000S (See drawing on page: 4-142)** | | | | | |
| 010 | 2978342-0000 | | 1 | VOLUME FLAP | |
| 015 | 2978340-0000 | | 1 | VOLUME FLAP | |
| 040 | 2809061-0011 | | 2 | ARM | |
| 120 | 2917307-0000 | | 2 | BUSHING | |
| 130 | 2978344-0000 | | 1 | VOLUME BULGE | |
| 140 | 2978343-0000 | | 3 | VOLUME SHIM | |
| 150 | 2907809-0000 | | 1 | BRACKET | |
| 155 | 2907808-0000 | | 1 | BRACKET | |
| 180 | 2842776-0000 | | 1 | PIN | |
| 190 | 2846667-0000 | | 1 | DAMPER | |
| 210 | 312105-0329 | | 4 | SCREW M6S ISO 4017 M5X16 A480 | |
| 230 | 312105-0331 | | 4 | SCREW M6S ISO 4017 M5X20 A480 | |
| 270 | 312155-0329 | | 2 | SCREW DIN 7991 MF6S M5X16 A4 70 | |
| 275 | 312155-0327 | | 4 | SCREW DIN 7991 MF6S M5X12 A4 70 | |
| 290 | 315105-0146 | | 12 | WASHER BRB 5,3X10 RFR | |
| 350 | 311103-0267 | | 2 | PARALLEL PIN ISO 2338 4M6X10 A1 | |
| 360 | 311103-0233 | | 2 | PARALLEL PIN ISO 2338 3M6X10 A1 | |
| 370 | 312115-0362 | | 2 | SCREW ISO4762 M6X8 A4 80 | |
| 390 | 312812-0314 | | 4 | HEXAGON NUT, NY-LOCK M5 A480 | |
| **Common Parts** | | | | | |
| 070 | 2842778-0000 | | 2 | DAMPER | |
| 090 | 2952691-0100 | | 2 | ROLLER ..... | **4-125** |
| 170 | 2842779-0000 | | 2 | SPACER | |
| 280 | 312318-0320 | | 2 | SCREW ISO4029 M5X5 A4 | |
| 330 | 90028-0020 | | 2 | CONE TUBE 2,5MM | |
| 340 | 90134-0063 | | 2 | BUSHING/NUT M8X1, D=2,5 MM | |

# VOLUME FLAP PRESSURE



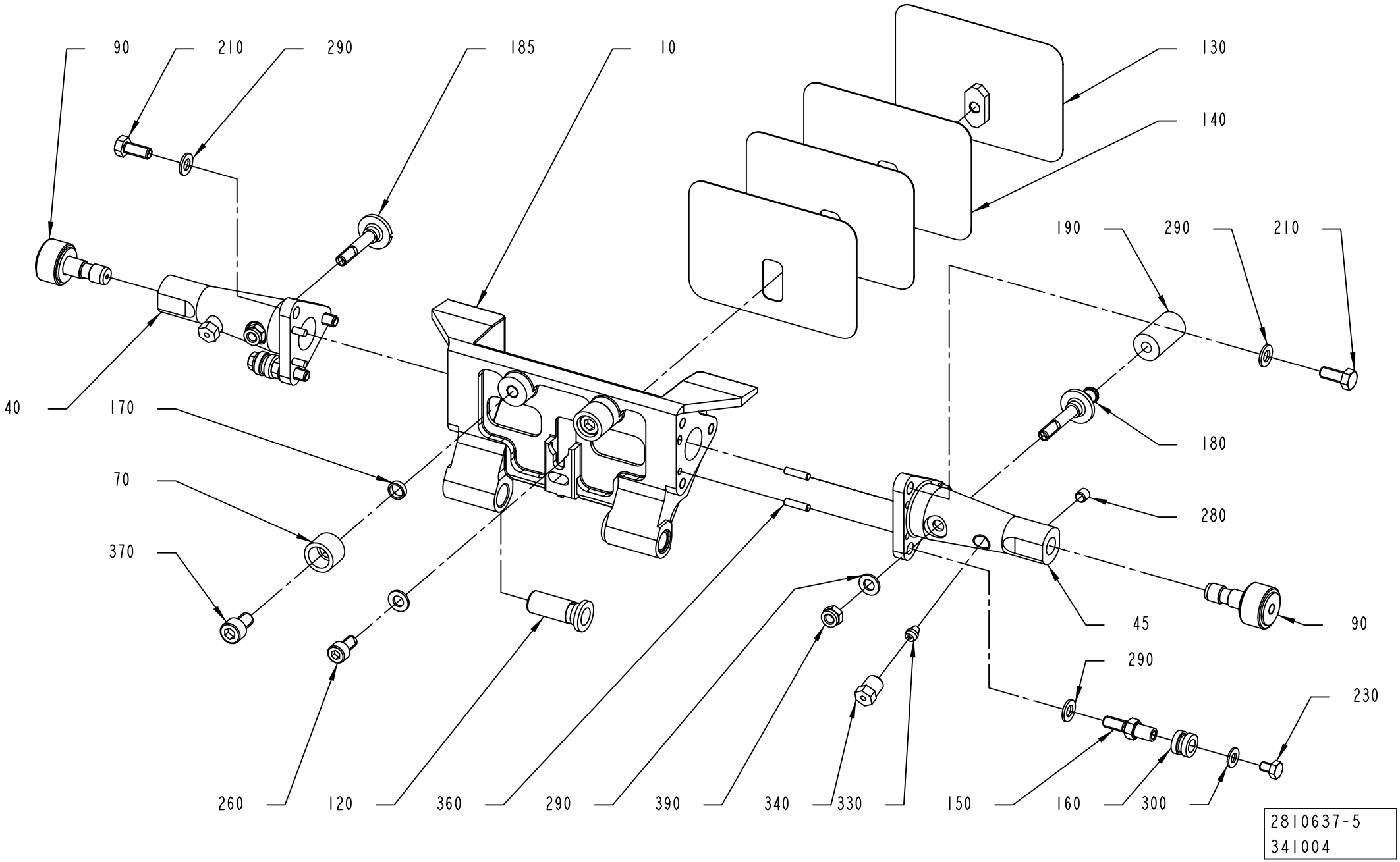

| Pos | Part No | UN | Qty | Description | Page No |
|---|---|---|---|---|---|
| **SEE PREVIOUS LISTS PAGES: 4-135, 4-137.** | | | | | |

| Pos | Part No | UN | Qty | Description | Page No |
|---|---|---|---|---|---|

# VOLUME FLAP PRESSURE



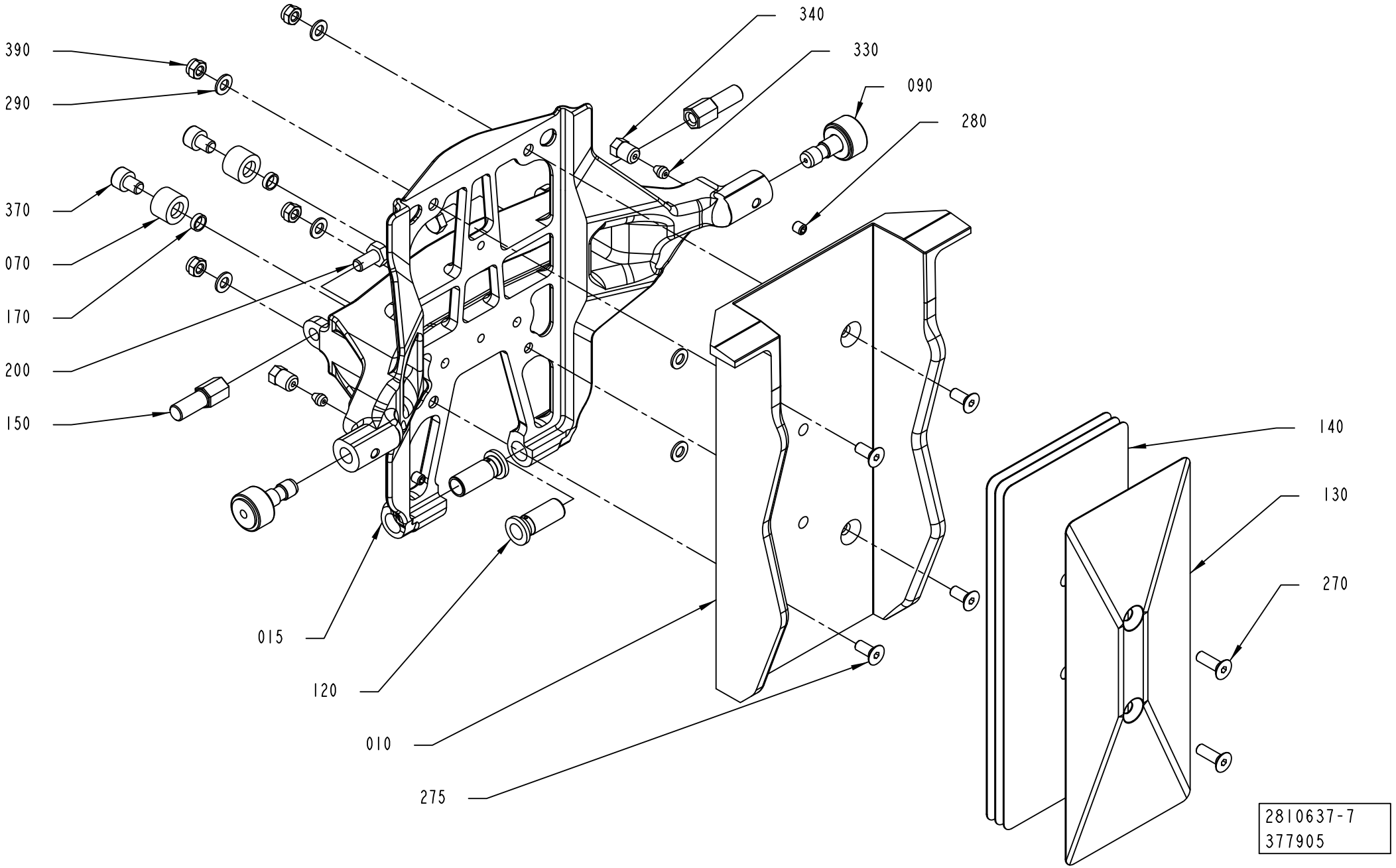

| Pos | Part No | UN | Qty | Description | Page No |
|---|---|---|---|---|---|
| **SEE PREVIOUS LISTS PAGES: 4-135, 4-137.** | | | | | |

| Pos | Part No | UN | Qty | Description | Page No |
|---|---|---|---|---|---|

# VOLUME FLAP PRESSURE



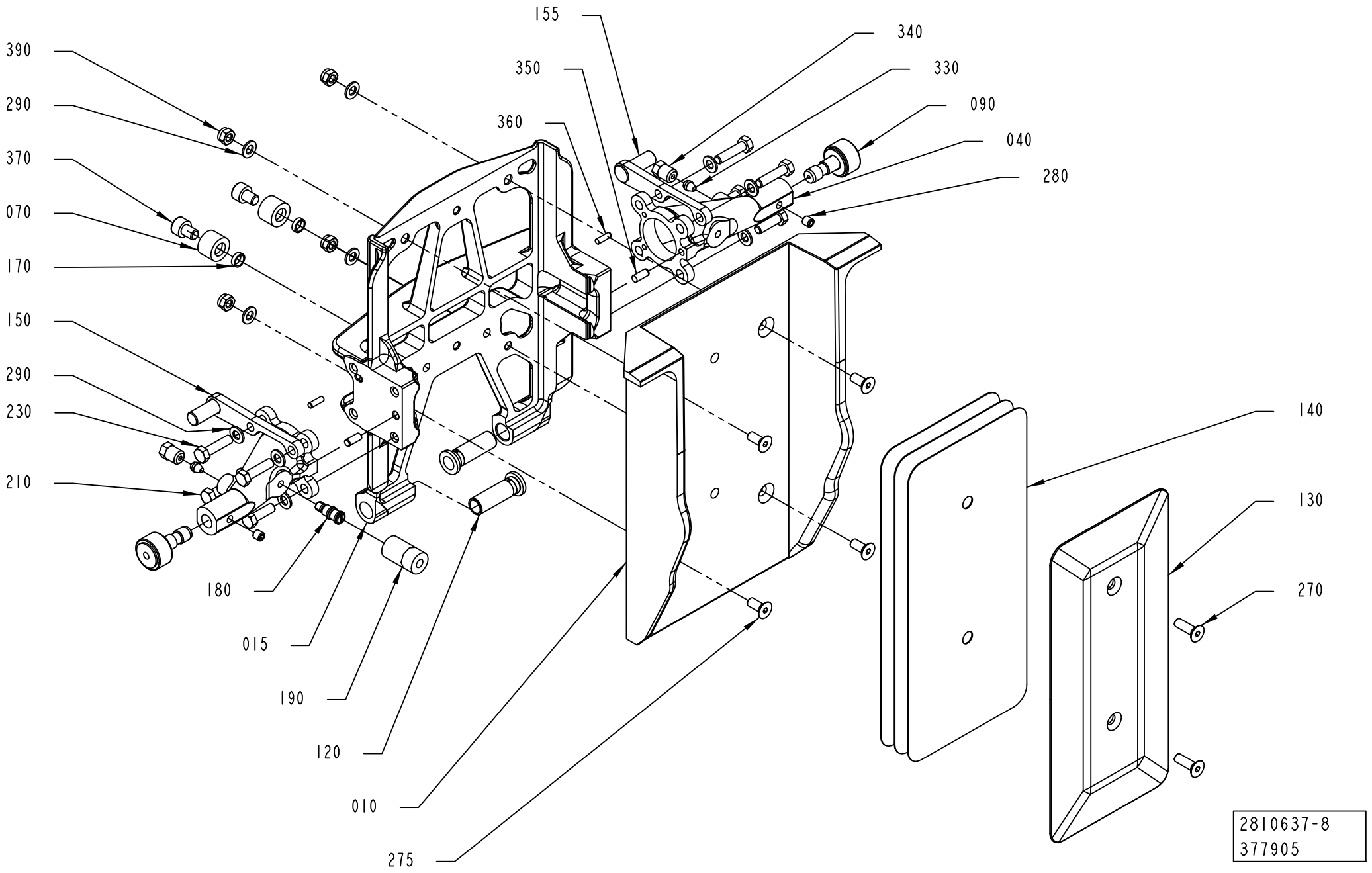

| Pos | Part No | UN | Qty | Description | Page No |
|---|---|---|---|---|---|
| **SEE PREVIOUS LISTS PAGES: 4-135, 4-137.** | | | | | |

| Pos | Part No | UN | Qty | Description | Page No |
|---|---|---|---|---|---|

# SHOCK ABSORBER PRESSURE



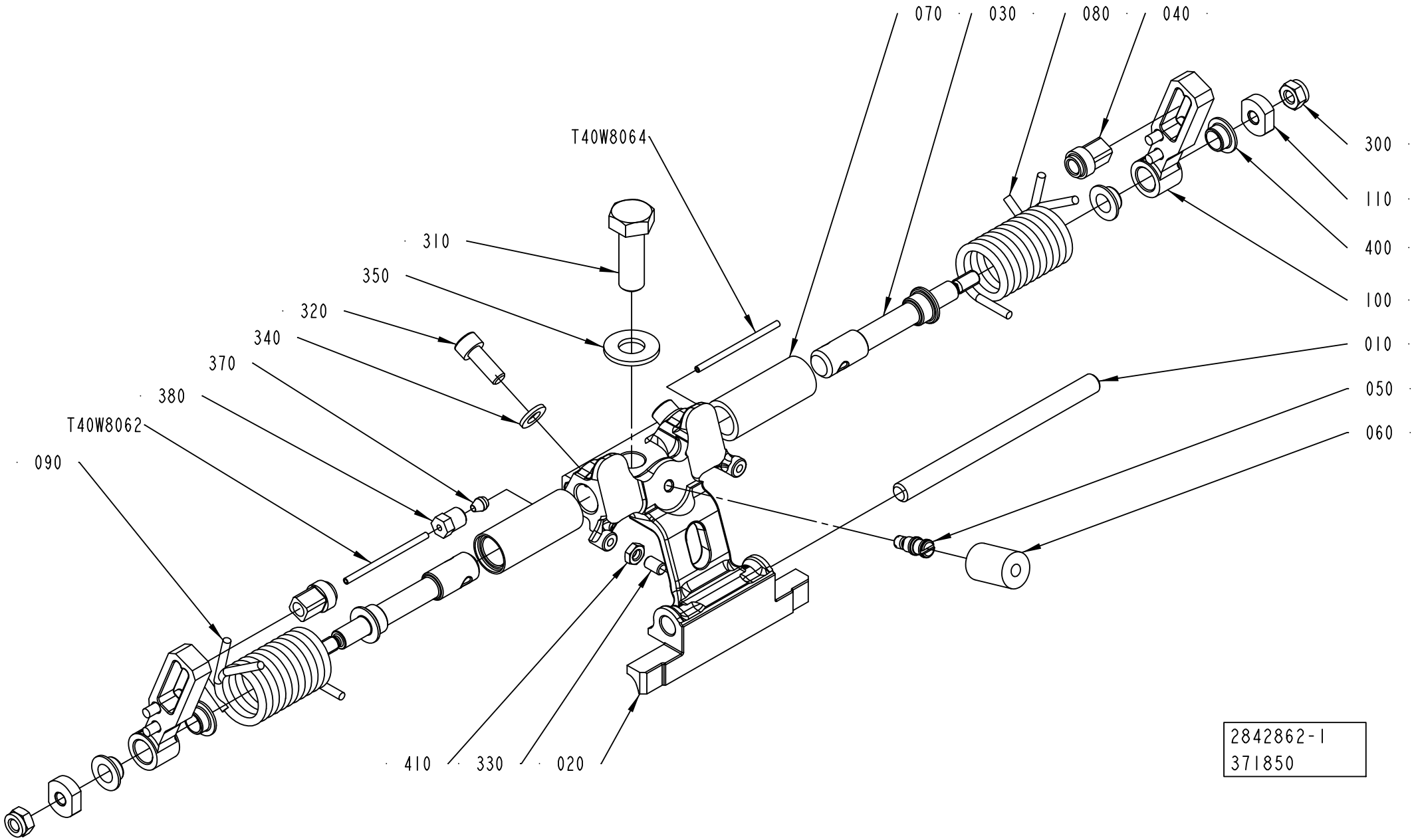

ECM: 375714 - 20081127
Group number: 2842862-0100
Assembly Drawing: 2842862-1_1_AD

This list covers pages from 4-144 to 4-149

| Pos | Part No | UN | Qty | Description | Page No |
|---|---|---|---|---|---|
| **TBA 0500B (See drawing on page: 4-146)** | | | | | |
| 010 | 2773510-0000 | | 1 | SHAFT | |
| 020 | 2922531-0001 | | 1 | HOLDER | |
| 030 | 2902006-0000 | | 2 | SHAFT | |
| 050 | 2842776-0000 | | 1 | PIN | |
| 060 | 2842777-0001 | | 1 | DAMPER | |
| 080 | 2961953-0000 | | 2 | TENSION SPRING | |
| 120 | 2905199-0000 | | 2 | HOLDER | |
| 300 | 312105-0285 | | 2 | SCREW M6S ISO 4017 M4X6 A470 | |
| 310 | 312105-0495 | | 1 | SCREW M6S ISO 4017 M10X30 A480 | |
| 320 | 312115-0368 | | 2 | SCREW ISO4762 M6X16 A4 80 | |
| 330 | 312318-0325 | | 1 | SCREW ISO4029 M5X10 A4 | |
| 360 | 315106-0136 | | 2 | WASHER ISO 7089-4-200 HV A4 | |
| 370 | 90028-0020 | | 2 | CONE TUBE 2,5MM | |
| 380 | 90134-0063 | | 2 | BUSHING/NUT M8X1, D=2,5 MM | |
| 410 | 312625-0314 | | 1 | HEXAGON THIN NUT, EN 24035 ML6M M5 A4 | |
| T40W8062 | 90166-0143 | MM | 220 | TUBE 2,5 MM PA TRANSP. | |
| T40W8064 | 90166-0143 | MM | 220 | TUBE 2,5 MM PA TRANSP. | |
| **TBA 0500SQ (See drawing on page: 4-146)** | | | | | |
| 010 | 2773510-0000 | | 1 | SHAFT | |
| 020 | 2922527-0001 | | 1 | HOLDER | |
| 030 | 2863119-0000 | | 2 | SHAFT | |
| 050 | 2842776-0000 | | 1 | PIN | |
| 060 | 2842777-0001 | | 1 | DAMPER | |
| 080 | 2959868-0000 | | 2 | TENSION SPRING | |
| 120 | 2905199-0000 | | 2 | HOLDER | |
| 300 | 312105-0285 | | 2 | SCREW M6S ISO 4017 M4X6 A470 | |
| 310 | 312105-0495 | | 1 | SCREW M6S ISO 4017 M10X30 A480 | |
| 320 | 312115-0368 | | 2 | SCREW ISO4762 M6X16 A4 80 | |
| 330 | 312318-0323 | | 1 | SCREW ISO4029 M5X8 A4 | |
| 360 | 315106-0136 | | 2 | WASHER ISO 7089-4-200 HV A4 | |
| 370 | 90028-0020 | | 2 | CONE TUBE 2,5MM | |
| 380 | 90134-0063 | | 2 | BUSHING/NUT M8X1, D=2,5 MM | |
| 410 | 312625-0314 | | 1 | HEXAGON THIN NUT, EN 24035 ML6M M5 A4 | |
| T40W8062 | 90166-0143 | MM | 220 | TUBE 2,5 MM PA TRANSP. | |
| T40W8064 | 90166-0143 | MM | 220 | TUBE 2,5 MM PA TRANSP. | |
| **TBA 1000B (See drawing on page: 4-144)** | | | | | |
| 010 | 2773510-0000 | | 1 | SHAFT | |
| 020 | 2922531-0001 | | 1 | HOLDER | |
| 030 | 2911622-0000 | | 2 | SHAFT | |
| 040 | 2916130-0000 | | 2 | SLIDER | |
| 050 | 2842776-0000 | | 1 | PIN | |
| 060 | 2842777-0001 | | 1 | DAMPER | |
| 070 | 2842780-0000 | | 2 | BUSHING | |
| 080 | 2842781-0000 | | 1 | SPRING | |
| 090 | 2842782-0000 | | 1 | SPRING | |
| 100 | 2916131-0000 | | 2 | LEVER | |
| 110 | 2911623-0000 | | 2 | WASHER | |
| 300 | 312812-0316 | | 2 | HEXAGON NUT, NY-LOCK M6 A480 | |
| 310 | 312105-0495 | | 1 | SCREW M6S ISO 4017 M10X30 A480 | |
| 320 | 312115-0368 | | 2 | SCREW ISO4762 M6X16 A4 80 | |
| 330 | 312318-0325 | | 1 | SCREW ISO4029 M5X10 A4 | |
| 370 | 90028-0020 | | 2 | CONE TUBE 2,5MM | |
| 380 | 90134-0063 | | 2 | BUSHING/NUT M8X1, D=2,5 MM | |
| 400 | 90600-2013 | | 4 | FLANGE BUSHING, 8X10X5,5 MM | |
| 410 | 312625-0314 | | 1 | HEXAGON THIN NUT, EN 24035 ML6M M5 A4 | |
| T40W8062 | 90166-0143 | MM | 220 | TUBE 2,5 MM PA TRANSP. | |
| T40W8064 | 90166-0143 | MM | 220 | TUBE 2,5 MM PA TRANSP. | |
| **TBA 1000S (See drawing on page: 4-144)** | | | | | |
| 010 | 2773510-0000 | | 1 | SHAFT | |
| 020 | 2922529-0001 | | 1 | HOLDER | |
| 030 | 2911622-0000 | | 2 | SHAFT | |
| 040 | 2916130-0000 | | 2 | SLIDER | |
| 050 | 2842776-0000 | | 1 | PIN | |
| 060 | 2842777-0001 | | 1 | DAMPER | |
| 070 | 2842780-0000 | | 2 | BUSHING | |
| 080 | 2842781-0000 | | 1 | SPRING | |
| 090 | 2842782-0000 | | 1 | SPRING | |
| 100 | 2916131-0000 | | 2 | LEVER | |
| 110 | 2911623-0000 | | 2 | WASHER | |
| 300 | 312812-0316 | | 2 | HEXAGON NUT, NY-LOCK M6 A480 | |
| 310 | 312105-0495 | | 1 | SCREW M6S ISO 4017 M10X30 A480 | |
| 320 | 312115-0368 | | 2 | SCREW ISO4762 M6X16 A4 80 | |
| 330 | 312318-0325 | | 1 | SCREW ISO4029 M5X10 A4 | |
| 370 | 90028-0020 | | 2 | CONE TUBE 2,5MM | |
| 380 | 90134-0063 | | 2 | BUSHING/NUT M8X1, D=2,5 MM | |
| 400 | 90600-2013 | | 4 | FLANGE BUSHING, 8X10X5,5 MM | |
| 410 | 312625-0314 | | 1 | HEXAGON THIN NUT, EN 24035 ML6M M5 A4 | |
| T40W8062 | 90166-0143 | MM | 220 | TUBE 2,5 MM PA TRANSP. | |
| T40W8064 | 90166-0143 | MM | 220 | TUBE 2,5 MM PA TRANSP. | |
| **TBA 1000SQ (See drawing on page: 4-144)** | | | | | |
| 010 | 2773510-0000 | | 1 | SHAFT | |
| 020 | 2922527-0001 | | 1 | HOLDER | |
| 030 | 2911622-0000 | | 2 | SHAFT | |

Machine Type | Group Description | Used-In | Group Number | Page No

# SHOCK ABSORBER PRESSURE



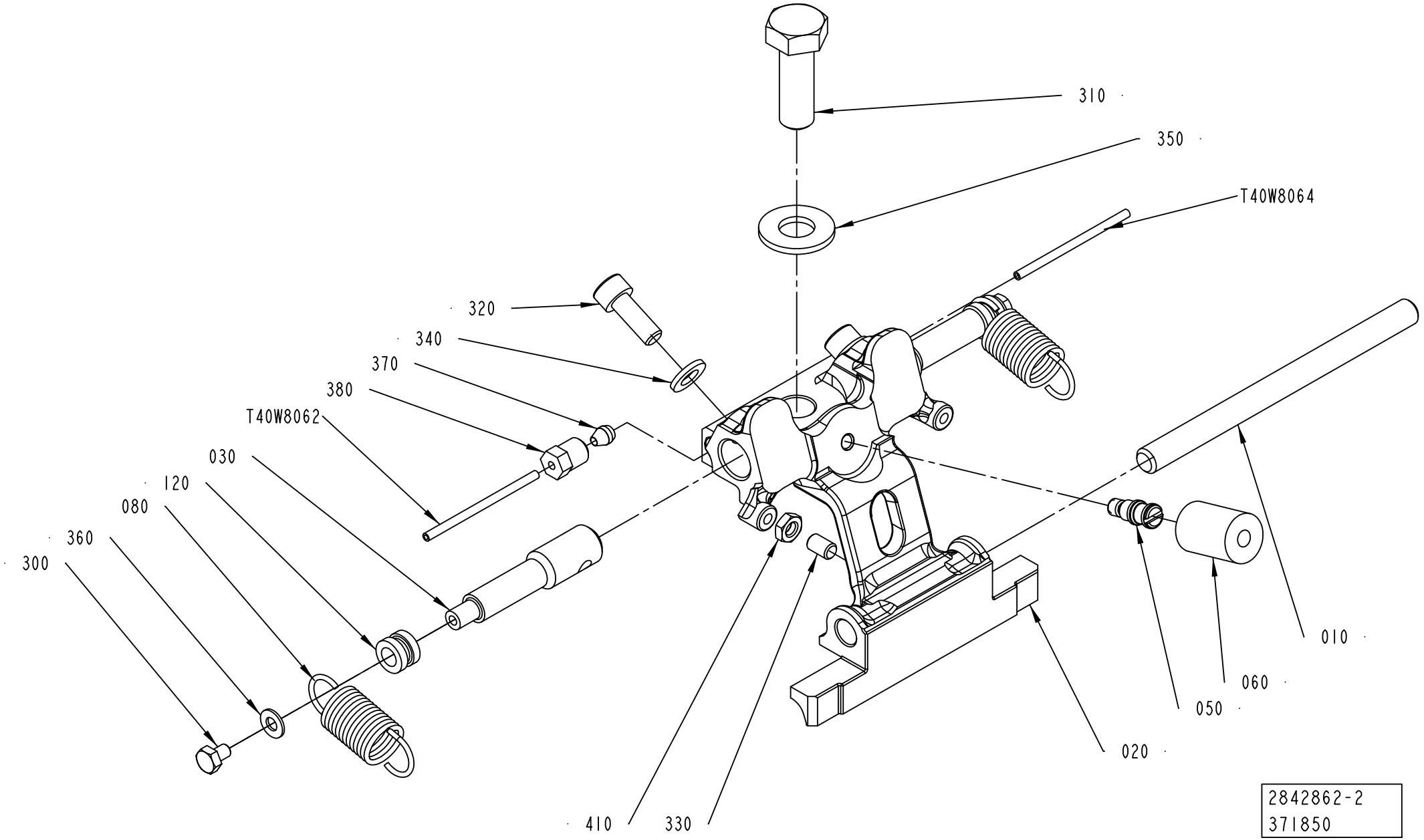

ECM: 375714 - 20081127
Group number: 2842862-0100
Assembly Drawing: 2842862-2_1_AC

This list covers pages from 4-144 to 4-149

| Pos | Part No | UN | Qty | Description | Page No |
|---|---|---|---|---|---|
| **TBA 1000SQ (Cont'd) (See drawing on page: 4-144)** | | | | | |
| 040 | 2916130-0000 | | 2 | SLIDER | |
| 050 | 2842776-0000 | | 1 | PIN | |
| 060 | 2842777-0001 | | 1 | DAMPER | |
| 070 | 2842780-0000 | | 2 | BUSHING | |
| 080 | 2842781-0000 | | 1 | SPRING | |
| 090 | 2842782-0000 | | 1 | SPRING | |
| 100 | 2916131-0000 | | 2 | LEVER | |
| 110 | 2911623-0000 | | 2 | WASHER | |
| 300 | 312812-0316 | | 2 | HEXAGON NUT, NY-LOCK M6 A480 | |
| 310 | 312105-0495 | | 1 | SCREW M6S ISO 4017 M10X30 A480 | |
| 320 | 312115-0368 | | 2 | SCREW ISO4762 M6X16 A4 80 | |
| 330 | 312318-0323 | | 1 | SCREW ISO4029 M5X8 A4 | |
| 370 | 90028-0020 | | 2 | CONE TUBE 2,5MM | |
| 380 | 90134-0063 | | 2 | BUSHING/NUT M8X1, D=2,5 MM | |
| 400 | 90600-2013 | | 4 | FLANGE BUSHING, 8X10X5,5 MM | |
| 410 | 312625-0314 | | 1 | HEXAGON THIN NUT, EN 24035 ML6M M5 A4 | |
| T40W8062 | 90166-0143 | MM | 220 | TUBE 2,5 MM PA TRANSP. | |
| T40W8064 | 90166-0143 | MM | 220 | TUBE 2,5 MM PA TRANSP. | |
| **TBA 1500S (See drawing on page: 4-144)** | | | | | |
| 010 | 2773510-0000 | | 1 | SHAFT | |
| 020 | 2930285-0001 | | 1 | HOLDER | |
| 030 | 2907800-0000 | | 2 | SHAFT | |
| 040 | 2907807-0000 | | 2 | SLIDER | |
| 050 | 2907797-0000 | | 1 | PIN | |
| 060 | 2842777-0005 | | 1 | DAMPER | |
| 070 | 2916984-0000 | | 2 | BUSHING | |
| 080 | 2907805-0000 | | 1 | SPRING | |
| 090 | 2907804-0000 | | 1 | SPRING | |
| 100 | 2907806-0000 | | 2 | LEVER | |
| 110 | 2911623-0000 | | 2 | WASHER | |
| 300 | 312812-0316 | | 2 | HEXAGON NUT, NY-LOCK M6 A480 | |
| 310 | 312105-0499 | | 1 | SCREW M6S ISO 4014 M10X40 A480 | |
| 320 | 312115-0368 | | 2 | SCREW ISO4762 M6X16 A4 80 | |
| 330 | 312318-0325 | | 1 | SCREW ISO4029 M5X10 A4 | |
| 370 | 90028-0020 | | 2 | CONE TUBE 2,5MM | |
| 380 | 90134-0063 | | 2 | BUSHING/NUT M8X1, D=2,5 MM | |
| 400 | 90600-2013 | | 4 | FLANGE BUSHING, 8X10X5,5 MM | |
| 410 | 312625-0314 | | 1 | HEXAGON THIN NUT, EN 24035 ML6M M5 A4 | |
| T40W8062 | 90166-0143 | MM | 220 | TUBE 2,5 MM PA TRANSP. | |
| T40W8064 | 90166-0143 | MM | 220 | TUBE 2,5 MM PA TRANSP. | |
| **TBA 2000S (See drawing on page: 4-144)** | | | | | |
| 010 | 2907798-0000 | | 1 | SHAFT | |
| 020 | 2917311-0001 | | 1 | HOLDER | |
| 030 | 2907800-0000 | | 2 | SHAFT | |
| 040 | 2907807-0000 | | 2 | SLIDER | |
| 050 | 2907797-0000 | | 1 | PIN | |
| 060 | 2842777-0005 | | 1 | DAMPER | |
| 070 | 2916984-0000 | | 2 | BUSHING | |
| 080 | 2907805-0000 | | 1 | SPRING | |
| 090 | 2907804-0000 | | 1 | SPRING | |
| 100 | 2907806-0000 | | 2 | LEVER | |
| 110 | 2911623-0000 | | 2 | WASHER | |
| 300 | 312812-0316 | | 2 | HEXAGON NUT, NY-LOCK M6 A480 | |
| 310 | 312105-0499 | | 1 | SCREW M6S ISO 4014 M10X40 A480 | |
| 320 | 312115-0368 | | 2 | SCREW ISO4762 M6X16 A4 80 | |
| 330 | 312318-0325 | | 1 | SCREW ISO4029 M5X10 A4 | |
| 370 | 90028-0020 | | 2 | CONE TUBE 2,5MM | |
| 380 | 90134-0063 | | 2 | BUSHING/NUT M8X1, D=2,5 MM | |
| 400 | 90600-2013 | | 4 | FLANGE BUSHING, 8X10X5,5 MM | |
| 410 | 312625-0314 | | 1 | HEXAGON THIN NUT, EN 24035 ML6M M5 A4 | |
| T40W8062 | 90166-0143 | MM | 220 | TUBE 2,5 MM PA TRANSP. | |
| T40W8064 | 90166-0143 | MM | 220 | TUBE 2,5 MM PA TRANSP. | |
| **TPA 1000SQ, TPA 0750SQ (See drawing on page: 4-144)** | | | | | |
| 010 | 2916971-0000 | | 1 | SHAFT | |
| 020 | 2921237-0001 | | 1 | HOLDER | |
| 030 | 2907800-0000 | | 2 | SHAFT | |
| 040 | 2907807-0000 | | 2 | SLIDER | |
| 050 | 2907797-0000 | | 1 | PIN | |
| 060 | 2842777-0004 | | 1 | DAMPER | |
| 070 | 2916984-0000 | | 2 | BUSHING | |
| 080 | 2907805-0000 | | 1 | SPRING | |
| 090 | 2907804-0000 | | 1 | SPRING | |
| 100 | 2907806-0000 | | 2 | LEVER | |
| 110 | 2911623-0000 | | 2 | WASHER | |
| 300 | 312812-0316 | | 2 | HEXAGON NUT, NY-LOCK M6 A480 | |
| 310 | 312105-0499 | | 1 | SCREW M6S ISO 4014 M10X40 A480 | |
| 320 | 312115-0368 | | 2 | SCREW ISO4762 M6X16 A4 80 | |
| 330 | 312318-0325 | | 1 | SCREW ISO4029 M5X10 A4 | |
| 370 | 90028-0020 | | 2 | CONE TUBE 2,5MM | |
| 380 | 90134-0063 | | 2 | BUSHING/NUT M8X1, D=2,5 MM | |
| 400 | 90600-2013 | | 4 | FLANGE BUSHING, 8X10X5,5 MM | |
| 410 | 312625-0314 | | 1 | HEXAGON THIN NUT, EN 24035 ML6M M5 A4 | |
| T40W8062 | 90166-0143 | MM | 220 | TUBE 2,5 MM PA TRANSP. | |

**See previous drawings pages: 4-144, 4-146.**

| Pos | Part No | UN | Qty | Description | Page No |
|---|---|---|---|---|---|
| **TPA 1000SQ, TPA 0750SQ (Cont'd) (See drawing on page: 4-144)** | | | | | |
| T40W8064 | 90166-0143 | MM | 220 | TUBE 2,5 MM PA TRANSP. | |
| **Common Parts** | | | | | |
| 340 | 315105-0153 | | 2 | WASHER BRB 6,4X12 RFR | |
| 350 | 315105-0173 | | 1 | WASHER BRB 10,5X22 RFR | |

| Pos | Part No | UN | Qty | Description | Page No |
|---|---|---|---|---|---|

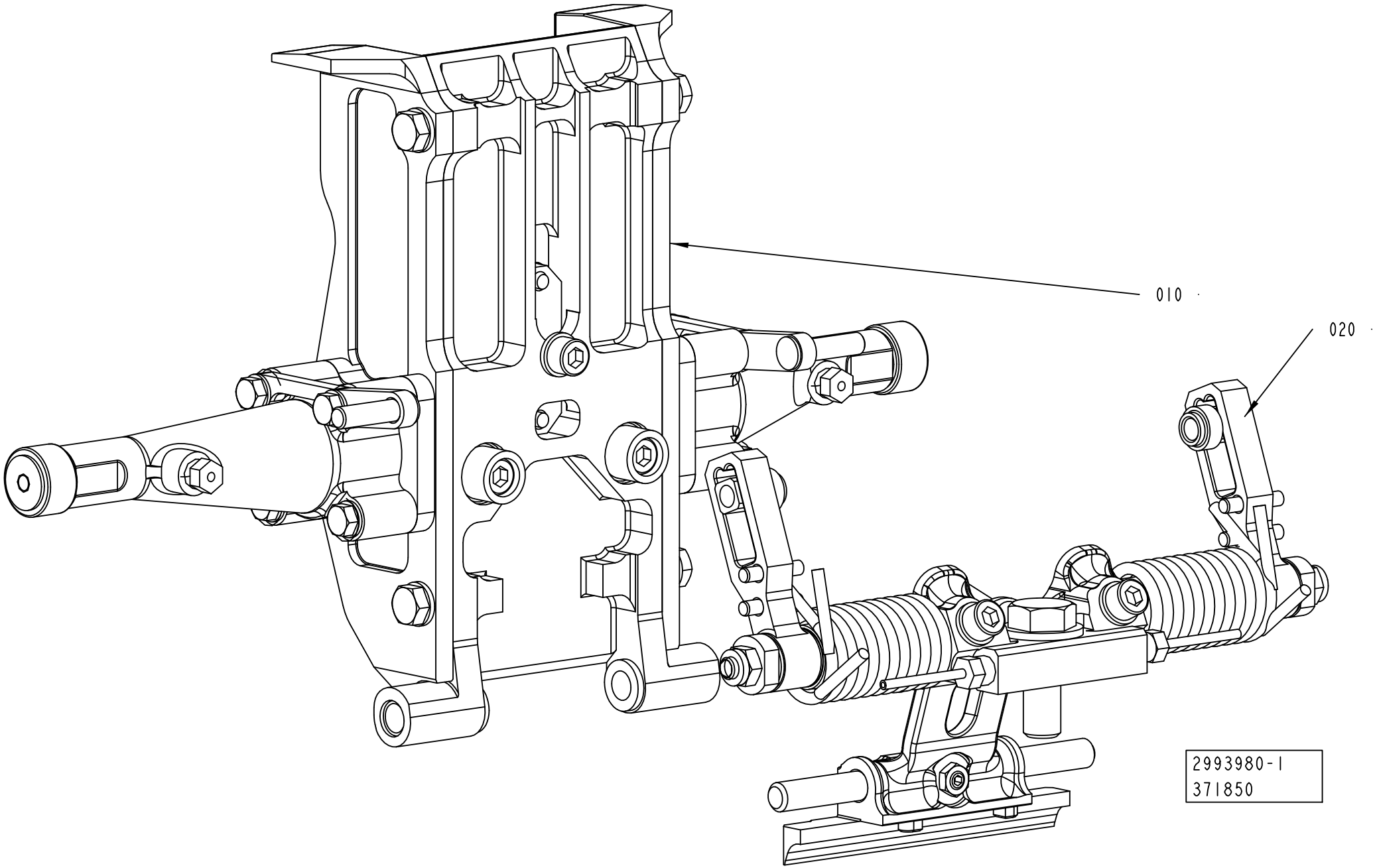
010
020
2993980-1
371850

ECM: 375711 - 20081127
Group number: 2993980-0100
Assembly Drawing: 2993980-1_1_AA

| Pos | Part No | UN | Qty | Description | Page No |
|---|---|---|---|---|---|
| **TBA 0500B** | | | | | |
| 010 | 2808800-0100 | | 1 | VOLUME FLAP CUTTING | **4-115, 4-117, 4-119, 4-121, 4-123** |
| 020 | 2993979-0100 | | 1 | SHOCK ABSORBER CUTTING | **4-153, 4-155, 4-157** |
| **TBA 0500SQ** | | | | | |
| 010 | 2808800-0100 | | 1 | VOLUME FLAP CUTTING | **4-115, 4-117, 4-119, 4-121, 4-123** |
| 020 | 2993979-0100 | | 1 | SHOCK ABSORBER CUTTING | **4-153, 4-155, 4-157** |
| **TBA 1000B** | | | | | |
| 010 | 2808800-0100 | | 1 | VOLUME FLAP CUTTING | **4-115, 4-117, 4-119, 4-121, 4-123** |
| 020 | 2993979-0100 | | 1 | SHOCK ABSORBER CUTTING | **4-153, 4-155, 4-157** |
| **TBA 1000S** | | | | | |
| 010 | 2808800-0100 | | 1 | VOLUME FLAP CUTTING | **4-115, 4-117, 4-119, 4-121, 4-123** |
| 020 | 2993979-0100 | | 1 | SHOCK ABSORBER CUTTING | **4-153, 4-155, 4-157** |
| **TBA 1000SQ** | | | | | |
| 010 | 2808800-0100 | | 1 | VOLUME FLAP CUTTING | **4-115, 4-117, 4-119, 4-121, 4-123** |
| 020 | 2993979-0100 | | 1 | SHOCK ABSORBER CUTTING | **4-153, 4-155, 4-157** |
| **TBA 1500S** | | | | | |
| 010 | 2808800-0100 | | 1 | VOLUME FLAP CUTTING | **4-115, 4-117, 4-119, 4-121, 4-123** |
| 020 | 2993979-0100 | | 1 | SHOCK ABSORBER CUTTING | **4-153, 4-155, 4-157** |
| **TBA 2000S** | | | | | |
| 010 | 2808800-0100 | | 1 | VOLUME FLAP CUTTING | **4-115, 4-117, 4-119, 4-121, 4-123** |
| 020 | 2993979-0100 | | 1 | SHOCK ABSORBER CUTTING | **4-153, 4-155, 4-157** |
| **TPA 0750SQ** | | | | | |
| 010 | 2808800-0100 | | 1 | VOLUME FLAP CUTTING | **4-115, 4-117, 4-119, 4-121, 4-123** |
| 020 | 2993979-0100 | | 1 | SHOCK ABSORBER CUTTING | **4-153, 4-155, 4-157** |
| **TPA 1000SQ** | | | | | |
| 010 | 2808800-0100 | | 1 | VOLUME FLAP CUTTING | **4-115, 4-117, 4-119, 4-121, 4-123** |
| 020 | 2993979-0100 | | 1 | SHOCK ABSORBER CUTTING | **4-153, 4-155, 4-157** |

| Pos | Part No | UN | Qty | Description | Page No |
|---|---|---|---|---|---|

# SHOCK ABSORBER CUTTING



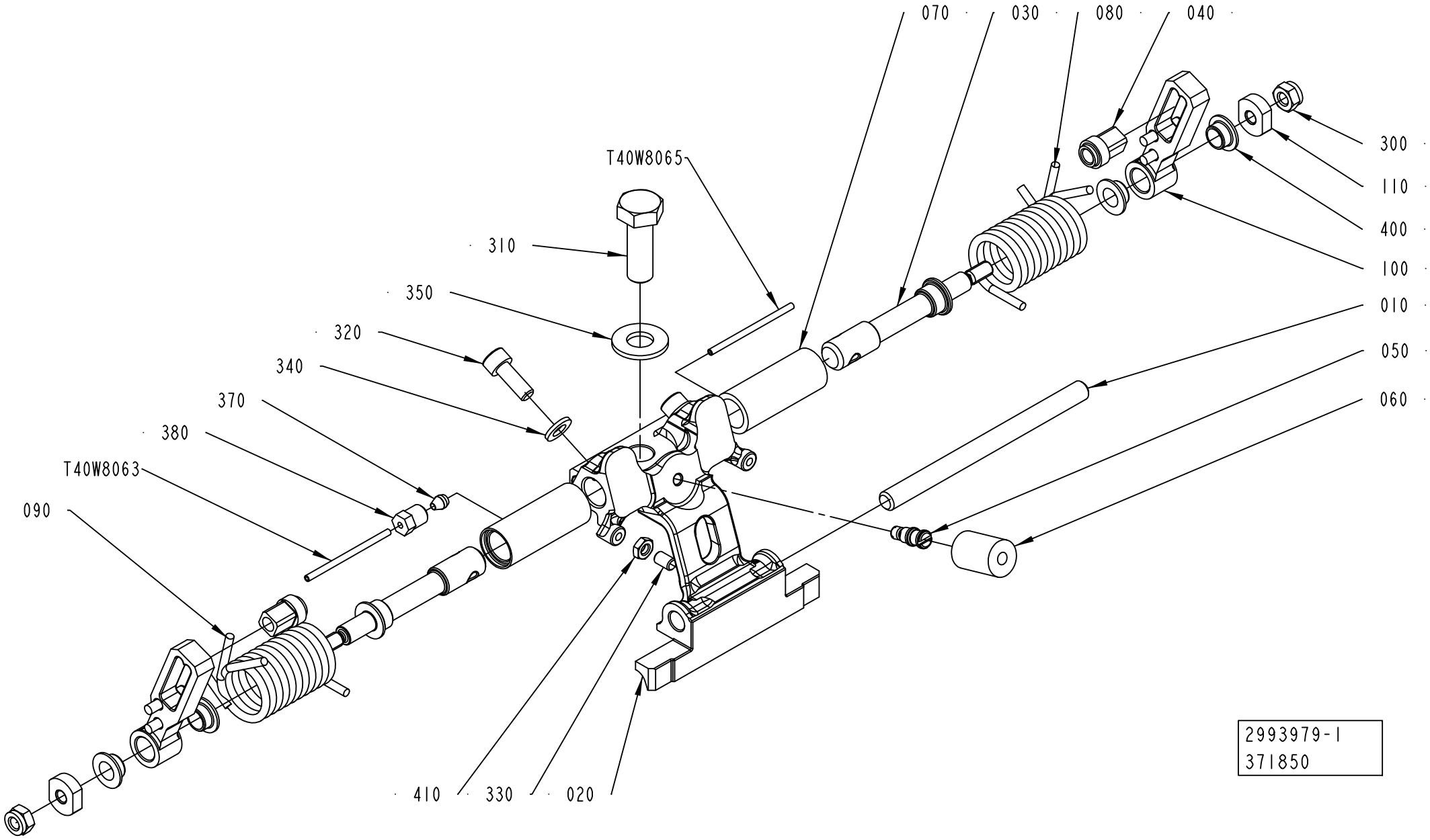

ECM: 375709 - 20081127
Group number: 2993979-0100
Assembly Drawing: 2993979-1_1_AA

This list covers pages from 4-152 to 4-157

| Pos | Part No | UN | Qty | Description | Page No |
|---|---|---|---|---|---|
| **TBA 0500B (See drawing on page: 4-154)** | | | | | |
| 010 | 2773510-0000 | | 1 | SHAFT | |
| 020 | 2922530-0002 | | 1 | HOLDER | |
| 030 | 2902006-0000 | | 2 | SHAFT | |
| 050 | 2842776-0000 | | 1 | PIN | |
| 060 | 2842777-0001 | | 1 | DAMPER | |
| 080 | 2916858-0000 | | 2 | TENSION SPRING | |
| 120 | 2905199-0000 | | 2 | HOLDER | |
| 300 | 312105-0285 | | 2 | SCREW M6S ISO 4017 M4X6 A470 | |
| 310 | 312105-0495 | | 1 | SCREW M6S ISO 4017 M10X30 A480 | |
| 320 | 312115-0368 | | 2 | SCREW ISO4762 M6X16 A4 80 | |
| 330 | 312318-0325 | | 1 | SCREW ISO4029 M5X10 A4 | |
| 360 | 315106-0136 | | 2 | WASHER ISO 7089-4-200 HV A4 | |
| 370 | 90028-0020 | | 2 | CONE TUBE 2,5MM | |
| 380 | 90134-0063 | | 2 | BUSHING/NUT M8X1, D=2,5 MM | |
| 410 | 312625-0314 | | 1 | HEXAGON THIN NUT, EN 24035 ML6M M5 A4 | |
| T40W8062 | 90166-0143 | MM | 220 | TUBE 2,5 MM PA TRANSP. | |
| T40W8064 | 90166-0143 | MM | 220 | TUBE 2,5 MM PA TRANSP. | |
| **TBA 0500SQ (See drawing on page: 4-154)** | | | | | |
| 010 | 2773510-0000 | | 1 | SHAFT | |
| 020 | 2922526-0002 | | 1 | HOLDER | |
| 030 | 2863119-0000 | | 2 | SHAFT | |
| 050 | 2842776-0000 | | 1 | PIN | |
| 060 | 2842777-0001 | | 1 | DAMPER | |
| 080 | 2959868-0000 | | 2 | TENSION SPRING | |
| 120 | 2905199-0000 | | 2 | HOLDER | |
| 300 | 312105-0285 | | 2 | SCREW M6S ISO 4017 M4X6 A470 | |
| 310 | 312105-0495 | | 1 | SCREW M6S ISO 4017 M10X30 A480 | |
| 320 | 312115-0368 | | 2 | SCREW ISO4762 M6X16 A4 80 | |
| 330 | 312318-0323 | | 1 | SCREW ISO4029 M5X8 A4 | |
| 360 | 315106-0136 | | 2 | WASHER ISO 7089-4-200 HV A4 | |
| 370 | 90028-0020 | | 2 | CONE TUBE 2,5MM | |
| 380 | 90134-0063 | | 2 | BUSHING/NUT M8X1, D=2,5 MM | |
| 410 | 312625-0314 | | 1 | HEXAGON THIN NUT, EN 24035 ML6M M5 A4 | |
| T40W8062 | 90166-0143 | MM | 220 | TUBE 2,5 MM PA TRANSP. | |
| T40W8064 | 90166-0143 | MM | 220 | TUBE 2,5 MM PA TRANSP. | |
| **TBA 1000B (See drawing on page: 4-152)** | | | | | |
| 010 | 2773510-0000 | | 1 | SHAFT | |
| 020 | 2922530-0002 | | 1 | HOLDER | |
| 030 | 2911622-0000 | | 2 | SHAFT | |
| 040 | 2916130-0000 | | 2 | SLIDER | |
| 050 | 2842776-0000 | | 1 | PIN | |
| 060 | 2842777-0001 | | 1 | DAMPER | |
| 070 | 2842780-0000 | | 2 | BUSHING | |
| 080 | 2842781-0000 | | 1 | SPRING | |
| 090 | 2842782-0000 | | 1 | SPRING | |
| 100 | 2916131-0000 | | 2 | LEVER | |
| 110 | 2911623-0000 | | 2 | WASHER | |
| 300 | 312812-0316 | | 2 | HEXAGON NUT, NY-LOCK M6 A480 | |
| 310 | 312105-0495 | | 1 | SCREW M6S ISO 4017 M10X30 A480 | |
| 320 | 312115-0368 | | 2 | SCREW ISO4762 M6X16 A4 80 | |
| 330 | 312318-0325 | | 1 | SCREW ISO4029 M5X10 A4 | |
| 370 | 90028-0020 | | 2 | CONE TUBE 2,5MM | |
| 380 | 90134-0063 | | 2 | BUSHING/NUT M8X1, D=2,5 MM | |
| 400 | 90600-2013 | | 4 | FLANGE BUSHING, 8X10X5,5 MM | |
| 410 | 312625-0314 | | 1 | HEXAGON THIN NUT, EN 24035 ML6M M5 A4 | |
| T40W8062 | 90166-0143 | MM | 220 | TUBE 2,5 MM PA TRANSP. | |
| T40W8064 | 90166-0143 | MM | 220 | TUBE 2,5 MM PA TRANSP. | |
| **TBA 1000S (See drawing on page: 4-152)** | | | | | |
| 010 | 2773510-0000 | | 1 | SHAFT | |
| 020 | 2922528-0002 | | 1 | HOLDER | |
| 030 | 2911622-0000 | | 2 | SHAFT | |
| 040 | 2916130-0000 | | 2 | SLIDER | |
| 050 | 2842776-0000 | | 1 | PIN | |
| 060 | 2842777-0001 | | 1 | DAMPER | |
| 070 | 2842780-0000 | | 2 | BUSHING | |
| 080 | 2842781-0000 | | 1 | SPRING | |
| 090 | 2842782-0000 | | 1 | SPRING | |
| 100 | 2916131-0000 | | 2 | LEVER | |
| 110 | 2911623-0000 | | 2 | WASHER | |
| 300 | 312812-0316 | | 2 | HEXAGON NUT, NY-LOCK M6 A480 | |
| 310 | 312105-0495 | | 1 | SCREW M6S ISO 4017 M10X30 A480 | |
| 320 | 312115-0368 | | 2 | SCREW ISO4762 M6X16 A4 80 | |
| 370 | 90028-0020 | | 2 | CONE TUBE 2,5MM | |
| 380 | 90134-0063 | | 2 | BUSHING/NUT M8X1, D=2,5 MM | |
| 400 | 90600-2013 | | 4 | FLANGE BUSHING, 8X10X5,5 MM | |
| 410 | 312625-0314 | | 1 | HEXAGON THIN NUT, EN 24035 ML6M M5 A4 | |
| T40W8062 | 90166-0143 | MM | 220 | TUBE 2,5 MM PA TRANSP. | |
| T40W8064 | 90166-0143 | MM | 220 | TUBE 2,5 MM PA TRANSP. | |
| **TBA 1000SQ (See drawing on page: 4-152)** | | | | | |
| 010 | 2773510-0000 | | 1 | SHAFT | |
| 020 | 2922526-0002 | | 1 | HOLDER | |
| 030 | 2911622-0000 | | 2 | SHAFT | |
| 040 | 2916130-0000 | | 2 | SLIDER | |

Machine Type | Group Description | Used-In | Group Number | Page No

# SHOCK ABSORBER CUTTING



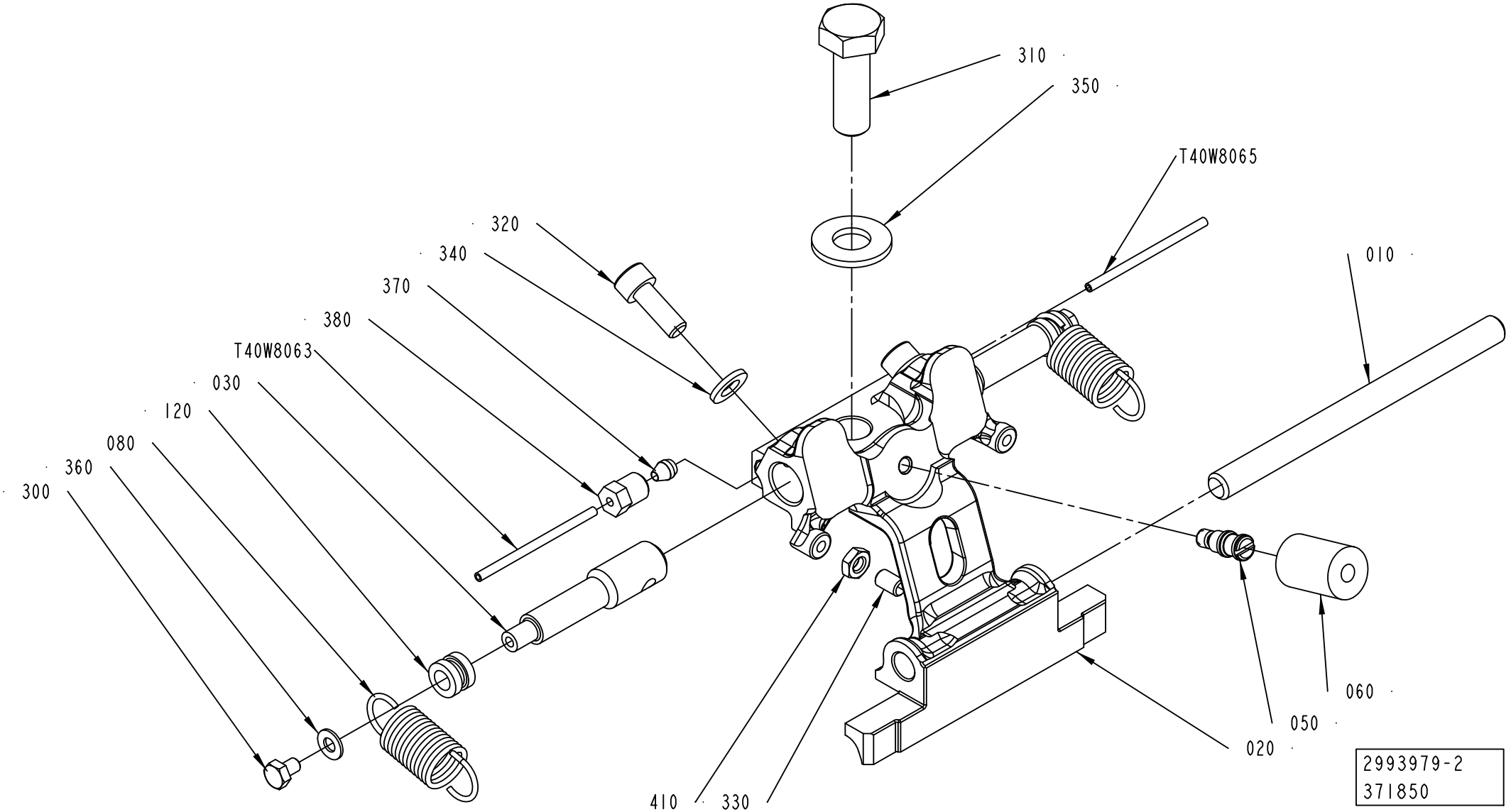

ECM: 375709 - 20081127
Group number: 2993979-0100
Assembly Drawing: 2993979-2_1_AA

This list covers pages from 4-152 to 4-157

| Pos | Part No | UN | Qty | Description | Page No |
|---|---|---|---|---|---|
| **TBA 1000SQ (Cont'd) (See drawing on page: 4-152)** | | | | | |
| 050 | 2842776-0000 | | 1 | PIN | |
| 060 | 2842777-0001 | | 1 | DAMPER | |
| 070 | 2842780-0000 | | 2 | BUSHING | |
| 080 | 2842781-0000 | | 1 | SPRING | |
| 090 | 2842782-0000 | | 1 | SPRING | |
| 100 | 2916131-0000 | | 2 | LEVER | |
| 110 | 2911623-0000 | | 2 | WASHER | |
| 300 | 312812-0316 | | 2 | HEXAGON NUT, NY-LOCK M6 A480 | |
| 310 | 312105-0495 | | 1 | SCREW M6S ISO 4017 M10X30 A480 | |
| 320 | 312115-0368 | | 2 | SCREW ISO4762 M6X16 A4 80 | |
| 330 | 312318-0323 | | 1 | SCREW ISO4029 M5X8 A4 | |
| 370 | 90028-0020 | | 2 | CONE TUBE 2,5MM | |
| 380 | 90134-0063 | | 2 | BUSHING/NUT M8X1, D=2,5 MM | |
| 400 | 90600-2013 | | 4 | FLANGE BUSHING, 8X10X5,5 MM | |
| 410 | 312625-0314 | | 1 | HEXAGON THIN NUT, EN 24035 ML6M M5 A4 | |
| T40W8062 | 90166-0143 | MM | 220 | TUBE 2,5 MM PA TRANSP. | |
| T40W8064 | 90166-0143 | MM | 220 | TUBE 2,5 MM PA TRANSP. | |
| **TBA 1500S (See drawing on page: 4-152)** | | | | | |
| 010 | 2773510-0000 | | 1 | SHAFT | |
| 020 | 2930284-0002 | | 1 | HOLDER | |
| 030 | 2907800-0000 | | 2 | SHAFT | |
| 040 | 2907807-0000 | | 2 | SLIDER | |
| 050 | 2907797-0000 | | 1 | PIN | |
| 060 | 2842777-0005 | | 1 | DAMPER | |
| 070 | 2916984-0000 | | 2 | BUSHING | |
| 080 | 2907805-0000 | | 1 | SPRING | |
| 090 | 2907804-0000 | | 1 | SPRING | |
| 100 | 2907806-0000 | | 2 | LEVER | |
| 110 | 2911623-0000 | | 2 | WASHER | |
| 300 | 312812-0316 | | 2 | HEXAGON NUT, NY-LOCK M6 A480 | |
| 310 | 312105-0499 | | 1 | SCREW M6S ISO 4014 M10X40 A480 | |
| 320 | 312115-0368 | | 2 | SCREW ISO4762 M6X16 A4 80 | |
| 330 | 312318-0325 | | 1 | SCREW ISO4029 M5X10 A4 | |
| 370 | 90028-0020 | | 2 | CONE TUBE 2,5MM | |
| 380 | 90134-0063 | | 2 | BUSHING/NUT M8X1, D=2,5 MM | |
| 400 | 90600-2013 | | 4 | FLANGE BUSHING, 8X10X5,5 MM | |
| 410 | 312625-0314 | | 1 | HEXAGON THIN NUT, EN 24035 ML6M M5 A4 | |
| T40W8062 | 90166-0143 | MM | 220 | TUBE 2,5 MM PA TRANSP. | |
| T40W8064 | 90166-0143 | MM | 220 | TUBE 2,5 MM PA TRANSP. | |
| **TBA 2000S (See drawing on page: 4-152)** | | | | | |
| 010 | 2907798-0000 | | 1 | SHAFT | |
| 020 | 2917310-0002 | | 1 | HOLDER | |
| 030 | 2907800-0000 | | 2 | SHAFT | |
| 040 | 2907807-0000 | | 2 | SLIDER | |
| 050 | 2907797-0000 | | 1 | PIN | |
| 060 | 2842777-0005 | | 1 | DAMPER | |
| 070 | 2916984-0000 | | 2 | BUSHING | |
| 080 | 2907805-0000 | | 1 | SPRING | |
| 090 | 2907804-0000 | | 1 | SPRING | |
| 100 | 2907806-0000 | | 2 | LEVER | |
| 110 | 2911623-0000 | | 2 | WASHER | |
| 300 | 312812-0316 | | 2 | HEXAGON NUT, NY-LOCK M6 A480 | |
| 310 | 312105-0495 | | 1 | SCREW M6S ISO 4014 M10X40 A480 | |
| 320 | 312115-0368 | | 2 | SCREW ISO4762 M6X16 A4 80 | |
| 330 | 312318-0325 | | 1 | SCREW ISO4029 M5X10 A4 | |
| 370 | 90028-0020 | | 2 | CONE TUBE 2,5MM | |
| 380 | 90134-0063 | | 2 | BUSHING/NUT M8X1, D=2,5 MM | |
| 400 | 90600-2013 | | 4 | FLANGE BUSHING, 8X10X5,5 MM | |
| 410 | 312625-0314 | | 1 | HEXAGON THIN NUT, EN 24035 ML6M M5 A4 | |
| T40W8062 | 90166-0143 | MM | 220 | TUBE 2,5 MM PA TRANSP. | |
| T40W8064 | 90166-0143 | MM | 220 | TUBE 2,5 MM PA TRANSP. | |
| **TPA 1000SQ, TPA 0750SQ (See drawing on page: 4-152)** | | | | | |
| 010 | 2916971-0000 | | 1 | SHAFT | |
| 020 | 2921236-0002 | | 1 | HOLDER | |
| 030 | 2907800-0000 | | 2 | SHAFT | |
| 040 | 2907807-0000 | | 2 | SLIDER | |
| 050 | 2907797-0000 | | 1 | PIN | |
| 060 | 2842777-0004 | | 1 | DAMPER | |
| 070 | 2916984-0000 | | 2 | BUSHING | |
| 080 | 2907805-0000 | | 1 | SPRING | |
| 090 | 2907804-0000 | | 1 | SPRING | |
| 100 | 2907806-0000 | | 2 | LEVER | |
| 110 | 2911623-0000 | | 2 | WASHER | |
| 300 | 312812-0316 | | 2 | HEXAGON NUT, NY-LOCK M6 A480 | |
| 310 | 312105-0499 | | 1 | SCREW M6S ISO 4014 M10X40 A480 | |
| 320 | 312115-0368 | | 2 | SCREW ISO4762 M6X16 A4 80 | |
| 330 | 312318-0325 | | 1 | SCREW ISO4029 M5X10 A4 | |
| 370 | 90028-0020 | | 2 | CONE TUBE 2,5MM | |
| 380 | 90134-0063 | | 2 | BUSHING/NUT M8X1, D=2,5 MM | |
| 400 | 90600-2013 | | 4 | FLANGE BUSHING, 8X10X5,5 MM | |
| 410 | 312625-0314 | | 1 | HEXAGON THIN NUT, EN 24035 ML6M M5 A4 | |
| T40W8062 | 90166-0143 | MM | 220 | TUBE 2,5 MM PA TRANSP. | |
| T40W8064 | 90166-0143 | MM | 220 | TUBE 2,5 MM PA TRANSP. | |

**See previous drawings pages: 4-152, 4-154.**

ECM: 375709 - 20081127
Group number: 2993979-0100
Assembly Drawing: 2993979-2_1_AA

This list covers pages from 4-152 to 4-157

| Pos | Part No | UN | Qty | Description | Page No |
|---|---|---|---|---|---|
| **TBA 1000SQ (Cont'd) (See drawing on page: 4-152)** | | | | | |
| 050 | 2842776-0000 | | 1 | PIN | |
| 060 | 2842777-0001 | | 1 | DAMPER | |
| 070 | 2842780-0000 | | 2 | BUSHING | |
| 080 | 2842781-0000 | | 1 | SPRING | |
| 090 | 2842782-0000 | | 1 | SPRING | |
| 100 | 2916131-0000 | | 2 | LEVER | |
| 110 | 2911623-0000 | | 2 | WASHER | |
| 300 | 312812-0316 | | 2 | HEXAGON NUT, NY-LOCK M6 A480 | |
| 310 | 312105-0495 | | 1 | SCREW M6S ISO 4017 M10X30 A480 | |
| 320 | 312115-0368 | | 2 | SCREW ISO4762 M6X16 A4 80 | |
| 330 | 312318-0323 | | 1 | SCREW ISO4029 M5X8 A4 | |
| 370 | 90028-0020 | | 2 | CONE TUBE 2,5MM | |
| 380 | 90134-0063 | | 2 | BUSHING/NUT M8X1, D=2,5 MM | |
| 400 | 90600-2013 | | 4 | FLANGE BUSHING, 8X10X5,5 MM | |
| 410 | 312625-0314 | | 1 | HEXAGON THIN NUT, EN 24035 ML6M M5 A4 | |
| T40W8062 | 90166-0143 | MM | 220 | TUBE 2,5 MM PA TRANSP. | |
| T40W8064 | 90166-0143 | MM | 220 | TUBE 2,5 MM PA TRANSP. | |
| **TBA 1500S (See drawing on page: 4-152)** | | | | | |
| 010 | 2773510-0000 | | 1 | SHAFT | |
| 020 | 2930284-0002 | | 1 | HOLDER | |
| 030 | 2907800-0000 | | 2 | SHAFT | |
| 040 | 2907807-0000 | | 2 | SLIDER | |
| 050 | 2907797-0000 | | 1 | PIN | |
| 060 | 2842777-0005 | | 1 | DAMPER | |
| 070 | 2916984-0000 | | 2 | BUSHING | |
| 080 | 2907805-0000 | | 1 | SPRING | |
| 090 | 2907804-0000 | | 1 | SPRING | |
| 100 | 2907806-0000 | | 2 | LEVER | |
| 110 | 2911623-0000 | | 2 | WASHER | |
| 300 | 312812-0316 | | 2 | HEXAGON NUT, NY-LOCK M6 A480 | |
| 310 | 312105-0499 | | 1 | SCREW M6S ISO 4014 M10X40 A480 | |
| 320 | 312115-0368 | | 2 | SCREW ISO4762 M6X16 A4 80 | |
| 330 | 312318-0325 | | 1 | SCREW ISO4029 M5X10 A4 | |
| 370 | 90028-0020 | | 2 | CONE TUBE 2,5MM | |
| 380 | 90134-0063 | | 2 | BUSHING/NUT M8X1, D=2,5 MM | |
| 400 | 90600-2013 | | 4 | FLANGE BUSHING, 8X10X5,5 MM | |
| 410 | 312625-0314 | | 1 | HEXAGON THIN NUT, EN 24035 ML6M M5 A4 | |
| T40W8062 | 90166-0143 | MM | 220 | TUBE 2,5 MM PA TRANSP. | |
| T40W8064 | 90166-0143 | MM | 220 | TUBE 2,5 MM PA TRANSP. | |
| **TBA 2000S (See drawing on page: 4-152)** | | | | | |
| 010 | 2907798-0000 | | 1 | SHAFT | |
| 020 | 2917310-0002 | | 1 | HOLDER | |
| 030 | 2907800-0000 | | 2 | SHAFT | |
| 040 | 2907807-0000 | | 2 | SLIDER | |
| 050 | 2907797-0000 | | 1 | PIN | |
| 060 | 2842777-0005 | | 1 | DAMPER | |
| 070 | 2916984-0000 | | 2 | BUSHING | |
| 080 | 2907805-0000 | | 1 | SPRING | |
| 090 | 2907804-0000 | | 1 | SPRING | |
| 100 | 2907806-0000 | | 2 | LEVER | |
| 110 | 2911623-0000 | | 2 | WASHER | |
| 300 | 312812-0316 | | 2 | HEXAGON NUT, NY-LOCK M6 A480 | |
| 310 | 312105-0495 | | 1 | SCREW M6S ISO 4017 M10X30 A480 | |
| 320 | 312115-0368 | | 2 | SCREW ISO4762 M6X16 A4 80 | |
| 330 | 312318-0323 | | 1 | SCREW ISO4029 M5X8 A4 | |
| 370 | 90028-0020 | | 2 | CONE TUBE 2,5MM | |
| 380 | 90134-0063 | | 2 | BUSHING/NUT M8X1, D=2,5 MM | |
| 400 | 90600-2013 | | 4 | FLANGE BUSHING, 8X10X5,5 MM | |
| 410 | 312625-0314 | | 1 | HEXAGON THIN NUT, EN 24035 ML6M M5 A4 | |
| T40W8062 | 90166-0143 | MM | 220 | TUBE 2,5 MM PA TRANSP. | |
| T40W8064 | 90166-0143 | MM | 220 | TUBE 2,5 MM PA TRANSP. | |
| **TPA 1000SQ, TPA 0750SQ (See drawing on page: 4-152)** | | | | | |
| 010 | 2916971-0000 | | 1 | SHAFT | |
| 020 | 2921236-0002 | | 1 | HOLDER | |
| 030 | 2907800-0000 | | 2 | SHAFT | |
| 040 | 2907807-0000 | | 2 | SLIDER | |
| 050 | 2907797-0000 | | 1 | PIN | |
| 060 | 2842777-0004 | | 1 | DAMPER | |
| 070 | 2916984-0000 | | 2 | BUSHING | |
| 080 | 2907805-0000 | | 1 | SPRING | |
| 090 | 2907804-0000 | | 1 | SPRING | |
| 100 | 2907806-0000 | | 2 | LEVER | |
| 110 | 2911623-0000 | | 2 | WASHER | |
| 300 | 312812-0316 | | 2 | HEXAGON NUT, NY-LOCK M6 A480 | |
| 310 | 312105-0499 | | 1 | SCREW M6S ISO 4014 M10X40 A480 | |
| 320 | 312115-0368 | | 2 | SCREW ISO4762 M6X16 A4 80 | |
| 330 | 312318-0325 | | 1 | SCREW ISO4029 M5X10 A4 | |
| 370 | 90028-0020 | | 2 | CONE TUBE 2,5MM | |
| 380 | 90134-0063 | | 2 | BUSHING/NUT M8X1, D=2,5 MM | |
| 400 | 90600-2013 | | 4 | FLANGE BUSHING, 8X10X5,5 MM | |
| 410 | 312625-0314 | | 1 | HEXAGON THIN NUT, EN 24035 ML6M M5 A4 | |
| T40W8062 | 90166-0143 | MM | 220 | TUBE 2,5 MM PA TRANSP. | |
| T40W8064 | 90166-0143 | MM | 220 | TUBE 2,5 MM PA TRANSP. | |

# SUPPORT FLAP PRESSURE



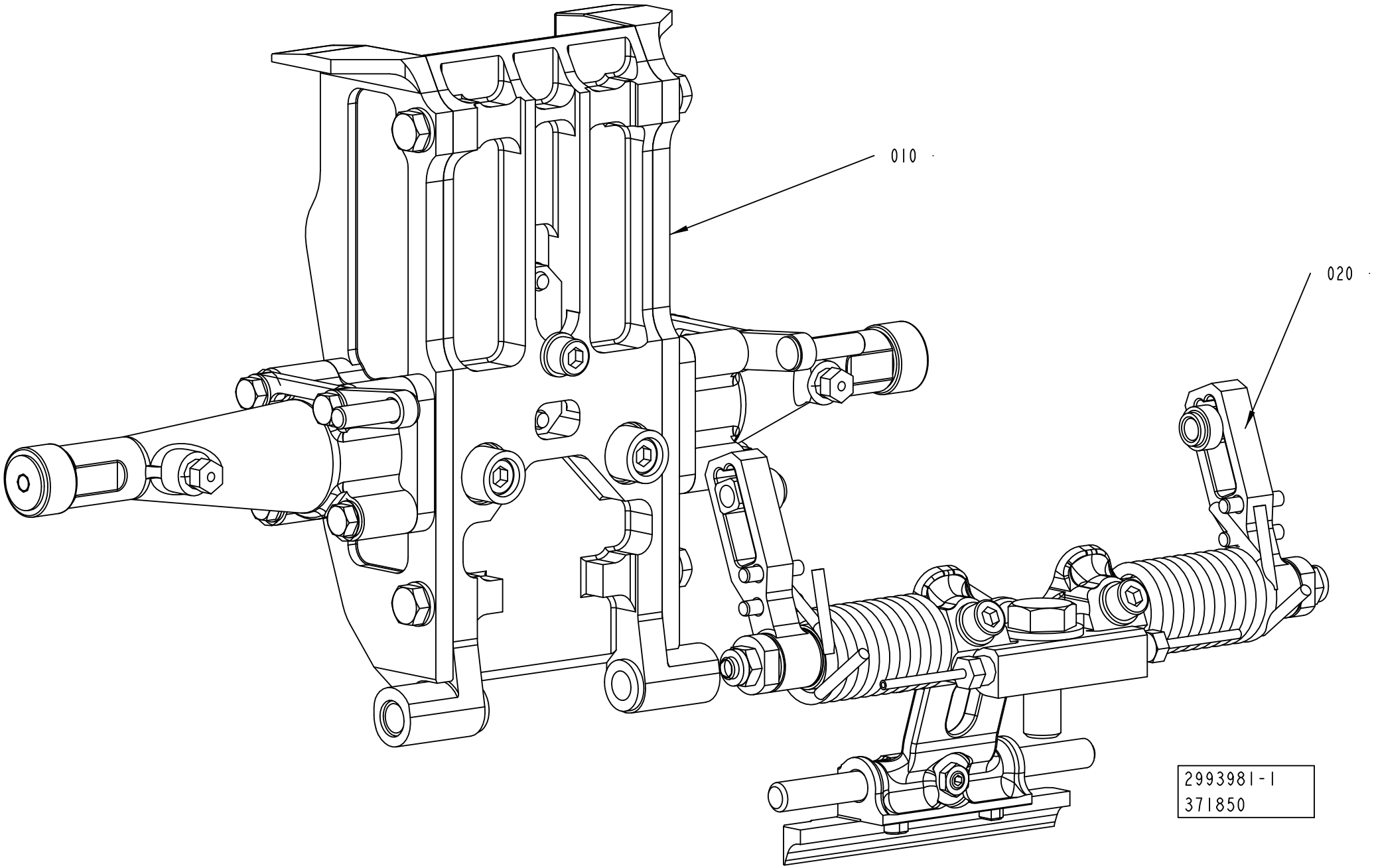

ECM: 375710 - 20081127
Group number: 2993981-0100
Assembly Drawing: 2993981-1_1_AA

| Pos | Part No | UN | Qty | Description | Page No |
|---|---|---|---|---|---|
| **TBA 0500B** | | | | | |
| 010 | 2810637-0100 | | 1 | VOLUME FLAP PRESSURE | **4-135, 4-137, 4-139, 4-141, 4-143** |
| 020 | 2993982-0100 | | 1 | SHOCK ABSORBER PRESSURE | **4-161, 4-163, 4-165** |
| **TBA 0500SQ** | | | | | |
| 010 | 2810637-0100 | | 1 | VOLUME FLAP PRESSURE | **4-135, 4-137, 4-139, 4-141, 4-143** |
| 020 | 2993982-0100 | | 1 | SHOCK ABSORBER PRESSURE | **4-161, 4-163, 4-165** |
| **TBA 1000B** | | | | | |
| 010 | 2810637-0100 | | 1 | VOLUME FLAP PRESSURE | **4-135, 4-137, 4-139, 4-141, 4-143** |
| 020 | 2993982-0100 | | 1 | SHOCK ABSORBER PRESSURE | **4-161, 4-163, 4-165** |
| **TBA 1000S** | | | | | |
| 010 | 2810637-0100 | | 1 | VOLUME FLAP PRESSURE | **4-135, 4-137, 4-139, 4-141, 4-143** |
| 020 | 2993982-0100 | | 1 | SHOCK ABSORBER PRESSURE | **4-161, 4-163, 4-165** |
| **TBA 1000SQ** | | | | | |
| 010 | 2810637-0100 | | 1 | VOLUME FLAP PRESSURE | **4-135, 4-137, 4-139, 4-141, 4-143** |
| 020 | 2993982-0100 | | 1 | SHOCK ABSORBER PRESSURE | **4-161, 4-163, 4-165** |
| **TBA 1500S** | | | | | |
| 010 | 2810637-0100 | | 1 | VOLUME FLAP PRESSURE | **4-135, 4-137, 4-139, 4-141, 4-143** |
| 020 | 2993982-0100 | | 1 | SHOCK ABSORBER PRESSURE | **4-161, 4-163, 4-165** |
| **TBA 2000S** | | | | | |
| 010 | 2810637-0100 | | 1 | VOLUME FLAP PRESSURE | **4-135, 4-137, 4-139, 4-141, 4-143** |
| 020 | 2993982-0100 | | 1 | SHOCK ABSORBER PRESSURE | **4-161, 4-163, 4-165** |
| **TPA 0750SQ** | | | | | |
| 010 | 2810637-0100 | | 1 | VOLUME FLAP PRESSURE | **4-135, 4-137, 4-139, 4-141, 4-143** |
| 020 | 2993982-0100 | | 1 | SHOCK ABSORBER PRESSURE | **4-161, 4-163, 4-165** |
| **TPA 1000SQ** | | | | | |
| 010 | 2810637-0100 | | 1 | VOLUME FLAP PRESSURE | **4-135, 4-137, 4-139, 4-141, 4-143** |
| 020 | 2993982-0100 | | 1 | SHOCK ABSORBER PRESSURE | **4-161, 4-163, 4-165** |

| Pos | Part No | UN | Qty | Description | Page No |
|---|---|---|---|---|---|

# SHOCK ABSORBER PRESSURE



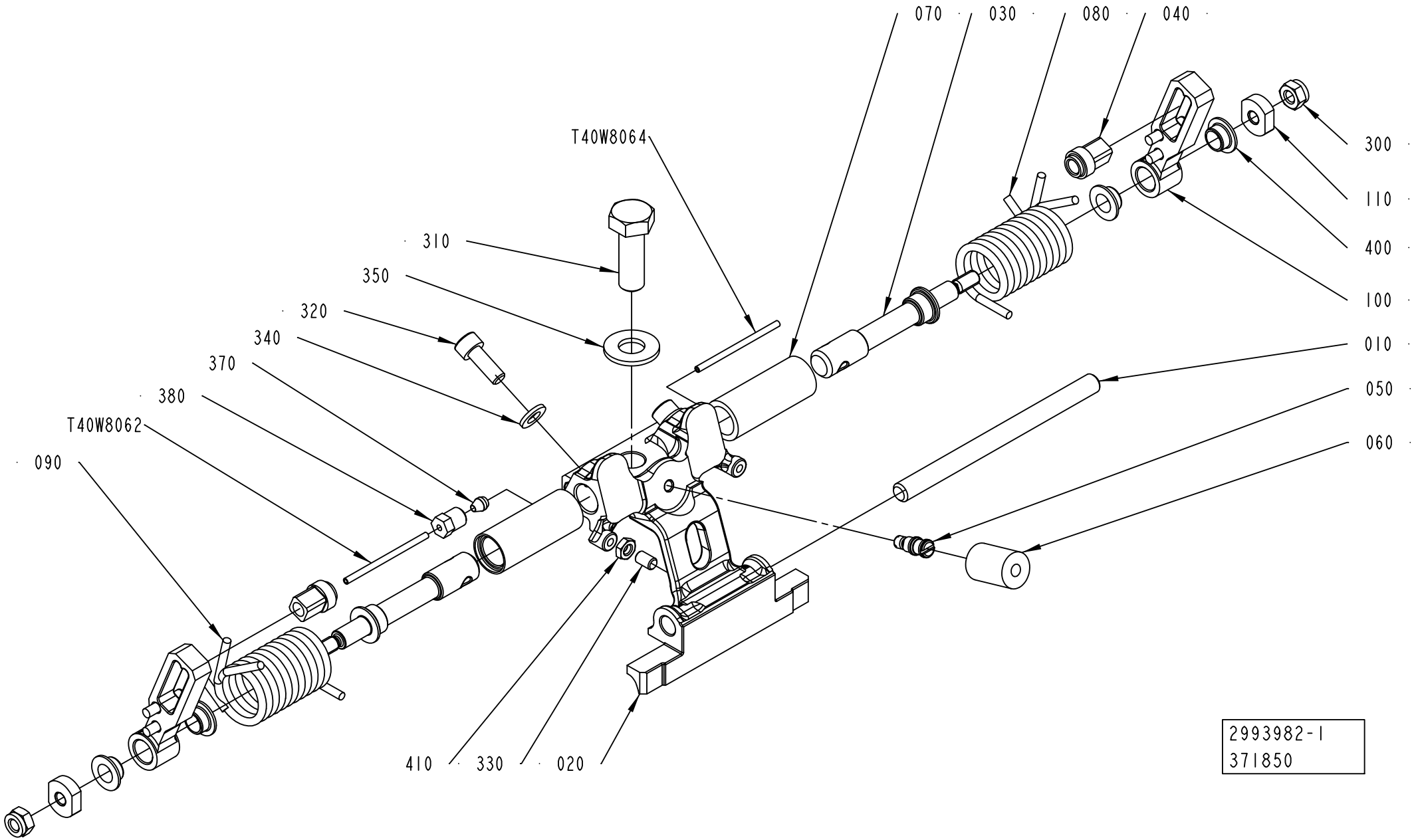

ECM: 375708 - 20081127
Group number: 2993982-0100
Assembly Drawing: 2993982-1_1_AA

This list covers pages from 4-160 to 4-165

| Pos | Part No | UN | Qty | Description | Page No |
|---|---|---|---|---|---|
| **TBA 0500B (See drawing on page: 4-162)** | | | | | |
| 010 | 2773510-0000 | | 1 | SHAFT | |
| 020 | 2922531-0002 | | 1 | HOLDER | |
| 030 | 2902006-0000 | | 2 | SHAFT | |
| 050 | 2842776-0000 | | 1 | PIN | |
| 060 | 2842777-0001 | | 1 | DAMPER | |
| 080 | 2916858-0000 | | 2 | TENSION SPRING | |
| 120 | 2905199-0000 | | 2 | HOLDER | |
| 300 | 312105-0285 | | 2 | SCREW M6S ISO 4017 M4X6 A470 | |
| 310 | 312105-0495 | | 1 | SCREW M6S ISO 4017 M10X30 A480 | |
| 320 | 312115-0368 | | 2 | SCREW ISO4762 M6X16 A4 80 | |
| 330 | 312318-0325 | | 1 | SCREW ISO4029 M5X10 A4 | |
| 360 | 315106-0136 | | 2 | WASHER ISO 7089-4-200 HV A4 | |
| 370 | 90028-0020 | | 2 | CONE TUBE 2,5MM | |
| 380 | 90134-0063 | | 2 | BUSHING/NUT M8X1, D=2,5 MM | |
| 410 | 312625-0314 | | 1 | HEXAGON THIN NUT, EN 24035 ML6M M5 A4 | |
| T40W8062 | 90166-0143 | MM | 220 | TUBE 2,5 MM PA TRANSP. | |
| T40W8064 | 90166-0143 | MM | 220 | TUBE 2,5 MM PA TRANSP. | |
| **TBA 0500SQ (See drawing on page: 4-162)** | | | | | |
| 010 | 2773510-0000 | | 1 | SHAFT | |
| 020 | 2922527-0002 | | 1 | HOLDER | |
| 030 | 2863119-0000 | | 2 | SHAFT | |
| 050 | 2842776-0000 | | 1 | PIN | |
| 060 | 2842777-0001 | | 1 | DAMPER | |
| 080 | 2959868-0000 | | 2 | TENSION SPRING | |
| 120 | 2905199-0000 | | 2 | HOLDER | |
| 300 | 312105-0285 | | 2 | SCREW M6S ISO 4017 M4X6 A470 | |
| 310 | 312105-0495 | | 1 | SCREW M6S ISO 4017 M10X30 A480 | |
| 320 | 312115-0368 | | 2 | SCREW ISO4762 M6X16 A4 80 | |
| 330 | 312318-0323 | | 1 | SCREW ISO4029 M5X8 A4 | |
| 360 | 315106-0136 | | 2 | WASHER ISO 7089-4-200 HV A4 | |
| 370 | 90028-0020 | | 2 | CONE TUBE 2,5MM | |
| 380 | 90134-0063 | | 2 | BUSHING/NUT M8X1, D=2,5 MM | |
| 410 | 312625-0314 | | 1 | HEXAGON THIN NUT, EN 24035 ML6M M5 A4 | |
| T40W8062 | 90166-0143 | MM | 220 | TUBE 2,5 MM PA TRANSP. | |
| T40W8064 | 90166-0143 | MM | 220 | TUBE 2,5 MM PA TRANSP. | |
| **TBA 1000B (See drawing on page: 4-160)** | | | | | |
| 010 | 2773510-0000 | | 1 | SHAFT | |
| 020 | 2922531-0002 | | 1 | HOLDER | |
| 030 | 2911622-0000 | | 2 | SHAFT | |
| 040 | 2916130-0000 | | 2 | SLIDER | |
| 050 | 2842776-0000 | | 1 | PIN | |
| 060 | 2842777-0001 | | 1 | DAMPER | |
| 070 | 2842780-0000 | | 2 | BUSHING | |
| 080 | 2842781-0000 | | 1 | SPRING | |
| 090 | 2842782-0000 | | 1 | SPRING | |
| 100 | 2916131-0000 | | 2 | LEVER | |
| 110 | 2911623-0000 | | 2 | WASHER | |
| 300 | 312812-0316 | | 2 | HEXAGON NUT, NY-LOCK M6 A480 | |
| 310 | 312105-0495 | | 1 | SCREW M6S ISO 4017 M10X30 A480 | |
| 320 | 312115-0368 | | 2 | SCREW ISO4762 M6X16 A4 80 | |
| 330 | 312318-0325 | | 1 | SCREW ISO4029 M5X10 A4 | |
| 370 | 90028-0020 | | 2 | CONE TUBE 2,5MM | |
| 380 | 90134-0063 | | 2 | BUSHING/NUT M8X1, D=2,5 MM | |
| 400 | 90600-2013 | | 4 | FLANGE BUSHING, 8X10X5,5 MM | |
| 410 | 312625-0314 | | 1 | HEXAGON THIN NUT, EN 24035 ML6M M5 A4 | |
| T40W8062 | 90166-0143 | MM | 220 | TUBE 2,5 MM PA TRANSP. | |
| T40W8064 | 90166-0143 | MM | 220 | TUBE 2,5 MM PA TRANSP. | |
| **TBA 1000S (See drawing on page: 4-160)** | | | | | |
| 010 | 2773510-0000 | | 1 | SHAFT | |
| 020 | 2922529-0002 | | 1 | HOLDER | |
| 030 | 2911622-0000 | | 2 | SHAFT | |
| 040 | 2916130-0000 | | 2 | SLIDER | |
| 050 | 2842776-0000 | | 1 | PIN | |
| 060 | 2842777-0001 | | 1 | DAMPER | |
| 070 | 2842780-0000 | | 2 | BUSHING | |
| 080 | 2842781-0000 | | 1 | SPRING | |
| 090 | 2842782-0000 | | 1 | SPRING | |
| 100 | 2916131-0000 | | 2 | LEVER | |
| 110 | 2911623-0000 | | 2 | WASHER | |
| 300 | 312812-0316 | | 2 | HEXAGON NUT, NY-LOCK M6 A480 | |
| 310 | 312105-0495 | | 1 | SCREW M6S ISO 4017 M10X30 A480 | |
| 320 | 312115-0368 | | 2 | SCREW ISO4762 M6X16 A4 80 | |
| 330 | 312318-0325 | | 1 | SCREW ISO4029 M5X10 A4 | |
| 370 | 90028-0020 | | 2 | CONE TUBE 2,5MM | |
| 380 | 90134-0063 | | 2 | BUSHING/NUT M8X1, D=2,5 MM | |
| 400 | 90600-2013 | | 4 | FLANGE BUSHING, 8X10X5,5 MM | |
| 410 | 312625-0314 | | 1 | HEXAGON THIN NUT, EN 24035 ML6M M5 A4 | |
| T40W8062 | 90166-0143 | MM | 220 | TUBE 2,5 MM PA TRANSP. | |
| T40W8064 | 90166-0143 | MM | 220 | TUBE 2,5 MM PA TRANSP. | |
| **TBA 1000SQ (See drawing on page: 4-160)** | | | | | |
| 010 | 2773510-0000 | | 1 | SHAFT | |
| 020 | 2922527-0002 | | 1 | HOLDER | |
| 030 | 2911622-0000 | | 2 | SHAFT | |

Machine Type | Group Description | Used-In | Group Number | Page No

# SHOCK ABSORBER PRESSURE



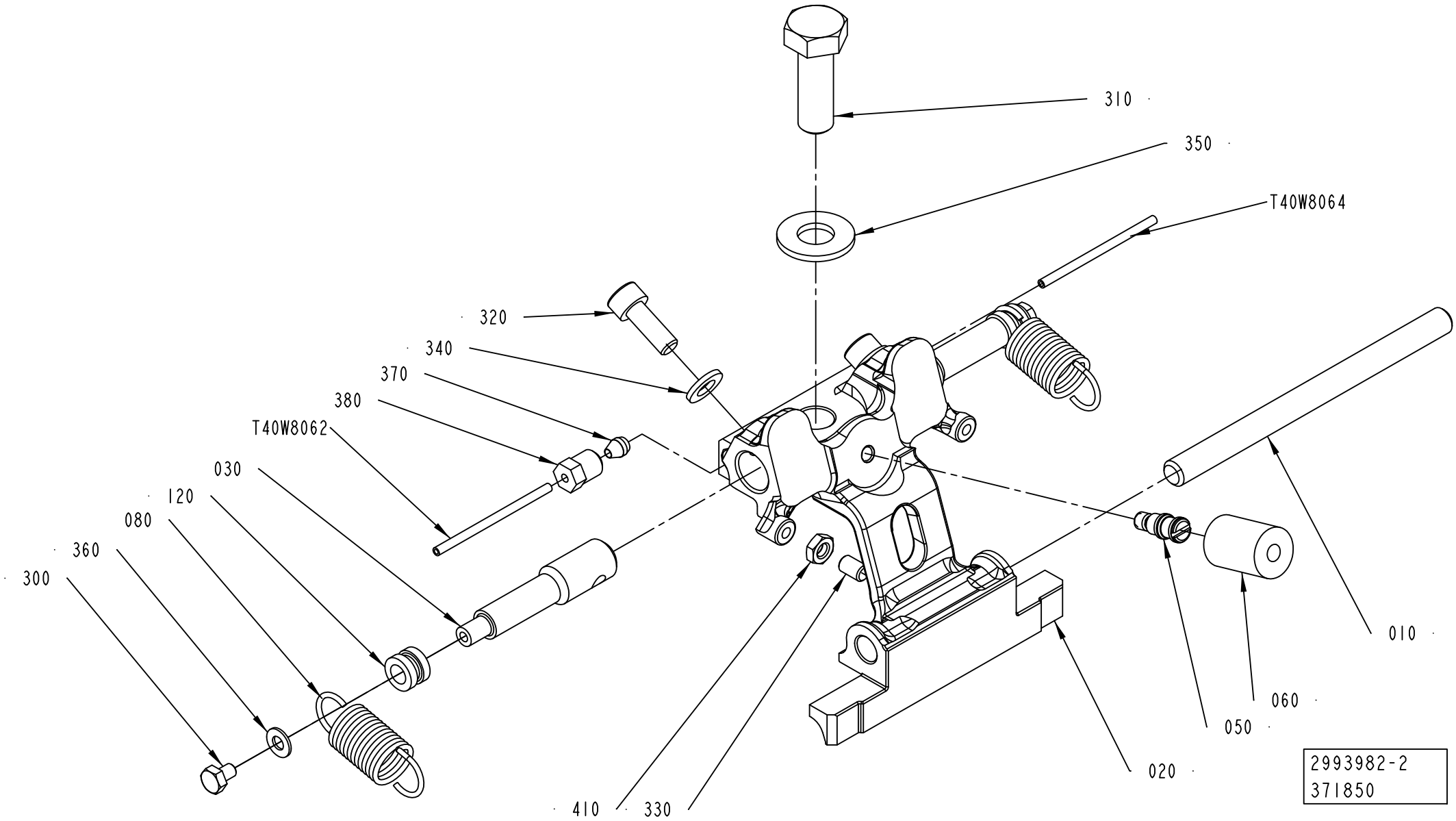

ECM: 375708 - 20081127
Group number: 2993982-0100
Assembly Drawing: 2993982-2_1_AA

This list covers pages from 4-160 to 4-165

| Pos | Part No | UN | Qty | Description | Page No |
|---|---|---|---|---|---|
| **TBA 1000SQ (Cont'd) (See drawing on page: 4-160)** | | | | | |
| 040 | 2916130-0000 | | 2 | SLIDER | |
| 050 | 2842776-0000 | | 1 | PIN | |
| 060 | 2842777-0001 | | 1 | DAMPER | |
| 070 | 2842780-0000 | | 2 | BUSHING | |
| 080 | 2842781-0000 | | 1 | SPRING | |
| 090 | 2842782-0000 | | 1 | SPRING | |
| 100 | 2916131-0000 | | 2 | LEVER | |
| 110 | 2911623-0000 | | 2 | WASHER | |
| 300 | 312812-0316 | | 2 | HEXAGON NUT, NY-LOCK M6 A480 | |
| 310 | 312105-0495 | | 1 | SCREW M6S ISO 4017 M10X30 A480 | |
| 320 | 312115-0368 | | 2 | SCREW ISO4762 M6X16 A4 80 | |
| 330 | 312318-0323 | | 1 | SCREW ISO4029 M5X8 A4 | |
| 370 | 90028-0020 | | 2 | CONE TUBE 2,5MM | |
| 380 | 90134-0063 | | 2 | BUSHING/NUT M8X1, D=2,5 MM | |
| 400 | 90600-2013 | | 4 | FLANGE BUSHING, 8X10X5,5 MM | |
| 410 | 312625-0314 | | 1 | HEXAGON THIN NUT, EN 24035 ML6M M5 A4 | |
| T40W8062 | 90166-0143 | MM | 220 | TUBE 2,5 MM PA TRANSP. | |
| T40W8064 | 90166-0143 | MM | 220 | TUBE 2,5 MM PA TRANSP. | |
| **TBA 1500S (See drawing on page: 4-160)** | | | | | |
| 010 | 2773510-0000 | | 1 | SHAFT | |
| 020 | 2930285-0002 | | 1 | HOLDER | |
| 030 | 2907800-0000 | | 2 | SHAFT | |
| 040 | 2907807-0000 | | 2 | SLIDER | |
| 050 | 2907797-0000 | | 1 | PIN | |
| 060 | 2842777-0005 | | 1 | DAMPER | |
| 070 | 2916984-0000 | | 2 | BUSHING | |
| 080 | 2907805-0000 | | 1 | SPRING | |
| 090 | 2907804-0000 | | 1 | SPRING | |
| 100 | 2907806-0000 | | 2 | LEVER | |
| 110 | 2911623-0000 | | 2 | WASHER | |
| 300 | 312812-0316 | | 2 | HEXAGON NUT, NY-LOCK M6 A480 | |
| 310 | 312105-0499 | | 1 | SCREW M6S ISO 4014 M10X40 A480 | |
| 320 | 312115-0368 | | 2 | SCREW ISO4762 M6X16 A4 80 | |
| 330 | 312318-0325 | | 1 | SCREW ISO4029 M5X10 A4 | |
| 370 | 90028-0020 | | 2 | CONE TUBE 2,5MM | |
| 380 | 90134-0063 | | 2 | BUSHING/NUT M8X1, D=2,5 MM | |
| 400 | 90600-2013 | | 4 | FLANGE BUSHING, 8X10X5,5 MM | |
| 410 | 312625-0314 | | 1 | HEXAGON THIN NUT, EN 24035 ML6M M5 A4 | |
| T40W8062 | 90166-0143 | MM | 220 | TUBE 2,5 MM PA TRANSP. | |
| T40W8064 | 90166-0143 | MM | 220 | TUBE 2,5 MM PA TRANSP. | |
| **TBA 2000S (See drawing on page: 4-160)** | | | | | |
| 010 | 2907798-0000 | | 1 | SHAFT | |
| 020 | 2917311-0002 | | 1 | HOLDER | |
| 030 | 2907800-0000 | | 2 | SHAFT | |
| 040 | 2907807-0000 | | 2 | SLIDER | |
| 050 | 2907797-0000 | | 1 | PIN | |
| 060 | 2842777-0005 | | 1 | DAMPER | |
| 070 | 2916984-0000 | | 2 | BUSHING | |
| 080 | 2907805-0000 | | 1 | SPRING | |
| 090 | 2907804-0000 | | 1 | SPRING | |
| 100 | 2907806-0000 | | 2 | LEVER | |
| 110 | 2911623-0000 | | 2 | WASHER | |
| 300 | 312812-0316 | | 2 | HEXAGON NUT, NY-LOCK M6 A480 | |
| 310 | 312105-0499 | | 1 | SCREW M6S ISO 4014 M10X40 A480 | |
| 320 | 312115-0368 | | 2 | SCREW ISO4762 M6X16 A4 80 | |
| 330 | 312318-0325 | | 1 | SCREW ISO4029 M5X10 A4 | |
| 370 | 90028-0020 | | 2 | CONE TUBE 2,5MM | |
| 380 | 90134-0063 | | 2 | BUSHING/NUT M8X1, D=2,5 MM | |
| 400 | 90600-2013 | | 4 | FLANGE BUSHING, 8X10X5,5 MM | |
| 410 | 312625-0314 | | 1 | HEXAGON THIN NUT, EN 24035 ML6M M5 A4 | |
| T40W8062 | 90166-0143 | MM | 220 | TUBE 2,5 MM PA TRANSP. | |
| T40W8064 | 90166-0143 | MM | 220 | TUBE 2,5 MM PA TRANSP. | |
| **TPA 1000SQ, TPA 0750SQ (See drawing on page: 4-160)** | | | | | |
| 010 | 2916971-0000 | | 1 | SHAFT | |
| 020 | 2921237-0002 | | 1 | HOLDER | |
| 030 | 2907800-0000 | | 2 | SHAFT | |
| 040 | 2907807-0000 | | 2 | SLIDER | |
| 050 | 2907797-0000 | | 1 | PIN | |
| 060 | 2842777-0004 | | 1 | DAMPER | |
| 070 | 2916984-0000 | | 2 | BUSHING | |
| 080 | 2907805-0000 | | 1 | SPRING | |
| 090 | 2907804-0000 | | 1 | SPRING | |
| 100 | 2907806-0000 | | 2 | LEVER | |
| 110 | 2911623-0000 | | 2 | WASHER | |
| 300 | 312812-0316 | | 2 | HEXAGON NUT, NY-LOCK M6 A480 | |
| 310 | 312105-0499 | | 1 | SCREW M6S ISO 4014 M10X40 A480 | |
| 320 | 312115-0368 | | 2 | SCREW ISO4762 M6X16 A4 80 | |
| 330 | 312318-0325 | | 1 | SCREW ISO4029 M5X10 A4 | |
| 370 | 90028-0020 | | 2 | CONE TUBE 2,5MM | |
| 380 | 90134-0063 | | 2 | BUSHING/NUT M8X1, D=2,5 MM | |
| 400 | 90600-2013 | | 4 | FLANGE BUSHING, 8X10X5,5 MM | |
| 410 | 312625-0314 | | 1 | HEXAGON THIN NUT, EN 24035 ML6M M5 A4 | |
| T40W8062 | 90166-0143 | MM | 220 | TUBE 2,5 MM PA TRANSP. | |

**See previous drawings pages: 4-160, 4-162.**

| Pos | Part No | UN | Qty | Description | Page No |
|---|---|---|---|---|---|
| **TPA 1000SQ, TPA 0750SQ (Cont'd) (See drawing on page: 4-160)** | | | | | |
| T40W8064 | 90166-0143 | MM | 220 | TUBE 2,5 MM PA TRANSP. | |
| **Common Parts** | | | | | |
| 340 | 315105-0153 | | 2 | WASHER BRB 6,4X12 RFR | |
| 350 | 315105-0173 | | 1 | WASHER BRB 10,5X22 RFR | |

| Pos | Part No | UN | Qty | Description | Page No |
|---|---|---|---|---|---|

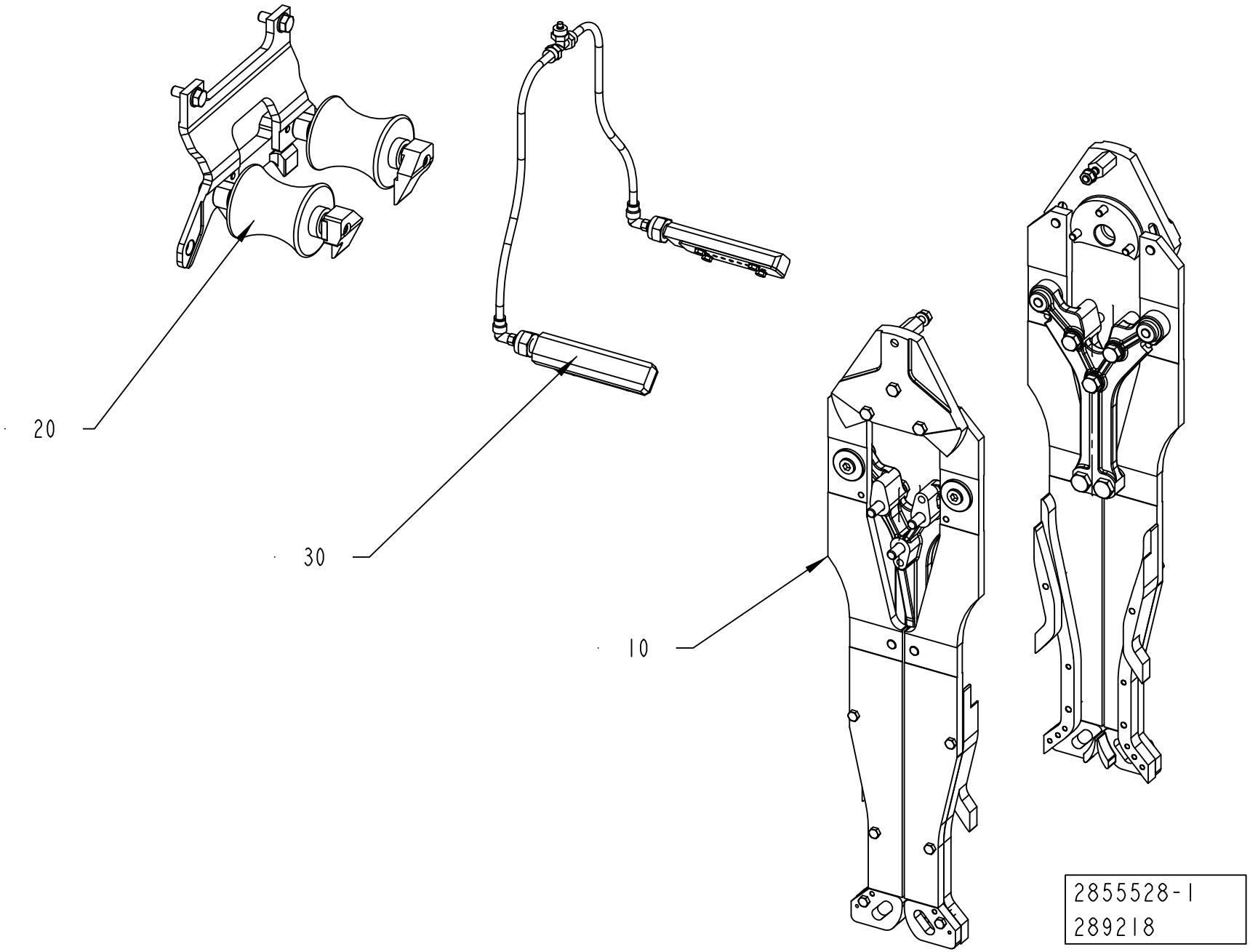
20
30
10
2855528-1
289218

ECM: 376683 - 20081127
Group number: 2855528-0100
Assembly Drawing: 2855528-1_1_AA

| Pos | Part No | UN | Qty | Description | Page No |
|---|---|---|---|---|---|
| **TBA 0500B, TBA 1000B NOMOLDEDCAP** | | | | | |
| 010 | 2835897-0100 | | 1 | CURVE UNIT | **4-169, 4-171** |
| **TBA 0500SQ, TBA 1000SQ** | | | | | |
| 010 | 2835897-0100 | | 1 | CURVE UNIT | **4-169, 4-171** |
| **TBA 1000B STDA7** | | | | | |
| 010 | 2835897-0100 | | 1 | CURVE UNIT | **4-169, 4-171** |
| **TBA 1000S NOMOLDEDCAP** | | | | | |
| 010 | 2835897-0100 | | 1 | CURVE UNIT | **4-169, 4-171** |
| **TBA 1000S STDA7, TBA 1000S LIGHTCAP** | | | | | |
| 010 | 2835897-0100 | | 1 | CURVE UNIT | **4-169, 4-171** |
| **TBA 1500S** | | | | | |
| 010 | 2835897-0100 | | 1 | CURVE UNIT | **4-169, 4-171** |
| **TBA 2000S** | | | | | |
| 010 | 2835897-0100 | | 1 | CURVE UNIT | **4-169, 4-171** |
| **TPA 1000SQ, TPA 0750SQ** | | | | | |
| 010 | 2835897-0100 | | 1 | CURVE UNIT | **4-169, 4-171** |
| **Common Parts** | | | | | |
| 020 | 2812896-0100 | | 1 | SUPPORT ROLLER | **4-173, 4-175** |
| 030 | 2885034-0100 | | 1 | TUBE FLUSHING | **4-177** |

| Pos | Part No | UN | Qty | Description | Page No |
|---|---|---|---|---|---|

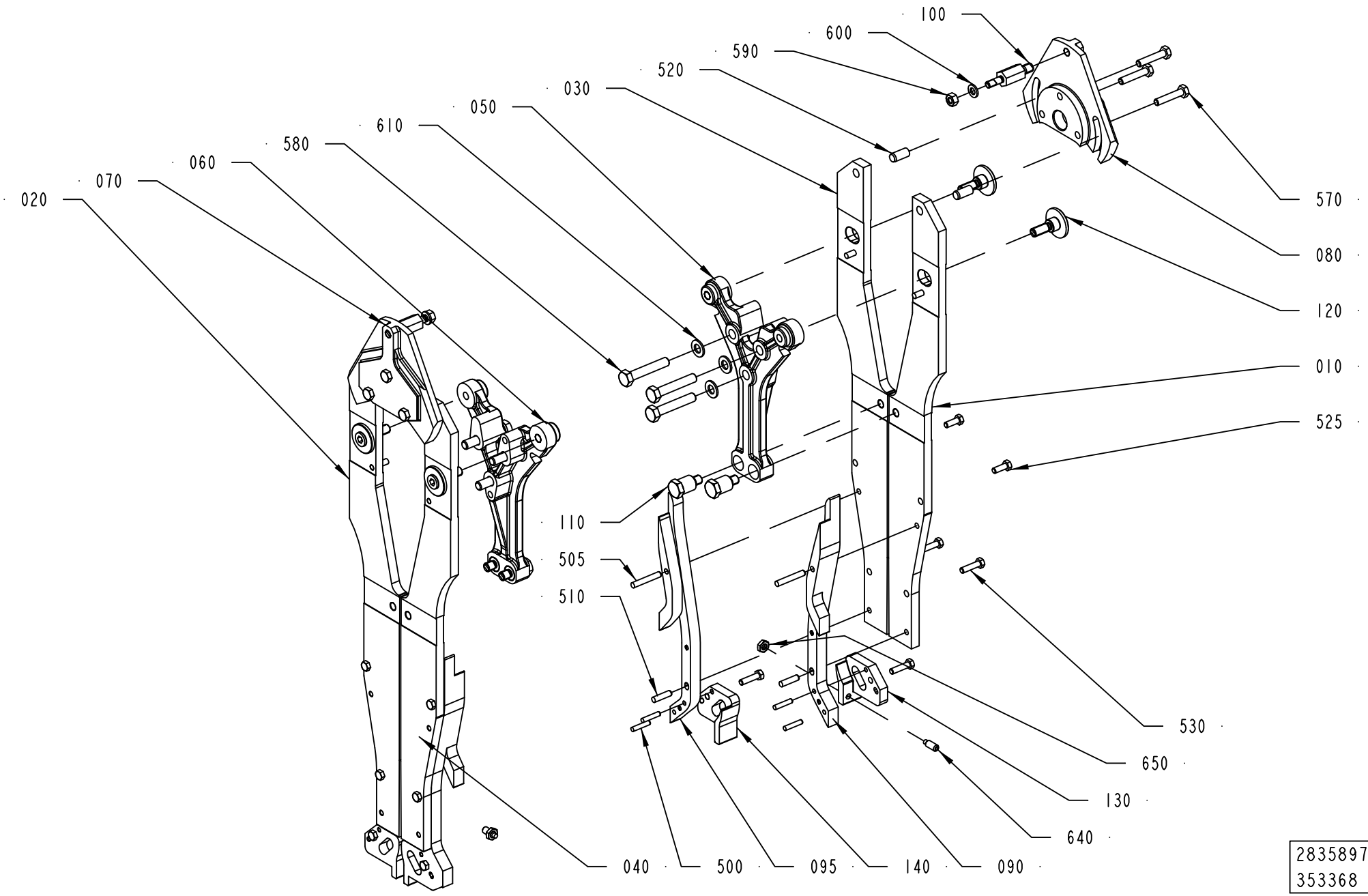


2835897-1
353368

ECM: 376682 - 20081127
Group number: 2835897-0100
Assembly Drawing: 2835897-1_1_AB

This list covers pages from 4-168 to 4-171

| Pos | Part No | UN | Qty | Description | Page No |
|---|---|---|---|---|---|
| **TBA 0500B, TBA 1000B (See drawing on page: 4-168)** | | | | | |
| 010 | 2900398-0001 | | 1 | RAIL BRACKET | |
| 020 | 2900398-0002 | | 1 | RAIL BRACKET | |
| 030 | 2900398-0003 | | 1 | RAIL BRACKET | |
| 040 | 2900398-0004 | | 1 | RAIL BRACKET | |
| 050 | 2835895-0001 | | 1 | SPACER | |
| 060 | 2835895-0002 | | 1 | SPACER | |
| 070 | 2780752-0000 | | 1 | ECCENTRIC | |
| 080 | 2780751-0000 | | 1 | ECCENTRIC | |
| 090 | 2900399-0000 | | 2 | VOLUME CAM | |
| 095 | 2900400-0000 | | 2 | VOLUME CAM | |
| 100 | 2780753-0000 | | 2 | PIVOT PIN | |
| 130 | 2900401-0000 | | 2 | PULLER CAM | |
| 140 | 2900402-0000 | | 2 | PULLER CAM | |
| 500 | 311103-0272 | | 8 | PARALLEL PIN ISO 2338 4M6X20 A1 | |
| 510 | 311103-0310 | | 8 | PARALLEL PIN ISO 2338 5M6X20 A1 | |
| 520 | 311103-0400 | | 4 | PARALLEL PIN ISO 2338 8M6X18 A | |
| 530 | 312105-0331 | | 12 | SCREW M6S ISO 4017 M5X20 A480 | |
| 570 | 312109-0374 | | 6 | SCREW M6S ISO 4017 M6X30 A480 | |
| 580 | 312105-0460 | | 6 | SCREW M6S ISO 4014 M8X45 A480 | |
| 590 | 312605-0316 | | 2 | HEXAGON NUT, M6M M6 A280 | |
| 600 | 315101-0153 | | 2 | WASHER PLAIN, BRB, 6,4/12 H=1,5 | |
| **TBA 1000SQ, TBA 0500SQ (See drawing on page: 4-168)** | | | | | |
| 010 | 2835896-0001 | | 1 | RAIL BRACKET | |
| 020 | 2835896-0002 | | 1 | RAIL BRACKET | |
| 030 | 2835896-0003 | | 1 | RAIL BRACKET | |
| 040 | 2835896-0004 | | 1 | RAIL BRACKET | |
| 050 | 2835895-0001 | | 1 | SPACER | |
| 060 | 2835895-0002 | | 1 | SPACER | |
| 070 | 2780752-0000 | | 1 | ECCENTRIC | |
| 080 | 2780751-0000 | | 1 | ECCENTRIC | |
| 090 | 2874249-0000 | | 2 | VOLUME CAM | |
| 095 | 2874250-0000 | | 2 | VOLUME CAM | |
| 100 | 2780753-0000 | | 2 | PIVOT PIN | |
| 130 | 2844888-0000 | | 2 | PULLER CAM | |
| 140 | 2844889-0000 | | 2 | PULLER CAM | |
| 500 | 311103-0272 | | 8 | PARALLEL PIN ISO 2338 4M6X20 A1 | |
| 505 | 311103-0315 | | 4 | PARALLEL PIN ISO 2338 5M6X32 A1 | |
| 510 | 311103-0310 | | 4 | PARALLEL PIN ISO 2338 5M6X20 A1 | |
| 520 | 311103-0400 | | 4 | PARALLEL PIN ISO 2338 8M6X18 A | |
| 525 | 312105-0328 | | 4 | SCREW M6S ISO 4017 M5X14 A480 | |
| 530 | 312105-0331 | | 8 | SCREW M6S ISO 4017 M5X20 A480 | |
| 570 | 312109-0374 | | 6 | SCREW M6S ISO 4017 M6X30 A480 | |
| 580 | 312105-0460 | | 6 | SCREW M6S ISO 4014 M8X45 A480 | |
| 590 | 312605-0316 | | 2 | HEXAGON NUT, M6M M6 A280 | |
| 600 | 315101-0153 | | 2 | WASHER PLAIN, BRB, 6,4/12 H=1,5 | |
| **TBA 1000S (See drawing on page: 4-168)** | | | | | |
| 010 | 2871884-0001 | | 1 | RAIL BRACKET | |
| 020 | 2871884-0002 | | 1 | RAIL BRACKET | |
| 030 | 2871884-0003 | | 1 | RAIL BRACKET | |
| 040 | 2871884-0004 | | 1 | RAIL BRACKET | |
| 050 | 2835895-0001 | | 1 | SPACER | |
| 060 | 2835895-0002 | | 1 | SPACER | |
| 070 | 2780752-0000 | | 1 | ECCENTRIC | |
| 080 | 2780751-0000 | | 1 | ECCENTRIC | |
| 090 | 2871040-0000 | | 4 | VOLUME CAM | |
| 100 | 2780753-0000 | | 2 | PIVOT PIN | |
| 130 | 2871038-0000 | | 2 | PULLER CAM | |
| 140 | 2871039-0000 | | 2 | PULLER CAM | |
| 500 | 311103-0272 | | 8 | PARALLEL PIN ISO 2338 4M6X20 A1 | |
| 510 | 311103-0310 | | 8 | PARALLEL PIN ISO 2338 5M6X20 A1 | |
| 520 | 311103-0400 | | 4 | PARALLEL PIN ISO 2338 8M6X18 A | |
| 530 | 312105-0331 | | 12 | SCREW M6S ISO 4017 M5X20 A480 | |
| 570 | 312109-0374 | | 6 | SCREW M6S ISO 4017 M6X30 A480 | |
| 580 | 312105-0460 | | 6 | SCREW M6S ISO 4014 M8X45 A480 | |
| 590 | 312605-0316 | | 2 | HEXAGON NUT, M6M M6 A280 | |
| 600 | 315101-0153 | | 2 | WASHER PLAIN, BRB, 6,4/12 H=1,5 | |
| **TBA 1500S (See drawing on page: 4-168)** | | | | | |
| 010 | 2930279-0001 | | 1 | RAIL BRACKET | |
| 020 | 2930279-0002 | | 1 | RAIL BRACKET | |
| 030 | 2930279-0003 | | 1 | RAIL BRACKET | |
| 040 | 2930279-0004 | | 1 | RAIL BRACKET | |
| 050 | 2835895-0001 | | 1 | SPACER | |
| 060 | 2835895-0002 | | 1 | SPACER | |
| 070 | 2968867-0000 | | 1 | ECCENTRIC | |
| 080 | 2968868-0000 | | 1 | ECCENTRIC | |
| 090 | 2955618-0000 | | 2 | VOLUME CAM | |
| 095 | 2955619-0000 | | 2 | VOLUME CAM | |
| 100 | 2780753-0000 | | 2 | PIVOT PIN | |
| 140 | 2930283-0000 | | 2 | PULLER CAM | |
| 500 | 311103-0272 | | 4 | PARALLEL PIN ISO 2338 4M6X20 A1 | |
| 510 | 311103-0310 | | 8 | PARALLEL PIN ISO 2338 5M6X20 A1 | |
| 520 | 311103-0400 | | 4 | PARALLEL PIN ISO 2338 8M6X18 A | |
| 525 | 312105-0331 | | 4 | SCREW M6S ISO 4017 M5X20 A480 | |

Machine Type | Group Description | Used-In | Group Number | Page No

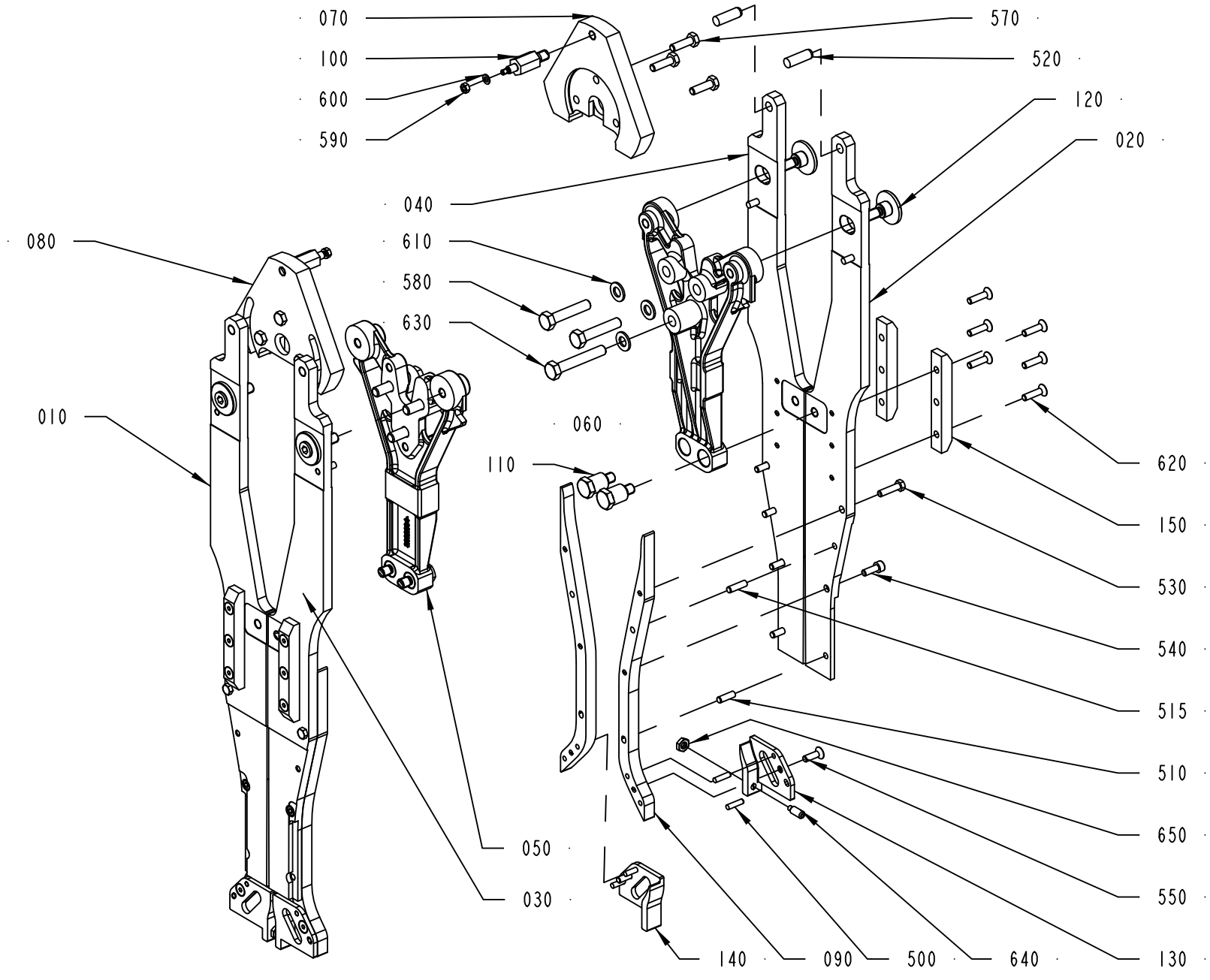


2835897-2
353368

ECM: 376682 - 20081127
Group number: 2835897-0100
Assembly Drawing: 2835897-2_1_AA

This list covers pages from 4-168 to 4-171

| Pos | Part No | UN | Qty | Description | Page No |
|---|---|---|---|---|---|
| **TBA 1500S (Cont'd) (See drawing on page: 4-168)** | | | | | |
| 530 | 312105-0331 | | 6 | SCREW M6S ISO 4017 M5X20 A480 | |
| 570 | 312109-0374 | | 6 | SCREW M6S ISO 4017 M6X30 A480 | |
| 580 | 312105-0460 | | 6 | SCREW M6S ISO 4014 M8X45 A480 | |
| 590 | 312605-0316 | | 2 | HEXAGON NUT, M6M M6 A280 | |
| 600 | 315101-0153 | | 2 | WASHER PLAIN, BRB, 6,4/12 H=1,5 | |
| **TBA 2000S (See drawing on page: 4-170)** | | | | | |
| 010 | 2909315-0001 | | 1 | RAIL BRACKET | |
| 020 | 2909315-0002 | | 1 | RAIL BRACKET | |
| 030 | 2936881-0003 | | 1 | RAIL BRACKET | |
| 040 | 2936881-0004 | | 1 | RAIL BRACKET | |
| 050 | 2922694-0001 | | 1 | SPACER | |
| 060 | 2922694-0002 | | 1 | SPACER | |
| 070 | 2909317-0000 | | 1 | ECCENTRIC | |
| 080 | 2909318-0000 | | 1 | ECCENTRIC | |
| 090 | 2909316-0000 | | 4 | VOLUME CAM | |
| 100 | 2535443-0000 | | 2 | PIVOT PIN | |
| 130 | 2922700-0000 | | 2 | PULLER CAM | |
| 140 | 2922701-0000 | | 2 | PULLER CAM | |
| 150 | 2922698-0000 | | 4 | PLATE | |
| 500 | 311103-0270 | | 8 | PARALLEL PIN ISO 2338 4M6X16 A1 | |
| 510 | 311103-0308 | | 4 | PARALLEL PIN ISO 2338 5M6X16 A1 | |
| 515 | 311103-0309 | | 4 | PARALLEL PIN ISO 2338 5M6X18 A1 | |
| 520 | 311103-0402 | | 4 | PARALLEL PIN ISO 2338 8M6X22 A1 | |
| 530 | 312105-0331 | | 4 | SCREW M6S ISO 4017 M5X20 A480 | |
| 540 | 312115-0328 | | 4 | SCREW ISO4762 M5X14 A4 80 | |
| 550 | 312155-0329 | | 4 | SCREW DIN 7991 MF6S M5X16 A4 70 | |
| 570 | 312105-0370 | | 6 | SCREW M6S ISO 4017 M6X20 A480 | |
| 580 | 312105-0459 | | 4 | SCREW M6S ISO 4014 M8X40 A480 | |
| 590 | 312605-0312 | | 2 | HEXAGON NUT, M6M M4 A280 | |
| 600 | 315105-0136 | | 2 | WASHER BRB 4,3X8 RFR | |
| 620 | 312155-0331 | | 12 | SCREW DIN 7991 MF6S M5X20 A4 70 | |
| 630 | 312105-0461 | | 2 | SCREW M6S ISO 4014 M8X50 A480 | |
| **TPA 1000SQ, TPA 0750SQ (See drawing on page: 4-168)** | | | | | |
| 010 | 2916978-0001 | | 1 | RAIL BRACKET | |
| 020 | 2916978-0002 | | 1 | RAIL BRACKET | |
| 030 | 2916978-0003 | | 1 | RAIL BRACKET | |
| 040 | 2916978-0004 | | 1 | RAIL BRACKET | |
| 050 | 2835895-0001 | | 1 | SPACER | |
| 060 | 2835895-0002 | | 1 | SPACER | |
| 070 | 2780752-0000 | | 1 | ECCENTRIC | |
| 080 | 2780751-0000 | | 1 | ECCENTRIC | |
| 090 | 2916979-0000 | | 2 | VOLUME CAM | |
| 095 | 2916980-0000 | | 2 | VOLUME CAM | |
| 100 | 2780753-0000 | | 2 | PIVOT PIN | |
| 130 | 2916981-0000 | | 2 | PULLER CAM | |
| 140 | 2916982-0000 | | 2 | PULLER CAM | |
| 500 | 311103-0272 | | 8 | PARALLEL PIN ISO 2338 4M6X20 A1 | |
| 510 | 311103-0310 | | 8 | PARALLEL PIN ISO 2338 5M6X20 A1 | |
| 520 | 311103-0400 | | 4 | PARALLEL PIN ISO 2338 8M6X18 A | |
| 530 | 312105-0331 | | 12 | SCREW M6S ISO 4017 M5X20 A480 | |
| 570 | 312109-0374 | | 6 | SCREW M6S ISO 4017 M6X30 A480 | |
| 580 | 312105-0460 | | 6 | SCREW M6S ISO 4014 M8X45 A480 | |
| 590 | 312605-0316 | | 2 | HEXAGON NUT, M6M M6 A280 | |
| 600 | 315101-0153 | | 2 | WASHER PLAIN, BRB, 6,4/12 H=1,5 | |
| **Common Parts** | | | | | |
| 110 | 2835893-0000 | | 4 | PIN | |
| 120 | 2835894-0000 | | 4 | PIN | |
| 530 | 312105-0331 | | 6 | SCREW M6S ISO 4017 M5X20 A480 | |
| 610 | 315105-0165 | | 6 | WASHER BRB 8,4X16 RFR | |
| 640 | 312318-0368 | | 2 | SCREW ISO4029 M6X16 A4 | |
| 650 | 312625-0316 | | 2 | HEXAGON THIN NUT, EN 24035 ML6M M6 A4 | |

Machine Type | Group Description | Used-In | Group Number | Page No

# SUPPORT ROLLER



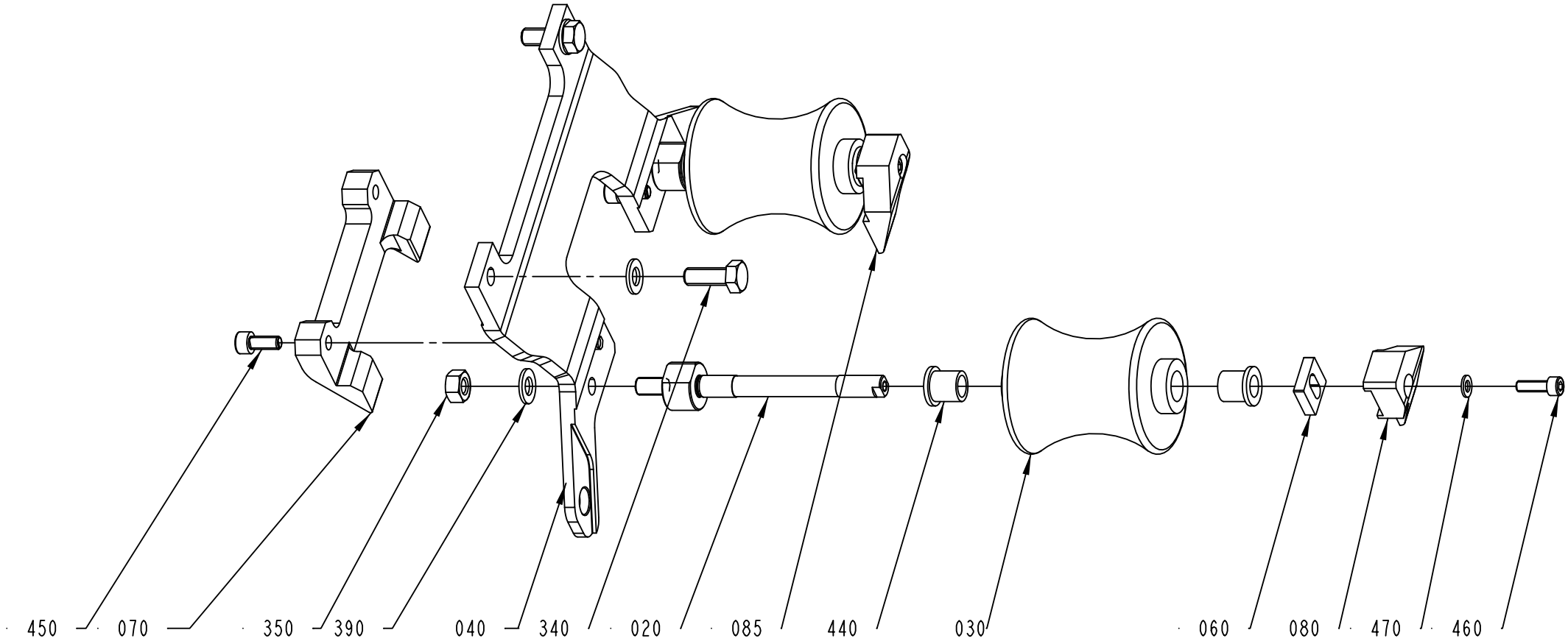


2812896-1
289218

ECM: 378237 - 20081127
Group number: 2812896-0100
Assembly Drawing: 2812896-1_1_AA

This list covers pages from 4-172 to 4-175

| Pos | Part No | UN | Qty | Description | Page No |
|---|---|---|---|---|---|
| **TBA 0500B, TBA 1000B NOMOLDEDCAP** | | | | | |
| 020 | 2837095-0000 | | 2 | SHAFT | |
| 030 | 2619199-0000 | | 2 | ROLLER | |
| 040 | 2900397-0000 | | 1 | PLATE | |
| 070 | 2812899-0000 | | 1 | CAM | |
| 080 | 2837097-0000 | | 1 | CAM | |
| 085 | 2837108-0000 | | 1 | CAM | |
| 350 | 312605-0318 | | 2 | HEXAGON NUT, M6M M8 A280 | |
| 390 | 315105-0165 | | 4 | WASHER BRB 8,4X16 RFR | |
| 450 | 312115-0367 | | 2 | SCREW ISO4762 M6X14 A4 80 | |
| 460 | 312115-0329 | | 2 | SCREW ISO4762 M5X16 A4 80 | |
| 470 | 315105-0146 | | 2 | WASHER BRB 5,3X10 RFR | |
| **TBA 0500SQ, TBA 1000SQ** | | | | | |
| 020 | 2837095-0000 | | 2 | SHAFT | |
| 030 | 1499678-0000 | | 2 | ROLLER | |
| 040 | 2812897-0000 | | 1 | PLATE | |
| 070 | 2812899-0000 | | 1 | CAM | |
| 080 | 2837097-0000 | | 1 | CAM | |
| 085 | 2837108-0000 | | 1 | CAM | |
| 350 | 312605-0318 | | 2 | HEXAGON NUT, M6M M8 A280 | |
| 390 | 315105-0165 | | 4 | WASHER BRB 8,4X16 RFR | |
| 450 | 312115-0367 | | 2 | SCREW ISO4762 M6X14 A4 80 | |
| 460 | 312115-0329 | | 2 | SCREW ISO4762 M5X16 A4 80 | |
| 470 | 315105-0146 | | 2 | WASHER BRB 5,3X10 RFR | |
| **TBA 1000B STDA7** | | | | | |
| 020 | 2837095-0000 | | 2 | SHAFT | |
| 030 | 2767478-0001 | | 2 | ROLLER | |
| 040 | 2900397-0000 | | 1 | PLATE | |
| 070 | 2812899-0000 | | 1 | CAM | |
| 080 | 2837097-0000 | | 1 | CAM | |
| 085 | 2837108-0000 | | 1 | CAM | |
| 350 | 312605-0318 | | 2 | HEXAGON NUT, M6M M8 A280 | |
| 390 | 315105-0165 | | 4 | WASHER BRB 8,4X16 RFR | |
| 450 | 312115-0367 | | 2 | SCREW ISO4762 M6X14 A4 80 | |
| 460 | 312115-0329 | | 2 | SCREW ISO4762 M5X16 A4 80 | |
| 470 | 315105-0146 | | 2 | WASHER BRB 5,3X10 RFR | |
| **TBA 1000S NOMOLDEDCAP** | | | | | |
| 020 | 2837095-0000 | | 2 | SHAFT | |
| 030 | 569058-0000 | | 2 | SUPPORT ROLLER | |
| 040 | 2812897-0000 | | 1 | PLATE | |
| 070 | 2812899-0000 | | 1 | CAM | |
| 080 | 2837097-0000 | | 1 | CAM | |
| 085 | 2837108-0000 | | 1 | CAM | |
| 350 | 312605-0318 | | 2 | HEXAGON NUT, M6M M8 A280 | |
| 390 | 315105-0165 | | 4 | WASHER BRB 8,4X16 RFR | |
| 450 | 312115-0367 | | 2 | SCREW ISO4762 M6X14 A4 80 | |
| 460 | 312115-0329 | | 2 | SCREW ISO4762 M5X16 A4 80 | |
| 470 | 315105-0146 | | 2 | WASHER BRB 5,3X10 RFR | |
| **TBA 1000S STDA7, TBA 1000S LIGHTCAP** | | | | | |
| 020 | 2837095-0000 | | 2 | SHAFT | |
| 030 | 2767478-0002 | | 2 | ROLLER | |
| 040 | 2812897-0000 | | 1 | PLATE | |
| 070 | 2812899-0000 | | 1 | CAM | |
| 080 | 2837097-0000 | | 1 | CAM | |
| 085 | 2837108-0000 | | 1 | CAM | |
| 350 | 312605-0318 | | 2 | HEXAGON NUT, M6M M8 A280 | |
| 390 | 315105-0165 | | 4 | WASHER BRB 8,4X16 RFR | |
| 450 | 312115-0367 | | 2 | SCREW ISO4762 M6X14 A4 80 | |
| 460 | 312115-0329 | | 2 | SCREW ISO4762 M5X16 A4 80 | |
| 470 | 315105-0146 | | 2 | WASHER BRB 5,3X10 RFR | |
| **TBA 1500S** | | | | | |
| 020 | 2945841-0000 | | 2 | SHAFT | |
| 030 | 560122-0000 | | 2 | SUPPORT ROLLER | |
| 040 | 2930293-0000 | | 1 | PLATE | |
| 080 | 2931344-0000 | | 2 | CAM | |
| 350 | 312605-0318 | | 2 | HEXAGON NUT, M6M M8 A280 | |
| 390 | 315105-0165 | | 4 | WASHER BRB 8,4X16 RFR | |
| 460 | 312155-0327 | | 2 | SCREW DIN 7991 MF6S M5X12 A4 70 | |
| **TBA 2000S** | | | | | |
| 020 | 2922696-0000 | | 2 | SHAFT | |
| 030 | 2602655-0000 | | 2 | ROLLER | |
| 040 | 2922201-0000 | | 1 | PLATE | |
| 070 | 2931345-0000 | | 2 | CAM | |
| 080 | 2931344-0000 | | 2 | CAM | |
| 350 | 312605-0318 | | 2 | HEXAGON NUT, M6M M8 A280 | |
| 390 | 315105-0165 | | 4 | WASHER BRB 8,4X16 RFR | |
| 450 | 312155-0368 | | 4 | SCREW DIN 7991 MF6S M6X16 A4 70 | |
| 460 | 312155-0327 | | 2 | SCREW DIN 7991 MF6S M5X12 A4 70 | |
| **TPA 1000SQ, TPA 0750SQ** | | | | | |
| 020 | 2837095-0000 | | 2 | SHAFT | |
| 030 | 1524421-0000 | | 2 | ROLLER | |
| 040 | 2916977-0000 | | 1 | PLATE | |
| 070 | 2916983-0000 | | 1 | CAM | |
| 080 | 2837097-0000 | | 1 | CAM | |

Machine Type | Group Description | Used-In | Group Number | Page No

# SUPPORT ROLLER



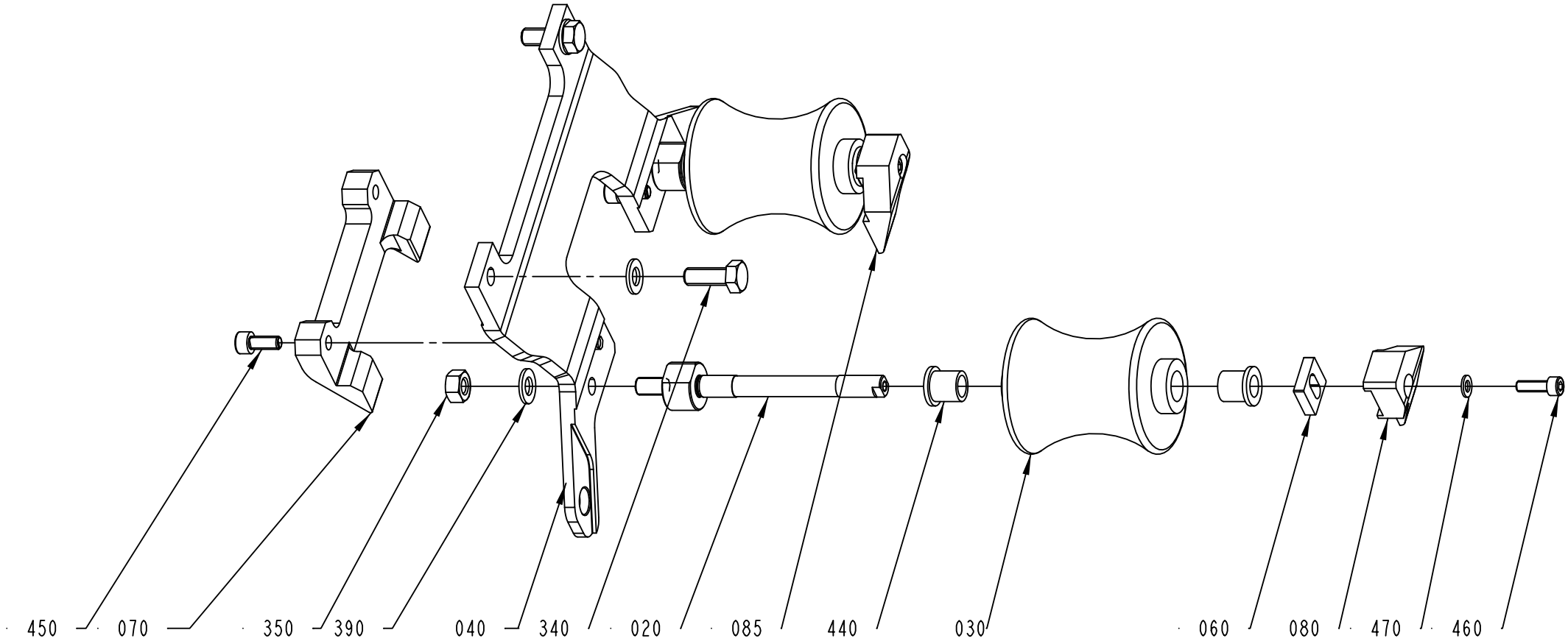


2812896-1
289218

| Pos | Part No | UN | Qty | Description | Page No |
|---|---|---|---|---|---|
| **TPA 1000SQ, TPA 0750SQ (Cont'd)** | | | | | |
| 085 | 2837108-0000 | | 1 | CAM | |
| 350 | 312605-0318 | | 2 | HEXAGON NUT, M6M M8 A280 | |
| 390 | 315105-0165 | | 4 | WASHER BRB 8,4X16 RFR | |
| 450 | 312115-0367 | | 2 | SCREW ISO4762 M6X14 A4 80 | |
| 460 | 312115-0329 | | 2 | SCREW ISO4762 M5X16 A4 80 | |
| 470 | 315105-0146 | | 2 | WASHER BRB 5,3X10 RFR | |
| **Common Parts** | | | | | |
| 060 | 2837096-0000 | | 2 | WASHER | |
| 340 | 312105-0452 | | 2 | SCREW M6S ISO 4017 M8X22 A480 | |
| 440 | 90240-0180 | | 4 | FLANGE BUSHING 10X14X15MM | |

| Pos | Part No | UN | Qty | Description | Page No |
|---|---|---|---|---|---|

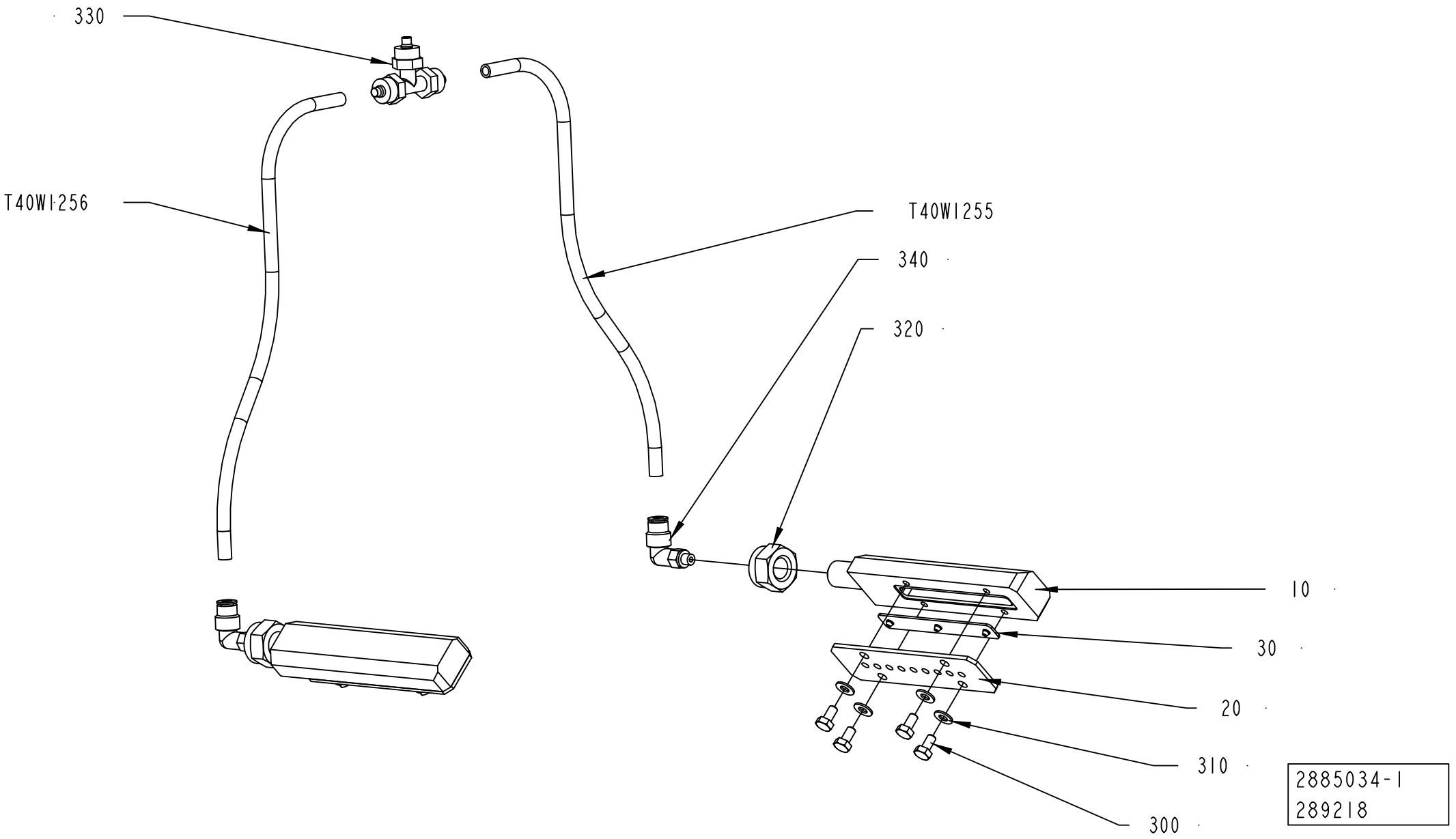
330
T40W1256
T40W1255
340
320
10
30
20
310
300
2885034-1
289218

ECM: 376684 - 20081127
Group number: 2885034-0100
Assembly Drawing: 2885034-1_1_AA

| Pos | Part No | UN | Qty | Description | Page No |
|---|---|---|---|---|---|
| **TBA 0500SQ, TBA 0500B, TBA 1000B, TBA 1000SQ, TBA 1000S, TPA 1000SQ, TPA 0750SQ** | | | | | |
| 010 | 2886417-0000 | | 2 | DISTRIBUTOR | |
| 020 | 2886418-0000 | | 2 | COVER | |
| 030 | 2859949-0000 | | 2 | NOZZLE | |
| **TBA 1500S** | | | | | |
| 010 | 2922695-0000 | | 2 | DISTRIBUTOR | |
| 020 | 2931944-0000 | | 2 | COVER | |
| 030 | 2931945-0000 | | 2 | NOZZLE | |
| **TBA 2000S** | | | | | |
| 010 | 2922695-0000 | | 2 | DISTRIBUTOR | |
| 020 | 2886418-0000 | | 2 | COVER | |
| 030 | 2859949-0000 | | 2 | NOZZLE | |
| **Common Parts** | | | | | |
| 300 | 312105-0287 | | 8 | SCREW M6S ISO 4017 M4X8 A470 | |
| 310 | 315106-0136 | | 8 | WASHER ISO 7089-4-200 HV A4 | |
| 320 | 312812-0322 | | 2 | HEXAGON NUT, NY-LOCK M12 A480 | |
| 330 | 342946-0112 | | 1 | T-COUPLING,UNION 6/4 | |
| 340 | 350002-0002 | | 2 | PUSH-IN L-FITTING QSL-F-M5-6 | |
| T40W1255 | 315400-0003 | MM | 500 | TUBE PUN-H-6X1-SW | |
| T40W1256 | 315400-0003 | MM | 500 | TUBE PUN-H-6X1-SW | |

| Pos | Part No | UN | Qty | Description | Page No |
|---|---|---|---|---|---|

Tetra Pak

# SPC
## Spare Parts Catalogue

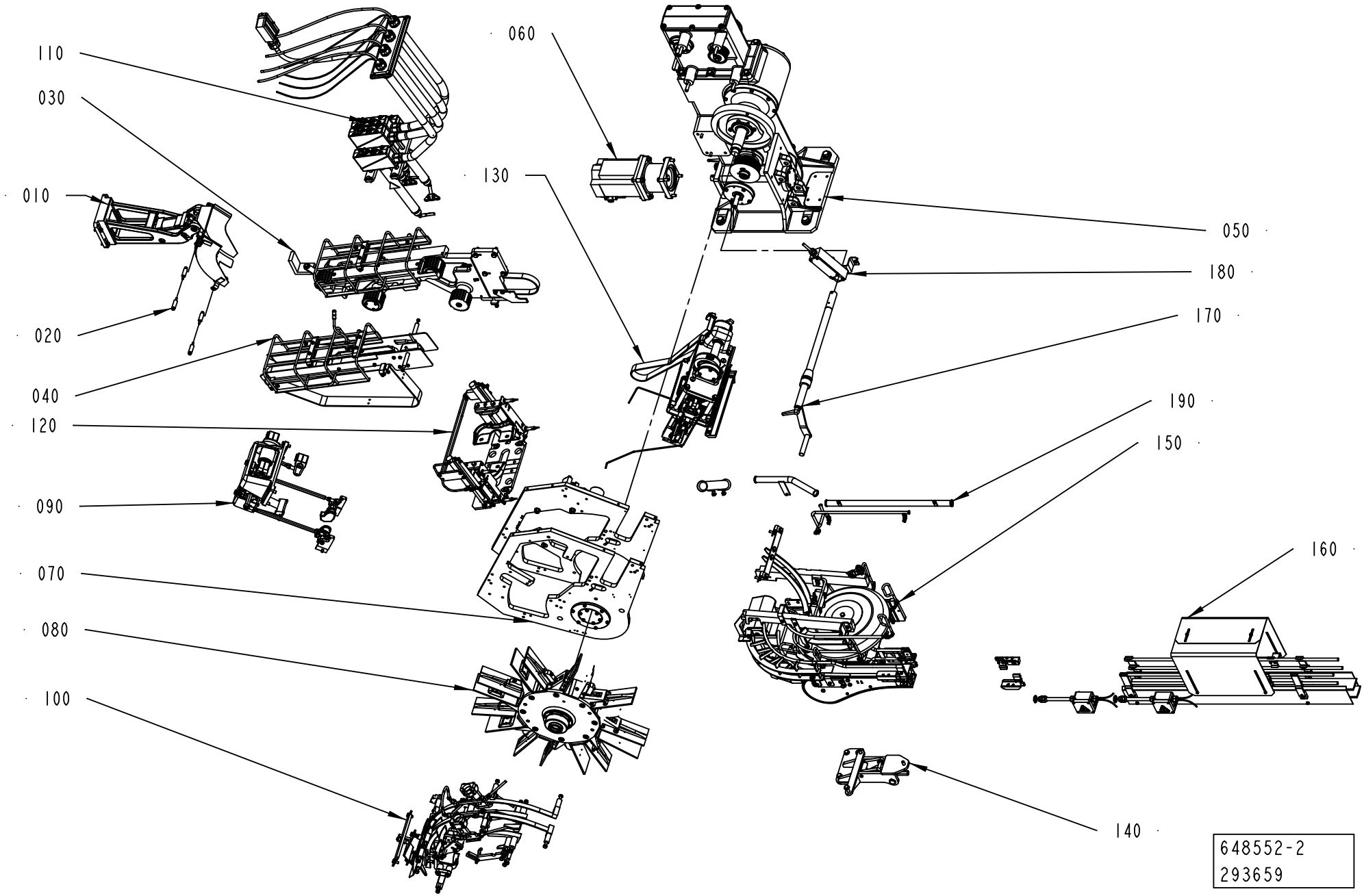
110
030
010
020
040
120
090
070
080
100
060
130
050
180
170
190
150
160
140
648552-2
293659

ECM: 367719 - 20081003
Group number: 648552-0200
Assembly Drawing: 648552-2_1_AA

| Pos | Part No | UN | Qty | Description | Page No |
|---|---|---|---|---|---|
| **TBA 0500B, TBA 1000B NOMOLDEDCAP** | | | | | |
| 020 | 2537128-0100 | | 1 | DROP CHUTE VARIANT | **5-5, 5-7, 5-9** |
| 120 | 2931380-0100 | | 1 | FRAME | **5-11, 5-13, 5-15** |
| **TBA 0500SQ, TBA 1000SQ** | | | | | |
| 020 | 2537128-0100 | | 1 | DROP CHUTE VARIANT | **5-5, 5-7, 5-9** |
| 120 | 2931380-0100 | | 1 | FRAME | **5-11, 5-13, 5-15** |
| **TBA 1000B STDA7** | | | | | |
| 020 | 1361922-0200 | | 1 | DROP CHUTE VARIANT | **5-17** |
| **TBA 1000S** | | | | | |
| 020 | 1361922-0200 | | 1 | DROP CHUTE VARIANT | **5-17** |
| **TBA 1500S** | | | | | |
| 020 | 1361922-0200 | | 1 | DROP CHUTE VARIANT | **5-17** |
| **TBA 2000S** | | | | | |
| 020 | 2537128-0100 | | 1 | DROP CHUTE VARIANT | **5-5, 5-7, 5-9** |
| **TPA 1000SQ, TPA 0750SQ** | | | | | |
| 020 | 2537128-0100 | | 1 | DROP CHUTE VARIANT | **5-5, 5-7, 5-9** |
| 120 | 2931380-0100 | | 1 | FRAME | **5-11, 5-13, 5-15** |
| **Common Parts** | | | | | |
| 010 | 2876472-0100 | | 1 | DROP CHUTE CRADLE | **5-19** |
| 030 | 1517298-0300 | | 1 | INFEED CONVEYOR | **5-21** |
| 040 | 2931389-0100 | | 1 | INFEED CONVEYOR VARIANT | **5-31, 5-33, 5-35, 5-37** |
| 050 | 2931385-0100 | | 1 | INDEXING UNIT | **5-39** |
| 060 | 2751519-0100 | | 1 | MOTOR UNIT | **5-41** |
| 070 | 2895568-0100 | | 1 | FRAMEWORK | **5-43** |
| 080 | 2927613-0100 | | 1 | WHEEL | **5-45, 5-47, 5-49, 5-51** |
| 090 | 2769842-0100 | | 1 | PULL-DOWN DEVICE | **5-79, 5-81** |
| 100 | 2866604-0100 | | 1 | FOLDING PART | **5-105** |
| 110 | 2876462-0100 | | 1 | HEATING CHAMBER | **5-131, 5-133** |
| 130 | 2857893-0100 | | 1 | PRESSURE DEVICE | **5-139, 5-141, 5-143, 5-145** |
| 150 | 2922972-0100 | | 1 | OUTFEEDER | **5-153** |
| 160 | 2872916-0100 | | 1 | LAST POINT DE | **5-187** |

| Pos | Part No | UN | Qty | Description | Page No |
|---|---|---|---|---|---|

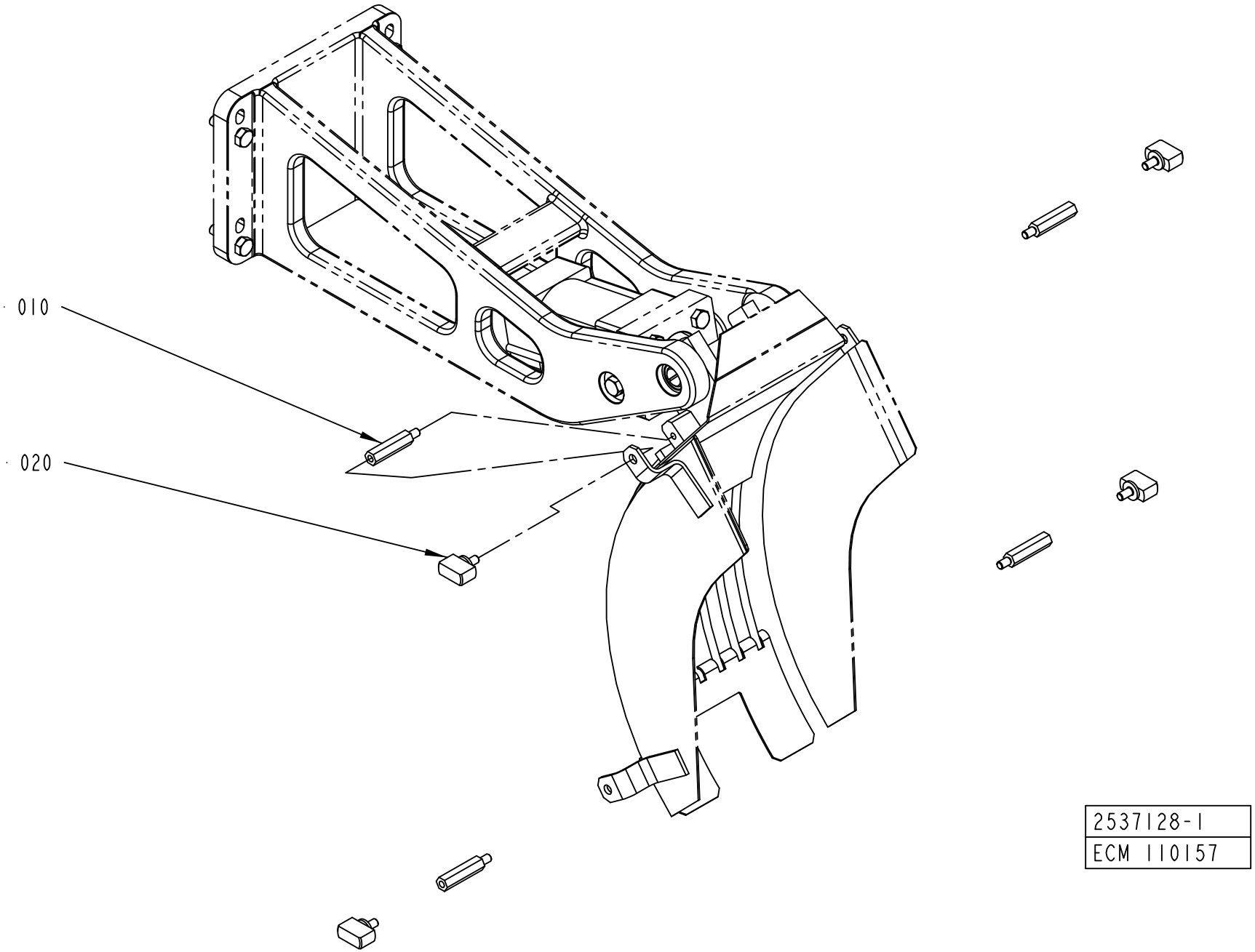
010
020
2537128-1
ECM 110157

| Pos | Part No | UN | Qty | Description | Page No |
|---|---|---|---|---|---|
| **TBA 0500B, TBA 1000B (See drawing on page: 5-4)** | | | | | |
| 010 | 2537129-0000 | | 4 | SPACER | |
| 020 | 2540609-0000 | | 4 | KNOB | |
| **TBA 0500SQ, TBA 1000SQ (See drawing on page: 5-6)** | | | | | |
| 010 | 2598820-0000 | | 2 | SPACER | |
| 020 | 2540609-0000 | | 4 | KNOB | |
| 030 | 2619574-0000 | | 2 | SPACER | |
| **TBA 2000S (See drawing on page: 5-8)** | | | | | |
| 010 | 2661153-0000 | | 4 | SPACER | |
| 020 | 2540609-0000 | | 4 | KNOB | |
| 040 | 315402-0156 | | 4 | LOCK WASHER FBB 6,5 | |
| **TPA 1000SQ, TPA 0750SQ (See drawing on page: 5-4)** | | | | | |
| 020 | 2540609-0000 | | 4 | KNOB | |

| Pos | Part No | UN | Qty | Description | Page No |
|---|---|---|---|---|---|

# DROP CHUTE VARIANT



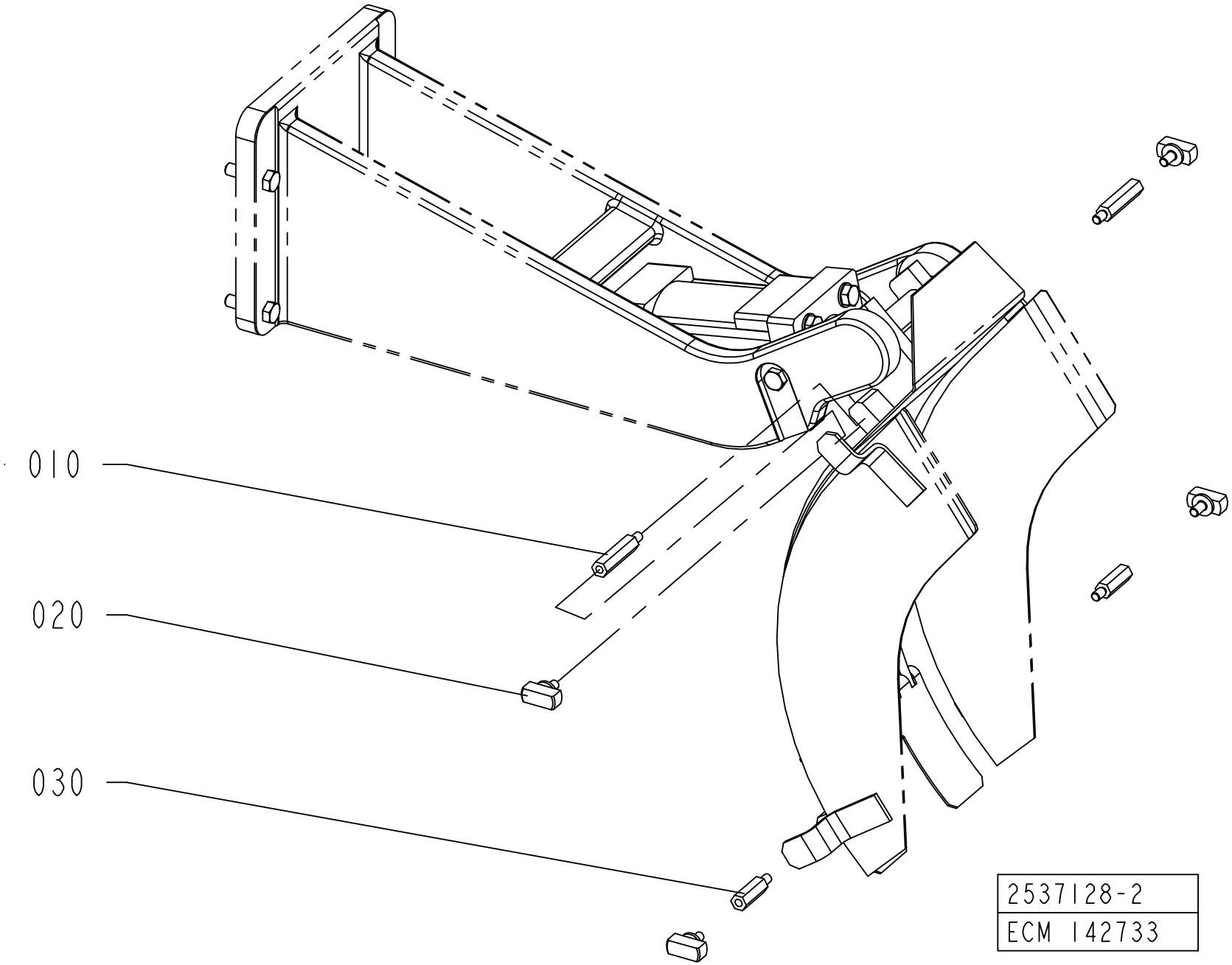

| Pos | Part No | UN | Qty | Description | Page No |
|---|---|---|---|---|---|
| **TBA 0500B, TBA 1000B (See drawing on page: 5-4)** | | | | | |
| 010 | 2537129-0000 | | 4 | SPACER | |
| 020 | 2540609-0000 | | 4 | KNOB | |
| **TBA 0500SQ, TBA 1000SQ (See drawing on page: 5-6)** | | | | | |
| 010 | 2598820-0000 | | 2 | SPACER | |
| 020 | 2540609-0000 | | 4 | KNOB | |
| 030 | 2619574-0000 | | 2 | SPACER | |
| **TBA 2000S (See drawing on page: 5-8)** | | | | | |
| 010 | 2661153-0000 | | 4 | SPACER | |
| 020 | 2540609-0000 | | 4 | KNOB | |
| 040 | 315402-0156 | | 4 | LOCK WASHER FBB 6,5 | |
| **TPA 1000SQ, TPA 0750SQ (See drawing on page: 5-4)** | | | | | |
| 020 | 2540609-0000 | | 4 | KNOB | |

| Pos | Part No | UN | Qty | Description | Page No |
|---|---|---|---|---|---|

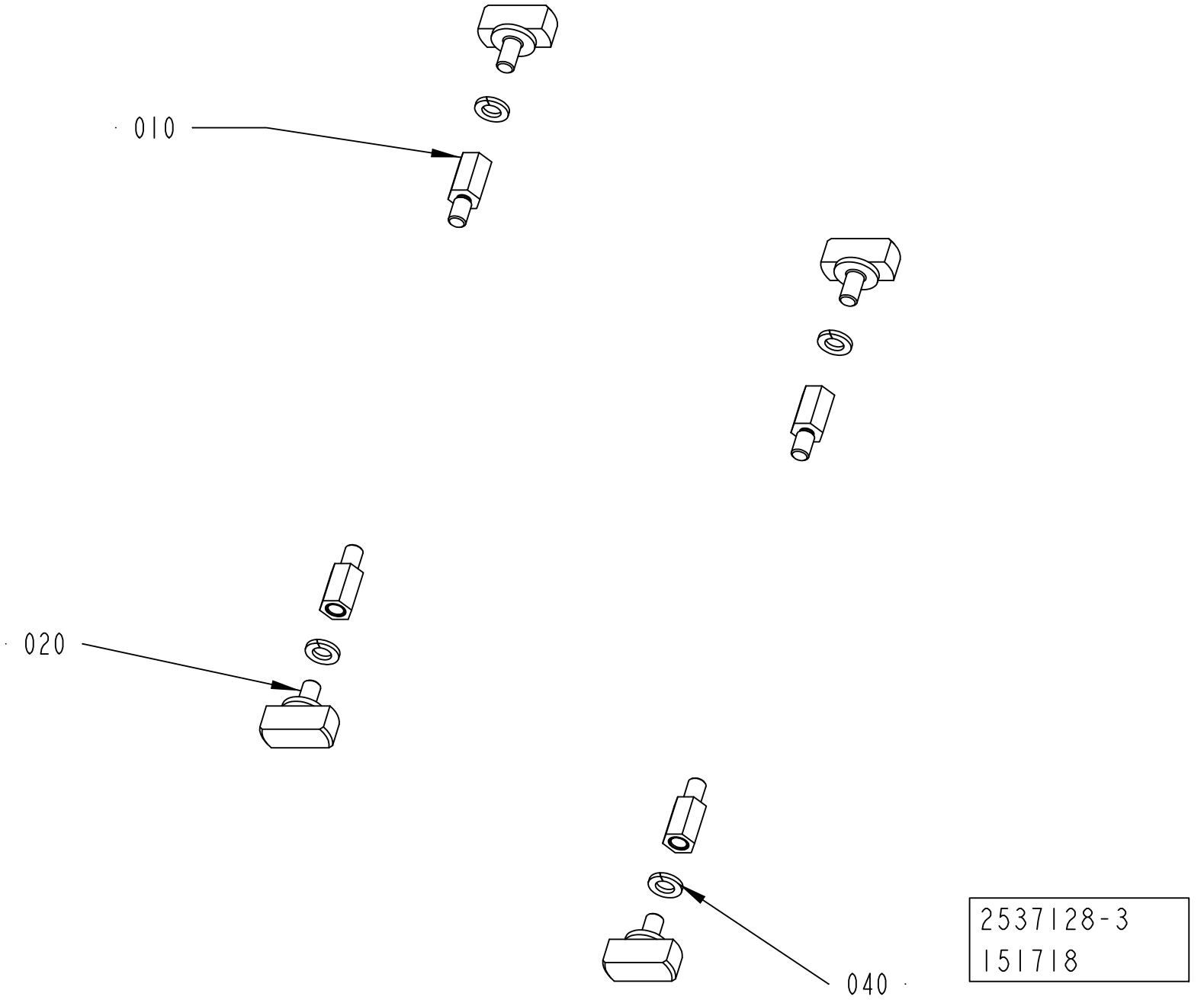
010
020
040
2537128-3
151718

ECM: 367692 - 20081003
Group number: 2537128-0100
Assembly Drawing: 2537128-3_1_AA

This list covers pages from 5-4 to 5-9

| Pos | Part No | UN | Qty | Description | Page No |
|---|---|---|---|---|---|
| **TBA 0500B, TBA 1000B (See drawing on page: 5-4)** | | | | | |
| 010 | 2537129-0000 | | 4 | SPACER | |
| 020 | 2540609-0000 | | 4 | KNOB | |
| **TBA 0500SQ, TBA 1000SQ (See drawing on page: 5-6)** | | | | | |
| 010 | 2598820-0000 | | 2 | SPACER | |
| 020 | 2540609-0000 | | 4 | KNOB | |
| 030 | 2619574-0000 | | 2 | SPACER | |
| **TBA 2000S (See drawing on page: 5-8)** | | | | | |
| 010 | 2661153-0000 | | 4 | SPACER | |
| 020 | 2540609-0000 | | 4 | KNOB | |
| 040 | 315402-0156 | | 4 | LOCK WASHER FBB 6,5 | |
| **TPA 1000SQ, TPA 0750SQ (See drawing on page: 5-4)** | | | | | |
| 020 | 2540609-0000 | | 4 | KNOB | |

| Pos | Part No | UN | Qty | Description | Page No |
|---|---|---|---|---|---|

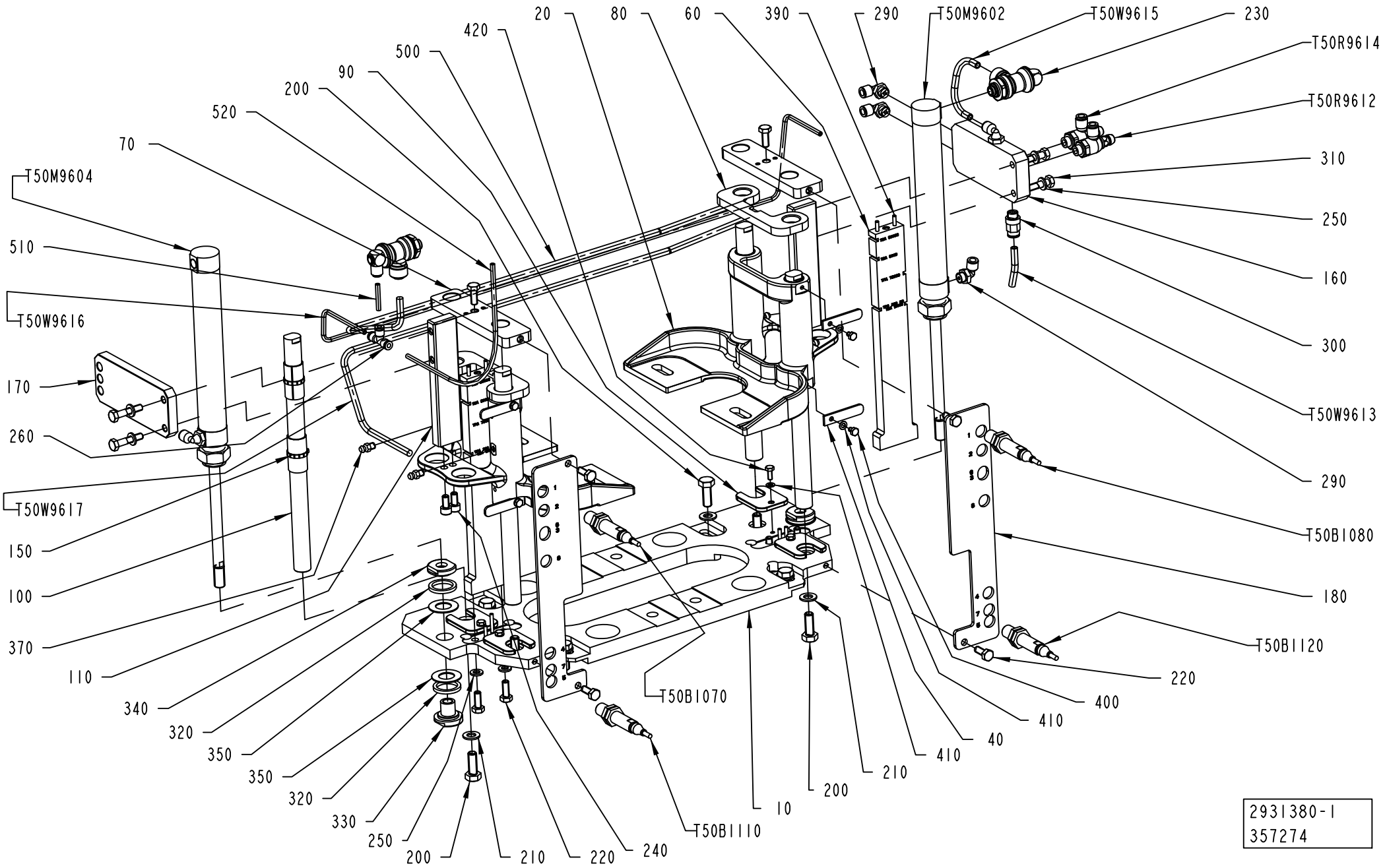
20
80
60
390
290
T50M9602
T50W9615
230
T50R9614
T50R9612
310
250
160
300
T50W9613
290
T50B1080
180
T50B1120
220
400
410
40
410
210
200
10
T50B1110
240
220
210
200
250
330
320
350
350
320
340
110
370
100
150
T50W9617
260
170
T50W9616
510
T50M9604
70
520
200
90
500
420
T50B1070
2931380-1
357274

ECM: 367713 - 20081003
Group number: 2931380-0100
Assembly Drawing: 2931380-1_1_AB

This list covers pages from 5-10 to 5-15

| Pos | Part No | UN | Qty | Description | Page No |
|---|---|---|---|---|---|
| **TBA 0500B, TBA 1000B (See drawing on page: 5-12)** | | | | | |
| 090 | 2852461-0000 | | 4 | SPACER | |
| **TBA 0500SQ, TBA 1000SQ (See drawing on page: 5-10)** | | | | | |
| 090 | 2852461-0000 | | 4 | SPACER | |
| **TPA 1000SQ, TPA 0750SQ (See drawing on page: 5-14)** | | | | | |
| 090 | 2852461-0000 | | 4 | SPACER | |
| **Common Parts** | | | | | |
| 010 | 2936209-0000 | | 1 | PLATE | |
| 020 | 2852465-0000 | | 2 | BRACKET | |
| 040 | 2829385-0000 | | 4 | PLATE | |
| 060 | 2936210-0000 | | 2 | PLATE | |
| 070 | 2760126-0000 | | 2 | SPACER | |
| 080 | 2760089-0000 | | 2 | STOP | |
| 100 | 2760121-0000 | | 4 | BAR | |
| 110 | 2760120-0000 | | 2 | PLATE | |
| 150 | 90458-2920 | | 8 | BUSHING INSERT, JUM-01-16 | |
| 160 | 2936212-0000 | | 1 | PLATE | |
| 170 | 2936211-0000 | | 1 | PLATE | |
| 180 | 2936213-0000 | | 2 | BRACKET | |
| 200 | 312105-0452 | | 8 | SCREW M6S ISO 4017 M8X22 A480 | |
| 210 | 315105-0165 | | 8 | WASHER BRB 8,4X16 RFR | |
| 220 | 312105-0368 | | 10 | SCREW M6S ISO 4017 M6X16 A480 | |
| 230 | 90600-3222 | | 2 | PILOTED FUNCTION VALVE G1/8, 7880 06 10 | |
| 240 | 312115-0366 | | 4 | SCREW ISO4762 M6X12 A4 80 | |
| 250 | 315105-0153 | | 8 | WASHER BRB 6,4X12 RFR | |
| 260 | 342748-0100 | | 1 | T-CONNECTION 4MM | |
| 290 | 90458-2956 | | 5 | ELBOW PIPE JOINT, EXT.THREAD, D=6MM-G1/8 | |
| 300 | 350001-0006 | | 1 | PUSH-IN FITTING QS-F-G1/8-6 | |
| 310 | 312105-0374 | | 4 | SCREW M6S ISO 4014 M6X30 A480 | |
| 320 | 2881044-0000 | | 4 | DAMPER | |
| 330 | 2951198-0000 | | 2 | BUSHING | |
| 340 | 2881047-0000 | | 2 | BUSHING | |
| 350 | 2881048-0000 | | 4 | WASHER | |
| 370 | 90286-0013 | | 4 | GREASE NIPPLE STRAIGHT, H1 M6X1 2346 | |
| 390 | 311102-0238 | | 8 | PARALLEL PIN ISO 2338 3M6X20 ST | |
| 400 | 312105-0285 | | 4 | SCREW M6S ISO 4017 M4X6 A470 | |
| 410 | 315101-0136 | | 8 | WASHER BRB, 4,3/8 H=0,8 | |
| 420 | 312105-0289 | | 4 | SCREW M6S H4X10 A4 70 ISO4017/DIN933 | |
| 500 | 90166-0013 | MM | 600 | TUBE 8 MM PA BLUE | |
| 510 | 315400-0016 | MM | 1000 | TUBE PUN-H-4X0,75-BL | |
| 520 | 315400-0016 | MM | 150 | TUBE PUN-H-4X0,75-BL | |
| T50B1070 | 90600-0464 | | 1 | INDUCTIVE SWITCH,E2A-M12LS02-WP-B1-TP 5M | |
| T50B1080 | 90600-0464 | | 1 | INDUCTIVE SWITCH,E2A-M12LS02-WP-B1-TP 5M | |
| T50B1110 | 90600-0464 | | 1 | INDUCTIVE SWITCH,E2A-M12LS02-WP-B1-TP 5M | |
| T50B1120 | 90600-0464 | | 1 | INDUCTIVE SWITCH,E2A-M12LS02-WP-B1-TP 5M | |
| T50M9602 | 90459-5268 | | 1 | DOUBLE ACTING, MINI-ISO, CYL. 25-130 | |
| T50M9604 | 90459-5268 | | 1 | DOUBLE ACTING, MINI-ISO, CYL. 25-130 | |
| T50R9612 | 90235-0846 | | 1 | THROTTLE CHECK VALVE G1/8", MANUAL, 6 | |
| T50R9614 | 90235-0846 | | 1 | THROTTLE CHECK VALVE G1/8", MANUAL, 6 | |
| T50W9613 | 90166-0081 | MM | 1000 | TUBE 6 MM PA BLUE | |
| T50W9615 | 90166-0081 | MM | 1000 | TUBE 6 MM PA BLUE | |
| T50W9616 | 315400-0016 | MM | 2000 | TUBE PUN-H-4X0,75-BL | |
| T50W9617 | 90166-0081 | MM | 600 | TUBE 6 MM PA BLUE | |

Machine Type | Group Description | Used-In | Group Number | Page No

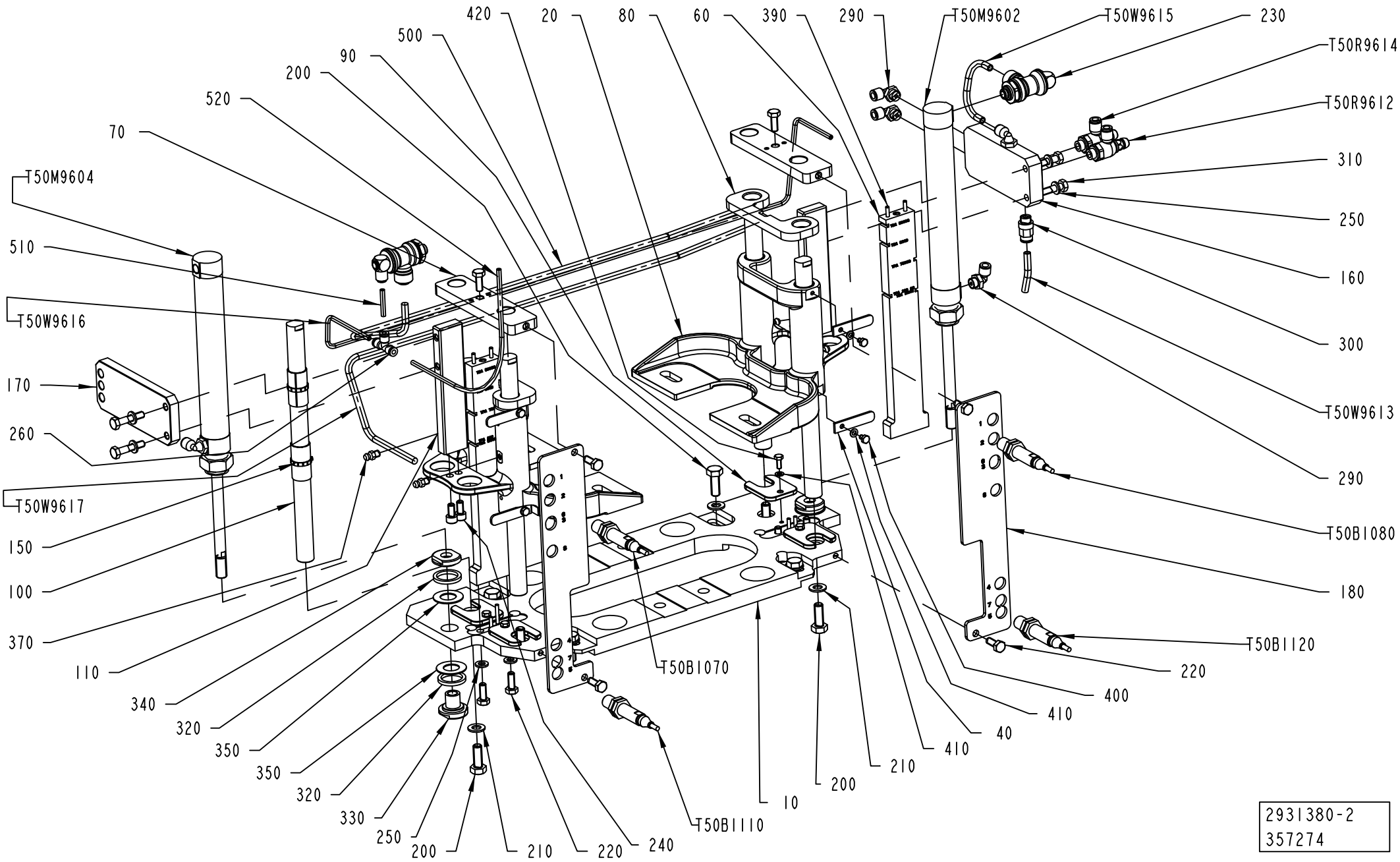


2931380-2
357274

ECM: 367713 - 20081003
Group number: 2931380-0100
Assembly Drawing: 2931380-2_1_AB

This list covers pages from 5-10 to 5-15

| Pos | Part No | UN | Qty | Description | Page No |
|---|---|---|---|---|---|
| **TBA 0500B, TBA 1000B (See drawing on page: 5-12)** | | | | | |
| 090 | 2852461-0000 | | 4 | SPACER | |
| **TBA 0500SQ, TBA 1000SQ (See drawing on page: 5-10)** | | | | | |
| 090 | 2852461-0000 | | 4 | SPACER | |
| **TPA 1000SQ, TPA 0750SQ (See drawing on page: 5-14)** | | | | | |
| 090 | 2852461-0000 | | 4 | SPACER | |
| **Common Parts** | | | | | |
| 010 | 2936209-0000 | | 1 | PLATE | |
| 020 | 2852465-0000 | | 2 | BRACKET | |
| 040 | 2829385-0000 | | 4 | PLATE | |
| 060 | 2936210-0000 | | 2 | PLATE | |
| 070 | 2760126-0000 | | 2 | SPACER | |
| 080 | 2760089-0000 | | 2 | STOP | |
| 100 | 2760121-0000 | | 4 | BAR | |
| 110 | 2760120-0000 | | 2 | PLATE | |
| 150 | 90458-2920 | | 8 | BUSHING INSERT, JUM-01-16 | |
| 160 | 2936212-0000 | | 1 | PLATE | |
| 170 | 2936211-0000 | | 1 | PLATE | |
| 180 | 2936213-0000 | | 2 | BRACKET | |
| 200 | 312105-0452 | | 8 | SCREW M6S ISO 4017 M8X22 A480 | |
| 210 | 315105-0165 | | 8 | WASHER BRB 8,4X16 RFR | |
| 220 | 312105-0368 | | 10 | SCREW M6S ISO 4017 M6X16 A480 | |
| 230 | 90600-3222 | | 2 | PILOTED FUNCTION VALVE G1/8, 7880 06 10 | |
| 240 | 312115-0366 | | 4 | SCREW ISO4762 M6X12 A4 80 | |
| 250 | 315105-0153 | | 8 | WASHER BRB 6,4X12 RFR | |
| 260 | 342748-0100 | | 1 | T-CONNECTION 4MM | |
| 290 | 90458-2956 | | 5 | ELBOW PIPE JOINT, EXT.THREAD, D=6MM-G1/8 | |
| 300 | 350001-0006 | | 1 | PUSH-IN FITTING QS-F-G1/8-6 | |
| 310 | 312105-0374 | | 4 | SCREW M6S ISO 4014 M6X30 A480 | |
| 320 | 2881044-0000 | | 4 | DAMPER | |
| 330 | 2951198-0000 | | 2 | BUSHING | |
| 340 | 2881047-0000 | | 2 | BUSHING | |
| 350 | 2881048-0000 | | 4 | WASHER | |
| 370 | 90286-0013 | | 4 | GREASE NIPPLE STRAIGHT, H1 M6X1 2346 | |
| 390 | 311102-0238 | | 8 | PARALLEL PIN ISO 2338 3M6X20 ST | |
| 400 | 312105-0285 | | 4 | SCREW M6S ISO 4017 M4X6 A470 | |
| 410 | 315101-0136 | | 8 | WASHER BRB, 4,3/8 H=0,8 | |
| 420 | 312105-0289 | | 4 | SCREW M6S H4X10 A4 70 ISO4017/DIN933 | |
| 500 | 90166-0013 | MM | 600 | TUBE 8 MM PA BLUE | |
| 510 | 315400-0016 | MM | 1000 | TUBE PUN-H-4X0,75-BL | |
| 520 | 315400-0016 | MM | 150 | TUBE PUN-H-4X0,75-BL | |
| T50B1070 | 90600-0464 | | 1 | INDUCTIVE SWITCH,E2A-M12LS02-WP-B1-TP 5M | |
| T50B1080 | 90600-0464 | | 1 | INDUCTIVE SWITCH,E2A-M12LS02-WP-B1-TP 5M | |
| T50B1110 | 90600-0464 | | 1 | INDUCTIVE SWITCH,E2A-M12LS02-WP-B1-TP 5M | |
| T50B1120 | 90600-0464 | | 1 | INDUCTIVE SWITCH,E2A-M12LS02-WP-B1-TP 5M | |
| T50M9602 | 90459-5268 | | 1 | DOUBLE ACTING, MINI-ISO, CYL. 25-130 | |
| T50M9604 | 90459-5268 | | 1 | DOUBLE ACTING, MINI-ISO, CYL. 25-130 | |
| T50R9612 | 90235-0846 | | 1 | THROTTLE CHECK VALVE G1/8", MANUAL, 6 | |
| T50R9614 | 90235-0846 | | 1 | THROTTLE CHECK VALVE G1/8", MANUAL, 6 | |
| T50W9613 | 90166-0081 | MM | 1000 | TUBE 6 MM PA BLUE | |
| T50W9615 | 90166-0081 | MM | 1000 | TUBE 6 MM PA BLUE | |
| T50W9616 | 315400-0016 | MM | 2000 | TUBE PUN-H-4X0,75-BL | |
| T50W9617 | 90166-0081 | MM | 600 | TUBE 6 MM PA BLUE | |

Machine Type | Group Description | Used-In | Group Number | Page No

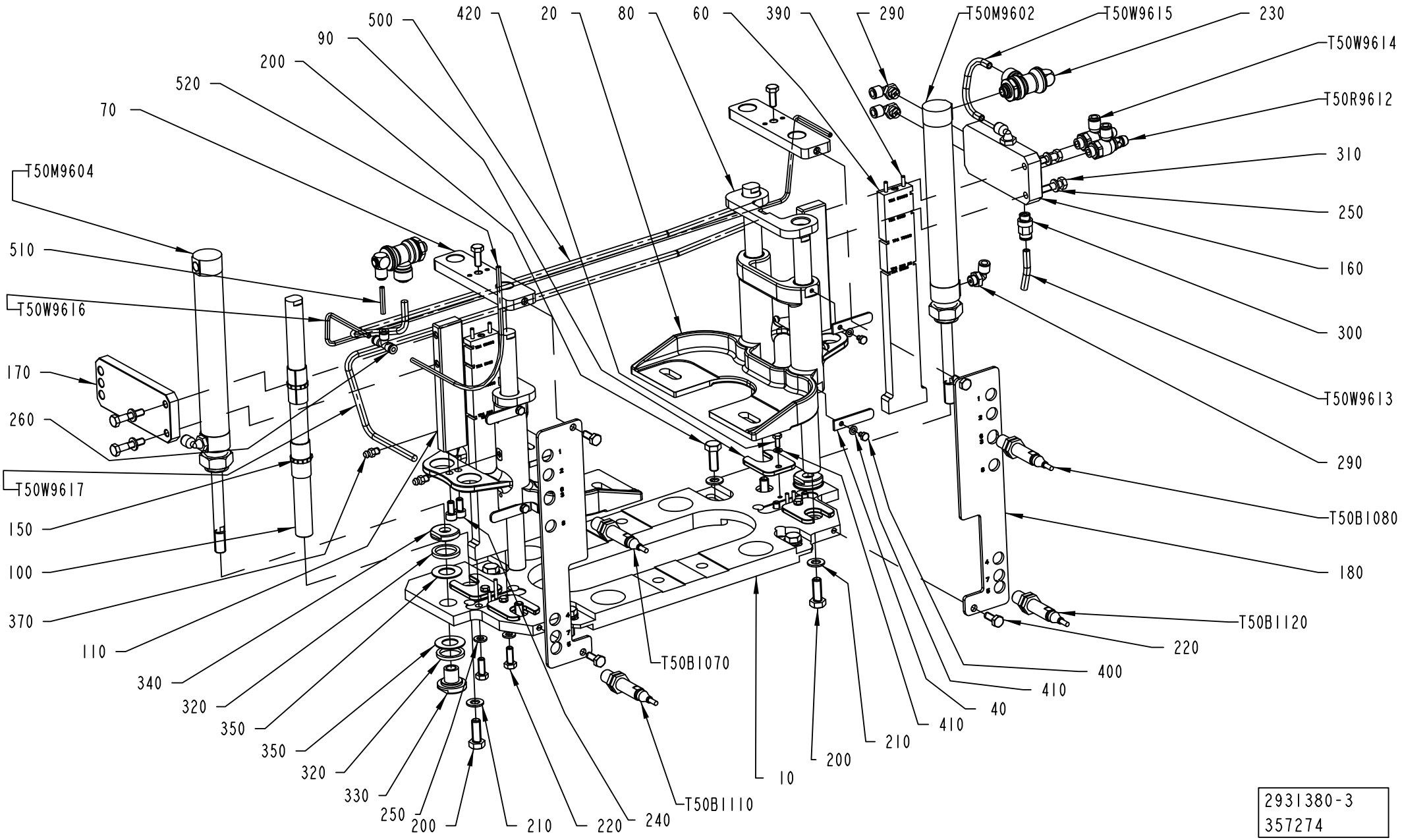


2931380-3
357274

ECM: 367713 - 20081003
Group number: 2931380-0100
Assembly Drawing: 2931380-3_1_AB

This list covers pages from 5-10 to 5-15

| Pos | Part No | UN | Qty | Description | Page No |
|---|---|---|---|---|---|
| **TBA 0500B, TBA 1000B (See drawing on page: 5-12)** | | | | | |
| 090 | 2852461-0000 | | 4 | SPACER | |
| **TBA 0500SQ, TBA 1000SQ (See drawing on page: 5-10)** | | | | | |
| 090 | 2852461-0000 | | 4 | SPACER | |
| **TPA 1000SQ, TPA 0750SQ (See drawing on page: 5-14)** | | | | | |
| 090 | 2852461-0000 | | 4 | SPACER | |
| **Common Parts** | | | | | |
| 010 | 2936209-0000 | | 1 | PLATE | |
| 020 | 2852465-0000 | | 2 | BRACKET | |
| 040 | 2829385-0000 | | 4 | PLATE | |
| 060 | 2936210-0000 | | 2 | PLATE | |
| 070 | 2760126-0000 | | 2 | SPACER | |
| 080 | 2760089-0000 | | 2 | STOP | |
| 100 | 2760121-0000 | | 4 | BAR | |
| 110 | 2760120-0000 | | 2 | PLATE | |
| 150 | 90458-2920 | | 8 | BUSHING INSERT, JUM-01-16 | |
| 160 | 2936212-0000 | | 1 | PLATE | |
| 170 | 2936211-0000 | | 1 | PLATE | |
| 180 | 2936213-0000 | | 2 | BRACKET | |
| 200 | 312105-0452 | | 8 | SCREW M6S ISO 4017 M8X22 A480 | |
| 210 | 315105-0165 | | 8 | WASHER BRB 8,4X16 RFR | |
| 220 | 312105-0368 | | 10 | SCREW M6S ISO 4017 M6X16 A480 | |
| 230 | 90600-3222 | | 2 | PILOTED FUNCTION VALVE G1/8, 7880 06 10 | |
| 240 | 312115-0366 | | 4 | SCREW ISO4762 M6X12 A4 80 | |
| 250 | 315105-0153 | | 8 | WASHER BRB 6,4X12 RFR | |
| 260 | 342748-0100 | | 1 | T-CONNECTION 4MM | |
| 290 | 90458-2956 | | 5 | ELBOW PIPE JOINT, EXT.THREAD, D=6MM-G1/8 | |
| 300 | 350001-0006 | | 1 | PUSH-IN FITTING QS-F-G1/8-6 | |
| 310 | 312105-0374 | | 4 | SCREW M6S ISO 4014 M6X30 A480 | |
| 320 | 2881044-0000 | | 4 | DAMPER | |
| 330 | 2951198-0000 | | 2 | BUSHING | |
| 340 | 2881047-0000 | | 2 | BUSHING | |
| 350 | 2881048-0000 | | 4 | WASHER | |
| 370 | 90286-0013 | | 4 | GREASE NIPPLE STRAIGHT, H1 M6X1 2346 | |
| 390 | 311102-0238 | | 8 | PARALLEL PIN ISO 2338 3M6X20 ST | |
| 400 | 312105-0285 | | 4 | SCREW M6S ISO 4017 M4X6 A470 | |
| 410 | 315101-0136 | | 8 | WASHER BRB, 4,3/8 H=0,8 | |
| 420 | 312105-0289 | | 4 | SCREW M6S H4X10 A4 70 ISO4017/DIN933 | |
| 500 | 90166-0013 | MM | 600 | TUBE 8 MM PA BLUE | |
| 510 | 315400-0016 | MM | 1000 | TUBE PUN-H-4X0,75-BL | |
| 520 | 315400-0016 | MM | 150 | TUBE PUN-H-4X0,75-BL | |
| T50B1070 | 90600-0464 | | 1 | INDUCTIVE SWITCH,E2A-M12LS02-WP-B1-TP 5M | |
| T50B1080 | 90600-0464 | | 1 | INDUCTIVE SWITCH,E2A-M12LS02-WP-B1-TP 5M | |
| T50B1110 | 90600-0464 | | 1 | INDUCTIVE SWITCH,E2A-M12LS02-WP-B1-TP 5M | |
| T50B1120 | 90600-0464 | | 1 | INDUCTIVE SWITCH,E2A-M12LS02-WP-B1-TP 5M | |
| T50M9602 | 90459-5268 | | 1 | DOUBLE ACTING, MINI-ISO, CYL. 25-130 | |
| T50M9604 | 90459-5268 | | 1 | DOUBLE ACTING, MINI-ISO, CYL. 25-130 | |
| T50R9612 | 90235-0846 | | 1 | THROTTLE CHECK VALVE G1/8", MANUAL, 6 | |
| T50R9614 | 90235-0846 | | 1 | THROTTLE CHECK VALVE G1/8", MANUAL, 6 | |
| T50W9613 | 90166-0081 | MM | 1000 | TUBE 6 MM PA BLUE | |
| T50W9615 | 90166-0081 | MM | 1000 | TUBE 6 MM PA BLUE | |
| T50W9616 | 315400-0016 | MM | 2000 | TUBE PUN-H-4X0,75-BL | |
| T50W9617 | 90166-0081 | MM | 600 | TUBE 6 MM PA BLUE | |

Machine Type | Group Description | Used-In | Group Number | Page No

# DROP CHUTE VARIANT



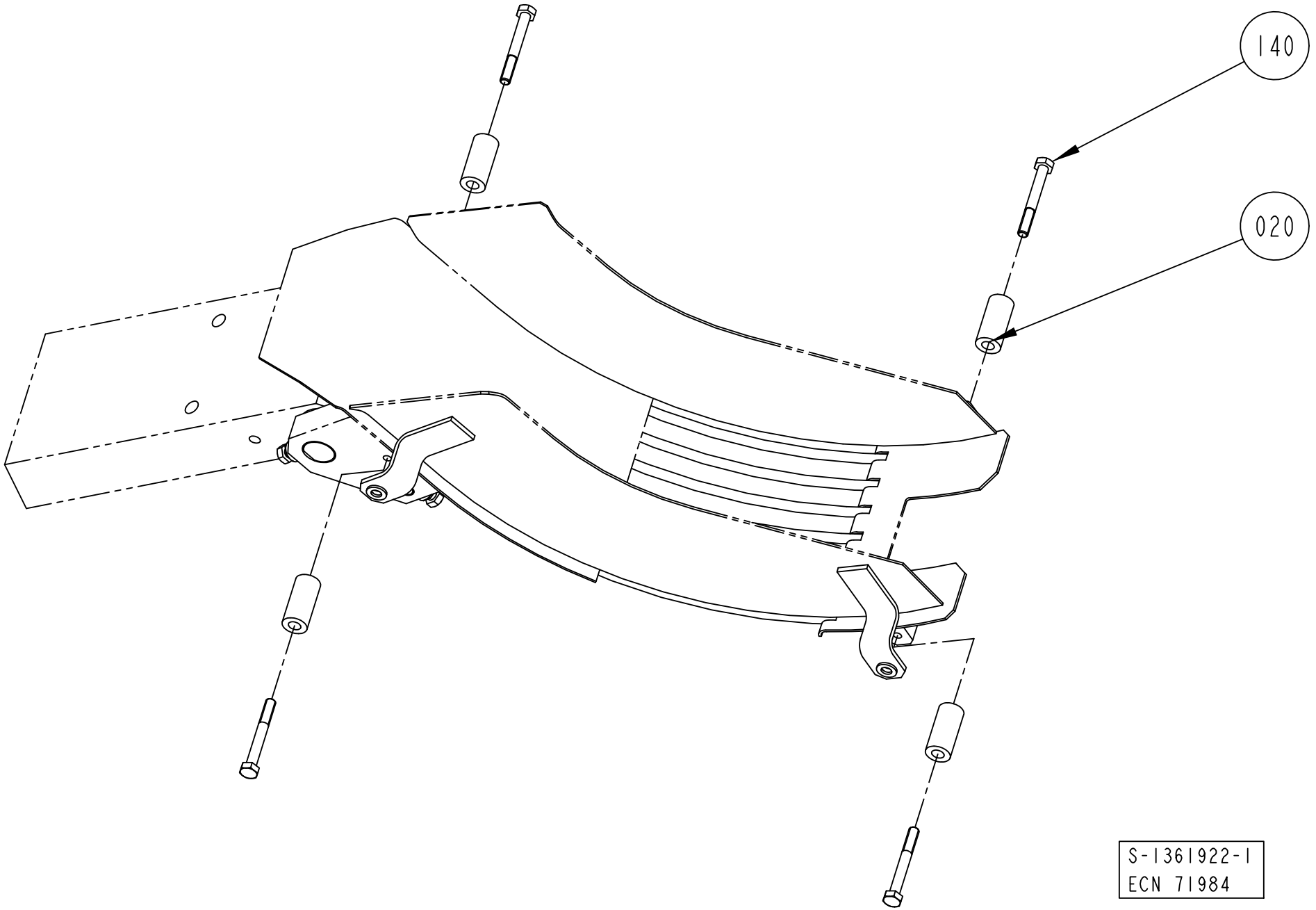

ECM: 316420 - 20080103
Group number: 1361922-0200
Assembly Drawing: 1361922-1_1_AC

| Pos | Part No | UN | Qty | Description | Page No |
|---|---|---|---|---|---|
| **TBA 0500B, TBA 1000B** | | | | | |
| 020 | 1260714-0000 | | 4 | SPACER | |
| 140 | 312105-0382 | | 4 | SCREW M6S ISO 4014 M6X60 A480 | |
| **TBA 1000S** | | | | | |
| 020 | 1279670-0000 | | 4 | SPACER | |
| 140 | 312105-0382 | | 4 | SCREW M6S ISO 4014 M6X60 A480 | |
| **TBA 1000SQ** | | | | | |
| 020 | 1487929-0000 | | 4 | SPACER | |
| 140 | 312105-0379 | | 4 | SCREW M6S ISO 4014 M6X45 A480 | |
| **TBA 1500S** | | | | | |
| 140 | 312105-0366 | | 4 | SCREW M6S ISO 4017 M6X12 A480 | |

| Pos | Part No | UN | Qty | Description | Page No |
|---|---|---|---|---|---|

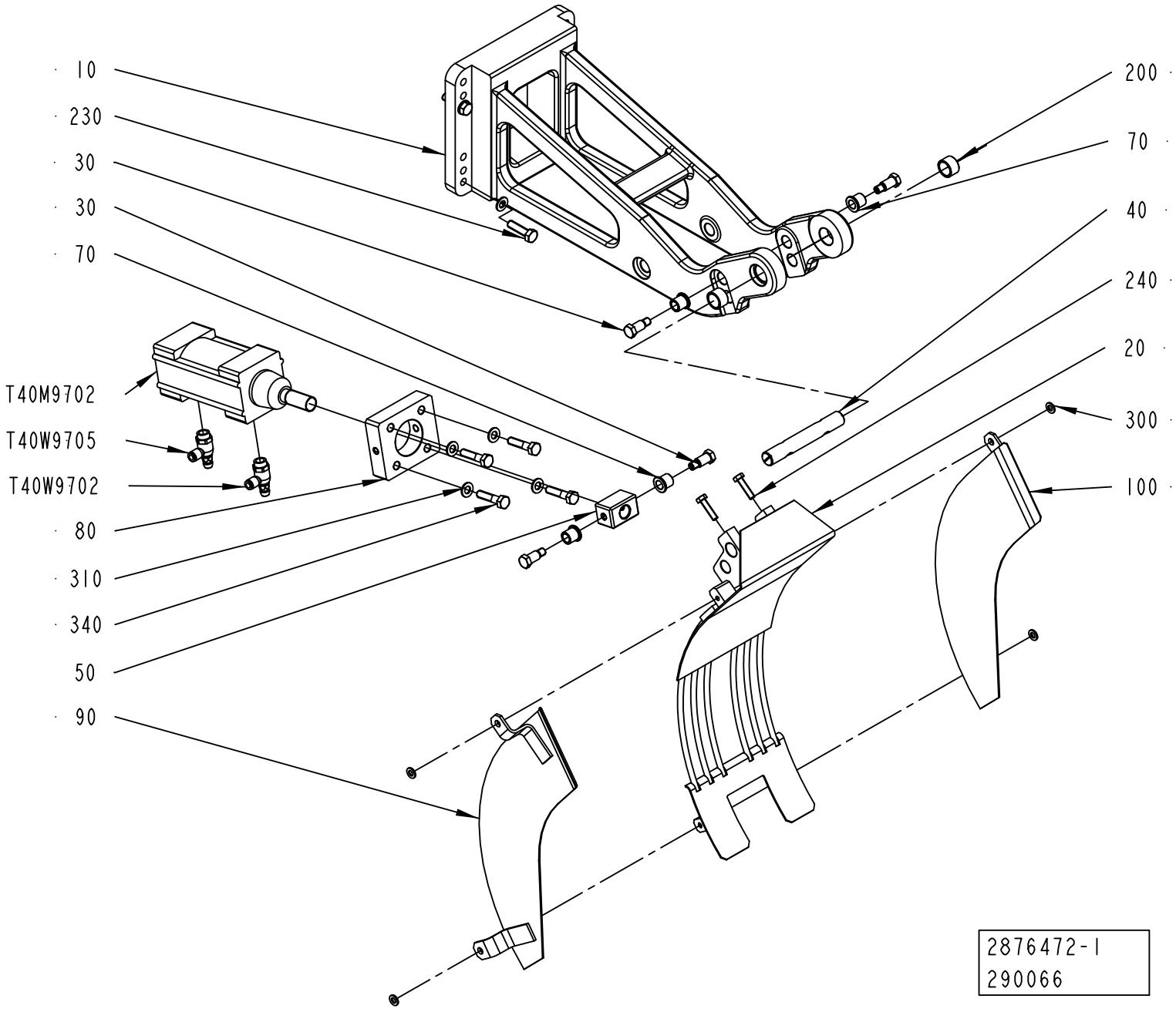
10
230
30
30
70
T40M9702
T40W9705
T40W9702
80
310
340
50
90
200
70
40
240
20
300
100
2876472-1
290066

ECM: 367701 - 20081003
Group number: 2876472-0100
Assembly Drawing: 2876472-1_1_AA

| Pos | Part No | UN | Qty | Description | Page No |
|---|---|---|---|---|---|
| **TBA 0500B QC** | | | | | |
| 020 | 2751788-0000 | | 1 | CRADLE | |
| 090 | 2605993-0000 | | 1 | SIDE PLATE | |
| 100 | 2605994-0000 | | 1 | SIDE PLATE | |
| 240 | 312105-0372 | | 2 | SCREW M6S ISO 4017 M6X25 A480 | |
| 300 | 315105-0153 | | 4 | WASHER BRB 6,4X12 RFR | |
| **TBA 1000S, TBA 1000B QC, TBA 1000B STDA7, TBA 0500SQ QC, TBA 1000SQ QC** | | | | | |
| 020 | 2751788-0000 | | 1 | CRADLE | |
| 090 | 1285023-0000 | | 1 | SIDE PLATE | |
| 100 | 1285022-0000 | | 1 | SIDE PLATE | |
| 240 | 312105-0372 | | 2 | SCREW M6S ISO 4017 M6X25 A480 | |
| 300 | 315105-0153 | | 4 | WASHER BRB 6,4X12 RFR | |
| **TBA 2000S, TBA 1500S** | | | | | |
| 020 | 2665204-0000 | | 1 | CRADLE | |
| 090 | 2665205-0000 | | 1 | PLATE | |
| 100 | 2665206-0000 | | 1 | PLATE | |
| 240 | 312105-0372 | | 2 | SCREW M6S ISO 4017 M6X25 A480 | |
| **TPA 1000SQ QC, TPA 0750SQ QC** | | | | | |
| 020 | 2913594-0000 | | 1 | CRADLE | |
| 240 | 312105-0368 | | 2 | SCREW M6S ISO 4017 M6X16 A480 | |
| **Common Parts** | | | | | |
| 010 | 2540823-0000 | | 1 | BRACKET | |
| 030 | 449190-0000 | | 4 | SHAFT | |
| 040 | 1144579-0000 | | 1 | AXLE | |
| 050 | 1144577-0000 | | 1 | BLOCK | |
| 070 | 1478928-0000 | | 4 | BUSHING | |
| 080 | 2594886-0000 | | 1 | PLATE | |
| 200 | 321116-0234 | | 2 | BEARING BUSH W/O FLANGE, 16X20X12 MM | |
| 230 | 312105-0455 | | 4 | SCREW M6S ISO 4017 M8X30 A480 | |
| 310 | 315105-0165 | | 8 | WASHER BRB 8,4X16 RFR | |
| 340 | 312105-0457 | | 4 | SCREW M6S ISO 4014 M8X35 A480 | |
| T40M9702 | 90450-0504 | | 1 | DOUBLE ACTING, PROFILE, CYL 50-25 | |
| T40W9702 | 90235-0847 | | 1 | THROTTLE CHECK VALVE, G1/4", MANUAL,6 | |
| T40W9705 | 90235-0847 | | 1 | THROTTLE CHECK VALVE, G1/4", MANUAL,6 | |

| Pos | Part No | UN | Qty | Description | Page No |
|---|---|---|---|---|---|

**This page is intentionally left blank.**

ECM: 367691 - 20081003
Group number: 1517298-0300
Assembly Drawing:

| Pos | Part No | UN | Qty | Description | Page No |
|---|---|---|---|---|---|
| **TBA 1000SQ, TBA 0500B QC, TBA 1000B QC, TBA 1000S NOMOLDEDCAP, TBA 1000S STDA7, TBA 1000B STDA7, TBA 0500SQ QC, TBA 1000SQ QC** | | | | | |
| 010 | 1517299-0400 | | 1 | INFEED CONVEYOR LONG | **5-23** |
| **TPA 1000SQ, TPA 0750SQ QC, TBA 1500S** | | | | | |
| 020 | 2927640-0100 | | 1 | INFEED CONVEYOR SHORT | **5-29** |

| Pos | Part No | UN | Qty | Description | Page No |
|---|---|---|---|---|---|

# INFEED CONVEYOR LONG



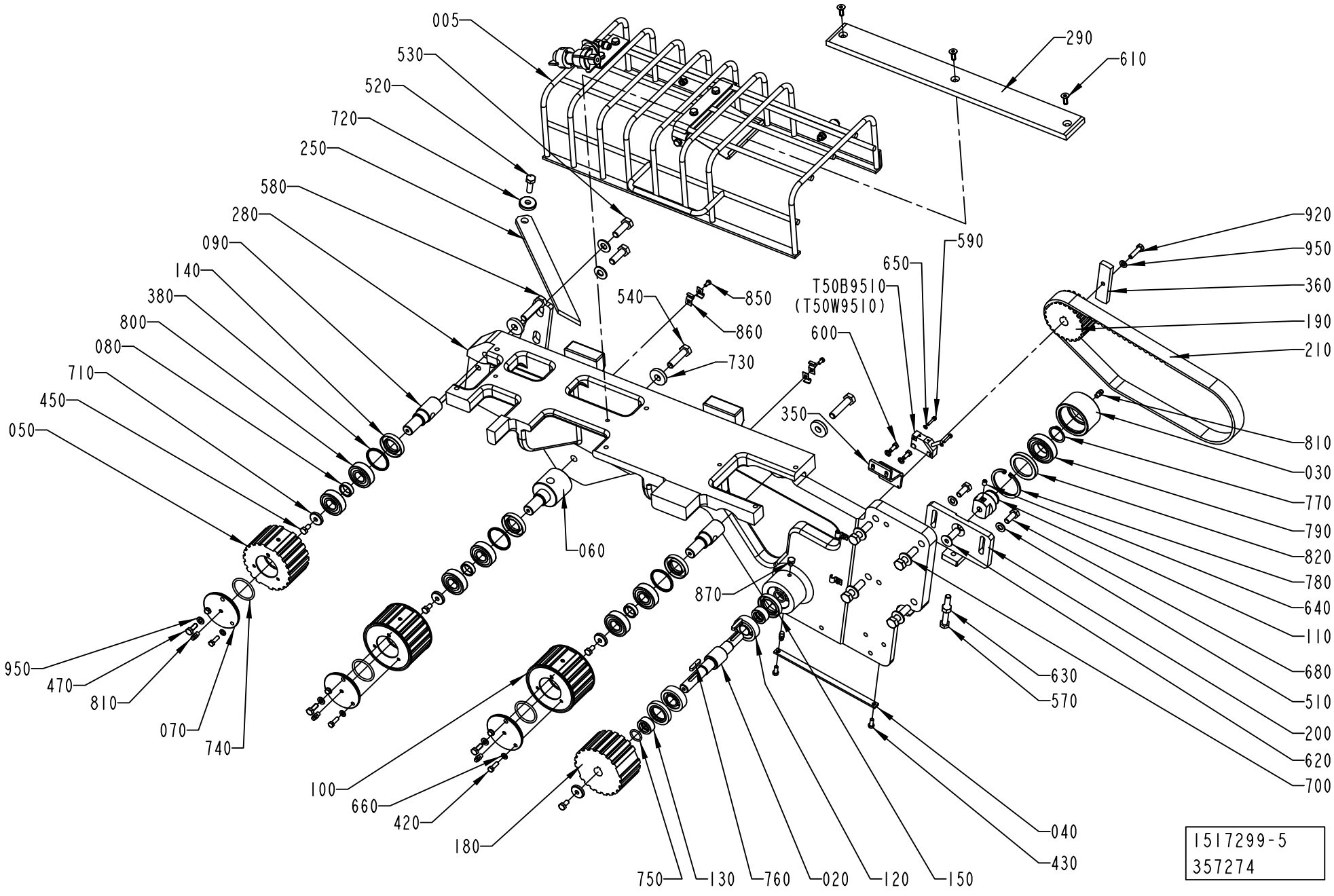

ECM: 357274 - 20080620
Group number: 1517299-0400
Assembly Drawing: 1517299-5_1_AC

| Pos | Part No | UN | Qty | Description | Page No |
|---|---|---|---|---|---|
| - | | | | | |
| 005 | 2889590-0100 | | 1 | PROTECTIVE COVER ..... | **5-25, 5-27** |
| 020 | 1144470-0000 | | 1 | SHAFT | |
| 030 | 2958240-0000 | | 1 | ROLLER | |
| 040 | 1144593-0000 | | 1 | PLATE | |
| 050 | 2952684-0000 | | 1 | TOOTHED PULLEY | |
| 060 | 2852228-0000 | | 1 | ECCENTRIC SHAFT | |
| 070 | 2955104-0000 | | 3 | PLUG | |
| 080 | 1144597-0000 | | 3 | SPACER | |
| 090 | 1484620-0000 | | 2 | SHAFT | |
| 100 | 2952685-0000 | | 2 | TOOTHED PULLEY | |
| 110 | 2958241-0000 | | 1 | SHAFT | |
| 120 | 90214-0219 | | 2 | CYL.ROLLER BEARING, 17X40X12 MM | |
| 130 | 1144625-0000 | | 2 | SPACER | |
| 140 | 90091-0440 | | 3 | RADIAL SEAL 22X40X7 MM DUST LIP | |
| 150 | 1498068-0000 | | 2 | SEAL RING | |
| 180 | 1144784-0000 | | 1 | TOOTHED PULLEY | |
| 190 | 1144788-0000 | | 1 | TOOTHED PULLEY | |
| 200 | 1144794-0000 | | 1 | SUPPORT | |
| 210 | 1144841-0000 | | 1 | TIMING BELT | |
| 250 | 2552445-0000 | | 1 | SUPPORT | |
| 280 | 1347699-0000 | | 1 | PLATE | |
| 290 | 1260941-0000 | | 1 | SLIDE | |
| 350 | 1279688-0000 | | 1 | SUPPORT | |
| 360 | 1279689-0000 | | 1 | ACTIVATOR | |
| 380 | 2850481-0000 | | 3 | SPACER | |
| 420 | 312105-0329 | | 6 | SCREW M6S ISO 4017 M5X16 A480 | |
| 430 | 312105-0327 | | 2 | SCREW M6S ISO 4017 M5X12 A480 | |
| 450 | 312105-0366 | | 4 | SCREW M6S ISO 4017 M6X12 A480 | |
| 470 | 312105-0368 | | 3 | SCREW M6S ISO 4017 M6X16 A480 | |
| 510 | 312105-0451 | | 2 | SCREW M6S ISO 4017 M8X20 A480 | |
| 520 | 312105-0453 | | 1 | SCREW M6S ISO 4017 M8X25 A480 | |
| 530 | 312105-0495 | | 2 | SCREW M6S ISO 4017 M10X30 A480 | |
| 540 | 312109-0499 | | 5 | SCREW M6S ISO 4017 M10X40 A480 | |
| 570 | 312109-0463 | | 1 | SCREW M6S ISO 4017 M8X60 A480 | |
| 580 | 312109-0500 | | 2 | SCREW M6S ISO 4017 M10X45 A480 | |
| 590 | 312115-0228 | | 2 | SCREW ISO4762 M3X16 A4 80 | |
| 600 | 312125-0327 | | 2 | SCREW ISO 1207 M5X12 A4 | |
| 610 | 312155-0368 | | 3 | SCREW DIN 7991 MF6S M6X16 A4 70 | |
| 620 | 312155-0495 | | 1 | SCREW DIN 7991 MF6S M10X30 A4 70 | |
| 630 | 312605-0318 | | 1 | HEXAGON NUT, M6M M8 A280 | |
| 640 | 312318-0362 | | 1 | SCREW ISO4029 M6X8 A4 | |
| 650 | 315105-0124 | | 2 | WASHER BRB 3,2X6 RFR | |
| 660 | 315105-0146 | | 8 | WASHER BRB 5,3X10 RFR | |
| 680 | 315105-0165 | | 2 | WASHER BRB 8,4X16 RFR | |
| 700 | 315105-0173 | | 6 | WASHER BRB 10,5X22 RFR | |
| 710 | 315125-0153 | | 4 | WASHER TBRSB 6,4X22X4 A4 | |
| 720 | 315125-0165 | | 1 | WASHER TBRSB 8,4X26X5 A4 | |
| 730 | 315125-0173 | | 3 | WASHER TBRSB 10,5X28X6 A4 | |
| 740 | 315202-0221 | | 3 | O-RING 34,2X3 MM | |
| 750 | 315202-0267 | | 2 | O-RING 16,3X2,4 MM | |
| 760 | 315705-0202 | | 2 | PARALLEL KEY W ROUND ENDS 5X5X25MM | |
| 770 | 315751-0119 | | 1 | RETAINING RING FOR SHAFT DIN 471 25 SS | |
| 780 | 90141-0019 | | 1 | RETAINING RING FOR BORE DIN 472 50 A2 | |
| 790 | 321306-0105 | | 1 | BALL BEARING, 25X47X12 MM | |
| 800 | 321309-0103 | | 6 | BALL BEARING, 17X40X12 MM | |
| 810 | 344502-0021 | | 5 | GREASE NIPPLE STRAIGHT M6 | |
| 820 | 90091-0297 | | 1 | RADIAL SEAL 35X47X7 MM DUST LIP | |
| 830 | 90296-0068 | | 1 | SHELL ALVANIA GREASE EP 2 | |
| 850 | 312125-0287 | | 4 | SCREW ISO 1207 M4X8 A4 | |
| 860 | 90165-0057 | | 6 | PIPE CLIP FOR TUBE D=6 MM | |
| 870 | 312105-0362 | | 1 | SCREW M6S ISO 4017 M6X8 A480 | |
| 920 | 312105-0372 | | 1 | SCREW M6S ISO 4017 M6X25 A480 | |
| 950 | 315105-0153 | | 4 | WASHER BRB 6,4X12 RFR | |
| T50B9510 | 90044-0194 | | 1 | PROX.SW. IN5329/IN3002-BPKG(EX90044-104) | |

| Machine Type | Group Description | Used-In | Group Number | Page No |
|---|---|---|---|---|

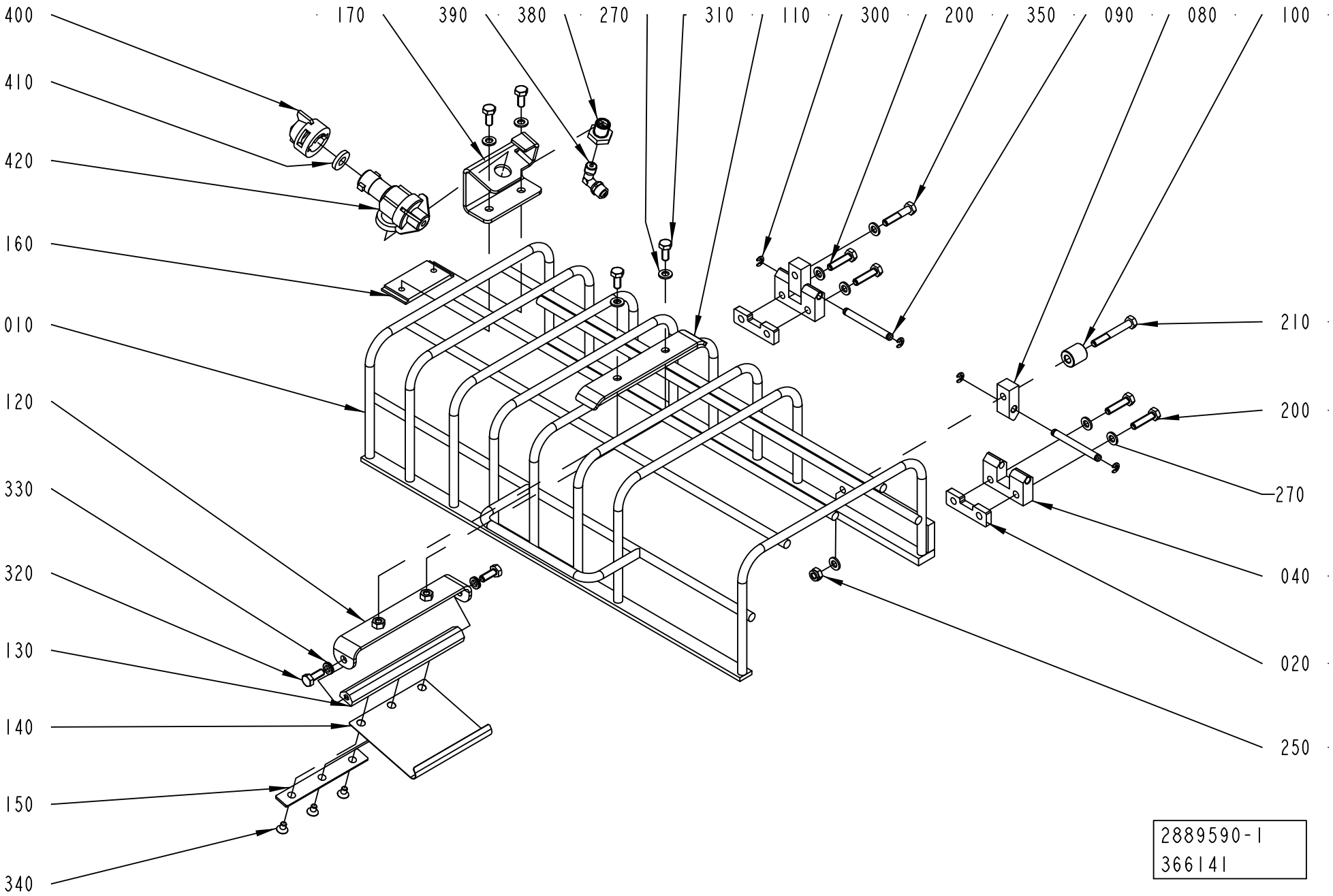
400
410
420
160
010
120
330
320
130
140
150
340
170
390
380
270
310
110
300
200
350
090
080
100
210
200
270
040
020
250
2889590-1
366141

ECM: 367705 - 20081003
Group number: 2889590-0100
Assembly Drawing: 2889590-1_1_AC

This list covers pages from 5-24 to 5-27

| Pos | Part No | UN | Qty | Description | Page No |
|---|---|---|---|---|---|
| **TBA 0500SQ, TBA 0500B, TBA 1000B, TBA 1000SQ, TBA 1000S (See drawing on page: 5-24)** | | | | | |
| 010 | 2990908-0000 | | 1 | PROTECTION | |
| 020 | 2996045-0000 | | 2 | SPACER | |
| 110 | 1499476-0000 | | 1 | HOLDER | |
| 120 | 2527792-0000 | | 1 | SUPPORT | |
| 130 | 2527793-0000 | | 1 | SHAFT | |
| 140 | 2530418-0000 | | 1 | SPRING | |
| 150 | 2540612-0000 | | 1 | PLATE | |
| 270 | 315105-0153 | | 11 | WASHER BRB 6,4X12 RFR | |
| 310 | 312105-0367 | | 4 | SCREW M6S ISO 4017 M6X14 A480 | |
| 320 | 312105-0368 | | 2 | SCREW M6S ISO 4017 M6X16 A480 | |
| 330 | 90062-0061 | | 2 | LOCK WASHER NORD-LOCK,6,5/10,8, T=2,2 | |
| 340 | 312155-0323 | | 3 | SCREW DIN 7991 MF6S M5X8 A4 70 | |
| **TBA 1500S, TPA 1000SQ, TBA 2000S, TPA 0750SQ (See drawing on page: 5-26)** | | | | | |
| 010 | 2889589-0000 | | 1 | PROTECTION | |
| 020 | 2996045-0000 | | 2 | SPACER | |
| 110 | 1499476-0000 | | 1 | HOLDER | |
| 120 | 2527792-0000 | | 1 | SUPPORT | |
| 130 | 2527793-0000 | | 1 | SHAFT | |
| 140 | 2530418-0000 | | 1 | SPRING | |
| 150 | 2540612-0000 | | 1 | PLATE | |
| 270 | 315105-0153 | | 12 | WASHER BRB 6,4X12 RFR | |
| 310 | 312105-0367 | | 4 | SCREW M6S ISO 4017 M6X14 A480 | |
| 320 | 312105-0368 | | 2 | SCREW M6S ISO 4017 M6X16 A480 | |
| 330 | 90062-0061 | | 2 | LOCK WASHER NORD-LOCK,6,5/10,8, T=2,2 | |
| 340 | 312155-0323 | | 3 | SCREW DIN 7991 MF6S M5X8 A4 70 | |
| **Common Parts** | | | | | |
| 040 | 1144667-0000 | | 2 | HINGE | |
| 080 | 1144668-0000 | | 2 | HINGE | |
| 090 | 1144669-0000 | | 2 | PIN | |
| 100 | 1360149-0000 | | 1 | SPACER | |
| 160 | 2862253-0000 | | 1 | PLATE | |
| 170 | 2982474-0000 | | 1 | SUPPORT | |
| 200 | 312105-0372 | | 4 | SCREW M6S ISO 4017 M6X25 A480 | |
| 210 | 312105-0379 | | 1 | SCREW M6S ISO 4014 M6X45 A480 | |
| 250 | 312812-0316 | | 2 | HEXAGON NUT, NY-LOCK M6 A480 | |
| 300 | 315755-0106 | | 4 | RETAINING RING SHAFT DIN 6799 4 A2 | |
| 350 | 312105-0374 | | 1 | SCREW M6S ISO 4014 M6X30 A480 | |
| 380 | 532413-0000 | | 1 | REDUCING NIPPLE | |
| 390 | 342930-0113 | | 1 | ELBOW 90 COUPL.,EXT.THREAD 6/4-R1/8" | |
| 400 | 534310-0003 | | 1 | NOZZLE | |
| 410 | 90005-0094 | | 1 | GASKET C 19438-EPR | |
| 420 | 90230-0027 | | 1 | NON-RETURN VALVE QJ 8355-1/4" | |
| | *90230-0300* | | *1* | *STRAINER* | |
| | *90230-0301* | | *1* | *DIAPHRAGM* | |

Machine Type | Group Description | Used-In | Group Number | Page No

# PROTECTIVE COVER



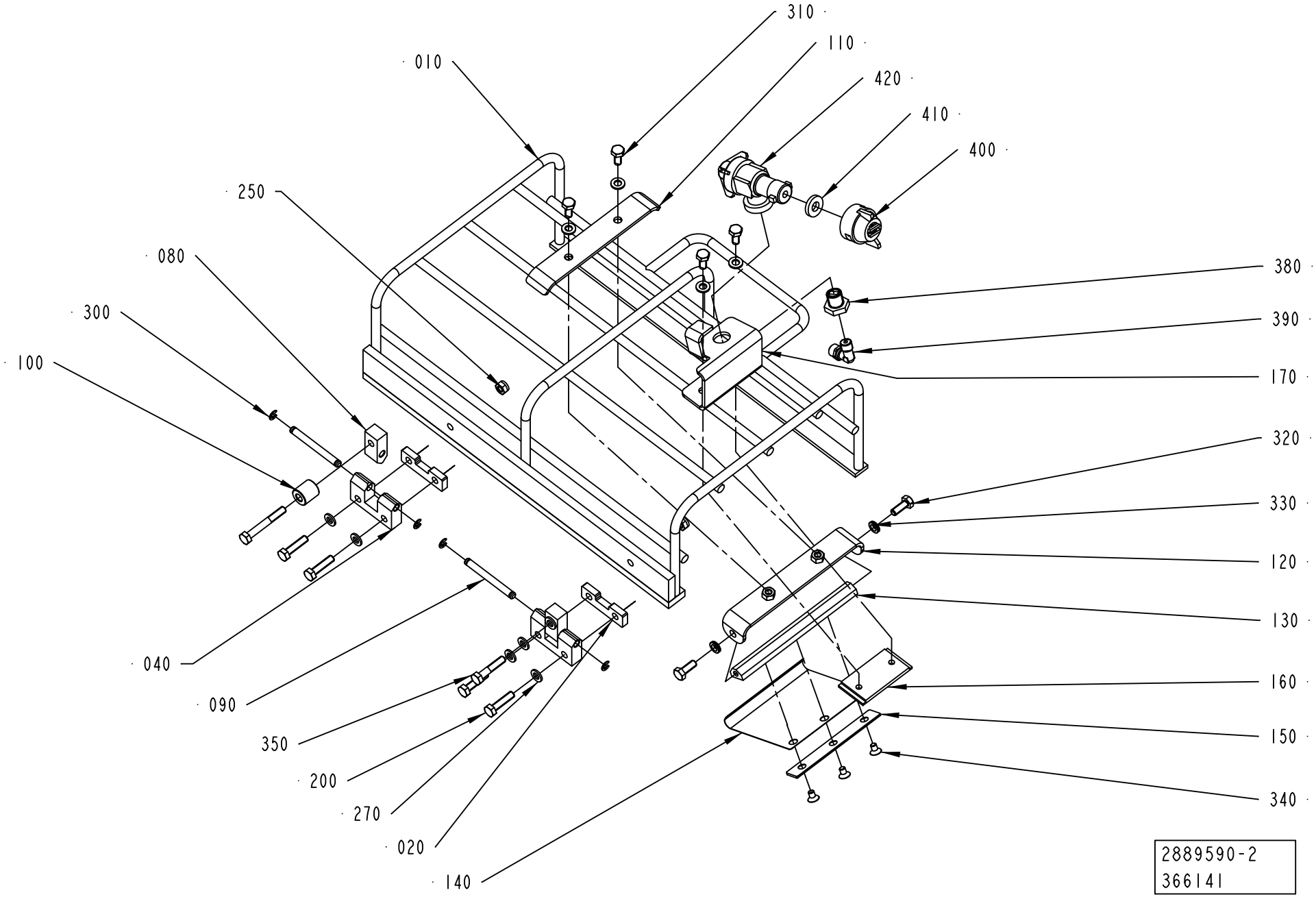

ECM: 367705 - 20081003
Group number: 2889590-0100
Assembly Drawing: 2889590-2_1_AC

This list covers pages from 5-24 to 5-27

| Pos | Part No | UN | Qty | Description | Page No |
|---|---|---|---|---|---|
| **TBA 0500SQ, TBA 0500B, TBA 1000B, TBA 1000SQ, TBA 1000S (See drawing on page: 5-24)** | | | | | |
| 010 | 2990908-0000 | | 1 | PROTECTION | |
| 020 | 2996045-0000 | | 2 | SPACER | |
| 110 | 1499476-0000 | | 1 | HOLDER | |
| 120 | 2527792-0000 | | 1 | SUPPORT | |
| 130 | 2527793-0000 | | 1 | SHAFT | |
| 140 | 2530418-0000 | | 1 | SPRING | |
| 150 | 2540612-0000 | | 1 | PLATE | |
| 270 | 315105-0153 | | 11 | WASHER BRB 6,4X12 RFR | |
| 310 | 312105-0367 | | 4 | SCREW M6S ISO 4017 M6X14 A480 | |
| 320 | 312105-0368 | | 2 | SCREW M6S ISO 4017 M6X16 A480 | |
| 330 | 90062-0061 | | 2 | LOCK WASHER NORD-LOCK,6,5/10,8, T=2,2 | |
| 340 | 312155-0323 | | 3 | SCREW DIN 7991 MF6S M5X8 A4 70 | |
| **TBA 1500S, TPA 1000SQ, TBA 2000S, TPA 0750SQ (See drawing on page: 5-26)** | | | | | |
| 010 | 2889589-0000 | | 1 | PROTECTION | |
| 020 | 2996045-0000 | | 2 | SPACER | |
| 110 | 1499476-0000 | | 1 | HOLDER | |
| 120 | 2527792-0000 | | 1 | SUPPORT | |
| 130 | 2527793-0000 | | 1 | SHAFT | |
| 140 | 2530418-0000 | | 1 | SPRING | |
| 150 | 2540612-0000 | | 1 | PLATE | |
| 270 | 315105-0153 | | 12 | WASHER BRB 6,4X12 RFR | |
| 310 | 312105-0367 | | 4 | SCREW M6S ISO 4017 M6X14 A480 | |
| 320 | 312105-0368 | | 2 | SCREW M6S ISO 4017 M6X16 A480 | |
| 330 | 90062-0061 | | 2 | LOCK WASHER NORD-LOCK,6,5/10,8, T=2,2 | |
| 340 | 312155-0323 | | 3 | SCREW DIN 7991 MF6S M5X8 A4 70 | |
| **Common Parts** | | | | | |
| 040 | 1144667-0000 | | 2 | HINGE | |
| 080 | 1144668-0000 | | 2 | HINGE | |
| 090 | 1144669-0000 | | 2 | PIN | |
| 100 | 1360149-0000 | | 1 | SPACER | |
| 160 | 2862253-0000 | | 1 | PLATE | |
| 170 | 2982474-0000 | | 1 | SUPPORT | |
| 200 | 312105-0372 | | 4 | SCREW M6S ISO 4017 M6X25 A480 | |
| 210 | 312105-0379 | | 1 | SCREW M6S ISO 4014 M6X45 A480 | |
| 250 | 312812-0316 | | 2 | HEXAGON NUT, NY-LOCK M6 A480 | |
| 300 | 315755-0106 | | 4 | RETAINING RING SHAFT DIN 6799 4 A2 | |
| 350 | 312105-0374 | | 1 | SCREW M6S ISO 4014 M6X30 A480 | |
| 380 | 532413-0000 | | 1 | REDUCING NIPPLE | |
| 390 | 342930-0113 | | 1 | ELBOW 90 COUPL.,EXT.THREAD 6/4-R1/8" | |
| 400 | 534310-0003 | | 1 | NOZZLE | |
| 410 | 90005-0094 | | 1 | GASKET C 19438-EPR | |
| 420 | 90230-0027 | | 1 | NON-RETURN VALVE QJ 8355-1/4" | |
| | *90230-0300* | | *1* | *STRAINER* | |
| | *90230-0301* | | *1* | *DIAPHRAGM* | |

Machine Type | Group Description | Used-In | Group Number | Page No

# INFEED CONVEYOR SHORT



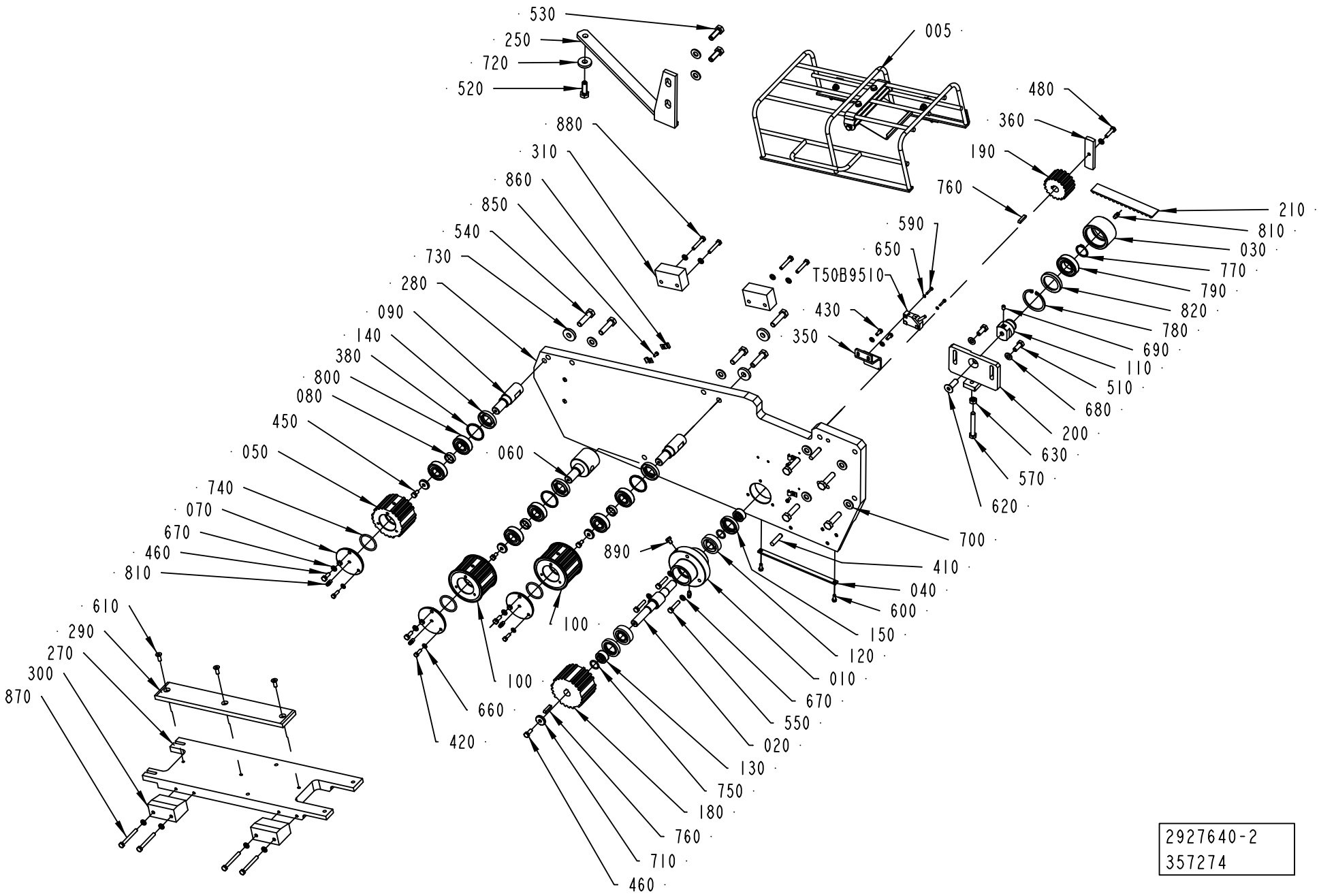


2927640-2
357274

ECM: 367722 - 20081003
Group number: 2927640-0100
Assembly Drawing: 2927640-2_1_AB

| Pos | Part No | UN | Qty | Description | Page No |
|---|---|---|---|---|---|
| - | | | | | |
| 005 | 2889590-0100 | | 1 | PROTECTIVE COVER ..... | **5-25, 5-27** |
| 010 | 2955763-0000 | | 1 | BEARING HOUSING | |
| 020 | 1144470-0000 | | 1 | SHAFT | |
| 030 | 2958240-0000 | | 1 | ROLLER | |
| 040 | 1144593-0000 | | 1 | PLATE | |
| 050 | 2952687-0000 | | 1 | TOOTHED PULLEY | |
| 060 | 2852228-0000 | | 1 | ECCENTRIC SHAFT | |
| 070 | 2955104-0000 | | 3 | PLUG | |
| 080 | 1144597-0000 | | 3 | SPACER | |
| 090 | 1144598-0000 | | 2 | SHAFT | |
| 100 | 2952688-0000 | | 2 | TOOTHED PULLEY | |
| 110 | 2958241-0000 | | 1 | SHAFT | |
| 120 | 90214-0219 | | 2 | CYL.ROLLER BEARING, 17X40X12 MM | |
| 130 | 1144625-0000 | | 2 | SPACER | |
| 140 | 90091-0440 | | 3 | RADIAL SEAL 22X40X7 MM DUST LIP | |
| 150 | 1498068-0000 | | 2 | SEAL RING | |
| 180 | 927859-0000 | | 1 | TOOTHED PULLEY | |
| 190 | 2927642-0000 | | 1 | TOOTHED PULLEY | |
| 200 | 1144794-0000 | | 1 | SUPPORT | |
| 210 | 1144841-0000 | | 1 | TIMING BELT | |
| 250 | 2678708-0000 | | 1 | SUPPORT | |
| 270 | 2665197-0000 | | 1 | BRACKET | |
| 280 | 2927641-0000 | | 1 | PLATE | |
| 290 | 2665199-0000 | | 1 | SLIDE | |
| 300 | 1285956-0000 | | 2 | BLOCK | |
| 310 | 1285955-0000 | | 2 | PLATE | |
| 350 | 1279688-0000 | | 1 | SUPPORT | |
| 360 | 1279689-0000 | | 1 | ACTIVATOR | |
| 380 | 2850481-0000 | | 3 | SPACER | |
| 410 | 311103-0407 | | 2 | PARALLEL PIN ISO 2338 8M6X35 A1 | |
| 420 | 312105-0329 | | 6 | SCREW M6S ISO 4017 M5X16 A480 | |
| 430 | 312105-0327 | | 2 | SCREW M6S ISO 4017 M5X12 A480 | |
| 450 | 312105-0366 | | 3 | SCREW M6S ISO 4017 M6X12 A480 | |
| 460 | 312105-0368 | | 4 | SCREW M6S ISO 4017 M6X16 A480 | |
| 480 | 312105-0372 | | 1 | SCREW M6S ISO 4017 M6X25 A480 | |
| 510 | 312105-0451 | | 2 | SCREW M6S ISO 4017 M8X20 A480 | |
| 520 | 312105-0495 | | 1 | SCREW M6S ISO 4017 M10X30 A480 | |
| 530 | 312105-0495 | | 2 | SCREW M6S ISO 4017 M10X30 A480 | |
| 540 | 312109-0499 | | 9 | SCREW M6S ISO 4017 M10X40 A480 | |
| 550 | 312109-0374 | | 3 | SCREW M6S ISO 4017 M6X30 A480 | |
| 570 | 312109-0463 | | 1 | SCREW M6S ISO 4017 M8X60 A480 | |
| 590 | 312115-0228 | | 2 | SCREW ISO4762 M3X16 A4 80 | |
| 600 | 312125-0327 | | 2 | SCREW ISO 1207 M5X12 A4 | |
| 610 | 312155-0368 | | 3 | SCREW DIN 7991 MF6S M6X16 A4 70 | |
| 620 | 312155-0495 | | 1 | SCREW DIN 7991 MF6S M10X30 A4 70 | |
| 630 | 312605-0318 | | 1 | HEXAGON NUT, M6M M8 A280 | |
| 650 | 315105-0124 | | 2 | WASHER BRB 3,2X6 RFR | |
| 660 | 315105-0146 | | 8 | WASHER BRB 5,3X10 RFR | |
| 670 | 315105-0153 | | 15 | WASHER BRB 6,4X12 RFR | |
| 680 | 315105-0165 | | 2 | WASHER BRB 8,4X16 RFR | |
| 690 | 312318-0362 | | 1 | SCREW ISO4029 M6X8 A4 | |
| 700 | 315105-0173 | | 8 | WASHER BRB 10,5X22 RFR | |
| 710 | 315125-0153 | | 4 | WASHER TBRSB 6,4X22X4 A4 | |
| 720 | 315125-0173 | | 1 | WASHER TBRSB 10,5X28X6 A4 | |
| 730 | 315125-0173 | | 3 | WASHER TBRSB 10,5X28X6 A4 | |
| 740 | 315202-0221 | | 3 | O-RING 34,2X3 MM | |
| 750 | 315202-0267 | | 2 | O-RING 16,3X2,4 MM | |
| 760 | 315705-0202 | | 2 | PARALLEL KEY W ROUND ENDS 5X5X25MM | |
| 770 | 315751-0119 | | 1 | RETAINING RING FOR SHAFT DIN 471 25 SS | |
| 780 | 90141-0019 | | 1 | RETAINING RING FOR BORE DIN 472 50 A2 | |
| 790 | 321306-0105 | | 1 | BALL BEARING, 25X47X12 MM | |
| 800 | 321309-0103 | | 6 | BALL BEARING, 17X40X12 MM | |
| 810 | 344502-0021 | | 5 | GREASE NIPPLE STRAIGHT M6 | |
| 820 | 90091-0297 | | 1 | RADIAL SEAL 35X47X7 MM DUST LIP | |
| 830 | 90296-0068 | | 1 | SHELL ALVANIA GREASE EP 2 | |
| 850 | 312125-0287 | | 4 | SCREW ISO 1207 M4X8 A4 | |
| 860 | 90165-0057 | | 6 | PIPE CLIP FOR TUBE D=6 MM | |
| 870 | 312105-0381 | | 4 | SCREW M6S ISO 4014 M6X55 A480 | |
| 880 | 312105-0376 | | 4 | SCREW M6S ISO 4014 M6X35 A480 | |
| 890 | 312105-0362 | | 1 | SCREW M6S ISO 4017 M6X8 A480 | |
| T50B9510 | 90044-0194 | | 1 | PROX.SW. IN5329/IN3002-BPKG(EX90044-104) | |

| Machine Type | Group Description | Used-In | Group Number | Page No |
|---|---|---|---|---|

# INFEED CONVEYOR VARIANT



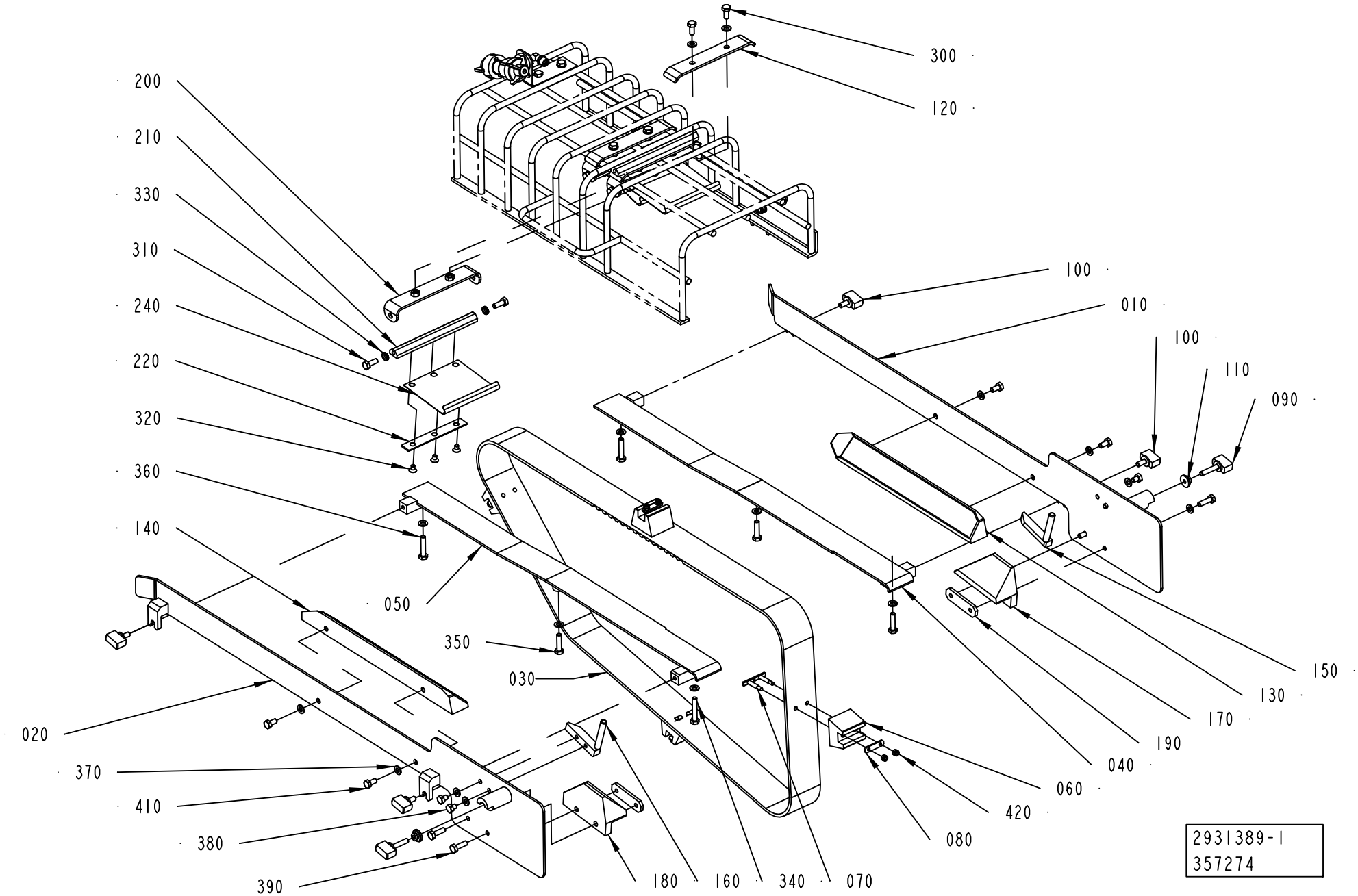

ECM: 367714 - 20081003
Group number: 2931389-0100
Assembly Drawing: 2931389-1_1_AB

This list covers pages from 5-30 to 5-37

| Pos | Part No | UN | Qty | Description | Page No |
|---|---|---|---|---|---|
| **TPA 0750SQ** | | | | | |
| 010 | 2912508-0000 | | 1 | GUIDE | |
| 020 | 2912507-0000 | | 1 | GUIDE | |
| 030 | 2927639-0000 | | 1 | TIMING BELT | |
| 040 | 2912506-0000 | | 1 | GUIDE | |
| 050 | 2912505-0000 | | 1 | GUIDE | |
| 060 | 1519344-0000 | | 3 | CARRIER | |
| 070 | 1517476-0000 | | 6 | WEDGE | |
| 080 | 1517477-0000 | | 3 | PLATE | |
| 090 | 2529785-0000 | | 2 | KNOB | |
| 100 | 2529786-0000 | | 4 | KNOB | |
| 110 | 2520160-0000 | | 2 | CLAMP | |
| 130 | 2971774-0000 | | 1 | GUIDE | |
| 140 | 2971773-0000 | | 1 | GUIDE | |
| 150 | 2647088-0000 | | 1 | BAR | |
| 160 | 312109-0374 | | 2 | SCREW M6S ISO 4017 M6X30 A480 | |
| 160 | 2647089-0000 | | 1 | BAR | |
| 170 | 2647090-0000 | | 1 | SLIDE | |
| 180 | 2647091-0000 | | 1 | SLIDE | |
| 190 | 2647092-0000 | | 2 | ANGLE BLOCK | |
| 340 | 312105-0370 | | 4 | SCREW M6S ISO 4017 M6X20 A480 | |
| 350 | 312105-0376 | | 2 | SCREW M6S ISO 4014 M6X35 A480 | |
| 350 | 312105-0372 | | 3 | SCREW M6S ISO 4017 M6X25 A480 | |
| 370 | 315105-0153 | | 18 | WASHER BRB 6,4X12 RFR | |
| 380 | 312105-0368 | | 4 | SCREW M6S ISO 4017 M6X16 A480 | |
| 390 | 312105-0368 | | 4 | SCREW M6S ISO 4017 M6X16 A480 | |
| 410 | 312105-0364 | | 4 | SCREW M6S ISO 4017 M6X10 A480 | |
| 420 | 312812-0312 | | 6 | HEXAGON NUT, NY-LOCK M4 A480 | |
| **TPA 1000SQ** | | | | | |
| 010 | 2912508-0000 | | 1 | GUIDE | |
| 020 | 2912507-0000 | | 1 | GUIDE | |
| 030 | 2927639-0000 | | 1 | TIMING BELT | |
| 040 | 2912506-0000 | | 1 | GUIDE | |
| 050 | 2912505-0000 | | 1 | GUIDE | |
| 060 | 1519344-0000 | | 3 | CARRIER | |
| 070 | 1517476-0000 | | 6 | WEDGE | |
| 080 | 1517477-0000 | | 3 | PLATE | |
| 090 | 2529785-0000 | | 2 | KNOB | |
| 100 | 2529786-0000 | | 4 | KNOB | |
| 110 | 2520160-0000 | | 2 | CLAMP | |
| 130 | 2971774-0000 | | 1 | GUIDE | |
| 140 | 2971773-0000 | | 1 | GUIDE | |
| 150 | 2647084-0000 | | 1 | BAR | |
| 160 | 312109-0374 | | 2 | SCREW M6S ISO 4017 M6X30 A480 | |
| 160 | 2647085-0000 | | 1 | BAR | |
| 170 | 2675323-0000 | | 1 | SLIDE | |
| 180 | 2675322-0000 | | 1 | SLIDE | |
| 190 | 2543242-0000 | | 2 | ANGLE BLOCK | |
| 340 | 312105-0370 | | 4 | SCREW M6S ISO 4017 M6X20 A480 | |
| 350 | 312105-0372 | | 3 | SCREW M6S ISO 4017 M6X25 A480 | |
| 350 | 312105-0376 | | 2 | SCREW M6S ISO 4014 M6X35 A480 | |
| 370 | 315105-0153 | | 18 | WASHER BRB 6,4X12 RFR | |
| 380 | 312105-0368 | | 4 | SCREW M6S ISO 4017 M6X16 A480 | |
| 390 | 312105-0368 | | 4 | SCREW M6S ISO 4017 M6X16 A480 | |
| 410 | 312105-0364 | | 4 | SCREW M6S ISO 4017 M6X10 A480 | |
| 420 | 312812-0312 | | 6 | HEXAGON NUT, NY-LOCK M4 A480 | |
| **TBA 0500B (See drawing on page: 5-30)** | | | | | |
| 010 | 2522166-0000 | | 1 | GUIDE | |
| 020 | 2522167-0000 | | 1 | GUIDE | |
| 030 | 1144783-0000 | | 1 | TIMING BELT | |
| 040 | 2779739-0000 | | 1 | GUIDE | |
| 050 | 2779738-0000 | | 1 | GUIDE | |
| 060 | 1144919-0000 | | 4 | CARRIER | |
| 070 | 1346471-0000 | | 8 | WEDGE | |
| 080 | 1144918-0000 | | 4 | PLATE | |
| 090 | 2529785-0000 | | 2 | KNOB | |
| 100 | 2529786-0000 | | 4 | KNOB | |
| 110 | 2520160-0000 | | 2 | CLAMP | |
| 120 | 1499476-0000 | | 1 | HOLDER | |
| 150 | 1539877-0000 | | 1 | BAR | |
| 160 | 1539878-0000 | | 1 | BAR | |
| 160 | 312109-0374 | | 2 | SCREW M6S ISO 4017 M6X30 A480 | |
| 170 | 1539874-0000 | | 1 | SLIDE | |
| 180 | 1539875-0000 | | 1 | SLIDE | |
| 190 | 1539876-0000 | | 2 | PLATE | |
| 200 | 2527792-0000 | | 1 | SUPPORT | |
| 210 | 2527793-0000 | | 1 | SHAFT | |
| 220 | 2540612-0000 | | 1 | PLATE | |
| 240 | 2530418-0000 | | 1 | SPRING | |
| 300 | 312105-0367 | | 2 | SCREW M6S ISO 4017 M6X14 A480 | |
| 310 | 312105-0368 | | 2 | SCREW M6S ISO 4017 M6X16 A480 | |
| 320 | 312155-0323 | | 3 | SCREW DIN 7991 MF6S M5X8 A4 70 | |
| 330 | 90062-0061 | | 2 | LOCK WASHER NORD-LOCK,6,5/10,8, T=2,2 | |
| 340 | 312109-0376 | | 1 | SCREW M6S ISO 4017 M6X35 A480 | |

Machine Type | Group Description | Used-In | Group Number | Page No

# INFEED CONVEYOR VARIANT



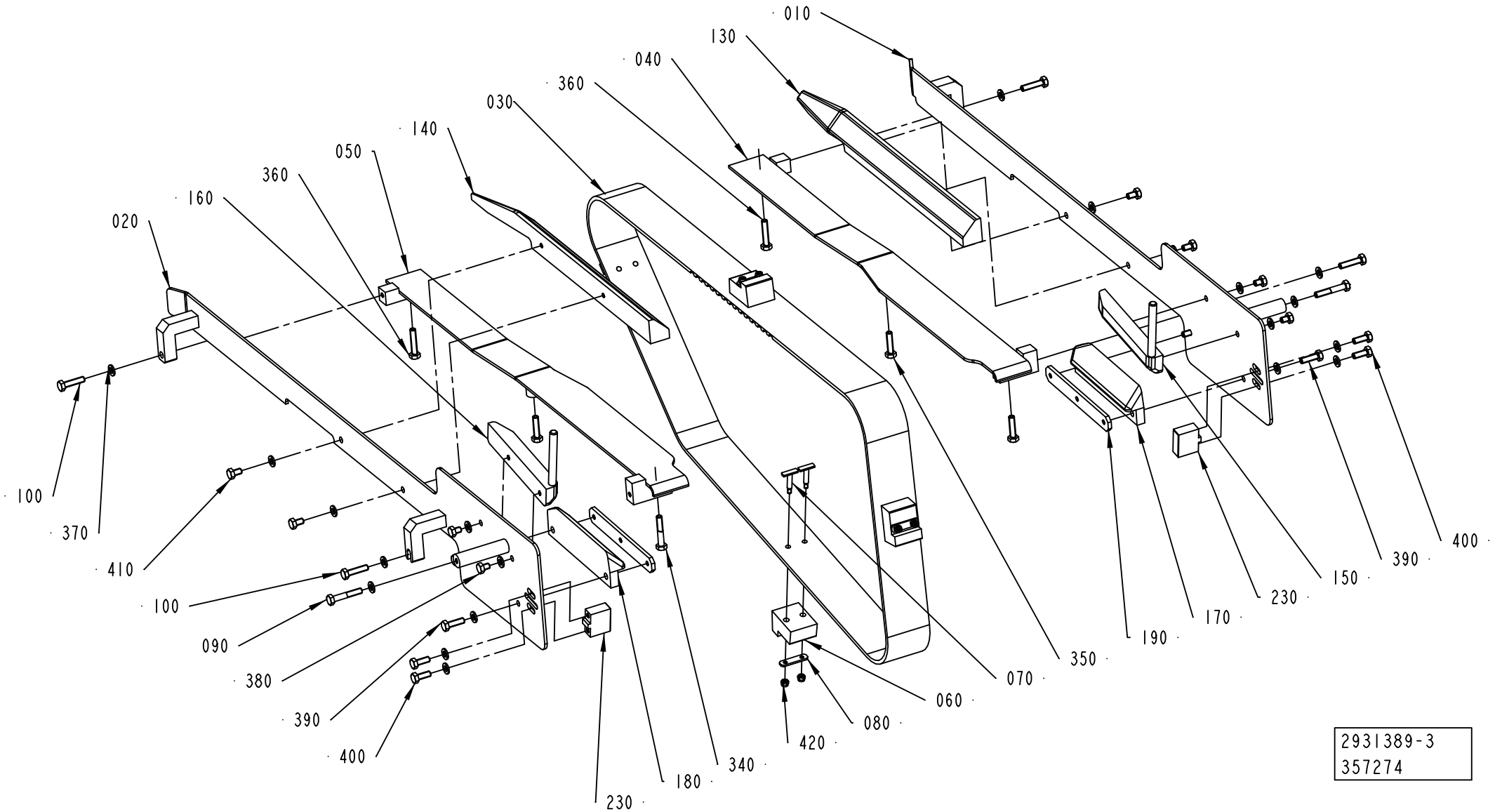


2931389-3
357274

| Pos | Part No | UN | Qty | Description | Page No |
|---|---|---|---|---|---|
| **TBA 0500B (Cont'd) (See drawing on page: 5-30)** | | | | | |
| 350 | 312105-0372 | | 3 | SCREW M6S ISO 4017 M6X25 A480 | |
| 360 | 312109-0374 | | 2 | SCREW M6S ISO 4017 M6X30 A480 | |
| 370 | 315105-0153 | | 20 | WASHER BRB 6,4X12 RFR | |
| 380 | 312105-0362 | | 4 | SCREW M6S ISO 4017 M6X8 A480 | |
| 390 | 312105-0370 | | 4 | SCREW M6S ISO 4017 M6X20 A480 | |
| 420 | 312812-0312 | | 8 | HEXAGON NUT, NY-LOCK M4 A480 | |
| **TBA 0500SQ (See drawing on page: 5-30)** | | | | | |
| 010 | 2848493-0000 | | 1 | GUIDE | |
| 020 | 2848492-0000 | | 1 | GUIDE | |
| 030 | 1144783-0000 | | 1 | TIMING BELT | |
| 040 | 1317651-0000 | | 1 | GUIDE | |
| 050 | 1317650-0000 | | 1 | GUIDE | |
| 060 | 1282848-0000 | | 4 | CARRIER | |
| 070 | 1346471-0000 | | 8 | WEDGE | |
| 080 | 1144918-0000 | | 4 | PLATE | |
| 090 | 2529785-0000 | | 2 | KNOB | |
| 100 | 2529786-0000 | | 4 | KNOB | |
| 110 | 2520160-0000 | | 2 | CLAMP | |
| 120 | 1499476-0000 | | 2 | HOLDER | |
| 130 | 2619728-0000 | | 1 | GUIDE | |
| 140 | 2619727-0000 | | 1 | GUIDE | |
| 150 | 2529277-0000 | | 1 | BAR | |
| 160 | 2529278-0000 | | 1 | BAR | |
| 160 | 312109-0374 | | 2 | SCREW M6S ISO 4017 M6X30 A480 | |
| 170 | 2860106-0000 | | 1 | SLIDE | |
| 180 | 2860107-0000 | | 1 | SLIDE | |
| 190 | 2529279-0000 | | 2 | PLATE | |
| 200 | 2527792-0000 | | 2 | SUPPORT | |
| 210 | 2527793-0000 | | 2 | SHAFT | |
| 220 | 2540612-0000 | | 2 | PLATE | |
| 240 | 2530418-0000 | | 2 | SPRING | |
| 300 | 312105-0367 | | 4 | SCREW M6S ISO 4017 M6X14 A480 | |
| 310 | 312105-0368 | | 4 | SCREW M6S ISO 4017 M6X16 A480 | |
| 320 | 312155-0323 | | 6 | SCREW DIN 7991 MF6S M5X8 A4 70 | |
| 340 | 312109-0376 | | 1 | SCREW M6S ISO 4017 M6X35 A480 | |
| 350 | 312105-0372 | | 3 | SCREW M6S ISO 4017 M6X25 A480 | |
| 360 | 312109-0374 | | 2 | SCREW M6S ISO 4017 M6X30 A480 | |
| 370 | 315105-0153 | | 22 | WASHER BRB 6,4X12 RFR | |
| 380 | 312105-0362 | | 4 | SCREW M6S ISO 4017 M6X8 A480 | |
| 390 | 312105-0370 | | 4 | SCREW M6S ISO 4017 M6X20 A480 | |
| 410 | 312105-0366 | | 4 | SCREW M6S ISO 4017 M6X12 A480 | |
| 420 | 312812-0312 | | 8 | HEXAGON NUT, NY-LOCK M4 A480 | |
| **TBA 1000B (See drawing on page: 5-30)** | | | | | |
| 010 | 2518129-0000 | | 1 | GUIDE | |
| 020 | 2518130-0000 | | 1 | GUIDE | |
| 030 | 1144783-0000 | | 1 | TIMING BELT | |
| 040 | 2779739-0000 | | 1 | GUIDE | |
| 050 | 2779738-0000 | | 1 | GUIDE | |
| 060 | 1144919-0000 | | 4 | CARRIER | |
| 070 | 1346471-0000 | | 8 | WEDGE | |
| 080 | 1144918-0000 | | 4 | PLATE | |
| 090 | 2529785-0000 | | 2 | KNOB | |
| 100 | 2529786-0000 | | 4 | KNOB | |
| 110 | 2520160-0000 | | 2 | CLAMP | |
| 120 | 1499476-0000 | | 1 | HOLDER | |
| 150 | 1348144-0000 | | 1 | BAR | |
| 160 | 312109-0374 | | 2 | SCREW M6S ISO 4017 M6X30 A480 | |
| 160 | 1348150-0000 | | 1 | BAR | |
| 170 | 1348133-0000 | | 1 | SLIDE | |
| 180 | 1348139-0000 | | 1 | SLIDE | |
| 190 | 1279409-0000 | | 2 | PLATE | |
| 200 | 2527792-0000 | | 1 | SUPPORT | |
| 210 | 2527793-0000 | | 1 | SHAFT | |
| 220 | 2540612-0000 | | 1 | PLATE | |
| 240 | 2530418-0000 | | 1 | SPRING | |
| 300 | 312105-0367 | | 2 | SCREW M6S ISO 4017 M6X14 A480 | |
| 310 | 312105-0368 | | 2 | SCREW M6S ISO 4017 M6X16 A480 | |
| 320 | 312155-0323 | | 3 | SCREW DIN 7991 MF6S M5X8 A4 70 | |
| 330 | 90062-0061 | | 2 | LOCK WASHER NORD-LOCK,6,5/10,8, T=2,2 | |
| 340 | 312109-0376 | | 1 | SCREW M6S ISO 4017 M6X35 A480 | |
| 350 | 312105-0372 | | 3 | SCREW M6S ISO 4017 M6X25 A480 | |
| 360 | 312109-0374 | | 2 | SCREW M6S ISO 4017 M6X30 A480 | |
| 370 | 315105-0153 | | 20 | WASHER BRB 6,4X12 RFR | |
| 380 | 312105-0362 | | 4 | SCREW M6S ISO 4017 M6X8 A480 | |
| 390 | 312105-0370 | | 4 | SCREW M6S ISO 4017 M6X20 A480 | |
| 420 | 312812-0312 | | 8 | HEXAGON NUT, NY-LOCK M4 A480 | |
| **TBA 1000S (See drawing on page: 5-32)** | | | | | |
| 010 | 1517242-0000 | | 1 | GUIDE | |
| 020 | 1517243-0000 | | 1 | GUIDE | |
| 030 | 1144783-0000 | | 1 | TIMING BELT | |
| 040 | 1317651-0000 | | 1 | GUIDE | |
| 050 | 1317650-0000 | | 1 | GUIDE | |
| 060 | 1144919-0000 | | 4 | CARRIER | |

**See previous drawings pages: 5-30, 5-32.**

| Pos | Part No | UN | Qty | Description | Page No |
|---|---|---|---|---|---|
| **TBA 1000S (Cont'd) (See drawing on page: 5-32)** | | | | | |
| 070 | 1346471-0000 | | 8 | WEDGE | |
| 080 | 1144918-0000 | | 4 | PLATE | |
| 090 | 312109-0376 | | 2 | SCREW M6S ISO 4017 M6X35 A480 | |
| 100 | 312105-0368 | | 4 | SCREW M6S ISO 4017 M6X16 A480 | |
| 150 | 1348145-0000 | | 1 | BAR | |
| 160 | 1348151-0000 | | 1 | BAR | |
| 170 | 1348132-0000 | | 1 | SLIDE | |
| 180 | 1348138-0000 | | 1 | SLIDE | |
| 190 | 1279409-0000 | | 2 | PLATE | |
| 340 | 312109-0376 | | 1 | SCREW M6S ISO 4017 M6X35 A480 | |
| 350 | 312105-0372 | | 3 | SCREW M6S ISO 4017 M6X25 A480 | |
| 360 | 312109-0374 | | 2 | SCREW M6S ISO 4017 M6X30 A480 | |
| 370 | 315105-0153 | | 20 | WASHER BRB 6,4X12 RFR | |
| 380 | 312105-0362 | | 4 | SCREW M6S ISO 4017 M6X8 A480 | |
| 390 | 312105-0370 | | 4 | SCREW M6S ISO 4017 M6X20 A480 | |
| 420 | 312812-0312 | | 8 | HEXAGON NUT, NY-LOCK M4 A480 | |
| **TBA 1000SQ (See drawing on page: 5-30)** | | | | | |
| 010 | 2848491-0000 | | 1 | GUIDE | |
| 020 | 2848490-0000 | | 1 | GUIDE | |
| 030 | 1144783-0000 | | 1 | TIMING BELT | |
| 040 | 1317651-0000 | | 1 | GUIDE | |
| 050 | 1317650-0000 | | 1 | GUIDE | |
| 060 | 1282848-0000 | | 4 | CARRIER | |
| 070 | 1346471-0000 | | 8 | WEDGE | |
| 080 | 1144918-0000 | | 4 | PLATE | |
| 090 | 2529785-0000 | | 2 | KNOB | |
| 100 | 2529786-0000 | | 4 | KNOB | |
| 110 | 2520160-0000 | | 2 | CLAMP | |
| 120 | 1499476-0000 | | 2 | HOLDER | |
| 150 | 1490035-0000 | | 1 | BAR | |
| 160 | 312109-0374 | | 2 | SCREW M6S ISO 4017 M6X30 A480 | |
| 160 | 1490036-0000 | | 1 | BAR | |
| 170 | 1490033-0000 | | 1 | SLIDE | |
| 180 | 1490034-0000 | | 1 | SLIDE | |
| 190 | 1144621-0000 | | 2 | PLATE | |
| 200 | 2527792-0000 | | 2 | SUPPORT | |
| 210 | 2527793-0000 | | 2 | SHAFT | |
| 220 | 2540612-0000 | | 2 | PLATE | |
| 240 | 2530418-0000 | | 2 | SPRING | |
| 300 | 312105-0367 | | 4 | SCREW M6S ISO 4017 M6X14 A480 | |
| 310 | 312105-0368 | | 4 | SCREW M6S ISO 4017 M6X16 A480 | |
| 320 | 312155-0323 | | 6 | SCREW DIN 7991 MF6S M5X8 A4 70 | |
| 340 | 312109-0376 | | 1 | SCREW M6S ISO 4017 M6X35 A480 | |
| 350 | 312105-0372 | | 3 | SCREW M6S ISO 4017 M6X25 A480 | |
| 360 | 312109-0374 | | 2 | SCREW M6S ISO 4017 M6X30 A480 | |
| 370 | 315105-0153 | | 18 | WASHER BRB 6,4X12 RFR | |
| 380 | 312105-0362 | | 4 | SCREW M6S ISO 4017 M6X8 A480 | |
| 390 | 312105-0370 | | 4 | SCREW M6S ISO 4017 M6X20 A480 | |
| 420 | 312812-0312 | | 8 | HEXAGON NUT, NY-LOCK M4 A480 | |
| **TBA 1500S (See drawing on page: 5-32)** | | | | | |
| 010 | 2937242-0000 | | 1 | GUIDE | |
| 020 | 2937243-0000 | | 1 | GUIDE | |
| 030 | 2927638-0000 | | 1 | TIMING BELT | |
| 040 | 2665201-0000 | | 1 | GUIDE | |
| 050 | 2665200-0000 | | 1 | GUIDE | |
| 060 | 1282848-0000 | | 3 | CARRIER | |
| 080 | 1144918-0000 | | 3 | PLATE | |
| 090 | 312109-0376 | | 2 | SCREW M6S ISO 4017 M6X35 A480 | |
| 100 | 312105-0368 | | 4 | SCREW M6S ISO 4017 M6X16 A480 | |
| 150 | 1317805-0000 | | 1 | BAR | |
| 160 | 312109-0374 | | 2 | SCREW M6S ISO 4017 M6X30 A480 | |
| 160 | 1334271-0000 | | 1 | BAR | |
| 170 | 1334561-0000 | | 1 | SLIDE | |
| 180 | 1334562-0000 | | 1 | SLIDE | |
| 190 | 1144621-0000 | | 2 | PLATE | |
| 340 | 312105-0370 | | 4 | SCREW M6S ISO 4017 M6X20 A480 | |
| 350 | 312105-0372 | | 3 | SCREW M6S ISO 4017 M6X25 A480 | |
| 350 | 312105-0376 | | 2 | SCREW M6S ISO 4014 M6X35 A480 | |
| 370 | 315105-0153 | | 20 | WASHER BRB 6,4X12 RFR | |
| 380 | 312105-0362 | | 4 | SCREW M6S ISO 4017 M6X8 A480 | |
| 390 | 312105-0370 | | 4 | SCREW M6S ISO 4017 M6X20 A480 | |
| 420 | 312812-0312 | | 6 | HEXAGON NUT, NY-LOCK M4 A480 | |
| **TBA 2000S (See drawing on page: 5-30)** | | | | | |
| 010 | 2925962-0000 | | 1 | GUIDE | |
| 020 | 2925963-0000 | | 1 | GUIDE | |
| 030 | 2927638-0000 | | 1 | TIMING BELT | |
| 040 | 2665201-0000 | | 1 | GUIDE | |
| 050 | 2665200-0000 | | 1 | GUIDE | |
| 060 | 1282848-0000 | | 3 | CARRIER | |
| 070 | 1346471-0000 | | 6 | WEDGE | |
| 080 | 1144918-0000 | | 3 | PLATE | |
| 090 | 2529785-0000 | | 2 | KNOB | |
| 100 | 2529786-0000 | | 4 | KNOB | |

**See previous drawings pages: 5-30, 5-32.**

| Pos | Part No | UN | Qty | Description | Page No |
|---|---|---|---|---|---|
| **TBA 2000S (Cont'd) (See drawing on page: 5-30)** | | | | | |
| 110 | 2520160-0000 | | 2 | CLAMP | |
| 150 | 1317805-0000 | | 1 | BAR | |
| 160 | 1334271-0000 | | 1 | BAR | |
| 170 | 2598487-0000 | | 1 | SLIDE | |
| 180 | 2598488-0000 | | 1 | SLIDE | |
| 190 | 1144621-0000 | | 2 | PLATE | |
| 340 | 312105-0370 | | 4 | SCREW M6S ISO 4017 M6X20 A480 | |
| 350 | 312105-0370 | | 4 | SCREW M6S ISO 4017 M6X20 A480 | |
| 350 | 312105-0376 | | 2 | SCREW M6S ISO 4014 M6X35 A480 | |
| 370 | 315105-0153 | | 16 | WASHER BRB 6,4X12 RFR | |
| 390 | 312105-0374 | | 6 | SCREW M6S ISO 4014 M6X30 A480 | |
| 420 | 312812-0312 | | 6 | HEXAGON NUT, NY-LOCK M4 A480 | |
| **Common Parts** | | | | | |
| 170 | 312109-0376 | | 1 | SCREW M6S ISO 4017 M6X35 A480 | |

| Pos | Part No | UN | Qty | Description | Page No |
|---|---|---|---|---|---|

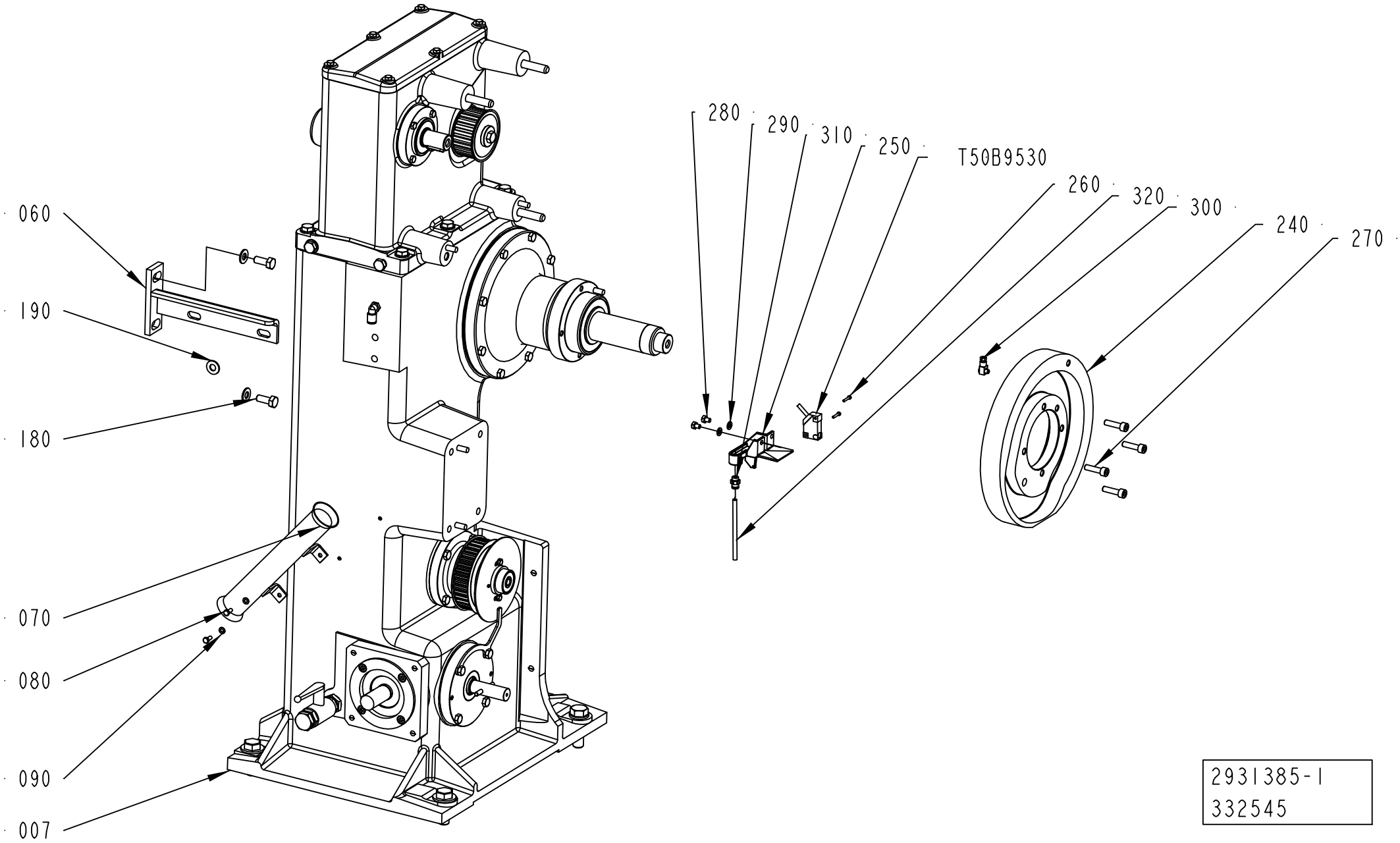
060
190
180
070
080
090
007
280
290
310
250
T50B9530
260
320
300
240
270
2931385-1
332545

ECM: 332545 - 20080401
Group number: 2931385-0100
Assembly Drawing: 2931385-1_1_AA

| Pos | Part No | UN | Qty | Description | Page No |
|---|---|---|---|---|---|
| - | | | | | |
| 007 | 2897116-0000 | | 1 | INDEXING DEVICE | |
| *010* | *2799925-0000* | | *1* | *HEAD* | |
| *040* | *90459-4576* | | *1* | *O-RING 55X3 MM* | |
| *050* | *90459-4586* | | *1* | *RADIAL SEAL 30X55X7 MM DUST LIP* | |
| *060* | *2680393-0000* | | *1* | *LEVER* | |
| *070* | *90242-0281* | | *1* | *O-RING 58X3 MM* | |
| *080* | *90091-0299* | | *1* | *RADIAL SEAL 30X52X7 MM DUST LIP* | |
| *090* | *2680392-0000* | | *1* | *FILTER* | |
| *020* | *1347017-0000* | | *1* | *PULLEY* | |
| *030* | *1144681-0000* | | *1* | *WASHER* | |
| *040* | *312105-0499* | | *1* | *SCREW M6S ISO 4014 M10X40 A480* | |
| *050* | *1348303-0000* | | *4* | *STUD SCREW* | |
| *060* | *315105-0186* | | *2* | *WASHER BRB 17X30 RFR* | |
| *070* | *312105-0631* | | *2* | *SCREW M6S ISO 4014 M16X55 A480* | |
| *080* | *315105-0192* | | *2* | *WASHER BRB 21X36 RFR* | |
| *090* | *598549-0000* | | *2* | *SCREW* | |
| *100* | *311103-0407* | | *4* | *PARALLEL PIN ISO 2338 8M6X35 A1* | |
| *110* | *2604539-0000* | | *1* | *PROTRACTOR* | |
| *120* | *315105-0146* | | *2* | *WASHER BRB 5,3X10 RFR* | |
| *130* | *90287-0199* | | *2* | *SCREW M6S ISO 4017 M5X6 A480* | |
| *140* | *2897881-0000* | | *1* | *FINGER* | |
| *150* | *321133-0224* | | *4* | *BUSHING, 16X18X20 MM* | |
| *160* | *90199-0010* | | *1* | *LEVEL GLAS* | |
| *170* | *312105-0331* | | *6* | *SCREW M6S ISO 4017 M5X20 A480* | |
| *180* | *2897882-0000* | | *16* | *SPRING* | |
| *190* | *2897883-0000* | | *1* | *WASHER* | |
| *200* | *2897884-0000* | | *1* | *WASHER* | |
| *210* | *2897880-0000* | | *1* | *O-RING* | |
| *220* | *2802495-0000* | | *2* | *O-RING* | |
| *230* | *90459-4577* | | *1* | *O-RING 64X3 MM* | |
| *240* | *2897879-0000* | | *1* | *COVER* | |
| *250* | *312105-0368* | | *4* | *SCREW M6S ISO 4017 M6X16 A480* | |
| *260* | *312105-0540* | | *1* | *SCREW M6S ISO 4017 M12X40 A480* | |
| *270* | *312805-0110* | | *1* | *NUT ROUND WITH SLOTS M50X1,5 FE* | |
| *280* | *315202-0225* | | *1* | *O-RING 44,2X3 MM* | |
| *290* | *315221-0197* | | *1* | *RADIAL SEAL 48X72X8 MM* | |
| *300* | *90459-4588* | | *1* | *RADIAL SEAL 60X85X8 MM DUST LIP* | |
| *310* | *2802496-0000* | | *1* | *O-RING* | |
| *320* | *315202-0217* | | *1* | *O-RING 24,2X3 MM* | |
| *330* | *315221-0185* | | *1* | *RADIAL SEAL 40X62X7 MM* | |
| *340* | *2680401-0000* | | *1* | *SPRING* | |
| *350* | *90459-4579* | | *1* | *O-RING 94X3 MM* | |
| *360* | *90091-0148* | | *1* | *RADIAL SEAL 25X47X7 MM DUST LIP* | |
| *370* | *90459-4580* | | *1* | *O-RING 165X4 MM* | |
| *380* | *90459-4577* | | *1* | *O-RING 64X3 MM* | |
| *390* | *90459-4578* | | *2* | *O-RING 78X3 MM* | |
| *400* | *90459-4585* | | *1* | *RADIAL SEAL 25X52X7 MM DUST LIP* | |
| 060 | 2544902-0000 | | 1 | BRACKET | |
| 070 | 1279680-0000 | | 1 | PIPE | |
| 080 | 312105-0327 | | 2 | SCREW M6S ISO 4017 M5X12 A480 | |
| 090 | 315105-0146 | | 2 | WASHER BRB 5,3X10 RFR | |
| 180 | 312105-0493 | | 4 | SCREW M6S ISO 4017 M10X25 A480 | |
| 190 | 315105-0173 | | 4 | WASHER BRB 10,5X22 RFR | |
| 240 | 2875326-0000 | | 1 | CAM | |
| 250 | 1348072-0000 | | 1 | DRIP PLATE | |
| 260 | 312125-0228 | | 2 | SCREW ISO 1207 M3X16 A4 | |
| 270 | 312115-0455 | | 4 | SCREW ISO4762 M8X30 A4 80 | |
| 280 | 312105-0362 | | 2 | SCREW M6S ISO 4017 M6X8 A480 | |
| 290 | 315105-0153 | | 2 | WASHER BRB 6,4X12 RFR | |
| 300 | 90134-0058 | | 1 | CONNECTION | |
| 310 | 342722-0202 | | 1 | PIPE COUPLING 1/8" D=6MM | |
| 320 | 90166-0132 | MM | 1500 | TUBE 6 MM PA,TRANSP. | |
| T50B9530 | 90044-0194 | | 1 | PROX.SW. IN5329/IN3002-BPKG(EX90044-104) | |

| Machine Type | Group Description | Used-In | Group Number | Page No |
|---|---|---|---|---|

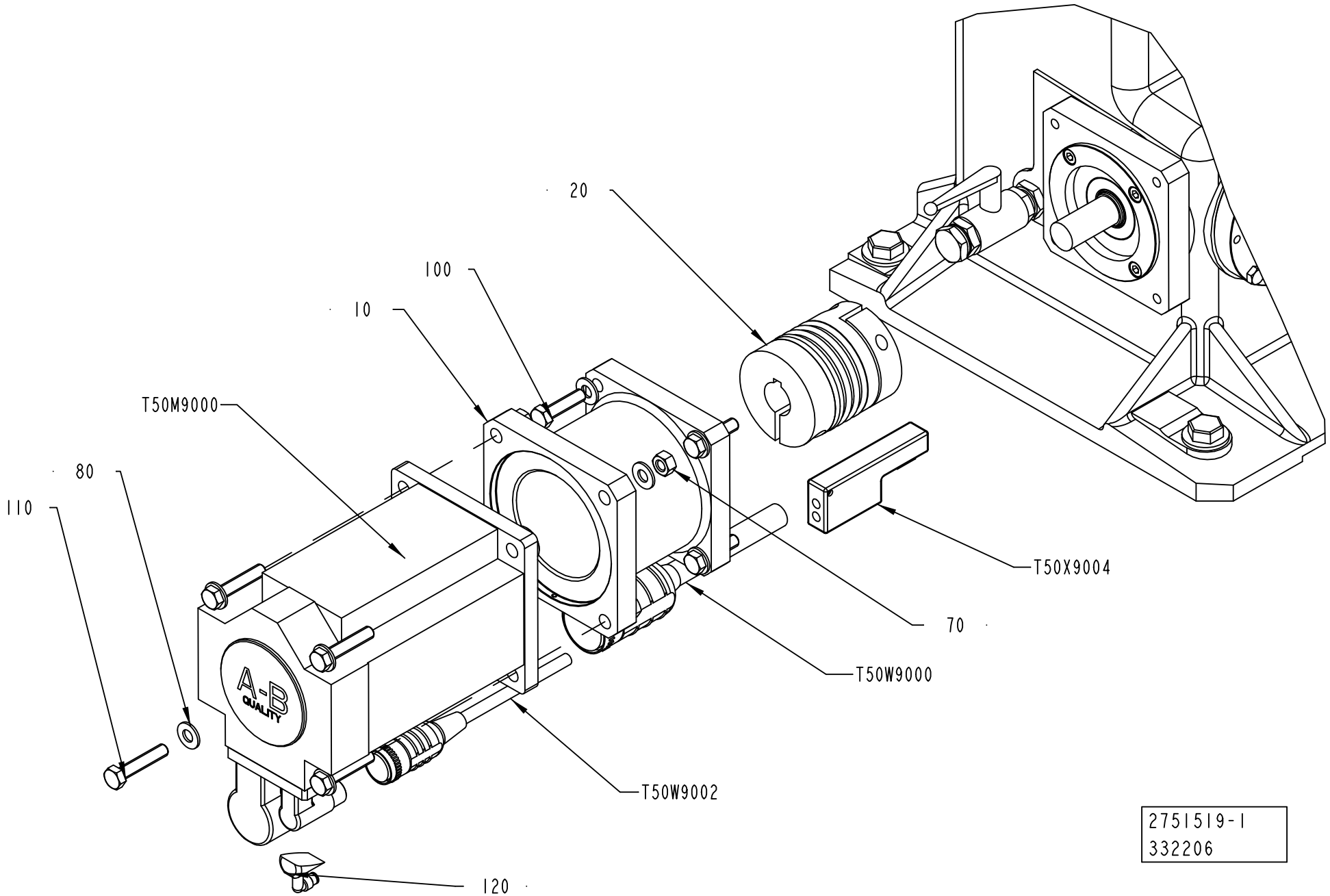
20
100
10
T50M9000
80
110
70
T50X9004
T50W9000
T50W9002
120
A-B
QUALITY
2751519-1
332206

ECM: 332217 - 20080401
Group number: 2751519-0100
Assembly Drawing: 2751519-1_1_AB

| Pos | Part No | UN | Qty | Description | Page No |
|---|---|---|---|---|---|
| - | | | | | |
| 010 | 2705896-0000 | | 1 | FLANGE | |
| 020 | 90459-5278 | | 1 | BELLOW COUPLING, 24X28 MM | |
| 070 | 312605-0320 | | 4 | HEXAGON NUT, M6M M10 A280 | |
| 080 | 315105-0173 | | 12 | WASHER BRB 10,5X22 RFR | |
| 100 | 312109-0499 | | 4 | SCREW M6S ISO 4017 M10X40 A480 | |
| 110 | 312109-0501 | | 4 | SCREW M6S ISO 4017 M10X50 A480 | |
| 120 | 90459-5720 | | 1 | MPF-AIR-PURGE CONNECTOR | |
| T50M9000 | 90459-7172 | | 1 | SERVO MOTOR MPF-B540K-MJ22AA | |
| T50W9000 | 90459-7175 | | 1 | MOTOR POWER CABLE 2090-XXNPMF-10S15/A | |
| T50W9002 | 90459-7176 | | 1 | MOTOR FEEDBACK CABLE 2090-XXNFMF-S15 | |
| T50X9004 | 90459-2551 | | 1 | CONNECTOR, MOTOR FEEDBACK 15 PIN MALE | |

| Pos | Part No | UN | Qty | Description | Page No |
|---|---|---|---|---|---|

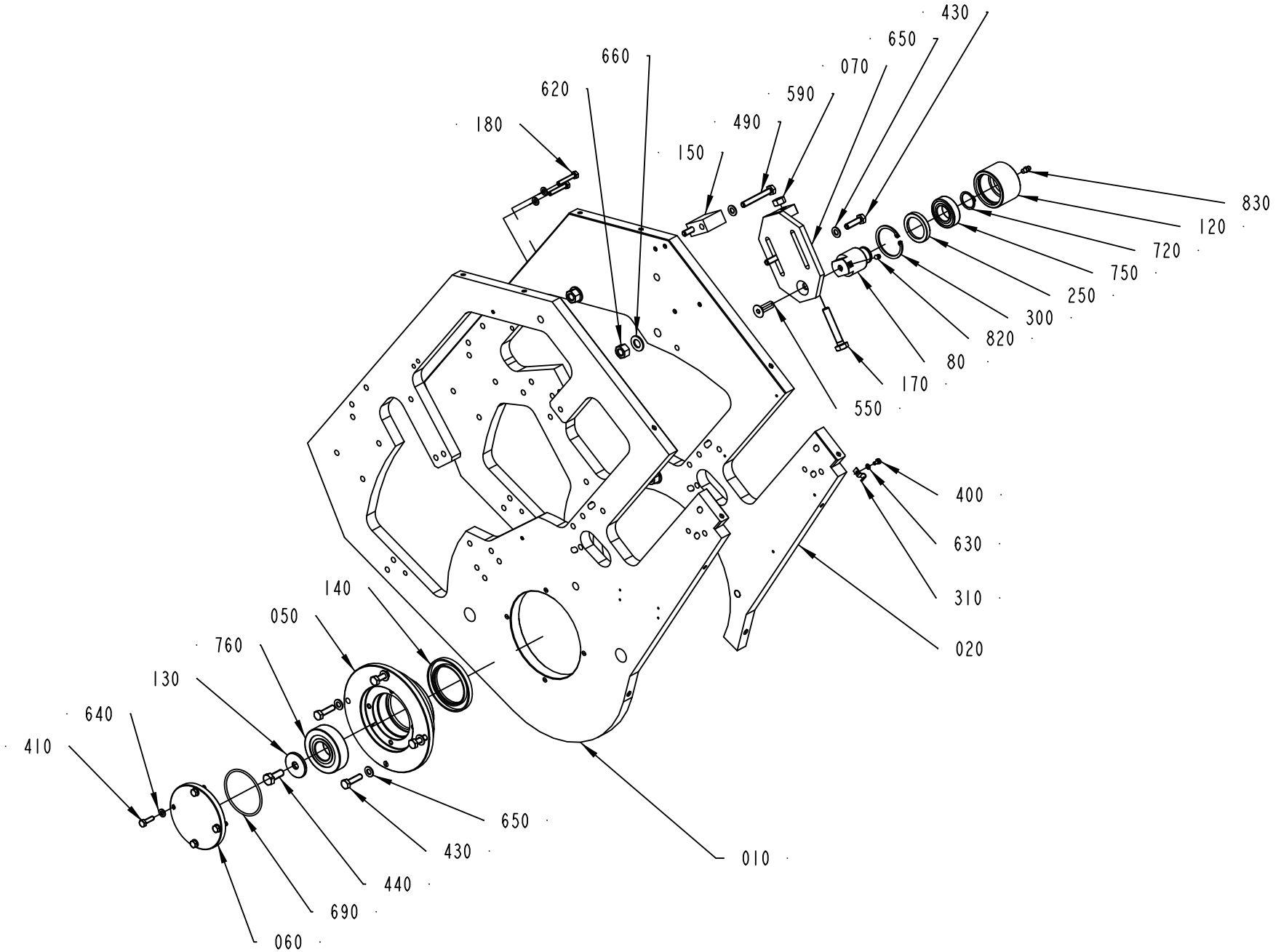
430
650
070
590
490
150
660
620
180
830
120
720
750
250
300
820
80
170
550
400
630
310
020
140
050
760
130
640
410
650
430
440
690
060
010

ECM: 355363 - 20080620
Group number: 2895568-0100
Assembly Drawing: 2895568-1_1_AB

| Pos | Part No | UN | Qty | Description | Page No |
|---|---|---|---|---|---|
| - | | | | | |
| 010 | 2895570-0000 | | 1 | PLATE | |
| 020 | 2863138-0000 | | 1 | PLATE | |
| 050 | 2862627-0000 | | 1 | BEARING HOUSING | |
| 060 | 2862626-0000 | | 1 | FLANGE | |
| 070 | 1144797-0000 | | 1 | SUPPORT | |
| 080 | 2963361-0000 | | 1 | SHAFT | |
| 120 | 2963360-0000 | | 1 | ROLLER | |
| 130 | 1144620-0000 | | 1 | WASHER | |
| 140 | 1144665-0000 | | 1 | SEAL RING | |
| 150 | 1144839-0000 | | 1 | BLOCK | |
| 170 | 1260931-0000 | | 1 | SCREW | |
| 180 | 312109-0376 | | 2 | SCREW M6S ISO 4017 M6X35 A480 | |
| 250 | 90091-0297 | | 1 | RADIAL SEAL 35X47X7 MM DUST LIP | |
| 300 | 90141-0019 | | 1 | RETAINING RING FOR BORE DIN 472 50 A2 | |
| 310 | 316810-0106 | | 5 | PIPE CLIP FOR TUBE D=8 MM | |
| 400 | 312105-0287 | | 5 | SCREW M6S ISO 4017 M4X8 A470 | |
| 410 | 312105-0370 | | 4 | SCREW M6S ISO 4017 M6X20 A480 | |
| 430 | 312105-0455 | | 6 | SCREW M6S ISO 4017 M8X30 A480 | |
| 440 | 312105-0493 | | 1 | SCREW M6S ISO 4017 M10X25 A480 | |
| 490 | 312109-0463 | | 2 | SCREW M6S ISO 4017 M8X60 A480 | |
| 550 | 312155-0495 | | 1 | SCREW DIN 7991 MF6S M10X30 A4 70 | |
| 590 | 312605-0320 | | 1 | HEXAGON NUT, M6M M10 A280 | |
| 620 | 312605-0322 | | 3 | HEXAGON NUT, M6M M12 A280 | |
| 630 | 315105-0136 | | 5 | WASHER BRB 4,3X8 RFR | |
| 640 | 315105-0153 | | 6 | WASHER BRB 6,4X12 RFR | |
| 650 | 315105-0165 | | 8 | WASHER BRB 8,4X16 RFR | |
| 660 | 315105-0178 | | 3 | WASHER BRB 13X24 RFR | |
| 690 | 315202-0305 | | 1 | O-RING 69,5X3 MM | |
| 720 | 315751-0119 | | 1 | RETAINING RING FOR SHAFT DIN 471 25 SS | |
| 750 | 321306-0105 | | 1 | BALL BEARING, 25X47X12 MM | |
| 760 | 321316-0206 | | 1 | BALL BEARING, 30X72X19 MM | |
| 780 | 352113-0102 | | 3 | CABLE TIE, BLACK 188X4,8 MM | |
| 790 | 352113-0101 | | 7 | CABLE TIE, BLACK 92X2,5 MM | |
| 820 | 312318-0362 | | 1 | SCREW ISO4029 M6X8 A4 | |
| 830 | 344502-0021 | | 1 | GREASE NIPPLE STRAIGHT M6 | |
| 840 | 90296-0068 | | 1 | SHELL ALVANIA GREASE EP 2 | |

| Pos | Part No | UN | Qty | Description | Page No |
|---|---|---|---|---|---|

Machine Type | Group Description | Used-In | Group Number | Page No

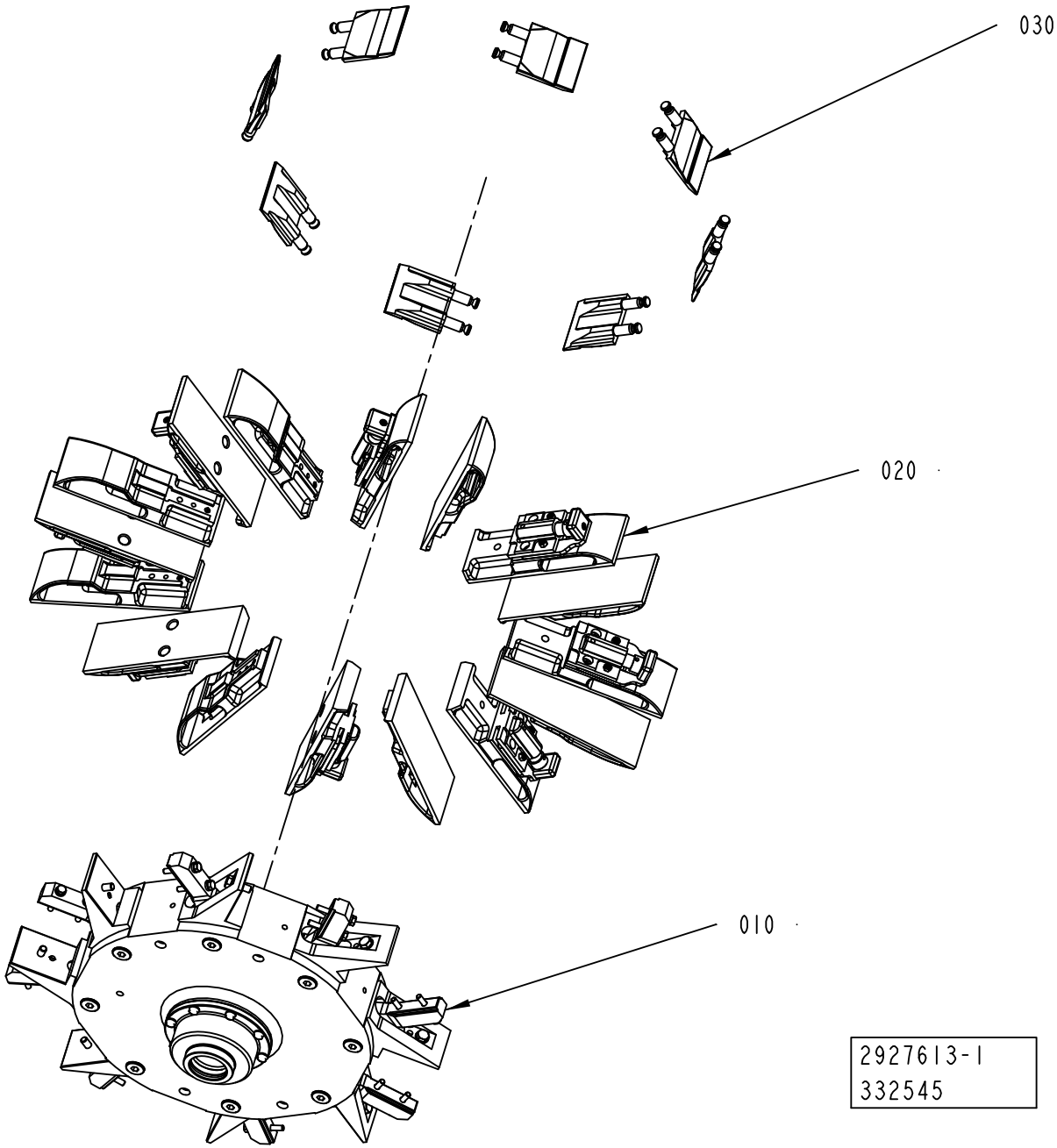
030
020
010
2927613-1
332545

| Pos | Part No | UN | Qty | Description | Page No |
|---|---|---|---|---|---|
| **TBA 0500B, TBA 1000B NOMOLDEDCAP (See drawing on page: 5-44)** | | | | | |
| 030 | 2925965-0100 | | 1 | BOTTOM | **5-53, 5-55, 5-57, 5-59, 5-61** |
| **TBA 0500SQ (See drawing on page: 5-44)** | | | | | |
| 030 | 2925965-0100 | | 1 | BOTTOM | **5-53, 5-55, 5-57, 5-59, 5-61** |
| **TBA 1000B STDA7 (See drawing on page: 5-48)** | | | | | |
| 030 | 2925965-0100 | | 1 | BOTTOM | **5-53, 5-55, 5-57, 5-59, 5-61** |
| **TBA 1000S NOMOLDEDCAP (See drawing on page: 5-44)** | | | | | |
| 030 | 2925965-0100 | | 1 | BOTTOM | **5-53, 5-55, 5-57, 5-59, 5-61** |
| **TBA 1000S STDA7 (See drawing on page: 5-44)** | | | | | |
| 030 | 2925965-0100 | | 1 | BOTTOM | **5-53, 5-55, 5-57, 5-59, 5-61** |
| **TBA 1000SQ (See drawing on page: 5-48)** | | | | | |
| 030 | 2925965-0100 | | 1 | BOTTOM | **5-53, 5-55, 5-57, 5-59, 5-61** |
| **TBA 1500S (See drawing on page: 5-48)** | | | | | |
| 030 | 2925965-0100 | | 1 | BOTTOM | **5-53, 5-55, 5-57, 5-59, 5-61** |
| **TBA 2000S (See drawing on page: 5-48)** | | | | | |
| 030 | 2925965-0100 | | 1 | BOTTOM | **5-53, 5-55, 5-57, 5-59, 5-61** |
| **TPA 0750SQ (See drawing on page: 5-46)** | | | | | |
| 030 | 2925965-0100 | | 1 | BOTTOM | **5-53, 5-55, 5-57, 5-59, 5-61** |
| **TPA 1000SQ (See drawing on page: 5-50)** | | | | | |
| 030 | 2925965-0100 | | 1 | BOTTOM | **5-53, 5-55, 5-57, 5-59, 5-61** |
| **Common Parts** | | | | | |
| 010 | 2925961-0100 | | 1 | HUB | **5-63** |
| 020 | 2925964-0100 | | 1 | FLAP | **5-65, 5-67, 5-69, 5-71** |

| Pos | Part No | UN | Qty | Description | Page No |
|---|---|---|---|---|---|

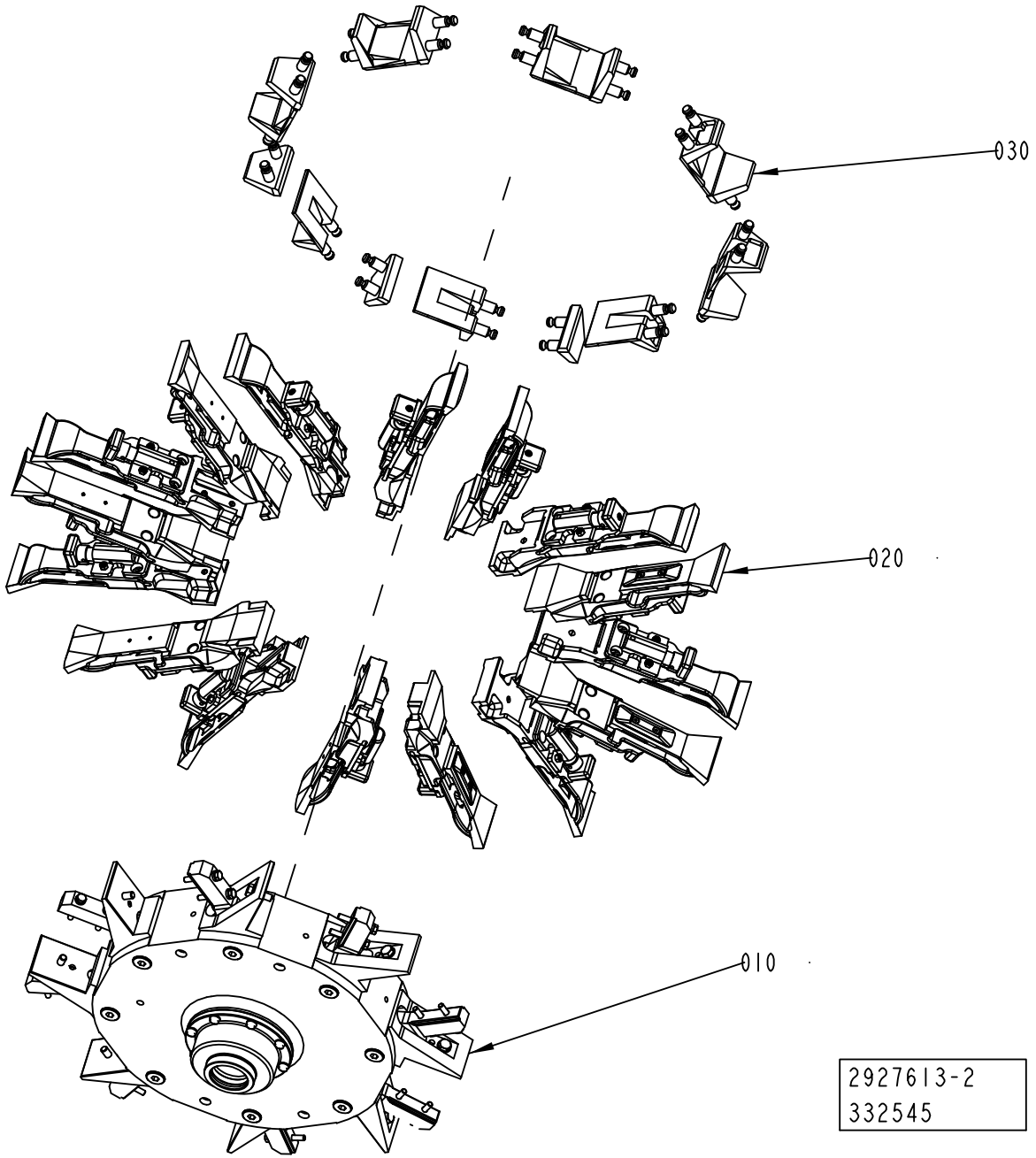
030
020
010
2927613-2
332545

| Pos | Part No | UN | Qty | Description | Page No |
|---|---|---|---|---|---|
| **TBA 0500B, TBA 1000B NOMOLDEDCAP (See drawing on page: 5-44)** | | | | | |
| 030 | 2925965-0100 | | 1 | BOTTOM | **5-53, 5-55, 5-57, 5-59, 5-61** |
| **TBA 0500SQ (See drawing on page: 5-44)** | | | | | |
| 030 | 2925965-0100 | | 1 | BOTTOM | **5-53, 5-55, 5-57, 5-59, 5-61** |
| **TBA 1000B STDA7 (See drawing on page: 5-48)** | | | | | |
| 030 | 2925965-0100 | | 1 | BOTTOM | **5-53, 5-55, 5-57, 5-59, 5-61** |
| **TBA 1000S NOMOLDEDCAP (See drawing on page: 5-44)** | | | | | |
| 030 | 2925965-0100 | | 1 | BOTTOM | **5-53, 5-55, 5-57, 5-59, 5-61** |
| **TBA 1000S STDA7 (See drawing on page: 5-44)** | | | | | |
| 030 | 2925965-0100 | | 1 | BOTTOM | **5-53, 5-55, 5-57, 5-59, 5-61** |
| **TBA 1000SQ (See drawing on page: 5-48)** | | | | | |
| 030 | 2925965-0100 | | 1 | BOTTOM | **5-53, 5-55, 5-57, 5-59, 5-61** |
| **TBA 1500S (See drawing on page: 5-48)** | | | | | |
| 030 | 2925965-0100 | | 1 | BOTTOM | **5-53, 5-55, 5-57, 5-59, 5-61** |
| **TBA 2000S (See drawing on page: 5-48)** | | | | | |
| 030 | 2925965-0100 | | 1 | BOTTOM | **5-53, 5-55, 5-57, 5-59, 5-61** |
| **TPA 0750SQ (See drawing on page: 5-46)** | | | | | |
| 030 | 2925965-0100 | | 1 | BOTTOM | **5-53, 5-55, 5-57, 5-59, 5-61** |
| **TPA 1000SQ (See drawing on page: 5-50)** | | | | | |
| 030 | 2925965-0100 | | 1 | BOTTOM | **5-53, 5-55, 5-57, 5-59, 5-61** |
| **Common Parts** | | | | | |
| 010 | 2925961-0100 | | 1 | HUB | **5-63** |
| 020 | 2925964-0100 | | 1 | FLAP | **5-65, 5-67, 5-69, 5-71** |

| Pos | Part No | UN | Qty | Description | Page No |
|---|---|---|---|---|---|

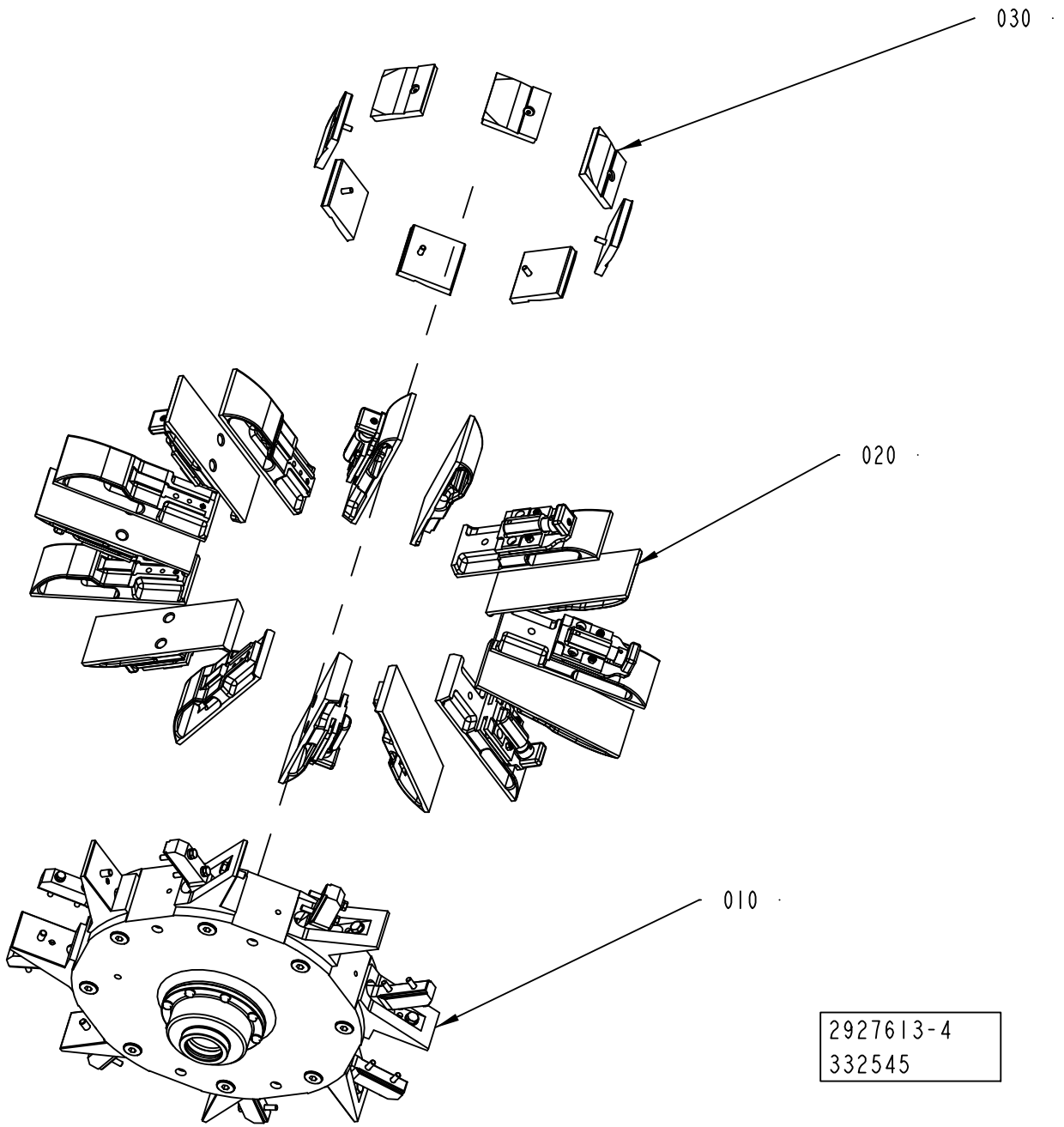
030
020
010
2927613-4
332545

| Pos | Part No | UN | Qty | Description | Page No |
|---|---|---|---|---|---|
| **TBA 0500B, TBA 1000B NOMOLDEDCAP (See drawing on page: 5-44)** | | | | | |
| 030 | 2925965-0100 | | 1 | BOTTOM | **5-53, 5-55, 5-57, 5-59, 5-61** |
| **TBA 0500SQ (See drawing on page: 5-44)** | | | | | |
| 030 | 2925965-0100 | | 1 | BOTTOM | **5-53, 5-55, 5-57, 5-59, 5-61** |
| **TBA 1000B STDA7 (See drawing on page: 5-48)** | | | | | |
| 030 | 2925965-0100 | | 1 | BOTTOM | **5-53, 5-55, 5-57, 5-59, 5-61** |
| **TBA 1000S NOMOLDEDCAP (See drawing on page: 5-44)** | | | | | |
| 030 | 2925965-0100 | | 1 | BOTTOM | **5-53, 5-55, 5-57, 5-59, 5-61** |
| **TBA 1000S STDA7 (See drawing on page: 5-44)** | | | | | |
| 030 | 2925965-0100 | | 1 | BOTTOM | **5-53, 5-55, 5-57, 5-59, 5-61** |
| **TBA 1000SQ (See drawing on page: 5-48)** | | | | | |
| 030 | 2925965-0100 | | 1 | BOTTOM | **5-53, 5-55, 5-57, 5-59, 5-61** |
| **TBA 1500S (See drawing on page: 5-48)** | | | | | |
| 030 | 2925965-0100 | | 1 | BOTTOM | **5-53, 5-55, 5-57, 5-59, 5-61** |
| **TBA 2000S (See drawing on page: 5-48)** | | | | | |
| 030 | 2925965-0100 | | 1 | BOTTOM | **5-53, 5-55, 5-57, 5-59, 5-61** |
| **TPA 0750SQ (See drawing on page: 5-46)** | | | | | |
| 030 | 2925965-0100 | | 1 | BOTTOM | **5-53, 5-55, 5-57, 5-59, 5-61** |
| **TPA 1000SQ (See drawing on page: 5-50)** | | | | | |
| 030 | 2925965-0100 | | 1 | BOTTOM | **5-53, 5-55, 5-57, 5-59, 5-61** |
| **Common Parts** | | | | | |
| 010 | 2925961-0100 | | 1 | HUB | **5-63** |
| 020 | 2925964-0100 | | 1 | FLAP | **5-65, 5-67, 5-69, 5-71** |

| Pos | Part No | UN | Qty | Description | Page No |
|---|---|---|---|---|---|

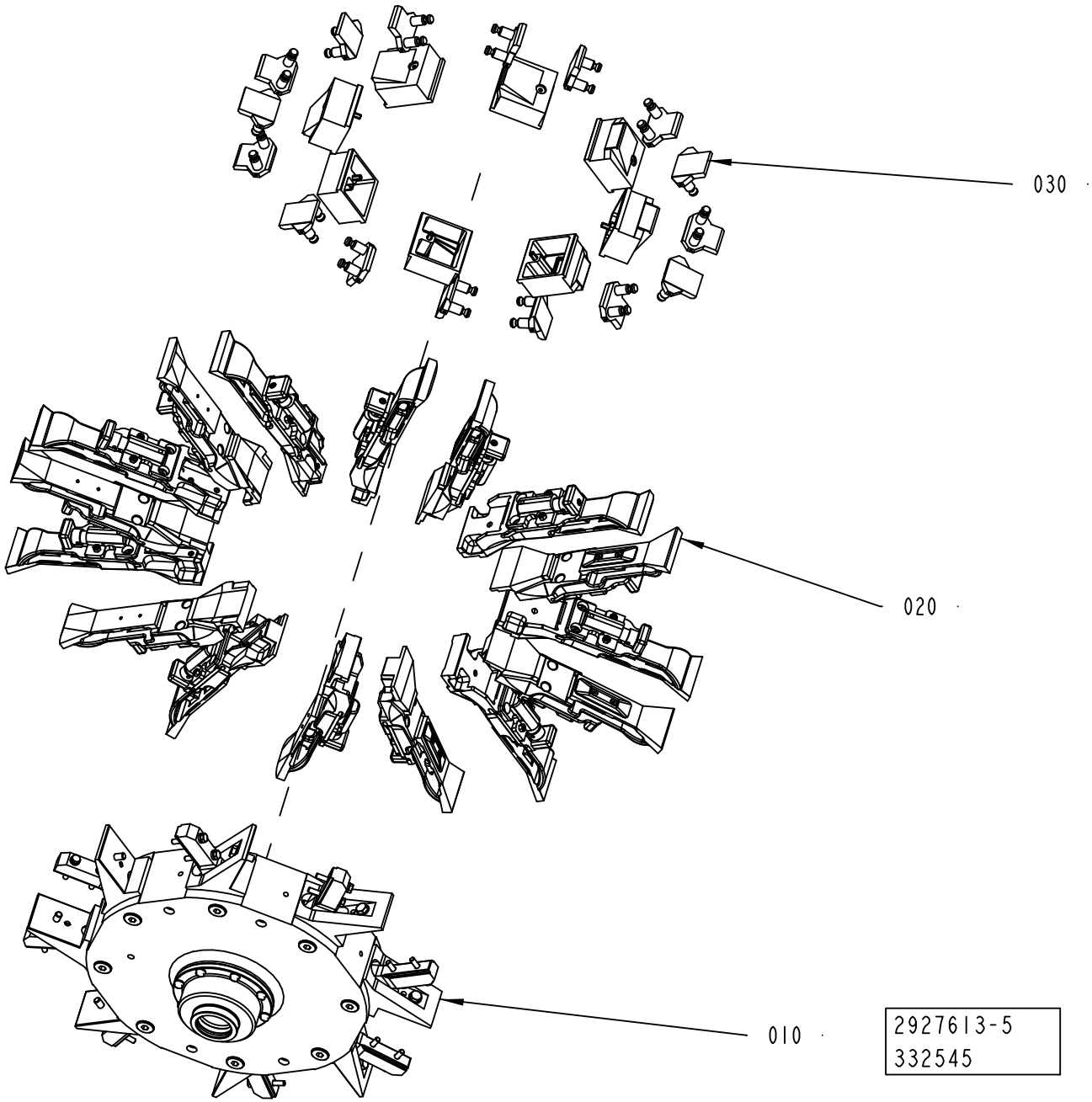
030
020
010
2927613-5
332545

| Pos | Part No | UN | Qty | Description | Page No |
|---|---|---|---|---|---|
| **TBA 0500B, TBA 1000B NOMOLDEDCAP (See drawing on page: 5-44)** | | | | | |
| 030 | 2925965-0100 | | 1 | BOTTOM | **5-53, 5-55, 5-57, 5-59, 5-61** |
| **TBA 0500SQ (See drawing on page: 5-44)** | | | | | |
| 030 | 2925965-0100 | | 1 | BOTTOM | **5-53, 5-55, 5-57, 5-59, 5-61** |
| **TBA 1000B STDA7 (See drawing on page: 5-48)** | | | | | |
| 030 | 2925965-0100 | | 1 | BOTTOM | **5-53, 5-55, 5-57, 5-59, 5-61** |
| **TBA 1000S NOMOLDEDCAP (See drawing on page: 5-44)** | | | | | |
| 030 | 2925965-0100 | | 1 | BOTTOM | **5-53, 5-55, 5-57, 5-59, 5-61** |
| **TBA 1000S STDA7 (See drawing on page: 5-44)** | | | | | |
| 030 | 2925965-0100 | | 1 | BOTTOM | **5-53, 5-55, 5-57, 5-59, 5-61** |
| **TBA 1000SQ (See drawing on page: 5-48)** | | | | | |
| 030 | 2925965-0100 | | 1 | BOTTOM | **5-53, 5-55, 5-57, 5-59, 5-61** |
| **TBA 1500S (See drawing on page: 5-48)** | | | | | |
| 030 | 2925965-0100 | | 1 | BOTTOM | **5-53, 5-55, 5-57, 5-59, 5-61** |
| **TBA 2000S (See drawing on page: 5-48)** | | | | | |
| 030 | 2925965-0100 | | 1 | BOTTOM | **5-53, 5-55, 5-57, 5-59, 5-61** |
| **TPA 0750SQ (See drawing on page: 5-46)** | | | | | |
| 030 | 2925965-0100 | | 1 | BOTTOM | **5-53, 5-55, 5-57, 5-59, 5-61** |
| **TPA 1000SQ (See drawing on page: 5-50)** | | | | | |
| 030 | 2925965-0100 | | 1 | BOTTOM | **5-53, 5-55, 5-57, 5-59, 5-61** |
| **Common Parts** | | | | | |
| 010 | 2925961-0100 | | 1 | HUB | **5-63** |
| 020 | 2925964-0100 | | 1 | FLAP | **5-65, 5-67, 5-69, 5-71** |

| Pos | Part No | UN | Qty | Description | Page No |
|---|---|---|---|---|---|

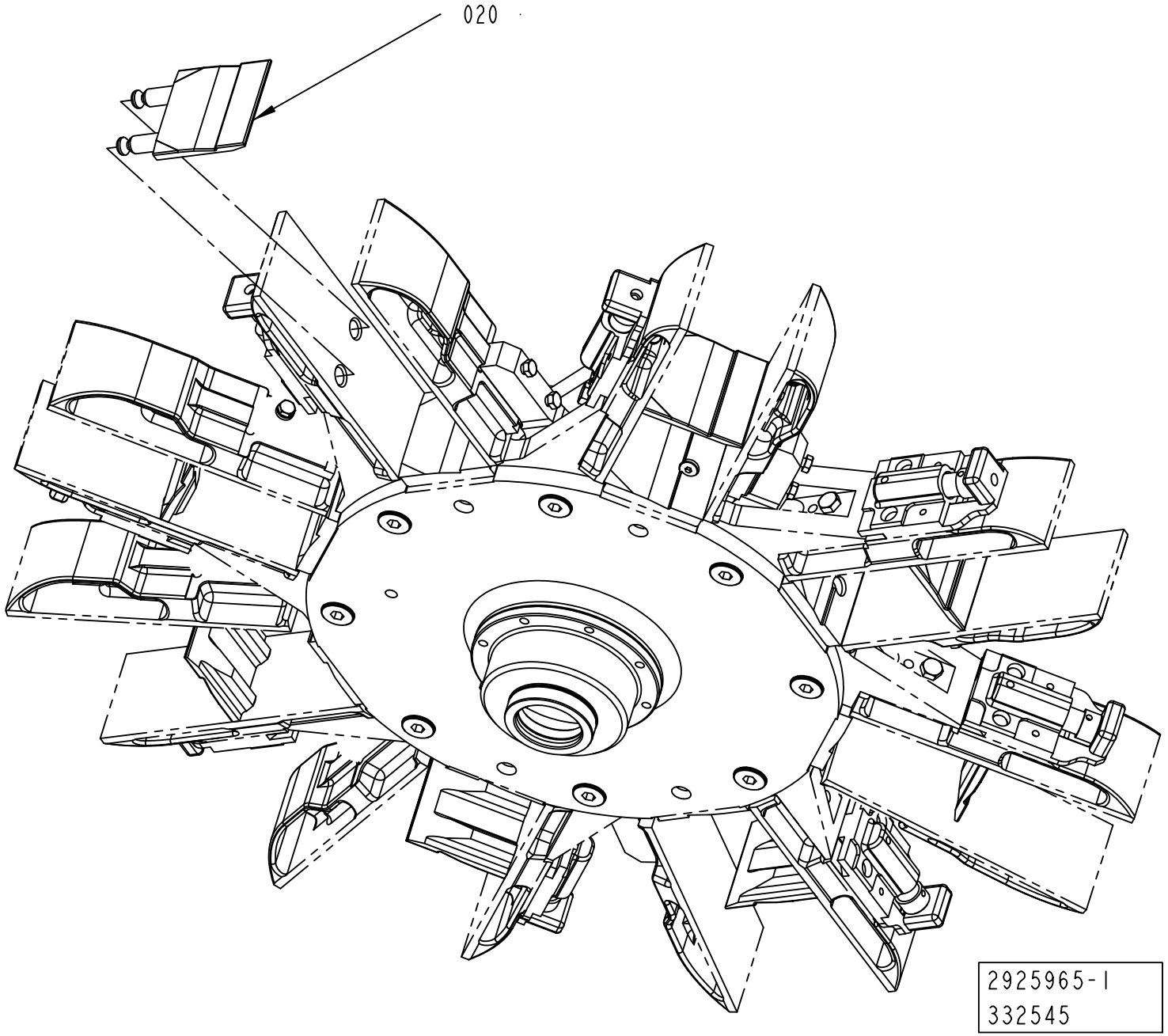
020
2925965-1
332545

ECM: 367710 - 20081003
Group number: 2925965-0100
Assembly Drawing: 2925965-1_1_AA

This list covers pages from 5-52 to 5-61

| Pos | Part No | UN | Qty | Description | Page No |
|---|---|---|---|---|---|
| **TBA 0500B QC (See drawing on page: 5-54)** | | | | | |
| 020 | 2895569-0000 | | 8 | BOTTOM PLATE | |
| **TBA 0500SQ QC (See drawing on page: 5-52)** | | | | | |
| 020 | 2871043-0000 | | 8 | BOTTOM | |
| **TBA 1000B QC (See drawing on page: 5-54)** | | | | | |
| 020 | 2895569-0000 | | 8 | BOTTOM PLATE | |
| **TBA 1000B STDA7 (See drawing on page: 5-60)** | | | | | |
| 010 | 2932827-0000 | | 8 | BOTTOM | |
| 100 | 312155-0380 | | 8 | SCREW DIN 7991 MF6S M6X50 A4 70 | |
| **TBA 1000S NOMOLDEDCAP (See drawing on page: 5-60)** | | | | | |
| 010 | 2818555-0000 | | 8 | BOTTOM | |
| 100 | 312155-0370 | | 8 | SCREW DIN 7991 MF6S M6X20 A4 70 | |
| **TBA 1000S STDA7 (See drawing on page: 5-60)** | | | | | |
| 010 | 2818554-0000 | | 8 | BOTTOM | |
| 100 | 312155-0370 | | 8 | SCREW DIN 7991 MF6S M6X20 A4 70 | |
| **TBA 1000SQ, TBA 1000SQ QC (See drawing on page: 5-60)** | | | | | |
| 010 | 2795264-0000 | | 8 | BOTTOM | |
| 100 | 312155-0370 | | 8 | SCREW DIN 7991 MF6S M6X20 A4 70 | |
| **TBA 1500S (See drawing on page: 5-60)** | | | | | |
| 010 | 2929030-0000 | | 8 | BOTTOM | |
| **TBA 2000S (See drawing on page: 5-60)** | | | | | |
| 010 | 2960430-0000 | | 8 | BOTTOM | |
| **TPA 0750SQ QC (See drawing on page: 5-56)** | | | | | |
| 020 | 2663373-0000 | | 8 | BOTTOM | |
| 030 | 2658239-0000 | | 8 | BOTTOM | |
| **TPA 1000SQ QC (See drawing on page: 5-58)** | | | | | |
| 010 | 2802612-0000 | | 8 | BOTTOM | |
| 020 | 2658240-0000 | | 8 | BOTTOM | |
| 030 | 2658240-0000 | | 8 | BOTTOM | |
| 100 | 312155-0379 | | 8 | SCREW DIN 7991 MF6S M6X45 A4 70 | |
| 100 | 312155-0376 | | 8 | SCREW DIN 7991 MF6S M6X35 A4 70 | |

| Pos | Part No | UN | Qty | Description | Page No |
|---|---|---|---|---|---|

TBA 0500 B

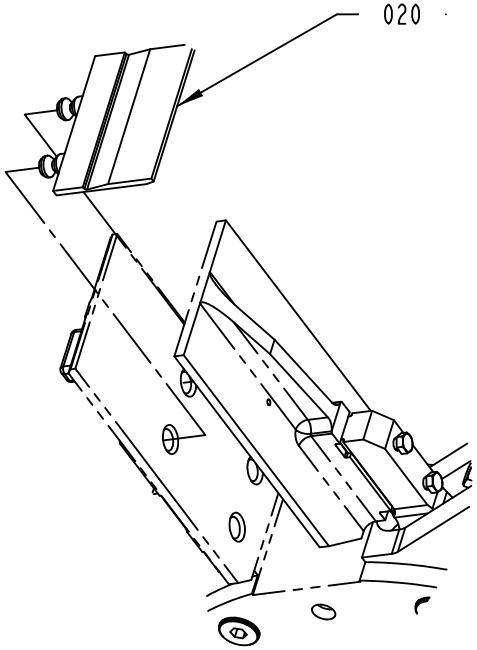


TBA 1000 B

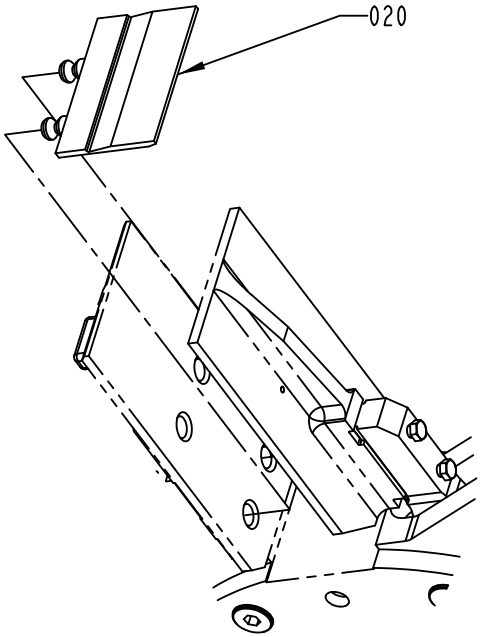


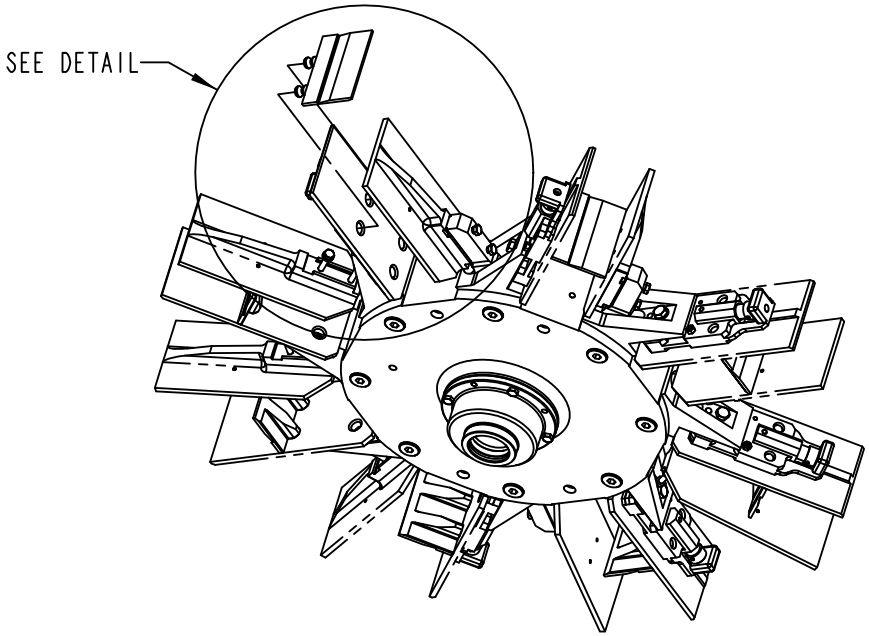


2925965-2
332545

ECM: 367710 - 20081003
Group number: 2925965-0100
Assembly Drawing: 2925965-2_1_AA

This list covers pages from 5-52 to 5-61

| Pos | Part No | UN | Qty | Description | Page No |
|---|---|---|---|---|---|
| **TBA 0500B QC (See drawing on page: 5-54)** | | | | | |
| 020 | 2895569-0000 | | 8 | BOTTOM PLATE | |
| **TBA 0500SQ QC (See drawing on page: 5-52)** | | | | | |
| 020 | 2871043-0000 | | 8 | BOTTOM | |
| **TBA 1000B QC (See drawing on page: 5-54)** | | | | | |
| 020 | 2895569-0000 | | 8 | BOTTOM PLATE | |
| **TBA 1000B STDA7 (See drawing on page: 5-60)** | | | | | |
| 010 | 2932827-0000 | | 8 | BOTTOM | |
| 100 | 312155-0380 | | 8 | SCREW DIN 7991 MF6S M6X50 A4 70 | |
| **TBA 1000S NOMOLDEDCAP (See drawing on page: 5-60)** | | | | | |
| 010 | 2818555-0000 | | 8 | BOTTOM | |
| 100 | 312155-0370 | | 8 | SCREW DIN 7991 MF6S M6X20 A4 70 | |
| **TBA 1000S STDA7 (See drawing on page: 5-60)** | | | | | |
| 010 | 2818554-0000 | | 8 | BOTTOM | |
| 100 | 312155-0370 | | 8 | SCREW DIN 7991 MF6S M6X20 A4 70 | |
| **TBA 1000SQ, TBA 1000SQ QC (See drawing on page: 5-60)** | | | | | |
| 010 | 2795264-0000 | | 8 | BOTTOM | |
| 100 | 312155-0370 | | 8 | SCREW DIN 7991 MF6S M6X20 A4 70 | |
| **TBA 1500S (See drawing on page: 5-60)** | | | | | |
| 010 | 2929030-0000 | | 8 | BOTTOM | |
| **TBA 2000S (See drawing on page: 5-60)** | | | | | |
| 010 | 2960430-0000 | | 8 | BOTTOM | |
| **TPA 0750SQ QC (See drawing on page: 5-56)** | | | | | |
| 020 | 2663373-0000 | | 8 | BOTTOM | |
| 030 | 2658239-0000 | | 8 | BOTTOM | |
| **TPA 1000SQ QC (See drawing on page: 5-58)** | | | | | |
| 010 | 2802612-0000 | | 8 | BOTTOM | |
| 020 | 2658240-0000 | | 8 | BOTTOM | |
| 030 | 2658240-0000 | | 8 | BOTTOM | |
| 100 | 312155-0379 | | 8 | SCREW DIN 7991 MF6S M6X45 A4 70 | |
| 100 | 312155-0376 | | 8 | SCREW DIN 7991 MF6S M6X35 A4 70 | |

| Pos | Part No | UN | Qty | Description | Page No |
|---|---|---|---|---|---|

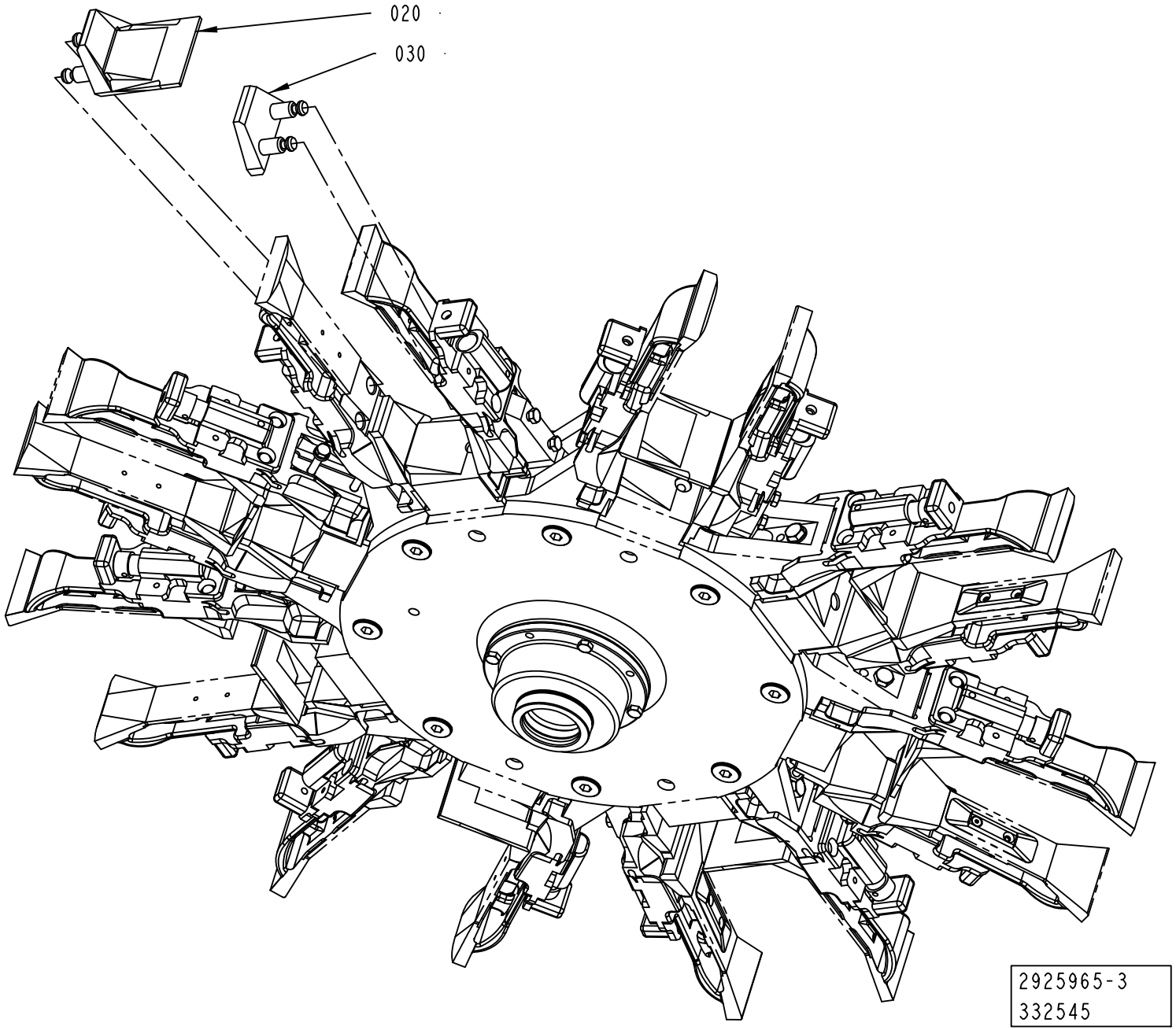
020
030
2925965-3
332545

ECM: 367710 - 20081003
Group number: 2925965-0100
Assembly Drawing: 2925965-3_1_AA

This list covers pages from 5-52 to 5-61

| Pos | Part No | UN | Qty | Description | Page No |
|---|---|---|---|---|---|
| **TBA 0500B QC (See drawing on page: 5-54)** | | | | | |
| 020 | 2895569-0000 | | 8 | BOTTOM PLATE | |
| **TBA 0500SQ QC (See drawing on page: 5-52)** | | | | | |
| 020 | 2871043-0000 | | 8 | BOTTOM | |
| **TBA 1000B QC (See drawing on page: 5-54)** | | | | | |
| 020 | 2895569-0000 | | 8 | BOTTOM PLATE | |
| **TBA 1000B STDA7 (See drawing on page: 5-60)** | | | | | |
| 010 | 2932827-0000 | | 8 | BOTTOM | |
| 100 | 312155-0380 | | 8 | SCREW DIN 7991 MF6S M6X50 A4 70 | |
| **TBA 1000S NOMOLDEDCAP (See drawing on page: 5-60)** | | | | | |
| 010 | 2818555-0000 | | 8 | BOTTOM | |
| 100 | 312155-0370 | | 8 | SCREW DIN 7991 MF6S M6X20 A4 70 | |
| **TBA 1000S STDA7 (See drawing on page: 5-60)** | | | | | |
| 010 | 2818554-0000 | | 8 | BOTTOM | |
| 100 | 312155-0370 | | 8 | SCREW DIN 7991 MF6S M6X20 A4 70 | |
| **TBA 1000SQ, TBA 1000SQ QC (See drawing on page: 5-60)** | | | | | |
| 010 | 2795264-0000 | | 8 | BOTTOM | |
| 100 | 312155-0370 | | 8 | SCREW DIN 7991 MF6S M6X20 A4 70 | |
| **TBA 1500S (See drawing on page: 5-60)** | | | | | |
| 010 | 2929030-0000 | | 8 | BOTTOM | |
| **TBA 2000S (See drawing on page: 5-60)** | | | | | |
| 010 | 2960430-0000 | | 8 | BOTTOM | |
| **TPA 0750SQ QC (See drawing on page: 5-56)** | | | | | |
| 020 | 2663373-0000 | | 8 | BOTTOM | |
| 030 | 2658239-0000 | | 8 | BOTTOM | |
| **TPA 1000SQ QC (See drawing on page: 5-58)** | | | | | |
| 010 | 2802612-0000 | | 8 | BOTTOM | |
| 020 | 2658240-0000 | | 8 | BOTTOM | |
| 030 | 2658240-0000 | | 8 | BOTTOM | |
| 100 | 312155-0379 | | 8 | SCREW DIN 7991 MF6S M6X45 A4 70 | |
| 100 | 312155-0376 | | 8 | SCREW DIN 7991 MF6S M6X35 A4 70 | |

| Pos | Part No | UN | Qty | Description | Page No |
|---|---|---|---|---|---|

Machine Type | Group Description | Used-In | Group Number | Page No

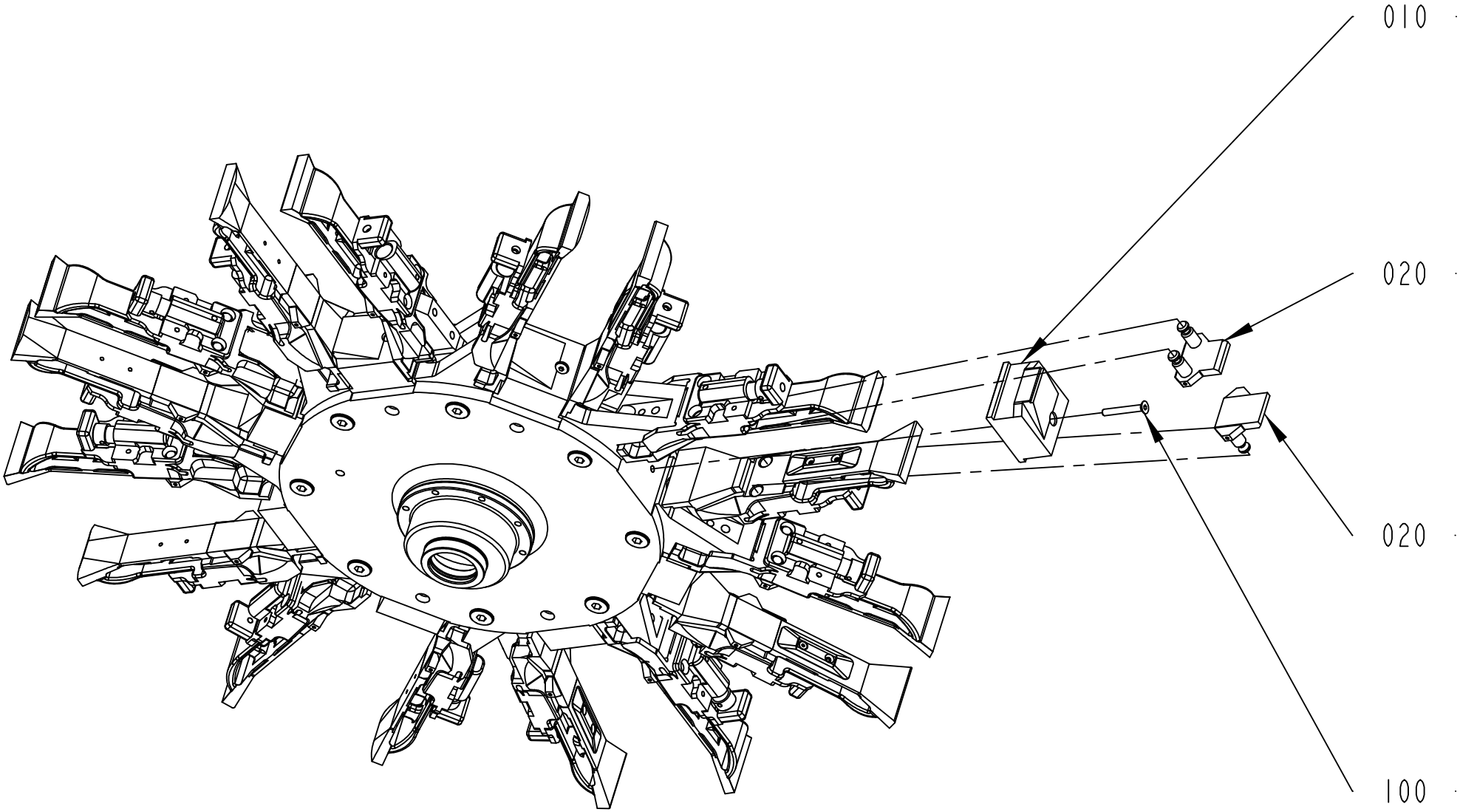


2925965-6
332545

ECM: 367710 - 20081003
Group number: 2925965-0100
Assembly Drawing: 2925965-6_1_AA

This list covers pages from 5-52 to 5-61

| Pos | Part No | UN | Qty | Description | Page No |
|---|---|---|---|---|---|
| **TBA 0500B QC (See drawing on page: 5-54)** | | | | | |
| 020 | 2895569-0000 | | 8 | BOTTOM PLATE | |
| **TBA 0500SQ QC (See drawing on page: 5-52)** | | | | | |
| 020 | 2871043-0000 | | 8 | BOTTOM | |
| **TBA 1000B QC (See drawing on page: 5-54)** | | | | | |
| 020 | 2895569-0000 | | 8 | BOTTOM PLATE | |
| **TBA 1000B STDA7 (See drawing on page: 5-60)** | | | | | |
| 010 | 2932827-0000 | | 8 | BOTTOM | |
| 100 | 312155-0380 | | 8 | SCREW DIN 7991 MF6S M6X50 A4 70 | |
| **TBA 1000S NOMOLDEDCAP (See drawing on page: 5-60)** | | | | | |
| 010 | 2818555-0000 | | 8 | BOTTOM | |
| 100 | 312155-0370 | | 8 | SCREW DIN 7991 MF6S M6X20 A4 70 | |
| **TBA 1000S STDA7 (See drawing on page: 5-60)** | | | | | |
| 010 | 2818554-0000 | | 8 | BOTTOM | |
| 100 | 312155-0370 | | 8 | SCREW DIN 7991 MF6S M6X20 A4 70 | |
| **TBA 1000SQ, TBA 1000SQ QC (See drawing on page: 5-60)** | | | | | |
| 010 | 2795264-0000 | | 8 | BOTTOM | |
| 100 | 312155-0370 | | 8 | SCREW DIN 7991 MF6S M6X20 A4 70 | |
| **TBA 1500S (See drawing on page: 5-60)** | | | | | |
| 010 | 2929030-0000 | | 8 | BOTTOM | |
| **TBA 2000S (See drawing on page: 5-60)** | | | | | |
| 010 | 2960430-0000 | | 8 | BOTTOM | |
| **TPA 0750SQ QC (See drawing on page: 5-56)** | | | | | |
| 020 | 2663373-0000 | | 8 | BOTTOM | |
| 030 | 2658239-0000 | | 8 | BOTTOM | |
| **TPA 1000SQ QC (See drawing on page: 5-58)** | | | | | |
| 010 | 2802612-0000 | | 8 | BOTTOM | |
| 020 | 2658240-0000 | | 8 | BOTTOM | |
| 030 | 2658240-0000 | | 8 | BOTTOM | |
| 100 | 312155-0379 | | 8 | SCREW DIN 7991 MF6S M6X45 A4 70 | |
| 100 | 312155-0376 | | 8 | SCREW DIN 7991 MF6S M6X35 A4 70 | |

| Pos | Part No | UN | Qty | Description | Page No |
|---|---|---|---|---|---|

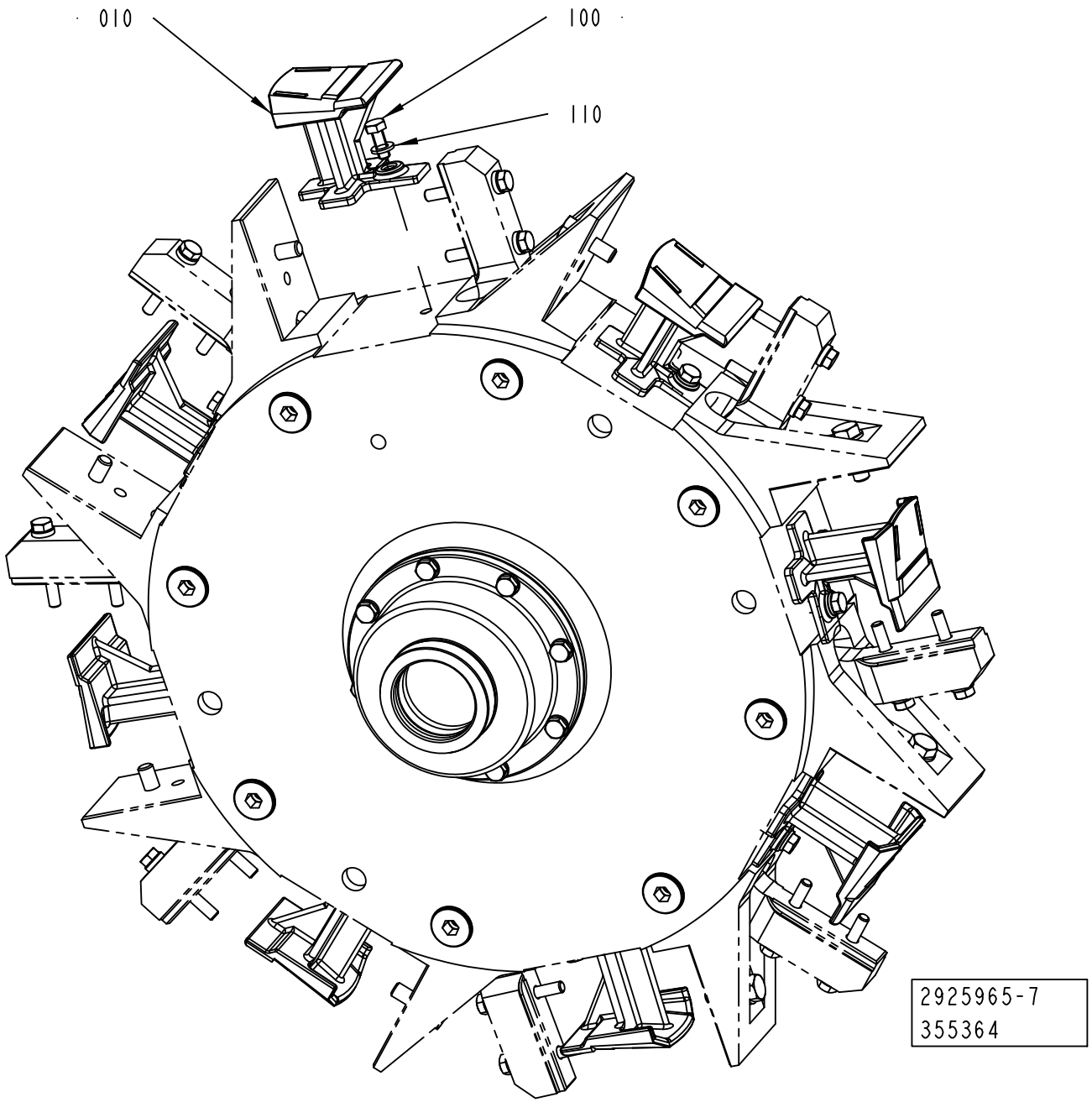
010
100
110
2925965-7
355364

| Pos | Part No | UN | Qty | Description | Page No |
|---|---|---|---|---|---|
| **TBA 0500B QC (See drawing on page: 5-54)** | | | | | |
| 020 | 2895569-0000 | | 8 | BOTTOM PLATE | |
| **TBA 0500SQ QC (See drawing on page: 5-52)** | | | | | |
| 020 | 2871043-0000 | | 8 | BOTTOM | |
| **TBA 1000B QC (See drawing on page: 5-54)** | | | | | |
| 020 | 2895569-0000 | | 8 | BOTTOM PLATE | |
| **TBA 1000B STDA7 (See drawing on page: 5-60)** | | | | | |
| 010 | 2932827-0000 | | 8 | BOTTOM | |
| 100 | 312155-0380 | | 8 | SCREW DIN 7991 MF6S M6X50 A4 70 | |
| **TBA 1000S NOMOLDEDCAP (See drawing on page: 5-60)** | | | | | |
| 010 | 2818555-0000 | | 8 | BOTTOM | |
| 100 | 312155-0370 | | 8 | SCREW DIN 7991 MF6S M6X20 A4 70 | |
| **TBA 1000S STDA7 (See drawing on page: 5-60)** | | | | | |
| 010 | 2818554-0000 | | 8 | BOTTOM | |
| 100 | 312155-0370 | | 8 | SCREW DIN 7991 MF6S M6X20 A4 70 | |
| **TBA 1000SQ, TBA 1000SQ QC (See drawing on page: 5-60)** | | | | | |
| 010 | 2795264-0000 | | 8 | BOTTOM | |
| 100 | 312155-0370 | | 8 | SCREW DIN 7991 MF6S M6X20 A4 70 | |
| **TBA 1500S (See drawing on page: 5-60)** | | | | | |
| 010 | 2929030-0000 | | 8 | BOTTOM | |
| **TBA 2000S (See drawing on page: 5-60)** | | | | | |
| 010 | 2960430-0000 | | 8 | BOTTOM | |
| **TPA 0750SQ QC (See drawing on page: 5-56)** | | | | | |
| 020 | 2663373-0000 | | 8 | BOTTOM | |
| 030 | 2658239-0000 | | 8 | BOTTOM | |
| **TPA 1000SQ QC (See drawing on page: 5-58)** | | | | | |
| 010 | 2802612-0000 | | 8 | BOTTOM | |
| 020 | 2658240-0000 | | 8 | BOTTOM | |
| 030 | 2658240-0000 | | 8 | BOTTOM | |
| 100 | 312155-0379 | | 8 | SCREW DIN 7991 MF6S M6X45 A4 70 | |
| 100 | 312155-0376 | | 8 | SCREW DIN 7991 MF6S M6X35 A4 70 | |

| Pos | Part No | UN | Qty | Description | Page No |
|---|---|---|---|---|---|

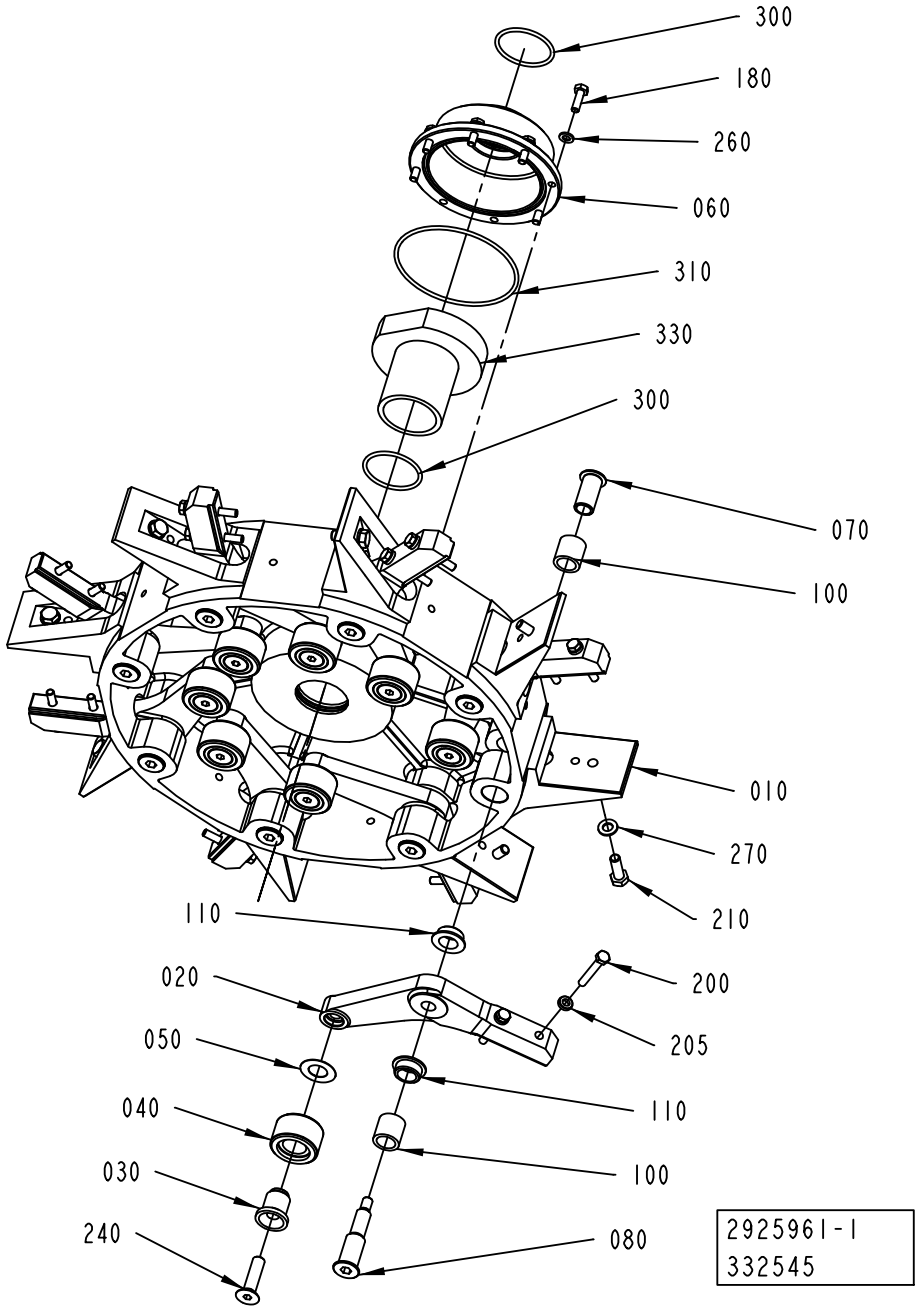
300
180
260
060
310
330
300
070
100
010
270
210
110
020
200
205
050
110
040
100
030
240
080
2925961-1
332545

ECM: 367720 - 20081003
Group number: 2925961-0100
Assembly Drawing: 2925961-1_1_AA

| Pos | Part No | UN | Qty | Description | Page No |
|---|---|---|---|---|---|
| **TBA 0500SQ, TBA 0500B, TBA 1000B, TBA 1000SQ, TPA 1000SQ, TBA 2000S, TPA 0750SQ** | | | | | |
| 010 | 2733999-0000 | | 1 | HUB | |
| **Common Parts** | | | | | |
| 020 | 1279559-0000 | | 8 | ARM | |
| 030 | 1144312-0000 | | 8 | AXLE PIN | |
| 040 | 1144335-0000 | | 8 | ROLLER | |
| 050 | 1144354-0000 | | 8 | WASHER | |
| 060 | 1144356-0000 | | 1 | COVER | |
| 070 | 2774465-0000 | | 8 | SCREW BUSHING | |
| 080 | 2774466-0000 | | 8 | SCREW HOLDER | |
| 100 | 1144417-0000 | | 16 | BUSHING | |
| 110 | 1282708-0000 | | 16 | BUSHING | |
| 180 | 312105-0370 | | 8 | SCREW M6S ISO 4017 M6X20 A480 | |
| 200 | 2693200-0000 | | 16 | SCREW | |
| 205 | 315115-0153 | | 16 | WASHER PLAIN, TBRB 6,4/12 H=3 | |
| 210 | 312105-0453 | | 8 | SCREW M6S ISO 4017 M8X25 A480 | |
| 240 | 312155-0499 | | 8 | SCREW DIN 7991 MF6S M10X40 A4 70 | |
| 260 | 315105-0153 | | 8 | WASHER BRB 6,4X12 RFR | |
| 270 | 315105-0165 | | 8 | WASHER BRB 8,4X16 RFR | |
| 300 | 315202-0225 | | 2 | O-RING 44,2X3 MM | |
| 310 | 315202-0311 | | 1 | O-RING 99,5X3 MM | |
| 330 | 90459-5828 | | 1 | CLAMPING ELEMENT WITH SLEEVE, 45X54 MM | |

| Pos | Part No | UN | Qty | Description | Page No |
|---|---|---|---|---|---|

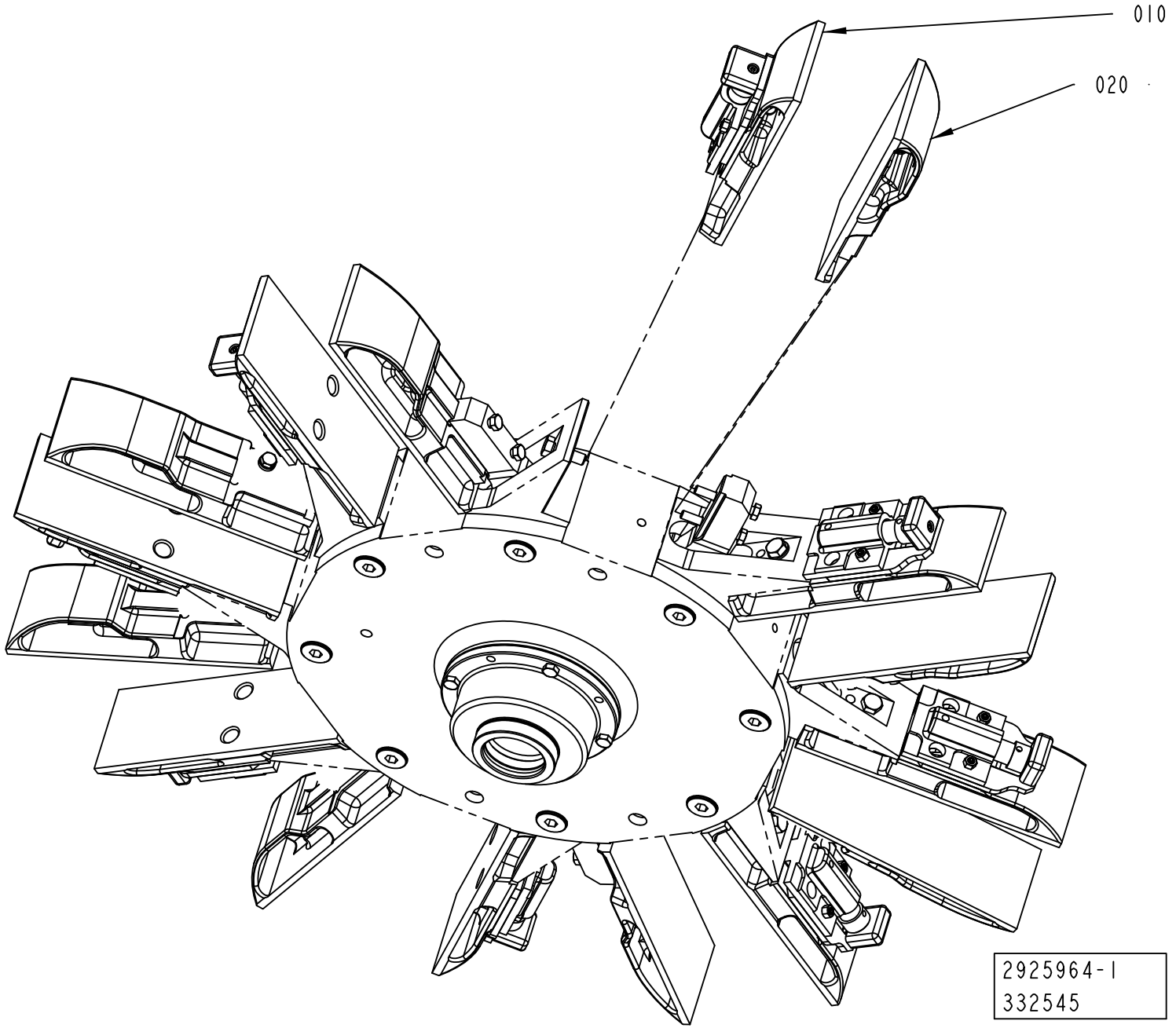
010
020
2925964-1
332545

ECM: 367721 - 20081003
Group number: 2925964-0100
Assembly Drawing: 2925964-1_1_AA

This list covers pages from 5-64 to 5-71

| Pos | Part No | UN | Qty | Description | Page No |
|---|---|---|---|---|---|
| **TBA 0500B, TBA 1000B NOMOLDEDCAP (See drawing on page: 5-64)** | | | | | |
| 010 | 2927548-0100 | | 8 | FLAP | **5-73, 5-75** |
| 020 | 1260704-0000 | | 8 | FLAP | |
| **TBA 0500SQ, TBA 1000SQ (See drawing on page: 5-64)** | | | | | |
| 010 | 2927548-0100 | | 8 | FLAP | **5-73, 5-75** |
| 020 | 1487739-0000 | | 8 | FLAP | |
| **TBA 1000B STDA7 (See drawing on page: 5-68)** | | | | | |
| 010 | 1260705-0000 | | 8 | FLAP | |
| 020 | 1260704-0000 | | 8 | FLAP | |
| **TBA 1000S NOMOLDEDCAP, TBA 1000S STDA7 (See drawing on page: 5-68)** | | | | | |
| 010 | 1144927-0000 | | 8 | FLAP | |
| 020 | 1144926-0000 | | 8 | FLAP | |
| 040 | 2550211-0000 | | 8 | VOLUME BULGE | |
| 110 | 312155-0287 | | 16 | SCREW DIN 7991 MF6S M4X8 A4 70 | |
| **TBA 1500S (See drawing on page: 5-70)** | | | | | |
| 010 | 1317555-0000 | | 8 | FLAP | |
| 020 | 1317554-0000 | | 8 | FLAP | |
| 080 | 1317656-0000 | | 16 | INSERT | |
| 120 | 312105-0289 | | 32 | SCREW M6S H4X10 A4 70 ISO4017/DIN933 | |
| 130 | 315105-0136 | | 32 | WASHER BRB 4,3X8 RFR | |
| **TBA 2000S (See drawing on page: 5-68)** | | | | | |
| 010 | 2566321-0000 | | 8 | FLAP | |
| 020 | 2566323-0000 | | 8 | FLAP | |
| 050 | 2588327-0000 | | 8 | INSERT | |
| 060 | 2638180-0000 | | 16 | INSERT | |
| 070 | 2693197-0000 | | 32 | INSERT | |
| 100 | 312115-0370 | | 8 | SCREW ISO4762 M6X20 A4 80 | |
| 120 | 312155-0287 | | 32 | SCREW DIN 7991 MF6S M4X8 A4 70 | |
| **TPA 1000SQ, TPA 0750SQ (See drawing on page: 5-66)** | | | | | |
| 010 | 2927548-0100 | | 8 | FLAP | **5-73, 5-75** |
| 020 | 2927549-0100 | | 8 | FLAP | **5-77** |

| Pos | Part No | UN | Qty | Description | Page No |
|---|---|---|---|---|---|

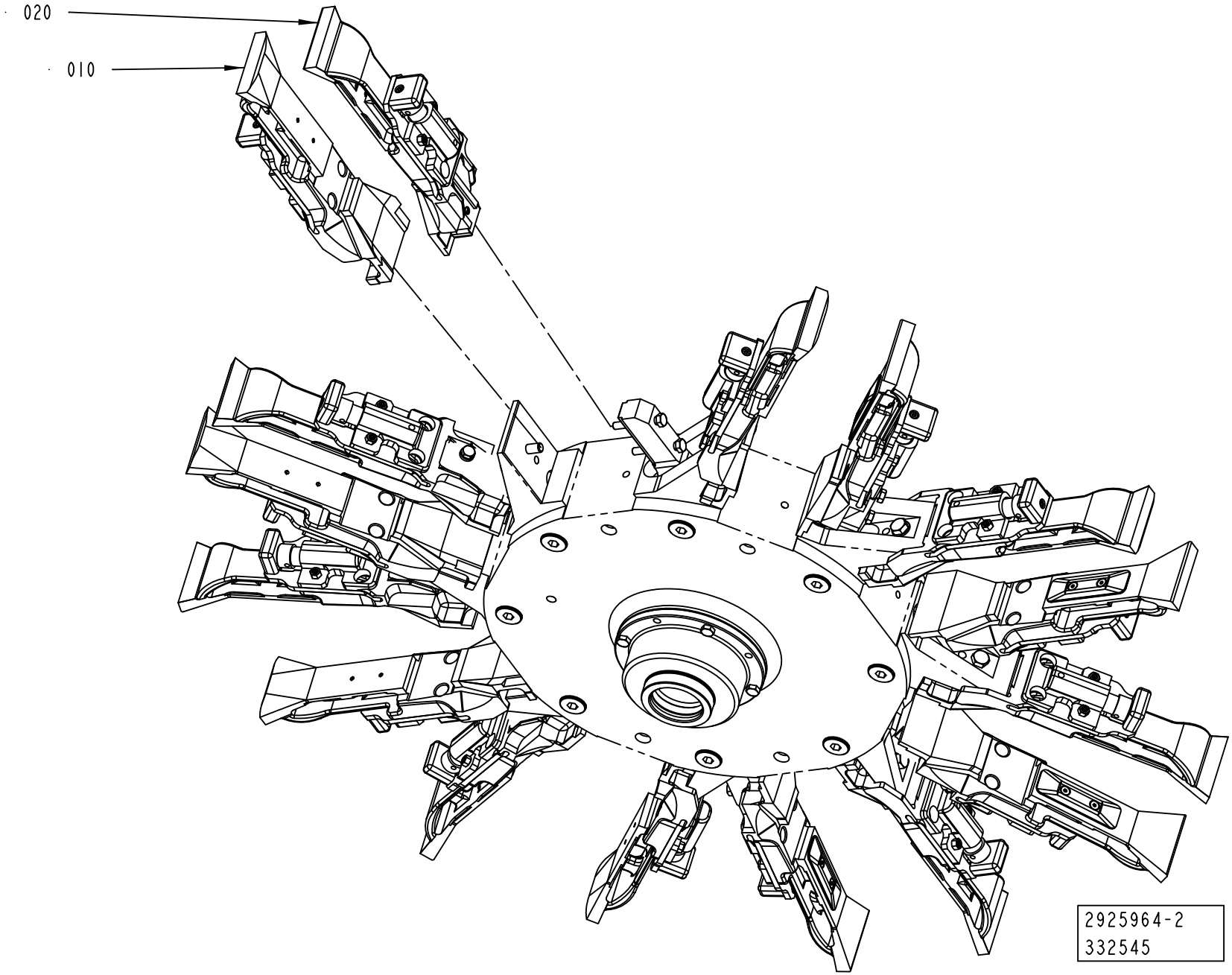
020
010
2925964-2
332545

ECM: 367721 - 20081003
Group number: 2925964-0100
Assembly Drawing: 2925964-2_1_AA

This list covers pages from 5-64 to 5-71

| Pos | Part No | UN | Qty | Description | Page No |
|---|---|---|---|---|---|
| **TBA 0500B, TBA 1000B NOMOLDEDCAP (See drawing on page: 5-64)** | | | | | |
| 010 | 2927548-0100 | | 8 | FLAP | **5-73, 5-75** |
| 020 | 1260704-0000 | | 8 | FLAP | |
| **TBA 0500SQ, TBA 1000SQ (See drawing on page: 5-64)** | | | | | |
| 010 | 2927548-0100 | | 8 | FLAP | **5-73, 5-75** |
| 020 | 1487739-0000 | | 8 | FLAP | |
| **TBA 1000B STDA7 (See drawing on page: 5-68)** | | | | | |
| 010 | 1260705-0000 | | 8 | FLAP | |
| 020 | 1260704-0000 | | 8 | FLAP | |
| **TBA 1000S NOMOLDEDCAP, TBA 1000S STDA7 (See drawing on page: 5-68)** | | | | | |
| 010 | 1144927-0000 | | 8 | FLAP | |
| 020 | 1144926-0000 | | 8 | FLAP | |
| 040 | 2550211-0000 | | 8 | VOLUME BULGE | |
| 110 | 312155-0287 | | 16 | SCREW DIN 7991 MF6S M4X8 A4 70 | |
| **TBA 1500S (See drawing on page: 5-70)** | | | | | |
| 010 | 1317555-0000 | | 8 | FLAP | |
| 020 | 1317554-0000 | | 8 | FLAP | |
| 080 | 1317656-0000 | | 16 | INSERT | |
| 120 | 312105-0289 | | 32 | SCREW M6S H4X10 A4 70 ISO4017/DIN933 | |
| 130 | 315105-0136 | | 32 | WASHER BRB 4,3X8 RFR | |
| **TBA 2000S (See drawing on page: 5-68)** | | | | | |
| 010 | 2566321-0000 | | 8 | FLAP | |
| 020 | 2566323-0000 | | 8 | FLAP | |
| 050 | 2588327-0000 | | 8 | INSERT | |
| 060 | 2638180-0000 | | 16 | INSERT | |
| 070 | 2693197-0000 | | 32 | INSERT | |
| 100 | 312115-0370 | | 8 | SCREW ISO4762 M6X20 A4 80 | |
| 120 | 312155-0287 | | 32 | SCREW DIN 7991 MF6S M4X8 A4 70 | |
| **TPA 1000SQ, TPA 0750SQ (See drawing on page: 5-66)** | | | | | |
| 010 | 2927548-0100 | | 8 | FLAP | **5-73, 5-75** |
| 020 | 2927549-0100 | | 8 | FLAP | **5-77** |

| Pos | Part No | UN | Qty | Description | Page No |
|---|---|---|---|---|---|

Machine Type | Group Description | Used-In | Group Number | Page No

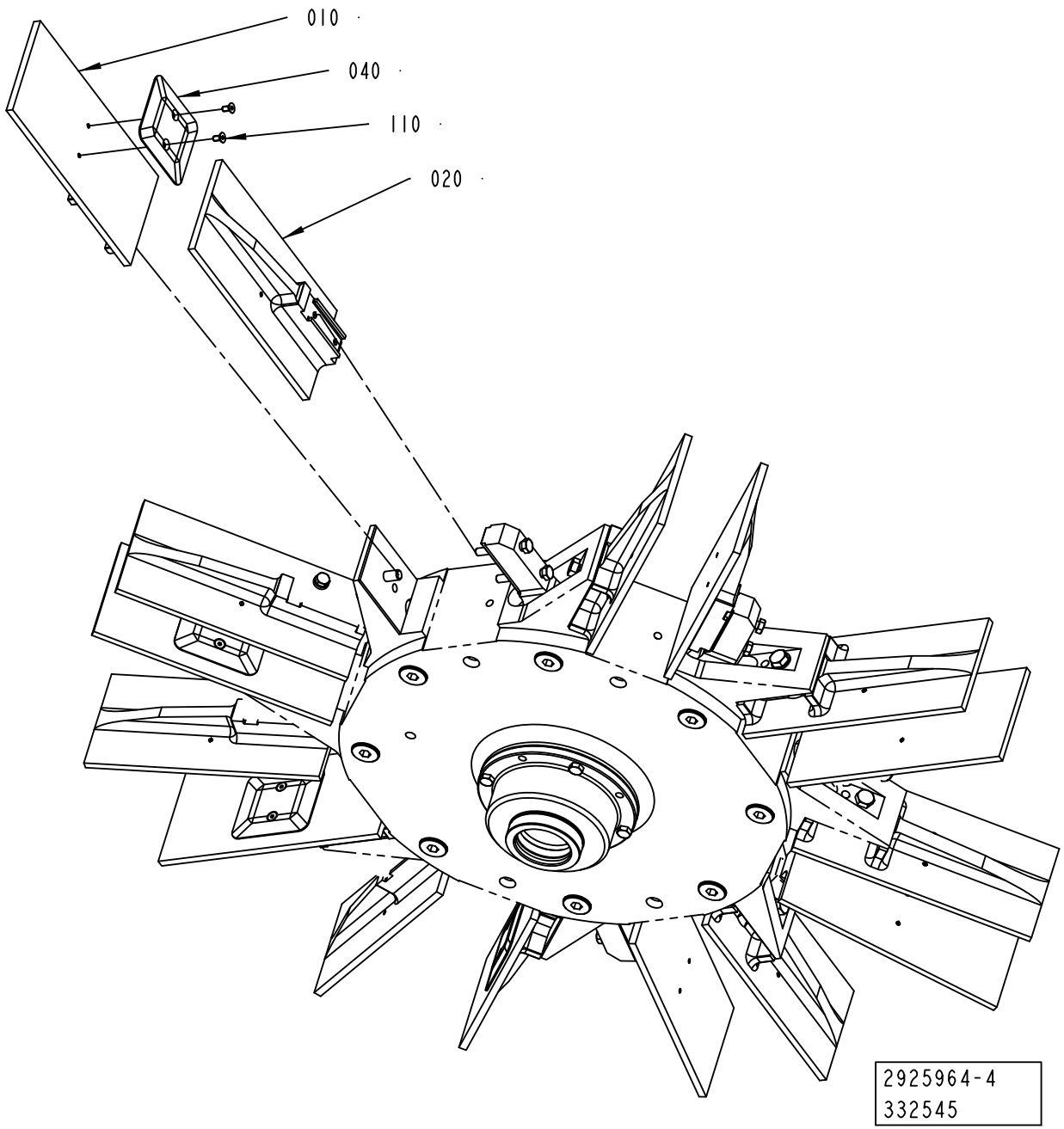
010
040
110
020
2925964-4
332545

ECM: 367721 - 20081003
Group number: 2925964-0100
Assembly Drawing: 2925964-4_1_AA

This list covers pages from 5-64 to 5-71

| Pos | Part No | UN | Qty | Description | Page No |
|---|---|---|---|---|---|
| **TBA 0500B, TBA 1000B NOMOLDEDCAP (See drawing on page: 5-64)** | | | | | |
| 010 | 2927548-0100 | | 8 | FLAP | **5-73, 5-75** |
| 020 | 1260704-0000 | | 8 | FLAP | |
| **TBA 0500SQ, TBA 1000SQ (See drawing on page: 5-64)** | | | | | |
| 010 | 2927548-0100 | | 8 | FLAP | **5-73, 5-75** |
| 020 | 1487739-0000 | | 8 | FLAP | |
| **TBA 1000B STDA7 (See drawing on page: 5-68)** | | | | | |
| 010 | 1260705-0000 | | 8 | FLAP | |
| 020 | 1260704-0000 | | 8 | FLAP | |
| **TBA 1000S NOMOLDEDCAP, TBA 1000S STDA7 (See drawing on page: 5-68)** | | | | | |
| 010 | 1144927-0000 | | 8 | FLAP | |
| 020 | 1144926-0000 | | 8 | FLAP | |
| 040 | 2550211-0000 | | 8 | VOLUME BULGE | |
| 110 | 312155-0287 | | 16 | SCREW DIN 7991 MF6S M4X8 A4 70 | |
| **TBA 1500S (See drawing on page: 5-70)** | | | | | |
| 010 | 1317555-0000 | | 8 | FLAP | |
| 020 | 1317554-0000 | | 8 | FLAP | |
| 080 | 1317656-0000 | | 16 | INSERT | |
| 120 | 312105-0289 | | 32 | SCREW M6S H4X10 A4 70 ISO4017/DIN933 | |
| 130 | 315105-0136 | | 32 | WASHER BRB 4,3X8 RFR | |
| **TBA 2000S (See drawing on page: 5-68)** | | | | | |
| 010 | 2566321-0000 | | 8 | FLAP | |
| 020 | 2566323-0000 | | 8 | FLAP | |
| 050 | 2588327-0000 | | 8 | INSERT | |
| 060 | 2638180-0000 | | 16 | INSERT | |
| 070 | 2693197-0000 | | 32 | INSERT | |
| 100 | 312115-0370 | | 8 | SCREW ISO4762 M6X20 A4 80 | |
| 120 | 312155-0287 | | 32 | SCREW DIN 7991 MF6S M4X8 A4 70 | |
| **TPA 1000SQ, TPA 0750SQ (See drawing on page: 5-66)** | | | | | |
| 010 | 2927548-0100 | | 8 | FLAP | **5-73, 5-75** |
| 020 | 2927549-0100 | | 8 | FLAP | **5-77** |

| Pos | Part No | UN | Qty | Description | Page No |
|---|---|---|---|---|---|

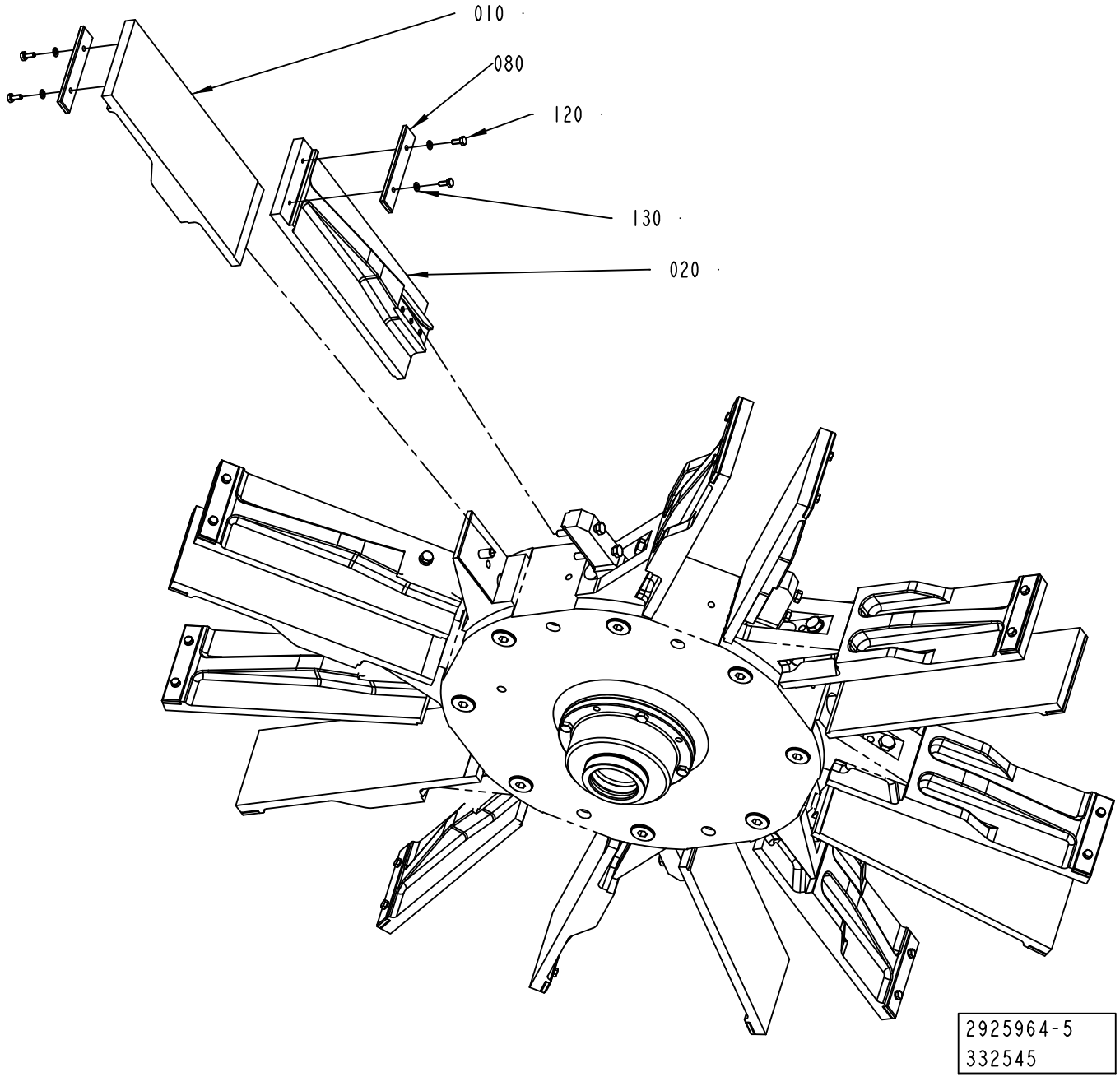
010
080
120
130
020
2925964-5
332545

| Pos | Part No | UN | Qty | Description | Page No |
|---|---|---|---|---|---|
| **TBA 0500B, TBA 1000B NOMOLDEDCAP (See drawing on page: 5-64)** | | | | | |
| 010 | 2927548-0100 | | 8 | FLAP | **5-73, 5-75** |
| 020 | 1260704-0000 | | 8 | FLAP | |
| **TBA 0500SQ, TBA 1000SQ (See drawing on page: 5-64)** | | | | | |
| 010 | 2927548-0100 | | 8 | FLAP | **5-73, 5-75** |
| 020 | 1487739-0000 | | 8 | FLAP | |
| **TBA 1000B STDA7 (See drawing on page: 5-68)** | | | | | |
| 010 | 1260705-0000 | | 8 | FLAP | |
| 020 | 1260704-0000 | | 8 | FLAP | |
| **TBA 1000S NOMOLDEDCAP, TBA 1000S STDA7 (See drawing on page: 5-68)** | | | | | |
| 010 | 1144927-0000 | | 8 | FLAP | |
| 020 | 1144926-0000 | | 8 | FLAP | |
| 040 | 2550211-0000 | | 8 | VOLUME BULGE | |
| 110 | 312155-0287 | | 16 | SCREW DIN 7991 MF6S M4X8 A4 70 | |
| **TBA 1500S (See drawing on page: 5-70)** | | | | | |
| 010 | 1317555-0000 | | 8 | FLAP | |
| 020 | 1317554-0000 | | 8 | FLAP | |
| 080 | 1317656-0000 | | 16 | INSERT | |
| 120 | 312105-0289 | | 32 | SCREW M6S H4X10 A4 70 ISO4017/DIN933 | |
| 130 | 315105-0136 | | 32 | WASHER BRB 4,3X8 RFR | |
| **TBA 2000S (See drawing on page: 5-68)** | | | | | |
| 010 | 2566321-0000 | | 8 | FLAP | |
| 020 | 2566323-0000 | | 8 | FLAP | |
| 050 | 2588327-0000 | | 8 | INSERT | |
| 060 | 2638180-0000 | | 16 | INSERT | |
| 070 | 2693197-0000 | | 32 | INSERT | |
| 100 | 312115-0370 | | 8 | SCREW ISO4762 M6X20 A4 80 | |
| 120 | 312155-0287 | | 32 | SCREW DIN 7991 MF6S M4X8 A4 70 | |
| **TPA 1000SQ, TPA 0750SQ (See drawing on page: 5-66)** | | | | | |
| 010 | 2927548-0100 | | 8 | FLAP | **5-73, 5-75** |
| 020 | 2927549-0100 | | 8 | FLAP | **5-77** |

| Pos | Part No | UN | Qty | Description | Page No |
|---|---|---|---|---|---|

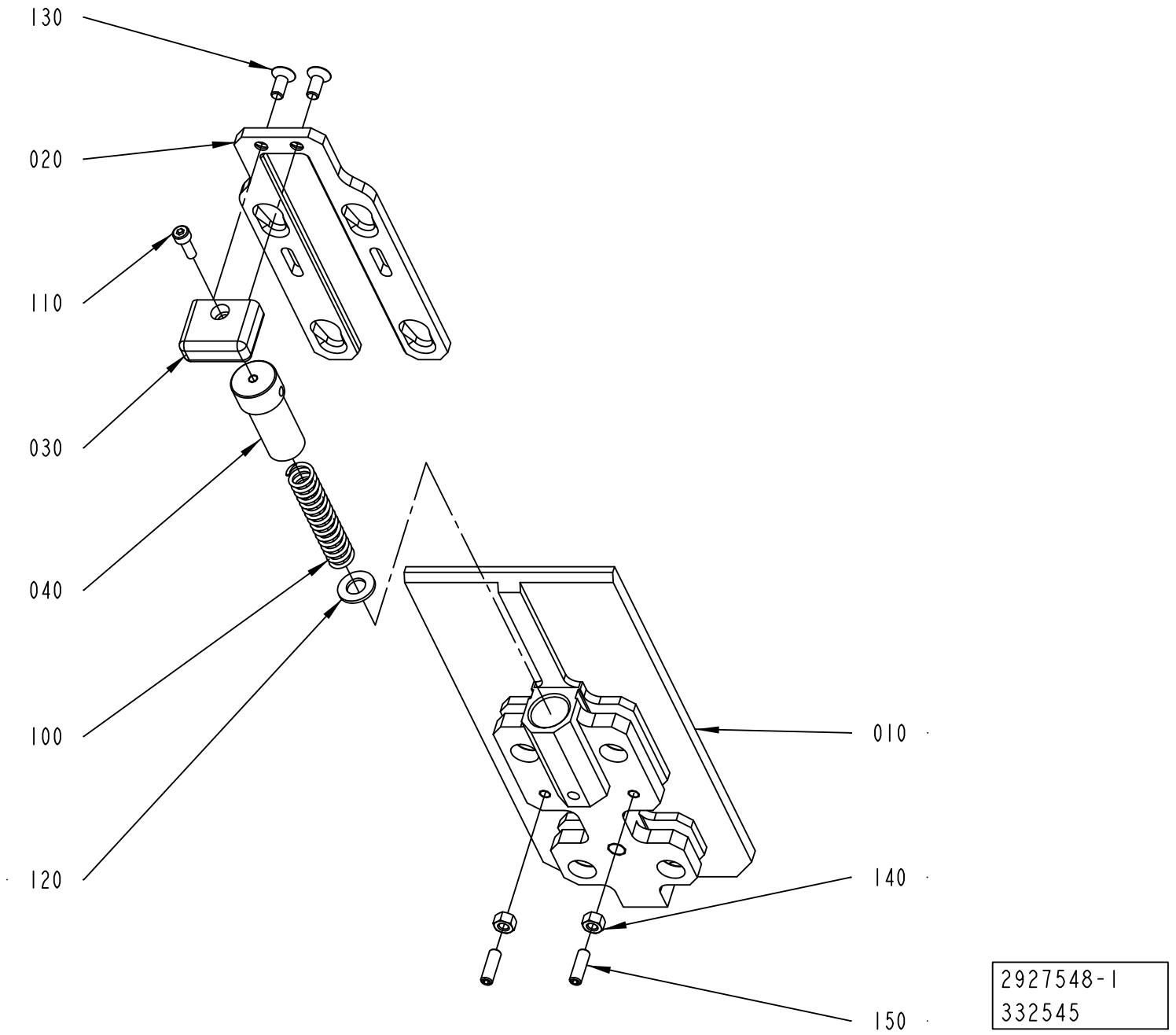
130
020
110
030
040
100
120
010
140
150
2927548-1
332545

ECM: 367711 - 20081003
Group number: 2927548-0100
Assembly Drawing: 2927548-1_1_AA

This list covers pages from 5-72 to 5-75

| Pos | Part No | UN | Qty | Description | Page No |
|---|---|---|---|---|---|
| **TBA 0500B, TBA 1000B (See drawing on page: 5-72)** | | | | | |
| 010 | 2520170-0000 | | 1 | FLAP | |
| 020 | 2520168-0000 | | 1 | SLIDE | |
| 110 | 312115-0291 | | 1 | SCREW ISO4762 M4X12 A4 80 | |
| 140 | 312605-0314 | | 2 | HEXAGON NUT, M6M M5 A280 | |
| 150 | 312318-0329 | | 2 | SCREW ISO4029 M5X16 A4 | |
| **TBA 0500SQ, TBA 1000SQ (See drawing on page: 5-72)** | | | | | |
| 010 | 2869538-0000 | | 1 | FLAP | |
| 020 | 2871044-0000 | | 1 | SLIDE | |
| 090 | 312115-0291 | | 1 | SCREW ISO4762 M4X12 A4 80 | |
| 150 | 312318-0327 | | 2 | SCREW ISO4029 M5X12 A4 | |
| **TPA 1000SQ, TPA 0750SQ (See drawing on page: 5-74)** | | | | | |
| 010 | 2658242-0000 | | 1 | FLAP | |
| 020 | 2658241-0000 | | 1 | SLIDE | |
| 110 | 312115-0291 | | 1 | SCREW ISO4762 M4X12 A4 80 | |
| 140 | 312605-0314 | | 2 | HEXAGON NUT, M6M M5 A280 | |
| 150 | 312605-0314 | | 2 | HEXAGON NUT, M6M M5 A280 | |
| **Common Parts** | | | | | |
| 030 | 2526563-0000 | | 1 | HANDLE | |
| 040 | 2526567-0000 | | 1 | CYLINDER | |
| 100 | 90459-0969 | | 1 | COMP. SPRING A D22430, 1,6X11,6X58,5 | |
| 120 | 315105-0165 | | 1 | WASHER BRB 8,4X16 RFR | |
| 130 | 312155-0327 | | 2 | SCREW DIN 7991 MF6S M5X12 A4 70 | |

| Pos | Part No | UN | Qty | Description | Page No |
|---|---|---|---|---|---|

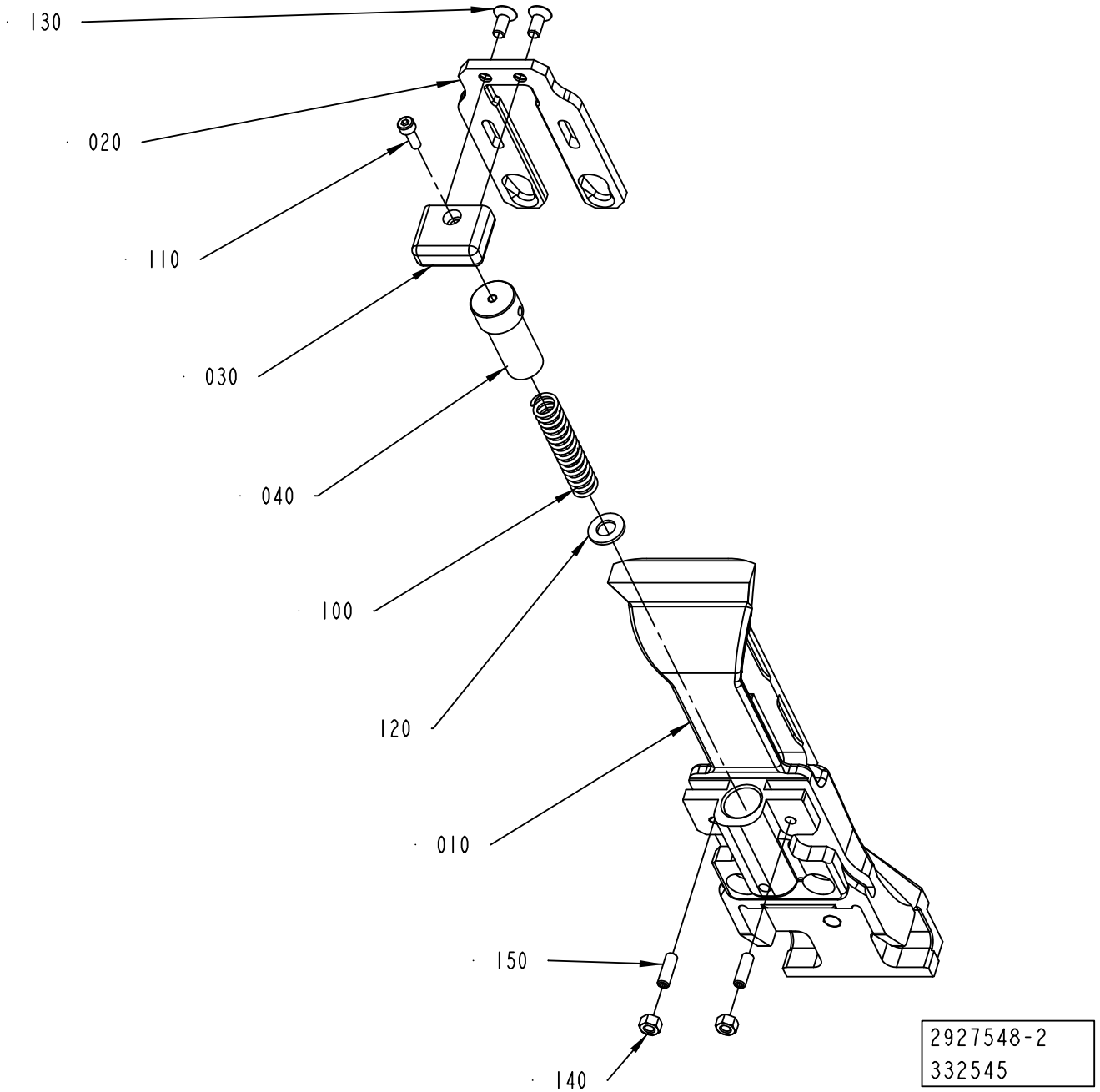
130
020
110
030
040
100
120
010
150
140
2927548-2
332545

ECM: 367711 - 20081003
Group number: 2927548-0100
Assembly Drawing: 2927548-2_1_AA

This list covers pages from 5-72 to 5-75

| Pos | Part No | UN | Qty | Description | Page No |
|---|---|---|---|---|---|
| **TBA 0500B, TBA 1000B (See drawing on page: 5-72)** | | | | | |
| 010 | 2520170-0000 | | 1 | FLAP | |
| 020 | 2520168-0000 | | 1 | SLIDE | |
| 110 | 312115-0291 | | 1 | SCREW ISO4762 M4X12 A4 80 | |
| 140 | 312605-0314 | | 2 | HEXAGON NUT, M6M M5 A280 | |
| 150 | 312318-0329 | | 2 | SCREW ISO4029 M5X16 A4 | |
| **TBA 0500SQ, TBA 1000SQ (See drawing on page: 5-72)** | | | | | |
| 010 | 2869538-0000 | | 1 | FLAP | |
| 020 | 2871044-0000 | | 1 | SLIDE | |
| 090 | 312115-0291 | | 1 | SCREW ISO4762 M4X12 A4 80 | |
| 150 | 312318-0327 | | 2 | SCREW ISO4029 M5X12 A4 | |
| **TPA 1000SQ, TPA 0750SQ (See drawing on page: 5-74)** | | | | | |
| 010 | 2658242-0000 | | 1 | FLAP | |
| 020 | 2658241-0000 | | 1 | SLIDE | |
| 110 | 312115-0291 | | 1 | SCREW ISO4762 M4X12 A4 80 | |
| 140 | 312605-0314 | | 2 | HEXAGON NUT, M6M M5 A280 | |
| 150 | 312605-0314 | | 2 | HEXAGON NUT, M6M M5 A280 | |
| **Common Parts** | | | | | |
| 030 | 2526563-0000 | | 1 | HANDLE | |
| 040 | 2526567-0000 | | 1 | CYLINDER | |
| 100 | 90459-0969 | | 1 | COMP. SPRING A D22430, 1,6X11,6X58,5 | |
| 120 | 315105-0165 | | 1 | WASHER BRB 8,4X16 RFR | |
| 130 | 312155-0327 | | 2 | SCREW DIN 7991 MF6S M5X12 A4 70 | |

| Pos | Part No | UN | Qty | Description | Page No |
|---|---|---|---|---|---|

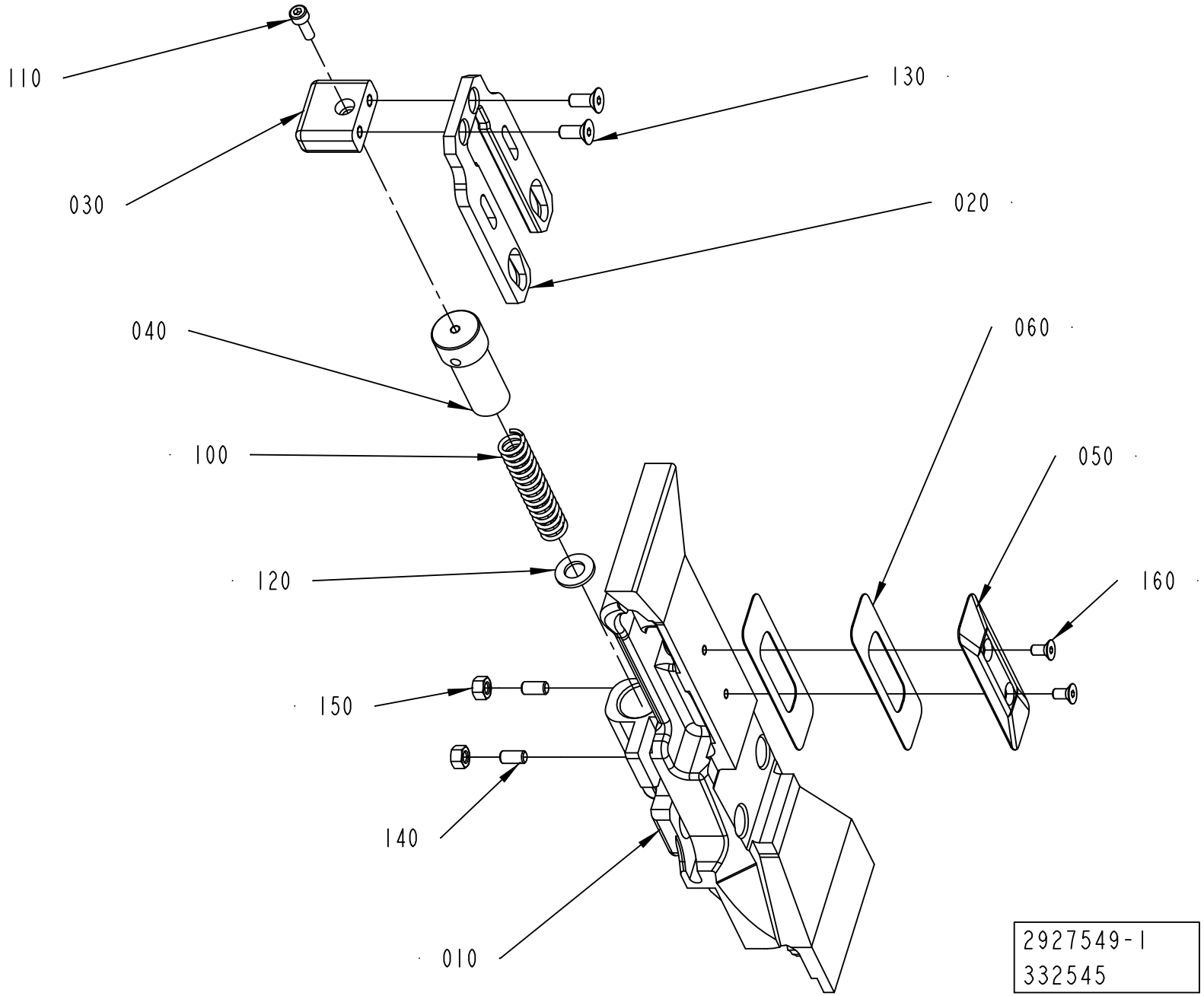
110
130
030
020
040
060
100
050
120
160
150
140
010
2927549-1
332545

ECM: 367718 - 20081003
Group number: 2927549-0100
Assembly Drawing: 2927549-1_1_AA

| Pos | Part No | UN | Qty | Description | Page No |
|---|---|---|---|---|---|
| **TPA 1000SQ, TPA 0750SQ** | | | | | |
| 010 | 2658238-0000 | | 1 | FLAP | |
| 020 | 2658241-0000 | | 1 | SLIDE | |
| 050 | 2960404-0000 | | 1 | VOLUME BULGE | |
| 060 | 2960405-0000 | | 2 | SHIM | |
| 160 | 312155-0287 | | 2 | SCREW DIN 7991 MF6S M4X8 A4 70 | |
| **Common Parts** | | | | | |
| 030 | 2526563-0000 | | 1 | HANDLE | |
| 040 | 2526567-0000 | | 1 | CYLINDER | |
| 100 | 90459-0969 | | 1 | COMP. SPRING A D22430, 1,6X11,6X58,5 | |
| 110 | 312115-0291 | | 1 | SCREW ISO4762 M4X12 A4 80 | |
| 120 | 315105-0165 | | 1 | WASHER BRB 8,4X16 RFR | |
| 130 | 312155-0327 | | 2 | SCREW DIN 7991 MF6S M5X12 A4 70 | |
| 140 | 312318-0325 | | 2 | SCREW ISO4029 M5X10 A4 | |
| 150 | 312605-0314 | | 2 | HEXAGON NUT, M6M M5 A280 | |

| Pos | Part No | UN | Qty | Description | Page No |
|---|---|---|---|---|---|

# PULL-DOWN DEVICE



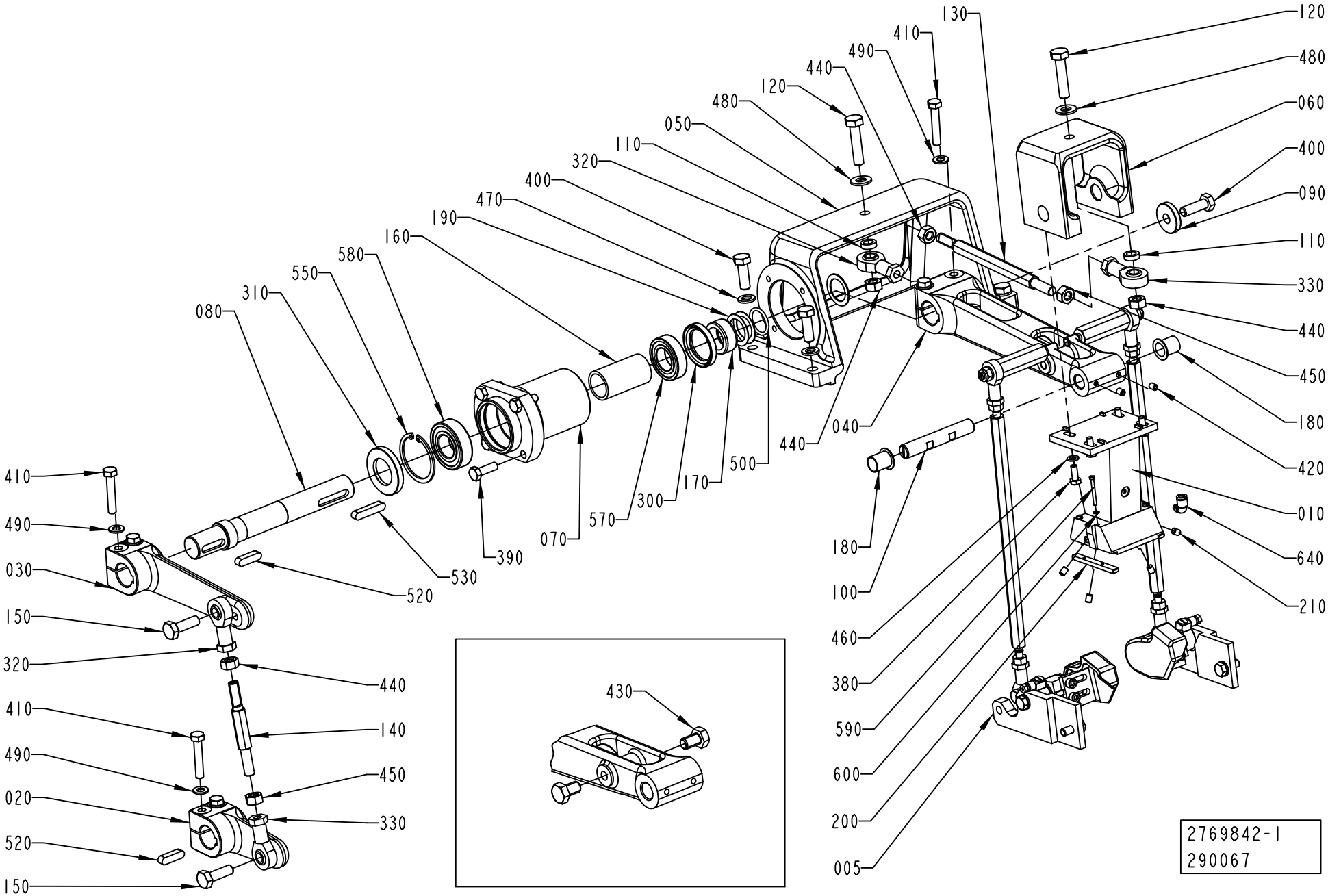

ECM: 367693 - 20081003
Group number: 2769842-0100
Assembly Drawing: 2769842-1_1_AA

This list covers pages from 5-78 to 5-81

| Pos | Part No | UN | Qty | Description | Page No |
|---|---|---|---|---|---|
| **TBA 0500B QC, TBA 1000B QC** | | | | | |
| 010 | 2895566-0000 | | 1 | BLOCK | |
| 200 | 2895567-0000 | | 2 | BAR | |
| 430 | 312105-0489 | | 2 | SCREW M6S ISO 4017 M10X16 A480 | |
| 590 | 312125-0234 | | 4 | SCREW ISO 1207 M3X30 A4 | |
| 600 | 315105-0124 | | 4 | WASHER BRB 3,2X6 RFR | |
| **TBA 1000B STDA7** | | | | | |
| 005 | 1348056-0300 | | 1 | FOLDING PART ..... | **5-83, 5-85** |
| 010 | 2895566-0000 | | 1 | BLOCK | |
| 200 | 2895567-0000 | | 2 | BAR | |
| 590 | 312125-0234 | | 4 | SCREW ISO 1207 M3X30 A4 | |
| 600 | 315105-0124 | | 4 | WASHER BRB 3,2X6 RFR | |
| **TBA 1000S NOMOLDEDCAP** | | | | | |
| 010 | 2818556-0000 | | 1 | BLOCK | |
| 200 | 2858421-0000 | | 2 | BAR | |
| 430 | 312105-0489 | | 2 | SCREW M6S ISO 4017 M10X16 A480 | |
| 590 | 312125-0234 | | 4 | SCREW ISO 1207 M3X30 A4 | |
| 600 | 315105-0124 | | 4 | WASHER BRB 3,2X6 RFR | |
| **TBA 1000S STDA7** | | | | | |
| 005 | 1348056-0300 | | 1 | FOLDING PART ..... | **5-83, 5-85** |
| 010 | 2818556-0000 | | 1 | BLOCK | |
| 200 | 2858421-0000 | | 2 | BAR | |
| 590 | 312125-0234 | | 4 | SCREW ISO 1207 M3X30 A4 | |
| 600 | 315105-0124 | | 4 | WASHER BRB 3,2X6 RFR | |
| **TBA 1000SQ, TBA 0500SQ QC** | | | | | |
| 005 | 2863123-0100 | | 1 | FOLDING PART ..... | **5-87** |
| 010 | 2769843-0000 | | 1 | BLOCK | |
| 200 | 2844575-0000 | | 2 | BAR | |
| 590 | 312125-0234 | | 4 | SCREW ISO 1207 M3X30 A4 | |
| 600 | 315105-0124 | | 4 | WASHER BRB 3,2X6 RFR | |
| **TBA 1500S** | | | | | |
| 010 | 2929028-0000 | | 1 | BLOCK | |
| 200 | 2929029-0000 | | 2 | BAR | |
| 430 | 312105-0489 | | 2 | SCREW M6S ISO 4017 M10X16 A480 | |
| 590 | 312115-0232 | | 4 | SCREW ISO4762 M3X25 A4 80 | |
| 600 | 315105-0124 | | 4 | WASHER BRB 3,2X6 RFR | |
| **TBA 2000S** | | | | | |
| 010 | 2922911-0000 | | 1 | BLOCK | |
| 430 | 312105-0489 | | 2 | SCREW M6S ISO 4017 M10X16 A480 | |
| **TPA 1000SQ QC, TPA 0750SQ QC** | | | | | |
| 005 | 2931388-0100 | | 1 | FOLDING DEVICE ..... | **5-89, 5-91** |
| 010 | 2911510-0000 | | 1 | BLOCK | |
| 200 | 2911509-0000 | | 2 | BAR | |
| 590 | 312115-0232 | | 4 | SCREW ISO4762 M3X25 A4 80 | |
| 600 | 315105-0124 | | 4 | WASHER BRB 3,2X6 RFR | |
| **Common Parts** | | | | | |
| 020 | 1144472-0000 | | 1 | LEVER | |
| 030 | 1144473-0000 | | 1 | LEVER | |
| 040 | 1499635-0000 | | 1 | LEVER | |
| 050 | 1144475-0000 | | 1 | BRACKET | |
| 060 | 1144476-0000 | | 1 | BRACKET | |
| 070 | 1144566-0000 | | 1 | FLANGE | |
| 080 | 1144678-0000 | | 1 | SHAFT | |
| 090 | 1144681-0000 | | 1 | WASHER | |
| 100 | 1144683-0000 | | 1 | AXLE PIN | |
| 110 | 1144684-0000 | | 2 | SPACER | |
| 120 | 1144685-0000 | | 2 | SCREW | |
| 130 | 1144686-0000 | | 1 | TIE ROD | |
| 140 | 1144687-0000 | | 1 | TIE ROD | |
| 150 | 1144688-0000 | | 2 | SCREW | |
| 160 | 1260824-0000 | | 1 | SPACER RING | |
| 170 | 1334328-0000 | | 1 | SPACER | |
| 180 | 1260944-0000 | | 2 | BUSHING | |
| 190 | 1334018-0000 | | 4 | SHIM | |
| 210 | 2769844-0000 | | 4 | GRUB SCREW | |
| 300 | 90091-0297 | | 1 | RADIAL SEAL 35X47X7 MM DUST LIP | |
| 310 | 90091-0299 | | 1 | RADIAL SEAL 30X52X7 MM DUST LIP | |
| 320 | 90115-0181 | | 2 | ROD END, ID=10 MM M10X1,5 | |
| 330 | 90115-0182 | | 2 | ROD END, ID=10 MM M10X1,5LH | |
| 380 | 312105-0368 | | 4 | SCREW M6S ISO 4017 M6X16 A480 | |
| 390 | 312105-0453 | | 4 | SCREW M6S ISO 4017 M8X25 A480 | |
| 400 | 312105-0495 | | 5 | SCREW M6S ISO 4017 M10X30 A480 | |
| 410 | 312109-0460 | | 6 | SCREW M6S ISO 4017 M8X45 A480 | |
| 420 | 312318-0362 | | 2 | SCREW ISO4029 M6X8 A4 | |
| 440 | 312605-0320 | | 4 | HEXAGON NUT, M6M M10 A280 | |
| 450 | 312902-0320 | | 2 | NUT HEX. LEFT THREAD, M10 A280 | |
| 460 | 315105-0153 | | 4 | WASHER BRB 6,4X12 RFR | |
| 470 | 315105-0171 | | 4 | WASHER BRB 10X18 RFR | |
| 480 | 315105-0173 | | 2 | WASHER BRB 10,5X22 RFR | |
| 490 | 315105-0165 | | 6 | WASHER BRB 8,4X16 RFR | |
| 500 | 315202-0217 | | 1 | O-RING 24,2X3 MM | |
| 520 | 315705-0267 | | 1 | PARALLEL KEY W. ROUND ENDS 8X7X30 MM | |
| 530 | 315705-0270 | | 1 | PARALLEL KEY W. ROUND ENDS 8X7X40 MM | |
| 550 | 315753-0132 | | 1 | RETAINING RING FOR BORE DIN 472 52 A2 | |

Machine Type | Group Description | Used-In | Group Number | Page No

# PULL-DOWN DEVICE



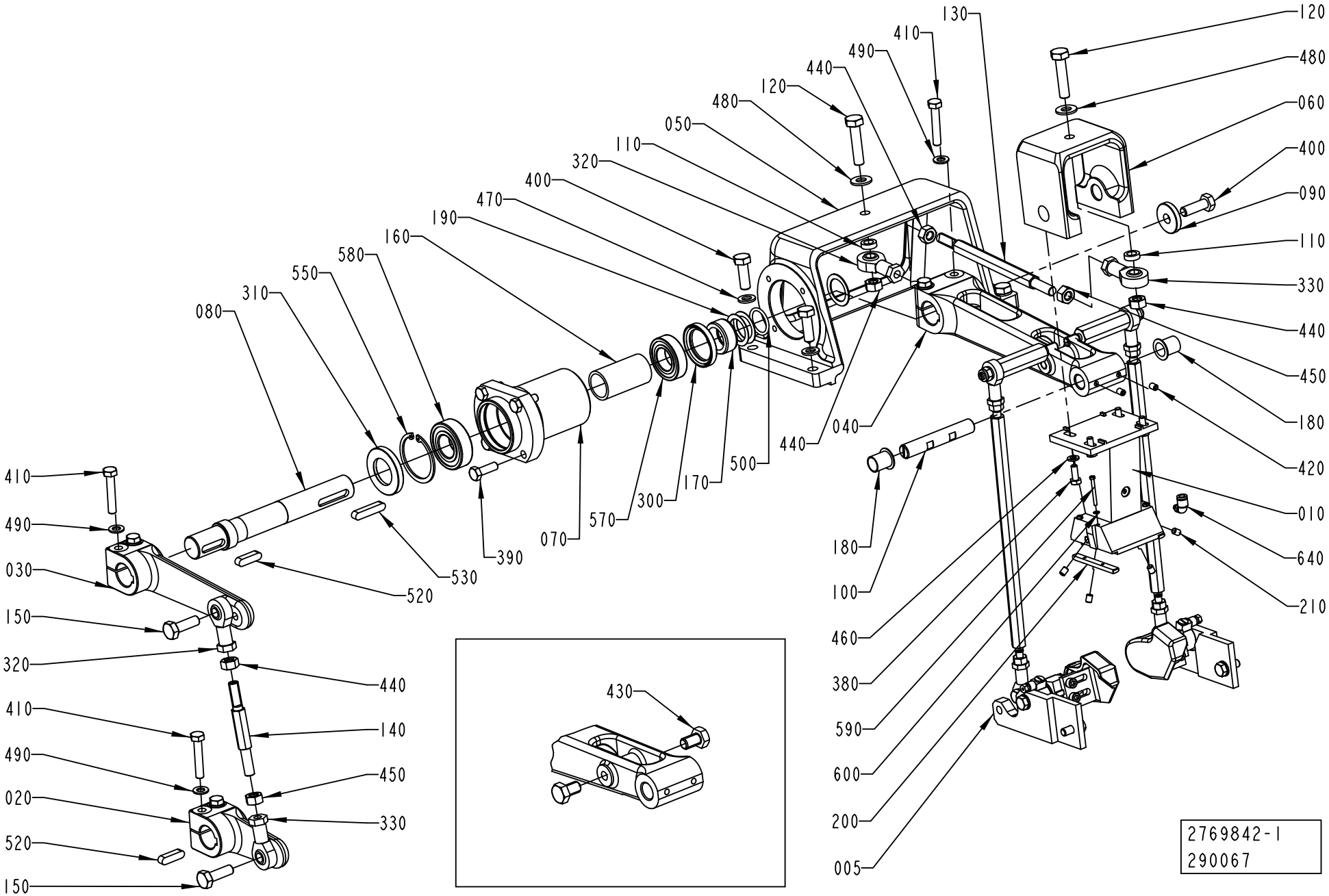

ECM: 367693 - 20081003
Group number: 2769842-0100
Assembly Drawing: 2769842-1_1_AA

This list covers pages from 5-78 to 5-81

| Pos | Part No | UN | Qty | Description | Page No |
|---|---|---|---|---|---|
| **Common Parts (Cont'd)** | | | | | |
| 570 | 321308-0205 | | 1 | BALL BEARING, 25X47X12MM | |
| 580 | 321313-0105 | | 1 | BALL BEARING, 25X52X15MM | |
| 640 | 90457-0922 | | 1 | ELBOW PIPE JOINT, EXT.THREAD, D=6MM M5 | |

| Pos | Part No | UN | Qty | Description | Page No |
|---|---|---|---|---|---|

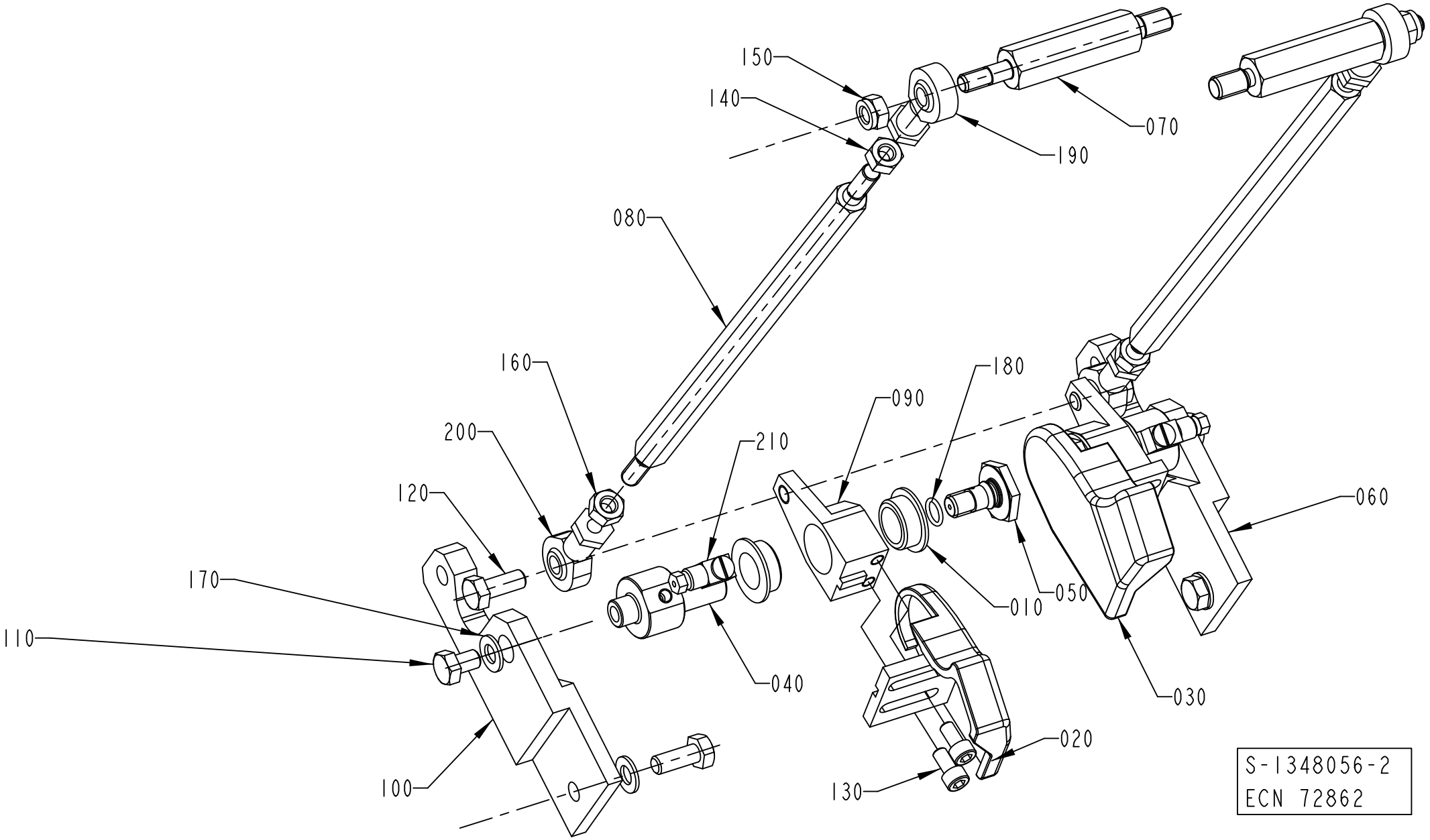
150
140
070
190
080
160
180
090
200
210
120
060
170
010
050
110
040
030
020
100
130
S-1348056-2
ECN 72862

ECM: 339647 - 20080215
Group number: 1348056-0300
Assembly Drawing: 1348056-2_1_AA

This list covers pages from 5-82 to 5-85

| Pos | Part No | UN | Qty | Description | Page No |
|---|---|---|---|---|---|
| **TBA 1000B STDA7 (See drawing on page: 5-82)** | | | | | |
| 020 | 1487922-0000 | | 1 | FOLDING DEVICE | |
| 030 | 1487923-0000 | | 1 | FOLDING DEVICE | |
| 060 | 1347600-0000 | | 1 | SUPPORT | |
| 070 | 1499765-0000 | | 2 | AXLE LINK | |
| 080 | 2609368-0000 | | 2 | TIE ROD | |
| 090 | 1350440-0000 | | 2 | LEVER | |
| 100 | 1350441-0000 | | 1 | SUPPORT | |
| **TBA 1000SQ, TBA 1000S STDA7, TBA 1000S LIGHTCAP (See drawing on page: 5-82)** | | | | | |
| 020 | 1487922-0000 | | 1 | FOLDING DEVICE | |
| 030 | 1487923-0000 | | 1 | FOLDING DEVICE | |
| 060 | 1347600-0000 | | 1 | SUPPORT | |
| 070 | 1499765-0000 | | 2 | AXLE LINK | |
| 080 | 1499103-0000 | | 2 | TIE ROD | |
| 090 | 1350440-0000 | | 2 | LEVER | |
| 100 | 1350441-0000 | | 1 | SUPPORT | |
| **TPA 1000SQ (See drawing on page: 5-82)** | | | | | |
| 020 | 1296180-0000 | | 1 | FOLDING DEVICE | |
| 030 | 1296181-0000 | | 1 | FOLDING DEVICE | |
| 060 | 1347600-0000 | | 1 | SUPPORT | |
| 070 | 1499765-0000 | | 2 | AXLE LINK | |
| 080 | 1519340-0000 | | 2 | TIE ROD | |
| 090 | 1350440-0000 | | 2 | LEVER | |
| 100 | 1350441-0000 | | 1 | SUPPORT | |
| **TPA 1000SQ SMILE (See drawing on page: 5-84)** | | | | | |
| 020 | 2529671-0000 | | 1 | FOLDING DEVICE | |
| 030 | 2529672-0000 | | 1 | FOLDING DEVICE | |
| 060 | 2553343-0000 | | 1 | SUPPORT | |
| 070 | 2553346-0000 | | 2 | AXLE LINK | |
| 080 | 2553345-0000 | | 2 | TIE ROD | |
| 090 | 2529676-0000 | | 1 | LEVER | |
| 100 | 2553344-0000 | | 1 | SUPPORT | |
| 220 | 2529675-0000 | | 1 | LEVER | |
| **Common Parts** | | | | | |
| 010 | 1282708-0000 | | 4 | BUSHING | |
| 040 | 1347495-0000 | | 2 | AXLE PIN | |
| 050 | 1347496-0000 | | 2 | SCREW | |
| 110 | 312105-0447 | | 2 | SCREW M6S ISO 4017 M8X12 A480 | |
| 120 | 312105-0451 | | 4 | SCREW M6S ISO 4017 M8X20 A480 | |
| 130 | 312115-0366 | | 4 | SCREW ISO4762 M6X12 A4 80 | |
| 140 | 312605-0318 | | 2 | HEXAGON NUT, M6M M8 A280 | |
| 150 | 312812-0318 | | 2 | HEXAGON NUT, NY-LOCK M8 A480 | |
| 160 | 312902-0318 | | 2 | NUT HEX. LEFT THREAD, M8 A280 | |
| 170 | 315105-0165 | | 4 | WASHER BRB 8,4X16 RFR | |
| 180 | 315202-0107 | | 2 | O-RING 9,1X1,6 MM | |
| 190 | 90115-0139 | | 2 | ROD END, ID=8 MM, M8X1,25 | |
| 200 | 90115-0180 | | 2 | ROD END, ID=8 MM, M8X1,25 LH | |
| 210 | 90134-0068 | | 2 | CONNECTION | |
| 230 | 2868548-0000 | | 1 | PIPE | |
| 240 | 2868547-0000 | | 1 | PIPE | |

| Machine Type | Group Description | Used-In | Group Number | Page No |
|---|---|---|---|---|

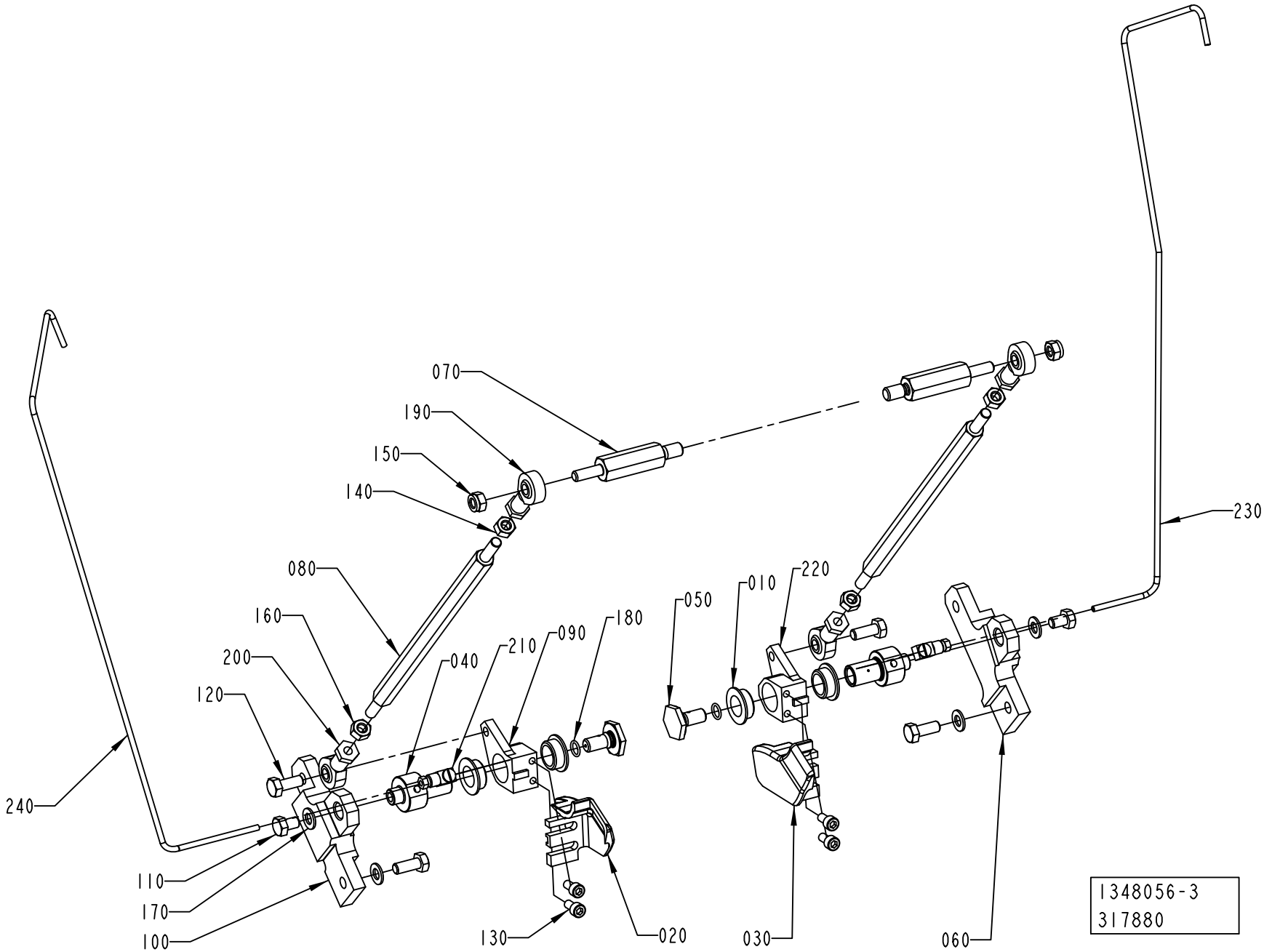
070
190
150
140
080
160
200
120
240
110
170
100
040
210
090
180
130
020
050
010
220
230
030
060
1348056-3
317880

ECM: 339647 - 20080215
Group number: 1348056-0300
Assembly Drawing: 1348056-3_1_AB

This list covers pages from 5-82 to 5-85

| Pos | Part No | UN | Qty | Description | Page No |
|---|---|---|---|---|---|
| **TBA 1000B STDA7 (See drawing on page: 5-82)** | | | | | |
| 020 | 1487922-0000 | | 1 | FOLDING DEVICE | |
| 030 | 1487923-0000 | | 1 | FOLDING DEVICE | |
| 060 | 1347600-0000 | | 1 | SUPPORT | |
| 070 | 1499765-0000 | | 2 | AXLE LINK | |
| 080 | 2609368-0000 | | 2 | TIE ROD | |
| 090 | 1350440-0000 | | 2 | LEVER | |
| 100 | 1350441-0000 | | 1 | SUPPORT | |
| **TBA 1000SQ, TBA 1000S STDA7, TBA 1000S LIGHTCAP (See drawing on page: 5-82)** | | | | | |
| 020 | 1487922-0000 | | 1 | FOLDING DEVICE | |
| 030 | 1487923-0000 | | 1 | FOLDING DEVICE | |
| 060 | 1347600-0000 | | 1 | SUPPORT | |
| 070 | 1499765-0000 | | 2 | AXLE LINK | |
| 080 | 1499103-0000 | | 2 | TIE ROD | |
| 090 | 1350440-0000 | | 2 | LEVER | |
| 100 | 1350441-0000 | | 1 | SUPPORT | |
| **TPA 1000SQ (See drawing on page: 5-82)** | | | | | |
| 020 | 1296180-0000 | | 1 | FOLDING DEVICE | |
| 030 | 1296181-0000 | | 1 | FOLDING DEVICE | |
| 060 | 1347600-0000 | | 1 | SUPPORT | |
| 070 | 1499765-0000 | | 2 | AXLE LINK | |
| 080 | 1519340-0000 | | 2 | TIE ROD | |
| 090 | 1350440-0000 | | 2 | LEVER | |
| 100 | 1350441-0000 | | 1 | SUPPORT | |
| **TPA 1000SQ SMILE (See drawing on page: 5-84)** | | | | | |
| 020 | 2529671-0000 | | 1 | FOLDING DEVICE | |
| 030 | 2529672-0000 | | 1 | FOLDING DEVICE | |
| 060 | 2553343-0000 | | 1 | SUPPORT | |
| 070 | 2553346-0000 | | 2 | AXLE LINK | |
| 080 | 2553345-0000 | | 2 | TIE ROD | |
| 090 | 2529676-0000 | | 1 | LEVER | |
| 100 | 2553344-0000 | | 1 | SUPPORT | |
| 220 | 2529675-0000 | | 1 | LEVER | |
| **Common Parts** | | | | | |
| 010 | 1282708-0000 | | 4 | BUSHING | |
| 040 | 1347495-0000 | | 2 | AXLE PIN | |
| 050 | 1347496-0000 | | 2 | SCREW | |
| 110 | 312105-0447 | | 2 | SCREW M6S ISO 4017 M8X12 A480 | |
| 120 | 312105-0451 | | 4 | SCREW M6S ISO 4017 M8X20 A480 | |
| 130 | 312115-0366 | | 4 | SCREW ISO4762 M6X12 A4 80 | |
| 140 | 312605-0318 | | 2 | HEXAGON NUT, M6M M8 A280 | |
| 150 | 312812-0318 | | 2 | HEXAGON NUT, NY-LOCK M8 A480 | |
| 160 | 312902-0318 | | 2 | NUT HEX. LEFT THREAD, M8 A280 | |
| 170 | 315105-0165 | | 4 | WASHER BRB 8,4X16 RFR | |
| 180 | 315202-0107 | | 2 | O-RING 9,1X1,6 MM | |
| 190 | 90115-0139 | | 2 | ROD END, ID=8 MM, M8X1,25 | |
| 200 | 90115-0180 | | 2 | ROD END, ID=8 MM, M8X1,25 LH | |
| 210 | 90134-0068 | | 2 | CONNECTION | |
| 230 | 2868548-0000 | | 1 | PIPE | |
| 240 | 2868547-0000 | | 1 | PIPE | |

| Machine Type | Group Description | Used-In | Group Number | Page No |
|---|---|---|---|---|

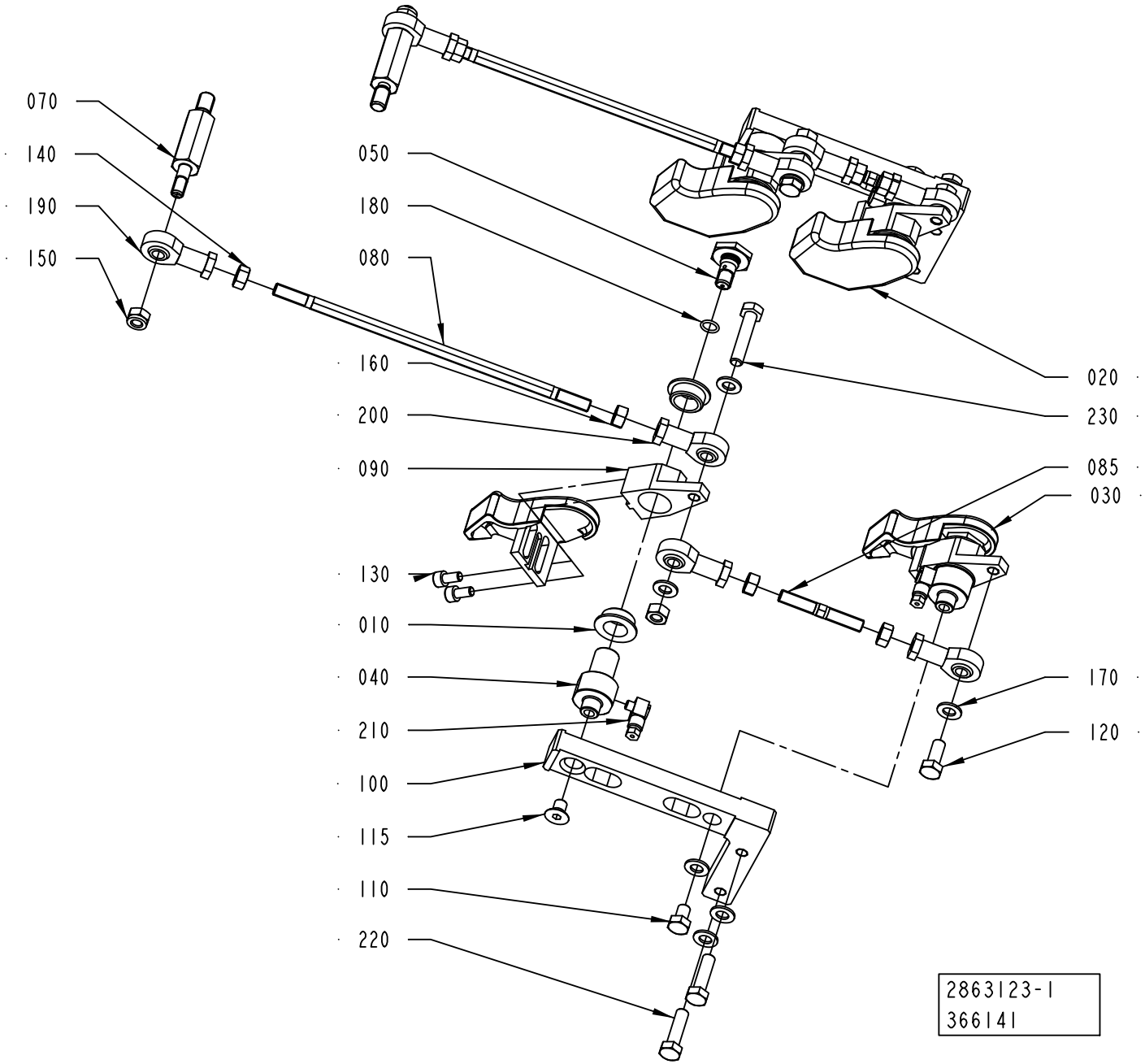
070
140
190
150
050
180
080
160
200
090
130
010
040
210
100
115
110
220
020
230
085
030
170
120
2863123-1
366141

ECM: 366141 - 20081003
Group number: 2863123-0100
Assembly Drawing: 2863123-1_1_AB

| Pos | Part No | UN | Qty | Description | Page No |
|---|---|---|---|---|---|
| **TBA 0500SQ QC, TBA 1000SQ QC** | | | | | |
| 010 | 1282708-0000 | | 8 | BUSHING | |
| 020 | 1487922-0000 | | 2 | FOLDING DEVICE | |
| 030 | 1487923-0000 | | 2 | FOLDING DEVICE | |
| 040 | 1347495-0000 | | 4 | AXLE PIN | |
| 050 | 1347496-0000 | | 4 | SCREW | |
| 070 | 2868213-0000 | | 2 | AXLE LINK | |
| 080 | 2868214-0000 | | 2 | TIE ROD | |
| 085 | 2868215-0000 | | 2 | TIE ROD | |
| 090 | 1350440-0000 | | 4 | LEVER | |
| 115 | 312155-0447 | | 2 | SCREW DIN 7991 MF6S M8X12 A4 70 | |
| 130 | 312115-0366 | | 8 | SCREW ISO4762 M6X12 A4 80 | |
| 140 | 312605-0318 | | 6 | HEXAGON NUT, M6M M8 A280 | |
| 160 | 312902-0318 | | 4 | NUT HEX. LEFT THREAD, M8 A280 | |
| 170 | 315105-0165 | | 12 | WASHER BRB 8,4X16 RFR | |
| 180 | 315202-0107 | | 4 | O-RING 9,1X1,6 MM | |
| 190 | 90115-0139 | | 4 | ROD END, ID=8 MM, M8X1,25 | |
| 200 | 90115-0180 | | 4 | ROD END, ID=8 MM, M8X1,25 LH | |
| 210 | 90134-0058 | | 4 | CONNECTION | |
| 230 | 312109-0459 | | 2 | SCREW M6S ISO 4017 M8X40 A480 | |
| **Common Parts** | | | | | |
| 100 | 2868216-0000 | | 2 | BRACKET | |
| 110 | 312105-0447 | | 2 | SCREW M6S ISO 4017 M8X12 A480 | |
| 120 | 312105-0451 | | 2 | SCREW M6S ISO 4017 M8X20 A480 | |
| 150 | 312812-0318 | | 2 | HEXAGON NUT, NY-LOCK M8 A480 | |
| 220 | 312105-0455 | | 4 | SCREW M6S ISO 4017 M8X30 A480 | |

| Pos | Part No | UN | Qty | Description | Page No |
|---|---|---|---|---|---|

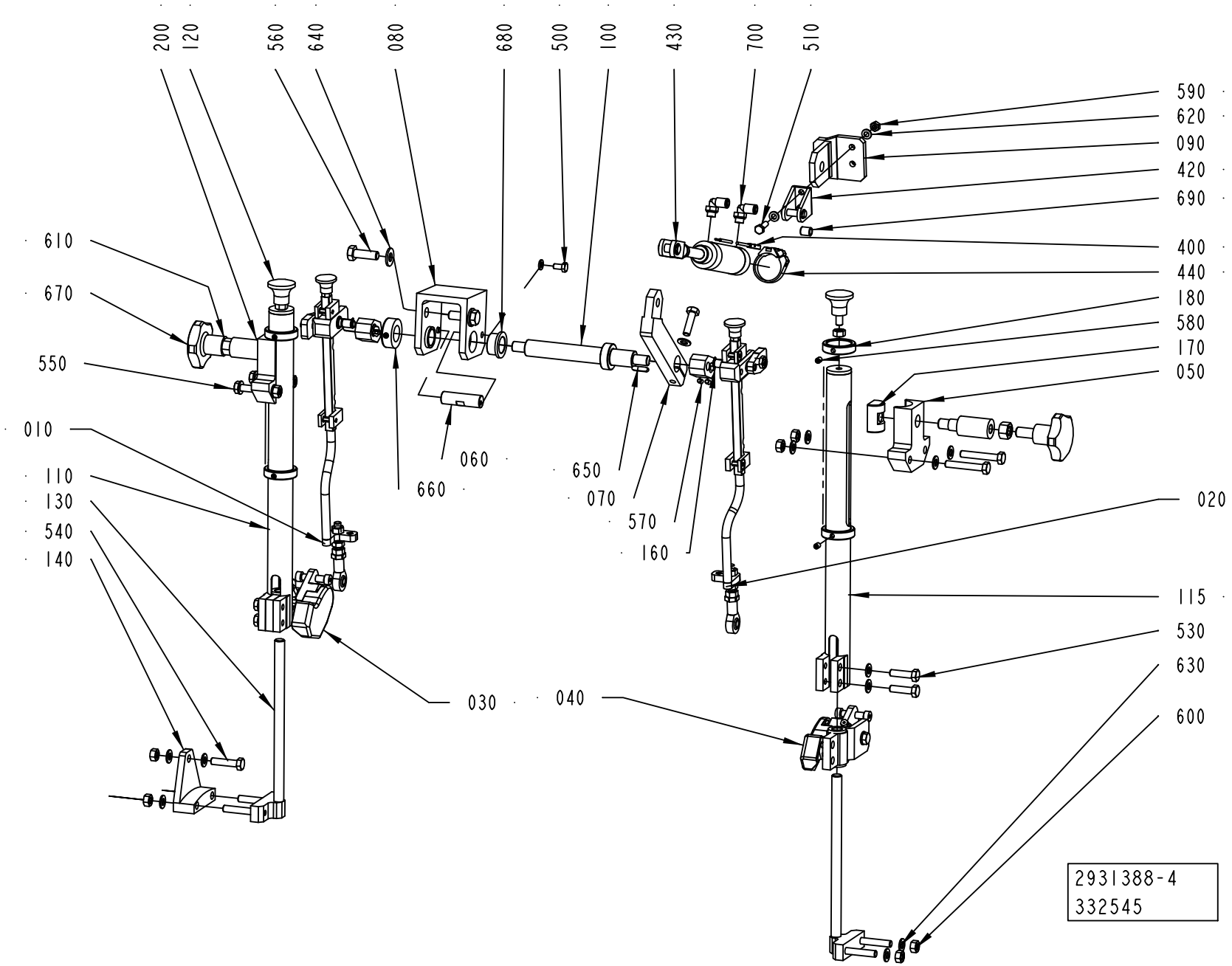
200
120
560
640
080
680
500
100
430
700
510
590
620
090
420
690
400
440
180
580
170
050
610
670
550
010
110
130
540
140
060
660
650
070
570
160
020
115
530
630
600
030
040
2931388-4
332545

ECM: 358057 - 20080620
Group number: 2931388-0100
Assembly Drawing: 2931388-4_1_AA

This list covers pages from 5-88 to 5-91

| Pos | Part No | UN | Qty | Description | Page No |
|---|---|---|---|---|---|
| **TBA 0500SQ, TBA 0500B, TBA 1000B, TBA 1000SQ (See drawing on page: 5-88)** | | | | | |
| 010 | 2619584-0200 | | 1 | STRUT | **5-93** |
| 020 | 2619585-0200 | | 1 | STRUT | **5-95** |
| 070 | 2588133-0000 | | 1 | BRACKET | |
| 090 | 2588136-0000 | | 1 | BRACKET | |
| 100 | 2826966-0000 | | 1 | SHAFT | |
| 110 | 2796887-0000 | | 1 | PIPE | |
| 115 | 2796888-0000 | | 1 | PIPE | |
| 140 | 2619592-0000 | | 1 | HOLDER | |
| 160 | 2826363-0000 | | 2 | ECCENTRIC | |
| 170 | 2767297-0000 | | 2 | LOCK NUT | |
| 180 | 2696851-0000 | | 4 | RETAINING RING | |
| 400 | 90600-3275 | | 1 | PROXIMITY SENSOR, SME-8M-DS-24V-K-5,0-OE | |
| 420 | 90239-0487 | | 1 | REAR, CLEVIS, MINI-ISO 20-25 | |
| 430 | 90459-1507 | | 1 | DOUBLE ACTING, ROUND, CYL 32-50 | |
| 440 | 90459-2780 | | 1 | SENSOR BRACKET SMBR-8-32 | |
| 510 | 312105-0370 | | 2 | SCREW M6S ISO 4017 M6X20 A480 | |
| 530 | 312105-0455 | | 5 | SCREW M6S ISO 4017 M8X30 A480 | |
| 540 | 312105-0457 | | 1 | SCREW M6S ISO 4014 M8X35 A480 | |
| 570 | 312318-0323 | | 4 | SCREW ISO4029 M5X8 A4 | |
| 580 | 312318-0362 | | 5 | SCREW ISO4029 M6X8 A4 | |
| 590 | 312605-0316 | | 2 | HEXAGON NUT, M6M M6 A280 | |
| 600 | 312605-0318 | | 11 | HEXAGON NUT, M6M M8 A280 | |
| 620 | 315105-0153 | | 6 | WASHER BRB 6,4X12 RFR | |
| 630 | 315105-0165 | | 19 | WASHER BRB 8,4X16 RFR | |
| 650 | 315705-0201 | | 2 | PARALLEL KEY W. ROUND ENDS 5X5X20 MM | |
| 690 | 321141-0104 | | 1 | BEARING BUSH W/O FLANGE, 8X10X12 MM | |
| 700 | 350002-0006 | | 2 | PUSH-IN L-FITTING QSL-F-G1/8-6 | |
| **TPA 1000SQ, TPA 0750SQ (See drawing on page: 5-90)** | | | | | |
| 010 | 2619584-0100 | | 1 | STRUT | **5-97, 5-99** |
| 020 | 2619584-0100 | | 1 | STRUT | **5-97, 5-99** |
| 100 | 2647103-0000 | | 1 | SHAFT | |
| 110 | 2918659-0000 | | 1 | PIPE | |
| 115 | 2918660-0000 | | 1 | 8IPE | |
| 170 | 2912511-0000 | | 2 | BLOCKING PIECE | |
| 530 | 312105-0455 | | 4 | SCREW M6S ISO 4017 M8X30 A480 | |
| 580 | 312318-0362 | | 1 | SCREW ISO4029 M6X8 A4 | |
| 600 | 312605-0318 | | 10 | HEXAGON NUT, M6M M8 A280 | |
| 620 | 315105-0153 | | 2 | WASHER BRB 6,4X12 RFR | |
| 630 | 315105-0165 | | 16 | WASHER BRB 8,4X16 RFR | |
| 710 | 312105-0325 | | 2 | SCREW M6S ISO 4017 M5X10 A480 | |
| 720 | 90005-0125 | | 2 | WASHER PLAIN ROUND 5,5/22, H=1,5 FZB | |

| Pos | Part No | UN | Qty | Description | Page No |
|---|---|---|---|---|---|
| **Common Parts** | | | | | |
| 030 | 2619597-0100 | | 1 | FLAP GUIDE | **5-101** |
| 040 | 2619598-0100 | | 1 | FLAP GUIDE | **5-103** |
| 050 | 2767295-0000 | | 2 | BLOCK | |
| 060 | 2588127-0000 | | 1 | AXLE PIN | |
| 080 | 2588134-0000 | | 1 | YOKE | |
| 120 | 318871-0105 | | 2 | KNOB CIRCULAR, EXT THREAD, NO. 8302-6150 | |
| 130 | 2663370-0000 | | 2 | SUPPORT | |
| 200 | 2767296-0000 | | 2 | SPACER SCREW | |
| 500 | 312105-0366 | | 2 | SCREW M6S ISO 4017 M6X12 A480 | |
| 550 | 312109-0461 | | 4 | SCREW M6S ISO 4017 M8X50 A480 | |
| 560 | 312105-0495 | | 2 | SCREW M6S ISO 4017 M10X30 A480 | |
| 610 | 312605-0322 | | 2 | HEXAGON NUT, M6M M12 A280 | |
| 640 | 315105-0173 | | 2 | WASHER BRB 10,5X22 RFR | |
| 660 | 315741-0216 | | 1 | RETAINING RING DIN 705 A4 20 | |
| 670 | 318856-0115 | | 2 | KNOB, EXTERNAL THREAD. NO. 8306-0278 | |
| 680 | 321111-0302 | | 2 | FLANGE BUSHING, 20X26X15 MM | |

Machine Type | Group Description | Used-In | Group Number | Page No

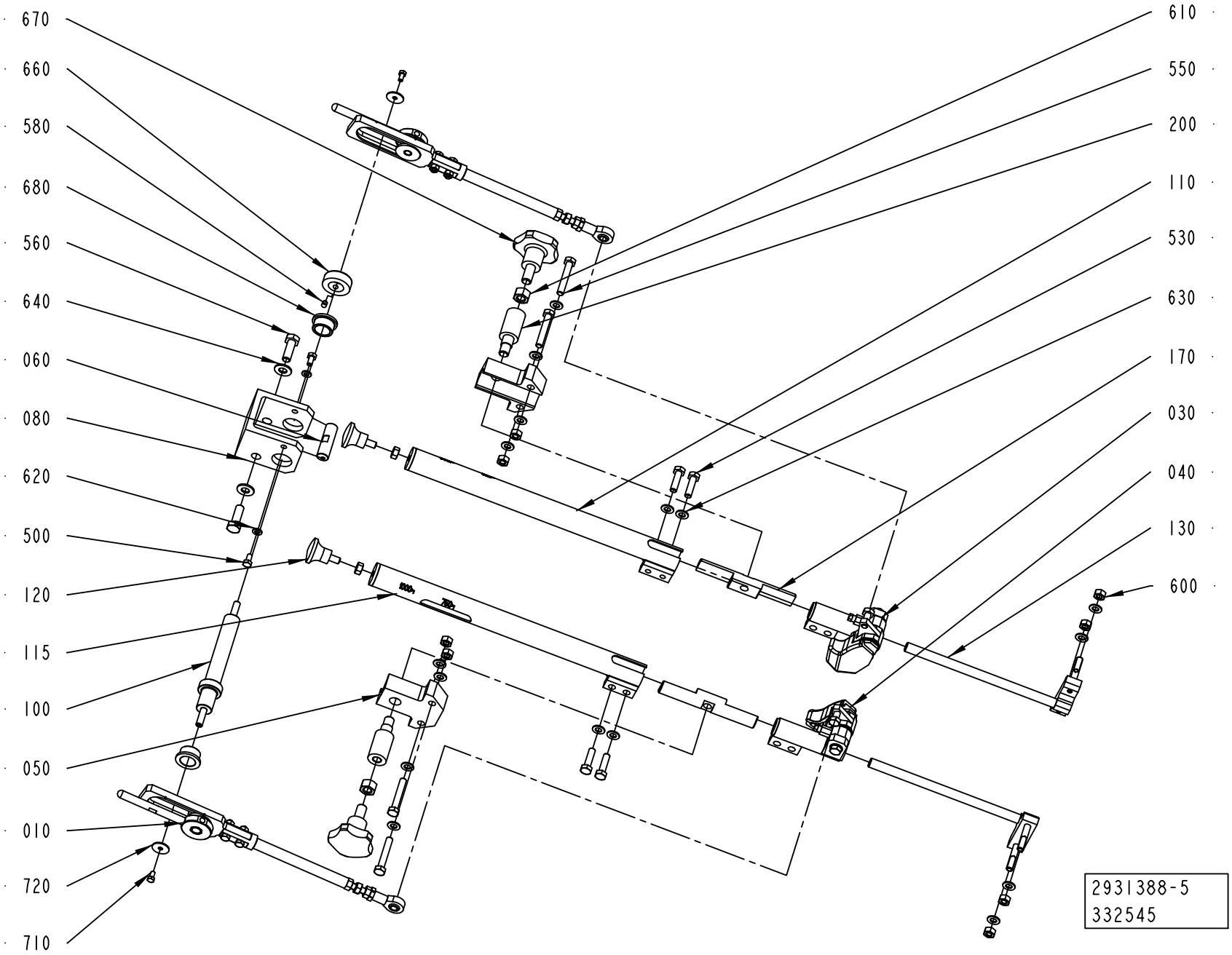
670
660
580
680
560
640
060
080
620
500
120
115
100
050
010
720
710
610
550
200
110
530
630
170
030
040
130
600
2931388-5
332545

ECM: 358057 - 20080620
Group number: 2931388-0100
Assembly Drawing: 2931388-5_1_AA

This list covers pages from 5-88 to 5-91

| Pos | Part No | UN | Qty | Description | Page No |
|---|---|---|---|---|---|
| **TBA 0500SQ, TBA 0500B, TBA 1000B, TBA 1000SQ (See drawing on page: 5-88)** | | | | | |
| 010 | 2619584-0200 | | 1 | STRUT | **5-93** |
| 020 | 2619585-0200 | | 1 | STRUT | **5-95** |
| 070 | 2588133-0000 | | 1 | BRACKET | |
| 090 | 2588136-0000 | | 1 | BRACKET | |
| 100 | 2826966-0000 | | 1 | SHAFT | |
| 110 | 2796887-0000 | | 1 | PIPE | |
| 115 | 2796888-0000 | | 1 | PIPE | |
| 140 | 2619592-0000 | | 1 | HOLDER | |
| 160 | 2826363-0000 | | 2 | ECCENTRIC | |
| 170 | 2767297-0000 | | 2 | LOCK NUT | |
| 180 | 2696851-0000 | | 4 | RETAINING RING | |
| 400 | 90600-3275 | | 1 | PROXIMITY SENSOR, SME-8M-DS-24V-K-5,0-OE | |
| 420 | 90239-0487 | | 1 | REAR, CLEVIS, MINI-ISO 20-25 | |
| 430 | 90459-1507 | | 1 | DOUBLE ACTING, ROUND, CYL 32-50 | |
| 440 | 90459-2780 | | 1 | SENSOR BRACKET SMBR-8-32 | |
| 510 | 312105-0370 | | 2 | SCREW M6S ISO 4017 M6X20 A480 | |
| 530 | 312105-0455 | | 5 | SCREW M6S ISO 4017 M8X30 A480 | |
| 540 | 312105-0457 | | 1 | SCREW M6S ISO 4014 M8X35 A480 | |
| 570 | 312318-0323 | | 4 | SCREW ISO4029 M5X8 A4 | |
| 580 | 312318-0362 | | 5 | SCREW ISO4029 M6X8 A4 | |
| 590 | 312605-0316 | | 2 | HEXAGON NUT, M6M M6 A280 | |
| 600 | 312605-0318 | | 11 | HEXAGON NUT, M6M M8 A280 | |
| 620 | 315105-0153 | | 6 | WASHER BRB 6,4X12 RFR | |
| 630 | 315105-0165 | | 19 | WASHER BRB 8,4X16 RFR | |
| 650 | 315705-0201 | | 2 | PARALLEL KEY W. ROUND ENDS 5X5X20 MM | |
| 690 | 321141-0104 | | 1 | BEARING BUSH W/O FLANGE, 8X10X12 MM | |
| 700 | 350002-0006 | | 2 | PUSH-IN L-FITTING QSL-F-G1/8-6 | |
| **TPA 1000SQ, TPA 0750SQ (See drawing on page: 5-90)** | | | | | |
| 010 | 2619584-0100 | | 1 | STRUT | **5-97, 5-99** |
| 020 | 2619584-0100 | | 1 | STRUT | **5-97, 5-99** |
| 100 | 2647103-0000 | | 1 | SHAFT | |
| 110 | 2918659-0000 | | 1 | PIPE | |
| 115 | 2918660-0000 | | 1 | 8IPE | |
| 170 | 2912511-0000 | | 2 | BLOCKING PIECE | |
| 530 | 312105-0455 | | 4 | SCREW M6S ISO 4017 M8X30 A480 | |
| 580 | 312318-0362 | | 1 | SCREW ISO4029 M6X8 A4 | |
| 600 | 312605-0318 | | 10 | HEXAGON NUT, M6M M8 A280 | |
| 620 | 315105-0153 | | 2 | WASHER BRB 6,4X12 RFR | |
| 630 | 315105-0165 | | 16 | WASHER BRB 8,4X16 RFR | |
| 710 | 312105-0325 | | 2 | SCREW M6S ISO 4017 M5X10 A480 | |
| 720 | 90005-0125 | | 2 | WASHER PLAIN ROUND 5,5/22, H=1,5 FZB | |

| Pos | Part No | UN | Qty | Description | Page No |
|---|---|---|---|---|---|
| **Common Parts** | | | | | |
| 030 | 2619597-0100 | | 1 | FLAP GUIDE | **5-101** |
| 040 | 2619598-0100 | | 1 | FLAP GUIDE | **5-103** |
| 050 | 2767295-0000 | | 2 | BLOCK | |
| 060 | 2588127-0000 | | 1 | AXLE PIN | |
| 080 | 2588134-0000 | | 1 | YOKE | |
| 120 | 318871-0105 | | 2 | KNOB CIRCULAR, EXT THREAD, NO. 8302-6150 | |
| 130 | 2663370-0000 | | 2 | SUPPORT | |
| 200 | 2767296-0000 | | 2 | SPACER SCREW | |
| 500 | 312105-0366 | | 2 | SCREW M6S ISO 4017 M6X12 A480 | |
| 550 | 312109-0461 | | 4 | SCREW M6S ISO 4017 M8X50 A480 | |
| 560 | 312105-0495 | | 2 | SCREW M6S ISO 4017 M10X30 A480 | |
| 610 | 312605-0322 | | 2 | HEXAGON NUT, M6M M12 A280 | |
| 640 | 315105-0173 | | 2 | WASHER BRB 10,5X22 RFR | |
| 660 | 315741-0216 | | 1 | RETAINING RING DIN 705 A4 20 | |
| 670 | 318856-0115 | | 2 | KNOB, EXTERNAL THREAD. NO. 8306-0278 | |
| 680 | 321111-0302 | | 2 | FLANGE BUSHING, 20X26X15 MM | |

Machine Type | Group Description | Used-In | Group Number | Page No

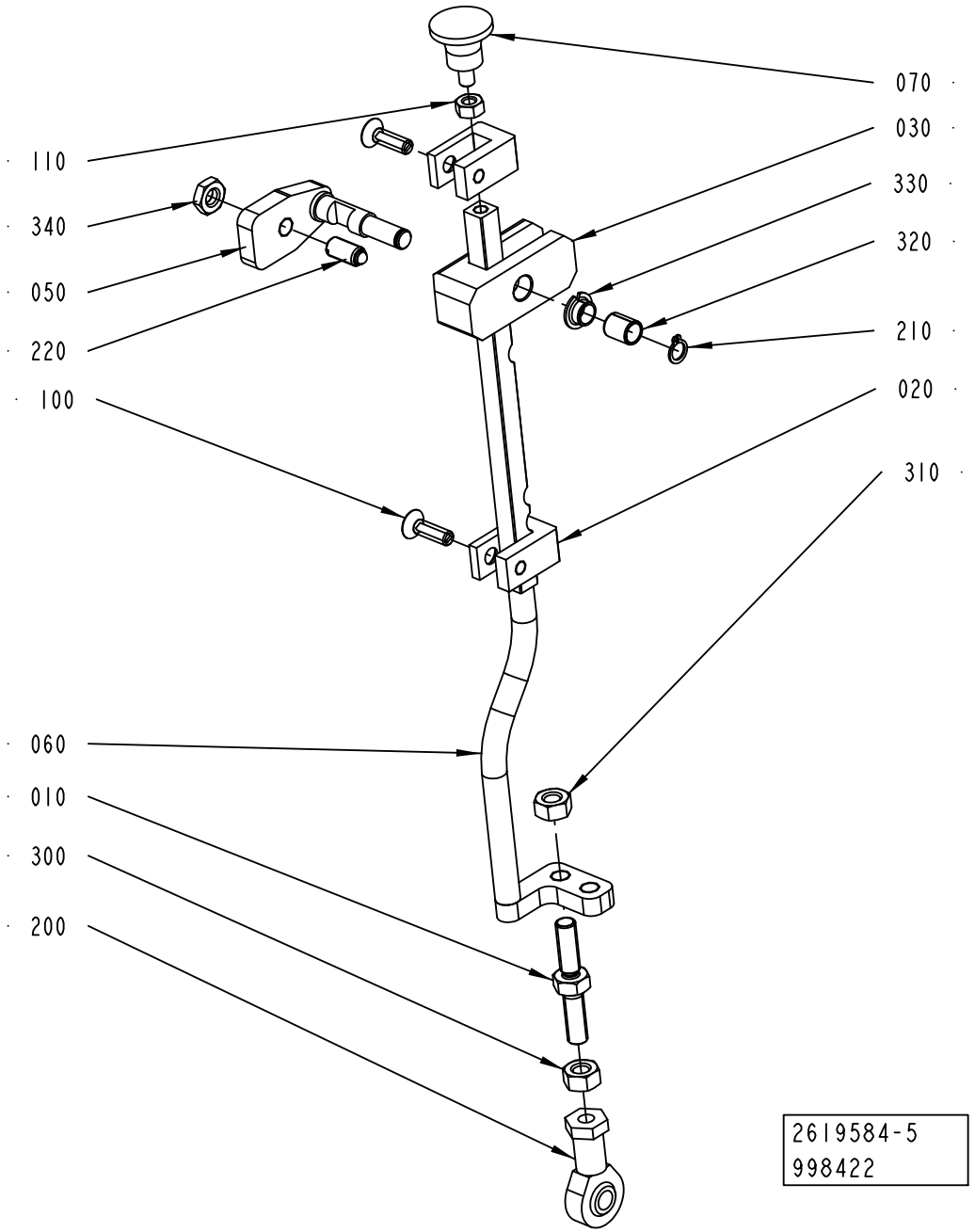
070
030
330
320
210
020
310
110
340
050
220
100
060
010
300
200
2619584-5
998422

ECM: 998422 - 20070301
Group number: 2619584-0200
Assembly Drawing: 2619584-5_1_AA

| Pos | Part No | UN | Qty | Description | Page No |
|---|---|---|---|---|---|
| - | | | | | |
| 010 | 2826364-0000 | | 1 | ROD | |
| 020 | 2826964-0000 | | 2 | LOCKING BLOCK | |
| 030 | 2826961-0000 | | 1 | LINK | |
| 050 | 2826962-0000 | | 1 | LOCKING BOLT | |
| 060 | 2826959-0000 | | 1 | ROD | |
| 070 | 318871-0104 | | 1 | KNOB CIRCULAR, EXT THREAD, NO. 8302-6118 | |
| 100 | 312155-0370 | | 2 | SCREW DIN 7991 MF6S M6X20 A4 70 | |
| 110 | 312605-0316 | | 1 | HEXAGON NUT, M6M M6 A280 | |
| 200 | 90115-0021 | | 1 | ROD END, ID=8 MM, M8X1,25 LH | |
| 210 | 90141-0015 | | 1 | RETAINING RING FOR SHAFT DIN 471 8 SS | |
| 220 | 90287-0112 | | 1 | SCREW SPRINGLOAD. SLOTTED HEAD M8X16 | |
| 300 | 312605-0318 | | 1 | HEXAGON NUT, M6M M8 A280 | |
| 310 | 312902-0318 | | 1 | NUT HEX. LEFT THREAD, M8 A280 | |
| 320 | 321141-0104 | | 1 | BEARING BUSH W/O FLANGE, 8X10X12 MM | |
| 330 | 321161-0098 | | 1 | FLANGE BUSHING, 8X10X5, 5 MM | |
| 340 | 312625-0318 | | 1 | HEXAGON THIN NUT, EN 24035 ML6M M8 A4 | |

| Pos | Part No | UN | Qty | Description | Page No |
|---|---|---|---|---|---|

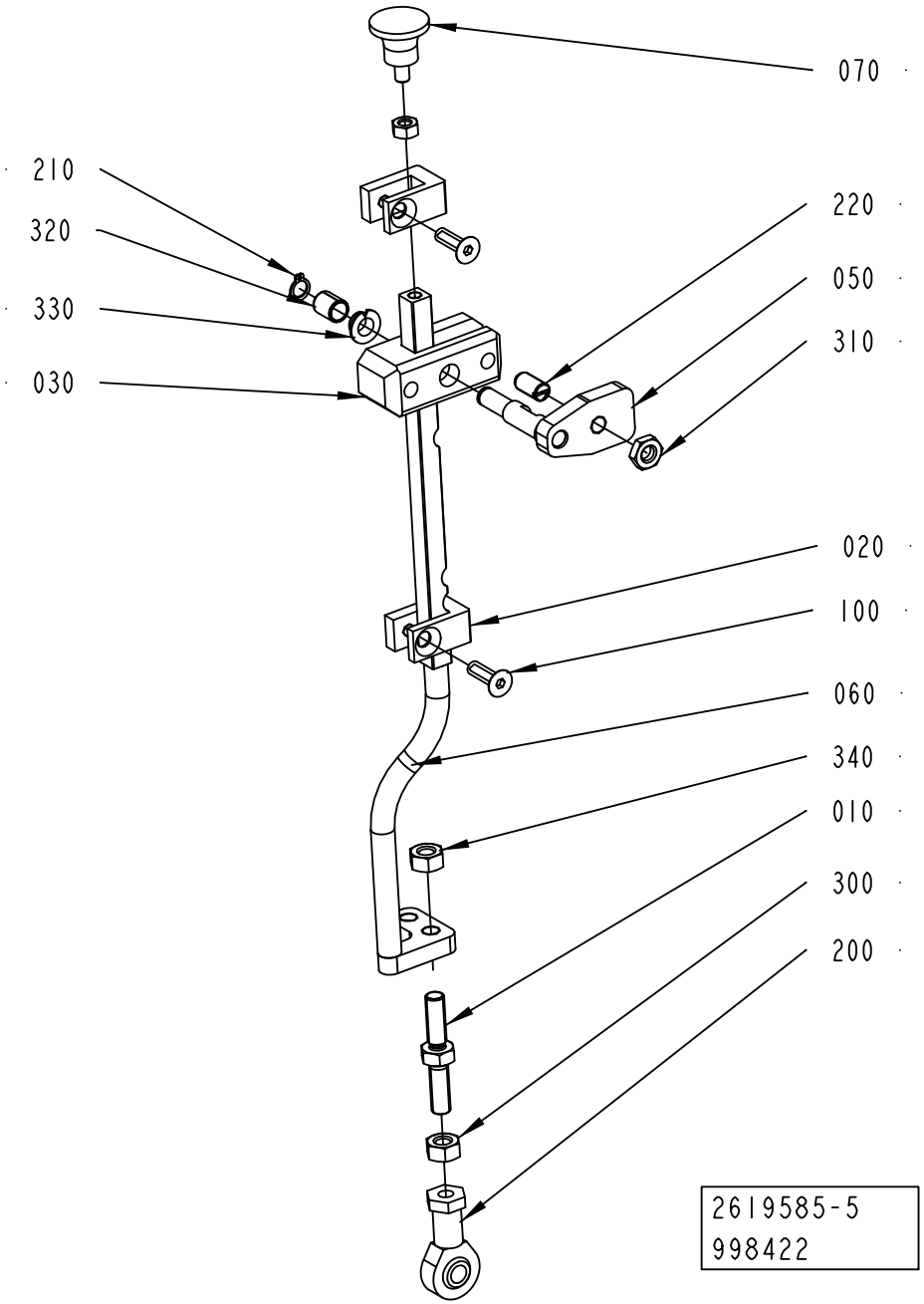
070
210
320
330
030
220
050
310
020
100
060
340
010
300
200
2619585-5
998422

ECM: 998422 - 20070301
Group number: 2619585-0200
Assembly Drawing: 2619585-5_1_AA

| Pos | Part No | UN | Qty | Description | Page No |
|---|---|---|---|---|---|
| - | | | | | |
| 010 | 2826364-0000 | | 1 | ROD | |
| 020 | 2826964-0000 | | 2 | LOCKING BLOCK | |
| 030 | 2826961-0000 | | 1 | LINK | |
| 050 | 2826962-0000 | | 1 | LOCKING BOLT | |
| 060 | 2826960-0000 | | 1 | ROD | |
| 070 | 318871-0104 | | 1 | KNOB CIRCULAR, EXT THREAD, NO. 8302-6118 | |
| 100 | 312155-0370 | | 2 | SCREW DIN 7991 MF6S M6X20 A4 70 | |
| 110 | 312605-0316 | | 1 | HEXAGON NUT, M6M M6 A280 | |
| 200 | 90115-0021 | | 1 | ROD END, ID=8 MM, M8X1,25 LH | |
| 210 | 90141-0015 | | 1 | RETAINING RING FOR SHAFT DIN 471 8 SS | |
| 220 | 90287-0112 | | 1 | SCREW SPRINGLOAD. SLOTTED HEAD M8X16 | |
| 300 | 312605-0318 | | 1 | HEXAGON NUT, M6M M8 A280 | |
| 310 | 312625-0318 | | 1 | HEXAGON THIN NUT, EN 24035 ML6M M8 A4 | |
| 320 | 321141-0104 | | 1 | BEARING BUSH W/O FLANGE, 8X10X12 MM | |
| 330 | 321161-0098 | | 1 | FLANGE BUSHING, 8X10X5, 5 MM | |
| 340 | 312902-0318 | | 1 | NUT HEX. LEFT THREAD, M8 A280 | |

| Pos | Part No | UN | Qty | Description | Page No |
|---|---|---|---|---|---|

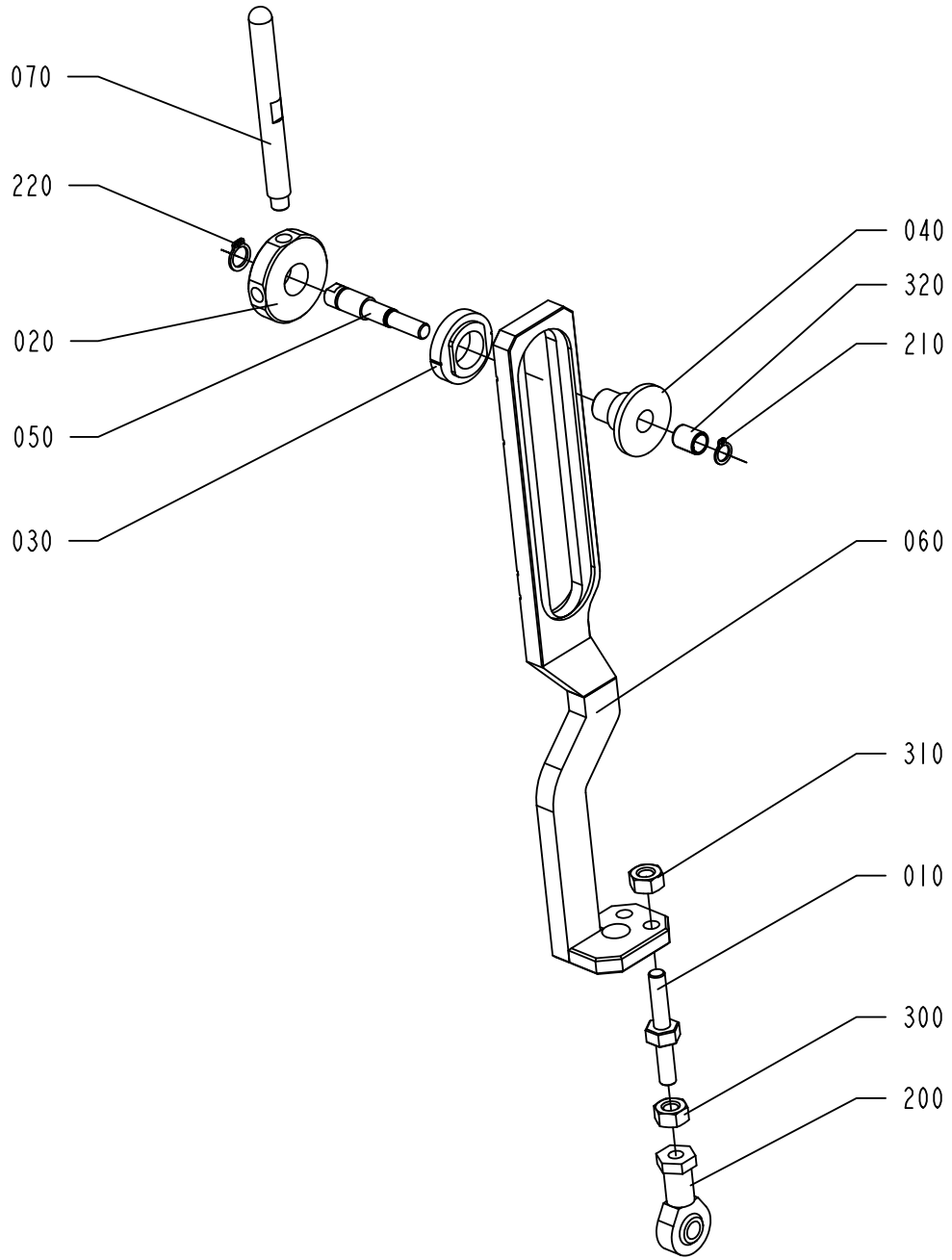
070
220
020
050
030
040
320
210
060
310
010
300
200
2619584-1
ECM 174515

ECM: 291437 - 20070205
Group number: 2619584-0100
Assembly Drawing: 2619584-1_1_AA

This list covers pages from 5-96 to 5-99

| Pos | Part No | UN | Qty | Description | Page No |
|---|---|---|---|---|---|
| **TBA 0500SQ, TBA 1000SQ (See drawing on page: 5-96)** | | | | | |
| 050 | 2619531-0000 | | 1 | SHAFT | |
| 060 | 2851929-0000 | | 1 | STRUT | |
| 200 | 90115-0020 | | 1 | ROD END, ID=8 MM, M8X1,25 | |
| 210 | 90141-0015 | | 1 | RETAINING RING FOR SHAFT DIN 471 8 SS | |
| 220 | 90141-0016 | | 1 | RETAINING RING FOR SHAFT DIN 471 10 SS | |
| **TPA 1000SQ, TPA 0750SQ (See drawing on page: 5-98)** | | | | | |
| 060 | 2647108-0000 | | 1 | STRUT | |
| 080 | 2647109-0000 | | 1 | SHAFT | |
| 200 | 90115-0021 | | 1 | ROD END, ID=8 MM, M8X1,25 LH | |
| 330 | 312105-0372 | | 2 | SCREW M6S ISO 4017 M6X25 A480 | |
| 340 | 312605-0316 | | 2 | HEXAGON NUT, M6M M6 A280 | |
| **Common Parts** | | | | | |
| 010 | 2598880-0000 | | 1 | SETTING SCREW | |
| 020 | 2619528-0000 | | 1 | LOCKING CIRCLIP | |
| 030 | 2619529-0000 | | 1 | SLEEVE | |
| 040 | 2619530-0000 | | 1 | SLEEVE | |
| 070 | 2619596-0000 | | 1 | HANDLE | |
| 300 | 312605-0318 | | 1 | HEXAGON NUT, M6M M8 A280 | |
| 310 | 312902-0318 | | 1 | NUT HEX. LEFT THREAD, M8 A280 | |
| 320 | 321141-0104 | | 1 | BEARING BUSH W/O FLANGE, 8X10X12 MM | |

| Pos | Part No | UN | Qty | Description | Page No |
|---|---|---|---|---|---|

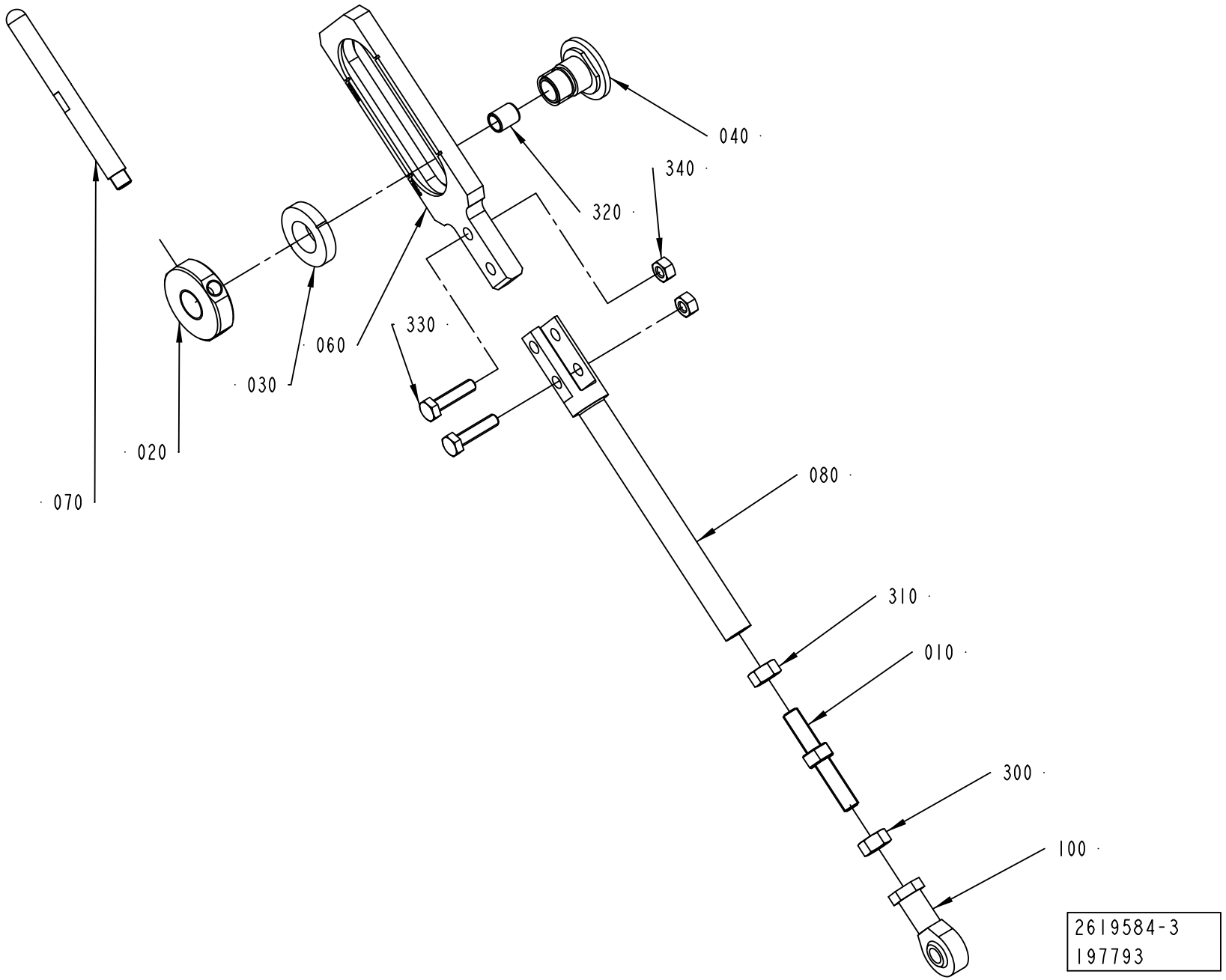
040
340
320
330
060
030
020
070
080
310
010
300
100
2619584-3
197793

ECM: 291437 - 20070205
Group number: 2619584-0100
Assembly Drawing: 2619584-3_1_AA

This list covers pages from 5-96 to 5-99

| Pos | Part No | UN | Qty | Description | Page No |
|---|---|---|---|---|---|
| **TBA 0500SQ, TBA 1000SQ (See drawing on page: 5-96)** | | | | | |
| 050 | 2619531-0000 | | 1 | SHAFT | |
| 060 | 2851929-0000 | | 1 | STRUT | |
| 200 | 90115-0020 | | 1 | ROD END, ID=8 MM, M8X1,25 | |
| 210 | 90141-0015 | | 1 | RETAINING RING FOR SHAFT DIN 471 8 SS | |
| 220 | 90141-0016 | | 1 | RETAINING RING FOR SHAFT DIN 471 10 SS | |
| **TPA 1000SQ, TPA 0750SQ (See drawing on page: 5-98)** | | | | | |
| 060 | 2647108-0000 | | 1 | STRUT | |
| 080 | 2647109-0000 | | 1 | SHAFT | |
| 200 | 90115-0021 | | 1 | ROD END, ID=8 MM, M8X1,25 LH | |
| 330 | 312105-0372 | | 2 | SCREW M6S ISO 4017 M6X25 A480 | |
| 340 | 312605-0316 | | 2 | HEXAGON NUT, M6M M6 A280 | |
| **Common Parts** | | | | | |
| 010 | 2598880-0000 | | 1 | SETTING SCREW | |
| 020 | 2619528-0000 | | 1 | LOCKING CIRCLIP | |
| 030 | 2619529-0000 | | 1 | SLEEVE | |
| 040 | 2619530-0000 | | 1 | SLEEVE | |
| 070 | 2619596-0000 | | 1 | HANDLE | |
| 300 | 312605-0318 | | 1 | HEXAGON NUT, M6M M8 A280 | |
| 310 | 312902-0318 | | 1 | NUT HEX. LEFT THREAD, M8 A280 | |
| 320 | 321141-0104 | | 1 | BEARING BUSH W/O FLANGE, 8X10X12 MM | |

| Pos | Part No | UN | Qty | Description | Page No |
|---|---|---|---|---|---|

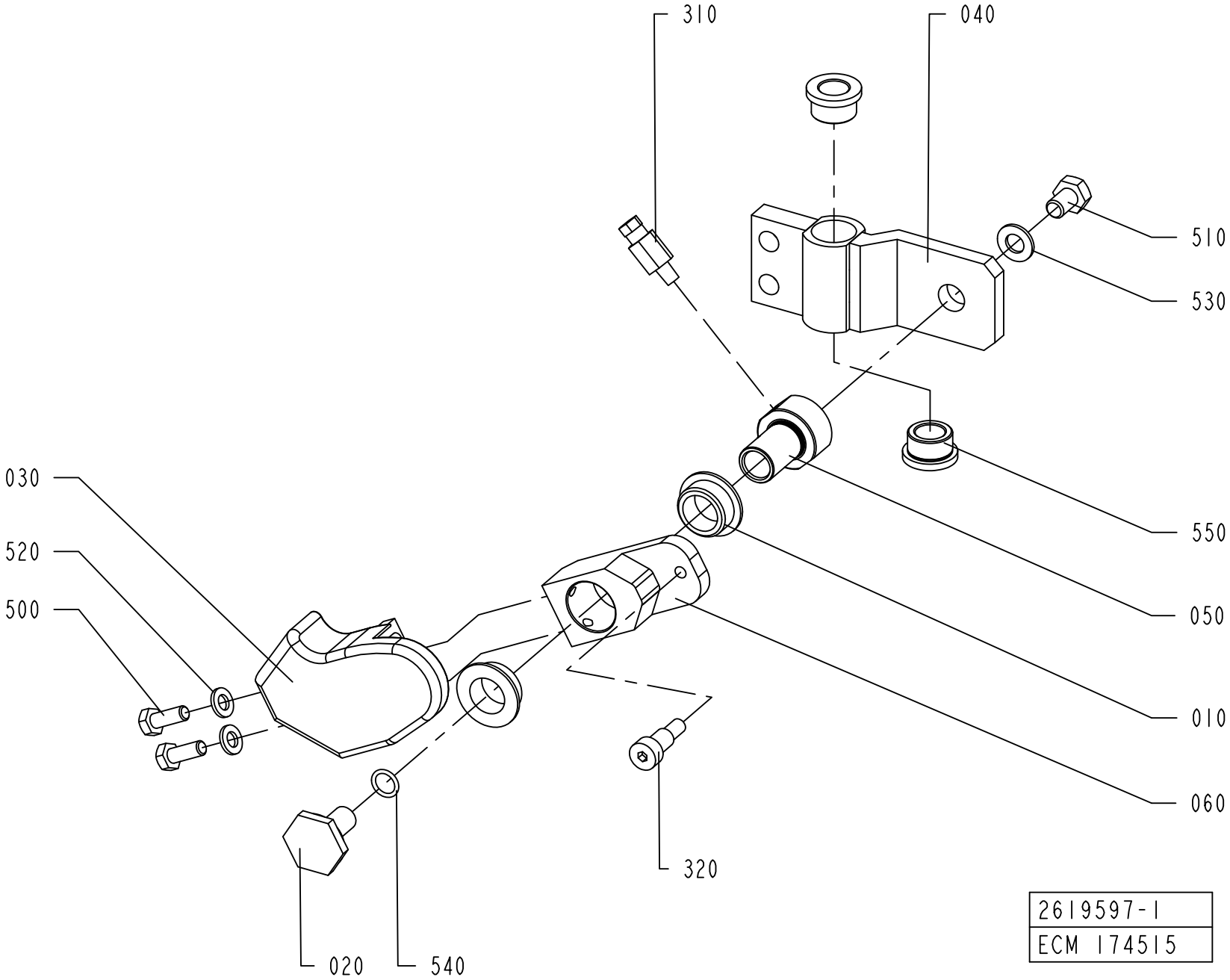
310
040
510
530
030
520
500
550
050
010
060
320
020
540
2619597-1
ECM 174515

ECM: 339659 - 20080215
Group number: 2619597-0100
Assembly Drawing: 2619597-1_1_AA

| Pos | Part No | UN | Qty | Description | Page No |
|---|---|---|---|---|---|
| **TBA 0500SQ, TBA 1000SQ** | | | | | |
| 030 | 1487922-0000 | | 1 | FOLDING DEVICE | |
| 040 | 2619591-0000 | | 1 | SLIDER | |
| 050 | 2598890-0000 | | 1 | AXLE PIN | |
| 060 | 1350440-0000 | | 1 | LEVER | |
| 310 | 90134-0065 | | 1 | CONNECTION M6 TUBE 2,5 MM | |
| 320 | 312115-0451 | | 1 | SCREW ISO4762 M8X20 A4 80 | |
| 510 | 312105-0447 | | 1 | SCREW M6S ISO 4017 M8X12 A480 | |
| **TPA 1000SQ, TPA 0750SQ** | | | | | |
| 030 | 2529671-0000 | | 1 | FOLDING DEVICE | |
| 040 | 2647107-0000 | | 1 | SLIDER | |
| 050 | 2647105-0000 | | 1 | AXLE PIN | |
| 060 | 2647104-0000 | | 1 | LEVER | |
| 310 | 90134-0058 | | 1 | CONNECTION | |
| 320 | 312115-0451 | | 1 | SCREW ISO4762 M8X20 A4 80 | |
| 510 | 312105-0447 | | 1 | SCREW M6S ISO 4017 M8X12 A480 | |
| **Common Parts** | | | | | |
| 010 | 1282708-0000 | | 2 | BUSHING | |
| 020 | 1347496-0000 | | 1 | SCREW | |
| 500 | 312115-0366 | | 2 | SCREW ISO4762 M6X12 A4 80 | |
| 520 | 315101-0153 | | 2 | WASHER PLAIN, BRB, 6,4/12 H=1,5 | |
| 530 | 315105-0165 | | 1 | WASHER BRB 8,4X16 RFR | |
| 540 | 315202-0107 | | 1 | O-RING 9,1X1,6 MM | |
| 550 | 321101-0173 | | 2 | FLANGE BUSHING, 12X18X12 MM | |

| Pos | Part No | UN | Qty | Description | Page No |
|---|---|---|---|---|---|

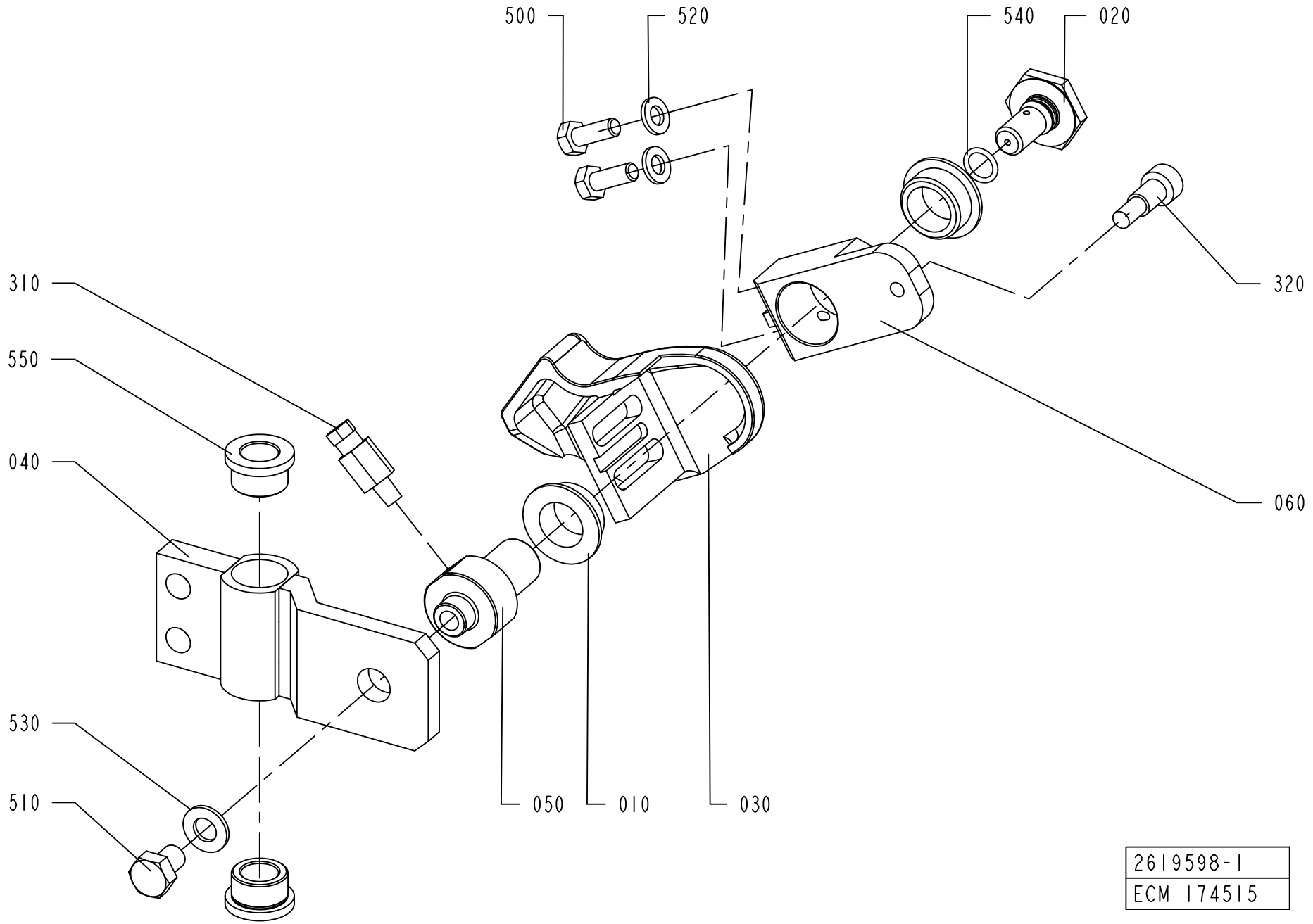
500
520
540
020
320
310
550
040
060
530
510
050
010
030
2619598-1
ECM 174515

ECM: 339660 - 20080215
Group number: 2619598-0100
Assembly Drawing: 2619598-1_1_AA

| Pos | Part No | UN | Qty | Description | Page No |
|---|---|---|---|---|---|
| **TBA 0500SQ, TBA 1000SQ** | | | | | |
| 030 | 1487923-0000 | | 1 | FOLDING DEVICE | |
| 040 | 2619591-0000 | | 1 | SLIDER | |
| 050 | 2598890-0000 | | 1 | AXLE PIN | |
| 060 | 1350440-0000 | | 1 | LEVER | |
| 310 | 90134-0065 | | 1 | CONNECTION M6 TUBE 2,5 MM | |
| 320 | 312115-0451 | | 1 | SCREW ISO4762 M8X20 A4 80 | |
| 510 | 312105-0447 | | 1 | SCREW M6S ISO 4017 M8X12 A480 | |
| **TPA 1000SQ, TPA 0750SQ** | | | | | |
| 030 | 2529672-0000 | | 1 | FOLDING DEVICE | |
| 040 | 2647106-0000 | | 1 | SLIDER | |
| 050 | 2647105-0000 | | 1 | AXLE PIN | |
| 060 | 2647104-0000 | | 1 | LEVER | |
| 310 | 90134-0058 | | 1 | CONNECTION | |
| 320 | 312115-0451 | | 1 | SCREW ISO4762 M8X20 A4 80 | |
| 510 | 312105-0447 | | 1 | SCREW M6S ISO 4017 M8X12 A480 | |
| **Common Parts** | | | | | |
| 010 | 1282708-0000 | | 2 | BUSHING | |
| 020 | 1347496-0000 | | 1 | SCREW | |
| 500 | 312115-0366 | | 2 | SCREW ISO4762 M6X12 A4 80 | |
| 520 | 315101-0153 | | 2 | WASHER PLAIN, BRB, 6,4/12 H=1,5 | |
| 530 | 315105-0165 | | 1 | WASHER BRB 8,4X16 RFR | |
| 540 | 315202-0107 | | 1 | O-RING 9,1X1,6 MM | |
| 550 | 321101-0173 | | 2 | FLANGE BUSHING, 12X18X12 MM | |

| Pos | Part No | UN | Qty | Description | Page No |
|---|---|---|---|---|---|

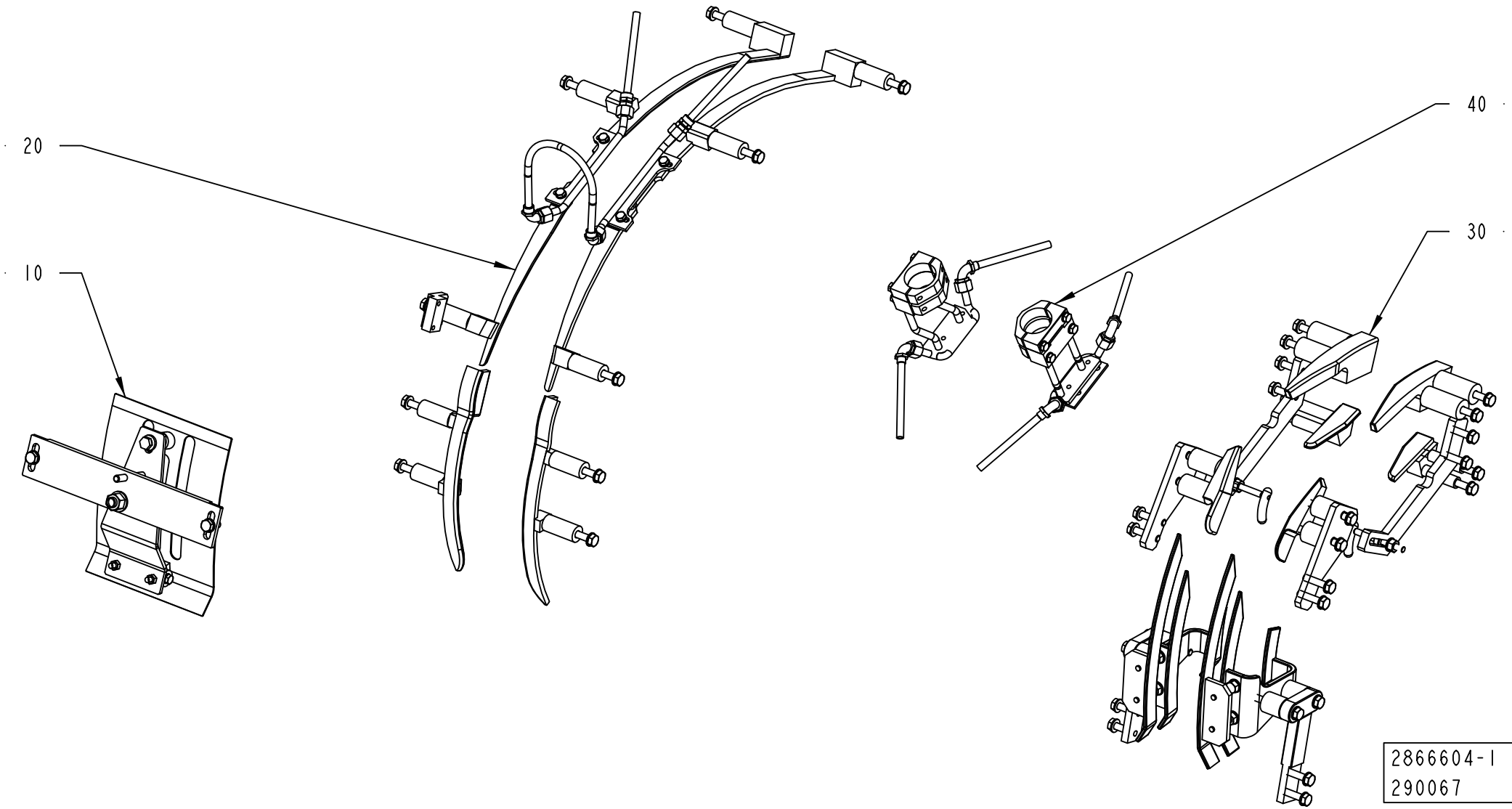
20
10
40
30
2866604-1
290067

ECM: 367698 - 20081003
Group number: 2866604-0100
Assembly Drawing: 2866604-1_1_AA

| Pos | Part No | UN | Qty | Description | Page No |
|---|---|---|---|---|---|
| **TBA 0500B QC, TBA 1000B QC** | | | | | |
| 030 | 2866605-0100 | | 1 | FLAP GUIDE | **5-107, 5-109, 5-111** |
| 040 | 2887887-0100 | | 1 | FOLDING PART | **5-113, 5-115** |
| **TBA 0500SQ QC, TBA 1000SQ QC** | | | | | |
| 030 | 2866605-0100 | | 1 | FLAP GUIDE | **5-107, 5-109, 5-111** |
| 040 | 2887887-0100 | | 1 | FOLDING PART | **5-113, 5-115** |
| **TBA 1000B STDA7** | | | | | |
| 030 | 2887081-0100 | | 1 | FLAP GUIDE | **5-117, 5-119, 5-121** |
| **TBA 1000S NOMOLDEDCAP** | | | | | |
| 030 | 2887081-0100 | | 1 | FLAP GUIDE | **5-117, 5-119, 5-121** |
| **TBA 1000S STDA7** | | | | | |
| 030 | 2887081-0100 | | 1 | FLAP GUIDE | **5-117, 5-119, 5-121** |
| **TBA 1000SQ NOQC** | | | | | |
| 030 | 2887081-0100 | | 1 | FLAP GUIDE | **5-117, 5-119, 5-121** |
| **TBA 1500S** | | | | | |
| 030 | 2887081-0100 | | 1 | FLAP GUIDE | **5-117, 5-119, 5-121** |
| **TBA 2000S** | | | | | |
| 030 | 2887081-0100 | | 1 | FLAP GUIDE | **5-117, 5-119, 5-121** |
| **TPA 1000SQ QC, TPA 0750SQ QC** | | | | | |
| 030 | 2866605-0100 | | 1 | FLAP GUIDE | **5-107, 5-109, 5-111** |
| 040 | 2887887-0100 | | 1 | FOLDING PART | **5-113, 5-115** |
| **Common Parts** | | | | | |
| 010 | 2861926-0100 | | 1 | TOP SECTION | **5-123, 5-125, 5-127** |
| 020 | 2816115-0100 | | 1 | TOP RAIL | **5-129** |

| Pos | Part No | UN | Qty | Description | Page No |
|---|---|---|---|---|---|

Machine Type | Group Description | Used-In | Group Number | Page No

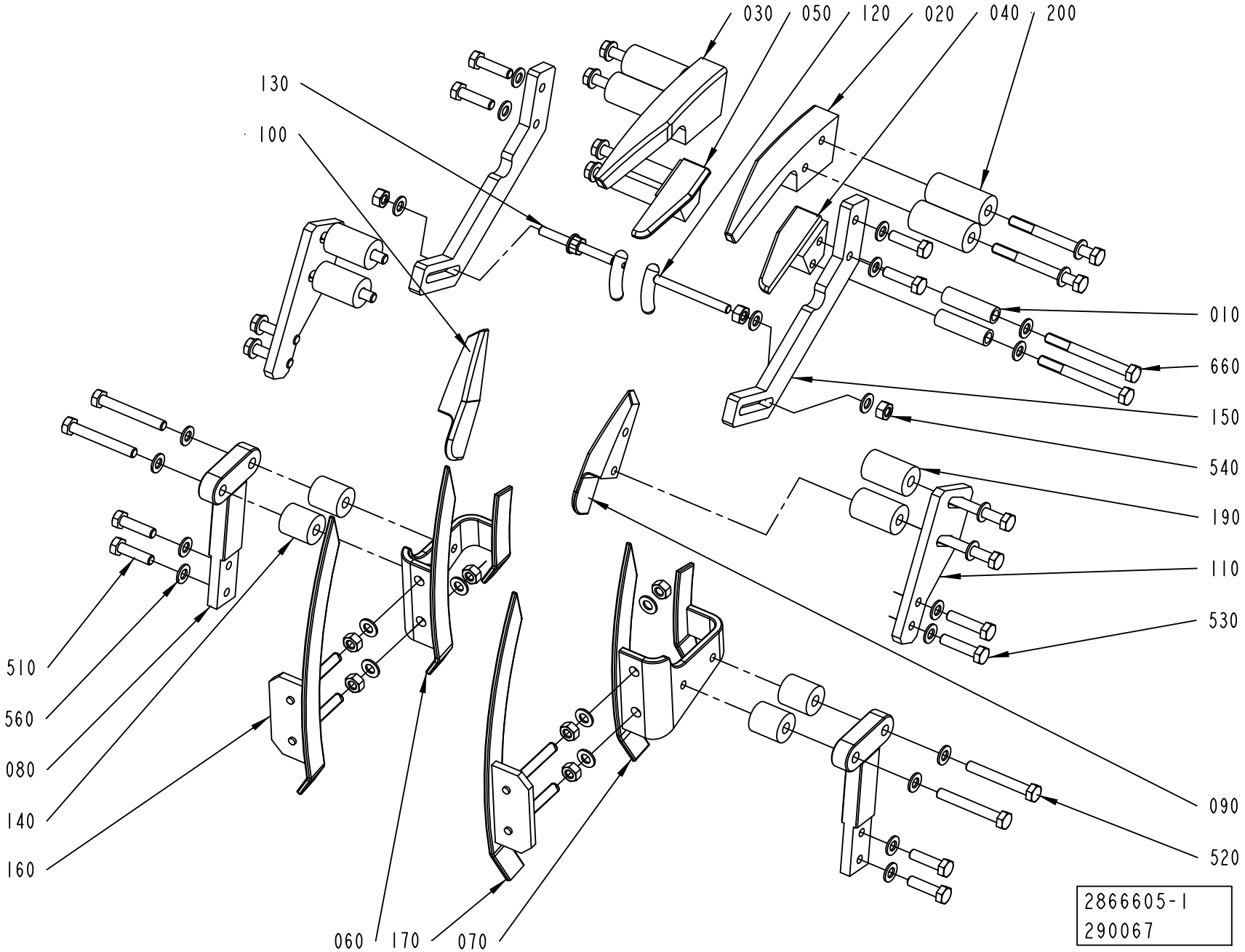
030
050
120
020
040
200
130
100
010
660
150
540
190
110
530
510
560
080
140
160
090
520
060
170
070
2866605-1
290067

ECM: 367699 - 20081003
Group number: 2866605-0100
Assembly Drawing: 2866605-1_1_AA

This list covers pages from 5-106 to 5-111

| Pos | Part No | UN | Qty | Description | Page No |
|---|---|---|---|---|---|
| **TBA 0500B, TBA 1000B (See drawing on page: 5-108)** | | | | | |
| 010 | 2901067-0000 | | 1 | GUIDE | |
| 020 | 2901066-0000 | | 1 | GUIDE | |
| 030 | 2901068-0000 | | 1 | GUIDE | |
| 040 | 2901069-0000 | | 1 | GUIDE | |
| 050 | 2603661-0000 | | 2 | BRACKET | |
| 060 | 2903584-0000 | | 1 | GUIDE | |
| 070 | 2903585-0000 | | 1 | GUIDE | |
| 090 | 2544342-0000 | | 2 | BRACKET | |
| 110 | 2603662-0000 | | 4 | BRACKET | |
| 120 | 2603548-0000 | | 1 | FOLDING PART | |
| 130 | 2603547-0000 | | 1 | FOLDING PART | |
| 140 | 2903586-0000 | | 4 | SPACER | |
| 200 | 312155-0366 | | 10 | SCREW DIN 7991 MF6S M6X12 A4 70 | |
| 210 | 315105-0153 | | 6 | WASHER BRB 6,4X12 RFR | |
| 220 | 312105-0368 | | 6 | SCREW M6S ISO 4017 M6X16 A480 | |
| 510 | 312105-0455 | | 4 | SCREW M6S ISO 4017 M8X30 A480 | |
| 520 | 312109-0457 | | 6 | SCREW M6S ISO 4017 M8X35 A480 | |
| 560 | 315105-0165 | | 12 | WASHER BRB 8,4X16 RFR | |
| **TBA 0500SQ, TBA 1000SQ (See drawing on page: 5-106)** | | | | | |
| 010 | 2906011-0000 | | 2 | HOLDER | |
| 020 | 2906006-0000 | | 1 | RAIL | |
| 030 | 2906007-0000 | | 1 | RAIL | |
| 040 | 2909030-0000 | | 1 | FOLDING BAR | |
| 050 | 2909506-0000 | | 1 | FOLDING BAR | |
| 060 | 2903583-0000 | | 1 | GUIDE | |
| 070 | 2903582-0000 | | 1 | GUIDE | |
| 080 | 2588218-0000 | | 2 | STRUT | |
| 090 | 2906008-0000 | | 1 | GUIDE | |
| 100 | 2906009-0000 | | 1 | GUIDE | |
| 110 | 2876334-0000 | | 2 | HOLDER | |
| 120 | 2909028-0000 | | 1 | GUIDE PIN | |
| 130 | 2909029-0000 | | 1 | GUIDE PIN | |
| 140 | 2619703-0000 | | 4 | SPACER | |
| 500 | 312105-0451 | | 2 | SCREW M6S ISO 4017 M8X20 A480 | |
| 510 | 312105-0455 | | 8 | SCREW M6S ISO 4017 M8X30 A480 | |
| 520 | 312105-0461 | | 4 | SCREW M6S ISO 4014 M8X50 A480 | |
| 530 | 312105-0453 | | 4 | SCREW M6S ISO 4017 M8X25 A480 | |
| 540 | 312105-0457 | | 4 | SCREW M6S ISO 4014 M8X35 A480 | |
| 550 | 312105-0455 | | 4 | SCREW M6S ISO 4017 M8X30 A480 | |
| 560 | 315105-0165 | | 30 | WASHER BRB 8,4X16 RFR | |
| 660 | 312105-0457 | | 4 | SCREW M6S ISO 4014 M8X35 A480 | |

| Pos | Part No | UN | Qty | Description | Page No |
|---|---|---|---|---|---|
| **TPA 1000SQ, TPA 0750SQ (See drawing on page: 5-110)** | | | | | |
| 010 | 2647128-0000 | | 1 | FOLDING PART | |
| 020 | 2647127-0000 | | 1 | FOLDING PART | |
| 030 | 2913601-0000 | | 1 | FOLDING PART | |
| 040 | 2913600-0000 | | 1 | FOLDING PART | |
| 050 | 2644368-0000 | | 2 | BRACKET | |
| 060 | 2647129-0000 | | 1 | FOLDING PART | |
| 070 | 2647130-0000 | | 1 | FOLDING PART | |
| 080 | 2647126-0000 | | 2 | BRACKET | |
| 140 | 1519355-0000 | | 12 | SPACER | |
| 510 | 312105-0455 | | 6 | SCREW M6S ISO 4017 M8X30 A480 | |
| 520 | 312105-0462 | | 12 | SCREW M6S ISO 4014 M8X55 A480 | |
| 560 | 315105-0165 | | 18 | WASHER BRB 8,4X16 RFR | |

| Machine Type | Group Description | Used-In | Group Number | Page No |
|---|---|---|---|---|

# FLAP GUIDE



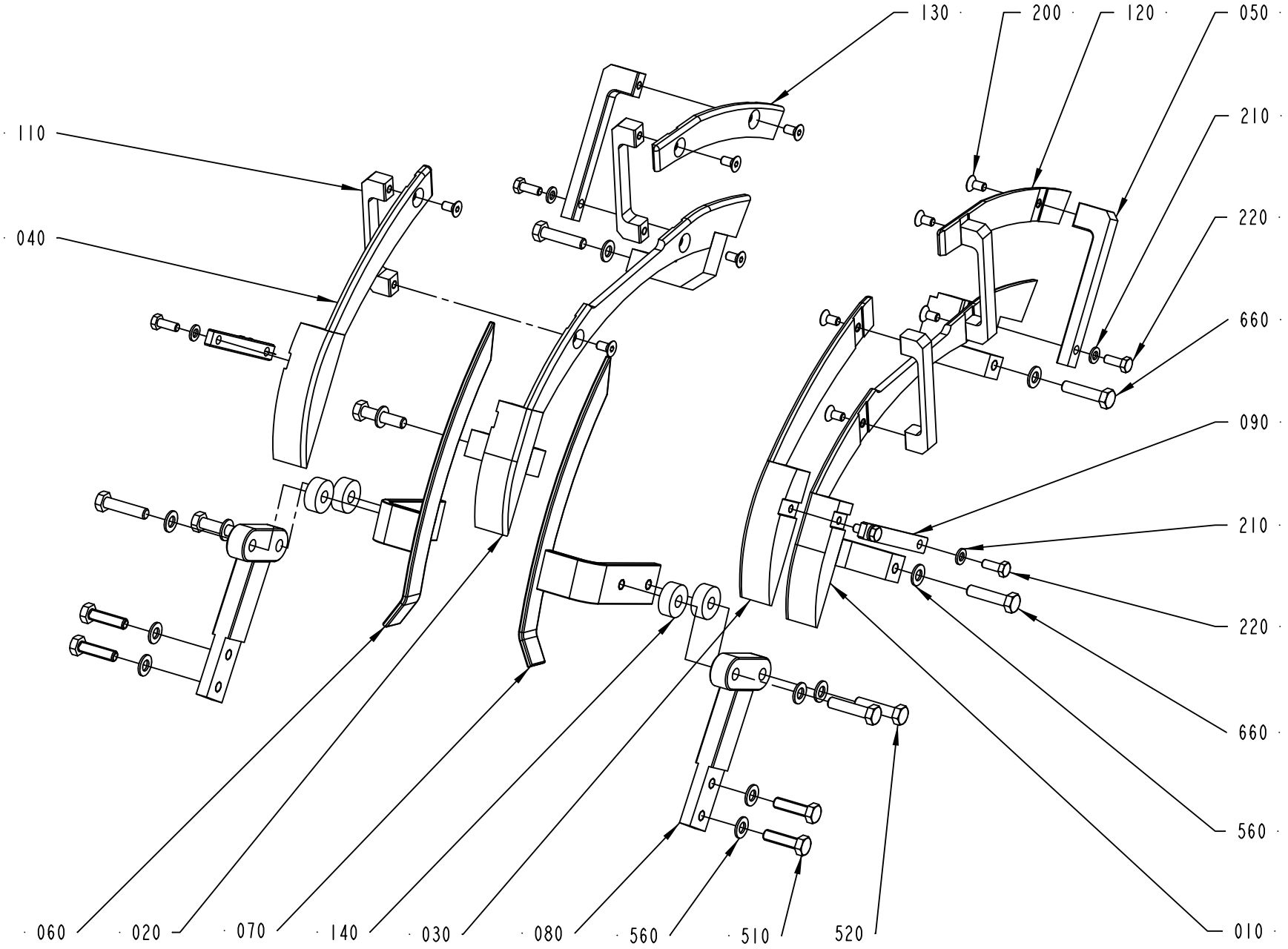


| 2866605-2 |
| --- |
| ECM 332206 |

ECM: 367699 - 20081003
Group number: 2866605-0100
Assembly Drawing: 2866605-2_1_AA

This list covers pages from 5-106 to 5-111

| Pos | Part No | UN | Qty | Description | Page No |
|---|---|---|---|---|---|
| **TBA 0500B, TBA 1000B (See drawing on page: 5-108)** | | | | | |
| 010 | 2901067-0000 | | 1 | GUIDE | |
| 020 | 2901066-0000 | | 1 | GUIDE | |
| 030 | 2901068-0000 | | 1 | GUIDE | |
| 040 | 2901069-0000 | | 1 | GUIDE | |
| 050 | 2603661-0000 | | 2 | BRACKET | |
| 060 | 2903584-0000 | | 1 | GUIDE | |
| 070 | 2903585-0000 | | 1 | GUIDE | |
| 090 | 2544342-0000 | | 2 | BRACKET | |
| 110 | 2603662-0000 | | 4 | BRACKET | |
| 120 | 2603548-0000 | | 1 | FOLDING PART | |
| 130 | 2603547-0000 | | 1 | FOLDING PART | |
| 140 | 2903586-0000 | | 4 | SPACER | |
| 200 | 312155-0366 | | 10 | SCREW DIN 7991 MF6S M6X12 A4 70 | |
| 210 | 315105-0153 | | 6 | WASHER BRB 6,4X12 RFR | |
| 220 | 312105-0368 | | 6 | SCREW M6S ISO 4017 M6X16 A480 | |
| 510 | 312105-0455 | | 4 | SCREW M6S ISO 4017 M8X30 A480 | |
| 520 | 312109-0457 | | 6 | SCREW M6S ISO 4017 M8X35 A480 | |
| 560 | 315105-0165 | | 12 | WASHER BRB 8,4X16 RFR | |
| **TBA 0500SQ, TBA 1000SQ (See drawing on page: 5-106)** | | | | | |
| 010 | 2906011-0000 | | 2 | HOLDER | |
| 020 | 2906006-0000 | | 1 | RAIL | |
| 030 | 2906007-0000 | | 1 | RAIL | |
| 040 | 2909030-0000 | | 1 | FOLDING BAR | |
| 050 | 2909506-0000 | | 1 | FOLDING BAR | |
| 060 | 2903583-0000 | | 1 | GUIDE | |
| 070 | 2903582-0000 | | 1 | GUIDE | |
| 080 | 2588218-0000 | | 2 | STRUT | |
| 090 | 2906008-0000 | | 1 | GUIDE | |
| 100 | 2906009-0000 | | 1 | GUIDE | |
| 110 | 2876334-0000 | | 2 | HOLDER | |
| 120 | 2909028-0000 | | 1 | GUIDE PIN | |
| 130 | 2909029-0000 | | 1 | GUIDE PIN | |
| 140 | 2619703-0000 | | 4 | SPACER | |
| 500 | 312105-0451 | | 2 | SCREW M6S ISO 4017 M8X20 A480 | |
| 510 | 312105-0455 | | 8 | SCREW M6S ISO 4017 M8X30 A480 | |
| 520 | 312105-0461 | | 4 | SCREW M6S ISO 4014 M8X50 A480 | |
| 530 | 312105-0453 | | 4 | SCREW M6S ISO 4017 M8X25 A480 | |
| 540 | 312105-0457 | | 4 | SCREW M6S ISO 4014 M8X35 A480 | |
| 550 | 312105-0455 | | 4 | SCREW M6S ISO 4017 M8X30 A480 | |
| 560 | 315105-0165 | | 30 | WASHER BRB 8,4X16 RFR | |
| 660 | 312105-0457 | | 4 | SCREW M6S ISO 4014 M8X35 A480 | |

| Pos | Part No | UN | Qty | Description | Page No |
|---|---|---|---|---|---|
| **TPA 1000SQ, TPA 0750SQ (See drawing on page: 5-110)** | | | | | |
| 010 | 2647128-0000 | | 1 | FOLDING PART | |
| 020 | 2647127-0000 | | 1 | FOLDING PART | |
| 030 | 2913601-0000 | | 1 | FOLDING PART | |
| 040 | 2913600-0000 | | 1 | FOLDING PART | |
| 050 | 2644368-0000 | | 2 | BRACKET | |
| 060 | 2647129-0000 | | 1 | FOLDING PART | |
| 070 | 2647130-0000 | | 1 | FOLDING PART | |
| 080 | 2647126-0000 | | 2 | BRACKET | |
| 140 | 1519355-0000 | | 12 | SPACER | |
| 510 | 312105-0455 | | 6 | SCREW M6S ISO 4017 M8X30 A480 | |
| 520 | 312105-0462 | | 12 | SCREW M6S ISO 4014 M8X55 A480 | |
| 560 | 315105-0165 | | 18 | WASHER BRB 8,4X16 RFR | |

| Machine Type | Group Description | Used-In | Group Number | Page No |
|---|---|---|---|---|

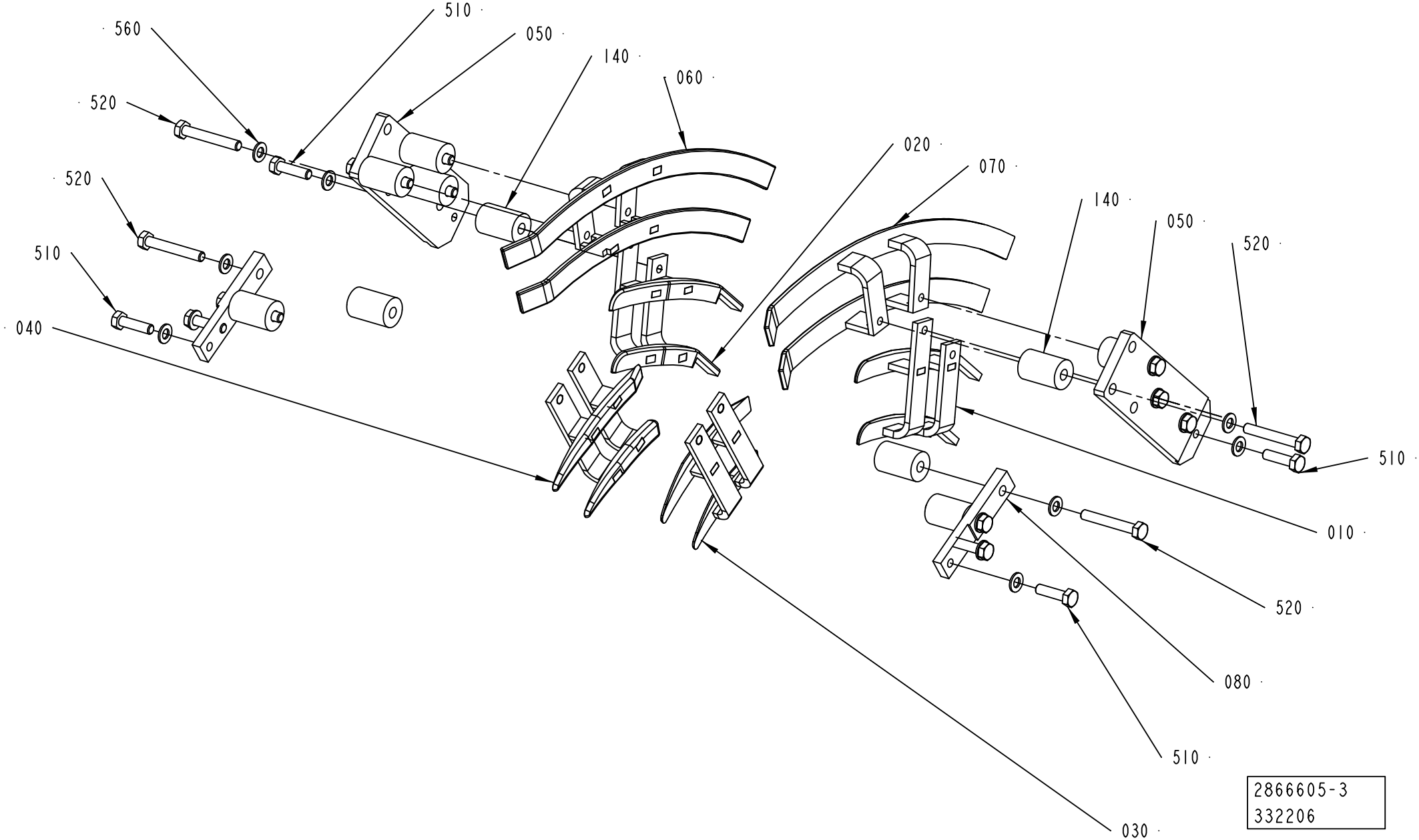
560
510
050
140
060
520
520
510
040
020
070
140
050
520
510
010
520
080
510
030
2866605-3
332206

ECM: 367699 - 20081003
Group number: 2866605-0100
Assembly Drawing: 2866605-3_1_AA

This list covers pages from 5-106 to 5-111

| Pos | Part No | UN | Qty | Description | Page No |
|---|---|---|---|---|---|
| **TBA 0500B, TBA 1000B (See drawing on page: 5-108)** | | | | | |
| 010 | 2901067-0000 | | 1 | GUIDE | |
| 020 | 2901066-0000 | | 1 | GUIDE | |
| 030 | 2901068-0000 | | 1 | GUIDE | |
| 040 | 2901069-0000 | | 1 | GUIDE | |
| 050 | 2603661-0000 | | 2 | BRACKET | |
| 060 | 2903584-0000 | | 1 | GUIDE | |
| 070 | 2903585-0000 | | 1 | GUIDE | |
| 090 | 2544342-0000 | | 2 | BRACKET | |
| 110 | 2603662-0000 | | 4 | BRACKET | |
| 120 | 2603548-0000 | | 1 | FOLDING PART | |
| 130 | 2603547-0000 | | 1 | FOLDING PART | |
| 140 | 2903586-0000 | | 4 | SPACER | |
| 200 | 312155-0366 | | 10 | SCREW DIN 7991 MF6S M6X12 A4 70 | |
| 210 | 315105-0153 | | 6 | WASHER BRB 6,4X12 RFR | |
| 220 | 312105-0368 | | 6 | SCREW M6S ISO 4017 M6X16 A480 | |
| 510 | 312105-0455 | | 4 | SCREW M6S ISO 4017 M8X30 A480 | |
| 520 | 312109-0457 | | 6 | SCREW M6S ISO 4017 M8X35 A480 | |
| 560 | 315105-0165 | | 12 | WASHER BRB 8,4X16 RFR | |
| **TBA 0500SQ, TBA 1000SQ (See drawing on page: 5-106)** | | | | | |
| 010 | 2906011-0000 | | 2 | HOLDER | |
| 020 | 2906006-0000 | | 1 | RAIL | |
| 030 | 2906007-0000 | | 1 | RAIL | |
| 040 | 2909030-0000 | | 1 | FOLDING BAR | |
| 050 | 2909506-0000 | | 1 | FOLDING BAR | |
| 060 | 2903583-0000 | | 1 | GUIDE | |
| 070 | 2903582-0000 | | 1 | GUIDE | |
| 080 | 2588218-0000 | | 2 | STRUT | |
| 090 | 2906008-0000 | | 1 | GUIDE | |
| 100 | 2906009-0000 | | 1 | GUIDE | |
| 110 | 2876334-0000 | | 2 | HOLDER | |
| 120 | 2909028-0000 | | 1 | GUIDE PIN | |
| 130 | 2909029-0000 | | 1 | GUIDE PIN | |
| 140 | 2619703-0000 | | 4 | SPACER | |
| 500 | 312105-0451 | | 2 | SCREW M6S ISO 4017 M8X20 A480 | |
| 510 | 312105-0455 | | 8 | SCREW M6S ISO 4017 M8X30 A480 | |
| 520 | 312105-0461 | | 4 | SCREW M6S ISO 4014 M8X50 A480 | |
| 530 | 312105-0453 | | 4 | SCREW M6S ISO 4017 M8X25 A480 | |
| 540 | 312105-0457 | | 4 | SCREW M6S ISO 4014 M8X35 A480 | |
| 550 | 312105-0455 | | 4 | SCREW M6S ISO 4017 M8X30 A480 | |
| 560 | 315105-0165 | | 30 | WASHER BRB 8,4X16 RFR | |
| 660 | 312105-0457 | | 4 | SCREW M6S ISO 4014 M8X35 A480 | |

| Pos | Part No | UN | Qty | Description | Page No |
|---|---|---|---|---|---|
| **TPA 1000SQ, TPA 0750SQ (See drawing on page: 5-110)** | | | | | |
| 010 | 2647128-0000 | | 1 | FOLDING PART | |
| 020 | 2647127-0000 | | 1 | FOLDING PART | |
| 030 | 2913601-0000 | | 1 | FOLDING PART | |
| 040 | 2913600-0000 | | 1 | FOLDING PART | |
| 050 | 2644368-0000 | | 2 | BRACKET | |
| 060 | 2647129-0000 | | 1 | FOLDING PART | |
| 070 | 2647130-0000 | | 1 | FOLDING PART | |
| 080 | 2647126-0000 | | 2 | BRACKET | |
| 140 | 1519355-0000 | | 12 | SPACER | |
| 510 | 312105-0455 | | 6 | SCREW M6S ISO 4017 M8X30 A480 | |
| 520 | 312105-0462 | | 12 | SCREW M6S ISO 4014 M8X55 A480 | |
| 560 | 315105-0165 | | 18 | WASHER BRB 8,4X16 RFR | |

| Machine Type | Group Description | Used-In | Group Number | Page No |
|---|---|---|---|---|

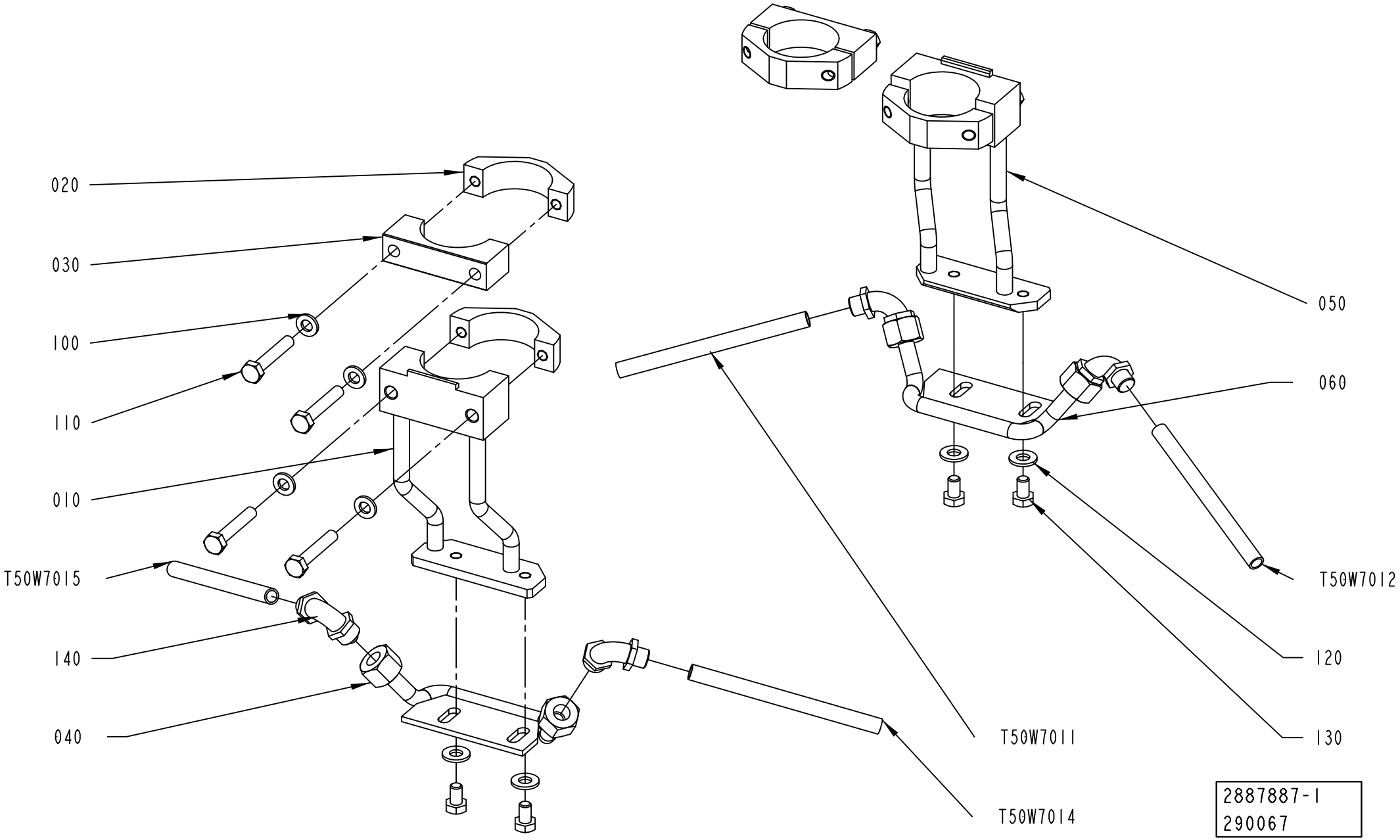
020
030
100
110
010
T50W7015
140
040
050
060
T50W7012
120
T50W7011
130
T50W7014
2887887-1
290067

| Pos | Part No | UN | Qty | Description | Page No |
|---|---|---|---|---|---|
| **TBA 0500B, TBA 1000B (See drawing on page: 5-114)** | | | | | |
| 010 | 2901065-0000 | | 2 | BRACKET | |
| 020 | 2887770-0000 | | 4 | CLAMP | |
| 030 | 2887771-0000 | | 2 | CLAMP | |
| 100 | 315105-0153 | | 8 | WASHER BRB 6,4X12 RFR | |
| 110 | 312105-0376 | | 8 | SCREW M6S ISO 4014 M6X35 A480 | |
| 120 | 315105-0156 | | 4 | WASHER BRB 6,7X14 RFR | |
| 130 | 312105-0364 | | 4 | SCREW M6S ISO 4017 M6X10 A480 | |
| T50E7011 | 2903581-0000 | | 1 | GUIDE | |
| T50E7014 | 2903581-0000 | | 1 | GUIDE | |
| **TBA 0500SQ, TBA 1000SQ (See drawing on page: 5-112)** | | | | | |
| 010 | 2887773-0000 | | 1 | BRACKET | |
| 020 | 2887770-0000 | | 4 | CLAMP | |
| 030 | 2887771-0000 | | 2 | CLAMP | |
| 050 | 2887772-0000 | | 1 | BRACKET | |
| 100 | 315105-0153 | | 8 | WASHER BRB 6,4X12 RFR | |
| 110 | 312105-0376 | | 8 | SCREW M6S ISO 4014 M6X35 A480 | |
| 120 | 315105-0156 | | 4 | WASHER BRB 6,7X14 RFR | |
| 130 | 312105-0364 | | 4 | SCREW M6S ISO 4017 M6X10 A480 | |
| T50E7011 | 2906004-0000 | | 1 | GUIDE | |
| T50E7014 | 2906004-0000 | | 1 | GUIDE | |
| **TPA 1000SQ, TPA 0750SQ (See drawing on page: 5-114)** | | | | | |
| 010 | 2901065-0000 | | 2 | BRACKET | |
| 020 | 2887770-0000 | | 4 | CLAMP | |
| 030 | 2887771-0000 | | 2 | CLAMP | |
| 100 | 315105-0153 | | 8 | WASHER BRB 6,4X12 RFR | |
| 110 | 312105-0376 | | 8 | SCREW M6S ISO 4014 M6X35 A480 | |
| 120 | 315105-0156 | | 4 | WASHER BRB 6,7X14 RFR | |
| 130 | 312105-0364 | | 4 | SCREW M6S ISO 4017 M6X10 A480 | |
| T50E7011 | 2647131-0000 | | 1 | GUIDE | |
| T50E7014 | 2647131-0000 | | 1 | GUIDE | |
| **Common Parts** | | | | | |
| 140 | 342931-0121 | | 4 | ELBOW 90 COUPL.,EXT.THREAD 8/6-G1/8" | |
| T50W7011 | 90166-0118 | MM | 500 | TUBE 8 MM PA BLACK | |
| T50W7012 | 90166-0118 | MM | 300 | TUBE 8 MM PA BLACK | |
| T50W7014 | 90166-0118 | MM | 300 | TUBE 8 MM PA BLACK | |
| T50W7015 | 90166-0118 | MM | 500 | TUBE 8 MM PA BLACK | |

| Pos | Part No | UN | Qty | Description | Page No |
|---|---|---|---|---|---|

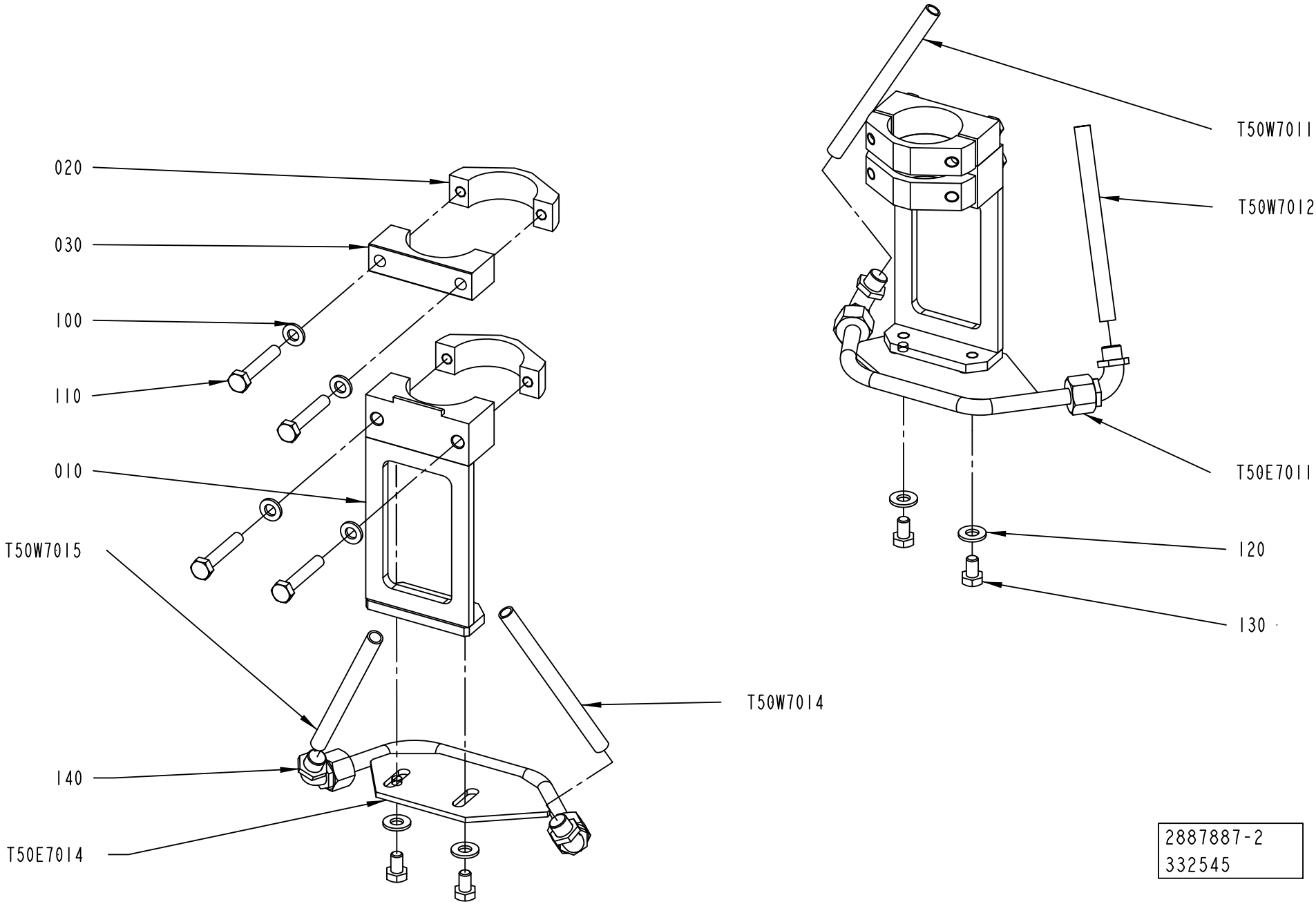


2887887-2
332545

ECM: 367703 - 20081003
Group number: 2887887-0100
Assembly Drawing: 2887887-2_1_AA

This list covers pages from 5-112 to 5-115

| Pos | Part No | UN | Qty | Description | Page No |
|---|---|---|---|---|---|
| **TBA 0500B, TBA 1000B (See drawing on page: 5-114)** | | | | | |
| 010 | 2901065-0000 | | 2 | BRACKET | |
| 020 | 2887770-0000 | | 4 | CLAMP | |
| 030 | 2887771-0000 | | 2 | CLAMP | |
| 100 | 315105-0153 | | 8 | WASHER BRB 6,4X12 RFR | |
| 110 | 312105-0376 | | 8 | SCREW M6S ISO 4014 M6X35 A480 | |
| 120 | 315105-0156 | | 4 | WASHER BRB 6,7X14 RFR | |
| 130 | 312105-0364 | | 4 | SCREW M6S ISO 4017 M6X10 A480 | |
| T50E7011 | 2903581-0000 | | 1 | GUIDE | |
| T50E7014 | 2903581-0000 | | 1 | GUIDE | |
| **TBA 0500SQ, TBA 1000SQ (See drawing on page: 5-112)** | | | | | |
| 010 | 2887773-0000 | | 1 | BRACKET | |
| 020 | 2887770-0000 | | 4 | CLAMP | |
| 030 | 2887771-0000 | | 2 | CLAMP | |
| 050 | 2887772-0000 | | 1 | BRACKET | |
| 100 | 315105-0153 | | 8 | WASHER BRB 6,4X12 RFR | |
| 110 | 312105-0376 | | 8 | SCREW M6S ISO 4014 M6X35 A480 | |
| 120 | 315105-0156 | | 4 | WASHER BRB 6,7X14 RFR | |
| 130 | 312105-0364 | | 4 | SCREW M6S ISO 4017 M6X10 A480 | |
| T50E7011 | 2906004-0000 | | 1 | GUIDE | |
| T50E7014 | 2906004-0000 | | 1 | GUIDE | |
| **TPA 1000SQ, TPA 0750SQ (See drawing on page: 5-114)** | | | | | |
| 010 | 2901065-0000 | | 2 | BRACKET | |
| 020 | 2887770-0000 | | 4 | CLAMP | |
| 030 | 2887771-0000 | | 2 | CLAMP | |
| 100 | 315105-0153 | | 8 | WASHER BRB 6,4X12 RFR | |
| 110 | 312105-0376 | | 8 | SCREW M6S ISO 4014 M6X35 A480 | |
| 120 | 315105-0156 | | 4 | WASHER BRB 6,7X14 RFR | |
| 130 | 312105-0364 | | 4 | SCREW M6S ISO 4017 M6X10 A480 | |
| T50E7011 | 2647131-0000 | | 1 | GUIDE | |
| T50E7014 | 2647131-0000 | | 1 | GUIDE | |
| **Common Parts** | | | | | |
| 140 | 342931-0121 | | 4 | ELBOW 90 COUPL.,EXT.THREAD 8/6-G1/8" | |
| T50W7011 | 90166-0118 | MM | 500 | TUBE 8 MM PA BLACK | |
| T50W7012 | 90166-0118 | MM | 300 | TUBE 8 MM PA BLACK | |
| T50W7014 | 90166-0118 | MM | 300 | TUBE 8 MM PA BLACK | |
| T50W7015 | 90166-0118 | MM | 500 | TUBE 8 MM PA BLACK | |

| Pos | Part No | UN | Qty | Description | Page No |
|---|---|---|---|---|---|

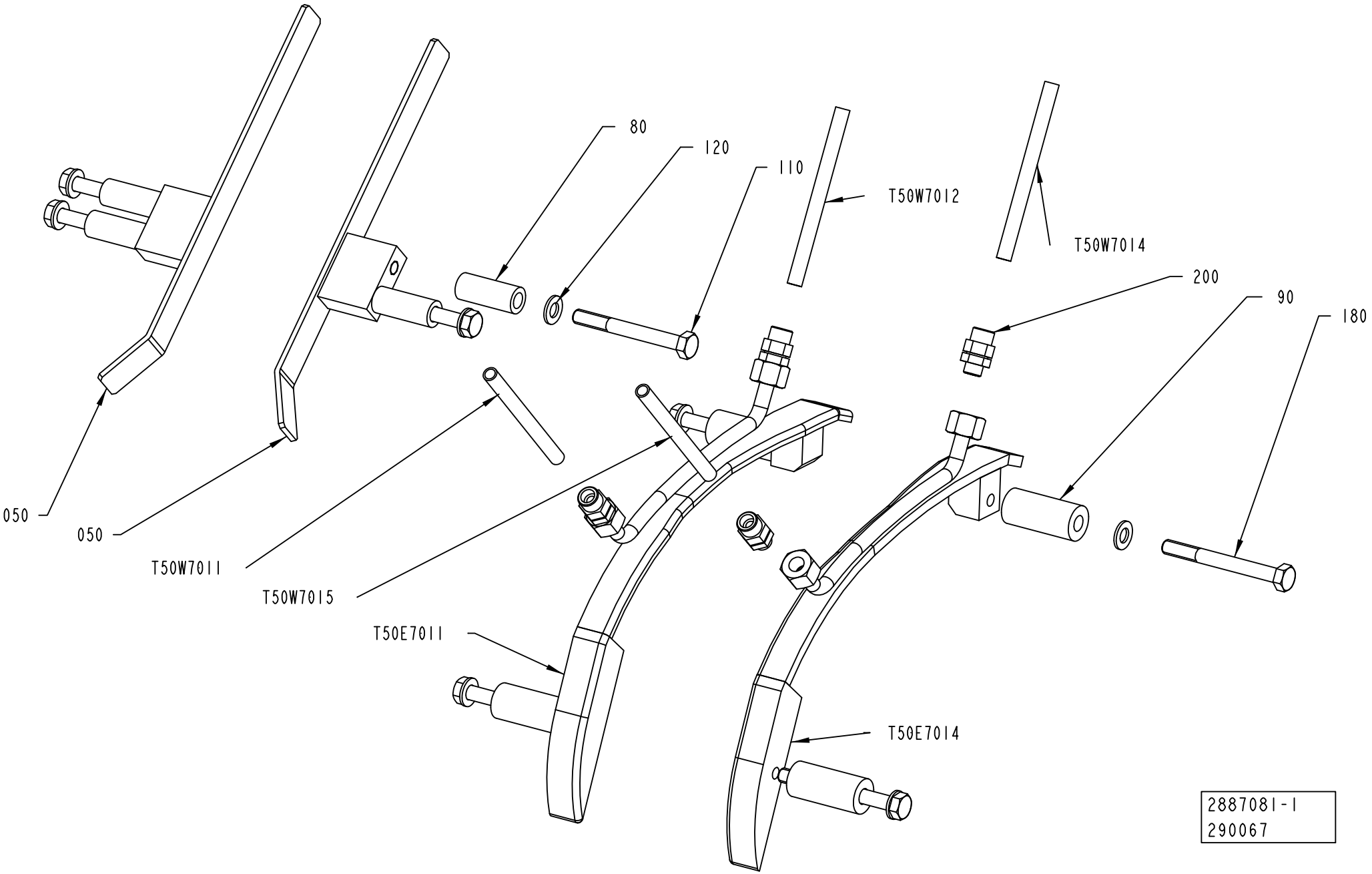
80
120
110
T50W7012
T50W7014
200
90
180
050
050
T50W7011
T50W7015
T50E7011
T50E7014
2887081-1
290067

ECM: 367702 - 20081003
Group number: 2887081-0100
Assembly Drawing: 2887081-1_1_AA

This list covers pages from 5-116 to 5-121

| Pos | Part No | UN | Qty | Description | Page No |
|---|---|---|---|---|---|
| **TBA 1000B STDA7 (See drawing on page: 5-118)** | | | | | |
| 030 | 1317043-0000 | | 2 | SUPPORT | |
| 040 | 1499150-0000 | | 1 | RAIL | |
| 050 | 1499151-0000 | | 1 | RAIL | |
| 080 | 2609371-0000 | | 4 | SPACER | |
| 100 | 312109-0457 | | 4 | SCREW M6S ISO 4017 M8X35 A480 | |
| 110 | 312105-0462 | | 4 | SCREW M6S ISO 4014 M8X55 A480 | |
| 120 | 315105-0165 | | 14 | WASHER BRB 8,4X16 RFR | |
| 130 | 312605-0318 | | 2 | HEXAGON NUT, M6M M8 A280 | |
| 160 | 312155-0459 | | 2 | SCREW DIN 7991 MF6S M8X40 A4 70 | |
| 170 | 312105-0453 | | 2 | SCREW M6S ISO 4017 M8X25 A480 | |
| 180 | 312109-0457 | | 2 | SCREW M6S ISO 4017 M8X35 A480 | |
| 200 | 342931-0121 | | 4 | ELBOW 90 COUPL.,EXT.THREAD 8/6-G1/8" | |
| T50E7011 | 2938200-0000 | | 1 | FOLDING BAR | |
| T50E7014 | 2938199-0000 | | 1 | FOLDING BAR | |
| **TBA 1000S (See drawing on page: 5-116)** | | | | | |
| 050 | 1144719-0000 | | 2 | RAIL | |
| 080 | 2852472-0000 | | 4 | SPACER | |
| 110 | 312105-0465 | | 4 | SCREW M6S ISO 4014 M8X70 A480 | |
| 120 | 315105-0165 | | 8 | WASHER BRB 8,4X16 RFR | |
| 180 | 312109-0457 | | 4 | SCREW M6S ISO 4017 M8X35 A480 | |
| 200 | 342921-0121 | | 4 | STRAIGHT CPLNG,EXT.THREADED 8/6-G1/8INCH | |
| T50E7011 | 2937351-0000 | | 1 | FOLDING BAR | |
| T50E7014 | 2937352-0000 | | 1 | FOLDING BAR | |
| **TBA 1000S STDA7 (See drawing on page: 5-118)** | | | | | |
| 030 | 1317043-0000 | | 2 | SUPPORT | |
| 040 | 1317042-0000 | | 1 | RAIL | |
| 050 | 1317047-0000 | | 1 | RAIL | |
| 060 | 2509936-0000 | | 2 | SPACER SCREW | |
| 080 | 2509937-0000 | | 4 | SPACER | |
| 090 | 2509935-0000 | | 2 | SPACER | |
| 100 | 312109-0457 | | 4 | SCREW M6S ISO 4017 M8X35 A480 | |
| 110 | 312109-0461 | | 4 | SCREW M6S ISO 4017 M8X50 A480 | |
| 120 | 315105-0165 | | 14 | WASHER BRB 8,4X16 RFR | |
| 130 | 312605-0318 | | 2 | HEXAGON NUT, M6M M8 A280 | |
| 160 | 312155-0459 | | 2 | SCREW DIN 7991 MF6S M8X40 A4 70 | |
| 170 | 312105-0451 | | 2 | SCREW M6S ISO 4017 M8X20 A480 | |
| 180 | 312105-0464 | | 2 | SCREW M6S ISO 4014 M8X65 A480 | |
| 200 | 342931-0121 | | 4 | ELBOW 90 COUPL.,EXT.THREAD 8/6-G1/8" | |
| T50E7011 | 1498827-0000 | | 1 | FOLDING BAR | |
| **TBA 1000SQ (See drawing on page: 5-118)** | | | | | |
| 030 | 1317043-0000 | | 2 | SUPPORT | |
| 040 | 1317042-0000 | | 1 | RAIL | |
| 050 | 1317047-0000 | | 1 | RAIL | |
| 060 | 1499094-0000 | | 2 | SPACER SCREW | |
| 080 | 1499072-0000 | | 4 | SPACER | |
| 090 | 1499071-0000 | | 2 | SPACER | |
| 100 | 312109-0457 | | 4 | SCREW M6S ISO 4017 M8X35 A480 | |
| 110 | 312105-0463 | | 4 | SCREW M6S ISO 4014 M8X60 A480 | |
| 120 | 315105-0165 | | 14 | WASHER BRB 8,4X16 RFR | |
| 130 | 312605-0318 | | 2 | HEXAGON NUT, M6M M8 A280 | |
| 160 | 312155-0459 | | 2 | SCREW DIN 7991 MF6S M8X40 A4 70 | |
| 170 | 312105-0453 | | 2 | SCREW M6S ISO 4017 M8X25 A480 | |
| 180 | 312105-0466 | | 2 | SCREW M6S ISO 4014 M8X75 A480 | |
| 200 | 342931-0121 | | 4 | ELBOW 90 COUPL.,EXT.THREAD 8/6-G1/8" | |
| T50E7011 | 1498827-0000 | | 1 | FOLDING BAR | |
| T50E7014 | 1498828-0000 | | 1 | FOLDING BAR | |
| **TBA 1500S (See drawing on page: 5-120)** | | | | | |
| 030 | 1317043-0000 | | 2 | SUPPORT | |
| 040 | 1317042-0000 | | 1 | RAIL | |
| 050 | 1317047-0000 | | 1 | RAIL | |
| 080 | 1334718-0000 | | 4 | SPACER | |
| 100 | 312109-0457 | | 4 | SCREW M6S ISO 4017 M8X35 A480 | |
| 110 | 312109-0461 | | 4 | SCREW M6S ISO 4017 M8X50 A480 | |
| 120 | 315105-0165 | | 12 | WASHER BRB 8,4X16 RFR | |
| 130 | 312605-0318 | | 2 | HEXAGON NUT, M6M M8 A280 | |
| 140 | 90287-0196 | MM | 65 | THREADED ROD MHGS M8 SS | |
| 170 | 312109-0460 | | 1 | SCREW M6S ISO 4017 M8X45 A480 | |
| 180 | 312109-0457 | | 2 | SCREW M6S ISO 4017 M8X35 A480 | |
| 200 | 342931-0121 | | 4 | ELBOW 90 COUPL.,EXT.THREAD 8/6-G1/8" | |
| T50E7011 | 2933181-0000 | | 1 | FOLDING BAR | |
| T50E7014 | 2933180-0000 | | 1 | FOLDING BAR | |
| T50E7014 | 1498828-0000 | | 1 | FOLDING BAR | |
| **TBA 2000S (See drawing on page: 5-120)** | | | | | |
| 030 | 1317043-0000 | | 2 | SUPPORT | |
| 040 | 1499150-0000 | | 1 | RAIL | |
| 050 | 1499151-0000 | | 1 | RAIL | |
| 080 | 2629344-0000 | | 4 | SPACER | |
| 100 | 312109-0457 | | 4 | SCREW M6S ISO 4017 M8X35 A480 | |
| 110 | 312109-0460 | | 4 | SCREW M6S ISO 4017 M8X45 A480 | |
| 120 | 315105-0165 | | 12 | WASHER BRB 8,4X16 RFR | |
| 130 | 312605-0318 | | 2 | HEXAGON NUT, M6M M8 A280 | |
| 140 | 90287-0196 | MM | 65 | THREADED ROD MHGS M8 SS | |
| 170 | 312109-0460 | | 1 | SCREW M6S ISO 4017 M8X45 A480 | |

Machine Type | Group Description | Used-In | Group Number | Page No

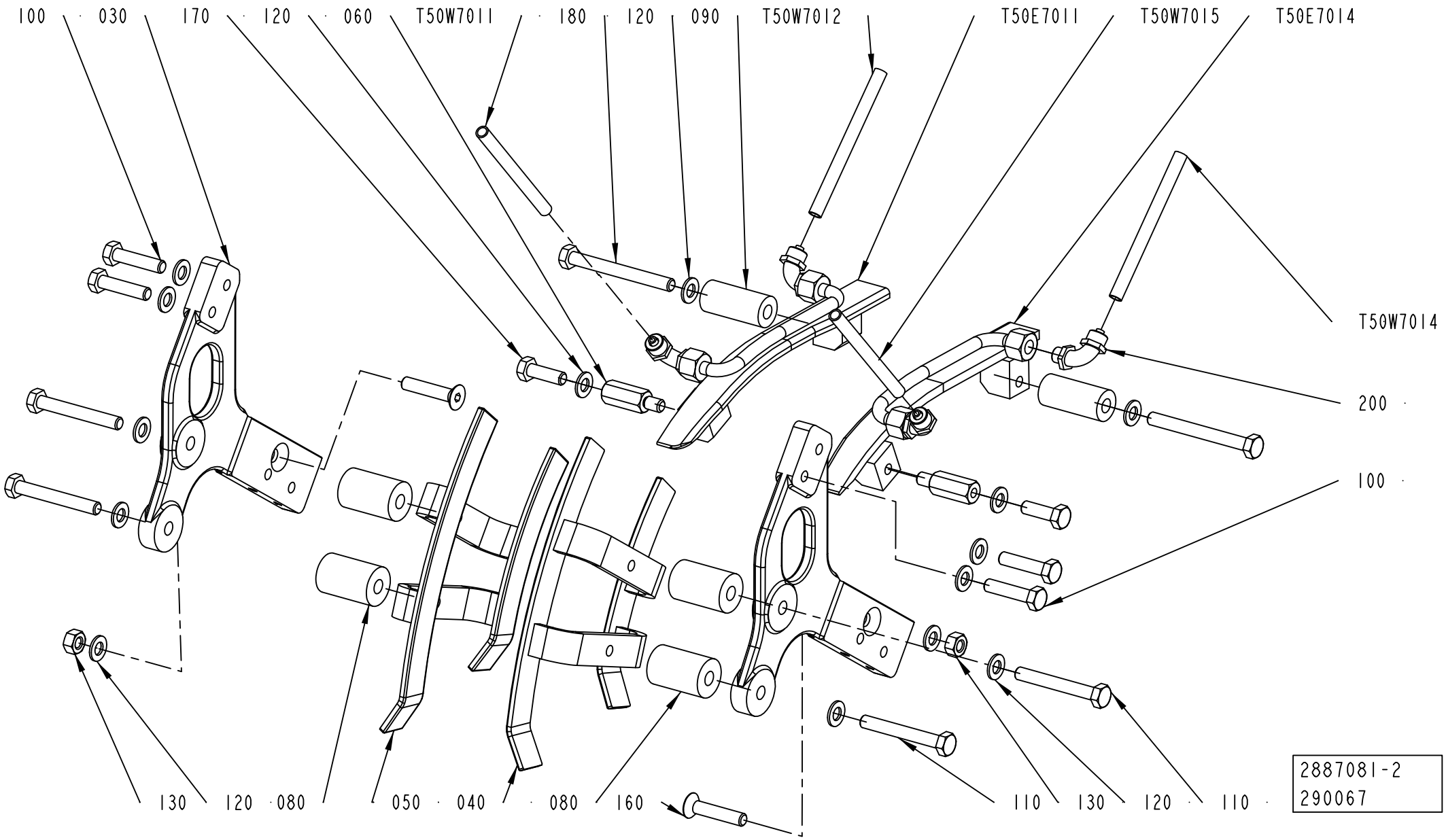
100
030
170
120
060
T50W7011
180
120
090
T50W7012
T50E7011
T50W7015
T50E7014
T50W7014
200
100
130
120
080
050
040
080
160
110
130
120
110
2887081-2
290067

| Pos | Part No | UN | Qty | Description | Page No |
|---|---|---|---|---|---|
| **TBA 2000S (Cont'd) (See drawing on page: 5-120)** | | | | | |
| 180 | 312109-0457 | | 2 | SCREW M6S ISO 4017 M8X35 A480 | |
| 200 | 342931-0121 | | 4 | ELBOW 90 COUPL.,EXT.THREAD 8/6-G1/8" | |
| T50E7011 | 2960431-0000 | | 1 | FOLDING BAR | |
| T50E7014 | 2960432-0000 | | 1 | FOLDING BAR | |
| **Common Parts** | | | | | |
| T50W7011 | 90166-0118 | MM | 500 | TUBE 8 MM PA BLACK | |
| T50W7012 | 90166-0118 | MM | 300 | TUBE 8 MM PA BLACK | |
| T50W7014 | 90166-0118 | MM | 300 | TUBE 8 MM PA BLACK | |
| T50W7015 | 90166-0118 | MM | 500 | TUBE 8 MM PA BLACK | |

| Pos | Part No | UN | Qty | Description | Page No |
|---|---|---|---|---|---|

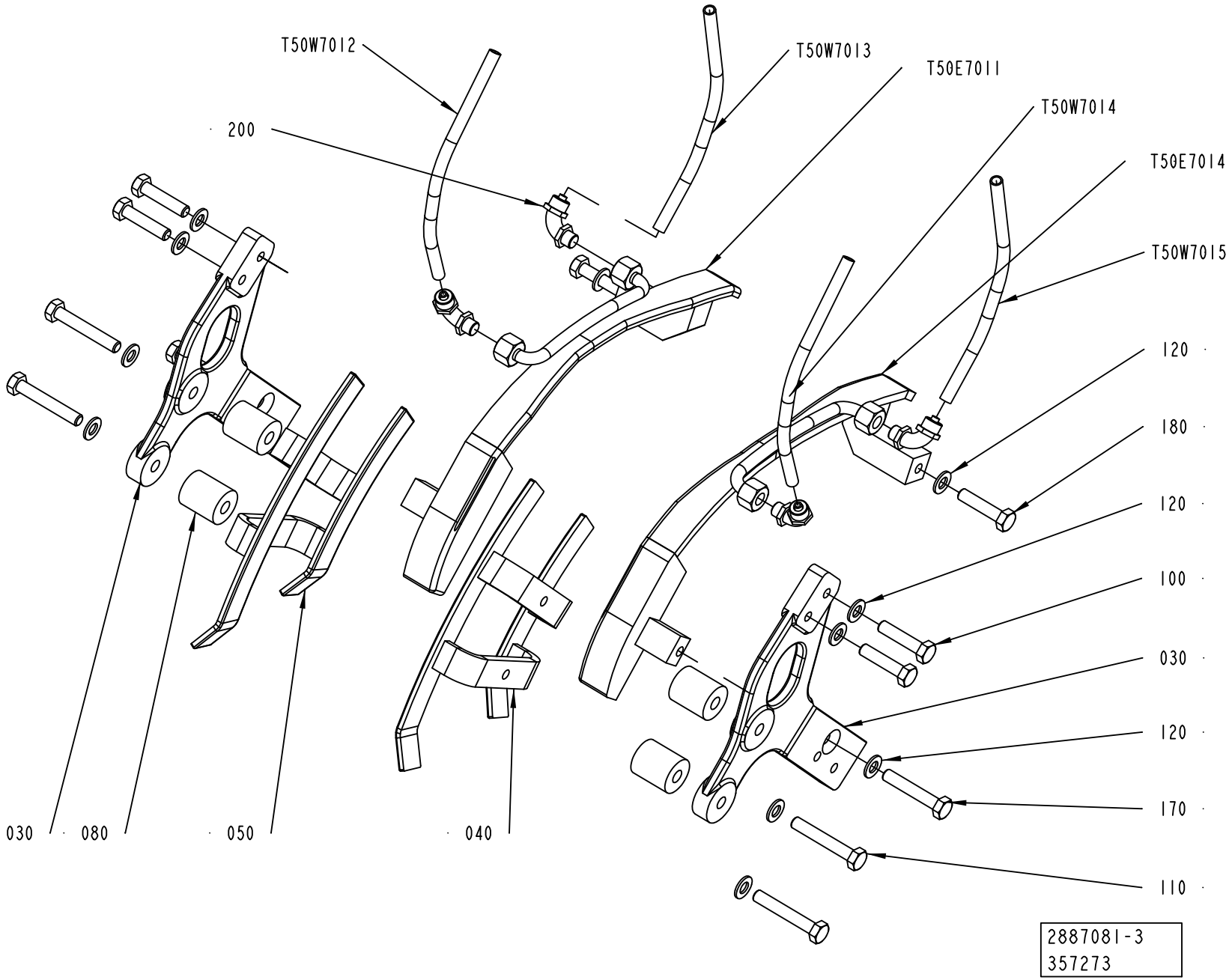
T50W7012
T50W7013
T50E7011
T50W7014
T50E7014
T50W7015
200
120
180
120
100
030
120
170
110
030
080
050
040
2887081-3
357273

ECM: 367702 - 20081003
Group number: 2887081-0100
Assembly Drawing: 2887081-3_1_AB

This list covers pages from 5-116 to 5-121

| Pos | Part No | UN | Qty | Description | Page No |
|---|---|---|---|---|---|
| **SEE PREVIOUS LISTS PAGES: 5-117, 5-119.** | | | | | |

| Pos | Part No | UN | Qty | Description | Page No |
|---|---|---|---|---|---|

| Machine Type | Group Description | Used-In | Group Number | Page No |
|---|---|---|---|---|

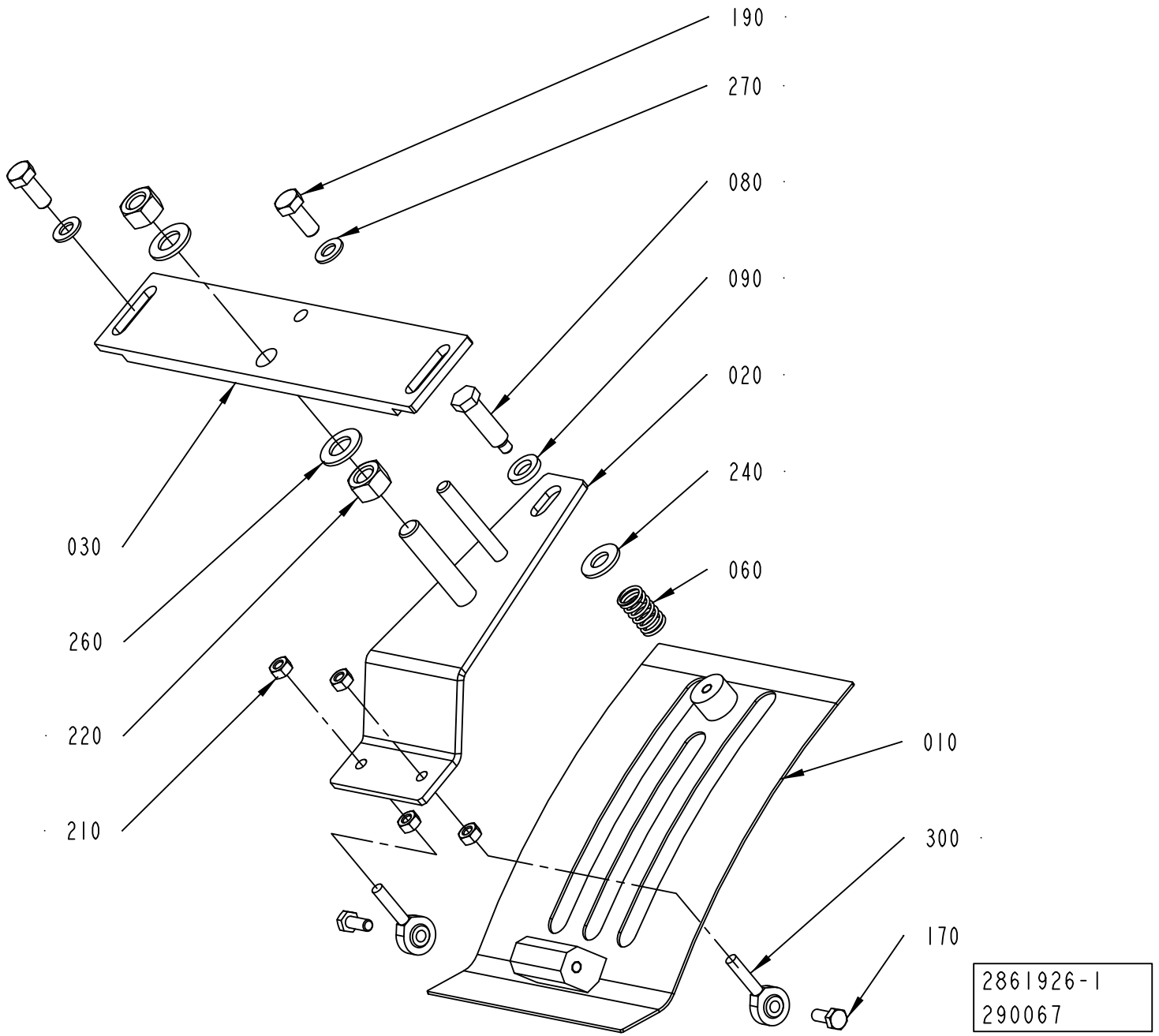
190
270
080
090
020
240
060
030
260
220
210
010
300
170
2861926-1
290067

ECM: 367697 - 20081003
Group number: 2861926-0100
Assembly Drawing: 2861926-1_1_AA

This list covers pages from 5-122 to 5-127

| Pos | Part No | UN | Qty | Description | Page No |
|---|---|---|---|---|---|
| **TBA 0500B, TBA 1000B (See drawing on page: 5-124)** | | | | | |
| 010 | 2966896-0000 | | 1 | COVERING PLATE | |
| 030 | 2861981-0000 | | 1 | ATTACHMENT PLATE | |
| 040 | 1144902-0000 | | 1 | SUPPORT | |
| 070 | 2609372-0000 | | 1 | GUIDE | |
| 180 | 312105-0453 | | 1 | SCREW M6S ISO 4017 M8X25 A480 | |
| 190 | 312105-0451 | | 2 | SCREW M6S ISO 4017 M8X20 A480 | |
| 200 | 312105-0457 | | 2 | SCREW M6S ISO 4014 M8X35 A480 | |
| 270 | 315105-0165 | | 5 | WASHER BRB 8,4X16 RFR | |
| **TBA 1000S (See drawing on page: 5-124)** | | | | | |
| 010 | 2966896-0000 | | 1 | COVERING PLATE | |
| 030 | 2861981-0000 | | 1 | ATTACHMENT PLATE | |
| 040 | 1144902-0000 | | 1 | SUPPORT | |
| 070 | 1144901-0000 | | 1 | GUIDE | |
| 180 | 312105-0449 | | 2 | SCREW M6S ISO 4017 M8X16 A480 | |
| 190 | 312105-0451 | | 2 | SCREW M6S ISO 4017 M8X20 A480 | |
| 200 | 312105-0457 | | 2 | SCREW M6S ISO 4014 M8X35 A480 | |
| 270 | 315105-0165 | | 6 | WASHER BRB 8,4X16 RFR | |
| **TBA 0500SQ, TBA 1000SQ (See drawing on page: 5-122)** | | | | | |
| 010 | 2966896-0000 | | 1 | COVERING PLATE | |
| 030 | 2861981-0000 | | 1 | ATTACHMENT PLATE | |
| 190 | 312105-0451 | | 2 | SCREW M6S ISO 4017 M8X20 A480 | |
| 270 | 315105-0165 | | 2 | WASHER BRB 8,4X16 RFR | |
| **TBA 1500S, TBA 2000S (See drawing on page: 5-124)** | | | | | |
| 010 | 2966896-0000 | | 1 | COVERING PLATE | |
| 030 | 2913595-0000 | | 1 | ATTACHMENT PLATE | |
| 040 | 2944780-0000 | | 1 | SUPPORT | |
| 070 | 1347057-0000 | | 1 | GUIDE | |
| 180 | 312105-0449 | | 2 | SCREW M6S ISO 4017 M8X16 A480 | |
| 190 | 312105-0453 | | 2 | SCREW M6S ISO 4017 M8X25 A480 | |
| 200 | 312105-0457 | | 2 | SCREW M6S ISO 4014 M8X35 A480 | |
| 270 | 315105-0165 | | 6 | WASHER BRB 8,4X16 RFR | |
| **TPA 1000SQ, TPA 0750SQ (See drawing on page: 5-126)** | | | | | |
| 010 | 2966896-0000 | | 1 | COVERING PLATE | |
| 030 | 2913595-0000 | | 1 | ATTACHMENT PLATE | |
| 040 | 2647111-0000 | | 1 | SUPPORT | |
| 070 | 2647112-0000 | | 1 | GUIDE | |
| 180 | 312105-0449 | | 1 | SCREW M6S ISO 4017 M8X16 A480 | |
| 190 | 312105-0453 | | 2 | SCREW M6S ISO 4017 M8X25 A480 | |
| 200 | 312105-0457 | | 2 | SCREW M6S ISO 4014 M8X35 A480 | |
| 270 | 315105-0165 | | 6 | WASHER BRB 8,4X16 RFR | |
| 310 | 312115-0449 | | 1 | SCREW ISO4762 M8X16 A4 80 | |

| Pos | Part No | UN | Qty | Description | Page No |
|---|---|---|---|---|---|
| **Common Parts** | | | | | |
| 020 | 2861978-0000 | | 1 | ADJUSTING PLATE | |
| 060 | 90335-0036 | | 1 | COMP. SPRING 22450, 1,6X14,1X24 | |
| 080 | 1144976-0000 | | 1 | STOP SCREW | |
| 090 | 1144979-0000 | | 1 | WASHER | |
| 170 | 312105-0368 | | 2 | SCREW M6S ISO 4017 M6X16 A480 | |
| 210 | 312605-0316 | | 4 | HEXAGON NUT, M6M M6 A280 | |
| 220 | 312605-0322 | | 2 | HEXAGON NUT, M6M M12 A280 | |
| 240 | 315105-0173 | | 1 | WASHER BRB 10,5X22 RFR | |
| 260 | 315105-0178 | | 2 | WASHER BRB 13X24 RFR | |
| 300 | 90115-0137 | | 2 | ROD END, ID=6 MM, M6X1 | |

Machine Type | Group Description | Used-In | Group Number | Page No

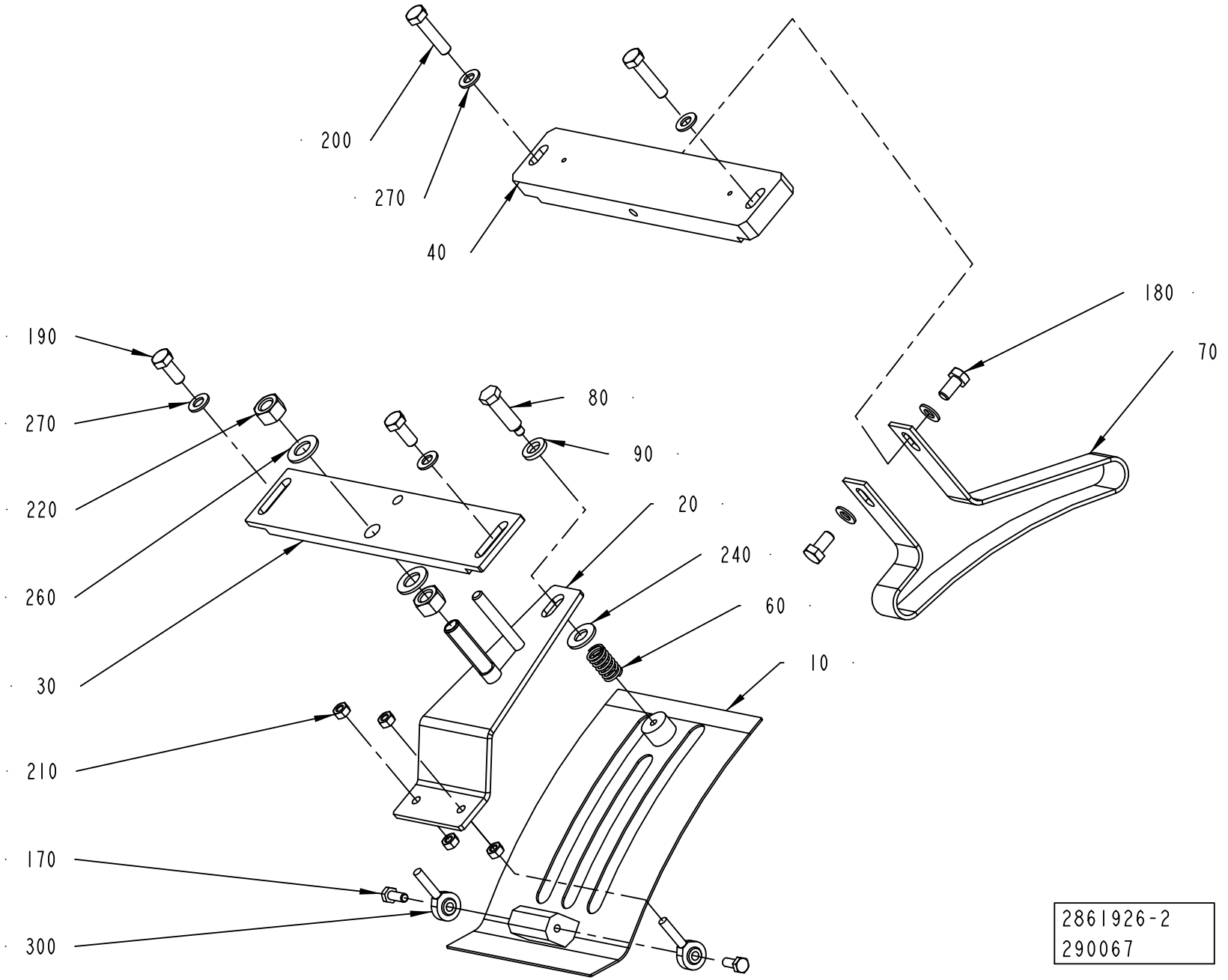
200
270
40
180
70
190
270
220
260
30
210
170
300
80
90
20
240
60
10
2861926-2
290067

ECM: 367697 - 20081003
Group number: 2861926-0100
Assembly Drawing: 2861926-2_1_AA

This list covers pages from 5-122 to 5-127

| Pos | Part No | UN | Qty | Description | Page No |
|---|---|---|---|---|---|
| **TBA 0500B, TBA 1000B (See drawing on page: 5-124)** | | | | | |
| 010 | 2966896-0000 | | 1 | COVERING PLATE | |
| 030 | 2861981-0000 | | 1 | ATTACHMENT PLATE | |
| 040 | 1144902-0000 | | 1 | SUPPORT | |
| 070 | 2609372-0000 | | 1 | GUIDE | |
| 180 | 312105-0453 | | 1 | SCREW M6S ISO 4017 M8X25 A480 | |
| 190 | 312105-0451 | | 2 | SCREW M6S ISO 4017 M8X20 A480 | |
| 200 | 312105-0457 | | 2 | SCREW M6S ISO 4014 M8X35 A480 | |
| 270 | 315105-0165 | | 5 | WASHER BRB 8,4X16 RFR | |
| **TBA 1000S (See drawing on page: 5-124)** | | | | | |
| 010 | 2966896-0000 | | 1 | COVERING PLATE | |
| 030 | 2861981-0000 | | 1 | ATTACHMENT PLATE | |
| 040 | 1144902-0000 | | 1 | SUPPORT | |
| 070 | 1144901-0000 | | 1 | GUIDE | |
| 180 | 312105-0449 | | 2 | SCREW M6S ISO 4017 M8X16 A480 | |
| 190 | 312105-0451 | | 2 | SCREW M6S ISO 4017 M8X20 A480 | |
| 200 | 312105-0457 | | 2 | SCREW M6S ISO 4014 M8X35 A480 | |
| 270 | 315105-0165 | | 6 | WASHER BRB 8,4X16 RFR | |
| **TBA 0500SQ, TBA 1000SQ (See drawing on page: 5-122)** | | | | | |
| 010 | 2966896-0000 | | 1 | COVERING PLATE | |
| 030 | 2861981-0000 | | 1 | ATTACHMENT PLATE | |
| 190 | 312105-0451 | | 2 | SCREW M6S ISO 4017 M8X20 A480 | |
| 270 | 315105-0165 | | 2 | WASHER BRB 8,4X16 RFR | |
| **TBA 1500S, TBA 2000S (See drawing on page: 5-124)** | | | | | |
| 010 | 2966896-0000 | | 1 | COVERING PLATE | |
| 030 | 2913595-0000 | | 1 | ATTACHMENT PLATE | |
| 040 | 2944780-0000 | | 1 | SUPPORT | |
| 070 | 1347057-0000 | | 1 | GUIDE | |
| 180 | 312105-0449 | | 2 | SCREW M6S ISO 4017 M8X16 A480 | |
| 190 | 312105-0453 | | 2 | SCREW M6S ISO 4017 M8X25 A480 | |
| 200 | 312105-0457 | | 2 | SCREW M6S ISO 4014 M8X35 A480 | |
| 270 | 315105-0165 | | 6 | WASHER BRB 8,4X16 RFR | |
| **TPA 1000SQ, TPA 0750SQ (See drawing on page: 5-126)** | | | | | |
| 010 | 2966896-0000 | | 1 | COVERING PLATE | |
| 030 | 2913595-0000 | | 1 | ATTACHMENT PLATE | |
| 040 | 2647111-0000 | | 1 | SUPPORT | |
| 070 | 2647112-0000 | | 1 | GUIDE | |
| 180 | 312105-0449 | | 1 | SCREW M6S ISO 4017 M8X16 A480 | |
| 190 | 312105-0453 | | 2 | SCREW M6S ISO 4017 M8X25 A480 | |
| 200 | 312105-0457 | | 2 | SCREW M6S ISO 4014 M8X35 A480 | |
| 270 | 315105-0165 | | 6 | WASHER BRB 8,4X16 RFR | |
| 310 | 312115-0449 | | 1 | SCREW ISO4762 M8X16 A4 80 | |

| Pos | Part No | UN | Qty | Description | Page No |
|---|---|---|---|---|---|
| **Common Parts** | | | | | |
| 020 | 2861978-0000 | | 1 | ADJUSTING PLATE | |
| 060 | 90335-0036 | | 1 | COMP. SPRING 22450, 1,6X14,1X24 | |
| 080 | 1144976-0000 | | 1 | STOP SCREW | |
| 090 | 1144979-0000 | | 1 | WASHER | |
| 170 | 312105-0368 | | 2 | SCREW M6S ISO 4017 M6X16 A480 | |
| 210 | 312605-0316 | | 4 | HEXAGON NUT, M6M M6 A280 | |
| 220 | 312605-0322 | | 2 | HEXAGON NUT, M6M M12 A280 | |
| 240 | 315105-0173 | | 1 | WASHER BRB 10,5X22 RFR | |
| 260 | 315105-0178 | | 2 | WASHER BRB 13X24 RFR | |
| 300 | 90115-0137 | | 2 | ROD END, ID=6 MM, M6X1 | |

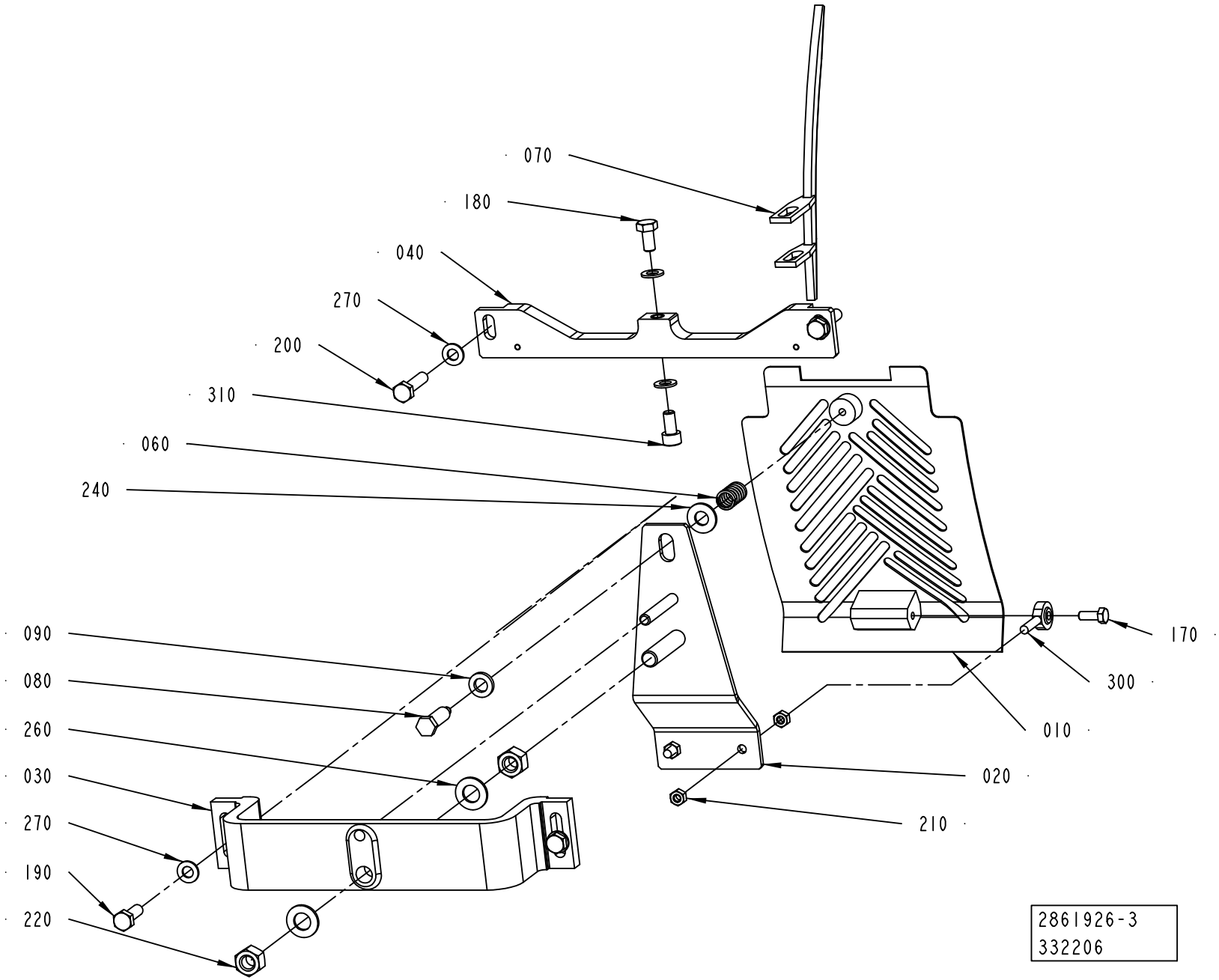
070
180
040
270
200
310
060
240
090
080
260
030
270
190
220
170
300
010
020
210
2861926-3
332206

ECM: 367697 - 20081003
Group number: 2861926-0100
Assembly Drawing: 2861926-3_1_AA

This list covers pages from 5-122 to 5-127

| Pos | Part No | UN | Qty | Description | Page No |
|---|---|---|---|---|---|
| **TBA 0500B, TBA 1000B (See drawing on page: 5-124)** | | | | | |
| 010 | 2966896-0000 | | 1 | COVERING PLATE | |
| 030 | 2861981-0000 | | 1 | ATTACHMENT PLATE | |
| 040 | 1144902-0000 | | 1 | SUPPORT | |
| 070 | 2609372-0000 | | 1 | GUIDE | |
| 180 | 312105-0453 | | 1 | SCREW M6S ISO 4017 M8X25 A480 | |
| 190 | 312105-0451 | | 2 | SCREW M6S ISO 4017 M8X20 A480 | |
| 200 | 312105-0457 | | 2 | SCREW M6S ISO 4014 M8X35 A480 | |
| 270 | 315105-0165 | | 5 | WASHER BRB 8,4X16 RFR | |
| **TBA 1000S (See drawing on page: 5-124)** | | | | | |
| 010 | 2966896-0000 | | 1 | COVERING PLATE | |
| 030 | 2861981-0000 | | 1 | ATTACHMENT PLATE | |
| 040 | 1144902-0000 | | 1 | SUPPORT | |
| 070 | 1144901-0000 | | 1 | GUIDE | |
| 180 | 312105-0449 | | 2 | SCREW M6S ISO 4017 M8X16 A480 | |
| 190 | 312105-0451 | | 2 | SCREW M6S ISO 4017 M8X20 A480 | |
| 200 | 312105-0457 | | 2 | SCREW M6S ISO 4014 M8X35 A480 | |
| 270 | 315105-0165 | | 6 | WASHER BRB 8,4X16 RFR | |
| **TBA 0500SQ, TBA 1000SQ (See drawing on page: 5-122)** | | | | | |
| 010 | 2966896-0000 | | 1 | COVERING PLATE | |
| 030 | 2861981-0000 | | 1 | ATTACHMENT PLATE | |
| 190 | 312105-0451 | | 2 | SCREW M6S ISO 4017 M8X20 A480 | |
| 270 | 315105-0165 | | 2 | WASHER BRB 8,4X16 RFR | |
| **TBA 1500S, TBA 2000S (See drawing on page: 5-124)** | | | | | |
| 010 | 2966896-0000 | | 1 | COVERING PLATE | |
| 030 | 2913595-0000 | | 1 | ATTACHMENT PLATE | |
| 040 | 2944780-0000 | | 1 | SUPPORT | |
| 070 | 1347057-0000 | | 1 | GUIDE | |
| 180 | 312105-0449 | | 2 | SCREW M6S ISO 4017 M8X16 A480 | |
| 190 | 312105-0453 | | 2 | SCREW M6S ISO 4017 M8X25 A480 | |
| 200 | 312105-0457 | | 2 | SCREW M6S ISO 4014 M8X35 A480 | |
| 270 | 315105-0165 | | 6 | WASHER BRB 8,4X16 RFR | |
| **TPA 1000SQ, TPA 0750SQ (See drawing on page: 5-126)** | | | | | |
| 010 | 2966896-0000 | | 1 | COVERING PLATE | |
| 030 | 2913595-0000 | | 1 | ATTACHMENT PLATE | |
| 040 | 2647111-0000 | | 1 | SUPPORT | |
| 070 | 2647112-0000 | | 1 | GUIDE | |
| 180 | 312105-0449 | | 1 | SCREW M6S ISO 4017 M8X16 A480 | |
| 190 | 312105-0453 | | 2 | SCREW M6S ISO 4017 M8X25 A480 | |
| 200 | 312105-0457 | | 2 | SCREW M6S ISO 4014 M8X35 A480 | |
| 270 | 315105-0165 | | 6 | WASHER BRB 8,4X16 RFR | |
| 310 | 312115-0449 | | 1 | SCREW ISO4762 M8X16 A4 80 | |

| Pos | Part No | UN | Qty | Description | Page No |
|---|---|---|---|---|---|
| **Common Parts** | | | | | |
| 020 | 2861978-0000 | | 1 | ADJUSTING PLATE | |
| 060 | 90335-0036 | | 1 | COMP. SPRING 22450, 1,6X14,1X24 | |
| 080 | 1144976-0000 | | 1 | STOP SCREW | |
| 090 | 1144979-0000 | | 1 | WASHER | |
| 170 | 312105-0368 | | 2 | SCREW M6S ISO 4017 M6X16 A480 | |
| 210 | 312605-0316 | | 4 | HEXAGON NUT, M6M M6 A280 | |
| 220 | 312605-0322 | | 2 | HEXAGON NUT, M6M M12 A280 | |
| 240 | 315105-0173 | | 1 | WASHER BRB 10,5X22 RFR | |
| 260 | 315105-0178 | | 2 | WASHER BRB 13X24 RFR | |
| 300 | 90115-0137 | | 2 | ROD END, ID=6 MM, M6X1 | |

Machine Type | Group Description | Used-In | Group Number | Page No

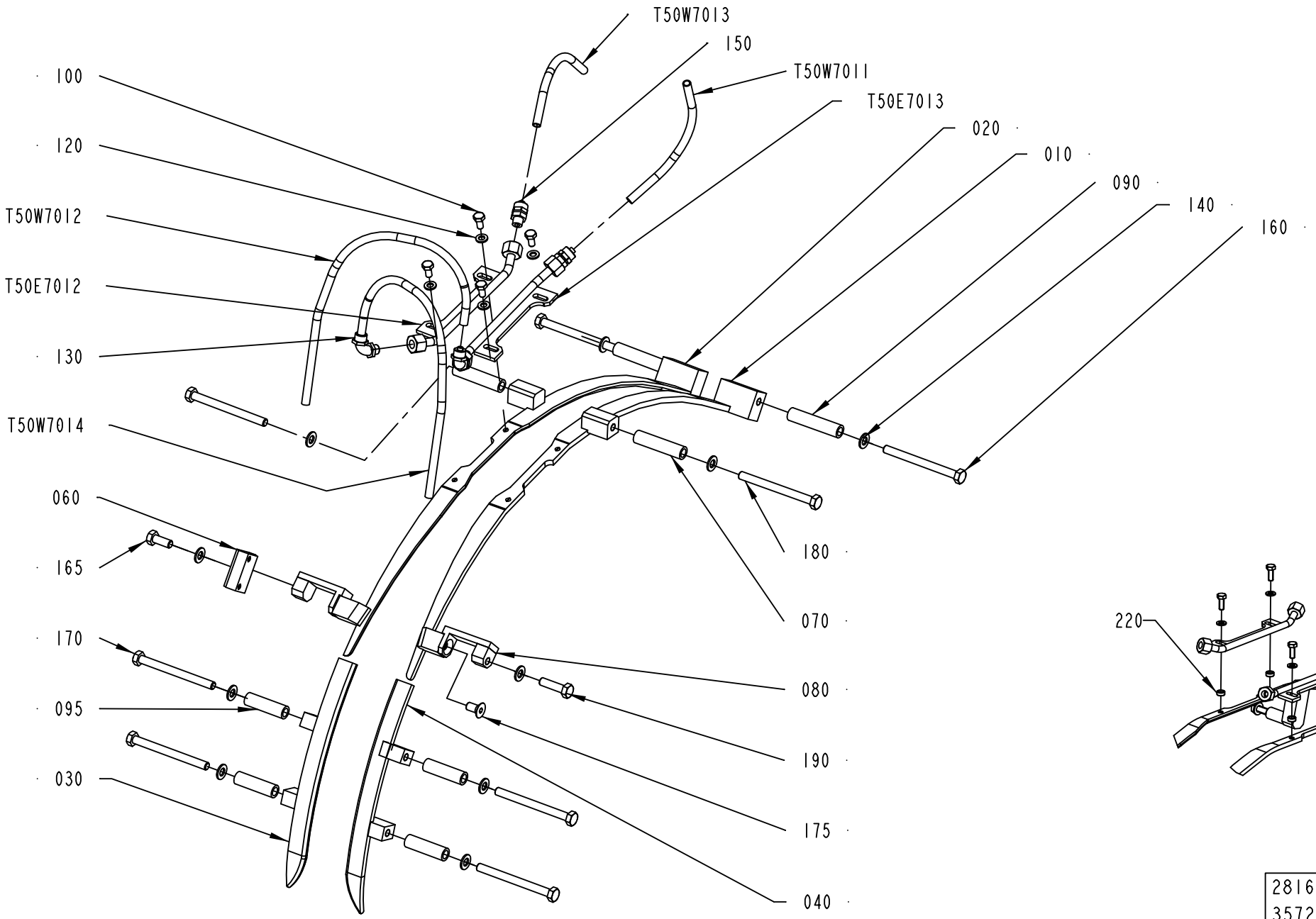
T50W7013
150
T50W7011
T50E7013
020
010
090
140
160
100
120
T50W7012
T50E7012
130
T50W7014
060
165
170
095
030
180
070
080
190
175
040
220
2816115-5
357273

ECM: 367694 - 20081003
Group number: 2816115-0100
Assembly Drawing: 2816115-5_1_AA

| Pos | Part No | UN | Qty | Description | Page No |
|---|---|---|---|---|---|
| **TBA 0500B, TBA 1000B** | | | | | |
| 010 | 2806345-0000 | | 1 | GUIDE | |
| 020 | 2806346-0000 | | 1 | GUIDE | |
| 030 | 1539900-0000 | | 1 | RIGHT UPPER GUIDE | |
| 040 | 1549614-0000 | | 1 | LEFT UPPER GUIDE | |
| 090 | 2603663-0000 | | 6 | SPACER | |
| 095 | 1334447-0000 | | 4 | SPACER | |
| 100 | 312105-0366 | | 4 | SCREW M6S ISO 4017 M6X12 A480 | |
| 160 | 312105-0465 | | 9 | SCREW M6S ISO 4014 M8X70 A480 | |
| 165 | 312105-0463 | | 1 | SCREW M6S ISO 4014 M8X60 A480 | |
| **TBA 0500SQ, TBA 1000SQ** | | | | | |
| 010 | 2806345-0000 | | 1 | GUIDE | |
| 020 | 2806346-0000 | | 1 | GUIDE | |
| 030 | 1549411-0000 | | 1 | PACKAGE GUIDE | |
| 040 | 1549406-0000 | | 1 | PACKAGE GUIDE | |
| 090 | 1499071-0000 | | 10 | SPACER | |
| 100 | 312105-0366 | | 4 | SCREW M6S ISO 4017 M6X12 A480 | |
| 160 | 312105-0466 | | 10 | SCREW M6S ISO 4014 M8X75 A480 | |
| **TBA 1000S** | | | | | |
| 010 | 2806345-0000 | | 1 | GUIDE | |
| 020 | 2806346-0000 | | 1 | GUIDE | |
| 030 | 1549411-0000 | | 1 | PACKAGE GUIDE | |
| 040 | 1549406-0000 | | 1 | PACKAGE GUIDE | |
| 090 | 2852473-0000 | | 6 | SPACER | |
| 095 | 2852463-0000 | | 4 | SPACER | |
| 100 | 312105-0366 | | 4 | SCREW M6S ISO 4017 M6X12 A480 | |
| 160 | 312105-0465 | | 9 | SCREW M6S ISO 4014 M8X70 A480 | |
| 165 | 312105-0463 | | 1 | SCREW M6S ISO 4014 M8X60 A480 | |
| **TBA 1500S** | | | | | |
| 010 | 2913597-0000 | | 1 | GUIDE | |
| 020 | 2913596-0000 | | 1 | GUIDE | |
| 030 | 2929034-0000 | | 1 | GUIDE | |
| 040 | 2929035-0000 | | 1 | GUIDE | |
| 070 | 2929033-0000 | | 2 | SPACER | |
| 080 | 2929032-0000 | | 2 | SPACER | |
| 090 | 2929031-0000 | | 2 | SPACER | |
| 095 | 2929036-0000 | | 4 | SCREW M6S ISO 4017 M6X16 A480 | |
| 100 | 312105-0368 | | 4 | SCREW M6S ISO 4017 M8X50 A480 | |
| 160 | 312109-0461 | | 2 | SCREW M6S ISO 4017 M8X30 A480 | |
| 165 | 312105-0455 | | 1 | SCREW M6S ISO 4017 M8X40 A480 | |
| 170 | 312109-0459 | | 4 | SCREW M6S ISO 4017 M8X45 A480 | |
| 180 | 312109-0460 | | 2 | SCREW M6S ISO 4017 M8X40 A480 | |
| 190 | 312109-0459 | | 1 | SCREW M6S ISO 4017 M8X40 A480 | |
| 220 | 1282705-0000 | | 4 | SUPPORT | |
| **TBA 2000S** | | | | | |
| 010 | 2913597-0000 | | 1 | GUIDE | |
| 020 | 2913596-0000 | | 1 | GUIDE | |
| 030 | 2929034-0000 | | 1 | GUIDE | |
| 040 | 2929035-0000 | | 1 | GUIDE | |
| 100 | 312105-0368 | | 4 | SCREW M6S ISO 4017 M6X16 A480 | |
| 160 | 312105-0457 | | 9 | SCREW M6S ISO 4014 M8X35 A480 | |
| 165 | 312105-0453 | | 1 | SCREW M6S ISO 4017 M8X25 A480 | |
| 220 | 1282705-0000 | | 4 | SUPPORT | |
| **TPA 1000SQ, TPA 0750SQ** | | | | | |
| 010 | 2913597-0000 | | 1 | GUIDE | |
| 020 | 2913596-0000 | | 1 | GUIDE | |
| 030 | 2913599-0000 | | 1 | GUIDE | |
| 040 | 2913598-0000 | | 1 | GUIDE | |
| 090 | 2931384-0000 | | 6 | GUIDE | |
| 100 | 312105-0368 | | 4 | SCREW M6S ISO 4017 M6X16 A480 | |
| 160 | 312109-0463 | | 5 | SCREW M6S ISO 4017 M8X60 A480 | |
| 165 | 312109-0461 | | 1 | SCREW M6S ISO 4017 M8X50 A480 | |
| 170 | 312105-0457 | | 4 | SCREW M6S ISO 4014 M8X35 A480 | |
| 220 | 1282705-0000 | | 4 | SUPPORT | |
| **Common Parts** | | | | | |
| 060 | 2866896-0000 | | 1 | SUPPORT | |
| 120 | 315105-0153 | | 4 | WASHER BRB 6,4X12 RFR | |
| 130 | 342931-0121 | | 2 | ELBOW 90 COUPL.,EXT.THREAD 8/6-G1/8" | |
| 140 | 315105-0165 | | 10 | WASHER BRB 8,4X16 RFR | |
| 150 | 342920-0121 | | 2 | STRAIGHT COUPLING,EXT.THREADED 8/6-R1/8" | |
| T50E7012 | 2879069-0000 | | 1 | FOLDING BAR | |
| T50E7013 | 2879069-0000 | | 1 | FOLDING BAR | |
| T50W7012 | 90166-0118 | MM | 500 | TUBE 8 MM PA BLACK | |
| T50W7013 | 90166-0118 | MM | 400 | TUBE 8 MM PA BLACK | |
| T50W7014 | 90166-0118 | MM | 500 | TUBE 8 MM PA BLACK | |

| Machine Type | Group Description | Used-In | Group Number | Page No |
|---|---|---|---|---|

# HEATING CHAMBER



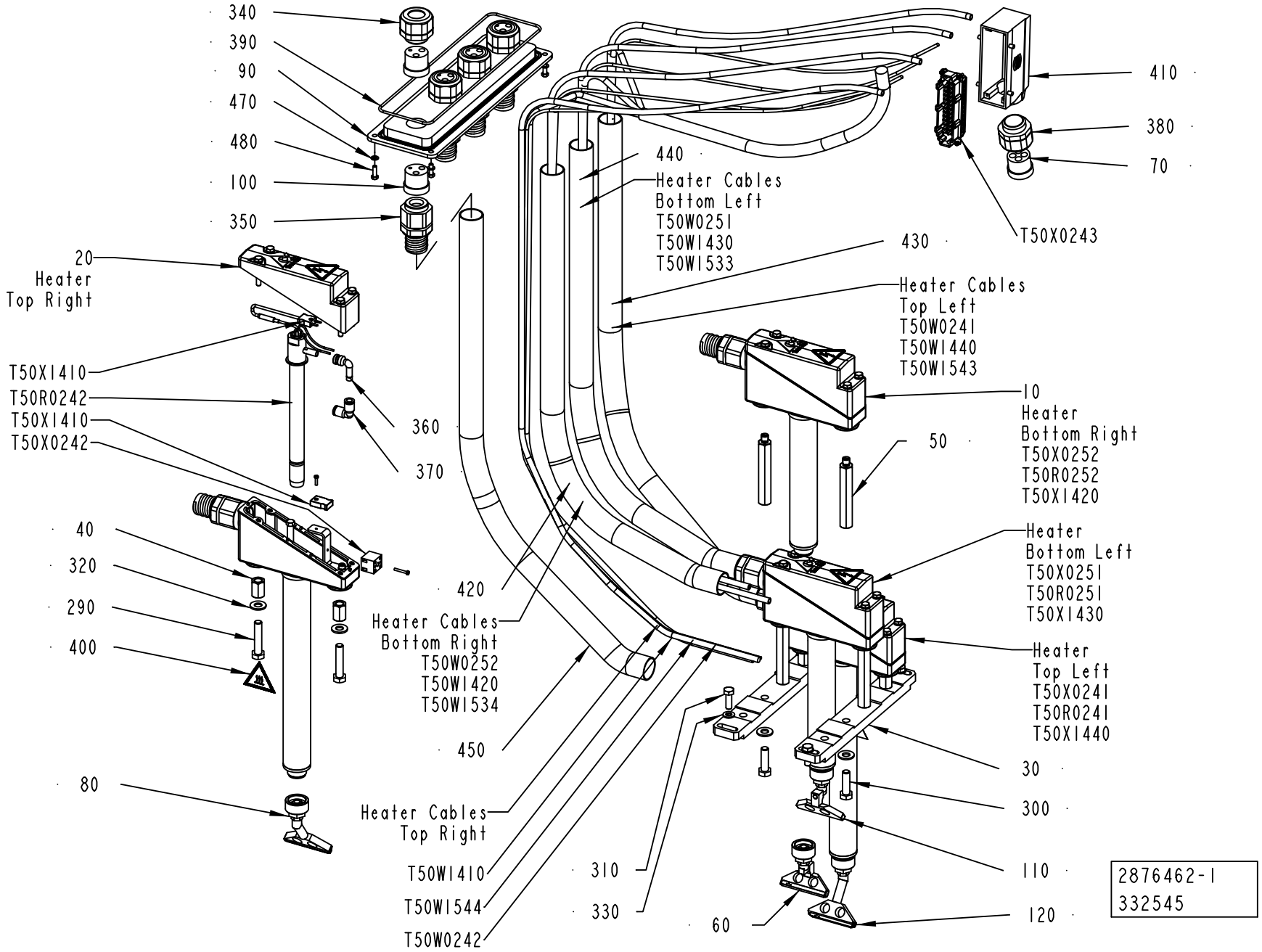

ECM: 367704 - 20081003
Group number: 2876462-0100
Assembly Drawing: 2876462-1_1_AB

This list covers pages from 5-130 to 5-133

| Pos | Part No | UN | Qty | Description | Page No |
|---|---|---|---|---|---|
| **TBA 0500B QC, TBA 1000B QC** | | | | | |
| 040 | 2898035-0000 | | 4 | SPACER | |
| 050 | 2898028-0000 | | 4 | SPACER | |
| 060 | 2898033-0000 | | 1 | AIR NOZZLE | |
| 080 | 2898030-0000 | | 1 | NOZZLE | |
| 110 | 2898034-0000 | | 1 | AIR NOZZLE | |
| 120 | 2898029-0000 | | 1 | NOZZLE | |
| 290 | 312105-0491 | | 4 | SCREW M6S ISO 4017 M10X20 A480 | |
| **TBA 0500SQ QC, TBA 1000SQ QC** | | | | | |
| 040 | 2852462-0000 | | 4 | SPACER | |
| 050 | 2876469-0000 | | 4 | SPACER | |
| 060 | 2906166-0000 | | 1 | NOZZLE | |
| 080 | 2862762-0000 | | 1 | NOZZLE | |
| 110 | 2906167-0000 | | 1 | NOZZLE | |
| 120 | 2862761-0000 | | 1 | NOZZLE | |
| 290 | 312105-0495 | | 4 | SCREW M6S ISO 4017 M10X30 A480 | |
| **TBA 1000B NOQC** | | | | | |
| 030 | 2876473-0000 | | 2 | PLATE | |
| 040 | 2931386-0000 | | 4 | SPACER | |
| 050 | 2931346-0000 | | 4 | SPACER | |
| 050 | 2898028-0000 | | 4 | SPACER | |
| 060 | 2898033-0000 | | 1 | AIR NOZZLE | |
| 080 | 2898030-0000 | | 1 | NOZZLE | |
| 120 | 2898029-0000 | | 1 | NOZZLE | |
| 290 | 312105-0497 | | 4 | SCREW M6S ISO 4017 M10X35 A480 | |
| **TBA 1000S** | | | | | |
| 030 | 2876473-0000 | | 2 | PLATE | |
| 040 | 2884994-0000 | | 4 | SPACER | |
| 050 | 2878205-0000 | | 4 | SPACER | |
| 060 | 2855844-0000 | | 1 | NOZZLE | |
| 080 | 2855845-0000 | | 1 | NOZZLE | |
| 110 | 2855843-0000 | | 1 | NOZZLE | |
| 120 | 2855846-0000 | | 1 | NOZZLE | |
| 290 | 312105-0501 | | 4 | SCREW M6S ISO 4014 M10X50 A480 | |
| 310 | 312105-0453 | | 4 | SCREW M6S ISO 4017 M8X25 A480 | |
| 330 | 315105-0165 | | 4 | WASHER BRB 8,4X16 RFR | |
| **TBA 1000SQ NOQC** | | | | | |
| 030 | 2876473-0000 | | 2 | PLATE | |
| 040 | 2862763-0000 | | 4 | SPACER | |
| 050 | 2876469-0000 | | 4 | SPACER | |
| 060 | 2906166-0000 | | 1 | NOZZLE | |
| 080 | 2862762-0000 | | 1 | NOZZLE | |
| 110 | 2906167-0000 | | 1 | NOZZLE | |
| 120 | 2862761-0000 | | 1 | NOZZLE | |
| 290 | 312105-0495 | | 4 | SCREW M6S ISO 4017 M10X30 A480 | |
| **TBA 1500S** | | | | | |
| 030 | 2876473-0000 | | 2 | PLATE | |
| 040 | 2931347-0000 | | 4 | SPACER | |
| 060 | 2931193-0000 | | 1 | AIR NOZZLE | |
| 080 | 2926126-0000 | | 1 | AIR NOZZLE | |
| 110 | 2931194-0000 | | 1 | AIR NOZZLE | |
| 120 | 2926125-0000 | | 1 | BRACKET | |
| 290 | 312105-0501 | | 4 | SCREW M6S ISO 4014 M10X50 A480 | |
| 310 | 312105-0453 | | 4 | SCREW M6S ISO 4017 M8X25 A480 | |
| 330 | 315105-0165 | | 4 | WASHER BRB 8,4X16 RFR | |
| **TBA 2000S** | | | | | |
| 040 | 2976577-0000 | | 4 | SPACER | |
| 050 | 2919384-0000 | | 4 | SPACER | |
| 060 | 2902082-0000 | | 1 | AIR NOZZLE | |
| 080 | 2919381-0000 | | 1 | AIR NOZZLE | |
| 110 | 2902083-0000 | | 1 | AIR NOZZLE | |
| 120 | 2919382-0000 | | 1 | AIR NOZZLE | |
| 290 | 312105-0495 | | 4 | SCREW M6S ISO 4017 M10X30 A480 | |
| **TPA 1000SQ QC, TPA 0750SQ QC** | | | | | |
| 040 | 2912153-0000 | | 4 | SPACER | |
| 050 | 2912154-0000 | | 4 | SPACER | |
| 060 | 2912157-0000 | | 1 | AIR NOZZLE | |
| 080 | 2912163-0000 | | 1 | AIR NOZZLE | |
| 110 | 2912158-0000 | | 1 | AIR NOZZLE | |
| 120 | 2912164-0000 | | 1 | AIR NOZZLE | |
| 290 | 312105-0503 | | 4 | SCREW M6S ISO 4014 M10X60 A480 | |
| **Common Parts** | | | | | |
| 010 | 2864950-0100 | | 2 | HEATING ELEMENT ..... | **5-135** |
| 020 | 2864960-0100 | | 2 | HEATING ELEMENT ..... | **5-137** |
| 070 | 90457-0030 | | 1 | INSERT, MULTI HOLE, EK155M4X9 | |
| 090 | 2877129-0000 | | 1 | PLATE | |
| 100 | 1484379-0000 | | 12 | INSERT | |
| 130 | 2951197-0000 | | 1 | PLATE | |
| 280 | 312125-0228 | | 4 | SCREW ISO 1207 M3X16 A4 | |
| 300 | 312105-0497 | | 4 | SCREW M6S ISO 4017 M10X35 A480 | |
| 320 | 315105-0173 | | 8 | WASHER BRB 10,5X22 RFR | |
| 340 | 90458-0423 | | 4 | GLAND W/O INSERT M32X1,5 EXTENDED | |

Machine Type | Group Description | Used-In | Group Number | Page No

# HEATING CHAMBER



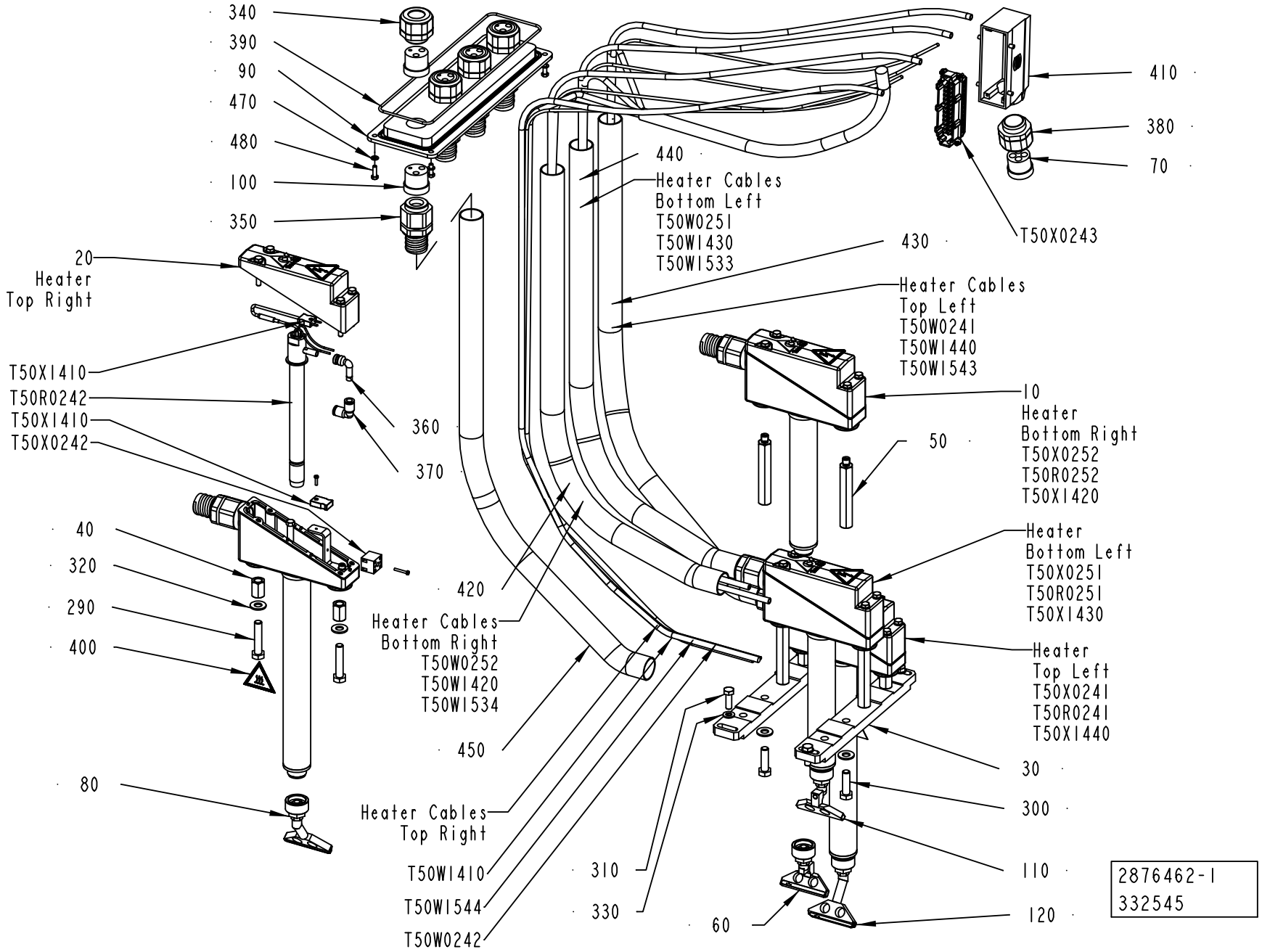

| Pos | Part No | UN | Qty | Description | Page No |
|---|---|---|---|---|---|
| **Common Parts (Cont'd)** | | | | | |
| 350 | 90458-0451 | | 4 | HOSE GLAND EMC M32 EXTENDED | |
| 360 | 90055-0172 | | 4 | ELBOW WITH TAILPIECE 8/8 MM | |
| 370 | 342735-0103 | | 4 | ELBOW PIPE JOINT | |
| 380 | 90458-0423 | | 1 | GLAND W/O INSERT M32X1,5 EXTENDED | |
| 390 | 90161-0001 | M | 1 | O-RING MATERIAL 3 MM | |
| 400 | 359710-0001 | | 2 | WARNING SIGN ISO, HOT SURFACE | |
| 410 | 90459-6631 | | 1 | HOOD 24 B SIDE ENTRY, 19 30 024 1522 | |
| 420 | 90152-0070 | MM | 420 | METAL HOSE, 32,5X26, UL 2621 | |
| 430 | 90152-0070 | MM | 390 | METAL HOSE, 32,5X26, UL 2621 | |
| 440 | 90152-0070 | MM | 420 | METAL HOSE, 32,5X26, UL 2621 | |
| 450 | 90152-0070 | MM | 390 | METAL HOSE, 32,5X26, UL 2621 | |
| 470 | 315105-0146 | | 8 | WASHER BRB 5,3X10 RFR | |
| 480 | 312105-0329 | | 4 | SCREW M6S ISO 4017 M5X16 A480 | |
| T50R0241 | 2773828-0000 | | 1 | HEATING ELEMENT | |
| T50R0242 | 2773828-0000 | | 1 | HEATING ELEMENT | |
| T50R0251 | 2773828-0000 | | 1 | HEATING ELEMENT | |
| T50R0252 | 2773828-0000 | | 1 | HEATING ELEMENT | |
| T50W0241 | 90220-0034 | MM | 1250 | THERMOCABLE TEX/SITW-20F-KX 2X0,5MM2 | |
| T50W0242 | 90220-0034 | MM | 1250 | THERMOCABLE TEX/SITW-20F-KX 2X0,5MM2 | |
| T50W0251 | 90220-0034 | MM | 1250 | THERMOCABLE TEX/SITW-20F-KX 2X0,5MM2 | |
| T50W0252 | 90220-0034 | MM | 1250 | THERMOCABLE TEX/SITW-20F-KX 2X0,5MM2 | |
| T50W1410 | 351150-0417 | MM | 2600 | CABLE OLFLEX 3X2,5 MM2 LIGHT/GREY | |
| T50W1411 | 90220-0034 | MM | 1200 | THERMOCABLE TEX/SITW-20F-KX 2X0,5MM2 | |
| T50W1420 | 351150-0417 | MM | 2600 | CABLE OLFLEX 3X2,5 MM2 LIGHT/GREY | |
| T50W1421 | 90220-0034 | MM | 1200 | THERMOCABLE TEX/SITW-20F-KX 2X0,5MM2 | |
| T50W1430 | 351150-0417 | MM | 2600 | CABLE OLFLEX 3X2,5 MM2 LIGHT/GREY | |
| T50W1431 | 90220-0034 | MM | 1200 | THERMOCABLE TEX/SITW-20F-KX 2X0,5MM2 | |
| T50W1440 | 351150-0417 | MM | 2600 | CABLE OLFLEX 3X2,5 MM2 LIGHT/GREY | |
| T50W1441 | 90220-0034 | MM | 1200 | THERMOCABLE TEX/SITW-20F-KX 2X0,5MM2 | |
| T50W1533 | 90166-0013 | MM | 2350 | TUBE 8 MM PA BLUE | |
| T50W1534 | 90166-0013 | MM | 2350 | TUBE 8 MM PA BLUE | |
| T50W1543 | 90166-0013 | MM | 2350 | TUBE 8 MM PA BLUE | |
| T50W1544 | 90166-0013 | MM | 2350 | TUBE 8 MM PA BLUE | |
| T50X0241 | 90195-0020 | | 1 | TERMINAL BLOCK, BK 2CRN; 0624720000 | |
| T50X0242 | 90195-0020 | | 1 | TERMINAL BLOCK, BK 2CRN; 0624720000 | |
| T50X0243 | 90110-0056 | | 1 | MALE INSERT HAN 24 E 09 33 024 2601 | |
| T50X0251 | 90195-0020 | | 1 | TERMINAL BLOCK, BK 2CRN; 0624720000 | |
| T50X0252 | 90195-0020 | | 1 | TERMINAL BLOCK, BK 2CRN; 0624720000 | |
| T50X1410 | 90458-0135 | | 1 | MALE PLUG, COD.220-0397 | |
| T50X1410 | 90458-0136 | | 1 | FEMALE PLUG, COD 220-0381 | |
| T50X1411 | 90326-0020 | | 1 | PLUG, FEMALE YELLOW CR-AL | |
| T50X1411 | 90326-0022 | | 1 | PLUG, MALE YELLOW CR-AL | |
| T50X1420 | 90458-0136 | | 1 | FEMALE PLUG, COD 220-0381 | |
| T50X1420 | 90458-0135 | | 1 | MALE PLUG, COD.220-0397 | |
| T50X1421 | 90326-0020 | | 1 | PLUG, FEMALE YELLOW CR-AL | |
| T50X1421 | 90326-0022 | | 1 | PLUG, MALE YELLOW CR-AL | |
| T50X1430 | 90458-0136 | | 1 | FEMALE PLUG, COD 220-0381 | |
| T50X1430 | 90458-0135 | | 1 | MALE PLUG, COD.220-0397 | |
| T50X1431 | 90326-0022 | | 1 | PLUG, MALE YELLOW CR-AL | |
| T50X1431 | 90326-0020 | | 1 | PLUG, FEMALE YELLOW CR-AL | |
| T50X1440 | 90458-0135 | | 1 | MALE PLUG, COD.220-0397 | |
| T50X1440 | 90458-0136 | | 1 | FEMALE PLUG, COD 220-0381 | |
| T50X1441 | 90326-0020 | | 1 | PLUG, FEMALE YELLOW CR-AL | |
| T50X1441 | 90326-0022 | | 1 | PLUG, MALE YELLOW CR-AL | |

Machine Type | Group Description | Used-In | Group Number | Page No

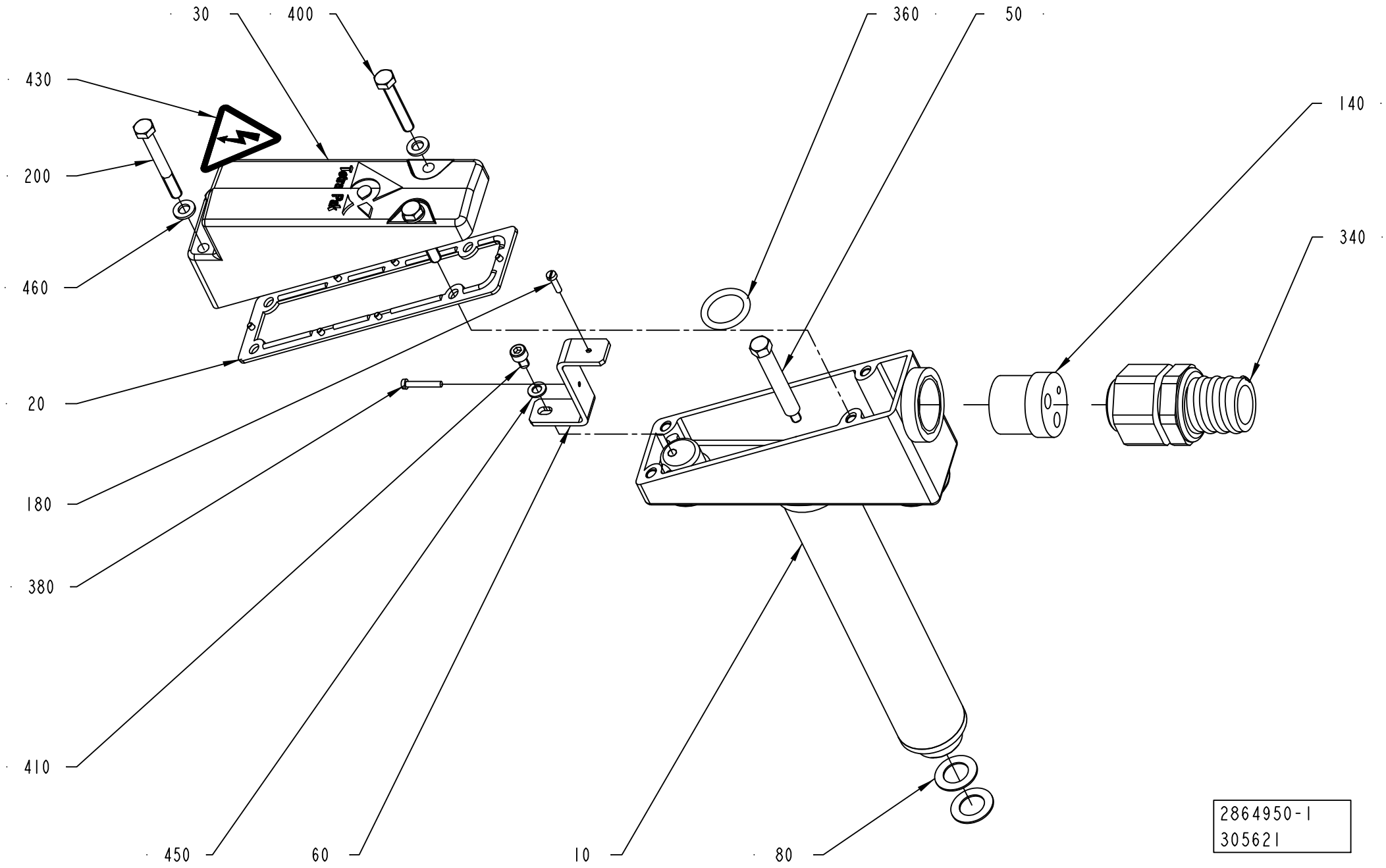
30
400
360
50
430
140
200
340
460
20
180
380
410
450
60
10
80
2864950-1
305621

ECM: 326766 - 20070703
Group number: 2864950-0100
Assembly Drawing: 2864950-1_1_AA

| Pos | Part No | UN | Qty | Description | Page No |
|---|---|---|---|---|---|
| - | | | | | |
| 010 | 2864951-0000 | | 1 | HEATING PIPE | |
| 020 | 2833324-0000 | | 1 | GASKET | |
| 030 | 2855849-0000 | | 1 | COVER | |
| 050 | 2833326-0000 | | 1 | BRACKET | |
| 060 | 2818560-0000 | | 1 | BRACKET | |
| 080 | 2773832-0000 | | 2 | GASKET | |
| 140 | 1484379-0000 | | 1 | INSERT | |
| 180 | 312125-0226 | | 1 | SCREW ISO 1207 M3X12 A4 | |
| 200 | 312105-0381 | | 2 | SCREW M6S ISO 4014 M6X55 A480 | |
| 340 | 90458-0451 | | 1 | HOSE GLAND EMC M32 EXTENDED | |
| 360 | 315205-0516 | | 1 | O-RING 20,22X3,53 MM | |
| 380 | 312125-0230 | | 1 | SCREW ISO 1207 M3X20 A4 | |
| 400 | 312109-0378 | | 2 | SCREW M6S ISO 4017 M6X40 A480 | |
| 410 | 312115-0323 | | 1 | SCREW ISO4762 M5X8 A4 80 | |
| 430 | 359705-0015 | | 1 | WARNING SIGN ISO, RISK OF ELECTRIC SHOCK | |
| 450 | 315105-0146 | | 1 | WASHER BRB 5,3X10 RFR | |
| 460 | 315105-0153 | | 4 | WASHER BRB 6,4X12 RFR | |

| Pos | Part No | UN | Qty | Description | Page No |
|---|---|---|---|---|---|

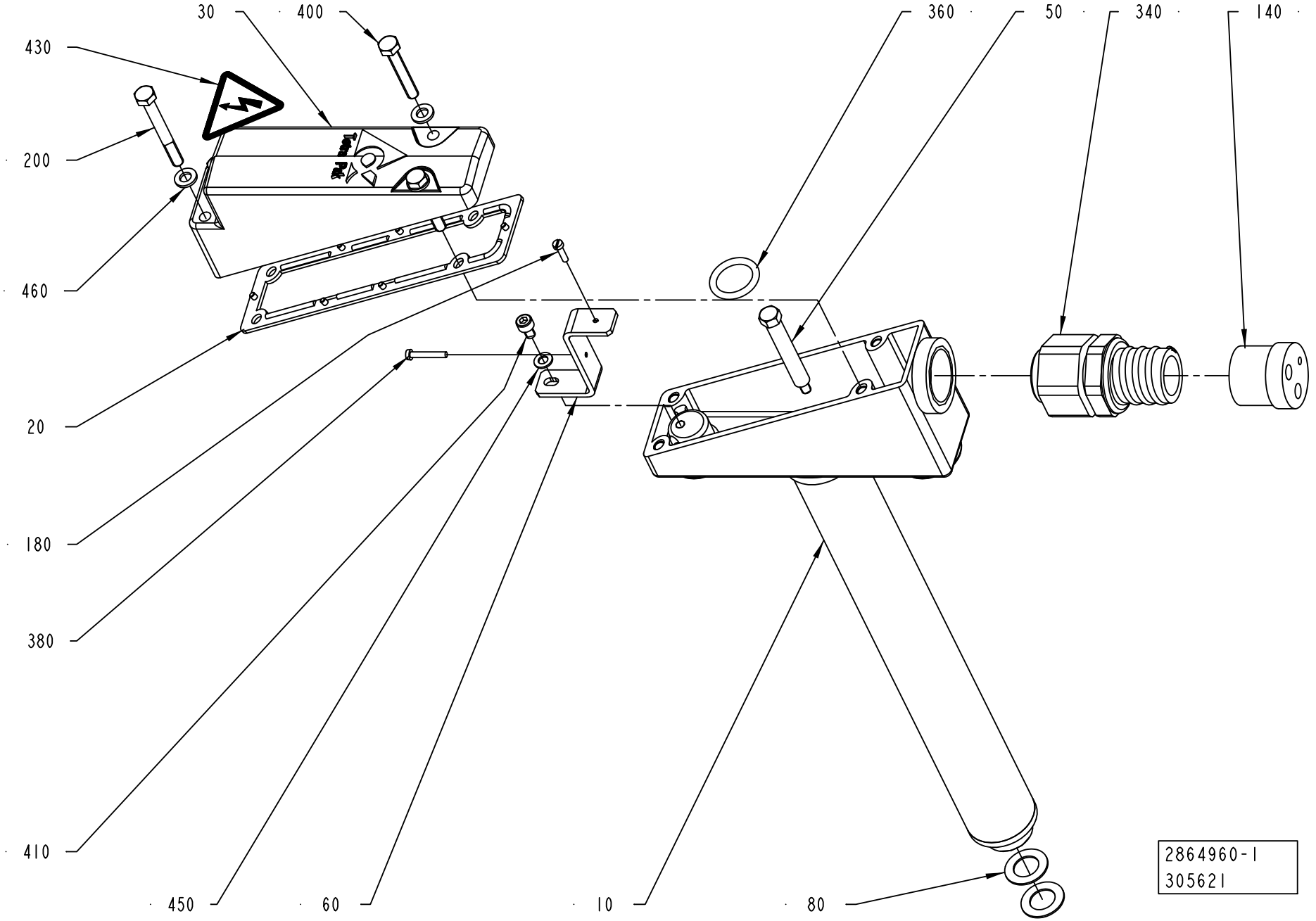
30
400
360
50
340
140
430
200
460
20
180
380
410
450
60
10
80
2864960-1
305621

ECM: 326767 - 20070703
Group number: 2864960-0100
Assembly Drawing: 2864960-1_1_AA

| Pos | Part No | UN | Qty | Description | Page No |
|---|---|---|---|---|---|
| - | | | | | |
| 010 | 2864952-0000 | | 1 | HEATING PIPE | |
| 020 | 2833324-0000 | | 1 | GASKET | |
| 030 | 2855849-0000 | | 1 | COVER | |
| 050 | 2833326-0000 | | 1 | BRACKET | |
| 060 | 2818560-0000 | | 1 | BRACKET | |
| 080 | 2773832-0000 | | 2 | GASKET | |
| 140 | 1484379-0000 | | 1 | INSERT | |
| 180 | 312125-0226 | | 1 | SCREW ISO 1207 M3X12 A4 | |
| 200 | 312105-0381 | | 2 | SCREW M6S ISO 4014 M6X55 A480 | |
| 340 | 90458-0451 | | 1 | HOSE GLAND EMC M32 EXTENDED | |
| 360 | 315205-0516 | | 1 | O-RING 20,22X3,53 MM | |
| 380 | 312125-0230 | | 1 | SCREW ISO 1207 M3X20 A4 | |
| 400 | 312109-0378 | | 2 | SCREW M6S ISO 4017 M6X40 A480 | |
| 410 | 312115-0323 | | 1 | SCREW ISO4762 M5X8 A4 80 | |
| 430 | 359705-0015 | | 1 | WARNING SIGN ISO, RISK OF ELECTRIC SHOCK | |
| 450 | 315105-0146 | | 1 | WASHER BRB 5,3X10 RFR | |
| 460 | 315105-0153 | | 4 | WASHER BRB 6,4X12 RFR | |

| Pos | Part No | UN | Qty | Description | Page No |
|---|---|---|---|---|---|

Machine Type | Group Description | Used-In | Group Number | Page No

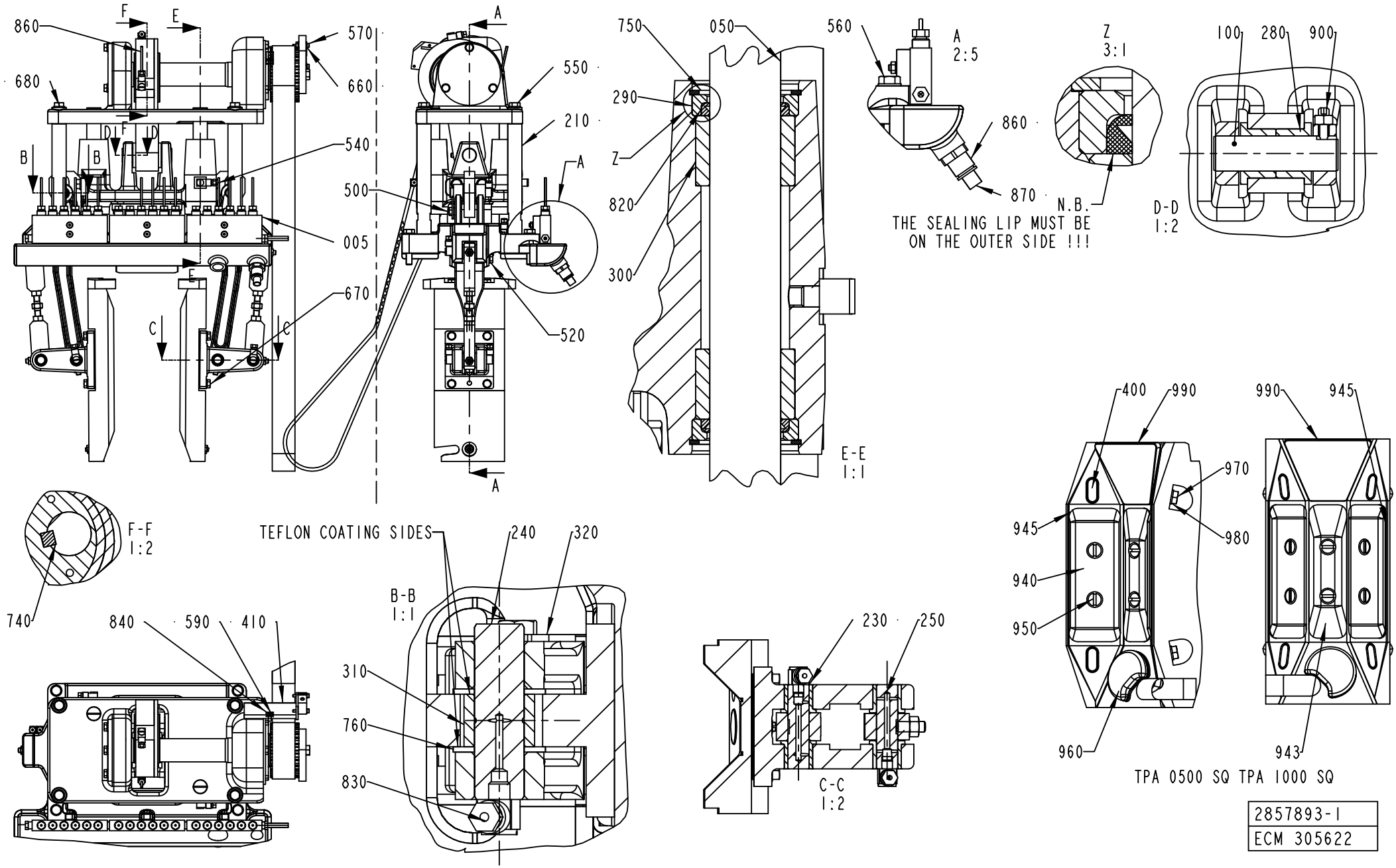
860
680
570
660
550
210
540
500
005
670
520
750
050
560
290
Z
820
300
A
2:5
860
870
N.B.
THE SEALING LIP MUST BE
ON THE OUTER SIDE !!!
Z
3:1
100
280
900
D-D
1:2
E-E
1:1
F-F
1:2
740
TEFLON COATING SIDES
240
320
B-B
1:1
840
590
410
310
760
830
230
250
C-C
1:2
400
990
990
945
970
980
945
940
950
960
943
TPA 0500 SQ TPA 1000 SQ
2857893-1
ECM 305622

ECM: 367695 - 20081003
Group number: 2857893-0100
Assembly Drawing: 2857893-1_1_AA

This list covers pages from 5-138 to 5-145

| Pos | Part No | UN | Qty | Description | Page No |
|---|---|---|---|---|---|
| **TBA 0500B, TBA 1000B (See drawing on pages: 5-138, 5-140)** | | | | | |
| 010 | 1144482-0000 | | 2 | SUPPORT | |
| 080 | 1144492-0000 | | 1 | SPRING | |
| 260 | 1144511-0000 | | 6 | SHIM | |
| 360 | 321133-0375 | | 1 | BUSHING, 35X39X30 MM | |
| 450 | 1144978-0000 | | 2 | CAM | |
| 475 | 2524512-0000 | | 1 | PUSHER | |
| 480 | 1260702-0000 | | 1 | PLATE | |
| 500 | 312105-0366 | | 8 | SCREW M6S ISO 4017 M6X12 A480 | |
| 520 | 312105-0370 | | 11 | SCREW M6S ISO 4017 M6X20 A480 | |
| 530 | 312105-0372 | | 8 | SCREW M6S ISO 4017 M6X25 A480 | |
| 580 | 312115-0370 | | 1 | SCREW ISO4762 M6X20 A4 80 | |
| 630 | 312605-0316 | | 9 | HEXAGON NUT, M6M M6 A280 | |
| 650 | 315103-0153 | | 3 | WASHER, BRB, 6,4/12,H=1,5 NIPL BR | |
| 670 | 315105-0153 | | 5 | WASHER BRB 6,4X12 RFR | |
| **TBA 0500SQ, TBA 1000SQ (See drawing on pages: 5-138, 5-140)** | | | | | |
| 010 | 1144482-0000 | | 2 | SUPPORT | |
| 080 | 1144492-0000 | | 1 | SPRING | |
| 260 | 1144511-0000 | | 6 | SHIM | |
| 360 | 321141-0375 | | 1 | BEARING BUSH W/O FLANGE, 35X39X30 MM | |
| 450 | 1144978-0000 | | 2 | CAM | |
| 470 | 2529289-0000 | | 1 | PUSHER | |
| 475 | 2716534-0000 | | 1 | PUSHER | |
| 480 | 1549940-0000 | | 1 | PUSHER | |
| 500 | 312105-0366 | | 8 | SCREW M6S ISO 4017 M6X12 A480 | |
| 530 | 312105-0370 | | 11 | SCREW M6S ISO 4017 M6X20 A480 | |
| 580 | 312115-0370 | | 1 | SCREW ISO4762 M6X20 A4 80 | |
| 630 | 312605-0316 | | 9 | HEXAGON NUT, M6M M6 A280 | |
| 650 | 315103-0153 | | 3 | WASHER, BRB, 6,4/12,H=1,5 NIPL BR | |
| 670 | 315105-0153 | | 5 | WASHER BRB 6,4X12 RFR | |
| **TBA 1000S (See drawing on pages: 5-138, 5-140)** | | | | | |
| 010 | 1144482-0000 | | 2 | SUPPORT | |
| 080 | 1144492-0000 | | 1 | SPRING | |
| 260 | 1144511-0000 | | 6 | SHIM | |
| 360 | 321133-0375 | | 1 | BUSHING, 35X39X30 MM | |
| 450 | 1144978-0000 | | 2 | CAM | |
| 470 | 1144928-0000 | | 1 | PUSHER | |
| 475 | 1144928-0000 | | 1 | PUSHER | |
| 480 | 1144932-0000 | | 1 | PLATE | |
| 500 | 312105-0366 | | 8 | SCREW M6S ISO 4017 M6X12 A480 | |
| 520 | 312105-0370 | | 11 | SCREW M6S ISO 4017 M6X20 A480 | |
| 530 | 312105-0372 | | 8 | SCREW M6S ISO 4017 M6X25 A480 | |
| 580 | 312115-0370 | | 1 | SCREW ISO4762 M6X20 A4 80 | |
| 630 | 312605-0316 | | 9 | HEXAGON NUT, M6M M6 A280 | |
| 650 | 315103-0153 | | 3 | WASHER, BRB, 6,4/12,H=1,5 NIPL BR | |
| 670 | 315105-0153 | | 5 | WASHER BRB 6,4X12 RFR | |
| **TBA 1500S (See drawing on pages: 5-138, 5-140)** | | | | | |
| 010 | 1144482-0000 | | 2 | SUPPORT | |
| 080 | 1144492-0000 | | 1 | SPRING | |
| 260 | 1144511-0000 | | 6 | SHIM | |
| 360 | 321133-0375 | | 1 | BUSHING, 35X39X30 MM | |
| 450 | 1144978-0000 | | 2 | CAM | |
| 470 | 1317654-0000 | | 1 | PUSHER | |
| 475 | 1317654-0000 | | 1 | PUSHER | |
| 480 | 1317655-0000 | | 1 | PLATE | |
| 500 | 312105-0366 | | 8 | SCREW M6S ISO 4017 M6X12 A480 | |
| 520 | 312105-0370 | | 15 | SCREW M6S ISO 4017 M6X20 A480 | |
| 530 | 312105-0372 | | 8 | SCREW M6S ISO 4017 M6X25 A480 | |
| 580 | 312115-0370 | | 1 | SCREW ISO4762 M6X20 A4 80 | |
| 630 | 312605-0316 | | 9 | HEXAGON NUT, M6M M6 A280 | |
| 650 | 315103-0153 | | 3 | WASHER, BRB, 6,4/12,H=1,5 NIPL BR | |
| 655 | 1317787-0000 | | 2 | CATCH | |
| 670 | 315105-0153 | | 5 | WASHER BRB 6,4X12 RFR | |
| **TBA 2000S (See drawing on pages: 5-138, 5-140)** | | | | | |
| 010 | 1144482-0000 | | 2 | SUPPORT | |
| 080 | 2662142-0000 | | 1 | SPRING | |
| 260 | 1144511-0000 | | 6 | SHIM | |
| 360 | 321133-0375 | | 1 | BUSHING, 35X39X30 MM | |
| 450 | 1144978-0000 | | 2 | CAM | |
| 470 | 2661429-0000 | | 1 | PUSHER | |
| 475 | 2661429-0000 | | 1 | PUSHER | |
| 480 | 2660841-0000 | | 1 | PUSHER | |
| 500 | 312105-0366 | | 7 | SCREW M6S ISO 4017 M6X12 A480 | |
| 520 | 312105-0370 | | 3 | SCREW M6S ISO 4017 M6X20 A480 | |
| 530 | 312605-0316 | | 8 | HEXAGON NUT, M6M M6 A280 | |
| 580 | 312115-0370 | | 5 | SCREW ISO4762 M6X20 A4 80 | |
| 630 | 312605-0316 | | 9 | HEXAGON NUT, M6M M6 A280 | |
| 650 | 315103-0153 | | 3 | WASHER, BRB, 6,4/12,H=1,5 NIPL BR | |
| 655 | 2594902-0000 | | 2 | CATCH | |
| 670 | 315105-0153 | | 4 | WASHER BRB 6,4X12 RFR | |
| **TPA 1000SQ, TPA 0750SQ (See drawing on pages: 5-142, 5-144)** | | | | | |
| 010 | 2647101-0000 | | 2 | SUPPORT | |
| 040 | 2647099-0000 | | 2 | GUIDE | |
| 080 | 1143530-0000 | | 1 | SPRING | |

Machine Type | Group Description | Used-In | Group Number | Page No

# PRESSURE DEVICE



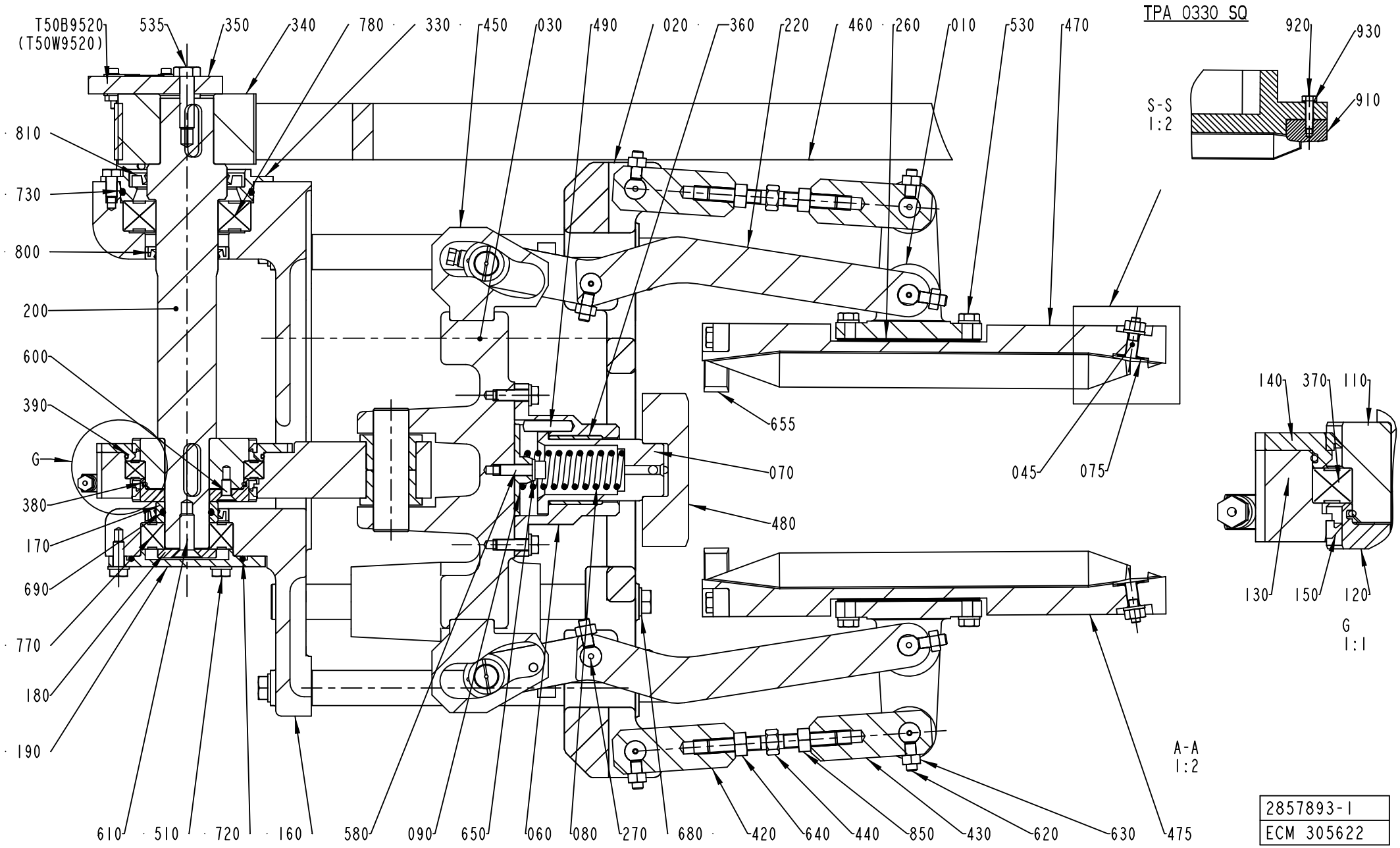


| |
|---|
| 2857893-1 |
| ECM 305622 |

| Pos | Part No | UN | Qty | Description | Page No |
|---|---|---|---|---|---|
| **TPA 1000SQ, TPA 0750SQ (Cont'd) (See drawing on pages: 5-142, 5-144)** | | | | | |
| 260 | 2658249-0000 | | 6 | SHIM | |
| 360 | 321133-0375 | | 1 | BUSHING, 35X39X30 MM | |
| 450 | 1144486-0000 | | 2 | CAM | |
| 470 | 2971903-0100 | | 1 | PUSHER | **5-147** |
| 480 | 2698300-0000 | | 1 | PLATE | |
| 500 | 312105-0366 | | 7 | SCREW M6S ISO 4017 M6X12 A480 | |
| 520 | 312105-0370 | | 3 | SCREW M6S ISO 4017 M6X20 A480 | |
| 525 | 312105-0368 | | 4 | SCREW M6S ISO 4017 M6X16 A480 | |
| 530 | 312105-0372 | | 4 | SCREW M6S ISO 4017 M6X25 A480 | |
| 580 | 312115-0370 | | 1 | SCREW ISO4762 M6X20 A4 80 | |
| 630 | 312605-0316 | | 9 | HEXAGON NUT, M6M M6 A280 | |
| 650 | 315103-0153 | | 3 | WASHER, BRB, 6,4/12,H=1,5 NIPL BR | |
| 670 | 315105-0153 | | 4 | WASHER BRB 6,4X12 RFR | |
| 905 | 90459-3940 | | 2 | LEVER, GN 612-6-M16X1.5-A-NI | |
| **Common Parts** | | | | | |
| 005 | 2861123-0100 | | 1 | DISTRIBUTOR | **5-149, 5-151** |
| 020 | 2851346-0000 | | 1 | PLATE | |
| 030 | 1144485-0000 | | 1 | SUPPORT | |
| 050 | 1144488-0000 | | 2 | COLUMN | |
| 060 | 1144489-0000 | | 1 | FLANGE | |
| 070 | 1478189-0000 | | 1 | SUPPORT | |
| 090 | 1144493-0000 | | 1 | WASHER | |
| 100 | 1144494-0000 | | 1 | AXLE PIN | |
| 110 | 1144495-0000 | | 1 | ECCENTRIC | |
| 120 | 1144496-0000 | | 1 | ECCENTRIC | |
| 130 | 1346539-0000 | | 1 | CONNECTING ROD | |
| 140 | 1144498-0000 | | 1 | FLANGE | |
| 150 | 90091-0408 | | 2 | BEARING SEAL 70X78X5 MM | |
| 160 | 1144500-0000 | | 1 | SUPPORT | |
| 170 | 1144501-0000 | | 1 | SPACER | |
| 180 | 1144502-0000 | | 1 | WASHER | |
| 190 | 1144503-0000 | | 1 | FLANGE | |
| 200 | 1349516-0000 | | 1 | SHAFT | |
| 210 | 1144505-0000 | | 4 | COLUMN | |
| 220 | 1144506-0000 | | 2 | LEVER | |
| 230 | 90458-1404 | | 16 | FLANGE BUSHING, 12X16X16 MM | |
| 240 | 1144508-0000 | | 2 | AXLE PIN | |
| 250 | 1317362-0000 | | 6 | SHAFT | |
| 270 | 1317363-0000 | | 2 | SHAFT | |
| 280 | 1144514-0000 | | 2 | BUSHING | |
| 290 | 1144515-0000 | | 4 | INSERT | |
| 300 | 1144517-0000 | | 4 | BUSHING | |
| 310 | 2526249-0000 | | 2 | ROLLER | |
| 320 | 1144521-0000 | | 2 | CLAMP | |
| 330 | 1347018-0000 | | 1 | PLUG | |
| 340 | 1349517-0000 | | 1 | TOOTHED PULLEY | |
| 350 | 2727631-0000 | | 1 | ACTIVATOR | |
| 370 | 90214-0229 | | 1 | BALL BEARING, 65X85X10 MM | |
| 380 | 90242-0271 | | 1 | O-RING 63,22X1,78 MM | |
| 390 | 90242-0270 | | 1 | O-RING 82,27X1,78 MM | |
| 410 | 1349518-0000 | | 1 | SUPPORT | |
| 420 | 1144914-0000 | | 2 | LEVER | |
| 430 | 1144915-0000 | | 2 | LEVER | |
| 440 | 1144916-0000 | | 2 | ADJUSTING SCREW | |
| 460 | 1348537-0000 | | 1 | TIMING BELT | |
| 480 | 1499143-0000 | | 1 | PLATE | |
| 490 | 1498029-0000 | | 1 | PIN | |
| 510 | 312105-0368 | | 3 | SCREW M6S ISO 4017 M6X16 A480 | |
| 530 | 312105-0372 | | 8 | SCREW M6S ISO 4017 M6X25 A480 | |
| 535 | 312105-0455 | | 1 | SCREW M6S ISO 4017 M8X30 A480 | |
| 540 | 312105-0451 | | 4 | SCREW M6S ISO 4017 M8X20 A480 | |
| 550 | 312105-0457 | | 6 | SCREW M6S ISO 4014 M8X35 A480 | |
| 560 | 312109-0460 | | 4 | SCREW M6S ISO 4017 M8X45 A480 | |
| 570 | 312115-0230 | | 2 | SCREW ISO4762 M3X20 A4 80 | |
| 590 | 312125-0287 | | 1 | SCREW ISO 1207 M4X8 A4 | |
| 600 | 312155-0327 | | 6 | SCREW DIN 7991 MF6S M5X12 A4 70 | |
| 610 | 312155-0453 | | 1 | SCREW DIN 7991 MF6S M8X25 A4 70 | |
| 620 | 312318-0368 | | 9 | SCREW ISO4029 M6X16 A4 | |
| 640 | 312605-0318 | | 2 | HEXAGON NUT, M6M M8 A280 | |
| 660 | 315105-0124 | | 2 | WASHER BRB 3,2X6 RFR | |
| 680 | 315105-0165 | | 14 | WASHER BRB 8,4X16 RFR | |
| 690 | 315202-0217 | | 1 | O-RING 24,2X3 MM | |
| 720 | 315202-0303 | | 1 | O-RING 59,5X3 MM | |
| 730 | 315202-0305 | | 1 | O-RING 69,5X3 MM | |
| 740 | 315705-0267 | | 2 | PARALLEL KEY W. ROUND ENDS 8X7X30 MM | |
| 750 | 315753-0122 | | 4 | RETAINING RING FOR BORE DIN 472 30 A2 | |
| 760 | 321130-0200 | | 4 | THRUST WASHER, 14X26X1,5 MM | |
| 770 | 321313-0105 | | 1 | BALL BEARING, 25X52X15MM | |
| 780 | 321313-0107 | | 1 | BALL BEARING, 35X72X17MM | |
| 800 | 90091-0297 | | 2 | RADIAL SEAL 35X47X7 MM DUST LIP | |
| 810 | 90091-0298 | | 1 | RADIAL SEAL 45X65X8 MM DUST LIP | |
| 820 | 90091-0380 | | 4 | SCRAPER, EXCLUDER 20X24,8X3,7 MM | |
| 830 | 90134-0058 | | 14 | CONNECTION | |

Machine Type | Group Description | Used-In | Group Number | Page No

# PRESSURE DEVICE



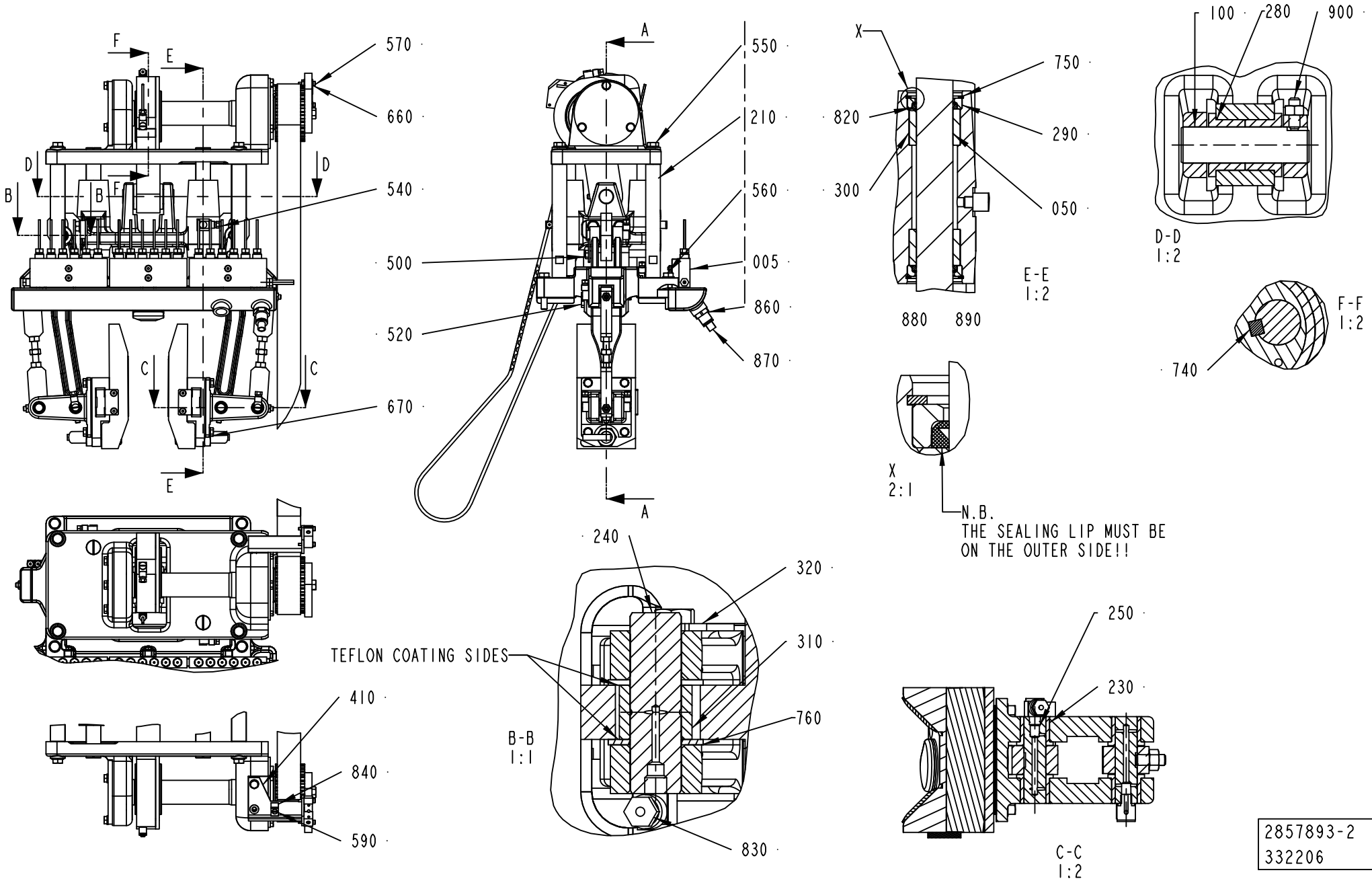


2857893-2
332206

ECM: 367695 - 20081003
Group number: 2857893-0100
Assembly Drawing: 2857893-2_1_AB

This list covers pages from 5-138 to 5-145

| Pos | Part No | UN | Qty | Description | Page No |
|---|---|---|---|---|---|
| **Common Parts (Cont'd)** | | | | | |
| 840 | 90165-0056 | | 1 | PIPE CLIP FOR TUBE D=4 MM | |
| 850 | 312902-0318 | | 2 | NUT HEX. LEFT THREAD, M8 A280 | |
| 860 | 342722-0206 | | 1 | STRAIGHT COUPLING D=8-G3/8" | |
| 870 | 90166-0013 | M | 4 | TUBE 8 MM PA BLUE | |
| 880 | 352113-0102 | | 5 | CABLE TIE, BLACK 188X4,8 MM | |
| 890 | 352113-0101 | | 8 | CABLE TIE, BLACK 92X2,5 MM | |
| 900 | 312311-0370 | | 1 | SCREW ISO4028 M6X20 FZB | |
| T50B9520 | 90044-0194 | | 1 | PROX.SW. IN5329/IN3002-BPKG(EX90044-104) | |

| Pos | Part No | UN | Qty | Description | Page No |
|---|---|---|---|---|---|

# PRESSURE DEVICE



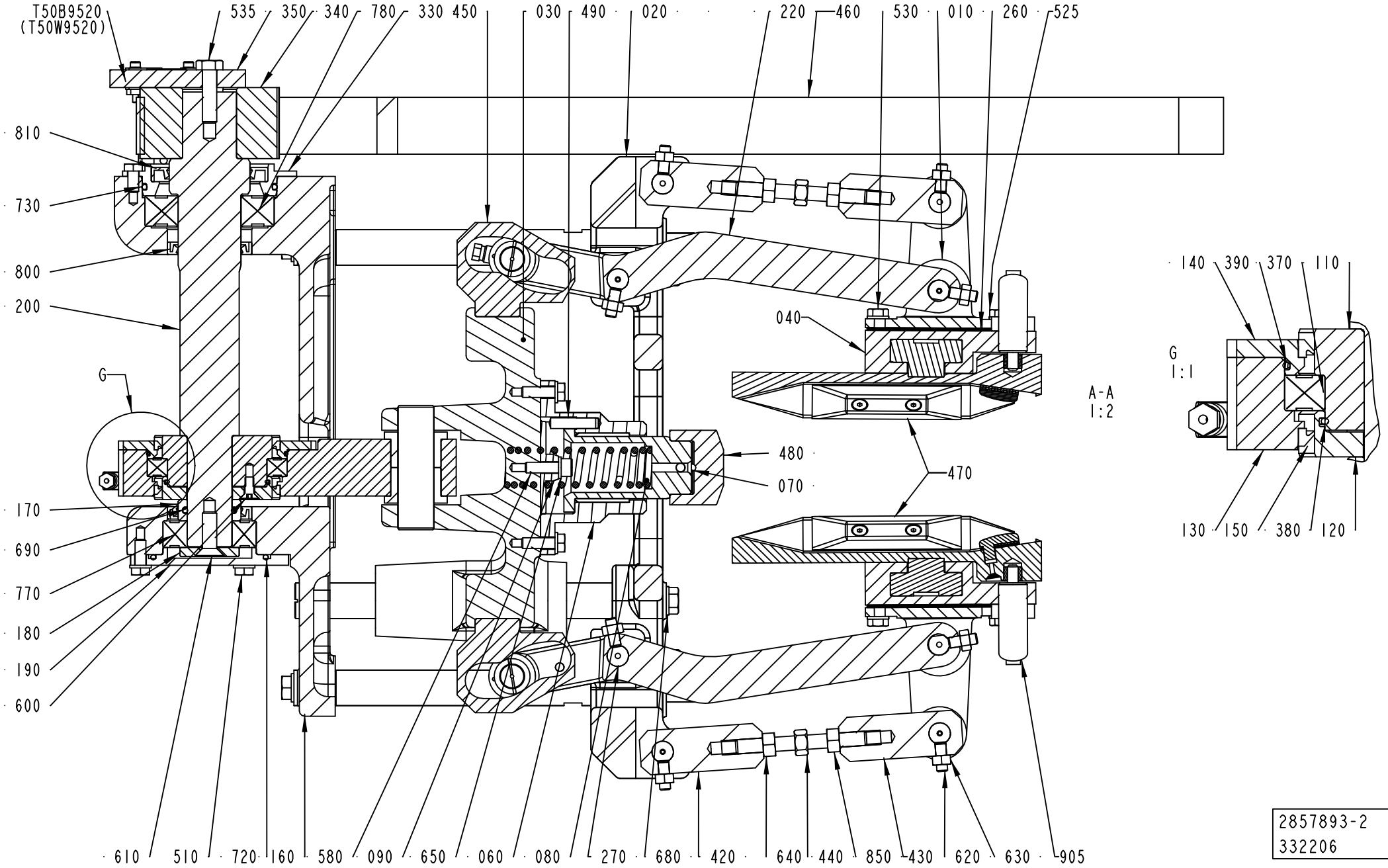


2857893-2
332206

| Pos | Part No | UN | Qty | Description | Page No |
|---|---|---|---|---|---|
| **SEE PREVIOUS LISTS PAGES: 5-139, 5-141, 5-143.** | | | | | |

| Pos | Part No | UN | Qty | Description | Page No |
|---|---|---|---|---|---|

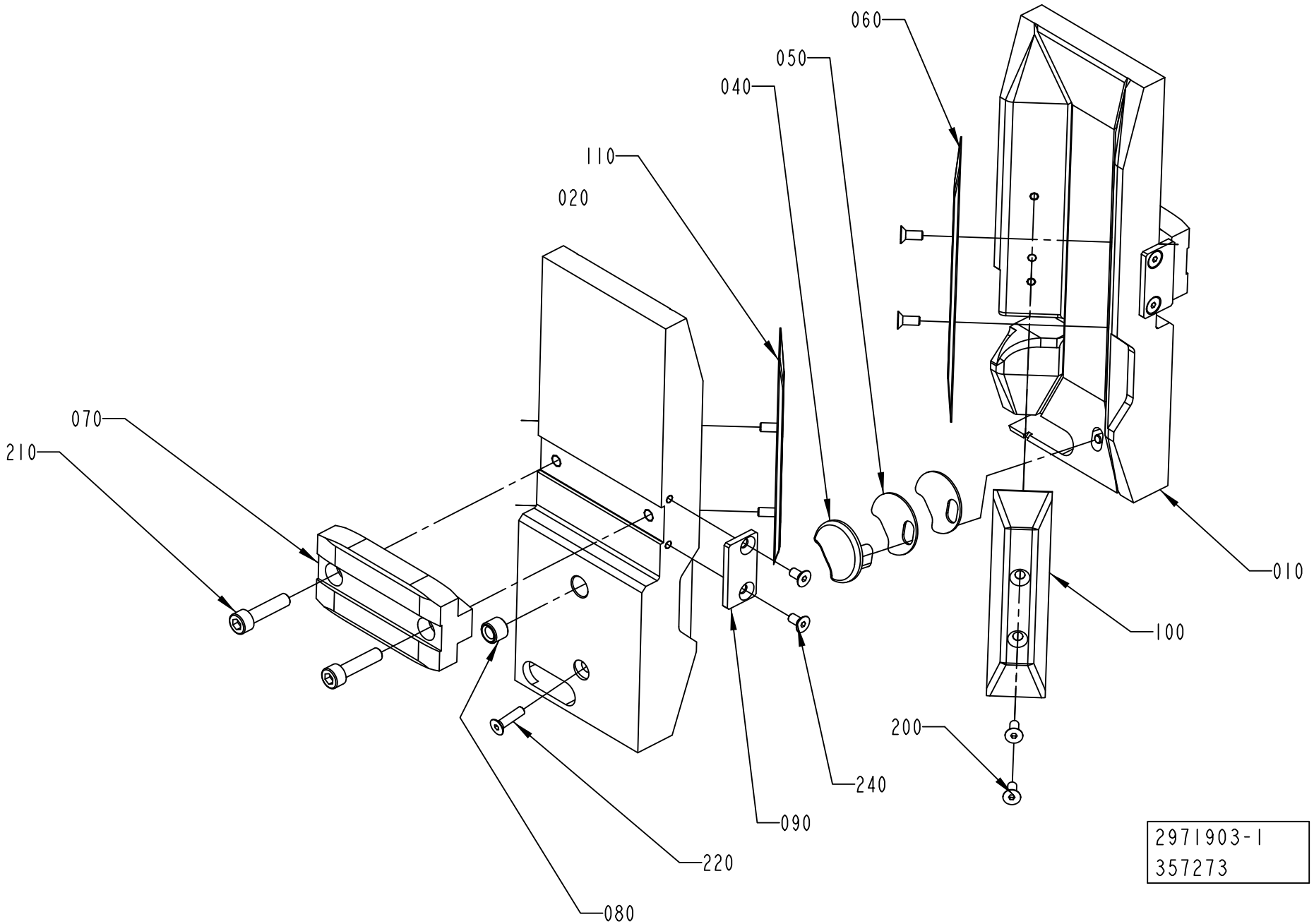
060
050
040
110
020
070
210
010
100
200
240
090
220
080
2971903-1
357273

ECM: 367717 - 20081003
Group number: 2971903-0100
Assembly Drawing: 2971903-1_1_AA

| Pos | Part No | UN | Qty | Description | Page No |
|---|---|---|---|---|---|
| **TPA 0750SQ (See drawing on page: 5-146)** | | | | | |
| 010 | 2647094-0000 | | 1 | PUSHER | |
| 020 | 2647093-0000 | | 1 | PUSHER | |
| 040 | 2647097-0000 | | 2 | NAIL | |
| 050 | 2658247-0000 | | 6 | WASHER | |
| 060 | 2647100-0000 | | 4 | VOLUME BULGE | |
| 090 | 2698319-0000 | | 2 | BLOCK | |
| 200 | 312155-0289 | | 8 | SCREW DIN 7991 MF6S M4X10 A4 70 | |
| 220 | 312155-0293 | | 2 | SCREW DIN 7991 MF6S M4X16 A4 70 | |
| 240 | 312155-0287 | | 4 | SCREW DIN 7991 MF6S M4X8 A4 70 | |
| **TPA 1000SQ (See drawing on page: 5-146)** | | | | | |
| 010 | 2647096-0000 | | 1 | PUSHER | |
| 020 | 2647095-0000 | | 1 | PUSHER | |
| 040 | 2647097-0000 | | 2 | NAIL | |
| 050 | 2658247-0000 | | 6 | WASHER | |
| 060 | 2960407-0000 | | 2 | VOLUME BULGE | |
| 090 | 2698319-0000 | | 2 | BLOCK | |
| 100 | 2960409-0000 | | 1 | VOLUME BULGE | |
| 200 | 312155-0289 | | 8 | SCREW DIN 7991 MF6S M4X10 A4 70 | |
| 220 | 312155-0293 | | 2 | SCREW DIN 7991 MF6S M4X16 A4 70 | |
| 240 | 312155-0287 | | 4 | SCREW DIN 7991 MF6S M4X8 A4 70 | |
| **Common Parts** | | | | | |
| 070 | 2647098-0000 | | 2 | BLOCK | |
| 080 | 2647113-0000 | | 2 | BUSHING | |
| 210 | 312115-0372 | | 4 | SCREW ISO4762 M6X25 A4 80 | |

| Pos | Part No | UN | Qty | Description | Page No |
|---|---|---|---|---|---|

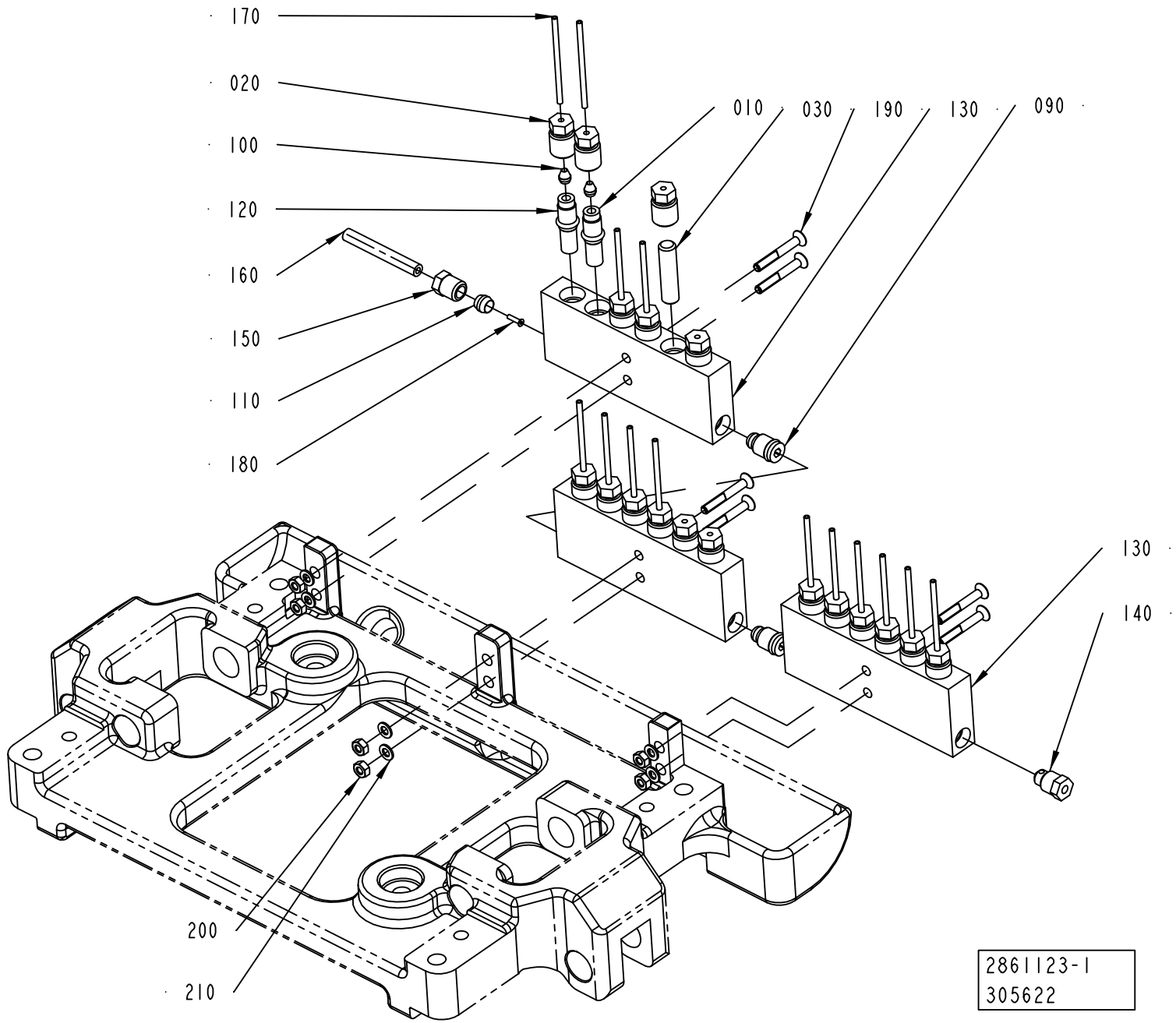
170
020
100
120
160
150
110
180
010
030
190
130
090
130
140
200
210
2861123-1
305622

ECM: 367696 - 20081003
Group number: 2861123-0100
Assembly Drawing: 2861123-1_1_AA

This list covers pages from 5-148 to 5-151

| Pos | Part No | UN | Qty | Description | Page No |
|---|---|---|---|---|---|
| **TBA 1000B, TBA 1000S, TBA 1500S, TBA 2000S, TBA 0500B (See drawing on page: 5-148)** | | | | | |
| 010 | 90092-0052 | | 14 | METERING VALVE 10 MM3 | |
| 020 | 90134-0039 | | 18 | BUSHING VALVE CONNECTION 2,5 MM | |
| 030 | 90134-0052 | | 4 | PLUG DOSING BLOCK | |
| 100 | 90028-0020 | | 14 | CONE TUBE 2,5MM | |
| **TBA 0500SQ, TBA 1000SQ (See drawing on page: 5-148)** | | | | | |
| 010 | 90092-0052 | | 17 | METERING VALVE 10 MM3 | |
| 020 | 90134-0039 | | 18 | BUSHING VALVE CONNECTION 2,5 MM | |
| 100 | 90028-0020 | | 18 | CONE TUBE 2,5MM | |
| T50W8065 | 90166-0143 | MM | 500 | TUBE 2,5 MM PA TRANSP. | |
| T50W8071 | 90166-0143 | MM | 500 | TUBE 2,5 MM PA TRANSP. | |
| T50W8078 | 90166-0143 | M | 1 | TUBE 2,5 MM PA TRANSP. | |
| T50W8079 | 90166-0143 | M | 1 | TUBE 2,5 MM PA TRANSP. | |
| **TPA 1000SQ, TPA 0750SQ (See drawing on page: 5-150)** | | | | | |
| 010 | 90092-0052 | | 15 | METERING VALVE 10 MM3 | |
| 020 | 90134-0039 | | 16 | BUSHING VALVE CONNECTION 2,5 MM | |
| 030 | 90134-0052 | | 2 | PLUG DOSING BLOCK | |
| 040 | 90134-0040 | | 2 | BUSHING VALVE CONNECTION 4 MM | |
| 050 | 90028-0021 | | 2 | CONE TUBE 4 MM | |
| 100 | 90028-0020 | | 14 | CONE TUBE 2,5MM | |
| T50W8061 | 90166-0143 | M | 1 | TUBE 2,5 MM PA TRANSP. | |
| T50W8077 | 90166-0143 | M | 1 | TUBE 2,5 MM PA TRANSP. | |
| **Common Parts** | | | | | |
| 090 | 90134-0054 | | 2 | BLOCK CONNECTION M10X1 | |
| 110 | 90028-0022 | | 1 | CONE TUBE 6 MM | |
| 120 | 90092-0054 | | 1 | METERING VALVE 50 MM3 | |
| 130 | 90459-5652 | | 3 | LUBRICATION BLOCK, HFS4666 | |
| 140 | 90087-0019 | | 1 | PLUG M10X1 STAINLESS | |
| 150 | 90134-0055 | | 1 | BUSHING/NUT INLET/OUTLET 6 MM | |
| 180 | 90134-0030 | | 1 | SLEEVE FOR PLASTIC TUBE | |
| 190 | 312155-0299 | | 6 | SCREW DIN 7991 MF6S M4X30 A4 70 | |
| 200 | 312602-0312 | | 6 | HEXAGON NUT, EN 24032 M6M M4 NIPLBR | |
| 210 | 315105-0136 | | 6 | WASHER BRB 4,3X8 RFR | |
| T50W1344 | 90166-0108 | M | 4 | TUBE 6 MM PA TRANSP. | |
| T50W8060 | 90166-0143 | MM | 500 | TUBE 2,5 MM PA TRANSP. | |
| T50W8062 | 90166-0143 | MM | 500 | TUBE 2,5 MM PA TRANSP. | |
| T50W8063 | 90166-0143 | MM | 500 | TUBE 2,5 MM PA TRANSP. | |
| T50W8064 | 90166-0143 | MM | 500 | TUBE 2,5 MM PA TRANSP. | |
| T50W8066 | 90166-0143 | MM | 500 | TUBE 2,5 MM PA TRANSP. | |
| T50W8067 | 90166-0143 | MM | 500 | TUBE 2,5 MM PA TRANSP. | |
| T50W8068 | 90166-0143 | MM | 500 | TUBE 2,5 MM PA TRANSP. | |
| T50W8069 | 90166-0143 | MM | 500 | TUBE 2,5 MM PA TRANSP. | |
| T50W8070 | 90166-0143 | MM | 500 | TUBE 2,5 MM PA TRANSP. | |
| T50W8072 | 90166-0143 | MM | 500 | TUBE 2,5 MM PA TRANSP. | |
| T50W8073 | 90166-0143 | MM | 500 | TUBE 2,5 MM PA TRANSP. | |
| T50W8074 | 90166-0143 | MM | 500 | TUBE 2,5 MM PA TRANSP. | |
| T50W8075 | 90166-0143 | MM | 500 | TUBE 2,5 MM PA TRANSP. | |
| T50W8076 | 90166-0143 | MM | 500 | TUBE 2,5 MM PA TRANSP. | |

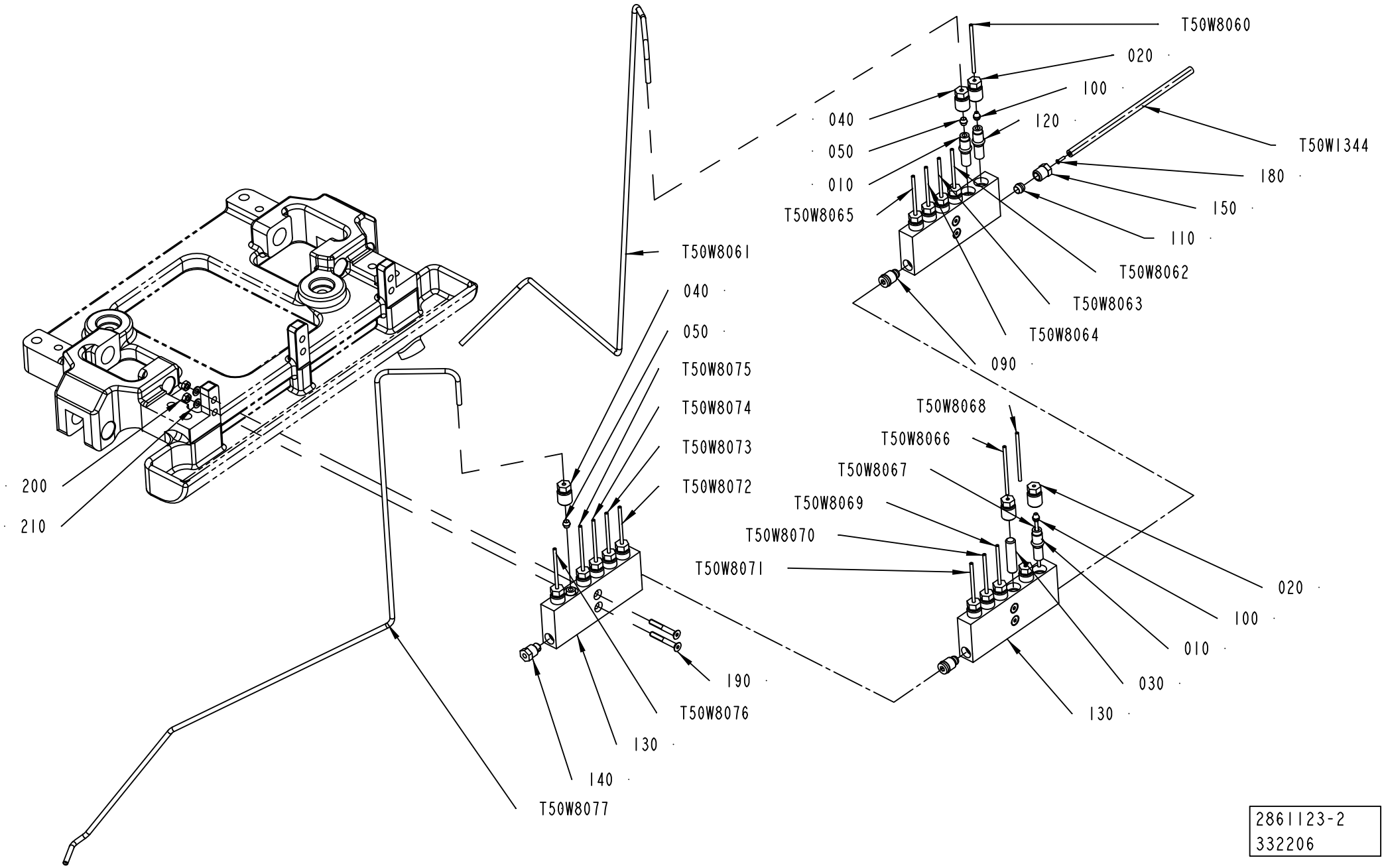


2861123-2
332206

ECM: 367696 - 20081003
Group number: 2861123-0100
Assembly Drawing: 2861123-2_1_AA

This list covers pages from 5-148 to 5-151

| Pos | Part No | UN | Qty | Description | Page No |
|---|---|---|---|---|---|
| **TBA 1000B, TBA 1000S, TBA 1500S, TBA 2000S, TBA 0500B (See drawing on page: 5-148)** | | | | | |
| 010 | 90092-0052 | | 14 | METERING VALVE 10 MM3 | |
| 020 | 90134-0039 | | 18 | BUSHING VALVE CONNECTION 2,5 MM | |
| 030 | 90134-0052 | | 4 | PLUG DOSING BLOCK | |
| 100 | 90028-0020 | | 14 | CONE TUBE 2,5MM | |
| **TBA 0500SQ, TBA 1000SQ (See drawing on page: 5-148)** | | | | | |
| 010 | 90092-0052 | | 17 | METERING VALVE 10 MM3 | |
| 020 | 90134-0039 | | 18 | BUSHING VALVE CONNECTION 2,5 MM | |
| 100 | 90028-0020 | | 18 | CONE TUBE 2,5MM | |
| T50W8065 | 90166-0143 | MM | 500 | TUBE 2,5 MM PA TRANSP. | |
| T50W8071 | 90166-0143 | MM | 500 | TUBE 2,5 MM PA TRANSP. | |
| T50W8078 | 90166-0143 | M | 1 | TUBE 2,5 MM PA TRANSP. | |
| T50W8079 | 90166-0143 | M | 1 | TUBE 2,5 MM PA TRANSP. | |
| **TPA 1000SQ, TPA 0750SQ (See drawing on page: 5-150)** | | | | | |
| 010 | 90092-0052 | | 15 | METERING VALVE 10 MM3 | |
| 020 | 90134-0039 | | 16 | BUSHING VALVE CONNECTION 2,5 MM | |
| 030 | 90134-0052 | | 2 | PLUG DOSING BLOCK | |
| 040 | 90134-0040 | | 2 | BUSHING VALVE CONNECTION 4 MM | |
| 050 | 90028-0021 | | 2 | CONE TUBE 4 MM | |
| 100 | 90028-0020 | | 14 | CONE TUBE 2,5MM | |
| T50W8061 | 90166-0143 | M | 1 | TUBE 2,5 MM PA TRANSP. | |
| T50W8077 | 90166-0143 | M | 1 | TUBE 2,5 MM PA TRANSP. | |
| **Common Parts** | | | | | |
| 090 | 90134-0054 | | 2 | BLOCK CONNECTION M10X1 | |
| 110 | 90028-0022 | | 1 | CONE TUBE 6 MM | |
| 120 | 90092-0054 | | 1 | METERING VALVE 50 MM3 | |
| 130 | 90459-5652 | | 3 | LUBRICATION BLOCK, HFS4666 | |
| 140 | 90087-0019 | | 1 | PLUG M10X1 STAINLESS | |
| 150 | 90134-0055 | | 1 | BUSHING/NUT INLET/OUTLET 6 MM | |
| 180 | 90134-0030 | | 1 | SLEEVE FOR PLASTIC TUBE | |
| 190 | 312155-0299 | | 6 | SCREW DIN 7991 MF6S M4X30 A4 70 | |
| 200 | 312602-0312 | | 6 | HEXAGON NUT, EN 24032 M6M M4 NIPLBR | |
| 210 | 315105-0136 | | 6 | WASHER BRB 4,3X8 RFR | |
| T50W1344 | 90166-0108 | M | 4 | TUBE 6 MM PA TRANSP. | |
| T50W8060 | 90166-0143 | MM | 500 | TUBE 2,5 MM PA TRANSP. | |
| T50W8062 | 90166-0143 | MM | 500 | TUBE 2,5 MM PA TRANSP. | |
| T50W8063 | 90166-0143 | MM | 500 | TUBE 2,5 MM PA TRANSP. | |
| T50W8064 | 90166-0143 | MM | 500 | TUBE 2,5 MM PA TRANSP. | |
| T50W8066 | 90166-0143 | MM | 500 | TUBE 2,5 MM PA TRANSP. | |
| T50W8067 | 90166-0143 | MM | 500 | TUBE 2,5 MM PA TRANSP. | |
| T50W8068 | 90166-0143 | MM | 500 | TUBE 2,5 MM PA TRANSP. | |
| T50W8069 | 90166-0143 | MM | 500 | TUBE 2,5 MM PA TRANSP. | |
| T50W8070 | 90166-0143 | MM | 500 | TUBE 2,5 MM PA TRANSP. | |
| T50W8072 | 90166-0143 | MM | 500 | TUBE 2,5 MM PA TRANSP. | |
| T50W8073 | 90166-0143 | MM | 500 | TUBE 2,5 MM PA TRANSP. | |
| T50W8074 | 90166-0143 | MM | 500 | TUBE 2,5 MM PA TRANSP. | |
| T50W8075 | 90166-0143 | MM | 500 | TUBE 2,5 MM PA TRANSP. | |
| T50W8076 | 90166-0143 | MM | 500 | TUBE 2,5 MM PA TRANSP. | |

Machine Type | Group Description | Used-In | Group Number | Page No

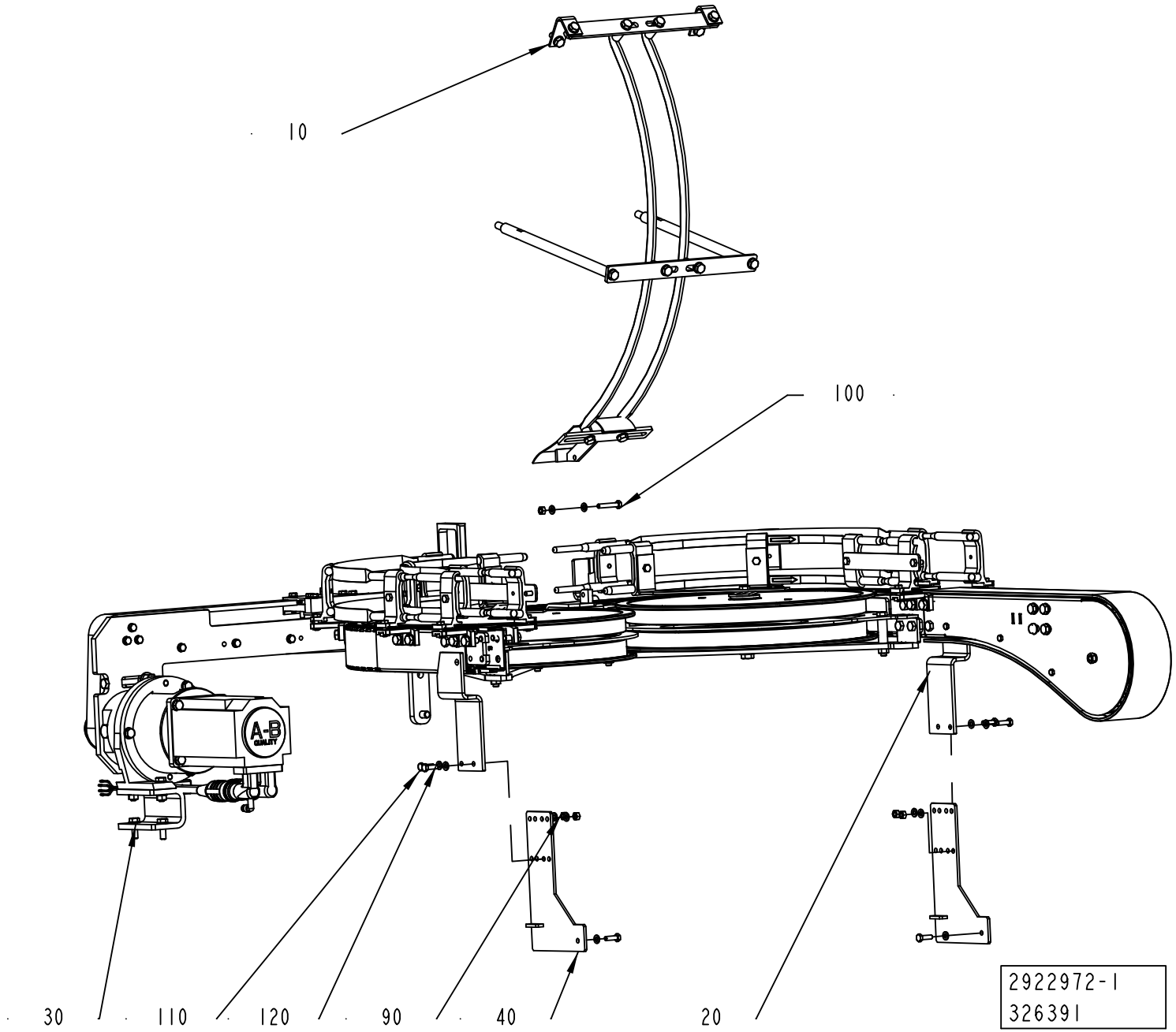
10
100
A-B
30
110
120
90
40
20
2922972-1
326391

ECM: 348326 - 20081003
Group number: 2922972-0100
Assembly Drawing: 2922972-1_1_AA

| Pos | Part No | UN | Qty | Description | Page No |
|---|---|---|---|---|---|
| - | | | | | |
| 010 | 2921646-0100 | | 1 | FOLDING PART | **5-155** |
| 020 | 2921266-0100 | | 1 | OUTFEED CONVEYOR | **5-157, 5-159** |
| 030 | 2921643-0100 | | 1 | OUTFEED SERVO | **5-177** |
| 040 | 2921639-0000 | | 2 | SUPPORT | |
| 050 | 2872917-0100 | | 1 | PHOTOCELL UNIT | **5-185** |
| 090 | 312607-0316 | | 5 | HEXAGON NUT, EN 24032 M6M M6 A480 | |
| 100 | 312105-0376 | | 1 | SCREW M6S ISO 4014 M6X35 A480 | |
| 110 | 312105-0370 | | 14 | SCREW M6S ISO 4017 M6X20 A480 | |
| 120 | 315106-0153 | | 28 | WASHER ISO 7089-6-200 HV A4 | |

| Pos | Part No | UN | Qty | Description | Page No |
|---|---|---|---|---|---|

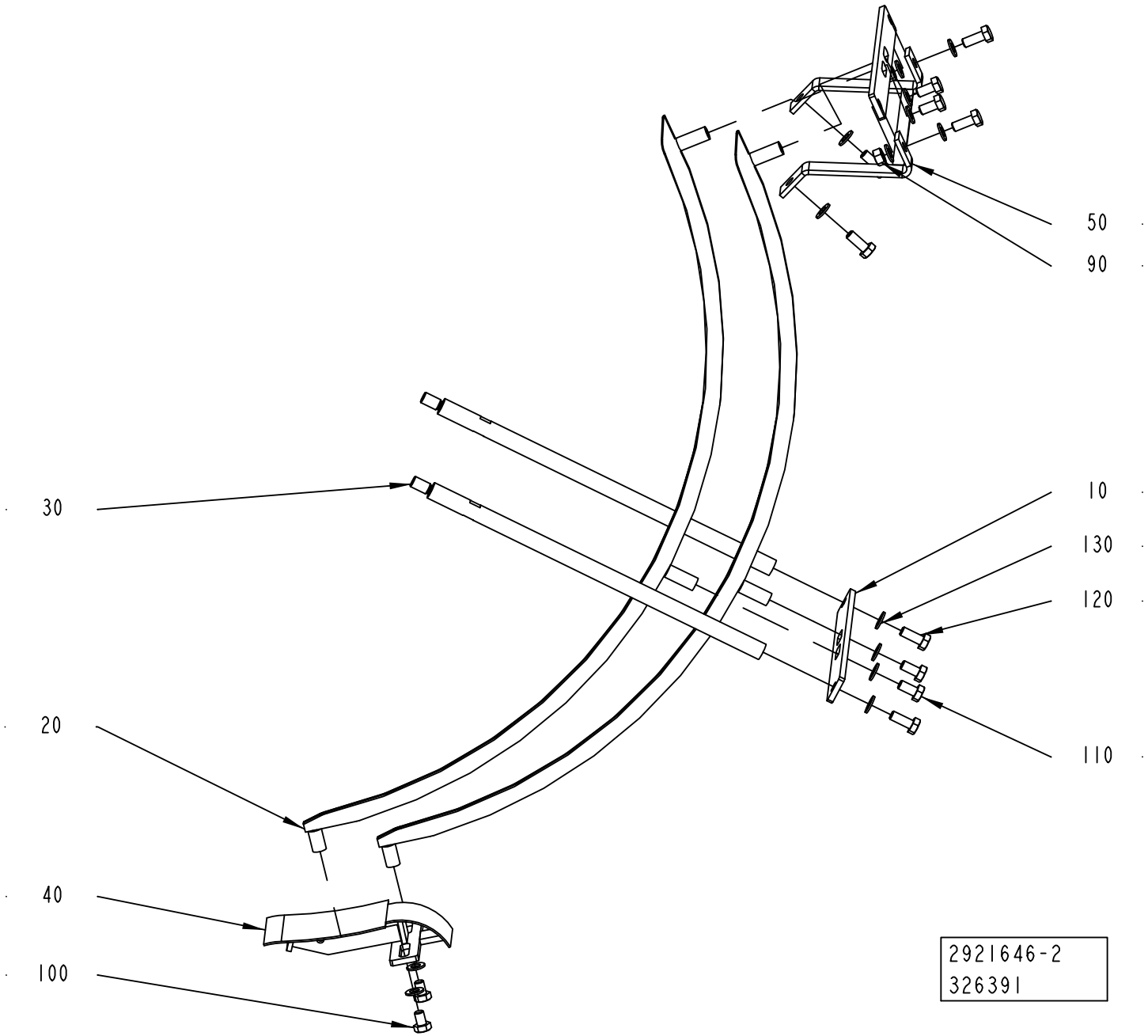
50
90
10
130
120
110
30
20
40
100
2921646-2
326391

ECM: 367708 - 20081003
Group number: 2921646-0100
Assembly Drawing: 2921646-2_1_AA

| Pos | Part No | UN | Qty | Description | Page No |
|---|---|---|---|---|---|
| **TBA 0500SQ, TBA 0500B, TBA 1000B, TBA 1000SQ, TBA 1000S** | | | | | |
| 030 | 1144551-0000 | | 2 | SPACER | |
| 040 | 2983786-0000 | | 1 | SUPPORT | |
| 050 | 1144899-0000 | | 2 | SUPPORT | |
| 130 | 315105-0165 | | 14 | WASHER BRB 8,4X16 RFR | |
| **TBA 1500S, TPA 1000SQ, TBA 2000S, TPA 0750SQ** | | | | | |
| 030 | 2876458-0000 | | 2 | SPACER | |
| 040 | 2876459-0000 | | 1 | SUPPORT | |
| 050 | 2851347-0000 | | 1 | HOLDER | |
| 130 | 315105-0165 | | 10 | WASHER BRB 8,4X16 RFR | |
| **Common Parts** | | | | | |
| 010 | 1144552-0000 | | 2 | PLATE | |
| 090 | 312605-0318 | | 2 | HEXAGON NUT, M6M M8 A280 | |
| 110 | 312105-0449 | | 4 | SCREW M6S ISO 4017 M8X16 A480 | |
| 120 | 312105-0451 | | 6 | SCREW M6S ISO 4017 M8X20 A480 | |

| Pos | Part No | UN | Qty | Description | Page No |
|---|---|---|---|---|---|

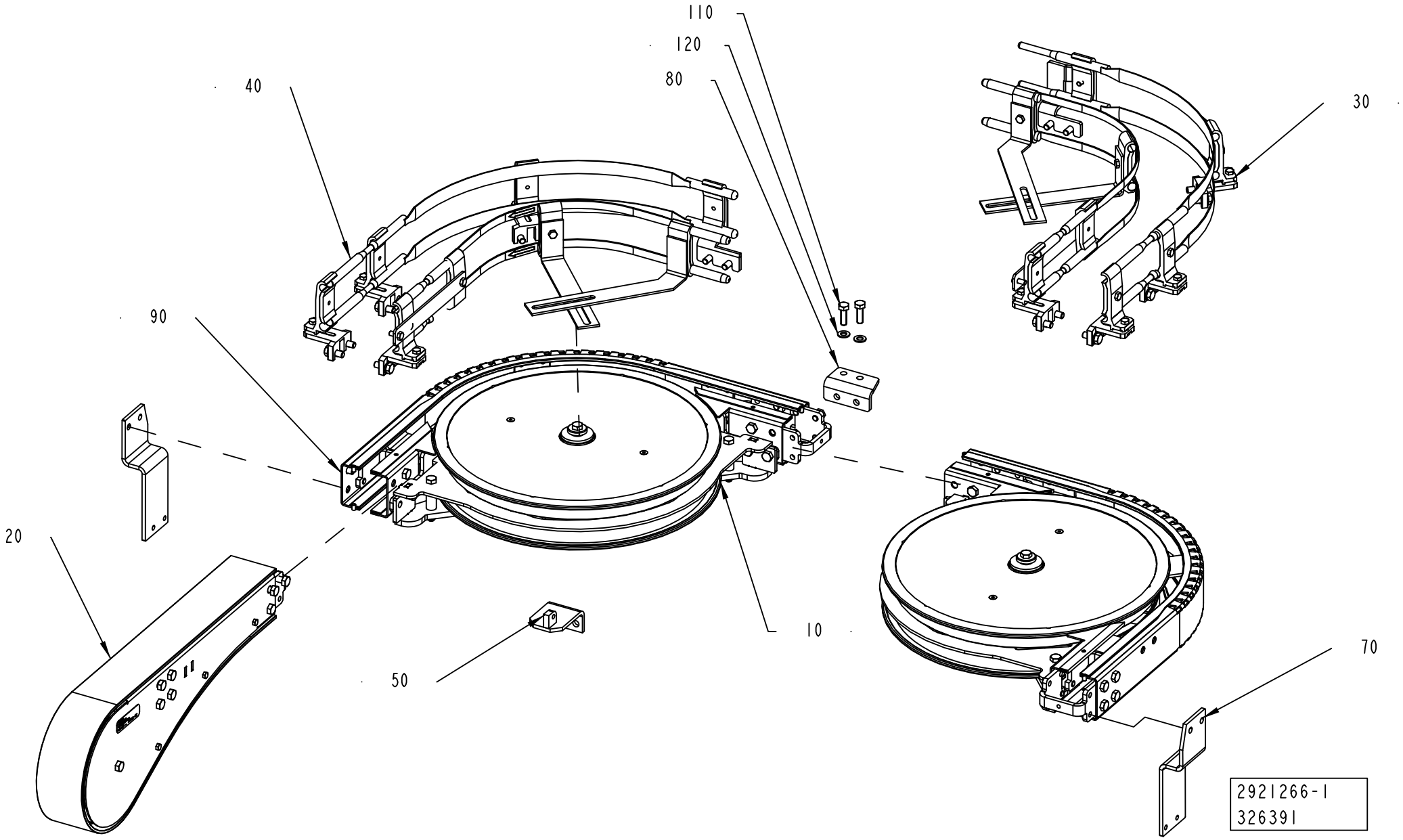
110
120
80
40
30
90
20
10
50
70
2921266-1
326391

ECM: 367706 - 20081003
Group number: 2921266-0100
Assembly Drawing: 2921266-1_1_AA

This list covers pages from 5-156 to 5-159

| Pos | Part No | UN | Qty | Description | Page No |
|---|---|---|---|---|---|
| - | | | | | |
| 010 | 2921263-0100 | | 2 | WHEEL CURVE 90 DEGREES | **5-161** |
| 020 | 2952916-0100 | | 1 | END UNIT | **5-163, 5-165** |
| 030 | 2921267-0100 | | 1 | RAILING KIT | **5-169** |
| 040 | 2922975-0100 | | 1 | RAILING KIT | **5-173** |
| 050 | 2876457-0000 | | 1 | SUPPORT | |
| 070 | 2921640-0000 | | 2 | SUPPORT | |
| 080 | 2937586-0000 | | 1 | BRACKET | |
| 090 | 2981915-0000 | | 1 | BRACKET | |
| 100 | 532413-0000 | | 1 | REDUCING NIPPLE | |
| 110 | 534310-0001 | | 1 | NOZZLE | |
| 120 | 315105-0165 | | 2 | WASHER BRB 8,4X16 RFR | |
| 190 | 312105-0449 | | 2 | SCREW M6S ISO 4017 M8X16 A480 | |
| 210 | 90005-0094 | | 1 | GASKET C 19438-EPR | |
| 220 | 90230-0027 | | 1 | NON-RETURN VALVE QJ 8355-1/4" | |
| | *90230-0300* | | *1* | *STRAINER* | |
| | *90230-0301* | | *1* | *DIAPHRAGM* | |
| 320 | 342921-0113 | | 1 | STRAIGHT COUPLING,EXT.THREADED 6/4-G1/8" | |
| T50W1253 | 90166-0266 | MM | 1700 | TUBE 6 MM PA BLACK | |

| Pos | Part No | UN | Qty | Description | Page No |
|---|---|---|---|---|---|

Machine Type | Group Description | Used-In | Group Number | Page No

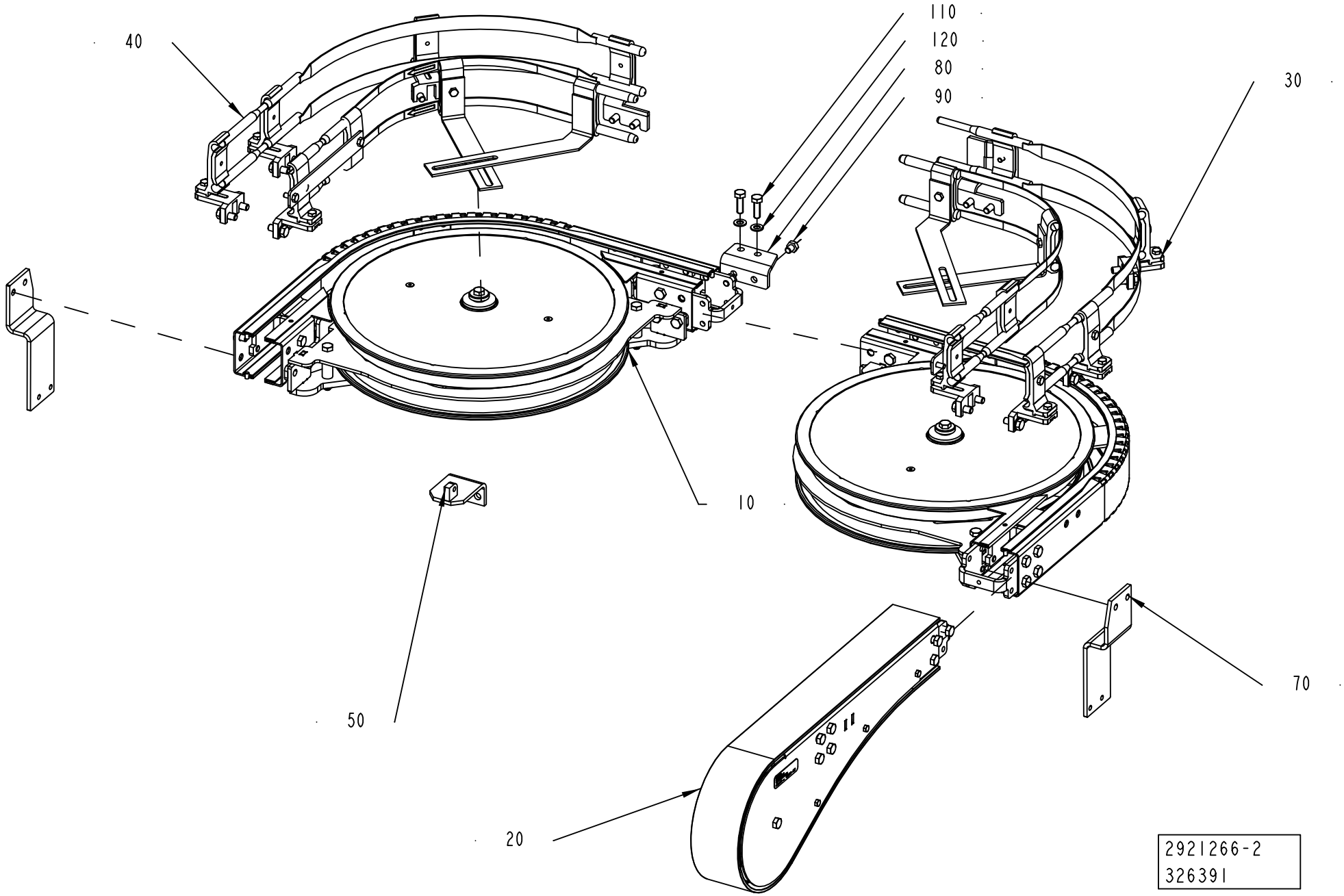
110
120
80
90
40
30
10
50
70
20
2921266-2
326391

ECM: 367706 - 20081003
Group number: 2921266-0100
Assembly Drawing: 2921266-2_1_AA

This list covers pages from 5-156 to 5-159

| Pos | Part No | UN | Qty | Description | Page No |
|---|---|---|---|---|---|
| - | | | | | |
| 010 | 2921263-0100 | | 2 | WHEEL CURVE 90 DEGREES | **5-161** |
| 020 | 2952916-0100 | | 1 | END UNIT | **5-163, 5-165** |
| 030 | 2921267-0100 | | 1 | RAILING KIT | **5-169** |
| 040 | 2922975-0100 | | 1 | RAILING KIT | **5-173** |
| 050 | 2876457-0000 | | 1 | SUPPORT | |
| 070 | 2921640-0000 | | 2 | SUPPORT | |
| 080 | 2937586-0000 | | 1 | BRACKET | |
| 090 | 2981915-0000 | | 1 | BRACKET | |
| 100 | 532413-0000 | | 1 | REDUCING NIPPLE | |
| 110 | 534310-0001 | | 1 | NOZZLE | |
| 120 | 315105-0165 | | 2 | WASHER BRB 8,4X16 RFR | |
| 190 | 312105-0449 | | 2 | SCREW M6S ISO 4017 M8X16 A480 | |
| 210 | 90005-0094 | | 1 | GASKET C 19438-EPR | |
| 220 | 90230-0027 | | 1 | NON-RETURN VALVE QJ 8355-1/4" | |
| | *90230-0300* | | *1* | *STRAINER* | |
| | *90230-0301* | | *1* | *DIAPHRAGM* | |
| 320 | 342921-0113 | | 1 | STRAIGHT COUPLING,EXT.THREADED 6/4-G1/8" | |
| T50W1253 | 90166-0266 | MM | 1700 | TUBE 6 MM PA BLACK | |

| Pos | Part No | UN | Qty | Description | Page No |
|---|---|---|---|---|---|

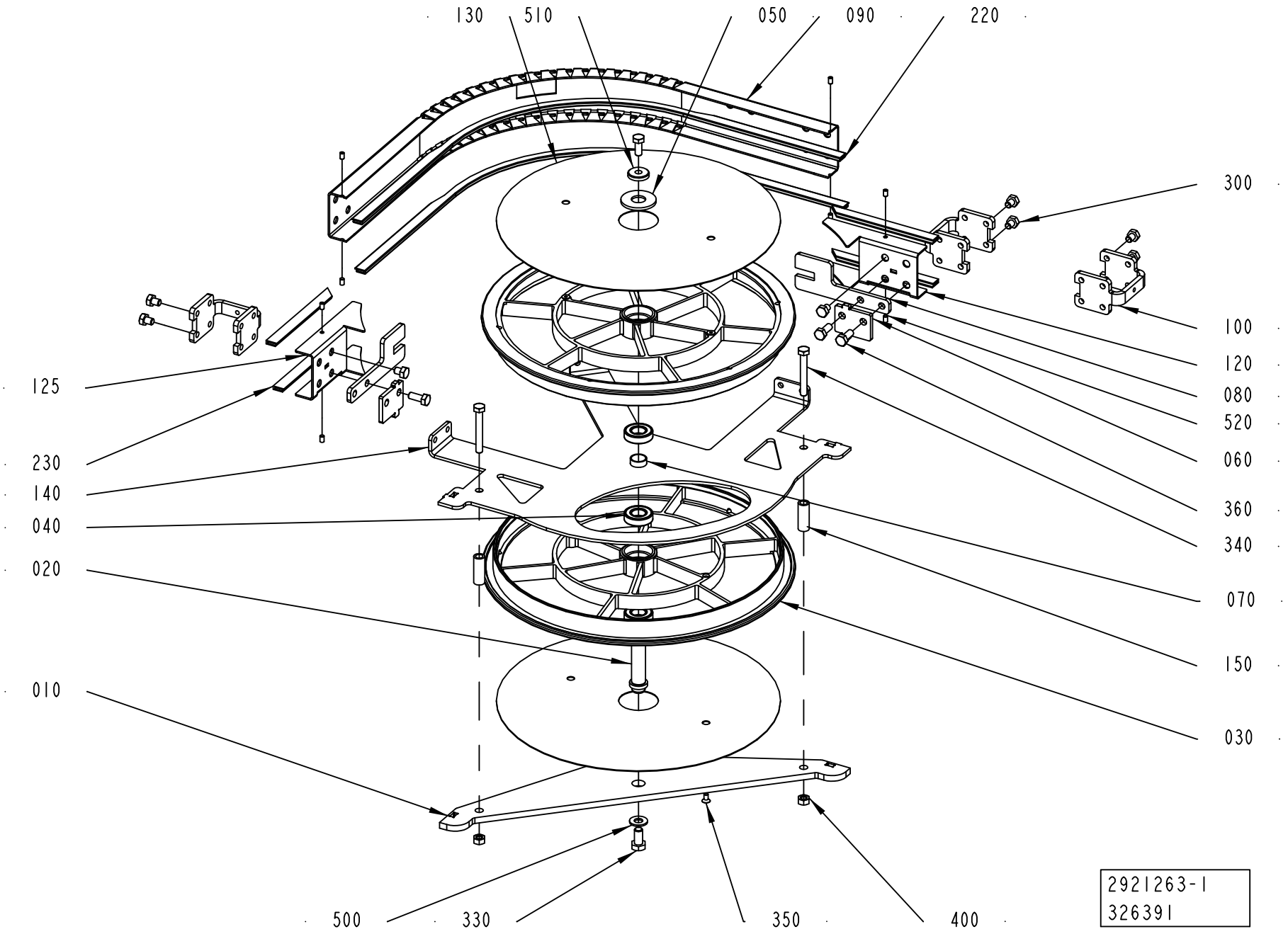
130
510
050
090
220
300
100
120
080
520
060
360
340
070
150
030
125
230
140
040
020
010
500
330
350
400
2921263-1
326391

ECM: 332208 - 20080401
Group number: 2921263-0100
Assembly Drawing: 2921263-1_1_AA

| Pos | Part No | UN | Qty | Description | Page No |
|---|---|---|---|---|---|
| - | | | | | |
| 010 | 2921261-0000 | | 1 | BOTTOM PANEL | |
| 020 | 1550689-0000 | | 1 | SHAFT | |
| 030 | 2656655-0000 | | 2 | WHEEL | |
| 040 | 1550348-0002 | | 4 | BEARING | |
| 050 | 1550693-0000 | | 1 | WASHER | |
| 060 | 2921262-0000 | | 2 | SPACER | |
| 070 | 1550690-0000 | | 1 | SLEEVE | |
| 080 | 2921264-0000 | | 2 | SPACER | |
| 090 | 2921642-0000 | | 1 | SIDE PLATE | |
| 110 | 2561206-0000 | | 3 | SPACER | |
| 120 | 2921265-0000 | | 1 | SIDE PLATE | |
| 125 | 2921265-0000 | | 1 | SIDE PLATE | |
| 130 | 2561232-0000 | | 2 | COVER | |
| 140 | 2921259-0000 | | 1 | BRACKET | |
| 150 | 1550626-0005 | | 2 | SPACER | |
| 220 | 2699584-0830 | | 2 | SLIDING STRIP | |
| 230 | 1550595-1801 | | 4 | SLIDING STRIP | |
| 300 | 90459-4735 | | 8 | SCREW M6S ISO 4017 M8X10 A480 | |
| 330 | 312105-0491 | | 1 | SCREW M6S ISO 4017 M10X20 A480 | |
| 340 | 312105-0463 | | 2 | SCREW M6S ISO 4014 M8X60 A480 | |
| 350 | 312155-0325 | | 4 | SCREW DIN 7991 MF6S M5X10 A4 70 | |
| 360 | 312105-0451 | | 4 | SCREW M6S ISO 4017 M8X20 A480 | |
| 400 | 312605-0318 | | 2 | HEXAGON NUT, M6M M8 A280 | |
| 500 | 315105-0173 | | 1 | WASHER BRB 10,5X22 RFR | |
| 510 | 315125-0165 | | 1 | WASHER TBRSB 8,4X26X5 A4 | |
| 520 | 90459-7293 | | 8 | SET SCREW DIN 551M5X8 PA66 | |

| Pos | Part No | UN | Qty | Description | Page No |
|---|---|---|---|---|---|

Machine Type | Group Description | Used-In | Group Number | Page No

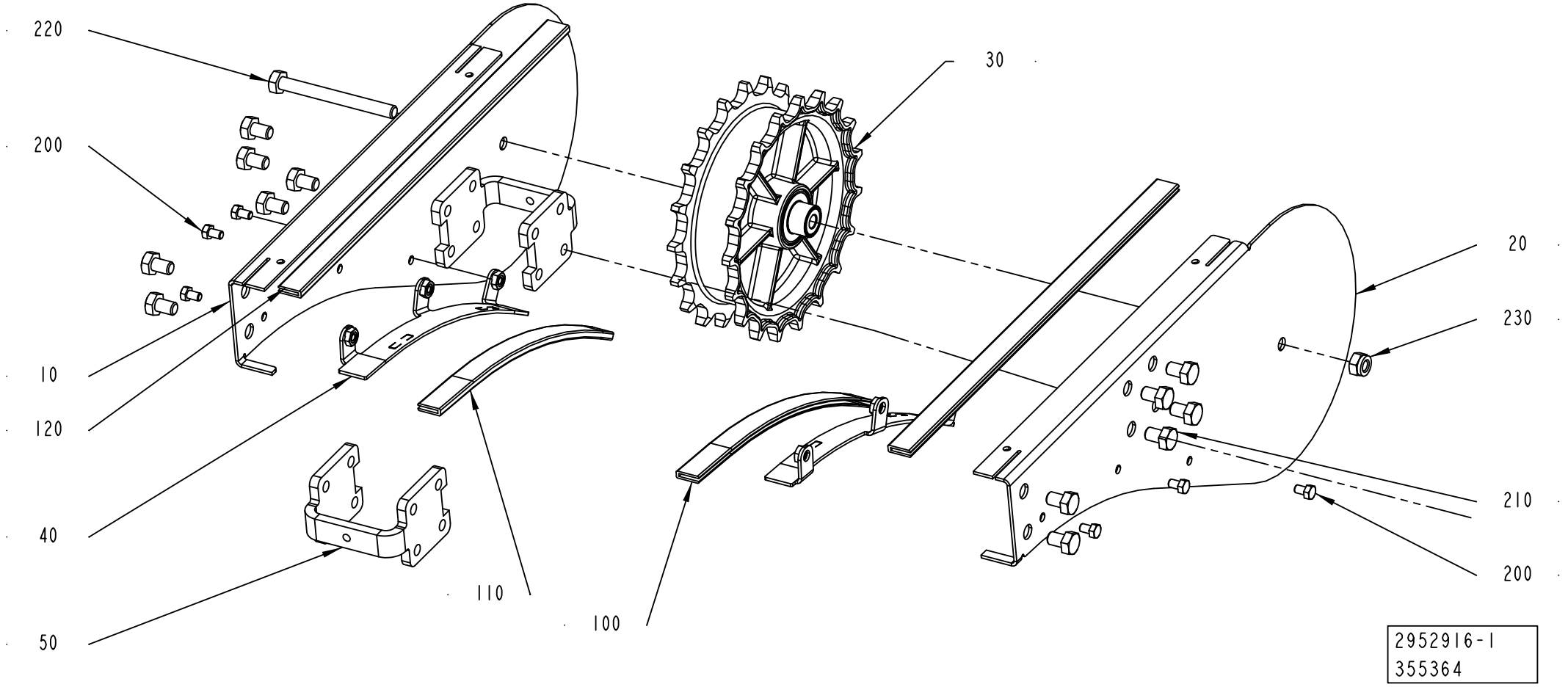
220
200
10
120
40
50
110
100
30
20
230
210
200
2952916-1
355364

ECM: 367715 - 20081003
Group number: 2952916-0100
Assembly Drawing: 2952916-1_1_AA

This list covers pages from 5-162 to 5-165

| Pos | Part No | UN | Qty | Description | Page No |
|---|---|---|---|---|---|
| - | | | | | |
| 010 | 2952918-0000 | | 1 | SIDE PLATE | |
| 020 | 2952917-0000 | | 1 | SIDE PLATE | |
| 030 | 2561244-0200 | | 1 | DRIVE WHEEL ..... | **5-167** |
| 040 | 2952919-0000 | | 2 | SLIDE PLATE | |
| 050 | 2561206-0000 | | 2 | SPACER | |
| 100 | 1550595-3223 | | 1 | SLIDING STRIP | |
| 110 | 1550595-3224 | | 1 | SLIDING STRIP | |
| 120 | 2589960-2123 | | 1 | SLIDING STRIP | |
| 130 | 2589960-2124 | | 1 | SLIDING STRIP | |
| 200 | 312105-0323 | | 6 | SCREW M6S ISO 4017 M5X8 A480 | |
| 210 | 312105-0447 | | 12 | SCREW M6S ISO 4017 M8X12 A480 | |
| 220 | 312105-0467 | | 1 | SCREW M6S ISO 4014 M8X80 A480 | |
| 230 | 312812-0318 | | 1 | HEXAGON NUT, NY-LOCK M8 A480 | |
| T50B1050 | 90600-0467 | | 1 | INDUCTIVE SWITCH,E2A-M18KS05-WP-B1-TP 6M | |

| Pos | Part No | UN | Qty | Description | Page No |
|---|---|---|---|---|---|

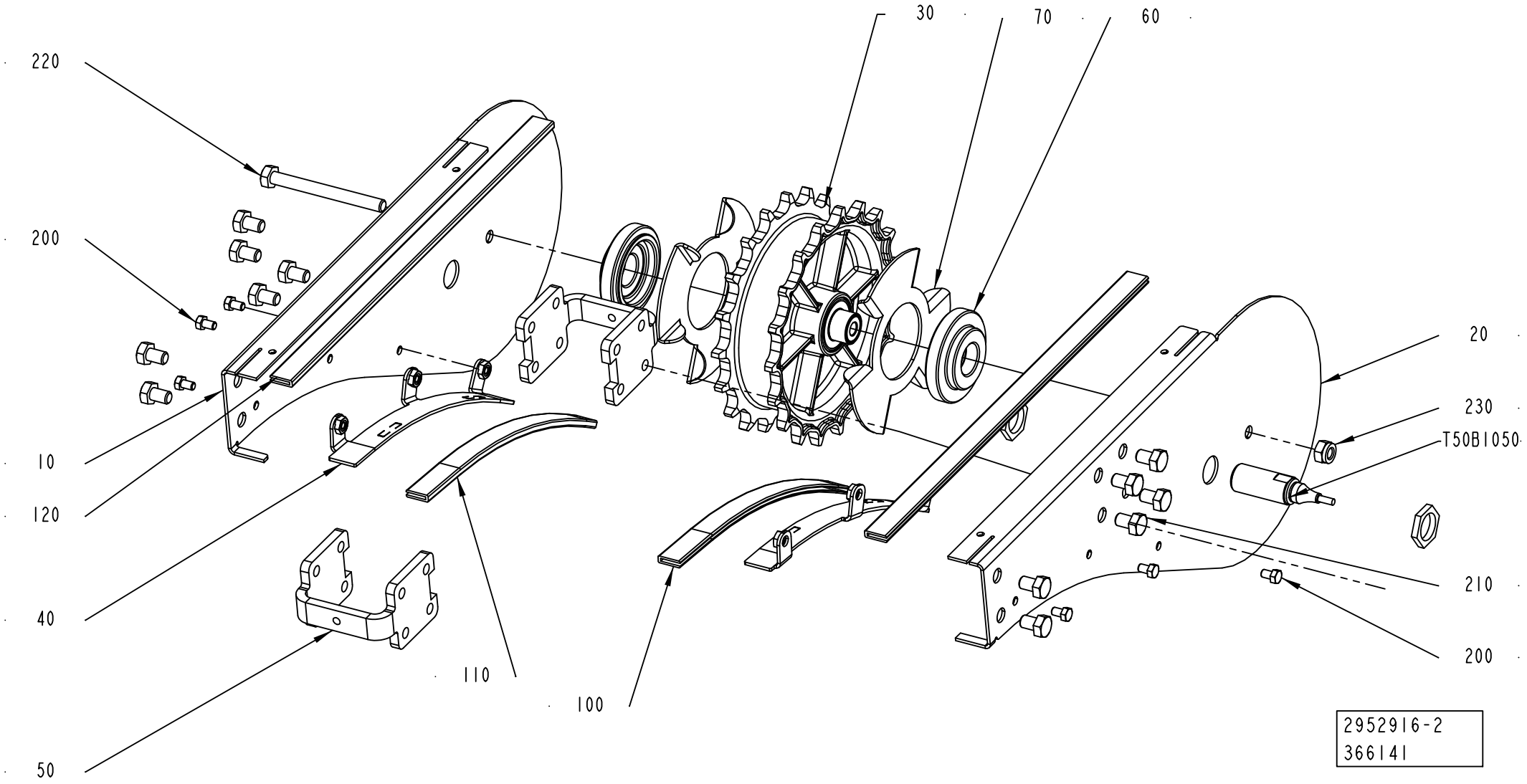
30
70
60
220
200
20
230
T50B1050
10
120
210
40
200
110
100
50
2952916-2
366141

ECM: 367715 - 20081003
Group number: 2952916-0100
Assembly Drawing: 2952916-2_1_AA

This list covers pages from 5-162 to 5-165

| Pos | Part No | UN | Qty | Description | Page No |
|---|---|---|---|---|---|
| - | | | | | |
| 010 | 2952918-0000 | | 1 | SIDE PLATE | |
| 020 | 2952917-0000 | | 1 | SIDE PLATE | |
| 030 | 2561244-0200 | | 1 | DRIVE WHEEL ..... | **5-167** |
| 040 | 2952919-0000 | | 2 | SLIDE PLATE | |
| 050 | 2561206-0000 | | 2 | SPACER | |
| 100 | 1550595-3223 | | 1 | SLIDING STRIP | |
| 110 | 1550595-3224 | | 1 | SLIDING STRIP | |
| 120 | 2589960-2123 | | 1 | SLIDING STRIP | |
| 130 | 2589960-2124 | | 1 | SLIDING STRIP | |
| 200 | 312105-0323 | | 6 | SCREW M6S ISO 4017 M5X8 A480 | |
| 210 | 312105-0447 | | 12 | SCREW M6S ISO 4017 M8X12 A480 | |
| 220 | 312105-0467 | | 1 | SCREW M6S ISO 4014 M8X80 A480 | |
| 230 | 312812-0318 | | 1 | HEXAGON NUT, NY-LOCK M8 A480 | |
| T50B1050 | 90600-0467 | | 1 | INDUCTIVE SWITCH,E2A-M18KS05-WP-B1-TP 6M | |

| Pos | Part No | UN | Qty | Description | Page No |
|---|---|---|---|---|---|

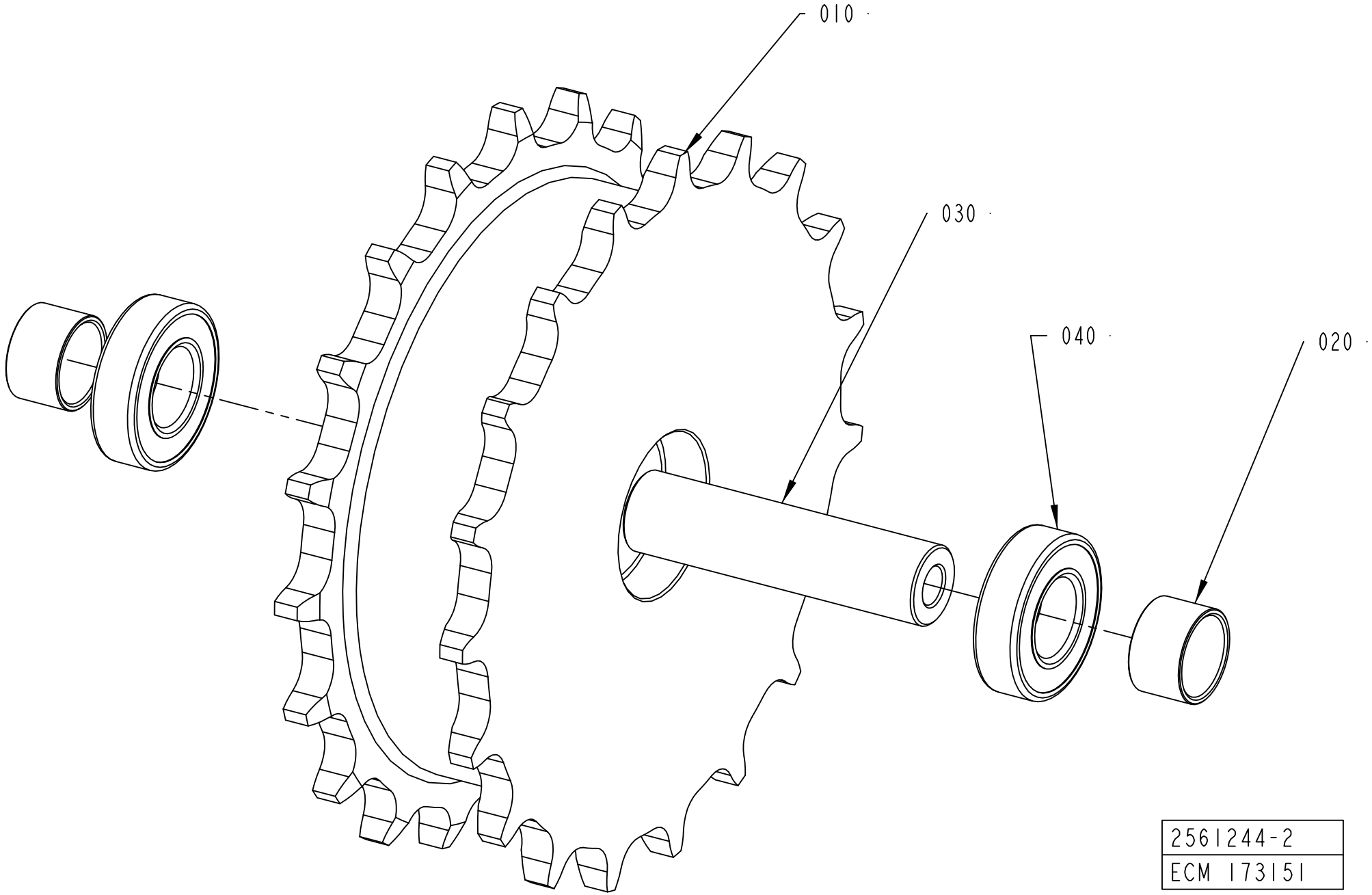
010
030
040
020
2561244-2
ECM 173151

ECM: 306227 - 20070817
Group number: 2561244-0200
Assembly Drawing: 2561244-2_1_AA

| Pos | Part No | UN | Qty | Description | Page No |
|---|---|---|---|---|---|
| - | | | | | |
| 010 | 2656672-0000 | | 1 | SPROCKET | |
| 020 | 2656673-0000 | | 2 | SPACER | |
| 030 | 2561267-0000 | | 1 | SHAFT | |
| 040 | 1550348-0001 | | 2 | BEARING | |

| Pos | Part No | UN | Qty | Description | Page No |
|---|---|---|---|---|---|

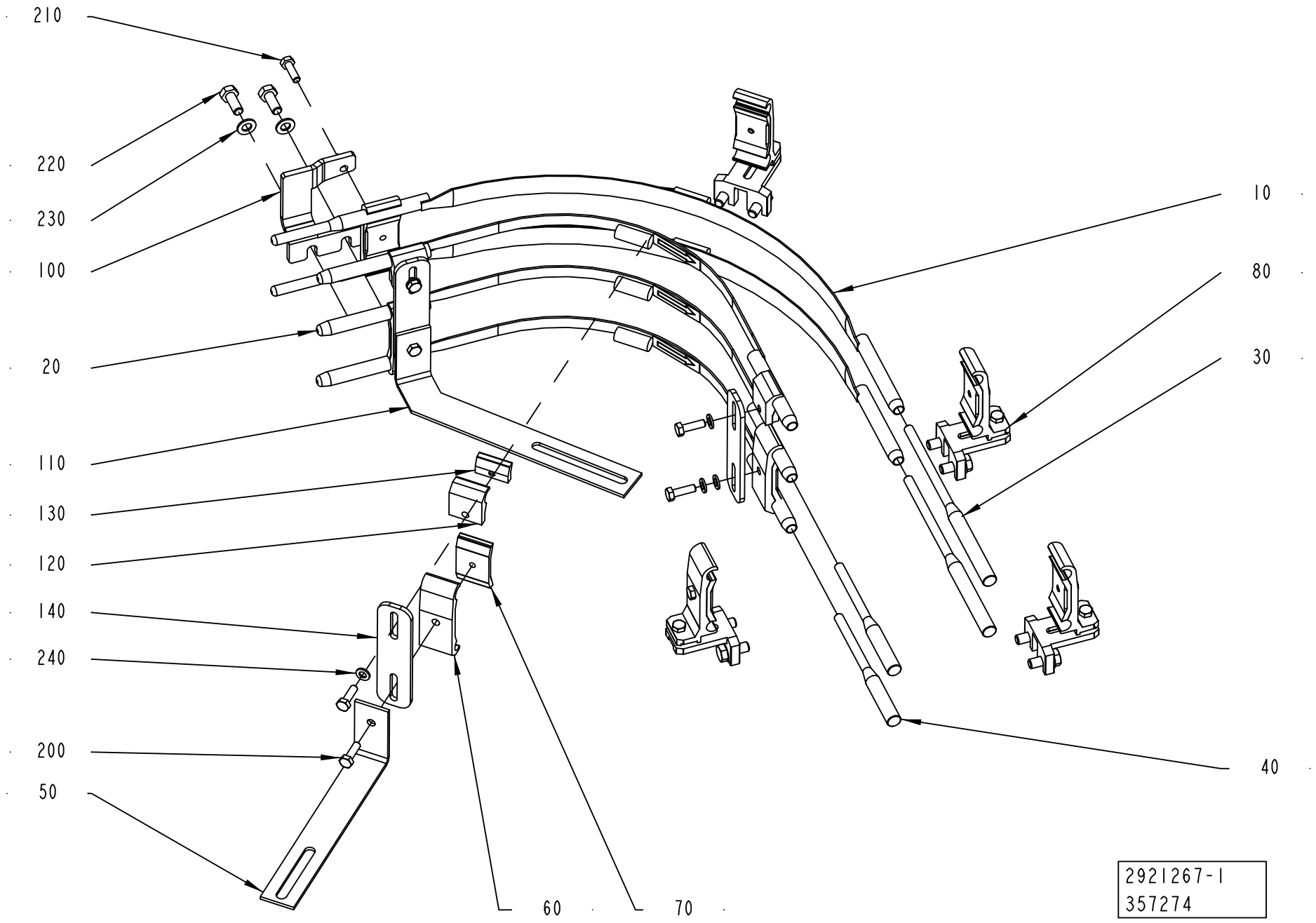
210
220
230
100
20
110
130
120
140
240
200
50
10
80
30
40
60
70
2921267-1
357274

ECM: 359061 - 20080620
Group number: 2921267-0100
Assembly Drawing: 2921267-1_1_AB

| Pos | Part No | UN | Qty | Description | Page No |
|---|---|---|---|---|---|
| - | | | | | |
| 010 | 2921647-0000 | | 2 | ARCH | |
| 020 | 2922970-0000 | | 3 | ARCH | |
| 030 | 1550664-0000 | | 2 | DOWEL | |
| 040 | 2922971-0000 | | 2 | DOWEL | |
| 050 | 1550666-0000 | | 1 | HOLDER | |
| 060 | 1366750-0000 | | 4 | HOLDER | |
| 070 | 1366727-0000 | | 4 | CLAMP | |
| 080 | 1550743-0200 | | 4 | RAIL HOLDER ..... | **5-171** |
| 100 | 2922977-0000 | | 1 | SUPPORT | |
| 110 | 2914989-0000 | | 1 | SUPPORT | |
| 120 | 2699375-0000 | | 3 | HOLDER | |
| 130 | 2699376-0000 | | 3 | CLAMP | |
| 140 | 2699377-0000 | | 3 | BRACKET | |
| 200 | 312105-0370 | | 6 | SCREW M6S ISO 4017 M6X20 A480 | |
| 210 | 312105-0370 | | 1 | SCREW M6S ISO 4017 M6X20 A480 | |
| 220 | 312105-0451 | | 2 | SCREW M6S ISO 4017 M8X20 A480 | |
| 230 | 315105-0165 | | 2 | WASHER BRB 8,4X16 RFR | |
| 240 | 315105-0153 | | 5 | WASHER BRB 6,4X12 RFR | |

| Pos | Part No | UN | Qty | Description | Page No |
|---|---|---|---|---|---|

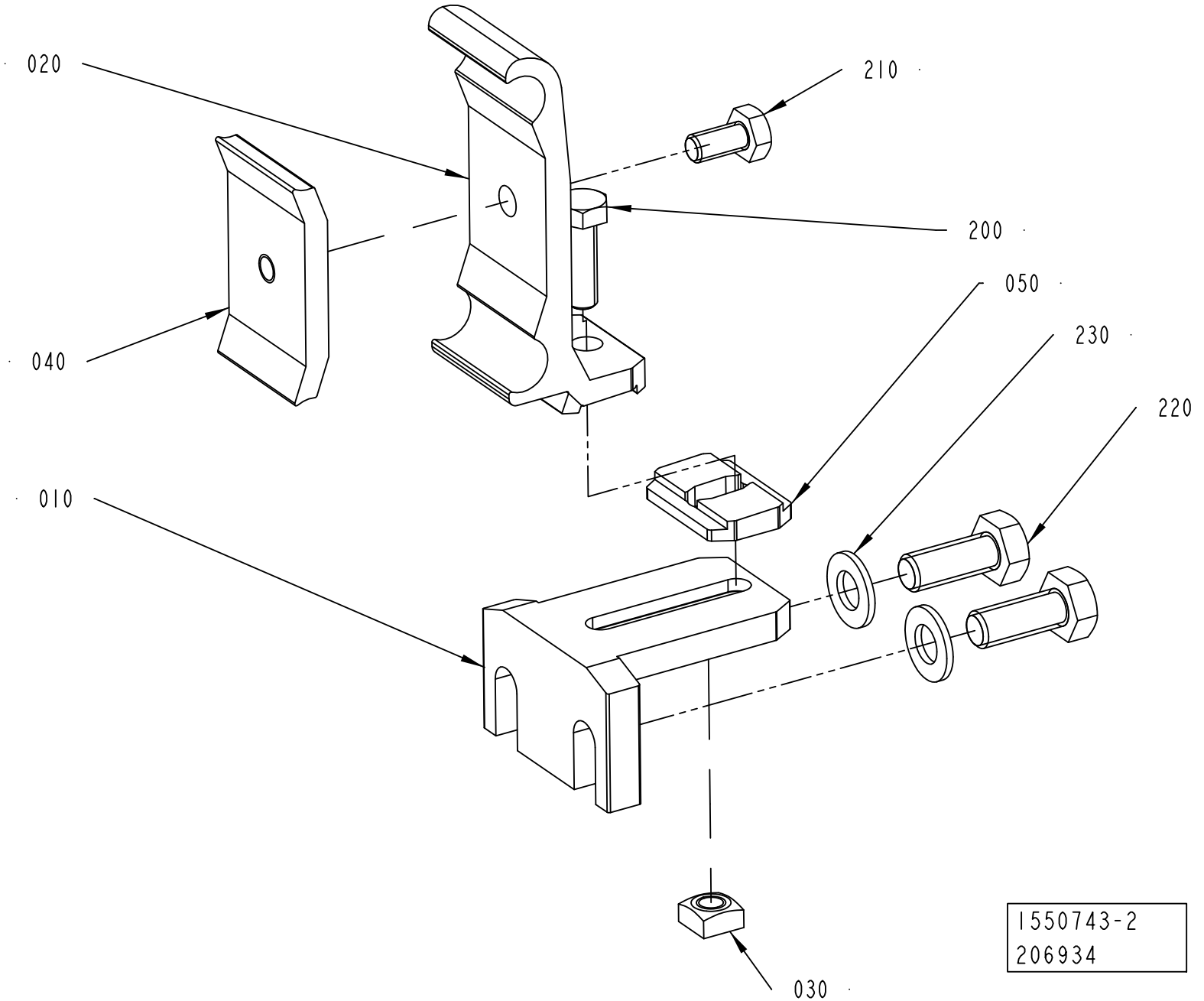
020
210
200
050
230
220
040
010
030
1550743-2
206934

ECM: 206965 - 20050602
Group number: 1550743-0200
Assembly Drawing: 1550743-2_1_AA

| Pos | Part No | UN | Qty | Description | Page No |
|---|---|---|---|---|---|
| - | | | | | |
| 010 | 1550772-0000 | | 1 | HOLDER | |
| 020 | 2699437-0000 | | 1 | RAIL HOLDER | |
| 030 | 1359565-0000 | | 1 | NUT | |
| 040 | 1366727-0000 | | 1 | CLAMP | |
| 050 | 2699436-0000 | | 1 | SPACER | |
| 200 | 312105-0370 | | 1 | SCREW M6S ISO 4017 M6X20 A480 | |
| 210 | 312105-0366 | | 1 | SCREW M6S ISO 4017 M6X12 A480 | |
| 220 | 312105-0451 | | 2 | SCREW M6S ISO 4017 M8X20 A480 | |
| 230 | 315105-0165 | | 2 | WASHER BRB 8,4X16 RFR | |

| Pos | Part No | UN | Qty | Description | Page No |
|---|---|---|---|---|---|

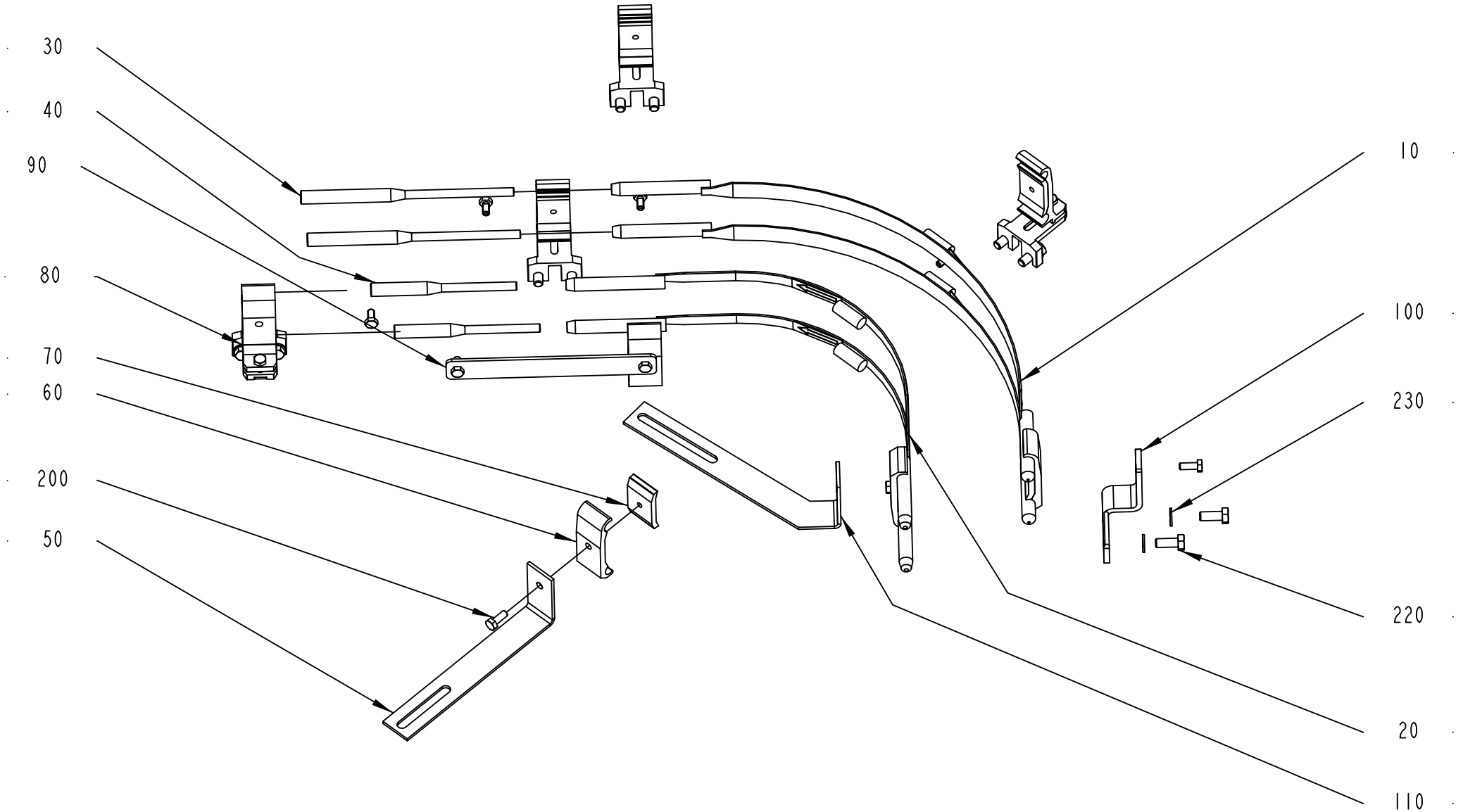
30
40
90
80
70
60
200
50
10
100
230
220
20
110
2922975-1
326391

ECM: 367709 - 20081003
Group number: 2922975-0100
Assembly Drawing: 2922975-1_1_AA

| Pos | Part No | UN | Qty | Description | Page No |
|---|---|---|---|---|---|
| - | | | | | |
| 010 | 2921648-0000 | | 2 | ARCH | |
| 020 | 2922970-0000 | | 2 | ARCH | |
| 030 | 1550664-0000 | | 2 | DOWEL | |
| 040 | 2922971-0000 | | 2 | DOWEL | |
| 050 | 1550666-0000 | | 1 | HOLDER | |
| 060 | 1366750-0000 | | 4 | HOLDER | |
| 070 | 1366727-0000 | | 4 | CLAMP | |
| 080 | 1550743-0200 | | 3 | RAIL HOLDER ..... | **5-171** |
| 090 | 2561602-0100 | | 1 | RAIL HOLDER KIT ..... | **5-175** |
| 100 | 2922978-0000 | | 1 | BRACKET | |
| 110 | 2914988-0000 | | 1 | SUPPORT | |
| 120 | 2699375-0000 | | 3 | HOLDER | |
| 130 | 2699376-0000 | | 3 | CLAMP | |
| 140 | 2699377-0000 | | 3 | BRACKET | |
| 200 | 312105-0368 | | 3 | SCREW M6S ISO 4017 M6X16 A480 | |
| 220 | 312105-0451 | | 2 | SCREW M6S ISO 4017 M8X20 A480 | |
| 230 | 315105-0165 | | 2 | WASHER BRB 8,4X16 RFR | |

| Pos | Part No | UN | Qty | Description | Page No |
|---|---|---|---|---|---|

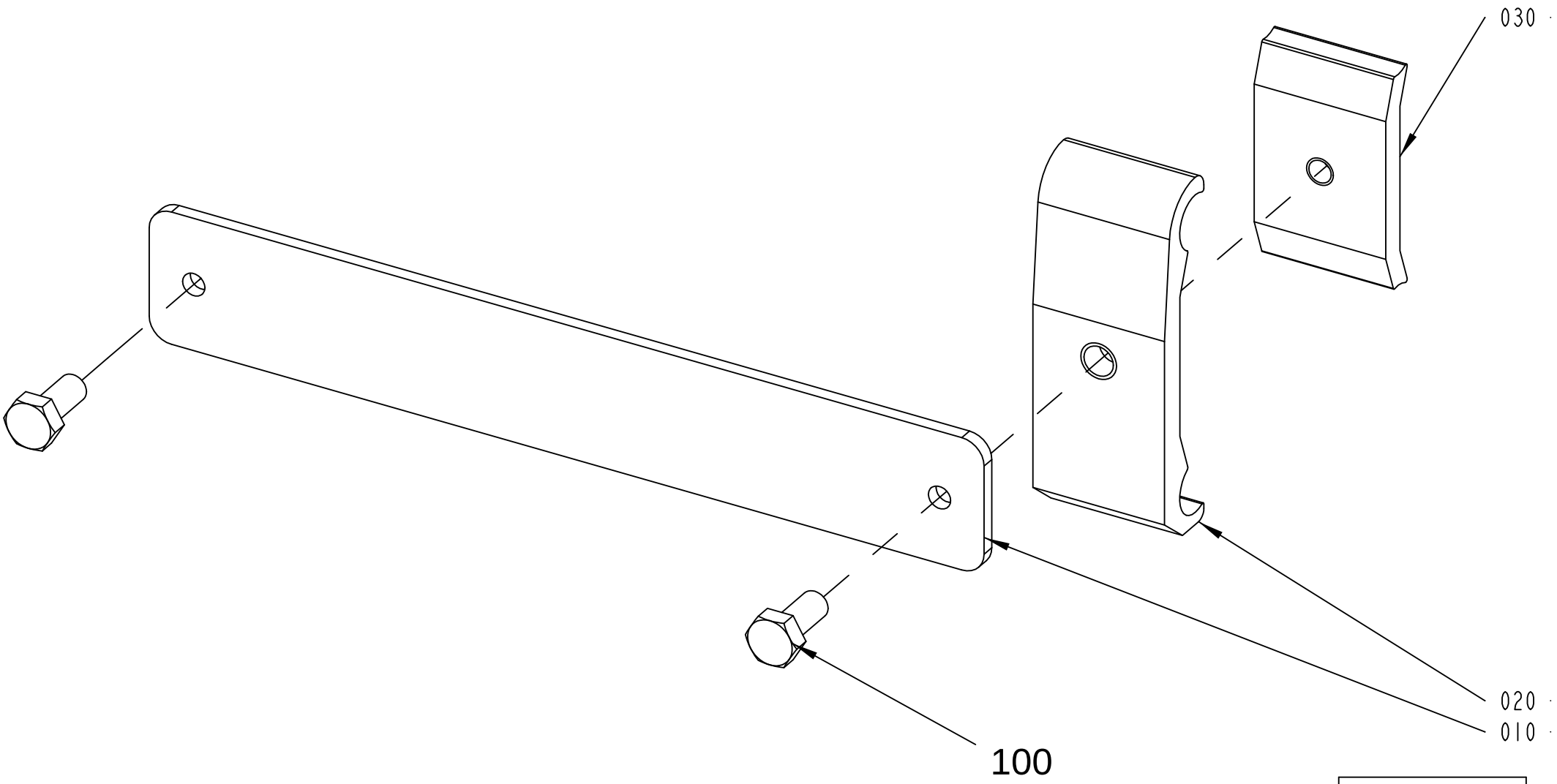


| 2561602-1 |
| --- |
| ECM 153837 |

ECM: 255321 - 20060302
Group number: 2561602-0100
Assembly Drawing: 2561602-1_1_AB

| Pos | Part No | UN | Qty | Description | Page No |
|---|---|---|---|---|---|
| - | | | | | |
| 010 | 2561596-0000 | | 1 | RAIL HOLDER KIT | |
| 020 | 1366750-0000 | | 1 | HOLDER | |
| 030 | 1366727-0000 | | 1 | CLAMP | |
| 100 | 312105-0367 | | 2 | SCREW M6S ISO 4017 M6X14 A480 | |

| Pos | Part No | UN | Qty | Description | Page No |
|---|---|---|---|---|---|

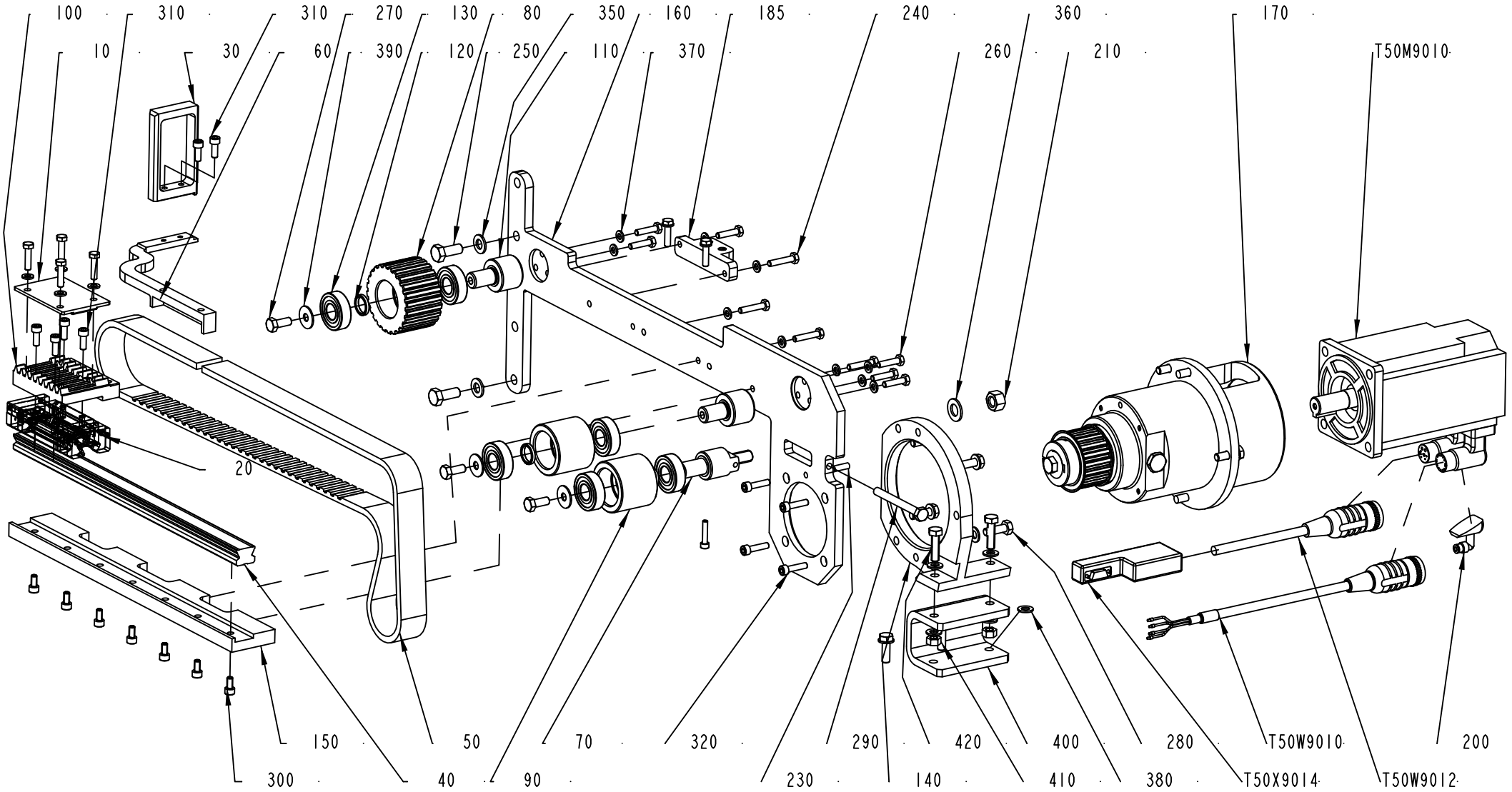


2921643-1
326391

ECM: 367707 - 20081003
Group number: 2921643-0100
Assembly Drawing: 2921643-1_1_AA

| Pos | Part No | UN | Qty | Description | Page No |
|---|---|---|---|---|---|
| **TBA 0500SQ, TBA 0500B, TBA 1000B, TBA 1000SQ, TBA 1000S, TBA 0500B QC, TBA 1000B QC** | | | | | |
| 280 | 312105-0453 | | 9 | SCREW M6S ISO 4017 M8X25 A480 | |
| 380 | 315105-0165 | | 10 | WASHER BRB 8,4X16 RFR | |
| 400 | 2914987-0000 | | 1 | SPACER | |
| 410 | 312607-0318 | | 2 | HEXAGON NUT, EN 24032 M6M M8 A480 | |
| **TBA 1500S, TPA 1000SQ, TBA 2000S, TPA 0750SQ** | | | | | |
| 380 | 315106-0165 | | 6 | WASHER ISO 7089-8-200 HV A4 | |
| **Common Parts** | | | | | |
| 010 | 2921645-0000 | | 1 | PLATE | |
| 020 | 90600-0344 | | 1 | CARRIAGE, SSR 25 XWYQZSSHH M | |
| 030 | 2958758-0100 | | 1 | PUSHER ..... | **5-179** |
| 040 | 2774953-0000 | | 1 | RAIL | |
| 050 | 2922973-0000 | | 1 | BELT | |
| 070 | 2914981-0000 | | 1 | COLUMN | |
| 080 | 2789208-0000 | | 1 | PULLEY | |
| 090 | 2914984-0000 | | 2 | PULLEY | |
| 100 | 2761952-0000 | | 1 | PLATE | |
| 110 | 2914982-0000 | | 2 | SHAFT | |
| 120 | 2761962-0000 | | 3 | SPACER | |
| 130 | 90214-0189 | | 6 | BALL BEARING, 17X40X12 MM | |
| 140 | 2914983-0000 | | 1 | SUPPORT | |
| 150 | 2914980-0000 | | 1 | PLATE | |
| 160 | 2914985-0000 | | 1 | PLATE | |
| 170 | 2762008-0100 | | 1 | DRIVE ..... | **5-183** |
| 185 | 2937587-0000 | | 1 | SUPPORT | |
| 200 | 90459-5720 | | 1 | MPF-AIR-PURGE CONNECTOR | |
| 210 | 312605-0322 | | 1 | HEXAGON NUT, M6M M12 A280 | |
| 230 | 311103-0353 | | 3 | PARALLEL PIN ISO 2338 6M6X20 A1 | |
| 240 | 312105-0372 | | 6 | SCREW M6S ISO 4017 M6X25 A480 | |
| 250 | 312105-0493 | | 3 | SCREW M6S ISO 4017 M10X25 A480 | |
| 260 | 312105-0368 | | 5 | SCREW M6S ISO 4017 M6X16 A480 | |
| 270 | 312105-0451 | | 3 | SCREW M6S ISO 4017 M8X20 A480 | |
| 290 | 312109-0467 | | 1 | SCREW M6S ISO 4017 M8X80 A480 | |
| 300 | 312115-0366 | | 7 | SCREW ISO4762 M6X12 A4 80 | |
| 310 | 312115-0368 | | 6 | SCREW ISO4762 M6X16 A4 80 | |
| 320 | 312115-0372 | | 4 | SCREW ISO4762 M6X25 A4 80 | |
| 350 | 315106-0173 | | 2 | WASHER ISO 7089-10-200 HV A4 | |
| 360 | 315105-0178 | | 1 | WASHER BRB 13X24 RFR | |
| 370 | 315106-0153 | | 16 | WASHER ISO 7089-6-200 HV A4 | |
| 390 | 90005-0105 | | 3 | WASHER PLAIN ROUND 8,4(M8)/24, H=1,5 | |
| 420 | 312105-0455 | | 2 | SCREW M6S ISO 4017 M8X30 A480 | |
| 430 | 312105-0370 | | 3 | SCREW M6S ISO 4017 M6X20 A480 | |

| Pos | Part No | UN | Qty | Description | Page No |
|---|---|---|---|---|---|
| T50M9010 | 2921644-0000 | | 1 | MOTOR | |
| T50W9010 | 90459-7173 | | 1 | MOTOR POWER CABLE 2090-XXNPMF-16S15/A | |
| T50W9012 | 90459-7176 | | 1 | MOTOR FEEDBACK CABLE 2090-XXNFMF-S15 | |
| T50X9014 | 90459-2551 | | 1 | CONNECTOR, MOTOR FEEDBACK 15 PIN MALE | |

Machine Type | Group Description | Used-In | Group Number | Page No

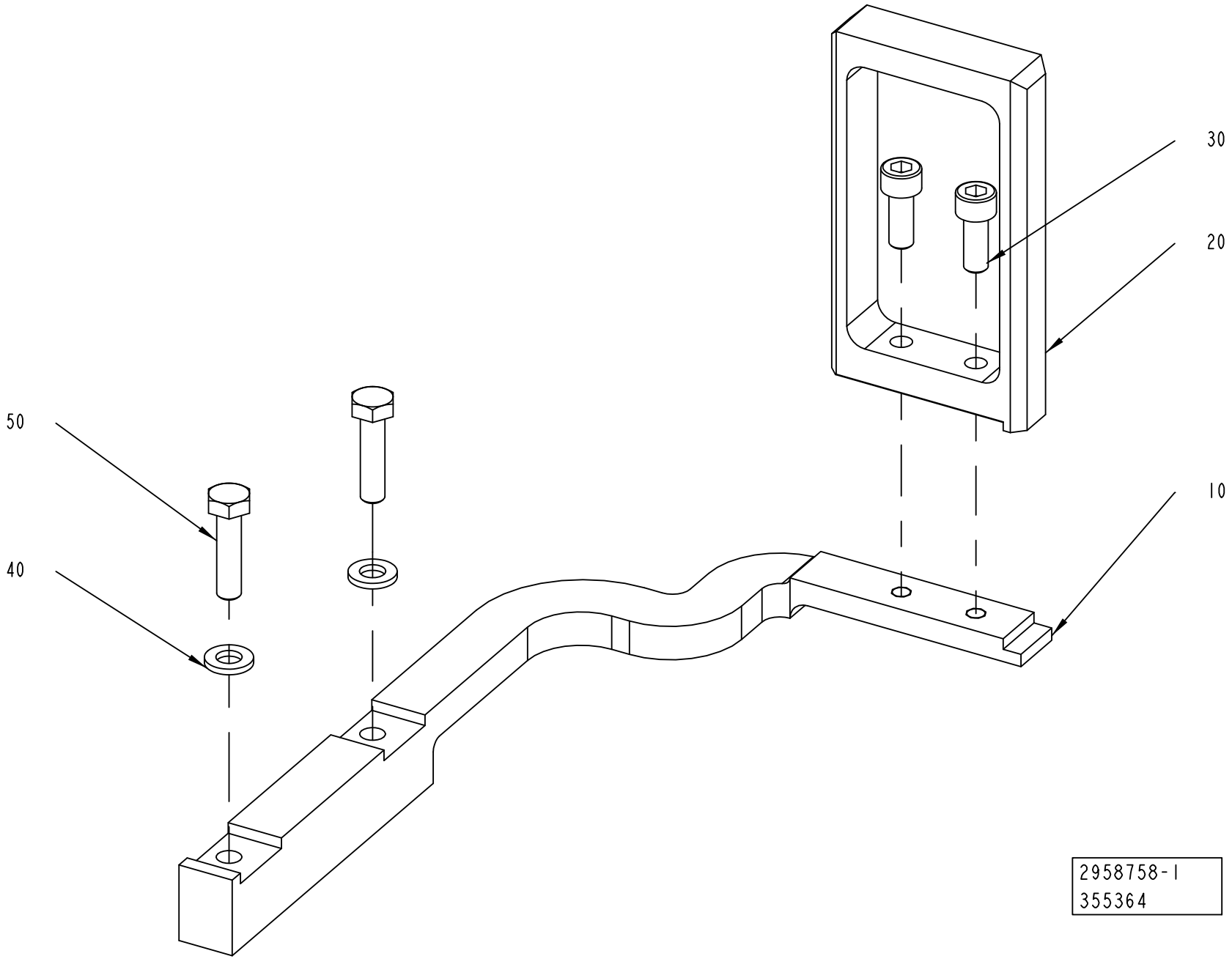
30
20
50
40
10
2958758-1
355364

ECM: 367716 - 20081003
Group number: 2958758-0100
Assembly Drawing: 2958758-1_1_AA

| Pos | Part No | UN | Qty | Description | Page No |
|---|---|---|---|---|---|
| **TBA 0500B** | | | | | |
| 010 | 2922976-0000 | | 1 | FINGER | |
| 020 | 2947624-0100 | | 1 | PUSHER | **5-181** |
| 030 | 312105-0325 | | 2 | SCREW M6S ISO 4017 M5X10 A480 | |
| **TBA 0500SQ, TBA 1000SQ, TBA 1000S, TBA 1500S, TBA 1000B STDA7, TBA 2000S, TPA 1000SQ, TPA 0750SQ** | | | | | |
| 010 | 2922976-0000 | | 1 | FINGER | |
| 020 | 2774936-0000 | | 1 | PUSHER | |
| 030 | 312115-0329 | | 2 | SCREW ISO4762 M5X16 A4 80 | |
| **TBA 1000B QC** | | | | | |
| 010 | 2922976-0000 | | 1 | FINGER | |
| 020 | 2947624-0100 | | 1 | PUSHER | **5-181** |
| 030 | 312105-0325 | | 2 | SCREW M6S ISO 4017 M5X10 A480 | |
| **Common Parts** | | | | | |
| 040 | 315106-0153 | | 2 | WASHER ISO 7089-6-200 HV A4 | |
| 050 | 312105-0372 | | 2 | SCREW M6S ISO 4017 M6X25 A480 | |

| Pos | Part No | UN | Qty | Description | Page No |
|---|---|---|---|---|---|

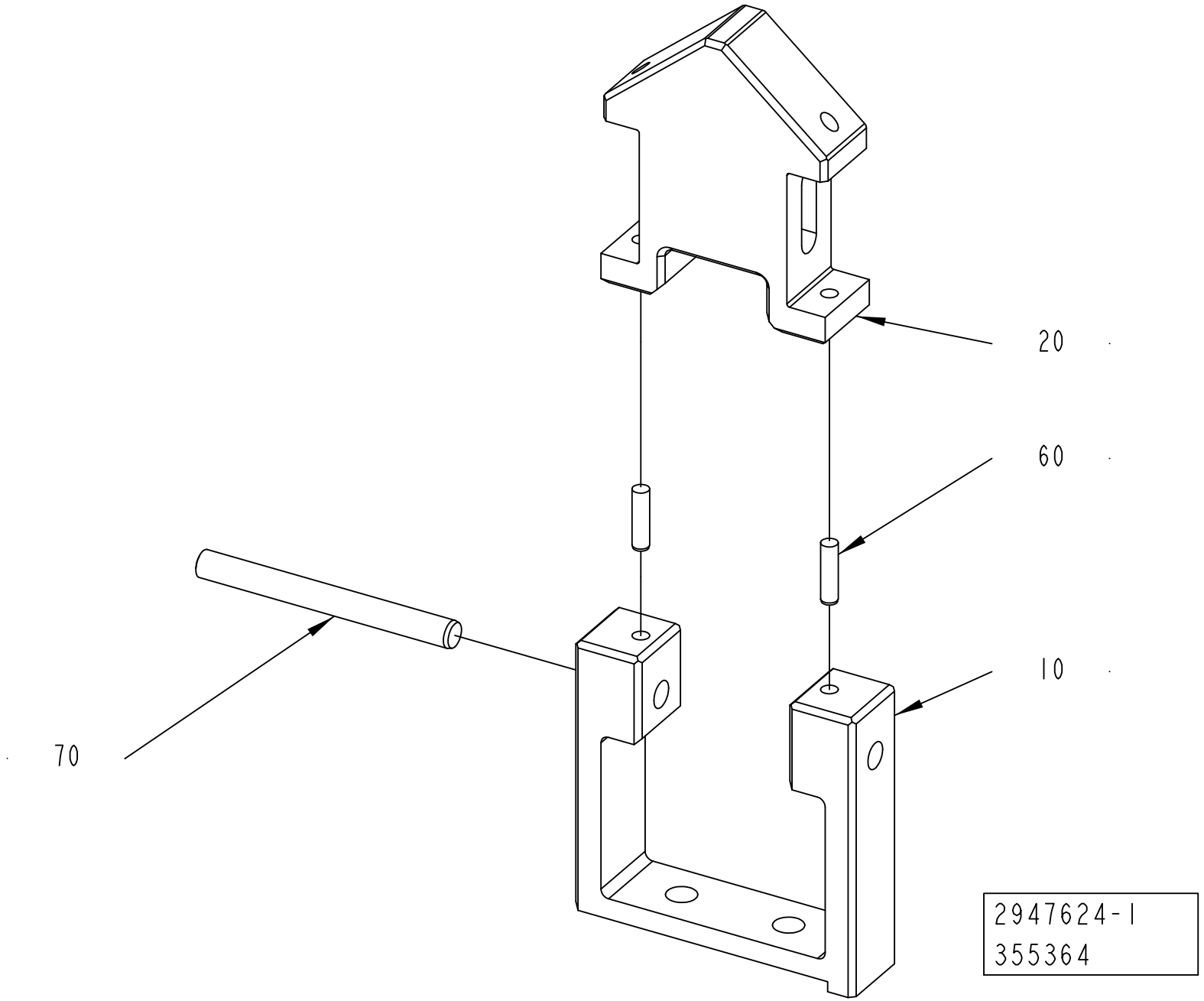
20
60
10
70
2947624-1
355364

ECM: 358058 - 20080620
Group number: 2947624-0100
Assembly Drawing: 2947624-1_1_AA

| Pos | Part No | UN | Qty | Description | Page No |
|---|---|---|---|---|---|
| - | | | | | |
| 010 | 2947625-0000 | | 1 | PUSHER | |
| 020 | 2947626-0000 | | 1 | PUSHER | |
| 060 | 311103-0234 | | 2 | PARALLEL PIN ISO 2338 3M6X12 A1 | |
| 070 | 311103-0322 | | 1 | PARALLEL PIN ISO 2338 5M6X50 A1 | |

| Pos | Part No | UN | Qty | Description | Page No |
|---|---|---|---|---|---|

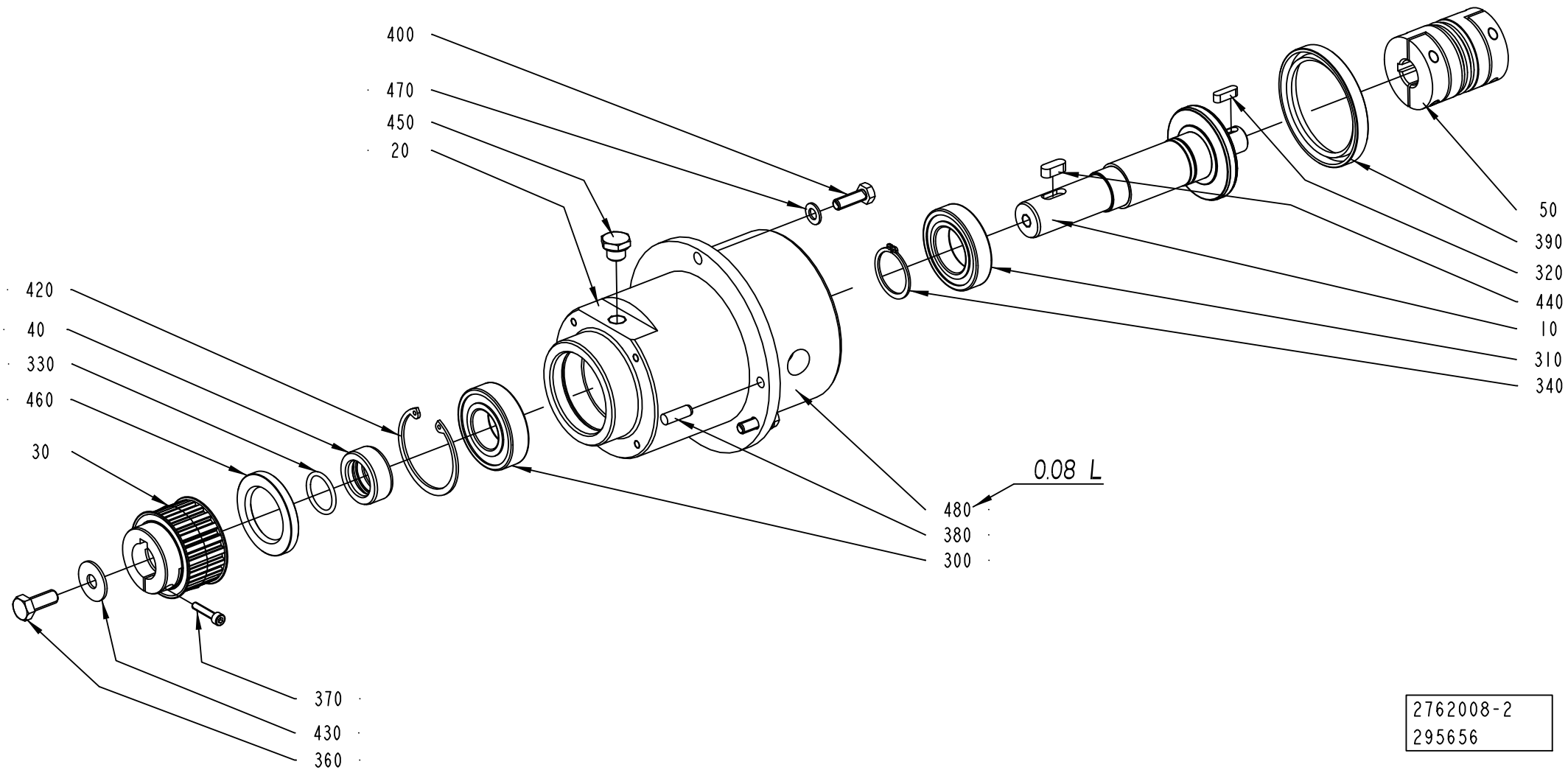
400
470
450
20
420
40
330
460
30
370
430
360
480
380
300
0.08 L
50
390
320
440
10
310
340
2762008-2
295656

ECM: 343643 - 20080701
Group number: 2762008-0100
Assembly Drawing: 2762008-2_1_AB

| Pos | Part No | UN | Qty | Description | Page No |
|---|---|---|---|---|---|
| **TBA, TPA** | | | | | |
| 030 | 2761956-0000 | | 1 | DRIVE PULLEY | |
| **Common Parts** | | | | | |
| 010 | 2789197-0000 | | 1 | SHAFT | |
| 020 | 2789196-0000 | | 1 | FLANGE | |
| 040 | 2761957-0000 | | 1 | SPACER | |
| 050 | 2761998-0000 | | 1 | COUPLING | |
| 300 | 90458-2362 | | 1 | BALL BEARING, 30X62X16 MM | |
| 310 | 321308-0207 | | 1 | BALL BEARING, 35X62X14 MM | |
| 320 | 315705-0232 | | 1 | PARALLEL KEY W. ROUND ENDS 6X6X20 MM | |
| 330 | 315202-0218 | | 1 | O-RING 26,2X3 MM | |
| 340 | 315751-0124 | | 1 | RETAINING RING FOR SHAFT DIN 471 35 SS | |
| 360 | 312105-0493 | | 1 | SCREW M6S ISO 4017 M10X25 A480 | |
| 370 | 312115-0333 | | 1 | SCREW ISO4762 M5X25 A4 80 | |
| 380 | 311103-1403 | | 2 | PARALLEL PIN ISO 2338 8M6X24 A1 | |
| 390 | 315221-0221 | | 1 | RADIAL SEAL 70X90X10 MM | |
| 400 | 312105-0453 | | 3 | SCREW M6S ISO 4017 M8X25 A480 | |
| 420 | 90458-0048 | | 1 | RETAINING RING FOR HOLE, 62X2 MM | |
| 430 | 90005-0140 | | 1 | WASHER PLAIN ROUND 10,5(M10)/30, H=2 | |
| 440 | 315705-0263 | | 1 | PARALLEL KEY W. ROUND ENDS 8X7X20 MM | |
| 450 | 90330-0026 | | 1 | PLUG, EXT. G-THREAD, G1/4 | |
| 460 | 315221-0185 | | 1 | RADIAL SEAL 40X62X7 MM | |
| 470 | 315105-0165 | | 3 | WASHER BRB 8,4X16 RFR | |
| 480 | 90296-0072 | L | 1 | SHELL OMALA OIL 150, CAN 20 LITRES | |

| Pos | Part No | UN | Qty | Description | Page No |
|---|---|---|---|---|---|

# PHOTOCELL UNIT



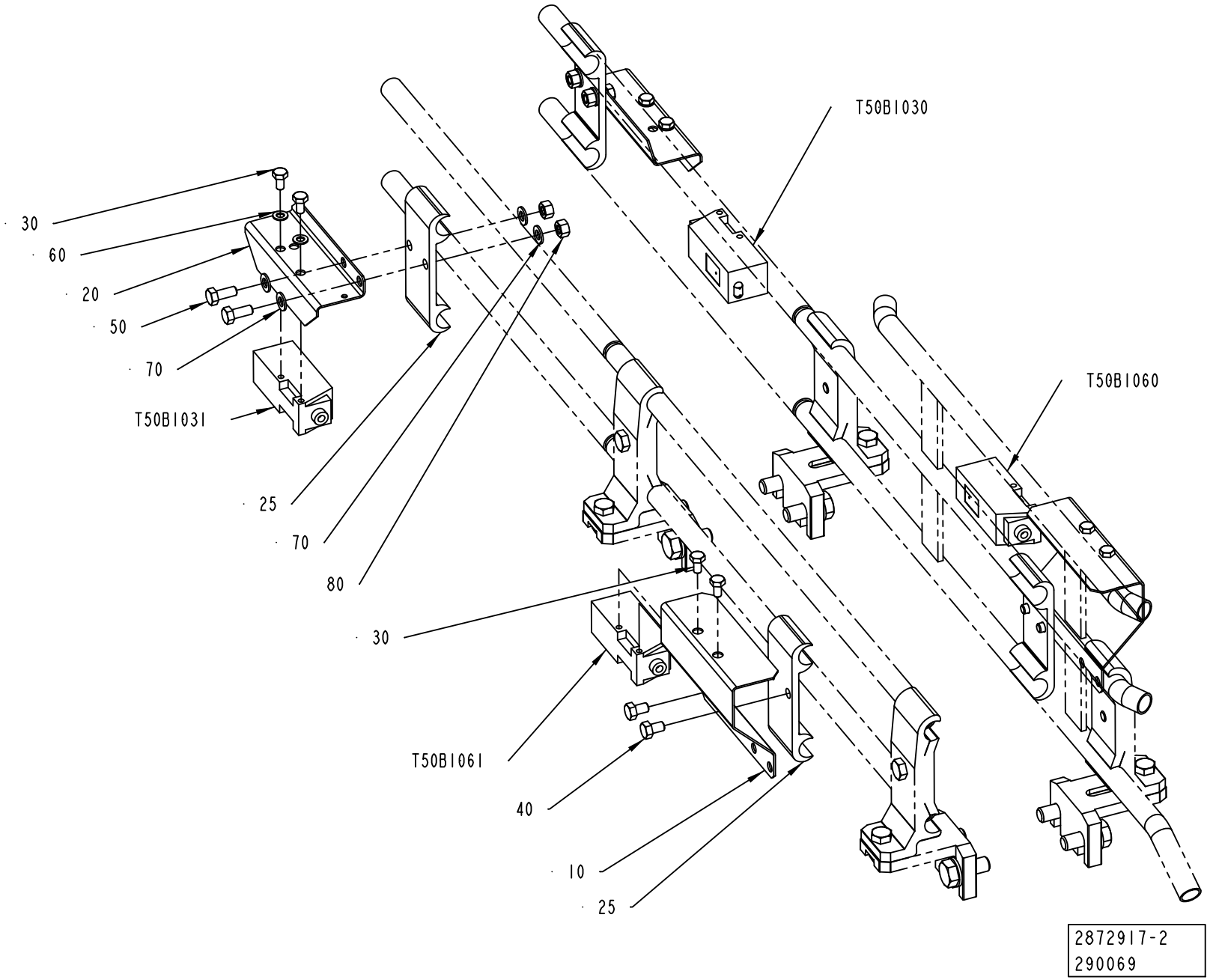

ECM: 367700 - 20081003
Group number: 2872917-0100
Assembly Drawing: 2872917-2_1_AA

| Pos | Part No | UN | Qty | Description | Page No |
|---|---|---|---|---|---|
| **A3/FLEX TBA 0500B, A3/FLEX TBA 1000B, A3/FLEX TBA 1000S, A3/FLEX TBA 1000SQ, A3/FLEX TPA 1000SQ, A3/FLEX TBA 1500S, A3/FLEX TBA 2000S, A3/FLEX TPA 0750SQ** | | | | | |
| 010 | 1285010-0000 | | 2 | HOLDER | |
| 020 | 1086889-0000 | | 2 | COVER | |
| **Common Parts** | | | | | |
| 025 | 1020637-0000 | | 4 | HOLDER | |
| 030 | 312105-0287 | | 8 | SCREW M6S ISO 4017 M4X8 A470 | |
| 040 | 312105-0323 | | 4 | SCREW M6S ISO 4017 M5X8 A480 | |
| 050 | 312105-0327 | | 4 | SCREW M6S ISO 4017 M5X12 A480 | |
| 060 | 315105-0136 | | 4 | WASHER BRB 4,3X8 RFR | |
| 070 | 315105-0146 | | 8 | WASHER BRB 5,3X10 RFR | |
| 080 | 312605-0314 | | 4 | HEXAGON NUT, M6M M5 A280 | |
| T50B1030 | 90232-0104 | | 1 | PH.CELL E3S-CT61-D-5M | |
| T50B1031 | 90232-0103 | | 1 | PH.CELL E3S-CT61-L-5M | |
| T50B1060 | 90232-0104 | | 1 | PH.CELL E3S-CT61-D-5M | |
| T50B1061 | 90232-0103 | | 1 | PH.CELL E3S-CT61-L-5M | |

| Pos | Part No | UN | Qty | Description | Page No |
|---|---|---|---|---|---|

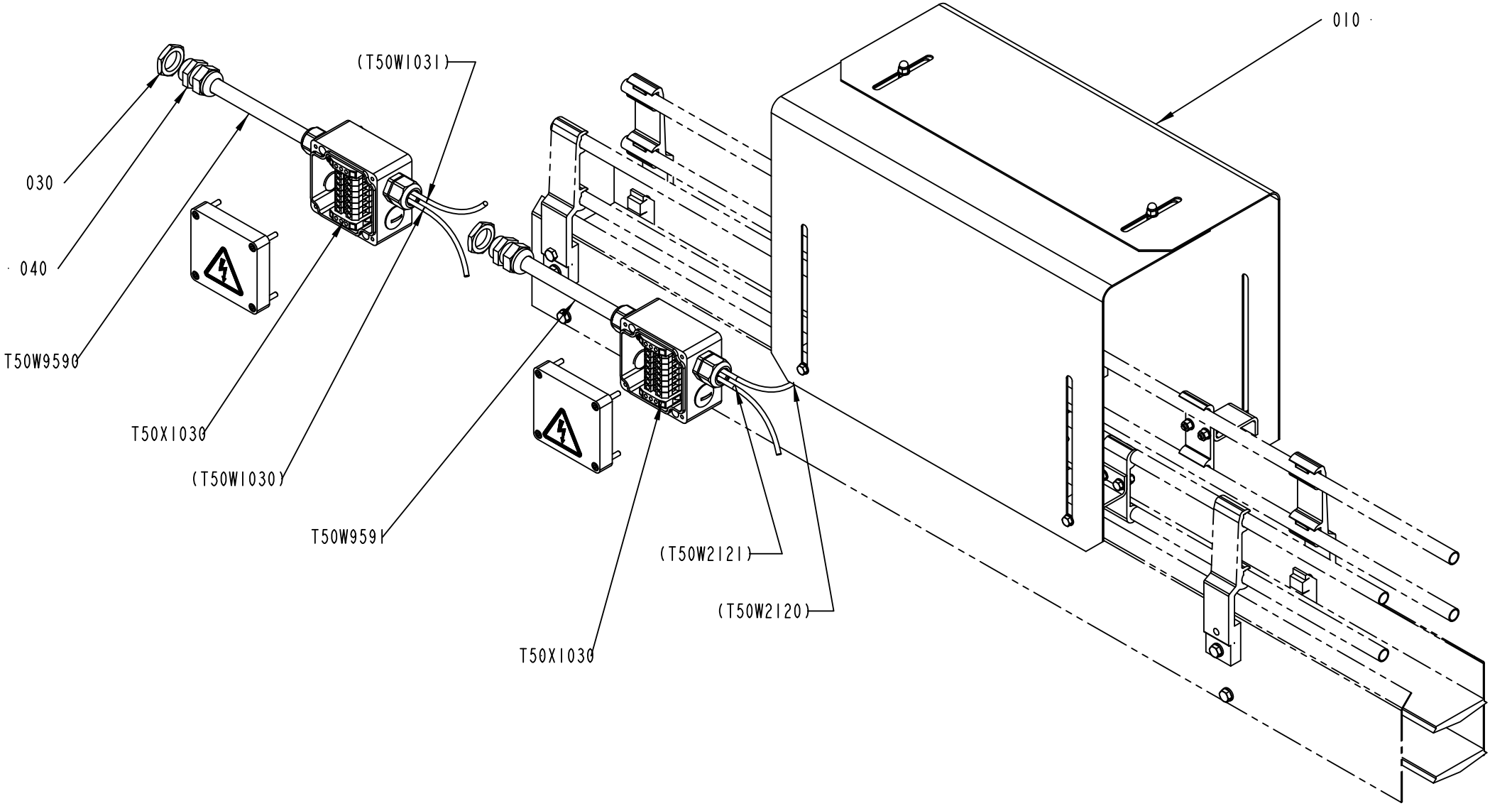
010
(T50W1031)
030
040
T50W9590
T50X1030
(T50W1030)
T50W9591
(T50W2121)
(T50W2120)
T50X1030
2872916-1
293657

ECM: 353498 - 20080529
Group number: 2872916-0100
Assembly Drawing: 2872916-1_1_AA

| Pos | Part No | UN | Qty | Description | Page No |
|---|---|---|---|---|---|
| - | | | | | |
| 010 | 2872918-0100 | | 1 | METERING DEVICE ..... | **5-189** |
| 030 | 90099-0118 | | 2 | NUT, PR 20,4 (PG13,5) | |
| 040 | 352103-0108 | | 2 | CABLE GLAND, ST 13,5 , PR20,4/PG13,5 | |
| T50W9590 | 351150-0405 | M | 10 | CABLE OLFLEX 5X0,75 MM2 LIGHT/GREY | |
| T50W9591 | 351150-0405 | M | 100 | CABLE OLFLEX 5X0,75 MM2 LIGHT/GREY | |
| T50X1030 | 2872919-0100 | | 1 | CONNECTION BOX ..... | **5-191** |
| T50X2121 | 2872919-0100 | | 1 | CONNECTION BOX ..... | **5-191** |

| Pos | Part No | UN | Qty | Description | Page No |
|---|---|---|---|---|---|

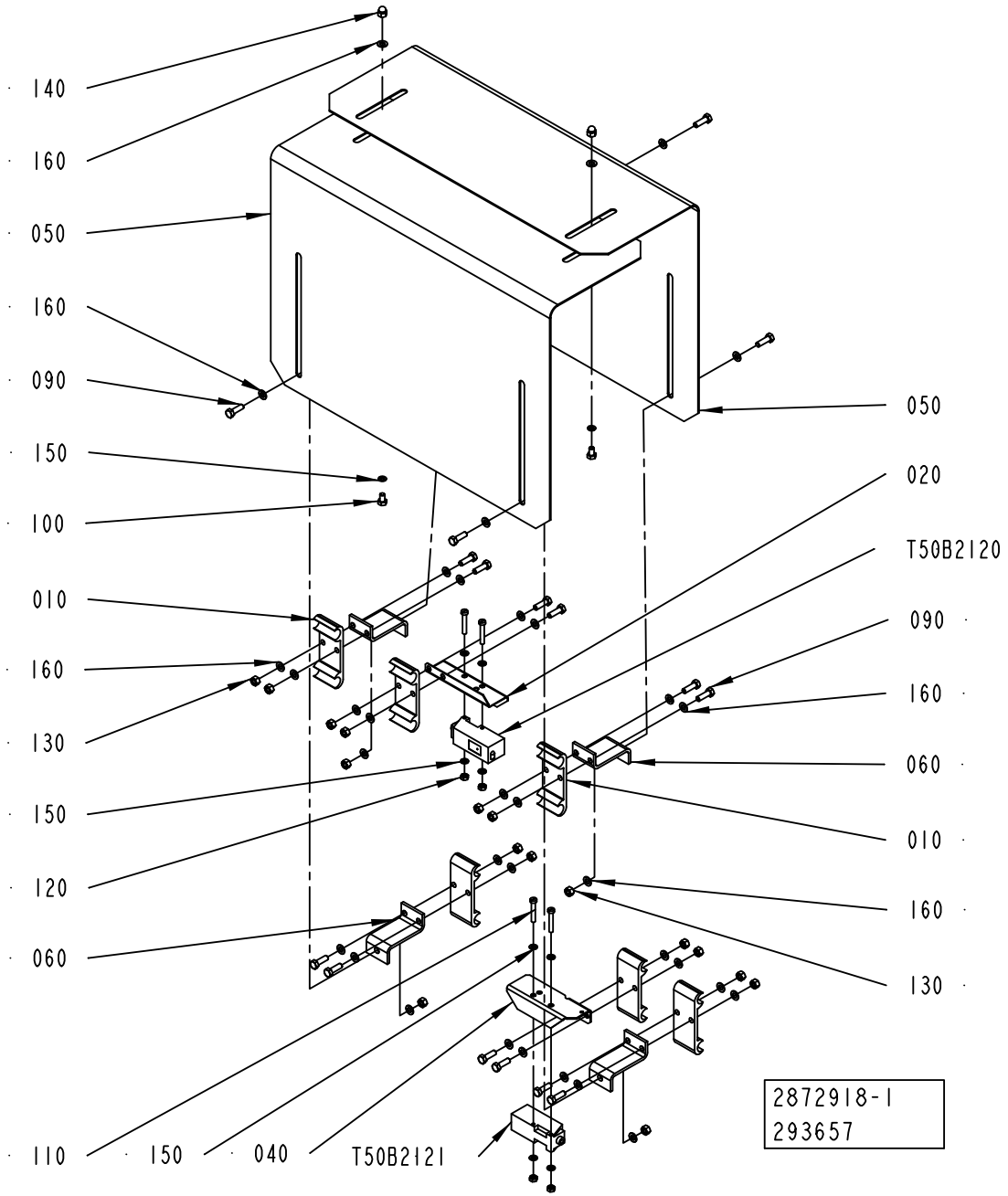
140
160
050
160
090
150
100
010
160
130
150
120
060
110
150
040
T50B2121
050
020
T50B2120
090
160
060
010
160
130
2872918-1
293657

ECM: 300224 - 20070701
Group number: 2872918-0100
Assembly Drawing: 2872918-1_1_AA

| Pos | Part No | UN | Qty | Description | Page No |
|---|---|---|---|---|---|
| - | | | | | |
| 010 | 1020637-0000 | | 6 | HOLDER | |
| 020 | 1086889-0000 | | 1 | COVER | |
| 030 | 1020638-0000 | | 6 | HOLDER | |
| 040 | 1086888-0000 | | 1 | COVER | |
| 050 | 1349566-0000 | | 2 | COVER | |
| 060 | 1478659-0000 | | 4 | BRACKET | |
| 090 | 312105-0329 | | 16 | SCREW M6S ISO 4017 M5X16 A480 | |
| 100 | 312105-0323 | | 2 | SCREW M6S ISO 4017 M5X8 A480 | |
| 110 | 312125-0297 | | 4 | SCREW ISO 1207 M4X25 A4 | |
| 120 | 312605-0312 | | 4 | HEXAGON NUT, M6M M4 A280 | |
| 130 | 312605-0314 | | 16 | HEXAGON NUT, M6M M5 A280 | |
| 140 | 312705-0314 | | 2 | NUT HEX. DOMED CAP MHM-6 M5 A280 | |
| 150 | 315105-0136 | | 8 | WASHER BRB 4,3X8 RFR | |
| 160 | 315105-0146 | | 42 | WASHER BRB 5,3X10 RFR | |
| T50B2120 | 90232-0104 | | 1 | PH.CELL E3S-CT61-D-5M | |
| T50B2121 | 90232-0103 | | 1 | PH.CELL E3S-CT61-L-5M | |

| Pos | Part No | UN | Qty | Description | Page No |
|---|---|---|---|---|---|

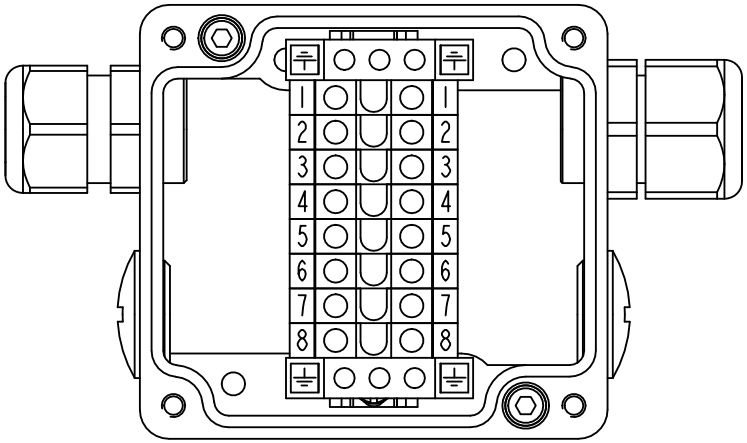


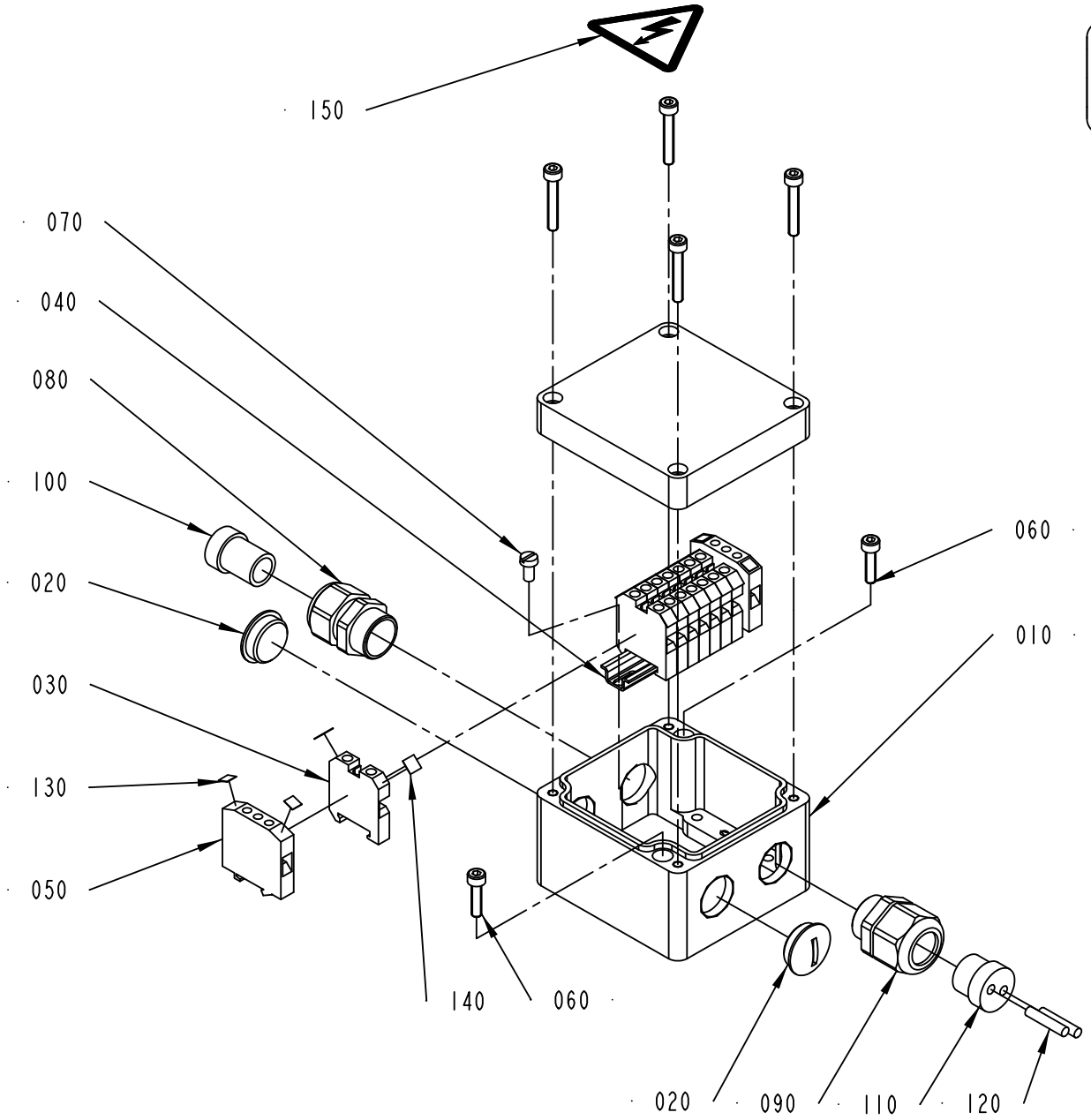


2872919-1
293657

ECM: 300222 - 20070701
Group number: 2872919-0100
Assembly Drawing: 2872919-1_1_AA

| Pos | Part No | UN | Qty | Description | Page No |
|---|---|---|---|---|---|
| - | | | | | |
| 010 | 1349568-0000 | | 1 | CONNECTION BOX | |
| 020 | 90002-0009 | | 2 | BLANK-OFF PLUG, PR 18.6 SKINDICHT-BLK11 | |
| 030 | 90077-0079 | | 8 | FEED THROUGH TERMINAL, 02943.6 | |
| 040 | 90077-0328 | MM | 65 | RAIL TS15/5 | |
| 050 | 90135-0026 | | 2 | EARTH TERMINAL, 3802.6 | |
| 060 | 312115-0293 | | 2 | SCREW ISO4762 M4X16 A4 80 | |
| 070 | 312125-0287 | | 2 | SCREW ISO 1207 M4X8 A4 | |
| 080 | 353240-0002 | | 1 | GLAND W/O INSERT PG11 NORMAL | |
| 090 | 353241-0002 | | 1 | GLAND W/O INSERT PG11 EXTENDED | |
| 100 | 353249-0003 | | 1 | INSERT, SINGLE HOLE, E151/11 | |
| 110 | 353249-0036 | | 1 | INSERT, MULTI HOLE, EK152 M 2X4 | |
| 120 | 353249-0301 | | 2 | SEALING PIN, 4X20 | |
| 130 | 359011-0819 | | 4 | MARKING PLATES 5-GW (EARTH) | |
| 140 | 359011-0821 | | 2 | SET OF SIGNS 6-FW 1-50 | |
| 150 | 359705-0015 | | 1 | WARNING SIGN ISO, RISK OF ELECTRIC SHOCK | |

| Pos | Part No | UN | Qty | Description | Page No |
|---|---|---|---|---|---|

Tetra Pak

# SPC

## Spare Parts Catalogue

## Tetra Pak A3/Flex

**648575-0200**

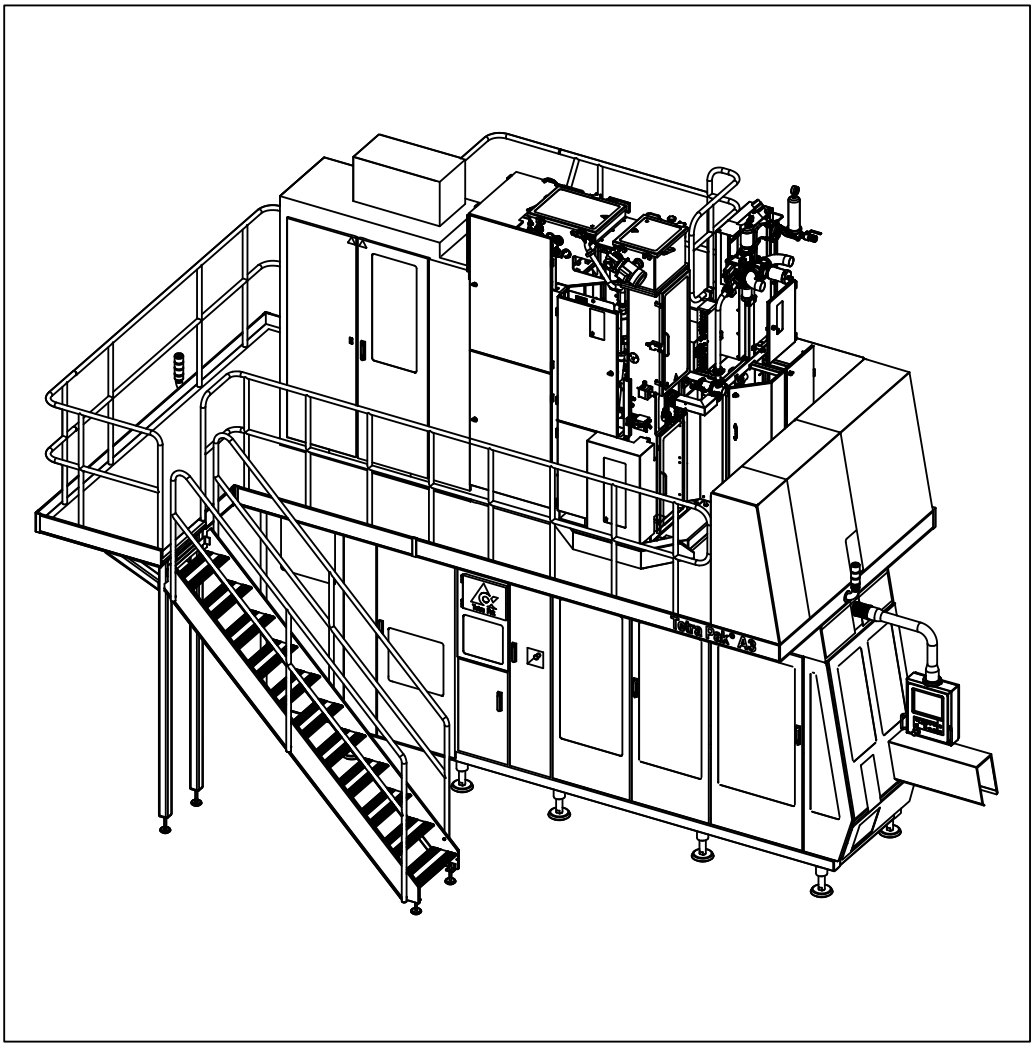

Tetra Pak

Doc. No: SPC-2819201-0103

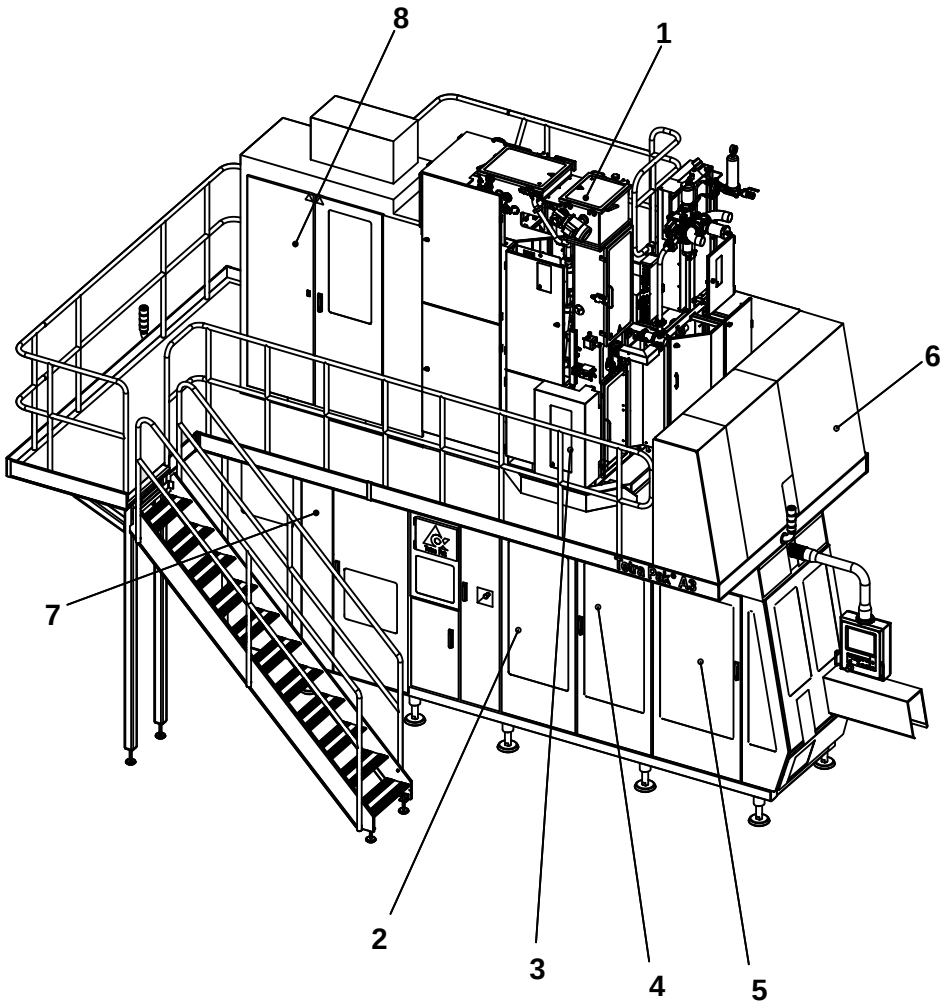


The position numbers in the illustration correspond with the chapter numbers listed on the next page.

Copyright © 2008 Tetra Pak Group

All rights reserved. No part of this document may be reproduced or copied in any form or by any means without written permission from Tetra Pak Packaging Solutions .

Tetra Pak and all Tetra Pak products are trademarks belonging to the Tetra Pak Group.

The content of this manual is in accordance with the design and construction of the machine or equipment at the time of publishing. Tetra Pak reserves the right to introduce design modifications without prior notice.

This document was produced by:

Tetra Pak Packaging Solutions
Via Delfini 1
411 00 Modena
ITALY

Additional copies can be ordered from Tetra Pak. When ordering additional copies, always provide the document number.

Doc. No. SPC-2819201-0103

Issue 2008-10

This document is valid for:

21208/00014

Series No/Machine No Sign.

# SPC

## Spare Parts Catalogue

Tetra Pak A3/Flex
648575-0200


BINDER 1

i Introduction

1 Superstructure

2 Machine Body

3 Drive Unit

4 Jaw System

5 Final Folder

BINDER 2

6 Service Unit

7 Automatic Splicing Unit

8 Electrical Cabinet

9 Regular Accessories

10 Electric Equipment

ii Part Number Index

iii Ref. Des. Parts Index


Machine or equipment configurations that this catalogue is valid for are described on the next page.


Doc. No: SPC-2819201-0103

Issue 2008-10


Tetra Pak

**Tetra Pak Packaging Solutions**

# Valid for:

| Name | Drawing Specification and Development Step | Additional Information |
|---|---|---|
| Tetra Pak A3/Flex | 648575-0200 | Valid for T-Order 21208/00014 |

# SPC
## Spare Parts Catalogue

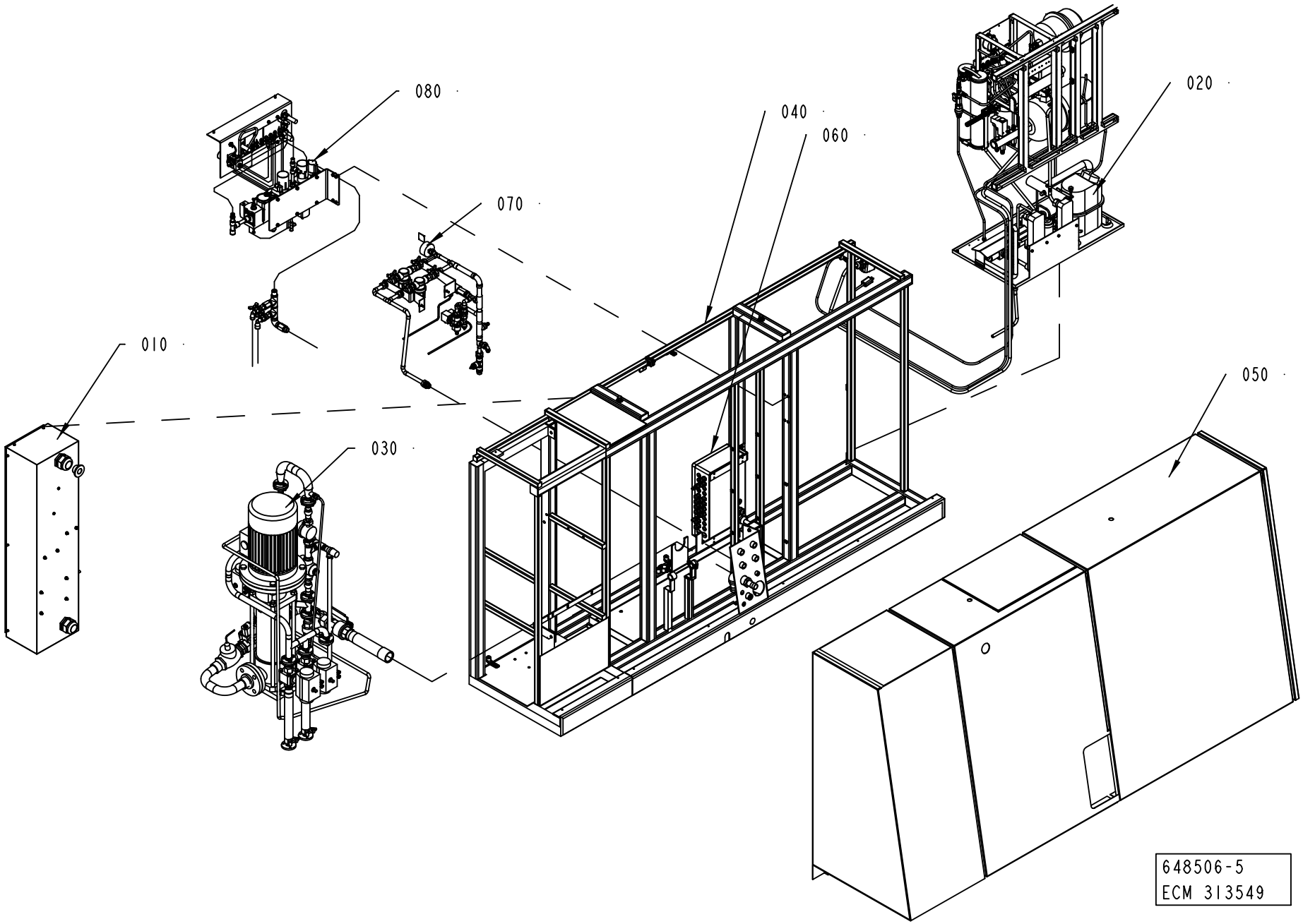
080
040
060
020
070
010
050
030
648506-5
ECM 313549

ECM: 351650 - 20080430
Group number: 648506-0500
Assembly Drawing: 648506-5_1_AA

This list covers pages from 6-2 to 6-5

| Pos | Part No | UN | Qty | Description | Page No |
|---|---|---|---|---|---|
| **A3/FLEX PEROXIDE DILUTION (See drawing on pages: 6-2, 6-4)** | | | | | |
| 110 | 2833381-0100 | | 1 | WATER SYSTEM | **6-7** |
| **Common Parts** | | | | | |
| 010 | 1095610-0400 | | 1 | SWITCH | **6-19** |
| 020 | 1095612-0400 | | 1 | COOLING WATER SYSTEM | **6-21, 6-23** |
| 030 | 1095627-0400 | | 1 | FOAMING UNIT | **6-41** |
| 040 | 2613034-0200 | | 1 | MACHINE BODY | **6-55, 6-57** |
| 050 | 1095607-0300 | | 1 | COVERING PANEL | **6-59** |
| 060 | 2785231-0100 | | 1 | CONNECTION BOX | **6-81, 6-83** |
| 070 | 1095608-0200 | | 1 | PANEL | **6-87, 6-89** |
| 080 | 1095714-0400 | | 1 | SUPPLY SYSTEM | **6-91** |

| Pos | Part No | UN | Qty | Description | Page No |
|---|---|---|---|---|---|

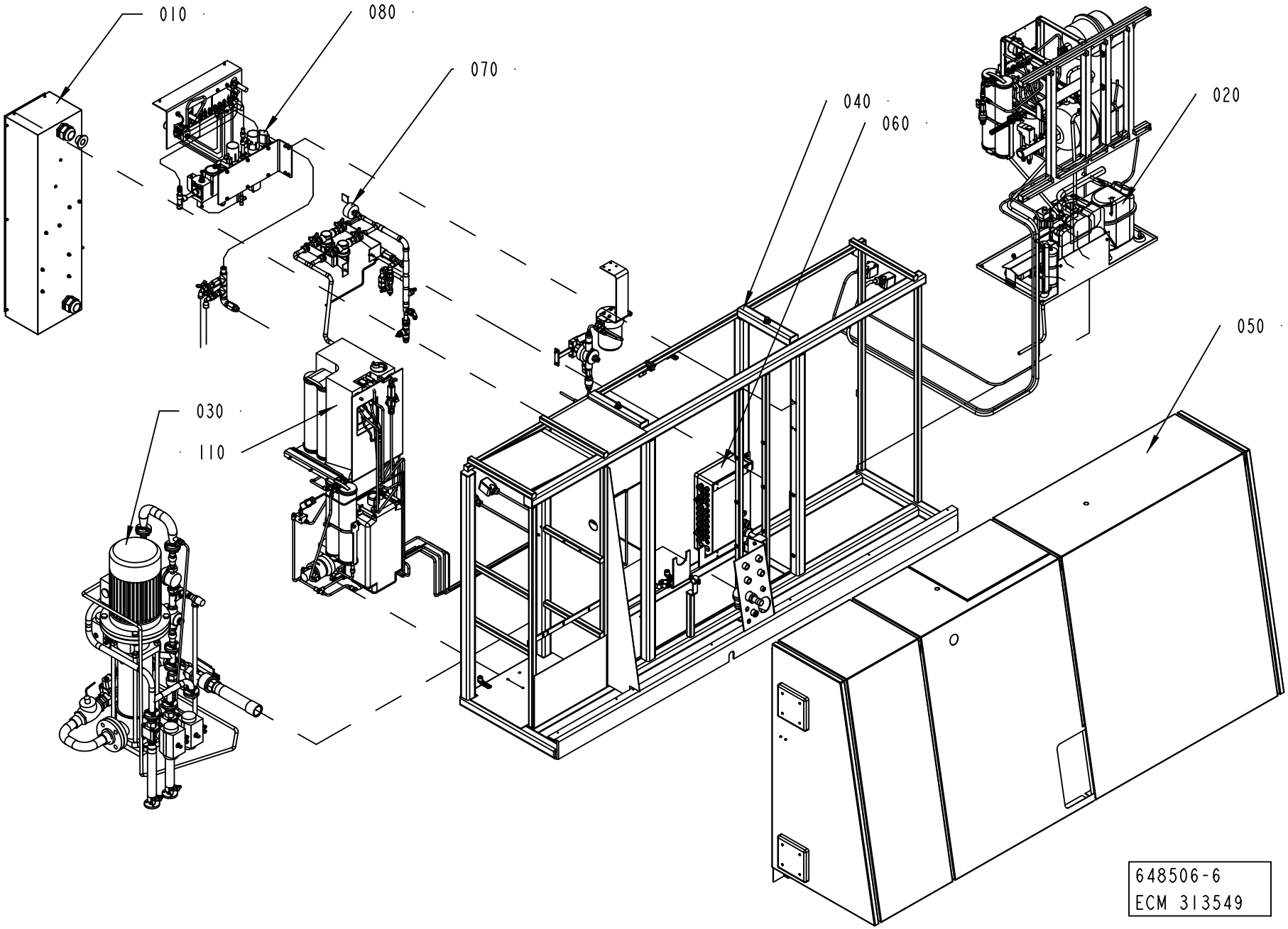
010
080
070
040
060
020
050
030
110
648506-6
ECM 313549

ECM: 351650 - 20080430
Group number: 648506-0500
Assembly Drawing: 648506-6_1_AA

This list covers pages from 6-2 to 6-5

| Pos | Part No | UN | Qty | Description | Page No |
|---|---|---|---|---|---|
| **A3/FLEX PEROXIDE DILUTION (See drawing on pages: 6-2, 6-4)** | | | | | |
| 110 | 2833381-0100 | | 1 | WATER SYSTEM | **6-7** |
| **Common Parts** | | | | | |
| 010 | 1095610-0400 | | 1 | SWITCH | **6-19** |
| 020 | 1095612-0400 | | 1 | COOLING WATER SYSTEM | **6-21, 6-23** |
| 030 | 1095627-0400 | | 1 | FOAMING UNIT | **6-41** |
| 040 | 2613034-0200 | | 1 | MACHINE BODY | **6-55, 6-57** |
| 050 | 1095607-0300 | | 1 | COVERING PANEL | **6-59** |
| 060 | 2785231-0100 | | 1 | CONNECTION BOX | **6-81, 6-83** |
| 070 | 1095608-0200 | | 1 | PANEL | **6-87, 6-89** |
| 080 | 1095714-0400 | | 1 | SUPPLY SYSTEM | **6-91** |

| Pos | Part No | UN | Qty | Description | Page No |
|---|---|---|---|---|---|

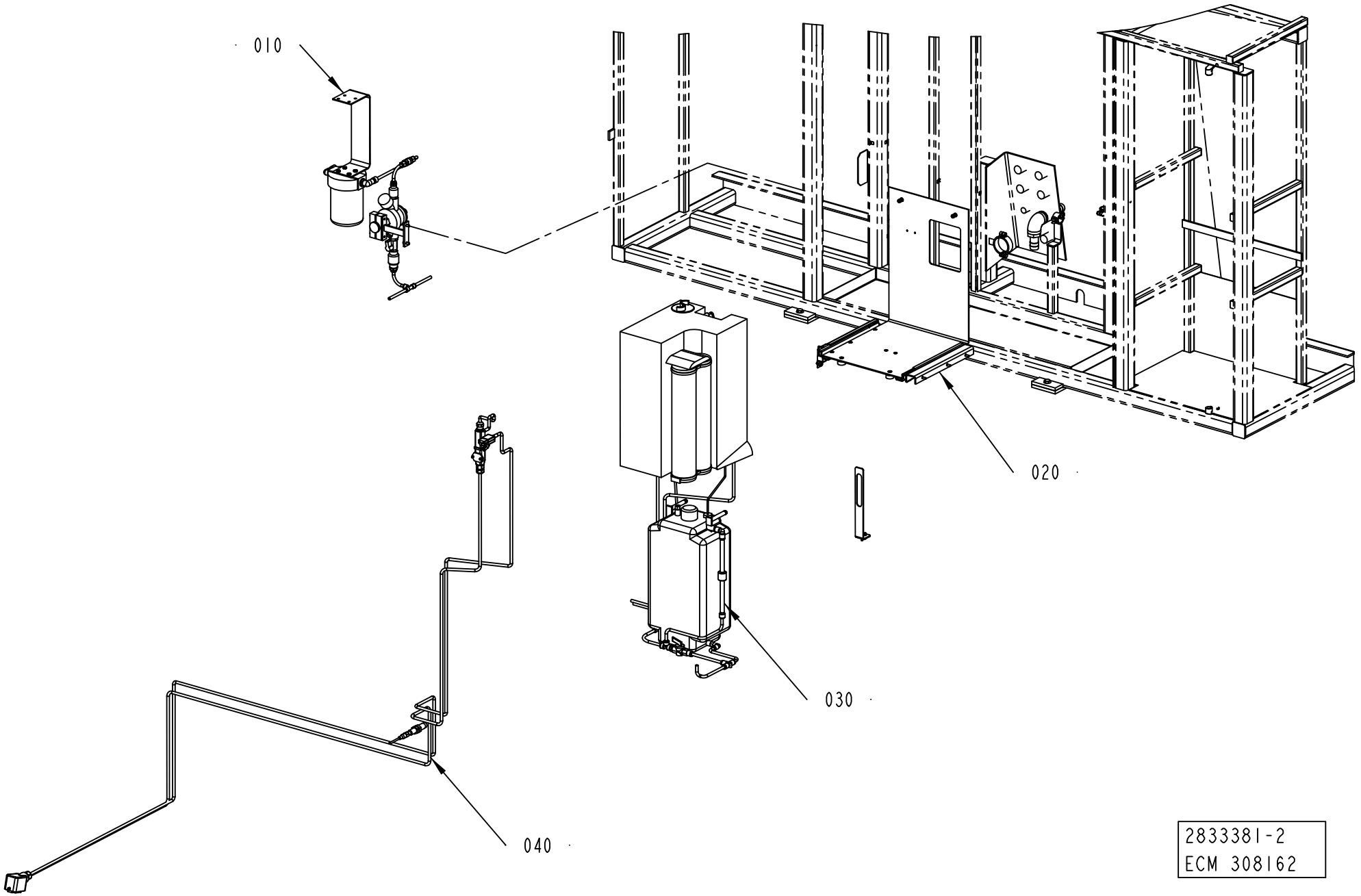
010
020
030
040
2833381-2
ECM 308162

ECM: 351654 - 20080430
Group number: 2833381-0100
Assembly Drawing: 2833381-2_1_AA

| Pos | Part No | UN | Qty | Description | Page No |
|---|---|---|---|---|---|
| - | | | | | |
| 010 | 2795888-0100 | | 1 | FILTER | **6-9** |
| 020 | 2833383-0100 | | 1 | SUPPORT | **6-11** |
| 030 | 2879650-0100 | | 1 | CIRCUIT | **6-13** |
| 040 | 2879651-0100 | | 1 | ELECTRICAL CONNECTION | **6-15** |

| Pos | Part No | UN | Qty | Description | Page No |
|---|---|---|---|---|---|

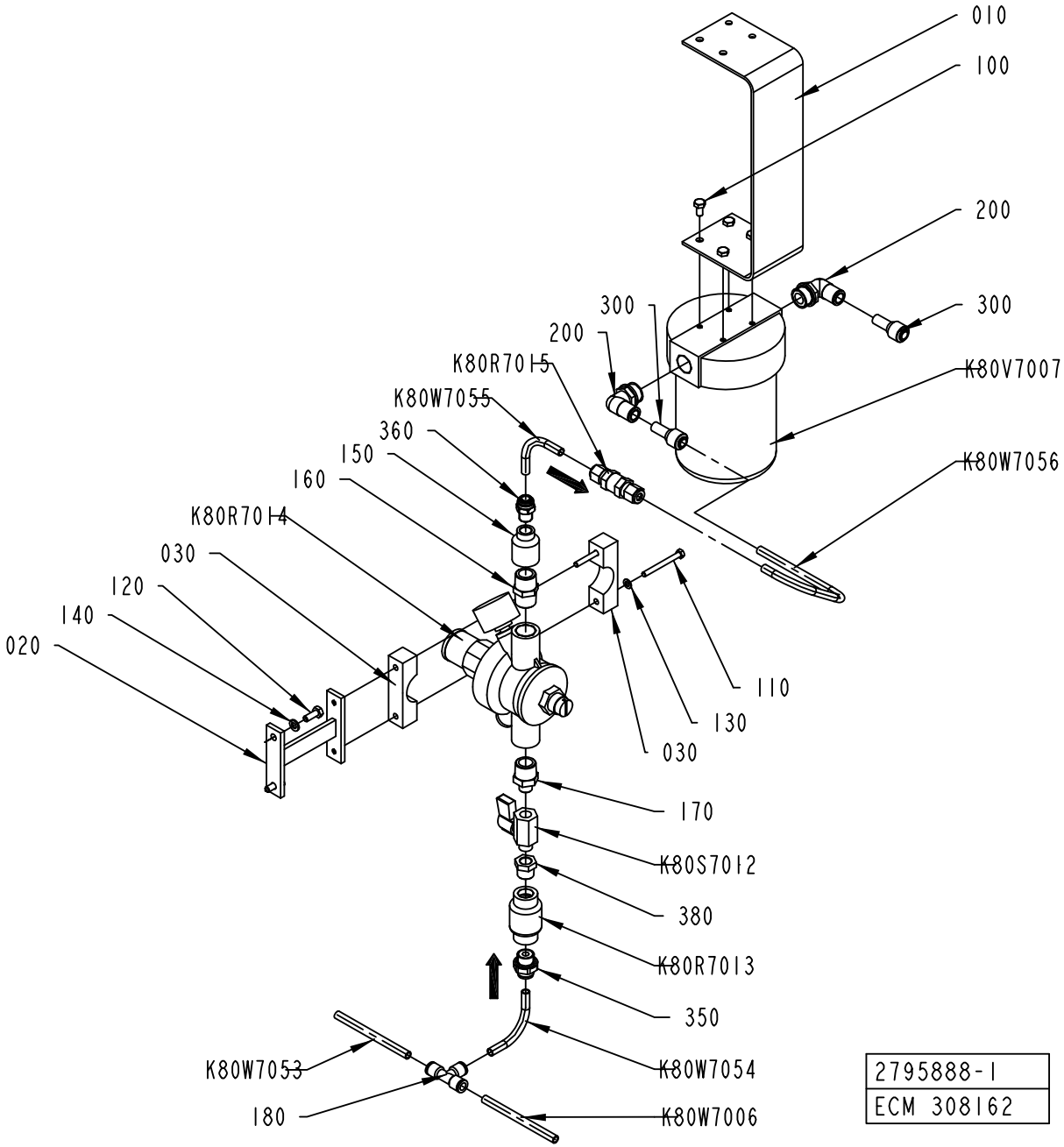
010
100
200
300
300
200
K80R7015
K80W7055
360
150
160
K80R7014
030
120
140
020
K80V7007
K80W7056
110
130
030
170
K80S7012
380
K80R7013
350
K80W7054
K80W7006
K80W7053
180
2795888-1
ECM 308162

ECM: 308162 - 20070629
Group number: 2795888-0100
Assembly Drawing: 2795888-1_1_AA

| Pos | Part No | UN | Qty | Description | Page No |
|---|---|---|---|---|---|
| - | | | | | |
| 010 | 2604069-0000 | | 1 | BRACKET | |
| 020 | 2623715-0000 | | 1 | HOLDER | |
| 030 | 2623717-0000 | | 2 | HOLDER | |
| 100 | 312105-0366 | | 4 | SCREW M6S ISO 4017 M6X12 A480 | |
| 110 | 312105-0341 | | 2 | SCREW M6S ISO 4014 M5X50 A480 | |
| 120 | 312105-0368 | | 2 | SCREW M6S ISO 4017 M6X16 A480 | |
| 130 | 315105-0146 | | 2 | WASHER BRB 5,3X10 RFR | |
| 140 | 315105-0153 | | 2 | WASHER BRB 6,4X12 RFR | |
| 150 | 342217-0103 | | 1 | SLEEVE, REDUCTION, INT, R-2021/2X1/4 | |
| 160 | 90330-0021 | | 1 | NIPPLES, EXT. THREAD. R-207R1/2 | |
| 170 | 342203-0107 | | 1 | NIPPLES, EXT. THREAD, HEXAGON,ÿNO. 209 | |
| 180 | 342748-0103 | | 1 | T-CONNECTION 8MM | |
| 200 | 350002-0015 | | 2 | PUSH-IN L-FITTING QSL-F-G1/2-10 | |
| 300 | 90055-0249 | | 2 | REDUCER 8-10 | |
| 350 | 90458-1963 | | 1 | STRAIGHT COUPLING D=8-G3/8" | |
| 360 | 90459-0997 | | 1 | STRAIGHT COUPLING D=8-R1/4" | |
| 380 | 90330-0042 | | 1 | BUSHING, INT/EXT. THR. R3/8-RP1/4 | |
| K80R7013 | 90230-0040 | | 1 | NON-RETURN VALVE, R3/8, L=55 | |
| K80R7014 | 90458-0201 | | 1 | FLUID AUT. FEEDER, ALINOX 1/2 46.04.00 | |
| K80R7015 | 90230-0032 | | 1 | NON-RETURN VALVE, 8MM, L=63,25 | |
| K80S7012 | 90187-0045 | | 1 | BALL VALVE G1/4 CR PL | |
| K80V7007 | 90415-0065 | | 1 | FILTER | |
| *010* | *90415-0357* | | *1* | *FILTER INSERT* | |
| K80W7006 | 90166-0188 | MM | 400 | PLASTIC HOSE | |
| K80W7053 | 90166-0188 | MM | 60 | PLASTIC HOSE | |
| K80W7054 | 90166-0188 | MM | 1000 | PLASTIC HOSE | |
| K80W7055 | 90166-0188 | MM | 1000 | PLASTIC HOSE | |
| K80W7056 | 90166-0188 | MM | 1000 | PLASTIC HOSE | |

| Pos | Part No | UN | Qty | Description | Page No |
|---|---|---|---|---|---|

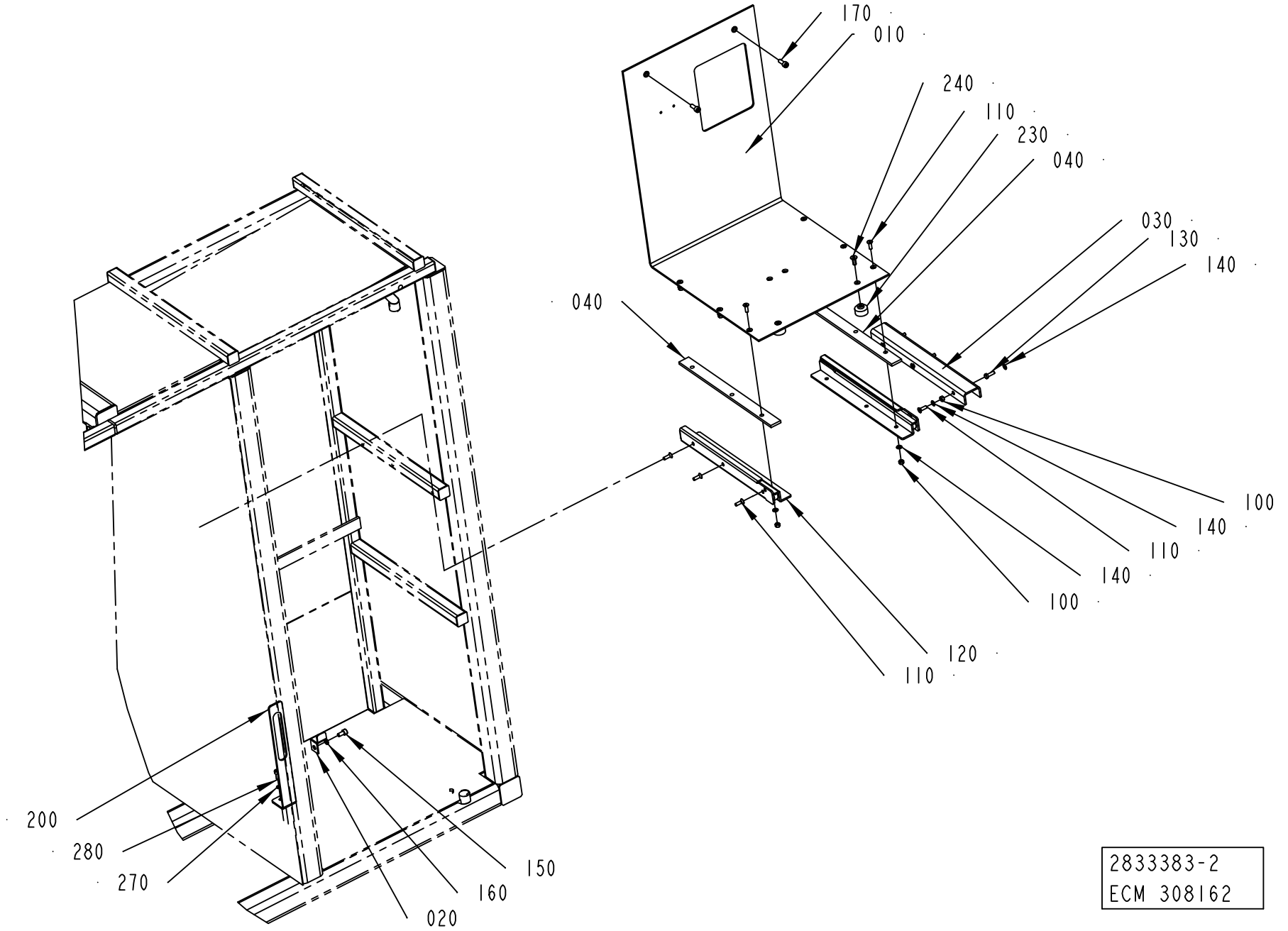
170
010
240
110
230
040
030
130
140
040
100
140
110
140
100
120
110
200
280
270
150
160
020
2833383-2
ECM 308162

ECM: 351655 - 20080430
Group number: 2833383-0100
Assembly Drawing: 2833383-2_1_AA

| Pos | Part No | UN | Qty | Description | Page No |
|---|---|---|---|---|---|
| **A3/FLEX** | | | | | |
| 140 | 315105-0146 | | 12 | WASHER BRB 5,3X10 RFR | |
| 160 | 315105-0153 | | 1 | WASHER BRB 6,4X12 RFR | |
| **Common Parts** | | | | | |
| 010 | 2833384-0000 | | 1 | TOP COVER | |
| 020 | 2866745-0000 | | 1 | HOLDER | |
| 030 | 2866746-0000 | | 1 | SUPPORT | |
| 040 | 2866749-0000 | | 2 | GASKET | |
| 100 | 312605-0314 | | 9 | HEXAGON NUT, M6M M5 A280 | |
| 110 | 312155-0329 | | 12 | SCREW DIN 7991 MF6S M5X16 A4 70 | |
| 120 | 90600-1767 | | 1 | GUIDE CONSOLE 30X13X300, FR1105/300 | |
| 130 | 312105-0329 | | 3 | SCREW M6S ISO 4017 M5X16 A480 | |
| 150 | 312115-0366 | | 1 | SCREW ISO4762 M6X12 A4 80 | |
| 170 | 312115-0368 | | 2 | SCREW ISO4762 M6X16 A4 80 | |
| 200 | 2887528-0000 | | 1 | HOLDER | |
| 210 | 2863540-0000 | | 1 | FITTING PIECE | |
| 230 | 90051-0053 | | 2 | KNOB, INTERNAL THREAD, M6 24X17 | |
| 260 | 312105-0378 | | 2 | SCREW M6S ISO 4014 M6X40 A480 | |
| 270 | 315402-0146 | | 2 | LOCK WASHER FBB 5,1 | |
| 280 | 312115-0328 | | 2 | SCREW ISO4762 M5X14 A4 80 | |

| Pos | Part No | UN | Qty | Description | Page No |
|---|---|---|---|---|---|

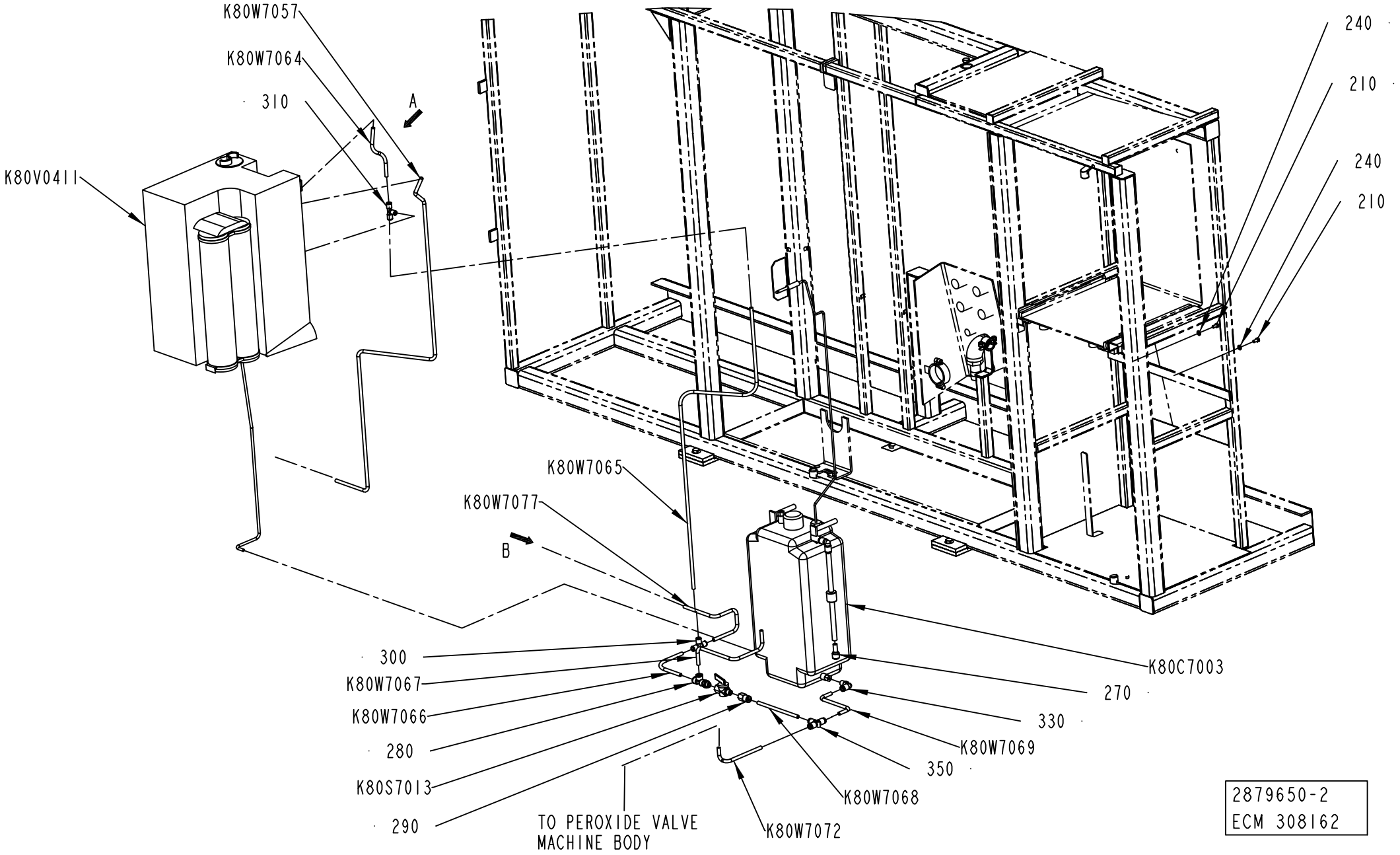
K80W7057
K80W7064
310
A
K80V0411
240
210
240
210
K80W7065
K80W7077
B
300
K80W7067
K80W7066
280
K80S7013
290
TO PEROXIDE VALVE
MACHINE BODY
K80W7072
K80W7068
350
K80W7069
330
270
K80C7003
2879650-2
ECM 308162

ECM: 351656 - 20080430
Group number: 2879650-0100
Assembly Drawing: 2879650-2_1_AA

| Pos | Part No | UN | Qty | Description | Page No |
|---|---|---|---|---|---|
| **A3/FLEX** | | | | | |
| 330 | 90600-2653 | | 1 | PUSH-IN L-FITTING KPL08-02 | |
| K80W7072 | 315400-0006 | MM | 1000 | TUBE PUN-H-8X1,25-SW | |
| **Common Parts** | | | | | |
| 210 | 312105-0366 | | 4 | SCREW M6S ISO 4017 M6X12 A480 | |
| 240 | 315105-0153 | | 4 | WASHER BRB 6,4X12 RFR | |
| 270 | 90055-0249 | | 1 | REDUCER 8-10 | |
| 280 | 90055-0275 | | 1 | ELBOW FITTING, 8 - G1/4 | |
| 290 | 90055-0266 | | 1 | STRAIGHT CONNECTION | |
| 300 | 350005-0003 | | 1 | PUSH-IN T-FITTING QST-F-8 | |
| 310 | 350011-0002 | | 1 | PUSH-IN T-FITTING QS-F-8-6 | |
| 350 | 90600-2650 | | 1 | PUSH-IN T-FITTING KPT08-00 | |
| 410 | 90055-0266 | | 2 | STRAIGHT CONNECTION | |
| 460 | 90600-2650 | | 1 | PUSH-IN T-FITTING KPT08-00 | |
| 500 | 90600-3267 | | 1 | MAINTENANCE KIT, TPAKKIT01 | |
| K80B1100 | 90459-1234 | | 1 | FLOW SWITCH, FS-3 SERIES/166703 | |
| K80C7003 | 90600-2901 | | 1 | TANK 10L, TANKPE010 | |
| K80S7013 | 90187-0197 | | 1 | BALL VALVE G1/4 | |
| K80V0411 | 90600-2902 | | 1 | STERILE WATER SYSTEM, ZLXS5003Y | |
| K80W7057 | 315400-0006 | MM | 4000 | TUBE PUN-H-8X1,25-SW | |
| K80W7064 | 315400-0006 | MM | 180 | TUBE PUN-H-8X1,25-SW | |
| K80W7065 | 315400-0006 | MM | 1100 | TUBE PUN-H-8X1,25-SW | |
| K80W7066 | 315400-0006 | MM | 200 | TUBE PUN-H-8X1,25-SW | |
| K80W7067 | 315400-0006 | MM | 350 | TUBE PUN-H-8X1,25-SW | |
| K80W7068 | 315400-0006 | MM | 150 | TUBE PUN-H-8X1,25-SW | |
| K80W7069 | 315400-0006 | MM | 200 | TUBE PUN-H-8X1,25-SW | |
| K80W7073 | 315400-0006 | MM | 800 | TUBE PUN-H-8X1,25-SW | |
| K80W7077 | 315400-0006 | MM | 3000 | TUBE PUN-H-8X1,25-SW | |
| U70W7386 | 315400-0006 | MM | 6000 | TUBE PUN-H-8X1,25-SW | |
| U70W7387 | 315400-0006 | MM | 200 | TUBE PUN-H-8X1,25-SW | |
| U70W7388 | 315400-0006 | MM | 1000 | TUBE PUN-H-8X1,25-SW | |
| U70W7389 | 315400-0006 | M | 10 | TUBE PUN-H-8X1,25-SW | |

| Pos | Part No | UN | Qty | Description | Page No |
|---|---|---|---|---|---|

Machine Type | Group Description | Used-In | Group Number | Page No

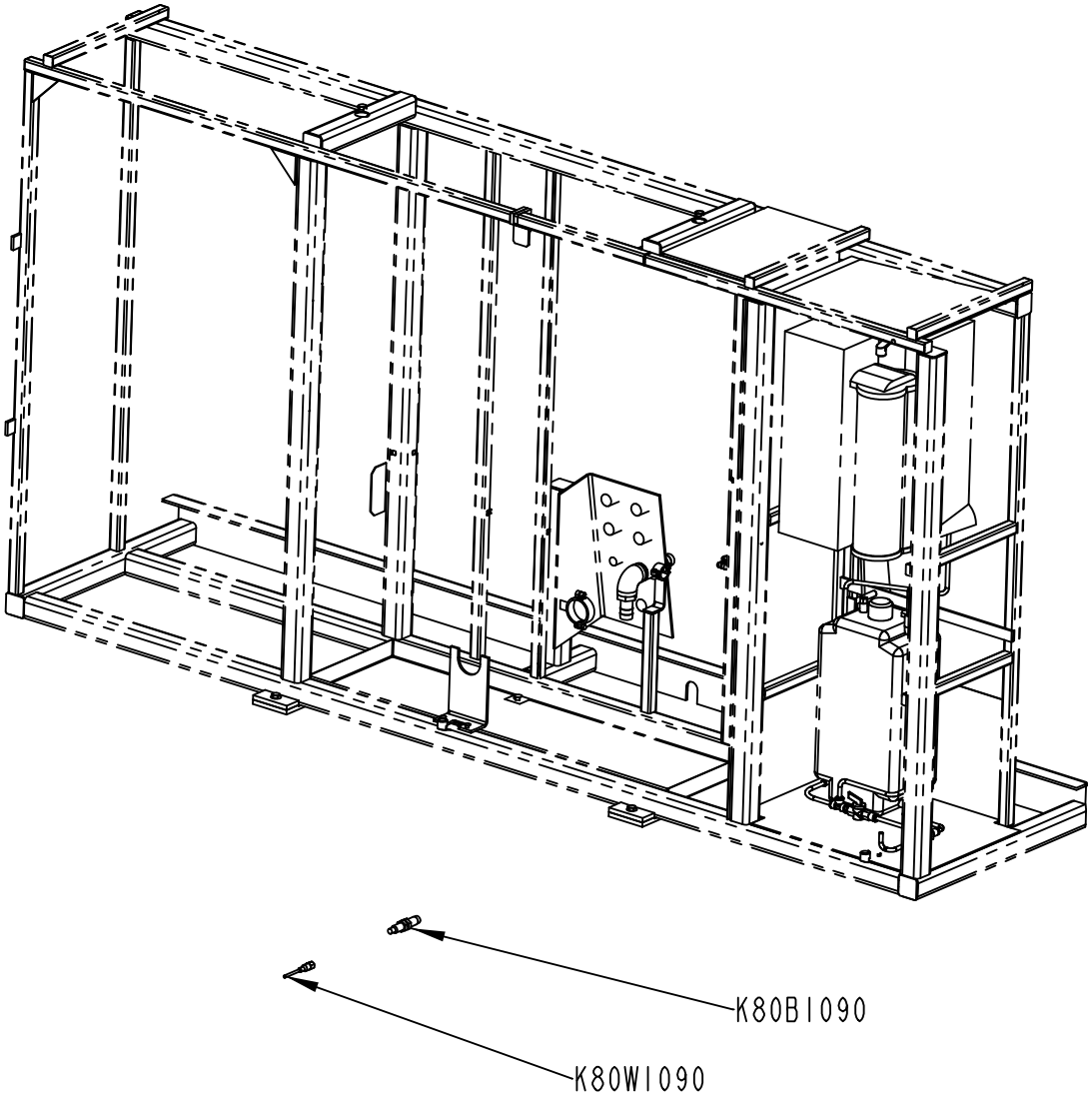


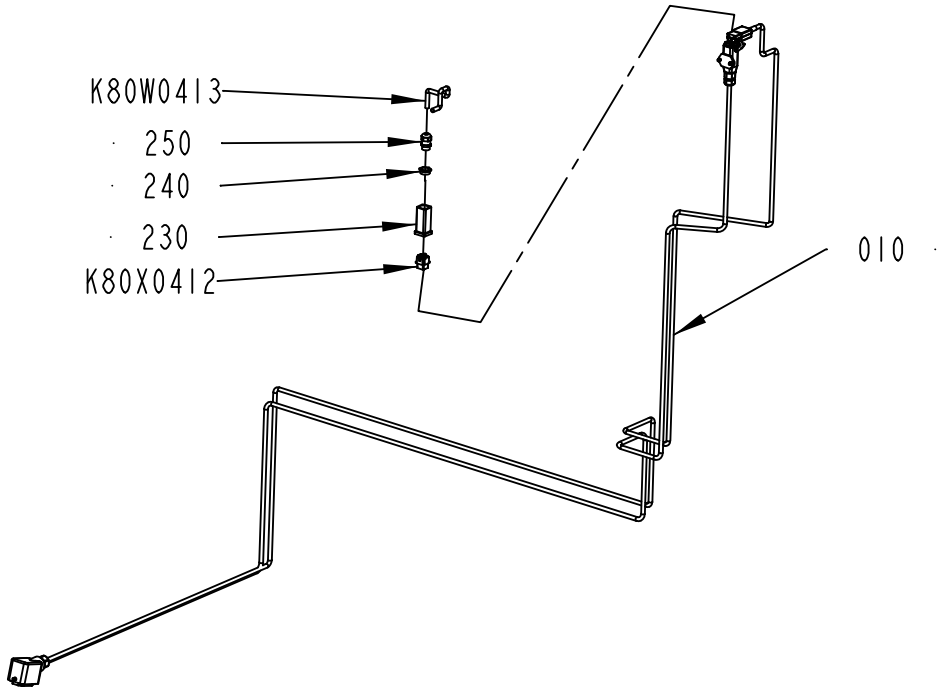


2879651-2
ECM 308162

ECM: 351657 - 20080430
Group number: 2879651-0100
Assembly Drawing: 2879651-2_1_AA

| Pos | Part No | UN | Qty | Description | Page No |
|---|---|---|---|---|---|
| - | | | | | |
| 010 | 2901822-0100 | | 1 | ELECTRICAL CONNECTION ..... | **6-17** |
| 230 | 90459-3080 | | 1 | HOOD HAN-BRID 3A 19 20 003 1443 | |
| 240 | 90459-7223 | | 1 | REDUCER, M20/M16 | |
| 250 | 90458-0314 | | 1 | CABLE GLAND, M16X1,5, NO.5311 1110 | |
| K80B1090 | 90458-1840 | | 1 | CAPACITIVE SENSOR CM18-12NPP-KC1 | |
| K80W0413 | 351150-0403 | MM | 300 | CABLE OLFLEX 3X0,75 MM2 LIGHT/GREY | |
| K80W1090 | 351309-0050 | | 1 | 'ACTUATOR/SENSOR CABLE PRKT 4-07/5M | |
| K80X0412 | 90459-6820 | | 1 | FEMALE INSERT HAN 4 A, 09 20 004 2711 | |

| Pos | Part No | UN | Qty | Description | Page No |
|---|---|---|---|---|---|

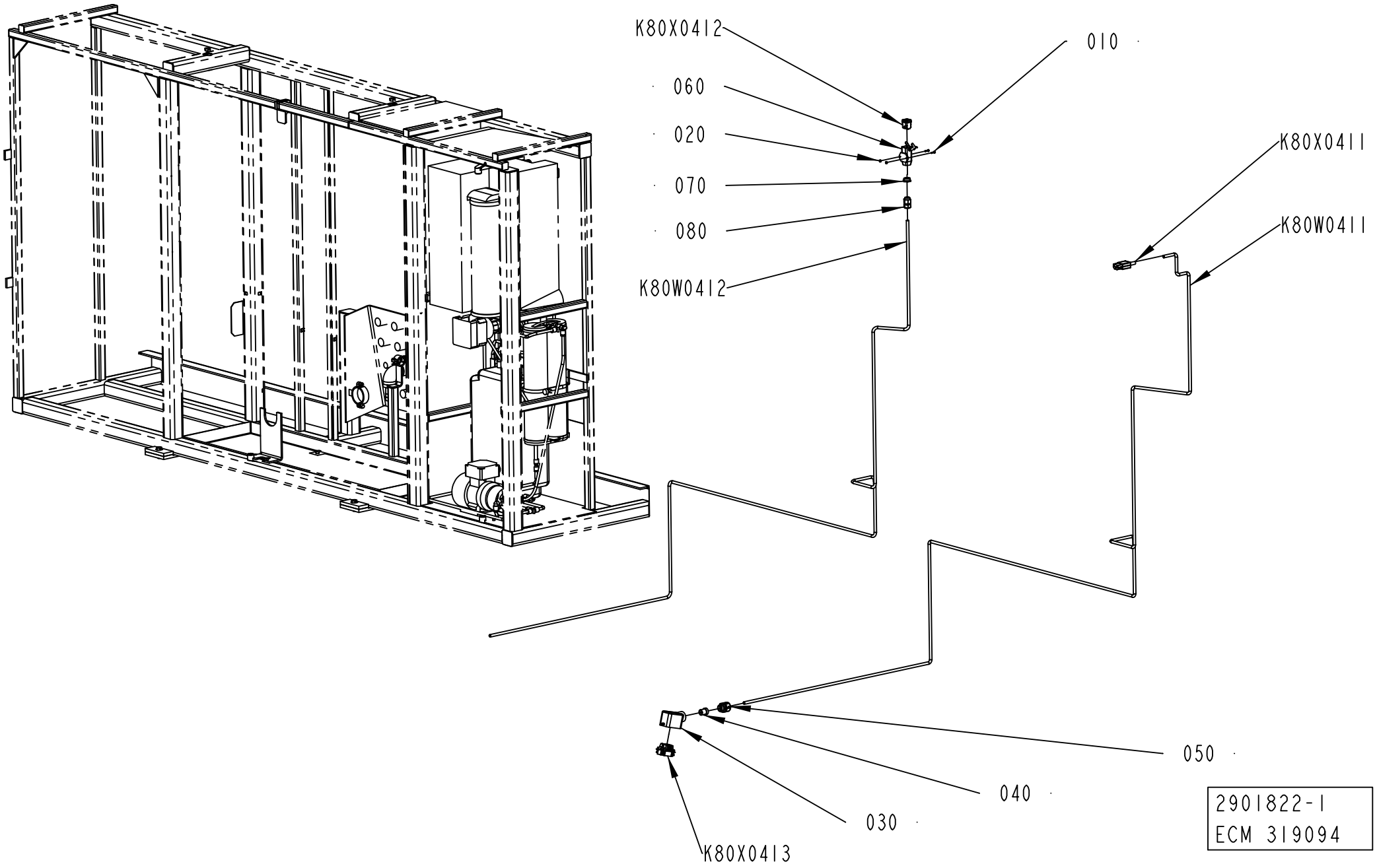
K80X0412
010
060
020
070
080
K80W0412
K80X0411
K80W0411
050
040
030
K80X0413
2901822-1
ECM 319094

ECM: 328072 - 20070705
Group number: 2901822-0100
Assembly Drawing: 2901822-1_1_AB

| Pos | Part No | UN | Qty | Description | Page No |
|---|---|---|---|---|---|
| - | | | | | |
| 010 | 312125-0226 | | 2 | SCREW ISO 1207 M3X12 A4 | |
| 020 | 312605-0310 | | 2 | HEXAGON NUT, M6M M3 A280 | |
| 030 | 90459-1458 | | 1 | HOOD HAN 6 E 19 30 006 1540 | |
| 040 | 353249-0028 | | 1 | INSERT, MULTI HOLE, E153M2X8 | |
| 050 | 90458-0422 | | 1 | GLAND W/O INSERT M20 EXTENDED | |
| 060 | 90459-3081 | | 1 | HOUSING HAN A 19 20 003 1250 | |
| 070 | 90459-7223 | | 1 | REDUCER, M20/M16 | |
| 080 | 90458-0436 | | 1 | GLAND, EXTENDED WITH INSERT, M16X1,5 | |
| K80W0411 | 351150-0403 | MM | 4500 | CABLE OLFLEX 3X0,75 MM2 LIGHT/GREY | |
| K80W0412 | 351150-0403 | MM | 3700 | CABLE OLFLEX 3X0,75 MM2 LIGHT/GREY | |
| K80X0411 | 2803661-0000 | | 1 | CABLE | |
| K80X0412 | 90459-6821 | | 1 | MALE INSERT HAN 4A, 09 20 004 2611 | |
| K80X0413 | 90110-0052 | | 1 | MALE INSERT HAN 6E 09 33 006 2601 | |

| Pos | Part No | UN | Qty | Description | Page No |
|---|---|---|---|---|---|

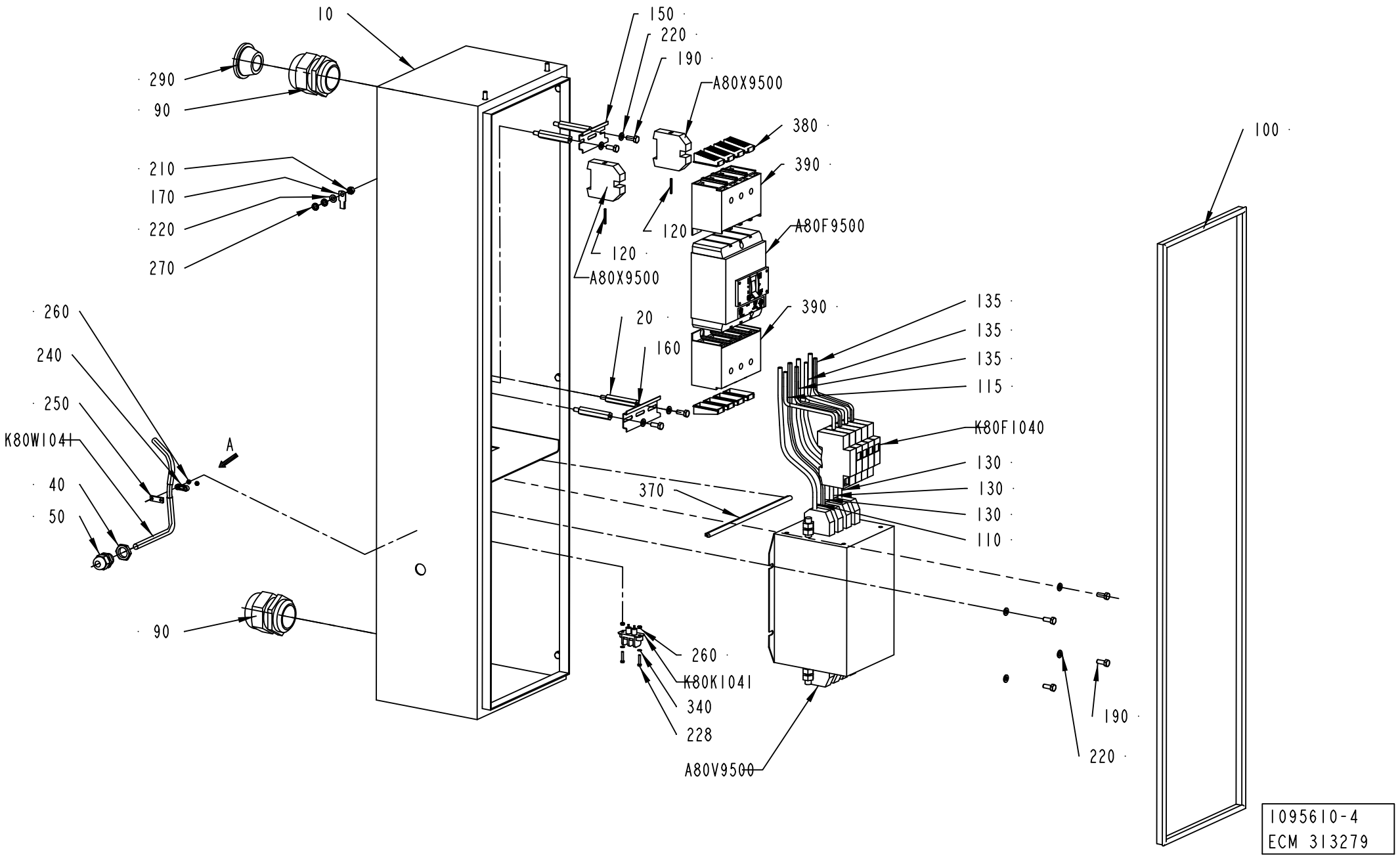
10
290
90
210
170
220
270
260
240
250
K80W1041
A
40
50
90
150
220
190
A80X9500
380
390
A80F9500
120
120
A80X9500
20
160
390
370
260
K80K1041
340
228
A80V9500
135
135
135
115
K80F1040
130
130
130
110
190
220
100
1095610-4
ECM 313279

ECM: 313489 - 20070629
Group number: 1095610-0400
Assembly Drawing: 1095610-4_1_AA

| Pos | Part No | UN | Qty | Description | Page No |
|---|---|---|---|---|---|
| - | | | | | |
| 010 | 2842999-0000 | | 1 | CABINET | |
| 020 | 1037184-0000 | | 4 | SPACER SCREW | |
| 040 | 90099-0117 | | 1 | NUT, PR 18,6 (PG11) | |
| 050 | 352103-0106 | | 1 | CABLE GLAND, ST 11, PR18,6/PG11 | |
| 090 | 352103-0123 | | 2 | CABLE GLAND, ST 42, PR54,0/PG42 | |
| 100 | 90143-0057 | MM | 2600 | STRIP EMKA 1011-05 21X11MM | |
| 110 | 351161-0111 | MM | 280 | WIRE AWM 1X35 MM2 LIGHTBLUE | |
| 115 | 351161-0110 | MM | 180 | WIRE AWM 1X25 MM2 LIGHTBLUE | |
| 120 | 351162-0109 | MM | 1700 | WIRE AWM 1X16 MM2 YELLOW-GREEN | |
| 130 | 351164-0111 | MM | 840 | WIRE AWM 1X35 MM2 BLACK | |
| 135 | 351164-0110 | MM | 540 | WIRE AWM 1X25 MM2 BLACK | |
| 150 | 353042-0005 | MM | 75 | RAIL TS 35/7.5 | |
| 160 | 353042-0005 | MM | 100 | RAIL TS 35/7.5 | |
| 170 | 353104-0168 | | 1 | CABLE SHOE, RING UNINS., YAV 16 M 6 | |
| 180 | 353105-0200 | | 9 | PIN CABLE SHOE A4630SR | |
| 190 | 312105-0368 | | 13 | SCREW M6S ISO 4017 M6X16 A480 | |
| 210 | 312605-0316 | | 1 | HEXAGON NUT, M6M M6 A280 | |
| 220 | 315105-0153 | | 14 | WASHER BRB 6,4X12 RFR | |
| 228 | 312125-0228 | | 2 | SCREW ISO 1207 M3X16 A4 | |
| 240 | 90220-0303 | | 1 | CLAMP FOR SCR.CABLE, 10MM, 55-016-22 | |
| 250 | 90220-0305 | | 1 | CLAMP FOR SCR.CABLE, 16MM, | |
| 260 | 312605-0310 | | 4 | HEXAGON NUT, M6M M3 A280 | |
| 270 | 90062-0015 | | 2 | LOCK WASHER SERRAT.EXT.GEAR,6,4/11 H=0,7 | |
| 290 | 90015-0025 | | 1 | LEAD-IN, TET26-35, E-1458041 | |
| 340 | 315105-0124 | | 2 | WASHER BRB 3,2X6 RFR | |
| 370 | 90143-0060 | MM | 250 | EDGE STRIP 9,5X6,3MM BLACK PVC | |
| 380 | 90459-6616 | | 8 | FINGER PROTECTION IP20, NZM1-4-XIPA | |
| 390 | 90459-6617 | | 2 | COVER 4-POLE, NZM1-4-XKSA | |
| A80F9500 | 90459-6618 | | 1 | CIRCUIT BREAKER, NZMB1-4-A100 | |
| A80V9500 | 90024-0060 | | 1 | FILTER 80 A 440/250 VAC, B84144-A80-R | |
| A80X9500 | 353024-0209 | | 2 | EARTH TERMINAL, 1010.5 | |
| K80F1040 | 90082-0013 | | 1 | OVER VOLT. PROTECT. PU 4C-R 230 VAC | |
| | *90082-0301* | | *3* | *OVER VOLT. PROTECT. PU 0 C 833951* | |
| K80K1041 | 90024-0036 | | 1 | FEED THROUGH FILTER, 52-160-002 | |
| K80W1041 | 90220-0095 | MM | 3000 | SCR. CABLE 3X0,75MM2 | |

| Pos | Part No | UN | Qty | Description | Page No |
|---|---|---|---|---|---|

Machine Type | Group Description | Used-In | Group Number | Page No

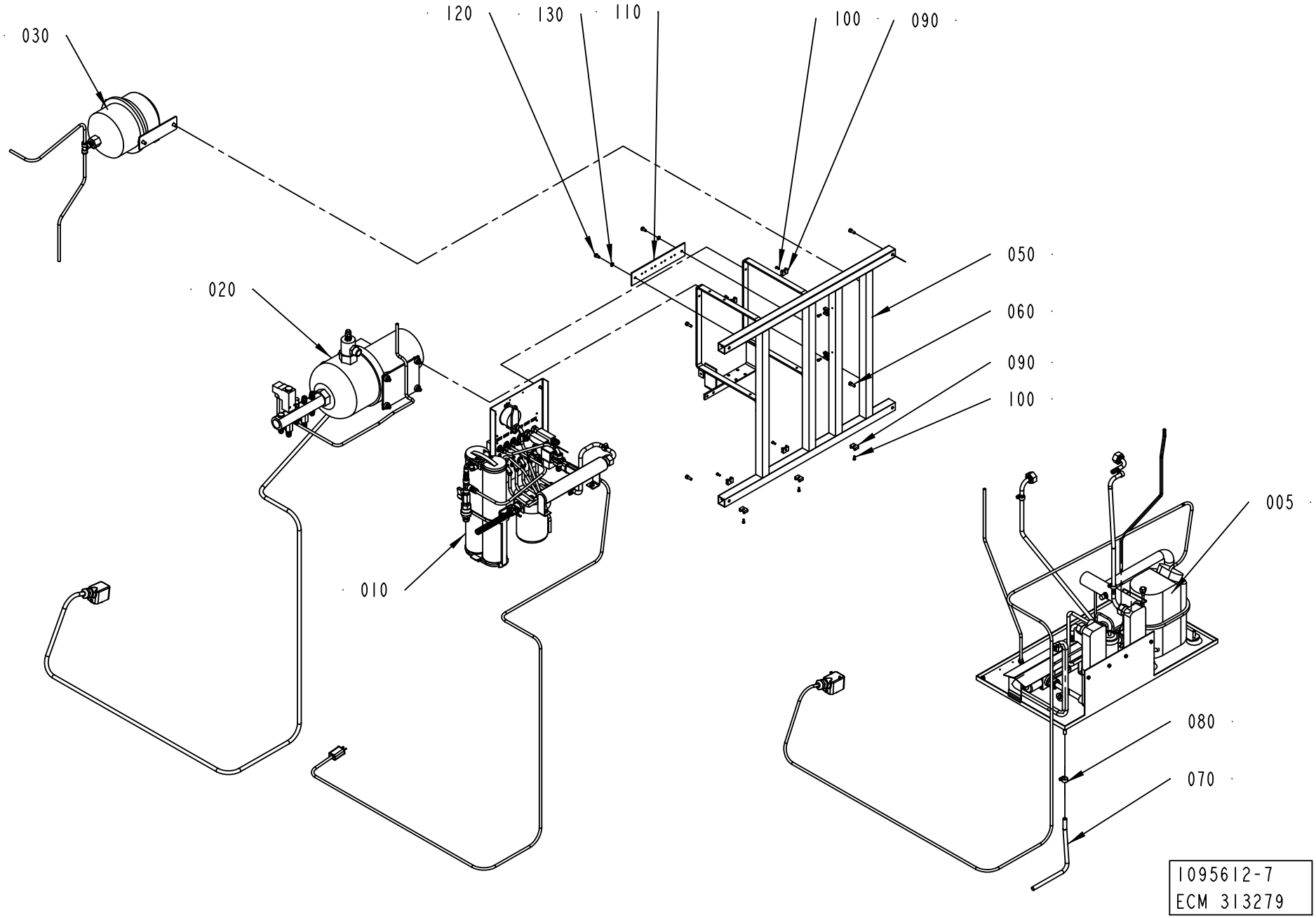
030
120
130
110
100
090
020
050
060
090
100
010
005
080
070
1095612-7
ECM 313279

ECM: 319100 - 20070705
Group number: 1095612-0400
Assembly Drawing: 1095612-7_1_AA

This list covers pages from 6-20 to 6-23

| Pos | Part No | UN | Qty | Description | Page No |
|---|---|---|---|---|---|
| **A3/FLEX COMPRESSOR (See drawing on page: 6-20)** | | | | | |
| 005 | 1095710-0400 | | 1 | COMPRESSOR UNIT | **6-25, 6-27** |
| 110 | 2871889-0000 | | 1 | PLATE | |
| 120 | 312105-0366 | | 2 | SCREW M6S ISO 4017 M6X12 A480 | |
| 130 | 315105-0153 | | 2 | WASHER BRB 6,4X12 RFR | |
| **A3/FLEX ICE-WATER (See drawing on page: 6-22)** | | | | | |
| 007 | 1260547-0200 | | 1 | ICE WATER | **6-29** |
| 110 | 2871889-0000 | | 1 | PLATE | |
| 120 | 312105-0366 | | 2 | SCREW M6S ISO 4017 M6X12 A480 | |
| 130 | 315105-0153 | | 2 | WASHER BRB 6,4X12 RFR | |
| **Common Parts** | | | | | |
| 010 | 2552113-0200 | | 1 | FLOW METER | **6-33** |
| 020 | 1095706-0400 | | 1 | COOLING WATER PUMP | **6-37** |
| 030 | 2514077-0200 | | 1 | EXPANSION VESSEL | **6-39** |
| 050 | 2871890-0000 | | 1 | MACHINE BODY | |
| 060 | 312115-0368 | | 4 | SCREW ISO4762 M6X16 A4 80 | |
| 070 | 90166-0121 | MM | 1000 | HOSE | |
| 080 | 342991-0101 | | 1 | HOSE CLIP,WORM DRIVE TYPE (13)-16 | |
| 090 | 352113-0203 | | 9 | ANCHOR PLATES FOR STRIPS, TYPE TM3S8-M0 | |
| 100 | 312125-0289 | | 9 | SCREW ISO 1207 M4X10 A4 | |

| Pos | Part No | UN | Qty | Description | Page No |
|---|---|---|---|---|---|

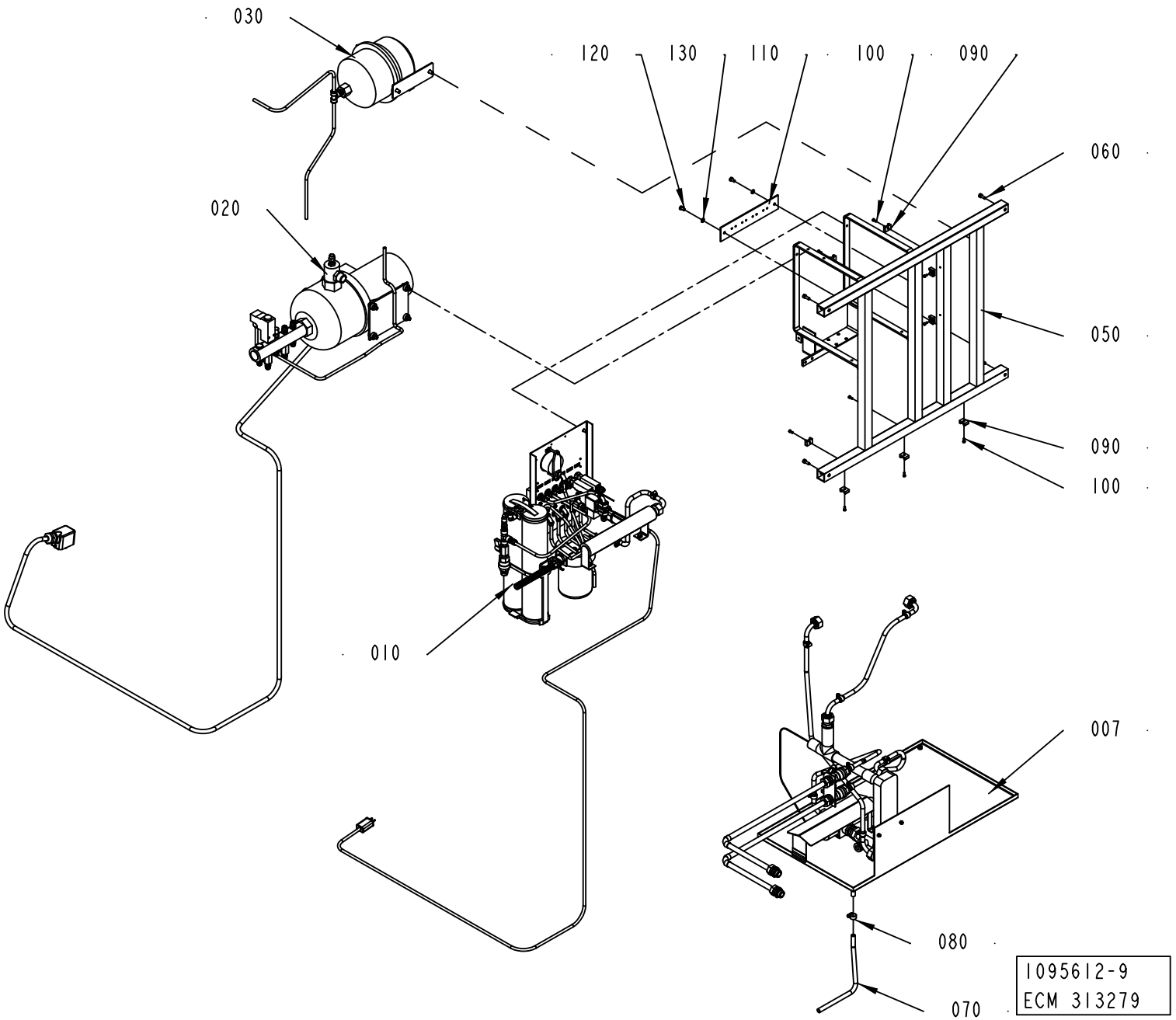
030
120
130
110
100
090
060
020
050
090
100
010
007
080
070
1095612-9
ECM 313279

ECM: 319100 - 20070705
Group number: 1095612-0400
Assembly Drawing: 1095612-9_1_AA

This list covers pages from 6-20 to 6-23

| Pos | Part No | UN | Qty | Description | Page No |
|---|---|---|---|---|---|
| **A3/FLEX COMPRESSOR (See drawing on page: 6-20)** | | | | | |
| 005 | 1095710-0400 | | 1 | COMPRESSOR UNIT | **6-25, 6-27** |
| 110 | 2871889-0000 | | 1 | PLATE | |
| 120 | 312105-0366 | | 2 | SCREW M6S ISO 4017 M6X12 A480 | |
| 130 | 315105-0153 | | 2 | WASHER BRB 6,4X12 RFR | |
| **A3/FLEX ICE-WATER (See drawing on page: 6-22)** | | | | | |
| 007 | 1260547-0200 | | 1 | ICE WATER | **6-29** |
| 110 | 2871889-0000 | | 1 | PLATE | |
| 120 | 312105-0366 | | 2 | SCREW M6S ISO 4017 M6X12 A480 | |
| 130 | 315105-0153 | | 2 | WASHER BRB 6,4X12 RFR | |
| **Common Parts** | | | | | |
| 010 | 2552113-0200 | | 1 | FLOW METER | **6-33** |
| 020 | 1095706-0400 | | 1 | COOLING WATER PUMP | **6-37** |
| 030 | 2514077-0200 | | 1 | EXPANSION VESSEL | **6-39** |
| 050 | 2871890-0000 | | 1 | MACHINE BODY | |
| 060 | 312115-0368 | | 4 | SCREW ISO4762 M6X16 A4 80 | |
| 070 | 90166-0121 | MM | 1000 | HOSE | |
| 080 | 342991-0101 | | 1 | HOSE CLIP,WORM DRIVE TYPE (13)-16 | |
| 090 | 352113-0203 | | 9 | ANCHOR PLATES FOR STRIPS, TYPE TM3S8-M0 | |
| 100 | 312125-0289 | | 9 | SCREW ISO 1207 M4X10 A4 | |

| Pos | Part No | UN | Qty | Description | Page No |
|---|---|---|---|---|---|

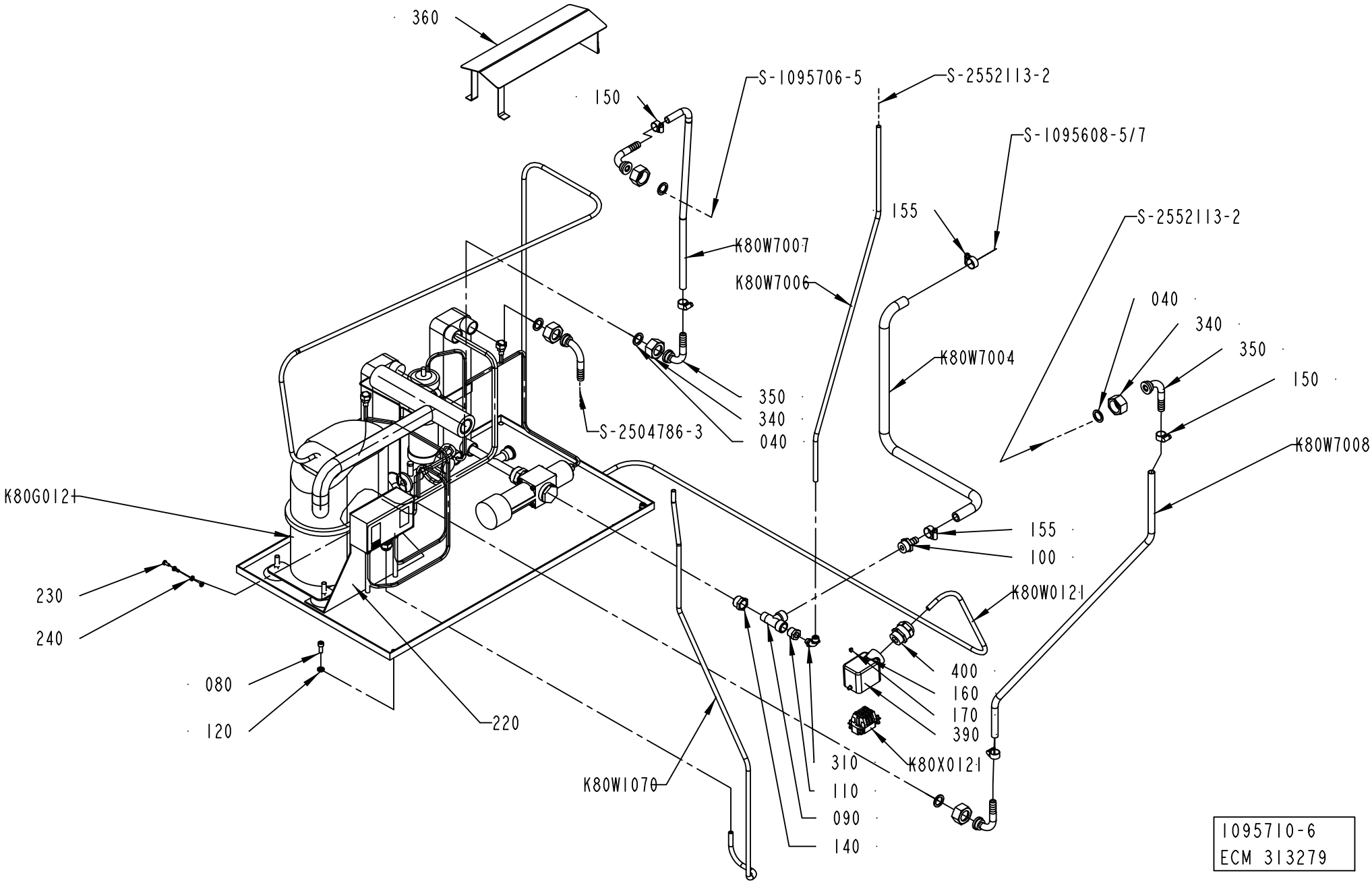
360
150
S-1095706-5
S-2552113-2
S-1095608-5/7
155
K80W7007
K80W7006
S-2552113-2
040
340
350
150
K80W7004
K80W7008
S-2504786-3
350
340
040
K80G0121
155
100
K80W0121
230
240
400
160
170
390
080
120
220
310
110
090
140
K80X0121
K80W1070
1095710-6
ECM 313279

ECM: 351658 - 20080430
Group number: 1095710-0400
Assembly Drawing: 1095710-6_1_AA

This list covers pages from 6-24 to 6-27

| Pos | Part No | UN | Qty | Description | Page No |
|---|---|---|---|---|---|
| **A3/FLEX NO PEROXIDE DILUTION (See drawing on page: 6-24)** | | | | | |
| 040 | 90459-3339 | | 5 | GASKET NBR/PTFE 17X24X2 MM 3/4" | |
| 340 | 2531423-0000 | | 5 | NUT | |
| K80G0121 | 1140603-0000 | | 1 | COMPRESSOR UNIT | |
| | *342713-0213* | | *1* | *PLUG, EXT THREAD HEX SOCKET 8638-00-120* | |
| | *90459-6809* | | *1* | *EXP. VALVE TUB ORIF 5 R134A, 068U2004* | |
| | *90459-6804* | | *1* | *CONDENSER, B8/14 CONNECTION 2/22U + 2/1/* | |
| | *90459-6802* | | *1* | *COMPRESSOR, TAJ4511Y* | |
| | *90459-6800* | | *1* | *CAPACITY REGULATOR, KVP 12* | |
| | *90459-6799* | | *1* | *THERMOST. VALVE,WVFX 15 3.5-16 BAR 1/2"* | |
| | *90459-6798* | | *1* | *DRYING FILTER, DMC 2032S* | |
| | *90422-0037* | | *1* | *HEAT EXCHANGER* | |
| | *90274-0123* | | *1* | *PRESSURE SWITCH, KP 1560-1254* | |
| K80W7006 | 90166-0118 | MM | 500 | TUBE 8 MM PA BLACK | |
| **A3/FLEX PEROXIDE DILUTION (See drawing on page: 6-26)** | | | | | |
| 040 | 90459-3339 | | 5 | GASKET NBR/PTFE 17X24X2 MM 3/4" | |
| 340 | 2531423-0000 | | 5 | NUT | |
| K80G0121 | 1140603-0000 | | 1 | COMPRESSOR UNIT | |
| | *342713-0213* | | *1* | *PLUG, EXT THREAD HEX SOCKET 8638-00-120* | |
| | *90459-6809* | | *1* | *EXP. VALVE TUB ORIF 5 R134A, 068U2004* | |
| | *90459-6804* | | *1* | *CONDENSER, B8/14 CONNECTION 2/22U + 2/1/* | |
| | *90459-6802* | | *1* | *COMPRESSOR, TAJ4511Y* | |
| | *90459-6800* | | *1* | *CAPACITY REGULATOR, KVP 12* | |
| | *90459-6799* | | *1* | *THERMOST. VALVE,WVFX 15 3.5-16 BAR 1/2"* | |
| | *90459-6798* | | *1* | *DRYING FILTER, DMC 2032S* | |
| | *90422-0037* | | *1* | *HEAT EXCHANGER* | |
| | *90274-0123* | | *1* | *PRESSURE SWITCH, KP 1560-1254* | |
| **Common Parts** | | | | | |
| 080 | 312115-0368 | | 2 | SCREW ISO4762 M6X16 A4 80 | |
| 090 | 90140-0023 | | 1 | T-PIPE, INT. THREAD, NO. 2070-3/8-3/8 | |
| 100 | 342901-0105 | | 1 | HOSE NIPPLE, EXT.THR. R1/2-12 MM | |
| 110 | 342701-0202 | | 1 | BUSHING,INT./EXT.G-THREAD G3/8"-G1/8" | |
| 120 | 315115-0153 | | 2 | WASHER PLAIN, TBRB 6,4/12 H=3 | |
| 140 | 342701-0206 | | 1 | BUSHING,INT./EXT.G-THREAD G1/2"-G3/8" | |
| 150 | 342991-0101 | | 4 | HOSE CLIP,WORM DRIVE TYPE (13)-16 | |
| 155 | 342991-0102 | | 2 | HOSE CLIP,WORM DRIVE TYPE (16)-19 | |
| 160 | 359005-0050 | | 1 | MARKING LABEL KIT X, 04.841.4550.0 | |
| 170 | 359005-0010 | | 1 | MARKING LABEL KIT 0 - 9, 04.841.2150.0 | |
| 220 | 1361560-0000 | | 1 | PLATE | |
| 230 | 312132-0289 | | 4 | SLOTTED HEAD, PAN SCREW, MSCS M4X10 | |
| 240 | 90062-0029 | | 4 | LOCK WASHER 5,1X 8,6, T= 1,5 DIN 7980 | |
| 310 | 342931-0121 | | 1 | ELBOW 90 COUPL.,EXT.THREAD 8/6-G1/8" | |
| 350 | 2531245-0000 | | 5 | HOSE NIPPLE | |
| 360 | 2532574-0000 | | 1 | COVER | |
| 390 | 90459-1458 | | 1 | HOOD HAN 6 E 19 30 006 1540 | |
| 400 | 90458-0308 | | 1 | CABLE GLAND, M25X1,5, NO.5311 1030 | |
| K80W0121 | 351150-0418 | MM | 4000 | CABLE OLFLEX 4X2,5 MM2 LIGHT/GREY | |
| K80W1070 | 351150-0404 | MM | 1000 | CABLE OLFLEX 4X0,75 MM2 LIGHT/GREY | |
| K80W7004 | 90166-0121 | MM | 705 | HOSE | |
| K80W7007 | 90166-0121 | MM | 840 | HOSE | |
| K80W7008 | 90166-0121 | MM | 930 | HOSE | |
| K80X0121 | 90110-0052 | | 1 | MALE INSERT HAN 6E 09 33 006 2601 | |

Machine Type | Group Description | Used-In | Group Number | Page No

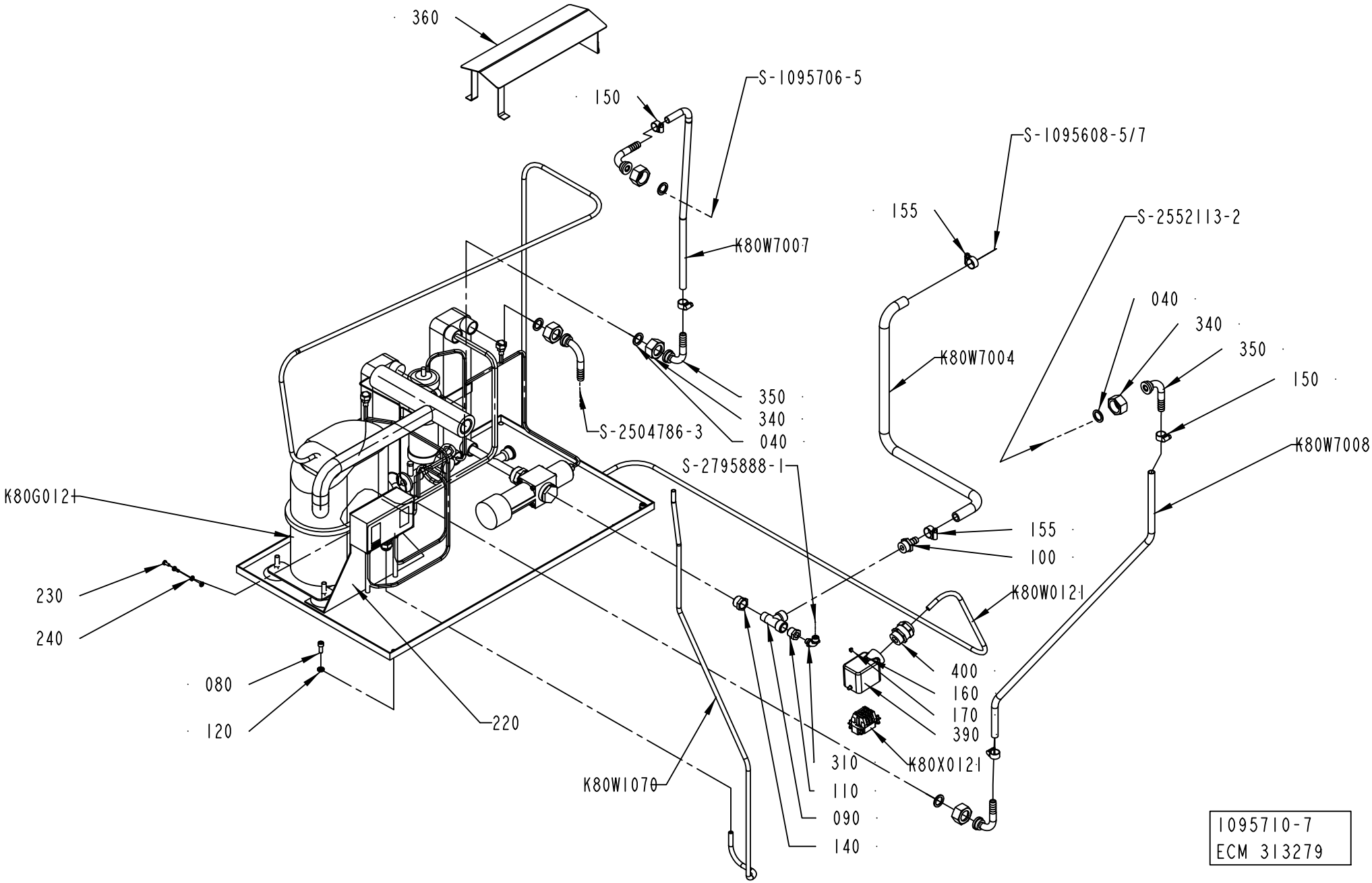
360
150
S-1095706-5
S-1095608-5/7
155
S-2552113-2
K80W7007
040
340
350
150
K80W7004
K80W7008
350
340
040
S-2504786-3
S-2795888-1
K80G012-
155
100
K80W012-
230
240
080
120
220
400
160
170
390
K80X012-
310
110
090
140
K80W107-
1095710-7
ECM 313279

ECM: 351658 - 20080430
Group number: 1095710-0400
Assembly Drawing: 1095710-7_1_AA

This list covers pages from 6-24 to 6-27

| Pos | Part No | UN | Qty | Description | Page No |
|---|---|---|---|---|---|
| **A3/FLEX NO PEROXIDE DILUTION (See drawing on page: 6-24)** | | | | | |
| 040 | 90459-3339 | | 5 | GASKET NBR/PTFE 17X24X2 MM 3/4" | |
| 340 | 2531423-0000 | | 5 | NUT | |
| K80G0121 | 1140603-0000 | | 1 | COMPRESSOR UNIT | |
| | *342713-0213* | | *1* | *PLUG, EXT THREAD HEX SOCKET 8638-00-120* | |
| | *90459-6809* | | *1* | *EXP. VALVE TUB ORIF 5 R134A, 068U2004* | |
| | *90459-6804* | | *1* | *CONDENSER, B8/14 CONNECTION 2/22U + 2/1/* | |
| | *90459-6802* | | *1* | *COMPRESSOR, TAJ4511Y* | |
| | *90459-6800* | | *1* | *CAPACITY REGULATOR, KVP 12* | |
| | *90459-6799* | | *1* | *THERMOST. VALVE,WVFX 15 3.5-16 BAR 1/2"* | |
| | *90459-6798* | | *1* | *DRYING FILTER, DMC 2032S* | |
| | *90422-0037* | | *1* | *HEAT EXCHANGER* | |
| | *90274-0123* | | *1* | *PRESSURE SWITCH, KP 1560-1254* | |
| K80W7006 | 90166-0118 | MM | 500 | TUBE 8 MM PA BLACK | |
| **A3/FLEX PEROXIDE DILUTION (See drawing on page: 6-26)** | | | | | |
| 040 | 90459-3339 | | 5 | GASKET NBR/PTFE 17X24X2 MM 3/4" | |
| 340 | 2531423-0000 | | 5 | NUT | |
| K80G0121 | 1140603-0000 | | 1 | COMPRESSOR UNIT | |
| | *342713-0213* | | *1* | *PLUG, EXT THREAD HEX SOCKET 8638-00-120* | |
| | *90459-6809* | | *1* | *EXP. VALVE TUB ORIF 5 R134A, 068U2004* | |
| | *90459-6804* | | *1* | *CONDENSER, B8/14 CONNECTION 2/22U + 2/1/* | |
| | *90459-6802* | | *1* | *COMPRESSOR, TAJ4511Y* | |
| | *90459-6800* | | *1* | *CAPACITY REGULATOR, KVP 12* | |
| | *90459-6799* | | *1* | *THERMOST. VALVE,WVFX 15 3.5-16 BAR 1/2"* | |
| | *90459-6798* | | *1* | *DRYING FILTER, DMC 2032S* | |
| | *90422-0037* | | *1* | *HEAT EXCHANGER* | |
| | *90274-0123* | | *1* | *PRESSURE SWITCH, KP 1560-1254* | |
| **Common Parts** | | | | | |
| 080 | 312115-0368 | | 2 | SCREW ISO4762 M6X16 A4 80 | |
| 090 | 90140-0023 | | 1 | T-PIPE, INT. THREAD, NO. 2070-3/8-3/8 | |
| 100 | 342901-0105 | | 1 | HOSE NIPPLE, EXT.THR. R1/2-12 MM | |
| 110 | 342701-0202 | | 1 | BUSHING,INT./EXT.G-THREAD G3/8"-G1/8" | |
| 120 | 315115-0153 | | 2 | WASHER PLAIN, TBRB 6,4/12 H=3 | |
| 140 | 342701-0206 | | 1 | BUSHING,INT./EXT.G-THREAD G1/2"-G3/8" | |
| 150 | 342991-0101 | | 4 | HOSE CLIP,WORM DRIVE TYPE (13)-16 | |
| 155 | 342991-0102 | | 2 | HOSE CLIP,WORM DRIVE TYPE (16)-19 | |
| 160 | 359005-0050 | | 1 | MARKING LABEL KIT X, 04.841.4550.0 | |
| 170 | 359005-0010 | | 1 | MARKING LABEL KIT 0 - 9, 04.841.2150.0 | |
| 220 | 1361560-0000 | | 1 | PLATE | |
| 230 | 312132-0289 | | 4 | SLOTTED HEAD, PAN SCREW, MSCS M4X10 | |
| 240 | 90062-0029 | | 4 | LOCK WASHER 5,1X 8,6, T= 1,5 DIN 7980 | |
| 310 | 342931-0121 | | 1 | ELBOW 90 COUPL.,EXT.THREAD 8/6-G1/8" | |
| 350 | 2531245-0000 | | 5 | HOSE NIPPLE | |
| 360 | 2532574-0000 | | 1 | COVER | |
| 390 | 90459-1458 | | 1 | HOOD HAN 6 E 19 30 006 1540 | |
| 400 | 90458-0308 | | 1 | CABLE GLAND, M25X1,5, NO.5311 1030 | |
| K80W0121 | 351150-0418 | MM | 4000 | CABLE OLFLEX 4X2,5 MM2 LIGHT/GREY | |
| K80W1070 | 351150-0404 | MM | 1000 | CABLE OLFLEX 4X0,75 MM2 LIGHT/GREY | |
| K80W7004 | 90166-0121 | MM | 705 | HOSE | |
| K80W7007 | 90166-0121 | MM | 840 | HOSE | |
| K80W7008 | 90166-0121 | MM | 930 | HOSE | |
| K80X0121 | 90110-0052 | | 1 | MALE INSERT HAN 6E 09 33 006 2601 | |

Machine Type | Group Description | Used-In | Group Number | Page No

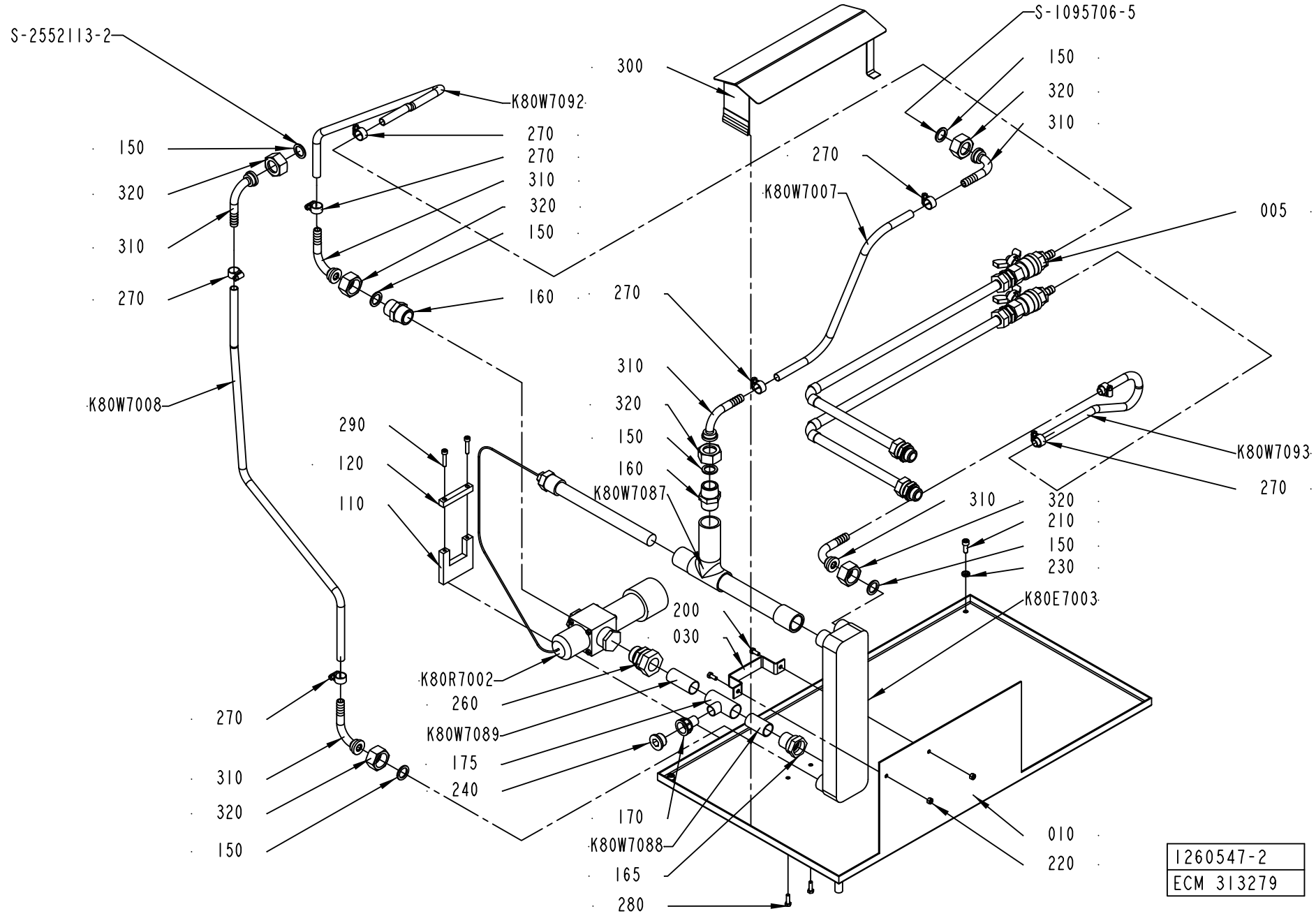
S-2552113-2
150
320
310
270
K80W7008
K80W7092
270
270
310
320
150
160
300
S-1095706-5
150
320
310
270
K80W7007
005
270
310
320
150
160
K80W7087
290
120
110
K80W7093
270
310
320
210
150
230
K80E7003
200
030
K80R7002
260
K80W7089
175
240
270
310
320
150
170
K80W7088
165
280
010
220
1260547-2
ECM 313279

ECM: 313492 - 20070629
Group number: 1260547-0200
Assembly Drawing: 1260547-2_1_AA

| Pos | Part No | UN | Qty | Description | Page No |
|---|---|---|---|---|---|
| - | | | | | |
| 005 | 1095715-0200 | | 1 | ICE WATER ..... | **6-31** |
| 010 | 1255365-0000 | | 1 | MOUNTING PLATE | |
| 030 | 1255365-0000 | | 1 | MOUNTING PLATE | |
| 110 | 1511615-0000 | | 1 | BRACKET | |
| 120 | 1511616-0000 | | 1 | BRACKET | |
| 150 | 90459-3339 | | 6 | GASKET NBR/PTFE 17X24X2 MM 3/4" | |
| 160 | 90330-0004 | | 2 | NIPPLES,HEXAGON,EXT.R-THREAD R3/4"-R3/4" | |
| 165 | 90418-0045 | | 1 | ADAPTER, INT. CONN. NO. 7272CU/22-G3/4 | |
| 170 | 90418-0057 | | 1 | ADAPTER, EXT. CONN. NO. 7276CU / 15-G1/2 | |
| 175 | 90418-0062 | | 1 | T-PIPE, REDUCTION, INT, NO. 7130-22X15X2 | |
| 200 | 312105-0327 | | 2 | SCREW M6S ISO 4017 M5X12 A480 | |
| 210 | 312115-0368 | | 2 | SCREW ISO4762 M6X16 A4 80 | |
| 220 | 312605-0314 | | 2 | HEXAGON NUT, M6M M5 A280 | |
| 230 | 315115-0153 | | 2 | WASHER PLAIN, TBRB 6,4/12 H=3 | |
| 240 | 342713-0213 | | 1 | PLUG, EXT THREAD HEX SOCKET 8638-00-120 | |
| 260 | 342720-0119 | | 1 | CONN. STR., GA-22-G3/4 | |
| 270 | 342991-0101 | | 8 | HOSE CLIP,WORM DRIVE TYPE (13)-16 | |
| 280 | 312105-0329 | | 2 | SCREW M6S ISO 4017 M5X16 A480 | |
| 290 | 312115-0333 | | 2 | SCREW ISO4762 M5X25 A4 80 | |
| 300 | 2532574-0000 | | 1 | COVER | |
| 310 | 2531245-0000 | | 6 | HOSE NIPPLE | |
| 320 | 2531423-0000 | | 6 | NUT | |
| K80E7003 | 90422-0037 | | 1 | HEAT EXCHANGER | |
| K80R7002 | 90187-0130 | | 1 | TEMP. CONTR. VALVE, R3/4 0-30øC | |
| K80W7007 | 90166-0121 | MM | 600 | HOSE | |
| K80W7008 | 90166-0121 | MM | 850 | HOSE | |
| K80W7087 | 1511680-0000 | | 1 | TUBE | |
| K80W7088 | 1260327-0000 | | 1 | TUBE | |
| K80W7089 | 1285363-0000 | | 1 | TUBE | |
| K80W7092 | 90166-0121 | MM | 550 | HOSE | |
| K80W7093 | 90166-0121 | MM | 400 | HOSE | |

| Pos | Part No | UN | Qty | Description | Page No |
|---|---|---|---|---|---|

Machine Type | Group Description | Used-In | Group Number | Page No

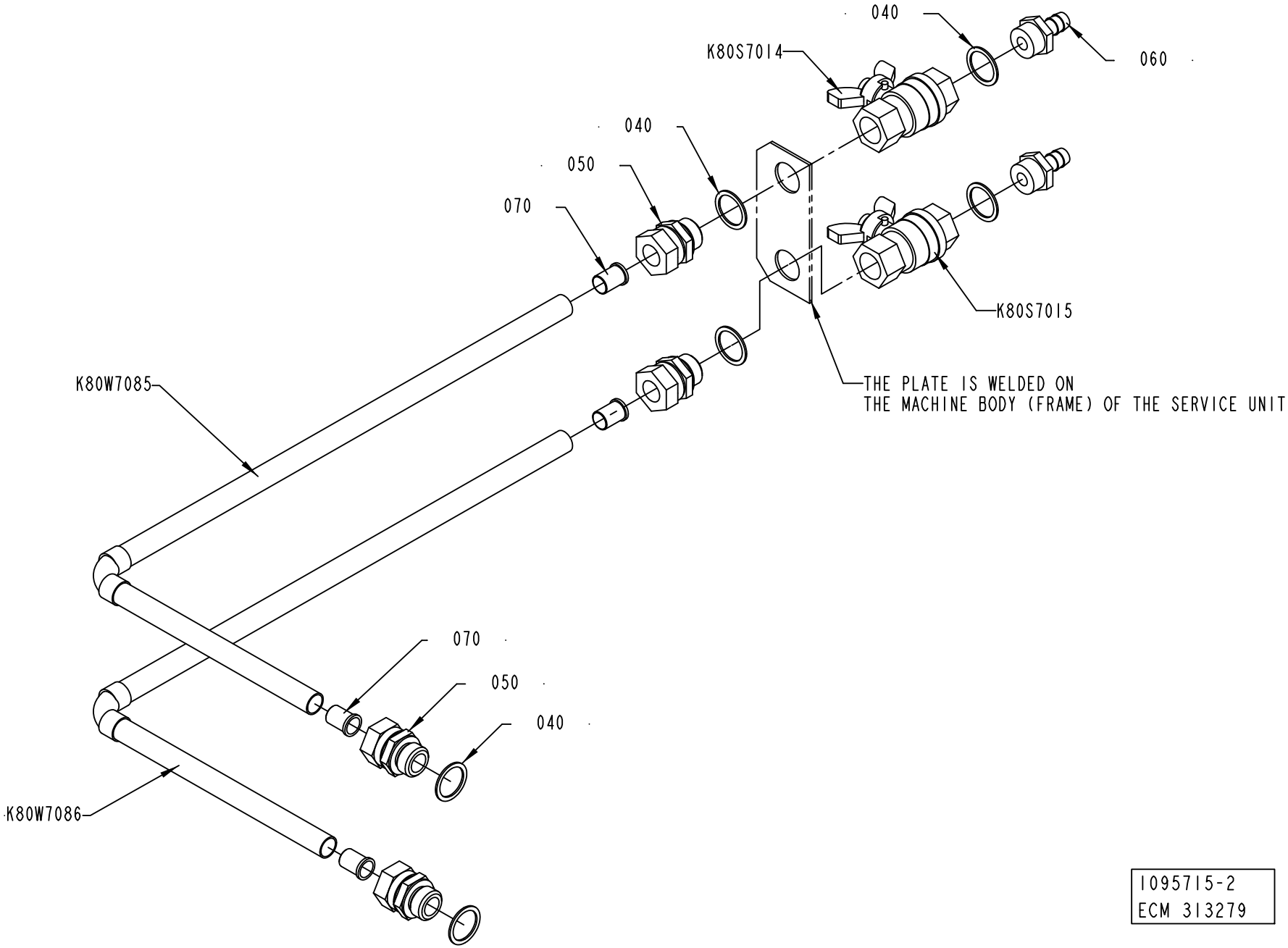


1095715-2
ECM 313279

ECM: 313493 - 20070629
Group number: 1095715-0200
Assembly Drawing: 1095715-2_1_AA

| Pos | Part No | UN | Qty | Description | Page No |
|---|---|---|---|---|---|
| - | | | | | |
| 040 | 315233-0113 | | 6 | WASHER CAPTIVE SEALING G1/2 | |
| 050 | 342720-0114 | | 4 | CONN. STR. GA-15-G1/2 | |
| 060 | 342901-0105 | | 2 | HOSE NIPPLE, EXT.THR. R1/2-12 MM | |
| 070 | 342708-0109 | | 4 | REINFORCING RING VSH 15X1 MM | |
| K80S7014 | 90187-0029 | | 1 | BALL VALVE G1/2, NPBR | |
| K80S7015 | 90187-0029 | | 1 | BALL VALVE G1/2, NPBR | |
| K80W7085 | 1041930-0000 | | 1 | PIPE | |
| K80W7086 | 1041931-0000 | | 1 | PIPE | |

| Pos | Part No | UN | Qty | Description | Page No |
|---|---|---|---|---|---|

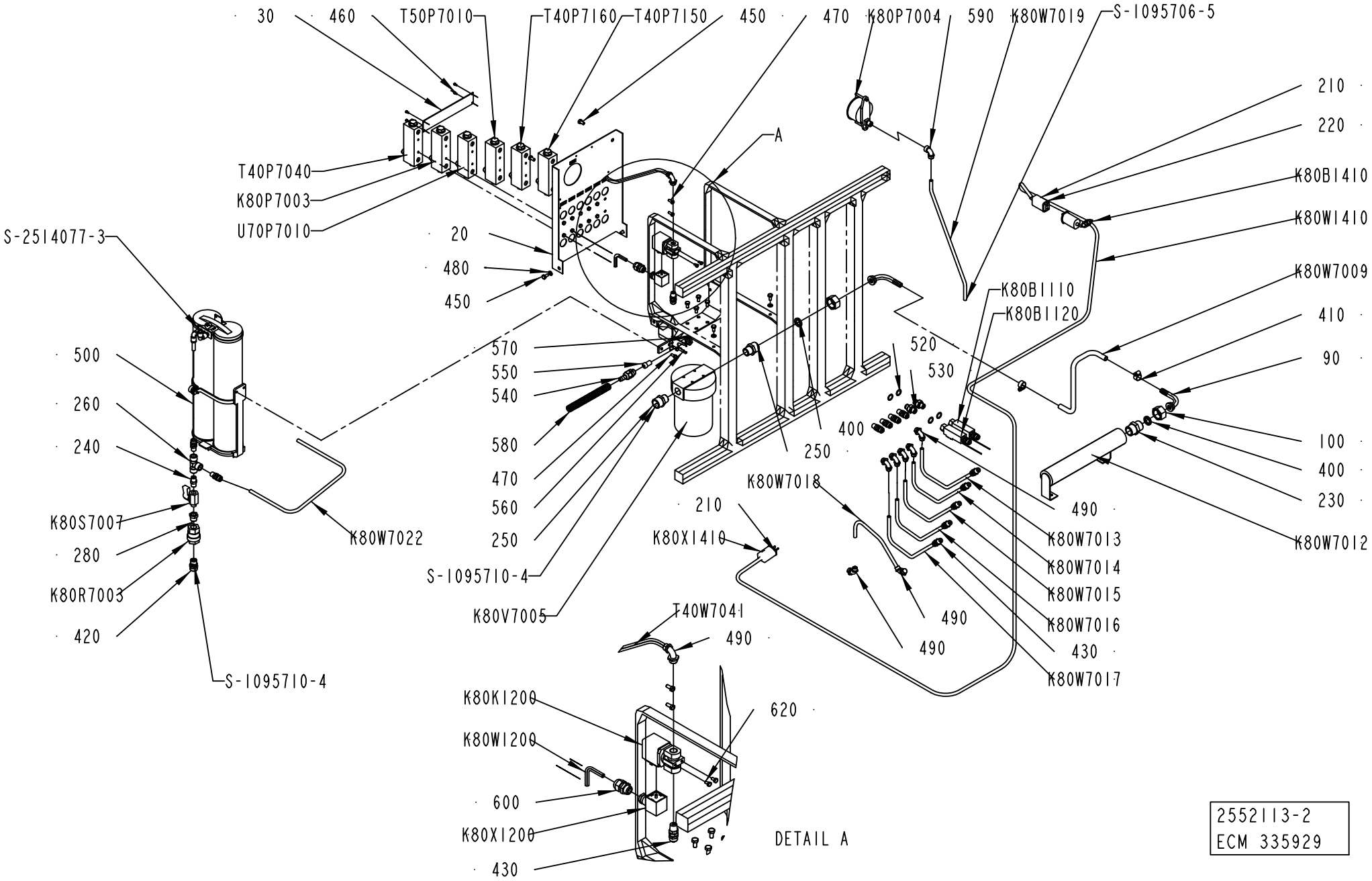
30
460
T50P7010
T40P7160
T40P7150
450
470
K80P7004
590
K80W7019
S-1095706-5
210
220
K80B1410
K80W1410
K80W7009
410
90
100
400
230
K80W7012
T40P7040
K80P7003
U70P7010
A
S-2514077-3
20
480
450
K80B1110
K80B1120
520
530
400
250
570
550
540
580
470
560
250
S-1095710-4
K80V7005
500
260
240
K80S7007
280
K80R7003
420
K80W7022
S-1095710-4
K80W7018
210
K80X1410
490
K80W7013
K80W7014
K80W7015
K80W7016
430
K80W7017
T40W7041
490
K80K1200
K80W1200
620
600
K80X1200
430
DETAIL A
2552113-2
ECM 335929

ECM: 336580 - 20080205
Group number: 2552113-0200
Assembly Drawing: 2552113-2_1_AC

| Pos | Part No | UN | Qty | Description | Page No |
|---|---|---|---|---|---|
| **A3/FLEX** | | | | | |
| 020 | 2922321-0001 | | 1 | PIVOT BRACKET | |
| 030 | 2547474-0000 | | 1 | SIGN LANGUAGE INDEPENDENT | |
| 430 | 342922-0122 | | 14 | STRAIG.COUPL.,ADJUST.,EXT.THRE.8/6-R1/4" | |
| 490 | 342931-0122 | | 8 | ELBOW 90 COUPL.,EXT.THREAD 8/6-G1/4" | |
| 600 | 352103-0101 | | 1 | CABLE GLAND, ST 9, PR15,2/PG9 | |
| 620 | 312105-0287 | | 2 | SCREW M6S ISO 4017 M4X8 A470 | |
| K80K1200 | 90042-0248 | | 1 | SOLENOID VALVE OFFICIENE DI ENSINO | |
| K80W1200 | 351150-0403 | MM | 3000 | CABLE OLFLEX 3X0,75 MM2 LIGHT/GREY | |
| K80X1200 | 90110-0095 | | 1 | CONNECTOR 3 POLE + EARTH | |
| T40P7002 | 1129079-0000 | | 5 | FLOW METER | |
| T40P7040 | 1129079-0000 | | 1 | FLOW METER | |
| T40P7150 | 1129079-0000 | | 1 | FLOW METER | |
| T40P7160 | 1129079-0000 | | 1 | FLOW METER | |
| T40W7041 | 90166-0118 | MM | 400 | TUBE 8 MM PA BLACK | |
| T50P7002 | 1041046-0000 | | 1 | FLOW METER | |
| T50P7010 | 1041046-0000 | | 1 | FLOW METER | |
| U70P7010 | 1129079-0000 | | 1 | FLOW METER | |
| **Common Parts** | | | | | |
| 090 | 2531245-0000 | | 2 | HOSE NIPPLE | |
| 100 | 2531423-0000 | | 2 | NUT | |
| 210 | 90326-0012 | | 2 | PROTECTIVE COVER, T31A4618 | |
| 220 | 90326-0020 | | 1 | PLUG, FEMALE YELLOW CR-AL | |
| 230 | 90330-0004 | | 1 | NIPPLES,HEXAGON,EXT.R-THREAD R3/4"-R3/4" | |
| 240 | 90330-0043 | | 1 | NIPPLES, EXT. THREAD. R-207R1/4 | |
| 250 | 90358-0091 | | 2 | REDUCING NIPPLE | |
| 260 | 90140-0018 | | 1 | T-PIPE, INT. THREAD, 2003-1/4 | |
| 280 | 90330-0042 | | 1 | BUSHING, INT/EXT. THR. R3/8-RP1/4 | |
| 400 | 315229-0102 | | 2 | GASKETS, 16,8X23,8X3,7 MM 3/4" FDA | |
| 410 | 342991-0101 | | 2 | HOSE CLIP,WORM DRIVE TYPE (13)-16 | |
| 420 | 342920-0123 | | 1 | STRAIGHT COUPLING,EXT.THREADED 8/6-R3/8" | |
| 450 | 312105-0366 | | 10 | SCREW M6S ISO 4017 M6X12 A480 | |
| 460 | 312125-0220 | | 4 | SCREW ISO 1207 M3X6 A4 | |
| 470 | 312105-0327 | | 14 | SCREW M6S ISO 4017 M5X12 A480 | |
| 480 | 315105-0153 | | 4 | WASHER BRB 6,4X12 RFR | |
| 500 | 2792119-0200 | | 1 | FILTER ..... | **6-35** |
| 520 | 315233-0110 | | 4 | WASHER CAPTIVE SEALING G1/4 | |
| 530 | 90055-0042 | | 2 | NIPPLES, EXT. THREAD, HEXAGON, NO. 6835- | |
| 540 | 353242-0005 | | 1 | HOSE GLAND W/O INSERT PG9 NORMAL | |
| 550 | 353249-0067 | | 1 | INSERT, SINGLE HOLE, E150/7 | |
| 560 | 977527-0000 | | 1 | BRACKET | |
| 570 | 90099-0104 | | 1 | NUT, PR 15,2 (PG9) | |
| 580 | 90152-0058 | M | 1 | SPIRAL CONDUIT, 15X9, UL 0909 | |
| 590 | 342933-0122 | | 1 | ELBOW 90 COUPL.,INT.THREAD 8/6-G1/4 | |
| K80B1110 | 90459-0180 | | 1 | FLOW SWITCH, 0,1 - 2,5 L/MIN | |
| K80B1120 | 90459-0181 | | 1 | PIPE SURFACE THERM., PT-100 -50° -+120°C | |
| K80B1410 | 90326-0057 | | 1 | THERMOCOUPLE, CR-AL | |
| K80P7003 | 1129079-0000 | | 1 | FLOW METER | |
| K80P7004 | 90043-0100 | | 1 | PRESSURE GAUGE, 2948 D=63 MM | |
| K80R7003 | 90230-0028 | | 1 | NON-RETURN VALVE H 151 R 3/8" | |
| K80S7007 | 90187-0045 | | 1 | BALL VALVE G1/4 CR PL | |
| K80V7005 | 90415-0065 | | 1 | FILTER | |
| *010* | *90415-0357* | | *1* | *FILTER INSERT* | |
| K80W1410 | 90220-0034 | MM | 3700 | THERMOCABLE TEX/SITW-20F-KX 2X0,5MM2 | |
| K80W7009 | 90166-0121 | MM | 400 | HOSE | |
| K80W7012 | 1041984-0000 | | 1 | ATTACHMENT PIPE | |
| K80W7013 | 90166-0118 | MM | 255 | TUBE 8 MM PA BLACK | |
| K80W7014 | 90166-0118 | MM | 255 | TUBE 8 MM PA BLACK | |
| K80W7015 | 90166-0118 | MM | 255 | TUBE 8 MM PA BLACK | |
| K80W7016 | 90166-0118 | MM | 255 | TUBE 8 MM PA BLACK | |
| K80W7017 | 90166-0118 | MM | 255 | TUBE 8 MM PA BLACK | |
| K80W7018 | 90166-0118 | MM | 700 | TUBE 8 MM PA BLACK | |
| K80W7019 | 90166-0118 | MM | 490 | TUBE 8 MM PA BLACK | |
| K80W7022 | 90166-0118 | MM | 800 | TUBE 8 MM PA BLACK | |
| K80X1410 | 90326-0022 | | 1 | PLUG, MALE YELLOW CR-AL | |

Machine Type | Group Description | Used-In | Group Number | Page No

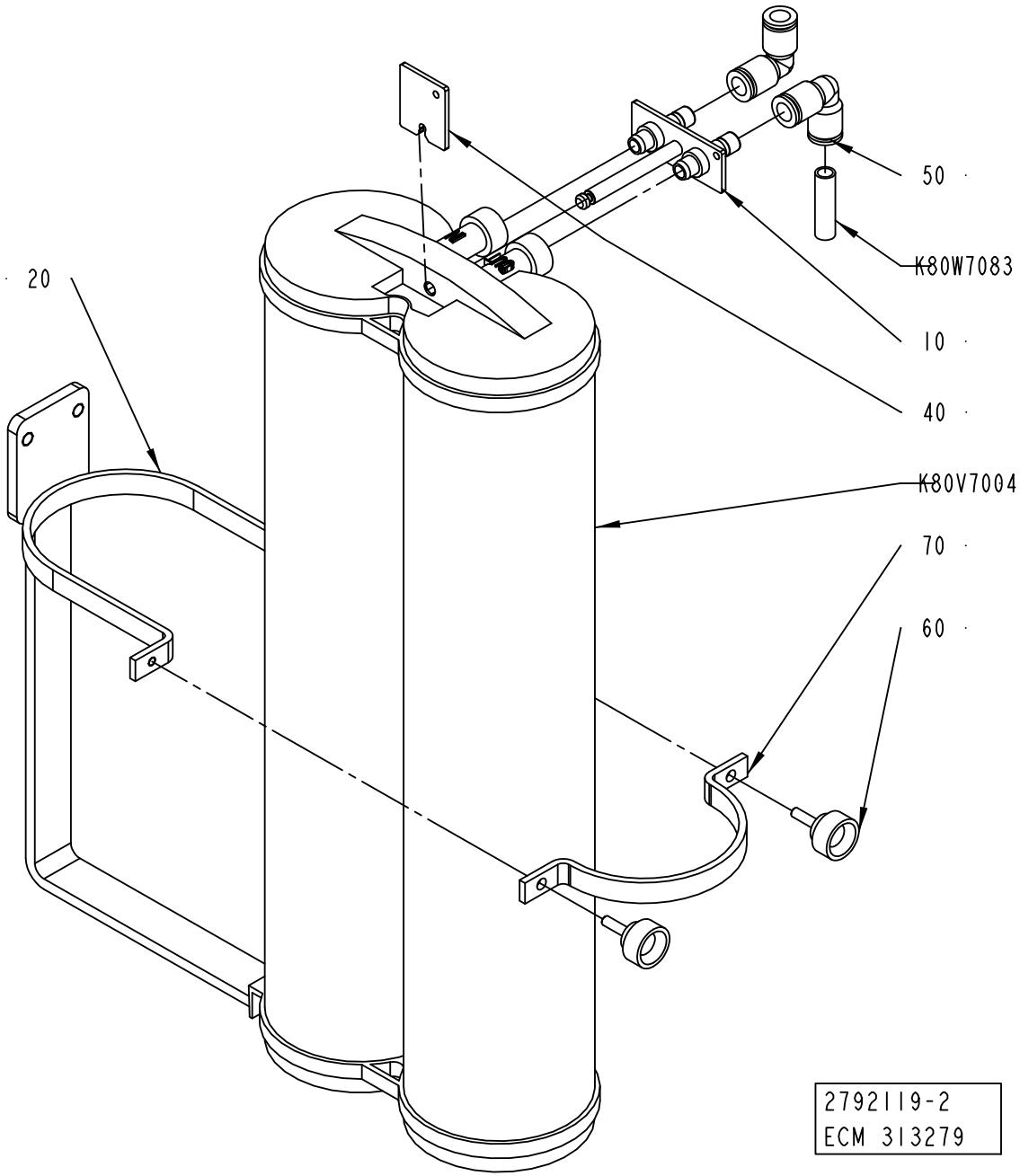
50
K80W7083
10
40
20
K80V7004
70
60
2792119-2
ECM 313279

ECM: 313495 - 20070629
Group number: 2792119-0200
Assembly Drawing: 2792119-2_1_AA

| Pos | Part No | UN | Qty | Description | Page No |
|---|---|---|---|---|---|
| - | | | | | |
| 010 | 2793908-0000 | | 1 | CONNECTOR | |
| 020 | 2792118-0000 | | 1 | SUPPORT | |
| 040 | 2793907-0000 | | 1 | FASTENING PLATE | |
| 050 | 342735-0103 | | 2 | ELBOW PIPE JOINT | |
| 060 | 318856-0101 | | 2 | KNOB, EXTERNAL THREAD. NO. 8308-1011 | |
| 070 | 2792120-0000 | | 1 | SUPPORT | |
| K80V7004 | 90459-7084 | | 1 | FILTER, CPDI000M1 | |
| K80W7083 | 90166-0118 | MM | 200 | TUBE 8 MM PA BLACK | |

| Pos | Part No | UN | Qty | Description | Page No |
|---|---|---|---|---|---|

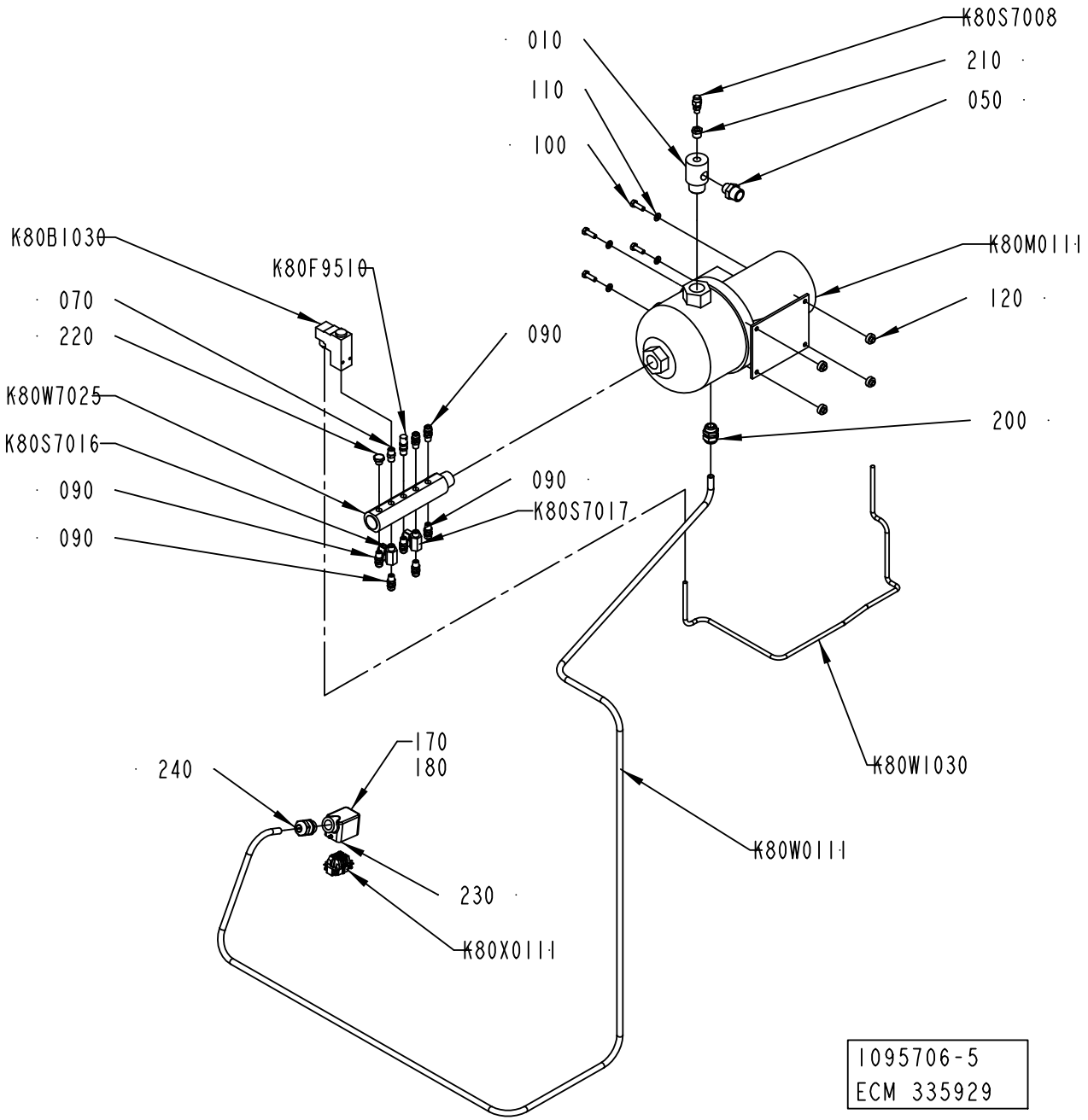
K80S7008
010
210
110
050
100
K80B1030
K80F9510
K80M0111
070
120
220
090
K80W7025
200
K80S7016
090
090
090
K80S7017
170
180
240
K80W1030
K80W0111
230
K80X0111
1095706-5
ECM 335929

ECM: 335933 - 20080205
Group number: 1095706-0400
Assembly Drawing: 1095706-5_1_AC

| Pos | Part No | UN | Qty | Description | Page No |
|---|---|---|---|---|---|
| **A3/FLEX** | | | | | |
| K80W7025 | 2922322-0001 | | 1 | RETURN PIPE | |
| **Common Parts** | | | | | |
| 010 | 2532806-0000 | | 1 | ATTACHMENT PIPE | |
| 050 | 90330-0080 | | 1 | NIPPLES, EXT. THREAD. R3/4-R1/2 | |
| 070 | 90330-0043 | | 1 | NIPPLES, EXT. THREAD. R-207R1/4 | |
| 090 | 342922-0122 | | 7 | STRAIG.COUPL.,ADJUST.,EXT.THRE.8/6-R1/4" | |
| 100 | 312105-0453 | | 4 | SCREW M6S ISO 4017 M8X25 A480 | |
| 110 | 315105-0165 | | 4 | WASHER BRB 8,4X16 RFR | |
| 120 | 90015-0037 | | 4 | RUBBER BUSHING | |
| 170 | 359005-0050 | | 1 | MARKING LABEL KIT X, 04.841.4550.0 | |
| 180 | 359005-0010 | | 1 | MARKING LABEL KIT 0 - 9, 04.841.2150.0 | |
| 200 | 352103-0110 | | 1 | CABLE GLAND, STR 16, PR22,5/PG16 | |
| 210 | 342701-0202 | | 1 | BUSHING,INT./EXT.G-THREAD G3/8"-G1/8" | |
| 220 | 90330-0026 | | 1 | PLUG, EXT. G-THREAD, G1/4 | |
| 230 | 90459-1458 | | 1 | HOOD HAN 6 E 19 30 006 1540 | |
| 240 | 90458-0308 | | 1 | CABLE GLAND, M25X1,5, NO.5311 1030 | |
| K80B1030 | 90274-0056 | | 1 | PRESS.SWITCH 1-12BAR, PEV-1/4-B-SA22358 | |
| K80F9510 | 90230-0041 | | 1 | OVERPRESSURE VALVE SS-4 CPA2-RTDG-3 | |
| K80M0111 | 90321-0116 | | 1 | PUMP GRUNDFOS CHI 2-60 | |
| | *90321-0618* | | *1* | *SEAL KIT FOR REPAIR OF PUMP* | |
| K80S7008 | 90459-1736 | | 1 | PURGE VALVE, 2RM-PG4L-SS | |
| K80S7016 | 90187-0045 | | 1 | BALL VALVE G1/4 CR PL | |
| K80S7017 | 90187-0045 | | 1 | BALL VALVE G1/4 CR PL | |
| K80W0111 | 351150-0418 | MM | 3500 | CABLE OLFLEX 4X2,5 MM2 LIGHT/GREY | |
| K80W1030 | 351150-0431 | MM | 1000 | CABLE OLFLEX 2X0,75 MM2 LIGHT/GREY | |
| K80X0111 | 90110-0052 | | 1 | MALE INSERT HAN 6E 09 33 006 2601 | |

| Pos | Part No | UN | Qty | Description | Page No |
|---|---|---|---|---|---|

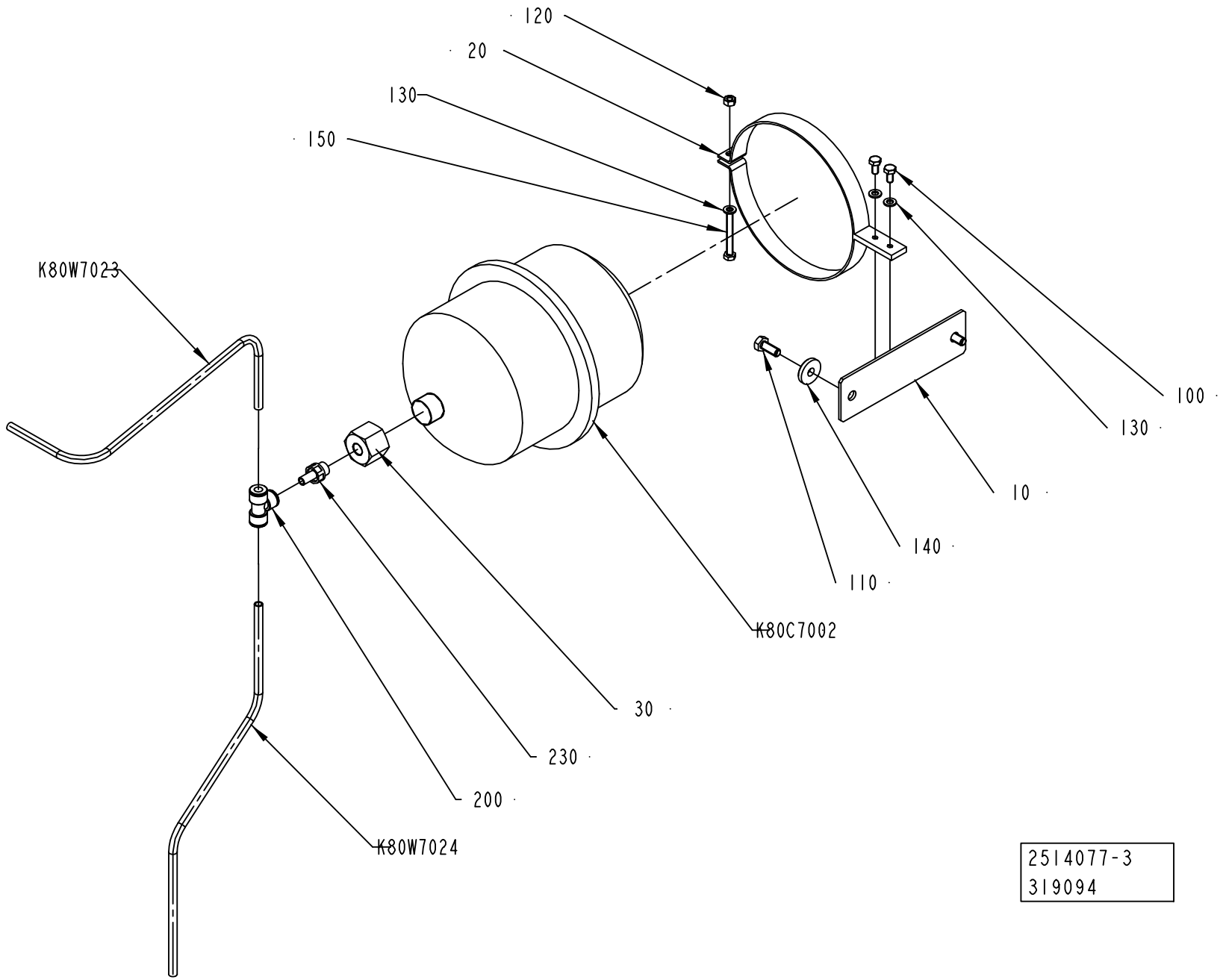
120
20
130
150
K80W7023
100
130
10
140
110
K80C7002
30
230
200
K80W7024
2514077-3
319094

ECM: 320971 - 20070705
Group number: 2514077-0200
Assembly Drawing: 2514077-3_1_AB

| Pos | Part No | UN | Qty | Description | Page No |
|---|---|---|---|---|---|
| - | | | | | |
| 010 | 2514087-0000 | | 1 | PLATE | |
| 020 | 1484081-0000 | | 1 | BRACKET | |
| 030 | 2514083-0000 | | 1 | REDUCTION NIPPLE | |
| 100 | 312105-0366 | | 2 | SCREW M6S ISO 4017 M6X12 A480 | |
| 110 | 312105-0451 | | 2 | SCREW M6S ISO 4017 M8X20 A480 | |
| 120 | 312605-0316 | | 1 | HEXAGON NUT, M6M M6 A280 | |
| 130 | 315105-0153 | | 3 | WASHER BRB 6,4X12 RFR | |
| 140 | 315125-0165 | | 2 | WASHER TBRSB 8,4X26X5 A4 | |
| 150 | 312109-0380 | | 1 | SCREW M6S ISO 4017 M6X50 A480 | |
| 200 | 90055-0276 | | 1 | T-CONNECTION 8 MM | |
| 230 | 90055-0260 | | 1 | NIPPLE-8 MM G1/4" | |
| K80C7002 | 90304-0020 | | 1 | RECIPIENTE | |
| K80W7023 | 90166-0118 | MM | 450 | TUBE 8 MM PA BLACK | |
| K80W7024 | 90166-0118 | MM | 500 | TUBE 8 MM PA BLACK | |

| Pos | Part No | UN | Qty | Description | Page No |
|---|---|---|---|---|---|

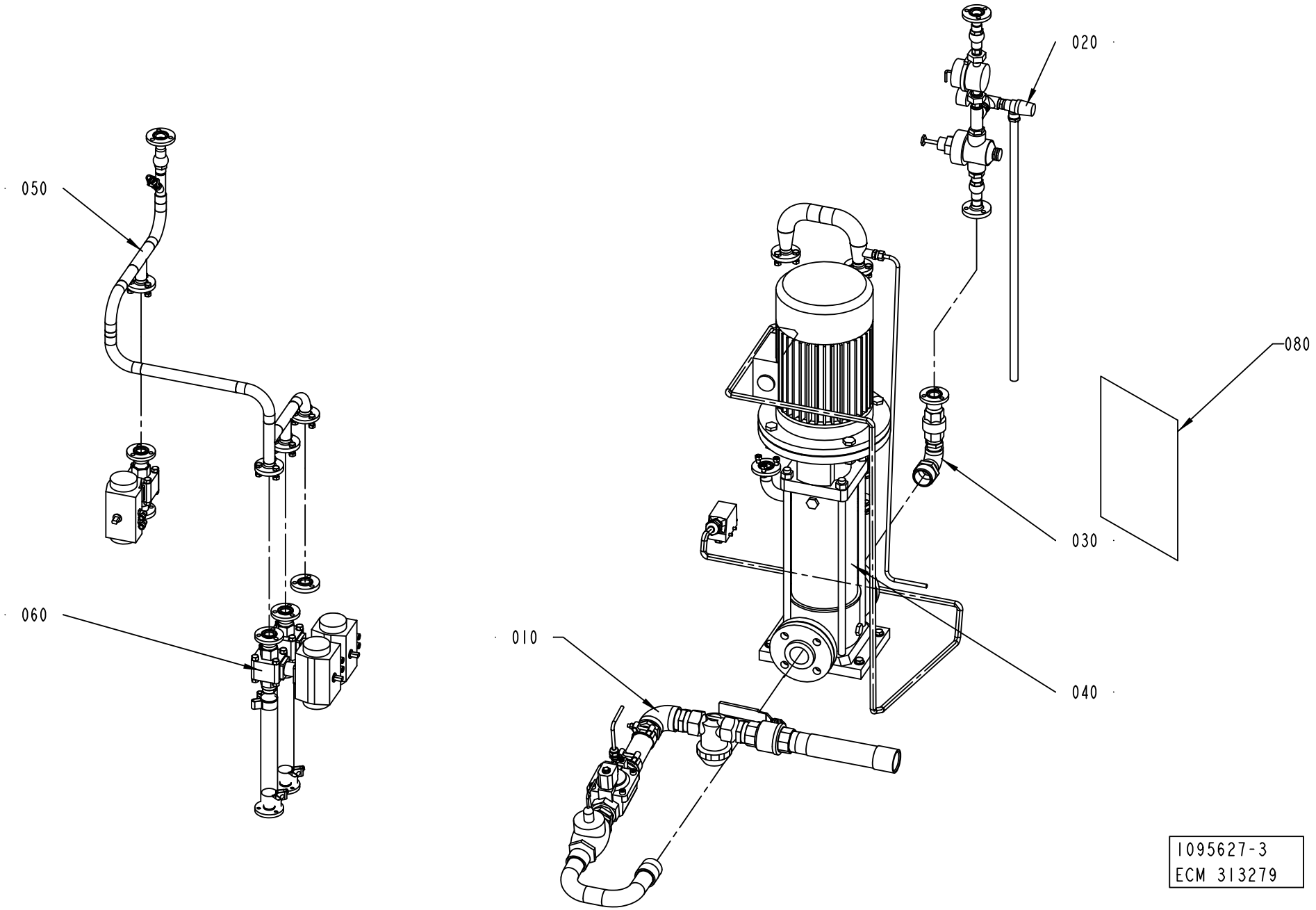
020
050
080
030
060
010
040
1095627-3
ECM 313279

ECM: 313498 - 20070629
Group number: 1095627-0400
Assembly Drawing: 1095627-3_1_AA

| Pos | Part No | UN | Qty | Description | Page No |
|---|---|---|---|---|---|
| **A3/FLEX 50HZ** | | | | | |
| 080 | 2898343-0000 | | 1 | DIAGRAM | |
| **A3/FLEX 60HZ** | | | | | |
| 080 | 2898343-0000 | | 1 | DIAGRAM | |
| **Common Parts** | | | | | |
| 010 | 1095672-0200 | | 1 | PIPE | **6-43** |
| 020 | 1095673-0200 | | 1 | SIDE | **6-45** |
| 030 | 1095675-0200 | | 1 | PIPE | **6-47** |
| 040 | 1095676-0200 | | 1 | PUMP | **6-49** |
| 050 | 1095677-0200 | | 1 | BRANCHING PIPE | **6-51** |
| 060 | 1095678-0400 | | 1 | BALL VALVE | **6-53** |

| Pos | Part No | UN | Qty | Description | Page No |
|---|---|---|---|---|---|

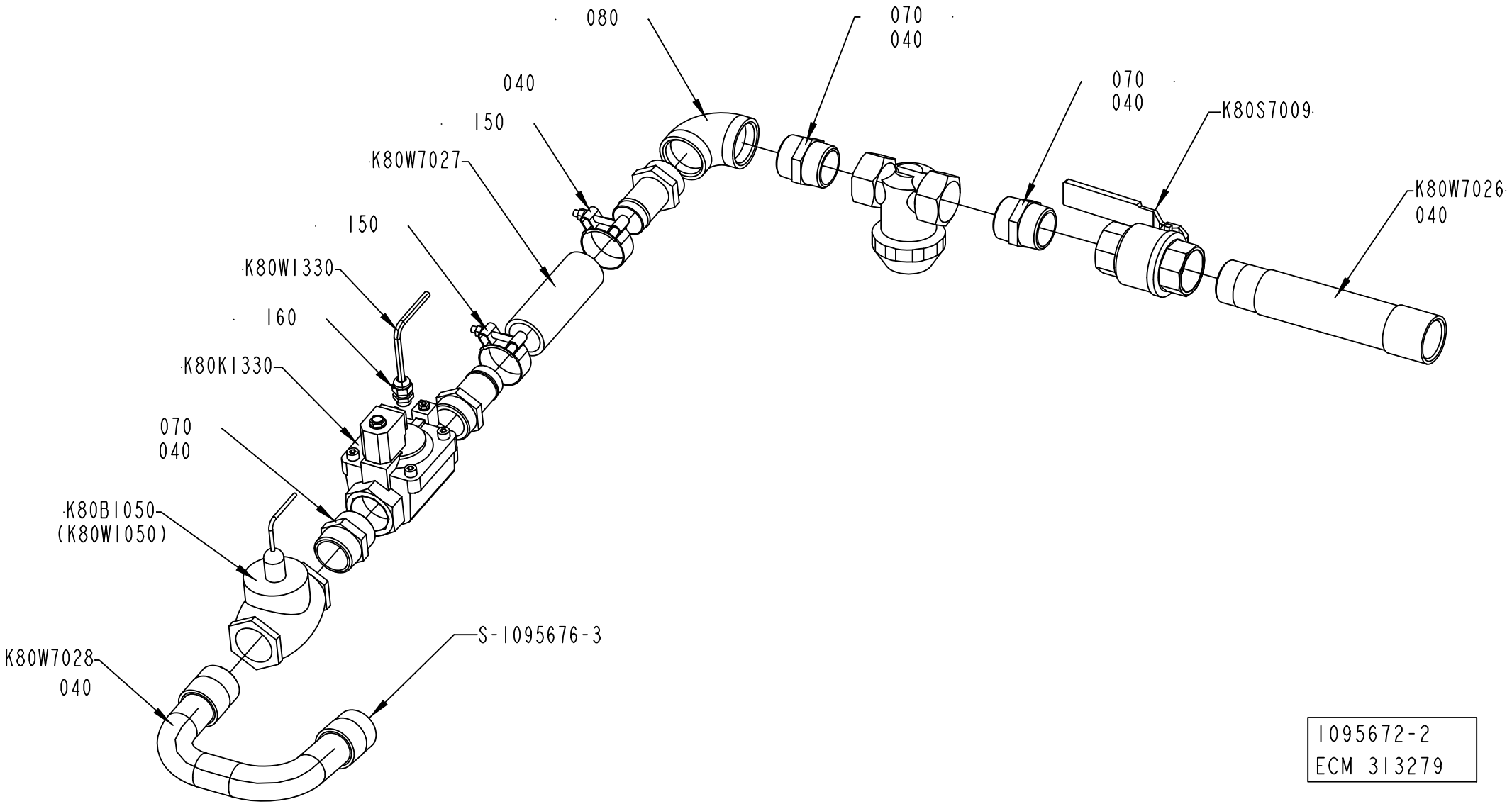


1095672-2
ECM 313279

ECM: 313499 - 20070629
Group number: 1095672-0200
Assembly Drawing: 1095672-2_1_AA

| Pos | Part No | UN | Qty | Description | Page No |
|---|---|---|---|---|---|
| - | | | | | |
| 040 | 90144-0007 | | 1 | TAPE | |
| 070 | 90330-0056 | | 3 | NIPPLES, EXT. THREAD. R-207 KR11/2 | |
| 080 | 90330-0057 | | 1 | ELBOW, 90 INT. THREAD, R-222R11/2 | |
| 110 | 90055-0166 | | 2 | HOSE NIPPLE, EXT.THR. R11/2X38 MM | |
| 150 | 90458-2850 | | 2 | HOSE CLIP , 51 MM | |
| 160 | 352103-0101 | | 1 | CABLE GLAND, ST 9, PR15,2/PG9 | |
| K80B1050 | 90274-0082 | | 1 | FLOW SWITCH, 2 - 3 L/MIN | |
| | *90274-0322* | | *1* | *SPARE PART KIT* | |
| K80K1330 | 90042-0254 | | 1 | SOLENOID DIAPHRAGM VALVE, R1 1/2 | |
| | *90042-0557* | | *1* | *COIL V24DC-N3* | |
| | *90458-2575* | | *1* | *DIAPHRAGM, R450466/B FOR 90042-0254* | |
| K80S7009 | 90187-0147 | | 1 | BALL VALVE G11/2 | |
| K80V7006 | 90415-0032 | | 1 | FILTER / 3-02-00-1 1/2" | |
| | *90415-0328* | | *1* | *FILTER INSERT* | |
| K80W1330 | 351150-0403 | M | 2 | CABLE OLFLEX 3X0,75 MM2 LIGHT/GREY | |
| K80W7026 | 1041926-0000 | | 1 | PIPE | |
| K80W7027 | 90166-0236 | MM | 150 | HOSE, 38/51 REINFORCED RUBBER | |
| K80W7028 | 1041925-0000 | | 1 | PIPE | |

| Pos | Part No | UN | Qty | Description | Page No |
|---|---|---|---|---|---|

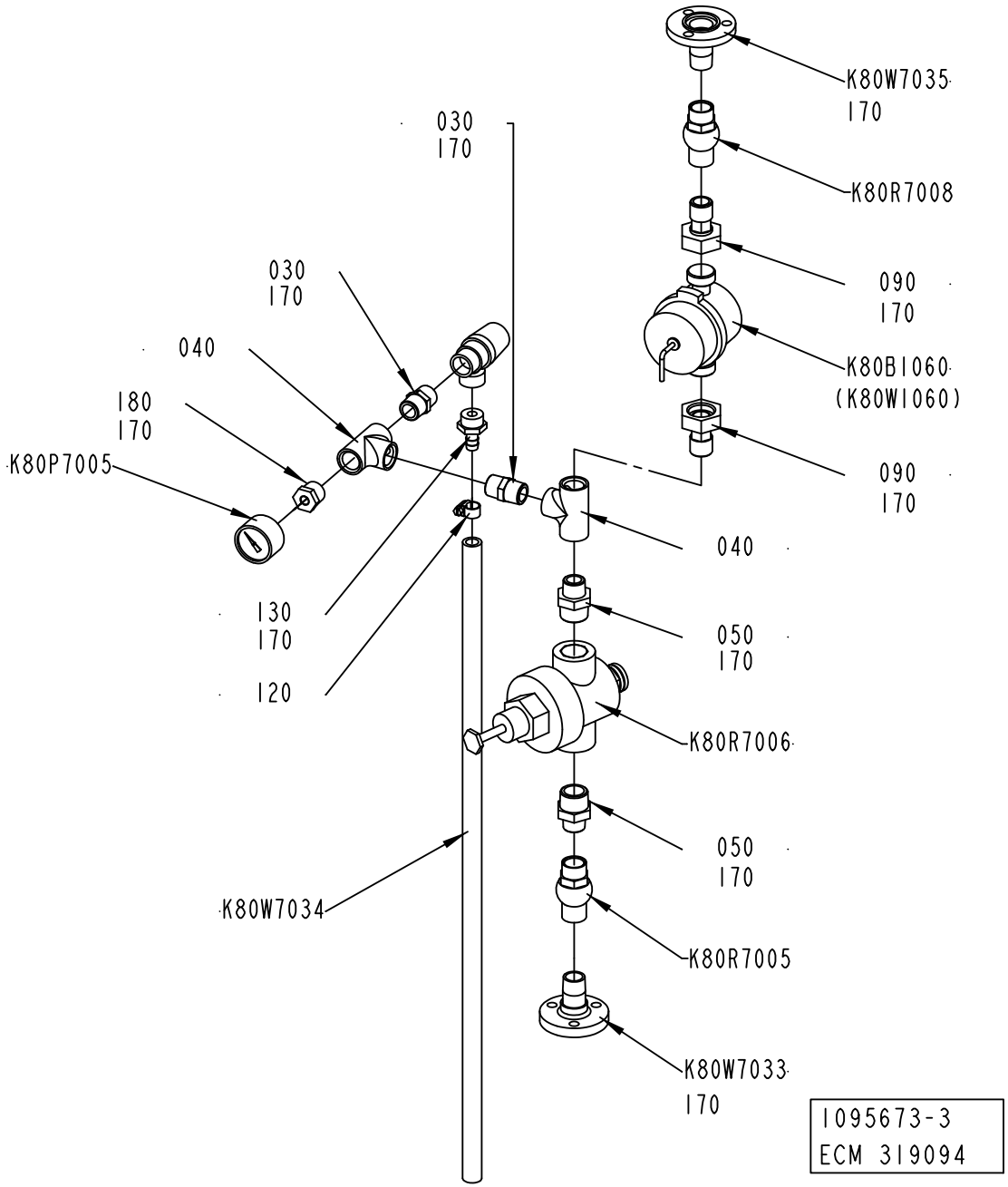
K80W7035
170
030
170
K80R7008
030
170
090
170
040
K80B1060
(K80W1060)
180
170
090
170
K80P7005
040
130
170
050
170
120
K80R7006
050
170
K80W7034
K80R7005
K80W7033
170
1095673-3
ECM 319094

ECM: 320972 - 20070705
Group number: 1095673-0200
Assembly Drawing: 1095673-3_1_AA

| Pos | Part No | UN | Qty | Description | Page No |
|---|---|---|---|---|---|
| - | | | | | |
| 030 | 90330-0021 | | 2 | NIPPLES, EXT. THREAD. R-207R1/2 | |
| 040 | 90330-0049 | | 2 | T-PIPE, INT. THREAD, R-221R1/2 | |
| 050 | 90330-0080 | | 2 | NIPPLES, EXT. THREAD. R3/4-R1/2 | |
| 090 | 90030-0465 | | 2 | STRAIGHT CONNECTION, MAD DN 15 | |
| | *90005-0156* | | *1* | *WASHER PLAIN ROUND 16/24, H=1,5* | |
| 120 | 342991-0100 | | 1 | HOSE CLIP,WORM DRIVE TYPE 10-13 | |
| 130 | 342901-0105 | | 1 | HOSE NIPPLE, EXT.THR. R1/2-12 MM | |
| 170 | 90144-0007 | MM | 1 | TAPE | |
| 180 | 90330-0036 | | 1 | BUSHING, INT/EXT. THR. RP1/8-RP1/2 | |
| K80B1060 | 90243-0245 | | 1 | MEASURING INSTRUMENT | |
| K80P7005 | 90043-0043 | | 1 | PRESSURE GAUGE 0-10 BAR 1/8" | |
| K80R7005 | 90230-0042 | | 1 | NON-RETURN VALVE 1/2" | |
| K80R7006 | 90113-0098 | | 1 | PRESSURE REGULATOR | |
| K80R7007 | 90187-0133 | | 1 | SAFETY VALVE, 10 BARS, R1/2, R1/2 | |
| K80R7008 | 90230-0042 | | 1 | NON-RETURN VALVE 1/2" | |
| K80W7033 | 1036826-0000 | | 1 | PIPE | |
| K80W7034 | 90166-0121 | M | 1 | HOSE | |
| K80W7035 | 1036827-0000 | | 1 | PIPE | |

| Pos | Part No | UN | Qty | Description | Page No |
|---|---|---|---|---|---|

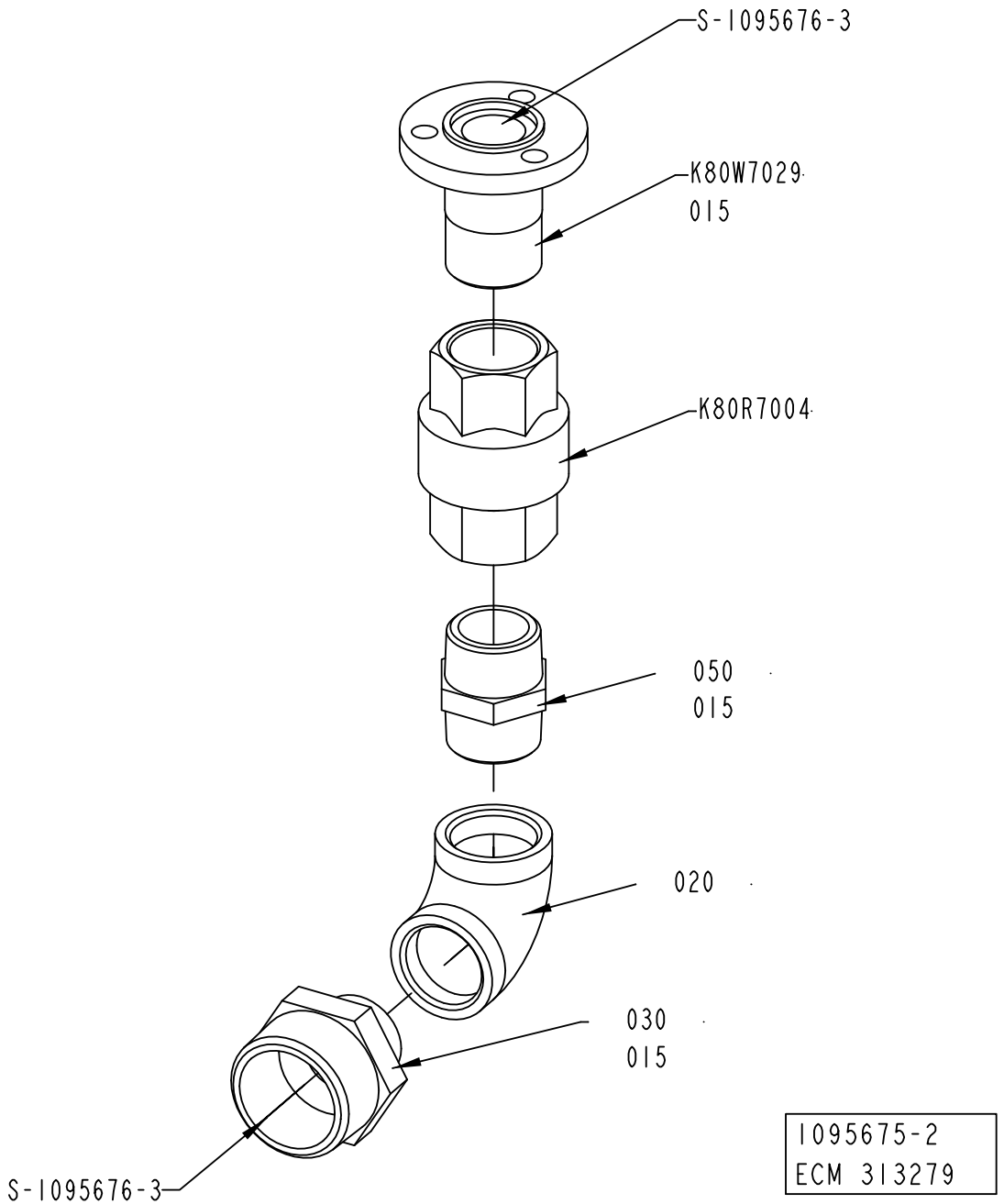
S-1095676-3
K80W7029
015
K80R7004
050
015
020
030
015
S-1095676-3
1095675-2
ECM 313279

ECM: 313501 - 20070629
Group number: 1095675-0200
Assembly Drawing: 1095675-2_1_AA

| Pos | Part No | UN | Qty | Description | Page No |
|---|---|---|---|---|---|
| - | | | | | |
| 015 | 90144-0007 | MM | 1 | TAPE | |
| 020 | 90330-0014 | | 1 | ELBOW, 90 INT. THREAD, R-222R1 | |
| 030 | 90330-0045 | | 1 | NIPPLES, EXT. THREAD. R-209 KR11/2- KR1 | |
| 050 | 342203-0120 | | 1 | NIPPLES, EXT. THREAD, HEXAGON,ÿNO. 209 | |
| K80R7004 | 90230-0044 | | 1 | NON-RETURN VALVE 1" | |
| | *90230-0308* | | *1* | *GASKET KIT* | |
| K80W7029 | 1036794-0000 | | 1 | PIPE | |

| Pos | Part No | UN | Qty | Description | Page No |
|---|---|---|---|---|---|

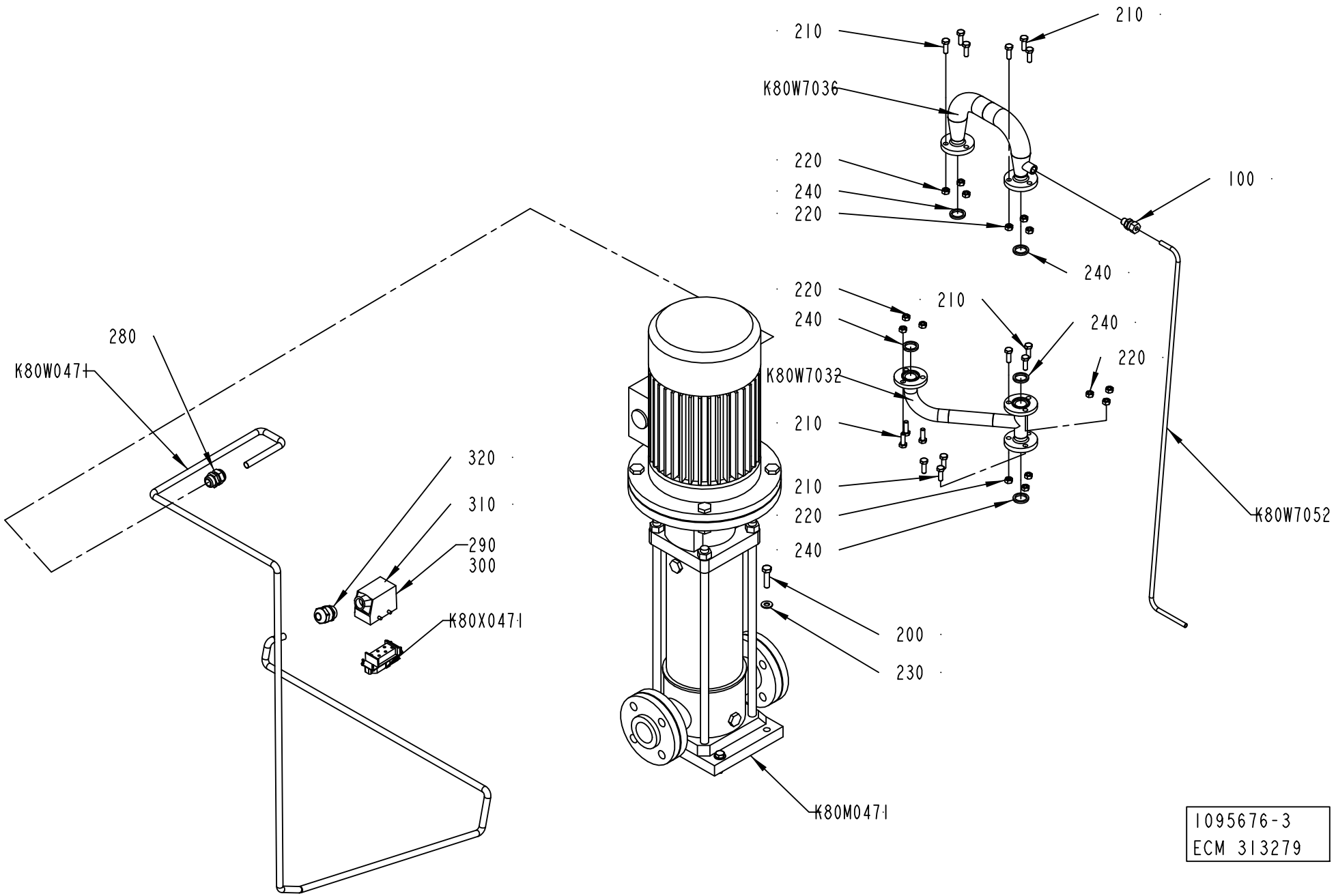
210
210
K80W7036
220
240
220
100
240
220
240
210
240
220
K80W7032
210
210
220
240
K80W7052
280
K80W0471
320
310
290
300
K80X0471
200
230
K80M0471
1095676-3
ECM 313279

ECM: 313502 - 20070629
Group number: 1095676-0200
Assembly Drawing: 1095676-3_1_AA

| Pos | Part No | UN | Qty | Description | Page No |
|---|---|---|---|---|---|
| **A3/FLEX 50HZ** | | | | | |
| K80M0471 | 90600-1257 | | 1 | PUMP SV 808 F 55 T | |
| **A3/FLEX 60HZ** | | | | | |
| K80M0471 | 90600-2686 | | 1 | PUMP SV806 F556 T | |
| **Common Parts** | | | | | |
| 100 | 90030-0185 | | 1 | CONN. STR. GE08LRED71 | |
| 200 | 312105-0499 | | 4 | SCREW M6S ISO 4014 M10X40 A480 | |
| 210 | 312105-0453 | | 15 | SCREW M6S ISO 4017 M8X25 A480 | |
| 220 | 312605-0318 | | 15 | HEXAGON NUT, M6M M8 A280 | |
| 230 | 315105-0176 | | 4 | WASHER BRB 12X22 RFR | |
| 240 | 315229-0103 | | 5 | GASKETS, 23,1X30,1X3,7 MM 1" FDA | |
| 280 | 352103-0111 | | 1 | CABLE GLAND, ST 16, PR22,5/PG16 | |
| 290 | 359005-0010 | | 2 | MARKING LABEL KIT 0 - 9, 04.841.2150.0 | |
| 300 | 359005-0050 | | 1 | MARKING LABEL KIT X, 04.841.4550.0 | |
| 310 | 90459-6629 | | 1 | HOOD 10 B SIDE ENTRY, 19 30 010 1520 | |
| 320 | 90458-0308 | | 1 | CABLE GLAND, M25X1,5, NO.5311 1030 | |
| K80W0471 | 351150-0166 | MM | 4000 | CABLE OLFLEX 4X4 MM2 LIGHT/GREY | |
| K80W7032 | 1041946-0000 | | 1 | PIPE | |
| K80W7036 | 1036828-0000 | | 1 | TANK | |
| K80W7052 | 1140642-0000 | | 1 | PIPE | |
| K80X0471 | 90110-0054 | | 1 | MALE INSERT HAN 6 HSB 09 31 006 2601 | |

| Pos | Part No | UN | Qty | Description | Page No |
|---|---|---|---|---|---|

# BRANCHING PIPE



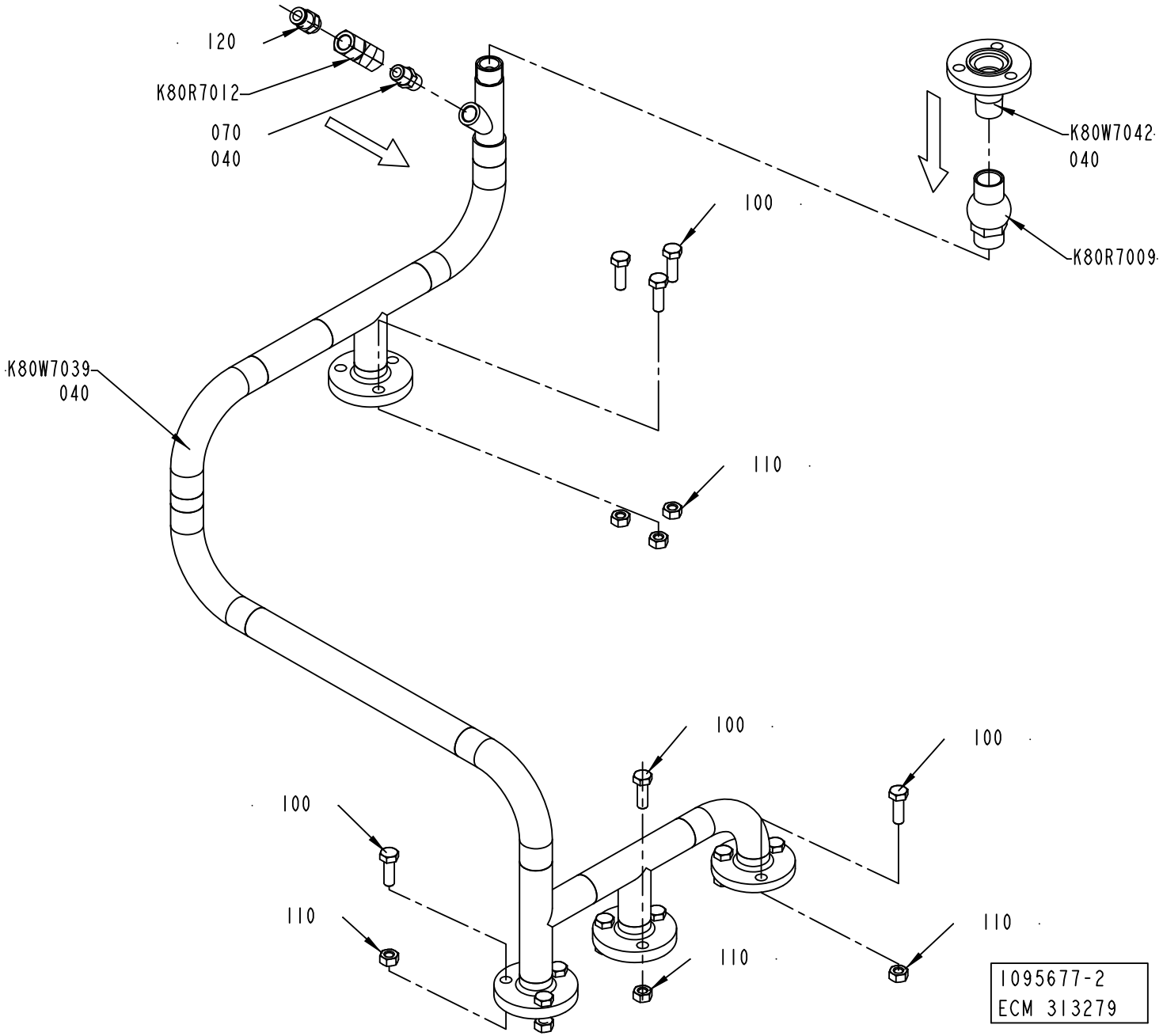

ECM: 313503 - 20070629
Group number: 1095677-0200
Assembly Drawing: 1095677-2_1_AA

| Pos | Part No | UN | Qty | Description | Page No |
|---|---|---|---|---|---|
| - | | | | | |
| 040 | 90144-0007 | MM | 1 | TAPE | |
| 070 | 90330-0043 | | 1 | NIPPLES, EXT. THREAD. R-207R1/4 | |
| 100 | 312105-0453 | | 12 | SCREW M6S ISO 4017 M8X25 A480 | |
| 110 | 312605-0318 | | 12 | HEXAGON NUT, M6M M8 A280 | |
| 120 | 342722-0205 | | 1 | STRAIGHT COUPLING D=8-G1/4" | |
| K80R7009 | 90230-0042 | | 1 | NON-RETURN VALVE 1/2" | |
| K80R7012 | 90235-0151 | | 1 | NON-RETURN VALVE, 534 098 110 0 | |
| K80W7039 | 1041934-0000 | | 1 | PIPE | |
| K80W7042 | 1036827-0000 | | 1 | PIPE | |

| Pos | Part No | UN | Qty | Description | Page No |
|---|---|---|---|---|---|

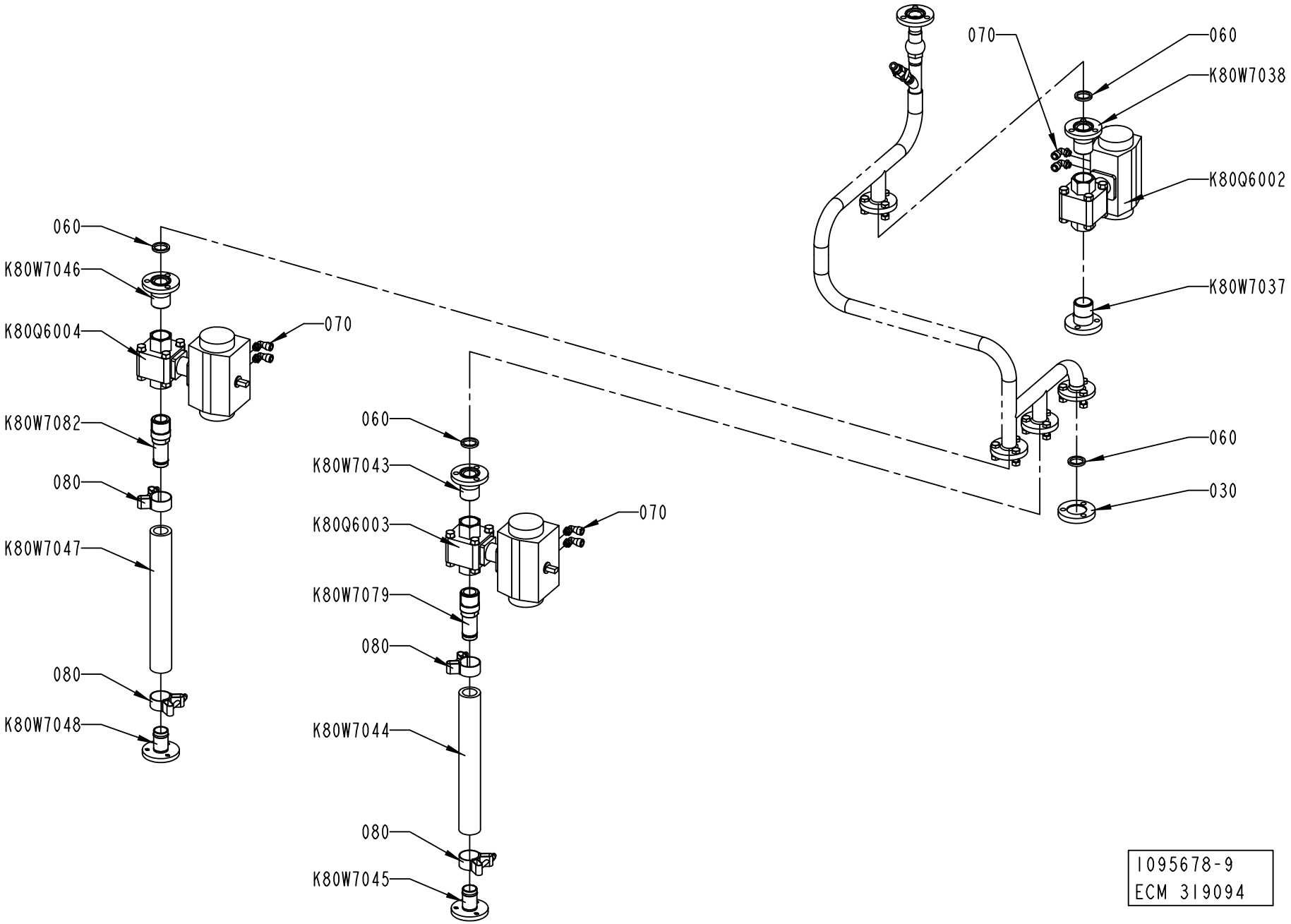
070
060
K80W7038
K80Q6002
K80W7037
060
030
060
K80W7046
K80Q6004
070
K80W7082
080
K80W7047
080
K80W7048
060
K80W7043
K80Q6003
070
K80W7079
080
K80W7044
080
K80W7045
1095678-9
ECM 319094

ECM: 320973 - 20070705
Group number: 1095678-0400
Assembly Drawing: 1095678-9_1_AB

| Pos | Part No | UN | Qty | Description | Page No |
|---|---|---|---|---|---|
| - | | | | | |
| 030 | 1037129-0000 | | 1 | LID | |
| 060 | 315229-0103 | | 4 | GASKETS, 23,1X30,1X3,7 MM 1" FDA | |
| 070 | 90458-2964 | | 6 | ELBOW PIPE JOINT, EXT.THREAD, D=8MM-G1/8 | |
| 080 | 90459-2366 | | 4 | HOSE CLIP, (32)-35 | |
| K80Q6002 | 90187-0148 | | 1 | BALL VALVE G1 | |
| | *90187-0319* | | *1* | *GASKET UNIT* | |
| K80Q6003 | 90187-0148 | | 1 | BALL VALVE G1 | |
| | *90187-0319* | | *1* | *GASKET UNIT* | |
| K80Q6004 | 90187-0148 | | 1 | BALL VALVE G1 | |
| | *90187-0319* | | *1* | *GASKET UNIT* | |
| K80W7037 | 2522184-0000 | | 1 | PIPE | |
| K80W7038 | 2522148-0000 | | 1 | PIPE | |
| K80W7043 | 2522148-0000 | | 1 | PIPE | |
| K80W7044 | 90166-0233 | MM | 300 | HOSE | |
| K80W7045 | 1195466-0000 | | 1 | PIPE | |
| K80W7046 | 2522148-0000 | | 1 | PIPE | |
| K80W7047 | 90166-0233 | MM | 300 | HOSE | |
| K80W7048 | 1195466-0000 | | 1 | PIPE | |
| K80W7079 | 1487023-0000 | | 1 | PIPE | |
| K80W7082 | 1487023-0000 | | 1 | PIPE | |

| Pos | Part No | UN | Qty | Description | Page No |
|---|---|---|---|---|---|

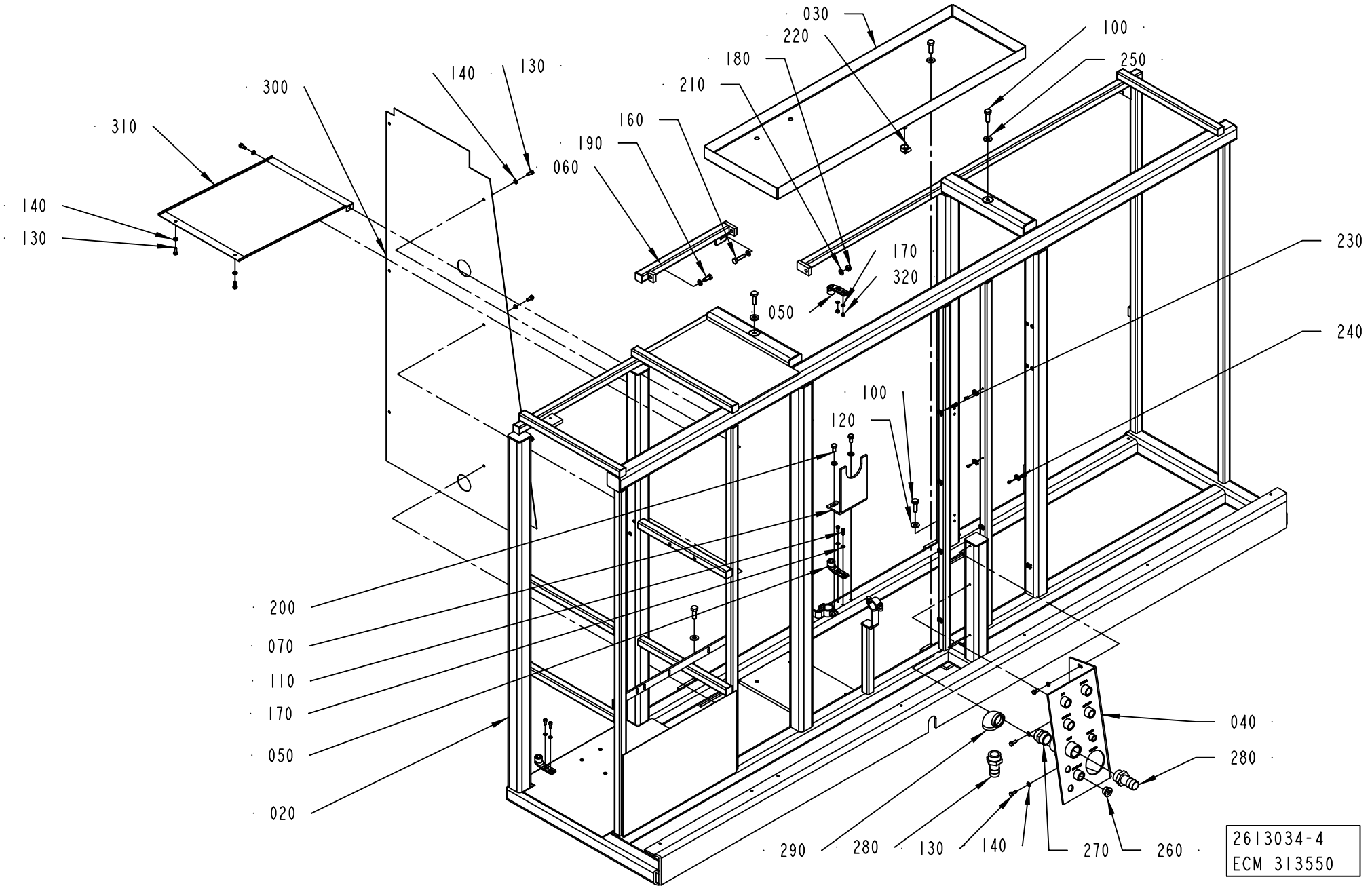
030
220
180
210
160
190
060
140
130
300
310
140
130
100
250
230
240
170
320
050
100
120
200
070
110
170
050
020
040
280
290
280
130
140
270
260
2613034-4
ECM 313550

| Pos | Part No | UN | Qty | Description | Page No |
|---|---|---|---|---|---|
| **A3/FLEX NO PEROXIDE DILUTION (See drawing on page: 6-56)** | | | | | |
| 130 | 312105-0368 | | 3 | SCREW M6S ISO 4017 M6X16 A480 | |
| 140 | 315105-0153 | | 3 | WASHER BRB 6,4X12 RFR | |
| **A3/FLEX PEROXIDE DILUTION (See drawing on page: 6-54)** | | | | | |
| 130 | 312105-0368 | | 9 | SCREW M6S ISO 4017 M6X16 A480 | |
| 140 | 315105-0153 | | 9 | WASHER BRB 6,4X12 RFR | |
| 300 | 2833377-0000 | | 1 | COVER | |
| 310 | 2833382-0000 | | 1 | COVER | |
| **Common Parts** | | | | | |
| 020 | 2833374-0000 | | 1 | MACHINE BODY | |
| 030 | 1041963-0000 | | 1 | WASTE BOX | |
| 040 | 1129387-0000 | | 1 | CONNECTION TABLE | |
| 050 | 1538868-0000 | | 4 | BRACKET | |
| 060 | 1255293-0000 | | 1 | CROSS BAR | |
| 070 | 2524363-0000 | | 1 | HANGER | |
| 100 | 312105-0495 | | 5 | SCREW M6S ISO 4017 M10X30 A480 | |
| 110 | 312115-0327 | | 6 | SCREW ISO4762 M5X12 A4 80 | |
| 120 | 315105-0173 | | 3 | WASHER BRB 10,5X22 RFR | |
| 150 | 90261-0069 | | 1 | PLUG, BLIND, PLASTIC, NO. 055-0615 | |
| 160 | 312109-0457 | | 1 | SCREW M6S ISO 4017 M8X35 A480 | |
| 170 | 315105-0146 | | 8 | WASHER BRB 5,3X10 RFR | |
| 180 | 312605-0318 | | 1 | HEXAGON NUT, M6M M8 A280 | |
| 190 | 312105-0451 | | 1 | SCREW M6S ISO 4017 M8X20 A480 | |
| 200 | 312105-0449 | | 2 | SCREW M6S ISO 4017 M8X16 A480 | |
| 210 | 315105-0165 | | 5 | WASHER BRB 8,4X16 RFR | |
| 220 | 342991-0102 | | 1 | HOSE CLIP,WORM DRIVE TYPE (16)-19 | |
| 230 | 352113-0205 | | 15 | ANCHOR PLATES FOR STRIPS, TYPE TM2S8-C10 | |
| 240 | 312125-0287 | | 15 | SCREW ISO 1207 M4X8 A4 | |
| 250 | 315115-0173 | | 2 | WASHER PLAIN, TBRB 10,5/22 H=4 | |
| 260 | 342713-0213 | | 1 | PLUG, EXT THREAD HEX SOCKET 8638-00-120 | |
| 270 | 342700-0116 | | 1 | NIPPLES,HEXAGON,EXT.G-THREAD G1"-G1" | |
| 280 | 90055-0053 | | 2 | HOSE NIPPLE, EXT.THR. R1-25 MM | |
| 290 | 90330-0014 | | 1 | ELBOW, 90 INT. THREAD, R-222R1 | |
| 320 | 312605-0314 | | 2 | HEXAGON NUT, M6M M5 A280 | |

| Pos | Part No | UN | Qty | Description | Page No |
|---|---|---|---|---|---|

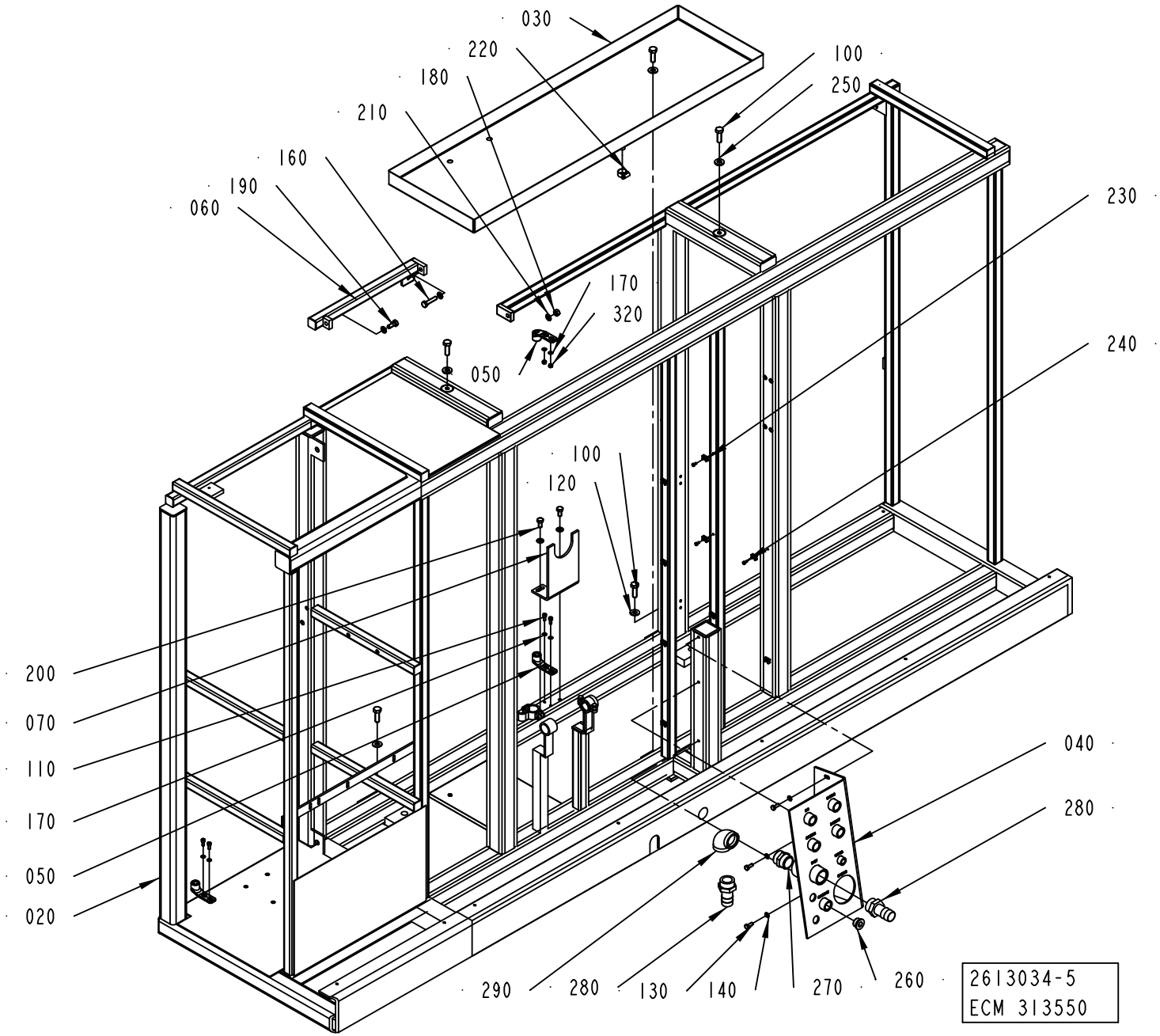
030
220
180
210
160
190
060
100
250
230
240
170
320
050
100
120
200
070
110
170
050
020
040
280
290
280
130
140
270
260
2613034-5
ECM 313550

| Pos | Part No | UN | Qty | Description | Page No |
|---|---|---|---|---|---|
| **A3/FLEX NO PEROXIDE DILUTION (See drawing on page: 6-56)** | | | | | |
| 130 | 312105-0368 | | 3 | SCREW M6S ISO 4017 M6X16 A480 | |
| 140 | 315105-0153 | | 3 | WASHER BRB 6,4X12 RFR | |
| **A3/FLEX PEROXIDE DILUTION (See drawing on page: 6-54)** | | | | | |
| 130 | 312105-0368 | | 9 | SCREW M6S ISO 4017 M6X16 A480 | |
| 140 | 315105-0153 | | 9 | WASHER BRB 6,4X12 RFR | |
| 300 | 2833377-0000 | | 1 | COVER | |
| 310 | 2833382-0000 | | 1 | COVER | |
| **Common Parts** | | | | | |
| 020 | 2833374-0000 | | 1 | MACHINE BODY | |
| 030 | 1041963-0000 | | 1 | WASTE BOX | |
| 040 | 1129387-0000 | | 1 | CONNECTION TABLE | |
| 050 | 1538868-0000 | | 4 | BRACKET | |
| 060 | 1255293-0000 | | 1 | CROSS BAR | |
| 070 | 2524363-0000 | | 1 | HANGER | |
| 100 | 312105-0495 | | 5 | SCREW M6S ISO 4017 M10X30 A480 | |
| 110 | 312115-0327 | | 6 | SCREW ISO4762 M5X12 A4 80 | |
| 120 | 315105-0173 | | 3 | WASHER BRB 10,5X22 RFR | |
| 150 | 90261-0069 | | 1 | PLUG, BLIND, PLASTIC, NO. 055-0615 | |
| 160 | 312109-0457 | | 1 | SCREW M6S ISO 4017 M8X35 A480 | |
| 170 | 315105-0146 | | 8 | WASHER BRB 5,3X10 RFR | |
| 180 | 312605-0318 | | 1 | HEXAGON NUT, M6M M8 A280 | |
| 190 | 312105-0451 | | 1 | SCREW M6S ISO 4017 M8X20 A480 | |
| 200 | 312105-0449 | | 2 | SCREW M6S ISO 4017 M8X16 A480 | |
| 210 | 315105-0165 | | 5 | WASHER BRB 8,4X16 RFR | |
| 220 | 342991-0102 | | 1 | HOSE CLIP,WORM DRIVE TYPE (16)-19 | |
| 230 | 352113-0205 | | 15 | ANCHOR PLATES FOR STRIPS, TYPE TM2S8-C10 | |
| 240 | 312125-0287 | | 15 | SCREW ISO 1207 M4X8 A4 | |
| 250 | 315115-0173 | | 2 | WASHER PLAIN, TBRB 10,5/22 H=4 | |
| 260 | 342713-0213 | | 1 | PLUG, EXT THREAD HEX SOCKET 8638-00-120 | |
| 270 | 342700-0116 | | 1 | NIPPLES,HEXAGON,EXT.G-THREAD G1"-G1" | |
| 280 | 90055-0053 | | 2 | HOSE NIPPLE, EXT.THR. R1-25 MM | |
| 290 | 90330-0014 | | 1 | ELBOW, 90 INT. THREAD, R-222R1 | |
| 320 | 312605-0314 | | 2 | HEXAGON NUT, M6M M5 A280 | |

| Pos | Part No | UN | Qty | Description | Page No |
|---|---|---|---|---|---|

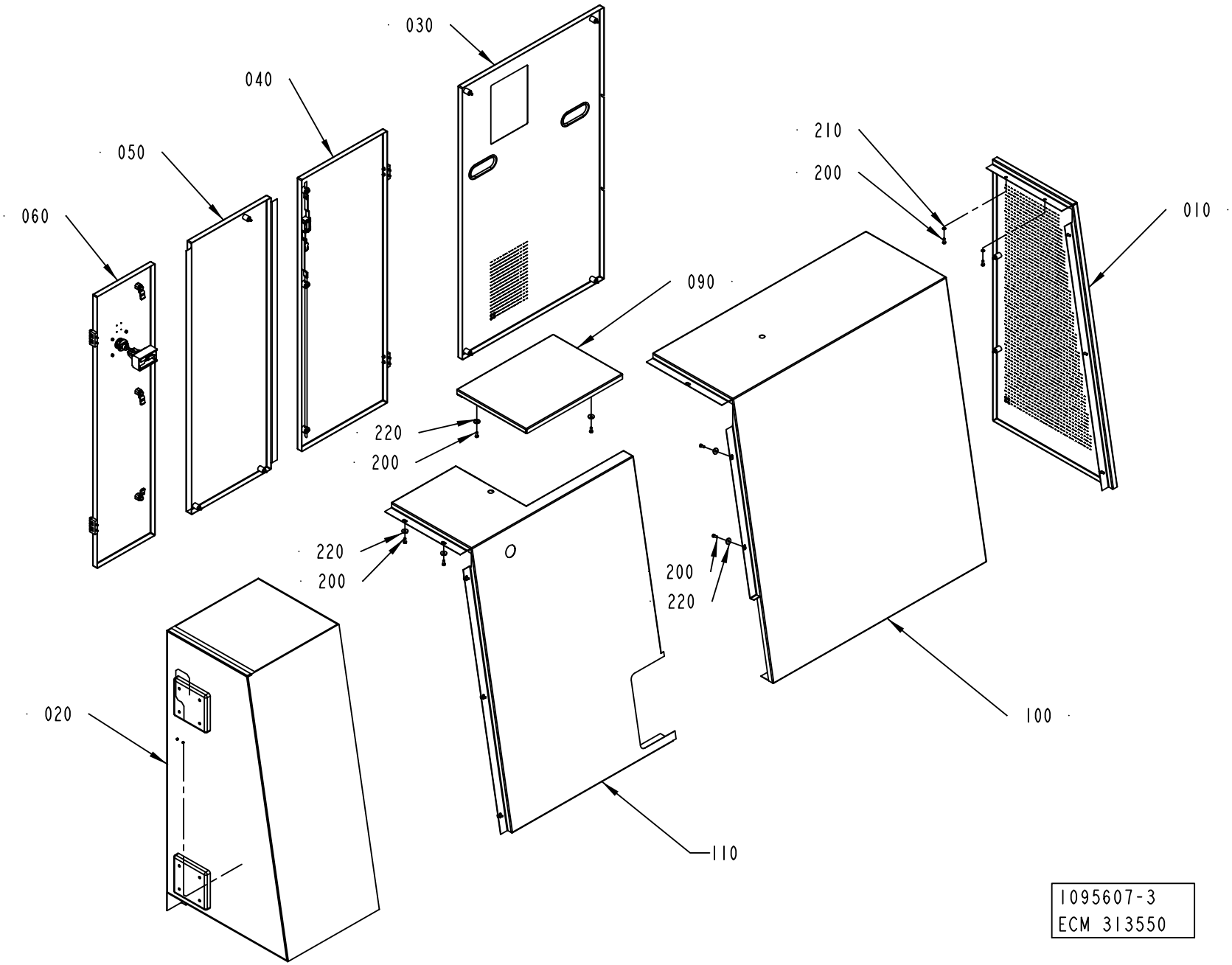
030
040
050
060
210
200
010
090
220
200
220
200
200
220
020
100
110
1095607-3
ECM 313550

ECM: 320974 - 20070705
Group number: 1095607-0300
Assembly Drawing: 1095607-3_1_AA

| Pos | Part No | UN | Qty | Description | Page No |
|---|---|---|---|---|---|
| - | | | | | |
| 010 | 1095883-0200 | | 1 | GABLE PLATE | **6-61** |
| 020 | 1095886-0300 | | 1 | COVERING PANEL | **6-63** |
| 030 | 1095888-0200 | | 1 | HATCH | **6-73** |
| 040 | 1095889-0100 | | 1 | DOOR | **6-75** |
| 050 | 1095890-0200 | | 1 | HATCH | **6-77** |
| 060 | 1095891-0200 | | 1 | DOOR | **6-79** |
| 090 | 1255637-0000 | | 1 | COVER | |
| 100 | 1255636-0000 | | 1 | COVERING PANEL | |
| 110 | 1255638-0000 | | 1 | COVERING PANEL | |
| 200 | 312105-0368 | | 19 | SCREW M6S ISO 4017 M6X16 A480 | |
| 210 | 315105-0153 | | 5 | WASHER BRB 6,4X12 RFR | |
| 220 | 315125-0153 | | 14 | WASHER TBRSB 6,4X22X4 A4 | |

| Pos | Part No | UN | Qty | Description | Page No |
|---|---|---|---|---|---|

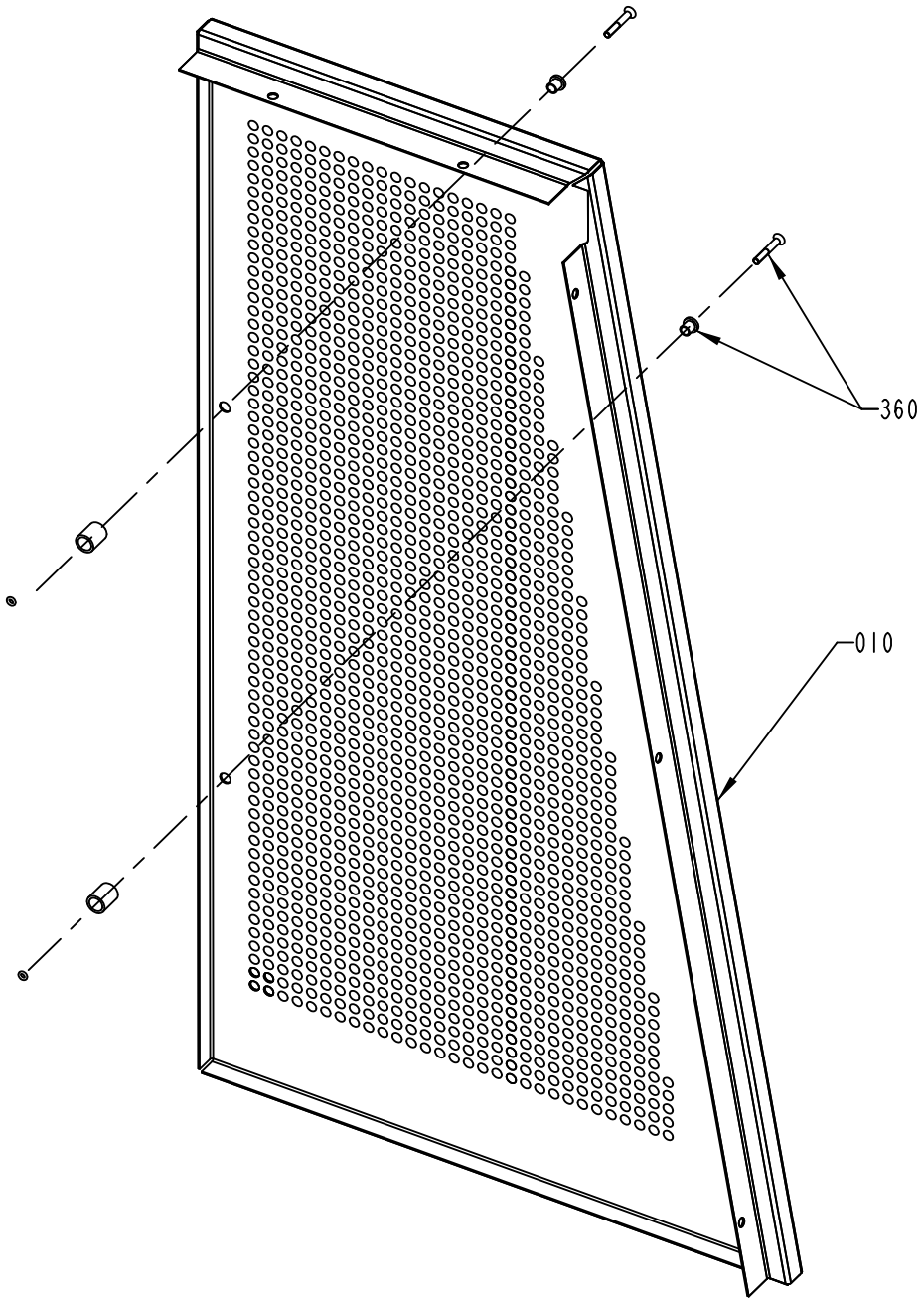
360
010

ECM: 189435 - 20041104
Group number: 1095883-0200
Assembly Drawing: 1095883-2_1_AA

| Pos | Part No | UN | Qty | Description | Page No |
|---|---|---|---|---|---|
| - | | | | | |
| 010 | 1255671-0000 | | 1 | GABLE PLATE | |
| 360 | 90226-0458 | | 2 | MOUNTING SCREW | |

| Pos | Part No | UN | Qty | Description | Page No |
|---|---|---|---|---|---|

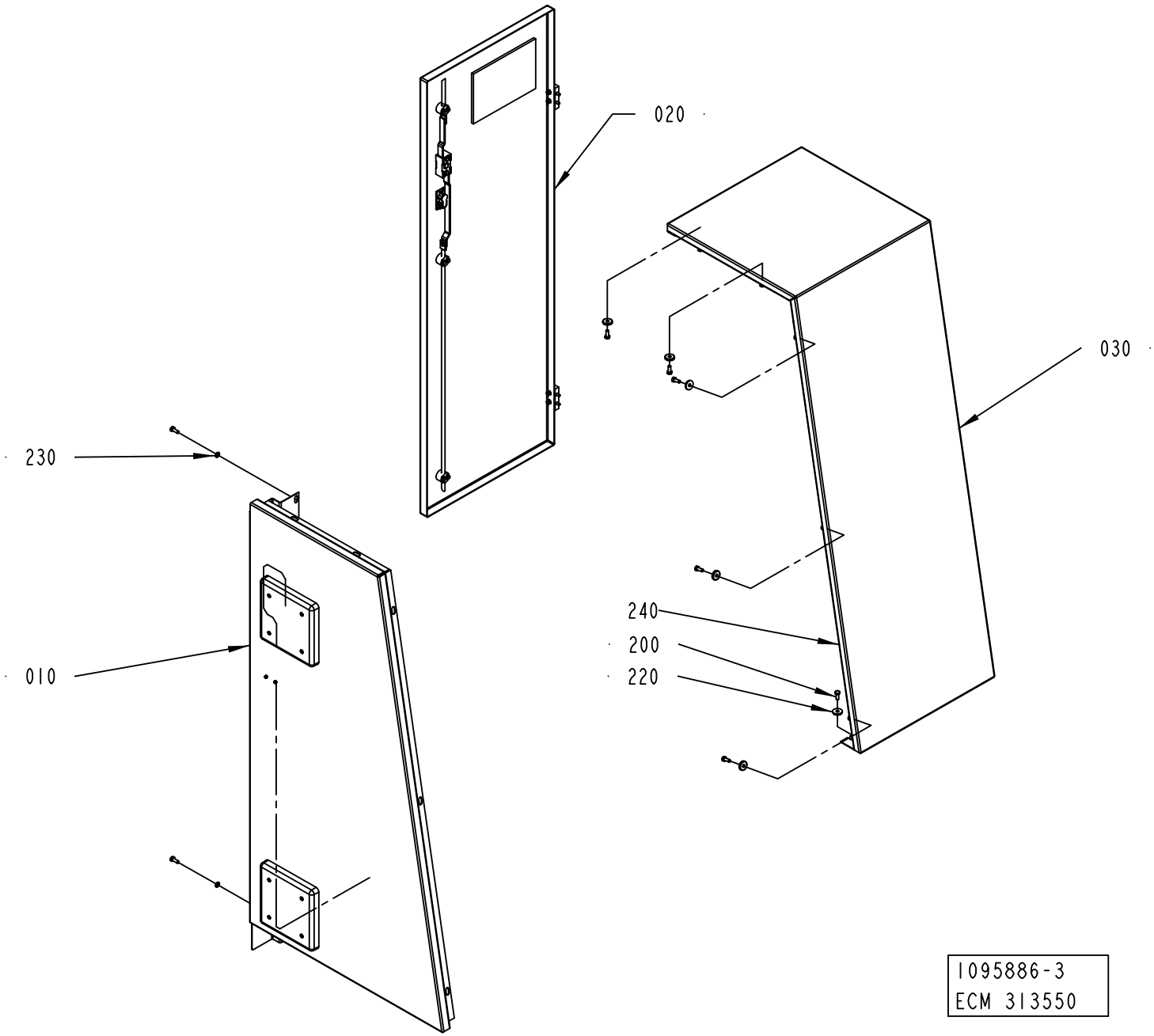
020
030
230
010
240
200
220
1095886-3
ECM 313550

ECM: 313554 - 20070629
Group number: 1095886-0300
Assembly Drawing: 1095886-3_1_AA

| Pos | Part No | UN | Qty | Description | Page No |
|---|---|---|---|---|---|
| - | | | | | |
| 010 | 2866748-0100 | | 1 | COVER | **6-65** |
| 020 | 1484889-0200 | | 1 | DOOR | **6-69, 6-71** |
| 030 | 1041967-0000 | | 1 | COVERING PANEL | |
| 200 | 312105-0368 | | 7 | SCREW M6S ISO 4017 M6X16 A480 | |
| 220 | 315125-0153 | | 7 | WASHER TBRSB 6,4X22X4 A4 | |
| 230 | 315105-0153 | | 2 | WASHER BRB 6,4X12 RFR | |
| 240 | 90143-0060 | MM | 1120 | EDGE STRIP 9,5X6,3MM BLACK PVC | |

| Pos | Part No | UN | Qty | Description | Page No |
|---|---|---|---|---|---|

Machine Type | Group Description | Used-In | Group Number | Page No

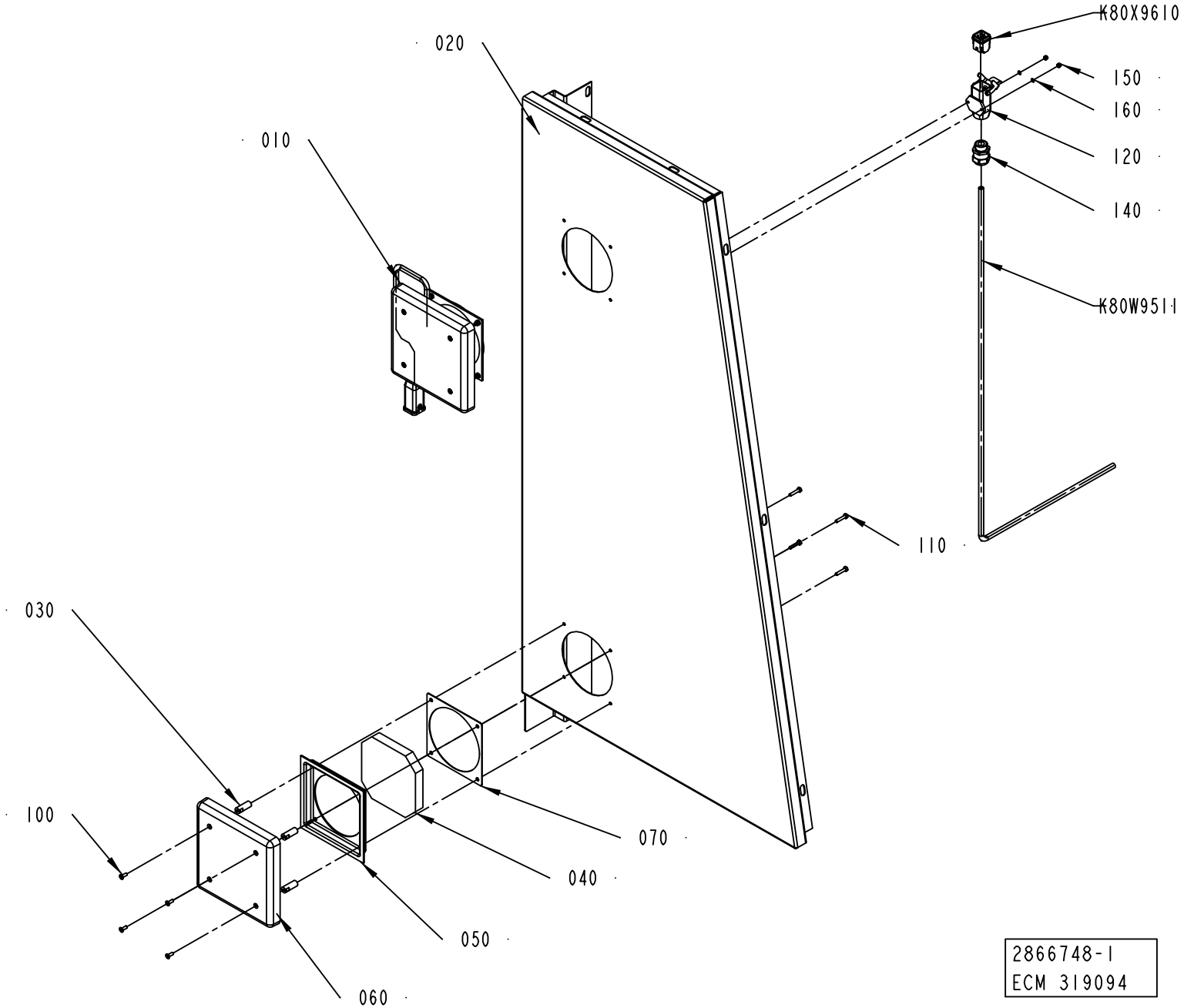
K80X9610
020
150
160
010
120
140
K80W9511
110
030
100
070
040
050
060
2866748-1
ECM 319094

ECM: 348470 - 20080430
Group number: 2866748-0100
Assembly Drawing: 2866748-1_1_AB

| Pos | Part No | UN | Qty | Description | Page No |
|---|---|---|---|---|---|
| **A3/FLEX NO PEROXIDE DILUTION** | | | | | |
| 020 | 2665129-0000 | | 1 | GABLE PLATE | |
| **A3/FLEX PEROXIDE DILUTION** | | | | | |
| 010 | 2879652-0100 | | 1 | FAN ..... | **6-67** |
| 020 | 2866747-0000 | | 1 | GABLE PLATE | |
| 030 | 599753-0000 | | 4 | SPACER | |
| 040 | 599750-0000 | | 1 | FILTER | |
| 050 | 599751-0000 | | 1 | INSERT | |
| 060 | 599752-0000 | | 1 | COVER | |
| 070 | 599755-0000 | | 1 | GASKET | |
| 100 | 312155-0291 | | 4 | SCREW DIN 7991 MF6S M4X12 A4 70 | |
| 110 | 312105-0295 | | 4 | SCREW M6S ISO 4017 M4X20 A470 | |
| 120 | 90459-3081 | | 1 | HOUSING HAN A 19 20 003 1250 | |
| 140 | 90458-0315 | | 1 | CABLE GLAND, M20X1,5, NO.5311 1120 | |
| 150 | 312812-0310 | | 2 | HEXAGON NUT, NY-LOCK M3 A480 | |
| 160 | 315105-0124 | | 2 | WASHER BRB 3,2X6 RFR | |
| K80W9511 | 351150-0403 | MM | 2000 | CABLE OLFLEX 3X0,75 MM2 LIGHT/GREY | |
| K80X9610 | 90459-6821 | | 1 | MALE INSERT HAN 4A, 09 20 004 2611 | |

| Pos | Part No | UN | Qty | Description | Page No |
|---|---|---|---|---|---|

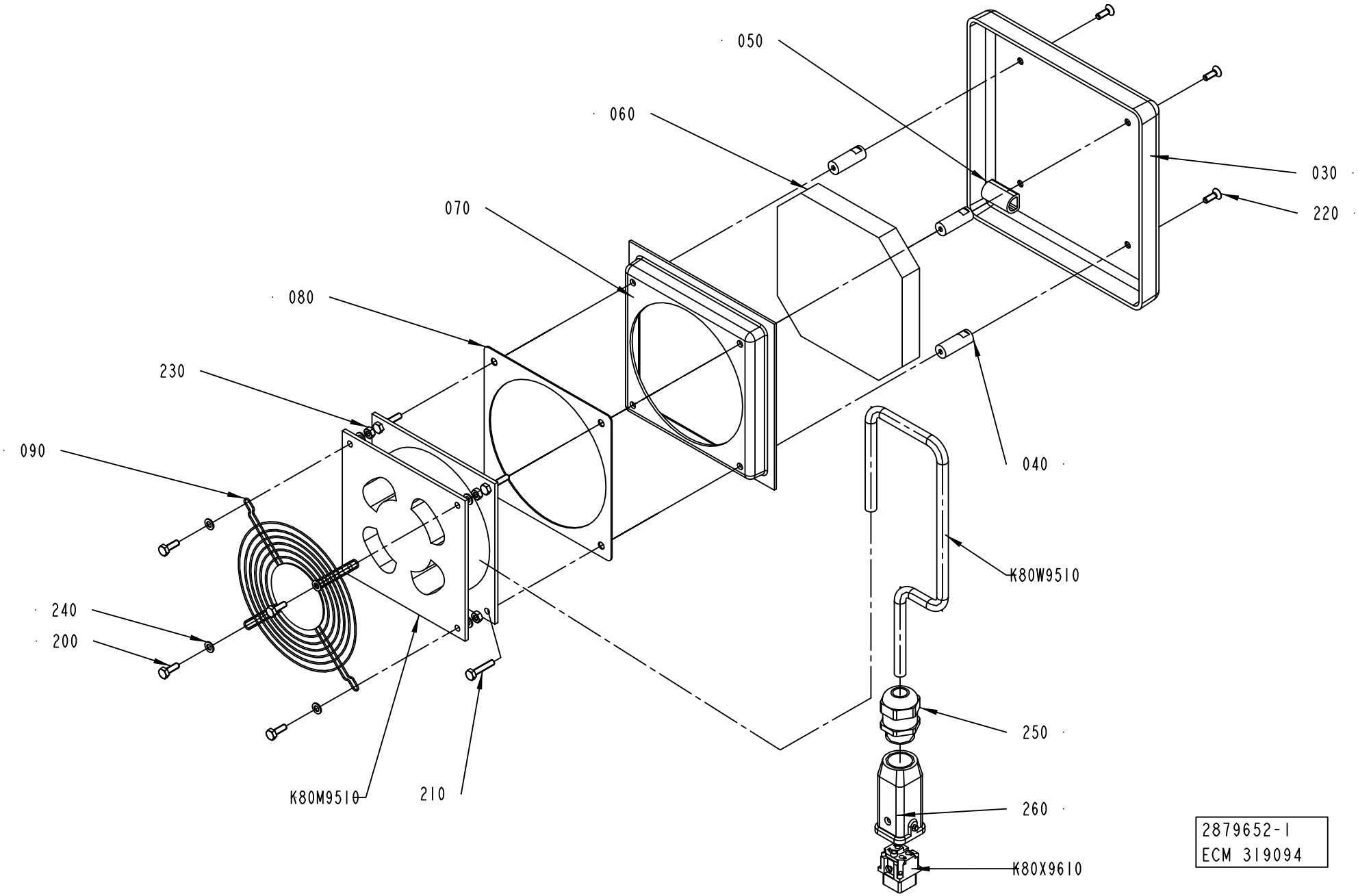
050
060
070
080
230
090
240
200
K80M9510
210
030
220
040
K80W9510
250
260
K80X9610
2879652-1
ECM 319094

ECM: 328067 - 20070705
Group number: 2879652-0100
Assembly Drawing: 2879652-1_1_AB

| Pos | Part No | UN | Qty | Description | Page No |
|---|---|---|---|---|---|
| - | | | | | |
| 090 | 90600-2848 | | 1 | GRILL, LZ30 | |
| 200 | 312105-0291 | | 4 | SCREW M6S ISO 4017 M4X12 A470 | |
| 210 | 312105-0295 | | 4 | SCREW M6S ISO 4017 M4X20 A470 | |
| 220 | 312155-0291 | | 4 | SCREW DIN 7991 MF6S M4X12 A4 70 | |
| 230 | 312605-0312 | | 4 | HEXAGON NUT, M6M M4 A280 | |
| 240 | 315105-0136 | | 8 | WASHER BRB 4,3X8 RFR | |
| 250 | 90458-0315 | | 1 | CABLE GLAND, M20X1,5, NO.5311 1120 | |
| 260 | 90459-3080 | | 1 | HOOD HAN-BRID 3A 19 20 003 1443 | |
| 30 | 599752-0000 | | 1 | COVER | |
| 40 | 599753-0000 | | 4 | SPACER | |
| 50 | 599760-0000 | | 1 | SPACER | |
| 60 | 599750-0000 | | 1 | FILTER | |
| 70 | 599751-0000 | | 1 | INSERT | |
| 80 | 599755-0000 | | 1 | GASKET | |
| K80M9510 | 2875358-0000 | | 1 | FAN | |
| K80W9510 | 351150-0403 | MM | 500 | CABLE OLFLEX 3X0,75 MM2 LIGHT/GREY | |
| K80X9610 | 90459-6820 | | 1 | FEMALE INSERT HAN 4 A, 09 20 004 2711 | |

| Pos | Part No | UN | Qty | Description | Page No |
|---|---|---|---|---|---|

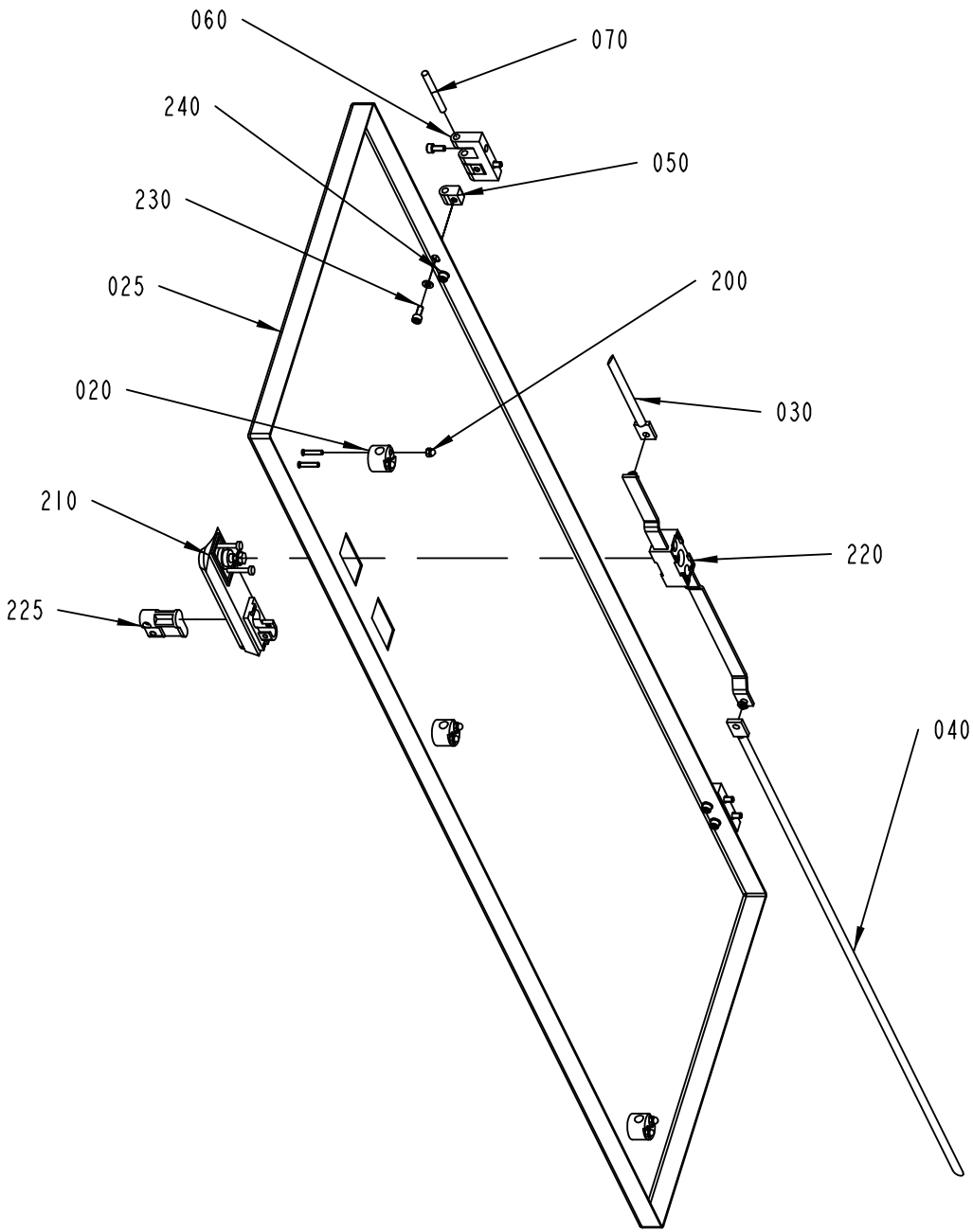


| 1484889-1 |
| --- |
| ECM 153027 |

ECM: 351651 - 20080430
Group number: 1484889-0200
Assembly Drawing: 1484889-1_1_AB

This list covers pages from 6-68 to 6-71

| Pos | Part No | UN | Qty | Description | Page No |
|---|---|---|---|---|---|
| **A3/FLEX NO PEROXIDE DILUTION (See drawing on page: 6-68)** | | | | | |
| 025 | 1484890-0000 | | 1 | DOOR | |
| **A3/FLEX PEROXIDE DILUTION (See drawing on page: 6-70)** | | | | | |
| 025 | 2833375-0000 | | 1 | DOOR | |
| **Common Parts** | | | | | |
| 020 | 1129274-0000 | | 3 | GUIDE LUG | |
| 030 | 2665132-0000 | | 1 | LOCKING ARM | |
| 040 | 2665131-0000 | | 1 | LOCKING ARM | |
| 050 | 1035794-0000 | | 4 | BLOCKING PIECE | |
| 060 | 1035792-0000 | | 2 | E-HINGE | |
| 070 | 988685-0000 | | 2 | PIN | |
| 200 | 312705-0312 | | 6 | NUT HEX. DOMED CAP MHM-6 M4 A280 | |
| 210 | 90237-0175 | | 1 | TURNING HANDLE, 1125-U185-0A | |
| 220 | 90237-0153 | | 1 | LOCK HOUSING, 1121-U26-0B | |
| 225 | 90237-0128 | | 1 | LOCK CYLINDER, 1109-SU125 | |
| 230 | 312115-0327 | | 8 | SCREW ISO4762 M5X12 A4 80 | |
| 240 | 315105-0146 | | 4 | WASHER BRB 5,3X10 RFR | |
| 250 | 2833376-0000 | | 1 | GLASS PANE | |

| Pos | Part No | UN | Qty | Description | Page No |
|---|---|---|---|---|---|

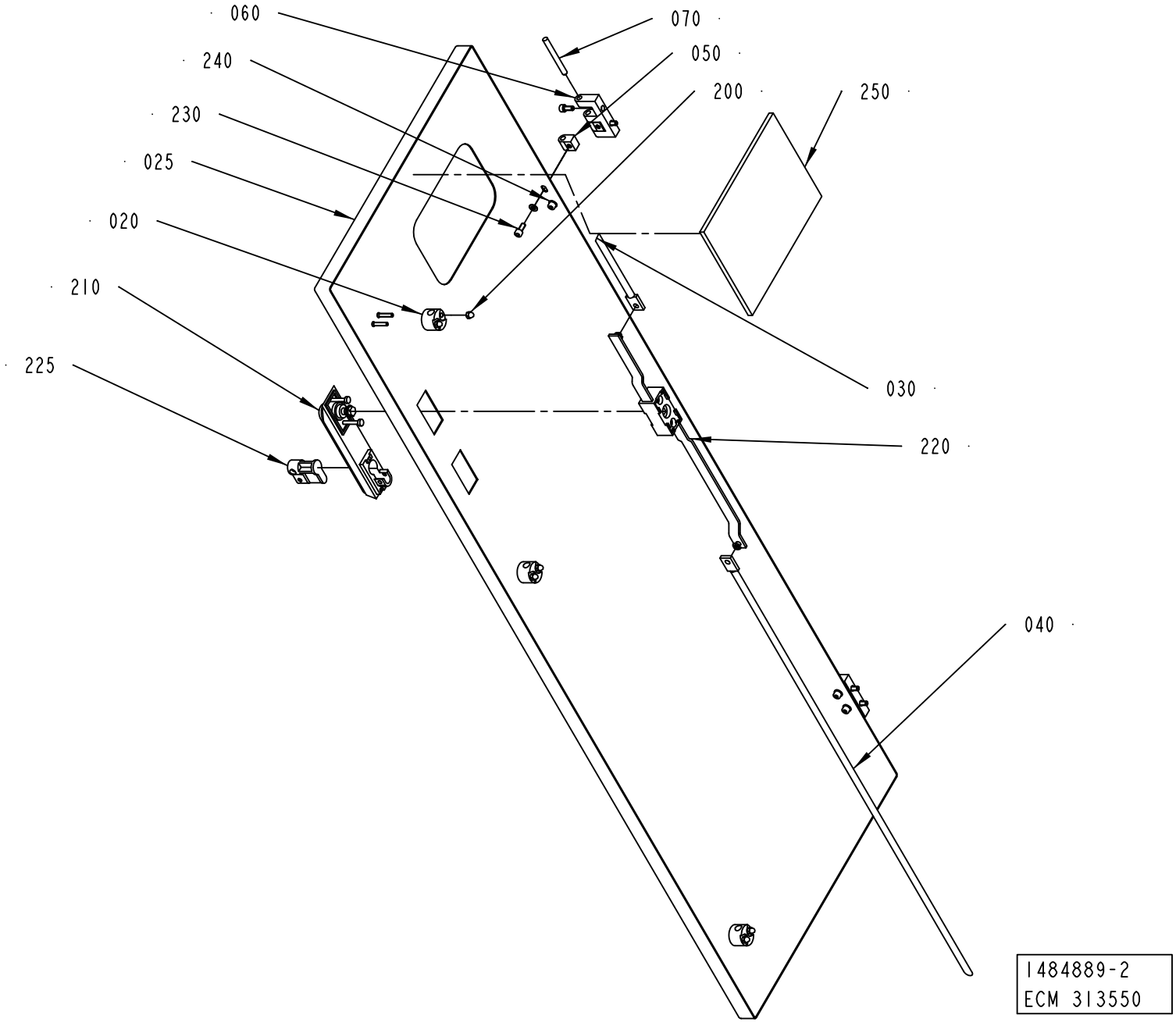
060
070
240
050
200
250
230
025
020
210
225
030
220
040
1484889-2
ECM 313550

ECM: 351651 - 20080430
Group number: 1484889-0200
Assembly Drawing: 1484889-2_1_AA

This list covers pages from 6-68 to 6-71

| Pos | Part No | UN | Qty | Description | Page No |
|---|---|---|---|---|---|
| **A3/FLEX NO PEROXIDE DILUTION (See drawing on page: 6-68)** | | | | | |
| 025 | 1484890-0000 | | 1 | DOOR | |
| **A3/FLEX PEROXIDE DILUTION (See drawing on page: 6-70)** | | | | | |
| 025 | 2833375-0000 | | 1 | DOOR | |
| **Common Parts** | | | | | |
| 020 | 1129274-0000 | | 3 | GUIDE LUG | |
| 030 | 2665132-0000 | | 1 | LOCKING ARM | |
| 040 | 2665131-0000 | | 1 | LOCKING ARM | |
| 050 | 1035794-0000 | | 4 | BLOCKING PIECE | |
| 060 | 1035792-0000 | | 2 | E-HINGE | |
| 070 | 988685-0000 | | 2 | PIN | |
| 200 | 312705-0312 | | 6 | NUT HEX. DOMED CAP MHM-6 M4 A280 | |
| 210 | 90237-0175 | | 1 | TURNING HANDLE, 1125-U185-0A | |
| 220 | 90237-0153 | | 1 | LOCK HOUSING, 1121-U26-0B | |
| 225 | 90237-0128 | | 1 | LOCK CYLINDER, 1109-SU125 | |
| 230 | 312115-0327 | | 8 | SCREW ISO4762 M5X12 A4 80 | |
| 240 | 315105-0146 | | 4 | WASHER BRB 5,3X10 RFR | |
| 250 | 2833376-0000 | | 1 | GLASS PANE | |

| Pos | Part No | UN | Qty | Description | Page No |
|---|---|---|---|---|---|

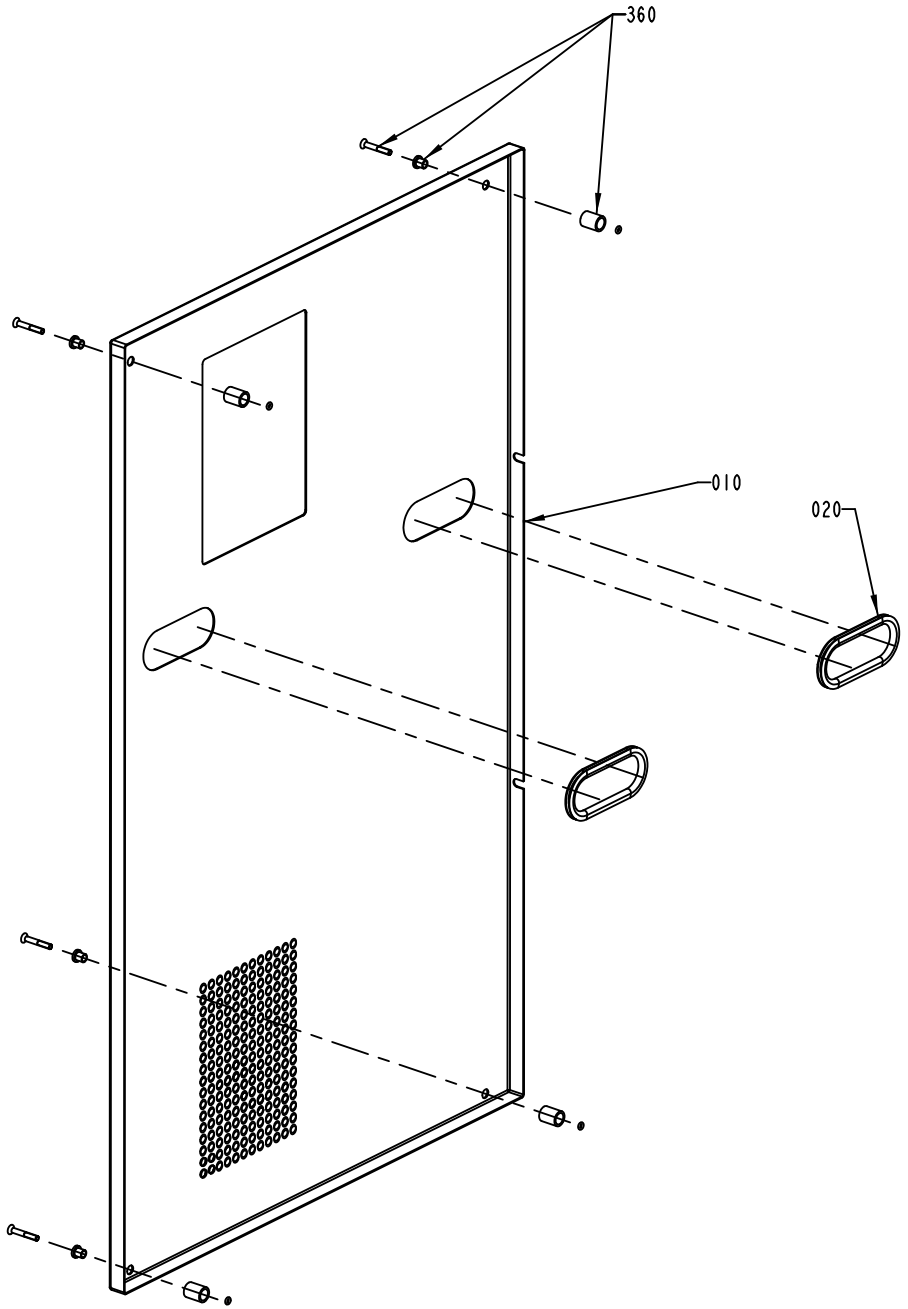
360
010
020

ECM: 189438 - 20041104
Group number: 1095888-0200
Assembly Drawing: 1095888-2_1_AB

| Pos | Part No | UN | Qty | Description | Page No |
|---|---|---|---|---|---|
| - | | | | | |
| 010 | 1255633-0000 | | 1 | HATCH | |
| 020 | 90143-0060 | M | 1 | EDGE STRIP 9,5X6,3MM BLACK PVC | |
| 360 | 90226-0458 | | 4 | MOUNTING SCREW | |

| Pos | Part No | UN | Qty | Description | Page No |
|---|---|---|---|---|---|

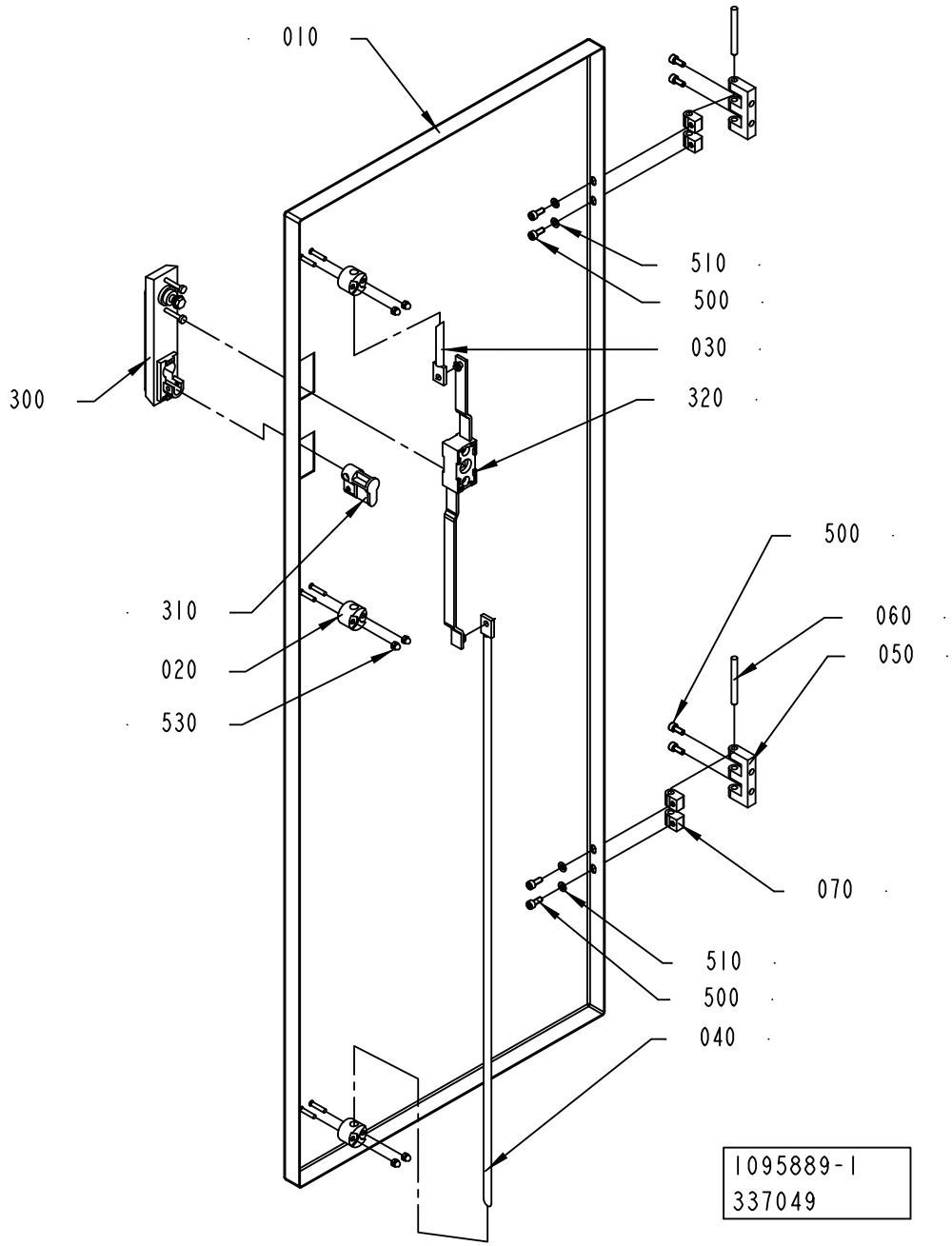
010
510
500
030
320
300
500
060
050
310
020
530
070
510
500
040
1095889-1
337049

ECM: 340138 - 20080124
Group number: 1095889-0100
Assembly Drawing: 1095889-1_1_AC

| Pos | Part No | UN | Qty | Description | Page No |
|---|---|---|---|---|---|
| - | | | | | |
| 010 | 1041970-0000 | | 1 | DOOR | |
| 020 | 1129274-0000 | | 1 | GUIDE LUG | |
| 030 | 1036304-0001 | | 1 | LOCKING ARM | |
| 040 | 1036304-0014 | | 1 | LOCKING ARM | |
| 050 | 1035792-0000 | | 2 | E-HINGE | |
| 060 | 988685-0000 | | 2 | PIN | |
| 070 | 1035794-0000 | | 4 | BLOCKING PIECE | |
| 300 | 90237-0175 | | 1 | TURNING HANDLE, 1125-U185-0A | |
| 310 | 90237-0128 | | 1 | LOCK CYLINDER, 1109-SU125 | |
| 320 | 90237-0153 | | 1 | LOCK HOUSING, 1121-U26-0B | |
| 500 | 312115-0327 | | 8 | SCREW ISO4762 M5X12 A4 80 | |
| 510 | 315105-0146 | | 4 | WASHER BRB 5,3X10 RFR | |
| 530 | 312705-0312 | | 6 | NUT HEX. DOMED CAP MHM-6 M4 A280 | |

| Pos | Part No | UN | Qty | Description | Page No |
|---|---|---|---|---|---|

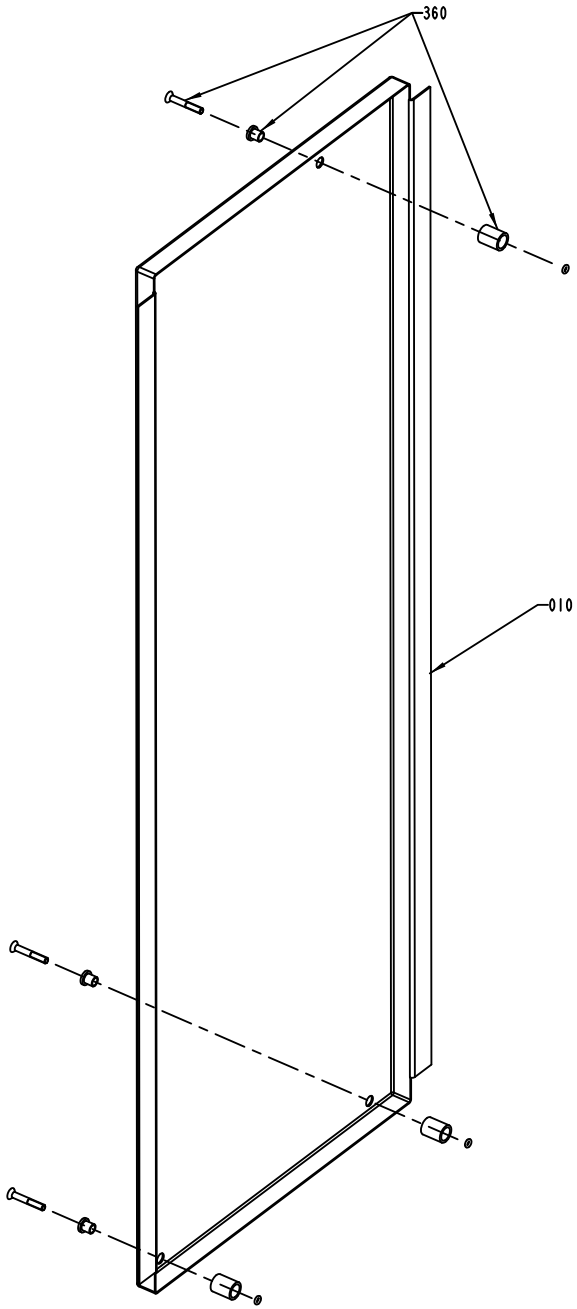
360
010

ECM: 189439 - 20041104
Group number: 1095890-0200
Assembly Drawing: 1095890-2_1_AA

| Pos | Part No | UN | Qty | Description | Page No |
|---|---|---|---|---|---|
| - | | | | | |
| 010 | 1255635-0000 | | 1 | HATCH | |
| 360 | 90226-0458 | | 3 | MOUNTING SCREW | |

| Pos | Part No | UN | Qty | Description | Page No |
|---|---|---|---|---|---|

Machine Type | Group Description | Used-In | Group Number | Page No

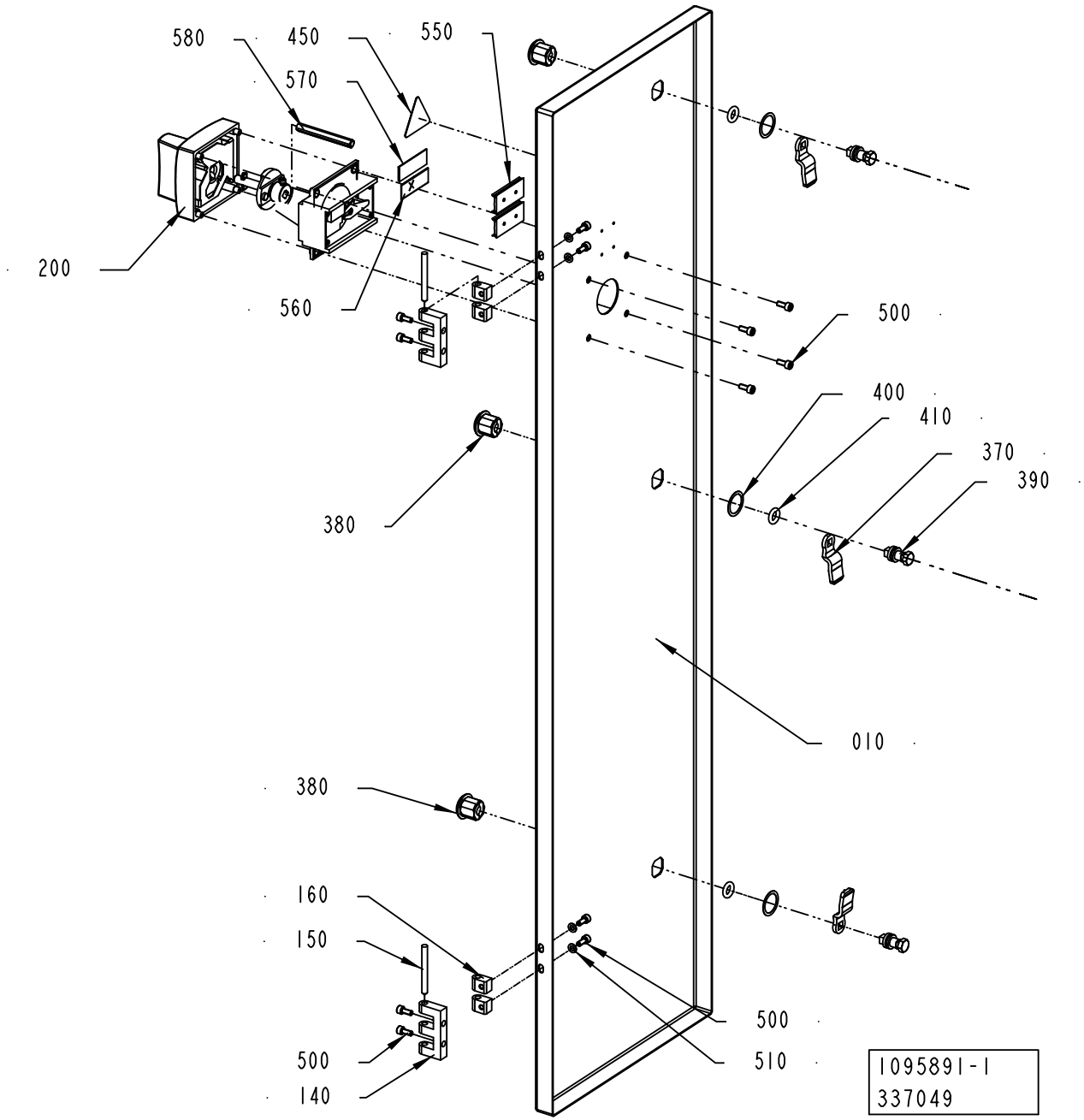
580
450
550
570
200
560
500
400
410
370
390
380
010
380
160
150
500
140
500
510
1095891-1
337049

ECM: 340135 - 20080124
Group number: 1095891-0200
Assembly Drawing: 1095891-1_1_AD

| Pos | Part No | UN | Qty | Description | Page No |
|---|---|---|---|---|---|
| **50HZ** | | | | | |
| 570 | 359243-0917 | | 1 | SIGN"400V, 50HZ, 100A" | |
| **60HZ** | | | | | |
| 570 | 359243-0918 | | 1 | SIGN"400V, 60HZ, 100A" | |
| **Common Parts** | | | | | |
| 010 | 2843000-0000 | | 1 | DOOR | |
| 140 | 1035792-0000 | | 2 | E-HINGE | |
| 150 | 988685-0000 | | 2 | PIN | |
| 160 | 1035794-0000 | | 4 | BLOCKING PIECE | |
| 200 | 90459-6620 | | 1 | HANDLE, NZM1-XTVDV | |
| 370 | 90237-0157 | | 3 | LOCK BOLT, 1000-230 | |
| 380 | 90237-0319 | | 3 | LOCK HOUSING, 1000-U134 | |
| 390 | 90237-0320 | | 3 | LOCK HOUSING, 1000-U136 | |
| 400 | 90237-0322 | | 3 | LOCK GASKET, 1000-U137 | |
| 410 | 90237-0323 | | 3 | LOCK O-RING, 1000-24 | |
| 450 | 359705-0015 | | 1 | WARNING SIGN ISO, RISK OF ELECTRIC SHOCK | |
| 490 | 311520-0329 | | 4 | RIVET, BLANK 2,4X8 | |
| 500 | 312115-0327 | | 8 | SCREW ISO4762 M5X12 A4 80 | |
| 510 | 315105-0146 | | 4 | WASHER BRB 5,3X10 RFR | |
| 550 | 359240-0100 | | 2 | SIGN HOLDER FOR 359240-0001 | |
| 560 | 359241-0431 | | 1 | SIGN: " MAIN SWITCH" | |
| 580 | 2774348-0000 | | 1 | EXTENSION SHAFT | |

| Pos | Part No | UN | Qty | Description | Page No |
|---|---|---|---|---|---|

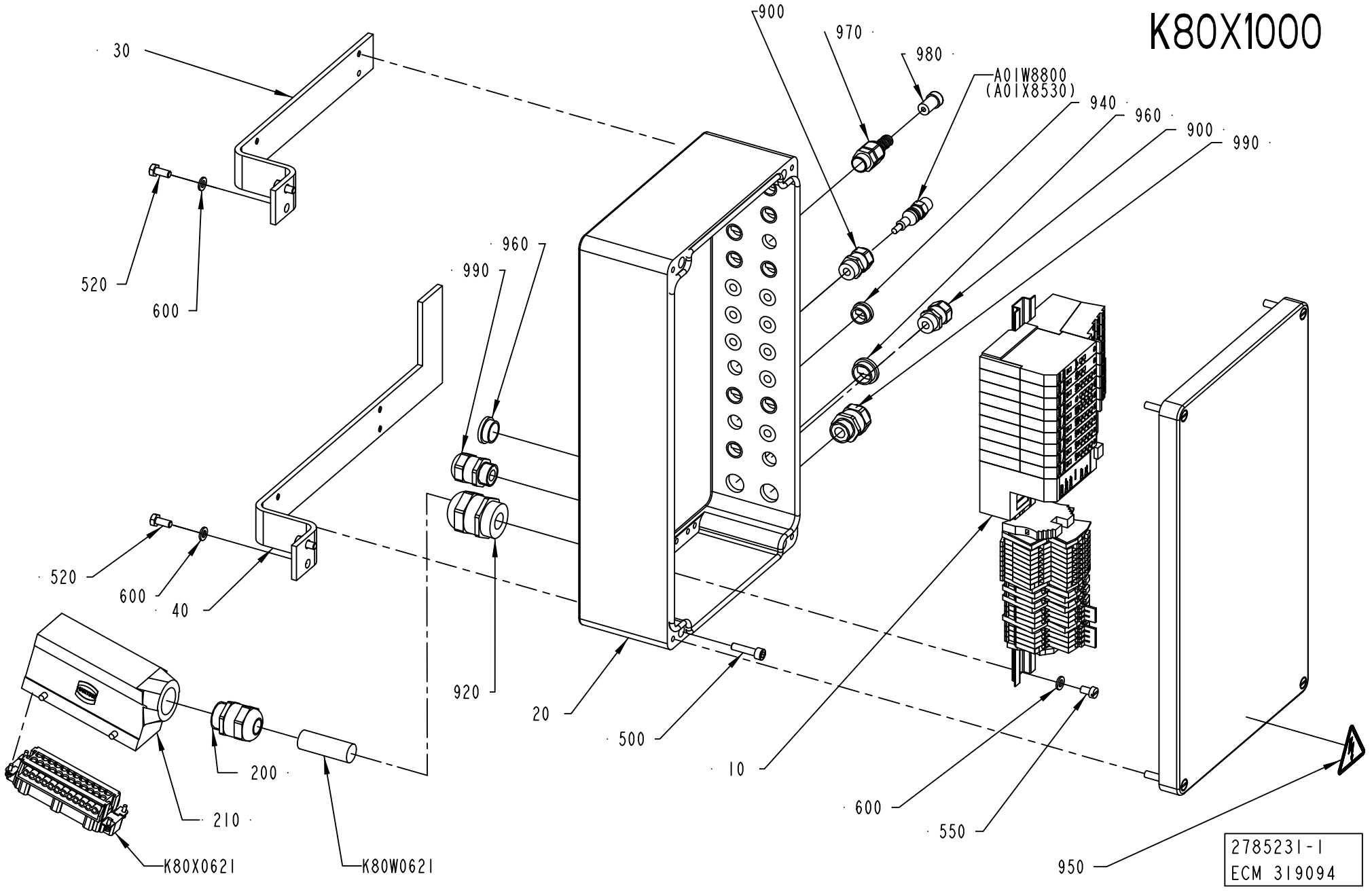
K80X1000
900
970
980
A01W8800
(A01X8530)
940
960
900
990
30
520
600
960
990
520
600
40
920
20
500
10
600
550
950
200
210
K80X0621
K80W0621
2785231-1
ECM 319094

ECM: 351653 - 20080430
Group number: 2785231-0100
Assembly Drawing: 2785231-1_1_AB

This list covers pages from 6-80 to 6-83

| Pos | Part No | UN | Qty | Description | Page No |
|---|---|---|---|---|---|
| **A3/FLEX NO PEROXIDE DILUTION (See drawing on page: 6-80)** | | | | | |
| 900 | 90458-0306 | | 12 | CABLE GLAND, M16X1,5, NO.5311 1010 | |
| 940 | 90458-1307 | | 9 | BLIND PLUG CIRCULAR, M16X1,5 514GFK/216 | |
| **A3/FLEX PEROXIDE DILUTION (See drawing on page: 6-82)** | | | | | |
| 900 | 90458-0306 | | 14 | CABLE GLAND, M16X1,5, NO.5311 1010 | |
| 940 | 90458-1307 | | 7 | BLIND PLUG CIRCULAR, M16X1,5 514GFK/216 | |
| **Common Parts** | | | | | |
| 010 | 2701359-0100 | | 1 | BLOCK ..... | **6-85** |
| 020 | 2785232-0000 | | 1 | CONNECTION BOX | |
| 030 | 2702949-0000 | | 1 | BRACKET | |
| 040 | 2833378-0000 | | 1 | BRACKET | |
| 200 | 90458-0308 | | 1 | CABLE GLAND, M25X1,5, NO.5311 1030 | |
| 210 | 90600-0717 | | 1 | HOOD 24 B SIDE ENTRY, 19 30 024 1521 | |
| 500 | 312115-0372 | | 4 | SCREW ISO4762 M6X25 A4 80 | |
| 520 | 312105-0367 | | 4 | SCREW M6S ISO 4017 M6X14 A480 | |
| 550 | 312121-0364 | | 2 | SCREW ISO 1207 M6X10 4.8-5.8 Z.PL. | |
| 600 | 315105-0153 | | 6 | WASHER BRB 6,4X12 RFR | |
| 920 | 90458-0309 | | 1 | CABLE GLAND, M32X1,5, NO.5311 1040 | |
| 950 | 359705-0015 | | 1 | WARNING SIGN ISO, RISK OF ELECTRIC SHOCK | |
| 960 | 90458-1308 | | 2 | BLIND PLUG CIRCULAR, M20X1,5 514GFK/220 | |
| 970 | 353242-0005 | | 1 | HOSE GLAND W/O INSERT PG9 NORMAL | |
| 980 | 353249-0067 | | 1 | INSERT, SINGLE HOLE, E150/7 | |
| 990 | 90458-0307 | | 2 | CABLE GLAND, M20X1,5, NO.5311 1020 | |
| A01W8800 | 351414-0020 | | 1 | DEVICENET CONN. CABLE, 0935 361 104/2M | |
| K80W0621 | 351150-0425 | MM | 3000 | CABLE OLFLEX 25X0,75 MM2 LIGHT/GREY | |
| K80X0621 | 90110-0056 | | 1 | MALE INSERT HAN 24 E 09 33 024 2601 | |

| Pos | Part No | UN | Qty | Description | Page No |
|---|---|---|---|---|---|

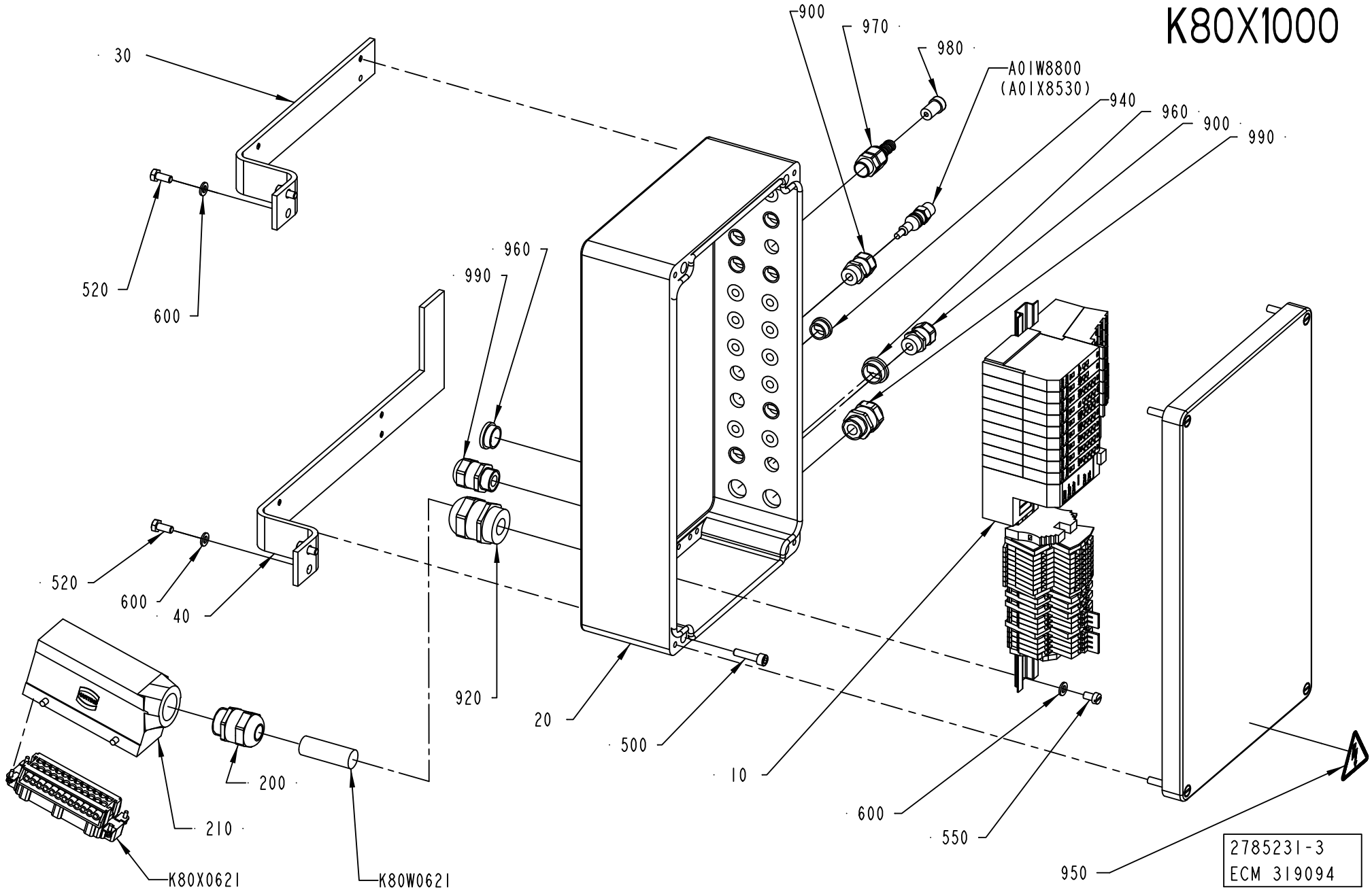
K80X1000
900
970
980
A01W8800
(A01X8530)
940
960
900
990
30
520
600
960
990
520
600
40
920
20
500
10
600
550
950
200
210
K80X0621
K80W0621
2785231-3
ECM 319094

ECM: 351653 - 20080430
Group number: 2785231-0100
Assembly Drawing: 2785231-3_1_AB

This list covers pages from 6-80 to 6-83

| Pos | Part No | UN | Qty | Description | Page No |
|---|---|---|---|---|---|
| **A3/FLEX NO PEROXIDE DILUTION (See drawing on page: 6-80)** | | | | | |
| 900 | 90458-0306 | | 12 | CABLE GLAND, M16X1,5, NO.5311 1010 | |
| 940 | 90458-1307 | | 9 | BLIND PLUG CIRCULAR, M16X1,5 514GFK/216 | |
| **A3/FLEX PEROXIDE DILUTION (See drawing on page: 6-82)** | | | | | |
| 900 | 90458-0306 | | 14 | CABLE GLAND, M16X1,5, NO.5311 1010 | |
| 940 | 90458-1307 | | 7 | BLIND PLUG CIRCULAR, M16X1,5 514GFK/216 | |
| **Common Parts** | | | | | |
| 010 | 2701359-0100 | | 1 | BLOCK ..... | **6-85** |
| 020 | 2785232-0000 | | 1 | CONNECTION BOX | |
| 030 | 2702949-0000 | | 1 | BRACKET | |
| 040 | 2833378-0000 | | 1 | BRACKET | |
| 200 | 90458-0308 | | 1 | CABLE GLAND, M25X1,5, NO.5311 1030 | |
| 210 | 90600-0717 | | 1 | HOOD 24 B SIDE ENTRY, 19 30 024 1521 | |
| 500 | 312115-0372 | | 4 | SCREW ISO4762 M6X25 A4 80 | |
| 520 | 312105-0367 | | 4 | SCREW M6S ISO 4017 M6X14 A480 | |
| 550 | 312121-0364 | | 2 | SCREW ISO 1207 M6X10 4.8-5.8 Z.PL. | |
| 600 | 315105-0153 | | 6 | WASHER BRB 6,4X12 RFR | |
| 920 | 90458-0309 | | 1 | CABLE GLAND, M32X1,5, NO.5311 1040 | |
| 950 | 359705-0015 | | 1 | WARNING SIGN ISO, RISK OF ELECTRIC SHOCK | |
| 960 | 90458-1308 | | 2 | BLIND PLUG CIRCULAR, M20X1,5 514GFK/220 | |
| 970 | 353242-0005 | | 1 | HOSE GLAND W/O INSERT PG9 NORMAL | |
| 980 | 353249-0067 | | 1 | INSERT, SINGLE HOLE, E150/7 | |
| 990 | 90458-0307 | | 2 | CABLE GLAND, M20X1,5, NO.5311 1020 | |
| A01W8800 | 351414-0020 | | 1 | DEVICENET CONN. CABLE, 0935 361 104/2M | |
| K80W0621 | 351150-0425 | MM | 3000 | CABLE OLFLEX 25X0,75 MM2 LIGHT/GREY | |
| K80X0621 | 90110-0056 | | 1 | MALE INSERT HAN 24 E 09 33 024 2601 | |

| Pos | Part No | UN | Qty | Description | Page No |
|---|---|---|---|---|---|

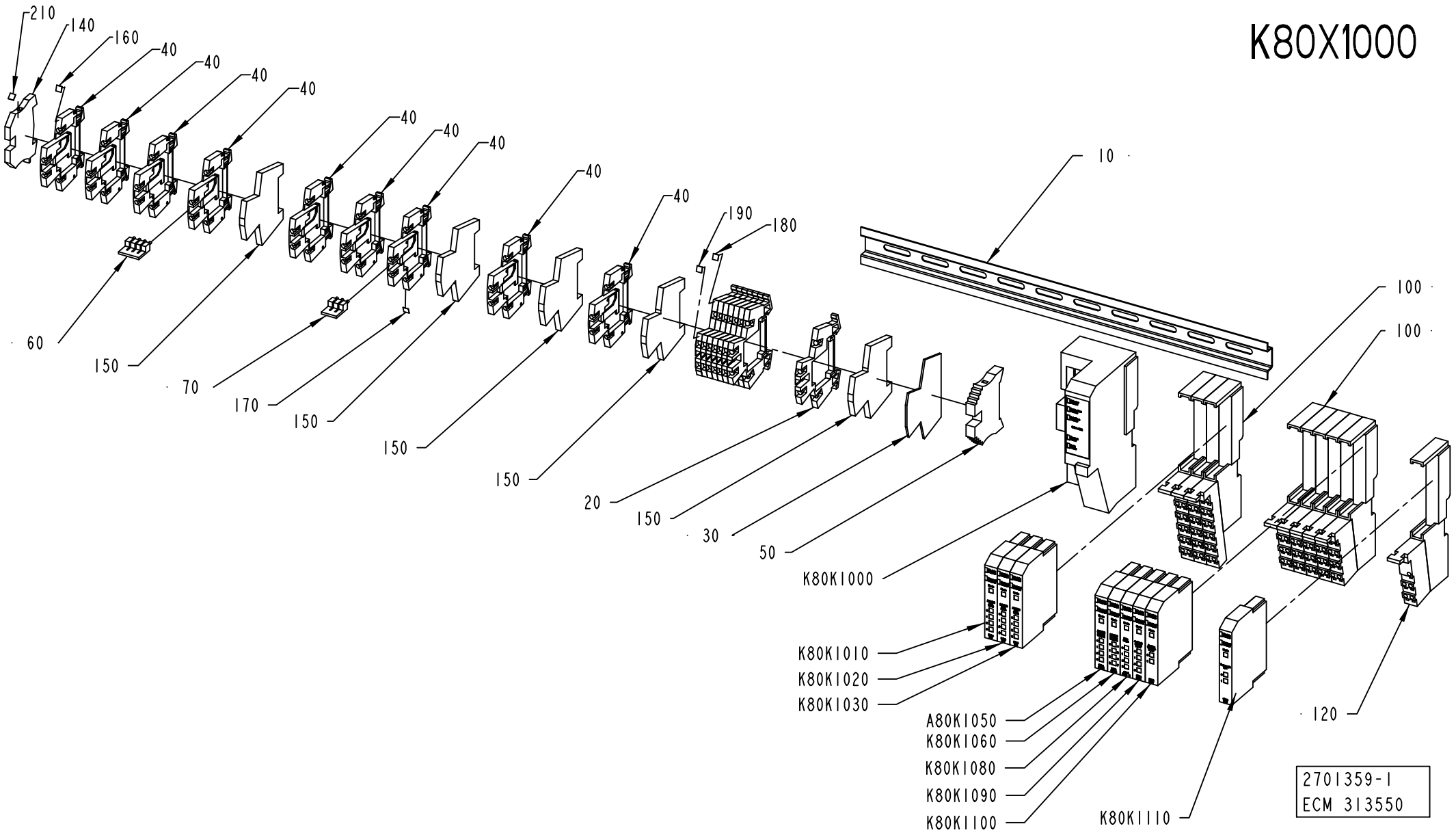
K80X1000
210
140
160
40
40
40
40
40
40
40
40
40
190
180
10
60
150
70
170
150
150
150
20
150
30
50
100
100
K80K1000
K80K1010
K80K1020
K80K1030
A80K1050
K80K1060
K80K1080
K80K1090
K80K1100
K80K1110
120
2701359-1
ECM 313550

ECM: 313558 - 20070629
Group number: 2701359-0100
Assembly Drawing: 2701359-1_1_AA

| Pos | Part No | UN | Qty | Description | Page No |
|---|---|---|---|---|---|
| - | | | | | |
| 010 | 353042-0004 | MM | 385 | RAIL TS 35/7,5 | |
| 020 | 90077-0113 | | 8 | FEED THROUGH TERMINAL, 10-00102150-1 | |
| 030 | 90077-0114 | | 1 | END PLATE, WAP/WDK 2,5 | |
| 040 | 90457-0049 | | 9 | TERMINAL BLOCK WDK 2.5V, 102230 | |
| 050 | 353031-0203 | | 1 | END SUPPORT, WEW 35/2 | |
| 060 | 353034-0030 | | 1 | BRIDGE CONNECTOR WQV 2,5/10, 10544.6 | |
| 070 | 353034-0030 | | 1 | BRIDGE CONNECTOR WQV 2,5/10, 10544.6 | |
| 100 | 90459-2526 | | 5 | REMOTE I/O BASE MODULE 8 POINTS, 1734-TB | |
| 110 | 90459-2527 | | 3 | REMOTE I/O BASE MODULE 12 POINTS | |
| 120 | 90459-2528 | | 1 | REMOTE I/O BASE MODULE FOR THERMOCOUPLE | |
| 140 | 353024-0204 | | 1 | EARTH TERMINAL WPE 2,5 | |
| 150 | 353024-0212 | | 5 | EARTH TERMINAL, 10363.0 | |
| 160 | 359011-0807 | | 1 | MARKING PLATES 5-FW 1-50 | |
| 170 | 359011-0808 | | 1 | MARKING PLATES 5-FW 51-100 | |
| 180 | 359011-0809 | | 2 | MARKING PLATES 5-FW 101-150 | |
| 190 | 359011-0810 | | 2 | MARKING PLATES 5-FW 151-200 | |
| 210 | 359011-0819 | | 1 | MARKING PLATES 5-GW (EARTH) | |
| A80K1050 | 90459-2505 | | 1 | DIGITAL OUTPUT 4 PTS, 1734-OB4E | |
| K80K1000 | 90459-2494 | | 1 | DEVICENET I/O ADAPTER MODULE, 1734-ADN | |
| K80K1010 | 90459-2503 | | 1 | DIGITAL INPUT 4 PTS SINK, 1734-IB4 | |
| K80K1020 | 90459-2503 | | 1 | DIGITAL INPUT 4 PTS SINK, 1734-IB4 | |
| K80K1030 | 90459-2503 | | 1 | DIGITAL INPUT 4 PTS SINK, 1734-IB4 | |
| K80K1060 | 90459-6560 | | 1 | DIGITAL OUTPUT 8 PTS, 1734-OB8E/C | |
| K80K1080 | 90459-5261 | | 1 | REMOTE I/O, RELAY OUTP. 4 PTS,1734-OW4/C | |
| K80K1090 | 90459-2509 | | 1 | REMOTE I/O ANALOG INPUT CURRENT 2 PTS | |
| K80K1100 | 90459-2508 | | 1 | REMOTE I/O ANALOG INPUT VOLTAGE 2 PTS | |
| K80K1110 | 90459-2512 | | 1 | REMOTE I/O THERMOCOUPLE INPUT 2 PTS | |

| Pos | Part No | UN | Qty | Description | Page No |
|---|---|---|---|---|---|

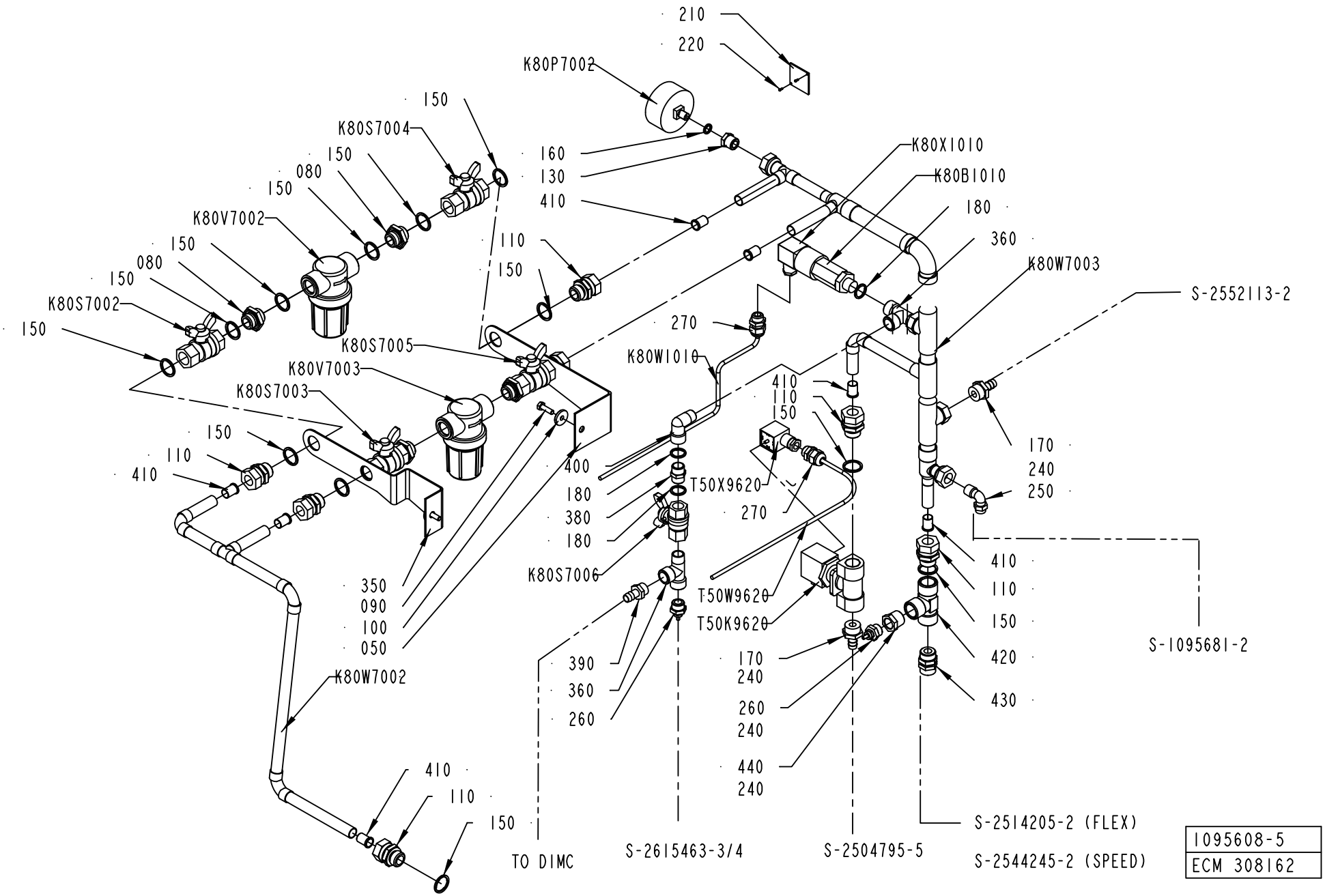
210
220
K80P7002
150
K80S7004
150
080
150
K80V7002
150
080
150
K80S7002
150
160
130
410
110
150
K80X1010
K80B1010
180
360
K80W7003
S-2552113-2
270
K80W1010
K80S7005
K80V7003
K80S7003
150
110
410
400
180
380
180
K80S7006
T50X9620
270
410
110
150
170
240
250
T50W9620
T50K9620
410
110
150
420
430
S-1095681-2
350
090
100
050
K80W7002
390
360
260
170
240
260
240
440
240
410
110
150
TO DIMC
S-2615463-3/4
S-2504795-5
S-2514205-2 (FLEX)
S-2544245-2 (SPEED)
1095608-5
ECM 308162

ECM: 328652 - 20070705
Group number: 1095608-0200
Assembly Drawing: 1095608-5_1_AA

This list covers pages from 6-86 to 6-89

| Pos | Part No | UN | Qty | Description | Page No |
|---|---|---|---|---|---|
| **A3/FLEX DIMC/FLEX COMPRESSOR (See drawing on page: 6-86)** | | | | | |
| 110 | 342720-0114 | | 7 | CONN. STR. GA-15-G1/2 | |
| 150 | 315239-0113 | | 19 | NYLON WASHER G1/2, 1/2RRP | |
| 170 | 342901-0105 | | 2 | HOSE NIPPLE, EXT.THR. R1/2-12 MM | |
| 260 | 342921-0115 | | 2 | STRAIGHT COUPLING,EXT.THREADED 6/4-G3/8" | |
| 270 | 352103-0101 | | 2 | CABLE GLAND, ST 9, PR15,2/PG9 | |
| 330 | 2767463-0000 | | 1 | WATER DIAGRAM | |
| T50W9620 | 351150-0403 | MM | 2000 | CABLE OLFLEX 3X0,75 MM2 LIGHT/GREY | |
| T50X9620 | 90110-0095 | | 1 | CONNECTOR 3 POLE + EARTH | |
| **A3/FLEX NO DIMC COMPRESSOR (See drawing on page: 6-86)** | | | | | |
| 110 | 342720-0114 | | 7 | CONN. STR. GA-15-G1/2 | |
| 150 | 315239-0113 | | 19 | NYLON WASHER G1/2, 1/2RRP | |
| 170 | 342901-0105 | | 2 | HOSE NIPPLE, EXT.THR. R1/2-12 MM | |
| 260 | 342921-0115 | | 2 | STRAIGHT COUPLING,EXT.THREADED 6/4-G3/8" | |
| 270 | 352103-0101 | | 2 | CABLE GLAND, ST 9, PR15,2/PG9 | |
| 330 | 2901119-0000 | | 1 | WATER DIAGRAM | |
| T50W9620 | 351150-0403 | MM | 2000 | CABLE OLFLEX 3X0,75 MM2 LIGHT/GREY | |
| T50X9620 | 90110-0095 | | 1 | CONNECTOR 3 POLE + EARTH | |
| **A3/FLEX NO DIMC ICE WATER (See drawing on page: 6-88)** | | | | | |
| 110 | 342720-0114 | | 7 | CONN. STR. GA-15-G1/2 | |
| 150 | 315239-0113 | | 19 | NYLON WASHER G1/2, 1/2RRP | |
| 170 | 342901-0105 | | 1 | HOSE NIPPLE, EXT.THR. R1/2-12 MM | |
| 235 | 342920-0124 | | 1 | STRAIGHT COUPLING,EXT.THREADED 8/6-R1/2" | |
| 260 | 342921-0115 | | 2 | STRAIGHT COUPLING,EXT.THREADED 6/4-G3/8" | |
| 270 | 352103-0101 | | 2 | CABLE GLAND, ST 9, PR15,2/PG9 | |
| 330 | 2911787-0000 | | 1 | WATER DIAGRAM | |
| K80W7084 | 90166-0118 | MM | 900 | TUBE 8 MM PA BLACK | |
| T50K9620 | 90042-0249 | | 1 | SOLENOID VALVE OFFICINE DI ENSINO | |
| T50W9620 | 351150-0403 | MM | 2000 | CABLE OLFLEX 3X0,75 MM2 LIGHT/GREY | |
| T50X9620 | 90110-0095 | | 1 | CONNECTOR 3 POLE + EARTH | |
| **Common Parts** | | | | | |
| 050 | 1037583-0000 | | 1 | HOLDER | |
| 080 | 479261-0000 | | 4 | NIPPLE | |
| 090 | 312105-0370 | | 2 | SCREW M6S ISO 4017 M6X20 A480 | |
| 100 | 315125-0153 | | 2 | WASHER TBRSB 6,4X22X4 A4 | |
| 130 | 342701-0202 | | 1 | BUSHING,INT./EXT.G-THREAD G3/8"-G1/8" | |
| 160 | 315239-0109 | | 1 | NYLON WASHER G1/8, 1/8RRP | |
| 180 | 315239-0111 | | 3 | NYLON WASHER G3/8, 3/8RRP | |
| 210 | 273455-0000 | | 1 | SIGN, COLD WATER | |
| 220 | 312502-0120 | | 2 | DRIVE SCREW ROUND HEAD KDS 0X5 | |
| 240 | 90157-0016 | ML | 1 | LOCKING FLUID LOCTITE 242 50 ML | |
| 250 | 342930-0133 | | 1 | ELBOW 90 COUPL.,EXT.THREADED 10/8-R3/8" | |
| 350 | 2547061-0000 | | 1 | HOLDER | |
| 360 | 90140-0023 | | 2 | T-PIPE, INT. THREAD, NO. 2070-3/8-3/8 | |
| 380 | 342700-0111 | | 1 | NIPPLES,HEXAGON,EXT.G-THREAD G3/8"-G3/8" | |
| 390 | 90163-0041 | | 1 | HOSE NIPPLE, EXT.THR. 3/8-12 MM | |
| 400 | 90140-0020 | | 1 | ELBOW, 90, INT/EXT. THREAD, NO. 2020-3/8 | |
| 410 | 342708-0109 | | 7 | REINFORCING RING VSH 15X1 MM | |
| 420 | 90140-0010 | | 1 | T-PIPE, INT. THREAD, 20031/2 | |
| 430 | 342921-0151 | | 1 | STRAIGHT COUPL.,EXT.THREAD.15/12,5-G1/2" | |
| 440 | 90330-0048 | | 1 | BUSHING, INT/EXT. THR. R1/2-RP3/8 | |
| K80B1010 | 90274-0042 | | 1 | PRESSURE GUARD, 200 KPA | |
| K80P7002 | 90043-0006 | | 1 | PRESSURE GAUGE, 2041 D=63 MM | |
| K80S7002 | 90187-0029 | | 1 | BALL VALVE G1/2, NPBR | |
| K80S7003 | 90187-0029 | | 1 | BALL VALVE G1/2, NPBR | |
| K80S7004 | 90187-0029 | | 1 | BALL VALVE G1/2, NPBR | |
| K80S7005 | 90187-0029 | | 1 | BALL VALVE G1/2, NPBR | |
| K80S7006 | 90187-0089 | | 1 | BALL VALVE G3/8, NPBR | |
| K80V7002 | 90458-0921 | | 1 | FILTER SP 122-200 | |
| | *90458-2541* | | *1* | *FILTER, CP23174-7-304SS* | |
| K80V7003 | 90458-0921 | | 1 | FILTER SP 122-200 | |
| | *90458-2541* | | *1* | *FILTER, CP23174-7-304SS* | |
| K80W1010 | 351150-0403 | MM | 2000 | CABLE OLFLEX 3X0,75 MM2 LIGHT/GREY | |
| K80W7002 | 1041932-0000 | | 1 | PIPE | |
| K80W7003 | 1041933-0000 | | 1 | PIPE | |
| K80X1010 | 90110-0095 | | 1 | CONNECTOR 3 POLE + EARTH | |

Machine Type | Group Description | Used-In | Group Number | Page No

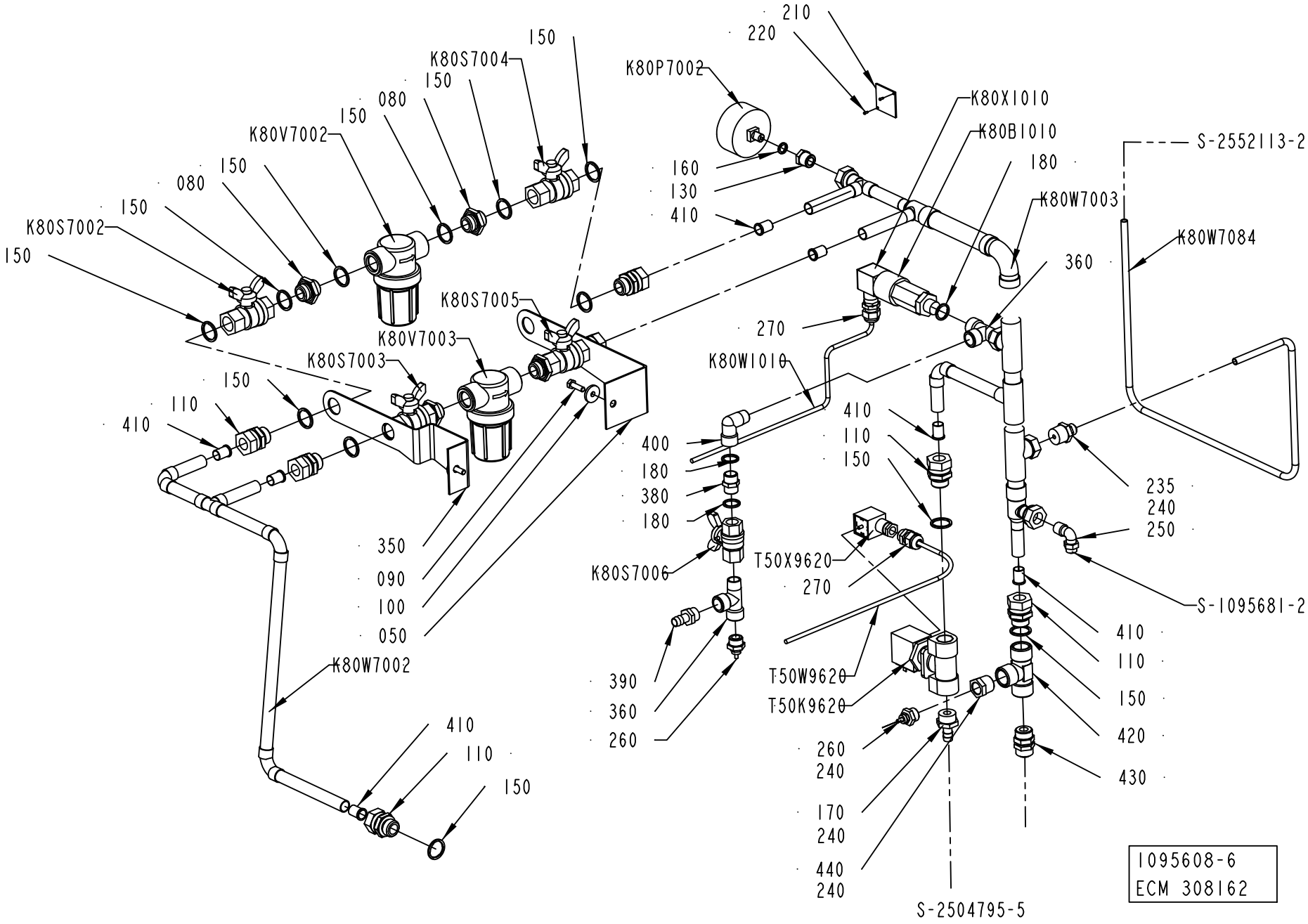
150
K80S7004
150
080
150
K80V7002
150
080
150
K80S7002
150
150
K80S7005
K80V7003
K80S7003
150
110
410
350
090
100
050
K80W7002
410
110
150
K80P7002
210
220
160
130
410
K80X1010
K80B1010
180
K80W7003
S-2552113-2
K80W7084
360
270
K80W1010
410
110
150
400
180
380
180
K80S7006
T50X9620
270
235
240
250
S-1095681-2
410
110
150
420
430
390
360
260
T50W9620
T50K9620
260
240
170
240
440
240
S-2504795-5
1095608-6
ECM 308162

ECM: 328652 - 20070705
Group number: 1095608-0200
Assembly Drawing: 1095608-6_1_AA

This list covers pages from 6-86 to 6-89

| Pos | Part No | UN | Qty | Description | Page No |
|---|---|---|---|---|---|
| **A3/FLEX DIMC/FLEX COMPRESSOR (See drawing on page: 6-86)** | | | | | |
| 110 | 342720-0114 | | 7 | CONN. STR. GA-15-G1/2 | |
| 150 | 315239-0113 | | 19 | NYLON WASHER G1/2, 1/2RRP | |
| 170 | 342901-0105 | | 2 | HOSE NIPPLE, EXT.THR. R1/2-12 MM | |
| 260 | 342921-0115 | | 2 | STRAIGHT COUPLING,EXT.THREADED 6/4-G3/8" | |
| 270 | 352103-0101 | | 2 | CABLE GLAND, ST 9, PR15,2/PG9 | |
| 330 | 2767463-0000 | | 1 | WATER DIAGRAM | |
| T50W9620 | 351150-0403 | MM | 2000 | CABLE OLFLEX 3X0,75 MM2 LIGHT/GREY | |
| T50X9620 | 90110-0095 | | 1 | CONNECTOR 3 POLE + EARTH | |
| **A3/FLEX NO DIMC COMPRESSOR (See drawing on page: 6-86)** | | | | | |
| 110 | 342720-0114 | | 7 | CONN. STR. GA-15-G1/2 | |
| 150 | 315239-0113 | | 19 | NYLON WASHER G1/2, 1/2RRP | |
| 170 | 342901-0105 | | 2 | HOSE NIPPLE, EXT.THR. R1/2-12 MM | |
| 260 | 342921-0115 | | 2 | STRAIGHT COUPLING,EXT.THREADED 6/4-G3/8" | |
| 270 | 352103-0101 | | 2 | CABLE GLAND, ST 9, PR15,2/PG9 | |
| 330 | 2901119-0000 | | 1 | WATER DIAGRAM | |
| T50W9620 | 351150-0403 | MM | 2000 | CABLE OLFLEX 3X0,75 MM2 LIGHT/GREY | |
| T50X9620 | 90110-0095 | | 1 | CONNECTOR 3 POLE + EARTH | |
| **A3/FLEX NO DIMC ICE WATER (See drawing on page: 6-88)** | | | | | |
| 110 | 342720-0114 | | 7 | CONN. STR. GA-15-G1/2 | |
| 150 | 315239-0113 | | 19 | NYLON WASHER G1/2, 1/2RRP | |
| 170 | 342901-0105 | | 1 | HOSE NIPPLE, EXT.THR. R1/2-12 MM | |
| 235 | 342920-0124 | | 1 | STRAIGHT COUPLING,EXT.THREADED 8/6-R1/2" | |
| 260 | 342921-0115 | | 2 | STRAIGHT COUPLING,EXT.THREADED 6/4-G3/8" | |
| 270 | 352103-0101 | | 2 | CABLE GLAND, ST 9, PR15,2/PG9 | |
| 330 | 2911787-0000 | | 1 | WATER DIAGRAM | |
| K80W7084 | 90166-0118 | MM | 900 | TUBE 8 MM PA BLACK | |
| T50K9620 | 90042-0249 | | 1 | SOLENOID VALVE OFFICINE DI ENSINO | |
| T50W9620 | 351150-0403 | MM | 2000 | CABLE OLFLEX 3X0,75 MM2 LIGHT/GREY | |
| T50X9620 | 90110-0095 | | 1 | CONNECTOR 3 POLE + EARTH | |
| **Common Parts** | | | | | |
| 050 | 1037583-0000 | | 1 | HOLDER | |
| 080 | 479261-0000 | | 4 | NIPPLE | |
| 090 | 312105-0370 | | 2 | SCREW M6S ISO 4017 M6X20 A480 | |
| 100 | 315125-0153 | | 2 | WASHER TBRSB 6,4X22X4 A4 | |
| 130 | 342701-0202 | | 1 | BUSHING,INT./EXT.G-THREAD G3/8"-G1/8" | |
| 160 | 315239-0109 | | 1 | NYLON WASHER G1/8, 1/8RRP | |
| 180 | 315239-0111 | | 3 | NYLON WASHER G3/8, 3/8RRP | |
| 210 | 273455-0000 | | 1 | SIGN, COLD WATER | |
| 220 | 312502-0120 | | 2 | DRIVE SCREW ROUND HEAD KDS 0X5 | |
| 240 | 90157-0016 | ML | 1 | LOCKING FLUID LOCTITE 242 50 ML | |
| 250 | 342930-0133 | | 1 | ELBOW 90 COUPL.,EXT.THREADED 10/8-R3/8" | |
| 350 | 2547061-0000 | | 1 | HOLDER | |
| 360 | 90140-0023 | | 2 | T-PIPE, INT. THREAD, NO. 2070-3/8-3/8 | |
| 380 | 342700-0111 | | 1 | NIPPLES,HEXAGON,EXT.G-THREAD G3/8"-G3/8" | |
| 390 | 90163-0041 | | 1 | HOSE NIPPLE, EXT.THR. 3/8-12 MM | |
| 400 | 90140-0020 | | 1 | ELBOW, 90, INT/EXT. THREAD, NO. 2020-3/8 | |
| 410 | 342708-0109 | | 7 | REINFORCING RING VSH 15X1 MM | |
| 420 | 90140-0010 | | 1 | T-PIPE, INT. THREAD, 20031/2 | |
| 430 | 342921-0151 | | 1 | STRAIGHT COUPL.,EXT.THREAD.15/12,5-G1/2" | |
| 440 | 90330-0048 | | 1 | BUSHING, INT/EXT. THR. R1/2-RP3/8 | |
| K80B1010 | 90274-0042 | | 1 | PRESSURE GUARD, 200 KPA | |
| K80P7002 | 90043-0006 | | 1 | PRESSURE GAUGE, 2041 D=63 MM | |
| K80S7002 | 90187-0029 | | 1 | BALL VALVE G1/2, NPBR | |
| K80S7003 | 90187-0029 | | 1 | BALL VALVE G1/2, NPBR | |
| K80S7004 | 90187-0029 | | 1 | BALL VALVE G1/2, NPBR | |
| K80S7005 | 90187-0029 | | 1 | BALL VALVE G1/2, NPBR | |
| K80S7006 | 90187-0089 | | 1 | BALL VALVE G3/8, NPBR | |
| K80V7002 | 90458-0921 | | 1 | FILTER SP 122-200 | |
| | *90458-2541* | | *1* | *FILTER, CP23174-7-304SS* | |
| K80V7003 | 90458-0921 | | 1 | FILTER SP 122-200 | |
| | *90458-2541* | | *1* | *FILTER, CP23174-7-304SS* | |
| K80W1010 | 351150-0403 | MM | 2000 | CABLE OLFLEX 3X0,75 MM2 LIGHT/GREY | |
| K80W7002 | 1041932-0000 | | 1 | PIPE | |
| K80W7003 | 1041933-0000 | | 1 | PIPE | |
| K80X1010 | 90110-0095 | | 1 | CONNECTOR 3 POLE + EARTH | |

Machine Type | Group Description | Used-In | Group Number | Page No

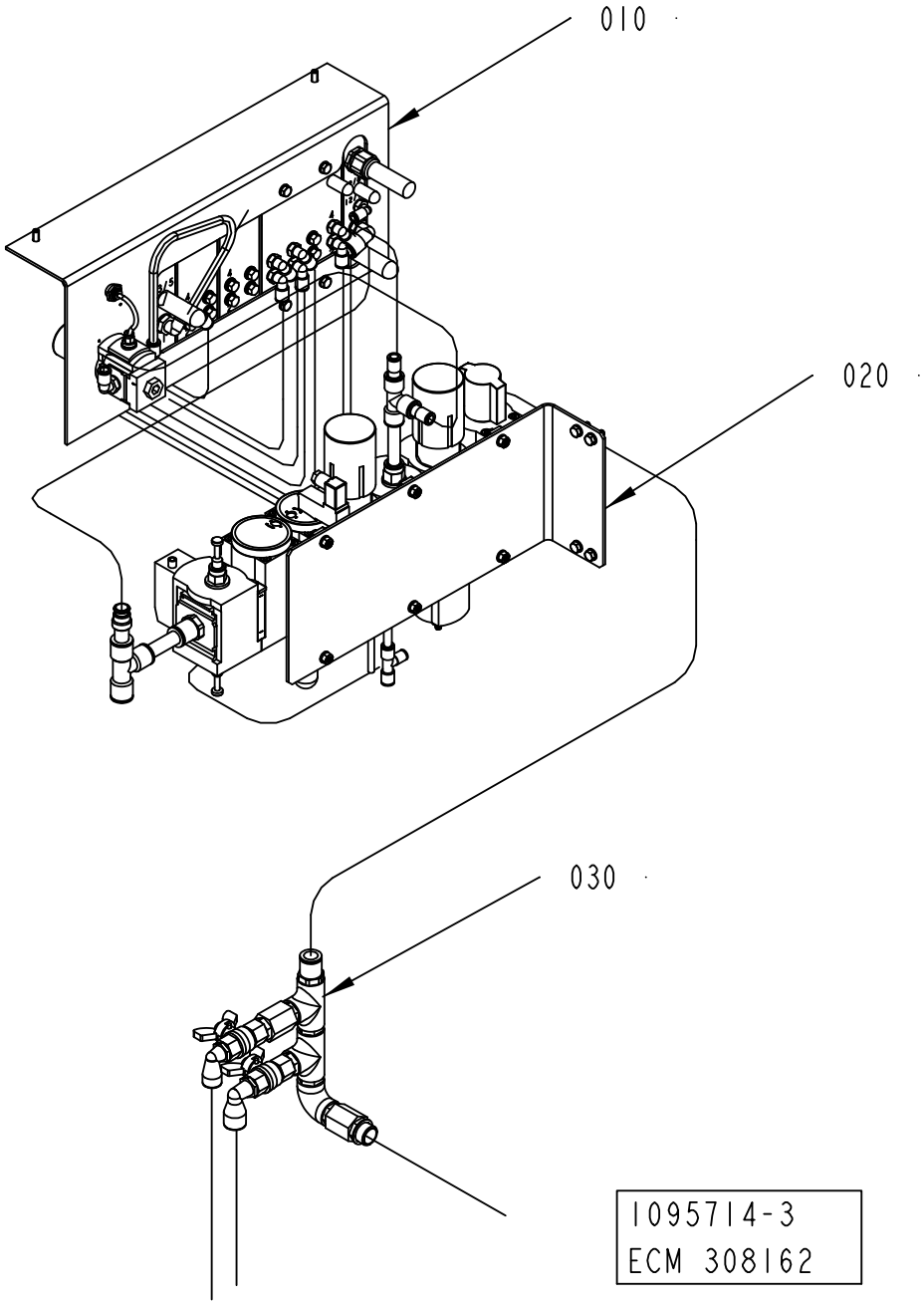
010
020
030
1095714-3
ECM 308162

ECM: 308166 - 20070629
Group number: 1095714-0400
Assembly Drawing: 1095714-3_1_AA

| Pos | Part No | UN | Qty | Description | Page No |
|---|---|---|---|---|---|
| - | | | | | |
| 010 | 2778526-0100 | | 1 | VALVE PANEL | **6-93** |
| 020 | 2708544-0100 | | 1 | PANEL | **6-97** |
| 030 | 1095716-0200 | | 1 | PIPE WORK-AIR | **6-101** |

| Pos | Part No | UN | Qty | Description | Page No |
|---|---|---|---|---|---|

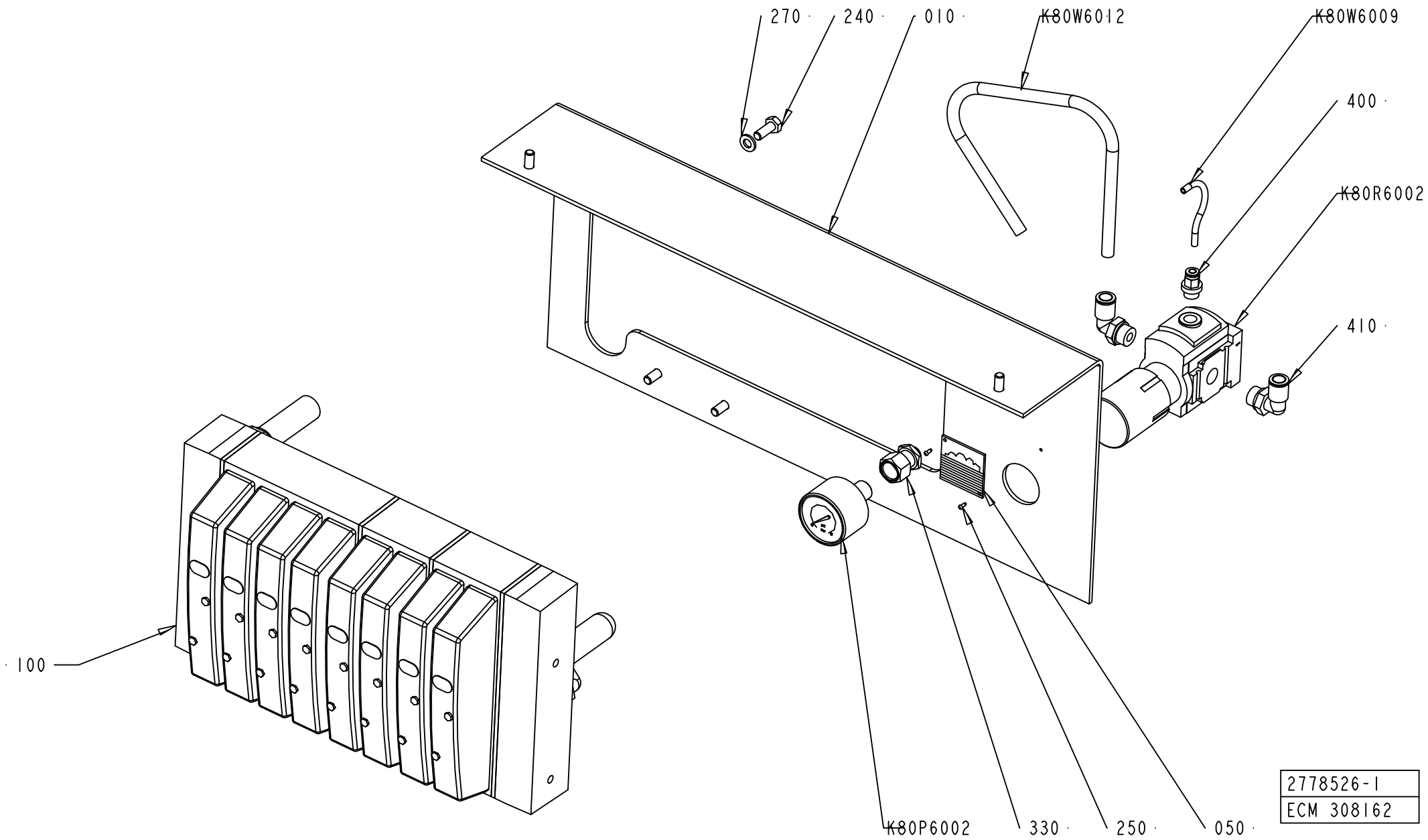
270
240
010
K80W6012
K80W6009
400
K80R6002
410
100
K80P6002
330
250
050
2778526-1
ECM 308162

ECM: 308167 - 20070629
Group number: 2778526-0100
Assembly Drawing: 2778526-1_1_AA

| Pos | Part No | UN | Qty | Description | Page No |
|---|---|---|---|---|---|
| - | | | | | |
| 005 | 2778524-0000 | | 1 | PNEUMATIC DIAGRAM | |
| 010 | 2778767-0000 | | 1 | PLATE | |
| 050 | 1041938-0000 | | 1 | SIGN | |
| 100 | 2778525-0100 | | 1 | VALVE PANEL ..... | **6-95** |
| 240 | 312105-0368 | | 6 | SCREW M6S ISO 4017 M6X16 A480 | |
| 250 | 312502-0120 | | 2 | DRIVE SCREW ROUND HEAD KDS 0X5 | |
| 270 | 315105-0153 | | 6 | WASHER BRB 6,4X12 RFR | |
| 330 | 90459-7333 | | 1 | PUSH-IN FITTING QSSF-1/4-4-B | |
| 400 | 350001-0005 | | 1 | PUSH-IN FITTING QS-F-G1/8-4 | |
| 410 | 350002-0009 | | 2 | PUSH-IN L-FITTING QSL-F-G1/4-8 | |
| K80P6002 | 90459-7344 | | 1 | PRESSURE GAUGE, MA-40-6-R1/4-EN | |
| K80R6002 | 90459-2822 | | 1 | REGULATOR, MS4-LR-1/4-D5-A8 | |
| K80W6009 | 315400-0016 | MM | 300 | TUBE PUN-H-4X0,75-BL | |
| K80W6012 | 315400-0001 | MM | 360 | TUBE PUN-H-6X1-BL | |

| Pos | Part No | UN | Qty | Description | Page No |
|---|---|---|---|---|---|

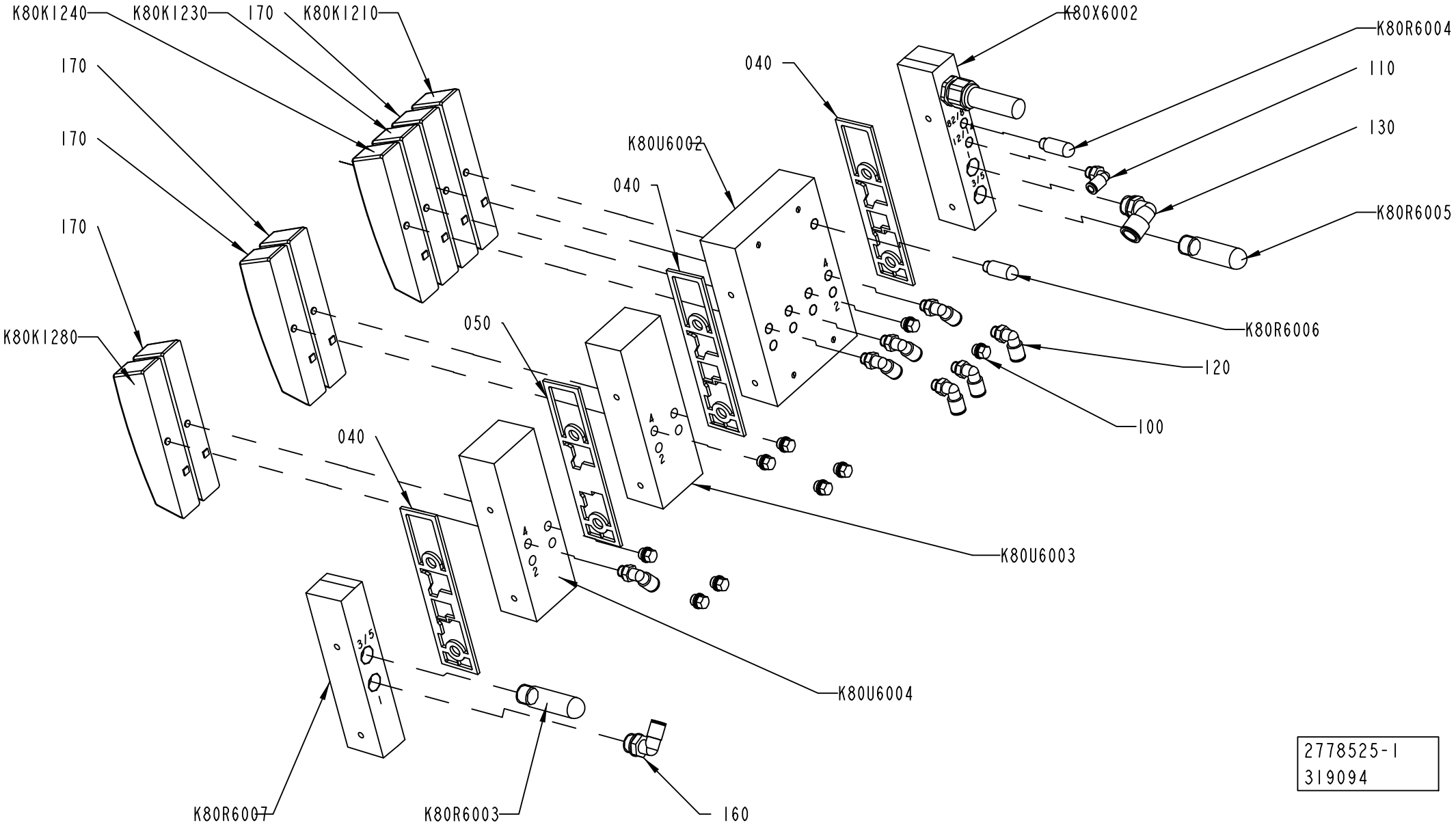
K80K1240
K80K1230
170
K80K1210
170
170
170
K80K1280
K80X6002
040
K80R6004
110
130
K80R6005
K80U6002
040
K80R6006
120
100
050
040
K80U6003
K80U6004
K80R6007
K80R6003
160
2778525-1
319094

ECM: 328068 - 20070705
Group number: 2778525-0100
Assembly Drawing: 2778525-1_1_AB

| Pos | Part No | UN | Qty | Description | Page No |
|---|---|---|---|---|---|
| - | | | | | |
| 040 | 90458-1207 | | 3 | SEALING, STANDARD | |
| 050 | 90458-1208 | | 1 | SEALING, CHANNEL 1 BLOCKED | |
| 100 | 90459-0698 | | 9 | PLUG, EXT. G-THREAD, G1/8 | |
| 110 | 350002-0006 | | 1 | PUSH-IN L-FITTING QSL-F-G1/8-6 | |
| 120 | 350002-0007 | | 7 | PUSH-IN L-FITTING QSL-F-G1/8-8 | |
| 130 | 350002-0014 | | 1 | PUSH-IN L-FITTING QSL-F-G3/8-12 | |
| 160 | 350002-0012 | | 1 | PUSH-IN L-FITTING QSL-F-G3/8-8 | |
| 170 | 90458-1215 | | 4 | COVER PLATE FOR EMPTY VALVE POSITION | |
| K80K1210 | 90458-1194 | | 1 | MONOSTABLE VALVE 5/2 | |
| K80K1230 | 90458-1194 | | 1 | MONOSTABLE VALVE 5/2 | |
| K80K1240 | 90458-1194 | | 1 | MONOSTABLE VALVE 5/2 | |
| K80K1280 | 90458-1194 | | 1 | MONOSTABLE VALVE 5/2 | |
| K80R6003 | 90328-0024 | | 1 | SILENCER G3/8" | |
| K80R6004 | 90328-0047 | | 1 | SILENCER G1/8" | |
| K80R6005 | 90328-0024 | | 1 | SILENCER G3/8" | |
| K80R6006 | 90328-0047 | | 1 | SILENCER G1/8" | |
| K80R6007 | 90458-1214 | | 1 | RIGHT ENDPL EXT. PILOT AIR,CDVI5.0-EPR-S | |
| K80U6002 | 90458-1204 | | 1 | BASIC SUB-BASE 4 VALVES, CDVI5.0-GB4-MP | |
| K80U6003 | 90458-1206 | | 1 | EXP. SUB-BASE 2 VALVES, CDVI5.0-EB | |
| K80U6004 | 90458-1206 | | 1 | EXP. SUB-BASE 2 VALVES, CDVI5.0-EB | |
| K80X6002 | 90458-1212 | | 1 | LEFT ENDPLATE INCL. 10M CABLE | |

| Pos | Part No | UN | Qty | Description | Page No |
|---|---|---|---|---|---|

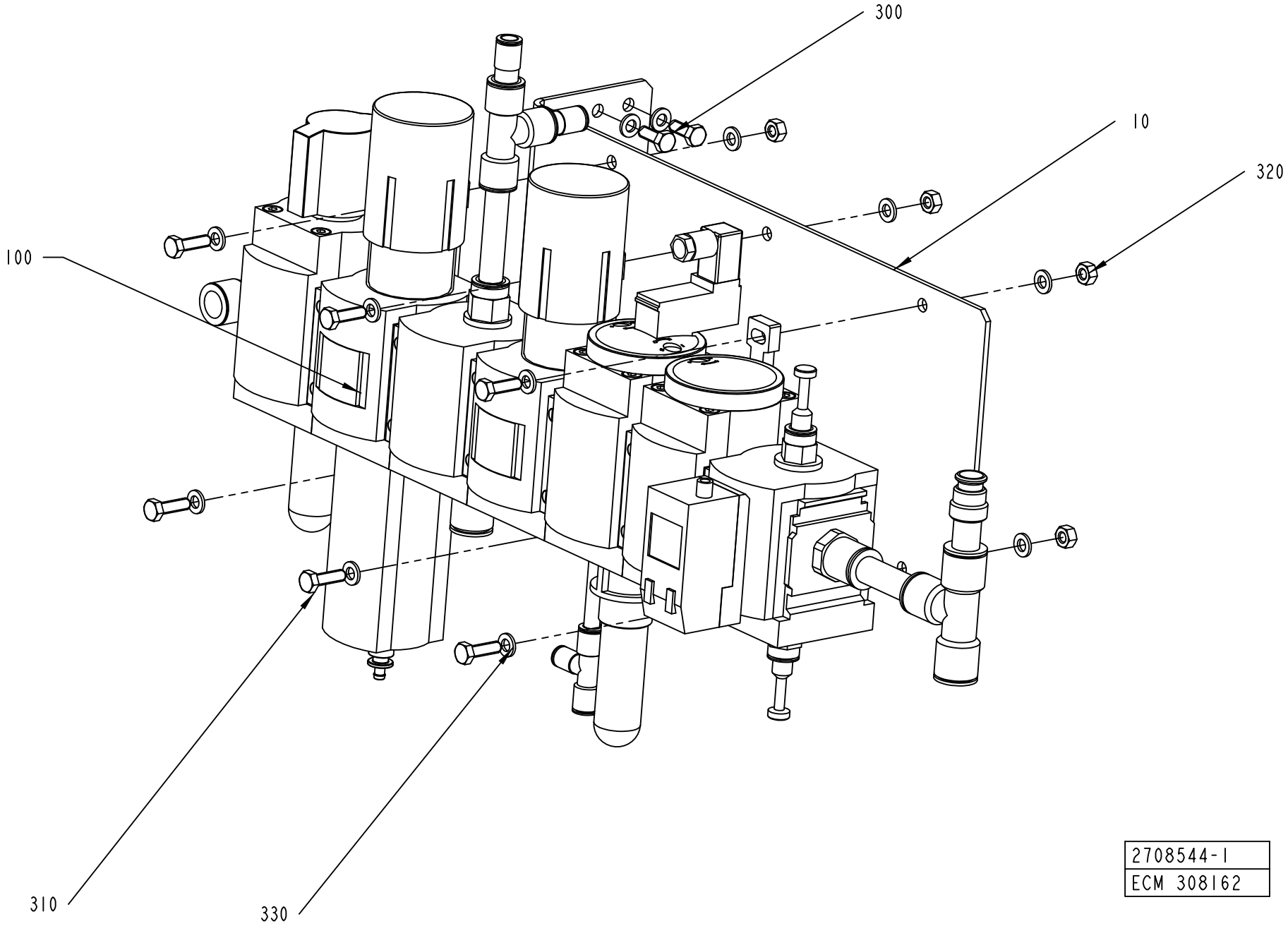
300
10
320
100
310
330
2708544-1
ECM 308162

ECM: 308169 - 20070629
Group number: 2708544-0100
Assembly Drawing: 2708544-1_1_AA

| Pos | Part No | UN | Qty | Description | Page No |
|---|---|---|---|---|---|
| - | | | | | |
| 005 | 2816352-0000 | | 1 | PNEUMATIC DIAGRAM | |
| 010 | 2708543-0000 | | 1 | PLATE | |
| 100 | 2708542-0100 | | 1 | PNEUMATIC UNIT ..... | **6-99** |
| 300 | 312105-0368 | | 4 | SCREW M6S ISO 4017 M6X16 A480 | |
| 310 | 312105-0370 | | 6 | SCREW M6S ISO 4017 M6X20 A480 | |
| 320 | 312605-0316 | | 6 | HEXAGON NUT, M6M M6 A280 | |
| 330 | 315105-0153 | | 16 | WASHER BRB 6,4X12 RFR | |

| Pos | Part No | UN | Qty | Description | Page No |
|---|---|---|---|---|---|

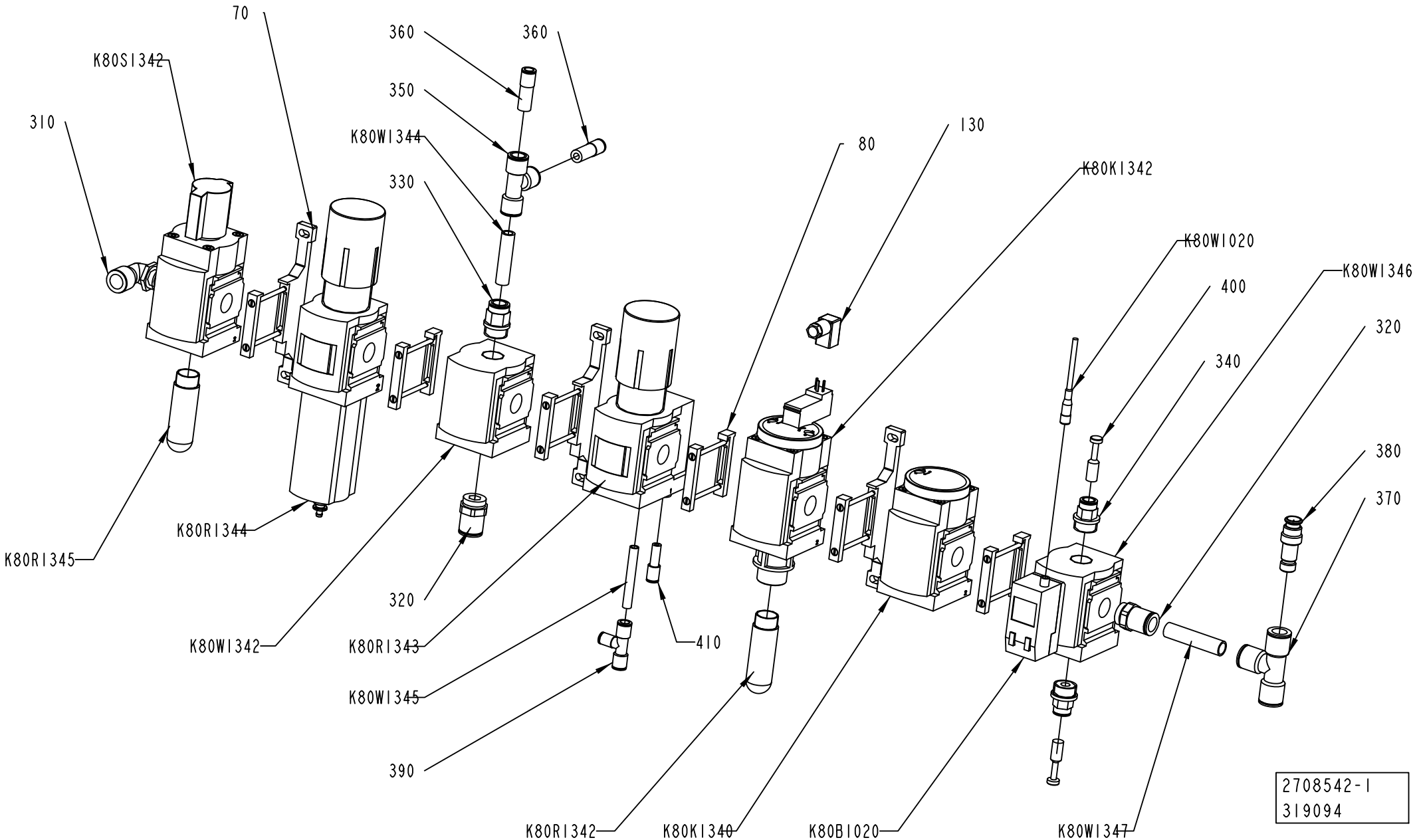
70
360
360
K80S1342
350
310
K80W1344
330
80
130
K80K1342
K80W1020
400
K80W1346
340
320
380
370
K80R1345
K80R1344
320
K80W1342
K80R1343
410
K80W1345
390
K80R1342
K80K1340
K80B1020
K80W1347
2708542-1
319094

ECM: 328069 - 20070705
Group number: 2708542-0100
Assembly Drawing: 2708542-1_1_AB

| Pos | Part No | UN | Qty | Description | Page No |
|---|---|---|---|---|---|
| - | | | | | |
| 070 | 90459-1858 | | 3 | BRACKET, MS6-WP | |
| 080 | 90459-1859 | | 3 | BRACKET, MS6-MV | |
| | *90459-4787* | | *1* | *SENSOR BRACKET WSM-12-J-M5* | |
| 130 | 90458-2837 | | 1 | PLUG SOCKET, KMEB-1-24-5-LED | |
| 310 | 90458-2965 | | 1 | ELBOW PIPE JOINT, EXT.THREAD,D=14MM-G1/2 | |
| 320 | 90055-0097 | | 2 | STRAIGHT COUPLING | |
| 330 | 350001-0016 | | 1 | PUSH-IN FITTING QS-F-G1/2-12 | |
| 340 | 350001-0015 | | 2 | PUSH-IN FITTING QS-F-G1/2-10 | |
| 350 | 350005-0005 | | 1 | PUSH-IN T-FITTING QST-F-12 | |
| 360 | 350006-0008 | | 2 | PUSH-IN FITTING QS-F-12H-8 | |
| 370 | 342748-0110 | | 1 | T-CONNECTION 14MM | |
| 380 | 342716-0211 | | 1 | REDUCER 12-14 | |
| 390 | 350011-0002 | | 1 | PUSH-IN T-FITTING QS-F-8-6 | |
| 400 | 350013-0004 | | 2 | PLUG QSC-10H | |
| 410 | 350006-0003 | | 1 | PUSH-IN FITTING QS-F-8H-6 | |
| K80B1020 | 90600-2031 | | 1 | PRESSURE SENS. SDE1-D10-G2-MS6-C-PU-M8 | |
| K80K1340 | 90459-1855 | | 1 | SOFT START VALVE, MS6-DL-1/2 | |
| K80K1342 | 90459-1854 | | 1 | SHUT OFF VALVE, MS6-EE-1/2-10V24 | |
| K80R1342 | 90328-0025 | | 1 | SILENCER G1/2" | |
| K80R1343 | 90459-7342 | | 1 | REGULATOR, MS6-LRB-1/2-D7-AS-BD | |
| K80R1344 | 90459-1853 | | 1 | FILTER REGULATOR, MS6-LFR-1/2-D7-ERV-AS | |
| | *90459-3809* | | *1* | *FILTER CARTRIDGE, MS6-LFP-E* | |
| K80R1345 | 90328-0025 | | 1 | SILENCER G1/2" | |
| K80S1342 | 90459-1852 | | 1 | SHUT OFF VALVE, MS6-EM1-1/2 | |
| K80W1020 | 90600-3690 | | 1 | SENSOR CABLE SIM-M8-4GD-2,5-PU | |
| K80W1342 | 90459-1856 | | 1 | DISTRIBUTOR, MS6-FRM-1/2 | |
| K80W1344 | 315400-0010 | MM | 80 | TUBE PUN-H-12X2-BL | |
| K80W1345 | 315400-0004 | MM | 80 | TUBE PUN-H-8X1,25-BL | |
| K80W1346 | 90459-1856 | | 1 | DISTRIBUTOR, MS6-FRM-1/2 | |
| K80W1347 | 90166-0196 | MM | 100 | TUBE 14MM PA BLUE | |

| Pos | Part No | UN | Qty | Description | Page No |
|---|---|---|---|---|---|

Machine Type | Group Description | Used-In | Group Number | Page No

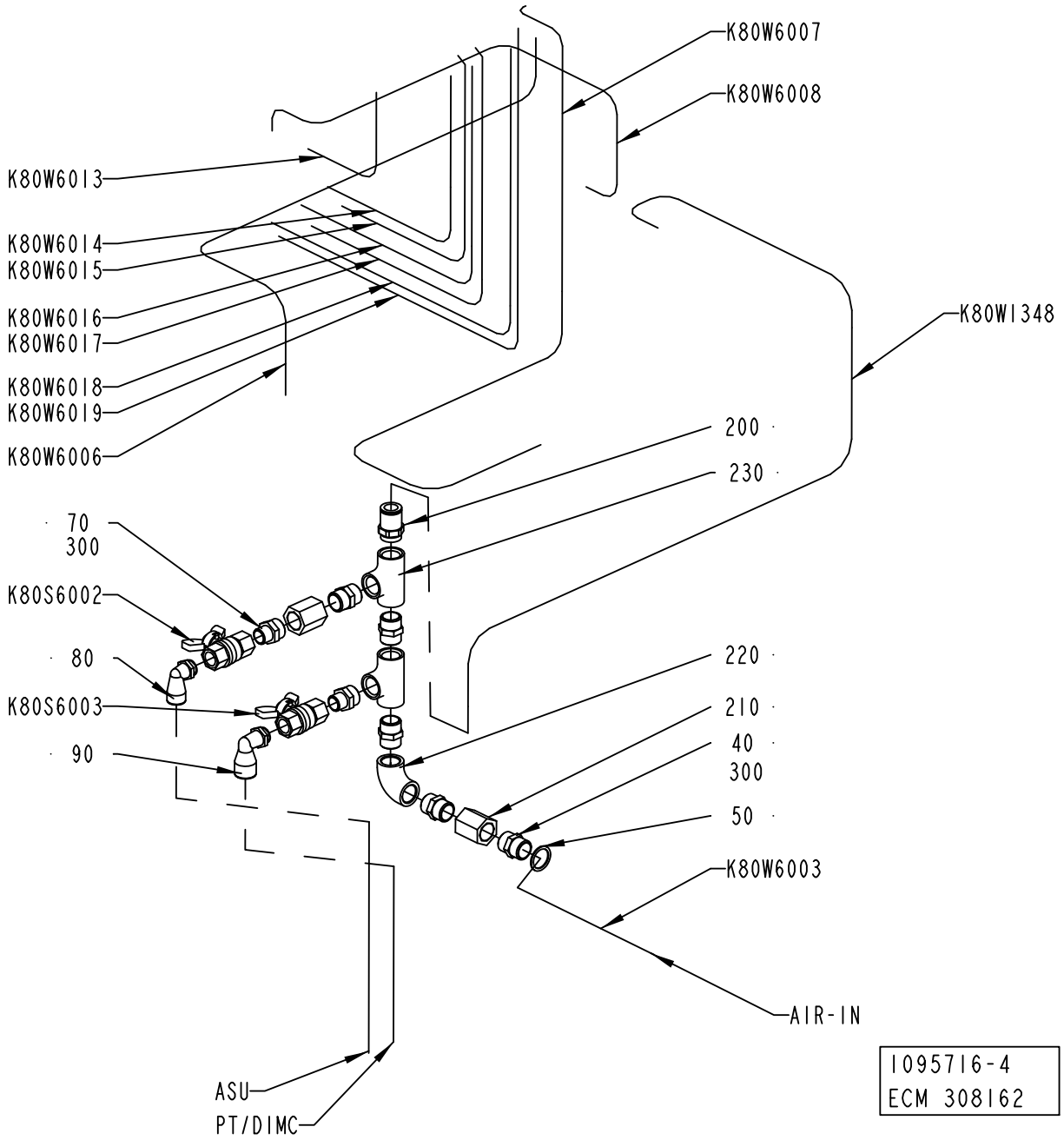
K80W6007
K80W6008
K80W6013
K80W6014
K80W6015
K80W6016
K80W6017
K80W6018
K80W6019
K80W6006
K80W1348
200
230
70
300
K80S6002
80
K80S6003
90
220
210
40
300
50
K80W6003
AIR-IN
ASU
PT/DIMC
1095716-4
ECM 308162

ECM: 308171 - 20070629
Group number: 1095716-0200
Assembly Drawing: 1095716-4_1_AA

| Pos | Part No | UN | Qty | Description | Page No |
|---|---|---|---|---|---|
| - | | | | | |
| 040 | 342700-0113 | | 5 | NIPPLES,HEXAGON,EXT.G-THREAD G1/2"-G1/2" | |
| 050 | 315233-0113 | | 1 | WASHER CAPTIVE SEALING G1/2 | |
| 070 | 342700-0206 | | 2 | NIPPLES,HEXAGON,EXT.G-THREAD G1/2"-G3/8" | |
| 080 | 90458-2960 | | 1 | ELBOW PIPE JOINT, EXT.THREAD,D=12MM-G3/8 | |
| 090 | 90458-2963 | | 1 | ELBOW PIPE JOINT, EXT.THREAD,D=14MM-G3/8 | |
| 200 | 90055-0097 | | 1 | STRAIGHT COUPLING | |
| 210 | 90140-0079 | | 2 | SLEEVE, INT. THREAD, NO. 501-08 | |
| 220 | 90330-0020 | | 1 | ELBOW, 90 INT. THREAD, R-2221/2 | |
| 230 | 90330-0049 | | 2 | T-PIPE, INT. THREAD, R-221R1/2 | |
| 300 | 90144-0007 | | 1 | TAPE | |
| K80S6002 | 90187-0089 | | 1 | BALL VALVE G3/8, NPBR | |
| K80S6003 | 90187-0089 | | 1 | BALL VALVE G3/8, NPBR | |
| K80W1348 | 90166-0196 | MM | 1400 | TUBE 14MM PA BLUE | |
| K80W6003 | 90166-0196 | MM | 1000 | TUBE 14MM PA BLUE | |
| K80W6006 | 315400-0010 | MM | 1000 | TUBE PUN-H-12X2-BL | |
| K80W6007 | 315400-0001 | MM | 1100 | TUBE PUN-H-6X1-BL | |
| K80W6008 | 90166-0013 | MM | 1000 | TUBE 8 MM PA BLUE | |
| K80W6013 | 90166-0013 | MM | 1400 | TUBE 8 MM PA BLUE | |
| K80W6018 | 90166-0013 | MM | 1400 | TUBE 8 MM PA BLUE | |
| K80W6019 | 90166-0013 | MM | 1400 | TUBE 8 MM PA BLUE | |
| T40W6016 | 90166-0013 | MM | 1500 | TUBE 8 MM PA BLUE | |
| T40W6017 | 90166-0013 | MM | 1500 | TUBE 8 MM PA BLUE | |
| T50W6014 | 90166-0013 | MM | 1500 | TUBE 8 MM PA BLUE | |
| T50W6015 | 90166-0013 | MM | 1500 | TUBE 8 MM PA BLUE | |

| Pos | Part No | UN | Qty | Description | Page No |
|---|---|---|---|---|---|

Tetra Pak

# SPC
## Spare Parts Catalogue

# AUTOMATIC SPLICING UNIT



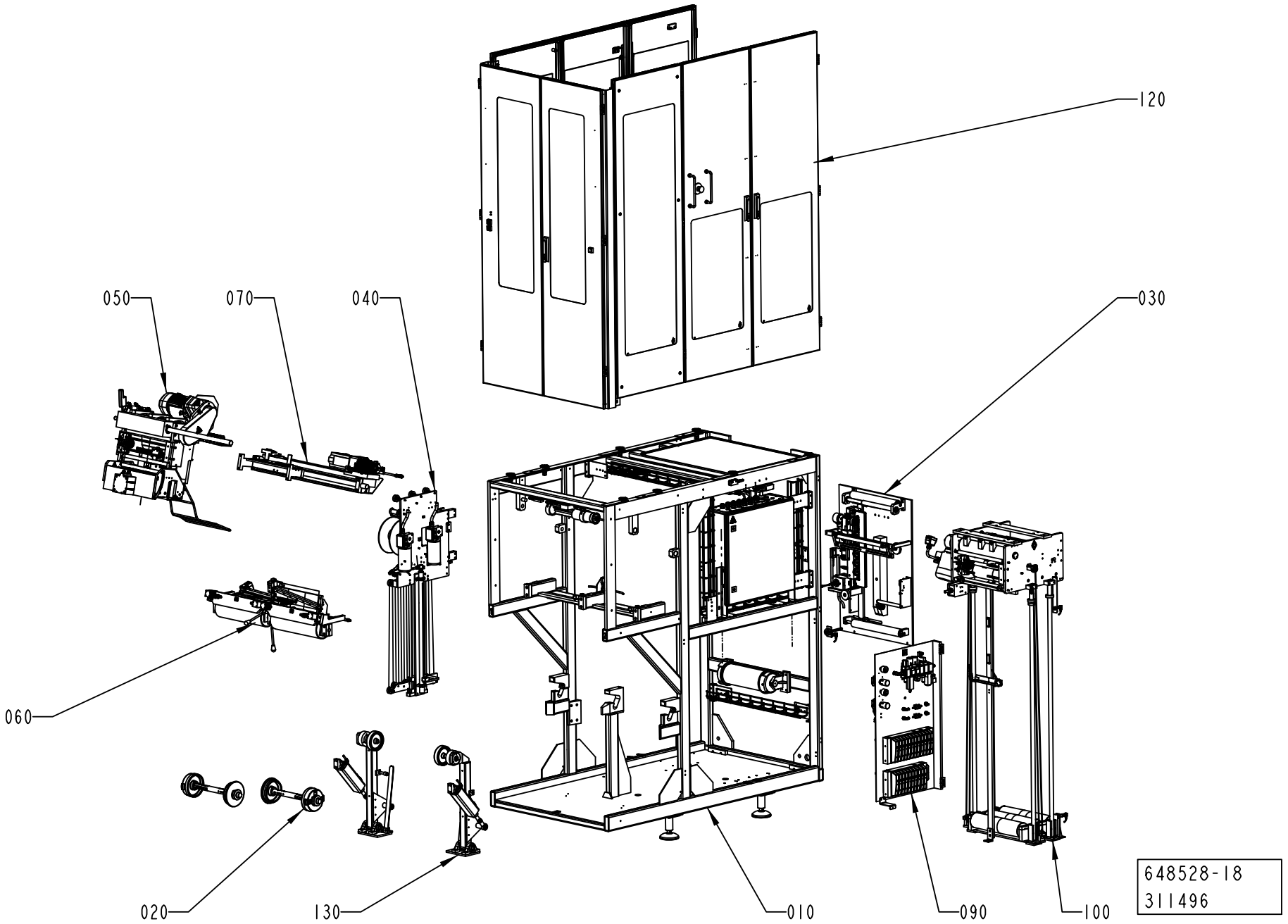

ECM: 366948 - 20080825
Group number: 648528-0300
Assembly Drawing: 648528-18_1_AA

| Pos | Part No | UN | Qty | Description | Page No |
|---|---|---|---|---|---|
| **A3/FLEX** | | | | | |
| 100 | 2731243-0100 | | 1 | MAGAZINE | **7-5** |
| **Common Parts** | | | | | |
| 010 | 2741026-0100 | | 1 | MACHINE BODY | **7-41, 7-43, 7-45** |
| 020 | 2731217-0100 | | 2 | PAPER REEL HOLDER | **7-59** |
| 030 | 2765667-0100 | | 1 | STRIP APPLICATOR | **7-61** |
| 040 | 2843884-0100 | | 1 | STRIP MAGAZINE | **7-89** |
| 050 | 2737941-0100 | | 1 | SPLICING DEVICE | **7-107** |
| 060 | 2731220-0100 | | 1 | MATERIAL HOLDER | **7-127** |
| 070 | 2751571-0100 | | 1 | SIDE FEEDER | **7-135** |
| 090 | 2790920-0100 | | 1 | PNEUMATIC PANEL | **7-137** |
| 120 | 2746328-0100 | | 1 | COVERING PANEL | **7-149** |
| 130 | 2731222-0100 | | 1 | BOBBIN BRAKE | **7-173** |

| Pos | Part No | UN | Qty | Description | Page No |
|---|---|---|---|---|---|

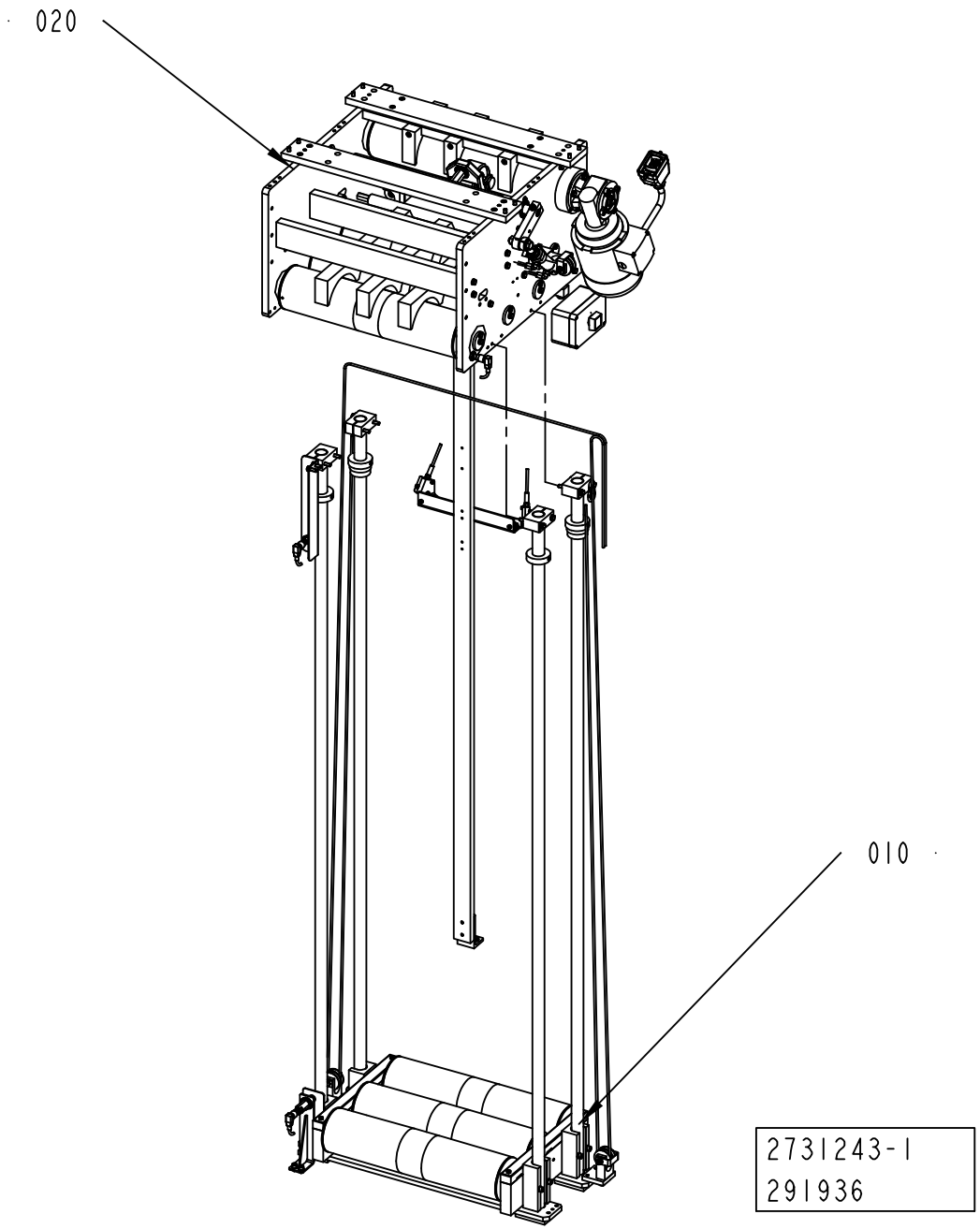
020
010
2731243-1
291936

ECM: 303104 - 20070508
Group number: 2731243-0100
Assembly Drawing: 2731243-1_1_AA

| Pos | Part No | UN | Qty | Description | Page No |
|---|---|---|---|---|---|
| - | | | | | |
| 010 | 2731241-0100 | | 1 | MAGAZINE | **7-7** |
| 020 | 2731242-0100 | | 1 | BRACKET | **7-13** |

| Pos | Part No | UN | Qty | Description | Page No |
|---|---|---|---|---|---|

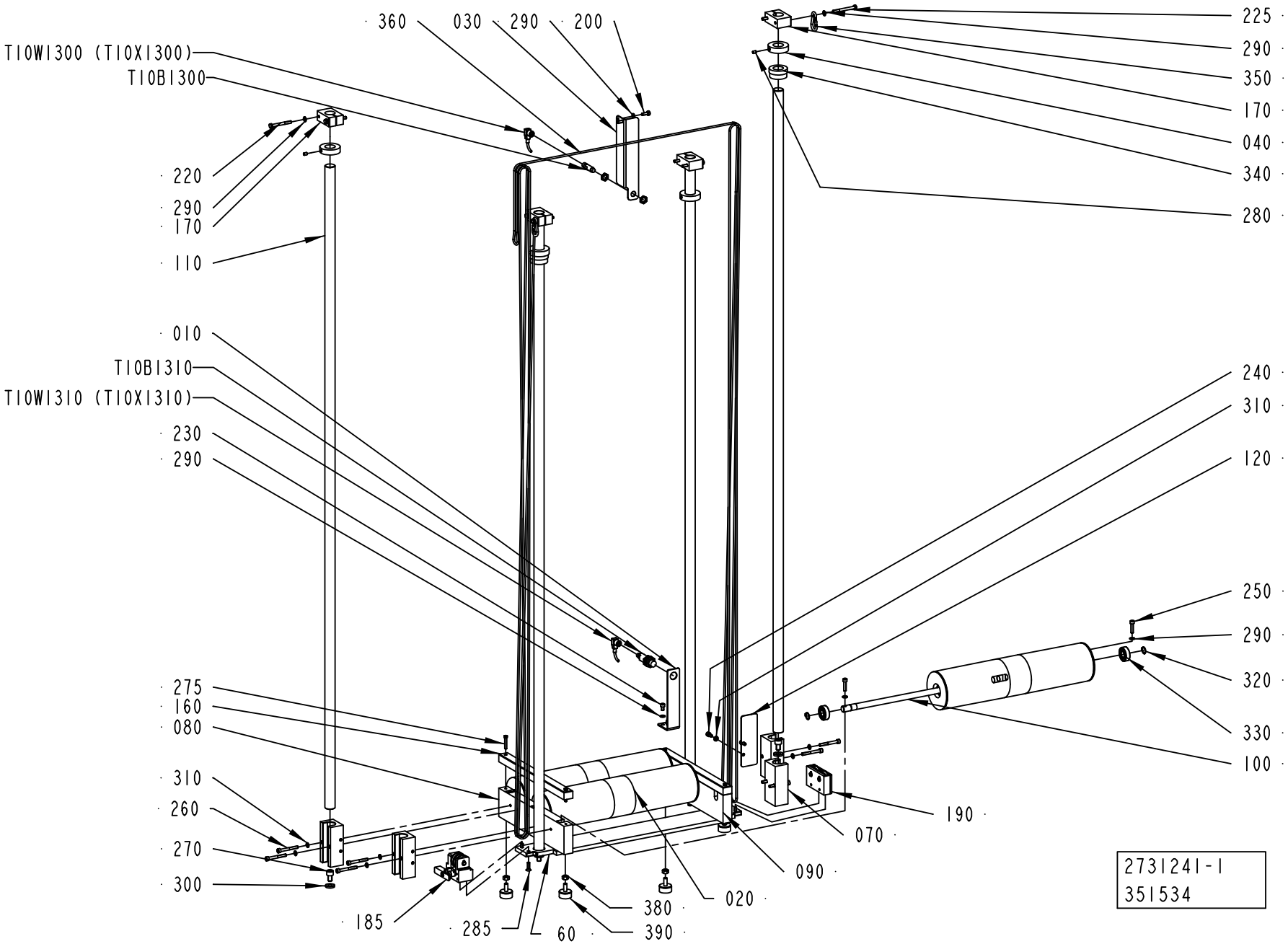
360
030
290
200
T10W1300 (T10X1300)
T10B1300
220
290
170
110
010
T10B1310
T10W1310 (T10X1310)
230
290
275
160
080
310
260
270
300
185
285
60
380
390
020
090
070
190
100
330
320
290
250
120
310
240
280
340
040
170
350
290
225
2731241-1
351534

ECM: 351538 - 20080430
Group number: 2731241-0100
Assembly Drawing: 2731241-1_1_AC

| Pos | Part No | UN | Qty | Description | Page No |
|---|---|---|---|---|---|
| - | | | | | |
| 010 | 2760936-0000 | | 1 | ANGLE BRACKET | |
| 020 | 1484766-0000 | | 3 | DANCE ROLLER | |
| 030 | 2806681-0000 | | 1 | ANGLE BRACKET | |
| 040 | 1487769-0000 | | 4 | SPACER | |
| 060 | 2936230-0000 | | 1 | PLATE | |
| 070 | 2731233-0000 | | 4 | SLIDER | |
| 080 | 2760950-0000 | | 1 | BRACKET | |
| 090 | 2760951-0000 | | 1 | BRACKET | |
| 100 | 2731236-0000 | | 3 | SHAFT | |
| 110 | 2731237-0000 | | 4 | GUIDE ROD | |
| 120 | 2731238-0000 | | 1 | PLATE | |
| 150 | 1487765-0000 | | 4 | SPACER | |
| 160 | 2776083-0000 | | 2 | BRACKET | |
| 170 | 2735069-0000 | | 4 | SUPPORT | |
| 185 | 2935136-0100 | | 1 | LOCKING DEVICE ..... | **7-9** |
| 190 | 2935820-0100 | | 1 | ROPE BRACKET ..... | **7-11** |
| 200 | 312105-0368 | | 2 | SCREW M6S ISO 4017 M6X16 A480 | |
| 210 | 312105-0370 | | 4 | SCREW M6S ISO 4017 M6X20 A480 | |
| 220 | 312105-0381 | | 7 | SCREW M6S ISO 4014 M6X55 A480 | |
| 225 | 312105-0382 | | 1 | SCREW M6S ISO 4014 M6X60 A480 | |
| 230 | 312115-0364 | | 2 | SCREW ISO4762 M6X10 A4 80 | |
| 240 | 312115-0366 | | 2 | SCREW ISO4762 M6X12 A4 80 | |
| 250 | 312115-0372 | | 6 | SCREW ISO4762 M6X25 A4 80 | |
| 260 | 312115-0380 | | 8 | SCREW ISO4762 M6X50 A4 80 | |
| 270 | 312115-0489 | | 4 | SCREW ISO4762 M10X16 A4 80 | |
| 275 | 312109-0335 | | 4 | SCREW M6S ISO 4017 M5X30 A480 | |
| 280 | 312316-0362 | | 4 | SCREW HEX.SOCK.SET CUP P.MSK6SS6X8 FZB | |
| 285 | 312155-0370 | | 4 | SCREW DIN 7991 MF6S M6X20 A4 70 | |
| 290 | 315105-0153 | | 18 | WASHER BRB 6,4X12 RFR | |
| 300 | 315115-0173 | | 4 | WASHER PLAIN, TBRB 10,5/22 H=4 | |
| 310 | 315402-0156 | | 10 | LOCK WASHER FBB 6,5 | |
| 320 | 315751-0112 | | 6 | RETAINING RING FOR SHAFT DIN 471 15 SS | |
| 330 | 321313-0102 | | 6 | BALL BEARING, 15X35X11 MM | |
| 340 | 353249-0054 | | 2 | INSERT, SINGLE HOLE, EK 156/25 | |
| 350 | 90459-2704 | | 2 | SNAP HOOK STAINLESS 50X5MM | |
| 360 | 90319-0013 | M | 17 | POLYESTER-SILKROPE 4MM 3900N, 102079 | |
| 380 | 90600-3899 | | 4 | RUBBER BUFFER, TYPE D 30/15 ART. NO. 319 | |
| 390 | 312607-0318 | | 4 | HEXAGON NUT, EN 24032 M6M M8 A480 | |
| T10B1300 | 90600-0460 | | 1 | INDUCTIVE SWITCH, E2A-M12KN05-M1-B1-TP | |
| T10B1310 | 90459-6392 | | 1 | INDUCTIV SWITCH E2A-M18LN16-M1-B1 | |
| T10W1300 | 90458-1076 | | 1 | L-SHAPED CONNECTOR CABLE 933 235-042 | |

| Machine Type | Group Description | Used-In | Group Number | Page No |
|---|---|---|---|---|

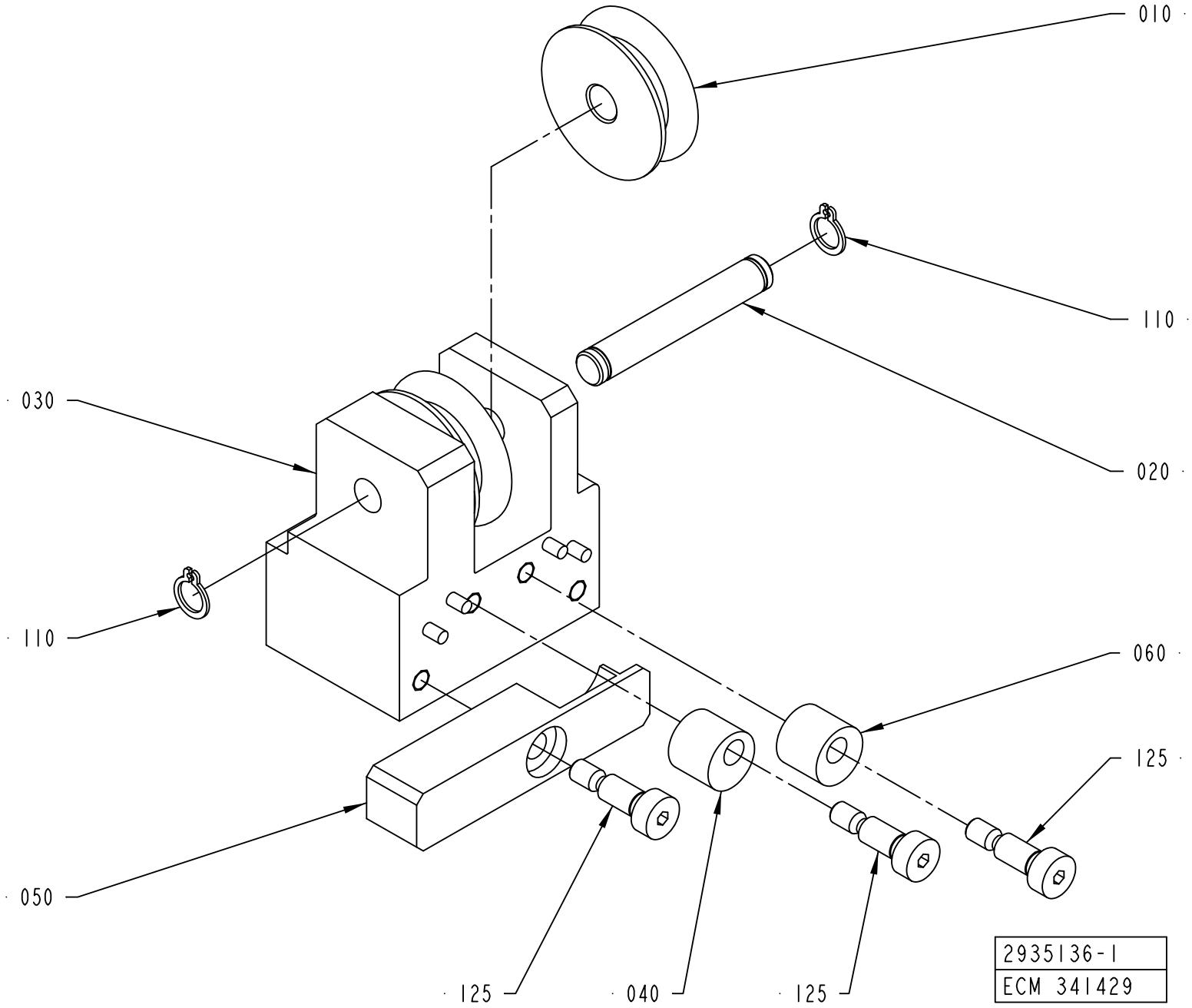
010
110
020
030
110
060
125
050
125
040
125
2935136-1
ECM 341429

ECM: 344937 - 20080228
Group number: 2935136-0100
Assembly Drawing: 2935136-1_1_AA

| Pos | Part No | UN | Qty | Description | Page No |
|---|---|---|---|---|---|
| - | | | | | |
| 010 | 2933544-0000 | | 2 | ROLLER | |
| 020 | 2934253-0000 | | 1 | AXLE PIN | |
| 030 | 2935135-0000 | | 1 | PIPE | |
| 040 | 1539397-0000 | | 1 | ROLLER | |
| 050 | 2948651-0000 | | 1 | ARM | |
| 060 | 1549332-0000 | | 1 | ROLLER | |
| 110 | 90141-0015 | | 2 | RETAINING RING FOR SHAFT DIN 471 8 SS | |
| 125 | 312180-0366 | | 3 | SCREW ISO7379 H6X12 | |

| Pos | Part No | UN | Qty | Description | Page No |
|---|---|---|---|---|---|

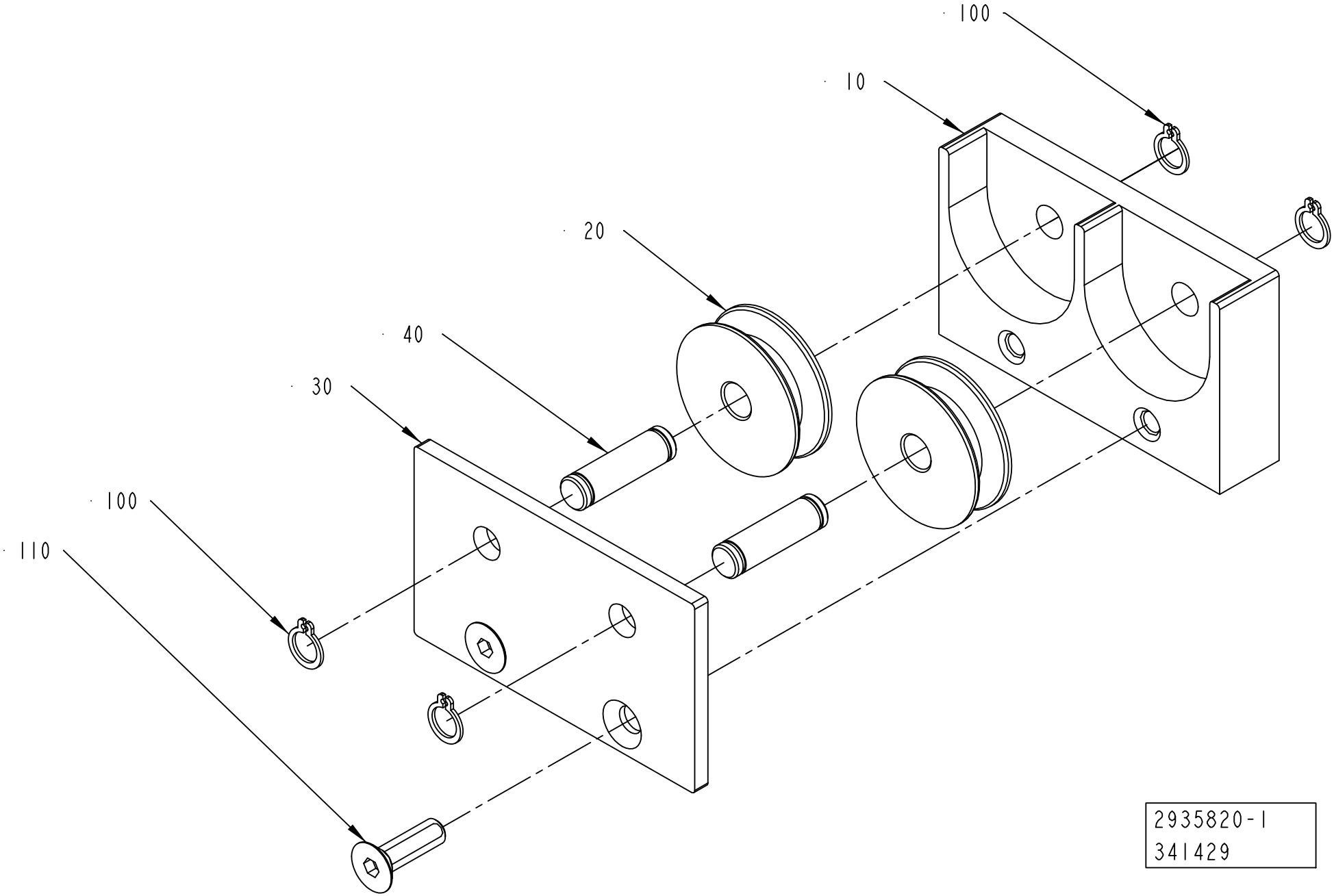
100
10
20
40
30
100
110
2935820-1
341429

ECM: 344938 - 20080228
Group number: 2935820-0100
Assembly Drawing: 2935820-1_1_AA

| Pos | Part No | UN | Qty | Description | Page No |
|---|---|---|---|---|---|
| - | | | | | |
| 010 | 2933542-0000 | | 1 | ROLLER BRACKET | |
| 020 | 2933544-0000 | | 2 | ROLLER | |
| 030 | 2933545-0000 | | 1 | PLATE | |
| 040 | 2933546-0000 | | 2 | SHAFT | |
| 100 | 90141-0015 | | 4 | RETAINING RING FOR SHAFT DIN 471 8 SS | |
| 110 | 312155-0370 | | 2 | SCREW DIN 7991 MF6S M6X20 A4 70 | |

| Pos | Part No | UN | Qty | Description | Page No |
|---|---|---|---|---|---|

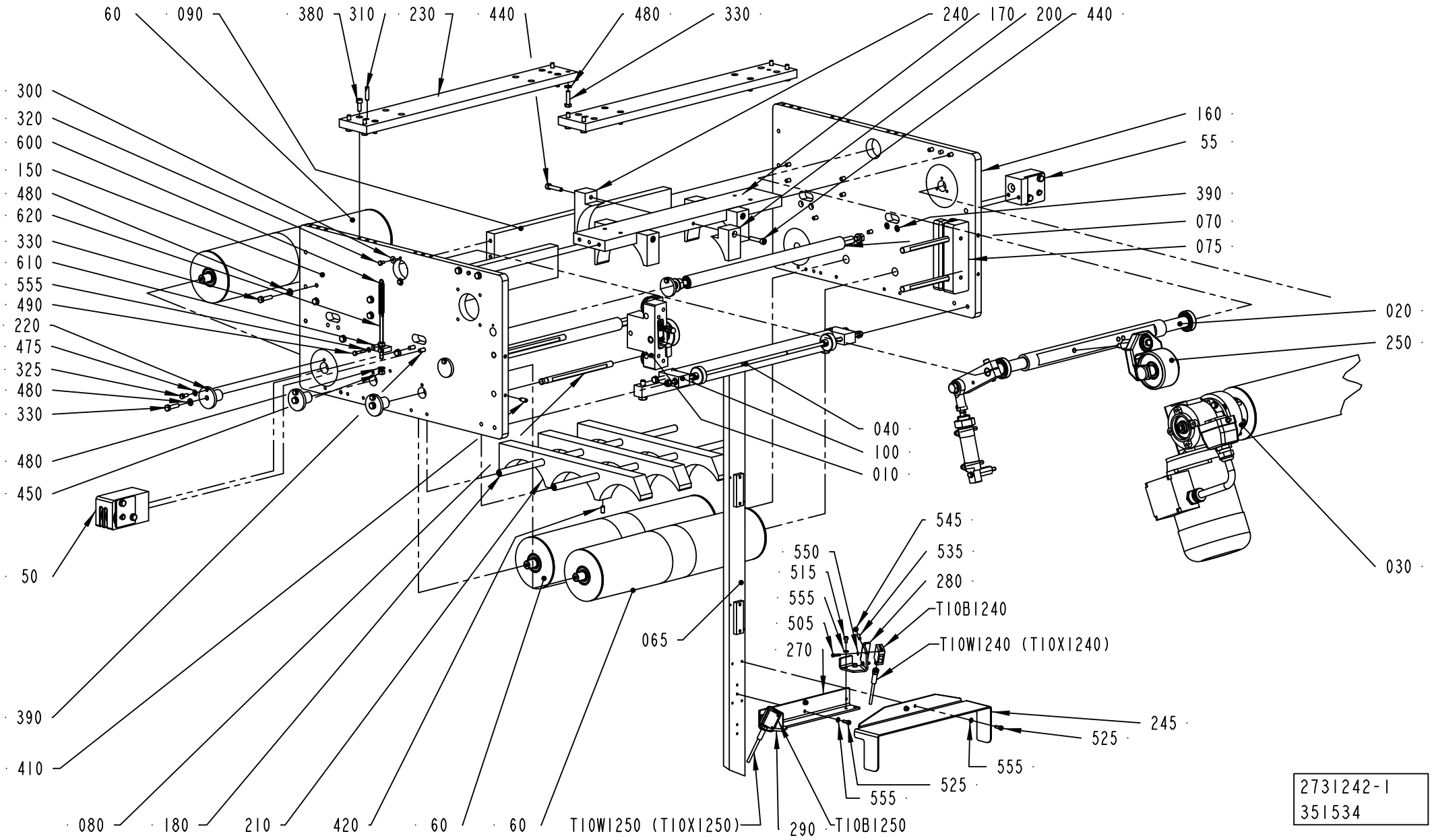
60
090
380
310
230
440
480
330
240
170
200
440
300
320
600
150
480
620
330
610
555
490
220
475
325
480
330
480
450
50
390
410
080
180
210
420
60
60
T10W1250 (T10X1250)
290
T10B1250
555
525
555
245
525
545
535
280
T10B1240
T10W1240 (T10X1240)
550
515
555
505
270
065
040
100
010
160
55
390
070
075
020
250
030
2731242-1
351534

ECM: 351534 - 20080430
Group number: 2731242-0100
Assembly Drawing: 2731242-1_1_AD

| Pos | Part No | UN | Qty | Description | Page No |
|---|---|---|---|---|---|
| - | | | | | |
| 010 | 2737931-0100 | | 1 | PAPER GUIDE | 7-15 |
| 020 | 2731245-0100 | | 1 | PRESSURE ROLLER | 7-17 |
| 030 | 2731246-0100 | | 1 | DRIVE UNIT | 7-19 |
| 040 | 2806680-0100 | | 1 | WHEEL | 7-21 |
| 050 | 2934255-0100 | | 1 | ROPE BRACKET | 7-23 |
| 055 | 2934257-0100 | | 1 | ROPE BRACKET | 7-25 |
| 060 | 2735064-0100 | | 3 | BENDING ROLLER | 7-27 |
| 065 | 2741029-0100 | | 1 | BRACKET | 7-29 |
| 070 | 2875291-0100 | | 2 | ROLLER | 7-31 |
| 075 | 2776086-0100 | | 1 | PAPER GUIDE | 7-35 |
| 080 | 1484704-0000 | | 4 | SHAFT | |
| 090 | 1487800-0000 | | 2 | PLATE | |
| 100 | 2875292-0100 | | 1 | ROLLER | 7-37 |
| 150 | 2731255-0000 | | 1 | PLATE | |
| 160 | 2731256-0000 | | 1 | PLATE | |
| 170 | 2731257-0000 | | 1 | PLATE | |
| 180 | 2735065-0000 | | 2 | SHAFT | |
| 200 | 2735067-0000 | | 3 | GUIDE | |
| 210 | 2735068-0000 | | 3 | GUIDE | |
| 220 | 2765642-0000 | | 3 | PIN | |
| 230 | 2765643-0000 | | 2 | PLATE | |
| 240 | 2806674-0000 | | 3 | GUIDE | |
| 245 | 2931467-0000 | | 1 | COVER | |
| 250 | 2731251-0100 | | 1 | COUNTER ROLLER | 7-39 |
| 270 | 2891993-0000 | | 1 | PLATE | |
| 280 | 2891994-0000 | | 1 | SUPPORT | |
| 290 | 2891995-0000 | | 1 | SUPPORT | |
| 300 | 90005-0082 | | 4 | WASHER PLAIN ROUND 4,3(M4)/12,H=1 | |
| 310 | 311103-0355 | | 4 | PARALLEL PIN ISO 2338 6M6X25 A1 | |
| 320 | 312105-0287 | | 4 | SCREW M6S ISO 4017 M4X8 A470 | |
| 325 | 312105-0327 | | 3 | SCREW M6S ISO 4017 M5X12 A480 | |
| 330 | 312105-0372 | | 27 | SCREW M6S ISO 4017 M6X25 A480 | |
| 380 | 312115-0368 | | 8 | SCREW ISO4762 M6X16 A4 80 | |
| 390 | 312115-0370 | | 4 | SCREW ISO4762 M6X20 A4 80 | |
| 410 | 312311-0368 | | 4 | SCREW ISO4028 M6X16 FZB | |
| 420 | 312318-0366 | | 3 | SCREW ISO4029 M6X12 A4 | |
| 440 | 312115-0374 | | 6 | SCREW ISO4762 M6X30 A4 80 | |
| 450 | 312605-0316 | | 2 | HEXAGON NUT, M6M M6 A280 | |
| 475 | 315105-0146 | | 5 | WASHER BRB 5,3X10 RFR | |
| 480 | 315105-0153 | | 29 | WASHER BRB 6,4X12 RFR | |
| 490 | 312105-0297 | | 2 | SCREW M6S ISO 4017 M4X25 A470 | |
| 505 | 312115-0226 | | 4 | SCREW ISO4762 M3X12 A4 80 | |
| 515 | 312115-0285 | | 4 | SCREW ISO4762 M4X6 A4 80 | |
| 525 | 312115-0291 | | 4 | SCREW ISO4762 M4X12 A4 80 | |
| 535 | 312318-0291 | | 4 | SCREW ISO4029 M4X12 A4 | |
| 545 | 312607-0312 | | 4 | HEXAGON NUT, EN 24032 M6M M4 A480 | |
| 550 | 315105-0124 | | 4 | WASHER BRB 3,2X6 RFR | |
| 555 | 315105-0136 | | 10 | WASHER BRB 4,3X8 RFR | |
| 600 | 1478303-0000 | | 1 | TENSION SPRING | |
| 610 | 2765678-0000 | | 1 | PLATE | |
| 620 | 2765679-0000 | | 1 | PIN | |
| T10B1240 | 90459-7421 | | 1 | PH.CELL WL100-P3439 | |
| T10B1250 | 90459-7421 | | 1 | PH.CELL WL100-P3439 | |
| T10W1240 | 351303-0050 | | 1 | ACTUATOR/SENSOR CABLE RKMVN 3-224/5M | |
| T10W1250 | 351303-0050 | | 1 | ACTUATOR/SENSOR CABLE RKMVN 3-224/5M | |

| Machine Type | Group Description | Used-In | Group Number | Page No |
|---|---|---|---|---|

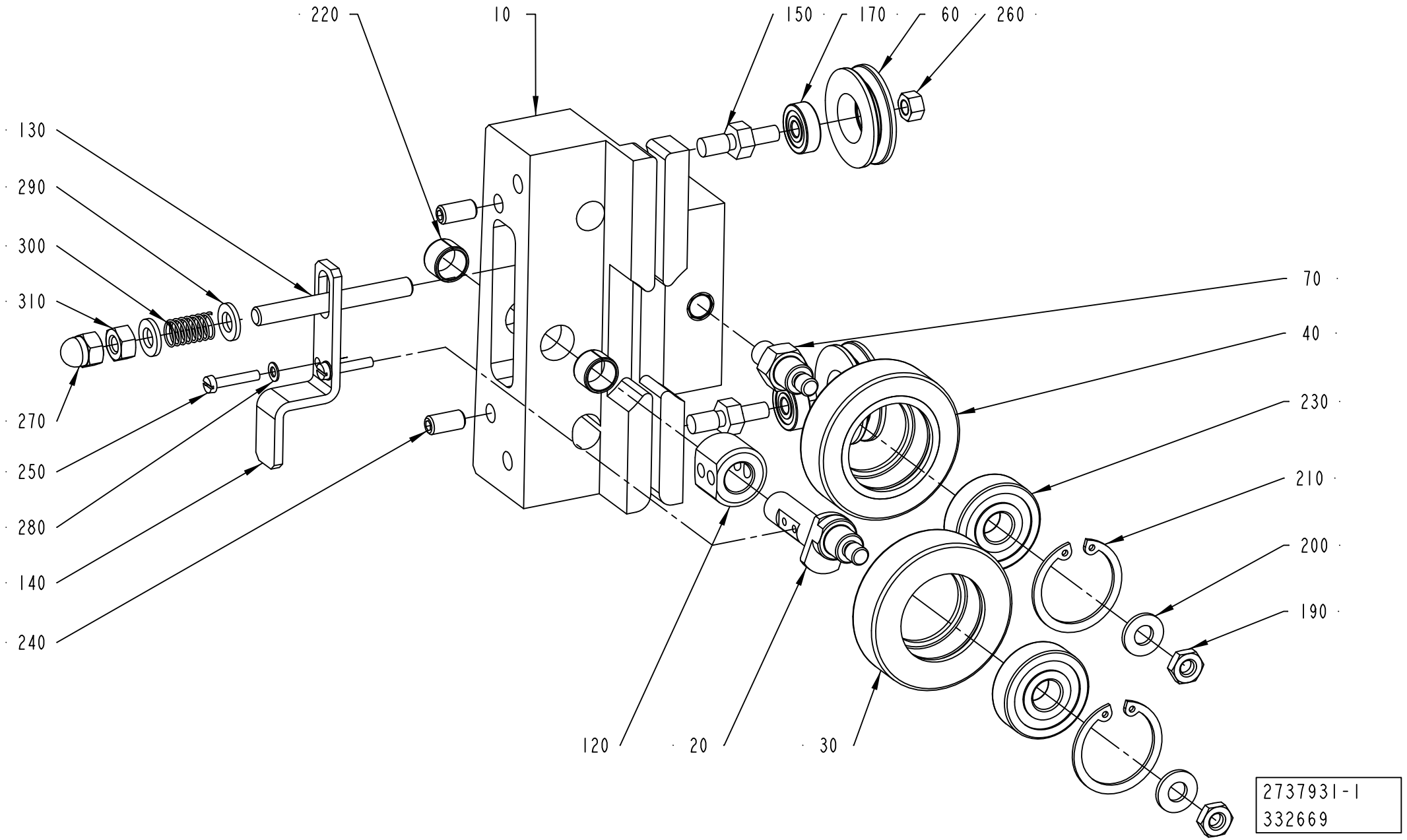
220
10
150
170
60
260
130
290
300
310
270
250
280
140
240
70
40
230
210
200
190
120
20
30
2737931-1
332669

ECM: 334865 - 20071206
Group number: 2737931-0100
Assembly Drawing: 2737931-1_1_AB

| Pos | Part No | UN | Qty | Description | Page No |
|---|---|---|---|---|---|
| - | | | | | |
| 010 | 2737930-0000 | | 1 | SUPPORT | |
| 020 | 2876448-0000 | | 1 | SHAFT | |
| 030 | 1036622-0000 | | 1 | GUIDE ROLLER | |
| 040 | 1036623-0000 | | 1 | GUIDE ROLLER | |
| 060 | 2533673-0000 | | 2 | ROLLER | |
| 070 | 1558254-0000 | | 1 | SHAFT | |
| 120 | 2805510-0000 | | 1 | SLEEVE | |
| 130 | 2805509-0000 | | 1 | SHAFT | |
| 140 | 2800316-0000 | | 1 | LEVER | |
| 150 | 2776087-0000 | | 2 | PIN | |
| 170 | 90214-0037 | | 2 | BALL BEARING, 5X16X5 MM | |
| 190 | 312625-0316 | | 2 | HEXAGON THIN NUT, EN 24035 ML6M M6 A4 | |
| 200 | 315105-0156 | | 2 | WASHER BRB 6,7X14 RFR | |
| 210 | 315753-0122 | | 2 | RETAINING RING FOR BORE DIN 472 30 A2 | |
| 220 | 321141-0138 | | 2 | BEARING BUSH W/O FLANGE, 10X12X8 MM | |
| 230 | 321313-0100 | | 2 | BALL BEARING, 10X30X9 MM | |
| 240 | 312318-0366 | | 2 | SCREW ISO4029 M6X12 A4 | |
| 250 | 312125-0228 | | 2 | SCREW ISO 1207 M3X16 A4 | |
| 260 | 312607-0314 | | 2 | HEXAGON NUT, EN 24032 M6M M5 A480 | |
| 270 | 312705-0316 | | 1 | NUT HEX. DOMED CAP MHM-6 M6 A280 | |
| 280 | 315105-0124 | | 2 | WASHER BRB 3,2X6 RFR | |
| 290 | 315105-0153 | | 2 | WASHER BRB 6,4X12 RFR | |
| 300 | 90600-1092 | | 1 | COMP. SPRING D21550, 0,63X8,63X16 | |
| 310 | 312605-0316 | | 1 | HEXAGON NUT, M6M M6 A280 | |

| Pos | Part No | UN | Qty | Description | Page No |
|---|---|---|---|---|---|

# PRESSURE ROLLER



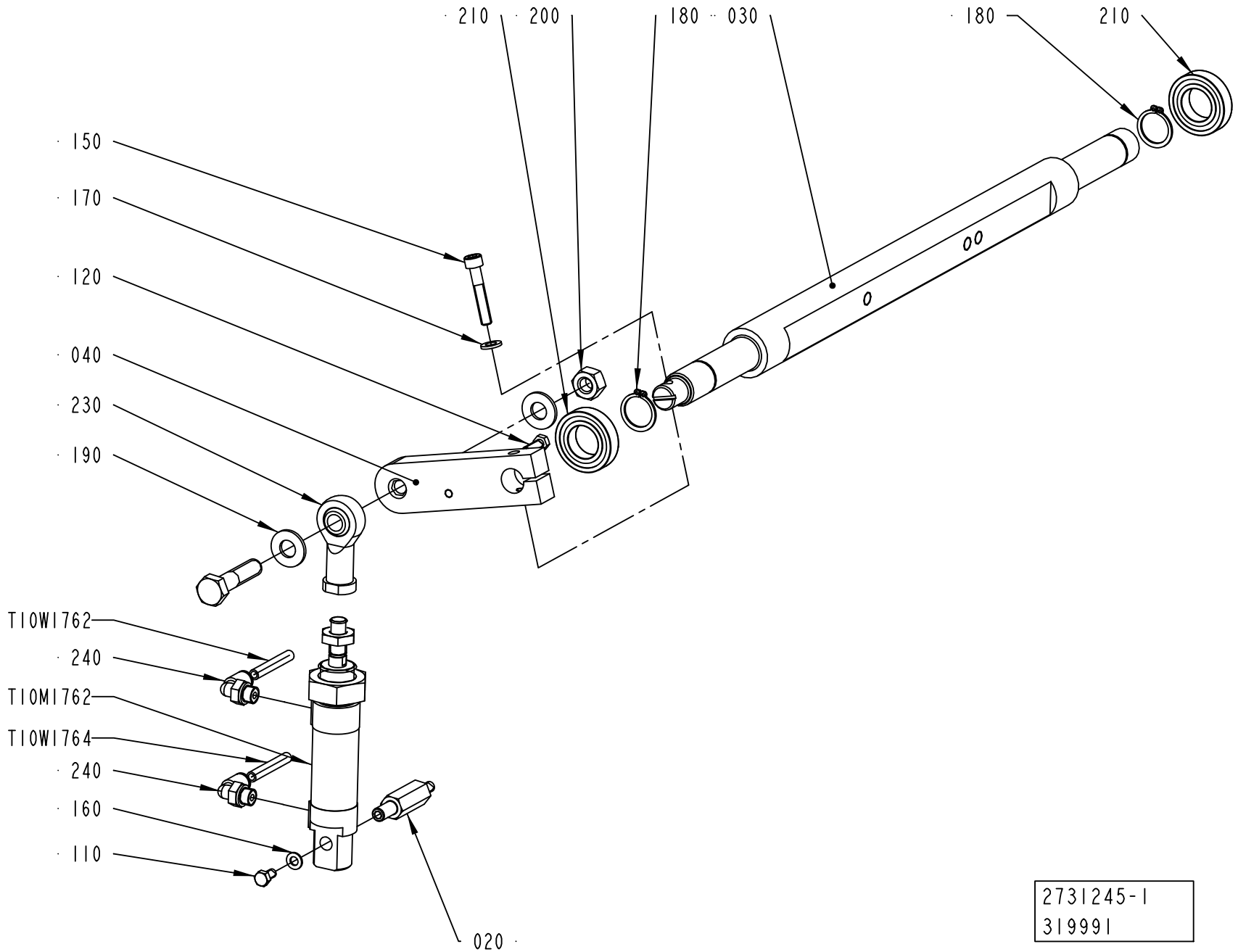

ECM: 320806 - 20070903
Group number: 2731245-0100
Assembly Drawing: 2731245-1_1_AB

| Pos | Part No | UN | Qty | Description | Page No |
|---|---|---|---|---|---|
| - | | | | | |
| 020 | 2790924-0000 | | 1 | SHAFT | |
| 030 | 2731252-0000 | | 1 | SHAFT | |
| 040 | 2731253-0000 | | 1 | ROCKER ARM | |
| 110 | 312105-0325 | | 1 | SCREW M6S ISO 4017 M5X10 A480 | |
| 120 | 312105-0329 | | 1 | SCREW M6S ISO 4017 M5X16 A480 | |
| 130 | 312105-0500 | | 1 | SCREW M6S ISO 4014 M10X45 A480 | |
| 150 | 312115-0376 | | 1 | SCREW ISO4762 M6X35 A4 80 | |
| 160 | 315105-0146 | | 1 | WASHER BRB 5,3X10 RFR | |
| 170 | 315105-0153 | | 1 | WASHER BRB 6,4X12 RFR | |
| 180 | 315751-0116 | | 2 | RETAINING RING FOR SHAFT DIN 471 20 SS | |
| 190 | 315105-0173 | | 2 | WASHER BRB 10,5X22 RFR | |
| 200 | 312605-0320 | | 1 | HEXAGON NUT, M6M M10 A280 | |
| 210 | 90214-0203 | | 2 | BALL BEARING, 20X37X9 MM | |
| 230 | 90459-1018 | | 1 | ROD END,BALL JOINT EYE M10X1,25 | |
| 240 | 350002-0006 | | 2 | PUSH-IN L-FITTING QSL-F-G1/8-6 | |
| T10M1762 | 90459-1953 | | 1 | DOUBLE ACTING, MINI-ISO, CYL. 25-10 | |
| T10W1762 | 315400-0001 | MM | 6000 | TUBE PUN-H-6X1-BL | |
| T10W1764 | 315400-0001 | MM | 6000 | TUBE PUN-H-6X1-BL | |

| Pos | Part No | UN | Qty | Description | Page No |
|---|---|---|---|---|---|

Machine Type | Group Description | Used-In | Group Number | Page No

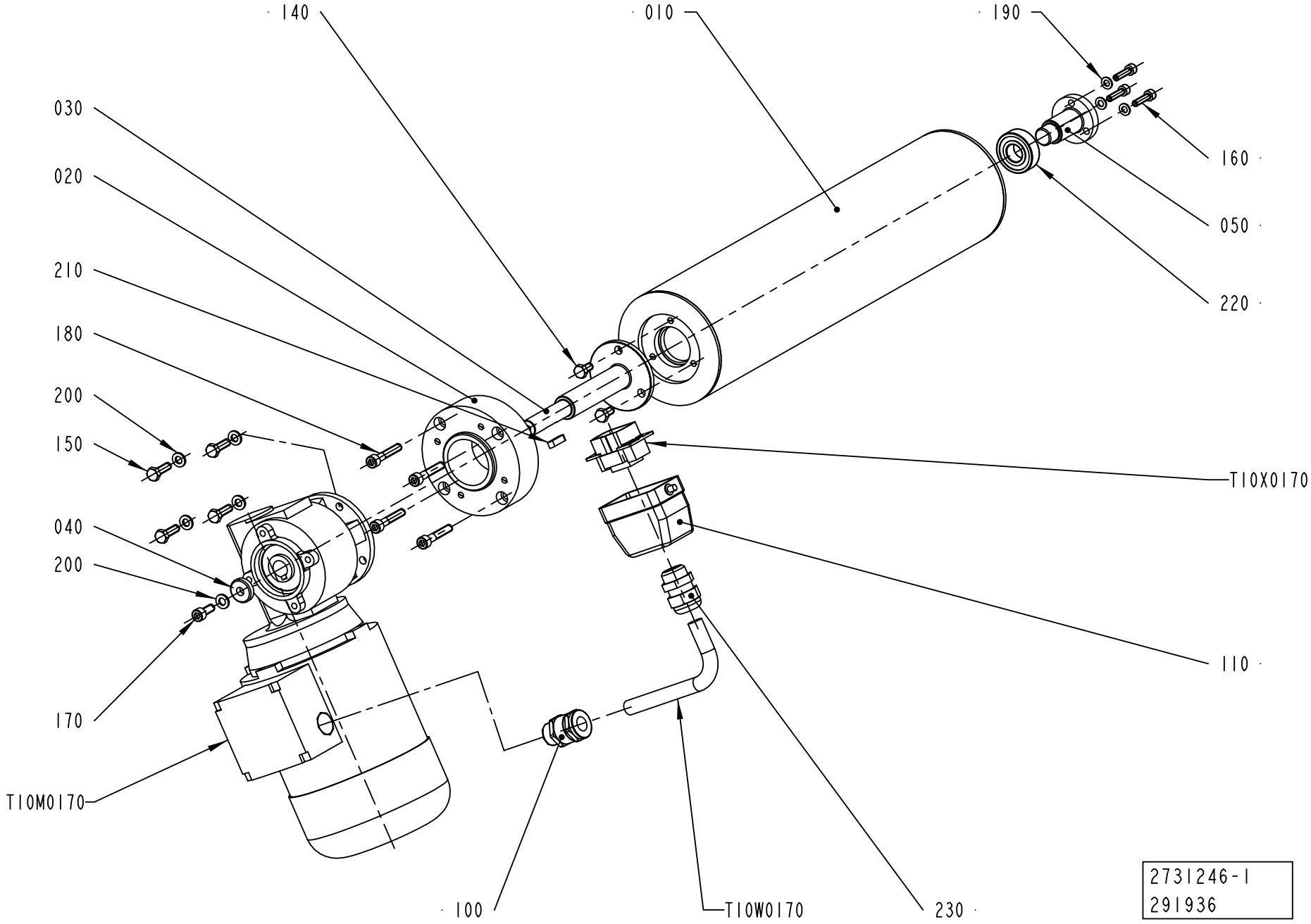
140
010
190
030
020
160
050
210
220
180
200
150
T10X0170
040
200
110
170
T10M0170
100
T10W0170
230
2731246-1
291936

ECM: 351539 - 20080430
Group number: 2731246-0100
Assembly Drawing: 2731246-1_1_AA

| Pos | Part No | UN | Qty | Description | Page No |
|---|---|---|---|---|---|
| **A3/FLEX** | | | | | |
| 010 | 2523497-0000 | | 1 | BENDING ROLLER | |
| **Common Parts** | | | | | |
| 020 | 2731247-0000 | | 1 | SPACER | |
| 030 | 2731248-0000 | | 1 | SHAFT | |
| 040 | 2731249-0000 | | 1 | COVER | |
| 050 | 2731250-0000 | | 1 | COVER | |
| 100 | 90012-0137 | | 1 | GLAND, EXTENDED WITH INSERT, PG11 | |
| 110 | 90110-0157 | | 1 | CABLE HOOD 6-POL 70.352.0628.1 | |
| 140 | 312105-0366 | | 3 | SCREW M6S ISO 4017 M6X12 A480 | |
| 150 | 312105-0370 | | 4 | SCREW M6S ISO 4017 M6X20 A480 | |
| 160 | 312115-0331 | | 3 | SCREW ISO4762 M5X20 A4 80 | |
| 170 | 312115-0368 | | 1 | SCREW ISO4762 M6X16 A4 80 | |
| 180 | 312115-0376 | | 4 | SCREW ISO4762 M6X35 A4 80 | |
| 190 | 315105-0146 | | 3 | WASHER BRB 5,3X10 RFR | |
| 200 | 315105-0153 | | 5 | WASHER BRB 6,4X12 RFR | |
| 210 | 315705-0201 | | 1 | PARALLEL KEY W. ROUND ENDS 5X5X20 MM | |
| 220 | 321313-0102 | | 1 | BALL BEARING, 15X35X11 MM | |
| 230 | 352103-0108 | | 1 | CABLE GLAND, ST 13,5 , PR20,4/PG13,5 | |
| T10M0170 | 90459-2096 | | 1 | GEARS, WORM MOTOR F2 15 P63 B14 B8 PV 75 | |
| T10W0170 | 90220-0104 | M | 7.5 | SCR. CABLE 4X1,5MM2 | |
| T10X0170 | 90110-0159 | | 1 | MALE INSERT 70.310.0640.0 | |

| Pos | Part No | UN | Qty | Description | Page No |
|---|---|---|---|---|---|

Machine Type | Group Description | Used-In | Group Number | Page No

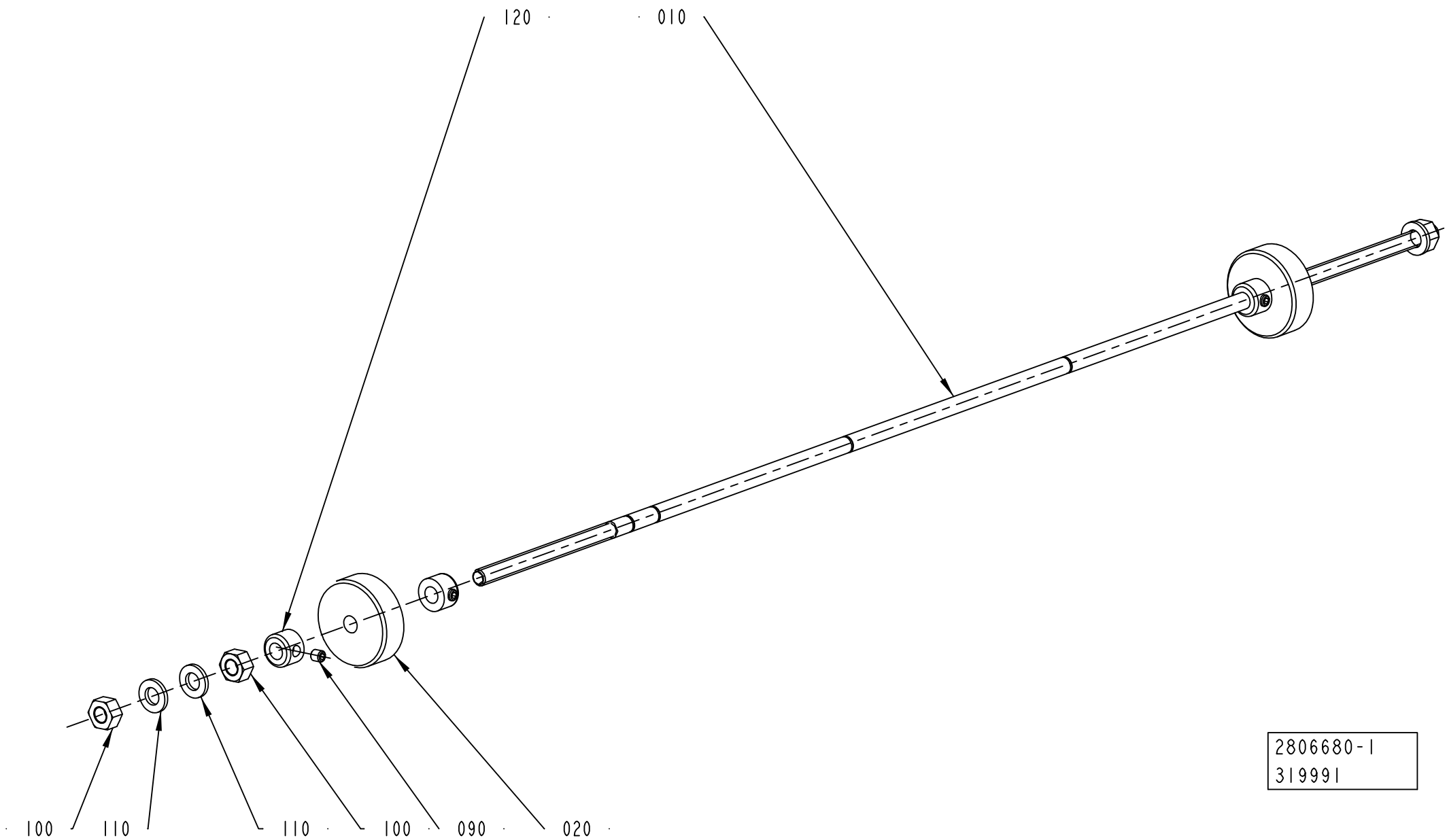
120
010
100
110
110
100
090
020
2806680-1
319991

ECM: 320828 - 20070903
Group number: 2806680-0100
Assembly Drawing: 2806680-1_1_AB

| Pos | Part No | UN | Qty | Description | Page No |
|---|---|---|---|---|---|
| - | | | | | |
| 010 | 2701319-0000 | | 1 | GUIDE PIN | |
| 020 | 2735071-0000 | | 2 | WHEEL | |
| 090 | 312318-0283 | | 4 | SCREW ISO4029 M4X4 A4 | |
| 100 | 312607-0316 | | 3 | HEXAGON NUT, EN 24032 M6M M6 A480 | |
| 110 | 315103-0153 | | 3 | WASHER, BRB, 6,4/12,H=1,5 NIPL BR | |
| 120 | 315741-0102 | | 4 | RETAINING RING DIN 705 A2 6 | |

| Pos | Part No | UN | Qty | Description | Page No |
|---|---|---|---|---|---|

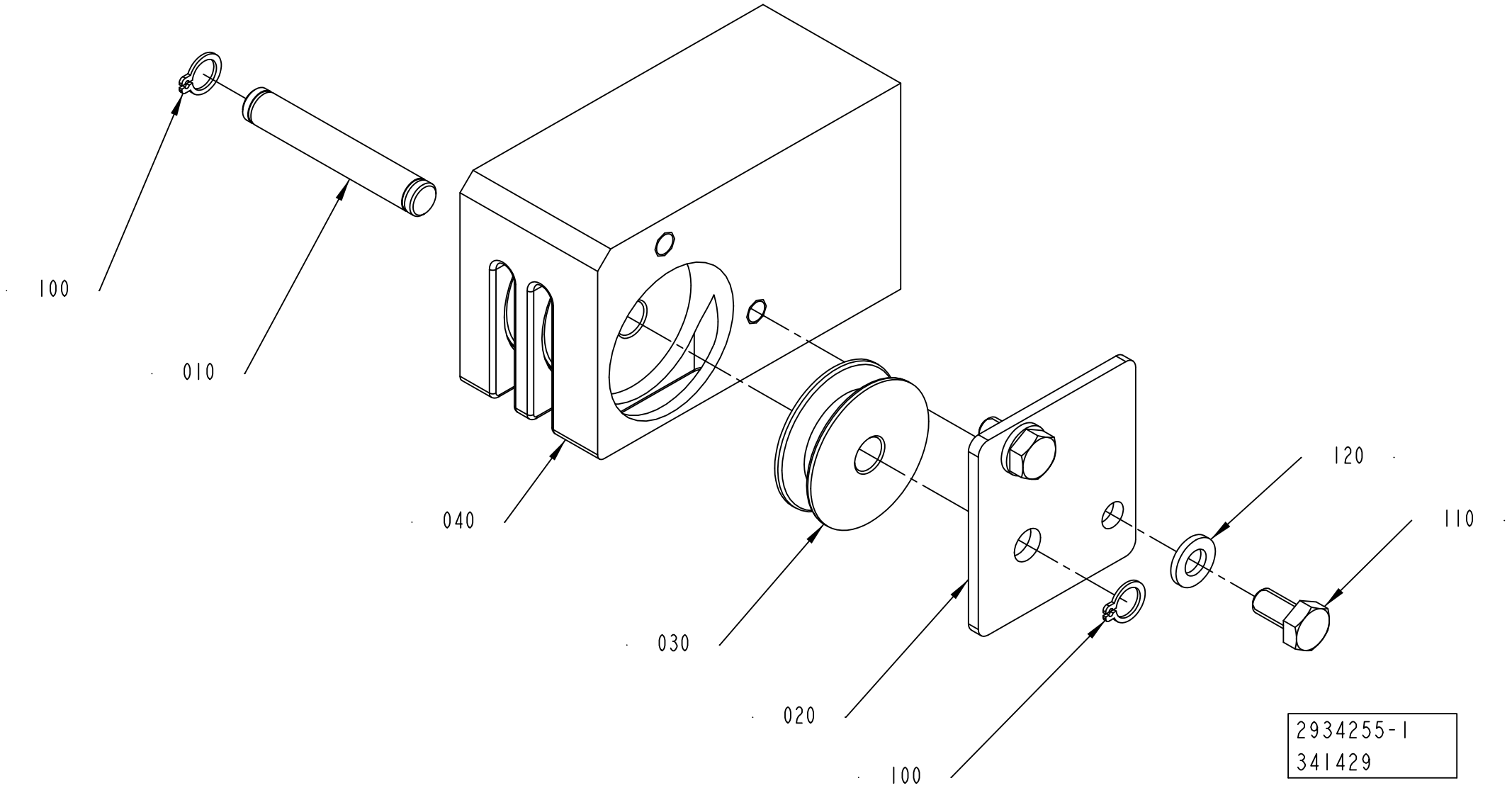
100
010
040
030
020
100
120
110
2934255-1
341429

ECM: 341434 - 20080228
Group number: 2934255-0100
Assembly Drawing: 2934255-1_1_AA

| Pos | Part No | UN | Qty | Description | Page No |
|---|---|---|---|---|---|
| - | | | | | |
| 010 | 2934253-0000 | | 1 | AXLE PIN | |
| 020 | 2934254-0000 | | 1 | COVER | |
| 030 | 2933544-0000 | | 3 | ROLLER | |
| 040 | 2934252-0000 | | 1 | ROLLER BRACKET | |
| 100 | 90141-0015 | | 2 | RETAINING RING FOR SHAFT DIN 471 8 SS | |
| 110 | 312105-0366 | | 2 | SCREW M6S ISO 4017 M6X12 A480 | |
| 120 | 315106-0153 | | 2 | WASHER ISO 7089-6-200 HV A4 | |

| Pos | Part No | UN | Qty | Description | Page No |
|---|---|---|---|---|---|

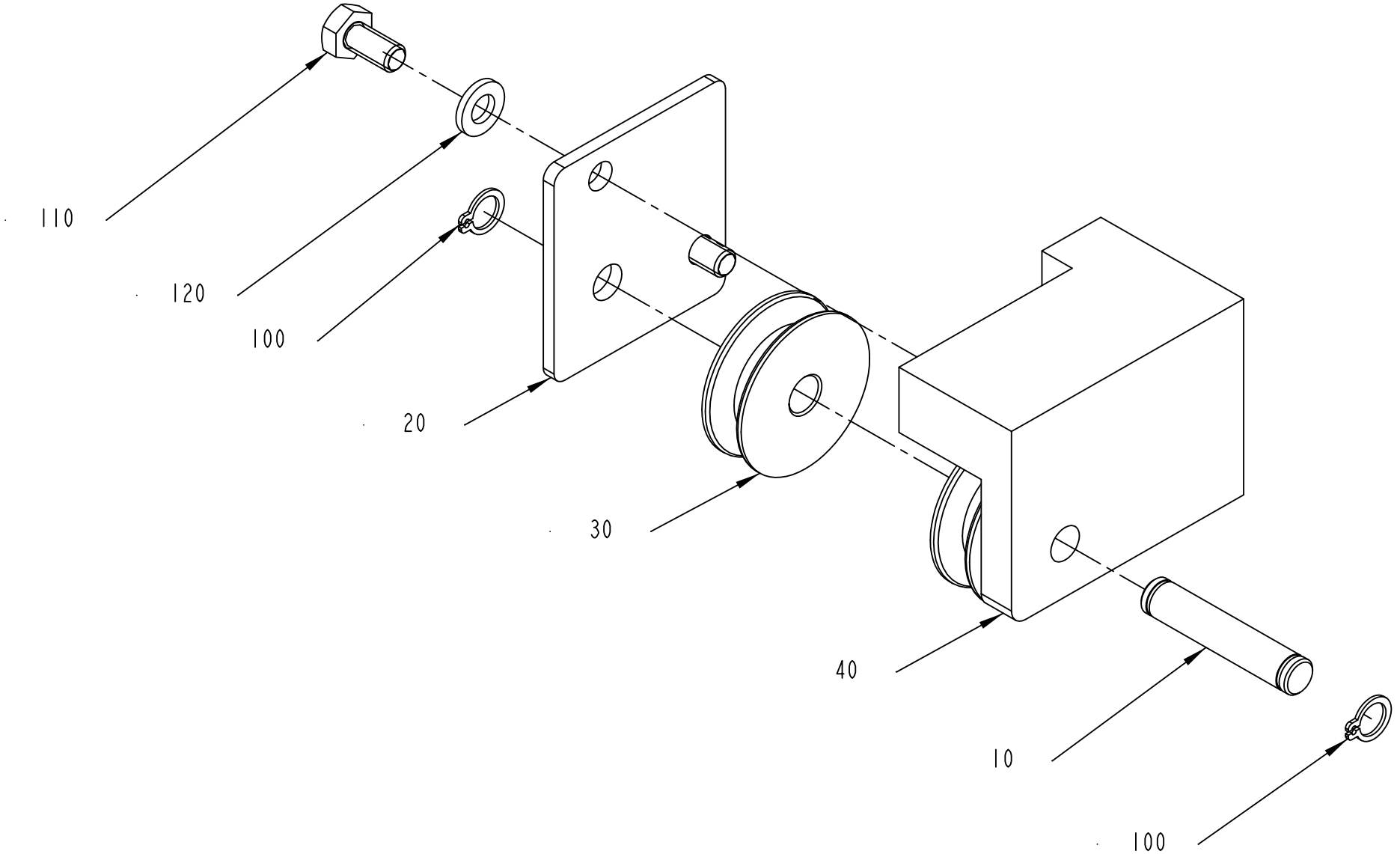
110
120
100
20
30
40
10
100
2934257-1
341429

ECM: 341433 - 20080228
Group number: 2934257-0100
Assembly Drawing: 2934257-1_1_AA

| Pos | Part No | UN | Qty | Description | Page No |
|---|---|---|---|---|---|
| - | | | | | |
| 010 | 2935134-0000 | | 1 | AXLE PIN | |
| 020 | 2934254-0000 | | 1 | COVER | |
| 030 | 2933544-0000 | | 2 | ROLLER | |
| 040 | 2934256-0000 | | 1 | ROLLER BRACKET | |
| 100 | 90141-0015 | | 2 | RETAINING RING FOR SHAFT DIN 471 8 SS | |
| 110 | 312105-0366 | | 2 | SCREW M6S ISO 4017 M6X12 A480 | |
| 120 | 315106-0153 | | 2 | WASHER ISO 7089-6-200 HV A4 | |

| Pos | Part No | UN | Qty | Description | Page No |
|---|---|---|---|---|---|

# BENDING ROLLER



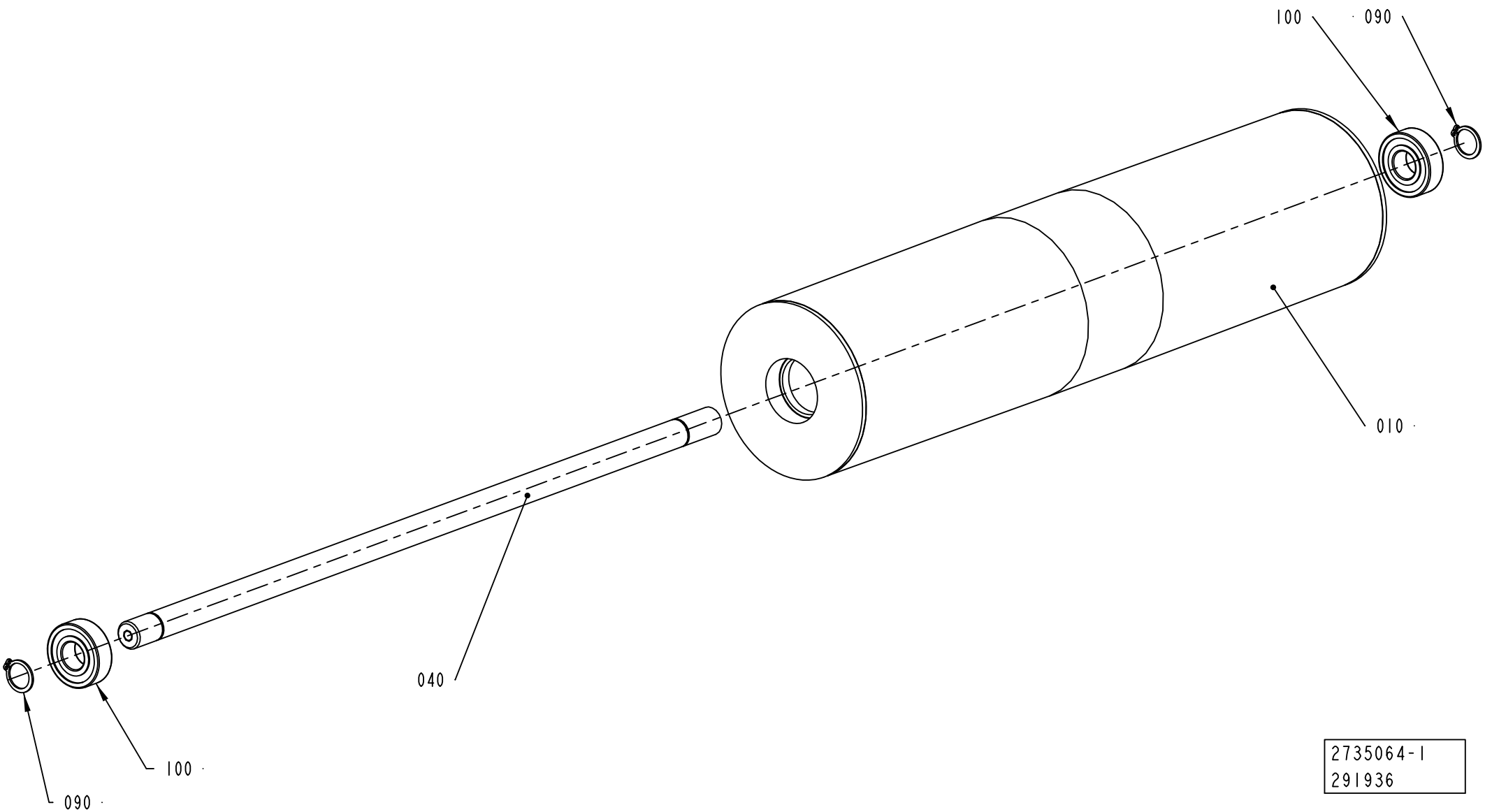

ECM: 301904 - 20070508
Group number: 2735064-0100
Assembly Drawing: 2735064-1_1_AA

| Pos | Part No | UN | Qty | Description | Page No |
|---|---|---|---|---|---|
| - | | | | | |
| 010 | 1484766-0000 | | 1 | DANCE ROLLER | |
| 040 | 2735063-0000 | | 1 | SHAFT | |
| 090 | 315751-0112 | | 2 | RETAINING RING FOR SHAFT DIN 471 15 SS | |
| 100 | 321313-0102 | | 2 | BALL BEARING, 15X35X11 MM | |

| Pos | Part No | UN | Qty | Description | Page No |
|---|---|---|---|---|---|

# BRACKET



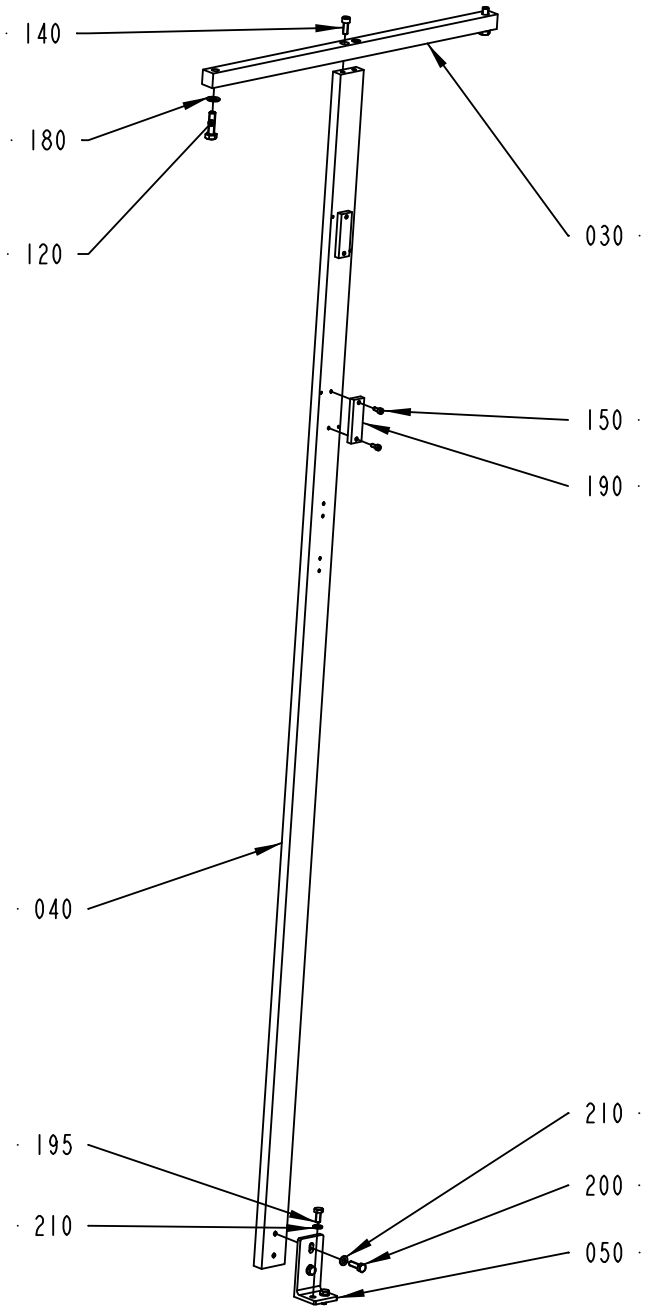


2741029-1
291936

ECM: 301903 - 20070508
Group number: 2741029-0100
Assembly Drawing: 2741029-1_1_AA

| Pos | Part No | UN | Qty | Description | Page No |
|---|---|---|---|---|---|
| - | | | | | |
| 030 | 2741030-0000 | | 1 | PLATE | |
| 040 | 2741031-0000 | | 1 | PLATE | |
| 050 | 2891996-0000 | | 1 | SUPPORT | |
| 120 | 312105-0455 | | 2 | SCREW M6S ISO 4017 M8X30 A480 | |
| 140 | 312115-0368 | | 2 | SCREW ISO4762 M6X16 A4 80 | |
| 150 | 312115-0289 | | 4 | SCREW ISO4762 M4X10 A4 80 | |
| 180 | 315105-0165 | | 2 | WASHER BRB 8,4X16 RFR | |
| 190 | 90458-0565 | | 2 | REFLECTOR, PL20A | |
| 195 | 312105-0367 | | 2 | SCREW M6S ISO 4017 M6X14 A480 | |
| 200 | 312105-0370 | | 2 | SCREW M6S ISO 4017 M6X20 A480 | |
| 210 | 315105-0153 | | 4 | WASHER BRB 6,4X12 RFR | |

| Pos | Part No | UN | Qty | Description | Page No |
|---|---|---|---|---|---|

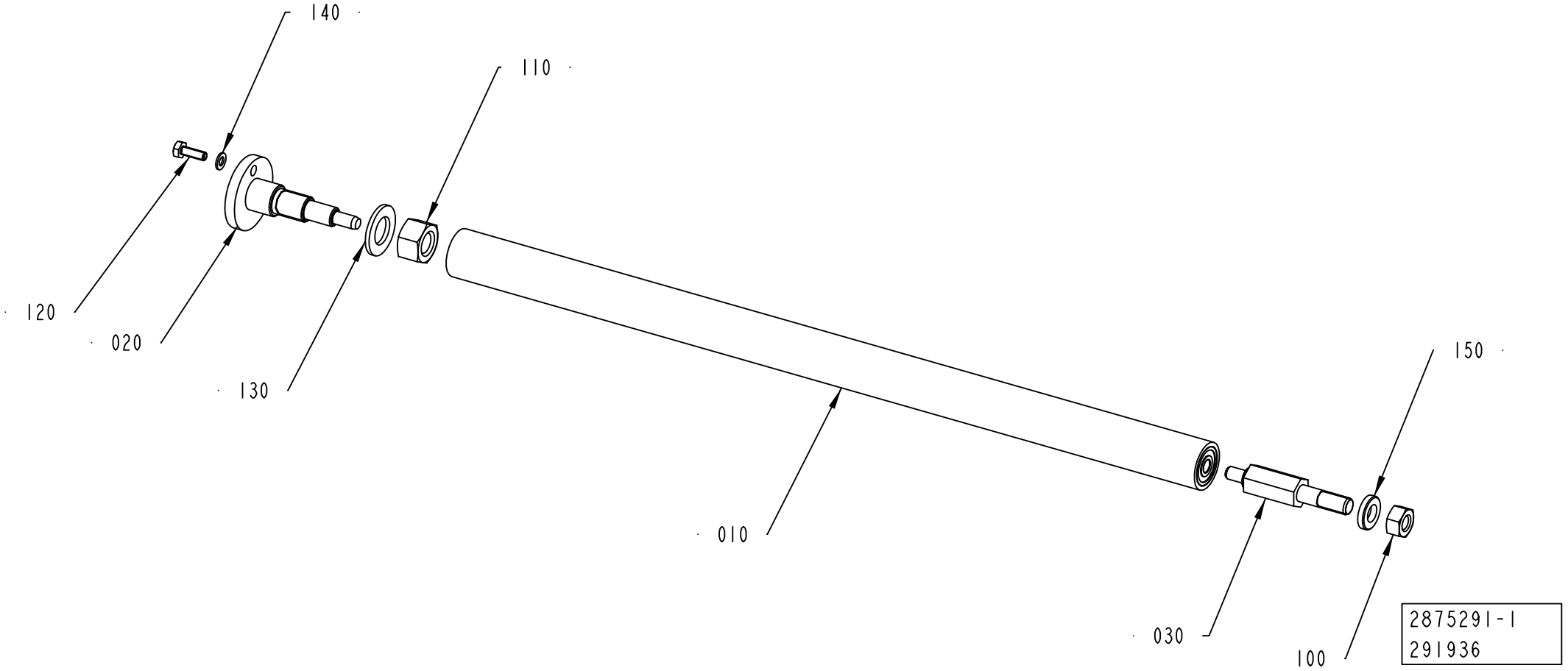
140
110
120
020
130
010
150
030
100
2875291-1
291936

ECM: 303112 - 20070508
Group number: 2875291-0100
Assembly Drawing: 2875291-1_1_AA

| Pos | Part No | UN | Qty | Description | Page No |
|---|---|---|---|---|---|
| - | | | | | |
| 010 | 2863550-0100 | | 1 | ROLLER ..... | **7-33** |
| 020 | 2875289-0000 | | 1 | PIN | |
| 030 | 2875290-0000 | | 1 | SHAFT | |
| 100 | 312605-0318 | | 1 | HEXAGON NUT, M6M M8 A280 | |
| 110 | 312605-0322 | | 1 | HEXAGON NUT, M6M M12 A280 | |
| 120 | 312105-0291 | | 1 | SCREW M6S ISO 4017 M4X12 A470 | |
| 130 | 315105-0179 | | 1 | WASHER BRB 13,5X24 RFR | |
| 140 | 315105-0136 | | 1 | WASHER BRB 4,3X8 RFR | |
| 150 | 315115-0165 | | 1 | WASHER PLAIN, TBRB 8,4/16 H=3 | |

| Pos | Part No | UN | Qty | Description | Page No |
|---|---|---|---|---|---|

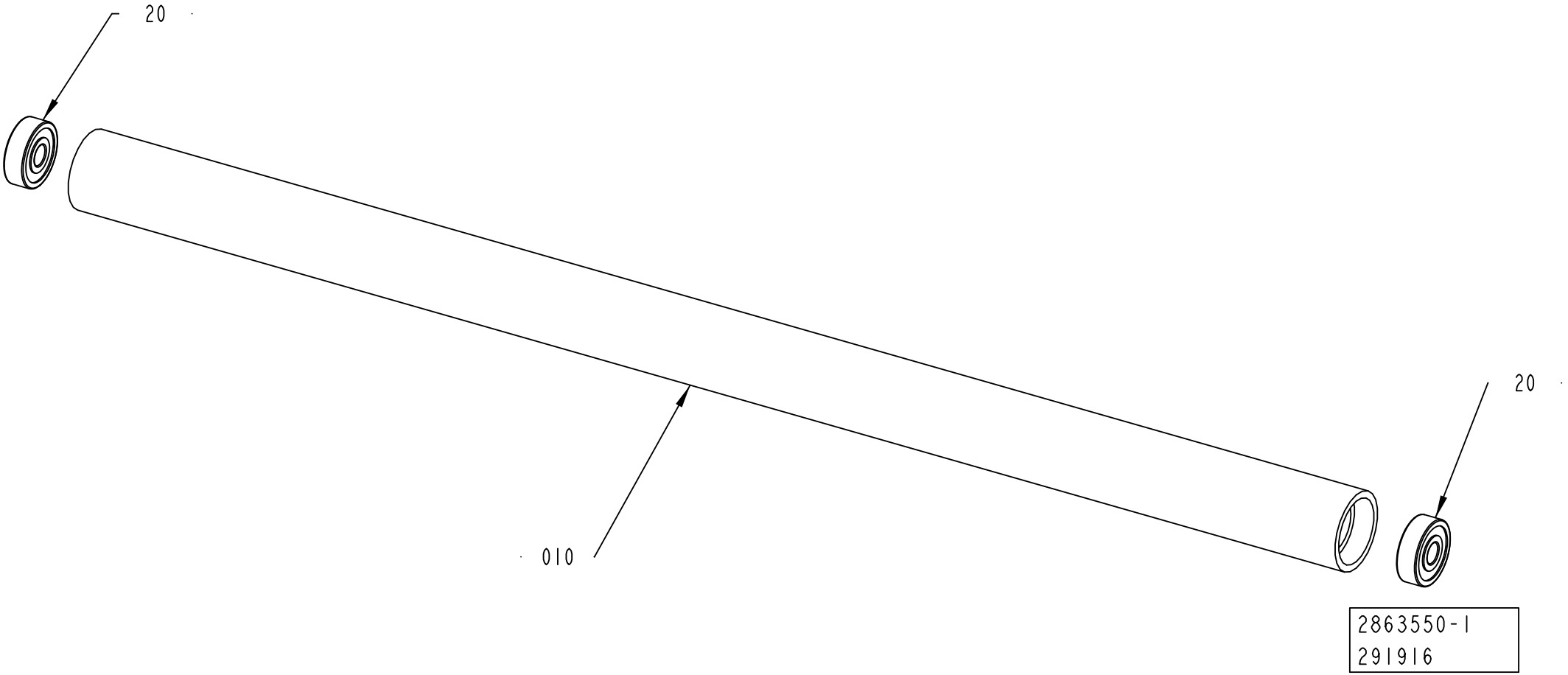
20
010
20
2863550-1
291916

ECM: 297373 - 20070508
Group number: 2863550-0100
Assembly Drawing: 2863550-1_1_AA

| Pos | Part No | UN | Qty | Description | Page No |
|---|---|---|---|---|---|
| - | | | | | |
| 010 | 2863546-0000 | | 1 | ROLLER | |
| 020 | 90600-2897 | | 2 | BALL BEARING, 6X19X6 MM | |

| Pos | Part No | UN | Qty | Description | Page No |
|---|---|---|---|---|---|

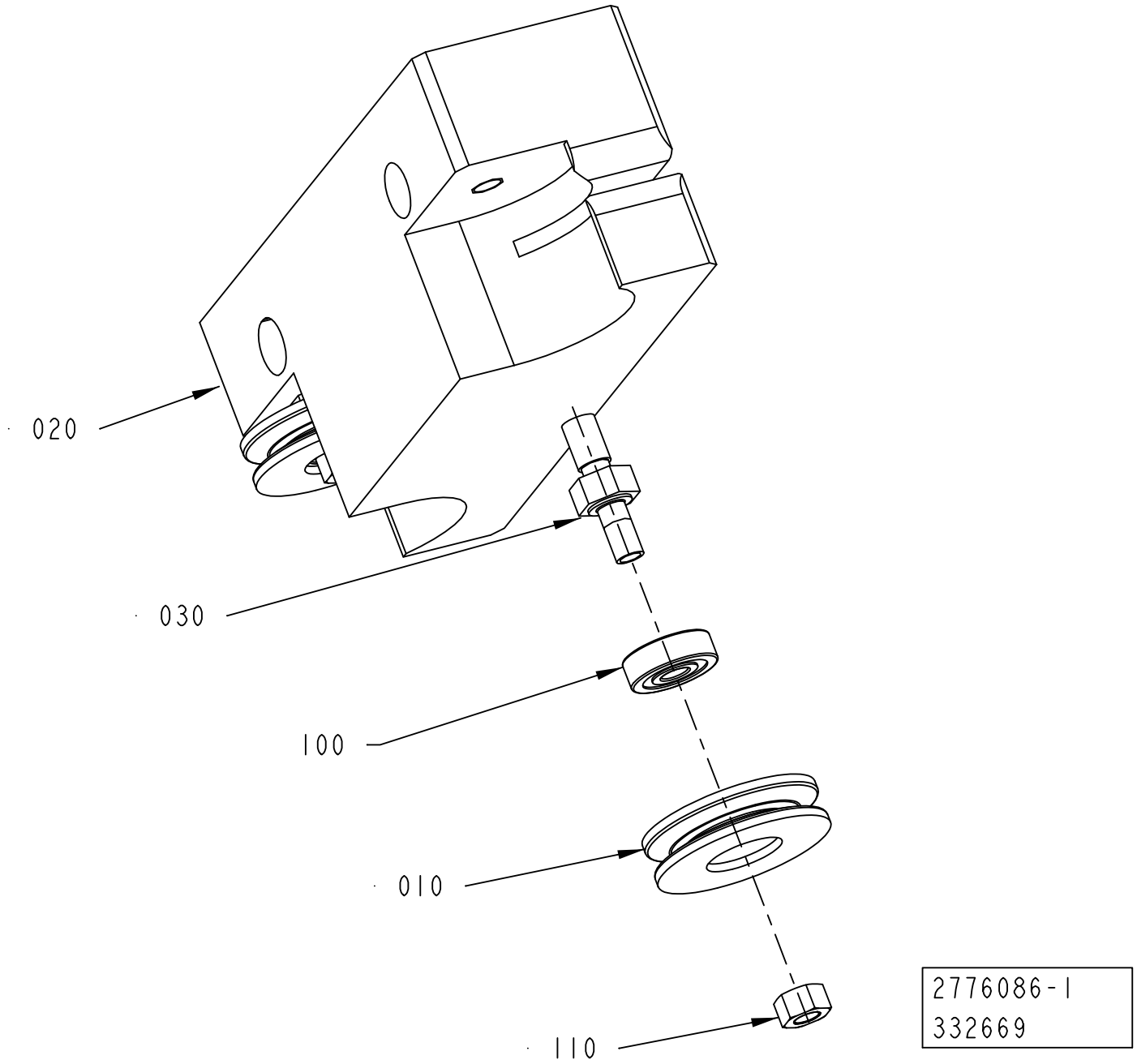
020
030
100
010
110
2776086-1
332669

ECM: 334866 - 20071206
Group number: 2776086-0100
Assembly Drawing: 2776086-1_1_AB

| Pos | Part No | UN | Qty | Description | Page No |
|---|---|---|---|---|---|
| - | | | | | |
| 010 | 2533673-0000 | | 2 | ROLLER | |
| 020 | 2776084-0000 | | 1 | SUPPORT | |
| 030 | 2776087-0000 | | 2 | PIN | |
| 100 | 90214-0037 | | 2 | BALL BEARING, 5X16X5 MM | |
| 110 | 312607-0314 | | 2 | HEXAGON NUT, EN 24032 M6M M5 A480 | |

| Pos | Part No | UN | Qty | Description | Page No |
|---|---|---|---|---|---|

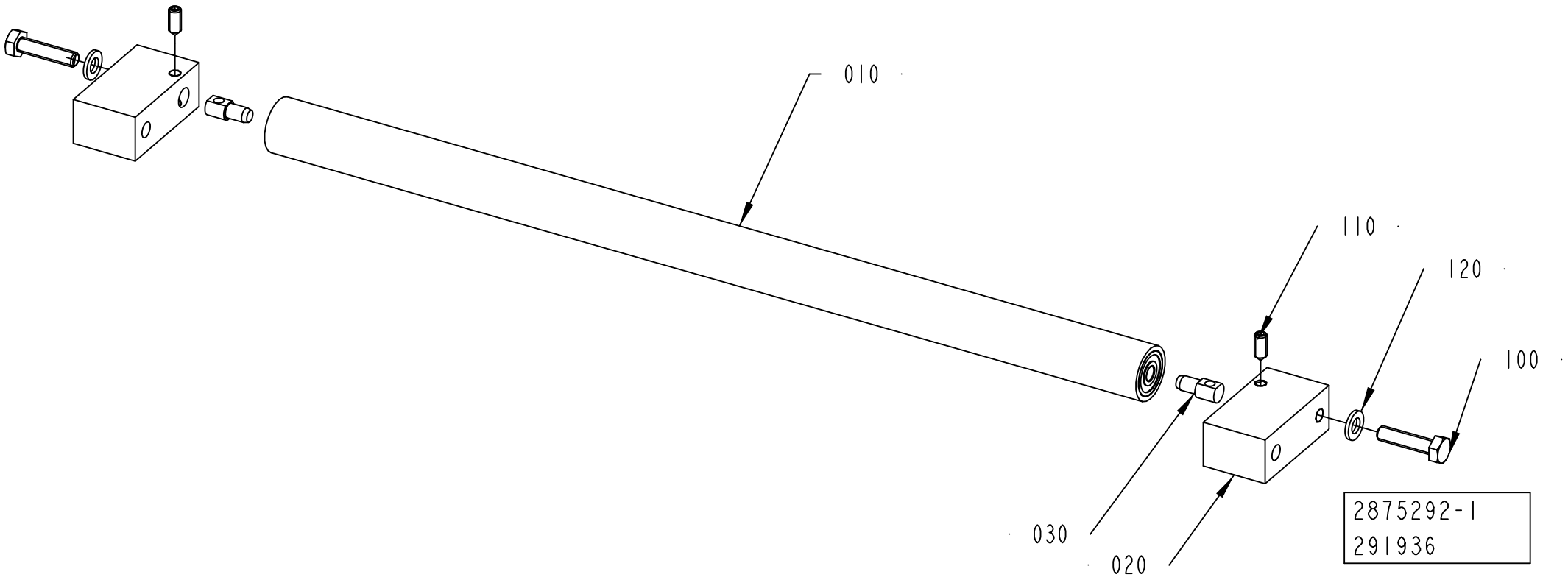
010
110
120
100
030
020
2875292-1
291936

ECM: 303745 - 20070508
Group number: 2875292-0100
Assembly Drawing: 2875292-1_1_AA

| Pos | Part No | UN | Qty | Description | Page No |
|---|---|---|---|---|---|
| - | | | | | |
| 010 | 2863550-0100 | | 1 | ROLLER ..... | **7-33** |
| 020 | 2863547-0000 | | 2 | PIN | |
| 030 | 2875287-0000 | | 2 | BRACKET | |
| 100 | 312105-0372 | | 2 | SCREW M6S ISO 4017 M6X25 A480 | |
| 110 | 90459-7283 | | 2 | SCREW HEX.SOCK.SET CONEPT.MS6SS M5X12 A2 | |
| 120 | 315105-0153 | | 2 | WASHER BRB 6,4X12 RFR | |

| Pos | Part No | UN | Qty | Description | Page No |
|---|---|---|---|---|---|

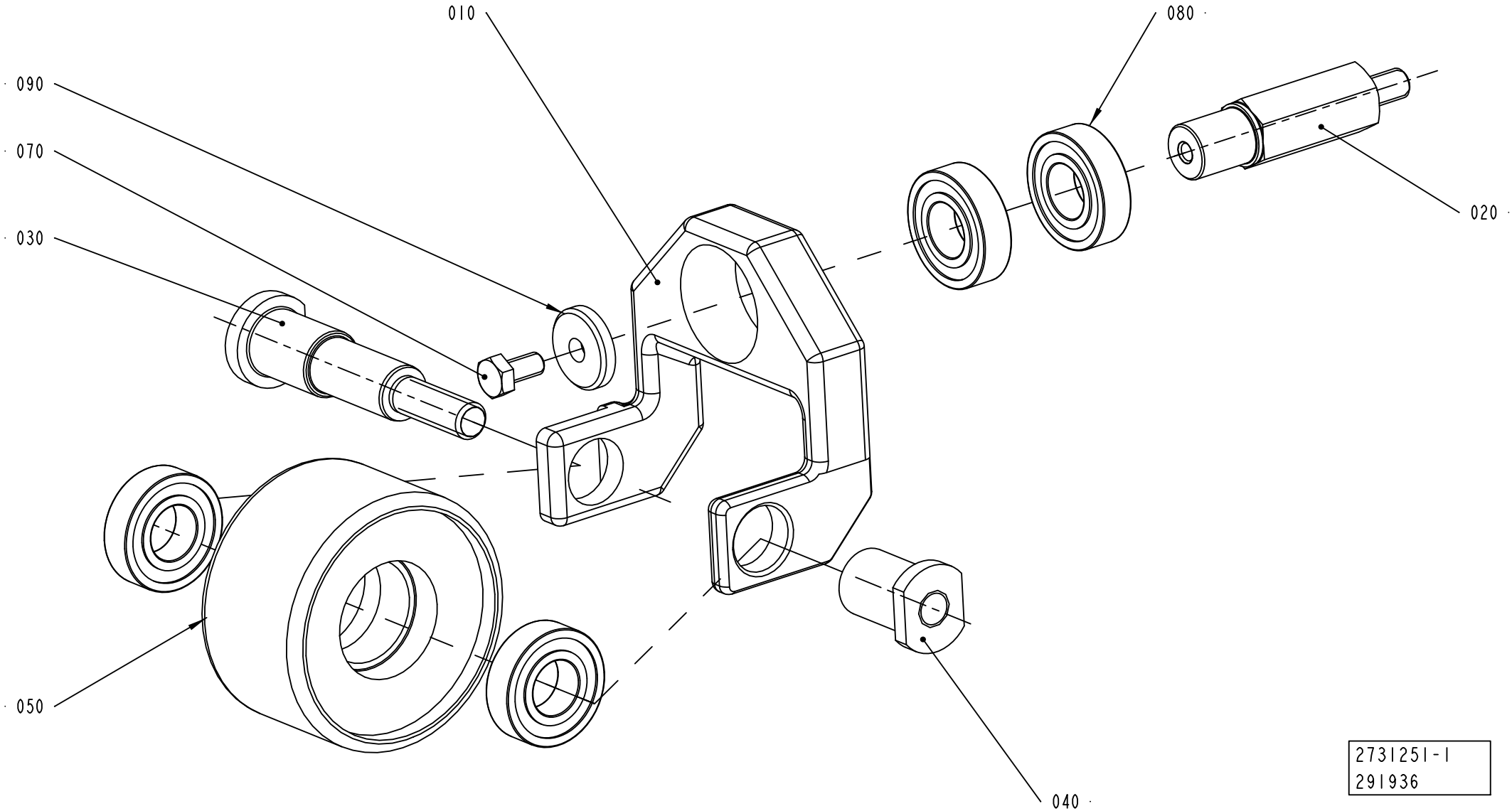
010
080
090
070
030
020
050
040
2731251-1
291936

ECM: 301902 - 20070508
Group number: 2731251-0100
Assembly Drawing: 2731251-1_1_AA

| Pos | Part No | UN | Qty | Description | Page No |
|---|---|---|---|---|---|
| - | | | | | |
| 010 | 263150-0000 | | 1 | BRACKET | |
| 020 | 2731254-0000 | | 1 | PIN | |
| 030 | 263152-0000 | | 1 | SHAFT | |
| 040 | 263153-0000 | | 1 | NUT | |
| 050 | 1145079-0000 | | 1 | WHEEL | |
| 070 | 312105-0366 | | 1 | SCREW M6S ISO 4017 M6X12 A480 | |
| 080 | 321308-0202 | | 4 | BALL BEARING, 15X32X9 MM | |
| 090 | 315125-0153 | | 1 | WASHER TBRSB 6,4X22X4 A4 | |

| Pos | Part No | UN | Qty | Description | Page No |
|---|---|---|---|---|---|

# MACHINE BODY



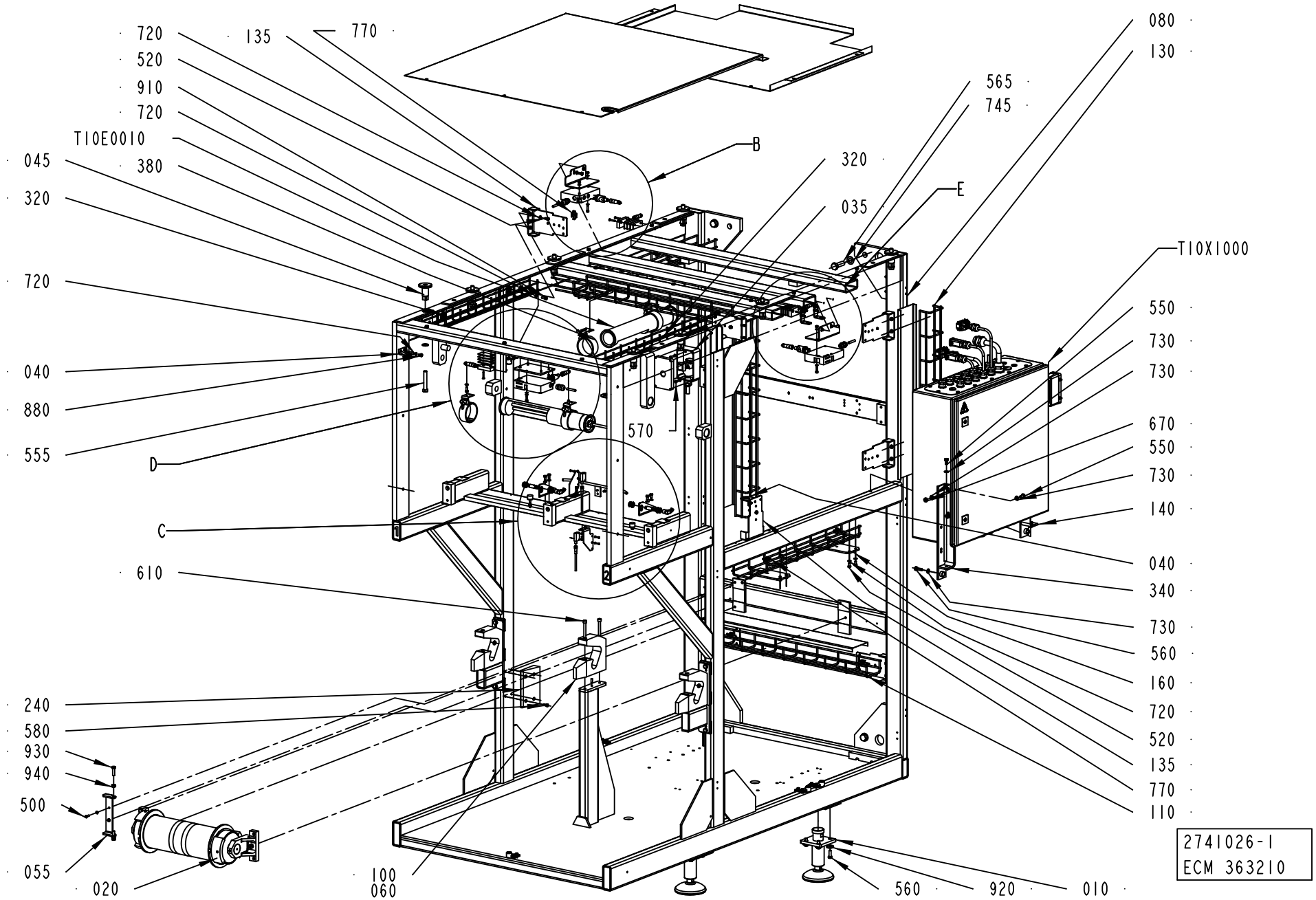

ECM: 365052 - 20080825
Group number: 2741026-0100
Assembly Drawing: 2741026-1_1_AE

This list covers pages from 7-40 to 7-45

| Pos | Part No | UN | Qty | Description | Page No |
|---|---|---|---|---|---|
| - | | | | | |
| 010 | 90600-0725 | | 4 | FOOT 25000N, R0772 611223 | |
| 020 | 2771084-0100 | | 1 | BENDING ROLLER ..... | **7-47** |
| 030 | 2776106-0100 | | 1 | COVER ..... | **7-49** |
| 035 | 2806687-0100 | | 1 | PUSH BUTTON ..... | **7-51** |
| 040 | 1558798-0000 | | 3 | BRACKET | |
| 045 | 2599941-0000 | | 8 | SPACER | |
| 050 | 2876447-0000 | | 2 | BRACKET | |
| 055 | 2933050-0000 | | 1 | HANGER | |
| 060 | 2940174-0000 | | 3 | SHIM | |
| 080 | 2731209-0000 | | 1 | FRAME | |
| 090 | 2927621-0000 | | 2 | BEARING BLOCK | |
| 100 | 2927622-0000 | | 1 | BEARING BLOCK | |
| 110 | 2731244-0000 | | 1 | CABLE DUCT | |
| 120 | 2875286-0000 | | 2 | BRACKET | |
| 130 | 2737917-0000 | | 2 | CABLE DUCT | |
| 135 | 2741024-0000 | | 7 | SUPPORT | |
| 140 | 2741047-0000 | | 1 | BRACKET | |
| 160 | 2746315-0000 | | 2 | PLATE | |
| 200 | 2746362-0000 | | 2 | BRACKET | |
| 210 | 2927619-0000 | | 1 | COVER | |
| 220 | 2927620-0000 | | 1 | COVER | |
| 240 | 2755506-0000 | | 2 | PLATE | |
| 250 | 2852897-0000 | | 1 | CABLE DUCT | |
| 260 | 2852899-0000 | | 1 | PLATE | |
| 270 | 2755516-0000 | | 1 | PLATE | |
| 280 | 2776093-0000 | | 4 | BRACKET | |
| 300 | 1538868-0000 | | 6 | BRACKET | |
| 310 | 2927615-0000 | | 1 | CABLE DUCT | |
| 320 | 2790944-0000 | | 2 | CABLE DUCT | |
| 330 | 2806665-0000 | | 1 | PLATE | |
| 340 | 2819396-0000 | | 1 | BRACKET | |
| 350 | 2859492-0000 | | 1 | SUPPORT | |
| 360 | 2927616-0000 | | 1 | COVER | |
| 365 | 2927623-0000 | | 1 | COVER | |
| 380 | 90164-0303 | | 4 | LIGHT FIXTURE, BRACKET 70MM | |
| 420 | 90458-0306 | | 3 | CABLE GLAND, M16X1,5, NO.5311 1010 | |
| 435 | 90459-2726 | | 2 | RUBBER BUFFER, 20-00484-01 | |
| 470 | 311103-0351 | | 7 | PARALLEL PIN ISO 2338 6M6X16 A1 | |
| 500 | 312105-0329 | | 20 | SCREW M6S ISO 4017 M5X16 A480 | |
| 520 | 312105-0366 | | 36 | SCREW M6S ISO 4017 M6X12 A480 | |
| 530 | 312105-0368 | | 4 | SCREW M6S ISO 4017 M6X16 A480 | |
| 550 | 312105-0449 | | 6 | SCREW M6S ISO 4017 M8X16 A480 | |
| 555 | 312105-0547 | | 8 | SCREW M6S ISO 4014 M12X75 A480 | |
| 560 | 312105-0453 | | 22 | SCREW M6S ISO 4017 M8X25 A480 | |
| 565 | 312105-0630 | | 4 | SCREW M6S ISO 4017 M16X50 A480 | |
| 570 | 312115-0329 | | 5 | SCREW ISO4762 M5X16 A4 80 | |
| 575 | 312115-0331 | | 4 | SCREW ISO4762 M5X20 A4 80 | |
| 580 | 312115-0366 | | 8 | SCREW ISO4762 M6X12 A4 80 | |
| 610 | 312115-0463 | | 4 | SCREW ISO4762 M8X60 A4 80 | |
| 650 | 312155-0327 | | 4 | SCREW DIN 7991 MF6S M5X12 A4 70 | |
| 660 | 312607-0316 | | 3 | HEXAGON NUT, EN 24032 M6M M6 A480 | |
| 670 | 312605-0318 | | 4 | HEXAGON NUT, M6M M8 A280 | |
| 690 | 312607-0314 | | 4 | HEXAGON NUT, EN 24032 M6M M5 A480 | |
| 700 | 312115-0453 | | 2 | SCREW ISO4762 M8X25 A4 80 | |
| 710 | 315105-0146 | | 18 | WASHER BRB 5,3X10 RFR | |
| 720 | 315105-0153 | | 66 | WASHER BRB 6,4X12 RFR | |
| 730 | 315105-0165 | | 17 | WASHER BRB 8,4X16 RFR | |
| 735 | 315105-0179 | | 8 | WASHER BRB 13,5X24 RFR | |
| 740 | 315115-0153 | | 20 | WASHER PLAIN, TBRB 6,4/12 H=3 | |
| 745 | 315105-0186 | | 4 | WASHER BRB 17X30 RFR | |
| 760 | 90459-4165 | | 6 | SAFETY SCREW, 20-053-43 SM4X25 | |
| 770 | 90600-1448 | | 16 | CLAMP, 6016 82 0 | |
| 840 | 312145-0289 | | 2 | SCREW ISO 2009 MFS M4X10 A4 | |
| 860 | 312605-0316 | | 2 | HEXAGON NUT, M6M M6 A280 | |
| 870 | 315105-0124 | | 4 | WASHER BRB 3,2X6 RFR | |
| 880 | 312105-0364 | | 10 | SCREW M6S ISO 4017 M6X10 A480 | |
| 900 | 90287-0175 | | 4 | SCREW M6S M3X12 A480 | |
| 910 | 312115-0368 | | 16 | SCREW ISO4762 M6X16 A4 80 | |
| 920 | 315125-0165 | | 16 | WASHER TBRSB 8,4X26X5 A4 | |
| 930 | 312101-0455 | | 2 | SCREW M6S M8X30 FZB | |
| 940 | 312607-0318 | | 2 | HEXAGON NUT, EN 24032 M6M M8 A480 | |
| 950 | 312115-0366 | | 2 | SCREW ISO4762 M6X12 A4 80 | |
| 960 | 90143-0060 | MM | 150 | EDGE STRIP 9,5X6,3MM BLACK PVC | |
| T10B1030 | 90459-4142 | | 1 | SAFETY SENSOR, 20-051-00 ADAM | |
| T10B1040 | 90600-1056 | | 1 | KEY SAF.SW. AZM 161SK-12/12RKA 024 | |
| T10B1140 | 90459-4142 | | 1 | SAFETY SENSOR, 20-051-00 ADAM | |
| T10B1160 | 90600-1056 | | 1 | KEY SAF.SW. AZM 161SK-12/12RKA 024 | |
| T10B1190 | 90459-4142 | | 1 | SAFETY SENSOR, 20-051-00 ADAM | |
| T10B1200 | 90600-1056 | | 1 | KEY SAF.SW. AZM 161SK-12/12RKA 024 | |
| T10B1220 | 90600-0460 | | 1 | INDUCTIVE SWITCH, E2A-M12KN05-M1-B1-TP | |
| T10B1230 | 90600-0460 | | 1 | INDUCTIVE SWITCH, E2A-M12KN05-M1-B1-TP | |
| T10B1280 | 90459-7421 | | 1 | PH.CELL WL100-P3439 | |
| T10B1290 | 90459-7421 | | 1 | PH.CELL WL100-P3439 | |

Machine Type | Group Description | Used-In | Group Number | Page No

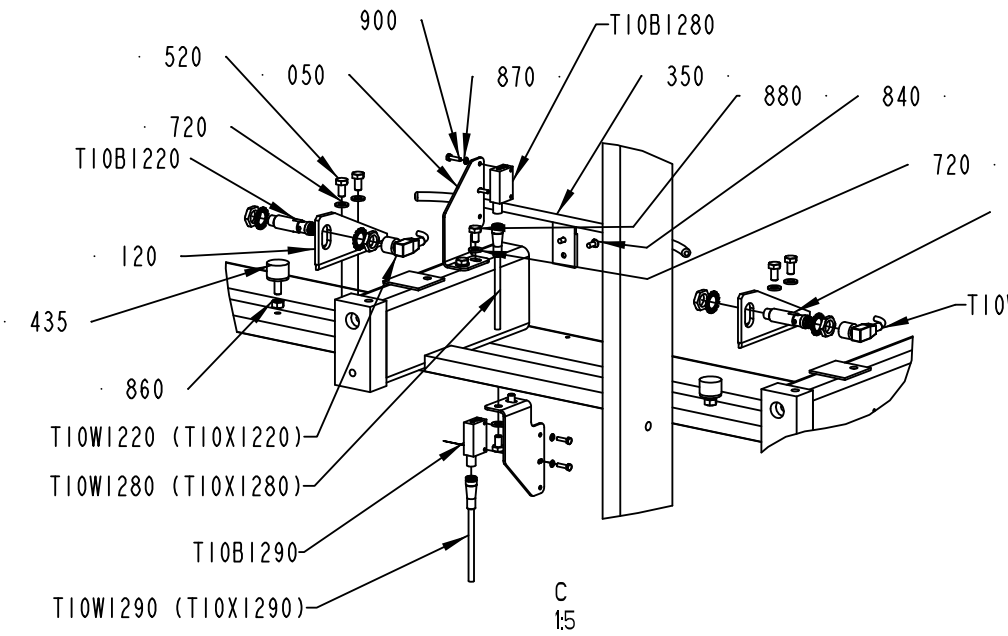


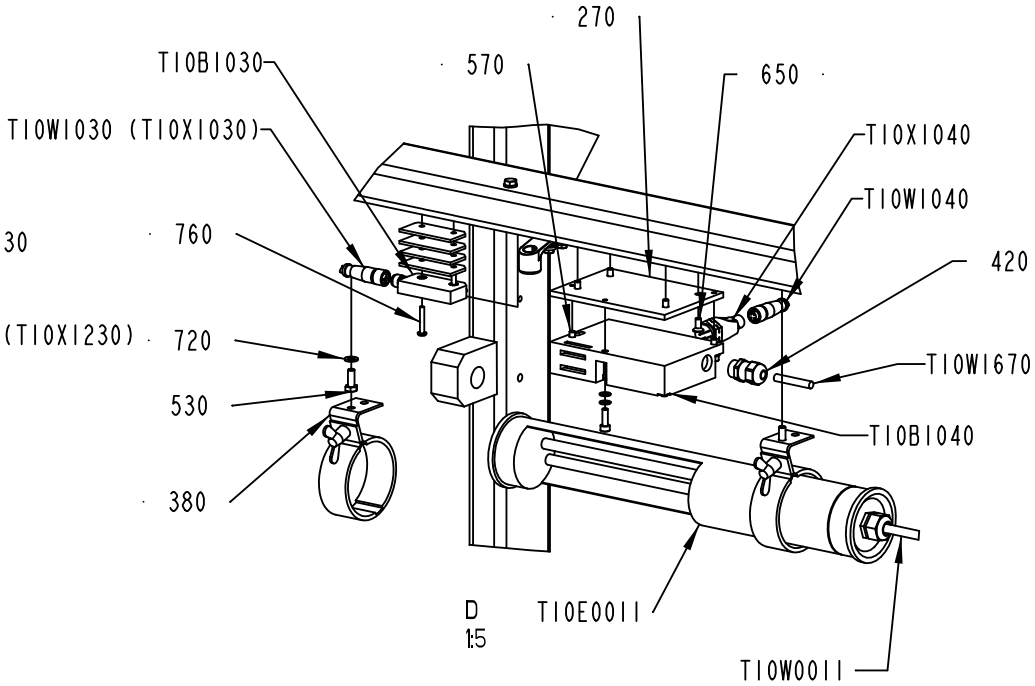


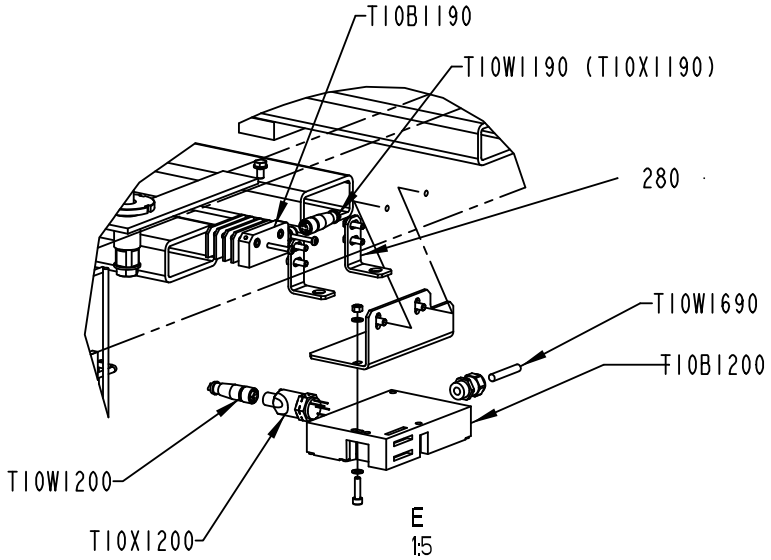


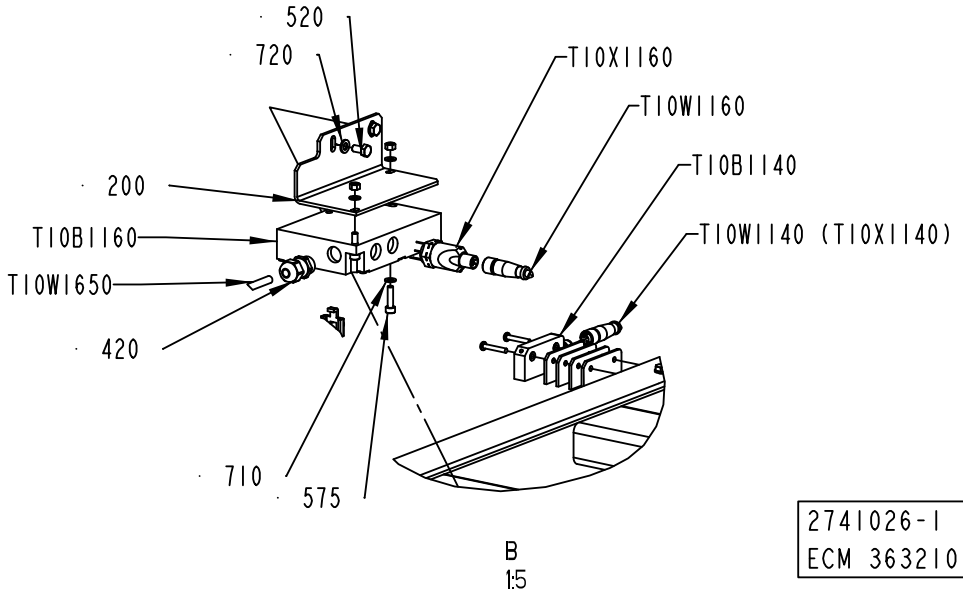


2741026-1
ECM 363210

| Pos | Part No | UN | Qty | Description | Page No |
|---|---|---|---|---|---|
| **- (Cont'd)** | | | | | |
| T10E0010 | 90164-0015 | | 1 | LIGHT FIXTURE, RL70CV-111 / 230V 50HZ | |
| | *90297-0007* | | *1* | *FLUORESCENT TUBE, PLS 11* | |
| | *92297-0301* | | *1* | *STARTER 4-65W S10, E 8219023* | |
| T10E0011 | 90164-0015 | | 1 | LIGHT FIXTURE, RL70CV-111 / 230V 50HZ | |
| | *90297-0007* | | *1* | *FLUORESCENT TUBE, PLS 11* | |
| | *92297-0301* | | *1* | *STARTER 4-65W S10, E 8219023* | |
| T10W0010 | 351150-0412 | MM | 8000 | CABLE OLFLEX 3X1,5 MM2 LIGHT/GREY | |
| T10W0011 | 351150-0412 | MM | 8000 | CABLE OLFLEX 3X1,5 MM2 LIGHT/GREY | |
| T10W1030 | 90459-4252 | | 1 | CABLE M12-C101, 20-056-10 | |
| T10W1040 | 90459-4252 | | 1 | CABLE M12-C101, 20-056-10 | |
| T10W1140 | 90459-4252 | | 1 | CABLE M12-C101, 20-056-10 | |
| T10W1160 | 90459-4252 | | 1 | CABLE M12-C101, 20-056-10 | |
| T10W1190 | 90459-4252 | | 1 | CABLE M12-C101, 20-056-10 | |
| T10W1200 | 90459-4252 | | 1 | CABLE M12-C101, 20-056-10 | |
| T10W1220 | 90458-1076 | | 1 | L-SHAPED CONNECTOR CABLE 933 235-042 | |
| T10W1230 | 90458-1076 | | 1 | L-SHAPED CONNECTOR CABLE 933 235-042 | |
| T10W1280 | 90458-0165 | | 1 | CABLE, SICK DOL-0803-G05M | |
| T10W1290 | 90458-0165 | | 1 | CABLE, SICK DOL-0803-G05M | |
| T10W1650 | 351150-0403 | MM | 1500 | CABLE OLFLEX 3X0,75 MM2 LIGHT/GREY | |
| T10W1670 | 351150-0403 | MM | 1500 | CABLE OLFLEX 3X0,75 MM2 LIGHT/GREY | |
| T10W1690 | 351150-0403 | MM | 1500 | CABLE OLFLEX 3X0,75 MM2 LIGHT/GREY | |
| T10X1000 | 2806682-0100 | | 1 | CONNECTION BOX ..... | **7-53** |
| T10X1040 | 90459-7094 | | 1 | TINA 3-A INTERFACE PLUG, 20-054-02 | |
| T10X1160 | 90459-7094 | | 1 | TINA 3-A INTERFACE PLUG, 20-054-02 | |
| T10X1200 | 90459-7094 | | 1 | TINA 3-A INTERFACE PLUG, 20-054-02 | |

| Pos | Part No | UN | Qty | Description | Page No |
|---|---|---|---|---|---|

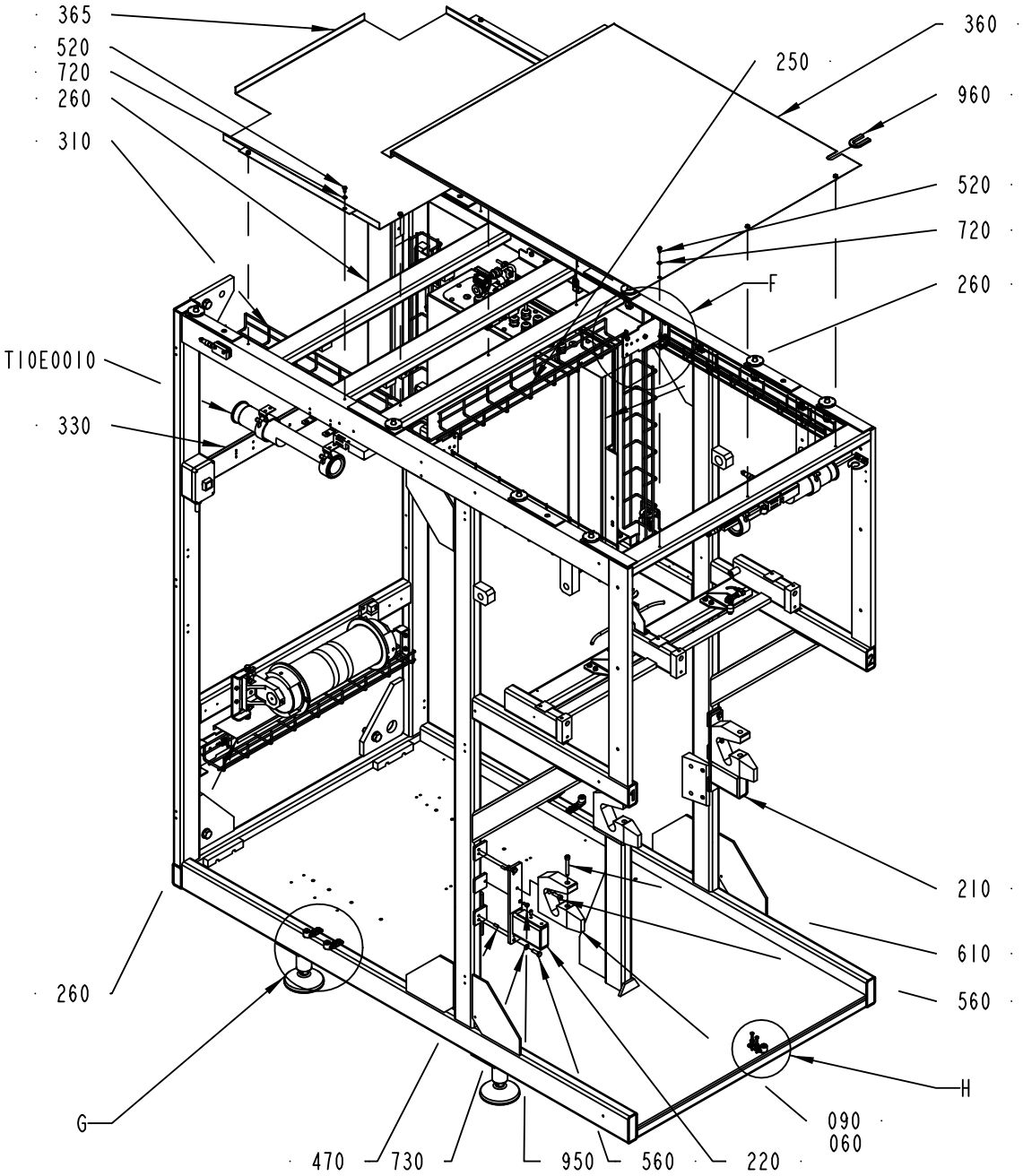


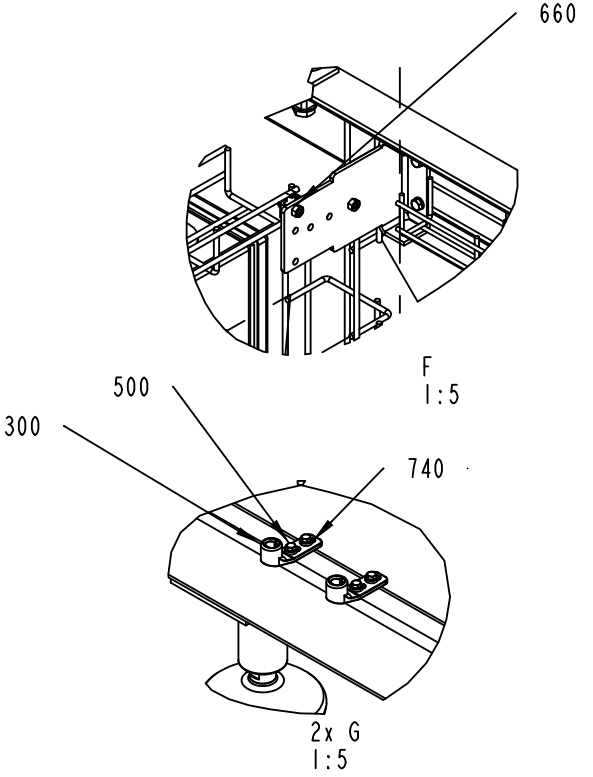


2741026-1
ECM 363210

| Pos | Part No | UN | Qty | Description | Page No |
|---|---|---|---|---|---|
| **SEE PREVIOUS LISTS PAGES: 7-41, 7-43.** | | | | | |

| Pos | Part No | UN | Qty | Description | Page No |
|---|---|---|---|---|---|

# BENDING ROLLER



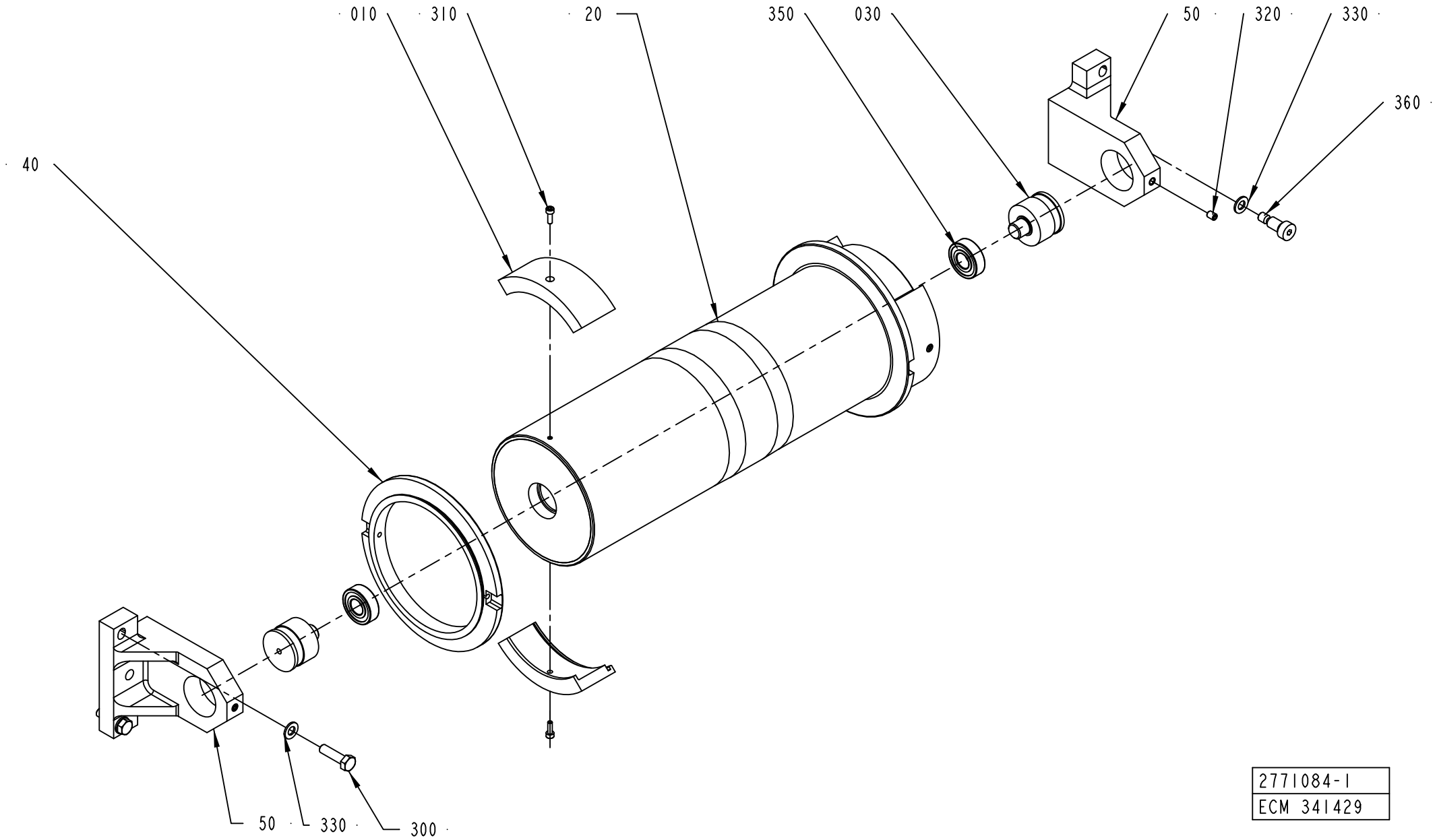


| 2771084-1 |
| --- |
| ECM 341429 |

ECM: 351542 - 20080430
Group number: 2771084-0100
Assembly Drawing: 2771084-1_1_AC

| Pos | Part No | UN | Qty | Description | Page No |
|---|---|---|---|---|---|
| **TBA 0500SQ, TBA 1000SQ** | | | | | |
| 010 | 2523766-0003 | | 4 | BRACKET | |
| **TBA 1000B, TBA 1500S** | | | | | |
| 010 | 2523766-0001 | | 4 | BRACKET | |
| **TBA 1000S** | | | | | |
| 010 | 2523766-0002 | | 4 | BRACKET | |
| **TBA 2000S** | | | | | |
| 010 | 2701881-0000 | | 4 | BRACKET | |
| **TPA 1000SQ, TPA 0750SQ** | | | | | |
| 010 | 2523766-0012 | | 4 | BRACKET | |
| **Common Parts** | | | | | |
| 020 | 2890423-0000 | | 1 | ROLLER | |
| 030 | 1499584-0000 | | 2 | AXLE PIN | |
| 040 | 2890424-0000 | | 2 | FLANGE | |
| 050 | 2932450-0000 | | 2 | BRACKET | |
| 300 | 312105-0455 | | 2 | SCREW M6S ISO 4017 M8X30 A480 | |
| 310 | 312115-0291 | | 4 | SCREW ISO4762 M4X12 A4 80 | |
| 320 | 312318-0362 | | 2 | SCREW ISO4029 M6X8 A4 | |
| 330 | 315105-0165 | | 3 | WASHER BRB 8,4X16 RFR | |
| 350 | 321313-0102 | | 2 | BALL BEARING, 15X35X11 MM | |
| 360 | 312180-0489 | | 1 | SCREW ISO7379 H10X16 | |

| Pos | Part No | UN | Qty | Description | Page No |
|---|---|---|---|---|---|

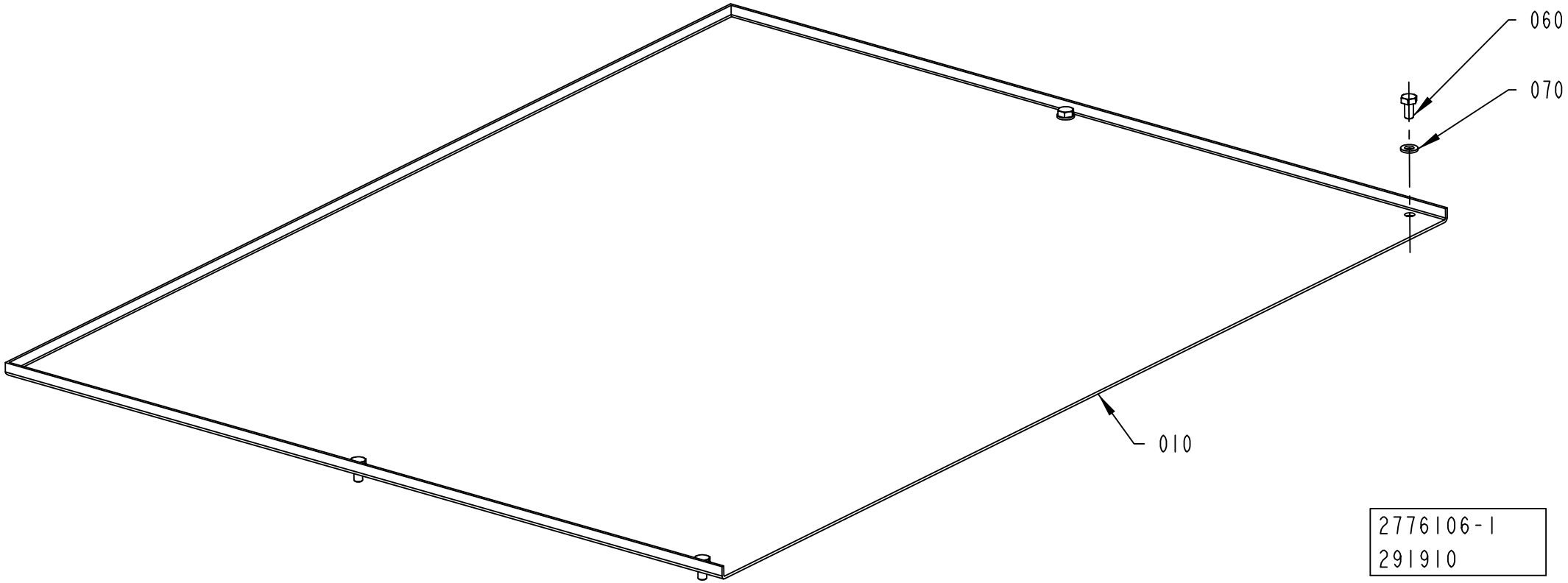
060
070
010
2776106-1
291910

ECM: 300586 - 20070508
Group number: 2776106-0100
Assembly Drawing: 2776106-1_1_AA

| Pos | Part No | UN | Qty | Description | Page No |
|---|---|---|---|---|---|
| - | | | | | |
| 010 | 2776107-0000 | | 1 | PLATE | |
| 060 | 312105-0366 | | 4 | SCREW M6S ISO 4017 M6X12 A480 | |
| 070 | 315105-0153 | | 4 | WASHER BRB 6,4X12 RFR | |

| Pos | Part No | UN | Qty | Description | Page No |
|---|---|---|---|---|---|

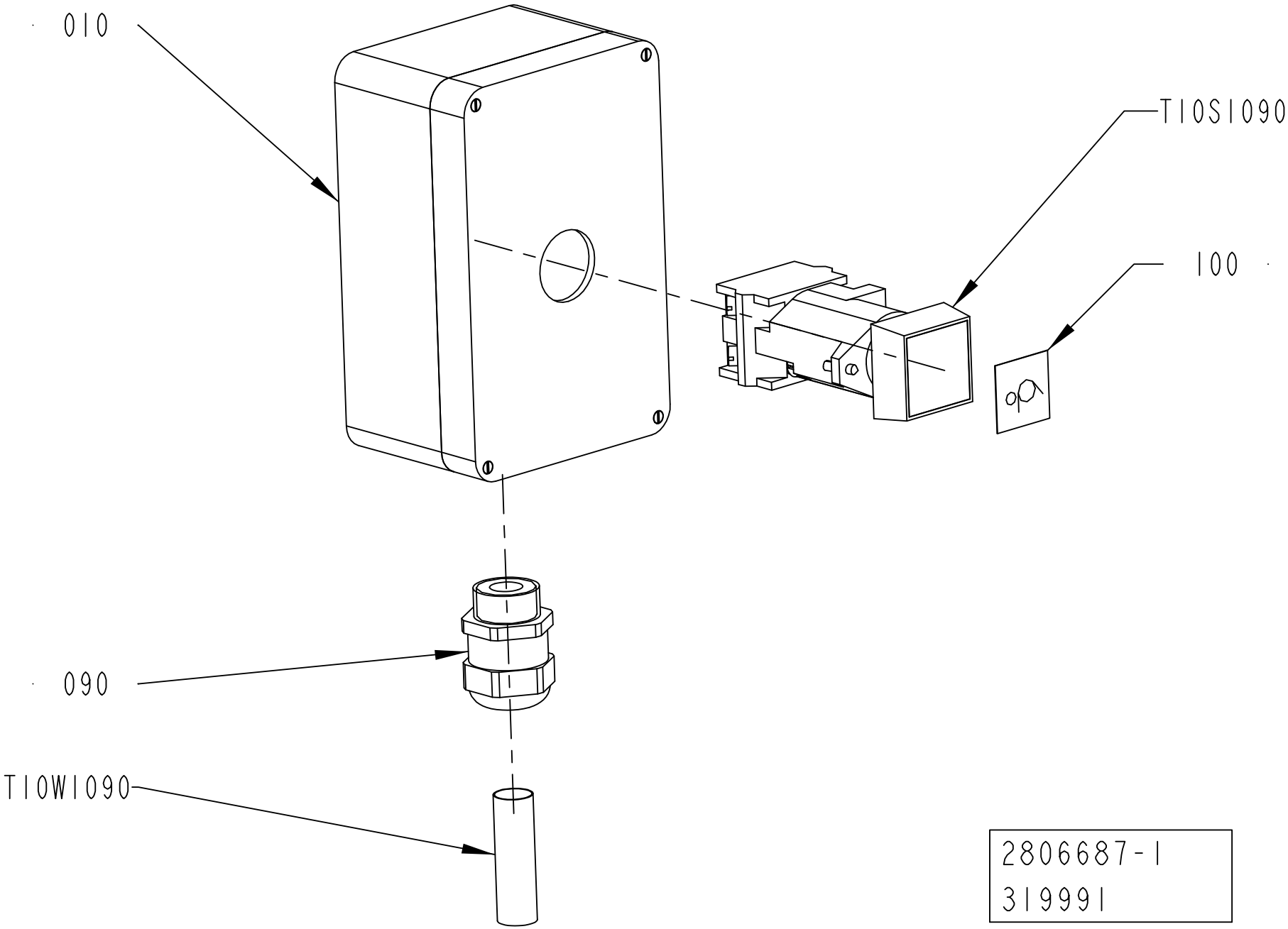
010
T10S1090
100
090
T10W1090
2806687-1
319991

ECM: 323369 - 20070903
Group number: 2806687-0100
Assembly Drawing: 2806687-1_1_AB

| Pos | Part No | UN | Qty | Description | Page No |
|---|---|---|---|---|---|
| - | | | | | |
| 010 | 2806686-0000 | | 1 | PUSH BUTTON | |
| 090 | 90458-0307 | | 1 | CABLE GLAND, M20X1,5, NO.5311 1020 | |
| 100 | 90600-3597 | | 1 | SIGN, PAPER MAGAZINE PRESSURE ROLLER | |
| T10S1090 | 90064-0082 | | 1 | PUSH BUTTON, WHITE | |
| | *90036-0057* | | *1* | *LIGHT BULB, BA9S 28V* | |
| T10W1090 | 351150-0407 | MM | 4000 | CABLE OLFLEX 12X0,75 MM2 LIGHT/GREY | |

| Pos | Part No | UN | Qty | Description | Page No |
|---|---|---|---|---|---|

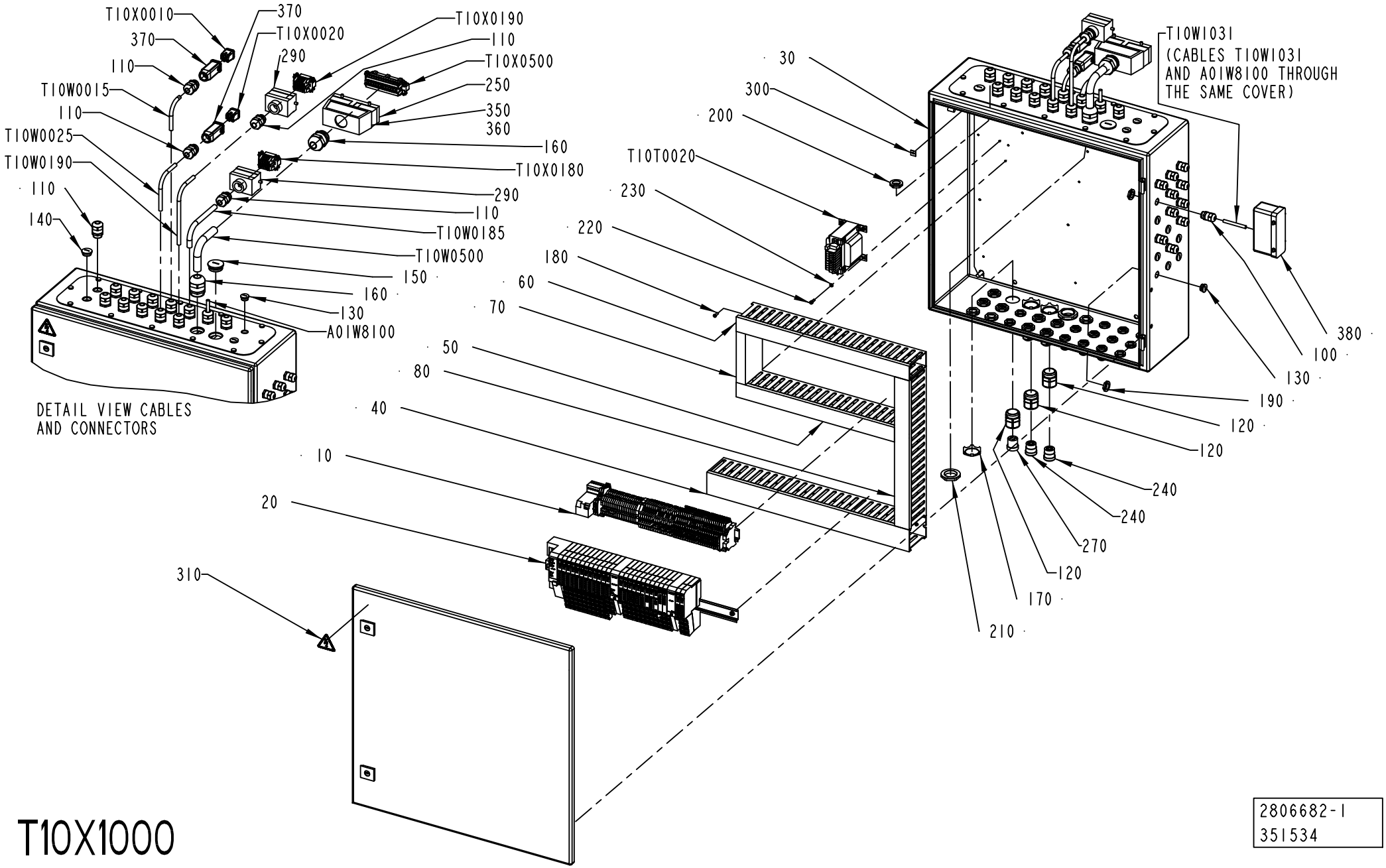


T10X1000

2806682-1
351534

ECM: 351534 - 20080430
Group number: 2806682-0100
Assembly Drawing: 2806682-1_1_AC

| Pos | Part No | UN | Qty | Description | Page No |
|---|---|---|---|---|---|
| - | | | | | |
| 010 | 2851534-0100 | | 1 | PLINTH ..... | **7-55** |
| 020 | 2851535-0100 | | 1 | TERMINAL BLOCK ..... | **7-57** |
| 030 | 2892690-0000 | | 1 | BOX | |
| 040 | 2851538-0000 | | 1 | CABLE DUCT | |
| 050 | 2851539-0000 | | 1 | CABLE DUCT | |
| 060 | 2851540-0000 | | 1 | CABLE DUCT | |
| 070 | 2851541-0000 | | 1 | CABLE DUCT | |
| 080 | 2855891-0000 | | 1 | CABLE DUCT | |
| 100 | 90458-0306 | | 19 | CABLE GLAND, M16X1,5, NO.5311 1010 | |
| 110 | 90458-0307 | | 24 | CABLE GLAND, M20X1,5, NO.5311 1020 | |
| 120 | 90458-0408 | | 3 | GLAND W/O INSERT M32 NORMAL | |
| 130 | 90458-1307 | | 14 | BLIND PLUG CIRCULAR, M16X1,5 514GFK/216 | |
| 140 | 90458-1308 | | 4 | BLIND PLUG CIRCULAR, M20X1,5 514GFK/220 | |
| 150 | 90458-1310 | | 2 | BLIND PLUG CIRCULAR, M32X1,5 514GFK/232 | |
| 160 | 90458-0309 | | 2 | CABLE GLAND, M32X1,5, NO.5311 1040 | |
| 170 | 90458-0463 | | 3 | GLAND, LOCK NUT, M32X1,5 | |
| 180 | 90287-0124 | | 14 | SCREW PAN HEAD MSCS M4X12 NYLON | |
| 190 | 90458-0322 | | 33 | NUT, M16X1,5 | |
| 200 | 90458-0323 | | 24 | NUT, M20X1,5 | |
| 210 | 90458-0325 | | 3 | NUT, M32X1,5 | |
| 220 | 312115-0291 | | 4 | SCREW ISO4762 M4X12 A4 80 | |
| 230 | 315105-0136 | | 4 | WASHER BRB 4,3X8 RFR | |
| 240 | 90012-0125 | | 2 | GLAND FITTING | |
| 250 | 90459-6636 | | 1 | HOOD 24 B TOP ENTRY, 19 30 024 0427 | |
| 270 | 353249-0051 | | 1 | INSERT, MULTI HOLE, E154M4X6 | |
| 290 | 90459-6632 | | 2 | HOOD 6 B TOP ENTRY, 19 30 006 1440 | |
| 300 | 90194-0152 | | 1 | SIGN, EARTH | |
| 310 | 359705-0015 | | 1 | WARNING SIGN ISO, RISK OF ELECTRIC SHOCK | |
| 350 | 359005-0010 | | 7 | MARKING LABEL KIT 0 - 9, 04.841.2150.0 | |
| 360 | 359005-0050 | | 1 | MARKING LABEL KIT X, 04.841.4550.0 | |
| 370 | 90459-3080 | | 2 | HOOD HAN-BRID 3A 19 20 003 1443 | |
| 380 | 90110-0381 | | 1 | COVER, 310601-33 CYR24.4 | |
| A01W8100 | 90459-2530 | M | 10 | DEVICENET CABLE THIN | |
| T10T0020 | 90458-0258 | | 1 | TRANSFORMER, 220VAC/6-9-12VAC | |
| T10W0015 | 351150-0412 | M | 9 | CABLE OLFLEX 3X1,5 MM2 LIGHT/GREY | |
| T10W0025 | 351150-0412 | M | 9 | CABLE OLFLEX 3X1,5 MM2 LIGHT/GREY | |
| T10W0185 | 90220-0104 | M | 10 | SCR. CABLE 4X1,5MM2 | |
| T10W0190 | 351150-0412 | M | 9 | CABLE OLFLEX 3X1,5 MM2 LIGHT/GREY | |
| T10W0500 | 351150-0425 | M | 8.5 | CABLE OLFLEX 25X0,75 MM2 LIGHT/GREY | |
| T10W1031 | 90220-0072 | M | 7 | SCR. CABLE 4X0,34MM2 | |
| T10X0010 | 90459-6821 | | 1 | MALE INSERT HAN 4A, 09 20 004 2611 | |
| T10X0020 | 90459-6821 | | 1 | MALE INSERT HAN 4A, 09 20 004 2611 | |
| T10X0180 | 90110-0052 | | 1 | MALE INSERT HAN 6E 09 33 006 2601 | |
| T10X0190 | 90110-0052 | | 1 | MALE INSERT HAN 6E 09 33 006 2601 | |
| T10X0500 | 90110-0056 | | 1 | MALE INSERT HAN 24 E 09 33 024 2601 | |

Machine Type | Group Description | Used-In | Group Number | Page No

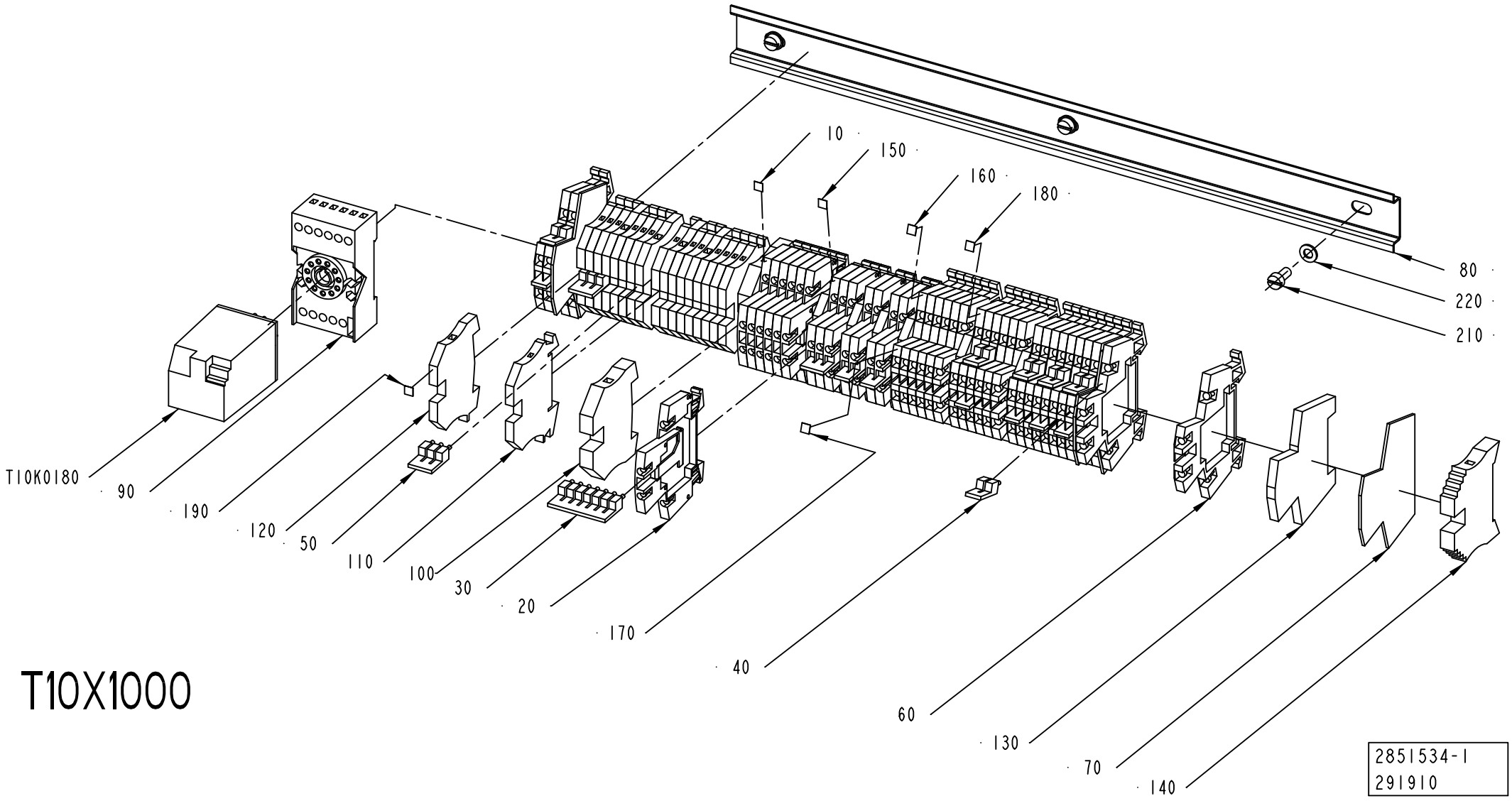
10
150
160
180
80
220
210
T10K0180
90
190
120
50
110
100
30
20
170
40
60
130
70
140
T10X1000
2851534-1
291910

ECM: 301419 - 20070508
Group number: 2851534-0100
Assembly Drawing: 2851534-1_1_AA

| Pos | Part No | UN | Qty | Description | Page No |
|---|---|---|---|---|---|
| - | | | | | |
| 010 | 359011-0807 | | 1 | MARKING PLATES 5-FW 1-50 | |
| 020 | 90457-0049 | | 14 | TERMINAL BLOCK WDK 2.5V, 102230 | |
| 030 | 353034-0030 | | 1 | BRIDGE CONNECTOR WQV 2,5/10, 10544.6 | |
| 040 | 353034-0030 | | 13 | BRIDGE CONNECTOR WQV 2,5/10, 10544.6 | |
| 050 | 353034-0030 | | 3 | BRIDGE CONNECTOR WQV 2,5/10, 10544.6 | |
| 060 | 90077-0113 | | 24 | FEED THROUGH TERMINAL, 10-00102150-1 | |
| 070 | 90077-0114 | | 3 | END PLATE, WAP/WDK 2,5 | |
| 080 | 2855890-0000 | | 1 | RAIL | |
| 090 | 90129-0006 | | 1 | BASE, S3-B | |
| 100 | 353024-0206 | | 2 | EARTH TERMINAL, 1010.2 | |
| 110 | 353021-0212 | | 20 | FEED THROUGH TERMINAL, 10200.0 | |
| 120 | 353024-0204 | | 5 | EARTH TERMINAL WPE 2,5 | |
| 130 | 353024-0212 | | 1 | EARTH TERMINAL, 10363.0 | |
| 140 | 353031-0203 | | 1 | END SUPPORT, WEW 35/2 | |
| 150 | 359011-0808 | | 1 | MARKING PLATES 5-FW 51-100 | |
| 160 | 359011-0810 | | 1 | MARKING PLATES 5-FW 151-200 | |
| 170 | 359011-0811 | | 1 | MARKING PLATES 5-FW 201-2 | |
| 180 | 359011-0812 | | 1 | SET OF SIGNS 5-FW 251-300 | |
| 190 | 359011-0819 | | 1 | MARKING PLATES 5-GW (EARTH) | |
| 210 | 312125-0325 | | 3 | SCREW ISO 1207 M5X10 A4 | |
| 220 | 315105-0146 | | 3 | WASHER BRB 5,3X10 RFR | |
| T10K0180 | 90119-0056 | | 1 | RELAY, AUXILIARY MK3P5-S 24VDC | |

| Pos | Part No | UN | Qty | Description | Page No |
|---|---|---|---|---|---|

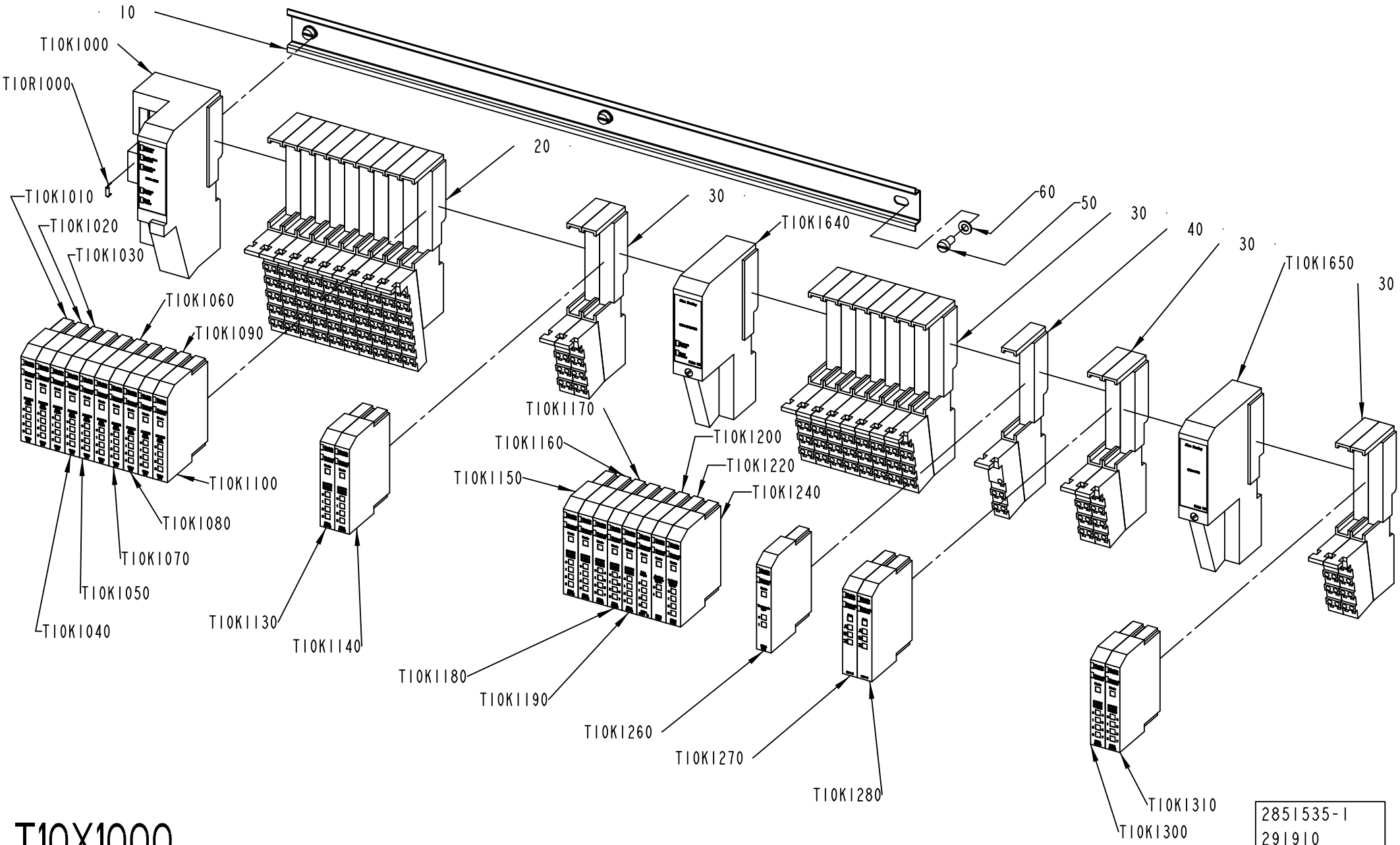
10
T10K1000
T10R1000
T10K1010
T10K1020
T10K1030
T10K1060
T10K1090
T10K1100
T10K1080
T10K1070
T10K1050
T10K1040
20
T10K1130
T10K1140
30
T10K1640
T10K1170
T10K1160
T10K1150
T10K1200
T10K1220
T10K1240
T10K1180
T10K1190
T10K1260
T10K1270
T10K1280
60
50
30
40
30
T10K1650
30
T10K1310
T10K1300
T10X1000
2851535-1
291910

ECM: 301420 - 20070508
Group number: 2851535-0100
Assembly Drawing: 2851535-1_1_AA

| Pos | Part No | UN | Qty | Description | Page No |
|---|---|---|---|---|---|
| - | | | | | |
| 010 | 2851537-0000 | | 1 | RAIL | |
| 020 | 90459-2527 | | 10 | REMOTE I/O BASE MODULE 12 POINTS | |
| 030 | 90459-2526 | | 14 | REMOTE I/O BASE MODULE 8 POINTS, 1734-TB | |
| 040 | 90459-2528 | | 1 | REMOTE I/O BASE MODULE FOR THERMOCOUPLE | |
| 050 | 312125-0325 | | 3 | SCREW ISO 1207 M5X10 A4 | |
| 060 | 315105-0146 | | 3 | WASHER BRB 5,3X10 RFR | |
| T10K1000 | 90459-2494 | | 1 | DEVICENET I/O ADAPTER MODULE, 1734-ADN | |
| T10K1010 | 90459-2503 | | 1 | DIGITAL INPUT 4 PTS SINK, 1734-IB4 | |
| T10K1020 | 90459-2503 | | 1 | DIGITAL INPUT 4 PTS SINK, 1734-IB4 | |
| T10K1030 | 90459-2503 | | 1 | DIGITAL INPUT 4 PTS SINK, 1734-IB4 | |
| T10K1040 | 90459-2503 | | 1 | DIGITAL INPUT 4 PTS SINK, 1734-IB4 | |
| T10K1050 | 90459-2503 | | 1 | DIGITAL INPUT 4 PTS SINK, 1734-IB4 | |
| T10K1060 | 90459-2503 | | 1 | DIGITAL INPUT 4 PTS SINK, 1734-IB4 | |
| T10K1070 | 90459-2503 | | 1 | DIGITAL INPUT 4 PTS SINK, 1734-IB4 | |
| T10K1080 | 90459-2503 | | 1 | DIGITAL INPUT 4 PTS SINK, 1734-IB4 | |
| T10K1090 | 90459-2503 | | 1 | DIGITAL INPUT 4 PTS SINK, 1734-IB4 | |
| T10K1100 | 90459-2503 | | 1 | DIGITAL INPUT 4 PTS SINK, 1734-IB4 | |
| T10K1130 | 90459-2505 | | 1 | DIGITAL OUTPUT 4 PTS, 1734-OB4E | |
| T10K1140 | 90459-2505 | | 1 | DIGITAL OUTPUT 4 PTS, 1734-OB4E | |
| T10K1150 | 90459-2505 | | 1 | DIGITAL OUTPUT 4 PTS, 1734-OB4E | |
| T10K1160 | 90459-2505 | | 1 | DIGITAL OUTPUT 4 PTS, 1734-OB4E | |
| T10K1170 | 90459-6560 | | 1 | DIGITAL OUTPUT 8 PTS, 1734-OB8E/C | |
| T10K1180 | 90459-6560 | | 1 | DIGITAL OUTPUT 8 PTS, 1734-OB8E/C | |
| T10K1190 | 90459-2505 | | 1 | DIGITAL OUTPUT 4 PTS, 1734-OB4E | |
| T10K1200 | 90459-5261 | | 1 | REMOTE I/O, RELAY OUTP. 4 PTS,1734-OW4/C | |
| T10K1220 | 90459-2508 | | 1 | REMOTE I/O ANALOG INPUT VOLTAGE 2 PTS | |
| T10K1240 | 90459-2509 | | 1 | REMOTE I/O ANALOG INPUT CURRENT 2 PTS | |
| T10K1260 | 90459-2512 | | 1 | REMOTE I/O THERMOCOUPLE INPUT 2 PTS | |
| T10K1270 | 90459-6731 | | 1 | ENCODER/COUNTER MODULE, 1734-IK SERIES C | |
| T10K1280 | 90459-6731 | | 1 | ENCODER/COUNTER MODULE, 1734-IK SERIES C | |
| T10K1300 | 90459-6560 | | 1 | DIGITAL OUTPUT 8 PTS, 1734-OB8E/C | |
| T10K1310 | 90459-6560 | | 1 | DIGITAL OUTPUT 8 PTS, 1734-OB8E/C | |
| T10K1640 | 90459-2500 | | 1 | EXPANSION POWER SUPPLY MODULE | |
| T10K1650 | 90459-2501 | | 1 | FIELD POWER DISTRIBUTOR, 1734-FPD | |
| T10R1000 | 90459-2523 | | 1 | OPEN STYLE TERMINATOR, 1485A-C2 | |

| Pos | Part No | UN | Qty | Description | Page No |
|---|---|---|---|---|---|

# PAPER REEL HOLDER



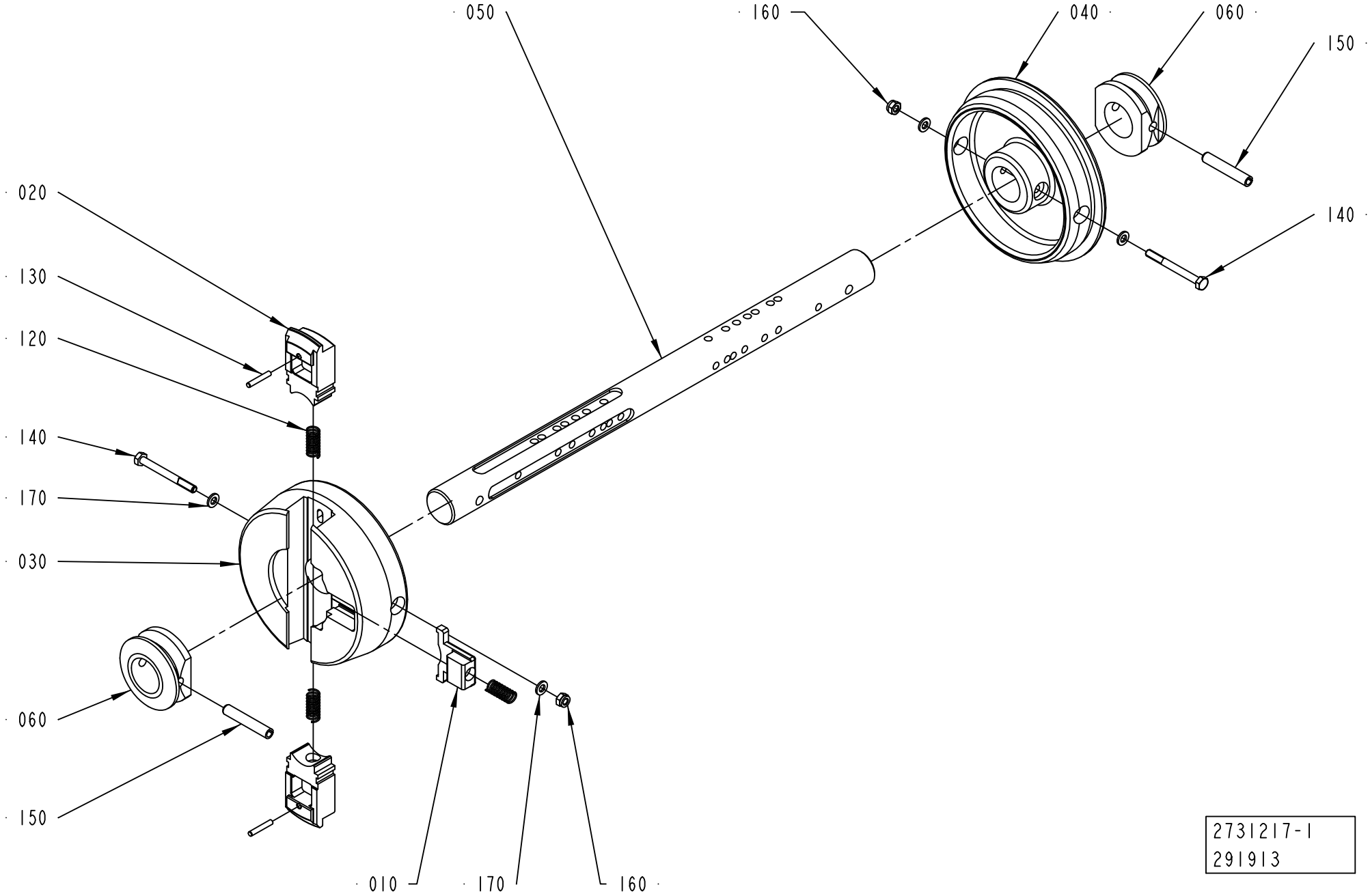

ECM: 300589 - 20070508
Group number: 2731217-0100
Assembly Drawing: 2731217-1_1_AA

| Pos | Part No | UN | Qty | Description | Page No |
|---|---|---|---|---|---|
| - | | | | | |
| 010 | 272728-0000 | | 1 | BARRIER | |
| 020 | 2851385-0000 | | 2 | PLUNGER | |
| 030 | 2790925-0000 | | 1 | SLEEVE | |
| 040 | 2731210-0000 | | 1 | SLEEVE | |
| 050 | 2790929-0000 | | 1 | SHAFT | |
| 060 | 2731212-0000 | | 2 | RING | |
| 120 | 90335-0025 | | 3 | COMP. SPRING 22010, 1X11X26 | |
| 130 | 311103-0274 | | 2 | PARALLEL PIN ISO 2338 4M6X25 A1 | |
| 140 | 312105-0382 | | 2 | SCREW M6S ISO 4014 M6X60 A480 | |
| 150 | 311112-0385 | | 2 | SPRING PIN, ISO 8752 8X50-C | |
| 160 | 312812-0316 | | 2 | HEXAGON NUT, NY-LOCK M6 A480 | |
| 170 | 315105-0153 | | 4 | WASHER BRB 6,4X12 RFR | |

| Pos | Part No | UN | Qty | Description | Page No |
|---|---|---|---|---|---|

# STRIP APPLICATOR



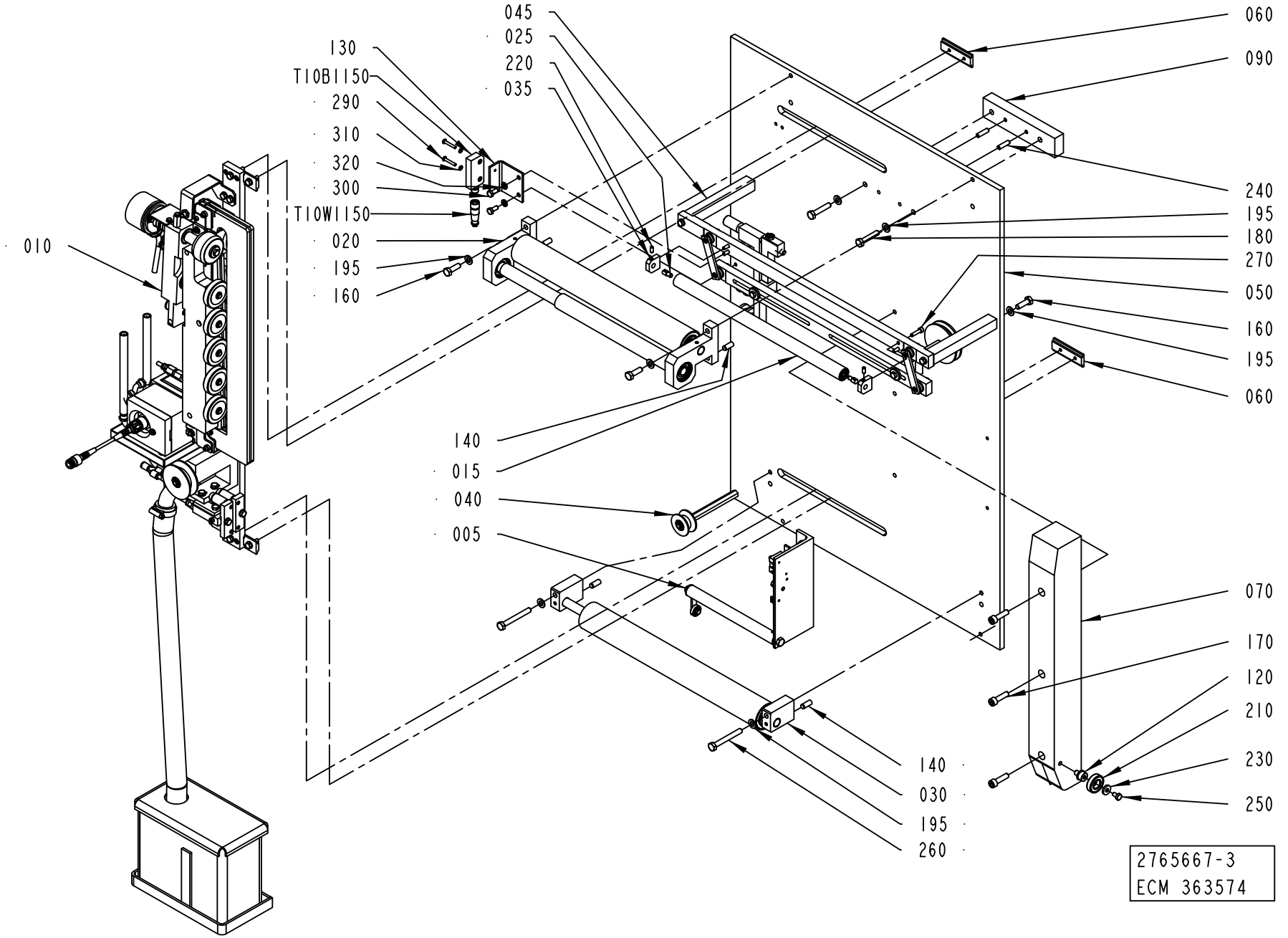

ECM: 364199 - 20080825
Group number: 2765667-0100
Assembly Drawing: 2765667-3_1_AC

| Pos | Part No | UN | Qty | Description | Page No |
|---|---|---|---|---|---|
| - | | | | | |
| 005 | 2859436-0100 | | 1 | SPLICE DETECTOR | **7-63** |
| 010 | 2765668-0100 | | 1 | INDUCTOR | **7-65** |
| 015 | 2863550-0100 | | 1 | ROLLER | **7-33** |
| 020 | 2771065-0100 | | 1 | ROLLER | **7-79** |
| 025 | 2863547-0000 | | 2 | PIN | |
| 030 | 2771070-0100 | | 1 | ROLLER | **7-81** |
| 035 | 2863548-0000 | | 2 | BRACKET | |
| 040 | 2771081-0100 | | 1 | BENDING ROLLER | **7-83** |
| 045 | 2806658-0100 | | 1 | STRIP GUIDE | **7-87** |
| 050 | 2765677-0000 | | 1 | SHEET | |
| 060 | 2765680-0000 | | 2 | NUT | |
| 070 | 2765687-0000 | | 1 | STEERING | |
| 090 | 2868759-0000 | | 1 | SPACER | |
| 120 | 2844168-0000 | | 1 | SPACER | |
| 130 | 2868761-0000 | | 1 | PLATE | |
| 140 | 311103-0401 | | 4 | PARALLEL PIN ISO 2338 8M6X20 A1 | |
| 160 | 312105-0453 | | 4 | SCREW M6S ISO 4017 M8X25 A480 | |
| 170 | 312115-0455 | | 3 | SCREW ISO4762 M8X30 A4 80 | |
| 180 | 312105-0459 | | 2 | SCREW M6S ISO 4014 M8X40 A480 | |
| 195 | 315105-0165 | | 8 | WASHER BRB 8,4X16 RFR | |
| 210 | 321308-0102 | | 1 | BALL BEARING, 15X32X9 MM | |
| 220 | 90459-7283 | | 2 | SCREW HEX.SOCK.SET CONEPT.MS6SS M5X12 A2 | |
| 230 | 90459-7441 | | 1 | WASHER PLAIN, DIN 7349, 6,4/17 H=3 | |
| 240 | 311112-0341 | | 2 | SPRING PIN, ISO 8752 6X24-C | |
| 250 | 312105-0364 | | 1 | SCREW M6S ISO 4017 M6X10 A480 | |
| 260 | 312105-0464 | | 2 | SCREW M6S ISO 4014 M8X65 A480 | |
| 270 | 312115-0331 | | 4 | SCREW ISO4762 M5X20 A4 80 | |
| 290 | 90459-4165 | | 2 | SAFETY SCREW, 20-053-43 SM4X25 | |
| 300 | 312105-0367 | | 2 | SCREW M6S ISO 4017 M6X14 A480 | |
| 310 | 315105-0136 | | 2 | WASHER BRB 4,3X8 RFR | |
| 320 | 315105-0153 | | 2 | WASHER BRB 6,4X12 RFR | |
| T10B1150 | 90459-4142 | | 1 | SAFETY SENSOR, 20-051-00 ADAM | |
| T10W1150 | 90459-4252 | | 1 | CABLE M12-C101, 20-056-10 | |

| Pos | Part No | UN | Qty | Description | Page No |
|---|---|---|---|---|---|

Machine Type | Group Description | Used-In | Group Number | Page No

# SPLICE DETECTOR



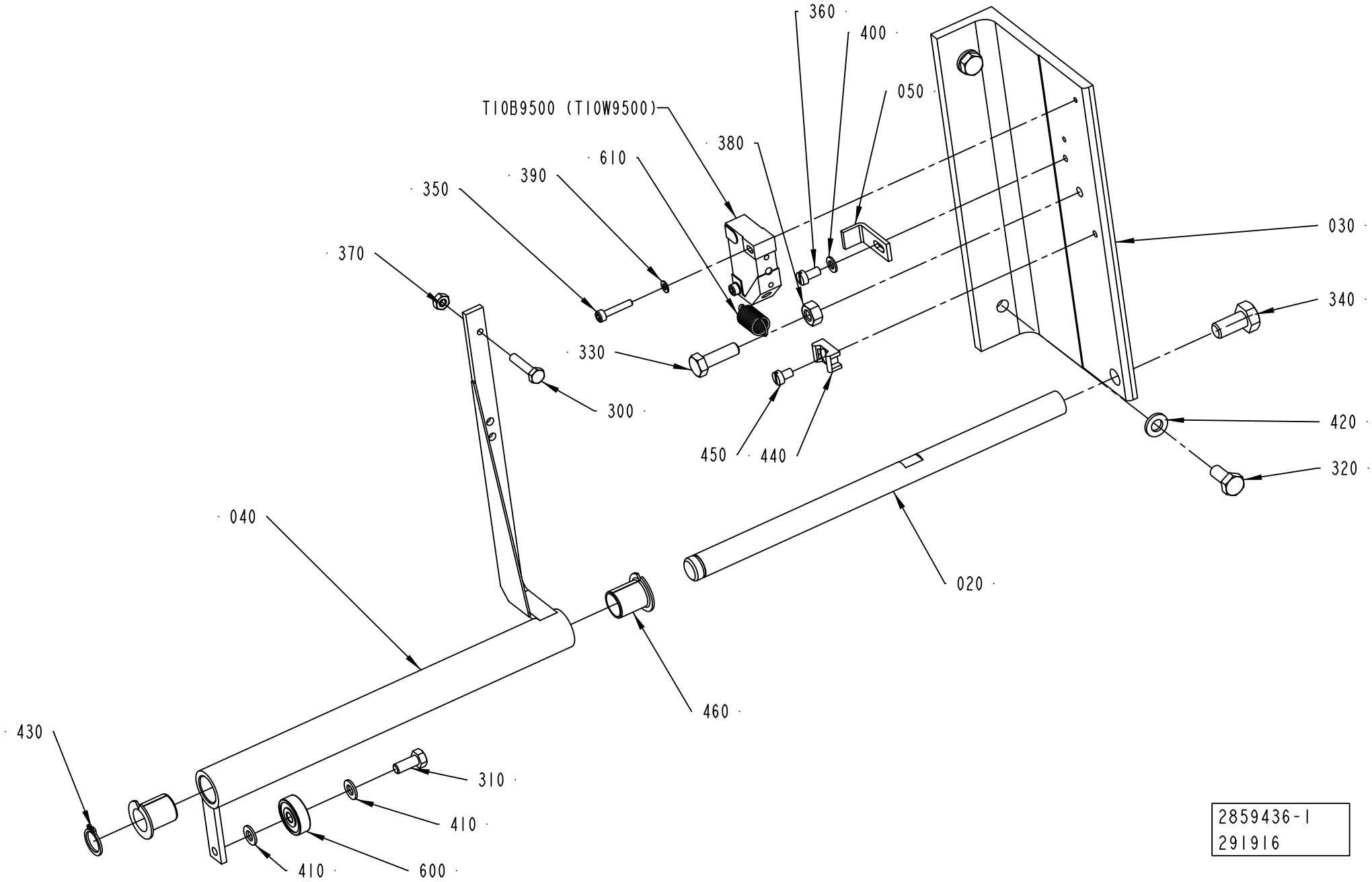

ECM: 348179 - 20080825
Group number: 2859436-0100
Assembly Drawing: 2859436-1_1_AA

| Pos | Part No | UN | Qty | Description | Page No |
|---|---|---|---|---|---|
| - | | | | | |
| 020 | 1498429-0000 | | 1 | AXLE | |
| 030 | 2859437-0000 | | 1 | BRACKET | |
| 040 | 2504811-0000 | | 1 | BRACKET | |
| 050 | 2504812-0000 | | 1 | BLOCK | |
| 300 | 312105-0295 | | 1 | SCREW M6S ISO 4017 M4X20 A470 | |
| 310 | 312105-0327 | | 1 | SCREW M6S ISO 4017 M5X12 A480 | |
| 320 | 312105-0367 | | 2 | SCREW M6S ISO 4017 M6X14 A480 | |
| 330 | 312105-0370 | | 1 | SCREW M6S ISO 4017 M6X20 A480 | |
| 340 | 312105-0449 | | 1 | SCREW M6S ISO 4017 M8X16 A480 | |
| 350 | 312115-0228 | | 2 | SCREW ISO4762 M3X16 A4 80 | |
| 360 | 312125-0287 | | 1 | SCREW ISO 1207 M4X8 A4 | |
| 370 | 312605-0312 | | 1 | HEXAGON NUT, M6M M4 A280 | |
| 380 | 312605-0316 | | 1 | HEXAGON NUT, M6M M6 A280 | |
| 390 | 315105-0124 | | 2 | WASHER BRB 3,2X6 RFR | |
| 400 | 315105-0136 | | 1 | WASHER BRB 4,3X8 RFR | |
| 410 | 315105-0146 | | 2 | WASHER BRB 5,3X10 RFR | |
| 420 | 315105-0153 | | 2 | WASHER BRB 6,4X12 RFR | |
| 430 | 315751-0109 | | 1 | RETAINING RING FOR SHAFT DIN 471 12 SS | |
| 440 | 352113-0205 | | 1 | ANCHOR PLATES FOR STRIPS, TYPE TM2S8-C10 | |
| 450 | 312121-0285 | | 1 | SCREW ISO 1207 M4X6 4.8-5.8 Z.PL. | |
| 460 | 321161-0185 | | 2 | FLANGE BUSHING, 12X14X17 MM | |
| 600 | 90214-0138 | | 1 | BALL BEARING, 5X19X6 MM | |
| 610 | 90335-0089 | | 1 | TENSION SPRING 41490, 0,9X10X23 | |
| T10B9500 | 90044-0104 | | 1 | PROX.SWITCH IN-3002-BPKG REPBY 90044-194 | |

| Pos | Part No | UN | Qty | Description | Page No |
|---|---|---|---|---|---|

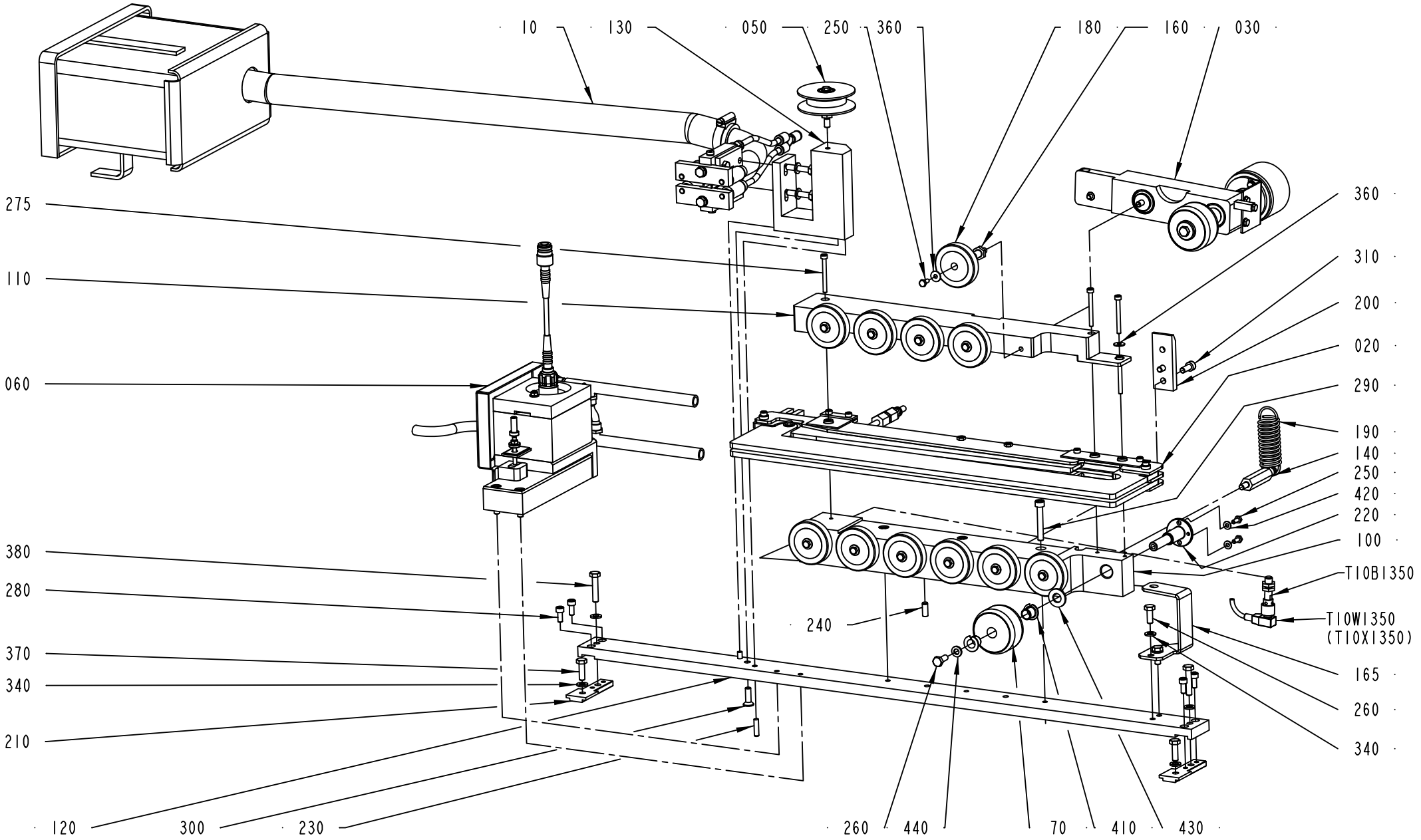
10
130
050
250
360
180
160
030
275
110
060
380
280
370
340
210
120
300
230
260
440
70
410
430
240
360
310
200
020
290
190
140
250
420
220
100
T10B1350
T10W1350
(T10X1350)
165
260
340

ECM: 364200 - 20080825
Group number: 2765668-0100
Assembly Drawing: 2765668-3_1_AC

| Pos | Part No | UN | Qty | Description | Page No |
|---|---|---|---|---|---|
| - | | | | | |
| 020 | 2765671-0100 | | 1 | INDUCTOR | **7-67, 7-69** |
| 030 | 2771068-0100 | | 1 | PRESSURE ROLLER | **7-71, 7-73** |
| 050 | 2771091-0100 | | 1 | PULLEY | **7-75** |
| 060 | 2862485-0100 | | 1 | INDUCTOR | **7-77** |
| 070 | 2963237-0000 | | 1 | ROLLER | |
| 100 | 2765669-0000 | | 1 | BRACKET | |
| 110 | 2765672-0000 | | 1 | BRACKET | |
| 120 | 2765676-0000 | | 1 | BRACKET | |
| 130 | 2900026-0000 | | 1 | SUPPORT | |
| 140 | 2771083-0000 | | 1 | SHAFT | |
| 160 | 2797161-0000 | | 11 | PIN | |
| 165 | 2797162-0000 | | 1 | BRACKET | |
| 180 | 2797167-0000 | | 11 | PRESSURE ROLLER | |
| 190 | 2852893-0000 | | 1 | TENSION SPRING | |
| 200 | 2852892-0000 | | 1 | BRACKET | |
| 210 | 2860081-0000 | | 2 | NUT | |
| 220 | 2963239-0000 | | 1 | SHAFT | |
| 230 | 311103-0310 | | 2 | PARALLEL PIN ISO 2338 5M6X20 A1 | |
| 240 | 311103-0351 | | 2 | PARALLEL PIN ISO 2338 6M6X16 A1 | |
| 250 | 312105-0289 | | 13 | SCREW M6S H4X10 A4 70 ISO4017/DIN933 | |
| 260 | 312105-0368 | | 3 | SCREW M6S ISO 4017 M6X16 A480 | |
| 275 | 312115-0303 | | 3 | SCREW ISO4762 M4X40 A4 80 | |
| 280 | 312115-0327 | | 4 | SCREW ISO4762 M5X12 A4 80 | |
| 290 | 312115-0378 | | 3 | SCREW ISO4762 M6X40 A4 80 | |
| 300 | 312155-0370 | | 1 | SCREW DIN 7991 MF6S M6X20 A4 70 | |
| 310 | 312115-0368 | | 2 | SCREW ISO4762 M6X16 A4 80 | |
| 330 | 312180-0499 | | 1 | SCREW ISO7379 H10X40 | |
| 340 | 315105-0153 | | 6 | WASHER BRB 6,4X12 RFR | |
| 360 | 90005-0082 | | 12 | WASHER PLAIN ROUND 4,3(M4)/12,H=1 | |
| 370 | 312105-0370 | | 2 | SCREW M6S ISO 4017 M6X20 A480 | |
| 380 | 312105-0374 | | 2 | SCREW M6S ISO 4014 M6X30 A480 | |
| 410 | 321161-0142 | | 2 | FLANGE BUSHING, 10X12X12 MM | |
| 420 | 315106-0146 | | 2 | WASHER ISO 7089-5-200 HV A4 | |
| 430 | 90005-0097 | | 1 | WASHER PL.RND.NYL.10,5/21, H=2 | |
| 440 | 90005-0151 | | 1 | WASHER PLAIN ROUND, 6,2/12, H=1,6 | |
| T10B1350 | 90459-3286 | | 1 | INDUCTIVE SWITCH E2A-S08KS02-M1-B1 | |
| T10W1350 | 90458-1076 | | 1 | L-SHAPED CONNECTOR CABLE 933 235-042 | |

| Pos | Part No | UN | Qty | Description | Page No |
|---|---|---|---|---|---|

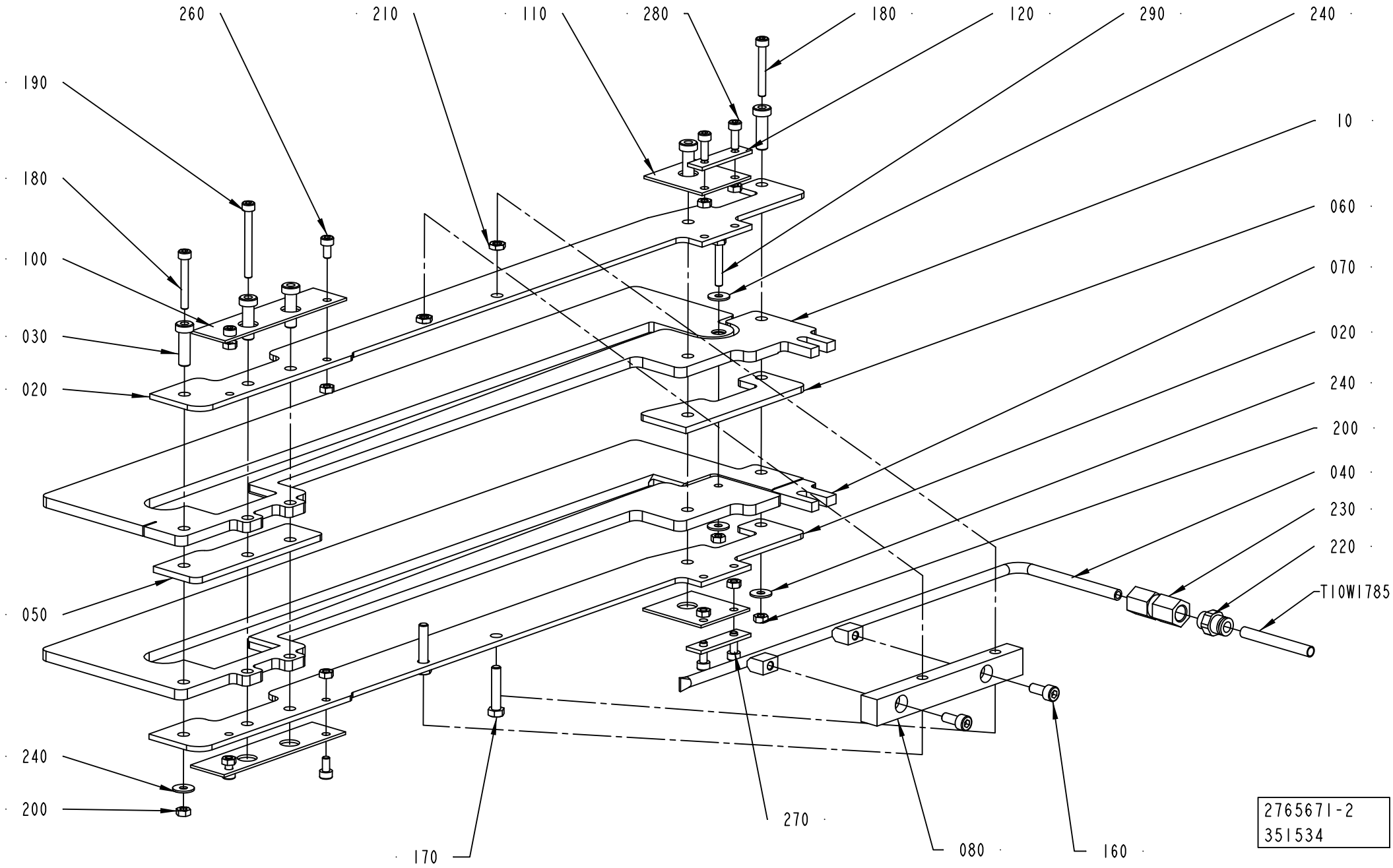
260
210
110
280
180
120
290
240
190
10
180
060
100
070
030
020
020
240
200
040
230
220
T10W1785
050
240
200
170
270
080
160
2765671-2
351534

ECM: 351534 - 20080430
Group number: 2765671-0100
Assembly Drawing: 2765671-2_1_AC

This list covers pages from 7-66 to 7-69

| Pos | Part No | UN | Qty | Description | Page No |
|---|---|---|---|---|---|
| - | | | | | |
| 010 | 2963240-0000 | | 1 | SEALING PLATE | |
| | *2799308-0000* | | *1* | *SPACER* | |
| | *2776094-0000* | | *1* | *SEALING PLATE* | |
| | *2507111-0000* | | *1* | *TAPE* | |
| 020 | 2776096-0000 | | 2 | PLATE | |
| 030 | 2776097-0000 | | 5 | SPACER | |
| 040 | 2765691-0000 | | 1 | AIR NOZZLE | |
| 050 | 2874469-0000 | | 1 | PLATE | |
| 060 | 2874468-0000 | | 1 | PLATE | |
| 070 | 2797158-0000 | | 1 | SEALING PLATE | |
| 080 | 2797164-0000 | | 1 | PLATE | |
| 090 | 2799308-0000 | | 1 | SPACER | |
| 100 | 2852886-0000 | | 2 | SHIM | |
| 110 | 2852885-0000 | | 2 | SHIM | |
| 120 | 2852895-0000 | | 2 | PLATE | |
| 160 | 312115-0327 | | 2 | SCREW ISO4762 M5X12 A4 80 | |
| 170 | 312105-0333 | | 2 | SCREW M6S ISO 4017 M5X25 A480 | |
| 180 | 312115-0299 | | 2 | SCREW ISO4762 M4X30 A4 80 | |
| 190 | 312115-0303 | | 1 | SCREW ISO4762 M4X40 A4 80 | |
| 200 | 312607-0312 | | 11 | HEXAGON NUT, EN 24032 M6M M4 A480 | |
| 210 | 312625-0314 | | 2 | HEXAGON THIN NUT, EN 24035 ML6M M5 A4 | |
| 220 | 342722-0202 | | 1 | PIPE COUPLING 1/8" D=6MM | |
| 230 | 342725-0102 | | 1 | CONN. STR. PIPE GAI06LR G1/8 | |
| 240 | 90005-0082 | | 4 | WASHER PLAIN ROUND 4,3(M4)/12,H=1 | |
| 260 | 312115-0287 | | 4 | SCREW ISO4762 M4X8 A4 80 | |
| 270 | 312111-0291 | | 2 | SCREW HEX.SOCK.HD.MC6S-TT 4X12 88 FZB | |
| 280 | 312115-0291 | | 2 | SCREW ISO4762 M4X12 A4 80 | |
| 290 | 312105-0297 | | 1 | SCREW M6S ISO 4017 M4X25 A470 | |
| T10W1785 | 90166-0193 | MM | 850 | TUBE 6 MM PUR BLUE | |

| Pos | Part No | UN | Qty | Description | Page No |
|---|---|---|---|---|---|

Machine Type | Group Description | Used-In | Group Number | Page No

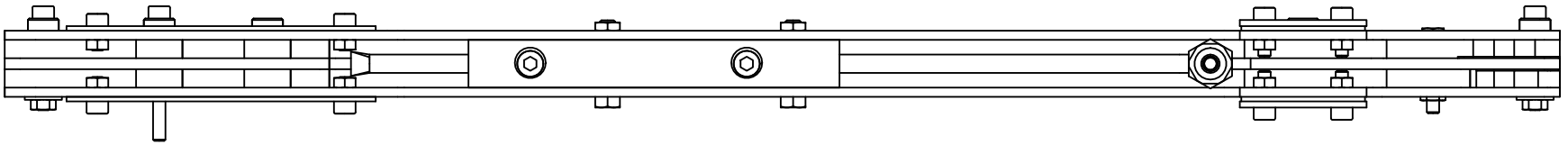

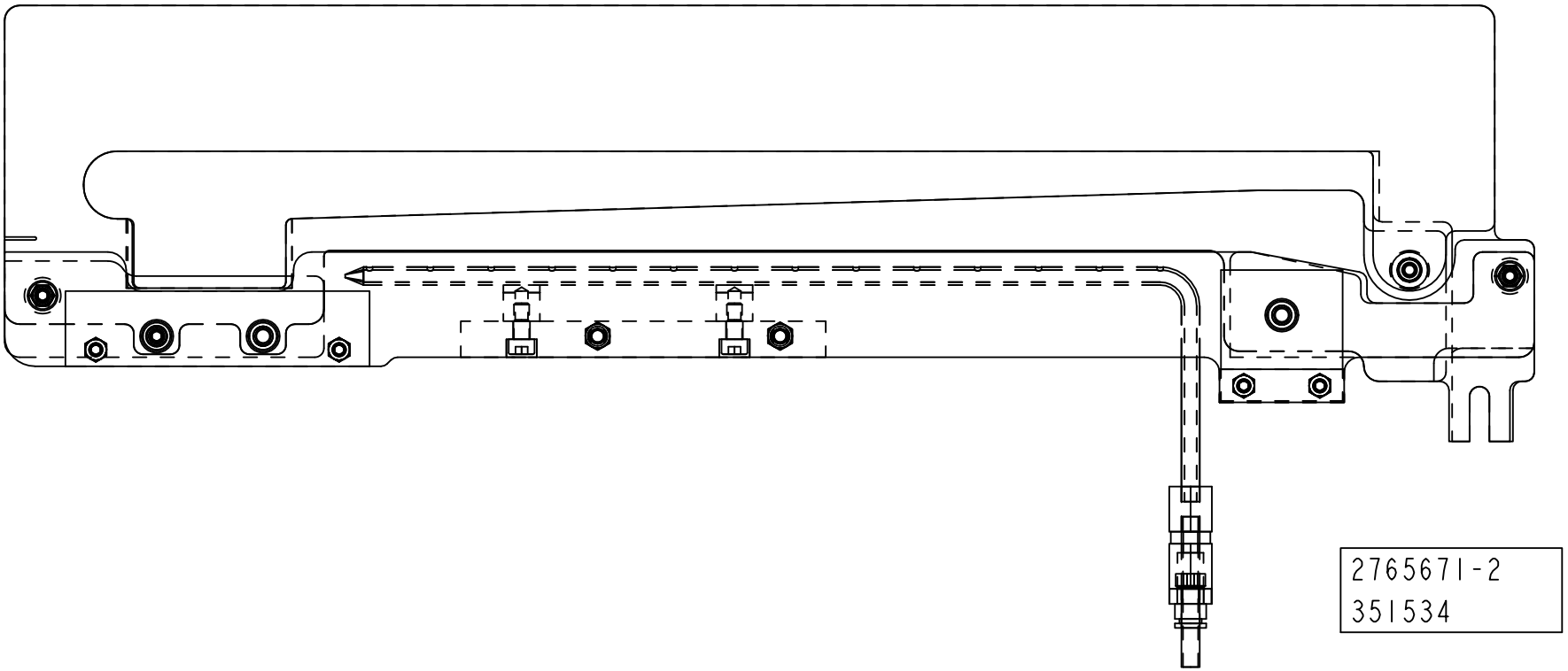
2765671-2
351534

ECM: 351534 - 20080430
Group number: 2765671-0100
Assembly Drawing: 2765671-2_2_AC

This list covers pages from 7-66 to 7-69

| Pos | Part No | UN | Qty | Description | Page No |
|---|---|---|---|---|---|
| - | | | | | |
| 010 | 2963240-0000 | | 1 | SEALING PLATE | |
| | *2799308-0000* | | *1* | *SPACER* | |
| | *2776094-0000* | | *1* | *SEALING PLATE* | |
| | *2507111-0000* | | *1* | *TAPE* | |
| 020 | 2776096-0000 | | 2 | PLATE | |
| 030 | 2776097-0000 | | 5 | SPACER | |
| 040 | 2765691-0000 | | 1 | AIR NOZZLE | |
| 050 | 2874469-0000 | | 1 | PLATE | |
| 060 | 2874468-0000 | | 1 | PLATE | |
| 070 | 2797158-0000 | | 1 | SEALING PLATE | |
| 080 | 2797164-0000 | | 1 | PLATE | |
| 090 | 2799308-0000 | | 1 | SPACER | |
| 100 | 2852886-0000 | | 2 | SHIM | |
| 110 | 2852885-0000 | | 2 | SHIM | |
| 120 | 2852895-0000 | | 2 | PLATE | |
| 160 | 312115-0327 | | 2 | SCREW ISO4762 M5X12 A4 80 | |
| 170 | 312105-0333 | | 2 | SCREW M6S ISO 4017 M5X25 A480 | |
| 180 | 312115-0299 | | 2 | SCREW ISO4762 M4X30 A4 80 | |
| 190 | 312115-0303 | | 1 | SCREW ISO4762 M4X40 A4 80 | |
| 200 | 312607-0312 | | 11 | HEXAGON NUT, EN 24032 M6M M4 A480 | |
| 210 | 312625-0314 | | 2 | HEXAGON THIN NUT, EN 24035 ML6M M5 A4 | |
| 220 | 342722-0202 | | 1 | PIPE COUPLING 1/8" D=6MM | |
| 230 | 342725-0102 | | 1 | CONN. STR. PIPE GAI06LR G1/8 | |
| 240 | 90005-0082 | | 4 | WASHER PLAIN ROUND 4,3(M4)/12,H=1 | |
| 260 | 312115-0287 | | 4 | SCREW ISO4762 M4X8 A4 80 | |
| 270 | 312111-0291 | | 2 | SCREW HEX.SOCK.HD.MC6S-TT 4X12 88 FZB | |
| 280 | 312115-0291 | | 2 | SCREW ISO4762 M4X12 A4 80 | |
| 290 | 312105-0297 | | 1 | SCREW M6S ISO 4017 M4X25 A470 | |
| T10W1785 | 90166-0193 | MM | 850 | TUBE 6 MM PUR BLUE | |

| Pos | Part No | UN | Qty | Description | Page No |
|---|---|---|---|---|---|

# PRESSURE ROLLER



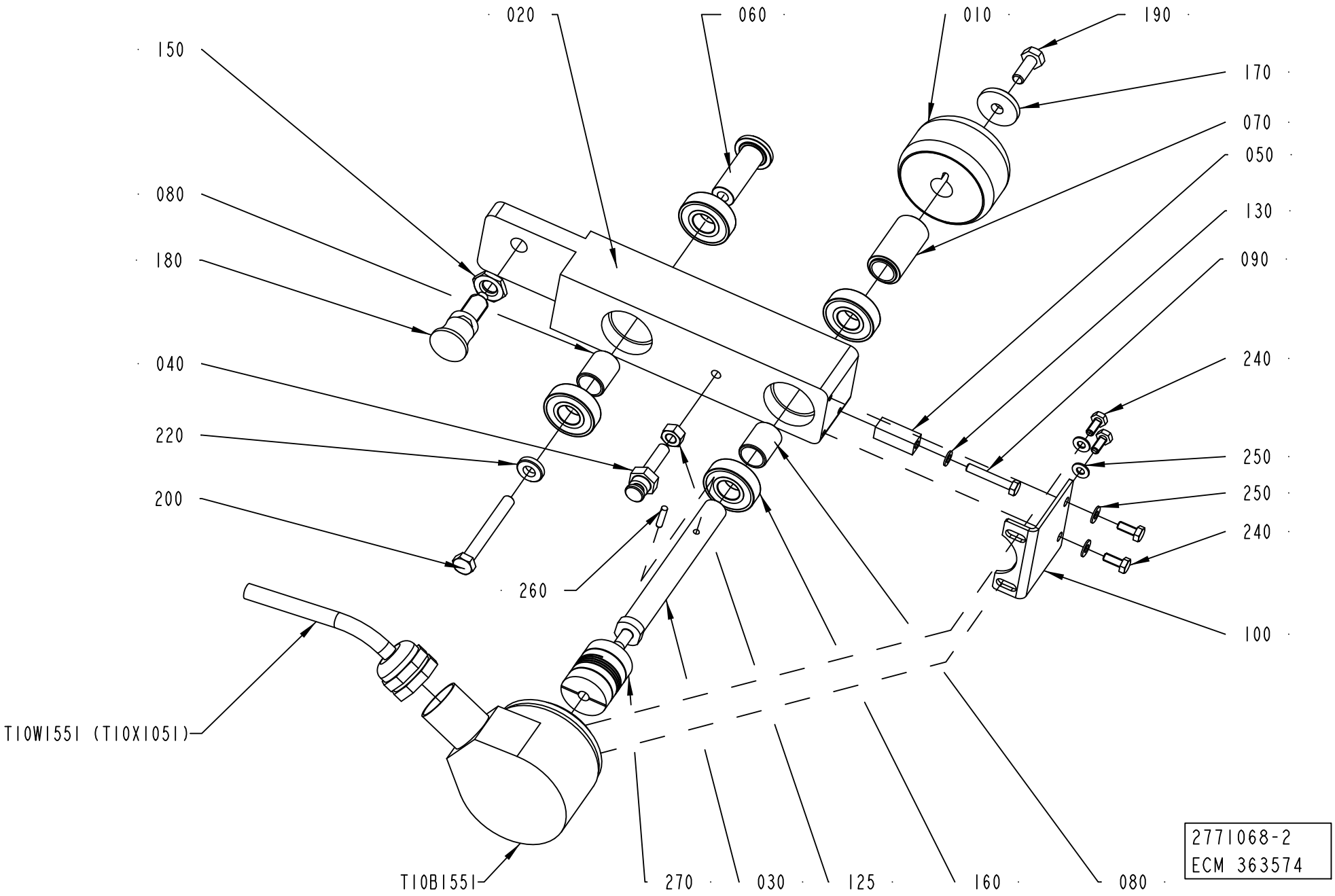

ECM: 363574 - 20080825
Group number: 2771068-0100
Assembly Drawing: 2771068-2_1_AC

This list covers pages from 7-70 to 7-73

| Pos | Part No | UN | Qty | Description | Page No |
|---|---|---|---|---|---|
| - | | | | | |
| 010 | 2963237-0000 | | 1 | ROLLER | |
| 020 | 2771067-0000 | | 1 | ARM | |
| 030 | 2963236-0000 | | 1 | PIN | |
| 040 | 2819397-0000 | | 1 | SPRING PIN | |
| 050 | 2535932-0000 | | 1 | CAM | |
| 060 | 2841916-0000 | | 1 | SPACER | |
| 070 | 2852887-0000 | | 1 | SPACER | |
| 080 | 2852888-0000 | | 2 | SPACER | |
| 090 | 312105-0297 | | 1 | SCREW M6S ISO 4017 M4X25 A470 | |
| 100 | 2963238-0000 | | 1 | HOLDER | |
| 125 | 312607-0316 | | 1 | HEXAGON NUT, EN 24032 M6M M6 A480 | |
| 130 | 315105-0136 | | 1 | WASHER BRB 4,3X8 RFR | |
| 150 | 90099-0007 | | 1 | HEXAGON NUT, M10X1, E 63 137 10 | |
| 160 | 90459-5536 | | 4 | BALL BEARING, 12X28X8 MM | |
| 170 | 315125-0153 | | 1 | WASHER TBRSB 6,4X22X4 A4 | |
| 180 | 90051-0087 | | 1 | LOCK KNOB, NO. GN 617 A5 | |
| 190 | 312105-0368 | | 1 | SCREW M6S ISO 4017 M6X16 A480 | |
| 200 | 312105-0380 | | 1 | SCREW M6S ISO 4014 M6X50 A480 | |
| 220 | 315111-0156 | | 1 | WASHER PLAIN, TBRB 6,7/14 H=3 | |
| 240 | 312105-0289 | | 4 | SCREW M6S H4X10 A4 70 ISO4017/DIN933 | |
| 250 | 315106-0136 | | 4 | WASHER ISO 7089-4-200 HV A4 | |
| 260 | 311103-0235 | | 1 | PARALLEL PIN ISO 2338 3M6X14 A1 | |
| 270 | 90458-1013 | | 1 | BELLOW COUPLING, 6X6 MM | |
| T10B1551 | 90600-1390 | | 1 | INCREMENTAL ENCODER, DGS60-G1A02000 | |
| T10W1551 | 90459-6604 | | 1 | CABLE, SICK DOL-2312-G 05MMA3 | |

| Pos | Part No | UN | Qty | Description | Page No |
|---|---|---|---|---|---|

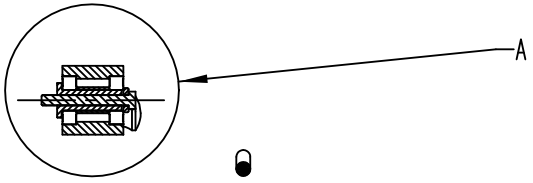


B-B

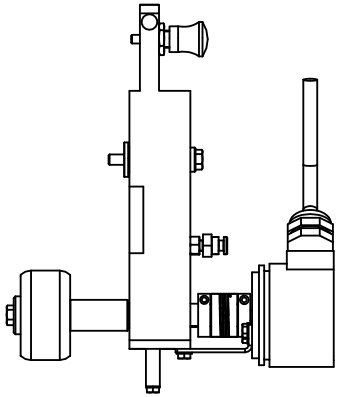

3:10

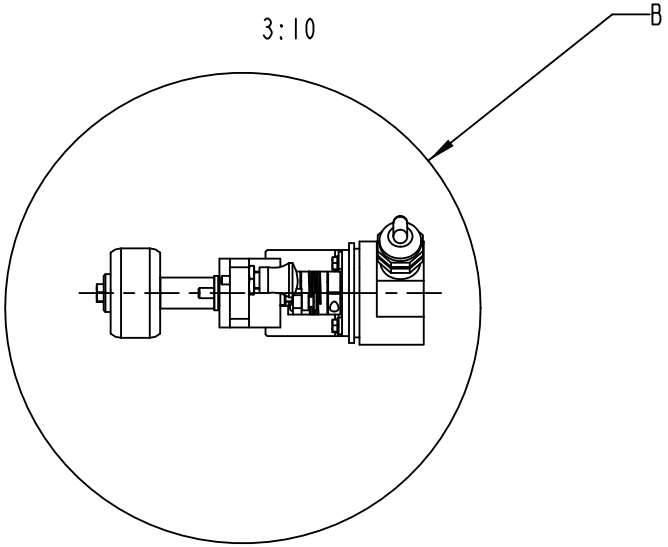


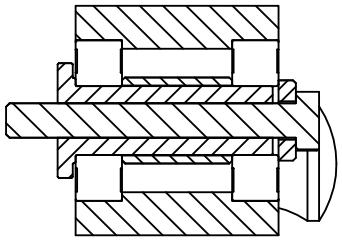

A
1:1

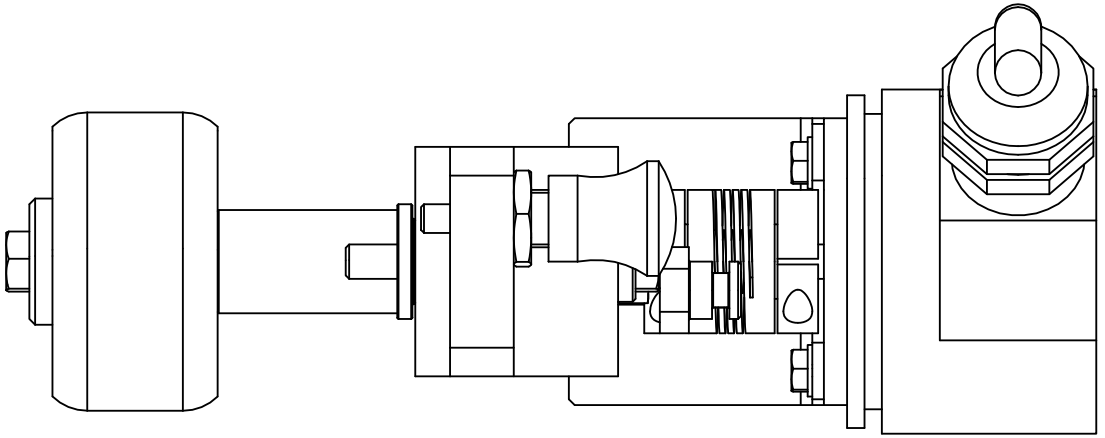

B
1:1

2771068-2
363574

ECM: 363574 - 20080825
Group number: 2771068-0100
Assembly Drawing: 2771068-2_2_AC

This list covers pages from 7-70 to 7-73

| Pos | Part No | UN | Qty | Description | Page No |
|---|---|---|---|---|---|
| - | | | | | |
| 010 | 2963237-0000 | | 1 | ROLLER | |
| 020 | 2771067-0000 | | 1 | ARM | |
| 030 | 2963236-0000 | | 1 | PIN | |
| 040 | 2819397-0000 | | 1 | SPRING PIN | |
| 050 | 2535932-0000 | | 1 | CAM | |
| 060 | 2841916-0000 | | 1 | SPACER | |
| 070 | 2852887-0000 | | 1 | SPACER | |
| 080 | 2852888-0000 | | 2 | SPACER | |
| 090 | 312105-0297 | | 1 | SCREW M6S ISO 4017 M4X25 A470 | |
| 100 | 2963238-0000 | | 1 | HOLDER | |
| 125 | 312607-0316 | | 1 | HEXAGON NUT, EN 24032 M6M M6 A480 | |
| 130 | 315105-0136 | | 1 | WASHER BRB 4,3X8 RFR | |
| 150 | 90099-0007 | | 1 | HEXAGON NUT, M10X1, E 63 137 10 | |
| 160 | 90459-5536 | | 4 | BALL BEARING, 12X28X8 MM | |
| 170 | 315125-0153 | | 1 | WASHER TBRSB 6,4X22X4 A4 | |
| 180 | 90051-0087 | | 1 | LOCK KNOB, NO. GN 617 A5 | |
| 190 | 312105-0368 | | 1 | SCREW M6S ISO 4017 M6X16 A480 | |
| 200 | 312105-0380 | | 1 | SCREW M6S ISO 4014 M6X50 A480 | |
| 220 | 315111-0156 | | 1 | WASHER PLAIN, TBRB 6,7/14 H=3 | |
| 240 | 312105-0289 | | 4 | SCREW M6S H4X10 A4 70 ISO4017/DIN933 | |
| 250 | 315106-0136 | | 4 | WASHER ISO 7089-4-200 HV A4 | |
| 260 | 311103-0235 | | 1 | PARALLEL PIN ISO 2338 3M6X14 A1 | |
| 270 | 90458-1013 | | 1 | BELLOW COUPLING, 6X6 MM | |
| T10B1551 | 90600-1390 | | 1 | INCREMENTAL ENCODER, DGS60-G1A02000 | |
| T10W1551 | 90459-6604 | | 1 | CABLE, SICK DOL-2312-G 05MMA3 | |

| Pos | Part No | UN | Qty | Description | Page No |
|---|---|---|---|---|---|

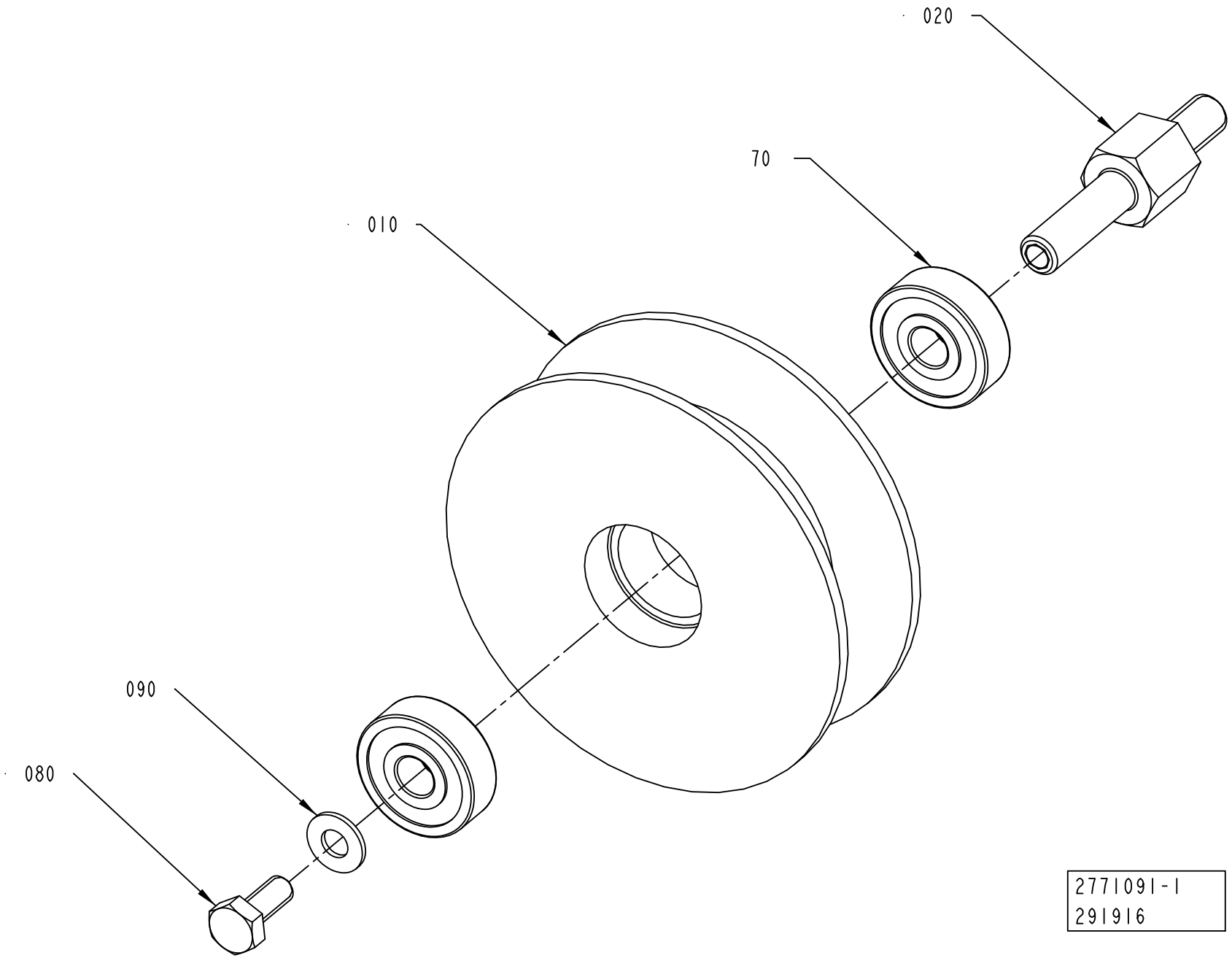
020
70
010
090
080
2771091-1
291916

ECM: 320820 - 20070903
Group number: 2771091-0100
Assembly Drawing: 2771091-1_1_AA

| Pos | Part No | UN | Qty | Description | Page No |
|---|---|---|---|---|---|
| - | | | | | |
| 010 | 2771080-0000 | | 1 | PULLEY | |
| 020 | 2771090-0000 | | 1 | SHAFT | |
| 070 | 90600-2897 | | 2 | BALL BEARING, 6X19X6 MM | |
| 080 | 312105-0289 | | 1 | SCREW M6S H4X10 A4 70 ISO4017/DIN933 | |
| 090 | 315106-0136 | | 1 | WASHER ISO 7089-4-200 HV A4 | |

| Pos | Part No | UN | Qty | Description | Page No |
|---|---|---|---|---|---|

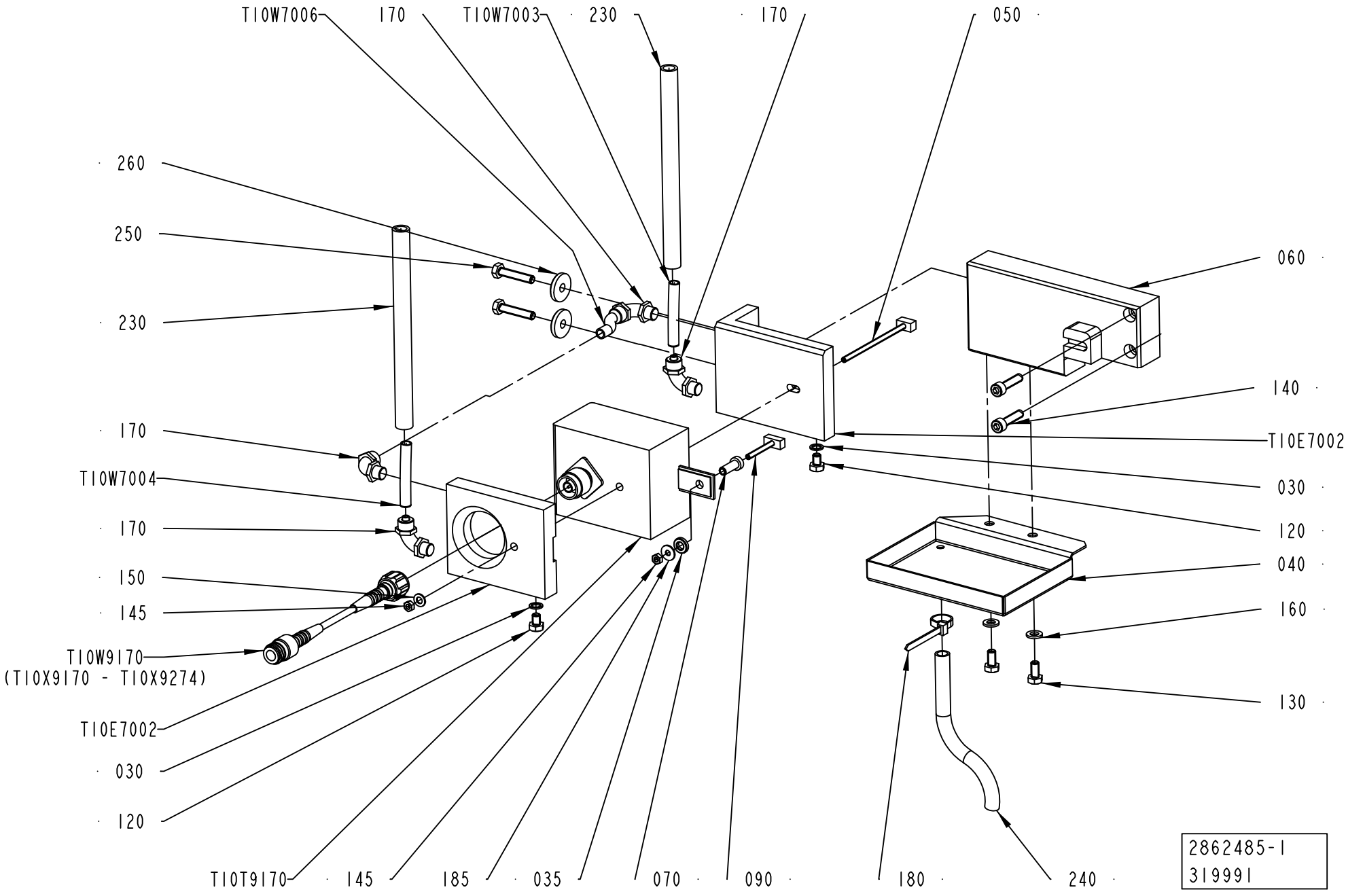
T10W7006
170
T10W7003
230
170
050
260
250
230
060
140
170
T10W7004
170
150
145
T10W9170
(T10X9170 - T10X9274)
T10E7002
030
120
T10E7002
030
120
040
160
130
T10T9170
145
185
035
070
090
180
240
2862485-1
319991

ECM: 348178 - 20080825
Group number: 2862485-0100
Assembly Drawing: 2862485-1_1_AB

| Pos | Part No | UN | Qty | Description | Page No |
|---|---|---|---|---|---|
| - | | | | | |
| 030 | 1140077-0000 | | 2 | RING | |
| 035 | 1558917-0000 | | 1 | SPACER DISC | |
| 040 | 2862487-0000 | | 1 | PROTECTION | |
| 050 | 2863542-0000 | | 1 | SCREW | |
| 060 | 2862488-0000 | | 1 | BLOCK | |
| 070 | 2776098-0000 | | 1 | SPACER | |
| 090 | 2841914-0000 | | 1 | SCREW | |
| 120 | 312105-0362 | | 2 | SCREW M6S ISO 4017 M6X8 A480 | |
| 130 | 312105-0366 | | 2 | SCREW M6S ISO 4017 M6X12 A480 | |
| 140 | 312115-0372 | | 2 | SCREW ISO4762 M6X25 A4 80 | |
| 145 | 312607-0312 | | 2 | HEXAGON NUT, EN 24032 M6M M4 A480 | |
| 150 | 315105-0146 | | 1 | WASHER BRB 5,3X10 RFR | |
| 160 | 315105-0153 | | 2 | WASHER BRB 6,4X12 RFR | |
| 170 | 342931-0121 | | 4 | ELBOW 90 COUPL.,EXT.THREAD 8/6-G1/8" | |
| 180 | 352113-0102 | | 1 | CABLE TIE, BLACK 188X4,8 MM | |
| 185 | 90005-0082 | | 1 | WASHER PLAIN ROUND 4,3(M4)/12,H=1 | |
| 210 | 90166-0018 | MM | 55 | SHRINKABLE HOSE PVC (13MM) | |
| 230 | 90458-2329 | MM | 3200 | HOSE, SILICONE, 50 SHORE, 9/13 MM | |
| 240 | 90459-1126 | MM | 1000 | PLASTIC HOSE PVC TRANSPARENT, 8X11MM | |
| 250 | 312109-0374 | | 2 | SCREW M6S ISO 4017 M6X30 A480 | |
| 260 | 315125-0153 | | 2 | WASHER TBRSB 6,4X22X4 A4 | |
| T10E7002 | 1129839-0000 | | 1 | COOLING PLATE | |
| T10E7002 | 2862486-0000 | | 1 | COOLING PLATE | |
| T10T9170 | 67380-0218 | | 1 | TRANSFORMER | |
| T10W7003 | 90166-0118 | MM | 1600 | TUBE 8 MM PA BLACK | |
| T10W7004 | 90166-0118 | MM | 1600 | TUBE 8 MM PA BLACK | |
| T10W7006 | 90166-0118 | MM | 55 | TUBE 8 MM PA BLACK | |
| T10W9170 | 2540595-0010 | | 1 | COAXIAL CABLE | |

| Pos | Part No | UN | Qty | Description | Page No |
|---|---|---|---|---|---|

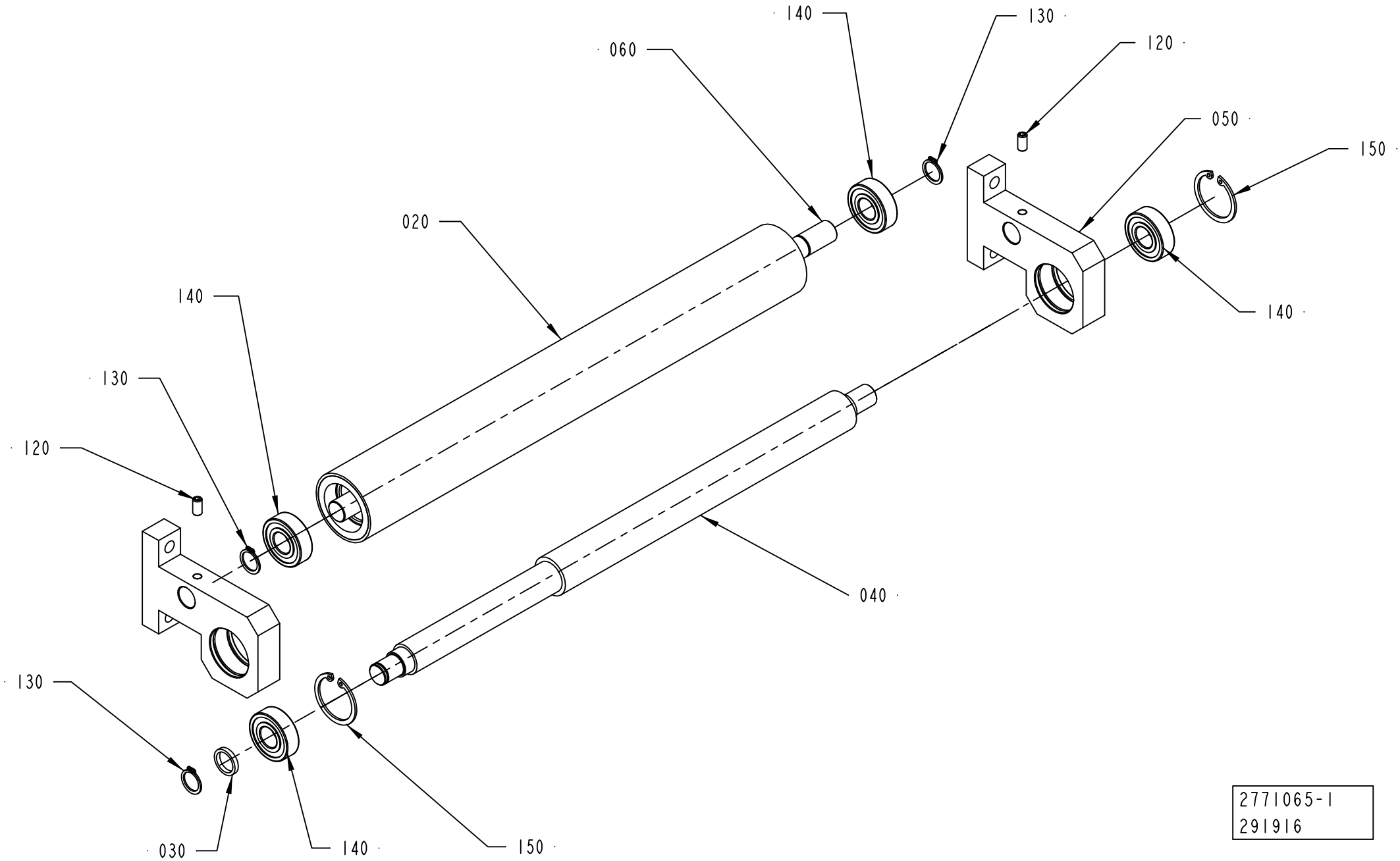


2771065-1
291916

ECM: 297374 - 20070508
Group number: 2771065-0100
Assembly Drawing: 2771065-1_1_AA

| Pos | Part No | UN | Qty | Description | Page No |
|---|---|---|---|---|---|
| - | | | | | |
| 020 | 2506661-0000 | | 1 | ROLLER | |
| 030 | 2797163-0000 | | 1 | SPACER | |
| 040 | 2506663-0000 | | 1 | SUPPORT | |
| 050 | 2771066-0000 | | 2 | SUPPORT | |
| 060 | 2506666-0000 | | 1 | AXEL | |
| 120 | 312318-0366 | | 2 | SCREW ISO4029 M6X12 A4 | |
| 130 | 315751-0112 | | 3 | RETAINING RING FOR SHAFT DIN 471 15 SS | |
| 140 | 321313-0102 | | 4 | BALL BEARING, 15X35X11 MM | |
| 150 | 315753-0124 | | 2 | RETAINING RING FOR BORE DIN 472 35 A2 | |

| Pos | Part No | UN | Qty | Description | Page No |
|---|---|---|---|---|---|

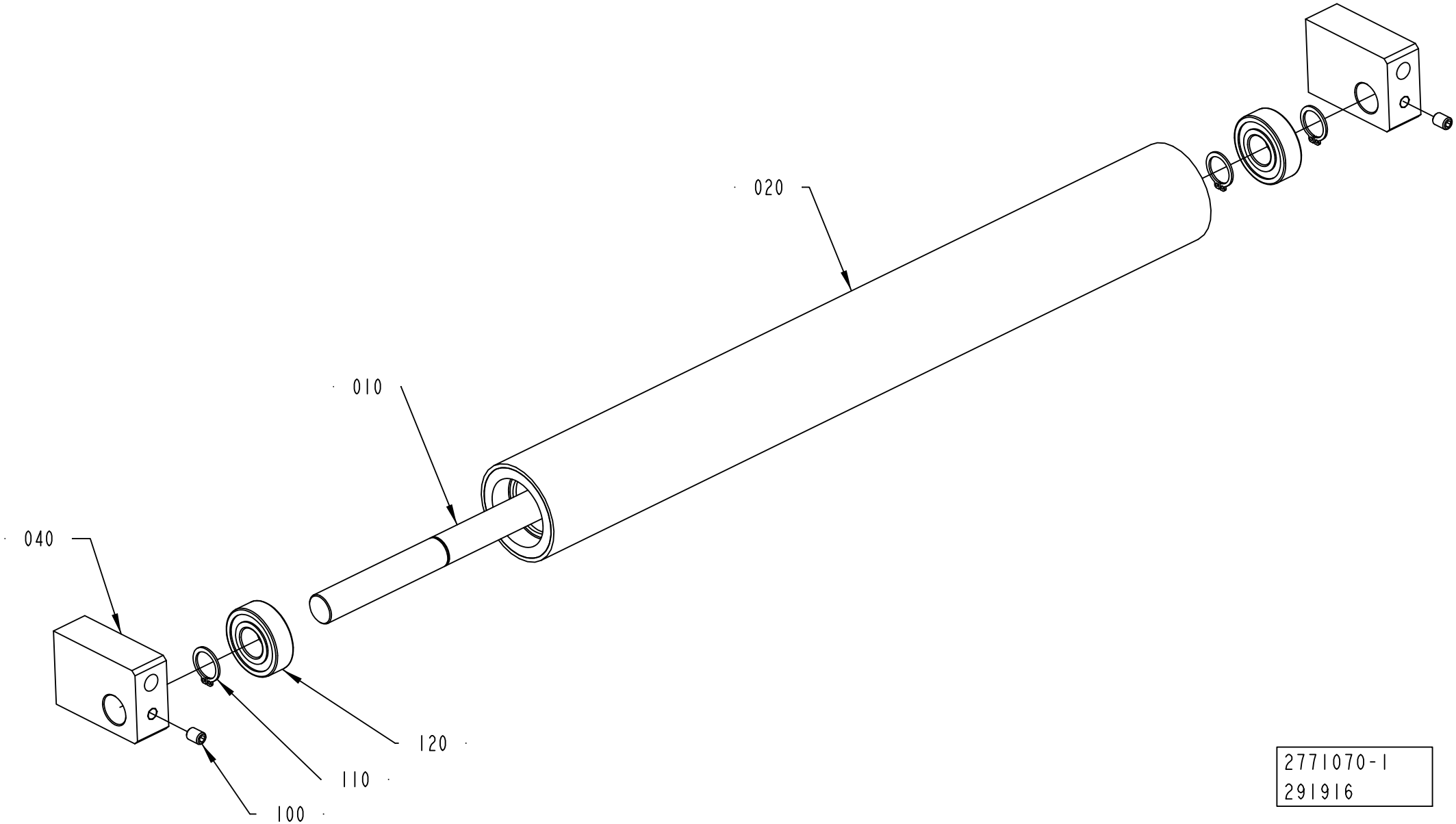


2771070-1
291916

ECM: 300599 - 20070508
Group number: 2771070-0100
Assembly Drawing: 2771070-1_1_AA

| Pos | Part No | UN | Qty | Description | Page No |
|---|---|---|---|---|---|
| - | | | | | |
| 010 | 2771071-0000 | | 1 | SHAFT | |
| 020 | 2771072-0000 | | 1 | BENDING ROLLER | |
| 040 | 2771077-0000 | | 2 | SUPPORT | |
| 100 | 312318-0362 | | 2 | SCREW ISO4029 M6X8 A4 | |
| 110 | 315751-0112 | | 3 | RETAINING RING FOR SHAFT DIN 471 15 SS | |
| 120 | 321313-0102 | | 2 | BALL BEARING, 15X35X11 MM | |

| Pos | Part No | UN | Qty | Description | Page No |
|---|---|---|---|---|---|

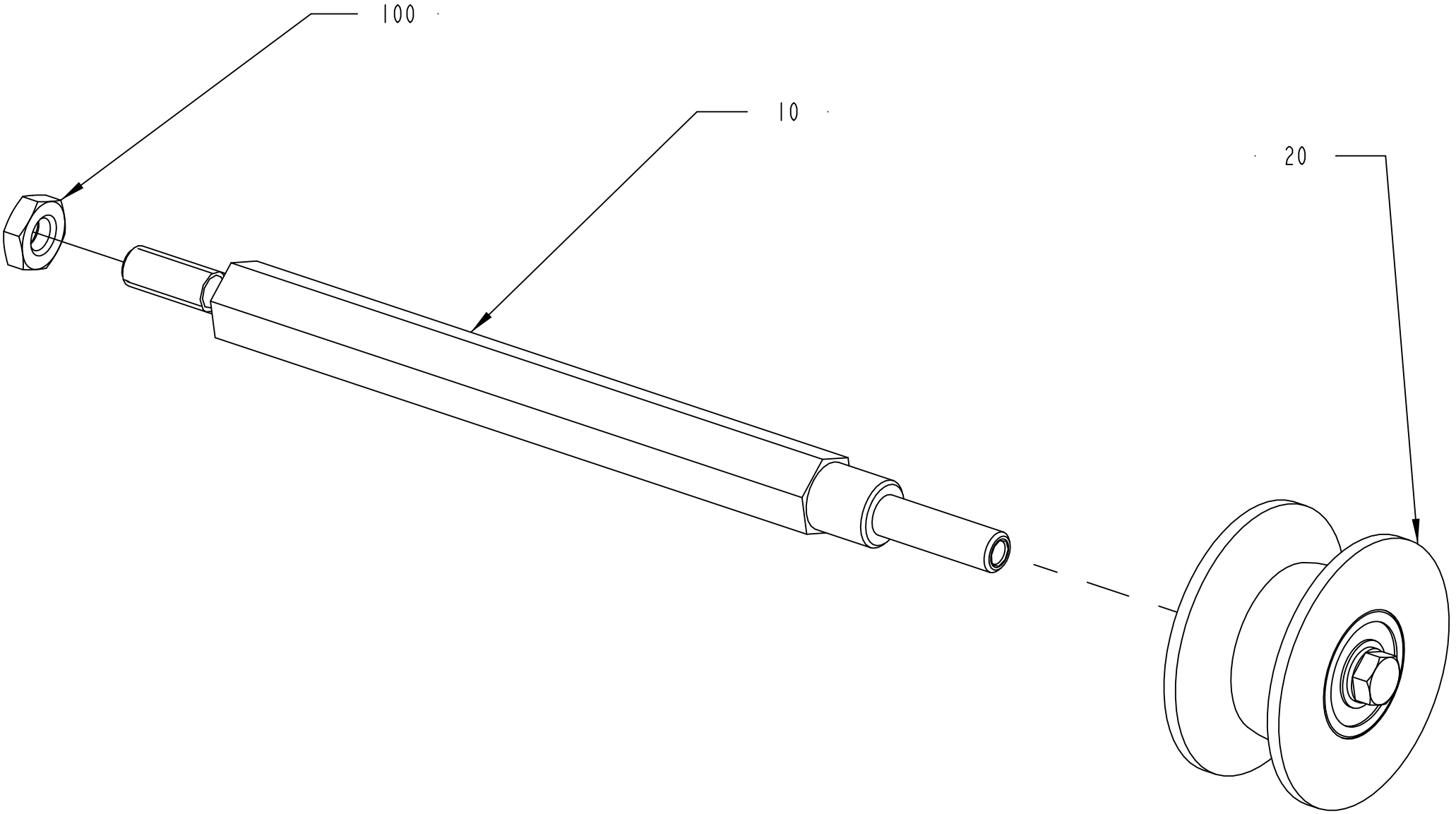


2771081-1
332669

ECM: 334863 - 20071206
Group number: 2771081-0100
Assembly Drawing: 2771081-1_1_AB

| Pos | Part No | UN | Qty | Description | Page No |
|---|---|---|---|---|---|
| - | | | | | |
| 010 | 2944545-0000 | | 1 | SHAFT | |
| 020 | 2737899-0100 | | 1 | WHEEL ..... | **7-85** |
| 100 | 312625-0316 | | 1 | HEXAGON THIN NUT, EN 24035 ML6M M6 A4 | |

| Pos | Part No | UN | Qty | Description | Page No |
|---|---|---|---|---|---|

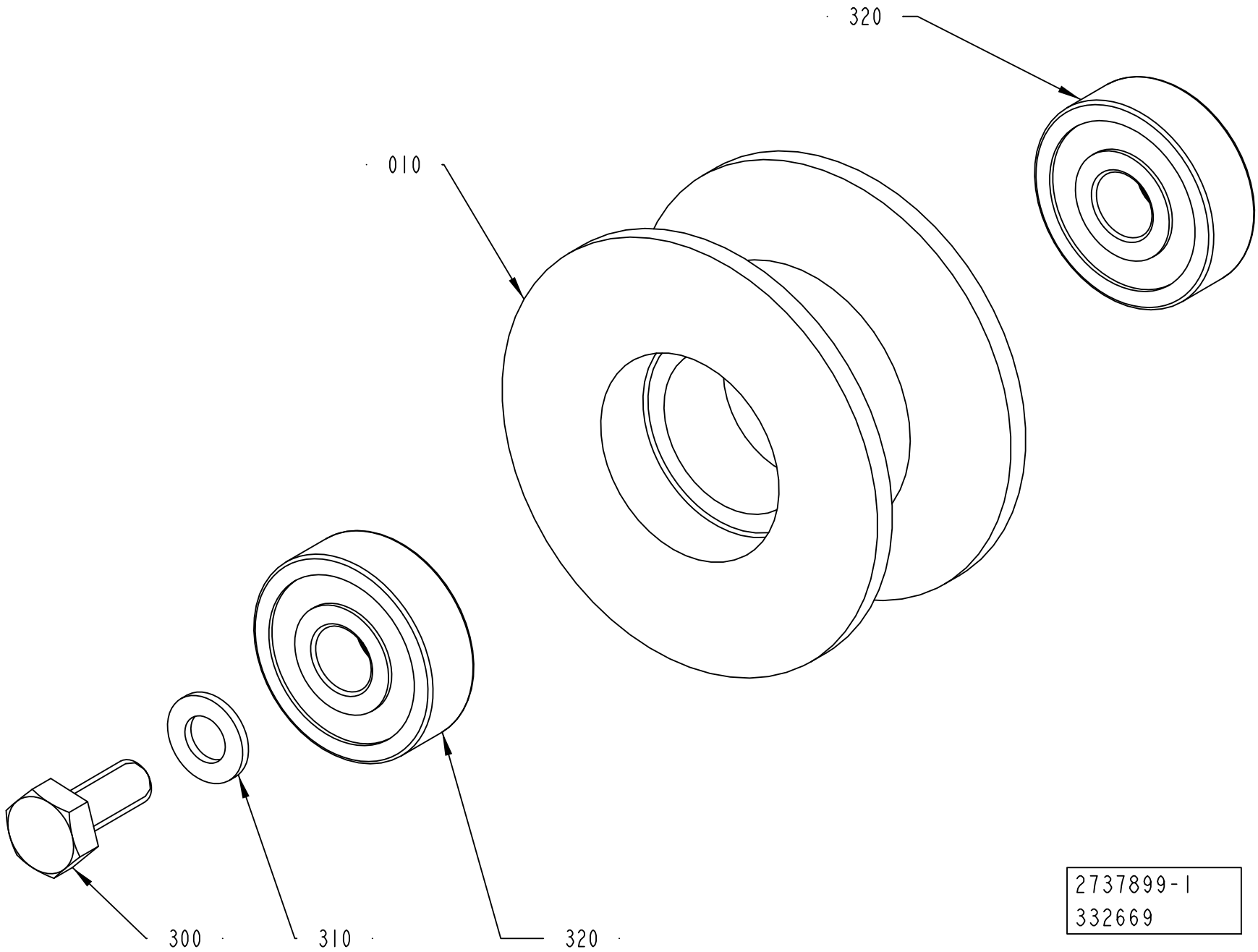
320
010
300
310
320
2737899-1
332669

ECM: 332669 - 20071206
Group number: 2737899-0100
Assembly Drawing: 2737899-1_1_AB

| Pos | Part No | UN | Qty | Description | Page No |
|---|---|---|---|---|---|
| - | | | | | |
| 010 | 2737898-0000 | | 1 | ROLLER | |
| 300 | 312105-0289 | | 1 | SCREW M6S H4X10 A4 70 ISO4017/DIN933 | |
| 310 | 315105-0136 | | 1 | WASHER BRB 4,3X8 RFR | |
| 320 | 90600-2897 | | 2 | BALL BEARING, 6X19X6 MM | |

| Pos | Part No | UN | Qty | Description | Page No |
|---|---|---|---|---|---|

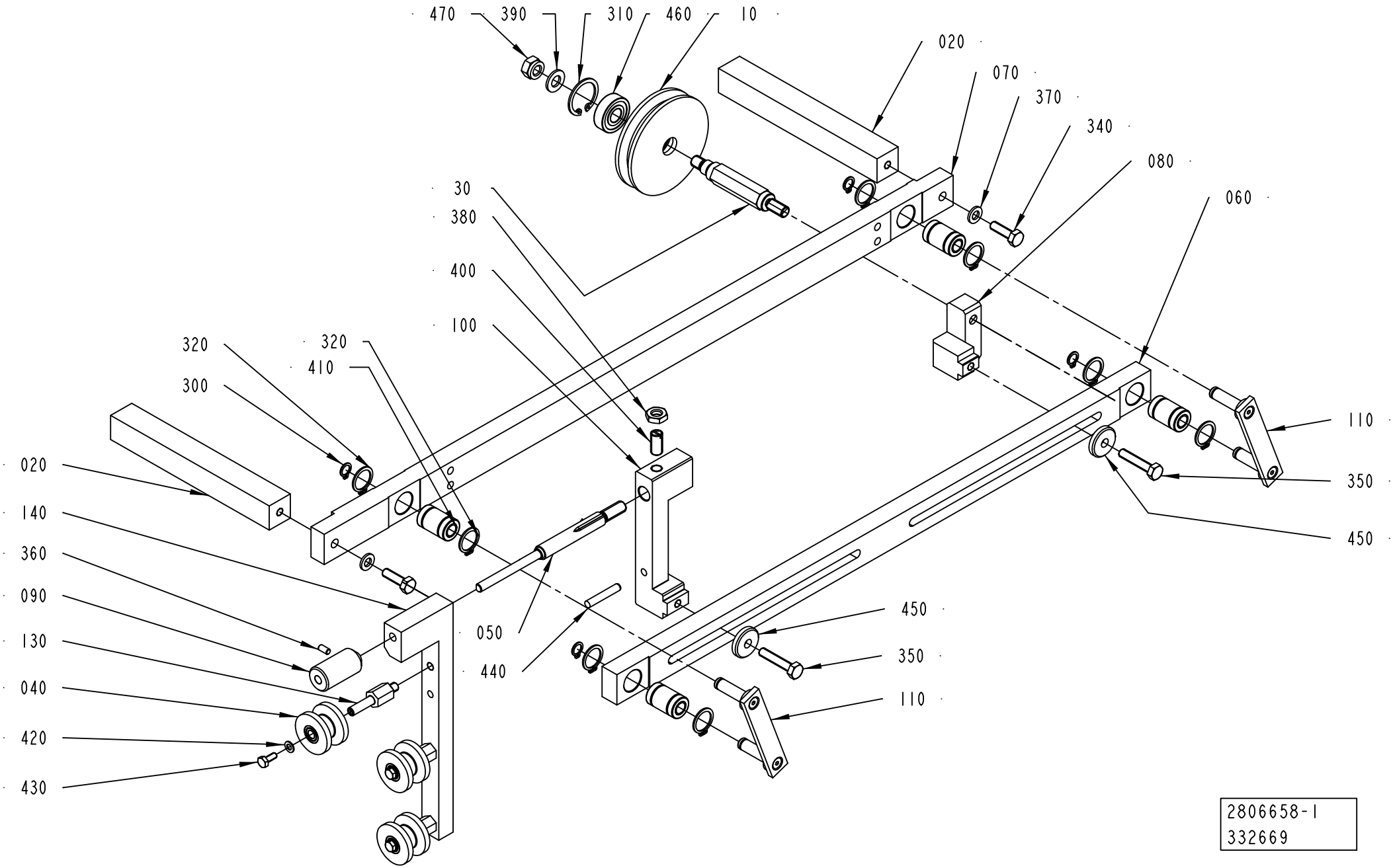
470
390
310
460
10
020
070
370
340
080
060
30
380
400
100
320
320
410
300
110
350
450
020
140
360
090
130
040
420
430
050
440
450
350
110
2806658-1
332669

ECM: 332669 - 20071206
Group number: 2806658-0100
Assembly Drawing: 2806658-1_1_AC

| Pos | Part No | UN | Qty | Description | Page No |
|---|---|---|---|---|---|
| - | | | | | |
| 010 | 2941710-0000 | | 1 | GUIDE WHEEL | |
| 020 | 2841915-0000 | | 2 | BRACKET | |
| 030 | 2941709-0000 | | 1 | AXLE PIN | |
| 040 | 2831686-0000 | | 3 | ROLLER | |
| 050 | 2748698-0000 | | 1 | ADJUSTING SCREW | |
| 060 | 2868756-0000 | | 1 | ROD | |
| 070 | 2868755-0000 | | 1 | ROD | |
| 080 | 2860082-0000 | | 1 | BRACKET | |
| 090 | 2748699-0000 | | 1 | KNOB | |
| 100 | 2841922-0000 | | 1 | BRACKET | |
| 110 | 2863543-0000 | | 2 | LEVER | |
| 130 | 2799295-0000 | | 3 | SHAFT | |
| 140 | 2863545-0000 | | 1 | SUPPORT | |
| 300 | 90141-0015 | | 4 | RETAINING RING FOR SHAFT DIN 471 8 SS | |
| 310 | 90458-0506 | | 1 | RETAINING RING FOR BORE DIN 472 26 A2 | |
| 320 | 315751-0113 | | 8 | RETAINING RING FOR SHAFT DIN 471 16 SS | |
| 340 | 312105-0370 | | 2 | SCREW M6S ISO 4017 M6X20 A480 | |
| 350 | 312109-0374 | | 2 | SCREW M6S ISO 4017 M6X30 A480 | |
| 360 | 312318-0287 | | 1 | SCREW ISO4029 M4X8 A4 | |
| 370 | 315105-0153 | | 2 | WASHER BRB 6,4X12 RFR | |
| 380 | 312625-0318 | | 1 | HEXAGON THIN NUT, EN 24035 ML6M M8 A4 | |
| 390 | 315106-0165 | | 1 | WASHER ISO 7089-8-200 HV A4 | |
| 400 | 90287-0334 | | 1 | SCREW SPRINGLOAD. SLOTTED HEAD M8X16 | |
| 410 | 90600-2854 | | 4 | LINEAR BUSHING 8X16X25 | |
| 420 | 315105-0136 | | 3 | WASHER BRB 4,3X8 RFR | |
| 430 | 312105-0289 | | 3 | SCREW M6S H4X10 A4 70 ISO4017/DIN933 | |
| 440 | 311103-0314 | | 1 | PARALLEL PIN ISO 2338 5M6X30 A1 | |
| 450 | 315125-0153 | | 2 | WASHER TBRSB 6,4X22X4 A4 | |
| 460 | 90214-0029 | | 1 | BALL BEARING, 10X26X8 MM | |
| 470 | 312812-0318 | | 1 | HEXAGON NUT, NY-LOCK M8 A480 | |

| Pos | Part No | UN | Qty | Description | Page No |
|---|---|---|---|---|---|

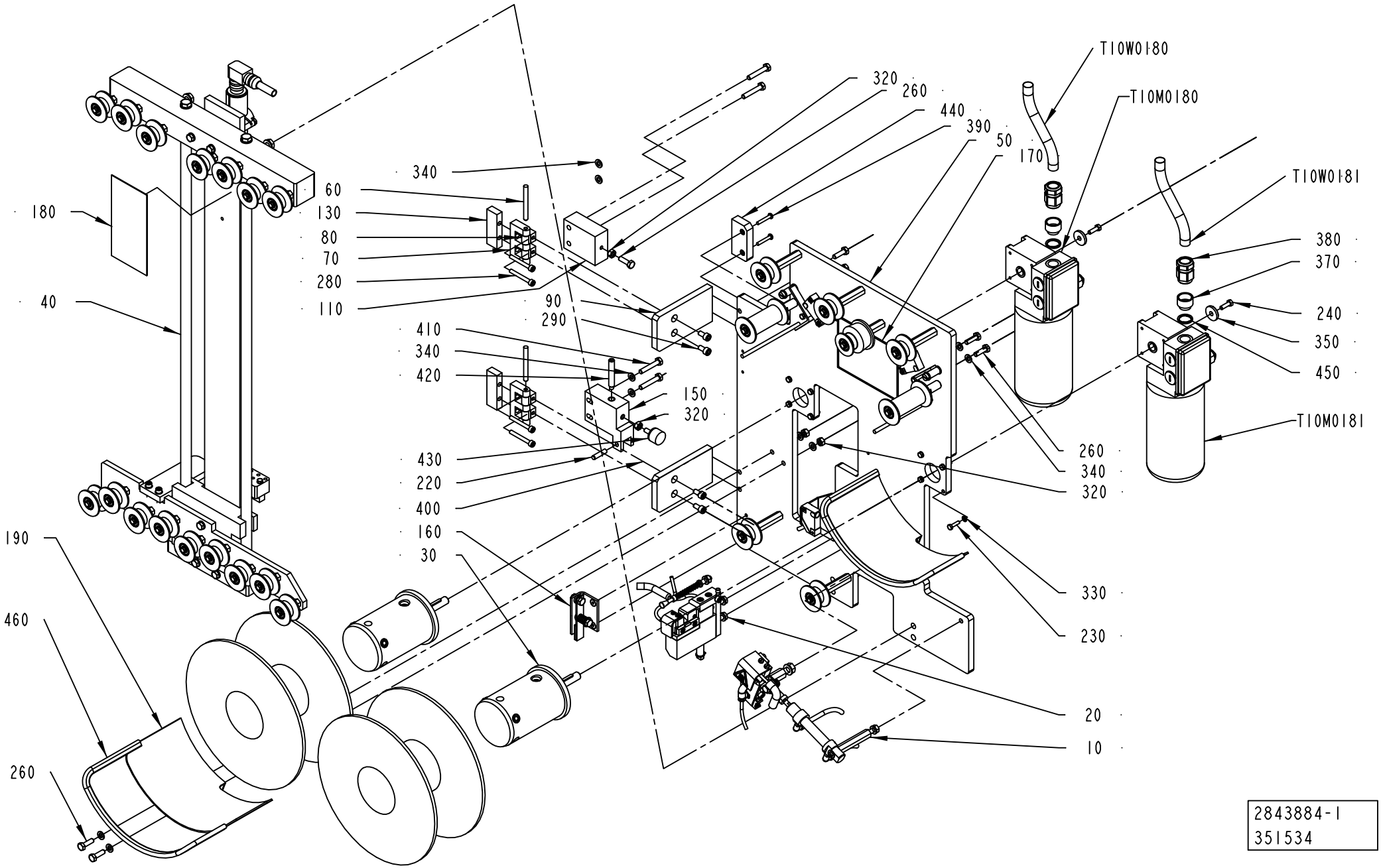
T10W0180
T10M0180
320
260
440
390
50
170
T10W0181
380
370
240
350
450
T10M0181
180
40
60
130
80
70
280
110
340
90
290
410
340
420
150
320
260
340
320
430
220
400
160
30
190
460
260
330
230
20
10
2843884-1
351534

ECM: 359844 - 20080825
Group number: 2843884-0100
Assembly Drawing: 2843884-1_1_AD

| Pos | Part No | UN | Qty | Description | Page No |
|---|---|---|---|---|---|
| - | | | | | |
| 010 | 2765649-0100 | | 1 | HEATING DEVICE | **7-91** |
| 020 | 2765653-0100 | | 1 | CUTTING TABLE | **7-93** |
| 030 | 2843840-0100 | | 2 | HUB | **7-95** |
| 040 | 2843848-0100 | | 1 | BUFFER | **7-97** |
| 050 | 2843883-0100 | | 1 | MOUNTING SHEET | **7-99** |
| 060 | 988685-0000 | | 2 | PIN | |
| 070 | 1035792-0000 | | 2 | E-HINGE | |
| 080 | 1129770-0000 | | 4 | BLOCKING PIECE | |
| 090 | 2765657-0000 | | 2 | PLATE | |
| 110 | 2841924-0000 | | 1 | BRACKET | |
| 130 | 2844151-0000 | | 2 | SPACER | |
| 150 | 2868760-0000 | | 1 | BLOCK | |
| 160 | 2510401-0100 | | 1 | HOLDER | **7-105** |
| 170 | 2558878-0000 | | 1 | SIGN | |
| 180 | 2917420-0000 | | 1 | SIGN | |
| 190 | 2921684-0000 | | 2 | PROTECTION | |
| 220 | 311102-1355 | | 1 | PARALLEL PIN ISO 2338 6M6X24 ST | |
| 230 | 312105-0293 | | 8 | SCREW M6S ISO 4017 M4X16 A470 | |
| 240 | 312105-0329 | | 2 | SCREW M6S ISO 4017 M5X16 A480 | |
| 260 | 312105-0370 | | 9 | SCREW M6S ISO 4017 M6X20 A480 | |
| 280 | 312115-0339 | | 4 | SCREW ISO4762 M5X40 A4 80 | |
| 290 | 312115-0366 | | 4 | SCREW ISO4762 M6X12 A4 80 | |
| 320 | 312605-0316 | | 6 | HEXAGON NUT, M6M M6 A280 | |
| 330 | 315105-0136 | | 8 | WASHER BRB 4,3X8 RFR | |
| 340 | 315105-0153 | | 16 | WASHER BRB 6,4X12 RFR | |
| 350 | 315125-0153 | | 2 | WASHER TBRSB 6,4X22X4 A4 | |
| 370 | 90458-1155 | | 2 | ENLARGING SLEEVE, 5210 4452 | |
| 380 | 90458-0438 | | 2 | GLAND, EXTENDED WITH INSERT, M20X1,5 | |
| 390 | 90459-4165 | | 2 | SAFETY SCREW, 20-053-43 SM4X25 | |
| 400 | 90600-2659 | | 1 | SPRING LOADED CATCH, EH 2220.080 | |
| 410 | 312105-0376 | | 4 | SCREW M6S ISO 4014 M6X35 A480 | |
| 420 | 312311-0461 | | 1 | SCREW ISO4028 M8X50 FZB | |
| 430 | 90459-2726 | | 1 | RUBBER BUFFER, 20-00484-01 | |
| 440 | 90458-2794 | | 1 | SAFETY SENSOR, NON-CONTACT EVA | |
| 450 | 315239-0111 | | 2 | NYLON WASHER G3/8, 3/8RRP | |
| 460 | 90143-0060 | M | 1 | EDGE STRIP 9,5X6,3MM BLACK PVC | |
| T10M0180 | 90600-1459 | | 1 | GEARS, WORM MOTOR MC 320P2TB5 | |
| T10M0181 | 90600-1459 | | 1 | GEARS, WORM MOTOR MC 320P2TB5 | |
| T10W0180 | 351150-0406 | M | 6 | CABLE OLFLEX 7X0,75 MM2 LIGHT/GREY | |
| T10W0181 | 351150-0406 | M | 6 | CABLE OLFLEX 7X0,75 MM2 LIGHT/GREY | |

| Pos | Part No | UN | Qty | Description | Page No |
|---|---|---|---|---|---|

Machine Type | Group Description | Used-In | Group Number | Page No

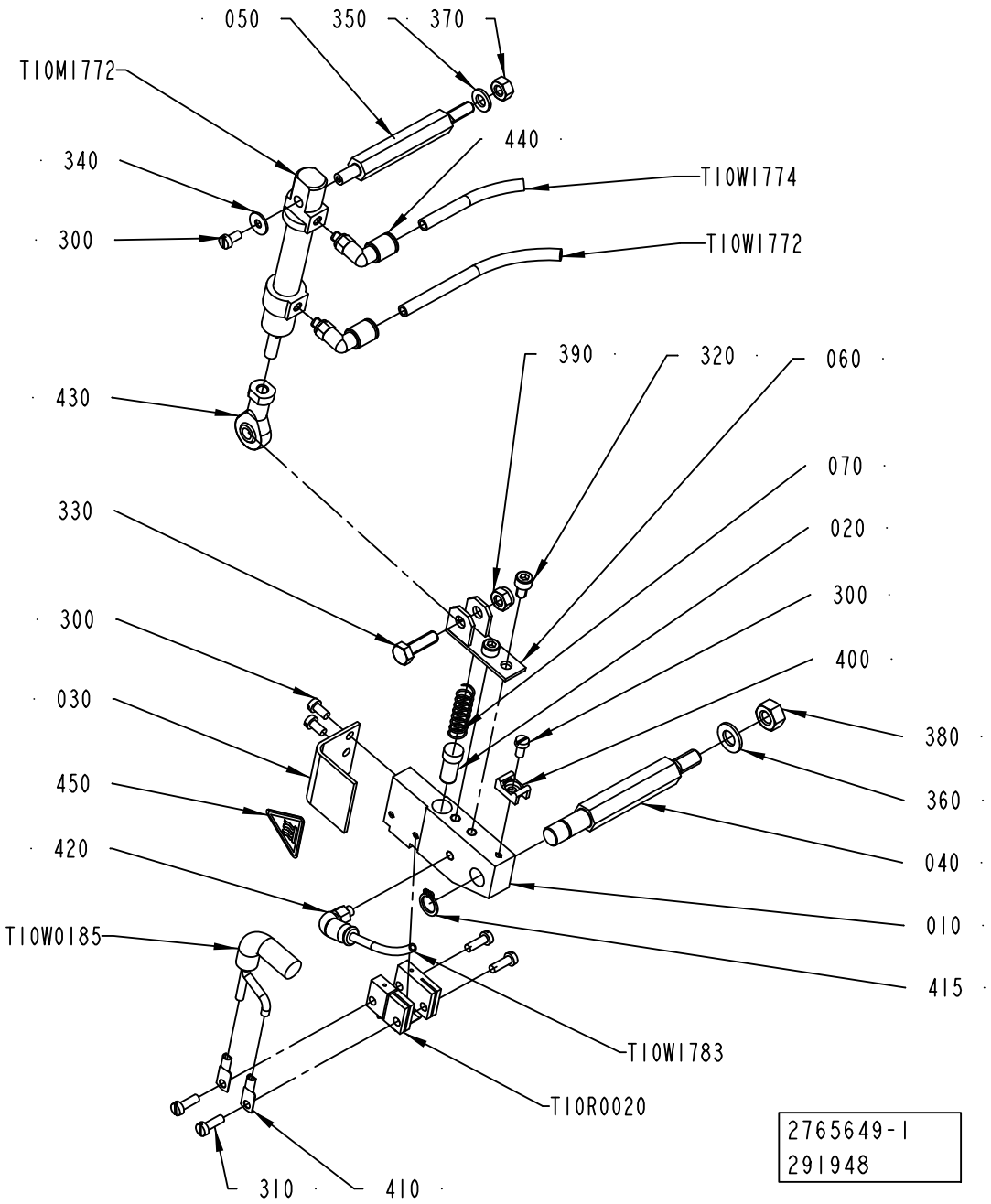
050
350
370
T10M1772
440
340
T10W1774
300
T10W1772
390
320
060
430
070
330
020
300
300
400
030
380
450
360
420
040
T10W0185
010
415
T10W1783
T10R0020
310
410
2765649-1
291948

ECM: 320815 - 20070903
Group number: 2765649-0100
Assembly Drawing: 2765649-1_1_AA

| Pos | Part No | UN | Qty | Description | Page No |
|---|---|---|---|---|---|
| - | | | | | |
| 010 | 1490804-0000 | | 1 | HOLDER | |
| 020 | 400833-0000 | | 1 | PLUNGER | |
| 030 | 1349181-0000 | | 1 | TOUCH GUARD | |
| 040 | 2765650-0000 | | 1 | SHAFT | |
| 050 | 2765651-0000 | | 1 | SHAFT | |
| 060 | 1037124-0000 | | 1 | HOLDER | |
| 070 | 400828-0000 | | 1 | SPRING | |
| 300 | 312125-0287 | | 4 | SCREW ISO 1207 M4X8 A4 | |
| 310 | 312125-0291 | | 4 | SCREW ISO 1207 M4X12 A4 | |
| 320 | 312115-0323 | | 2 | SCREW ISO4762 M5X8 A4 80 | |
| 330 | 312105-0370 | | 1 | SCREW M6S ISO 4017 M6X20 A480 | |
| 340 | 90005-0082 | | 1 | WASHER PLAIN ROUND 4,3(M4)/12,H=1 | |
| 350 | 315105-0153 | | 1 | WASHER BRB 6,4X12 RFR | |
| 360 | 315105-0165 | | 1 | WASHER BRB 8,4X16 RFR | |
| 370 | 312605-0316 | | 1 | HEXAGON NUT, M6M M6 A280 | |
| 380 | 312605-0318 | | 1 | HEXAGON NUT, M6M M8 A280 | |
| 390 | 312812-0316 | | 1 | HEXAGON NUT, NY-LOCK M6 A480 | |
| 400 | 352113-0205 | | 1 | ANCHOR PLATES FOR STRIPS, TYPE TM2S8-C10 | |
| 410 | 353104-0140 | | 2 | CABLE SHOE, RING UNINS., YAV 06 M 4 | |
| 415 | 90141-0016 | | 1 | RETAINING RING FOR SHAFT DIN 471 10 SS | |
| 420 | 90458-2954 | | 1 | ELBOW PIPE JOINT, EXT.THREAD, D=4MM M5 | |
| 430 | 90239-0491 | | 1 | ROD END, BALL JOINT EYE, MINI-ISO M6 | |
| 440 | 350002-0002 | | 2 | PUSH-IN L-FITTING QSL-F-M5-6 | |
| 450 | 90194-0143 | | 1 | WARNING SIGN ISO, HOT SURFACE | |
| T10M1772 | 90450-0306 | | 1 | DOUBLE ACTING, MINI-ISO, CYL. 12-25 | |
| T10R0020 | 1498047-0000 | | 1 | SEALING BLOCK | |
| T10W0185 | 351120-0126 | M | 1 | CABLE SILFLEX SIHF 2X4 0046025 | |
| T10W1772 | 90166-0193 | M | 1 | TUBE 6 MM PUR BLUE | |
| T10W1774 | 90166-0193 | M | 1 | TUBE 6 MM PUR BLUE | |
| T10W1783 | 90166-0095 | M | 1 | TUBE 4 MM PA BLUE (50M) | |

| Pos | Part No | UN | Qty | Description | Page No |
|---|---|---|---|---|---|

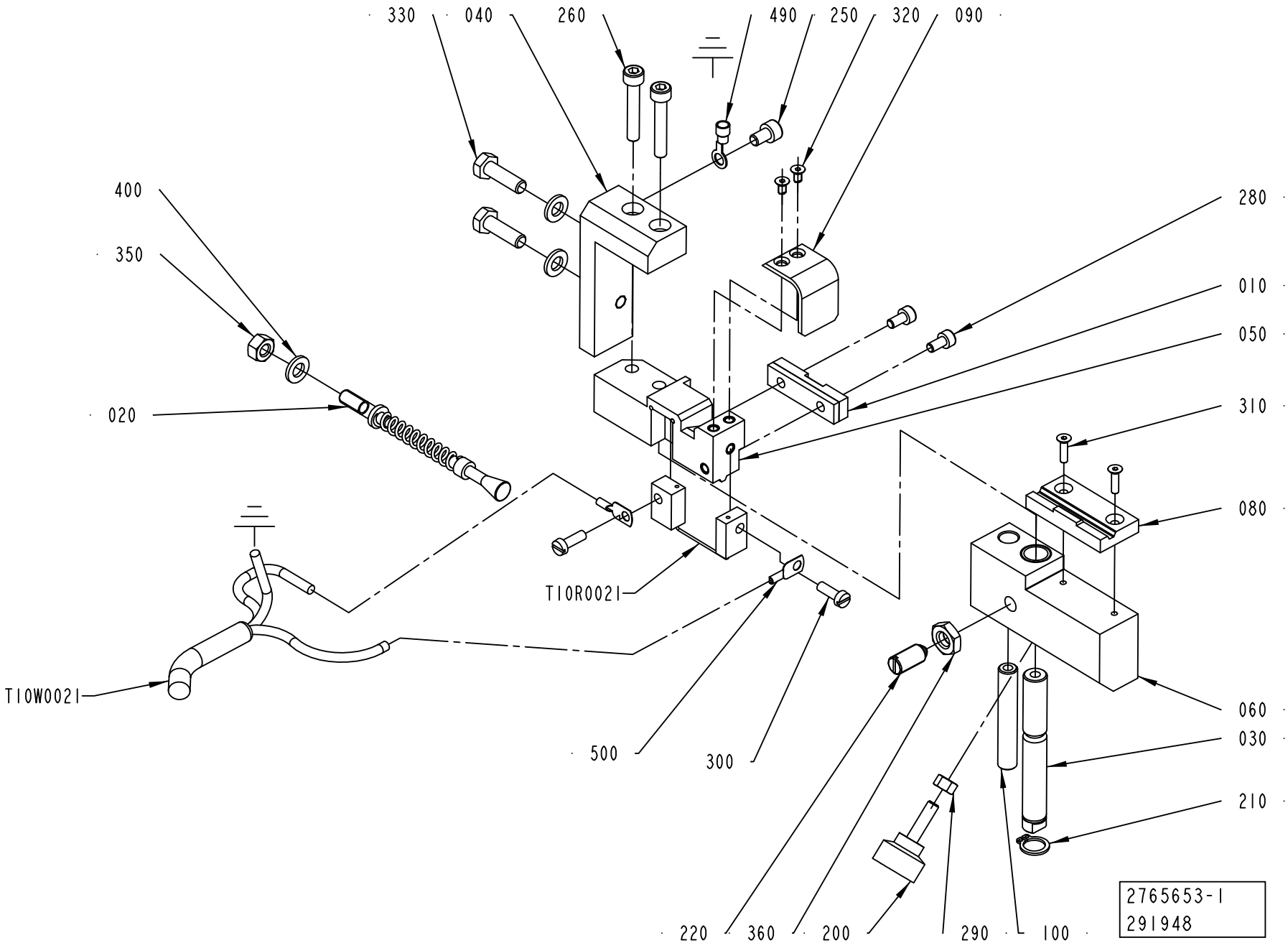
330
040
260
490
250
320
090
400
350
020
280
010
050
310
080
T10R0021
T10W0021
500
300
060
030
210
220
360
200
290
100
2765653-1
291948

ECM: 301447 - 20070509
Group number: 2765653-0100
Assembly Drawing: 2765653-1_1_AA

| Pos | Part No | UN | Qty | Description | Page No |
|---|---|---|---|---|---|
| - | | | | | |
| 010 | 1349014-0000 | | 1 | PAD | |
| 020 | 2765652-0000 | | 1 | FINGER | |
| 030 | 1517751-0000 | | 1 | SHAFT | |
| 040 | 2765654-0000 | | 1 | BRACKET | |
| 050 | 2523598-0000 | | 1 | SPLICING TABLE | |
| 060 | 2843841-0000 | | 1 | SLIDER | |
| 080 | 2843842-0000 | | 1 | PAD | |
| 090 | 2579838-0000 | | 1 | TOUCH GUARD | |
| 100 | 2523600-0000 | | 1 | PIN | |
| 200 | 90051-0035 | | 1 | KNOB, EXTERNAL THREAD. NO. 8308-1135 | |
| 210 | 90141-0016 | | 1 | RETAINING RING FOR SHAFT DIN 471 10 SS | |
| 220 | 90287-0112 | | 1 | SCREW SPRINGLOAD. SLOTTED HEAD M8X16 | |
| 250 | 312115-0323 | | 1 | SCREW ISO4762 M5X8 A4 80 | |
| 260 | 312115-0335 | | 2 | SCREW ISO4762 M5X30 A4 80 | |
| 280 | 312115-0287 | | 2 | SCREW ISO4762 M4X8 A4 80 | |
| 290 | 312605-0314 | | 1 | HEXAGON NUT, M6M M5 A280 | |
| 300 | 312125-0291 | | 2 | SCREW ISO 1207 M4X12 A4 | |
| 310 | 312155-0226 | | 2 | SCREW DIN 7991 MF6S M3X12 A4 70 | |
| 320 | 312155-0220 | | 2 | SCREW DIN 7991 MF6S M3X6 A4 70 | |
| 330 | 312105-0370 | | 2 | SCREW M6S ISO 4017 M6X20 A480 | |
| 350 | 312605-0316 | | 1 | HEXAGON NUT, M6M M6 A280 | |
| 360 | 312625-0318 | | 1 | HEXAGON THIN NUT, EN 24035 ML6M M8 A4 | |
| 400 | 315105-0153 | | 3 | WASHER BRB 6,4X12 RFR | |
| 490 | 353101-0132 | | 1 | CABLE SHOE 1,5-2,5MM2 M5 BLUE | |
| 500 | 353104-0130 | | 2 | CABLE SHOE, RING UNINS., YAV 025 M 4 | |
| T10R0021 | 1524481-0000 | | 1 | SEALING BLOCK | |
| T10W0021 | 351120-0145 | MM | 4000 | CABLE SILFLEX SIHF 3X2,5 0046020 | |

| Pos | Part No | UN | Qty | Description | Page No |
|---|---|---|---|---|---|

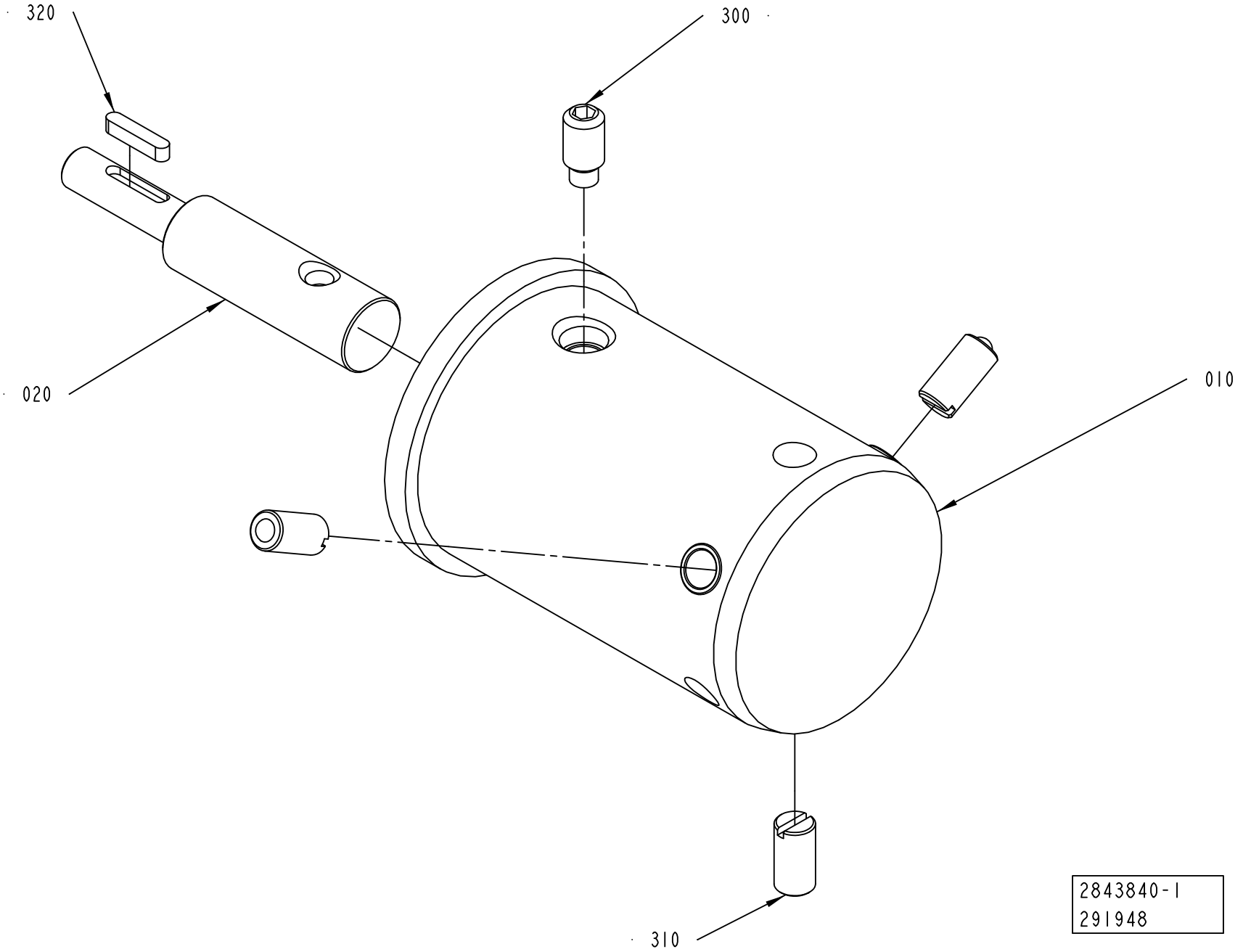
320
300
020
010
310
2843840-1
291948

ECM: 297378 - 20070509
Group number: 2843840-0100
Assembly Drawing: 2843840-1_1_AA

| Pos | Part No | UN | Qty | Description | Page No |
|---|---|---|---|---|---|
| - | | | | | |
| 010 | 2839989-0000 | | 1 | HUB | |
| 020 | 2839988-0000 | | 1 | SHAFT | |
| 300 | 312311-0491 | | 1 | SCREW ISO4028 M10X20 FZB | |
| 310 | 90287-0106 | | 3 | SCREW SPRINGLOAD. SLOTTED HEAD M10X21 | |
| 320 | 315701-0170 | | 1 | PARALLEL KEY W. ROUND ENDS 4X4X20 MM | |

| Pos | Part No | UN | Qty | Description | Page No |
|---|---|---|---|---|---|

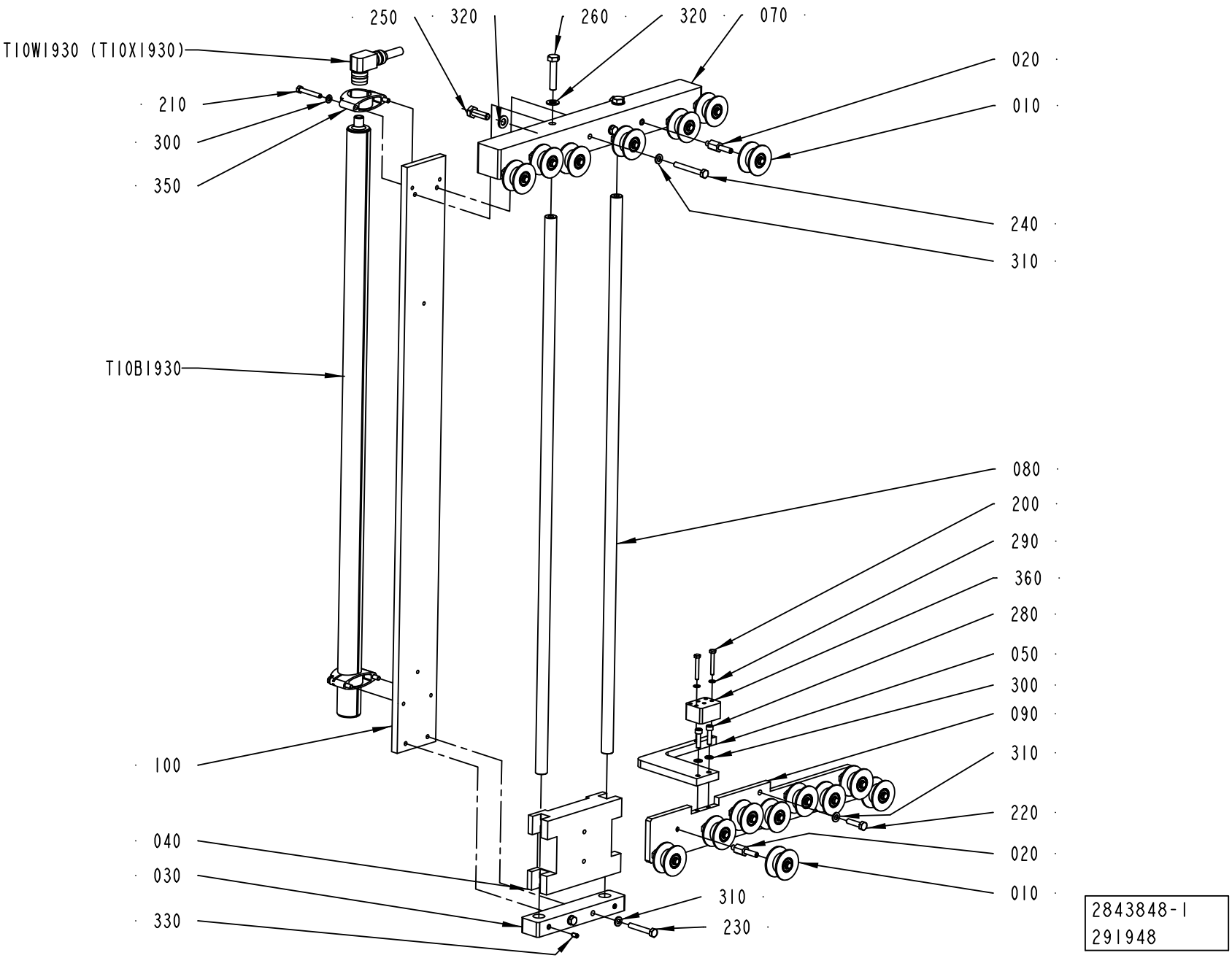
250
320
260
320
070
T10W1930 (T10X1930)
020
210
010
300
350
240
310
T10B1930
080
200
290
360
280
050
300
090
310
100
220
040
020
030
010
310
330
230
2843848-1
291948

ECM: 301446 - 20070509
Group number: 2843848-0100
Assembly Drawing: 2843848-1_1_AA

| Pos | Part No | UN | Qty | Description | Page No |
|---|---|---|---|---|---|
| - | | | | | |
| 010 | 2737899-0100 | | 16 | WHEEL ..... | **7-85** |
| 020 | 2799295-0000 | | 16 | SHAFT | |
| 030 | 2841912-0000 | | 1 | PLATE | |
| 040 | 2842998-0000 | | 1 | SLIDER | |
| 050 | 2843003-0000 | | 1 | BRACKET | |
| 070 | 2843844-0000 | | 1 | SPACER | |
| 080 | 2843845-0000 | | 2 | GUIDE | |
| 090 | 2862492-0000 | | 1 | PLATE | |
| 100 | 2843847-0000 | | 1 | BRACKET | |
| 200 | 312105-0299 | | 2 | SCREW M6S ISO 4017 M4X30 A470 | |
| 210 | 312105-0337 | | 4 | SCREW M6S ISO 4014 M5X35 A480 | |
| 220 | 312105-0372 | | 2 | SCREW M6S ISO 4017 M6X25 A480 | |
| 230 | 312105-0378 | | 2 | SCREW M6S ISO 4014 M6X40 A480 | |
| 240 | 312105-0380 | | 2 | SCREW M6S ISO 4014 M6X50 A480 | |
| 250 | 312105-0453 | | 4 | SCREW M6S ISO 4017 M8X25 A480 | |
| 260 | 312105-0459 | | 2 | SCREW M6S ISO 4014 M8X40 A480 | |
| 280 | 312115-0331 | | 2 | SCREW ISO4762 M5X20 A4 80 | |
| 290 | 315105-0136 | | 2 | WASHER BRB 4,3X8 RFR | |
| 300 | 315105-0146 | | 6 | WASHER BRB 5,3X10 RFR | |
| 310 | 315105-0153 | | 6 | WASHER BRB 6,4X12 RFR | |
| 320 | 315105-0165 | | 6 | WASHER BRB 8,4X16 RFR | |
| 330 | 312309-0323 | | 2 | SCREW ISO4026 M5X8 A4 | |
| 350 | 90600-0969 | | 2 | MOUNTING BRACKET, BTL6-A-MF03-K-50 | |
| 360 | 90600-0973 | | 1 | FLOATING MAGNET, BTL6-A-3800-2 | |
| T10B1930 | 90600-0967 | | 1 | TRANSDUCER, BTL6-A110-M0650-A1-S115 | |
| T10W1930 | 90600-0972 | | 1 | SENSOR CABLE BKS-S116-PU10 | |

| Pos | Part No | UN | Qty | Description | Page No |
|---|---|---|---|---|---|

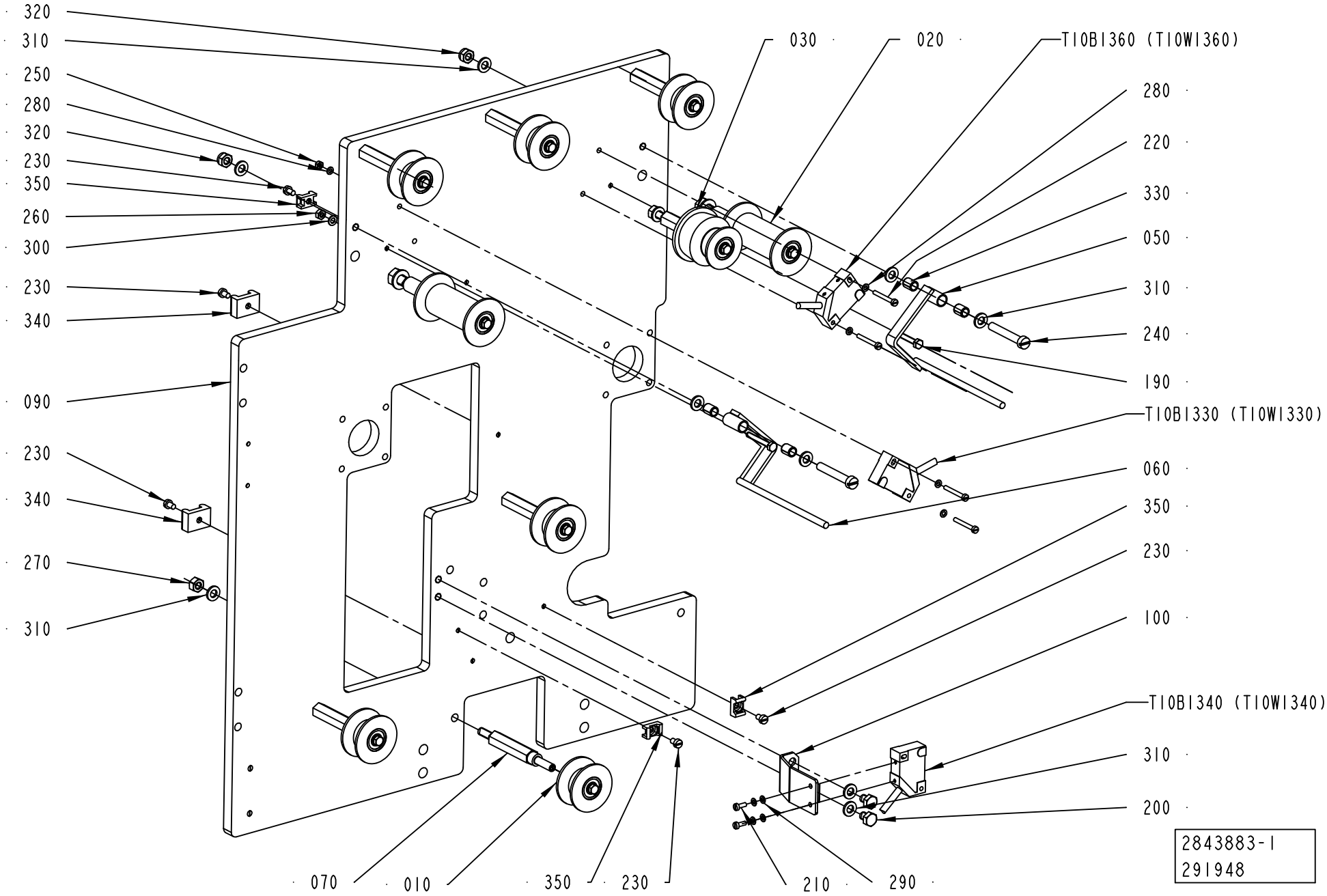
320
310
250
280
320
230
350
260
300
230
340
090
230
340
270
310
030
020
T10B1360 (T10W1360)
280
220
330
050
310
240
190
T10B1330 (T10W1330)
060
350
230
100
T10B1340 (T10W1340)
310
200
070
010
350
230
210
290
2843883-1
291948

ECM: 320830 - 20070903
Group number: 2843883-0100
Assembly Drawing: 2843883-1_1_AA

| Pos | Part No | UN | Qty | Description | Page No |
|---|---|---|---|---|---|
| - | | | | | |
| 010 | 2737899-0100 | | 6 | WHEEL ..... | **7-85** |
| 020 | 2760939-0100 | | 2 | BEARING ROLLER ..... | **7-101** |
| 030 | 2760942-0100 | | 1 | PULLEY ..... | **7-103** |
| 050 | 2862493-0000 | | 1 | ARM | |
| 060 | 2862494-0000 | | 1 | ARM | |
| 070 | 2765646-0000 | | 6 | SHAFT | |
| 090 | 2843881-0000 | | 1 | MOUNTING PLATE | |
| 100 | 2843882-0000 | | 1 | BRACKET | |
| 190 | 312105-0299 | | 2 | SCREW M6S ISO 4017 M4X30 A470 | |
| 200 | 312105-0362 | | 2 | SCREW M6S ISO 4017 M6X8 A480 | |
| 210 | 312125-0222 | | 2 | SCREW ISO 1207 M3X8 A4 | |
| 220 | 312125-0232 | | 4 | SCREW ISO 1207 M3X25 A4 | |
| 230 | 312125-0285 | | 5 | SCREW ISO 1207 M4X6 A4 | |
| 240 | 312125-0378 | | 2 | SCREW ISO 1207 M6X40 A4 | |
| 250 | 312605-0310 | | 4 | HEXAGON NUT, M6M M3 A280 | |
| 260 | 312605-0312 | | 2 | HEXAGON NUT, M6M M4 A280 | |
| 270 | 312605-0316 | | 6 | HEXAGON NUT, M6M M6 A280 | |
| 280 | 315103-0124 | | 8 | WASHER, BRB, 3,2/6,H=0,5 NI PL BR | |
| 290 | 315105-0124 | | 4 | WASHER BRB 3,2X6 RFR | |
| 300 | 315105-0136 | | 2 | WASHER BRB 4,3X8 RFR | |
| 310 | 315105-0153 | | 14 | WASHER BRB 6,4X12 RFR | |
| 320 | 312812-0316 | | 2 | HEXAGON NUT, NY-LOCK M6 A480 | |
| 330 | 321141-0064 | | 4 | BEARING BUSH W/O FLANGE, 6X8X10 MM | |
| 340 | 352113-0203 | | 2 | ANCHOR PLATES FOR STRIPS, TYPE TM3S8-M0 | |
| 350 | 352113-0205 | | 3 | ANCHOR PLATES FOR STRIPS, TYPE TM2S8-C10 | |
| T10B1330 | 90044-0194 | | 1 | PROX.SW. IN5329/IN3002-BPKG(EX90044-104) | |
| T10B1340 | 90044-0194 | | 1 | PROX.SW. IN5329/IN3002-BPKG(EX90044-104) | |
| T10B1360 | 90044-0194 | | 1 | PROX.SW. IN5329/IN3002-BPKG(EX90044-104) | |

| Pos | Part No | UN | Qty | Description | Page No |
|---|---|---|---|---|---|

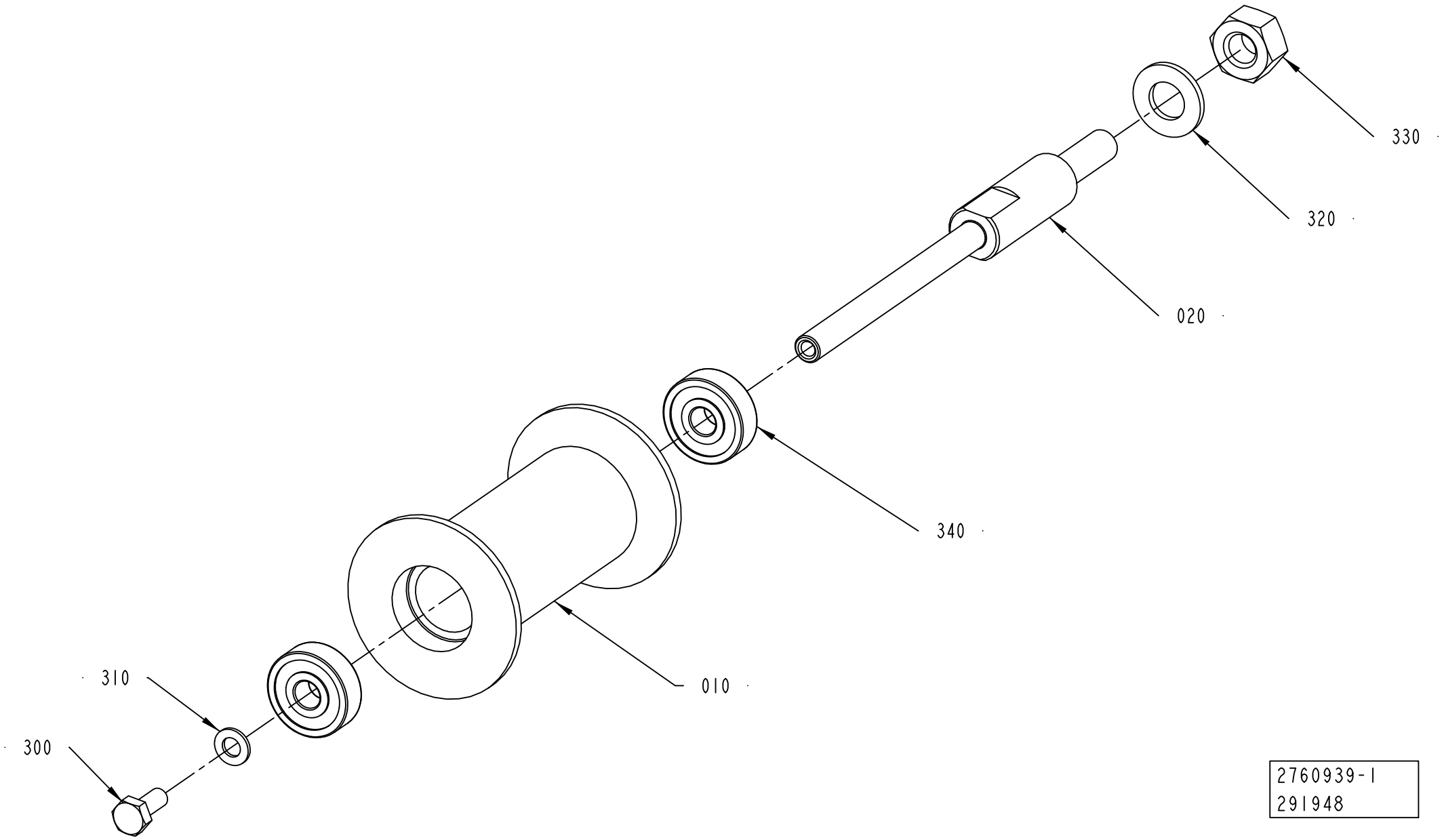
330
320
020
340
010
310
300
2760939-1
291948

ECM: 297381 - 20070509
Group number: 2760939-0100
Assembly Drawing: 2760939-1_1_AA

| Pos | Part No | UN | Qty | Description | Page No |
|---|---|---|---|---|---|
| - | | | | | |
| 010 | 2859686-0000 | | 1 | ROLLER | |
| 020 | 2765647-0000 | | 1 | SHAFT | |
| 300 | 312105-0289 | | 1 | SCREW M6S H4X10 A4 70 ISO4017/DIN933 | |
| 310 | 315105-0136 | | 1 | WASHER BRB 4,3X8 RFR | |
| 320 | 315105-0165 | | 1 | WASHER BRB 8,4X16 RFR | |
| 330 | 312605-0318 | | 1 | HEXAGON NUT, M6M M8 A280 | |
| 340 | 90600-2897 | | 2 | BALL BEARING, 6X19X6 MM | |

| Pos | Part No | UN | Qty | Description | Page No |
|---|---|---|---|---|---|

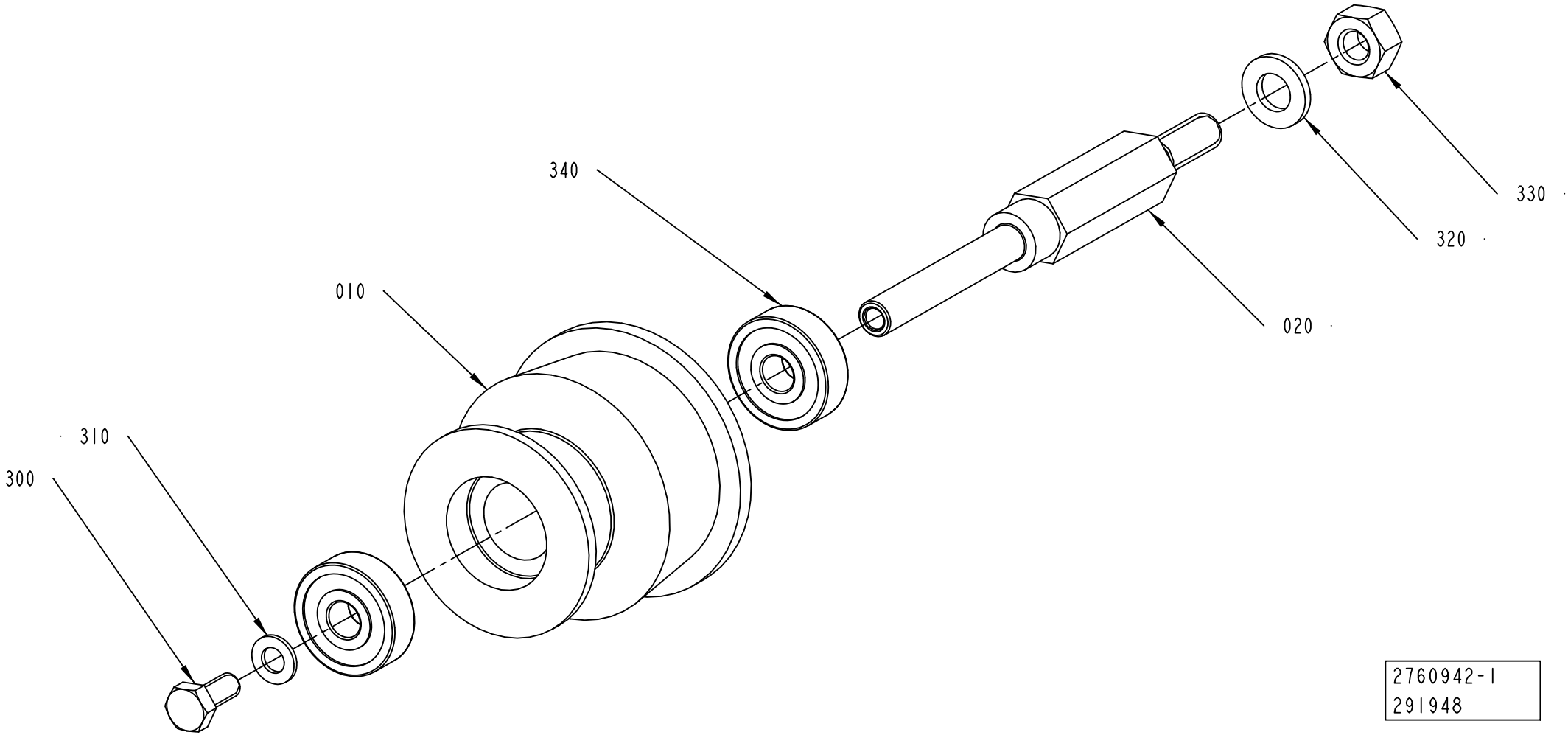
340
330
320
010
020
310
300
2760942-1
291948

ECM: 297380 - 20070509
Group number: 2760942-0100
Assembly Drawing: 2760942-1_1_AA

| Pos | Part No | UN | Qty | Description | Page No |
|---|---|---|---|---|---|
| - | | | | | |
| 010 | 2760941-0000 | | 1 | ROLLER | |
| 020 | 2868758-0000 | | 1 | SHAFT | |
| 300 | 312105-0289 | | 1 | SCREW M6S H4X10 A4 70 ISO4017/DIN933 | |
| 310 | 315105-0136 | | 1 | WASHER BRB 4,3X8 RFR | |
| 320 | 315105-0153 | | 1 | WASHER BRB 6,4X12 RFR | |
| 330 | 312605-0316 | | 1 | HEXAGON NUT, M6M M6 A280 | |
| 340 | 90600-2897 | | 2 | BALL BEARING, 6X19X6 MM | |

| Pos | Part No | UN | Qty | Description | Page No |
|---|---|---|---|---|---|

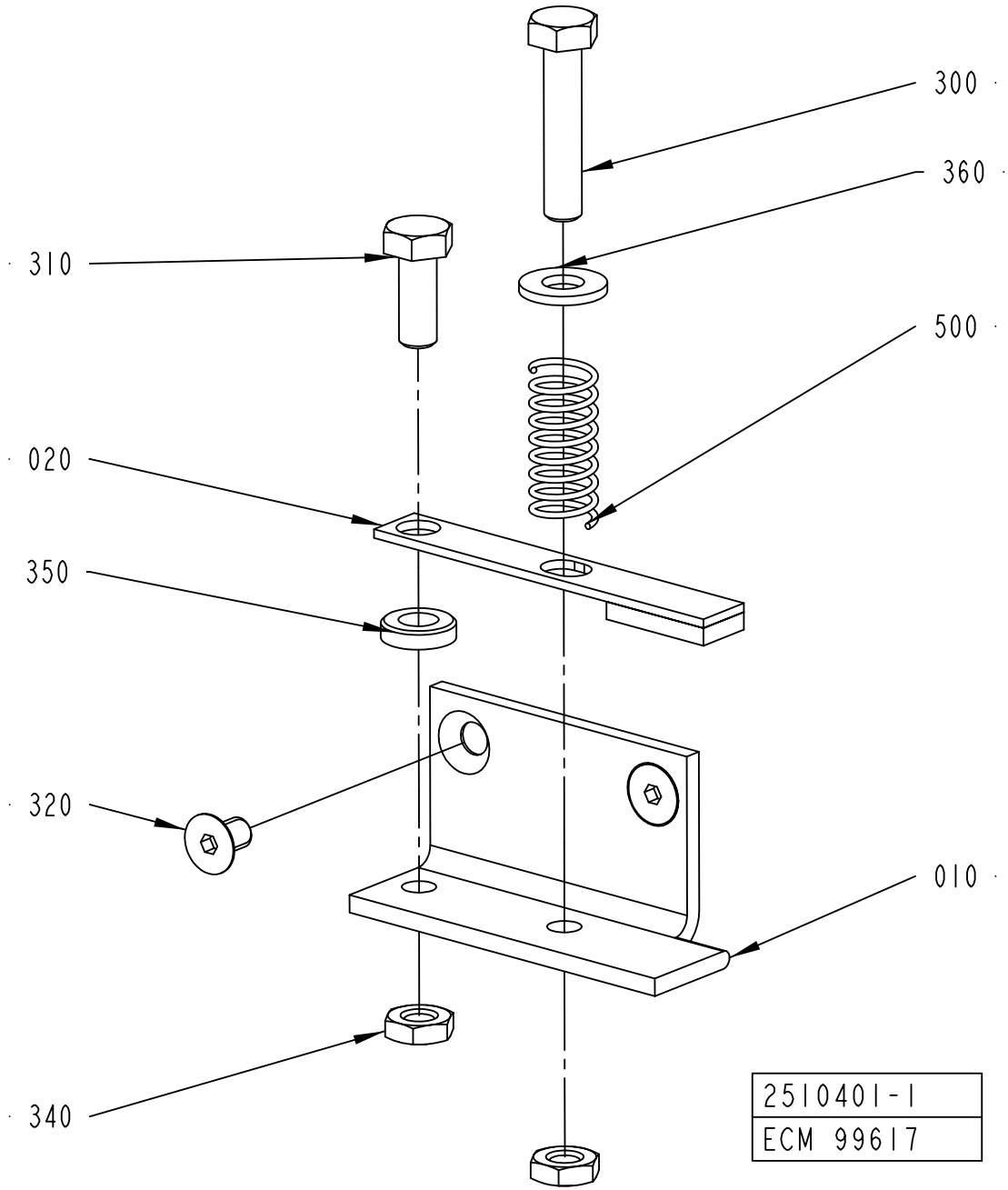
300
360
310
500
020
350
320
010
340
2510401-1
ECM 99617

ECM: 178408 - 20041005
Group number: 2510401-0100
Assembly Drawing: 2510401-1_1_AA

| Pos | Part No | UN | Qty | Description | Page No |
|---|---|---|---|---|---|
| - | | | | | |
| 010 | 2510399-0000 | | 1 | BRACKET | |
| 020 | 2510400-0000 | | 1 | HOLDER | |
| 300 | 312109-0374 | | 1 | SCREW M6S ISO 4017 M6X30 A480 | |
| 310 | 312105-0368 | | 1 | SCREW M6S ISO 4017 M6X16 A480 | |
| 320 | 312155-0323 | | 2 | SCREW DIN 7991 MF6S M5X8 A4 70 | |
| 340 | 312625-0316 | | 2 | HEXAGON THIN NUT, EN 24035 ML6M M6 A4 | |
| 350 | 315115-0153 | | 1 | WASHER PLAIN, TBRB 6,4/12 H=3 | |
| 360 | 315105-0156 | | 1 | WASHER BRB 6,7X14 RFR | |
| 500 | 90335-0025 | | 1 | COMP. SPRING 22010, 1X11X26 | |

| Pos | Part No | UN | Qty | Description | Page No |
|---|---|---|---|---|---|

# SPLICING DEVICE



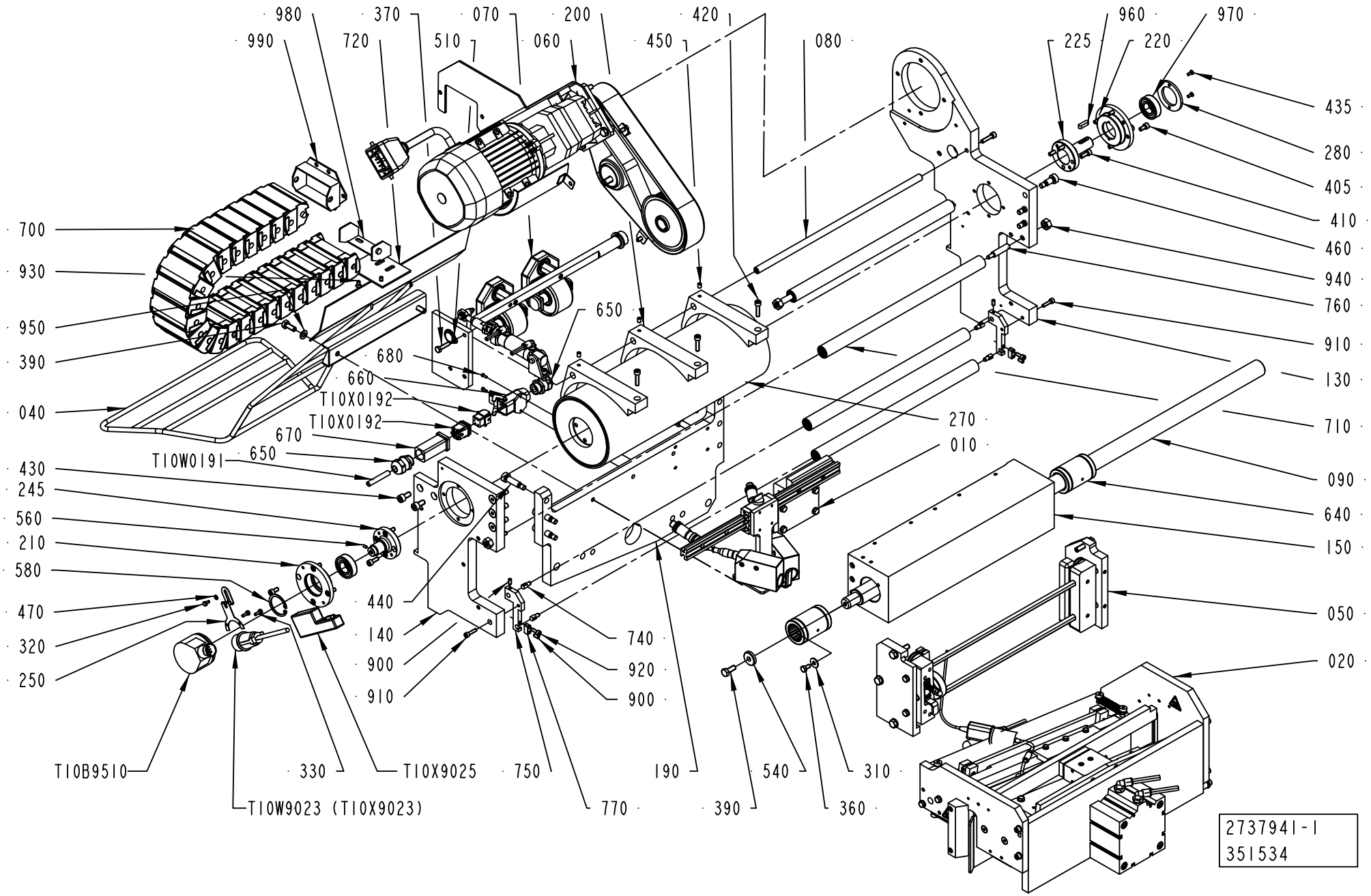

ECM: 351541 - 20080430
Group number: 2737941-0100
Assembly Drawing: 2737941-1_1_AC

| Pos | Part No | UN | Qty | Description | Page No |
|---|---|---|---|---|---|
| - | | | | | |
| 010 | 2737913-0100 | | 1 | BAR CODE READER | 7-109 |
| 020 | 2741003-0100 | | 1 | PRESSURE JAW | 7-111 |
| 040 | 2859151-0000 | | 1 | GUIDE RAIL | |
| 050 | 2806677-0100 | | 1 | PAPER GUIDE | 7-119 |
| 060 | 2806678-0100 | | 1 | DRIVE UNIT | 7-121 |
| 070 | 2806679-0100 | | 1 | COUNTER ROLLER | 7-123 |
| 080 | 2737904-0000 | | 1 | SHAFT | |
| 090 | 2737906-0000 | | 1 | SHAFT | |
| 130 | 2737942-0000 | | 1 | PLATE | |
| 140 | 2737943-0000 | | 1 | PLATE | |
| 150 | 2737944-0000 | | 1 | BRACKET | |
| 190 | 2741002-0000 | | 1 | PLATE | |
| 200 | 2741020-0000 | | 3 | PAPER GUIDE | |
| 210 | 2862727-0000 | | 1 | FLANGE | |
| 220 | 2839980-0000 | | 1 | FLANGE | |
| 225 | 2838959-0000 | | 1 | SHAFT | |
| 245 | 2776123-0000 | | 1 | SHAFT | |
| 250 | 2838963-0000 | | 1 | BRACKET | |
| 270 | 2776128-0000 | | 1 | BENDING ROLLER | |
| 280 | 2839981-0000 | | 1 | FLANGE | |
| 310 | 90457-0192 | | 2 | WASHER PLAIN ROUND, 6,5/18, H=1,5 | |
| 320 | 312105-0287 | | 1 | SCREW M6S ISO 4017 M4X8 A470 | |
| 330 | 312105-0291 | | 2 | SCREW M6S ISO 4017 M4X12 A470 | |
| 360 | 312105-0366 | | 2 | SCREW M6S ISO 4017 M6X12 A480 | |
| 370 | 312105-0372 | | 1 | SCREW M6S ISO 4017 M6X25 A480 | |
| 390 | 312105-0451 | | 3 | SCREW M6S ISO 4017 M8X20 A480 | |
| 405 | 312115-0366 | | 8 | SCREW ISO4762 M6X12 A4 80 | |
| 410 | 312115-0368 | | 8 | SCREW ISO4762 M6X16 A4 80 | |
| 420 | 312115-0372 | | 4 | SCREW ISO4762 M6X25 A4 80 | |
| 430 | 312115-0449 | | 2 | SCREW ISO4762 M8X16 A4 80 | |
| 435 | 312155-0289 | | 2 | SCREW DIN 7991 MF6S M4X10 A4 70 | |
| 440 | 312180-0495 | | 8 | SCREW ISO7379 H10X30 | |
| 450 | 312318-0362 | | 3 | SCREW ISO4029 M6X8 A4 | |
| 460 | 312180-0489 | | 6 | SCREW ISO7379 H10X16 | |
| 470 | 315105-0136 | | 1 | WASHER BRB 4,3X8 RFR | |
| 510 | 315105-0153 | | 1 | WASHER BRB 6,4X12 RFR | |
| 540 | 315125-0165 | | 1 | WASHER TBRSB 8,4X26X5 A4 | |
| 560 | 312318-0285 | | 1 | SCREW ISO4029 M4X6 A4 | |
| 580 | 315753-0127 | | 1 | RETAINING RING FOR BORE DIN 472 40 A2 | |
| 640 | 90600-3054 | | 2 | BEARING HOUSING, RJUM-01-30 | |
| 650 | 90458-0307 | | 2 | CABLE GLAND, M20X1,5, NO.5311 1020 | |
| 660 | 90459-3081 | | 1 | HOUSING HAN A 19 20 003 1250 | |
| 670 | 90459-3670 | | 1 | HOOD HAN 3A 19 20 003 1440 | |
| 680 | 312125-0222 | | 2 | SCREW ISO 1207 M3X8 A4 | |
| 700 | 2852891-0000 | | 1 | LINK CHAIN | |
| 710 | 2863550-0100 | | 4 | ROLLER | 7-33 |
| 720 | 2838965-0000 | | 1 | PLATE | |
| 740 | 2863547-0000 | | 4 | PIN | |
| 750 | 2863549-0000 | | 2 | BRACKET | |
| 760 | 2863551-0000 | | 4 | PIN | |
| 770 | 2868754-0000 | | 2 | BRACKET | |
| 900 | 90459-7283 | | 4 | SCREW HEX.SOCK.SET CONEPT.MS6SS M5X12 A2 | |
| 910 | 312111-0331 | | 2 | SCREW HEX.SOCK.HD.MC6S-TT 5X20 88 FZB | |
| 920 | 312115-0328 | | 2 | SCREW ISO4762 M5X14 A4 80 | |
| 930 | 312155-0325 | | 2 | SCREW DIN 7991 MF6S M5X10 A4 70 | |
| 940 | 312607-0320 | | 4 | HEXAGON NUT, EN 24032 M6M M10 A480 | |
| 950 | 315105-0165 | | 2 | WASHER BRB 8,4X16 RFR | |
| 960 | 315705-0233 | | 1 | PARALLEL KEY W. ROUND ENDS 6X6X22 MM | |
| 970 | 321308-0204 | | 2 | BALL BEARING, 20X42X12 MM | |
| 980 | 90600-3055 | | 1 | FLEXIBLE CHAIN, BRACKET 582.1.2 | |
| 990 | 90600-3056 | | 1 | FLEXIBLE CHAIN, BRACKET 580.1.1 | |
| T10B9510 | 90459-6603 | | 1 | INCREMENTAL ENCODER, DGS60A1A02000 | |
| T10W0191 | 351150-0412 | MM | 8000 | CABLE OLFLEX 3X1,5 MM2 LIGHT/GREY | |
| T10W9023 | 90600-1395 | | 1 | CABLE 15M, 2030692 | |
| T10X0192 | 90459-6821 | | 1 | MALE INSERT HAN 4A, 09 20 004 2611 | |
| T10X0192 | 90459-6820 | | 1 | FEMALE INSERT HAN 4 A, 09 20 004 2711 | |
| T10X9025 | 90459-6679 | | 1 | CONN 15 P FEM, AUX. FEEDB,2090-K6CK-D15F | |

Machine Type | Group Description | Used-In | Group Number | Page No

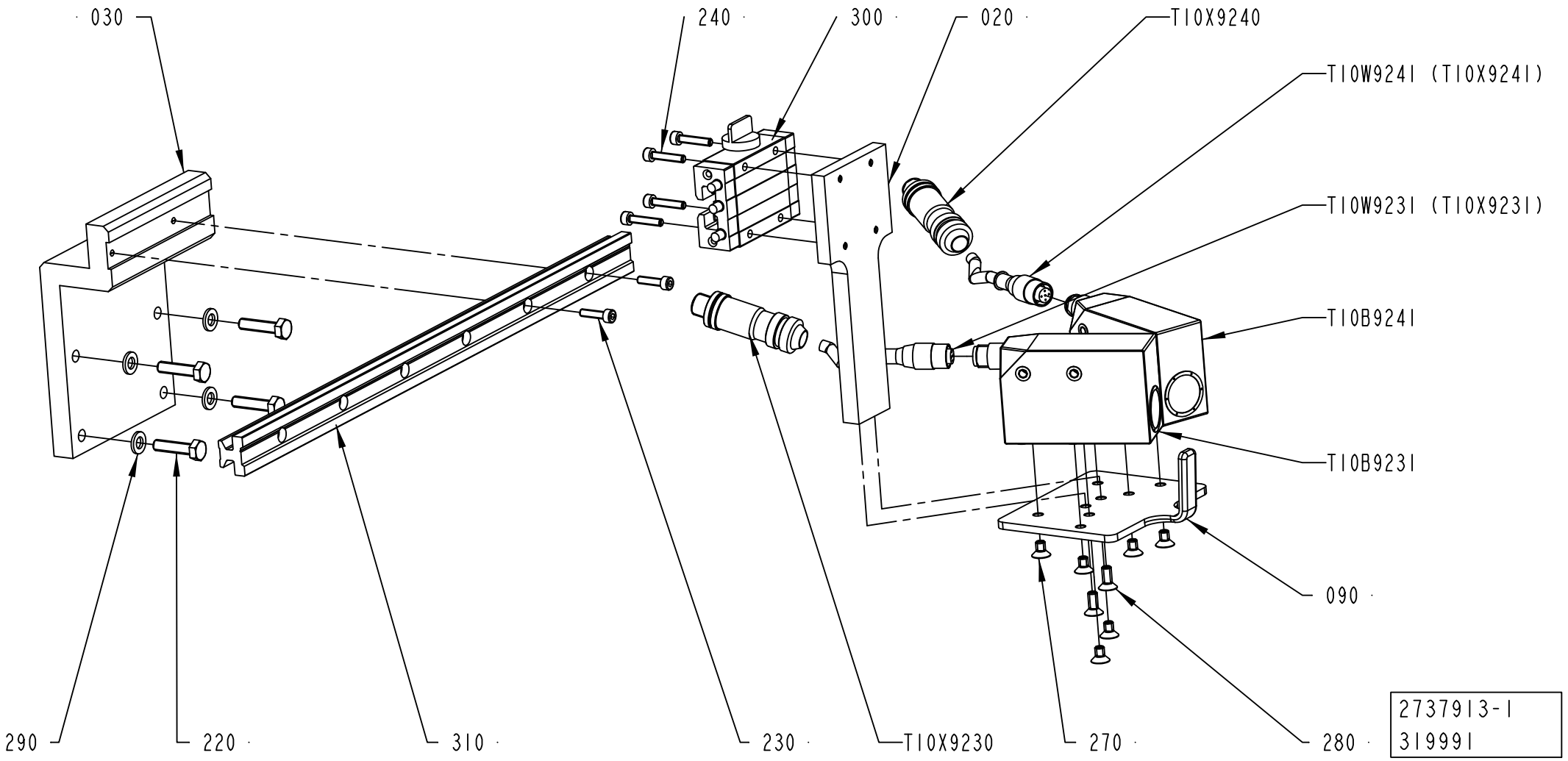
030
240
300
020
T10X9240
T10W924I (T10X924I)
T10W923I (T10X923I)
T10B924I
T10B923I
090
290
220
310
230
T10X9230
270
280
2737913-1
319991

ECM: 320809 - 20070903
Group number: 2737913-0100
Assembly Drawing: 2737913-1_1_AB

| Pos | Part No | UN | Qty | Description | Page No |
|---|---|---|---|---|---|
| - | | | | | |
| 020 | 2737919-0000 | | 1 | PLATE | |
| 030 | 2737920-0000 | | 1 | PLATE | |
| 090 | 2737933-0000 | | 1 | FASTENING PLATE | |
| 220 | 312105-0372 | | 4 | SCREW M6S ISO 4017 M6X25 A480 | |
| 230 | 312115-0293 | | 2 | SCREW ISO4762 M4X16 A4 80 | |
| 240 | 312115-0295 | | 4 | SCREW ISO4762 M4X20 A4 80 | |
| 270 | 312155-0323 | | 6 | SCREW DIN 7991 MF6S M5X8 A4 70 | |
| 280 | 312155-0327 | | 2 | SCREW DIN 7991 MF6S M5X12 A4 70 | |
| 290 | 315105-0153 | | 4 | WASHER BRB 6,4X12 RFR | |
| 300 | 90600-2667 | | 1 | CARRIAGE, TW-01-15-HKA | |
| 310 | 90600-3051 | | 1 | GUIDE BAR, 15X15,5X380 MM | |
| T10B9231 | 90458-0602 | | 1 | CONTRAST SCANNER, KT15W-P2110S01 | |
| T10B9241 | 90458-0602 | | 1 | CONTRAST SCANNER, KT15W-P2110S01 | |
| T10W9231 | 90458-0603 | | 1 | CONNECTOR FEMALE 5 PINS | |
| T10W9241 | 90458-0603 | | 1 | CONNECTOR FEMALE 5 PINS | |
| T10X9230 | 90459-6387 | | 1 | CONNECTOR 5-POL M12, RSCS 5/9 | |
| T10X9240 | 90459-6387 | | 1 | CONNECTOR 5-POL M12, RSCS 5/9 | |

| Pos | Part No | UN | Qty | Description | Page No |
|---|---|---|---|---|---|

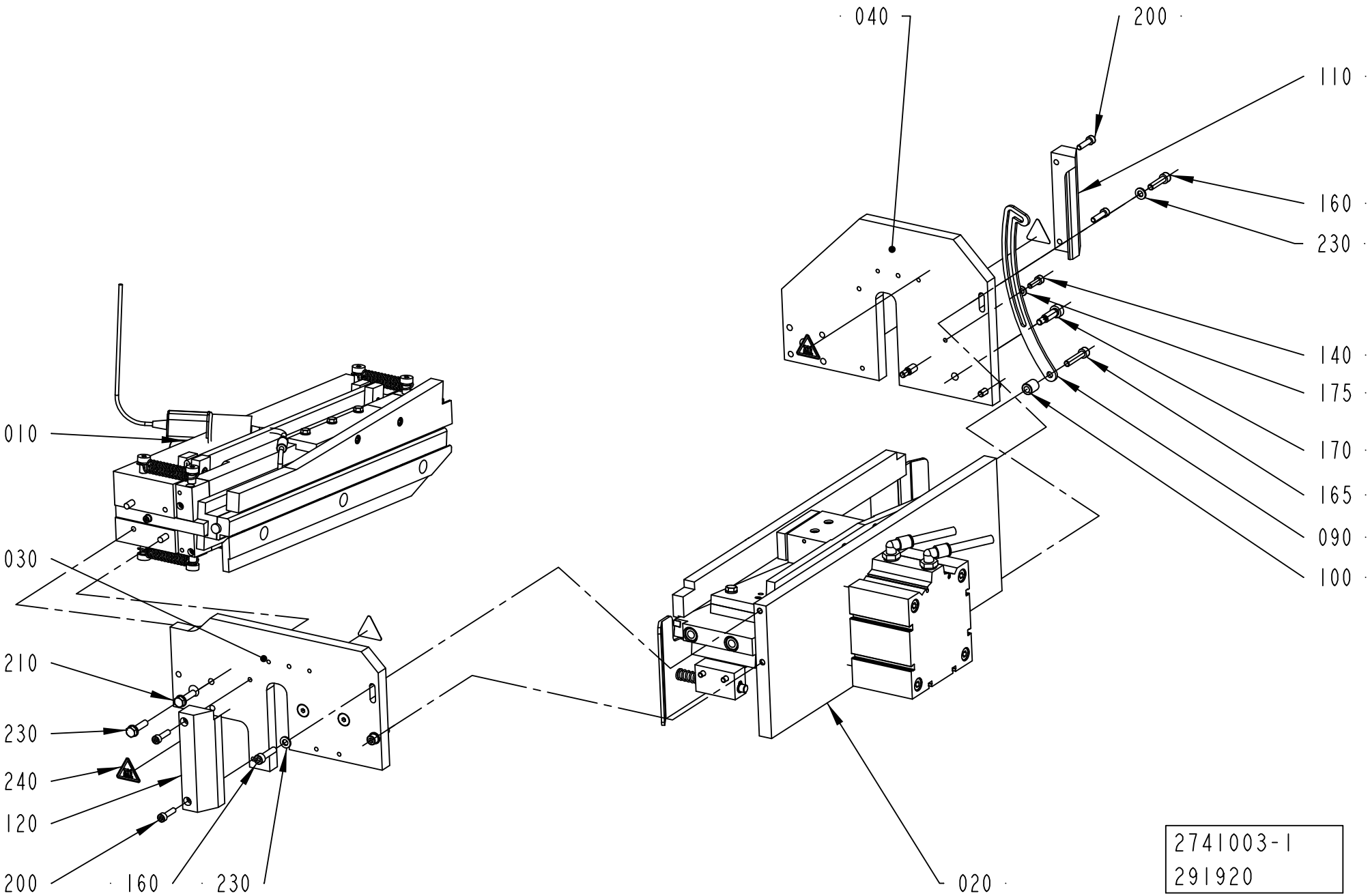
040
200
110
160
230
140
175
170
165
090
100
010
030
210
230
240
120
200
160
230
020
2741003-1
291920

ECM: 301474 - 20070508
Group number: 2741003-0100
Assembly Drawing: 2741003-1_1_AA

| Pos | Part No | UN | Qty | Description | Page No |
|---|---|---|---|---|---|
| - | | | | | |
| 010 | 2797149-0100 | | 1 | PRESSURE JAW | **7-113** |
| 020 | 2797150-0100 | | 1 | PRESSURE JAW | **7-117** |
| 030 | 2741009-0000 | | 1 | PLATE | |
| 040 | 2741010-0000 | | 1 | PLATE | |
| 090 | 2806661-0000 | | 1 | CATCH | |
| 100 | 2806666-0000 | | 1 | SPACER | |
| 110 | 2790940-0000 | | 1 | INFEEDER | |
| 120 | 2790942-0000 | | 1 | INFEEDER | |
| 140 | 312115-0329 | | 1 | SCREW ISO4762 M5X16 A4 80 | |
| 160 | 312115-0372 | | 4 | SCREW ISO4762 M6X25 A4 80 | |
| 165 | 312115-0374 | | 1 | SCREW ISO4762 M6X30 A4 80 | |
| 170 | 312180-0451 | | 4 | SCREW ISO7379 H8X20 | |
| 175 | 315105-0146 | | 1 | WASHER BRB 5,3X10 RFR | |
| 180 | 315105-0153 | | 6 | WASHER BRB 6,4X12 RFR | |
| 200 | 312115-0331 | | 4 | SCREW ISO4762 M5X20 A4 80 | |
| 210 | 312105-0372 | | 4 | SCREW M6S ISO 4017 M6X25 A480 | |
| 230 | 315105-0153 | | 2 | WASHER BRB 6,4X12 RFR | |
| 240 | 90194-0143 | | 4 | WARNING SIGN ISO, HOT SURFACE | |

| Pos | Part No | UN | Qty | Description | Page No |
|---|---|---|---|---|---|

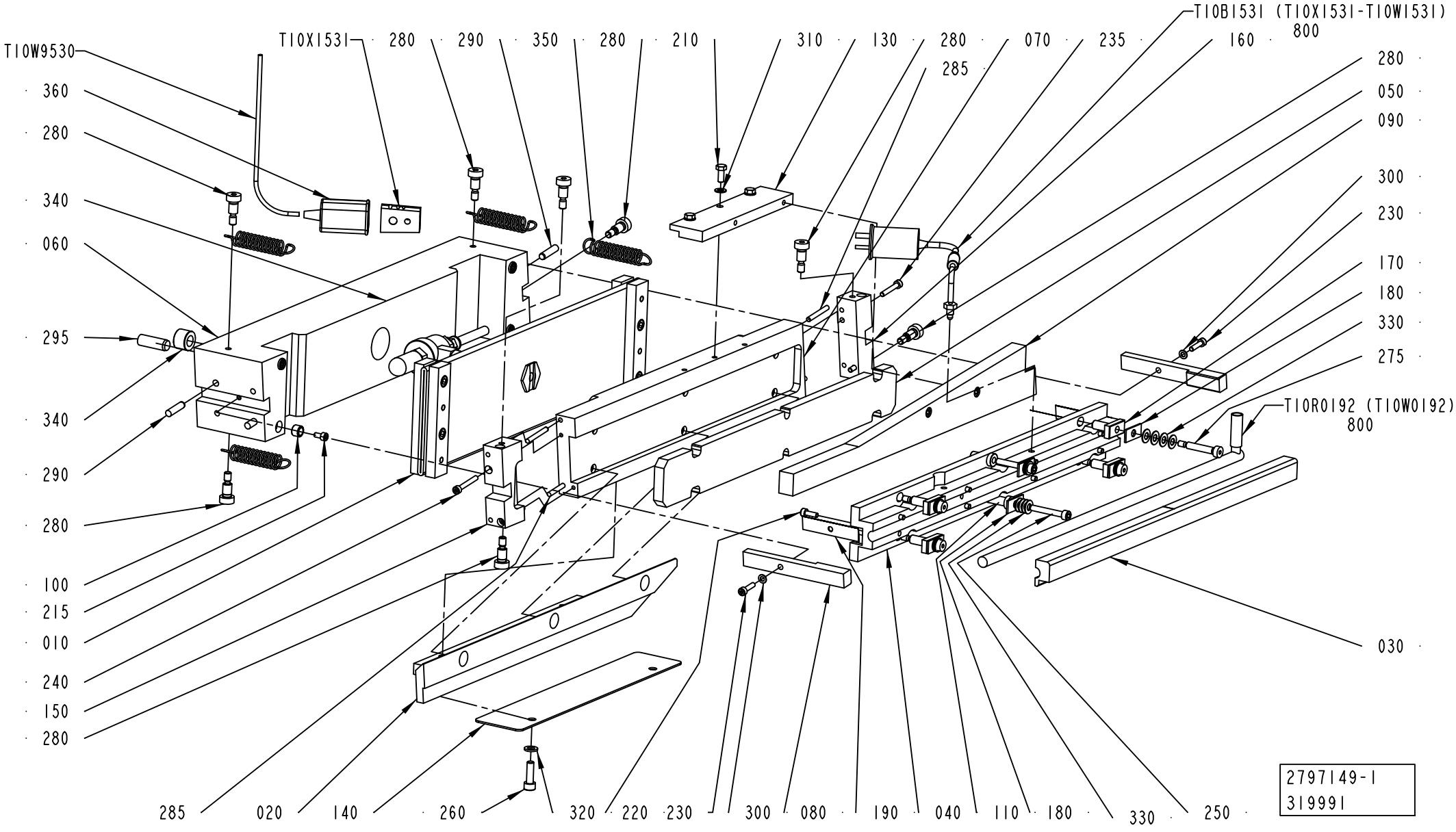
T10W9530
360
280
340
060
295
340
290
280
100
215
010
240
150
280
T10X1531
280
290
350
280
210
310
130
280
070
235
160
T10B1531 (T10X1531-T10W1531)
800
285
280
050
090
300
230
170
180
330
275
T10R0192 (T10W0192)
800
030
285
020
140
260
320
220
230
300
080
190
040
110
180
330
250
2797149-1
319991

ECM: 323368 - 20070903
Group number: 2797149-0100
Assembly Drawing: 2797149-1_1_AB

| Pos | Part No | UN | Qty | Description | Page No |
|---|---|---|---|---|---|
| - | | | | | |
| 010 | 2737938-0100 | | 1 | HOSE ..... | 7-115 |
| 020 | 2737916-0000 | | 1 | BAR | |
| 030 | 2741004-0000 | | 1 | SEALING PLATE | |
| 040 | 2741005-0000 | | 1 | SEALING PLATE | |
| 050 | 2741006-0000 | | 1 | PLATE | |
| 060 | 2741007-0000 | | 1 | PLATE | |
| 070 | 2741011-0000 | | 1 | PLATE | |
| 080 | 2741012-0000 | | 2 | PLATE | |
| 090 | 2741014-0000 | | 1 | PLATE | |
| 100 | 2819398-0000 | | 4 | SPACER | |
| 110 | 2790938-0000 | | 2 | SPACER | |
| 130 | 2797154-0000 | | 1 | PLATE | |
| 140 | 2806668-0000 | | 1 | PLATE | |
| 150 | 2806683-0000 | | 1 | PLATE | |
| 160 | 2806684-0000 | | 1 | PLATE | |
| 170 | 2838966-0000 | | 4 | SPACER | |
| 180 | 2839982-0000 | | 6 | SPACER | |
| 190 | 2852458-0000 | | 8 | SHIM | |
| 210 | 312105-0327 | | 3 | SCREW M6S ISO 4017 M5X12 A480 | |
| 215 | 312115-0287 | | 4 | SCREW ISO4762 M4X8 A4 80 | |
| 220 | 312115-0291 | | 8 | SCREW ISO4762 M4X12 A4 80 | |
| 230 | 312115-0293 | | 2 | SCREW ISO4762 M4X16 A4 80 | |
| 235 | 312115-0297 | | 2 | SCREW ISO4762 M4X25 A4 80 | |
| 240 | 312115-0299 | | 2 | SCREW ISO4762 M4X30 A4 80 | |
| 245 | 312115-0329 | | 2 | SCREW ISO4762 M5X16 A4 80 | |
| 250 | 312115-0337 | | 2 | SCREW ISO4762 M5X35 A4 80 | |
| 260 | 312115-0370 | | 2 | SCREW ISO4762 M6X20 A4 80 | |
| 275 | 312180-0374 | | 4 | SCREW ISO7379 H6X30 | |
| 280 | 312180-0447 | | 8 | SCREW ISO7379 H8X12 | |
| 285 | 311103-0277 | | 4 | PARALLEL PIN ISO 2338 4M6X32 A1 | |
| 290 | 311103-1355 | | 4 | PARALLEL PIN ISO 2338 6M6X24 A1 | |
| 295 | 311103-0458 | | 2 | PARALLEL PIN ISO 2338 10M6X30 A1 | |
| 300 | 315105-0136 | | 2 | WASHER BRB 4,3X8 RFR | |
| 310 | 315105-0146 | | 3 | WASHER BRB 5,3X10 RFR | |
| 320 | 315105-0153 | | 2 | WASHER BRB 6,4X12 RFR | |
| 330 | 319030-0125 | | 24 | DISC SPRING, CONICAL 12,5X6,2X0,5 MM | |
| 340 | 90600-2575 | | 2 | BEARING BUSH W/O FLANGE, 10,1X18X12 MM | |
| 350 | 90335-0120 | | 4 | TENSION SPRING 42010, 1,4X15X43,3 | |
| 360 | 90326-0012 | | 1 | PROTECTIVE COVER, T31A4618 | |
| 800 | 90296-0051 | | 1 | PASTE | |
| T10B1531 | 90326-0054 | | 1 | THERMOCOUPLE, CR-AL STD.GR, 12826-36 | |
| T10R0192 | 90600-2586 | | 1 | HEATING CARTRIDGE, 800W 240V | |
| T10W9530 | 90220-0034 | M | 1 | THERMOCABLE TEX/SITW-20F-KX 2X0,5MM2 | |
| T10X1531 | 90326-0020 | | 1 | PLUG, FEMALE YELLOW CR-AL | |

Machine Type | Group Description | Used-In | Group Number | Page No

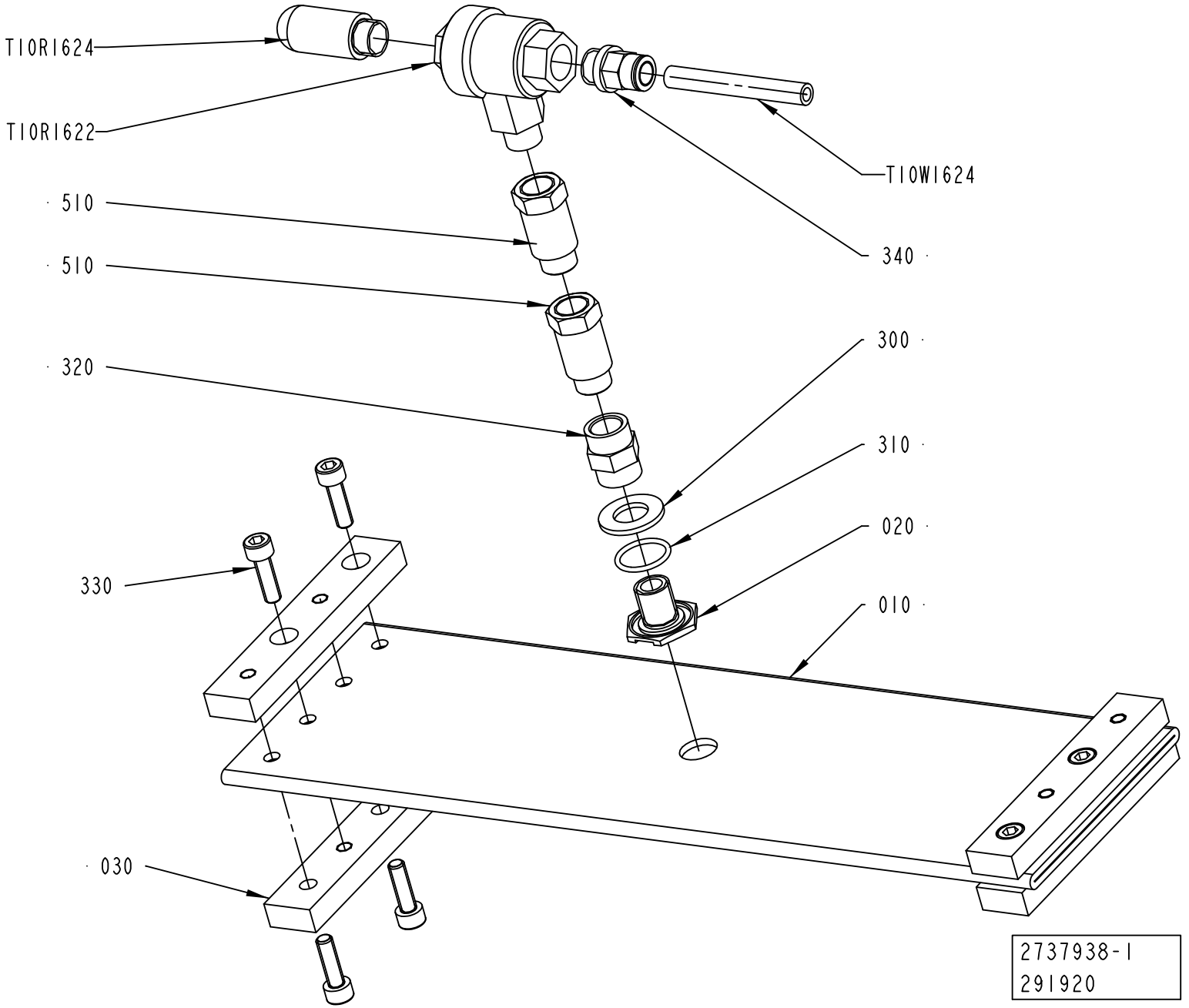
T10R1624
T10R1622
T10W1624
510
510
340
320
300
310
020
330
010
030
2737938-1
291920

ECM: 297392 - 20070508
Group number: 2737938-0100
Assembly Drawing: 2737938-1_1_AA

| Pos | Part No | UN | Qty | Description | Page No |
|---|---|---|---|---|---|
| - | | | | | |
| 010 | 2737935-0000 | | 1 | HOSE | |
| 020 | 2790917-0000 | | 1 | AIR NOZZLE | |
| 030 | 2737940-0000 | | 4 | BRACKET | |
| 300 | 315105-0178 | | 1 | WASHER BRB 13X24 RFR | |
| 310 | 315202-0705 | | 1 | O-RING 17,17X1,78 MM | |
| 320 | 342707-0110 | | 1 | SLEEVE, INT. THREAD, NO. 2543-1/4 | |
| 330 | 312115-0370 | | 8 | SCREW ISO4762 M6X20 A4 80 | |
| 340 | 350001-0009 | | 1 | PUSH-IN FITTING QS-F-G1/4-8 | |
| 510 | 90600-3047 | | 2 | BUSHING,INT/EXT THREAD, 1/4"GAS - 1/4"GA | |
| T10R1622 | 90459-0205 | | 1 | QUICK EXHAUST VALVE, SE-1/4-B | |
| T10R1624 | 90328-0026 | | 1 | SILENCER G1/4" | |
| T10W1624 | 315400-0004 | M | 10 | TUBE PUN-H-8X1,25-BL | |

| Pos | Part No | UN | Qty | Description | Page No |
|---|---|---|---|---|---|

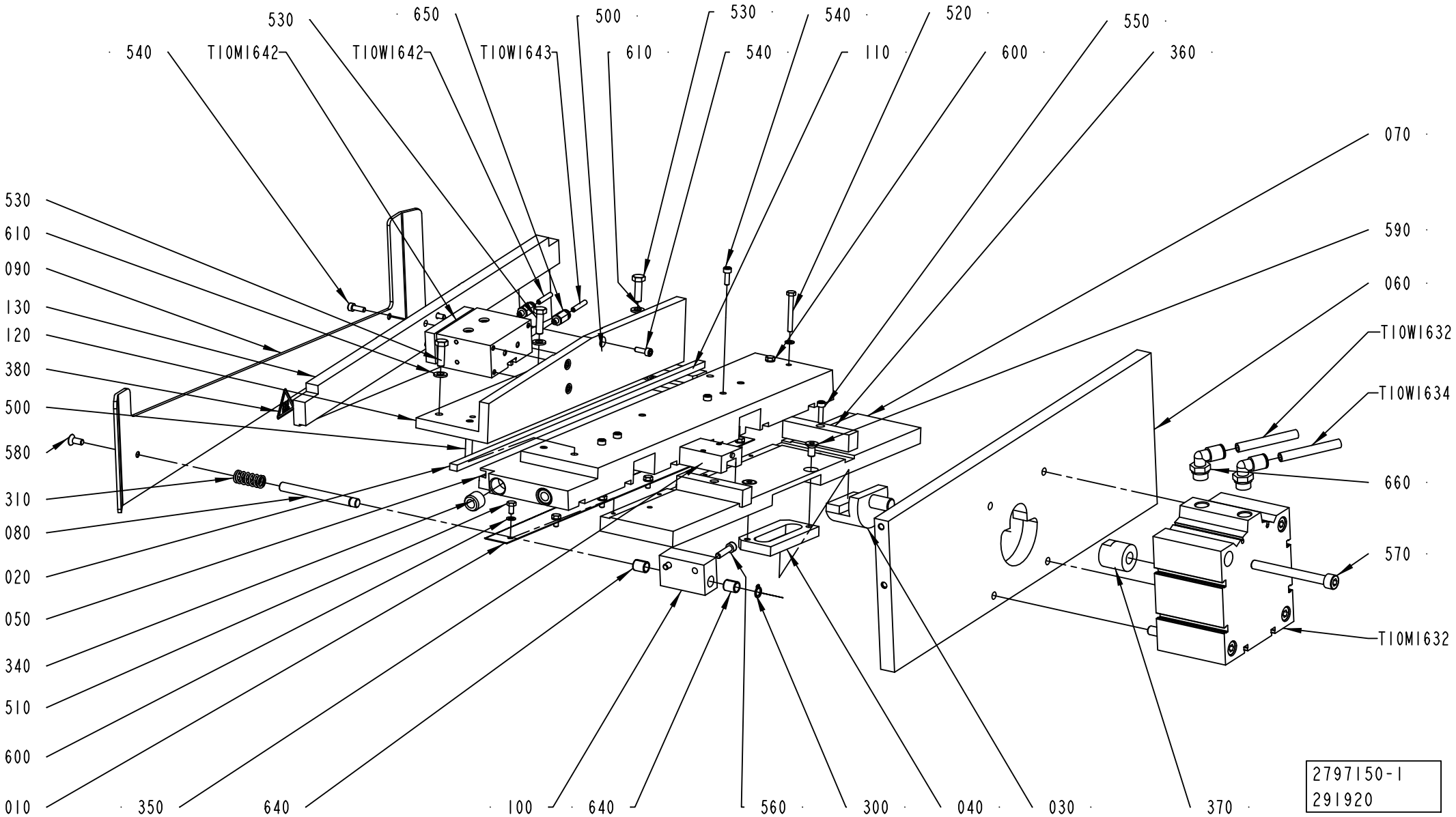
530
650
500
530
540
520
550
540
T10M1642
T10W1642
T10W1643
610
540
110
600
360
070
530
610
590
090
060
130
T10W1632
120
T10W1634
380
500
580
660
310
080
570
020
050
T10M1632
340
510
600
010
350
640
100
640
560
300
040
030
370
2797150-1
291920

ECM: 320823 - 20070903
Group number: 2797150-0100
Assembly Drawing: 2797150-1_1_AA

| Pos | Part No | UN | Qty | Description | Page No | Pos | Part No | UN | Qty | Description | Page No |
|---|---|---|---|---|---|---|---|---|---|---|---|
| - | | | | | | | | | | | |
| 010 | 1484695-0000 | | 1 | KNIFE | | | | | | | |
| 020 | 2592780-0000 | | 1 | DOLLY | | | | | | | |
| 030 | 2737914-0000 | | 1 | PIN | | | | | | | |
| 040 | 2737915-0000 | | 1 | BRACKET | | | | | | | |
| 050 | 2741008-0000 | | 1 | PRESSURE RAIL | | | | | | | |
| 060 | 2741013-0000 | | 1 | PLATE | | | | | | | |
| 070 | 2741019-0000 | | 1 | PLATE | | | | | | | |
| 080 | 2797148-0000 | | 2 | PIN | | | | | | | |
| 090 | 2839983-0000 | | 1 | PLATE | | | | | | | |
| 100 | 2839985-0000 | | 1 | BRACKET | | | | | | | |
| 110 | 2851928-0000 | | 1 | BRACKET | | | | | | | |
| 120 | 2851943-0000 | | 1 | BRACKET | | | | | | | |
| 130 | 2851944-0000 | | 1 | RAIL | | | | | | | |
| 300 | 90141-0015 | | 2 | RETAINING RING FOR SHAFT DIN 471 8 SS | | | | | | | |
| 310 | 90458-2284 | | 2 | COMP. SPRING 22410, 1,6X11,6X27 | | | | | | | |
| 340 | 90600-2837 | | 4 | BEARING BUSH W/O FLANGE, 8,2X15X12 MM | | | | | | | |
| 350 | 90600-3040 | | 2 | RUNNER BLOCK, 1666-114-20 | | | | | | | |
| 360 | 90600-3052 | | 2 | GUIDE RAIL, 1605-104-31-71 35.5/0/35.5 | | | | | | | |
| 370 | 90600-1204 | | 1 | DOUBLE ACTING, COMPACT, 100-15 | | | | | | | |
| 380 | 90194-0143 | | 1 | WARNING SIGN ISO, HOT SURFACE | | | | | | | |
| 500 | 311103-0359 | | 2 | PARALLEL PIN ISO 2338 6M6X35 A1 | | | | | | | |
| 510 | 312105-0287 | | 6 | SCREW M6S ISO 4017 M4X8 A470 | | | | | | | |
| 520 | 312105-0301 | | 2 | SCREW M6S ISO 4017 M4X35 A470 | | | | | | | |
| 530 | 312105-0370 | | 3 | SCREW M6S ISO 4017 M6X20 A480 | | | | | | | |
| 540 | 312115-0291 | | 11 | SCREW ISO4762 M4X12 A4 80 | | | | | | | |
| 550 | 312115-0293 | | 2 | SCREW ISO4762 M4X16 A4 80 | | | | | | | |
| 560 | 312115-0331 | | 2 | SCREW ISO4762 M5X20 A4 80 | | | | | | | |
| 570 | 312115-0467 | | 4 | SCREW ISO4762 M8X80 A4 80 | | | | | | | |
| 580 | 312155-0327 | | 2 | SCREW DIN 7991 MF6S M5X12 A4 70 | | | | | | | |
| 590 | 312155-0366 | | 2 | SCREW DIN 7991 MF6S M6X12 A4 70 | | | | | | | |
| 600 | 315105-0136 | | 8 | WASHER BRB 4,3X8 RFR | | | | | | | |
| 610 | 315105-0153 | | 3 | WASHER BRB 6,4X12 RFR | | | | | | | |
| 640 | 321141-0104 | | 2 | BEARING BUSH W/O FLANGE, 8X10X12 MM | | | | | | | |
| 650 | 350001-0001 | | 2 | PUSH-IN FITTING QS-F-M5-4 | | | | | | | |
| 660 | 350002-0009 | | 2 | PUSH-IN L-FITTING QSL-F-G1/4-8 | | | | | | | |
| T10M1632 | 90600-1204 | | 1 | DOUBLE ACTING, COMPACT, 100-15 | | | | | | | |
| T10M1642 | 90459-7306 | | 1 | CYLINDER WITH INT. GUIDING BORE 16 | | | | | | | |
| T10W1632 | 315400-0004 | M | 6 | TUBE PUN-H-8X1,25-BL | | | | | | | |
| T10W1634 | 315400-0004 | M | 6 | TUBE PUN-H-8X1,25-BL | | | | | | | |
| T10W1642 | 315400-0016 | M | 6 | TUBE PUN-H-4X0,75-BL | | | | | | | |
| T10W1643 | 315400-0016 | M | 6 | TUBE PUN-H-4X0,75-BL | | | | | | | |

| Machine Type | Group Description | Used-In | Group Number | Page No |
|---|---|---|---|---|

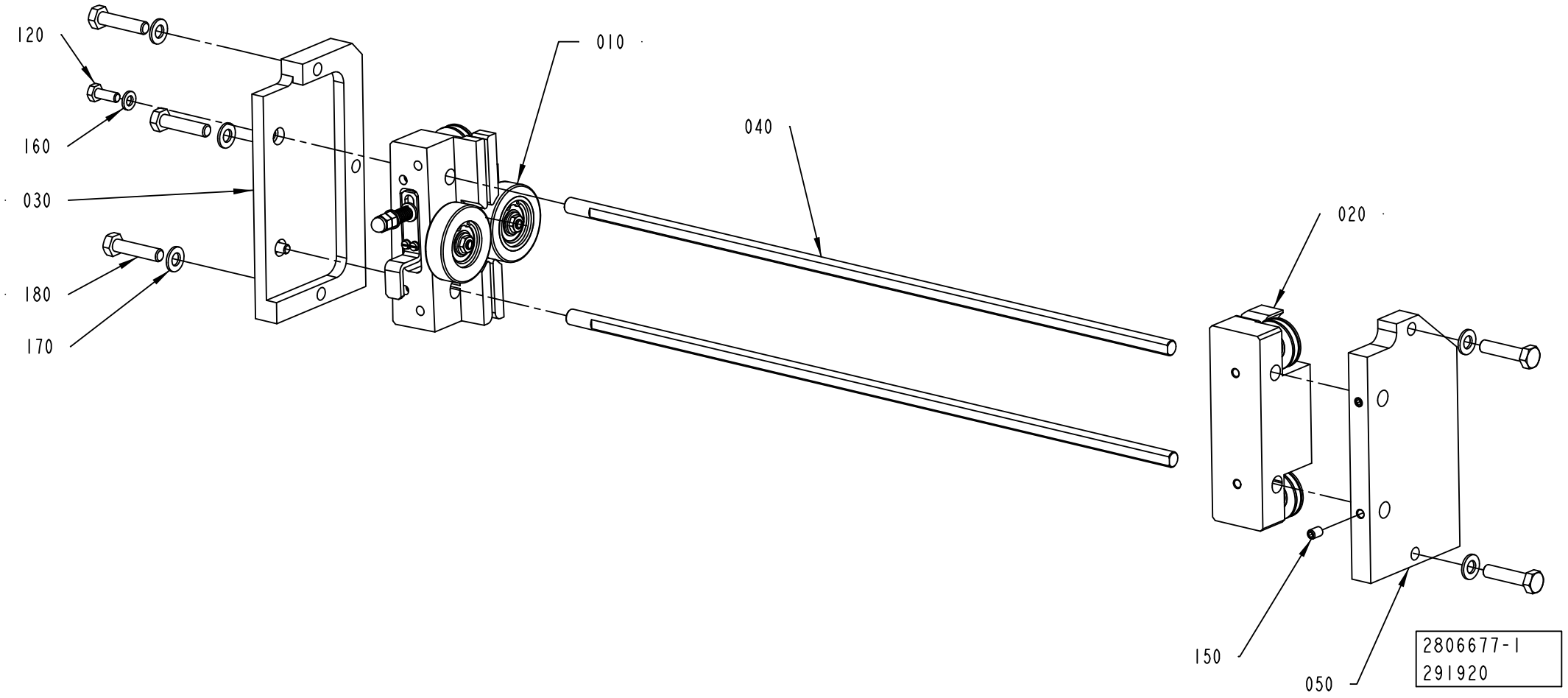
120
160
030
180
170
010
040
020
150
050
2806677-1
291920

ECM: 363265 - 20080825
Group number: 2806677-0100
Assembly Drawing: 2806677-1_1_AA

| Pos | Part No | UN | Qty | Description | Page No |
|---|---|---|---|---|---|
| **A3/FLEX** | | | | | |
| 020 | 2776086-0100 | | 1 | PAPER GUIDE ..... | **7-35** |
| **Common Parts** | | | | | |
| 010 | 2737931-0100 | | 1 | PAPER GUIDE ..... | **7-15** |
| 030 | 2741000-0000 | | 1 | PLATE | |
| 040 | 2741001-0000 | | 2 | SHAFT | |
| 050 | 2790936-0000 | | 1 | PLATE | |
| 120 | 312105-0368 | | 2 | SCREW M6S ISO 4017 M6X16 A480 | |
| 150 | 312309-0362 | | 2 | SCREW ISO4026 M6X8 A4 | |
| 160 | 315105-0153 | | 2 | WASHER BRB 6,4X12 RFR | |
| 170 | 315106-0165 | | 5 | WASHER ISO 7089-8-200 HV A4 | |
| 180 | 312105-0457 | | 5 | SCREW M6S ISO 4014 M8X35 A480 | |

| Pos | Part No | UN | Qty | Description | Page No |
|---|---|---|---|---|---|

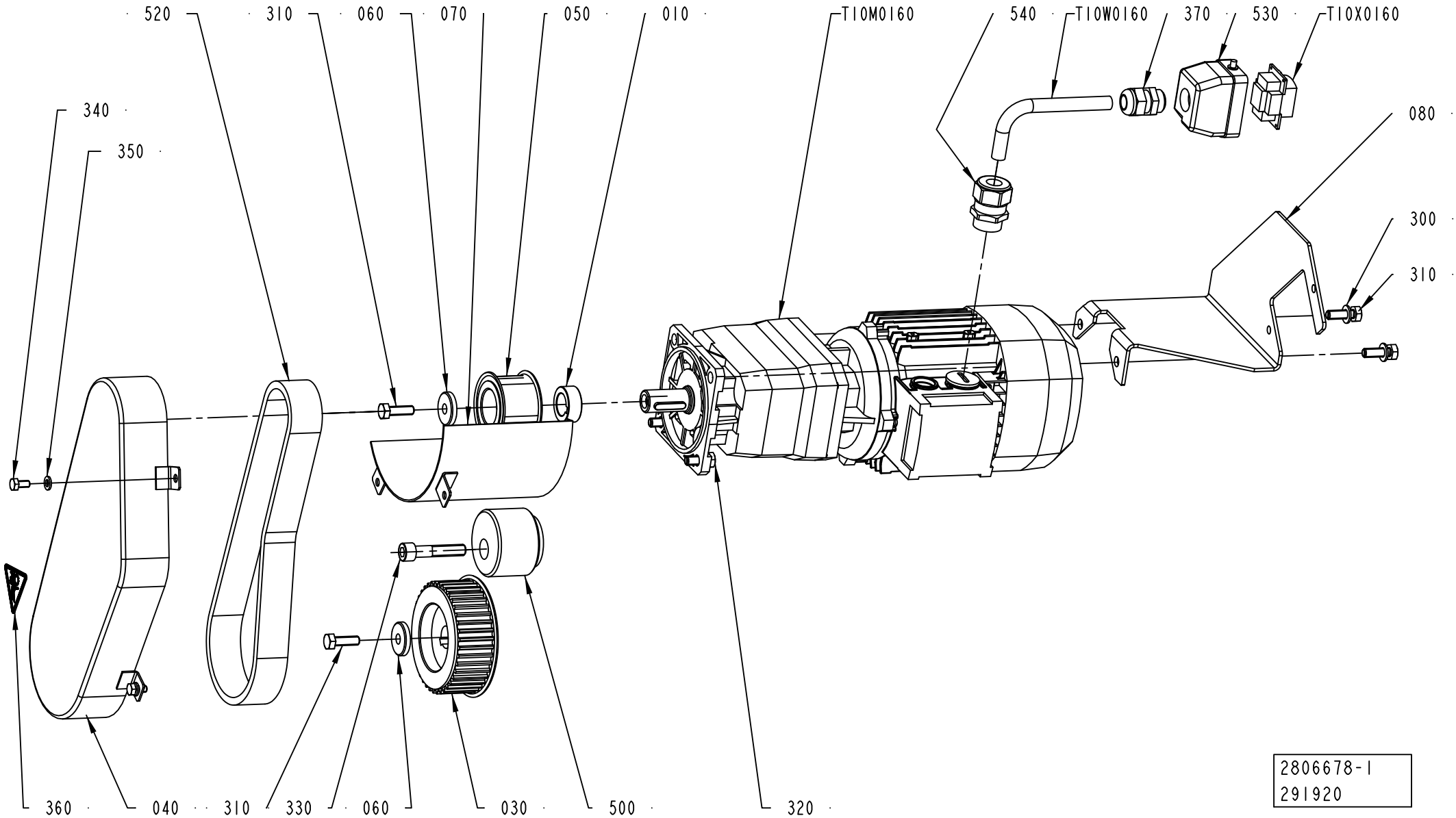
520
310
060
070
050
010
T10M0160
540
T10W0160
370
530
T10X0160
340
350
080
300
310
360
040
310
330
060
030
500
320
2806678-1
291920

ECM: 348183 - 20080430
Group number: 2806678-0100
Assembly Drawing: 2806678-1_1_AA

| Pos | Part No | UN | Qty | Description | Page No |
|---|---|---|---|---|---|
| - | | | | | |
| 010 | 2819402-0000 | | 1 | SPACER | |
| 030 | 2852909-0000 | | 1 | PULLEY | |
| 040 | 2838961-0000 | | 1 | COVER | |
| 050 | 2852908-0000 | | 1 | PULLEY | |
| 060 | 2838960-0000 | | 2 | WASHER | |
| 070 | 2790922-0000 | | 1 | PROTECTION | |
| 080 | 2838964-0000 | | 1 | PLATE | |
| 300 | 315105-0165 | | 4 | WASHER BRB 8,4X16 RFR | |
| 310 | 312105-0453 | | 4 | SCREW M6S ISO 4017 M8X25 A480 | |
| 320 | 312105-0451 | | 2 | SCREW M6S ISO 4017 M8X20 A480 | |
| 330 | 312115-0501 | | 1 | SCREW ISO4762 M10X50 A4 80 | |
| 340 | 312105-0366 | | 3 | SCREW M6S ISO 4017 M6X12 A480 | |
| 350 | 315105-0153 | | 3 | WASHER BRB 6,4X12 RFR | |
| 360 | 359705-0001 | | 1 | WARNING SIGN ISO, ENTANGLEMENT | |
| 370 | 352103-0108 | | 1 | CABLE GLAND, ST 13,5 , PR20,4/PG13,5 | |
| 500 | 90344-0078 | | 1 | PULLEY | |
| 520 | 90600-1299 | | 1 | TIMING BELT HPPD 720-8M-30 | |
| 530 | 90110-0157 | | 1 | CABLE HOOD 6-POL 70.352.0628.1 | |
| 540 | 90458-0440 | | 1 | GLAND, EXTENDED WITH INSERT, M25X1,5 | |
| T10M0160 | 90600-1249 | | 1 | GEARS, HELICAL MOTOR C 112 UF 6.2 S1 B52 | |
| T10W0160 | 90220-0104 | M | 9 | SCR. CABLE 4X1,5MM2 | |
| T10X0160 | 90110-0159 | | 1 | MALE INSERT 70.310.0640.0 | |

| Pos | Part No | UN | Qty | Description | Page No |
|---|---|---|---|---|---|

# COUNTER ROLLER



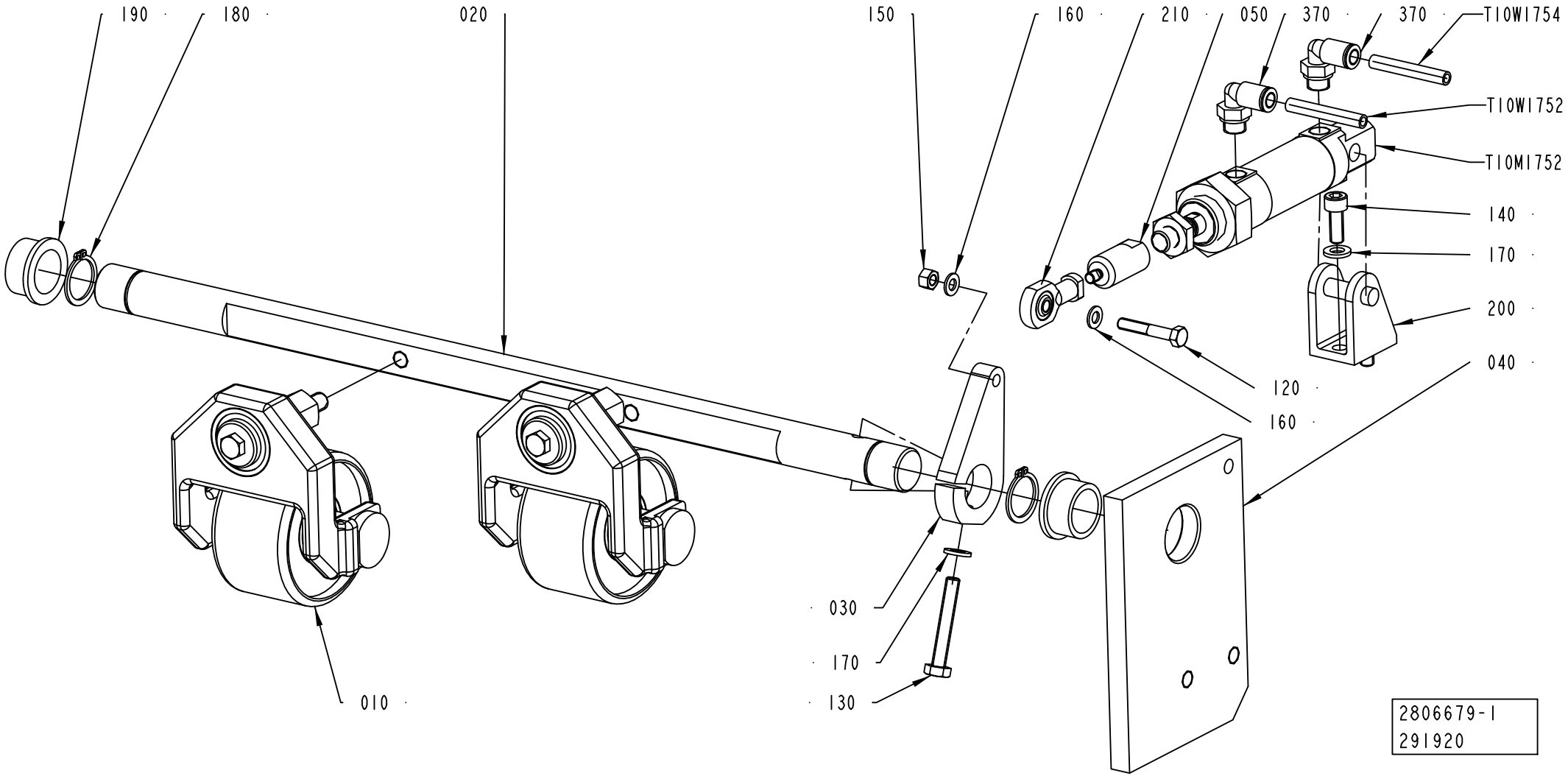

ECM: 320827 - 20070903
Group number: 2806679-0100
Assembly Drawing: 2806679-1_1_AA

| Pos | Part No | UN | Qty | Description | Page No |
|---|---|---|---|---|---|
| - | | | | | |
| 010 | 2741021-0100 | | 2 | COUNTER ROLLER ..... | **7-125** |
| 020 | 2737903-0000 | | 1 | SHAFT | |
| 030 | 2737905-0000 | | 1 | LEVER | |
| 040 | 2755525-0000 | | 1 | PLATE | |
| 050 | 2776131-0000 | | 1 | PIN | |
| 120 | 312105-0335 | | 1 | SCREW M6S ISO 4014 M5X30 A480 | |
| 130 | 312109-0378 | | 1 | SCREW M6S ISO 4017 M6X40 A480 | |
| 140 | 312115-0368 | | 2 | SCREW ISO4762 M6X16 A4 80 | |
| 150 | 312607-0314 | | 1 | HEXAGON NUT, EN 24032 M6M M5 A480 | |
| 160 | 315105-0146 | | 2 | WASHER BRB 5,3X10 RFR | |
| 170 | 315105-0153 | | 3 | WASHER BRB 6,4X12 RFR | |
| 180 | 315751-0116 | | 2 | RETAINING RING FOR SHAFT DIN 471 20 SS | |
| 190 | 90240-0221 | | 2 | FLANGE BUSHING, 20X25X14 MM | |
| 200 | 90459-1908 | | 1 | REAR CLEVIS FOOT MOUNTING, LBN-20/25 | |
| 210 | 90600-3066 | | 1 | ROD END, ID=5 MM, M5 | |
| 370 | 350002-0006 | | 2 | PUSH-IN L-FITTING QSL-F-G1/8-6 | |
| T10M1752 | 90459-1953 | | 1 | DOUBLE ACTING, MINI-ISO, CYL. 25-10 | |
| T10W1752 | 315400-0001 | M | 10 | TUBE PUN-H-6X1-BL | |
| T10W1754 | 315400-0001 | M | 10 | TUBE PUN-H-6X1-BL | |

| Pos | Part No | UN | Qty | Description | Page No |
|---|---|---|---|---|---|

# COUNTER ROLLER



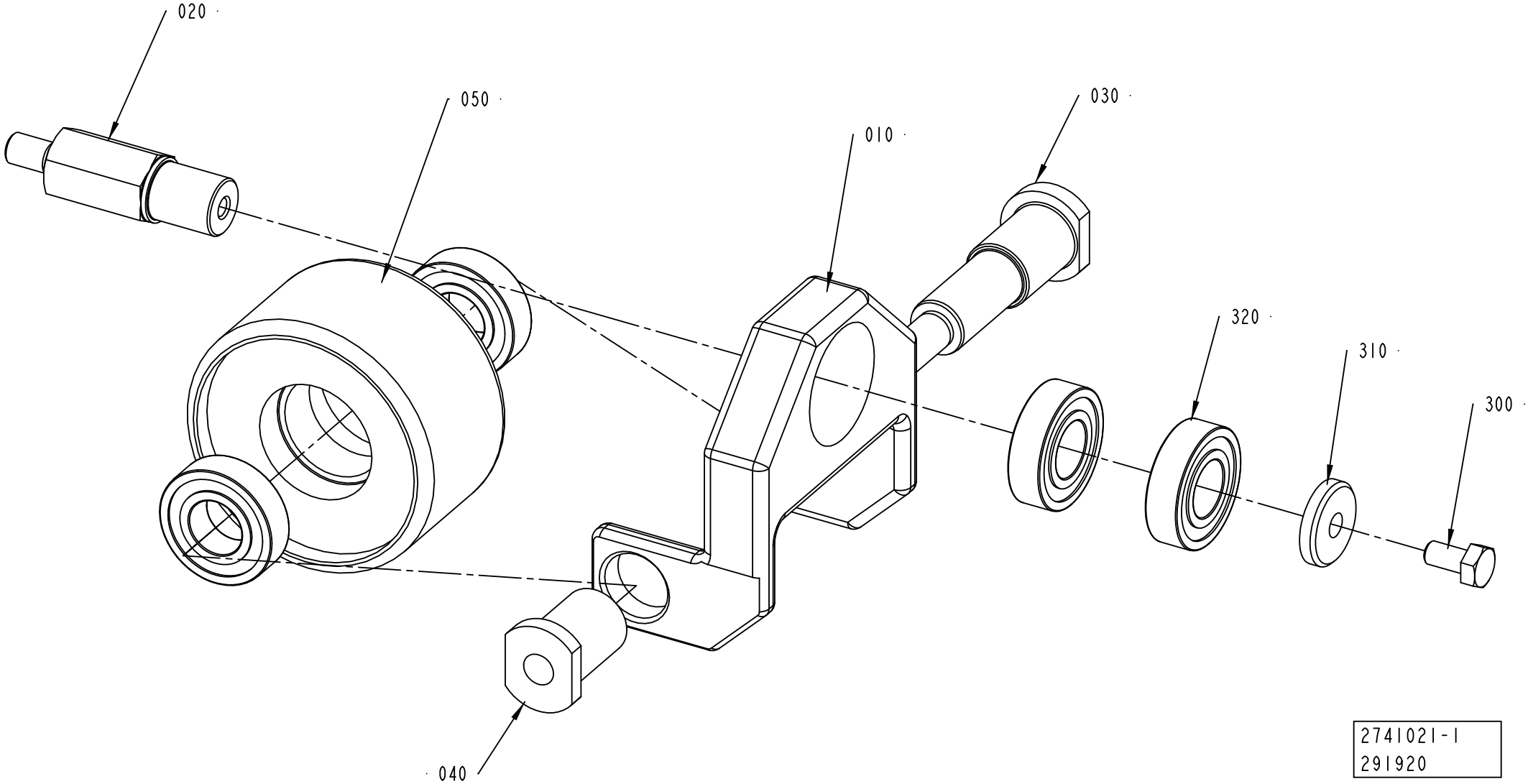

ECM: 297389 - 20070508
Group number: 2741021-0100
Assembly Drawing: 2741021-1_1_AA

| Pos | Part No | UN | Qty | Description | Page No |
|---|---|---|---|---|---|
| - | | | | | |
| 010 | 263150-0000 | | 1 | BRACKET | |
| 020 | 2741022-0000 | | 1 | PIN | |
| 030 | 263152-0000 | | 1 | SHAFT | |
| 040 | 263153-0000 | | 1 | NUT | |
| 050 | 1145079-0000 | | 1 | WHEEL | |
| 300 | 312105-0366 | | 1 | SCREW M6S ISO 4017 M6X12 A480 | |
| 310 | 315125-0153 | | 1 | WASHER TBRSB 6,4X22X4 A4 | |
| 320 | 321308-0202 | | 4 | BALL BEARING, 15X32X9 MM | |

| Pos | Part No | UN | Qty | Description | Page No |
|---|---|---|---|---|---|

# MATERIAL HOLDER



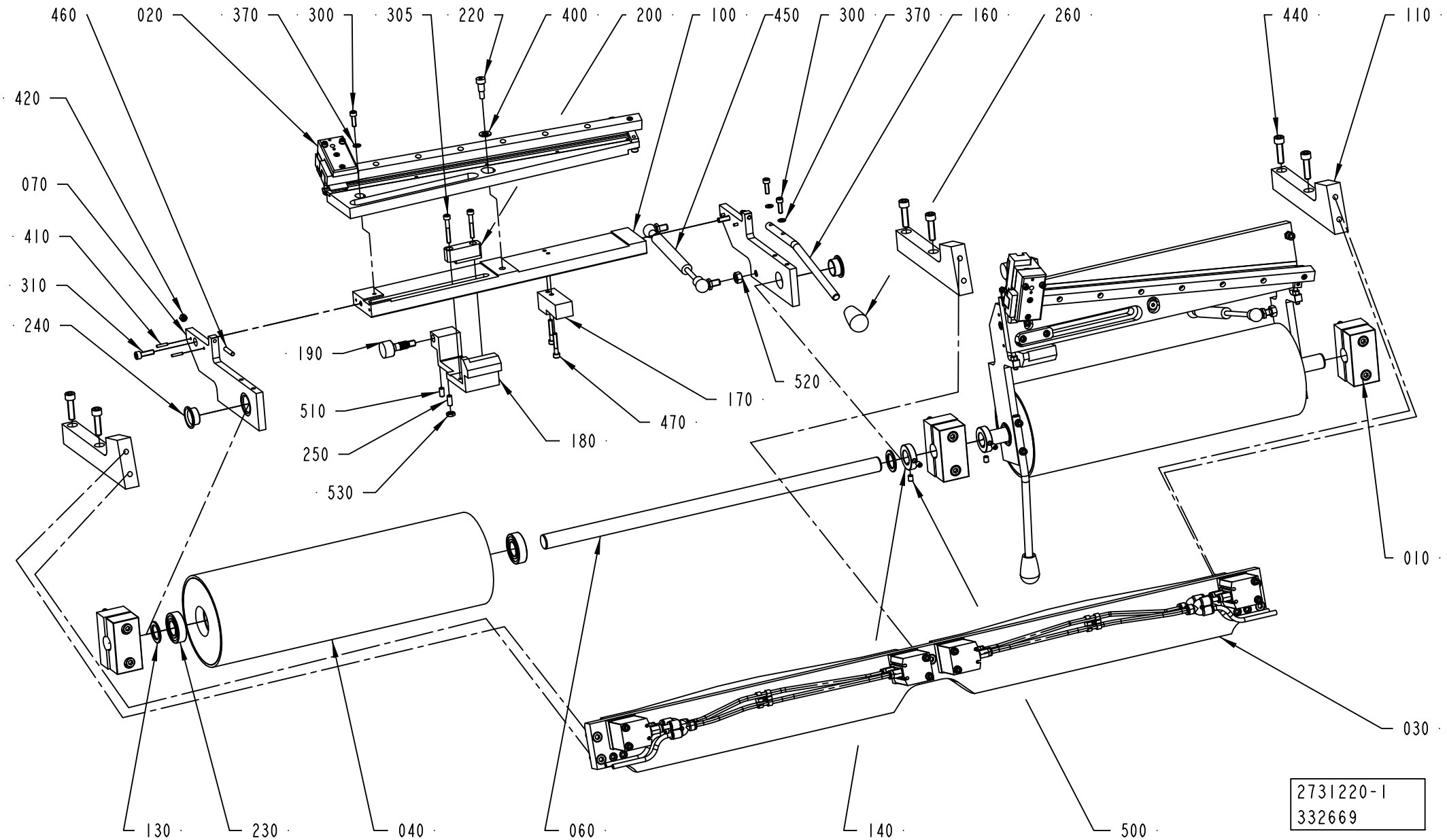

ECM: 332669 - 20071206
Group number: 2731220-0100
Assembly Drawing: 2731220-1_1_AC

| Pos | Part No | UN | Qty | Description | Page No |
|---|---|---|---|---|---|
| - | | | | | |
| 010 | 2731231-0100 | | 3 | BRACKET ..... | **7-129** |
| 020 | 2771102-0100 | | 2 | CUTTING TABLE ..... | **7-131** |
| 030 | 2735095-0100 | | 1 | BRAKE SHOE ..... | **7-133** |
| 040 | 2731216-0000 | | 2 | BENDING ROLLER | |
| 060 | 2731221-0000 | | 2 | SHAFT | |
| 070 | 2735073-0000 | | 2 | BRACKET | |
| 080 | 2735074-0000 | | 2 | BRACKET | |
| 100 | 2735079-0000 | | 2 | BAR | |
| 110 | 2735099-0000 | | 3 | BRACKET | |
| 130 | 2735101-0000 | | 4 | SPACER | |
| 140 | 2876451-0000 | | 2 | SPACER | |
| 160 | 2897024-0000 | | 2 | HANDLE | |
| 170 | 2875285-0000 | | 2 | BRACKET | |
| 180 | 2891813-0000 | | 2 | ANGLE PIECE | |
| 190 | 2891814-0000 | | 2 | ADJUSTING SCREW | |
| 200 | 2895374-0000 | | 2 | BLOCK | |
| 220 | 90287-0265 | | 2 | SCREW, HEX.SOCK.HEAD SHOULD. M6X8 | |
| 230 | 90214-0170 | | 4 | BALL BEARING SOLID OIL 20X42X12 MM | |
| 240 | 90459-5154 | | 4 | FLANGE BUSHING, 20X23X11,5 MM | |
| 250 | 90287-0163 | | 2 | SCREW SPRINGLOAD. SLOTTED HEAD M6X14 | |
| 260 | 90600-2661 | | 2 | HANDLE, I.222/40N-10 | |
| 300 | 312115-0329 | | 6 | SCREW ISO4762 M5X16 A4 80 | |
| 305 | 312115-0337 | | 4 | SCREW ISO4762 M5X35 A4 80 | |
| 310 | 312115-0370 | | 4 | SCREW ISO4762 M6X20 A4 80 | |
| 370 | 315105-0146 | | 6 | WASHER BRB 5,3X10 RFR | |
| 400 | 315105-0165 | | 2 | WASHER BRB 8,4X16 RFR | |
| 410 | 311103-0236 | | 8 | PARALLEL PIN ISO 2338 3M6X16 A1 | |
| 420 | 312607-0314 | | 4 | HEXAGON NUT, EN 24032 M6M M5 A480 | |
| 440 | 312115-0455 | | 6 | SCREW ISO4762 M8X30 A4 80 | |
| 450 | 90600-2833 | | 2 | GAS SPRING LIFT-O-MAT 4915DY | |
| 460 | 312318-0333 | | 4 | SCREW ISO4029 M5X25 A4 | |
| 470 | 312115-0335 | | 4 | SCREW ISO4762 M5X30 A4 80 | |
| 500 | 312318-0362 | | 4 | SCREW ISO4029 M6X8 A4 | |
| 510 | 312318-0366 | | 2 | SCREW ISO4029 M6X12 A4 | |
| 520 | 312605-0318 | | 2 | HEXAGON NUT, M6M M8 A280 | |
| 530 | 312625-0316 | | 2 | HEXAGON THIN NUT, EN 24035 ML6M M6 A4 | |

| Pos | Part No | UN | Qty | Description | Page No |
|---|---|---|---|---|---|

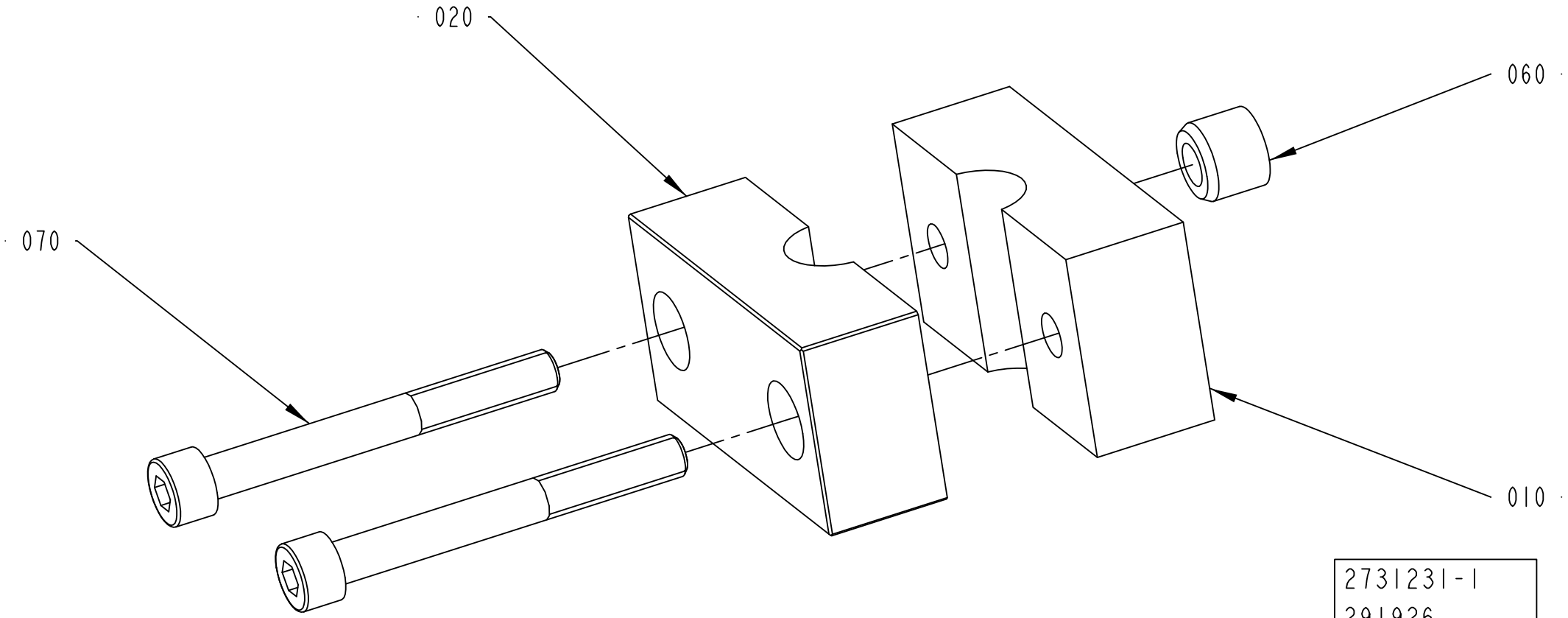
020
060
070
010
2731231-1
291926

ECM: 301716 - 20070508
Group number: 2731231-0100
Assembly Drawing: 2731231-1_1_AA

| Pos | Part No | UN | Qty | Description | Page No |
|---|---|---|---|---|---|
| - | | | | | |
| 010 | 2731219-0000 | | 1 | BRACKET | |
| 020 | 2731232-0000 | | 1 | BRACKET | |
| 060 | 90600-2837 | | 1 | BEARING BUSH W/O FLANGE, 8,2X15X12 MM | |
| 070 | 312115-0465 | | 2 | SCREW ISO4762 M8X70 A4 80 | |

| Pos | Part No | UN | Qty | Description | Page No |
|---|---|---|---|---|---|

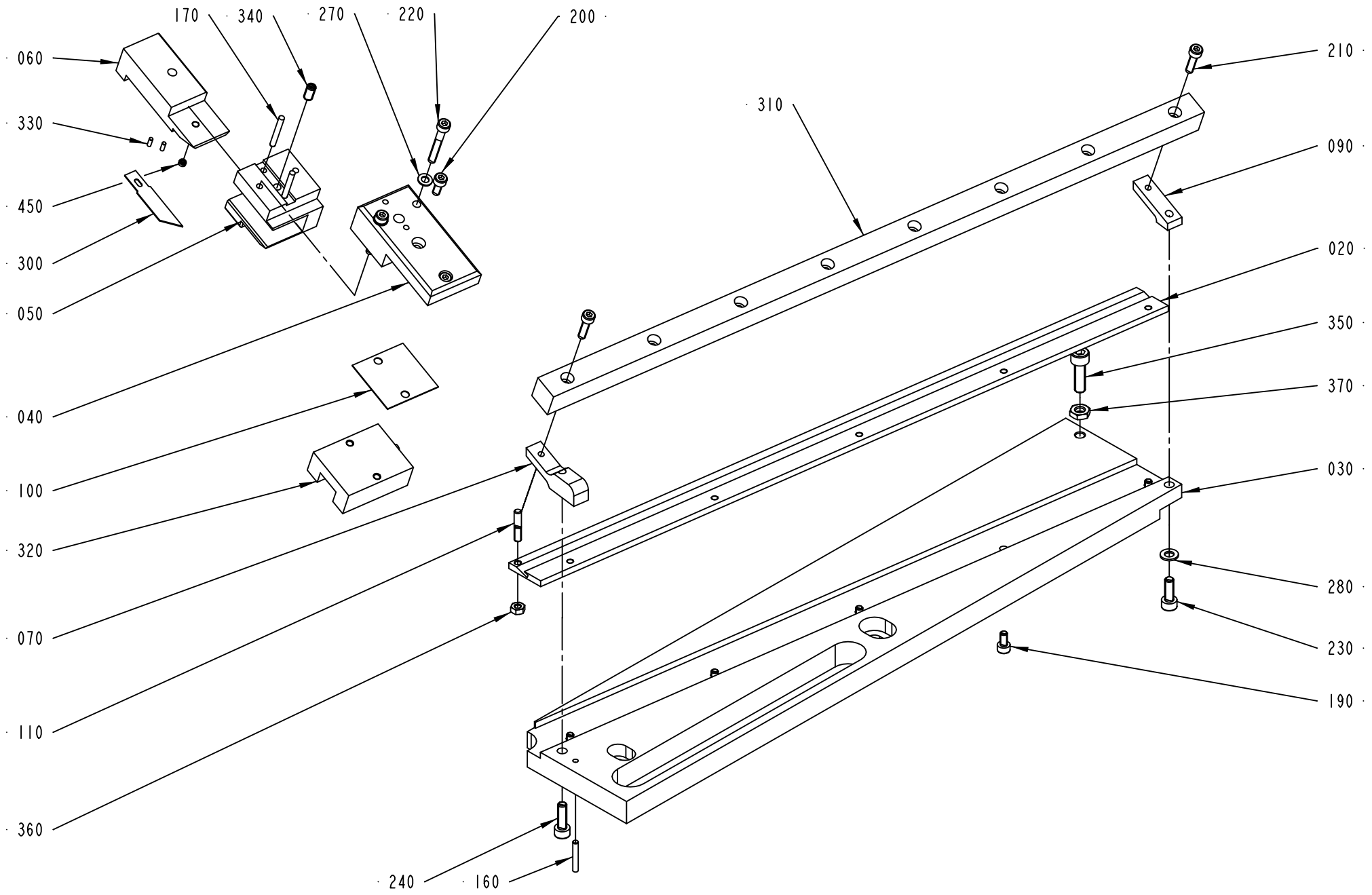
170
340
270
220
200
060
330
450
300
050
040
100
320
070
110
360
240
160
310
210
090
020
350
370
030
280
230
190

ECM: 320821 - 20070903
Group number: 2771102-0100
Assembly Drawing: 2771102-1_1_AA

| Pos | Part No | UN | Qty | Description | Page No |
|---|---|---|---|---|---|
| - | | | | | |
| 020 | 2755503-0000 | | 1 | RULER | |
| 030 | 2771103-0000 | | 1 | TABLE | |
| 040 | 2771104-0000 | | 1 | BRACKET | |
| 050 | 2771107-0000 | | 1 | BRACKET | |
| 060 | 2771108-0000 | | 1 | HOLDER | |
| 070 | 2771109-0000 | | 1 | SHOE | |
| 090 | 2771111-0000 | | 1 | SHOE | |
| 100 | 2851526-0000 | | 4 | SHIM | |
| 110 | 2895375-0000 | | 1 | PIN | |
| 160 | 311103-0238 | | 1 | PARALLEL PIN ISO 2338 3M6X20 A1 | |
| 170 | 311103-1240 | | 2 | PARALLEL PIN ISO 2338 3M6X24 A1 | |
| 190 | 312115-0287 | | 5 | SCREW ISO4762 M4X8 A4 80 | |
| 200 | 312115-0289 | | 2 | SCREW ISO4762 M4X10 A4 80 | |
| 210 | 312115-0293 | | 2 | SCREW ISO4762 M4X16 A4 80 | |
| 220 | 312115-0299 | | 2 | SCREW ISO4762 M4X30 A4 80 | |
| 230 | 312115-0328 | | 1 | SCREW ISO4762 M5X14 A4 80 | |
| 240 | 312115-0329 | | 1 | SCREW ISO4762 M5X16 A4 80 | |
| 250 | 90459-1395 | | 1 | SCREW HEX.SOCK.SET CONEPT.MS6SS M4X4 A2 | |
| 270 | 315105-0136 | | 2 | WASHER BRB 4,3X8 RFR | |
| 280 | 315105-0146 | | 1 | WASHER BRB 5,3X10 RFR | |
| 300 | 90600-3039 | | 1 | BLADE, C5321 ART: 27.50 | |
| 310 | 90600-3042 | | 1 | GUIDE BAR, 15X16,2X450 | |
| 320 | 90600-3040 | | 1 | RUNNER BLOCK, 1666-114-20 | |
| 330 | 311102-0185 | | 2 | PARALLEL PIN ISO 2338 2M6X6 ST | |
| 340 | 90459-7283 | | 1 | SCREW HEX.SOCK.SET CONEPT.MS6SS M5X12 A2 | |
| 350 | 312115-0370 | | 1 | SCREW ISO4762 M6X20 A4 80 | |
| 360 | 312605-0312 | | 1 | HEXAGON NUT, M6M M4 A280 | |
| 370 | 312625-0316 | | 1 | HEXAGON THIN NUT, EN 24035 ML6M M6 A4 | |
| 450 | 90459-1395 | | 1 | SCREW HEX.SOCK.SET CONEPT.MS6SS M4X4 A2 | |

| Pos | Part No | UN | Qty | Description | Page No |
|---|---|---|---|---|---|

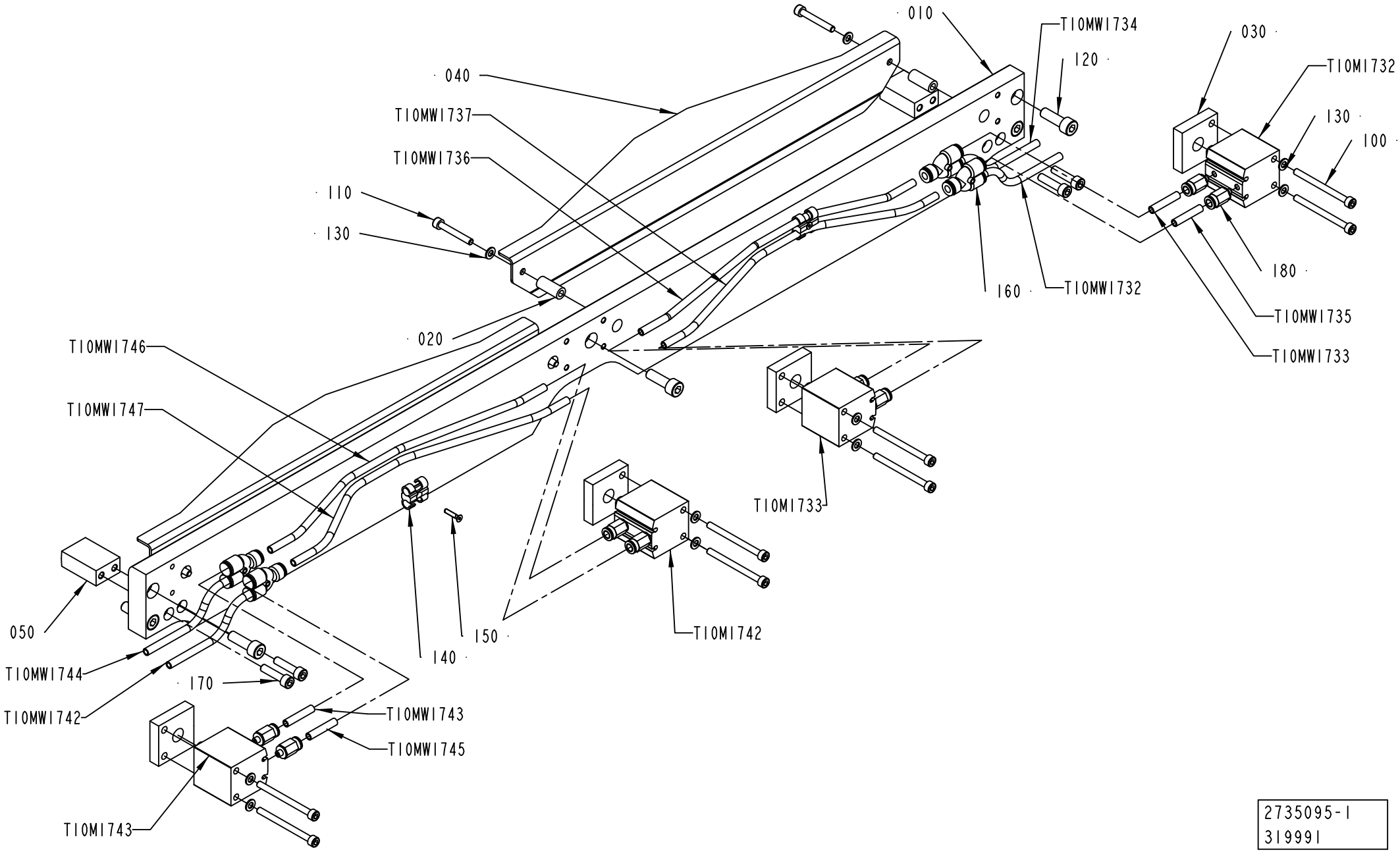


2735095-1
319991

ECM: 320807 - 20070903
Group number: 2735095-0100
Assembly Drawing: 2735095-1_1_AB

| Pos | Part No | UN | Qty | Description | Page No |
|---|---|---|---|---|---|
| - | | | | | |
| 010 | 2735094-0000 | | 1 | BAR | |
| 020 | 2735096-0000 | | 4 | SPACER | |
| 030 | 2735097-0000 | | 4 | SPACER | |
| 040 | 2735098-0000 | | 2 | RAIL | |
| 050 | 2735100-0000 | | 2 | BLOCK | |
| 100 | 312111-0343 | | 8 | SCREW HEX.SOCK.HD.MC6S-TT 5X60 88 FZB | |
| 110 | 312115-0337 | | 4 | SCREW ISO4762 M5X35 A4 80 | |
| 120 | 312115-0453 | | 5 | SCREW ISO4762 M8X25 A4 80 | |
| 130 | 315105-0146 | | 12 | WASHER BRB 5,3X10 RFR | |
| 140 | 90165-0087 | | 2 | T-CLIP T6 FOR TUBE D=6 - 7 MM | |
| 150 | 312155-0228 | | 2 | SCREW DIN 7991 MF6S M3X16 A4 70 | |
| 160 | 90055-0257 | | 4 | Y-FITTING QSY-6 | |
| 170 | 312115-0372 | | 4 | SCREW ISO4762 M6X25 A4 80 | |
| 180 | 350001-0002 | | 8 | PUSH-IN FITTING QS-F-M5-6 | |
| T10M1732 | 90600-2793 | | 1 | DOUBLE ACTING, COMPACT, 25-10 | |
| T10M1733 | 90600-2793 | | 1 | DOUBLE ACTING, COMPACT, 25-10 | |
| T10M1742 | 90600-2793 | | 1 | DOUBLE ACTING, COMPACT, 25-10 | |
| T10M1743 | 90600-2793 | | 1 | DOUBLE ACTING, COMPACT, 25-10 | |
| T10W1732 | 315400-0001 | MM | 4000 | TUBE PUN-H-6X1-BL | |
| T10W1733 | 315400-0001 | MM | 100 | TUBE PUN-H-6X1-BL | |
| T10W1734 | 315400-0001 | MM | 4000 | TUBE PUN-H-6X1-BL | |
| T10W1735 | 315400-0001 | MM | 100 | TUBE PUN-H-6X1-BL | |
| T10W1736 | 315400-0001 | MM | 500 | TUBE PUN-H-6X1-BL | |
| T10W1737 | 315400-0001 | MM | 500 | TUBE PUN-H-6X1-BL | |
| T10W1742 | 315400-0001 | MM | 5000 | TUBE PUN-H-6X1-BL | |
| T10W1743 | 315400-0001 | MM | 100 | TUBE PUN-H-6X1-BL | |
| T10W1744 | 315400-0001 | MM | 5000 | TUBE PUN-H-6X1-BL | |
| T10W1745 | 315400-0001 | MM | 100 | TUBE PUN-H-6X1-BL | |
| T10W1746 | 315400-0001 | MM | 500 | TUBE PUN-H-6X1-BL | |
| T10W1747 | 315400-0001 | MM | 500 | TUBE PUN-H-6X1-BL | |

| Pos | Part No | UN | Qty | Description | Page No |
|---|---|---|---|---|---|

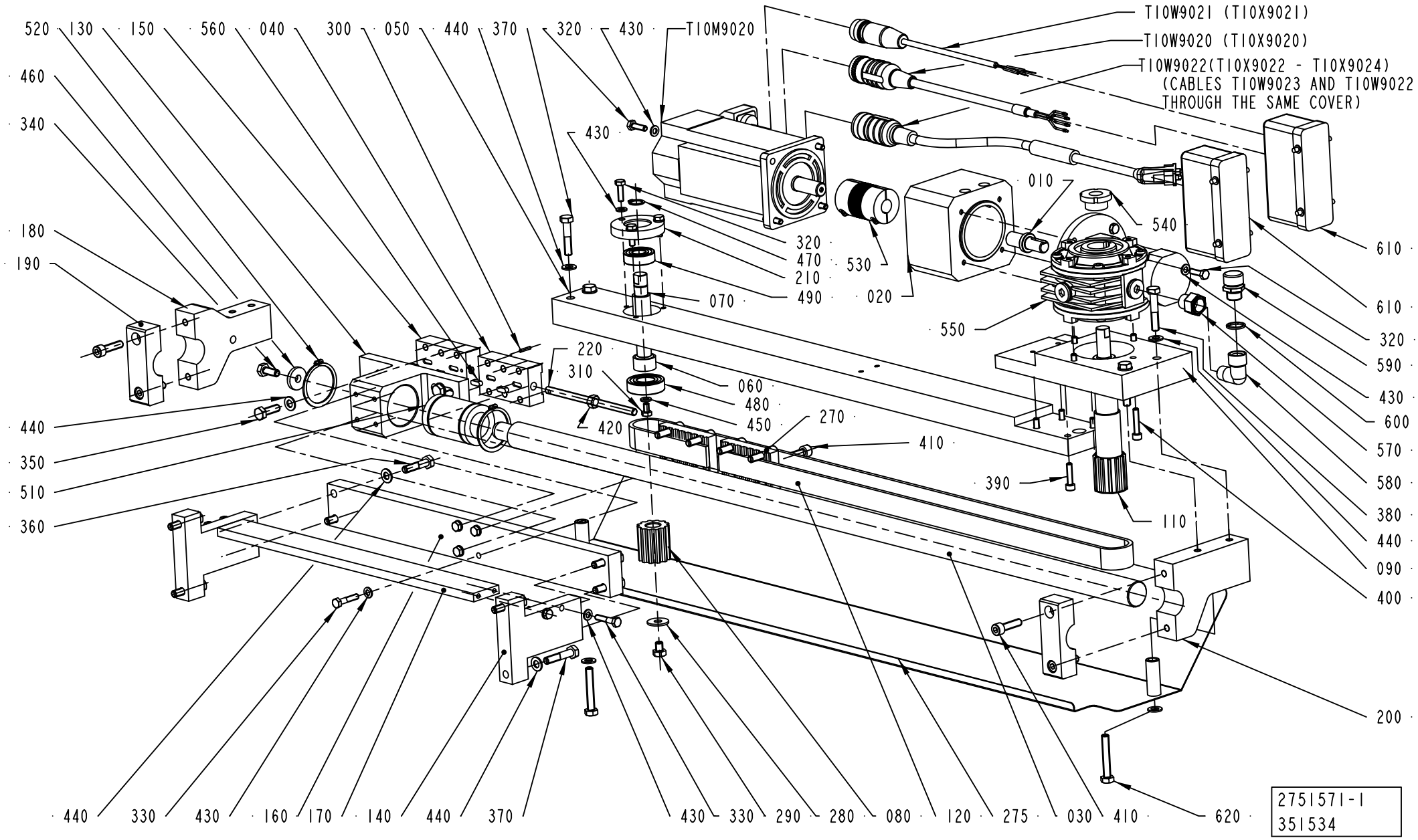
T10W9021 (T10X9021)
T10W9020 (T10X9020)
T10W9022(T10X9022 - T10X9024)
(CABLES T10W9023 AND T10W9022
THROUGH THE SAME COVER)
T10M9020
520
130
150
560
040
300
050
440
370
320
430
460
340
180
190
440
350
510
360
220
310
420
060
480
450
270
410
390
110
010
540
530
020
550
610
320
590
430
600
570
580
380
440
090
400
200
070
490
210
470
320
440
330
430
160
170
140
440
370
430
330
290
280
080
120
275
030
410
620
2751571-1
351534

ECM: 353747 - 20080430
Group number: 2751571-0100
Assembly Drawing: 2751571-1_1_AD

| Pos | Part No | UN | Qty | Description | Page No |
|---|---|---|---|---|---|
| - | | | | | |
| 010 | 2735107-0000 | | 1 | SHAFT | |
| 020 | 2735108-0000 | | 1 | FLANGE | |
| 030 | 2737906-0000 | | 1 | SHAFT | |
| 040 | 2751569-0000 | | 1 | PLATE | |
| 050 | 2751573-0000 | | 1 | BAR | |
| 060 | 2751574-0000 | | 1 | SPACER | |
| 070 | 2751575-0000 | | 1 | SHAFT | |
| 080 | 2751576-0000 | | 1 | PULLEY | |
| 090 | 2751579-0000 | | 1 | PLATE | |
| 110 | 2844167-0000 | | 1 | PULLEY | |
| 120 | 2751585-0000 | | 1 | TIMING BELT | |
| 130 | 2751590-0000 | | 1 | BRACKET | |
| 140 | 2751591-0000 | | 2 | PLATE | |
| 150 | 2751592-0000 | | 1 | PLATE | |
| 160 | 2751593-0000 | | 1 | PLATE | |
| 170 | 2751594-0000 | | 1 | PLATE | |
| 180 | 2751595-0000 | | 1 | PLATE | |
| 190 | 2751596-0000 | | 2 | PLATE | |
| 200 | 2751597-0000 | | 1 | PLATE | |
| 210 | 2751598-0000 | | 1 | COVER | |
| 220 | 2755496-0000 | | 1 | BAR | |
| 230 | 2755538-0000 | | 1 | BRACKET | |
| 270 | 2844166-0000 | | 2 | PLATE | |
| 275 | 2891696-0000 | | 1 | CABLE DUCT | |
| 280 | 90005-0116 | | 1 | WASHER PLAIN ROUND 8,4(M8)/24, H=2 | |
| 290 | 90459-4735 | | 1 | SCREW M6S ISO 4017 M8X10 A480 | |
| 300 | 311103-0236 | | 1 | PARALLEL PIN ISO 2338 3M6X16 A1 | |
| 310 | 312105-0364 | | 2 | SCREW M6S ISO 4017 M6X10 A480 | |
| 320 | 312105-0370 | | 11 | SCREW M6S ISO 4017 M6X20 A480 | |
| 330 | 312105-0374 | | 8 | SCREW M6S ISO 4014 M6X30 A480 | |
| 340 | 312105-0451 | | 1 | SCREW M6S ISO 4017 M8X20 A480 | |
| 350 | 312105-0453 | | 4 | SCREW M6S ISO 4017 M8X25 A480 | |
| 360 | 312105-0457 | | 4 | SCREW M6S ISO 4014 M8X35 A480 | |
| 370 | 312105-0459 | | 6 | SCREW M6S ISO 4014 M8X40 A480 | |
| 380 | 312105-0460 | | 2 | SCREW M6S ISO 4014 M8X45 A480 | |
| 390 | 312115-0372 | | 4 | SCREW ISO4762 M6X25 A4 80 | |
| 400 | 312115-0374 | | 4 | SCREW ISO4762 M6X30 A4 80 | |
| 410 | 312115-0455 | | 12 | SCREW ISO4762 M8X30 A4 80 | |
| 420 | 312605-0318 | | 1 | HEXAGON NUT, M6M M8 A280 | |
| 430 | 315105-0153 | | 19 | WASHER BRB 6,4X12 RFR | |
| 440 | 315105-0165 | | 18 | WASHER BRB 8,4X16 RFR | |
| 450 | 315106-0153 | | 2 | WASHER ISO 7089-6-200 HV A4 | |
| 460 | 315125-0165 | | 1 | WASHER TBRSB 8,4X26X5 A4 | |
| 470 | 315751-0112 | | 1 | RETAINING RING FOR SHAFT DIN 471 15 SS | |
| 480 | 321308-0204 | | 1 | BALL BEARING, 20X42X12 MM | |
| 490 | 321313-0102 | | 1 | BALL BEARING, 15X35X11 MM | |
| 510 | 90600-2722 | | 1 | 6ALL BUSHING, 30X47X68 MM | |
| 520 | 90600-2740 | | 2 | RETAINING RING SHAFT DIN 471 ST 47 | |
| 530 | 90600-2733 | | 1 | BELLOW COUPLING, 16X16 MM | |
| 540 | 90600-2721 | | 1 | CLAMPING ELEMENT TLK 250-15-25 | |
| 550 | 90600-2530 | | 1 | WORM GEAR VF-EP49-P1-7-P71-B14-B6-NP-PV- | |
| 560 | 315705-0198 | | 4 | PARALLEL KEY W. ROUND ENDS 5X5X14 MM | |
| 570 | 90030-0144 | | 1 | REDUCER, 2520-3/8-3/8 | |
| 580 | 90140-0020 | | 1 | ELBOW, 90, INT/EXT. THREAD, NO. 2020-3/8 | |
| 590 | 90600-2532 | | 1 | BREATHER PLUG, TSS2G | |
| 600 | 315239-0111 | | 1 | NYLON WASHER G3/8, 3/8RRP | |
| 610 | 90110-0381 | | 2 | COVER, 310601-33 CYR24.4 | |
| 620 | 312109-0461 | | 2 | SCREW M6S ISO 4017 M8X50 A480 | |
| T10M9020 | 90600-2599 | | 1 | SERVO MOTOR MPL-B320P-MK24AA | |
| T10W9020 | 90459-2566 | | 1 | MOTOR CABLE 16 AWG 2090-XXNPMP-16S15 | |
| T10W9021 | 90459-2577 | | 1 | MOTOR BRAKE CABLE 2090-UXNBMP-18S15 | |
| T10W9022 | 90459-7206 | | 1 | MOTOR FEEDBACK CABLE 2090-UXNFBMP-S15/C | |

| Machine Type | Group Description | Used-In | Group Number | Page No |
|---|---|---|---|---|

# PNEUMATIC PANEL



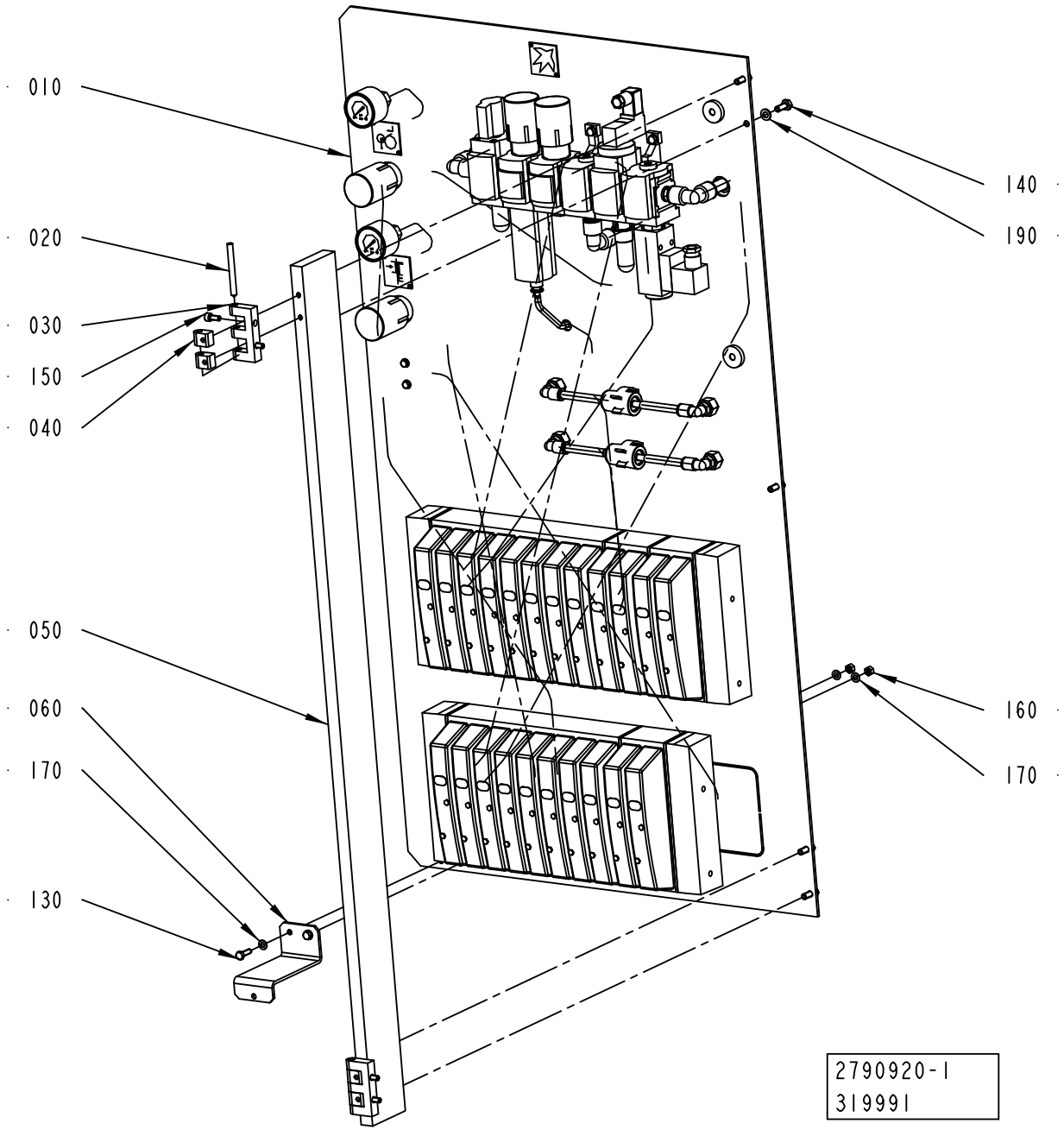

ECM: 320822 - 20070903
Group number: 2790920-0100
Assembly Drawing: 2790920-1_1_AB

| Pos | Part No | UN | Qty | Description | Page No |
|---|---|---|---|---|---|
| - | | | | | |
| 005 | 2816348-0000 | | 1 | PNEUMATIC DIAGRAM | |
| 010 | 2797505-0100 | | 1 | VALVE PANEL ..... | **7-139, 7-141** |
| 020 | 988685-0000 | | 2 | PIN | |
| 030 | 1035792-0000 | | 2 | E-HINGE | |
| 040 | 1129770-0000 | | 4 | BLOCKING PIECE | |
| 050 | 2844157-0000 | | 1 | PLATE | |
| 060 | 2844158-0000 | | 1 | BRACKET | |
| 130 | 312105-0329 | | 2 | SCREW M6S ISO 4017 M5X16 A480 | |
| 140 | 312105-0368 | | 5 | SCREW M6S ISO 4017 M6X16 A480 | |
| 150 | 312115-0327 | | 4 | SCREW ISO4762 M5X12 A4 80 | |
| 160 | 312607-0314 | | 2 | HEXAGON NUT, EN 24032 M6M M5 A480 | |
| 170 | 315105-0146 | | 4 | WASHER BRB 5,3X10 RFR | |
| 190 | 315105-0153 | | 5 | WASHER BRB 6,4X12 RFR | |

| Pos | Part No | UN | Qty | Description | Page No |
|---|---|---|---|---|---|

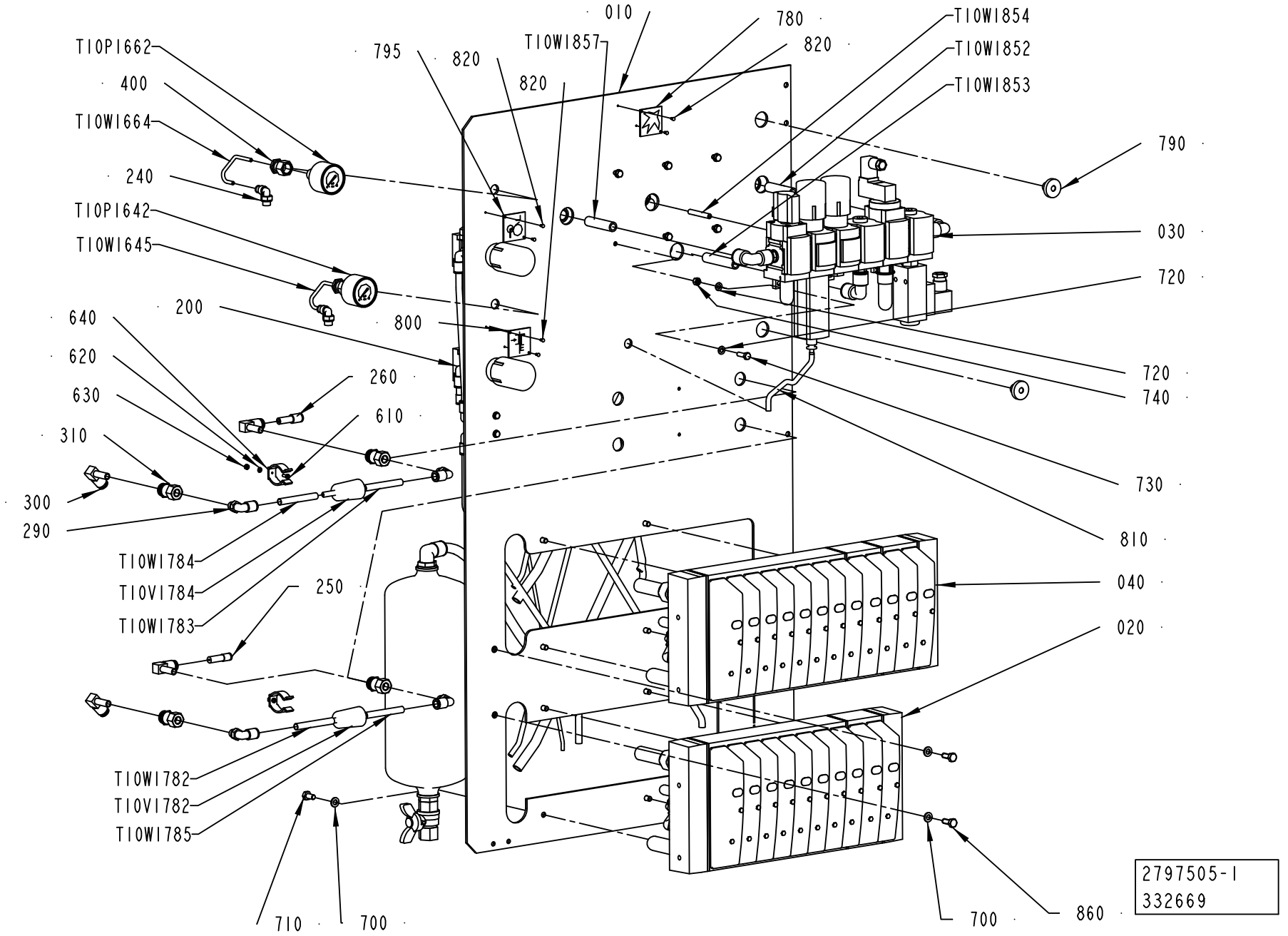
T10P1662
400
T10W1664
240
T10P1642
T10W1645
200
640
620
630
310
300
290
T10W1784
T10V1784
T10W1783
250
T10W1782
T10V1782
T10W1785
710
700
795
820
820
010
T10W1857
780
820
T10W1854
T10W1852
T10W1853
790
030
720
720
740
730
810
040
020
700
860
260
610
800
2797505-1
332669

ECM: 364203 - 20080825
Group number: 2797505-0100
Assembly Drawing: 2797505-1_1_AC

This list covers pages from 7-138 to 7-141

| Pos | Part No | UN | Qty | Description | Page No |
|---|---|---|---|---|---|
| **A3/FLEX** | | | | | |
| 240 | 350002-0005 | | 2 | PUSH-IN L-FITTING QSL-F-G1/8-4 | |
| 400 | 90459-7333 | | 2 | PUSH-IN FITTING QSSF-1/4-4-B | |
| 710 | 312105-0366 | | 8 | SCREW M6S ISO 4017 M6X12 A480 | |
| 720 | 315106-0146 | | 12 | WASHER ISO 7089-5-200 HV A4 | |
| 740 | 312605-0314 | | 6 | HEXAGON NUT, M6M M5 A280 | |
| 820 | 312502-0169 | | 6 | DRIVE SCREW ROUND HEAD KDS 2X5 | |
| T10R1662 | 90459-2822 | | 1 | REGULATOR, MS4-LR-1/4-D5-A8 | |
| **Common Parts** | | | | | |
| 010 | 2797502-0000 | | 1 | PANEL | |
| 020 | 2797506-0100 | | 1 | VALVE GROUP ..... | **7-143** |
| 030 | 2797504-0100 | | 1 | AIR INLET ..... | **7-145** |
| 040 | 2797503-0100 | | 1 | VALVE GROUP ..... | **7-147** |
| 200 | 350002-0009 | | 3 | PUSH-IN L-FITTING QSL-F-G1/4-8 | |
| 210 | 350001-0007 | | 1 | PUSH-IN FITTING QS-F-G1/8-8 | |
| 220 | 350001-0009 | | 1 | PUSH-IN FITTING QS-F-G1/4-8 | |
| 230 | 350004-0005 | | 3 | PUSH-IN L-FITTING QSL-F-12 | |
| 250 | 350006-0002 | | 3 | PUSH-IN FITTING QS-F-8H-4 | |
| 260 | 350006-0003 | | 1 | PUSH-IN FITTING QS-F-8H-6 | |
| 270 | 350011-0004 | | 1 | PUSH-IN T-FITTING QS-F-12-10 | |
| 280 | 350005-0002 | | 1 | PUSH-IN T-FITTING QST-F-6 | |
| 290 | 350002-0007 | | 6 | PUSH-IN L-FITTING QSL-F-G1/8-8 | |
| 300 | 90600-1175 | | 4 | ELBOW WITH TAILPIECE 8/8 MM | |
| 310 | 90600-1173 | | 4 | PUSH-IN BULKHEAD FITTING QSSF-1/8-8-B | |
| 320 | 350006-0006 | | 1 | PUSH-IN FITTING QS-F-10H-8 | |
| 610 | 312125-0222 | | 2 | SCREW ISO 1207 M3X8 A4 | |
| 620 | 315105-0124 | | 3 | WASHER BRB 3,2X6 RFR | |
| 630 | 312605-0310 | | 2 | HEXAGON NUT, M6M M3 A280 | |
| 640 | 90165-0019 | | 2 | TOOL CLIP, 81/3, OPEN, 20 - 30 MM | |
| 700 | 315105-0153 | | 12 | WASHER BRB 6,4X12 RFR | |
| 730 | 312105-0329 | | 6 | SCREW M6S ISO 4017 M5X16 A480 | |
| 750 | 315106-0136 | | 4 | WASHER ISO 7089-4-200 HV A4 | |
| 760 | 312105-0297 | | 2 | SCREW M6S ISO 4017 M4X25 A470 | |
| 770 | 312605-0312 | | 2 | HEXAGON NUT, M6M M4 A280 | |
| 780 | 273458-0000 | | 1 | SIGN, AIR | |
| 790 | 90015-0023 | | 2 | LEAD-IN, TET7-10, E-1458019 | |
| 795 | 2912326-0000 | | 1 | LABEL | |
| 800 | 2912327-0000 | | 1 | LABEL | |
| 810 | 315400-0001 | MM | 1500 | TUBE PUN-H-6X1-BL | |
| 830 | 350002-0016 | | 1 | PUSH-IN L-FITTING QSL-F-G1/2-12 | |
| 840 | 342700-0205 | | 1 | NIPPLES,HEXAGON,EXT.G-THREAD G1/2"-G1/4" | |
| 850 | 312630-0316 | | 2 | HEX.NUT FINE, EN 24032 M6M M6X0,75 FZB8 | |
| 860 | 312105-0368 | | 2 | SCREW M6S ISO 4017 M6X16 A480 | |
| 870 | 350005-0005 | | 1 | PUSH-IN T-FITTING QST-F-12 | |
| T10C1852 | 90187-0088 | | 1 | BALL VALVE G1/4, NPBR | |
| T10P1642 | 90459-7344 | | 1 | PRESSURE GAUGE, MA-40-6-R1/4-EN | |
| T10P1662 | 90459-7344 | | 1 | PRESSURE GAUGE, MA-40-6-R1/4-EN | |
| T10Q1662 | 90459-2141 | | 1 | LOGIC ELEMENT, OS-1/8-B | |
| T10R1642 | 90459-2822 | | 1 | REGULATOR, MS4-LR-1/4-D5-A8 | |
| T10S1852 | 90457-0100 | | 1 | ACCUMULATOR CRVZS-2 | |
| T10V1782 | 90277-0035 | | 1 | FILTER / DFU 9933-05-A | |
| T10V1784 | 90277-0035 | | 1 | FILTER / DFU 9933-05-A | |
| T10W1644 | 315400-0016 | MM | 800 | TUBE PUN-H-4X0,75-BL | |
| T10W1645 | 315400-0016 | MM | 100 | TUBE PUN-H-4X0,75-BL | |
| T10W1662 | 315400-0004 | MM | 1000 | TUBE PUN-H-8X1,25-BL | |
| T10W1663 | 315400-0004 | MM | 1000 | TUBE PUN-H-8X1,25-BL | |
| T10W1664 | 315400-0016 | MM | 100 | TUBE PUN-H-4X0,75-BL | |
| T10W1665 | 315400-0004 | MM | 250 | TUBE PUN-H-8X1,25-BL | |
| T10W1666 | 315400-0004 | MM | 350 | TUBE PUN-H-8X1,25-BL | |
| T10W1667 | 315400-0010 | MM | 500 | TUBE PUN-H-12X2-BL | |
| T10W1782 | 315400-0004 | MM | 300 | TUBE PUN-H-8X1,25-BL | |
| T10W1783 | 315400-0004 | MM | 80 | TUBE PUN-H-8X1,25-BL | |
| T10W1784 | 315400-0004 | MM | 350 | TUBE PUN-H-8X1,25-BL | |
| T10W1785 | 315400-0004 | MM | 80 | TUBE PUN-H-8X1,25-BL | |
| T10W1852 | 315400-0010 | MM | 50 | TUBE PUN-H-12X2-BL | |
| T10W1853 | 315400-0010 | MM | 50 | TUBE PUN-H-12X2-BL | |
| T10W1854 | 315400-0001 | MM | 50 | TUBE PUN-H-6X1-BL | |
| T10W1855 | 315400-0001 | MM | 650 | TUBE PUN-H-6X1-BL | |
| T10W1856 | 315400-0001 | MM | 1200 | TUBE PUN-H-6X1-BL | |
| T10W1857 | 315400-0010 | MM | 50 | TUBE PUN-H-12X2-BL | |
| T10W1858 | 315400-0010 | MM | 500 | TUBE PUN-H-12X2-BL | |

| Machine Type | Group Description | Used-In | Group Number | Page No |
|---|---|---|---|---|

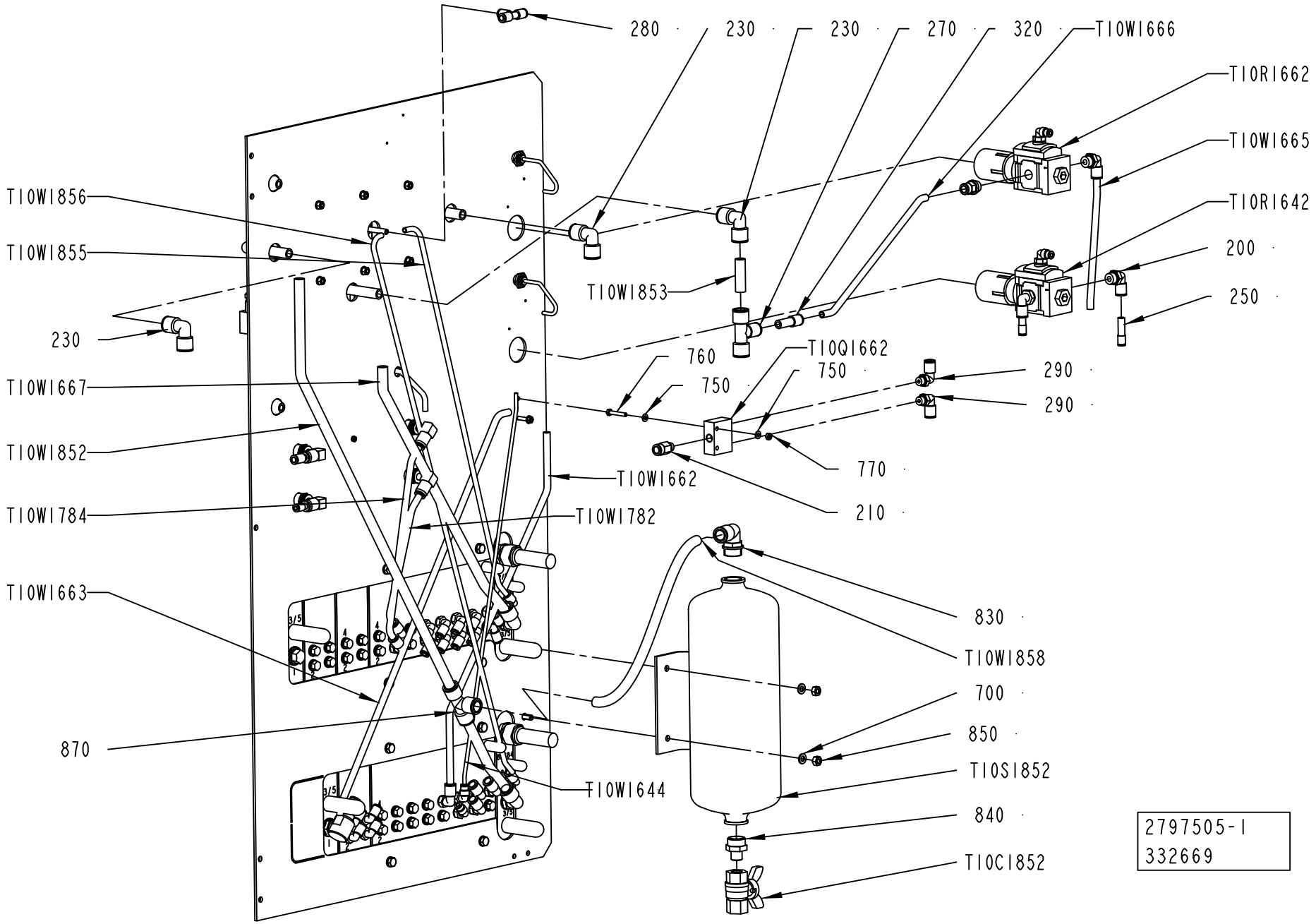
280
230
230
270
320
T10W1666
T10R1662
T10W1665
T10R1642
200
250
T10W1856
T10W1855
T10W1853
230
760
750
T10Q1662
750
290
290
T10W1667
T10W1852
T10W1662
770
210
T10W1784
T10W1782
T10W1663
830
T10W1858
700
850
870
T10W1644
T10S1852
840
T10C1852
2797505-1
332669

ECM: 364203 - 20080825
Group number: 2797505-0100
Assembly Drawing: 2797505-1_2_AC

This list covers pages from 7-138 to 7-141

| Pos | Part No | UN | Qty | Description | Page No |
|---|---|---|---|---|---|
| **A3/FLEX** | | | | | |
| 240 | 350002-0005 | | 2 | PUSH-IN L-FITTING QSL-F-G1/8-4 | |
| 400 | 90459-7333 | | 2 | PUSH-IN FITTING QSSF-1/4-4-B | |
| 710 | 312105-0366 | | 8 | SCREW M6S ISO 4017 M6X12 A480 | |
| 720 | 315106-0146 | | 12 | WASHER ISO 7089-5-200 HV A4 | |
| 740 | 312605-0314 | | 6 | HEXAGON NUT, M6M M5 A280 | |
| 820 | 312502-0169 | | 6 | DRIVE SCREW ROUND HEAD KDS 2X5 | |
| T10R1662 | 90459-2822 | | 1 | REGULATOR, MS4-LR-1/4-D5-A8 | |
| **Common Parts** | | | | | |
| 010 | 2797502-0000 | | 1 | PANEL | |
| 020 | 2797506-0100 | | 1 | VALVE GROUP ..... | **7-143** |
| 030 | 2797504-0100 | | 1 | AIR INLET ..... | **7-145** |
| 040 | 2797503-0100 | | 1 | VALVE GROUP ..... | **7-147** |
| 200 | 350002-0009 | | 3 | PUSH-IN L-FITTING QSL-F-G1/4-8 | |
| 210 | 350001-0007 | | 1 | PUSH-IN FITTING QS-F-G1/8-8 | |
| 220 | 350001-0009 | | 1 | PUSH-IN FITTING QS-F-G1/4-8 | |
| 230 | 350004-0005 | | 3 | PUSH-IN L-FITTING QSL-F-12 | |
| 250 | 350006-0002 | | 3 | PUSH-IN FITTING QS-F-8H-4 | |
| 260 | 350006-0003 | | 1 | PUSH-IN FITTING QS-F-8H-6 | |
| 270 | 350011-0004 | | 1 | PUSH-IN T-FITTING QS-F-12-10 | |
| 280 | 350005-0002 | | 1 | PUSH-IN T-FITTING QST-F-6 | |
| 290 | 350002-0007 | | 6 | PUSH-IN L-FITTING QSL-F-G1/8-8 | |
| 300 | 90600-1175 | | 4 | ELBOW WITH TAILPIECE 8/8 MM | |
| 310 | 90600-1173 | | 4 | PUSH-IN BULKHEAD FITTING QSSF-1/8-8-B | |
| 320 | 350006-0006 | | 1 | PUSH-IN FITTING QS-F-10H-8 | |
| 610 | 312125-0222 | | 2 | SCREW ISO 1207 M3X8 A4 | |
| 620 | 315105-0124 | | 3 | WASHER BRB 3,2X6 RFR | |
| 630 | 312605-0310 | | 2 | HEXAGON NUT, M6M M3 A280 | |
| 640 | 90165-0019 | | 2 | TOOL CLIP, 81/3, OPEN, 20 - 30 MM | |
| 700 | 315105-0153 | | 12 | WASHER BRB 6,4X12 RFR | |
| 730 | 312105-0329 | | 6 | SCREW M6S ISO 4017 M5X16 A480 | |
| 750 | 315106-0136 | | 4 | WASHER ISO 7089-4-200 HV A4 | |
| 760 | 312105-0297 | | 2 | SCREW M6S ISO 4017 M4X25 A470 | |
| 770 | 312605-0312 | | 2 | HEXAGON NUT, M6M M4 A280 | |
| 780 | 273458-0000 | | 1 | SIGN, AIR | |
| 790 | 90015-0023 | | 2 | LEAD-IN, TET7-10, E-1458019 | |
| 795 | 2912326-0000 | | 1 | LABEL | |
| 800 | 2912327-0000 | | 1 | LABEL | |
| 810 | 315400-0001 | MM | 1500 | TUBE PUN-H-6X1-BL | |
| 830 | 350002-0016 | | 1 | PUSH-IN L-FITTING QSL-F-G1/2-12 | |
| 840 | 342700-0205 | | 1 | NIPPLES,HEXAGON,EXT.G-THREAD G1/2"-G1/4" | |
| 850 | 312630-0316 | | 2 | HEX.NUT FINE, EN 24032 M6M M6X0,75 FZB8 | |
| 860 | 312105-0368 | | 2 | SCREW M6S ISO 4017 M6X16 A480 | |
| 870 | 350005-0005 | | 1 | PUSH-IN T-FITTING QST-F-12 | |
| T10C1852 | 90187-0088 | | 1 | BALL VALVE G1/4, NPBR | |
| T10P1642 | 90459-7344 | | 1 | PRESSURE GAUGE, MA-40-6-R1/4-EN | |
| T10P1662 | 90459-7344 | | 1 | PRESSURE GAUGE, MA-40-6-R1/4-EN | |
| T10Q1662 | 90459-2141 | | 1 | LOGIC ELEMENT, OS-1/8-B | |
| T10R1642 | 90459-2822 | | 1 | REGULATOR, MS4-LR-1/4-D5-A8 | |
| T10S1852 | 90457-0100 | | 1 | ACCUMULATOR CRVZS-2 | |
| T10V1782 | 90277-0035 | | 1 | FILTER / DFU 9933-05-A | |
| T10V1784 | 90277-0035 | | 1 | FILTER / DFU 9933-05-A | |
| T10W1644 | 315400-0016 | MM | 800 | TUBE PUN-H-4X0,75-BL | |
| T10W1645 | 315400-0016 | MM | 100 | TUBE PUN-H-4X0,75-BL | |
| T10W1662 | 315400-0004 | MM | 1000 | TUBE PUN-H-8X1,25-BL | |
| T10W1663 | 315400-0004 | MM | 1000 | TUBE PUN-H-8X1,25-BL | |
| T10W1664 | 315400-0016 | MM | 100 | TUBE PUN-H-4X0,75-BL | |
| T10W1665 | 315400-0004 | MM | 250 | TUBE PUN-H-8X1,25-BL | |
| T10W1666 | 315400-0004 | MM | 350 | TUBE PUN-H-8X1,25-BL | |
| T10W1667 | 315400-0010 | MM | 500 | TUBE PUN-H-12X2-BL | |
| T10W1782 | 315400-0004 | MM | 300 | TUBE PUN-H-8X1,25-BL | |
| T10W1783 | 315400-0004 | MM | 80 | TUBE PUN-H-8X1,25-BL | |
| T10W1784 | 315400-0004 | MM | 350 | TUBE PUN-H-8X1,25-BL | |
| T10W1785 | 315400-0004 | MM | 80 | TUBE PUN-H-8X1,25-BL | |
| T10W1852 | 315400-0010 | MM | 50 | TUBE PUN-H-12X2-BL | |
| T10W1853 | 315400-0010 | MM | 50 | TUBE PUN-H-12X2-BL | |
| T10W1854 | 315400-0001 | MM | 50 | TUBE PUN-H-6X1-BL | |
| T10W1855 | 315400-0001 | MM | 650 | TUBE PUN-H-6X1-BL | |
| T10W1856 | 315400-0001 | MM | 1200 | TUBE PUN-H-6X1-BL | |
| T10W1857 | 315400-0010 | MM | 50 | TUBE PUN-H-12X2-BL | |
| T10W1858 | 315400-0010 | MM | 500 | TUBE PUN-H-12X2-BL | |

| Machine Type | Group Description | Used-In | Group Number | Page No |
|---|---|---|---|---|

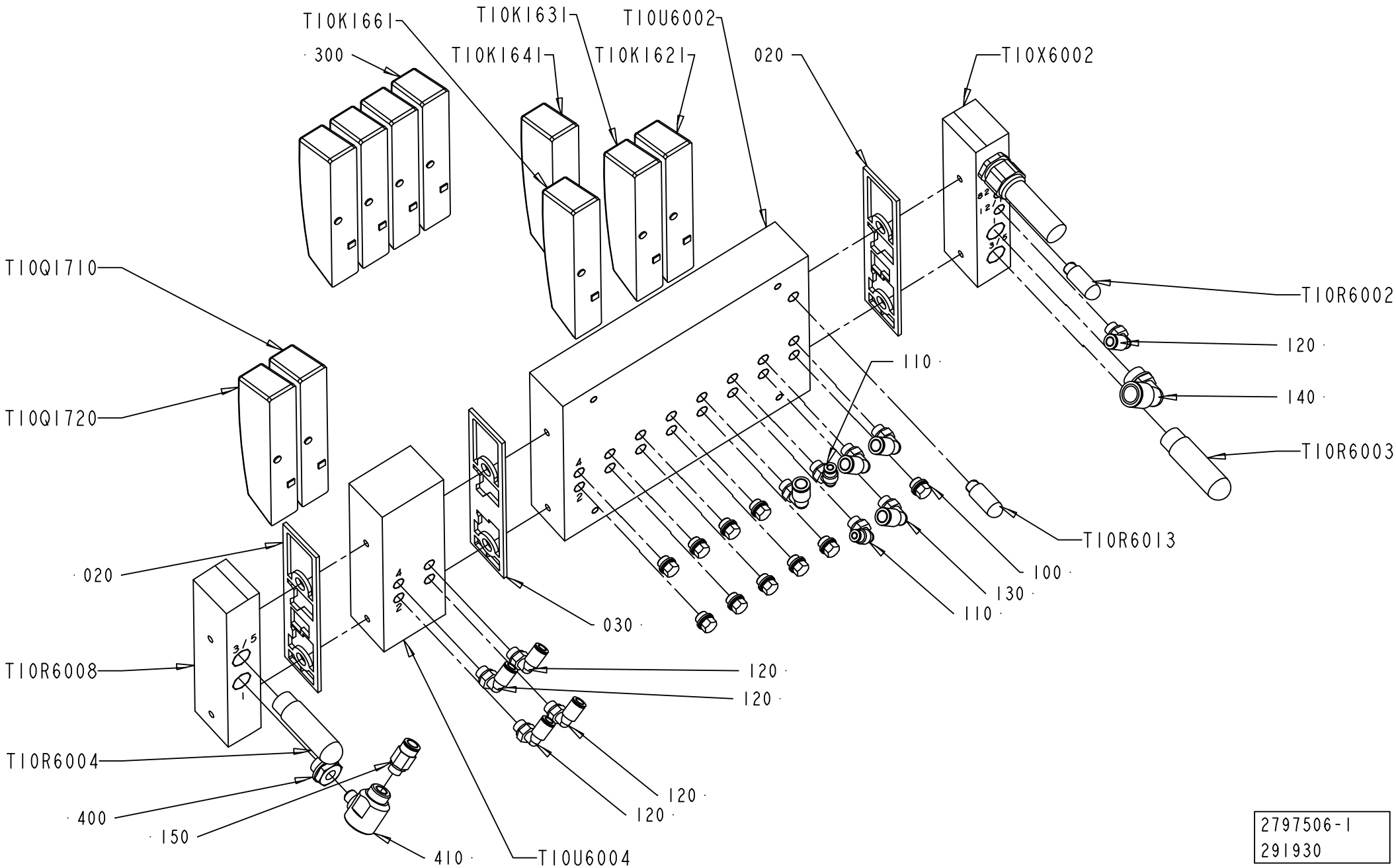


2797506-1
291930

ECM: 320825 - 20070903
Group number: 2797506-0100
Assembly Drawing: 2797506-1_1_AA

| Pos | Part No | UN | Qty | Description | Page No |
|---|---|---|---|---|---|
| - | | | | | |
| 020 | 90458-1207 | | 2 | SEALING, STANDARD | |
| 030 | 90458-1208 | | 1 | SEALING, CHANNEL 1 BLOCKED | |
| 040 | 90458-1212 | | 1 | LEFT ENDPLATE INCL. 10M CABLE | |
| 100 | 90459-0698 | | 10 | PLUG, EXT. G-THREAD, G1/8 | |
| 110 | 350002-0005 | | 2 | PUSH-IN L-FITTING QSL-F-G1/8-4 | |
| 120 | 350002-0006 | | 5 | PUSH-IN L-FITTING QSL-F-G1/8-6 | |
| 130 | 350002-0007 | | 4 | PUSH-IN L-FITTING QSL-F-G1/8-8 | |
| 140 | 350002-0014 | | 1 | PUSH-IN L-FITTING QSL-F-G3/8-12 | |
| 150 | 350001-0007 | | 1 | PUSH-IN FITTING QS-F-G1/8-8 | |
| 300 | 90458-1215 | | 4 | COVER PLATE FOR EMPTY VALVE POSITION | |
| 400 | 90600-3003 | | 1 | BUSHING,INT/EXT THREAD, 534147 | |
| 410 | 90235-0206 | | 1 | QUICK EXHAUST VALVE, SEU-1/8 | |
| T10K1621 | 90458-1194 | | 1 | MONOSTABLE VALVE 5/2 | |
| T10K1631 | 90458-1194 | | 1 | MONOSTABLE VALVE 5/2 | |
| T10K1641 | 90458-1203 | | 1 | VALVE 2X3/2 1X OPEN 1X CLOSED | |
| T10K1661 | 90458-1194 | | 1 | MONOSTABLE VALVE 5/2 | |
| T10Q1710 | 90458-1194 | | 1 | MONOSTABLE VALVE 5/2 | |
| T10Q1720 | 90458-1194 | | 1 | MONOSTABLE VALVE 5/2 | |
| T10R6002 | 90328-0047 | | 1 | SILENCER G1/8" | |
| T10R6003 | 90328-0024 | | 1 | SILENCER G3/8" | |
| T10R6004 | 90328-0024 | | 1 | SILENCER G3/8" | |
| T10R6008 | 90458-1214 | | 1 | RIGHT ENDPL EXT. PILOT AIR,CDVI5.0-EPR-S | |
| T10R6013 | 90328-0047 | | 1 | SILENCER G1/8" | |
| T10U6002 | 90458-1205 | | 1 | BASIC SUB-BASE 8 VALVES, CDVI5.0-GB8-MP | |
| T10U6004 | 90458-1206 | | 1 | EXP. SUB-BASE 2 VALVES, CDVI5.0-EB | |
| T10X6002 | 90458-1212 | | 1 | LEFT ENDPLATE INCL. 10M CABLE | |

| Pos | Part No | UN | Qty | Description | Page No |
|---|---|---|---|---|---|

Machine Type | Group Description | Used-In | Group Number | Page No

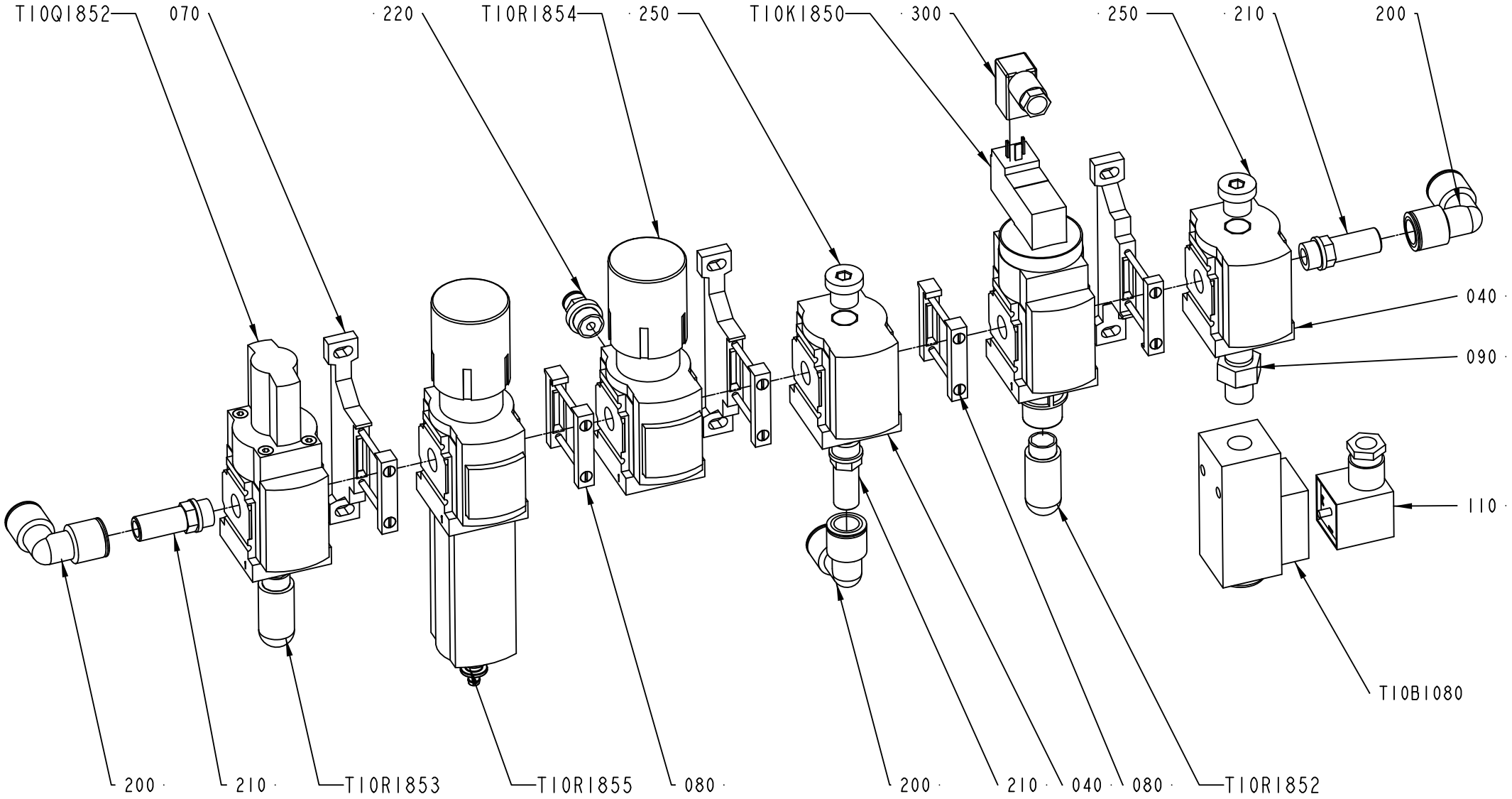
T10Q1852
070
220
T10R1854
250
T10K1850
300
250
210
200
040
090
110
T10B1080
200
210
T10R1853
T10R1855
080
200
210
040
080
T10R1852
2797504-1
319991

ECM: 324159 - 20070903
Group number: 2797504-0100
Assembly Drawing: 2797504-1_1_AB

| Pos | Part No | UN | Qty | Description | Page No |
|---|---|---|---|---|---|
| - | | | | | |
| 040 | 90459-2245 | | 2 | DISTRIBUTOR, MS4-FRM-1/4 | |
| 070 | 90459-2247 | | 3 | BRACKET, MS4-WP | |
| 080 | 90459-2248 | | 2 | BRACKET, MS4-MV | |
| 090 | 90224-0372 | | 1 | CONN. STRAIGHT ESK-1/4-1/4 151521 | |
| 110 | 90110-0095 | | 1 | CONNECTOR 3 POLE + EARTH | |
| 200 | 350004-0005 | | 3 | PUSH-IN L-FITTING QSL-F-12 | |
| 210 | 350014-0011 | | 3 | FITTING QS-F-G1/4-12H | |
| 220 | 350001-0008 | | 1 | PUSH-IN FITTING QS-F-G1/4-6 | |
| 250 | 90600-1167 | | 2 | PLUG, EXT. R-THREAD, R1/4 | |
| 300 | 90458-2837 | | 1 | PLUG SOCKET, KMEB-1-24-5-LED | |
| T10B1080 | 90459-6426 | | 1 | PRESSURE GUARD PEV-1/4-B-OD | |
| T10K1850 | 90459-2243 | | 1 | SHUT OFF VALVE, MS4-EE-1/4-10V24 | |
| T10Q1852 | 90459-2337 | | 1 | SHUT OFF VALVE, MS4-EM1-1/4 | |
| T10R1852 | 90328-0026 | | 1 | SILENCER G1/4" | |
| T10R1853 | 90328-0026 | | 1 | SILENCER G1/4" | |
| T10R1854 | 90459-2242 | | 1 | REGULATOR, MS4-LRB-1/4-D7-AS | |
| T10R1855 | 90459-2339 | | 1 | FILTER REGULATOR, MS4-LFR-1/4-D7-ERV-AS | |
| | *90459-3814* | | *1* | *FILTER CARTRIDGE, MS4-LFP-E* | |

| Pos | Part No | UN | Qty | Description | Page No |
|---|---|---|---|---|---|

Machine Type | Group Description | Used-In | Group Number | Page No

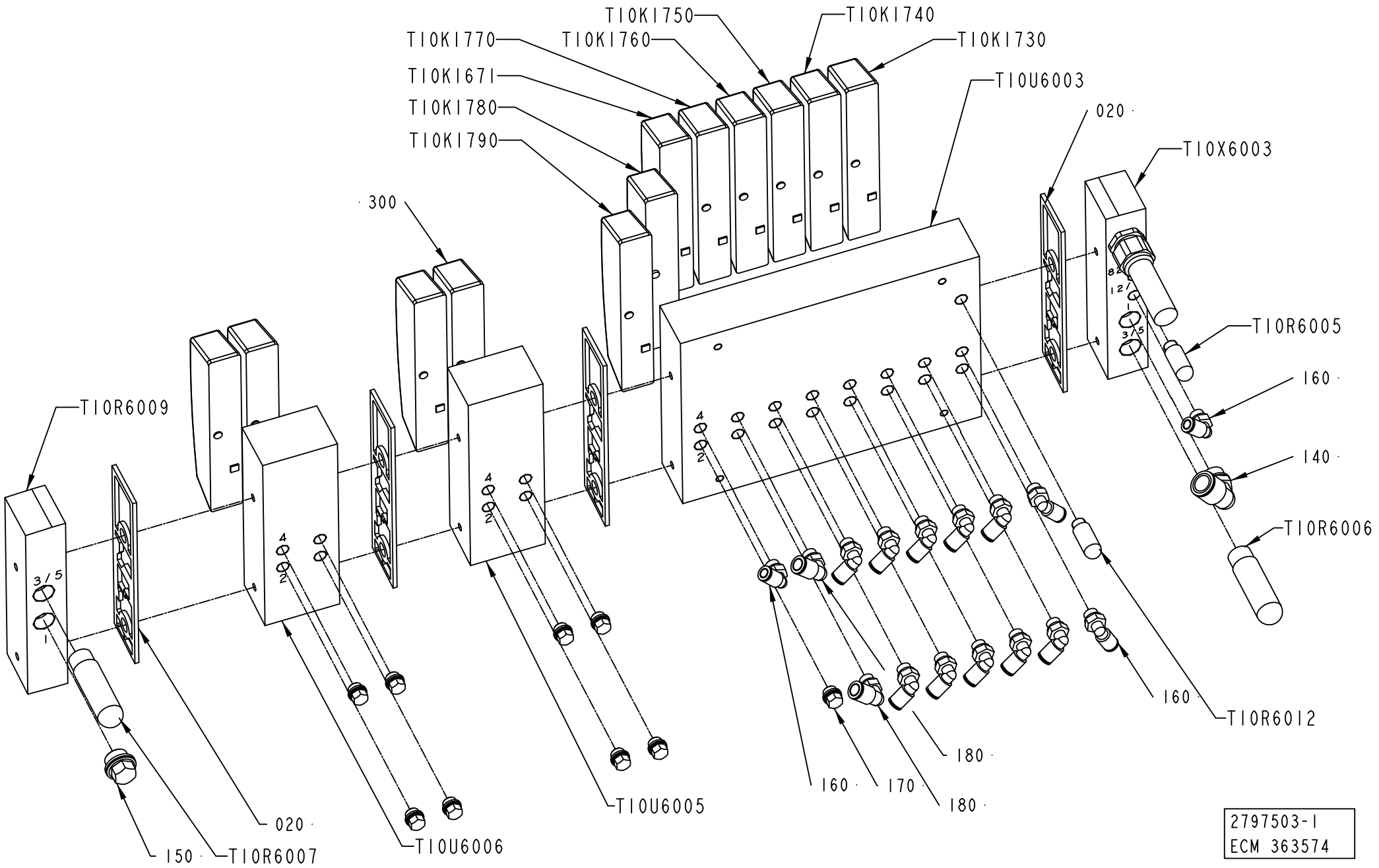
T10K1750
T10K1740
T10K1770
T10K1760
T10K1730
T10K1671
T10U6003
T10K1780
020
T10K1790
T10X6003
300
T10R6005
160
T10R6009
140
T10R6006
T10R6012
180
160
170
180
T10U6005
020
150
T10R6007
T10U6006
2797503-1
ECM 363574

ECM: 364202 - 20080825
Group number: 2797503-0100
Assembly Drawing: 2797503-1_1_AC

| Pos | Part No | UN | Qty | Description | Page No |
|---|---|---|---|---|---|
| **A3/FLEX** | | | | | |
| 160 | 350002-0006 | | 13 | PUSH-IN L-FITTING QSL-F-G1/8-6 | |
| 170 | 90459-0698 | | 10 | PLUG, EXT. G-THREAD, G1/8 | |
| 300 | 90458-1215 | | 5 | COVER PLATE FOR EMPTY VALVE POSITION | |
| **Common Parts** | | | | | |
| 020 | 90458-1207 | | 4 | SEALING, STANDARD | |
| 140 | 350002-0014 | | 1 | PUSH-IN L-FITTING QSL-F-G3/8-12 | |
| 150 | 90459-0699 | | 1 | BLANKING PLUG, CDVI5.0-B-G3/8 | |
| 180 | 350002-0007 | | 2 | PUSH-IN L-FITTING QSL-F-G1/8-8 | |
| T10K1671 | 90458-1194 | | 1 | MONOSTABLE VALVE 5/2 | |
| T10K1730 | 90458-1194 | | 1 | MONOSTABLE VALVE 5/2 | |
| T10K1740 | 90458-1194 | | 1 | MONOSTABLE VALVE 5/2 | |
| T10K1750 | 90458-1194 | | 1 | MONOSTABLE VALVE 5/2 | |
| T10K1760 | 90458-1194 | | 1 | MONOSTABLE VALVE 5/2 | |
| T10K1770 | 90458-1194 | | 1 | MONOSTABLE VALVE 5/2 | |
| T10K1780 | 90458-1202 | | 1 | VALVES 2X3/2, CLOSED | |
| T10R6005 | 90328-0047 | | 1 | SILENCER G1/8" | |
| T10R6006 | 90328-0024 | | 1 | SILENCER G3/8" | |
| T10R6007 | 90328-0024 | | 1 | SILENCER G3/8" | |
| T10R6009 | 90458-1212 | | 1 | LEFT ENDPLATE INCL. 10M CABLE | |
| T10R6012 | 90328-0047 | | 1 | SILENCER G1/8" | |
| T10U6003 | 90458-1205 | | 1 | BASIC SUB-BASE 8 VALVES, CDVI5.0-GB8-MP | |
| T10U6005 | 90458-1206 | | 1 | EXP. SUB-BASE 2 VALVES, CDVI5.0-EB | |
| T10U6006 | 90458-1206 | | 1 | EXP. SUB-BASE 2 VALVES, CDVI5.0-EB | |
| T10X6003 | 90458-1214 | | 1 | RIGHT ENDPL EXT. PILOT AIR,CDVI5.0-EPR-S | |

| Pos | Part No | UN | Qty | Description | Page No |
|---|---|---|---|---|---|

# COVERING PANEL

Drawing file: 2746328-1_1_AA.hpgl



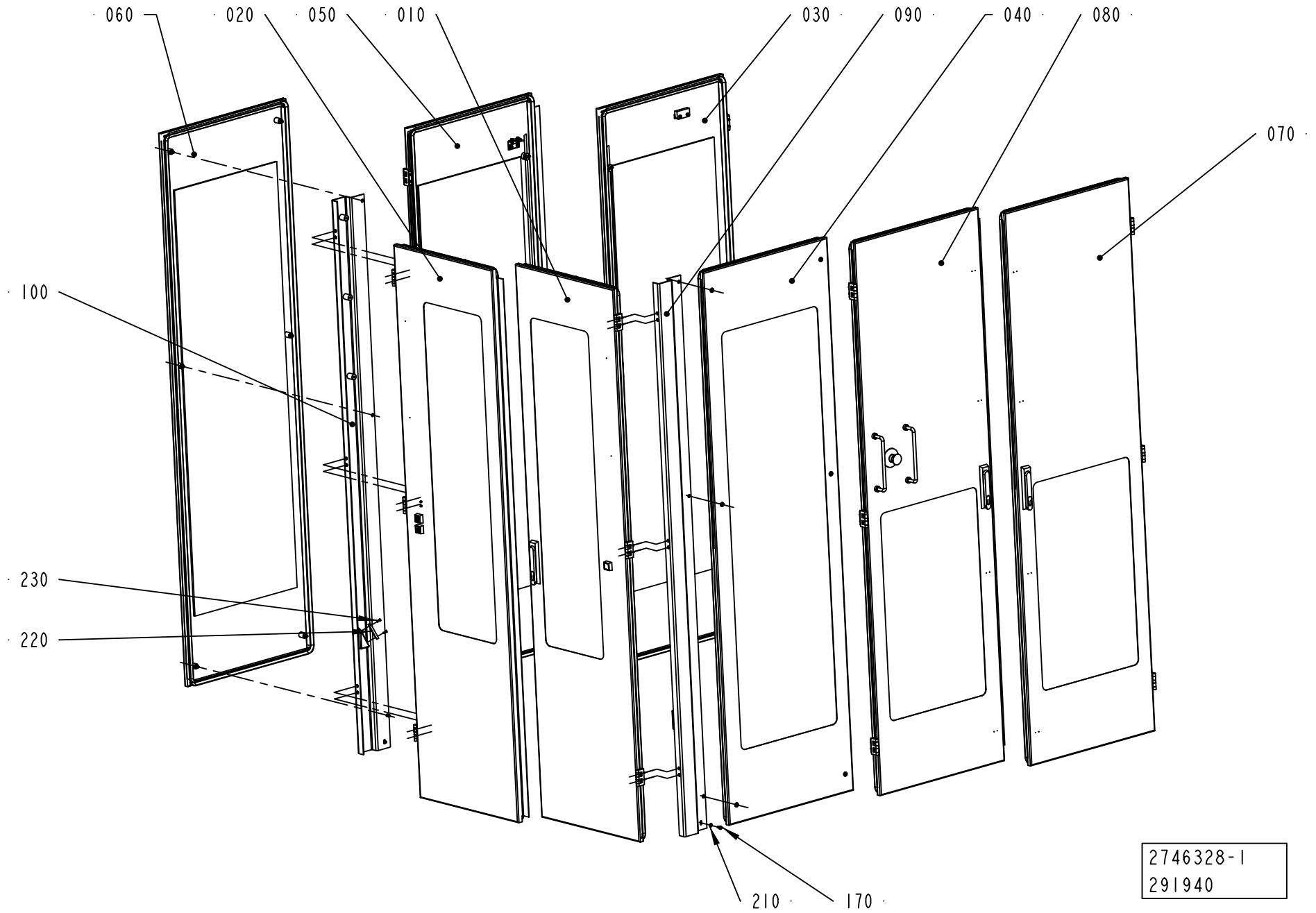

ECM: 303105 - 20070508
Group number: 2746328-0100
Assembly Drawing: 2746328-1_1_AA

| Pos | Part No | UN | Qty | Description | Page No |
|---|---|---|---|---|---|
| - | | | | | |
| 010 | 2746337-0100 | | 1 | DOOR | **7-151** |
| 020 | 2746339-0100 | | 1 | DOOR | **7-155** |
| 030 | 2746341-0100 | | 1 | DOOR | **7-159** |
| 040 | 2746343-0100 | | 1 | DOOR | **7-161** |
| 050 | 2746345-0100 | | 1 | DOOR | **7-163** |
| 060 | 2746347-0100 | | 1 | DOOR | **7-165** |
| 070 | 2746349-0100 | | 1 | DOOR | **7-167** |
| 080 | 2746351-0100 | | 1 | DOOR | **7-169** |
| 090 | 2790927-0000 | | 1 | BRACKET | |
| 100 | 2790930-0000 | | 1 | BRACKET | |
| 170 | 312105-0366 | | 2 | SCREW M6S ISO 4017 M6X12 A480 | |
| 210 | 315105-0153 | | 2 | WASHER BRB 6,4X12 RFR | |
| 220 | 90458-0565 | | 2 | REFLECTOR, PL20A | |
| 230 | 312115-0289 | | 4 | SCREW ISO4762 M4X10 A4 80 | |

| Pos | Part No | UN | Qty | Description | Page No |
|---|---|---|---|---|---|

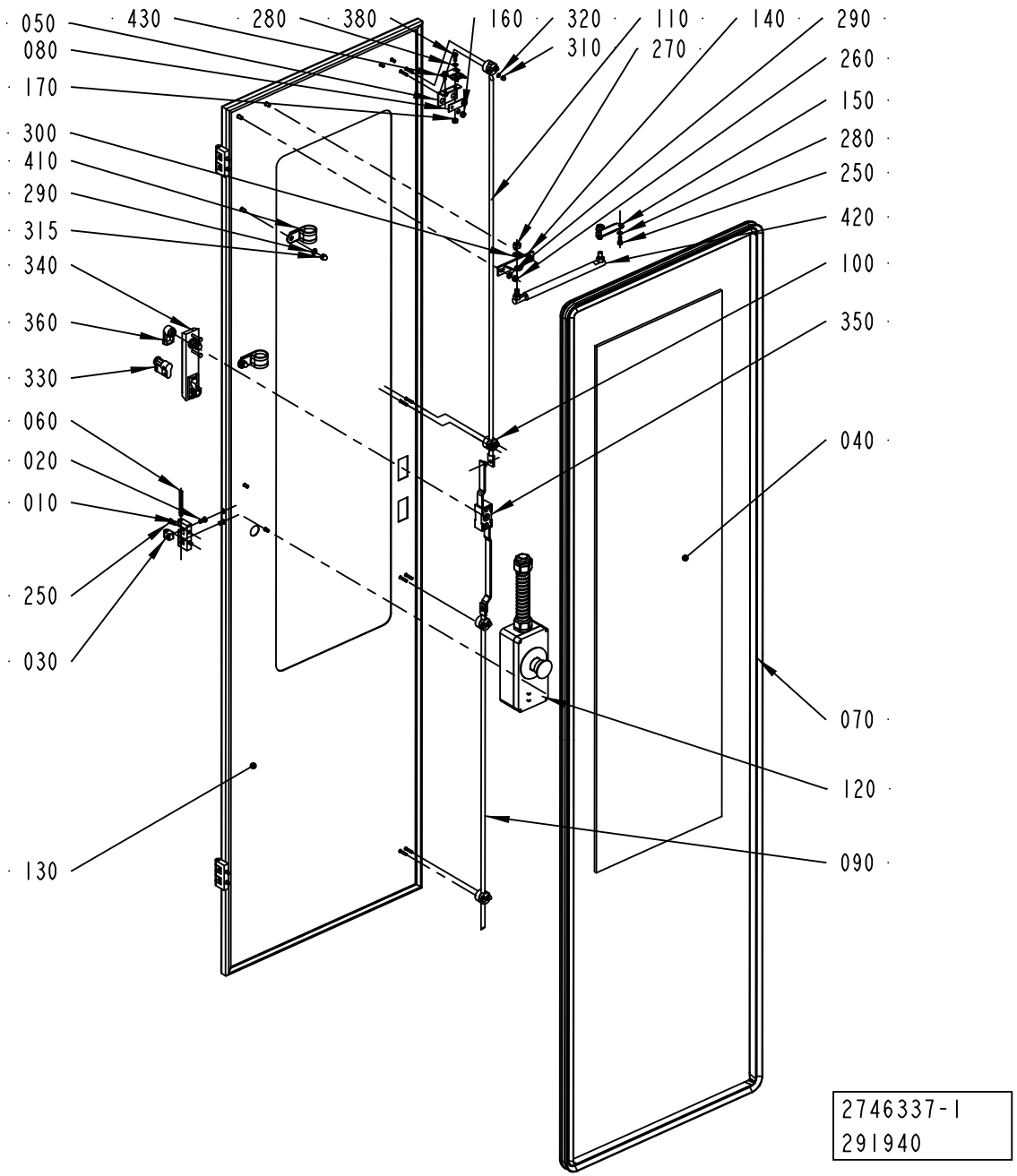
050
080
170
300
410
290
315
340
360
330
060
020
010
250
030
130
430
280
380
160
320
310
110
270
140
290
260
150
280
250
420
100
350
040
070
120
090
2746337-1
291940

ECM: 301944 - 20070508
Group number: 2746337-0100
Assembly Drawing: 2746337-1_1_AA

| Pos | Part No | UN | Qty | Description | Page No |
|---|---|---|---|---|---|
| - | | | | | |
| 010 | 1035792-0000 | | 3 | E-HINGE | |
| 020 | 1129767-0000 | | 6 | SCREW | |
| 030 | 1129770-0000 | | 6 | BLOCKING PIECE | |
| 040 | 1498459-0001 | | 1 | GLASS PANE | |
| 050 | 2755512-0000 | | 1 | BRACKET | |
| 060 | 988685-0000 | | 3 | PIN | |
| 070 | 1498461-0001 | | 1 | SEALING STRIP | |
| 080 | 1036563-0000 | | 1 | WASHER | |
| 090 | 2790931-0000 | | 1 | LOCKING ARM | |
| 100 | 2550333-0000 | | 4 | GUIDE LUG | |
| 110 | 2746353-0000 | | 1 | LOCKING ARM | |
| 120 | 2746352-0100 | | 1 | CONTROL PANEL ..... | **7-153** |
| 130 | 2746336-0000 | | 1 | DOOR | |
| 140 | 2746354-0000 | | 1 | BRACKET | |
| 150 | 2746355-0000 | | 1 | BRACKET | |
| 160 | 1539391-0000 | | 2 | ROUND NUT | |
| 170 | 575034-0000 | | 2 | ROUND NUT | |
| 250 | 312115-0327 | | 8 | SCREW ISO4762 M5X12 A4 80 | |
| 260 | 312605-0316 | | 2 | HEXAGON NUT, M6M M6 A280 | |
| 270 | 312605-0318 | | 2 | HEXAGON NUT, M6M M8 A280 | |
| 280 | 315105-0146 | | 4 | WASHER BRB 5,3X10 RFR | |
| 290 | 315105-0153 | | 4 | WASHER BRB 6,4X12 RFR | |
| 300 | 315105-0165 | | 2 | WASHER BRB 8,4X16 RFR | |
| 310 | 312705-0312 | | 8 | NUT HEX. DOMED CAP MHM-6 M4 A280 | |
| 315 | 312705-0316 | | 2 | NUT HEX. DOMED CAP MHM-6 M6 A280 | |
| 320 | 315105-0136 | | 10 | WASHER BRB 4,3X8 RFR | |
| 330 | 90237-0128 | | 1 | LOCK CYLINDER, 1109-SU125 | |
| 340 | 90237-0175 | | 1 | TURNING HANDLE, 1125-U185-0A | |
| 350 | 90237-0153 | | 1 | LOCK HOUSING, 1121-U26-0B | |
| 360 | 90237-0165 | | 1 | LATCH | |
| 380 | 312105-0327 | | 2 | SCREW M6S ISO 4017 M5X12 A480 | |
| 410 | 90600-2668 | | 2 | PIPE CLAMP D=28 MM, RSGU 1.28/20 WI | |
| 420 | 90600-2669 | | 1 | GAS SPRING, LIFT-0-MAT 5072DE (F1=50N) | |
| 430 | 90600-3021 | | 1 | KEY FOR SAFETY SWITCH AZM - 161 - BIF | |

| Pos | Part No | UN | Qty | Description | Page No |
|---|---|---|---|---|---|

Machine Type | Group Description | Used-In | Group Number | Page No

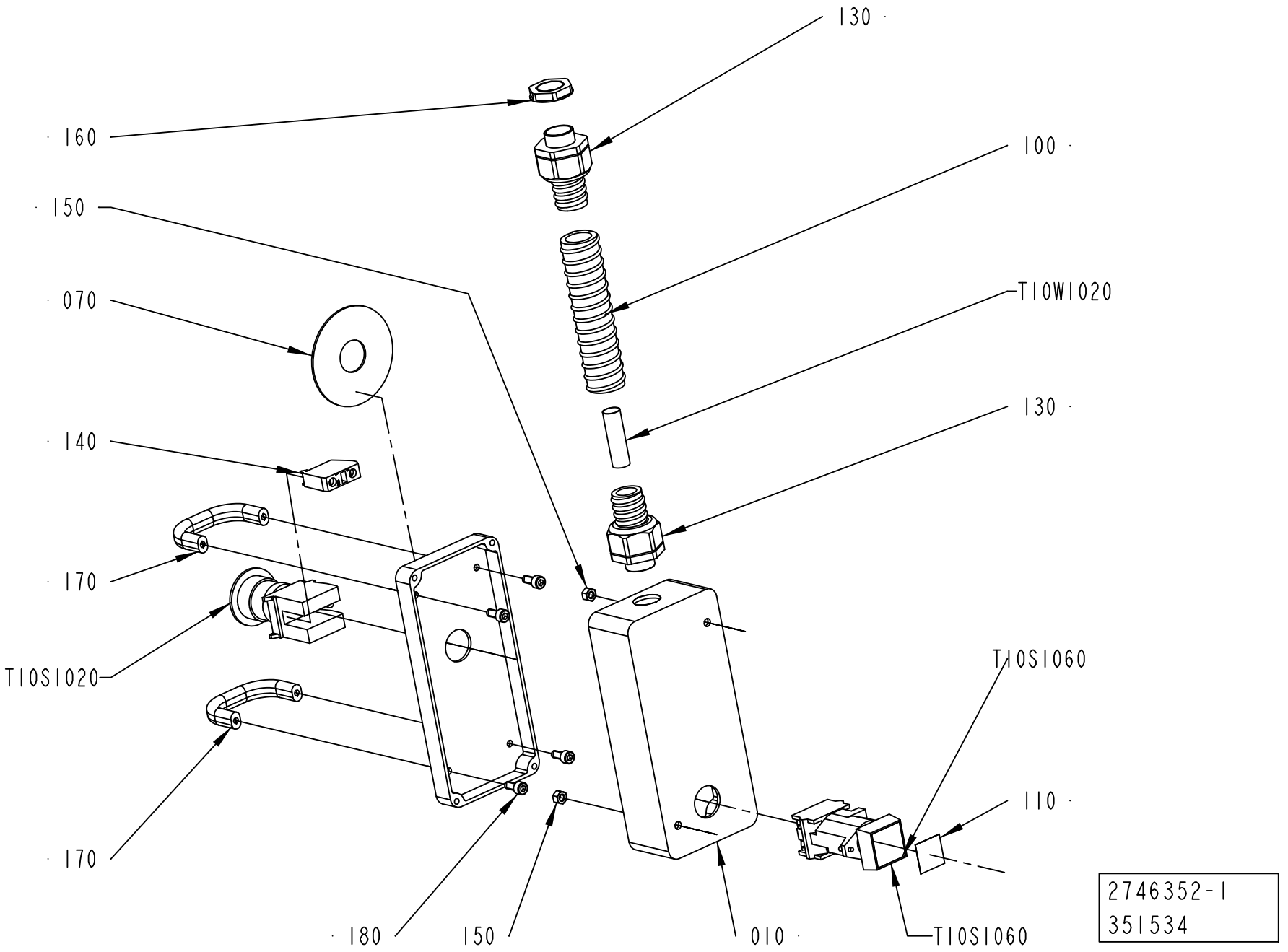
130
160
100
150
T10W1020
070
130
140
170
T10S1020
T10S1060
110
170
180
150
010
T10S1060
2746352-1
351534

ECM: 351543 - 20080430
Group number: 2746352-0100
Assembly Drawing: 2746352-1_1_AB

| Pos | Part No | UN | Qty | Description | Page No |
|---|---|---|---|---|---|
| - | | | | | |
| 010 | 2755520-0000 | | 1 | PUSH BUTTON | |
| 070 | 486826-0001 | | 1 | SIGN "EMERGENCY STOP" | |
| 100 | 90152-0051 | MM | 200 | SPIRAL CONDUIT, 25X18, UL 1816 | |
| 110 | 359301-0110 | | 1 | BUTTON SIGN, SHORT STOP | |
| 130 | 90458-0430 | | 2 | HOSE GLAND W/O INSERT M20 EXTENDED | |
| 140 | 90459-1917 | | 1 | CONTACT BLOCK ZBE-102 NC | |
| 150 | 312605-0314 | | 2 | HEXAGON NUT, M6M M5 A280 | |
| 160 | 90458-0323 | | 1 | NUT, M20X1,5 | |
| 170 | 90600-5075 | | 2 | HANDLE, RHOA-12.55.01 | |
| 180 | 312115-0327 | | 4 | SCREW ISO4762 M5X12 A4 80 | |
| T10S1020 | 90458-1651 | | 1 | EMERGENCY STOP, ZB4-BS-844 ZB4-BZ-104 | |
| T10S1060 | 90064-0084 | | 1 | PUSH BUTTON, YELLOW | |
| T10W1020 | 351150-0407 | MM | 4000 | CABLE OLFLEX 12X0,75 MM2 LIGHT/GREY | |

| Pos | Part No | UN | Qty | Description | Page No |
|---|---|---|---|---|---|

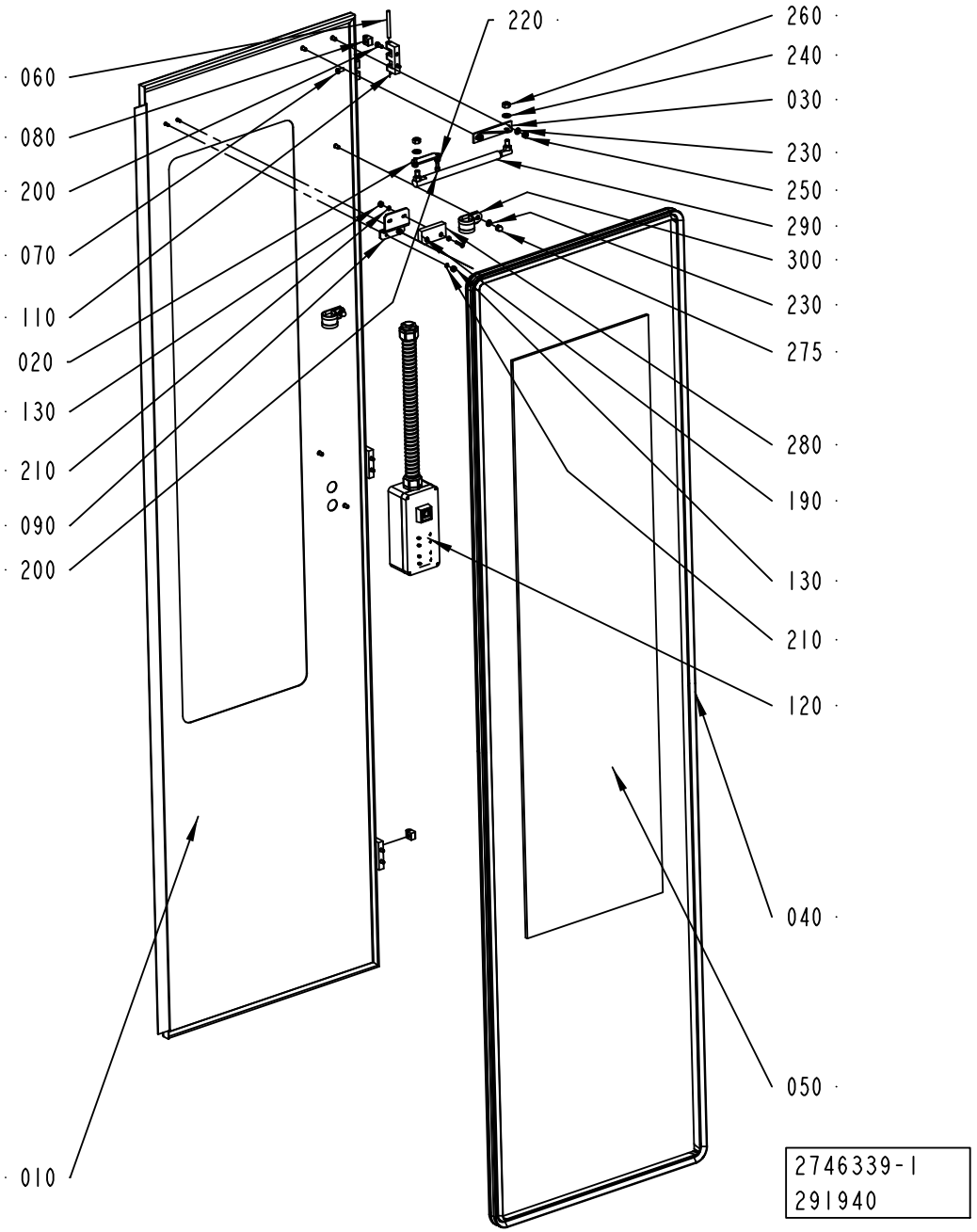
060
080
200
070
110
020
130
210
090
200
220
260
240
030
230
250
290
300
230
275
280
190
130
210
120
040
050
010
2746339-1
291940

ECM: 301947 - 20070508
Group number: 2746339-0100
Assembly Drawing: 2746339-1_1_AA

| Pos | Part No | UN | Qty | Description | Page No |
|---|---|---|---|---|---|
| - | | | | | |
| 010 | 2746338-0000 | | 1 | DOOR | |
| 020 | 2746355-0000 | | 1 | BRACKET | |
| 030 | 2746358-0000 | | 1 | BRACKET | |
| 040 | 1498461-0001 | | 1 | SEALING STRIP | |
| 050 | 1498459-0001 | | 1 | GLASS PANE | |
| 060 | 988685-0000 | | 3 | PIN | |
| 070 | 1129767-0000 | | 9 | SCREW | |
| 080 | 1129770-0000 | | 9 | BLOCKING PIECE | |
| 090 | 2790933-0000 | | 1 | BRACKET | |
| 110 | 1035792-0000 | | 3 | E-HINGE | |
| 120 | 2746357-0100 | | 1 | CONTROL PANEL ..... | **7-157** |
| 130 | 1539391-0000 | | 2 | ROUND NUT | |
| 190 | 90459-4164 | | 2 | SAFETY SCREW SM4X20, 20-053-42 | |
| 200 | 312115-0327 | | 8 | SCREW ISO4762 M5X12 A4 80 | |
| 210 | 315105-0136 | | 4 | WASHER BRB 4,3X8 RFR | |
| 220 | 315105-0146 | | 2 | WASHER BRB 5,3X10 RFR | |
| 230 | 315105-0153 | | 4 | WASHER BRB 6,4X12 RFR | |
| 240 | 315105-0165 | | 2 | WASHER BRB 8,4X16 RFR | |
| 250 | 312605-0316 | | 2 | HEXAGON NUT, M6M M6 A280 | |
| 260 | 312605-0318 | | 2 | HEXAGON NUT, M6M M8 A280 | |
| 275 | 312705-0316 | | 2 | NUT HEX. DOMED CAP MHM-6 M6 A280 | |
| 280 | 90458-2794 | | 1 | SAFETY SENSOR, NON-CONTACT EVA | |
| 290 | 90600-2669 | | 1 | GAS SPRING, LIFT-0-MAT 5072DE (F1=50N) | |
| 300 | 90600-2668 | | 2 | PIPE CLAMP D=28 MM, RSGU 1.28/20 WI | |

| Pos | Part No | UN | Qty | Description | Page No |
|---|---|---|---|---|---|

Machine Type | Group Description | Used-In | Group Number | Page No

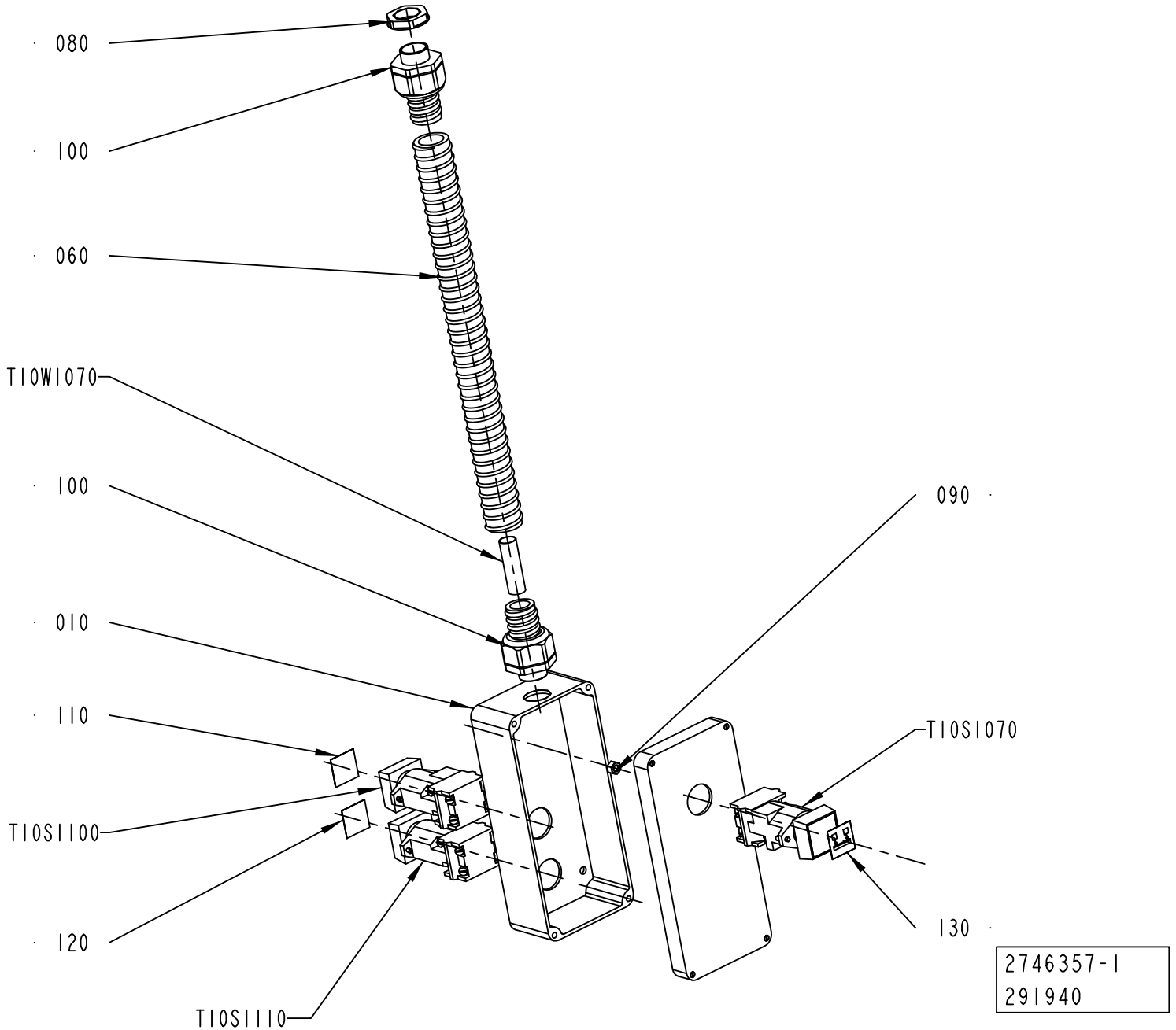
080
100
060
T10W1070
100
010
110
T10S1100
120
T10S1110
090
T10S1070
130
2746357-1
291940

ECM: 301946 - 20070508
Group number: 2746357-0100
Assembly Drawing: 2746357-1_1_AA

| Pos | Part No | UN | Qty | Description | Page No |
|---|---|---|---|---|---|
| - | | | | | |
| 010 | 2746356-0000 | | 1 | PUSH BUTTON | |
| 060 | 90152-0051 | MM | 300 | SPIRAL CONDUIT, 25X18, UL 1816 | |
| 080 | 90458-0323 | | 1 | NUT, M20X1,5 | |
| 090 | 312605-0314 | | 2 | HEXAGON NUT, M6M M5 A280 | |
| 100 | 90458-0430 | | 2 | HOSE GLAND W/O INSERT M20 EXTENDED | |
| 110 | 359301-0100 | | 1 | BUTTON SIGN, SPLICING | |
| 120 | 359301-0101 | | 1 | BUTTON SIGN, STRIP SPLICING ON | |
| 130 | 359301-0488 | | 1 | BUTTON SIGN, MATERIAL LOCKING | |
| T10S1070 | 90064-0082 | | 1 | PUSH BUTTON, WHITE | |
| | *90036-0057* | | *1* | *LIGHT BULB, BA9S 28V* | |
| T10S1100 | 90064-0082 | | 1 | PUSH BUTTON, WHITE | |
| | *90036-0057* | | *1* | *LIGHT BULB, BA9S 28V* | |
| T10S1110 | 90064-0082 | | 1 | PUSH BUTTON, WHITE | |
| | *90036-0057* | | *1* | *LIGHT BULB, BA9S 28V* | |
| T10W1070 | 351150-0407 | MM | 4000 | CABLE OLFLEX 12X0,75 MM2 LIGHT/GREY | |

| Pos | Part No | UN | Qty | Description | Page No |
|---|---|---|---|---|---|

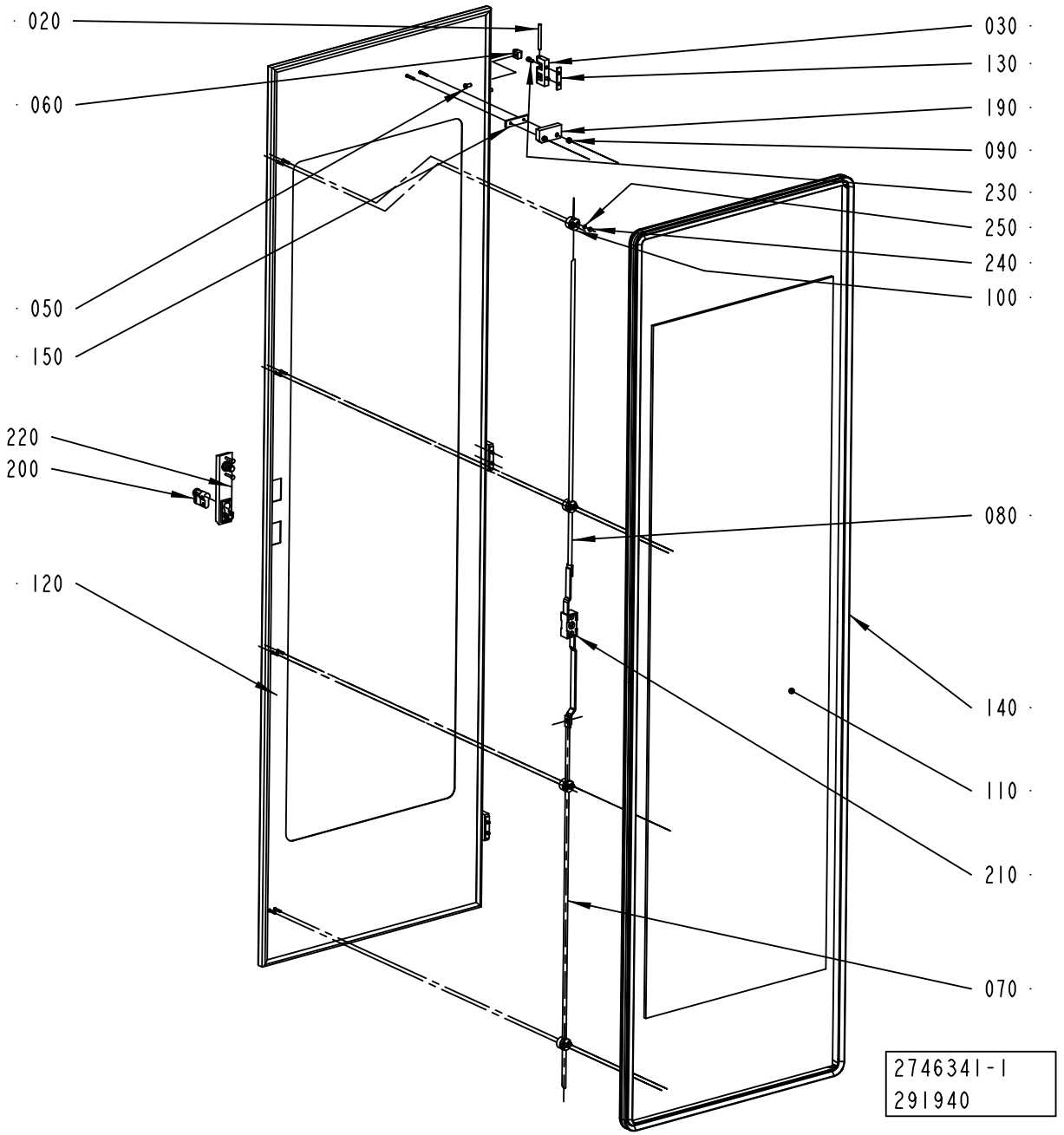
020
060
050
150
220
200
120
030
130
190
090
230
250
240
100
080
140
110
210
070
2746341-1
291940

ECM: 301938 - 20070508
Group number: 2746341-0100
Assembly Drawing: 2746341-1_1_AA

| Pos | Part No | UN | Qty | Description | Page No |
|---|---|---|---|---|---|
| - | | | | | |
| 020 | 988685-0000 | | 3 | PIN | |
| 030 | 1035792-0000 | | 3 | E-HINGE | |
| 050 | 1129767-0000 | | 6 | SCREW | |
| 060 | 1129770-0000 | | 6 | BLOCKING PIECE | |
| 070 | 2790932-0000 | | 1 | LOCKING ARM | |
| 080 | 1499562-0004 | | 1 | LOCKING ARM | |
| 090 | 1539391-0000 | | 2 | ROUND NUT | |
| 100 | 2550333-0000 | | 4 | GUIDE LUG | |
| 110 | 2619039-0000 | | 1 | GLASS PANE | |
| 120 | 2746340-0000 | | 1 | DOOR | |
| 130 | 2746359-0000 | | 3 | SPACER | |
| 140 | 2746360-0000 | | 1 | SEALING STRIP | |
| 150 | 2790934-0000 | | 1 | WASHER | |
| 190 | 90458-2794 | | 1 | SAFETY SENSOR, NON-CONTACT EVA | |
| 200 | 90237-0128 | | 1 | LOCK CYLINDER, 1109-SU125 | |
| 210 | 90237-0153 | | 1 | LOCK HOUSING, 1121-U26-0B | |
| 220 | 90237-0175 | | 1 | TURNING HANDLE, 1125-U185-0A | |
| 230 | 312115-0327 | | 6 | SCREW ISO4762 M5X12 A4 80 | |
| 240 | 312705-0312 | | 8 | NUT HEX. DOMED CAP MHM-6 M4 A280 | |
| 250 | 315105-0136 | | 8 | WASHER BRB 4,3X8 RFR | |

| Pos | Part No | UN | Qty | Description | Page No |
|---|---|---|---|---|---|

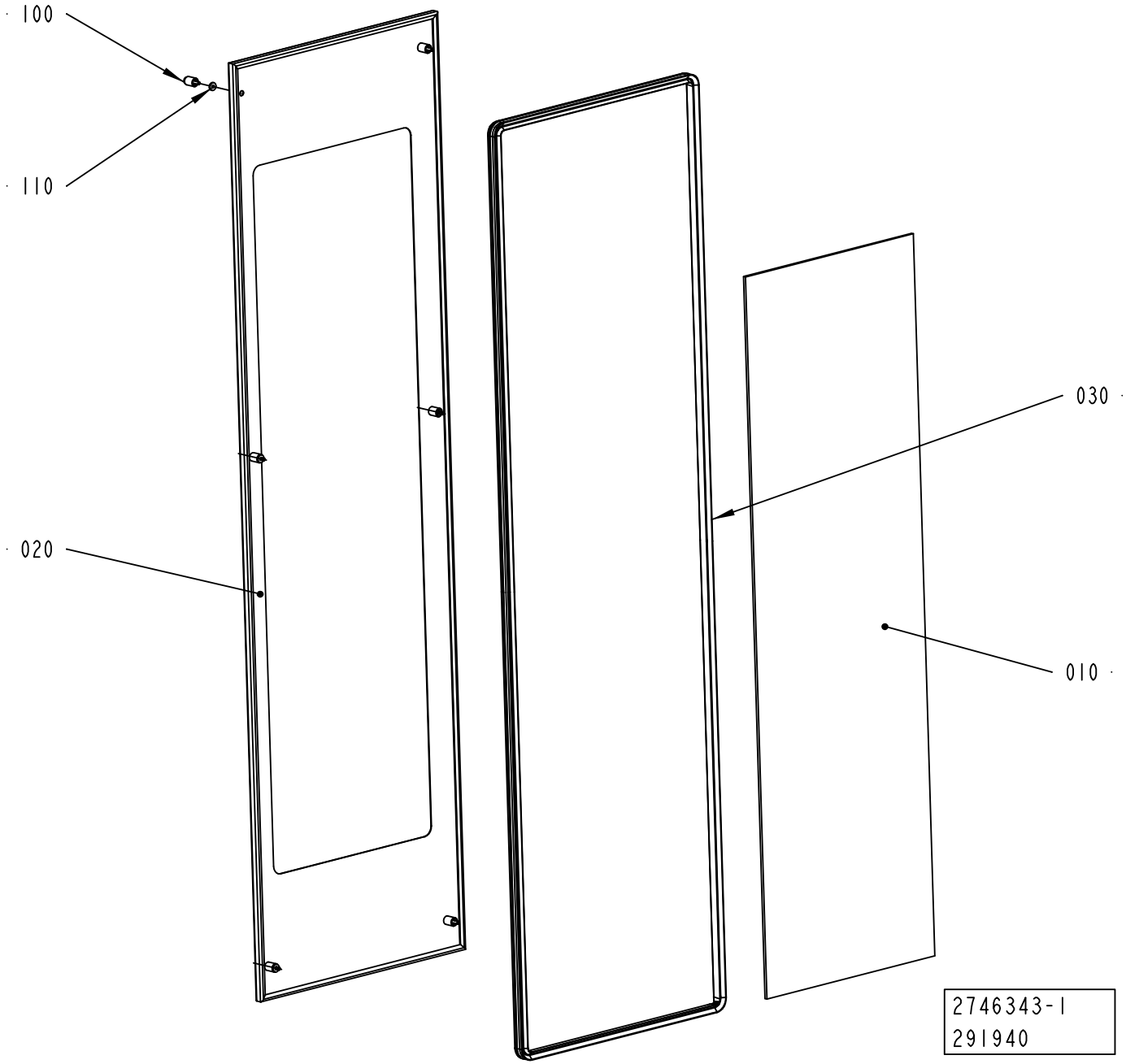
100
110
020
030
010
2746343-1
291940

ECM: 301939 - 20070508
Group number: 2746343-0100
Assembly Drawing: 2746343-1_1_AA

| Pos | Part No | UN | Qty | Description | Page No |
|---|---|---|---|---|---|
| - | | | | | |
| 010 | 2619039-0000 | | 1 | GLASS PANE | |
| 020 | 2746342-0000 | | 1 | DOOR | |
| 030 | 2746360-0000 | | 1 | SEALING STRIP | |
| 100 | 90226-0458 | | 6 | MOUNTING SCREW | |
| 110 | 90459-7441 | | 3 | WASHER PLAIN, DIN 7349, 6,4/17 H=3 | |

| Pos | Part No | UN | Qty | Description | Page No |
|---|---|---|---|---|---|

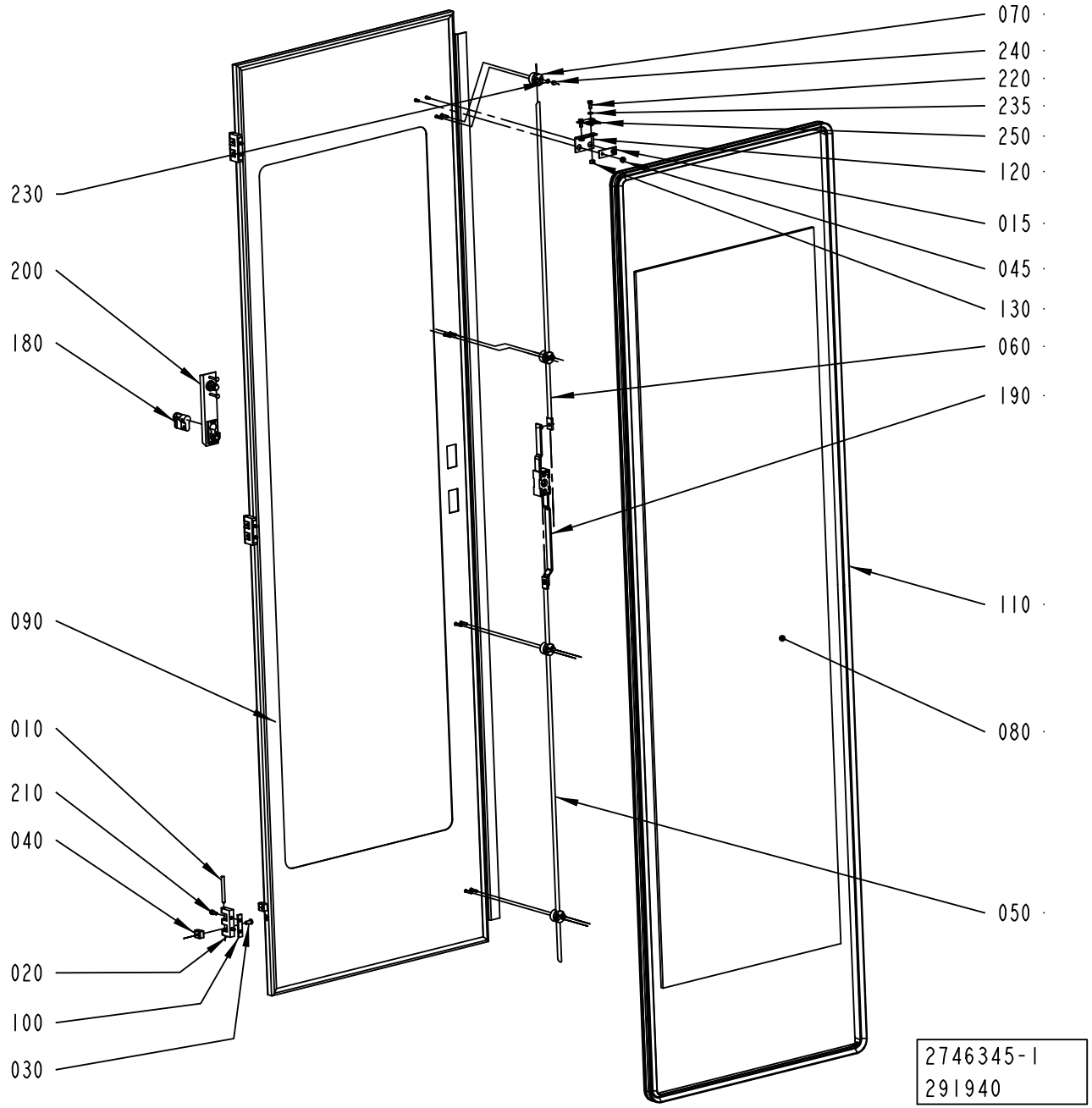
070
240
220
235
250
120
015
045
130
060
190
110
080
050
230
200
180
090
010
210
040
020
100
030
2746345-1
291940

ECM: 301940 - 20070508
Group number: 2746345-0100
Assembly Drawing: 2746345-1_1_AA

| Pos | Part No | UN | Qty | Description | Page No |
|---|---|---|---|---|---|
| - | | | | | |
| 010 | 988685-0000 | | 3 | PIN | |
| 015 | 1036563-0000 | | 1 | WASHER | |
| 020 | 1035792-0000 | | 3 | E-HINGE | |
| 030 | 1129767-0000 | | 6 | SCREW | |
| 040 | 1129770-0000 | | 6 | BLOCKING PIECE | |
| 045 | 1539391-0000 | | 2 | ROUND NUT | |
| 050 | 2790932-0000 | | 1 | LOCKING ARM | |
| 060 | 1499562-0004 | | 1 | LOCKING ARM | |
| 070 | 2550333-0000 | | 4 | GUIDE LUG | |
| 080 | 2619039-0000 | | 1 | GLASS PANE | |
| 090 | 2746344-0000 | | 1 | DOOR | |
| 100 | 2746359-0000 | | 3 | SPACER | |
| 110 | 2746360-0000 | | 1 | SEALING STRIP | |
| 120 | 2755512-0000 | | 1 | BRACKET | |
| 130 | 575034-0000 | | 2 | ROUND NUT | |
| 180 | 90237-0128 | | 1 | LOCK CYLINDER, 1109-SU125 | |
| 190 | 90237-0153 | | 1 | LOCK HOUSING, 1121-U26-0B | |
| 200 | 90237-0175 | | 1 | TURNING HANDLE, 1125-U185-0A | |
| 210 | 312115-0327 | | 6 | SCREW ISO4762 M5X12 A4 80 | |
| 220 | 312105-0327 | | 2 | SCREW M6S ISO 4017 M5X12 A480 | |
| 230 | 315105-0136 | | 8 | WASHER BRB 4,3X8 RFR | |
| 235 | 315105-0146 | | 2 | WASHER BRB 5,3X10 RFR | |
| 240 | 312705-0312 | | 8 | NUT HEX. DOMED CAP MHM-6 M4 A280 | |
| 245 | 312607-0314 | | 2 | HEXAGON NUT, EN 24032 M6M M5 A480 | |
| 250 | 90600-3021 | | 1 | KEY FOR SAFETY SWITCH AZM - 161 - BIF | |

| Pos | Part No | UN | Qty | Description | Page No |
|---|---|---|---|---|---|

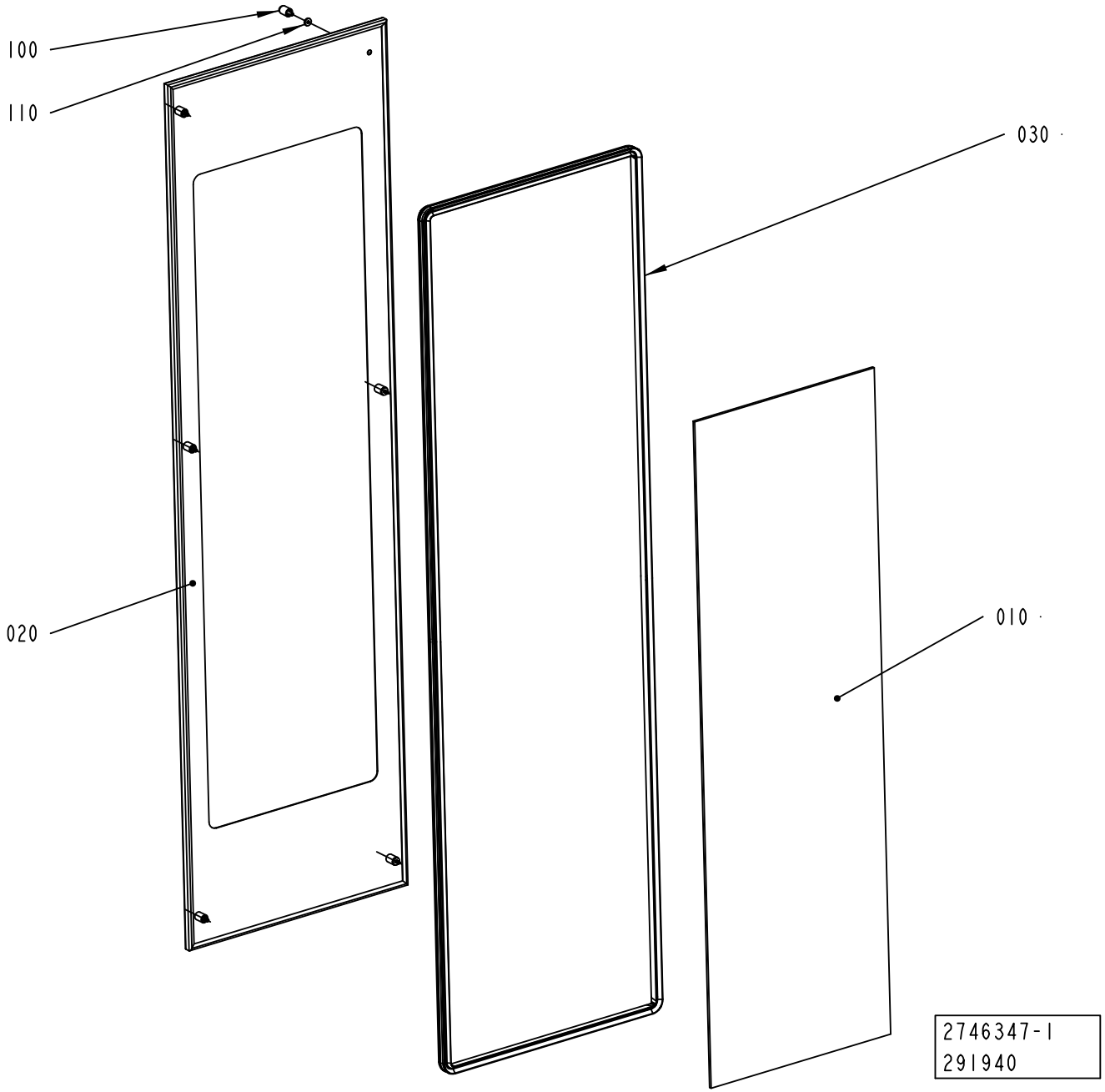
100
110
030
020
010
2746347-1
291940

ECM: 301941 - 20070508
Group number: 2746347-0100
Assembly Drawing: 2746347-1_1_AA

| Pos | Part No | UN | Qty | Description | Page No |
|---|---|---|---|---|---|
| - | | | | | |
| 010 | 2619039-0000 | | 1 | GLASS PANE | |
| 020 | 2746346-0000 | | 1 | DOOR | |
| 030 | 2746360-0000 | | 1 | SEALING STRIP | |
| 100 | 90226-0458 | | 6 | MOUNTING SCREW | |
| 110 | 90459-7441 | | 3 | WASHER PLAIN, DIN 7349, 6,4/17 H=3 | |

| Pos | Part No | UN | Qty | Description | Page No |
|---|---|---|---|---|---|

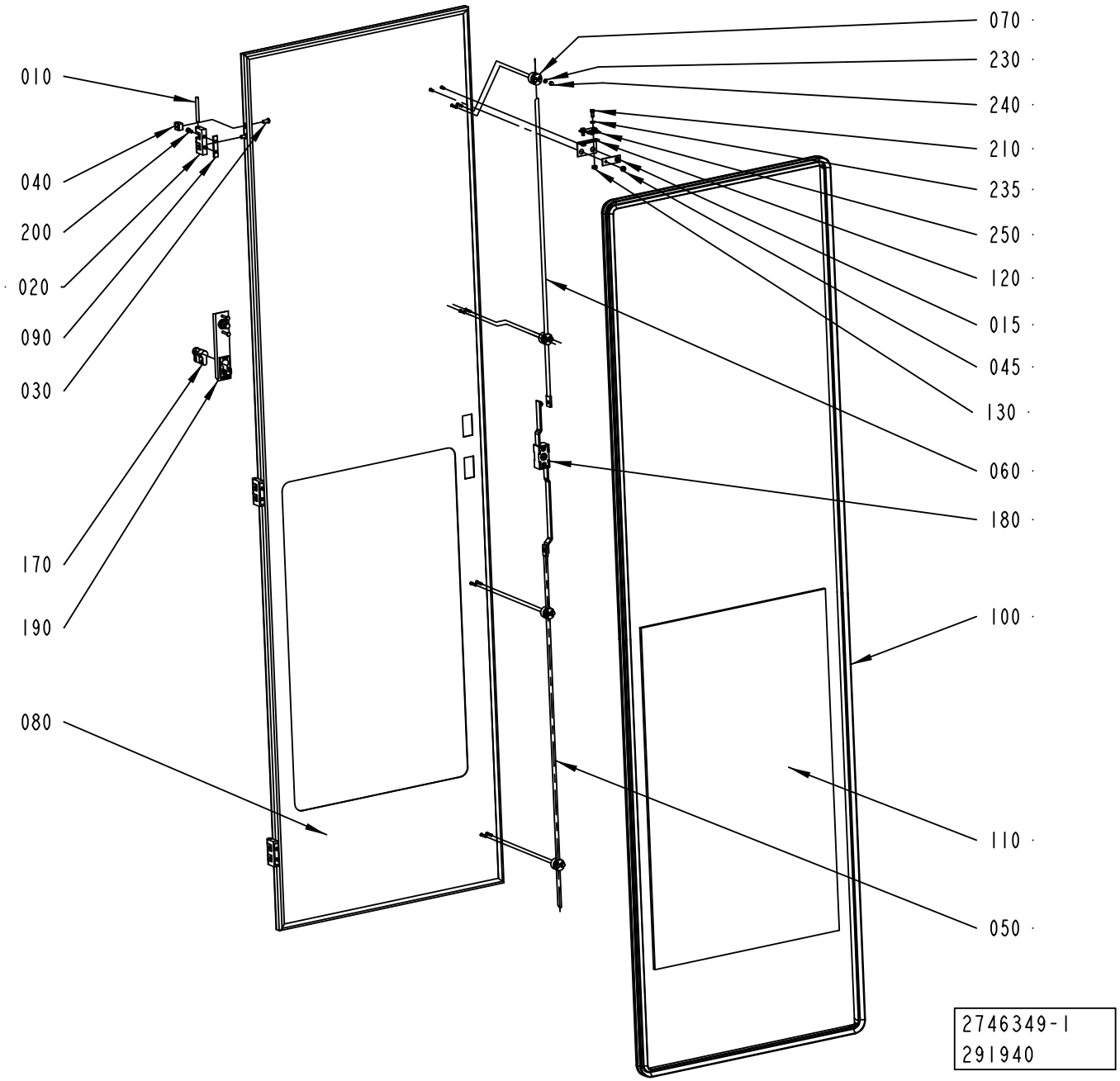
070
230
240
210
235
250
120
015
045
130
060
180
100
110
050
010
040
200
020
090
030
170
190
080
2746349-1
291940

ECM: 301942 - 20070508
Group number: 2746349-0100
Assembly Drawing: 2746349-1_1_AA

| Pos | Part No | UN | Qty | Description | Page No |
|---|---|---|---|---|---|
| - | | | | | |
| 010 | 988685-0000 | | 3 | PIN | |
| 015 | 1036563-0000 | | 1 | WASHER | |
| 020 | 1035792-0000 | | 3 | E-HINGE | |
| 030 | 1129767-0000 | | 6 | SCREW | |
| 040 | 1129770-0000 | | 6 | BLOCKING PIECE | |
| 045 | 1539391-0000 | | 2 | ROUND NUT | |
| 050 | 2790932-0000 | | 1 | LOCKING ARM | |
| 060 | 1499562-0004 | | 1 | LOCKING ARM | |
| 070 | 2550333-0000 | | 4 | GUIDE LUG | |
| 080 | 2746348-0000 | | 1 | DOOR | |
| 090 | 2746359-0000 | | 3 | SPACER | |
| 100 | 2746360-0000 | | 1 | SEALING STRIP | |
| 110 | 2746361-0000 | | 1 | GLASS PANE | |
| 120 | 2755512-0000 | | 1 | BRACKET | |
| 130 | 575034-0000 | | 2 | ROUND NUT | |
| 170 | 90237-0128 | | 1 | LOCK CYLINDER, 1109-SU125 | |
| 180 | 90237-0153 | | 1 | LOCK HOUSING, 1121-U26-0B | |
| 190 | 90237-0175 | | 1 | TURNING HANDLE, 1125-U185-0A | |
| 200 | 312115-0327 | | 6 | SCREW ISO4762 M5X12 A4 80 | |
| 210 | 312105-0327 | | 2 | SCREW M6S ISO 4017 M5X12 A480 | |
| 230 | 315105-0136 | | 8 | WASHER BRB 4,3X8 RFR | |
| 235 | 315105-0146 | | 2 | WASHER BRB 5,3X10 RFR | |
| 240 | 312705-0312 | | 8 | NUT HEX. DOMED CAP MHM-6 M4 A280 | |
| 250 | 90600-3021 | | 1 | KEY FOR SAFETY SWITCH AZM - 161 - BIF | |

| Pos | Part No | UN | Qty | Description | Page No |
|---|---|---|---|---|---|

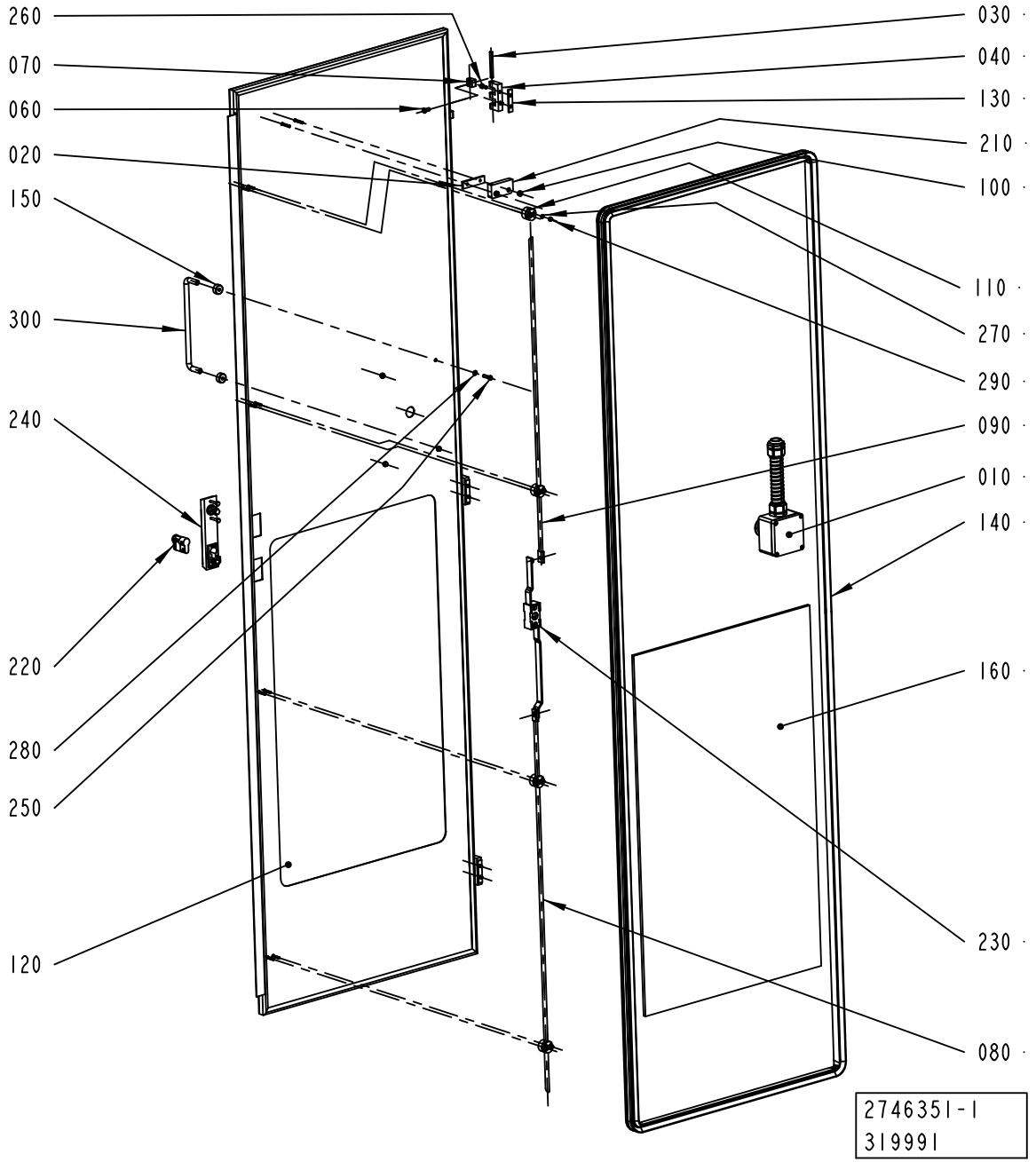
260
070
060
020
150
300
240
220
280
250
120
030
040
130
210
100
110
270
290
090
010
140
160
230
080
2746351-1
319991

ECM: 320813 - 20070903
Group number: 2746351-0100
Assembly Drawing: 2746351-1_1_AB

| Pos | Part No | UN | Qty | Description | Page No |
|---|---|---|---|---|---|
| - | | | | | |
| 010 | 2904947-0100 | | 1 | EMERGENCY STOP ..... | **7-171** |
| 020 | 2790934-0000 | | 1 | WASHER | |
| 030 | 988685-0000 | | 3 | PIN | |
| 040 | 1035792-0000 | | 3 | E-HINGE | |
| 060 | 1129767-0000 | | 6 | SCREW | |
| 070 | 1129770-0000 | | 6 | BLOCKING PIECE | |
| 080 | 2790932-0000 | | 1 | LOCKING ARM | |
| 090 | 1499562-0004 | | 1 | LOCKING ARM | |
| 100 | 1539391-0000 | | 2 | ROUND NUT | |
| 110 | 2550333-0000 | | 4 | GUIDE LUG | |
| 120 | 2746350-0000 | | 1 | DOOR | |
| 130 | 2746359-0000 | | 3 | SPACER | |
| 140 | 2746360-0000 | | 1 | SEALING STRIP | |
| 150 | 2751586-0000 | | 4 | SPACER | |
| 160 | 2746361-0000 | | 1 | GLASS PANE | |
| 210 | 90458-2794 | | 1 | SAFETY SENSOR, NON-CONTACT EVA | |
| 220 | 90237-0128 | | 1 | LOCK CYLINDER, 1109-SU125 | |
| 230 | 90237-0153 | | 1 | LOCK HOUSING, 1121-U26-0B | |
| 240 | 90237-0175 | | 1 | TURNING HANDLE, 1125-U185-0A | |
| 250 | 312105-0331 | | 4 | SCREW M6S ISO 4017 M5X20 A480 | |
| 260 | 312115-0327 | | 6 | SCREW ISO4762 M5X12 A4 80 | |
| 270 | 315105-0136 | | 8 | WASHER BRB 4,3X8 RFR | |
| 280 | 315105-0146 | | 4 | WASHER BRB 5,3X10 RFR | |
| 290 | 312705-0312 | | 8 | NUT HEX. DOMED CAP MHM-6 M4 A280 | |
| 300 | 90600-2670 | | 2 | HANDLE, GN 425-10-200-NI | |

| Pos | Part No | UN | Qty | Description | Page No |
|---|---|---|---|---|---|

Machine Type | Group Description | Used-In | Group Number | Page No

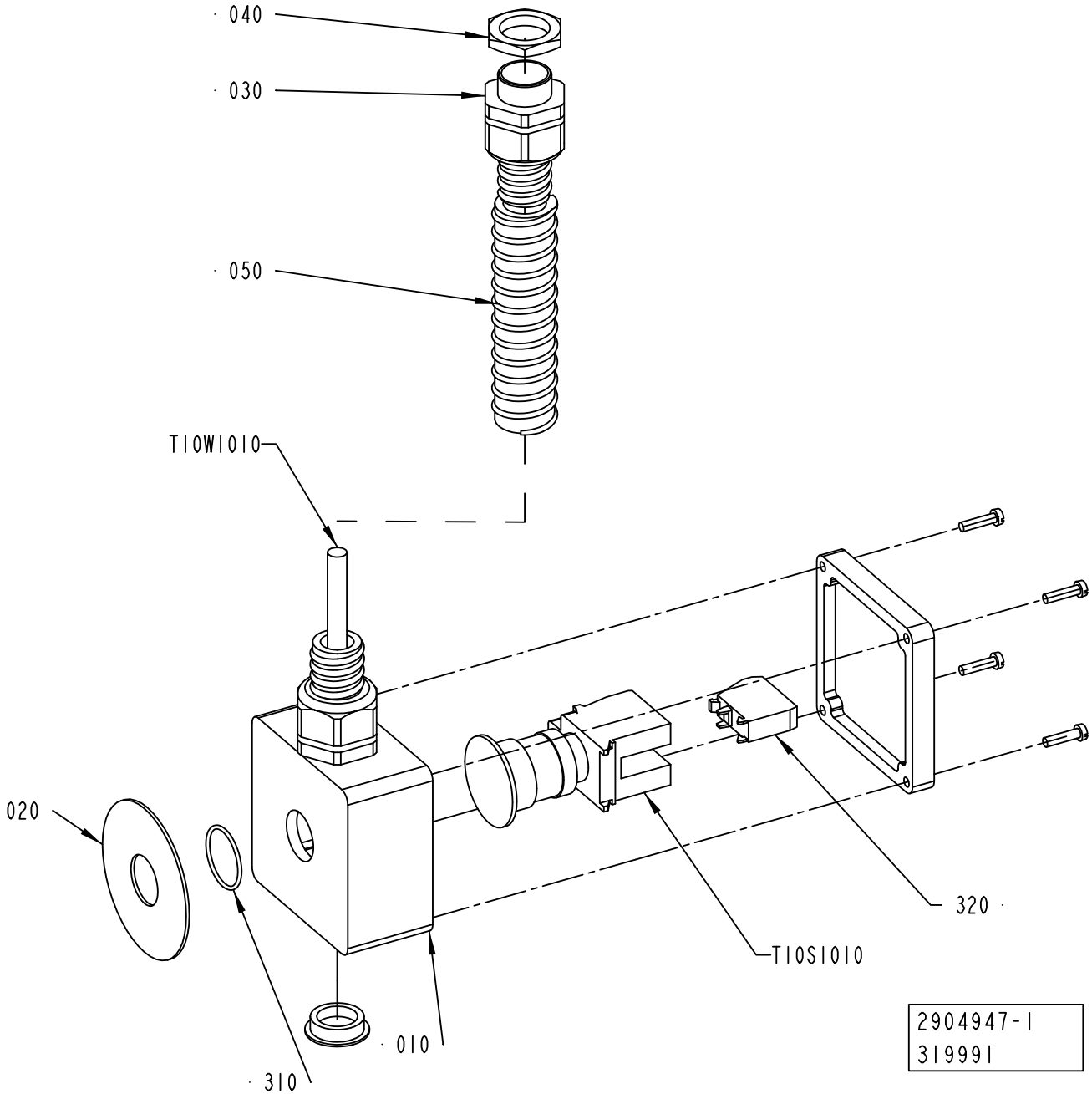
040
030
050
T10W1010
020
320
T10S1010
010
310
2904947-1
319991

ECM: 320833 - 20070903
Group number: 2904947-0100
Assembly Drawing: 2904947-1_1_AB

| Pos | Part No | UN | Qty | Description | Page No |
|---|---|---|---|---|---|
| - | | | | | |
| 010 | 1037130-0000 | | 1 | CONNECTION BOX | |
| 020 | 486826-0001 | | 1 | SIGN "EMERGENCY STOP" | |
| 030 | 353243-0005 | | 2 | HOSE GLAND W/O INSERT PG16 EXTENDED | |
| 040 | 90099-0110 | | 1 | NUT, PR 22,5 (PG16) | |
| 050 | 90152-0051 | MM | 700 | SPIRAL CONDUIT, 25X18, UL 1816 | |
| 300 | 352103-0110 | | 1 | CABLE GLAND, STR 16, PR22,5/PG16 | |
| 310 | 315202-0119 | | 1 | O-RING 25,1X1,6 MM | |
| 320 | 90459-1917 | | 1 | CONTACT BLOCK ZBE-102 NC | |
| T10S1010 | 90458-1651 | | 1 | EMERGENCY STOP, ZB4-BS-844 ZB4-BZ-104 | |
| T10W1010 | 351150-0405 | MM | 3000 | CABLE OLFLEX 5X0,75 MM2 LIGHT/GREY | |

| Pos | Part No | UN | Qty | Description | Page No |
|---|---|---|---|---|---|

# BOBBIN BRAKE



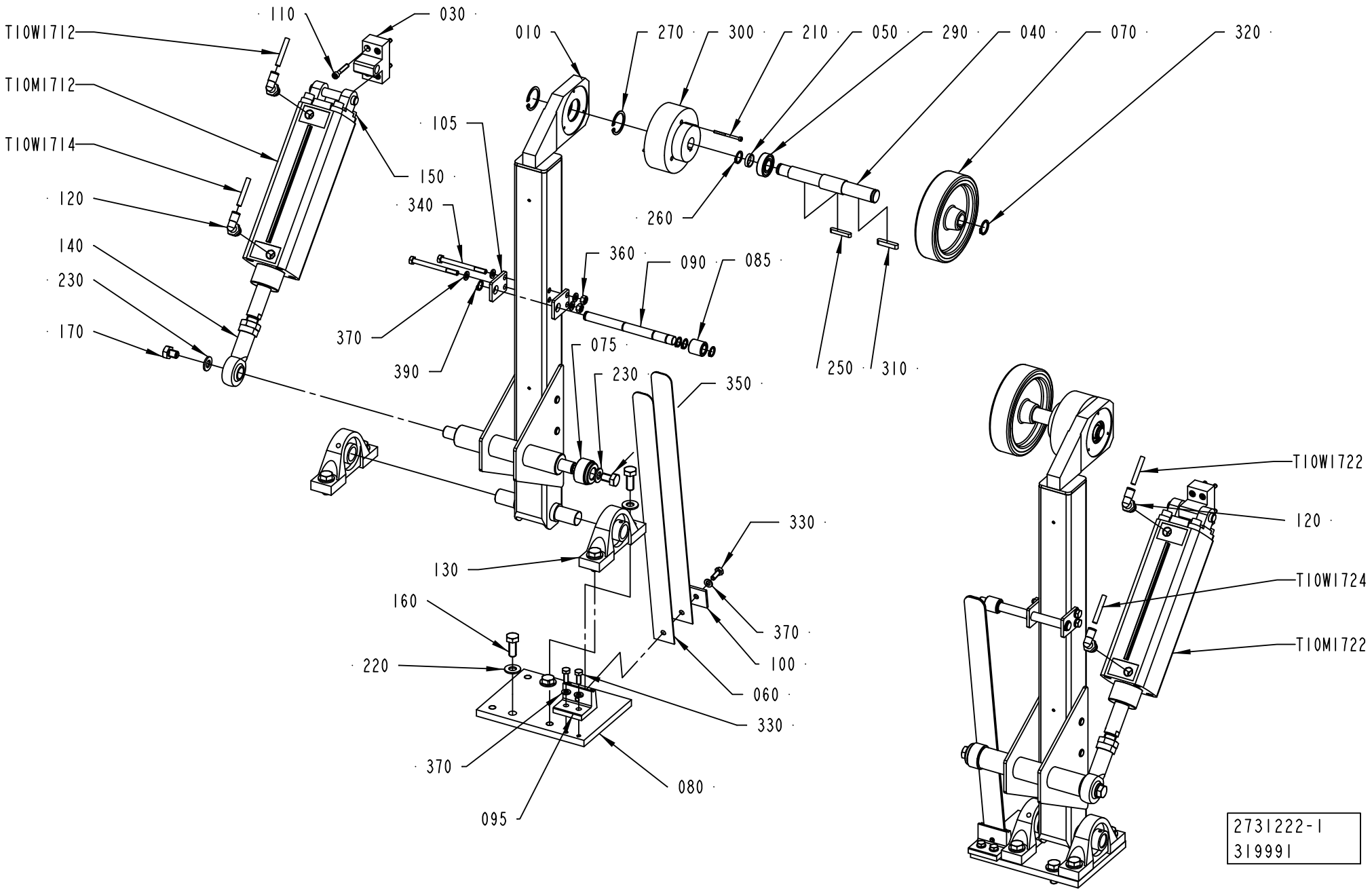

ECM: 320804 - 20070903
Group number: 2731222-0100
Assembly Drawing: 2731222-1_1_AB

| Pos | Part No | UN | Qty | Description | Page No |
|---|---|---|---|---|---|
| - | | | | | |
| 010 | 2851003-0000 | | 2 | ARM | |
| 030 | 2844499-0000 | | 2 | SUPPORT | |
| 040 | 2731227-0000 | | 2 | SHAFT | |
| 050 | 2856034-0000 | | 2 | SPACER | |
| 060 | 2875029-0000 | | 4 | SPRING | |
| 070 | 2731230-0000 | | 2 | WHEEL | |
| 075 | 2875030-0000 | | 2 | TURNING WHEEL | |
| 080 | 2844511-0000 | | 2 | PLATE | |
| 085 | 2875031-0000 | | 2 | TURNING WHEEL | |
| 090 | 2875032-0000 | | 2 | SHAFT | |
| 095 | 2875033-0000 | | 2 | HOLDER | |
| 100 | 2875034-0000 | | 2 | PLATE | |
| 105 | 2876195-0000 | | 4 | HOLDER | |
| 110 | 312115-0335 | | 8 | SCREW ISO4762 M5X30 A4 80 | |
| 120 | 350002-0008 | | 4 | PUSH-IN L-FITTING QSL-F-G1/4-6 | |
| 130 | 90345-0006 | | 4 | STANDING BEARING, TYPE SY 20 TF | |
| 140 | 90459-6096 | | 2 | ROD END, BALL JOINT EYE M16X1,5 | |
| 150 | 90459-5727 | | 2 | BRACKET, REAR, EYE WITH AXLE 50 | |
| 160 | 312105-0493 | | 12 | SCREW M6S ISO 4017 M10X25 A480 | |
| 170 | 312105-0487 | | 2 | SCREW M6S ISO 4017 M10X12 A480 | |
| 210 | 90457-0937 | | 6 | SCREW MC6S M3X40 A480 | |
| 220 | 315105-0173 | | 12 | WASHER BRB 10,5X22 RFR | |
| 230 | 315106-0173 | | 4 | WASHER ISO 7089-10-200 HV A4 | |
| 250 | 315701-0206 | | 2 | PARALLEL KEY W. ROUND ENDS 5X5X32 MM | |
| 260 | 315751-0112 | | 2 | RETAINING RING FOR SHAFT DIN 471 15 SS | |
| 270 | 315753-0123 | | 4 | RETAINING RING FOR BORE DIN 472 32 A2 | |
| 290 | 321308-0202 | | 2 | BALL BEARING, 15X32X9 MM | |
| 300 | 90432-0024 | | 2 | ELECTROMAG. POWDER BRAKE, FAT50/24 VDC | |
| 310 | 315705-0237 | | 2 | PARALLEL KEY W. ROUND ENDS 6X6X32 MM | |
| 320 | 315751-0115 | | 2 | RETAINING RING FOR SHAFT DIN 471 18 SS | |
| 330 | 312105-0368 | | 6 | SCREW M6S ISO 4017 M6X16 A480 | |
| 340 | 312105-0384 | | 4 | SCREW M6S ISO 4014 M6X70 A480 | |
| 350 | 312105-0489 | | 2 | SCREW M6S ISO 4017 M10X16 A480 | |
| 360 | 312607-0316 | | 4 | HEXAGON NUT, EN 24032 M6M M6 A480 | |
| 370 | 315106-0153 | | 14 | WASHER ISO 7089-6-200 HV A4 | |
| 390 | 315750-0109 | | 8 | RETAINING RING SHAFT DIN 471 ST 12 | |
| T10M1712 | 90459-7102 | | 1 | DOUBLE ACTING, PROFILE,CYL 50-125 | |
| T10M1722 | 90459-7102 | | 1 | DOUBLE ACTING, PROFILE,CYL 50-125 | |
| T10W1712 | 315400-0001 | MM | 2000 | TUBE PUN-H-6X1-BL | |
| T10W1714 | 315400-0001 | MM | 2000 | TUBE PUN-H-6X1-BL | |
| T10W1722 | 315400-0001 | MM | 2000 | TUBE PUN-H-6X1-BL | |
| T10W1724 | 315400-0001 | MM | 2000 | TUBE PUN-H-6X1-BL | |

| Machine Type | Group Description | Used-In | Group Number | Page No |
|---|---|---|---|---|

Tetra Pak

# SPC
## Spare Parts Catalogue

# ELECTRICAL CABINET



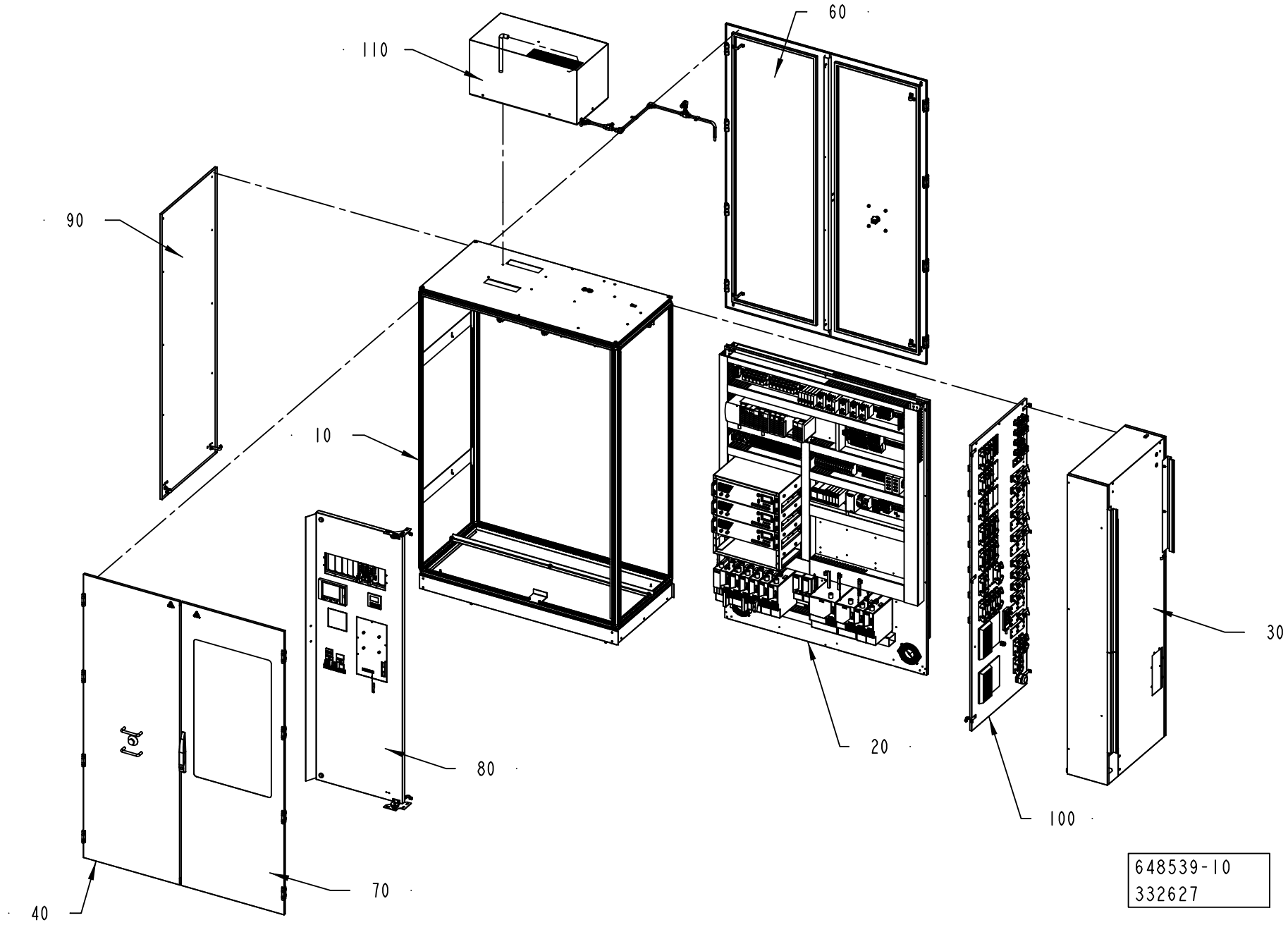

ECM: 333750 - 20071221
Group number: 648539-0300
Assembly Drawing: 648539-10_1_AB

| Pos | Part No | UN | Qty | Description | Page No |
|---|---|---|---|---|---|
| - | | | | | |
| 0010 | 2862701-0100 | | 1 | CABINET | **8-5, 8-7** |
| 0020 | 2840947-0100 | | 1 | PLATE | **8-9, 8-11** |
| 0030 | 2862711-0100 | | 1 | COVER | **8-45** |
| 0040 | 2862707-0100 | | 2 | DOOR | **8-47** |
| 0060 | 2862714-0100 | | 1 | DOOR | **8-49** |
| 0070 | 2862715-0100 | | 1 | DOOR | **8-51** |
| 0080 | 2849078-0100 | | 1 | DOOR | **8-53** |
| 0090 | 2862713-0100 | | 1 | DOOR | **8-59** |
| 0100 | 2867677-0100 | | 1 | PANEL | **8-61, 8-63, 8-65, 8-67** |
| 0110 | 2912647-0100 | | 1 | COOLING UNIT | **8-69** |

| Pos | Part No | UN | Qty | Description | Page No |
|---|---|---|---|---|---|

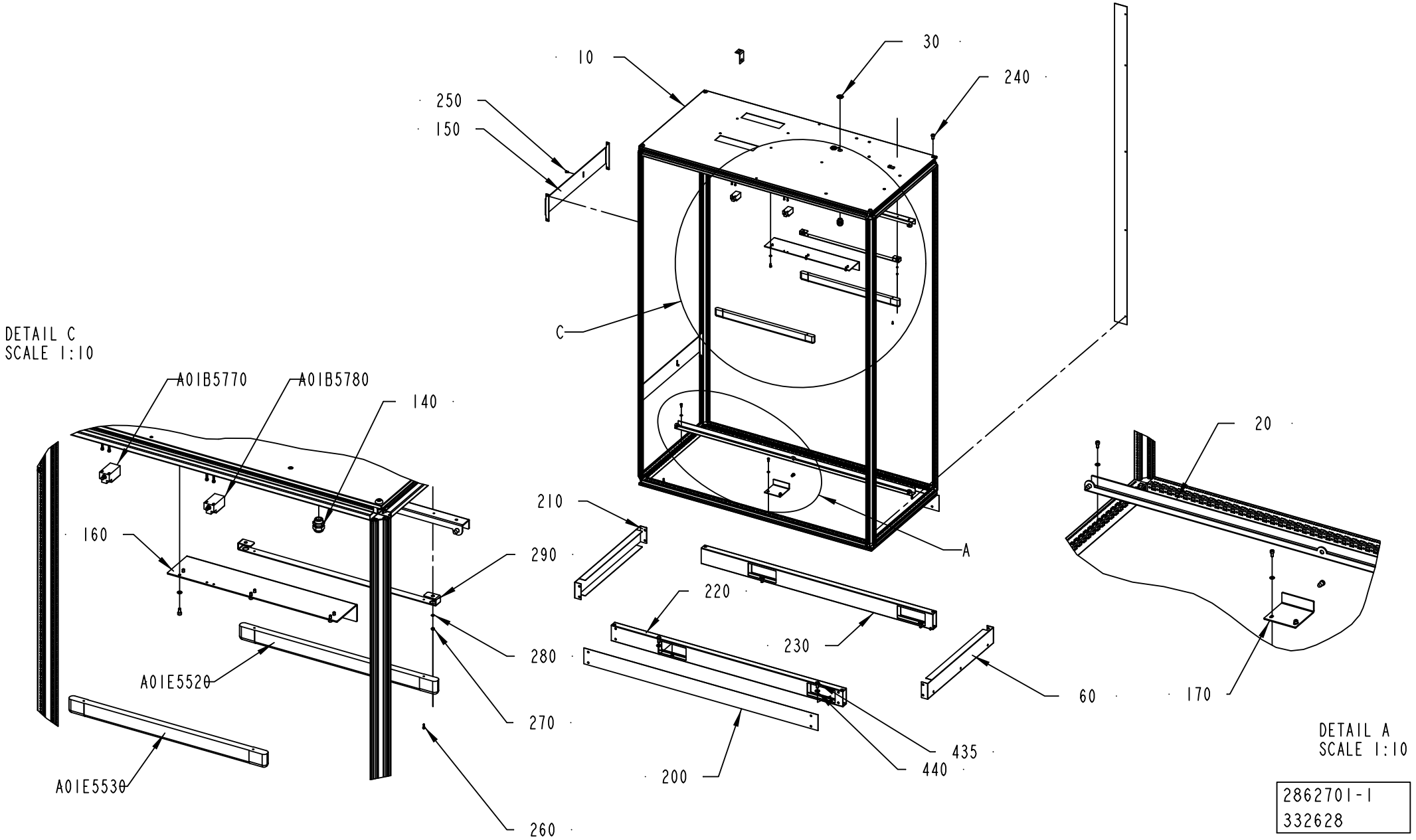
10
30
240
250
150
C
A
DETAIL C
SCALE 1:10
A01B5770
A01B5780
140
160
290
210
220
230
280
270
260
A01E5520
A01E5530
200
435
440
20
60
170
DETAIL A
SCALE 1:10
2862701-1
332628

ECM: 348253 - 20071222
Group number: 2862701-0100
Assembly Drawing: 2862701-1_1_AB

This list covers pages from 8-4 to 8-7

| Pos | Part No | UN | Qty | Description | Page No |
|---|---|---|---|---|---|
| - | | | | | |
| 0010 | 2862702-0000 | | 1 | CABINET | |
| 0020 | 2862703-0000 | | 2 | GUIDE | |
| 0030 | 90099-0110 | | 2 | NUT, PR 22,5 (PG16) | |
| 0040 | 1129318-0000 | | 1 | BRACKET | |
| 0060 | 2862720-0000 | | 1 | BRACKET | |
| 0080 | 312111-0297 | | 8 | SCREW HEX.SOCK.HD.MC6S-TT 4X25 88 FZB | |
| 0090 | 312115-0325 | | 2 | SCREW ISO4762 M5X10 A4 80 | |
| 0100 | 312115-0366 | | 18 | SCREW ISO4762 M6X12 A4 80 | |
| 0110 | 312605-0316 | | 2 | HEXAGON NUT, M6M M6 A280 | |
| 0120 | 315105-0146 | | 2 | WASHER BRB 5,3X10 RFR | |
| 0130 | 315105-0153 | | 20 | WASHER BRB 6,4X12 RFR | |
| 0140 | 352103-0110 | | 2 | CABLE GLAND, STR 16, PR22,5/PG16 | |
| 0150 | 2862704-0000 | | 2 | BRACKET | |
| 0160 | 2862705-0000 | | 1 | BRACKET | |
| 0170 | 2862706-0000 | | 1 | BRACKET | |
| 0180 | 2867679-0000 | | 1 | BRACKET | |
| 0200 | 2862716-0000 | | 2 | PLATE | |
| 0210 | 2862717-0000 | | 1 | BRACKET | |
| 0220 | 2862718-0000 | | 1 | BRACKET | |
| 0230 | 2862719-0000 | | 1 | BRACKET | |
| 0240 | 318301-0122 | | 4 | LIFTING EYE BOLT, LT M12 FZB | |
| 0250 | 90458-0072 | | 2 | SCREW ISO 7380 S M6X12 A2 | |
| 0260 | 312115-0224 | | 4 | SCREW ISO4762 M3X10 A4 80 | |
| 0270 | 312605-0312 | | 4 | HEXAGON NUT, M6M M4 A280 | |
| 0280 | 315105-0136 | | 4 | WASHER BRB 4,3X8 RFR | |
| 0290 | 2927017-0000 | | 2 | SUPPORT | |
| 0435 | 312105-0534 | | 4 | SCREW M6S ISO 4017 M12X25 A480 | |
| 044O | 315105-0178 | | 4 | WASHER BRB 13X24 RFR | |
| 0450 | 2927011-0000 | | 1 | PLATE | |
| A01B5760 | 90326-0053 | | 1 | THERMOCOUPLE, 12826-35 | |
| A01B5770 | 90044-0192 | | 1 | LIMIT SW. SZ2586.000 | |
| A01B5780 | 90044-0192 | | 1 | LIMIT SW. SZ2586.000 | |
| A01B5790 | 90044-0192 | | 1 | LIMIT SW. SZ2586.000 | |
| A01B5800 | 90044-0192 | | 1 | LIMIT SW. SZ2586.000 | |
| A01E5520 | 90600-4048 | | 1 | LIGHT FIXTURE, TCH128 1XTL5-14W/830 HF | |
| | *90600-4238* | | *1* | *FLUORESC. TUBE,MASTER TL5 HE 14W/830 SLV* | |
| A01E5530 | 90600-4048 | | 1 | LIGHT FIXTURE, TCH128 1XTL5-14W/830 HF | |
| | *90600-4238* | | *1* | *FLUORESC. TUBE,MASTER TL5 HE 14W/830 SLV* | |
| A01X5760 | 90326-0020 | | 1 | PLUG, FEMALE YELLOW CR-AL | |

| Pos | Part No | UN | Qty | Description | Page No |
|---|---|---|---|---|---|

Machine Type | Group Description | Used-In | Group Number | Page No

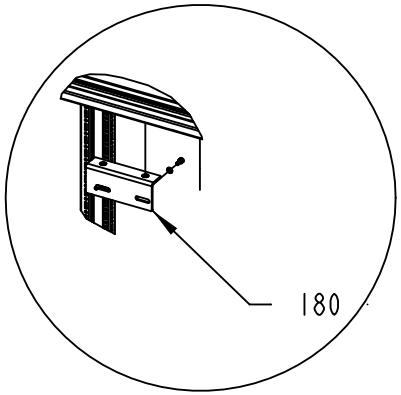


DETAIL B
SCALE 1:10

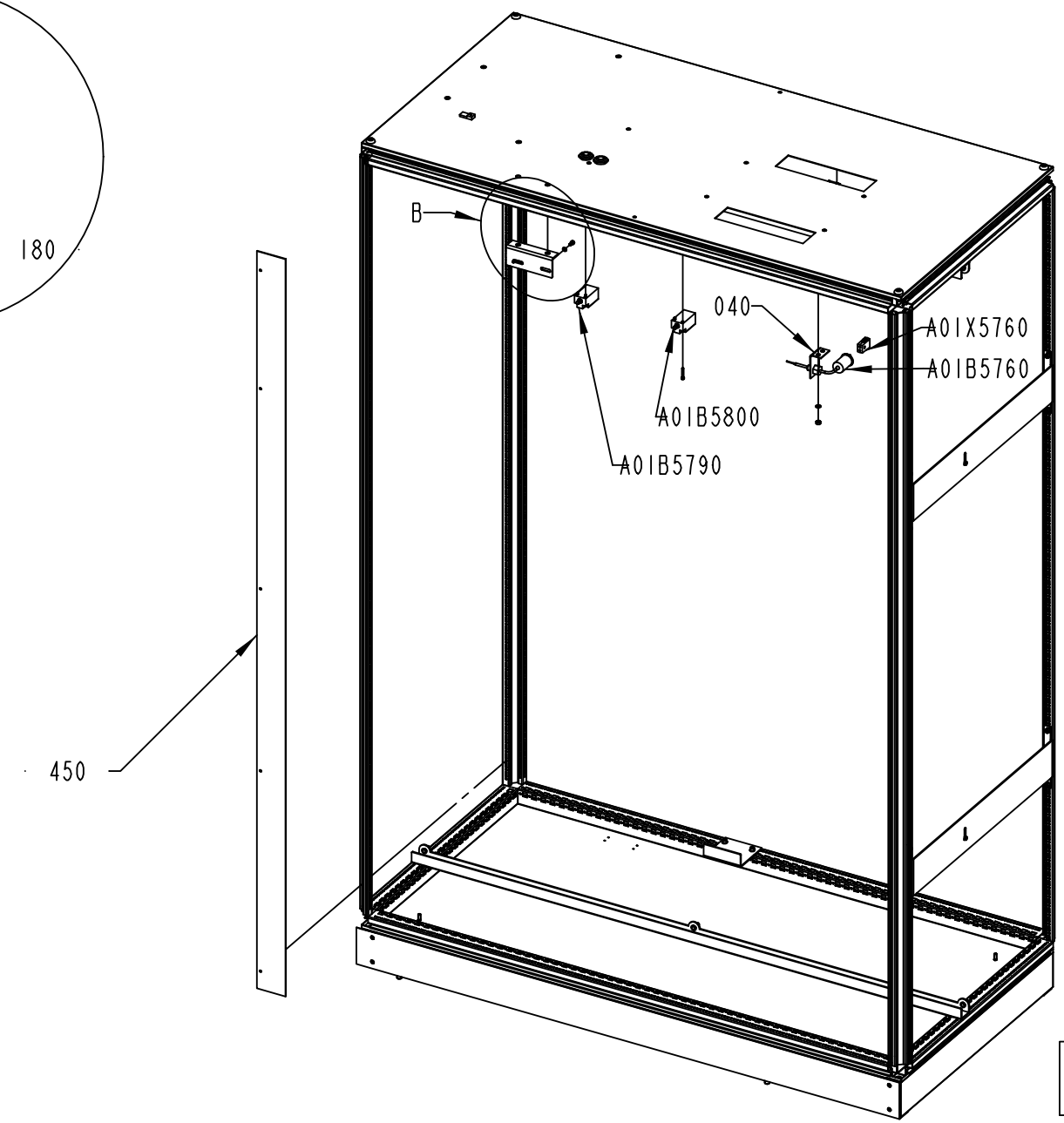


2862701-1
332628

ECM: 348253 - 20071222
Group number: 2862701-0100
Assembly Drawing: 2862701-1_2_AB

This list covers pages from 8-4 to 8-7

| Pos | Part No | UN | Qty | Description | Page No |
|---|---|---|---|---|---|
| - | | | | | |
| 0010 | 2862702-0000 | | 1 | CABINET | |
| 0020 | 2862703-0000 | | 2 | GUIDE | |
| 0030 | 90099-0110 | | 2 | NUT, PR 22,5 (PG16) | |
| 0040 | 1129318-0000 | | 1 | BRACKET | |
| 0060 | 2862720-0000 | | 1 | BRACKET | |
| 0080 | 312111-0297 | | 8 | SCREW HEX.SOCK.HD.MC6S-TT 4X25 88 FZB | |
| 0090 | 312115-0325 | | 2 | SCREW ISO4762 M5X10 A4 80 | |
| 0100 | 312115-0366 | | 18 | SCREW ISO4762 M6X12 A4 80 | |
| 0110 | 312605-0316 | | 2 | HEXAGON NUT, M6M M6 A280 | |
| 0120 | 315105-0146 | | 2 | WASHER BRB 5,3X10 RFR | |
| 0130 | 315105-0153 | | 20 | WASHER BRB 6,4X12 RFR | |
| 0140 | 352103-0110 | | 2 | CABLE GLAND, STR 16, PR22,5/PG16 | |
| 0150 | 2862704-0000 | | 2 | BRACKET | |
| 0160 | 2862705-0000 | | 1 | BRACKET | |
| 0170 | 2862706-0000 | | 1 | BRACKET | |
| 0180 | 2867679-0000 | | 1 | BRACKET | |
| 0200 | 2862716-0000 | | 2 | PLATE | |
| 0210 | 2862717-0000 | | 1 | BRACKET | |
| 0220 | 2862718-0000 | | 1 | BRACKET | |
| 0230 | 2862719-0000 | | 1 | BRACKET | |
| 0240 | 318301-0122 | | 4 | LIFTING EYE BOLT, LT M12 FZB | |
| 0250 | 90458-0072 | | 2 | SCREW ISO 7380 S M6X12 A2 | |
| 0260 | 312115-0224 | | 4 | SCREW ISO4762 M3X10 A4 80 | |
| 0270 | 312605-0312 | | 4 | HEXAGON NUT, M6M M4 A280 | |
| 0280 | 315105-0136 | | 4 | WASHER BRB 4,3X8 RFR | |
| 0290 | 2927017-0000 | | 2 | SUPPORT | |
| 0435 | 312105-0534 | | 4 | SCREW M6S ISO 4017 M12X25 A480 | |
| 044O | 315105-0178 | | 4 | WASHER BRB 13X24 RFR | |
| 0450 | 2927011-0000 | | 1 | PLATE | |
| A01B5760 | 90326-0053 | | 1 | THERMOCOUPLE, 12826-35 | |
| A01B5770 | 90044-0192 | | 1 | LIMIT SW. SZ2586.000 | |
| A01B5780 | 90044-0192 | | 1 | LIMIT SW. SZ2586.000 | |
| A01B5790 | 90044-0192 | | 1 | LIMIT SW. SZ2586.000 | |
| A01B5800 | 90044-0192 | | 1 | LIMIT SW. SZ2586.000 | |
| A01E5520 | 90600-4048 | | 1 | LIGHT FIXTURE, TCH128 1XTL5-14W/830 HF | |
| | *90600-4238* | | *1* | *FLUORESC. TUBE,MASTER TL5 HE 14W/830 SLV* | |
| A01E5530 | 90600-4048 | | 1 | LIGHT FIXTURE, TCH128 1XTL5-14W/830 HF | |
| | *90600-4238* | | *1* | *FLUORESC. TUBE,MASTER TL5 HE 14W/830 SLV* | |
| A01X5760 | 90326-0020 | | 1 | PLUG, FEMALE YELLOW CR-AL | |

| Pos | Part No | UN | Qty | Description | Page No |
|---|---|---|---|---|---|

Machine Type | Group Description | Used-In | Group Number | Page No

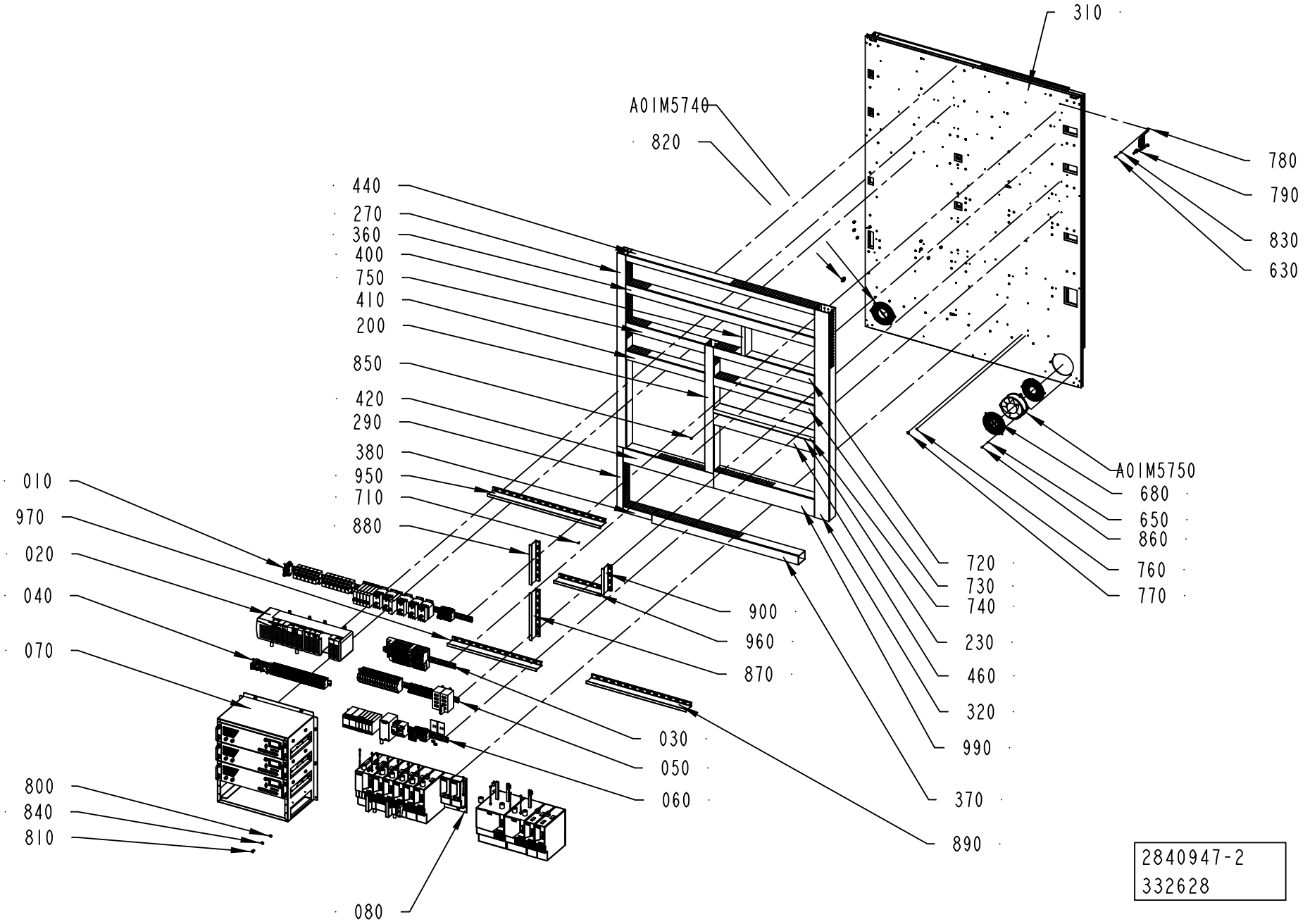
310
A01M5740
820
780
790
830
630
440
270
360
400
750
410
200
850
420
290
380
950
710
880
A01M5750
680
650
860
760
770
720
730
740
230
460
320
990
370
890
900
960
870
010
970
020
040
070
030
050
060
800
840
810
080
2840947-2
332628

ECM: 348256 - 20071222
Group number: 2840947-0100
Assembly Drawing: 2840947-2_1_AB

This list covers pages from 8-8 to 8-11

| Pos | Part No | UN | Qty | Description | Page No |
|---|---|---|---|---|---|
| **A3/FLEX** | | | | | |
| 0790 | 90600-1200 | | 7 | SCREEN CLAMPING SADDLE, 790-108 | |
| **A3/FLEX DIMC/FLEX (See drawing on pages: 8-8, 8-10)** | | | | | |
| 0240 | 2845786-0000 | | 2 | BRACKET | |
| 0640 | 312115-0364 | | 4 | SCREW ISO4762 M6X10 A4 80 | |
| 0660 | 315105-0153 | | 4 | WASHER BRB 6,4X12 RFR | |
| T40V9080 | 90459-2549 | | 1 | AC LINE FILTER 3-PHASE 30A, 2090-XXLF-X3 | |
| T40V9081 | 90458-1162 | | 1 | FILTER 6 A 250 VAC, 6FC10 | |
| T50V9000 | 90459-2549 | | 1 | AC LINE FILTER 3-PHASE 30A, 2090-XXLF-X3 | |
| T50V9001 | 90458-1162 | | 1 | FILTER 6 A 250 VAC, 6FC10 | |
| **A3/FLEX NODIMC (See drawing on pages: 8-8, 8-10)** | | | | | |
| 0240 | 2845786-0000 | | 2 | BRACKET | |
| 0640 | 312115-0364 | | 4 | SCREW ISO4762 M6X10 A4 80 | |
| 0660 | 315105-0153 | | 4 | WASHER BRB 6,4X12 RFR | |
| 0790 | 90600-1200 | | 7 | SCREEN CLAMPING SADDLE, 790-108 | |
| T40V9080 | 90459-2549 | | 1 | AC LINE FILTER 3-PHASE 30A, 2090-XXLF-X3 | |
| T40V9081 | 90458-1162 | | 1 | FILTER 6 A 250 VAC, 6FC10 | |
| T50V9000 | 90459-2549 | | 1 | AC LINE FILTER 3-PHASE 30A, 2090-XXLF-X3 | |
| T50V9001 | 90458-1162 | | 1 | FILTER 6 A 250 VAC, 6FC10 | |
| **Common Parts** | | | | | |
| 0010 | 2840929-0100 | | 1 | RELAY UNIT ..... | **8-13** |
| 0020 | 2840930-0100 | | 1 | PLC ..... | **8-15** |
| 0030 | 2840931-0100 | | 1 | PLC ..... | **8-17** |
| 0040 | 2840932-0100 | | 1 | PLINTH ..... | **8-19** |
| 0050 | 2840933-0100 | | 1 | PLINTH ..... | **8-21** |
| 0060 | 2840934-0100 | | 1 | RELAY ..... | **8-23** |
| 0070 | 2840935-0100 | | 1 | IH EQUIPMENT ..... | **8-25** |
| 0080 | 2840936-0100 | | 1 | MOTOR DRIVE CONTROL ..... | **8-27** |
| 0090 | 2840938-0100 | | 1 | PLC ..... | **8-29** |
| 0100 | 2840939-0100 | | 1 | FUSE BOARD 1 ..... | **8-31** |
| 0110 | 2840940-0100 | | 1 | FUSE BOARD 2 ..... | **8-33** |
| 0120 | 2840941-0100 | | 1 | FUSE BOARD 3 ..... | **8-35** |
| 0130 | 2840943-0100 | | 1 | FREQUENCY CONVERTER WITH ACCESSORIES ..... | **8-37, 8-39** |
| 0140 | 2840944-0100 | | 1 | PLINTH ..... | **8-41** |
| 0150 | 2840945-0100 | | 1 | PLINTH ..... | **8-43** |
| 0160 | 90181-0054 | MM | 1314 | CABLE DUCT 60X80MM | |
| 0170 | 90181-0054 | MM | 1314 | CABLE DUCT 60X80MM | |
| 0180 | 90181-0054 | MM | 1314 | CABLE DUCT 60X80MM | |
| 0200 | 2845789-0000 | | 1 | CABLE DUCT 60 X 80 MM | |
| 0210 | 2845793-0000 | | 2 | CABLE DUCT 60 X 80 MM | |
| 0220 | 2845794-0000 | | 3 | CABLE DUCT 60 X 80 MM | |
| 0230 | 2849076-0000 | | 2 | BRACKET | |
| 0250 | 2840948-0000 | | 1 | COVER | |
| 0260 | 2845785-0000 | | 1 | COVER | |
| 0270 | 2845787-0000 | | 1 | CABLE DUCT 60 X 80 MM | |
| 0280 | 2845791-0000 | | 1 | CABLE DUCT 40X80MM | |
| 0290 | 2845788-0000 | | 1 | CABLE DUCT 40X80MM | |
| 0300 | 1038275-0012 | | 8 | SPACER | |
| 0310 | 2876479-0000 | | 1 | PLATE | |
| 0320 | 2845790-0000 | | 1 | CABLE DUCT 100X80MM | |
| 0330 | 2845792-0000 | | 1 | CABLE DUCT 100X80MM | |
| 0350 | 90181-0052 | MM | 704 | CABLE DUCT 25X80MM | |
| 0360 | 90181-0054 | MM | 1314 | CABLE DUCT 60X80MM | |
| 0370 | 90181-0054 | MM | 1019 | CABLE DUCT 60X80MM | |
| 0380 | 90181-0053 | MM | 200 | CABLE DUCT 40X80MM | |
| 0390 | 90181-0053 | MM | 295 | CABLE DUCT 40X80MM | |
| 0400 | 90181-0052 | MM | 206 | CABLE DUCT 25X80MM | |
| 0410 | 90181-0054 | MM | 550 | CABLE DUCT 60X80MM | |
| 0420 | 90181-0056 | MM | 629 | CABLE DUCT 100X80MM | |
| 0440 | 90181-0053 | MM | 1314 | CABLE DUCT 40X80MM | |
| 0450 | 90181-0055 | MM | 1314 | CABLE DUCT 80X80MM | |
| 0460 | 90181-0055 | MM | 704 | CABLE DUCT 80X80MM | |
| 0500 | 90459-0959 | | 1 | DISTRIBUTOR BLOCK 1492-PD3163 | |
| 0600 | 312115-0323 | | 10 | SCREW ISO4762 M5X8 A4 80 | |
| 0610 | 312115-0287 | | 6 | SCREW ISO4762 M4X8 A4 80 | |
| 0620 | 312115-0328 | | 8 | SCREW ISO4762 M5X14 A4 80 | |
| 0630 | 312121-0323 | | 2 | SCREW ISO 1207 M5X8 4.8-5.8 Z.PL. | |
| 0650 | 315105-0136 | | 4 | WASHER BRB 4,3X8 RFR | |
| 0680 | 90457-0057 | | 4 | GRID FOR FAN LZ36 | |
| 0690 | 90195-0020 | | 2 | TERMINAL BLOCK, BK 2CRN; 0624720000 | |
| 0710 | 90181-0313 | | 141 | RIVET DUCTAFIX R4 | |
| 0720 | 90181-0054 | MM | 704 | CABLE DUCT 60X80MM | |
| 0730 | 90181-0054 | MM | 704 | CABLE DUCT 60X80MM | |
| 0740 | 90181-0052 | MM | 704 | CABLE DUCT 25X80MM | |
| 0750 | 90181-0054 | MM | 550 | CABLE DUCT 60X80MM | |
| 0760 | 2608177-0000 | | 8 | SIGN | |
| 0770 | 90194-0152 | | 8 | SIGN, EARTH | |
| 0780 | 90600-1201 | | 1 | BUSBAR U-SHAPED, 790-191 | |
| 0800 | 90062-0016 | | 8 | LOCK WASHER SERRAT.EXT.GEAR,8,4/15 H=0,8 | |
| 0810 | 312115-0447 | | 8 | SCREW ISO4762 M8X12 A4 80 | |
| 0820 | 90135-0034 | | 14 | SHIELD CLAMP KLBU 3-8 | |
| 0830 | 315105-0146 | | 18 | WASHER BRB 5,3X10 RFR | |
| 0840 | 315105-0165 | | 8 | WASHER BRB 8,4X16 RFR | |
| 0850 | 312155-0325 | | 3 | SCREW DIN 7991 MF6S M5X10 A4 70 | |

Machine Type Group Description Used-In Group Number Page No

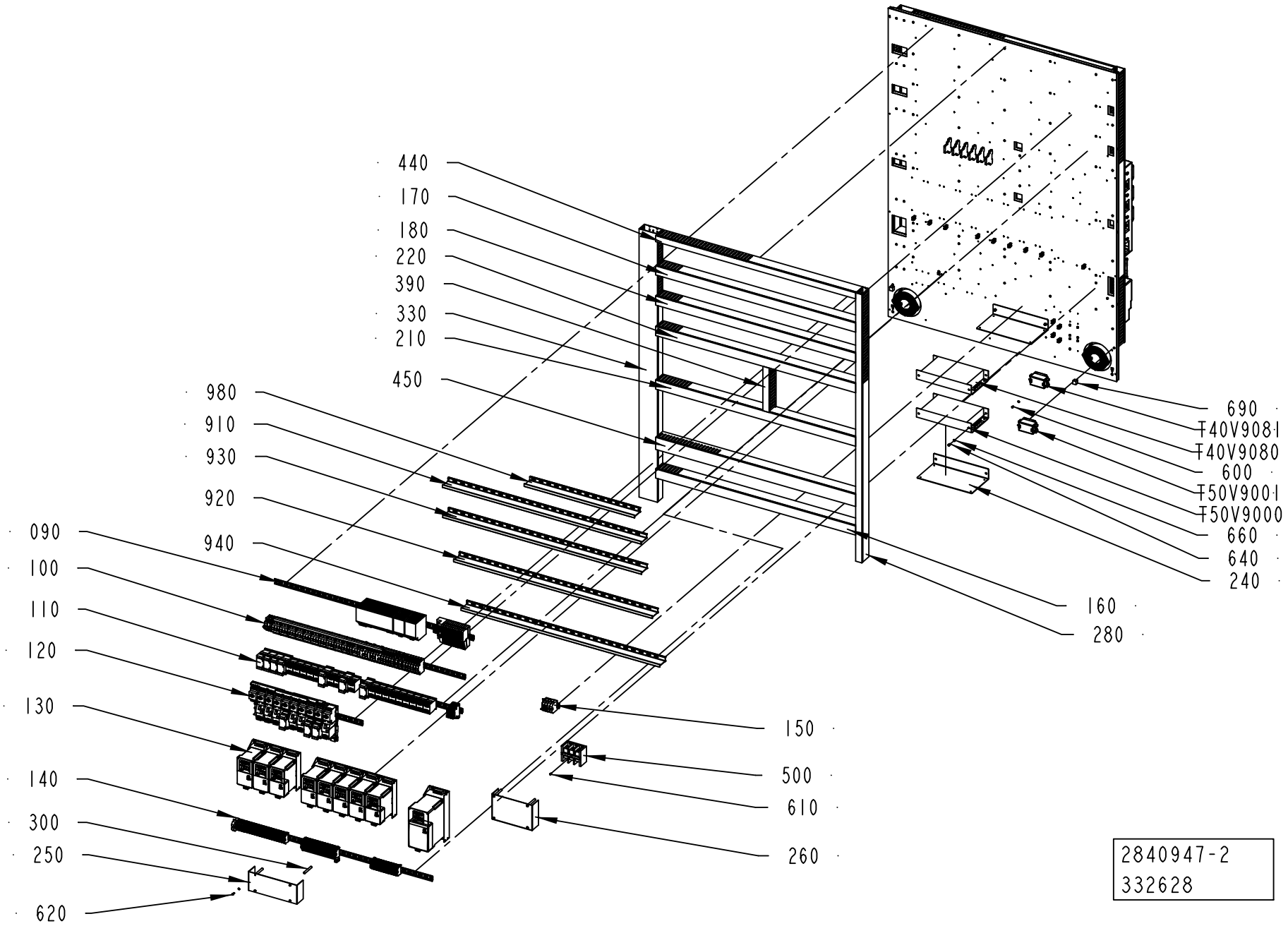
440
170
180
220
390
330
210
450
980
910
930
920
940
090
100
110
120
130
140
300
250
620
690
T40V9081
T40V9080
600
T50V9001
T50V9000
660
640
240
160
280
150
500
610
260
2840947-2
332628

| Pos | Part No | UN | Qty | Description | Page No |
|---|---|---|---|---|---|
| **Common Parts (Cont'd)** | | | | | |
| 0860 | 312115-0289 | | 4 | SCREW ISO4762 M4X10 A4 80 | |
| 0870 | 2918723-0000 | | 1 | DIVIDER | |
| 0880 | 2918724-0000 | | 1 | DIVIDER | |
| 0890 | 2918725-0000 | | 1 | DIVIDER | |
| 0900 | 2918726-0000 | | 1 | DIVIDER | |
| 0910 | 2918727-0000 | | 1 | DIVIDER | |
| 0920 | 2918727-0000 | | 1 | DIVIDER | |
| 0930 | 2918727-0000 | | 1 | DIVIDER | |
| 0940 | 2918727-0000 | | 1 | DIVIDER | |
| 0950 | 2927013-0000 | | 1 | DIVIDER | |
| 0960 | 2927014-0000 | | 1 | DIVIDER | |
| 0970 | 2927015-0000 | | 1 | DIVIDER | |
| 0980 | 90181-0067 | MM | 724 | DIVIDING PLATE SEP80 | |
| 0990 | 90181-0057 | MM | 704 | CABLE DUCT 120X80MM | |
| A01M5740 | 90457-0056 | | 1 | FAN 7450 ES | |
| A01M5750 | 90457-0056 | | 1 | FAN 7450 ES | |

| Pos | Part No | UN | Qty | Description | Page No |
|---|---|---|---|---|---|

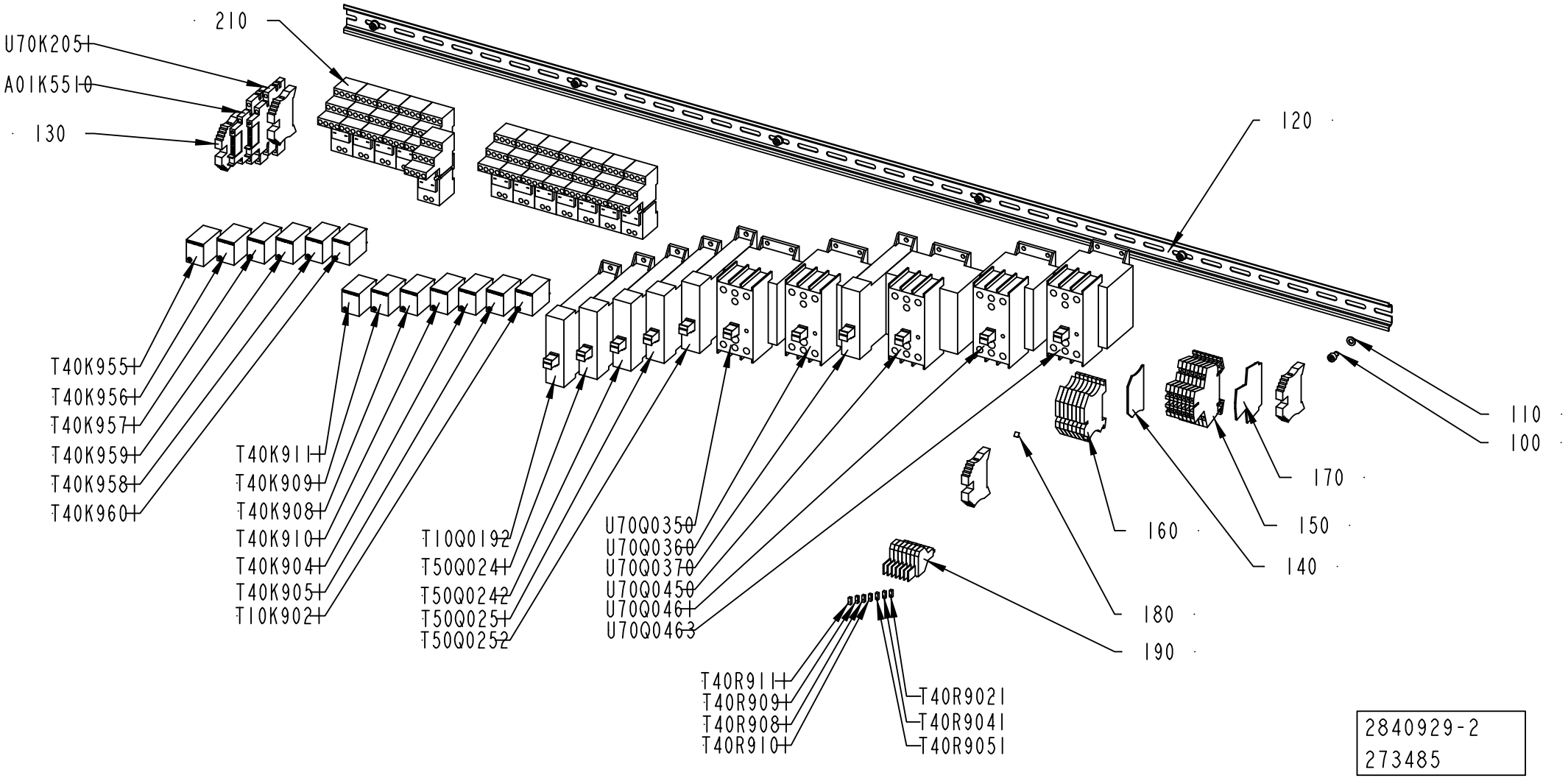
210
U70K205
A01K551
130
120
T40K955
T40K956
T40K957
T40K959
T40K958
T40K960
T40K911
T40K909
T40K908
T40K910
T40K904
T40K905
T10K902
T10Q0192
T50Q024
T50Q0242
T50Q025
T50Q0252
U70Q0350
U70Q0360
U70Q0370
U70Q0450
U70Q046
U70Q0463
110
100
170
160
150
140
180
190
T40R911
T40R909
T40R908
T40R910
T40R902
T40R904
T40R905
2840929-2
273485

ECM: 348270 - 20071222
Group number: 2840929-0100
Assembly Drawing: 2840929-2_1_AA

| Pos | Part No | UN | Qty | Description | Page No |
|---|---|---|---|---|---|
| **A3/FLEX** | | | | | |
| 0150 | 90077-0113 | | 7 | FEED THROUGH TERMINAL, 10-00102150-1 | |
| 0160 | 90600-2134 | | 7 | TERMINAL DISCONNECATBLE, WTR 2,5/O.TNHE | |
| 0190 | 90600-2133 | | 7 | MODULE CONNECTOR 250V, BEST 1833100000 | |
| 0210 | 90600-1219 | | 13 | SOCKET, 700-HN104 | |
| T40K9041 | 90600-1214 | | 1 | SOLID STATE RELAY, 700-SCNN3Z26 | |
| T40K9081 | 90600-1214 | | 1 | SOLID STATE RELAY, 700-SCNN3Z26 | |
| T40K9091 | 90600-1214 | | 1 | SOLID STATE RELAY, 700-SCNN3Z26 | |
| T40K9101 | 90600-1214 | | 1 | SOLID STATE RELAY, 700-SCNN3Z26 | |
| T40K9111 | 90600-1214 | | 1 | SOLID STATE RELAY, 700-SCNN3Z26 | |
| T40K9551 | 90600-1214 | | 1 | SOLID STATE RELAY, 700-SCNN3Z26 | |
| T40K9561 | 90600-1214 | | 1 | SOLID STATE RELAY, 700-SCNN3Z26 | |
| T40K9571 | 90600-1214 | | 1 | SOLID STATE RELAY, 700-SCNN3Z26 | |
| T40K9581 | 90600-1214 | | 1 | SOLID STATE RELAY, 700-SCNN3Z26 | |
| T40K9591 | 90600-1214 | | 1 | SOLID STATE RELAY, 700-SCNN3Z26 | |
| T40K9601 | 90600-1214 | | 1 | SOLID STATE RELAY, 700-SCNN3Z26 | |
| T40R9041 | 90600-1199 | | 1 | VARISTOR MOV, 390KD07 | |
| T40R9091 | 90600-1199 | | 1 | VARISTOR MOV, 390KD07 | |
| T40R9101 | 90600-1199 | | 1 | VARISTOR MOV, 390KD07 | |
| T40R9111 | 90600-1199 | | 1 | VARISTOR MOV, 390KD07 | |
| **Common Parts** | | | | | |
| 0100 | 312115-0323 | | 6 | SCREW ISO4762 M5X8 A4 80 | |
| 0110 | 315105-0146 | | 6 | WASHER BRB 5,3X10 RFR | |
| 0120 | 353042-0004 | MM | 1305 | RAIL TS 35/7,5 | |
| 0130 | 353031-0203 | | 4 | END SUPPORT, WEW 35/2 | |
| 0140 | 353032-0004 | | 1 | END PLATE WAP 2,5-10 BEIGE | |
| 0170 | 353032-0009 | | 1 | END PLATE, WAP FOR WDK | |
| 0180 | 359011-0807 | | 2 | MARKING PLATES 5-FW 1-50 | |
| A01K5510 | 90600-1211 | | 1 | TERMINAL BLOCK RELAY, 700-HLT1Z24 | |
| T10K9021 | 90600-1214 | | 1 | SOLID STATE RELAY, 700-SCNN3Z26 | |
| T10Q0192 | 90600-0943 | | 1 | SOLID STATE CONTACTOR, 3RF2320-1AA04 | |
| T40K9051 | 90600-1214 | | 1 | SOLID STATE RELAY, 700-SCNN3Z26 | |
| T40R9021 | 90600-1199 | | 1 | VARISTOR MOV, 390KD07 | |
| T40R9051 | 90600-1199 | | 1 | VARISTOR MOV, 390KD07 | |
| T50Q0241 | 90600-0943 | | 1 | SOLID STATE CONTACTOR, 3RF2320-1AA04 | |
| T50Q0242 | 90600-0943 | | 1 | SOLID STATE CONTACTOR, 3RF2320-1AA04 | |
| T50Q0251 | 90600-0943 | | 1 | SOLID STATE CONTACTOR, 3RF2320-1AA04 | |
| T50Q0252 | 90600-0943 | | 1 | SOLID STATE CONTACTOR, 3RF2320-1AA04 | |
| U70K2051 | 90600-1211 | | 1 | TERMINAL BLOCK RELAY, 700-HLT1Z24 | |
| U70Q0350 | 90600-0947 | | 1 | SOLID STATE CONTACTOR, 3RF2420-1AB45 | |
| U70Q0360 | 90600-0947 | | 1 | SOLID STATE CONTACTOR, 3RF2420-1AB45 | |
| U70Q0370 | 90600-0943 | | 1 | SOLID STATE CONTACTOR, 3RF2320-1AA04 | |
| U70Q0450 | 90600-0948 | | 1 | SOLID STATE CONTACTOR, 3RF2430-1AB45 | |
| U70Q0461 | 90600-0947 | | 1 | SOLID STATE CONTACTOR, 3RF2420-1AB45 | |
| U70Q0463 | 90600-0947 | | 1 | SOLID STATE CONTACTOR, 3RF2420-1AB45 | |

Machine Type | Group Description | Used-In | Group Number | Page No

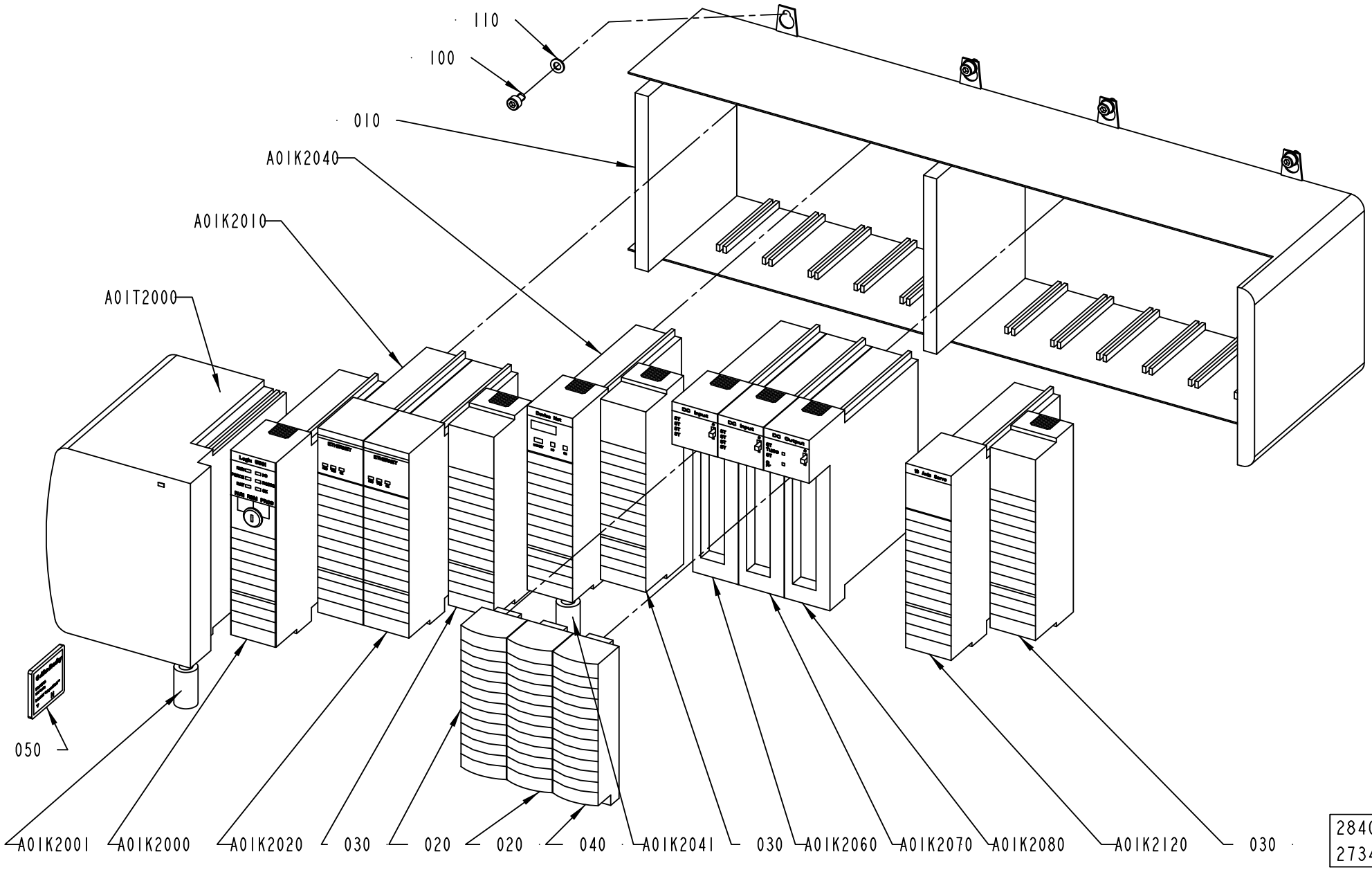


2840930-2
273485

ECM: 348269 - 20071222
Group number: 2840930-0100
Assembly Drawing: 2840930-2_1_AA

| Pos | Part No | UN | Qty | Description | Page No |
|---|---|---|---|---|---|
| **A3/FLEX** | | | | | |
| A01K2120 | 90459-2481 | | 1 | PLC 16-AXIS SERCOS MOTION MODULE | |
| **Common Parts** | | | | | |
| 0010 | 90459-2459 | | 1 | BASEPLATE, 13 SLOT CONTROLLOGIX CHASSIS | |
| 0020 | 90459-2488 | | 2 | REMOVABLE TERMINAL BLOCK 36 POINTS | |
| 0030 | 90459-5044 | | 3 | PLC EMPTY SLOT FILLER, 1756-N2 SERIE A | |
| 0040 | 90459-2487 | | 1 | REMOVABLE TERMINAL BLOCK 20 POINTS | |
| 0050 | 90459-3145 | | 1 | FLASH MEMORY 64MBYTE, 1784-CF64 | |
| 0100 | 312115-0323 | | 8 | SCREW ISO4762 M5X8 A4 80 | |
| 0110 | 315105-0146 | | 8 | WASHER BRB 5,3X10 RFR | |
| A01K2000 | 90459-6559 | | 1 | PROCESSOR L63, SERIES B, 1756-L63/B | |
| | *90459-6726* | | *1* | *SPARE BATTERY FOR CONTROLLOGIX, 1756-BA2* | |
| A01K2001 | 90458-1141 | | 1 | FERRITE, RI-16-28-9 | |
| A01K2010 | 90459-2477 | | 1 | ETHERNET I/P BRIDGE MODULE, 1756-ENBT | |
| A01K2020 | 90459-2477 | | 1 | ETHERNET I/P BRIDGE MODULE, 1756-ENBT | |
| A01K2040 | 90459-2479 | | 1 | PLC DEVICENET BRIDGE/SCANNER MODULE | |
| A01K2041 | 90458-1141 | | 1 | FERRITE, RI-16-28-9 | |
| A01K2060 | 90459-6556 | | 1 | PLC DIGITAL INPUT 32PTS, 1756-IB32/B | |
| A01K2070 | 90459-6556 | | 1 | PLC DIGITAL INPUT 32PTS, 1756-IB32/B | |
| A01K2080 | 90459-2474 | | 1 | PLC,DIGIT. OUTPUT MODULE 16 PTS 10-31VDC | |
| A01T2000 | 90459-7267 | | 1 | POWER SUPPLY 24VDC, 1756-PB75/B | |

| Pos | Part No | UN | Qty | Description | Page No |
|---|---|---|---|---|---|

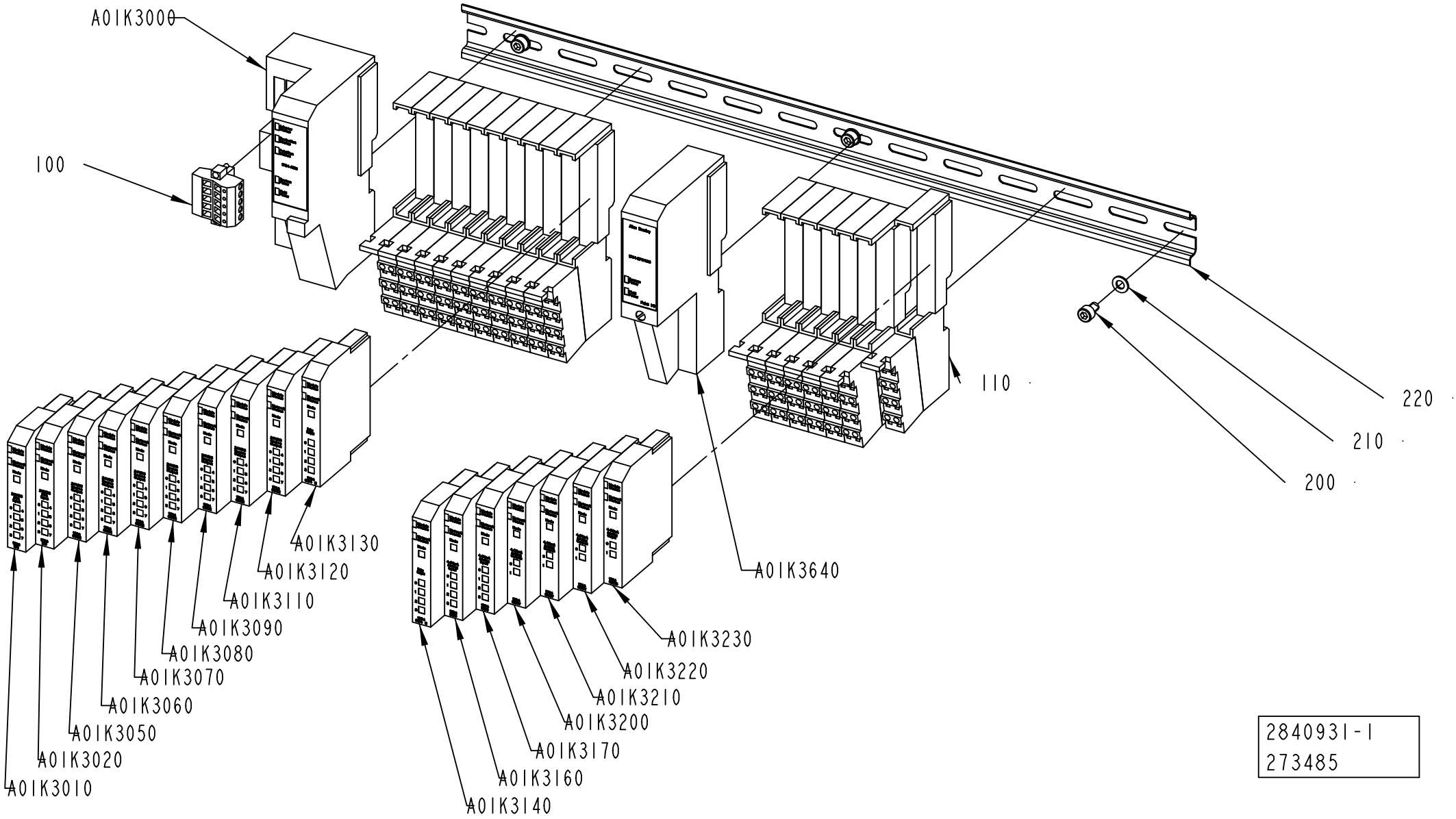
A01K3000
100
110
220
210
200
A01K3130
A01K3120
A01K3110
A01K3090
A01K3080
A01K3070
A01K3060
A01K3050
A01K3020
A01K3010
A01K3640
A01K3230
A01K3220
A01K3210
A01K3200
A01K3170
A01K3160
A01K3140
2840931-1
273485

ECM: 348268 - 20071222
Group number: 2840931-0100
Assembly Drawing: 2840931-1_1_AA

| Pos | Part No | UN | Qty | Description | Page No |
|---|---|---|---|---|---|
| - | | | | | |
| 0100 | 90459-5574 | | 1 | DEVICENET OPEN STYLE CONN, 1787-PLUG10R | |
| 0110 | 90459-2526 | | 17 | REMOTE I/O BASE MODULE 8 POINTS, 1734-TB | |
| 0200 | 312115-0323 | | 3 | SCREW ISO4762 M5X8 A4 80 | |
| 0210 | 315105-0146 | | 3 | WASHER BRB 5,3X10 RFR | |
| 0220 | 353042-0004 | MM | 476 | RAIL TS 35/7,5 | |
| A01K3000 | 90459-2494 | | 1 | DEVICENET I/O ADAPTER MODULE, 1734-ADN | |
| A01K3010 | 90459-6561 | | 1 | DIGITAL INPUT 8 PTS SINK, 1734-IB8/C | |
| A01K3020 | 90459-6561 | | 1 | DIGITAL INPUT 8 PTS SINK, 1734-IB8/C | |
| A01K3050 | 90459-6560 | | 1 | DIGITAL OUTPUT 8 PTS, 1734-OB8E/C | |
| A01K3060 | 90459-6560 | | 1 | DIGITAL OUTPUT 8 PTS, 1734-OB8E/C | |
| A01K3070 | 90459-6560 | | 1 | DIGITAL OUTPUT 8 PTS, 1734-OB8E/C | |
| A01K3080 | 90459-6560 | | 1 | DIGITAL OUTPUT 8 PTS, 1734-OB8E/C | |
| A01K3090 | 90459-6560 | | 1 | DIGITAL OUTPUT 8 PTS, 1734-OB8E/C | |
| A01K3110 | 90459-6560 | | 1 | DIGITAL OUTPUT 8 PTS, 1734-OB8E/C | |
| A01K3120 | 90459-6560 | | 1 | DIGITAL OUTPUT 8 PTS, 1734-OB8E/C | |
| A01K3130 | 90459-5261 | | 1 | REMOTE I/O, RELAY OUTP. 4 PTS,1734-OW4/C | |
| A01K3140 | 90459-5261 | | 1 | REMOTE I/O, RELAY OUTP. 4 PTS,1734-OW4/C | |
| A01K3160 | 90459-2509 | | 1 | REMOTE I/O ANALOG INPUT CURRENT 2 PTS | |
| A01K3170 | 90459-2509 | | 1 | REMOTE I/O ANALOG INPUT CURRENT 2 PTS | |
| A01K3200 | 90459-2510 | | 1 | ANALOG OUTP. VOLT. 2PTS, 1734-OE2V SER.C | |
| A01K3210 | 90459-2510 | | 1 | ANALOG OUTP. VOLT. 2PTS, 1734-OE2V SER.C | |
| A01K3220 | 90459-2510 | | 1 | ANALOG OUTP. VOLT. 2PTS, 1734-OE2V SER.C | |
| A01K3230 | 90459-2511 | | 1 | REMOTE I/O ANALOG OUTPUT CURRENT 2PTS | |
| A01K3640 | 90459-2500 | | 1 | EXPANSION POWER SUPPLY MODULE | |

| Pos | Part No | UN | Qty | Description | Page No |
|---|---|---|---|---|---|

| Machine Type | Group Description | Used-In | Group Number | Page No |
|---|---|---|---|---|

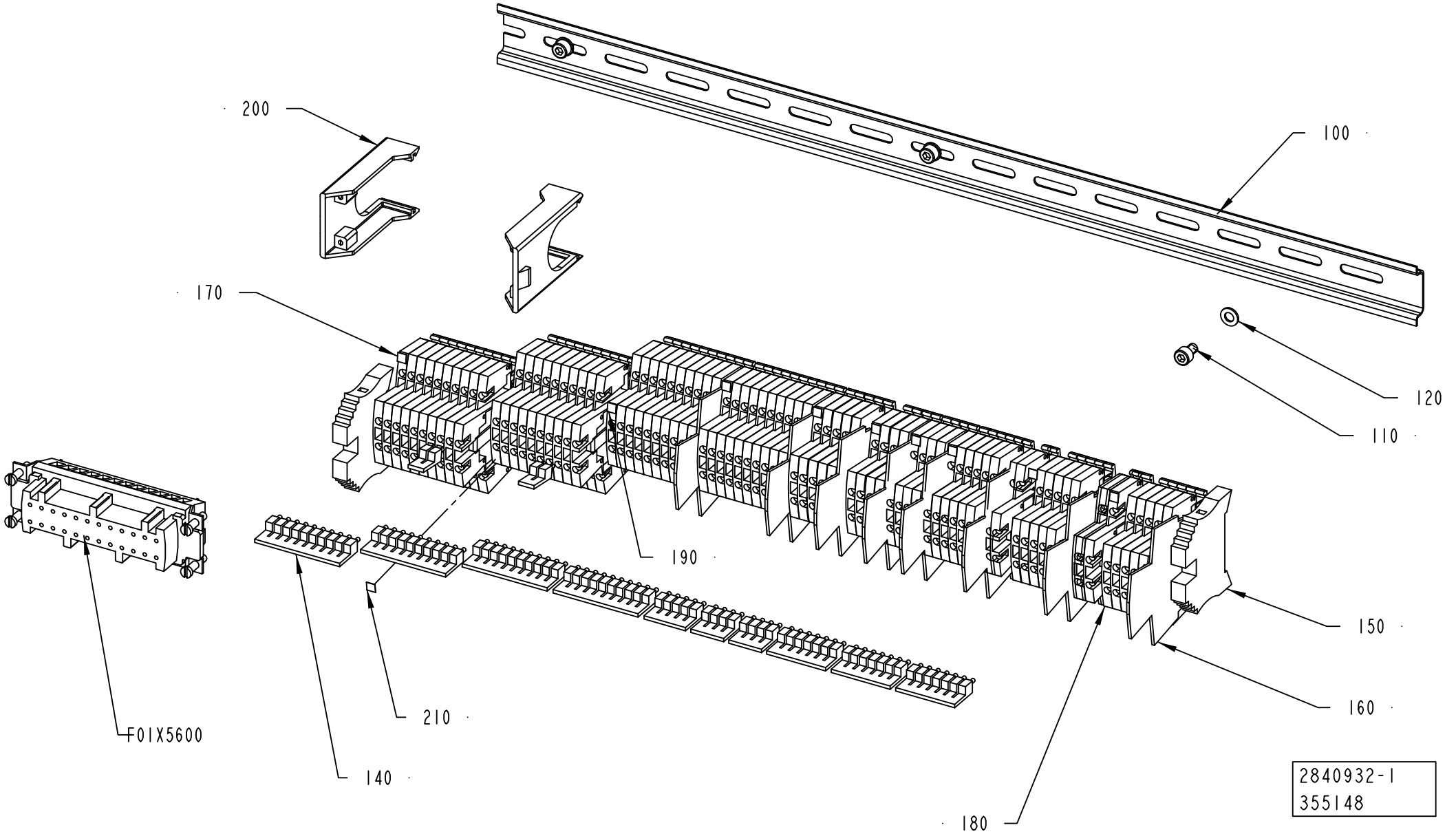
200
100
170
120
110
190
150
160
F01X5600
210
140
180
2840932-1
355148

ECM: 356552 - 20080916
Group number: 2840932-0100
Assembly Drawing: 2840932-1_1_AB

| Pos | Part No | UN | Qty | Description | Page No |
|---|---|---|---|---|---|
| - | | | | | |
| 0100 | 353042-0004 | MM | 540 | RAIL TS 35/7,5 | |
| 0110 | 312115-0323 | | 3 | SCREW ISO4762 M5X8 A4 80 | |
| 0120 | 315105-0146 | | 3 | WASHER BRB 5,3X10 RFR | |
| 0140 | 353034-0030 | | 12 | BRIDGE CONNECTOR WQV 2,5/10, 10544.6 | |
| 0150 | 353031-0203 | | 2 | END SUPPORT, WEW 35/2 | |
| 0160 | 353032-0009 | | 8 | END PLATE, WAP FOR WDK | |
| 0170 | 359011-0809 | | 8 | MARKING PLATES 5-FW 101-150 | |
| 0180 | 90457-0049 | | 74 | TERMINAL BLOCK WDK 2.5V, 102230 | |
| 0190 | 359011-0810 | | 1 | MARKING PLATES 5-FW 151-200 | |
| 0200 | 90459-6859 | | 2 | HOUS.SIZE 6-24B HAN-SNAP, 09 33 000 9980 | |
| 0210 | 359011-0811 | | 1 | MARKING PLATES 5-FW 201-2 | |
| F01X5600 | 90110-0057 | | 1 | FEMALE INSERT HAN 24 E 09 33 002 4201 | |

| Pos | Part No | UN | Qty | Description | Page No |
|---|---|---|---|---|---|

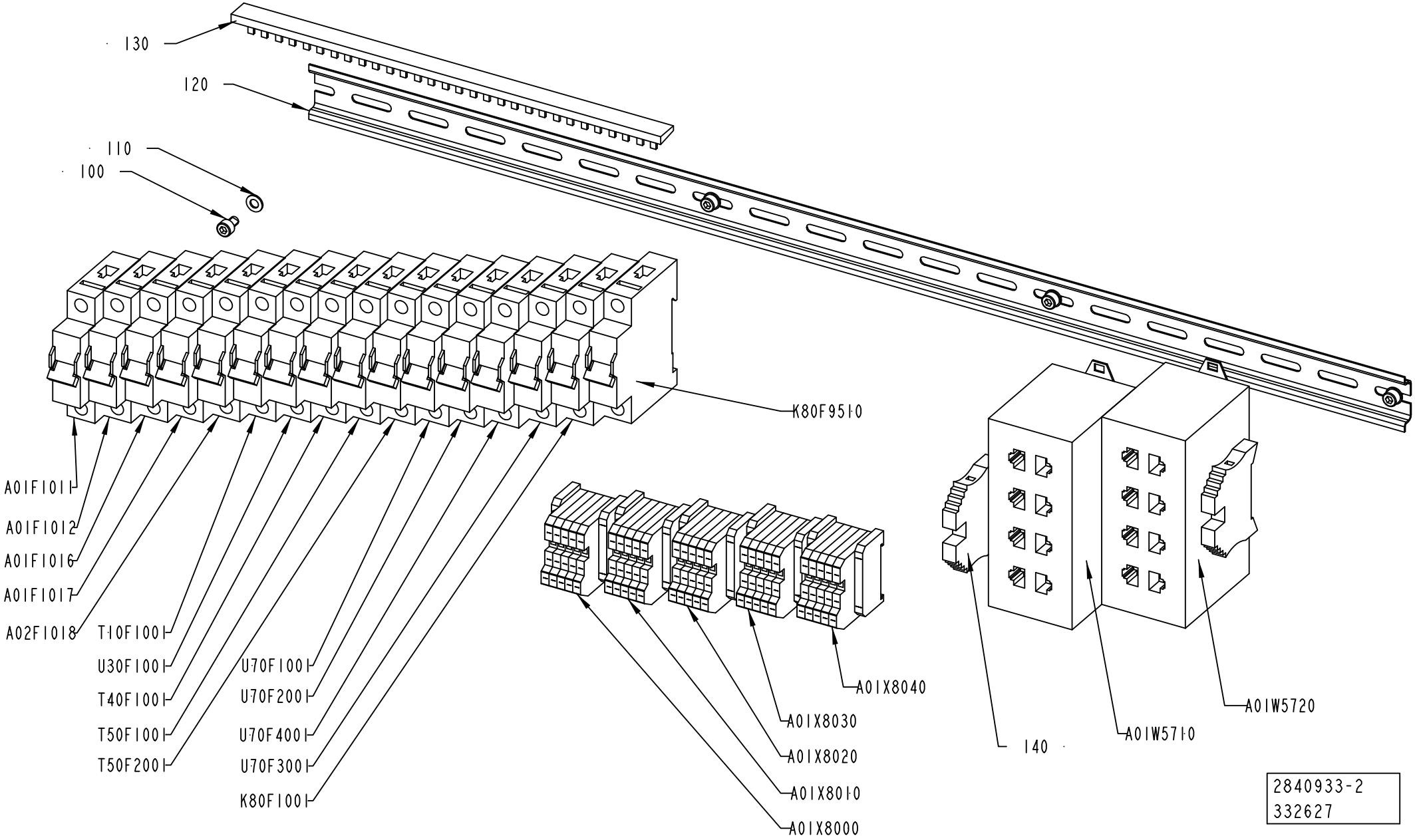
130
120
110
100
K80F9510
A01F1011
A01F1012
A01F1016
A01F1017
A02F1018
T10F1001
U30F1001
T40F1001
T50F1001
T50F2001
U70F1001
U70F2001
U70F4001
U70F3001
K80F1001
A01X8040
A01X8030
A01X8020
A01X8010
A01X8000
A01W5720
A01W5710
140
2840933-2
332627

ECM: 348266 - 20071222
Group number: 2840933-0100
Assembly Drawing: 2840933-2_1_AB

| Pos | Part No | UN | Qty | Description | Page No |
|---|---|---|---|---|---|
| **A3/FLEX** | | | | | |
| 0130 | 90459-5883 | MM | 272 | COMMONING BUSBAR, 1-P 1-PH 1X57 MOD 63A | |
| **Common Parts** | | | | | |
| 0100 | 312115-0323 | | 4 | SCREW ISO4762 M5X8 A4 80 | |
| 0110 | 315105-0146 | | 4 | WASHER BRB 5,3X10 RFR | |
| 0120 | 353042-0004 | MM | 694 | RAIL TS 35/7,5 | |
| 0140 | 353031-0203 | | 2 | END SUPPORT, WEW 35/2 | |
| A01F1011 | 351416-0060 | | 1 | MINIATURE CIRC. BREAK., FAZ -D6 1-POLE | |
| A01F1012 | 351416-0060 | | 1 | MINIATURE CIRC. BREAK., FAZ -D6 1-POLE | |
| A01F1016 | 351416-0100 | | 1 | MINIATURE CIRC. BREAK., FAZ -D10 1-POLE | |
| A01F1017 | 351416-0060 | | 1 | MINIATURE CIRC. BREAK., FAZ -D6 1-POLE | |
| A01W5710 | 90600-1848 | | 1 | ETHERNET SW, FL SWITCH SFN 8TX | |
| A01W5720 | 90600-1848 | | 1 | ETHERNET SW, FL SWITCH SFN 8TX | |
| A01X8000 | 90459-2519 | | 1 | OPEN STYLE TAP | |
| A01X8010 | 90459-2519 | | 1 | OPEN STYLE TAP | |
| A01X8020 | 90459-2519 | | 1 | OPEN STYLE TAP | |
| A01X8030 | 90459-2519 | | 1 | OPEN STYLE TAP | |
| A01X8040 | 90459-2519 | | 1 | OPEN STYLE TAP | |
| A02F1018 | 351416-0160 | | 1 | MINIATURE CIRC. BREAK., FAZ -D16 1-POLE | |
| K80F1001 | 351416-0040 | | 1 | MINIATURE CIRC. BREAK., FAZ -D4 1-POLE | |
| K80F9510 | 351416-0005 | | 1 | MINIATURE CIRC. BREAK., FAZ-D0,5 1-POLE | |
| T10F1001 | 351416-0040 | | 1 | MINIATURE CIRC. BREAK., FAZ -D4 1-POLE | |
| T40F1001 | 351416-0040 | | 1 | MINIATURE CIRC. BREAK., FAZ -D4 1-POLE | |
| T50F1001 | 351416-0040 | | 1 | MINIATURE CIRC. BREAK., FAZ -D4 1-POLE | |
| T50F2001 | 351416-0040 | | 1 | MINIATURE CIRC. BREAK., FAZ -D4 1-POLE | |
| U30F1001 | 351416-0040 | | 1 | MINIATURE CIRC. BREAK., FAZ -D4 1-POLE | |
| U70F1001 | 351416-0040 | | 1 | MINIATURE CIRC. BREAK., FAZ -D4 1-POLE | |
| U70F2001 | 351416-0040 | | 1 | MINIATURE CIRC. BREAK., FAZ -D4 1-POLE | |
| U70F3001 | 351416-0040 | | 1 | MINIATURE CIRC. BREAK., FAZ -D4 1-POLE | |
| U70F4001 | 351416-0040 | | 1 | MINIATURE CIRC. BREAK., FAZ -D4 1-POLE | |

| Pos | Part No | UN | Qty | Description | Page No |
|---|---|---|---|---|---|

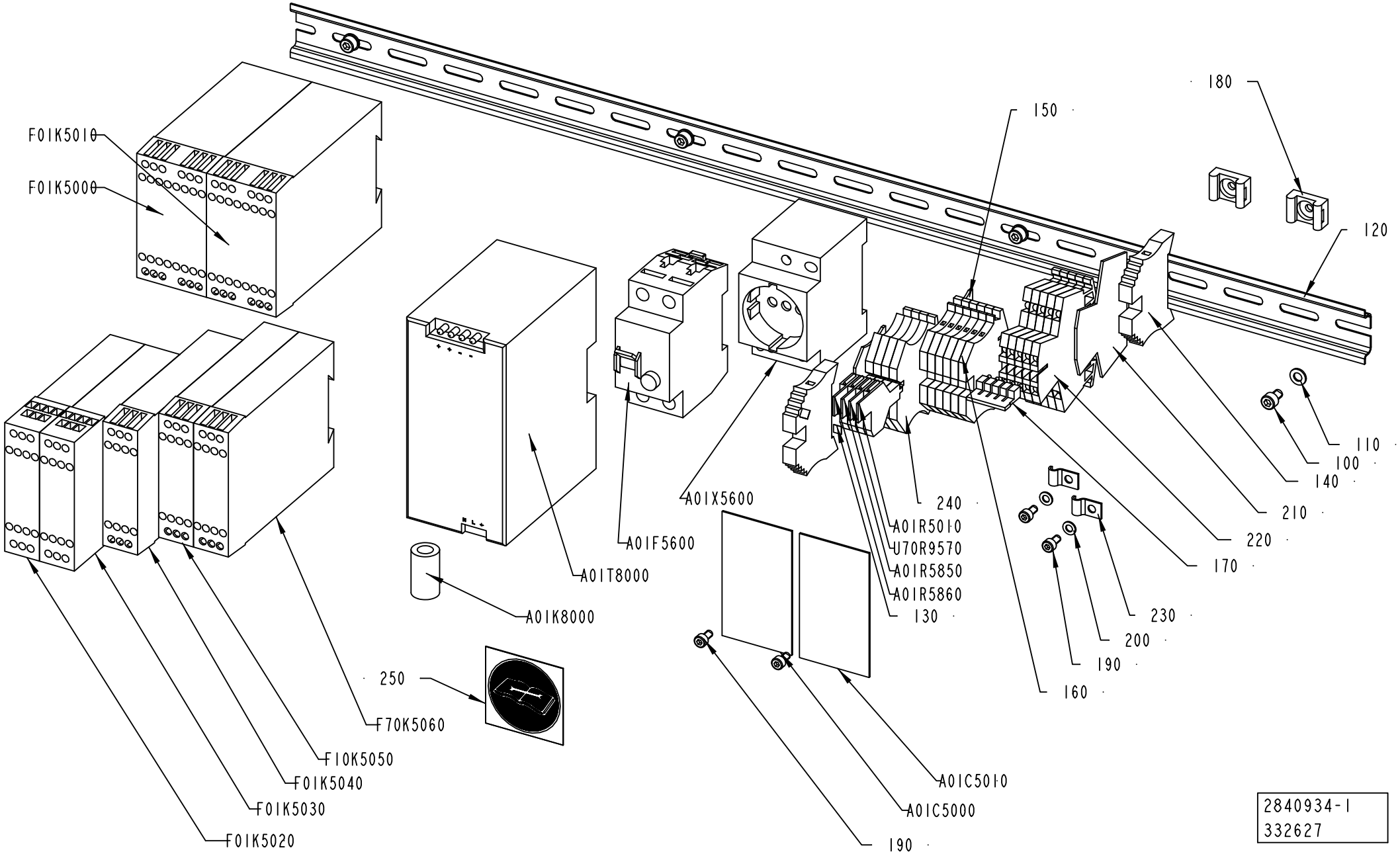
F01K5010
F01K5000
F01K5020
F01K5030
F01K5040
F10K5050
F70K5060
250
A01K8000
A01T8000
A01F5600
A01X5600
A01R5010
U70R9570
A01R5850
A01R5860
130
240
150
180
120
110
100
140
210
220
170
230
200
190
160
A01C5010
A01C5000
190
2840934-1
332627

ECM: 348265 - 20071222
Group number: 2840934-0100
Assembly Drawing: 2840934-1_1_AB

| Pos | Part No | UN | Qty | Description | Page No |
|---|---|---|---|---|---|
| - | | | | | |
| 0100 | 312115-0323 | | 4 | SCREW ISO4762 M5X8 A4 80 | |
| 0110 | 315105-0146 | | 4 | WASHER BRB 5,3X10 RFR | |
| 0120 | 353042-0004 | MM | 694 | RAIL TS 35/7,5 | |
| 0130 | 359011-0807 | | 2 | MARKING PLATES 5-FW 1-50 | |
| 0140 | 353031-0203 | | 2 | END SUPPORT, WEW 35/2 | |
| 0150 | 353032-0004 | | 2 | END PLATE WAP 2,5-10 BEIGE | |
| 0160 | 353021-0212 | | 6 | FEED THROUGH TERMINAL, 10200.0 | |
| 0170 | 353034-0030 | | 1 | BRIDGE CONNECTOR WQV 2,5/10, 10544.6 | |
| 0180 | 352113-0203 | | 2 | ANCHOR PLATES FOR STRIPS, TYPE TM3S8-M0 | |
| 0190 | 312115-0287 | | 4 | SCREW ISO4762 M4X8 A4 80 | |
| 0200 | 315105-0136 | | 2 | WASHER BRB 4,3X8 RFR | |
| 0210 | 90077-0114 | | 1 | END PLATE, WAP/WDK 2,5 | |
| 0220 | 90077-0113 | | 5 | FEED THROUGH TERMINAL, 10-00102150-1 | |
| 0230 | 90165-0003 | | 2 | PIPE CLIP FOR TUBE D=4 MM | |
| 0240 | 90600-2134 | | 4 | TERMINAL DISCONNECATBLE, WTR 2,5/O.TNHE | |
| 0250 | 90459-1738 | | 1 | MANDATORY ACTION SIGN ISO, READ MAINTENA | |
| A01C5000 | 90459-4891 | | 1 | PROGR. IDENTIFIER ID-FIX RW, 20-070-21 | |
| A01C5010 | 90459-4891 | | 1 | PROGR. IDENTIFIER ID-FIX RW, 20-070-21 | |
| A01F5600 | 90459-5811 | | 1 | RESIDUAL CURRENT DEVICE, FI-25/2/003-A | |
| A01K8000 | 90458-1141 | | 1 | FERRITE, RI-16-28-9 | |
| A01R5010 | 90600-2135 | | 1 | MODULE CONNECTOR 250V, BEST/D 1878560000 | |
| A01R5850 | 90600-2135 | | 1 | MODULE CONNECTOR 250V, BEST/D 1878560000 | |
| A01R5860 | 90600-2135 | | 1 | MODULE CONNECTOR 250V, BEST/D 1878560000 | |
| A01T8000 | 90459-5886 | | 1 | POWER SUPPLY UNIT 115-230 VAC/24VDC100W | |
| A01X5600 | 90459-3845 | | 1 | POWER SOCKET, Z-SD230 | |
| F01K5000 | 90459-6692 | | 1 | SAFETY PLC, PLUTO B20 20-070-06 | |
| F01K5010 | 90459-6692 | | 1 | SAFETY PLC, PLUTO B20 20-070-06 | |
| F01K5020 | 90459-1131 | | 1 | SAFETY RELAY, E1T 0SEC | |
| F01K5030 | 90459-1131 | | 1 | SAFETY RELAY, E1T 0SEC | |
| F01K5040 | 90600-1454 | | 1 | SAFETY TIME RELAY, E1T-1.0S-24VDC | |
| F10K5050 | 90459-2291 | | 1 | SAFETY TIME RELAY, E1T-0.5S-24VDC | |
| F70K5060 | 90459-2291 | | 1 | SAFETY TIME RELAY, E1T-0.5S-24VDC | |
| U70R9570 | 90600-2135 | | 1 | MODULE CONNECTOR 250V, BEST/D 1878560000 | |

| Pos | Part No | UN | Qty | Description | Page No |
|---|---|---|---|---|---|

Machine Type | Group Description | Used-In | Group Number | Page No

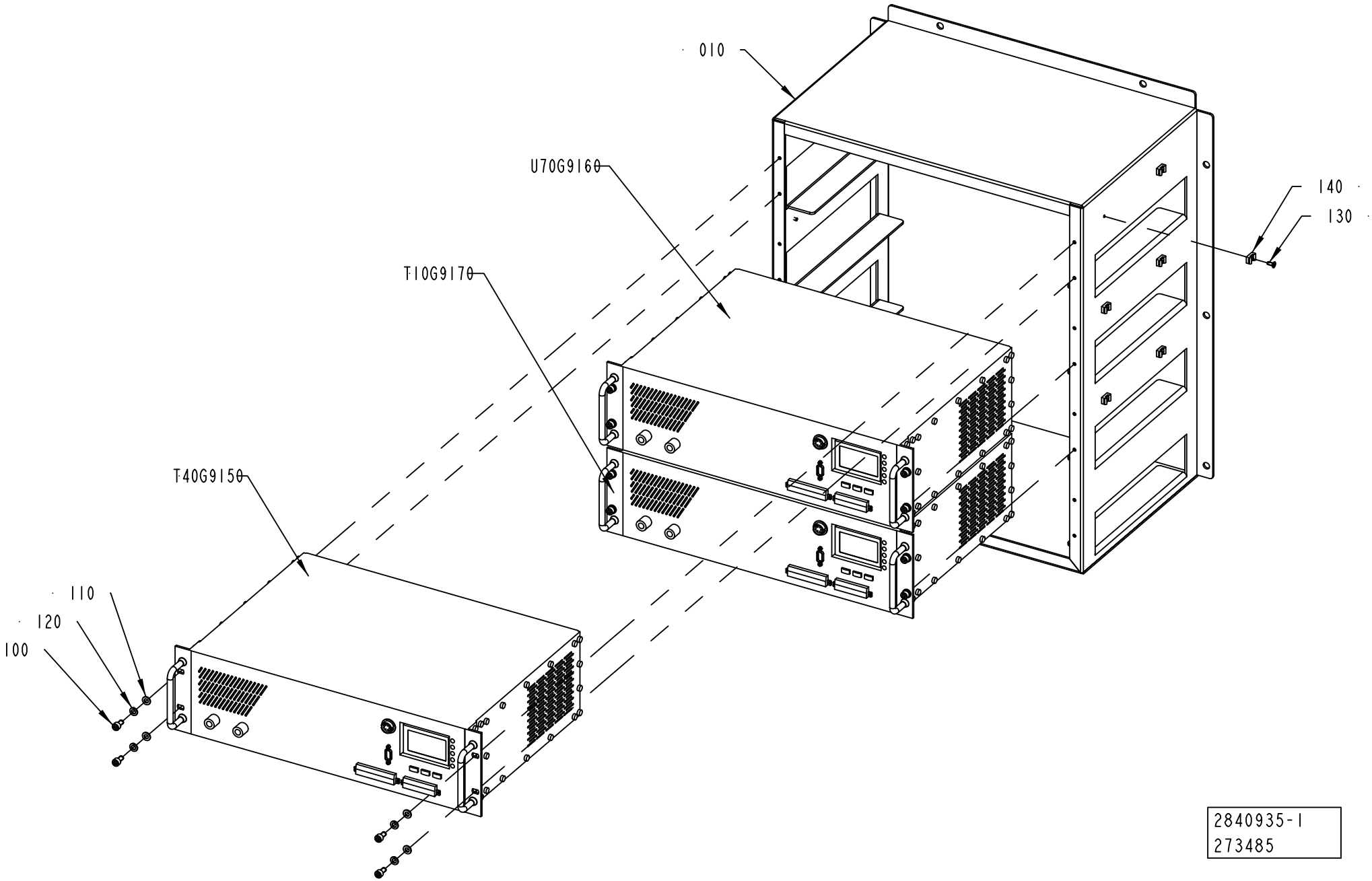
010
U70G9160
T10G9170
T40G9150
140
130
110
120
100
2840935-1
273485

ECM: 348264 - 20071222
Group number: 2840935-0100
Assembly Drawing: 2840935-1_1_AA

| Pos | Part No | UN | Qty | Description | Page No |
|---|---|---|---|---|---|
| - | | | | | |
| 0010 | 2840937-0000 | | 1 | RACK | |
| 0100 | 312115-0366 | | 12 | SCREW ISO4762 M6X12 A4 80 | |
| 0110 | 315105-0153 | | 12 | WASHER BRB 6,4X12 RFR | |
| 0120 | 315402-0156 | | 12 | LOCK WASHER FBB 6,5 | |
| 0130 | 312155-0289 | | 16 | SCREW DIN 7991 MF6S M4X10 A4 70 | |
| 0140 | 352113-0205 | | 16 | ANCHOR PLATES FOR STRIPS, TYPE TM2S8-C10 | |
| T10G9170 | 1499642-0301 | | 1 | TPIH GENERATOR | |
| T40G9150 | 1499642-0301 | | 1 | TPIH GENERATOR | |
| U70G9160 | 1499642-0301 | | 1 | TPIH GENERATOR | |

| Pos | Part No | UN | Qty | Description | Page No |
|---|---|---|---|---|---|

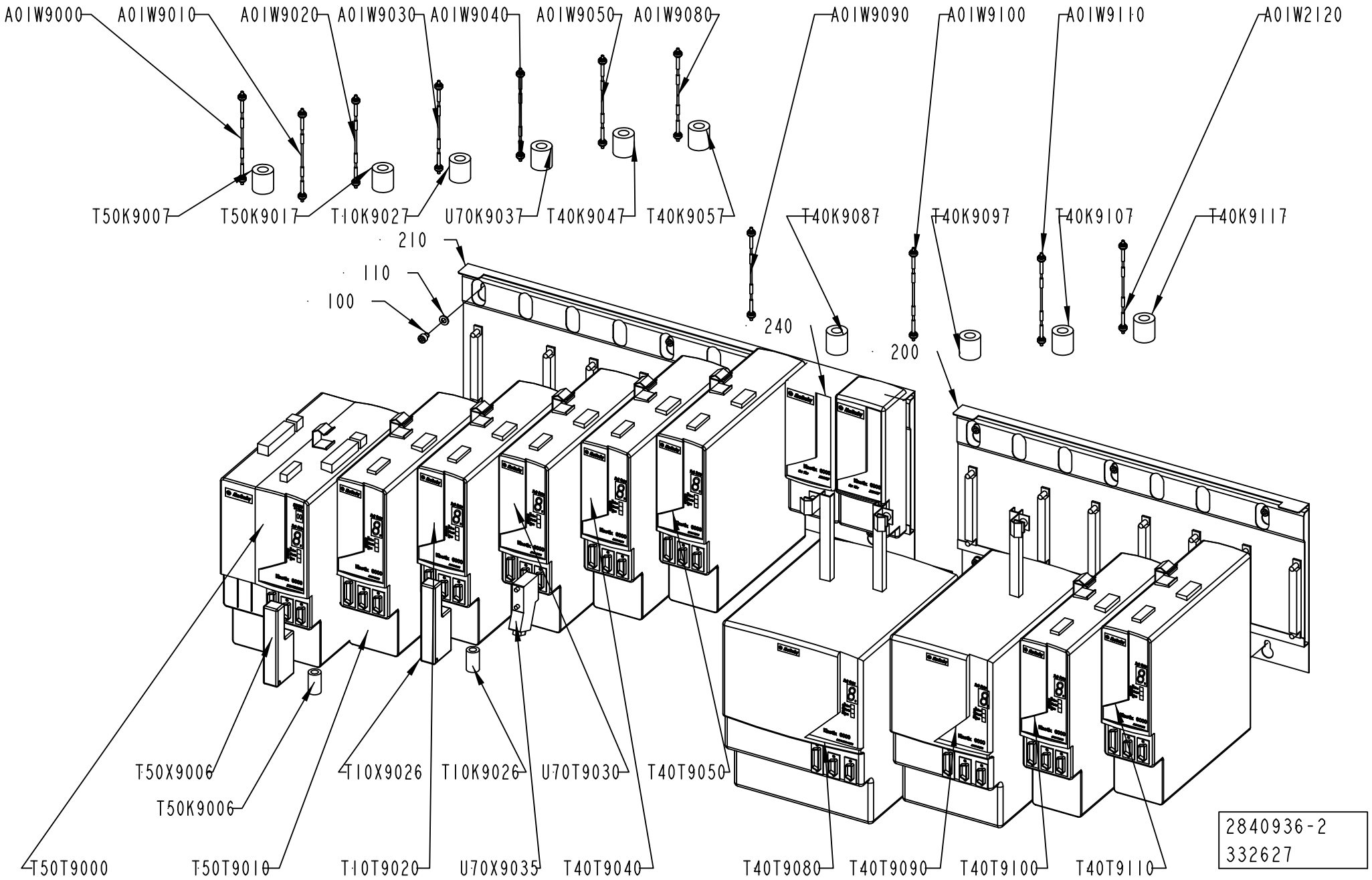
A01W9000
A01W9010
A01W9020
A01W9030
A01W9040
A01W9050
A01W9080
A01W9090
A01W9100
A01W9110
A01W2120
T50K9007
T50K9017
T10K9027
U70K9037
T40K9047
T40K9057
T40K9087
T40K9097
T40K9107
T40K9117
210
110
100
240
200
T50X9006
T50K9006
T10X9026
T10K9026
U70T9030
T40T9050
T50T9000
T50T9010
T10T9020
U70X9035
T40T9040
T40T9080
T40T9090
T40T9100
T40T9110
2840936-2
332627

ECM: 356554 - 20080916
Group number: 2840936-0100
Assembly Drawing: 2840936-2_1_AB

| Pos | Part No | UN | Qty | Description | Page No |
|---|---|---|---|---|---|
| **A3/FLEX** | | | | | |
| 0100 | 312115-0362 | | 11 | SCREW ISO4762 M6X8 A4 80 | |
| 0110 | 315105-0153 | | 11 | WASHER BRB 6,4X12 RFR | |
| 0200 | 90459-5193 | | 1 | SLIM POW. RAIL, KINETIX, 6 AX, 2094-PRS6 | |
| A01W2120 | 90459-2540 | | 1 | SERCOS CABLE 3.0M, 2090-SCEP3-0 | |
| A01W9000 | 90459-2540 | | 1 | SERCOS CABLE 3.0M, 2090-SCEP3-0 | |
| A01W9010 | 90459-2536 | | 1 | SERCOS CABLE 0.1M, 2090-SCEP0-1 | |
| A01W9020 | 90459-2536 | | 1 | SERCOS CABLE 0.1M, 2090-SCEP0-1 | |
| A01W9030 | 90459-2536 | | 1 | SERCOS CABLE 0.1M, 2090-SCEP0-1 | |
| A01W9040 | 90459-2536 | | 1 | SERCOS CABLE 0.1M, 2090-SCEP0-1 | |
| A01W9050 | 90459-2536 | | 1 | SERCOS CABLE 0.1M, 2090-SCEP0-1 | |
| A01W9080 | 90459-2539 | | 1 | SERCOS CABLE 1.0M, 2090-SCEP1-0 | |
| A01W9090 | 90459-2537 | | 1 | SERCOS CABLE 0.3M | |
| A01W9100 | 90459-2536 | | 1 | SERCOS CABLE 0.1M, 2090-SCEP0-1 | |
| A01W9110 | 90459-2536 | | 1 | SERCOS CABLE 0.1M, 2090-SCEP0-1 | |
| T40K9057 | 90458-1140 | | 1 | FERRITE, RI-26-28-13 | |
| T40K9087 | 90458-1140 | | 1 | FERRITE, RI-26-28-13 | |
| T40K9097 | 90458-1140 | | 1 | FERRITE, RI-26-28-13 | |
| T40K9107 | 90458-1140 | | 1 | FERRITE, RI-26-28-13 | |
| T40K9117 | 90458-1140 | | 1 | FERRITE, RI-26-28-13 | |
| T40T9050 | 90459-7214 | | 1 | AXIS MODULE 650V, 6,1A, 2094-BM01-S | |
| T40T9080 | 90459-7212 | | 1 | AXIS MODULE WITH INT. PS, 2094-BC04-M03- | |
| T40T9090 | 90459-7216 | | 1 | AXIS MODULE 650V, 21,2A, 2094-BM03-S | |
| T40T9100 | 90459-7215 | | 1 | AXIS MODULE 650V, 10,3A, 2094-BM02-S | |
| T40T9110 | 90459-7215 | | 1 | AXIS MODULE 650V, 10,3A, 2094-BM02-S | |
| T40X9056 | 90459-2550 | | 1 | I/O CONNECTOR 26 PIN MALE, 2090-K6CK-D26 | |
| T50K9006 | 90458-1141 | | 1 | FERRITE, RI-16-28-9 | |
| T50T9000 | 90459-7211 | | 1 | SERVO AXIS MODULE W/PS 15A 400/460V | |
| T50T9010 | 90459-7214 | | 1 | AXIS MODULE 650V, 6,1A, 2094-BM01-S | |
| **Common Parts** | | | | | |
| 0210 | 90459-5195 | | 1 | SLIM POWER RAIL,KINETIX,8 AXIS,2094-PRS8 | |
| 0240 | 90459-2547 | | 2 | POWER RAIL SLOT FILLER MODULE, 2094-PRF | |
| T10K9026 | 90458-1141 | | 1 | FERRITE, RI-16-28-9 | |
| T10K9027 | 90458-1140 | | 1 | FERRITE, RI-26-28-13 | |
| T10T9020 | 90459-7214 | | 1 | AXIS MODULE 650V, 6,1A, 2094-BM01-S | |
| T10X9026 | 90459-2550 | | 1 | I/O CONNECTOR 26 PIN MALE, 2090-K6CK-D26 | |
| T40K9047 | 90458-1140 | | 1 | FERRITE, RI-26-28-13 | |
| T40T9040 | 90459-7214 | | 1 | AXIS MODULE 650V, 6,1A, 2094-BM01-S | |
| T50K9007 | 90458-1140 | | 1 | FERRITE, RI-26-28-13 | |
| T50K9017 | 90458-1140 | | 1 | FERRITE, RI-26-28-13 | |
| U70K9037 | 90458-1140 | | 1 | FERRITE, RI-26-28-13 | |
| U70T9030 | 90459-7214 | | 1 | AXIS MODULE 650V, 6,1A, 2094-BM01-S | |
| U70X9035 | 2870905-0001 | | 1 | CONNECTOR | |
| U70X9035 | 2870905-0000 | | 1 | CONNECTOR | |

Machine Type | Group Description | Used-In | Group Number | Page No

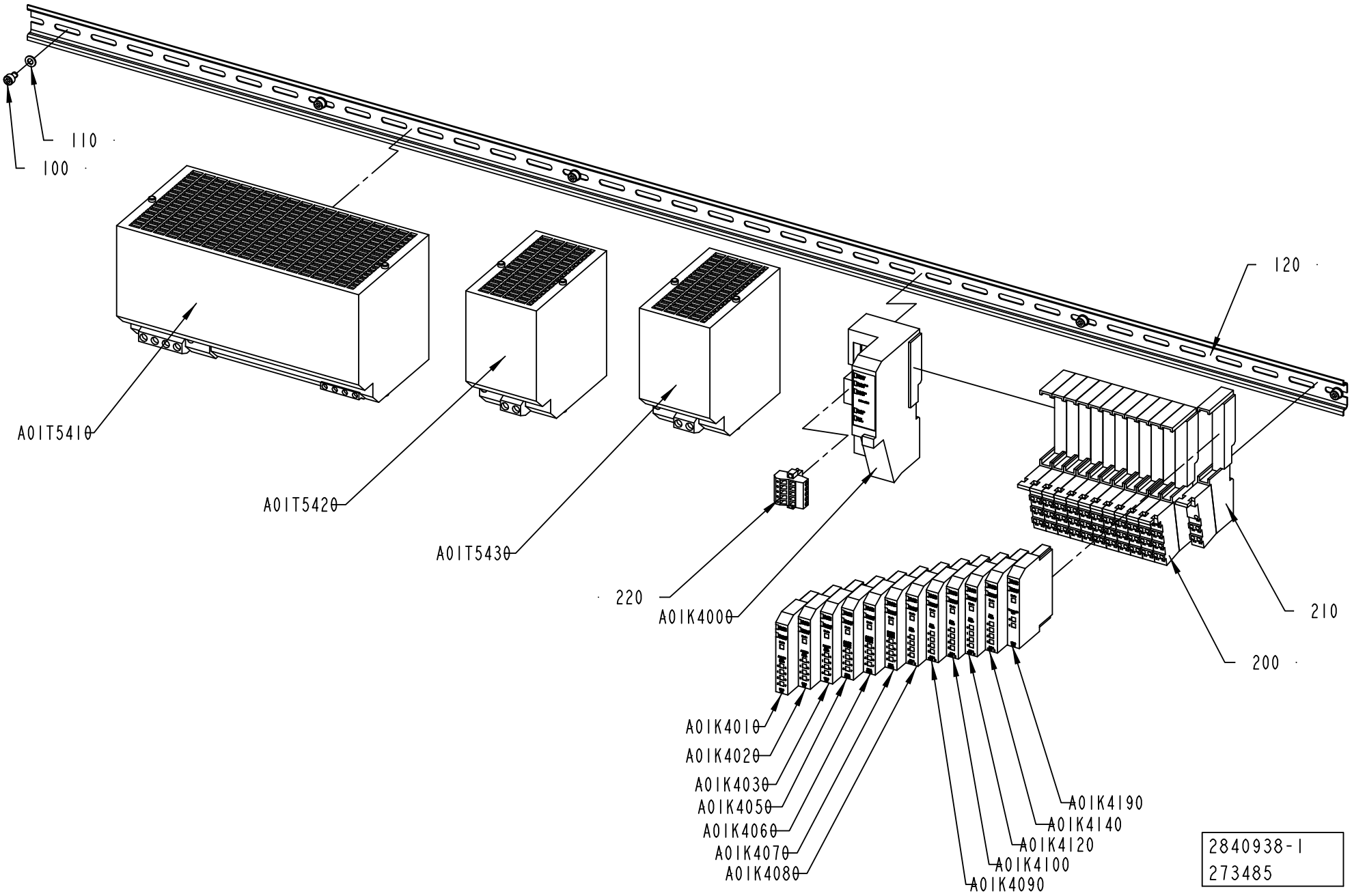
110
100
120
A01T5410
A01T5420
A01T5430
220
A01K4000
210
200
A01K4010
A01K4020
A01K4030
A01K4050
A01K4060
A01K4070
A01K4080
A01K4090
A01K4100
A01K4120
A01K4140
A01K4190
2840938-1
273485

ECM: 348262 - 20071222
Group number: 2840938-0100
Assembly Drawing: 2840938-1_1_AA

| Pos | Part No | UN | Qty | Description | Page No |
|---|---|---|---|---|---|
| - | | | | | |
| 0100 | 312115-0323 | | 6 | SCREW ISO4762 M5X8 A4 80 | |
| 0110 | 315105-0146 | | 6 | WASHER BRB 5,3X10 RFR | |
| 0120 | 353042-0004 | MM | 1305 | RAIL TS 35/7,5 | |
| 0200 | 90459-2526 | | 11 | REMOTE I/O BASE MODULE 8 POINTS, 1734-TB | |
| 0210 | 90459-2528 | | 1 | REMOTE I/O BASE MODULE FOR THERMOCOUPLE | |
| 0220 | 90459-5574 | | 1 | DEVICENET OPEN STYLE CONN, 1787-PLUG10R | |
| A01K4000 | 90459-2494 | | 1 | DEVICENET I/O ADAPTER MODULE, 1734-ADN | |
| A01K4010 | 90459-6561 | | 1 | DIGITAL INPUT 8 PTS SINK, 1734-IB8/C | |
| A01K4020 | 90459-6561 | | 1 | DIGITAL INPUT 8 PTS SINK, 1734-IB8/C | |
| A01K4030 | 90459-6561 | | 1 | DIGITAL INPUT 8 PTS SINK, 1734-IB8/C | |
| A01K4050 | 90459-6560 | | 1 | DIGITAL OUTPUT 8 PTS, 1734-OB8E/C | |
| A01K4060 | 90459-6560 | | 1 | DIGITAL OUTPUT 8 PTS, 1734-OB8E/C | |
| A01K4070 | 90459-6560 | | 1 | DIGITAL OUTPUT 8 PTS, 1734-OB8E/C | |
| A01K4080 | 90459-5261 | | 1 | REMOTE I/O, RELAY OUTP. 4 PTS,1734-OW4/C | |
| A01K4090 | 90459-5261 | | 1 | REMOTE I/O, RELAY OUTP. 4 PTS,1734-OW4/C | |
| A01K4100 | 90459-5261 | | 1 | REMOTE I/O, RELAY OUTP. 4 PTS,1734-OW4/C | |
| A01K4120 | 90459-5261 | | 1 | REMOTE I/O, RELAY OUTP. 4 PTS,1734-OW4/C | |
| A01K4140 | 90459-5261 | | 1 | REMOTE I/O, RELAY OUTP. 4 PTS,1734-OW4/C | |
| A01K4190 | 90459-2512 | | 1 | REMOTE I/O THERMOCOUPLE INPUT 2 PTS | |
| A01T5410 | 90459-2938 | | 1 | POWER SUPPLY, 6EP1437-3BA00 | |
| A01T5420 | 90459-2939 | | 1 | POWER SUPPLY UNIT 6EP1961-3BA00 | |
| A01T5430 | 90459-2939 | | 1 | POWER SUPPLY UNIT 6EP1961-3BA00 | |

| Pos | Part No | UN | Qty | Description | Page No |
|---|---|---|---|---|---|

Machine Type | Group Description | Used-In | Group Number | Page No

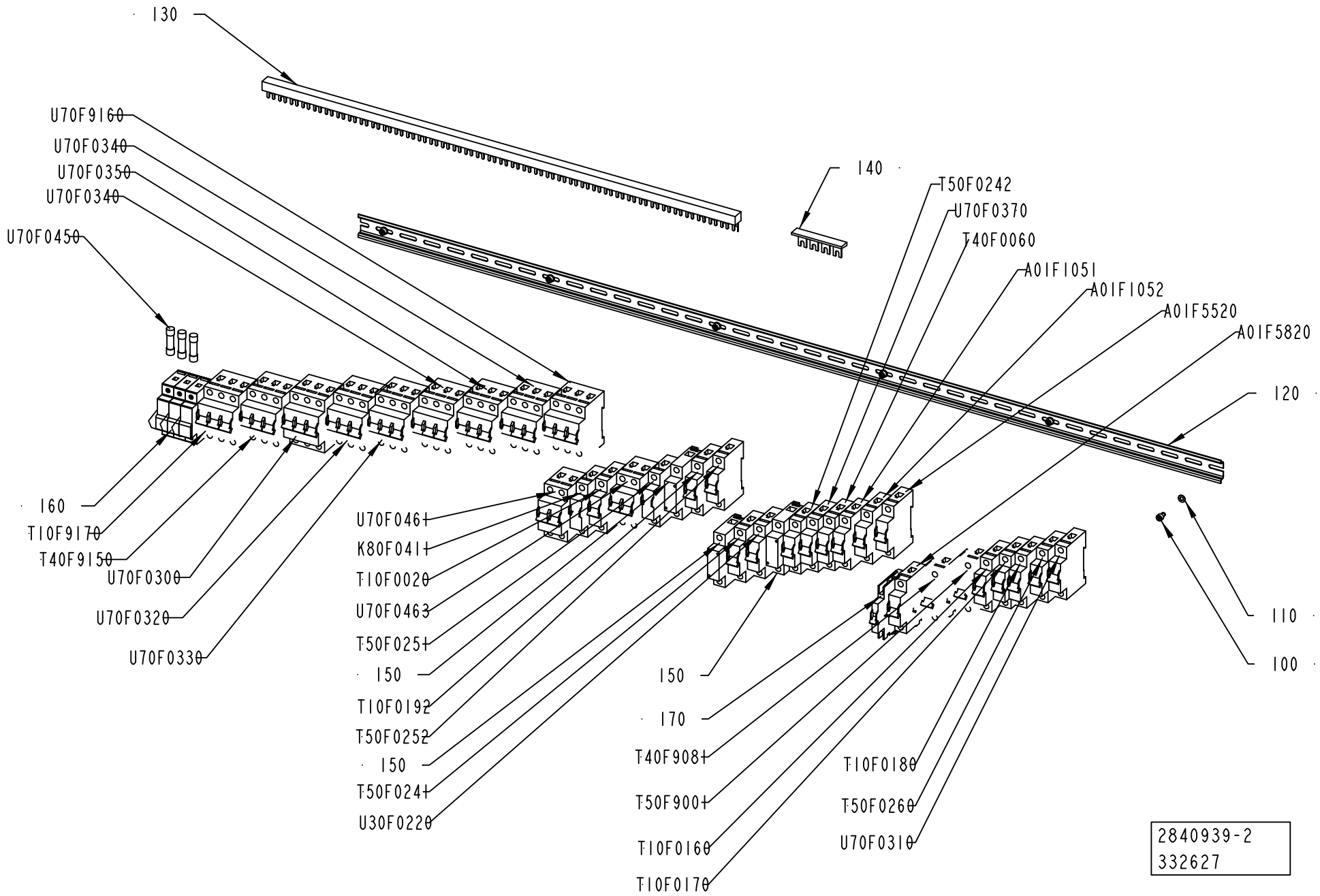
130
U70F9160
U70F0340
U70F0350
U70F0340
U70F0450
140
T50F0242
U70F0370
T40F0060
A01F1051
A01F1052
A01F5520
A01F5820
120
160
T10F9170
T40F9150
U70F0300
U70F0320
U70F0330
U70F0461
K80F0411
T10F0020
U70F0463
T50F0251
150
T10F0192
T50F0252
150
T50F0241
U30F0220
150
170
T40F9081
T50F9001
T10F0160
T10F0170
T10F0180
T50F0260
U70F0310
110
100
2840939-2
332627

ECM: 348261 - 20071222
Group number: 2840939-0100
Assembly Drawing: 2840939-2_1_AB

| Pos | Part No | UN | Qty | Description | Page No |
|---|---|---|---|---|---|
| **A3/FLEX** | | | | | |
| 0140 | 90459-5883 | MM | 76 | COMMONING BUSBAR, 1-P 1-PH 1X57 MOD 63A | |
| 0150 | 90459-6856 | | 3 | FEEDER BLOCK, FAZ/FIP-XVS-KL | |
| 0170 | 90459-5813 | | 3 | AUXILARY CONTACT, FAZ-XHI11 | |
| T40F0060 | 354000-0010 | | 1 | MINIATURE CIRCUIT BREAKER, FAZ-C1/1 | |
| T40F9081 | 351416-0060 | | 1 | MINIATURE CIRC. BREAK., FAZ -D6 1-POLE | |
| T50F0241 | 354000-0100 | | 1 | MINIATURE CIRCUIT BREAKER, FAZ-C10/1 | |
| T50F0242 | 354000-0100 | | 1 | MINIATURE CIRCUIT BREAKER, FAZ-C10/1 | |
| T50F9001 | 351416-0060 | | 1 | MINIATURE CIRC. BREAK., FAZ -D6 1-POLE | |
| U70F0450 | 90233-0029 | | 2 | TUBE FUSE 25A, A070GRB25T13 L330014 | |
| U70F0461 | 354001-0250 | | 1 | MINIATURE CIRCUIT BREAKER, FAZ-C25/2 | |
| **Common Parts** | | | | | |
| 0100 | 312115-0323 | | 6 | SCREW ISO4762 M5X8 A4 80 | |
| 0110 | 315105-0146 | | 6 | WASHER BRB 5,3X10 RFR | |
| 0120 | 353042-0004 | MM | 1305 | RAIL TS 35/7,5 | |
| 0130 | 90459-5884 | MM | 722 | COMMONING BUSBAR, 3-P 3-PH 3X19 MOD 63A | |
| 0160 | 90459-3800 | | 1 | FUSE HOLDER, MSC 10 3-POLE D250151 | |
| A01F1051 | 351416-0100 | | 1 | MINIATURE CIRC. BREAK., FAZ -D10 1-POLE | |
| A01F1052 | 351416-0100 | | 1 | MINIATURE CIRC. BREAK., FAZ -D10 1-POLE | |
| A01F5520 | 354000-0100 | | 1 | MINIATURE CIRCUIT BREAKER, FAZ-C10/1 | |
| A01F5820 | 354000-0020 | | 1 | MINIATURE CIRCUIT BREAKER, FAZ-C2/1 | |
| K80F0411 | 351416-0020 | | 1 | MINIATURE CIRC. BREAK., FAZ -D2 1-POLE | |
| T10F0020 | 354000-0010 | | 1 | MINIATURE CIRCUIT BREAKER, FAZ-C1/1 | |
| T10F0160 | 351416-0160 | | 1 | MINIATURE CIRC. BREAK., FAZ -D16 1-POLE | |
| T10F0170 | 351416-0160 | | 1 | MINIATURE CIRC. BREAK., FAZ -D16 1-POLE | |
| T10F0180 | 351416-0160 | | 1 | MINIATURE CIRC. BREAK., FAZ -D16 1-POLE | |
| T10F0192 | 354000-0040 | | 1 | MINIATURE CIRCUIT BREAKER, FAZ-C4/1 | |
| T10F9170 | 351418-0060 | | 1 | MINIATURE CIRC. BREAK., FAZ-D6/3 3-POLE | |
| T40F9150 | 351418-0060 | | 1 | MINIATURE CIRC. BREAK., FAZ-D6/3 3-POLE | |
| T50F0251 | 354000-0160 | | 1 | MINIATURE CIRCUIT BREAKER, FAZ-C16/1 | |
| T50F0252 | 354000-0160 | | 1 | MINIATURE CIRCUIT BREAKER, FAZ-C16/1 | |
| T50F0260 | 351416-0160 | | 1 | MINIATURE CIRC. BREAK., FAZ -D16 1-POLE | |
| U30F0220 | 351416-0160 | | 1 | MINIATURE CIRC. BREAK., FAZ -D16 1-POLE | |
| U70F0300 | 351418-0160 | | 1 | MINIATURE CIRC. BREAK.,FAZ-D16/3 3-POLE | |
| U70F0310 | 351416-0160 | | 1 | MINIATURE CIRC. BREAK., FAZ -D16 1-POLE | |
| U70F0320 | 351418-0100 | | 1 | MINIATURE CIRC. BREAK., FAZ-D10/3 3-POLE | |
| U70F0330 | 351418-0100 | | 1 | MINIATURE CIRC. BREAK., FAZ-D10/3 3-POLE | |
| U70F0340 | 354002-0100 | | 1 | MINIATURE CIRCUIT BREAKER, FAZ-C10/3 | |
| U70F0350 | 354002-0100 | | 1 | MINIATURE CIRCUIT BREAKER, FAZ-C10/3 | |
| U70F0370 | 354000-0100 | | 1 | MINIATURE CIRCUIT BREAKER, FAZ-C10/1 | |
| U70F0463 | 354001-0250 | | 1 | MINIATURE CIRCUIT BREAKER, FAZ-C25/2 | |
| U70F9160 | 351418-0060 | | 1 | MINIATURE CIRC. BREAK., FAZ-D6/3 3-POLE | |

| Pos | Part No | UN | Qty | Description | Page No |
|---|---|---|---|---|---|

Machine Type | Group Description | Used-In | Group Number | Page No

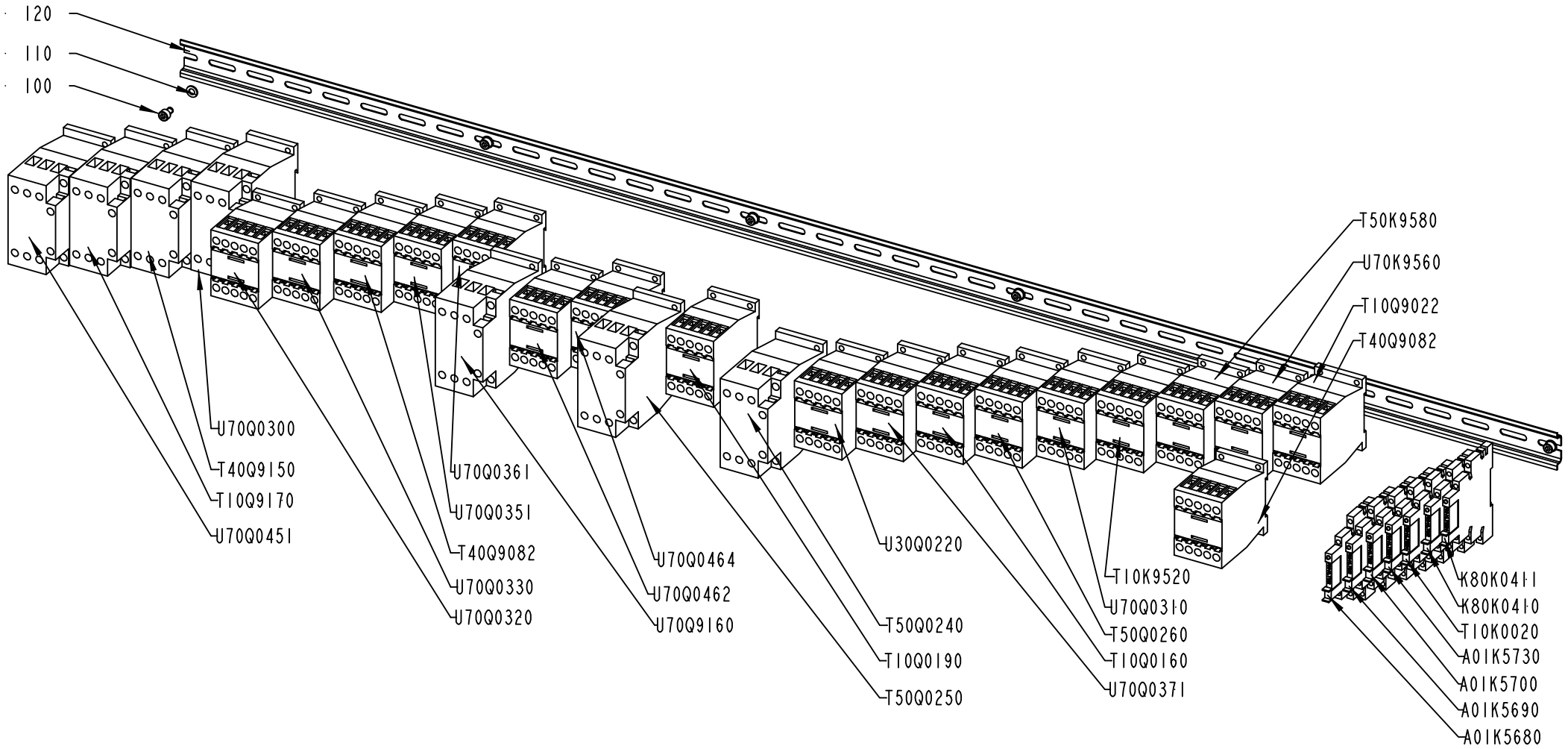


2840940-2
332628

ECM: 348260 - 20071222
Group number: 2840940-0100
Assembly Drawing: 2840940-2_1_AB

| Pos | Part No | UN | Qty | Description | Page No |
|---|---|---|---|---|---|
| **A3/FLEX** | | | | | |
| U70Q0340 | 90459-5440 | | 1 | CONTACTOR 4KW 24VDC, DILM9-01 | |
| **Common Parts** | | | | | |
| 0100 | 312115-0323 | | 6 | SCREW ISO4762 M5X8 A4 80 | |
| 0110 | 315105-0146 | | 6 | WASHER BRB 5,3X10 RFR | |
| 0120 | 353042-0004 | MM | 1305 | RAIL TS 35/7,5 | |
| A01K5680 | 90600-1209 | | 1 | TERMINAL BLOCK RELAY, 700-HLT1U2 | |
| A01K5690 | 90600-1209 | | 1 | TERMINAL BLOCK RELAY, 700-HLT1U2 | |
| A01K5700 | 90600-1209 | | 1 | TERMINAL BLOCK RELAY, 700-HLT1U2 | |
| A01K5730 | 90600-1211 | | 1 | TERMINAL BLOCK RELAY, 700-HLT1Z24 | |
| K80K0410 | 90600-1209 | | 1 | TERMINAL BLOCK RELAY, 700-HLT1U2 | |
| K80K0411 | 90600-1211 | | 1 | TERMINAL BLOCK RELAY, 700-HLT1Z24 | |
| T10K0020 | 90600-1211 | | 1 | TERMINAL BLOCK RELAY, 700-HLT1Z24 | |
| T10K9520 | 90459-5440 | | 1 | CONTACTOR 4KW 24VDC, DILM9-01 | |
| T10Q0160 | 90459-5440 | | 1 | CONTACTOR 4KW 24VDC, DILM9-01 | |
| T10Q0190 | 90459-5440 | | 1 | CONTACTOR 4KW 24VDC, DILM9-01 | |
| T10Q9022 | 90459-5440 | | 1 | CONTACTOR 4KW 24VDC, DILM9-01 | |
| T10Q9170 | 90459-5441 | | 1 | CONTACTOR 7,5KW 24VDC, DILM17-01 | |
| T40Q9150 | 90459-5441 | | 1 | CONTACTOR 7,5KW 24VDC, DILM17-01 | |
| T50K9580 | 90459-5440 | | 1 | CONTACTOR 4KW 24VDC, DILM9-01 | |
| T50Q0240 | 90459-5441 | | 1 | CONTACTOR 7,5KW 24VDC, DILM17-01 | |
| T50Q0250 | 90459-5441 | | 1 | CONTACTOR 7,5KW 24VDC, DILM17-01 | |
| T50Q0260 | 90459-5440 | | 1 | CONTACTOR 4KW 24VDC, DILM9-01 | |
| U30Q0220 | 90459-5440 | | 1 | CONTACTOR 4KW 24VDC, DILM9-01 | |
| U70K9560 | 90459-5440 | | 1 | CONTACTOR 4KW 24VDC, DILM9-01 | |
| U70Q0300 | 90459-5441 | | 1 | CONTACTOR 7,5KW 24VDC, DILM17-01 | |
| U70Q0310 | 90459-5440 | | 1 | CONTACTOR 4KW 24VDC, DILM9-01 | |
| U70Q0320 | 90459-5440 | | 1 | CONTACTOR 4KW 24VDC, DILM9-01 | |
| U70Q0330 | 90459-5440 | | 1 | CONTACTOR 4KW 24VDC, DILM9-01 | |
| U70Q0340 | 90459-5440 | | 1 | CONTACTOR 4KW 24VDC, DILM9-01 | |
| U70Q0351 | 90459-5440 | | 1 | CONTACTOR 4KW 24VDC, DILM9-01 | |
| U70Q0361 | 90459-5440 | | 1 | CONTACTOR 4KW 24VDC, DILM9-01 | |
| U70Q0371 | 90459-5440 | | 1 | CONTACTOR 4KW 24VDC, DILM9-01 | |
| U70Q0451 | 90459-5441 | | 1 | CONTACTOR 7,5KW 24VDC, DILM17-01 | |
| U70Q0462 | 90459-5440 | | 1 | CONTACTOR 4KW 24VDC, DILM9-01 | |
| U70Q0464 | 90459-5440 | | 1 | CONTACTOR 4KW 24VDC, DILM9-01 | |
| U70Q9160 | 90459-5441 | | 1 | CONTACTOR 7,5KW 24VDC, DILM17-01 | |

| Pos | Part No | UN | Qty | Description | Page No |
|---|---|---|---|---|---|

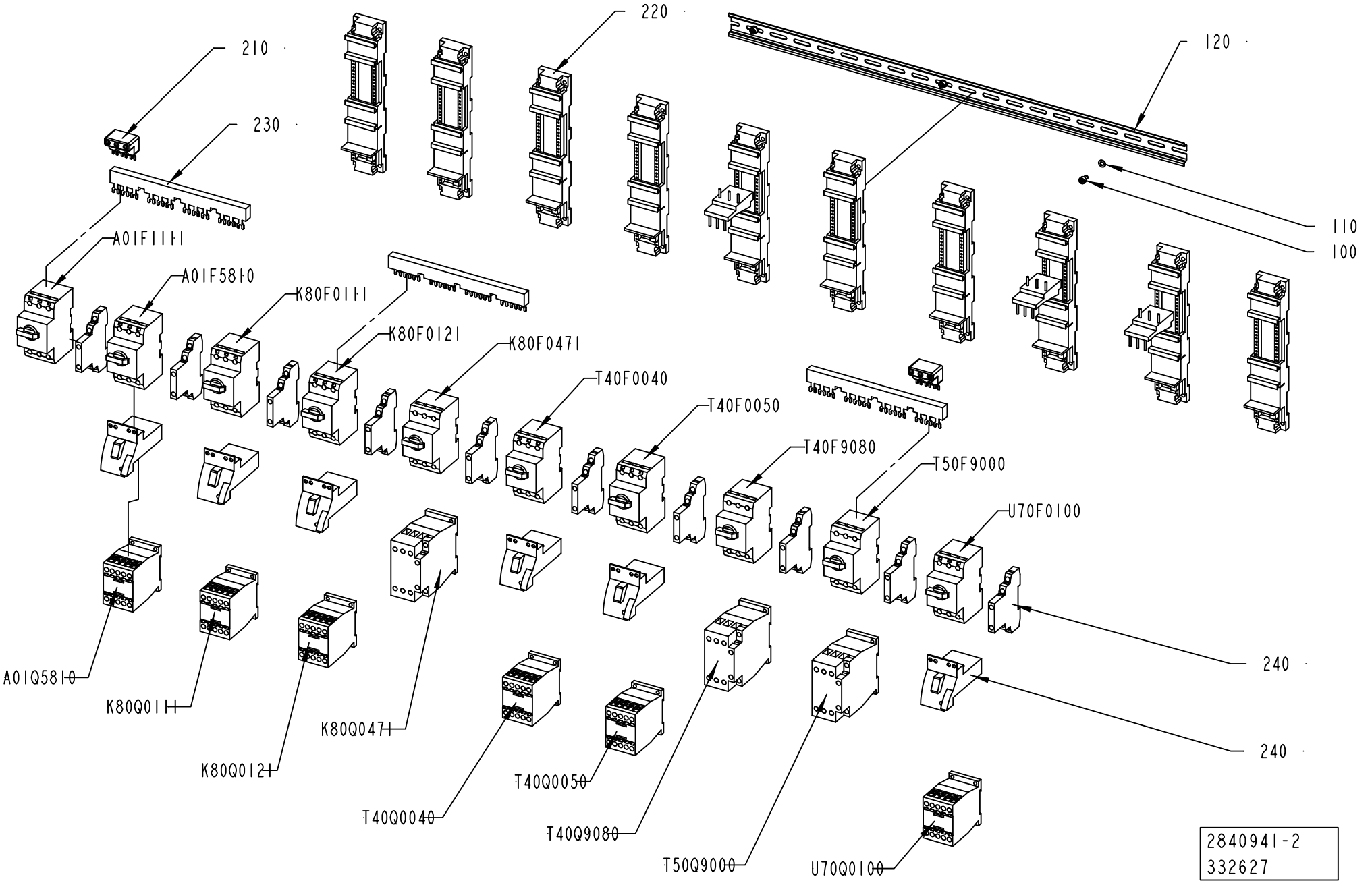
210
230
220
120
110
100
A01F1111
A01F5810
K80F0111
K80F0121
K80F0471
T40F0040
T40F0050
T40F9080
T50F9000
U70F0100
240
240
A01Q5810
K80Q011
K80Q012
K80Q047
T40Q0040
T40Q0050
T40Q9080
T50Q9000
U70Q0100
2840941-2
332627

ECM: 348259 - 20071222
Group number: 2840941-0100
Assembly Drawing: 2840941-2_1_AB

| Pos | Part No | UN | Qty | Description | Page No |
|---|---|---|---|---|---|
| **A3/FLEX** | | | | | |
| 0200 | 90259-0313 | | 10 | AUX. CONTACT K&M NHI21-PKZM0 | |
| 0220 | 90459-6851 | | 10 | BASE UNIT, PKZM0-XDM32 | |
| 0240 | 90459-6850 | | 6 | CONNECTION, PKZM0-XDM12 | |
| K80F0121 | 90459-5325 | | 1 | OVERLOAD PROTECTION, PKZM0-2,5 | |
| T40F0040 | 90459-5326 | | 1 | OVERLOAD PROTECTION, PKZM0-4 | |
| T40F9000 | 90459-5333 | | 1 | OVERLOAD PROTECTION, PKZM0-32 | |
| T40F9080 | 90459-5333 | | 1 | OVERLOAD PROTECTION, PKZM0-32 | |
| T40Q0040 | 90459-5440 | | 1 | CONTACTOR 4KW 24VDC, DILM9-01 | |
| T40Q9080 | 90459-5444 | | 1 | CONTACTOR 15KW 24VDC, DILM32-01 | |
| T50Q9000 | 90459-5444 | | 1 | CONTACTOR 15KW 24VDC, DILM32-01 | |
| **Common Parts** | | | | | |
| 0100 | 312115-0323 | | 3 | SCREW ISO4762 M5X8 A4 80 | |
| 0110 | 315105-0146 | | 3 | WASHER BRB 5,3X10 RFR | |
| 0120 | 353042-0004 | MM | 694 | RAIL TS 35/7,5 | |
| 0210 | 90259-0308 | | 2 | CONN.TERM.K&M BK 25/3-PKZ0 | |
| 0230 | 90259-0309 | | 3 | 3 POLE BUSBAR, K&M B3.1/4 | |
| A01F1111 | 90459-5326 | | 1 | OVERLOAD PROTECTION, PKZM0-4 | |
| A01F5810 | 90459-5326 | | 1 | OVERLOAD PROTECTION, PKZM0-4 | |
| A01Q5810 | 90459-5308 | | 1 | CONTACTOR 4KW 24VDC, DILM9-10 | |
| K80F0111 | 90459-5325 | | 1 | OVERLOAD PROTECTION, PKZM0-2,5 | |
| K80F0471 | 90459-5330 | | 1 | OVERLOAD PROTECTION, PKZM0-16 | |
| K80Q0111 | 90459-5440 | | 1 | CONTACTOR 4KW 24VDC, DILM9-01 | |
| K80Q0121 | 90459-5440 | | 1 | CONTACTOR 4KW 24VDC, DILM9-01 | |
| K80Q0471 | 90459-5441 | | 1 | CONTACTOR 7,5KW 24VDC, DILM17-01 | |
| T40F0050 | 90459-5324 | | 1 | OVERLOAD PROTECTION, PKZM0-1,6 | |
| T40Q0050 | 90459-5440 | | 1 | CONTACTOR 4KW 24VDC, DILM9-01 | |
| U70F0100 | 90459-5323 | | 1 | OVERLOAD PROTECTION, PKZM0-1 | |
| U70Q0100 | 90459-5440 | | 1 | CONTACTOR 4KW 24VDC, DILM9-01 | |

| Pos | Part No | UN | Qty | Description | Page No |
|---|---|---|---|---|---|

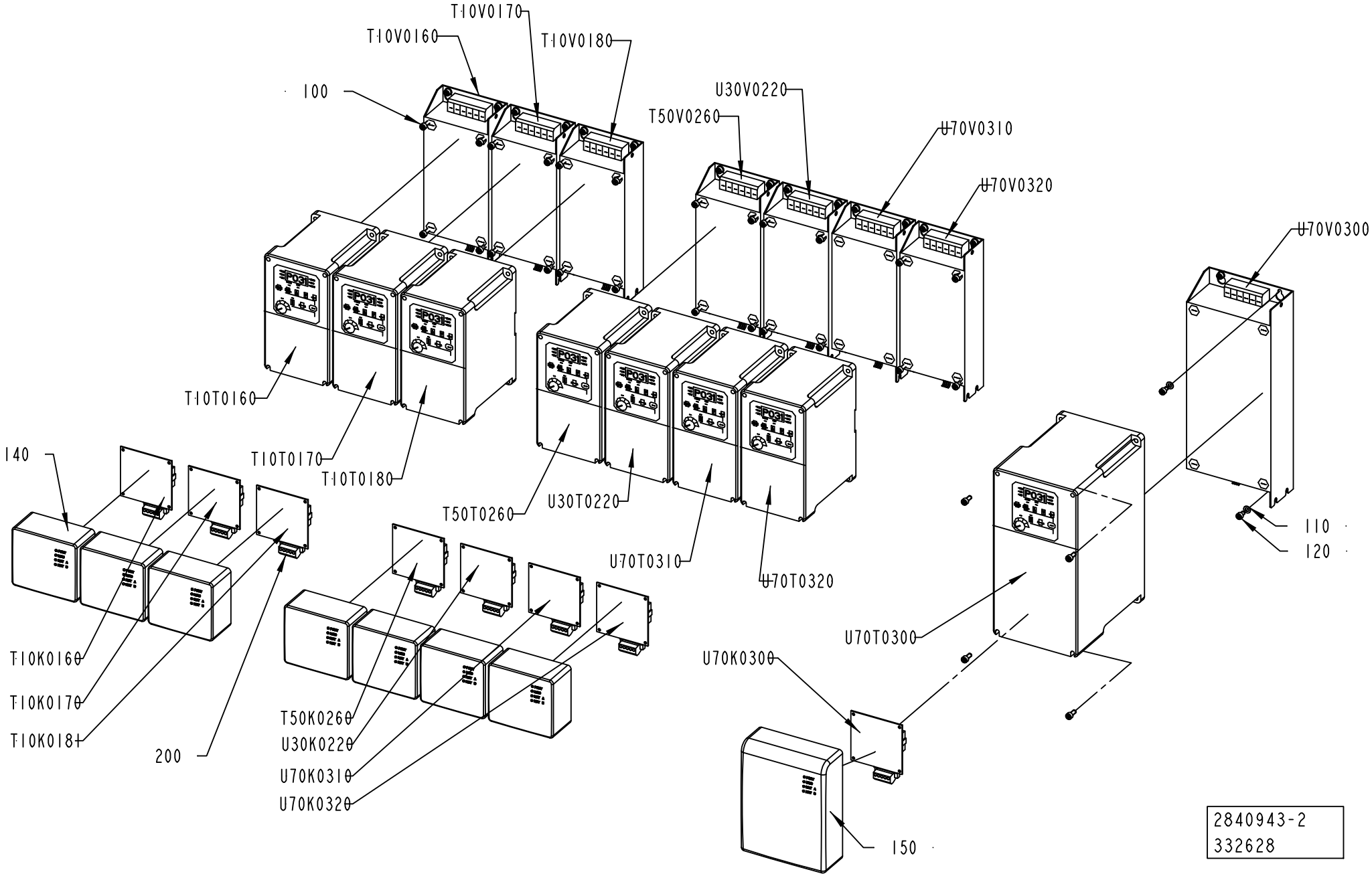
T10V0170
T10V0160
T10V0180
100
U30V0220
T50V0260
U70V0310
U70V0320
U70V0300
T10T0160
T10T0170
T10T0180
T50T0260
U30T0220
U70T0310
U70T0320
140
110
120
T10K0160
T10K0170
T10K0180
200
T50K0260
U30K0220
U70K0310
U70K0320
U70T0300
U70K0300
150
2840943-2
332628

| Pos | Part No | UN | Qty | Description | Page No |
|---|---|---|---|---|---|
| **A3/FLEX DIMC/FLEX (See drawing on page: 8-38)** | | | | | |
| 0100 | 312115-0327 | | 28 | SCREW ISO4762 M5X12 A4 80 | |
| 0110 | 315105-0146 | | 36 | WASHER BRB 5,3X10 RFR | |
| 0120 | 312115-0323 | | 36 | SCREW ISO4762 M5X8 A4 80 | |
| 0140 | 90459-2795 | | 8 | FRONT LID FOR POWERFLEX 40, 22B-CCB | |
| 0200 | 90459-5574 | | 9 | DEVICENET OPEN STYLE CONN, 1787-PLUG10R | |
| U70K0330 | 90459-2614 | | 1 | DEVICENET ADAPTER POWERFLEX 40 22-COMM-D | |
| U70T0330 | 90459-2607 | | 1 | VARIABLE FREQUENCY DRIVE 22B-D6P0N104 | |
| U70V0330 | 90459-3458 | | 1 | FOOTPRINT FILTER 22-RF012-BL | |
| **A3/FLEX NODIMC (See drawing on page: 8-36)** | | | | | |
| 0100 | 312115-0327 | | 28 | SCREW ISO4762 M5X12 A4 80 | |
| 0110 | 315105-0146 | | 32 | WASHER BRB 5,3X10 RFR | |
| 0120 | 312115-0323 | | 32 | SCREW ISO4762 M5X8 A4 80 | |
| 0140 | 90459-2795 | | 7 | FRONT LID FOR POWERFLEX 40, 22B-CCB | |
| 0200 | 90459-5574 | | 8 | DEVICENET OPEN STYLE CONN, 1787-PLUG10R | |
| **Common Parts** | | | | | |
| 0150 | 90459-2796 | | 1 | FRONT LID FOR POWERFLEX 40, 22B-CCC | |
| T10K0160 | 90459-2614 | | 1 | DEVICENET ADAPTER POWERFLEX 40 22-COMM-D | |
| T10K0170 | 90459-2614 | | 1 | DEVICENET ADAPTER POWERFLEX 40 22-COMM-D | |
| T10K0181 | 90459-2614 | | 1 | DEVICENET ADAPTER POWERFLEX 40 22-COMM-D | |
| T10T0160 | 90459-3442 | | 1 | VARIABLE FREQUENCY DRIVE 22B-A5P0N104 | |
| T10T0170 | 90459-3442 | | 1 | VARIABLE FREQUENCY DRIVE 22B-A5P0N104 | |
| T10T0180 | 90459-3442 | | 1 | VARIABLE FREQUENCY DRIVE 22B-A5P0N104 | |
| T10V0160 | 90459-3454 | | 1 | FOOTPRINT FILTER, 22-RF018-BL | |
| T10V0170 | 90459-3454 | | 1 | FOOTPRINT FILTER, 22-RF018-BL | |
| T10V0180 | 90459-3454 | | 1 | FOOTPRINT FILTER, 22-RF018-BL | |
| T50K0260 | 90459-2614 | | 1 | DEVICENET ADAPTER POWERFLEX 40 22-COMM-D | |
| T50T0260 | 90459-3442 | | 1 | VARIABLE FREQUENCY DRIVE 22B-A5P0N104 | |
| T50V0260 | 90459-3454 | | 1 | FOOTPRINT FILTER, 22-RF018-BL | |
| U30K0220 | 90459-2614 | | 1 | DEVICENET ADAPTER POWERFLEX 40 22-COMM-D | |
| U30T0220 | 90459-3442 | | 1 | VARIABLE FREQUENCY DRIVE 22B-A5P0N104 | |
| U30V0220 | 90459-3454 | | 1 | FOOTPRINT FILTER, 22-RF018-BL | |
| U70K0300 | 90459-2614 | | 1 | DEVICENET ADAPTER POWERFLEX 40 22-COMM-D | |
| U70K0310 | 90459-2614 | | 1 | DEVICENET ADAPTER POWERFLEX 40 22-COMM-D | |
| U70K0320 | 90459-2614 | | 1 | DEVICENET ADAPTER POWERFLEX 40 22-COMM-D | |
| U70T0300 | 90459-3446 | | 1 | FREQUENCY CONVERTER 5,5 KW | |
| U70T0310 | 90459-3442 | | 1 | VARIABLE FREQUENCY DRIVE 22B-A5P0N104 | |
| U70T0320 | 90459-2607 | | 1 | VARIABLE FREQUENCY DRIVE 22B-D6P0N104 | |
| U70V0300 | 90459-3459 | | 1 | FOOTPRINT FILTER, 22-RF018-CL | |
| U70V0310 | 90459-3454 | | 1 | FOOTPRINT FILTER, 22-RF018-BL | |
| U70V0320 | 90459-3458 | | 1 | FOOTPRINT FILTER 22-RF012-BL | |

| Pos | Part No | UN | Qty | Description | Page No |
|---|---|---|---|---|---|

Machine Type | Group Description | Used-In | Group Number | Page No

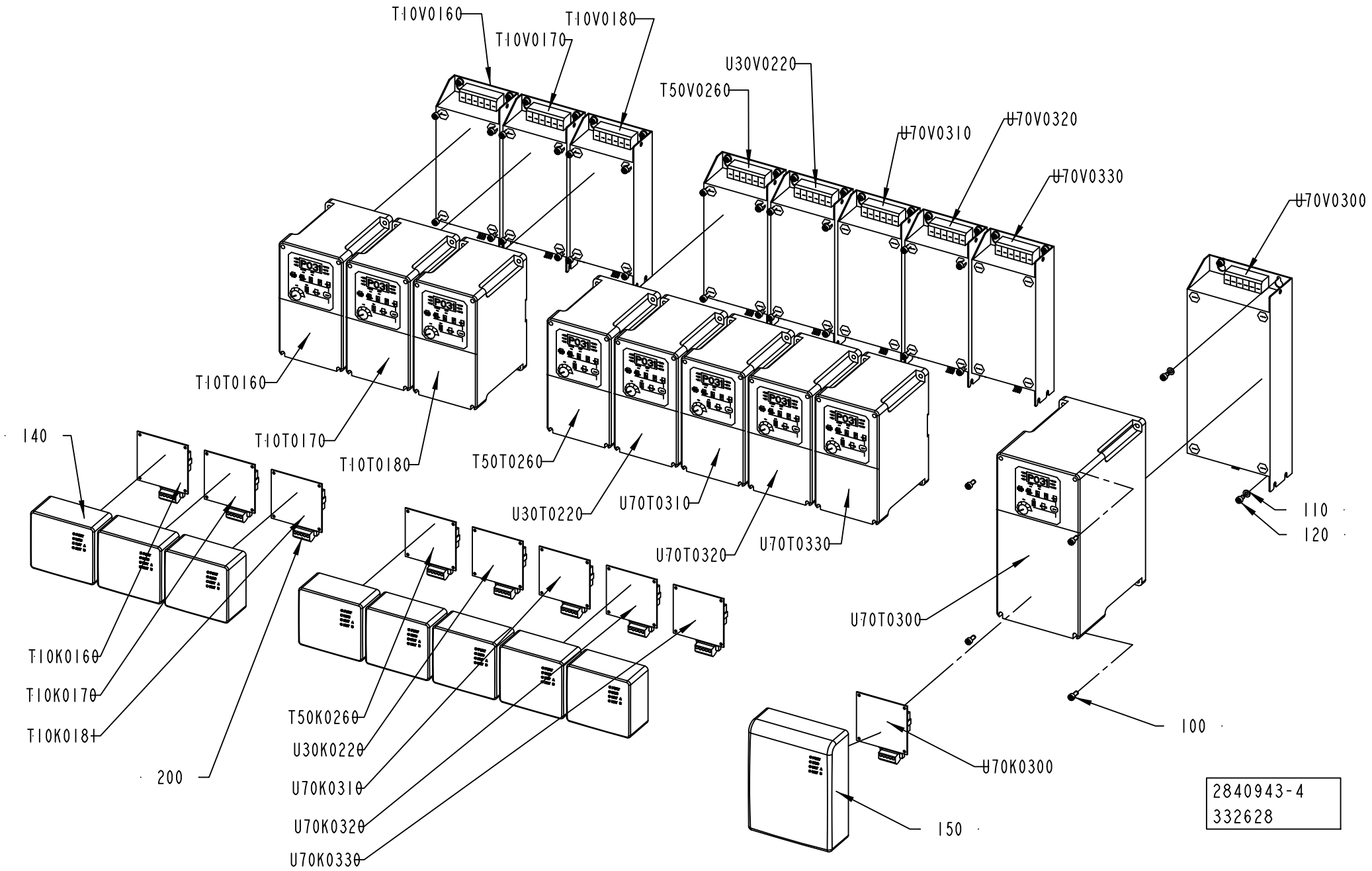
T10V0160
T10V0170
T10V0180
U30V0220
T50V0260
U70V0310
U70V0320
U70V0330
U70V0300
T10T0160
T10T0170
T10T0180
T50T0260
U30T0220
U70T0310
U70T0320
U70T0330
140
T10K0160
T10K0170
T10K0180
200
T50K0260
U30K0220
U70K0310
U70K0320
U70K0330
U70T0300
U70K0300
150
100
110
120
2840943-4
332628

ECM: 333738 - 20071221
Group number: 2840943-0100
Assembly Drawing: 2840943-4_1_AB

This list covers pages from 8-36 to 8-39

| Pos | Part No | UN | Qty | Description | Page No |
|---|---|---|---|---|---|
| **A3/FLEX DIMC/FLEX (See drawing on page: 8-38)** | | | | | |
| 0100 | 312115-0327 | | 28 | SCREW ISO4762 M5X12 A4 80 | |
| 0110 | 315105-0146 | | 36 | WASHER BRB 5,3X10 RFR | |
| 0120 | 312115-0323 | | 36 | SCREW ISO4762 M5X8 A4 80 | |
| 0140 | 90459-2795 | | 8 | FRONT LID FOR POWERFLEX 40, 22B-CCB | |
| 0200 | 90459-5574 | | 9 | DEVICENET OPEN STYLE CONN, 1787-PLUG10R | |
| U70K0330 | 90459-2614 | | 1 | DEVICENET ADAPTER POWERFLEX 40 22-COMM-D | |
| U70T0330 | 90459-2607 | | 1 | VARIABLE FREQUENCY DRIVE 22B-D6P0N104 | |
| U70V0330 | 90459-3458 | | 1 | FOOTPRINT FILTER 22-RF012-BL | |
| **A3/FLEX NODIMC (See drawing on page: 8-36)** | | | | | |
| 0100 | 312115-0327 | | 28 | SCREW ISO4762 M5X12 A4 80 | |
| 0110 | 315105-0146 | | 32 | WASHER BRB 5,3X10 RFR | |
| 0120 | 312115-0323 | | 32 | SCREW ISO4762 M5X8 A4 80 | |
| 0140 | 90459-2795 | | 7 | FRONT LID FOR POWERFLEX 40, 22B-CCB | |
| 0200 | 90459-5574 | | 8 | DEVICENET OPEN STYLE CONN, 1787-PLUG10R | |
| **Common Parts** | | | | | |
| 0150 | 90459-2796 | | 1 | FRONT LID FOR POWERFLEX 40, 22B-CCC | |
| T10K0160 | 90459-2614 | | 1 | DEVICENET ADAPTER POWERFLEX 40 22-COMM-D | |
| T10K0170 | 90459-2614 | | 1 | DEVICENET ADAPTER POWERFLEX 40 22-COMM-D | |
| T10K0181 | 90459-2614 | | 1 | DEVICENET ADAPTER POWERFLEX 40 22-COMM-D | |
| T10T0160 | 90459-3442 | | 1 | VARIABLE FREQUENCY DRIVE 22B-A5P0N104 | |
| T10T0170 | 90459-3442 | | 1 | VARIABLE FREQUENCY DRIVE 22B-A5P0N104 | |
| T10T0180 | 90459-3442 | | 1 | VARIABLE FREQUENCY DRIVE 22B-A5P0N104 | |
| T10V0160 | 90459-3454 | | 1 | FOOTPRINT FILTER, 22-RF018-BL | |
| T10V0170 | 90459-3454 | | 1 | FOOTPRINT FILTER, 22-RF018-BL | |
| T10V0180 | 90459-3454 | | 1 | FOOTPRINT FILTER, 22-RF018-BL | |
| T50K0260 | 90459-2614 | | 1 | DEVICENET ADAPTER POWERFLEX 40 22-COMM-D | |
| T50T0260 | 90459-3442 | | 1 | VARIABLE FREQUENCY DRIVE 22B-A5P0N104 | |
| T50V0260 | 90459-3454 | | 1 | FOOTPRINT FILTER, 22-RF018-BL | |
| U30K0220 | 90459-2614 | | 1 | DEVICENET ADAPTER POWERFLEX 40 22-COMM-D | |
| U30T0220 | 90459-3442 | | 1 | VARIABLE FREQUENCY DRIVE 22B-A5P0N104 | |
| U30V0220 | 90459-3454 | | 1 | FOOTPRINT FILTER, 22-RF018-BL | |
| U70K0300 | 90459-2614 | | 1 | DEVICENET ADAPTER POWERFLEX 40 22-COMM-D | |
| U70K0310 | 90459-2614 | | 1 | DEVICENET ADAPTER POWERFLEX 40 22-COMM-D | |
| U70K0320 | 90459-2614 | | 1 | DEVICENET ADAPTER POWERFLEX 40 22-COMM-D | |
| U70T0300 | 90459-3446 | | 1 | FREQUENCY CONVERTER 5,5 KW | |
| U70T0310 | 90459-3442 | | 1 | VARIABLE FREQUENCY DRIVE 22B-A5P0N104 | |
| U70T0320 | 90459-2607 | | 1 | VARIABLE FREQUENCY DRIVE 22B-D6P0N104 | |
| U70V0300 | 90459-3459 | | 1 | FOOTPRINT FILTER, 22-RF018-CL | |
| U70V0310 | 90459-3454 | | 1 | FOOTPRINT FILTER, 22-RF018-BL | |
| U70V0320 | 90459-3458 | | 1 | FOOTPRINT FILTER 22-RF012-BL | |

| Pos | Part No | UN | Qty | Description | Page No |
|---|---|---|---|---|---|

| Machine Type | Group Description | Used-In | Group Number | Page No |
|---|---|---|---|---|

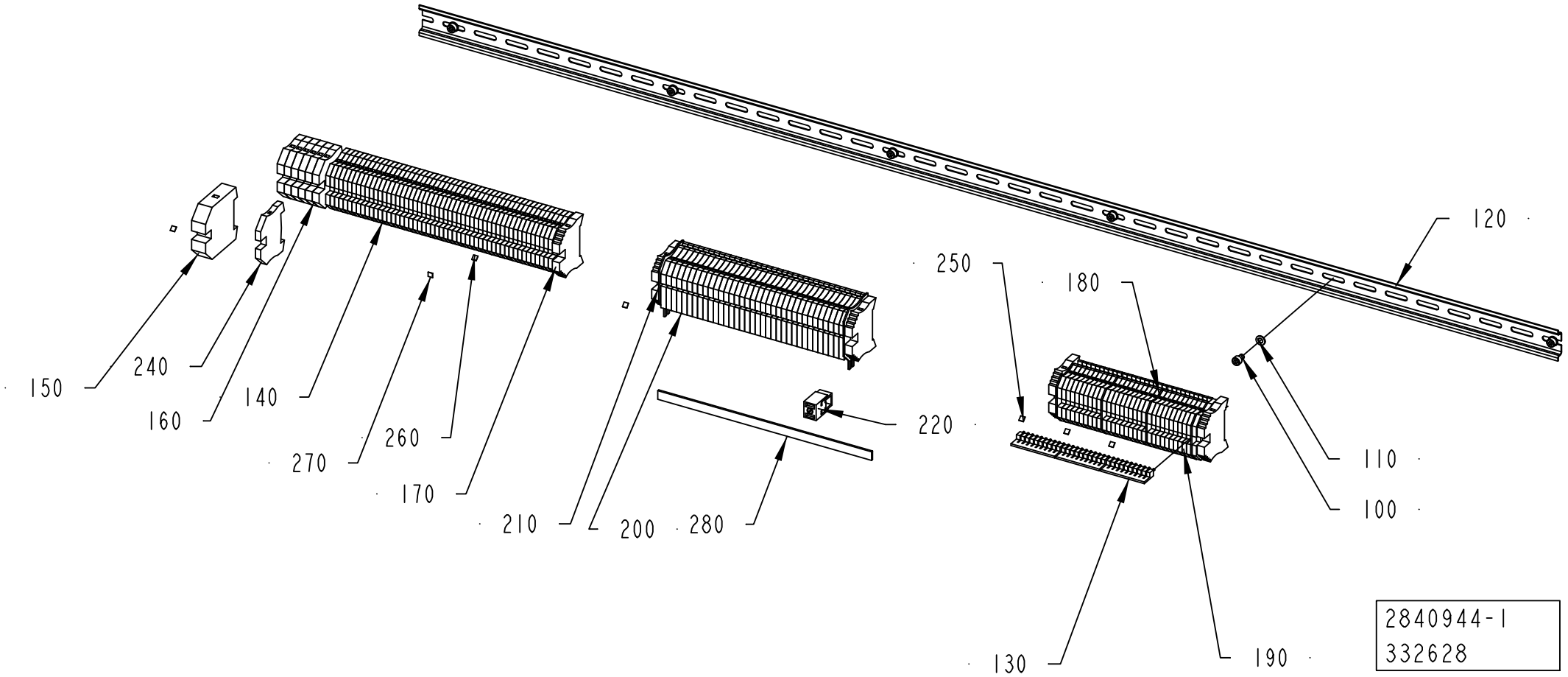
120
250
180
150
240
160
140
270
260
170
210
200
280
220
110
100
130
190
2840944-1
332628

ECM: 348258 - 20071222
Group number: 2840944-0100
Assembly Drawing: 2840944-1_1_AB

| Pos | Part No | UN | Qty | Description | Page No |
|---|---|---|---|---|---|
| - | | | | | |
| 0100 | 312115-0323 | | 6 | SCREW ISO4762 M5X8 A4 80 | |
| 0110 | 315105-0146 | | 6 | WASHER BRB 5,3X10 RFR | |
| 0120 | 353042-0004 | MM | 1305 | RAIL TS 35/7,5 | |
| 0130 | 353034-0030 | | 3 | BRIDGE CONNECTOR WQV 2,5/10, 10544.6 | |
| 0140 | 353024-0204 | | 53 | EARTH TERMINAL WPE 2,5 | |
| 0150 | 353024-0209 | | 1 | EARTH TERMINAL, 1010.5 | |
| 0160 | 353024-0206 | | 6 | EARTH TERMINAL, 1010.2 | |
| 0170 | 353031-0203 | | 5 | END SUPPORT, WEW 35/2 | |
| 0180 | 353032-0004 | | 4 | END PLATE WAP 2,5-10 BEIGE | |
| 0190 | 353021-0212 | | 30 | FEED THROUGH TERMINAL, 10200.0 | |
| 0200 | 353022-0002 | | 35 | NEUTRAL TERMINAL, 10107.8 | |
| 0210 | 353033-0104 | | 2 | END PLATE, 10502.8 | |
| 0220 | 353041-0106 | | 1 | HOLDER ZB35 K 5026.8 | |
| 0240 | 353024-0205 | | 1 | EARTH TERMINAL, 1010.1 | |
| 0250 | 359011-0807 | | 5 | MARKING PLATES 5-FW 1-50 | |
| 0260 | 359011-0808 | | 1 | MARKING PLATES 5-FW 51-100 | |
| 0270 | 359011-0809 | | 1 | MARKING PLATES 5-FW 101-150 | |
| 0280 | 353041-0001 | MM | 245 | BUS BAR RAIL 10X3MM SSCH | |

| Pos | Part No | UN | Qty | Description | Page No |
|---|---|---|---|---|---|

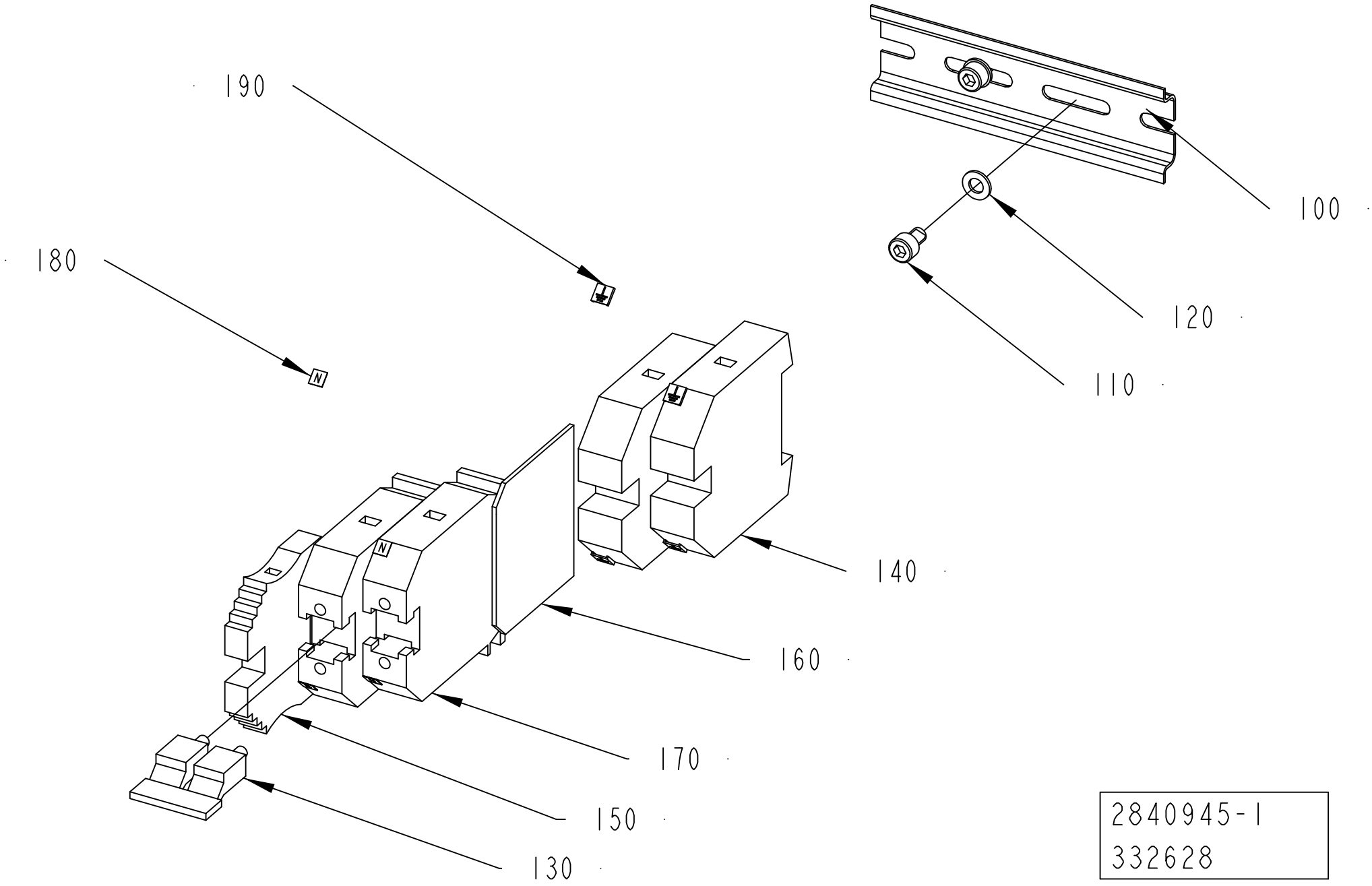


2840945-1
332628

ECM: 348257 - 20071222
Group number: 2840945-0100
Assembly Drawing: 2840945-1_1_AB

| Pos | Part No | UN | Qty | Description | Page No |
|---|---|---|---|---|---|
| - | | | | | |
| 0100 | 353042-0004 | MM | 108 | RAIL TS 35/7,5 | |
| 0110 | 312115-0323 | | 2 | SCREW ISO4762 M5X8 A4 80 | |
| 0120 | 315105-0146 | | 2 | WASHER BRB 5,3X10 RFR | |
| 0130 | 353034-0026 | | 1 | BRIDGE CONNECTOR, WQV 35/2, 10530.6 | |
| 0140 | 353024-0209 | | 2 | EARTH TERMINAL, 1010.5 | |
| 0150 | 353031-0203 | | 1 | END SUPPORT, WEW 35/2 | |
| 0160 | 353033-0105 | | 1 | PARTITITION, 10501.0 | |
| 0170 | 353021-0226 | | 2 | BY-PASS TERMINAL WDU 35 | |
| 0180 | 90600-0719 | | 4 | MARKING PLATES DEK 5 GW N | |
| 0190 | 359011-0834 | | 4 | SET OF SIGNS 6-GW(EARTH) | |

| Pos | Part No | UN | Qty | Description | Page No |
|---|---|---|---|---|---|

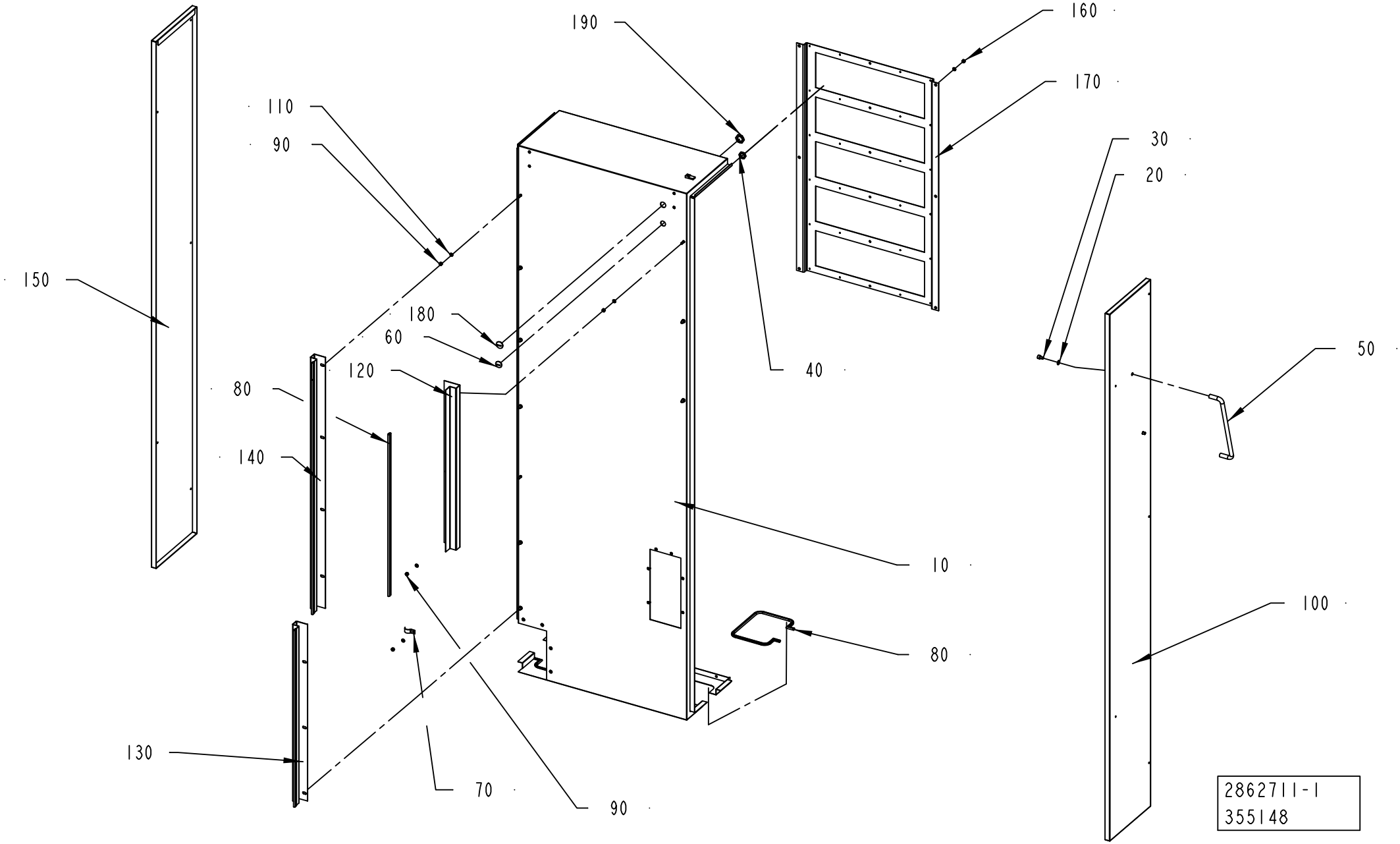
190
160
170
110
90
30
20
150
180
60
120
40
50
80
140
10
100
80
130
70
90
2862711-1
355148

ECM: 356551 - 20080916
Group number: 2862711-0100
Assembly Drawing: 2862711-1_1_AC

| Pos | Part No | UN | Qty | Description | Page No |
|---|---|---|---|---|---|
| **A3/FLEX** | | | | | |
| 0060 | 90002-0016 | | 2 | BLANK-OFF PLUG PR 20.4 SKINDICHT-BLK13,5 | |
| 0180 | 90002-0004 | | 1 | BLANK-OFF PLUG, PR 22,5 SKINDICHT-BLK16 | |
| **Common Parts** | | | | | |
| 0010 | 2862712-0000 | | 1 | COVER | |
| 0020 | 315105-0165 | | 2 | WASHER BRB 8,4X16 RFR | |
| 0030 | 312115-0447 | | 2 | SCREW ISO4762 M8X12 A4 80 | |
| 0040 | 90099-0118 | | 1 | NUT, PR 20,4 (PG13,5) | |
| 0050 | 90017-0015 | | 1 | HANDLE, NO. 14.4012.02.308 | |
| 0070 | 90074-0011 | | 1 | CABLE CLIPS, D=14 MM | |
| 0080 | 90143-0097 | MM | 2430 | SELF GRIPPING GASKET, 1011-24 | |
| 0090 | 312605-0316 | | 11 | HEXAGON NUT, M6M M6 A280 | |
| 0100 | 2918728-0000 | | 1 | COVER | |
| 0110 | 315105-0153 | | 17 | WASHER BRB 6,4X12 RFR | |
| 0120 | 2748701-0000 | | 1 | BRACKET | |
| 0130 | 2748702-0000 | | 1 | BRACKET | |
| 0140 | 2747630-0000 | | 1 | BRACKET | |
| 0150 | 2918729-0000 | | 1 | COVER | |
| 0160 | 312812-0316 | | 6 | HEXAGON NUT, NY-LOCK M6 A480 | |
| 0170 | 1532911-0000 | | 1 | FASTENING PLATE | |
| 0190 | 90099-0110 | | 1 | NUT, PR 22,5 (PG16) | |

| Pos | Part No | UN | Qty | Description | Page No |
|---|---|---|---|---|---|

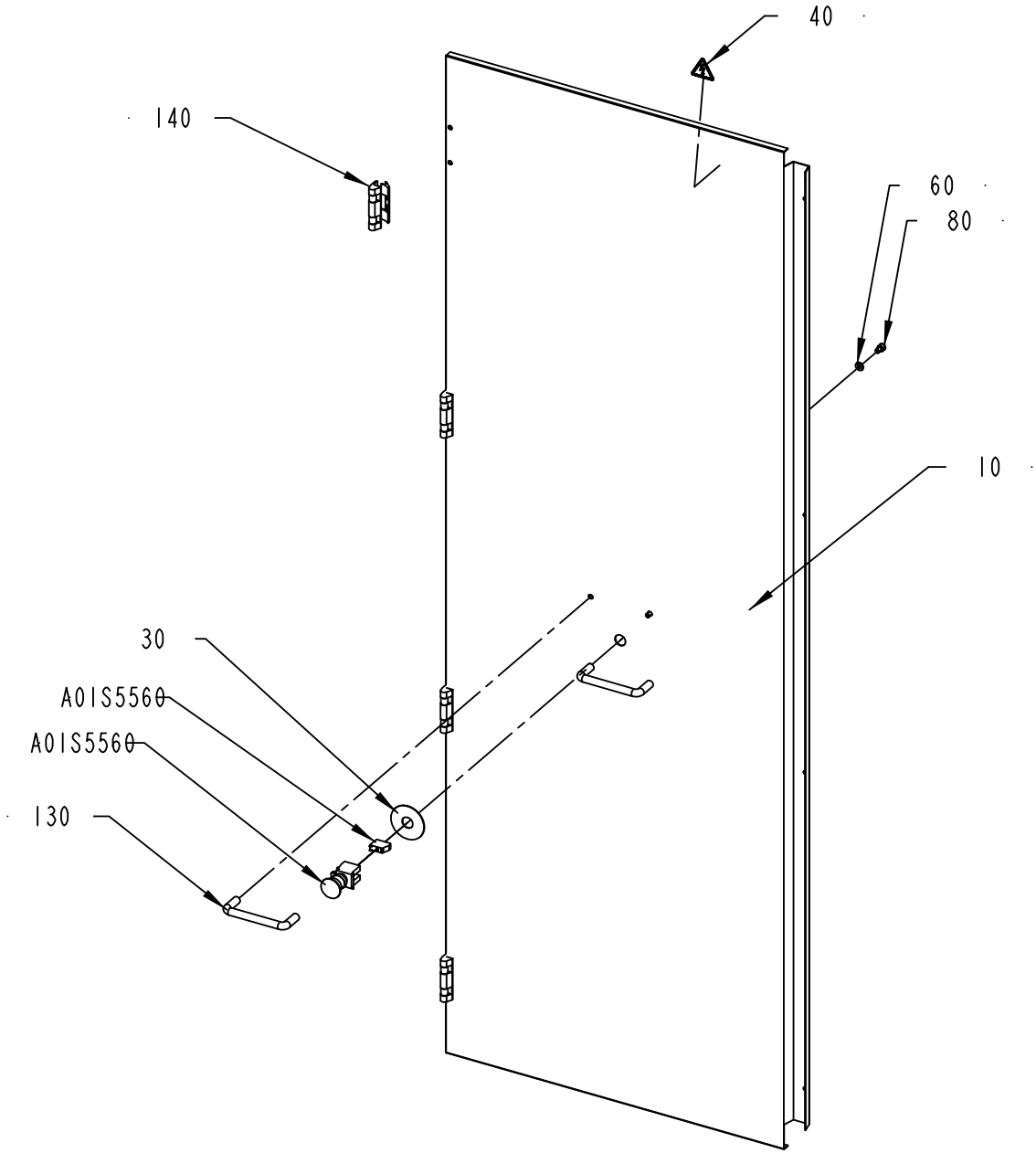


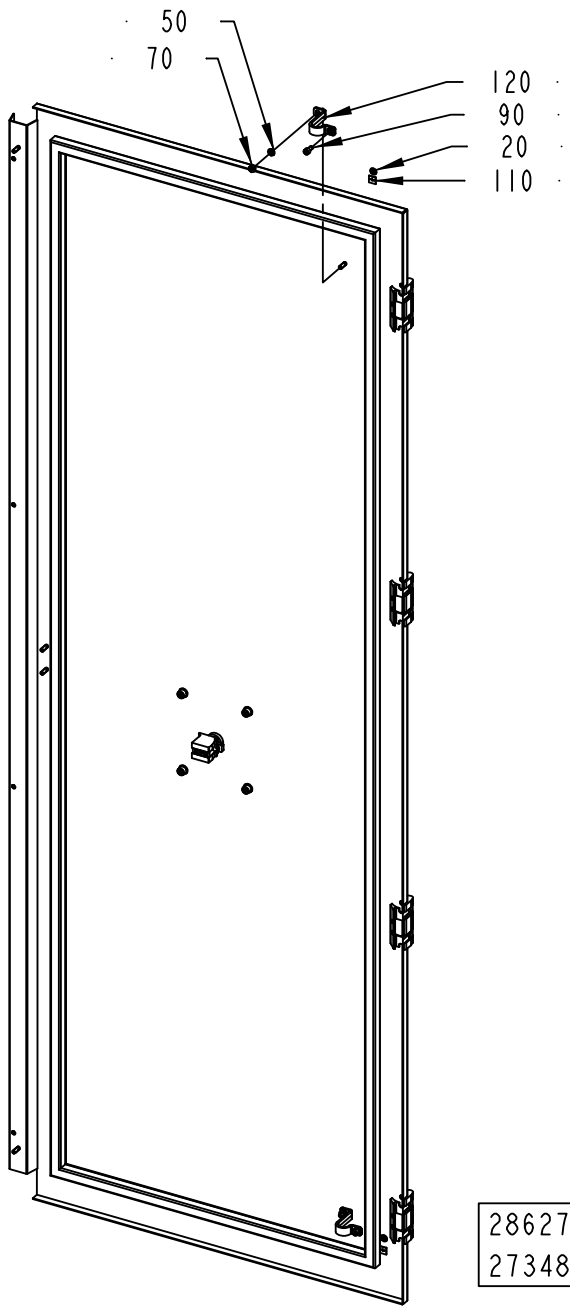


2862707-1
273485

ECM: 315175 - 20070625
Group number: 2862707-0100
Assembly Drawing: 2862707-1_1_AA

| Pos | Part No | UN | Qty | Description | Page No |
|---|---|---|---|---|---|
| - | | | | | |
| 0010 | 2862708-0000 | | 1 | DOOR | |
| 0020 | 2608177-0000 | | 2 | SIGN | |
| 0030 | 486826-0001 | | 1 | SIGN "EMERGENCY STOP" | |
| 0040 | 359705-0015 | | 1 | WARNING SIGN ISO, RISK OF ELECTRIC SHOCK | |
| 0050 | 315105-0153 | | 4 | WASHER BRB 6,4X12 RFR | |
| 0060 | 315101-0165 | | 4 | WASHER PLAIN, BRB, 8,4/16 H=1,5 | |
| 0070 | 312605-0316 | | 2 | HEXAGON NUT, M6M M6 A280 | |
| 0080 | 312115-0447 | | 4 | SCREW ISO4762 M8X12 A4 80 | |
| 0090 | 312115-0366 | | 2 | SCREW ISO4762 M6X12 A4 80 | |
| 0110 | 90194-0152 | | 2 | SIGN, EARTH | |
| 0120 | 90135-0035 | | 2 | EARTH WIRE, L=250 MM 16 MM2 | |
| 0130 | 90017-0016 | | 2 | HANDLE, NO. 14.4012.02.120 | |
| 0140 | 2869592-0000 | | 4 | HINGE | |
| A01S5560 | 90459-1917 | | 1 | CONTACT BLOCK ZBE-102 NC | |
| A01S5560 | 90458-1651 | | 1 | EMERGENCY STOP, ZB4-BS-844 ZB4-BZ-104 | |

| Pos | Part No | UN | Qty | Description | Page No |
|---|---|---|---|---|---|

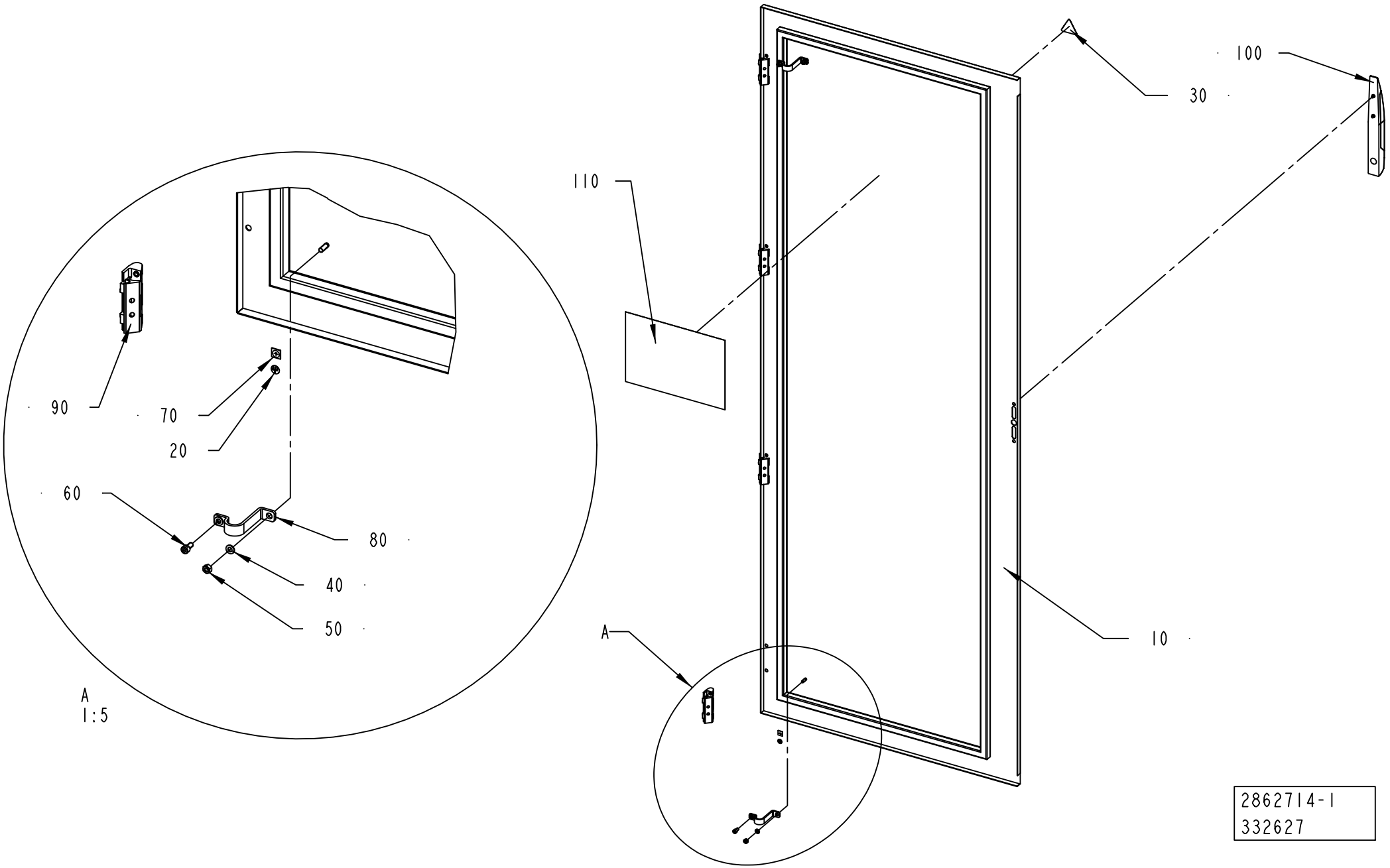
100
30
110
90
70
20
60
80
40
50
10
A
A
1:5
2862714-1
332627

ECM: 337817 - 20071221
Group number: 2862714-0100
Assembly Drawing: 2862714-1_1_AB

| Pos | Part No | UN | Qty | Description | Page No |
|---|---|---|---|---|---|
| **A3/FLEX** | | | | | |
| 0110 | 2918733-0000 | | 1 | FUSE PANEL LABEL | |
| **Common Parts** | | | | | |
| 0010 | 2867675-0000 | | 1 | DOOR | |
| 0020 | 2608177-0000 | | 2 | SIGN | |
| 0030 | 359705-0015 | | 1 | WARNING SIGN ISO, RISK OF ELECTRIC SHOCK | |
| 0040 | 315105-0153 | | 4 | WASHER BRB 6,4X12 RFR | |
| 0050 | 312605-0316 | | 2 | HEXAGON NUT, M6M M6 A280 | |
| 0060 | 312115-0366 | | 2 | SCREW ISO4762 M6X12 A4 80 | |
| 0070 | 90194-0152 | | 2 | SIGN, EARTH | |
| 0080 | 90135-0035 | | 2 | EARTH WIRE, L=250 MM 16 MM2 | |
| 0090 | 2869592-0000 | | 4 | HINGE | |
| 0100 | 2869593-0000 | | 1 | HANDLE | |

| Pos | Part No | UN | Qty | Description | Page No |
|---|---|---|---|---|---|

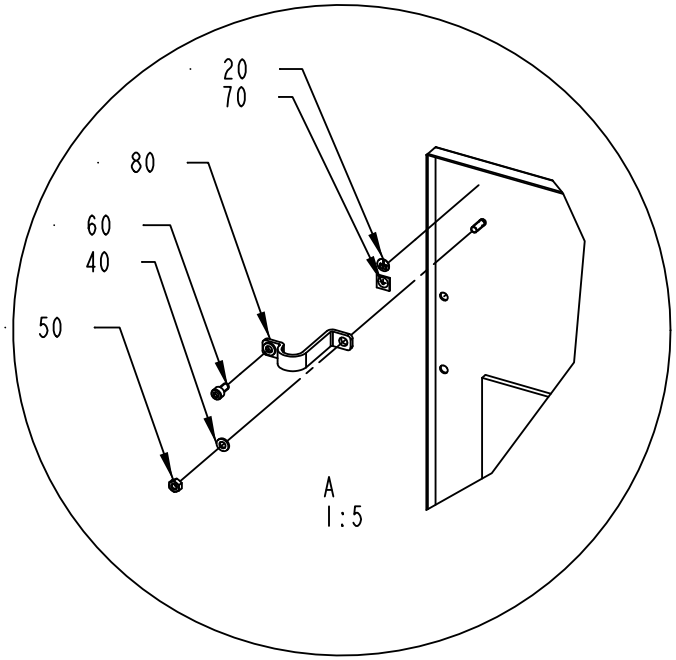
20
70
80
60
40
50
A
1:5

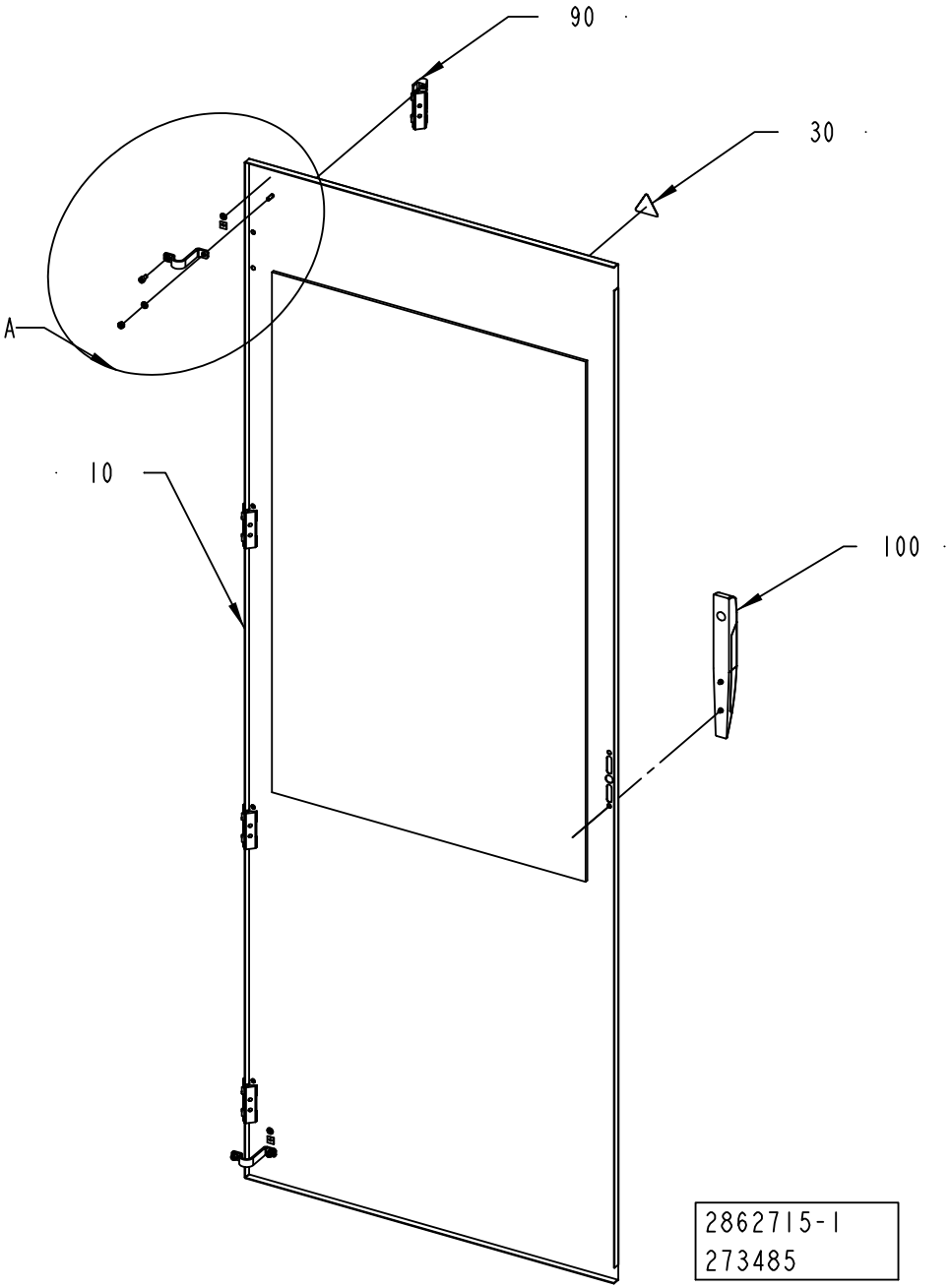
90
30
A
10
100
2862715-1
273485

ECM: 315180 - 20070625
Group number: 2862715-0100
Assembly Drawing: 2862715-1_1_AA

| Pos | Part No | UN | Qty | Description | Page No |
|---|---|---|---|---|---|
| - | | | | | |
| 0010 | 2867676-0000 | | 1 | DOOR | |
| 0020 | 2608177-0000 | | 2 | SIGN | |
| 0030 | 359705-0015 | | 1 | WARNING SIGN ISO, RISK OF ELECTRIC SHOCK | |
| 0040 | 315105-0153 | | 4 | WASHER BRB 6,4X12 RFR | |
| 0050 | 312605-0316 | | 2 | HEXAGON NUT, M6M M6 A280 | |
| 0060 | 312115-0366 | | 2 | SCREW ISO4762 M6X12 A4 80 | |
| 0070 | 90194-0152 | | 2 | SIGN, EARTH | |
| 0080 | 90135-0035 | | 2 | EARTH WIRE, L=250 MM 16 MM2 | |
| 0090 | 2869592-0000 | | 4 | HINGE | |
| 0100 | 2869593-0000 | | 1 | HANDLE | |

| Pos | Part No | UN | Qty | Description | Page No |
|---|---|---|---|---|---|

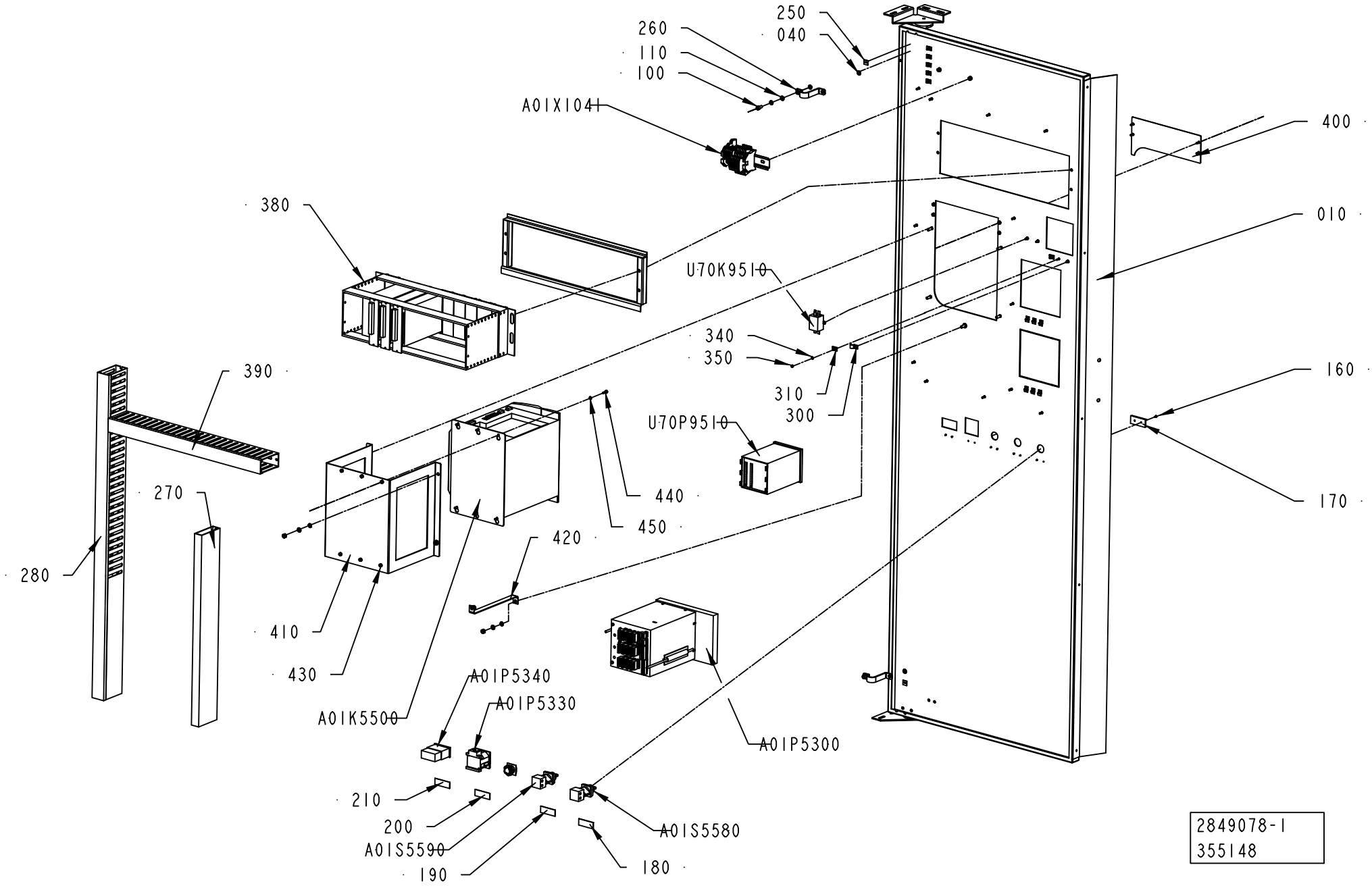
250
040
260
110
100
A01X1041
400
380
010
U70K9510
340
350
390
160
310
300
U70P9510
270
440
450
420
280
410
430
A01P5340
A01P5330
A01K5500
A01P5300
210
200
A01S5590
190
A01S5580
180
2849078-1
355148

ECM: 356373 - 20080916
Group number: 2849078-0100
Assembly Drawing: 2849078-1_1_AC

| Pos | Part No | UN | Qty | Description | Page No |
|---|---|---|---|---|---|
| - | | | | | |
| 0010 | 2849077-0000 | | 1 | DOOR | |
| 0020 | 2601232-0000 | | 1 | FRAME | |
| 0030 | 1038355-0000 | | 1 | FRAME | |
| 0040 | 2608177-0000 | | 2 | SIGN | |
| 0100 | 312115-0366 | | 2 | SCREW ISO4762 M6X12 A4 80 | |
| 0110 | 315105-0153 | | 10 | WASHER BRB 6,4X12 RFR | |
| 0130 | 312605-0316 | | 6 | HEXAGON NUT, M6M M6 A280 | |
| 0150 | 90062-0022 | | 12 | LOCK WASHER D=6,4/11 | |
| 0160 | 311520-0320 | | 10 | RIVET, BLANK 2,4X6 | |
| 0170 | 359240-0100 | | 5 | SIGN HOLDER FOR 359240-0001 | |
| 0180 | 359241-0133 | | 1 | SIGN: " SERVICE SWITCH" | |
| 0190 | 359241-0122 | | 1 | SIGN: " CLEANING STEAM BARRIER SPACE" | |
| 0200 | 359241-0201 | | 1 | SIGN: " HOUR METER" | |
| 0210 | 359241-0482 | | 1 | SIGN "PACKAGE COUNTER" | |
| 0250 | 90194-0152 | | 2 | SIGN, EARTH | |
| 0260 | 90135-0035 | | 2 | EARTH WIRE, L=250 MM 16 MM2 | |
| 0270 | 90181-0052 | MM | 560 | CABLE DUCT 25X80MM | |
| 0280 | 90181-0053 | MM | 955 | CABLE DUCT 40X80MM | |
| 0290 | 90181-0053 | MM | 570 | CABLE DUCT 40X80MM | |
| 0300 | 90165-0022 | | 1 | PIPE CLIP, FOR TUBE D=2,5 MM, B-3570 | |
| 0310 | 90165-0007 | | 13 | PIPE CLIP FOR TUBE D=8 MM | |
| 0320 | 90002-0014 | | 1 | BLANK PLUG D=22,5MM, ZB2-SP03 | |
| 0330 | 312605-0314 | | 2 | HEXAGON NUT, M6M M5 A280 | |
| 0340 | 315106-0124 | | 16 | WASHER ISO 7089-3-200 HV A4 | |
| 0350 | 312605-0310 | | 16 | HEXAGON NUT, M6M M3 A280 | |
| 0360 | 315106-0146 | | 2 | WASHER ISO 7089-5-200 HV A4 | |
| 0380 | 2849071-0100 | | 1 | RACK ..... | **8-55** |
| 0390 | 90181-0053 | MM | 520 | CABLE DUCT 40X80MM | |
| 0400 | 2918720-0000 | | 1 | COVER | |
| 0410 | 2912644-0000 | | 1 | SUPPORT | |
| 0420 | 90600-2904 | | 1 | EARTH BRAID, 250/16/8,5 | |
| 0430 | 312605-0312 | | 10 | HEXAGON NUT, M6M M4 A280 | |
| 0440 | 312115-0291 | | 6 | SCREW ISO4762 M4X12 A4 80 | |
| 0450 | 315105-0136 | | 16 | WASHER BRB 4,3X8 RFR | |
| 0460 | 90600-1456 | | 1 | INTOUCH OEM 5000 V 9.5 HW KEY USB | |
| A01K5500 | 90600-3694 | | 1 | COMPUTOR APC620, 5P62:TETRAPAK-17 | |
| | *90600-4999* | | *1* | *COMPACTFLASH CARD 8GB, 5CFCRD.8192-03* | |
| | *90600-4998* | | *1* | *COMPACTFLASH CARD 4GB, 5CFCRD.4096-03* | |
| | *90600-4984* | | *1* | *FAN FILTERS 5 PCI, 5AC600.FA05-00* | |
| | *90600-4983* | | *1* | *FAN KIT 5PCI, 5PC600.FA05-00* | |
| | *90600-4979* | | *1* | *SLIDE IN DVD-ROMCD-RW, 5AC600.DVDS-00* | |
| | *90600-4978* | | *1* | *ETHERNET PCB, 0TB360.61* | |
| | *90600-0186* | | *1* | *TERMINAL BLOCK 3 PIN, 0TB103.91* | |
| | *90459-1485* | | *1* | *LITHIUM BATTERY TPOP MAXI* | |
| A01P5300 | 90459-6436 | | 1 | RECORDER 12-CHANNEL, LOGOSCREEN CF | |
| A01P5330 | 90053-0031 | | 1 | HOUR COUNTER, B 609.10 10-50VDC | |
| A01P5340 | 90053-0029 | | 1 | COUNTER, F524.800FA3C 24VDC | |
| A01S5580 | 90111-0122 | | 1 | KEY SWITCH, 2 NO CONTACTS | |
| A01S5590 | 90111-0124 | | 1 | KEY SWITCH, 1NO,1NC CONTACT | |
| A01X1041 | 2849075-0100 | | 1 | PLINTH ..... | **8-57** |
| U70K9510 | 90459-1359 | | 1 | FILTER 1 A, 250 VAC, FN 332-1/05 | |
| U70P9510 | 90459-5187 | | 1 | CONDUCTIVITY TRANSMITTER CLM223-ID7105 | |

| Machine Type | Group Description | Used-In | Group Number | Page No |
|---|---|---|---|---|

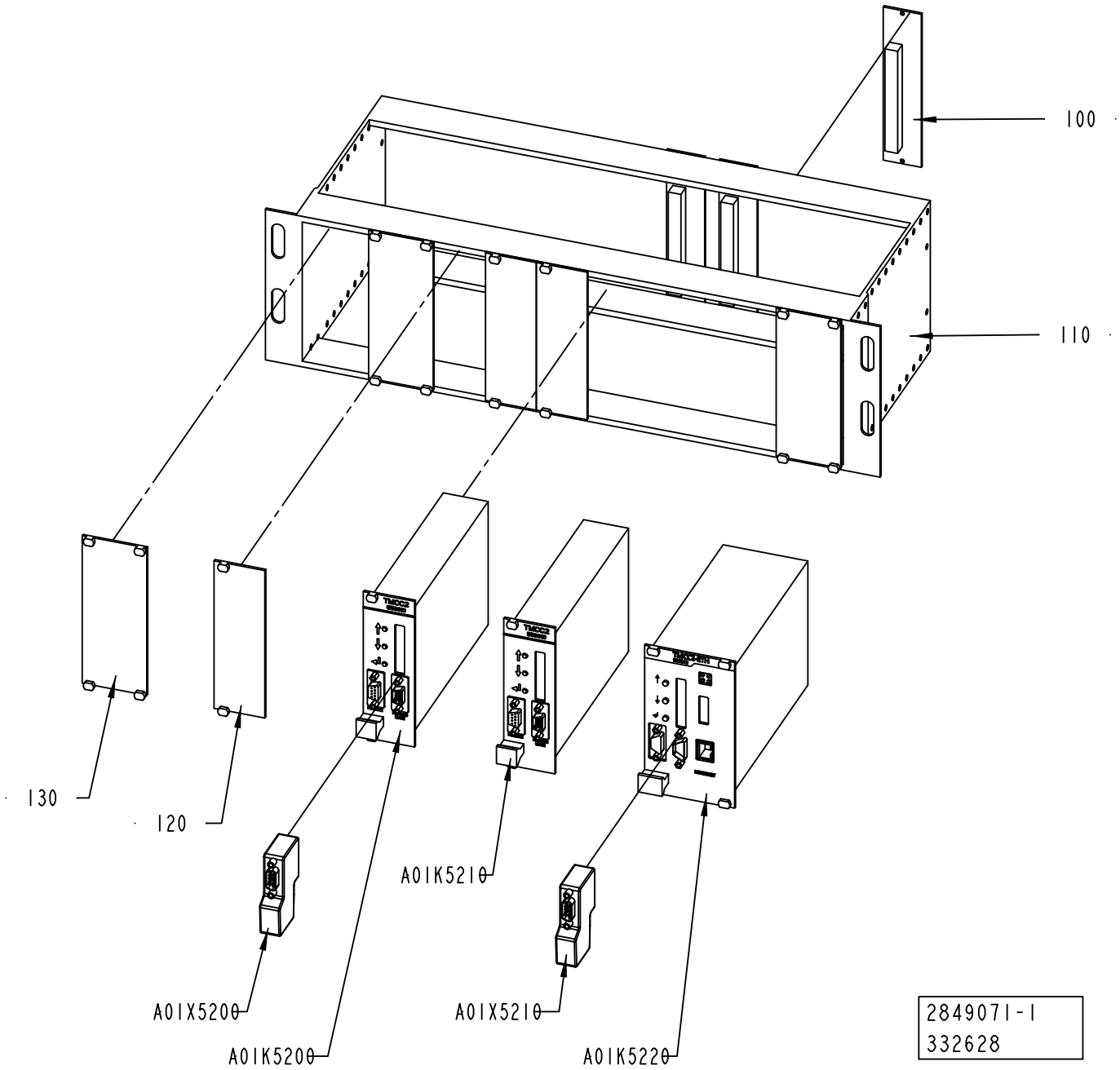
100
110
130
120
A01K5210
A01X5200
A01K5200
A01X5210
A01K5220
2849071-1
332628

ECM: 333741 - 20071221
Group number: 2849071-0100
Assembly Drawing: 2849071-1_1_AB

| Pos | Part No | UN | Qty | Description | Page No |
|---|---|---|---|---|---|
| **A3/FLEX** | | | | | |
| 0100 | 68262-0101 | | 3 | BACKPLANE FRONT RACK 8TE | |
| *100* | *543371-0000* | | *1* | *CIRCUIT BOARD 8TE* | |
| *110* | *551927-0001* | | *1* | *COMPONENTS WITHOUNT TP-NO* | |
| *120* | *551928-0000* | | *1* | *TERMINAL LABELS 8TE* | |
| 0120 | 68445-0104 | | 3 | FRONT PLATE 8 TE | |
| *010 4* | *543921-0004* | | *1* | *COMPONENTS WITHOUT TP-NO* | |
| **Common Parts** | | | | | |
| 0110 | 67388-0102 | | 1 | RACK FRONTMOUNTED 84TE | |
| *020 2* | *542038-0002* | | *1* | *COMPONENTS WITHOUT TP-NO* | |
| 0130 | 68445-0105 | | 3 | FRONT PLATE 10TE | |
| *010 5* | *543921-0005* | | *1* | *COMPONENTS WITHOUT TP-NO* | |
| A01K5200 | 559810-0101 | | 1 | TMCC2 CONTROLLER | |
| A01K5210 | 559810-0101 | | 1 | TMCC2 CONTROLLER | |
| A01K5220 | 559815-0101 | | 1 | TMCC2 CONTROLLER | |
| A01X5200 | 90459-0182 | | 1 | INTERFACE CONNECTOR FOR TMCC2 | |
| A01X5210 | 90459-0182 | | 1 | INTERFACE CONNECTOR FOR TMCC2 | |

| Pos | Part No | UN | Qty | Description | Page No |
|---|---|---|---|---|---|

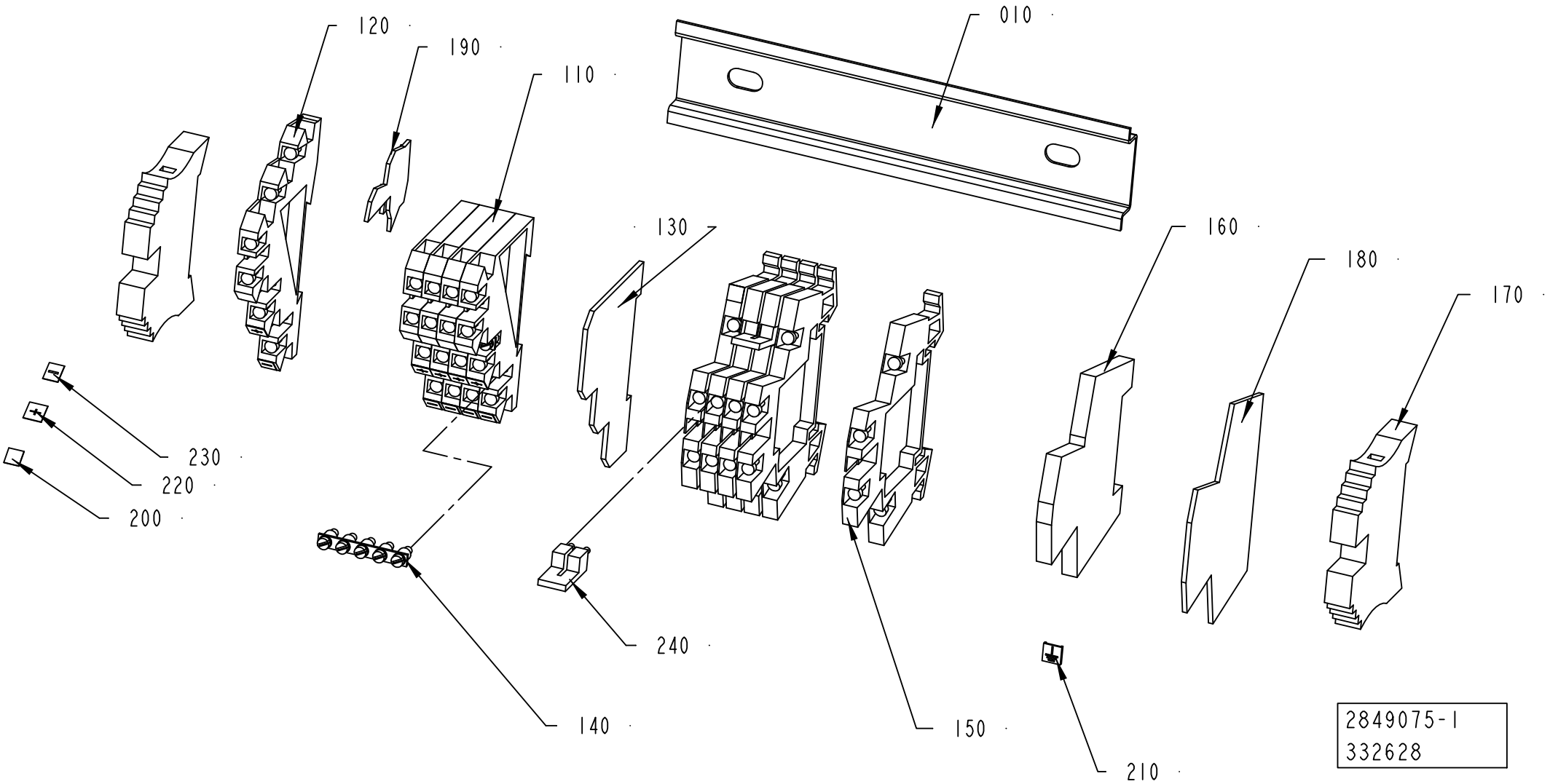
120
190
110
010
130
160
180
170
230
220
200
240
140
150
210
2849075-1
332628

ECM: 348255 - 20071222
Group number: 2849075-0100
Assembly Drawing: 2849075-1_1_AB

| Pos | Part No | UN | Qty | Description | Page No |
|---|---|---|---|---|---|
| - | | | | | |
| 0010 | 2849079-0000 | | 1 | RAIL | |
| 0110 | 353021-0301 | | 4 | TERMINALS,TRIPLE-LEVEL, DLI 2,5/35 PA | |
| 0120 | 353021-0302 | | 1 | TERMINALS,TRIPLE-LEVEL, DLD 2,5/35 PA | |
| 0130 | 353032-0301 | | 1 | END PLATE WAP, 13132.6 | |
| 0140 | 353034-0404 | | 2 | BRIDGE CONNECTOR Q10, 13131.0 | |
| 0150 | 90077-0113 | | 5 | FEED THROUGH TERMINAL, 10-00102150-1 | |
| 0160 | 353024-0212 | | 1 | EARTH TERMINAL, 10363.0 | |
| 0170 | 353031-0203 | | 2 | END SUPPORT, WEW 35/2 | |
| 0180 | 90077-0114 | | 1 | END PLATE, WAP/WDK 2,5 | |
| 0190 | 353032-0013 | | 1 | END PLATE, 13818.6 | |
| 0200 | 359011-0807 | | 2 | MARKING PLATES 5-FW 1-50 | |
| 0210 | 359011-0834 | | 1 | SET OF SIGNS 6-GW(EARTH) | |
| 0220 | 359011-0817 | | 6 | SYMBOL 5-GW (+) 50PC | |
| 0230 | 359011-0818 | | 6 | SYMBOL 5-GW (-) 50PC | |
| 0240 | 353034-0030 | | 2 | BRIDGE CONNECTOR WQV 2,5/10, 10544.6 | |

| Pos | Part No | UN | Qty | Description | Page No |
|---|---|---|---|---|---|

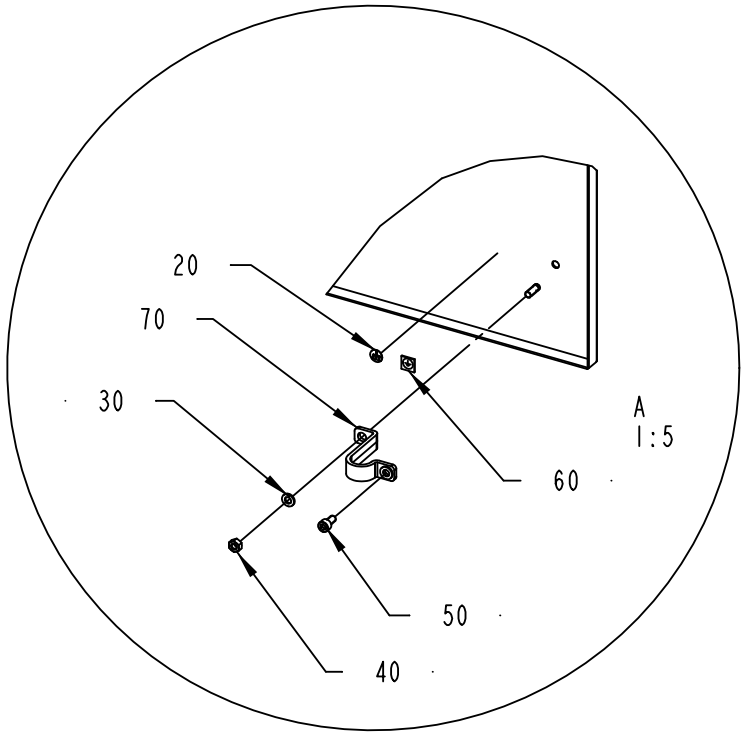
20
70
30
60
50
40
A
1:5

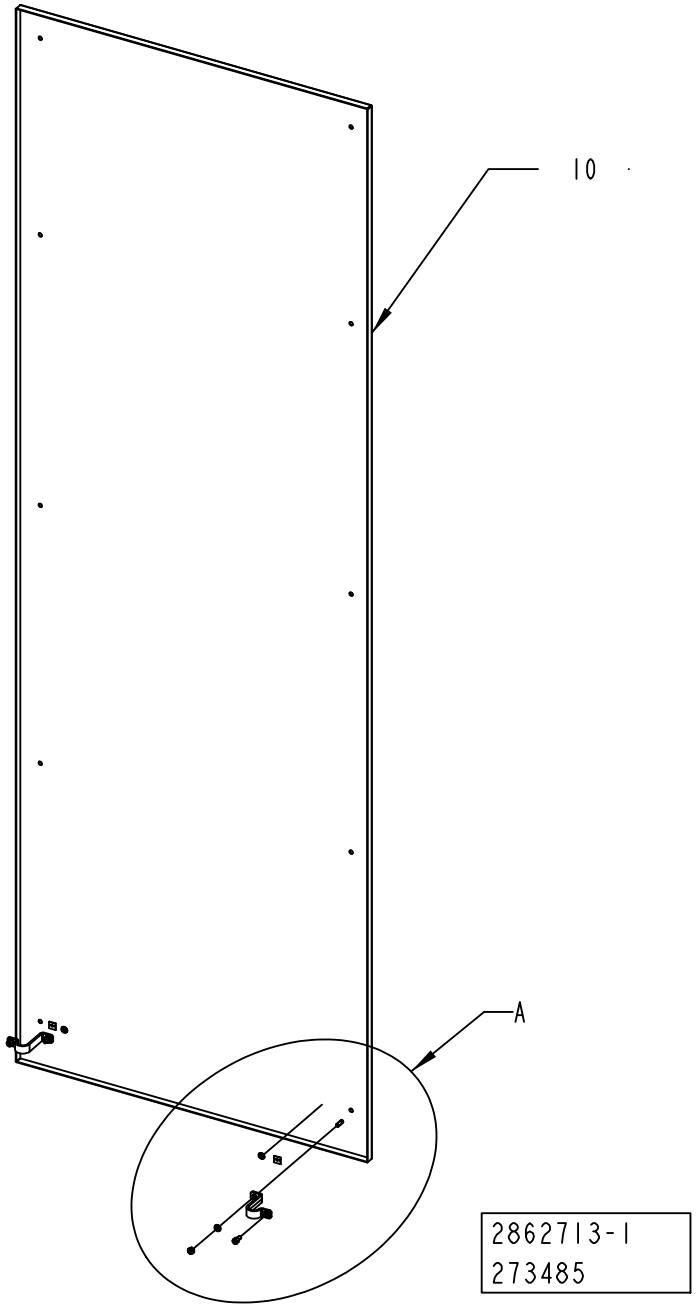
10
A
2862713-1
273485

ECM: 315178 - 20070625
Group number: 2862713-0100
Assembly Drawing: 2862713-1_1_AA

| Pos | Part No | UN | Qty | Description | Page No |
|---|---|---|---|---|---|
| - | | | | | |
| 0010 | 2867674-0000 | | 1 | PANEL | |
| 0020 | 2608177-0000 | | 2 | SIGN | |
| 0030 | 315105-0153 | | 4 | WASHER BRB 6,4X12 RFR | |
| 0040 | 312605-0316 | | 2 | HEXAGON NUT, M6M M6 A280 | |
| 0050 | 312115-0366 | | 2 | SCREW ISO4762 M6X12 A4 80 | |
| 0060 | 90194-0152 | | 2 | SIGN, EARTH | |
| 0070 | 90135-0035 | | 2 | EARTH WIRE, L=250 MM 16 MM2 | |

| Pos | Part No | UN | Qty | Description | Page No |
|---|---|---|---|---|---|

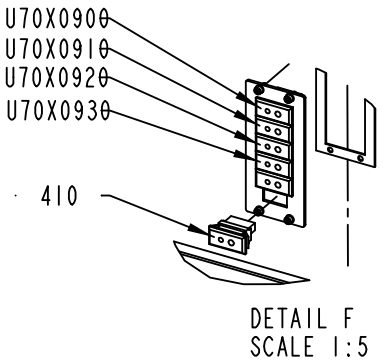


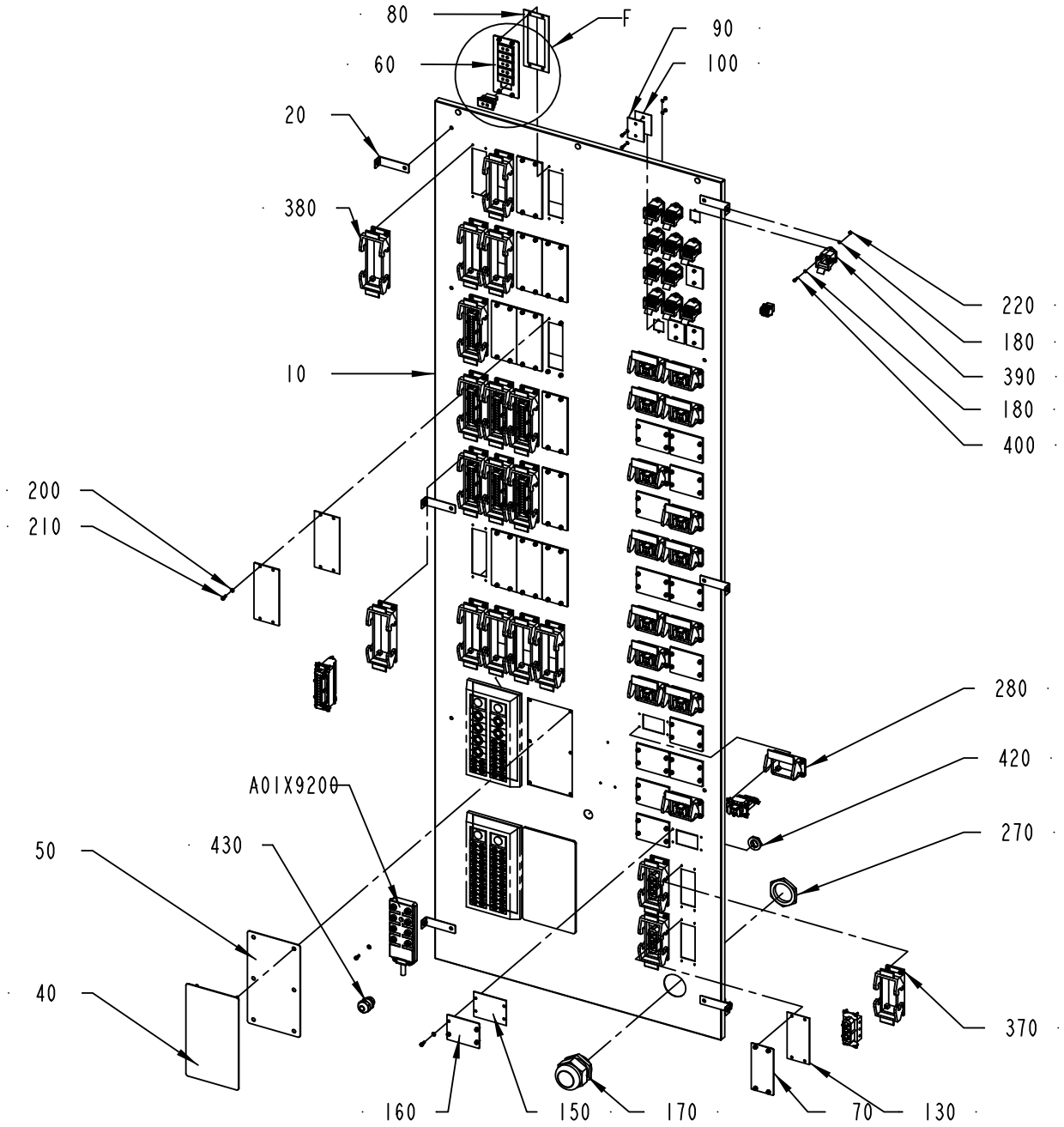


2867677-2
355148

ECM: 356553 - 20080916
Group number: 2867677-0100
Assembly Drawing: 2867677-2_1_AC

This list covers pages from 8-60 to 8-67

| Pos | Part No | UN | Qty | Description | Page No |
|---|---|---|---|---|---|
| **A3/FLEX DIMC/FLEX HI (See drawing on pages: 8-64, 8-66)** | | | | | |
| 0090 | 1487430-0000 | | 4 | COVER | |
| 0100 | 1487431-0000 | | 4 | GASKET | |
| 0120 | 1037575-0000 | | 11 | GASKET | |
| 0140 | 1037574-0000 | | 11 | COVER PLATE | |
| 0150 | 1037573-0000 | | 11 | GASKET | |
| 0160 | 1037572-0000 | | 11 | COVER PLATE | |
| 0280 | 90110-0123 | | 18 | HOUSING, 09 30 006 0301 | |
| 0380 | 90459-6639 | | 16 | HOUSING 24B BULKHEAD, 09 30 024 0301 | |
| 0390 | 90459-6822 | | 11 | HOUSING 3A BULKHEAD, 09 20 003 0301 | |
| T40X0040 | 90459-6820 | | 1 | FEMALE INSERT HAN 4 A, 09 20 004 2711 | |
| T40X0060 | 90459-6820 | | 1 | FEMALE INSERT HAN 4 A, 09 20 004 2711 | |
| T40X0070 | 90459-6820 | | 1 | FEMALE INSERT HAN 4 A, 09 20 004 2711 | |
| U70X0370 | 90459-6624 | | 1 | FEMALE INSERT HAN E AV, 09 33 006 4735 | |
| **A3/FLEX DIMC/FLEX NOHI (See drawing on pages: 8-64, 8-66)** | | | | | |
| 0090 | 1487430-0000 | | 4 | COVER | |
| 0100 | 1487431-0000 | | 4 | GASKET | |
| 0120 | 1037575-0000 | | 11 | GASKET | |
| 0140 | 1037574-0000 | | 11 | COVER PLATE | |
| 0150 | 1037573-0000 | | 10 | GASKET | |
| 0160 | 1037572-0000 | | 10 | COVER PLATE | |
| 0280 | 90110-0123 | | 17 | HOUSING, 09 30 006 0301 | |
| 0380 | 90459-6639 | | 16 | HOUSING 24B BULKHEAD, 09 30 024 0301 | |
| 0390 | 90459-6822 | | 11 | HOUSING 3A BULKHEAD, 09 20 003 0301 | |
| T40X0040 | 90459-6820 | | 1 | FEMALE INSERT HAN 4 A, 09 20 004 2711 | |
| T40X0060 | 90459-6820 | | 1 | FEMALE INSERT HAN 4 A, 09 20 004 2711 | |
| T40X0070 | 90459-6820 | | 1 | FEMALE INSERT HAN 4 A, 09 20 004 2711 | |
| U70X0330 | 90459-6624 | | 1 | FEMALE INSERT HAN E AV, 09 33 006 4735 | |
| **A3/FLEX NODIMC HI (See drawing on pages: 8-64, 8-66)** | | | | | |
| 0090 | 1487430-0000 | | 4 | COVER | |
| 0100 | 1487431-0000 | | 4 | GASKET | |
| 0120 | 1037575-0000 | | 11 | GASKET | |
| 0140 | 1037574-0000 | | 11 | COVER PLATE | |
| 0150 | 1037573-0000 | | 11 | GASKET | |
| 0160 | 1037572-0000 | | 11 | COVER PLATE | |
| 0280 | 90110-0123 | | 17 | HOUSING, 09 30 006 0301 | |
| 0380 | 90459-6639 | | 16 | HOUSING 24B BULKHEAD, 09 30 024 0301 | |
| 0390 | 90459-6822 | | 11 | HOUSING 3A BULKHEAD, 09 20 003 0301 | |
| T40X0040 | 90459-6820 | | 1 | FEMALE INSERT HAN 4 A, 09 20 004 2711 | |
| T40X0060 | 90459-6820 | | 1 | FEMALE INSERT HAN 4 A, 09 20 004 2711 | |
| T40X0070 | 90459-6820 | | 1 | FEMALE INSERT HAN 4 A, 09 20 004 2711 | |
| U70X0330 | 90459-6624 | | 1 | FEMALE INSERT HAN E AV, 09 33 006 4735 | |
| U70X0370 | 90459-6624 | | 1 | FEMALE INSERT HAN E AV, 09 33 006 4735 | |
| **A3/FLEX NODIMC NOHI (See drawing on pages: 8-60, 8-62)** | | | | | |
| 0090 | 1487430-0000 | | 4 | COVER | |
| 0100 | 1487431-0000 | | 4 | GASKET | |
| 0120 | 1037575-0000 | | 11 | GASKET | |
| 0140 | 1037574-0000 | | 11 | COVER PLATE | |
| 0150 | 1037573-0000 | | 12 | GASKET | |
| 0160 | 1037572-0000 | | 12 | COVER PLATE | |
| 0280 | 90110-0123 | | 16 | HOUSING, 09 30 006 0301 | |
| 0380 | 90459-6639 | | 16 | HOUSING 24B BULKHEAD, 09 30 024 0301 | |
| 0390 | 90459-6822 | | 11 | HOUSING 3A BULKHEAD, 09 20 003 0301 | |
| T40X0040 | 90459-6820 | | 1 | FEMALE INSERT HAN 4 A, 09 20 004 2711 | |
| T40X0060 | 90459-6820 | | 1 | FEMALE INSERT HAN 4 A, 09 20 004 2711 | |
| T40X0070 | 90459-6820 | | 1 | FEMALE INSERT HAN 4 A, 09 20 004 2711 | |
| **Common Parts** | | | | | |
| 0010 | 2867678-0000 | | 1 | PANEL | |
| 0020 | 2867680-0000 | | 6 | BRACKET | |
| 0030 | 2867681-0000 | | 2 | PLATE | |
| 0040 | 2867682-0000 | | 2 | COVER PLATE | |
| 0050 | 2867683-0000 | | 2 | GASKET | |
| 0060 | 2869590-0000 | | 1 | COVER PLATE | |
| 0070 | 1129481-0000 | | 1 | COVERING PLATE | |
| 0080 | 1129550-0000 | | 1 | GASKET | |
| 0110 | 2608177-0000 | | 2 | SIGN | |
| 0130 | 1129478-0000 | | 1 | GASKET | |
| 0170 | 352103-0123 | | 1 | CABLE GLAND, ST 42, PR54,0/PG42 | |
| 0180 | 315105-0124 | | 63 | WASHER BRB 3,2X6 RFR | |
| 0190 | 312605-0312 | | 17 | HEXAGON NUT, M6M M4 A280 | |
| 0200 | 315105-0136 | | 261 | WASHER BRB 4,3X8 RFR | |
| 0210 | 312115-0289 | | 244 | SCREW ISO4762 M4X10 A4 80 | |
| 0220 | 312605-0310 | | 31 | HEXAGON NUT, M6M M3 A280 | |
| 0230 | 312605-0314 | | 12 | HEXAGON NUT, M6M M5 A280 | |
| 0240 | 312605-0316 | | 4 | HEXAGON NUT, M6M M6 A280 | |
| 0250 | 315105-0146 | | 12 | WASHER BRB 5,3X10 RFR | |
| 0260 | 315105-0153 | | 4 | WASHER BRB 6,4X12 RFR | |
| 0270 | 90099-0103 | | 1 | NUT, PR 47 (PG36) | |
| 0300 | 90135-0035 | | 2 | EARTH WIRE, L=250 MM 16 MM2 | |
| 0310 | 90181-0052 | MM | 225 | CABLE DUCT 25X80MM | |
| 0320 | 90194-0152 | | 2 | SIGN, EARTH | |
| 0330 | 90458-1173 | | 6 | MULTI DIAMETER MODULE, CM 30W40 | |
| 0340 | 90458-1174 | | 23 | MULTI DIAMETER MODULE, CM 20W40 | |
| 0360 | 90458-1179 | | 2 | FRAME CF 32 | |

Machine Type | Group Description | Used-In | Group Number | Page No

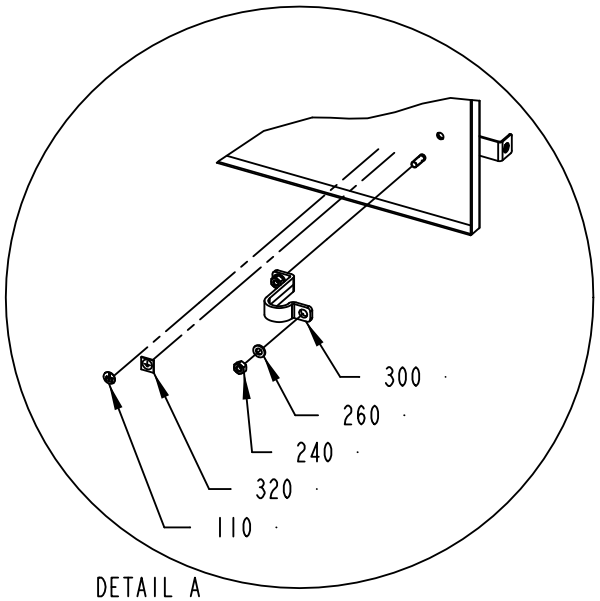
300
260
240
320
110
DETAIL A
SCALE 1:5

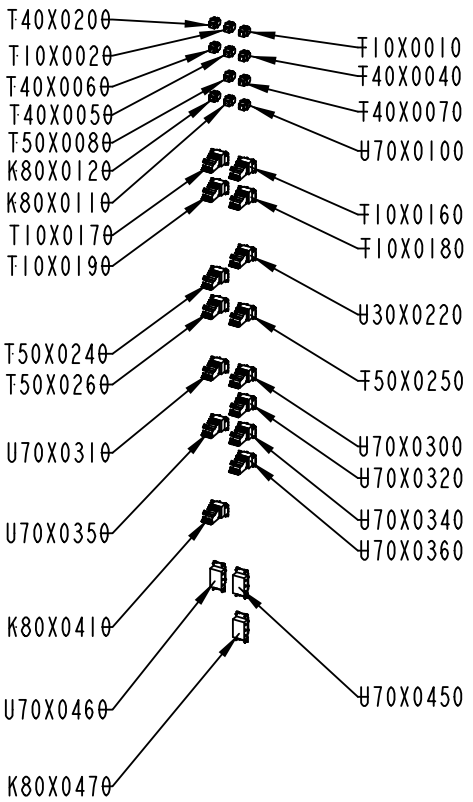
T40X0200
T10X0020
T40X0060
T40X0050
T50X0080
K80X0120
K80X0110
T10X0170
T10X0190
T50X0240
T50X0260
U70X0310
U70X0350
K80X0410
U70X0460
K80X0470
T10X0010
T40X0040
T40X0070
U70X0100
T10X0160
T10X0180
U30X0220
T50X0250
U70X0300
U70X0320
U70X0340
U70X0360
U70X0450

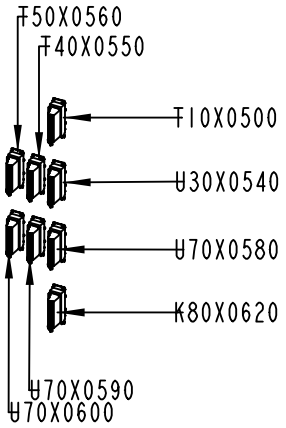
T50X0560
T40X0550
T10X0500
U30X0540
U70X0580
K80X0620
U70X0590
U70X0600

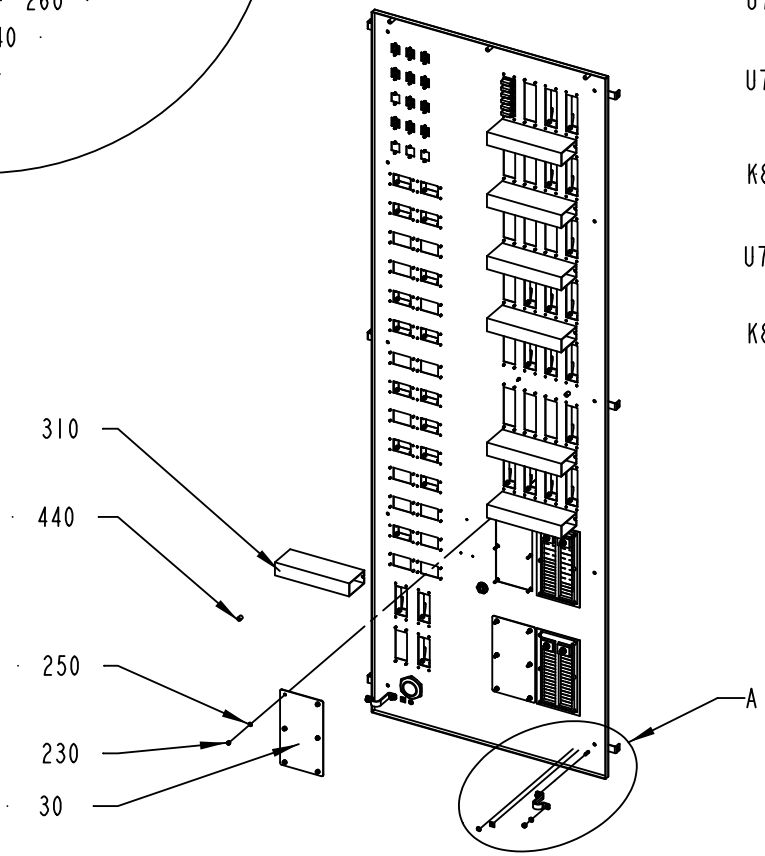
310
440
250
230
30
A

ECM: 356553 - 20080916
Group number: 2867677-0100
Assembly Drawing: 2867677-2_2_AC

This list covers pages from 8-60 to 8-67

| Pos | Part No | UN | Qty | Description | Page No |
|---|---|---|---|---|---|
| **Common Parts (Cont'd)** | | | | | |
| 0370 | 90459-6638 | | 3 | HOUSING 16B BULKHEAD, 09 30 016 0301 | |
| 0400 | 312115-0226 | | 30 | SCREW ISO4762 M3X12 A4 80 | |
| 0410 | 90459-4928 | | 2 | PANEL CONNECTOR FEMALE, TYPE K | |
| 0420 | 90458-0323 | | 1 | NUT, M20X1,5 | |
| 0430 | 90458-0307 | | 1 | CABLE GLAND, M20X1,5, NO.5311 1020 | |
| A01X9200 | 90459-0839 | | 1 | DISTRIBUTION FRAME, ASBV 8 5-135/10M | |
| K80X0110 | 90459-6820 | | 1 | FEMALE INSERT HAN 4 A, 09 20 004 2711 | |
| K80X0120 | 90459-6820 | | 1 | FEMALE INSERT HAN 4 A, 09 20 004 2711 | |
| K80X0410 | 90459-6624 | | 1 | FEMALE INSERT HAN E AV, 09 33 006 4735 | |
| K80X0470 | 90110-0055 | | 1 | FEMALE INSERT HAN 6 HSB 09 31 006 2701 | |
| K80X0620 | 90459-6627 | | 1 | FEMALE INSERT HAN E AV, 09 33 024 4735 | |
| T10X0010 | 90459-6820 | | 1 | FEMALE INSERT HAN 4 A, 09 20 004 2711 | |
| T10X0020 | 90459-6820 | | 1 | FEMALE INSERT HAN 4 A, 09 20 004 2711 | |
| T10X0160 | 90459-6624 | | 1 | FEMALE INSERT HAN E AV, 09 33 006 4735 | |
| T10X0170 | 90459-6624 | | 1 | FEMALE INSERT HAN E AV, 09 33 006 4735 | |
| T10X0180 | 90459-6624 | | 1 | FEMALE INSERT HAN E AV, 09 33 006 4735 | |
| T10X0190 | 90459-6624 | | 1 | FEMALE INSERT HAN E AV, 09 33 006 4735 | |
| T10X0500 | 90459-6627 | | 1 | FEMALE INSERT HAN E AV, 09 33 024 4735 | |
| T40X0050 | 90459-6820 | | 1 | FEMALE INSERT HAN 4 A, 09 20 004 2711 | |
| T40X0200 | 90459-6820 | | 1 | FEMALE INSERT HAN 4 A, 09 20 004 2711 | |
| T40X0550 | 90459-6627 | | 1 | FEMALE INSERT HAN E AV, 09 33 024 4735 | |
| T50X0080 | 90459-6820 | | 1 | FEMALE INSERT HAN 4 A, 09 20 004 2711 | |
| T50X0240 | 90459-6624 | | 1 | FEMALE INSERT HAN E AV, 09 33 006 4735 | |
| T50X0250 | 90459-6624 | | 1 | FEMALE INSERT HAN E AV, 09 33 006 4735 | |
| T50X0260 | 90459-6624 | | 1 | FEMALE INSERT HAN E AV, 09 33 006 4735 | |
| T50X0560 | 90459-6627 | | 1 | FEMALE INSERT HAN E AV, 09 33 024 4735 | |
| U30X0220 | 90459-6624 | | 1 | FEMALE INSERT HAN E AV, 09 33 006 4735 | |
| U30X0540 | 90459-6627 | | 1 | FEMALE INSERT HAN E AV, 09 33 024 4735 | |
| U70X0100 | 90459-6820 | | 1 | FEMALE INSERT HAN 4 A, 09 20 004 2711 | |
| U70X0300 | 90459-6624 | | 1 | FEMALE INSERT HAN E AV, 09 33 006 4735 | |
| U70X0310 | 90459-6824 | | 1 | CURRENT LIMITER, CL-PKZ0 | |
| U70X0320 | 90459-6824 | | 1 | CURRENT LIMITER, CL-PKZ0 | |
| U70X0340 | 90459-6624 | | 1 | FEMALE INSERT HAN E AV, 09 33 006 4735 | |
| U70X0350 | 90459-6824 | | 1 | CURRENT LIMITER, CL-PKZ0 | |
| U70X0360 | 90459-6624 | | 1 | FEMALE INSERT HAN E AV, 09 33 006 4735 | |
| U70X0450 | 90110-0055 | | 1 | FEMALE INSERT HAN 6 HSB 09 31 006 2701 | |
| U70X0460 | 90110-0055 | | 1 | FEMALE INSERT HAN 6 HSB 09 31 006 2701 | |
| U70X0580 | 90459-6627 | | 1 | FEMALE INSERT HAN E AV, 09 33 024 4735 | |
| U70X0590 | 90459-6627 | | 1 | FEMALE INSERT HAN E AV, 09 33 024 4735 | |
| U70X0600 | 90459-6627 | | 1 | FEMALE INSERT HAN E AV, 09 33 024 4735 | |
| U70X0900 | 90459-4928 | | 1 | PANEL CONNECTOR FEMALE, TYPE K | |
| U70X0910 | 90459-4928 | | 1 | PANEL CONNECTOR FEMALE, TYPE K | |
| U70X0920 | 90459-4928 | | 1 | PANEL CONNECTOR FEMALE, TYPE K | |
| U70X0930 | 90459-4928 | | 1 | PANEL CONNECTOR FEMALE, TYPE K | |

Machine Type | Group Description | Used-In | Group Number | Page No

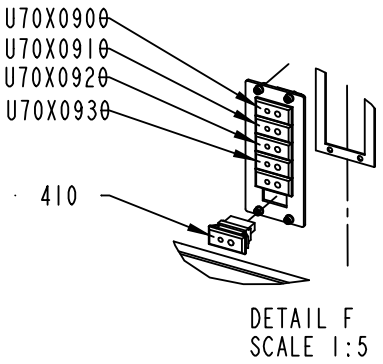


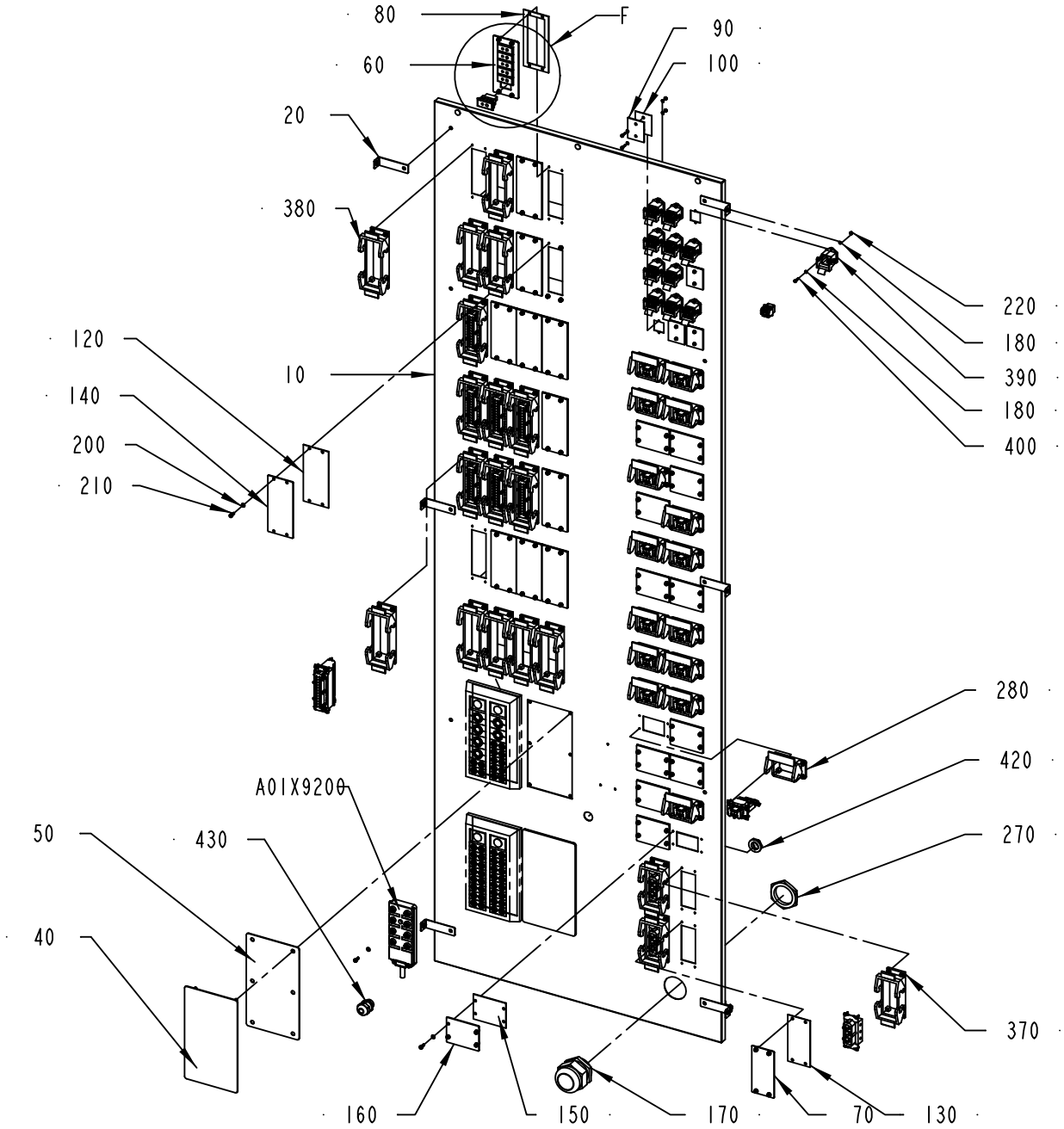


2867677-4
355148

| Pos | Part No | UN | Qty | Description | Page No |
|---|---|---|---|---|---|
| **SEE PREVIOUS LISTS PAGES: 8-61, 8-63.** | | | | | |

| Pos | Part No | UN | Qty | Description | Page No |
|---|---|---|---|---|---|

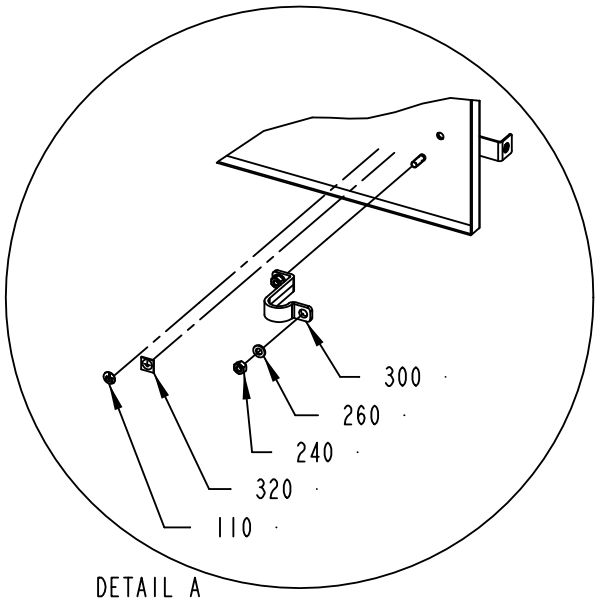


DETAIL A
SCALE 1:5

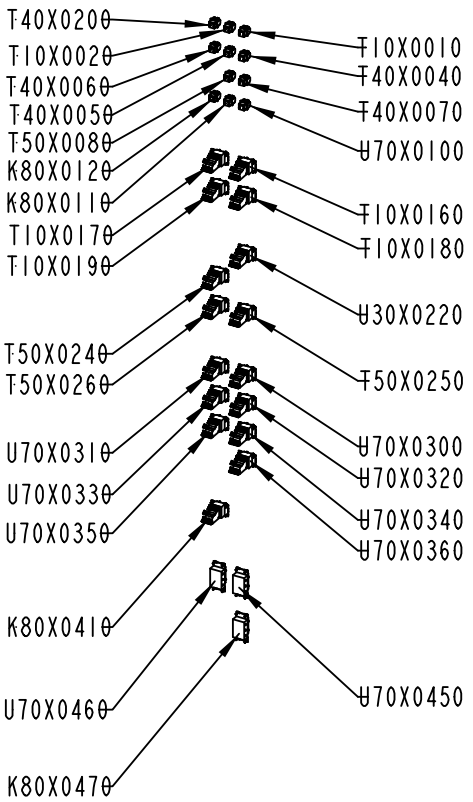


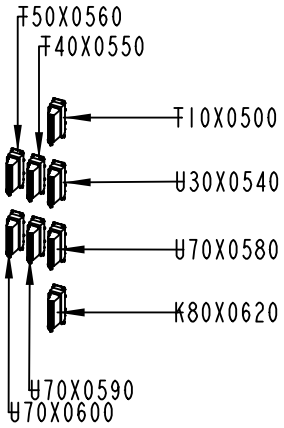


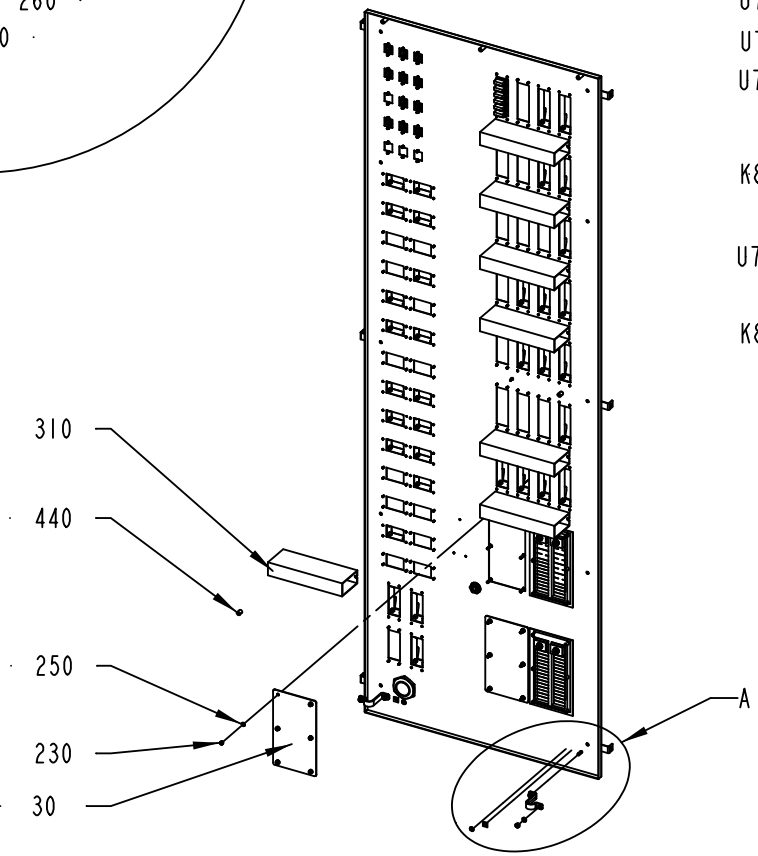

| Pos | Part No | UN | Qty | Description | Page No |
|---|---|---|---|---|---|
| **SEE PREVIOUS LISTS PAGES: 8-61, 8-63.** | | | | | |

| Pos | Part No | UN | Qty | Description | Page No |
|---|---|---|---|---|---|

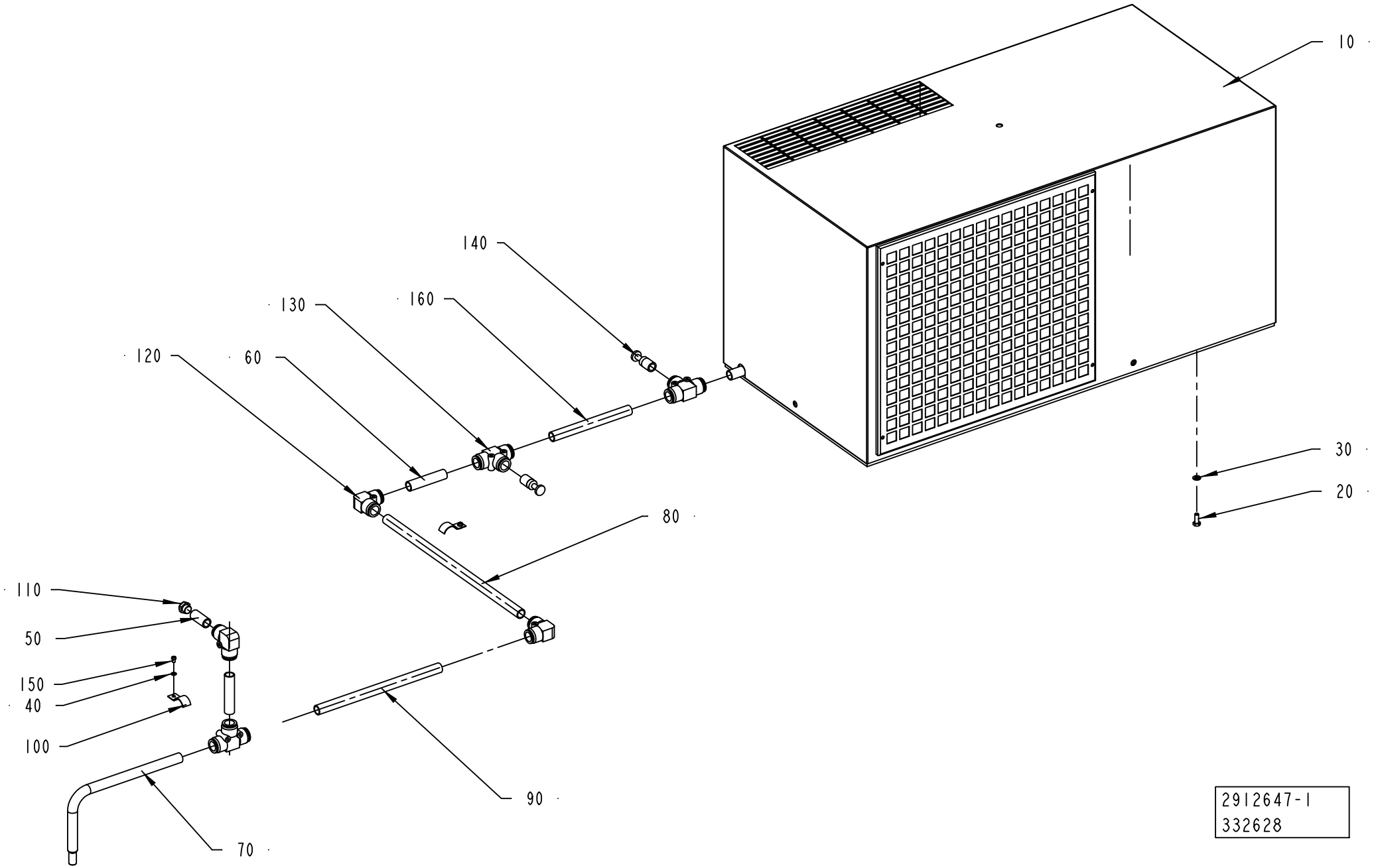


2912647-1
332628

ECM: 348251 - 20071222
Group number: 2912647-0100
Assembly Drawing: 2912647-1_1_AA

| Pos | Part No | UN | Qty | Description | Page No |
|---|---|---|---|---|---|
| **A3/FLEX** | | | | | |
| 0140 | 90459-2557 | | 2 | BLIND PLUG 16 MM | |
| **Common Parts** | | | | | |
| 0010 | 90459-0363 | | 1 | COOLING UNIT, KB40A0721.03 | |
| | *90600-0676* | | *1* | *GRID, DISA1880AA* | |
| | *90600-0675* | | *1* | *GASKET, A6411AA* | |
| | *90600-0673* | | *1* | *THERMOSTAT, KELVIN TMI0000218* | |
| | *90600-0672* | | *1* | *FAN, VBA0001499 , 50HZ_3UF , 60HZ_2UF* | |
| | *90600-0670* | | *1* | *FAN, VBA0001508 ,50/60HZ 4UF* | |
| | *90459-0364* | | *1* | *FILTER KB20/30/40 POLYURETH. FILTER 2001* | |
| 0020 | 312105-0368 | | 6 | SCREW M6S ISO 4017 M6X16 A480 | |
| 0030 | 315105-0153 | | 6 | WASHER BRB 6,4X12 RFR | |
| 0040 | 315105-0136 | | 2 | WASHER BRB 4,3X8 RFR | |
| 0050 | 2800104-0000 | | 1 | HOSE | |
| 0060 | 2800116-0000 | | 2 | HOSE | |
| 0070 | 2912646-0000 | | 1 | HOSE | |
| 0080 | 2918730-0000 | | 1 | HOSE | |
| 0090 | 2918731-0000 | | 1 | HOSE | |
| 0100 | 90074-0011 | | 2 | CABLE CLIPS, D=14 MM | |
| 0110 | 90257-0001 | | 1 | FILTER PLUG ART.NO.8145-00-140 TYPE F14 | |
| 0120 | 90459-2553 | | 3 | ELBOW PIPE JOINT 16 MM | |
| 0130 | 90459-2555 | | 3 | T-CONNECTION 16MM | |
| 0150 | 312125-0285 | | 2 | SCREW ISO 1207 M4X6 A4 | |
| 0160 | 2927018-0000 | | 1 | HOSE | |

| Pos | Part No | UN | Qty | Description | Page No |
|---|---|---|---|---|---|

Tetra Pak

# SPC
## Spare Parts Catalogue

This page is intentionally left blank.

ECM: 339869 - 20080530
Group number: 648561-0200
Assembly Drawing:

| Pos | Part No | UN | Qty | Description | Page No |
|---|---|---|---|---|---|
| **A3/FLEX DIMC/FLEX** | | | | | |
| 120 | 2550979-0000 | | 1 | TRANSPORT EQUIPMENT | |
| 130 | 1558933-0000 | | 2 | FRAME | |
| 140 | 90458-2138 | | 2 | SCREW M6S M12X120 A280 | |
| 150 | 312605-0322 | | 4 | HEXAGON NUT, M6M M12 A280 | |
| 160 | 315105-0178 | | 4 | WASHER BRB 13X24 RFR | |
| 500 | 90600-3267 | | 1 | MAINTENANCE KIT, TPAKKIT01 | |
| **A3/FLEX PT/FLEX** | | | | | |
| 120 | 2550979-0000 | | 1 | TRANSPORT EQUIPMENT | |
| 130 | 1558933-0000 | | 2 | FRAME | |
| 140 | 90458-2138 | | 4 | SCREW M6S M12X120 A280 | |
| 150 | 312605-0322 | | 8 | HEXAGON NUT, M6M M12 A280 | |
| 160 | 315105-0178 | | 8 | WASHER BRB 13X24 RFR | |
| **A3/FLEX TBA NODIMC, A3/FLEX TPA NODIMC, A3/FLEX TBA NOPT, A3/FLEX TPA NOPT** | | | | | |
| 120 | 2550979-0000 | | 1 | TRANSPORT EQUIPMENT | |
| 130 | 1558933-0000 | | 2 | FRAME | |
| 140 | 90458-2138 | | 2 | SCREW M6S M12X120 A280 | |
| 150 | 312605-0322 | | 4 | HEXAGON NUT, M6M M12 A280 | |
| 160 | 315105-0178 | | 4 | WASHER BRB 13X24 RFR | |
| **DOMINO** | | | | | |
| 220 | 2909728-0100 | | 1 | PRINTER SUPPORT ..... | **9-5** |
| **Common Parts** | | | | | |
| 010 | 2555393-0200 | | 1 | START-UP KIT ..... | **9-17** |
| 030 | 531345-0200 | | 1 | PERSONAL PROTECT. EQ H2O2 ..... | **9-33** |
| 040 | 2574483-0200 | | 1 | TOOLS AND TEMPLATES ..... | **9-35** |
| 050 | 2544873-0100 | | 1 | CONNECTION PIPE ..... | **9-43** |
| 060 | 90600-3339 | | 1 | PAPER REEL TROLLEY, TP A3 | |
| | *1558477-0100* | | *1* | *WHEEL* | |
| | *1558479-0100* | | *1* | *HANDLE* | |
| | *1558480-0100* | | *1* | *LIFTING CYLINDER* | |
| | *312812-0324* | | *1* | *HEXAGON NUT, NY-LOCK M16 A480* | |
| | *312105-0634* | | *1* | *SCREW M6S ISO 4014 M16X70 A480* | |
| | *312101-0678* | | *2* | *SCREW M6S M20X70 FZB* | |
| | *90458-1473* | | *1* | *PUMP, 34 73 521 7* | |
| *010* | *90458-1468* | | *1* | *SPLIT PIN, 43 71 234 8* | |
| *020* | *90067-0351* | | *1* | *SEAL KIT* | |
| *030* | *90067-0354* | | *1* | *PUMP PISTON* | |
| *040* | *90067-0355* | | *1* | *COMPRESSION SPRING* | |
| *050* | *90067-0356* | | *1* | *TOP WASHER* | |
| *060* | *90067-0357* | | *1* | *REPAIR KIT* | |
| *070* | *90067-0369* | | *1* | *VALVE ARM* | |
| *080* | *90458-1470* | | *1* | *SINK VALVE COMPL, 34 73 094 5* | |
| *100* | *90458-1393* | | *1* | *PUMP CYLINDER, 34 73 522 5* | |
| | *90067-0372* | | *2* | *SHAFT, 32 04 174 1* | |
| | *90067-0371* | | *4* | *SLEEVE, 32 04 175 8* | |
| | *90067-0370* | | *2* | *WHEEL, 32 04 176 6* | |
| | *90067-0368* | | *1* | *YOKE* | |
| | *90067-0365* | | *1* | *HYDRAULIC HOSE, 32 04 169 1* | |
| 100 | 593682-0000 | | 1 | MACHINE SIGN, EEA(CE-MARK) | |
| 110 | 311521-0142 | | 4 | RIVET, BLANK 3,2X6 | |
| 170 | 312105-0503 | | 2 | SCREW M6S ISO 4014 M10X60 A480 | |
| 180 | 315105-0173 | | 2 | WASHER BRB 10,5X22 RFR | |
| 200 | 90459-6033 | | 1 | PROGRAMMING CABLE FOR PLUTO 20-070-56 | |
| 250 | 2508173-0200 | | 1 | DIAGRAM ..... | **9-45** |

Machine Type | Group Description | Used-In | Group Number | Page No

**This page is intentionally left blank.**

ECM: 321714 - 20080101
Group number: 2909728-0100
Assembly Drawing:

| Pos | Part No | UN | Qty | Description | Page No |
|---|---|---|---|---|---|
| **TBA 0500SQ, TBA 0500B, TBA 1000B, TBA 1000SQ, TBA 1000S, TBA 1500S, TPA 1000SQ, TPA 0750SQ** | | | | | |
| 010 | 2775770-0101 | | 1 | BRACKET | **9-7, 9-9** |
| **TBA 2000S** | | | | | |
| 010 | 2775770-0102 | | 1 | BRACKET | **9-13, 9-15** |

| Pos | Part No | UN | Qty | Description | Page No |
|---|---|---|---|---|---|

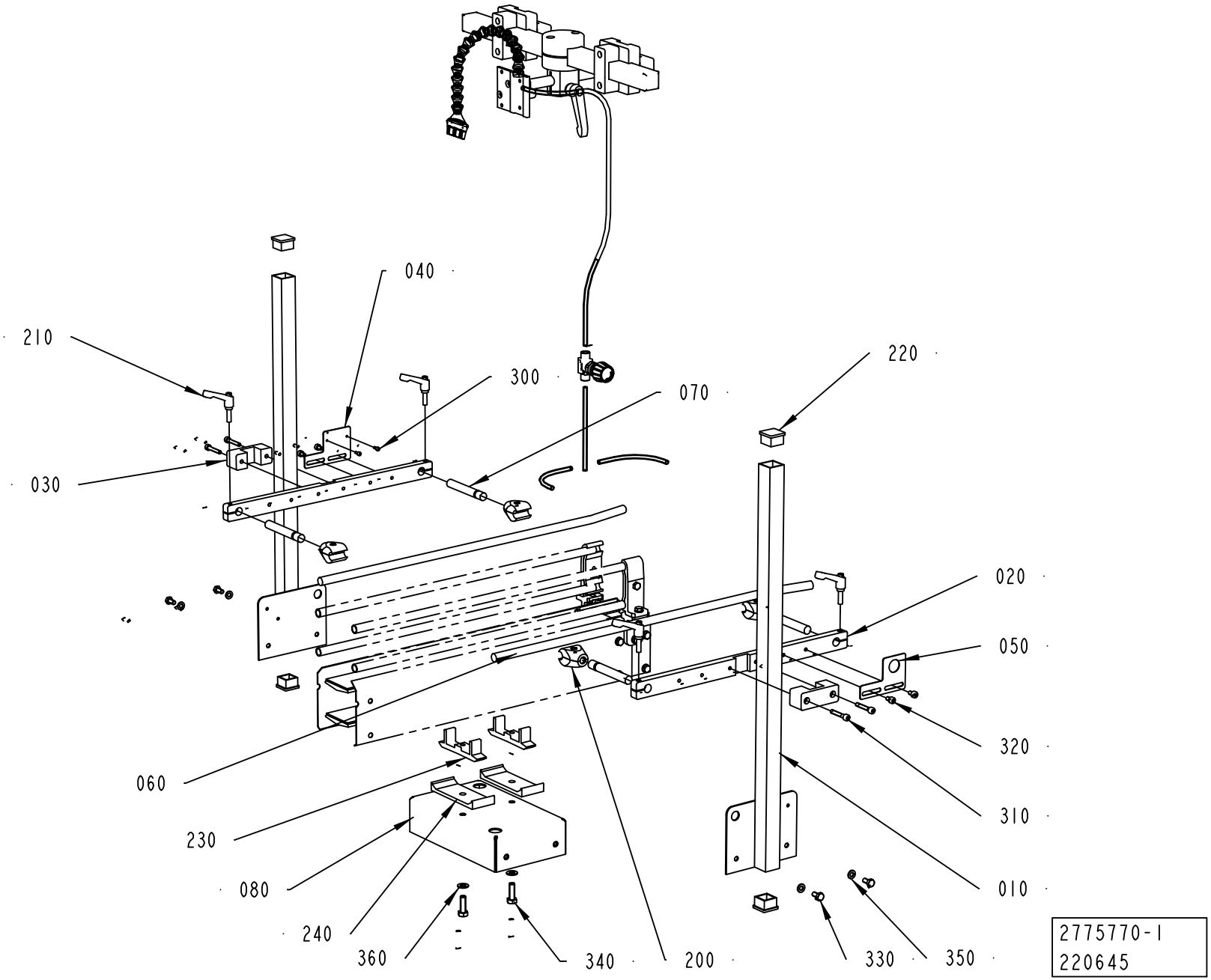
040
210
300
070
220
030
020
050
320
060
310
230
080
010
240
360
340
200
330
350
2775770-1
220645

ECM: 220645 -
Group number: 2775770-0101
Assembly Drawing: 2775770-1_1_AA

This list covers pages from 9-6 to 9-9

| Pos | Part No | UN | Qty | Description | Page No |
|---|---|---|---|---|---|
| **PCONV21 (See drawing on pages: 9-6, 9-12)** | | | | | |
| 010 | 2775771-0000 | | 2 | BRACKET | |
| 080 | 2775772-0000 | | 1 | BRACKET | |
| 230 | 537482-0000 | | 2 | BRACKET | |
| 240 | 537483-0000 | | 2 | BRACKET | |
| 330 | 312105-0366 | | 4 | SCREW M6S ISO 4017 M6X12 A480 | |
| 340 | 312105-0453 | | 2 | SCREW M6S ISO 4017 M8X25 A480 | |
| 350 | 315105-0153 | | 4 | WASHER BRB 6,4X12 RFR | |
| 360 | 315105-0165 | | 2 | WASHER BRB 8,4X16 RFR | |
| **Common Parts** | | | | | |
| 010 | 2895213-0000 | | 2 | BRACKET | |
| 020 | 2763627-0000 | | 2 | BRACKET | |
| 030 | 2763628-0000 | | 2 | BRACKET | |
| 040 | 2763632-0000 | | 1 | PLATE | |
| 050 | 2763633-0000 | | 1 | PLATE | |
| 060 | 2763629-0000 | | 2 | RAILING | |
| 070 | 2775586-0000 | | 4 | BRACKET | |
| 090 | 2807605-0101 | | 1 | LEG,CONVEYOR ..... | **9-11** |
| 100 | 2807592-0000 | | 2 | MULTI BRACKET SINGLE | |
| 200 | 90068-0312 | | 4 | CLAMPING PIECE, T 12 / 12 | |
| 210 | 90458-2911 | | 4 | LOCKING HANDLE, M6/M | |
| 220 | 90261-0048 | | 4 | SQUARE PLUG GPN 260/Q2525 | |
| 300 | 312115-0222 | | 2 | SCREW ISO4762 M3X8 A4 80 | |
| 310 | 312115-0335 | | 4 | SCREW ISO4762 M5X30 A4 80 | |
| 320 | 312115-0323 | | 4 | SCREW ISO4762 M5X8 A4 80 | |

| Pos | Part No | UN | Qty | Description | Page No |
|---|---|---|---|---|---|

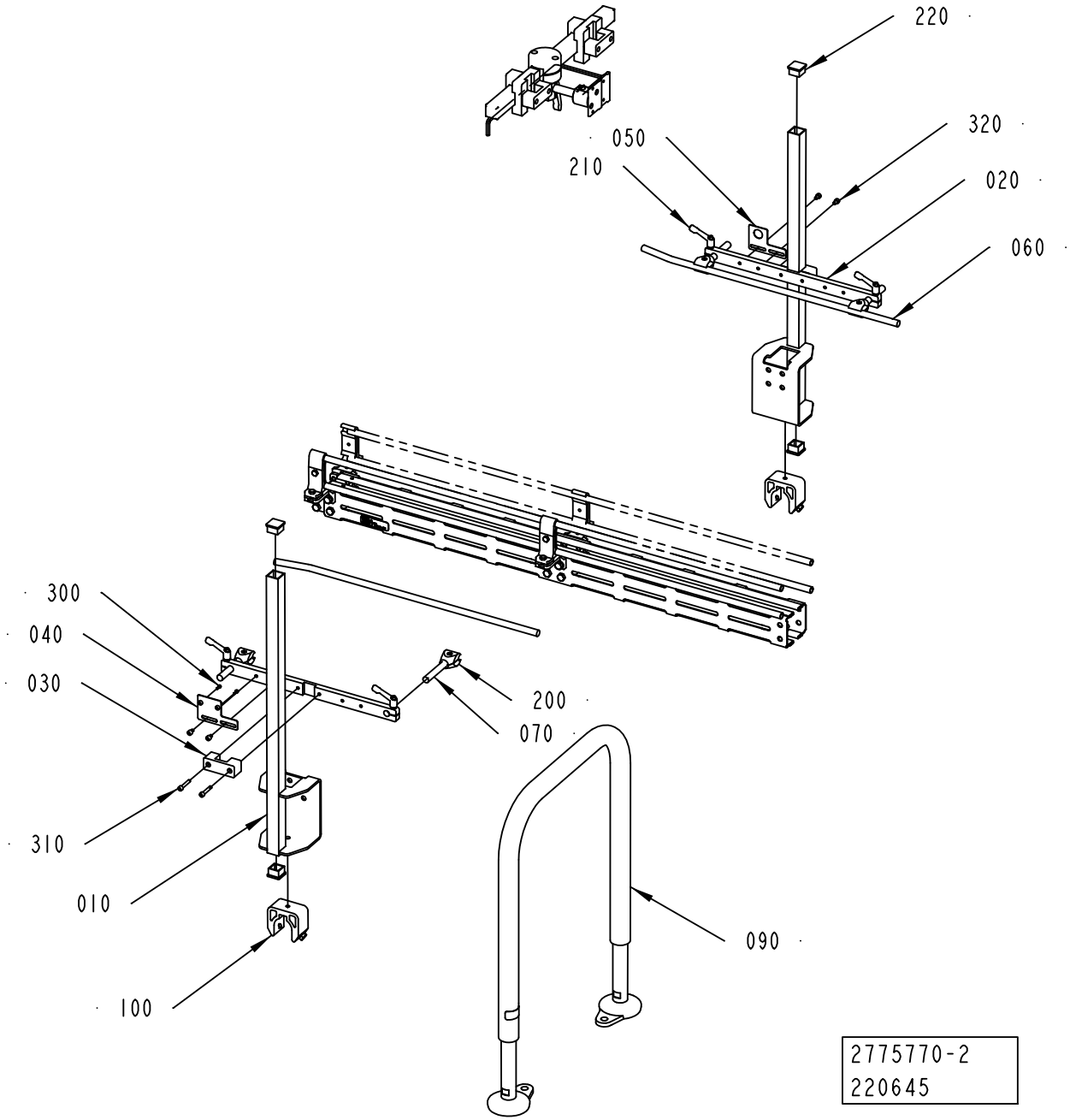
220
320
050
210
020
060
300
040
030
200
070
310
010
090
100
2775770-2
220645

| Pos | Part No | UN | Qty | Description | Page No |
|---|---|---|---|---|---|
| **PCONV21 (See drawing on pages: 9-6, 9-12)** | | | | | |
| 010 | 2775771-0000 | | 2 | BRACKET | |
| 080 | 2775772-0000 | | 1 | BRACKET | |
| 230 | 537482-0000 | | 2 | BRACKET | |
| 240 | 537483-0000 | | 2 | BRACKET | |
| 330 | 312105-0366 | | 4 | SCREW M6S ISO 4017 M6X12 A480 | |
| 340 | 312105-0453 | | 2 | SCREW M6S ISO 4017 M8X25 A480 | |
| 350 | 315105-0153 | | 4 | WASHER BRB 6,4X12 RFR | |
| 360 | 315105-0165 | | 2 | WASHER BRB 8,4X16 RFR | |
| **Common Parts** | | | | | |
| 010 | 2895213-0000 | | 2 | BRACKET | |
| 020 | 2763627-0000 | | 2 | BRACKET | |
| 030 | 2763628-0000 | | 2 | BRACKET | |
| 040 | 2763632-0000 | | 1 | PLATE | |
| 050 | 2763633-0000 | | 1 | PLATE | |
| 060 | 2763629-0000 | | 2 | RAILING | |
| 070 | 2775586-0000 | | 4 | BRACKET | |
| 090 | 2807605-0101 | | 1 | LEG,CONVEYOR ..... | **9-11** |
| 100 | 2807592-0000 | | 2 | MULTI BRACKET SINGLE | |
| 200 | 90068-0312 | | 4 | CLAMPING PIECE, T 12 / 12 | |
| 210 | 90458-2911 | | 4 | LOCKING HANDLE, M6/M | |
| 220 | 90261-0048 | | 4 | SQUARE PLUG GPN 260/Q2525 | |
| 300 | 312115-0222 | | 2 | SCREW ISO4762 M3X8 A4 80 | |
| 310 | 312115-0335 | | 4 | SCREW ISO4762 M5X30 A4 80 | |
| 320 | 312115-0323 | | 4 | SCREW ISO4762 M5X8 A4 80 | |

| Pos | Part No | UN | Qty | Description | Page No |
|---|---|---|---|---|---|

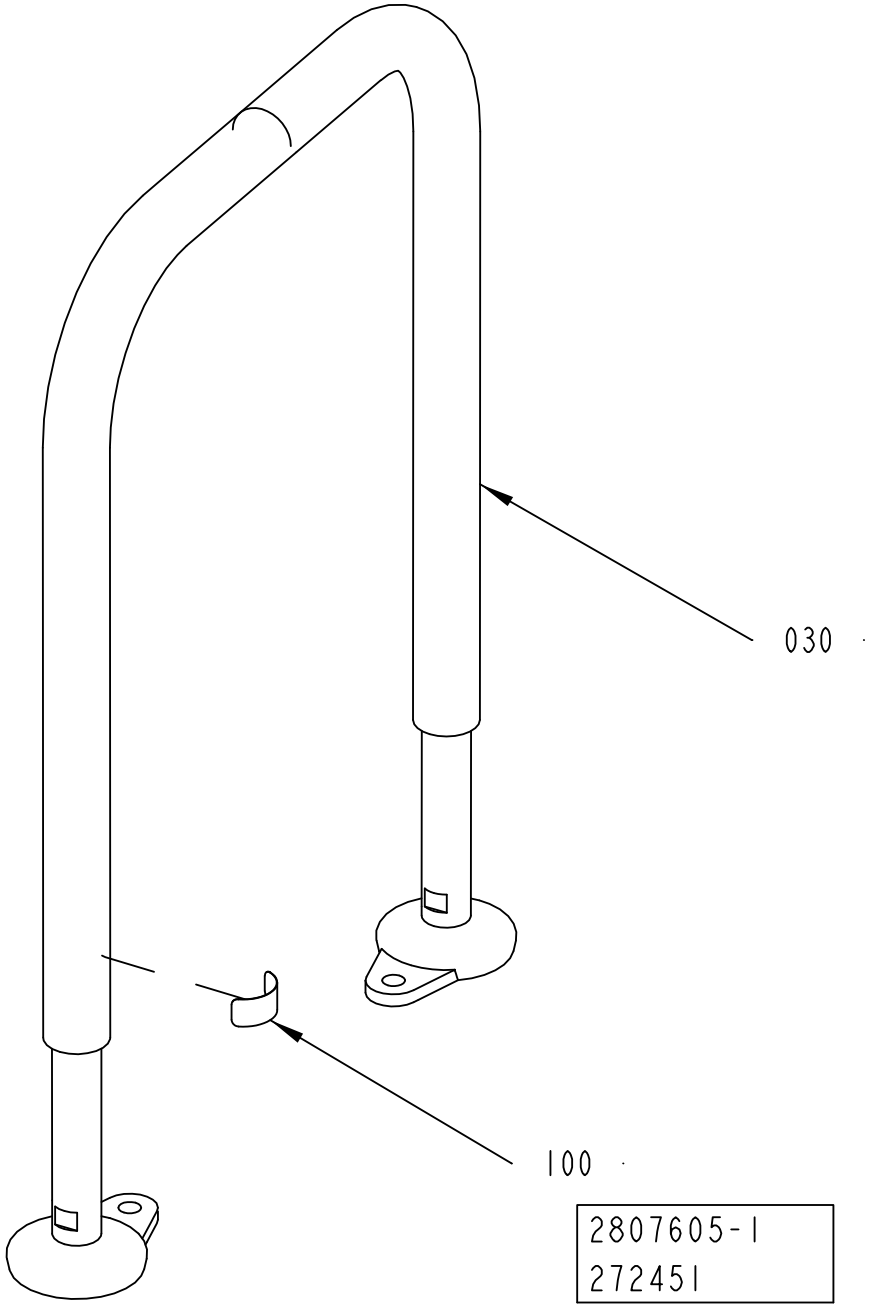
030
100
2807605-1
272451

ECM: 272451 -
Group number: 2807605-0101
Assembly Drawing: 2807605-1_1_AA

| Pos | Part No | UN | Qty | Description | Page No |
|---|---|---|---|---|---|
| - | | | | | |
| 030 | 2807615-0000 | | 1 | LEG,CONVEYOR | |
| 100 | 1086870-0000 | | 1 | SIGN | |

| Pos | Part No | UN | Qty | Description | Page No |
|---|---|---|---|---|---|

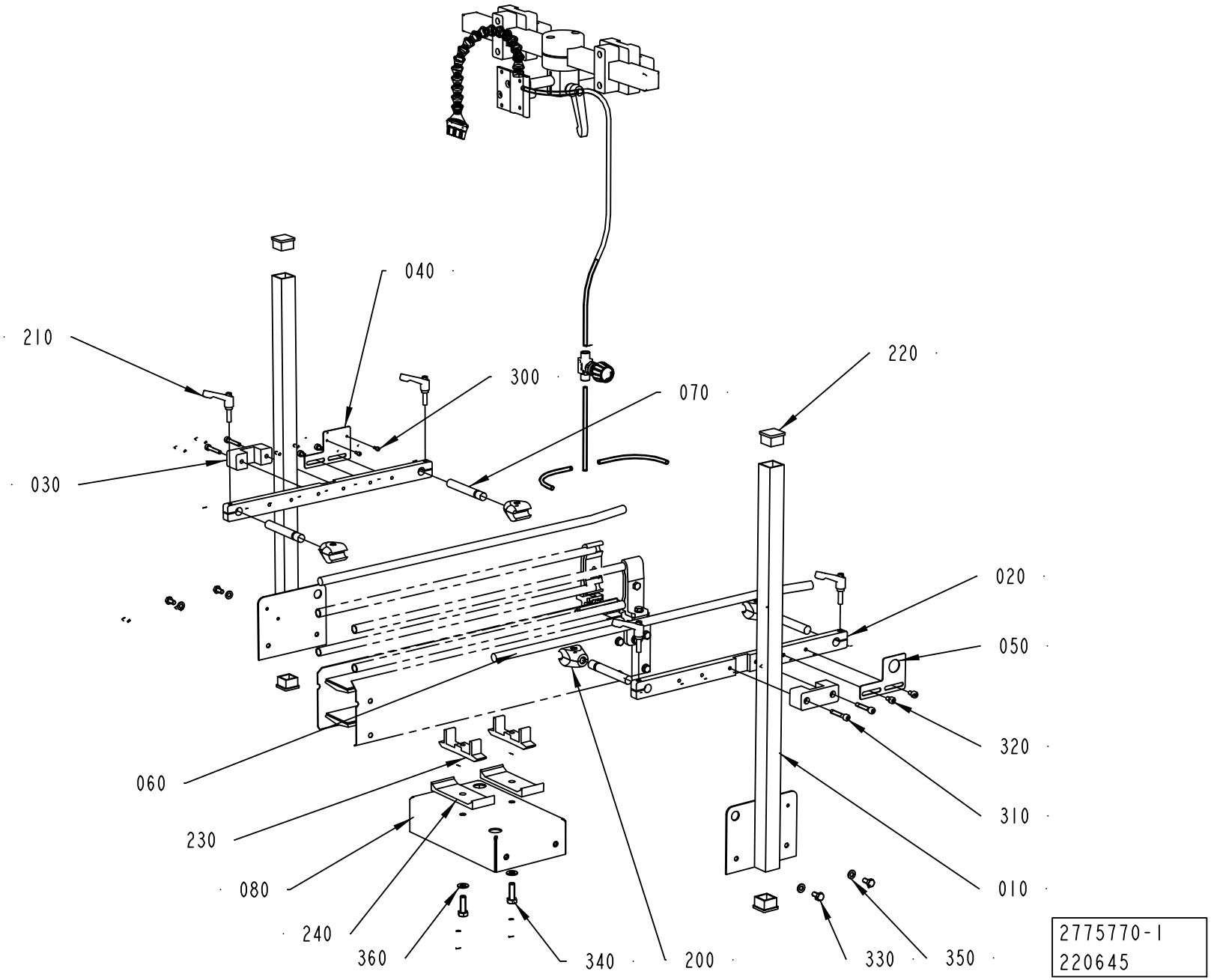
040
210
300
070
220
030
020
050
320
060
310
230
080
010
240
360
340
200
330
350
2775770-1
220645

ECM: 220645 -
Group number: 2775770-0102
Assembly Drawing: 2775770-1_1_AA

This list covers pages from 9-12 to 9-15

| Pos | Part No | UN | Qty | Description | Page No |
|---|---|---|---|---|---|
| **CONVEYOR PC23 (See drawing on pages: 9-8, 9-14)** | | | | | |
| 010 | 2895213-0000 | | 2 | BRACKET | |
| 090 | 2807605-0101 | | 1 | LEG,CONVEYOR ..... | **9-11** |
| 100 | 2807592-0000 | | 2 | MULTI BRACKET SINGLE | |
| **Common Parts** | | | | | |
| 010 | 2775771-0000 | | 2 | BRACKET | |
| 020 | 2763627-0000 | | 2 | BRACKET | |
| 030 | 2763628-0000 | | 2 | BRACKET | |
| 040 | 2763632-0000 | | 1 | PLATE | |
| 050 | 2763633-0000 | | 1 | PLATE | |
| 060 | 2763629-0000 | | 2 | RAILING | |
| 070 | 2775586-0000 | | 4 | BRACKET | |
| 080 | 2775772-0000 | | 1 | BRACKET | |
| 200 | 90068-0312 | | 4 | CLAMPING PIECE, T 12 / 12 | |
| 210 | 90458-2911 | | 4 | LOCKING HANDLE, M6/M | |
| 220 | 90261-0048 | | 4 | SQUARE PLUG GPN 260/Q2525 | |
| 230 | 537482-0000 | | 2 | BRACKET | |
| 240 | 537483-0000 | | 2 | BRACKET | |
| 300 | 312115-0222 | | 2 | SCREW ISO4762 M3X8 A4 80 | |
| 310 | 312115-0335 | | 4 | SCREW ISO4762 M5X30 A4 80 | |
| 320 | 312115-0323 | | 4 | SCREW ISO4762 M5X8 A4 80 | |
| 330 | 312105-0366 | | 4 | SCREW M6S ISO 4017 M6X12 A480 | |
| 340 | 312105-0453 | | 2 | SCREW M6S ISO 4017 M8X25 A480 | |
| 350 | 315105-0153 | | 4 | WASHER BRB 6,4X12 RFR | |
| 360 | 315105-0165 | | 2 | WASHER BRB 8,4X16 RFR | |

| Pos | Part No | UN | Qty | Description | Page No |
|---|---|---|---|---|---|

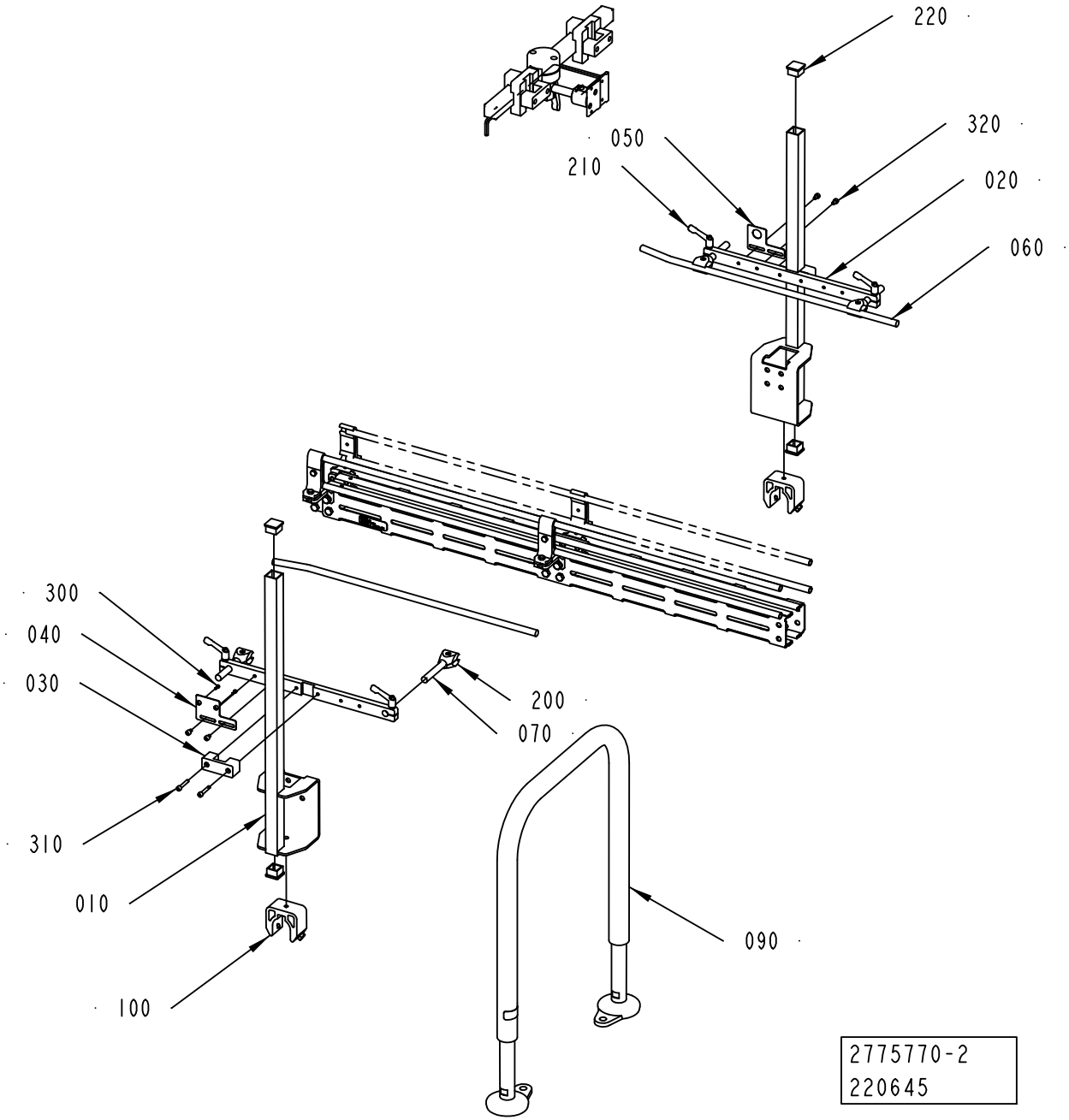
220
320
050
210
020
060
300
040
030
200
070
310
010
090
100
2775770-2
220645

ECM: 220645 -
Group number: 2775770-0102
Assembly Drawing: 2775770-2_1_AA

This list covers pages from 9-12 to 9-15

| Pos | Part No | UN | Qty | Description | Page No |
|---|---|---|---|---|---|
| **CONVEYOR PC23 (See drawing on pages: 9-8, 9-14)** | | | | | |
| 010 | 2895213-0000 | | 2 | BRACKET | |
| 090 | 2807605-0101 | | 1 | LEG,CONVEYOR ..... | **9-11** |
| 100 | 2807592-0000 | | 2 | MULTI BRACKET SINGLE | |
| **Common Parts** | | | | | |
| 010 | 2775771-0000 | | 2 | BRACKET | |
| 020 | 2763627-0000 | | 2 | BRACKET | |
| 030 | 2763628-0000 | | 2 | BRACKET | |
| 040 | 2763632-0000 | | 1 | PLATE | |
| 050 | 2763633-0000 | | 1 | PLATE | |
| 060 | 2763629-0000 | | 2 | RAILING | |
| 070 | 2775586-0000 | | 4 | BRACKET | |
| 080 | 2775772-0000 | | 1 | BRACKET | |
| 200 | 90068-0312 | | 4 | CLAMPING PIECE, T 12 / 12 | |
| 210 | 90458-2911 | | 4 | LOCKING HANDLE, M6/M | |
| 220 | 90261-0048 | | 4 | SQUARE PLUG GPN 260/Q2525 | |
| 230 | 537482-0000 | | 2 | BRACKET | |
| 240 | 537483-0000 | | 2 | BRACKET | |
| 300 | 312115-0222 | | 2 | SCREW ISO4762 M3X8 A4 80 | |
| 310 | 312115-0335 | | 4 | SCREW ISO4762 M5X30 A4 80 | |
| 320 | 312115-0323 | | 4 | SCREW ISO4762 M5X8 A4 80 | |
| 330 | 312105-0366 | | 4 | SCREW M6S ISO 4017 M6X12 A480 | |
| 340 | 312105-0453 | | 2 | SCREW M6S ISO 4017 M8X25 A480 | |
| 350 | 315105-0153 | | 4 | WASHER BRB 6,4X12 RFR | |
| 360 | 315105-0165 | | 2 | WASHER BRB 8,4X16 RFR | |

| Pos | Part No | UN | Qty | Description | Page No |
|---|---|---|---|---|---|

**This page is intentionally left blank.**

ECM: 323253 - 20070914
Group number: 2555393-0200
Assembly Drawing:

| Pos | Part No | UN | Qty | Description | Page No |
|---|---|---|---|---|---|
| - | | | | | |
| 010 | 2555394-0200 | | 1 | START-UP KIT ..... | **9-19, 9-21, 9-23, 9-25** |
| 100 | 90296-0009 | | 1 | SILICONE GREASE DOW CORNING 150 GR. | |
| AS010 | 1484695-0000 | | 1 | KNIFE | |
| AS020 | 2592780-0000 | | 1 | DOLLY | |
| EC010 | 90233-0028 | | 10 | TUBE FUSE 10A, A070GRB10T13 G330010 | |
| EC020 | 90233-0029 | | 3 | TUBE FUSE 25A, A070GRB25T13 L330014 | |
| EC030 | 90233-0027 | | 3 | TUBE FUSE 16A, A070GRB16T13 J330012 | |
| | *90233-0305* | | *1* | *INDICATOR* | |
| EC040 | 90459-1254 | | 10 | TUBE FUSE, 4A 500V | |
| JS010 | 28509-0000 | | 2 | WASHER | |
| JS020 | 32544-0000 | | 2 | INSULATION NUT | |
| JS025 | 2836239-0000 | | 2 | WASHER | |
| JS030 | 107426-0000 | | 4 | GUIDE SLEEVE | |
| JS035 | 2836238-0000 | | 2 | INSULATION NUT | |
| JS040 | 1036584-0000 | | 4 | WASHER | |
| JS050 | 315211-0104 | | 4 | BONDED SEAL SS/NBR90 M8 | |
| JS060 | 312115-0297 | | 8 | SCREW ISO4762 M4X25 A4 80 | |
| JS070 | 312125-0295 | | 2 | SCREW ISO 1207 M4X20 A4 | |
| JS080 | 315211-0103 | | 4 | BONDED SEAL SS/NBR90 M6 | |
| JS090 | 315202-0101 | | 8 | O-RING 3,1X1,6 MM | |
| MB010 | 315229-0105 | | 5 | GASKETS, 48,5X55,5X3,7 MM 2" FDA | |
| MB020 | 315229-0104 | | 2 | GASKETS, 35,8X42,8X3,7 MM 1"1/2 FD | |
| MB030 | 315229-0103 | | 2 | GASKETS, 23,1X30,1X3,7 MM 1" FDA | |
| MB040 | 315229-0107 | | 1 | GASKETS, 73,9X80,9X3,7 MM 2"1/2 FD | |
| MB050 | 90036-0057 | | 3 | LIGHT BULB, BA9S 28V | |
| SA010 | 1498047-0000 | | 1 | SEALING BLOCK | |
| SU010 | 1296877-0100 | | 1 | SEAL KIT ..... | **9-27** |
| SU020 | 1296878-0100 | | 1 | SEAL KIT ..... | **9-29** |
| SU030 | 1296879-0100 | | 1 | SEAL KIT ..... | **9-31** |
| SU040 | 90217-0348 | | 4 | GASKET 35,4X46,8X4 MM | |
| SU050 | 342850-0304 | | 5 | GASKET 35,4X49,1X5,2 1"1/2 FDA | |
| SU060 | 925998-0000 | | 2 | DIAPHRAGM | |
| SU070 | 342850-0306 | | 4 | GASKET 60,3X76,1X5,2 MM 2"1/2 FDA 3-A | |
| SU080 | 342850-0304 | | 4 | GASKET 35,4X49,1X5,2 1"1/2 FDA | |

| Pos | Part No | UN | Qty | Description | Page No |
|---|---|---|---|---|---|

Machine Type | Group Description | Used-In | Group Number | Page No

**This page is intentionally left blank.**

ECM: 346828 - 20080310
Group number: 2555394-0200
Assembly Drawing:

This list covers pages from 9-18 to 9-25

| Pos | Part No | UN | Qty | Description | Page No |
|---|---|---|---|---|---|
| **TPA 0750SQ QC HI, TPA 1000SQ QC HI** | | | | | |
| FF040 | 2658249-0000 | | 6 | SHIM | |
| JS010 | 1520633-0002 | | 12 | DOLLY | |
| JS020 | 2663377-0000 | | 1 | INDUCTOR | |
| JS020 | 2663378-0000 | | 1 | INDUCTOR | |
| JS030 | 2660393-0000 | | 12 | VOLUME SHIM | |
| JS035 | 2660390-0000 | | 12 | VOLUME SHIM | |
| JS040 | 1348956-0000 | | 2 | KNIFE | |
| JS060 | 1538109-0000 | | 2 | COMPRESSION SPRING | |
| SS010 | 257330-0000 | | 3 | PRESSURE ROLLER (10 PCS) | |
| SS020 | 2529420-0000 | | 1 | SHAFT | |
| SS030 | 315204-0219 | | 2 | O-RING 29,2X3 MM | |
| SS040 | 2745328-0000 | | 1 | PIPE | |
| SS050 | 2874684-0000 | | 1 | TOUCH GUARD | |
| SS055 | 359705-0007 | | 1 | WARNING SIGN ISO, HOT SURFACE | |
| SS060 | 90600-0614 | | 1 | BLANK PLUG, 16AMP-316-1/2"-3/4"-AR | |
| SS070 | 342850-0304 | | 1 | GASKET 35,4X49,1X5,2 1"1/2 FDA | |
| **TBA 1000B QC NOHI, TBA 0500B QC NOHI** | | | | | |
| FF040 | 1144511-0000 | | 6 | SHIM | |
| JS010 | 1110083-0002 | | 12 | DOLLY | |
| JS020 | 1110938-0000 | | 2 | INDUCTOR | |
| JS030 | 1511337-0000 | | 8 | VOLUME SHIM | |
| JS030 | 1511336-0000 | | 8 | VOLUME SHIM | |
| JS040 | 1348955-0000 | | 2 | KNIFE | |
| JS060 | 1538109-0000 | | 2 | COMPRESSION SPRING | |
| SS010 | 232979-0000 | | 4 | PRESSURE ROLLER (PAK OF 10) | |
| SS015 | 24928-0000 | | 8 | LOCKING RUBBER | |
| SS030 | 315204-0219 | | 2 | O-RING 29,2X3 MM | |
| **TBA 1000S LIGHTCAP** | | | | | |
| | 90240-0180 | | 12 | FLANGE BUSHING 10X14X15MM | |
| FF040 | 1144511-0000 | | 6 | SHIM | |
| JS010 | 1110083-0002 | | 12 | DOLLY | |
| JS020 | 1566843-0000 | | 2 | INDUCTOR | |
| JS030 | 1040755-0000 | | 8 | VOLUME SHIM | |
| JS040 | 2774798-0000 | | 2 | KNIFE | |
| JS050 | 2774799-0000 | | 4 | BLOCK | |
| JS060 | 1538109-0000 | | 2 | COMPRESSION SPRING | |
| JS100 | 2767478-0004 | | 2 | ROLLER | |
| JS100 | 2767478-0003 | | 2 | ROLLER | |
| JS100 | 2767478-0001 | | 2 | ROLLER | |
| SS010 | 499387-0000 | | 3 | PRESSURE ROLLER - (10 PCS) | |
| SS020 | 2529419-0000 | | 1 | SHAFT | |
| SS030 | 315204-0219 | | 2 | O-RING 29,2X3 MM | |
| SS080 | 2811775-0000 | | 1 | SEAL | |
| **TBA 1000S NOMOLDEDCAP HI** | | | | | |
| FF040 | 1144511-0000 | | 6 | SHIM | |
| JS010 | 1110083-0002 | | 12 | DOLLY | |
| JS020 | 1110937-0000 | | 2 | INDUCTOR | |
| JS030 | 1040755-0000 | | 8 | VOLUME SHIM | |
| JS040 | 2774798-0000 | | 2 | KNIFE | |
| JS050 | 2774799-0000 | | 4 | BLOCK | |
| JS060 | 1538109-0000 | | 2 | COMPRESSION SPRING | |
| SS010 | 257330-0000 | | 4 | PRESSURE ROLLER (10 PCS) | |
| SS015 | 24928-0000 | | 8 | LOCKING RUBBER | |
| SS030 | 315204-0219 | | 2 | O-RING 29,2X3 MM | |
| SS040 | 2745328-0000 | | 1 | PIPE | |
| SS050 | 2874684-0000 | | 1 | TOUCH GUARD | |
| SS055 | 359705-0007 | | 1 | WARNING SIGN ISO, HOT SURFACE | |
| SS060 | 90600-0614 | | 1 | BLANK PLUG, 16AMP-316-1/2"-3/4"-AR | |
| SS070 | 342850-0304 | | 1 | GASKET 35,4X49,1X5,2 1"1/2 FDA | |
| **TBA 1000S NOMOLDEDCAP NOHI** | | | | | |
| FF040 | 1144511-0000 | | 6 | SHIM | |
| JS010 | 1110083-0002 | | 12 | DOLLY | |
| JS020 | 1110937-0000 | | 2 | INDUCTOR | |
| JS030 | 1040755-0000 | | 8 | VOLUME SHIM | |
| JS040 | 2774798-0000 | | 2 | KNIFE | |
| JS050 | 2774799-0000 | | 4 | BLOCK | |
| JS060 | 1538109-0000 | | 2 | COMPRESSION SPRING | |
| SS010 | 257330-0000 | | 4 | PRESSURE ROLLER (10 PCS) | |
| SS015 | 24928-0000 | | 8 | LOCKING RUBBER | |
| SS030 | 315204-0219 | | 2 | O-RING 29,2X3 MM | |
| **TBA 1000S STDA7 HI** | | | | | |
| | 90240-0180 | | 12 | FLANGE BUSHING 10X14X15MM | |
| FF040 | 1144511-0000 | | 6 | SHIM | |
| JS010 | 1110083-0002 | | 12 | DOLLY | |
| JS020 | 2546474-0000 | | 2 | INDUCTOR | |
| JS030 | 1040755-0000 | | 8 | VOLUME SHIM | |
| JS040 | 2774798-0000 | | 2 | KNIFE | |
| JS050 | 2774799-0000 | | 4 | BLOCK | |
| JS060 | 1538109-0000 | | 2 | COMPRESSION SPRING | |
| JS100 | 2767478-0004 | | 2 | ROLLER | |
| JS100 | 2767478-0003 | | 2 | ROLLER | |
| JS100 | 2767478-0001 | | 2 | ROLLER | |
| SS010 | 499387-0000 | | 3 | PRESSURE ROLLER - (10 PCS) | |

Machine Type | Group Description | Used-In | Group Number | Page No

**This page is intentionally left blank.**

ECM: 346828 - 20080310
Group number: 2555394-0200
Assembly Drawing:

This list covers pages from 9-18 to 9-25

| Pos | Part No | UN | Qty | Description | Page No |
|---|---|---|---|---|---|
| **TBA 1000S STDA7 HI (Cont'd)** | | | | | |
| SS020 | 2529419-0000 | | 1 | SHAFT | |
| SS030 | 315204-0219 | | 2 | O-RING 29,2X3 MM | |
| SS040 | 2745328-0000 | | 1 | PIPE | |
| SS050 | 2874684-0000 | | 1 | TOUCH GUARD | |
| SS055 | 359705-0007 | | 1 | WARNING SIGN ISO, HOT SURFACE | |
| SS060 | 90600-0614 | | 1 | BLANK PLUG, 16AMP-316-1/2"-3/4"-AR | |
| SS070 | 342850-0304 | | 1 | GASKET 35,4X49,1X5,2 1"1/2 FDA | |
| **TBA 1000S STDA7 NOHI** | | | | | |
| | 90240-0180 | | 12 | FLANGE BUSHING 10X14X15MM | |
| FF040 | 1144511-0000 | | 6 | SHIM | |
| JS010 | 1110083-0002 | | 12 | DOLLY | |
| JS020 | 2546474-0000 | | 2 | INDUCTOR | |
| JS030 | 1040755-0000 | | 8 | VOLUME SHIM | |
| JS040 | 2774798-0000 | | 2 | KNIFE | |
| JS050 | 2774799-0000 | | 4 | BLOCK | |
| JS060 | 1538109-0000 | | 2 | COMPRESSION SPRING | |
| JS100 | 2767478-0003 | | 2 | ROLLER | |
| JS100 | 2767478-0001 | | 2 | ROLLER | |
| JS100 | 2767478-0004 | | 2 | ROLLER | |
| SS010 | 499387-0000 | | 3 | PRESSURE ROLLER - (10 PCS) | |
| SS020 | 2529419-0000 | | 1 | SHAFT | |
| SS030 | 315204-0219 | | 2 | O-RING 29,2X3 MM | |
| **TBA 1000SQ NOQC HI** | | | | | |
| FF040 | 1144511-0000 | | 6 | SHIM | |
| JS010 | 1520633-0002 | | 12 | DOLLY | |
| JS020 | 1110936-0000 | | 2 | INDUCTOR | |
| JS030 | 1487627-0000 | | 8 | VOLUME SHIM | |
| JS030 | 2827055-0000 | | 8 | VOLUME SHIM | |
| JS040 | 2774798-0000 | | 2 | KNIFE | |
| JS050 | 2774799-0000 | | 4 | BLOCK | |
| JS060 | 1538109-0000 | | 2 | COMPRESSION SPRING | |
| SS010 | 257330-0000 | | 4 | PRESSURE ROLLER (10 PCS) | |
| SS015 | 24928-0000 | | 8 | LOCKING RUBBER | |
| SS030 | 315204-0219 | | 2 | O-RING 29,2X3 MM | |
| SS040 | 2745328-0000 | | 1 | PIPE | |
| SS050 | 2874684-0000 | | 1 | TOUCH GUARD | |
| SS055 | 359705-0007 | | 1 | WARNING SIGN ISO, HOT SURFACE | |
| SS060 | 90600-0614 | | 1 | BLANK PLUG, 16AMP-316-1/2"-3/4"-AR | |
| SS070 | 342850-0304 | | 1 | GASKET 35,4X49,1X5,2 1"1/2 FDA | |
| **TBA 1000SQ NOQC NO HI** | | | | | |
| FF040 | 1144511-0000 | | 6 | SHIM | |
| JS010 | 1520633-0002 | | 12 | DOLLY | |
| JS020 | 1110936-0000 | | 2 | INDUCTOR | |
| JS030 | 1487627-0000 | | 8 | VOLUME SHIM | |
| JS030 | 2827055-0000 | | 8 | VOLUME SHIM | |
| JS040 | 2774798-0000 | | 2 | KNIFE | |
| JS050 | 2774799-0000 | | 4 | BLOCK | |
| JS060 | 1538109-0000 | | 2 | COMPRESSION SPRING | |
| SS010 | 257330-0000 | | 4 | PRESSURE ROLLER (10 PCS) | |
| SS015 | 24928-0000 | | 8 | LOCKING RUBBER | |
| SS030 | 315204-0219 | | 2 | O-RING 29,2X3 MM | |
| **TBA 1000SQ QC NOHI** | | | | | |
| FF040 | 1144511-0000 | | 6 | SHIM | |
| JS010 | 1520633-0002 | | 12 | DOLLY | |
| JS010 | 1110083-0002 | | 12 | DOLLY | |
| JS020 | 1110936-0000 | | 2 | INDUCTOR | |
| JS030 | 1487627-0000 | | 8 | VOLUME SHIM | |
| JS030 | 2827055-0000 | | 8 | VOLUME SHIM | |
| JS040 | 2774798-0000 | | 2 | KNIFE | |
| JS050 | 2774799-0000 | | 4 | BLOCK | |
| JS060 | 1538109-0000 | | 2 | COMPRESSION SPRING | |
| SS010 | 257330-0000 | | 4 | PRESSURE ROLLER (10 PCS) | |
| SS015 | 24928-0000 | | 8 | LOCKING RUBBER | |
| SS030 | 315204-0219 | | 2 | O-RING 29,2X3 MM | |
| **TBA 1500S HI** | | | | | |
| FF040 | 1144511-0000 | | 6 | SHIM | |
| JS010 | 1110083-0002 | | 12 | DOLLY | |
| JS020 | 1110938-0000 | | 2 | INDUCTOR | |
| JS030 | 1349208-0000 | | 8 | VOLUME SHIM | |
| JS040 | 1348955-0000 | | 2 | KNIFE | |
| JS060 | 1538109-0000 | | 2 | COMPRESSION SPRING | |
| SS010 | 232979-0000 | | 3 | PRESSURE ROLLER (PAK OF 10) | |
| SS020 | 2523268-0000 | | 1 | SHAFT | |
| SS030 | 315204-0219 | | 2 | O-RING 29,2X3 MM | |
| SS040 | 2745328-0000 | | 1 | PIPE | |
| SS050 | 2874684-0000 | | 1 | TOUCH GUARD | |
| SS055 | 359705-0007 | | 1 | WARNING SIGN ISO, HOT SURFACE | |
| SS060 | 90600-0614 | | 1 | BLANK PLUG, 16AMP-316-1/2"-3/4"-AR | |
| SS070 | 342850-0304 | | 1 | GASKET 35,4X49,1X5,2 1"1/2 FDA | |
| **TBA 1500S NOHI** | | | | | |
| FF040 | 1144511-0000 | | 6 | SHIM | |
| JS010 | 1110083-0002 | | 12 | DOLLY | |
| JS020 | 1110938-0000 | | 2 | INDUCTOR | |

Machine Type | Group Description | Used-In | Group Number | Page No

**This page is intentionally left blank.**

ECM: 346828 - 20080310
Group number: 2555394-0200
Assembly Drawing: This list covers pages from 9-18 to 9-25

| Pos | Part No | UN | Qty | Description | Page No |
|---|---|---|---|---|---|
| **TBA 1500S NOHI (Cont'd)** | | | | | |
| JS030 | 1349208-0000 | | 8 | VOLUME SHIM | |
| JS040 | 1348955-0000 | | 2 | KNIFE | |
| JS060 | 1538109-0000 | | 2 | COMPRESSION SPRING | |
| SS010 | 232979-0000 | | 3 | PRESSURE ROLLER (PAK OF 10) | |
| SS020 | 2523268-0000 | | 1 | SHAFT | |
| SS030 | 315204-0219 | | 2 | O-RING 29,2X3 MM | |
| **TBA 2000S HI** | | | | | |
| FF040 | 1144511-0000 | | 6 | SHIM | |
| JS010 | 1520633-0005 | | 12 | DOLLY | |
| JS020 | 1533046-0000 | | 2 | INDUCTOR | |
| JS030 | 2594891-0000 | | 8 | VOLUME SHIM | |
| JS035 | 2672745-0000 | | 8 | VOLUME SHIM | |
| JS035 | 2594890-0000 | | 8 | VOLUME SHIM | |
| JS040 | 2664761-0000 | | 2 | KNIFE | |
| JS060 | 1538109-0000 | | 2 | COMPRESSION SPRING | |
| SS010 | 232979-0000 | | 6 | PRESSURE ROLLER (PAK OF 10) | |
| SS030 | 315204-0223 | | 2 | O-RING 39,2X3 MM | |
| SS040 | 2745328-0000 | | 1 | PIPE | |
| SS050 | 2874684-0000 | | 1 | TOUCH GUARD | |
| SS055 | 359705-0007 | | 1 | WARNING SIGN ISO, HOT SURFACE | |
| SS060 | 90600-0614 | | 1 | BLANK PLUG, 16AMP-316-1/2"-3/4"-AR | |
| SS070 | 342850-0304 | | 1 | GASKET 35,4X49,1X5,2 1"1/2 FDA | |
| **TBA 0500B QC HI, TBA 1000B QC HI** | | | | | |
| FF040 | 1144511-0000 | | 6 | SHIM | |
| JS010 | 1110083-0002 | | 12 | DOLLY | |
| JS020 | 1110938-0000 | | 2 | INDUCTOR | |
| JS030 | 1511336-0000 | | 8 | VOLUME SHIM | |
| JS030 | 1511337-0000 | | 8 | VOLUME SHIM | |
| JS040 | 1348955-0000 | | 2 | KNIFE | |
| JS060 | 1538109-0000 | | 2 | COMPRESSION SPRING | |
| SS010 | 232979-0000 | | 4 | PRESSURE ROLLER (PAK OF 10) | |
| SS015 | 24928-0000 | | 8 | LOCKING RUBBER | |
| SS030 | 315204-0219 | | 2 | O-RING 29,2X3 MM | |
| SS040 | 2745328-0000 | | 1 | PIPE | |
| SS050 | 2874684-0000 | | 1 | TOUCH GUARD | |
| SS055 | 359705-0007 | | 1 | WARNING SIGN ISO, HOT SURFACE | |
| SS060 | 90600-0614 | | 1 | BLANK PLUG, 16AMP-316-1/2"-3/4"-AR | |
| SS070 | 342850-0304 | | 1 | GASKET 35,4X49,1X5,2 1"1/2 FDA | |
| **TBA 0500SQ QC NOHI** | | | | | |
| FF040 | 1144511-0000 | | 6 | SHIM | |
| JS010 | 1520633-0002 | | 12 | DOLLY | |
| JS020 | 1110936-0000 | | 2 | INDUCTOR | |
| JS030 | 2827055-0000 | | 8 | VOLUME SHIM | |
| JS030 | 2860038-0000 | | 8 | VOLUME SHIM | |
| JS040 | 2774798-0000 | | 2 | KNIFE | |
| JS050 | 2774799-0000 | | 4 | BLOCK | |
| JS060 | 1538109-0000 | | 2 | COMPRESSION SPRING | |
| SS010 | 257330-0000 | | 4 | PRESSURE ROLLER (10 PCS) | |
| SS015 | 24928-0000 | | 8 | LOCKING RUBBER | |
| SS030 | 315204-0219 | | 2 | O-RING 29,2X3 MM | |
| **TBA 1000B NOQC HI, TBA 1000B NOQC NOHI** | | | | | |
| SS015 | 24928-0000 | | 8 | LOCKING RUBBER | |
| **TBA 1000B NOQC NOMOLDEDCAP HI** | | | | | |
| FF040 | 1144511-0000 | | 6 | SHIM | |
| JS010 | 1110083-0002 | | 12 | DOLLY | |
| JS020 | 1110938-0000 | | 2 | INDUCTOR | |
| JS030 | 1035831-0000 | | 8 | VOLUME SHIM | |
| JS040 | 1348955-0000 | | 2 | KNIFE | |
| JS060 | 1538109-0000 | | 2 | COMPRESSION SPRING | |
| SS010 | 232979-0000 | | 4 | PRESSURE ROLLER (PAK OF 10) | |
| SS030 | 315204-0219 | | 2 | O-RING 29,2X3 MM | |
| SS040 | 2745328-0000 | | 1 | PIPE | |
| SS050 | 2874684-0000 | | 1 | TOUCH GUARD | |
| SS055 | 359705-0007 | | 1 | WARNING SIGN ISO, HOT SURFACE | |
| SS060 | 90600-0614 | | 1 | BLANK PLUG, 16AMP-316-1/2"-3/4"-AR | |
| SS070 | 342850-0304 | | 1 | GASKET 35,4X49,1X5,2 1"1/2 FDA | |
| **TBA 1000B NOQC NOMOLDEDCAP NOHI** | | | | | |
| FF040 | 1144511-0000 | | 6 | SHIM | |
| JS010 | 1110083-0002 | | 12 | DOLLY | |
| JS020 | 1110938-0000 | | 2 | INDUCTOR | |
| JS030 | 1035831-0000 | | 8 | VOLUME SHIM | |
| JS040 | 1348955-0000 | | 2 | KNIFE | |
| JS060 | 1538109-0000 | | 2 | COMPRESSION SPRING | |
| SS010 | 232979-0000 | | 4 | PRESSURE ROLLER (PAK OF 10) | |
| SS030 | 315204-0219 | | 2 | O-RING 29,2X3 MM | |
| **TBA 1000B NOQC STDA7 HI** | | | | | |
| | 90240-0180 | | 8 | FLANGE BUSHING 10X14X15MM | |
| FF040 | 1144511-0000 | | 6 | SHIM | |
| JS010 | 1110083-0002 | | 12 | DOLLY | |
| JS020 | 2610956-0000 | | 2 | INDUCTOR | |
| JS030 | 1035831-0000 | | 8 | VOLUME SHIM | |
| JS040 | 1348955-0000 | | 2 | KNIFE | |
| JS060 | 1538109-0000 | | 2 | COMPRESSION SPRING | |

Machine Type | Group Description | Used-In | Group Number | Page No

**This page is intentionally left blank.**

| Pos | Part No | UN | Qty | Description | Page No |
|---|---|---|---|---|---|
| **TBA 1000B NOQC STDA7 HI (Cont'd)** | | | | | |
| JS100 | 2767478-0002 | | 2 | ROLLER | |
| JS100 | 2767478-0003 | | 2 | ROLLER | |
| SS010 | 232979-0000 | | 3 | PRESSURE ROLLER (PAK OF 10) | |
| SS020 | 2523268-0000 | | 1 | SHAFT | |
| SS030 | 315204-0219 | | 2 | O-RING 29,2X3 MM | |
| SS040 | 2745328-0000 | | 1 | PIPE | |
| SS050 | 2874684-0000 | | 1 | TOUCH GUARD | |
| SS055 | 359705-0007 | | 1 | WARNING SIGN ISO, HOT SURFACE | |
| SS060 | 90600-0614 | | 1 | BLANK PLUG, 16AMP-316-1/2"-3/4"-AR | |
| SS070 | 342850-0304 | | 1 | GASKET 35,4X49,1X5,2 1"1/2 FDA | |
| **TBA 1000B NOQC STDA7 NOHI** | | | | | |
| | 90240-0180 | | 8 | FLANGE BUSHING 10X14X15MM | |
| FF040 | 1144511-0000 | | 6 | SHIM | |
| JS010 | 1110083-0002 | | 12 | DOLLY | |
| JS020 | 2610956-0000 | | 2 | INDUCTOR | |
| JS030 | 1035831-0000 | | 8 | VOLUME SHIM | |
| JS040 | 1348955-0000 | | 2 | KNIFE | |
| JS060 | 1538109-0000 | | 2 | COMPRESSION SPRING | |
| JS100 | 2767478-0003 | | 2 | ROLLER | |
| JS100 | 2767478-0002 | | 2 | ROLLER | |
| SS010 | 232979-0000 | | 3 | PRESSURE ROLLER (PAK OF 10) | |
| SS020 | 2523268-0000 | | 1 | SHAFT | |
| SS030 | 315204-0219 | | 2 | O-RING 29,2X3 MM | |
| **Common Parts** | | | | | |
| FF030 | 2773832-0000 | | 4 | GASKET | |
| JS050 | 1037254-0000 | | 12 | SHIM | |
| SS090 | 1296877-0100 | | 1 | SEAL KIT ..... | **9-27** |
| SS100 | 1296878-0100 | | 1 | SEAL KIT ..... | **9-29** |
| SS110 | 1296879-0100 | | 1 | SEAL KIT ..... | **9-31** |
| SS120 | 2725145-0000 | | 2 | DIAPHRAGM | |
| SS130 | 90217-0348 | | 6 | GASKET 35,4X46,8X4 MM | |
| SS140 | 90459-4179 | | 4 | GASKET 30,5X42X4 MM FDA | |

| Pos | Part No | UN | Qty | Description | Page No |
|---|---|---|---|---|---|

**This page is intentionally left blank.**

ECM: 70850 - 19970729
Group number: 1296877-0100
Assembly Drawing:

| Pos | Part No | UN | Qty | Description | Page No |
|---|---|---|---|---|---|
| - | | | | | |
| 010 | 530589-0000 | | 4 | SEAL RING | |
| 020 | 530588-0000 | | 1 | SEAL RING | |
| 030 | 533169-0000 | | 1 | DIAPHRAGM | |
| 040 | 539212-0000 | | 1 | GASKET | |
| 050 | 90091-0266 | | 2 | SEAL RING 10,4X16,3X2,5 MM | |
| 060 | 90207-0363 | | 1 | GASKET 75X85X1,8 MM 3" FDA 3-A | |
| 070 | 90207-0365 | | 1 | GASKET 53X63X1,8 MM 2,5" FDA 3-A | |
| 100 | 315204-0215 | | 1 | O-RING 19,2X3 MM | |
| 110 | 315204-0301 | | 1 | O-RING 49,5X3 MM | |

| Pos | Part No | UN | Qty | Description | Page No |
|---|---|---|---|---|---|

**This page is intentionally left blank.**

ECM: 70850 - 19970729
Group number: 1296878-0100
Assembly Drawing:

| Pos | Part No | UN | Qty | Description | Page No |
|---|---|---|---|---|---|
| - | | | | | |
| 080 | 90030-0336 | | 2 | CONN. STRAIGHT, 316L-12M-BVCO-3 | |
| 090 | 90091-0237 | | 5 | ROD SEAL, GLIDORING 20X27,5X3 MM | |
| 100 | 315204-0215 | | 2 | O-RING 19,2X3 MM | |
| 120 | 90091-0238 | | 4 | WEAR RING 20X22X10 MM | |
| 140 | 315204-0308 | | 2 | O-RING 84,5X3 MM | |

| Pos | Part No | UN | Qty | Description | Page No |
|---|---|---|---|---|---|

**This page is intentionally left blank.**

ECM: 70850 - 19970729
Group number: 1296879-0100
Assembly Drawing:

| Pos | Part No | UN | Qty | Description | Page No |
|---|---|---|---|---|---|
| - | | | | | |
| 090 | 90091-0237 | | 3 | ROD SEAL, GLIDORING 20X27,5X3 MM | |
| 100 | 315204-0215 | | 1 | O-RING 19,2X3 MM | |
| 120 | 90091-0238 | | 2 | WEAR RING 20X22X10 MM | |
| 130 | 90091-0335 | | 1 | PISTON SEAL GLIDE RING 62,5X70X3 MM | |
| 150 | 90091-0304 | | 1 | RADIAL SEAL 45X65X8 MM DUST LIP | |

| Pos | Part No | UN | Qty | Description | Page No |
|---|---|---|---|---|---|

**This page is intentionally left blank.**

ECM: 72190 - 19990628
Group number: 531345-0200
Assembly Drawing:

| Pos | Part No | UN | Qty | Description | Page No | Pos | Part No | UN | Qty | Description | Page No |
|---|---|---|---|---|---|---|---|---|---|---|---|
| - | | | | | | | | | | | |
| | 90303-0013 | | 1 | APRON | | | | | | | |
| | 90303-0012 | | 1 | PROTECTIVE GLOVES | | | | | | | |
| | 90303-0011 | | 1 | PROTECTIVE GOGGLES | | | | | | | |

Machine Type | Group Description | Used-In | Group Number | Page No

**This page is intentionally left blank.**

ECM: 347455 - 20080310
Group number: 2574483-0200
Assembly Drawing:

| Pos | Part No | UN | Qty | Description | Page No |
|---|---|---|---|---|---|
| - | | | | | |
| JS010 | 2908997-0100 | | 1 | TOOL | **9-37** |
| SU010 | 1349914-0100 | | 1 | TEMPLATE FILLING PIPE | **9-39** |
| SU020 | 2793320-0100 | | 1 | TEMPLATE | **9-41** |

| Pos | Part No | UN | Qty | Description | Page No |
|---|---|---|---|---|---|

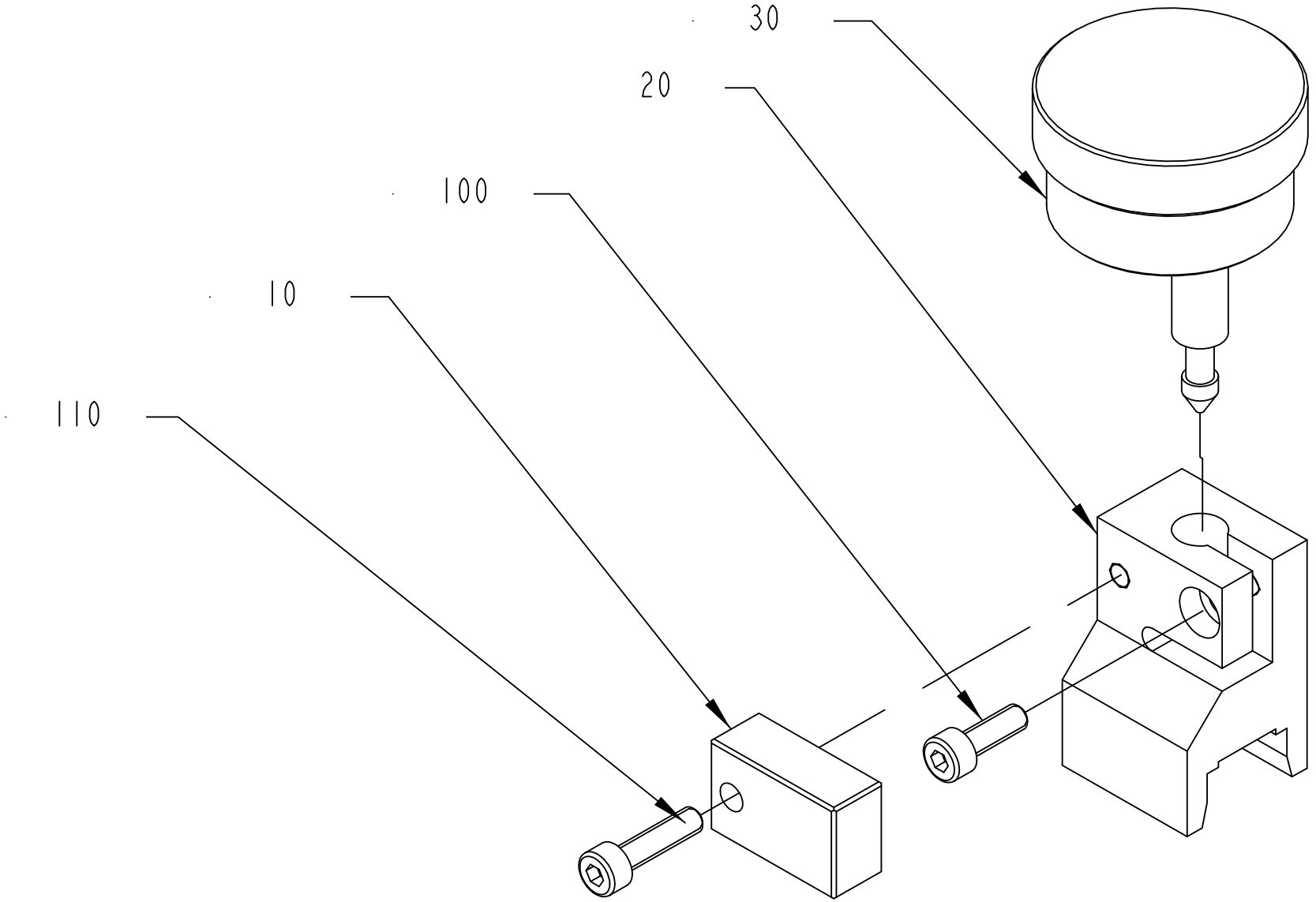


2908997-1
311572

ECM: 311575 - 20071001
Group number: 2908997-0100
Assembly Drawing: 2908997-1_1_AA

| Pos | Part No | UN | Qty | Description | Page No |
|---|---|---|---|---|---|
| - | | | | | |
| 010 | 2908996-0000 | | 1 | TOOL | |
| 020 | 2908923-0000 | | 1 | TOOL | |
| 030 | 90600-3053 | | 1 | DIAL GAUGE MITUTOYO 1160 | |
| 100 | 312115-0291 | | 1 | SCREW ISO4762 M4X12 A4 80 | |
| 110 | 312115-0293 | | 1 | SCREW ISO4762 M4X16 A4 80 | |

| Pos | Part No | UN | Qty | Description | Page No |
|---|---|---|---|---|---|

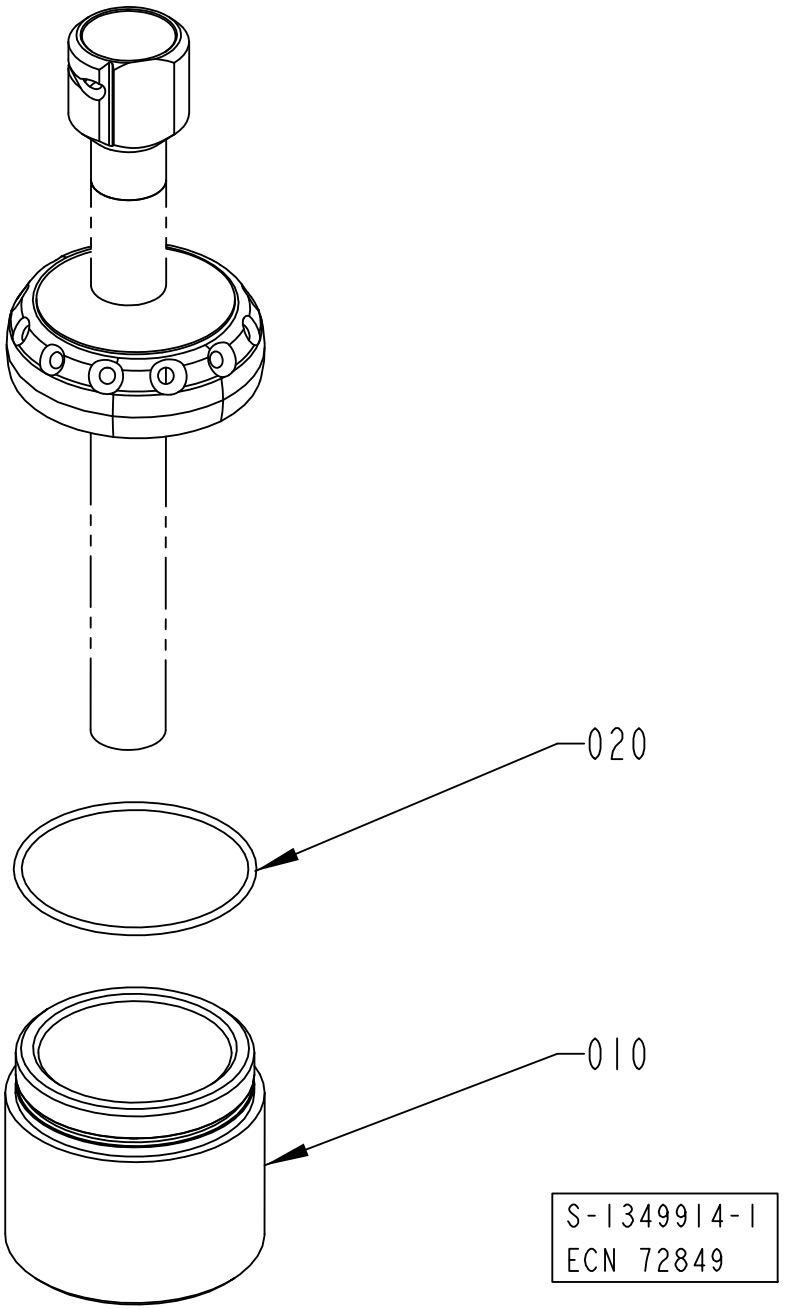
020
010
S-1349914-1
ECN 72849

ECM: 363455 - 20080825
Group number: 1349914-0100
Assembly Drawing: 1349914-1_1_AA

| Pos | Part No | UN | Qty | Description | Page No |
|---|---|---|---|---|---|
| **TBA 0500B QC, TBA 1000B QC** | | | | | |
| 010 | 2774372-0000 | | 1 | TEMPLATE | |
| 020 | 315202-0233 | | 1 | O-RING 79,2X5,7 MM | |
| **TBA 0500SQ, TBA 1000SQ** | | | | | |
| 010 | 1517987-0000 | | 1 | TEMPLATE | |
| 020 | 315202-0305 | | 1 | O-RING 69,5X3 MM | |
| **TBA 1000B STDA7** | | | | | |
| 010 | 2774374-0000 | | 1 | TEMPLATE | |
| 020 | 315202-0308 | | 1 | O-RING 84,5X3 MM | |
| **TBA 1000S NOMOLDEDCAP** | | | | | |
| 010 | 1498151-0000 | | 1 | TEMPLATE | |
| 020 | 315202-0307 | | 1 | O-RING 79,5X3 MM | |
| **TBA 1000S STDA7, TBA 1000S LIGHTCAP** | | | | | |
| 010 | 2774373-0000 | | 1 | TEMPLATE | |
| 020 | 315202-0307 | | 1 | O-RING 79,5X3 MM | |
| **TBA 1500S, TBA 1000B NOQC NOMOLDEDCAP** | | | | | |
| 010 | 1498150-0000 | | 1 | TEMPLATE | |
| 020 | 315202-0308 | | 1 | O-RING 84,5X3 MM | |
| **TBA 2000S** | | | | | |
| 010 | 2660843-0000 | | 1 | TEMPLATE | |
| 020 | 315202-0310 | | 1 | O-RING 94,5X3 MM | |
| **TPA 1000SQ, TPA 0750SQ** | | | | | |
| 010 | 1524841-0000 | | 1 | TEMPLATE | |
| 020 | 315202-0303 | | 1 | O-RING 59,5X3 MM | |

| Pos | Part No | UN | Qty | Description | Page No |
|---|---|---|---|---|---|

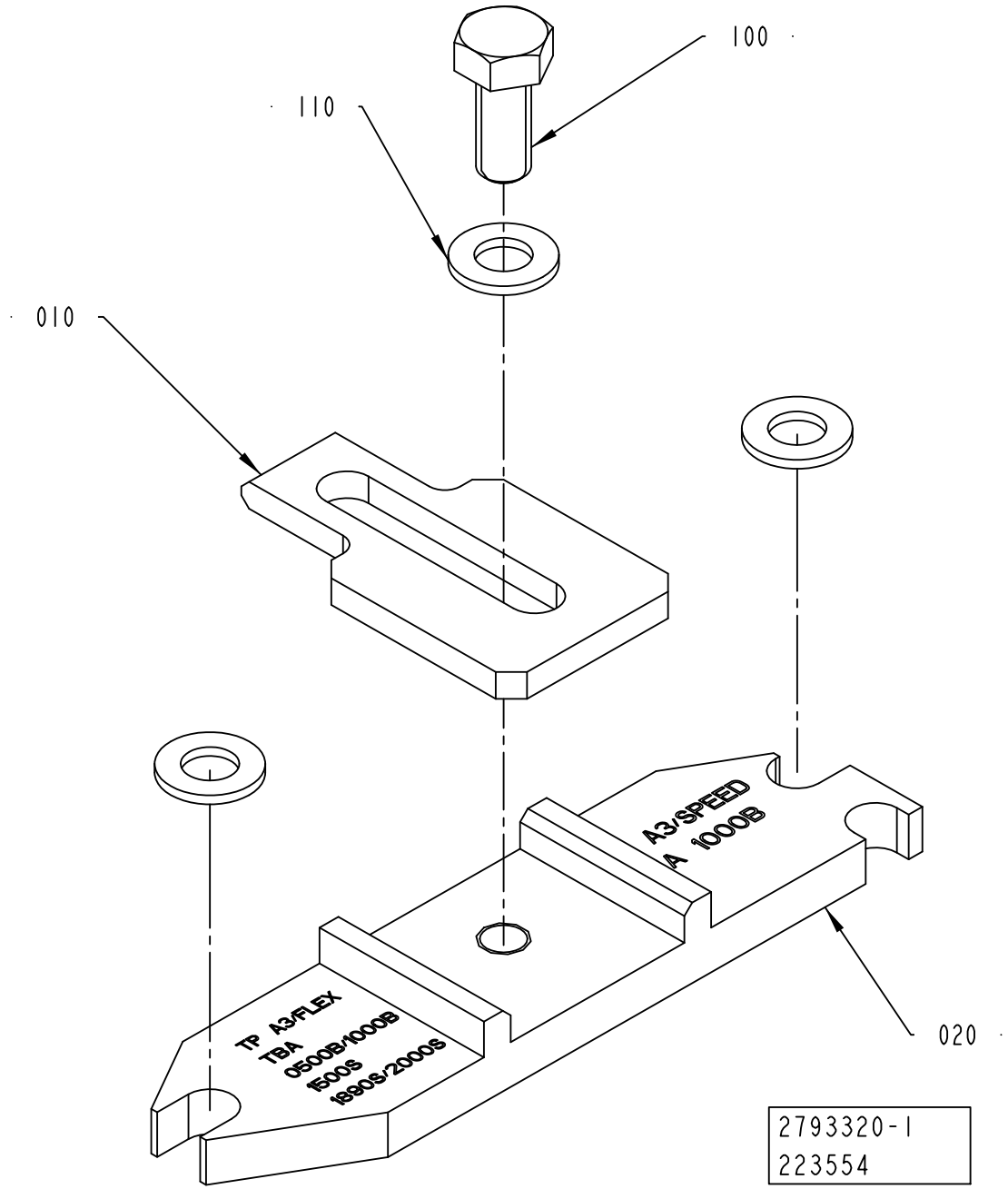
100
110
010
020
A3/SPEED
A 1000B
TP A3/FLEX
TBA
0500B/1000B
1500S
1890S/2000S
2793320-1
223554

ECM: 313942 - 20070702
Group number: 2793320-0100
Assembly Drawing: 2793320-1_1_AA

| Pos | Part No | UN | Qty | Description | Page No |
|---|---|---|---|---|---|
| **TBA 0500B, TBA 1000B, TBA 1500S, TBA 2000S** | | | | | |
| 020 | 2793321-0000 | | 1 | PLATE | |
| **TBA 0500SQ, TBA 1000SQ** | | | | | |
| 020 | 2793319-0000 | | 1 | PLATE | |
| **TBA 1000S** | | | | | |
| 020 | 2793322-0000 | | 1 | PLATE | |
| **TPA 1000SQ, TPA 0750SQ, TPA 1000SQ NOQC** | | | | | |
| 020 | 2793329-0000 | | 1 | PLATE | |
| **Common Parts** | | | | | |
| 010 | 2736719-0000 | | 1 | PLATE | |
| 100 | 312105-0327 | | 1 | SCREW M6S ISO 4017 M5X12 A480 | |
| 110 | 315105-0146 | | 3 | WASHER BRB 5,3X10 RFR | |

| Pos | Part No | UN | Qty | Description | Page No |
|---|---|---|---|---|---|

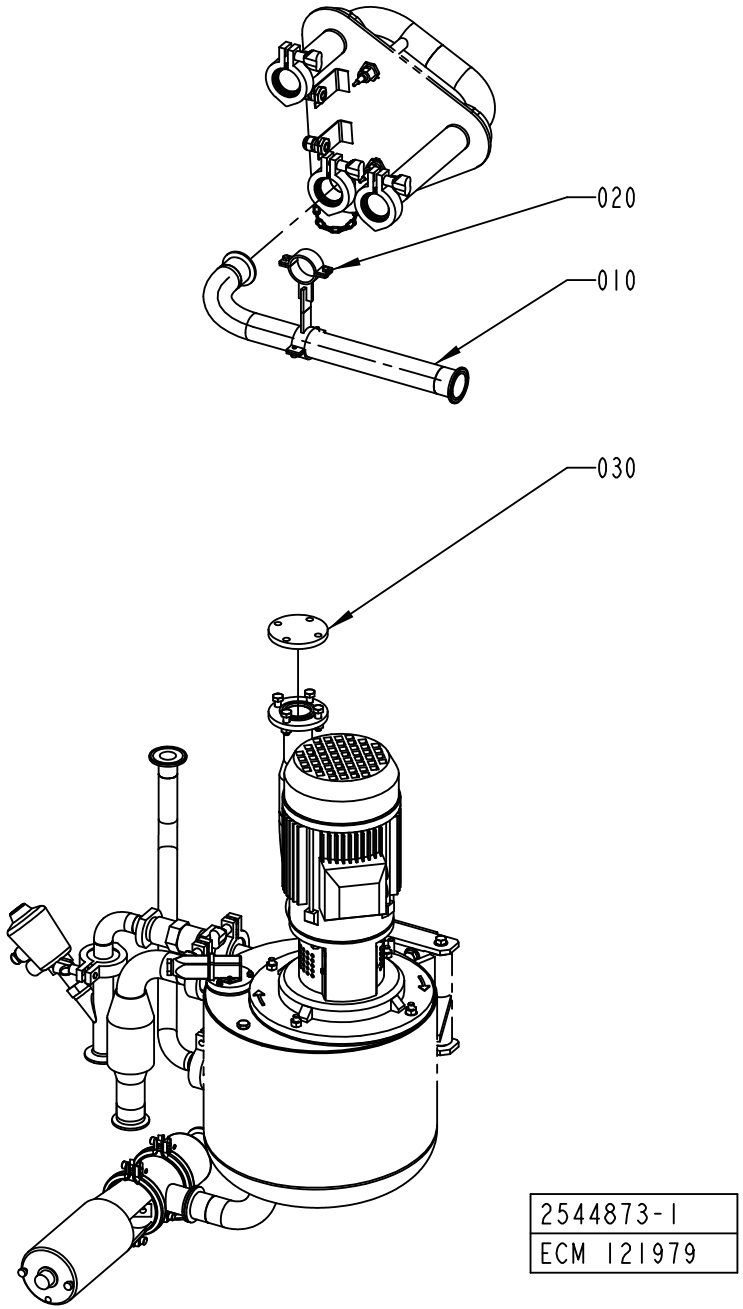
020
010
030
2544873-1
ECM 121979

ECM: 121994 - 20030403
Group number: 2544873-0100
Assembly Drawing: 2544873-1_1_AA

| Pos | Part No | UN | Qty | Description | Page No |
|---|---|---|---|---|---|
| - | | | | | |
| 010 | 2500089-0000 | | 1 | PIPE | |
| 020 | 2539459-0000 | | 1 | HOLDER | |
| 030 | 2539457-0000 | | 1 | LID | |

| Pos | Part No | UN | Qty | Description | Page No |
|---|---|---|---|---|---|

**This page is intentionally left blank.**

ECM: 358595 - 20080708
Group number: 2508173-0200
Assembly Drawing:

| Pos | Part No | UN | Qty | Description | Page No |
|---|---|---|---|---|---|
| **A3/FLEX DIMC/FLEX, A3/FLEX TBA 2000S** | | | | | |
| 010 | 2767463-0000 | | 1 | WATER DIAGRAM | |
| 010 | 2911787-0000 | | 1 | WATER DIAGRAM | |
| 010 | 2901119-0000 | | 1 | WATER DIAGRAM | |
| 020 | 2874312-0000 | | 1 | DIAGRAM | |
| 040 | 2898343-0000 | | 1 | DIAGRAM | |
| 050 | 2898342-0000 | | 1 | LUBRICATION DIAGRAM | |
| **A3/FLEX HI** | | | | | |
| 060 | 2895150-0000 | | 1 | PNEUMATIC DIAGRAM | |
| 070 | 2979715-0000 | | 1 | PNEUMATIC DIAGRAM | |
| **A3/FLEX NOHI** | | | | | |
| 070 | 2979714-0000 | | 1 | PNEUMATIC DIAGRAM | |
| **A3/FLEX TBA 0500B, A3/FLEX TBA 1000SQ, A3/FLEX TBA 1000S NODIMC, A3/FLEX TBA 1000B NODIMC, A3/FLEX TBA 1500S** | | | | | |
| 010 | 2911787-0000 | | 1 | WATER DIAGRAM | |
| 010 | 2901119-0000 | | 1 | WATER DIAGRAM | |
| 020 | 2874312-0000 | | 1 | DIAGRAM | |
| 030 | 2776369-0000 | | 1 | PNEUMATIC DIAGRAM | |
| 040 | 2898343-0000 | | 1 | DIAGRAM | |
| 050 | 2898342-0000 | | 1 | LUBRICATION DIAGRAM | |
| **Common Parts** | | | | | |
| 030 | 2887587-0000 | | 1 | PNEUMATIC DIAGRAM | |
| 030 | 2778524-0000 | | 1 | PNEUMATIC DIAGRAM | |
| 030 | 2816348-0000 | | 1 | PNEUMATIC DIAGRAM | |
| 030 | 2816352-0000 | | 1 | PNEUMATIC DIAGRAM | |
| 030 | 2895150-0000 | | 1 | PNEUMATIC DIAGRAM | |

| Pos | Part No | UN | Qty | Description | Page No |
|---|---|---|---|---|---|

Machine Type | Group Description | Used-In | Group Number | Page No

Tetra Pak

# SPC
## Spare Parts Catalogue

**This page is intentionally left blank.**

ECM: 320667 - 20070831
Group number: 649489-0300
Assembly Drawing:

| Pos | Part No | UN | Qty | Description | Page No |
|---|---|---|---|---|---|
| - | | | | | |
| 0010 | 2922532-0100 | | 1 | SOFTWARE | |
| 0020 | 2922533-0100 | | 1 | ELECTRICAL DOCUMENT | |

| Pos | Part No | UN | Qty | Description | Page No |
|---|---|---|---|---|---|

Tetra Pak

# SPC
## Spare Parts Catalogue

| Part No | Description | Page No |
|---|---|---|
| 2033-0007 | WASHER | 1-63 |
| 2033-0008 | WASHER | 1-63 |
| 2033-0011 | WASHER | 1-63, 1-93, 1-95, 1-97, 1-99, 1-101, 1-103, 1-105, 1-107, 1-109, 1-111, 1-115, 1-117, 1-119, 1-121, 1-123, 1-133, 1-135, 1-137, 1-153, 1-155, 1-157, 1-159 |
| 7309-0000 | HANDLE | 1-339, 1-341 |
| 12242-0003 | GASKET 48X38X5,5 | 1-47, 1-49, 1-51 |
| 12242-0004 | WASHER 73,5X63,5X5,5 | 1-193 |
| 14600-0000 | HOOD | 1-197, 1-199 |
| 14729-0000 | NUT | 4-15, 4-21 |
| 19972-0000 | WASHER | 4-125 |
| 20494-0000 | COMPRESSION SPRING | 4-11, 4-17 |
| 22462-0000 | SHAFT | 4-93, 4-95, 4-109, 4-111 |
| 22463-0000 | ROLL | 4-93, 4-95, 4-109, 4-111 |
| 24928-0000 | LOCKING RUBBER | 1-197, 1-199, 9-19, 9-21, 9-23, 9-25 |
| 28509-0000 | WASHER | 4-61, 4-69, 9-17 |
| 29876-0000 | COVER | 1-189 |
| 29886-0000 | LACE | 4-11, 4-17 |
| 30298-0000 | INSULATION | 1-189 |
| 31838-0000 | PLUNGER | 4-11, 4-17 |
| 32079-0000 | WASHER | 4-61, 4-69 |
| 32544-0000 | INSULATION NUT | 4-61, 4-69, 9-17 |
| 32957-0000 | SCREW | 4-15, 4-21 |
| 36753-0000 | RING | 4-11, 4-17 |
| 67379-0101 | TRANSFORMER | 4-61, 4-69 |
| 67379-0106 | TRANSFORMER | 4-61, 4-69 |
| 67380-0218 | TRANSFORMER | 7-77 |
| 67388-0102 | RACK FRONTMOUNTED 84TE | 8-55 |
| 68262-0101 | BACKPLANE FRONT RACK 8TE | 8-55 |
| 68445-0104 | FRONT PLATE 8 TE | 8-55 |
| 68445-0105 | FRONT PLATE 10TE | 8-55 |
| 90002-0004 | BLANK-OFF PLUG, PR 22,5 SKINDICHT-BLK16 | 8-45 |
| 90002-0009 | BLANK-OFF PLUG, PR 18.6 SKINDICHT-BLK11 | 5-191 |
| 90002-0013 | BLANK-OFF PLUG, PR 15,2 SKINDICHT-BLK9 | 1-331, 1-333, 2-119 |
| 90002-0014 | BLANK PLUG D=22,5MM, ZB2-SP03 | 8-53 |
| 90002-0016 | BLANK-OFF PLUG PR 20.4 SKINDICHT-BLK13,5 | 8-45 |
| 90005-0060 | WASHER PLAIN, RBS 6,4/M6)/18,H=1,5 | 1-53, 1-181 |
| 90005-0082 | WASHER PLAIN ROUND 4,3(M4)/12,H=1 | 7-13, 7-65, 7-67, 7-69, 7-77, 7-91 |
| 90005-0094 | GASKET C 19438-EPR | 5-25, 5-27, 5-157, 5-159 |
| 90005-0097 | WASHER PL.RND.NYL.10,5/21, H=2 | 7-65 |
| 90005-0105 | WASHER PLAIN ROUND 8,4(M8)/24, H=1,5 | 5-177 |
| 90005-0116 | WASHER PLAIN ROUND 8,4(M8)/24, H=2 | 7-135 |
| 90005-0125 | WASHER PLAIN ROUND 5,5/22, H=1,5 FZB | 4-29, 4-31, 5-89, 5-91 |
| 90005-0140 | WASHER PLAIN ROUND 10,5(M10)/30, H=2 | 5-183 |
| 90005-0151 | WASHER PLAIN ROUND, 6,2/12, H=1,6 | 7-65 |
| 90012-0063 | CABLE GLAND PR 15,2 | 2-41 |
| 90012-0125 | GLAND FITTING | 7-53 |
| 90012-0126 | HOSE GLAND W/O INSERT PG29 NORMAL | 1-189 |
| 90012-0131 | HOSE GLAND W/O INSERT PG21 NORMAL | 1-265 |
| 90012-0137 | GLAND, EXTENDED WITH INSERT, PG11 | 1-37, 7-19 |
| 90015-0020 | LEAD-IN, TET5-7, E-1458016 | 2-9, 2-45, 2-47, 2-61, 2-67 |
| 90015-0021 | LEAD-IN, TET10-14, E-1458023 | 2-61, 2-197, 2-241 |
| 90015-0022 | LEAD-IN, TET14-20, E-1458029 | 2-9 |
| 90015-0023 | LEAD-IN, TET7-10, E-1458019 | 2-9, 2-135, 7-139, 7-141 |
| 90015-0025 | LEAD-IN, TET26-35, E-1458041 | 6-19 |
| 90015-0037 | RUBBER BUSHING | 6-37 |
| 90017-0015 | HANDLE, NO. 14.4012.02.308 | 8-45 |
| 90017-0016 | HANDLE, NO. 14.4012.02.120 | 8-47 |
| 90024-0036 | FEED THROUGH FILTER, 52-160-002 | 6-19 |
| 90024-0060 | FILTER 80 A 440/250 VAC, B84144-A80-R | 6-19 |
| 90028-0020 | CONE TUBE 2,5MM | 4-11, 4-13, 4-15, 4-17, 4-19, 4-21, 4-115, 4-117, 4-127, 4-129, 4-131, 4-135, 4-137, 4-145, 4-147, 4-149, 4-153, 4-155, 4-157, 4-161, 4-163, 4-165, 5-149, 5-151 |
| 90028-0021 | CONE TUBE 4 MM | 2-85, 4-11, 4-13, 4-15, 4-17, 4-19, 4-21, 5-149, 5-151 |
| 90028-0022 | CONE TUBE 6 MM | 2-85, 4-13, 4-19, 5-149, 5-151 |
| 90028-0024 | CONE TUBE 4 MM | 4-13, 4-19 |
| 90028-0025 | CONE TUBE 6 MM | 2-85 |
| 90030-0030 | CONN. BULKHEAD SV12L71 | 1-245 |
| 90030-0058 | CONN. T-PIPE T-12 | 1-243 |
| 90030-0071 | CONN. ELBOW WE08LR71 | 2-37 |
| 90030-0096 | CONN. ELBOW W12L71 | 1-241 |
| 90030-0098 | ACCESSORIES, FERRULE 8 | 4-37, 4-39 |
| 90030-0106 | CONN. PIPE G-12 | 1-241, 1-245, 1-267 |
| 90030-0109 | STRAIGHT PIPE CONN. GE12LR1/271 | 1-241 |
| 90030-0144 | REDUCER, 2520-3/8-3/8 | 7-135 |
| 90030-0147 | ADJUSTABLE ELBOW CONNECTION,EXT 10-G1/4 | 2-75, 2-77 |
| 90030-0159 | CONN. BULKHEAD SV15L71 | 2-249 |
| 90030-0171 | ADJUSTABLE ELBOW CONNECTION, EVW06LR71 | 2-33 |
| 90030-0180 | CONN. STR. GE12L1/2NPT71 | 1-241, 1-245, 1-267 |
| 90030-0184 | CONN. STR. GE06LRED71 | 1-277, 1-349, 1-351, 2-27, 2-67 |
| 90030-0185 | CONN. STR. GE08LRED71 | 6-49 |
| 90030-0187 | CONN. STR. GA-12-G3/8 | 1-243, 1-267, 1-277 |
| 90030-0188 | CONN. STR. GA-15-G1/2 | 1-185, 1-193, 1-241, 1-267 |
| 90030-0202 | CONN. STR., 6-G1/4, EXT. THREAD | 1-275, 1-277 |
| 90030-0203 | ADJUSTABLE ELBOW CONNECTION,EXT 6-G1/4 | 1-277 |
| 90030-0219 | CONN. ELBOW BULKHEAD WSV 6 | 2-85 |

| Part No | Description | Page No |
|---|---|---|
| 90030-0241 | ADJUSTABLE ELBOW CONNECTION,EXT 12-G3/8 | 2-75, 2-77 |
| 90030-0257 | CONN. ELBOW, 8-R1/8, EXT.THREAD | 4-81, 4-83, 4-103, 4-105 |
| 90030-0336 | CONN. STRAIGHT, 316L-12M-BVCO-3 | 1-217, 9-29 |
| 90030-0338 | NUT, PIPE & CONNECTORS, SS-8-BVCO-4 | 1-217 |
| 90030-0340 | NIPPLES, EXT. THREAD, HEXAGON, RA-G1/2A3 | 2-75, 2-77 |
| 90030-0465 | STRAIGHT CONNECTION, MAD DN 15 | 6-45 |
| 90030-0481 | REDUCER M12TURM6-316 | 1-245 |
| 90030-0485 | CONN. BULKHEAD SV 8- | 1-255, 2-39 |
| 90030-0571 | CONN. T-PIPE 6 | 1-233 |
| 90032-0038 | BLOCK 2 WAYS | 2-85, 4-11, 4-17 |
| 90032-0039 | BLOCK 4 WAYS | 4-11, 4-15, 4-17, 4-21 |
| 90032-0040 | BLOCK 6 WAYS | 4-15, 4-21 |
| 90032-0043 | DISTRIBUTION BLOCK 3 WAYS | 2-85, 4-13, 4-19 |
| 90032-0046 | DISTRIBUTION BLOCK 6 WAYS | 2-85 |
| 90036-0057 | LIGHT BULB, BA9S 28V | 9-17 |
| 90036-0068 | BULB 6.5W 24V | 2-159, 2-173 |
| 90038-0049 | DIODE | 1-283 |
| 90042-0170 | SOLENOID VALVE BüRKERT | 2-21 |
| 90042-0171 | SOLENOID VALVE BURKERT | 1-207 |
| 90042-0172 | SOLENOID VALVE 4023/1005/1032 24VDC | 1-193 |
| 90042-0203 | SOLENOID VALVE BüRKERT | 1-209, 1-277 |
| 90042-0206 | SOLENOID VALVE G1/8, 444-111-000-1 | 2-25 |
| 90042-0248 | SOLENOID VALVE OFFICIENE DI ENSINO | 2-183, 2-185, 2-189, 6-33 |
| 90042-0249 | SOLENOID VALVE OFFICINE DI ENSINO | 6-87, 6-89 |
| 90042-0254 | SOLENOID DIAPHRAGM VALVE, R1 1/2 | 6-43 |
| 90042-0487 | COIL 24 VDC/15W, 04983 197 18 | 2-25 |
| 90043-0002 | PRESSURE GAUGE, 2040 D=63 MM | 1-267 |
| 90043-0006 | PRESSURE GAUGE, 2041 D=63 MM | 6-87, 6-89 |
| 90043-0043 | PRESSURE GAUGE 0-10 BAR 1/8" | 6-45 |
| 90043-0082 | PRESSURE GAUGE, 2740, D=63 MM | 1-193, 1-241, 1-245 |
| 90043-0095 | PRESSURE GAUGE, 2740, D=63 MM, GLYC. | 1-185 |
| 90043-0100 | PRESSURE GAUGE, 2948 D=63 MM | 6-33 |
| 90044-0084 | LIMIT SW. 14 CE1-4 | 1-271, 1-273 |
| 90044-0104 | PROX.SWITCH IN-3002-BPKG REPBY 90044-194 | 7-63 |
| 90044-0192 | LIMIT SW. SZ2586.000 | 8-5, 8-7 |
| 90044-0194 | PROX.SW. IN5329/IN3002-BPKG(EX90044-104) | 1-215, 1-305, 1-307, 5-23, 5-29, 5-39, 5-139, 5-141, 5-143, 7-99 |
| 90044-0204 | KEY SAF.SW. NZIVZ-538-E | 2-99 |
| 90044-0310 | KEY FOR SAFETY SWITCH AZ 15/16 B1 | 1-341 |
| 90045-0162 | MOTOR M42X30/I | 2-41 |
| 90051-0035 | KNOB, EXTERNAL THREAD. NO. 8308-1135 | 1-289, 1-291, 7-93 |
| 90051-0045 | STELLAR KNOB, NO. 8323-257 | 1-23, 1-25 |
| 90051-0053 | KNOB, INTERNAL THREAD, M6 24X17 | 6-11 |
| 90051-0059 | KNOB, EXTERNAL THREAD. NO. 8308-1550 | 1-177 |
| 90051-0087 | LOCK KNOB, NO. GN 617 A5 | 7-71, 7-73 |
| 90051-0112 | LOCK KNOB, NO. GN 617 NIK5 | 2-49, 3-11, 3-23 |
| 90053-0029 | COUNTER, F524.800FA3C 24VDC | 8-53 |
| 90053-0031 | HOUR COUNTER, B 609.10 10-50VDC | 8-53 |
| 90055-0033 | HOSE NIPPLE, EXT.THR. R1/2-13 MM | 2-243 |
| 90055-0042 | NIPPLES, EXT. THREAD, HEXAGON, NO. 6835- | 6-33 |
| 90055-0051 | HOSE NIPPLE, EXT.THR. R3/8X13 MM | 2-17, 2-19, 2-21, 2-39 |
| 90055-0053 | HOSE NIPPLE, EXT.THR. R1-25 MM | 6-55, 6-57 |
| 90055-0097 | STRAIGHT COUPLING | 6-99, 6-101 |
| 90055-0100 | Y-CONNECTION, 6-6 | 4-9 |
| 90055-0129 | REDUCER 8-14 | 2-197 |
| 90055-0132 | HOSE NIPPLE, EXT.THR. R1/4X7,8 MM | 2-37 |
| 90055-0166 | HOSE NIPPLE, EXT.THR. R11/2X38 MM | 6-43 |
| 90055-0172 | ELBOW WITH TAILPIECE 8/8 MM | 5-131, 5-133 |
| 90055-0249 | REDUCER 8-10 | 6-9, 6-13 |
| 90055-0257 | Y-FITTING QSY-6 | 7-133 |
| 90055-0260 | NIPPLE-8 MM G1/4" | 6-39 |
| 90055-0266 | STRAIGHT CONNECTION | 6-13 |
| 90055-0267 | ELBOW PIPE JOINT,EXT.THREAD,D=8 MM G1/4 | 2-21 |
| 90055-0275 | ELBOW FITTING, 8 - G1/4 | 6-13 |
| 90055-0276 | T-CONNECTION 8 MM | 6-39 |
| 90062-0015 | LOCK WASHER SERRAT.EXT.GEAR,6,4/11 H=0,7 | 6-19 |
| 90062-0016 | LOCK WASHER SERRAT.EXT.GEAR,8,4/15 H=0,8 | 8-9, 8-11 |
| 90062-0022 | LOCK WASHER D=6,4/11 | 8-53 |
| 90062-0029 | LOCK WASHER 5,1X 8,6, T= 1,5 DIN 7980 | 1-19, 6-25, 6-27 |
| 90062-0030 | LOCK WASHER 6,1X9,7; T=1,5 DIN 7980 | 1-19 |
| 90062-0031 | LOCK WASHER 8,2X12,8; T=2 DIN 7980 | 1-19 |
| 90062-0061 | LOCK WASHER NORD-LOCK,6,5/10,8, T=2,2 | 1-47, 1-49, 1-51, 5-25, 5-27, 5-31, 5-33, 5-35, 5-37 |
| 90064-0082 | PUSH BUTTON, WHITE | 7-51, 7-157 |
| 90064-0084 | PUSH BUTTON, YELLOW | 1-349, 1-351, 7-153 |
| 90068-0312 | CLAMPING PIECE, T 12 / 12 | 9-7, 9-9, 9-13, 9-15 |
| 90074-0011 | CABLE CLIPS, D=14 MM | 1-185, 8-45, 8-69 |
| 90077-0079 | FEED THROUGH TERMINAL, 02943.6 | 5-191 |
| 90077-0113 | FEED THROUGH TERMINAL, 10-00102150-1 | 1-213, 1-283, 1-347, 1-355, 2-59, 2-97, 2-141, 2-145, 6-85, 7-55, 8-13, 8-23, 8-57 |
| 90077-0114 | END PLATE, WAP/WDK 2,5 | 1-213, 1-283, 1-347, 1-355, 2-59, 2-97, 2-141, 2-145, 6-85, 7-55, 8-23, 8-57 |
| 90077-0328 | RAIL TS15/5 | 5-191 |
| 90082-0013 | OVER VOLT. PROTECT. PU 4C-R 230 VAC | 6-19 |

| Part No | Description | Page No |
|---|---|---|
| 90087-0019 | PLUG M10X1 STAINLESS | 2-85, 4-11, 4-13, 4-17, 4-19, 5-149, 5-151 |
| 90089-0003 | REDUCING SLEEVE, PR22,5/PR18,6 | 1-37 |
| 90091-0074 | WEAR RING 35X40X5,3 MM | 4-55 |
| 90091-0138 | V-RINGS 40X50X9 MM V-45A | 4-29, 4-31 |
| 90091-0159 | GASKET 330X308X9 MM | 2-75, 2-77 |
| 90091-0237 | ROD SEAL, GLIDORING 20X27,5X3 MM | 1-219, 1-221, 1-223, 9-29, 9-31 |
| 90091-0238 | WEAR RING 20X22X10 MM | 1-219, 1-221, 1-223, 9-29, 9-31 |
| 90091-0266 | SEAL RING 10,4X16,3X2,5 MM | 1-217, 9-27 |
| 90091-0297 | RADIAL SEAL 35X47X7 MM DUST LIP | 5-23, 5-29, 5-43, 5-79, 5-81, 5-139, 5-141, 5-143 |
| 90091-0298 | RADIAL SEAL 45X65X8 MM DUST LIP | 5-139, 5-141, 5-143 |
| 90091-0299 | RADIAL SEAL 30X52X7 MM DUST LIP | 5-79, 5-81 |
| 90091-0304 | RADIAL SEAL 45X65X8 MM DUST LIP | 9-31 |
| 90091-0335 | PISTON SEAL GLIDE RING 62,5X70X3 MM | 1-221, 9-31 |
| 90091-0336 | PISTON SEAL GLIDE RING 79X90X4 MM | 1-219, 1-223 |
| 90091-0359 | X-SEAL 36,17X2,62 MM | 4-55 |
| 90091-0360 | BACK-UP RING 37,5X1,4 MM | 4-55 |
| 90091-0362 | SCRAPER, EXCLUDER2 18X22,8X3,7 MM | 4-55 |
| 90091-0364 | ROD SEAL, STEPSEAL 18X25,3X3,2 MM | 4-55 |
| 90091-0366 | WEAR RING 18X23X3.9 | 4-55 |
| 90091-0368 | WEAR RING 30X45X5,3 MM | 4-55 |
| 90091-0380 | SCRAPER, EXCLUDER 20X24,8X3,7 MM | 5-139, 5-141, 5-143 |
| 90091-0408 | BEARING SEAL 70X78X5 MM | 5-139, 5-141, 5-143 |
| 90091-0412 | SEAL RING | 2-33 |
| 90091-0428 | PISTON SEAL GLIDE RING T 27,5X34,5X3,2 M | 4-55 |
| 90091-0429 | VARILIP 15X26X7 MM | 1-53 |
| 90091-0436 | RADIAL SEAL 20X40X7 MM DUST LIP | 4-29, 4-31 |
| 90091-0440 | RADIAL SEAL 22X40X7 MM DUST LIP | 5-23, 5-29 |
| 90092-0052 | METERING VALVE 10 MM3 | 4-11, 4-13, 4-15, 4-17, 4-19, 4-21, 5-149, 5-151 |
| 90092-0053 | METERING VALVE 30 MM3 | 2-85 |
| 90092-0054 | METERING VALVE 50 MM3 | 4-11, 4-17, 5-149, 5-151 |
| 90099-0007 | HEXAGON NUT, M10X1, E 63 137 10 | 7-71, 7-73 |
| 90099-0027 | HEXAGON NUT, M14, DIN936 | 1-39, 1-41 |
| 90099-0103 | NUT, PR 47 (PG36) | 8-61, 8-63 |
| 90099-0104 | NUT, PR 15,2 (PG9) | 1-21, 1-27, 1-179, 1-181, 1-189, 1-191, 1-215, 1-229, 1-231, 1-233, 1-261, 1-265, 1-277, 1-305, 1-307, 2-39, 2-85, 6-33 |
| 90099-0110 | NUT, PR 22,5 (PG16) | 1-233, 2-135, 7-171, 8-5, 8-7, 8-45 |
| 90099-0117 | NUT, PR 18,6 (PG11) | 1-259, 1-265, 6-19 |
| 90099-0118 | NUT, PR 20,4 (PG13,5) | 1-85, 5-187, 8-45 |
| 90099-0120 | NUT, PR 37 (PG29) | 2-135 |
| 90110-0052 | MALE INSERT HAN 6E 09 33 006 2601 | 1-19, 1-37, 1-179, 1-211, 1-253, 1-265, 2-61, 2-105, 2-107, 2-135, 6-17, 6-25, 6-27, 6-37, 7-53 |
| 90110-0053 | FEMALE INSERT HAN 6 E 09 33 006 2701 | 2-93 |
| 90110-0054 | MALE INSERT HAN 6 HSB 09 31 006 2601 | 1-189, 1-279, 1-281, 2-105, 2-107, 6-49 |
| 90110-0055 | FEMALE INSERT HAN 6 HSB 09 31 006 2701 | 2-93, 8-61, 8-63 |
| 90110-0056 | MALE INSERT HAN 24 E 09 33 024 2601 | 1-279, 1-281, 1-345, 1-349, 1-351, 2-61, 2-105, 2-107, 2-135, 5-131, 5-133, 6-81, 6-83, 7-53 |
| 90110-0057 | FEMALE INSERT HAN 24 E 09 33 002 4201 | 2-93, 8-19 |
| 90110-0095 | CONNECTOR 3 POLE + EARTH | 1-207, 2-25, 6-33, 6-87, 6-89, 7-145 |
| 90110-0123 | HOUSING, 09 30 006 0301 | 8-61, 8-63 |
| 90110-0144 | COVER D-SUB 9, 8655MH0911LF | 1-229, 1-231 |
| 90110-0147 | PLUG D-SUB 9 FEMALE, DE09S064TLF | 1-229, 1-231 |
| 90110-0157 | CABLE HOOD 6-POL 70.352.0628.1 | 7-19, 7-121 |
| 90110-0159 | MALE INSERT 70.310.0640.0 | 1-183, 7-19, 7-121 |
| 90110-0296 | FEMALE INSERT HDC-HA-4BS 149840-B/2 | 2-105, 2-107 |
| 90110-0370 | BASE HOUSING | 2-105, 2-107 |
| 90110-0381 | COVER, 310601-33 CYR24.4 | 1-229, 1-231, 1-235, 2-143, 7-53, 7-135 |
| 90111-0122 | KEY SWITCH, 2 NO CONTACTS | 8-53 |
| 90111-0124 | KEY SWITCH, 1NO,1NC CONTACT | 8-53 |
| 90113-0056 | REGULATOR, 11-818-998 | 2-49 |
| 90113-0064 | PRESSURE REGULATOR | 1-241 |
| 90113-0098 | PRESSURE REGULATOR | 6-45 |
| 90115-0020 | ROD END, ID=8 MM, M8X1,25 | 5-97, 5-99 |
| 90115-0021 | ROD END, ID=8 MM, M8X1,25 LH | 5-93, 5-95, 5-97, 5-99 |
| 90115-0137 | ROD END, ID=6 MM, M6X1 | 5-123, 5-125, 5-127 |
| 90115-0139 | ROD END, ID=8 MM, M8X1,25 | 2-209, 5-83, 5-85, 5-87 |
| 90115-0180 | ROD END, ID=8 MM, M8X1,25 LH | 5-83, 5-85, 5-87 |
| 90115-0181 | ROD END, ID=10 MM M10X1,5 | 5-79, 5-81 |
| 90115-0182 | ROD END, ID=10 MM M10X1,5LH | 5-79, 5-81 |
| 90119-0056 | RELAY, AUXILIARY MK3P5-S 24VDC | 7-55 |
| 90121-0127 | RESISTANCE FIXED, 1,5 KOHM, 0,25 W | 1-283 |
| 90121-0132 | RESISTANCE FIXED, 0,51 KOHM, 0,25 W | 1-229, 1-231 |
| 90129-0006 | BASE, S3-B | 7-55 |
| 90132-0021 | HOSE CLIP 6-10MM | 2-25 |
| 90132-0030 | SUPORTE MV 87177 KS 580T | 1-193 |
| 90134-0030 | SLEEVE FOR PLASTIC TUBE | 2-83, 2-85, 4-37, 4-39, 5-149, 5-151 |
| 90134-0031 | SLEEVE FOR PLASTIC TUBE | 4-13, 4-19 |
| 90134-0038 | BUSHING/NUT INLET/OUTLET 4 MM | 4-11, 4-13, 4-15, 4-17, 4-19, 4-21 |
| 90134-0039 | BUSHING VALVE CONNECTION 2,5 MM | 4-11, 4-13, 4-15, 4-17, 4-19, 4-21, 5-149, 5-151 |
| 90134-0040 | BUSHING VALVE CONNECTION 4 MM | 2-85, 4-13, 4-15, 4-19, 4-21, 5-149, 5-151 |
| 90134-0051 | SPACING COLLAR DOSING BLOCK | 4-13, 4-19 |
| 90134-0052 | PLUG DOSING BLOCK | 4-15, 4-21, 5-149, 5-151 |
| 90134-0054 | BLOCK CONNECTION M10X1 | 2-85, 5-149, 5-151 |
| 90134-0055 | BUSHING/NUT INLET/OUTLET 6 MM | 2-85, 4-13, 4-19, 5-149, 5-151 |
| 90134-0058 | CONNECTION | 3-17, 3-25, 4-11, 4-13, 4-15, 4-17, 4-19, 4-21, 4-25, 4-77, 4-79, 4-81, 4-83, 4-99 |

| Part No | Description | Page No |
|---|---|---|
| | | 4-101, 4-103, 4-105, 5-39, 5-87, 5-101, 5-103, 5-139, 5-141, 5-143 |
| 90134-0063 .... | BUSHING/NUT M8X1, D=2,5 MM | 4-115, 4-117, 4-127, 4-129, 4-131, 4-135, 4-137, 4-145, 4-147, 4-149, 4-153, 4-155, 4-157, 4-161, 4-163, 4-165 |
| 90134-0065 .... | CONNECTION M6 TUBE 2,5 MM | 5-101, 5-103 |
| 90134-0068 .... | CONNECTION | 4-33, 4-35, 5-83, 5-85 |
| 90135-0026 .... | EARTH TERMINAL, 3802.6 | 5-191 |
| 90135-0034 .... | SHIELD CLAMP KLBU 3-8 | 8-9, 8-11 |
| 90135-0035 .... | EARTH WIRE, L=250 MM 16 MM2 | 8-47, 8-49, 8-51, 8-53, 8-59, 8-61, 8-63 |
| 90140-0010 .... | T-PIPE, INT. THREAD, 20031/2 | 6-87, 6-89 |
| 90140-0012 .... | ELBOW, 90 INT/EXT, 2020-1/2-1/2 | 1-267 |
| 90140-0013 .... | ELBOW, 90 INT/EXT, 2020-1/4-1/4 | 1-193, 2-191, 2-193 |
| 90140-0018 .... | T-PIPE, INT. THREAD, 2003-1/4 | 6-33 |
| 90140-0019 .... | ELBOW, 90, INT. THREAD, NO. 2013-1/4 | 2-189 |
| 90140-0020 .... | ELBOW, 90, INT/EXT. THREAD, NO. 2020-3/8 | 6-87, 6-89, 7-135 |
| 90140-0023 .... | T-PIPE, INT. THREAD, NO. 2070-3/8-3/8 | 6-25, 6-27, 6-87, 6-89 |
| 90140-0079 .... | SLEEVE, INT. THREAD, NO. 501-08 | 6-101 |
| 90141-0015 .... | RETAINING RING FOR SHAFT DIN 471 8 SS | 2-209, 4-55, 5-93, 5-95, 5-97, 5-99, 7-9, 7-11, 7-23, 7-25, 7-87, 7-117 |
| 90141-0016 .... | RETAINING RING FOR SHAFT DIN 471 10 SS | 1-47, 1-49, 1-51, 1-299, 1-301, 3-11, 3-23, 5-97, 5-99, 7-91, 7-93 |
| 90141-0019 .... | RETAINING RING FOR BORE DIN 472 50 A2 | 5-23, 5-29, 5-43 |
| 90141-0020 .... | RETAINING RING FOR BORE DIN 472 42 A2 | 2-41 |
| 90141-0022 .... | SNAP RING B 16 | 1-187, 1-191 |
| 90141-0029 .... | CIRCLIP | 4-93, 4-95, 4-109, 4-111 |
| 90143-0020 .... | STRIP | 2-29 |
| 90143-0054 .... | STRIP | 2-219 |
| 90143-0057 .... | STRIP EMKA 1011-05 21X11MM | 6-19 |
| 90143-0059 .... | SELF GRIPPING GASKET, 4610069 | 2-39 |
| 90143-0060 .... | EDGE STRIP 9,5X6,3MM BLACK PVC | 1-329, 2-161, 2-163, 2-209, 6-19, 6-63, 6-73, 7-41, 7-43, 7-89 |
| 90143-0097 .... | SELF GRIPPING GASKET, 1011-24 | 1-313, 1-315, 1-323, 2-9, 2-241, 2-245, 8-45 |
| 90144-0007 .... | TAPE | 1-275, 6-43, 6-45, 6-47, 6-51, 6-101 |
| 90144-0073 .... | TREBOFLON-TAPE W=13MM | 1-185, 1-193, 1-265, 1-267, 1-271, 1-273, 2-17, 2-19, 2-27, 2-31, 2-39 |
| 90152-0016 .... | HOSE (SPIRAL) | 2-125 |
| 90152-0017 .... | HOSE (SPIRAL) | 2-195 |
| 90152-0050 .... | SPIRAL CONDUIT, 20X13, UL 1313 | 1-229, 1-231, 1-265 |
| 90152-0051 .... | SPIRAL CONDUIT, 25X18, UL 1816 | 1-233, 1-265, 7-153, 7-157, 7-171 |
| 90152-0058 .... | SPIRAL CONDUIT, 15X9, UL 0909 | 6-33 |
| 90152-0059 .... | SPIRAL CONDUIT, 18X12, UL 1211 | 1-233 |
| 90152-0070 .... | METAL HOSE, 32,5X26, UL 2621 | 5-131, 5-133 |
| 90153-0015 .... | ADHESIVE,LOCTITE IS 496/CYANOLOT 303 | 4-89, 4-91 |
| 90153-0020 .... | ADHESIVE, BOSTIK 1782 125ML | 1-189 |
| 90153-0023 .... | ADHESIVE, SILICON 251470 TUB 90CC(UN1993 | 1-75, 1-77, 2-29 |
| 90155-0008 .... | HANGER CHAIN, 18 | 1-261 |
| 90157-0016 .... | LOCKING FLUID LOCTITE 242 50 ML | 2-67, 4-85, 4-93, 4-95, 4-109, 4-111, 6-87, 6-89 |
| 90157-0021 .... | LOCKING FLUID LOCTITE 270 | 2-129, 2-131, 4-11, 4-17 |
| 90157-0034 .... | THREAD SEALANT LOCTITE 572 50 ML | 2-197 |
| 90157-0037 .... | THREAD SEALANT LOCTITE 542 | 1-81, 1-185, 1-193, 1-265, 1-267 |
| 90157-0041 .... | SEALING COMPOUND, RHODORSEAL 5651 | 2-201, 2-203, 2-209, 2-211, 2-219, 2-227, 2-229, 2-231, 2-235 |
| 90161-0001 .... | O-RING MATERIAL 3 MM | 5-131, 5-133 |
| 90163-0039 .... | HOSE NIPPLE EXT.THR. R1/2 2601-17 MM | 2-31 |
| 90163-0041 .... | HOSE NIPPLE, EXT.THR. 3/8-12 MM | 6-87, 6-89 |
| 90163-0052 .... | HOSE NIPPLE, EXT.THR. 1/4-12 MM | 2-83 |
| 90163-0057 .... | QUICK COUPLING, (M) 5150-1/8 | 1-325 |
| 90163-0062 .... | QUICK COUPLING, (F) 5053-1/8 | 1-325 |
| 90163-0064 .... | QUICK COUPLING, (M) LP-006-2-WR517 | 2-75, 2-77, 2-83 |
| 90163-0076 .... | QUICK COUPLING, (F) LP-006-0-WR021 | 2-75, 2-77 |
| 90163-0141 .... | QUICK-RELEASE COUPLING SS-QTM2A-B-8M0-K2 | 2-39 |
| 90163-0172 .... | QUICK-RELEASE COUPLING SS-QTM2A-B-8M0-K4 | 2-39 |
| 90163-0304 .... | QUICK COUPLING, LP-006-5-74-KU (DUST CAP | 2-75, 2-77, 2-83 |
| 90164-0015 .... | LIGHT FIXTURE, RL70CV-111 / 230V 50HZ | 7-41, 7-43 |
| 90164-0303 .... | LIGHT FIXTURE, BRACKET 70MM | 7-41, 7-43 |
| 90165-0003 .... | PIPE CLIP FOR TUBE D=4 MM | 8-23 |
| 90165-0007 .... | PIPE CLIP FOR TUBE D=8 MM | 8-53 |
| 90165-0019 .... | TOOL CLIP, 81/3, OPEN, 20 - 30 MM | 7-139, 7-141 |
| 90165-0022 .... | PIPE CLIP, FOR TUBE D=2,5 MM, B-3570 | 8-53 |
| 90165-0039 .... | PIPE CLAMP D=15 MM, GSK15/12 | 1-193 |
| 90165-0056 .... | PIPE CLIP FOR TUBE D=4 MM | 4-77, 4-79, 4-81, 4-83, 4-99, 4-101, 4-103, 4-105, 5-139, 5-141, 5-143 |
| 90165-0057 .... | PIPE CLIP FOR TUBE D=6 MM | 5-23, 5-29 |
| 90165-0058 .... | PIPE CLIP FOR TUBE D=2,5 MM | 3-17, 3-25 |
| 90165-0087 .... | T-CLIP T6 FOR TUBE D=6 - 7 MM | 7-133 |
| 90166-0008 .... | HOSE 7/10 PVC TRANSP. | 1-83, 2-37 |
| 90166-0013 .... | TUBE 8 MM PA BLUE | 1-207, 2-45, 2-47, 2-125, 2-187, 2-197, 5-11, 5-13, 5-15, 5-131, 5-133, 5-139, 5-141, 5-143, 6-101 |
| 90166-0018 .... | SHRINKABLE HOSE PVC (13MM) | 7-77 |
| 90166-0049 .... | HOSE PVC 25/33-34 | 2-187 |
| 90166-0060 .... | HOSE 19/26-27 REINF.PVC | 2-13 |
| 90166-0068 .... | TUBE 12 MM PA BLUE | 2-127 |
| 90166-0081 .... | TUBE 6 MM PA BLUE | 2-9, 2-39, 2-45, 2-47, 2-197, 4-9, 5-11, 5-13, 5-15 |
| 90166-0087 .... | HOSE 15/23 REINF.PVC TRANSP. | 1-267, 2-17, 2-19, 2-27, 2-31 |
| 90166-0095 .... | TUBE 4 MM PA BLUE (50M) | 2-45, 2-47, 7-91 |
| 90166-0101 .... | HOSE, SILICONE, 60 SHORE, 6/10 MM | 2-25 |
| 90166-0108 .... | TUBE 6 MM PA TRANSP. | 2-85, 4-37, 4-39, 5-149, 5-151 |
| 90166-0109 .... | TUBE 4 MM PA TRANSP. | 4-11, 4-15, 4-17, 4-21 |

| Part No | Description | Page No |
|---|---|---|
| 90166-0110 | TUBE 15 MM PA,TRANSP. | 2-187 |
| 90166-0113 | HOSE | 2-83 |
| 90166-0118 | TUBE 8 MM PA BLACK | 1-81, 2-37, 2-191, 2-193, 5-113, 5-115, 5-117, 5-119, 5-129, 6-25, 6-27, 6-33, 6-35, 6-39, 6-87, 6-89, 7-77 |
| 90166-0121 | HOSE | 1-185, 1-193, 2-9, 2-121, 2-187, 6-21, 6-23, 6-25, 6-27, 6-29, 6-33, 6-45 |
| 90166-0132 | TUBE 6 MM PA,TRANSP. | 2-33, 2-189, 5-39 |
| 90166-0138 | HOSE | 2-17, 2-19 |
| 90166-0141 | TUBE 10 MM PA,TRANSP. MIN.50M | 2-195 |
| 90166-0143 | TUBE 2,5 MM PA TRANSP. | 4-11, 4-13, 4-15, 4-17, 4-19, 4-21, 4-127, 4-129, 4-131, 4-145, 4-147, 4-149, 4-153, 4-155, 4-157, 4-161, 4-163, 4-165, 5-149, 5-151 |
| 90166-0151 | HOSE | 2-17, 2-19, 2-67, 2-117 |
| 90166-0158 | HOSE | 2-27, 2-67 |
| 90166-0161 | HOSE | 2-25 |
| 90166-0176 | RUBBER HOSE | 1-349, 1-351 |
| 90166-0188 | PLASTIC HOSE | 6-9 |
| 90166-0193 | TUBE 6 MM PUR BLUE | 7-67, 7-69, 7-91 |
| 90166-0195 | TUBE 12 MM PA BLUE | 1-245, 2-45, 2-47, 2-197 |
| 90166-0196 | TUBE 14MM PA BLUE | 2-197, 6-99, 6-101 |
| 90166-0198 | RUBBER HOSE | 2-39 |
| 90166-0225 | HOSE | 2-39 |
| 90166-0233 | HOSE | 2-69, 6-53 |
| 90166-0236 | HOSE, 38/51 REINFORCED RUBBER | 1-257, 2-109, 2-243, 6-43 |
| 90166-0260 | HOSE | 2-187, 2-249 |
| 90166-0266 | TUBE 6 MM PA BLACK | 2-183, 2-185, 5-157, 5-159 |
| 90181-0043 | CABLE DUCT 15X60MM | 1-349, 1-351 |
| 90181-0052 | CABLE DUCT 25X80MM | 8-9, 8-11, 8-53, 8-61, 8-63 |
| 90181-0053 | CABLE DUCT 40X80MM | 8-9, 8-11, 8-53 |
| 90181-0054 | CABLE DUCT 60X80MM | 8-9, 8-11 |
| 90181-0055 | CABLE DUCT 80X80MM | 8-9, 8-11 |
| 90181-0056 | CABLE DUCT 100X80MM | 8-9, 8-11 |
| 90181-0057 | CABLE DUCT 120X80MM | 8-9, 8-11 |
| 90181-0067 | DIVIDING PLATE SEP80 | 8-9, 8-11 |
| 90181-0183 | JOINING FITTING | 2-147 |
| 90181-0184 | CABLE TRENCH PARTS | 1-329 |
| 90181-0313 | RIVET DUCTAFIX R4 | 8-9, 8-11 |
| 90181-0314 | CABLE TRENCH PARTS | 1-329, 2-147 |
| 90187-0029 | BALL VALVE G1/2, NPBR | 6-31, 6-87, 6-89 |
| 90187-0045 | BALL VALVE G1/4 CR PL | 6-9, 6-33, 6-37 |
| 90187-0059 | BALL VALVE FOR HYDR.PER. G1/2 3MM HOLE | 2-17, 2-19, 2-27 |
| 90187-0062 | BALL VALVE G1/2, NPBR | 1-193, 1-267 |
| 90187-0088 | BALL VALVE G1/4, NPBR | 7-139, 7-141 |
| 90187-0089 | BALL VALVE G3/8, NPBR | 6-87, 6-89, 6-101 |
| 90187-0105 | PURGING VALVE, G3/8 FOR WATER | 1-265 |
| 90187-0110 | DIAPHRAGM VALVE DN15, NC WELD CONN. | 1-243 |
| 90187-0130 | TEMP. CONTR. VALVE, R3/4 0-30øC | 6-29 |
| 90187-0133 | SAFETY VALVE, 10 BARS, R1/2, R1/2 | 6-45 |
| 90187-0147 | BALL VALVE G11/2 | 6-43 |
| 90187-0148 | BALL VALVE G1 | 6-53 |
| 90187-0149 | THROTTLE VALVE, G1/4, G1/4, MALE | 2-183, 2-185 |
| 90187-0197 | BALL VALVE G1/4 | 6-13 |
| 90194-0143 | WARNING SIGN ISO, HOT SURFACE | 7-91, 7-111, 7-117 |
| 90194-0152 | SIGN, EARTH | 7-53, 8-9, 8-11, 8-47, 8-49, 8-51, 8-53, 8-59, 8-61, 8-63 |
| 90195-0020 | TERMINAL BLOCK, BK 2CRN; 0624720000 | 2-41, 5-131, 5-133, 8-9, 8-11 |
| 90195-0028 | TERM.BLOCK 6-POLE STEATIT | 1-189 |
| 90195-0029 | CONN. LINK NO324 FOR -28 | 1-189 |
| 90201-0129 | SOL.COIL, 24VDC, NO. 4WE6J6X/EG24N9K4 | 2-75, 2-77 |
| 90201-0442 | GASKET, NO. 313162 | 2-75, 2-77 |
| 90206-0070 | HEATING ELEMENT 6000W 380/220V | 1-265 |
| 90206-0326 | CONNECTION BOX K2 FOR 90206-56 AND -70 | 1-265 |
| 90207-0363 | GASKET 75X85X1,8 MM 3" FDA 3-A | 1-217, 9-27 |
| 90207-0365 | GASKET 53X63X1,8 MM 2,5" FDA 3-A | 1-217, 9-27 |
| 90214-0029 | BALL BEARING, 10X26X8 MM | 7-87 |
| 90214-0036 | BALL BEARING, 10X22X6 MM | 3-11, 3-23 |
| 90214-0037 | BALL BEARING, 5X16X5 MM | 1-303, 7-15, 7-35 |
| 90214-0112 | BALL BEARING, 12X24X6 MM | 1-53 |
| 90214-0138 | BALL BEARING, 5X19X6 MM | 1-305, 1-307, 7-63 |
| 90214-0165 | BALL BEARING, 25X47X12 MM | 1-37 |
| 90214-0170 | BALL BEARING SOLID OIL 20X42X12 MM | 7-127 |
| 90214-0189 | BALL BEARING, 17X40X12 MM | 5-177 |
| 90214-0194 | SPHERICAL BALL BEARING, 15X35X1 MM | 4-29, 4-31 |
| 90214-0203 | BALL BEARING, 20X37X9 MM | 7-17 |
| 90214-0219 | CYL.ROLLER BEARING, 17X40X12 MM | 5-23, 5-29 |
| 90214-0229 | BALL BEARING, 65X85X10 MM | 5-139, 5-141, 5-143 |
| 90217-0206 | UNION NUT, 1 1/2 APV, 07-01-376/17 | 1-261 |
| 90217-0348 | GASKET 35,4X46,8X4 MM | 1-229, 1-231, 1-261, 9-17, 9-19, 9-21, 9-23, 9-25 |
| 90220-0034 | THERMOCABLE TEX/SITW-20F-KX 2X0,5MM2 | 1-75, 1-77, 1-179, 1-189, 1-193, 1-211, 1-233, 1-265, 1-279, 1-281, 1-349, 1-351, 2-17, 2-19, 5-131, 5-133, 6-33, 7-113 |
| 90220-0072 | SCR. CABLE 4X0,34MM2 | 2-17, 2-19, 7-53 |
| 90220-0091 | PAIR TWISTED CABLE 2X2X0,25MM2 | 1-229, 1-231, 1-349, 1-351 |
| 90220-0095 | SCR. CABLE 3X0,75MM2 | 6-19 |
| 90220-0104 | SCR. CABLE 4X1,5MM2 | 1-37, 1-253, 7-19, 7-53, 7-121 |
| 90220-0105 | SCR. CABLE 4X2,5MM2 | 1-19, 1-183 |
| 90220-0165 | SCR. CABLE 5X0,34MM2 | 1-53, 1-211, 1-313, 1-315, 2-127 |
| 90220-0303 | CLAMP FOR SCR.CABLE, 10MM, 55-016-22 | 6-19 |

| Part No | Description | Page No |
|---|---|---|
| 90220-0305 | CLAMP FOR SCR.CABLE, 16MM, | 6-19 |
| 90224-0308 | CONN. BANJO, ART. NO. 2023-1/8-1/8 | 1-325 |
| 90224-0329 | ELBOW 90 COUPL.,EXT.THREAD 6/4-G1/4" | 2-183, 2-185, 2-189 |
| 90224-0349 | CONN. BULKHEAD. 1250-6 | 1-241, 1-325 |
| 90224-0372 | CONN. STRAIGHT ESK-1/4-1/4 151521 | 7-145 |
| 90226-0458 | MOUNTING SCREW | 1-335, 1-339, 1-341, 2-205, 2-207, 2-209, 2-225, 2-229, 2-231, 2-233, 2-237, 6-61, 6-73, 6-77, 7-161, 7-165 |
| 90230-0027 | NON-RETURN VALVE QJ 8355-1/4" | 5-25, 5-27, 5-157, 5-159 |
| 90230-0028 | NON-RETURN VALVE H 151 R 3/8" | 6-33 |
| 90230-0032 | NON-RETURN VALVE, 8MM, L=63,25 | 6-9 |
| 90230-0040 | NON-RETURN VALVE, R3/8, L=55 | 6-9 |
| 90230-0041 | OVERPRESSURE VALVE SS-4 CPA2-RTDG-3 | 6-37 |
| 90230-0042 | NON-RETURN VALVE 1/2" | 2-121, 6-45, 6-51 |
| 90230-0044 | NON-RETURN VALVE 1" | 2-121, 6-47 |
| 90230-0045 | NON-RETURN VALVE 1 1/2" | 1-259 |
| 90230-0064 | CHECK VALVE, 6 MM HIGH TEMP. | 1-205, 2-33 |
| 90232-0103 | PH.CELL E3S-CT61-L-5M | 5-185, 5-189 |
| 90232-0104 | PH.CELL E3S-CT61-D-5M | 5-185, 5-189 |
| 90233-0027 | TUBE FUSE 16A, A070GRB16T13 J330012 | 9-17 |
| 90233-0028 | TUBE FUSE 10A, A070GRB10T13 G330010 | 9-17 |
| 90233-0029 | TUBE FUSE 25A, A070GRB25T13 L330014 | 8-31, 9-17 |
| 90235-0151 | NON-RETURN VALVE, 534 098 110 0 | 6-51 |
| 90235-0206 | QUICK EXHAUST VALVE, SEU-1/8 | 7-143 |
| 90235-0259 | VALVE | 1-325 |
| 90235-0844 | THROTTLE CHECK VALVE, M5, MANUAL, 6MM | 1-181 |
| 90235-0846 | THROTTLE CHECK VALVE G1/8", MANUAL, 6 | 1-47, 1-49, 1-51, 2-209, 5-11, 5-13, 5-15 |
| 90235-0847 | THROTTLE CHECK VALVE, G1/4", MANUAL,6 | 1-79, 5-19 |
| 90237-0128 | LOCK CYLINDER, 1109-SU125 | 2-203, 2-211, 2-215, 2-221, 2-223, 2-227, 2-235, 6-69, 6-71, 6-75, 7-151, 7-159, 7-163, 7-167, 7-169 |
| 90237-0153 | LOCK HOUSING, 1121-U26-0B | 2-203, 2-211, 2-215, 2-221, 2-223, 2-227, 2-235, 6-69, 6-71, 6-75, 7-151, 7-159, 7-163, 7-167, 7-169 |
| 90237-0157 | LOCK BOLT, 1000-230 | 6-79 |
| 90237-0165 | LATCH | 2-203, 2-227, 2-235, 7-151 |
| 90237-0175 | TURNING HANDLE, 1125-U185-0A | 6-69, 6-71, 6-75, 7-151, 7-159, 7-163, 7-167, 7-169 |
| 90237-0176 | TURNING HANDLE, 1125-U190-A | 2-203, 2-211, 2-215, 2-221, 2-223, 2-227, 2-235 |
| 90237-0319 | LOCK HOUSING, 1000-U134 | 1-239, 1-313, 1-315, 1-339, 1-341, 6-79 |
| 90237-0320 | LOCK HOUSING, 1000-U136 | 6-79 |
| 90237-0322 | LOCK GASKET, 1000-U137 | 6-79 |
| 90237-0323 | LOCK O-RING, 1000-24 | 1-239, 1-313, 1-315, 1-339, 1-341, 6-79 |
| 90237-0335 | LOCKING CATCH | 1-239, 1-313, 1-315, 1-339, 1-341 |
| 90237-0337 | LOCK HANDLE FOR 90237-319 | 1-239, 1-313, 1-315, 1-339, 1-341 |
| 90239-0487 | REAR, CLEVIS, MINI-ISO 20-25 | 5-89, 5-91 |
| 90239-0489 | ROD END, CLEVIS WITH AXLE M6X1,25 | 1-47, 1-49, 1-51, 1-55 |
| 90239-0491 | ROD END, BALL JOINT EYE, MINI-ISO M6 | 7-91 |
| 90240-0119 | BEAR. BUSHING WITHOUT FL | 3-11, 3-23 |
| 90240-0146 | FLANGE BUSHING, 15X21X20 MM | 1-271, 1-273 |
| 90240-0165 | FLANGE BUSHING, 12X16X10 MM | 4-45, 4-47 |
| 90240-0172 | FLANGE BUSHING, 8X12X10 MM | 1-93, 1-95, 1-97, 1-99, 1-101, 1-103, 1-105, 1-107, 1-109, 1-111, 1-115, 1-117, 1-119, 1-121, 1-123, 1-133, 1-135, 1-137, 1-153, 1-155, 1-157, 1-159 |
| 90240-0180 | FLANGE BUSHING 10X14X15MM | 4-173, 4-175, 9-19, 9-21, 9-23, 9-25 |
| 90240-0221 | FLANGE BUSHING, 20X25X14 MM | 7-123 |
| 90240-0261 | FLANGE BUSHING, 12X14X9 MM | 4-45, 4-47, 4-49 |
| 90240-0289 | FLANGE BUSHING, 10X12X6 MM | 4-45, 4-47 |
| 90240-0293 | FLANGE BUSHING, 25X28X21 MM | 1-75, 1-77 |
| 90240-0315 | SPHER. BEARING, 30X47X22 PLASTIC MM | 2-245 |
| 90242-0126 | O-RING 82,27X1,78 MM | 1-57, 1-59 |
| 90242-0222 | O-RING 45,36X3,53 MM | 2-41 |
| 90242-0223 | O-RING 47,35X1,78 MM | 2-41 |
| 90242-0224 | O-RING 44,17X1,78 MM | 2-41 |
| 90242-0270 | O-RING 82,27X1,78 MM | 5-139, 5-141, 5-143 |
| 90242-0271 | O-RING 63,22X1,78 MM | 5-139, 5-141, 5-143 |
| 90243-0112 | FLOW METER | 2-189 |
| 90243-0245 | MEASURING INSTRUMENT | 1-193, 6-45 |
| 90257-0001 | FILTER PLUG ART.NO.8145-00-140 TYPE F14 | 8-69 |
| 90258-0031 | PIN, STRAIGHT SLOTTED SPRING FRP 3X20 | 1-23, 1-25 |
| 90259-0308 | CONN.TERM.K&M BK 25/3-PKZ0 | 8-35 |
| 90259-0309 | 3 POLE BUSBAR, K&M B3.1/4 | 8-35 |
| 90259-0313 | AUX. CONTACT K&M NHI21-PKZM0 | 8-35 |
| 90261-0033 | PLUG, BLIND, PLASTIC GPN300F182 | 2-161, 2-163, 2-175, 2-177 |
| 90261-0048 | SQUARE PLUG GPN 260/Q2525 | 9-7, 9-9, 9-13, 9-15 |
| 90261-0057 | PLUG, BLIND, PLASTIC | 2-67 |
| 90261-0069 | PLUG, BLIND, PLASTIC, NO. 055-0615 | 6-55, 6-57 |
| 90261-0070 | PLASTIC PLUG SS 0082.31 | 2-9 |
| 90266-0019 | PIPE | 4-11, 4-13, 4-15, 4-17, 4-19, 4-21 |
| 90266-0165 | BRASS PIPE | 4-11, 4-13, 4-15, 4-17, 4-19, 4-21, 4-33, 4-35 |
| 90274-0042 | PRESSURE GUARD, 200 KPA | 6-87, 6-89 |
| 90274-0056 | PRESS.SWITCH 1-12BAR, PEV-1/4-B-SA22358 | 6-37 |
| 90274-0082 | FLOW SWITCH, 2 - 3 L/MIN | 6-43 |
| 90274-0084 | PRESSURE GUARD, 1800 KPA | 2-83 |
| 90274-0103 | PRESSURE GUARD PEV-1/4-B (10773 | 2-49 |
| 90277-0035 | FILTER / DFU 9933-05-A | 7-139, 7-141 |
| 90277-0045 | FILTER / 9900-05-BK | 2-49 |
| 90277-0046 | FILTER / 9933-05-101 | 2-49 |
| 90277-0323 | FILTER HOUSING / ART.NO 95S6-1/4 S 5430 | 1-207 |

| Part No | Description | Page No |
|---|---|---|
| 90277-0324 | FILTER CARTRIDGE 050-11-A | 1-207 |
| 90286-0013 | GREASE NIPPLE STRAIGHT, H1 M6X1 2346 | 5-11, 5-13, 5-15 |
| 90287-0075 | SCREW SLOT. PAN HEAD LKCS M6X12 | 2-117, 2-209 |
| 90287-0106 | SCREW SPRINGLOAD. SLOTTED HEAD M10X21 | 7-95 |
| 90287-0112 | SCREW SPRINGLOAD. SLOTTED HEAD M8X16 | 1-75, 1-77, 4-7, 4-15, 4-21, 4-45, 4-47, 5-93, 5-95, 7-93 |
| 90287-0124 | SCREW PAN HEAD MSCS M4X12 NYLON | 1-279, 1-281, 7-53 |
| 90287-0148 | SCREW SPRINGLOAD. SLOTTED HEAD M5X12 | 4-73, 4-75 |
| 90287-0159 | SCREW, SOCK.SET DOGPOINT M6X16 | 2-33 |
| 90287-0163 | SCREW SPRINGLOAD. SLOTTED HEAD M6X14 | 7-127 |
| 90287-0175 | SCREW M6S M3X12 A480 | 7-41, 7-43 |
| 90287-0196 | THREADED ROD MHGS M8 SS | 5-117, 5-119 |
| 90287-0261 | SCREW MC6S M5X55 A270 | 2-75, 2-77 |
| 90287-0264 | SCREW | 2-73 |
| 90287-0265 | SCREW, HEX.SOCK.HEAD SHOULD. M6X8 | 7-127 |
| 90287-0334 | SCREW SPRINGLOAD. SLOTTED HEAD M8X16 | 7-87 |
| 90296-0009 | SILICONE GREASE DOW CORNING 150 GR. | 9-17 |
| 90296-0051 | PASTE | 7-113 |
| 90296-0068 | SHELL ALVANIA GREASE EP 2 | 5-23, 5-29, 5-43 |
| 90296-0072 | SHELL OMALA OIL 150, CAN 20 LITRES | 5-183 |
| 90303-0011 | PROTECTIVE GOGGLES | 9-33 |
| 90303-0012 | PROTECTIVE GLOVES | 9-33 |
| 90303-0013 | APRON | 9-33 |
| 90304-0020 | RECIPIENTE | 6-39 |
| 90304-0307 | ATTACHMENT PIPE | 1-267 |
| 90319-0013 | POLYESTER-SILKROPE 4MM 3900N, 102079 | 7-7 |
| 90321-0102 | PUMP, MG209XTS37 | 2-41 |
| 90321-0116 | PUMP GRUNDFOS CHI 2-60 | 6-37 |
| 90321-0128 | CHEM. PUMP 081778 | 2-37 |
| 90321-0134 | CIRC. PUMP TCB25-6LV.230 HZ 50 | 1-265 |
| 90321-0135 | CIRC. PUMP TMB 40/2 230V60HZ | 1-265 |
| 90326-0012 | PROTECTIVE COVER, T31A4618 | 1-75, 1-77, 1-179, 1-205, 1-265, 1-271, 1-273, 2-17, 2-19, 6-33, 7-113 |
| 90326-0020 | PLUG, FEMALE YELLOW CR-AL | 1-75, 1-77, 1-179, 1-189, 1-205, 1-233, 1-243, 1-265, 1-271, 1-273, 2-17, 2-19, 5-131, 5-133, 6-33, 7-113, 8-5, 8-7 |
| 90326-0022 | PLUG, MALE YELLOW CR-AL | 1-211, 1-233, 1-279, 1-281, 1-349, 1-351, 5-131, 5-133, 6-33 |
| 90326-0051 | THERMOCOUPLE, 12826-33 | 1-189, 1-193 |
| 90326-0053 | THERMOCOUPLE, 12826-35 | 1-205, 1-271, 1-273, 8-5, 8-7 |
| 90326-0054 | THERMOCOUPLE, CR-AL STD.GR, 12826-36 | 7-113 |
| 90326-0057 | THERMOCOUPLE, CR-AL | 1-179, 1-265, 6-33 |
| 90326-0060 | THERMOCOUPLE, CR-AL | 1-233 |
| 90326-0089 | THERMOCOUPLE, 5110-089-000 | 1-179, 1-243 |
| 90328-0024 | SILENCER G3/8" | 1-317, 1-319, 1-321, 2-51, 6-95, 7-143, 7-147 |
| 90328-0025 | SILENCER G1/2" | 6-99 |
| 90328-0026 | SILENCER G1/4" | 1-241, 1-257, 7-115, 7-145 |
| 90328-0047 | SILENCER G1/8" | 1-243, 1-317, 1-319, 1-321, 2-51, 6-95, 7-143, 7-147 |
| 90330-0004 | NIPPLES,HEXAGON,EXT.R-THREAD R3/4"-R3/4" | 6-29, 6-33 |
| 90330-0011 | SLEEVE, REDUCTION, INT, R-2023/8X1/4 | 1-245 |
| 90330-0014 | ELBOW, 90 INT. THREAD, R-222R1 | 6-47, 6-55, 6-57 |
| 90330-0020 | ELBOW, 90 INT. THREAD, R-2221/2 | 1-193, 6-101 |
| 90330-0021 | NIPPLES, EXT. THREAD. R-207R1/2 | 2-21, 2-27, 6-9, 6-45 |
| 90330-0022 | SLEEVE, REDUCTION, INT, R-202 3/4X1/2 | 1-193 |
| 90330-0026 | PLUG, EXT. G-THREAD, G1/4 | 2-9, 5-183, 6-37 |
| 90330-0028 | NIPPLES, EXT. THREAD. R-207R3/8 | 2-21 |
| 90330-0036 | BUSHING, INT/EXT. THR. RP1/8-RP1/2 | 6-45 |
| 90330-0042 | BUSHING, INT/EXT. THR. R3/8-RP1/4 | 6-9, 6-33 |
| 90330-0043 | NIPPLES, EXT. THREAD. R-207R1/4 | 1-265, 2-21, 2-191, 2-193, 6-33, 6-37, 6-51 |
| 90330-0045 | NIPPLES, EXT. THREAD. R-209 KR11/2- KR1 | 6-47 |
| 90330-0047 | SLEEVE, REDUCTION, INT, R-2021/2X3/8 | 2-21 |
| 90330-0048 | BUSHING, INT/EXT. THR. R1/2-RP3/8 | 1-267, 2-21, 6-87, 6-89 |
| 90330-0049 | T-PIPE, INT. THREAD, R-221R1/2 | 1-185, 1-193, 2-21, 6-45, 6-101 |
| 90330-0054 | SLEEVE, INT. THREAD, NO. R-201R1/2 | 2-27 |
| 90330-0056 | NIPPLES, EXT. THREAD. R-207 KR11/2 | 6-43 |
| 90330-0057 | ELBOW, 90 INT. THREAD, R-222R11/2 | 6-43 |
| 90330-0066 | PLUG, EXT. G-THREAD, G1/8 | 1-75, 1-77, 1-243 |
| 90330-0080 | NIPPLES, EXT. THREAD. R3/4-R1/2 | 6-37, 6-45 |
| 90330-0085 | BUSHING, INT/EXT. THR. R1/2-RP1/4 | 2-21 |
| 90330-0093 | NUT, HEXAGON, G1/2 | 2-191, 2-193 |
| 90330-0133 | NIPPLES, EXT. THREAD. R-209 1-1/2 | 1-265 |
| 90330-0144 | T-PIPE, INT. THREAD, 3/8MMO-SS | 2-17, 2-19 |
| 90330-0171 | ELBOW, 90 INT/EXT, 1/2NPT | 2-31 |
| 90330-0172 | ELBOW, 90 INT/EXT, SS-6-SE | 1-245, 2-17, 2-19 |
| 90335-0024 | COMP. SPRING 22250, 1,25X13,75X27 | 4-73, 4-75 |
| 90335-0025 | COMP. SPRING 22010, 1X11X26 | 7-59, 7-105 |
| 90335-0036 | COMP. SPRING 22450, 1,6X14,1X24 | 5-123, 5-125, 5-127 |
| 90335-0089 | TENSION SPRING 41490, 0,9X10X23 | 1-305, 1-307, 7-63 |
| 90335-0120 | TENSION SPRING 42010, 1,4X15X43,3 | 7-113 |
| 90337-0315 | FILTER INSERT / MCS 4463 | 1-241, 1-245 |
| 90342-0022 | BELLOWS | 1-187 |
| 90342-0024 | RUBBER BELLOWS, 100X100 MM | 2-129 |
| 90344-0073 | TOOTHED WHEEL | 2-245 |
| 90344-0078 | PULLEY | 7-121 |
| 90345-0006 | STANDING BEARING, TYPE SY 20 TF | 7-173 |
| 90347-0004 | VIBRATION DAMPER D=30 TH=M8 H=17 H2=21MM | 1-293 |

| Part No | Description | Page No |
|---|---|---|
| 90347-0007 | VIBRATION DAMPER | 2-11 |
| 90347-0009 | FLOOR PLATE, NO 1256730 | 2-175, 2-177, 2-179 |
| 90347-0034 | VIBRATION DAMPER | 1-313, 1-315, 1-339, 4-7 |
| 90347-0039 | DAMPER | 1-21, 1-27 |
| 90347-0054 | ROTARY DASHPOT, S-CRD-P277 | 1-299, 1-301 |
| 90347-0144 | VIBRATION DAMPER, NO. RA 40EM-A | 1-183 |
| 90358-0091 | REDUCING NIPPLE | 6-33 |
| 90360-0020 | STEAM TRAP / MK36/51 3/8 INCH | 1-243 |
| 90360-0305 | FLOAT, ART NO 10739920 | 1-185 |
| 90411-0001 | INSULATING MAT | 1-205 |
| 90411-0005 | 90411-0005 1200MM SERIE 21 89/154X30 | 1-189 |
| 90411-0020 | INSULATING TUBE | 2-187 |
| 90415-0032 | FILTER / 3-02-00-1 1/2" | 6-43 |
| 90415-0033 | OIL FILTER REFILLING UC-HP-1229-25 | 2-83 |
| 90415-0052 | FILTER ART NO 12565 C-340-6E FOTVENTI EP | 2-37, 2-39 |
| 90415-0065 | FILTER | 6-9, 6-33 |
| 90418-0045 | ADAPTER, INT. CONN. NO. 7272CU/22-G3/4 | 6-29 |
| 90418-0057 | ADAPTER, EXT. CONN. NO. 7276CU / 15-G1/2 | 6-29 |
| 90418-0062 | T-PIPE, REDUCTION, INT, NO. 7130-22X15X2 | 6-29 |
| 90422-0037 | HEAT EXCHANGER | 6-29 |
| 90426-0003 | HAND SHOWER | 2-195 |
| 90432-0024 | ELECTROMAG. POWDER BRAKE, FAT50/24 VDC | 7-173 |
| 90450-0281 | DOUBLE ACTING,PROF.CYL 32-80 | 1-191 |
| 90450-0306 | DOUBLE ACTING, MINI-ISO, CYL. 12-25 | 7-91 |
| 90450-0504 | DOUBLE ACTING, PROFILE, CYL 50-25 | 5-19 |
| 90450-0669 | SENSOR, BRACKET SERIES 168 | 1-191 |
| 90450-0725 | ROD END, CLEVIS WITH AXLE M6 | 1-63, 1-181 |
| 90457-0030 | INSERT, MULTI HOLE, EK155M4X9 | 5-131, 5-133 |
| 90457-0047 | SENSOR 2750-1-5111-1 W.ADAPTER PNP | 1-191 |
| 90457-0049 | TERMINAL BLOCK WDK 2.5V, 102230 | 1-213, 1-283, 1-347, 1-355, 2-59, 2-97, 2-141, 2-145, 6-85, 7-55, 8-19 |
| 90457-0056 | FAN 7450 ES | 8-9, 8-11 |
| 90457-0057 | GRID FOR FAN LZ36 | 8-9, 8-11 |
| 90457-0100 | ACCUMULATOR CRVZS-2 | 7-139, 7-141 |
| 90457-0192 | WASHER PLAIN ROUND, 6,5/18, H=1,5 | 7-107 |
| 90457-0196 | KEY SAF.SW. TZ2RE024PG RC1635 | 2-99, 2-135 |
| 90457-0871 | DOUBLE ACTING, MINI-ISO, CYL. 16-25 | 1-63 |
| 90457-0922 | ELBOW PIPE JOINT, EXT.THREAD, D=6MM M5 | 5-79, 5-81 |
| 90457-0937 | SCREW MC6S M3X40 A480 | 7-173 |
| 90457-1038 | DOUBLE ACTING, COMPACT, 32-25 | 1-47, 1-49, 1-51 |
| 90458-0048 | RETAINING RING FOR HOLE, 62X2 MM | 5-183 |
| 90458-0058 | SCREW M5X60 A280 | 4-61, 4-69 |
| 90458-0072 | SCREW ISO 7380 S M6X12 A2 | 2-157, 2-161, 2-163, 2-175, 2-177, 8-5, 8-7 |
| 90458-0073 | WASHER 6,4/30, H=1,5 | 2-157, 2-161, 2-163, 2-175, 2-177, 3-13 |
| 90458-0135 | MALE PLUG, COD.220-0397 | 5-131, 5-133 |
| 90458-0136 | FEMALE PLUG, COD 220-0381 | 5-131, 5-133 |
| 90458-0165 | CABLE, SICK DOL-0803-G05M | 7-41, 7-43 |
| 90458-0200 | PEROX. SAFETY VALVE, NO. 527-430 1/2X3/4 | 1-267 |
| 90458-0201 | FLUID AUT. FEEDER, ALINOX 1/2 46.04.00 | 1-267, 6-9 |
| 90458-0254 | PRECISION PRESSURE REGULATOR,LRP-1/4-0,7 | 2-49 |
| 90458-0256 | PROX.SWITCH IIA 3010-BPKG/6M | 2-67 |
| 90458-0258 | TRANSFORMER, 220VAC/6-9-12VAC | 7-53 |
| 90458-0274 | DISC FOR COUPLING, HUCO 236.50T | 2-33 |
| 90458-0292 | BASE, KT70-1001 | 2-159, 2-173 |
| 90458-0293 | LIGHT ELEMENT, RED, KL70-401R | 2-159, 2-173 |
| 90458-0294 | LIGHT ELEMENT, YELLOW, KL70-401Y | 2-159, 2-173 |
| 90458-0295 | LIGHT ELEMENT, BLUE, KL70-401L | 2-159, 2-173 |
| 90458-0302 | SIREN WITH ADJUSTABLE VOLUME KS 70-3004 | 2-159, 2-173 |
| 90458-0306 | CABLE GLAND, M16X1,5, NO.5311 1010 | 1-211, 1-279, 1-281, 1-329, 1-345, 1-349, 1-351, 2-55, 2-57, 2-95, 2-139, 2-143, 6-81, 6-83, 7-41, 7-43, 7-53 |
| 90458-0307 | CABLE GLAND, M20X1,5, NO.5311 1020 | 1-37, 1-179, 1-211, 1-253, 1-265, 1-279, 1-281, 1-345, 1-349, 1-351, 2-55, 2-57, 2-61, 2-93, 2-95, 2-99, 2-105, 2-107, 2-131, 2-135, 2-139, 2-143, 2-247, 6-81, 6-83, 7-51, 7-53, 7-107, 8-61, 8-63 |
| 90458-0308 | CABLE GLAND, M25X1,5, NO.5311 1030 | 1-19, 1-183, 1-189, 1-279, 1-281, 2-93, 2-105, 2-107, 2-131, 6-25, 6-27, 6-37, 6-49, 6-81, 6-83 |
| 90458-0309 | CABLE GLAND, M32X1,5, NO.5311 1040 | 1-279, 1-281, 1-345, 1-349, 1-351, 2-55, 2-57, 2-61, 2-95, 2-105, 2-107, 2-135, 2-139, 6-81, 6-83, 7-53 |
| 90458-0314 | CABLE GLAND, M16X1,5, NO.5311 1110 | 6-15 |
| 90458-0315 | CABLE GLAND, M20X1,5, NO.5311 1120 | 6-65, 6-67 |
| 90458-0322 | NUT, M16X1,5 | 1-329, 7-53 |
| 90458-0323 | NUT, M20X1,5 | 1-71, 1-73, 1-329, 7-53, 7-153, 7-157, 8-61, 8-63 |
| 90458-0324 | NUT, M25X1,5 | 1-329 |
| 90458-0325 | NUT, M32X1,5 | 1-329, 7-53 |
| 90458-0341 | THERMOCOUPLE, 5130050-001 | 1-75, 1-77 |
| 90458-0407 | GLAND W/O INSERT M25 NORMAL | 4-9 |
| 90458-0408 | GLAND W/O INSERT M32 NORMAL | 7-53 |
| 90458-0413 | HOSE GLAND W/O INSERT M20 NORMAL | 1-329 |
| 90458-0422 | GLAND W/O INSERT M20 EXTENDED | 6-17 |
| 90458-0423 | GLAND W/O INSERT M32X1,5 EXTENDED | 5-131, 5-133 |
| 90458-0427 | HOSE GLAND W/O INSERT M16 EXTENDED | 1-345 |
| 90458-0429 | HOSE GLAND W/O INSERT M20 EXTENDED | 1-71, 1-73, 1-179, 1-211, 1-329, 1-341, 1-349, 1-351 |
| 90458-0430 | HOSE GLAND W/O INSERT M20 EXTENDED | 7-153, 7-157 |
| 90458-0431 | HOSE GLAND W/O INSERT M25 EXTENDED | 1-329 |


Machine Type Group Description Page No

| Part No | Description | Page No |
|---|---|---|
| 90458-0433 | HOSE GLAND W/O INSERT M32 EXTENDED | 1-329 |
| 90458-0434 | HOSE GLAND W/O INSERT M40 EXTENDED | 2-209 |
| 90458-0436 | GLAND, EXTENDED WITH INSERT, M16X1,5 | 6-17 |
| 90458-0438 | GLAND, EXTENDED WITH INSERT, M20X1,5 | 7-89 |
| 90458-0440 | GLAND, EXTENDED WITH INSERT, M25X1,5 | 1-19, 1-183, 1-253, 7-121 |
| 90458-0451 | HOSE GLAND EMC M32 EXTENDED | 5-131, 5-133, 5-135, 5-137 |
| 90458-0463 | GLAND, LOCK NUT, M32X1,5 | 7-53 |
| 90458-0506 | RETAINING RING FOR BORE DIN 472 26 A2 | 7-87 |
| 90458-0565 | REFLECTOR, PL20A | 7-29, 7-149 |
| 90458-0601 | CONTRAST SCANNER, KT15W-P2110S01 | 4-9 |
| 90458-0602 | CONTRAST SCANNER, KT15W-P2110S01 | 7-109 |
| 90458-0603 | CONNECTOR FEMALE 5 PINS | 7-109 |
| 90458-0639 | VARILIP 20X30X7 MM | 1-39, 1-41, 1-61, 1-63 |
| 90458-0640 | O-RING 88,62X1,78 MM | 1-13, 1-15 |
| 90458-0751 | BUSHING,INT./EXT.G-THREAD G3/4"-G1/2" | 1-267 |
| 90458-0806 | FLOW METER, NO. XF DF23-DN32 | 1-229, 1-231 |
| 90458-0921 | FILTER SP 122-200 | 6-87, 6-89 |
| 90458-1013 | BELLOW COUPLING, 6X6 MM | 7-71, 7-73 |
| 90458-1076 | L-SHAPED CONNECTOR CABLE 933 235-042 | 7-7, 7-41, 7-43, 7-65 |
| 90458-1092 | PROPORTIONAL VALVE 0 - 10V/0-6 BAR | 1-313, 1-315, 2-127 |
| 90458-1140 | FERRITE, RI-26-28-13 | 8-27 |
| 90458-1141 | FERRITE, RI-16-28-9 | 8-15, 8-23, 8-27 |
| 90458-1155 | ENLARGING SLEEVE, 5210 4452 | 7-89 |
| 90458-1162 | FILTER 6 A 250 VAC, 6FC10 | 8-9, 8-11 |
| 90458-1173 | MULTI DIAMETER MODULE, CM 30W40 | 8-61, 8-63 |
| 90458-1174 | MULTI DIAMETER MODULE, CM 20W40 | 8-61, 8-63 |
| 90458-1179 | FRAME CF 32 | 8-61, 8-63 |
| 90458-1194 | MONOSTABLE VALVE 5/2 | 1-317, 1-319, 1-321, 2-51, 6-95, 7-143, 7-147 |
| 90458-1200 | VALVE OPEN IN MID-POSITION 5/3 | 2-51 |
| 90458-1202 | VALVES 2X3/2, CLOSED | 1-317, 1-319, 1-321, 2-51, 7-147 |
| 90458-1203 | VALVE 2X3/2 1X OPEN 1X CLOSED | 7-143 |
| 90458-1204 | BASIC SUB-BASE 4 VALVES, CDVI5.0-GB4-MP | 6-95 |
| 90458-1205 | BASIC SUB-BASE 8 VALVES, CDVI5.0-GB8-MP | 1-317, 1-319, 1-321, 2-51, 7-143, 7-147 |
| 90458-1206 | EXP. SUB-BASE 2 VALVES, CDVI5.0-EB | 1-317, 1-319, 1-321, 2-51, 6-95, 7-143, 7-147 |
| 90458-1207 | SEALING, STANDARD | 1-317, 1-319, 1-321, 2-51, 6-95, 7-143, 7-147 |
| 90458-1208 | SEALING, CHANNEL 1 BLOCKED | 1-317, 1-319, 1-321, 2-51, 6-95, 7-143 |
| 90458-1212 | LEFT ENDPLATE INCL. 10M CABLE | 1-317, 1-319, 1-321, 2-51, 6-95, 7-143, 7-147 |
| 90458-1213 | RIGHT ENDPLATE INTERNAL PILOT AIR | 2-51 |
| 90458-1214 | RIGHT ENDPL EXT. PILOT AIR,CDVI5.0-EPR-S | 1-317, 1-319, 1-321, 6-95, 7-143, 7-147 |
| 90458-1215 | COVER PLATE FOR EMPTY VALVE POSITION | 1-317, 1-319, 1-321, 2-51, 6-95, 7-143, 7-147 |
| 90458-1307 | BLIND PLUG CIRCULAR, M16X1,5 514GFK/216 | 1-211, 1-279, 1-281, 1-345, 1-349, 1-351, 2-55, 2-57, 2-95, 2-139, 2-143, 6-81, 6-83, 7-53 |
| 90458-1308 | BLIND PLUG CIRCULAR, M20X1,5 514GFK/220 | 1-279, 1-281, 1-329, 1-345, 1-349, 1-351, 2-55, 2-57, 2-95, 2-139, 2-143, 2-247, 6-81, 6-83, 7-53 |
| 90458-1309 | BLIND PLUG CIRCULAR, M25X1,5 514GFK/225 | 1-329, 2-143 |
| 90458-1310 | BLIND PLUG CIRCULAR, M32X1,5 514GFK/232 | 1-345, 2-55, 2-57, 2-95, 2-139, 2-143, 7-53 |
| 90458-1404 | FLANGE BUSHING, 12X16X16 MM | 4-43, 5-139, 5-141, 5-143 |
| 90458-1477 | CONNECTOR 6-1/8 NPT, EXT. TAPERED | 2-63 |
| 90458-1478 | BALL VALVE SS-43T6MM-SH-10147 | 2-63 |
| 90458-1531 | ACTUATOR, N.O., PA 38/100 | 2-111 |
| 90458-1537 | HOLDER, FOR INDUCTIVE SENSORS | 2-111 |
| 90458-1541 | DIAPHRAGM, NA 38/25 PFTE | 2-111 |
| 90458-1595 | CONNECTION, BKS-S 33M-00 | 2-17, 2-19 |
| 90458-1651 | EMERGENCY STOP, ZB4-BS-844 ZB4-BZ-104 | 1-349, 1-351, 2-213, 2-217, 7-153, 7-171, 8-47 |
| 90458-1704 | BALL BEARING, 15X35X11 MM | 1-13, 1-15, 1-29, 1-31, 1-33, 1-35, 1-37, 1-39, 1-41, 1-57, 1-59, 1-61 |
| 90458-1840 | CAPACITIVE SENSOR CM18-12NPP-KC1 | 6-15 |
| 90458-1849 | CONN. STR., 6-R1/8, EXT. THREAD | 1-325 |
| 90458-1963 | STRAIGHT COUPLING D=8-G3/8" | 6-9 |
| 90458-1977 | REFRACTOMETER SET DA15FC15A DFTP A | 2-63 |
| 90458-2006 | CONN. STR., 12-R1/2 | 1-193 |
| 90458-2071 | RETAINING RING FOR BORE DIN 472 24 A2 | 1-53 |
| 90458-2138 | SCREW M6S M12X120 A280 | 9-3 |
| 90458-2241 | PRESSURE SWITCH 0,5-10 BAR ADJUSTABLE | 1-207 |
| 90458-2264 | PRESSURE REGULATOR ARC-30-1/2" | 1-245 |
| 90458-2284 | COMP. SPRING 22410, 1,6X11,6X27 | 7-117 |
| 90458-2301 | SPRING, YELLOW SPRING G40X115 | 3-15 |
| 90458-2303 | CLAMPING ELEMENT WITH SLEEVE, 38X50 MM | 3-27 |
| 90458-2305 | COMP. SPRING D22280 | 3-11, 3-23 |
| 90458-2306 | TIMING BELT ATL10 2020X50 MM | 3-9 |
| 90458-2329 | HOSE, SILICONE, 50 SHORE, 9/13 MM | 7-77 |
| 90458-2333 | VALVE, M8A-V4LQ-KZ-11AO-SS PNEUM. OPER. | 2-39 |
| 90458-2358 | FLOAT, BTL2-S-4414-4Z | 2-17, 2-19 |
| 90458-2362 | BALL BEARING, 30X62X16 MM | 5-183 |
| 90458-2466 | MOTOR 3GVA071002-CSC-M2VA71B2 | 2-33 |
| 90458-2554 | STERILE GRADE MEMBRANE FILTER 0,2µM | 1-245 |
| 90458-2602 | BULKHEAD CONNECTOR, 12 MM | 2-197 |
| 90458-2633 | HANDLE, 1045-05 | 2-157 |
| 90458-2738 | THROTTLE CHECK VALVE, GRLA-1/8-B | 1-325 |
| 90458-2752 | PLASTIC HOSE, 3/4"X1" | 2-113 |
| 90458-2794 | SAFETY SENSOR, NON-CONTACT EVA | 1-21, 1-27, 1-71, 1-73, 7-89, 7-155, 7-159, 7-169 |
| 90458-2837 | PLUG SOCKET, KMEB-1-24-5-LED | 6-99, 7-145 |
| 90458-2845 | SCREW,HEXAGON HEAD M6S ISO 4017 M10X45 | 2-157, 2-161, 2-163 |
| 90458-2850 | HOSE CLIP , 51 MM | 6-43 |
| 90458-2890 | CONNECTOR, 21N-50N12N133NE | 1-81 |

| Part No | Description | Page No |
|---|---|---|
| 90458-2892 | CONNECTOR, 11 N-50-3-31/133 NE | 1-81 |
| 90458-2893 | SLEEVE, 78 Z-0-3-4 | 1-81 |
| 90458-2895 | COAXIAL CABLE RG 400/U BROWN | 1-81 |
| 90458-2911 | LOCKING HANDLE, M6/M | 9-7, 9-9, 9-13, 9-15 |
| 90458-2920 | BUSHING INSERT, JUM-01-16 | 5-11, 5-13, 5-15 |
| 90458-2954 | ELBOW PIPE JOINT, EXT.THREAD, D=4MM M5 | 7-91 |
| 90458-2956 | ELBOW PIPE JOINT, EXT.THREAD, D=6MM-G1/8 | 1-79, 1-233, 1-243, 1-277, 2-25, 2-37, 2-39, 5-11, 5-13, 5-15 |
| 90458-2957 | ELBOW PIPE JOINT, EXT.THREAD, D=6MM-G1/4 | 1-257 |
| 90458-2959 | ELBOW PIPE JOINT, EXT.THREAD,D=12MM-G1/4 | 2-127 |
| 90458-2960 | ELBOW PIPE JOINT, EXT.THREAD,D=12MM-G3/8 | 6-101 |
| 90458-2963 | ELBOW PIPE JOINT, EXT.THREAD,D=14MM-G3/8 | 6-101 |
| 90458-2964 | ELBOW PIPE JOINT, EXT.THREAD, D=8MM-G1/8 | 6-53 |
| 90458-2965 | ELBOW PIPE JOINT, EXT.THREAD,D=14MM-G1/2 | 6-99 |
| 90458-2969 | PRESSURE GAUGE, MAP-40-1-1/8-EN | 2-49 |
| 90459-0075 | HINGE, 1056-U30 | 2-209 |
| 90459-0094 | O-RING 133,07X1,78 MM | 1-13, 1-15 |
| 90459-0106 | SPRAY NOZZLE 103 DEG B1/4 HH - SS 14W | 1-193 |
| 90459-0173 | AIR GUN ASSEMBLY, CEJN SERIE 208 | 2-125 |
| 90459-0180 | FLOW SWITCH, 0,1 - 2,5 L/MIN | 2-183, 2-185, 6-33 |
| 90459-0181 | PIPE SURFACE THERM., PT-100 -50° -+120°C | 6-33 |
| 90459-0182 | INTERFACE CONNECTOR FOR TMCC2 | 8-55 |
| 90459-0205 | QUICK EXHAUST VALVE, SE-1/4-B | 7-115 |
| 90459-0363 | COOLING UNIT, KB40A0721.03 | 8-69 |
| 90459-0462 | CANISTER LY 500-10 | 2-39 |
| 90459-0472 | KEY SAF.SW. AZ 16 02ZVRK-M20-2152-2254 | 1-341 |
| 90459-0586 | SWIVEL FLANGE 50 | 1-39, 1-41, 1-79 |
| 90459-0587 | DOUBLE ACTING, PROFILE, CYL 50-50 | 1-79 |
| 90459-0689 | PRESSURE TRANSMITTER 0 - 0,6 BAR | 1-17 |
| 90459-0698 | PLUG, EXT. G-THREAD, G1/8 | 1-317, 1-319, 1-321, 2-51, 6-95, 7-143, 7-147 |
| 90459-0699 | BLANKING PLUG, CDVI5.0-B-G3/8 | 7-147 |
| 90459-0713 | DOUBLE ACTING, MINI-ISO, CYL 12-80 | 1-181 |
| 90459-0729 | HEXAGONAL PROTECTIVE CAP GPN 1000 | 1-197, 1-199 |
| 90459-0799 | SENSOR BRACKET SMBR-12 FOR CYL 12 | 1-181 |
| 90459-0802 | RADIAL SEAL 55X75X10 MM | 1-19 |
| 90459-0803 | O-RING 355,19X3,53 MM | 1-19 |
| 90459-0804 | MOTOR B3/B5 CE CODE: 159353 | 1-19 |
| 90459-0805 | BUSHING, 10X14X8 MM | 1-53 |
| 90459-0828 | BRIDGE CONNECTOR WQV 4/2, 105196 | 1-283 |
| 90459-0829 | PROX.SENSOR SMTO-4U-PS-K-LED-24 | 1-181 |
| 90459-0839 | DISTRIBUTION FRAME, ASBV 8 5-135/10M | 8-61, 8-63 |
| 90459-0871 | SEALING RING 18X30X7 MM | 1-75, 1-77 |
| 90459-0941 | QUICK COUPLING, PLCD 130-M8 | 2-191, 2-193 |
| 90459-0951 | TRANSDUCER, BTL5-A11-M0400-B-S32 | 2-17, 2-19 |
| 90459-0959 | DISTRIBUTOR BLOCK 1492-PD3163 | 8-9, 8-11 |
| 90459-0960 | QUICK COUPLING, PLCD 200-M8 | 2-191, 2-193 |
| 90459-0969 | COMP. SPRING A D22430, 1,6X11,6X58,5 | 5-73, 5-75, 5-77 |
| 90459-0997 | STRAIGHT COUPLING D=8-R1/4" | 6-9 |
| 90459-1000 | LIGHT FIXTURE, RL 70CV-136/230V 50HZ | 2-89, 2-91, 2-137 |
| 90459-1009 | RUBBER STRIP, 1025088988 | 2-9, 2-117 |
| 90459-1018 | ROD END,BALL JOINT EYE M10X1,25 | 1-53, 7-17 |
| 90459-1058 | FLANGE BUSHING, 25X28X11,5 MM | 1-63 |
| 90459-1126 | PLASTIC HOSE PVC TRANSPARENT, 8X11MM | 7-77 |
| 90459-1130 | EM. STOP XAL-K178F | 1-85 |
| 90459-1131 | SAFETY RELAY, E1T 0SEC | 8-23 |
| 90459-1147 | GEARS, WORM MOTOR VF30 F1-10 P63 B14 V6 | 2-245 |
| 90459-1148 | VARILIP 14X24X7 MM | 1-43, 1-45 |
| 90459-1174 | O-RING 75,87X2,62 MM | 1-75, 1-77 |
| 90459-1175 | O-RING 418X3,0 MM | 1-75, 1-77 |
| 90459-1189 | O-RING 56,87X1,78 MM | 1-181 |
| 90459-1226 | GEARS, WORM MOTOR VF 44P-10+BN71B 0.37KW | 1-37 |
| 90459-1234 | FLOW SWITCH, FS-3 SERIES/166703 | 6-13 |
| 90459-1235 | ANGLE SEAT VALVE, N.C. DN13 TYPE 2002 | 1-241 |
| 90459-1241 | ANGLE SEAT VALVE, TRI-CLAMP, N.C. DN20 | 1-257 |
| 90459-1254 | TUBE FUSE, 4A 500V | 9-17 |
| 90459-1297 | RESISTANCE FIXED, 120 OHM, 0,25 W | 1-229, 1-231, 1-331, 1-333 |
| 90459-1359 | FILTER 1 A, 250 VAC, FN 332-1/05 | 8-53 |
| 90459-1395 | SCREW HEX.SOCK.SET CONEPT.MS6SS M4X4 A2 | 1-79, 7-131 |
| 90459-1420 | PROPORTIONAL VALVE 0 - 10V/0-6 BAR | 1-207 |
| 90459-1424 | CONN. STR., 6-G1/8, EXT. THREAD | 1-209, 1-233, 2-39 |
| 90459-1425 | CONN. T-PIPE 8 | 2-39 |
| 90459-1427 | QUICK-RELEASE COUPLING, SS-QTM2-D-8M0-K2 | 2-39 |
| 90459-1430 | QUICK-RELEASE COUPLING, SS-QTM2-D-8M0-K4 | 2-39 |
| 90459-1458 | HOOD HAN 6 E 19 30 006 1540 | 6-17, 6-25, 6-27, 6-37 |
| 90459-1461 | HOUSING HAN 6 E 19 30 006 1255 | 2-93 |
| 90459-1501 | CABLE SEALING, 12023/I, ELFA. 44-625-78 | 4-9 |
| 90459-1507 | DOUBLE ACTING, ROUND, CYL 32-50 | 5-89, 5-91 |
| 90459-1536 | FLEXIBLE COUPLING DISC, 14 MM | 2-33 |
| 90459-1623 | O-RING 66,40X1,78 MM | 1-37 |
| 90459-1627 | O-RING 114,02X1,78 MM | 1-23, 1-25, 1-37, 1-57, 1-59, 1-61 |
| 90459-1650 | VARILIP 30X40X7 MM | 1-37 |
| 90459-1728 | SCREW ISO4029 M6X45 A4 | 1-47, 1-49, 1-51 |
| 90459-1733 | BELLOW COUPLING, 15X15 MM | 4-33, 4-35 |
| 90459-1736 | PURGE VALVE, 2RM-PG4L-SS | 6-37 |

| Part No | Description | Page No |
|---|---|---|
| 90459-1738 | MANDATORY ACTION SIGN ISO, READ MAINTENA | 8-23 |
| 90459-1852 | SHUT OFF VALVE, MS6-EM1-1/2 | 6-99 |
| 90459-1853 | FILTER REGULATOR, MS6-LFR-1/2-D7-ERV-AS | 6-99 |
| 90459-1854 | SHUT OFF VALVE, MS6-EE-1/2-10V24 | 6-99 |
| 90459-1855 | SOFT START VALVE, MS6-DL-1/2 | 6-99 |
| 90459-1856 | DISTRIBUTOR, MS6-FRM-1/2 | 6-99 |
| 90459-1858 | BRACKET, MS6-WP | 1-207, 6-99 |
| 90459-1859 | BRACKET, MS6-MV | 6-99 |
| 90459-1861 | X-SEAL 6,07X2,62 MM | 4-85 |
| 90459-1908 | REAR CLEVIS FOOT MOUNTING, LBN-20/25 | 7-123 |
| 90459-1917 | CONTACT BLOCK ZBE-102 NC | 1-349, 1-351, 2-213, 2-217, 7-153, 7-171, 8-47 |
| 90459-1953 | DOUBLE ACTING, MINI-ISO, CYL. 25-10 | 7-17, 7-123 |
| 90459-2096 | GEARS, WORM MOTOR F2 15 P63 B14 B8 PV 75 | 7-19 |
| 90459-2106 | CABLE CONNECTOR, C091 31D004 100 2 | 1-229, 1-231 |
| 90459-2122 | THERMOCOUPLE, EN-5130060-0001 | 1-205 |
| 90459-2141 | LOGIC ELEMENT, OS-1/8-B | 7-139, 7-141 |
| 90459-2145 | BACK-UP RING 43,5X1,4 MM | 4-55 |
| 90459-2146 | X-SEAL 42,52X2,62 MM | 4-55 |
| 90459-2173 | SEAL GLYDRING 32,5X40X3,2 MM | 4-55 |
| 90459-2242 | REGULATOR, MS4-LRB-1/4-D7-AS | 7-145 |
| 90459-2243 | SHUT OFF VALVE, MS4-EE-1/4-10V24 | 7-145 |
| 90459-2245 | DISTRIBUTOR, MS4-FRM-1/4 | 7-145 |
| 90459-2246 | END PLATE, MS4-AGB | 2-49 |
| 90459-2247 | BRACKET, MS4-WP | 2-49, 7-145 |
| 90459-2248 | BRACKET, MS4-MV | 1-313, 1-315, 2-49, 7-145 |
| 90459-2258 | SEAL GLYDRING 25,1X30X2,2 MM | 4-93, 4-95, 4-109, 4-111 |
| 90459-2291 | SAFETY TIME RELAY, E1T-0.5S-24VDC | 8-23 |
| 90459-2323 | REDUCER, M25/M20 | 1-19 |
| 90459-2337 | SHUT OFF VALVE, MS4-EM1-1/4 | 7-145 |
| 90459-2338 | FILTER, MS4-LF-1/4-CRV | 2-49 |
| 90459-2339 | FILTER REGULATOR, MS4-LFR-1/4-D7-ERV-AS | 7-145 |
| 90459-2363 | O-RING MATERIAL 1,78 MM | 4-89, 4-91 |
| 90459-2366 | HOSE CLIP, (32)-35 | 2-69, 2-187, 6-53 |
| 90459-2409 | INDUCTIVE SWITCH IN-3002-BPKG/AS | 1-39, 1-41, 1-47, 1-49, 1-51 |
| 90459-2459 | BASEPLATE, 13 SLOT CONTROLLOGIX CHASSIS | 8-15 |
| 90459-2474 | PLC,DIGIT. OUTPUT MODULE 16 PTS 10-31VDC | 8-15 |
| 90459-2477 | ETHERNET I/P BRIDGE MODULE, 1756-ENBT | 8-15 |
| 90459-2479 | PLC DEVICENET BRIDGE/SCANNER MODULE | 8-15 |
| 90459-2481 | PLC 16-AXIS SERCOS MOTION MODULE | 8-15 |
| 90459-2487 | REMOVABLE TERMINAL BLOCK 20 POINTS | 8-15 |
| 90459-2488 | REMOVABLE TERMINAL BLOCK 36 POINTS | 8-15 |
| 90459-2494 | DEVICENET I/O ADAPTER MODULE, 1734-ADN | 1-213, 1-285, 1-347, 1-353, 2-59, 2-97, 2-141, 2-145, 6-85, 7-57, 8-17, 8-29 |
| 90459-2500 | EXPANSION POWER SUPPLY MODULE | 1-285, 1-347, 1-353, 2-59, 2-141, 7-57, 8-17 |
| 90459-2501 | FIELD POWER DISTRIBUTOR, 1734-FPD | 7-57 |
| 90459-2503 | DIGITAL INPUT 4 PTS SINK, 1734-IB4 | 1-213, 1-285, 1-347, 1-353, 2-59, 2-97, 2-141, 2-145, 6-85, 7-57 |
| 90459-2505 | DIGITAL OUTPUT 4 PTS, 1734-OB4E | 1-213, 1-285, 1-347, 1-353, 2-97, 2-141, 6-85, 7-57 |
| 90459-2508 | REMOTE I/O ANALOG INPUT VOLTAGE 2 PTS | 1-213, 1-285, 1-353, 2-59, 2-141, 6-85, 7-57 |
| 90459-2509 | REMOTE I/O ANALOG INPUT CURRENT 2 PTS | 1-213, 1-285, 1-353, 2-59, 2-97, 6-85, 7-57, 8-17 |
| 90459-2510 | ANALOG OUTP. VOLT. 2PTS, 1734-OE2V SER.C | 1-213, 1-285, 1-347, 2-141, 8-17 |
| 90459-2511 | REMOTE I/O ANALOG OUTPUT CURRENT 2PTS | 8-17 |
| 90459-2512 | REMOTE I/O THERMOCOUPLE INPUT 2 PTS | 1-213, 1-285, 1-347, 1-353, 2-59, 2-97, 2-141, 6-85, 7-57, 8-29 |
| 90459-2517 | DEVICE BOX 8 PORT THIN CABLE | 1-331, 1-333, 2-119 |
| 90459-2519 | OPEN STYLE TAP | 2-59, 8-21 |
| 90459-2523 | OPEN STYLE TERMINATOR, 1485A-C2 | 7-57 |
| 90459-2526 | REMOTE I/O BASE MODULE 8 POINTS, 1734-TB | 1-213, 1-285, 1-347, 1-353, 2-59, 2-97, 2-141, 2-145, 6-85, 7-57, 8-17, 8-29 |
| 90459-2527 | REMOTE I/O BASE MODULE 12 POINTS | 1-213, 1-285, 1-347, 1-353, 2-59, 2-97, 2-141, 2-145, 6-85, 7-57 |
| 90459-2528 | REMOTE I/O BASE MODULE FOR THERMOCOUPLE | 1-213, 1-285, 1-347, 1-353, 2-59, 2-97, 2-141, 6-85, 7-57, 8-29 |
| 90459-2530 | DEVICENET CABLE THIN | 1-331, 1-333, 2-55, 2-57, 2-119, 7-53 |
| 90459-2536 | SERCOS CABLE 0.1M, 2090-SCEP0-1 | 8-27 |
| 90459-2537 | SERCOS CABLE 0.3M | 8-27 |
| 90459-2539 | SERCOS CABLE 1.0M, 2090-SCEP1-0 | 8-27 |
| 90459-2540 | SERCOS CABLE 3.0M, 2090-SCEP3-0 | 8-27 |
| 90459-2547 | POWER RAIL SLOT FILLER MODULE, 2094-PRF | 8-27 |
| 90459-2549 | AC LINE FILTER 3-PHASE 30A, 2090-XXLF-X3 | 8-9, 8-11 |
| 90459-2550 | I/O CONNECTOR 26 PIN MALE, 2090-K6CK-D26 | 8-27 |
| 90459-2551 | CONNECTOR, MOTOR FEEDBACK 15 PIN MALE | 1-235, 5-41, 5-177 |
| 90459-2553 | ELBOW PIPE JOINT 16 MM | 8-69 |
| 90459-2555 | T-CONNECTION 16MM | 8-69 |
| 90459-2557 | BLIND PLUG 16 MM | 8-69 |
| 90459-2565 | MOTOR CABLE 16 AWG 2090-XXNPMP-16S09 | 1-235 |
| 90459-2566 | MOTOR CABLE 16 AWG 2090-XXNPMP-16S15 | 2-105, 2-107, 7-135 |
| 90459-2568 | MOTOR FEEDBACK CABLE 2090-XXNFMP-S09 | 1-235 |
| 90459-2577 | MOTOR BRAKE CABLE 2090-UXNBMP-18S15 | 2-105, 2-107, 7-135 |
| 90459-2579 | SERVO MOTOR MPL-B320P-SJ22AA | 1-235 |
| 90459-2590 | ROD END, CLEVIS WITH AXLE M8 | 1-39, 1-41 |
| 90459-2594 | SERVO MOTOR MPL-B680B-MX141 | 3-27 |
| 90459-2607 | VARIABLE FREQUENCY DRIVE 22B-D6P0N104 | 8-37, 8-39 |

| Part No | Description | Page No |
|---|---|---|
| 90459-2609 | BALL VALVE 3/8", 6A-V6LQ-SI-SSP-ALH | 2-39 |
| 90459-2614 | DEVICENET ADAPTER POWERFLEX 40 22-COMM-D | 8-37, 8-39 |
| 90459-2615 | HOSE NIPPLE SS-6-HC-A-601 | 2-39 |
| 90459-2650 | SWIVEL FLANGE 32 | 1-47, 1-49, 1-51 |
| 90459-2704 | SNAP HOOK STAINLESS 50X5MM | 7-7 |
| 90459-2726 | RUBBER BUFFER, 20-00484-01 | 7-41, 7-43, 7-89 |
| 90459-2738 | PLUG, EXT. THR. HEX. SOCK. VSTI1/8EDA3C | 2-75, 2-77 |
| 90459-2742 | LEVEL CONTROL RELAY, RM4-LA32MW | 1-213, 1-347, 1-353 |
| 90459-2780 | SENSOR BRACKET SMBR-8-32 | 5-89, 5-91 |
| 90459-2795 | FRONT LID FOR POWERFLEX 40, 22B-CCB | 8-37, 8-39 |
| 90459-2796 | FRONT LID FOR POWERFLEX 40, 22B-CCC | 8-37, 8-39 |
| 90459-2804 | REDUCING VALVE G1/2", 51.04.70 | 1-193 |
| 90459-2822 | REGULATOR, MS4-LR-1/4-D5-A8 | 6-93, 7-139, 7-141 |
| 90459-2938 | POWER SUPPLY, 6EP1437-3BA00 | 8-29 |
| 90459-2939 | POWER SUPPLY UNIT 6EP1961-3BA00 | 8-29 |
| 90459-3080 | HOOD HAN-BRID 3A 19 20 003 1443 | 1-265, 2-105, 2-107, 2-135, 6-15, 6-67, 7-53 |
| 90459-3081 | HOUSING HAN A 19 20 003 1250 | 6-17, 6-65, 7-107 |
| 90459-3145 | FLASH MEMORY 64MBYTE, 1784-CF64 | 8-15 |
| 90459-3154 | CABLE OLFLONPTFE 1X4,72 MM² YELLOW-GREEN | 1-205 |
| 90459-3164 | TUBE 14MM PA BLACK | 2-187 |
| 90459-3165 | CABLE OLFLON PTFE 1X4,72 MM² BLACK | 1-205 |
| 90459-3198 | PLUG, LD-PE Ø 7.2 | 1-235 |
| 90459-3286 | INDUCTIVE SWITCH E2A-S08KS02-M1-B1 | 7-65 |
| 90459-3339 | GASKET NBR/PTFE 17X24X2 MM 3/4" | 6-25, 6-27, 6-29 |
| 90459-3388 | SCRAPER, 10X16X4,7 MM | 4-81, 4-83, 4-103, 4-105 |
| 90459-3442 | VARIABLE FREQUENCY DRIVE 22B-A5P0N104 | 8-37, 8-39 |
| 90459-3446 | FREQUENCY CONVERTER 5,5 KW | 8-37, 8-39 |
| 90459-3454 | FOOTPRINT FILTER, 22-RF018-BL | 8-37, 8-39 |
| 90459-3458 | FOOTPRINT FILTER 22-RF012-BL | 8-37, 8-39 |
| 90459-3459 | FOOTPRINT FILTER, 22-RF018-CL | 8-37, 8-39 |
| 90459-3670 | HOOD HAN 3A 19 20 003 1440 | 7-107 |
| 90459-3682 | ROTARY POSITION SENSOR RPN1A111 | 1-53 |
| 90459-3709 | CONNECTOR 3-POLE AMP 282087-1 | 1-53 |
| 90459-3759 | TIMING BELT 5MR-550-25 | 4-29, 4-31 |
| 90459-3800 | FUSE HOLDER, MSC 10 3-POLE D250151 | 8-31 |
| 90459-3845 | POWER SOCKET, Z-SD230 | 8-23 |
| 90459-3940 | LEVER, GN 612-6-M16X1.5-A-NI | 5-139, 5-141, 5-143 |
| 90459-4032 | HYDR.ACC., SBO-210-1.4E1/112U-210AK | 2-75, 2-77 |
| 90459-4055 | REMOTE I/O RELAY OUTPUT 2 PTS | 1-285, 2-59 |
| 90459-4056 | REMOTE I/O RTD INPUT 2PTS | 1-347 |
| 90459-4077 | WIRE SEAL , AMP 281934 | 1-53 |
| 90459-4079 | MINI MIC SRS, AMP 183035-1 | 1-53 |
| 90459-4090 | GASKET FPM 61X107X4, KLINGER 6080.1925 | 1-183 |
| 90459-4142 | SAFETY SENSOR, 20-051-00 ADAM | 1-21, 1-27, 1-71, 1-73, 7-41, 7-43, 7-61 |
| 90459-4148 | CONN. STR., 1/2"-1/4 ISO 7/1, EXT. THREA | 1-209 |
| 90459-4151 | HOSE ASSEMBLY 12,7 X 304,8 MM | 1-209 |
| 90459-4164 | SAFETY SCREW SM4X20, 20-053-42 | 1-21, 1-27, 1-71, 1-73, 7-155 |
| 90459-4165 | SAFETY SCREW, 20-053-43 SM4X25 | 1-21, 1-27, 1-71, 1-73, 7-41, 7-43, 7-61, 7-89 |
| 90459-4169 | HOSE ASSEMBLY 919-1D-1D-8-8-5C-3800 | 1-255 |
| 90459-4179 | GASKET 30,5X42X4 MM FDA | 1-229, 1-231, 9-19, 9-21, 9-23, 9-25 |
| 90459-4186 | REDUCER, M32/M25 | 1-183 |
| 90459-4252 | CABLE M12-C101, 20-056-10 | 1-21, 1-27, 1-71, 1-73, 7-41, 7-43, 7-61 |
| 90459-4274 | SCR. CABLE 2X0,5MM2 | 1-255 |
| 90459-4504 | ROD END, ID=6MM, M6X1 | 4-45, 4-47 |
| 90459-4505 | ROD END, ID=6MM, M6X1 LH | 4-45, 4-47 |
| 90459-4511 | CONN. ELBOW, 6 | 1-205 |
| 90459-4554 | REGULATOR, MS4-LRB-1/4-D7-A8-AS | 1-313, 1-315, 2-49 |
| 90459-4686 | NON-RETURN VALVE, M12A-C6L-1-EPR-SS | 1-245 |
| 90459-4705 | LOCKING PLUG, S 103 A 053-130+ AND 90220 | 2-101 |
| 90459-4728 | CLAMPING PIECE 6", C.025 DN 150 | 1-185 |
| 90459-4735 | SCREW M6S ISO 4017 M8X10 A480 | 5-161, 7-135 |
| 90459-4766 | DOUBLE ACTING, MINI-ISO, CYL. 20-60 | 2-209 |
| 90459-4810 | PRESS TRANSD (DIFF) 0 - 2000PA, 2681-20C | 1-349, 1-351 |
| 90459-4891 | PROGR. IDENTIFIER ID-FIX RW, 20-070-21 | 8-23 |
| 90459-4928 | PANEL CONNECTOR FEMALE, TYPE K | 8-61, 8-63 |
| 90459-4932 | REAR CLEVIS FOOT MOUNTING , CRLBN-20/25 | 2-209 |
| 90459-4977 | LINEAR ACTUATOR LA 1 SP - SP36 17A16 - 0 | 1-187 |
| 90459-5044 | PLC EMPTY SLOT FILLER, 1756-N2 SERIE A | 8-15 |
| 90459-5154 | FLANGE BUSHING, 20X23X11,5 MM | 7-127 |
| 90459-5177 | ANGLE SEAT VALVE W. FLANGES, N.O.8498668 | 2-23 |
| 90459-5178 | ANGLE SEAT VALVE W. FLANGES, N.O.8498669 | 2-23 |
| 90459-5179 | BALL VALVE 12MM, M12A-B8LJ-SSP-ST | 1-269 |
| 90459-5180 | FLOW METER, PROWIRL 72W50-SD0BA1AAA0AW | 1-193 |
| 90459-5187 | CONDUCTIVITY TRANSMITTER CLM223-ID7105 | 8-53 |
| 90459-5193 | SLIM POW. RAIL, KINETIX, 6 AX, 2094-PRS6 | 8-27 |
| 90459-5195 | SLIM POWER RAIL,KINETIX,8 AXIS,2094-PRS8 | 8-27 |
| 90459-5261 | REMOTE I/O, RELAY OUTP. 4 PTS,1734-OW4/C | 1-285, 2-59, 2-145, 6-85, 7-57, 8-17, 8-29 |
| 90459-5268 | DOUBLE ACTING, MINI-ISO, CYL. 25-130 | 5-11, 5-13, 5-15 |
| 90459-5278 | BELLOW COUPLING, 24X28 MM | 5-41 |
| 90459-5308 | CONTACTOR 4KW 24VDC, DILM9-10 | 8-35 |
| 90459-5323 | OVERLOAD PROTECTION, PKZM0-1 | 8-35 |
| 90459-5324 | OVERLOAD PROTECTION, PKZM0-1,6 | 8-35 |
| 90459-5325 | OVERLOAD PROTECTION, PKZM0-2,5 | 8-35 |
| 90459-5326 | OVERLOAD PROTECTION, PKZM0-4 | 8-35 |

| Part No | Description | Page No |
|---|---|---|
| 90459-5330 | OVERLOAD PROTECTION, PKZM0-16 | 8-35 |
| 90459-5333 | OVERLOAD PROTECTION, PKZM0-32 | 8-35 |
| 90459-5440 | CONTACTOR 4KW 24VDC, DILM9-01 | 8-33, 8-35 |
| 90459-5441 | CONTACTOR 7,5KW 24VDC, DILM17-01 | 8-33, 8-35 |
| 90459-5444 | CONTACTOR 15KW 24VDC, DILM32-01 | 8-35 |
| 90459-5481 | OIL PUMP 3L, 10P-P3 | 2-83 |
| 90459-5536 | BALL BEARING, 12X28X8 MM | 7-71, 7-73 |
| 90459-5574 | DEVICENET OPEN STYLE CONN, 1787-PLUG10R | 2-59, 8-17, 8-29, 8-37, 8-39 |
| 90459-5578 | ACTUATOR/SENSOR CABLE PRKT 5-56/5M | 1-187 |
| 90459-5581 | TENSION SPRING 1,2X23X8,5 | 1-305, 1-307 |
| 90459-5650 | LUBRICATION BLOCK, HFS4662 | 2-85 |
| 90459-5651 | LUBRICATION BLOCK, HFS4664 | 4-13, 4-19 |
| 90459-5652 | LUBRICATION BLOCK, HFS4666 | 5-149, 5-151 |
| 90459-5720 | MPF-AIR-PURGE CONNECTOR | 5-41, 5-177 |
| 90459-5727 | BRACKET, REAR, EYE WITH AXLE 50 | 7-173 |
| 90459-5811 | RESIDUAL CURRENT DEVICE, FI-25/2/003-A | 8-23 |
| 90459-5813 | AUXILARY CONTACT, FAZ-XHI11 | 8-31 |
| 90459-5828 | CLAMPING ELEMENT WITH SLEEVE, 45X54 MM | 5-63 |
| 90459-5883 | COMMONING BUSBAR, 1-P 1-PH 1X57 MOD 63A | 8-21, 8-31 |
| 90459-5884 | COMMONING BUSBAR, 3-P 3-PH 3X19 MOD 63A | 8-31 |
| 90459-5886 | POWER SUPPLY UNIT 115-230 VAC/24VDC100W | 8-23 |
| 90459-5901 | DIAPHRAGM, 425 EPM SIZE 15 | 1-243 |
| 90459-5968 | WEAR RING 19X22X3,2 MM | 4-97 |
| 90459-6019 | PISTON SEAL STEPSEAL 11,5X19X3,2 MM | 4-97 |
| 90459-6022 | PISTON SEAL STEPSEAL 14,5X22X3,2 MM | 4-97 |
| 90459-6023 | PISTON SEAL 13X19X3,2 MM | 4-97 |
| 90459-6024 | PISTON SEAL 16X22X3,2 MM | 4-97 |
| 90459-6026 | WEAR RING 16X19X3,2 MM | 4-97 |
| 90459-6033 | PROGRAMMING CABLE FOR PLUTO 20-070-56 | 9-3 |
| 90459-6065 | Y-FITTING QSY-12-8 | 2-127 |
| 90459-6084 | WARNING SIGN ISO, HAZARDOUS ROTATING BEL | 1-339 |
| 90459-6096 | ROD END, BALL JOINT EYE M16X1,5 | 7-173 |
| 90459-6178 | TEMPERATURE SENSOR, , 902522/10-386-1003 | 1-229, 1-231 |
| 90459-6215 | FLOW SWITCH BFS-10-N-G1/4-MS-NO-ST | 1-207 |
| 90459-6255 | COMP. SPRING 23460, 3,2X35,2X190 | 1-187 |
| 90459-6387 | CONNECTOR 5-POL M12, RSCS 5/9 | 4-9, 7-109 |
| 90459-6392 | INDUCTIV SWITCH E2A-M18LN16-M1-B1 | 7-7 |
| 90459-6426 | PRESSURE GUARD PEV-1/4-B-OD | 7-145 |
| 90459-6436 | RECORDER 12-CHANNEL, LOGOSCREEN CF | 8-53 |
| 90459-6556 | PLC DIGITAL INPUT 32PTS, 1756-IB32/B | 8-15 |
| 90459-6559 | PROCESSOR L63, SERIES B, 1756-L63/B | 8-15 |
| 90459-6560 | DIGITAL OUTPUT 8 PTS, 1734-OB8E/C | 1-285, 1-347, 2-59, 2-97, 2-141, 2-145, 6-85, 7-57, 8-17 |
| | | 8-29 |
| 90459-6561 | DIGITAL INPUT 8 PTS SINK, 1734-IB8/C | 2-59, 2-145, 8-17, 8-29 |
| 90459-6603 | INCREMENTAL ENCODER, DGS60A1A02000 | 7-107 |
| 90459-6604 | CABLE, SICK DOL-2312-G 05MMA3 | 7-71, 7-73 |
| 90459-6616 | FINGER PROTECTION IP20, NZM1-4-XIPA | 6-19 |
| 90459-6617 | COVER 4-POLE, NZM1-4-XKSA | 6-19 |
| 90459-6618 | CIRCUIT BREAKER, NZMB1-4-A100 | 6-19 |
| 90459-6620 | HANDLE, NZM1-XTVDV | 6-79 |
| 90459-6624 | FEMALE INSERT HAN E AV, 09 33 006 4735 | 8-61, 8-63 |
| 90459-6627 | FEMALE INSERT HAN E AV, 09 33 024 4735 | 8-61, 8-63 |
| 90459-6629 | HOOD 10 B SIDE ENTRY, 19 30 010 1520 | 6-49 |
| 90459-6631 | HOOD 24 B SIDE ENTRY, 19 30 024 1522 | 5-131, 5-133 |
| 90459-6632 | HOOD 6 B TOP ENTRY, 19 30 006 1440 | 1-37, 1-179, 1-211, 1-253, 1-265, 2-61, 2-105, 2-107, 2-135, 7-53 |
| 90459-6634 | HOOD 16 B TOP ENTRY, 19 30 016 1421 | 1-189, 1-279, 1-281, 2-105, 2-107 |
| 90459-6636 | HOOD 24 B TOP ENTRY, 19 30 024 0427 | 1-279, 1-281, 1-345, 1-349, 1-351, 2-61, 2-105, 2-107, 2-135, 7-53 |
| 90459-6638 | HOUSING 16B BULKHEAD, 09 30 016 0301 | 8-61, 8-63 |
| 90459-6639 | HOUSING 24B BULKHEAD, 09 30 024 0301 | 8-61, 8-63 |
| 90459-6640 | HOUSING 6B SURF MOUNT, 19 30 006 1250 | 2-93 |
| 90459-6642 | HOUSING 16B SURF MOUNT, 19 30 016 1231 | 2-93 |
| 90459-6643 | HOUSING 24B SURF MOUNT, 19 30 024 1231 | 2-93 |
| 90459-6661 | COMPRESSOR, 2BV5410-8FP02-6S | 1-183 |
| 90459-6679 | CONN 15 P FEM, AUX. FEEDB,2090-K6CK-D15F | 7-107 |
| 90459-6692 | SAFETY PLC, PLUTO B20 20-070-06 | 8-23 |
| 90459-6731 | ENCODER/COUNTER MODULE, 1734-IK SERIES C | 1-285, 7-57 |
| 90459-6820 | FEMALE INSERT HAN 4 A, 09 20 004 2711 | 6-15, 6-67, 7-107, 8-61, 8-63 |
| 90459-6821 | MALE INSERT HAN 4A, 09 20 004 2611 | 1-265, 2-105, 2-107, 2-135, 6-17, 6-65, 7-53, 7-107 |
| 90459-6822 | HOUSING 3A BULKHEAD, 09 20 003 0301 | 8-61, 8-63 |
| 90459-6824 | CURRENT LIMITER, CL-PKZ0 | 8-61, 8-63 |
| 90459-6850 | CONNECTION, PKZM0-XDM12 | 8-35 |
| 90459-6851 | BASE UNIT, PKZM0-XDM32 | 8-35 |
| 90459-6856 | FEEDER BLOCK, FAZ/FIP-XVS-KL | 8-31 |
| 90459-6859 | HOUS.SIZE 6-24B HAN-SNAP, 09 33 000 9980 | 8-19 |
| 90459-6881 | SPHERICAL WASHER M10 DIN 6319 C SHAPE | 1-75, 1-77 |
| 90459-6882 | CONICAL WASHER M10 DIN 6319 D SHAPE | 1-75, 1-77 |
| 90459-6975 | SOLENOID VALVE G1/4, 2401186082702400 | 1-277 |
| 90459-6977 | SOLENOID VALVE G1/4, V04B286N-B423A | 1-277 |
| 90459-7084 | FILTER, CPDI000M1 | 6-35 |
| 90459-7086 | DOUBLE ACTING, COMPACT, 50-25 | 1-39, 1-41 |
| 90459-7094 | TINA 3-A INTERFACE PLUG, 20-054-02 | 7-41, 7-43 |
| 90459-7102 | DOUBLE ACTING, PROFILE,CYL 50-125 | 7-173 |

| Part No | Description | Page No |
|---|---|---|
| 90459-7172 | SERVO MOTOR MPF-B540K-MJ22AA | 5-41 |
| 90459-7173 | MOTOR POWER CABLE 2090-XXNPMF-16S15/A | 5-177 |
| 90459-7174 | MOTOR POWER CABLE 2090-XXNPMP-10S15 | 2-105, 2-107 |
| 90459-7175 | MOTOR POWER CABLE 2090-XXNPMF-10S15/A | 5-41 |
| 90459-7176 | MOTOR FEEDBACK CABLE 2090-XXNFMF-S15 | 5-41, 5-177 |
| 90459-7178 | SERVO MOTOR MPL-B330P-SJ24AA | 4-29, 4-31 |
| 90459-7206 | MOTOR FEEDBACK CABLE 2090-UXNFBMP-S15/C | 7-135 |
| 90459-7208 | MOTOR FEEDBACK CABLE 2090-XXNFMP-S15/C | 2-105, 2-107 |
| 90459-7211 | SERVO AXIS MODULE W/PS 15A 400/460V | 8-27 |
| 90459-7212 | AXIS MODULE WITH INT. PS, 2094-BC04-M03- | 8-27 |
| 90459-7214 | AXIS MODULE 650V, 6,1A, 2094-BM01-S | 8-27 |
| 90459-7215 | AXIS MODULE 650V, 10,3A, 2094-BM02-S | 8-27 |
| 90459-7216 | AXIS MODULE 650V, 21,2A, 2094-BM03-S | 8-27 |
| 90459-7223 | REDUCER, M20/M16 | 6-15, 6-17 |
| 90459-7267 | POWER SUPPLY 24VDC, 1756-PB75/B | 8-15 |
| 90459-7280 | AIR NOZZLE, 011 | 2-183, 2-185 |
| 90459-7283 | SCREW HEX.SOCK.SET CONEPT.MS6SS M5X12 A2 | 1-229, 1-231, 7-37, 7-61, 7-107, 7-131 |
| 90459-7293 | SET SCREW DIN 551M5X8 PA66 | 5-161 |
| 90459-7306 | CYLINDER WITH INT. GUIDING BORE 16 | 7-117 |
| 90459-7332 | PUSH-IN FITTING QSSF-1/8-4-B | 2-49 |
| 90459-7333 | PUSH-IN FITTING QSSF-1/4-4-B | 2-49, 6-93, 7-139, 7-141 |
| 90459-7342 | REGULATOR, MS6-LRB-1/2-D7-AS-BD | 6-99 |
| 90459-7344 | PRESSURE GAUGE, MA-40-6-R1/4-EN | 1-313, 1-315, 2-49, 6-93, 7-139, 7-141 |
| 90459-7421 | PH.CELL WL100-P3439 | 7-13, 7-41, 7-43 |
| 90459-7432 | HOUSING 24B SURF MOUNT, 19 30 024 1271 | 2-93 |
| 90459-7441 | WASHER PLAIN, DIN 7349, 6,4/17 H=3 | 7-61, 7-161, 7-165 |
| 90600-0260 | CLAMPING PIECE, 10503.000.400.14 | 1-185 |
| 90600-0344 | CARRIAGE, SSR 25 XWYQZSSHH M | 5-177 |
| 90600-0460 | INDUCTIVE SWITCH, E2A-M12KN05-M1-B1-TP | 7-7, 7-41, 7-43 |
| 90600-0463 | INDUCTIVE SWITCH,E2A-M12LN05-WP-B1-TP 5M | 1-233, 1-299, 1-301 |
| 90600-0464 | INDUCTIVE SWITCH,E2A-M12LS02-WP-B1-TP 5M | 5-11, 5-13, 5-15 |
| 90600-0467 | INDUCTIVE SWITCH,E2A-M18KS05-WP-B1-TP 6M | 1-261, 5-163, 5-165 |
| 90600-0473 | INDUCTIVE SWITCH E2A-S08KS01-WP-B1-TP 5M | 2-39, 2-111, 4-29, 4-31 |
| 90600-0495 | O-RING 4X2 MM | 1-229, 1-231, 1-233, 1-255 |
| 90600-0614 | BLANK PLUG, 16AMP-316-1/2"-3/4"-AR | 1-233, 9-19, 9-21, 9-23, 9-25 |
| 90600-0657 | SCREW UNC 1/4-20 X10 | 1-179, 1-289, 1-291 |
| 90600-0717 | HOOD 24 B SIDE ENTRY, 19 30 024 1521 | 6-81, 6-83 |
| 90600-0719 | MARKING PLATES DEK 5 GW N | 8-43 |
| 90600-0725 | FOOT 25000N, R0772 611223 | 2-9, 2-67, 2-117, 7-41, 7-43 |
| 90600-0731 | ADJUSTABLE ELBOW CONNECTION,EXT 6-G1/4 | 1-207 |
| 90600-0775 | BALL VALVE G1/4, 406F-1/4" | 1-265, 2-75, 2-77 |
| 90600-0805 | DOUBLE ACTING, MINI-ISO, CYL. 25-62 MM | 1-53 |
| 90600-0821 | LEVEL PR.,LEVELFLEX-M FMP41C-AKTJKB11A2Y | 1-255 |
| 90600-0845 | ELBOW FITTING WE06ZLM71 | 2-85 |
| 90600-0943 | SOLID STATE CONTACTOR, 3RF2320-1AA04 | 8-13 |
| 90600-0947 | SOLID STATE CONTACTOR, 3RF2420-1AB45 | 8-13 |
| 90600-0948 | SOLID STATE CONTACTOR, 3RF2430-1AB45 | 8-13 |
| 90600-0967 | TRANSDUCER, BTL6-A110-M0650-A1-S115 | 7-97 |
| 90600-0969 | MOUNTING BRACKET, BTL6-A-MF03-K-50 | 7-97 |
| 90600-0972 | SENSOR CABLE BKS-S116-PU10 | 7-97 |
| 90600-0973 | FLOATING MAGNET, BTL6-A-3800-2 | 7-97 |
| 90600-0975 | HOSE GLAND W/O INSERT PG13,5 EXTENDED | 1-205 |
| 90600-0976 | INSERT, SINGLE HOLE, HI.TEMP, EK153I9 | 1-205, 1-211 |
| 90600-1056 | KEY SAF.SW. AZM 161SK-12/12RKA 024 | 7-41, 7-43 |
| 90600-1092 | COMP. SPRING D21550, 0,63X8,63X16 | 7-15 |
| 90600-1154 | FLOW METER,D-6230-HGB-BB-AV-99-0-N2/IP65 | 1-207 |
| 90600-1167 | PLUG, EXT. R-THREAD, R1/4 | 1-313, 1-315, 7-145 |
| 90600-1168 | PUSH-IN FITTING QSSF-1/4-4-B | 1-313, 1-315 |
| 90600-1169 | PLUG G1/4, B-1/4-NPT | 1-313, 1-315, 2-49 |
| 90600-1173 | PUSH-IN BULKHEAD FITTING QSSF-1/8-8-B | 7-139, 7-141 |
| 90600-1175 | ELBOW WITH TAILPIECE 8/8 MM | 7-139, 7-141 |
| 90600-1199 | VARISTOR MOV, 390KD07 | 2-97, 8-13 |
| 90600-1200 | SCREEN CLAMPING SADDLE, 790-108 | 8-9, 8-11 |
| 90600-1201 | BUSBAR U-SHAPED, 790-191 | 8-9, 8-11 |
| 90600-1204 | DOUBLE ACTING, COMPACT, 100-15 | 7-117 |
| 90600-1209 | TERMINAL BLOCK RELAY, 700-HLT1U2 | 8-33 |
| 90600-1211 | TERMINAL BLOCK RELAY, 700-HLT1Z24 | 8-13, 8-33 |
| 90600-1214 | SOLID STATE RELAY, 700-SCNN3Z26 | 8-13 |
| 90600-1219 | SOCKET, 700-HN104 | 8-13 |
| 90600-1249 | GEARS, HELICAL MOTOR C 112 UF 6.2 S1 B52 | 7-121 |
| 90600-1257 | PUMP SV 808 F 55 T | 6-49 |
| 90600-1269 | HEAT EXCHANGER M18-10 | 2-75, 2-77 |
| 90600-1280 | FLEXIBLE COUPLING, 17,29X24 MM | 2-75, 2-77 |
| 90600-1281 | BELLHOUSING, PL 200/02/03 | 2-75, 2-77 |
| 90600-1282 | NON-RETURN VALVE, NO. S8 A1,X/ | 2-75, 2-77 |
| 90600-1283 | PUMP, AZPF -12-004RH030KB | 2-75, 2-77 |
| 90600-1284 | PRESSURE GAUGE, D=63 MM AB31-13/063-0160 | 2-75, 2-77 |
| 90600-1286 | FILTER, 97713047 | 2-75, 2-77 |
| 90600-1287 | BREATHER FILTER, ELFP 3-F10W1.0 | 2-75, 2-77 |
| 90600-1288 | PRESSURE SENSOR 0-420 BAR VD 5/420C X DF | 2-75, 2-77 |
| 90600-1289 | HYDRAULIC VALVE, HMBF-PK-30-M1-K342-02 | 2-75, 2-77 |
| 90600-1291 | PRESSURE RELIEF VALVE,ZDBK 6 VP2-1X/210V | 2-75, 2-77 |
| 90600-1292 | PRESSURE RED. VALVE, ZDR 6 DP2-4X/150YM | 2-75, 2-77 |
| 90600-1293 | CHECK VALVE, NO. Z1S 6 F05-4X/V | 2-75, 2-77 |

| Part No | Description | Page No |
|---|---|---|
| 90600-1294 | NON-RETURN VALVE, NO. Z1S 6 T05-4X/V | 2-75, 2-77 |
| 90600-1295 | SENSOR | 2-75, 2-77 |
| 90600-1296 | CONNECTOR 2 POLE + PE, Z4-A GRIG | 2-75, 2-77 |
| 90600-1297 | CONNECTOR | 2-75, 2-77 |
| 90600-1298 | CONNECTOR | 2-75, 2-77 |
| 90600-1299 | TIMING BELT HPPD 720-8M-30 | 7-121 |
| 90600-1301 | LEVEL INDICATOR | 2-75, 2-77 |
| 90600-1302 | REDUCER, RI1/2EDX3/8 | 2-75, 2-77 |
| 90600-1303 | REDUCER, RI3/4EDX1/2 | 2-75, 2-77 |
| 90600-1304 | PUMP ELBOW W. FIXING HOLES, RP901012 | 2-75, 2-77 |
| 90600-1305 | PUMP ELBOW W. FIXING HOLES, RP901038 | 2-75, 2-77 |
| 90600-1306 | MANOMETER GAUGE CONN., AB20-11 M 1/4" | 2-75, 2-77 |
| 90600-1307 | MEASURING HOSE, AB20-11/1000 | 2-75, 2-77 |
| 90600-1308 | HOSE ATTACHMENT, AB20-11/K1 1/4G | 2-75, 2-77 |
| 90600-1390 | INCREMENTAL ENCODER, DGS60-G1A02000 | 7-71, 7-73 |
| 90600-1395 | CABLE 15M, 2030692 | 7-107 |
| 90600-1448 | CLAMP, 6016 82 0 | 1-329, 7-41, 7-43 |
| 90600-1454 | SAFETY TIME RELAY, E1T-1.0S-24VDC | 8-23 |
| 90600-1456 | INTOUCH OEM 5000 V 9.5 HW KEY USB | 8-53 |
| 90600-1459 | GEARS, WORM MOTOR MC 320P2TB5 | 7-89 |
| 90600-1712 | PLUG, EXT. THREAD HEX. SOCKET 09190017 | 1-183, 1-267 |
| 90600-1767 | GUIDE CONSOLE 30X13X300, FR1105/300 | 6-11 |
| 90600-1848 | ETHERNET SW, FL SWITCH SFN 8TX | 8-21 |
| 90600-1881 | MOTOR KW 1,5 4P 220/380 50 HZ B5 "MOT AS | 2-75, 2-77 |
| 90600-1882 | VALVE PLATE, 757234 | 2-75, 2-77 |
| 90600-1891 | FLOW RESTRICTOR 156476, D=4,6 MM | 2-75, 2-77 |
| 90600-1892 | FLOW RESTRICTOR 158547, D=2,0 MM | 2-75, 2-77 |
| 90600-1946 | VALVE, SEAT, 3A. 9613320304 | 1-259 |
| 90600-1949 | CONTACT BLOCK 1NC, ZEN L1121 | 1-85 |
| 90600-1986 | BALL VALVE RP1/4 | 2-191, 2-193 |
| 90600-1987 | BULKHEAD, WSV10ZL71 | 2-79 |
| 90600-1988 | REDUCTION, GZR10/08L71 | 2-79 |
| 90600-1989 | CONN. STR. 10-G3/8, EXT. THREAD | 2-79 |
| 90600-1990 | CONN. STR. 6-R1/4, EXT. TAPERED | 2-191, 2-193 |
| 90600-1991 | ADJUSTABLE ELBOW CONNECTION,EXT 4-G1/8 | 4-77, 4-79, 4-99, 4-101 |
| 90600-2002 | REDUCER, INT/EXT. G-THREAD 1/4X3/4 | 2-191, 2-193 |
| 90600-2004 | LINEAR UNIT, SHS25LC1QZSSFME+740LKF | 3-7, 3-21 |
| 90600-2005 | PLAIN BEAR,SELF ADJ.SPHER.17X30X14 MM | 3-9 |
| 90600-2007 | HEATING ELEM.15KW 3X230/400V,T90600-2007 | 1-189 |
| 90600-2011 | BUSHING INSERT, JUM-02-10 | 4-81, 4-83, 4-103, 4-105 |
| 90600-2013 | FLANGE BUSHING, 8X10X5,5 MM | 4-127, 4-129, 4-131, 4-145, 4-147, 4-149, 4-153, 4-155, 4-157, 4-161, 4-163, 4-165 |
| 90600-2014 | WEAR RING 8,9X12X4 MM | 4-85 |
| 90600-2015 | WEAR RING 12X15,1X4 MM | 4-97 |
| 90600-2016 | BACK-UP RING 17,4X1,4 MM | 4-97 |
| 90600-2017 | SEAL GLYDRING 20,1X25X2,2 MM | 4-93, 4-95, 4-109, 4-111 |
| 90600-2018 | SCRAPER, 12X18,6X5,4 MM | 4-89, 4-91, 4-97 |
| 90600-2031 | PRESSURE SENS. SDE1-D10-G2-MS6-C-PU-M8 | 6-99 |
| 90600-2107 | LEVEL SWITCH, FTL20H-0TCJ2B | 1-185 |
| 90600-2133 | MODULE CONNECTOR 250V, BEST 1833100000 | 1-283, 8-13 |
| 90600-2134 | TERMINAL DISCONNECATBLE, WTR 2,5/O.TNHE | 1-283, 8-13, 8-23 |
| 90600-2135 | MODULE CONNECTOR 250V, BEST/D 1878560000 | 8-23 |
| 90600-2522 | FLOATING JOINT, JS32-10-125 | 1-187 |
| 90600-2530 | WORM GEAR VF-EP49-P1-7-P71-B14-B6-NP-PV- | 7-135 |
| 90600-2532 | BREATHER PLUG, TSS2G | 7-135 |
| 90600-2575 | BEARING BUSH W/O FLANGE, 10,1X18X12 MM | 7-113 |
| 90600-2586 | HEATING CARTRIDGE, 800W 240V | 7-113 |
| 90600-2599 | SERVO MOTOR MPL-B320P-MK24AA | 7-135 |
| 90600-2646 | ROT.SPRAY NOZZLE, 599.186.1Y.AF.00.0 | 2-69, 2-121 |
| 90600-2650 | PUSH-IN T-FITTING KPT08-00 | 6-13 |
| 90600-2653 | PUSH-IN L-FITTING KPL08-02 | 6-13 |
| 90600-2659 | SPRING LOADED CATCH, EH 2220.080 | 7-89 |
| 90600-2661 | HANDLE, I.222/40N-10 | 7-127 |
| 90600-2667 | CARRIAGE, TW-01-15-HKA | 7-109 |
| 90600-2668 | PIPE CLAMP D=28 MM, RSGU 1.28/20 WI | 7-151, 7-155 |
| 90600-2669 | GAS SPRING, LIFT-0-MAT 5072DE (F1=50N) | 7-151, 7-155 |
| 90600-2670 | HANDLE, GN 425-10-200-NI | 7-169 |
| 90600-2686 | PUMP SV806 F556 T | 6-49 |
| 90600-2721 | CLAMPING ELEMENT TLK 250-15-25 | 7-135 |
| 90600-2722 | 6ALL BUSHING, 30X47X68 MM | 7-135 |
| 90600-2724 | REDUCER, G 1/4- G 1/2 X40,0SW30-A3C | 2-75, 2-77 |
| 90600-2726 | O-RING 385X3 MM | 1-23, 1-25 |
| 90600-2733 | BELLOW COUPLING, 16X16 MM | 7-135 |
| 90600-2740 | RETAINING RING SHAFT DIN 471 ST 47 | 7-135 |
| 90600-2793 | DOUBLE ACTING, COMPACT, 25-10 | 7-133 |
| 90600-2833 | GAS SPRING LIFT-O-MAT 4915DY | 7-127 |
| 90600-2837 | BEARING BUSH W/O FLANGE, 8,2X15X12 MM | 7-117, 7-129 |
| 90600-2848 | GRILL, LZ30 | 6-67 |
| 90600-2854 | LINEAR BUSHING 8X16X25 | 7-87 |
| 90600-2862 | LEVEL SWITCH, LIQUIPHANT FTL20-0025 | 1-271, 1-273 |
| 90600-2897 | BALL BEARING, 6X19X6 MM | 7-33, 7-75, 7-85, 7-101, 7-103 |
| 90600-2901 | TANK 10L, TANKPE010 | 6-13 |
| 90600-2902 | STERILE WATER SYSTEM, ZLXS5003Y | 6-13 |
| 90600-2904 | EARTH BRAID, 250/16/8,5 | 8-53 |

| Part No | Description | Page No |
|---|---|---|
| 90600-3003 | BUSHING,INT/EXT THREAD, 534147 | 7-143 |
| 90600-3021 | KEY FOR SAFETY SWITCH AZM - 161 - BIF | 7-151, 7-163, 7-167 |
| 90600-3039 | BLADE, C5321 ART: 27.50 | 7-131 |
| 90600-3040 | RUNNER BLOCK, 1666-114-20 | 7-117, 7-131 |
| 90600-3042 | GUIDE BAR, 15X16,2X450 | 7-131 |
| 90600-3047 | BUSHING,INT/EXT THREAD, 1/4"GAS - 1/4"GA | 7-115 |
| 90600-3051 | GUIDE BAR, 15X15,5X380 MM | 7-109 |
| 90600-3052 | GUIDE RAIL, 1605-104-31-71 35.5/0/35.5 | 7-117 |
| 90600-3053 | DIAL GAUGE MITUTOYO 1160 | 9-37 |
| 90600-3054 | BEARING HOUSING, RJUM-01-30 | 7-107 |
| 90600-3055 | FLEXIBLE CHAIN, BRACKET 582.1.2 | 7-107 |
| 90600-3056 | FLEXIBLE CHAIN, BRACKET 580.1.1 | 7-107 |
| 90600-3066 | ROD END, ID=5 MM, M5 | 7-123 |
| 90600-3159 | FILTER HOUSING, MDS4463G58383 | 1-241, 1-245 |
| 90600-3222 | PILOTED FUNCTION VALVE G1/8, 7880 06 10 | 5-11, 5-13, 5-15 |
| 90600-3267 | MAINTENANCE KIT, TPAKKIT01 | 6-13, 9-3 |
| 90600-3272 | PROX.SENSOR SMT-8M-PS-24V-K-5,0-OE | 1-79 |
| 90600-3275 | PROXIMITY SENSOR, SME-8M-DS-24V-K-5,0-OE | 5-89, 5-91 |
| 90600-3313 | BUSHING, 10X14X10 MM | 1-161, 1-163 |
| 90600-3339 | PAPER REEL TROLLEY, TP A3 | 9-3 |
| 90600-3558 | GASKET 16,2X21,8X4,45 MM 3/4" | 1-241, 1-253, 1-255, 1-257 |
| 90600-3559 | CLAMPING PIECE, 211290 | 1-241, 1-253, 1-255, 1-257 |
| 90600-3597 | SIGN, PAPER MAGAZINE PRESSURE ROLLER | 7-51 |
| 90600-3677 | BUSHING, 15X21X20 MM | 1-63 |
| 90600-3690 | SENSOR CABLE SIM-M8-4GD-2,5-PU | 6-99 |
| 90600-3694 | COMPUTOR APC620, 5P62:TETRAPAK-17 | 8-53 |
| 90600-3695 | CONTROL PANEL 1, 5AP920_1505-K42 | 2-239 |
| 90600-3697 | SDL FLEX CABLE 10M, 5CASDL.0100-03 | 2-239 |
| 90600-3701 | BALL VALVE 1/2NPT | 1-241, 1-245 |
| 90600-3817 | HOOD TOP ENTRY, 19 30 006 0446 | 1-19, 1-183 |
| 90600-3899 | RUBBER BUFFER, TYPE D 30/15 ART. NO. 319 | 7-7 |
| 90600-3924 | CONDUCTIVITY SENSOR CLS 54-ACS1022 | 1-259 |
| 90600-3964 | SWIVEL FLANGE 16 | 1-55 |
| 90600-4048 | LIGHT FIXTURE, TCH128 1XTL5-14W/830 HF | 8-5, 8-7 |
| 90600-4326 | FLOW SWITCH | 1-265 |
| 90600-4392 | TEMPERATURE SENSOR, TR45-BF5A1Q3MA0000 | 1-261 |
| 90600-4631 | PROXIMITY SWITCH | 1-235 |
| 90600-4782 | FLEXIBLE COUPLING, 12X12 MM | 2-245 |
| 90600-5006 | PLAIN BEAR,SELF ADJ.SPHER. 16X38X21 | 3-17, 3-25 |
| 90600-5075 | HANDLE, RHOA-12.55.01 | 7-153 |
| 90600-5087 | BACK-UP RING 19,4X1,4 MM | 4-97 |
| 90600-5274 | KEY FOR SAF.SW.TZRE024PG RC1635-103845 Z | 2-99, 2-135 |
| 90600-5275 | KEY FOR SAF.SW.TZRE024PG RC1635-104068 Z | 2-135 |
| 90600-5307 | SCRAPER, 45X53X7 MM | 4-11, 4-17 |
| 90600-5541 | DOUBLE ACTING, COMPACT, CYL 16-25 | 1-55 |
| 90600-5548 | FILTER, MS6-LFM-1/4-AUV | 1-207 |
| 107426-0000 | GUIDE SLEEVE | 4-55, 9-17 |
| 209183-0000 | RING | 1-261 |
| 232979-0000 | PRESSURE ROLLER (PAK OF 10) | 1-197, 1-199, 9-19, 9-21, 9-23, 9-25 |
| 239874-0000 | WASHER | 4-11 |
| 246513-0000 | BEARING | 4-11, 4-17 |
| 247358-0000 | SHIFTER HANDLE | 1-43, 1-45 |
| 256628-0000 | PIECE | 4-15, 4-21 |
| 256629-0001 | AXLE PIN | 4-15, 4-21 |
| 257330-0000 | PRESSURE ROLLER (10 PCS) | 1-197, 1-199, 9-19, 9-21, 9-23, 9-25 |
| 263150-0000 | BRACKET | 7-39, 7-125 |
| 263152-0000 | SHAFT | 7-39, 7-125 |
| 263153-0000 | NUT | 7-39, 7-125 |
| 263311-0000 | WASHER | 1-81 |
| 263655-0007 | SHAFT | 1-149 |
| 263655-0009 | SHAFT | 1-143, 1-145, 1-147, 1-149 |
| 263655-0015 | SHAFT | 1-149 |
| 266737-0000 | WASHER | 1-305, 1-307 |
| 269151-0000 | SHAFT | 1-161, 1-163 |
| 271860-0000 | CLAMP BLOCK | 1-21, 1-27, 1-71, 1-73 |
| 272728-0000 | BARRIER | 7-59 |
| 273429-0000 | WASHER | 1-189 |
| 273450-0000 | SIGN, AIR SPRAY | 1-313, 1-315 |
| 273452-0000 | SIGN, ROLLING MACHINE FOR FABRICS | 1-313, 1-315 |
| 273455-0000 | SIGN, COLD WATER | 6-87, 6-89 |
| 273458-0000 | SIGN, AIR | 7-139, 7-141 |
| 273977-0000 | NUT | 2-35 |
| 273978-0000 | LEVEL GLAS | 2-35 |
| 273980-0000 | SPRING | 2-35 |
| 273981-0000 | GASKET | 2-25 |
| 273996-0000 | NUT | 2-35 |
| 276398-0000 | HEXAGON NIPPLE | 2-191, 2-193 |
| 279008-0000 | BUSHING | 1-43, 1-45 |
| 311102-0185 | PARALLEL PIN ISO 2338 2M6X6 ST | 7-131 |
| 311102-0238 | PARALLEL PIN ISO 2338 3M6X20 ST | 5-11, 5-13, 5-15 |
| 311102-1355 | PARALLEL PIN ISO 2338 6M6X24 ST | 7-89 |
| 311103-0233 | PARALLEL PIN ISO 2338 3M6X10 A1 | 4-115, 4-117, 4-135, 4-137 |
| 311103-0234 | PARALLEL PIN ISO 2338 3M6X12 A1 | 4-57, 4-59, 4-65, 4-67, 4-115, 4-117, 4-135, 4-137, 5-181 |
| 311103-0235 | PARALLEL PIN ISO 2338 3M6X14 A1 | 1-53, 7-71, 7-73 |

| Part No | Description | Page No |
|---|---|---|
| 311103-0236 .. | PARALLEL PIN ISO 2338 3M6X16 A1 | 1-93, 1-95, 1-97, 1-99, 1-101, 1-103, 1-105, 1-107, 1-109, 1-115, 1-117, 1-119, 1-121, 1-123, 7-127, 7-135 |
| 311103-0238 .. | PARALLEL PIN ISO 2338 3M6X20 A1 | 1-161, 1-163, 7-131 |
| 311103-0267 .. | PARALLEL PIN ISO 2338 4M6X10 A1 | 4-57, 4-59, 4-65, 4-67, 4-115, 4-117, 4-135, 4-137 |
| 311103-0268 .. | PARALLEL PIN ISO 2338 4M6X12 A1 | 4-77, 4-79, 4-81, 4-83, 4-99, 4-101, 4-103, 4-105, 4-115, 4-117, 4-135, 4-137 |
| 311103-0270 .. | PARALLEL PIN ISO 2338 4M6X16 A1 | 1-271, 1-273, 2-33, 4-169, 4-171 |
| 311103-0272 .. | PARALLEL PIN ISO 2338 4M6X20 A1 | 4-169, 4-171 |
| 311103-0274 .. | PARALLEL PIN ISO 2338 4M6X25 A1 | 7-59 |
| 311103-0276 .. | PARALLEL PIN ISO 2338 4M6X30 A1 | 1-161, 1-163 |
| 311103-0277 .. | PARALLEL PIN ISO 2338 4M6X32 A1 | 7-113 |
| 311103-0305 .. | PARALLEL PIN ISO 2338 5M6X10 A1 | 1-181 |
| 311103-0306 .. | PARALLEL PIN ISO 2338 5M6X12 A1 | 1-157, 1-159, 1-161, 1-163 |
| 311103-0307 .. | PARALLEL PIN ISO 2338 5M6X14 A1 | 1-181, 3-7, 3-21 |
| 311103-0308 .. | PARALLEL PIN ISO 2338 5M6X16 A1 | 1-79, 4-169, 4-171 |
| 311103-0309 .. | PARALLEL PIN ISO 2338 5M6X18 A1 | 4-169, 4-171 |
| 311103-0310 .. | PARALLEL PIN ISO 2338 5M6X20 A1 | 4-169, 4-171, 7-65 |
| 311103-0314 .. | PARALLEL PIN ISO 2338 5M6X30 A1 | 7-87 |
| 311103-0315 .. | PARALLEL PIN ISO 2338 5M6X32 A1 | 4-169, 4-171 |
| 311103-0322 .. | PARALLEL PIN ISO 2338 5M6X50 A1 | 5-181 |
| 311103-0351 .. | PARALLEL PIN ISO 2338 6M6X16 A1 | 1-79, 4-33, 4-35, 7-41, 7-43, 7-65 |
| 311103-0352 .. | PARALLEL PIN ISO 2338 6M6X18 A1 | 3-15 |
| 311103-0353 .. | PARALLEL PIN ISO 2338 6M6X20 A1 | 5-177 |
| 311103-0354 .. | PARALLEL PIN ISO 2338 6M6X22 A1 | 4-29, 4-31 |
| 311103-0355 .. | PARALLEL PIN ISO 2338 6M6X25 A1 | 7-13 |
| 311103-0359 .. | PARALLEL PIN ISO 2338 6M6X35 A1 | 7-117 |
| 311103-0400 .. | PARALLEL PIN ISO 2338 8M6X18 A | 4-169, 4-171 |
| 311103-0401 .. | PARALLEL PIN ISO 2338 8M6X20 A1 | 7-61 |
| 311103-0402 .. | PARALLEL PIN ISO 2338 8M6X22 A1 | 4-169, 4-171 |
| 311103-0404 .. | PARALLEL PIN ISO 2338 8M6X28 A1 | 1-289, 1-291 |
| 311103-0407 .. | PARALLEL PIN ISO 2338 8M6X35 A1 | 5-29 |
| 311103-0409 .. | PARALLEL PIN ISO 2338 8M6X40 A1 | 3-15 |
| 311103-0413 .. | PARALLEL PIN ISO 2338 8M6X50 A1 | 1-21, 1-27, 1-71, 1-73 |
| 311103-0458 .. | PARALLEL PIN ISO 2338 10M6X30 A1 | 7-113 |
| 311103-1240 .. | PARALLEL PIN ISO 2338 3M6X24 A1 | 7-131 |
| 311103-1274 .. | PARALLEL PIN ISO 2338 4M6X24 A1 | 1-143, 1-145, 1-147, 1-149 |
| 311103-1355 .. | PARALLEL PIN ISO 2338 6M6X24 A1 | 7-113 |
| 311103-1403 .. | PARALLEL PIN ISO 2338 8M6X24 A1 | 1-271, 1-273, 5-183 |
| 311103-1456 .. | PARALLEL PIN ISO 2338 10M6X24 A1 | 2-67, 3-7, 3-21 |
| 311112-0255 .. | SPRING PIN, ISO 8752 4X18-C | 4-45, 4-47 |
| 311112-0256 .. | SPRING PIN, ISO 8752 4X20-C | 4-45, 4-47, 4-49 |
| 311112-0258 .. | SPRING PIN, ISO 8752 4X24-C | 4-45, 4-47 |
| 311112-0262 .. | SPRING PIN, ISO 8752 4X32-C | 1-43, 1-45 |
| 311112-0263 .. | SPRING PIN, ISO 8752 4X35-C | 4-45, 4-47 |
| 311112-0341 .. | SPRING PIN, ISO 8752 6X24-C | 7-61 |
| 311112-0385 .. | SPRING PIN, ISO 8752 8X50-C | 7-59 |
| 311520-0320 .. | RIVET, BLANK 2,4X6 | 8-53 |
| 311520-0329 .. | RIVET, BLANK 2,4X8 | 6-79 |
| 311521-0142 .. | RIVET, BLANK 3,2X6 | 9-3 |
| 312101-0455 .. | SCREW M6S M8X30 FZB | 7-41, 7-43 |
| 312104-0461 .. | SCREW M6S M8X50H FZB | 1-293, 2-179 |
| 312105-0153 .. | SCREW EN 10642 MF6S M5X25 A480 | 2-37 |
| 312105-0285 .. | SCREW M6S ISO 4017 M4X6 A470 | 2-245, 4-115, 4-117, 4-127, 4-129, 4-131, 4-135, 4-137, 4-145, 4-147, 4-149, 4-153, 4-155, 4-157, 4-161, 4-163, 4-165, 5-11, 5-13, 5-15 |
| 312105-0287 .. | SCREW M6S ISO 4017 M4X8 A470 | 1-19, 1-83, 1-161, 1-163, 1-189, 1-193, 1-215, 1-339, 2-183, 2-185, 4-177, 5-43, 5-185, 6-33, 7-13, 7-107, 7-117 |
| 312105-0289 .. | SCREW M6S H4X10 A4 70 ISO4017/DIN933 | 1-23, 1-25, 1-47, 1-49, 1-51, 1-93, 1-95, 1-97, 1-99, 1-101, 1-103, 1-105, 1-107, 1-109, 1-115, 1-117, 1-119, 1-121, 1-123, 1-207, 1-215, 2-157, 2-183, 2-185, 2-189, 4-85, 5-11, 5-13, 5-15, 5-65, 5-67, 5-69, 5-71, 7-65, 7-71, 7-73, 7-75, 7-85, 7-87, 7-101, 7-103 |
| 312105-0291 .. | SCREW M6S ISO 4017 M4X12 A470 | 1-53, 1-207, 2-247, 6-67, 7-31, 7-107 |
| 312105-0293 .. | SCREW M6S ISO 4017 M4X16 A470 | 1-207, 1-277, 1-341, 2-247, 7-89 |
| 312105-0295 .. | SCREW M6S ISO 4017 M4X20 A470 | 1-305, 1-307, 2-85, 4-11, 4-13, 4-15, 4-17, 4-19, 4-21, 4-61, 4-69, 6-65, 6-67, 7-63 |
| 312105-0297 .. | SCREW M6S ISO 4017 M4X25 A470 | 1-17, 1-177, 4-45, 4-47, 4-49, 7-13, 7-67, 7-69, 7-71, 7-73, 7-139, 7-141 |
| 312105-0299 .. | SCREW M6S ISO 4017 M4X30 A470 | 1-17, 7-97, 7-99 |
| 312105-0301 .. | SCREW M6S ISO 4017 M4X35 A470 | 1-81, 1-207, 7-117 |
| 312105-0303 .. | SCREW M6S ISO 4017 M4X40 A470 | 1-229, 1-231 |
| 312105-0323 .. | SCREW M6S ISO 4017 M5X8 A480 | 1-65, 1-111, 4-45, 4-47, 4-93, 4-95, 4-109, 4-111, 5-163, 5-165, 5-185, 5-189 |
| 312105-0325 .. | SCREW M6S ISO 4017 M5X10 A480 | 1-53, 1-83, 1-135, 1-137, 1-161, 1-163, 2-49, 2-67, 3-17, 3-25, 4-9, 5-89, 5-91, 5-179, 7-17 |
| 312105-0327 .. | SCREW M6S ISO 4017 M5X12 A480 | 1-39, 1-41, 1-55, 1-75, 1-77, 1-79, 1-93, 1-95, 1-97, 1-99, 1-101, 1-103, 1-105, 1-107, 1-109, 1-115, 1-117, 1-119, 1-121, 1-123, 1-133, 1-135, 1-137, 1-161, 1-163, 1-239, 1-269, 1-339, 1-349, 1-351, 2-73, 2-183, 2-185, 4-13, 4-19, 4-115, 4-117, 4-135, 4-137, 5-23, 5-29, 5-39, 5-185, 6-29, 6-33, 7-13, 7-63, 7-113, 7-151, 7-163, 7-167, 9-41 |
| 312105-0328 .. | SCREW M6S ISO 4017 M5X14 A480 | 4-169, 4-171 |
| 312105-0329 .. | SCREW M6S ISO 4017 M5X16 A480 | 1-55, 1-57, 1-59, 1-75, 1-77, 1-93, 1-95, 1-97, 1-99, 1-101, 1-103, 1-105, 1-107, 1-109, 1-115, 1-117, 1-119, 1-121, 1-123, 1-135, 1-137, 1-157, 1-159, 1-289, 1-291, 1-305, 1-307, 1-329, 1-339, 1-341, 2-39, 4-13, 4-19, 4-77, 4-79, 4-99, 4-101, 4-115, 4-117, 4-135, 4-137, 5-23, 5-29, 5-131, 5-133, 5-189, 6-11, 6-29, 7-17, 7-41, 7-43, 7-89, 7-137, 7-139, 7-141 |
| 312105-0331 .. | SCREW M6S ISO 4017 M5X20 A480 | 1-133, 1-135, 1-137, 1-157, 1-159, 1-305, 1-307, 1-339, 4-29, 4-31, 4-115, 4-117, 4-135, 4-137, 4-169, 4-171, 7-169 |

| Part No | Description | Page No |
|---|---|---|
| 312105-0333 .. | SCREW M6S ISO 4017 M5X25 A480 | 1-209, 1-233, 2-129, 2-201, 2-203, 2-227, 2-235, 4-45 4-47, 4-115, 4-117, 4-135, 4-137, 7-67, 7-69 |
| 312105-0335 .. | SCREW M6S ISO 4014 M5X30 A480 | 4-11, 4-17, 4-115, 4-117, 4-135, 4-137, 7-123 |
| 312105-0337 .. | SCREW M6S ISO 4014 M5X35 A480 | 2-49, 4-115, 4-117, 4-135, 4-137, 7-97 |
| 312105-0339 .. | SCREW M6S ISO 4014 M5X40 A480 | 1-23, 1-25, 4-115, 4-117, 4-135, 4-137 |
| 312105-0340 .. | SCREW M6S ISO 4014 M5X45 A480 | 1-277, 2-183, 2-185, 4-115, 4-117, 4-135, 4-137 |
| 312105-0341 .. | SCREW M6S ISO 4014 M5X50 A480 | 6-9 |
| 312105-0362 .. | SCREW M6S ISO 4017 M6X8 A480 | 1-23, 1-25, 1-75, 1-77, 1-161, 1-163, 1-229, 1-231, 1-233 1-267, 2-241, 4-11, 4-15, 4-17, 4-21, 4-81, 4-83, 4-89, 4-91, 4-103, 4-105, 5-23, 5-29, 5-31, 5-33 5-35, 5-37, 5-39, 7-77, 7-99 |
| 312105-0364 .. | SCREW M6S ISO 4017 M6X10 A480 | 1-53, 1-83, 1-161, 1-163, 1-239, 1-289, 1-291, 2-39, 2-117 2-127, 5-31, 5-33, 5-35, 5-37, 5-113, 5-115, 7-41, 7-43, 7-61, 7-135 |
| 312105-0366 .. | SCREW M6S ISO 4017 M6X12 A480 | 1-13, 1-15, 1-23, 1-25, 1-29, 1-31, 1-33, 1-35, 1-37, 1-53 1-57, 1-59, 1-61, 1-63, 1-79, 1-153, 1-155, 1-179, 1-181, 1-189, 1-207, 1-209, 1-229, 1-231, 1-243 1-261, 1-265, 1-269, 1-277, 1-279, 1-281, 1-313, 1-315, 1-329, 1-331, 1-333, 1-339, 1-349, 1-351 2-31, 2-37, 2-49, 2-63, 2-67, 2-69, 2-89, 2-91, 2-93, 2-117, 2-119, 2-137, 2-147, 2-189, 2-203 2-209, 2-211, 2-215, 2-221, 2-223, 2-227, 2-235, 2-243, 2-245, 2-249, 3-13, 4-11, 4-17, 4-43, 4-81 4-83, 4-103, 4-105, 4-115, 4-117, 4-135, 4-137, 5-17, 5-23, 5-29, 5-31, 5-33, 5-35, 5-37, 5-89, 5-91 5-129, 5-139, 5-141, 5-143, 5-171, 6-9, 6-13, 6-21, 6-23, 6-33, 6-39, 7-19, 7-23, 7-25, 7-39, 7-41 7-43, 7-49, 7-77, 7-107, 7-121, 7-125, 7-139, 7-141, 7-149, 9-7, 9-9, 9-13, 9-15 |
| 312105-0367 .. | SCREW M6S ISO 4017 M6X14 A480 | 1-329, 2-39, 2-121, 4-49, 5-25, 5-27, 5-31, 5-33, 5-35, 5-37 5-175, 6-81, 6-83, 7-29, 7-61, 7-63 |
| 312105-0368 .. | SCREW M6S ISO 4017 M6X16 A480 | 1-13, 1-15, 1-17, 1-21, 1-23, 1-25, 1-27, 1-37, 1-47, 1-49 1-51, 1-55, 1-61, 1-71, 1-73, 1-75, 1-77, 1-79, 1-161, 1-163, 1-207, 1-267, 1-269, 1-277, 1-299 1-301, 1-313, 1-315, 1-323, 1-329, 1-341, 2-25, 2-39, 2-49, 2-55, 2-57, 2-67, 2-83, 2-95, 2-103 2-109, 2-117, 2-139, 2-143, 2-209, 2-241, 2-245, 2-247, 4-73, 4-75, 5-11, 5-13, 5-15, 5-19, 5-23 5-25, 5-27, 5-29, 5-31, 5-33, 5-35, 5-37, 5-79, 5-81, 5-107, 5-109, 5-111, 5-123, 5-125, 5-127 5-129, 5-139, 5-141, 5-143, 5-173, 5-177, 6-9, 6-19, 6-55, 6-57, 6-59, 6-63, 6-93, 6-97, 7-7, 7-41 7-43, 7-65, 7-71, 7-73, 7-105, 7-119, 7-137, 7-139, 7-141, 7-173, 8-69 |
| 312105-0370 .. | SCREW M6S ISO 4017 M6X20 A480 | 1-23, 1-25, 1-29, 1-31, 1-33, 1-35, 1-37, 1-39, 1-41, 1-43 1-45, 1-47, 1-49, 1-51, 1-57, 1-59, 1-61, 1-67, 1-71, 1-75, 1-77, 1-153, 1-155, 1-161, 1-163, 1-173 1-175, 1-177, 1-181, 1-191, 1-243, 1-271, 1-273, 1-297, 1-299, 1-301, 1-329, 1-339, 1-349, 1-351 2-33, 2-67, 2-89, 2-91, 2-137, 2-161, 2-163, 2-175, 2-177, 2-245, 4-7, 4-45, 4-47, 4-49, 4-115 4-117, 4-135, 4-137, 4-169, 4-171, 5-31, 5-33, 5-35, 5-37, 5-43, 5-63, 5-89, 5-91, 5-139, 5-141 5-143, 5-153, 5-169, 5-171, 5-177, 6-87, 6-89, 6-97, 7-7, 7-19, 7-29, 7-63, 7-65, 7-87, 7-89, 7-91 7-93, 7-117, 7-135 |
| 312105-0372 .. | SCREW M6S ISO 4017 M6X25 A480 | 1-13, 1-15, 1-53, 1-55, 1-57, 1-59, 1-63, 1-157, 1-159 1-161, 1-163, 1-237, 1-269, 1-299, 1-301, 1-329, 1-335, 2-33, 2-103, 4-45, 4-47, 4-49, 5-19, 5-23 5-25, 5-27, 5-29, 5-31, 5-33, 5-35, 5-37, 5-97, 5-99, 5-139, 5-141, 5-143, 5-177, 5-179, 7-13, 7-37 7-97, 7-107, 7-109, 7-111 |
| 312105-0374 .. | SCREW M6S ISO 4014 M6X30 A480 | 1-161, 1-163, 1-271, 1-273, 2-245, 4-31, 4-77, 4-79, 4-99 4-101, 5-11, 5-13, 5-15, 5-25, 5-27, 5-31, 5-33, 5-35, 5-37, 7-65, 7-135 |
| 312105-0376 .. | SCREW M6S ISO 4014 M6X35 A480 | 1-17, 5-29, 5-31, 5-33, 5-35, 5-37, 5-113, 5-115, 5-153, 7-89 |
| 312105-0378 .. | SCREW M6S ISO 4014 M6X40 A480 | 4-33, 4-35, 4-37, 4-39, 6-11, 7-97 |
| 312105-0379 .. | SCREW M6S ISO 4014 M6X45 A480 | 2-25, 5-17, 5-25, 5-27 |
| 312105-0380 .. | SCREW M6S ISO 4014 M6X50 A480 | 7-71, 7-73, 7-97 |
| 312105-0381 .. | SCREW M6S ISO 4014 M6X55 A480 | 1-185, 2-69, 5-29, 5-135, 5-137, 7-7 |
| 312105-0382 .. | SCREW M6S ISO 4014 M6X60 A480 | 1-193, 2-247, 5-17, 7-7, 7-59 |
| 312105-0384 .. | SCREW M6S ISO 4014 M6X70 A480 | 1-271, 1-273, 7-173 |
| 312105-0388 .. | SCREW M6S ISO 4014 M6X90 A480 | 1-345 |
| 312105-0447 .. | SCREW M6S ISO 4017 M8X12 A480 | 1-75, 1-77, 1-265, 1-345, 2-27, 2-117, 2-161, 2-163, 2-175 2-177, 2-241, 3-27, 4-73, 4-75, 4-87, 4-107, 5-83, 5-85, 5-87, 5-101, 5-103, 5-163, 5-165 |
| 312105-0449 .. | SCREW M6S ISO 4017 M8X16 A480 | 1-17, 1-21, 1-27, 1-75, 1-77, 1-135, 1-137, 1-181, 1-183 1-237, 1-265, 1-271, 1-273, 2-17, 2-19, 2-23, 2-63, 2-83, 2-179, 2-245, 4-9, 4-29, 4-31, 4-73, 4-75 5-123, 5-125, 5-127, 5-155, 5-157, 5-159, 6-55, 6-57, 7-41, 7-43, 7-63 |
| 312105-0451 .. | SCREW M6S ISO 4017 M8X20 A480 | 1-17, 1-21, 1-23, 1-25, 1-27, 1-39, 1-41, 1-53, 1-71, 1-73 1-133, 1-135, 1-137, 1-143, 1-145, 1-147, 1-149, 1-157, 1-159, 1-161, 1-163, 1-179, 1-189, 1-253 1-269, 1-293, 2-23, 2-25, 2-27, 2-39, 2-73, 2-121, 2-179, 5-23, 5-29, 5-83, 5-85, 5-87, 5-107 5-109, 5-111, 5-117, 5-119, 5-123, 5-125, 5-127, 5-139, 5-141, 5-143, 5-155, 5-161, 5-169, 5-171 5-173, 5-177, 6-39, 6-55, 6-57, 7-107, 7-121, 7-135 |
| 312105-0452 .. | SCREW M6S ISO 4017 M8X22 A480 | 2-73, 2-103, 4-173, 4-175, 5-11, 5-13, 5-15 |
| 312105-0453 .. | SCREW M6S ISO 4017 M8X25 A480 | 1-23, 1-25, 1-75, 1-77, 1-135, 1-137, 1-153, 1-155, 1-175 1-177, 1-179, 1-183, 1-187, 1-189, 1-191, 1-233, 1-269, 1-289, 1-291, 2-17, 2-19, 2-23, 2-69, 2-73 4-7, 4-15, 4-21, 4-29, 4-31, 5-23, 5-63, 5-79, 5-81, 5-107, 5-109, 5-111, 5-117, 5-119, 5-123 5-125, 5-127, 5-129, 5-131, 5-133, 5-177, 5-183, 6-37, 6-49, 6-51, 7-41, 7-43, 7-61, 7-97, 7-121 7-135, 9-7, 9-9, 9-13, 9-15 |
| 312105-0455 .. | SCREW M6S ISO 4017 M8X30 A480 | 1-23, 1-25, 1-75, 1-77, 1-179, 1-197, 1-199, 1-265, 1-269 2-69, 4-13, 4-15, 4-19, 4-21, 5-19, 5-43, 5-87, 5-89, 5-91, 5-107, 5-109, 5-111, 5-129, 5-139 5-141, 5-143, 5-177, 7-29, 7-47 |
| 312105-0457 .. | SCREW M6S ISO 4014 M8X35 A480 | 2-11, 2-73, 5-19, 5-89, 5-91, 5-107, 5-109, 5-111, 5-123 5-125, 5-127, 5-129, 5-139, 5-141, 5-143, 7-119, 7-135 |
| 312105-0459 .. | SCREW M6S ISO 4014 M8X40 A480 | 4-169, 4-171, 7-61, 7-97, 7-135 |
| 312105-0460 .. | SCREW M6S ISO 4014 M8X45 A480 | 4-77, 4-79, 4-81, 4-83, 4-99, 4-101, 4-103, 4-105, 4-169 4-171, 7-135 |
| 312105-0461 .. | SCREW M6S ISO 4014 M8X50 A480 | 4-169, 4-171, 5-107, 5-109, 5-111 |
| 312105-0462 .. | SCREW M6S ISO 4014 M8X55 A480 | 1-143, 1-145, 1-147, 1-149, 1-265, 4-43, 5-107, 5-109 5-111, 5-117, 5-119 |
| 312105-0463 .. | SCREW M6S ISO 4014 M8X60 A480 | 4-7, 5-117, 5-119, 5-129, 5-161 |
| 312105-0464 .. | SCREW M6S ISO 4014 M8X65 A480 | 5-117, 5-119, 7-61 |
| 312105-0465 .. | SCREW M6S ISO 4014 M8X70 A480 | 5-117, 5-119, 5-129 |
| 312105-0466 .. | SCREW M6S ISO 4014 M8X75 A480 | 2-29, 5-117, 5-119, 5-129 |
| 312105-0467 .. | SCREW M6S ISO 4014 M8X80 A480 | 5-163, 5-165 |
| 312105-0469 .. | SCREW M6S ISO 4014 M8X90 A480 | 4-87, 4-107 |
| 312105-0487 .. | SCREW M6S ISO 4017 M10X12 A480 | 7-173 |

| Part No | Description | Page No |
|---|---|---|
| 312105-0489 .. | SCREW M6S ISO 4017 M10X16 A480 | 1-75, 1-77, 5-79, 5-81, 7-173 |
| 312105-0491 .. | SCREW M6S ISO 4017 M10X20 A480 | 1-255, 1-289, 1-291, 2-161, 2-163, 5-131, 5-133, 5-161 |
| 312105-0493 .. | SCREW M6S ISO 4017 M10X25 A480 | 1-93, 1-95, 1-97, 1-99, 1-101, 1-103, 1-105, 1-107, 1-109 1-289, 1-291, 2-75, 2-77, 5-39, 5-43, 5-177, 5-183, 7-173 |
| 312105-0495 .. | SCREW M6S ISO 4017 M10X30 A480 | 1-143, 1-145, 1-147, 1-149, 1-189, 1-197, 1-199, 1-255 2-161, 2-163, 2-175, 2-177, 2-179, 4-127, 4-129, 4-131, 4-145, 4-147, 4-149, 4-153, 4-155, 4-157 4-161, 4-163, 4-165, 5-23, 5-29, 5-79, 5-81, 5-89, 5-91, 5-131, 5-133, 6-55, 6-57 |
| 312105-0497 .. | SCREW M6S ISO 4017 M10X35 A480 | 1-183, 3-5, 3-19, 5-131, 5-133 |
| 312105-0499 .. | SCREW M6S ISO 4014 M10X40 A480 | 1-183, 4-127, 4-129, 4-131, 4-145, 4-147, 4-149, 4-153 4-155, 4-157, 4-161, 4-163, 4-165, 6-49 |
| 312105-0500 .. | SCREW M6S ISO 4014 M10X45 A480 | 5-131, 5-133, 7-17 |
| 312105-0501 .. | SCREW M6S ISO 4014 M10X50 A480 | 5-131, 5-133 |
| 312105-0503 .. | SCREW M6S ISO 4014 M10X60 A480 | 5-131, 5-133, 9-3 |
| 312105-0505 .. | SCREW M6S ISO 4014 M10X70 A480 | 1-289, 1-291 |
| 312105-0506 .. | SCREW M6S ISO 4014 M10X75 A480 | 2-161, 2-163 |
| 312105-0517 .. | SCREW M6S ISO 4014 M10X130 A480 | 1-287 |
| 312105-0532 .. | SCREW M6S ISO 4017 M12X20 A480 | 1-39, 1-41, 1-75, 1-77 |
| 312105-0534 .. | SCREW M6S ISO 4017 M12X25 A480 | 8-5, 8-7 |
| 312105-0536 .. | SCREW M6S ISO 4017 M12X30 A480 | 1-75, 1-77, 2-175, 2-177 |
| 312105-0538 .. | SCREW M6S ISO 4017 M12X35 A480 | 1-75, 1-77, 2-9, 2-67, 2-117 |
| 312105-0542 .. | SCREW M6S ISO 4014 M12X50 A480 | 3-27 |
| 312105-0546 .. | SCREW M6S ISO 4014 M12X70 A480 | 3-27 |
| 312105-0547 .. | SCREW M6S ISO 4014 M12X75 A480 | 7-41, 7-43 |
| 312105-0550 .. | SCREW M6S ISO 4014 M12X90 A480 | 4-7 |
| 312105-0552 .. | SCREW M6S ISO 4014 M12X100 A480 | 4-7 |
| 312105-0622 .. | SCREW M6S ISO 4017 M16X25 A480 | 2-175, 2-177 |
| 312105-0630 .. | SCREW M6S ISO 4017 M16X50 A480 | 7-41, 7-43 |
| 312105-0632 .. | SCREW M6S ISO 4014 M16X60 A480 | 1-183 |
| 312105-0633 .. | SCREW M6S ISO 4014 M16X65 A480 | 2-161, 2-163 |
| 312105-0638 .. | SCREW M6S ISO 4014 M16X90 A480 | 2-9, 2-117 |
| 312105-0674 .. | SCREW M6S ISO 4017 M20X50 A480 | 2-161, 2-163 |
| 312109-0335 .. | SCREW M6S ISO 4017 M5X30 A480 | 4-37, 4-39, 7-7 |
| 312109-0374 .. | SCREW M6S ISO 4017 M6X30 A480 | 1-55, 1-135, 1-137, 1-175, 1-177, 2-17, 2-19, 3-7, 3-21 3-29, 4-169, 4-171, 5-29, 5-31, 5-33, 5-35, 5-37, 7-77, 7-87, 7-105 |
| 312109-0376 .. | SCREW M6S ISO 4017 M6X35 A480 | 1-229, 1-231, 1-233, 1-277, 5-31, 5-33, 5-35, 5-37, 5-43 |
| 312109-0378 .. | SCREW M6S ISO 4017 M6X40 A480 | 1-237, 2-161, 2-163, 2-245, 4-29, 5-135, 5-137, 7-123 |
| 312109-0380 .. | SCREW M6S ISO 4017 M6X50 A480 | 1-229, 1-231, 2-33, 6-39 |
| 312109-0381 .. | SCREW M6S ISO 4017 M6X55 A480 | 1-179 |
| 312109-0457 .. | SCREW M6S ISO 4017 M8X35 A480 | 1-179, 1-205, 5-107, 5-109, 5-111, 5-117, 5-119, 6-55, 6-57 |
| 312109-0459 .. | SCREW M6S ISO 4017 M8X40 A480 | 1-23, 1-25, 1-115, 1-117, 1-119, 1-121, 1-123, 4-15, 4-21 5-87, 5-129 |
| 312109-0460 .. | SCREW M6S ISO 4017 M8X45 A480 | 1-115, 1-117, 1-119, 1-121, 1-123, 4-11, 4-17, 5-79, 5-81 |
| | | 5-117, 5-119, 5-129, 5-139, 5-141, 5-143 |
| 312109-0461 .. | SCREW M6S ISO 4017 M8X50 A480 | 1-143, 1-145, 1-147, 1-149, 5-89, 5-91, 5-117, 5-119 5-129, 7-135 |
| 312109-0463 .. | SCREW M6S ISO 4017 M8X60 A480 | 5-23, 5-29, 5-43, 5-129 |
| 312109-0467 .. | SCREW M6S ISO 4017 M8X80 A480 | 5-177 |
| 312109-0499 .. | SCREW M6S ISO 4017 M10X40 A480 | 3-7, 3-21, 5-23, 5-29, 5-41 |
| 312109-0500 .. | SCREW M6S ISO 4017 M10X45 A480 | 1-75, 1-77, 5-23 |
| 312109-0501 .. | SCREW M6S ISO 4017 M10X50 A480 | 5-41 |
| 312109-0541 .. | SCREW M6S ISO 4017 M12X45 A480 | 2-161, 2-163 |
| 312109-0544 .. | SCREW M6S ISO 4017 M12X60 A480 | 2-17, 2-19 |
| 312111-0291 .. | SCREW HEX.SOCK.HD.MC6S-TT 4X12 88 FZB | 7-67, 7-69 |
| 312111-0297 .. | SCREW HEX.SOCK.HD.MC6S-TT 4X25 88 FZB | 8-5, 8-7 |
| 312111-0331 .. | SCREW HEX.SOCK.HD.MC6S-TT 5X20 88 FZB | 7-107 |
| 312111-0343 .. | SCREW HEX.SOCK.HD.MC6S-TT 5X60 88 FZB | 7-133 |
| 312111-0630 .. | SCREW HEX.SOCK.HD.MC6S-TT 16X50 88 FZB | 2-157, 2-161, 2-163, 2-175, 2-177 |
| 312115-0222 .. | SCREW ISO4762 M3X8 A4 80 | 4-45, 4-47, 4-49, 9-7, 9-9, 9-13, 9-15 |
| 312115-0224 .. | SCREW ISO4762 M3X10 A4 80 | 8-5, 8-7 |
| 312115-0226 .. | SCREW ISO4762 M3X12 A4 80 | 7-13, 8-61, 8-63 |
| 312115-0228 .. | SCREW ISO4762 M3X16 A4 80 | 1-305, 1-307, 5-23, 5-29, 7-63 |
| 312115-0230 .. | SCREW ISO4762 M3X20 A4 80 | 5-139, 5-141, 5-143 |
| 312115-0232 .. | SCREW ISO4762 M3X25 A4 80 | 5-79, 5-81 |
| 312115-0285 .. | SCREW ISO4762 M4X6 A4 80 | 3-17, 3-25, 4-77, 4-79, 4-81, 4-83, 4-99, 4-101, 4-103, 4-105, 7-13 |
| 312115-0287 .. | SCREW ISO4762 M4X8 A4 80 | 1-205, 1-233, 7-67, 7-69, 7-93, 7-113, 7-131, 8-9, 8-11, 8-23 |
| 312115-0289 .. | SCREW ISO4762 M4X10 A4 80 | 1-85, 1-331, 1-333, 7-29, 7-131, 7-149, 8-9, 8-11, 8-61, 8-63 |
| 312115-0291 .. | SCREW ISO4762 M4X12 A4 80 | 1-223, 2-33, 2-119, 3-11, 3-23, 5-73, 5-75, 5-77, 7-13, 7-47 7-53, 7-67, 7-69, 7-113, 7-117, 8-53, 9-37 |
| 312115-0293 .. | SCREW ISO4762 M4X16 A4 80 | 4-57, 4-59, 4-65, 4-67, 5-191, 7-109, 7-113, 7-117, 7-131, 9-37 |
| 312115-0295 .. | SCREW ISO4762 M4X20 A4 80 | 1-17, 4-57, 4-59, 4-65, 4-67, 7-109 |
| 312115-0297 .. | SCREW ISO4762 M4X25 A4 80 | 4-57, 4-59, 4-65, 4-67, 7-113, 9-17 |
| 312115-0299 .. | SCREW ISO4762 M4X30 A4 80 | 7-67, 7-69, 7-113, 7-131 |
| 312115-0303 .. | SCREW ISO4762 M4X40 A4 80 | 7-65, 7-67, 7-69 |
| 312115-0305 .. | SCREW ISO4762 M4X50 A4 80 | 1-207, 1-313, 1-315, 2-127 |
| 312115-0323 .. | SCREW ISO4762 M5X8 A4 80 | 1-339, 3-15, 4-89, 4-91, 5-135, 5-137, 7-91, 7-93, 8-9, 8-11, 8-13 8-15, 8-17, 8-19, 8-21, 8-23, 8-29, 8-31, 8-33, 8-35, 8-37, 8-39, 8-41, 8-43, 9-7, 9-9, 9-13, 9-15 |
| 312115-0325 .. | SCREW ISO4762 M5X10 A4 80 | 1-47, 1-49, 1-51, 2-75, 2-77, 4-115, 4-117, 4-135, 4-137, 8-5, 8-7 |
| 312115-0327 .. | SCREW ISO4762 M5X12 A4 80 | 1-313, 1-315, 1-339, 1-341, 2-49, 2-157, 2-179, 2-203, 2-215 2-221, 2-223, 2-235, 4-77, 4-79, 4-99, 4-101, 6-55, 6-57, 6-69, 6-71, 6-75, 6-79, 7-65, 7-67, 7-69 7-137, 7-151, 7-153, 7-155, 7-159, 7-163, 7-167, 7-169, 8-37, 8-39 |
| 312115-0328 .. | SCREW ISO4762 M5X14 A4 80 | 4-97, 4-115, 4-117, 4-135, 4-137, 4-169, 4-171, 6-11, 7-107 7-131, 8-9, 8-11 |
| 312115-0329 .. | SCREW ISO4762 M5X16 A4 80 | 1-271, 1-273, 4-11, 4-17, 4-173, 4-175, 5-179, 7-41, 7-43 7-111, 7-113, 7-127, 7-131 |

| Part No | Description | Page No |
|---|---|---|
| 312115-0331 .. | SCREW ISO4762 M5X20 A4 80 | 1-39, 1-47, 1-49, 1-51, 2-33, 7-19, 7-41, 7-43, 7-61, 7-97, 7-111, 7-117 |
| 312115-0333 .. | SCREW ISO4762 M5X25 A4 80 | 5-183, 6-29 |
| 312115-0335 .. | SCREW ISO4762 M5X30 A4 80 | 7-93, 7-127, 7-173, 9-7, 9-9, 9-13, 9-15 |
| 312115-0337 .. | SCREW ISO4762 M5X35 A4 80 | 2-161, 2-163, 7-113, 7-127, 7-133 |
| 312115-0339 .. | SCREW ISO4762 M5X40 A4 80 | 2-99, 7-89 |
| 312115-0340 .. | SCREW ISO4762 M5X45 A4 80 | 2-99, 2-135 |
| 312115-0345 .. | SCREW ISO4762 M5X70 A4 70 | 2-75, 2-77 |
| 312115-0362 .. | SCREW ISO4762 M6X8 A4 80 | 2-221, 2-223, 4-115, 4-117, 4-135, 4-137, 8-27 |
| 312115-0364 .. | SCREW ISO4762 M6X10 A4 80 | 2-33, 4-115, 4-117, 4-135, 4-137, 7-7, 8-9, 8-11 |
| 312115-0366 .. | SCREW ISO4762 M6X12 A4 80 | 1-11, 1-235, 1-339, 1-341, 3-15, 4-29, 4-31, 5-11, 5-13, 5-15 5-83, 5-85, 5-87, 5-101, 5-103, 5-177, 6-11, 7-7, 7-41, 7-43, 7-89, 7-107, 8-5, 8-7, 8-25, 8-47, 8-49 8-51, 8-53, 8-59 |
| 312115-0367 .. | SCREW ISO4762 M6X14 A4 80 | 2-75, 2-77, 4-115, 4-117, 4-135, 4-137, 4-173, 4-175 |
| 312115-0368 .. | SCREW ISO4762 M6X16 A4 80 | 1-13, 1-15, 1-235, 2-67, 3-27, 4-29, 4-31, 4-45, 4-47, 4-127 4-129, 4-131, 4-145, 4-147, 4-149, 4-153, 4-155, 4-157, 4-161, 4-163, 4-165, 5-177, 6-11, 6-21 6-23, 6-25, 6-27, 6-29, 7-13, 7-19, 7-29, 7-41, 7-43, 7-65, 7-107, 7-123 |
| 312115-0370 .. | SCREW ISO4762 M6X20 A4 80 | 1-19, 1-235, 1-245, 1-271, 1-273, 2-75, 2-77, 4-29, 4-31, 5-65 5-67, 5-69, 5-71, 5-139, 5-141, 5-143, 7-13, 7-113, 7-115, 7-127, 7-131 |
| 312115-0372 .. | SCREW ISO4762 M6X25 A4 80 | 1-279, 1-281, 1-345, 2-55, 2-57, 2-95, 2-139, 2-143, 4-25, 4-55 5-147, 5-177, 6-81, 6-83, 7-7, 7-77, 7-107, 7-111, 7-133, 7-135 |
| 312115-0374 .. | SCREW ISO4762 M6X30 A4 80 | 1-79, 1-299, 1-301, 1-349, 1-351, 7-13, 7-111, 7-135 |
| 312115-0376 .. | SCREW ISO4762 M6X35 A4 80 | 1-235, 3-7, 3-21, 4-55, 7-17, 7-19 |
| 312115-0378 .. | SCREW ISO4762 M6X40 A4 80 | 7-65 |
| 312115-0379 .. | SCREW ISO4762 M6X45 A4 80 | 4-89, 4-91 |
| 312115-0380 .. | SCREW ISO4762 M6X50 A4 80 | 4-55, 4-89, 4-91, 7-7 |
| 312115-0447 .. | SCREW ISO4762 M8X12 A4 80 | 2-157, 4-77, 4-79, 4-99, 4-101, 8-9, 8-11, 8-45, 8-47 |
| 312115-0449 .. | SCREW ISO4762 M8X16 A4 80 | 2-75, 2-77, 5-123, 5-125, 5-127, 7-107 |
| 312115-0451 .. | SCREW ISO4762 M8X20 A4 80 | 2-73, 3-11, 3-23, 4-11, 4-17, 5-101, 5-103 |
| 312115-0453 .. | SCREW ISO4762 M8X25 A4 80 | 1-19, 1-271, 1-273, 7-41, 7-43, 7-133 |
| 312115-0455 .. | SCREW ISO4762 M8X30 A4 80 | 1-271, 1-273, 2-75, 2-77, 4-55, 5-39, 7-61, 7-127, 7-135 |
| 312115-0457 .. | SCREW ISO4762 M8X35 A4 80 | 1-295, 4-55 |
| 312115-0459 .. | SCREW ISO4762 M8X40 A4 80 | 4-55 |
| 312115-0461 .. | SCREW ISO4762 M8X50 A4 80 | 4-55 |
| 312115-0463 .. | SCREW ISO4762 M8X60 A4 80 | 7-41, 7-43 |
| 312115-0464 .. | SCREW ISO4762 M8X65 A4 80 | 2-73 |
| 312115-0465 .. | SCREW ISO4762 M8X70 A4 80 | 4-15, 4-21, 7-129 |
| 312115-0467 .. | SCREW ISO4762 M8X80 A4 80 | 7-117 |
| 312115-0489 .. | SCREW ISO4762 M10X16 A4 80 | 2-75, 2-77, 7-7 |
| 312115-0491 .. | SCREW ISO4762 M10X20 A4 80 | 2-131 |
| 312115-0499 .. | SCREW ISO4762 M10X40 A4 80 | 2-129 |
| 312115-0501 .. | SCREW ISO4762 M10X50 A4 80 | 2-9, 7-121 |
| 312115-0546 .. | SCREW ISO4762 M12X70 A4 80 | 2-157, 2-161, 2-163 |
| 312115-0630 .. | SCREW ISO4762 M16X50 A4 80 | 1-287 |
| 312115-0634 .. | SCREW ISO4762 M16X70 A4 80 | 2-161, 2-163 |
| 312121-0285 .. | SCREW ISO 1207 M4X6 4.8-5.8 Z.PL. | 7-63 |
| 312121-0323 .. | SCREW ISO 1207 M5X8 4.8-5.8 Z.PL. | 8-9, 8-11 |
| 312121-0364 .. | SCREW ISO 1207 M6X10 4.8-5.8 Z.PL. | 2-143, 6-81, 6-83 |
| 312122-0372 .. | SCREW ISO 1207 M6X25 NI PL BRASS | 1-211 |
| 312125-0220 .. | SCREW ISO 1207 M3X6 A4 | 1-265, 2-41, 6-33 |
| 312125-0222 .. | SCREW ISO 1207 M3X8 A4 | 1-299, 1-301, 7-99, 7-107, 7-139, 7-141 |
| 312125-0224 .. | SCREW ISO 1207 M3X10 A4 | 1-349, 1-351 |
| 312125-0226 .. | SCREW ISO 1207 M3X12 A4 | 2-105, 2-107, 5-135, 5-137, 6-17 |
| 312125-0228 .. | SCREW ISO 1207 M3X16 A4 | 1-39, 1-41, 1-47, 1-49, 1-51, 5-39, 5-131, 5-133, 6-19, 7-15 |
| 312125-0230 .. | SCREW ISO 1207 M3X20 A4 | 1-215, 5-135, 5-137 |
| 312125-0232 .. | SCREW ISO 1207 M3X25 A4 | 2-41, 7-99 |
| 312125-0234 .. | SCREW ISO 1207 M3X30 A4 | 5-79, 5-81 |
| 312125-0285 .. | SCREW ISO 1207 M4X6 A4 | 1-191, 1-277, 1-329, 1-339, 2-17, 2-19, 2-83, 7-99, 8-69 |
| 312125-0287 .. | SCREW ISO 1207 M4X8 A4 | 1-299, 1-301, 1-313, 1-315, 2-93, 2-245, 5-23, 5-29, 5-139, 5-141 5-143, 5-191, 6-55, 6-57, 7-63, 7-91 |
| 312125-0289 .. | SCREW ISO 1207 M4X10 A4 | 1-289, 1-291, 6-21, 6-23 |
| 312125-0291 .. | SCREW ISO 1207 M4X12 A4 | 1-235, 7-91, 7-93 |
| 312125-0293 .. | SCREW ISO 1207 M4X16 A4 | 1-235 |
| 312125-0295 .. | SCREW ISO 1207 M4X20 A4 | 9-17 |
| 312125-0297 .. | SCREW ISO 1207 M4X25 A4 | 5-189 |
| 312125-0299 .. | SCREW ISO 1207 M4X30 A4 | 2-83, 2-247 |
| 312125-0323 .. | SCREW ISO 1207 M5X8 A4 | 1-189, 1-193, 1-219, 1-221, 1-223 |
| 312125-0325 .. | SCREW ISO 1207 M5X10 A4 | 1-279, 1-281, 1-349, 1-351, 7-55, 7-57 |
| 312125-0327 .. | SCREW ISO 1207 M5X12 A4 | 5-23, 5-29 |
| 312125-0331 .. | SCREW ISO 1207 M5X20 A4 | 1-189 |
| 312125-0364 .. | SCREW ISO 1207 M6X10 A4 | 1-23, 1-25, 1-265, 1-279, 1-281, 1-289, 1-291, 1-349, 1-351, 2-55 2-57, 2-61, 2-105, 2-107, 2-139, 2-189, 2-191, 2-193, 3-5, 3-19 |
| 312125-0366 .. | SCREW ISO 1207 M6X12 A4 | 1-75, 1-77, 1-213, 1-345, 2-95, 2-161, 2-163 |
| 312125-0370 .. | SCREW ISO 1207 M6X20 A4 | 2-25 |
| 312125-0378 .. | SCREW ISO 1207 M6X40 A4 | 7-99 |
| 312132-0289 .. | SLOTTED HEAD, PAN SCREW, MSCS M4X10 | 6-25, 6-27 |
| 312145-0222 .. | SCREW ISO 2009 MFS M3X8 A4 | 1-47, 1-49, 1-51 |
| 312145-0224 .. | SCREW ISO 2009 MFS M3X10 A4 | 1-47, 1-49, 1-51 |
| 312145-0228 .. | SCREW ISO 2009 MFS M3X16 A4 | 1-233 |
| 312145-0236 .. | SCREW ISO 2009 MFS M3X35 A4 | 4-89, 4-91 |
| 312145-0238 .. | SCREW ISO 2009 MFS M3X40 A4 | 4-89, 4-91 |
| 312145-0287 .. | SCREW ISO 2009 MFS M4X8 A4 | 4-13, 4-15, 4-19, 4-21 |
| 312145-0289 .. | SCREW ISO 2009 MFS M4X10 A4 | 7-41, 7-43 |
| 312145-0291 .. | SCREW ISO 2009 MFS M4X12 A4 | 4-115, 4-117, 4-135, 4-137 |
| 312155-0220 .. | SCREW DIN 7991 MF6S M3X6 A4 70 | 7-93 |

| Part No | Description | Page No |
|---|---|---|
| 312155-0226 .. | SCREW DIN 7991 MF6S M3X12 A4 70 | 7-93 |
| 312155-0228 .. | SCREW DIN 7991 MF6S M3X16 A4 70 | 7-133 |
| 312155-0285 .. | SCREW DIN 7991 MF6S M4X6 A4 70 | 4-89, 4-91 |
| 312155-0287 .. | SCREW DIN 7991 MF6S M4X8 A4 70 | 4-57, 4-59, 4-65, 4-67, 4-81, 4-83, 4-89, 4-91, 4-103, 4-105, 5-65, 5-67, 5-69, 5-71, 5-77, 5-147 |
| 312155-0289 .. | SCREW DIN 7991 MF6S M4X10 A4 70 | 5-147, 7-107, 8-25 |
| 312155-0291 .. | SCREW DIN 7991 MF6S M4X12 A4 70 | 1-235, 6-65, 6-67 |
| 312155-0293 .. | SCREW DIN 7991 MF6S M4X16 A4 70 | 5-147 |
| 312155-0295 .. | SCREW DIN 7991 MF6S M4X20 A4 70 | 4-57, 4-59, 4-65, 4-67 |
| 312155-0299 .. | SCREW DIN 7991 MF6S M4X30 A4 70 | 5-149, 5-151 |
| 312155-0323 .. | SCREW DIN 7991 MF6S M5X8 A4 70 | 2-209, 5-25, 5-27, 5-31, 5-33, 5-35, 5-37, 7-105, 7-109 |
| 312155-0325 .. | SCREW DIN 7991 MF6S M5X10 A4 70 | 1-341, 5-161, 7-107, 8-9, 8-11 |
| 312155-0327 .. | SCREW DIN 7991 MF6S M5X12 A4 70 | 4-13, 4-19, 4-115, 4-117, 4-135, 4-137, 4-173, 4-175, 5-73, 5-75, 5-77, 5-139, 5-141, 5-143, 7-41, 7-43, 7-109, 7-117 |
| 312155-0329 .. | SCREW DIN 7991 MF6S M5X16 A4 70 | 1-235, 2-67, 2-209, 4-115, 4-117, 4-135, 4-137, 4-169, 4-171, 6-11 |
| 312155-0331 .. | SCREW DIN 7991 MF6S M5X20 A4 70 | 4-169, 4-171 |
| 312155-0364 .. | SCREW DIN 7991 MF6S M6X10 A4 70 | 1-11 |
| 312155-0366 .. | SCREW DIN 7991 MF6S M6X12 A4 70 | 5-107, 5-109, 5-111, 7-117 |
| 312155-0368 .. | SCREW DIN 7991 MF6S M6X16 A4 70 | 1-233, 2-245, 4-173, 4-175, 5-23, 5-29 |
| 312155-0370 .. | SCREW DIN 7991 MF6S M6X20 A4 70 | 1-287, 2-73, 5-53, 5-55, 5-57, 5-59, 5-61, 5-93, 5-95, 7-7, 7-11, 7-65 |
| 312155-0376 .. | SCREW DIN 7991 MF6S M6X35 A4 70 | 5-53, 5-55, 5-57, 5-59, 5-61 |
| 312155-0378 .. | SCREW DIN 7991 MF6S M6X40 A4 70 | 2-219, 2-247 |
| 312155-0379 .. | SCREW DIN 7991 MF6S M6X45 A4 70 | 5-53, 5-55, 5-57, 5-59, 5-61 |
| 312155-0380 .. | SCREW DIN 7991 MF6S M6X50 A4 70 | 5-53, 5-55, 5-57, 5-59, 5-61 |
| 312155-0447 .. | SCREW DIN 7991 MF6S M8X12 A4 70 | 5-87 |
| 312155-0449 .. | SCREW DIN 7991 MF6S M8X16 A4 70 | 1-161, 1-163, 2-73 |
| 312155-0451 .. | SCREW DIN 7991 MF6S M8X20 A4 70 | 2-73 |
| 312155-0453 .. | SCREW DIN 7991 MF6S M8X25 A4 70 | 5-139, 5-141, 5-143 |
| 312155-0459 .. | SCREW DIN 7991 MF6S M8X40 A4 70 | 5-117, 5-119 |
| 312155-0495 .. | SCREW DIN 7991 MF6S M10X30 A4 70 | 5-23, 5-29, 5-43 |
| 312155-0499 .. | SCREW DIN 7991 MF6S M10X40 A4 70 | 5-63 |
| 312180-0364 .. | SCREW ISO7379 H6X10 | 3-7, 3-21 |
| 312180-0366 .. | SCREW ISO7379 H6X12 | 7-9 |
| 312180-0374 .. | SCREW ISO7379 H6X30 | 7-113 |
| 312180-0447 .. | SCREW ISO7379 H8X12 | 7-113 |
| 312180-0451 .. | SCREW ISO7379 H8X20 | 7-111 |
| 312180-0489 .. | SCREW ISO7379 H10X16 | 7-47, 7-107 |
| 312180-0495 .. | SCREW ISO7379 H10X30 | 7-107 |
| 312180-0499 .. | SCREW ISO7379 H10X40 | 7-65 |
| 312180-0534 .. | SCREW ISO7379 H12X25 | 1-287 |
| 312309-0323 .. | SCREW ISO4026 M5X8 A4 | 7-97 |
| 312309-0362 .. | SCREW ISO4026 M6X8 A4 | 7-119 |
| 312311-0329 .. | SCREW ISO4028 M5X16 FZB | 1-289, 1-291 |
| 312311-0368 .. | SCREW ISO4028 M6X16 FZB | 7-13 |
| 312311-0370 .. | SCREW ISO4028 M6X20 FZB | 5-139, 5-141, 5-143 |
| 312311-0461 .. | SCREW ISO4028 M8X50 FZB | 7-89 |
| 312311-0491 .. | SCREW ISO4028 M10X20 FZB | 7-95 |
| 312316-0362 .. | SCREW HEX.SOCK.SET CUP P.MSK6SS6X8 FZB | 7-7 |
| 312318-0283 .. | SCREW ISO4029 M4X4 A4 | 1-235, 7-21 |
| 312318-0285 .. | SCREW ISO4029 M4X6 A4 | 2-41, 7-107 |
| 312318-0287 .. | SCREW ISO4029 M4X8 A4 | 1-303, 7-87 |
| 312318-0289 .. | SCREW ISO4029 M4X10 A4 | 4-15, 4-21 |
| 312318-0291 .. | SCREW ISO4029 M4X12 A4 | 1-265, 7-13 |
| 312318-0320 .. | SCREW ISO4029 M5X5 A4 | 4-115, 4-117, 4-135, 4-137 |
| 312318-0323 .. | SCREW ISO4029 M5X8 A4 | 1-111, 3-11, 3-23, 4-73, 4-75, 4-127, 4-129, 4-131, 4-145, 4-147, 4-149, 4-153, 4-155, 4-157, 4-161, 4-163, 4-165, 5-89, 5-91 |
| 312318-0325 .. | SCREW ISO4029 M5X10 A4 | 4-127, 4-129, 4-131, 4-145, 4-147, 4-149, 4-153, 4-155, 4-157, 4-161, 4-163, 4-165, 5-77 |
| 312318-0327 .. | SCREW ISO4029 M5X12 A4 | 5-73, 5-75 |
| 312318-0329 .. | SCREW ISO4029 M5X16 A4 | 5-73, 5-75 |
| 312318-0333 .. | SCREW ISO4029 M5X25 A4 | 7-127 |
| 312318-0362 .. | SCREW ISO4029 M6X8 A4 | 1-43, 1-45, 3-9, 3-13, 4-33, 4-35, 5-23, 5-29, 5-43, 5-79, 5-81, 5-89, 5-91, 7-47, 7-81, 7-107, 7-127 |
| 312318-0364 .. | SCREW ISO4029 M6X10 A4 | 2-11 |
| 312318-0366 .. | SCREW ISO4029 M6X12 A4 | 7-13, 7-15, 7-79, 7-127 |
| 312318-0368 .. | SCREW ISO4029 M6X16 A4 | 4-169, 4-171, 5-139, 5-141, 5-143 |
| 312318-0372 .. | SCREW ISO4029 M6X25 A4 | 2-131 |
| 312318-0449 .. | SCREW ISO4029 M8X16 A4 | 4-13, 4-15, 4-19, 4-21 |
| 312318-0453 .. | SCREW ISO4029 M8X25 A4 | 1-295, 2-161, 2-163, 2-175, 2-177 |
| 312318-0459 .. | SCREW ISO4029 M8X40 A4 | 1-39, 1-41 |
| 312502-0120 .. | DRIVE SCREW ROUND HEAD KDS 0X5 | 2-49, 2-215, 6-87, 6-89, 6-93 |
| 312502-0169 .. | DRIVE SCREW ROUND HEAD KDS 2X5 | 7-139, 7-141 |
| 312503-0225 .. | TAPPING SCREW ISO 7049-ST2,9X9,5-C-Z | 2-41 |
| 312601-0322 .. | HEXAGON NUT, DIN 934 M12 8 FZB | 3-27 |
| 312602-0312 .. | HEXAGON NUT, EN 24032 M6M M4 NIPLBR | 5-149, 5-151 |
| 312602-0318 .. | HEXAGON NUT, EN 24032 M6M M8 NIPLBR | 2-69 |
| 312605-0310 .. | HEXAGON NUT, M6M M3 A280 | 1-215, 6-17, 6-19, 7-99, 7-139, 7-141, 8-53, 8-61, 8-63 |
| 312605-0312 .. | HEXAGON NUT, M6M M4 A280 | 1-81, 1-83, 1-161, 1-163, 1-205, 1-209, 1-277, 1-305, 1-307, 2-83, 2-127, 2-207, 2-247, 4-15, 4-21, 4-61, 4-69, 4-169, 4-171, 5-189, 6-67, 7-63, 7-99, 7-131, 7-139, 7-141, 8-5, 8-7, 8-53, 8-61, 8-63 |
| 312605-0314 .. | HEXAGON NUT, M6M M5 A280 | 1-19, 1-23, 1-25, 1-81, 1-83, 1-161, 1-163, 1-277, 1-289, 1-291, 1-305, 1-307, 1-339, 2-183, 2-185, 5-73, 5-75, 5-77, 5-185, 5-189, 6-11, 6-29, 6-55, 6-57, 7-93 |

| Part No | Description | Page No |
|---|---|---|
| | | 7-139, 7-141, 7-153, 7-157, 8-53, 8-61, 8-63 |
| 312605-0316 .. | HEXAGON NUT, M6M M6 A280 | 1-13, 1-15, 1-17, 1-23, 1-25, 1-29, 1-31, 1-33, 1-35, 1-37, 1-39 1-41, 1-43, 1-45, 1-47, 1-49, 1-51, 1-53, 1-55, 1-57, 1-59, 1-61, 1-63, 1-67, 1-75, 1-77, 1-81, 1-83 1-161, 1-163, 1-173, 1-175, 1-177, 1-181, 1-193, 1-205, 1-239, 1-269, 1-271, 1-273, 1-313, 1-315 1-329, 1-339, 1-343, 1-345, 1-349, 1-351, 2-11, 2-25, 2-27, 2-33, 2-39, 2-49, 2-73, 2-121, 2-131 2-157, 2-209, 2-243, 2-245, 4-29, 4-31, 4-45, 4-47, 4-77, 4-79, 4-99, 4-101, 4-169, 4-171, 5-89 5-91, 5-93, 5-95, 5-97, 5-99, 5-123, 5-125, 5-127, 5-139, 5-141, 5-143, 6-19, 6-39, 6-97, 7-13, 7-15 7-41, 7-43, 7-63, 7-89, 7-91, 7-93, 7-99, 7-103, 7-151, 7-155, 8-5, 8-7, 8-45, 8-47, 8-49, 8-51, 8-53 8-59, 8-61, 8-63 |
| 312605-0318 .. | HEXAGON NUT, M6M M8 A280 | 1-17, 1-21, 1-23, 1-25, 1-27, 1-39, 1-41, 1-43, 1-45, 1-75, 1-77 1-161, 1-163, 1-175, 1-177, 1-179, 1-183, 1-187, 1-189, 1-191, 1-197, 1-199, 1-205, 1-233, 1-265 1-269, 1-293, 1-299, 1-301, 2-23, 2-29, 2-39, 2-73, 2-83, 2-121, 2-179, 4-13, 4-15, 4-19, 4-21, 4-29 4-31, 4-87, 4-107, 4-173, 4-175, 5-23, 5-29, 5-83, 5-85, 5-87, 5-89, 5-91, 5-93, 5-95, 5-97, 5-99 5-117, 5-119, 5-139, 5-141, 5-143, 5-155, 5-161, 6-49, 6-51, 6-55, 6-57, 7-31, 7-41, 7-43, 7-91 7-101, 7-127, 7-135, 7-151, 7-155 |
| 312605-0320 .. | HEXAGON NUT, M6M M10 A280 | 1-189, 1-197, 1-199, 1-255, 1-305, 1-307, 5-41, 5-43, 5-79 5-81, 7-17 |
| 312605-0322 .. | HEXAGON NUT, M6M M12 A280 | 1-47, 1-49, 1-51, 1-75, 1-77, 2-17, 2-19, 5-43, 5-89, 5-91 5-123, 5-125, 5-127, 5-177, 7-31, 9-3 |
| 312605-0324 .. | HEXAGON NUT, M6M M16 A280 | 1-183, 2-175, 2-177, 2-179 |
| 312607-0312 .. | HEXAGON NUT, EN 24032 M6M M4 A480 | 7-13, 7-67, 7-69, 7-77 |
| 312607-0314 .. | HEXAGON NUT, EN 24032 M6M M5 A480 | 7-15, 7-35, 7-41, 7-43, 7-123, 7-127, 7-137, 7-163 |
| 312607-0316 .. | HEXAGON NUT, EN 24032 M6M M6 A480 | 5-153, 7-21, 7-41, 7-43, 7-71, 7-73, 7-173 |
| 312607-0318 .. | HEXAGON NUT, EN 24032 M6M M8 A480 | 5-177, 7-7, 7-41, 7-43 |
| 312607-0320 .. | HEXAGON NUT, EN 24032 M6M M10 A480 | 3-15, 7-107 |
| 312625-0314 .. | HEXAGON THIN NUT, EN 24035 ML6M M5 A4 | 4-127, 4-129, 4-131, 4-145, 4-147, 4-149, 4-153 4-155, 4-157, 4-161, 4-163, 4-165, 7-67, 7-69 |
| 312625-0316 .. | HEXAGON THIN NUT, EN 24035 ML6M M6 A4 | 1-47, 1-49, 1-51, 1-303, 4-169, 4-171, 7-15, 7-83 7-105, 7-127, 7-131 |
| 312625-0318 .. | HEXAGON THIN NUT, EN 24035 ML6M M8 A4 | 1-293, 4-7, 4-15, 4-21, 4-45, 4-47, 4-81, 4-83 4-103, 4-105, 5-93, 5-95, 7-87, 7-93 |
| 312625-0322 .. | HEXAGON THIN NUT, EN 24035 ML6M M12 A4 | 2-247 |
| 312625-0324 .. | HEXAGON THIN NUT, EN 24035 ML6M M16 A4 | 1-187 |
| 312625-0326 .. | HEXAGON THIN NUT, EN 24035 ML6M M20 A4 | 2-161, 2-163 |
| 312630-0316 .. | HEX.NUT FINE, EN 24032 M6M M6X0,75 FZB8 | 7-139, 7-141 |
| 312631-0321 .. | HEX.NUT FINE, EN 24032 M6M M10X1,25 FZB8 | 1-187 |
| 312635-0320 .. | NUT M6M 10X1 STAINLESS A2 80 | 4-15, 4-21 |
| 312705-0310 .. | NUT HEX. DOMED CAP MHM-6 M3 A2 | 1-47, 1-49, 1-51 |
| 312705-0312 .. | NUT HEX. DOMED CAP MHM-6 M4 A280 | 1-21, 1-27, 1-47, 1-49, 1-51, 1-71, 1-73, 2-203, 2-211 2-215, 2-221, 2-223, 2-227, 2-235, 6-69, 6-71, 6-75, 7-151, 7-159, 7-163, 7-167, 7-169 |
| 312705-0314 .. | NUT HEX. DOMED CAP MHM-6 M5 A280 | 2-209, 2-245, 5-189 |
| 312705-0316 .. | NUT HEX. DOMED CAP MHM-6 M6 A280 | 1-13, 1-15, 1-47, 1-49, 1-51, 1-153, 1-155, 2-209 |
| | | 2-245, 7-15, 7-151, 7-155 |
| 312705-0318 .. | NUT HEX. DOMED CAP MHM-6 M8 A280 | 1-43, 1-45, 1-153, 1-155 |
| 312715-0116 .. | WING NUT DIN 315 A2 MVM-K M6 | 1-233, 1-271, 1-273 |
| 312805-0103 .. | NUT ROUND WITH SLOTS M17X1 FE | 2-33 |
| 312811-0318 .. | NUT HEX.LOCK HELI COIL M8 SS | 4-15, 4-21 |
| 312812-0310 .. | HEXAGON NUT, NY-LOCK M3 A480 | 6-65 |
| 312812-0312 .. | HEXAGON NUT, NY-LOCK M4 A480 | 2-201, 2-229, 2-231, 4-45, 4-47, 4-49, 5-31, 5-33, 5-35 5-37 |
| 312812-0314 .. | HEXAGON NUT, NY-LOCK M5 A480 | 1-233, 1-305, 1-307, 2-209, 4-115, 4-117, 4-135, 4-137 |
| 312812-0316 .. | HEXAGON NUT, NY-LOCK M6 A480 | 1-23, 1-25, 1-53, 1-267, 1-271, 1-273, 2-89, 2-91, 2-109 2-137, 2-161, 2-163, 4-127, 4-129, 4-131, 4-145, 4-147, 4-149, 4-153, 4-155, 4-157, 4-161, 4-163 4-165, 5-25, 5-27, 7-59, 7-91, 7-99, 8-45 |
| 312812-0318 .. | HEXAGON NUT, NY-LOCK M8 A480 | 4-13, 4-15, 4-19, 4-21, 4-33, 4-35, 5-83, 5-85, 5-87, 5-163 5-165, 7-87 |
| 312812-0320 .. | HEXAGON NUT, NY-LOCK M10 A480 | 4-29, 4-31 |
| 312812-0322 .. | HEXAGON NUT, NY-LOCK M12 A480 | 2-157, 2-161, 2-163, 3-17, 3-25, 4-177 |
| 312902-0316 .. | NUT HEX. LEFT THREAD, M6 A280 | 4-45, 4-47 |
| 312902-0318 .. | NUT HEX. LEFT THREAD, M8 A280 | 5-83, 5-85, 5-87, 5-93, 5-95, 5-97, 5-99, 5-139, 5-141, 5-143 |
| 312902-0320 .. | NUT HEX. LEFT THREAD, M10 A280 | 5-79, 5-81 |
| 315101-0136 .. | WASHER BRB, 4,3/8 H=0,8 | 5-11, 5-13, 5-15 |
| 315101-0153 .. | WASHER PLAIN, BRB, 6,4/12 H=1,5 | 2-175, 2-177, 4-169, 4-171, 5-101, 5-103 |
| 315101-0165 .. | WASHER PLAIN, BRB, 8,4/16 H=1,5 | 1-293, 2-175, 2-177, 8-47 |
| 315103-0124 .. | WASHER, BRB, 3,2/6,H=0,5 NI PL BR | 7-99 |
| 315103-0153 .. | WASHER, BRB, 6,4/12,H=1,5 NIPL BR | 5-139, 5-141, 5-143, 7-21 |
| 315105-0124 .. | WASHER BRB 3,2X6 RFR | 1-39, 1-41, 1-47, 1-49, 1-51, 1-215, 1-305, 1-307, 1-349, 1-351 2-105, 2-107, 5-23, 5-29, 5-79, 5-81, 5-139, 5-141, 5-143, 6-19, 6-65, 7-13, 7-15, 7-41, 7-43, 7-63 7-99, 7-139, 7-141, 8-61, 8-63 |
| 315105-0136 .. | WASHER BRB 4,3X8 RFR | 1-23, 1-25, 1-47, 1-49, 1-51, 1-83, 1-177, 1-193, 1-205, 1-207, 1-209 1-215, 1-229, 1-231, 1-277, 1-289, 1-291, 1-341, 2-17, 2-19, 2-83, 2-85, 2-157, 2-183, 2-185 2-189, 2-201, 2-203, 2-207, 2-211, 2-215, 2-221, 2-223, 2-227, 2-229, 2-231, 2-235, 2-245, 4-13 4-19, 4-85, 4-169, 4-171, 5-43, 5-65, 5-67, 5-69, 5-71, 5-149, 5-151, 5-185, 5-189, 6-67, 7-13 7-31, 7-53, 7-61, 7-63, 7-71, 7-73, 7-85, 7-87, 7-89, 7-97, 7-99, 7-101, 7-103, 7-107, 7-113, 7-117 . 7-131, 7-151, 7-155, 7-159, 7-163, 7-167, 7-169, 8-5, 8-7, 8-9, 8-11, 8-23, 8-53, 8-61, 8-63, 8-69 |
| 315105-0146 .. | WASHER BRB 5,3X10 RFR | 1-65, 1-75, 1-77, 1-81, 1-83, 1-189, 1-209, 1-233, 1-239, 1-277 1-279, 1-281, 1-289, 1-291, 1-305, 1-307, 1-339, 1-341, 1-349, 1-351, 2-39, 2-73, 2-179, 2-183 2-185, 2-201, 2-203, 2-209, 2-227, 2-235, 2-245, 4-13, 4-19, 4-37, 4-39, 4-45, 4-47, 4-77, 4-79 4-99, 4-101, 4-115, 4-117, 4-135, 4-137, 4-173, 4-175, 5-23, 5-29, 5-39, 5-131, 5-133, 5-135 5-137, 5-185, 5-189, 6-9, 6-11, 6-55, 6-57, 6-69, 6-71, 6-75, 6-79, 7-13, 7-17, 7-19, 7-41, 7-43 7-55, 7-57, 7-63, 7-77, 7-97, 7-111, 7-113, 7-123, 7-127, 7-131, 7-133, 7-137, 7-151, 7-155, 7-163 7-167, 7-169, 8-5, 8-7, 8-9, 8-11, 8-13, 8-15, 8-17, 8-19, 8-21, 8-23, 8-29, 8-31, 8-33, 8-35, 8-37 8-39, 8-41, 8-43, 8-61, 8-63, 9-41 |
| 315105-0153 .. | WASHER BRB 6,4X12 RFR | 1-11, 1-17, 1-23, 1-25, 1-39, 1-41, 1-47, 1-49, 1-51, 1-57, 1-59 |

| Part No | Description | Page No |
|---|---|---|
| | | 1-75, 1-77, 1-81, 1-153, 1-155, 1-157, 1-159, 1-161, 1-163, 1-179, 1-193, 1-205, 1-207, 1-213 |
| | | 1-229, 1-231, 1-235, 1-237, 1-239, 1-243, 1-245, 1-261, 1-271, 1-273, 1-277, 1-289, 1-291, 1-297 |
| | | 1-299, 1-301, 1-313, 1-315, 1-323, 1-329, 1-339, 1-341, 1-345, 2-25, 2-31, 2-33, 2-39, 2-49, 2-55 |
| | | 2-57, 2-63, 2-67, 2-69, 2-83, 2-89, 2-91, 2-93, 2-95, 2-117, 2-119, 2-121, 2-127, 2-137, 2-139 |
| | | 2-143, 2-147, 2-161, 2-163, 2-189, 2-203, 2-209, 2-211, 2-215, 2-221, 2-223, 2-227, 2-235, 2-241 |
| | | 2-245, 2-247, 2-249, 3-7, 3-21, 3-29, 4-11, 4-15, 4-17, 4-21, 4-33, 4-35, 4-45, 4-47, 4-49, 4-73 |
| | | 4-75, 4-77, 4-79, 4-99, 4-101, 4-115, 4-117, 4-127, 4-129, 4-131, 4-135, 4-137, 4-145, 4-147, 4-149 |
| | | 4-153, 4-155, 4-157, 4-161, 4-163, 4-165, 5-11, 5-13, 5-15, 5-19, 5-23, 5-25, 5-27, 5-29, 5-31, 5-33 |
| | | 5-35, 5-37, 5-39, 5-43, 5-63, 5-79, 5-81, 5-89, 5-91, 5-107, 5-109, 5-111, 5-113, 5-115, 5-129 |
| | | 5-135, 5-137, 5-139, 5-141, 5-143, 5-169, 6-9, 6-11, 6-13, 6-19, 6-21, 6-23, 6-33, 6-39, 6-55, 6-57 |
| | | 6-59, 6-63, 6-81, 6-83, 6-93, 6-97, 7-7, 7-13, 7-15, 7-17, 7-19, 7-29, 7-37, 7-41, 7-43, 7-49, 7-59 |
| | | 7-61, 7-63, 7-65, 7-77, 7-87, 7-89, 7-91, 7-93, 7-97, 7-99, 7-103, 7-107, 7-109, 7-111, 7-113, 7-117 |
| | | 7-119, 7-121, 7-123, 7-135, 7-137, 7-139, 7-141, 7-149, 7-151, 7-155, 8-5, 8-7, 8-9, 8-11, 8-25 |
| | | 8-27, 8-45, 8-47, 8-49, 8-51, 8-53, 8-59, 8-61, 8-63, 8-69, 9-7, 9-9, 9-13, 9-15 |
| 315105-0156 .. | WASHER BRB 6,7X14 RFR | 1-303, 5-113, 5-115, 7-15, 7-105 |
| 315105-0165 .. | WASHER BRB 8,4X16 RFR | 1-17, 1-43, 1-45, 1-83, 1-121, 1-123, 1-135, 1-137, 1-157, 1-159 |
| | | 1-161, 1-163, 1-205, 1-233, 1-237, 1-253, 1-265, 1-269, 1-299, 1-301, 1-345, 2-11, 2-17, 2-19, 2-25 |
| | | 2-39, 2-69, 2-73, 2-83, 2-103, 2-117, 2-157, 2-161, 2-163, 2-179, 2-241, 2-245, 4-7, 4-11, 4-13 |
| | | 4-15, 4-17, 4-19, 4-21, 4-29, 4-31, 4-43, 4-73, 4-75, 4-77, 4-79, 4-81, 4-83, 4-87, 4-99, 4-101 |
| | | 4-103, 4-105, 4-107, 4-169, 4-171, 4-173, 4-175, 5-11, 5-13, 5-15, 5-19, 5-23, 5-29, 5-43, 5-63 |
| | | 5-73, 5-75, 5-77, 5-79, 5-81, 5-83, 5-85, 5-87, 5-89, 5-91, 5-101, 5-103, 5-107, 5-109, 5-111, 5-117 |
| | | 5-119, 5-123, 5-125, 5-127, 5-129, 5-131, 5-133, 5-139, 5-141, 5-143, 5-155, 5-157, 5-159, 5-169 |
| | | 5-171, 5-173, 5-177, 5-183, 6-37, 6-55, 6-57, 7-29, 7-41, 7-43, 7-47, 7-61, 7-91, 7-97, 7-101, 7-107 |
| | | 7-121, 7-127, 7-135, 7-151, 7-155, 8-9, 8-11, 8-45, 9-7, 9-9, 9-13, 9-15 |
| 315105-0171 .. | WASHER BRB 10X18 RFR | 5-79, 5-81 |
| 315105-0173 .. | WASHER BRB 10,5X22 RFR | 1-53, 1-197, 1-199, 1-255, 1-305, 1-307, 2-131, 2-157, 2-161 |
| | | 2-163, 2-175, 2-177, 2-179, 3-5, 3-7, 3-19, 3-21, 4-89, 4-91, 4-127, 4-129, 4-131, 4-145, 4-147 |
| | | 4-149, 4-153, 4-155, 4-157, 4-161, 4-163, 4-165, 5-23, 5-29, 5-39, 5-41, 5-79, 5-81, 5-89, 5-91 |
| | | 5-123, 5-125, 5-127, 5-131, 5-133, 5-161, 6-55, 6-57, 7-17, 7-173, 9-3 |
| 315105-0176 .. | WASHER BRB 12X22 RFR | 6-49 |
| 315105-0178 .. | WASHER BRB 13X24 RFR | 2-9, 2-17, 2-19, 2-39, 2-67, 2-117, 2-161, 2-163, 2-175, 2-177, 3-27 |
| | | 4-7, 5-43, 5-123, 5-125, 5-127, 5-177, 7-115, 8-5, 8-7, 9-3 |
| 315105-0179 .. | WASHER BRB 13,5X24 RFR | 7-31, 7-41, 7-43 |
| 315105-0186 .. | WASHER BRB 17X30 RFR | 1-183, 1-187, 2-9, 2-117, 2-161, 2-163, 2-175, 2-177, 3-15, 4-13 |
| | | 4-19, 7-41, 7-43 |
| 315106-0124 .. | WASHER ISO 7089-3-200 HV A4 | 8-53 |
| 315106-0136 .. | WASHER ISO 7089-4-200 HV A4 | 1-235, 4-115, 4-117, 4-127, 4-129, 4-131, 4-135, 4-137, 4-145 |
| | | 4-147, 4-149, 4-153, 4-155, 4-157, 4-161, 4-163, 4-165, 4-177, 7-71, 7-73, 7-75, 7-139, 7-141 |
| 315106-0146 .. | WASHER ISO 7089-5-200 HV A4 | 2-49, 7-65, 7-139, 7-141, 8-53 |
| 315106-0153 .. | WASHER ISO 7089-6-200 HV A4 | 2-73, 5-153, 5-177, 5-179, 7-23, 7-25, 7-135, 7-173 |
| 315106-0165 .. | WASHER ISO 7089-8-200 HV A4 | 5-177, 7-87, 7-119 |
| 315106-0173 .. | WASHER ISO 7089-10-200 HV A4 | 3-15, 5-177, 7-173 |
| 315111-0156 .. | WASHER PLAIN, TBRB 6,7/14 H=3 | 7-71, 7-73 |
| 315111-0186 .. | WASHER PLAIN, TBRB 17/30 H=6 | 2-157, 2-161, 2-163, 2-175, 2-177 |
| 315115-0153 .. | WASHER PLAIN, TBRB 6,4/12 H=3 | 2-245, 5-63, 6-25, 6-27, 6-29, 7-41, 7-43, 7-105 |
| 315115-0165 .. | WASHER PLAIN, TBRB 8,4/16 H=3 | 1-75, 1-77, 1-115, 1-117, 1-119, 1-121, 1-123, 1-143, 1-145 |
| | | 1-147, 1-149, 1-161, 1-163, 4-7, 7-31 |
| 315115-0173 .. | WASHER PLAIN, TBRB 10,5/22 H=4 | 1-183, 1-287, 4-29, 4-31, 6-55, 6-57, 7-7 |
| 315115-0178 .. | WASHER PLAIN, TBRB 13/24 H=4 | 1-75, 1-77 |
| 315125-0146 .. | WASHER TBRSB 5.3X15X1 A4 | 3-15 |
| 315125-0153 .. | WASHER TBRSB 6,4X22X4 A4 | 1-79, 1-269, 1-329, 2-103, 2-157, 2-161, 2-163, 2-175, 2-177 |
| | | 2-241, 2-243, 2-245, 4-29, 4-31, 4-43, 5-23, 5-29, 6-59, 6-63, 6-87, 6-89, 7-39, 7-71, 7-73, 7-77 |
| | | 7-87, 7-89, 7-125 |
| 315125-0165 .. | WASHER TBRSB 8,4X26X5 A4 | 1-43, 1-45, 1-63, 1-289, 1-291, 2-17, 2-19, 2-73, 3-27, 4-9, 5-23 |
| | | 5-161, 6-39, 7-41, 7-43, 7-107, 7-135 |
| 315125-0173 .. | WASHER TBRSB 10,5X28X6 A4 | 1-75, 1-77, 1-143, 1-145, 1-147, 1-149, 2-161, 2-163, 5-23 |
| | | 5-29 |
| 315202-0101 .. | O-RING 3,1X1,6 MM | 4-53, 4-57, 4-59, 4-63, 4-65, 4-67, 9-17 |
| 315202-0102 .. | O-RING 4,1X1,6 MM | 4-77, 4-79, 4-81, 4-83, 4-99, 4-101, 4-103, 4-105 |
| 315202-0104 .. | O-RING 6,1X1,6 MM | 4-97 |
| 315202-0105 .. | O-RING 7,1X1,6 MM | 4-53, 4-55, 4-63, 4-77, 4-79, 4-89, 4-91, 4-97, 4-99, 4-101 |
| 315202-0107 .. | O-RING 9,1X1,6 MM | 4-77, 4-79, 4-99, 4-101, 5-83, 5-85, 5-87, 5-101, 5-103 |
| 315202-0111 .. | O-RING 13,1X1,6 MM | 4-85 |
| 315202-0116 .. | O-RING 18,1X1,6 MM | 4-81, 4-83, 4-103, 4-105 |
| 315202-0119 .. | O-RING 25,1X1,6 MM | 2-213, 2-217, 7-171 |
| 315202-0124 .. | O-RING 37,1X1,6 MM | 3-27 |
| 315202-0211 .. | O-RING 13,3X2,4 MM | 2-105, 2-107 |
| 315202-0217 .. | O-RING 24,2X3 MM | 5-79, 5-81, 5-139, 5-141, 5-143 |
| 315202-0218 .. | O-RING 26,2X3 MM | 5-183 |
| 315202-0221 .. | O-RING 34,2X3 MM | 5-23, 5-29 |
| 315202-0225 .. | O-RING 44,2X3 MM | 5-63 |
| 315202-0233 .. | O-RING 79,2X5,7 MM | 9-39 |
| 315202-0267 .. | O-RING 16,3X2,4 MM | 5-23, 5-29 |
| 315202-0302 .. | O-RING 54,5X3 MM | 2-109 |
| 315202-0303 .. | O-RING 59,5X3 MM | 5-139, 5-141, 5-143, 9-39 |
| 315202-0304 .. | O-RING 64,5X3 MM | 1-221 |
| 315202-0305 .. | O-RING 69,5X3 MM | 5-43, 5-139, 5-141, 5-143, 9-39 |
| 315202-0307 .. | O-RING 79,5X3 MM | 2-131, 9-39 |
| 315202-0308 .. | O-RING 84,5X3 MM | 1-219, 1-223, 9-39 |
| 315202-0310 .. | O-RING 94,5X3 MM | 9-39 |
| 315202-0311 .. | O-RING 99,5X3 MM | 5-63 |
| 315202-0701 .. | O-RING 10,82X1,78 MM | 2-41 |
| 315202-0705 .. | O-RING 17,17X1,78 MM | 4-97, 7-115 |
| 315202-0706 .. | O-RING 18,77X1,78 MM | 4-97 |

| Part No | Description | Page No |
|---|---|---|
| 315202-0709 .. | O-RING 23,52X1,78 MM | 2-67, 2-117 |
| 315202-0739 .. | O-RING 55,25X2,62 MM | 1-19 |
| 315204-0103 .. | O-RING 5,1X1,6 MM | 2-25 |
| 315204-0105 .. | O-RING 7,1X1,6 MM | 4-89, 4-91 |
| 315204-0122 .. | O-RING 32,1X1,6 MM | 1-39, 1-41 |
| 315204-0206 .. | O-RING 7,3X2,4 MM | 1-181 |
| 315204-0207 .. | O-RING 8,3X2,4 MM | 2-37 |
| 315204-0208 .. | O-RING 9,3X2,4 MM | 1-233 |
| 315204-0209 .. | O-RING 10,3X2,4 MM | 1-61 |
| 315204-0214 .. | O-RING 17,3X2,4 MM | 1-233 |
| 315204-0215 .. | O-RING 19,2X3 MM | 1-219, 1-221, 1-223, 9-27, 9-29, 9-31 |
| 315204-0219 .. | O-RING 29,2X3 MM | 1-197, 1-199, 9-19, 9-21, 9-23, 9-25 |
| 315204-0222 .. | O-RING 36,2X3 MM | 2-33 |
| 315204-0223 .. | O-RING 39,2X3 MM | 1-197, 1-199, 9-19, 9-21, 9-23, 9-25 |
| 315204-0301 .. | O-RING 49,5X3 MM | 1-221, 9-27 |
| 315204-0307 .. | O-RING 79,5X3 MM | 1-67 |
| 315204-0308 .. | O-RING 84,5X3 MM | 9-29 |
| 315204-0317 .. | O-RING 129,5X3 MM | 1-193 |
| 315204-0324 .. | O-RING 164,3X5,7 MM | 1-143, 1-145, 1-147, 1-149 |
| 315205-0516 .. | O-RING 20,22X3,53 MM | 5-135, 5-137 |
| 315205-0703 .. | O-RING 14,0X1,78 MM | 1-79 |
| 315205-0705 .. | O-RING 17,17X1,78 MM | 1-23, 1-25 |
| 315205-0707 .. | O-RING 20,35X1,78 MM | 1-75, 1-77, 1-177 |
| 315205-0709 .. | O-RING 23,52X1,78 MM | 1-55 |
| 315205-0713 .. | O-RING 29,87X1,78 MM | 1-57, 1-59 |
| 315205-0714 .. | O-RING 31,47X1,78 MM | 1-43, 1-45 |
| 315205-0715 .. | O-RING 33,05X1,78 MM | 1-53, 1-63 |
| 315205-0716 .. | O-RING 34,65X1,78 MM | 1-39, 1-41 |
| 315205-0731 .. | O-RING 42,52X2,62 MM | 1-43, 1-45 |
| 315205-0801 .. | O-RING 37,82X1,78 MM | 1-61 |
| 315205-0802 .. | O-RING 41,0X1,78 MM | 1-13, 1-15, 1-23, 1-25, 1-29, 1-31, 1-33, 1-35, 1-37, 1-57, 1-59, 1-173, 1-175, 1-271, 1-273 |
| 315205-0804 .. | O-RING 47,35X1,78 MM | 1-29, 1-31, 1-33, 1-35, 1-47, 1-49, 1-51, 1-61, 1-63 |
| 315205-0807 .. | O-RING 94,97X1,78 MM | 1-181 |
| 315206-0506 .. | O-RING 7,65X1,78 MM | 2-39 |
| 315206-0707 .. | O-RING 20,35X1,78 MM | 2-99, 2-135 |
| 315206-0711 .. | O-RING 26,70X1,78 MM | 1-271, 1-273 |
| 315207-0710 .. | O-RING 25,12X1,78 MM | 1-17 |
| 315207-0716 .. | O-RING 34,65X1,78 MM | 1-17 |
| 315211-0103 .. | BONDED SEAL SS/NBR90 M6 | 4-81, 4-83, 4-89, 4-91, 4-103, 4-105, 9-17 |
| 315211-0104 .. | BONDED SEAL SS/NBR90 M8 | 4-77, 4-79, 4-99, 4-101, 9-17 |
| 315220-0143 .. | V-RINGS 18X26X10,5 MM V-20S | 4-45, 4-47 |
| 315220-0183 .. | V-RINGS 36X46X13 MM V-40S | 2-109 |
| 315220-0198 .. | V-RINGS 45X55X13 MM V-50S | 2-39, 2-117 |
| 315221-0185 .. | RADIAL SEAL 40X62X7 MM | 5-183 |
| 315221-0221 .. | RADIAL SEAL 70X90X10 MM | 5-183 |
| 315229-0101 .. | GASKETS, 10,4X17,4X3,7 MM 1/2" FDA | 1-269 |
| 315229-0102 .. | GASKETS, 16,8X23,8X3,7 MM 3/4" FDA | 6-33 |
| 315229-0103 .. | GASKETS, 23,1X30,1X3,7 MM 1" FDA | 1-17, 1-175, 1-265, 1-269, 2-23, 2-69, 2-121, 6-49, 6-53, 9-17 |
| 315229-0104 .. | GASKETS, 35,8X42,8X3,7 MM 1"1/2 FD | 1-17, 1-23, 1-25, 1-265, 2-23, 9-17 |
| 315229-0105 .. | GASKETS, 48,5X55,5X3,7 MM 2" FDA | 1-17, 1-269, 2-23, 2-27, 9-17 |
| 315229-0106 .. | GASKETS, 61,2X68,2X3,7 MM 2"1/2 FD | 1-269 |
| 315229-0107 .. | GASKETS, 73,9X80,9X3,7 MM 2"1/2 FD | 2-23, 9-17 |
| 315229-0203 .. | GASKET 22,1X30,1X3,7 MM 1" | 1-177, 1-179 |
| 315229-0204 .. | GASKET 34,8X42,8X3,7 MM 1"1/2 | 1-179 |
| 315229-0205 .. | GASKET 47,5X55,5X3,7 MM 2 INCH | 1-179, 1-183, 1-187, 1-191, 1-193 |
| 315229-0206 .. | GASKET 60,2X68,2X3,7 MM 2"1/2 | 1-179, 1-187, 1-189, 1-191 |
| 315229-0208 .. | GASKET 97,4X105,4X3,7 MM 4" | 1-205 |
| 315233-0101 .. | WASHER CAPTIVE SEALING M5(NEW315239-101) | 1-219, 1-221, 1-223 |
| 315233-0110 .. | WASHER CAPTIVE SEALING G1/4 | 6-33 |
| 315233-0113 .. | WASHER CAPTIVE SEALING G1/2 | 6-31, 6-101 |
| 315234-0110 .. | WASHER,PL.RND.CU.13,5/18 H=1,5 | 1-205, 2-75, 2-77 |
| 315237-0109 .. | WASHER,PL.RND.AL.10/14,H=1,5 | 1-325 |
| 315237-0110 .. | WASHER,PL.RND.AL.13,5/18,H=1,5 | 1-75, 1-77, 1-271, 1-273, 2-9, 2-83 |
| 315239-0109 .. | NYLON WASHER G1/8, 1/8RRP | 6-87, 6-89 |
| 315239-0110 .. | NYLON WASHER G1/4, 1/4RRP | 2-83 |
| 315239-0111 .. | NYLON WASHER G3/8, 3/8RRP | 6-87, 6-89, 7-89, 7-135 |
| 315239-0113 .. | NYLON WASHER G1/2, 1/2RRP | 2-121, 2-191, 2-193, 6-87, 6-89 |
| 315400-0001 .. | TUBE PUN-H-6X1-BL | 1-241, 1-243, 1-245, 1-311, 1-313, 1-315, 2-49, 6-93, 6-101, 7-17, 7-123, 7-133, 7-139, 7-141, 7-173 |
| 315400-0003 .. | TUBE PUN-H-6X1-SW | 4-177 |
| 315400-0004 .. | TUBE PUN-H-8X1,25-BL | 1-313, 1-315, 2-49, 6-99, 7-115, 7-117, 7-139, 7-141 |
| 315400-0006 .. | TUBE PUN-H-8X1,25-SW | 6-13 |
| 315400-0007 .. | TUBE PUN-H-10X1,5-BL | 1-311, 1-313, 1-315, 2-197 |
| 315400-0010 .. | TUBE PUN-H-12X2-BL | 2-49, 6-99, 6-101, 7-139, 7-141 |
| 315400-0016 .. | TUBE PUN-H-4X0,75-BL | 1-313, 1-315, 2-49, 5-11, 5-13, 5-15, 6-93, 7-117, 7-139, 7-141 |
| 315400-0018 .. | TUBE PUN-H-4X0,75-SW | 2-21 |
| 315402-0136 .. | LOCK WASHER FBB 4,1 | 1-223 |
| 315402-0146 .. | LOCK WASHER FBB 5,1 | 1-189, 6-11 |
| 315402-0156 .. | LOCK WASHER FBB 6,5 | 1-37, 1-235, 4-29, 4-31, 4-81, 4-83, 4-103, 4-105, 5-5, 5-7, 5-9, 7-7, 8-25 |
| 315402-0173 .. | LOCK WASHER FBB 10,2 | 2-129 |
| 315410-0103 .. | LOCK WASHER MB 3 D=17 H=1 | 2-33, 3-9 |
| 315701-0165 .. | PARALLEL KEY W. ROUND ENDS 4X4X10 MM | 4-29, 4-31 |
| 315701-0170 .. | PARALLEL KEY W. ROUND ENDS 4X4X20 MM | 7-95 |

| Part No | Description | Page No |
|---|---|---|
| 315701-0203 .. | PARALLEL KEY W. ROUND ENDS 5X5X25 MM | 4-31 |
| 315701-0205 .. | PARALLEL KEY W. ROUND ENDS 5X5X30 MM | 4-29 |
| 315701-0206 .. | PARALLEL KEY W. ROUND ENDS 5X5X32 MM | 7-173 |
| 315705-0164 .. | PARALLEL KEY W. ROUND ENDS 4X4X8 MM | 1-161, 1-163, 2-245 |
| 315705-0198 .. | PARALLEL KEY W. ROUND ENDS 5X5X14 MM | 1-63, 7-135 |
| 315705-0201 .. | PARALLEL KEY W. ROUND ENDS 5X5X20 MM | 2-245, 5-89, 5-91, 7-19 |
| 315705-0202 .. | PARALLEL KEY W ROUND ENDS 5X5X25MM | 1-235, 5-23, 5-29 |
| 315705-0232 .. | PARALLEL KEY W. ROUND ENDS 6X6X20 MM | 5-183 |
| 315705-0233 .. | PARALLEL KEY W. ROUND ENDS 6X6X22 MM | 7-107 |
| 315705-0237 .. | PARALLEL KEY W. ROUND ENDS 6X6X32 MM | 7-173 |
| 315705-0238 .. | PARALLEL KEY W. ROUND ENDS 6X6X36 MM | 2-245 |
| 315705-0239 .. | PARALLEL KEY W. ROUND ENDS 6X6X40 MM | 1-37, 3-15 |
| 315705-0263 .. | PARALLEL KEY W. ROUND ENDS 8X7X20 MM | 5-183 |
| 315705-0267 .. | PARALLEL KEY W. ROUND ENDS 8X7X30 MM | 5-79, 5-81, 5-139, 5-141, 5-143 |
| 315705-0270 .. | PARALLEL KEY W. ROUND ENDS 8X7X40 MM | 5-79, 5-81 |
| 315705-0301 .. | PARALLEL KEY W. ROUND ENDS 10X8X40 MM | 1-161, 1-163 |
| 315705-0334 .. | PARALLEL KEY W. ROUND ENDS 12X8X50 MM | 1-19 |
| 315741-0102 .. | RETAINING RING DIN 705 A2 6 | 7-21 |
| 315741-0216 .. | RETAINING RING DIN 705 A4 20 | 5-89, 5-91 |
| 315742-0112 .. | RETAINING RING 16 SMS 199 RFR | 4-33, 4-35 |
| 315742-0122 .. | RETAINING RING 30 SMS 199 | 2-245 |
| 315750-0109 .. | RETAINING RING SHAFT DIN 471 ST 12 | 7-173 |
| 315751-0103 .. | RETAINING RING FOR SHAFT DIN 471 6 SS | 1-55, 1-181 |
| 315751-0109 .. | RETAINING RING FOR SHAFT DIN 471 12 SS | 1-305, 1-307, 4-45, 4-47, 7-63 |
| 315751-0112 .. | RETAINING RING FOR SHAFT DIN 471 15 SS | 1-29, 1-31, 1-33, 1-35, 1-37, 1-57, 1-59, 4-29, 4-31, 7-7, 7-27, 7-79, 7-81, 7-135, 7-173 |
| 315751-0113 .. | RETAINING RING FOR SHAFT DIN 471 16 SS | 1-39, 1-41, 1-75, 1-77, 2-129, 7-87 |
| 315751-0115 .. | RETAINING RING FOR SHAFT DIN 471 18 SS | 7-173 |
| 315751-0116 .. | RETAINING RING FOR SHAFT DIN 471 20 SS | 7-17, 7-123 |
| 315751-0119 .. | RETAINING RING FOR SHAFT DIN 471 25 SS | 5-23, 5-29, 5-43 |
| 315751-0124 .. | RETAINING RING FOR SHAFT DIN 471 35 SS | 5-183 |
| 315753-0122 .. | RETAINING RING FOR BORE DIN 472 30 A2 | 1-303, 5-139, 5-141, 5-143, 7-15 |
| 315753-0123 .. | RETAINING RING FOR BORE DIN 472 32 A2 | 7-173 |
| 315753-0124 .. | RETAINING RING FOR BORE DIN 472 35 A2 | 4-29, 4-31, 7-79 |
| 315753-0127 .. | RETAINING RING FOR BORE DIN 472 40 A2 | 7-107 |
| 315753-0132 .. | RETAINING RING FOR BORE DIN 472 52 A2 | 5-79, 5-81 |
| 315753-0135 .. | RETAINING RING FOR BORE DIN 472 60 A2 | 4-11, 4-17 |
| 315754-0113 .. | LOCKING WAE 15 | 1-219, 1-221, 1-223 |
| 315755-0105 .. | RETAINING RING SHAFT DIN 6799 3,2 A2 | 1-67 |
| 315755-0106 .. | RETAINING RING SHAFT DIN 6799 4 A2 | 1-63, 1-187, 5-25, 5-27 |
| 315755-0107 .. | RETAINING RING SHAFT DIN 6799 5 A2 | 1-53, 2-247 |
| 315755-0108 .. | RETAINING RING SHAFT DIN 6799 6 A2 | 1-299, 1-301 |
| 315755-0110 .. | RETAINING RING SHAFT DIN 6799 9 A2 | 2-17, 2-19 |
| 315755-0113 .. | RETAINING RING SHAFT DIN 6799 15 A2 | 1-63 |
| 315755-0801 .. | RETAINING RING SHAFT DIN 6799 8 A2 | 2-11 |
| 316810-0106 .. | PIPE CLIP FOR TUBE D=8 MM | 5-43 |
| 318301-0122 .. | LIFTING EYE BOLT, LT M12 FZB | 8-5, 8-7 |
| 318800-0104 .. | HANDLE,SPHERICAL KNOB,INT.THRE.,D.30-M8 | 1-75, 1-77 |
| 318856-0101 .. | KNOB, EXTERNAL THREAD. NO. 8308-1011 | 6-35 |
| 318856-0115 .. | KNOB, EXTERNAL THREAD. NO. 8306-0278 | 5-89, 5-91 |
| 318871-0104 .. | KNOB CIRCULAR, EXT THREAD, NO. 8302-6118 | 5-93, 5-95 |
| 318871-0105 .. | KNOB CIRCULAR, EXT THREAD, NO. 8302-6150 | 5-89, 5-91 |
| 319030-0125 .. | DISC SPRING, CONICAL 12,5X6,2X0,5 MM | 7-113 |
| 321101-0162 .. | FLANGE BUSHING, 10X16X8 MM | 4-33, 4-35 |
| 321101-0163 .. | FLANGE BUSHING, 10X16X10 MM | 4-15, 4-21 |
| 321101-0173 .. | FLANGE BUSHING, 12X18X12 MM | 5-101, 5-103 |
| 321101-0203 .. | FLANGE BUSHING, 16X22X16 MM | 4-33, 4-35 |
| 321111-0163 .. | FLANGE BUSHING, 12X18X20 MM | 4-45, 4-47 |
| 321111-0302 .. | FLANGE BUSHING, 20X26X15 MM | 5-89, 5-91 |
| 321116-0234 .. | BEARING BUSH W/O FLANGE, 16X20X12 MM | 5-19 |
| 321130-0200 .. | THRUST WASHER, 14X26X1,5 MM | 5-139, 5-141, 5-143 |
| 321133-0180 .. | BUSHING, 12X14X12 MM | 1-55 |
| 321133-0260 .. | BUSHING, 20X23X20 MM | 4-49 |
| 321133-0375 .. | BUSHING, 35X39X30 MM | 5-139, 5-141, 5-143 |
| 321134-0260 .. | BUSHING, 20X23X20 MM | 1-177 |
| 321141-0064 .. | BEARING BUSH W/O FLANGE, 6X8X10 MM | 7-99 |
| 321141-0104 .. | BEARING BUSH W/O FLANGE, 8X10X12 MM | 5-89, 5-91, 5-93, 5-95, 5-97, 5-99, 7-117 |
| 321141-0138 .. | BEARING BUSH W/O FLANGE, 10X12X8 MM | 1-303, 7-15 |
| 321141-0183 .. | BEARING BUSH W/O FLANGE, 12X14X15 MM | 1-305, 1-307 |
| 321141-0375 .. | BEARING BUSH W/O FLANGE, 35X39X30 MM | 5-139, 5-141, 5-143 |
| 321158-0221 .. | FLANGE BUSHING, 16X18X17 MM | 1-63 |
| 321161-0098 .. | FLANGE BUSHING, 8X10X5, 5 MM | 5-93, 5-95 |
| 321161-0142 .. | FLANGE BUSHING, 10X12X12 MM | 7-65 |
| 321161-0185 .. | FLANGE BUSHING, 12X14X17 MM | 7-63 |
| 321161-0221 .. | FLANGE BUSHING, 16X18X17 MM | 2-129 |
| 321302-0298 .. | BALL BEARING, 8X22X7 MM | 1-235 |
| 321306-0105 .. | BALL BEARING, 25X47X12 MM | 5-23, 5-29, 5-43 |
| 321308-0102 .. | BALL BEARING, 15X32X9 MM | 7-61 |
| 321308-0202 .. | BALL BEARING, 15X32X9 MM | 7-39, 7-125, 7-173 |
| 321308-0204 .. | BALL BEARING, 20X42X12 MM | 7-107, 7-135 |
| 321308-0205 .. | BALL BEARING, 25X47X12MM | 5-79, 5-81 |
| 321308-0207 .. | BALL BEARING, 35X62X14 MM | 5-183 |
| 321309-0103 .. | BALL BEARING, 17X40X12 MM | 5-23, 5-29 |
| 321313-0100 .. | BALL BEARING, 10X30X9 MM | 1-303, 7-15 |

| Part No | Description | Page No |
|---|---|---|
| 321313-0102 | BALL BEARING, 15X35X11 MM | 1-299, 1-301, 2-11, 7-7, 7-19, 7-27, 7-47, 7-79, 7-81, 7-135 |
| 321313-0103 | BALL BEARING, 17X40X12MM | 2-33 |
| 321313-0105 | BALL BEARING, 25X52X15MM | 5-79, 5-81, 5-139, 5-141, 5-143 |
| 321313-0107 | BALL BEARING, 35X72X17MM | 5-139, 5-141, 5-143 |
| 321316-0205 | BALL BEARING, 25X62X17 MM | 3-13 |
| 321316-0206 | BALL BEARING, 30X72X19 MM | 5-43 |
| 321390-0145 | STEEL BALL 15MM, RB-15 RS | 2-247 |
| 342203-0107 | NIPPLES, EXT. THREAD, HEXAGON,ÿNO. 209 | 6-9 |
| 342203-0120 | NIPPLES, EXT. THREAD, HEXAGON,ÿNO. 209 | 6-47 |
| 342206-0109 | BUSHING, TAPERED, INT/EXT. THR NO. R211 | 1-185, 1-267 |
| 342217-0103 | SLEEVE, REDUCTION, INT, R-2021/2X1/4 | 6-9 |
| 342700-0109 | NIPPLES,HEXAGON,EXT.G-THREAD G1/8"-G1/8" | 1-325 |
| 342700-0111 | NIPPLES,HEXAGON,EXT.G-THREAD G3/8"-G3/8" | 6-87, 6-89 |
| 342700-0113 | NIPPLES,HEXAGON,EXT.G-THREAD G1/2"-G1/2" | 1-267, 6-101 |
| 342700-0116 | NIPPLES,HEXAGON,EXT.G-THREAD G1"-G1" | 6-55, 6-57 |
| 342700-0203 | NIPPLES,HEXAGON,EXT.G-THREAD G3/8"-G1/4" | 2-83 |
| 342700-0205 | NIPPLES,HEXAGON,EXT.G-THREAD G1/2"-G1/4" | 7-139, 7-141 |
| 342700-0206 | NIPPLES,HEXAGON,EXT.G-THREAD G1/2"-G3/8" | 2-75, 2-77, 6-101 |
| 342701-0202 | BUSHING,INT./EXT.G-THREAD G3/8"-G1/8" | 4-81, 4-83, 4-103, 4-105, 6-25, 6-27, 6-37, 6-87, 6-89 |
| 342701-0203 | BUSHING, INT/EXT. G-THREAD NO. 3/8-1/4 | 1-267 |
| 342701-0205 | BUSHING,INT./EXT.G-THREAD G1/2"-G1/4" | 2-195 |
| 342701-0206 | BUSHING,INT./EXT.G-THREAD G1/2"-G3/8" | 6-25, 6-27 |
| 342701-0209 | BUSHING,INT./EXT.G-THREAD G3/4"-G3/8" | 1-267 |
| 342703-0208 | NUT, PIPES & CONNECTORS,NUT M-8 SS | 4-37, 4-39 |
| 342706-0130 | ACCESSORIES, INSERT SLEEVE 6 MM | 1-241, 1-325, 2-33 |
| 342706-0195 | ACCESSORIES, INSERT SLEEVE 12 MM | 1-245 |
| 342707-0110 | SLEEVE, INT. THREAD, NO. 2543-1/4 | 7-115 |
| 342708-0109 | REINFORCING RING VSH 15X1 MM | 6-31, 6-87, 6-89 |
| 342713-0209 | PLUG (QUANT.MINIMA= 10PC). | 2-75, 2-77, 4-77, 4-79, 4-81, 4-83, 4-89, 4-91, 4-99, 4-101, 4-103, 4-105 |
| 342713-0210 | PLUG, EXT THREAD HEX SOCKET | 1-207 |
| 342713-0213 | PLUG, EXT THREAD HEX SOCKET 8638-00-120 | 2-187, 2-243, 6-29, 6-55, 6-57 |
| 342713-0313 | PLUG, EXT. THREAD HEX. SOCKET. BPS12 | 2-75, 2-77 |
| 342715-0106 | BLIND PLUG 14 MM | 2-9 |
| 342716-0203 | REDUCER 6-8 | 2-197 |
| 342716-0210 | REDUCER 6-12 | 1-245 |
| 342716-0211 | REDUCER 12-14 | 2-197, 6-99 |
| 342720-0114 | CONN. STR. GA-15-G1/2 | 6-31, 6-87, 6-89 |
| 342720-0119 | CONN. STR., GA-22-G3/4 | 6-29 |
| 342722-0202 | PIPE COUPLING 1/8" D=6MM | 1-39, 1-41, 1-53, 1-191, 2-83, 2-111, 5-39, 7-67, 7-69 |
| 342722-0203 | STRAIGHT COUPLING | 2-23 |
| 342722-0205 | STRAIGHT COUPLING D=8-G1/4" | 2-37, 6-51 |
| 342722-0206 | STRAIGHT COUPLING D=8-G3/8" | 5-139, 5-141, 5-143 |
| 342724-0102 | CONN. STR. PIPE GI 6-G1/8 | 1-325 |
| 342725-0102 | CONN. STR. PIPE GAI06LR G1/8 | 7-67, 7-69 |
| 342735-0102 | ELBOW PIPE JOINT | 2-183, 2-185 |
| 342735-0103 | ELBOW PIPE JOINT | 2-197, 5-131, 5-133, 6-35 |
| 342735-0109 | ELBOW PIPE JOINT | 1-245, 2-127, 2-197 |
| 342735-0110 | ELBOW PIPE | 2-197 |
| 342738-0125 | ADJUSTABLE ELBOW CONNECTION,EXT 18-G1/2 | 2-75, 2-77 |
| 342738-0221 | ADJUSTABLE ELBOW CONNECTION,EXT 15-G1/2 | 1-185, 1-267 |
| 342738-0228 | ADJUSTABLE ELBOW CONNECTION,EXT 22-G3/4 | 2-75, 2-77 |
| 342741-0209 | CONN. T-PIPE TE-12-R3/8 | 1-267 |
| 342748-0100 | T-CONNECTION 4MM | 5-11, 5-13, 5-15 |
| 342748-0103 | T-CONNECTION 8MM | 1-207, 6-9 |
| 342748-0109 | T-CONNECTION 12MM | 2-127 |
| 342748-0110 | T-CONNECTION 14MM | 2-197, 6-99 |
| 342751-0215 | CONN. L-PIPE, EXT. LE-12-R3/8 | 1-245 |
| 342751-0221 | CONN. L-PIPE, EXT. LE-15-R1/2 | 1-241 |
| 342752-0104 | CONN. STR. GA-10-G1/4 | 2-75, 2-77 |
| 342752-0110 | CONN. STR. GA-12-G3/8 | 2-75, 2-77 |
| 342752-0118 | CONN. STR. GA-18-G1/2 | 2-75, 2-77 |
| 342752-0119 | CONN. STR. GA-22-G3/4 | 2-75, 2-77 |
| 342767-0100 | CONN. BULKHEAD G1/8 | 1-349, 1-351 |
| 342767-0104 | CONN. BULKHEAD G1/4 | 2-125, 2-195 |
| 342768-0102 | BULKHEAD CONNECTOR, 6 MM | 1-233, 2-9, 2-39, 2-197 |
| 342768-0110 | BULKHEAD CONNECTOR, 14 MM | 2-9, 2-197 |
| 342796-0118 | CONN. BANJO,WH 18-G1/2 | 2-75, 2-77 |
| 342797-0121 | CONN. BANJO, RINGPIECE 6-1/8 | 1-325 |
| 342797-0122 | CONN. BANJO, RINGPIECE 6-1/4 | 1-241, 1-245 |
| 342800-1103 | DIAPHRAGM FDA PTFE/EPDM 5E, SEAT S. 25 | 1-253 |
| 342800-1303 | ACTUATOR, SS, N.O. SEAT S. 25 | 1-253 |
| 342800-1503 | VALVE ASSEMBLING KIT, SEAT S. 25 | 1-253 |
| 342840-0101 | CLAMP, 12,7 AND 19,1 MM 3-A PCS+PMCS | 1-233 |
| 342840-0103 | CLAMPING PIECE | 1-185, 1-233, 1-249, 1-253, 1-255, 1-257, 1-259, 1-261, 2-109, 2-243 |
| 342840-0105 | CLAMPING PIECE | 1-185, 1-193, 1-215, 1-253, 1-259 |
| 342840-0107 | CLAMP 3" | 1-215, 2-243 |
| 342850-0107 | GASKET, FDA, 3-A, 3 | 2-243 |
| 342850-0209 | GASKET 147,57X165,61X5,182 MM 6" | 1-185 |
| 342850-0303 | GASKET 22,7X49,1X5,2 MM 1" FDA | 1-257, 1-261 |
| 342850-0304 | GASKET 35,4X49,1X5,2 1"1/2 FDA | 1-249, 1-253, 1-255, 1-257, 1-259, 1-261, 2-109, 2-113, 2-243, 9-17, 9-19, 9-21, 9-23, 9-25 |
| 342850-0305 | GASKET 47,8X62,6X5,2 MM 2" FDA | 1-215, 1-249, 1-253, 1-259 |
| 342850-0306 | GASKET 60,3X76,1X5,2 MM 2"1/2 FDA 3-A | 1-249, 9-17 |


Machine Type Group Description Page No

| Part No | Description | Page No |
|---|---|---|
| 342850-0307 .. | GASKET 72,9X89,6X5,2 MM 3" FDA 3-A | 1-215 |
| 342850-0404 .. | GASKET 35,4X49,1X5,2 MM 1"1/2 FDA | 1-185 |
| 342850-0405 .. | GASKET 47,8X62,6X5,2 MM 2" FDA | 1-185, 1-193 |
| 342850-0408 .. | GASKET 97X117,7X5,2 MM 4" FDA | 1-185 |
| 342901-0101 .. | HOSE NIPPLE, EXT.THR. R1/8-7 MM | 2-25 |
| 342901-0105 .. | HOSE NIPPLE, EXT.THR. R1/2-12 MM | 1-185, 1-193, 2-121, 2-187, 6-25, 6-27, 6-31, 6-45, 6-87, 6-89 |
| 342901-0106 .. | HOSE NIPPLE, EXT.THR. R3/8-17 MM | 2-17, 2-19, 2-27 |
| 342920-0114 .. | STRAIGHT COUPLING,EXT.THREADED 6/4-R1/4" | 2-189 |
| 342920-0121 .. | STRAIGHT COUPLING,EXT.THREADED 8/6-R1/8" | 5-129 |
| 342920-0122 .. | STRAIGHT COUPLING,EXT.THREADED 8/6-R1/4" | 2-125 |
| 342920-0123 .. | STRAIGHT COUPLING,EXT.THREADED 8/6-R3/8" | 6-33 |
| 342920-0124 .. | STRAIGHT COUPLING,EXT.THREADED 8/6-R1/2" | 6-87, 6-89 |
| 342920-0132 .. | STRAIGHT COUPL.,EXT.THREADED 10/8-R1/4" | 2-195 |
| 342920-0151 .. | STRAIGHT COUPL.,EXT.THREAD.15/12,5-R1/2" | 1-193 |
| 342921-0113 .. | STRAIGHT COUPLING,EXT.THREADED 6/4-G1/8" | 1-349, 1-351, 5-157, 5-159 |
| 342921-0114 .. | STRAIGHT COUPLING,EXT.THREADED 6/4-G1/4" | 2-189 |
| 342921-0115 .. | STRAIGHT COUPLING,EXT.THREADED 6/4-G3/8" | 6-87, 6-89 |
| 342921-0121 .. | STRAIGHT CPLNG,EXT.THREADED 8/6-G1/8INCH | 5-117, 5-119 |
| 342921-0122 .. | STRAIGHT COUPLING,EXT.THREADED 8/6-G1/4" | 1-207, 2-187, 2-191, 2-193 |
| 342921-0151 .. | STRAIGHT COUPL.,EXT.THREAD.15/12,5-G1/2" | 6-87, 6-89 |
| 342922-0122 .. | STRAIG.COUPL.,ADJUST.,EXT.THRE.8/6-R1/4" | 6-33, 6-37 |
| 342923-0122 .. | STRAIGHT COUPL.,INT.THREADED 8/6-G1/4" | 2-37 |
| 342930-0113 .. | ELBOW 90 COUPL.,EXT.THREAD 6/4-R1/8" | 5-25, 5-27 |
| 342930-0133 .. | ELBOW 90 COUPL.,EXT.THREADED 10/8-R3/8" | 6-87, 6-89 |
| 342931-0121 .. | ELBOW 90 COUPL.,EXT.THREAD 8/6-G1/8" | 1-281, 5-113, 5-115, 5-117, 5-119, 5-129, 6-25, 6-27, 7-77 |
| 342931-0122 .. | ELBOW 90 COUPL.,EXT.THREAD 8/6-G1/4" | 1-207, 2-191, 2-193, 6-33 |
| 342933-0122 .. | ELBOW 90 COUPL.,INT.THREAD 8/6-G1/4 | 6-33 |
| 342936-0122 .. | ELBOW 90 COUPL.,UNION 8/6 | 2-191, 2-193 |
| 342941-0114 .. | T-COUPLING,EXT.THREAD 6/4-G1/4" | 2-183, 2-185 |
| 342941-0122 .. | T-COUPLING,EXT.THREAD 8/6-G1/4" | 1-207 |
| 342946-0112 .. | T-COUPLING,UNION 6/4 | 2-189, 4-177 |
| 342980-0303 .. | BANJO-HOLLOW BOLT COUPL,EXT.THR.01-G1/8 | 1-325 |
| 342980-0304 .. | BANJO-HOLLOW BOLT COUPL,EXT.THR.01-G1/4 | 1-241, 1-245 |
| 342991-0100 .. | HOSE CLIP,WORM DRIVE TYPE 10-13 | 1-245, 2-37, 6-45 |
| 342991-0101 .. | HOSE CLIP,WORM DRIVE TYPE (13)-16 | 1-185, 1-193, 2-17, 2-19, 2-25, 2-39, 2-83, 2-187, 2-243, 6-21, 6-23, 6-25, 6-27, 6-29, 6-33 |
| 342991-0102 .. | HOSE CLIP,WORM DRIVE TYPE (16)-19 | 2-9, 2-39, 2-121, 6-25, 6-27, 6-55, 6-57 |
| 342991-0103 .. | HOSE CLIP,WORM DRIVE TYPE (19)-23 | 1-267, 2-17, 2-19, 2-27, 2-31 |
| 342991-0104 .. | HOSE CLIP,WORM DRIVE TYPE (23)-27 | 2-17, 2-19, 2-113, 2-187, 2-249 |
| 342991-0105 .. | HOSE CLIP,WORM DRIVE TYPE (27)-30 | 2-13, 2-67, 2-117 |
| 342991-0106 .. | HOSE CLIP,WORM DRIVE TYPE (30)-36 | 2-27, 2-67 |
| 342991-0109 .. | HOSE CLIP,WORM DRIVE TYPE (48)-50 | 1-187, 1-257, 2-109, 2-243 |
| 342991-0110 .. | HOSE CLIP,WORM DRIVE TYPE (54)-63 | 2-17, 2-19, 2-27 |
| 342991-0114 .. | HOSE CLIP,WORM DRIVE TYPE (93)-110 | 2-129 |
| 344502-0021 .. | GREASE NIPPLE STRAIGHT M6 | 5-23, 5-29, 5-43 |
| 346800-0109 .. | SILENCER FILTER R1/8" | 1-325 |
| 346800-0110 .. | SILENCER FILTER R1/4" | 1-207, 1-277, 2-127 |
| 350001-0001 .. | PUSH-IN FITTING QS-F-M5-4 | 7-117 |
| 350001-0002 .. | PUSH-IN FITTING QS-F-M5-6 | 7-133 |
| 350001-0005 .. | PUSH-IN FITTING QS-F-G1/8-4 | 1-313, 1-315, 6-93 |
| 350001-0006 .. | PUSH-IN FITTING QS-F-G1/8-6 | 5-11, 5-13, 5-15 |
| 350001-0007 .. | PUSH-IN FITTING QS-F-G1/8-8 | 7-139, 7-141, 7-143 |
| 350001-0008 .. | PUSH-IN FITTING QS-F-G1/4-6 | 1-253, 2-183, 2-185, 7-145 |
| 350001-0009 .. | PUSH-IN FITTING QS-F-G1/4-8 | 1-319, 1-321, 2-49, 7-115, 7-139, 7-141 |
| 350001-0010 .. | PUSH-IN FITTING QS-F-G1/4-10 | 1-313, 1-315 |
| 350001-0015 .. | PUSH-IN FITTING QS-F-G1/2-10 | 6-99 |
| 350001-0016 .. | PUSH-IN FITTING QS-F-G1/2-12 | 6-99 |
| 350002-0002 .. | PUSH-IN L-FITTING QSL-F-M5-6 | 1-55, 1-63, 4-177, 7-91 |
| 350002-0005 .. | PUSH-IN L-FITTING QSL-F-G1/8-4 | 2-49, 7-139, 7-141, 7-143 |
| 350002-0006 .. | PUSH-IN L-FITTING QSL-F-G1/8-6 | 1-209, 1-317, 1-319, 1-321, 2-51, 5-89, 5-91, 6-95, 7-17, 7-123, 7-143, 7-147 |
| 350002-0007 .. | PUSH-IN L-FITTING QSL-F-G1/8-8 | 2-51, 2-183, 2-185, 6-95, 7-139, 7-141, 7-143, 7-147 |
| 350002-0008 .. | PUSH-IN L-FITTING QSL-F-G1/4-6 | 1-313, 1-315, 2-31, 2-49, 7-173 |
| 350002-0009 .. | PUSH-IN L-FITTING QSL-F-G1/4-8 | 1-313, 1-315, 2-49, 6-93, 7-117, 7-139, 7-141 |
| 350002-0010 .. | PUSH-IN L-FITTING QSL-F-G1/4-10 | 1-313, 1-315 |
| 350002-0012 .. | PUSH-IN L-FITTING QSL-F-G3/8-8 | 1-317, 2-51, 6-95 |
| 350002-0013 .. | PUSH-IN L-FITTING QSL-F-G3/8-10 | 1-313, 1-315, 1-317, 1-319, 1-321 |
| 350002-0014 .. | PUSH-IN L-FITTING QSL-F-G3/8-12 | 2-51, 6-95, 7-143, 7-147 |
| 350002-0015 .. | PUSH-IN L-FITTING QSL-F-G1/2-10 | 6-9 |
| 350002-0016 .. | PUSH-IN L-FITTING QSL-F-G1/2-12 | 7-139, 7-141 |
| 350004-0003 .. | PUSH-IN L-FITTING QSL-F-8 | 2-49 |
| 350004-0005 .. | PUSH-IN L-FITTING QSL-F-12 | 7-139, 7-141, 7-145 |
| 350005-0002 .. | PUSH-IN T-FITTING QST-F-6 | 2-49, 7-139, 7-141 |
| 350005-0003 .. | PUSH-IN T-FITTING QST-F-8 | 2-45, 2-47, 2-49, 6-13 |
| 350005-0004 .. | PUSH-IN T-FITTING QST-F-10 | 1-311, 1-313, 1-315 |
| 350005-0005 .. | PUSH-IN T-FITTING QST-F-12 | 6-99, 7-139, 7-141 |
| 350006-0001 .. | PUSH-IN FITTING QS-F-6H-4 | 2-45, 2-47, 2-49 |
| 350006-0002 .. | PUSH-IN FITTING QS-F-8H-4 | 1-313, 1-315, 2-21, 2-45, 2-47, 7-139, 7-141 |
| 350006-0003 .. | PUSH-IN FITTING QS-F-8H-6 | 2-45, 2-47, 2-49, 6-99, 7-139, 7-141 |
| 350006-0005 .. | PUSH-IN FITTING QS-F-10H-6 | 1-311, 1-313, 1-315 |
| 350006-0006 .. | PUSH-IN FITTING QS-F-10H-8 | 1-311, 7-139, 7-141 |
| 350006-0008 .. | PUSH-IN FITTING QS-F-12H-8 | 6-99 |
| 350006-0009 .. | PUSH-IN FITTING QS-F-12H-10 | 2-197 |

| Part No | Description | Page No |
|---|---|---|
| 350007-0009 .. | PUSH-IN T-FITTING QST-F-G1/4-8 | 2-49 |
| 350007-0011 .. | PUSH-IN T-FITTING QST-F-G1/4-12 | 2-49 |
| 350009-0003 .. | PUSH-IN FITTING QS-F-8 | 2-21 |
| 350010-0002 .. | PUSH-IN BULKHEAD FITTING QSS-F-6 | 1-23, 1-25, 2-45, 2-47 |
| 350010-0003 .. | PUSH-IN BULKHEAD FITTING QSS-F-8 | 2-49 |
| 350011-0002 .. | PUSH-IN T-FITTING QS-F-8-6 | 2-49, 6-13, 6-99 |
| 350011-0003 .. | PUSH-IN T-FITTING QS-F-10-8 | 1-313, 1-315 |
| 350011-0004 .. | PUSH-IN T-FITTING QS-F-12-10 | 7-139, 7-141 |
| 350012-0004 .. | SLEEVE QSH-F-10 | 1-311, 1-313, 1-315 |
| 350013-0002 .. | PLUG QSC-6H | 1-311, 2-45, 2-47 |
| 350013-0003 .. | PLUG QSC-8H | 1-311, 1-313, 1-315 |
| 350013-0004 .. | PLUG QSC-10H | 6-99 |
| 350014-0011 .. | FITTING QS-F-G1/4-12H | 7-145 |
| 350015-0001 .. | Y-FITTING QSY-F-6 | 1-313, 1-315 |
| 350015-0005 .. | Y-FITTING QSY-F-10 | 1-311, 1-313, 1-315 |
| 351120-0126 .. | CABLE SILFLEX SIHF 2X4 0046025 | 7-91 |
| 351120-0145 .. | CABLE SILFLEX SIHF 3X2,5 0046020 | 7-93 |
| 351120-0264 .. | CABLE SILFLEX SIHF 4X1,5 00460153 | 1-179, 1-265 |
| 351120-0267 .. | CABLE SILFLEX SIHF 4X6 00460333 | 1-189 |
| 351150-0166 .. | CABLE OLFLEX 4X4 MM2 LIGHT/GREY | 6-49 |
| 351150-0196 .. | CABLE OLFLEX 7X4 MM2 LIGHT/GREY | 1-279, 1-281 |
| 351150-0403 .. | CABLE OLFLEX 3X0,75 MM2 LIGHT/GREY | 1-17, 1-193, 1-211, 1-277, 2-21, 2-25, 2-39, 2-61, 6-15, 6-17, 6-33, 6-43, 6-65, 6-67, 6-87, 6-89, 7-41, 7-43 |
| 351150-0404 .. | CABLE OLFLEX 4X0,75 MM2 LIGHT/GREY | 1-185, 1-209, 1-211, 1-261, 1-277, 2-39, 6-25, 6-27 |
| 351150-0405 .. | CABLE OLFLEX 5X0,75 MM2 LIGHT/GREY | 1-341, 2-99, 2-247, 5-187, 7-171 |
| 351150-0406 .. | CABLE OLFLEX 7X0,75 MM2 LIGHT/GREY | 1-85, 1-211, 2-61, 2-99, 7-89 |
| 351150-0407 .. | CABLE OLFLEX 12X0,75 MM2 LIGHT/GREY | 7-51, 7-153, 7-157 |
| 351150-0412 .. | CABLE OLFLEX 3X1,5 MM2 LIGHT/GREY | 1-265, 2-89, 2-91, 7-41, 7-43, 7-53, 7-107 |
| 351150-0413 .. | CABLE OLFLEX 4GX1,5 MM2 LIGHT/GREY | 2-137 |
| 351150-0417 .. | CABLE OLFLEX 3X2,5 MM2 LIGHT/GREY | 1-211, 5-131, 5-133 |
| 351150-0418 .. | CABLE OLFLEX 4X2,5 MM2 LIGHT/GREY | 2-33, 2-245, 6-25, 6-27, 6-37 |
| 351150-0425 .. | CABLE OLFLEX 25X0,75 MM2 LIGHT/GREY | 1-279, 1-281, 1-345, 1-349, 1-351, 2-61, 6-81, 6-83, 7-53 |
| 351150-0431 .. | CABLE OLFLEX 2X0,75 MM2 LIGHT/GREY | 1-265, 6-37 |
| 351161-0110 .. | WIRE AWM 1X25 MM2 LIGHTBLUE | 6-19 |
| 351161-0111 .. | WIRE AWM 1X35 MM2 LIGHTBLUE | 6-19 |
| 351162-0102 .. | WIRE AWM 1X0,75 MM2 YELLOW-GREEN | 2-41 |
| 351162-0109 .. | WIRE AWM 1X16 MM2 YELLOW-GREEN | 6-19 |
| 351164-0110 .. | WIRE AWM 1X25 MM2 BLACK | 6-19 |
| 351164-0111 .. | WIRE AWM 1X35 MM2 BLACK | 6-19 |
| 351301-0050 .. | ACTUATOR/SENSOR CABLE PRKMV 3-06/5M | 1-39, 1-41, 1-47, 1-49, 1-51, 1-187 |
| 351302-0050 .. | ACTUATOR/SENSOR CABLE PRKMWV 3-06/5M | 1-235 |
| 351303-0050 .. | ACTUATOR/SENSOR CABLE RKMVN 3-224/5M | 7-13 |
| 351309-0050 .. | 'ACTUATOR/SENSOR CABLE PRKT 4-07/5M | 6-15 |
| 351310-0050 .. | ACTUATOR/SENSOR CABLE PRKWT 4-07/5M | 1-271, 1-273 |
| 351414-0020 .. | DEVICENET CONN. CABLE, 0935 361 104/2M | 6-81, 6-83 |
| 351414-0050 .. | DEVICENET CONN. CABLE, 0935 361 104/5M | 1-331, 1-333 |
| 351415-0020 .. | DEVICENET CONN. CABLE, 0935 361 105/2M | 2-119 |
| 351415-0050 .. | DEVICENET CONN. CABLE, 0935 361 105/5M | 2-119 |
| 351416-0005 .. | MINIATURE CIRC. BREAK., FAZ-D0,5 1-POLE | 8-21 |
| 351416-0020 .. | MINIATURE CIRC. BREAK., FAZ -D2 1-POLE | 8-31 |
| 351416-0040 .. | MINIATURE CIRC. BREAK., FAZ -D4 1-POLE | 8-21 |
| 351416-0060 .. | MINIATURE CIRC. BREAK., FAZ -D6 1-POLE | 8-21, 8-31 |
| 351416-0100 .. | MINIATURE CIRC. BREAK., FAZ -D10 1-POLE | 8-21, 8-31 |
| 351416-0160 .. | MINIATURE CIRC. BREAK., FAZ -D16 1-POLE | 8-21, 8-31 |
| 351418-0060 .. | MINIATURE CIRC. BREAK., FAZ-D6/3 3-POLE | 8-31 |
| 351418-0100 .. | MINIATURE CIRC. BREAK., FAZ-D10/3 3-POLE | 8-31 |
| 351418-0160 .. | MINIATURE CIRC. BREAK.,FAZ-D16/3 3-POLE | 8-31 |
| 351501-0075 .. | ETHERNET PATCH CABLE, FL CAT5 PATCH 7,5 | 2-143 |
| 352103-0101 .. | CABLE GLAND, ST 9, PR15,2/PG9 | 1-181, 1-193, 1-207, 1-215, 1-261, 1-277, 2-25, 2-39, 2-83, 2-85, 2-189, 6-33, 6-43, 6-87, 6-89 |
| 352103-0106 .. | CABLE GLAND, ST 11, PR18,6/PG11 | 1-207, 1-241, 2-21, 2-105, 2-107, 6-19 |
| 352103-0108 .. | CABLE GLAND, ST 13,5 , PR20,4/PG13,5 | 5-187, 7-19, 7-121 |
| 352103-0110 .. | CABLE GLAND, STR 16, PR22,5/PG16 | 2-33, 2-213, 2-217, 6-37, 7-171, 8-5, 8-7 |
| 352103-0111 .. | CABLE GLAND, ST 16, PR22,5/PG16 | 6-49 |
| 352103-0123 .. | CABLE GLAND, ST 42, PR54,0/PG42 | 6-19, 8-61, 8-63 |
| 352113-0101 .. | CABLE TIE, BLACK 92X2,5 MM | 1-83, 2-83, 4-11, 4-17, 4-37, 4-39, 5-43, 5-139, 5-141, 5-143 |
| 352113-0102 .. | CABLE TIE, BLACK 188X4,8 MM | 5-43, 5-139, 5-141, 5-143, 7-77 |
| 352113-0103 .. | CABLE TIE, BLACK 290X7,6 MM | 2-189, 3-5, 3-19 |
| 352113-0104 .. | CABLE TIE, BLACK 300X4,8 MM | 2-187 |
| 352113-0203 .. | ANCHOR PLATES FOR STRIPS, TYPE TM3S8-M0 | 1-313, 1-315, 1-329, 1-339, 2-245, 6-21, 6-23, 7-99, 8-23 |
| 352113-0204 .. | ANCHOR PLATES FOR STRIPS, TYPE TM3S25-M | 1-23, 1-25, 1-75, 1-77, 1-265, 1-289, 1-291, 2-61, 2-105, 2-107, 2-161, 2-163, 2-189, 2-191, 2-193, 3-5, 3-19 |
| 352113-0205 .. | ANCHOR PLATES FOR STRIPS, TYPE TM2S8-C10 | 1-299, 1-301, 2-83, 6-55, 6-57, 7-63, 7-91, 7-99, 8-25 |
| 353001-0103 .. | END SLEEVE 0,75 MM2 | 2-247 |
| 353021-0127 .. | TERMINAL DISCONNECTABLE, WTR 2,5+WSD 2,5 | 2-97 |
| 353021-0212 .. | FEED THROUGH TERMINAL, 10200.0 | 1-213, 2-97, 2-141, 7-55, 8-23, 8-41 |
| 353021-0213 .. | FEED THROUGH TERMINAL, 10201.0 | 1-283 |
| 353021-0226 .. | BY-PASS TERMINAL WDU 35 | 8-43 |
| 353021-0301 .. | TERMINALS,TRIPLE-LEVEL, DLI 2,5/35 PA | 8-57 |
| 353021-0302 .. | TERMINALS,TRIPLE-LEVEL, DLD 2,5/35 PA | 8-57 |
| 353022-0002 .. | NEUTRAL TERMINAL, 10107.8 | 8-41 |
| 353024-0204 .. | EARTH TERMINAL WPE 2,5 | 1-213, 1-347, 1-355, 2-59, 2-97, 2-141, 2-145, 6-85, 7-55, 8-41 |


Machine Type Group Description Page No

| Part No | Description | Page No |
|---|---|---|
| 353024-0205 .. | EARTH TERMINAL, 1010.1 | 1-283, 8-41 |
| 353024-0206 .. | EARTH TERMINAL, 1010.2 | 7-55, 8-41 |
| 353024-0209 .. | EARTH TERMINAL, 1010.5 | 6-19, 8-41, 8-43 |
| 353024-0212 .. | EARTH TERMINAL, 10363.0 | 1-213, 1-283, 1-347, 1-355, 2-59, 2-97, 2-141, 2-145, 6-85, 7-55, 8-57 |
| 353031-0203 .. | END SUPPORT, WEW 35/2 | 1-213, 1-347, 2-59, 2-97, 2-141, 2-145, 6-85, 7-55, 8-13, 8-19, 8-21, 8-23, 8-41, 8-43, 8-57 |
| 353032-0004 .. | END PLATE WAP 2,5-10 BEIGE | 8-13, 8-23, 8-41 |
| 353032-0009 .. | END PLATE, WAP FOR WDK | 8-13, 8-19 |
| 353032-0013 .. | END PLATE, 13818.6 | 8-57 |
| 353032-0301 .. | END PLATE WAP, 13132.6 | 8-57 |
| 353033-0104 .. | END PLATE, 10502.8 | 8-41 |
| 353033-0105 .. | PARTITITION, 10501.0 | 8-43 |
| 353034-0026 .. | BRIDGE CONNECTOR, WQV 35/2, 10530.6 | 8-43 |
| 353034-0030 .. | BRIDGE CONNECTOR WQV 2,5/10, 10544.6 | 1-213, 1-283, 1-347, 1-355, 2-59, 2-97, 2-141, 2-145, 6-85, 7-55, 8-19, 8-23, 8-41, 8-57 |
| 353034-0404 .. | BRIDGE CONNECTOR Q10, 13131.0 | 8-57 |
| 353041-0001 .. | BUS BAR RAIL 10X3MM SSCH | 8-41 |
| 353041-0106 .. | HOLDER ZB35 K 5026.8 | 8-41 |
| 353042-0004 .. | RAIL TS 35/7,5 | 2-145, 6-85, 8-13, 8-17, 8-19, 8-21, 8-23, 8-29, 8-31, 8-33, 8-35, 8-41, 8-43 |
| 353042-0005 .. | RAIL TS 35/7.5 | 1-353, 1-355, 6-19 |
| 353101-0118 .. | CABLE SHOE 0,5-1,5MM2 M3 RED | 2-41 |
| 353101-0130 .. | CABLE SHOE 1,5-2,5MM2 M4 BLUE | 1-235 |
| 353101-0132 .. | CABLE SHOE 1,5-2,5MM2 M5 BLUE | 7-93 |
| 353104-0130 .. | CABLE SHOE, RING UNINS., YAV 025 M 4 | 7-93 |
| 353104-0140 .. | CABLE SHOE, RING UNINS., YAV 06 M 4 | 7-91 |
| 353104-0168 .. | CABLE SHOE, RING UNINS., YAV 16 M 6 | 6-19 |
| 353105-0117 .. | PIN CABLE SHOE 0,75-1,5MM2 RED A1519SR | 2-41 |
| 353105-0200 .. | PIN CABLE SHOE A4630SR | 6-19 |
| 353240-0002 .. | GLAND W/O INSERT PG11 NORMAL | 2-245, 5-191 |
| 353240-0006 .. | GLAND W/O INSERT PG29 NORMAL | 2-135 |
| 353241-0002 .. | GLAND W/O INSERT PG11 EXTENDED | 5-191 |
| 353242-0005 .. | HOSE GLAND W/O INSERT PG9 NORMAL | 6-33, 6-81, 6-83 |
| 353243-0001 .. | HOSE GLAND W/O INSERT PG9 EXTENDED | 1-17, 1-21, 1-27, 1-179, 1-189, 1-191, 1-229, 1-231, 1-233, 1-265, 1-305, 1-307 |
| 353243-0003 .. | HOSE GLAND W/O INSERT PG11 EXTENDED | 1-259, 1-265 |
| 353243-0004 .. | HOSE GLAND W/O INSERT PG13,5 EXTENDED | 1-85 |
| 353243-0005 .. | HOSE GLAND W/O INSERT PG16 EXTENDED | 1-233, 2-135, 7-171 |
| 353243-0008 .. | HOSE GLAND W/O INSERT PG29 EXTENDED | 2-135 |
| 353245-0006 .. | GLAND, EXTENDED WITH INSERT, PG21/PR28,3 | 2-135 |
| 353249-0003 .. | INSERT, SINGLE HOLE, E151/11 | 5-191 |
| 353249-0008 .. | INSERT, SINGLE HOLE, EK 152/7 | 1-179, 1-189, 1-191, 1-229, 1-231, 1-265, 1-305, 1-307, 1-329, 1-345 |
| 353249-0009 .. | INSERT, SINGLE HOLE, EK 152/9 | 1-17, 1-21, 1-27, 1-233 |
| 353249-0011 .. | INSERT, SINGLE HOLE, EK 153/11 | 1-71, 1-73, 1-179, 1-259, 1-265, 1-329, 1-349, 1-351 |
| 353249-0013 .. | INSERT, SINGLE HOLE, EK 154/13 | 1-85, 1-265, 1-329 |
| 353249-0028 .. | INSERT, MULTI HOLE, E153M2X8 | 6-17 |
| 353249-0036 .. | INSERT, MULTI HOLE, EK152 M 2X4 | 5-191 |
| 353249-0049 .. | INSERT, SOLID, EK155G | 2-135 |
| 353249-0051 .. | INSERT, MULTI HOLE, E154M4X6 | 7-53 |
| 353249-0054 .. | INSERT, SINGLE HOLE, EK 156/25 | 7-7 |
| 353249-0061 .. | INSERT, SINGLE HOLE, EK 155/20 | 1-329 |
| 353249-0067 .. | INSERT, SINGLE HOLE, E150/7 | 6-33, 6-81, 6-83 |
| 353249-0301 .. | SEALING PIN, 4X20 | 5-191 |
| 353250-0025 .. | GLAND, LOCK NUT M25X1,5 | 4-9 |
| 353250-0032 .. | GLAND, LOCK NUT M32X1,5 | 1-183 |
| 353250-0040 .. | GLAND, LOCK NUT M40X1,5 | 2-209 |
| 354000-0010 .. | MINIATURE CIRCUIT BREAKER, FAZ-C1/1 | 8-31 |
| 354000-0020 .. | MINIATURE CIRCUIT BREAKER, FAZ-C2/1 | 8-31 |
| 354000-0040 .. | MINIATURE CIRCUIT BREAKER, FAZ-C4/1 | 8-31 |
| 354000-0100 .. | MINIATURE CIRCUIT BREAKER, FAZ-C10/1 | 8-31 |
| 354000-0160 .. | MINIATURE CIRCUIT BREAKER, FAZ-C16/1 | 8-31 |
| 354001-0250 .. | MINIATURE CIRCUIT BREAKER, FAZ-C25/2 | 8-31 |
| 354002-0100 .. | MINIATURE CIRCUIT BREAKER, FAZ-C10/3 | 8-31 |
| 359000-0101 .. | WIRE MARKING, YELLOW, PY01/3"1" | 2-41 |
| 359000-0102 .. | WIRE MARKING, YELLOW, PY01/3"2" | 2-41 |
| 359005-0010 .. | MARKING LABEL KIT 0 - 9, 04.841.2150.0 | 6-25, 6-27, 6-37, 6-49, 7-53 |
| 359005-0050 .. | MARKING LABEL KIT X, 04.841.4550.0 | 6-25, 6-27, 6-37, 6-49, 7-53 |
| 359011-0807 .. | MARKING PLATES 5-FW 1-50 | 1-213, 1-283, 1-347, 1-355, 2-59, 2-97, 2-141, 2-145, 6-85, 7-55, 8-13, 8-23, 8-41, 8-57 |
| 359011-0808 .. | MARKING PLATES 5-FW 51-100 | 1-213, 1-283, 1-347, 1-355, 2-59, 2-97, 2-141, 2-145, 6-85, 7-55, 8-41 |
| 359011-0809 .. | MARKING PLATES 5-FW 101-150 | 1-213, 1-283, 1-347, 1-355, 2-59, 2-97, 2-141, 2-145, 6-85, 8-19, 8-41 |
| 359011-0810 .. | MARKING PLATES 5-FW 151-200 | 1-213, 1-347, 1-355, 2-59, 2-97, 2-141, 2-145, 6-85, 7-55, 8-19 |
| 359011-0811 .. | MARKING PLATES 5-FW 201-2 | 1-355, 2-59, 2-97, 2-141, 2-145, 7-55, 8-19 |
| 359011-0812 .. | SET OF SIGNS 5-FW 251-300 | 1-355, 2-59, 2-97, 2-141, 2-145, 7-55 |
| 359011-0817 .. | SYMBOL 5-GW (+) 50PC | 8-57 |
| 359011-0818 .. | SYMBOL 5-GW (-) 50PC | 8-57 |
| 359011-0819 .. | MARKING PLATES 5-GW (EARTH) | 1-213, 1-283, 1-347, 2-59, 2-97, 2-141, 2-145, 5-191, 6-85, 7-55 |
| 359011-0821 .. | SET OF SIGNS 6-FW 1-50 | 5-191 |
| 359011-0834 .. | SET OF SIGNS 6-GW(EARTH) | 8-43, 8-57 |
| 359240-0100 .. | SIGN HOLDER FOR 359240-0001 | 6-79, 8-53 |
| 359241-0122 .. | SIGN: " CLEANING STEAM BARRIER SPACE" | 8-53 |
| 359241-0133 .. | SIGN: " SERVICE SWITCH" | 8-53 |

| Part No | Description | Page No |
|---|---|---|
| 359241-0201 .. | SIGN: " HOUR METER" | 8-53 |
| 359241-0431 .. | SIGN: " MAIN SWITCH" | 6-79 |
| 359241-0482 .. | SIGN "PACKAGE COUNTER" | 8-53 |
| 359243-0917 .. | SIGN"400V, 50HZ, 100A" | 6-79 |
| 359243-0918 .. | SIGN"400V, 60HZ, 100A" | 6-79 |
| 359301-0100 .. | BUTTON SIGN, SPLICING | 7-157 |
| 359301-0101 .. | BUTTON SIGN, STRIP SPLICING ON | 7-157 |
| 359301-0110 .. | BUTTON SIGN, SHORT STOP | 1-349, 1-351, 7-153 |
| 359301-0488 .. | BUTTON SIGN, MATERIAL LOCKING | 7-157 |
| 359605-0002 .. | MANDATORY SIGN ISO, EYE PROTECTION | 2-39 |
| 359705-0001 .. | WARNING SIGN ISO, ENTANGLEMENT | 7-121 |
| 359705-0003 .. | WARNING SIGN ISO, DANGEROUS CHEMICALS | 1-255, 2-39 |
| 359705-0004 .. | WARNING SIGN ISO, DANGEROUS CHEMICALS | 1-271, 1-273, 2-17, 2-19, 2-39 |
| 359705-0007 .. | WARNING SIGN ISO, HOT SURFACE | 1-21, 1-27, 1-71, 1-73, 1-179, 1-205, 1-229, 1-231, 1-255 1-265, 1-269, 9-19, 9-21, 9-23, 9-25 |
| 359705-0008 .. | WARNING SIGN ISO, HOT SURFACE | 1-185 |
| 359705-0015 .. | WARNING SIGN ISO, RISK OF ELECTRIC SHOCK | 1-189, 1-211, 1-265, 1-279, 1-281, 1-331 1-333, 1-345, 1-349, 1-351, 2-55, 2-57, 2-95, 2-119, 2-139, 2-143, 4-13, 4-19, 5-135, 5-137, 5-191 6-79, 6-81, 6-83, 7-53, 8-47, 8-49, 8-51 |
| 359710-0001 .. | WARNING SIGN ISO, HOT SURFACE | 5-131, 5-133 |
| 400828-0000 .. | SPRING | 7-91 |
| 400833-0000 .. | PLUNGER | 7-91 |
| 436781-0000 .. | GASKET | 1-269 |
| 440650-0000 .. | WASHER | 1-223 |
| 440655-0000 .. | RING | 1-219 |
| 440659-0000 .. | CYLINDRICAL PIN | 1-223 |
| 440660-0000 .. | COMPRESSION SPRING | 1-223 |
| 440661-0000 .. | COMPRESSION SPRING | 1-223 |
| 440662-0000 .. | COMPRESSION SPRING | 1-221 |
| 440663-0000 .. | COMPRESSION SPRING | 1-219, 1-223 |
| 441706-0000 .. | WASHER | 4-15, 4-21 |
| 441737-0000 .. | WASHER | 1-21, 1-27, 1-71, 1-73 |
| 441739-0000 .. | WASHER | 1-21, 1-27, 1-71, 1-73 |
| 441871-0000 .. | PENDULUM SUSPENSION | 1-191 |
| 449190-0000 .. | SHAFT | 5-19 |
| 450457-0000 .. | FLANGE | 2-67 |
| 450833-0000 .. | FILTER | 1-209, 1-277 |
| 451430-0000 .. | CONNECTION HOUS.(MINOR) | 1-189 |
| 456123-0000 .. | SUPPORT | 1-189 |
| 464368-0000 .. | CRAMP | 4-37, 4-39 |
| 466042-0000 .. | SEAL | 1-143, 1-145, 1-147, 1-149 |
| 466046-0000 .. | ROLLER | 1-143, 1-145, 1-147, 1-149 |
| 479261-0000 .. | NIPPLE | 1-193, 6-87, 6-89 |
| 486826-0001 .. | SIGN "EMERGENCY STOP" | 1-349, 1-351, 2-213, 2-217, 7-153, 7-171, 8-47 |
| 491305-0000 .. | CONN.DIAGRAM AIR SUPERH. | 1-189 |
| 497748-0000 .. | PIN | 1-225, 1-227 |
| 499011-0000 .. | SHAFT | 1-197, 1-199 |
| 499387-0000 .. | PRESSURE ROLLER - (10 PCS) | 9-19, 9-21, 9-23, 9-25 |
| 527898-0100 .. | MKS CONTAINER H2O2 | 2-15 |
| 527912-0000 .. | NON-RETURN VALVE | 2-25 |
| 530551-0000 .. | WASHER | 2-25 |
| 530587-0000 .. | WASHER | 1-221 |
| 530588-0000 .. | SEAL RING | 9-27 |
| 530589-0000 .. | SEAL RING | 1-191, 9-27 |
| 530591-0000 .. | HOLDER | 1-223 |
| 530595-0000 .. | SEAL RING HOLDER | 1-219 |
| 530597-0000 .. | WASHER | 1-223 |
| 530598-0000 .. | WASHER | 1-223 |
| 530599-0000 .. | RING | 1-191, 1-223 |
| 531345-0200 .. | PERSONAL PROTECT. EQ H2O2 | 9-3 |
| 531616-0000 .. | HOLDER | 2-209 |
| 531731-0000 .. | GASKET | 1-189 |
| 532117-0000 .. | CLAMP RING | 1-225 |
| 532118-0000 .. | CLAMP RING | 1-227 |
| 532349-0000 .. | PLAIN BEARING | 1-187, 1-191 |
| 532413-0000 .. | REDUCING NIPPLE | 5-25, 5-27, 5-157, 5-159 |
| 532655-0000 .. | CAUTION SIGN | 2-35 |
| 533169-0000 .. | DIAPHRAGM | 1-219, 9-27 |
| 534310-0001 .. | NOZZLE | 5-157, 5-159 |
| 534310-0003 .. | NOZZLE | 5-25, 5-27 |
| 536704-0000 .. | WASHER | 4-13, 4-15, 4-19, 4-21 |
| 537482-0000 .. | BRACKET | 9-7, 9-9, 9-13, 9-15 |
| 537483-0000 .. | BRACKET | 9-7, 9-9, 9-13, 9-15 |
| 539212-0000 .. | GASKET | 1-217, 9-27 |
| 541163-0200 .. | CLAMP RING | 1-217 |
| 541164-0200 .. | CLAMP RING | 1-217 |
| 541165-0000 .. | WASHER | 1-225, 1-227 |
| 541166-0000 .. | WASHER | 1-219 |
| 546929-0000 .. | FILTER | 1-193 |
| 549267-0000 .. | LID | 1-277 |
| 553607-0000 .. | SLEEVE | 1-219, 1-221, 1-223 |
| 554141-0000 .. | FILTER | 1-209, 1-277 |
| 554142-0000 .. | FILTER HOUSING | 1-209, 1-277 |
| 554162-0000 .. | SCREW | 1-225, 1-227 |

| Part No | Description | Page No |
|---|---|---|
| 554585-0000 .. | STUD SCREW | 1-277 |
| 555458-0000 .. | SEALING WASHER | 1-223 |
| 556133-0000 .. | SEALING WASHER | 1-221 |
| 559810-0101 .. | TMCC2 CONTROLLER | 8-55 |
| 559815-0101 .. | TMCC2 CONTROLLER | 8-55 |
| 560122-0000 .. | SUPPORT ROLLER | 4-173, 4-175 |
| 561427-0000 .. | CONTAINER | 2-35 |
| 563285-0000 .. | BLIND PLUG | 2-25 |
| 565250-0000 .. | WASHER | 2-35 |
| 565251-0000 .. | VALVE | 2-35 |
| 566171-0000 .. | CUP SPRING | 2-29 |
| 566194-0000 .. | WEIGHT | 2-29 |
| 566195-0000 .. | LID | 2-29 |
| 566196-0100 .. | LID WITH WEIGHT | 2-27 |
| 567018-0000 .. | STEAM HOUSE | 1-217 |
| 567743-0000 .. | SEAL | 1-143, 1-145, 1-147, 1-149 |
| 567746-0001 .. | ROLLER (STANDARD SIZE) | 1-93, 1-95, 1-97, 1-99, 1-101, 1-103, 1-105, 1-107, 1-109 |
| 568828-0000 .. | FLOAT GUARD | 1-185 |
| 569058-0000 .. | SUPPORT ROLLER | 4-173, 4-175 |
| 573504-0000 .. | ROLLER | 1-143, 1-145, 1-147, 1-149 |
| 575034-0000 .. | ROUND NUT | 2-201, 2-203, 2-227, 2-235, 7-151, 7-163, 7-167 |
| 576436-0100 .. | A-CYLINDER | 1-217 |
| 576437-0100 .. | C-CYLINDER | 1-217 |
| 576438-0100 .. | B-CYLINDER | 1-217 |
| 576439-0000 .. | CYLINDER HOUSING | 1-219, 1-223 |
| 576440-0000 .. | END SECTION | 1-219, 1-223 |
| 576441-0000 .. | PISTON | 1-219, 1-223 |
| 576442-0000 .. | PISTON ROD | 1-223 |
| 576443-0000 .. | CYLINDER HOUSING | 1-221 |
| 576444-0000 .. | END SECTION | 1-221 |
| 576445-0000 .. | PISTON | 1-221 |
| 576446-0000 .. | PISTON ROD | 1-219 |
| 576447-0000 .. | PISTON ROD | 1-221 |
| 576448-0000 .. | SPACER | 1-219 |
| 576449-0000 .. | SPACER | 1-219 |
| 576450-0000 .. | SPACER | 1-223 |
| 576451-0000 .. | SPACER | 1-221 |
| 578640-0000 .. | CLAMPING RING | 1-295 |
| 579318-0000 .. | SEAL | 1-149 |
| 591341-0000 .. | PIN | 2-9 |
| 593682-0000 .. | MACHINE SIGN, EEA(CE-MARK) | 9-3 |
| 599750-0000 .. | FILTER | 6-65, 6-67 |
| 599751-0000 .. | INSERT | 6-65, 6-67 |
| 599752-0000 .. | COVER | 6-65, 6-67 |
| 599753-0000 .. | SPACER | 6-65, 6-67 |
| 599755-0000 .. | GASKET | 6-65, 6-67 |
| 599760-0000 .. | SPACER | 6-67 |
| 735041-0000 .. | CONNECTION CLAMP | 1-345 |
| 751009-0000 .. | INSULATION | 1-189 |
| 751395-0000 .. | FLANGE | 2-33 |
| 751485-0000 .. | SCREW | 1-295 |
| 752186-0001 .. | SHAFT | 1-135, 1-137 |
| 752186-0004 .. | SHAFT | 1-135, 1-137 |
| 752186-0005 .. | SHAFT | 1-133, 1-135, 1-137 |
| 752186-0006 .. | SHAFT | 1-135, 1-137 |
| 752186-0007 .. | SHAFT | 1-115, 1-117, 1-119, 1-121, 1-123 |
| 752186-0013 .. | SHAFT | 1-135, 1-137 |
| 752186-0014 .. | SHAFT | 1-93, 1-95, 1-97, 1-99, 1-101, 1-103, 1-105, 1-107, 1-109 |
| 752186-0015 .. | SHAFT | 1-93, 1-95, 1-97, 1-99, 1-101, 1-103, 1-105, 1-107, 1-109, 1-115, 1-117, 1-119, 1-121 1-123 |
| 752186-0016 .. | SHAFT | 1-93, 1-95, 1-97, 1-99, 1-101, 1-103, 1-105, 1-107, 1-109, 1-157, 1-159 |
| 752186-0019 .. | SHAFT | 1-133, 1-135, 1-137 |
| 779910-0101 .. | PADLOCK, 250/40 W 2 KEYS | 1-241, 1-245 |
| 925998-0000 .. | DIAPHRAGM | 9-17 |
| 927244-0100 .. | PUMP | 2-39 |
| 927262-0000 .. | PIPE | 2-39 |
| 927339-0000 .. | ADAPTER | 2-41 |
| 927340-0000 .. | DISC | 2-41 |
| 927341-0000 .. | HOLDER | 2-41 |
| 927342-0000 .. | CYLINDER | 2-41 |
| 927354-0000 .. | SCREW | 1-239 |
| 927362-0000 .. | MAGNET | 2-41 |
| 927363-0000 .. | PLUG | 2-41 |
| 927420-0001 .. | O-RING 5.1X1.6 SILICONE | 1-209, 1-277 |
| 927421-0002 .. | O-RING 12.3X2.4 SILICONE | 1-277 |
| 927421-0003 .. | O-RING 13.3X2.4 SILICONE | 1-209, 1-269 |
| 927421-0004 .. | O-RING 15.3X2.4 SILICONE | 1-209, 1-277 |
| 927422-0001 .. | O-RING 19.2X3 SILICONE | 1-209, 1-277 |
| 927422-0003 .. | O.RING 24.2X3 SILICONE | 2-35 |
| 927422-0005 .. | O-RING 36.2X3 SILICONE | 2-33 |
| 927422-0006 .. | O-RING 42.2X3 SILICONE | 1-209, 2-33 |
| 927422-0007 .. | O-RING 44.2X3 SILICONE | 1-209, 1-277 |
| 927422-0009 .. | O-RING 54.5X3 SILICONE | 1-277 |
| 927422-0016 .. | O-RING 79.5X3 SILICONE | 2-17, 2-19 |

| Part No | Description | Page No |
|---|---|---|
| 927454-0000 .. | GASKET | 1-189 |
| 927859-0000 .. | TOOTHED PULLEY | 5-29 |
| 928025-0000 .. | PLUG | 2-39 |
| 950351-0000 .. | SHAFT | 4-55 |
| 977527-0000 .. | BRACKET | 6-33 |
| 978440-0000 .. | CRAMP | 1-233 |
| 978603-0000 .. | SIGN | 2-49 |
| 979548-0000 .. | MACHINE PLATE | 1-299, 1-301 |
| 985328-0000 .. | CONNECTION | 2-161, 2-163, 2-175, 2-177 |
| 988685-0000 .. | PIN | 1-313, 1-315, 1-339, 1-341, 2-49, 2-203, 2-215, 2-221, 2-223, 2-235, 6-69, 6-71, 6-75, 6-79, 7-89, 7-137, 7-151, 7-155, 7-159, 7-163, 7-167, 7-169 |
| 996388-0700 .. | PEROXIDE PUMP | 2-15 |
| 1010822-0000 . | RAILING | 2-161, 2-163, 2-175, 2-177 |
| 1020637-0000 . | HOLDER | 2-183, 2-185, 5-185, 5-189 |
| 1020638-0000 . | HOLDER | 5-189 |
| 1035654-0000 . | CONNECTION | 1-295 |
| 1035788-0000 . | SHAFT | 4-13, 4-15, 4-19, 4-21 |
| 1035792-0000 . | E-HINGE | 1-313, 1-315, 1-339, 1-341, 2-49, 2-203, 2-215, 2-221, 2-223, 2-235, 6-69, 6-71, 6-75, 6-79, 7-89, 7-137, 7-151, 7-155, 7-159, 7-163, 7-167, 7-169 |
| 1035794-0000 . | BLOCKING PIECE | 6-69, 6-71, 6-75, 6-79 |
| 1035831-0000 . | VOLUME SHIM | 9-19, 9-21, 9-23, 9-25 |
| 1035877-0000 . | ARM LEFT | 4-13 |
| 1035878-0000 . | ARM RIGHT | 4-19 |
| 1036155-0000 . | TOOTH PART | 4-15, 4-21 |
| 1036156-0000 . | TOOTH PART | 4-13, 4-19 |
| 1036187-0000 . | T-PIPE | 1-187, 1-191 |
| 1036188-0000 . | SHAFT | 1-191 |
| 1036189-0000 . | SPINDEL GUIDE | 1-191 |
| 1036191-0000 . | SEAL HOLDER | 1-191 |
| 1036192-0000 . | SPACER ROD | 1-191 |
| 1036193-0000 . | CYLINDER BRACKET | 1-191 |
| 1036293-0000 . | HOLDER | 1-179, 1-191 |
| 1036294-0000 . | GASKET | 1-179 |
| 1036304-0001 . | LOCKING ARM | 6-75 |
| 1036304-0014 . | LOCKING ARM | 6-75 |
| 1036343-0000 . | SCREW | 4-77, 4-79, 4-99, 4-101 |
| 1036372-0000 . | PIPE | 1-189 |
| 1036373-0000 . | HOLDER | 1-189 |
| 1036475-0000 . | PIN | 1-23, 1-25 |
| 1036483-0000 . | SEAL | 4-13, 4-19 |
| 1036484-0000 . | GASKET | 4-13, 4-19 |
| 1036485-0000 . | COVERING PLATE | 4-13, 4-19 |
| 1036494-0000 . | GUIDE BUSHING | 4-89, 4-91 |
| 1036501-0000 . | SPACER | 4-13, 4-19 |
| 1036563-0000 . | WASHER | 7-151, 7-163, 7-167 |
| 1036584-0000 . | WASHER | 4-57, 4-59, 4-65, 4-67, 9-17 |
| 1036610-0000 . | BRACKET | 1-21, 1-27, 1-181, 1-305, 1-307 |
| 1036615-0000 . | SHAFT | 4-15, 4-21 |
| 1036616-0000 . | WASHER | 4-15, 4-21 |
| 1036618-0000 . | ROLL | 4-15, 4-21 |
| 1036620-0000 . | SHAFT | 4-15, 4-21 |
| 1036622-0000 . | GUIDE ROLLER | 7-15 |
| 1036623-0000 . | GUIDE ROLLER | 1-303, 7-15 |
| 1036673-0000 . | WASHER | 2-103, 4-73, 4-75 |
| 1036674-0000 . | FASTENING PLATE | 4-9 |
| 1036794-0000 . | PIPE | 6-47 |
| 1036811-0000 . | CLAMP | 1-185, 1-193 |
| 1036826-0000 . | PIPE | 6-45 |
| 1036827-0000 . | PIPE | 6-45, 6-51 |
| 1036828-0000 . | TANK | 6-49 |
| 1036939-0000 . | SIDE PIECE | 1-293 |
| 1036940-0000 . | SIDE PIECE | 1-293 |
| 1036954-0000 . | AXLE SUPPORT | 1-143, 1-145, 1-147, 1-149 |
| 1036955-0000 . | AXLE SUPPORT | 1-143, 1-145, 1-147, 1-149 |
| 1036963-0000 . | HOOK HOLDER | 1-293 |
| 1036965-0000 . | HOOK HOLDER | 1-293 |
| 1037012-0000 . | AXLE PIN | 2-11 |
| 1037044-0000 . | RAILING | 1-295 |
| 1037069-0000 . | SCREW | 4-13, 4-19 |
| 1037089-0000 . | SPACER | 1-27 |
| 1037093-0000 . | SENSOR BRACKET | 1-215 |
| 1037102-0000 . | SPACER PIPE | 2-17, 2-19 |
| 1037104-0000 . | LOCATING PIECE | 4-11, 4-17 |
| 1037106-0000 . | SLEEVE | 4-11, 4-17 |
| 1037124-0000 . | HOLDER | 7-91 |
| 1037129-0000 . | LID | 6-53 |
| 1037130-0000 . | CONNECTION BOX | 2-213, 2-217, 7-171 |
| 1037184-0000 . | SPACER SCREW | 6-19 |
| 1037254-0000 . | SHIM | 4-15, 4-21, 9-19, 9-21, 9-23, 9-25 |
| 1037391-0000 . | CANTILEVER | 2-179 |
| 1037443-0000 . | GASKET | 2-69, 2-121 |
| 1037539-0000 . | BRACKET | 2-25 |
| 1037552-0000 . | SPACER | 1-335 |
| 1037571-0000 . | GUIDE BUSHING | 2-161, 2-163 |

| Part No | Description | Page No |
|---|---|---|
| 1037572-0000 | .COVER PLATE | 8-61, 8-63 |
| 1037573-0000 | .GASKET | 8-61, 8-63 |
| 1037574-0000 | .COVER PLATE | 8-61, 8-63 |
| 1037575-0000 | .GASKET | 8-61, 8-63 |
| 1037583-0000 | .HOLDER | 6-87, 6-89 |
| 1037853-0000 | .SHAFT | 4-13, 4-15, 4-19, 4-21 |
| 1037885-0000 | .REAMED BOLT | 1-143, 1-145, 1-147, 1-149 |
| 1038021-0000 | .WASHER | 4-23 |
| 1038240-0000 | .SPACER | 4-55 |
| 1038275-0012 | .SPACER | 8-9, 8-11 |
| 1038355-0000 | .FRAME | 8-53 |
| 1038464-0000 | .SPROCKET | 1-43, 1-45 |
| 1038509-0000 | .WASHER | 4-11, 4-17 |
| 1038634-0000 | .DRAINING | 1-185 |
| 1038688-0000 | .HOLDER | 1-269 |
| 1038867-0000 | .BOW CLAMP | 4-15, 4-21 |
| 1040754-0000 | .VOLUME BULGE | 4-115, 4-117, 4-135, 4-137 |
| 1040755-0000 | .VOLUME SHIM | 4-115, 4-117, 4-135, 4-137, 9-19, 9-21, 9-23, 9-25 |
| 1040756-0000 | .WEDGE | 4-115, 4-117, 4-135, 4-137 |
| 1040796-0000 | .PIPE | 2-33 |
| 1040807-0000 | .LID | 2-27 |
| 1040808-0000 | .GASKET | 2-27 |
| 1040840-0000 | .FLANGE | 2-17, 2-19 |
| 1040841-0000 | .FLANGE | 2-17, 2-19 |
| 1040852-0000 | .SEALING RING | 2-17, 2-19 |
| 1040853-0000 | .SEALING RING | 2-17, 2-19 |
| 1040970-0000 | .BRACKET | 1-265, 1-277 |
| 1041046-0000 | .FLOW METER | 6-33 |
| 1041603-0000 | .BRACKET | 2-11 |
| 1041925-0000 | .PIPE | 6-43 |
| 1041926-0000 | .PIPE | 6-43 |
| 1041930-0000 | .PIPE | 6-31 |
| 1041931-0000 | .PIPE | 6-31 |
| 1041932-0000 | .PIPE | 6-87, 6-89 |
| 1041933-0000 | .PIPE | 6-87, 6-89 |
| 1041934-0000 | .PIPE | 6-51 |
| 1041937-0000 | .SIGN | 1-313, 1-315 |
| 1041938-0000 | .SIGN | 6-93 |
| 1041946-0000 | .PIPE | 6-49 |
| 1041963-0000 | .WASTE BOX | 6-55, 6-57 |
| 1041967-0000 | .COVERING PANEL | 6-63 |
| 1041970-0000 | .DOOR | 6-75 |
| 1041978-0000 | .HINGE FLANGE | 1-21, 1-27, 1-71, 1-73 |
| 1041979-0000 | .HINGE FLANGE | 1-21, 1-27, 1-71, 1-73 |
| 1041984-0000 | .ATTACHMENT PIPE | 6-33 |
| 1041988-0000 | .CLAMP | 1-229, 1-231, 1-233 |
| 1086870-0000 | .SIGN | 9-11 |
| 1086888-0000 | .COVER | 5-189 |
| 1086889-0000 | .COVER | 5-185, 5-189 |
| 1095607-0300 | .COVERING PANEL | 6-3, 6-5 |
| 1095608-0200 | .PANEL | 6-3, 6-5 |
| 1095610-0400 | .SWITCH | 6-3, 6-5 |
| 1095612-0400 | .COOLING WATER SYSTEM | 6-3, 6-5 |
| 1095627-0400 | .FOAMING UNIT | 6-3, 6-5 |
| 1095672-0200 | .PIPE | 6-41 |
| 1095673-0200 | .SIDE | 6-41 |
| 1095675-0200 | .PIPE | 6-41 |
| 1095676-0200 | .PUMP | 6-41 |
| 1095677-0200 | .BRANCHING PIPE | 6-41 |
| 1095678-0400 | .BALL VALVE | 6-41 |
| 1095681-0200 | .SPRAY GUN | 2-181 |
| 1095682-0200 | .AIR JET GUN | 2-123 |
| 1095706-0400 | .COOLING WATER PUMP | 6-21, 6-23 |
| 1095710-0400 | .COMPRESSOR UNIT | 6-21, 6-23 |
| 1095714-0400 | .SUPPLY SYSTEM | 6-3, 6-5 |
| 1095715-0200 | .ICE WATER | 6-29 |
| 1095716-0200 | .PIPE WORK-AIR | 6-91 |
| 1095862-0100 | .LADDER | 1-287 |
| 1095863-0400 | .PIVOT ARM | 2-115 |
| 1095883-0200 | .GABLE PLATE | 6-59 |
| 1095886-0300 | .COVERING PANEL | 6-59 |
| 1095888-0200 | .HATCH | 6-59 |
| 1095889-0100 | .DOOR | 6-59 |
| 1095890-0200 | .HATCH | 6-59 |
| 1095891-0200 | .DOOR | 6-59 |
| 1103298-0000 | .NON-SKID | 2-67 |
| 1103300-0000 | .NON-SKID | 2-67, 2-117 |
| 1110083-0002 | .DOLLY | 4-89, 4-91, 9-19, 9-21, 9-23, 9-25 |
| 1110936-0000 | .INDUCTOR | 4-57, 4-59, 4-65, 4-67, 9-19, 9-21, 9-23, 9-25 |
| 1110937-0000 | .INDUCTOR | 4-57, 4-59, 4-65, 4-67, 9-19, 9-21, 9-23, 9-25 |
| 1110938-0000 | .INDUCTOR | 4-57, 4-59, 4-65, 4-67, 9-19, 9-21, 9-23, 9-25 |
| 1129079-0000 | .FLOW METER | 6-33 |
| 1129274-0000 | .GUIDE LUG | 2-203, 2-211, 2-215, 2-221, 2-223, 2-227, 2-235, 6-69, 6-71, 6-75 |
| 1129275-0000 | .BOX FOR DIAGRAM | 2-211 |

| Part No | Description | Page No |
|---|---|---|
| 1129318-0000 | .BRACKET | 8-5, 8-7 |
| 1129324-0000 | .WASHER | 2-201, 2-229, 2-231 |
| 1129325-0000 | .SEALING FLANGE | 2-201, 2-229, 2-231 |
| 1129328-0000 | .ATTACHMENT | 2-25 |
| 1129370-0000 | .SIGN | 2-49 |
| 1129387-0000 | .CONNECTION TABLE | 6-55, 6-57 |
| 1129431-0000 | .WASHER | 1-143, 1-145, 1-147, 1-149 |
| 1129432-0000 | .LID | 2-37 |
| 1129478-0000 | .GASKET | 8-61, 8-63 |
| 1129481-0000 | .COVERING PLATE | 8-61, 8-63 |
| 1129550-0000 | .GASKET | 8-61, 8-63 |
| 1129599-0000 | .CRAMP | 4-37, 4-39 |
| 1129600-0000 | .BRAID | 2-135 |
| 1129643-0000 | .STAIR | 1-293 |
| 1129644-0000 | .BRACKET | 1-293 |
| 1129767-0000 | .SCREW | 2-201, 2-203, 2-211, 2-215, 2-221, 2-223, 2-227, 2-235, 7-151, 7-155, 7-159, 7-163, 7-167, 7-169 |
| 1129770-0000 | .BLOCKING PIECE | 1-313, 1-315, 1-339, 1-341, 2-49, 2-201, 2-203, 2-211, 2-215, 2-221, 2-223, 2-227, 2-235, 7-89, 7-137, 7-151, 7-155, 7-159, 7-163, 7-167, 7-169 |
| 1129839-0000 | .COOLING PLATE | 7-77 |
| 1140077-0000 | .RING | 7-77 |
| 1140129-0000 | .HOLDER | 2-89, 2-91, 2-137 |
| 1140480-0000 | .CLAMP | 1-229, 1-231, 1-233 |
| 1140603-0000 | .COMPRESSOR UNIT | 6-25, 6-27 |
| 1140642-0000 | .PIPE | 6-49 |
| 1143530-0000 | .SPRING | 5-139, 5-141, 5-143 |
| 1144312-0000 | .AXLE PIN | 5-63 |
| 1144335-0000 | .ROLLER | 5-63 |
| 1144354-0000 | .WASHER | 5-63 |
| 1144356-0000 | .COVER | 5-63 |
| 1144417-0000 | .BUSHING | 5-63 |
| 1144470-0000 | .SHAFT | 5-23, 5-29 |
| 1144472-0000 | .LEVER | 5-79, 5-81 |
| 1144473-0000 | .LEVER | 5-79, 5-81 |
| 1144475-0000 | .BRACKET | 5-79, 5-81 |
| 1144476-0000 | .BRACKET | 5-79, 5-81 |
| 1144482-0000 | .SUPPORT | 5-139, 5-141, 5-143 |
| 1144485-0000 | .SUPPORT | 5-139, 5-141, 5-143 |
| 1144486-0000 | .CAM | 5-139, 5-141, 5-143 |
| 1144488-0000 | .COLUMN | 5-139, 5-141, 5-143 |
| 1144489-0000 | .FLANGE | 5-139, 5-141, 5-143 |
| 1144492-0000 | .SPRING | 5-139, 5-141, 5-143 |
| 1144493-0000 | .WASHER | 5-139, 5-141, 5-143 |
| 1144494-0000 | .AXLE PIN | 5-139, 5-141, 5-143 |
| 1144495-0000 | .ECCENTRIC | 5-139, 5-141, 5-143 |
| 1144496-0000 | .ECCENTRIC | 5-139, 5-141, 5-143 |
| 1144498-0000 | .FLANGE | 5-139, 5-141, 5-143 |
| 1144500-0000 | .SUPPORT | 5-139, 5-141, 5-143 |
| 1144501-0000 | .SPACER | 5-139, 5-141, 5-143 |
| 1144502-0000 | .WASHER | 5-139, 5-141, 5-143 |
| 1144503-0000 | .FLANGE | 5-139, 5-141, 5-143 |
| 1144505-0000 | .COLUMN | 5-139, 5-141, 5-143 |
| 1144506-0000 | .LEVER | 5-139, 5-141, 5-143 |
| 1144508-0000 | .AXLE PIN | 5-139, 5-141, 5-143 |
| 1144511-0000 | .SHIM | 5-139, 5-141, 5-143, 9-19, 9-21, 9-23, 9-25 |
| 1144514-0000 | .BUSHING | 5-139, 5-141, 5-143 |
| 1144515-0000 | .INSERT | 5-139, 5-141, 5-143 |
| 1144517-0000 | .BUSHING | 5-139, 5-141, 5-143 |
| 1144521-0000 | .CLAMP | 5-139, 5-141, 5-143 |
| 1144551-0000 | .SPACER | 5-155 |
| 1144552-0000 | .PLATE | 5-155 |
| 1144566-0000 | .FLANGE | 5-79, 5-81 |
| 1144577-0000 | .BLOCK | 5-19 |
| 1144579-0000 | .AXLE | 5-19 |
| 1144593-0000 | .PLATE | 5-23, 5-29 |
| 1144597-0000 | .SPACER | 5-23, 5-29 |
| 1144598-0000 | .SHAFT | 5-29 |
| 1144620-0000 | .WASHER | 5-43 |
| 1144621-0000 | .PLATE | 5-31, 5-33, 5-35, 5-37 |
| 1144625-0000 | .SPACER | 5-23, 5-29 |
| 1144653-0000 | .SWITCH | 2-247 |
| 1144665-0000 | .SEAL RING | 5-43 |
| 1144667-0000 | .HINGE | 5-25, 5-27 |
| 1144668-0000 | .HINGE | 5-25, 5-27 |
| 1144669-0000 | .PIN | 5-25, 5-27 |
| 1144678-0000 | .SHAFT | 5-79, 5-81 |
| 1144681-0000 | .WASHER | 5-79, 5-81 |
| 1144683-0000 | .AXLE PIN | 5-79, 5-81 |
| 1144684-0000 | .SPACER | 5-79, 5-81 |
| 1144685-0000 | .SCREW | 5-79, 5-81 |
| 1144686-0000 | .TIE ROD | 5-79, 5-81 |
| 1144687-0000 | .TIE ROD | 5-79, 5-81 |
| 1144688-0000 | .SCREW | 5-79, 5-81 |
| 1144719-0000 | .RAIL | 5-117, 5-119 |

| Part No | Description | Page No |
|---|---|---|
| 1144783-0000 | .TIMING BELT | 5-31, 5-33, 5-35, 5-37 |
| 1144784-0000 | .TOOTHED PULLEY | 5-23 |
| 1144788-0000 | .TOOTHED PULLEY | 5-23 |
| 1144794-0000 | .SUPPORT | 5-23, 5-29 |
| 1144797-0000 | .SUPPORT | 5-43 |
| 1144839-0000 | .BLOCK | 5-43 |
| 1144841-0000 | .TIMING BELT | 5-23, 5-29 |
| 1144899-0000 | .SUPPORT | 5-155 |
| 1144901-0000 | .GUIDE | 5-123, 5-125, 5-127 |
| 1144902-0000 | .SUPPORT | 5-123, 5-125, 5-127 |
| 1144914-0000 | .LEVER | 5-139, 5-141, 5-143 |
| 1144915-0000 | .LEVER | 5-139, 5-141, 5-143 |
| 1144916-0000 | .ADJUSTING SCREW | 5-139, 5-141, 5-143 |
| 1144918-0000 | .PLATE | 5-31, 5-33, 5-35, 5-37 |
| 1144919-0000 | .CARRIER | 5-31, 5-33, 5-35, 5-37 |
| 1144926-0000 | .FLAP | 5-65, 5-67, 5-69, 5-71 |
| 1144927-0000 | .FLAP | 5-65, 5-67, 5-69, 5-71 |
| 1144928-0000 | .PUSHER | 5-139, 5-141, 5-143 |
| 1144932-0000 | .PLATE | 5-139, 5-141, 5-143 |
| 1144976-0000 | .STOP SCREW | 5-123, 5-125, 5-127 |
| 1144978-0000 | .CAM | 5-139, 5-141, 5-143 |
| 1144979-0000 | .WASHER | 5-123, 5-125, 5-127 |
| 1145079-0000 | .WHEEL | 7-39, 7-125 |
| 1195360-0000 | .YOKE LEFT | 4-11 |
| 1195361-0000 | .YOKE RIGHT | 4-17 |
| 1195466-0000 | .PIPE | 6-53 |
| 1254025-0000 | .STRIP | 2-157 |
| 1254027-0000 | .CORNER STRIP | 2-157 |
| 1254028-0000 | .FASTENING PLATE | 2-157 |
| 1254030-0000 | .CHECKER PLATE | 2-157 |
| 1254109-0000 | .BRACKET | 4-73, 4-75 |
| 1254410-0000 | .WASHER | 1-295 |
| 1254494-0000 | .SPACER | 2-129 |
| 1255117-0000 | .PLAIN BEARING | 4-33, 4-35 |
| 1255222-0000 | .FRAME | 3-5, 3-19 |
| 1255223-0000 | .HOLDER | 3-7 |
| 1255233-0000 | .BUSHING | 3-21, 3-27 |
| 1255261-0000 | .FLANGE | 3-27 |
| 1255293-0000 | .CROSS BAR | 6-55, 6-57 |
| 1255365-0000 | .MOUNTING PLATE | 6-29 |
| 1255390-0000 | .BUSHING | 4-89, 4-91 |
| 1255551-0000 | .SEAL CLOTH | 1-269 |
| 1255557-0000 | .GASKET | 2-33 |
| 1255633-0000 | .HATCH | 6-73 |
| 1255635-0000 | .HATCH | 6-77 |
| 1255636-0000 | .COVERING PANEL | 6-59 |
| 1255637-0000 | .COVER | 6-59 |
| 1255638-0000 | .COVERING PANEL | 6-59 |
| 1255671-0000 | .GABLE PLATE | 6-61 |
| 1260303-0000 | .WASHER | 1-335 |
| 1260327-0000 | .TUBE | 6-29 |
| 1260328-0000 | .SPRING | 4-55 |
| 1260547-0200 | .ICE WATER | 6-21, 6-23 |
| 1260702-0000 | .PLATE | 5-139, 5-141, 5-143 |
| 1260704-0000 | .FLAP | 5-65, 5-67, 5-69, 5-71 |
| 1260705-0000 | .FLAP | 5-65, 5-67, 5-69, 5-71 |
| 1260714-0000 | .SPACER | 5-17 |
| 1260824-0000 | .SPACER RING | 5-79, 5-81 |
| 1260931-0000 | .SCREW | 5-43 |
| 1260941-0000 | .SLIDE | 5-23 |
| 1260944-0000 | .BUSHING | 5-79, 5-81 |
| 1279409-0000 | .PLATE | 5-31, 5-33, 5-35, 5-37 |
| 1279559-0000 | .ARM | 5-63 |
| 1279670-0000 | .SPACER | 5-17 |
| 1279680-0000 | .PIPE | 5-39 |
| 1279688-0000 | .SUPPORT | 5-23, 5-29 |
| 1279689-0000 | .ACTIVATOR | 5-23, 5-29 |
| 1282705-0000 | .SUPPORT | 5-129 |
| 1282708-0000 | .BUSHING | 5-63, 5-83, 5-85, 5-87, 5-101, 5-103 |
| 1282848-0000 | .CARRIER | 5-31, 5-33, 5-35, 5-37 |
| 1282876-0000 | .PIPE | 2-23 |
| 1282879-0000 | .CONNECTING PIPE | 2-23 |
| 1282891-0000 | .PIPE | 2-17, 2-19 |
| 1282892-0000 | .TANK | 2-27 |
| 1282894-0200 | .PEROXIDE TANK | 2-15 |
| 1282895-0300 | .PEROXIDE PIPE | 2-15 |
| 1282896-0200 | .TANK | 2-15 |
| 1282898-0000 | .HOSE | 2-27 |
| 1282899-0000 | .HOSE | 2-17, 2-19 |
| 1282901-0000 | .PIPE | 2-23 |
| 1282906-0000 | .NIPPLE | 2-17, 2-19 |
| 1285003-0000 | .LINK | 4-71 |
| 1285005-0000 | .NUT | 4-71 |
| 1285006-0000 | .SPACER | 4-71 |

| Part No | Description | Page No |
|---|---|---|
| 1285010-0000 | .HOLDER | 5-185 |
| 1285022-0000 | .SIDE PLATE | 5-19 |
| 1285023-0000 | .SIDE PLATE | 5-19 |
| 1285363-0000 | .TUBE | 6-29 |
| 1285955-0000 | .PLATE | 5-29 |
| 1285956-0000 | .BLOCK | 5-29 |
| 1296180-0000 | .FOLDING DEVICE | 5-83, 5-85 |
| 1296181-0000 | .FOLDING DEVICE | 5-83, 5-85 |
| 1296877-0100 | .SEAL KIT | 9-17, 9-19, 9-21, 9-23, 9-25 |
| 1296878-0100 | .SEAL KIT | 9-17, 9-19, 9-21, 9-23, 9-25 |
| 1296879-0100 | .SEAL KIT | 9-17, 9-19, 9-21, 9-23, 9-25 |
| 1317042-0000 | .RAIL | 5-117, 5-119 |
| 1317043-0000 | .SUPPORT | 5-117, 5-119 |
| 1317047-0000 | .RAIL | 5-117, 5-119 |
| 1317226-0000 | .WEIGHT | 2-25 |
| 1317228-0000 | .WASHER | 2-219 |
| 1317362-0000 | .SHAFT | 5-139, 5-141, 5-143 |
| 1317363-0000 | .SHAFT | 5-139, 5-141, 5-143 |
| 1317475-0000 | .BRACKET | 2-103 |
| 1317554-0000 | .FLAP | 5-65, 5-67, 5-69, 5-71 |
| 1317555-0000 | .FLAP | 5-65, 5-67, 5-69, 5-71 |
| 1317650-0000 | .GUIDE | 5-31, 5-33, 5-35, 5-37 |
| 1317651-0000 | .GUIDE | 5-31, 5-33, 5-35, 5-37 |
| 1317654-0000 | .PUSHER | 5-139, 5-141, 5-143 |
| 1317655-0000 | .PLATE | 5-139, 5-141, 5-143 |
| 1317656-0000 | .INSERT | 5-65, 5-67, 5-69, 5-71 |
| 1317784-0000 | .BRACKET | 2-25 |
| 1317787-0000 | .CATCH | 5-139, 5-141, 5-143 |
| 1317805-0000 | .BAR | 5-31, 5-33, 5-35, 5-37 |
| 1334018-0000 | .SHIM | 5-79, 5-81 |
| 1334271-0000 | .BAR | 5-31, 5-33, 5-35, 5-37 |
| 1334328-0000 | .SPACER | 5-79, 5-81 |
| 1334447-0000 | .SPACER | 5-129 |
| 1334507-0000 | .TUBE | 1-265 |
| 1334561-0000 | .SLIDE | 5-31, 5-33, 5-35, 5-37 |
| 1334562-0000 | .SLIDE | 5-31, 5-33, 5-35, 5-37 |
| 1334659-0000 | .SCREW | 4-25 |
| 1334718-0000 | .SPACER | 5-117, 5-119 |
| 1334856-0000 | .COUNTER ROLLER | 1-93, 1-95, 1-97, 1-99, 1-101, 1-103, 1-105, 1-107, 1-109 |
| 1338793-0000 | .BRACKET | 4-15, 4-21 |
| 1346312-0000 | .SCREW | 2-247 |
| 1346313-0000 | .PLATE | 2-247 |
| 1346471-0000 | .WEDGE | 5-31, 5-33, 5-35, 5-37 |
| 1346539-0000 | .CONNECTING ROD | 5-139, 5-141, 5-143 |
| 1346568-0000 | .HEAT EXCHANGER | 1-265 |
| 1346885-0000 | .SUPPORT | 2-201, 2-203, 2-227, 2-235 |
| 1346890-0000 | .SPACER | 3-13 |
| 1347018-0000 | .PLUG | 5-139, 5-141, 5-143 |
| 1347057-0000 | .GUIDE | 5-123, 5-125, 5-127 |
| 1347495-0000 | .AXLE PIN | 5-83, 5-85, 5-87 |
| 1347496-0000 | .SCREW | 5-83, 5-85, 5-87, 5-101, 5-103 |
| 1347600-0000 | .SUPPORT | 5-83, 5-85 |
| 1347699-0000 | .PLATE | 5-23 |
| 1347704-0000 | .THERMOCOUPLE | 2-17, 2-19 |
| 1347766-0000 | .SIGN | 2-215 |
| 1347767-0000 | .SIGN | 2-215 |
| 1347839-0000 | .PULLEY | 3-27 |
| 1347878-0000 | .RAIL | 2-97, 2-141 |
| 1348048-0000 | .FORK | 1-197, 1-199 |
| 1348056-0300 | .FOLDING PART | 5-79, 5-81 |
| 1348072-0000 | .DRIP PLATE | 5-39 |
| 1348132-0000 | .SLIDE | 5-31, 5-33, 5-35, 5-37 |
| 1348133-0000 | .SLIDE | 5-31, 5-33, 5-35, 5-37 |
| 1348138-0000 | .SLIDE | 5-31, 5-33, 5-35, 5-37 |
| 1348139-0000 | .SLIDE | 5-31, 5-33, 5-35, 5-37 |
| 1348144-0000 | .BAR | 5-31, 5-33, 5-35, 5-37 |
| 1348145-0000 | .BAR | 5-31, 5-33, 5-35, 5-37 |
| 1348150-0000 | .BAR | 5-31, 5-33, 5-35, 5-37 |
| 1348151-0000 | .BAR | 5-31, 5-33, 5-35, 5-37 |
| 1348196-0000 | .FASTENING PLATE | 4-19 |
| 1348386-0000 | .BEARING HOUSING | 2-245 |
| 1348455-0300 | .YOKE LEFT | 4-5 |
| 1348456-0300 | .PRESSURE ARM LEFT | 4-5 |
| 1348460-0300 | .YOKE RIGHT | 4-5 |
| 1348461-0300 | .PRESSURE ARM RIGHT | 4-5 |
| 1348466-0100 | .SCISSOR ARM LINK | 4-5 |
| 1348504-0000 | .SLEEVE | 4-55 |
| 1348529-0000 | .STRAINER | 2-23 |
| 1348530-0000 | .LID | 2-23 |
| 1348537-0000 | .TIMING BELT | 5-139, 5-141, 5-143 |
| 1348669-0000 | .SCREW | 4-15, 4-21 |
| 1348955-0000 | .KNIFE | 9-19, 9-21, 9-23, 9-25 |
| 1348956-0000 | .KNIFE | 9-19, 9-21, 9-23, 9-25 |
| 1349014-0000 | .PAD | 7-93 |

| Part No | Description | Page No |
|---|---|---|
| 1349020-0000 | .GLAND FITTING | 2-247 |
| 1349181-0000 | .TOUCH GUARD | 7-91 |
| 1349187-0000 | .SPRING | 2-247 |
| 1349208-0000 | .VOLUME SHIM | 9-19, 9-21, 9-23, 9-25 |
| 1349266-0000 | .PLATE | 3-11, 3-23 |
| 1349516-0000 | .SHAFT | 5-139, 5-141, 5-143 |
| 1349517-0000 | .TOOTHED PULLEY | 5-139, 5-141, 5-143 |
| 1349518-0000 | .SUPPORT | 5-139, 5-141, 5-143 |
| 1349566-0000 | .COVER | 5-189 |
| 1349568-0000 | .CONNECTION BOX | 5-191 |
| 1349608-0000 | .HOLDER | 1-265 |
| 1349612-0000 | .PISTON | 4-55 |
| 1349780-0000 | .LID | 4-11, 4-17 |
| 1349851-0000 | .ROLL | 1-93, 1-95, 1-97, 1-99, 1-101, 1-103, 1-105, 1-107, 1-109 |
| 1349853-0000 | .ROLL | 1-93, 1-95, 1-97, 1-99, 1-101, 1-103, 1-105, 1-107, 1-109 |
| 1349867-0000 | .FASTENING PLATE | 4-13 |
| 1349868-0000 | .FASTENING PLATE | 4-13, 4-19 |
| 1349914-0100 | .TEMPLATE FILLING PIPE | 9-35 |
| 1349972-0000 | .SPRING HOUSING | 4-11, 4-17 |
| 1350440-0000 | .LEVER | 5-83, 5-85, 5-87, 5-101, 5-103 |
| 1350441-0000 | .SUPPORT | 5-83, 5-85 |
| 1359565-0000 | .NUT | 5-171 |
| 1360149-0000 | .SPACER | 5-25, 5-27 |
| 1361560-0000 | .PLATE | 6-25, 6-27 |
| 1361922-0200 | .DROP CHUTE VARIANT | 5-3 |
| 1366727-0000 | .CLAMP | 5-169, 5-171, 5-173, 5-175 |
| 1366750-0000 | .HOLDER | 5-169, 5-173, 5-175 |
| 1478000-0000 | .HOSE | 4-13, 4-19 |
| 1478001-0000 | .HOSE | 4-13, 4-19 |
| 1478170-0000 | .CONTAINER | 1-277 |
| 1478189-0000 | .SUPPORT | 5-139, 5-141, 5-143 |
| 1478303-0000 | .TENSION SPRING | 7-13 |
| 1478359-0000 | .ROLLER | 1-153, 1-155 |
| 1478659-0000 | .BRACKET | 5-189 |
| 1478928-0000 | .BUSHING | 5-19 |
| 1484080-0000 | .SUPPORT | 1-189 |
| 1484081-0000 | .BRACKET | 1-267, 6-39 |
| 1484320-0000 | .ROD | 4-15, 4-21 |
| 1484363-0000 | .COVER | 2-215 |
| 1484379-0000 | .INSERT | 5-131, 5-133, 5-135, 5-137 |
| 1484620-0000 | .SHAFT | 5-23 |
| 1484695-0000 | .KNIFE | 7-117, 9-17 |
| 1484704-0000 | .SHAFT | 7-13 |
| 1484766-0000 | .DANCE ROLLER | 7-7, 7-27 |
| 1484889-0200 | .DOOR | 6-63 |
| 1484890-0000 | .DOOR | 6-69, 6-71 |
| 1487023-0000 | .PIPE | 6-53 |
| 1487338-0200 | .SUPPORT LEVEL DETECTOR | 2-101 |
| 1487430-0000 | .COVER | 8-61, 8-63 |
| 1487431-0000 | .GASKET | 8-61, 8-63 |
| 1487626-0000 | .VOLUME BULGE | 4-115, 4-117, 4-135, 4-137 |
| 1487627-0000 | .VOLUME SHIM | 4-115, 4-117, 4-135, 4-137, 9-19, 9-21, 9-23, 9-25 |
| 1487629-0100 | .DAMPER | 3-5 |
| 1487630-0100 | .DAMPER | 3-19 |
| 1487631-0000 | .BRACKET | 3-11, 3-23 |
| 1487632-0000 | .FORK | 3-11, 3-23 |
| 1487633-0000 | .AXLE PIN | 3-11, 3-23 |
| 1487634-0000 | .AXLE PIN | 3-11, 3-23 |
| 1487635-0000 | .WHEEL | 3-11, 3-23 |
| 1487636-0000 | .STOPPER | 3-11, 3-23 |
| 1487739-0000 | .FLAP | 5-65, 5-67, 5-69, 5-71 |
| 1487765-0000 | .SPACER | 7-7 |
| 1487769-0000 | .SPACER | 7-7 |
| 1487800-0000 | .PLATE | 7-13 |
| 1487922-0000 | .FOLDING DEVICE | 5-83, 5-85, 5-87, 5-101 |
| 1487923-0000 | .FOLDING DEVICE | 5-83, 5-85, 5-87, 5-103 |
| 1487929-0000 | .SPACER | 5-17 |
| 1490033-0000 | .SLIDE | 5-31, 5-33, 5-35, 5-37 |
| 1490034-0000 | .SLIDE | 5-31, 5-33, 5-35, 5-37 |
| 1490035-0000 | .BAR | 5-31, 5-33, 5-35, 5-37 |
| 1490036-0000 | .BAR | 5-31, 5-33, 5-35, 5-37 |
| 1490046-0000 | .PIN | 1-289, 1-291, 2-67 |
| 1490713-0000 | .SPRING HOLDER | 1-11 |
| 1490714-0000 | .GUIDE | 1-11 |
| 1490715-0000 | .DOLLY | 1-11 |
| 1490762-0000 | .ROLLER | 1-149 |
| 1490763-0000 | .ROLLER | 1-101, 1-103, 1-105, 1-107, 1-109 |
| 1490765-0000 | .ROLLER | 1-93, 1-95, 1-97, 1-99 |
| 1490804-0000 | .HOLDER | 7-91 |
| 1490950-0000 | .SPLASH PLATE | 2-25 |
| 1490962-0000 | .LID | 1-189 |
| 1490963-0000 | .PIPE | 1-185 |
| 1498029-0000 | .PIN | 5-139, 5-141, 5-143 |
| 1498047-0000 | .SEALING BLOCK | 7-91, 9-17 |

| Part No | Description | Page No |
|---|---|---|
| 1498068-0000 | .SEAL RING | 5-23, 5-29 |
| 1498132-0000 | .SHAFT | 1-47, 1-49, 1-51 |
| 1498133-0000 | .ARM | 1-39, 1-41 |
| 1498135-0000 | .ARM | 1-39, 1-41 |
| 1498150-0000 | .TEMPLATE | 9-39 |
| 1498151-0000 | .TEMPLATE | 9-39 |
| 1498429-0000 | .AXLE | 7-63 |
| 1498459-0001 | .GLASS PANE | 7-151, 7-155 |
| 1498461-0001 | .SEALING STRIP | 7-151, 7-155 |
| 1498782-0000 | .TANK BRACKET | 1-289, 1-291 |
| 1498783-0000 | .WHEEL | 1-61 |
| 1498787-0000 | .BRACKET | 1-289, 1-291 |
| 1498790-0000 | .SHAFT | 1-39, 1-41 |
| 1498791-0000 | .FLANGE | 1-39, 1-41 |
| 1498827-0000 | .FOLDING BAR | 5-117, 5-119 |
| 1498828-0000 | .FOLDING BAR | 5-117, 5-119 |
| 1498855-0000 | .GASKET | 2-109 |
| 1498856-0000 | .FLANGE | 2-109 |
| 1498857-0000 | .CONNECTION | 2-109 |
| 1498858-0000 | .FLANGE | 2-109 |
| 1499071-0000 | .SPACER | 5-117, 5-119, 5-129 |
| 1499072-0000 | .SPACER | 5-117, 5-119 |
| 1499094-0000 | .SPACER SCREW | 5-117, 5-119 |
| 1499103-0000 | .TIE ROD | 5-83, 5-85 |
| 1499143-0000 | .PLATE | 5-139, 5-141, 5-143 |
| 1499150-0000 | .RAIL | 5-117, 5-119 |
| 1499151-0000 | .RAIL | 5-117, 5-119 |
| 1499157-0000 | .HEATING PIPE | 1-189 |
| 1499158-0200 | .AIR SUPER-HEATER | 1-167, 1-169, 1-171 |
| 1499160-0300 | .SCRUBBER | 1-167, 1-169, 1-171 |
| 1499166-0000 | .PIPE | 1-267 |
| 1499168-0000 | .LID | 1-23, 1-25 |
| 1499169-0000 | .GASKET | 1-23, 1-25 |
| 1499170-0000 | .GASKET | 1-23, 1-25 |
| 1499171-0000 | .LID | 1-23, 1-25 |
| 1499411-0000 | .COUNTER ROLLER | 1-93, 1-95, 1-97, 1-99 |
| 1499476-0000 | .HOLDER | 5-25, 5-27, 5-31, 5-33, 5-35, 5-37 |
| 1499562-0004 | .LOCKING ARM | 7-159, 7-163, 7-167, 7-169 |
| 1499584-0000 | .AXLE PIN | 7-47 |
| 1499635-0000 | .LEVER | 5-79, 5-81 |
| 1499642-0301 | .TPIH GENERATOR | 8-25 |
| 1499678-0000 | .ROLLER | 4-173, 4-175 |
| 1499765-0000 | .AXLE LINK | 5-83, 5-85 |
| 1511195-0000 | .SHAFT | 3-13 |
| 1511203-0000 | .PIPE | 2-69 |
| 1511336-0000 | .VOLUME SHIM | 9-19, 9-21, 9-23, 9-25 |
| 1511337-0000 | .VOLUME SHIM | 9-19, 9-21, 9-23, 9-25 |
| 1511492-0000 | .SHAFT | 1-153, 1-155 |
| 1511497-0000 | .CONTAINER | 1-267 |
| 1511503-0000 | .PIPE | 1-191 |
| 1511504-0000 | .SPACER | 1-287 |
| 1511512-0000 | .BEARING BUSHING | 1-53 |
| 1511615-0000 | .BRACKET | 6-29 |
| 1511616-0000 | .BRACKET | 6-29 |
| 1511680-0000 | .TUBE | 6-29 |
| 1511755-0000 | .NET | 1-191 |
| 1512145-0000 | .LID | 2-241 |
| 1512405-0000 | .NUT | 1-275 |
| 1517242-0000 | .GUIDE | 5-31, 5-33, 5-35, 5-37 |
| 1517243-0000 | .GUIDE | 5-31, 5-33, 5-35, 5-37 |
| 1517298-0300 | .INFEED CONVEYOR | 5-3 |
| 1517299-0400 | .INFEED CONVEYOR LONG | 5-21 |
| 1517348-0000 | .HOSE | 4-37, 4-39 |
| 1517476-0000 | .WEDGE | 5-31, 5-33, 5-35, 5-37 |
| 1517477-0000 | .PLATE | 5-31, 5-33, 5-35, 5-37 |
| 1517482-0000 | .TUBE | 1-191 |
| 1517707-0000 | .BRACKET | 1-265 |
| 1517751-0000 | .SHAFT | 7-93 |
| 1517987-0000 | .TEMPLATE | 9-39 |
| 1519150-0000 | .PIN | 1-75, 1-77 |
| 1519156-0000 | .AIR DISTRIBUTOR | 1-47, 1-49, 1-51 |
| 1519158-0000 | .LID | 1-47, 1-49, 1-51 |
| 1519159-0000 | .BUSHING | 1-47, 1-49, 1-51 |
| 1519160-0000 | .SHAFT | 1-47, 1-49, 1-51 |
| 1519166-0000 | .BUSHING | 1-47, 1-49, 1-51 |
| 1519340-0000 | .TIE ROD | 5-83, 5-85 |
| 1519344-0000 | .CARRIER | 5-31, 5-33, 5-35, 5-37 |
| 1519355-0000 | .SPACER | 5-107, 5-109, 5-111 |
| 1519486-0000 | .FILTER HOUSING | 1-209, 1-277 |
| 1519789-0000 | .BRACKET | 1-349, 1-351 |
| 1519790-0000 | .PLATE | 1-349, 1-351 |
| 1519799-0000 | .ANGLE BRACKET | 1-11 |
| 1520455-0000 | .CUTTING RAIL | 4-89, 4-91 |
| 1520494-0000 | .CUTTING RAIL | 4-89, 4-91 |

| Part No | Description | Page No |
|---|---|---|
| 1520633-0002 | .DOLLY | 4-89, 4-91, 9-19, 9-21, 9-23, 9-25 |
| 1520633-0005 | .DOLLY | 4-89, 4-91, 9-19, 9-21, 9-23, 9-25 |
| 1523154-0003 | .SPRAY NOZZLE | 1-233 |
| 1523154-0004 | .SPRAY NOZZLE | 1-233 |
| 1523154-0005 | .SPRAY NOZZLE | 1-233 |
| 1523154-0006 | .SPRAY NOZZLE | 1-233 |
| 1523179-0000 | .FLANGE | 1-55 |
| 1523185-0000 | .AXLE PIN | 1-55 |
| 1523190-0000 | .SHAFT | 1-43, 1-45 |
| 1523216-0300 | .LEVEL CONTROL DEVICE | 2-87 |
| 1523641-0000 | .SPACER | 2-183, 2-185 |
| 1523645-0000 | .AIR NOZZLE | 2-183, 2-185 |
| 1523685-0000 | .IMPELLER | 1-19 |
| 1523686-0000 | .LID | 1-19 |
| 1523687-0000 | .PUMP BODY | 1-19 |
| 1523691-0200 | .BLOWING DEVICE | 1-17 |
| 1523696-0000 | .GUIDE | 1-143, 1-145, 1-147 |
| 1523777-0100 | .STAIR CASE | 2-149, 2-151, 2-153, 2-155 |
| 1523784-0000 | .TOE PLATE | 2-157 |
| 1523793-0000 | .TOE PLATE | 2-161, 2-163 |
| 1523805-0000 | .PIN | 1-271, 1-273 |
| 1523808-0000 | .GASKET | 1-269 |
| 1524151-0000 | .ROLLER | 1-121, 1-123 |
| 1524156-0000 | .ROLLER | 1-93, 1-95, 1-97, 1-99, 1-101, 1-103, 1-105, 1-107, 1-109 |
| 1524167-0000 | .CORNER STRIP | 2-161, 2-163, 2-175, 2-177 |
| 1524168-0000 | .CORNER STRIP | 2-161, 2-163 |
| 1524171-0000 | .FRAME | 2-175, 2-177 |
| 1524172-0000 | .CHECKER PLATE | 2-175, 2-177 |
| 1524173-0000 | .CHECKER PLATE | 2-175, 2-177 |
| 1524174-0000 | .HOOK | 2-175, 2-177 |
| 1524175-0000 | .LEG | 2-175, 2-177 |
| 1524176-0000 | .CLAMP | 2-175, 2-177 |
| 1524177-0000 | .TOE PLATE | 2-175, 2-177 |
| 1524179-0000 | .TOE PLATE | 2-175, 2-177 |
| 1524180-0000 | .TOE PLATE | 2-175, 2-177 |
| 1524181-0000 | .PIN | 2-175, 2-177 |
| 1524182-0000 | .RAILING | 2-175, 2-177 |
| 1524185-0000 | .EXTENSION PIECE | 2-175, 2-177, 2-179 |
| 1524186-0000 | .PROFILE | 2-179 |
| 1524187-0000 | .PROFILE | 2-179 |
| 1524188-0000 | .STAIR | 2-179 |
| 1524190-0000 | .BRACKET | 2-179 |
| 1524191-0000 | .RIM | 2-179 |
| 1524192-0000 | .RAILING | 2-179 |
| 1524193-0000 | .RAILING | 2-179 |
| 1524236-0000 | .VALVE HOUSING | 1-181 |
| 1524237-0000 | .PIPE | 1-325 |
| 1524414-0000 | .SEAL | 1-149 |
| 1524416-0000 | .ROLLER | 1-149 |
| 1524421-0000 | .ROLLER | 4-173, 4-175 |
| 1524481-0000 | .SEALING BLOCK | 7-93 |
| 1524547-0000 | .COUNTER ROLLER | 1-93, 1-95, 1-97, 1-99, 1-101, 1-103, 1-105, 1-107, 1-109 |
| 1524841-0000 | .TEMPLATE | 9-39 |
| 1524854-0000 | .BEAM | 2-161, 2-163 |
| 1524864-0000 | .RAILING | 2-175, 2-177 |
| 1524870-0000 | .RAILING | 2-157 |
| 1528639-0000 | .GASKET | 1-271, 1-273 |
| 1528746-0100 | .GUIDE | 1-5, 1-7, 1-9 |
| 1532223-0000 | .BLOCK | 1-277 |
| 1532231-0000 | .CONNECTION | 1-47, 1-49, 1-51 |
| 1532250-0200 | .HEAT EXCHANGER VALVE | 1-167, 1-169, 1-171 |
| 1532911-0000 | .FASTENING PLATE | 8-45 |
| 1533046-0000 | .INDUCTOR | 4-57, 4-59, 4-65, 4-67, 9-19, 9-21, 9-23, 9-25 |
| 1533051-0000 | .CUTTING RAIL | 4-89, 4-91 |
| 1535036-0000 | .PLATE | 2-161, 2-163 |
| 1538049-0000 | .PIPE | 1-265 |
| 1538109-0000 | .COMPRESSION SPRING | 4-71, 9-19, 9-21, 9-23, 9-25 |
| 1538154-0000 | .DRAIN PIPE | 1-179 |
| 1538157-0000 | .PIPE | 1-187 |
| 1538158-0000 | .PIPE | 1-187 |
| 1538163-0000 | .LEVER | 1-55 |
| 1538166-0200 | .AIR VALVE | 1-167, 1-169, 1-171 |
| 1538183-0000 | .PIPE | 1-179 |
| 1538348-0000 | .CATCH | 4-89, 4-91 |
| 1538349-0000 | .CATCH | 4-55 |
| 1538474-0000 | .PIPE | 1-179 |
| 1538487-0000 | .PIPE | 1-179 |
| 1538494-0000 | .LID | 1-67 |
| 1538502-0000 | .PIPE | 1-267 |
| 1538503-0000 | .PIPE | 1-265 |
| 1538725-0000 | .WASHER | 1-61 |
| 1538726-0000 | .BUSHING | 1-61 |
| 1538735-0000 | .GASKET | 1-271, 1-273 |
| 1538742-0000 | .LID | 1-271, 1-273 |

| Part No | Description | Page No |
|---|---|---|
| 1538868-0000 | .BRACKET | 2-203, 2-211, 2-215, 2-221, 2-223, 2-227, 2-235, 6-55, 6-57, 7-41, 7-43 |
| 1538950-0000 | .ROLLER | 1-111 |
| 1538952-0000 | .FORK | 1-197, 1-199 |
| 1538953-0000 | .SHAFT | 1-197, 1-199 |
| 1539174-0000 | .BUSHING | 1-81 |
| 1539175-0000 | .PLATE | 1-81 |
| 1539391-0000 | .ROUND NUT | 2-201, 2-203, 2-227, 2-235, 7-151, 7-155, 7-159, 7-163, 7-167, 7-169 |
| 1539397-0000 | .ROLLER | 7-9 |
| 1539454-0000 | .GUIDE | 1-143, 1-145, 1-147 |
| 1539726-0000 | .SHAFT | 1-271, 1-273 |
| 1539727-0000 | .WHEEL | 1-271, 1-273 |
| 1539729-0000 | .BRACKET | 1-271, 1-273 |
| 1539741-0000 | .COVER | 1-181 |
| 1539746-0300 | .DOOR | 1-5, 1-7, 1-9 |
| 1539874-0000 | .SLIDE | 5-31, 5-33, 5-35, 5-37 |
| 1539875-0000 | .SLIDE | 5-31, 5-33, 5-35, 5-37 |
| 1539876-0000 | .PLATE | 5-31, 5-33, 5-35, 5-37 |
| 1539877-0000 | .BAR | 5-31, 5-33, 5-35, 5-37 |
| 1539878-0000 | .BAR | 5-31, 5-33, 5-35, 5-37 |
| 1539900-0000 | .RIGHT UPPER GUIDE | 5-129 |
| 1548211-0000 | .RAILING | 2-161, 2-163 |
| 1548531-0000 | .ROLLER | 1-121, 1-123 |
| 1548540-0000 | .ROLLER | 1-121, 1-123 |
| 1548541-0000 | .ROLLER | 1-121, 1-123 |
| 1548734-0000 | .FLANGE | 1-61 |
| 1548735-0000 | .LID | 1-61 |
| 1548736-0100 | .BENDING ROLLER | 1-5, 1-7, 1-9 |
| 1548739-0000 | .FLANGE | 1-61 |
| 1548742-0000 | .SPACER | 1-181 |
| 1548749-0000 | .PIPE | 1-349, 1-351 |
| 1548751-0000 | .BUSHING | 1-37 |
| 1548753-0200 | .DRIVE ROLLER | 1-5, 1-7, 1-9 |
| 1548869-0000 | .SPACER | 1-349, 1-351 |
| 1548870-0000 | .SPACER | 1-349, 1-351 |
| 1548872-0200 | .PILLAR | 1-69 |
| 1548876-0200 | .IH EQUIPMENT | 1-69 |
| 1548877-0000 | .SPACER | 1-21 |
| 1548882-0000 | .FLANGE | 1-37 |
| 1548892-0200 | .CALENDER ROLLER | 1-5, 1-7, 1-9 |
| 1548940-0000 | .SPRING | 4-81, 4-83, 4-103, 4-105 |
| 1549332-0000 | .ROLLER | 7-9 |
| 1549406-0000 | .PACKAGE GUIDE | 5-129 |
| 1549411-0000 | .PACKAGE GUIDE | 5-129 |
| 1549526-0000 | .CONTAINER | 1-179 |
| 1549545-0000 | .FLANGE | 1-53 |
| 1549548-0000 | .FLANGE | 1-53 |
| 1549573-0200 | .CRANK | 1-5, 1-7, 1-9 |
| 1549614-0000 | .LEFT UPPER GUIDE | 5-129 |
| 1549940-0000 | .PUSHER | 5-139, 5-141, 5-143 |
| 1549980-0400 | .FRAME | 1-287 |
| 1549981-0000 | .FLANGE | 1-43, 1-45 |
| 1549982-0000 | .FLANGE | 1-43, 1-45 |
| 1550348-0001 | .BEARING | 5-167 |
| 1550348-0002 | .BEARING | 5-161 |
| 1550595-1801 | .SLIDING STRIP | 5-161 |
| 1550595-3223 | .SLIDING STRIP | 5-163, 5-165 |
| 1550595-3224 | .SLIDING STRIP | 5-163, 5-165 |
| 1550626-0005 | .SPACER | 5-161 |
| 1550664-0000 | .DOWEL | 5-169, 5-173 |
| 1550666-0000 | .HOLDER | 5-169, 5-173 |
| 1550689-0000 | .SHAFT | 5-161 |
| 1550690-0000 | .SLEEVE | 5-161 |
| 1550693-0000 | .WASHER | 5-161 |
| 1550743-0200 | .RAIL HOLDER | 5-169, 5-173 |
| 1550772-0000 | .HOLDER | 5-171 |
| 1558254-0000 | .SHAFT | 1-303, 7-15 |
| 1558327-0000 | .LID | 2-17, 2-19 |
| 1558352-0000 | .FLANGE | 1-299, 1-301 |
| 1558356-0100 | .SPLICE DETECTOR | 1-299, 1-301 |
| 1558358-0000 | .WHEEL | 1-53 |
| 1558417-0000 | .FLANGE | 1-67 |
| 1558418-0000 | .SHAFT | 1-67 |
| 1558427-0000 | .LID | 1-269 |
| 1558438-0000 | .CHECKER PLATE | 1-287 |
| 1558439-0000 | .CHECKER PLATE | 1-287 |
| 1558440-0000 | .BRACKET | 1-289, 1-291 |
| 1558441-0000 | .BRACKET | 1-81 |
| 1558447-0000 | .SPACER | 4-29, 4-31 |
| 1558494-0200 | .PRODUCT VALVE | 1-195 |
| 1558495-0200 | .HEATING UNIT | 1-263 |
| 1558497-0300 | .FRAME SECTION,UPPER | 1-3 |
| 1558510-0000 | .PIPE | 1-179 |
| 1558511-0300 | .PIPE WORK-AIR | 1-167, 1-169, 1-171 |
| 1558701-0000 | .BUSHING | 4-115, 4-117, 4-135, 4-137 |

| Part No | Description | Page No |
|---|---|---|
| 1558733-0000 | .VOLUME BULGE | 4-89, 4-91 |
| 1558734-0000 | .VOLUME BULGE | 4-57, 4-59, 4-65, 4-67 |
| 1558768-0000 | .WASHER | 1-13, 1-15 |
| 1558769-0300 | .SEPARATOR | 1-167, 1-169, 1-171 |
| 1558795-0000 | .RAILING | 2-161, 2-163 |
| 1558798-0000 | .BRACKET | 7-41, 7-43 |
| 1558842-0000 | .PIPE | 1-269 |
| 1558845-0000 | .BRACKET | 1-343 |
| 1558917-0000 | .SPACER DISC | 7-77 |
| 1558933-0000 | .FRAME | 9-3 |
| 1558945-0000 | .PIVOT PIN | 2-129 |
| 1558946-0000 | .PLUG | 2-179 |
| 1558947-0000 | .STRIP | 2-161, 2-163 |
| 1558974-0000 | .PIPE BRACKET | 2-129 |
| 1558975-0000 | .BLOCKING PIECE | 2-129 |
| 1566843-0000 | .INDUCTOR | 4-57, 4-59, 4-65, 4-67, 9-19, 9-21, 9-23, 9-25 |
| 2500071-0000 | .O-RING | 1-197, 1-199 |
| 2500082-0000 | .MOUNTING PLATE | 1-197, 1-199 |
| 2500088-0200 | .3-WAY VALVE | 2-109 |
| 2500089-0000 | .PIPE | 9-43 |
| 2501290-0300 | .FILLING SYSTEM | 1-3 |
| 2501292-0000 | .VALVE HOUSING | 2-111 |
| 2501310-0200 | .FILLING PIPE | 1-195 |
| 2501378-0000 | .PIPE | 2-63 |
| 2503436-0000 | .SHAFT | 1-303 |
| 2503438-0000 | .LEVER | 1-303 |
| 2503634-0000 | .BEARING FLANGE | 1-19 |
| 2503635-0000 | .SHIELD | 1-19 |
| 2503636-0000 | .STOP SCREW | 1-19 |
| 2503637-0000 | .FAN | 1-19 |
| 2503638-0000 | .FAN HOUSING | 1-19 |
| 2503665-0200 | .DESIGN CORRECTION DEVICE LEFT | 4-27 |
| 2503666-0200 | .DESIGN CORRECTION DEVICE RIGHT | 4-27 |
| 2503669-0000 | .ECCENTRIC SHAFT | 4-33, 4-35 |
| 2503699-0000 | .VOLUME BULGE | 4-89, 4-91 |
| 2504496-0200 | .TRANSPORT EQUIPMENT | 1-3 |
| 2504502-0200 | .CABLE TRENCH | 1-3 |
| 2504523-0000 | .CENTERING | 1-79 |
| 2504779-0200 | .REAR MODULE | 2-3 |
| 2504780-0200 | .MACHINE BODY | 2-5, 2-7 |
| 2504781-0200 | .HYDROGEN PEROXIDE | 2-5, 2-7 |
| 2504782-0200 | .CHEMICALS | 2-5, 2-7 |
| 2504784-0200 | .BENDING ROLLER | 2-9 |
| 2504785-0300 | .CENTRAL MODULE | 2-3 |
| 2504786-0300 | .MACHINE BODY | 2-65 |
| 2504787-0200 | .CLEANING SYSTEM | 2-65 |
| 2504789-0200 | .LUBRICATION UNIT | 2-81 |
| 2504790-0200 | .LIGHT FIXTURE | 2-133 |
| 2504791-0200 | .CABLE DUCT | 2-3 |
| 2504792-0200 | .DRAINING | 2-65 |
| 2504793-0200 | .FRONT MODULE | 2-3 |
| 2504794-0200 | .MACHINE BODY | 2-115 |
| 2504795-0200 | .CLEANING SYSTEM | 2-115 |
| 2504811-0000 | .BRACKET | 7-63 |
| 2504812-0000 | .BLOCK | 7-63 |
| 2504917-0200 | .PIPE WORK-WATER | 2-3 |
| 2504918-0200 | .PNEUMATIC SYSTEM | 2-3 |
| 2504920-0200 | .DOORS AND COVERS | 2-3 |
| 2506269-0000 | .BUSHING | 1-79 |
| 2506273-0000 | .LEVER | 1-79 |
| 2506283-0000 | .PIN | 1-75, 1-77 |
| 2506291-0000 | .BUSHING | 1-79 |
| 2506334-0000 | .SUPPORT | 4-29, 4-31 |
| 2506336-0000 | .PROTECTIVE COVER | 4-29 |
| 2506337-0000 | .ANGLE BRACKET | 4-29, 4-31 |
| 2506338-0000 | .SHAFT | 4-29, 4-31 |
| 2506340-0000 | .ECCENTRIC SHAFT | 4-33, 4-35 |
| 2506392-0000 | .SPACER | 4-29, 4-31 |
| 2506636-0000 | .PIN | 2-9, 2-117 |
| 2506637-0200 | .AIR PIPE-LINE | 2-15 |
| 2506653-0000 | .PIPE | 2-69 |
| 2506661-0000 | .ROLLER | 7-79 |
| 2506663-0000 | .SUPPORT | 7-79 |
| 2506666-0000 | .AXEL | 7-79 |
| 2506776-0300 | .CENTRAL LUBRICATION | 2-81 |
| 2506796-0200 | .CABLE CONNECTION | 2-87 |
| 2506922-0000 | .PIPE | 2-121 |
| 2506923-0000 | .PIPE | 2-121 |
| 2506924-0000 | .PIPE | 2-121 |
| 2506925-0000 | .PIPE | 2-121 |
| 2506933-0000 | .PIPE | 2-69 |
| 2506934-0000 | .PIPE | 2-69 |
| 2507048-0000 | .GASKET | 1-197, 1-199 |
| 2507060-0300 | .PRODUCT LINES | 1-195 |

| Part No | Description | Page No |
|---|---|---|
| 2508129-0200 | .DOOR | 2-199 |
| 2508130-0000 | .DOOR | 2-201 |
| 2508131-0000 | .GLASS PANE | 2-201, 2-203 |
| 2508132-0000 | .RUBBER SEAL | 2-201 |
| 2508133-0000 | .LOCKING ARM | 2-203, 2-211, 2-215, 2-223, 2-227, 2-235 |
| 2508134-0000 | .LOCKING ARM | 2-203, 2-227, 2-235 |
| 2508135-0200 | .DOOR | 2-199 |
| 2508136-0000 | .DOOR | 2-203 |
| 2508137-0000 | .RUBBER SEAL | 2-203 |
| 2508138-0200 | .DOOR | 2-199 |
| 2508140-0000 | .LOCKING ARM | 2-211, 2-215, 2-223 |
| 2508147-0000 | .LOCKING ARM | 2-221 |
| 2508149-0200 | .DOOR | 2-199 |
| 2508150-0000 | .DOOR | 2-221 |
| 2508151-0000 | .RUBBER SEAL | 2-221 |
| 2508152-0000 | .LOCKING ARM | 2-221 |
| 2508159-0100 | .COVER | 2-199 |
| 2508160-0000 | .COVER | 2-205 |
| 2508161-0000 | .RUBBER SEAL | 2-205, 2-237 |
| 2508165-0100 | .COVER | 2-199 |
| 2508166-0000 | .COVER | 2-225 |
| 2508167-0000 | .RUBBER SEAL | 2-225 |
| 2508168-0100 | .COVER | 2-199 |
| 2508169-0000 | .COVER | 2-207 |
| 2508171-0000 | .RUBBER SEAL | 2-207 |
| 2508173-0200 | .DIAGRAM | 9-3 |
| 2508175-0200 | .DOOR | 2-199 |
| 2508176-0000 | .DOOR | 2-227 |
| 2508177-0100 | .DOOR | 2-199 |
| 2508178-0000 | .DOOR | 2-229 |
| 2508179-0000 | .RUBBER SEAL | 2-229 |
| 2508180-0001 | .GLASS PANE | 2-229 |
| 2508180-0002 | .GLASS PANE | 2-231 |
| 2508181-0100 | .DOOR | 2-199 |
| 2508182-0000 | .DOOR | 2-231 |
| 2508183-0000 | .RUBBER SEAL | 2-231 |
| 2508186-0000 | .RUBBER SEAL | 2-211, 2-215 |
| 2508200-0000 | .SHAFT | 2-245 |
| 2508203-0000 | .HOLDER | 2-247 |
| 2508279-0200 | .DOOR | 1-69 |
| 2508281-0000 | .GASKET | 1-73 |
| 2508283-0300 | .DOOR | 1-69 |
| 2508285-0000 | .GASKET | 1-71 |
| 2508292-0000 | .BUSHING | 1-161, 1-163 |
| 2508297-0000 | .WASHER | 1-161, 1-163 |
| 2508309-0000 | .PLATE | 1-161, 1-163 |
| 2508311-0000 | .PLATE | 1-161, 1-163 |
| 2508369-0300 | .PLATFORM | 2-149, 2-151, 2-153, 2-155 |
| 2508370-0000 | .PLATFORM | 2-157 |
| 2508371-0000 | .PLATFORM | 2-157 |
| 2508374-0000 | .CHECKER PLATE | 2-157 |
| 2508375-0000 | .CHECKER PLATE | 2-157 |
| 2508379-0000 | .CHECKER PLATE | 2-157 |
| 2508380-0000 | .CHECKER PLATE | 2-157 |
| 2508384-0000 | .CHECKER PLATE | 2-157 |
| 2508385-0000 | .CHECKER PLATE | 2-157 |
| 2508406-0000 | .STRUT | 4-33, 4-35 |
| 2508424-0000 | .PIPE | 2-69 |
| 2508425-0000 | .PIPE | 2-121 |
| 2508426-0000 | .BRACKET | 2-121 |
| 2508427-0000 | .BRACKET | 2-69 |
| 2508428-0000 | .PIPE | 2-69 |
| 2509544-0000 | .PIPE | 2-109 |
| 2509545-0000 | .PIPE | 2-109 |
| 2509546-0000 | .CONNECTION | 2-109 |
| 2509552-0000 | .DRAINING | 2-67, 2-117 |
| 2509658-0000 | .BRACKET | 1-339 |
| 2509659-0000 | .PLATE | 1-339 |
| 2509681-0000 | .RAIL | 1-47, 1-49, 1-51 |
| 2509935-0000 | .SPACER | 5-117, 5-119 |
| 2509936-0000 | .SPACER SCREW | 5-117, 5-119 |
| 2509937-0000 | .SPACER | 5-117, 5-119 |
| 2510399-0000 | .BRACKET | 7-105 |
| 2510400-0000 | .HOLDER | 7-105 |
| 2510401-0100 | .HOLDER | 7-89 |
| 2510785-0000 | .COVER PLATE | 2-117 |
| 2510787-0000 | .HOSE | 4-37, 4-39 |
| 2510833-0000 | .PIPE | 2-69 |
| 2510901-0000 | .BRACKET | 2-67 |
| 2510904-0000 | .HOLDER | 2-67 |
| 2511330-0000 | .SPACER | 1-207 |
| 2512737-0000 | .ROLLER | 1-115, 1-117, 1-119, 1-121, 1-123 |
| 2512738-0000 | .ROLLER | 1-115, 1-117, 1-119, 1-121, 1-123 |
| 2512740-0000 | .ROLLER | 1-121, 1-123 |

| Part No | Description | Page No |
|---|---|---|
| 2512741-0000 | .ROLLER | 1-115, 1-117, 1-119, 1-121, 1-123 |
| 2512742-0000 | .ROLLER | 1-115, 1-117, 1-119, 1-121, 1-123 |
| 2512746-0000 | .ROLLER | 1-133, 1-135, 1-137 |
| 2512748-0000 | .ROLLER | 1-133, 1-135, 1-137 |
| 2512749-0000 | .ROLLER | 1-133, 1-135, 1-137 |
| 2512768-0000 | .SHAFT | 1-75, 1-77 |
| 2512769-0000 | .SHAFT | 1-75, 1-77 |
| 2512774-0000 | .SHIM | 1-75, 1-77 |
| 2512779-0000 | .RING | 1-149 |
| 2512780-0100 | .SEAL | 1-141 |
| 2512910-0400 | .CLEANING SYSTEM | 1-3 |
| 2512930-0300 | .SUPPORT RAIL | 1-69 |
| 2512936-0100 | .CLEANING CUP | 1-247 |
| 2512939-0000 | .DISTRIBUTOR BLOCK | 1-209 |
| 2514077-0200 | .EXPANSION VESSEL | 6-21, 6-23 |
| 2514083-0000 | .REDUCTION NIPPLE | 6-39 |
| 2514087-0000 | .PLATE | 6-39 |
| 2514204-0100 | .DRAINING | 2-9 |
| 2514205-0200 | .PIPE WORK-WATER | 2-181 |
| 2514254-0200 | .TUBE FLUSHING | 2-181 |
| 2514255-0200 | .PIPE WORK-WATER | 2-181 |
| 2514514-0000 | .INDUCTOR | 1-161, 1-163 |
| 2514521-0000 | .ROLLER | 1-135, 1-137 |
| 2514522-0000 | .INDUCTOR | 1-161, 1-163 |
| 2514546-0000 | .COMPRESSION SPRING | 1-235 |
| 2514804-0000 | .PIN | 2-67 |
| 2514832-0000 | .GLASS PANE | 2-209 |
| 2517371-0000 | .CLAMP | 1-243 |
| 2518098-0000 | .COUNTER ROLLER | 1-93, 1-95, 1-97, 1-99 |
| 2518129-0000 | .GUIDE | 5-31, 5-33, 5-35, 5-37 |
| 2518130-0000 | .GUIDE | 5-31, 5-33, 5-35, 5-37 |
| 2519430-0000 | .BRACKET | 2-121 |
| 2519437-0000 | .TUBE | 1-193 |
| 2519440-0000 | .TUBE | 1-193 |
| 2519554-0000 | .PIPE | 2-23 |
| 2519555-0000 | .PIPE | 2-23 |
| 2519556-0000 | .BRACKET | 2-63 |
| 2519574-0200 | .HYDROGEN PEROXIDE | 2-53 |
| 2520160-0000 | .CLAMP | 5-31, 5-33, 5-35, 5-37 |
| 2520168-0000 | .SLIDE | 5-73, 5-75 |
| 2520170-0000 | .FLAP | 5-73, 5-75 |
| 2520181-0000 | .LID | 2-241 |
| 2522148-0000 | .PIPE | 6-53 |
| 2522166-0000 | .GUIDE | 5-31, 5-33, 5-35, 5-37 |
| 2522167-0000 | .GUIDE | 5-31, 5-33, 5-35, 5-37 |
| 2522184-0000 | .PIPE | 6-53 |
| 2522195-0000 | .CONNECTION | 1-241 |
| 2522213-0004 | .SHAFT | 1-133, 1-135, 1-137 |
| 2522213-0005 | .SHAFT | 1-133, 1-135, 1-137 |
| 2522213-0006 | .SHAFT | 1-93, 1-95, 1-97, 1-99, 1-101, 1-103, 1-105, 1-107, 1-109 |
| 2522213-0007 | .SHAFT | 1-121, 1-123 |
| 2522213-0008 | .SHAFT | 1-135, 1-137 |
| 2522213-0009 | .SHAFT | 1-135, 1-137 |
| 2522213-0015 | .SHAFT | 1-111, 1-157, 1-159 |
| 2522213-0016 | .SHAFT | 1-157, 1-159 |
| 2522213-0017 | .SHAFT | 1-157, 1-159 |
| 2522213-0019 | .SHAFT | 1-135, 1-137 |
| 2522213-0020 | .SHAFT | 1-135, 1-137 |
| 2522233-0000 | .BUSHING | 1-79 |
| 2522235-0000 | .COMPRESSION SPRING | 1-79 |
| 2522258-0000 | .FLANGE | 1-55 |
| 2523268-0000 | .SHAFT | 1-197, 1-199, 9-19, 9-21, 9-23, 9-25 |
| 2523497-0000 | .BENDING ROLLER | 7-19 |
| 2523598-0000 | .SPLICING TABLE | 7-93 |
| 2523600-0000 | .PIN | 7-93 |
| 2523766-0001 | .BRACKET | 7-47 |
| 2523766-0002 | .BRACKET | 7-47 |
| 2523766-0003 | .BRACKET | 7-47 |
| 2523766-0012 | .BRACKET | 7-47 |
| 2524363-0000 | .HANGER | 6-55, 6-57 |
| 2524512-0000 | .PUSHER | 5-139, 5-141, 5-143 |
| 2525338-0000 | .PLUG | 1-261 |
| 2525570-0000 | .COVER | 3-15 |
| 2526249-0000 | .ROLLER | 5-139, 5-141, 5-143 |
| 2526563-0000 | .HANDLE | 5-73, 5-75, 5-77 |
| 2526567-0000 | .CYLINDER | 5-73, 5-75, 5-77 |
| 2526740-0000 | .BRACKET | 2-227, 2-235 |
| 2526820-0000 | .LINK | 1-55 |
| 2526825-0000 | .WASHER | 1-93, 1-95, 1-97, 1-99, 1-101, 1-103, 1-105, 1-107, 1-109, 1-115, 1-117, 1-119, 1-121, 1-123 |
| 2526826-0000 | .BUSHING | 1-93, 1-95, 1-97, 1-99, 1-101, 1-103, 1-105, 1-107, 1-109, 1-115, 1-117, 1-119, 1-121, 1-123 |
| 2526827-0000 | .SHAFT | 1-93, 1-95, 1-97, 1-99, 1-101, 1-103, 1-105, 1-107, 1-109, 1-115, 1-117, 1-119, 1-121, 1-123 |
| 2526841-0000 | .SHAFT | 1-79 |
| 2526842-0000 | .LINK | 1-55 |
| 2526849-0000 | .PLATE | 1-55 |

| Part No | Description | Page No |
|---|---|---|
| 2526850-0000 | .SHAFT | 1-55 |
| 2526858-0000 | .DOWEL | 1-75, 1-77 |
| 2526859-0000 | .CAM | 1-75, 1-77 |
| 2527295-0200 | .CABLE HARNESS | 2-133 |
| 2527300-0200 | .ELECTRIC EQUIPMENT | 2-115 |
| 2527639-0000 | .RUBBER SEAL | 2-227, 2-235 |
| 2527792-0000 | .SUPPORT | 5-25, 5-27, 5-31, 5-33, 5-35, 5-37 |
| 2527793-0000 | .SHAFT | 5-25, 5-27, 5-31, 5-33, 5-35, 5-37 |
| 2528044-0200 | .PNEUMATIC SYSTEM | 2-115 |
| 2528056-0000 | .RESISTANCE | 1-271, 1-273 |
| 2528059-0000 | .BRACKET | 1-271, 1-273 |
| 2528068-0000 | .CAM | 1-75, 1-77 |
| 2528070-0000 | .LOCKING LEVER | 1-75, 1-77 |
| 2528076-0200 | .STERILE AIR SYSTEM | 1-3 |
| 2528079-0400 | .PNEUMATIC SYSTEM | 1-3 |
| 2528080-0400 | .HOSE INSTALLATION | 1-309 |
| 2528081-0300 | .HOSE HOLDER | 1-309 |
| 2528082-0000 | .PIPE | 1-323 |
| 2528087-0200 | .EMERGENCY STOP | 1-69 |
| 2528088-0000 | .HOLDER | 1-75, 1-77 |
| 2528101-0200 | .BLOWING DEVICE | 1-5, 1-7, 1-9 |
| 2528102-0000 | .LOCKING LEVER | 1-75, 1-77 |
| 2528105-0000 | .PLATE | 1-305, 1-307 |
| 2528110-0000 | .HOUSING | 1-299, 1-301 |
| 2528112-0000 | .BRACKET | 1-153, 1-155 |
| 2528113-0000 | .BRACKET | 1-153, 1-155 |
| 2528114-0000 | .COVER PLATE | 1-153, 1-155 |
| 2528118-0001 | .LOCK PLATE | 1-115, 1-117, 1-119, 1-121, 1-123 |
| 2528118-0003 | .LOCK PLATE | 1-121, 1-123 |
| 2528118-0004 | .LOCK PLATE | 1-93, 1-95, 1-97, 1-99, 1-101, 1-103, 1-105, 1-107, 1-109, 1-121, 1-123 |
| 2528118-0005 | .LOCK PLATE | 1-93, 1-95, 1-97, 1-99, 1-101, 1-103, 1-105, 1-107, 1-109, 1-115, 1-117, 1-119, 1-121, 1-123 |
| 2528119-0001 | .LOCK PLATE | 1-115, 1-117, 1-119, 1-121, 1-123 |
| 2528119-0003 | .LOCK PLATE | 1-121, 1-123 |
| 2528119-0004 | .LOCK PLATE | 1-93, 1-95, 1-97, 1-99, 1-101, 1-103, 1-105, 1-107, 1-109, 1-121, 1-123 |
| 2528119-0005 | .LOCK PLATE | 1-93, 1-95, 1-97, 1-99, 1-101, 1-103, 1-105, 1-107, 1-109, 1-115, 1-117, 1-119, 1-121, 1-123 |
| 2528123-0001 | .LOCK PLATE | 1-115, 1-117, 1-119, 1-121, 1-123, 1-133, 1-135, 1-137 |
| 2528123-0002 | .LOCK PLATE | 1-121, 1-123, 1-133, 1-135, 1-137 |
| 2528123-0004 | .LOCK PLATE | 1-93, 1-95, 1-97, 1-99, 1-101, 1-103, 1-105, 1-107, 1-109, 1-115, 1-117, 1-119, 1-121, 1-123 |
| 2528123-0005 | .LOCK PLATE | 1-121, 1-123 |
| 2528123-0006 | .LOCK PLATE | 1-157, 1-159 |
| 2528123-0007 | .LOCK PLATE | 1-133, 1-135, 1-137 |
| 2528123-0008 | .LOCK PLATE | 1-115, 1-117, 1-119, 1-121, 1-123, 1-133, 1-135, 1-137 |
| 2528123-0009 | .LOCK PLATE | 1-157, 1-159 |
| 2528127-0000 | .BRACKET | 1-305, 1-307 |
| 2528128-0000 | .SHAFT | 1-305, 1-307 |
| 2528133-0000 | .WASHER | 1-23, 1-25 |
| 2528134-0000 | .GASKET | 1-23, 1-25 |
| 2528135-0000 | .SHAFT | 1-305, 1-307 |
| 2528136-0000 | .SQUEE-GEE ROLLER | 1-39, 1-41, 1-57, 1-59 |
| 2528146-0200 | .DOOR | 1-5, 1-7, 1-9 |
| 2528455-0200 | .ELECTRIC EQUIPMENT | 2-5, 2-7 |
| 2528457-0200 | .PNEUMATIC SYSTEM | 2-5, 2-7 |
| 2529069-0000 | .PIPE | 2-69 |
| 2529073-0000 | .PIPE | 1-269 |
| 2529110-0000 | .BRACKET | 2-69 |
| 2529116-0200 | .ELECTRICAL SYSTEM | 2-65 |
| 2529117-0300 | .DOOR SAFETY SWITCH | 2-87 |
| 2529167-0300 | .LUBRICATING SYSTEM | 2-65 |
| 2529277-0000 | .BAR | 5-31, 5-33, 5-35, 5-37 |
| 2529278-0000 | .BAR | 5-31, 5-33, 5-35, 5-37 |
| 2529279-0000 | .PLATE | 5-31, 5-33, 5-35, 5-37 |
| 2529289-0000 | .PUSHER | 5-139, 5-141, 5-143 |
| 2529341-0000 | .GASKET | 2-67 |
| 2529342-0000 | .GASKET | 2-67 |
| 2529410-0200 | .CABLE HARNESS | 2-87 |
| 2529412-0000 | .PUMP HOUSING | 2-33 |
| 2529419-0000 | .SHAFT | 9-19, 9-21, 9-23, 9-25 |
| 2529420-0000 | .SHAFT | 9-19, 9-21, 9-23, 9-25 |
| 2529484-0300 | .PEROXIDE PIPE | 1-263 |
| 2529485-0300 | .SPRAY SYSTEM | 1-263 |
| 2529499-0200 | .CABLE HARNESS | 2-53 |
| 2529597-0200 | .DOOR | 2-199 |
| 2529598-0000 | .DOOR | 2-223 |
| 2529599-0000 | .RUBBER SEAL | 2-223 |
| 2529670-0000 | .WASHER | 2-245 |
| 2529671-0000 | .FOLDING DEVICE | 5-83, 5-85, 5-101 |
| 2529672-0000 | .FOLDING DEVICE | 5-83, 5-85, 5-103 |
| 2529675-0000 | .LEVER | 5-83, 5-85 |
| 2529676-0000 | .LEVER | 5-83, 5-85 |
| 2529742-0000 | .CLAMP | 1-345 |
| 2529760-0300 | .COVERING PANEL | 1-337 |

| Part No | Description | Page No |
|---|---|---|
| 2529785-0000 | .KNOB | 5-31, 5-33, 5-35, 5-37 |
| 2529786-0000 | .KNOB | 5-31, 5-33, 5-35, 5-37 |
| 2529925-0000 | .STEP | 1-297 |
| 2529926-0000 | .RAILING | 1-295 |
| 2529991-0200 | .RAILING | 1-287 |
| 2530080-0200 | .DOOR | 2-199 |
| 2530087-0000 | .DOOR | 2-235 |
| 2530096-0000 | .RAILING | 1-295 |
| 2530188-0100 | .STEP | 1-287 |
| 2530292-0000 | .BRACKET | 4-77, 4-79, 4-99, 4-101 |
| 2530293-0000 | .BRACKET | 4-77, 4-79, 4-99, 4-101 |
| 2530296-0000 | .ROLLER | 4-77, 4-79, 4-99, 4-101 |
| 2530300-0000 | .PIPE | 2-117 |
| 2530301-0000 | .PIPE | 2-117 |
| 2530302-0000 | .PIPE | 2-117 |
| 2530303-0000 | .PIPE | 2-117 |
| 2530418-0000 | .SPRING | 5-25, 5-27, 5-31, 5-33, 5-35, 5-37 |
| 2531045-0000 | .GASKET | 1-21 |
| 2531052-0200 | .PRESSURE UNIT | 1-263 |
| 2531054-0000 | .PLUG | 1-23, 1-25, 1-173, 1-175 |
| 2531055-0000 | .PLUG | 1-23, 1-25 |
| 2531060-0000 | .BRACKET | 1-161, 1-163 |
| 2531083-0000 | .SLEEVE | 1-259 |
| 2531245-0000 | .HOSE NIPPLE | 6-25, 6-27, 6-29, 6-33 |
| 2531423-0000 | .NUT | 6-25, 6-27, 6-29, 6-33 |
| 2531500-0000 | .PIPE | 2-63 |
| 2531501-0000 | .PIPE | 2-63 |
| 2532531-0000 | .ROLLER | 4-77, 4-79, 4-99, 4-101 |
| 2532574-0000 | .COVER | 6-25, 6-27, 6-29 |
| 2532619-0000 | .COVER | 2-211 |
| 2532806-0000 | .ATTACHMENT PIPE | 6-37 |
| 2532895-0002 | .LOCK PLATE | 1-135, 1-137 |
| 2532895-0003 | .LOCK PLATE | 1-133, 1-135, 1-137 |
| 2532895-0004 | .LOCK PLATE | 1-133, 1-135, 1-137, 1-157, 1-159 |
| 2532895-0007 | .LOCK PLATE | 1-135, 1-137 |
| 2532895-0008 | .LOCK PLATE | 1-157, 1-159 |
| 2532898-0000 | .BRACKET | 1-161, 1-163 |
| 2532899-0000 | .BRACKET | 1-161, 1-163 |
| 2532908-0000 | .ROLLER | 1-299, 1-301 |
| 2532909-0300 | .COVERING PANEL | 1-3 |
| 2532911-0000 | .ROLLER | 1-299, 1-301 |
| 2532914-0000 | .SPACER | 1-115, 1-117, 1-119, 1-121, 1-123 |
| 2532915-0000 | .WASHER | 1-47, 1-49, 1-51 |
| 2532918-0000 | .HOLDER | 1-47, 1-49, 1-51 |
| 2532919-0000 | .PLATE | 1-47, 1-49, 1-51 |
| 2532925-0000 | .INDUCTOR | 1-161, 1-163 |
| 2532931-0000 | .FLANGE | 1-37 |
| 2532934-0200 | .AIR KNIFE | 1-5, 1-7, 1-9 |
| 2532965-0000 | .ROLLER | 1-121, 1-123 |
| 2532977-0000 | .BRACKET | 1-75, 1-77 |
| 2532978-0000 | .PLATE | 1-75, 1-77 |
| 2532979-0000 | .SPACER | 1-81 |
| 2532983-0000 | .FLANGE | 1-57, 1-59 |
| 2532984-0000 | .FLANGE | 1-57, 1-59 |
| 2533627-0000 | .SUPPORT BLOCK | 1-75, 1-77 |
| 2533628-0000 | .SUPPORT BLOCK | 1-75, 1-77 |
| 2533638-0000 | .AXLE PIN | 3-27 |
| 2533671-0000 | .SCREW | 1-303 |
| 2533672-0000 | .SHAFT | 1-303 |
| 2533673-0000 | .ROLLER | 1-303, 7-15, 7-35 |
| 2533763-0000 | .COVERING PANEL | 1-335 |
| 2533766-0100 | .COVERING PANEL | 1-3 |
| 2533768-0000 | .COVERING PLATE | 1-335 |
| 2534851-0000 | .BAR | 4-33, 4-35 |
| 2535441-0000 | .LEVER | 4-45, 4-47 |
| 2535442-0000 | .PIVOT PIN | 4-45, 4-47 |
| 2535443-0000 | .PIVOT PIN | 4-169, 4-171 |
| 2535455-0000 | .LINK | 4-45, 4-47, 4-49 |
| 2535457-0000 | .WOODRUFF KEY | 4-45, 4-47, 4-49 |
| 2535458-0000 | .SHAFT | 4-45, 4-47, 4-49 |
| 2535461-0000 | .CONNECTING ROD | 4-45, 4-47 |
| 2535932-0000 | .CAM | 7-71, 7-73 |
| 2536047-0000 | .ARM | 4-21 |
| 2536048-0000 | .ARM | 4-15 |
| 2537120-0000 | .BRACKET | 2-67 |
| 2537128-0100 | .DROP CHUTE VARIANT | 5-3 |
| 2537129-0000 | .SPACER | 5-5, 5-7, 5-9 |
| 2539440-0200 | .ASEPTIC CHAMBER | 1-3 |
| 2539445-0300 | .PENDULUM ROLLER | 1-5, 1-7, 1-9 |
| 2539450-0300 | .DRYING CHAMBER | 1-3 |
| 2539452-0300 | .FLOW SWITCH | 1-247 |
| 2539455-0200 | .VALVE | 1-5, 1-7, 1-9 |
| 2539457-0000 | .LID | 9-43 |
| 2539458-0200 | .SPRAY TANK | 1-203 |

| Part No | Description | Page No |
|---|---|---|
| 2539459-0000 | .HOLDER | 9-43 |
| 2539471-0000 | .COVERING PLATE | 1-335 |
| 2540595-0010 | .COAXIAL CABLE | 7-77 |
| 2540596-0007 | .COAXIAL CABLE | 2-105, 2-107 |
| 2540609-0000 | .KNOB | 5-5, 5-7, 5-9 |
| 2540612-0000 | .PLATE | 5-25, 5-27, 5-31, 5-33, 5-35, 5-37 |
| 2540716-0200 | .SIGNAL LAMP | 2-157 |
| 2540767-0000 | .PIPE | 2-159, 2-173 |
| 2540823-0000 | .BRACKET | 5-19 |
| 2541633-0000 | .FLANGE | 1-57, 1-59 |
| 2541634-0200 | .EDGE ROLLER | 1-151 |
| 2541637-0000 | .SHAFT | 1-57, 1-59 |
| 2541639-0000 | .LID | 1-13, 1-15, 1-29, 1-31, 1-33, 1-35, 1-37, 1-57, 1-59 |
| 2541643-0000 | .FLANGE | 1-39, 1-41 |
| 2541647-0000 | .LID | 1-57, 1-59 |
| 2541648-0000 | .LID | 1-57, 1-59 |
| 2541650-0000 | .LID | 1-39, 1-41 |
| 2541658-0000 | .SCREW | 1-79 |
| 2541661-0000 | .LID | 1-55 |
| 2541664-0000 | .COVER | 1-81 |
| 2541673-0000 | .WASHER | 1-287 |
| 2541680-0200 | .HYDROGEN PEROXIDE | 1-3 |
| 2541681-0000 | .WASHER | 1-39, 1-41 |
| 2541682-0000 | .BUSHING | 1-39, 1-41 |
| 2541702-0000 | .COVER | 2-215 |
| 2541703-0200 | .DOOR | 2-199 |
| 2541704-0000 | .DOOR | 2-215 |
| 2542341-0000 | .DRAINING | 2-67 |
| 2542488-0000 | .NUT | 4-7 |
| 2542489-0300 | .GUIDE | 4-5 |
| 2542493-0000 | .BLOCK | 4-7 |
| 2542494-0000 | .BLOCK | 4-7 |
| 2543242-0000 | .ANGLE BLOCK | 5-31, 5-33, 5-35, 5-37 |
| 2543349-0000 | .DRAINING | 2-67 |
| 2544199-0400 | .STEAM PIPE | 1-239 |
| 2544213-0000 | .BRACKET | 2-69 |
| 2544214-0000 | .PIPE | 2-69 |
| 2544310-0200 | .PROTECTIVE COVER | 2-199 |
| 2544312-0000 | .FLOAT | 2-39 |
| 2544313-0000 | .PIPE | 2-39 |
| 2544314-0000 | .PIPE | 2-39 |
| 2544316-0000 | .PIPE | 2-39 |
| 2544318-0000 | .PIPE | 2-39 |
| 2544321-0000 | .COVER | 2-39 |
| 2544324-0000 | .PIPE | 2-39 |
| 2544325-0000 | .GASKET | 2-39 |
| 2544326-0200 | .INTEGRATED CLEANING UNIT | 2-5, 2-7 |
| 2544330-0000 | .PLUG | 2-39 |
| 2544331-0000 | .COVER | 2-237 |
| 2544332-0000 | .PROTECTION | 2-237 |
| 2544333-0100 | .DOOR | 2-199 |
| 2544342-0000 | .BRACKET | 5-107, 5-109, 5-111 |
| 2544850-0200 | .FORMING SECTION | 1-3 |
| 2544865-0000 | .BUSHING | 1-75, 1-77 |
| 2544866-0000 | .WASHER | 1-75, 1-77 |
| 2544873-0100 | .CONNECTION PIPE | 9-3 |
| 2544885-0000 | .ARM | 1-39, 1-41 |
| 2544886-0000 | .ARM | 1-39, 1-41 |
| 2544897-0000 | .BRACKET | 1-161, 1-163 |
| 2544898-0000 | .SHAFT | 1-161, 1-163 |
| 2544902-0000 | .BRACKET | 5-39 |
| 2545017-0000 | .PARALLEL KEYS WITH ROUND ENDS | 3-27 |
| 2545639-0300 | .COVERING PANEL | 1-337 |
| 2545651-0400 | .STEAM SYSTEM | 1-195 |
| 2545658-0000 | .PLATE | 1-289, 1-291 |
| 2546319-0000 | .HOLDER | 2-49 |
| 2546474-0000 | .INDUCTOR | 4-57, 4-59, 4-65, 4-67, 9-19, 9-21, 9-23, 9-25 |
| 2546499-0300 | .GUIDE | 2-71 |
| 2546500-0200 | .HYDRAULIC SYSTEM | 2-65 |
| 2547061-0000 | .HOLDER | 6-87, 6-89 |
| 2547376-0200 | .KNOB | 1-161, 1-163 |
| 2547377-0000 | .WASHER | 1-161, 1-163 |
| 2547386-0000 | .SHAFT | 1-75, 1-77 |
| 2547387-0000 | .ROD END | 1-79 |
| 2547388-0000 | .AXLE PIN | 1-161, 1-163 |
| 2547391-0100 | .NOZZLE | 1-263 |
| 2547401-0000 | .SUPPORT PLATE | 1-79 |
| 2547402-0000 | .BRACKET | 1-79 |
| 2547403-0000 | .WHEEL | 1-79 |
| 2547404-0000 | .BRACKET | 1-161, 1-163 |
| 2547405-0000 | .BRACKET | 1-161, 1-163 |
| 2547406-0000 | .ROLLER | 1-39, 1-41, 1-57, 1-59 |
| 2547410-0100 | .PRODUCT VALVE | 1-215 |
| 2547419-0000 | .SHIM | 1-79 |

| Part No | Description | Page No |
|---|---|---|
| 2547420-0200 | .EDGE ROLLER | 1-151 |
| 2547421-0200 | .FORMING RING | 1-131 |
| 2547422-0300 | .UPPER FORMING RING | 1-113 |
| 2547425-0000 | .BRACKET | 1-299, 1-301 |
| 2547474-0000 | .SIGN LANGUAGE INDEPENDENT | 6-33 |
| 2547568-0000 | .PLATE | 1-299, 1-301 |
| 2547588-0000 | .SPRING | 4-77, 4-79, 4-99, 4-101 |
| 2547589-0000 | .SPRING | 4-77, 4-79, 4-99, 4-101 |
| 2550138-0200 | .PLATFORM | 2-149, 2-151, 2-153, 2-155 |
| 2550139-0200 | .PLATFORM | 2-3 |
| 2550141-0000 | .CHECKER PLATE | 2-161, 2-163 |
| 2550142-0000 | .PLATFORM | 2-161, 2-163 |
| 2550143-0000 | .PLATFORM | 2-161, 2-163 |
| 2550145-0000 | .RAILING | 2-161, 2-163 |
| 2550146-0000 | .RAILING | 2-161, 2-163 |
| 2550147-0000 | .RAILING | 2-161, 2-163 |
| 2550189-0000 | .RAILING | 2-161, 2-163 |
| 2550191-0000 | .TOE PLATE | 2-161, 2-163 |
| 2550192-0000 | .TOE PLATE | 2-161, 2-163 |
| 2550193-0000 | .TOE PLATE | 2-161, 2-163 |
| 2550211-0000 | .VOLUME BULGE | 5-65, 5-67, 5-69, 5-71 |
| 2550333-0000 | .GUIDE LUG | 7-151, 7-159, 7-163, 7-167, 7-169 |
| 2550890-0100 | .VALVE | 1-5, 1-7, 1-9 |
| 2550895-0200 | .CHANGE-OVER VALVE | 1-179 |
| 2550979-0000 | .TRANSPORT EQUIPMENT | 9-3 |
| 2551951-0000 | .RAILING | 2-161, 2-163 |
| 2552002-0300 | .BASE UNIT | 4-3 |
| 2552003-0200 | .FORMING UNIT | 4-3 |
| 2552113-0200 | .FLOW METER | 6-21, 6-23 |
| 2552121-0000 | .BRACKET | 1-79 |
| 2552124-0000 | .BRACKET | 1-299, 1-301 |
| 2552125-0100 | .BENDING ROLLER | 1-287 |
| 2552127-0000 | .FLANGE | 1-29, 1-31, 1-33, 1-35 |
| 2552135-0000 | .BENDING ROLLER | 1-37 |
| 2552139-0000 | .BENDING ROLLER | 1-37 |
| 2552140-0000 | .BRACKET | 1-157, 1-159 |
| 2552141-0000 | .BRACKET | 1-157, 1-159 |
| 2552142-0000 | .BRACKET | 1-157, 1-159 |
| 2552143-0000 | .BRACKET | 1-157, 1-159 |
| 2552144-0000 | .ROLL | 1-157, 1-159 |
| 2552155-0000 | .ROLL | 1-157, 1-159 |
| 2552158-0000 | .SCREW | 1-157, 1-159 |
| 2552160-0000 | .SUPPORT RING | 1-133, 1-135, 1-137 |
| 2552161-0000 | .SUPPORT RING | 1-133, 1-135, 1-137 |
| 2552176-0001 | .LOCK PLATE | 1-133, 1-135, 1-137 |
| 2552176-0003 | .LOCK PLATE | 1-133, 1-135, 1-137 |
| 2552177-0001 | .LOCK PLATE | 1-133, 1-135, 1-137 |
| 2552177-0003 | .LOCK PLATE | 1-133, 1-135, 1-137 |
| 2552187-0000 | .ROLLER | 1-135, 1-137 |
| 2552188-0000 | .ROLLER | 1-133, 1-135, 1-137 |
| 2552201-0000 | .LOCKING DEVICE | 1-229, 1-231 |
| 2552205-0000 | .ROLLER | 1-133, 1-135, 1-137 |
| 2552206-0000 | .ROLLER | 1-133, 1-135, 1-137 |
| 2552215-0500 | .STEAM TRAP | 1-239 |
| 2552445-0000 | .SUPPORT | 5-23 |
| 2552931-0200 | .HOSE INSTALLATION | 2-43 |
| 2553118-0000 | .TOE PLATE | 2-161, 2-163 |
| 2553119-0000 | .RAILING | 2-161, 2-163 |
| 2553124-0000 | .PIN | 2-161, 2-163 |
| 2553167-0000 | .LID | 1-209 |
| 2553343-0000 | .SUPPORT | 5-83, 5-85 |
| 2553344-0000 | .SUPPORT | 5-83, 5-85 |
| 2553345-0000 | .TIE ROD | 5-83, 5-85 |
| 2553346-0000 | .AXLE LINK | 5-83, 5-85 |
| 2555393-0200 | .START-UP KIT | 9-3 |
| 2555394-0200 | .START-UP KIT | 9-17 |
| 2555614-0000 | .BRACKET | 1-161, 1-163 |
| 2555615-0000 | .BRACKET | 1-161, 1-163 |
| 2555616-0000 | .ROLLER | 1-161, 1-163 |
| 2555617-0000 | .PIN | 1-161, 1-163 |
| 2555618-0000 | .SHAFT | 1-161, 1-163 |
| 2555620-0000 | .COVER | 1-161, 1-163 |
| 2555621-0000 | .ROLLER | 1-115, 1-117, 1-119 |
| 2555622-0000 | .ROLLER | 1-115, 1-117, 1-119 |
| 2555623-0000 | .COVER | 1-161, 1-163 |
| 2555625-0000 | .ROLL | 1-161, 1-163 |
| 2555627-0200 | .PRESSURE ROLLER | 1-89, 1-91 |
| 2558878-0000 | .SIGN | 7-89 |
| 2559045-0003 | .ELECTRODE | 1-277 |
| 2559045-0004 | .ELECTRODE | 1-277 |
| 2559051-0000 | .INSERT | 1-233 |
| 2559061-0200 | .UPPER FORMING RING | 1-113 |
| 2559062-0200 | .LOWER FORMING RING | 1-89, 1-91 |
| 2559062-0300 | .LOWER FORMING RING | 1-89, 1-91 |

| Part No | Description | Page No |
|---|---|---|
| 2559064-0100 | .SEAL | 1-141 |
| 2559066-0000 | .STUD SCREW | 1-81 |
| 2559095-0000 | .BRACKET | 1-215 |
| 2559102-0000 | .RING | 1-149 |
| 2559103-0000 | .PLATE | 1-149 |
| 2559104-0000 | .PLATE | 1-149 |
| 2559461-0000 | .SPACER | 2-39 |
| 2559976-0000 | .BRACKET | 2-39 |
| 2559977-0000 | .HOSE | 2-39 |
| 2559978-0000 | .PIPE | 2-39 |
| 2561206-0000 | .SPACER | 5-161, 5-163, 5-165 |
| 2561232-0000 | .COVER | 5-161 |
| 2561244-0200 | .DRIVE WHEEL | 5-163, 5-165 |
| 2561267-0000 | .SHAFT | 5-167 |
| 2561596-0000 | .RAIL HOLDER KIT | 5-175 |
| 2561602-0100 | .RAIL HOLDER KIT | 5-173 |
| 2562307-0000 | .PIPE | 1-205 |
| 2562315-0000 | .PLUG | 1-205 |
| 2562664-0000 | .ROLL | 1-157, 1-159 |
| 2562667-0002 | .LOCK PLATE | 1-157, 1-159 |
| 2562667-0008 | .LOCK PLATE | 1-135, 1-137 |
| 2562667-0009 | .LOCK PLATE | 1-135, 1-137 |
| 2562677-0000 | .WASHER | 1-75, 1-77 |
| 2562684-0000 | .ROLL | 1-157, 1-159 |
| 2562687-0000 | .PLATE | 1-143, 1-145, 1-147 |
| 2562688-0000 | .RING | 1-143, 1-145, 1-147 |
| 2562692-0000 | .BRACKET | 1-157, 1-159 |
| 2562693-0000 | .BRACKET | 1-157, 1-159 |
| 2562694-0000 | .ROLLER | 1-157, 1-159 |
| 2562695-0000 | .ROLLER | 1-157, 1-159 |
| 2562696-0000 | .BRACKET | 1-157, 1-159 |
| 2562697-0000 | .BRACKET | 1-157, 1-159 |
| 2562736-0001 | .COAXIAL CABLE | 4-37, 4-39 |
| 2563279-0000 | .PIPE | 1-269 |
| 2563281-0000 | .PIPE | 1-269 |
| 2563294-0000 | .PRESSURE FLANGE | 1-197, 1-199 |
| 2563759-0000 | .SPRAY SYSTEM | 1-275 |
| 2563760-0000 | .EXTENSION | 1-275 |
| 2563761-0000 | .NUT | 1-275 |
| 2563762-0000 | .SPACER | 1-275 |
| 2564107-0000 | .LID | 1-269 |
| 2564342-0000 | .SPACER | 2-33 |
| 2564545-0000 | .PLATE | 2-175, 2-177 |
| 2564546-0100 | .PLATFORM | 2-149, 2-151, 2-153, 2-155 |
| 2564561-0000 | .PIPE | 2-33 |
| 2564565-0000 | .TOE PLATE | 2-157 |
| 2564566-0000 | .TOE PLATE | 2-157 |
| 2564606-0000 | .SUPPORT PLATE | 1-207 |
| 2564978-0000 | .PIPE | 2-33 |
| 2565467-0000 | .FLANGE | 1-179 |
| 2565483-0000 | .NOZZLE | 1-17 |
| 2565513-0000 | .ROLLER | 1-93, 1-95, 1-97, 1-99, 1-101, 1-103, 1-105, 1-107, 1-109 |
| 2566209-0000 | .PLATE | 2-39 |
| 2566210-0000 | .PLATE | 2-39 |
| 2566211-0000 | .LABEL | 2-39 |
| 2566212-0000 | .LABEL | 2-39 |
| 2566258-0000 | .TOE PLATE | 2-161, 2-163 |
| 2566319-0000 | .FOLDING FLAP | 4-93, 4-95, 4-109, 4-111 |
| 2566320-0000 | .FOLDING FLAP | 4-93, 4-95, 4-109, 4-111 |
| 2566321-0000 | .FLAP | 5-65, 5-67, 5-69, 5-71 |
| 2566323-0000 | .FLAP | 5-65, 5-67, 5-69, 5-71 |
| 2566338-0000 | .CATCH | 4-55 |
| 2566339-0000 | .CATCH | 4-89, 4-91 |
| 2570017-0000 | .PRESSURE FLANGE | 1-197, 1-199 |
| 2572071-0000 | .HOOD | 1-197, 1-199 |
| 2574421-0000 | .PIPE | 2-27 |
| 2574483-0200 | .TOOLS AND TEMPLATES | 9-3 |
| 2578486-0000 | .BRACKET | 1-277 |
| 2579838-0000 | .TOUCH GUARD | 7-93 |
| 2582590-0000 | .PIPE | 1-241 |
| 2582616-0000 | .PLATE | 1-149 |
| 2582623-0000 | .SEAL | 1-149 |
| 2582629-0000 | .RING | 1-149 |
| 2582630-0000 | .ROLLER | 1-149 |
| 2582654-0000 | .PLATE | 1-47, 1-49, 1-51 |
| 2582655-0000 | .HOLDER | 1-47, 1-49, 1-51 |
| 2587289-0000 | .CHECKER PLATE | 2-157 |
| 2587290-0000 | .CHECKER PLATE | 2-157 |
| 2587291-0000 | .CHECKER PLATE | 2-157 |
| 2587292-0000 | .CHECKER PLATE | 2-157 |
| 2587464-0000 | .CANTILEVER | 4-43 |
| 2588127-0000 | .AXLE PIN | 5-89, 5-91 |
| 2588133-0000 | .BRACKET | 5-89, 5-91 |
| 2588134-0000 | .YOKE | 5-89, 5-91 |

| Part No | Description | Page No |
|---|---|---|
| 2588136-0000 | .BRACKET | 5-89, 5-91 |
| 2588218-0000 | .STRUT | 5-107, 5-109, 5-111 |
| 2588295-0000 | .SLEEVE | 4-55 |
| 2588296-0000 | .PISTON | 4-55 |
| 2588297-0000 | .SHAFT | 4-55 |
| 2588299-0000 | .BUSHING | 4-89, 4-91 |
| 2588303-0000 | .SCREW | 4-89, 4-91 |
| 2588317-0100 | .KNIFE | 4-51 |
| 2588327-0000 | .INSERT | 5-65, 5-67, 5-69, 5-71 |
| 2589960-2123 | .SLIDING STRIP | 5-163, 5-165 |
| 2589960-2124 | .SLIDING STRIP | 5-163, 5-165 |
| 2591782-0000 | .SPRING | 1-303 |
| 2592545-0000 | .ROLLER | 1-133 |
| 2592546-0000 | .ROLLER | 1-143, 1-145, 1-147 |
| 2592547-0000 | .ROLLER | 1-143, 1-145, 1-147 |
| 2592548-0000 | .ROLLER | 1-143, 1-145, 1-147 |
| 2592549-0000 | .ROLLER | 1-143, 1-145, 1-147 |
| 2592550-0100 | .FORMING RING | 1-131 |
| 2592780-0000 | .DOLLY | 7-117, 9-17 |
| 2593851-0200 | .EMERGENCY STOP | 2-211 |
| 2594125-0000 | .SLEEVE | 1-303 |
| 2594126-0000 | .GUIDE ROLLER | 1-303 |
| 2594596-0000 | .BRACKET | 1-111 |
| 2594601-0000 | .RAIL | 1-47, 1-49, 1-51 |
| 2594636-0000 | .BRACKET | 1-161, 1-163 |
| 2594646-0000 | .PIPE | 2-109 |
| 2594647-0000 | .PIPE | 2-109 |
| 2594886-0000 | .PLATE | 5-19 |
| 2594890-0000 | .VOLUME SHIM | 9-19, 9-21, 9-23, 9-25 |
| 2594891-0000 | .VOLUME SHIM | 9-19, 9-21, 9-23, 9-25 |
| 2594892-0000 | .SPRING | 4-55 |
| 2594902-0000 | .CATCH | 5-139, 5-141, 5-143 |
| 2597330-0100 | .CONTROL UNIT | 4-41 |
| 2597331-0100 | .CENTERING UNIT | 4-41 |
| 2597531-0000 | .5019011FLOAT | 1-197, 1-199 |
| 2598017-0000 | .PRESSURE FLANGE | 1-197, 1-199 |
| 2598025-0000 | .SIGN | 2-49 |
| 2598065-0000 | .SUPPORT | 4-43 |
| 2598067-0000 | .SHAFT | 4-49 |
| 2598084-0000 | .PLATE | 1-205 |
| 2598085-0000 | .SPACER | 1-205 |
| 2598487-0000 | .SLIDE | 5-31, 5-33, 5-35, 5-37 |
| 2598488-0000 | .SLIDE | 5-31, 5-33, 5-35, 5-37 |
| 2598502-0000 | .SUPPORT | 4-45, 4-47 |
| 2598689-0000 | .HOSE | 2-23 |
| 2598820-0000 | .SPACER | 5-5, 5-7, 5-9 |
| 2598844-0000 | .COVER | 2-67 |
| 2598880-0000 | .SETTING SCREW | 5-97, 5-99 |
| 2598890-0000 | .AXLE PIN | 5-101, 5-103 |
| 2599741-0000 | .SUPPORT | 4-49 |
| 2599742-0000 | .SHAFT | 4-45, 4-47, 4-49 |
| 2599743-0000 | .SHAFT | 4-49 |
| 2599941-0000 | .SPACER | 2-161, 2-163, 7-41, 7-43 |
| 2601232-0000 | .FRAME | 8-53 |
| 2601240-0000 | .ROLLER | 1-133 |
| 2601247-0000 | .INDUCTOR | 1-161, 1-163 |
| 2601249-0000 | .BRACKET | 1-161, 1-163 |
| 2601269-0000 | .ROLLER | 1-157, 1-159 |
| 2601271-0000 | .ROLLER | 1-157, 1-159 |
| 2601272-0000 | .ROLLER | 1-157, 1-159 |
| 2601273-0000 | .ROLLER | 1-157, 1-159 |
| 2601278-0000 | .ROLLER | 1-135, 1-137 |
| 2601279-0000 | .ROLLER | 1-135, 1-137 |
| 2601285-0000 | .ROLLER | 1-135, 1-137 |
| 2601286-0000 | .ROLLER | 1-135, 1-137, 1-153, 1-155 |
| 2601289-0000 | .INDUCTOR | 1-161, 1-163 |
| 2601469-0000 | .PRESSURE FLANGE | 1-197, 1-199 |
| 2601483-0100 | .PAPER GUIDE | 1-299, 1-301 |
| 2602652-0000 | .SHAFT | 4-45, 4-47, 4-49 |
| 2602655-0000 | .ROLLER | 4-173, 4-175 |
| 2602657-0000 | .LOCK PLATE | 4-45, 4-47 |
| 2602658-0000 | .SHAFT | 4-45, 4-47 |
| 2603387-0000 | .SPACER | 2-39 |
| 2603547-0000 | .FOLDING PART | 5-107, 5-109, 5-111 |
| 2603548-0000 | .FOLDING PART | 5-107, 5-109, 5-111 |
| 2603661-0000 | .BRACKET | 5-107, 5-109, 5-111 |
| 2603662-0000 | .BRACKET | 5-107, 5-109, 5-111 |
| 2603663-0000 | .SPACER | 5-129 |
| 2604069-0000 | .BRACKET | 6-9 |
| 2605877-0000 | .BENDING ROLLER | 2-11 |
| 2605879-0000 | .CANTILEVER | 2-11 |
| 2605880-0000 | .SHAFT | 2-11 |
| 2605993-0000 | .SIDE PLATE | 5-19 |
| 2605994-0000 | .SIDE PLATE | 5-19 |

| Part No | Description | Page No |
|---|---|---|
| 2607089-0000 | .PRESSURE ROLLER | 1-197, 1-199 |
| 2608103-0000 | .BRACKET | 2-39 |
| 2608104-0000 | .BRACKET | 2-39 |
| 2608177-0000 | .SIGN | 8-9, 8-11, 8-47, 8-49, 8-51, 8-53, 8-59, 8-61, 8-63 |
| 2609365-0000 | .HOLDER | 2-183, 2-185 |
| 2609368-0000 | .TIE ROD | 5-83, 5-85 |
| 2609371-0000 | .SPACER | 5-117, 5-119 |
| 2609372-0000 | .GUIDE | 5-123, 5-125, 5-127 |
| 2610956-0000 | .INDUCTOR | 4-57, 4-59, 4-65, 4-67, 9-19, 9-21, 9-23, 9-25 |
| 2611009-0000 | .SHAFT | 1-53 |
| 2611052-0000 | .BRACKET | 1-111 |
| 2611106-0000 | .HOUSING | 1-235 |
| 2611108-0000 | .CAM | 1-235 |
| 2611110-0000 | .WASHER | 1-235 |
| 2611113-0000 | .SPINDLE | 1-235 |
| 2611454-0100 | .REGULATING VALVE | 1-229, 1-231 |
| 2613034-0200 | .MACHINE BODY | 6-3, 6-5 |
| 2613644-0100 | .CANTILEVER | 4-41 |
| 2613646-0100 | .VOLUME ADJUSTER | 4-5 |
| 2613975-0000 | .SPRING CUSHION | 1-235 |
| 2614038-0000 | .SPACER | 4-49 |
| 2614039-0000 | .CLAMP | 4-43 |
| 2615463-0200 | .FLUSHING DEVICE | 2-181 |
| 2616221-0000 | .BRACKET | 4-7 |
| 2616225-0000 | .CLAMP | 4-7 |
| 2616236-0000 | .WASHER | 1-17 |
| 2616238-0000 | .HOLDER | 1-17 |
| 2616239-0000 | .HOLDER | 1-17 |
| 2616298-0000 | .BRACKET | 1-245 |
| 2618329-0000 | .PLATE | 4-45, 4-47 |
| 2618330-0000 | .HANDLE | 4-45, 4-47 |
| 2618332-0000 | .SHAFT | 4-45, 4-47 |
| 2618333-0000 | .PLATE | 4-45, 4-47 |
| 2619039-0000 | .GLASS PANE | 7-159, 7-161, 7-163, 7-165 |
| 2619199-0000 | .ROLLER | 4-173, 4-175 |
| 2619528-0000 | .LOCKING CIRCLIP | 5-97, 5-99 |
| 2619529-0000 | .SLEEVE | 5-97, 5-99 |
| 2619530-0000 | .SLEEVE | 5-97, 5-99 |
| 2619531-0000 | .SHAFT | 5-97, 5-99 |
| 2619574-0000 | .SPACER | 5-5, 5-7, 5-9 |
| 2619584-0100 | .STRUT | 5-89, 5-91 |
| 2619584-0200 | .STRUT | 5-89, 5-91 |
| 2619585-0200 | .STRUT | 5-89, 5-91 |
| 2619591-0000 | .SLIDER | 5-101, 5-103 |
| 2619592-0000 | .HOLDER | 5-89, 5-91 |
| 2619596-0000 | .HANDLE | 5-97, 5-99 |
| 2619597-0100 | .FLAP GUIDE | 5-89, 5-91 |
| 2619598-0100 | .FLAP GUIDE | 5-89, 5-91 |
| 2619607-0000 | .COVER | 1-339 |
| 2619703-0000 | .SPACER | 5-107, 5-109, 5-111 |
| 2619727-0000 | .GUIDE | 5-31, 5-33, 5-35, 5-37 |
| 2619728-0000 | .GUIDE | 5-31, 5-33, 5-35, 5-37 |
| 2623513-0000 | .BUSHING | 4-49 |
| 2623715-0000 | .HOLDER | 6-9 |
| 2623717-0000 | .HOLDER | 6-9 |
| 2623721-0200 | .PEROXIDE REDUCER | 2-17, 2-19 |
| 2629344-0000 | .SPACER | 5-117, 5-119 |
| 2632642-0300 | .NOZZLE UNIT | 1-229, 1-231 |
| 2634917-0000 | .SIGN | 1-313, 1-315 |
| 2634926-0000 | .SUPPORT ROLLER | 1-135, 1-137 |
| 2634932-0000 | .BRACKET | 1-153, 1-155 |
| 2634933-0000 | .BRACKET | 1-153, 1-155 |
| 2634934-0000 | .SHAFT | 1-153, 1-155 |
| 2634953-0000 | .ROLLER | 1-121, 1-123 |
| 2634954-0000 | .ROLLER | 1-121, 1-123 |
| 2634955-0000 | .ROLLER | 1-121, 1-123 |
| 2634956-0000 | .ROLLER | 1-121, 1-123 |
| 2634957-0000 | .ROLLER | 1-121, 1-123 |
| 2634958-0000 | .ROLLER | 1-121, 1-123 |
| 2634968-0000 | .ROLLER | 1-135, 1-137 |
| 2634969-0000 | .ROLLER | 1-135, 1-137 |
| 2634970-0000 | .ROLLER | 1-135, 1-137 |
| 2634972-0000 | .SHAFT | 1-197, 1-199 |
| 2634995-0000 | .FLOAT | 1-197, 1-199 |
| 2638077-0000 | .SHAFT | 1-197, 1-199 |
| 2638180-0000 | .INSERT | 5-65, 5-67, 5-69, 5-71 |
| 2638981-0000 | .HOLDER | 2-183, 2-185 |
| 2638982-0000 | .PIPE | 2-183, 2-185 |
| 2640822-0000 | .SIGN | 1-313, 1-315 |
| 2640826-0000 | .NUT | 3-15 |
| 2640831-0000 | .GUIDE | 4-7 |
| 2640991-0000 | .SLIDE | 1-161, 1-163 |
| 2640992-0000 | .SLIDE | 1-161, 1-163 |
| 2640993-0000 | .PLATE | 1-161, 1-163 |

| Part No | Description | Page No |
|---|---|---|
| 2641000-0000 | .SHAFT | 1-161, 1-163 |
| 2641296-0000 | .PIPE | 1-179 |
| 2641297-0000 | .PRESSURE FLANGE | 1-197, 1-199 |
| 2641298-0000 | .PIPE | 1-175, 1-177 |
| 2644368-0000 | .BRACKET | 5-107, 5-109, 5-111 |
| 2644623-0000 | .SHOULDER SCREW | 3-9 |
| 2647084-0000 | .BAR | 5-31, 5-33, 5-35, 5-37 |
| 2647085-0000 | .BAR | 5-31, 5-33, 5-35, 5-37 |
| 2647088-0000 | .BAR | 5-31, 5-33, 5-35, 5-37 |
| 2647089-0000 | .BAR | 5-31, 5-33, 5-35, 5-37 |
| 2647090-0000 | .SLIDE | 5-31, 5-33, 5-35, 5-37 |
| 2647091-0000 | .SLIDE | 5-31, 5-33, 5-35, 5-37 |
| 2647092-0000 | .ANGLE BLOCK | 5-31, 5-33, 5-35, 5-37 |
| 2647093-0000 | .PUSHER | 5-147 |
| 2647094-0000 | .PUSHER | 5-147 |
| 2647095-0000 | .PUSHER | 5-147 |
| 2647096-0000 | .PUSHER | 5-147 |
| 2647097-0000 | .NAIL | 5-147 |
| 2647098-0000 | .BLOCK | 5-147 |
| 2647099-0000 | .GUIDE | 5-139, 5-141, 5-143 |
| 2647100-0000 | .VOLUME BULGE | 5-147 |
| 2647101-0000 | .SUPPORT | 5-139, 5-141, 5-143 |
| 2647103-0000 | .SHAFT | 5-89, 5-91 |
| 2647104-0000 | .LEVER | 5-101, 5-103 |
| 2647105-0000 | .AXLE PIN | 5-101, 5-103 |
| 2647106-0000 | .SLIDER | 5-103 |
| 2647107-0000 | .SLIDER | 5-101 |
| 2647108-0000 | .STRUT | 5-97, 5-99 |
| 2647109-0000 | .SHAFT | 5-97, 5-99 |
| 2647111-0000 | .SUPPORT | 5-123, 5-125, 5-127 |
| 2647112-0000 | .GUIDE | 5-123, 5-125, 5-127 |
| 2647113-0000 | .BUSHING | 5-147 |
| 2647126-0000 | .BRACKET | 5-107, 5-109, 5-111 |
| 2647127-0000 | .FOLDING PART | 5-107, 5-109, 5-111 |
| 2647128-0000 | .FOLDING PART | 5-107, 5-109, 5-111 |
| 2647129-0000 | .FOLDING PART | 5-107, 5-109, 5-111 |
| 2647130-0000 | .FOLDING PART | 5-107, 5-109, 5-111 |
| 2647131-0000 | .GUIDE | 5-113, 5-115 |
| 2650713-0000 | .PLATE | 4-29, 4-31 |
| 2650717-0000 | .SCREW | 4-29, 4-31 |
| 2651695-0000 | .COVER PLATE | 1-153, 1-155 |
| 2651789-0000 | .ROLLER | 1-157, 1-159 |
| 2651790-0000 | .ROLLER | 1-157, 1-159 |
| 2651987-0000 | .LID | 3-29 |
| 2651988-0000 | .GASKET | 3-29 |
| 2651989-0000 | .LID | 3-29 |
| 2651990-0100 | .LINK SYSTEM GASKET | 3-3 |
| 2652891-0000 | .TOOTHED PULLEY | 4-29, 4-31 |
| 2653607-0000 | .SCREW | 1-53 |
| 2656655-0000 | .WHEEL | 5-161 |
| 2656672-0000 | .SPROCKET | 5-167 |
| 2656673-0000 | .SPACER | 5-167 |
| 2656899-0000 | .BRACKET | 2-103 |
| 2656910-0300 | .HEAD SPACE BY INJECTION | 1-195 |
| 2657863-0000 | .PIPE CONNECTION | 1-209 |
| 2657864-0000 | .PIPE CONNECTION | 1-209 |
| 2657865-0000 | .PIPE CONNECTION | 1-209 |
| 2657873-0200 | .LONGITUDINAL SEALING | 1-87 |
| 2657923-0000 | .COUNTER ROLLER | 1-93, 1-95, 1-97, 1-99, 1-101, 1-103, 1-105, 1-107, 1-109 |
| 2657925-0000 | .ROLLER | 1-111 |
| 2658077-0000 | .SHAFT | 1-53 |
| 2658238-0000 | .FLAP | 5-77 |
| 2658239-0000 | .BOTTOM | 5-53, 5-55, 5-57, 5-59, 5-61 |
| 2658240-0000 | .BOTTOM | 5-53, 5-55, 5-57, 5-59, 5-61 |
| 2658241-0000 | .SLIDE | 5-73, 5-75, 5-77 |
| 2658242-0000 | .FLAP | 5-73, 5-75 |
| 2658247-0000 | .WASHER | 5-147 |
| 2658249-0000 | .SHIM | 5-139, 5-141, 5-143, 9-19, 9-21, 9-23, 9-25 |
| 2659361-0000 | .BRACKET | 1-111 |
| 2659364-0000 | .FORK | 1-197, 1-199 |
| 2660390-0000 | .VOLUME SHIM | 9-19, 9-21, 9-23, 9-25 |
| 2660393-0000 | .VOLUME SHIM | 9-19, 9-21, 9-23, 9-25 |
| 2660841-0000 | .PUSHER | 5-139, 5-141, 5-143 |
| 2660843-0000 | .TEMPLATE | 9-39 |
| 2661153-0000 | .SPACER | 5-5, 5-7, 5-9 |
| 2661429-0000 | .PUSHER | 5-139, 5-141, 5-143 |
| 2662142-0000 | .SPRING | 5-139, 5-141, 5-143 |
| 2662639-0000 | .ROLLER | 1-299, 1-301 |
| 2663370-0000 | .SUPPORT | 5-89, 5-91 |
| 2663373-0000 | .BOTTOM | 5-53, 5-55, 5-57, 5-59, 5-61 |
| 2663377-0000 | .INDUCTOR | 4-65, 4-67, 9-19, 9-21, 9-23, 9-25 |
| 2663378-0000 | .INDUCTOR | 4-57, 4-59, 9-19, 9-21, 9-23, 9-25 |
| 2664761-0000 | .KNIFE | 9-19, 9-21, 9-23, 9-25 |
| 2665129-0000 | .GABLE PLATE | 6-65 |

| Part No | Description | Page No |
|---|---|---|
| 2665131-0000 | .LOCKING ARM | 6-69, 6-71 |
| 2665132-0000 | .LOCKING ARM | 6-69, 6-71 |
| 2665197-0000 | .BRACKET | 5-29 |
| 2665199-0000 | .SLIDE | 5-29 |
| 2665200-0000 | .GUIDE | 5-31, 5-33, 5-35, 5-37 |
| 2665201-0000 | .GUIDE | 5-31, 5-33, 5-35, 5-37 |
| 2665204-0000 | .CRADLE | 5-19 |
| 2665205-0000 | .PLATE | 5-19 |
| 2665206-0000 | .PLATE | 5-19 |
| 2665720-0000 | .SUPPORT | 4-45, 4-47 |
| 2665721-0000 | .SHAFT | 4-45, 4-47 |
| 2665722-0000 | .SUPPORT | 4-45, 4-47 |
| 2672745-0000 | .VOLUME SHIM | 9-19, 9-21, 9-23, 9-25 |
| 2672972-0000 | .ELECTRODE | 1-209 |
| 2672973-0000 | .ELECTRODE | 1-209 |
| 2672974-0000 | .BUSHING | 1-209 |
| 2672975-0000 | .SPACER | 1-205 |
| 2672994-0000 | .HOOD | 1-197, 1-199 |
| 2672995-0000 | .BRACKET | 1-197, 1-199 |
| 2673023-0000 | .LOWER FORMING RING | 1-93, 1-95, 1-97, 1-99, 1-101, 1-103, 1-105, 1-107, 1-109 |
| 2675322-0000 | .SLIDE | 5-31, 5-33, 5-35, 5-37 |
| 2675323-0000 | .SLIDE | 5-31, 5-33, 5-35, 5-37 |
| 2678708-0000 | .SUPPORT | 5-29 |
| 2680417-0000 | .SUPPORT | 2-189 |
| 2681617-0000 | .GEAR WHEEL | 4-45, 4-47, 4-49 |
| 2681618-0000 | .WORM WHEEL | 4-45, 4-47 |
| 2681619-0000 | .WORM GEAR | 4-45, 4-47 |
| 2683976-0000 | .SUPPORT | 4-29, 4-31 |
| 2685246-0000 | .PIPE | 1-185 |
| 2685283-0000 | .HEAT EXCHANGER | 1-189 |
| 2685284-0000 | .FILTER | 1-193 |
| 2685285-0000 | .BRACKET | 1-197, 1-199 |
| 2685303-0000 | .SHUTTER | 1-55 |
| 2685314-0000 | .COIL | 1-205 |
| 2685339-0000 | .GASKET | 1-205 |
| 2685340-0000 | .COVER | 1-205 |
| 2685341-0000 | .COVER | 1-205 |
| 2685342-0000 | .HEATING ELEMENT | 1-205 |
| 2685346-0000 | .PIPE | 1-205 |
| 2685350-0000 | .THREADED ROD | 1-193 |
| 2685386-0000 | .FLANGE | 1-13, 1-15 |
| 2685387-0000 | .FLANGE | 1-13, 1-15 |
| 2686316-0000 | .FLANGE | 3-27 |
| 2686317-0000 | .SUPPORT | 2-73 |
| 2691183-0000 | .FLANGED SHAFT | 1-53 |
| 2691184-0000 | .SHAFT | 1-53 |
| 2691421-0000 | .SHIM | 4-45, 4-47 |
| 2691499-0000 | .CONTAINER | 1-193 |
| 2691501-0000 | .UPPER SECTION | 1-193 |
| 2693197-0000 | .INSERT | 5-65, 5-67, 5-69, 5-71 |
| 2693200-0000 | .SCREW | 5-63 |
| 2694095-0000 | .BRACKET | 4-73, 4-75 |
| 2694714-0000 | .GUIDE | 1-161, 1-163 |
| 2694715-0000 | .SUPPORT | 1-161, 1-163 |
| 2694716-0000 | .PLATE | 1-161, 1-163 |
| 2695994-0000 | .ATTACHMENT PIPE | 1-243 |
| 2695997-0000 | .PIPE | 1-179 |
| 2695998-0000 | .PIPE | 1-179 |
| 2695999-0000 | .PIPE | 1-325 |
| 2696000-0000 | .PIPE | 1-325 |
| 2696001-0000 | .PIPE | 1-325 |
| 2696005-0000 | .PIPE | 1-257 |
| 2696025-0000 | .PIPE | 1-243 |
| 2696029-0000 | .CONNECTING PIPE | 1-261 |
| 2696034-0000 | .HOLDER | 1-289, 1-291 |
| 2696036-0000 | .HOLDER | 1-289, 1-291 |
| 2696037-0000 | .PIPE | 1-243 |
| 2696104-0000 | .BRACKET | 1-289, 1-291 |
| 2696106-0000 | .BRACKET | 1-233 |
| 2696108-0000 | .PIPE | 1-233 |
| 2696109-0000 | .PLUG | 1-233 |
| 2696111-0000 | .VALVE BODY | 1-233 |
| 2696112-0000 | .VALVE BODY | 1-233 |
| 2696118-0200 | .HEATER | 1-203 |
| 2696119-0000 | .PIPE | 1-205 |
| 2696120-0200 | .PNEUMATIC PANEL | 1-203 |
| 2696411-0000 | .SPACER | 1-121, 1-123 |
| 2696412-0000 | .SPACER | 1-121, 1-123 |
| 2696851-0000 | .RETAINING RING | 5-89, 5-91 |
| 2696978-0100 | .TERMINAL BLOCK | 1-345 |
| 2696979-0000 | .RAIL | 1-347, 2-59 |
| 2697704-0000 | .LEVEL PROBE | 2-101 |
| 2698300-0000 | .PLATE | 5-139, 5-141, 5-143 |
| 2698319-0000 | .BLOCK | 5-147 |

| Part No | Description | Page No |
|---|---|---|
| 2698628-0000 | .RULER | 4-7 |
| 2699375-0000 | .HOLDER | 5-169, 5-173 |
| 2699376-0000 | .CLAMP | 5-169, 5-173 |
| 2699377-0000 | .BRACKET | 5-169, 5-173 |
| 2699436-0000 | .SPACER | 5-171 |
| 2699437-0000 | .RAIL HOLDER | 5-171 |
| 2699584-0830 | .SLIDING STRIP | 5-161 |
| 2700059-0200 | .COMPRESSOR UNIT | 1-167, 1-169, 1-171 |
| 2700546-0000 | .FRONT RING | 1-93, 1-95, 1-97, 1-99, 1-101, 1-103, 1-105, 1-107, 1-109 |
| 2701232-0100 | .TERMINAL BLOCK | 2-95 |
| 2701319-0000 | .GUIDE PIN | 7-21 |
| 2701350-0000 | .HANDLE | 1-349, 1-351 |
| 2701352-0100 | .TERMINAL BLOCK | 2-143 |
| 2701355-0100 | .TERMINAL BLOCK | 2-139 |
| 2701359-0100 | .BLOCK | 6-81, 6-83 |
| 2701881-0000 | .BRACKET | 7-47 |
| 2702944-0100 | .TERMINAL BLOCK | 2-55, 2-57 |
| 2702947-0000 | .HOLDER | 2-143 |
| 2702949-0000 | .BRACKET | 6-81, 6-83 |
| 2705896-0000 | .FLANGE | 5-41 |
| 2708542-0100 | .PNEUMATIC UNIT | 6-97 |
| 2708543-0000 | .PLATE | 6-97 |
| 2708544-0100 | .PANEL | 6-91 |
| 2709210-0000 | .FLANGE | 1-29, 1-31, 1-33, 1-35 |
| 2709212-0000 | .LID | 1-29, 1-31, 1-33, 1-35 |
| 2709219-0000 | .COVER | 1-205 |
| 2709220-0000 | .SPACER | 1-205 |
| 2709224-0000 | .WHEEL | 1-271, 1-273 |
| 2709234-0000 | .FILTER | 1-185 |
| 2709262-0000 | .SHAFT | 1-79 |
| 2709274-0000 | .FLANGE | 1-75, 1-77 |
| 2709275-0000 | .GASKET | 1-75, 1-77 |
| 2709276-0000 | .GASKET | 1-75, 1-77 |
| 2709281-0000 | .SHIM | 1-75, 1-77 |
| 2709284-0000 | .PILLAR | 1-75, 1-77 |
| 2710560-0000 | .COVER | 1-341 |
| 2710561-0000 | .COVERING PANEL | 1-339 |
| 2710563-0000 | .BRACKET | 1-341 |
| 2710564-0000 | .DOOR | 1-339 |
| 2711240-0000 | .BRACKET | 1-341 |
| 2711242-0000 | .BRACKET | 1-341 |
| 2711246-0000 | .COVERING PANEL | 1-339 |
| 2711248-0000 | .DOOR | 1-339 |
| 2711251-0000 | .HINGE | 1-239 |
| 2711255-0000 | .COVERING PANEL | 1-339 |
| 2711257-0000 | .BRACKET | 1-341 |
| 2711258-0000 | .FRAME | 1-341 |
| 2711259-0000 | .FRAME | 1-341 |
| 2711261-0000 | .BRACKET | 1-339 |
| 2711262-0000 | .BRACKET | 1-339 |
| 2711263-0000 | .BRACKET | 1-339 |
| 2711266-0000 | .BRACKET | 1-339 |
| 2711267-0000 | .BRACKET | 1-339 |
| 2711289-0000 | .SUPPORT | 4-49 |
| 2712433-0000 | .COVERING PANEL | 1-339 |
| 2712434-0000 | .FRAME | 1-341 |
| 2715295-0000 | .BRACKET | 4-73, 4-75 |
| 2715297-0000 | .BOW CLAMP | 4-9 |
| 2715298-0000 | .BRACKET | 2-103 |
| 2715299-0000 | .BRACKET | 2-103 |
| 2715300-0000 | .BRACKET | 4-7 |
| 2715301-0000 | .SUPPORT | 4-7 |
| 2715553-0000 | .BENDING ROLLER | 1-61 |
| 2715556-0300 | .BATH | 1-263 |
| 2715567-0000 | .BRACKET | 1-111 |
| 2715569-0000 | .BRACKET | 1-197, 1-199 |
| 2715570-0000 | .ROLLER | 1-111 |
| 2715601-0000 | .SHAFT | 1-79 |
| 2715602-0000 | .PIPE | 1-233 |
| 2715618-0000 | .LEVER | 1-79 |
| 2715649-0003 | .SPACER | 1-111 |
| 2715649-0004 | .SPACER | 1-111 |
| 2715649-0005 | .SPACER | 1-111 |
| 2715650-0002 | .SCREW | 1-111 |
| 2715650-0003 | .SCREW | 1-111 |
| 2715650-0006 | .SCREW | 1-111 |
| 2715650-0009 | .SCREW | 1-111 |
| 2715652-0000 | .FORK | 1-197, 1-199 |
| 2716443-0000 | .ROLLER | 1-133 |
| 2716534-0000 | .PUSHER | 5-139, 5-141, 5-143 |
| 2716539-0000 | .ROLLER | 1-115, 1-117, 1-119 |
| 2716540-0000 | .ROLLER | 1-115, 1-117, 1-119 |
| 2716547-0000 | .ROLLER | 1-143, 1-145, 1-147 |
| 2716548-0000 | .ROLLER | 1-143, 1-145, 1-147 |

| Part No | Description | Page No |
|---|---|---|
| 2720852-0000 | .PIN | 1-187 |
| 2721423-0000 | .FORMING RING | 1-93, 1-95, 1-97, 1-99, 1-101, 1-103, 1-105, 1-107, 1-109 |
| 2721434-0000 | .SHAFT | 1-305, 1-307 |
| 2724929-0000 | .KNOB | 4-73, 4-75 |
| 2725145-0000 | .DIAPHRAGM | 1-235, 9-19, 9-21, 9-23, 9-25 |
| 2725216-0000 | .SHUTTER | 1-235 |
| 2725313-0000 | .SHAFT | 1-235 |
| 2725526-0000 | .SCREW | 1-161, 1-163 |
| 2725564-0000 | .WHEEL | 1-61 |
| 2726295-0000 | .COVER STRIP | 2-223 |
| 2726296-0000 | .COVER STRIP | 2-221 |
| 2726570-0100 | .TUBE HOLDER | 1-229, 1-231 |
| 2727631-0000 | .ACTIVATOR | 5-139, 5-141, 5-143 |
| 2728139-0000 | .COVER STRIP | 2-223 |
| 2728140-0000 | .COVER STRIP | 2-221 |
| 2728238-0000 | .VALVE BODY | 1-235 |
| 2730770-0000 | .SPACER | 3-27 |
| 2731209-0000 | .FRAME | 7-41, 7-43 |
| 2731210-0000 | .SLEEVE | 7-59 |
| 2731212-0000 | .RING | 7-59 |
| 2731216-0000 | .BENDING ROLLER | 7-127 |
| 2731217-0100 | .PAPER REEL HOLDER | 7-3 |
| 2731219-0000 | .BRACKET | 7-129 |
| 2731220-0100 | .MATERIAL HOLDER | 7-3 |
| 2731221-0000 | .SHAFT | 7-127 |
| 2731222-0100 | .BOBBIN BRAKE | 7-3 |
| 2731227-0000 | .SHAFT | 7-173 |
| 2731230-0000 | .WHEEL | 7-173 |
| 2731231-0100 | .BRACKET | 7-127 |
| 2731232-0000 | .BRACKET | 7-129 |
| 2731233-0000 | .SLIDER | 7-7 |
| 2731236-0000 | .SHAFT | 7-7 |
| 2731237-0000 | .GUIDE ROD | 7-7 |
| 2731238-0000 | .PLATE | 7-7 |
| 2731241-0100 | .MAGAZINE | 7-5 |
| 2731242-0100 | .BRACKET | 7-5 |
| 2731243-0100 | .MAGAZINE | 7-3 |
| 2731244-0000 | .CABLE DUCT | 7-41, 7-43 |
| 2731245-0100 | .PRESSURE ROLLER | 7-13 |
| 2731246-0100 | .DRIVE UNIT | 7-13 |
| 2731247-0000 | .SPACER | 7-19 |
| 2731248-0000 | .SHAFT | 7-19 |
| 2731249-0000 | .COVER | 7-19 |
| 2731250-0000 | .COVER | 7-19 |
| 2731251-0100 | .COUNTER ROLLER | 7-13 |
| 2731252-0000 | .SHAFT | 7-17 |
| 2731253-0000 | .ROCKER ARM | 7-17 |
| 2731254-0000 | .PIN | 7-39 |
| 2731255-0000 | .PLATE | 7-13 |
| 2731256-0000 | .PLATE | 7-13 |
| 2731257-0000 | .PLATE | 7-13 |
| 2731428-0000 | .NUT | 1-93, 1-95, 1-97, 1-99, 1-101, 1-103, 1-105, 1-107, 1-109, 1-115, 1-117, 1-119, 1-121, 1-123 |
| 2731434-0000 | .LEVER | 1-79 |
| 2731503-0000 | .LOWER FORMING RING | 1-93, 1-95, 1-97, 1-99, 1-101, 1-103, 1-105, 1-107, 1-109 |
| 2733999-0000 | .HUB | 5-63 |
| 2734101-0000 | .EXTENSION PIPE | 2-33 |
| 2734102-0000 | .BUSHING | 2-33 |
| 2734104-0000 | .BUSHING | 2-33 |
| 2735063-0000 | .SHAFT | 7-27 |
| 2735064-0100 | .BENDING ROLLER | 7-13 |
| 2735065-0000 | .SHAFT | 7-13 |
| 2735067-0000 | .GUIDE | 7-13 |
| 2735068-0000 | .GUIDE | 7-13 |
| 2735069-0000 | .SUPPORT | 7-7 |
| 2735071-0000 | .WHEEL | 7-21 |
| 2735073-0000 | .BRACKET | 7-127 |
| 2735074-0000 | .BRACKET | 7-127 |
| 2735079-0000 | .BAR | 7-127 |
| 2735094-0000 | .BAR | 7-133 |
| 2735095-0100 | .BRAKE SHOE | 7-127 |
| 2735096-0000 | .SPACER | 7-133 |
| 2735097-0000 | .SPACER | 7-133 |
| 2735098-0000 | .RAIL | 7-133 |
| 2735099-0000 | .BRACKET | 7-127 |
| 2735100-0000 | .BLOCK | 7-133 |
| 2735101-0000 | .SPACER | 7-127 |
| 2735107-0000 | .SHAFT | 7-135 |
| 2735108-0000 | .FLANGE | 7-135 |
| 2736631-0000 | .UPPER FORMING RING | 1-121, 1-123 |
| 2736633-0000 | .UPPER FORMING RING | 1-121, 1-123 |
| 2736676-0000 | .UPPER FORMING RING | 1-115, 1-117, 1-119, 1-121, 1-123 |
| 2736677-0000 | .UPPER FORMING RING | 1-115, 1-117, 1-119, 1-121, 1-123 |
| 2736680-0000 | .RETAINING RING | 1-185 |
| 2736697-0000 | .UPPER FORMING RING | 1-121, 1-123 |

| Part No | Description | Page No |
|---|---|---|
| 2736705-0000 | .LOWER FORMING RING | 1-93, 1-95, 1-97, 1-99, 1-101, 1-103, 1-105, 1-107, 1-109 |
| 2736707-0000 | .PIPE | 1-205 |
| 2736719-0000 | .PLATE | 9-41 |
| 2737825-0000 | .VALVE HOUSING | 1-235 |
| 2737898-0000 | .ROLLER | 7-85 |
| 2737899-0100 | .WHEEL | 7-83, 7-97, 7-99 |
| 2737903-0000 | .SHAFT | 7-123 |
| 2737904-0000 | .SHAFT | 7-107 |
| 2737905-0000 | .LEVER | 7-123 |
| 2737906-0000 | .SHAFT | 7-107, 7-135 |
| 2737913-0100 | .BAR CODE READER | 7-107 |
| 2737914-0000 | .PIN | 7-117 |
| 2737915-0000 | .BRACKET | 7-117 |
| 2737916-0000 | .BAR | 7-113 |
| 2737917-0000 | .CABLE DUCT | 7-41, 7-43 |
| 2737919-0000 | .PLATE | 7-109 |
| 2737920-0000 | .PLATE | 7-109 |
| 2737930-0000 | .SUPPORT | 7-15 |
| 2737931-0100 | .PAPER GUIDE | 7-13, 7-119 |
| 2737933-0000 | .FASTENING PLATE | 7-109 |
| 2737935-0000 | .HOSE | 7-115 |
| 2737938-0100 | .HOSE | 7-113 |
| 2737940-0000 | .BRACKET | 7-115 |
| 2737941-0100 | .SPLICING DEVICE | 7-3 |
| 2737942-0000 | .PLATE | 7-107 |
| 2737943-0000 | .PLATE | 7-107 |
| 2737944-0000 | .BRACKET | 7-107 |
| 2740795-0000 | .FLANGE BUSHING | 1-115, 1-117, 1-119 |
| 2741000-0000 | .PLATE | 7-119 |
| 2741001-0000 | .SHAFT | 7-119 |
| 2741002-0000 | .PLATE | 7-107 |
| 2741003-0100 | .PRESSURE JAW | 7-107 |
| 2741004-0000 | .SEALING PLATE | 7-113 |
| 2741005-0000 | .SEALING PLATE | 7-113 |
| 2741006-0000 | .PLATE | 7-113 |
| 2741007-0000 | .PLATE | 7-113 |
| 2741008-0000 | .PRESSURE RAIL | 7-117 |
| 2741009-0000 | .PLATE | 7-111 |
| 2741010-0000 | .PLATE | 7-111 |
| 2741011-0000 | .PLATE | 7-113 |
| 2741012-0000 | .PLATE | 7-113 |
| 2741013-0000 | .PLATE | 7-117 |
| 2741014-0000 | .PLATE | 7-113 |
| 2741019-0000 | .PLATE | 7-117 |
| 2741020-0000 | .PAPER GUIDE | 7-107 |
| 2741021-0100 | .COUNTER ROLLER | 7-123 |
| 2741022-0000 | .PIN | 7-125 |
| 2741024-0000 | .SUPPORT | 7-41, 7-43 |
| 2741026-0100 | .MACHINE BODY | 7-3 |
| 2741029-0100 | .BRACKET | 7-13 |
| 2741030-0000 | .PLATE | 7-29 |
| 2741031-0000 | .PLATE | 7-29 |
| 2741047-0000 | .BRACKET | 7-41, 7-43 |
| 2743319-0000 | .SUPPORT | 1-339 |
| 2743320-0000 | .SUPPORT | 1-339 |
| 2744234-0000 | .SPACER | 2-33 |
| 2745325-0000 | .ECCENTRIC | 1-229, 1-231 |
| 2745328-0000 | .PIPE | 1-229, 1-231, 9-19, 9-21, 9-23, 9-25 |
| 2745332-0000 | .PIPE | 1-229, 1-231 |
| 2745337-0100 | .BENDING ROLLER | 1-5, 1-7, 1-9 |
| 2746315-0000 | .PLATE | 7-41, 7-43 |
| 2746328-0100 | .COVERING PANEL | 7-3 |
| 2746336-0000 | .DOOR | 7-151 |
| 2746337-0100 | .DOOR | 7-149 |
| 2746338-0000 | .DOOR | 7-155 |
| 2746339-0100 | .DOOR | 7-149 |
| 2746340-0000 | .DOOR | 7-159 |
| 2746341-0100 | .DOOR | 7-149 |
| 2746342-0000 | .DOOR | 7-161 |
| 2746343-0100 | .DOOR | 7-149 |
| 2746344-0000 | .DOOR | 7-163 |
| 2746345-0100 | .DOOR | 7-149 |
| 2746346-0000 | .DOOR | 7-165 |
| 2746347-0100 | .DOOR | 7-149 |
| 2746348-0000 | .DOOR | 7-167 |
| 2746349-0100 | .DOOR | 7-149 |
| 2746350-0000 | .DOOR | 7-169 |
| 2746351-0100 | .DOOR | 7-149 |
| 2746352-0100 | .CONTROL PANEL | 7-151 |
| 2746353-0000 | .LOCKING ARM | 7-151 |
| 2746354-0000 | .BRACKET | 7-151 |
| 2746355-0000 | .BRACKET | 7-151, 7-155 |
| 2746356-0000 | .PUSH BUTTON | 7-157 |
| 2746357-0100 | .CONTROL PANEL | 7-155 |

| Part No | Description | Page No |
|---|---|---|
| 2746358-0000 | .BRACKET | 7-155 |
| 2746359-0000 | .SPACER | 7-159, 7-163, 7-167, 7-169 |
| 2746360-0000 | .SEALING STRIP | 7-159, 7-161, 7-163, 7-165, 7-167, 7-169 |
| 2746361-0000 | .GLASS PANE | 7-167, 7-169 |
| 2746362-0000 | .BRACKET | 7-41, 7-43 |
| 2746712-0000 | .CHECKER PLATE | 2-157 |
| 2746721-0000 | .COVER | 2-207 |
| 2747630-0000 | .BRACKET | 8-45 |
| 2748698-0000 | .ADJUSTING SCREW | 7-87 |
| 2748699-0000 | .KNOB | 7-87 |
| 2748701-0000 | .BRACKET | 8-45 |
| 2748702-0000 | .BRACKET | 8-45 |
| 2751466-0000 | .SHAFT | 1-79 |
| 2751478-0000 | .ROLLER | 1-115, 1-117, 1-119 |
| 2751479-0000 | .ROLLER | 1-115, 1-117, 1-119 |
| 2751481-0000 | .ROLLER | 1-115, 1-117, 1-119 |
| 2751482-0000 | .ROLLER | 1-115, 1-117, 1-119 |
| 2751483-0000 | .ROLLER | 1-115, 1-117, 1-119 |
| 2751509-0000 | .FLANGE | 1-37 |
| 2751519-0100 | .MOTOR UNIT | 5-3 |
| 2751569-0000 | .PLATE | 7-135 |
| 2751571-0100 | .SIDE FEEDER | 7-3 |
| 2751573-0000 | .BAR | 7-135 |
| 2751574-0000 | .SPACER | 7-135 |
| 2751575-0000 | .SHAFT | 7-135 |
| 2751576-0000 | .PULLEY | 7-135 |
| 2751579-0000 | .PLATE | 7-135 |
| 2751585-0000 | .TIMING BELT | 7-135 |
| 2751586-0000 | .SPACER | 7-169 |
| 2751590-0000 | .BRACKET | 7-135 |
| 2751591-0000 | .PLATE | 7-135 |
| 2751592-0000 | .PLATE | 7-135 |
| 2751593-0000 | .PLATE | 7-135 |
| 2751594-0000 | .PLATE | 7-135 |
| 2751595-0000 | .PLATE | 7-135 |
| 2751596-0000 | .PLATE | 7-135 |
| 2751597-0000 | .PLATE | 7-135 |
| 2751598-0000 | .COVER | 7-135 |
| 2751788-0000 | .CRADLE | 5-19 |
| 2755071-0000 | .UPPER SECTION | 1-185 |
| 2755496-0000 | .BAR | 7-135 |
| 2755503-0000 | .RULER | 7-131 |
| 2755506-0000 | .PLATE | 7-41, 7-43 |
| 2755512-0000 | .BRACKET | 7-151, 7-163, 7-167 |
| 2755516-0000 | .PLATE | 7-41, 7-43 |
| 2755520-0000 | .PUSH BUTTON | 7-153 |
| 2755525-0000 | .PLATE | 7-123 |
| 2755538-0000 | .BRACKET | 7-135 |
| 2758064-0100 | .SQUEE-GEE ROLLER | 1-5, 1-7, 1-9 |
| 2758079-0000 | .BLOCK | 1-23, 1-25 |
| 2758080-0000 | .BLOCK | 1-23, 1-25 |
| 2758082-0000 | .LEVER | 1-53 |
| 2758083-0000 | .SUPPORT | 1-53 |
| 2758084-0000 | .ROLLER | 1-115, 1-117, 1-119 |
| 2758085-0000 | .ROLLER | 1-115, 1-117, 1-119 |
| 2758236-0000 | .BRACKET | 2-161, 2-163 |
| 2758728-0000 | .HANDLE | 1-177 |
| 2758729-0000 | .CLAMPING LINK | 1-177 |
| 2758730-0000 | .HUB | 1-177 |
| 2758731-0000 | .ADJUSTING SCREW | 1-177 |
| 2758732-0000 | .AIR NOZZLE | 1-177 |
| 2758733-0001 | .AIR PIPE | 1-177 |
| 2758733-0002 | .AIR PIPE | 1-177 |
| 2758733-0003 | .AIR PIPE | 1-177 |
| 2758734-0000 | .HUB | 1-177 |
| 2758737-0000 | .SEAL | 1-177 |
| 2758738-0001 | .SCREW | 1-177 |
| 2758738-0002 | .SCREW | 1-177 |
| 2758738-0003 | .SCREW | 1-177 |
| 2758739-0000 | .PLUG | 1-177 |
| 2758740-0001 | .SPACER | 1-177 |
| 2758740-0002 | .SPACER | 1-177 |
| 2759019-0000 | .PLATE | 4-89, 4-91 |
| 2760089-0000 | .STOP | 5-11, 5-13, 5-15 |
| 2760120-0000 | .PLATE | 5-11, 5-13, 5-15 |
| 2760121-0000 | .BAR | 5-11, 5-13, 5-15 |
| 2760126-0000 | .SPACER | 5-11, 5-13, 5-15 |
| 2760936-0000 | .ANGLE BRACKET | 7-7 |
| 2760939-0100 | .BEARING ROLLER | 7-99 |
| 2760941-0000 | .ROLLER | 7-103 |
| 2760942-0100 | .PULLEY | 7-99 |
| 2760950-0000 | .BRACKET | 7-7 |
| 2760951-0000 | .BRACKET | 7-7 |
| 2760964-0000 | .RUBBER SEAL | 2-233 |

| Part No | Description | Page No |
|---|---|---|
| 2761952-0000 | .PLATE | 5-177 |
| 2761956-0000 | .DRIVE PULLEY | 5-183 |
| 2761957-0000 | .SPACER | 5-183 |
| 2761962-0000 | .SPACER | 5-177 |
| 2761998-0000 | .COUPLING | 5-183 |
| 2762008-0100 | .DRIVE | 5-177 |
| 2763627-0000 | .BRACKET | 9-7, 9-9, 9-13, 9-15 |
| 2763628-0000 | .BRACKET | 9-7, 9-9, 9-13, 9-15 |
| 2763629-0000 | .RAILING | 9-7, 9-9, 9-13, 9-15 |
| 2763632-0000 | .PLATE | 9-7, 9-9, 9-13, 9-15 |
| 2763633-0000 | .PLATE | 9-7, 9-9, 9-13, 9-15 |
| 2763956-0000 | .LEVER | 1-53 |
| 2763957-0000 | .SHAFT | 1-53 |
| 2763959-0000 | .SHAFT | 1-177 |
| 2763962-0000 | .BRACKET | 1-277 |
| 2763963-0000 | .SLEEVE | 1-177 |
| 2763966-0000 | .PIPE | 1-277 |
| 2763967-0000 | .PIPE | 1-277 |
| 2763968-0000 | .SPACER | 1-277 |
| 2763969-0000 | .REDUCER | 1-277 |
| 2763973-0000 | .TOUCH GUARD | 1-229, 1-231 |
| 2763974-0000 | .TOUCH GUARD | 1-229, 1-231 |
| 2763994-0000 | .COVER | 1-233 |
| 2763996-0000 | .BENDING ROLLER | 1-13, 1-15 |
| 2763999-0100 | .BENDING ROLLER | 1-5, 1-7, 1-9 |
| 2764007-0000 | .SPACER | 1-177 |
| 2764009-0000 | .BRACKET | 1-111 |
| 2764013-0000 | .UPPER FORMING RING | 1-121, 1-123 |
| 2764014-0000 | .UPPER FORMING RING | 1-115, 1-117, 1-119, 1-121, 1-123 |
| 2764015-0000 | .UPPER FORMING RING | 1-121, 1-123 |
| 2764019-0000 | .UPPER FORMING RING | 1-121, 1-123 |
| 2764022-0000 | .UPPER FORMING RING | 1-115, 1-117, 1-119, 1-121, 1-123 |
| 2764023-0000 | .LOWER FORMING RING | 1-93, 1-95, 1-97, 1-99, 1-101, 1-103, 1-105, 1-107, 1-109 |
| 2764025-0000 | .LOWER FORMING RING | 1-93, 1-95, 1-97, 1-99, 1-101, 1-103, 1-105, 1-107, 1-109 |
| 2764026-0000 | .LOWER FORMING RING | 1-93, 1-95, 1-97, 1-99, 1-101, 1-103, 1-105, 1-107, 1-109 |
| 2764027-0000 | .LOWER FORMING RING | 1-93, 1-95, 1-97, 1-99, 1-101, 1-103, 1-105, 1-107, 1-109 |
| 2764029-0000 | .LOWER FORMING RING | 1-93, 1-95, 1-97, 1-99, 1-101, 1-103, 1-105, 1-107, 1-109 |
| 2764032-0000 | .SHAFT | 1-93, 1-95, 1-97, 1-99, 1-101, 1-103, 1-105, 1-107, 1-109 |
| 2764033-0000 | .SHAFT | 1-93, 1-95, 1-97, 1-99, 1-101, 1-103, 1-105, 1-107, 1-109 |
| 2764034-0000 | .SHAFT | 1-115, 1-117, 1-119, 1-121, 1-123 |
| 2764035-0000 | .SHAFT | 1-115, 1-117, 1-119, 1-121, 1-123 |
| 2764036-0000 | .KNOB | 1-93, 1-95, 1-97, 1-99, 1-101, 1-103, 1-105, 1-107, 1-109, 1-115, 1-117, 1-119, 1-121, 1-123 |
| 2764404-0000 | .SPACER | 2-183, 2-185 |
| 2764890-0100 | .HYDRAULIC UNIT | 2-71 |
| 2764891-0000 | .TANK | 2-75, 2-77 |
| 2764892-0000 | .LID | 2-75, 2-77 |
| 2764894-0000 | .PIPE | 2-75, 2-77 |
| 2764895-0000 | .PIPE | 2-75, 2-77 |
| 2764896-0000 | .PIPE | 2-75, 2-77 |
| 2764897-0000 | .PIPE | 2-75, 2-77 |
| 2764898-0000 | .PIPE | 2-75, 2-77 |
| 2764899-0000 | .PIPE | 2-75, 2-77 |
| 2764900-0000 | .PIPE | 2-75, 2-77 |
| 2765642-0000 | .PIN | 7-13 |
| 2765643-0000 | .PLATE | 7-13 |
| 2765646-0000 | .SHAFT | 7-99 |
| 2765647-0000 | .SHAFT | 7-101 |
| 2765649-0100 | .HEATING DEVICE | 7-89 |
| 2765650-0000 | .SHAFT | 7-91 |
| 2765651-0000 | .SHAFT | 7-91 |
| 2765652-0000 | .FINGER | 7-93 |
| 2765653-0100 | .CUTTING TABLE | 7-89 |
| 2765654-0000 | .BRACKET | 7-93 |
| 2765657-0000 | .PLATE | 7-89 |
| 2765667-0100 | .STRIP APPLICATOR | 7-3 |
| 2765668-0100 | .INDUCTOR | 7-61 |
| 2765669-0000 | .BRACKET | 7-65 |
| 2765671-0100 | .INDUCTOR | 7-65 |
| 2765672-0000 | .BRACKET | 7-65 |
| 2765676-0000 | .BRACKET | 7-65 |
| 2765677-0000 | .SHEET | 7-61 |
| 2765678-0000 | .PLATE | 7-13 |
| 2765679-0000 | .PIN | 7-13 |
| 2765680-0000 | .NUT | 7-61 |
| 2765687-0000 | .STEERING | 7-61 |
| 2765691-0000 | .AIR NOZZLE | 7-67, 7-69 |
| 2767107-0000 | .RAILING | 1-295 |
| 2767295-0000 | .BLOCK | 5-89, 5-91 |
| 2767296-0000 | .SPACER SCREW | 5-89, 5-91 |
| 2767297-0000 | .LOCK NUT | 5-89, 5-91 |
| 2767463-0000 | .WATER DIAGRAM | 6-87, 6-89, 9-45 |
| 2767478-0001 | .ROLLER | 4-173, 4-175, 9-19, 9-21, 9-23, 9-25 |
| 2767478-0002 | .ROLLER | 4-173, 4-175, 9-19, 9-21, 9-23, 9-25 |
| 2767478-0003 | .ROLLER | 9-19, 9-21, 9-23, 9-25 |

| Part No | Description | Page No |
|---|---|---|
| 2767478-0004 | .ROLLER | 9-19, 9-21, 9-23, 9-25 |
| 2769842-0100 | .PULL-DOWN DEVICE | 5-3 |
| 2769843-0000 | .BLOCK | 5-79, 5-81 |
| 2769844-0000 | .GRUB SCREW | 5-79, 5-81 |
| 2770115-0000 | .SUPPORT | 2-73 |
| 2771065-0100 | .ROLLER | 7-61 |
| 2771066-0000 | .SUPPORT | 7-79 |
| 2771067-0000 | .ARM | 7-71, 7-73 |
| 2771068-0100 | .PRESSURE ROLLER | 7-65 |
| 2771070-0100 | .ROLLER | 7-61 |
| 2771071-0000 | .SHAFT | 7-81 |
| 2771072-0000 | .BENDING ROLLER | 7-81 |
| 2771077-0000 | .SUPPORT | 7-81 |
| 2771080-0000 | .PULLEY | 7-75 |
| 2771081-0100 | .BENDING ROLLER | 7-61 |
| 2771083-0000 | .SHAFT | 7-65 |
| 2771084-0100 | .BENDING ROLLER | 7-41, 7-43 |
| 2771090-0000 | .SHAFT | 7-75 |
| 2771091-0100 | .PULLEY | 7-65 |
| 2771102-0100 | .CUTTING TABLE | 7-127 |
| 2771103-0000 | .TABLE | 7-131 |
| 2771104-0000 | .BRACKET | 7-131 |
| 2771107-0000 | .BRACKET | 7-131 |
| 2771108-0000 | .HOLDER | 7-131 |
| 2771109-0000 | .SHOE | 7-131 |
| 2771111-0000 | .SHOE | 7-131 |
| 2772645-0100 | .PISTON | 4-87, 4-107 |
| 2772646-0000 | .PLUNGER | 4-97 |
| 2772647-0000 | .SLEEVE | 4-97 |
| 2772648-0000 | .COVER | 4-97 |
| 2773510-0000 | .SHAFT | 4-127, 4-129, 4-131, 4-145, 4-147, 4-149, 4-153, 4-155, 4-157, 4-161, 4-163, 4-165 |
| 2773828-0000 | .HEATING ELEMENT | 5-131, 5-133 |
| 2773832-0000 | .GASKET | 5-135, 5-137, 9-19, 9-21, 9-23, 9-25 |
| 2774348-0000 | .EXTENSION SHAFT | 6-79 |
| 2774372-0000 | .TEMPLATE | 9-39 |
| 2774373-0000 | .TEMPLATE | 9-39 |
| 2774374-0000 | .TEMPLATE | 9-39 |
| 2774463-0100 | .VALVE PANEL | 2-43 |
| 2774465-0000 | .SCREW BUSHING | 5-63 |
| 2774466-0000 | .SCREW HOLDER | 5-63 |
| 2774798-0000 | .KNIFE | 4-71, 9-19, 9-21, 9-23, 9-25 |
| 2774799-0000 | .BLOCK | 4-71, 9-19, 9-21, 9-23, 9-25 |
| 2774800-0100 | .CARRIER CUTTING LEFT | 4-51 |
| 2774802-0000 | .COVER | 4-81, 4-83, 4-103, 4-105 |
| 2774803-0000 | .SEAT | 4-81, 4-83, 4-103, 4-105 |
| 2774805-0000 | .DAMPER | 4-81, 4-83, 4-103, 4-105 |
| 2774806-0000 | .TUBE | 4-37, 4-39 |
| 2774808-0000 | .ARM | 4-15 |
| 2774809-0000 | .JOINT | 4-15 |
| 2774936-0000 | .PUSHER | 5-179 |
| 2774953-0000 | .RAIL | 5-177 |
| 2775100-0200 | .INTEGRATED CLEANING UNIT | 1-247 |
| 2775101-0000 | .HOLDER | 1-345 |
| 2775114-0100 | .CARRIER PRESSURE LEFT | 4-51 |
| 2775115-0100 | .CARRIER PRESSURE RIGHT | 4-51 |
| 2775118-0100 | .CARRIER CUTTING RIGHT | 4-51 |
| 2775282-0000 | .TUBE | 4-37, 4-39 |
| 2775357-0000 | .JOINT | 4-21 |
| 2775358-0000 | .ARM | 4-21 |
| 2775586-0000 | .BRACKET | 9-7, 9-9, 9-13, 9-15 |
| 2775770-0101 | .BRACKET | 9-5 |
| 2775770-0102 | .BRACKET | 9-5 |
| 2775771-0000 | .BRACKET | 9-7, 9-9, 9-13, 9-15 |
| 2775772-0000 | .BRACKET | 9-7, 9-9, 9-13, 9-15 |
| 2776083-0000 | .BRACKET | 7-7 |
| 2776084-0000 | .SUPPORT | 7-35 |
| 2776086-0100 | .PAPER GUIDE | 7-13, 7-119 |
| 2776087-0000 | .PIN | 7-15, 7-35 |
| 2776093-0000 | .BRACKET | 7-41, 7-43 |
| 2776096-0000 | .PLATE | 7-67, 7-69 |
| 2776097-0000 | .SPACER | 7-67, 7-69 |
| 2776098-0000 | .SPACER | 7-77 |
| 2776106-0100 | .COVER | 7-41, 7-43 |
| 2776107-0000 | .PLATE | 7-49 |
| 2776123-0000 | .SHAFT | 7-107 |
| 2776128-0000 | .BENDING ROLLER | 7-107 |
| 2776131-0000 | .PIN | 7-123 |
| 2776368-0100 | .VALVE GROUP | 2-49 |
| 2776369-0000 | .PNEUMATIC DIAGRAM | 9-45 |
| 2776370-0000 | .PANEL | 2-49 |
| 2777968-0000 | .SPACER | 1-207 |
| 2777982-0100 | .FRAME HOUSING | 1-5, 1-7, 1-9 |
| 2777986-0000 | .SUPPORT | 1-237 |
| 2777988-0000 | .FRAME UPPER | 1-289, 1-291 |


Machine Type Group Description Page No

| Part No | Description | Page No |
|---|---|---|
| 2778524-0000 | .PNEUMATIC DIAGRAM | 6-93, 9-45 |
| 2778525-0100 | .VALVE PANEL | 6-93 |
| 2778526-0100 | .VALVE PANEL | 6-91 |
| 2778562-0000 | .BOTTOM SECTION | 1-271, 1-273 |
| 2778767-0000 | .PLATE | 6-93 |
| 2778960-0000 | .BUSHING | 4-115, 4-117, 4-135, 4-137 |
| 2779738-0000 | .GUIDE | 5-31, 5-33, 5-35, 5-37 |
| 2779739-0000 | .GUIDE | 5-31, 5-33, 5-35, 5-37 |
| 2780203-0200 | .CONNECTION BOX | 1-263 |
| 2780205-0200 | .TERMINAL BLOCK | 1-279, 1-281 |
| 2780633-0000 | .SUPPORT | 1-279, 1-281 |
| 2780751-0000 | .ECCENTRIC | 4-169, 4-171 |
| 2780752-0000 | .ECCENTRIC | 4-169, 4-171 |
| 2780753-0000 | .PIVOT PIN | 4-169, 4-171 |
| 2783010-0200 | .CABLE DUCT | 1-327 |
| 2783015-0000 | .PIPE | 1-179 |
| 2783030-0000 | .PIPE | 1-183 |
| 2783046-0000 | .PLUG | 1-175 |
| 2783047-0100 | .STERILE AIR PIPE | 1-167, 1-169, 1-171 |
| 2783051-0000 | .FRAME | 1-73 |
| 2783052-0000 | .FRAME | 1-71 |
| 2783060-0000 | .WINDOW FRAME | 1-21 |
| 2783088-0100 | .STERILE AIR PIPE | 1-167, 1-169, 1-171 |
| 2783089-0000 | .SHAFT | 1-63 |
| 2783091-0000 | .ROD | 1-63 |
| 2783095-0000 | .PIPE | 1-175, 1-177 |
| 2783096-0000 | .BASE PLATE | 1-289, 1-291 |
| 2783098-0000 | .FRAME | 1-289, 1-291 |
| 2783102-0100 | .PLATE | 1-5, 1-7, 1-9 |
| 2784290-0000 | .PLATE | 4-89, 4-91 |
| 2785231-0100 | .CONNECTION BOX | 6-3, 6-5 |
| 2785232-0000 | .CONNECTION BOX | 6-81, 6-83 |
| 2785233-0100 | .CONNECTION BOX | 2-133 |
| 2785234-0000 | .CONNECTION BOX | 2-143 |
| 2785235-0100 | .CONNECTION BOX | 2-133 |
| 2785236-0000 | .CONNECTION BOX | 1-345, 2-55, 2-57, 2-95, 2-139 |
| 2785237-0000 | .SUPPORT | 2-139 |
| 2785238-0100 | .CONNECTION BOX | 1-3 |
| 2785239-0100 | .CONNECTION BOX | 2-53 |
| 2785243-0100 | .CONNECTION BOX | 2-87 |
| 2785246-0100 | .CONNECTION BOX | 1-3 |
| 2785247-0000 | .CONNECTION BOX | 1-349, 1-351 |
| 2785248-0000 | .MOUNTING PLATE | 1-349, 1-351 |
| 2785249-0100 | .TERMINAL BLOCK | 1-349, 1-351 |
| 2785250-0100 | .TERMINAL BLOCK | 1-349, 1-351 |
| 2786059-0000 | .VOLUME BULGE | 4-115, 4-117, 4-135, 4-137 |
| 2786750-0200 | .DRAINING | 2-3 |
| 2786751-0000 | .PIPE | 2-243 |
| 2786752-0000 | .PIPE | 2-243 |
| 2786754-0000 | .BRACKET | 2-243 |
| 2787568-0000 | .HOOD | 1-197, 1-199 |
| 2788602-0000 | .BENDING ROLLER | 1-13, 1-15 |
| 2788618-0000 | .CLAMP | 1-237 |
| 2788619-0000 | .CLAMP | 1-237 |
| 2788620-0000 | .CLAMP | 1-229, 1-231 |
| 2788621-0000 | .CLAMP | 1-229, 1-231 |
| 2788624-0000 | .BENDING ROLLER | 1-271, 1-273 |
| 2788625-0000 | .SHAFT | 1-39, 1-41 |
| 2788626-0000 | .SHAFT | 1-39, 1-41 |
| 2788628-0000 | .PLATE | 1-39, 1-41 |
| 2788631-0000 | .PLATE | 1-39, 1-41 |
| 2788927-0000 | .HOLDER | 1-345 |
| 2789196-0000 | .FLANGE | 5-183 |
| 2789197-0000 | .SHAFT | 5-183 |
| 2789208-0000 | .PULLEY | 5-177 |
| 2790041-0100 | .FASTENING PLATE | 2-129 |
| 2790042-0000 | .PLATE | 2-131 |
| 2790687-0000 | .SUPPORT | 2-55, 2-57, 2-95 |
| 2790818-0000 | .VOLUME SHIM | 4-115, 4-117, 4-135, 4-137 |
| 2790900-0200 | .BLOCK | 1-279, 1-281 |
| 2790902-0000 | .PIPE | 1-269 |
| 2790903-0000 | .PIPE | 1-269 |
| 2790904-0000 | .PIPE | 1-193 |
| 2790905-0000 | .PIPE | 1-193 |
| 2790917-0000 | .AIR NOZZLE | 7-115 |
| 2790920-0100 | .PNEUMATIC PANEL | 7-3 |
| 2790922-0000 | .PROTECTION | 7-121 |
| 2790924-0000 | .SHAFT | 7-17 |
| 2790925-0000 | .SLEEVE | 7-59 |
| 2790927-0000 | .BRACKET | 7-149 |
| 2790929-0000 | .SHAFT | 7-59 |
| 2790930-0000 | .BRACKET | 7-149 |
| 2790931-0000 | .LOCKING ARM | 7-151 |
| 2790932-0000 | .LOCKING ARM | 7-159, 7-163, 7-167, 7-169 |

| Part No | Description | Page No |
|---|---|---|
| 2790933-0000 | .BRACKET | 7-155 |
| 2790934-0000 | .WASHER | 7-159, 7-169 |
| 2790936-0000 | .PLATE | 7-119 |
| 2790938-0000 | .SPACER | 7-113 |
| 2790940-0000 | .INFEEDER | 7-111 |
| 2790942-0000 | .INFEEDER | 7-111 |
| 2790944-0000 | .CABLE DUCT | 7-41, 7-43 |
| 2791163-0100 | .CUTTING ARM LEFT | 4-5 |
| 2791164-0100 | .CUTTING ARM RIGHT | 4-5 |
| 2792118-0000 | .SUPPORT | 6-35 |
| 2792119-0200 | .FILTER | 6-33 |
| 2792120-0000 | .SUPPORT | 6-35 |
| 2792300-0200 | .DESIGN CORRECTION | 4-5 |
| 2792301-0200 | .DRIVE UNIT LEFT | 4-27 |
| 2792302-0200 | .DRIVE UNIT RIGHT | 4-27 |
| 2792304-0000 | .PLATE | 4-29 |
| 2792305-0000 | .PLATE | 4-31 |
| 2792306-0000 | .TOOTHED PULLEY | 4-29, 4-31 |
| 2792850-0000 | .CANTILEVER | 2-93 |
| 2793317-0000 | .PLUG | 1-177 |
| 2793318-0000 | .SLIDE | 1-177 |
| 2793319-0000 | .PLATE | 9-41 |
| 2793320-0100 | .TEMPLATE | 9-35 |
| 2793321-0000 | .PLATE | 9-41 |
| 2793322-0000 | .PLATE | 9-41 |
| 2793329-0000 | .PLATE | 9-41 |
| 2793359-0000 | .SLIDE BAR | 1-79 |
| 2793360-0000 | .HEATER | 1-179 |
| 2793364-0000 | .SUPPORT | 1-331, 1-333 |
| 2793365-0000 | .PLATE | 1-71, 1-73 |
| 2793366-0000 | .LID | 1-329 |
| 2793368-0000 | .BRACKET | 1-329 |
| 2793381-0000 | .BRACKET | 1-341 |
| 2793382-0000 | .DOOR | 1-341 |
| 2793383-0000 | .BRACKET | 1-341 |
| 2793907-0000 | .FASTENING PLATE | 6-35 |
| 2793908-0000 | .CONNECTOR | 6-35 |
| 2794725-0000 | .PLATE | 1-143, 1-145, 1-147 |
| 2794726-0000 | .RING | 1-143, 1-145, 1-147 |
| 2795023-0000 | .BRACKET | 4-73, 4-75 |
| 2795078-0000 | .VOLUME BULGE | 4-115, 4-117, 4-135, 4-137 |
| 2795079-0000 | .VOLUME SHIM | 4-115, 4-117, 4-135, 4-137 |
| 2795149-0000 | .PROTECTION | 2-219 |
| 2795150-0000 | .GLASS PANE | 2-219 |
| 2795264-0000 | .BOTTOM | 5-53, 5-55, 5-57, 5-59, 5-61 |
| 2795887-0000 | .CHECKER PLATE | 2-161, 2-163 |
| 2795888-0100 | .FILTER | 6-7 |
| 2795889-0000 | .PLATFORM | 2-161, 2-163 |
| 2796887-0000 | .PIPE | 5-89, 5-91 |
| 2796888-0000 | .PIPE | 5-89, 5-91 |
| 2797148-0000 | .PIN | 7-117 |
| 2797149-0100 | .PRESSURE JAW | 7-111 |
| 2797150-0100 | .PRESSURE JAW | 7-111 |
| 2797154-0000 | .PLATE | 7-113 |
| 2797158-0000 | .SEALING PLATE | 7-67, 7-69 |
| 2797161-0000 | .PIN | 7-65 |
| 2797162-0000 | .BRACKET | 7-65 |
| 2797163-0000 | .SPACER | 7-79 |
| 2797164-0000 | .PLATE | 7-67, 7-69 |
| 2797167-0000 | .PRESSURE ROLLER | 7-65 |
| 2797439-0000 | .FASTENING PLATE | 4-73, 4-75 |
| 2797502-0000 | .PANEL | 7-139, 7-141 |
| 2797503-0100 | .VALVE GROUP | 7-139, 7-141 |
| 2797504-0100 | .AIR INLET | 7-139, 7-141 |
| 2797505-0100 | .VALVE PANEL | 7-137 |
| 2797506-0100 | .VALVE GROUP | 7-139, 7-141 |
| 2798473-0000 | .SCREW | 4-89, 4-91 |
| 2798530-0000 | .FLANGE | 1-57, 1-59 |
| 2798531-0000 | .FLANGE | 1-57, 1-59 |
| 2799295-0000 | .SHAFT | 7-87, 7-97 |
| 2799308-0000 | .SPACER | 7-67, 7-69 |
| 2799892-0000 | .CLAMP | 1-229, 1-231 |
| 2799899-0000 | .CLEANING TANK | 1-255 |
| 2800104-0000 | .HOSE | 8-69 |
| 2800116-0000 | .HOSE | 8-69 |
| 2800316-0000 | .LEVER | 7-15 |
| 2802611-0000 | .SUPPORT PULLEY | 3-13 |
| 2802612-0000 | .BOTTOM | 5-53, 5-55, 5-57, 5-59, 5-61 |
| 2802624-0000 | .AXLE PIN | 3-13 |
| 2802625-0000 | .SHAFT | 3-15 |
| 2802756-0000 | .PULLEY | 3-13 |
| 2803072-0100 | .PULLEY | 3-5, 3-19 |
| 2803170-0000 | .CARRIER | 4-103, 4-105 |
| 2803171-0000 | .CARRIER | 4-81, 4-83 |

| Part No | Description | Page No |
|---|---|---|
| 2803174-0000 | .TIE ROD | 4-81, 4-83, 4-103, 4-105 |
| 2803661-0000 | .CABLE | 6-17 |
| 2803810-0000 | .CARRIER | 4-77, 4-79 |
| 2803811-0000 | .CARRIER | 4-99, 4-101 |
| 2803812-0000 | .SHAFT | 4-77, 4-79, 4-99, 4-101 |
| 2803813-0000 | .SCREW | 4-77, 4-79, 4-99, 4-101 |
| 2803986-0000 | .STOP PIN | 1-197, 1-199 |
| 2803987-0000 | .STOP PIN | 1-197, 1-199 |
| 2805509-0000 | .SHAFT | 7-15 |
| 2805510-0000 | .SLEEVE | 7-15 |
| 2805965-0000 | .PLATE | 1-17 |
| 2805966-0000 | .PLATE | 1-17 |
| 2805980-0000 | .BOX | 1-17 |
| 2805981-0000 | .CONNECTION | 1-17 |
| 2805982-0000 | .SLEEVE | 1-17 |
| 2806108-0000 | .FRAME | 2-117 |
| 2806345-0000 | .GUIDE | 5-129 |
| 2806346-0000 | .GUIDE | 5-129 |
| 2806368-0000 | .MACHINE BODY | 2-9 |
| 2806658-0100 | .STRIP GUIDE | 7-61 |
| 2806661-0000 | .CATCH | 7-111 |
| 2806665-0000 | .PLATE | 7-41, 7-43 |
| 2806666-0000 | .SPACER | 7-111 |
| 2806668-0000 | .PLATE | 7-113 |
| 2806674-0000 | .GUIDE | 7-13 |
| 2806677-0100 | .PAPER GUIDE | 7-107 |
| 2806678-0100 | .DRIVE UNIT | 7-107 |
| 2806679-0100 | .COUNTER ROLLER | 7-107 |
| 2806680-0100 | .WHEEL | 7-13 |
| 2806681-0000 | .ANGLE BRACKET | 7-7 |
| 2806682-0100 | .CONNECTION BOX | 7-41, 7-43 |
| 2806683-0000 | .PLATE | 7-113 |
| 2806684-0000 | .PLATE | 7-113 |
| 2806686-0000 | .PUSH BUTTON | 7-51 |
| 2806687-0100 | .PUSH BUTTON | 7-41, 7-43 |
| 2806963-0000 | .PIPE | 2-27 |
| 2807592-0000 | .MULTI BRACKET SINGLE | 9-7, 9-9, 9-13, 9-15 |
| 2807605-0101 | .LEG,CONVEYOR | 9-7, 9-9, 9-13, 9-15 |
| 2807615-0000 | .LEG,CONVEYOR | 9-11 |
| 2808422-0000 | .FILTER | 1-17 |
| 2808800-0100 | .VOLUME FLAP CUTTING | 4-113, 4-151 |
| 2808802-0000 | .VOLUME FLAP | 4-115, 4-117, 4-135, 4-137 |
| 2808803-0000 | .SIDE PLATE | 4-115, 4-117 |
| 2808804-0000 | .SIDE PLATE | 4-115, 4-117 |
| 2809061-0001 | .ARM | 4-115, 4-117, 4-135, 4-137 |
| 2809061-0002 | .ARM | 4-115, 4-117, 4-135, 4-137 |
| 2809061-0006 | .ARM | 4-115, 4-117, 4-135, 4-137 |
| 2809061-0011 | .ARM | 4-115, 4-117, 4-135, 4-137 |
| 2809237-0000 | .FRAME | 2-67 |
| 2809846-0000 | .STOP PIN | 1-197, 1-199 |
| 2809849-0000 | .STOP PIN | 1-197, 1-199 |
| 2810637-0100 | .VOLUME FLAP PRESSURE | 4-133, 4-159 |
| 2810640-0100 | .SUPPORT FLAP CUTTING | 4-51 |
| 2810641-0100 | .SUPPORT FLAP PRESSURE | 4-51 |
| 2810642-0000 | .SIDE PLATE | 4-135, 4-137 |
| 2810643-0000 | .SIDE PLATE | 4-135, 4-137 |
| 2811775-0000 | .SEAL | 1-143, 1-145, 1-147, 9-19, 9-21, 9-23, 9-25 |
| 2811776-0000 | .NOZZLE | 1-17 |
| 2812896-0100 | .SUPPORT ROLLER | 4-167 |
| 2812897-0000 | .PLATE | 4-173, 4-175 |
| 2812899-0000 | .CAM | 4-173, 4-175 |
| 2813203-0000 | .PIPE | 2-39 |
| 2813204-0000 | .TANK | 2-39 |
| 2813205-0000 | .BOX | 2-39 |
| 2813403-0100 | .BASKET | 2-115 |
| 2813668-0000 | .HOLDER | 2-147 |
| 2813723-0000 | .BEARING HOUSING | 4-89, 4-91 |
| 2813724-0000 | .PLATE | 4-89, 4-91 |
| 2813725-0000 | .CUTTING JAW | 4-89, 4-91 |
| 2813728-0000 | .FOLDING FLAP | 4-93, 4-95, 4-109, 4-111 |
| 2813729-0000 | .FOLDING FLAP | 4-93, 4-95, 4-109, 4-111 |
| 2813730-0000 | .LID | 4-55 |
| 2813731-0000 | .BEARING HOUSING | 4-55 |
| 2814401-0000 | .MOUNTING SHEET | 2-83 |
| 2814591-0000 | .SUPPORT | 2-119 |
| 2814896-0000 | .VOLUME FLAP | 4-115, 4-117, 4-135, 4-137 |
| 2814897-0000 | .SIDE PLATE | 4-115, 4-117 |
| 2814898-0000 | .SIDE PLATE | 4-115, 4-117 |
| 2814899-0000 | .SIDE PLATE | 4-135, 4-137 |
| 2814900-0000 | .SIDE PLATE | 4-135, 4-137 |
| 2815344-0000 | .HOLDER | 1-17 |
| 2815964-0000 | .RAIL | 4-57, 4-59 |
| 2815967-0000 | .BUSHING | 4-89, 4-91 |
| 2816115-0100 | .TOP RAIL | 5-105 |

| Part No | Description | Page No |
|---|---|---|
| 2816348-0000 | .PNEUMATIC DIAGRAM | 7-137, 9-45 |
| 2816352-0000 | .PNEUMATIC DIAGRAM | 6-97, 9-45 |
| 2817480-0000 | .TOE PLATE | 2-161, 2-163 |
| 2817481-0000 | .RAILING | 2-161, 2-163 |
| 2817482-0000 | .RAILING | 2-161, 2-163 |
| 2817483-0000 | .TOE PLATE | 2-161, 2-163 |
| 2817484-0000 | .PLATFORM | 2-161, 2-163 |
| 2818554-0000 | .BOTTOM | 5-53, 5-55, 5-57, 5-59, 5-61 |
| 2818555-0000 | .BOTTOM | 5-53, 5-55, 5-57, 5-59, 5-61 |
| 2818556-0000 | .BLOCK | 5-79, 5-81 |
| 2818560-0000 | .BRACKET | 5-135, 5-137 |
| 2819396-0000 | .BRACKET | 7-41, 7-43 |
| 2819397-0000 | .SPRING PIN | 7-71, 7-73 |
| 2819398-0000 | .SPACER | 7-113 |
| 2819402-0000 | .SPACER | 7-121 |
| 2826325-0000 | .COVER | 1-235 |
| 2826363-0000 | .ECCENTRIC | 5-89, 5-91 |
| 2826364-0000 | .ROD | 5-93, 5-95 |
| 2826390-0000 | .SPRING | 1-197, 1-199 |
| 2826393-0000 | .SPRING | 1-197, 1-199 |
| 2826397-0000 | .SPRING | 1-197, 1-199 |
| 2826398-0000 | .SPRING | 1-197, 1-199 |
| 2826399-0000 | .SPRING | 1-197, 1-199 |
| 2826410-0000 | .ROLLER | 1-111 |
| 2826414-0300 | .COUNTER ROLLER | 1-5, 1-7, 1-9 |
| 2826436-0000 | .PIPE | 1-215 |
| 2826438-0000 | .BODY | 1-217 |
| 2826439-0000 | .VALVE CONE | 1-221 |
| 2826440-0000 | .SEAL RING | 1-221 |
| 2826441-0000 | .SEAL RING | 1-219, 1-223 |
| 2826442-0000 | .VALVE CONE | 1-191, 1-219, 1-223 |
| 2826445-0000 | .BENDING ROLLER | 1-29, 1-31, 1-33, 1-35 |
| 2826452-0000 | .FLOAT | 1-197, 1-199 |
| 2826457-0000 | .FLOAT | 1-197, 1-199 |
| 2826458-0000 | .PRESSURE FLANGE | 1-197, 1-199 |
| 2826463-0000 | .FILLING PIPE | 1-197, 1-199 |
| 2826464-0000 | .FILLING PIPE | 1-197, 1-199 |
| 2826477-0000 | .BENDING ROLLER | 1-29, 1-31, 1-33, 1-35 |
| 2826478-0000 | .FILLING PIPE | 1-197, 1-199 |
| 2826959-0000 | .ROD | 5-93 |
| 2826960-0000 | .ROD | 5-95 |
| 2826961-0000 | .LINK | 5-93, 5-95 |
| 2826962-0000 | .LOCKING BOLT | 5-93, 5-95 |
| 2826964-0000 | .LOCKING BLOCK | 5-93, 5-95 |
| 2826966-0000 | .SHAFT | 5-89, 5-91 |
| 2827055-0000 | .VOLUME SHIM | 9-19, 9-21, 9-23, 9-25 |
| 2829288-0000 | .COVERING PLATE | 1-179 |
| 2829385-0000 | .PLATE | 5-11, 5-13, 5-15 |
| 2829717-0000 | .HORN | 1-179 |
| 2829764-0000 | .LID | 1-255 |
| 2829766-0000 | .SEALING | 1-255 |
| 2829767-0000 | .PIPE | 1-259 |
| 2829769-0000 | .PIPE | 1-253 |
| 2829770-0200 | .CENTRIFUGAL PUMP | 1-251 |
| 2830430-0000 | .BUSBAR | 4-57, 4-59 |
| 2831048-0000 | .BUSBAR | 4-65, 4-67 |
| 2831686-0000 | .ROLLER | 7-87 |
| 2832076-0000 | .RAIL | 4-65, 4-67 |
| 2832241-0100 | .PRESSURE JAW LEFT | 4-51 |
| 2832242-0100 | .PRESSURE JAW RIGHT | 4-51 |
| 2832243-0100 | .PRESSURE JAW | 4-53, 4-63 |
| 2832244-0100 | .INDUCTOR LEFT | 4-53 |
| 2832245-0100 | .INDUCTOR RIGHT | 4-63 |
| 2832463-0000 | .SUPPORT | 1-303 |
| 2832553-0000 | .FILLING PIPE | 1-197, 1-199 |
| 2832620-0000 | .CLEANING CUP | 1-249 |
| 2832818-0100 | .CUTTING JAW LEFT | 4-51 |
| 2832819-0100 | .CUTTING JAW RIGHT | 4-51 |
| 2832935-0100 | .CUTTING JAW | 4-87, 4-107 |
| 2832936-0100 | .FOLDING FLAP LEFT | 4-87 |
| 2832937-0100 | .FOLDING FLAP RIGHT | 4-107 |
| 2833036-0000 | .CLEANING CUP | 1-249 |
| 2833037-0000 | .SEAL RING | 1-219 |
| 2833038-0000 | .BODY | 1-217 |
| 2833039-0000 | .PIPE | 1-215 |
| 2833041-0000 | .BENDING ROLLER | 1-61 |
| 2833042-0000 | .BENDING ROLLER | 1-61 |
| 2833050-0000 | .PLASTIC HOSE | 1-269 |
| 2833054-0000 | .ROLLER | 1-299, 1-301 |
| 2833085-0000 | .ROLLER | 1-93, 1-95, 1-97, 1-99, 1-101, 1-103, 1-105, 1-107, 1-109 |
| 2833086-0000 | .ROLLER | 1-93, 1-95, 1-97, 1-99, 1-101, 1-103, 1-105, 1-107, 1-109 |
| 2833088-0000 | .ROLLER | 1-121, 1-123 |
| 2833122-0000 | .BRACKET | 1-339 |
| 2833124-0000 | .COVER | 1-339 |

| Part No | Description | Page No |
|---|---|---|
| 2833128-0000 | .PIPE | 1-17 |
| 2833129-0000 | .PIPE | 1-17 |
| 2833186-0000 | .PANEL | 1-339 |
| 2833212-0000 | .ROLLER | 1-121, 1-123 |
| 2833215-0000 | .ROLLER | 1-93, 1-95, 1-97, 1-99, 1-101, 1-103, 1-105, 1-107, 1-109 |
| 2833224-0000 | .HOLDER | 1-193 |
| 2833225-0000 | .BRACKET | 1-289, 1-291 |
| 2833324-0000 | .GASKET | 5-135, 5-137 |
| 2833326-0000 | .BRACKET | 5-135, 5-137 |
| 2833345-0000 | .PIPE | 1-257 |
| 2833348-0000 | .DRAIN PIPE | 1-253 |
| 2833350-0200 | .PIPE WORK | 1-247 |
| 2833351-0000 | .SUPPORT | 1-253 |
| 2833352-0000 | .PIPE | 2-113 |
| 2833354-0200 | .PIPE-LINE | 1-251 |
| 2833374-0000 | .MACHINE BODY | 6-55, 6-57 |
| 2833375-0000 | .DOOR | 6-69, 6-71 |
| 2833376-0000 | .GLASS PANE | 6-69, 6-71 |
| 2833377-0000 | .COVER | 6-55, 6-57 |
| 2833378-0000 | .BRACKET | 6-81, 6-83 |
| 2833381-0100 | .WATER SYSTEM | 6-3, 6-5 |
| 2833382-0000 | .COVER | 6-55, 6-57 |
| 2833383-0100 | .SUPPORT | 6-7 |
| 2833384-0000 | .TOP COVER | 6-11 |
| 2833413-0000 | .PIPE CONNECTION | 4-77, 4-79, 4-99, 4-101 |
| 2833952-0000 | .SCREW | 4-93, 4-95, 4-109, 4-111 |
| 2834035-0000 | .THERMOCOUPLE | 2-75, 2-77 |
| 2834329-0000 | .PIPE | 1-229, 1-231 |
| 2835471-0000 | .PLATE | 1-75, 1-77 |
| 2835472-0000 | .PLATE | 1-75, 1-77 |
| 2835893-0000 | .PIN | 4-169, 4-171 |
| 2835894-0000 | .PIN | 4-169, 4-171 |
| 2835895-0001 | .SPACER | 4-169, 4-171 |
| 2835895-0002 | .SPACER | 4-169, 4-171 |
| 2835896-0001 | .RAIL BRACKET | 4-169, 4-171 |
| 2835896-0002 | .RAIL BRACKET | 4-169, 4-171 |
| 2835896-0003 | .RAIL BRACKET | 4-169, 4-171 |
| 2835896-0004 | .RAIL BRACKET | 4-169, 4-171 |
| 2835897-0100 | .CURVE UNIT | 4-167 |
| 2836238-0000 | .INSULATION NUT | 4-57, 4-59, 4-65, 4-67, 9-17 |
| 2836239-0000 | .WASHER | 4-57, 4-59, 4-65, 4-67, 9-17 |
| 2837095-0000 | .SHAFT | 4-173, 4-175 |
| 2837096-0000 | .WASHER | 4-173, 4-175 |
| 2837097-0000 | .CAM | 4-173, 4-175 |
| 2837100-0200 | .CLEANING TANK | 1-251 |
| 2837107-0000 | .PIPE | 1-17 |
| 2837108-0000 | .CAM | 4-173, 4-175 |
| 2838347-0000 | .BLOCK | 2-75, 2-77 |
| 2838959-0000 | .SHAFT | 7-107 |
| 2838960-0000 | .WASHER | 7-121 |
| 2838961-0000 | .COVER | 7-121 |
| 2838963-0000 | .BRACKET | 7-107 |
| 2838964-0000 | .PLATE | 7-121 |
| 2838965-0000 | .PLATE | 7-107 |
| 2838966-0000 | .SPACER | 7-113 |
| 2839980-0000 | .FLANGE | 7-107 |
| 2839981-0000 | .FLANGE | 7-107 |
| 2839982-0000 | .SPACER | 7-113 |
| 2839983-0000 | .PLATE | 7-117 |
| 2839985-0000 | .BRACKET | 7-117 |
| 2839988-0000 | .SHAFT | 7-95 |
| 2839989-0000 | .HUB | 7-95 |
| 2840929-0100 | .RELAY UNIT | 8-9, 8-11 |
| 2840930-0100 | .PLC | 8-9, 8-11 |
| 2840931-0100 | .PLC | 8-9, 8-11 |
| 2840932-0100 | .PLINTH | 8-9, 8-11 |
| 2840933-0100 | .PLINTH | 8-9, 8-11 |
| 2840934-0100 | .RELAY | 8-9, 8-11 |
| 2840935-0100 | .IH EQUIPMENT | 8-9, 8-11 |
| 2840936-0100 | .MOTOR DRIVE CONTROL | 8-9, 8-11 |
| 2840937-0000 | .RACK | 8-25 |
| 2840938-0100 | .PLC | 8-9, 8-11 |
| 2840939-0100 | .FUSE BOARD 1 | 8-9, 8-11 |
| 2840940-0100 | .FUSE BOARD 2 | 8-9, 8-11 |
| 2840941-0100 | .FUSE BOARD 3 | 8-9, 8-11 |
| 2840943-0100 | .FREQUENCY CONVERTER WITH ACCESSORIES | 8-9, 8-11 |
| 2840944-0100 | .PLINTH | 8-9, 8-11 |
| 2840945-0100 | .PLINTH | 8-9, 8-11 |
| 2840947-0100 | .PLATE | 8-3 |
| 2840948-0000 | .COVER | 8-9, 8-11 |
| 2841912-0000 | .PLATE | 7-97 |
| 2841914-0000 | .SCREW | 7-77 |
| 2841915-0000 | .BRACKET | 7-87 |
| 2841916-0000 | .SPACER | 7-71, 7-73 |

| Part No | Description | Page No |
|---|---|---|
| 2841922-0000 | .BRACKET | 7-87 |
| 2841924-0000 | .BRACKET | 7-89 |
| 2842772-0100 | .SHOCK ABSORBER CUTTING | 4-113 |
| 2842776-0000 | .PIN | 4-115, 4-117, 4-127, 4-129, 4-131, 4-135, 4-137, 4-145, 4-147, 4-149, 4-153, 4-155, 4-157, 4-161, 4-163, 4-165 |
| 2842777-0001 | .DAMPER | 4-127, 4-129, 4-131, 4-145, 4-147, 4-149, 4-153, 4-155, 4-157, 4-161, 4-163, 4-165 |
| 2842777-0004 | .DAMPER | 4-127, 4-129, 4-131, 4-145, 4-147, 4-149, 4-153, 4-155, 4-157, 4-161, 4-163, 4-165 |
| 2842777-0005 | .DAMPER | 4-127, 4-129, 4-131, 4-145, 4-147, 4-149, 4-153, 4-155, 4-157, 4-161, 4-163, 4-165 |
| 2842778-0000 | .DAMPER | 4-115, 4-117, 4-135, 4-137 |
| 2842779-0000 | .SPACER | 4-115, 4-117, 4-135, 4-137 |
| 2842780-0000 | .BUSHING | 4-127, 4-129, 4-131, 4-145, 4-147, 4-149, 4-153, 4-155, 4-157, 4-161, 4-163, 4-165 |
| 2842781-0000 | .SPRING | 4-127, 4-129, 4-131, 4-145, 4-147, 4-149, 4-153, 4-155, 4-157, 4-161, 4-163, 4-165 |
| 2842782-0000 | .SPRING | 4-127, 4-129, 4-131, 4-145, 4-147, 4-149, 4-153, 4-155, 4-157, 4-161, 4-163, 4-165 |
| 2842862-0100 | .SHOCK ABSORBER PRESSURE | 4-133 |
| 2842918-0000 | .HOLDER | 2-183, 2-185 |
| 2842998-0000 | .SLIDER | 7-97 |
| 2842999-0000 | .CABINET | 6-19 |
| 2843000-0000 | .DOOR | 6-79 |
| 2843003-0000 | .BRACKET | 7-97 |
| 2843394-0100 | .TRANSDUCER HEAD | 2-123 |
| 2843395-0000 | .MOUNTING SHEET | 2-127 |
| 2843411-0000 | .RAIL | 4-57, 4-59 |
| 2843412-0000 | .RAIL | 4-65, 4-67 |
| 2843413-0000 | .RAIL | 4-57, 4-59 |
| 2843414-0000 | .RAIL | 4-65, 4-67 |
| 2843780-0000 | .PLATE | 4-93, 4-95, 4-109, 4-111 |
| 2843840-0100 | .HUB | 7-89 |
| 2843841-0000 | .SLIDER | 7-93 |
| 2843842-0000 | .PAD | 7-93 |
| 2843844-0000 | .SPACER | 7-97 |
| 2843845-0000 | .GUIDE | 7-97 |
| 2843847-0000 | .BRACKET | 7-97 |
| 2843848-0100 | .BUFFER | 7-89 |
| 2843881-0000 | .MOUNTING PLATE | 7-99 |
| 2843882-0000 | .BRACKET | 7-99 |
| 2843883-0100 | .MOUNTING SHEET | 7-89 |
| 2843884-0100 | .STRIP MAGAZINE | 7-3 |
| 2844151-0000 | .SPACER | 7-89 |
| 2844157-0000 | .PLATE | 7-137 |
| 2844158-0000 | .BRACKET | 7-137 |
| 2844166-0000 | .PLATE | 7-135 |
| 2844167-0000 | .PULLEY | 7-135 |
| 2844168-0000 | .SPACER | 7-61 |
| 2844499-0000 | .SUPPORT | 7-173 |
| 2844511-0000 | .PLATE | 7-173 |
| 2844575-0000 | .BAR | 5-79, 5-81 |
| 2844888-0000 | .PULLER CAM | 4-169, 4-171 |
| 2844889-0000 | .PULLER CAM | 4-169, 4-171 |
| 2845139-0000 | .COMPRESSION SPRING | 4-85 |
| 2845142-0000 | .STOP | 4-85 |
| 2845785-0000 | .COVER | 8-9, 8-11 |
| 2845786-0000 | .BRACKET | 8-9, 8-11 |
| 2845787-0000 | .CABLE DUCT 60 X 80 MM | 8-9, 8-11 |
| 2845788-0000 | .CABLE DUCT 40X80MM | 8-9, 8-11 |
| 2845789-0000 | .CABLE DUCT 60 X 80 MM | 8-9, 8-11 |
| 2845790-0000 | .CABLE DUCT 100X80MM | 8-9, 8-11 |
| 2845791-0000 | .CABLE DUCT 40X80MM | 8-9, 8-11 |
| 2845792-0000 | .CABLE DUCT 100X80MM | 8-9, 8-11 |
| 2845793-0000 | .CABLE DUCT 60 X 80 MM | 8-9, 8-11 |
| 2845794-0000 | .CABLE DUCT 60 X 80 MM | 8-9, 8-11 |
| 2846304-0000 | .PIPE | 1-233 |
| 2846305-0000 | .TOUCH GUARD | 1-233 |
| 2846309-0000 | .BRACKET | 1-197, 1-199 |
| 2846311-0000 | .FORK | 1-197, 1-199 |
| 2846319-0000 | .PIPE | 2-39 |
| 2846393-0000 | .ROLLER | 1-115, 1-117, 1-119 |
| 2846394-0000 | .ROLLER | 1-115, 1-117, 1-119 |
| 2846395-0000 | .ROLLER | 1-115, 1-117, 1-119 |
| 2846554-0000 | .PIPE | 1-17 |
| 2846667-0000 | .DAMPER | 4-115, 4-117, 4-135, 4-137 |
| 2847228-0000 | .BEARING HOUSING | 4-89, 4-91 |
| 2847229-0000 | .CUTTING JAW | 4-89, 4-91 |
| 2847230-0000 | .FOLDING FLAP | 4-93, 4-95, 4-109, 4-111 |
| 2847231-0000 | .FOLDING FLAP | 4-93, 4-95, 4-109, 4-111 |
| 2847233-0100 | .CONNECTION BOX | 1-203 |
| 2847234-0000 | .CONNECTION BOX | 1-211 |
| 2847235-0000 | .RAIL | 1-213 |
| 2847236-0000 | .BRACKET | 1-207 |
| 2847310-0000 | .CONNECTION | 1-233 |
| 2847313-0000 | .NUT | 1-255 |
| 2847387-0000 | .GLASS PANE | 2-211 |
| 2847388-0000 | .DOOR | 2-211 |
| 2847931-0000 | .PLATE | 3-9 |
| 2847932-0000 | .SHAFT | 3-9 |

| Part No | Description | Page No |
|---|---|---|
| 2847933-0000 | .BELT HOLDER | 3-9 |
| 2847934-0000 | .LINK HEAD | 3-9 |
| 2847935-0000 | .LINK ROD | 3-9 |
| 2847936-0000 | .CONNECTION CLAMP | 3-9 |
| 2847937-0000 | .LINK | 4-25 |
| 2847941-0000 | .DAMPER | 3-9 |
| 2848490-0000 | .GUIDE | 5-31, 5-33, 5-35, 5-37 |
| 2848491-0000 | .GUIDE | 5-31, 5-33, 5-35, 5-37 |
| 2848492-0000 | .GUIDE | 5-31, 5-33, 5-35, 5-37 |
| 2848493-0000 | .GUIDE | 5-31, 5-33, 5-35, 5-37 |
| 2848494-0000 | .COVER | 2-233 |
| 2848495-0100 | .COVER | 2-199 |
| 2849071-0100 | .RACK | 8-53 |
| 2849075-0100 | .PLINTH | 8-53 |
| 2849076-0000 | .BRACKET | 8-9, 8-11 |
| 2849077-0000 | .DOOR | 8-53 |
| 2849078-0100 | .DOOR | 8-3 |
| 2849079-0000 | .RAIL | 8-57 |
| 2850481-0000 | .SPACER | 5-23, 5-29 |
| 2851003-0000 | .ARM | 7-173 |
| 2851346-0000 | .PLATE | 5-139, 5-141, 5-143 |
| 2851347-0000 | .HOLDER | 5-155 |
| 2851385-0000 | .PLUNGER | 7-59 |
| 2851526-0000 | .SHIM | 7-131 |
| 2851533-0100 | .TERMINAL BLOCK | 1-211 |
| 2851534-0100 | .PLINTH | 7-53 |
| 2851535-0100 | .TERMINAL BLOCK | 7-53 |
| 2851537-0000 | .RAIL | 7-57 |
| 2851538-0000 | .CABLE DUCT | 7-53 |
| 2851539-0000 | .CABLE DUCT | 7-53 |
| 2851540-0000 | .CABLE DUCT | 7-53 |
| 2851541-0000 | .CABLE DUCT | 7-53 |
| 2851583-0000 | .ROLLER | 1-121, 1-123 |
| 2851586-0000 | .ROLLER | 1-121, 1-123 |
| 2851883-0000 | .PIPE | 1-257 |
| 2851885-0000 | .PIPE | 1-193 |
| 2851886-0000 | .CENTRIFUGAL PUMP | 1-253 |
| 2851928-0000 | .BRACKET | 7-117 |
| 2851929-0000 | .STRUT | 5-97, 5-99 |
| 2851943-0000 | .BRACKET | 7-117 |
| 2851944-0000 | .RAIL | 7-117 |
| 2852104-0000 | .LOCKING RING | 1-197, 1-199 |
| 2852227-0000 | .COLUMN | 4-7 |
| 2852228-0000 | .ECCENTRIC SHAFT | 5-23, 5-29 |
| 2852458-0000 | .SHIM | 7-113 |
| 2852461-0000 | .SPACER | 5-11, 5-13, 5-15 |
| 2852462-0000 | .SPACER | 5-131, 5-133 |
| 2852463-0000 | .SPACER | 5-129 |
| 2852465-0000 | .BRACKET | 5-11, 5-13, 5-15 |
| 2852472-0000 | .SPACER | 5-117, 5-119 |
| 2852473-0000 | .SPACER | 5-129 |
| 2852885-0000 | .SHIM | 7-67, 7-69 |
| 2852886-0000 | .SHIM | 7-67, 7-69 |
| 2852887-0000 | .SPACER | 7-71, 7-73 |
| 2852888-0000 | .SPACER | 7-71, 7-73 |
| 2852891-0000 | .LINK CHAIN | 7-107 |
| 2852892-0000 | .BRACKET | 7-65 |
| 2852893-0000 | .TENSION SPRING | 7-65 |
| 2852895-0000 | .PLATE | 7-67, 7-69 |
| 2852897-0000 | .CABLE DUCT | 7-41, 7-43 |
| 2852899-0000 | .PLATE | 7-41, 7-43 |
| 2852908-0000 | .PULLEY | 7-121 |
| 2852909-0000 | .PULLEY | 7-121 |
| 2854078-0100 | .PISTON | 4-81, 4-83, 4-103, 4-105 |
| 2855528-0100 | .VOLUME CURVE PIECE | 4-51 |
| 2855843-0000 | .NOZZLE | 5-131, 5-133 |
| 2855844-0000 | .NOZZLE | 5-131, 5-133 |
| 2855845-0000 | .NOZZLE | 5-131, 5-133 |
| 2855846-0000 | .NOZZLE | 5-131, 5-133 |
| 2855849-0000 | .COVER | 5-135, 5-137 |
| 2855890-0000 | .RAIL | 7-55 |
| 2855891-0000 | .CABLE DUCT | 7-53 |
| 2856034-0000 | .SPACER | 7-173 |
| 2857893-0100 | .PRESSURE DEVICE | 5-3 |
| 2858421-0000 | .BAR | 5-79, 5-81 |
| 2859151-0000 | .GUIDE RAIL | 7-107 |
| 2859436-0100 | .SPLICE DETECTOR | 7-61 |
| 2859437-0000 | .BRACKET | 7-63 |
| 2859492-0000 | .SUPPORT | 7-41, 7-43 |
| 2859686-0000 | .ROLLER | 7-101 |
| 2859949-0000 | .NOZZLE | 4-177 |
| 2860036-0000 | .VOLUME FLAP | 4-115, 4-117, 4-135, 4-137 |
| 2860037-0000 | .VOLUME BULGE | 4-115, 4-117, 4-135, 4-137 |
| 2860038-0000 | .VOLUME SHIM | 4-115, 4-117, 4-135, 4-137, 9-19, 9-21, 9-23, 9-25 |

| Part No | Description | Page No |
|---|---|---|
| 2860081-0000 | .NUT | 7-65 |
| 2860082-0000 | .BRACKET | 7-87 |
| 2860106-0000 | .SLIDE | 5-31, 5-33, 5-35, 5-37 |
| 2860107-0000 | .SLIDE | 5-31, 5-33, 5-35, 5-37 |
| 2861123-0100 | .DISTRIBUTOR | 5-139, 5-141, 5-143 |
| 2861926-0100 | .TOP SECTION | 5-105 |
| 2861978-0000 | .ADJUSTING PLATE | 5-123, 5-125, 5-127 |
| 2861981-0000 | .ATTACHMENT PLATE | 5-123, 5-125, 5-127 |
| 2862253-0000 | .PLATE | 5-25, 5-27 |
| 2862301-0000 | .PEROXIDE TANK | 2-17, 2-19 |
| 2862485-0100 | .INDUCTOR | 7-65 |
| 2862486-0000 | .COOLING PLATE | 7-77 |
| 2862487-0000 | .PROTECTION | 7-77 |
| 2862488-0000 | .BLOCK | 7-77 |
| 2862492-0000 | .PLATE | 7-97 |
| 2862493-0000 | .ARM | 7-99 |
| 2862494-0000 | .ARM | 7-99 |
| 2862626-0000 | .FLANGE | 5-43 |
| 2862627-0000 | .BEARING HOUSING | 5-43 |
| 2862701-0100 | .CABINET | 8-3 |
| 2862702-0000 | .CABINET | 8-5, 8-7 |
| 2862703-0000 | .GUIDE | 8-5, 8-7 |
| 2862704-0000 | .BRACKET | 8-5, 8-7 |
| 2862705-0000 | .BRACKET | 8-5, 8-7 |
| 2862706-0000 | .BRACKET | 8-5, 8-7 |
| 2862707-0100 | .DOOR | 8-3 |
| 2862708-0000 | .DOOR | 8-47 |
| 2862711-0100 | .COVER | 8-3 |
| 2862712-0000 | .COVER | 8-45 |
| 2862713-0100 | .DOOR | 8-3 |
| 2862714-0100 | .DOOR | 8-3 |
| 2862715-0100 | .DOOR | 8-3 |
| 2862716-0000 | .PLATE | 8-5, 8-7 |
| 2862717-0000 | .BRACKET | 8-5, 8-7 |
| 2862718-0000 | .BRACKET | 8-5, 8-7 |
| 2862719-0000 | .BRACKET | 8-5, 8-7 |
| 2862720-0000 | .BRACKET | 8-5, 8-7 |
| 2862727-0000 | .FLANGE | 7-107 |
| 2862742-0000 | .INSULATING PLATE | 1-161, 1-163 |
| 2862744-0000 | .INSULATING PLATE | 1-161, 1-163 |
| 2862745-0000 | .INSULATING PLATE | 1-161, 1-163 |
| 2862746-0000 | .INSULATING PLATE | 1-161, 1-163 |
| 2862748-0000 | .INSULATING PLATE | 1-161, 1-163 |
| 2862761-0000 | .NOZZLE | 5-131, 5-133 |
| 2862762-0000 | .NOZZLE | 5-131, 5-133 |
| 2862763-0000 | .SPACER | 5-131, 5-133 |
| 2863119-0000 | .SHAFT | 4-127, 4-129, 4-131, 4-145, 4-147, 4-149, 4-153, 4-155, 4-157, 4-161, 4-163, 4-165 |
| 2863123-0100 | .FOLDING PART | 5-79, 5-81 |
| 2863138-0000 | .PLATE | 5-43 |
| 2863174-0000 | .BUSBAR | 1-75, 1-77 |
| 2863210-0000 | .BLOCK | 2-183, 2-185 |
| 2863211-0000 | .PLATE | 2-183, 2-185 |
| 2863540-0000 | .FITTING PIECE | 6-11 |
| 2863542-0000 | .SCREW | 7-77 |
| 2863543-0000 | .LEVER | 7-87 |
| 2863545-0000 | .SUPPORT | 7-87 |
| 2863546-0000 | .ROLLER | 7-33 |
| 2863547-0000 | .PIN | 7-37, 7-61, 7-107 |
| 2863548-0000 | .BRACKET | 7-61 |
| 2863549-0000 | .BRACKET | 7-107 |
| 2863550-0100 | .ROLLER | 7-31, 7-37, 7-61, 7-107 |
| 2863551-0000 | .PIN | 7-107 |
| 2863744-0000 | .RAILING | 1-295 |
| 2864950-0100 | .HEATING ELEMENT | 5-131, 5-133 |
| 2864951-0000 | .HEATING PIPE | 5-135 |
| 2864952-0000 | .HEATING PIPE | 5-137 |
| 2864960-0100 | .HEATING ELEMENT | 5-131, 5-133 |
| 2865480-0100 | .CONNECTION BOX | 2-117 |
| 2866004-0000 | .PIPE | 1-257 |
| 2866426-0100 | .CONNECTION BOX | 1-327 |
| 2866604-0100 | .FOLDING PART | 5-3 |
| 2866605-0100 | .FLAP GUIDE | 5-105 |
| 2866745-0000 | .HOLDER | 6-11 |
| 2866746-0000 | .SUPPORT | 6-11 |
| 2866747-0000 | .GABLE PLATE | 6-65 |
| 2866748-0100 | .COVER | 6-63 |
| 2866749-0000 | .GASKET | 6-11 |
| 2866896-0000 | .SUPPORT | 5-129 |
| 2867460-0000 | .HOUSING | 1-23, 1-25 |
| 2867461-0000 | .LID | 1-23, 1-25 |
| 2867470-0000 | .AIR GUIDE | 1-47, 1-49, 1-51 |
| 2867472-0000 | .FRAME | 1-27 |
| 2867473-0000 | .GLASS PANE | 1-27 |
| 2867474-0000 | .GASKET | 1-27 |

| Part No | Description | Page No |
|---|---|---|
| 2867481-0000 | .PIPE | 1-243 |
| 2867482-0000 | .PLATE | 1-65 |
| 2867485-0000 | .BRACKET | 1-243 |
| 2867486-0000 | .PIPE | 1-229, 1-231 |
| 2867487-0000 | .CABLE TRENCH | 1-329 |
| 2867488-0000 | .CABLE DUCT | 1-329 |
| 2867489-0000 | .CABLE DUCT | 1-329 |
| 2867490-0000 | .CABLE DUCT | 1-329 |
| 2867491-0000 | .CABLE DUCT | 1-329 |
| 2867492-0000 | .COVER | 1-329 |
| 2867493-0000 | .COVER | 1-329 |
| 2867494-0000 | .COVER | 1-329 |
| 2867495-0000 | .COVER | 1-329 |
| 2867496-0000 | .SEPARATOR | 1-329 |
| 2867497-0000 | .SEPARATOR | 1-329 |
| 2867498-0000 | .SEPARATOR | 1-329 |
| 2867499-0000 | .BRACKET | 1-329 |
| 2867500-0000 | .BRACKET | 1-329 |
| 2867508-0000 | .COVER | 1-329 |
| 2867674-0000 | .PANEL | 8-59 |
| 2867675-0000 | .DOOR | 8-49 |
| 2867676-0000 | .DOOR | 8-51 |
| 2867677-0100 | .PANEL | 8-3 |
| 2867678-0000 | .PANEL | 8-61, 8-63 |
| 2867679-0000 | .BRACKET | 8-5, 8-7 |
| 2867680-0000 | .BRACKET | 8-61, 8-63 |
| 2867681-0000 | .PLATE | 8-61, 8-63 |
| 2867682-0000 | .COVER PLATE | 8-61, 8-63 |
| 2867683-0000 | .GASKET | 8-61, 8-63 |
| 2868043-0000 | .PIPE | 1-241 |
| 2868213-0000 | .AXLE LINK | 5-87 |
| 2868214-0000 | .TIE ROD | 5-87 |
| 2868215-0000 | .TIE ROD | 5-87 |
| 2868216-0000 | .BRACKET | 5-87 |
| 2868546-0100 | .PIPE WORK-HYDRAULIC | 2-71 |
| 2868547-0000 | .PIPE | 5-83, 5-85 |
| 2868548-0000 | .PIPE | 5-83, 5-85 |
| 2868754-0000 | .BRACKET | 7-107 |
| 2868755-0000 | .ROD | 7-87 |
| 2868756-0000 | .ROD | 7-87 |
| 2868758-0000 | .SHAFT | 7-103 |
| 2868759-0000 | .SPACER | 7-61 |
| 2868760-0000 | .BLOCK | 7-89 |
| 2868761-0000 | .PLATE | 7-61 |
| 2869171-0000 | .ELBOW PIPE | 1-259 |
| 2869172-0000 | .PIPE | 1-259 |
| 2869173-0000 | .PIPE | 1-259 |
| 2869175-0000 | .PLUG | 1-255 |
| 2869180-0100 | .DRAIN PIPE | 2-109 |
| 2869538-0000 | .FLAP | 5-73, 5-75 |
| 2869590-0000 | .COVER PLATE | 8-61, 8-63 |
| 2869592-0000 | .HINGE | 8-47, 8-49, 8-51 |
| 2869593-0000 | .HANDLE | 8-49, 8-51 |
| 2869816-0000 | .PIPE | 2-79 |
| 2869817-0000 | .PIPE | 2-79 |
| 2869818-0000 | .PIPE | 2-79 |
| 2869819-0000 | .PIPE | 2-79 |
| 2869820-0000 | .PIPE | 2-79 |
| 2869821-0000 | .PIPE | 2-79 |
| 2870893-0000 | .ADAPTER | 2-69 |
| 2870905-0000 | .CONNECTOR | 8-27 |
| 2870905-0001 | .CONNECTOR | 8-27 |
| 2871038-0000 | .PULLER CAM | 4-169, 4-171 |
| 2871039-0000 | .PULLER CAM | 4-169, 4-171 |
| 2871040-0000 | .VOLUME CAM | 4-169, 4-171 |
| 2871043-0000 | .BOTTOM | 5-53, 5-55, 5-57, 5-59, 5-61 |
| 2871044-0000 | .SLIDE | 5-73, 5-75 |
| 2871128-0000 | .ROUND NUT | 3-9 |
| 2871884-0001 | .RAIL BRACKET | 4-169, 4-171 |
| 2871884-0002 | .RAIL BRACKET | 4-169, 4-171 |
| 2871884-0003 | .RAIL BRACKET | 4-169, 4-171 |
| 2871884-0004 | .RAIL BRACKET | 4-169, 4-171 |
| 2871889-0000 | .PLATE | 6-21, 6-23 |
| 2871890-0000 | .MACHINE BODY | 6-21, 6-23 |
| 2872047-0000 | .ARM | 4-115, 4-117, 4-135, 4-137 |
| 2872048-0000 | .PIN | 4-115, 4-117, 4-135, 4-137 |
| 2872091-0000 | .PIN | 4-115, 4-117, 4-135, 4-137 |
| 2872687-0100 | .BELT TENSIONER | 3-5, 3-19 |
| 2872688-0100 | .SUPPORT | 3-3 |
| 2872689-0100 | .SUPPORT | 3-3 |
| 2872690-0100 | .GUIDE | 3-5 |
| 2872691-0100 | .GUIDE | 3-19 |
| 2872692-0100 | .RUNNER BLOCK UNIT | 3-7, 3-21 |
| 2872698-0100 | .CABLE CONNECTION | 4-5 |

| Part No | Description | Page No |
|---|---|---|
| 2872916-0100 | .LAST POINT DE | 5-3 |
| 2872917-0100 | .PHOTOCELL UNIT | 5-153 |
| 2872918-0100 | .METERING DEVICE | 5-187 |
| 2872919-0100 | .CONNECTION BOX | 5-187 |
| 2874249-0000 | .VOLUME CAM | 4-169, 4-171 |
| 2874250-0000 | .VOLUME CAM | 4-169, 4-171 |
| 2874312-0000 | .DIAGRAM | 2-71, 9-45 |
| 2874468-0000 | .PLATE | 7-67, 7-69 |
| 2874469-0000 | .PLATE | 7-67, 7-69 |
| 2874673-0000 | .SHAFT | 1-43, 1-45 |
| 2874674-0000 | .WHEEL | 1-43, 1-45 |
| 2874675-0000 | .SEPARATOR | 1-329 |
| 2874676-0000 | .PLATE | 1-329 |
| 2874677-0000 | .PLATE | 1-329 |
| 2874678-0000 | .PLATE | 1-329 |
| 2874679-0000 | .CABLE DUCT | 1-329 |
| 2874684-0000 | .TOUCH GUARD | 1-229, 1-231, 9-19, 9-21, 9-23, 9-25 |
| 2874687-0000 | .PLATE | 1-47, 1-49, 1-51 |
| 2874691-0000 | .BLANK PLATE | 1-23, 1-25 |
| 2874692-0000 | .PLATE | 1-65 |
| 2874694-0100 | .STEAM PIPE | 1-239 |
| 2874695-0000 | .PIPE | 1-241 |
| 2874700-0000 | .PIPE | 1-245 |
| 2874701-0000 | .PIPE | 1-241, 1-243, 1-245 |
| 2874702-0000 | .PIPE | 1-243, 1-245 |
| 2874703-0000 | .PIPE | 1-245 |
| 2874705-0000 | .PIPE | 1-243 |
| 2874706-0000 | .PIPE | 1-243 |
| 2874708-0000 | .PIPE | 1-241 |
| 2874713-0000 | .INTERMEDIARY SECTION | 1-185 |
| 2874715-0000 | .STUD SCREW | 1-165 |
| 2874716-0000 | .BODY | 1-165 |
| 2874717-0000 | .KNOB | 1-165 |
| 2874718-0000 | .TOUCH GUARD | 1-179 |
| 2874719-0000 | .CLAMP | 1-179 |
| 2874720-0000 | .CLAMP | 1-179 |
| 2874721-0000 | .PIPE | 1-179 |
| 2874731-0000 | .SHUTTER | 1-187 |
| 2874732-0000 | .VALVE SPINDLE | 1-187 |
| 2874733-0000 | .JOINT | 1-187 |
| 2874734-0000 | .SPACER ROD | 1-187 |
| 2874735-0000 | .FLANGE | 1-187 |
| 2874736-0000 | .BEARING FLANGE | 1-187 |
| 2874741-0000 | .SPRING COLLAR | 1-187 |
| 2874743-0000 | .SPINDLE GUIDE | 1-187 |
| 2874746-0000 | .COVERING PANEL | 1-339 |
| 2874747-0000 | .GLASS PANE | 1-339 |
| 2874749-0000 | .GLASS PANE | 1-21 |
| 2874751-0000 | .GLASS PANE | 1-73 |
| 2874752-0000 | .GLASS PANE | 1-71 |
| 2874763-0000 | .GLASS PANE | 1-339 |
| 2874770-0000 | .COVER PLATE | 1-23, 1-25 |
| 2874771-0000 | .PLATE | 1-47, 1-49, 1-51 |
| 2874772-0000 | .PLATE | 1-47, 1-49, 1-51 |
| 2875029-0000 | .SPRING | 7-173 |
| 2875030-0000 | .TURNING WHEEL | 7-173 |
| 2875031-0000 | .TURNING WHEEL | 7-173 |
| 2875032-0000 | .SHAFT | 7-173 |
| 2875033-0000 | .HOLDER | 7-173 |
| 2875034-0000 | .PLATE | 7-173 |
| 2875285-0000 | .BRACKET | 7-127 |
| 2875286-0000 | .BRACKET | 7-41, 7-43 |
| 2875287-0000 | .BRACKET | 7-37 |
| 2875289-0000 | .PIN | 7-31 |
| 2875290-0000 | .SHAFT | 7-31 |
| 2875291-0100 | .ROLLER | 7-13 |
| 2875292-0100 | .ROLLER | 7-13 |
| 2875326-0000 | .CAM | 5-39 |
| 2875358-0000 | .FAN | 6-67 |
| 2875994-0100 | .ADAPTION TRANSFORMER | 4-53 |
| 2875995-0100 | .ADAPTION TRANSFORMER | 4-63 |
| 2876195-0000 | .HOLDER | 7-173 |
| 2876313-0100 | .PHOTOCELL BRACKET | 4-51 |
| 2876320-0000 | .PROTECTIVE COVER | 4-31 |
| 2876334-0000 | .HOLDER | 5-107, 5-109, 5-111 |
| 2876447-0000 | .BRACKET | 7-41, 7-43 |
| 2876448-0000 | .SHAFT | 7-15 |
| 2876451-0000 | .SPACER | 7-127 |
| 2876457-0000 | .SUPPORT | 5-157, 5-159 |
| 2876458-0000 | .SPACER | 5-155 |
| 2876459-0000 | .SUPPORT | 5-155 |
| 2876462-0100 | .HEATING CHAMBER | 5-3 |
| 2876469-0000 | .SPACER | 5-131, 5-133 |
| 2876472-0100 | .DROP CHUTE CRADLE | 5-3 |

| Part No | Description | Page No |
|---|---|---|
| 2876473-0000 | .PLATE | 5-131, 5-133 |
| 2876479-0000 | .PLATE | 8-9, 8-11 |
| 2876664-0000 | .COUNTER ROLLER | 1-93, 1-95, 1-97, 1-99, 1-101, 1-103, 1-105, 1-107, 1-109 |
| 2877129-0000 | .PLATE | 5-131, 5-133 |
| 2877148-0100 | .MOTOR UNIT | 3-3 |
| 2877593-0100 | .VALVE | 2-27 |
| 2877756-0000 | .PROTECTION | 1-349, 1-351 |
| 2878186-0000 | .SETTING STOPPER | 3-7, 3-21 |
| 2878193-0000 | .PLATFORM | 2-161, 2-163 |
| 2878205-0000 | .SPACER | 5-131, 5-133 |
| 2878206-0000 | .CHECKER PLATE | 2-161, 2-163 |
| 2878261-0000 | .VALVE | 2-31 |
| 2878384-0000 | .LID | 1-63 |
| 2878566-0000 | .FLANGE | 1-63 |
| 2878567-0000 | .LID | 1-63 |
| 2878600-0000 | .PIN | 1-197, 1-199 |
| 2878601-0000 | .PIN | 1-197, 1-199 |
| 2878927-0100 | .LINK | 4-5 |
| 2878988-0000 | .SPACER | 4-7 |
| 2879069-0000 | .FOLDING BAR | 5-129 |
| 2879073-0000 | .PLATE | 2-31 |
| 2879536-0000 | .GASKET | 2-31 |
| 2879650-0100 | .CIRCUIT | 6-7 |
| 2879651-0100 | .ELECTRICAL CONNECTION | 6-7 |
| 2879652-0100 | .FAN | 6-65 |
| 2881044-0000 | .DAMPER | 5-11, 5-13, 5-15 |
| 2881047-0000 | .BUSHING | 5-11, 5-13, 5-15 |
| 2881048-0000 | .WASHER | 5-11, 5-13, 5-15 |
| 2883084-0000 | .CABLE DUCT | 1-279, 1-281 |
| 2883085-0000 | .RAIL | 1-283, 1-285 |
| 2883086-0000 | .CONNECTION BOX | 1-279, 1-281 |
| 2883087-0000 | .MOUNTING PLATE | 1-279, 1-281 |
| 2883295-0000 | .BUSHING | 1-181 |
| 2884994-0000 | .SPACER | 5-131, 5-133 |
| 2885029-0000 | .ROLLER | 1-153, 1-155 |
| 2885034-0100 | .TUBE FLUSHING | 4-167 |
| 2886173-0000 | .LOCKING RING | 1-197, 1-199 |
| 2886417-0000 | .DISTRIBUTOR | 4-177 |
| 2886418-0000 | .COVER | 4-177 |
| 2887081-0100 | .FLAP GUIDE | 5-105 |
| 2887528-0000 | .HOLDER | 6-11 |
| 2887587-0000 | .PNEUMATIC DIAGRAM | 2-123, 9-45 |
| 2887735-0000 | .FORK | 1-197, 1-199 |
| 2887736-0000 | .BRACKET | 1-197, 1-199 |
| 2887770-0000 | .CLAMP | 5-113, 5-115 |
| 2887771-0000 | .CLAMP | 5-113, 5-115 |
| 2887772-0000 | .BRACKET | 5-113, 5-115 |
| 2887773-0000 | .BRACKET | 5-113, 5-115 |
| 2887887-0100 | .FOLDING PART | 5-105 |
| 2888970-0438 | .TRANSFORMER VMN | 1-81 |
| 2888970-0524 | .TRANSFORMER VMN | 1-81 |
| 2889461-0000 | .ROLLER | 1-135, 1-137 |
| 2889462-0000 | .PLATE | 1-135, 1-137 |
| 2889463-0000 | .LOCK PLATE | 1-135, 1-137 |
| 2889464-0000 | .SHAFT | 1-135, 1-137 |
| 2889589-0000 | .PROTECTION | 5-25, 5-27 |
| 2889590-0100 | .PROTECTIVE COVER | 5-23, 5-29 |
| 2889885-0000 | .BLOCK | 4-13, 4-19 |
| 2889946-0000 | .HOSE | 4-13, 4-19 |
| 2889947-0000 | .HOSE | 4-13, 4-19 |
| 2890041-0000 | .WASHER | 1-181 |
| 2890423-0000 | .ROLLER | 7-47 |
| 2890424-0000 | .FLANGE | 7-47 |
| 2890567-0000 | .SHAFT | 3-15 |
| 2890593-0000 | .PIPE | 1-257 |
| 2890594-0000 | .PIPE | 1-257 |
| 2891551-0000 | .GUIDE | 2-73 |
| 2891696-0000 | .CABLE DUCT | 7-135 |
| 2891813-0000 | .ANGLE PIECE | 7-127 |
| 2891814-0000 | .ADJUSTING SCREW | 7-127 |
| 2891969-0000 | .ROD | 1-299, 1-301 |
| 2891970-0000 | .KNOB | 1-299, 1-301 |
| 2891971-0000 | .PLUG | 1-299, 1-301 |
| 2891993-0000 | .PLATE | 7-13 |
| 2891994-0000 | .SUPPORT | 7-13 |
| 2891995-0000 | .SUPPORT | 7-13 |
| 2891996-0000 | .SUPPORT | 7-29 |
| 2892690-0000 | .BOX | 7-53 |
| 2894048-0000 | .ROUND NUT | 2-69 |
| 2894521-0000 | .CABLE DUCT | 2-147 |
| 2894560-0000 | .SLIDE PLATE | 1-47, 1-49, 1-51 |
| 2894561-0000 | .SLIDE PLATE | 1-47, 1-49, 1-51 |
| 2894562-0000 | .PIPE | 1-325 |
| 2894563-0000 | .PIPE | 1-325 |

| Part No | Description | Page No |
|---|---|---|
| 2894566-0000 | .PLATE | 1-47, 1-49, 1-51 |
| 2894567-0000 | .PLATE | 1-47, 1-49, 1-51 |
| 2894568-0000 | .CHAIN GUIDE | 1-23, 1-25 |
| 2894604-0000 | .PLATE | 1-47, 1-49, 1-51 |
| 2894605-0000 | .BOTTOM PLATE | 1-47, 1-49, 1-51 |
| 2894606-0000 | .AIR GUIDE | 1-47, 1-49, 1-51 |
| 2894609-0000 | .PLATE | 1-65 |
| 2894611-0000 | .PIPE | 1-325 |
| 2894612-0000 | .SHIM | 1-289, 1-291 |
| 2894620-0000 | .FRAME | 1-339 |
| 2894635-0000 | .FRAME | 1-265 |
| 2894653-0000 | .FRAME | 1-289, 1-291 |
| 2894654-0000 | .COVER | 1-239 |
| 2894655-0000 | .COVER | 1-239 |
| 2894656-0000 | .COVER | 1-239 |
| 2894657-0000 | .PLATE | 1-239 |
| 2894658-0000 | .HANGER | 1-239 |
| 2895150-0000 | .PNEUMATIC DIAGRAM | 1-203, 9-45 |
| 2895153-0000 | .PEROXIDE CHAMBER | 1-271, 1-273 |
| 2895155-0000 | .INSULATING MAT | 1-271, 1-273 |
| 2895156-0000 | .SPACER | 1-271, 1-273 |
| 2895158-0000 | .STEAM PIPE | 1-255 |
| 2895213-0000 | .BRACKET | 9-7, 9-9, 9-13, 9-15 |
| 2895374-0000 | .BLOCK | 7-127 |
| 2895375-0000 | .PIN | 7-131 |
| 2895457-0000 | .ROLLER | 1-121, 1-123 |
| 2895458-0000 | .ROLLER | 1-121, 1-123 |
| 2895459-0000 | .ROLLER | 1-121, 1-123 |
| 2895460-0000 | .ROLLER | 1-121, 1-123 |
| 2895461-0000 | .ROLLER | 1-121, 1-123 |
| 2895462-0000 | .ROLLER | 1-121, 1-123 |
| 2895463-0000 | .ROLLER | 1-121, 1-123 |
| 2895566-0000 | .BLOCK | 5-79, 5-81 |
| 2895567-0000 | .BAR | 5-79, 5-81 |
| 2895568-0100 | .FRAMEWORK | 5-3 |
| 2895569-0000 | .BOTTOM PLATE | 5-53, 5-55, 5-57, 5-59, 5-61 |
| 2895570-0000 | .PLATE | 5-43 |
| 2896520-0000 | .ROLLER | 1-135, 1-137 |
| 2897024-0000 | .HANDLE | 7-127 |
| 2897116-0000 | .INDEXING DEVICE | 5-39 |
| 2897901-0000 | .ROLLER | 1-101, 1-103, 1-105, 1-107, 1-109 |
| 2897947-0000 | .INSERT | 4-9 |
| 2898028-0000 | .SPACER | 5-131, 5-133 |
| 2898029-0000 | .NOZZLE | 5-131, 5-133 |
| 2898030-0000 | .NOZZLE | 5-131, 5-133 |
| 2898033-0000 | .AIR NOZZLE | 5-131, 5-133 |
| 2898034-0000 | .AIR NOZZLE | 5-131, 5-133 |
| 2898035-0000 | .SPACER | 5-131, 5-133 |
| 2898203-0000 | .VALVE CONE | 1-219 |
| 2898309-0000 | .ROLLER | 1-101, 1-103, 1-105, 1-107, 1-109 |
| 2898310-0000 | .ROLLER | 1-101, 1-103, 1-105, 1-107, 1-109 |
| 2898342-0000 | .LUBRICATION DIAGRAM | 9-45 |
| 2898343-0000 | .DIAGRAM | 6-41, 9-45 |
| 2898459-0000 | .PROTECTION | 1-265 |
| 2898564-0000 | .BEARING HOUSING | 4-89, 4-91 |
| 2898565-0000 | .CUTTING JAW | 4-89, 4-91 |
| 2898568-0000 | .FOLDING FLAP | 4-93, 4-95, 4-109, 4-111 |
| 2898569-0000 | .FOLDING FLAP | 4-93, 4-95, 4-109, 4-111 |
| 2899089-0000 | .SPACER | 1-271, 1-273 |
| 2899090-0000 | .SQUARE TUBE | 1-271, 1-273 |
| 2900026-0000 | .SUPPORT | 7-65 |
| 2900397-0000 | .PLATE | 4-173, 4-175 |
| 2900398-0001 | .RAIL BRACKET | 4-169, 4-171 |
| 2900398-0002 | .RAIL BRACKET | 4-169, 4-171 |
| 2900398-0003 | .RAIL BRACKET | 4-169, 4-171 |
| 2900398-0004 | .RAIL BRACKET | 4-169, 4-171 |
| 2900399-0000 | .VOLUME CAM | 4-169, 4-171 |
| 2900400-0000 | .VOLUME CAM | 4-169, 4-171 |
| 2900401-0000 | .PULLER CAM | 4-169, 4-171 |
| 2900402-0000 | .PULLER CAM | 4-169, 4-171 |
| 2901065-0000 | .BRACKET | 5-113, 5-115 |
| 2901066-0000 | .GUIDE | 5-107, 5-109, 5-111 |
| 2901067-0000 | .GUIDE | 5-107, 5-109, 5-111 |
| 2901068-0000 | .GUIDE | 5-107, 5-109, 5-111 |
| 2901069-0000 | .GUIDE | 5-107, 5-109, 5-111 |
| 2901119-0000 | .WATER DIAGRAM | 6-87, 6-89, 9-45 |
| 2901228-0000 | .ROLLER | 1-135, 1-137 |
| 2901229-0000 | .ROLLER | 1-135, 1-137 |
| 2901291-0000 | .ROLLER | 1-135, 1-137 |
| 2901591-0000 | .CABLE DUCT | 2-241 |
| 2901594-0000 | .COVER PLATE | 2-245 |
| 2901822-0100 | .ELECTRICAL CONNECTION | 6-15 |
| 2902006-0000 | .SHAFT | 4-127, 4-129, 4-131, 4-145, 4-147, 4-149, 4-153, 4-155, 4-157, 4-161, 4-163, 4-165 |
| 2902007-0000 | .VOLUME FLAP | 4-115, 4-117, 4-135, 4-137 |

| Part No | Description | Page No |
|---|---|---|
| 2902008-0000 | .VOLUME FLAP | 4-115, 4-117, 4-135, 4-137 |
| 2902009-0000 | .SIDE PLATE | 4-115, 4-117, 4-135, 4-137 |
| 2902010-0000 | .SIDE PLATE | 4-115, 4-117, 4-135, 4-137 |
| 2902011-0000 | .BRACKET | 4-115, 4-117, 4-135, 4-137 |
| 2902012-0000 | .01BRACKET | 4-115, 4-117, 4-135, 4-137 |
| 2902078-0100 | .EMERGENCY STOP | 2-215 |
| 2902082-0000 | .AIR NOZZLE | 5-131, 5-133 |
| 2902083-0000 | .AIR NOZZLE | 5-131, 5-133 |
| 2902296-0000 | .ADAPTER | 2-239 |
| 2903581-0000 | .GUIDE | 5-113, 5-115 |
| 2903582-0000 | .GUIDE | 5-107, 5-109, 5-111 |
| 2903583-0000 | .GUIDE | 5-107, 5-109, 5-111 |
| 2903584-0000 | .GUIDE | 5-107, 5-109, 5-111 |
| 2903585-0000 | .GUIDE | 5-107, 5-109, 5-111 |
| 2903586-0000 | .SPACER | 5-107, 5-109, 5-111 |
| 2903761-0000 | .RAIL | 4-57, 4-59 |
| 2903762-0000 | .RAIL | 4-65, 4-67 |
| 2903813-0100 | .SIGNAL LAMP | 2-161, 2-163 |
| 2904947-0100 | .EMERGENCY STOP | 7-169 |
| 2905199-0000 | .HOLDER | 4-115, 4-117, 4-127, 4-129, 4-131, 4-135, 4-137, 4-145, 4-147, 4-149, 4-153, 4-155, 4-157, 4-161, 4-163, 4-165 |
| 2905200-0000 | .ARM | 4-115, 4-117, 4-135, 4-137 |
| 2905201-0000 | .SPACER SCREW | 4-115, 4-117, 4-135, 4-137 |
| 2905297-0000 | .ANGLE | 2-73 |
| 2905298-0000 | .ANGLE | 2-73 |
| 2905299-0000 | .ANGLE | 2-73 |
| 2905300-0000 | .PLATE | 2-73 |
| 2906004-0000 | .GUIDE | 5-113, 5-115 |
| 2906006-0000 | .RAIL | 5-107, 5-109, 5-111 |
| 2906007-0000 | .RAIL | 5-107, 5-109, 5-111 |
| 2906008-0000 | .GUIDE | 5-107, 5-109, 5-111 |
| 2906009-0000 | .GUIDE | 5-107, 5-109, 5-111 |
| 2906011-0000 | .HOLDER | 5-107, 5-109, 5-111 |
| 2906166-0000 | .NOZZLE | 5-131, 5-133 |
| 2906167-0000 | .NOZZLE | 5-131, 5-133 |
| 2906172-0000 | .ARM | 4-115, 4-117, 4-135, 4-137 |
| 2907794-0000 | .CARRIER PRESSURE LEFT | 4-77, 4-79 |
| 2907795-0000 | .LID | 4-55 |
| 2907797-0000 | .PIN | 4-127, 4-129, 4-131, 4-145, 4-147, 4-149, 4-153, 4-155, 4-157, 4-161, 4-163, 4-165 |
| 2907798-0000 | .SHAFT | 4-127, 4-129, 4-131, 4-145, 4-147, 4-149, 4-153, 4-155, 4-157, 4-161, 4-163, 4-165 |
| 2907800-0000 | .SHAFT | 4-127, 4-129, 4-131, 4-145, 4-147, 4-149, 4-153, 4-155, 4-157, 4-161, 4-163, 4-165 |
| 2907804-0000 | .SPRING | 4-127, 4-129, 4-131, 4-145, 4-147, 4-149, 4-153, 4-155, 4-157, 4-161, 4-163, 4-165 |
| 2907805-0000 | .SPRING | 4-127, 4-129, 4-131, 4-145, 4-147, 4-149, 4-153, 4-155, 4-157, 4-161, 4-163, 4-165 |
| 2907806-0000 | .LEVER | 4-127, 4-129, 4-131, 4-145, 4-147, 4-149, 4-153, 4-155, 4-157, 4-161, 4-163, 4-165 |
| 2907807-0000 | .SLIDER | 4-127, 4-129, 4-131, 4-145, 4-147, 4-149, 4-153, 4-155, 4-157, 4-161, 4-163, 4-165 |
| 2907808-0000 | .BRACKET | 4-115, 4-117, 4-135, 4-137 |
| 2907809-0000 | .BRACKET | 4-115, 4-117, 4-135, 4-137 |
| 2907814-0000 | .BRACKET | 2-73 |
| 2907974-0000 | .FRAME | 1-135, 1-137 |
| 2907975-0000 | .BRACKET | 1-135, 1-137 |
| 2908923-0000 | .TOOL | 9-37 |
| 2908996-0000 | .TOOL | 9-37 |
| 2908997-0100 | .TOOL | 9-35 |
| 2909028-0000 | .GUIDE PIN | 5-107, 5-109, 5-111 |
| 2909029-0000 | .GUIDE PIN | 5-107, 5-109, 5-111 |
| 2909030-0000 | .FOLDING BAR | 5-107, 5-109, 5-111 |
| 2909137-0000 | .AXLE PIN | 4-125 |
| 2909138-0000 | .ROLLER | 4-125 |
| 2909294-0100 | .LIGHT FIXTURE | 2-87 |
| 2909295-0100 | .LIGHT FIXTURE | 2-87 |
| 2909301-0000 | .BUSBAR | 4-57, 4-59 |
| 2909302-0000 | .BUSBAR | 4-65, 4-67 |
| 2909303-0000 | .CARRIER CUTTING LEFT | 4-81, 4-83 |
| 2909304-0000 | .BEARING HOUSING | 4-89, 4-91 |
| 2909305-0000 | .CUTTING JAW | 4-89, 4-91 |
| 2909308-0000 | .SLEEVE | 4-97 |
| 2909309-0000 | .PLUNGER | 4-97 |
| 2909310-0000 | .COVER | 4-97 |
| 2909311-0000 | .KNIFE | 4-71 |
| 2909315-0001 | .RAIL BRACKET | 4-169, 4-171 |
| 2909315-0002 | .RAIL BRACKET | 4-169, 4-171 |
| 2909316-0000 | .VOLUME CAM | 4-169, 4-171 |
| 2909317-0000 | .ECCENTRIC | 4-169, 4-171 |
| 2909318-0000 | .ECCENTRIC | 4-169, 4-171 |
| 2909504-0000 | .BUSHING | 3-15 |
| 2909505-0000 | .ROCKER | 3-15 |
| 2909506-0000 | .FOLDING BAR | 5-107, 5-109, 5-111 |
| 2909728-0100 | .PRINTER SUPPORT | 9-3 |
| 2909791-0000 | .SUPPORT | 1-135, 1-137 |
| 2910374-0000 | .LEVER | 1-63 |
| 2910375-0000 | .SHAFT | 1-63 |
| 2910376-0000 | .NUT | 1-63 |
| 2910377-0000 | .PIN | 1-63 |
| 2911509-0000 | .BAR | 5-79, 5-81 |

| Part No | Description | Page No |
|---|---|---|
| 2911510-0000 | .BLOCK | 5-79, 5-81 |
| 2911622-0000 | .SHAFT | 4-127, 4-129, 4-131, 4-145, 4-147, 4-149, 4-153, 4-155, 4-157, 4-161, 4-163, 4-165 |
| 2911623-0000 | .WASHER | 4-127, 4-129, 4-131, 4-145, 4-147, 4-149, 4-153, 4-155, 4-157, 4-161, 4-163, 4-165 |
| 2911787-0000 | .WATER DIAGRAM | 6-87, 6-89, 9-45 |
| 2912006-0000 | .KNIFE | 4-71 |
| 2912007-0000 | .BUSHING | 4-89, 4-91 |
| 2912153-0000 | .SPACER | 5-131, 5-133 |
| 2912154-0000 | .SPACER | 5-131, 5-133 |
| 2912157-0000 | .AIR NOZZLE | 5-131, 5-133 |
| 2912158-0000 | .AIR NOZZLE | 5-131, 5-133 |
| 2912163-0000 | .AIR NOZZLE | 5-131, 5-133 |
| 2912164-0000 | .AIR NOZZLE | 5-131, 5-133 |
| 2912326-0000 | .LABEL | 7-139, 7-141 |
| 2912327-0000 | .LABEL | 7-139, 7-141 |
| 2912354-0000 | .PLATE | 4-89, 4-91 |
| 2912355-0000 | .BEARING HOUSING | 4-89, 4-91 |
| 2912356-0000 | .CUTTING JAW | 4-89, 4-91 |
| 2912359-0000 | .FOLDING FLAP | 4-93, 4-95, 4-109, 4-111 |
| 2912360-0000 | .FOLDING FLAP | 4-93, 4-95, 4-109, 4-111 |
| 2912505-0000 | .GUIDE | 5-31, 5-33, 5-35, 5-37 |
| 2912506-0000 | .GUIDE | 5-31, 5-33, 5-35, 5-37 |
| 2912507-0000 | .GUIDE | 5-31, 5-33, 5-35, 5-37 |
| 2912508-0000 | .GUIDE | 5-31, 5-33, 5-35, 5-37 |
| 2912511-0000 | .BLOCKING PIECE | 5-89, 5-91 |
| 2912644-0000 | .SUPPORT | 8-53 |
| 2912646-0000 | .HOSE | 8-69 |
| 2912647-0100 | .COOLING UNIT | 8-3 |
| 2912699-0100 | .LOWER FORMING RING | 1-87 |
| 2912700-0100 | .UPPER FORMING RING | 1-87 |
| 2912702-0100 | .FORMING RING | 1-87 |
| 2912703-0100 | .EDGE ROLLER | 1-87 |
| 2912704-0100 | .SEAL | 1-87 |
| 2913594-0000 | .CRADLE | 5-19 |
| 2913595-0000 | .ATTACHMENT PLATE | 5-123, 5-125, 5-127 |
| 2913596-0000 | .GUIDE | 5-129 |
| 2913597-0000 | .GUIDE | 5-129 |
| 2913598-0000 | .GUIDE | 5-129 |
| 2913599-0000 | .GUIDE | 5-129 |
| 2913600-0000 | .FOLDING PART | 5-107, 5-109, 5-111 |
| 2913601-0000 | .FOLDING PART | 5-107, 5-109, 5-111 |
| 2914523-0100 | .VALVE PANEL | 1-309 |
| 2914524-0100 | .VALVE RAMP | 1-313, 1-315 |
| 2914525-0100 | .VALVE RAMP | 1-313, 1-315 |
| 2914526-0000 | .PLATE | 1-313, 1-315 |
| 2914801-0000 | .COVER | 1-271, 1-273 |
| 2914802-0000 | .COVER | 1-271, 1-273 |
| 2914952-0000 | .SPACER | 1-271, 1-273 |
| 2914980-0000 | .PLATE | 5-177 |
| 2914981-0000 | .COLUMN | 5-177 |
| 2914982-0000 | .SHAFT | 5-177 |
| 2914983-0000 | .SUPPORT | 5-177 |
| 2914984-0000 | .PULLEY | 5-177 |
| 2914985-0000 | .PLATE | 5-177 |
| 2914987-0000 | .SPACER | 5-177 |
| 2914988-0000 | .SUPPORT | 5-173 |
| 2914989-0000 | .SUPPORT | 5-169 |
| 2915909-0000 | .INSULATING MAT | 1-271, 1-273 |
| 2916130-0000 | .SLIDER | 4-127, 4-129, 4-131, 4-145, 4-147, 4-149, 4-153, 4-155, 4-157, 4-161, 4-163, 4-165 |
| 2916131-0000 | .LEVER | 4-127, 4-129, 4-131, 4-145, 4-147, 4-149, 4-153, 4-155, 4-157, 4-161, 4-163, 4-165 |
| 2916132-0000 | .BRACKET | 4-115, 4-117, 4-135, 4-137 |
| 2916133-0000 | .BRACKET | 4-115, 4-117, 4-135, 4-137 |
| 2916134-0000 | .BRACKET | 4-115, 4-117, 4-135, 4-137 |
| 2916135-0000 | .BRACKET | 4-115, 4-117, 4-135, 4-137 |
| 2916427-0000 | .BRACKET | 1-265 |
| 2916858-0000 | .TENSION SPRING | 4-153, 4-155, 4-157, 4-161, 4-163, 4-165 |
| 2916867-0000 | .SUPPORT RING | 1-135, 1-137 |
| 2916971-0000 | .SHAFT | 4-127, 4-129, 4-131, 4-145, 4-147, 4-149, 4-153, 4-155, 4-157, 4-161, 4-163, 4-165 |
| 2916977-0000 | .PLATE | 4-173, 4-175 |
| 2916978-0001 | .RAIL BRACKET | 4-169, 4-171 |
| 2916978-0002 | .RAIL BRACKET | 4-169, 4-171 |
| 2916978-0003 | .RAIL BRACKET | 4-169, 4-171 |
| 2916978-0004 | .RAIL BRACKET | 4-169, 4-171 |
| 2916979-0000 | .VOLUME CAM | 4-169, 4-171 |
| 2916980-0000 | .VOLUME CAM | 4-169, 4-171 |
| 2916981-0000 | .PULLER CAM | 4-169, 4-171 |
| 2916982-0000 | .PULLER CAM | 4-169, 4-171 |
| 2916983-0000 | .CAM | 4-173, 4-175 |
| 2916984-0000 | .BUSHING | 4-127, 4-129, 4-131, 4-145, 4-147, 4-149, 4-153, 4-155, 4-157, 4-161, 4-163, 4-165 |
| 2917307-0000 | .BUSHING | 4-115, 4-117, 4-135, 4-137 |
| 2917310-0001 | .HOLDER | 4-127, 4-129, 4-131 |
| 2917310-0002 | .HOLDER | 4-153, 4-155, 4-157 |
| 2917311-0001 | .HOLDER | 4-145, 4-147, 4-149 |
| 2917311-0002 | .HOLDER | 4-161, 4-163, 4-165 |
| 2917420-0000 | .SIGN | 7-89 |


Machine Type Group Description Page No

| Part No | Description | Page No |
|---|---|---|
| 2918380-0000 | .ROLLER | 1-63 |
| 2918659-0000 | .PIPE | 5-89, 5-91 |
| 2918660-0000 | .8IPE | 5-89, 5-91 |
| 2918720-0000 | .COVER | 8-53 |
| 2918723-0000 | .DIVIDER | 8-9, 8-11 |
| 2918724-0000 | .DIVIDER | 8-9, 8-11 |
| 2918725-0000 | .DIVIDER | 8-9, 8-11 |
| 2918726-0000 | .DIVIDER | 8-9, 8-11 |
| 2918727-0000 | .DIVIDER | 8-9, 8-11 |
| 2918728-0000 | .COVER | 8-45 |
| 2918729-0000 | .COVER | 8-45 |
| 2918730-0000 | .HOSE | 8-69 |
| 2918731-0000 | .HOSE | 8-69 |
| 2918733-0000 | .FUSE PANEL LABEL | 8-49 |
| 2919381-0000 | .AIR NOZZLE | 5-131, 5-133 |
| 2919382-0000 | .AIR NOZZLE | 5-131, 5-133 |
| 2919384-0000 | .SPACER | 5-131, 5-133 |
| 2921236-0001 | .HOLDER | 4-127, 4-129, 4-131 |
| 2921236-0002 | .HOLDER | 4-153, 4-155, 4-157 |
| 2921237-0001 | .HOLDER | 4-145, 4-147, 4-149 |
| 2921237-0002 | .HOLDER | 4-161, 4-163, 4-165 |
| 2921259-0000 | .BRACKET | 5-161 |
| 2921261-0000 | .BOTTOM PANEL | 5-161 |
| 2921262-0000 | .SPACER | 5-161 |
| 2921263-0100 | .WHEEL CURVE 90 DEGREES | 5-157, 5-159 |
| 2921264-0000 | .SPACER | 5-161 |
| 2921265-0000 | .SIDE PLATE | 5-161 |
| 2921266-0100 | .OUTFEED CONVEYOR | 5-153 |
| 2921267-0100 | .RAILING KIT | 5-157, 5-159 |
| 2921639-0000 | .SUPPORT | 5-153 |
| 2921640-0000 | .SUPPORT | 5-157, 5-159 |
| 2921642-0000 | .SIDE PLATE | 5-161 |
| 2921643-0100 | .OUTFEED SERVO | 5-153 |
| 2921644-0000 | .MOTOR | 5-177 |
| 2921645-0000 | .PLATE | 5-177 |
| 2921646-0100 | .FOLDING PART | 5-153 |
| 2921647-0000 | .ARCH | 5-169 |
| 2921648-0000 | .ARCH | 5-173 |
| 2921684-0000 | .PROTECTION | 7-89 |
| 2922201-0000 | .PLATE | 4-173, 4-175 |
| 2922321-0001 | .PIVOT BRACKET | 6-33 |
| 2922322-0001 | .RETURN PIPE | 6-37 |
| 2922434-0000 | .CARRIER CUTTING RIGHT | 4-103, 4-105 |
| 2922435-0000 | .CARRIER PRESSURE RIGHT | 4-99, 4-101 |
| 2922436-0000 | .SHAFT | 4-77, 4-79, 4-99, 4-101 |
| 2922437-0000 | .SCREW | 4-77, 4-79, 4-99, 4-101 |
| 2922438-0000 | .PLATE | 4-81, 4-83, 4-103, 4-105 |
| 2922439-0000 | .SHIM | 4-81, 4-83, 4-103, 4-105 |
| 2922526-0001 | .HOLDER | 4-127, 4-129, 4-131 |
| 2922526-0002 | .HOLDER | 4-153, 4-155, 4-157 |
| 2922527-0001 | .HOLDER | 4-145, 4-147, 4-149 |
| 2922527-0002 | .HOLDER | 4-161, 4-163, 4-165 |
| 2922528-0001 | .HOLDER | 4-127, 4-129, 4-131 |
| 2922528-0002 | .HOLDER | 4-153, 4-155, 4-157 |
| 2922529-0001 | .HOLDER | 4-145, 4-147, 4-149 |
| 2922529-0002 | .HOLDER | 4-161, 4-163, 4-165 |
| 2922530-0001 | .HOLDER | 4-127, 4-129, 4-131 |
| 2922530-0002 | .HOLDER | 4-153, 4-155, 4-157 |
| 2922531-0001 | .HOLDER | 4-145, 4-147, 4-149 |
| 2922531-0002 | .HOLDER | 4-161, 4-163, 4-165 |
| 2922532-0100 | .SOFTWARE | 10-3 |
| 2922533-0100 | .ELECTRICAL DOCUMENT | 10-3 |
| 2922694-0001 | .SPACER | 4-169, 4-171 |
| 2922694-0002 | .SPACER | 4-169, 4-171 |
| 2922695-0000 | .DISTRIBUTOR | 4-177 |
| 2922696-0000 | .SHAFT | 4-173, 4-175 |
| 2922698-0000 | .PLATE | 4-169, 4-171 |
| 2922700-0000 | .PULLER CAM | 4-169, 4-171 |
| 2922701-0000 | .PULLER CAM | 4-169, 4-171 |
| 2922729-0000 | .SHUTTER | 1-181 |
| 2922731-0000 | .SHOULDER SCREW | 1-181 |
| 2922911-0000 | .BLOCK | 5-79, 5-81 |
| 2922970-0000 | .ARCH | 5-169, 5-173 |
| 2922971-0000 | .DOWEL | 5-169, 5-173 |
| 2922972-0100 | .OUTFEEDER | 5-3 |
| 2922973-0000 | .BELT | 5-177 |
| 2922975-0100 | .RAILING KIT | 5-157, 5-159 |
| 2922976-0000 | .FINGER | 5-179 |
| 2922977-0000 | .SUPPORT | 5-169 |
| 2922978-0000 | .BRACKET | 5-173 |
| 2923889-0000 | .BRACKET | 1-63 |
| 2925961-0100 | .HUB | 5-45, 5-47, 5-49, 5-51 |
| 2925962-0000 | .GUIDE | 5-31, 5-33, 5-35, 5-37 |
| 2925963-0000 | .GUIDE | 5-31, 5-33, 5-35, 5-37 |

| Part No | Description | Page No |
|---|---|---|
| 2925964-0100 | .FLAP | 5-45, 5-47, 5-49, 5-51 |
| 2925965-0100 | .BOTTOM | 5-45, 5-47, 5-49, 5-51 |
| 2926125-0000 | .BRACKET | 5-131, 5-133 |
| 2926126-0000 | .AIR NOZZLE | 5-131, 5-133 |
| 2927011-0000 | .PLATE | 8-5, 8-7 |
| 2927013-0000 | .DIVIDER | 8-9, 8-11 |
| 2927014-0000 | .DIVIDER | 8-9, 8-11 |
| 2927015-0000 | .DIVIDER | 8-9, 8-11 |
| 2927017-0000 | .SUPPORT | 8-5, 8-7 |
| 2927018-0000 | .HOSE | 8-69 |
| 2927548-0100 | .FLAP | 5-65, 5-67, 5-69, 5-71 |
| 2927549-0100 | .FLAP | 5-65, 5-67, 5-69, 5-71 |
| 2927613-0100 | .WHEEL | 5-3 |
| 2927615-0000 | .CABLE DUCT | 7-41, 7-43 |
| 2927616-0000 | .COVER | 7-41, 7-43 |
| 2927619-0000 | .COVER | 7-41, 7-43 |
| 2927620-0000 | .COVER | 7-41, 7-43 |
| 2927621-0000 | .BEARING BLOCK | 7-41, 7-43 |
| 2927622-0000 | .BEARING BLOCK | 7-41, 7-43 |
| 2927623-0000 | .COVER | 7-41, 7-43 |
| 2927638-0000 | .TIMING BELT | 5-31, 5-33, 5-35, 5-37 |
| 2927639-0000 | .TIMING BELT | 5-31, 5-33, 5-35, 5-37 |
| 2927640-0100 | .INFEED CONVEYOR SHORT | 5-21 |
| 2927641-0000 | .PLATE | 5-29 |
| 2927642-0000 | .TOOTHED PULLEY | 5-29 |
| 2928342-0000 | .FOLDING FLAP | 4-93, 4-95, 4-109, 4-111 |
| 2928343-0000 | .FOLDING FLAP | 4-93, 4-95, 4-109, 4-111 |
| 2929028-0000 | .BLOCK | 5-79, 5-81 |
| 2929029-0000 | .BAR | 5-79, 5-81 |
| 2929030-0000 | .BOTTOM | 5-53, 5-55, 5-57, 5-59, 5-61 |
| 2929031-0000 | .SPACER | 5-129 |
| 2929032-0000 | .SPACER | 5-129 |
| 2929033-0000 | .SPACER | 5-129 |
| 2929034-0000 | .GUIDE | 5-129 |
| 2929035-0000 | .GUIDE | 5-129 |
| 2929036-0000 | .SPACER | 5-129 |
| 2930255-0100 | .WASTE CONVEYOR | 2-3 |
| 2930256-0000 | .CHUTE | 2-245 |
| 2930257-0000 | .SHAFT | 2-245 |
| 2930258-0000 | .DRIVE SHAFT | 2-245 |
| 2930259-0000 | .COVER | 2-245 |
| 2930260-0000 | .BRACKET | 2-245 |
| 2930262-0000 | .GUARD PLATE | 2-245 |
| 2930263-0000 | .PLATE | 2-245 |
| 2930264-0000 | .CONVEYOR CHAIN | 2-245 |
| 2930265-0000 | .FASTENING PLATE | 2-245 |
| 2930268-0000 | .BRACKET | 2-245 |
| 2930277-0000 | .SUPPORT | 2-247 |
| 2930278-0000 | .HOLDER | 2-247 |
| 2930279-0001 | .RAIL BRACKET | 4-169, 4-171 |
| 2930279-0002 | .RAIL BRACKET | 4-169, 4-171 |
| 2930279-0003 | .RAIL BRACKET | 4-169, 4-171 |
| 2930279-0004 | .RAIL BRACKET | 4-169, 4-171 |
| 2930283-0000 | .PULLER CAM | 4-169, 4-171 |
| 2930284-0001 | .HOLDER | 4-127, 4-129, 4-131 |
| 2930284-0002 | .HOLDER | 4-153, 4-155, 4-157 |
| 2930285-0001 | .HOLDER | 4-145, 4-147, 4-149 |
| 2930285-0002 | .HOLDER | 4-161, 4-163, 4-165 |
| 2930293-0000 | .PLATE | 4-173, 4-175 |
| 2930867-0000 | .BRACKET | 4-73, 4-75 |
| 2931192-0000 | .IMPELLER WHEEL | 2-33 |
| 2931193-0000 | .AIR NOZZLE | 5-131, 5-133 |
| 2931194-0000 | .AIR NOZZLE | 5-131, 5-133 |
| 2931344-0000 | .CAM | 4-173, 4-175 |
| 2931345-0000 | .CAM | 4-173, 4-175 |
| 2931346-0000 | .SPACER | 5-131, 5-133 |
| 2931347-0000 | .SPACER | 5-131, 5-133 |
| 2931380-0100 | .FRAME | 5-3 |
| 2931384-0000 | .GUIDE | 5-129 |
| 2931385-0100 | .INDEXING UNIT | 5-3 |
| 2931386-0000 | .SPACER | 5-131, 5-133 |
| 2931388-0100 | .FOLDING DEVICE | 5-79, 5-81 |
| 2931389-0100 | .INFEED CONVEYOR VARIANT | 5-3 |
| 2931467-0000 | .COVER | 7-13 |
| 2931944-0000 | .COVER | 4-177 |
| 2931945-0000 | .NOZZLE | 4-177 |
| 2932046-0000 | .CRANK | 2-247 |
| 2932047-0100 | .HAND CRANK | 2-3 |
| 2932048-0000 | .PLATE | 2-247 |
| 2932049-0000 | .RUBBER SEAL | 2-247 |
| 2932450-0000 | .BRACKET | 7-47 |
| 2932827-0000 | .BOTTOM | 5-53, 5-55, 5-57, 5-59, 5-61 |
| 2933050-0000 | .HANGER | 7-41, 7-43 |
| 2933180-0000 | .FOLDING BAR | 5-117, 5-119 |

| Part No | Description | Page No |
|---|---|---|
| 2933181-0000 | .FOLDING BAR | 5-117, 5-119 |
| 2933542-0000 | .ROLLER BRACKET | 7-11 |
| 2933544-0000 | .ROLLER | 7-9, 7-11, 7-23, 7-25 |
| 2933545-0000 | .PLATE | 7-11 |
| 2933546-0000 | .SHAFT | 7-11 |
| 2934252-0000 | .ROLLER BRACKET | 7-23 |
| 2934253-0000 | .AXLE PIN | 7-9, 7-23 |
| 2934254-0000 | .COVER | 7-23, 7-25 |
| 2934255-0100 | .ROPE BRACKET | 7-13 |
| 2934256-0000 | .ROLLER BRACKET | 7-25 |
| 2934257-0100 | .ROPE BRACKET | 7-13 |
| 2934366-0000 | .BRACKET | 1-83 |
| 2934367-0000 | .BRACKET | 1-83 |
| 2934368-0000 | .PROTECTION | 1-83 |
| 2935134-0000 | .AXLE PIN | 7-25 |
| 2935135-0000 | .PIPE | 7-9 |
| 2935136-0100 | .LOCKING DEVICE | 7-7 |
| 2935820-0100 | .ROPE BRACKET | 7-7 |
| 2936209-0000 | .PLATE | 5-11, 5-13, 5-15 |
| 2936210-0000 | .PLATE | 5-11, 5-13, 5-15 |
| 2936211-0000 | .PLATE | 5-11, 5-13, 5-15 |
| 2936212-0000 | .PLATE | 5-11, 5-13, 5-15 |
| 2936213-0000 | .BRACKET | 5-11, 5-13, 5-15 |
| 2936230-0000 | .PLATE | 7-7 |
| 2936335-0000 | .CHAIN | 1-239 |
| 2936336-0000 | .PIPE | 1-259 |
| 2936337-0000 | .PIPE SUPPORT | 1-261 |
| 2936342-0000 | .STOP PLATE | 1-313, 1-315 |
| 2936343-0000 | .ARM | 1-47, 1-49, 1-51 |
| 2936344-0000 | .BRACKET | 1-47, 1-49, 1-51 |
| 2936345-0000 | .PIPE | 1-269 |
| 2936346-0000 | .PIPE | 1-269 |
| 2936347-0000 | .PIPE | 1-269 |
| 2936349-0000 | .PIPE | 1-267 |
| 2936350-0000 | .TUBE | 1-193 |
| 2936351-0000 | .PIPE | 1-265 |
| 2936352-0000 | .PIPE | 1-265 |
| 2936480-0000 | .CABLE DUCT | 2-245 |
| 2936881-0003 | .RAIL BRACKET | 4-169, 4-171 |
| 2936881-0004 | .RAIL BRACKET | 4-169, 4-171 |
| 2937242-0000 | .GUIDE | 5-31, 5-33, 5-35, 5-37 |
| 2937243-0000 | .GUIDE | 5-31, 5-33, 5-35, 5-37 |
| 2937284-0100 | .DRAINING CONDENSE | 1-69 |
| 2937351-0000 | .FOLDING BAR | 5-117, 5-119 |
| 2937352-0000 | .FOLDING BAR | 5-117, 5-119 |
| 2937586-0000 | .BRACKET | 5-157, 5-159 |
| 2937587-0000 | .SUPPORT | 5-177 |
| 2937887-0000 | .RAILING | 2-161, 2-163 |
| 2937960-0000 | .RAILING | 2-161, 2-163 |
| 2937961-0000 | .TOE PLATE | 2-161, 2-163 |
| 2938199-0000 | .FOLDING BAR | 5-117, 5-119 |
| 2938200-0000 | .FOLDING BAR | 5-117, 5-119 |
| 2940174-0000 | .SHIM | 7-41, 7-43 |
| 2940879-0000 | .RAIL | 4-57, 4-59 |
| 2940880-0000 | .RAIL | 4-65, 4-67 |
| 2941709-0000 | .AXLE PIN | 7-87 |
| 2941710-0000 | .GUIDE WHEEL | 7-87 |
| 2941759-0000 | .COVER | 2-209 |
| 2941760-0000 | .PROTECTION | 2-209 |
| 2941761-0000 | .COVER | 2-209 |
| 2941762-0000 | .FRONT COVER | 2-209 |
| 2941763-0000 | .SEALING STRIP | 2-209 |
| 2941764-0000 | .SEALING STRIP | 2-209 |
| 2941765-0000 | .TUNNEL | 2-209 |
| 2941766-0000 | .COVERING PLATE | 2-209 |
| 2941767-0000 | .GASKET | 2-209 |
| 2941768-0000 | .GASKET | 2-209 |
| 2941769-0000 | .PLATE | 2-245 |
| 2941770-0100 | .FRONT COVER | 2-199 |
| 2944193-0000 | .VOLUME BULGE | 4-57, 4-59, 4-65, 4-67 |
| 2944194-0000 | .VOLUME BULGE | 4-57, 4-59, 4-65, 4-67 |
| 2944545-0000 | .SHAFT | 7-83 |
| 2944780-0000 | .SUPPORT | 5-123, 5-125, 5-127 |
| 2945841-0000 | .SHAFT | 4-173, 4-175 |
| 2946869-0000 | .PLATE | 1-39, 1-41 |
| 2946870-0000 | .PLATE | 1-39, 1-41 |
| 2946871-0000 | .BRACKET | 1-39, 1-41 |
| 2946883-0000 | .SPACER | 1-121, 1-123 |
| 2946884-0000 | .SUPPORT ROLLER | 1-157, 1-159 |
| 2946885-0000 | .BRACKET | 1-157, 1-159 |
| 2946894-0000 | .BENDING ROLLER | 1-271, 1-273 |
| 2946895-0000 | .SHAFT | 1-43, 1-45 |
| 2946896-0000 | .FLANGE | 1-57, 1-59 |
| 2946897-0000 | .FLANGE | 1-57, 1-59 |

| Part No | Description | Page No |
|---|---|---|
| 2946898-0000 | .CHAIN GUIDE | 1-23, 1-25 |
| 2946917-0000 | .SPRING | 1-197, 1-199 |
| 2947624-0100 | .PUSHER | 5-179 |
| 2947625-0000 | .PUSHER | 5-181 |
| 2947626-0000 | .PUSHER | 5-181 |
| 2948626-0000 | .ROLLER | 4-93, 4-95, 4-109, 4-111 |
| 2948627-0000 | .SHAFT | 4-93, 4-95, 4-109, 4-111 |
| 2948628-0000 | .CARRIER | 4-93, 4-95, 4-109, 4-111 |
| 2948629-0000 | .CARRIER RULER | 4-93, 4-95 |
| 2948630-0000 | .CARRIER RULER | 4-109, 4-111 |
| 2948631-0000 | .CARRIER RULER | 4-93, 4-95 |
| 2948632-0000 | .CARRIER RULER | 4-109, 4-111 |
| 2948633-0000 | .CARRIER RULER | 4-93, 4-95 |
| 2948634-0000 | .CARRIER RULER | 4-109, 4-111 |
| 2948635-0000 | .CARRIER RULER | 4-93, 4-95 |
| 2948636-0000 | .CARRIER RULER | 4-109, 4-111 |
| 2948637-0000 | .CARRIER RULER | 4-93, 4-95 |
| 2948638-0000 | .CARRIER RULER | 4-109, 4-111 |
| 2948651-0000 | .ARM | 7-9 |
| 2948764-0000 | .PIPE | 2-243 |
| 2948765-0000 | .LIP | 2-209 |
| 2948766-0000 | .PLATE | 2-209 |
| 2948767-0000 | .BRACKET | 2-209 |
| 2948768-0000 | .BRACKET | 2-209 |
| 2948770-0000 | .BRACKET | 2-69 |
| 2948771-0000 | .HOLDER | 2-117 |
| 2951197-0000 | .PLATE | 5-131, 5-133 |
| 2951198-0000 | .BUSHING | 5-11, 5-13, 5-15 |
| 2952684-0000 | .TOOTHED PULLEY | 5-23 |
| 2952685-0000 | .TOOTHED PULLEY | 5-23 |
| 2952687-0000 | .TOOTHED PULLEY | 5-29 |
| 2952688-0000 | .TOOTHED PULLEY | 5-29 |
| 2952691-0100 | .ROLLER | 4-115, 4-117, 4-135, 4-137 |
| 2952710-0000 | .ARM | 4-115, 4-117, 4-135, 4-137 |
| 2952916-0100 | .END UNIT | 5-157, 5-159 |
| 2952917-0000 | .SIDE PLATE | 5-163, 5-165 |
| 2952918-0000 | .SIDE PLATE | 5-163, 5-165 |
| 2952919-0000 | .SLIDE PLATE | 5-163, 5-165 |
| 2955104-0000 | .PLUG | 5-23, 5-29 |
| 2955548-0000 | .BRACKET | 4-73, 4-75 |
| 2955605-0000 | .SLEEVE | 4-85 |
| 2955606-0000 | .PISTON | 4-85 |
| 2955618-0000 | .VOLUME CAM | 4-169, 4-171 |
| 2955619-0000 | .VOLUME CAM | 4-169, 4-171 |
| 2955763-0000 | .BEARING HOUSING | 5-29 |
| 2957417-0000 | .CABLE | 1-81 |
| 2957418-0000 | .CARRIER | 1-43, 1-45 |
| 2957434-0000 | .CHAIN | 1-43, 1-45 |
| 2957436-0000 | .BRACKET | 1-181 |
| 2957437-0000 | .SHUTTER | 1-181 |
| 2957438-0000 | .COVER | 1-181 |
| 2957439-0000 | .COVER | 1-181 |
| 2957442-0000 | .LEVER | 1-181 |
| 2957443-0000 | .LEVER | 1-181 |
| 2957445-0000 | .SHAFT | 1-181 |
| 2957450-0100 | .PNEUMATIC COMPONENT | 1-309 |
| 2957451-0000 | .PIPE | 1-269 |
| 2957452-0000 | .BRACKET | 1-23, 1-25 |
| 2958240-0000 | .ROLLER | 5-23, 5-29 |
| 2958241-0000 | .SHAFT | 5-23, 5-29 |
| 2958758-0100 | .PUSHER | 5-177 |
| 2958876-0100 | .PHOTOCELL UNIT | 4-7 |
| 2959867-0000 | .SPACER SCREW | 4-115, 4-117, 4-135, 4-137 |
| 2959868-0000 | .TENSION SPRING | 4-127, 4-129, 4-131, 4-145, 4-147, 4-149, 4-153, 4-155, 4-157, 4-161, 4-163, 4-165 |
| 2960404-0000 | .VOLUME BULGE | 5-77 |
| 2960405-0000 | .SHIM | 5-77 |
| 2960407-0000 | .VOLUME BULGE | 5-147 |
| 2960409-0000 | .VOLUME BULGE | 5-147 |
| 2960430-0000 | .BOTTOM | 5-53, 5-55, 5-57, 5-59, 5-61 |
| 2960431-0000 | .FOLDING BAR | 5-117, 5-119 |
| 2960432-0000 | .FOLDING BAR | 5-117, 5-119 |
| 2961246-0000 | .FILLING PIPE | 1-197, 1-199 |
| 2961953-0000 | .TENSION SPRING | 4-127, 4-129, 4-131, 4-145, 4-147, 4-149 |
| 2961956-0000 | .LINK | 4-23 |
| 2963236-0000 | .PIN | 7-71, 7-73 |
| 2963237-0000 | .ROLLER | 7-65, 7-71, 7-73 |
| 2963238-0000 | .HOLDER | 7-71, 7-73 |
| 2963239-0000 | .SHAFT | 7-65 |
| 2963240-0000 | .SEALING PLATE | 7-67, 7-69 |
| 2963360-0000 | .ROLLER | 5-43 |
| 2963361-0000 | .SHAFT | 5-43 |
| 2966771-0000 | .PROTECTION | 1-265 |
| 2966896-0000 | .COVERING PLATE | 5-123, 5-125, 5-127 |
| 2968215-0100 | .DRAINING | 2-3 |

| Part No | Description | Page No |
|---|---|---|
| 2968216-0000 | .PIPE | 2-249 |
| 2968217-0000 | .DRAIN PIPE | 2-249 |
| 2968867-0000 | .ECCENTRIC | 4-169, 4-171 |
| 2968868-0000 | .ECCENTRIC | 4-169, 4-171 |
| 2968936-0100 | .STERILE AIR PIPE | 1-167, 1-169, 1-171 |
| 2969139-0000 | .VOLUME FLAP | 4-115, 4-117, 4-135, 4-137 |
| 2969140-0000 | .VOLUME FLAP | 4-135, 4-137 |
| 2969141-0000 | .VOLUME FLAP | 4-115, 4-117 |
| 2969142-0000 | .VOLUME BULGE | 4-115, 4-117, 4-135, 4-137 |
| 2969143-0000 | .BRACKET | 4-115, 4-117, 4-135, 4-137 |
| 2969941-0000 | .AXLE PIN | 3-17, 3-25 |
| 2970438-0000 | .LINK HEAD | 3-17 |
| 2970439-0000 | .LINK HEAD | 3-25 |
| 2970440-0000 | .FLANGE | 3-17, 3-25 |
| 2970441-0100 | .LINK | 3-5 |
| 2970442-0100 | .LINK | 3-19 |
| 2971773-0000 | .GUIDE | 5-31, 5-33, 5-35, 5-37 |
| 2971774-0000 | .GUIDE | 5-31, 5-33, 5-35, 5-37 |
| 2971903-0100 | .PUSHER | 5-139, 5-141, 5-143 |
| 2971938-0000 | .PEROXIDE CHAMBER | 1-271, 1-273 |
| 2974012-0000 | .FILLING PIPE | 1-197, 1-199 |
| 2974013-0000 | .FILLING PIPE | 1-197, 1-199 |
| 2974014-0000 | .FILLING PIPE | 1-197, 1-199 |
| 2974798-0000 | .PIPE | 1-269 |
| 2974799-0000 | .CONNECTION PIPE | 1-269 |
| 2976263-0000 | .FOLDING FLAP CAM | 4-33, 4-35 |
| 2976577-0000 | .SPACER | 5-131, 5-133 |
| 2977927-0000 | .PLATE | 2-67 |
| 2977928-0000 | .GASKET | 2-67 |
| 2978340-0000 | .VOLUME FLAP | 4-115, 4-117, 4-135, 4-137 |
| 2978341-0000 | .VOLUME FLAP | 4-115, 4-117 |
| 2978342-0000 | .VOLUME FLAP | 4-135, 4-137 |
| 2978343-0000 | .VOLUME SHIM | 4-115, 4-117, 4-135, 4-137 |
| 2978344-0000 | .VOLUME BULGE | 4-115, 4-117, 4-135, 4-137 |
| 2978813-0000 | .ANGLE | 2-73 |
| 2979714-0000 | .PNEUMATIC DIAGRAM | 1-313, 1-315, 9-45 |
| 2979715-0000 | .PNEUMATIC DIAGRAM | 1-313, 1-315, 9-45 |
| 2980539-0100 | .TPOP PANEL 15 INCH | 2-3 |
| 2981828-0000 | .BUSHING | 4-11, 4-17 |
| 2981915-0000 | .BRACKET | 5-157, 5-159 |
| 2982474-0000 | .SUPPORT | 5-25, 5-27 |
| 2983172-0000 | .SLEEVE | 4-23 |
| 2983173-0000 | .SHAFT | 4-25 |
| 2983786-0000 | .SUPPORT | 5-155 |
| 2986276-0000 | .AXLE PIN | 1-55 |
| 2986655-0000 | .BRACKET | 4-73, 4-75 |
| 2986656-0000 | .SLIDE | 4-73, 4-75 |
| 2986941-0000 | .EAR | 4-81, 4-83, 4-103, 4-105 |
| 2987038-0000 | .VOLUME SHIM | 4-115, 4-117, 4-135, 4-137 |
| 2990908-0000 | .PROTECTION | 5-25, 5-27 |
| 2991030-0000 | .CHECKER PLATE | 2-161, 2-163 |
| 2991031-0000 | .CHECKER PLATE | 2-161, 2-163 |
| 2993209-0000 | .SCREW | 4-73, 4-75 |
| 2993210-0000 | .NUT | 4-73, 4-75 |
| 2993979-0100 | .SHOCK ABSORBER CUTTING | 4-151 |
| 2993980-0100 | .SUPPORT FLAP CUTTING | 4-51 |
| 2993981-0100 | .SUPPORT FLAP PRESSURE | 4-51 |
| 2993982-0100 | .SHOCK ABSORBER PRESSURE | 4-159 |
| 2996045-0000 | .SPACER | 5-25, 5-27 |
| 2997337-0000 | .STOP SCREW | 4-81, 4-83, 4-103, 4-105 |
| 2997340-0000 | .SCREW | 4-81, 4-83, 4-103, 4-105 |
| 3002497-0000 | .INSULATION NUT | 4-57, 4-59, 4-65, 4-67 |
| 3002498-0000 | .WASHER | 4-57, 4-59, 4-65, 4-67 |
| 3002499-0000 | .WASHER | 4-57, 4-59, 4-65, 4-67 |
| 3002559-0000 | .RAIL | 4-57, 4-59 |
| 3002560-0000 | .BEARING HOUSING | 4-55 |
| 3002561-0000 | .RAIL | 4-65, 4-67 |

| Part No | Description | Page No | Part No | Description | Page No |
|---|---|---|---|---|---|

| Machine Type | Group Description | Page No |
|---|---|---|

Tetra Pak

# SPC
## Spare Parts Catalogue

| Pos | Part No | Description | Page No |
|---|---|---|---|
| **A** | | | |
| AS010 | 1484695-0000 .. | KNIFE | 9-17 |
| AS020 | 2592780-0000 .. | DOLLY | 9-17 |
| **B** | | | |
| A01B5760 | 90326-0053 | THERMOCOUPLE, 12826-35 | 8-5, 8-7 |
| A01B5770 | 90044-0192 | LIMIT SW. SZ2586.000 | 8-5, 8-7 |
| A01B5780 | 90044-0192 | LIMIT SW. SZ2586.000 | 8-5, 8-7 |
| A01B5790 | 90044-0192 | LIMIT SW. SZ2586.000 | 8-5, 8-7 |
| A01B5800 | 90044-0192 | LIMIT SW. SZ2586.000 | 8-5, 8-7 |
| A40B1100 | 90274-0084 | PRESSURE GUARD, 1800 KPA | 2-83 |
| K80B1010 | 90274-0042 | PRESSURE GUARD, 200 KPA | 6-87, 6-89 |
| K80B1020 | 90600-2031 | PRESSURE SENS. SDE1-D10-G2-MS6-C-PU-M8 | 6-99 |
| K80B1030 | 90274-0056 | PRESS.SWITCH 1-12BAR, PEV-1/4-B-SA22358 | 6-37 |
| K80B1050 | 90274-0082 | FLOW SWITCH, 2 - 3 L/MIN | 6-43 |
| K80B1060 | 90243-0245 | MEASURING INSTRUMENT | 6-45 |
| K80B1090 | 90458-1840 | CAPACITIVE SENSOR CM18-12NPP-KC1 | 6-15 |
| K80B1100 | 90459-1234 | FLOW SWITCH, FS-3 SERIES/166703 | 6-13 |
| K80B1110 | 90459-0180 | FLOW SWITCH, 0,1 - 2,5 L/MIN | 6-33 |
| K80B1120 | 90459-0181 | PIPE SURFACE THERM., PT-100 -50° -+120°C | 6-33 |
| K80B1410 | 90326-0057 | THERMOCOUPLE, CR-AL | 6-33 |
| T10B1030 | 90459-4142 | SAFETY SENSOR, 20-051-00 ADAM | 7-41, 7-43 |
| T10B1040 | 90600-1056 | KEY SAF.SW. AZM 161SK-12/12RKA 024 | 7-41, 7-43 |
| T10B1080 | 90459-6426 | PRESSURE GUARD PEV-1/4-B-OD | 7-145 |
| T10B1140 | 90459-4142 | SAFETY SENSOR, 20-051-00 ADAM | 7-41, 7-43 |
| T10B1150 | 90459-4142 | SAFETY SENSOR, 20-051-00 ADAM | 7-61 |
| T10B1160 | 90600-1056 | KEY SAF.SW. AZM 161SK-12/12RKA 024 | 7-41, 7-43 |
| T10B1190 | 90459-4142 | SAFETY SENSOR, 20-051-00 ADAM | 7-41, 7-43 |
| T10B1200 | 90600-1056 | KEY SAF.SW. AZM 161SK-12/12RKA 024 | 7-41, 7-43 |
| T10B1220 | 90600-0460 | INDUCTIVE SWITCH, E2A-M12KN05-M1-B1-TP | 7-41, 7-43 |
| T10B1230 | 90600-0460 | INDUCTIVE SWITCH, E2A-M12KN05-M1-B1-TP | 7-41, 7-43 |
| T10B1240 | 90459-7421 | PH.CELL WL100-P3439 | 7-13 |
| T10B1250 | 90459-7421 | PH.CELL WL100-P3439 | 7-13 |
| T10B1280 | 90459-7421 | PH.CELL WL100-P3439 | 7-41, 7-43 |
| T10B1290 | 90459-7421 | PH.CELL WL100-P3439 | 7-41, 7-43 |
| T10B1300 | 90600-0460 | INDUCTIVE SWITCH, E2A-M12KN05-M1-B1-TP | 7-7 |
| T10B1310 | 90459-6392 | INDUCTIV SWITCH E2A-M18LN16-M1-B1 | 7-7 |
| T10B1330 | 90044-0194 | PROX.SW. IN5329/IN3002-BPKG(EX90044-104) | 7-99 |
| T10B1340 | 90044-0194 | PROX.SW. IN5329/IN3002-BPKG(EX90044-104) | 7-99 |
| T10B1350 | 90459-3286 | INDUCTIVE SWITCH E2A-S08KS02-M1-B1 | 7-65 |
| T10B1360 | 90044-0194 | PROX.SW. IN5329/IN3002-BPKG(EX90044-104) | 7-99 |
| T10B1531 | 90326-0054 | THERMOCOUPLE, CR-AL STD.GR, 12826-36 | 7-113 |
| T10B1551 | 90600-1390 | INCREMENTAL ENCODER, DGS60-G1A02000 | 7-71, 7-73 |
| T10B1930 | 90600-0967 | TRANSDUCER, BTL6-A110-M0650-A1-S115 | 7-97 |
| T10B9231 | 90458-0602 | CONTRAST SCANNER, KT15W-P2110S01 | 7-109 |
| T10B9241 | 90458-0602 | CONTRAST SCANNER, KT15W-P2110S01 | 7-109 |
| T10B9500 | 90044-0104 | PROX.SWITCH IN-3002-BPKG REPBY 90044-194 | 7-63 |
| T10B9510 | 90459-6603 | INCREMENTAL ENCODER, DGS60A1A02000 | 7-107 |
| T40B1050 | 90458-0256 | PROX.SWITCH IIA 3010-BPKG/6M | 2-67 |
| T40B1060 | 90600-0473 | INDUCTIVE SWITCH E2A-S08KS01-WP-B1-TP 5M | 2-111 |
| T40B1070 | 90600-0473 | INDUCTIVE SWITCH E2A-S08KS01-WP-B1-TP 5M | 4-29 |
| T40B1080 | 90600-0473 | INDUCTIVE SWITCH E2A-S08KS01-WP-B1-TP 5M | 4-31 |
| T40B1130 | 90600-1288 | PRESSURE SENSOR 0-420 BAR VD 5/420C X DF | 2-75, 2-77 |
| T40B1150 | 90600-1301 | LEVEL INDICATOR | 2-75, 2-77 |
| T40B1270 | 90457-0196 | KEY SAF.SW. TZ2RE024PG RC1635 | 2-99 |
| T40B1271 | 90457-0196 | KEY SAF.SW. TZ2RE024PG RC1635 | 2-99 |
| T40B1370 | 2834035-0000 .. | THERMOCOUPLE | 2-75, 2-77 |
| T40B1390 | 90600-1295 | SENSOR | 2-75, 2-77 |
| T40B9210 | 90458-0601 | CONTRAST SCANNER, KT15W-P2110S01 | 4-9 |
| T40B9220 | 90458-0601 | CONTRAST SCANNER, KT15W-P2110S01 | 4-9 |
| T40B9500 | 2697704-0000 .. | LEVEL PROBE | 2-101 |
| T40B9510 | 90600-1295 | SENSOR | 2-75, 2-77 |
| T40B9520 | 90600-1295 | SENSOR | 2-75, 2-77 |
| T40B9610 | 90044-0204 | KEY SAF.SW. NZIVZ-538-E | 2-99 |
| T40B9640 | 90044-0204 | KEY SAF.SW. NZIVZ-538-E | 2-99 |
| T40B9700 | 90274-0103 | PRESSURE GUARD PEV-1/4-B (10773 | 2-49 |
| T50B1030 | 90232-0104 | PH.CELL E3S-CT61-D-5M | 5-185 |
| T50B1031 | 90232-0103 | PH.CELL E3S-CT61-L-5M | 5-185 |
| T50B1050 | 90600-0467 | INDUCTIVE SWITCH,E2A-M18KS05-WP-B1-TP 6M | 5-163, 5-165 |
| T50B1060 | 90232-0104 | PH.CELL E3S-CT61-D-5M | 5-185 |
| T50B1061 | 90232-0103 | PH.CELL E3S-CT61-L-5M | 5-185 |
| T50B1070 | 90600-0464 | INDUCTIVE SWITCH,E2A-M12LS02-WP-B1-TP 5M | 5-11, 5-13, 5-15 |
| T50B1080 | 90600-0464 | INDUCTIVE SWITCH,E2A-M12LS02-WP-B1-TP 5M | 5-11, 5-13, 5-15 |
| T50B1110 | 90600-0464 | INDUCTIVE SWITCH,E2A-M12LS02-WP-B1-TP 5M | 5-11, 5-13, 5-15 |
| T50B1120 | 90600-0464 | INDUCTIVE SWITCH,E2A-M12LS02-WP-B1-TP 5M | 5-11, 5-13, 5-15 |
| T50B1170 | 90457-0196 | KEY SAF.SW. TZ2RE024PG RC1635 | 2-135 |
| T50B1171 | 90457-0196 | KEY SAF.SW. TZ2RE024PG RC1635 | 2-135 |
| T50B1440 | 90326-0089 | THERMOCOUPLE, 5110-089-000 | 1-243 |
| T50B2120 | 90232-0104 | PH.CELL E3S-CT61-D-5M | 5-189 |
| T50B2121 | 90232-0103 | PH.CELL E3S-CT61-L-5M | 5-189 |
| T50B9500 | 1144653-0000 .. | SWITCH | 2-247 |
| T50B9510 | 90044-0194 | PROX.SW. IN5329/IN3002-BPKG(EX90044-104) | 5-23, 5-29 |
| T50B9520 | 90044-0194 | PROX.SW. IN5329/IN3002-BPKG(EX90044-104) | 5-139, 5-141, 5-143 |
| T50B9530 | 90044-0194 | PROX.SW. IN5329/IN3002-BPKG(EX90044-104) | 5-39 |

| Pos | Part No | Description | Page No |
|---|---|---|---|
| **B** | | | |
| U30B1020 | 90600-0473 | INDUCTIVE SWITCH E2A-S08KS01-WP-B1-TP 5M | 2-39 |
| U30B1090 | 90600-0473 | INDUCTIVE SWITCH E2A-S08KS01-WP-B1-TP 5M | 2-39 |
| U30B1630 | 90458-1977 | REFRACTOMETER SET DA15FC15A DFTP A | 2-63 |
| U30B1670 | 90459-0951 | TRANSDUCER, BTL5-A11-M0400-B-S32 | 2-17, 2-19 |
| U30B1710 | 1347704-0000 .. | THERMOCOUPLE | 2-17, 2-19 |
| U70B1060 | 90600-0467 | INDUCTIVE SWITCH,E2A-M18KS05-WP-B1-TP 6M | 1-261 |
| U70B1070 | 90600-0467 | INDUCTIVE SWITCH,E2A-M18KS05-WP-B1-TP 6M | 1-261 |
| U70B1080 | 90459-0472 | KEY SAF.SW. AZ 16 02ZVRK-M20-2152-2254 | 1-341 |
| U70B1100 | 90600-4631 | PROXIMITY SWITCH | 1-235 |
| U70B1140 | 90459-4142 | SAFETY SENSOR, 20-051-00 ADAM | 1-73 |
| U70B1730 | 90459-6178 | TEMPERATURE SENSOR, , 902522/10-386-1003 | 1-229, 1-231 |
| U70B1740 | 90600-4392 | TEMPERATURE SENSOR, TR45-BF5A1Q3MA0000 | 1-261 |
| U70B2010 | 90243-0245 | MEASURING INSTRUMENT | 1-193 |
| U70B2020 | 90600-2862 | LEVEL SWITCH, LIQUIPHANT FTL20-0025 | 1-271, 1-273 |
| U70B2030 | 90457-0047 | SENSOR 2750-1-5111-1 W.ADAPTER PNP | 1-191 |
| U70B2040 | 90600-4326 | FLOW SWITCH | 1-265 |
| U70B2050 | 90044-0084 | LIMIT SW. 14 CE1-4 | 1-271, 1-273 |
| U70B2051 | 90044-0084 | LIMIT SW. 14 CE1-4 | 1-271, 1-273 |
| U70B2060 | 90459-4142 | SAFETY SENSOR, 20-051-00 ADAM | 1-71 |
| U70B2470 | 90459-5180 | FLOW METER, PROWIRL 72W50-SD0BA1AAA0AW | 1-193 |
| U70B2480 | 90600-0821 | LEVEL PR.,LEVELFLEX-M FMP41C-AKTJKB11A2Y | 1-255 |
| U70B2490 | 90459-4977 | LINEAR ACTUATOR LA 1 SP - SP36 17A16 - 0 | 1-187 |
| U70B2610 | 90326-0051 | THERMOCOUPLE, 12826-33 | 1-189 |
| U70B2620 | 90326-0057 | THERMOCOUPLE, CR-AL | 1-265 |
| U70B2630 | 90326-0053 | THERMOCOUPLE, 12826-35 | 1-271, 1-273 |
| U70B2640 | 90326-0051 | THERMOCOUPLE, 12826-33 | 1-193 |
| U70B3020 | 90459-0829 | PROX.SENSOR SMTO-4U-PS-K-LED-24 | 1-181 |
| U70B3030 | 90459-0829 | PROX.SENSOR SMTO-4U-PS-K-LED-24 | 1-181 |
| U70B3090 | 90600-3272 | PROX.SENSOR SMT-8M-PS-24V-K-5,0-OE | 1-79 |
| U70B3100 | 90600-3272 | PROX.SENSOR SMT-8M-PS-24V-K-5,0-OE | 1-79 |
| U70B3120 | 90459-2409 | INDUCTIVE SWITCH IN-3002-BPKG/AS | 1-39, 1-41 |
| U70B3130 | 90459-4142 | SAFETY SENSOR, 20-051-00 ADAM | 1-27 |
| U70B3140 | 90459-4142 | SAFETY SENSOR, 20-051-00 ADAM | 1-21 |
| U70B3200 | 90600-2107 | LEVEL SWITCH, FTL20H-0TCJ2B | 1-185 |
| U70B3220 | 90459-0829 | PROX.SENSOR SMTO-4U-PS-K-LED-24 | 1-181 |
| U70B3230 | 90459-0829 | PROX.SENSOR SMTO-4U-PS-K-LED-24 | 1-181 |
| U70B3240 | 90459-2409 | INDUCTIVE SWITCH IN-3002-BPKG/AS | 1-47, 1-49, 1-51 |
| U70B3410 | 90459-0689 | PRESSURE TRANSMITTER 0 - 0,6 BAR | 1-17 |
| U70B3420 | 90459-4810 | PRESS TRANSD (DIFF) 0 - 2000PA, 2681-20C | 1-349, 1-351 |
| U70B3480 | 90459-3682 | ROTARY POSITION SENSOR RPN1A111 | 1-53 |
| U70B3520 | 90326-0057 | THERMOCOUPLE, CR-AL | 1-179 |
| U70B3530 | 90326-0089 | THERMOCOUPLE, 5110-089-000 | 1-179 |
| U70B3540 | 90458-0341 | THERMOCOUPLE, 5130050-001 | 1-75, 1-77 |
| U70B4010 | 90458-2241 | PRESSURE SWITCH 0,5-10 BAR ADJUSTABLE | 1-207 |
| U70B4020 | 90600-0463 | INDUCTIVE SWITCH,E2A-M12LN05-WP-B1-TP 5M | 1-233 |
| U70B4030 | 90600-0463 | INDUCTIVE SWITCH,E2A-M12LN05-WP-B1-TP 5M | 1-233 |
| U70B4040 | 90600-0463 | INDUCTIVE SWITCH,E2A-M12LN05-WP-B1-TP 5M | 1-233 |
| U70B4050 | 90600-0463 | INDUCTIVE SWITCH,E2A-M12LN05-WP-B1-TP 5M | 1-233 |
| U70B4060 | 2672972-0000 .. | ELECTRODE | 1-209 |
| U70B4070 | 90600-0463 | INDUCTIVE SWITCH,E2A-M12LN05-WP-B1-TP 5M | 1-233 |
| U70B4080 | 90459-6215 | FLOW SWITCH BFS-10-N-G1/4-MS-NO-ST | 1-207 |
| U70B4290 | 90600-1154 | FLOW METER,D-6230-HGB-BB-AV-99-0-N2/IP65 | 1-207 |
| U70B4350 | 90459-2122 | THERMOCOUPLE, EN-5130060-0001 | 1-205 |
| U70B4360 | 90326-0053 | THERMOCOUPLE, 12826-35 | 1-205 |
| U70B4370 | 90326-0060 | THERMOCOUPLE, CR-AL | 1-233 |
| U70B9510 | 90600-3924 | CONDUCTIVITY SENSOR CLS 54-ACS1022 | 1-259 |
| U70B9520 | 90458-0806 | FLOW METER, NO. XF DF23-DN32 | 1-229, 1-231 |
| B1040 | 90600-0463 | INDUCTIVE SWITCH,E2A-M12LN05-WP-B1-TP 5M | 1-299, 1-301 |
| B1301 | 90044-0194 | PROX.SW. IN5329/IN3002-BPKG(EX90044-104) | 1-215 |
| B1302 | 90044-0194 | PROX.SW. IN5329/IN3002-BPKG(EX90044-104) | 1-215 |
| B1303 | 90044-0194 | PROX.SW. IN5329/IN3002-BPKG(EX90044-104) | 1-215 |
| B1403 | 90044-0194 | PROX.SW. IN5329/IN3002-BPKG(EX90044-104) | 1-305, 1-307 |
| **C** | | | |
| A01C5000 | 90459-4891 | PROGR. IDENTIFIER ID-FIX RW, 20-070-21 | 8-23 |
| A01C5010 | 90459-4891 | PROGR. IDENTIFIER ID-FIX RW, 20-070-21 | 8-23 |
| K80C7002 | 90304-0020 | RECIPIENTE | 6-39 |
| K80C7003 | 90600-2901 | TANK 10L, TANKPE010 | 6-13 |
| T10C1852 | 90187-0088 | BALL VALVE G1/4, NPBR | 7-139, 7-141 |
| T40C0040 | 2764891-0000 .. | TANK | 2-75, 2-77 |
| T40C0041 | 90459-4032 | HYDR.ACC., SBO-210-1.4E1/112U-210AK | 2-75, 2-77 |
| **E** | | | |
| EC010 | 90233-0028 | TUBE FUSE 10A, A070GRB10T13 G330010 | 9-17 |
| EC020 | 90233-0029 | TUBE FUSE 25A, A070GRB25T13 L330014 | 9-17 |
| EC030 | 90233-0027 | TUBE FUSE 16A, A070GRB16T13 J330012 | 9-17 |
| EC040 | 90459-1254 | TUBE FUSE, 4A 500V | 9-17 |
| A01E5520 | 90600-4048 | LIGHT FIXTURE, TCH128 1XTL5-14W/830 HF | 8-5, 8-7 |
| A01E5530 | 90600-4048 | LIGHT FIXTURE, TCH128 1XTL5-14W/830 HF | 8-5, 8-7 |
| K80E7003 | 90422-0037 | HEAT EXCHANGER | 6-29 |
| T10E0010 | 90164-0015 | LIGHT FIXTURE, RL70CV-111 / 230V 50HZ | 7-41, 7-43 |
| T10E0011 | 90164-0015 | LIGHT FIXTURE, RL70CV-111 / 230V 50HZ | 7-41, 7-43 |
| T10E7002 | 1129839-0000 .. | COOLING PLATE | 7-77 |
| T10E7002 | 2862486-0000 .. | COOLING PLATE | 7-77 |

| Pos | Part No | Description | Page No |
|---|---|---|---|
| **E** | | | |
| T40E0030 | 90459-1000 | LIGHT FIXTURE, RL 70CV-136/230V 50HZ | 2-89 |
| T40E0031 | 90459-1000 | LIGHT FIXTURE, RL 70CV-136/230V 50HZ | 2-91 |
| T40E7040 | 90600-1269 | HEAT EXCHANGER M18-10 | 2-75, 2-77 |
| T50E0080 | 90459-1000 | LIGHT FIXTURE, RL 70CV-136/230V 50HZ | 2-137 |
| T50E7011 | 1498827-0000 .. | FOLDING BAR | 5-117, 5-119 |
| T50E7011 | 2647131-0000 .. | GUIDE | 5-113, 5-115 |
| T50E7011 | 2903581-0000 .. | GUIDE | 5-113, 5-115 |
| T50E7011 | 2906004-0000 .. | GUIDE | 5-113, 5-115 |
| T50E7011 | 2933181-0000 .. | FOLDING BAR | 5-117, 5-119 |
| T50E7011 | 2937351-0000 .. | FOLDING BAR | 5-117, 5-119 |
| T50E7011 | 2938200-0000 .. | FOLDING BAR | 5-117, 5-119 |
| T50E7011 | 2960431-0000 .. | FOLDING BAR | 5-117, 5-119 |
| T50E7012 | 2879069-0000 .. | FOLDING BAR | 5-129 |
| T50E7013 | 2879069-0000 .. | FOLDING BAR | 5-129 |
| T50E7014 | 1498828-0000 .. | FOLDING BAR | 5-117, 5-119 |
| T50E7014 | 2647131-0000 .. | GUIDE | 5-113, 5-115 |
| T50E7014 | 2903581-0000 .. | GUIDE | 5-113, 5-115 |
| T50E7014 | 2906004-0000 .. | GUIDE | 5-113, 5-115 |
| T50E7014 | 2933180-0000 .. | FOLDING BAR | 5-117, 5-119 |
| T50E7014 | 2937352-0000 .. | FOLDING BAR | 5-117, 5-119 |
| T50E7014 | 2938199-0000 .. | FOLDING BAR | 5-117, 5-119 |
| T50E7014 | 2960432-0000 .. | FOLDING BAR | 5-117, 5-119 |
| **F** | | | |
| FF030 | 2773832-0000 .. | GASKET | 9-19, 9-21, 9-23, 9-25 |
| FF040 | 1144511-0000 .. | SHIM | 9-19, 9-21, 9-23, 9-25 |
| FF040 | 2658249-0000 .. | SHIM | 9-19, 9-21, 9-23, 9-25 |
| A01F1011 | 351416-0060 | MINIATURE CIRC. BREAK., FAZ -D6 1-POLE | 8-21 |
| A01F1012 | 351416-0060 | MINIATURE CIRC. BREAK., FAZ -D6 1-POLE | 8-21 |
| A01F1016 | 351416-0100 | MINIATURE CIRC. BREAK., FAZ -D10 1-POLE | 8-21 |
| A01F1017 | 351416-0060 | MINIATURE CIRC. BREAK., FAZ -D6 1-POLE | 8-21 |
| A01F1051 | 351416-0100 | MINIATURE CIRC. BREAK., FAZ -D10 1-POLE | 8-31 |
| A01F1052 | 351416-0100 | MINIATURE CIRC. BREAK., FAZ -D10 1-POLE | 8-31 |
| A01F1111 | 90459-5326 | OVERLOAD PROTECTION, PKZM0-4 | 8-35 |
| A01F5520 | 354000-0100 | MINIATURE CIRCUIT BREAKER, FAZ-C10/1 | 8-31 |
| A01F5600 | 90459-5811 | RESIDUAL CURRENT DEVICE, FI-25/2/003-A | 8-23 |
| A01F5810 | 90459-5326 | OVERLOAD PROTECTION, PKZM0-4 | 8-35 |
| A01F5820 | 354000-0020 | MINIATURE CIRCUIT BREAKER, FAZ-C2/1 | 8-31 |
| A02F1018 | 351416-0160 | MINIATURE CIRC. BREAK., FAZ -D16 1-POLE | 8-21 |
| A80F9500 | 90459-6618 | CIRCUIT BREAKER, NZMB1-4-A100 | 6-19 |
| K80F0111 | 90459-5325 | OVERLOAD PROTECTION, PKZM0-2,5 | 8-35 |
| K80F0121 | 90459-5325 | OVERLOAD PROTECTION, PKZM0-2,5 | 8-35 |
| K80F0411 | 351416-0020 | MINIATURE CIRC. BREAK., FAZ -D2 1-POLE | 8-31 |
| K80F0471 | 90459-5330 | OVERLOAD PROTECTION, PKZM0-16 | 8-35 |
| K80F1001 | 351416-0040 | MINIATURE CIRC. BREAK., FAZ -D4 1-POLE | 8-21 |
| K80F1040 | 90082-0013 | OVER VOLT. PROTECT. PU 4C-R 230 VAC | 6-19 |
| K80F9510 | 90230-0041 | OVERPRESSURE VALVE SS-4 CPA2-RTDG-3 | 6-37 |
| K80F9510 | 351416-0005 | MINIATURE CIRC. BREAK., FAZ-D0,5 1-POLE | 8-21 |
| T10F0020 | 354000-0010 | MINIATURE CIRCUIT BREAKER, FAZ-C1/1 | 8-31 |
| T10F0160 | 351416-0160 | MINIATURE CIRC. BREAK., FAZ -D16 1-POLE | 8-31 |
| T10F0170 | 351416-0160 | MINIATURE CIRC. BREAK., FAZ -D16 1-POLE | 8-31 |
| T10F0180 | 351416-0160 | MINIATURE CIRC. BREAK., FAZ -D16 1-POLE | 8-31 |
| T10F0192 | 354000-0040 | MINIATURE CIRCUIT BREAKER, FAZ-C4/1 | 8-31 |
| T10F1001 | 351416-0040 | MINIATURE CIRC. BREAK., FAZ -D4 1-POLE | 8-21 |
| T10F9170 | 351418-0060 | MINIATURE CIRC. BREAK., FAZ-D6/3 3-POLE | 8-31 |
| T40F0040 | 90459-5326 | OVERLOAD PROTECTION, PKZM0-4 | 8-35 |
| T40F0050 | 90459-5324 | OVERLOAD PROTECTION, PKZM0-1,6 | 8-35 |
| T40F0060 | 354000-0010 | MINIATURE CIRCUIT BREAKER, FAZ-C1/1 | 8-31 |
| T40F1001 | 351416-0040 | MINIATURE CIRC. BREAK., FAZ -D4 1-POLE | 8-21 |
| T40F9000 | 90459-5333 | OVERLOAD PROTECTION, PKZM0-32 | 8-35 |
| T40F9080 | 90459-5333 | OVERLOAD PROTECTION, PKZM0-32 | 8-35 |
| T40F9081 | 351416-0060 | MINIATURE CIRC. BREAK., FAZ -D6 1-POLE | 8-31 |
| T40F9150 | 351418-0060 | MINIATURE CIRC. BREAK., FAZ-D6/3 3-POLE | 8-31 |
| T50F0241 | 354000-0100 | MINIATURE CIRCUIT BREAKER, FAZ-C10/1 | 8-31 |
| T50F0242 | 354000-0100 | MINIATURE CIRCUIT BREAKER, FAZ-C10/1 | 8-31 |
| T50F0251 | 354000-0160 | MINIATURE CIRCUIT BREAKER, FAZ-C16/1 | 8-31 |
| T50F0252 | 354000-0160 | MINIATURE CIRCUIT BREAKER, FAZ-C16/1 | 8-31 |
| T50F0260 | 351416-0160 | MINIATURE CIRC. BREAK., FAZ -D16 1-POLE | 8-31 |
| T50F1001 | 351416-0040 | MINIATURE CIRC. BREAK., FAZ -D4 1-POLE | 8-21 |
| T50F2001 | 351416-0040 | MINIATURE CIRC. BREAK., FAZ -D4 1-POLE | 8-21 |
| T50F9001 | 351416-0060 | MINIATURE CIRC. BREAK., FAZ -D6 1-POLE | 8-31 |
| U30F0220 | 351416-0160 | MINIATURE CIRC. BREAK., FAZ -D16 1-POLE | 8-31 |
| U30F1001 | 351416-0040 | MINIATURE CIRC. BREAK., FAZ -D4 1-POLE | 8-21 |
| U70F0100 | 90459-5323 | OVERLOAD PROTECTION, PKZM0-1 | 8-35 |
| U70F0300 | 351418-0160 | MINIATURE CIRC. BREAK.,FAZ-D16/3 3-POLE | 8-31 |
| U70F0310 | 351416-0160 | MINIATURE CIRC. BREAK., FAZ -D16 1-POLE | 8-31 |
| U70F0320 | 351418-0100 | MINIATURE CIRC. BREAK., FAZ-D10/3 3-POLE | 8-31 |
| U70F0330 | 351418-0100 | MINIATURE CIRC. BREAK., FAZ-D10/3 3-POLE | 8-31 |
| U70F0340 | 354002-0100 | MINIATURE CIRCUIT BREAKER, FAZ-C10/3 | 8-31 |
| U70F0350 | 354002-0100 | MINIATURE CIRCUIT BREAKER, FAZ-C10/3 | 8-31 |
| U70F0370 | 354000-0100 | MINIATURE CIRCUIT BREAKER, FAZ-C10/1 | 8-31 |
| U70F0450 | 90233-0029 | TUBE FUSE 25A, A070GRB25T13 L330014 | 8-31 |
| U70F0461 | 354001-0250 | MINIATURE CIRCUIT BREAKER, FAZ-C25/2 | 8-31 |

| Pos | Part No | Description | Page No |
|---|---|---|---|
| **F** | | | |
| U70F0463 | 354001-0250 | MINIATURE CIRCUIT BREAKER, FAZ-C25/2 | 8-31 |
| U70F1001 | 351416-0040 | MINIATURE CIRC. BREAK., FAZ -D4 1-POLE | 8-21 |
| U70F2001 | 351416-0040 | MINIATURE CIRC. BREAK., FAZ -D4 1-POLE | 8-21 |
| U70F3001 | 351416-0040 | MINIATURE CIRC. BREAK., FAZ -D4 1-POLE | 8-21 |
| U70F4001 | 351416-0040 | MINIATURE CIRC. BREAK., FAZ -D4 1-POLE | 8-21 |
| U70F9160 | 351418-0060 | MINIATURE CIRC. BREAK., FAZ-D6/3 3-POLE | 8-31 |
| **G** | | | |
| K80G0121 | 1140603-0000 | COMPRESSOR UNIT | 6-25, 6-27 |
| T10G9170 | 1499642-0301 | TPIH GENERATOR | 8-25 |
| T40G0040 | 90600-1283 | PUMP, AZPF -12-004RH030KB | 2-75, 2-77 |
| T40G9150 | 1499642-0301 | TPIH GENERATOR | 8-25 |
| U70G9160 | 1499642-0301 | TPIH GENERATOR | 8-25 |
| **J** | | | |
| JS010 | 28509-0000 | WASHER | 9-17 |
| JS010 | 1110083-0002 | DOLLY | 9-19, 9-21, 9-23, 9-25 |
| JS010 | 1520633-0002 | DOLLY | 9-19, 9-21, 9-23, 9-25 |
| JS010 | 1520633-0005 | DOLLY | 9-19, 9-21, 9-23, 9-25 |
| JS010 | 2908997-0100 | TOOL | 9-35 |
| JS020 | 32544-0000 | INSULATION NUT | 9-17 |
| JS020 | 1110936-0000 | INDUCTOR | 9-19, 9-21, 9-23, 9-25 |
| JS020 | 1110937-0000 | INDUCTOR | 9-19, 9-21, 9-23, 9-25 |
| JS020 | 1110938-0000 | INDUCTOR | 9-19, 9-21, 9-23, 9-25 |
| JS020 | 1533046-0000 | INDUCTOR | 9-19, 9-21, 9-23, 9-25 |
| JS020 | 1566843-0000 | INDUCTOR | 9-19, 9-21, 9-23, 9-25 |
| JS020 | 2546474-0000 | INDUCTOR | 9-19, 9-21, 9-23, 9-25 |
| JS020 | 2610956-0000 | INDUCTOR | 9-19, 9-21, 9-23, 9-25 |
| JS020 | 2663377-0000 | INDUCTOR | 9-19, 9-21, 9-23, 9-25 |
| JS020 | 2663378-0000 | INDUCTOR | 9-19, 9-21, 9-23, 9-25 |
| JS025 | 2836239-0000 | WASHER | 9-17 |
| JS030 | 107426-0000 | GUIDE SLEEVE | 9-17 |
| JS030 | 1035831-0000 | VOLUME SHIM | 9-19, 9-21, 9-23, 9-25 |
| JS030 | 1040755-0000 | VOLUME SHIM | 9-19, 9-21, 9-23, 9-25 |
| JS030 | 1349208-0000 | VOLUME SHIM | 9-19, 9-21, 9-23, 9-25 |
| JS030 | 1487627-0000 | VOLUME SHIM | 9-19, 9-21, 9-23, 9-25 |
| JS030 | 1511336-0000 | VOLUME SHIM | 9-19, 9-21, 9-23, 9-25 |
| JS030 | 1511337-0000 | VOLUME SHIM | 9-19, 9-21, 9-23, 9-25 |
| JS030 | 2594891-0000 | VOLUME SHIM | 9-19, 9-21, 9-23, 9-25 |
| JS030 | 2660393-0000 | VOLUME SHIM | 9-19, 9-21, 9-23, 9-25 |
| JS030 | 2827055-0000 | VOLUME SHIM | 9-19, 9-21, 9-23, 9-25 |
| JS030 | 2860038-0000 | VOLUME SHIM | 9-19, 9-21, 9-23, 9-25 |
| JS035 | 2594890-0000 | VOLUME SHIM | 9-19, 9-21, 9-23, 9-25 |
| JS035 | 2660390-0000 | VOLUME SHIM | 9-19, 9-21, 9-23, 9-25 |
| JS035 | 2672745-0000 | VOLUME SHIM | 9-19, 9-21, 9-23, 9-25 |
| JS035 | 2836238-0000 | INSULATION NUT | 9-17 |
| JS040 | 1036584-0000 | WASHER | 9-17 |
| JS040 | 1348955-0000 | KNIFE | 9-19, 9-21, 9-23, 9-25 |
| JS040 | 1348956-0000 | KNIFE | 9-19, 9-21, 9-23, 9-25 |
| JS040 | 2664761-0000 | KNIFE | 9-19, 9-21, 9-23, 9-25 |
| JS040 | 2774798-0000 | KNIFE | 9-19, 9-21, 9-23, 9-25 |
| JS050 | 315211-0104 | BONDED SEAL SS/NBR90 M8 | 9-17 |
| JS050 | 1037254-0000 | SHIM | 9-19, 9-21, 9-23, 9-25 |
| JS050 | 2774799-0000 | BLOCK | 9-19, 9-21, 9-23, 9-25 |
| JS060 | 312115-0297 | SCREW ISO4762 M4X25 A4 80 | 9-17 |
| JS060 | 1538109-0000 | COMPRESSION SPRING | 9-19, 9-21, 9-23, 9-25 |
| JS070 | 312125-0295 | SCREW ISO 1207 M4X20 A4 | 9-17 |
| JS080 | 315211-0103 | BONDED SEAL SS/NBR90 M6 | 9-17 |
| JS090 | 315202-0101 | O-RING 3,1X1,6 MM | 9-17 |
| JS100 | 2767478-0001 | ROLLER | 9-19, 9-21, 9-23, 9-25 |
| JS100 | 2767478-0002 | ROLLER | 9-19, 9-21, 9-23, 9-25 |
| JS100 | 2767478-0003 | ROLLER | 9-19, 9-21, 9-23, 9-25 |
| JS100 | 2767478-0004 | ROLLER | 9-19, 9-21, 9-23, 9-25 |
| **K** | | | |
| A01K2000 | 90459-6559 | PROCESSOR L63, SERIES B, 1756-L63/B | 8-15 |
| A01K2001 | 90458-1141 | FERRITE, RI-16-28-9 | 8-15 |
| A01K2010 | 90459-2477 | ETHERNET I/P BRIDGE MODULE, 1756-ENBT | 8-15 |
| A01K2020 | 90459-2477 | ETHERNET I/P BRIDGE MODULE, 1756-ENBT | 8-15 |
| A01K2040 | 90459-2479 | PLC DEVICENET BRIDGE/SCANNER MODULE | 8-15 |
| A01K2041 | 90458-1141 | FERRITE, RI-16-28-9 | 8-15 |
| A01K2060 | 90459-6556 | PLC DIGITAL INPUT 32PTS, 1756-IB32/B | 8-15 |
| A01K2070 | 90459-6556 | PLC DIGITAL INPUT 32PTS, 1756-IB32/B | 8-15 |
| A01K2080 | 90459-2474 | PLC,DIGIT. OUTPUT MODULE 16 PTS 10-31VDC | 8-15 |
| A01K2120 | 90459-2481 | PLC 16-AXIS SERCOS MOTION MODULE | 8-15 |
| A01K3000 | 90459-2494 | DEVICENET I/O ADAPTER MODULE, 1734-ADN | 8-17 |
| A01K3010 | 90459-6561 | DIGITAL INPUT 8 PTS SINK, 1734-IB8/C | 8-17 |
| A01K3020 | 90459-6561 | DIGITAL INPUT 8 PTS SINK, 1734-IB8/C | 8-17 |
| A01K3050 | 90459-6560 | DIGITAL OUTPUT 8 PTS, 1734-OB8E/C | 8-17 |
| A01K3060 | 90459-6560 | DIGITAL OUTPUT 8 PTS, 1734-OB8E/C | 8-17 |
| A01K3070 | 90459-6560 | DIGITAL OUTPUT 8 PTS, 1734-OB8E/C | 8-17 |
| A01K3080 | 90459-6560 | DIGITAL OUTPUT 8 PTS, 1734-OB8E/C | 8-17 |
| A01K3090 | 90459-6560 | DIGITAL OUTPUT 8 PTS, 1734-OB8E/C | 8-17 |
| A01K3110 | 90459-6560 | DIGITAL OUTPUT 8 PTS, 1734-OB8E/C | 8-17 |
| A01K3120 | 90459-6560 | DIGITAL OUTPUT 8 PTS, 1734-OB8E/C | 8-17 |

## K

| Pos | Part No | Description | Page No |
|---|---|---|---|
| A01K3130 | 90459-5261 | REMOTE I/O, RELAY OUTP. 4 PTS,1734-OW4/C | 8-17 |
| A01K3140 | 90459-5261 | REMOTE I/O, RELAY OUTP. 4 PTS,1734-OW4/C | 8-17 |
| A01K3160 | 90459-2509 | REMOTE I/O ANALOG INPUT CURRENT 2 PTS | 8-17 |
| A01K3170 | 90459-2509 | REMOTE I/O ANALOG INPUT CURRENT 2 PTS | 8-17 |
| A01K3200 | 90459-2510 | ANALOG OUTP. VOLT. 2PTS, 1734-OE2V SER.C | 8-17 |
| A01K3210 | 90459-2510 | ANALOG OUTP. VOLT. 2PTS, 1734-OE2V SER.C | 8-17 |
| A01K3220 | 90459-2510 | ANALOG OUTP. VOLT. 2PTS, 1734-OE2V SER.C | 8-17 |
| A01K3230 | 90459-2511 | REMOTE I/O ANALOG OUTPUT CURRENT 2PTS | 8-17 |
| A01K3640 | 90459-2500 | EXPANSION POWER SUPPLY MODULE | 8-17 |
| A01K4000 | 90459-2494 | DEVICENET I/O ADAPTER MODULE, 1734-ADN | 8-29 |
| A01K4010 | 90459-6561 | DIGITAL INPUT 8 PTS SINK, 1734-IB8/C | 8-29 |
| A01K4020 | 90459-6561 | DIGITAL INPUT 8 PTS SINK, 1734-IB8/C | 8-29 |
| A01K4030 | 90459-6561 | DIGITAL INPUT 8 PTS SINK, 1734-IB8/C | 8-29 |
| A01K4050 | 90459-6560 | DIGITAL OUTPUT 8 PTS, 1734-OB8E/C | 8-29 |
| A01K4060 | 90459-6560 | DIGITAL OUTPUT 8 PTS, 1734-OB8E/C | 8-29 |
| A01K4070 | 90459-6560 | DIGITAL OUTPUT 8 PTS, 1734-OB8E/C | 8-29 |
| A01K4080 | 90459-5261 | REMOTE I/O, RELAY OUTP. 4 PTS,1734-OW4/C | 8-29 |
| A01K4090 | 90459-5261 | REMOTE I/O, RELAY OUTP. 4 PTS,1734-OW4/C | 8-29 |
| A01K4100 | 90459-5261 | REMOTE I/O, RELAY OUTP. 4 PTS,1734-OW4/C | 8-29 |
| A01K4120 | 90459-5261 | REMOTE I/O, RELAY OUTP. 4 PTS,1734-OW4/C | 8-29 |
| A01K4140 | 90459-5261 | REMOTE I/O, RELAY OUTP. 4 PTS,1734-OW4/C | 8-29 |
| A01K4190 | 90459-2512 | REMOTE I/O THERMOCOUPLE INPUT 2 PTS | 8-29 |
| A01K5200 | 559810-0101 | TMCC2 CONTROLLER | 8-55 |
| A01K5210 | 559810-0101 | TMCC2 CONTROLLER | 8-55 |
| A01K5220 | 559815-0101 | TMCC2 CONTROLLER | 8-55 |
| A01K5500 | 90600-3694 | COMPUTOR APC620, 5P62:TETRAPAK-17 | 8-53 |
| A01K5510 | 90600-1211 | TERMINAL BLOCK RELAY, 700-HLT1Z24 | 8-13 |
| A01K5680 | 90600-1209 | TERMINAL BLOCK RELAY, 700-HLT1U2 | 8-33 |
| A01K5690 | 90600-1209 | TERMINAL BLOCK RELAY, 700-HLT1U2 | 8-33 |
| A01K5700 | 90600-1209 | TERMINAL BLOCK RELAY, 700-HLT1U2 | 8-33 |
| A01K5730 | 90600-1211 | TERMINAL BLOCK RELAY, 700-HLT1Z24 | 8-33 |
| A01K8000 | 90458-1141 | FERRITE, RI-16-28-9 | 8-23 |
| A30K1030 | 90459-6561 | DIGITAL INPUT 8 PTS SINK, 1734-IB8/C | 2-59 |
| A30K1050 | 90459-6560 | DIGITAL OUTPUT 8 PTS, 1734-OB8E/C | 2-59 |
| A30K1060 | 90459-6560 | DIGITAL OUTPUT 8 PTS, 1734-OB8E/C | 2-59 |
| A30K1340 | 90458-1202 | VALVES 2X3/2, CLOSED | 2-51 |
| A40K1250 | 90042-0248 | SOLENOID VALVE OFFICIENE DI ENSINO | 2-189 |
| A80K1050 | 90459-2505 | DIGITAL OUTPUT 4 PTS, 1734-OB4E | 6-85 |
| F01K5000 | 90459-6692 | SAFETY PLC, PLUTO B20 20-070-06 | 8-23 |
| F01K5010 | 90459-6692 | SAFETY PLC, PLUTO B20 20-070-06 | 8-23 |
| F01K5020 | 90459-1131 | SAFETY RELAY, E1T 0SEC | 8-23 |
| F01K5030 | 90459-1131 | SAFETY RELAY, E1T 0SEC | 8-23 |
| F01K5040 | 90600-1454 | SAFETY TIME RELAY, E1T-1.0S-24VDC | 8-23 |
| F10K5050 | 90459-2291 | SAFETY TIME RELAY, E1T-0.5S-24VDC | 8-23 |
| F70K5060 | 90459-2291 | SAFETY TIME RELAY, E1T-0.5S-24VDC | 8-23 |
| K80K0410 | 90600-1209 | TERMINAL BLOCK RELAY, 700-HLT1U2 | 8-33 |
| K80K0411 | 90600-1211 | TERMINAL BLOCK RELAY, 700-HLT1Z24 | 8-33 |
| K80K1000 | 90459-2494 | DEVICENET I/O ADAPTER MODULE, 1734-ADN | 6-85 |
| K80K1010 | 90459-2503 | DIGITAL INPUT 4 PTS SINK, 1734-IB4 | 6-85 |
| K80K1020 | 90459-2503 | DIGITAL INPUT 4 PTS SINK, 1734-IB4 | 6-85 |
| K80K1030 | 90459-2503 | DIGITAL INPUT 4 PTS SINK, 1734-IB4 | 6-85 |
| K80K1041 | 90024-0036 | FEED THROUGH FILTER, 52-160-002 | 6-19 |
| K80K1060 | 90459-6560 | DIGITAL OUTPUT 8 PTS, 1734-OB8E/C | 6-85 |
| K80K1080 | 90459-5261 | REMOTE I/O, RELAY OUTP. 4 PTS,1734-OW4/C | 6-85 |
| K80K1090 | 90459-2509 | REMOTE I/O ANALOG INPUT CURRENT 2 PTS | 6-85 |
| K80K1100 | 90459-2508 | REMOTE I/O ANALOG INPUT VOLTAGE 2 PTS | 6-85 |
| K80K1110 | 90459-2512 | REMOTE I/O THERMOCOUPLE INPUT 2 PTS | 6-85 |
| K80K1200 | 90042-0248 | SOLENOID VALVE OFFICIENE DI ENSINO | 6-33 |
| K80K1210 | 90458-1194 | MONOSTABLE VALVE 5/2 | 6-95 |
| K80K1230 | 90458-1194 | MONOSTABLE VALVE 5/2 | 6-95 |
| K80K1240 | 90458-1194 | MONOSTABLE VALVE 5/2 | 6-95 |
| K80K1280 | 90458-1194 | MONOSTABLE VALVE 5/2 | 6-95 |
| K80K1330 | 90042-0254 | SOLENOID DIAPHRAGM VALVE, R1 1/2 | 6-43 |
| K80K1340 | 90459-1855 | SOFT START VALVE, MS6-DL-1/2 | 6-99 |
| K80K1342 | 90459-1854 | SHUT OFF VALVE, MS6-EE-1/2-10V24 | 6-99 |
| T10K0020 | 90600-1211 | TERMINAL BLOCK RELAY, 700-HLT1Z24 | 8-33 |
| T10K0160 | 90459-2614 | DEVICENET ADAPTER POWERFLEX 40 22-COMM-D | 8-37, 8-39 |
| T10K0170 | 90459-2614 | DEVICENET ADAPTER POWERFLEX 40 22-COMM-D | 8-37, 8-39 |
| T10K0180 | 90119-0056 | RELAY, AUXILIARY MK3P5-S 24VDC | 7-55 |
| T10K0181 | 90459-2614 | DEVICENET ADAPTER POWERFLEX 40 22-COMM-D | 8-37, 8-39 |
| T10K1000 | 90459-2494 | DEVICENET I/O ADAPTER MODULE, 1734-ADN | 7-57 |
| T10K1010 | 90459-2503 | DIGITAL INPUT 4 PTS SINK, 1734-IB4 | 7-57 |
| T10K1020 | 90459-2503 | DIGITAL INPUT 4 PTS SINK, 1734-IB4 | 7-57 |
| T10K1030 | 90459-2503 | DIGITAL INPUT 4 PTS SINK, 1734-IB4 | 7-57 |
| T10K1040 | 90459-2503 | DIGITAL INPUT 4 PTS SINK, 1734-IB4 | 7-57 |
| T10K1050 | 90459-2503 | DIGITAL INPUT 4 PTS SINK, 1734-IB4 | 7-57 |
| T10K1060 | 90459-2503 | DIGITAL INPUT 4 PTS SINK, 1734-IB4 | 7-57 |
| T10K1070 | 90459-2503 | DIGITAL INPUT 4 PTS SINK, 1734-IB4 | 7-57 |
| T10K1080 | 90459-2503 | DIGITAL INPUT 4 PTS SINK, 1734-IB4 | 7-57 |
| T10K1090 | 90459-2503 | DIGITAL INPUT 4 PTS SINK, 1734-IB4 | 7-57 |
| T10K1100 | 90459-2503 | DIGITAL INPUT 4 PTS SINK, 1734-IB4 | 7-57 |
| T10K1130 | 90459-2505 | DIGITAL OUTPUT 4 PTS, 1734-OB4E | 7-57 |

| Pos | Part No | Description | Page No |
|---|---|---|---|
| **K** | | | |
| T10K1140 | 90459-2505 | DIGITAL OUTPUT 4 PTS, 1734-OB4E | 7-57 |
| T10K1150 | 90459-2505 | DIGITAL OUTPUT 4 PTS, 1734-OB4E | 7-57 |
| T10K1160 | 90459-2505 | DIGITAL OUTPUT 4 PTS, 1734-OB4E | 7-57 |
| T10K1170 | 90459-6560 | DIGITAL OUTPUT 8 PTS, 1734-OB8E/C | 7-57 |
| T10K1180 | 90459-6560 | DIGITAL OUTPUT 8 PTS, 1734-OB8E/C | 7-57 |
| T10K1190 | 90459-2505 | DIGITAL OUTPUT 4 PTS, 1734-OB4E | 7-57 |
| T10K1200 | 90459-5261 | REMOTE I/O, RELAY OUTP. 4 PTS,1734-OW4/C | 7-57 |
| T10K1220 | 90459-2508 | REMOTE I/O ANALOG INPUT VOLTAGE 2 PTS | 7-57 |
| T10K1240 | 90459-2509 | REMOTE I/O ANALOG INPUT CURRENT 2 PTS | 7-57 |
| T10K1260 | 90459-2512 | REMOTE I/O THERMOCOUPLE INPUT 2 PTS | 7-57 |
| T10K1270 | 90459-6731 | ENCODER/COUNTER MODULE, 1734-IK SERIES C | 7-57 |
| T10K1280 | 90459-6731 | ENCODER/COUNTER MODULE, 1734-IK SERIES C | 7-57 |
| T10K1300 | 90459-6560 | DIGITAL OUTPUT 8 PTS, 1734-OB8E/C | 7-57 |
| T10K1310 | 90459-6560 | DIGITAL OUTPUT 8 PTS, 1734-OB8E/C | 7-57 |
| T10K1621 | 90458-1194 | MONOSTABLE VALVE 5/2 | 7-143 |
| T10K1631 | 90458-1194 | MONOSTABLE VALVE 5/2 | 7-143 |
| T10K1640 | 90459-2500 | EXPANSION POWER SUPPLY MODULE | 7-57 |
| T10K1641 | 90458-1203 | VALVE 2X3/2 1X OPEN 1X CLOSED | 7-143 |
| T10K1650 | 90459-2501 | FIELD POWER DISTRIBUTOR, 1734-FPD | 7-57 |
| T10K1661 | 90458-1194 | MONOSTABLE VALVE 5/2 | 7-143 |
| T10K1671 | 90458-1194 | MONOSTABLE VALVE 5/2 | 7-147 |
| T10K1730 | 90458-1194 | MONOSTABLE VALVE 5/2 | 7-147 |
| T10K1740 | 90458-1194 | MONOSTABLE VALVE 5/2 | 7-147 |
| T10K1750 | 90458-1194 | MONOSTABLE VALVE 5/2 | 7-147 |
| T10K1760 | 90458-1194 | MONOSTABLE VALVE 5/2 | 7-147 |
| T10K1770 | 90458-1194 | MONOSTABLE VALVE 5/2 | 7-147 |
| T10K1780 | 90458-1202 | VALVES 2X3/2, CLOSED | 7-147 |
| T10K1850 | 90459-2243 | SHUT OFF VALVE, MS4-EE-1/4-10V24 | 7-145 |
| T10K9021 | 90600-1214 | SOLID STATE RELAY, 700-SCNN3Z26 | 8-13 |
| T10K9026 | 90458-1141 | FERRITE, RI-16-28-9 | 8-27 |
| T10K9027 | 90458-1140 | FERRITE, RI-26-28-13 | 8-27 |
| T10K9520 | 90459-5440 | CONTACTOR 4KW 24VDC, DILM9-01 | 8-33 |
| T40K1000 | 90459-2494 | DEVICENET I/O ADAPTER MODULE, 1734-ADN | 2-97 |
| T40K1010 | 90459-2503 | DIGITAL INPUT 4 PTS SINK, 1734-IB4 | 2-97 |
| T40K1020 | 90459-2503 | DIGITAL INPUT 4 PTS SINK, 1734-IB4 | 2-97 |
| T40K1030 | 90459-2503 | DIGITAL INPUT 4 PTS SINK, 1734-IB4 | 2-97 |
| T40K1040 | 90459-2503 | DIGITAL INPUT 4 PTS SINK, 1734-IB4 | 2-97 |
| T40K1050 | 90459-2503 | DIGITAL INPUT 4 PTS SINK, 1734-IB4 | 2-97 |
| T40K1060 | 90459-2503 | DIGITAL INPUT 4 PTS SINK, 1734-IB4 | 2-97 |
| T40K1070 | 90459-2505 | DIGITAL OUTPUT 4 PTS, 1734-OB4E | 2-97 |
| T40K1080 | 90459-6560 | DIGITAL OUTPUT 8 PTS, 1734-OB8E/C | 2-97 |
| T40K1090 | 90459-2512 | REMOTE I/O THERMOCOUPLE INPUT 2 PTS | 2-97 |
| T40K1100 | 90459-2509 | REMOTE I/O ANALOG INPUT CURRENT 2 PTS | 2-97 |
| T40K9041 | 90600-1214 | SOLID STATE RELAY, 700-SCNN3Z26 | 8-13 |
| T40K9047 | 90458-1140 | FERRITE, RI-26-28-13 | 8-27 |
| T40K9051 | 90600-1214 | SOLID STATE RELAY, 700-SCNN3Z26 | 8-13 |
| T40K9057 | 90458-1140 | FERRITE, RI-26-28-13 | 8-27 |
| T40K9081 | 90600-1214 | SOLID STATE RELAY, 700-SCNN3Z26 | 8-13 |
| T40K9087 | 90458-1140 | FERRITE, RI-26-28-13 | 8-27 |
| T40K9091 | 90600-1214 | SOLID STATE RELAY, 700-SCNN3Z26 | 8-13 |
| T40K9097 | 90458-1140 | FERRITE, RI-26-28-13 | 8-27 |
| T40K9101 | 90600-1214 | SOLID STATE RELAY, 700-SCNN3Z26 | 8-13 |
| T40K9107 | 90458-1140 | FERRITE, RI-26-28-13 | 8-27 |
| T40K9111 | 90600-1214 | SOLID STATE RELAY, 700-SCNN3Z26 | 8-13 |
| T40K9117 | 90458-1140 | FERRITE, RI-26-28-13 | 8-27 |
| T40K9550 | 90201-0129 | SOL.COIL, 24VDC, NO. 4WE6J6X/EG24N9K4 | 2-75, 2-77 |
| T40K9551 | 90600-1214 | SOLID STATE RELAY, 700-SCNN3Z26 | 8-13 |
| T40K9561 | 90600-1214 | SOLID STATE RELAY, 700-SCNN3Z26 | 8-13 |
| T40K9570 | 90201-0129 | SOL.COIL, 24VDC, NO. 4WE6J6X/EG24N9K4 | 2-75, 2-77 |
| T40K9571 | 90600-1214 | SOLID STATE RELAY, 700-SCNN3Z26 | 8-13 |
| T40K9581 | 90600-1214 | SOLID STATE RELAY, 700-SCNN3Z26 | 8-13 |
| T40K9590 | 90201-0129 | SOL.COIL, 24VDC, NO. 4WE6J6X/EG24N9K4 | 2-75, 2-77 |
| T40K9591 | 90600-1214 | SOLID STATE RELAY, 700-SCNN3Z26 | 8-13 |
| T40K9601 | 90600-1214 | SOLID STATE RELAY, 700-SCNN3Z26 | 8-13 |
| T40K9670 | 90458-1194 | MONOSTABLE VALVE 5/2 | 2-51 |
| T40K9700 | 90458-1200 | VALVE OPEN IN MID-POSITION 5/3 | 2-51 |
| T50K0260 | 90459-2614 | DEVICENET ADAPTER POWERFLEX 40 22-COMM-D | 8-37, 8-39 |
| T50K1000 | 90459-2494 | DEVICENET I/O ADAPTER MODULE, 1734-ADN | 2-141 |
| T50K1010 | 90459-2503 | DIGITAL INPUT 4 PTS SINK, 1734-IB4 | 2-141 |
| T50K1020 | 90459-2503 | DIGITAL INPUT 4 PTS SINK, 1734-IB4 | 2-141 |
| T50K1030 | 90459-2503 | DIGITAL INPUT 4 PTS SINK, 1734-IB4 | 2-141 |
| T50K1040 | 90459-2505 | DIGITAL OUTPUT 4 PTS, 1734-OB4E | 2-141 |
| T50K1050 | 90459-2505 | DIGITAL OUTPUT 4 PTS, 1734-OB4E | 2-141 |
| T50K1060 | 90459-6560 | DIGITAL OUTPUT 8 PTS, 1734-OB8E/C | 2-141 |
| T50K1070 | 90459-6560 | DIGITAL OUTPUT 8 PTS, 1734-OB8E/C | 2-141 |
| T50K1090 | 90459-2512 | REMOTE I/O THERMOCOUPLE INPUT 2 PTS | 2-141 |
| T50K1100 | 90459-2512 | REMOTE I/O THERMOCOUPLE INPUT 2 PTS | 2-141 |
| T50K1140 | 90459-2508 | REMOTE I/O ANALOG INPUT VOLTAGE 2 PTS | 2-141 |
| T50K1150 | 90459-2510 | ANALOG OUTP. VOLT. 2PTS, 1734-OE2V SER.C | 2-141 |
| T50K1200 | 90042-0248 | SOLENOID VALVE OFFICIENE DI ENSINO | 2-183, 2-185 |
| T50K1640 | 90459-2500 | EXPANSION POWER SUPPLY MODULE | 2-141 |
| T50K2000 | 90459-2494 | DEVICENET I/O ADAPTER MODULE, 1734-ADN | 2-145 |

## K

| Pos | Part No | Description | Page No |
|---|---|---|---|
| T50K2010 | 90459-2503 | DIGITAL INPUT 4 PTS SINK, 1734-IB4 | 2-145 |
| T50K2020 | 90459-2503 | DIGITAL INPUT 4 PTS SINK, 1734-IB4 | 2-145 |
| T50K2030 | 90459-2503 | DIGITAL INPUT 4 PTS SINK, 1734-IB4 | 2-145 |
| T50K2040 | 90459-6561 | DIGITAL INPUT 8 PTS SINK, 1734-IB8/C | 2-145 |
| T50K2050 | 90459-5261 | REMOTE I/O, RELAY OUTP. 4 PTS,1734-OW4/C | 2-145 |
| T50K2060 | 90459-5261 | REMOTE I/O, RELAY OUTP. 4 PTS,1734-OW4/C | 2-145 |
| T50K2070 | 90459-5261 | REMOTE I/O, RELAY OUTP. 4 PTS,1734-OW4/C | 2-145 |
| T50K2080 | 90459-6561 | DIGITAL INPUT 8 PTS SINK, 1734-IB8/C | 2-145 |
| T50K2090 | 90459-6561 | DIGITAL INPUT 8 PTS SINK, 1734-IB8/C | 2-145 |
| T50K2100 | 90459-5261 | REMOTE I/O, RELAY OUTP. 4 PTS,1734-OW4/C | 2-145 |
| T50K2110 | 90459-6560 | DIGITAL OUTPUT 8 PTS, 1734-OB8E/C | 2-145 |
| T50K9006 | 90458-1141 | FERRITE, RI-16-28-9 | 8-27 |
| T50K9007 | 90458-1140 | FERRITE, RI-26-28-13 | 8-27 |
| T50K9017 | 90458-1140 | FERRITE, RI-26-28-13 | 8-27 |
| T50K9580 | 90459-5440 | CONTACTOR 4KW 24VDC, DILM9-01 | 8-33 |
| T50K9600 | 90458-1194 | MONOSTABLE VALVE 5/2 | 2-51 |
| T50K9610 | 90458-1194 | MONOSTABLE VALVE 5/2 | 2-51 |
| T50K9620 | 90042-0249 | SOLENOID VALVE OFFICINE DI ENSINO | 6-87, 6-89 |
| U30K0220 | 90459-2614 | DEVICENET ADAPTER POWERFLEX 40 22-COMM-D | 8-37, 8-39 |
| U30K1000 | 90459-2494 | DEVICENET I/O ADAPTER MODULE, 1734-ADN | 2-59 |
| U30K1010 | 90459-2503 | DIGITAL INPUT 4 PTS SINK, 1734-IB4 | 2-59 |
| U30K1020 | 90459-2503 | DIGITAL INPUT 4 PTS SINK, 1734-IB4 | 2-59 |
| U30K1070 | 90459-6560 | DIGITAL OUTPUT 8 PTS, 1734-OB8E/C | 2-59 |
| U30K1090 | 90459-5261 | REMOTE I/O, RELAY OUTP. 4 PTS,1734-OW4/C | 2-59 |
| U30K1100 | 90459-5261 | REMOTE I/O, RELAY OUTP. 4 PTS,1734-OW4/C | 2-59 |
| U30K1110 | 90459-4055 | REMOTE I/O RELAY OUTPUT 2 PTS | 2-59 |
| U30K1120 | 90459-2509 | REMOTE I/O ANALOG INPUT CURRENT 2 PTS | 2-59 |
| U30K1140 | 90459-2508 | REMOTE I/O ANALOG INPUT VOLTAGE 2 PTS | 2-59 |
| U30K1160 | 90459-2512 | REMOTE I/O THERMOCOUPLE INPUT 2 PTS | 2-59 |
| U30K1250 | 90458-1194 | MONOSTABLE VALVE 5/2 | 2-51 |
| U30K1260 | 90458-1202 | VALVES 2X3/2, CLOSED | 2-51 |
| U30K1280 | 90458-1202 | VALVES 2X3/2, CLOSED | 2-51 |
| U30K1300 | 90458-1202 | VALVES 2X3/2, CLOSED | 2-51 |
| U30K1360 | 90458-1202 | VALVES 2X3/2, CLOSED | 2-51 |
| U30K1370 | 90458-1194 | MONOSTABLE VALVE 5/2 | 2-51 |
| U30K1460 | 90042-0487 | COIL 24 VDC/15W, 04983 197 18 | 2-25 |
| U30K1480 | 90042-0170 | SOLENOID VALVE BüRKERT | 2-21 |
| U30K1640 | 90459-2500 | EXPANSION POWER SUPPLY MODULE | 2-59 |
| U70K0300 | 90459-2614 | DEVICENET ADAPTER POWERFLEX 40 22-COMM-D | 8-37, 8-39 |
| U70K0310 | 90459-2614 | DEVICENET ADAPTER POWERFLEX 40 22-COMM-D | 8-37, 8-39 |
| U70K0320 | 90459-2614 | DEVICENET ADAPTER POWERFLEX 40 22-COMM-D | 8-37, 8-39 |
| U70K0330 | 90459-2614 | DEVICENET ADAPTER POWERFLEX 40 22-COMM-D | 8-37, 8-39 |
| U70K1000 | 90459-2494 | DEVICENET I/O ADAPTER MODULE, 1734-ADN | 1-347 |
| U70K1010 | 90459-2503 | DIGITAL INPUT 4 PTS SINK, 1734-IB4 | 1-347 |
| U70K1020 | 90459-2503 | DIGITAL INPUT 4 PTS SINK, 1734-IB4 | 1-347 |
| U70K1030 | 90459-2503 | DIGITAL INPUT 4 PTS SINK, 1734-IB4 | 1-347 |
| U70K1040 | 90459-2503 | DIGITAL INPUT 4 PTS SINK, 1734-IB4 | 1-347 |
| U70K1070 | 90459-2503 | DIGITAL INPUT 4 PTS SINK, 1734-IB4 | 1-347 |
| U70K1091 | 90459-2742 | LEVEL CONTROL RELAY, RM4-LA32MW | 1-347 |
| U70K1100 | 90459-2505 | DIGITAL OUTPUT 4 PTS, 1734-OB4E | 1-347 |
| U70K1110 | 90459-6560 | DIGITAL OUTPUT 8 PTS, 1734-OB8E/C | 1-347 |
| U70K1120 | 90459-6560 | DIGITAL OUTPUT 8 PTS, 1734-OB8E/C | 1-347 |
| U70K1160 | 90459-2510 | ANALOG OUTP. VOLT. 2PTS, 1734-OE2V SER.C | 1-347 |
| U70K1180 | 90459-2512 | REMOTE I/O THERMOCOUPLE INPUT 2 PTS | 1-347 |
| U70K1190 | 90459-4056 | REMOTE I/O RTD INPUT 2PTS | 1-347 |
| U70K1410 | 90458-1202 | VALVES 2X3/2, CLOSED | 1-319, 1-321 |
| U70K1430 | 90187-0110 | DIAPHRAGM VALVE DN15, NC WELD CONN. | 1-243 |
| U70K1430 | 90458-1202 | VALVES 2X3/2, CLOSED | 1-319, 1-321 |
| U70K1450 | 90458-1202 | VALVES 2X3/2, CLOSED | 1-319, 1-321 |
| U70K1470 | 90458-1194 | MONOSTABLE VALVE 5/2 | 1-319, 1-321 |
| U70K1500 | 90458-1202 | VALVES 2X3/2, CLOSED | 1-319, 1-321 |
| U70K1520 | 90458-1194 | MONOSTABLE VALVE 5/2 | 1-319, 1-321 |
| U70K1530 | 90458-1194 | MONOSTABLE VALVE 5/2 | 1-319, 1-321 |
| U70K1640 | 90459-2500 | EXPANSION POWER SUPPLY MODULE | 1-347 |
| U70K2000 | 90459-2494 | DEVICENET I/O ADAPTER MODULE, 1734-ADN | 1-285 |
| U70K2010 | 90459-2503 | DIGITAL INPUT 4 PTS SINK, 1734-IB4 | 1-285 |
| U70K2020 | 90459-2503 | DIGITAL INPUT 4 PTS SINK, 1734-IB4 | 1-285 |
| U70K2040 | 90459-2505 | DIGITAL OUTPUT 4 PTS, 1734-OB4E | 1-285 |
| U70K2050 | 90459-6560 | DIGITAL OUTPUT 8 PTS, 1734-OB8E/C | 1-285 |
| U70K2051 | 90600-1211 | TERMINAL BLOCK RELAY, 700-HLT1Z24 | 8-13 |
| U70K2060 | 90459-6560 | DIGITAL OUTPUT 8 PTS, 1734-OB8E/C | 1-285 |
| U70K2070 | 90459-6560 | DIGITAL OUTPUT 8 PTS, 1734-OB8E/C | 1-285 |
| U70K2080 | 90459-5261 | REMOTE I/O, RELAY OUTP. 4 PTS,1734-OW4/C | 1-285 |
| U70K2090 | 90459-4055 | REMOTE I/O RELAY OUTPUT 2 PTS | 1-285 |
| U70K2100 | 90459-2509 | REMOTE I/O ANALOG INPUT CURRENT 2 PTS | 1-285 |
| U70K2110 | 90459-2508 | REMOTE I/O ANALOG INPUT VOLTAGE 2 PTS | 1-285 |
| U70K2130 | 90459-2510 | ANALOG OUTP. VOLT. 2PTS, 1734-OE2V SER.C | 1-285 |
| U70K2131 | 90042-0172 | SOLENOID VALVE 4023/1005/1032 24VDC | 1-193 |
| U70K2150 | 90459-2512 | REMOTE I/O THERMOCOUPLE INPUT 2 PTS | 1-285 |
| U70K2160 | 90459-2512 | REMOTE I/O THERMOCOUPLE INPUT 2 PTS | 1-285 |
| U70K2170 | 90459-2512 | REMOTE I/O THERMOCOUPLE INPUT 2 PTS | 1-285 |
| U70K2180 | 90459-2512 | REMOTE I/O THERMOCOUPLE INPUT 2 PTS | 1-285 |

| Pos | Part No | Description | Page No |
|---|---|---|---|
| **K** | | | |
| U70K2220 | 90459-6731 | ENCODER/COUNTER MODULE, 1734-IK SERIES C | 1-285 |
| U70K2250 | 90458-1194 | MONOSTABLE VALVE 5/2 | 1-317 |
| U70K2270 | 90458-1202 | VALVES 2X3/2, CLOSED | 1-317 |
| U70K2300 | 90458-1194 | MONOSTABLE VALVE 5/2 | 1-317 |
| U70K2340 | 90458-1194 | MONOSTABLE VALVE 5/2 | 1-317 |
| U70K2350 | 90458-1194 | MONOSTABLE VALVE 5/2 | 1-317 |
| U70K2360 | 90458-1194 | MONOSTABLE VALVE 5/2 | 1-317 |
| U70K2370 | 90458-1194 | MONOSTABLE VALVE 5/2 | 1-317 |
| U70K2410 | 90458-1194 | MONOSTABLE VALVE 5/2 | 1-317 |
| U70K2420 | 90458-1194 | MONOSTABLE VALVE 5/2 | 1-317 |
| U70K2430 | 90458-1202 | VALVES 2X3/2, CLOSED | 1-317 |
| U70K2440 | 90458-1194 | MONOSTABLE VALVE 5/2 | 1-317 |
| U70K2640 | 90459-2500 | EXPANSION POWER SUPPLY MODULE | 1-285 |
| U70K3000 | 90459-2494 | DEVICENET I/O ADAPTER MODULE, 1734-ADN | 1-353 |
| U70K3010 | 90459-2503 | DIGITAL INPUT 4 PTS SINK, 1734-IB4 | 1-353 |
| U70K3020 | 90459-2503 | DIGITAL INPUT 4 PTS SINK, 1734-IB4 | 1-353 |
| U70K3030 | 90459-2503 | DIGITAL INPUT 4 PTS SINK, 1734-IB4 | 1-353 |
| U70K3040 | 90459-2503 | DIGITAL INPUT 4 PTS SINK, 1734-IB4 | 1-353 |
| U70K3050 | 90459-2503 | DIGITAL INPUT 4 PTS SINK, 1734-IB4 | 1-353 |
| U70K3060 | 90459-2503 | DIGITAL INPUT 4 PTS SINK, 1734-IB4 | 1-353 |
| U70K3080 | 90459-2505 | DIGITAL OUTPUT 4 PTS, 1734-OB4E | 1-353 |
| U70K3090 | 90459-2505 | DIGITAL OUTPUT 4 PTS, 1734-OB4E | 1-353 |
| U70K3110 | 90459-2509 | REMOTE I/O ANALOG INPUT CURRENT 2 PTS | 1-353 |
| U70K3130 | 90459-2508 | REMOTE I/O ANALOG INPUT VOLTAGE 2 PTS | 1-353 |
| U70K3140 | 90459-2508 | REMOTE I/O ANALOG INPUT VOLTAGE 2 PTS | 1-353 |
| U70K3160 | 90459-2512 | REMOTE I/O THERMOCOUPLE INPUT 2 PTS | 1-353 |
| U70K3170 | 90459-2512 | REMOTE I/O THERMOCOUPLE INPUT 2 PTS | 1-353 |
| U70K3181 | 90459-2742 | LEVEL CONTROL RELAY, RM4-LA32MW | 1-353 |
| U70K3290 | 90042-0203 | SOLENOID VALVE BüRKERT | 1-277 |
| U70K3330 | 90459-6975 | SOLENOID VALVE G1/4, 2401186082702400 | 1-277 |
| U70K3340 | 90459-6977 | SOLENOID VALVE G1/4, V04B286N-B423A | 1-277 |
| U70K3640 | 90459-2500 | EXPANSION POWER SUPPLY MODULE | 1-353 |
| U70K4000 | 90459-2494 | DEVICENET I/O ADAPTER MODULE, 1734-ADN | 1-213 |
| U70K4010 | 90459-2503 | DIGITAL INPUT 4 PTS SINK, 1734-IB4 | 1-213 |
| U70K4020 | 90459-2503 | DIGITAL INPUT 4 PTS SINK, 1734-IB4 | 1-213 |
| U70K4040 | 90459-2505 | DIGITAL OUTPUT 4 PTS, 1734-OB4E | 1-213 |
| U70K4060 | 90459-2509 | REMOTE I/O ANALOG INPUT CURRENT 2 PTS | 1-213 |
| U70K4070 | 90459-2508 | REMOTE I/O ANALOG INPUT VOLTAGE 2 PTS | 1-213 |
| U70K4080 | 90459-2510 | ANALOG OUTP. VOLT. 2PTS, 1734-OE2V SER.C | 1-213 |
| U70K4090 | 90459-2512 | REMOTE I/O THERMOCOUPLE INPUT 2 PTS | 1-213 |
| U70K4100 | 90459-2512 | REMOTE I/O THERMOCOUPLE INPUT 2 PTS | 1-213 |
| U70K4210 | 90042-0203 | SOLENOID VALVE BüRKERT | 1-209 |
| U70K4220 | 90042-0203 | SOLENOID VALVE BüRKERT | 1-209 |
| U70K4230 | 90042-0171 | SOLENOID VALVE BURKERT | 1-207 |
| U70K4240 | 90042-0171 | SOLENOID VALVE BURKERT | 1-207 |
| U70K9037 | 90458-1140 | FERRITE, RI-26-28-13 | 8-27 |
| U70K9510 | 90459-1359 | FILTER 1 A, 250 VAC, FN 332-1/05 | 8-53 |
| U70K9560 | 90459-5440 | CONTACTOR 4KW 24VDC, DILM9-01 | 8-33 |
| Y70K3300 | 90042-0203 | SOLENOID VALVE BüRKERT | 1-277 |
| **M** | | | |
| MB010 | 315229-0105 | GASKETS, 48,5X55,5X3,7 MM 2" FDA | 9-17 |
| MB020 | 315229-0104 | GASKETS, 35,8X42,8X3,7 MM 1"1/2 FD | 9-17 |
| MB030 | 315229-0103 | GASKETS, 23,1X30,1X3,7 MM 1" FDA | 9-17 |
| MB040 | 315229-0107 | GASKETS, 73,9X80,9X3,7 MM 2"1/2 FD | 9-17 |
| MB050 | 90036-0057 | LIGHT BULB, BA9S 28V | 9-17 |
| A01M5740 | 90457-0056 | FAN 7450 ES | 8-9, 8-11 |
| A01M5750 | 90457-0056 | FAN 7450 ES | 8-9, 8-11 |
| A40M1340 | 90459-5481 | OIL PUMP 3L, 10P-P3 | 2-83 |
| K80M0111 | 90321-0116 | PUMP GRUNDFOS CHI 2-60 | 6-37 |
| K80M0471 | 90600-1257 | PUMP SV 808 F 55 T | 6-49 |
| K80M0471 | 90600-2686 | PUMP SV806 F556 T | 6-49 |
| K80M9510 | 2875358-0000 | FAN | 6-67 |
| T10M0160 | 90600-1249 | GEARS, HELICAL MOTOR C 112 UF 6.2 S1 B52 | 7-121 |
| T10M0170 | 90459-2096 | GEARS, WORM MOTOR F2 15 P63 B14 B8 PV 75 | 7-19 |
| T10M0180 | 90600-1459 | GEARS, WORM MOTOR MC 320P2TB5 | 7-89 |
| T10M0181 | 90600-1459 | GEARS, WORM MOTOR MC 320P2TB5 | 7-89 |
| T10M1632 | 90600-1204 | DOUBLE ACTING, COMPACT, 100-15 | 7-117 |
| T10M1642 | 90459-7306 | CYLINDER WITH INT. GUIDING BORE 16 | 7-117 |
| T10M1712 | 90459-7102 | DOUBLE ACTING, PROFILE,CYL 50-125 | 7-173 |
| T10M1722 | 90459-7102 | DOUBLE ACTING, PROFILE,CYL 50-125 | 7-173 |
| T10M1732 | 90600-2793 | DOUBLE ACTING, COMPACT, 25-10 | 7-133 |
| T10M1733 | 90600-2793 | DOUBLE ACTING, COMPACT, 25-10 | 7-133 |
| T10M1742 | 90600-2793 | DOUBLE ACTING, COMPACT, 25-10 | 7-133 |
| T10M1743 | 90600-2793 | DOUBLE ACTING, COMPACT, 25-10 | 7-133 |
| T10M1752 | 90459-1953 | DOUBLE ACTING, MINI-ISO, CYL. 25-10 | 7-123 |
| T10M1762 | 90459-1953 | DOUBLE ACTING, MINI-ISO, CYL. 25-10 | 7-17 |
| T10M1772 | 90450-0306 | DOUBLE ACTING, MINI-ISO, CYL. 12-25 | 7-91 |
| T10M9020 | 90600-2599 | SERVO MOTOR MPL-B320P-MK24AA | 7-135 |
| T40M0040 | 90600-1881 | MOTOR KW 1,5 4P 220/380 50 HZ B5 "MOT AS | 2-75, 2-77 |
| T40M0050 | 90459-1147 | GEARS, WORM MOTOR VF30 F1-10 P63 B14 V6 | 2-245 |
| T40M9040 | 90459-7178 | SERVO MOTOR MPL-B330P-SJ24AA | 4-31 |
| T40M9050 | 90459-7178 | SERVO MOTOR MPL-B330P-SJ24AA | 4-29 |

| Pos | Part No | Description | Page No |
|---|---|---|---|
| **M** | | | |
| T40M9080 | 90459-2594 | SERVO MOTOR MPL-B680B-MX141 | 3-27 |
| T40M9090 | 90459-2594 | SERVO MOTOR MPL-B680B-MX141 | 3-27 |
| T40M9100 | 90459-2594 | SERVO MOTOR MPL-B680B-MX141 | 3-27 |
| T40M9110 | 90459-2594 | SERVO MOTOR MPL-B680B-MX141 | 3-27 |
| T40M9672 | 90459-4766 | DOUBLE ACTING, MINI-ISO, CYL. 20-60 | 2-209 |
| T40M9702 | 90450-0504 | DOUBLE ACTING, PROFILE, CYL 50-25 | 5-19 |
| T50M9000 | 90459-7172 | SERVO MOTOR MPF-B540K-MJ22AA | 5-41 |
| T50M9010 | 2921644-0000 | MOTOR | 5-177 |
| T50M9602 | 90459-5268 | DOUBLE ACTING, MINI-ISO, CYL. 25-130 | 5-11, 5-13, 5-15 |
| T50M9604 | 90459-5268 | DOUBLE ACTING, MINI-ISO, CYL. 25-130 | 5-11, 5-13, 5-15 |
| U30M0220 | 351150-0418 | CABLE OLFLEX 4X2,5 MM2 LIGHT/GREY | 2-33 |
| U30M1252 | 90321-0128 | CHEM. PUMP 081778 | 2-37 |
| U30M1570 | 927244-0100 | PUMP | 2-39 |
| U30M1590 | 927244-0100 | PUMP | 2-39 |
| U70M0100 | 90321-0134 | CIRC. PUMP TCB25-6LV.230 HZ 50 | 1-265 |
| U70M0100 | 90321-0135 | CIRC. PUMP TMB 40/2 230V60HZ | 1-265 |
| U70M0300 | 90459-6661 | COMPRESSOR, 2BV5410-8FP02-6S | 1-183 |
| U70M0310 | 90459-1226 | GEARS, WORM MOTOR VF 44P-10+BN71B 0.37KW | 1-37 |
| U70M0320 | 2851886-0000 | CENTRIFUGAL PUMP | 1-253 |
| U70M0330 | 90459-0804 | MOTOR B3/B5 CE CODE: 159353 | 1-19 |
| U70M2252 | 90459-0587 | DOUBLE ACTING, PROFILE, CYL 50-50 | 1-79 |
| U70M2300 | 90450-0281 | DOUBLE ACTING,PROF.CYL 32-80 | 1-191 |
| U70M2350 | 90459-0713 | DOUBLE ACTING, MINI-ISO, CYL 12-80 | 1-181 |
| U70M2360 | 90459-0713 | DOUBLE ACTING, MINI-ISO, CYL 12-80 | 1-181 |
| U70M2370 | 90600-5541 | DOUBLE ACTING, COMPACT, CYL 16-25 | 1-55 |
| U70M2410 | 90457-0871 | DOUBLE ACTING, MINI-ISO, CYL. 16-25 | 1-63 |
| U70M2422 | 90600-0805 | DOUBLE ACTING, MINI-ISO, CYL. 25-62 MM | 1-53 |
| U70M2432 | 90459-7086 | DOUBLE ACTING, COMPACT, 50-25 | 1-39, 1-41 |
| U70M2433 | 90459-7086 | DOUBLE ACTING, COMPACT, 50-25 | 1-39, 1-41 |
| U70M2442 | 90457-1038 | DOUBLE ACTING, COMPACT, 32-25 | 1-47, 1-49, 1-51 |
| U70M9030 | 90459-2579 | SERVO MOTOR MPL-B320P-SJ22AA | 1-235 |
| **P** | | | |
| A01P5300 | 90459-6436 | RECORDER 12-CHANNEL, LOGOSCREEN CF | 8-53 |
| A01P5330 | 90053-0031 | HOUR COUNTER, B 609.10 10-50VDC | 8-53 |
| A01P5340 | 90053-0029 | COUNTER, F524.800FA3C 24VDC | 8-53 |
| K80P6002 | 90459-7344 | PRESSURE GAUGE, MA-40-6-R1/4-EN | 6-93 |
| K80P7002 | 90043-0006 | PRESSURE GAUGE, 2041 D=63 MM | 6-87, 6-89 |
| K80P7003 | 1129079-0000 | FLOW METER | 6-33 |
| K80P7004 | 90043-0100 | PRESSURE GAUGE, 2948 D=63 MM | 6-33 |
| K80P7005 | 90043-0043 | PRESSURE GAUGE 0-10 BAR 1/8" | 6-45 |
| T10P1490 | 2903813-0100 | SIGNAL LAMP | 2-161, 2-163 |
| T10P1642 | 90459-7344 | PRESSURE GAUGE, MA-40-6-R1/4-EN | 7-139, 7-141 |
| T10P1662 | 90459-7344 | PRESSURE GAUGE, MA-40-6-R1/4-EN | 7-139, 7-141 |
| T40P0040 | 90600-1284 | PRESSURE GAUGE, D=63 MM AB31-13/063-0160 | 2-75, 2-77 |
| T40P1250 | 90243-0112 | FLOW METER | 2-189 |
| T40P6002 | 90458-2969 | PRESSURE GAUGE, MAP-40-1-1/8-EN | 2-49 |
| T40P7002 | 1129079-0000 | FLOW METER | 6-33 |
| T40P7040 | 1129079-0000 | FLOW METER | 6-33 |
| T40P7150 | 1129079-0000 | FLOW METER | 6-33 |
| T40P7160 | 1129079-0000 | FLOW METER | 6-33 |
| T40P9550 | 90600-1284 | PRESSURE GAUGE, D=63 MM AB31-13/063-0160 | 2-75, 2-77 |
| T40P9672 | 90459-7344 | PRESSURE GAUGE, MA-40-6-R1/4-EN | 2-49 |
| T50P1130 | 2540716-0200 | SIGNAL LAMP | 2-157 |
| T50P1131 | 90458-0295 | LIGHT ELEMENT, BLUE, KL70-401L | 2-159, 2-173 |
| T50P1140 | 90458-0294 | LIGHT ELEMENT, YELLOW, KL70-401Y | 2-159, 2-173 |
| T50P1150 | 90458-0293 | LIGHT ELEMENT, RED, KL70-401R | 2-159, 2-173 |
| T50P1160 | 90458-0302 | SIREN WITH ADJUSTABLE VOLUME KS 70-3004 | 2-159, 2-173 |
| T50P1250 | 90243-0112 | FLOW METER | 2-189 |
| T50P1362 | 90459-7344 | PRESSURE GAUGE, MA-40-6-R1/4-EN | 2-49 |
| T50P7002 | 1041046-0000 | FLOW METER | 6-33 |
| T50P7010 | 1041046-0000 | FLOW METER | 6-33 |
| U30P1462 | 90458-2969 | PRESSURE GAUGE, MAP-40-1-1/8-EN | 2-49 |
| U70P1500 | 90459-7344 | PRESSURE GAUGE, MA-40-6-R1/4-EN | 1-313, 1-315 |
| U70P2414 | 90459-7344 | PRESSURE GAUGE, MA-40-6-R1/4-EN | 1-313, 1-315 |
| U70P2422 | 90459-7344 | PRESSURE GAUGE, MA-40-6-R1/4-EN | 1-313, 1-315 |
| U70P2432 | 90459-7344 | PRESSURE GAUGE, MA-40-6-R1/4-EN | 1-313, 1-315 |
| U70P3302 | 90459-7344 | PRESSURE GAUGE, MA-40-6-R1/4-EN | 1-313, 1-315 |
| U70P4222 | 90459-7344 | PRESSURE GAUGE, MA-40-6-R1/4-EN | 1-313, 1-315 |
| U70P7010 | 1129079-0000 | FLOW METER | 6-33 |
| U70P9510 | 90459-5187 | CONDUCTIVITY TRANSMITTER CLM223-ID7105 | 8-53 |
| **Q** | | | |
| A01Q5810 | 90459-5308 | CONTACTOR 4KW 24VDC, DILM9-10 | 8-35 |
| K80Q0111 | 90459-5440 | CONTACTOR 4KW 24VDC, DILM9-01 | 8-35 |
| K80Q0121 | 90459-5440 | CONTACTOR 4KW 24VDC, DILM9-01 | 8-35 |
| K80Q0471 | 90459-5441 | CONTACTOR 7,5KW 24VDC, DILM17-01 | 8-35 |
| K80Q6002 | 90187-0148 | BALL VALVE G1 | 6-53 |
| K80Q6003 | 90187-0148 | BALL VALVE G1 | 6-53 |
| K80Q6004 | 90187-0148 | BALL VALVE G1 | 6-53 |
| T10Q0160 | 90459-5440 | CONTACTOR 4KW 24VDC, DILM9-01 | 8-33 |
| T10Q0190 | 90459-5440 | CONTACTOR 4KW 24VDC, DILM9-01 | 8-33 |
| T10Q0192 | 90600-0943 | SOLID STATE CONTACTOR, 3RF2320-1AA04 | 8-13 |
| T10Q1662 | 90459-2141 | LOGIC ELEMENT, OS-1/8-B | 7-139, 7-141 |

| Pos | Part No | Description | Page No |
|---|---|---|---|
| **Q** | | | |
| T10Q1710 | 90458-1194 | MONOSTABLE VALVE 5/2 | 7-143 |
| T10Q1720 | 90458-1194 | MONOSTABLE VALVE 5/2 | 7-143 |
| T10Q1852 | 90459-2337 | SHUT OFF VALVE, MS4-EM1-1/4 | 7-145 |
| T10Q9022 | 90459-5440 | CONTACTOR 4KW 24VDC, DILM9-01 | 8-33 |
| T10Q9170 | 90459-5441 | CONTACTOR 7,5KW 24VDC, DILM17-01 | 8-33 |
| T40Q0040 | 90459-5440 | CONTACTOR 4KW 24VDC, DILM9-01 | 8-35 |
| T40Q0040 | 90600-0775 | BALL VALVE G1/4, 406F-1/4" | 2-75, 2-77 |
| T40Q0050 | 90459-5440 | CONTACTOR 4KW 24VDC, DILM9-01 | 8-35 |
| T40Q9080 | 90459-5444 | CONTACTOR 15KW 24VDC, DILM32-01 | 8-35 |
| T40Q9150 | 90459-5441 | CONTACTOR 7,5KW 24VDC, DILM17-01 | 8-33 |
| T50Q0240 | 90459-5441 | CONTACTOR 7,5KW 24VDC, DILM17-01 | 8-33 |
| T50Q0241 | 90600-0943 | SOLID STATE CONTACTOR, 3RF2320-1AA04 | 8-13 |
| T50Q0242 | 90600-0943 | SOLID STATE CONTACTOR, 3RF2320-1AA04 | 8-13 |
| T50Q0250 | 90459-5441 | CONTACTOR 7,5KW 24VDC, DILM17-01 | 8-33 |
| T50Q0251 | 90600-0943 | SOLID STATE CONTACTOR, 3RF2320-1AA04 | 8-13 |
| T50Q0252 | 90600-0943 | SOLID STATE CONTACTOR, 3RF2320-1AA04 | 8-13 |
| T50Q0260 | 90459-5440 | CONTACTOR 4KW 24VDC, DILM9-01 | 8-33 |
| T50Q9000 | 90459-5444 | CONTACTOR 15KW 24VDC, DILM32-01 | 8-35 |
| U30Q0220 | 90459-5440 | CONTACTOR 4KW 24VDC, DILM9-01 | 8-33 |
| U30Q1262 | 90459-5178 | ANGLE SEAT VALVE W. FLANGES, N.O.8498669 | 2-23 |
| U30Q1264 | 90459-5177 | ANGLE SEAT VALVE W. FLANGES, N.O.8498668 | 2-23 |
| U30Q1282 | 90458-2333 | VALVE, M8A-V4LQ-KZ-11AO-SS PNEUM. OPER. | 2-39 |
| U30Q1284 | 90458-2333 | VALVE, M8A-V4LQ-KZ-11AO-SS PNEUM. OPER. | 2-39 |
| U30Q1302 | 90458-2333 | VALVE, M8A-V4LQ-KZ-11AO-SS PNEUM. OPER. | 2-39 |
| U30Q1304 | 90458-2333 | VALVE, M8A-V4LQ-KZ-11AO-SS PNEUM. OPER. | 2-39 |
| U30Q1372 | 2878261-0000 | VALVE | 2-31 |
| U70Q0100 | 90459-5440 | CONTACTOR 4KW 24VDC, DILM9-01 | 8-35 |
| U70Q0300 | 90459-5441 | CONTACTOR 7,5KW 24VDC, DILM17-01 | 8-33 |
| U70Q0310 | 90459-5440 | CONTACTOR 4KW 24VDC, DILM9-01 | 8-33 |
| U70Q0320 | 90459-5440 | CONTACTOR 4KW 24VDC, DILM9-01 | 8-33 |
| U70Q0330 | 90459-5440 | CONTACTOR 4KW 24VDC, DILM9-01 | 8-33 |
| U70Q0340 | 90459-5440 | CONTACTOR 4KW 24VDC, DILM9-01 | 8-33 |
| U70Q0350 | 90600-0947 | SOLID STATE CONTACTOR, 3RF2420-1AB45 | 8-13 |
| U70Q0351 | 90459-5440 | CONTACTOR 4KW 24VDC, DILM9-01 | 8-33 |
| U70Q0360 | 90600-0947 | SOLID STATE CONTACTOR, 3RF2420-1AB45 | 8-13 |
| U70Q0361 | 90459-5440 | CONTACTOR 4KW 24VDC, DILM9-01 | 8-33 |
| U70Q0370 | 90600-0943 | SOLID STATE CONTACTOR, 3RF2320-1AA04 | 8-13 |
| U70Q0371 | 90459-5440 | CONTACTOR 4KW 24VDC, DILM9-01 | 8-33 |
| U70Q0450 | 90600-0948 | SOLID STATE CONTACTOR, 3RF2430-1AB45 | 8-13 |
| U70Q0451 | 90459-5441 | CONTACTOR 7,5KW 24VDC, DILM17-01 | 8-33 |
| U70Q0461 | 90600-0947 | SOLID STATE CONTACTOR, 3RF2420-1AB45 | 8-13 |
| U70Q0462 | 90459-5440 | CONTACTOR 4KW 24VDC, DILM9-01 | 8-33 |
| U70Q0463 | 90600-0947 | SOLID STATE CONTACTOR, 3RF2420-1AB45 | 8-13 |
| U70Q0464 | 90459-5440 | CONTACTOR 4KW 24VDC, DILM9-01 | 8-33 |
| U70Q1412 | 90459-1241 | ANGLE SEAT VALVE, TRI-CLAMP, N.C. DN20 | 1-257 |
| U70Q1414 | 90600-1946 | VALVE, SEAT, 3A. 9613320304 | 1-259 |
| U70Q2274 | 90458-1531 | ACTUATOR, N.O., PA 38/100 | 2-111 |
| U70Q2344 | 342800-1303 | ACTUATOR, SS, N.O. SEAT S. 25 | 1-253 |
| U70Q9160 | 90459-5441 | CONTACTOR 7,5KW 24VDC, DILM17-01 | 8-33 |
| **R** | | | |
| A01R5010 | 90600-2135 | MODULE CONNECTOR 250V, BEST/D 1878560000 | 8-23 |
| A01R5850 | 90600-2135 | MODULE CONNECTOR 250V, BEST/D 1878560000 | 8-23 |
| A01R5860 | 90600-2135 | MODULE CONNECTOR 250V, BEST/D 1878560000 | 8-23 |
| A30R6012 | 90328-0047 | SILENCER G1/8" | 2-51 |
| A30R6013 | 90328-0024 | SILENCER G3/8" | 2-51 |
| A30R6014 | 90328-0047 | SILENCER G1/8" | 2-51 |
| A30R6015 | 90328-0024 | SILENCER G3/8" | 2-51 |
| A30R6016 | 90458-1213 | RIGHT ENDPLATE INTERNAL PILOT AIR | 2-51 |
| A40R1340 | 90163-0064 | QUICK COUPLING, (M) LP-006-2-WR517 | 2-83 |
| K80R1342 | 90328-0025 | SILENCER G1/2" | 6-99 |
| K80R1343 | 90459-7342 | REGULATOR, MS6-LRB-1/2-D7-AS-BD | 6-99 |
| K80R1344 | 90459-1853 | FILTER REGULATOR, MS6-LFR-1/2-D7-ERV-AS | 6-99 |
| K80R1345 | 90328-0025 | SILENCER G1/2" | 6-99 |
| K80R6002 | 90459-2822 | REGULATOR, MS4-LR-1/4-D5-A8 | 6-93 |
| K80R6003 | 90328-0024 | SILENCER G3/8" | 6-95 |
| K80R6004 | 90328-0047 | SILENCER G1/8" | 6-95 |
| K80R6005 | 90328-0024 | SILENCER G3/8" | 6-95 |
| K80R6006 | 90328-0047 | SILENCER G1/8" | 6-95 |
| K80R6007 | 90458-1214 | RIGHT ENDPL EXT. PILOT AIR,CDVI5.0-EPR-S | 6-95 |
| K80R7002 | 90187-0130 | TEMP. CONTR. VALVE, R3/4 0-30øC | 6-29 |
| K80R7003 | 90230-0028 | NON-RETURN VALVE H 151 R 3/8" | 6-33 |
| K80R7004 | 90230-0044 | NON-RETURN VALVE 1" | 6-47 |
| K80R7005 | 90230-0042 | NON-RETURN VALVE 1/2" | 6-45 |
| K80R7006 | 90113-0098 | PRESSURE REGULATOR | 6-45 |
| K80R7007 | 90187-0133 | SAFETY VALVE, 10 BARS, R1/2, R1/2 | 6-45 |
| K80R7008 | 90230-0042 | NON-RETURN VALVE 1/2" | 6-45 |
| K80R7009 | 90230-0042 | NON-RETURN VALVE 1/2" | 6-51 |
| K80R7012 | 90235-0151 | NON-RETURN VALVE, 534 098 110 0 | 6-51 |
| K80R7013 | 90230-0040 | NON-RETURN VALVE, R3/8, L=55 | 6-9 |
| K80R7014 | 90458-0201 | FLUID AUT. FEEDER, ALINOX 1/2 46.04.00 | 6-9 |
| K80R7015 | 90230-0032 | NON-RETURN VALVE, 8MM, L=63,25 | 6-9 |
| K80R7017 | 90230-0044 | NON-RETURN VALVE 1" | 2-121 |

| Pos | Part No | Description | Page No |
|---|---|---|---|
| **R** | | | |
| K80R7622 | 90230-0042 | NON-RETURN VALVE 1/2" | 2-121 |
| T10R0020 | 1498047-0000 | SEALING BLOCK | 7-91 |
| T10R0021 | 1524481-0000 | SEALING BLOCK | 7-93 |
| T10R0192 | 90600-2586 | HEATING CARTRIDGE, 800W 240V | 7-113 |
| T10R1000 | 90459-2523 | OPEN STYLE TERMINATOR, 1485A-C2 | 7-57 |
| T10R1622 | 90459-0205 | QUICK EXHAUST VALVE, SE-1/4-B | 7-115 |
| T10R1624 | 90328-0026 | SILENCER G1/4" | 7-115 |
| T10R1642 | 90459-2822 | REGULATOR, MS4-LR-1/4-D5-A8 | 7-139, 7-141 |
| T10R1662 | 90459-2822 | REGULATOR, MS4-LR-1/4-D5-A8 | 7-139, 7-141 |
| T10R1852 | 90328-0026 | SILENCER G1/4" | 7-145 |
| T10R1853 | 90328-0026 | SILENCER G1/4" | 7-145 |
| T10R1854 | 90459-2242 | REGULATOR, MS4-LRB-1/4-D7-AS | 7-145 |
| T10R1855 | 90459-2339 | FILTER REGULATOR, MS4-LFR-1/4-D7-ERV-AS | 7-145 |
| T10R6002 | 90328-0047 | SILENCER G1/8" | 7-143 |
| T10R6003 | 90328-0024 | SILENCER G3/8" | 7-143 |
| T10R6004 | 90328-0024 | SILENCER G3/8" | 7-143 |
| T10R6005 | 90328-0047 | SILENCER G1/8" | 7-147 |
| T10R6006 | 90328-0024 | SILENCER G3/8" | 7-147 |
| T10R6007 | 90328-0024 | SILENCER G3/8" | 7-147 |
| T10R6008 | 90458-1214 | RIGHT ENDPL EXT. PILOT AIR,CDVI5.0-EPR-S | 7-143 |
| T10R6009 | 90458-1212 | LEFT ENDPLATE INCL. 10M CABLE | 7-147 |
| T10R6012 | 90328-0047 | SILENCER G1/8" | 7-147 |
| T10R6013 | 90328-0047 | SILENCER G1/8" | 7-143 |
| T40R0040 | 90600-1308 | HOSE ATTACHMENT, AB20-11/K1 1/4G | 2-75, 2-77 |
| T40R1130 | 90600-1282 | NON-RETURN VALVE, NO. S8 A1,X/ | 2-75, 2-77 |
| T40R6002 | 90458-0254 | PRECISION PRESSURE REGULATOR,LRP-1/4-0,7 | 2-49 |
| T40R9021 | 90600-1199 | VARISTOR MOV, 390KD07 | 8-13 |
| T40R9041 | 90600-1199 | VARISTOR MOV, 390KD07 | 8-13 |
| T40R9051 | 90600-1199 | VARISTOR MOV, 390KD07 | 8-13 |
| T40R9091 | 90600-1199 | VARISTOR MOV, 390KD07 | 8-13 |
| T40R9101 | 90600-1199 | VARISTOR MOV, 390KD07 | 8-13 |
| T40R9111 | 90600-1199 | VARISTOR MOV, 390KD07 | 8-13 |
| T40R9150 | 1110936-0000 | INDUCTOR | 4-57, 4-59 |
| T40R9150 | 1110937-0000 | INDUCTOR | 4-57, 4-59 |
| T40R9150 | 1110938-0000 | INDUCTOR | 4-57, 4-59 |
| T40R9150 | 1533046-0000 | INDUCTOR | 4-57, 4-59 |
| T40R9150 | 1566843-0000 | INDUCTOR | 4-57, 4-59 |
| T40R9150 | 2546474-0000 | INDUCTOR | 4-57, 4-59 |
| T40R9150 | 2610956-0000 | INDUCTOR | 4-57, 4-59 |
| T40R9150 | 2663378-0000 | INDUCTOR | 4-57, 4-59 |
| T40R9151 | 1110936-0000 | INDUCTOR | 4-65, 4-67 |
| T40R9151 | 1110937-0000 | INDUCTOR | 4-65, 4-67 |
| T40R9151 | 1110938-0000 | INDUCTOR | 4-65, 4-67 |
| T40R9151 | 1533046-0000 | INDUCTOR | 4-65, 4-67 |
| T40R9151 | 1566843-0000 | INDUCTOR | 4-65, 4-67 |
| T40R9151 | 2546474-0000 | INDUCTOR | 4-65, 4-67 |
| T40R9151 | 2610956-0000 | INDUCTOR | 4-65, 4-67 |
| T40R9151 | 2663377-0000 | INDUCTOR | 4-65, 4-67 |
| T40R9550 | 90600-1199 | VARISTOR MOV, 390KD07 | 2-97 |
| T40R9550 | 90600-1292 | PRESSURE RED. VALVE, ZDR 6 DP2-4X/150YM | 2-75, 2-77 |
| T40R9551 | 90600-1882 | VALVE PLATE, 757234 | 2-75, 2-77 |
| T40R9552 | 90600-1308 | HOSE ATTACHMENT, AB20-11/K1 1/4G | 2-75, 2-77 |
| T40R9553 | 90600-1294 | NON-RETURN VALVE, NO. Z1S 6 T05-4X/V | 2-75, 2-77 |
| T40R9560 | 90600-1199 | VARISTOR MOV, 390KD07 | 2-97 |
| T40R9570 | 90600-1199 | VARISTOR MOV, 390KD07 | 2-97 |
| T40R9570 | 90600-1882 | VALVE PLATE, 757234 | 2-75, 2-77 |
| T40R9571 | 90600-1293 | CHECK VALVE, NO. Z1S 6 F05-4X/V | 2-75, 2-77 |
| T40R9580 | 90600-1199 | VARISTOR MOV, 390KD07 | 2-97 |
| T40R9590 | 90600-1199 | VARISTOR MOV, 390KD07 | 2-97 |
| T40R9590 | 90600-1293 | CHECK VALVE, NO. Z1S 6 F05-4X/V | 2-75, 2-77 |
| T40R9591 | 90600-1882 | VALVE PLATE, 757234 | 2-75, 2-77 |
| T40R9592 | 90600-1291 | PRESSURE RELIEF VALVE,ZDBK 6 VP2-1X/210V | 2-75, 2-77 |
| T40R9600 | 90600-1199 | VARISTOR MOV, 390KD07 | 2-97 |
| T40R9672 | 90459-4554 | REGULATOR, MS4-LRB-1/4-D7-A8-AS | 2-49 |
| T50R0241 | 2773828-0000 | HEATING ELEMENT | 5-131, 5-133 |
| T50R0242 | 2773828-0000 | HEATING ELEMENT | 5-131, 5-133 |
| T50R0251 | 2773828-0000 | HEATING ELEMENT | 5-131, 5-133 |
| T50R0252 | 2773828-0000 | HEATING ELEMENT | 5-131, 5-133 |
| T50R1362 | 90459-4554 | REGULATOR, MS4-LRB-1/4-D7-A8-AS | 2-49 |
| T50R9612 | 90235-0846 | THROTTLE CHECK VALVE G1/8", MANUAL, 6 | 5-11, 5-13, 5-15 |
| T50R9614 | 90235-0846 | THROTTLE CHECK VALVE G1/8", MANUAL, 6 | 5-11, 5-13, 5-15 |
| U30R1462 | 90113-0056 | REGULATOR, 11-818-998 | 2-49 |
| U70R0340 | 90206-0070 | HEATING ELEMENT 6000W 380/220V | 1-265 |
| U70R0350 | 90206-0070 | HEATING ELEMENT 6000W 380/220V | 1-265 |
| U70R0360 | 2793360-0000 | HEATER | 1-179 |
| U70R0370 | 2685342-0000 | HEATING ELEMENT | 1-205 |
| U70R0450 | 90600-2007 | HEATING ELEM.15KW 3X230/400V,T90600-2007 | 1-189 |
| U70R0461 | 2528056-0000 | RESISTANCE | 1-271, 1-273 |
| U70R0462 | 2528056-0000 | RESISTANCE | 1-271, 1-273 |
| U70R0463 | 2528056-0000 | RESISTANCE | 1-271, 1-273 |
| U70R0464 | 2528056-0000 | RESISTANCE | 1-271, 1-273 |
| U70R1000 | 90459-1297 | RESISTANCE FIXED, 120 OHM, 0,25 W | 1-331, 1-333 |

| Pos | Part No | Description | Page No |
|---|---|---|---|
| **R** | | | |
| U70R1500 | 90459-4554 | REGULATOR, MS4-LRB-1/4-D7-A8-AS | 1-313, 1-315 |
| U70R2252 | 90235-0847 | THROTTLE CHECK VALVE, G1/4", MANUAL,6 | 1-79 |
| U70R2254 | 90235-0847 | THROTTLE CHECK VALVE, G1/4", MANUAL,6 | 1-79 |
| U70R2352 | 90235-0844 | THROTTLE CHECK VALVE, M5, MANUAL, 6MM | 1-181 |
| U70R2354 | 90235-0844 | THROTTLE CHECK VALVE, M5, MANUAL, 6MM | 1-181 |
| U70R2362 | 90235-0844 | THROTTLE CHECK VALVE, M5, MANUAL, 6MM | 1-181 |
| U70R2364 | 90235-0844 | THROTTLE CHECK VALVE, M5, MANUAL, 6MM | 1-181 |
| U70R2414 | 90459-4554 | REGULATOR, MS4-LRB-1/4-D7-A8-AS | 1-313, 1-315 |
| U70R2432 | 90459-4554 | REGULATOR, MS4-LRB-1/4-D7-A8-AS | 1-313, 1-315 |
| U70R2442 | 90235-0846 | THROTTLE CHECK VALVE G1/8", MANUAL, 6 | 1-47, 1-49, 1-51 |
| U70R2444 | 90235-0846 | THROTTLE CHECK VALVE G1/8", MANUAL, 6 | 1-47, 1-49, 1-51 |
| U70R2490 | 90121-0127 | RESISTANCE FIXED, 1,5 KOHM, 0,25 W | 1-283 |
| U70R2491 | 90038-0049 | DIODE | 1-283 |
| U70R3302 | 90459-4554 | REGULATOR, MS4-LRB-1/4-D7-A8-AS | 1-313, 1-315 |
| U70R4222 | 90459-4554 | REGULATOR, MS4-LRB-1/4-D7-A8-AS | 1-313, 1-315 |
| U70R6002 | 90328-0047 | SILENCER G1/8" | 1-319, 1-321 |
| U70R6005 | 90458-1214 | RIGHT ENDPL EXT. PILOT AIR,CDVI5.0-EPR-S | 1-319, 1-321 |
| U70R6006 | 90328-0024 | SILENCER G3/8" | 1-319, 1-321 |
| U70R6007 | 90328-0047 | SILENCER G1/8" | 1-319, 1-321 |
| U70R6008 | 90328-0024 | SILENCER G3/8" | 1-319, 1-321 |
| U70R6009 | 90458-1214 | RIGHT ENDPL EXT. PILOT AIR,CDVI5.0-EPR-S | 1-317 |
| U70R6010 | 90328-0024 | SILENCER G3/8" | 1-317 |
| U70R6011 | 90328-0047 | SILENCER G1/8" | 1-317 |
| U70R6012 | 90328-0024 | SILENCER G3/8" | 1-317 |
| U70R6014 | 90328-0047 | SILENCER G1/8" | 1-319, 1-321 |
| U70R6015 | 90328-0047 | SILENCER G1/8" | 1-317 |
| U70R7003 | 90328-0047 | SILENCER G1/8" | 1-319, 1-321 |
| U70R9520 | 90121-0132 | RESISTANCE FIXED, 0,51 KOHM, 0,25 W | 1-229, 1-231 |
| U70R9521 | 90121-0132 | RESISTANCE FIXED, 0,51 KOHM, 0,25 W | 1-229, 1-231 |
| U70R9522 | 90459-1297 | RESISTANCE FIXED, 120 OHM, 0,25 W | 1-229, 1-231 |
| U70R9523 | 90459-1297 | RESISTANCE FIXED, 120 OHM, 0,25 W | 1-229, 1-231 |
| U70R9570 | 90600-2135 | MODULE CONNECTOR 250V, BEST/D 1878560000 | 8-23 |
| **S** | | | |
| SA010 | 1498047-0000 | SEALING BLOCK | 9-17 |
| SS010 | 232979-0000 | PRESSURE ROLLER (PAK OF 10) | 9-19, 9-21, 9-23, 9-25 |
| SS010 | 257330-0000 | PRESSURE ROLLER (10 PCS) | 9-19, 9-21, 9-23, 9-25 |
| SS010 | 499387-0000 | PRESSURE ROLLER - (10 PCS) | 9-19, 9-21, 9-23, 9-25 |
| SS015 | 24928-0000 | LOCKING RUBBER | 9-19, 9-21, 9-23, 9-25 |
| SS020 | 2523268-0000 | SHAFT | 9-19, 9-21, 9-23, 9-25 |
| SS020 | 2529419-0000 | SHAFT | 9-19, 9-21, 9-23, 9-25 |
| SS020 | 2529420-0000 | SHAFT | 9-19, 9-21, 9-23, 9-25 |
| SS030 | 315204-0219 | O-RING 29,2X3 MM | 9-19, 9-21, 9-23, 9-25 |
| SS030 | 315204-0223 | O-RING 39,2X3 MM | 9-19, 9-21, 9-23, 9-25 |
| SS040 | 2745328-0000 | PIPE | 9-19, 9-21, 9-23, 9-25 |
| SS050 | 2874684-0000 | TOUCH GUARD | 9-19, 9-21, 9-23, 9-25 |
| SS055 | 359705-0007 | WARNING SIGN ISO, HOT SURFACE | 9-19, 9-21, 9-23, 9-25 |
| SS060 | 90600-0614 | BLANK PLUG, 16AMP-316-1/2"-3/4"-AR | 9-19, 9-21, 9-23, 9-25 |
| SS070 | 342850-0304 | GASKET 35,4X49,1X5,2 1"1/2 FDA | 9-19, 9-21, 9-23, 9-25 |
| SS080 | 2811775-0000 | SEAL | 9-19, 9-21, 9-23, 9-25 |
| SS090 | 1296877-0100 | SEAL KIT | 9-19, 9-21, 9-23, 9-25 |
| SS100 | 1296878-0100 | SEAL KIT | 9-19, 9-21, 9-23, 9-25 |
| SS110 | 1296879-0100 | SEAL KIT | 9-19, 9-21, 9-23, 9-25 |
| SS120 | 2725145-0000 | DIAPHRAGM | 9-19, 9-21, 9-23, 9-25 |
| SS130 | 90217-0348 | GASKET 35,4X46,8X4 MM | 9-19, 9-21, 9-23, 9-25 |
| SS140 | 90459-4179 | GASKET 30,5X42X4 MM FDA | 9-19, 9-21, 9-23, 9-25 |
| SU010 | 1296877-0100 | SEAL KIT | 9-17 |
| SU010 | 1349914-0100 | TEMPLATE FILLING PIPE | 9-35 |
| SU020 | 1296878-0100 | SEAL KIT | 9-17 |
| SU020 | 2793320-0100 | TEMPLATE | 9-35 |
| SU030 | 1296879-0100 | SEAL KIT | 9-17 |
| SU040 | 90217-0348 | GASKET 35,4X46,8X4 MM | 9-17 |
| SU050 | 342850-0304 | GASKET 35,4X49,1X5,2 1"1/2 FDA | 9-17 |
| SU060 | 925998-0000 | DIAPHRAGM | 9-17 |
| SU070 | 342850-0306 | GASKET 60,3X76,1X5,2 MM 2"1/2 FDA 3-A | 9-17 |
| SU080 | 342850-0304 | GASKET 35,4X49,1X5,2 1"1/2 FDA | 9-17 |
| A01S5560 | 90458-1651 | EMERGENCY STOP, ZB4-BS-844 ZB4-BZ-104 | 8-47 |
| A01S5560 | 90459-1917 | CONTACT BLOCK ZBE-102 NC | 8-47 |
| A01S5580 | 90111-0122 | KEY SWITCH, 2 NO CONTACTS | 8-53 |
| A01S5590 | 90111-0124 | KEY SWITCH, 1NO,1NC CONTACT | 8-53 |
| K80S1342 | 90459-1852 | SHUT OFF VALVE, MS6-EM1-1/2 | 6-99 |
| K80S6002 | 90187-0089 | BALL VALVE G3/8, NPBR | 6-101 |
| K80S6003 | 90187-0089 | BALL VALVE G3/8, NPBR | 6-101 |
| K80S6004 | 90459-0173 | AIR GUN ASSEMBLY, CEJN SERIE 208 | 2-125 |
| K80S7002 | 90187-0029 | BALL VALVE G1/2, NPBR | 6-87, 6-89 |
| K80S7003 | 90187-0029 | BALL VALVE G1/2, NPBR | 6-87, 6-89 |
| K80S7004 | 90187-0029 | BALL VALVE G1/2, NPBR | 6-87, 6-89 |
| K80S7005 | 90187-0029 | BALL VALVE G1/2, NPBR | 6-87, 6-89 |
| K80S7006 | 90187-0089 | BALL VALVE G3/8, NPBR | 6-87, 6-89 |
| K80S7007 | 90187-0045 | BALL VALVE G1/4 CR PL | 6-33 |
| K80S7008 | 90459-1736 | PURGE VALVE, 2RM-PG4L-SS | 6-37 |
| K80S7009 | 90187-0147 | BALL VALVE G11/2 | 6-43 |
| K80S7012 | 90187-0045 | BALL VALVE G1/4 CR PL | 6-9 |

| Pos | Part No | Description | Page No |
|---|---|---|---|
| **S** | | | |
| K80S7013 | 90187-0197 | BALL VALVE G1/4 | 6-13 |
| K80S7014 | 90187-0029 | BALL VALVE G1/2, NPBR | 6-31 |
| K80S7015 | 90187-0029 | BALL VALVE G1/2, NPBR | 6-31 |
| K80S7016 | 90187-0045 | BALL VALVE G1/4 CR PL | 6-37 |
| K80S7017 | 90187-0045 | BALL VALVE G1/4 CR PL | 6-37 |
| T10S1010 | 90458-1651 | EMERGENCY STOP, ZB4-BS-844 ZB4-BZ-104 | 7-171 |
| T10S1020 | 90458-1651 | EMERGENCY STOP, ZB4-BS-844 ZB4-BZ-104 | 7-153 |
| T10S1060 | 90064-0084 | PUSH BUTTON, YELLOW | 7-153 |
| T10S1070 | 90064-0082 | PUSH BUTTON, WHITE | 7-157 |
| T10S1090 | 90064-0082 | PUSH BUTTON, WHITE | 7-51 |
| T10S1100 | 90064-0082 | PUSH BUTTON, WHITE | 7-157 |
| T10S1110 | 90064-0082 | PUSH BUTTON, WHITE | 7-157 |
| T10S1852 | 90457-0100 | ACCUMULATOR CRVZS-2 | 7-139, 7-141 |
| T40S7150 | 90600-1986 | BALL VALVE RP1/4 | 2-191, 2-193 |
| T40S7151 | 90600-1986 | BALL VALVE RP1/4 | 2-191, 2-193 |
| T40S7160 | 90600-1986 | BALL VALVE RP1/4 | 2-191, 2-193 |
| T40S7161 | 90600-1986 | BALL VALVE RP1/4 | 2-191, 2-193 |
| T50S7010 | 90600-1986 | BALL VALVE RP1/4 | 2-191, 2-193 |
| T50S7011 | 90600-1986 | BALL VALVE RP1/4 | 2-191, 2-193 |
| T50S7015 | 90187-0149 | THROTTLE VALVE, G1/4, G1/4, MALE | 2-183, 2-185 |
| T50S7016 | 90426-0003 | HAND SHOWER | 2-195 |
| U30S1050 | 90458-1651 | EMERGENCY STOP, ZB4-BS-844 ZB4-BZ-104 | 2-213 |
| U30S1060 | 90458-1651 | EMERGENCY STOP, ZB4-BS-844 ZB4-BZ-104 | 2-217 |
| U70S3040 | 90064-0084 | PUSH BUTTON, YELLOW | 1-349, 1-351 |
| U70S3170 | 90458-1651 | EMERGENCY STOP, ZB4-BS-844 ZB4-BZ-104 | 1-349, 1-351 |
| U70S3170 | 90459-1917 | CONTACT BLOCK ZBE-102 NC | 1-349, 1-351 |
| **T** | | | |
| A01T2000 | 90459-7267 | POWER SUPPLY 24VDC, 1756-PB75/B | 8-15 |
| A01T5410 | 90459-2938 | POWER SUPPLY, 6EP1437-3BA00 | 8-29 |
| A01T5420 | 90459-2939 | POWER SUPPLY UNIT 6EP1961-3BA00 | 8-29 |
| A01T5430 | 90459-2939 | POWER SUPPLY UNIT 6EP1961-3BA00 | 8-29 |
| A01T8000 | 90459-5886 | POWER SUPPLY UNIT 115-230 VAC/24VDC100W | 8-23 |
| T10T0020 | 90458-0258 | TRANSFORMER, 220VAC/6-9-12VAC | 7-53 |
| T10T0160 | 90459-3442 | VARIABLE FREQUENCY DRIVE 22B-A5P0N104 | 8-37, 8-39 |
| T10T0170 | 90459-3442 | VARIABLE FREQUENCY DRIVE 22B-A5P0N104 | 8-37, 8-39 |
| T10T0180 | 90459-3442 | VARIABLE FREQUENCY DRIVE 22B-A5P0N104 | 8-37, 8-39 |
| T10T9020 | 90459-7214 | AXIS MODULE 650V, 6,1A, 2094-BM01-S | 8-27 |
| T10T9170 | 67380-0218 | TRANSFORMER | 7-77 |
| T40T9040 | 90459-7214 | AXIS MODULE 650V, 6,1A, 2094-BM01-S | 8-27 |
| T40T9050 | 90459-7214 | AXIS MODULE 650V, 6,1A, 2094-BM01-S | 8-27 |
| T40T9080 | 90459-7212 | AXIS MODULE WITH INT. PS, 2094-BC04-M03- | 8-27 |
| T40T9090 | 90459-7216 | AXIS MODULE 650V, 21,2A, 2094-BM03-S | 8-27 |
| T40T9100 | 90459-7215 | AXIS MODULE 650V, 10,3A, 2094-BM02-S | 8-27 |
| T40T9110 | 90459-7215 | AXIS MODULE 650V, 10,3A, 2094-BM02-S | 8-27 |
| T40T9150 | 67379-0101 | TRANSFORMER | 4-61 |
| T40T9150 | 67379-0106 | TRANSFORMER | 4-61 |
| T40T9151 | 67379-0101 | TRANSFORMER | 4-69 |
| T40T9151 | 67379-0106 | TRANSFORMER | 4-69 |
| T50T0260 | 90459-3442 | VARIABLE FREQUENCY DRIVE 22B-A5P0N104 | 8-37, 8-39 |
| T50T1530 | 90458-1092 | PROPORTIONAL VALVE 0 - 10V/0-6 BAR | 2-127 |
| T50T1540 | 90458-1092 | PROPORTIONAL VALVE 0 - 10V/0-6 BAR | 2-127 |
| T50T9000 | 90459-7211 | SERVO AXIS MODULE W/PS 15A 400/460V | 8-27 |
| T50T9010 | 90459-7214 | AXIS MODULE 650V, 6,1A, 2094-BM01-S | 8-27 |
| U30T0220 | 90459-3442 | VARIABLE FREQUENCY DRIVE 22B-A5P0N104 | 8-37, 8-39 |
| U70T0300 | 90459-3446 | FREQUENCY CONVERTER 5,5 KW | 8-37, 8-39 |
| U70T0310 | 90459-3442 | VARIABLE FREQUENCY DRIVE 22B-A5P0N104 | 8-37, 8-39 |
| U70T0320 | 90459-2607 | VARIABLE FREQUENCY DRIVE 22B-D6P0N104 | 8-37, 8-39 |
| U70T0330 | 90459-2607 | VARIABLE FREQUENCY DRIVE 22B-D6P0N104 | 8-37, 8-39 |
| U70T2540 | 90458-1092 | PROPORTIONAL VALVE 0 - 10V/0-6 BAR | 1-313, 1-315 |
| U70T4330 | 90459-1420 | PROPORTIONAL VALVE 0 - 10V/0-6 BAR | 1-207 |
| U70T9030 | 90459-7214 | AXIS MODULE 650V, 6,1A, 2094-BM01-S | 8-27 |
| U70T9160 | 2888970-0438 | TRANSFORMER VMN | 1-81 |
| U70T9160 | 2888970-0524 | TRANSFORMER VMN | 1-81 |
| **U** | | | |
| A30U6002 | 90458-1205 | BASIC SUB-BASE 8 VALVES, CDVI5.0-GB8-MP | 2-51 |
| A30U6003 | 90458-1206 | EXP. SUB-BASE 2 VALVES, CDVI5.0-EB | 2-51 |
| A30U6004 | 90458-1206 | EXP. SUB-BASE 2 VALVES, CDVI5.0-EB | 2-51 |
| K80U6002 | 90458-1204 | BASIC SUB-BASE 4 VALVES, CDVI5.0-GB4-MP | 6-95 |
| K80U6003 | 90458-1206 | EXP. SUB-BASE 2 VALVES, CDVI5.0-EB | 6-95 |
| K80U6004 | 90458-1206 | EXP. SUB-BASE 2 VALVES, CDVI5.0-EB | 6-95 |
| T10U6002 | 90458-1205 | BASIC SUB-BASE 8 VALVES, CDVI5.0-GB8-MP | 7-143 |
| T10U6003 | 90458-1205 | BASIC SUB-BASE 8 VALVES, CDVI5.0-GB8-MP | 7-147 |
| T10U6004 | 90458-1206 | EXP. SUB-BASE 2 VALVES, CDVI5.0-EB | 7-143 |
| T10U6005 | 90458-1206 | EXP. SUB-BASE 2 VALVES, CDVI5.0-EB | 7-147 |
| T10U6006 | 90458-1206 | EXP. SUB-BASE 2 VALVES, CDVI5.0-EB | 7-147 |
| U70U6003 | 90458-1205 | BASIC SUB-BASE 8 VALVES, CDVI5.0-GB8-MP | 1-319, 1-321 |
| U70U6004 | 90458-1206 | EXP. SUB-BASE 2 VALVES, CDVI5.0-EB | 1-319, 1-321 |
| U70U6005 | 90458-1205 | BASIC SUB-BASE 8 VALVES, CDVI5.0-GB8-MP | 1-317 |
| U70U6006 | 90458-1206 | EXP. SUB-BASE 2 VALVES, CDVI5.0-EB | 1-319, 1-321 |
| U70U6007 | 90458-1206 | EXP. SUB-BASE 2 VALVES, CDVI5.0-EB | 1-317 |
| U70U6008 | 90458-1206 | EXP. SUB-BASE 2 VALVES, CDVI5.0-EB | 1-317 |

| Pos | Part No | Description | Page No |
|---|---|---|---|
| **V** | | | |
| A40V1340 | 90415-0033 | OIL FILTER REFILLING UC-HP-1229-25 | 2-83 |
| A80V9500 | 90024-0060 | FILTER 80 A 440/250 VAC, B84144-A80-R | 6-19 |
| K80V0411 | 90600-2902 | STERILE WATER SYSTEM, ZLXS5003Y | 6-13 |
| K80V7002 | 90458-0921 | FILTER SP 122-200 | 6-87, 6-89 |
| K80V7003 | 90458-0921 | FILTER SP 122-200 | 6-87, 6-89 |
| K80V7004 | 90459-7084 | FILTER, CPDI000M1 | 6-35 |
| K80V7005 | 90415-0065 | FILTER | 6-33 |
| K80V7006 | 90415-0032 | FILTER / 3-02-00-1 1/2" | 6-43 |
| K80V7007 | 90415-0065 | FILTER | 6-9 |
| T10V0160 | 90459-3454 | FOOTPRINT FILTER, 22-RF018-BL | 8-37, 8-39 |
| T10V0170 | 90459-3454 | FOOTPRINT FILTER, 22-RF018-BL | 8-37, 8-39 |
| T10V0180 | 90459-3454 | FOOTPRINT FILTER, 22-RF018-BL | 8-37, 8-39 |
| T10V1782 | 90277-0035 | FILTER / DFU 9933-05-A | 7-139, 7-141 |
| T10V1784 | 90277-0035 | FILTER / DFU 9933-05-A | 7-139, 7-141 |
| T40V0040 | 90600-1287 | BREATHER FILTER, ELFP 3-F10W1.0 | 2-75, 2-77 |
| T40V1130 | 90600-1286 | FILTER, 97713047 | 2-75, 2-77 |
| T40V6002 | 90277-0046 | FILTER / 9933-05-101 | 2-49 |
| T40V6003 | 90277-0045 | FILTER / 9900-05-BK | 2-49 |
| T40V9080 | 90459-2549 | AC LINE FILTER 3-PHASE 30A, 2090-XXLF-X3 | 8-9, 8-11 |
| T40V9081 | 90458-1162 | FILTER 6 A 250 VAC, 6FC10 | 8-9, 8-11 |
| T50V0260 | 90459-3454 | FOOTPRINT FILTER, 22-RF018-BL | 8-37, 8-39 |
| T50V9000 | 90459-2549 | AC LINE FILTER 3-PHASE 30A, 2090-XXLF-X3 | 8-9, 8-11 |
| T50V9001 | 90458-1162 | FILTER 6 A 250 VAC, 6FC10 | 8-9, 8-11 |
| U30V0220 | 90459-3454 | FOOTPRINT FILTER, 22-RF018-BL | 8-37, 8-39 |
| U30V1462 | 90459-2338 | FILTER, MS4-LF-1/4-CRV | 2-49 |
| U30V7002 | 90415-0052 | FILTER ART NO 12565 C-340-6E FOTVENTI EP | 2-37 |
| U70V0300 | 90459-3459 | FOOTPRINT FILTER, 22-RF018-CL | 8-37, 8-39 |
| U70V0310 | 90459-3454 | FOOTPRINT FILTER, 22-RF018-BL | 8-37, 8-39 |
| U70V0320 | 90459-3458 | FOOTPRINT FILTER 22-RF012-BL | 8-37, 8-39 |
| U70V0330 | 90459-3458 | FOOTPRINT FILTER 22-RF012-BL | 8-37, 8-39 |
| U70V4232 | 90600-5548 | FILTER, MS6-LFM-1/4-AUV | 1-207 |
| U70V4233 | 90277-0323 | FILTER HOUSING / ART.NO 95S6-1/4 S 5430 | 1-207 |
| **W** | | | |
| A01W2120 | 90459-2540 | SERCOS CABLE 3.0M, 2090-SCEP3-0 | 8-27 |
| A01W5710 | 90600-1848 | ETHERNET SW, FL SWITCH SFN 8TX | 8-21 |
| A01W5720 | 90600-1848 | ETHERNET SW, FL SWITCH SFN 8TX | 8-21 |
| A01W5830 | 351501-0075 | ETHERNET PATCH CABLE, FL CAT5 PATCH 7,5 | 2-143 |
| A01W5840 | 351501-0075 | ETHERNET PATCH CABLE, FL CAT5 PATCH 7,5 | 2-143 |
| A01W8100 | 90459-2530 | DEVICENET CABLE THIN | 7-53 |
| A01W8300 | 90459-2530 | DEVICENET CABLE THIN | 2-55, 2-57 |
| A01W8310 | 90459-2530 | DEVICENET CABLE THIN | 2-55, 2-57 |
| A01W8320 | 90459-2530 | DEVICENET CABLE THIN | 2-55, 2-57 |
| A01W8500 | 90459-2530 | DEVICENET CABLE THIN | 2-119 |
| A01W8501 | 351415-0050 | DEVICENET CONN. CABLE, 0935 361 105/5M | 2-119 |
| A01W8510 | 90459-2530 | DEVICENET CABLE THIN | 2-119 |
| A01W8520 | 90459-2530 | DEVICENET CABLE THIN | 2-119 |
| A01W8530 | 351415-0020 | DEVICENET CONN. CABLE, 0935 361 105/2M | 2-119 |
| A01W8540 | 90459-2530 | DEVICENET CABLE THIN | 2-119 |
| A01W8700 | 351414-0050 | DEVICENET CONN. CABLE, 0935 361 104/5M | 1-331, 1-333 |
| A01W8710 | 90459-2530 | DEVICENET CABLE THIN | 1-331, 1-333 |
| A01W8720 | 90459-2530 | DEVICENET CABLE THIN | 1-331, 1-333 |
| A01W8730 | 90459-2530 | DEVICENET CABLE THIN | 1-331, 1-333 |
| A01W8740 | 90459-2530 | DEVICENET CABLE THIN | 1-331, 1-333 |
| A01W8800 | 351414-0020 | DEVICENET CONN. CABLE, 0935 361 104/2M | 6-81, 6-83 |
| A01W9000 | 90459-2540 | SERCOS CABLE 3.0M, 2090-SCEP3-0 | 8-27 |
| A01W9010 | 90459-2536 | SERCOS CABLE 0.1M, 2090-SCEP0-1 | 8-27 |
| A01W9020 | 90459-2536 | SERCOS CABLE 0.1M, 2090-SCEP0-1 | 8-27 |
| A01W9030 | 90459-2536 | SERCOS CABLE 0.1M, 2090-SCEP0-1 | 8-27 |
| A01W9040 | 90459-2536 | SERCOS CABLE 0.1M, 2090-SCEP0-1 | 8-27 |
| A01W9050 | 90459-2536 | SERCOS CABLE 0.1M, 2090-SCEP0-1 | 8-27 |
| A01W9080 | 90459-2539 | SERCOS CABLE 1.0M, 2090-SCEP1-0 | 8-27 |
| A01W9090 | 90459-2537 | SERCOS CABLE 0.3M | 8-27 |
| A01W9100 | 90459-2536 | SERCOS CABLE 0.1M, 2090-SCEP0-1 | 8-27 |
| A01W9110 | 90459-2536 | SERCOS CABLE 0.1M, 2090-SCEP0-1 | 8-27 |
| A30W1344 | 90166-0081 | TUBE 6 MM PA BLUE | 2-45, 2-47 |
| A30W6002 | 90166-0013 | TUBE 8 MM PA BLUE | 2-45, 2-47, 2-197 |
| A30W6003 | 90166-0196 | TUBE 14MM PA BLUE | 2-197 |
| A30W6004 | 90166-0195 | TUBE 12 MM PA BLUE | 2-197 |
| A30W6005 | 90166-0081 | TUBE 6 MM PA BLUE | 2-45, 2-47, 2-197 |
| A30W6006 | 90166-0013 | TUBE 8 MM PA BLUE | 2-197 |
| A30W6007 | 90166-0195 | TUBE 12 MM PA BLUE | 2-45, 2-47, 2-197 |
| A30W6008 | 90166-0196 | TUBE 14MM PA BLUE | 2-197 |
| A30W6009 | 90166-0196 | TUBE 14MM PA BLUE | 2-197 |
| A30W6010 | 90166-0081 | TUBE 6 MM PA BLUE | 2-9 |
| A30W6012 | 90166-0196 | TUBE 14MM PA BLUE | 2-197 |
| A30W6012 | 315400-0010 | TUBE PUN-H-12X2-BL | 2-49 |
| A40W1102 | 90166-0108 | TUBE 6 MM PA TRANSP. | 2-85 |
| A40W1253 | 90166-0132 | TUBE 6 MM PA,TRANSP. | 2-189 |
| A40W1345 | 90166-0108 | TUBE 6 MM PA TRANSP. | 2-85 |
| A40W1346 | 90166-0108 | TUBE 6 MM PA TRANSP. | 2-85 |
| A50W6002 | 90166-0195 | TUBE 12 MM PA BLUE | 2-197 |
| A70W6002 | 90166-0081 | TUBE 6 MM PA BLUE | 2-197 |

## W

| Pos | Part No | Description | Page No |
|---|---|---|---|
| A70W6003 | 90166-0195 | TUBE 12 MM PA BLUE | 2-197 |
| A70W6003 | 315400-0001 | TUBE PUN-H-6X1-BL | 1-313, 1-315 |
| A70W6004 | 90166-0195 | TUBE 12 MM PA BLUE | 2-197 |
| A70W6005 | 315400-0007 | TUBE PUN-H-10X1,5-BL | 2-197 |
| A70W6006 | 90166-0081 | TUBE 6 MM PA BLUE | 2-197 |
| A70W6007 | 315400-0007 | TUBE PUN-H-10X1,5-BL | 2-197 |
| K80W0111 | 351150-0418 | CABLE OLFLEX 4X2,5 MM2 LIGHT/GREY | 6-37 |
| K80W0121 | 351150-0418 | CABLE OLFLEX 4X2,5 MM2 LIGHT/GREY | 6-25, 6-27 |
| K80W0411 | 351150-0403 | CABLE OLFLEX 3X0,75 MM2 LIGHT/GREY | 6-17 |
| K80W0412 | 351150-0403 | CABLE OLFLEX 3X0,75 MM2 LIGHT/GREY | 6-17 |
| K80W0413 | 351150-0403 | CABLE OLFLEX 3X0,75 MM2 LIGHT/GREY | 6-15 |
| K80W0470 | 90110-0054 | MALE INSERT HAN 6 HSB 09 31 006 2601 | 2-105, 2-107 |
| K80W0471 | 351150-0166 | CABLE OLFLEX 4X4 MM2 LIGHT/GREY | 6-49 |
| K80W0621 | 351150-0425 | CABLE OLFLEX 25X0,75 MM2 LIGHT/GREY | 6-81, 6-83 |
| K80W1010 | 351150-0403 | CABLE OLFLEX 3X0,75 MM2 LIGHT/GREY | 6-87, 6-89 |
| K80W1020 | 90600-3690 | SENSOR CABLE SIM-M8-4GD-2,5-PU | 6-99 |
| K80W1030 | 351150-0431 | CABLE OLFLEX 2X0,75 MM2 LIGHT/GREY | 6-37 |
| K80W1041 | 90220-0095 | SCR. CABLE 3X0,75MM2 | 6-19 |
| K80W1070 | 351150-0404 | CABLE OLFLEX 4X0,75 MM2 LIGHT/GREY | 6-25, 6-27 |
| K80W1090 | 351309-0050 | 'ACTUATOR/SENSOR CABLE PRKT 4-07/5M | 6-15 |
| K80W1200 | 351150-0403 | CABLE OLFLEX 3X0,75 MM2 LIGHT/GREY | 6-33 |
| K80W1330 | 351150-0403 | CABLE OLFLEX 3X0,75 MM2 LIGHT/GREY | 6-43 |
| K80W1342 | 90459-1856 | DISTRIBUTOR, MS6-FRM-1/2 | 6-99 |
| K80W1343 | 90166-0013 | TUBE 8 MM PA BLUE | 2-125 |
| K80W1344 | 315400-0010 | TUBE PUN-H-12X2-BL | 6-99 |
| K80W1345 | 315400-0004 | TUBE PUN-H-8X1,25-BL | 6-99 |
| K80W1346 | 90459-1856 | DISTRIBUTOR, MS6-FRM-1/2 | 6-99 |
| K80W1347 | 90166-0196 | TUBE 14MM PA BLUE | 6-99 |
| K80W1348 | 90152-0016 | HOSE (SPIRAL) | 2-125 |
| K80W1348 | 90166-0196 | TUBE 14MM PA BLUE | 6-101 |
| K80W1410 | 90220-0034 | THERMOCABLE TEX/SITW-20F-KX 2X0,5MM2 | 6-33 |
| K80W6003 | 90166-0196 | TUBE 14MM PA BLUE | 6-101 |
| K80W6004 | 90166-0196 | TUBE 14MM PA BLUE | 2-197 |
| K80W6005 | 90166-0195 | TUBE 12 MM PA BLUE | 2-197 |
| K80W6006 | 315400-0010 | TUBE PUN-H-12X2-BL | 6-101 |
| K80W6007 | 315400-0001 | TUBE PUN-H-6X1-BL | 6-101 |
| K80W6008 | 90166-0013 | TUBE 8 MM PA BLUE | 6-101 |
| K80W6009 | 315400-0016 | TUBE PUN-H-4X0,75-BL | 6-93 |
| K80W6012 | 315400-0001 | TUBE PUN-H-6X1-BL | 6-93 |
| K80W6013 | 90166-0013 | TUBE 8 MM PA BLUE | 6-101 |
| K80W6018 | 90166-0013 | TUBE 8 MM PA BLUE | 6-101 |
| K80W6019 | 90166-0013 | TUBE 8 MM PA BLUE | 6-101 |
| K80W7002 | 1041932-0000 | PIPE | 6-87, 6-89 |
| K80W7003 | 1041933-0000 | PIPE | 6-87, 6-89 |
| K80W7004 | 90166-0121 | HOSE | 6-25, 6-27 |
| K80W7005 | 90166-0132 | TUBE 6 MM PA,TRANSP. | 2-189 |
| K80W7006 | 90166-0118 | TUBE 8 MM PA BLACK | 6-25, 6-27 |
| K80W7006 | 90166-0188 | PLASTIC HOSE | 6-9 |
| K80W7007 | 90166-0121 | HOSE | 6-25, 6-27, 6-29 |
| K80W7008 | 90166-0121 | HOSE | 6-25, 6-27, 6-29 |
| K80W7009 | 90166-0121 | HOSE | 6-33 |
| K80W7012 | 1041984-0000 | ATTACHMENT PIPE | 6-33 |
| K80W7013 | 90166-0118 | TUBE 8 MM PA BLACK | 6-33 |
| K80W7014 | 90166-0118 | TUBE 8 MM PA BLACK | 6-33 |
| K80W7015 | 90166-0118 | TUBE 8 MM PA BLACK | 6-33 |
| K80W7016 | 90166-0118 | TUBE 8 MM PA BLACK | 6-33 |
| K80W7017 | 90166-0118 | TUBE 8 MM PA BLACK | 6-33 |
| K80W7018 | 90166-0118 | TUBE 8 MM PA BLACK | 6-33 |
| K80W7019 | 90166-0118 | TUBE 8 MM PA BLACK | 6-33 |
| K80W7022 | 90166-0118 | TUBE 8 MM PA BLACK | 6-33 |
| K80W7023 | 90166-0118 | TUBE 8 MM PA BLACK | 6-39 |
| K80W7024 | 90166-0118 | TUBE 8 MM PA BLACK | 6-39 |
| K80W7025 | 2922322-0001 | RETURN PIPE | 6-37 |
| K80W7026 | 1041926-0000 | PIPE | 6-43 |
| K80W7027 | 90166-0236 | HOSE, 38/51 REINFORCED RUBBER | 6-43 |
| K80W7028 | 1041925-0000 | PIPE | 6-43 |
| K80W7029 | 1036794-0000 | PIPE | 6-47 |
| K80W7032 | 1041946-0000 | PIPE | 6-49 |
| K80W7033 | 1036826-0000 | PIPE | 6-45 |
| K80W7034 | 90166-0121 | HOSE | 6-45 |
| K80W7035 | 1036827-0000 | PIPE | 6-45 |
| K80W7036 | 1036828-0000 | TANK | 6-49 |
| K80W7037 | 2522184-0000 | PIPE | 6-53 |
| K80W7038 | 2522148-0000 | PIPE | 6-53 |
| K80W7039 | 1041934-0000 | PIPE | 6-51 |
| K80W7042 | 1036827-0000 | PIPE | 6-51 |
| K80W7043 | 2522148-0000 | PIPE | 6-53 |
| K80W7044 | 90166-0233 | HOSE | 6-53 |
| K80W7045 | 1195466-0000 | PIPE | 6-53 |
| K80W7046 | 2522148-0000 | PIPE | 6-53 |
| K80W7047 | 90166-0233 | HOSE | 6-53 |
| K80W7048 | 1195466-0000 | PIPE | 6-53 |

| Pos | Part No | Description | Page No |
|---|---|---|---|
| **W** | | | |
| K80W7049 | 2506922-0000 | PIPE | 2-121 |
| K80W7052 | 1140642-0000 | PIPE | 6-49 |
| K80W7053 | 90166-0188 | PLASTIC HOSE | 6-9 |
| K80W7054 | 90166-0188 | PLASTIC HOSE | 6-9 |
| K80W7055 | 90166-0188 | PLASTIC HOSE | 6-9 |
| K80W7056 | 90166-0188 | PLASTIC HOSE | 6-9 |
| K80W7057 | 315400-0006 | TUBE PUN-H-8X1,25-SW | 6-13 |
| K80W7064 | 315400-0006 | TUBE PUN-H-8X1,25-SW | 6-13 |
| K80W7065 | 315400-0006 | TUBE PUN-H-8X1,25-SW | 6-13 |
| K80W7066 | 315400-0006 | TUBE PUN-H-8X1,25-SW | 6-13 |
| K80W7067 | 315400-0006 | TUBE PUN-H-8X1,25-SW | 6-13 |
| K80W7068 | 315400-0006 | TUBE PUN-H-8X1,25-SW | 6-13 |
| K80W7069 | 315400-0006 | TUBE PUN-H-8X1,25-SW | 6-13 |
| K80W7072 | 315400-0006 | TUBE PUN-H-8X1,25-SW | 6-13 |
| K80W7073 | 315400-0006 | TUBE PUN-H-8X1,25-SW | 6-13 |
| K80W7077 | 315400-0006 | TUBE PUN-H-8X1,25-SW | 6-13 |
| K80W7079 | 1487023-0000 | PIPE | 6-53 |
| K80W7082 | 1487023-0000 | PIPE | 6-53 |
| K80W7083 | 90166-0118 | TUBE 8 MM PA BLACK | 6-35 |
| K80W7084 | 90166-0118 | TUBE 8 MM PA BLACK | 6-87, 6-89 |
| K80W7085 | 1041930-0000 | PIPE | 6-31 |
| K80W7086 | 1041931-0000 | PIPE | 6-31 |
| K80W7087 | 1511680-0000 | TUBE | 6-29 |
| K80W7088 | 1260327-0000 | TUBE | 6-29 |
| K80W7089 | 1285363-0000 | TUBE | 6-29 |
| K80W7092 | 90166-0121 | HOSE | 6-29 |
| K80W7093 | 90166-0121 | HOSE | 6-29 |
| K80W7094 | 2506925-0000 | PIPE | 2-121 |
| K80W7095 | 2508425-0000 | PIPE | 2-121 |
| K80W7096 | 2508425-0000 | PIPE | 2-121 |
| K80W7097 | 2506923-0000 | PIPE | 2-121 |
| K80W7098 | 2506924-0000 | PIPE | 2-121 |
| K80W7099 | 90166-0233 | HOSE | 2-69 |
| K80W7102 | 2506934-0000 | PIPE | 2-69 |
| K80W7103 | 2506933-0000 | PIPE | 2-69 |
| K80W7104 | 2508424-0000 | PIPE | 2-69 |
| K80W7105 | 2529069-0000 | PIPE | 2-69 |
| K80W7106 | 2544214-0000 | PIPE | 2-69 |
| K80W7107 | 90166-0233 | HOSE | 2-69 |
| K80W7108 | 2508428-0000 | PIPE | 2-69 |
| K80W7109 | 90166-0233 | HOSE | 2-69 |
| K80W7112 | 2510833-0000 | PIPE | 2-69 |
| K80W7113 | 90166-0233 | HOSE | 2-69 |
| K80W7114 | 2506653-0000 | PIPE | 2-69 |
| K80W7115 | 1511203-0000 | PIPE | 2-69 |
| K80W7116 | 1511203-0000 | PIPE | 2-69 |
| K80W9510 | 351150-0403 | CABLE OLFLEX 3X0,75 MM2 LIGHT/GREY | 6-67 |
| K80W9511 | 351150-0403 | CABLE OLFLEX 3X0,75 MM2 LIGHT/GREY | 6-65 |
| P60W9500 | 90600-3697 | SDL FLEX CABLE 10M, 5CASDL.0100-03 | 2-239 |
| T10W0010 | 351150-0412 | CABLE OLFLEX 3X1,5 MM2 LIGHT/GREY | 7-41, 7-43 |
| T10W0011 | 351150-0412 | CABLE OLFLEX 3X1,5 MM2 LIGHT/GREY | 7-41, 7-43 |
| T10W0015 | 351150-0412 | CABLE OLFLEX 3X1,5 MM2 LIGHT/GREY | 7-53 |
| T10W0021 | 351120-0145 | CABLE SILFLEX SIHF 3X2,5 0046020 | 7-93 |
| T10W0025 | 351150-0412 | CABLE OLFLEX 3X1,5 MM2 LIGHT/GREY | 7-53 |
| T10W0160 | 90220-0104 | SCR. CABLE 4X1,5MM2 | 7-121 |
| T10W0170 | 90220-0104 | SCR. CABLE 4X1,5MM2 | 7-19 |
| T10W0180 | 351150-0406 | CABLE OLFLEX 7X0,75 MM2 LIGHT/GREY | 7-89 |
| T10W0181 | 351150-0406 | CABLE OLFLEX 7X0,75 MM2 LIGHT/GREY | 7-89 |
| T10W0185 | 90220-0104 | SCR. CABLE 4X1,5MM2 | 7-53 |
| T10W0185 | 351120-0126 | CABLE SILFLEX SIHF 2X4 0046025 | 7-91 |
| T10W0190 | 351150-0412 | CABLE OLFLEX 3X1,5 MM2 LIGHT/GREY | 7-53 |
| T10W0191 | 351150-0412 | CABLE OLFLEX 3X1,5 MM2 LIGHT/GREY | 7-107 |
| T10W0500 | 351150-0425 | CABLE OLFLEX 25X0,75 MM2 LIGHT/GREY | 7-53 |
| T10W1010 | 351150-0405 | CABLE OLFLEX 5X0,75 MM2 LIGHT/GREY | 7-171 |
| T10W1020 | 351150-0407 | CABLE OLFLEX 12X0,75 MM2 LIGHT/GREY | 7-153 |
| T10W1030 | 90459-4252 | CABLE M12-C101, 20-056-10 | 7-41, 7-43 |
| T10W1031 | 90220-0072 | SCR. CABLE 4X0,34MM2 | 7-53 |
| T10W1040 | 90459-4252 | CABLE M12-C101, 20-056-10 | 7-41, 7-43 |
| T10W1070 | 351150-0407 | CABLE OLFLEX 12X0,75 MM2 LIGHT/GREY | 7-157 |
| T10W1090 | 351150-0407 | CABLE OLFLEX 12X0,75 MM2 LIGHT/GREY | 7-51 |
| T10W1140 | 90459-4252 | CABLE M12-C101, 20-056-10 | 7-41, 7-43 |
| T10W1150 | 90459-4252 | CABLE M12-C101, 20-056-10 | 7-61 |
| T10W1160 | 90459-4252 | CABLE M12-C101, 20-056-10 | 7-41, 7-43 |
| T10W1190 | 90459-4252 | CABLE M12-C101, 20-056-10 | 7-41, 7-43 |
| T10W1200 | 90459-4252 | CABLE M12-C101, 20-056-10 | 7-41, 7-43 |
| T10W1220 | 90458-1076 | L-SHAPED CONNECTOR CABLE 933 235-042 | 7-41, 7-43 |
| T10W1230 | 90458-1076 | L-SHAPED CONNECTOR CABLE 933 235-042 | 7-41, 7-43 |
| T10W1240 | 351303-0050 | ACTUATOR/SENSOR CABLE RKMVN 3-224/5M | 7-13 |
| T10W1250 | 351303-0050 | ACTUATOR/SENSOR CABLE RKMVN 3-224/5M | 7-13 |
| T10W1280 | 90458-0165 | CABLE, SICK DOL-0803-G05M | 7-41, 7-43 |
| T10W1290 | 90458-0165 | CABLE, SICK DOL-0803-G05M | 7-41, 7-43 |
| T10W1300 | 90458-1076 | L-SHAPED CONNECTOR CABLE 933 235-042 | 7-7 |

| Pos | Part No | Description | Page No |
|---|---|---|---|
| **W** | | | |
| T10W1350 | 90458-1076 | L-SHAPED CONNECTOR CABLE 933 235-042 | 7-65 |
| T10W1551 | 90459-6604 | CABLE, SICK DOL-2312-G 05MMA3 | 7-71, 7-73 |
| T10W1624 | 315400-0004 | TUBE PUN-H-8X1,25-BL | 7-115 |
| T10W1632 | 315400-0004 | TUBE PUN-H-8X1,25-BL | 7-117 |
| T10W1634 | 315400-0004 | TUBE PUN-H-8X1,25-BL | 7-117 |
| T10W1642 | 315400-0016 | TUBE PUN-H-4X0,75-BL | 7-117 |
| T10W1643 | 315400-0016 | TUBE PUN-H-4X0,75-BL | 7-117 |
| T10W1644 | 315400-0016 | TUBE PUN-H-4X0,75-BL | 7-139, 7-141 |
| T10W1645 | 315400-0016 | TUBE PUN-H-4X0,75-BL | 7-139, 7-141 |
| T10W1650 | 351150-0403 | CABLE OLFLEX 3X0,75 MM2 LIGHT/GREY | 7-41, 7-43 |
| T10W1662 | 315400-0004 | TUBE PUN-H-8X1,25-BL | 7-139, 7-141 |
| T10W1663 | 315400-0004 | TUBE PUN-H-8X1,25-BL | 7-139, 7-141 |
| T10W1664 | 315400-0016 | TUBE PUN-H-4X0,75-BL | 7-139, 7-141 |
| T10W1665 | 315400-0004 | TUBE PUN-H-8X1,25-BL | 7-139, 7-141 |
| T10W1666 | 315400-0004 | TUBE PUN-H-8X1,25-BL | 7-139, 7-141 |
| T10W1667 | 315400-0010 | TUBE PUN-H-12X2-BL | 7-139, 7-141 |
| T10W1670 | 351150-0403 | CABLE OLFLEX 3X0,75 MM2 LIGHT/GREY | 7-41, 7-43 |
| T10W1690 | 351150-0403 | CABLE OLFLEX 3X0,75 MM2 LIGHT/GREY | 7-41, 7-43 |
| T10W1712 | 315400-0001 | TUBE PUN-H-6X1-BL | 7-173 |
| T10W1714 | 315400-0001 | TUBE PUN-H-6X1-BL | 7-173 |
| T10W1722 | 315400-0001 | TUBE PUN-H-6X1-BL | 7-173 |
| T10W1724 | 315400-0001 | TUBE PUN-H-6X1-BL | 7-173 |
| T10W1732 | 315400-0001 | TUBE PUN-H-6X1-BL | 7-133 |
| T10W1733 | 315400-0001 | TUBE PUN-H-6X1-BL | 7-133 |
| T10W1734 | 315400-0001 | TUBE PUN-H-6X1-BL | 7-133 |
| T10W1735 | 315400-0001 | TUBE PUN-H-6X1-BL | 7-133 |
| T10W1736 | 315400-0001 | TUBE PUN-H-6X1-BL | 7-133 |
| T10W1737 | 315400-0001 | TUBE PUN-H-6X1-BL | 7-133 |
| T10W1742 | 315400-0001 | TUBE PUN-H-6X1-BL | 7-133 |
| T10W1743 | 315400-0001 | TUBE PUN-H-6X1-BL | 7-133 |
| T10W1744 | 315400-0001 | TUBE PUN-H-6X1-BL | 7-133 |
| T10W1745 | 315400-0001 | TUBE PUN-H-6X1-BL | 7-133 |
| T10W1746 | 315400-0001 | TUBE PUN-H-6X1-BL | 7-133 |
| T10W1747 | 315400-0001 | TUBE PUN-H-6X1-BL | 7-133 |
| T10W1752 | 315400-0001 | TUBE PUN-H-6X1-BL | 7-123 |
| T10W1754 | 315400-0001 | TUBE PUN-H-6X1-BL | 7-123 |
| T10W1762 | 315400-0001 | TUBE PUN-H-6X1-BL | 7-17 |
| T10W1764 | 315400-0001 | TUBE PUN-H-6X1-BL | 7-17 |
| T10W1772 | 90166-0193 | TUBE 6 MM PUR BLUE | 7-91 |
| T10W1774 | 90166-0193 | TUBE 6 MM PUR BLUE | 7-91 |
| T10W1782 | 315400-0004 | TUBE PUN-H-8X1,25-BL | 7-139, 7-141 |
| T10W1783 | 90166-0095 | TUBE 4 MM PA BLUE (50M) | 7-91 |
| T10W1783 | 315400-0004 | TUBE PUN-H-8X1,25-BL | 7-139, 7-141 |
| T10W1784 | 315400-0004 | TUBE PUN-H-8X1,25-BL | 7-139, 7-141 |
| T10W1785 | 90166-0193 | TUBE 6 MM PUR BLUE | 7-67, 7-69 |
| T10W1785 | 315400-0004 | TUBE PUN-H-8X1,25-BL | 7-139, 7-141 |
| T10W1852 | 315400-0010 | TUBE PUN-H-12X2-BL | 7-139, 7-141 |
| T10W1853 | 315400-0010 | TUBE PUN-H-12X2-BL | 7-139, 7-141 |
| T10W1854 | 315400-0001 | TUBE PUN-H-6X1-BL | 7-139, 7-141 |
| T10W1855 | 315400-0001 | TUBE PUN-H-6X1-BL | 7-139, 7-141 |
| T10W1856 | 315400-0001 | TUBE PUN-H-6X1-BL | 7-139, 7-141 |
| T10W1857 | 90166-0195 | TUBE 12 MM PA BLUE | 2-197 |
| T10W1857 | 315400-0010 | TUBE PUN-H-12X2-BL | 7-139, 7-141 |
| T10W1858 | 315400-0010 | TUBE PUN-H-12X2-BL | 7-139, 7-141 |
| T10W1930 | 90600-0972 | SENSOR CABLE BKS-S116-PU10 | 7-97 |
| T10W7003 | 90166-0118 | TUBE 8 MM PA BLACK | 7-77 |
| T10W7004 | 90166-0118 | TUBE 8 MM PA BLACK | 7-77 |
| T10W7006 | 90166-0118 | TUBE 8 MM PA BLACK | 7-77 |
| T10W9020 | 90459-2566 | MOTOR CABLE 16 AWG 2090-XXNPMP-16S15 | 7-135 |
| T10W9021 | 90459-2577 | MOTOR BRAKE CABLE 2090-UXNBMP-18S15 | 7-135 |
| T10W9022 | 90459-7206 | MOTOR FEEDBACK CABLE 2090-UXNFBMP-S15/C | 7-135 |
| T10W9023 | 90600-1395 | CABLE 15M, 2030692 | 7-107 |
| T10W9170 | 2540595-0010 | COAXIAL CABLE | 7-77 |
| T10W9231 | 90458-0603 | CONNECTOR FEMALE 5 PINS | 7-109 |
| T10W9241 | 90458-0603 | CONNECTOR FEMALE 5 PINS | 7-109 |
| T10W9530 | 90220-0034 | THERMOCABLE TEX/SITW-20F-KX 2X0,5MM2 | 7-113 |
| T40W0030 | 351150-0412 | CABLE OLFLEX 3X1,5 MM2 LIGHT/GREY | 2-89 |
| T40W0031 | 351150-0412 | CABLE OLFLEX 3X1,5 MM2 LIGHT/GREY | 2-91 |
| T40W0042 | 2764900-0000 | PIPE | 2-75, 2-77 |
| T40W0043 | 2764899-0000 | PIPE | 2-75, 2-77 |
| T40W0044 | 2764897-0000 | PIPE | 2-75, 2-77 |
| T40W0045 | 2764898-0000 | PIPE | 2-75, 2-77 |
| T40W0046 | 2764895-0000 | PIPE | 2-75, 2-77 |
| T40W0047 | 2764894-0000 | PIPE | 2-75, 2-77 |
| T40W0048 | 2764896-0000 | PIPE | 2-75, 2-77 |
| T40W0050 | 351150-0418 | CABLE OLFLEX 4X2,5 MM2 LIGHT/GREY | 2-245 |
| T40W1252 | 90166-0132 | TUBE 6 MM PA,TRANSP. | 2-189 |
| T40W1253 | 90166-0132 | TUBE 6 MM PA,TRANSP. | 2-189 |
| T40W1255 | 315400-0003 | TUBE PUN-H-6X1-SW | 4-177 |
| T40W1256 | 315400-0003 | TUBE PUN-H-6X1-SW | 4-177 |
| T40W1257 | 90166-0132 | TUBE 6 MM PA,TRANSP. | 2-189 |
| T40W1270 | 351150-0406 | CABLE OLFLEX 7X0,75 MM2 LIGHT/GREY | 2-99 |

| Pos | Part No | Description | Page No |
|---|---|---|---|
| **W** | | | |
| T40W1271 | 351150-0406 | CABLE OLFLEX 7X0,75 MM2 LIGHT/GREY | 2-99 |
| T40W1344 | 90166-0108 | TUBE 6 MM PA TRANSP. | 2-85 |
| T40W1345 | 90166-0108 | TUBE 6 MM PA TRANSP. | 2-85, 4-37, 4-39 |
| T40W1346 | 90166-0108 | TUBE 6 MM PA TRANSP. | 2-85 |
| T40W1347 | 90166-0108 | TUBE 6 MM PA TRANSP. | 2-85, 4-37, 4-39 |
| T40W6016 | 90166-0013 | TUBE 8 MM PA BLUE | 6-101 |
| T40W6017 | 90166-0013 | TUBE 8 MM PA BLUE | 6-101 |
| T40W7041 | 90166-0118 | TUBE 8 MM PA BLACK | 2-191, 2-193, 6-33 |
| T40W7043 | 90166-0118 | TUBE 8 MM PA BLACK | 2-191, 2-193 |
| T40W7044 | 90166-0118 | TUBE 8 MM PA BLACK | 2-191, 2-193 |
| T40W7046 | 90166-0118 | TUBE 8 MM PA BLACK | 2-191, 2-193 |
| T40W7151 | 90166-0118 | TUBE 8 MM PA BLACK | 2-191, 2-193 |
| T40W7153 | 90166-0108 | TUBE 6 MM PA TRANSP. | 4-37, 4-39 |
| T40W7154 | 90166-0108 | TUBE 6 MM PA TRANSP. | 4-37, 4-39 |
| T40W7156 | 90166-0118 | TUBE 8 MM PA BLACK | 2-191, 2-193 |
| T40W7161 | 90166-0118 | TUBE 8 MM PA BLACK | 2-191, 2-193 |
| T40W7163 | 90166-0108 | TUBE 6 MM PA TRANSP. | 4-37, 4-39 |
| T40W7164 | 90166-0108 | TUBE 6 MM PA TRANSP. | 4-37, 4-39 |
| T40W7166 | 90166-0118 | TUBE 8 MM PA BLACK | 2-191, 2-193 |
| T40W8000 | 90266-0165 | BRASS PIPE | 4-35 |
| T40W8001 | 90266-0019 | PIPE | 4-19 |
| T40W8002 | 90266-0165 | BRASS PIPE | 4-19 |
| T40W8003 | 90166-0109 | TUBE 4 MM PA TRANSP. | 4-21 |
| T40W8004 | 90266-0019 | PIPE | 4-21 |
| T40W8005 | 90166-0143 | TUBE 2,5 MM PA TRANSP. | 4-21 |
| T40W8006 | 90266-0165 | BRASS PIPE | 4-21 |
| T40W8007 | 90166-0143 | TUBE 2,5 MM PA TRANSP. | 4-21 |
| T40W8008 | 90166-0143 | TUBE 2,5 MM PA TRANSP. | 4-21 |
| T40W8009 | 90166-0143 | TUBE 2,5 MM PA TRANSP. | 4-21 |
| T40W8010 | 90166-0109 | TUBE 4 MM PA TRANSP. | 4-17 |
| T40W8011 | 90266-0019 | PIPE | 4-17 |
| T40W8012 | 90266-0019 | PIPE | 4-17 |
| T40W8013 | 90266-0019 | PIPE | 4-17 |
| T40W8014 | 90266-0019 | PIPE | 4-17 |
| T40W8015 | 90266-0165 | BRASS PIPE | 4-17 |
| T40W8016 | 90266-0019 | PIPE | 4-17 |
| T40W8017 | 90266-0019 | PIPE | 4-17 |
| T40W8018 | 90266-0019 | PIPE | 4-17 |
| T40W8019 | 90266-0019 | PIPE | 4-17 |
| T40W8020 | 90266-0019 | PIPE | 4-17 |
| T40W8021 | 90266-0165 | BRASS PIPE | 4-17 |
| T40W8022 | 90266-0165 | BRASS PIPE | 4-35 |
| T40W8023 | 90166-0143 | TUBE 2,5 MM PA TRANSP. | 4-21 |
| T40W8024 | 90166-0143 | TUBE 2,5 MM PA TRANSP. | 4-19 |
| T40W8025 | 90166-0143 | TUBE 2,5 MM PA TRANSP. | 4-21 |
| T40W8026 | 90166-0143 | TUBE 2,5 MM PA TRANSP. | 4-19 |
| T40W8027 | 90166-0143 | TUBE 2,5 MM PA TRANSP. | 4-11, 4-17 |
| T40W8030 | 90266-0165 | BRASS PIPE | 4-33 |
| T40W8031 | 90266-0019 | PIPE | 4-13 |
| T40W8032 | 90266-0165 | BRASS PIPE | 4-13 |
| T40W8033 | 90166-0109 | TUBE 4 MM PA TRANSP. | 4-15 |
| T40W8034 | 90266-0019 | PIPE | 4-15 |
| T40W8035 | 90166-0143 | TUBE 2,5 MM PA TRANSP. | 4-15 |
| T40W8036 | 90266-0165 | BRASS PIPE | 4-15 |
| T40W8037 | 90166-0143 | TUBE 2,5 MM PA TRANSP. | 4-15 |
| T40W8038 | 90166-0143 | TUBE 2,5 MM PA TRANSP. | 4-15 |
| T40W8039 | 90166-0143 | TUBE 2,5 MM PA TRANSP. | 4-15 |
| T40W8040 | 90166-0109 | TUBE 4 MM PA TRANSP. | 4-11 |
| T40W8041 | 90266-0019 | PIPE | 4-11 |
| T40W8042 | 90266-0019 | PIPE | 4-11 |
| T40W8043 | 90266-0019 | PIPE | 4-11 |
| T40W8044 | 90266-0019 | PIPE | 4-11 |
| T40W8045 | 90266-0165 | BRASS PIPE | 4-11 |
| T40W8046 | 90266-0019 | PIPE | 4-11 |
| T40W8047 | 90266-0019 | PIPE | 4-11 |
| T40W8048 | 90266-0019 | PIPE | 4-11 |
| T40W8049 | 90266-0019 | PIPE | 4-11 |
| T40W8050 | 90266-0019 | PIPE | 4-11 |
| T40W8051 | 90266-0165 | BRASS PIPE | 4-11 |
| T40W8052 | 90266-0165 | BRASS PIPE | 4-33 |
| T40W8053 | 90166-0143 | TUBE 2,5 MM PA TRANSP. | 4-15 |
| T40W8054 | 90166-0143 | TUBE 2,5 MM PA TRANSP. | 4-13 |
| T40W8055 | 90166-0143 | TUBE 2,5 MM PA TRANSP. | 4-15 |
| T40W8056 | 90166-0143 | TUBE 2,5 MM PA TRANSP. | 4-13 |
| T40W8062 | 90166-0143 | TUBE 2,5 MM PA TRANSP. | 4-127, 4-129, 4-131, 4-145, 4-147, 4-149, 4-153, 4-155, 4-157, 4-161, 4-163, 4-165 |
| T40W8064 | 90166-0143 | TUBE 2,5 MM PA TRANSP. | 4-127, 4-129, 4-131, 4-145, 4-147, 4-149, 4-153, 4-155, 4-157, 4-161, 4-163, 4-165 |
| T40W9040 | 90459-2566 | MOTOR CABLE 16 AWG 2090-XXNPMP-16S15 | 2-105, 2-107 |
| T40W9041 | 90459-2577 | MOTOR BRAKE CABLE 2090-UXNBMP-18S15 | 2-105, 2-107 |
| T40W9042 | 90459-7208 | MOTOR FEEDBACK CABLE 2090-XXNFMP-S15/C | 2-105, 2-107 |
| T40W9050 | 90459-2566 | MOTOR CABLE 16 AWG 2090-XXNPMP-16S15 | 2-105, 2-107 |

## W

| Pos | Part No | Description | Page No |
|---|---|---|---|
| T40W9051 | 90459-2577 | MOTOR BRAKE CABLE 2090-UXNBMP-18S15 | 2-105, 2-107 |
| T40W9052 | 90459-7208 | MOTOR FEEDBACK CABLE 2090-XXNFMP-S15/C | 2-105, 2-107 |
| T40W9072 | 90166-0081 | TUBE 6 MM PA BLUE | 2-45, 2-47 |
| T40W9074 | 90166-0081 | TUBE 6 MM PA BLUE | 2-45, 2-47 |
| T40W9080 | 90459-7174 | MOTOR POWER CABLE 2090-XXNPMP-10S15 | 2-105, 2-107 |
| T40W9081 | 90459-2577 | MOTOR BRAKE CABLE 2090-UXNBMP-18S15 | 2-105, 2-107 |
| T40W9082 | 90459-7208 | MOTOR FEEDBACK CABLE 2090-XXNFMP-S15/C | 2-105, 2-107 |
| T40W9090 | 90459-7174 | MOTOR POWER CABLE 2090-XXNPMP-10S15 | 2-105, 2-107 |
| T40W9091 | 90459-2577 | MOTOR BRAKE CABLE 2090-UXNBMP-18S15 | 2-105, 2-107 |
| T40W9092 | 90459-7208 | MOTOR FEEDBACK CABLE 2090-XXNFMP-S15/C | 2-105, 2-107 |
| T40W9100 | 90459-7174 | MOTOR POWER CABLE 2090-XXNPMP-10S15 | 2-105, 2-107 |
| T40W9101 | 90459-2577 | MOTOR BRAKE CABLE 2090-UXNBMP-18S15 | 2-105, 2-107 |
| T40W9102 | 90459-7208 | MOTOR FEEDBACK CABLE 2090-XXNFMP-S15/C | 2-105, 2-107 |
| T40W9110 | 90459-7174 | MOTOR POWER CABLE 2090-XXNPMP-10S15 | 2-105, 2-107 |
| T40W9111 | 90459-2577 | MOTOR BRAKE CABLE 2090-UXNBMP-18S15 | 2-105, 2-107 |
| T40W9112 | 90459-7208 | MOTOR FEEDBACK CABLE 2090-XXNFMP-S15/C | 2-105, 2-107 |
| T40W9150 | 2562736-0001 | COAXIAL CABLE | 4-37, 4-39 |
| T40W9151 | 2562736-0001 | COAXIAL CABLE | 4-37, 4-39 |
| T40W9152 | 2540596-0007 | COAXIAL CABLE | 2-105, 2-107 |
| T40W9153 | 2540596-0007 | COAXIAL CABLE | 2-105, 2-107 |
| T40W9212 | 90166-0081 | TUBE 6 MM PA BLUE | 4-9 |
| T40W9213 | 90166-0081 | TUBE 6 MM PA BLUE | 4-9 |
| T40W9214 | 315400-0004 | TUBE PUN-H-8X1,25-BL | 2-49 |
| T40W9215 | 315400-0004 | TUBE PUN-H-8X1,25-BL | 2-49 |
| T40W9216 | 315400-0004 | TUBE PUN-H-8X1,25-BL | 2-49 |
| T40W9217 | 315400-0004 | TUBE PUN-H-8X1,25-BL | 2-49 |
| T40W9218 | 315400-0004 | TUBE PUN-H-8X1,25-BL | 2-49 |
| T40W9219 | 315400-0004 | TUBE PUN-H-8X1,25-BL | 2-49 |
| T40W9222 | 315400-0004 | TUBE PUN-H-8X1,25-BL | 2-49 |
| T40W9223 | 315400-0004 | TUBE PUN-H-8X1,25-BL | 2-49 |
| T40W9224 | 315400-0001 | TUBE PUN-H-6X1-BL | 2-49 |
| T40W9225 | 315400-0004 | TUBE PUN-H-8X1,25-BL | 2-49 |
| T40W9226 | 315400-0016 | TUBE PUN-H-4X0,75-BL | 2-49 |
| T40W9227 | 90166-0081 | TUBE 6 MM PA BLUE | 2-45, 2-47 |
| T40W9228 | 90166-0081 | TUBE 6 MM PA BLUE | 2-45, 2-47 |
| T40W9500 | 90459-4705 | LOCKING PLUG, S 103 A 053-130+ AND 90220 | 2-101 |
| T40W9553 | 2510787-0000 | HOSE | 4-37, 4-39 |
| T40W9554 | 2510787-0000 | HOSE | 4-37, 4-39 |
| T40W9573 | 1517348-0000 | HOSE | 4-37, 4-39 |
| T40W9574 | 1517348-0000 | HOSE | 4-37, 4-39 |
| T40W9593 | 1517348-0000 | HOSE | 4-37, 4-39 |
| T40W9594 | 1517348-0000 | HOSE | 4-37, 4-39 |
| T40W9610 | 351150-0405 | CABLE OLFLEX 5X0,75 MM2 LIGHT/GREY | 2-99 |
| T40W9640 | 351150-0405 | CABLE OLFLEX 5X0,75 MM2 LIGHT/GREY | 2-99 |
| T40W9672 | 315400-0001 | TUBE PUN-H-6X1-BL | 2-49 |
| T40W9673 | 90166-0081 | TUBE 6 MM PA BLUE | 2-45, 2-47 |
| T40W9674 | 90166-0081 | TUBE 6 MM PA BLUE | 2-45, 2-47 |
| T40W9675 | 315400-0016 | TUBE PUN-H-4X0,75-BL | 2-49 |
| T40W9700 | 351150-0403 | CABLE OLFLEX 3X0,75 MM2 LIGHT/GREY | 2-61 |
| T40W9702 | 90235-0847 | THROTTLE CHECK VALVE, G1/4", MANUAL,6 | 5-19 |
| T40W9703 | 315400-0004 | TUBE PUN-H-8X1,25-BL | 2-49 |
| T40W9705 | 90235-0847 | THROTTLE CHECK VALVE, G1/4", MANUAL,6 | 5-19 |
| T40W9705 | 315400-0004 | TUBE PUN-H-8X1,25-BL | 2-49 |
| T40W9706 | 315400-0004 | TUBE PUN-H-8X1,25-BL | 2-49 |
| T50W0080 | 351150-0413 | CABLE OLFLEX 4GX1,5 MM2 LIGHT/GREY | 2-137 |
| T50W0241 | 90220-0034 | THERMOCABLE TEX/SITW-20F-KX 2X0,5MM2 | 5-131, 5-133 |
| T50W0242 | 90220-0034 | THERMOCABLE TEX/SITW-20F-KX 2X0,5MM2 | 5-131, 5-133 |
| T50W0251 | 90220-0034 | THERMOCABLE TEX/SITW-20F-KX 2X0,5MM2 | 5-131, 5-133 |
| T50W0252 | 90220-0034 | THERMOCABLE TEX/SITW-20F-KX 2X0,5MM2 | 5-131, 5-133 |
| T50W1252 | 90166-0132 | TUBE 6 MM PA,TRANSP. | 2-189 |
| T50W1253 | 90166-0132 | TUBE 6 MM PA,TRANSP. | 2-189 |
| T50W1253 | 90166-0266 | TUBE 6 MM PA BLACK | 5-157, 5-159 |
| T50W1344 | 90166-0108 | TUBE 6 MM PA TRANSP. | 5-149, 5-151 |
| T50W1364 | 315400-0001 | TUBE PUN-H-6X1-BL | 2-49 |
| T50W1365 | 315400-0016 | TUBE PUN-H-4X0,75-BL | 2-49 |
| T50W1366 | 90166-0081 | TUBE 6 MM PA BLUE | 2-45, 2-47 |
| T50W1367 | 90166-0081 | TUBE 6 MM PA BLUE | 2-45, 2-47 |
| T50W1410 | 351150-0417 | CABLE OLFLEX 3X2,5 MM2 LIGHT/GREY | 5-131, 5-133 |
| T50W1411 | 90220-0034 | THERMOCABLE TEX/SITW-20F-KX 2X0,5MM2 | 5-131, 5-133 |
| T50W1420 | 351150-0417 | CABLE OLFLEX 3X2,5 MM2 LIGHT/GREY | 5-131, 5-133 |
| T50W1421 | 90220-0034 | THERMOCABLE TEX/SITW-20F-KX 2X0,5MM2 | 5-131, 5-133 |
| T50W1430 | 351150-0417 | CABLE OLFLEX 3X2,5 MM2 LIGHT/GREY | 5-131, 5-133 |
| T50W1431 | 90220-0034 | THERMOCABLE TEX/SITW-20F-KX 2X0,5MM2 | 5-131, 5-133 |
| T50W1440 | 351150-0417 | CABLE OLFLEX 3X2,5 MM2 LIGHT/GREY | 5-131, 5-133 |
| T50W1441 | 90220-0034 | THERMOCABLE TEX/SITW-20F-KX 2X0,5MM2 | 5-131, 5-133 |
| T50W1530 | 90220-0165 | SCR. CABLE 5X0,34MM2 | 2-127 |
| T50W1532 | 90166-0068 | TUBE 12 MM PA BLUE | 2-127 |
| T50W1533 | 90166-0013 | TUBE 8 MM PA BLUE | 5-131, 5-133 |
| T50W1534 | 90166-0013 | TUBE 8 MM PA BLUE | 5-131, 5-133 |
| T50W1535 | 90166-0068 | TUBE 12 MM PA BLUE | 2-127 |
| T50W1540 | 90220-0165 | SCR. CABLE 5X0,34MM2 | 2-127 |
| T50W1542 | 90166-0068 | TUBE 12 MM PA BLUE | 2-127 |

| Pos | Part No | Description | Page No |
|---|---|---|---|
| **W** | | | |
| T50W1543 | 90166-0013 | TUBE 8 MM PA BLUE | 5-131, 5-133 |
| T50W1544 | 90166-0013 | TUBE 8 MM PA BLUE | 5-131, 5-133 |
| T50W1545 | 90166-0068 | TUBE 12 MM PA BLUE | 2-127 |
| T50W6002 | 90166-0081 | TUBE 6 MM PA BLUE | 2-45, 2-47 |
| T50W6003 | 90166-0081 | TUBE 6 MM PA BLUE | 2-45, 2-47 |
| T50W6004 | 90166-0013 | TUBE 8 MM PA BLUE | 2-45, 2-47 |
| T50W6014 | 90166-0013 | TUBE 8 MM PA BLUE | 6-101 |
| T50W6015 | 90166-0013 | TUBE 8 MM PA BLUE | 6-101 |
| T50W7010 | 90166-0118 | TUBE 8 MM PA BLACK | 2-191, 2-193 |
| T50W7011 | 90166-0118 | TUBE 8 MM PA BLACK | 2-191, 2-193, 5-113, 5-115, 5-117, 5-119 |
| T50W7012 | 90166-0118 | TUBE 8 MM PA BLACK | 5-113, 5-115, 5-117, 5-119, 5-129 |
| T50W7013 | 90166-0118 | TUBE 8 MM PA BLACK | 2-191, 2-193, 5-129 |
| T50W7014 | 90166-0118 | TUBE 8 MM PA BLACK | 5-113, 5-115, 5-117, 5-119, 5-129 |
| T50W7015 | 90166-0118 | TUBE 8 MM PA BLACK | 5-113, 5-115, 5-117, 5-119 |
| T50W7016 | 90166-0118 | TUBE 8 MM PA BLACK | 2-191, 2-193 |
| T50W7017 | 90166-0266 | TUBE 6 MM PA BLACK | 2-183, 2-185 |
| T50W7018 | 90166-0266 | TUBE 6 MM PA BLACK | 2-183, 2-185 |
| T50W7019 | 90166-0266 | TUBE 6 MM PA BLACK | 2-183, 2-185 |
| T50W7022 | 90166-0141 | TUBE 10 MM PA,TRANSP. MIN.50M | 2-195 |
| T50W7023 | 90152-0017 | HOSE (SPIRAL) | 2-195 |
| T50W7622 | 90166-0121 | HOSE | 2-121 |
| T50W8060 | 90166-0143 | TUBE 2,5 MM PA TRANSP. | 5-149, 5-151 |
| T50W8061 | 90166-0143 | TUBE 2,5 MM PA TRANSP. | 5-149, 5-151 |
| T50W8062 | 90166-0143 | TUBE 2,5 MM PA TRANSP. | 5-149, 5-151 |
| T50W8063 | 90166-0143 | TUBE 2,5 MM PA TRANSP. | 5-149, 5-151 |
| T50W8064 | 90166-0143 | TUBE 2,5 MM PA TRANSP. | 5-149, 5-151 |
| T50W8065 | 90166-0143 | TUBE 2,5 MM PA TRANSP. | 5-149, 5-151 |
| T50W8066 | 90166-0143 | TUBE 2,5 MM PA TRANSP. | 5-149, 5-151 |
| T50W8067 | 90166-0143 | TUBE 2,5 MM PA TRANSP. | 5-149, 5-151 |
| T50W8068 | 90166-0143 | TUBE 2,5 MM PA TRANSP. | 5-149, 5-151 |
| T50W8069 | 90166-0143 | TUBE 2,5 MM PA TRANSP. | 5-149, 5-151 |
| T50W8070 | 90166-0143 | TUBE 2,5 MM PA TRANSP. | 5-149, 5-151 |
| T50W8071 | 90166-0143 | TUBE 2,5 MM PA TRANSP. | 5-149, 5-151 |
| T50W8072 | 90166-0143 | TUBE 2,5 MM PA TRANSP. | 5-149, 5-151 |
| T50W8073 | 90166-0143 | TUBE 2,5 MM PA TRANSP. | 5-149, 5-151 |
| T50W8074 | 90166-0143 | TUBE 2,5 MM PA TRANSP. | 5-149, 5-151 |
| T50W8075 | 90166-0143 | TUBE 2,5 MM PA TRANSP. | 5-149, 5-151 |
| T50W8076 | 90166-0143 | TUBE 2,5 MM PA TRANSP. | 5-149, 5-151 |
| T50W8077 | 90166-0143 | TUBE 2,5 MM PA TRANSP. | 5-149, 5-151 |
| T50W8078 | 90166-0143 | TUBE 2,5 MM PA TRANSP. | 5-149, 5-151 |
| T50W8079 | 90166-0143 | TUBE 2,5 MM PA TRANSP. | 5-149, 5-151 |
| T50W9000 | 90459-7175 | MOTOR POWER CABLE 2090-XXNPMF-10S15/A | 5-41 |
| T50W9002 | 90459-7176 | MOTOR FEEDBACK CABLE 2090-XXNFMF-S15 | 5-41 |
| T50W9003 | 90166-0095 | TUBE 4 MM PA BLUE (50M) | 2-45, 2-47 |
| T50W9010 | 90459-7173 | MOTOR POWER CABLE 2090-XXNPMF-16S15/A | 5-177 |
| T50W9012 | 90459-7176 | MOTOR FEEDBACK CABLE 2090-XXNFMF-S15 | 5-177 |
| T50W9013 | 90166-0095 | TUBE 4 MM PA BLUE (50M) | 2-45, 2-47 |
| T50W9500 | 351150-0405 | CABLE OLFLEX 5X0,75 MM2 LIGHT/GREY | 2-247 |
| T50W9590 | 351150-0405 | CABLE OLFLEX 5X0,75 MM2 LIGHT/GREY | 5-187 |
| T50W9591 | 351150-0405 | CABLE OLFLEX 5X0,75 MM2 LIGHT/GREY | 5-187 |
| T50W9604 | 90166-0081 | TUBE 6 MM PA BLUE | 2-45, 2-47 |
| T50W9612 | 90166-0081 | TUBE 6 MM PA BLUE | 2-45, 2-47 |
| T50W9613 | 90166-0081 | TUBE 6 MM PA BLUE | 5-11, 5-13, 5-15 |
| T50W9614 | 90166-0081 | TUBE 6 MM PA BLUE | 2-45, 2-47 |
| T50W9615 | 90166-0081 | TUBE 6 MM PA BLUE | 5-11, 5-13, 5-15 |
| T50W9616 | 315400-0016 | TUBE PUN-H-4X0,75-BL | 5-11, 5-13, 5-15 |
| T50W9617 | 90166-0081 | TUBE 6 MM PA BLUE | 5-11, 5-13, 5-15 |
| T50W9620 | 351150-0403 | CABLE OLFLEX 3X0,75 MM2 LIGHT/GREY | 6-87, 6-89 |
| U30W0220 | 90458-2466 | MOTOR 3GVA071002-CSC-M2VA71B2 | 2-33 |
| U30W0570 | 351150-0425 | CABLE OLFLEX 25X0,75 MM2 LIGHT/GREY | 2-61 |
| U30W1030 | 351150-0403 | CABLE OLFLEX 3X0,75 MM2 LIGHT/GREY | 2-39 |
| U30W1050 | 351150-0406 | CABLE OLFLEX 7X0,75 MM2 LIGHT/GREY | 2-61 |
| U30W1060 | 351150-0406 | CABLE OLFLEX 7X0,75 MM2 LIGHT/GREY | 2-61 |
| U30W1070 | 351150-0404 | CABLE OLFLEX 4X0,75 MM2 LIGHT/GREY | 2-39 |
| U30W1252 | 90166-0081 | TUBE 6 MM PA BLUE | 2-45, 2-47 |
| U30W1254 | 90166-0081 | TUBE 6 MM PA BLUE | 2-45, 2-47 |
| U30W1262 | 90166-0081 | TUBE 6 MM PA BLUE | 2-45, 2-47 |
| U30W1264 | 90166-0081 | TUBE 6 MM PA BLUE | 2-45, 2-47 |
| U30W1282 | 90166-0081 | TUBE 6 MM PA BLUE | 2-45, 2-47 |
| U30W1283 | 90166-0081 | TUBE 6 MM PA BLUE | 2-39 |
| U30W1284 | 90166-0081 | TUBE 6 MM PA BLUE | 2-45, 2-47 |
| U30W1285 | 90166-0081 | TUBE 6 MM PA BLUE | 2-39 |
| U30W1302 | 90166-0081 | TUBE 6 MM PA BLUE | 2-45, 2-47 |
| U30W1303 | 90166-0081 | TUBE 6 MM PA BLUE | 2-39 |
| U30W1304 | 90166-0081 | TUBE 6 MM PA BLUE | 2-45, 2-47 |
| U30W1305 | 90166-0081 | TUBE 6 MM PA BLUE | 2-39 |
| U30W1372 | 90166-0081 | TUBE 6 MM PA BLUE | 2-45, 2-47 |
| U30W1374 | 90166-0081 | TUBE 6 MM PA BLUE | 2-45, 2-47 |
| U30W1460 | 351150-0403 | CABLE OLFLEX 3X0,75 MM2 LIGHT/GREY | 2-25 |
| U30W1462 | 315400-0004 | TUBE PUN-H-8X1,25-BL | 2-49 |
| U30W1463 | 315400-0004 | TUBE PUN-H-8X1,25-BL | 2-49 |
| U30W1464 | 90166-0013 | TUBE 8 MM PA BLUE | 2-45, 2-47 |

## W

| Pos | Part No | Description | Page No |
|---|---|---|---|
| U30W1464 | 315400-0016 | TUBE PUN-H-4X0,75-BL | 2-49 |
| U30W1480 | 351150-0403 | CABLE OLFLEX 3X0,75 MM2 LIGHT/GREY | 2-21 |
| U30W1570 | 351150-0403 | CABLE OLFLEX 3X0,75 MM2 LIGHT/GREY | 2-39 |
| U30W1590 | 351150-0404 | CABLE OLFLEX 4X0,75 MM2 LIGHT/GREY | 2-39 |
| U30W1670 | 90220-0072 | SCR. CABLE 4X0,34MM2 | 2-17, 2-19 |
| U30W1710 | 90220-0034 | THERMOCABLE TEX/SITW-20F-KX 2X0,5MM2 | 2-17, 2-19 |
| U30W6003 | 90166-0132 | TUBE 6 MM PA,TRANSP. | 2-33 |
| U30W7002 | 90166-0118 | TUBE 8 MM PA BLACK | 2-37 |
| U30W7003 | 90166-0008 | HOSE 7/10 PVC TRANSP. | 2-37 |
| U30W7004 | 315400-0018 | TUBE PUN-H-4X0,75-SW | 2-21 |
| U70W0100 | 351150-0412 | CABLE OLFLEX 3X1,5 MM2 LIGHT/GREY | 1-265 |
| U70W0300 | 90220-0105 | SCR. CABLE 4X2,5MM2 | 1-183 |
| U70W0310 | 90220-0104 | SCR. CABLE 4X1,5MM2 | 1-37 |
| U70W0320 | 90220-0104 | SCR. CABLE 4X1,5MM2 | 1-253 |
| U70W0330 | 90220-0105 | SCR. CABLE 4X2,5MM2 | 1-19 |
| U70W0340 | 351120-0264 | CABLE SILFLEX SIHF 4X1,5 00460153 | 1-265 |
| U70W0350 | 351120-0264 | CABLE SILFLEX SIHF 4X1,5 00460153 | 1-265 |
| U70W0360 | 351120-0264 | CABLE SILFLEX SIHF 4X1,5 00460153 | 1-179 |
| U70W0370 | 90459-3165 | CABLE OLFLON PTFE 1X4,72 MM² BLACK | 1-205 |
| U70W0371 | 351150-0417 | CABLE OLFLEX 3X2,5 MM2 LIGHT/GREY | 1-211 |
| U70W0450 | 351120-0267 | CABLE SILFLEX SIHF 4X6 00460333 | 1-189 |
| U70W0460 | 351150-0196 | CABLE OLFLEX 7X4 MM2 LIGHT/GREY | 1-279, 1-281 |
| U70W0580 | 351150-0425 | CABLE OLFLEX 25X0,75 MM2 LIGHT/GREY | 1-345 |
| U70W0590 | 351150-0425 | CABLE OLFLEX 25X0,75 MM2 LIGHT/GREY | 1-279, 1-281 |
| U70W0600 | 351150-0425 | CABLE OLFLEX 25X0,75 MM2 LIGHT/GREY | 1-349, 1-351 |
| U70W0900 | 90220-0034 | THERMOCABLE TEX/SITW-20F-KX 2X0,5MM2 | 1-349, 1-351 |
| U70W0910 | 90220-0034 | THERMOCABLE TEX/SITW-20F-KX 2X0,5MM2 | 1-279, 1-281 |
| U70W0920 | 90220-0034 | THERMOCABLE TEX/SITW-20F-KX 2X0,5MM2 | 1-279, 1-281 |
| U70W0930 | 90220-0034 | THERMOCABLE TEX/SITW-20F-KX 2X0,5MM2 | 1-211 |
| U70W1080 | 351150-0405 | CABLE OLFLEX 5X0,75 MM2 LIGHT/GREY | 1-341 |
| U70W1100 | 351302-0050 | ACTUATOR/SENSOR CABLE PRKMWV 3-06/5M | 1-235 |
| U70W1140 | 90459-4252 | CABLE M12-C101, 20-056-10 | 1-73 |
| U70W1412 | 315400-0001 | TUBE PUN-H-6X1-BL | 1-311 |
| U70W1414 | 315400-0001 | TUBE PUN-H-6X1-BL | 1-311 |
| U70W1432 | 315400-0001 | TUBE PUN-H-6X1-BL | 1-241, 1-311 |
| U70W1434 | 315400-0001 | TUBE PUN-H-6X1-BL | 1-311 |
| U70W1452 | 315400-0001 | TUBE PUN-H-6X1-BL | 1-311 |
| U70W1454 | 315400-0001 | TUBE PUN-H-6X1-BL | 1-311 |
| U70W1472 | 315400-0001 | TUBE PUN-H-6X1-BL | 1-311 |
| U70W1474 | 315400-0001 | TUBE PUN-H-6X1-BL | 1-311 |
| U70W1502 | 315400-0016 | TUBE PUN-H-4X0,75-BL | 1-313, 1-315 |
| U70W1503 | 315400-0001 | TUBE PUN-H-6X1-BL | 1-311 |
| U70W1504 | 315400-0001 | TUBE PUN-H-6X1-BL | 1-245, 1-313, 1-315 |
| U70W1522 | 315400-0001 | TUBE PUN-H-6X1-BL | 1-311 |
| U70W1524 | 315400-0001 | TUBE PUN-H-6X1-BL | 1-311 |
| U70W1532 | 315400-0001 | TUBE PUN-H-6X1-BL | 1-311 |
| U70W1534 | 315400-0001 | TUBE PUN-H-6X1-BL | 1-311 |
| U70W1740 | 351150-0404 | CABLE OLFLEX 4X0,75 MM2 LIGHT/GREY | 1-261 |
| U70W2020 | 351310-0050 | ACTUATOR/SENSOR CABLE PRKWT 4-07/5M | 1-271, 1-273 |
| U70W2040 | 351150-0431 | CABLE OLFLEX 2X0,75 MM2 LIGHT/GREY | 1-265 |
| U70W2060 | 90459-4252 | CABLE M12-C101, 20-056-10 | 1-71 |
| U70W2131 | 351150-0403 | CABLE OLFLEX 3X0,75 MM2 LIGHT/GREY | 1-193 |
| U70W2252 | 315400-0001 | TUBE PUN-H-6X1-BL | 1-311 |
| U70W2254 | 315400-0001 | TUBE PUN-H-6X1-BL | 1-311 |
| U70W2255 | 315400-0001 | TUBE PUN-H-6X1-BL | 1-311 |
| U70W2302 | 315400-0001 | TUBE PUN-H-6X1-BL | 1-311 |
| U70W2304 | 315400-0001 | TUBE PUN-H-6X1-BL | 1-311 |
| U70W2344 | 315400-0001 | TUBE PUN-H-6X1-BL | 1-311 |
| U70W2352 | 315400-0001 | TUBE PUN-H-6X1-BL | 1-311 |
| U70W2354 | 315400-0001 | TUBE PUN-H-6X1-BL | 1-311 |
| U70W2362 | 315400-0001 | TUBE PUN-H-6X1-BL | 1-311 |
| U70W2364 | 315400-0001 | TUBE PUN-H-6X1-BL | 1-311 |
| U70W2372 | 315400-0001 | TUBE PUN-H-6X1-BL | 1-311 |
| U70W2374 | 315400-0001 | TUBE PUN-H-6X1-BL | 1-311 |
| U70W2412 | 315400-0001 | TUBE PUN-H-6X1-BL | 1-311 |
| U70W2414 | 315400-0001 | TUBE PUN-H-6X1-BL | 1-311, 1-313, 1-315 |
| U70W2415 | 315400-0016 | TUBE PUN-H-4X0,75-BL | 1-313, 1-315 |
| U70W2424 | 315400-0001 | TUBE PUN-H-6X1-BL | 1-311 |
| U70W2425 | 315400-0007 | TUBE PUN-H-10X1,5-BL | 1-313, 1-315 |
| U70W2426 | 315400-0007 | TUBE PUN-H-10X1,5-BL | 1-313, 1-315 |
| U70W2427 | 315400-0016 | TUBE PUN-H-4X0,75-BL | 1-313, 1-315 |
| U70W2428 | 315400-0001 | TUBE PUN-H-6X1-BL | 1-311 |
| U70W2432 | 315400-0001 | TUBE PUN-H-6X1-BL | 1-311 |
| U70W2433 | 315400-0001 | TUBE PUN-H-6X1-BL | 1-311 |
| U70W2434 | 315400-0001 | TUBE PUN-H-6X1-BL | 1-311 |
| U70W2435 | 315400-0001 | TUBE PUN-H-6X1-BL | 1-311 |
| U70W2436 | 315400-0001 | TUBE PUN-H-6X1-BL | 1-311 |
| U70W2437 | 315400-0001 | TUBE PUN-H-6X1-BL | 1-311 |
| U70W2438 | 315400-0004 | TUBE PUN-H-8X1,25-BL | 1-313, 1-315 |
| U70W2439 | 315400-0016 | TUBE PUN-H-4X0,75-BL | 1-313, 1-315 |
| U70W2442 | 315400-0001 | TUBE PUN-H-6X1-BL | 1-311 |
| U70W2443 | 315400-0001 | TUBE PUN-H-6X1-BL | 1-311 |

| Pos | Part No | Description | Page No |
|---|---|---|---|
| **W** | | | |
| U70W2444 | 315400-0001 | TUBE PUN-H-6X1-BL | 1-311 |
| U70W2445 | 315400-0001 | TUBE PUN-H-6X1-BL | 1-311 |
| U70W2450 | 351301-0050 | ACTUATOR/SENSOR CABLE PRKMV 3-06/5M | 1-187 |
| U70W2470 | 351150-0403 | CABLE OLFLEX 3X0,75 MM2 LIGHT/GREY | 1-193 |
| U70W2480 | 90459-4274 | SCR. CABLE 2X0,5MM2 | 1-255 |
| U70W2490 | 90459-5578 | ACTUATOR/SENSOR CABLE PRKT 5-56/5M | 1-187 |
| U70W2540 | 90220-0165 | SCR. CABLE 5X0,34MM2 | 1-313, 1-315 |
| U70W2610 | 90220-0034 | THERMOCABLE TEX/SITW-20F-KX 2X0,5MM2 | 1-189 |
| U70W2620 | 90220-0034 | THERMOCABLE TEX/SITW-20F-KX 2X0,5MM2 | 1-265 |
| U70W2640 | 90220-0034 | THERMOCABLE TEX/SITW-20F-KX 2X0,5MM2 | 1-193 |
| U70W3010 | 351150-0406 | CABLE OLFLEX 7X0,75 MM2 LIGHT/GREY | 1-85 |
| U70W3120 | 351301-0050 | ACTUATOR/SENSOR CABLE PRKMV 3-06/5M | 1-39, 1-41 |
| U70W3130 | 90459-4252 | CABLE M12-C101, 20-056-10 | 1-27 |
| U70W3131 | 90220-0091 | PAIR TWISTED CABLE 2X2X0,25MM2 | 1-349, 1-351 |
| U70W3140 | 90459-4252 | CABLE M12-C101, 20-056-10 | 1-21 |
| U70W3180 | 351150-0404 | CABLE OLFLEX 4X0,75 MM2 LIGHT/GREY | 1-277 |
| U70W3200 | 351150-0404 | CABLE OLFLEX 4X0,75 MM2 LIGHT/GREY | 1-185 |
| U70W3240 | 351301-0050 | ACTUATOR/SENSOR CABLE PRKMV 3-06/5M | 1-47, 1-49, 1-51 |
| U70W3290 | 351150-0403 | CABLE OLFLEX 3X0,75 MM2 LIGHT/GREY | 1-277 |
| U70W3300 | 351150-0403 | CABLE OLFLEX 3X0,75 MM2 LIGHT/GREY | 1-277 |
| U70W3302 | 315400-0001 | TUBE PUN-H-6X1-BL | 1-311 |
| U70W3303 | 315400-0016 | TUBE PUN-H-4X0,75-BL | 1-313, 1-315 |
| U70W3330 | 351150-0403 | CABLE OLFLEX 3X0,75 MM2 LIGHT/GREY | 1-277 |
| U70W3340 | 351150-0403 | CABLE OLFLEX 3X0,75 MM2 LIGHT/GREY | 1-277 |
| U70W3410 | 351150-0403 | CABLE OLFLEX 3X0,75 MM2 LIGHT/GREY | 1-17 |
| U70W3480 | 90220-0165 | SCR. CABLE 5X0,34MM2 | 1-53 |
| U70W3520 | 90220-0034 | THERMOCABLE TEX/SITW-20F-KX 2X0,5MM2 | 1-179 |
| U70W3530 | 90220-0034 | THERMOCABLE TEX/SITW-20F-KX 2X0,5MM2 | 1-179 |
| U70W3540 | 90220-0034 | THERMOCABLE TEX/SITW-20F-KX 2X0,5MM2 | 1-75, 1-77 |
| U70W4001 | 351150-0406 | CABLE OLFLEX 7X0,75 MM2 LIGHT/GREY | 1-211 |
| U70W4010 | 351150-0403 | CABLE OLFLEX 3X0,75 MM2 LIGHT/GREY | 1-211 |
| U70W4060 | 351150-0404 | CABLE OLFLEX 4X0,75 MM2 LIGHT/GREY | 1-209, 1-211 |
| U70W4080 | 351150-0403 | CABLE OLFLEX 3X0,75 MM2 LIGHT/GREY | 1-211 |
| U70W4210 | 351150-0403 | CABLE OLFLEX 3X0,75 MM2 LIGHT/GREY | 1-211 |
| U70W4220 | 351150-0403 | CABLE OLFLEX 3X0,75 MM2 LIGHT/GREY | 1-211 |
| U70W4222 | 315400-0001 | TUBE PUN-H-6X1-BL | 1-311 |
| U70W4223 | 315400-0016 | TUBE PUN-H-4X0,75-BL | 1-313, 1-315 |
| U70W4230 | 351150-0403 | CABLE OLFLEX 3X0,75 MM2 LIGHT/GREY | 1-211 |
| U70W4240 | 351150-0403 | CABLE OLFLEX 3X0,75 MM2 LIGHT/GREY | 1-211 |
| U70W4290 | 90220-0165 | SCR. CABLE 5X0,34MM2 | 1-211 |
| U70W4330 | 90220-0165 | SCR. CABLE 5X0,34MM2 | 1-211 |
| U70W4350 | 90220-0034 | THERMOCABLE TEX/SITW-20F-KX 2X0,5MM2 | 1-211 |
| U70W4360 | 90220-0034 | THERMOCABLE TEX/SITW-20F-KX 2X0,5MM2 | 1-211 |
| U70W4370 | 90220-0034 | THERMOCABLE TEX/SITW-20F-KX 2X0,5MM2 | 1-233 |
| U70W4372 | 315400-0001 | TUBE PUN-H-6X1-BL | 1-311 |
| U70W4374 | 315400-0001 | TUBE PUN-H-6X1-BL | 1-311 |
| U70W4412 | 315400-0001 | TUBE PUN-H-6X1-BL | 1-311 |
| U70W4414 | 315400-0001 | TUBE PUN-H-6X1-BL | 1-311 |
| U70W4424 | 315400-0001 | TUBE PUN-H-6X1-BL | 1-311 |
| U70W4428 | 315400-0001 | TUBE PUN-H-6X1-BL | 1-311 |
| U70W4432 | 315400-0001 | TUBE PUN-H-6X1-BL | 1-311 |
| U70W4434 | 315400-0001 | TUBE PUN-H-6X1-BL | 1-311 |
| U70W6005 | 315400-0007 | TUBE PUN-H-10X1,5-BL | 1-311 |
| U70W6006 | 315400-0001 | TUBE PUN-H-6X1-BL | 1-311 |
| U70W6007 | 315400-0007 | TUBE PUN-H-10X1,5-BL | 1-311 |
| U70W6008 | 315400-0007 | TUBE PUN-H-10X1,5-BL | 1-311 |
| U70W6103 | 315400-0007 | TUBE PUN-H-10X1,5-BL | 1-313, 1-315 |
| U70W6104 | 315400-0007 | TUBE PUN-H-10X1,5-BL | 1-313, 1-315 |
| U70W6105 | 315400-0007 | TUBE PUN-H-10X1,5-BL | 1-313, 1-315 |
| U70W6106 | 315400-0007 | TUBE PUN-H-10X1,5-BL | 1-313, 1-315 |
| U70W7002 | 90166-0118 | TUBE 8 MM PA BLACK | 1-81 |
| U70W7003 | 90166-0118 | TUBE 8 MM PA BLACK | 1-81 |
| U70W7004 | 90166-0118 | TUBE 8 MM PA BLACK | 1-81 |
| U70W7010 | 90166-0118 | TUBE 8 MM PA BLACK | 2-191, 2-193 |
| U70W7011 | 90166-0118 | TUBE 8 MM PA BLACK | 2-191, 2-193 |
| U70W7386 | 315400-0006 | TUBE PUN-H-8X1,25-SW | 6-13 |
| U70W7387 | 315400-0006 | TUBE PUN-H-8X1,25-SW | 6-13 |
| U70W7388 | 315400-0006 | TUBE PUN-H-8X1,25-SW | 6-13 |
| U70W7389 | 315400-0006 | TUBE PUN-H-8X1,25-SW | 6-13 |
| U70W9030 | 90459-2565 | MOTOR CABLE 16 AWG 2090-XXNPMP-16S09 | 1-235 |
| U70W9032 | 90459-2568 | MOTOR FEEDBACK CABLE 2090-XXNFMP-S09 | 1-235 |
| U70W9160 | 90458-2895 | COAXIAL CABLE RG 400/U BROWN | 1-81 |
| U70W9162 | 2957417-0000 | CABLE | 1-81 |
| U70W9521 | 90220-0091 | PAIR TWISTED CABLE 2X2X0,25MM2 | 1-229, 1-231 |
| W70W2132 | 90166-0121 | HOSE | 2-187 |
| **X** | | | |
| A01X1010 | 90459-6821 | MALE INSERT HAN 4A, 09 20 004 2611 | 2-105, 2-107 |
| A01X1020 | 90459-6821 | MALE INSERT HAN 4A, 09 20 004 2611 | 2-105, 2-107 |
| A01X1031 | 90459-6821 | MALE INSERT HAN 4A, 09 20 004 2611 | 2-105, 2-107 |
| A01X1040 | 90459-6821 | MALE INSERT HAN 4A, 09 20 004 2611 | 2-105, 2-107 |
| A01X1041 | 2849075-0100 | PLINTH | 8-53 |
| A01X5200 | 90459-0182 | INTERFACE CONNECTOR FOR TMCC2 | 8-55 |

| Pos | Part No | Description | Page No |
|---|---|---|---|
| **X** | | | |
| A01X5210 | 90459-0182 | INTERFACE CONNECTOR FOR TMCC2 | 8-55 |
| A01X5600 | 90459-3845 | POWER SOCKET, Z-SD230 | 8-23 |
| A01X5760 | 90326-0020 | PLUG, FEMALE YELLOW CR-AL | 8-5, 8-7 |
| A01X8000 | 90459-2519 | OPEN STYLE TAP | 8-21 |
| A01X8010 | 90459-2519 | OPEN STYLE TAP | 8-21 |
| A01X8020 | 90459-2519 | OPEN STYLE TAP | 8-21 |
| A01X8030 | 90459-2519 | OPEN STYLE TAP | 8-21 |
| A01X8040 | 90459-2519 | OPEN STYLE TAP | 8-21 |
| A01X8300 | 90459-2519 | OPEN STYLE TAP | 2-59 |
| A01X8700 | 2866426-0100 | CONNECTION BOX | 1-327 |
| A01X9200 | 90459-0839 | DISTRIBUTION FRAME, ASBV 8 5-135/10M | 8-61, 8-63 |
| A30X6002 | 90458-1212 | LEFT ENDPLATE INCL. 10M CABLE | 2-51 |
| A80X9500 | 353024-0209 | EARTH TERMINAL, 1010.5 | 6-19 |
| F01X5600 | 90110-0057 | FEMALE INSERT HAN 24 E 09 33 002 4201 | 8-19 |
| K80X0110 | 90459-6820 | FEMALE INSERT HAN 4 A, 09 20 004 2711 | 8-61, 8-63 |
| K80X0111 | 90110-0052 | MALE INSERT HAN 6E 09 33 006 2601 | 6-37 |
| K80X0111 | 90110-0053 | FEMALE INSERT HAN 6 E 09 33 006 2701 | 2-93 |
| K80X0120 | 90459-6820 | FEMALE INSERT HAN 4 A, 09 20 004 2711 | 8-61, 8-63 |
| K80X0121 | 90110-0052 | MALE INSERT HAN 6E 09 33 006 2601 | 6-25, 6-27 |
| K80X0121 | 90110-0053 | FEMALE INSERT HAN 6 E 09 33 006 2701 | 2-93 |
| K80X0400 | 90110-0052 | MALE INSERT HAN 6E 09 33 006 2601 | 2-105, 2-107 |
| K80X0401 | 90110-0053 | FEMALE INSERT HAN 6 E 09 33 006 2701 | 2-93 |
| K80X0410 | 90110-0052 | MALE INSERT HAN 6E 09 33 006 2601 | 2-135 |
| K80X0410 | 90459-6624 | FEMALE INSERT HAN E AV, 09 33 006 4735 | 8-61, 8-63 |
| K80X0411 | 2803661-0000 | CABLE | 6-17 |
| K80X0412 | 90459-6820 | FEMALE INSERT HAN 4 A, 09 20 004 2711 | 6-15 |
| K80X0412 | 90459-6821 | MALE INSERT HAN 4A, 09 20 004 2611 | 6-17 |
| K80X0413 | 90110-0052 | MALE INSERT HAN 6E 09 33 006 2601 | 6-17 |
| K80X0413 | 90110-0053 | FEMALE INSERT HAN 6 E 09 33 006 2701 | 2-93 |
| K80X0470 | 90110-0055 | FEMALE INSERT HAN 6 HSB 09 31 006 2701 | 8-61, 8-63 |
| K80X0471 | 90110-0054 | MALE INSERT HAN 6 HSB 09 31 006 2601 | 6-49 |
| K80X0471 | 90110-0055 | FEMALE INSERT HAN 6 HSB 09 31 006 2701 | 2-93 |
| K80X0620 | 90459-6627 | FEMALE INSERT HAN E AV, 09 33 024 4735 | 8-61, 8-63 |
| K80X0621 | 90110-0056 | MALE INSERT HAN 24 E 09 33 024 2601 | 6-81, 6-83 |
| K80X0621 | 90110-0057 | FEMALE INSERT HAN 24 E 09 33 002 4201 | 2-93 |
| K80X1010 | 90110-0095 | CONNECTOR 3 POLE + EARTH | 6-87, 6-89 |
| K80X1200 | 90110-0095 | CONNECTOR 3 POLE + EARTH | 6-33 |
| K80X1410 | 90326-0022 | PLUG, MALE YELLOW CR-AL | 6-33 |
| K80X6002 | 90458-1212 | LEFT ENDPLATE INCL. 10M CABLE | 6-95 |
| K80X6020 | 90110-0056 | MALE INSERT HAN 24 E 09 33 024 2601 | 2-105, 2-107 |
| K80X9610 | 90459-6820 | FEMALE INSERT HAN 4 A, 09 20 004 2711 | 6-67 |
| K80X9610 | 90459-6821 | MALE INSERT HAN 4A, 09 20 004 2611 | 6-65 |
| T10X0010 | 90459-6820 | FEMALE INSERT HAN 4 A, 09 20 004 2711 | 8-61, 8-63 |
| T10X0010 | 90459-6821 | MALE INSERT HAN 4A, 09 20 004 2611 | 7-53 |
| T10X0020 | 90459-6820 | FEMALE INSERT HAN 4 A, 09 20 004 2711 | 8-61, 8-63 |
| T10X0020 | 90459-6821 | MALE INSERT HAN 4A, 09 20 004 2611 | 7-53 |
| T10X0160 | 90110-0159 | MALE INSERT 70.310.0640.0 | 7-121 |
| T10X0160 | 90459-6624 | FEMALE INSERT HAN E AV, 09 33 006 4735 | 8-61, 8-63 |
| T10X0170 | 90110-0159 | MALE INSERT 70.310.0640.0 | 7-19 |
| T10X0170 | 90459-6624 | FEMALE INSERT HAN E AV, 09 33 006 4735 | 8-61, 8-63 |
| T10X0180 | 90110-0052 | MALE INSERT HAN 6E 09 33 006 2601 | 7-53 |
| T10X0180 | 90459-6624 | FEMALE INSERT HAN E AV, 09 33 006 4735 | 8-61, 8-63 |
| T10X0190 | 90110-0052 | MALE INSERT HAN 6E 09 33 006 2601 | 7-53 |
| T10X0190 | 90459-6624 | FEMALE INSERT HAN E AV, 09 33 006 4735 | 8-61, 8-63 |
| T10X0192 | 90459-6820 | FEMALE INSERT HAN 4 A, 09 20 004 2711 | 7-107 |
| T10X0192 | 90459-6821 | MALE INSERT HAN 4A, 09 20 004 2611 | 7-107 |
| T10X0500 | 90110-0056 | MALE INSERT HAN 24 E 09 33 024 2601 | 7-53 |
| T10X0500 | 90459-6627 | FEMALE INSERT HAN E AV, 09 33 024 4735 | 8-61, 8-63 |
| T10X1000 | 2806682-0100 | CONNECTION BOX | 7-41, 7-43 |
| T10X1040 | 90459-7094 | TINA 3-A INTERFACE PLUG, 20-054-02 | 7-41, 7-43 |
| T10X1160 | 90459-7094 | TINA 3-A INTERFACE PLUG, 20-054-02 | 7-41, 7-43 |
| T10X1200 | 90459-7094 | TINA 3-A INTERFACE PLUG, 20-054-02 | 7-41, 7-43 |
| T10X1531 | 90326-0020 | PLUG, FEMALE YELLOW CR-AL | 7-113 |
| T10X6002 | 90458-1212 | LEFT ENDPLATE INCL. 10M CABLE | 7-143 |
| T10X6003 | 90458-1214 | RIGHT ENDPL EXT. PILOT AIR,CDVI5.0-EPR-S | 7-147 |
| T10X9025 | 90459-6679 | CONN 15 P FEM, AUX. FEEDB,2090-K6CK-D15F | 7-107 |
| T10X9026 | 90459-2550 | I/O CONNECTOR 26 PIN MALE, 2090-K6CK-D26 | 8-27 |
| T10X9230 | 90459-6387 | CONNECTOR 5-POL M12, RSCS 5/9 | 7-109 |
| T10X9240 | 90459-6387 | CONNECTOR 5-POL M12, RSCS 5/9 | 7-109 |
| T40X0040 | 90163-0076 | QUICK COUPLING, (F) LP-006-0-WR021 | 2-75, 2-77 |
| T40X0040 | 90459-6820 | FEMALE INSERT HAN 4 A, 09 20 004 2711 | 8-61, 8-63 |
| T40X0041 | 90163-0064 | QUICK COUPLING, (M) LP-006-2-WR517 | 2-75, 2-77 |
| T40X0042 | 90600-1289 | HYDRAULIC VALVE, HMBF-PK-30-M1-K342-02 | 2-75, 2-77 |
| T40X0050 | 90459-6820 | FEMALE INSERT HAN 4 A, 09 20 004 2711 | 8-61, 8-63 |
| T40X0050 | 90459-6821 | MALE INSERT HAN 4A, 09 20 004 2611 | 2-135 |
| T40X0060 | 90459-6820 | FEMALE INSERT HAN 4 A, 09 20 004 2711 | 8-61, 8-63 |
| T40X0060 | 90459-6821 | MALE INSERT HAN 4A, 09 20 004 2611 | 2-105, 2-107 |
| T40X0070 | 90459-6820 | FEMALE INSERT HAN 4 A, 09 20 004 2711 | 8-61, 8-63 |
| T40X0070 | 90459-6821 | MALE INSERT HAN 4A, 09 20 004 2611 | 2-105, 2-107 |
| T40X0200 | 90459-6820 | FEMALE INSERT HAN 4 A, 09 20 004 2711 | 8-61, 8-63 |
| T40X0550 | 90110-0056 | MALE INSERT HAN 24 E 09 33 024 2601 | 2-105, 2-107 |
| T40X0550 | 90459-6627 | FEMALE INSERT HAN E AV, 09 33 024 4735 | 8-61, 8-63 |

| Pos | Part No | Description | Page No |
|---|---|---|---|
| **X** | | | |
| T40X9056 | 90459-2550 | I/O CONNECTOR 26 PIN MALE, 2090-K6CK-D26 | 8-27 |
| T40X9210 | 90459-6387 | CONNECTOR 5-POL M12, RSCS 5/9 | 4-9 |
| T40X9220 | 90459-6387 | CONNECTOR 5-POL M12, RSCS 5/9 | 4-9 |
| T40X9550 | 90600-1296 | CONNECTOR 2 POLE + PE, Z4-A GRIG | 2-75, 2-77 |
| T40X9560 | 90600-1297 | CONNECTOR | 2-75, 2-77 |
| T40X9570 | 90600-1296 | CONNECTOR 2 POLE + PE, Z4-A GRIG | 2-75, 2-77 |
| T40X9580 | 90600-1296 | CONNECTOR 2 POLE + PE, Z4-A GRIG | 2-75, 2-77 |
| T40X9590 | 90600-1297 | CONNECTOR | 2-75, 2-77 |
| T40X9600 | 90600-1297 | CONNECTOR | 2-75, 2-77 |
| T50X0080 | 90459-6820 | FEMALE INSERT HAN 4 A, 09 20 004 2711 | 8-61, 8-63 |
| T50X0080 | 90459-6821 | MALE INSERT HAN 4A, 09 20 004 2611 | 2-135 |
| T50X0090 | 90459-6821 | MALE INSERT HAN 4A, 09 20 004 2611 | 2-135 |
| T50X0240 | 90110-0052 | MALE INSERT HAN 6E 09 33 006 2601 | 2-135 |
| T50X0240 | 90459-6624 | FEMALE INSERT HAN E AV, 09 33 006 4735 | 8-61, 8-63 |
| T50X0241 | 90195-0020 | TERMINAL BLOCK, BK 2CRN; 0624720000 | 5-131, 5-133 |
| T50X0242 | 90195-0020 | TERMINAL BLOCK, BK 2CRN; 0624720000 | 5-131, 5-133 |
| T50X0243 | 90110-0056 | MALE INSERT HAN 24 E 09 33 024 2601 | 5-131, 5-133 |
| T50X0243 | 90110-0057 | FEMALE INSERT HAN 24 E 09 33 002 4201 | 2-93 |
| T50X0250 | 90110-0052 | MALE INSERT HAN 6E 09 33 006 2601 | 2-135 |
| T50X0250 | 90459-6624 | FEMALE INSERT HAN E AV, 09 33 006 4735 | 8-61, 8-63 |
| T50X0251 | 90195-0020 | TERMINAL BLOCK, BK 2CRN; 0624720000 | 5-131, 5-133 |
| T50X0252 | 90195-0020 | TERMINAL BLOCK, BK 2CRN; 0624720000 | 5-131, 5-133 |
| T50X0260 | 90110-0052 | MALE INSERT HAN 6E 09 33 006 2601 | 2-135 |
| T50X0260 | 90459-6624 | FEMALE INSERT HAN E AV, 09 33 006 4735 | 8-61, 8-63 |
| T50X0560 | 90110-0056 | MALE INSERT HAN 24 E 09 33 024 2601 | 2-135 |
| T50X0560 | 90459-6627 | FEMALE INSERT HAN E AV, 09 33 024 4735 | 8-61, 8-63 |
| T50X1030 | 2872919-0100 | CONNECTION BOX | 5-187 |
| T50X1410 | 90458-0135 | MALE PLUG, COD.220-0397 | 5-131, 5-133 |
| T50X1410 | 90458-0136 | FEMALE PLUG, COD 220-0381 | 5-131, 5-133 |
| T50X1411 | 90326-0020 | PLUG, FEMALE YELLOW CR-AL | 5-131, 5-133 |
| T50X1411 | 90326-0022 | PLUG, MALE YELLOW CR-AL | 5-131, 5-133 |
| T50X1420 | 90458-0135 | MALE PLUG, COD.220-0397 | 5-131, 5-133 |
| T50X1420 | 90458-0136 | FEMALE PLUG, COD 220-0381 | 5-131, 5-133 |
| T50X1421 | 90326-0020 | PLUG, FEMALE YELLOW CR-AL | 5-131, 5-133 |
| T50X1421 | 90326-0022 | PLUG, MALE YELLOW CR-AL | 5-131, 5-133 |
| T50X1430 | 90458-0135 | MALE PLUG, COD.220-0397 | 5-131, 5-133 |
| T50X1430 | 90458-0136 | FEMALE PLUG, COD 220-0381 | 5-131, 5-133 |
| T50X1431 | 90326-0020 | PLUG, FEMALE YELLOW CR-AL | 5-131, 5-133 |
| T50X1431 | 90326-0022 | PLUG, MALE YELLOW CR-AL | 5-131, 5-133 |
| T50X1440 | 90458-0135 | MALE PLUG, COD.220-0397 | 5-131, 5-133 |
| T50X1440 | 90458-0136 | FEMALE PLUG, COD 220-0381 | 5-131, 5-133 |
| T50X1441 | 90326-0020 | PLUG, FEMALE YELLOW CR-AL | 5-131, 5-133 |
| T50X1441 | 90326-0022 | PLUG, MALE YELLOW CR-AL | 5-131, 5-133 |
| T50X2121 | 2872919-0100 | CONNECTION BOX | 5-187 |
| T50X9004 | 90459-2551 | CONNECTOR, MOTOR FEEDBACK 15 PIN MALE | 5-41 |
| T50X9014 | 90459-2551 | CONNECTOR, MOTOR FEEDBACK 15 PIN MALE | 5-177 |
| T50X9620 | 90110-0095 | CONNECTOR 3 POLE + EARTH | 6-87, 6-89 |
| U30X0220 | 90110-0052 | MALE INSERT HAN 6E 09 33 006 2601 | 2-61 |
| U30X0220 | 90459-6624 | FEMALE INSERT HAN E AV, 09 33 006 4735 | 8-61, 8-63 |
| U30X0540 | 90110-0056 | MALE INSERT HAN 24 E 09 33 024 2601 | 2-61 |
| U30X0540 | 90459-6627 | FEMALE INSERT HAN E AV, 09 33 024 4735 | 8-61, 8-63 |
| U30X1460 | 90110-0095 | CONNECTOR 3 POLE + EARTH | 2-25 |
| U30X1670 | 90458-1595 | CONNECTION, BKS-S 33M-00 | 2-17, 2-19 |
| U30X1710 | 90326-0020 | PLUG, FEMALE YELLOW CR-AL | 2-17, 2-19 |
| U70X0100 | 90459-6820 | FEMALE INSERT HAN 4 A, 09 20 004 2711 | 8-61, 8-63 |
| U70X0300 | 90459-6624 | FEMALE INSERT HAN E AV, 09 33 006 4735 | 8-61, 8-63 |
| U70X0310 | 90110-0052 | MALE INSERT HAN 6E 09 33 006 2601 | 1-37 |
| U70X0310 | 90459-6824 | CURRENT LIMITER, CL-PKZ0 | 8-61, 8-63 |
| U70X0320 | 90459-6824 | CURRENT LIMITER, CL-PKZ0 | 8-61, 8-63 |
| U70X0330 | 90459-6624 | FEMALE INSERT HAN E AV, 09 33 006 4735 | 8-61, 8-63 |
| U70X0340 | 90459-6624 | FEMALE INSERT HAN E AV, 09 33 006 4735 | 8-61, 8-63 |
| U70X0350 | 90459-6824 | CURRENT LIMITER, CL-PKZ0 | 8-61, 8-63 |
| U70X0360 | 90110-0052 | MALE INSERT HAN 6E 09 33 006 2601 | 1-179 |
| U70X0360 | 90459-6624 | FEMALE INSERT HAN E AV, 09 33 006 4735 | 8-61, 8-63 |
| U70X0370 | 90110-0052 | MALE INSERT HAN 6E 09 33 006 2601 | 1-211 |
| U70X0370 | 90459-6624 | FEMALE INSERT HAN E AV, 09 33 006 4735 | 8-61, 8-63 |
| U70X0450 | 90110-0055 | FEMALE INSERT HAN 6 HSB 09 31 006 2701 | 8-61, 8-63 |
| U70X0460 | 90110-0054 | MALE INSERT HAN 6 HSB 09 31 006 2601 | 1-279, 1-281 |
| U70X0460 | 90110-0055 | FEMALE INSERT HAN 6 HSB 09 31 006 2701 | 8-61, 8-63 |
| U70X0580 | 90110-0056 | MALE INSERT HAN 24 E 09 33 024 2601 | 1-345 |
| U70X0580 | 90459-6627 | FEMALE INSERT HAN E AV, 09 33 024 4735 | 8-61, 8-63 |
| U70X0590 | 90110-0056 | MALE INSERT HAN 24 E 09 33 024 2601 | 1-279, 1-281 |
| U70X0590 | 90459-6627 | FEMALE INSERT HAN E AV, 09 33 024 4735 | 8-61, 8-63 |
| U70X0600 | 90110-0056 | MALE INSERT HAN 24 E 09 33 024 2601 | 1-349, 1-351 |
| U70X0600 | 90459-6627 | FEMALE INSERT HAN E AV, 09 33 024 4735 | 8-61, 8-63 |
| U70X0900 | 90459-4928 | PANEL CONNECTOR FEMALE, TYPE K | 8-61, 8-63 |
| U70X0910 | 90459-4928 | PANEL CONNECTOR FEMALE, TYPE K | 8-61, 8-63 |
| U70X0920 | 90459-4928 | PANEL CONNECTOR FEMALE, TYPE K | 8-61, 8-63 |
| U70X0930 | 90326-0022 | PLUG, MALE YELLOW CR-AL | 1-211 |
| U70X0930 | 90459-4928 | PANEL CONNECTOR FEMALE, TYPE K | 8-61, 8-63 |
| U70X1000 | 2785238-0100 | CONNECTION BOX | 1-3 |
| U70X1710 | 90326-0020 | PLUG, FEMALE YELLOW CR-AL | 1-243 |

| Pos | Part No | Description | Page No |
|---|---|---|---|
| **X** | | | |
| U70X2000 | 2780203-0200 .. | CONNECTION BOX | 1-263 |
| U70X3000 | 2785246-0100 .. | CONNECTION BOX | 1-3 |
| U70X3480 | 90459-3709 | CONNECTOR 3-POLE AMP 282087-1 | 1-53 |
| U70X3540 | 90326-0020 | PLUG, FEMALE YELLOW CR-AL | 1-75, 1-77 |
| U70X4000 | 2847233-0100 .. | CONNECTION BOX | 1-203 |
| U70X4350 | 90326-0020 | PLUG, FEMALE YELLOW CR-AL | 1-205 |
| U70X4360 | 90326-0020 | PLUG, FEMALE YELLOW CR-AL | 1-205 |
| U70X6002 | 90458-1212 | LEFT ENDPLATE INCL. 10M CABLE | 1-319, 1-321 |
| U70X6003 | 90458-1212 | LEFT ENDPLATE INCL. 10M CABLE | 1-317 |
| U70X9034 | 90459-2551 | CONNECTOR, MOTOR FEEDBACK 15 PIN MALE | 1-235 |
| U70X9035 | 2870905-0000 .. | CONNECTOR | 8-27 |
| U70X9035 | 2870905-0001 .. | CONNECTOR | 8-27 |
| U70X9520 | 90459-2106 | CABLE CONNECTOR, C091 31D004 100 2 | 1-229, 1-231 |
| U70X9522 | 90110-0147 | PLUG D-SUB 9 FEMALE, DE09S064TLF | 1-229, 1-231 |
| X1512 | 90459-4077 | WIRE SEAL , AMP 281934 | 1-53 |
| X1513 | 90459-4079 | MINI MIC SRS, AMP 183035-1 | 1-53 |

| Pos | Part No | Description | Page No | Pos | Part No | Description | Page No |
|---|---|---|---|---|---|---|---|

Tetra Pak

*SPC binder labels. 40 mm Full width* *Note! This page is generated* **automatically.**
*using the* **variable definitions** *made in the* **front page** *file!!*

# Tetra Pak A3/Flex 1(2)
**648575-0200**
Issue: 2008-10 Doc No: SPC-2819201-0103


# Tetra Pak A3/Flex 1(2)
**648575-0200**
Issue: 2008-10 Doc No: SPC-2819201-0103


# Tetra Pak A3/Flex 2(2)
**648575-0200**
Issue: 2008-10 Doc No: SPC-2819201-0103


# Tetra Pak A3/Flex 2(2)
**648575-0200**
Issue: 2008-10 Doc No: SPC-2819201-0103



# Tetra Pak A3/Flex 1(2)
**648575-0200**
Issue: 2008-10 Doc No: SPC-2819201-0103

# Tetra Pak A3/Flex 1(2)
**648575-0200**
Issue: 2008-10 Doc No: SPC-2819201-0103

# Tetra Pak A3/Flex 2(2)
**648575-0200**
Issue: 2008-10 Doc No: SPC-2819201-0103

# Tetra Pak A3/Flex 2(2)
**648575-0200**
Issue: 2008-10 Doc No: SPC-2819201-0103

# Tetra Pak A3/Flex 1(2)
**648575-0200**
Issue: 2008-10 Doc No: SPC-2819201-0103

# Tetra Pak A3/Flex 1(2)
**648575-0200**
Issue: 2008-10 Doc No: SPC-2819201-0103

# Tetra Pak A3/Flex 2(2)
**648575-0200**
Issue: 2008-10 Doc No: SPC-2819201-0103

# Tetra Pak A3/Flex 2(2)
**648575-0200**
Issue: 2008-10 Doc No: SPC-2819201-0103