SPC

Spare Parts Catalogue

VCK A3/Flex 040V

648597-0400

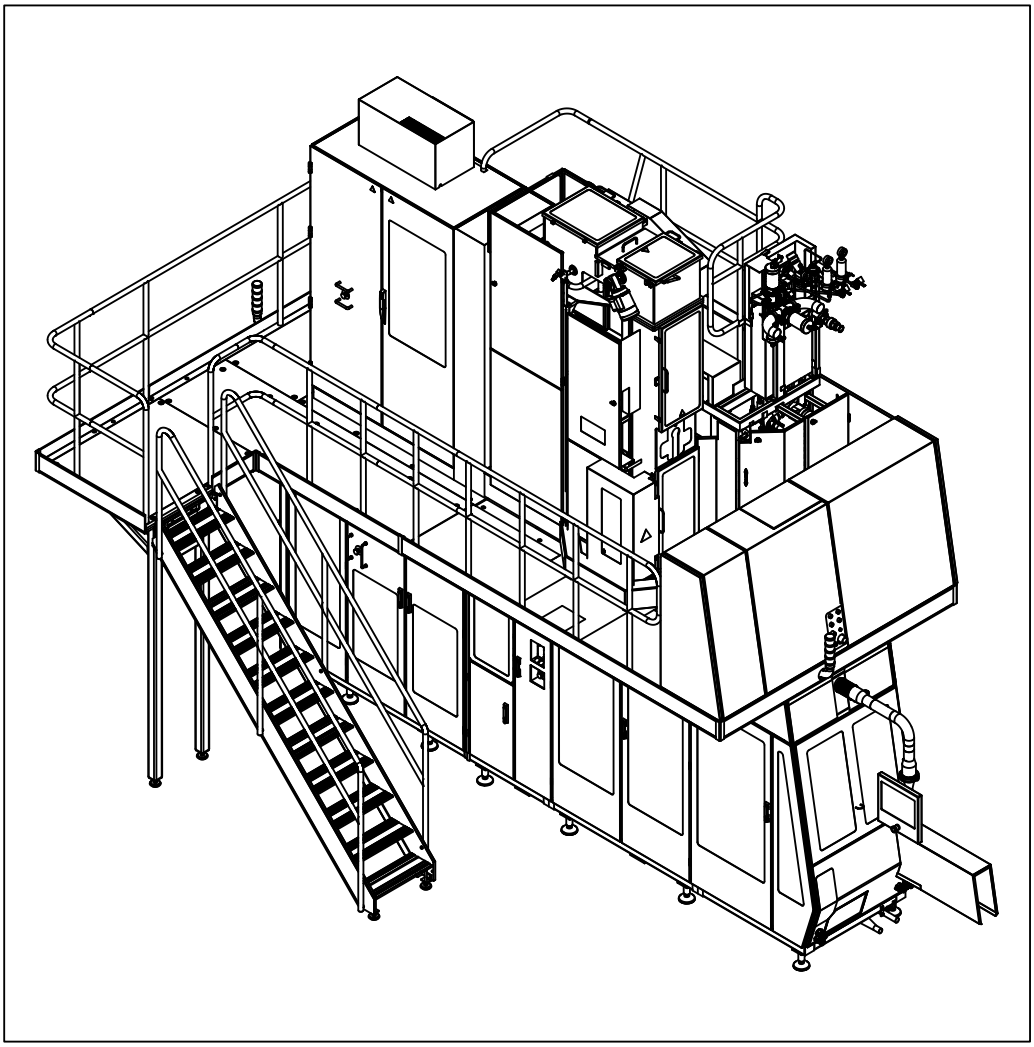

Tetra Pak

Doc. No: SPC-3212463-0102

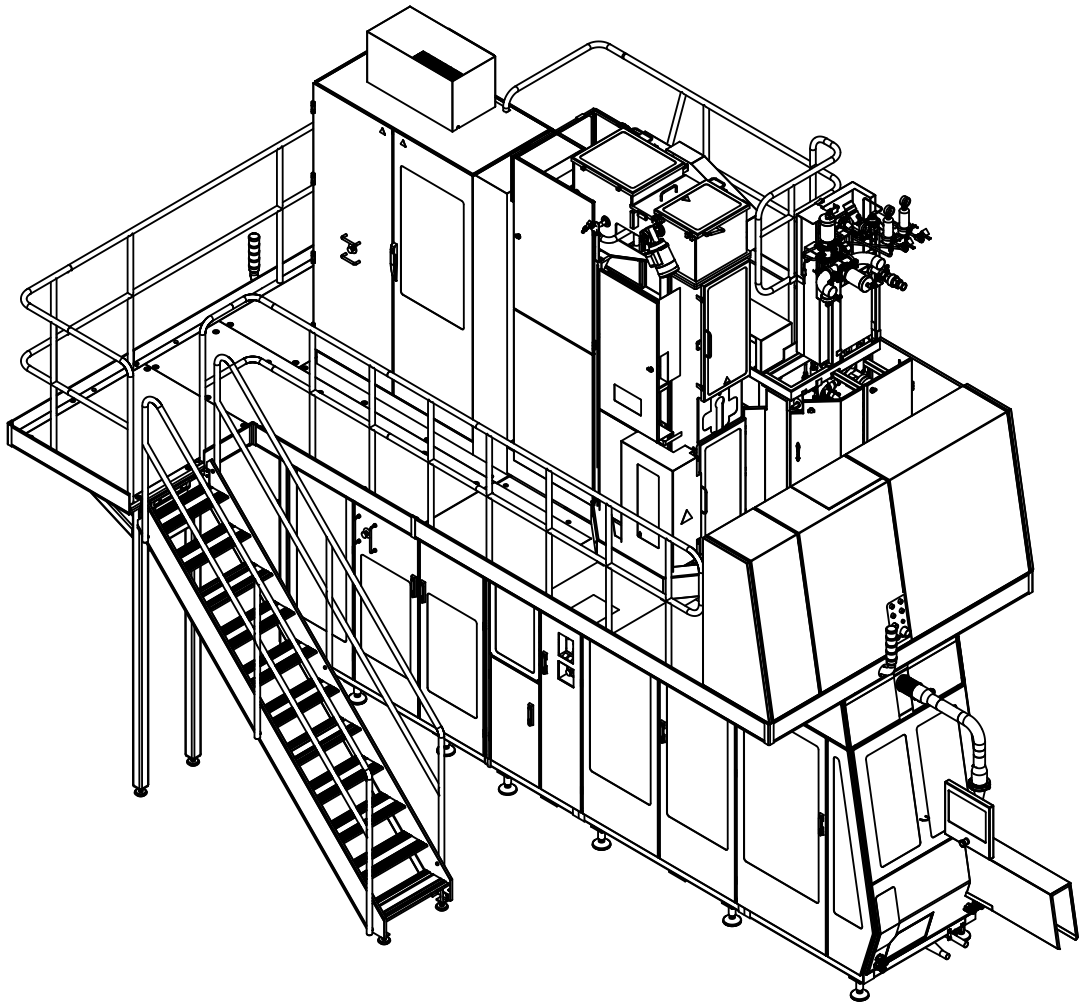

The position numbers in the illustration correspond with the chapter numbers listed on the next page.

Copyright © 2012 Tetra Pak Group

All rights reserved. No part of this document may be reproduced or copied in any form or by any means without written permission from Tetra Pak Packaging Solutions .

Tetra Pak and all Tetra Pak products are trademarks belonging to the Tetra Pak Group.

The content of this manual is in accordance with the design and construction of the machine or equipment at the time of publishing. Tetra Pak reserves the right to introduce design modifications without prior notice.

This document was produced by:

Tetra Pak Packaging Solutions
Via Delfini 1
41123 Modena
ITALY

Additional copies can be ordered from Tetra Pak. When ordering additional copies, always provide the document number.

Doc. No. SPC-3212463-0102

Issue 2012-06

This document is valid for:

Series No/Machine No Sign.

i Introduction
1 VCK A3/Flex
ii Part Number Index
iii Ref. Des. Parts Index

SPC

Spare Parts Catalogue

VCK A3/Flex 040V
648597-0400

Machine or equipment configurations that this catalogue is valid for are described on the next page.

Doc. No: SPC-3212463-0102

Issue 2012-06

Tetra Pak

Tetra Pak Packaging Solutions

Valid for:

Name	Drawing Specification and Development Step	Additional Information
Volume Conversion Kit A3/Flex 040V	6458597-0400	Valid from T-order: 22375/00004

Update Log for Doc. No. SPC-3212463-0102

This table shows all changes made to this catalogue, including installed rebuilding kits, added or removed pages.

Date	Installed Kit	Added Pages (Doc. No.)	Removed Pages	Signature

Date	Installed Kit	Added Pages (Doc. No.)	Removed Pages	Signature

i Introduction

en About the Introduction Chapter
This chapter contains basic information about this catalogue and related Tetra Pak equipment.

bg За уводната глава
Тази глава съдържа основна информация за този каталог и приложимото Tetra Pak оборудване.

cs O kapitole Úvod
Tato kapitola obsahuje základní informace o této příručce a souvisejícím zařízení Tetra Pak.

da Om indledningen
Kapitlet indeholder grundlæggende oplysninger om dette katalog og tilhørende Tetra Pak-udstyr.

de Über das Einleitungskapitel
Diese Kapitel enthält grundlegende Informationen über diesen Katalog und die zugehörige Tetra Pak-Ausrüstung.

el Σχετικά με το Κεφάλαιο 'Εισαγωγή'
Αυτό το κεφάλαιο περιέχει βασικές πληροφορίες για τον παρόντα κατάλογο και τον σχετικό εξοπλισμό της Tetra Pak.

es Acerca del capítulo Introducción
Este capítulo contiene información básica sobre este catálogo y el equipo Tetra Pak relacionado.

et Sissejuhatava peatüki kohta
See peatükk sisaldab teavet käesoleva kataloogi ja sellega seonduva Tetra Paki seadme kohta.

fi Tietoja Johdanto-luvusta
Tässä luvussa on perustietoja tästä luettelosta ja Tetra Pak -laitteesta.

fr À propos du chapitre Introduction
Ce chapitre contient les informations de base à propos de ce catalogue et de l'équipement Tetra Pak concerné.

hu A Bevezetés fejezetről
Ez a fejezet alapvető információkat tartalmaz a katalógusról és a hozzá tartozó Tetra Pak berendezésről.

is Um inngangskaflann
Þessi kafli inniheldur grundvallarupplýsingar um þennan vörulista og tengdan Tetra Pak búnað.

it Informazioni sul capitolo Introduzione
Questo capitolo contiene informazioni generali sul presente catalogo e sulla relativa macchina Tetra Pak.

lt Apie įvadinį skyrių
Šiame skyriuje pateikta pagrindinė informacija apie šį katalogą ir su juo susijusią "Tetra Pak" įrangą.

lv Par Ievada nodaļu
Šī nodaļa ietver galveno informāciju par šo katalogu un saistītajām Tetra Pak iekārtām.

nl Over de inleiding
Dit hoofdstuk bevat basisinformatie omtrent deze catalogus en aanverwante Tetra Pak-installatie.

no Om kapitlet Introduksjon
Dette kapitlet inneholder grunnleggende informasjon om denne katalogen og relatert Tetra Pak-ustyr.

pl Informacje na temat rozdziału wprowadzającego
Rozdział wprowadzający zawiera podstawowe informacje dotyczące niniejszego katalogu i związanej z nim maszyny Tetra Pak.

pt Acerca do Capítulo de Introdução
Este capítulo contém informações básicas sobre este catálogo e os equipamentos relacionados da Tetra Pak.

ro Despre capitolul introductiv
Acest capitol conține informații de bază despre acest catalog şi despre echipamentul Tetra Pak corelat.

sk O kapitole Úvod
Táto kapitola obsahuje základné informácie o tomto návode a informácie súvisiace so zariadením Tetra Pak.

sl O uvodnem poglavju
To poglavje vsebuje osnovne informacije o tem katalogu in opremi Tetra Pak.

sv Om inledningskapitlet
Det här kapitlet innehåller grundläggande information om katalogen och Tetra Pak-utrustningen.

Manual Information

Illustrations . . . . . i - 7

English Text . . . . . i - 9

Информация за ръководството

Илюстрации . . . . . i - 7

Текст на български език . . . . . i - 15

Informace o příručce

Obrázky . . . . . i - 7

Český text . . . . . i - 21

Oplysninger om vejledninger

Illustrationer . . . . . i - 7

Dansk tekst . . . . . i - 27

Handbuch-Informationen

Abbildungen . . . . . i - 7

Deutscher Text . . . . . i - 33

Πληροφορίες εγχειριδίου

Εικόνες . . . . . i - 7

Ελληνικό Κείμενο . . . . . i - 39

Información del manual

Ilustraciones . . . . . i - 7

Texto en español . . . . . i - 45

Manuaali informatsioon

Joonised . . . . . i - 7

Eestikeelne tekst . . . . . i - 51

Tiedot käsikirjasta

Kuvat . . . . . i - 7

Suomenkielinen teksti . . . . . i - 57

Information sur le manuel

Illustrations . . . . . i - 7

Texte français . . . . . i - 63

Kézikönyv információ

Ábrák . . . . . i - 7

Magyar szöveg . . . . . i - 69

Handbókaupplýsingar

Skýringarmyndir . . . . . i - 7

Íslenskur texti . . . . . i - 75

Informazioni sul manuale

Figure . . . . . i - 7

Testo in italiano . . . . . i - 81

Vadovo informacija

Paveikslėliai . . . . . i - 7

Lietuviškas tekstas . . . . . i - 87

Informācija par instrukciju

Ilustrācijas . . . . . i - 7

Teksts latviešu valodā . . . . . i - 93

Handboekinformatie

Afbeeldingen . . . . . i - 7

Nederlands tekst . . . . . i - 99

Informasjon om manualen

Illustrasjoner . . . . . i - 7

Norsk tekst . . . . . i - 105

Informacje na temat instrukcji

Rysunki . . . . . i - 7

Tekst polski . . . . . i - 111

Informação do Manual

Ilustrações . . . . . i - 7

Texto em português . . . . . i - 117

Informațiile de manual

Ilustrații . . . . . i - 7

Text în limba română . . . . . i - 123

Informácie o príručke

Ilustrácie . . . . . i - 7

Slovenský text . . . . . i - 129

Informacije o navodilu

Slike . . . . . i - 7

Slovensko besedilo . . . . . i - 135

Information om handboken

Bilder . . . . . i - 7

Svensk text . . . . . i - 141

This page intentionally left blank

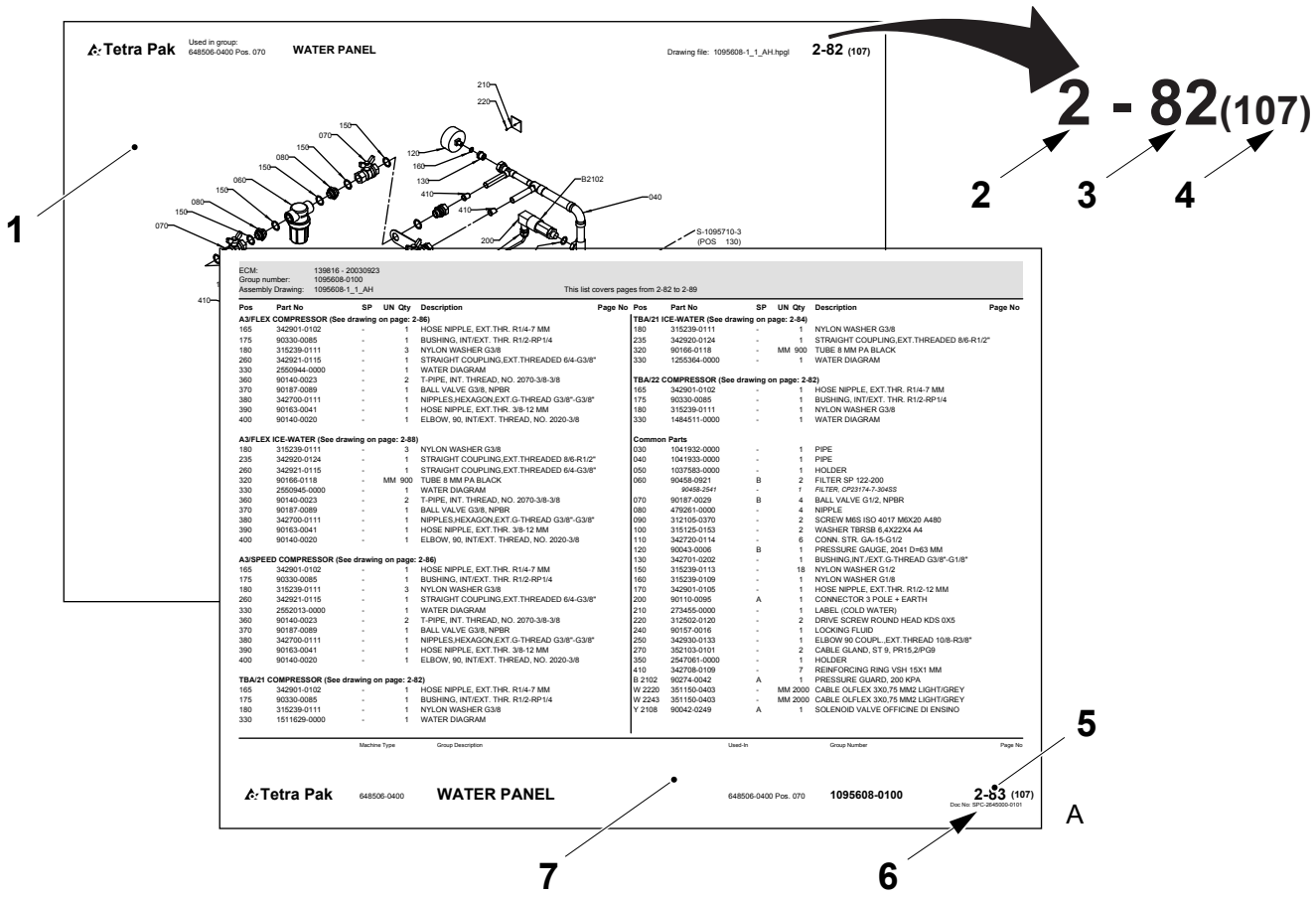
Tetra Pak
Used in group:
648506-0400 Pos. 070
WATER PANEL
Drawing file: 1095608-1_1_AH.hpgl
2-82 (107)
2 - 82(107)
1
2
3
4
5
6
7
A
ECM: 139816 - 20030923
Group number: 1095608-0100
Assembly Drawing: 1095608-1_1_AH
This list covers pages from 2-82 to 2-89
Tetra Pak 648506-0400 WATER PANEL 648506-0400 Pos. 070 1095608-0100 2-83 (107)

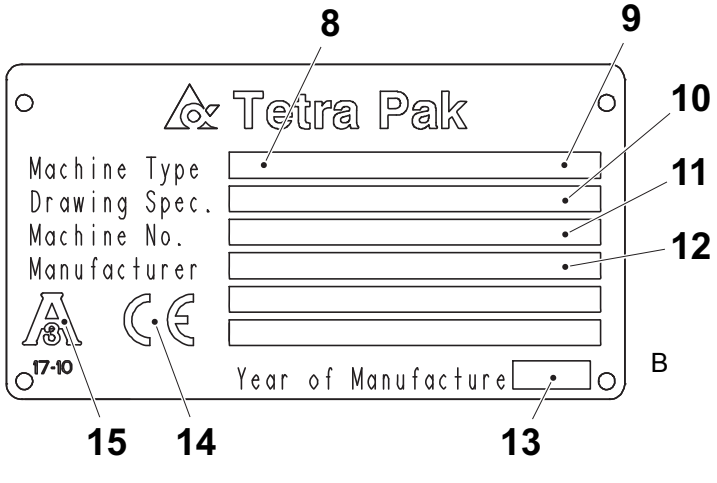
Tetra Pak
Machine Type
Drawing Spec.
Machine No.
Manufacturer
17-10
Year of Manufacture
8
9
10
11
12
13
14
15
B

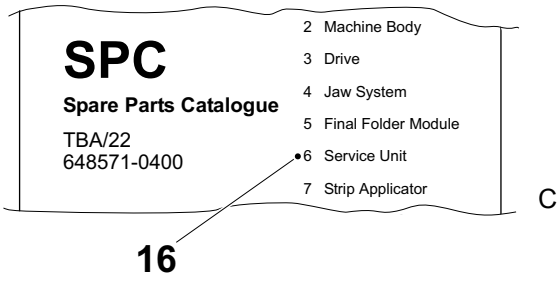
SPC
Spare Parts Catalogue
TBA/22
648571-0400
2 Machine Body
3 Drive
4 Jaw System
5 Final Folder Module
6 Service Unit
7 Strip Applicator
16
C

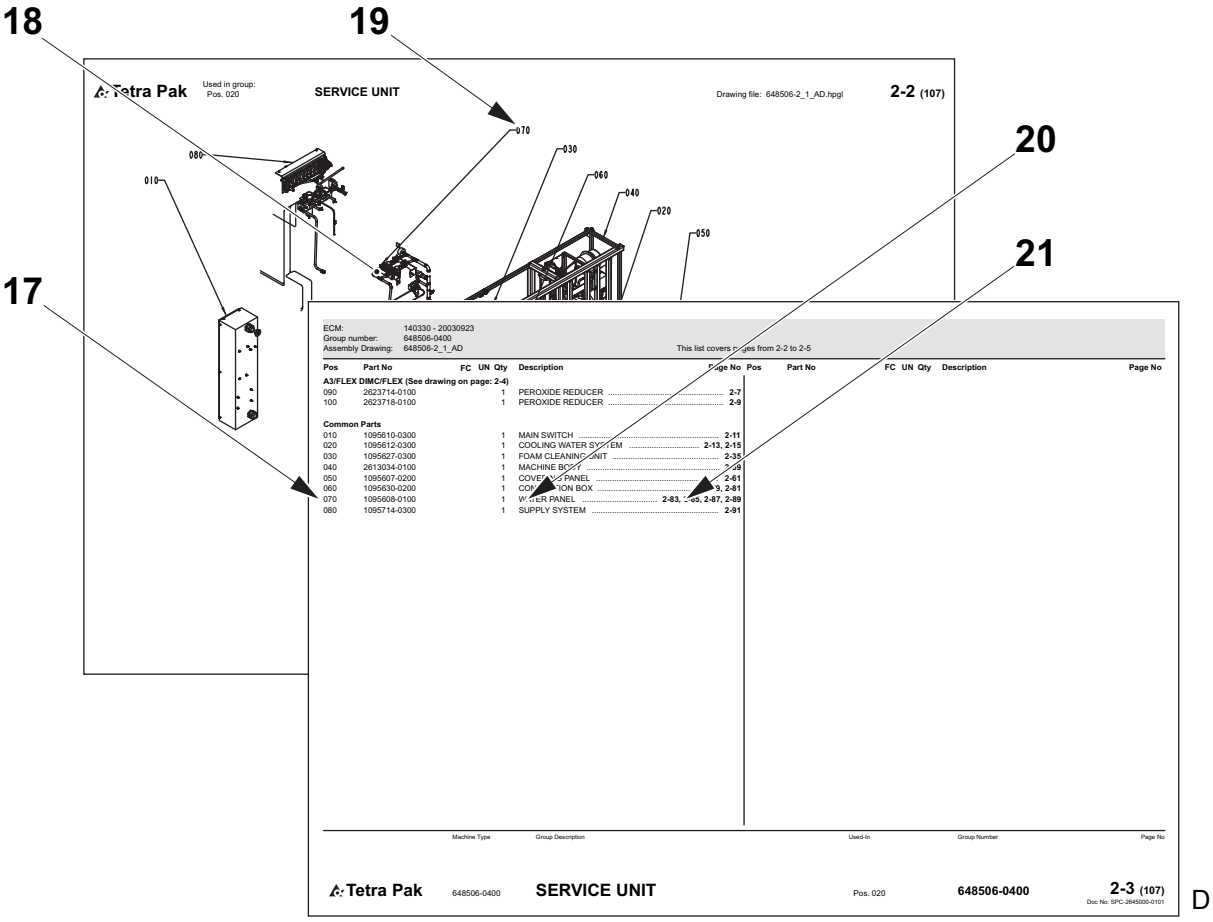
18
19
20
21
17
Tetra Pak
Used in group:
Pos. 020
SERVICE UNIT
Drawing file: 648506-2_1_AD.hpgl
2-2 (107)
070
030
060
040
020
050
080
010
ECM: 140330 - 20030923
Group number: 648506-0400
Assembly Drawing: 648506-2_1_AD
This list covers pages from 2-2 to 2-5
Pos Part No FC UN Qty Description Page No
A3/FLEX DIMC/FLEX (See drawing on page: 2-4)
090 2623714-0100 1 PEROXIDE REDUCER 2-7
100 2623718-0100 1 PEROXIDE REDUCER 2-9
Common Parts
010 1095610-0300 1 MAIN SWITCH 2-11
020 1095612-0300 1 COOLING WATER SYSTEM 2-13, 2-15
030 1095627-0300 1 FOAM CLEANING UNIT 2-35
040 2613034-0100 1 MACHINE BODY 2-39
050 1095607-0200 1 COVER SIDE PANEL 2-61
060 1095630-0200 1 CONNECTION BOX 2-81
070 1095608-0100 1 WATER PANEL 2-83, 2-85, 2-87, 2-89
080 1095714-0300 1 SUPPLY SYSTEM 2-91
Pos Part No FC UN Qty Description Page No
Machine Type
Group Description
Used-In
Group Number
Page No
Tetra Pak
648506-0400
SERVICE UNIT
Pos. 020
648506-0400
2-3 (107)
Doc No: SPC-2645000-0101
D

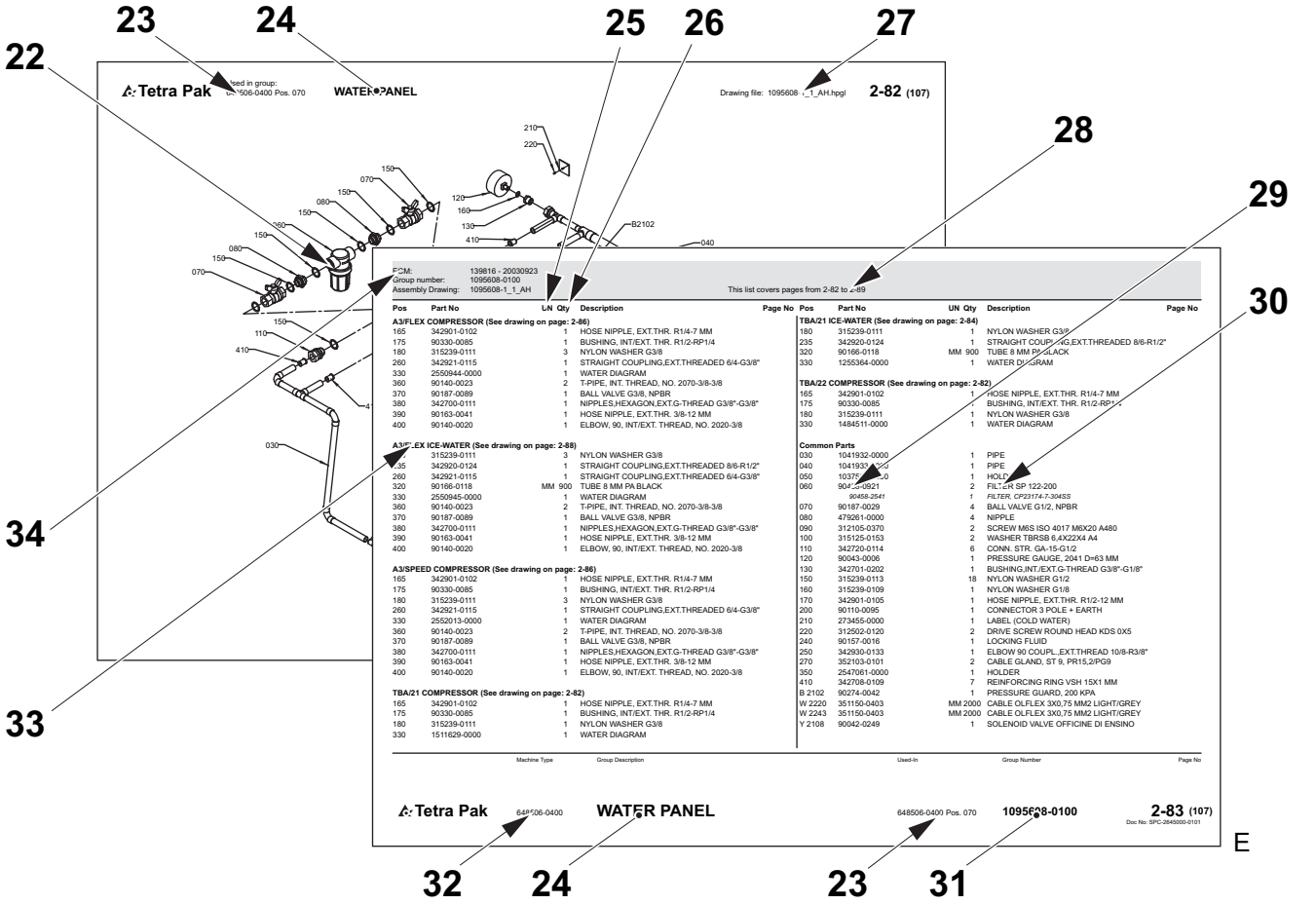
22
23
24
25
26
27
28
29
30
34
33
Tetra Pak
Used in group:
506-0400 Pos. 070
WATER PANEL
Drawing file: 1095608-_1_AH.hpgl
2-82 (107)
210
220
150
070
080
150
160
150
080
150
070
120
169
130
410
B2102
040
150
110
410
030
ECM: 139816 - 20030923
Group number: 1095608-0100
Assembly Drawing: 1095608-1_1_AH
This list covers pages from 2-82 to 2-89
Pos Part No UN Qty Description Page No
A3/FLEX COMPRESSOR (See drawing on page: 2-86)
165 342901-0102 1 HOSE NIPPLE, EXT.THR. R1/4-7 MM
175 90330-0085 1 BUSHING, INT/EXT. THR. R1/2-RP1/4
180 315239-0111 3 NYLON WASHER G3/8
260 342921-0115 1 STRAIGHT COUPLING,EXT.THREADED 6/4-G3/8"
330 2550944-0000 1 WATER DIAGRAM
360 90140-0023 2 T-PIPE, INT. THREAD, NO. 2070-3/8-3/8
370 90187-0089 1 BALL VALVE G3/8, NPBR
380 342700-0111 1 NIPPLES,HEXAGON,EXT.G-THREAD G3/8"-G3/8"
390 90163-0041 1 HOSE NIPPLE, EXT.THR. 3/8-12 MM
400 90140-0020 1 ELBOW, 90, INT/EXT. THREAD, NO. 2020-3/8
A3/FLEX ICE-WATER (See drawing on page: 2-88)
235 315239-0111 3 NYLON WASHER G3/8
240 342920-0124 1 STRAIGHT COUPLING,EXT.THREADED 8/6-R1/2"
260 342921-0115 1 STRAIGHT COUPLING,EXT.THREADED 6/4-G3/8"
320 90166-0118 MM 900 TUBE 8 MM PA BLACK
330 2550945-0000 1 WATER DIAGRAM
360 90140-0023 2 T-PIPE, INT. THREAD, NO. 2070-3/8-3/8
370 90187-0089 1 BALL VALVE G3/8, NPBR
380 342700-0111 1 NIPPLES,HEXAGON,EXT.G-THREAD G3/8"-G3/8"
390 90163-0041 1 HOSE NIPPLE, EXT.THR. 3/8-12 MM
400 90140-0020 1 ELBOW, 90, INT/EXT. THREAD, NO. 2020-3/8
A3/SPEED COMPRESSOR (See drawing on page: 2-86)
165 342901-0102 1 HOSE NIPPLE, EXT.THR. R1/4-7 MM
175 90330-0085 1 BUSHING, INT/EXT. THR. R1/2-RP1/4
180 315239-0111 3 NYLON WASHER G3/8
260 342921-0115 1 STRAIGHT COUPLING,EXT.THREADED 6/4-G3/8"
330 2552013-0000 1 WATER DIAGRAM
360 90140-0023 2 T-PIPE, INT. THREAD, NO. 2070-3/8-3/8
370 90187-0089 1 BALL VALVE G3/8, NPBR
380 342700-0111 1 NIPPLES,HEXAGON,EXT.G-THREAD G3/8"-G3/8"
390 90163-0041 1 HOSE NIPPLE, EXT.THR. 3/8-12 MM
400 90140-0020 1 ELBOW, 90, INT/EXT. THREAD, NO. 2020-3/8
TBA/21 COMPRESSOR (See drawing on page: 2-82)
165 342901-0102 1 HOSE NIPPLE, EXT.THR. R1/4-7 MM
175 90330-0085 1 BUSHING, INT/EXT. THR. R1/2-RP1/4
180 315239-0111 1 NYLON WASHER G3/8
330 1511629-0000 1 WATER DIAGRAM
TBA/21 ICE-WATER (See drawing on page: 2-84)
180 315239-0111 1 NYLON WASHER G3/8
235 342920-0124 1 STRAIGHT COUPLING,EXT.THREADED 8/6-R1/2"
320 90166-0118 MM 900 TUBE 8 MM PA BLACK
330 1255364-0000 1 WATER DIAGRAM
TBA/22 COMPRESSOR (See drawing on page: 2-82)
165 342901-0102 1 HOSE NIPPLE, EXT.THR. R1/4-7 MM
175 90330-0085 1 BUSHING, INT/EXT. THR. R1/2-RP1/4
180 315239-0111 1 NYLON WASHER G3/8
330 148451 1-0000 1 WATER DIAGRAM
Common Parts
030 1041932-0000 1 PIPE
040 1041933-0000 1 PIPE
050 1037[illegible]-0000 1 HOLDER
060 90458-0921 2 FILTER SP 122-200
90458-2541 1 FILTER, CP23174-7-30ASS
070 90187-0029 4 BALL VALVE G1/2, NPBR
080 479261-0000 4 NIPPLE
090 312105-0370 2 SCREW M6S ISO 4017 M6X20 A480
100 315125-0153 2 WASHER TBRSB 6.4X22X4 A4
110 342720-0114 6 CONN. STR. GA-15-G1/2
120 90043-0006 1 PRESSURE GAUGE, 2041 D=63 MM
130 342701-0202 1 BUSHING,INT./EXT.G-THREAD G3/8"-G1/8"
150 315239-0113 18 NYLON WASHER G1/2
160 315239-0109 1 NYLON WASHER G1/8
170 342901-0105 1 HOSE NIPPLE, EXT.THR. R1/2-12 MM
200 90110-0095 1 CONNECTOR 3 POLE + EARTH
210 273455-0000 1 LABEL (COLD WATER)
220 312502-0120 2 DRIVE SCREW ROUND HEAD KDS 0X5
240 90157-0016 1 LOCKING FLUID
250 342930-0133 1 ELBOW 90 COUPL.,EXT.THREAD 10/8-R3/8"
270 352103-0101 2 CABLE GLAND, ST 9, PR15,2/PG9
350 2547061-0000 1 HOLDER
410 342708-0109 7 REINFORCING RING VSH 15X1 MM
B 2102 90274-0042 1 PRESSURE GUARD, 200 KPA
W 2220 351150-0403 MM 2000 CABLE OLFLEX 3X0,75 MM2 LIGHT/GREY
W 2243 351150-0403 MM 2000 CABLE OLFLEX 3X0,75 MM2 LIGHT/GREY
Y 2108 90042-0249 1 SOLENOID VALVE OFFICINE DI ENSINO
Pos Part No UN Qty Description Page No
Machine Type
Group Description
Used-In
Group Number
Page No
Tetra Pak
648506-0400
WATER PANEL
648506-0400 Pos. 070
1095608-0100
2-83 (107)
Doc No: SPC-2645000-0101
E
32
24
23
31

Manual Information

Tetra Pak recommends reading all delivered manuals carefully. Make sure that the delivered manuals are available to personnel who operate or maintain the equipment.

It is important to keep this catalogue for the lifetime of the equipment and to pass the catalogue on to any subsequent holder or user.

Tetra Pak will not be held responsible for any damage to the equipment caused by not following the instructions given in the manuals that accompany this equipment.

Delivered Manuals

Manuals delivered with this equipment:

CM

The Conversion Manual provides technicians with information on converting the equipment between different production modes.

EM

The Electrical Manual provides technicians with information about the equipment’s electrical system.

IM

The Installation Manual provides technicians with information required to safely install the equipment.

MM

The Maintenance Manual provides technicians with information on maintaining the equipment.

OM

The Operation Manual provides the operator with information on handling and operating the equipment before, during, and after production.

RM

The Rebuilding Manual provides technicians with information required to safely install a kit to an installed machine or equipment.

(Cont'd)

(Cont'd)

SPC

The Spare Parts Catalogue provides the information necessary to order spare parts from Tetra Pak.

TeM

The Technical Manual provides technicians with information which can be:

- information required to safely install the equipment
- information required to maintaining the equipment
- information about the machine's/equipment's electrical system
- information necessary to order spare parts from Tetra Pak
- other technical information

UP

The Update Pages provides new pages to update existing machine manuals.

Page Layout

Refer to the illustration (A) on page i-7: The main pages in a Spare Parts Catalogue consist of an illustration page (1) and a corresponding list page (7). The page number (5) is shown in the header of an illustration page and in the footer of a list page. The document number (6) is shown in the footer of a list page.

Page Numbering

Refer to the illustration (A) on page i-7: A page number (5) has three parts:

- chapter number (2)
- consecutive page number within the chapter (3)
- total number of pages in the chapter (4)

Note! The letters UP may replace the chapter number (2) if the manual includes update pages. The consecutive page number (3) and the total number of pages (4) of update pages do not follow the existing sequential page numbering of the chapter.

Machine Introduction

Manufacturer

For the manufacturer’s name and address, see the second page of this catalogue.

Service

Tetra Pak does not accept responsibility for any damages or any injuries to equipment, staff or consumers that is caused by spare parts that are not genuine Tetra Pak spare parts.

To order genuine Tetra Pak spare parts for this machine contact the nearest Tetra Pak office.

Identification

CE Classification

This equipment complies with the basic health and safety regulations of the European Economic Area (EEA).

(Cont'd)

(Cont'd)

3-A Compliance

If the machine plate contains the 3-A mark (15) (see illustration (B) on page i-7) this equipment complies with the 3-A Sanitary Standards for Formers, Fillers, and Sealers of Containers for Fluid Milk and Fluid Milk Products, Number 17-10.

Machine Plate

The illustration (B) on page i-7 shows an example of a machine plate. An illustration of the valid machine plate and its location on the equipment is shown in the Introduction chapter of the manuals delivered with this equipment. The machine plate contains the data listed below, needed when contacting Tetra Pak concerning this specific equipment.

- Machine type (8)
- Volume (9)
- Drawing specifications (10)
- Machine serial number (11)
- Manufacturer (12)
- Year of manufacture (13)
- CE mark (14)
- 3-A mark (if applicable) (15)

Make sure that the equipment data in the front pages of this manual corresponds to the machine plate data and the machine specification.

How to Use This Spare Parts Catalogue

Locate a Spare Part Number

a) Refer to the illustration (C) on page i-7: Go to the chapter number (16) indicated beside the main group that contains the part you want to locate.

Items b) and c) refer to the illustration (D) on page i-8.

b) On the main group illustration, look for the machine subgroup (18) that contains the part or subgroup you are looking for. Note the position number (19) and go to the list page that follows the illustration.

c) Look for the position number/reference designation (17) or the subgroup name (20). Go to the corresponding page number (21) listed in the right-hand column. Tetra Pak has chosen to always use the function oriented structure for reference designation. The prefix indicating function oriented structure (=) is not shown in the reference designation

(Cont'd)

(Cont'd)

Items d) and e) refer to the illustration (E) on page i-8.

d) Locate the part (22) that you are looking for on the subgroup illustration and note the part's position number.

e) The part number (29) and part description (30) are listed beside the position number on the list page.

Information Listed in a Spare Parts Catalogue

The list below refers to the illustration (E) on page i-8. A Spare Parts Catalogue contains the following information about groups, subgroups, and spare parts for the equipment:

- Group structure reference (23). Indicates the next higher group in the equipment list structure.
- Group name (24)
- Unit of measure (25)
- Quantity (26)
- Assembly drawing number (27)
- List page range (28). Included if there are multiple pages in the group illustration or list.
- Part or subgroup number (29)
- Subgroup name or part description (30)
- Group number (31)
- Equipment number (32)
- Group information heading (33). Indicates if the section below the heading is for a specific machine variant or if it is a list of common parts. If a list has more than one variant and each variant has its own assembly drawing, a page reference to the variant's assembly drawing is shown.
- Internal information (34)

Support and Feedback

For assistance when operating this equipment, or other inquiries, comments, or suggestions, pose the questions or give feedback on the E-Liaison home page at http://e-liaison.tetrapak.com. If access to the Tetra Pak intranet is not available, contact the nearest Tetra Pak representative.

Информация за ръководството

Tetra Pak препоръчва внимателното прочитане на всички доставени ръководства. Уверете се, че всички доставени ръководства са достъпни за персонала, който работи с оборудването или го поддържа.

Важно е да съхранявате това ръководство през целия експлоатационен срок на оборудването и да го предадете на всеки следващ собственик или ползвател.

Tetra Pak няма да носи отговорност за никакви повреди на оборудването, предизвикани от неспазването на инструкциите, дадени в ръководството, което придружава това оборудване.

Доставени ръководства

Ръководства, доставени с това оборудване:

CM

Ръководството за преустройство предоставя на техниците информация за преустройство на оборудването за различните производствени режими.

EM

Електрическият наръчник осигурява на техниците информация за електрическата система на оборудването.

IM

Наръчникът за инсталацията осигурява на техниците информация за безопасно инсталиране на оборудването.

MM

Наръчникът за поддръжка осигурява на техниците информация за поддържане на оборудването.

OM

Ръководството за експлоатация предоставя на оператора информацията, която му е необходима за работата и експлоатацията на оборудването, преди, по време на и след производство.

PP

Ръководството за възстановяване предоставя на техниците информация, необходима за безопасно монтиране на .принадлежности на инсталирана машина или оборудване.

(Продължение)

(Продължение)

SPC

Каталогът за резервни части осигурява информация за поръчка на резервни части от Tetra pak.

TeM

Техническите ръководства, осигуряват на техниците информация, която може да бъде:

- информация, необходима за безопасното инсталиране на оборудването
- информация, необходима за поддръжката на оборудването
- информацията за електрическата система на оборудването/машината
- предоставя информацията необходима за поръчката на резервни части от Tetra Pak
- друга техническа информация.

НАГОРЕ

Страниците с актуализации предоставят нови страници за актуализиране на вече съществуващите ръководства за машината.

Разположение на страниците

Вижте илюстрация (A) на страница i-7: Основните страници на Каталога с резервни части съдържат страница с илюстрация (1) и страница със съответен списък (7). Номерът на страницата (5) е даден в горната част на илюстрованата страница и в долната част на страницата със списък.. Номерът на документа (6) е даден в долната част на списъчната страница.

Номериране на страниците

Вижте илюстрация (A) на страница i-7: Номерът на страница (5) има три части:

- номер на глава (2)
- пореден номер на страница (3) в рамките на главата
- общ брой страници (4) в главата.

Забележка! Буквите UP може да заместват номера на главата (2), ако ръководството включва страници с актуализации. Поредният номер на страница (3) и общият брой страници (4) на страниците с актуализации не следват съществуващата поредност в номерата на страниците на главата..

Въведение на машината

Производител

За името на производителя и адреса му, виж на втора страница от този каталог.

Обслужване

Tetra pak не носи отговорност за щети или наранявания на оборудване, персонал или клиенти, които са причинени от резервни части, които не са оригинални резервни части Tetra pak.

За да поръчате оригинални резервни части Tetra pak за тази машина, свържете се с най-близкия офис на Tetra pak.

Идентификация

CE Класификация

Това оборудване съответства на основните разпоредби за опазване на здравето и безопасност на Европейската Икономическа Зона (EEA).

(Продължение)

(Продължение)

3-A Съответствие

Ако табелката на машината съдържа означението 3-A (15) (виж илюстрация (B) на страница i-7), оборудването съответства на 3-A Санитарните стандарти за формоващи, пълнещи и запечатващи устройства за контейнери за течно мляко и течни млечни продукти, номер 17-10.

Табела с технически данни на машината

Илюстрация (B) на страница i-7 показва примерна табела с технически данни на машината.
Илюстрация на реална табела с технически данни на машината и нейното местоположение върху оборудването е дадена в глава Въведение на ръководството, придружаващо оборудването. Табелата с технически данни за машината съдържа данните, описани по-долу, необходими, когато се свързвате с Tetra pak относно това оборудване.

- Тип на машината (8)
- Обем (9)
- Спецификации (10)
- Сериен номер на машината (11)
- Производител (12)
- Година на производство (13)
- CE маркировка (14)
- 3-A маркировка (ако е приложимо) (15)

Уверете се, че данните за оборудването, дадени на първите страници на това ръководство съответстват на данните върху табелата с технически спецификации, и спецификацията на машината.

Как да ползвате Каталога за резервни части

Откриване номер на резервна част

a) Вижте илюстрация (C) на страница i-7: Преминете на глава номер (16), посочена .до основната група, която съдържа частта, която желаете да откриете.

Позиции b) и c) вижте на илюстрации (D) на страница i-8.

b) На главната илюстрация на група, потърсете машинната подгрупа (18), която съдържа частта или подгрупата, която търсите. Отбележете номера на позицията (19) и отидете на страницата със списъка, който следва илюстрацията.

c) Потърсете номера на позиция/вижте обозначението (17) или наименованието на подгрупата (20). Преминете на съответния номер на страница (21), вписан в дясната колона.
От Tetra Pak са избрали, винаги да се използва функционално ориентирана структура за обозначение препратка.
Представката посочва функционално ориентирана структура (=) не се показва в обозначението препратка.

(Продължение)

(Продължение)

Позиции d) и e) вижте на илюстрация (E) на страница i-8.

d) Открийте частта (22), която търсите на илюстрацията с подгрупи и отбележете номера на позицията на частта.

e) Номерът на частта (29) и описанието на частта (30) са вписани до номера на позицията на страницата със списъка.

Информация в Каталога за резервни части

Списъкът по-долу се отнася за илюстрация (E) на страница i-8.
Каталогът за резервни части съдържа следната информация за групи, подгрупи и резервни части за оборудването:

- Препратка към структура на групата (23). Посочва по-горната група в структурата на оборудването.
- Наименование на групата (24)
- Мерна единица (25)
- Количество (26)
- Номер от сборния чертеж (27)
- Серия страници със списък (28). Включен, ако има няколко страници в групова илюстрация или списък
- Част или номер на подгрупа (29)
- Наименование на подгрупа или описание на част (30)
- Номер на група (31)
- Номер на оборудването (32)
- Информационен надпис за група (33). Индицира, че раздела под заглавието е за определен модел машина или че е списък на унифицирани части. Ако списъкът има повече от един вариант и всеки вариант има своя монтажна схема, е показана препратка към страница със сборния чертеж.
- Международна информация (34)

Поддръжка и обратна връзка

За помощ при работа с това оборудване или за други запитвания, коментари или предложения, задайте въпросите си или изпратете информация за обратна връзка на страницата на E-Liaison http://e-liaison.tetrapak.com. Ако достъпът до вътрешната мрежа на Tetra pak не е възможен, свържете се с най-близкия представител на Tetra pak.

Informace o příručce

Společnost Tetra Pak doporučuje se důkladně seznámit se všemi dodanými příručkami. Dodané příručky musí být k dispozici pracovníkům, kteří provádějí obsluhu nebo údržbu zařízení.

Tento katalog je třeba uchovávat po celou dobu životnosti zařízení a předat jej každému dalšímu vlastníkovi nebo uživateli.

Společnost Tetra Pak nezodpovídá za škody na zařízení způsobené nedodržováním pokynů uvedených v příručkách, které doprovází toto zařízení.

Dodané příručky

Příručky dodávané s tímto zařízením:

CM

Příručka pro konverzi poskytuje technikům informace o konverzi zařízení mezi různými produkčními režimy.

EM

Příručka elektrického zařízení (EM) poskytuje technikům informace o elektrickém systému zařízení.

IM

Montážní příručka (IM) poskytuje technikům informace nutné pro bezpečné provedení montáže zařízení.

MM

Příručky údržby (MM) poskytuje technikům informace o údržbě zařízení.

OM

Návod k obsluze poskytuje technikům informace o manipulaci a provozu zařízení před, během a po ukončení výroby.

RM

Příručka pro rekonstrukci poskytuje technikům informace požadované pro bezpečnou instalaci soupravy na nainstalovaný stroj nebo zařízení.

(Pokračování)

(Pokračování)

SPC

Katalog náhradních dílů (SPC) obsahuje informace nezbytné pro objednávání náhradních dílů od společnosti Tetra Pak

TeM

Technická příručka poskytuje technikům informace, kterými mohou být:

- potřebné informace pro bezpečnou instalaci zařízení
- potřebné pro údržbu zařízení
- informace o elektrickém systému zařízení/stroje
- informace nezbytné pro objednávání náhradních dílů od společnosti Tetra Pak
- ostatní technické informace

UP

Aktualizované stránky poskytují nové stránky k existujícím příručkám k zařízení.

Vzhled stránky

Podívejte se na obrázek (A) na straně i-7: hlavní stránky v Katalogu náhradních dílů tvoří stránky s ilustracemi (1) a odpovídající stránka se seznamem (7). Číslo stránky (5) je uvedeno v záhlaví stránky s ilustrací a v zápatí stránky se seznamem. Číslo dokumentu (6) je uvedeno v zápatí stránky se seznamem.

Číslování stránek

Podívejte se na obrázek (A) na straně i-7: číslo stránky (5) má tři části:

- číslo kapitoly (2)
- číslo další stránky v rámci kapitoly (3),
- celkového počtu stránek v kapitole (4)

Poznámka! Písmena UP mohou nahradit číslo kapitoly (2) v případě, že manuál obsahuje aktualizované stránky. Následující číslo stránky (3) a celkový počet stran (4) aktualizovaných stránek se nedrží existujícího sekvenčního číslování stránek v této kapitole.

Seznámení se zařízením

Výrobce

Jméno a adresu výrobce najdete na druhé straně tohoto katalogu.

Servis

Tetra Pak nepřebírá odpovědnost za jakékoli škody na zařízení nebo za zranění zaměstnance nebo spotřebitele, které budou způsobeny tím, že se nepoužijí originální náhradní díly Tetra Pak.

Chcete-li pro tento stroj objednat originální náhradní díly Tetra Pak, kontaktujte nejbližší kancelář společnosti Tetra Pak.

Označení

Klasifikace CE

Toto zařízení vyhovuje základním zdravotním a bezpečnostním směrnicím EU.

(Pokračování)

(Pokračování)

3-A Soulad

Pokud štítek stroje obsahuje označení 3-A (15) (viz obrázek (B) na straně i-7), pak je toto zařízení v souladu s hygienickými normami 3-A pro formování, plnění a uzavírání obalů pro tekuté mléko a tekuté mléčné výrobky, číslo 17-10.

Typový štítek

Obrázek (B) na straně i-7 ukazuje příklad typového štítku.
Obrázek platného typového štítku a jeho umístění na zařízení je uvedeno v úvodní kapitole příruček dodaných s tímto zařízením.
Typový štítek obsahuje údaje uvedené níže, tyto údaje jsou zapotřebí, když kontaktujete společnost Tetra Pak ve věci týkající se tohoto specifického vybavení.

- Typ stroje (8)
- Objem (9)
- Specifikace výkresů (10)
- Sériové číslo stroje (11)
- Výrobce (12)
- Rok výroby (13)
- Symbol CE (14)
- Symbol 3-A (pokud se používá) (15)

Údaje o zařízení uvedené na předních stránkách této příručky musí souhlasit s údaji na typovém štítku a specifikacím zařízení.

Jak používat tento katalog náhradních dílů

Vyhledat číslo náhradního dílu

a) Viz obrázek (C) na straně i-7: Přejít na číslo kapitoly (16) uvedené vedle hlavní skupiny, která obsahuje díl, který chcete najít.

Položky b) a c) se vztahují k obrázku (D) na straně i-8.

b) Na obrázku hlavní skupiny se podívejte na podskupinu stroje (18), která obsahuje díly nebo podskupiny, které hledáte. Poznamenejte si číslo pozice (19) a přejděte na stránku seznamu, který následuje za obrázkem.

c) Podívejte se na číslo pozice/označení reference (17) nebo na název podskupiny (20). Přejděte na odpovídající číslo strany (21) uvedené v seznamu ve sloupci na pravé straně. Firma Tetra Pak si pro referenční označení zvolila vždy používat funkčně orientovanou strukturu. Předpona označující funkčně orientovanou strukturu (=) není uvedena v referenčním označení.

(Pokračování)

(Pokračování)

Položky d) a e) se vztahují k obrázku (E) na straně i-8.

d) Lokalizujte díl (22), který hledáte, na obrázku podskupiny a poznamenejte si číslo pozice dílu.

e) Číslo dílu (29) a popis dílu (30) jsou uvedeny vedle čísla pozice na stránce se seznamem.

Informace uvedené v katalogu náhradních dílů

Níže uvedený seznam se odkazuje na obrázek (E) na stránce i-8.
Katalog náhradních dílů obsahuje následující informace o skupinách, podskupinách a náhradních dílech pro zařízení:

- Reference struktury skupiny (23). Označuje následující vyšší skupinu ve struktuře seznamu výbavy.
- Název skupiny (24)
- Měrná jednotka (25)
- Množství (26)
- Číslo montážního výkresu (27)
- Rozsah stránek se seznamem (28). Zahrnuty, pokud existuje více stránek ve skupině obrázků nebo seznamu.
- Číslo dílu nebo podskupiny (29)
- Název podskupiny nebo popis dílu (30)
- Číslo skupiny (31)
- Číslo výbavy (32)
- Záhlaví informací o skupině (33). Označuje, zdali se část pod záhlavím týká konkrétní varianty stroje, nebo zdali se jedná o seznam společných dílů. Pokud seznam obsahuje více než jednu variantu a každá varianta má své vlastní montážní výkresy, je zobrazen odkaz na stránku s montážním výkresem varianty.
- Vnitřní informace (34)

Podpora a zpětná vazba

Můžete se na nás obracet s žádostí o pomoc při provozu tohoto zařízení nebo s jinými dotazy, připomínkami nebo náměty pomocí internetové kontaktní domovské stránky http://e-liaison.tetrapak.com, kde můžete rovněž poskytnout svou zpětnou vazbu. Pokud nemáte přístup na intranet společnosti Tetra Pak, obraťte se na nejbližšího zástupce firmy Tetra Pak.

Oplysninger om vejledninger

Tetra Pak anbefaler, at alle leverede vejledninger læses grundigt.
Sørg for, at de leverede vejledninger er til rådighed for det personale, som betjener eller vedligeholder udstyret.

Det er vigtigt, at dette katalog opbevares i hele udstyrets levetid og overdrages til en efterfølgende ejer eller bruger.

Tetra Pak hæfter ikke for skader på udstyret, som skyldes manglende overholdelse af anvisningerne i de vejledninger, som følger med dette udstyr.

Leverede vejledninger

Vejledninger, der leveres sammen med dette udstyr:

CM

Konverteringsvejledningen forsyner teknikere med oplysninger om konvertering af udstyret mellem forskellige produktionstilstande.

EM

Den elektriske vejledning forsyner teknikere med oplysninger om udstyrets elektriske system.

IM

Installationsvejledningen forsyner teknikere med oplysninger, som er nødvendige til sikker installation af udstyret.

MM

Vedligeholdelsesvejledningen forsyner teknikere med oplysninger om vedligeholdelsen af udstyret.

OM

Driftsvejledningen forsyner operatøren med oplysninger om håndteringen og betjeningen af udstyret før, under og efter produktion.

RM

Ombygningsvejledningen forsyner teknikere med oplysninger, der er nødvendige til sikker installation af et sæt på en installeret maskine eller installeret udstyr.

(Forts.)

(Forts.)

SPC

Reservedelskataloget indeholder de oplysninger, som er nødvendige til at bestille reservedele fra Tetra Pak.

TeM

Den Tekniske vejledning forsyner tekniker med oplysninger, der kan være:

- nødvendige oplysninger til sikker installation af udstyret
- nødvendige oplysninger til vedligeholdelse af udstyret
- oplysninger om maskinens/udstyrets elektriske system
- oplysninger, som er nødvendige til bestilling af reservedele fra Tetra Pak
- andre tekniske oplysninger

UP

Opdateringssiderne indeholder nye sider til opdatering af eksisterende maskinvejledninger.

Sidelayout

Se illustrationen (A) på side i-7: Hovedsiden i et reservedelskatalog består af en illustrationsside (1) og en tilsvarende listeside (7). Sidetallet (5) vises i overskriften på en illustrationsside og i fodteksten på en listeside. Dokumentnumret (6) vises i fodteksten på en listeside.

Sidenummerering

Se illustrationen (A) på side i-7: Et sidetal (5) har tre dele:

- kapitelnummer (2)
- fortløbende sidetal inden for kapitlet (3)
- det samlede antal sider i kapitlet (4)

Bemærk! Bogstaverne UP kan erstatte kapitelnumret (2), hvis vejledningen inkluderer opdateringssider. Det fortløbende sidetal (3) og det samlede antal sider (4) af opdateringssider følger ikke kapitlets eksisterende fortløbende sidenummerering.

Præsentation af maskinen

Producent

For producentens navn og adresse se anden side i dette katalog.

Service

Tetra Pak påtager sig intet ansvar for skader på udstyret eller kvæstelser af personale eller forbrugere, som forårsages af reservedele, der ikke er ægte reservedele fra Tetra Pak.

For at bestille ægte reservedele fra Tetra Pak til denne maskine kontakt det nærmeste Tetra Pak-kontor.

Identifikation

CE-klassificering

Dette udstyr overholder det Europæiske Økonomiske Samarbejdsområdes (EØS) grundlæggende sundheds- og sikkerhedsbestemmelser.

(Forts.)

(Forts.)

3-A overholdelse

Hvis typeskiltet indeholder 3-A-mærket (15) (se illustration (B) på side i-7), overholder dette udstyr 3-A-sanitetsstandarderne for formnings-, fylde- og forseglingsmaskiner for beholdere til flydende mælk og flydende mælkeprodukter, nummer 17-10.

Maskinens typeskilt

Illustration (B) på side i-7 viser et eksempel på et typeskilt.
En illustration af maskinens gældende typeskilt og dens placering på udstyret vises i kapitlet Indledning af de vejledninger, der leveres sammen med dette udstyr. Maskinens typeskilt indeholder de data, der opføres nedenfor og om der er brug for, hvis der rettes henvendelse til Tetra Pak vedrørende det specifikke udstyr.

- Maskintype (8)
- Volumen (9)
- Tegningsspecifikationer (10)
- Maskinens serienummer (11)
- Producent (12)
- Fremstillingsår (13)
- CE-mærke (14)
- 3-A mærke (i givet fald) (15)

Kontrollér, at udstyrsdataene på de første sider i denne vejledning svarer til dataene på typeskiltet og maskinens specifikation.

Sådan bruges dette reservedelskatalog

Sådan finder men et reservedelsnummer

a) Se illustrationen (C) på side i-7: Gå til kapitelnumret (16), der vises ved siden af hovedgruppen, som indeholder den del, der skal findes.

Punkterne b) og c) refererer til illustrationen (D) på side i-8.

b) På hovedgruppens illustration søg efter den maskinundergruppe (18), der indeholder den del eller undergruppe, der ledes efter. Notér positionsnumret (19) og gå til den listeside, der følger illustrationen.

c) Søg efter positionsnumret/henvisningsbetegnelsen (17) eller undergruppens navn (20). Gå til det tilsvarende sidetal (21), der er opført i højre spalte. Tetra Pak har valgt altid at bruge funktionen orienteret struktur til henvisningsbetegnelse. Det præfiks, der angiver funktionsorienteret struktur (=) vises ikke i henvisningsbetegnelsen.

(Forts.)

(Forts.)

Punkterne d) og e) refererer til illustrationen (E) på side i-8.

d) Find den del (22), der ledes efter, på undergruppens illustration og notér delens positionsnummer.

e) Delnumret (29) og delbeskrivelsen (30) er opført ved siden af positionsnumret på listesiden.

Oplysninger, der er opført i et reservedelskatalog

Listen nedenfor refererer til illustrationen (E) på side i-8.
Et reservedelskatalog indeholder følgende oplysninger om grupper, undergrupper og reservedele for udstyret:

- Gruppens strukturhenvisning (23). Viser den næste højere gruppe i udstyrets listestruktur.
- Gruppenavn (24)
- Måleenhed (25)
- Mængde (26)
- Monteringstegningens nummer (27)
- Listesideområde (28). Inkluderet, hvis gruppeillustrationen eller listen har flere sider.
- Del- eller undergruppenummer (29)
- Undergruppenavn eller delbeskrivelse (30)
- Gruppenummer (31)
- Udstyrsnummer (32)
- Gruppeinformationsoverskrift (33). Angiver, om afsnittet under overskriften gælder for en bestemt maskinversion eller om det er en liste over fælles dele. Hvis en liste har mere end en version og hver version har en egen monteringstegning, vises der en sidehenvisning til versionens monteringstegning.
- Interne oplysninger (34)

Support og feedback

For hjælp med betjening af dette udstyr, eller ved andre forespørgsler, kommentarer eller forslag, kan der stilles spørgsmål eller gives feedback på E-Liaison hjemmesiden på http://e-liaison.tetrapak.com.
Hvis adgang til Tetra Paks intranet ikke er til rådighed, kontakt den nærmeste Tetra Pak-repræsentant.

Handbuch-Informationen

Tetra Pak empfiehlt, alle gelieferten Handbücher sorgfältig zu lesen.
Es muss sichergestellt werden, dass die gelieferten Handbücher dem Bediener- oder Wartungspersonal der Ausrüstung verfügbar sind.

Es ist wichtig, diesen Katalog während der Lebensdauer der Ausrüstung vorzuhalten und an nachfolgende Halter oder Benutzer weiterzugeben.

Tetra Pak ist nicht verantwortlich für Schäden an der Ausrüstung, die durch die Nichtbefolgung der beiliegenden Anweisungen der Handbücher verursacht werden.

Gelieferte Handbücher

Mit dieser Ausrüstung gelieferte Handbücher

CM

Das Umbauhandbuch liefert den Technikern Informationen über den Umbau der Ausrüstung zwischen den verschiedenen Produktionsweisen.

EM

Das Elektrohandbuch liefert den Technikern Informationen zum Elektrosystem der Ausrüstung.

IM

Das Installationshandbuch liefert den Technikern Informationen für die sichere Installation der Ausrüstung.

MM

Das Wartungshandbuch liefert den Technikern Informationen über die Wartung der Ausrüstung.

OM

Das Betriebshandbuch enthält Informationen für den Bediener zu Handhabung und Betrieb der Ausrüstung vor, während und nach der Produktion.

RM

Das Umbauhandbuchliefert Informationen an die Techniker, die diese benötigen, um die Ausrüstung aus dem Kit sicher zu installieren.

(Forts.)

(Forts.)

SPC

Der Ersatzteilkatalog liefert die für die Bestellung von Ersatzteilen bei Tetra Pak erforderlichen Informationen.

TeM

Das Technische Handbuch liefert den Technikern folgende Informationen:

- Informationen für die sichere Installation der Ausrüstung
- Informationen für die Wartung der Ausrüstung
- Informationen über das Elektrosystem der Maschine/Ausrüstung.
- Notwendige Informationen für die Bestellung von Ersatzteilen bei Tetra Pak.
- andere technische Informationen

UP

Die Aktualisierungsseiten sind neu, um die Maschinenhandbücher zu aktualisieren.

Seitenlayout

Siehe die Abbildung (A) auf Seite i-7: Die Hauptseiten in einem Ersatzteilkatalog bestehen auf dem Abbildungsseite (1) und einer entsprechenden Listenseite (7). Die Seitennummer (5) ist im Kopf einer Abbildungsseite und im Fuß einer Listenseite aufgeführt.
Die Dokumentennummer (6) ist im Fuß einer Listenseite angegeben.

Seitennummerierung

Siehe die Abbildung (A) auf Seite i-7: Eine Seitennummer (5) hat drei Teile

- Kapitel Nummer (2)
- Fortlaufende Seitennummer (2) innerhalb des Kapitels (3)
- Gesamtanzahl der Seiten im Kapitel (4)

Hinweis! Die Buchstaben UP können die Kapitelnummer (2) ersetzen, wenn das Handbuch aktualisierte Seiten enthält. Die fortlaufende Seitennummer (3) und die Gesamtanzahl der Seiten (4) der aktualisierten Seiten folgen nicht der laufenden Seitennummerierung des Kapitels.

Einführung in die Maschine

Hersteller

Die zweite Seite des Katalogs enthält Name und Anschrift des Herstellers.

Service

Tetra Pak übernimmt keine Verantwortung für Schäden an Ausrüstungen und Verletzungen von Personen, verursacht durch Ersatzteile, die keine echten Tetra Pak-Ersatzteile sind.

Für die Bestellung echter Tetra Pak-Ersatzteile für die Maschine wende man sich an die nächstgelegene Tetra Pak-Stelle.

Identifizierung

CE-Klassifizierung

Diese Ausrüstung entspricht den grundlegenden Gesundheits- und Sicherheitsvorschriften des Europäischen Wirtschaftsraumes (EWR).

(Forts.)

(Forts.)

3-A Erfüllung

Wenn die Maschinenplatte eine 3-A Markierung (15) enthält (siehe Abbildung (B) auf Seite i-7), entspricht diese Ausrüstung den 3-A Sanitärnormen für Former, Füller und Versiegler von Containern für lose Milch und Milchprodukte Nummer 17-10.

Maschinenschild

Die Abbildung (B) auf Seite i-7 zeigt ein Beispiel eines Maschinenschildes. Eine Abbildung eines gültigen Maschinenschildes und dessen Lage an der Ausrüstung finden Sie in der Einleitung zu dem mit der Ausrüstung gelieferten Handbuch. Das Maschinenschild enthält die nachstehenden Daten, erforderlich für die Kontaktnahme mit Tetra Pak bezüglich dieser spezifischen Ausrüstung.

- Maschinentyp (8)
- Volumen (9)
- Zeichnungsspezifikationen (10)
- Serien-Nummer der Maschine (11)
- Hersteller (12)
- Baujahr (13)
- CE-Markierung (14)
- 3-A Markierung (falls zutreffend) (15)

Es muss sichergestellt sein, dass die in den Frontseiten dieses Handbuchs aufgeführten Ausrüstungsdaten mit den Daten des Maschinenschildes und der Maschinenspezifikation übereinstimmen.

Benutzung dieses Ersatzteilkatalogs

Lokalisieren einer Teilenummer

a) Bezugnahme auf Abbildung (C) auf Seite i-7: Weiter zu Kapitel Nummer (16) neben der Hauptgruppe, die das entsprechende Teil enthält.

Pos. b) und c) beziehen sich auf die Abb. (D) auf Seite i-8.

b) Auf der Abbildung der Hauptgruppe die Untergruppe (18) der Maschine suchen, welche das Teil oder die Untergruppe enthält, das/die Sie suchen. Die Positionsnummer (19) notieren und zu der Listenseite gehen, die auf die Abbildung folgt.

c) Suchen Sie die Positionsnummer/Referenzbezeichnung (17) oder den Untergruppennamen (20). Weiter zur entsprechenden Seitennummer (21) in der rechten Spalte. Tetra Pak verwendet die funktionsorientierte Struktur für die Referenzbezeichnung. Präfix zur funktionsorientierten Struktur (=) ist in der Referenzbezeichnung nicht dargestellt.

(Forts.)

(Forts.)

Pos. d) und e) beziehen sich auf die Abbildung (E) auf Seite i-8.

d) Das gesuchte Teil (22) auf der Untergruppen-Abbildung suchen und die Positionsnummer (060) des Teils notieren.

e) Die Teilenummer (29) und die Beschreibung (30) des Teils sind neben der Positionsnummer auf der Listenseite angegeben.

Information in einem Ersatzteilkatalog

Nachstehende Liste bezieht sich auf die Abbildung (E) auf Seite i-8.
Ein Ersatzteilkatalog enthält folgende Informationen zu Gruppen, Untergruppen und Ersatzteile der Ausrüstung.

- Verweis auf Gruppenstruktur (23). zeigt die nächsthöhere Gruppe in der Listenstruktur.
- Gruppenbezeichnung (24)
- Maßeinheit (25)
- Menge (26)
- Nummer der Montagezeichnung (27)
- Liste Seitenbereich (28). vorhanden, wenn mehrere Seiten in der Gruppenabbildung oder Liste vorhanden sind.
- Teile- oder Untergruppen-Nummer (29)
- Untergruppenbezeichnung oder Beschreibung des Teils (30)
- Gruppennummer (31)
- Gerätenummer (32)
- Gruppeninformations-Überschrift (33). erläutert, ob der Abschnitt unter der Überschrift für eine spezifische Maschinenvariante gilt oder ob es sich um eine Liste allgemeiner Teile handelt. Hat eine Liste mehr als eine Variante und ist jeder Variante eine eigene Montagezeichnung zugeordnet, wird ein Seiten-Querverweis auf die Montagezeichnung der Variante angegeben.
- Interne Informationen (34)

Unterstützung und Feedback

Für Hilfeleistung beim Betrieb der Ausrüstung oder für Anfragen, Kommentare oder Vorschläge wollen Sie Fragen oder Feedback richten an E-Liaison Home Page unter http://e-liaison.tetrapak.com.
Wenn kein Zugang zum Tetra Pak Intranet verfügbar ist, wenden Sie sich an den nächsten Tetra Pak-Vertreter.

Πληροφορίες εγχειριδίου

Η Tetra Pak συνιστά να διαβάζετε προσεκτικά όλα τα παρεχόμενα εγχειρίδια. Βεβαιωθείτε ότι τα παρεχόμενα εγχειρίδια είναι διαθέσιμα στο προσωπικό που χειρίζεται ή συντηρεί τον εξοπλισμό.

Είναι σημαντικό να διατηρήσετε το εγχειρίδιο αυτό καθ' όλη τη διάρκεια ζωής του εξοπλισμού και να το μεταβιβάσετε σε οποιονδήποτε επακόλουθο κάτοχο ή χρήστη.

Η Tetra Pak δεν μπορεί να καταστεί υπεύθυνη για οποιαδήποτε ζημιά στον εξοπλισμό που οφείλεται σε μη τήρηση των οδηγιών που παρατίθενται στα εγχειρίδια που συνοδεύουν τον εξοπλισμό.

Παρεχόμενα εγχειρίδια

Τα εγχειρίδια παρέχονται μαζί με αυτό τον εξοπλισμό:

CM

Το Εγχειρίδιο Μετατροπών (CM) παρέχει πληροφορίες στους τεχνικούς σχετικά με τη μετατροπή του εξοπλισμού για τους διαφορετικούς τρόπους παραγωγής.

EM

Το Ηλεκτρολογικό Εγχειρίδιο (EM) παρέχει στους τεχνικούς τις πληροφορίες για το ηλεκτρικό σύστημα του εξοπλισμού.

IM

Το Εγχειρίδιο Εγκατάστασης (IM) παρέχει στους τεχνικούς τις πληροφορίες που απαιτούνται για την ασφαλή τοποθέτηση του εξοπλισμού.

MM

Το Εγχειρίδιο Συντήρησης (MM) παρέχει στους τεχνικούς πληροφορίες σχετικά με τη συντήρηση του εξοπλισμού.

OM

Το Εγχειρίδιο Χειρισμού (OM) παρέχει στο χειριστή πληροφορίες σχετικά με το χειρισμό και τη λειτουργία του εξοπλισμού πριν, κατά και μετά την παραγωγή.

RM

Το Εγχειρίδιο Μετασκευής (RM) παρέχει πληροφορίες στους τεχνικούς σχετικά με την ασφαλή εγκατάσταση ενός κιτ σε μια εγκατεστημένη μηχανή ή εξοπλισμό.

(Συνέχεια)

(Συνέχεια)

SPC

Ο Κατάλογος Ανταλλακτικών (SPC) παρέχει πληροφορίες που είναι απαραίτητες για την παραγγελία ανταλλακτικών από την Tetra Pak

TeM

Το Τεχνικό Εγχειρίδιο (TeM) παρέχει στους τεχνικούς πληροφορίες που μπορεί να είναι:

- πληροφορίες που είναι απαραίτητες για την ασφαλή εγκατάσταση του εξοπλισμού
- πληροφορίες που απαιτούνται για τη συντήρηση του εξοπλισμού
- πληροφορίες σχετικά με το ηλεκτρικό σύστημα της μηχανής/ εξοπλισμού.
- απαραίτητες πληροφορίες για να παραγγείλετε ανταλλακτικά από την Tetra Pak.
- άλλες τεχνικές πληροφορίες

ΠΑΝΩ

Οι Σελίδες Ενημέρωσης παρέχουν νέες σελίδες για την ενημέρωση των υφιστάμενων εγχειριδίων της μηχανής.

Διάταξη σελίδας

Βλέπε εικόνα (A) στη σελίδα i-7: Οι κύριες σελίδες του Καταλόγου Ανταλλακτικών αποτελούνται από μία σελίδα με εικόνα (1) και μια σελίδα με αντίστοιχη λίστα (7). Ο αριθμός σελίδας (5) αναγράφεται στο πάνω μέρος της σελίδας με την εικόνα και στο κάτω μέρος της σελίδας με τη λίστα.
Ο αριθμός εγγράφου (6) αναγράφεται στο κάτω μέρος της σελίδας με τη λίστα.

Αρίθμηση σελίδων

Βλέπε εικόνα (A) στη σελίδα i-7: Ο αριθμός σελίδας (5) αποτελείται από τρία μέρη:

- τον αριθμό κεφαλαίου (2)
- τον αύξοντα αριθμό σελίδας (3) εντός του κεφαλαίου
- τον συνολικό αριθμό σελίδων (4) στο κεφάλαιο

Σημειωση! Αν το εγχειρίδιο περιέχει σελίδες ενημέρωσης, ο αριθμός κεφαλαίου (2) μπορεί να αντικαθίσταται με τα γράμματα «UP».
Ο αύξων αριθμός σελίδας (3) και ο συνολικός αριθμός σελίδων (4) των σελίδων ενημέρωσης δεν ακολουθούν την αρχική αύξουσα αρίθμηση σελίδων του κεφαλαίου.

Εισαγωγικές πληροφορίες για τη μηχανή

Κατασκευαστής

Για το όνομα και τη διεύθυνση του κατασκευαστή, βλέπε τη δεύτερη σελίδα αυτού του καταλόγου.

Τεχνική εξυπηρέτηση

Η Tetra Pak δεν αναλαμβάνει καμία ευθύνη για οποιαδήποτε ζημιά στον εξοπλισμό ή τραυματισμό του προσωπικού ή των καταναλωτών που οφείλεται σε χρήση ανταλλακτικών που δεν είναι γνήσια ανταλλακτικά της Tetra Pak.

Για να παραγγείλετε γνήσια ανταλλακτικά της Tetra Pak για αυτή τη μηχανή, επικοινωνήστε με το πλησιέστερο γραφείο Tetra Pak.

Αναγνώριση

Ταξινόμηση CE

Ο εξοπλισμός αυτός συμμορφώνεται με τους βασικούς κανονισμούς υγείας και ασφάλειας του Ευρωπαϊκού Οικονομικού Χώρου (ΕΕΑ).

(Συνέχεια)

(Συνέχεια)

Συμμόρφωση 3-A

Αν η πλάκα μηχανής περιλαμβάνει το σήμα 3-A (15) (βλέπε απεικόνιση (B) στη σελίδα i-7), ο εξοπλισμός αυτός συμμορφώνεται με τα υγειονομικά πρότυπα για διαμορφωτές, γεμιστικές μηχανές και διατάξεις σφράγισης των περιεκτών για υγρό γάλα και προϊόντα υγρού γάλακτος, αριθμός 17-10.

Πινακίδα χαρακτηριστικών μηχανής

Η εικόνα (B) στη σελίδα i-7 δείχνει ένα παράδειγμα μιας πινακίδας τύπου. Για μια εικόνα της πινακίδας τύπου της συγκεκριμένης μηχανής και της θέσης της πάνω στον εξοπλισμό, βλέπε το κεφάλαιο «Εισαγωγή» των εγχειριδίων που παραδίδονται μαζί με τον εξοπλισμό. Η πινακίδα τύπου περιέχει τα παρακάτω στοιχεία, τα οποία θα χρειάζεστε όταν επικοινωνείτε με την Tetra Pak σχετικά με τον συγκεκριμένο εξοπλισμό.

- Τύπος μηχανής (8)
- Όγκος (9)
- Στοιχεία σχεδίου (10)
- Αριθμός σειράς μηχανής (11)
- Κατασκευαστής (12)
- Έτος κατασκευής (13)
- Σήμανση CE (14)
- Σήμανση 3-A (εάν εφαρμόζεται) (15)

Βεβαιωθείτε ότι τα δεδομένα εξοπλισμού στις μπροστινές σελίδες αυτού του εγχειριδίου αντιστοιχούν στην πινακίδα χαρακτηριστικών της μηχανής και τις προδιαγραφής αυτής.

Πως να χρησιμοποιήσετε αυτό τον Κατάλογο Ανταλλακτικών

Παράδειγμα: Εντοπισμός αριθμού ανταλλακτικού

a) Βλέπε εικόνα (C) στη σελίδα i-7: Ανοίξτε το κεφάλαιο (16) που αναφέρεται δίπλα στην κυρίως ομάδα που περιέχει το εξάρτημα που θέλετε να εντοπίσετε.

Τα στοιχεία b) και c) αναφέρονται στην εικόνα (D) στη σελίδα i-8.

b) Στην απεικόνιση της k;yriaw ομάδας αναζητήστε την υποομάδα της μηχανής (18) που περιλαμβάνει το εξάρτημα ή την υποομάδα που αναζητάτε. Σημειώστε τον αριθμό θέσης (19) και μεταβείτε στη σελίδα λίστας που ακολουθεί την απεικόνιση.

c) Αναζητήστε τον αριθμό θέσης / χαρακτηρισμό αναφοράς (17) ή το όνομα της υπο-ομάδας (20). Ανοίξτε την αντίστοιχη σελίδα (21) που αναφέρεται στη δεξιά στήλη. Η Tetra Pak έχει επιλέξει να χρησιμοποιεί πάντα τη διάρθρωση που προσανατολίζεται στη λειτουργία για τον ορισμό αναφοράς. Το πρόθεμα που υποδεικνύει διάρθρωση που προσανατολίζεται στη λειτουργία (=) δεν εμφανίζεται στον ορισμό αναφοράς.

(Συνέχεια)

(Συνέχεια)

Τα στοιχεία d) και e) αναφέρονται στην εικόνα (E) στη σελίδα i-8.

d) Εντοπίστε το εξάρτημα (22) που αναζητάτε στην απεικόνιση της υποομάδας και σημειώστε τον αριθμο θέσης του εξαρτήματος.

e) Ο αριθμός εξαρτήματος (29) και η περιγραφή εξαρτήματος (30) παρατίθενται δίπλα στον αριθμό θέσης στη σελίδα λίστας.

Πληροφορίες που αναφέρονται στον Κατάλογο ανταλλακτικών

Η λίστα που ακολουθεί παραπέμπει στην εικόνα (E) στη σελίδα i-8.
Ο Κατάλογος Ανταλλακτικών περιέχει τις εξής πληροφορίες σχετικά με ομάδες, υπο-ομάδες και ανταλλακτικά για τον εξοπλισμό:

- Αναφορά στη δομή της ομάδας (23). Δείχνει την αμέσως μεγαλύτερη ομάδα στη δομή του καταλόγου του εξοπλισμού.
- Όνομα ομάδας (24)
- Μονάδα μέτρησης (25)
- Ποσότητα (26)
- Αριθμός σχεδίου συναρμολόγησης (27)
- Εύρος σελίδων της λίστας (28). Περιλαμβάνεται όταν υπάρχουν πολλαπλές σελίδες στην ομάδα ή στη λίστα.
- Αριθμός εξαρτήματος ή υποομάδας (29)
- Όνομα υποομάδας ή περιγραφή εξαρτήματος (30)
- Αριθμός ομάδας (31)
- Αριθμός εξοπλισμού (32)
- Επικεφαλίδα πληροφοριών ομάδας (33). Δείχνει αν το τμήμα της λίστας κάτω από την επικεφαλίδα ισχύει για συγκεκριμένη παραλλαγή της μηχανής ή αν πρόκειται για κατάλογο κοινών εξαρτημάτων.
  Αν μια λίστα αναφέρεται σε περισσότερες από μία παραλλαγές και κάθε παραλλαγή έχει το δικό της σχέδιο συναρμολόγησης, υπάρχει εδώ μια παραμπομπή στη σελίδα που δείχνει το σχέδιο συναρμολόγησης της παραλλαγής.
- Εσωτερικές πληροφορίες (34)

Υποστήριξη και σχολιασμός

Αν χρειαστείτε βοήθεια με τον χειρισμό αυτού του εξοπλισμού, ή αν έχετε απορίες, σχόλια ή προτάσεις, υποβάλετε τις ερωτήσεις ή τις παρατηρήσεις σας στην ιστοσελίδα της E-Liaison, στη διεύθυνση http://e-liaison.tetrapak.com. Αν δεν έχετε πρόσβαση στο Intranet της Tetra Pak, επικοινωνήστε με τον πλησιέστερο αντιπρόσωπο της Tetra Pak.

Información del manual

Tetra Pak recomienda que se lean cuidadosamente todos los manuales entregados. Comprobar que todos los manuales entregados estén disponibles para el personal que efectúe la operación o el mantenimiento del equipo.

Es importante conservar este manual durante la vida útil del equipo, así como facilitárselo a cualquier propietario o usuario posterior.

Tetra Pak no se responsabilizará de daños en la máquina o equipo debidos a la inobservancia de las instrucciones dadas en los manuales que acompañan este equipo.

Manuales entregados

Manuales entregados con este equipo:

CM

El Manual de conversión proporciona a los técnicos información sobre cómo convertir el equipo entre diferentes modos de producción.

EM

El Manual eléctrico proporciona a los técnicos información acerca del sistema eléctrico del equipo.

IM

El Manual de instalación proporciona a los técnicos la información requerida para instalar el equipo con seguridad.

MM

El Manual de mantenimiento proporciona a los técnicos información sobre el mantenimiento del equipo.

OM

El Manual de servicio proporciona a los operadores información sobre la manipulación y operación del equipo antes, durante y después de la producción.

RM

El Manual de Modificación provee la información necesaria a los técnicos para instalar con seguridad un kit en una máquina o equipo ya instalado.

(Continúa)

(Continuación)

SPC

El Catálogo de piezas de recambio proporciona la información necesaria para pedir piezas de recambio de Tetra Pak.

TeM

El Manual técnico proporciona información a los técnicos, que puede ser:

- la información requerida para instalar el equipo con seguridad
- información requerida para el mantenimiento del equipo
- información acerca del sistema eléctrico de la máquina/del equipo
- la información necesaria para pedir piezas de recambio a Tetra Pak
- otras informaciones técnicas

PA

Las Páginas de Actualización suministran nuevas páginas para actualizar los manuales de máquinas ya existentes.

Organización de las páginas

Remitirse a la ilustración (A) en la página i-7: Las páginas principales en un Catálogo de piezas de recambio se componen de una página de ilustración (1) y una página de lista correspondiente (7). El número de la página (5) se muestra en el encabezado de una página de ilustración y en el pie de página de una página de lista. El número del documento (6) se muestra en el pie de página de una página de lista.

Numeración de las páginas

Remitirse a la ilustración (A) en la página i-7:
Un número de página (5) se compone de tres partes:

- Número de capítulo (2)
- número de página consecutivo dentro del capítulo (3)
- número total de páginas del capítulo (4).

¡Nota! Las letras UP pueden reemplazar el número del capítulo (2) si el manual incluye páginas de actualización. El número de página consecutivo (3) y el número total de páginas (4) de páginas de actualización no siguen la numeración secuencial de páginas del capítulo.

Introducción a la máquina

Fabricante

Para el nombre y la dirección del fabricante, ver la segunda página de este catálogo.

Servicio

Tetra Pak no se hace responsable de cualquier daño o lesión al equipo, personal o consumidores que sea causado por piezas de recambio que no sean piezas Tetra Pak genuinas.

Para pedir piezas de recambio Tetra Pak genuinas para esta máquina, comunicarse con la oficina de Tetra Pak más cercana.

Identificación

Clasificación de la CE

Este equipo cumple los requisitos esenciales relativos a la salud y la seguridad del Área Económica Europea (EEA).

(Continúa)

(Continuación)

Conformidad con 3-A

Si la placa de la máquina contiene la marca 3-A (15) (consultar la ilustración (B) en la página i-7), este equipo cumple con las Normas sanitarias 3-A para formadoras, llenadoras y selladoras de envases para para leche fluida y productos de leche fluida 17-10.

Placa de la máquina

La ilustración (B) en la página i-7 muestra un ejemplo de placa de máquina. En la Introducción del capítulo de los manuales entregados con este equipo se muestra una ilustración de la placa de máquina válida y su ubicación en el equipo La placa de máquina contiene los datos listados a continuación requeridos al contactar con Tetra Pak en relación a este equipo específico.

- Tipo de máquina (8)
- Volumen (9)
- Especificaciones de plano (10)
- Número de serie de la máquina (11)
- Fabricante (12)
- Año de fabricación (13)
- Marca de la CE (14)
- Marca 3-A (si procede) (15)

Asegúrese que los datos de equipo listados en las páginas de cubierta de este manual corresponden a los datos de la placa de máquina y a la especificación máquina.

Cómo utilizar este Catálogo de piezas de recambio

Localizar un número de pieza de recambio

a) Remitirse a la ilustración (C) en la página i-7: Ir al número de capítulo (16) indicado al lado del grupo principal que contiene la pieza que usted desea localizar.

Los items b) y c) se refieren a la ilustración (D) en la página i-8.

b) En la ilustración del grupo principal, buscar el subgrupo máquina (18) que contiene la pieza o subgrupo que usted busca.
Anote el número de posición (19) y vaya a la página de lista que sigue a la ilustración.

c) Buscar el número de posición/designación de referencia (17) o el nombre del subgrupo (20). Vaya al número de página correspondiente (21) listado en la columna de la derecha. Tetra Pak ha elegido utilizar siempre la estructura orientada a la función para la designación de referencia. El prefijo que indica la estructura orientada a la función (=) no se muestra en la designación de referencia

(Continúa)

(Continuación)

Los Items d) y e) se refieren a la ilustración (E) en la página i-8.

d) Localizar la pieza (22) que busca en la ilustración del subgrupo y anotar el número de posición de la pieza.

e) El número de la pieza (29) y la descripción de la pieza (30) están listados al lado del número de posición en la página de lista.

Información listada en un Catálogo de piezas de recambio

La lista a continuación remite a la ilustración (E) en la página i-8.
Un Catálogo de piezas de recambio contiene la siguiente información sobre grupos, subgrupos y piezas de recambio para el equipo:

- Referencia de estructura de grupo (23). Indica el siguiente grupo más alto en la estructura de lista del equipo.
- Nombre de grupo (24)
- Unidad de medida (25)
- Cantidad (26)
- Número de plano de montaje (27)
- Rango de la página de lista (28). Incluida si hay páginas múltiples en la ilustración o lista de grupo.
- Número de pieza o subgrupo (29)
- Nombre del subgrupo o descripción de la pieza (30)
- Número de grupo (31)
- Número de equipo (32)
- Encabezado de información de grupo (33). Indica si la sección debajo del encabezado es para una variante máquina específica o si es una lista de piezas comunes. Si la lista tiene más de una variante y cada variante tiene su propio plano de conjunto, se muestra una referencia página para el plano de conjunto de la variante.
- Información interna (34)

Soporte y retroalimentación

Para asistencia al operar este equipo u otras preguntas, comentarios o sugerencias, haga sus preguntas u ofrezca información en la página de inicio de E-Liaison en http://e-liaison.tetrapak.com. Si no dispone de acceso a la intranet de Tetra Pak, comuníquese con el representante de Tetra Pak más cercano.

Manuaali informatsioon

Tetra Pak soovitab kõiki saadetud manuaale hoolikalt lugeda. Kindlustage saadetud manuaalide kättesaadavus seadmetega töötavale või neid hooldavale personalile.

Kataloog tuleb seadmete eluea jooksul alles hoida ning anda üle seadmete järgmisele omanikule või kasutajale.

Tetra Pak ei vastuta seadmete kahjustuste eest, mis on tekkinud seadmetega kaasapandud juhendites antud juhiste eiramise tagajärjel.

Kättetoimetatud manuaalid

Antud seadmega kaasasolevad manuaalid:

CM

Muutmise juhend annab tehnikutele informatsiooni seadmete muutmiseks vastavalt erinevatele tootmisrežiimidele.

EM

Elektrialane kasutusjuhend annab tehnikutele informatsiooni seadmete elektrisüsteemi kohta.

IM

Paigaldusjuhend annab tehnikutele seadmete turvaliseks paigaldamiseks vajalikku informatsiooni.

MM

Hooldusjuhend annab tehnikutele informatsiooni seadmete hooldamiseks.

OM

Kasutusjuhend annab operaatorile informatsiooni seadmete käsitsemiseks ja nendega töötamiseks enne tootmise alustamist, tootmise ajal ja pärast selle lõpetamist.

RM

Ümberehituse juhend annab tehnikutele vajalikku informatsiooni komplekti ohutuks paigaldamiseks eelnevalt paigaldatud masinale või seadmetele.

(Jätkub)

(Jätkub)

SPC

Varuosade kataloog annab vajalikku informatsiooni Tetra Pakist varuosade tellimiseks.

TeM

Tehniline juhend annab tehnikutele informatsiooni, mis võib olla näiteks:

- vajalik informatsioon seadmete ohutuks paigaldamiseks
- vajalik informatsioon seadmete hooldamiseks
- informatsioon masina/seadmestiku elektrisüsteemi kohta
- vajalik informatsioon tagavaraosade tellimiseks Tetra Pakist
- muu tehniline informatsioon

UP

Ajakohastatud leheküljed sisaldavad uusi lehekülgi olemasolevate masina juhendite ajakohastamiseks.

Lehekülje kujundus

Vaadake joonist (A) leheküljel i-7: varuosade kataloogi põhileheküljed koosnevad joonise leheküljest (1) ja vastava loendi leheküljest (7). Lehekülje number (5) näidatakse joonise lehekülje päises ja loendi lehekülje jaluses. Dokumendi number (6) näidatakse loendi lehekülje jaluses.

Lehekülgede nummerdamine

Vaadake joonist (A) leheküljel i-7: lehekülje numbril (5) on kolm osa:

- peatüki number (2)
- järjestikune lehekülje number peatükis (3)
- lehekülgede koguarv (4) peatükis

Pange tähele! Kui juhend sisaldab ajakohastatud lehekülgi, võivad peatüki numbrit (2) asendada tähed UP. Ajakohastatud lehekülgede järjestikune lehekülje number (3) ja lehekülgede koguarv (4) ei järgi peatüki olemasolevat järjestikust lehekülgede nummerdamist.

Masina sissejuhatus

Tootja

Tootja nime ja aadressi leiate kataloogi teiselt leheküljelt.

Teenindus

Tetra Pak ei vastuta seadmetele, töötajatele või tarbijatele põhjustatud kahjustuste või kehavigastuste eest, mis on tekkinud selliste varuosade kasutamise tagajärjel, mis ei ole Tetra Paki originaalvaruosad.

Tetra Paki originaalvaruosade tellimiseks käesoleva masina jaoks pöörduge lähimasse Tetra Paki kontorisse.

Identifikatsioon

CE klassifikatsioon

Need seadmed on vastavuses Euroopa Majanduspiirkonna (EEA) tervisekaitse ja ohutusmeetmete põhireeglitega.

(Jätkub)

(Jätkub)

3-A vastavus

Kui masina andmeplaadil on märk "3-A" (15) (vt joonist (B) lk i-7), vastab käesolev seadmestik piima- ja piimatoodete mahutite vormimis-, villimis- ja sulgemisseadmete sanitaarnormidele 3-A, number 17-10.

Seadmeplaat

Masina andmeplaadi näidis on toodud leheküljel i-7 oleval joonisel (B). Kehtiv andmeplaat ja selle asukoht seadmel on näidatud joonisel, mille leiate koos seadmestikuga tarnitud juhendite sissejuhatavast peatükist.
Masina andmeplaat sisaldab allpool loetletud andmeid, mida Te vajate antud seadme asjus Tetra Pakiga ühenduse võtmisel.

- Masina tüüp (8)
- Maht (9)
- Joonise spetsifikatsioonid (10)
- Masina seerianumber (11)
- Tootja (12)
- Valmistamise aasta (13)
- CE-märgistus (14)
- 3-A-märgistus (kui on asjakohane) (15)

Veenduge, et antud juhendi esilehtedel olevad andmed vastaksid masina andmesildil olevatele andmetele ja masina tehnilistele andmetele.

Varuosade kataloogi kasutamine

Leidke varuosa number

a) Vaadake joonist (C) leheküljel i-7: minge peatüki juurde, mille number (16) on näidatud selle põhigrupi kõrval, mis sisaldab Teie poolt otsitavat varuosa.

Elemendid b) ja c) viitavad joonisele (D) leheküljel i-8.

b) Põhigrupi joonisel otsige masina alamgruppi (18), mis sisaldab Teie poolt otsitavat varuosa või alamgruppi. Märkige üles positsiooni number (19) ja minge loendi leheküljele, mis järgneb joonisele.

c) Otsige üles positsiooni number/viitetähis (17) või alamgrupi nimi (20). Minge vastavale leheküljele, mille numbri (21) leiate parempoolses veerus olevast loetelust. Tetra Pak kasutab viitetähistes alati funktsioonile orienteeritud struktuuri. Prefiksit, mis näitab funktsioonile orienteeritud struktuuri (=), viitetähises ei näidata.

(Jätkub)

(Jätkub)

Elemendid d) ja e) viitavad joonisele (E) leheküljel i-8.

d) Leidke alamgrupi jooniselt üles otsitav varuosa (22) ja pange kirja varuosa positsiooni number.

e) Varuosa numbri (29) ja varuosa kirjelduse (30) leiate loendi leheküljelt positsiooni numbri kõrvalt.

Varuosade kataloogis loetletud informatsioon

Allpool antud loend viitab joonisele (E) leheküljel i-8.
Varuosade kataloog sisaldab alljärgnevat informatsiooni seadmete gruppide, alamgruppide ja varuosade kohta:

- Grupi struktuuri viide (23). Näitab järgmist kõrgemat gruppi seadmete loetelu struktuuris.
- Grupi nimetus (24)
- Mõõtühik (25)
- Kogus (26)
- Koostejoonise number (27)
- Loendi lehekülgede vahemik (28). Lisatakse juhul, kui grupi joonis või loend paiknevad mitmel leheküljel.
- Varuosa või alamgrupi number (29)
- Alamgrupi nimetus või varuosa kirjeldus (30)
- Grupi number (31)
- Seadme number (32)
- Grupis sisalduva informatsiooni pealkiri (33). Näitab, kas pealkirja all olev lõik puudutab konkreetset masina varianti või sisaldab see üldiste varuosade loendit. Kui loendis on variante rohkem kui üks ning nendel kõigil on eraldi koostejoonised, siis näidatakse konkreetse variandi koostejoonise lehekülgede numbrid.
- Siseinformatsioon (34)

Tugi ja tagasiside

Kui vajate abi seadmete kasutamisel või siis, kui Teil on küsimusi või soovite teha märkusi või ettepanekuid, esitage küsimused ja andke tagasisidet E-Liaisoni kodulehe kaudu aadressil http://e-liaison.tetrapak.com. Kui juurdepääs Tetra Paki intranetile puudub, võtke ühendust lähima Tetra Paki esindajaga.

Tiedot käsikirjasta

Tetra Pak suosittelee kaikkien toimitettujen käyttöohjeiden huolellista lukemista. Varmista että toimitetut käsikirjat ovat niiden henkilöiden käytettävissä, jotka käyttävät tai huoltavat laitetta.

On tärkeää, että käsikirjaa pidetään tallella koko laitteen käyttöiän ajan ja että käsikirja annetaan jokaiselle laitteen tulevalle omistajalle tai käyttäjälle.

Tetra Pak ei ole vastuussa mistään laitteille aiheutuneista vahingoista, jotka ovat johtuneet tämän käsikirjan ohjeiden noudattamatta jättämisestä.

Toimitetut käsikirjat

Laitteen mukana toimitetut käsikirjat:

CM

Muunnoskäsikirja (CM) palvelee teknikoita antamalla tiedot laitteen muuntamisesta erilaisiin tuotantotiloihin.

EM

Sähkökäsikirja (EM) palvelee teknikoita antamalla tiedot laitteen sähköjärjestelmästä.

IM

Asennuskäsikirja (IM) palvelee teknikoita antamalla tiedot laitteiden turvalliseksi asentamiseksi.

MM

Huoltokäsikirja (MM) palvelee teknikoita antamalla tiedot laitteiden huoltamisesta.

OM

Käyttäjän käsikirja (OM) palvelee käyttäjää antamalla tiedot laitteen käyttämisestä ennen tuotantoa, sen aikana ja sen jälkeen.

RM

Korjaus käsikirja antaa teknikoille vaadittavat tiedot turvallisesti asentaa rakennussarja valmiiseen koneeseen tai laitteeseen.

(Jatkuu)

(Jatkoa)

SPC

Varaosaluettelo antaa ne tarpeelliset tiedot, joiden avulla voi tilata varaosia Tetra Pakilta

TeM

Tekninen käsikirja antaa teknikoille tietoja, joka voi olla:

- tietoja laitteen turvallista asennusta varten
- tietoja, joita tarvitaan laitteita huollettaessa
- tietoja koneen/laitteen sähköjärjestelmästä
- tietoja, joita tarvitaan tilattaessa varaosia Tetra Pakilta.
- muita teknisiä tietoja.

SP

Sivujen Päivitys tarjoaa uusia sivuja jo olemassa oleviin koneen käyttöohjeisiin.

Sivutaitto

Katso kuvaa (A) sivulla i-7: Varaosaluettelon pääsivut koostuvat kuvitetusta sivusta (1) ja sitä vastaavasta luettelo sivusta (7). Sivunumero (5) näkyy kuvasivun otsikossa ja luettelo sivun alatunnisteessa.
Dokumentin numero (6) näkyy luettelo sivun alatunnisteessa.

Sivunumerointi

Katso kuvaa (A) sivulla i-7: sivunumerossa (5) on kolme osaa:

- kappaleen numero (2)
- juokseva sivunumero kappaleessa (2)
- kappaleen kokonaissivumäärä (3)

Huom! Kirjaimet SP voivat korvata kappaleen numeron (2) jos sivujen päivitys sisältyy käyttöohjeisiin. Peräkkäisten sivujen numero (3) ja päivitys sivujen kokonaismäärä (4) eivät noudata käytössä olevaa kappaleiden juoksevaa sivunumerointia.

Koneen esittely

Valmistaja

Katso valmistajan nimi ja osoite tämän luettelon toiselta sivulta.

Huolto

Tetra Pak ei vastaa sellaisista vahingoista tai mistään työvälineiden, henkilöstön tai kuluttajien vaurioista, jotka johtuvat varaosista, jotka eivät ole aitoja Tetra Pakin varaosia.

Aitoja Tetra Pakin tämän laitteen varaosia voi tilata ottamalla yhteys lähimpään Tetra Pak toimistoon.

Koneen tunnistaminen

CE-luokitus

Tämä laite täyttää Euroopan talousalueen (ETA) perus turvallisuus- ja terveysvaatimukset.

(Jatkuu)

(Jatkoa)

3-A Soveltuvuus

Jos konekilvessä on merkintä A-3 (15) (ks. kuvasta (B) sivulla i-7) se tarkoittaa, että laite täyttää A-3 -standardin puhtausvaatimukset muotoilimille, täyttimille ja tiivisteille astioissa, jotka on tarkoitettu maidolle ja maitotuotteille, numero 17-10.

Konekilpi

Kuva (B) sivulla i-7 näyttää esimerkin konekilvestä.
Esimerkki voimassa olevasta konekilvestä ja sen sijainnista laitteessa näkyy tämän laitteen mukana toimitettujen käyttöohjeiden johdanto luvussa.
Konekilpi sisältää alla luetellut tiedot, joita tarvitaan kun otetaan yhteyttä Tetra Pakkiin koskien erityisesti tätä laitetta.

- Koneen tyyppi (8)
- Teho (9)
- Piirustus erittelyt (10)
- Koneen sarjanumero (11)
- Valmistaja (12)
- Valmistusvuosi (13)
- CE-merkintä (14)
- 3-A merkintä (tarvittaessa) (15)

Varmista, että tämän käsikirjan etusivuilla olevat tuotetiedot vastaavat konekilven tietoja ja laitteen teknistä erittelyä.

Kuinka tätä varaosaluetteloa käytetään

Löydä ensin varaosan numero

a) Katso kuvaa (C) sivulla i-7: Mene pääryhmän vieressä ilmoitettuun kappaleeseen (16), joka sisältää sen osan, jonka haluat löytää.

Osat b) ja c) katso kuvaa (D) sivulla i-8.

b) Pääryhmän kuvassa etsi sitä koneen alaryhmää (18), joka sisältää etsimäsi osan tai alaryhmän. Huomioi sijaintinumero (19) ja siirry kuvaa seuraavaa luettelosivulle.

c) Etsi sijaintinumeroa/viitenimitystä (17) tai alaryhmän nimeä (20). Siirry vastaavalle sivunumerolle (21), joka on mainittu oikeanpuoleisessa sarakkeessa. Tetra Pak käyttää aina viitteissä toiminnallisia rakenteita. Prefiksi ilmaisin toiminto rakenne (=) ei näy viitenimityksissä.

(Jatkuu)

(Jatkoa)

Osat d) ja e) katso kuvaa (E) sivulla i-8.

d) Paikanna etsimäsi osa (22) alaryhmän piirroksessa ja huomioi osan sijaintinumero.

e) Osanumero (29) ja osan kuvaus (30) on luetteloitu sijaintinumeron vieressä luettelosivulla.

Varaosaluettelossa luetellut tiedot

Seuraava luettelo viittaa kuvaan (E) sivulla i-8. Varaosaluettelo sisältää seuraavat tiedot ryhmistä, alaryhmistä ja varaosista laitteelle:

- Viite ryhmän rakenteeseen (23). Osoittaa seuraavan ylemmän ryhmän laiteluettelon rakenteessa.
- Ryhmän nimi (24)
- Mittayksikkö (25)
- Määrä (26)
- Kokoamispiirustus numero (27)
- Luettelon sivualue (28). Sisällytetty, jos ryhmän kuvissa tai luetteloisssa on useita sivuja.
- Osan tai alaryhmän numero (29)
- Alaryhmän nimi tai osan kuvaus (30)
- Ryhmän numero (31)
- Laitteen numero (32)
- Ryhmätietojen otsikko (33). Ilmoittaa, onko otsikon alla oleva kohta erityiselle konevaihtoehdolle vai onko se luettelo yhteisistä osista. Jos luettelossa on useampi kuin yksi muunnos ja kullakin muunnoksella on oma asennuspiirroksensa, näytetään sivuviite muunnoksen asennuspiirustukseen.
- Sisäinen tiedotus (34)

Tuotetuki ja palaute

Tämän laitteen käyttöön, tai muihin tiedusteluihin, kommentteihin tai ehdotuksiin, esitettyihin kysymyksiin tai palautteeseen saa apua E-yhteystoimiston kotisivuilta osoitteesta http://e-liaison.tetrapak.com.
Jos pääsy Tetra Pak intranet sivuille ei ole saatavilla, ota yhteyttä lähimpään Tetra Pak edustajaan.

Information sur le manuel

Tetra Pak recommande de lire attentivement tous les manuels fournis. S'assurer que les manuels fournis sont accessibles au personnel qui s'occupe du fonctionnement ou de la maintenance de l'équipement.

Il est important de conserver ce manuel pendant toute la durée d'utilisation de la machine et de le transmettre à tout détenteur ou utilisateur ultérieur.

Tetra Pak ne sera pas tenu responsable d'un dommage causé à la machine ou à l'équipement par le fait de ne pas avoir respecté les instructions figurant dans le présent manuel.

Manuels fournis

Manuels fournis avec l'équipement:

CM

Le Manuel de Conversion fournit aux techniciens les informations nécessaires pour convertir la machine en vue des différents modes de production.

EM

Ce manuel électrique fournit aux techniciens les informations sur le système électrique de la machine.

IM

Ce manuel de Mise en place fournit aux techniciens les informations nécessaires pour l'installation de la machine en toute sécurité.

MM

Ce manuel de Maintenance fournit aux techniciens les informations pour la maintenance.

OM

Le Manuel d'Opérateur fournit à l'opérateur les informations sur la manutention et le fonctionnement de l'équipement avant, pendant et après la production.

RM

Le Manuel de Conversion fournit aux techniciens les renseignements nécessaires pour installer en toute sécurité un ensemble sur une machine ou un équipement mis en place.

(Suite à la page suivante)

(Suite de la page précédente)

SPC

Le Catalogue de pièces de rechange fournit les renseignements nécessaires pour commander les pièces de rechange chez Tetra Pak.

TeM

Le Manuel technique offre aux techniciens des informations qui peuvent être:

- des informations nécessaires pour installer l'équipement en toute sécurité,
- des informations nécessaires pour entretenir l'équipement
- des informations concernant le système électrique de l'équipement/des machines.
- des informations nécessaires à la commande de pièces de rechange auprès de Tetra Pak
- d'autres informations techniques.

HAUT

Les pages de Mise à Jour fournissent de nouvelles pages pour mettre à jour les manuels de machine existants.

Présentation d'une page

Se référer à la figure (A) à la page i-7: Les pages principales du Catalogue des Pièces de Rechange sont composées d'une page de figure (1) et d'une page de liste correspondante (7). Le numéro de page (5) est indiqué dans le titre de la page de figure et dans le bas de page d'une page de liste. Le numéro de document (6) est indiqué dans le bas de page de la page de liste.

Numérotation de page

Se référer (A) à la page i-7: Un numéro de page (5) possède trois parties:

- Numéro de chapitre (2)
- numéro de page consécutif (2) à l'intérieur du chapitre (3)
- nombre total de pages dans le chapitre (4)

Remarque! Les lettres UP peuvent remplacer le numéro de chapitre (2), si le manuel comprend des pages de mise à jour. Le numéro de page consécutif (3) et le nombre total de pages (4) des pages de mise à jour ne suivent pas la pagination séquentielle du chapitre.

Présentation de la machine

Fabricant

Pour le nom et l'adresse du fabricant, voir la deuxième page de ce catalogue.

Assistance technique

Tetra Pak ne sera pas tenu responsable des dommages sur l'équipement ou des blessures au personnel ou aux consommateurs qui pourraient être causés par des pièces de rechange qui ne sont pas des pièces de rechange Tetra Pak originales.

Pour commander les pièces de rechange originales de cette machine, prendre contact avec le bureau Tetra Pak le plus proche.

Identification

Certification CE

Cet équipement est conforme aux réglementations essentielles d'hygiène et de sécurité de la Communauté Économique Européenne (CEE).

(Suite à la page suivante)

(Suite de la page précédente)

3-A Conformité

Si la plaque de machine contient le repère 3-A (15) (voir la figure (B) à la page i-7), cet équipement est conforme aux Normes Sanitaires 3-A pour les moules, les remplisseuses et systèmes de soudure de conteneurs pour lait liquide et produits laitiers liquides, Numéro 17-10.

Plaque signalétique de la machine

La figure (B) à la page i-7 montre un exemple d'une plaque signalétique de machine.
Une représentation de la plaque de machine valable et son emplacement sur l'équipement est indiquée au chapitre Introduction des manuels fournis avec l'équipement. La plaque de machine contient les caractéristiques figurant dans la liste ci-dessous, nécessaires pour prendre contact avec Tetra Pak au sujet de cet équipement spécifique.

- Type de machine (8)
- Volume (9)
- Spécifications du plan (10)
- Numéro de série de la machine (11)
- Fabricant (12)
- Année de fabrication (13)
- Marquage CE (14)
- Repère 3-A (s'il y a lieu) (15)

S'assurer que les caractéristiques de l'équipement figurant dans la liste des pages de garde de ce manuel correspondent aux caractéristiques de la plaque signalétique de la machine et à ses spécifications.

Comment utiliser ce Catalogue de Pièces de Rechange

Localiser un Numéro de Pièce de rechange.

a) Se référer à la figure (C) à la page i-7: Aller au numéro de chapitre (16) indiqué à côté du groupe principal qui contient la pièce que vous souhaitez localiser.

Les articles b) et c) se réfèrent à la figure (D) à la page i-8.

b) Sur la figure du groupe principal, chercher la sous-groupe de machine (18) qui contient la pièce ou le sous-groupe que recherché. Noter le numéro de repère (19) et aller à la page de liste qui suit la figure.

c) Rechercher le numéro de repère/la désignation de référence (17) ou le nom de sous-groupe (20). Aller au numéro de page correspondant (21) figurant dans la liste de la colonne de droite. Tetra Pak a choisi de toujours utiliser la structure orientée vers la fonction pour la désignation de référence. Le préfixe indiquant la structure orientée vers la fonction (=) n'est pas indiquée dans la désignation de référence.

(Suite à la page suivante)

(Suite de la page précédente)

Les articles d) et e) se réfèrent à la figure (E) à la page i-8.

d) Localiser la pièce (22) recherchée sur la figure de sous-groupe et noter le numéro de repère de la pièce.
e) Le numéro de pièce (29) et la description de la pièce (30) figurent dans la liste à côté du numéro de repère sur la page de liste.

Informations figurant dans la Liste dans un Catalogue de Pièces de Rechange.

La liste ci-dessous se réfère à la figure (E) à la page i-8. Un Catalogue de Pièces de Rechange contient les renseignements suivants relatifs aux groupes, sous-groupes et pièces de rechange de l'équipement.

- Référence de structure de groupe (23). Indique le groupe supérieur suivant dans la structure de liste d'équipement.
- Nom du groupe (24)
- Unité de mesure (25)
- Quantité (26)
- Numéro de plan de montage (27)
- Gamme de la page de liste (28). Incluse s'il y a des pages multiples dans la figure de groupe ou dans la liste.
- Numéro de pièce ou de sous-groupe (29)
- Nom de sous-groupe ou description de la pièce (30)
- No. de groupe (31)
- Numéro de l'équipement (32)
- Titre des informations de groupe (33). Indique si la section sous le titre est pour une variante de machine spécifique ou s'il y a une liste de pièces communes. Si une liste comporte plus d'une variante et que chaque variante possède son propre plan de montage, une référence de page au plan de montage de la variante est alors indiqué.
- Informations internes (34)

Service Assistance et Réaction ("Support and Feeback")

Pour toute assistance lors de l'utilisation de cet équipement, ou pour toutes autres questions, commentaires ou suggestions, poser les questions ou faire part des réactions sur la page d'accueil du site de liaison électronique: http://e-liaison.tetrapak.com. Si l'accès au réseau interne Tetra Pak n'est pas disponible, prendre contact avec le représentant Tetra Pak le plus proche.

Kézikönyv információ

A Tetra Pak az összes leszállított kézikönyv alapos átolvasását javasolja. Gondoskodjon arról, hogy a készüléket üzemeltető és karbantartó személyzet számára elérhetőek legyenek a leszállított kézikönyvek.

Fontos, hogy a kézikönyvet a berendezés teljes élettartama alatt megőrizzék, és továbbadják azt minden későbbi tulajdonosnak és felhasználónak.

A Tetra Pak nem vállal felelősséget semmilyen a készülékben keletkező kárért, amely a berendezéshez mellékelt kézikönyvben lévő utasítások be nem tartásának következménye.

Leszállított kézikönyvek

A berendezéssel leszállított kézikönyvek:

CM

A CM Átállítási kézikönyv ellátja a szakembereket a különböző gyártási üzemmódokra való átállításról szóló információkkal.

EM

Az EM Elektromossági kézikönyv ellátja a szakembereket a készülék elektromos rendszerével kapcsolatos információkkal.

IM

Az IM Telepítési kézikönyv a készülék biztonságos telepítéséhez szolgáltat információkat a szakemberek számára.

MM

Az MM Karbantartási kézikönyv a készülék karbantartásával kapcsolatosan szolgáltat információkat a szakemberek számára.

OM

Az OM Üzemeltetési kézikönyv a kezelők részére szolgáltat információkat a berendezés kezeléséről és működtetéséről a gyártás előtt, alatt és után.

RM

Az RM újraépítési kézikönyv ellátja a szakembereket azokkal az információkkal, amelyek egy készletnek a már telepített gépre való biztonságos felszereléséhez szükségesek.

(Folyt.)

(Folyt.)

SPC

Az SPC Alkatrész-katalógus a Tetra Paktól megrendelhető alkatrészek megrendeléséhez szükséges információkat tartalmazza.

TeM

A TeM Műszaki útmutató az alábbi információkkal látja el a technikusokat:

- a berendezés biztonságos felszereléséhez szükséges információkkal,
- a berendezés karbantartásához szükséges információkkal,
- a gép/berendezés elektromos rendszerével kapcsolatos információkkal,
- A Tetra Paktól történő cserealkatrész rendeléshez szükséges információkkal,
- egyéb műszaki információkkal.

UP

A UP Termékfrissítési oldalak új oldalakkal frissíti a gépkönyveket.

Oldal elrendezés

Lásd az (A) ábrát a(z) i-7 oldalon: Az Alkatrész-katalógus fő oldalai egy ábrákat tartalmazó oldalból (1) és a megfelelő listát tartalmazó oldalból (7) állnak. Az oldalszám (5) az ábrákat tartalmazó oldal fejlécében és a listát tartalmazó oldal láblécében jelenik meg. A dokumentumszám a listát tartalmazó oldal (6) láblécében jelenik meg.

Oldalszámozás

Lásd az ábrát (A) a(z) i-7 oldalon: Az oldalszám (5) három részből áll:

- fejezetszám (2)
- fejezeten belüli egymást követő oldalak száma (3)
- a fejezet összoldalszáma (4)

Megjegyzés! A UP betűk helyettesíthetik a fejezetszámot (2), ha a kézikönyv termékfrissítési oldalakat tartalmaz. A termékfrissítési oldalak egymást követő oldalai (3) és összoldalszáma (4) nem igazodik a fejezet egymást követő oldalszámozásához.

Gép bevezetés

Gyártó

A gyártó neve és címe a katalógus második oldalán található.

Szerviz

A Tetra Pak nem vállal felelősséget a berendezés, személyzet vagy fogyasztók olyan sérüléseiért, amelyet nem eredeti Tetra Pak pótalkatrészek használata okozott.

Eredeti Tetra Pak pótalkatrészeket a legközelebbi Tetra Pak irodából rendelhet.

Azonosítás

CE besorolás

A berendezés megfelel az Európai Gazdasági Térség (EEA) alapvető egészségügyi és biztonsági előírásainak.

(Folyt.)

(Folyt.)

3-A megfelelőség

Ha a gép adattáblája tartalmazza a 3-A jelzést (15) (lásd (B) ábra az i-7 oldalon), akkor ez a berendezés megfelelő a 3-A Egészségügyi szabványok folyékony tej és folyékony tejtermékek csomagolásának alakító, töltő és lezáró eszközeire, 17-10. sz.

Géptábla

A (B) ábra a(z) i-7 oldalon egy példa a géptáblára.
Az érvényes géptáblát és annak a gépen elfoglalt helyét bemutató ábra a berendezéshez mellékelt kézikönyvek bevezető fejezetében található. A géptábla az alább felsorolt adatokat tartalmazza, amelyekre akkor van szükség, amikor felveszi a kapcsolatot a Tetra Pakkal ezzel a sajátos berendezéssel kapcsolatban.

- Géptípus (8)
- Térfogat (9)
- Tervrajz specifikációk (10)
- Gép gyártási száma (11)
- Gyártó (12)
- Gyártási év (13)
- CE jelölés (14)
- 3-A jelölés (ha van ilyen) (15)

Bizonyosodjon meg arról, hogy a kézikönyv első oldalán található berendezés-adatok megfelelnek a géptábla adatainak és a gép specifikációinak.

Az Alkatrész-katalógus használata

Keresse meg az alkatrész-számot

a) Lásd a (C) ábrát a(z) i-7 oldalon: Ugorjon a fejezetszámra (16), amely a keresett alkatrészt tartalmazó fő csoport mellett található.

A(z) b) és c) adatok a(z) i-8 oldalon található (D) ábrára vonatkoznak.

b) A főcsoport ábráját lásd a gép alcsoportban (18), amely a keresett alkatrészt vagy alcsoportot tartalmazza. Jegyezze fel a pozíció számot (19) és ugorjon az illusztrációt követő lista oldalra.

c) Keresse a pozíció számot/referencia elnevezést (17) vagy az alcsoport nevét (20). Ugorjon a jobboldali oszlopban feltüntetett megfelelő oldalszámra (21). A Tetra Pak úgy döntött, hogy referencia elnevezésre mindig a funkcióorientált szerkezetet alkalmazza. A funkcióorientált szerkezetet jelző előtag (=) nem jelenik meg a referencia elnevezésben.

(Folyt.)

(Folyt.)

A(z) d) és e) adatok a(z) i-8 oldalon található (E) ábrára vonatkoznak.

d) Keresse meg az alkatrészt (22) az alcsoport ábrán és jegyezze fel az alkatrész pozíció számát.

e) Az alkatrész-szám (29) és az alkatrész leírása (30) a lista oldalon a pozíció szám mellett van feltüntetve.

Az Alkatrész-katalógusban feltüntetett információk

Az alábbi lista a(z) i-8 oldalon lévő (E) ábrára vonatkozik.
Az Alkatrész-katalógus a következő információkat tartalmazza a berendezés alcsoportokról, csoportokról és alkatrészekről.

- Csoportszerkezet referencia (23). A következő nagyobb csoportot jelzi a berendezés listaszerkezetében.
- Csoportnév (24)
- Mértékegység (25)
- Mennyiség (26)
- Szerelési rajz száma (27)
- Listaoldal tartomány (28). Akkor található meg, ha több oldalt tartalmaz a csoportábrában vagy a listában.
- Alkatrész vagy alcsoport szám (29)
- Alcsoport név vagy alkatrész leírás (30)
- Csoportszám (31)
- Berendezés szám (32)
- Csoportinformáció címsor (33). Azt jelzi, hogy az alábbi szakaszban a címsor egy bizonyos gépváltozatra vonatkozik, vagy általános alkatrészek egy listája Ha egy lista egynél több változattal rendelkezik, és mindegyik változatnak saját összeszerelési rajza van, a változatok szerelési rajzának egy oldal-hivatkozása jelenik meg.
- Belső információk (34)

Támogatás és visszajelzés

A berendezés üzemeltetésére vonatkozó segítséghez, vagy egyéb kérésekhez, megjegyzésekhez vagy javaslatokhoz az E-Liaison http://e-liaison.tetrapak.com honlapján kell feltenni kérdéseket vagy visszajelzést adni. Ha a Tetra Pak intranet nem érhető el, forduljon a legközelebbi Tetra Pak képviselethez.

Handbókaupplýsingar

Tetra Pak mælir með því að allar handbækur séu lesnar vandlega.
Gangið úr skugga um að afhentar handbækur séu tiltækar starfsmönnum sem reka tækin eða viðhalda þeim.

Mikilvægt er geyma þessa handbók á endingartíma búnaðarins og afhenda hana arftökum eða öðrum notendum.

Tetra Pak ber ekki ábyrgð á neinu tjóni á tækjunum sem stafar af því að ekki var farið eftir leiðbeiningum í þessari handbók.

Afhentar handbækur

Handbækur sem afhentar voru með þessum tækjum:

CM

Breytingahandbók veitir tæknimönnum upplýsingar um breytingar á tækjunum svo að þau hæfi hinum ýmsu framleiðsluháttum.

EM

Raftækjahandbók veitir tæknimönnum upplýsingar um rafkerfi tækjanna.

IM

Uppsetningarhandbók veitir tæknimönnum nauðsynlegar upplýsingar um örugga uppsetningu tækjanna.

MM

Viðhaldshandbók veitir tæknimönnum upplýsingar um viðhald tækjanna.

OM

Rekstrarhandbók veitir stjórnanda upplýsingar um meðhöndlun og rekstur tækjanna fyrir og eftir framleiðslu.

RM

Endurbyggingarhandbók veitir tæknimönnum nauðsynlegar upplýsingar um örugga uppsetningu viðbótarbúnaðar við þegar uppsetta vél eða tæki.

(frh.)

(frh.)

SPC

Varahlutalisti veitir upplýsingar sem nauðsynlegar eru til að panta varahluti frá Tetra Pak.

TeM

Í Tæknihandbókinni eru tæknimönnum veittar upplýsingar, svo sem:

- upplýsingar um örugga uppsetningu tækjanna
- upplýsingar um viðhald tækjanna
- upplýsingar um rafkerfi vélarinnar/búnaðarins
- nauðsynlegar upplýsingar um pantanir varahluta frá Tetra Pak
- aðrar tæknilegar upplýsingar

UP

Uppfærslublaðsíður eru nýjar blaðsíður til að uppfæra eldri vélahandbækur.

Umbrot

Vísað er til myndar (A) á bls. i-7: Meginblaðsíður í Varahlutalistanum eru myndablaðsíða (1) og samsvarandi listablaðsíða (7). Blaðsíða númer (5) er sýnd í fyrirsögn myndablaðsíðu og neðst á listablaðsíðu. Skjalsnúmer (6) er neðst á listablaðsíðu.

Blaðsíðunúmer

Vísað er til myndar (A) á blaðsíðu i-7: Blaðsíðunúmer (5) skiptist í þrjá hluta:

- kaflanúmer (2)
- raðnúmer (3) innan kaflans
- heildarfjölda blaðsíðna (4) í kaflanum.

Ath.! Stafirnir UP kunna að koma í stað kaflanúmers (2) ef uppfærslublaðsíður eru í handbókinni. Raðnúmer blaðsíðu (3) og heildarfjöldi síðna (4) af uppfærslublaðsíðum sýna ekki eldri raðnúmer í kaflanum.

Inngangur um vélina

Framleiðandi

Nafn og heimilisfang framleiðanda er birt á 2. bls. þessa vörulista.

Þjónusta

Tetra Pak ber enga ábyrgð á tjóni eða slysum á tækjum, starfsmönnum eða neytendum af völdum varahluta sem eru ekki ekta Tetra Pak-varahlutir.

Pantanir á ekta Tetra Pak-varahlutum í þessa vél skulu sendar næstu skrifstofu Tetra Pak.

Auðkenni

CE flokkun

Þessi tæki fullnægja grundvallarheilbrigðis- og öryggisreglugerðum Evrópska efnahagssvæðisins (EES).

(frh.)

(frh.)

3-A samræmi

Ef vélarplatan inniheldur 3-A merkingu (15) (sjá mynd (B) á bls. i-7) er þessi búnaður í samræmi við 3-A hreinlætisstaðla fyrir mótara, áfyllara og lokara íláta fyrir mjólkurvökva og mjólkurvökvavörur, nr. 17-10.

Vélarskilti

Myndin (B) á bls. i-7 sýnir dæmi um vélarskilti.
Mynd af gildandi vélarskilti og staðsetning þess á búnaðinun er birt í inngangskafla handbókanna sem afhentar eru með þessum búnaði.
Á vélarskiltinu er að finna þau gögn sem talin eru upp hér að neðan og þörf er fyrir þegar haft er samband við Tetra Pak vegna þessa sérstaka búnaðar.

- Vélargerð (8)
- Magn (9)
- Tækniteikningar (10)
- Raðnúmer vélar (11)
- Framleiðandi vélar (12)
- Framleiðsluár(13)
- CE-merki (14)
- 3-A-merki (ef við á) (15)

Gangið úr skugga um að gögn um búnaðinn á fyrstu blaðsíðum þessarar handbókar komi heim og saman við vélarskiltið og tæknilýsingu vélarinnar.

Notkun þessa varahlutalista

Finna ber númer varahlutar

a) Vísað er til myndar (C) á bls. i-7: Fletta skal upp á kafla (16) sem birtist við hlið meginhópsins sem hefur að geyma þann hlut sem ætlunin er að finna.

Atriði b) og c) vísa til myndar (D) á bls. i-8.

b) Á mynd af meginhópnum ber að gá að undirflokki (18) vélar sem hefur að geyma hlut eða undirflokk sem leitað er að.
Aðgæta skal staðsetningarnúmerið (19) og fletta upp á listablaðsíðu sem fylgir myndinni.

c) Finna ber staðsetningarnúmer/tilvísaða skilgreiningu (17) eða heiti undirhóps (20). Aðgæta skal viðeigandi blaðsíðunúmer (21) sem birt er í dálkinum hægra megin. Tetra Pak hefur valið að nota ávallt virkniform sem skilgreiningarhlut. Forskeytið, sem bendir til virkniformsins (=), er ekki sýnt í skilgreiningarhlutnum

(frh.)

(frh.)

Atriði d) og e) eiga við um mynd (E) á bls. i-8.

d) Finna ber hlutinn (22) sem leitað er að í undirhópsmyndinni og aðgæta hvert er staðsetningarnúmer hlutarins.

e) Hlutarnúmerið (29) og lýsing hlutarins (30) eru listuð við hlið staðsetningarnúmersins á listablaðsíðunni.

Upplýsingar sem birtar eru í Varahlutalistanum

Listinn hér að neðan á við um mynd (E) á bls. i-8. Í Varahlutalista er að finna eftirfarandi upplýsingar um hópa, undirhópa og varahluti fyrir tækin:

- Skilgreining uppbyggingar hóps (23). Bendir til næsta hóps fyrir ofan í uppbyggingu hlutalistans.
- Heiti hóps (24)
- Mælieiningar (25)
- Magn (26)
- Númer á samsetningarteikningu (27)
- Svið listablaðsíðu (28). Fylgir með ef um er að ræða margar blaðsíður á hópmyndninni eða listanum.
- Númer hlutar eða undirflokks (29)
- Heiti undirhóps eða lýsing hlutar (30)
- Hópnúmer (31)
- Númer búnaðar (32)
- Fyrirsögn upplýsingar um hóp (33). Bendir til þess hvort kaflinn undir fyrirsögninni fjalli um sérstaka gerð vélar eða í honum sé listi yfir almenna hluti. Ef í listanum er að finna fleiri en einn frábrugðinn hlut og birt er samsetningarteikning fyrir sérhvern frábrugðinn hlut er vísað til blaðsíðunnar með samsetningarteikningu hins frábrugðna hlutar.
- Innri upplýsingar (34)

Stuðningur og endurgjöf

Ef óskað er aðstoðar við notkun þessa búnaðar, eða að bera fram fyrirspurnir, athugasemdir eða tillögur, á að bera upp spurningar eða veita endurgjöf á E-Liaison-heimasíðunni http://e-liaison.tetrapak.com. Ef ekki er um að ræða aðgang að Tetra Pak-heimasíðunni ber að hafa samband við næsta umboðsmann Tetra Pak.

Informazioni sul manuale

Tetra Pak raccomanda di leggere con attenzione tutti i manuali forniti. Assicurarsi che i manuali forniti siano disponibili per il personale che opera o mantiene in efficienza l'equipaggiamento.

E' importante conservare questo catalogo per tutta la durata dell'equipaggiamento e consegnarlo ad ogni successivo possessore o utilizzatore.

Tetra Pak non si assumerà alcuna responsabilità per qualsiasi danno all'equipaggiamento causato dall'inosservanza delle istruzioni contenute nei manuali forniti con questo equipaggiamento.

Manuali forniti

Manuali forniti con questo equipaggiamento:

CM

Il Manuale di Conversione fornisce ai tecnici le informazioni sulla conversione dell'equipaggiamento tra i diversi modi di produzione.

EM

Il Manuale Elettrico fornisce ai tecnici le informazioni sul sistema elettrico dell'equipaggiamento.

IM

Il Manuale d'Installazione fornisce ai tecnici le informazioni necessarie per installare facilmente l'equipaggiamento.

MM

Il Manuale di Manutenzione fornisce ai tecnici le informazioni sulla manutenzione dell'equipaggiamento.

OM

Il Manuale Operativo fornisce all'operatore informazioni su come movimentare ed azionare l'equipaggiamento prima, durante e dopo la produzione.

RM

Il Manuale di modifica fornisce ai tecnici le informazioni necessarie per installare facilmente un kit ad una macchina o ad un equipaggiamento.

(Continua)

(Continuazione)

SPC

Il Catalogo parti di ricambio fornisce informazioni necessarie per ordinare le parti di ricambio da Tetra Pak.

TeM

Il Manuale Tecnico fornisce le informazioni ai tecnici che possono essere:

- informazioni necessarie per installare in modo sicuro l'equipaggiamento
- informazioni necessarie per la manutenzione dell'equipaggiamento
- informazioni sul sistema elettrico della macchina/equipaggiamento
- informazioni necessarie per ordinare le parti di ricambio a Tetra Pak.
- altre informazioni tecniche

SU

Le pagine di aggiornamento forniscono nuove pagine per aggiornare i manuali delle macchine esistenti.

Schema pagina

Fare riferimento alla figura (A) a pagina i-7: Le pagine principali in un catalogo parti di ricambio consistono di una pagina di illustrazione (1) ed una corrispondente pagina della lista (7). Il numero di pagina (5) è indicato nell'intestazione di una pagina di illustrazione e nel piè di pagina di una pagina della lista. Il numero di documento (6) è indicato nel piè di pagina di una pagina della lista.

Numerazione pagina

Fare riferimento alla figura (A) a pagina i-7: Un numero di pagina (5) ha tre parti:

- numero capitolo (2)
- numero pagina consecutivo nel capitolo (3)
- numero totale di pagine nel capitolo (4)

Nota! Le lettere UP possono sostituire il numero del capitolo (2) se il manuale include le pagine di aggiornamento. Il numero di pagina consecutivo (3) ed il numero totale di pagine (4) delle pagine di aggiornamento non seguono la numerazione esistente sequenziale delle pagine del capitolo.

Introduzione macchina

Fabbricante

Per il nome e l'indirizzo del fabbricante, vedere la seconda pagina di questo catalogo.

Assistenza

Tetra Pak non si assume alcuna responsabilità per qualsiasi danno all'equipaggiamento, o lesioni al personale o ai clienti che sia stato causato da parti di ricambio non originali Tetra Pak.

Per ordinare le parti di ricambio originali Tetra Pak per questa macchina, contattare l'ufficio Tetra Pak più vicino.

Identificazione

Classificazione CE

Questa macchina è conforme alle norme sanitarie e di sicurezza dell'Area Economica Europea (EEA).

(Continua)

(Continuazione)

Conformità 3-A

Se la targhetta macchina contiene il marchio 3-A (15) (vedere la figura (B) a pagina i-7), questo equipaggiamento è conforme alle norme sanitarie 3-A per formatrici, riempitrici e saldatori di contenitori per latte liquido e prodotti lattiero-caseari liquidi, numero 17-10.

Targhetta macchina

La figura (B) a pagina i-7 mostra un esempio della targhetta della macchina. Una figura della targhetta della macchina valida e la relativa posizione sull'equipaggiamento è mostrata nel capitolo Introduzione dei manuali forniti con questo equipaggiamento. La targhetta della macchina contiene i dati elencati in basso, necessari quando si contatta Tetra Pak in merito a questo specifico equipaggiamento.

- Tipo di macchina (8)
- Volume (9)
- Specifiche disegni (10)
- Numero di serie della macchina (11)
- Fabbricante (12)
- Anno di fabbricazione (13)
- Sigla CE (14)
- Marcatura 3-A (se applicabile) (15)

Assicurarsi che i dati dell'equipaggiamento nelle pagine anteriori di questo manuale corrispondano alla targhetta della macchina ed alle specifiche della macchina stessa.

Come usare questo catalogo parti di ricambio

Individuazione di un numero di parte di ricambio

a) Fare riferimento alla figura (C) a pagina i-7: Passare al numero del capitolo (16) indicato accanto al gruppo principale che contiene la parte che si vuole individuare.

Punti b) e c) fare riferimento alla figura (D) a pagina i-8.

b) Sulla figura del gruppo principale, cercare il sottogruppo della macchina (18) che contiene la parte o il sottogruppo che si sta cercando. Annotare il numero di posizione (19) e passare alla pagina della lista che segue la figura.

c) Cercare il numero di posizione/denominazione di riferimento (17) o il nome del sottogruppo (20). Passare al numero di pagina corrispondente (21) elencato nella colonna destra. Tetra Pak ha scelto di utilizzare sempre la funzione della struttura orientata per la denominazione di riferimento. Il prefisso che indica la funzione della struttura orientata (=) non è mostrato nella denominazione di riferimento

(Continua)

(Continuazione)

Punti d) e e) fare riferimento alla figura (E) a pagina i-8 .

d) Individuare la parte (22) che si sta cercando sulla figura del sottogruppo ed annotare il numero di posizione della parte.

e) Il numero della parte (29) e la descrizione della parte (30) sono elencati accanto al numero di posizione nella pagina della lista.

Informazioni elencate nel catalogo parti di ricambio

La lista in basso si riferisce alla figura (E) a pagina i-8. Un catalogo parti di ricambio contiene le seguenti informazioni sui gruppi, sottogruppi e parti di ricambio per l'equipaggiamento:

- Riferimento struttura gruppo (23). Indica il gruppo successivo superiore nella struttura della lista dell'equipaggiamento.
- Nome del gruppo (24)
- Unità di misura (25)
- Quantità (26)
- Numero disegno di montaggio (27)
- Gamma di pagine della lista (28). Inclusa se ci sono pagine multiple nella figura del gruppo o della lista.
- Numero della parte o del sottogruppo (29)
- Nome del sottogruppo o descrizione della parte (30)
- Numero gruppo (31)
- Numero dell'equipaggiamento (32)
- Sezione informazioni del gruppo (33). Indica se la sezione sotto l'intestazione è per una variante macchina specifica o se è una lista di parti comuni. Se una lista ha più di una variante e ogni variante ha il proprio disegno di montaggio, un riferimento della pagina è indicato nel disegno di montaggio della variante.
- Informazioni interne (34)

Supporto e feedback

Per l'assistenza durante il funzionamento di questo equipaggiamento, o altre richieste, commenti, o suggerimenti, presentare le domande o fornire il feedback sulla pagina iniziale E-Liaison a http://e-liaison.tetrapak.com. Se l'accesso all'intranet Tetra Pak non è disponibile, contattare il rappresentante Tetra Pak più vicino.

Vadovo informacija

Tetra Pak rekomenduoja atidžiai perskaityti visus pristatomus vadovus. Įsitikinkite, kad pristatomi vadovai yra prieinami personalui, kuris dirba su įranga arba ją prižiūri.

Svarbu saugoti šį vadovą visam įrangos gyvavimo laikotarpiui ir perduoti vadovą kiekvienam sekančiam savininkui arba naudotojui.

Tetra Pak neatsako už bet kokius įrangos gedimus, atsiradusius nesilaikant šią įrangą lydinčiuose vadovuose pateiktų instrukcijų.

Pristatomi vadovai

Kartu su šia įranga pristatomi vadovai:

CM

Perjungimų vadove specialistams suteikiama informacija apie įrangos perjungimą tarp įvairių gamybos režimų.

EM

Elektrinės dalies vadove pateikiama informacija specialistams apie įrangos elektros sistemą.

IM

Montavimo vadove pateikiama specialistams informacija, reikalinga saugiam įrangos montavimui

MM

Priežiūros vadove pateikiama specialistams informacija, reikalinga prižiūrint įrangą.

OM

Darbo vadove pateikiama informacija operatoriams apie darbą su įranga ir įrangos valdymą prieš gamybą, gamybos metu ir po gamybos.

RM

Restauravimo vadove pateikiama specialistams informacija, reikalinga saugiai sumontuoti komplektą dalių į sumontuotą mašiną ar įrangą.

(Tęsiama)

(Tęsiama)

SPC

Atsarginių dalių kataloge pateikiama informacija, reikalinga užsakant atsargines dalis iš Tetra Pak.

TeM

Techniniame vadove pateikiama specialistams informacija, kuri gali būti:

- informacija, reikalinga saugiam įrangos montavimui
- informacija, reikalinga atliekant techninę įrangos priežiūrą
- informacija apie mašinos / įrangos elektros sistemą
- informacija, reikalinga užsakant atsargines dalis iš Tetra Pak
- kitokia techninė informacija

UP

Nauji puslapiai skirti esamų mašinos vadovų atnaujinimui naujais puslapiais.

Puslapio išdėstymas

Vadovaukitės (A) paveikslėliu i-7 puslapyje: atsarginių dalių katalogo pagrindinius puslapius sudaro paveikslėlių puslapis (1) ir atitinkamo sąrašo puslapis (7). Puslapio numeris (5) nurodytas paveikslėlių puslapio antraštėje ir apatinėje sąrašo puslapio poraštėje. Dokumento numeris (6) nurodytas apatinėje sąrašo puslapio poraštėje.

Puslapių numeravimas

Vadovaukitės (A) paveikslėliu i-7 puslapyje: puslapio numerį (5) sudaro trys dalys:

- skyriaus numeris (2)
- puslapio eilės numeris (3) skyriuje
- bendras puslapių skaičius (4) skyriuje

Pastaba! Jei vadove yra atnaujinimų puslapiai, UP raidės gali būti vietoje skyriaus numerio (2). Atnaujinimo puslapio eilės numeris (3) ir bendras atnaujinimo puslapių skaičius (4) neatitinka nuoseklios skyriaus puslapių numeracijos.

Mašinos įvadas

Gamintojas

Apie gamintojo įmonės pavadinimą ir adresą skaitykite antrame šio katalogo puslapyje.

Aptarnavimas

Tetra Pak neprisiims jokios atsakomybės už žalą ir įrangos gedimus ar darbuotojų arba vartotojų traumas, patirtas naudojant atsargines dalis, kurios nėra originalios Tetra Pak atsarginės dalys.

Norėdami užsakyti originalias Tetra Pak atsargines dalis susisiekite su artimiausia Tetra Pak įstaiga.

Identifikacija

CE klasifikacija

Ši įranga tenkina pagrindines Europos Ekonominės Zonos (EEA) sveikatos ir saugumo taisykles.

(Tęsiama)

(Tęsiama)

3-A atitiktis

Jei mašinos lentelėje yra ženklas 3-A (15) (žr. (B) iliustraciją i-7 puslapyje), ši įranga atitinka 3-A higienos standartus skysto pieno ir skysto prieno produktų talpyklų formuotojams, pripildytojams ir sandarikliams, numeris 17-10.

Mašinos plokštė

Paveikslėlyje (B), esančiame i-7 puslapyje, pavaizduotas įrenginio kortelės pavyzdys.
Mašinos galiojančios kortelės paveikslėlis ir kortelės vieta ant įrangos nurodyta kartu su įranga tiekiamų vadovų įžanginiame skyriuje. Įrangos kortelėje pateikiami išvardinti duomenys, kurių reikia kreipiantis į Tetra Pak dėl konkrečios įrangos.

- Mašinos tipas (8)
- Tūris (9)
- Brėžinio specifikacijos (10)
- Mašinos serijos numeris (11)
- Gamintojas (12)
- Pagaminimo metai (13)
- CE ženklas (14)
- 3-A ženklas (jei taikomas) (15)

Įsitikinkite, kad šio vadovo pirmuose puslapiuose pateikti įrangos duomenis atitinka duomenis pateiktus mašinos informacinėje lentelėje ir mašinos specifikacijoje.

Kaip naudotis šiuo atsarginių dalių katalogu?

Nustatykite atsarginės dalies numerį

a) Vadovaukitės (C) paveikslėliu, esančiu i-7 puslapyje: atsiverskite skyrių, kurio numeris (16) nurodytas prieš pagrindinę grupę, kurioje yra reikiama surasti dalis.

Elementai b) ir c) atitinka (D) paveikslėlį, esantį i-8 puslapyje.

b) Pagrindinės grupės paveikslėlyje ieškokite mašinos dalinės grupės (18), kurioje yra ieškoma dalis ar dalinė grupė. Įsidėmėkite pozicijos numerį (19) ir atsiverskite už paveikslėlio esantį sąrašo puslapį.

c) Suraskite pozicijos numerio / nuorodos aprašymą (17) ar dalinės grupės pavadinimą (20). Atsiverskite atitinkamą puslapio numerį (21), nurodytą dešiniajame stulpelyje. Tetra Pak nuorodų aprašymams pasirinko visuomet naudoti su atliekama funkcija susietą struktūrą. Nuorodos aprašyme nenaudojamas priešdėlis, pažymintis su atliekama funkcija susietą struktūrą (=)

(Tęsiama)

(Tęsiama)

Elementai d) ir e) atitinka (E) paveikslėlį, esantį i-8 puslapyje.

d) Ieškomą dalį (22) suraskite dalinės grupės paveikslėlyje ir įsidėmėkite dalies pozicijos numerį.

e) Dalies numeris (29) ir dalies aprašymas (30) nurodyti sąrašo puslapyje prie pozicijos numerio.

Atsarginių dalių kataloge pateikiama informacija

Pateiktas sąrašas atitinka (E) paveikslėlį, esantį i-8 puslapyje. Atsarginių dalių kataloge pateikiama tokia informacija apie įrangos grupes, dalines grupes ir atsargines dalis:

- Grupės struktūros apibūdinimas (23). Nurodo kitą aukščiausią grupę įrangos sąrašo struktūroje.
- Grupės pavadinimas (24)
- Mato vienetas (25)
- Kiekis (26)
- Surinkimo brėžinio numeris (27)
- Sąrašo puslapių intervalas (28). Nurodomas tuomet, kai grupės paveikslėlį ar sąrašą sudaro keli puslapiai.
- Dalies ar dalinės grupės numeris (29)
- Dalinės grupės pavadinimas arba dalies aprašymas (30)
- Grupės numeris (31)
- Įrangos numeris (32)
- Grupės informacijos antraštė (33). Pažymi, ar po antrašte esantis skyrius skirtas konkrečiam mašinos variantui, ar tai bendrų dalių sąrašas. Jei sąrašą sudaro daugiau kaip vienas variantas ir kiekvienas iš jų atitinka skirtingą surinkimo numerį, pateikiama varianto surinkimo brėžinio puslapio nuoroda.
- Vidinė informacija (34)

Techninė pagalba ir grįžtamasis ryšys

Dėl techninės pagalbos ar kitokių pasiteiravimų eksploatuojant šią įrangą, norėdami pateikti pastabas arba pasiūlymus, užduokite klausimus ar suteikite grįžtamąją informaciją E-Liaison pagrindiniame puslapyje, adresu http://e-liaison.tetrapak.com. Jei nepavyks pasiekti vidinio Tetra Pak tinklo, susisiekite su artimiausia Tetra Pak atstovybe.

Informācija par instrukciju

Tetra Pak iesaka uzmanīgi izlasīt visas piegādātās instrukcijas. Nodrošiniet, lai piegādātās instrukcijas būtu pieejamas personālam, kurš ekspluatē un apkalpo iekārtu.

Ir svarīgi saglabāt šo katalogu visā ierīces kalpošanas laikā un nodot to jebkuram sekojošam īpašniekam vai lietotājam.

Tetra Pak neuzņemas atbildību par jebkādiem šīs iekārtas bojājumiem, ko izraisa šim aprīkojumam pievienotajās rokasgrāmatās sniegto instrukciju neievērošana.

Piegādātās instrukcijas

Ar iekārtu piegādātās instrukcijas:

CM

Šī Maiņas instrukcija (CM) nodrošina tehnisko personālu ar informāciju par iekārtas pārvēršanu dažādiem ražošanas režīmiem.

EM

Elektrisko savienojumu instrukcija (EM) nodrošina tehniķus ar informāciju par iekārtas elektrisko sistēmu.

IM

Instalācijas instrukcija (IM) nodrošina tehniķus ar informāciju, kas ir nepieciešama drošai iekārtas instalācijai.

MM

Tehniskās apkopes instrukcija (MM) sniedz tehniķiem informāciju par aprīkojuma tehnisko apkopi.

OM

Ekspluatācijas instrukcija (OM) nodrošina operatorus ar informāciju par rīcību ar iekārtu un tās ekspluatāciju pirms un pēc ražošanas procesa, kā arī tā laikā.

RM

Pārveidošanas instrukcija (RM) sniedz tehniķiem informāciju, kas nepieciešama, lai uz uzstādītas iekārtas vai aprīkojuma droši uzstādītu komplektu.

(Turpinājums seko)

(Turpinājums seko)

SPC

Rezerves daļu katalogs (SPC) sniedz informāciju, kas ir nepieciešama rezerves daļu pasūtīšanai no Tetra Pak.

TeM

Tehniskā instrukcija (TeM) sniedz tehniķiem informāciju, kas var būt:

- informācija, kura nepieciešama, lai droši uzstādītu aprīkojumu;
- informācija, kura nepieciešama, lai veiktu aprīkojuma tehnisko apkopi;
- informācija par iekārtas/ aprīkojuma elektrosistēmu;
- informācija, kura nepieciešama rezerves daļu pasūtīšanai no Tetra Pak;
- cita tehniskā informācija.

UP

Atjauninājuma lappuses ir jaunas lapas, kas nepieciešamas, lai atjauninātu iekārtas esošās rokasgrāmatas.

Lappuses formāts

Skatiet attēlu (A) lappusē i-7: Rezerves daļu kataloga (SPC) galvenās lapas iekļauj ilustrāciju lapu (1) un attiecīgo saraksta lapu (7). Lappuses numurs (5) ir attēlots ilustrācijas lapas galvenes daļā un saraksta lapas kājenes daļā. Dokumenta numurs (6) ir attēlots saraksta lapas kājenes daļā.

Lappušu numerācija

Skatiet attēlu (A) lappusē i-7: lappuses numuram (5) ir trīs daļas:

- sadaļas numurs (2);
- lappuses kārtas numurs (2) sadaļā;
- kopējais lappušu skaits (3) sadaļā.

Piezīme! Burti UP var aizvietot sadaļas numuru (2), ja rokasgrāmata iekļauj atjauninājumu lappuses. Lappuses kārtas numurs (3) un atjauninājumu lappušu kopējais lappušu skaits (4) neatbilst sadaļas esošajai secīgajai lappušu numerācijai.

Ievads par ierīci

Ražotājs

Ražotāja nosaukumu un adresi skatiet šī kataloga otrajā lappusē.

Serviss

Tetra Pak neuzņemas atbildību par bojājumiem vai kaitējumu aprīkojumam, personālam vai klientiem, ko rada tādu rezerves daļu izmantošana, kas nav oriģinālas Tetra Pak rezerves daļas.

Lai pasūtītu oriģinālas Tetra Pak rezerves daļas šai iekārtai, sazinieties ar tuvāko Tetra Pak biroju.

Identifikācija

CE klasifikācija

Šī iekārta atbilst Eiropas Ekonomiskās Telpas (EEA) galvenajiem veselības un drošības noteikumiem.

(Turpinājums seko)

(Turpinājums seko)

3-A atbilstība

Ja uz iekārtas datu plāksnītes ir 3-A marķējums (15) (skatīt attēlu (B) lappusē i-7), šāds aprīkojums atbilst 3-A Šķidrā piena un šķidro piena produktu iepakojuma formētāju, pildītāju un sakausētāju sanitārajām normām Nr. 17-10.

Iekārtas datu plāksne

Attēlā (B) lappusē i-7 ir attēlots iekārtas datu plāksnes piemērs. Iekārtas datu plāksnes attēls, kā arī šīs plāksnes atrašanās vieta uz aprīkojuma ir attēlota līdz ar šo iekārtu piegādāto rokasgrāmatu ievada sadaļā. Iekārtas datu plāksnē ir iekļauti tālāk norādītie dati, kas ir nepieciešami, sazinoties ar Tetra Pak jautājumos, kuri saistīti ar šo specifisko aprīkojumu.

- Iekārtas tips (8)
- Tilpums (9)
- Rasējuma specifikācijas (10)
- Iekārtas sērijas numurs (11)
- Ražotājs (12)
- Ražošanas gads (13)
- CE marķējums (14)
- 3-A marķējums (ja piemērojams) (15)

Pārliecinieties, vai iekārtas dati šīs instrukcijas pirmajā lappusē atbilst datiem iekārtas datu plāksnē un iekārtas specifikācijai.

Kā lietot šo Rezerves daļu katalogu

Atrodiet rezerves daļas numuru

a) Skatiet attēlu (C) lappusē i-7: atrodiet sadaļas numuru (16), kas norādīts līdzās galvenajai grupai, kur atrodas meklējamā detaļa.

Punkti b) un c) attiecas uz attēlu (D) lappusē i-8.

b) Galvenās grupas attēlā atrodiet iekārtas apakšgrupu (18), kur atrodas meklējamā detaļa vai apakšgrupa. Atcerieties pozīcijas numuru (19) un skatiet sarakstu, kas seko pēc šī attēla.

c) Atrodiet pozīcijas numuru/ atsauces apzīmējumu (17) vai apakšgrupas nosaukumu (20). Atšķiriet attiecīgo lappusi (21), kas norādīta labajā ailē. Atsauču apzīmējumiem Tetra Pak vienmēr izvēlas lietot uz funkciju orientētu struktūru. Prefikss, kas apzīmē uz funkciju orientēto struktūru (=), atsauču apzīmējumos nav norādīts.

(Turpinājums seko)

(Turpinājums seko)

Punkti d) un e) attiecas uz attēlu (E) lappusē i-8.

d) Apakšgrupas attēlā atrodiet meklēto detaļu (22) un atcerieties detaļas pozīcijas numuru.

e) Detaļas numurs (29) un detaļas apraksts (30) ir sniegts saraksta lapā blakus pozīcijas numuram.

Informācija, kas sniegta Rezerves daļu katalogā

Tālāk sniegtais saraksts attiecas uz attēlu (E) lappusē i-8.
Rezerves daļu katalogs satur šādu informāciju par grupām, apakšgrupām un aprīkojuma rezerves daļām:

- grupas struktūras atsauci (23). Norāda uz aprīkojuma saraksta struktūras nākamo augstāko grupu.
- Grupas nosaukumu (24).
- Mērvienība (25)
- Daudzums (26)
- Montāžas rasējuma numurs (27)
- Saraksta lappušu diapazons (28). Ja grupas attēli vai saraksts iekļauj vairākas lappuses.
- Detaļas vai apakšgrupas numurs (29)
- Apakšgrupas nosaukums vai detaļas apraksts (30)
- Grupas numurs (31)
- Aprīkojuma numurs (32)
- Grupas informācijas virsraksts (33). Ja sadaļa, kas seko pēc virsraksta, attiecas uz specifisku iekārtas versiju, vai kopēju detaļu saraksta gadījumā. Ja sarakstā ir vairāk nekā viena versija un katrai versijai ir savs montāžas rasējums, ir sniegta atsauce uz konkrētās versijas montāžas rasējuma lappusi.
- Iekšējā informācija (34)

Atbalsts un atgriezeniskā saite

Lai saņemtu palīdzību attiecībā uz darbu ar šo aprīkojumu, pieprasītu informāciju, izteiktu komentārus, sniegtu ieteikumus, uzdotu jautājumus vai sniegtu atsauksmes, apmeklējiet E-Liaison mājas lapu: http://e-liaison.tetrapak.com. Ja piekļuve Tetra Pak iekštīklam nav iespējama, sazinieties ar tuvāko Tetra Pak pārstāvniecību.

Handboekinformatie

Tetra Pak raadt aan alle geleverde documentatie zorgvuldig te lezen. Ga na of de geleverde documentatie ter beschikking is van het personeel dat de machine moet bedienen of servicewerkzaamheden moet uitvoeren.

Het is belangrijk deze catalogus voor de duur van de machine te bewaren en de catalogus door te geven aan elke volgende eigenaar of gebruiker.

Tetra Pak aanvaardt geen verantwoordelijkheid voor om het even welke soort beschadiging aan de machine als gevolg van het niet opvolgen van de in dit handboek gegeven instructies.

Meegeleverde handboeken

Met deze apparatuur meegeleverde handboeken:

CM

Dit conversiehandboek geeft technici informatie over het ombouwen van de apparatuur tussen verschillende productiemodi.

EM

Het Elektrisch Handboek geeft technici informatie betreffende het elektrisch systeem van de apparatuur.

IM

Het Installatiehandboek geeft technici informatie om op veilige wijze de apparatuur te installeren.

MM

Het Onderhoudshandboek geeft technici informatie over het onderhoud van de apparatuur.

OM

Het Bedieningshandboek geeft operators informatie over hoe de machine moet worden bediend en hoe ermee moet worden omgegaan voor, tijdens en na productie.

RM

Het Ombouwhandboek bevat de nodige informatie voor technici om een kit veilig aan een geïnstalleerde machine of apparatuur te installeren.

(Zie volg. blz.)

(Vervolg)

SPC

De Catalogus Reservedelen geeft informatie die nodig is om reserveonderdelen bij Tetra Pak te bestellen.

TeM

Het Technische Handboek bevat informatie voor technici betreffende:

- het veilig installeren van de apparatuur
- het onderhoud van de apparatuur
- het elektrische systeem van de machine/apparatuur.
- het bestellen van reserveonderdelen bij Tetra Pak
- andere technische informatie

UP

De Update Pages bevat nieuwe bladzijden voor het updaten van de bestaande machinehandboeken.

Pagina lay-out

Zie de illustratie (A) op bladzijde i-7: De belangrijkste bladzijden van een Catalogus Reserveonderdelen bestaan uit een bladzijde met een illustratie (1) en een corresponderende bladzijde met een lijst (7).
Het bladzijdenummer (5) is te vinden in de kop van een illustratiebladzijde en in de voetnoot van de lijstbladzijde. Het documentnummer (6) is te vinden in de voetnoot van een lijstbladzijde.

Bladzijdenummering

Zie de illustratie (A) op bladzijde i-7: een bladzijdenummer (5) bestaat uit drie delen.

- hoofdstuknummer (2)
- opeenvolgende bladzijdenummer in het hoofdstuk (3)
- totaal aantal bladzijden in het hoofdstuk (4)

N.B.! De letters UP kunnen het hoofdstuknummer (2) vervangen als het handboek update-bladzijden omvat. Het opeenvolgende bladzijdenummer (3) en het totale aantal bladzijden (4) van de updatebladzijden volgen niet de bestaande volgordenummering van het hoofdstuk.

Introductie van de machine

Fabrikant

Voor naam en adres van de fabrikant, zie de tweede bladzijde van deze catalogus.

Service

Tetra Pak wijst elke verantwoordelijkheid af voor schade aan machines of letsels aan personeel of consumenten die zijn veroorzaakt door reserveonderdelen die geen originele Tetra Pak-reserveonderdelen zijn.

Neem voor het bestellen van originele Tetra Pak-reserveonderdelen voor deze machine contact op met het dichtstbijzijnde Tetra Pak-kantoor.

Identificatie

CE-classificatie

Deze apparatuur voldoet aan de basiseisen voor gezondheid en veiligheid voor de Europese Economische Ruimte (EEA).

(Zie volg. blz.)

(Vervolg)

3-A Naleving

Als het machineplaatje het 3-A merkteken (15) bevat (zie illustratie (B) op bladzijde i-7), voldoet deze apparatuur aan de 3-A hygiënenormen voor vorm-, vul- en sluitmachines van containers voor vloeibare melk en vloeibare melkproducten, nummer 17-10.

Machineplaatje

De illustratie (B) op bladzijde i-7 toont een voorbeeld van een machineplaatje.
Een illustratie van het wettige machineplaatje en de plaatsing ervan wordt getoond in het hoofdstuk Introductie van de handboeken, meegeleverd met deze apparatuur. Het machineplaatje bevat onderstaande gegevens die nodig zijn wanneer Tetra Pak moet worden gecontacteerd betreffende deze apparatuur.

- Machinetype (8)
- Volume (9)
- Tekeningspecificaties (10)
- Serienummer machine (11)
- Fabrikant (12)
- Fabricagejaar (13)
- CE-markering (14)
- Markering 3-A (indien van toepassing) (15)

Controleer of de gegevens betreffende de apparatuur in de voorste bladzijden van dit handboek overeenkomen met de gegevens op het machineplaatje en de machinespecificatie.

Hoe dient deze catalogus reserveonderdelen te worden gebruikt.

Lokaliseren van een nummer van een reserveonderdeel

a) Zie de illustratie (C) op bladzijde i-7: ga naar het hoofdstuknummer (16), naast de hoofdgroep die het gewenste deel bevat.

Items b) en c) refereren naar de illustratie (D) op bladzijde i-8.

b) Zoek in de illustratie van de hoofdgroep de machinesubgroep (18) op die het deel van de gewenste subgroep bevat. Noteer het positienummer (19) en ga naar de lijstbladzijde die op de illustratie volgt.

c) Zoek het positienummer/referentiebenaming (17) of de naam van de subgroep (20). Ga naar het corresponderende bladzijdenummer (21), aangegeven in de rechterkolom. Tetra Pak heeft altijd gekozen voor een functiegerichte structuur voor referentiebenaming. Het prefix dat de functiegerichte structuur aangeeft (=) wordt niet getoond in de referentiebenaming.

(Zie volg. blz.)

(Vervolg)

Items d) en e) refereren naar de illustratie (E) op bladzijde i-8.

d) Lokaliseer het gewenste onderdeel (22) in de illustratie van de subgroep en noteer het positienummer van het onderdeel.

e) Het onderdeelnummer (29) en de beschrijving ervan (30) worden naast het positienummer op de lijstbladzijde weergegeven.

Informatie die in een Catalogus reserveonderdelen wordt gegeven

Onderstaande lijst verwijst naar de illustratie (E) op bladzijde i-8.
Een Catalogus reserveonderdelen bevat de volgende informatie betreffende groepen, subgroepen en reserveonderdelen voor de apparatuur.

- Referentie groepsstructuur (23). Geeft de volgende hoogste groep in de structuur van de apparatuur aan.
- Groepsnaam (24)
- Meeteenheid (25)
- Hoeveelheid (26)
- Nummer montagetekening (27)
- Bereik lijstbladzijde (28). Inclusief indien er meerdere bladzijden in de groepsillustratie of lijst voorkomen.
- Onderdeel of subgroepsnummer (29)
- Naam subgroep of beschrijving onderdeel (30)
- Groepsnummer (31)
- Apparatuurnummer (32)
- Kopregel groepsinformatie (33). Geeft aan of het deel onder de titel bedoeld is voor een specifieke machinevariant dan wel of het een lijst is met algemene onderdelen. Indien een lijst meer dan één variant bevat en elke variant heeft zijn eigen montagetekening, wordt een bladzijdereferentie naar de montagetekening van de variant gegeven.
- Interne informatie (34)

Ondersteuning en feedback

Voor hulp bij het gebruik van deze apparatuur, of met andere vragen, commentaar, suggesties of feedback kunt u terecht op de E-Liaison homepage op http://e-liaison.tetrapak.com. Als u geen toegang hebt tot het intranet van Tetra Pak, dient u contact op te nemen met de dichtstbijzijnde Tetra Pak-vertegenwoordiger.

Informasjon om manualen

Tetra Pak anbefaler at du leser alle medfølgende manualer nøye. Kontroller at personalet som bruker eller vedlikeholder utstyret har adgang til de medfølgende manualene.

Det er viktig at denne manualen oppbevares trygt gjennom hele utstyrets levetid, og at den gis videre til senere eiere eller brukere av utstyret.

Tetra Pak kan ikke holdes ansvarlig for skader på utstyr som skyldes at instruksjonene i manualene som følger dette utstyret ikke er fulgt.

Medfølgende manualer

Manualer som følger med dette utstyret:

CM

Konverteringsmanualen gir teknikere opplysninger om konvertering av utstyret mellom forskjellige produksjonsmodus.

EM

Denne manualen gir teknikere opplysninger om utstyrets elektriske system.

IM

Denne manualen gir teknikere informasjonen som trengs for sikker installasjon av utstyret.

MM

Denne manualen gir teknikere informasjon om vedlikehold av utstyret.

OM

Driftsmanualen gir operatørene informasjon om håndtering og drift av utstyret før, under og etter produksjon.

RM

Ombyggingsmanualen gir teknikere informasjon som kreves for å installere et sett trygt på en installert maskin eller et utstyr.

(Forts.)

(Forts.)

SPC

Reservedelskatalogen gir nødvendige opplysninger for å kunne bestille reservedeler fra Tetra Pak.

TeM

Den tekniske manualen gir teknikerne informasjon som kan være:

- informasjon som kreves for en trygg installering av utstyret
- informasjon som kreves for vedlikehold av utstyret
- informasjon om maskinens/utstyrets elektriske system
- nødvendig informasjon for å bestille reservedeler fra Tetra Pak.
- annen teknisk informasjon

OPP

Oppdateringssidene har nye sider for å oppdatere eksisterende maskinmanualer.

Sideoppsett

Gå til illustrasjonen (A) på side i-7: Hovedsidene i en reservedelskatalog består av en illustrasjonsside (1) og en korresponderende oversiktsside (7). Sidenummeret (5) vises i overskriften på en illustrasjonsside og i fotnoten på en oversiktsside. Dokumentnummeret (6) vises i fotnoten på en oversiktsside.

Sidenummerering

Gå til illustrasjon (A) på side i-7: Et sidenummer (5) har tre deler:

- kapittelnummer (2)
- neste sidenummer innen kapitlet (3)
- totalt antall sider i kapitlet (4)

Merk! Bokstavene UP kan erstatte kapittelnummer (2) hvis manualen inkluderer oppdateringssidene. Følgende sidenummer (3) og totalt antall sider (4) på oppdateringssidene følger ikke eksisterende sekvensnummerering av sidene i kapitlet.

Innføring i maskinen

Produsent

For produsentens navn og adresse, se andre siden i denne katalogen.

Service

Tetra Pak aksepter ikke ansvar for skader eller personskader på utstyr, ansatte eller brukere forårsaket av reservedeler som ikke er originale Tetra Pak reservedeler.

For å bestille originale Tetra Pak reservedeler til denne maskinen, kontakt nærmeste Tetra Pak kontor.

Identifikasjon

CE-klassifisering

Dette utstyret tilfredsstiller grunnleggende helse- og sikkerhetskrav i Det europeiske økonomiske samarbeidsområde (EØS).

(Forts.)

(Forts.)

3-A samsvar

Hvis maskinplaten er 3-A-merket (15) (se illustrasjon (B) på side i-7), er dette utstyret i samsvar med 3-A Sanitærstandarder for formings-, påfyllings-, og tetningssystemer for beholdere for flytende melkeprodukter, nummer 17-10.

Merkeplate

Illustrasjonen (B) på side i-7 viser et eksempel på en maskinplate.
En illustrasjon av gyldig maskinplate og dennes plassering på utstyret vises i introduksjonskapitlet i manualene som følger dette utstyret.
Maskinplaten inneholder dataen som er oppført under, som er nødvendig når du kontakter Tetra Pak om dette spesifikke utstyret.

- Maskintype (8)
- Volum (9)
- Tegnespesifikasjoner (10)
- Maskinens serienummer (11)
- Produsent (12)
- Produksjonsår (13)
- CE merke (14)
- 3-A merke (hvis relevant) (15)

Pass på at utstyrsdataen på forsidene i denne manualen stemmer overens med merkeplaten og maskinspesifikasjonen.

Hvordan bruke denne reservedelskatalogen

Finn et reservedelsnummer

a) Gå til illustrasjonen (C) på side i-7: Gå til kapittelnummer (16) som er indikert ved siden av hovedgruppen som inneholder delen du ønsker å lokalisere.

Deler b) og c) viser til illustrasjonen (D) på side i-8.

b) På hovedgruppeillustrasjonen, se etter maskinundergruppen (18) som inneholder delen eller undergruppen du ser etter.
Merk posisjonsnummeret (19) og gå til oversiktssiden som følger illustrasjonen.

c) Se etter posisjonsnummer /referanseanvisning (17) eller undergruppenavnet (20). Gå til korresponderende sidenummer (21) oppført i søylen på høyre hånd. Tetra Pak har valgt alltid å bruke funksjonsorientert struktur for referansebestemmelse.
Forinnstilt indikering av funksjonsorientert struktur (=) vises ikke i referansehenvisningen

(Forts.)

(Forts.)

Deler d) og e) viser til illustrasjonen (E) på side i-8.

d) Finn delen (22) som du leter etter i undergruppeillustrasjonen og merk delens posisjonsnummer.

e) Delenummeret (29) og delebeskrivelsen (30) er oppført ved siden av posisjonsnummeret på listesiden.

Informasjon oppført i en reservedelskatalog

Listen under viser til illustrasjonen (E) på side i-8. En reservedelskatalog inneholder følgende informasjon om grupper, undergrupper og reservedeler for utstyret:

- Gruppestrukturreferanse (23). Indikerer den neste gruppen over i utstyrslistestrukturen.
- Gruppenavn (24)
- Måleenhet (25)
- Antall (26)
- Monteringstegningens nummer (27)
- Oversiktssideomfang (28). Inkludert hvis det er mange sider i gruppeillustrasjonen eller listen.
- Delenummer eller undergruppenummer (29)
- Undergruppenavn eller delebeskrivelse (30)
- Gruppenavn (31)
- Utstyrsnummer (32)
- Gruppeinformasjon overskrift (33). Indikerer om seksjonen under overskriften er for en spesiell maskinvariant eller om det er en liste med fellesdeler. Hvis en liste har mer enn en variant og hver variant har sin egen monteringstegning, vil det vises en sidereferanse til denne variantens monteringstegning.
- Intern informasjon (34)

Støtte og tilbakemeldinger

For hjelp med bruk av utstyret, eller andre spørsmål, kommentarer, eller forslag kan du stille spørsmålene eller gi tilbakemelding på E-Liason hjemmesiden på http://e-liaison.tetrapak.com. Hvis tilgang på Tetra Pak intranet ikke finnes, kontakt den nærmeste Tetra Pak representanten.

Informacje na temat instrukcji

Tetra Pak zaleca, aby uważnie przeczytano dostarczone instrukcje. Należy dopilnować, aby instrukcje zostały udostępnione pracownikom, którzy obsługują lub wykonują przeglądy urządzenia.

Ważne jest, aby zachować niniejszy katalog przez okres użytkowania maszyny i przekazać go kolejnemu właścicielowi lub użytkownikowi.

Tetra Pak nie ponosi odpowiedzialności za uszkodzenia maszyny spowodowane nieprzestrzeganiem wskazówek podanych w niniejszej instrukcji dołączonej do maszyny.

Dostarczone instrukcje

Instrukcje dostarczone w raz z maszyną:

CM

Instrukcja przestawienia dostarcza technikom informacji na temat przestawiania maszyny między różnymi trybami produkcji.

EM

Instrukcja elektryczna dostarcza technikom informacji na temat układu elektrycznego maszyny.

IM

Instrukcja instalacyjna dostarcza technikom informacji niezbędnych do bezpiecznej instalacji maszyny.

MM

Instrukcja serwisowa dostarcza technikom informacji na temat przeglądów i napraw maszyny.

OM

Instrukcja obsługi dostarcza operatorowi informacji na temat obsługi maszyny przed, w trakcie i po zakończeniu produkcji.

RM

Instrukcja przebudowy dostarcza technikom informacji niezbędnych do wykonania bezpiecznej instalacji zestawu do przebudowy w zainstalowanej maszynie lub wyposażeniu.

(Ciąg dalszy)

(Ciąg dalszy)

SPC

Katalog części zamiennych dostarcza informacji niezbędnych do zamawiania części zamiennych w Tetra Pak.

TeM

Instrukcja techniczna dostarcza technikom informacji, które mogą być:

- informacjami wymaganymi do bezpiecznej instalacji wyposażenia
- informacjami wymaganymi do wykonywania przeglądów i napraw wyposażenia
- informacjami o systemie elektrycznym maszyny/wyposażenia.
- informacjami niezbędnymi do zamawiania części zamiennych w Tetra Pak.
- innymi informacjami technicznymi

UP

Rozdział Strony aktualizacji zawiera nowe strony użyte do aktualizacji istniejących instrukcji maszyny.

Układ strony

Zapoznaj się z rysunkiem (A) na stronie i-7: Główne strony w Katalogu Części Zamiennych zawierają stronę z rysunkiem (1) i odpowiednią stronę z wykazem (7). Numer strony (5) znajduje się w nagłówku strony z rysunkiem oraz w stopce strony z wykazem. Numer dokumentu (6) znajduje się w stopce strony z wykazem.

Numeracja stron

Zapoznaj się z rysunkiem (A) na stronie i-7: Numer strony (5) składa się z trzech części:

- numer rozdziału (2)
- kolejny numer strony (3) w danym rozdziale
- całkowita ilość stron (4) w rozdziale

Uwaga! Litery UP mogą zastępować numer rozdziału (2) jeśli instrukcja zawiera strony aktualizacji. Kolejny numer strony (3) i całkowita ilość stron (4) aktualizacji nie odpowiada istniejącej numeracji stron rozdziału.

Informacje na temat maszyny

Producent

Nazwa i adres producenta, patrz druga strona niniejszego katalogu.

Serwis

Tetra Pak nie odpowiada za wszelkie uszkodzenia wyposażenia, obrażenia personelu lub konsumentów spowodowane przez części zamienne, które nie są oryginalnymi częściami zamiennymi Tetra Pak.

W celu zamówienia oryginalnych części zamiennych Tetra Pak dla maszyny, skontaktuj się z najbliższym biurem Tetra Pak.

Identyfikacja

Znak CE

Oznacza on, iż urządzenie spełnia wymagania określone w podstawowych przepisach dotyczących bezpieczeństwa i zdrowia, obowiązujących w Europejskiej Strefie Ekonomicznej (EEA).

(Ciąg dalszy)

(Ciąg dalszy)

Zgodność z normą 3-A

Jeśli tabliczka znamionowa maszyny zawiera znak 3-A (15) (patrz rysunek (B) na stronie i-7), oznacza to, że wyposażenie jest zgodne z normami sanitarnymi 3-A dla jednostek formowania, maszyn napełniających i zgrzewarek pojemników dla mleka płynnego i płynnych produktów mlecznych, numer 17-10.

Tabliczka znamionowa

Na rysunku (B) na stronie i-7 pokazano przykład tabliczki znamionowej. Rysunek tabliczki znamionowej i jej lokalizacja na wyposażeniu znajduje się w rozdziale Wstęp instrukcji dostarczonych wraz z wyposażeniem. Tabliczka znamionowa zawiera dane przedstawione poniżej, które trzeba podać kontaktując się z Tetra Pak w sprawach dotyczących określonego wyposażenia.

- Typ maszyny (8)
- Pojemność (9)
- Specyfikacje rysunkowe (10)
- Numer seryjny maszyny (11)
- Producent (12)
- Rok produkcji (13)
- Znak CE (14)
- Znak 3-A (jeśli ma zastosowanie) (15)

Upewnij się, czy dane wyposażenia na pierwszych stronach niniejszej instrukcji odpowiadają danym przedstawionym na tabliczce znamionowej maszyny i specyfikacji maszyny.

Jak korzystać z Katalogu Części Zamiennych

Lokalizacja numeru części zamiennej

a) Zapoznaj się z rysunkiem (C) na stronie i-7: Przejdź do numeru rozdziału (16) wskazanego obok głównej grupy, która zawiera część, którą chcesz zlokalizować.

Pozycje b) i c) dotyczą rysunku (D) na stronie i-8.

b) Na rysunku głównej grupy, poszukaj podgrupy maszyny (18), która zawiera część lub podgrupę, której szukasz. Zanotuj numer pozycji (19) i przejdź na stronę z wykazem odpowiadającym rysunkowi.

c) Poszukaj numeru pozycji/oznaczenia referencyjnego (17) lub nazwy podgrupy (20). Przejdź na odpowiedni numer strony (21) podany w prawej kolumnie. Do oznaczania referencyjnego firma Tetra Pak zdecydowała się zawsze wykorzystywać strukturę zorientowaną na funkcję. Przedrostek wskazujący strukturę zorientowaną na funkcję (=) nie jest uwzględniony w oznaczeniu referencyjnym.

(Ciąg dalszy)

(Ciąg dalszy)

Pozycje d) i e) dotyczą rysunku (E) na stronie i-8.

d) Zlokalizuj część (22), której szukasz na rysunku podgrupy i zanotuj jej numer pozycji.

e) Numer części (29) i opis części (30) znajdują się obok numeru pozycji na stronie z wykazem.

Informacje podane w Katalogu Części Zamiennych

Poniższy wykaz dotyczy rysunku (E) na stronie i-8.
Katalog Części Zamiennych zawiera następujące informacje o grupach, podgrupach i częściach zamiennych wyposażenia.

- Odnośnik struktury grupy (23). Wskazuje następną wyższą grupę w strukturze wykazu wyposażenia.
- Nazwa grupy (24)
- Jednostka miary (25)
- Ilość (26)
- Numer rysunku zespołu (27)
- Zakres stron (28). Dołączony, jeśli na wykazie lub rysunku grupy znajdują się strony o numerach wieloczęściowych.
- Numer części lub podgrupy (29)
- Nazwa podgrupy lub opis części (30)
- Numer grupy (31)
- Numer wyposażenia (32)
- Nagłówek z informacją o grupie (33). Wskazuje czy sekcja poniżej nagłówka przynależy do określonej wersji maszyny, lub czy jest wykazem części. Jeśli wykaz ma więcej niż jedną wersję i każda wersja ma swój własny rysunek montażowy, podany będzie numer strony z rysunkiem montażowym danej wersji.
- Informacje wewnętrzne (34)

Wsparcie techniczne i informacje zwrotne

Jeśli będziesz potrzebował pomocy odnośnie obsługi wyposażenia, lub będziesz miał pytania, komentarze albo sugestie, umieść swoje pytania lub przekaż informacje zwrotne na internetowej stronie pod adresem http://e-liaison.tetrapak.com. Jeśli dostęp do sieci wewnętrznej Tetra Pak nie jest możliwy, skontaktuj się z najbliższym przedstawicielem Tetra Pak.

Informação do Manual

A Tetra Pak recomenda ler cuidadosamente todos os manuais fornecidos. Verificar se os manuais fornecidos estão ao dispor do pessoal que trabalha com o equipamento ou que faz a manutenção do mesmo.

É importante guardar este catálogo durante o tempo útil de vida da máquina ou do equipamento e de entregar o catálogo a qualquer proprietário ou utilizador subsequente.

A Tetra Pak não toma a responsabilidade por quaisquer danos no equipamento causados devido ao facto de que as instruções dadas nos manuais que acompanham este equipamento não foram seguidas.

Manuais fornecidos

Manuais fornecidos com este equipamento:

CM

O Manual de conversão fornece aos técnicos as informações sobre a conversão do equipamento entre os diferentes modos de produção.

EM

Este Manual Eléctrico fornece aos técnicos as informações sobre o sistema eléctrico do equipamento.

IM

Este Manual de Instalação fornece aos técnicos as informações necessárias para instalar seguramente o equipamento.

MM

Este Manual de Manutenção fornece aos técnicos as informações para a manutenção do equipamento.

OM

O Manual de Operação fornece ao operador as informações que ele necessita para manusear e accionar o equipamento antes, durante e depois da produção.

RM

O Manual de Remodelação fornece aos técnicos as informações necessárias para instalar seguramente um conjunto numa máquina ou equipamento instalado.

(Cont.)

(Cont.)

SPC

O Catálogo de Peças Sobressalentes fornece as informações necessárias para se encomendar peças sobressalentes à Tetra Pak.

TeM

O Manual Técnico fornece os técnicos com informações que podem ser:

- informações necessárias para instalar seguramente o equipamento,
- informações necessárias para a manutenção do equipamento
- informações sobre o sistema eléctrico da máquina/do equipamento.
- informações necessárias para encomendar peças sobressalentes à Tetra Pak.
- outras informações técnicas

UP

As Páginas de Actualização fornecem novas páginas para actualizar os manuais existentes da máquina.

Disposição da página

Referência à ilustração (A) na página i-7: As páginas principais num Catálogo de Peças Sobressalentes consistem numa página ilustrada (1) e numa página com a lista correspondente (7). O número da página (5) é mostrado no cabeçalho de uma página ilustrada e no rodapé de uma página com lista. O número do documento (6) é mostrado no rodapé de uma página com lista.

Numeração da página

Referência à ilustração (A) na página i-7: Um número de página (5) tem três partes:

- Número do capítulo (2)
- número consecutivo da página dentro do capítulo (3)
- número total de páginas no capítulo (4)

Nota! As letras UP podem substituir o número do capítulo (2) se o manual incluir páginas de actualização. O número consecutivo da página (3) e o número total de páginas (4) das páginas de actualização não seguem a numeração sequente das páginas do capítulo.

Introdução da máquina

Fabricante

Para o nome e morada do fabricante, ver a segunda página deste catálogo.

Assistência técnica

Tetra Pak não aceita responsabilidade por quaisquer danos ou prejuízos no equipamento, equipa ou consumidores que sejam causados por peças sobressalentes não originais da Tetra Pak.

Para encomendar as peças sobressalentes originais para esta máquina, contactar o representante Tetra Pak mais próximo.

Identificação

Classificação CE

Este equipamento está de acordo com os regulamentos de segurança e saúde da Área Económica Europeia (EEA).

(Cont.)

(Cont.)

3-A Concordância

Se a placa da máquina conter a marca 3-A (15) (ver a ilustração (B) na página i-7), este equipamento cumpre com as Normas Sanitárias 3-A para Formadores, Enchedores e Vedadores de Recipientes para Leite Líquido e Produtos de Leite Líquido, Número 17-10.

Placa da máquina

A ilustração (B) na página i-7 mostra um exemplo de uma placa da máquina. Uma ilustração da placa da máquina válida e a sua localização no equipamento é mostrada no capítulo Introdução dos manuais fornecidos com este equipamento. A placa da máquina contem os dados alistados em baixo, necessários quando se contactar a Tetra Pak relacionando-se a este equipamento em específico.

- Tipo da máquina (8)
- Volume (9)
- Especificações dos desenhos (10)
- Número de série da máquina (11)
- Fabricante (12)
- Ano de construção (13)
- Marca CE (14)
- Marca 3-A (se aplicável) (15)

Verificar se os dados do equipamento indicados nas páginas da frente deste manual correspondem aos dados na placa da máquina e à especificação da máquina.

Como usar este Catálogo de Peças Sobressalentes

Localizar um Número da peça sobressalente

a) Referência à ilustração (C) na página i-7: Para o número do capítulo (16) indicado ao lado do grupo principal que contem a peça que quer localizar.

Itens b) e c) referem-se à ilustração (D) na página i-8.

b) Na ilustração do grupo principal, procurar o subgrupo da máquina (18) que contem a peça ou subgrupo que está à procura. Anotar o número da posição (19) e passar para a página da lista que segue a ilustração.

c) Procurar o número/referência da posição (17) ou o nome do subgrupo (20). Passar para o número da página correspondente (21) alistado na coluna do lado direito. A Tetra Pak escolheu para usar sempre a estrutura orientada na função para a designação da referência.
O prefixo indicando a estrutura orientada na função (=) não está mostrada na designação de referência.

(Cont.)

(Cont.)

Itens d) e e) referem-se à ilustração (E) na página i-8.

d) Localizar a peça (22) que está à procura na ilustração do subgrupo e anotar o número da posição da peça.

e) O número da peça (29) e a descrição da peça (30) estão alistados ao lado do número da posição na página da lista.

Informações indicadas num Catálogo de Peças Sobressalentes

A lista em baixo refere-se à ilustração (E) na página i-8.
Um Catálogo de Peças Sobressalentes contem as seguintes informações sobre grupos, subgrupos e peças sobressalentes para o equipamento:

- Referência da estrutura do grupo (23). Indica o grupo a seguir mais elevado na estrutura da lista do equipamento.
- Nome do grupo (24)
- Unidade de medição (25)
- Quantidade (26)
- Número do desenho de montagem (27)
- Gama da página de lista (28). Incluída se houver páginas múltiplas na ilustração do grupo ou lista.
- Número da peça ou do subgrupo (29)
- Nome do subgrupo ou descrição da peça (30)
- Número do grupo (31)
- Número do equipamento (32)
- Título da informação do grupo (33). Indica se a secção abaixo do título é para uma variante de máquina específica ou se é uma lista de peças comuns. Se uma lista tiver mais do que uma variante e cada variante tiver o seu próprio desenho de montagem, é mostrada uma referência para a página do desenho de montagem da variante.
- Informação interna (34)

Apoio e retro alimentação

Para assistência durante o accionamento deste equipamento, ou outros inquéritos, comentários ou sugestões, fazer as questões ou dar feedback no site da E-Liaison em http://e-liaison.tetrapak.com. Se não estiver disponível o acesso à intranet Tetra Pak, contactar por favor o representante Tetra Pak mais próximo.

Informațiile de manual

Tetra Pak recomandă citirea cu atenție a tuturor manualelor livrate. Asigurați-vă că manuale livrate sunt adecvate pentru personalul ce manipulează sau întreține instalația.

Este important să păstrați acest catalog pe tot parcursul funcționării instalației și să-l transmiteți următorului utilizator sau proprietar.

Tetra Pak nu își asumă nicio responsabilitate pentru nicio defecțiune a instalației cauzată de nerespectarea instrucțiunilor din manualul care însoțește instalația.

Manuale livrate

Manualele livrate împreună cu instalația

CM

Manualul de conversie (CM) furnizează tehnicienilor informații pentru conversia (adaptarea) echipamentului la diferite moduri de producție.

EM

Manualul electric oferă technicienilor informații despre sistemul electric al instalației.

IM

Manualul de instalare oferă tehnicienilor informații legate de montarea în siguranță a instalației.

MM

Manualul de întreținere oferă tehnicienilor informații privind întreținerea instalației.

OM

Manualul de funcționare (OM) oferă operatorului informații despre manipularea și funcționarea echipamentului înainte, în timpul și după procesul tehnologic.

RM

Manualul de reconstrucție oferă tehnicienilor informații necesare pentru montarea în siguranță a unui set pe un utilaj sau echipament montat.

(se continuă)

(se continuă)

SPC

Catalogul cu piese de schimb oferă informații necesare pentru comandarea pieselor de schimb de la Tetra Pak.

TeM

Manualul tehnic furnizează informații tehnicienilor ca de exemplu:

- informații necesare pentru a instala în condiții de siguranță echipamentul
- informații necesare pentru a întreține echipamentul
- informații privind sistemul electric al utilajului/echipamentului
- informațiile necesare pentru a comanda piesele de schimb de la Tetra Pak.
- alte informații tehnice

UP

Paginile pentru actualizare furnizează pagini noi pentru actualizarea manualelor existente ale utilajelor.

Configurația paginii

Consultați ilustrația (A) de la pagina i-7: Paginile principale din Catalogul pieselor de schimb sunt formate dintr-o pagină a ilustrațiilor (1) și o pagină a listei corespunzătoare (7). Numărul paginii (5) este prezentat în antetul unei pagini cu ilustrații și în subsolul unei pagini cu lista. Numărul documentului (6) este prezentat în subsolul unei pagini cu lista.

Numerotarea paginilor

Consultați ilustrația (A) de la pagina i-7: Numărul paginii (5) are trei părți:

- numărul capitolului (2)
- numărul consecutiv al paginii din cadrul capitolului (3)
- numărul total de pagini din capitol (4)

Notă! Literele UP pot înlocui numărul capitolului (2) dacă manualul include pagini actualizate. Numărul consecutiv al paginii (3) și numărul total de pagini (4) al paginilor actualizate nu urmează numerotarea existentă, secvențială a paginilor din cadrul capitolului.

Prezentarea aparatului

Producător

Pentru numele și adresa producătorului, vezi pagina a doua a acestui catalog.

Service

Tetra Pak nu își asumă responsabilitatea pentru nicio avarie sau rănire asupra echipamentului, personalului sau clienților, produsă de piese de schimb care nu sunt piese de schimb originale Tetra Pak.

Pentru a comanda piese de schimb originale Tetra Pak pentru acest utilaj, adresați-vă celui mai apropiat birou Tetra Pak.

Identificare

Clasificare CE

Acest echipament este în conformitate cu regulamentele de bază sanitare și de protecție ale Agenție Europene de Mediu (EEA).

(se continuă)

(se continuă)

Conformitatea 3-A

Dacă plăcuța cu numele utilajului conține marcajul 3-A (15) (vezi ilustrația (B) de la pagina i-7), acest echipament respectă standardele sanitare 3-A pentru dispozitive de formare, umplere și etanșare a containerelor pentru lapte lichid și produse lactate lichide, numărul 17-10.

Plăcuța mașinii

Ilustrația (B) de la pagina i-7 prezintă un exemplu al plăcuței mașinii. O ilustrație a plăcuței valabile a mașinii și a amplasării sale pe echipament este prezentată în capitolul Introducere al manualelor livrate cu acest echipament. Plăcuța mașinii conține datele prezentate mai jos, necesare când vă adresați Tetra Pak referitor la acest echipament.

- Tipul utilajului (8)
- Volum (9)
- Specificațiile desenului (10)
- Numărul de serie al utilajului (11)
- Producător (12)
- Anul de fabricație (13)
- Marcaj CE (14)
- Marcaj 3-A (dacă este cazul) (15)

Verificați dacă datele instalației din primele pagini ale acestui manual corespund cu datele de pe plăcuța mașinii și cu specificația mașinii.

Cum să folosiți acest catalog pentru piese de schimb

Localizați numărul piesei de schimb

a) Consultați ilustrația (C) de la pagina i-7: Mergeți la numărul capitolului (16) indicat lângă grupul principal care conține piesa pe care doriți să o localizați.

Elementele b) și c) se referă la ilustrația (D) de la pagina i-8.

b) Pe ilustrația grupului principal, căutați subgrupul mașinii (18) care conține piesa sau subgrupul pe care îl căutați. Notați numărul poziției (19) și mergeți la pagina listei de după ilustrație.

c) Căutați numărul poziției/denumirea referinței (17) sau numele subgrupului (20). Mergeți la numărul corespunzător al paginii (21) precizat în coloana din dreapta. Tetra Pak a ales să utilizeze întotdeuana structura orientată pe funcții pentru denumirea referinței. Prefixul care indică structura orientată pe funcții (=) nu este prezentat în denumirea referinței.

(se continuă)

(se continuă)

Elementele d) și e) se referă la ilustrația (E) de la pagina i-8.

d) Localizați piesa (22) pe care o căutați în ilustrația subgrupului și notați numărul poziției piesei.
e) Numărul piesei (29) și descrierea piesei (30) sunt listate lângă numărul poziției de pe pagina listei.

Informațiile enumerate în catalogul pentru piese de schimb

Lista de mai jos se referă la ilustrația (E) de la pagina i-8.
Un Catalog cu piese de schimb conține următoarele informații despre grupuri, subgrupuri și piese de schimb pentru echipament.

- Referința structurii grupului (23). Indică următorul grup superior din structura listei echipamentului.
- Numele grupului (24)
- Unitate de măsură (25)
- Cantitate (26)
- Numărul desenului de ansamblu (27)
- Domeniul paginii listei (28). Inclus dacă există mai multe pagini în ilustrația sau lista grupului.
- Numărul piesei sau subgrupului (29)
- Numele subgrupului sau descrierea piesei (30)
- Numărul grupului (31)
- Numărul echipamentului (32)
- Titlul cu informațiile grupului (33). Indică dacă secțiunea de sub titlu este pentru o anumită variantă de mașină sau este o listă de piese comune. Dacă o mașină are mai mult de o variantă și fiecare variantă își are propriul desen de ansamblu, este prezentată o referință a paginii la desenul de ansamblu al variantei.
- Informații interne (34)

Asistență şi feedback

Pentru asistență la operarea acestui echipament sau alte probleme, comentarii sau sugestii, adresați întrebările sau acordați feedback pe pagina E-Liaison, la http://e-liaison.tetrapak.com. Dacă nu este disponibil accesul la intranetul Tetra Pak, adresați-vă celui mai apropiat reprezentant Tetra Pak.

Informácie o príručke

Tetra Pak odporúča, aby ste si pozorne prečítali všetky dodané príručky. Presvedčite sa, či sú dodané príručky k dispozícii personálu, ktorý obsluhuje alebo vykonáva údržbu zariadenia.

Je dôležité, aby ste uchovávali tento katalóg po celý čas životnosti zariadenia, a odovzdali katalóg každému ďalšiemu vlastníkovi alebo užívateľovi zariadenia.

Spoločnosť Tetra Pak nezodpovedá za škody na zariadení spôsobené nedodržaním pokynov uvedených v príručkách, ktoré doprevádzajú toto zariadenie.

Dodané príručky

Príručky dodávané s týmto zariadením:

CM

Príručka na adaptáciu poskytuje technikom informácie o adaptácii zariadenia medzi rôznymi výrobnými režimami.

EM

Táto Elektrická príručka poskytuje technikom informácie o elektrickom systéme zariadenia.

IM

Táto Inštalačná príručka poskytuje technikom informácie potrebné pre bezpečnú inštaláciu zariadenia

MM

Táto Údržbárska príručka poskytuje technikom informácie o vykonávaní údržby zariadenia.

OM

Tento Návod na obsluhu poskytuje operátorovi informácie o tom, ako treba manipulovať so strojom a obsluhovať ho pred, počas a po výrobe.

RM

Príručka na prestavbu poskytuje technikom informácie potrebné pre bezpečnú inštaláciu súpravy na nainštalovaný stroj alebo zariadenie.

(Pokrač.)

(Pokrač.)

SPC

Katalóg náhradných dielov poskytuje informácie potrebné pre objednanie náhradných dielov od Tetra Pak.

TeM

Technická príručka poskytuje technikom informácie, ktorými môžu byť:

- potrebné informácie pre bezpečnú inštaláciu zariadenia
- potrebné informácie pre údržbu zariadenia
- informácie o elektrickom systéme stroja/zariadenia.
- poskytuje informácie potrebné na objednanie náhradných dielov od firmy Tetra Pak
- ostatné technické informácie

NAHOR

Aktualizované stránky poskytujú nové stránky k existujúcim príručkám na zariadenie.

Usporiadanie strany

Pozrite sa na obrázok (A) na strane i-7: hlavné stránky v Katalógu náhradných dielov tvorí stránky s ilustráciami (1) a odpovedajúca stránka so zoznamom (7). Číslo stránky (5) je uvedené v záhlaví stránky s obrázkom a v zápätí stránky so zoznamom. Číslo dokumentu (6) je uvedené v zápätí stránky so zoznamom.

Číslovanie strán

Pozrite sa na obrázok (A) na strane i-7: číslo stránky (5) má tri časti:

- číslo kapitoly (2)
- číslo ďalšej stránky v rámci kapitoly (3),
- celkový počet stránok v kapitole (4)

Poznámka! Písmena UP môžu nahradiť číslo kapitoly (2) v prípade, že manuál obsahuje aktualizované stránky. Nasledujúce číslo stránky (3) a celkový počet strán (4) aktualizovaných stránok sa nedrží existujúceho sekvenčného číslovania stránok v tejto kapitole.

Úvod k zariadeniu

Výrobca

Meno a adresu výrobcu nájdete na druhej strane tohto katalógu.

Servis

Tetra Pak nepreberá zodpovednosť za akúkoľvek škodu na zariadení alebo za zranení zamestnanca alebo spotrebiteľa, ktoré budú spôsobené tým, že sa nepoužijú originálne náhradné diele Tetra Pak.

Ak chcete pre tento stroj objednať originálne náhradné diely Tetra Pak, kontaktujte najbližšiu kanceláriu spoločnosti Tetra Pak.

Identifikácia

Klasifikácia CE

Toto zariadenie vyhovuje základným zdravotným a bezpečnostným predpisom Európskej hospodárskej oblasti (EEA).

(Pokrač.)

(Pokrač.)

3-A Súlad

Ak štítok stroja obsahuje označenie 3-A (15) (pozri obrázok (B) na strane i-7), potom je toto zariadenie v súlade s hygienickými normami 3-A pre formovanie, plnenie a uzatváranie obalov na tekuté mlieko a tekuté mliečne výrobky, číslo 17 -10.

Štítok zariadenia

Obrázok (B) na strane i-7 ukazuje príklad typového štítku.
Obrázok platného typového štítku a jeho umiestnenia na zariadení je uvedený v úvodnej kapitole príručiek dodaných s týmto zariadením.
Typový štítok obsahuje údaje uvedené niže, tieto údaje sú treba, keď kontaktujete spoločnosť Tetra Pak vo veci týkajúcej sa tohto špecifického vybavenia.

- Typ stroja (8)
- Objem (9)
- Špecifikácie výkresov (10)
- Sériové číslo stroja (11)
- Výrobca (12)
- Rok výroby (13)
- Symbol CE (14)
- Symbol 3-A (ak sa používa) (15)

Presvedčte sa, či dáta uvedené na čelnej strane tohoto manuálu korešpondujú s údajmi na identifikačnom typovom štítku stroja a so špecifikáciou stroja.

Ako používať tento katalóg náhradných dielov

Vyhľadať číslo náhradného dielu

a) Pozrite obrázok (C) na strane i-7: Prejsť na číslo kapitoly (16) uvedené vedľa hlavnej skupiny, ktorá obsahuje diel, ktorý chcete nájsť.

Položky b) a c) sa vzťahujú na obrázok (D) na strane i-8.

b) Na obrázku hlavnej skupiny sa pozrite na podskupinu stroja (18), ktorá obsahuje diely alebo podskupiny, ktoré hľadáte. Poznamenajte si číslo pozície (19) a prejdite na stránku zoznamu, ktorý nasleduje za obrázkom.

c) Pozrite sa na číslo pozície/označenie referencie (17) alebo na názov podskupiny (20). Prejdite na odpovedajúce číslo strany (21) uvedené v zozname v stĺpci na pravej strane. Spoločnosť Tetra Pak si zvolila vždy používať pre referenčné označenie štruktúru zameranú na funkciu. Predpona označujúca funkčne orientovanú štruktúru (=) nie je uvedená v referenčnom označení.

(Pokrač.)

(Pokrač.)

Položky d) a e) sa vzťahujú na obrázok (E) na strane i-8.

d) Lokalizujte diel (22), ktorý hľadáte, na obrázku podskupiny a poznamenajte si číslo pozície dielu.

e) Číslo dielu (29) a popis dielu (30) sú uvedené vedľa čísla pozície na stránke so zoznamom.

Informácie uvedené v katalógu náhradných dielov

Niže uvedený zoznam sa odkazuje na obrázok (E) na stránke i-8.
Katalóg náhradných dielov obsahuje nasledujúce informácie o skupinách, podskupinách a náhradných dieloch pre zariadenie:

- Referencia štruktúry skupiny (23). Označuje nasledujúcu vyššiu skupinu vo štruktúre zoznamu výbavy.
- Názov skupiny (24)
- Merná jednotka (25)
- Množstvo (26)
- Číslo montážneho výkresu (27)
- Rozsah stránok so zoznamom (28). Zahrnuté, ak existuje viac stránok v skupine obrázkov alebo v zozname.
- Číslo dielu alebo podskupiny (29)
- Názov podskupiny alebo popis dielu (30)
- Číslo skupiny (31)
- Číslo výbavy (32)
- Záhlavie informácií o skupine (33). Označuje, či sa časť pod záhlavím týka konkrétneho variantu stroja, alebo či sa jedná o zoznam spoločných dielov. Ak zoznam obsahuje viac ako jeden variant a každý variant má svoje vlastné montážne výkresy, je zobrazený odkaz na stránku s montážnym výkresom variantu.
- Vnútorné informácie (34)

Podpora a spätná väzba

Môžete sa na nás obracať s žiadosťou o pomoc počas prevádzky tohto zariadenia alebo s inými dotazmi, pripomienkami alebo námetmi pomocou internetovej kontaktnej domovskej stránky http://e-liaison.tetrapak.com, kde môžete takisto poskytnúť svoju spätnú väzbu. Ak nemáte prístup na intranet spoločnosti Tetra Pak, obráťte sa na najbližšieho zástupcu firmy Tetra Pak.

Informacije o navodilu

Tetra Pak priporoča, da vsa dobavljena navodila pazljivo prebrete. Prepričajte se, da so dobavljena navodila na razpolagu osebju, ki dela s strojem ali pa izvaja vzdrževalna dela na opremi.

Ta navodila je potrebno shraniti do konca življenjske dobe opreme in navodilo predati vsakemu naslednjemu imetniku ali uporabniku.

Tetra Pak ne nosi odgovornosti za poškodbo na opremi, do katere je prišlo zaradi neupoštevanja teh navodilih.

Dobavljena navodila

Navodila, ki se dobavljajo s to opremo:

CM

Navodila za spremembo (CM) oskrbujejo tehnike z informacijami glede zamenjav opreme med različnimi načini proizvodnje.

EM

Električna navodila oskrbujejo tehnike z informacijami glede električnega sistema opreme.

IM

Navodila za inštalacijo oskrbujejo tehnike z informacijami, ki so potrebne za varno inštalacijo opreme.

MM

Navodila za vzdrževanje oskrbujejo tehnika z informacijami glede vzdrževanja opreme.

OM

Navodila za delovanje (OM) oskrbijo strojnike z informacijami glede rokovanja z opremo in delovanjem le-te pred, med in po proizvodnji.

RM

Navodila za predelavo (RM) oskrbujejo tehnike z informacijami, ki so potrebne za varno inštalacijo opreme na inštalirani stroj ali opremo.

(Obrnite)

(Obrnite)

SPC

Katalog rezervnih delov prinaša informacije, ki so potrebne za naročanje rezervnih delov iz podjetja Tetra Pak.

TeM

Tehnološka navodila tehnikom podajo informacije, ki so lahko:

- potrebne za varno inštalacijo opreme
- potrebne za vzdževanje opreme
- vezane na električni sistem stroja/opreme
- ponujajo informacije, ki so potrebna za naročanje nadomestnih delov pri Tetra Paku
- druge tehnične informacije

GOR

Strani za posodobitev podajo nove strani za posodabljanje obstoječih navodil stroja.

Ureditev strani

Sklicujte se na ilustracijo (A) na strani i-7: Glavne strani v katalogu rezervnih delov so sestavljene iz strani z ilustracijami (1) in stranjo s seznamom (7). Številka strani (5) je prikazana v glavi strani z ilustracijo in v nogi strani s seznamom. Številka dokumenta (6) je prikazana v nogi strani s seznamom.

Oštevilčenje strani

Sklicujte se na ilustracijo (A) na strani i-7: Številka strani (5) ima tri dele:

- številko poglavja (2)
- zaporedno številko strani (2) znotraj poglavja (3)
- skupno število strani v poglavju (4)

Opomba! Črke UP lahko zamenjajo številko poglavja (2), če so v navodilih vključene posodobljene strani. Zaporedna številka strani (3) in skupno število strani (4) posodobljenih strani se ne ujemajo z obstoječim zaporedjem strani v poglavju.

Predstavitev stroja

Proizvajalec

Ime in naslov proizvajalca se nahajata na drugi strani tega kataloga.

Servisiranje

Tetra Pak ne prevzema odgovornosti za okvare ali poškodbe opreme, osebja ali potrošnikov, ki ga povzročijo rezervni deli, ki niso originalni Tetra Pak rezervni deli.

Za naročanje originalnih Tetra Pak rezervnih delov kontaktirajte najbližjo pisarno Tetra Pak.

Identifikacija

CE klasifikacija

Ta oprema izpolnjuje osnovne zdravstvene in varnostne ukrepe Evropskega ekonomskega prostora (EEA).

(Obrnite)

(Obrnite)

3-A Skladnost

Če ploščica stroja vsebuje oznako 3-A (15) (glejte ilustracijo (B) na strani i-7), ta oprema ustreza sanitetnim standardom 3-A za kalupe, polnilce in tesnila zbiralnikov za tekoče mleko in izdelke iz tekočega mleka, številka 17-10.

Strojna plošča

Ilustracija (B) na strani i-7 prikazuje primer ploščice za identifikacijo stroja. Ilustracija veljavne ploščice za identifikacijo stroja in njene lokacije na opremi je prikazana v uvodnem poglavju navodil, ki so bila dostavljena s to opremo. Ploščica za identifikacijo stroja vsebuje spodaj navedene podatke, ki so potrebni ob kontaktiranju podjetja Tetra Pak glede te specifične opreme.

- Tip stroja (8)
- Prostornina (9)
- Specifikacije skice (10)
- Serijska številka stroja (11)
- Proizvajalec (12)
- Leto izdelave (13)
- CE oznaka (14)
- 3-A oznaka (če obstaja) (15)

Prepričajte se, da se podatki o opremi, ki se nahajajo na sprednjih straneh teh navodil, v skladu s podatki strojne plošče in specifikacije stroja.

Kako uporabljati ta katalog rezrevnih delov

Poiščite številko rezervnega dela

a) Sklicujte se na ilustracijo (C) na strani i-7: Pojdite na številko poglavja (16), ki se nahaja poleg glavne skupine in ki vsebuje del, ki ga želite poiskati.

Predmeti b) in c) se nanašajo na ilustracijo (D) na strani i-8.

b) Na ilustraciji glavne skupine poiščite podskupino stroja (18), ki vsebuje del ali podskupino, ki jo iščete. Opazite položaj številke (19) in pojdite na stran seznama, ki sledi ilustraciji.

c) Poiščite številko lokacije/referenco (17) ali pa ime podskupine (20). Pojdite na ustrezno številko strani (21), ki je navedena v stolpcu na desni strani. Tetra Pak se je odločil za to, da vedno uporablja funkcijsko naravnano strukturo kot referenco. Predpona, ki nakazuje funkcijsko naravnano strukturo (=), ni prikazana v referenci.

(Obrnite)

(Obrnite)

Predmeti d) in e) se nanašajo na ilustracijo (E) na strani i-8.

d) Poiščite del (22), ki ga iščete, na ilustraciji podskupine in zabeležite številko lokacije dela.

e) Številka dela (29) in opis dela (30) sta navedena poleg lokacije številke na strani s seznamom.

Informacije, ki so navedene v katalogu rezervnih delov

Spodnji seznam se nanaša na ilustracijo (E) na strani i-8. Katalog rezervnih delov vsebuje naslednje informacije o skupinah, podskupinah in rezervnih delih za opremo.

- Referenca strukture skupine (23). Določa naslednjo višjo skupino v strukturi seznama opreme.
- Ime skupine (24)
- Enota merjenja (25)
- Količina (26)
- Številka skice sistema (27)
- Razpon seznama strani (28). Vključeno, če obstaja več strani v ilustraciji skupine ali na seznamu.
- Del ali številka podskupine (29)
- Ime podskupine ali opis dela (30)
- Številka skupine (31)
- Številka opreme (32)
- Naslov informacije o skupini (33). Nakazuje ali je spodnji odsek naslov specifične različice stroja ali pa če gre za seznam splošnih delov. Če ima seznam več kot eno različico in ima vsaka različica svojo skico sistema, je prikazana referenca strani na skici sistema vsake različice.
- Notranje informacije (34)

Podpora in ponovna uporaba

Za pomoč pri rokovanju z opremo ali druga vprašanja, komentarje ali predloge, se obrnite ali podajte mnenje na domači spletni strani sodelavcev na naslovu http://e-liaison.tetrapak.com. Če dostop do Tetra Pak intraneta ni na voljo, kontaktirajte najbližjega zastopnika podjetja Tetra Pak.

Information om handboken

Tetra Pak rekommenderar att alla handböcker läses noggrant.
Se till att handböckerna är tillgängliga för personalen som använder eller underhåller utrustningen.

Det är viktigt att denna katalog behålls under utrustningens livslängd, och att katalogen överlämnas till varje efterföljande innehavare eller användare.

Tetra Pak kan inte hållas ansvarig för eventuella skador på utrustningen som orsakas av man inte följer de instruktioner som ges i de handböcker som medföljer denna utrustning.

Medföljande handböcker

Handböcker som levereras tillsammans med denna utrustning:

CM

Konverteringshandboken ger tekniker information om konvertering av utrustningen mellan olika produktionssätt.

EM

Den elektriska handboken ger teknikerna information om utrustningens elektriska system.

IM

Installationshandboken ger teknikerna information som krävs för att kunna installera utrustningen säkert.

MM

Underhållshandboken ger teknikerna information om hur utrustningen ska underhållas.

OM

Drifthandboken ger operatören information om hur utrustningen ska hanteras före, under och efter produktion.

RM

Ombyggnadshandboken ger teknikerna den information som krävs för att säkert installera en sats på en installerad maskin eller utrustning.

(Forts.)

(Forts.)

SPC

Reservdelskatalogen (SPC) ger den information som krävs för att kunna beställa reservdelar från Tetra Pak.

TeM

Teknisk handbok ger tekniker information i form av:

- information som krävs för att säkert kunna installera utrustningen
- information som krävs för att underhålla utrustningen
- information om maskinens/utrustningens elsystem
- information som krävs för beställning av reservdelar från Tetra Pak
- annan teknisk information

UPP

Uppdateringssidorna innehåller nya sidor för att uppdatera befintliga maskinhandböcker.

Sidlayout

Se illustration (A) på sidan i-7: Huvudsidorna i en Reservdelskatalog består av en illustrationssida (1) och en tillhörande listsida (7).
Sidnumret (5) visas i sidhuvudet på en illustrationssida och i sidfoten på en listsida. Dokumentnumret (6) visas i sidfoten på listsidan.

Sidnumrering

Se illustration (A) på sidan i-7: Ett sidnummer (5) har tre delar:

- kapitelnummer (2)
- löpande sidnummer inom kapitlet (3)
- totalt sidantal i kapitlet (4)

OBS! Bokstäverna UP kan ersätta kapitelnumret (2) om handboken innehåller uppdateringssidor. Det löpande sidnumret (3) och det totala antalet sidor (4) för uppdateringssidor följer inte den befintliga löpande sidnumreringen av kapitlet.

Introduktion till maskinen

Tillverkare

För tillverkarens namn and adress, se andra sidan i denna katalog.

Service

Tetra Pak tar inte något ansvar för eventuella skador eller eventuella personskador på utrustning, personal eller konsumenter som orsakas av att reservdelarna inte är original Tetra Pak reservdelar.

Vid beställning av original Tetra Pak reservdelar för denna maskin, kontakta närmaste Tetra Pak-kontor.

Identifiering

CE-klassificering

Denna utrustning uppfyller de grundläggande hälso- och säkerhetskraven inom European Economic Area (EEA).

(Forts.)

(Forts.)

3-A överensstämmelse

Om maskinskylten är märkt med 3-A (15) (se bild (B) på sidan i-7), uppfyller denna utrustning 3-A Hygienstandarder för resare, fyllare och förseglare av behållare för flytande mjölk och flytande mjölkprodukter, Nummer 17-10.

Maskinskylt

Illustration (B) på sidan i-7 visar ett exempel på en maskinskylt.
En illustration av gällande maskinskylt och dess placering på utrustningen visas i Introduktion-kapitlet i de handböcker som levereras med denna utrustning. Maskinskylten innehåller data som listas nedan, vilken behövs för att kontakta Tetra Pak rörande denna specifika utrustning.

- Maskintyp (8)
- Volym (9)
- Ritningsspecifikationer (10)
- Maskinnummer (11)
- Tillverkare (12)
- Tillverkningsår (13)
- CE-märkning (14)
- 3A-märke (om tillämpligt) (15)

Kontrollera att utrustningsdata som finns på de inledande sidorna i denna handbok överensstämmer med maskinskyltens data och maskinspecifikationen.

Hur man använder denna reservdelskatalog

Hitta ett reservdelsnummer

a) Se illustration (C) på sidan i-7: Gå till det kapitelnummer (16) som anges bredvid huvudgruppen som innehåller delen du vill lokalisera.

Punkterna b) och c) refererar till illustration (D) på sidan i-8.

b) Leta på huvudgruppens bild upp den undergrupp (18) i maskinen som innehåller delen eller undergruppen du letar efter. Notera positionsnumret (19) och gå till listsidan som följer på bilden.

c) Leta upp positionsnummer/referensbeteckning (17) eller undergruppens namn (20). Gå till motsvarande sidnummer (21) som anges i den högra kolumnen. Tetra Pak har valt att alltid använda en funktionsorienterad struktur för referensbeteckning. Prefix som anger funktionsorienterad struktur (=) visas inte i referensbeteckningen.

(Forts.)

(Forts.)

Punkterna d) och e) refererar till illustration (E) på sidan i-8.

d) Leta upp den del (22) som du letar efter på undergruppens bild och notera delens positionsnummer.

e) Artikelnumret (29) och artikelbeskrivningen (30) anges bredvid positionsnumret på listsidan.

Information som anges i en Reservdelskatalog

Listan nedan refererar till illustration (E) på sidan i-8. En Reservdelskatalog innehåller följande information om grupper, undergrupper och reservdelar för utrustningen:

- Gruppstrukturreferens (23). Anger närmast högre grupp i utrustningens liststruktur.
- Gruppnamn (24)
- Måttenhet (25)
- Antal (26)
- Sammanställningsritningens nummer (27)
- Listans sidomfång (28). Anges om det finns flera sidor i gruppens bild eller lista.
- Artikel- eller undergruppnummer (29)
- Undergruppens namn eller beskrivning av delen (30)
- Gruppnummer (31)
- Utrustningsnummer (32)
- Gruppinformationsrubrik (33). Anger om avsnittet under rubriken gäller för en specifik maskinvariant eller om det är en lista över gemensamma delar. Om en lista har mer än en variant och varje variant har sin egen sammanställningsritning, visas en sidreferens till variantens sammanställningsritning.
- Intern information (34)

Support och feedback

För hjälp med att handha denna utrustning, eller andra frågor, kommentarer eller förslag, ställ frågorna eller ge feedback på E-Liaison hemsida på http://e-liaison.tetrapak.com. Om tillgång till Tetra Pak intranet inte föreligger, kontakta närmaste Tetra Pak-representant.

This page intentionally left blank

SPC
Spare Parts Catalogue

This page is intentionally left blank.

ECM: 535837 - 20120401
Group number: 648597-0400
Assembly Drawing:

Pos	Part No	UN	Qty	Description	Page No
VCK NOQC					
010	3015740-0200		1	VOLUME CONVERSION KIT	**1-5**
VCK QC					
010	3015741-0100		1	BOX6 - VOLUME KIT	**1-623, 1-625**

Pos	Part No	UN	Qty	Description	Page No

This page is intentionally left blank.

ECM: 535838 - 20120401
Group number: 3015740-0200
Assembly Drawing:

Pos	Part No	UN	Qty	Description	Page No
TBA, TPA					
030	2634506-0300		1	BOX4 - FINAL FOLDER	**1-7**
TGA					
030	3016237-0200		1	BOX4 - FINAL FOLDER	**1-223**
Common Parts					
010	2634504-0300		1	BOX2 - SUPERSTRUCTURE	**1-279**
020	2634505-0300		1	BOX3 - JAW SYSTEM	**1-409**
040	2691695-0300		1	BOX5 - SUPERSTRUCTURE	**1-595, 1-597**

Pos	Part No	UN	Qty	Description	Page No

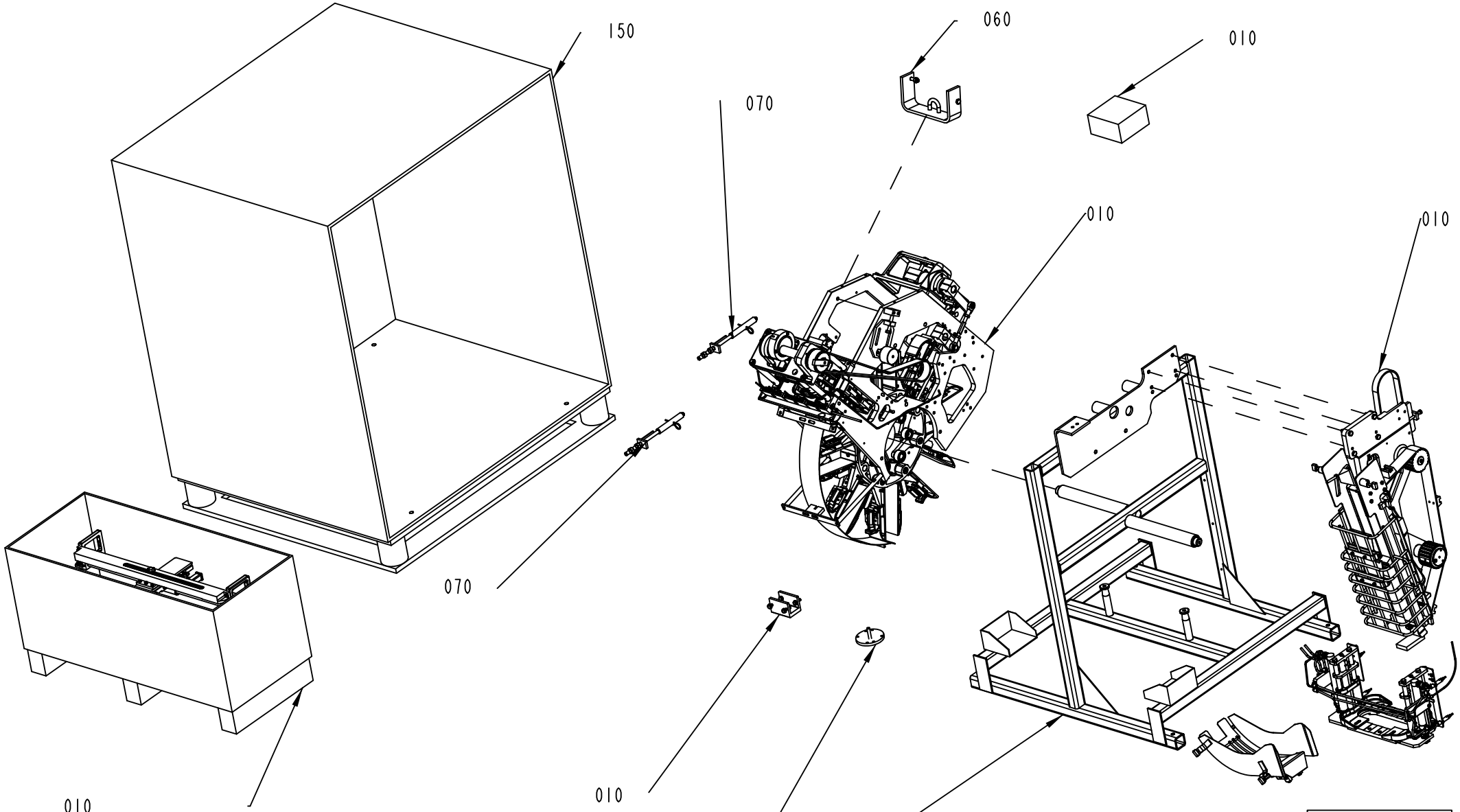

010
BOX DEDICATED TO
FOLDING DEVICE ONLY
COD.3038278-0200

ECM: 535842 - 20120401
Group number: 2634506-0300
Assembly Drawing: 2634506-2_1_AA

Pos	Part No	UN	Qty	Description	Page No
-					
010	2634509-0300		1	VOLUME KIT	**1-9**
050	1361935-0100		1	FRAME	**1-215**
060	1361558-0100		1	LIFTING KIT-WHEEL	**1-217**
070	599815-0100		2	HOLDING FIXTURE	**1-219**
080	1361559-0100		1	PULLER	**1-221**
150	1363768-0000		1	BOX	

Pos	Part No	UN	Qty	Description	Page No

This page is intentionally left blank.

ECM: 535843 - 20120401
Group number: 2634509-0300
Assembly Drawing:

Pos	Part No	UN	Qty	Description	Page No
-					
010	2984516-0100		1	SIDE PLATE	**1-11**
015	2984518-0100		1	SPACER	**1-13, 1-15**
020	2985175-0100		1	INFEED CONVEYOR VARIANT	**1-17, 1-19**
030	2895568-0200		1	FRAMEWORK	**1-21**
040	2769842-0200		1	PULL-DOWN DEVICE	**1-23, 1-25**
050	2866604-0100		1	FOLDING PART	**1-41**
060	2927613-0100		1	WHEEL	**1-71**
070	2985173-0100		1	NOZZLE	**1-107**
080	2857893-0200		1	PRESSURE DEVICE	**1-109, 1-111, 1-113, 1-115**
090	2985180-0100		1	BELT INFEED GUIDE	**1-135, 1-137**
100	2958758-0100		1	PUSHER	**1-139**
120	2634511-0300		1	MECHANICAL DIFFERENCES	**1-143**
130	3016193-0200		1	FLAP HEATER	**1-209**
140	2980903-0100		1	START-UP KIT FF	**1-213**

Pos	Part No	UN	Qty	Description	Page No

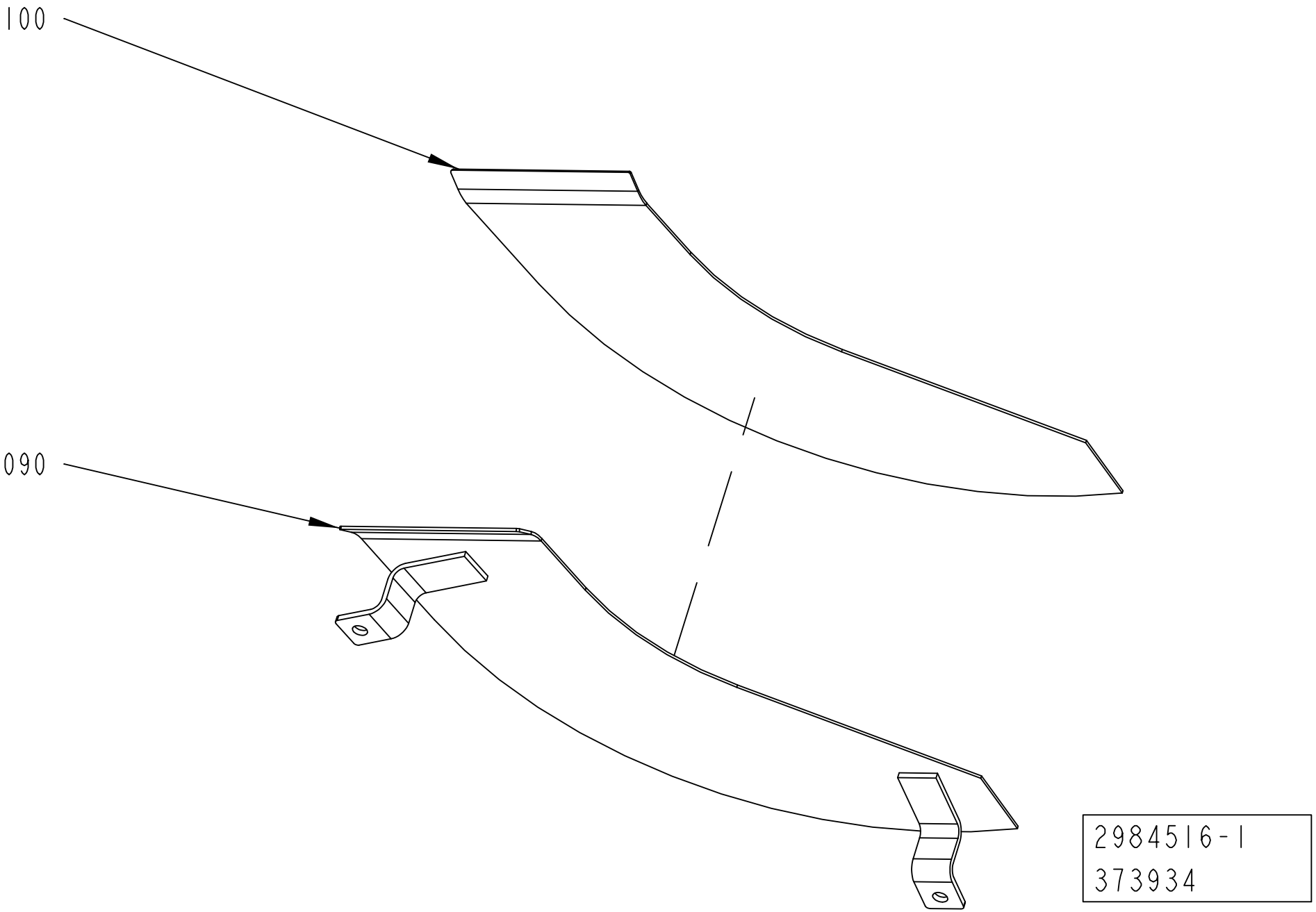
100
090
2984516-1
373934

ECM: 405529 - 20090703
Group number: 2984516-0100
Assembly Drawing: 2984516-1_1_AA

Pos	Part No	UN	Qty	Description	Page No
TBA 0500B					
090	2605993-0000		1	SIDE PLATE	
100	2605994-0000		1	SIDE PLATE	
TBA 0500S					
090	1285023-0000		1	SIDE PLATE	
100	1285022-0000		1	SIDE PLATE	
TBA 0500SQ, TBA 1000SQ					
090	1285023-0000		1	SIDE PLATE	
100	1285022-0000		1	SIDE PLATE	
TBA 1000B					
090	1285023-0000		1	SIDE PLATE	
100	1285022-0000		1	SIDE PLATE	
TBA 1000S					
090	1285023-0000		1	SIDE PLATE	
100	1285022-0000		1	SIDE PLATE	
TBA 1500S					
090	2665205-0000		1	PLATE	
100	2665206-0000		1	PLATE	
TBA 2000S					
090	2665205-0000		1	PLATE	
100	2665206-0000		1	PLATE	
TPA 0500SQ					
090	1285023-0000		1	SIDE PLATE	
100	1285022-0000		1	SIDE PLATE	

Pos	Part No	UN	Qty	Description	Page No

Machine Type | Group Description | Used-In | Group Number | Page No

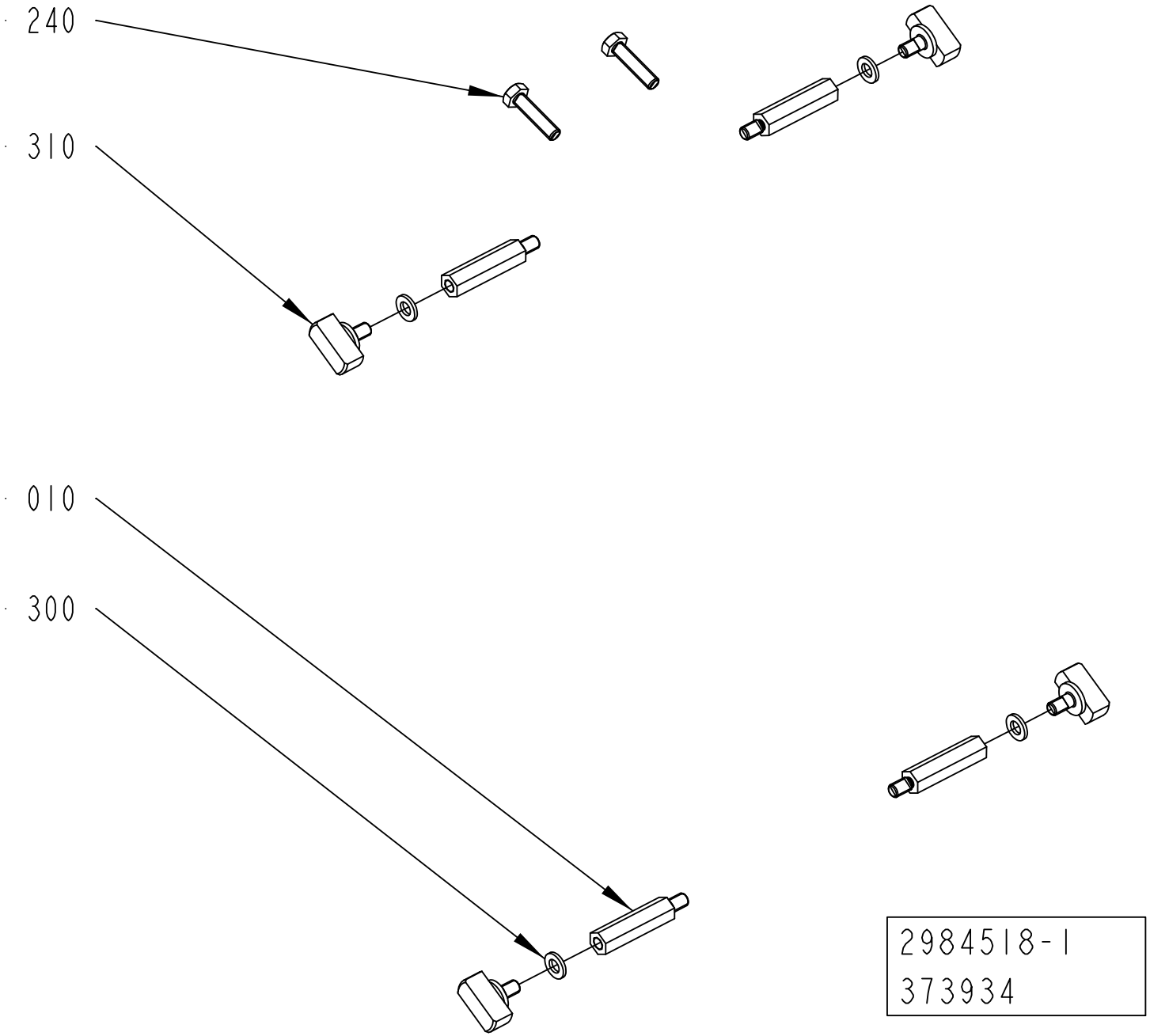

2984518-1
373934

ECM: 425775 - 20100401
Group number: 2984518-0100
Assembly Drawing: 2984518-1_1_AA

This list covers pages from 1-12 to 1-15

Pos	Part No	UN	Qty	Description	Page No
TBA 0500B, TBA 1000B (See drawing on page: 1-12)					
010	2537129-0000		4	SPACER	
240	312105-0372		2	SCREW, M6S ISO 4017 M6X25 A4 80	
300	90062-0061		4	LOCK WASHER NORD-LOCK,6,5/10,8, T=2,2	
310	2540609-0000		4	KNOB	
TBA 0500S (See drawing on page: 1-12)					
010	1499140-0000		4	SPACER	
240	312105-0372		2	SCREW, M6S ISO 4017 M6X25 A4 80	
300	90062-0061		4	LOCK WASHER NORD-LOCK,6,5/10,8, T=2,2	
310	312105-0378		4	SCREW, M6S ISO 4014 M6X40 A4 80	
TBA 0500SQ, TBA 1000SQ (See drawing on page: 1-14)					
010	2598820-0000		2	SPACER	
030	2619574-0000		2	SPACER	
240	312105-0372		2	SCREW, M6S ISO 4017 M6X25 A4 80	
300	90062-0061		4	LOCK WASHER NORD-LOCK,6,5/10,8, T=2,2	
310	2540609-0000		4	KNOB	
TBA 1000S (See drawing on page: 1-12)					
010	1279670-0000		4	SPACER	
240	312105-0372		2	SCREW, M6S ISO 4017 M6X25 A4 80	
300	90062-0061		4	LOCK WASHER NORD-LOCK,6,5/10,8, T=2,2	
310	312105-0381		4	SCREW, M6S ISO 4014 M6X55 A4 80	
TBA 1500S (See drawing on page: 1-12)					
240	312105-0372		2	SCREW, M6S ISO 4017 M6X25 A4 80	
310	312105-0366		4	SCREW, M6S ISO 4017 M6X12 A4 80	
TBA 2000S (See drawing on page: 1-12)					
010	2661153-0000		4	SPACER	
240	312105-0372		2	SCREW, M6S ISO 4017 M6X25 A4 80	
310	312105-0364		4	SCREW, M6S ISO 4017 M6X10 A4 80	
TPA 0500SQ (See drawing on page: 1-12)					
010	1549512-0000		4	SPACER	
240	312105-0372		2	SCREW, M6S ISO 4017 M6X25 A4 80	
300	90062-0061		4	LOCK WASHER NORD-LOCK,6,5/10,8, T=2,2	
310	312105-0374		4	SCREW, M6S ISO 4014 M6X30 A4 80	
TPA 1000SQ, TPA 0750SQ (See drawing on page: 1-12)					
240	312105-0368		2	SCREW, M6S ISO 4017 M6X16 A4 80	

Pos	Part No	UN	Qty	Description	Page No

Machine Type | Group Description | Used-In | Group Number | Page No

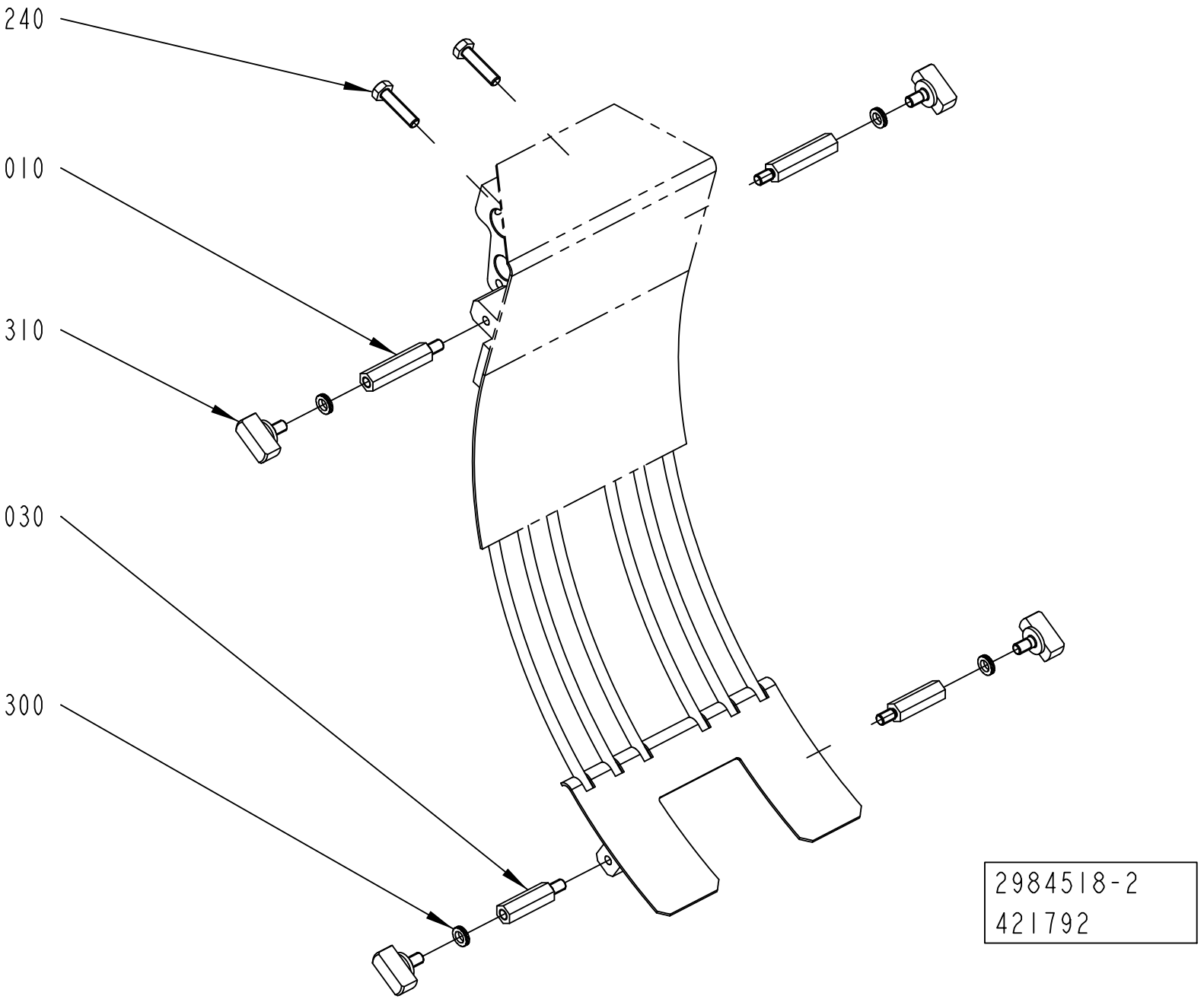
240
010
310
030
300
2984518-2
421792

ECM: 425775 - 20100401
Group number: 2984518-0100
Assembly Drawing: 2984518-2_1_AB

This list covers pages from 1-12 to 1-15

Pos	Part No	UN	Qty	Description	Page No
TBA 0500B, TBA 1000B (See drawing on page: 1-12)					
010	2537129-0000		4	SPACER	
240	312105-0372		2	SCREW, M6S ISO 4017 M6X25 A4 80	
300	90062-0061		4	LOCK WASHER NORD-LOCK,6,5/10,8, T=2,2	
310	2540609-0000		4	KNOB	
TBA 0500S (See drawing on page: 1-12)					
010	1499140-0000		4	SPACER	
240	312105-0372		2	SCREW, M6S ISO 4017 M6X25 A4 80	
300	90062-0061		4	LOCK WASHER NORD-LOCK,6,5/10,8, T=2,2	
310	312105-0378		4	SCREW, M6S ISO 4014 M6X40 A4 80	
TBA 0500SQ, TBA 1000SQ (See drawing on page: 1-14)					
010	2598820-0000		2	SPACER	
030	2619574-0000		2	SPACER	
240	312105-0372		2	SCREW, M6S ISO 4017 M6X25 A4 80	
300	90062-0061		4	LOCK WASHER NORD-LOCK,6,5/10,8, T=2,2	
310	2540609-0000		4	KNOB	
TBA 1000S (See drawing on page: 1-12)					
010	1279670-0000		4	SPACER	
240	312105-0372		2	SCREW, M6S ISO 4017 M6X25 A4 80	
300	90062-0061		4	LOCK WASHER NORD-LOCK,6,5/10,8, T=2,2	
310	312105-0381		4	SCREW, M6S ISO 4014 M6X55 A4 80	
TBA 1500S (See drawing on page: 1-12)					
240	312105-0372		2	SCREW, M6S ISO 4017 M6X25 A4 80	
310	312105-0366		4	SCREW, M6S ISO 4017 M6X12 A4 80	
TBA 2000S (See drawing on page: 1-12)					
010	2661153-0000		4	SPACER	
240	312105-0372		2	SCREW, M6S ISO 4017 M6X25 A4 80	
310	312105-0364		4	SCREW, M6S ISO 4017 M6X10 A4 80	
TPA 0500SQ (See drawing on page: 1-12)					
010	1549512-0000		4	SPACER	
240	312105-0372		2	SCREW, M6S ISO 4017 M6X25 A4 80	
300	90062-0061		4	LOCK WASHER NORD-LOCK,6,5/10,8, T=2,2	
310	312105-0374		4	SCREW, M6S ISO 4014 M6X30 A4 80	
TPA 1000SQ, TPA 0750SQ (See drawing on page: 1-12)					
240	312105-0368		2	SCREW, M6S ISO 4017 M6X16 A4 80	

Pos	Part No	UN	Qty	Description	Page No

INFEED CONVEYOR VARIANT

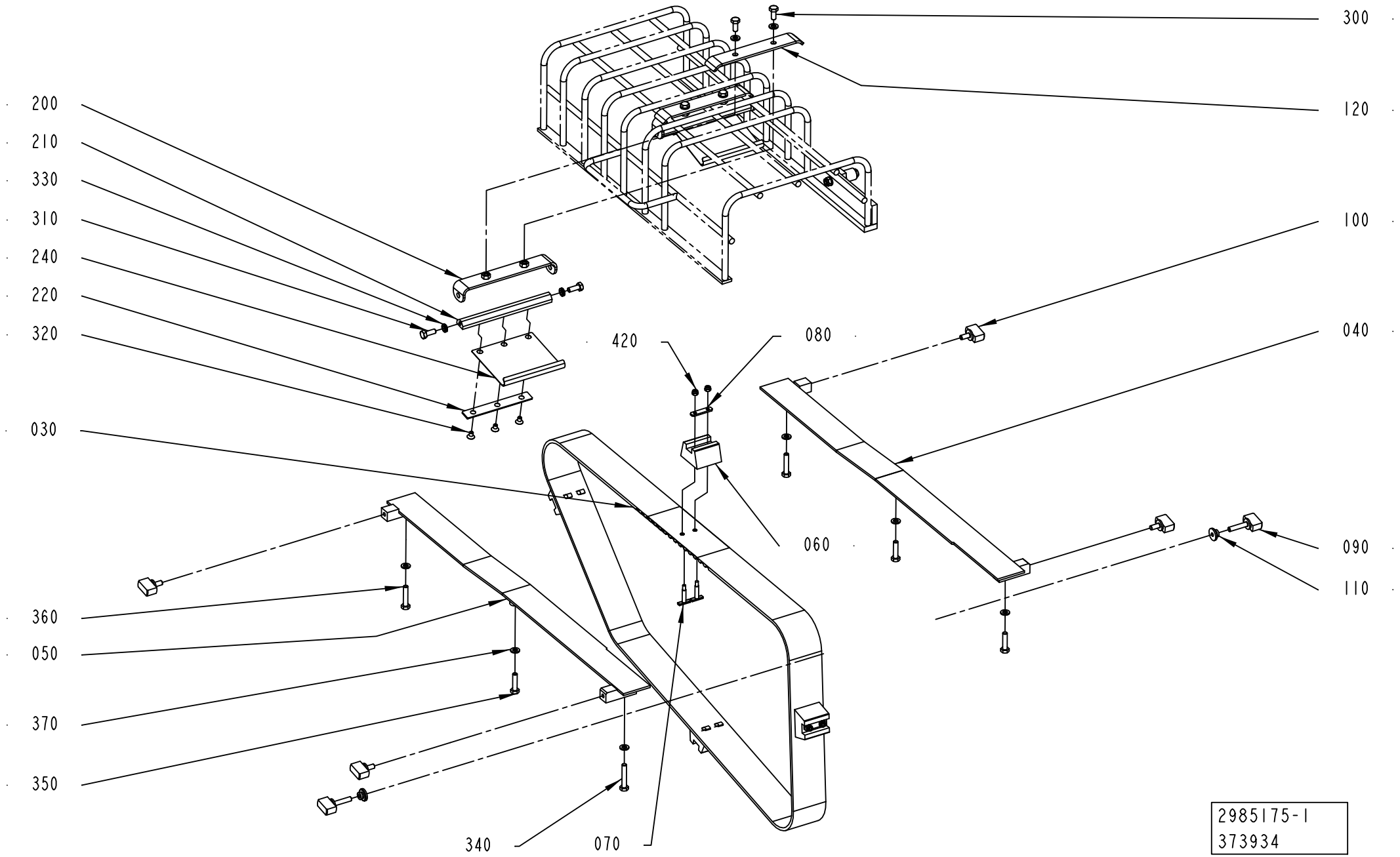

ECM: 550533 - 20120701
Group number: 2985175-0100
Assembly Drawing: 2985175-1_1_AA

This list covers pages from 1-16 to 1-19

Pos	Part No	UN	Qty	Description	Page No
TBA 0500B, TBA 1000B (See drawing on page: 1-16)					
030	1144783-0000		1	TIMING BELT	
040	2779739-0000		1	GUIDE	
050	2779738-0000		1	GUIDE	
060	1144919-0000		4	CARRIER	
070	1346471-0000		8	WEDGE	
080	1144918-0000		4	PLATE	
090	2529785-0000		2	KNOB	
100	2529786-0000		4	KNOB	
110	2520160-0000		2	CLAMP	
120	1499476-0000		1	HOLDER	
200	2527792-0000		1	SUPPORT	
210	2527793-0000		1	SHAFT	
220	2540612-0000		1	PLATE	
240	2530418-0000		1	SPRING	
300	312105-0367		2	SCREW, M6S ISO 4017 M6X14 A4 80	
310	312105-0368		2	SCREW, M6S ISO 4017 M6X16 A4 80	
320	312155-0323		3	SCREW DIN 7991 MF6S M5X8 A4 70	
330	90062-0061		2	LOCK WASHER NORD-LOCK,6,5/10,8, T=2,2	
340	312109-0376		1	SCREW, M6S ISO 4017 M6X35 A4 80	
350	312105-0372		3	SCREW, M6S ISO 4017 M6X25 A4 80	
360	312109-0374		2	SCREW, M6S ISO 4017 M6X30 A4 80	
370	315105-0153		8	WASHER PLAIN, 6,4X12X1,5 A4 BRB	
420	312812-0312		8	HEXAGON NUT, NY-LOCK M4 A4 80	
TBA 0500S (See drawing on page: 1-18)					
030	1144783-0000		1	TIMING BELT	
040	1317651-0000		1	GUIDE	
050	1317650-0000		1	GUIDE	
060	1282287-0000		4	CARRIER	
070	1346736-0000		8	WEDGE	
080	1144918-0000		4	PLATE	
090	312105-0376		2	SCREW, M6S ISO 4014 M6X35 A4 80	
100	312105-0368		4	SCREW, M6S ISO 4017 M6X16 A4 80	
340	312109-0376		1	SCREW, M6S ISO 4017 M6X35 A4 80	
350	312105-0372		3	SCREW, M6S ISO 4017 M6X25 A4 80	
360	312109-0374		2	SCREW, M6S ISO 4017 M6X30 A4 80	
370	315105-0153		12	WASHER PLAIN, 6,4X12X1,5 A4 BRB	
420	312812-0312		8	HEXAGON NUT, NY-LOCK M4 A4 80	
TBA 0500SQ, TBA 1000SQ (See drawing on page: 1-16)					
030	1144783-0000		1	TIMING BELT	
040	1317651-0000		1	GUIDE	
050	1317650-0000		1	GUIDE	
060	1282848-0000		4	CARRIER	
070	1346471-0000		8	WEDGE	
080	1144918-0000		4	PLATE	
090	2529785-0000		2	KNOB	
100	2529786-0000		4	KNOB	
110	2520160-0000		2	CLAMP	
120	1499476-0000		1	HOLDER	
200	2527792-0000		1	SUPPORT	
210	2527793-0000		1	SHAFT	
220	2540612-0000		1	PLATE	
240	2530418-0000		1	SPRING	
300	312105-0367		2	SCREW, M6S ISO 4017 M6X14 A4 80	
310	312105-0368		2	SCREW, M6S ISO 4017 M6X16 A4 80	
320	312155-0323		3	SCREW DIN 7991 MF6S M5X8 A4 70	
330	90062-0061		2	LOCK WASHER NORD-LOCK,6,5/10,8, T=2,2	
340	312109-0376		1	SCREW, M6S ISO 4017 M6X35 A4 80	
350	312105-0372		3	SCREW, M6S ISO 4017 M6X25 A4 80	
360	312109-0374		2	SCREW, M6S ISO 4017 M6X30 A4 80	
370	315105-0153		8	WASHER PLAIN, 6,4X12X1,5 A4 BRB	
420	312812-0312		8	HEXAGON NUT, NY-LOCK M4 A4 80	
TBA 1000S (See drawing on page: 1-18)					
030	1144783-0000		1	TIMING BELT	
040	1317651-0000		1	GUIDE	
050	1317650-0000		1	GUIDE	
060	1144919-0000		4	CARRIER	
070	1346471-0000		8	WEDGE	
080	1144918-0000		4	PLATE	
090	312109-0376		2	SCREW, M6S ISO 4017 M6X35 A4 80	
100	312105-0368		4	SCREW, M6S ISO 4017 M6X16 A4 80	
340	312109-0376		1	SCREW, M6S ISO 4017 M6X35 A4 80	
350	312105-0372		3	SCREW, M6S ISO 4017 M6X25 A4 80	
360	312109-0374		2	SCREW, M6S ISO 4017 M6X30 A4 80	
370	315105-0153		12	WASHER PLAIN, 6,4X12X1,5 A4 BRB	
420	312812-0312		8	HEXAGON NUT, NY-LOCK M4 A4 80	
TBA 1500S (See drawing on page: 1-18)					
030	2927638-0000		1	TIMING BELT	
040	2665201-0000		1	GUIDE	
050	2665200-0000		1	GUIDE	
060	1282848-0000		3	CARRIER	
070	1346471-0000		6	WEDGE	
080	1144918-0000		3	PLATE	
090	312109-0376		2	SCREW, M6S ISO 4017 M6X35 A4 80	

Machine Type | Group Description | Used-In | Group Number | Page No

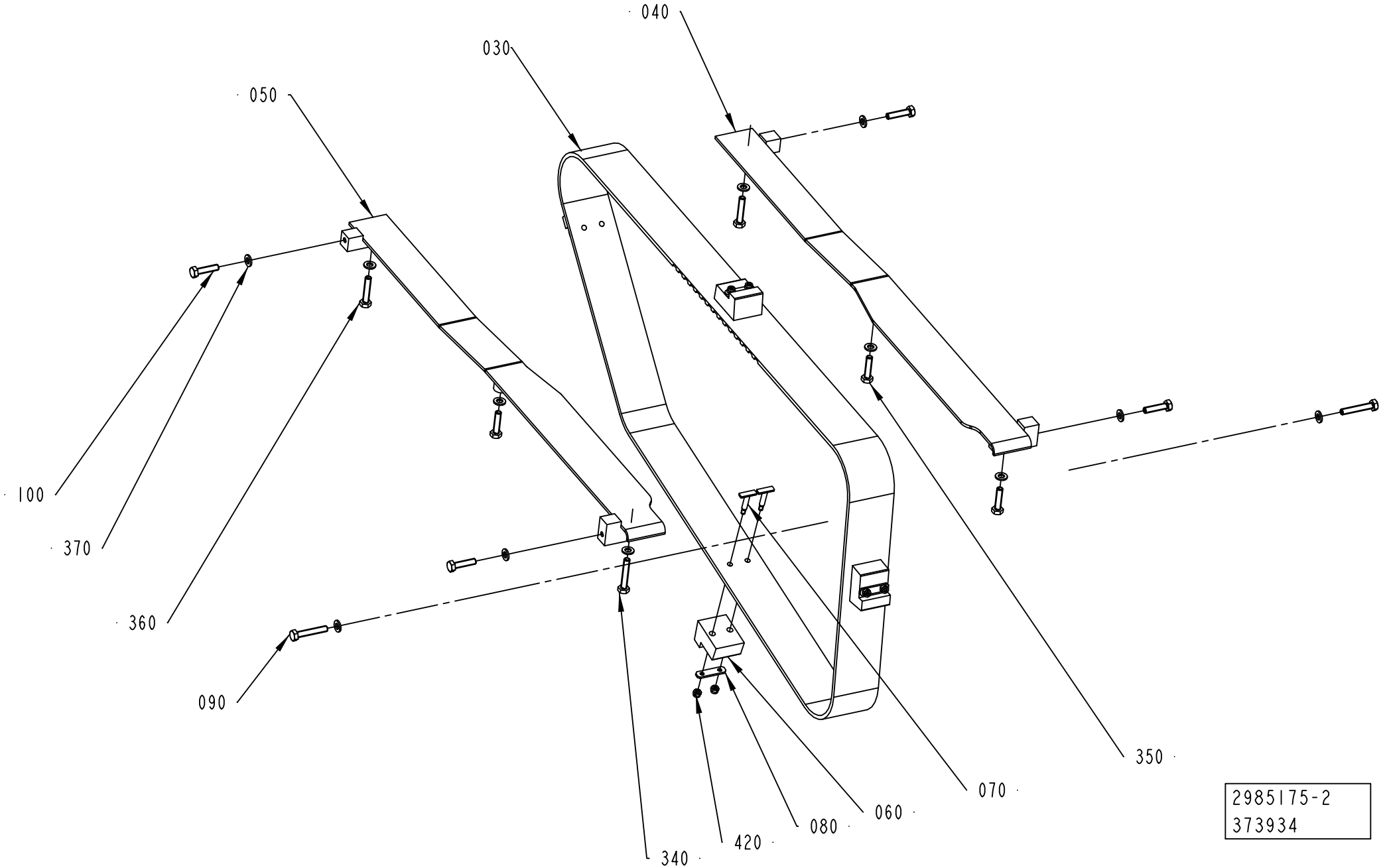
040
030
050
100
370
360
090
350
070
060
080
420
340
2985175-2
373934

Pos	Part No	UN	Qty	Description	Page No
TBA 1500S (Cont'd) (See drawing on page: 1-18)					
100	312105-0368		4	SCREW, M6S ISO 4017 M6X16 A4 80	
340	312105-0370		2	SCREW, M6S ISO 4017 M6X20 A4 80	
350	312105-0376		2	SCREW, M6S ISO 4014 M6X35 A4 80	
360	312105-0370		2	SCREW, M6S ISO 4017 M6X20 A4 80	
370	315105-0153		12	WASHER PLAIN, 6,4X12X1,5 A4 BRB	
420	312812-0312		6	HEXAGON NUT, NY-LOCK M4 A4 80	
TBA 2000S (See drawing on page: 1-18)					
030	2927638-0000		1	TIMING BELT	
040	2665201-0000		1	GUIDE	
050	2665200-0000		1	GUIDE	
060	1282848-0000		3	CARRIER	
070	1346471-0000		6	WEDGE	
080	1144918-0000		3	PLATE	
090	312109-0376		2	SCREW, M6S ISO 4017 M6X35 A4 80	
100	312105-0368		4	SCREW, M6S ISO 4017 M6X16 A4 80	
340	312105-0370		2	SCREW, M6S ISO 4017 M6X20 A4 80	
350	312105-0376		2	SCREW, M6S ISO 4014 M6X35 A4 80	
360	312105-0370		2	SCREW, M6S ISO 4017 M6X20 A4 80	
370	315105-0153		12	WASHER PLAIN, 6,4X12X1,5 A4 BRB	
420	312812-0312		6	HEXAGON NUT, NY-LOCK M4 A4 80	
TPA 0500SQ (See drawing on page: 1-18)					
030	1144783-0000		1	TIMING BELT	
040	1549523-0000		1	GUIDE	
050	1549522-0000		1	GUIDE	
060	1532256-0000		4	CARRIER	
070	1346471-0000		8	WEDGE	
080	1144918-0000		4	PLATE	
090	312109-0376		2	SCREW, M6S ISO 4017 M6X35 A4 80	
100	312105-0372		4	SCREW, M6S ISO 4017 M6X25 A4 80	
340	312109-0376		1	SCREW, M6S ISO 4017 M6X35 A4 80	
350	312105-0372		3	SCREW, M6S ISO 4017 M6X25 A4 80	
360	312109-0374		2	SCREW, M6S ISO 4017 M6X30 A4 80	
370	315105-0153		12	WASHER PLAIN, 6,4X12X1,5 A4 BRB	
420	312812-0312		8	HEXAGON NUT, NY-LOCK M4 A4 80	
TPA 1000SQ, TPA 0750SQ (See drawing on page: 1-16)					
030	2927639-0000		1	TIMING BELT	
040	2912506-0000		1	GUIDE	
050	2912505-0000		1	GUIDE	
060	3025644-0000		3	CARRIER	
070	1517476-0000		6	WEDGE	
080	1517477-0000		3	PLATE	
090	2529785-0000		2	KNOB	
100	2529786-0000		4	KNOB	
110	2520160-0000		2	CLAMP	
340	312105-0370		2	SCREW, M6S ISO 4017 M6X20 A4 80	
350	312105-0376		2	SCREW, M6S ISO 4014 M6X35 A4 80	
360	312105-0370		2	SCREW, M6S ISO 4017 M6X20 A4 80	
370	315105-0153		6	WASHER PLAIN, 6,4X12X1,5 A4 BRB	
420	312812-0312		6	HEXAGON NUT, NY-LOCK M4 A4 80	

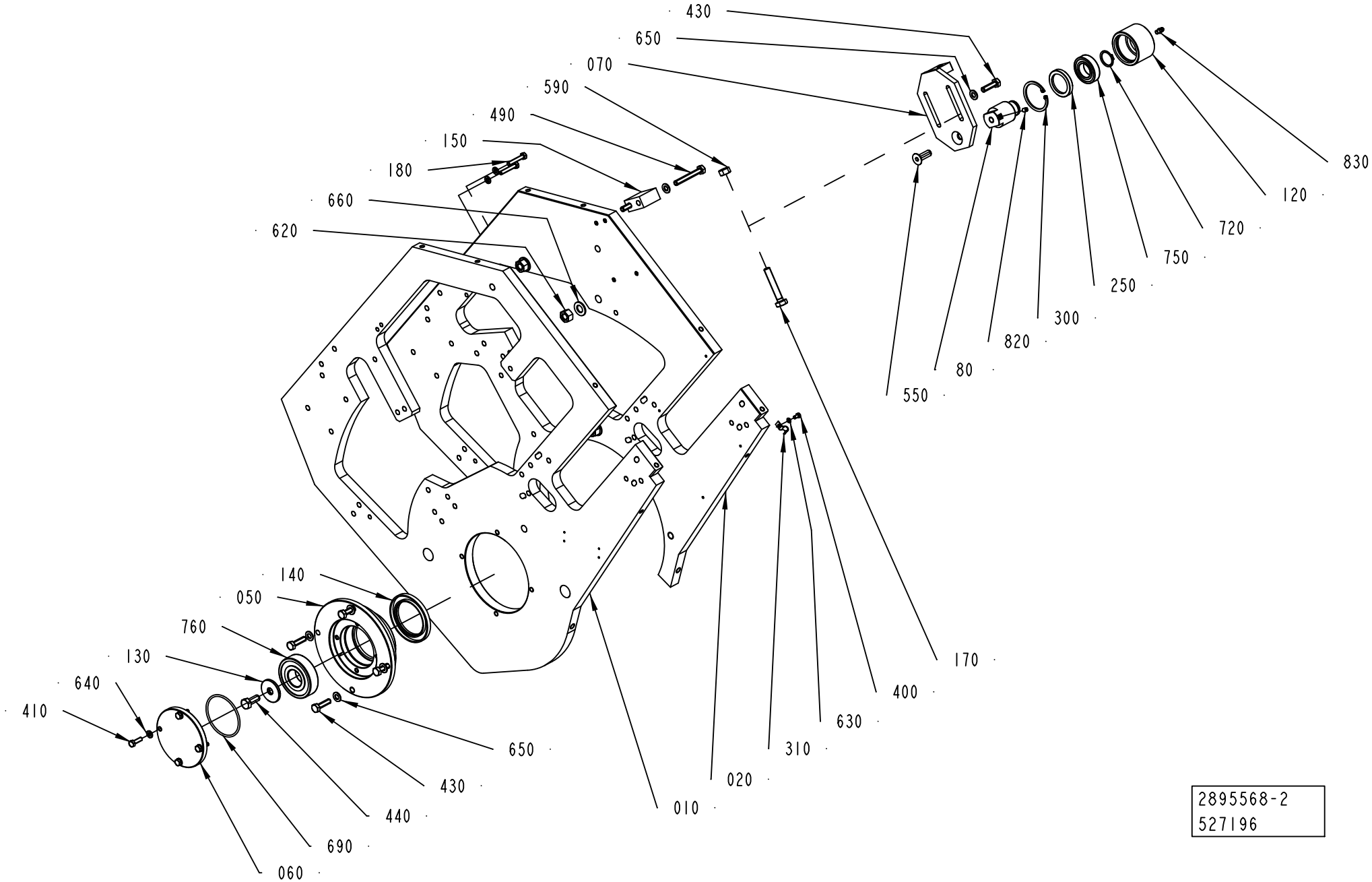
430
650
070
590
490
150
180
660
620
830
120
720
750
250
300
820
80
550
140
050
760
130
640
410
170
400
630
310
650
430
440
690
060
020
010
2895568-2
527196

ECM: 549123 - 20120701
Group number: 2895568-0200
Assembly Drawing: 2895568-2_1_AA

Pos	Part No	UN	Qty	Description	Page No
-					
010	2895570-0000		1	PLATE	
020	2863138-0000		1	PLATE	
050	2862627-0000		1	BEARING HOUSING	
060	2862626-0000		1	FLANGE	
070	1144797-0000		1	SUPPORT	
080	2963361-0000		1	SHAFT	
120	2963360-0000		1	ROLLER	
130	1144620-0000		1	WASHER	
140	1144665-0000		1	SEAL RING	
150	1144839-0000		1	BLOCK	
170	1260931-0000		1	SCREW	
180	312109-0376		2	SCREW, M6S ISO 4017 M6X35 A4 80	
250	90091-0297		1	RADIAL SEAL 35X47X7 MM DUST LIP	
300	90141-0019		1	RETAINING RING FOR BORE DIN 472 50 SS	
310	316810-0106		5	PIPE CLIP FOR TUBE D=8 MM	
400	312105-0287		5	SCREW, M6S ISO 4017 M4X8 A4 70	
410	312105-0370		4	SCREW, M6S ISO 4017 M6X20 A4 80	
430	312105-0455		6	SCREW, M6S ISO 4017 M8X30 A4 80	
440	312105-0493		1	SCREW, M6S ISO 4017 M10X25 A4 80	
490	312109-0463		2	SCREW, M6S ISO 4017 M8X60 A4 80	
550	312155-0495		1	SCREW DIN 7991 MF6S M10X30 A4 70	
590	312605-0320		1	HEXAGON NUT, M6M M10 A280	
620	312605-0322		3	HEXAGON NUT, M6M M12 A280	
630	315105-0136		5	WASHER PLAIN, 4,3X9X0,8 A4 BRB	
640	315105-0153		6	WASHER PLAIN, 6,4X12X1,5 A4 BRB	
650	315105-0165		8	WASHER PLAIN, 8,4X16X1,6 A4 BRB	
660	315105-0178		3	WASHER PLAIN, 13X24X2,5 A4 BRB	
690	315202-0305		1	O-RING 69,5X3 MM	
720	315751-0119		1	RETAINING RING FOR SHAFT DIN 471 25 SS	
750	321306-0105		1	BALL BEARING 25/47X12	
760	344227-0206		1	BALL BEARING 30/72X19	
780	352113-0102		3	CABLE TIE, BLACK 188X4,8 MM	
790	352113-0101		7	CABLE TIE, BLACK 92X2,5 MM	
820	312318-0362		1	SET SCREW, CUP END ISO4029 M6X8 A4	
830	90286-0013		1	GREASE NIPPLE STRAIGHT, H1 M6X1 2346	
840	90603-6022	G	1	KLüBERSYNTH UH1 64-62, ONLY IN BOM	
	90603-6023		*1*	*KLüBERSYNTH UH1 64-62, 1 KG CAN*	
	90603-6024		*1*	*KLüBERSYNTH UH1 64-62, 25KG BUCKET*	

Pos	Part No	UN	Qty	Description	Page No

Machine Type	Group Description	Used-In	Group Number	Page No

PULL-DOWN DEVICE

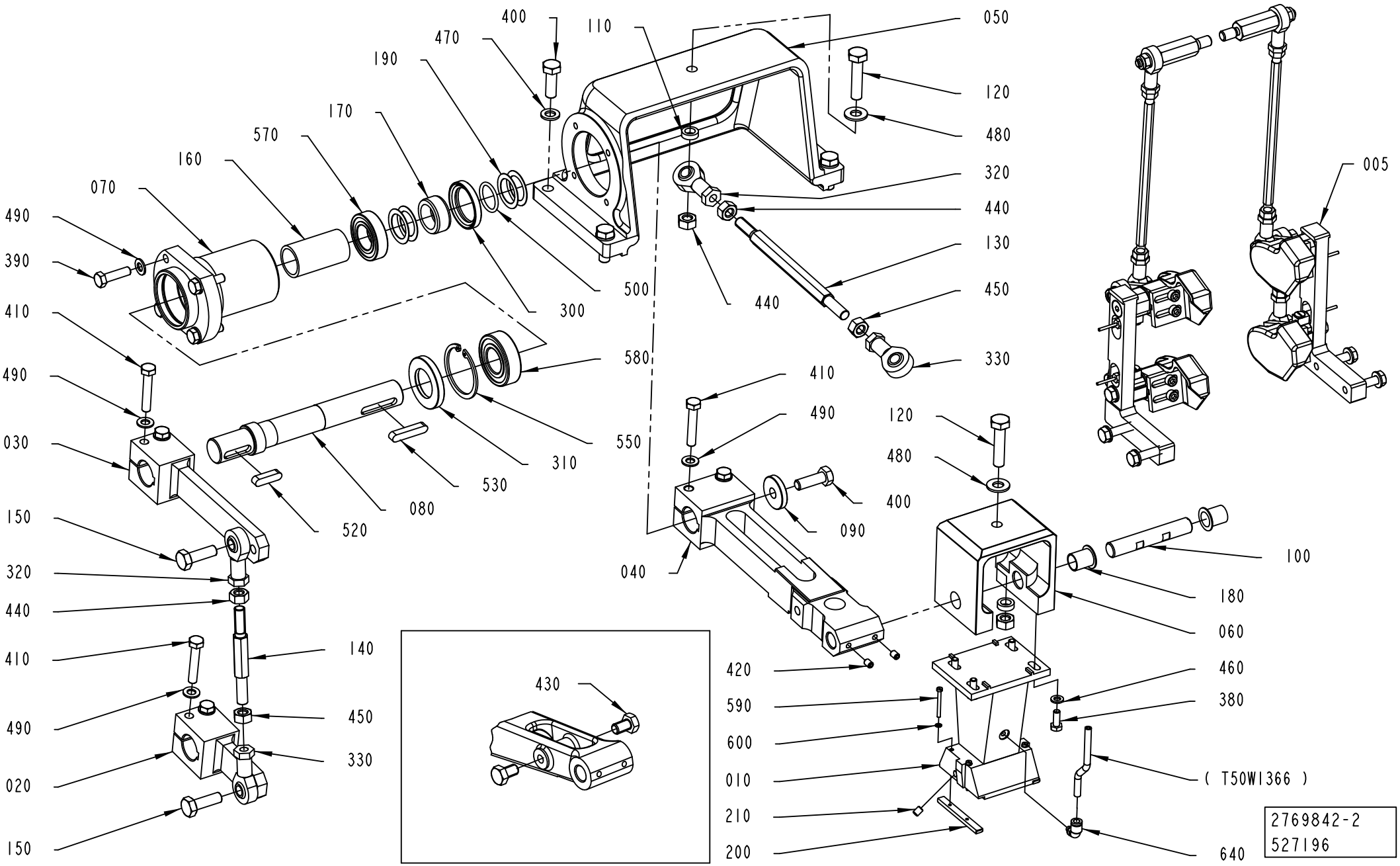

ECM: 528608 - 20120401
Group number: 2769842-0200
Assembly Drawing: 2769842-2_1_AA

This list covers pages from 1-22 to 1-25

Pos	Part No	UN	Qty	Description	Page No
TBA 0500B, TBA 1000B NOMOLDEDCAP					
010	2895566-0000		1	BLOCK	
200	2895567-0000		2	BAR	
430	312105-0489		2	SCREW, M6S ISO 4017 M10X16 A4 80	
590	312125-0234		4	SLOTTED HEAD SCREW, ISO1207 M3X30 A4	
600	315105-0124		4	WASHER PLAIN, 3,2X6X0,5 A4 BRB	
TBA 0500S					
010	2971484-0000		1	BLOCK	
200	2971485-0000		2	BAR	
430	312105-0489		2	SCREW, M6S ISO 4017 M10X16 A4 80	
590	312125-0230		4	SLOTTED HEAD SCREW, ISO1207 M3X20 A4	
600	315105-0124		4	WASHER PLAIN, 3,2X6X0,5 A4 BRB	
TBA 0500SQ, TBA 1000SQ					
005	2863123-0100		1	FOLDING PART	**1-27**
010	2769843-0000		1	BLOCK	
200	2844575-0000		2	BAR	
590	312125-0234		4	SLOTTED HEAD SCREW, ISO1207 M3X30 A4	
600	315105-0124		4	WASHER PLAIN, 3,2X6X0,5 A4 BRB	
TBA 1000S NOMOLDEDCAP					
010	2818556-0000		1	BLOCK	
200	2858421-0000		2	BAR	
430	312105-0489		2	SCREW, M6S ISO 4017 M10X16 A4 80	
590	312125-0234		4	SLOTTED HEAD SCREW, ISO1207 M3X30 A4	
600	315105-0124		4	WASHER PLAIN, 3,2X6X0,5 A4 BRB	
TBA 1500S					
010	2929028-0000		1	BLOCK	
200	2929029-0000		2	BAR	
430	312105-0489		2	SCREW, M6S ISO 4017 M10X16 A4 80	
590	312115-0232		4	SCREW ISO4762 M3X25 A4 80	
600	315105-0124		4	WASHER PLAIN, 3,2X6X0,5 A4 BRB	
TBA 2000S					
010	2922911-0000		1	BLOCK	
430	312105-0489		2	SCREW, M6S ISO 4017 M10X16 A4 80	
TPA 0500SQ					
005	3060490-0100		1	FOLDING PART	**1-29**
010	2953135-0000		1	BLOCK	
200	2598706-0000		2	BAR	
590	312125-0230		4	SLOTTED HEAD SCREW, ISO1207 M3X20 A4	
600	315105-0124		4	WASHER PLAIN, 3,2X6X0,5 A4 BRB	
TPA 1000SQ, TPA 0750SQ					
005	2931388-0100		1	FOLDING DEVICE	**1-31**
010	2911510-0000		1	BLOCK	
200	2911509-0000		2	BAR	
590	312115-0232		4	SCREW ISO4762 M3X25 A4 80	
600	315105-0124		4	WASHER PLAIN, 3,2X6X0,5 A4 BRB	
Common Parts					
020	1144472-0000		1	LEVER	
030	1144473-0000		1	LEVER	
040	1499635-0000		1	LEVER	
050	1144475-0000		1	BRACKET	
060	1144476-0000		1	BRACKET	
070	1144566-0000		1	FLANGE	
080	1144678-0000		1	SHAFT	
090	1144681-0000		1	WASHER	
100	1144683-0000		1	AXLE PIN	
110	1144684-0000		2	SPACER	
120	1144685-0000		2	SCREW	
130	1144686-0000		1	TIE ROD	
140	1144687-0000		1	TIE ROD	
150	1144688-0000		2	SCREW	
160	1260824-0000		1	SPACER RING	
170	1334328-0000		1	SPACER	
180	1260944-0000		2	BUSHING	
190	1334018-0000		4	SHIM	
210	2769844-0000		4	GRUB SCREW	
300	90091-0297		1	RADIAL SEAL 35X47X7 MM DUST LIP	
310	90091-0299		1	RADIAL SEAL 30X52X7 MM DUST LIP	
320	90115-0181		2	ROD END, ID=10 MM M10X1,5	
330	90115-0182		2	ROD END, ID=10 MM M10X1,5LH	
380	312105-0368		4	SCREW, M6S ISO 4017 M6X16 A4 80	
390	312105-0455		4	SCREW, M6S ISO 4017 M8X30 A4 80	
400	312105-0495		5	SCREW, M6S ISO 4017 M10X30 A4 80	
410	312109-0460		6	SCREW, M6S ISO 4017 M8X45 A4 80	
420	312318-0362		2	SET SCREW, CUP END ISO4029 M6X8 A4	
440	312605-0320		4	HEXAGON NUT, M6M M10 A280	
450	312902-0320		2	NUT HEX. LEFT THREAD, M10 A280	
460	315105-0153		4	WASHER PLAIN, 6,4X12X1,5 A4 BRB	
470	315105-0171		4	WASHER PLAIN, 10X18X2 A4 BRB	
480	315105-0173		2	WASHER PLAIN, 10,5X22X2 A4 BRB	
490	315105-0165		10	WASHER PLAIN, 8,4X16X1,6 A4 BRB	
500	315202-0217		1	O-RING 24,2X3 MM	
520	315705-0267		1	PARALLEL KEY W. ROUND ENDS, 8X7X30 MM	
530	315705-0270		1	PARALLEL KEY W. ROUND ENDS, 8X7X40 MM	
550	315753-0132		1	RETAINING RING FOR BORE DIN 472 52 SS	

Machine Type | Group Description | Used-In | Group Number | Page No

PULL-DOWN DEVICE

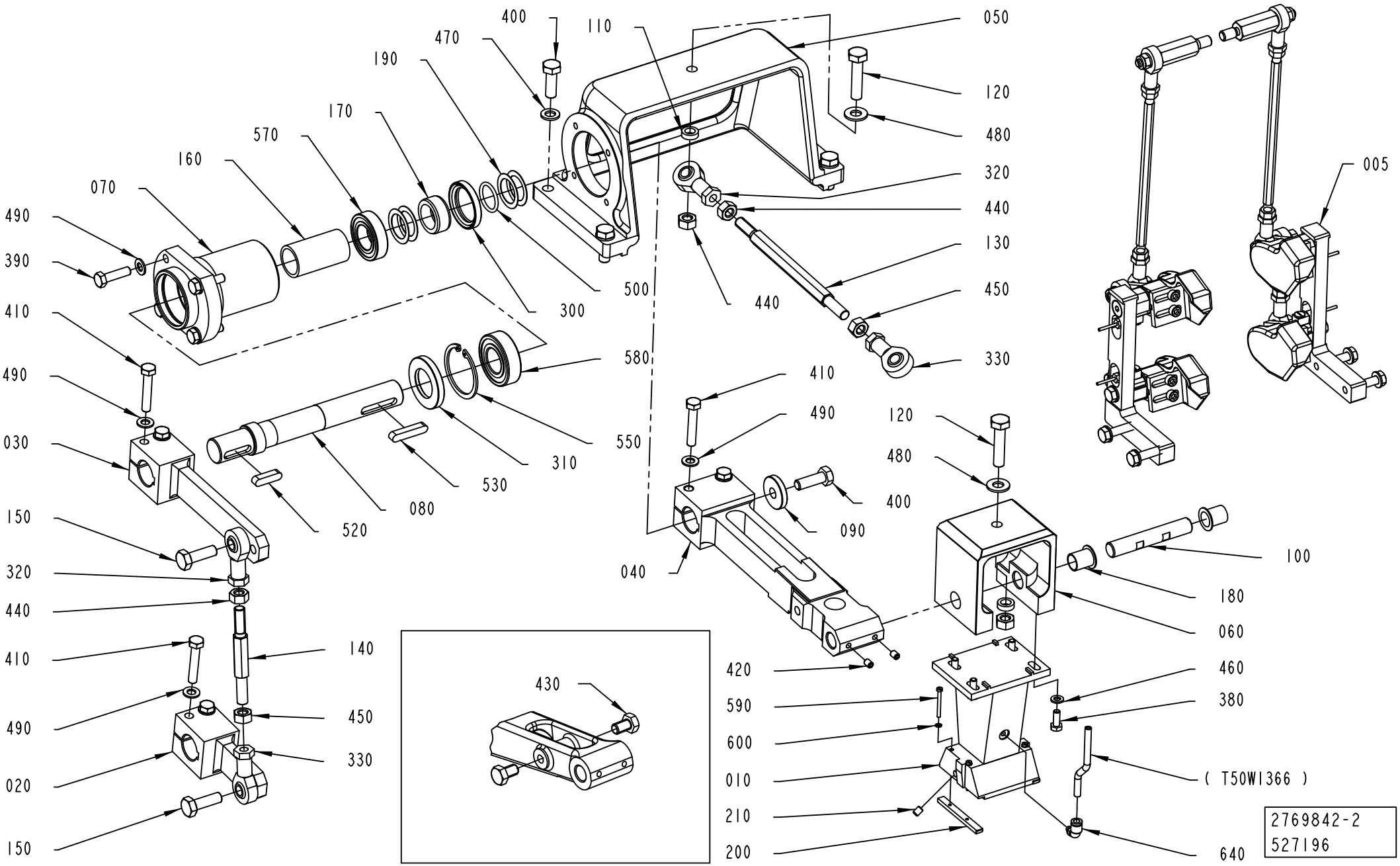

ECM: 528608 - 20120401
Group number: 2769842-0200
Assembly Drawing: 2769842-2_1_AA

This list covers pages from 1-22 to 1-25

Pos	Part No	UN	Qty	Description	Page No
Common Parts (Cont'd)					
570	344224-0205		1	BALL BEARING 25/47X12	
580	344226-0105		1	BALL BEARING 25/52X15	
640	90457-0922		1	ELBOW PIPE JOINT, EXT.THREAD, D=6MM M5	

Pos	Part No	UN	Qty	Description	Page No

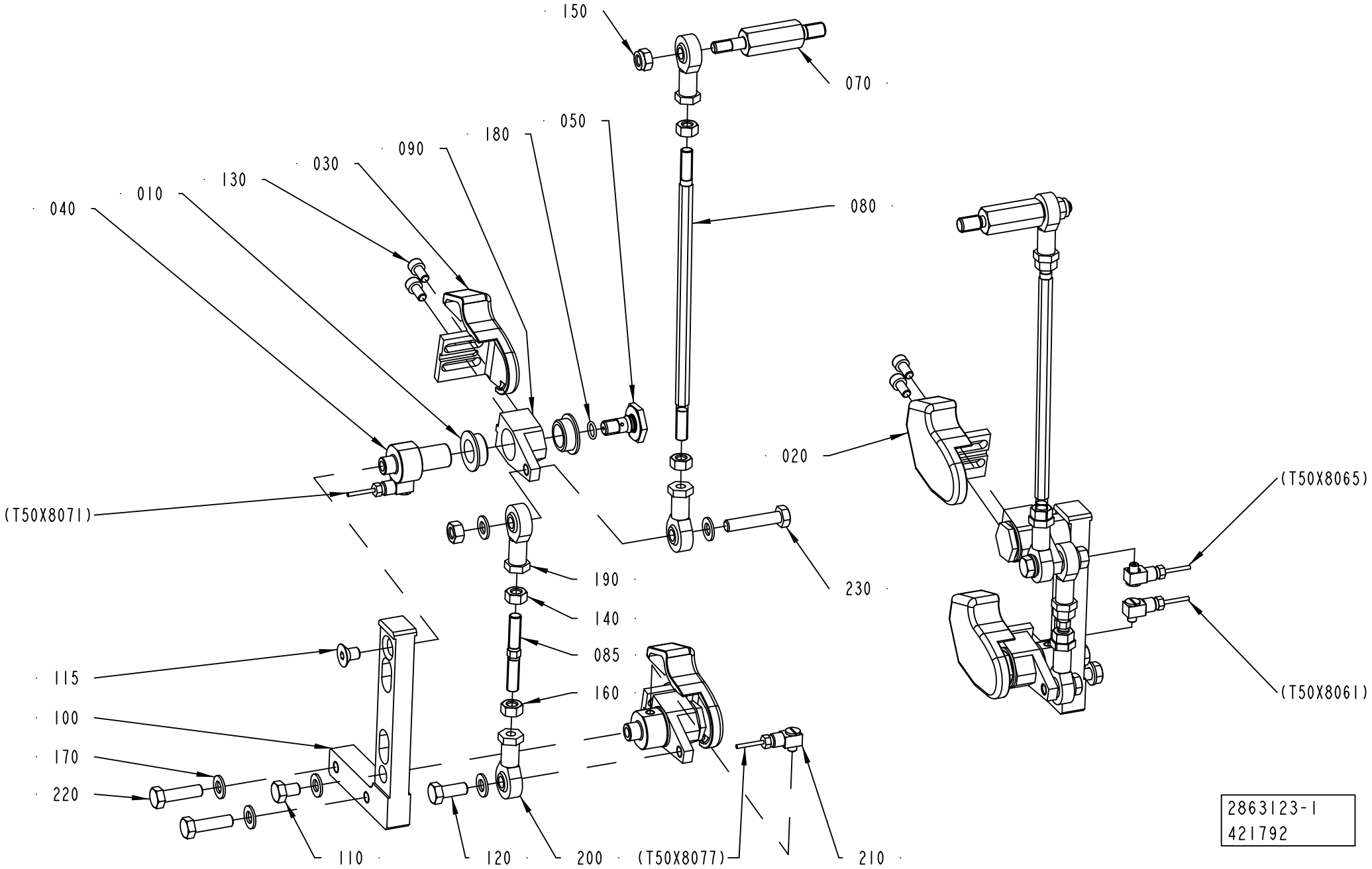
150
070
050
180
090
030
130
010
040
080
020
(T50X8065)
(T50X8071)
190
230
140
085
160
115
100
170
220
110
120
200
(T50X8077)
210
(T50X8061)
2863123-1
421792

ECM: 527813 - 20120401
Group number: 2863123-0100
Assembly Drawing: 2863123-1_1_AC

Pos	Part No	UN	Qty	Description	Page No
TBA 0500SQ QC, TBA 1000SQ QC					
010	1282708-0000		8	BUSHING	
020	1487922-0000		2	FOLDING DEVICE	
030	1487923-0000		2	FOLDING DEVICE	
040	1347495-0000		4	AXLE PIN	
050	1347496-0000		4	SCREW	
070	2868213-0000		2	AXLE LINK	
080	2868214-0000		2	TIE ROD	
085	2868215-0000		2	TIE ROD	
090	1350440-0000		4	LEVER	
115	312155-0447		2	SCREW DIN 7991 MF6S M8X12 A4 70	
130	312115-0366		8	SCREW ISO4762 M6X12 A4 80	
140	312605-0318		6	HEXAGON NUT, M6M M8 A280	
160	312902-0318		4	NUT HEX. LEFT THREAD, M8 A280	
170	315105-0165		12	WASHER PLAIN, 8,4X16X1,6 A4 BRB	
180	315202-0107		4	O-RING 9,1X1,6 MM	
190	90115-0139		4	ROD END, ID=8 MM, M8X1,25	
200	90115-0180		4	ROD END, ID=8 MM, M8X1,25 LH	
210	90134-0058		4	CONNECTION	
230	312109-0459		2	SCREW, M6S ISO 4017 M8X40 A4 80	
Common Parts					
100	2868216-0000		2	BRACKET	
110	312105-0447		2	SCREW, M6S ISO 4017 M8X12 A4 80	
120	312105-0451		2	SCREW, M6S ISO 4017 M8X20 A4 80	
150	312812-0318		2	HEXAGON NUT, NY-LOCK M8 A4 80	
220	312105-0455		4	SCREW, M6S ISO 4017 M8X30 A4 80	

Pos	Part No	UN	Qty	Description	Page No

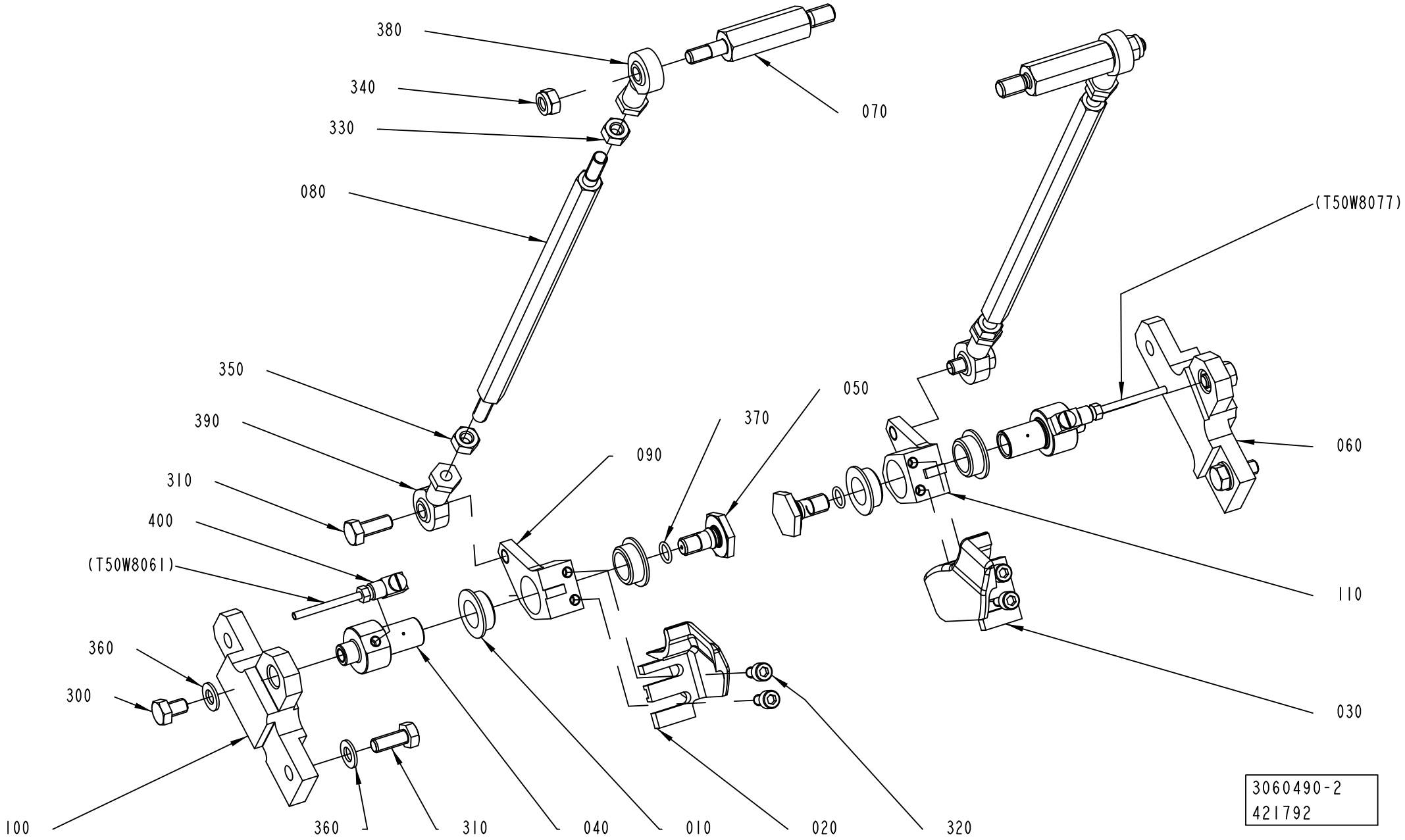
380
340
330
080
350
390
310
400
(T50W8061)
360
300
100
360
310
040
010
090
370
050
070
(T50W8077)
060
110
030
020
320
3060490-2
421792

ECM: 425751 - 20100401
Group number: 3060490-0100
Assembly Drawing: 3060490-2_1_AA

Pos	Part No	UN	Qty	Description	Page No
TPA 0500SQ SMILE					
020	2606277-0000		1	FOLDING DEVICE	
030	2606278-0000		1	FOLDING DEVICE	
060	2529673-0000		1	SUPPORT	
070	1532268-0000		2	AXLE LINK	
080	2527531-0000		2	TIE ROD	
090	2529676-0000		1	LEVER	
100	2529674-0000		1	SUPPORT	
110	2529675-0000		1	LEVER	
Common Parts					
010	1282708-0000		4	BUSHING	
040	1347495-0000		2	AXLE PIN	
050	1347496-0000		2	SCREW	
300	312105-0447		2	SCREW, M6S ISO 4017 M8X12 A4 80	
310	312105-0451		4	SCREW, M6S ISO 4017 M8X20 A4 80	
320	312115-0366		4	SCREW ISO4762 M6X12 A4 80	
330	312605-0318		2	HEXAGON NUT, M6M M8 A280	
340	312812-0318		2	HEXAGON NUT, NY-LOCK M8 A4 80	
350	312902-0318		2	NUT HEX. LEFT THREAD, M8 A280	
360	315105-0165		4	WASHER PLAIN, 8,4X16X1,6 A4 BRB	
370	315202-0107		2	O-RING 9,1X1,6 MM	
380	90115-0139		2	ROD END, ID=8 MM, M8X1,25	
390	90115-0180		2	ROD END, ID=8 MM, M8X1,25 LH	
400	90134-0068		2	CONNECTION	

Pos	Part No	UN	Qty	Description	Page No

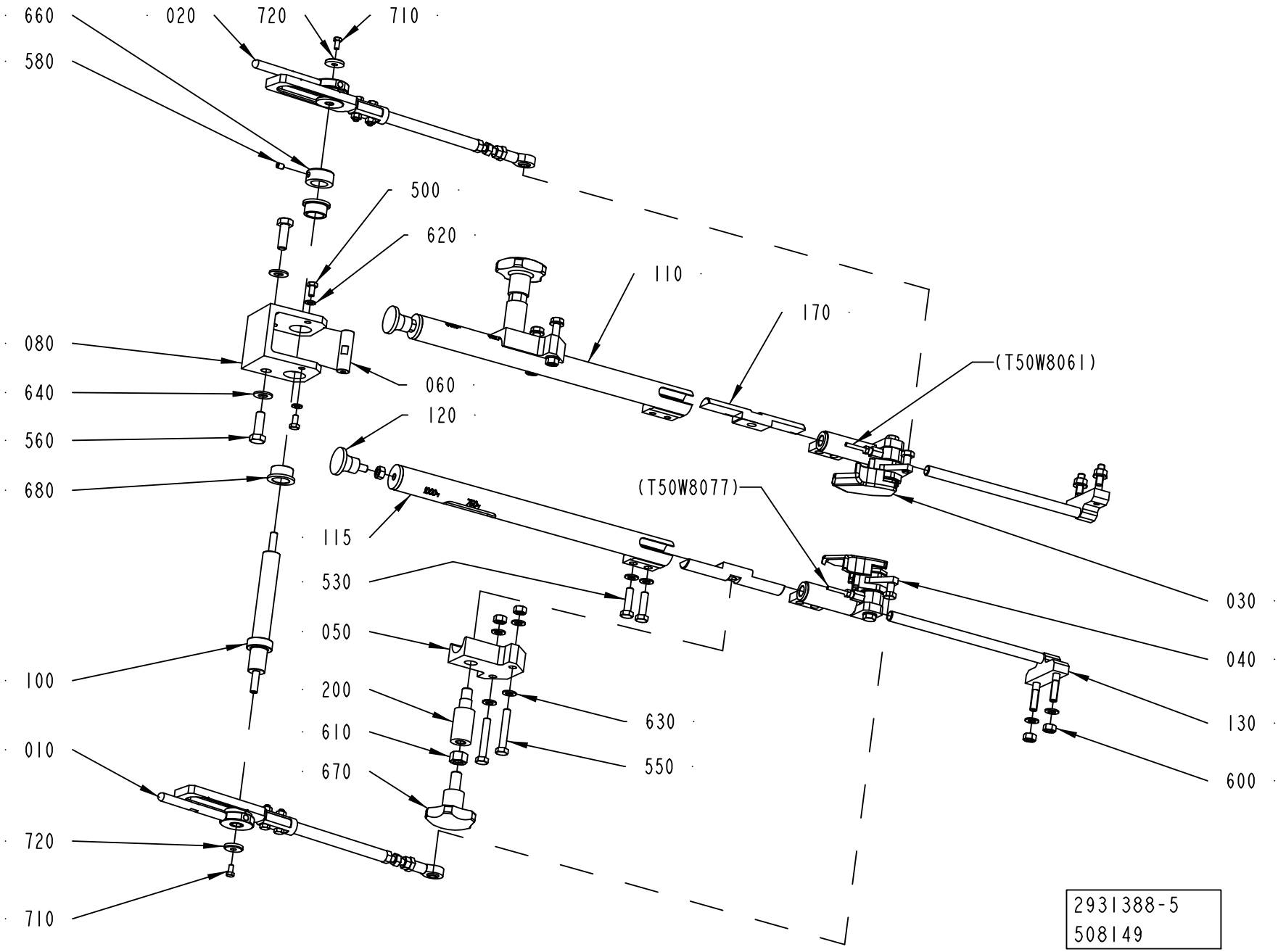
660
020
720
710
580
500
620
110
170
080
(T50W8061)
640
060
120
560
680
(T50W8077)
115
530
030
050
040
100
200
630
130
610
550
670
600
010
720
710
2931388-5
508149

ECM: 515992 - 20120101
Group number: 2931388-0100
Assembly Drawing: 2931388-5_1_AC

Pos	Part No	UN	Qty	Description	Page No
-					
010	2619584-0100		1	STRUT	**1-33, 1-35**
020	2619584-0100		1	STRUT	**1-33, 1-35**
030	2619597-0100		1	FLAP GUIDE	**1-37**
040	2619598-0100		1	FLAP GUIDE	**1-39**
050	2767295-0000		2	BLOCK	
060	2588127-0000		1	AXLE PIN	
080	2588134-0000		1	YOKE	
100	2647103-0000		1	SHAFT	
110	2918659-0000		1	PIPE	
115	2918660-0000		1	PIPE	
120	318871-0105		2	KNOB CIRCULAR, EXT THREAD, NO. 8302-6150	
130	2663370-0000		2	SUPPORT	
170	2912511-0000		2	BLOCKING PIECE	
200	2767296-0000		2	SPACER SCREW	
500	312105-0366		2	SCREW, M6S ISO 4017 M6X12 A4 80	
530	312105-0455		4	SCREW, M6S ISO 4017 M8X30 A4 80	
550	312109-0461		4	SCREW, M6S ISO 4017 M8X50 A4 80	
560	312105-0495		2	SCREW, M6S ISO 4017 M10X30 A4 80	
580	312318-0362		1	SET SCREW, CUP END ISO4029 M6X8 A4	
600	312605-0318		10	HEXAGON NUT, M6M M8 A280	
610	312605-0322		2	HEXAGON NUT, M6M M12 A280	
620	315105-0153		2	WASHER PLAIN, 6,4X12X1,5 A4 BRB	
630	315105-0165		16	WASHER PLAIN, 8,4X16X1,6 A4 BRB	
640	315105-0173		2	WASHER PLAIN, 10,5X22X2 A4 BRB	
660	315741-0216		1	RETAINING RING, DIN 705 A4 20	
670	318856-0115		2	KNOB, EXTERNAL THREAD. NO. 8306-0278	
680	321111-0302		2	FLANGE BUSHING, 20/26X15-32X3 MM	
710	312105-0325		2	SCREW, M6S ISO 4017 M5X10 A4 80	
720	315125-0153		2	WASHER HIGH, TBRSB 6,4X22X4 A4	

Pos	Part No	UN	Qty	Description	Page No

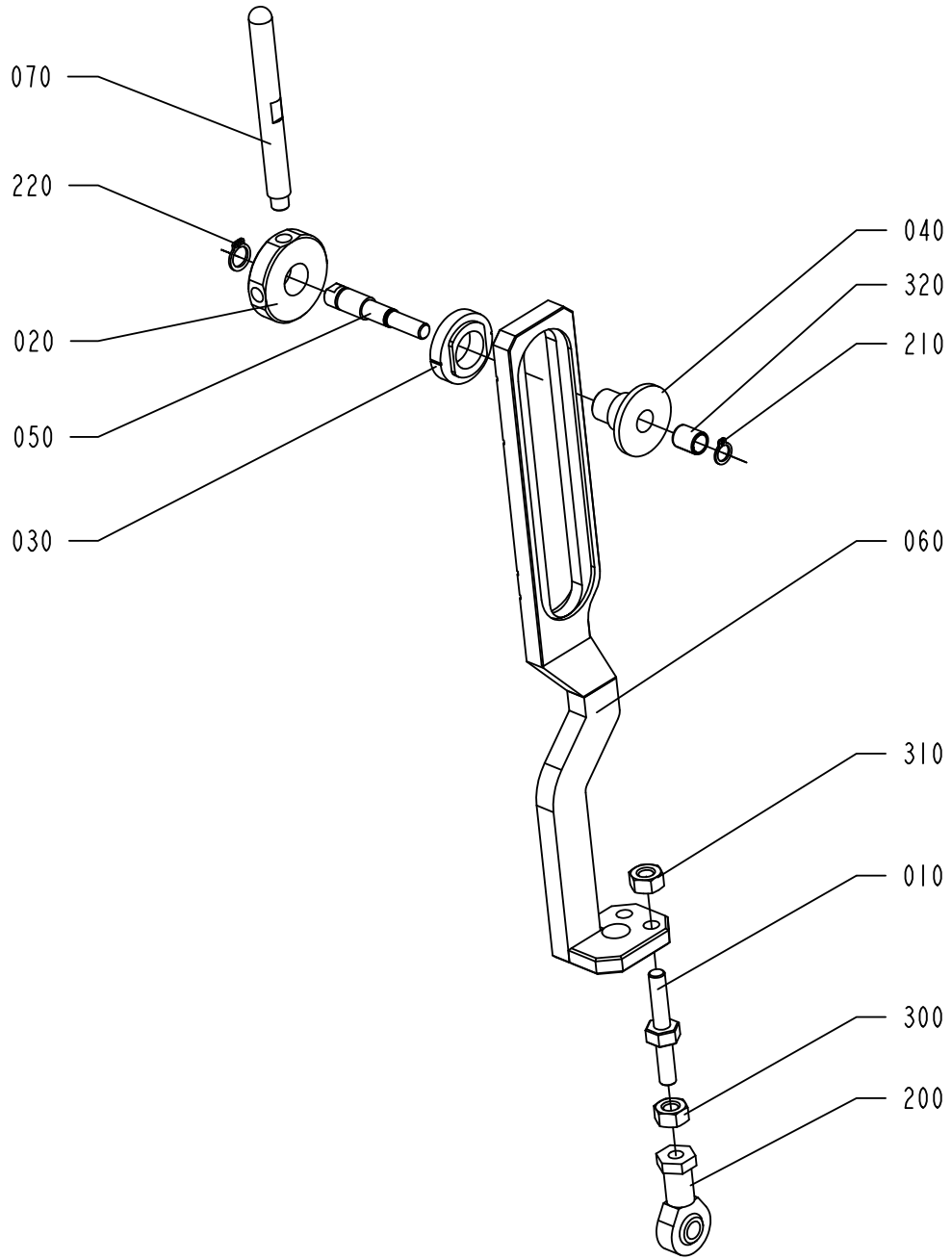
070
220
020
050
030
040
320
210
060
310
010
300
200
2619584-1
ECM 174515

ECM: 425754 - 20100401
Group number: 2619584-0100
Assembly Drawing: 2619584-1_1_AA

This list covers pages from 1-32 to 1-35

Pos	Part No	UN	Qty	Description	Page No
TBA 0500SQ, TBA 1000SQ (See drawing on page: 1-32)					
050	2619531-0000		1	SHAFT	
060	2851929-0000		1	STRUT	
200	90115-0020		1	ROD END, ID=8 MM, M8X1,25	
210	90141-0015		1	RETAINING RING FOR SHAFT DIN 471 8 SS	
220	90141-0016		1	RETAINING RING FOR SHAFT DIN 471 10 SS	
TPA 0750SQ (See drawing on page: 1-34)					
060	2647108-0000		1	STRUT	
080	2647109-0000		1	SHAFT	
200	90115-0021		1	ROD END, ID=8 MM, M8X1,25 LH	
330	312105-0372		2	SCREW, M6S ISO 4017 M6X25 A4 80	
340	312605-0316		2	HEXAGON NUT, M6M M6 A280	
TPA 1000SQ (See drawing on page: 1-34)					
060	2647108-0000		1	STRUT	
080	2647109-0000		1	SHAFT	
200	90115-0021		1	ROD END, ID=8 MM, M8X1,25 LH	
330	312105-0372		2	SCREW, M6S ISO 4017 M6X25 A4 80	
340	312605-0316		2	HEXAGON NUT, M6M M6 A280	
Common Parts					
010	2598880-0000		1	SETTING SCREW	
020	2619528-0000		1	LOCKING CIRCLIP	
030	2619529-0000		1	SLEEVE	
040	2619530-0000		1	SLEEVE	
070	2619596-0000		1	HANDLE	
300	312605-0318		1	HEXAGON NUT, M6M M8 A280	
310	312902-0318		1	NUT HEX. LEFT THREAD, M8 A280	
320	321141-0104		1	BEARING BUSHING, 8X10X12 MM	

Pos	Part No	UN	Qty	Description	Page No

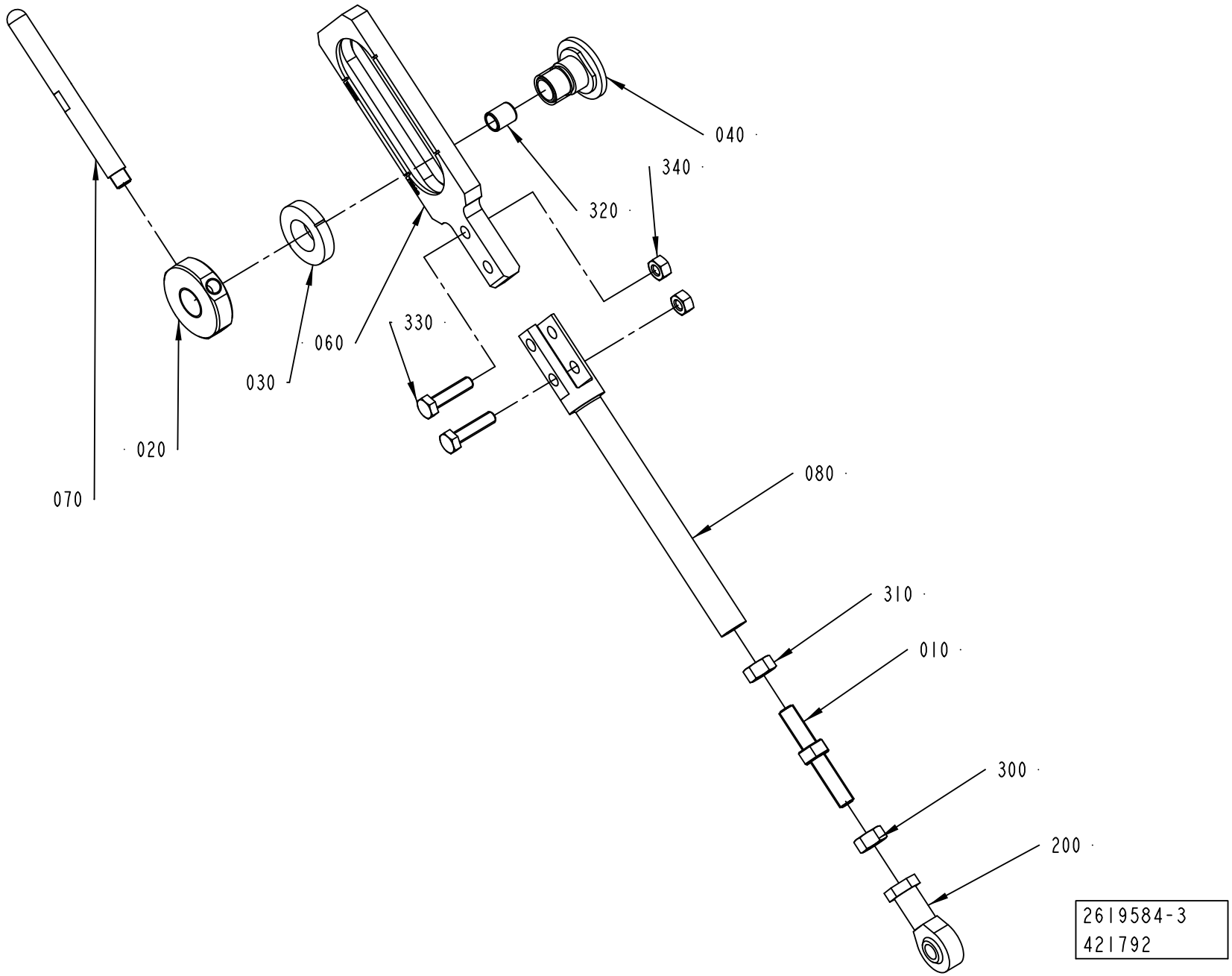
040
340
320
330
060
030
020
070
080
310
010
300
200
2619584-3
421792

ECM: 425754 - 20100401
Group number: 2619584-0100
Assembly Drawing: 2619584-3_1_AB

This list covers pages from 1-32 to 1-35

Pos	Part No	UN	Qty	Description	Page No
TBA 0500SQ, TBA 1000SQ (See drawing on page: 1-32)					
050	2619531-0000		1	SHAFT	
060	2851929-0000		1	STRUT	
200	90115-0020		1	ROD END, ID=8 MM, M8X1,25	
210	90141-0015		1	RETAINING RING FOR SHAFT DIN 471 8 SS	
220	90141-0016		1	RETAINING RING FOR SHAFT DIN 471 10 SS	
TPA 0750SQ (See drawing on page: 1-34)					
060	2647108-0000		1	STRUT	
080	2647109-0000		1	SHAFT	
200	90115-0021		1	ROD END, ID=8 MM, M8X1,25 LH	
330	312105-0372		2	SCREW, M6S ISO 4017 M6X25 A4 80	
340	312605-0316		2	HEXAGON NUT, M6M M6 A280	
TPA 1000SQ (See drawing on page: 1-34)					
060	2647108-0000		1	STRUT	
080	2647109-0000		1	SHAFT	
200	90115-0021		1	ROD END, ID=8 MM, M8X1,25 LH	
330	312105-0372		2	SCREW, M6S ISO 4017 M6X25 A4 80	
340	312605-0316		2	HEXAGON NUT, M6M M6 A280	
Common Parts					
010	2598880-0000		1	SETTING SCREW	
020	2619528-0000		1	LOCKING CIRCLIP	
030	2619529-0000		1	SLEEVE	
040	2619530-0000		1	SLEEVE	
070	2619596-0000		1	HANDLE	
300	312605-0318		1	HEXAGON NUT, M6M M8 A280	
310	312902-0318		1	NUT HEX. LEFT THREAD, M8 A280	
320	321141-0104		1	BEARING BUSHING, 8X10X12 MM	

Pos	Part No	UN	Qty	Description	Page No

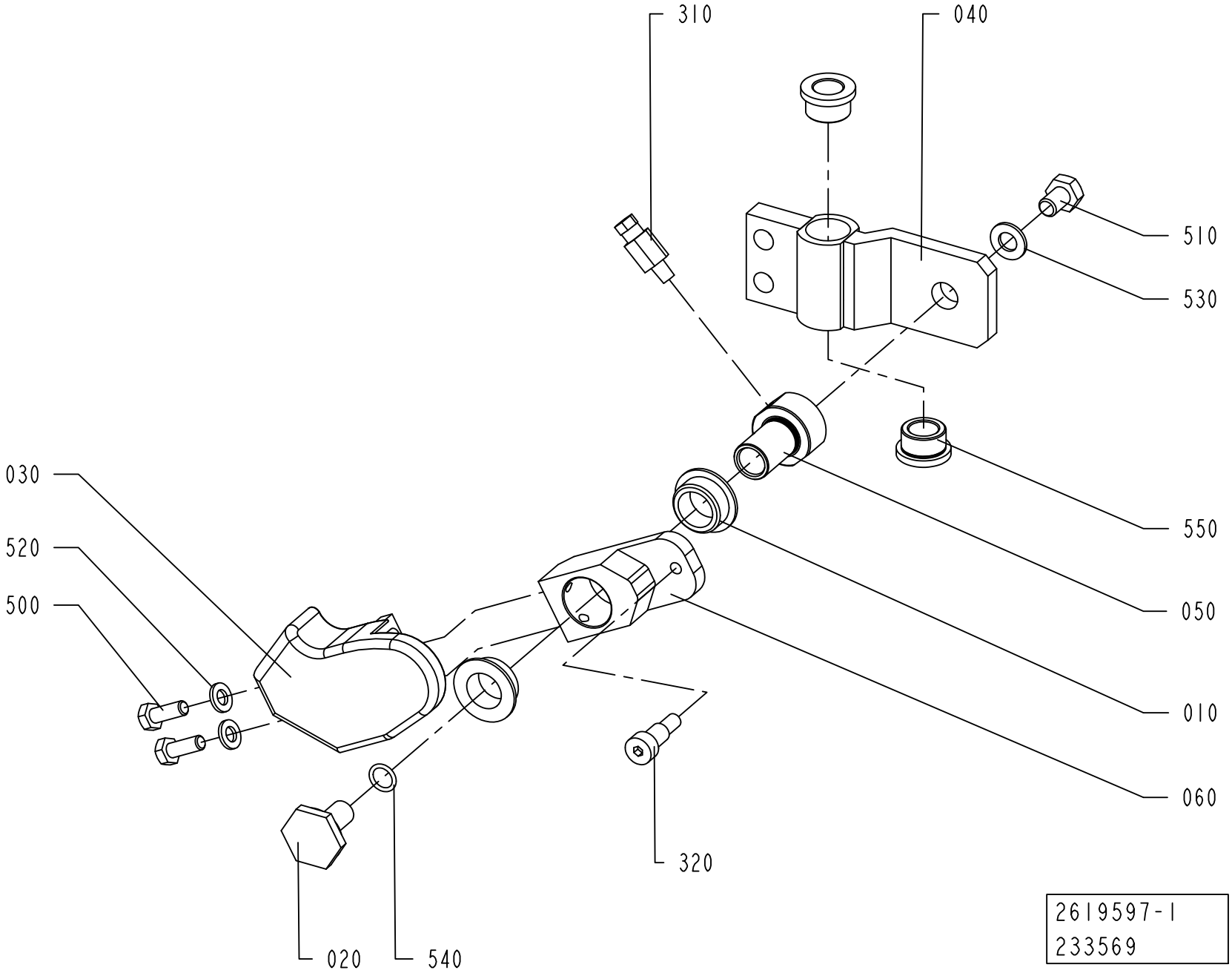
310
040
510
530
030
520
500
550
050
010
060
320
020
540
2619597-1
233569

ECM: 408999 - 20100402
Group number: 2619597-0100
Assembly Drawing: 2619597-1_1_AB

Pos	Part No	UN	Qty	Description	Page No
TBA 0500SQ, TBA 1000SQ					
030	1487922-0000		1	FOLDING DEVICE	
040	2619591-0000		1	SLIDER	
050	2598890-0000		1	AXLE PIN	
060	1350440-0000		1	LEVER	
310	90134-0065		1	CONNECTION M6 TUBE 2,5 MM	
320	312105-0451		1	SCREW, M6S ISO 4017 M8X20 A4 80	
510	312105-0447		1	SCREW, M6S ISO 4017 M8X12 A4 80	
TPA 1000SQ, TPA 0750SQ					
030	2529671-0000		1	FOLDING DEVICE	
040	2647107-0000		1	SLIDER	
050	2647105-0000		1	AXLE PIN	
060	2647104-0000		1	LEVER	
310	90134-0058		1	CONNECTION	
320	312105-0451		1	SCREW, M6S ISO 4017 M8X20 A4 80	
510	312105-0447		1	SCREW, M6S ISO 4017 M8X12 A4 80	
Common Parts					
010	1282708-0000		2	BUSHING	
020	1347496-0000		1	SCREW	
500	312115-0366		2	SCREW ISO4762 M6X12 A4 80	
520	315101-0153		2	WASHER PLAIN, BRB, 6,4/12 H=1,5	
530	315105-0165		1	WASHER PLAIN, 8,4X16X1,6 A4 BRB	
540	315202-0107		1	O-RING 9,1X1,6 MM	
550	321101-0173		2	FLANGE BUSHING, 12X18X12 MM	

Pos	Part No	UN	Qty	Description	Page No

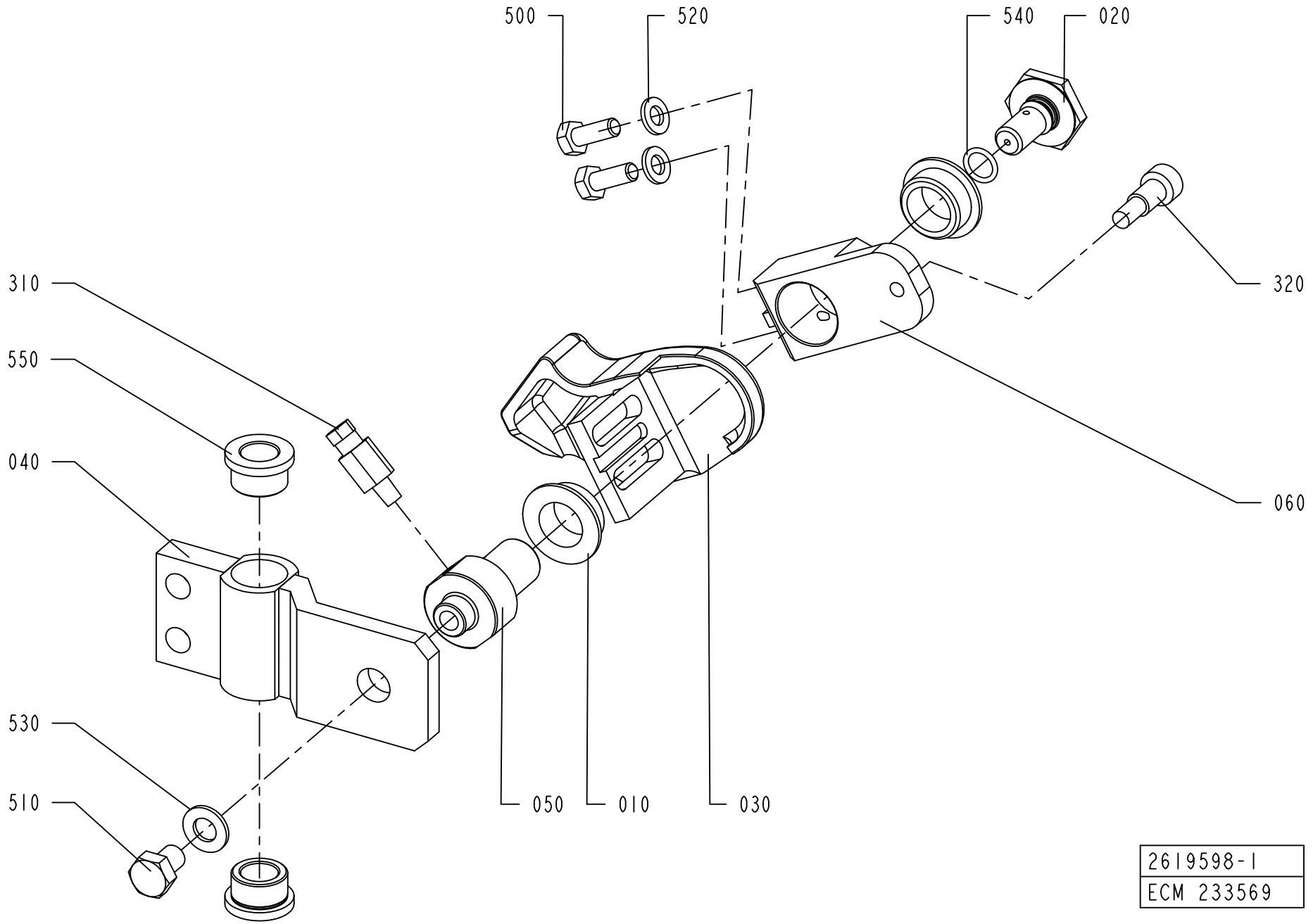
500
520
540
020
310
320
550
040
060
530
510
050
010
030
2619598-1
ECM 233569

ECM: 409000 - 20100402
Group number: 2619598-0100
Assembly Drawing: 2619598-1_1_AB

Pos	Part No	UN	Qty	Description	Page No
TBA 0500SQ, TBA 1000SQ					
030	1487923-0000		1	FOLDING DEVICE	
040	2619591-0000		1	SLIDER	
050	2598890-0000		1	AXLE PIN	
060	1350440-0000		1	LEVER	
310	90134-0065		1	CONNECTION M6 TUBE 2,5 MM	
320	312115-0451		1	SCREW ISO4762 M8X20 A4 80	
510	312105-0447		1	SCREW, M6S ISO 4017 M8X12 A4 80	
TPA 1000SQ, TPA 0750SQ					
030	2529672-0000		1	FOLDING DEVICE	
040	2647106-0000		1	SLIDER	
050	2647105-0000		1	AXLE PIN	
060	2647104-0000		1	LEVER	
310	90134-0058		1	CONNECTION	
320	312115-0451		1	SCREW ISO4762 M8X20 A4 80	
510	312105-0447		1	SCREW, M6S ISO 4017 M8X12 A4 80	
Common Parts					
010	1282708-0000		2	BUSHING	
020	1347496-0000		1	SCREW	
500	312115-0366		2	SCREW ISO4762 M6X12 A4 80	
520	315101-0153		2	WASHER PLAIN, BRB, 6,4/12 H=1,5	
530	315105-0165		1	WASHER PLAIN, 8,4X16X1,6 A4 BRB	
540	315202-0107		1	O-RING 9,1X1,6 MM	
550	321101-0173		2	FLANGE BUSHING, 12X18X12 MM	

Pos	Part No	UN	Qty	Description	Page No

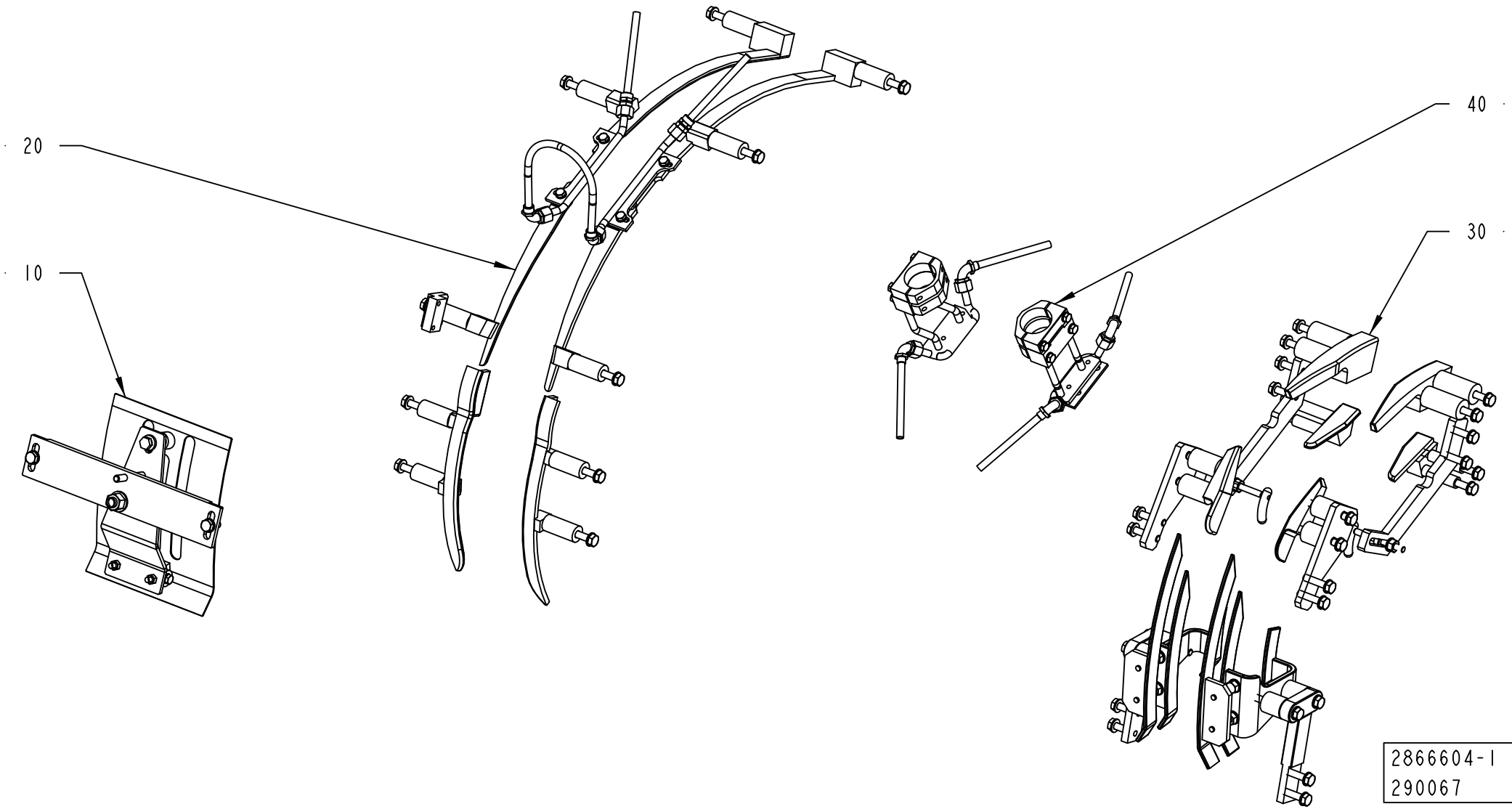
20
10
40
30
2866604-1
290067

ECM: 406170 - 20090703
Group number: 2866604-0100
Assembly Drawing: 2866604-1_1_AA

Pos	Part No	UN	Qty	Description	Page No
TBA 0500B, TBA 1000B NOMOLDEDCAP					
030	2866605-0100		1	FLAP GUIDE	**1-43, 1-45, 1-47**
040	2887887-0100		1	FOLDING PART	**1-49, 1-51**
TBA 0500S					
030	2887081-0100		1	FLAP GUIDE	**1-53, 1-55, 1-57**
TBA 0500SQ, TBA 1000SQ					
030	2866605-0100		1	FLAP GUIDE	**1-43, 1-45, 1-47**
040	2887887-0100		1	FOLDING PART	**1-49, 1-51**
TBA 1000S NOMOLDEDCAP					
030	2887081-0100		1	FLAP GUIDE	**1-53, 1-55, 1-57**
TBA 1500S					
030	2887081-0100		1	FLAP GUIDE	**1-53, 1-55, 1-57**
TBA 2000S					
030	2887081-0100		1	FLAP GUIDE	**1-53, 1-55, 1-57**
TPA 0500SQ					
030	2887081-0100		1	FLAP GUIDE	**1-53, 1-55, 1-57**
TPA 1000SQ, TPA 0750SQ					
030	2866605-0100		1	FLAP GUIDE	**1-43, 1-45, 1-47**
040	2887887-0100		1	FOLDING PART	**1-49, 1-51**
Common Parts					
010	2861926-0100		1	TOP SECTION	**1-59, 1-61, 1-63, 1-65**
020	2816115-0100		1	TOP RAIL	**1-67, 1-69**

Pos	Part No	UN	Qty	Description	Page No

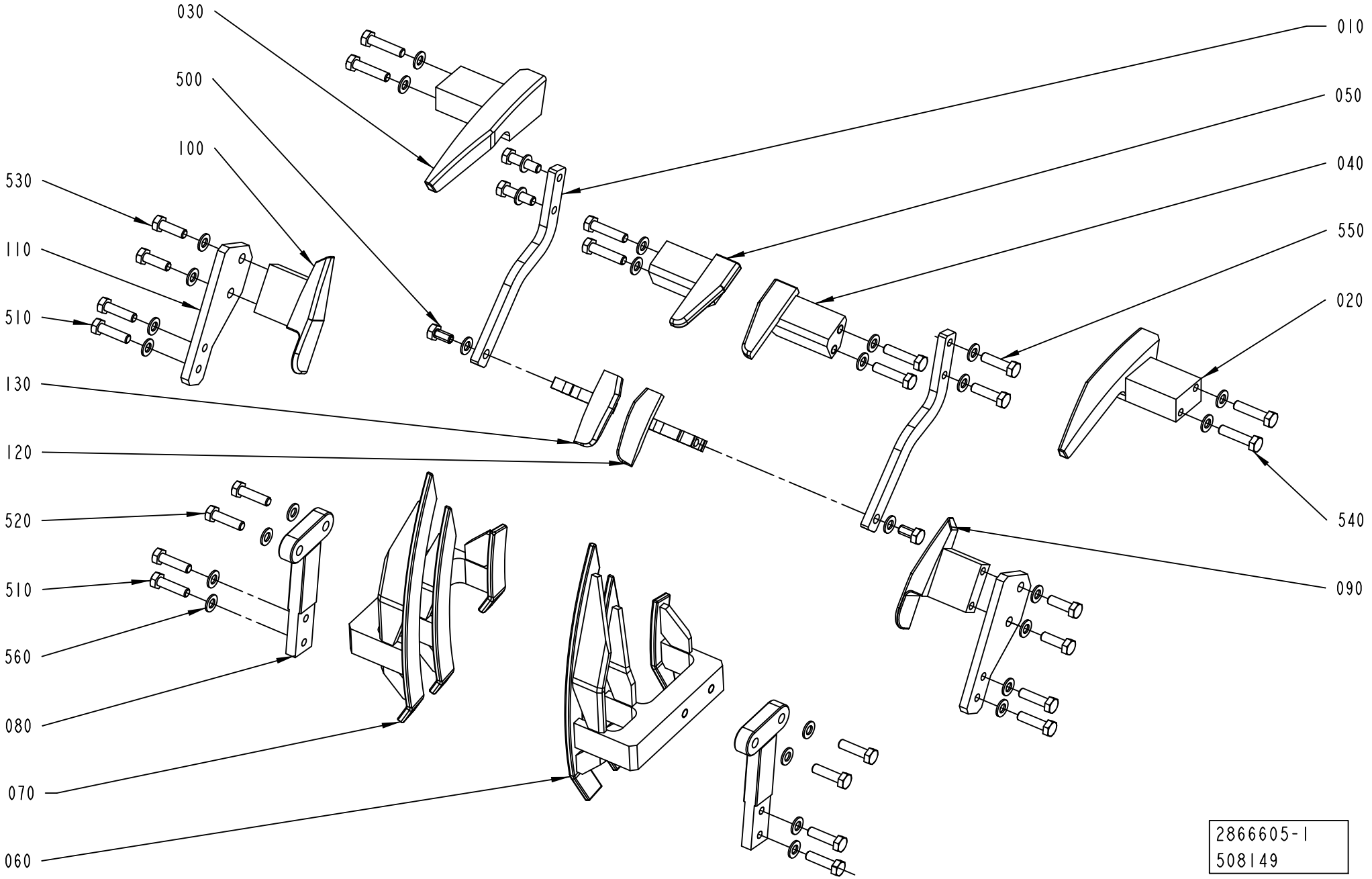
030
500
100
530
110
510
130
120
520
510
560
080
070
060
010
050
040
550
020
540
090
2866605-1
508149

ECM: 515985 - 20120101
Group number: 2866605-0100
Assembly Drawing: 2866605-1_1_AD

This list covers pages from 1-42 to 1-47

Pos	Part No	UN	Qty	Description	Page No
TBA 0500B, TBA 1000B (See drawing on page: 1-44)					
010	2901067-0000		1	GUIDE	
020	2901066-0000		1	GUIDE	
030	2901068-0000		1	GUIDE	
040	2901069-0000		1	GUIDE	
050	2603661-0000		2	BRACKET	
060	2903584-0000		1	GUIDE	
070	2903585-0000		1	GUIDE	
080	2588218-0000		2	STRUT	
090	2544342-0000		2	BRACKET	
110	2603662-0000		4	BRACKET	
120	2603548-0000		1	FOLDING PART	
130	2603547-0000		1	FOLDING PART	
200	312155-0366		10	SCREW DIN 7991 MF6S M6X12 A4 70	
210	315105-0153		6	WASHER PLAIN, 6,4X12X1,5 A4 BRB	
220	312105-0368		6	SCREW, M6S ISO 4017 M6X16 A4 80	
510	312105-0455		4	SCREW, M6S ISO 4017 M8X30 A4 80	
520	312105-0455		4	SCREW, M6S ISO 4017 M8X30 A4 80	
560	315105-0165		12	WASHER PLAIN, 8,4X16X1,6 A4 BRB	
TBA 0500SQ, TBA 1000SQ (See drawing on page: 1-42)					
010	2906011-0000		2	HOLDER	
020	2906006-0000		1	RAIL	
030	2906007-0000		1	RAIL	
040	2909030-0000		1	FOLDING BAR	
050	2909506-0000		1	FOLDING BAR	
060	2903583-0000		1	GUIDE	
070	2903582-0000		1	GUIDE	
080	2588218-0000		2	STRUT	
090	2906008-0000		1	GUIDE	
100	2906009-0000		1	GUIDE	
110	2876334-0000		2	HOLDER	
120	2909028-0000		1	GUIDE PIN	
130	2909029-0000		1	GUIDE PIN	
500	312105-0449		2	SCREW, M6S ISO 4017 M8X16 A4 80	
510	312105-0455		8	SCREW, M6S ISO 4017 M8X30 A4 80	
520	312105-0455		4	SCREW, M6S ISO 4017 M8X30 A4 80	
530	312105-0453		4	SCREW, M6S ISO 4017 M8X25 A4 80	
540	312105-0457		4	SCREW, M6S ISO 4014 M8X35 A4 80	
550	312105-0455		4	SCREW, M6S ISO 4017 M8X30 A4 80	
560	315105-0165		30	WASHER PLAIN, 8,4X16X1,6 A4 BRB	
660	312105-0457		4	SCREW, M6S ISO 4014 M8X35 A4 80	
TPA 1000SQ, TPA 0750SQ (See drawing on page: 1-46)					
010	2647128-0000		1	FOLDING PART	
020	2647127-0000		1	FOLDING PART	
030	2913601-0000		1	FOLDING PART	
040	2913600-0000		1	FOLDING PART	
050	2644368-0000		2	BRACKET	
060	2647129-0000		1	FOLDING PART	
070	2647130-0000		1	FOLDING PART	
080	2647126-0000		2	BRACKET	
140	1519355-0000		12	SPACER	
510	312105-0455		6	SCREW, M6S ISO 4017 M8X30 A4 80	
520	312105-0462		12	SCREW, M6S ISO 4014 M8X55 A4 80	
560	315105-0165		18	WASHER PLAIN, 8,4X16X1,6 A4 BRB	

Machine Type | Group Description | Used-In | Group Number | Page No

FLAP GUIDE

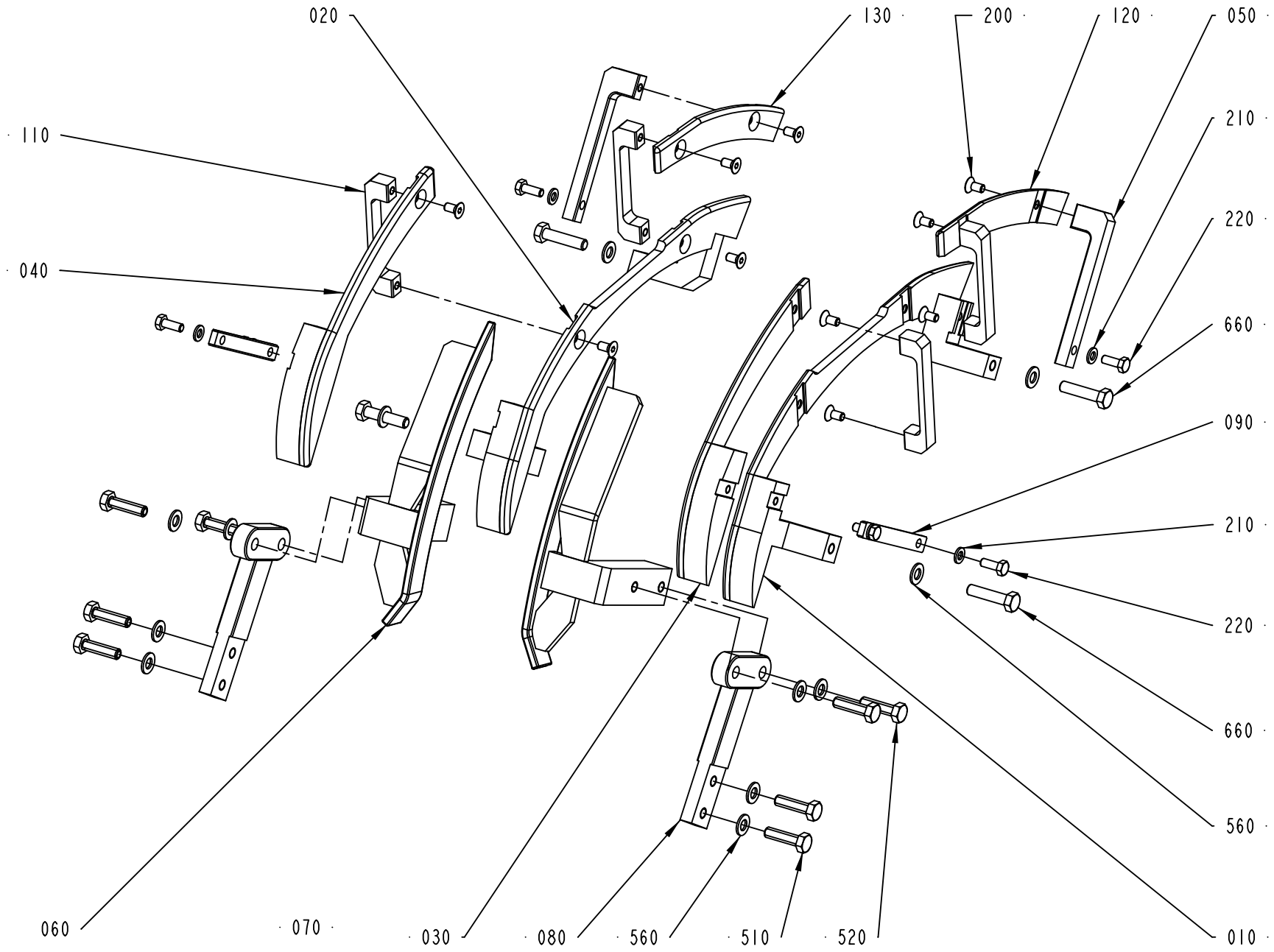

2866605-2
508149

ECM: 515985 - 20120101
Group number: 2866605-0100
Assembly Drawing: 2866605-2_1_AC

This list covers pages from 1-42 to 1-47

Pos	Part No	UN	Qty	Description	Page No
TBA 0500B, TBA 1000B (See drawing on page: 1-44)					
010	2901067-0000		1	GUIDE	
020	2901066-0000		1	GUIDE	
030	2901068-0000		1	GUIDE	
040	2901069-0000		1	GUIDE	
050	2603661-0000		2	BRACKET	
060	2903584-0000		1	GUIDE	
070	2903585-0000		1	GUIDE	
080	2588218-0000		2	STRUT	
090	2544342-0000		2	BRACKET	
110	2603662-0000		4	BRACKET	
120	2603548-0000		1	FOLDING PART	
130	2603547-0000		1	FOLDING PART	
200	312155-0366		10	SCREW DIN 7991 MF6S M6X12 A4 70	
210	315105-0153		6	WASHER PLAIN, 6,4X12X1,5 A4 BRB	
220	312105-0368		6	SCREW, M6S ISO 4017 M6X16 A4 80	
510	312105-0455		4	SCREW, M6S ISO 4017 M8X30 A4 80	
520	312105-0455		4	SCREW, M6S ISO 4017 M8X30 A4 80	
560	315105-0165		12	WASHER PLAIN, 8,4X16X1,6 A4 BRB	
TBA 0500SQ, TBA 1000SQ (See drawing on page: 1-42)					
010	2906011-0000		2	HOLDER	
020	2906006-0000		1	RAIL	
030	2906007-0000		1	RAIL	
040	2909030-0000		1	FOLDING BAR	
050	2909506-0000		1	FOLDING BAR	
060	2903583-0000		1	GUIDE	
070	2903582-0000		1	GUIDE	
080	2588218-0000		2	STRUT	
090	2906008-0000		1	GUIDE	
100	2906009-0000		1	GUIDE	
110	2876334-0000		2	HOLDER	
120	2909028-0000		1	GUIDE PIN	
130	2909029-0000		1	GUIDE PIN	
500	312105-0449		2	SCREW, M6S ISO 4017 M8X16 A4 80	
510	312105-0455		8	SCREW, M6S ISO 4017 M8X30 A4 80	
520	312105-0455		4	SCREW, M6S ISO 4017 M8X30 A4 80	
530	312105-0453		4	SCREW, M6S ISO 4017 M8X25 A4 80	
540	312105-0457		4	SCREW, M6S ISO 4014 M8X35 A4 80	
550	312105-0455		4	SCREW, M6S ISO 4017 M8X30 A4 80	
560	315105-0165		30	WASHER PLAIN, 8,4X16X1,6 A4 BRB	
660	312105-0457		4	SCREW, M6S ISO 4014 M8X35 A4 80	
TPA 1000SQ, TPA 0750SQ (See drawing on page: 1-46)					
010	2647128-0000		1	FOLDING PART	
020	2647127-0000		1	FOLDING PART	
030	2913601-0000		1	FOLDING PART	
040	2913600-0000		1	FOLDING PART	
050	2644368-0000		2	BRACKET	
060	2647129-0000		1	FOLDING PART	
070	2647130-0000		1	FOLDING PART	
080	2647126-0000		2	BRACKET	
140	1519355-0000		12	SPACER	
510	312105-0455		6	SCREW, M6S ISO 4017 M8X30 A4 80	
520	312105-0462		12	SCREW, M6S ISO 4014 M8X55 A4 80	
560	315105-0165		18	WASHER PLAIN, 8,4X16X1,6 A4 BRB	

Machine Type | Group Description | Used-In | Group Number | Page No

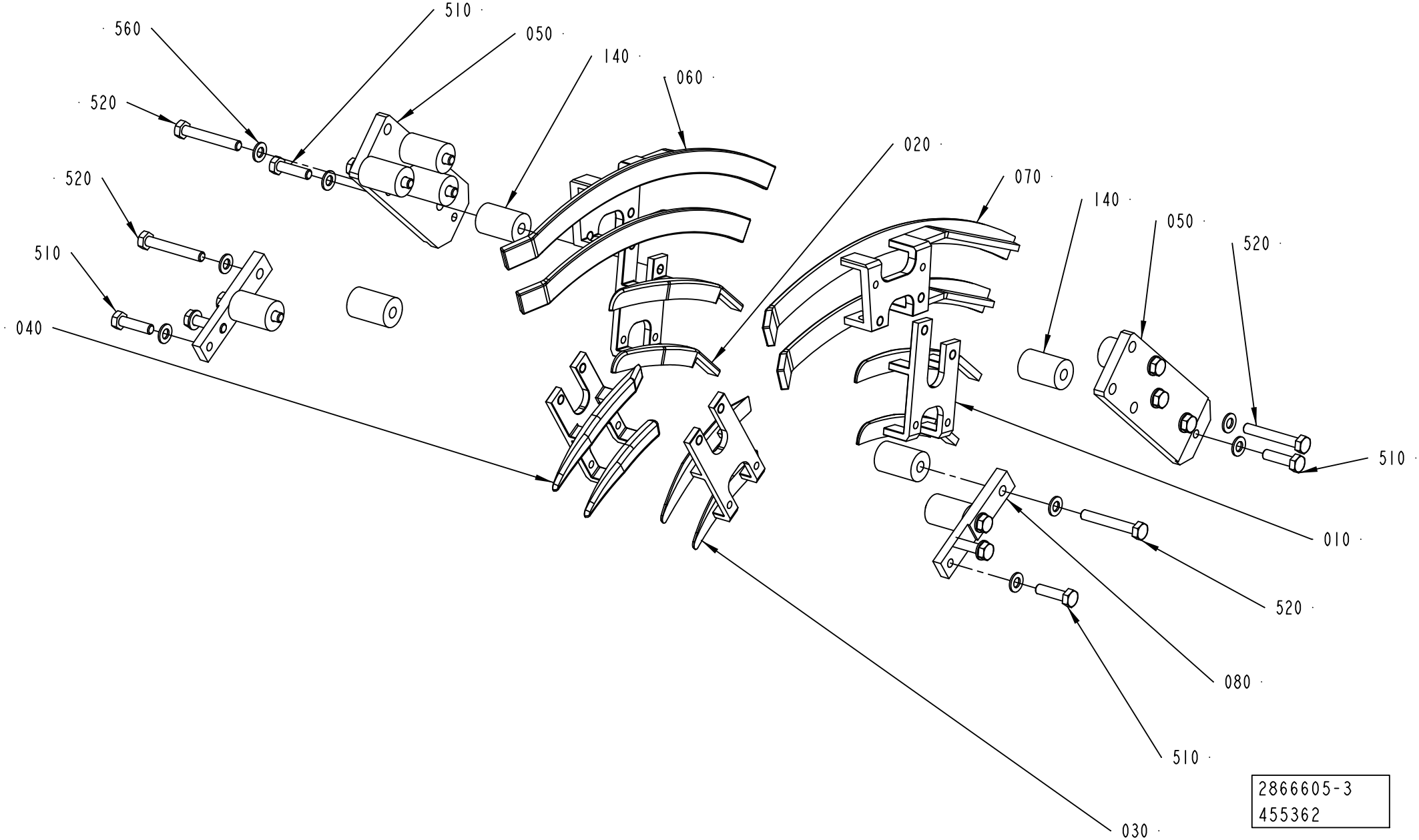
560
510
050
140
060
520
520
510
040
020
070
140
050
520
510
010
520
080
510
030
2866605-3
455362

ECM: 515985 - 20120101
Group number: 2866605-0100
Assembly Drawing: 2866605-3_1_AB

This list covers pages from 1-42 to 1-47

Pos	Part No	UN	Qty	Description	Page No
TBA 0500B, TBA 1000B (See drawing on page: 1-44)					
010	2901067-0000		1	GUIDE	
020	2901066-0000		1	GUIDE	
030	2901068-0000		1	GUIDE	
040	2901069-0000		1	GUIDE	
050	2603661-0000		2	BRACKET	
060	2903584-0000		1	GUIDE	
070	2903585-0000		1	GUIDE	
080	2588218-0000		2	STRUT	
090	2544342-0000		2	BRACKET	
110	2603662-0000		4	BRACKET	
120	2603548-0000		1	FOLDING PART	
130	2603547-0000		1	FOLDING PART	
200	312155-0366		10	SCREW DIN 7991 MF6S M6X12 A4 70	
210	315105-0153		6	WASHER PLAIN, 6,4X12X1,5 A4 BRB	
220	312105-0368		6	SCREW, M6S ISO 4017 M6X16 A4 80	
510	312105-0455		4	SCREW, M6S ISO 4017 M8X30 A4 80	
520	312105-0455		4	SCREW, M6S ISO 4017 M8X30 A4 80	
560	315105-0165		12	WASHER PLAIN, 8,4X16X1,6 A4 BRB	
TBA 0500SQ, TBA 1000SQ (See drawing on page: 1-42)					
010	2906011-0000		2	HOLDER	
020	2906006-0000		1	RAIL	
030	2906007-0000		1	RAIL	
040	2909030-0000		1	FOLDING BAR	
050	2909506-0000		1	FOLDING BAR	
060	2903583-0000		1	GUIDE	
070	2903582-0000		1	GUIDE	
080	2588218-0000		2	STRUT	
090	2906008-0000		1	GUIDE	
100	2906009-0000		1	GUIDE	
110	2876334-0000		2	HOLDER	
120	2909028-0000		1	GUIDE PIN	
130	2909029-0000		1	GUIDE PIN	
500	312105-0449		2	SCREW, M6S ISO 4017 M8X16 A4 80	
510	312105-0455		8	SCREW, M6S ISO 4017 M8X30 A4 80	
520	312105-0455		4	SCREW, M6S ISO 4017 M8X30 A4 80	
530	312105-0453		4	SCREW, M6S ISO 4017 M8X25 A4 80	
540	312105-0457		4	SCREW, M6S ISO 4014 M8X35 A4 80	
550	312105-0455		4	SCREW, M6S ISO 4017 M8X30 A4 80	
560	315105-0165		30	WASHER PLAIN, 8,4X16X1,6 A4 BRB	
660	312105-0457		4	SCREW, M6S ISO 4014 M8X35 A4 80	
TPA 1000SQ, TPA 0750SQ (See drawing on page: 1-46)					
010	2647128-0000		1	FOLDING PART	
020	2647127-0000		1	FOLDING PART	
030	2913601-0000		1	FOLDING PART	
040	2913600-0000		1	FOLDING PART	
050	2644368-0000		2	BRACKET	
060	2647129-0000		1	FOLDING PART	
070	2647130-0000		1	FOLDING PART	
080	2647126-0000		2	BRACKET	
140	1519355-0000		12	SPACER	
510	312105-0455		6	SCREW, M6S ISO 4017 M8X30 A4 80	
520	312105-0462		12	SCREW, M6S ISO 4014 M8X55 A4 80	
560	315105-0165		18	WASHER PLAIN, 8,4X16X1,6 A4 BRB	

Machine Type | Group Description | Used-In | Group Number | Page No

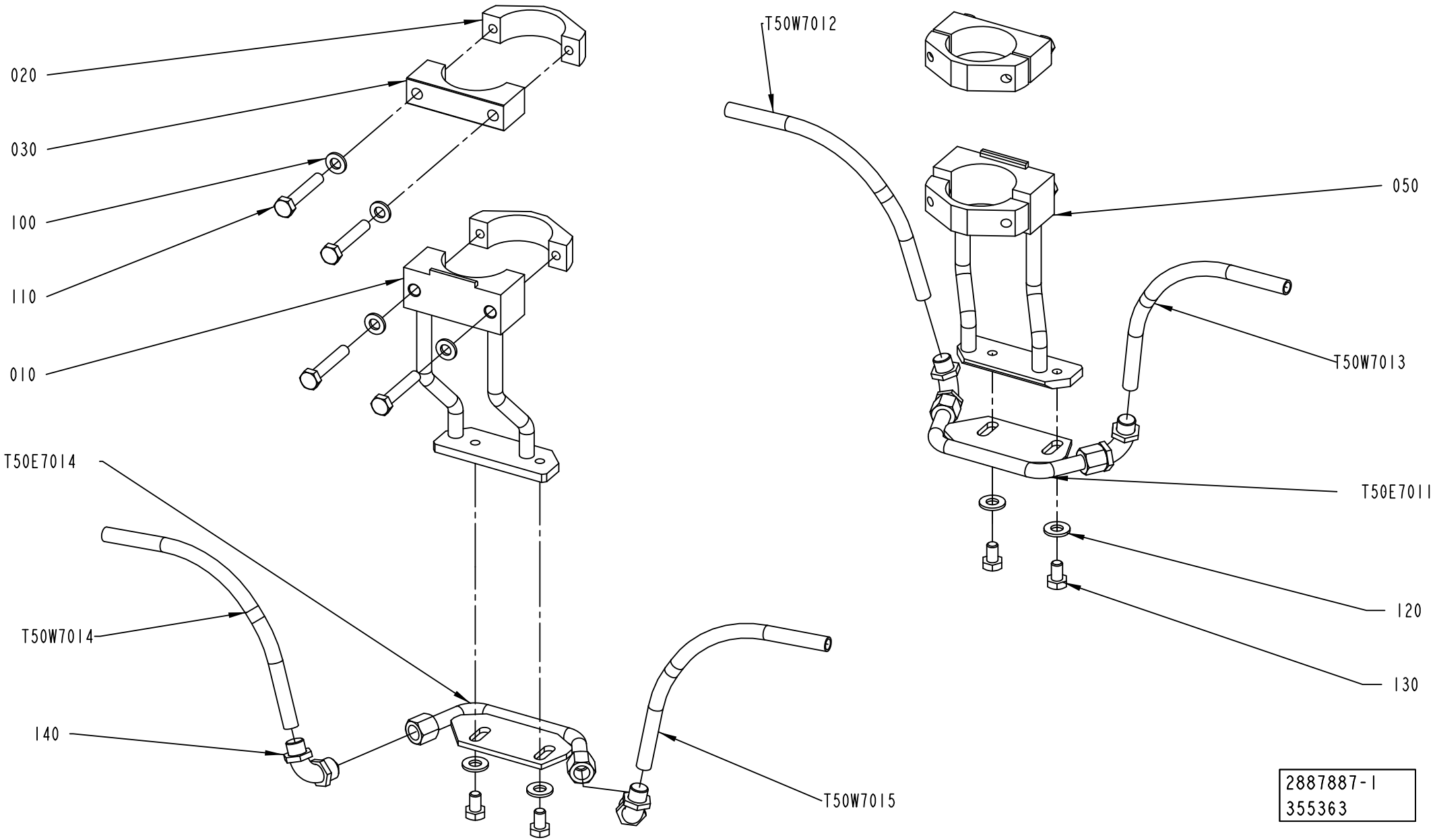
020
030
100
110
010
T50E7014
T50W7014
140
T50W7015
T50W7012
050
T50W7013
T50E7011
120
130
2887887-1
355363

ECM: 515988 - 20120101
Group number: 2887887-0100
Assembly Drawing: 2887887-1_1_AC

This list covers pages from 1-48 to 1-51

Pos	Part No	UN	Qty	Description	Page No
TBA 0500B, TBA 1000B (See drawing on page: 1-50)					
010	2901065-0000		2	BRACKET	
100	315105-0153		8	WASHER PLAIN, 6,4X12X1,5 A4 BRB	
120	315105-0156		4	WASHER PLAIN, 6,7X14X1,5 A4 BRB	
T50E7011	2903581-0000		1	GUIDE	
T50E7014	2903581-0000		1	GUIDE	
TBA 0500SQ, TBA 1000SQ (See drawing on page: 1-48)					
010	2887773-0000		1	BRACKET	
050	2887772-0000		1	BRACKET	
100	315105-0153		8	WASHER PLAIN, 6,4X12X1,5 A4 BRB	
120	315105-0156		4	WASHER PLAIN, 6,7X14X1,5 A4 BRB	
T50E7011	2906004-0000		1	GUIDE	
T50E7014	2906004-0000		1	GUIDE	
TPA 1000SQ, TPA 0750SQ (See drawing on page: 1-50)					
010	2901065-0000		2	BRACKET	
100	315105-0153		8	WASHER PLAIN, 6,4X12X1,5 A4 BRB	
120	315105-0156		4	WASHER PLAIN, 6,7X14X1,5 A4 BRB	
T50E7011	2647131-0000		1	GUIDE	
T50E7014	2647131-0000		1	GUIDE	
Common Parts					
020	2887770-0000		4	CLAMP	
030	2887771-0000		2	CLAMP	
110	312105-0376		8	SCREW, M6S ISO 4014 M6X35 A4 80	
130	312105-0364		4	SCREW, M6S ISO 4017 M6X10 A4 80	
140	342931-0121		4	ELBOW 90 COUPL., EXT. THREAD 8/6-G1/8"	
T50W7012	90166-0118	MM	400	TUBE 8 MM PA BLACK	
T50W7013	90166-0118	MM	400	TUBE 8 MM PA BLACK	
T50W7014	90166-0118	MM	400	TUBE 8 MM PA BLACK	
T50W7015	90166-0118	MM	850	TUBE 8 MM PA BLACK	

Pos	Part No	UN	Qty	Description	Page No

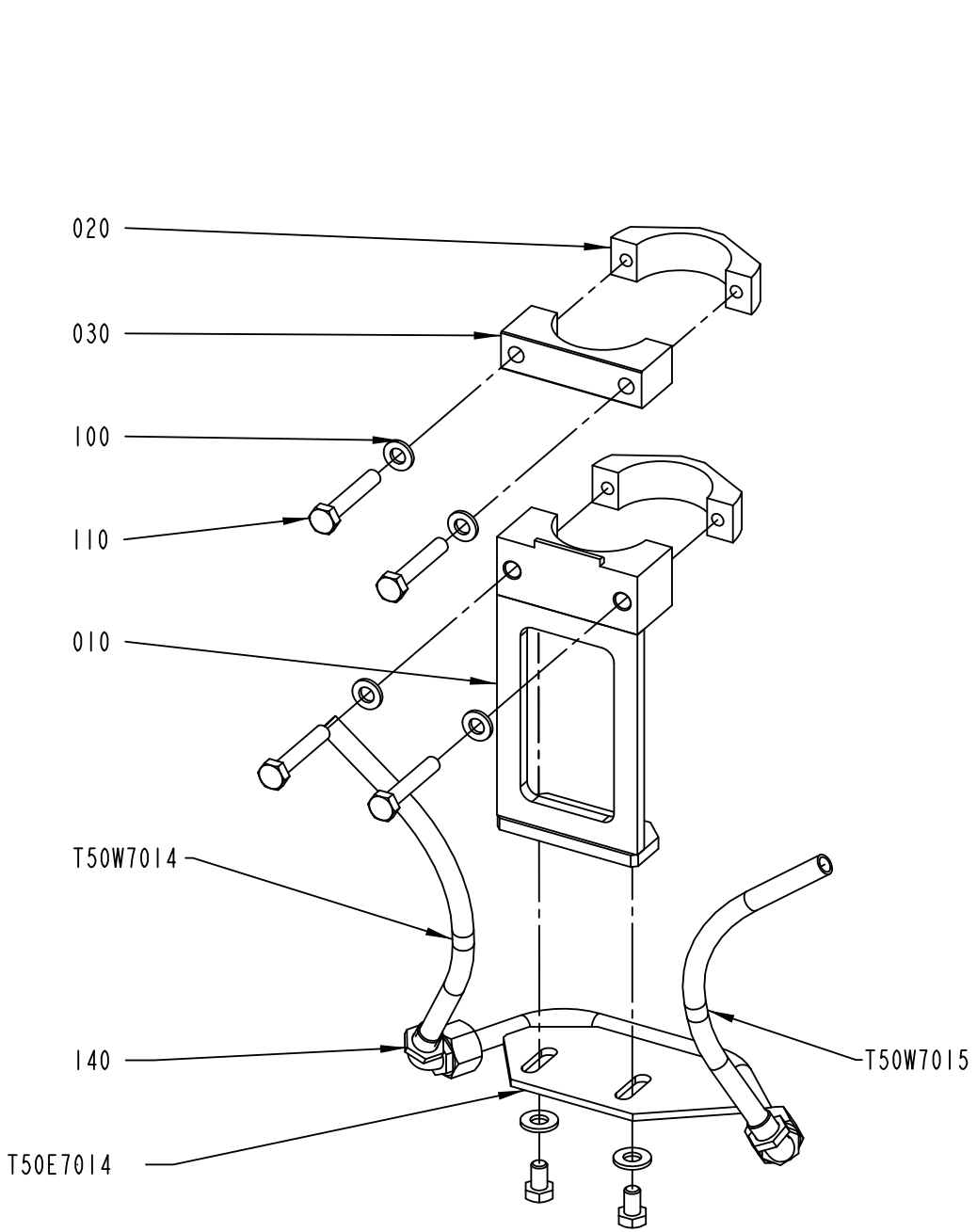

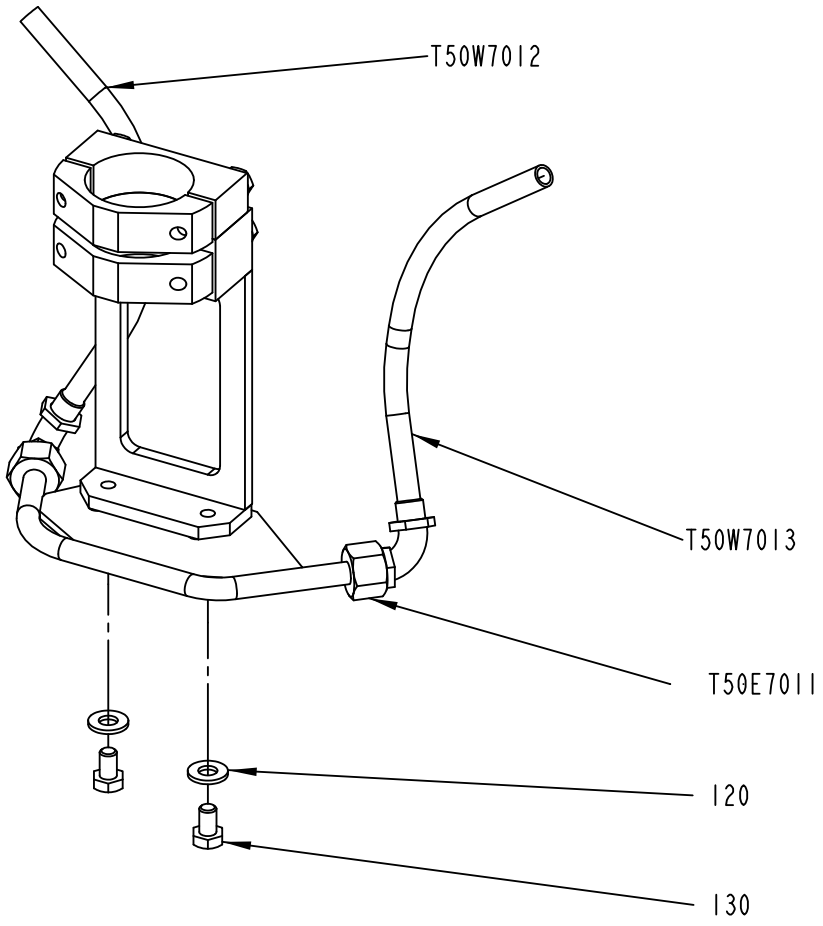

2887887-2
355363

ECM: 515988 - 20120101
Group number: 2887887-0100
Assembly Drawing: 2887887-2_1_AB

This list covers pages from 1-48 to 1-51

Pos	Part No	UN	Qty	Description	Page No
TBA 0500B, TBA 1000B (See drawing on page: 1-50)					
010	2901065-0000		2	BRACKET	
100	315105-0153		8	WASHER PLAIN, 6,4X12X1,5 A4 BRB	
120	315105-0156		4	WASHER PLAIN, 6,7X14X1,5 A4 BRB	
T50E7011	2903581-0000		1	GUIDE	
T50E7014	2903581-0000		1	GUIDE	
TBA 0500SQ, TBA 1000SQ (See drawing on page: 1-48)					
010	2887773-0000		1	BRACKET	
050	2887772-0000		1	BRACKET	
100	315105-0153		8	WASHER PLAIN, 6,4X12X1,5 A4 BRB	
120	315105-0156		4	WASHER PLAIN, 6,7X14X1,5 A4 BRB	
T50E7011	2906004-0000		1	GUIDE	
T50E7014	2906004-0000		1	GUIDE	
TPA 1000SQ, TPA 0750SQ (See drawing on page: 1-50)					
010	2901065-0000		2	BRACKET	
100	315105-0153		8	WASHER PLAIN, 6,4X12X1,5 A4 BRB	
120	315105-0156		4	WASHER PLAIN, 6,7X14X1,5 A4 BRB	
T50E7011	2647131-0000		1	GUIDE	
T50E7014	2647131-0000		1	GUIDE	
Common Parts					
020	2887770-0000		4	CLAMP	
030	2887771-0000		2	CLAMP	
110	312105-0376		8	SCREW, M6S ISO 4014 M6X35 A4 80	
130	312105-0364		4	SCREW, M6S ISO 4017 M6X10 A4 80	
140	342931-0121		4	ELBOW 90 COUPL., EXT. THREAD 8/6-G1/8"	
T50W7012	90166-0118	MM	400	TUBE 8 MM PA BLACK	
T50W7013	90166-0118	MM	400	TUBE 8 MM PA BLACK	
T50W7014	90166-0118	MM	400	TUBE 8 MM PA BLACK	
T50W7015	90166-0118	MM	850	TUBE 8 MM PA BLACK	

Pos	Part No	UN	Qty	Description	Page No

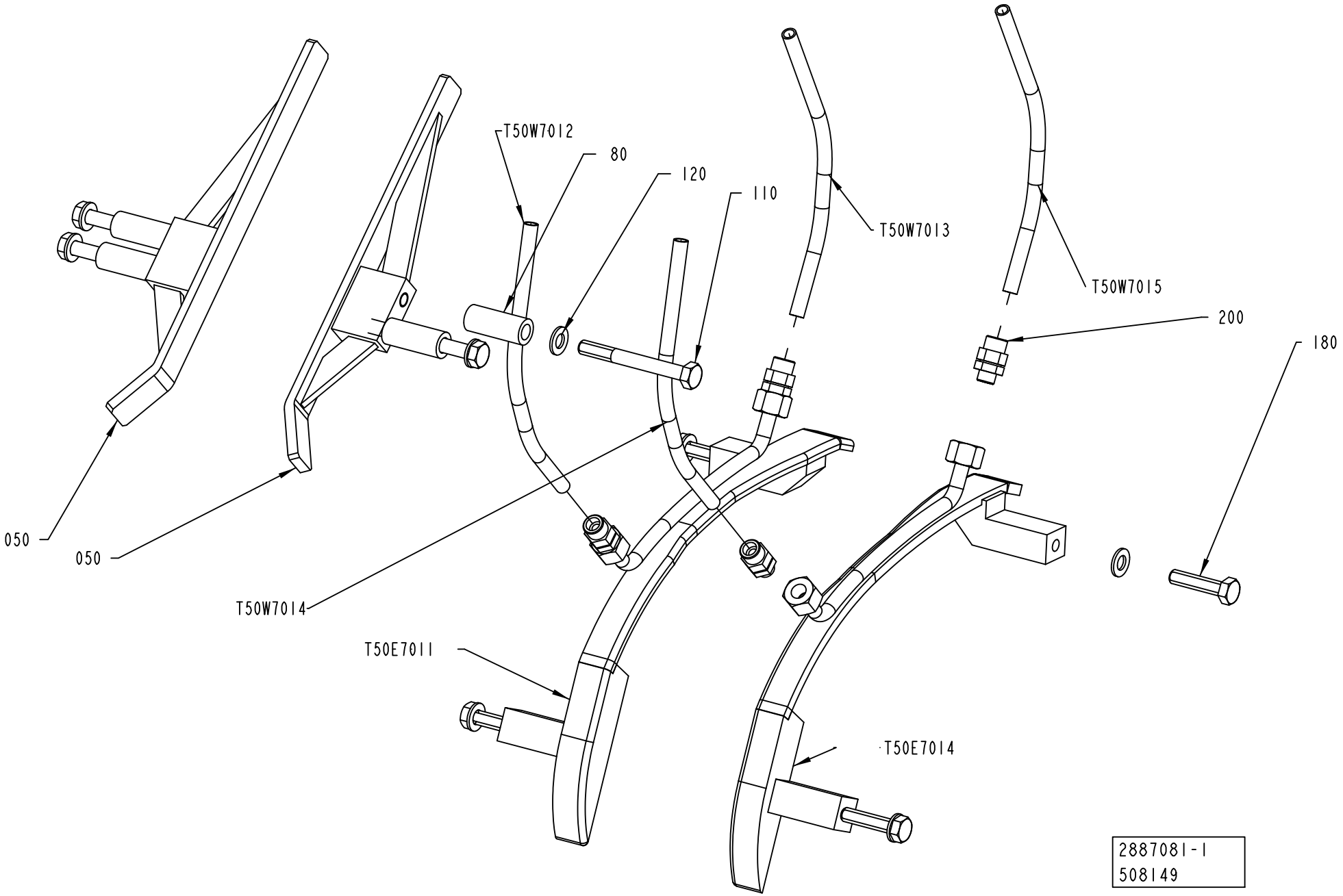
T50W7012
80
120
110
T50W7013
T50W7015
200
180
050
050
T50W7014
T50E7011
T50E7014
2887081-1
508149

ECM: 549122 - 20120701
Group number: 2887081-0100
Assembly Drawing: 2887081-1_1_AE

This list covers pages from 1-52 to 1-57

Pos	Part No	UN	Qty	Description	Page No
TBA 0500S (See drawing on page: 1-54)					
030	1317043-0000		2	SUPPORT	
040	1499150-0000		1	RAIL	
050	1499151-0000		1	RAIL	
080	1499072-0000		4	SPACER	
100	312109-0457		4	SCREW, M6S ISO 4017 M8X35 A4 80	
110	312105-0467		4	SCREW, M6S ISO 4014 M8X80 A4 80	
120	315105-0165		12	WASHER PLAIN, 8,4X16X1,6 A4 BRB	
130	312605-0318		1	HEXAGON NUT, M6M M8 A280	
140	90287-0196	MM	65	THREADED ROD MHGS M8 SS	
180	312105-0460		3	SCREW, M6S ISO 4014 M8X45 A4 80	
200	342920-0121		4	STRAIGHT COUPLING, EXT.THREAD 8/6-R1/8	
T50E7011	2983790-0000		1	FOLDING BAR	
T50E7014	2983789-0000		1	FOLDING BAR	
TBA 1000S NOMOLDEDCAP (See drawing on page: 1-52)					
050	1144719-0000		2	RAIL	
080	2852472-0000		4	SPACER	
110	312105-0465		4	SCREW, M6S ISO 4014 M8X70 A4 80	
120	315105-0165		8	WASHER PLAIN, 8,4X16X1,6 A4 BRB	
180	312109-0457		4	SCREW, M6S ISO 4017 M8X35 A4 80	
200	342920-0121		4	STRAIGHT COUPLING, EXT.THREAD 8/6-R1/8	
T50E7011	2937351-0000		1	FOLDING BAR	
T50E7014	2937352-0000		1	FOLDING BAR	
TBA 1500S (See drawing on page: 1-56)					
030	1317043-0000		2	SUPPORT	
040	1317042-0000		1	RAIL	
050	1317047-0000		1	RAIL	
080	1334718-0000		4	SPACER	
100	312109-0457		4	SCREW, M6S ISO 4017 M8X35 A4 80	
110	312109-0461		4	SCREW, M6S ISO 4017 M8X50 A4 80	
120	315105-0165		12	WASHER PLAIN, 8,4X16X1,6 A4 BRB	
130	312605-0318		2	HEXAGON NUT, M6M M8 A280	
140	90287-0196	MM	65	THREADED ROD MHGS M8 SS	
170	312109-0460		1	SCREW, M6S ISO 4017 M8X45 A4 80	
180	312109-0457		2	SCREW, M6S ISO 4017 M8X35 A4 80	
200	342931-0121		4	ELBOW 90 COUPL., EXT. THREAD 8/6-G1/8"	
T50E7011	2933181-0000		1	FOLDING BAR	
T50E7014	2933180-0000		1	FOLDING BAR	
TBA 2000S (See drawing on page: 1-56)					
030	1317043-0000		2	SUPPORT	
040	1499150-0000		1	RAIL	
050	1499151-0000		1	RAIL	
080	2629344-0000		4	SPACER	
100	312109-0457		4	SCREW, M6S ISO 4017 M8X35 A4 80	
110	312109-0460		4	SCREW, M6S ISO 4017 M8X45 A4 80	
120	315105-0165		12	WASHER PLAIN, 8,4X16X1,6 A4 BRB	
130	312605-0318		2	HEXAGON NUT, M6M M8 A280	
140	90287-0196	MM	65	THREADED ROD MHGS M8 SS	
170	312109-0460		1	SCREW, M6S ISO 4017 M8X45 A4 80	
180	312109-0457		2	SCREW, M6S ISO 4017 M8X35 A4 80	
200	342931-0121		4	ELBOW 90 COUPL., EXT. THREAD 8/6-G1/8"	
T50E7011	2960431-0000		1	FOLDING BAR	
T50E7014	2960432-0000		1	FOLDING BAR	
TPA 0500SQ (See drawing on page: 1-54)					
030	1317043-0000		2	SUPPORT	
040	1499150-0000		1	RAIL	
050	1499151-0000		1	RAIL	
080	1549508-0000		4	SPACER SCREW	
100	312109-0457		4	SCREW, M6S ISO 4017 M8X35 A4 80	
110	312105-0451		4	SCREW, M6S ISO 4017 M8X20 A4 80	
120	315105-0165		14	WASHER PLAIN, 8,4X16X1,6 A4 BRB	
130	312605-0318		2	HEXAGON NUT, M6M M8 A280	
160	312155-0459		2	SCREW DIN 7991 MF6S M8X40 A4 70	
170	312105-0453		2	SCREW, M6S ISO 4017 M8X25 A4 80	
180	312109-0457		2	SCREW, M6S ISO 4017 M8X35 A4 80	
200	342931-0121		4	ELBOW 90 COUPL., EXT. THREAD 8/6-G1/8"	
T50E7011	2953137-0000		1	FOLDING BAR	
T50E7014	2953136-0000		1	FOLDING BAR	
Common Parts					
T50W7012	90166-0118	MM	300	TUBE 8 MM PA BLACK	
T50W7013	90166-0118	MM	700	TUBE 8 MM PA BLACK	
T50W7014	90166-0118	MM	300	TUBE 8 MM PA BLACK	
T50W7015	90166-0118	MM	850	TUBE 8 MM PA BLACK	

FLAP GUIDE

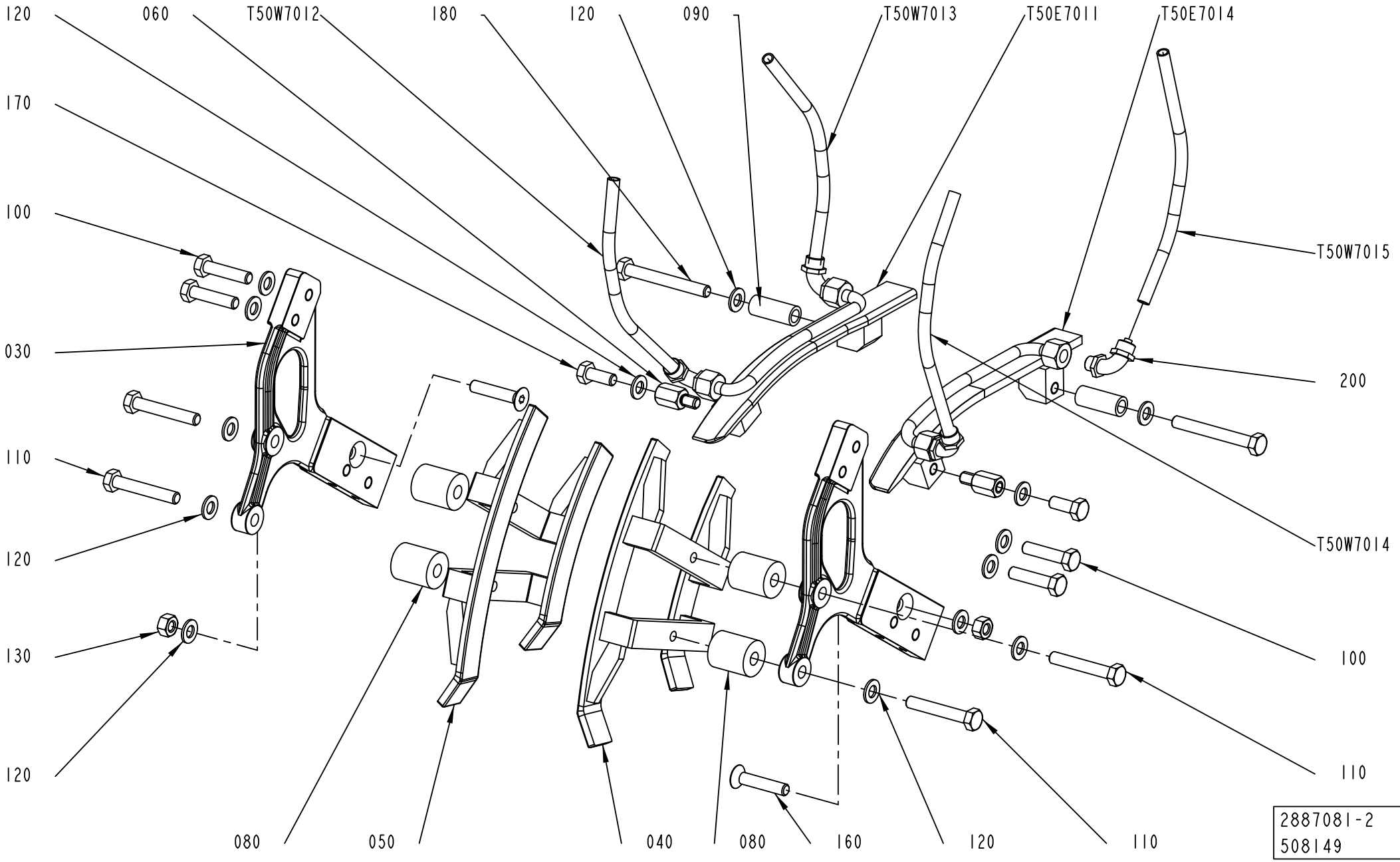
120
060
T50W7012
180
120
090
T50W7013
T50E7011
T50E7014
170
100
T50W7015
030
200
110
120
T50W7014
130
100
120
110
080
050
040
080
160
120
110
2887081-2
508149

ECM: 549122 - 20120701
Group number: 2887081-0100
Assembly Drawing: 2887081-2_1_AC

This list covers pages from 1-52 to 1-57

Pos	Part No	UN	Qty	Description	Page No
TBA 0500S (See drawing on page: 1-54)					
030	1317043-0000		2	SUPPORT	
040	1499150-0000		1	RAIL	
050	1499151-0000		1	RAIL	
080	1499072-0000		4	SPACER	
100	312109-0457		4	SCREW, M6S ISO 4017 M8X35 A4 80	
110	312105-0467		4	SCREW, M6S ISO 4014 M8X80 A4 80	
120	315105-0165		12	WASHER PLAIN, 8,4X16X1,6 A4 BRB	
130	312605-0318		1	HEXAGON NUT, M6M M8 A280	
140	90287-0196	MM	65	THREADED ROD MHGS M8 SS	
180	312105-0460		3	SCREW, M6S ISO 4014 M8X45 A4 80	
200	342920-0121		4	STRAIGHT COUPLING, EXT.THREAD 8/6-R1/8	
T50E7011	2983790-0000		1	FOLDING BAR	
T50E7014	2983789-0000		1	FOLDING BAR	
TBA 1000S NOMOLDEDCAP (See drawing on page: 1-52)					
050	1144719-0000		2	RAIL	
080	2852472-0000		4	SPACER	
110	312105-0465		4	SCREW, M6S ISO 4014 M8X70 A4 80	
120	315105-0165		8	WASHER PLAIN, 8,4X16X1,6 A4 BRB	
180	312109-0457		4	SCREW, M6S ISO 4017 M8X35 A4 80	
200	342920-0121		4	STRAIGHT COUPLING, EXT.THREAD 8/6-R1/8	
T50E7011	2937351-0000		1	FOLDING BAR	
T50E7014	2937352-0000		1	FOLDING BAR	
TBA 1500S (See drawing on page: 1-56)					
030	1317043-0000		2	SUPPORT	
040	1317042-0000		1	RAIL	
050	1317047-0000		1	RAIL	
080	1334718-0000		4	SPACER	
100	312109-0457		4	SCREW, M6S ISO 4017 M8X35 A4 80	
110	312109-0461		4	SCREW, M6S ISO 4017 M8X50 A4 80	
120	315105-0165		12	WASHER PLAIN, 8,4X16X1,6 A4 BRB	
130	312605-0318		2	HEXAGON NUT, M6M M8 A280	
140	90287-0196	MM	65	THREADED ROD MHGS M8 SS	
170	312109-0460		1	SCREW, M6S ISO 4017 M8X45 A4 80	
180	312109-0457		2	SCREW, M6S ISO 4017 M8X35 A4 80	
200	342931-0121		4	ELBOW 90 COUPL., EXT. THREAD 8/6-G1/8"	
T50E7011	2933181-0000		1	FOLDING BAR	
T50E7014	2933180-0000		1	FOLDING BAR	
TBA 2000S (See drawing on page: 1-56)					
030	1317043-0000		2	SUPPORT	
040	1499150-0000		1	RAIL	
050	1499151-0000		1	RAIL	
080	2629344-0000		4	SPACER	
100	312109-0457		4	SCREW, M6S ISO 4017 M8X35 A4 80	
110	312109-0460		4	SCREW, M6S ISO 4017 M8X45 A4 80	
120	315105-0165		12	WASHER PLAIN, 8,4X16X1,6 A4 BRB	
130	312605-0318		2	HEXAGON NUT, M6M M8 A280	
140	90287-0196	MM	65	THREADED ROD MHGS M8 SS	
170	312109-0460		1	SCREW, M6S ISO 4017 M8X45 A4 80	
180	312109-0457		2	SCREW, M6S ISO 4017 M8X35 A4 80	
200	342931-0121		4	ELBOW 90 COUPL., EXT. THREAD 8/6-G1/8"	
T50E7011	2960431-0000		1	FOLDING BAR	
T50E7014	2960432-0000		1	FOLDING BAR	
TPA 0500SQ (See drawing on page: 1-54)					
030	1317043-0000		2	SUPPORT	
040	1499150-0000		1	RAIL	
050	1499151-0000		1	RAIL	
080	1549508-0000		4	SPACER SCREW	
100	312109-0457		4	SCREW, M6S ISO 4017 M8X35 A4 80	
110	312105-0451		4	SCREW, M6S ISO 4017 M8X20 A4 80	
120	315105-0165		14	WASHER PLAIN, 8,4X16X1,6 A4 BRB	
130	312605-0318		2	HEXAGON NUT, M6M M8 A280	
160	312155-0459		2	SCREW DIN 7991 MF6S M8X40 A4 70	
170	312105-0453		2	SCREW, M6S ISO 4017 M8X25 A4 80	
180	312109-0457		2	SCREW, M6S ISO 4017 M8X35 A4 80	
200	342931-0121		4	ELBOW 90 COUPL., EXT. THREAD 8/6-G1/8"	
T50E7011	2953137-0000		1	FOLDING BAR	
T50E7014	2953136-0000		1	FOLDING BAR	
Common Parts					
T50W7012	90166-0118	MM	300	TUBE 8 MM PA BLACK	
T50W7013	90166-0118	MM	700	TUBE 8 MM PA BLACK	
T50W7014	90166-0118	MM	300	TUBE 8 MM PA BLACK	
T50W7015	90166-0118	MM	850	TUBE 8 MM PA BLACK	

FLAP GUIDE

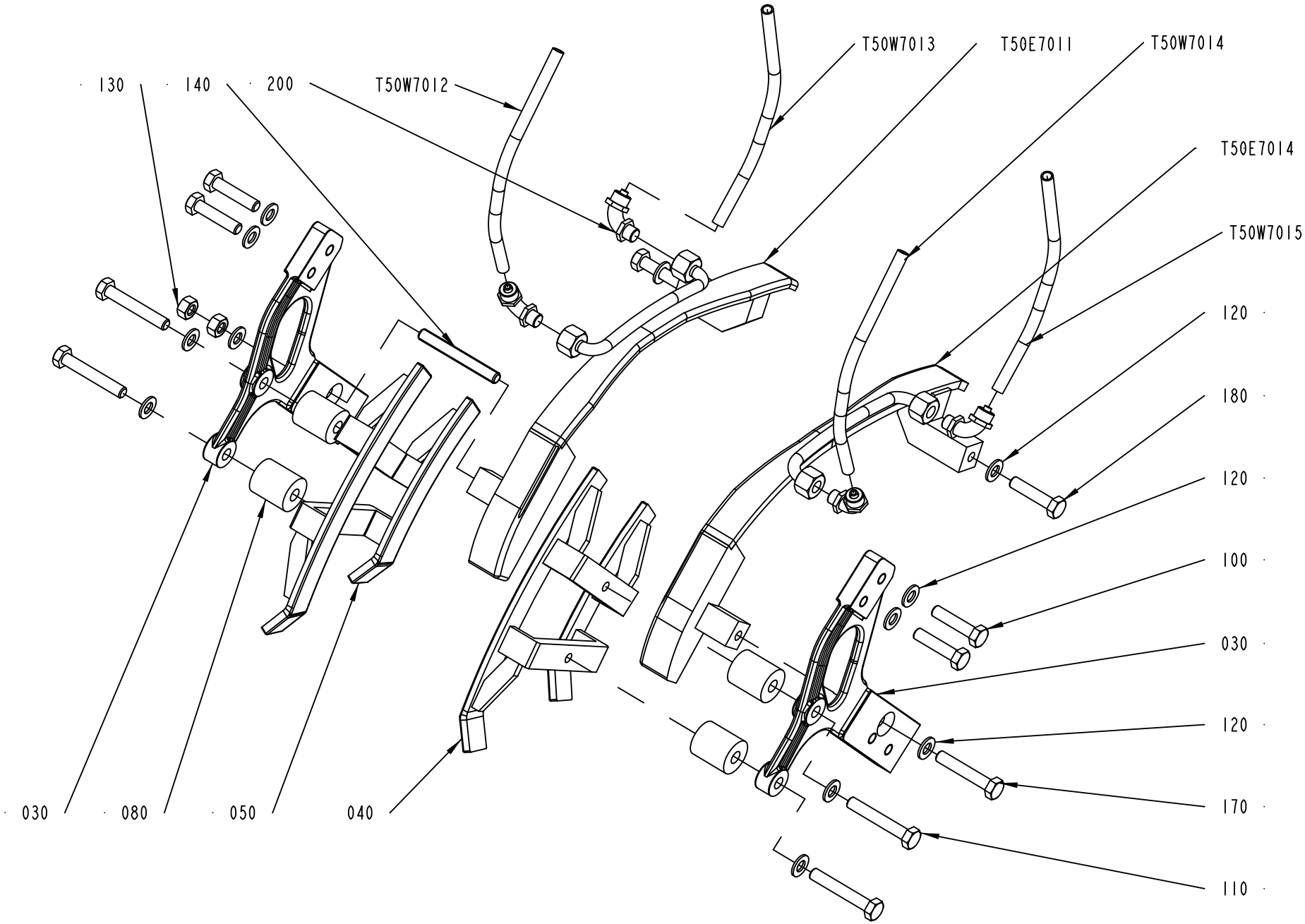
130
140
200
T50W7012
T50W7013
T50E7011
T50W7014
T50E7014
T50W7015
120
180
120
100
030
120
170
110
030
080
050
040
2887081-3
455362

ECM: 549122 - 20120701
Group number: 2887081-0100
Assembly Drawing: 2887081-3_1_AD

This list covers pages from 1-52 to 1-57

Pos	Part No	UN	Qty	Description	Page No
TBA 0500S (See drawing on page: 1-54)					
030	1317043-0000		2	SUPPORT	
040	1499150-0000		1	RAIL	
050	1499151-0000		1	RAIL	
080	1499072-0000		4	SPACER	
100	312109-0457		4	SCREW, M6S ISO 4017 M8X35 A4 80	
110	312105-0467		4	SCREW, M6S ISO 4014 M8X80 A4 80	
120	315105-0165		12	WASHER PLAIN, 8,4X16X1,6 A4 BRB	
130	312605-0318		1	HEXAGON NUT, M6M M8 A280	
140	90287-0196	MM	65	THREADED ROD MHGS M8 SS	
180	312105-0460		3	SCREW, M6S ISO 4014 M8X45 A4 80	
200	342920-0121		4	STRAIGHT COUPLING, EXT.THREAD 8/6-R1/8	
T50E7011	2983790-0000		1	FOLDING BAR	
T50E7014	2983789-0000		1	FOLDING BAR	
TBA 1000S NOMOLDEDCAP (See drawing on page: 1-52)					
050	1144719-0000		2	RAIL	
080	2852472-0000		4	SPACER	
110	312105-0465		4	SCREW, M6S ISO 4014 M8X70 A4 80	
120	315105-0165		8	WASHER PLAIN, 8,4X16X1,6 A4 BRB	
180	312109-0457		4	SCREW, M6S ISO 4017 M8X35 A4 80	
200	342920-0121		4	STRAIGHT COUPLING, EXT.THREAD 8/6-R1/8	
T50E7011	2937351-0000		1	FOLDING BAR	
T50E7014	2937352-0000		1	FOLDING BAR	
TBA 1500S (See drawing on page: 1-56)					
030	1317043-0000		2	SUPPORT	
040	1317042-0000		1	RAIL	
050	1317047-0000		1	RAIL	
080	1334718-0000		4	SPACER	
100	312109-0457		4	SCREW, M6S ISO 4017 M8X35 A4 80	
110	312109-0461		4	SCREW, M6S ISO 4017 M8X50 A4 80	
120	315105-0165		12	WASHER PLAIN, 8,4X16X1,6 A4 BRB	
130	312605-0318		2	HEXAGON NUT, M6M M8 A280	
140	90287-0196	MM	65	THREADED ROD MHGS M8 SS	
170	312109-0460		1	SCREW, M6S ISO 4017 M8X45 A4 80	
180	312109-0457		2	SCREW, M6S ISO 4017 M8X35 A4 80	
200	342931-0121		4	ELBOW 90 COUPL., EXT. THREAD 8/6-G1/8"	
T50E7011	2933181-0000		1	FOLDING BAR	
T50E7014	2933180-0000		1	FOLDING BAR	
TBA 2000S (See drawing on page: 1-56)					
030	1317043-0000		2	SUPPORT	
040	1499150-0000		1	RAIL	
050	1499151-0000		1	RAIL	
080	2629344-0000		4	SPACER	
100	312109-0457		4	SCREW, M6S ISO 4017 M8X35 A4 80	
110	312109-0460		4	SCREW, M6S ISO 4017 M8X45 A4 80	
120	315105-0165		12	WASHER PLAIN, 8,4X16X1,6 A4 BRB	
130	312605-0318		2	HEXAGON NUT, M6M M8 A280	
140	90287-0196	MM	65	THREADED ROD MHGS M8 SS	
170	312109-0460		1	SCREW, M6S ISO 4017 M8X45 A4 80	
180	312109-0457		2	SCREW, M6S ISO 4017 M8X35 A4 80	
200	342931-0121		4	ELBOW 90 COUPL., EXT. THREAD 8/6-G1/8"	
T50E7011	2960431-0000		1	FOLDING BAR	
T50E7014	2960432-0000		1	FOLDING BAR	
TPA 0500SQ (See drawing on page: 1-54)					
030	1317043-0000		2	SUPPORT	
040	1499150-0000		1	RAIL	
050	1499151-0000		1	RAIL	
080	1549508-0000		4	SPACER SCREW	
100	312109-0457		4	SCREW, M6S ISO 4017 M8X35 A4 80	
110	312105-0451		4	SCREW, M6S ISO 4017 M8X20 A4 80	
120	315105-0165		14	WASHER PLAIN, 8,4X16X1,6 A4 BRB	
130	312605-0318		2	HEXAGON NUT, M6M M8 A280	
160	312155-0459		2	SCREW DIN 7991 MF6S M8X40 A4 70	
170	312105-0453		2	SCREW, M6S ISO 4017 M8X25 A4 80	
180	312109-0457		2	SCREW, M6S ISO 4017 M8X35 A4 80	
200	342931-0121		4	ELBOW 90 COUPL., EXT. THREAD 8/6-G1/8"	
T50E7011	2953137-0000		1	FOLDING BAR	
T50E7014	2953136-0000		1	FOLDING BAR	
Common Parts					
T50W7012	90166-0118	MM	300	TUBE 8 MM PA BLACK	
T50W7013	90166-0118	MM	700	TUBE 8 MM PA BLACK	
T50W7014	90166-0118	MM	300	TUBE 8 MM PA BLACK	
T50W7015	90166-0118	MM	850	TUBE 8 MM PA BLACK	

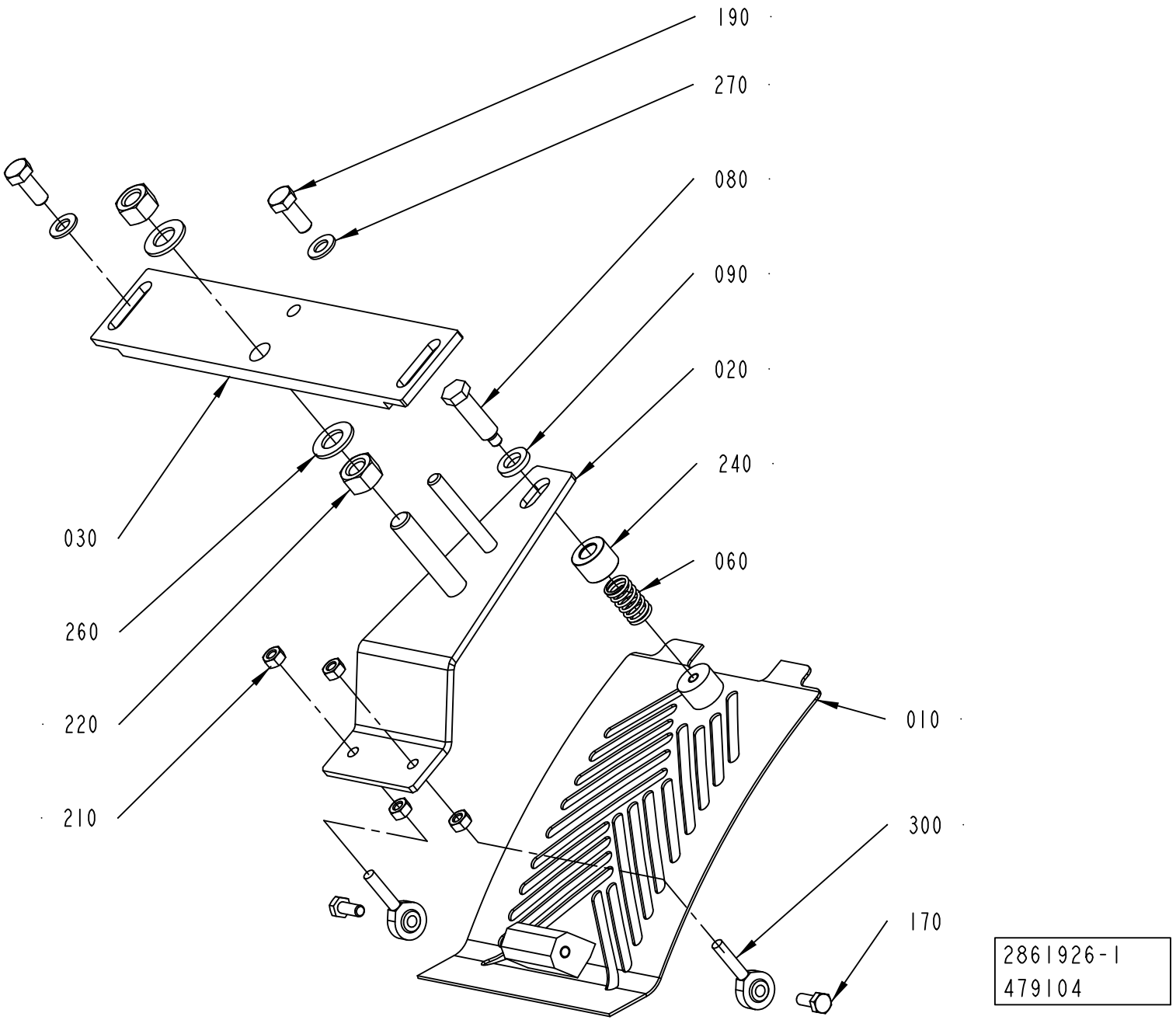
190
270
080
090
020
240
060
030
260
220
210
010
300
170
2861926-1
479104

Pos	Part No	UN	Qty	Description	Page No
TBA 0500B, TBA 1000B (See drawing on page: 1-60)					
010	2966896-0000		1	COVERING PLATE	
030	2861981-0000		1	ATTACHMENT PLATE	
040	1144902-0000		1	SUPPORT	
070	2609372-0000		1	GUIDE	
180	312105-0453		1	SCREW, M6S ISO 4017 M8X25 A4 80	
190	312105-0451		2	SCREW, M6S ISO 4017 M8X20 A4 80	
200	312105-0457		2	SCREW, M6S ISO 4014 M8X35 A4 80	
270	315105-0165		5	WASHER PLAIN, 8,4X16X1,6 A4 BRB	
TBA 0500S, TBA 1000S (See drawing on page: 1-60)					
010	2966896-0000		1	COVERING PLATE	
030	2861981-0000		1	ATTACHMENT PLATE	
040	1144902-0000		1	SUPPORT	
070	1144901-0000		1	GUIDE	
180	312105-0449		2	SCREW, M6S ISO 4017 M8X16 A4 80	
190	312105-0451		2	SCREW, M6S ISO 4017 M8X20 A4 80	
200	312105-0457		2	SCREW, M6S ISO 4014 M8X35 A4 80	
270	315105-0165		6	WASHER PLAIN, 8,4X16X1,6 A4 BRB	
TBA 0500SQ, TBA 1000SQ (See drawing on page: 1-58)					
010	2966896-0000		1	COVERING PLATE	
030	2861981-0000		1	ATTACHMENT PLATE	
190	312105-0451		2	SCREW, M6S ISO 4017 M8X20 A4 80	
270	315105-0165		2	WASHER PLAIN, 8,4X16X1,6 A4 BRB	
TBA 1500S, TBA 2000S (See drawing on page: 1-60)					
010	2966896-0000		1	COVERING PLATE	
030	2913595-0000		1	ATTACHMENT PLATE	
040	2944780-0000		1	SUPPORT	
070	1347057-0000		1	GUIDE	
180	312105-0449		2	SCREW, M6S ISO 4017 M8X16 A4 80	
190	312105-0453		2	SCREW, M6S ISO 4017 M8X25 A4 80	
200	312105-0457		2	SCREW, M6S ISO 4014 M8X35 A4 80	
270	315105-0165		6	WASHER PLAIN, 8,4X16X1,6 A4 BRB	
TPA 0500SQ (See drawing on page: 1-64)					
010	2966896-0000		1	COVERING PLATE	
030	2861981-0000		1	ATTACHMENT PLATE	
040	1144902-0000		1	SUPPORT	
070	2552022-0000		1	GUIDE	
100	2553284-0000		1	BLOCK	
180	312105-0451		2	SCREW, M6S ISO 4017 M8X20 A4 80	
190	312105-0451		2	SCREW, M6S ISO 4017 M8X20 A4 80	
200	312105-0457		2	SCREW, M6S ISO 4014 M8X35 A4 80	
270	315105-0165		6	WASHER PLAIN, 8,4X16X1,6 A4 BRB	

Pos	Part No	UN	Qty	Description	Page No
TPA 1000SQ, TPA 0750SQ (See drawing on page: 1-62)					
010	2966896-0000		1	COVERING PLATE	
030	2913595-0000		1	ATTACHMENT PLATE	
040	2647111-0000		1	SUPPORT	
070	2647112-0000		1	GUIDE	
180	312105-0449		1	SCREW, M6S ISO 4017 M8X16 A4 80	
190	312105-0453		2	SCREW, M6S ISO 4017 M8X25 A4 80	
200	312105-0457		2	SCREW, M6S ISO 4014 M8X35 A4 80	
270	315105-0165		6	WASHER PLAIN, 8,4X16X1,6 A4 BRB	
310	312115-0449		1	SCREW ISO4762 M8X16 A4 80	
Common Parts					
020	2861978-0000		1	ADJUSTING PLATE	
060	90335-0036		1	COMP. SPRING, 22450, 1,6X14,1X24	
080	1144976-0000		1	STOP SCREW	
090	1144979-0000		1	WASHER	
170	312105-0368		2	SCREW, M6S ISO 4017 M6X16 A4 80	
210	312605-0316		4	HEXAGON NUT, M6M M6 A280	
220	312605-0322		2	HEXAGON NUT, M6M M12 A280	
240	3109510-0000		1	WASHER	
260	315105-0178		2	WASHER PLAIN, 13X24X2,5 A4 BRB	
300	90115-0137		2	ROD END, ID=6 MM, M6X1	

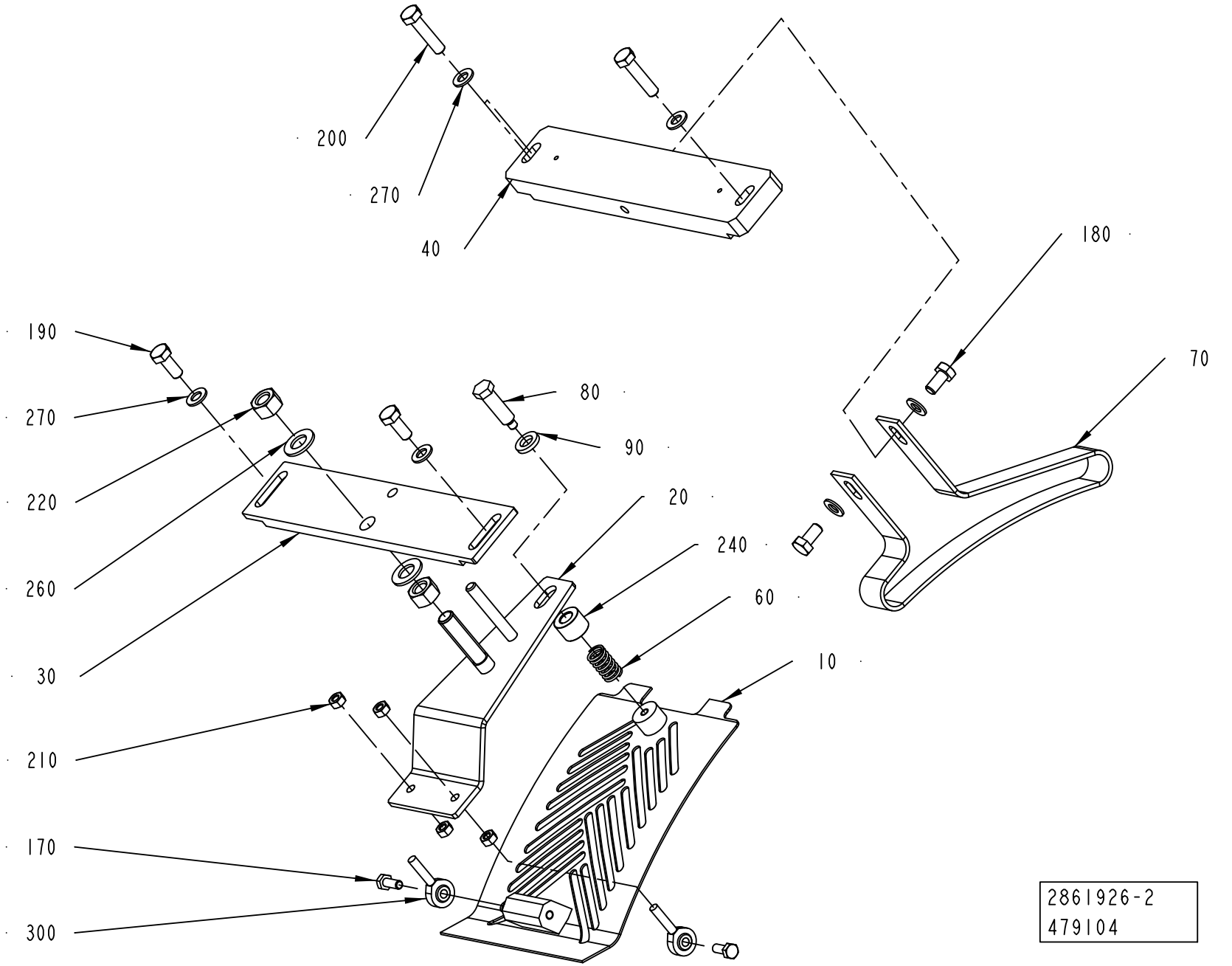
200
270
40
180
70
190
270
220
260
30
210
170
300
80
90
20
240
60
10
2861926-2
479104

Pos	Part No	UN	Qty	Description	Page No
TBA 0500B, TBA 1000B (See drawing on page: 1-60)					
010	2966896-0000		1	COVERING PLATE	
030	2861981-0000		1	ATTACHMENT PLATE	
040	1144902-0000		1	SUPPORT	
070	2609372-0000		1	GUIDE	
180	312105-0453		1	SCREW, M6S ISO 4017 M8X25 A4 80	
190	312105-0451		2	SCREW, M6S ISO 4017 M8X20 A4 80	
200	312105-0457		2	SCREW, M6S ISO 4014 M8X35 A4 80	
270	315105-0165		5	WASHER PLAIN, 8,4X16X1,6 A4 BRB	
TBA 0500S, TBA 1000S (See drawing on page: 1-60)					
010	2966896-0000		1	COVERING PLATE	
030	2861981-0000		1	ATTACHMENT PLATE	
040	1144902-0000		1	SUPPORT	
070	1144901-0000		1	GUIDE	
180	312105-0449		2	SCREW, M6S ISO 4017 M8X16 A4 80	
190	312105-0451		2	SCREW, M6S ISO 4017 M8X20 A4 80	
200	312105-0457		2	SCREW, M6S ISO 4014 M8X35 A4 80	
270	315105-0165		6	WASHER PLAIN, 8,4X16X1,6 A4 BRB	
TBA 0500SQ, TBA 1000SQ (See drawing on page: 1-58)					
010	2966896-0000		1	COVERING PLATE	
030	2861981-0000		1	ATTACHMENT PLATE	
190	312105-0451		2	SCREW, M6S ISO 4017 M8X20 A4 80	
270	315105-0165		2	WASHER PLAIN, 8,4X16X1,6 A4 BRB	
TBA 1500S, TBA 2000S (See drawing on page: 1-60)					
010	2966896-0000		1	COVERING PLATE	
030	2913595-0000		1	ATTACHMENT PLATE	
040	2944780-0000		1	SUPPORT	
070	1347057-0000		1	GUIDE	
180	312105-0449		2	SCREW, M6S ISO 4017 M8X16 A4 80	
190	312105-0453		2	SCREW, M6S ISO 4017 M8X25 A4 80	
200	312105-0457		2	SCREW, M6S ISO 4014 M8X35 A4 80	
270	315105-0165		6	WASHER PLAIN, 8,4X16X1,6 A4 BRB	
TPA 0500SQ (See drawing on page: 1-64)					
010	2966896-0000		1	COVERING PLATE	
030	2861981-0000		1	ATTACHMENT PLATE	
040	1144902-0000		1	SUPPORT	
070	2552022-0000		1	GUIDE	
100	2553284-0000		1	BLOCK	
180	312105-0451		2	SCREW, M6S ISO 4017 M8X20 A4 80	
190	312105-0451		2	SCREW, M6S ISO 4017 M8X20 A4 80	
200	312105-0457		2	SCREW, M6S ISO 4014 M8X35 A4 80	
270	315105-0165		6	WASHER PLAIN, 8,4X16X1,6 A4 BRB	

Pos	Part No	UN	Qty	Description	Page No
TPA 1000SQ, TPA 0750SQ (See drawing on page: 1-62)					
010	2966896-0000		1	COVERING PLATE	
030	2913595-0000		1	ATTACHMENT PLATE	
040	2647111-0000		1	SUPPORT	
070	2647112-0000		1	GUIDE	
180	312105-0449		1	SCREW, M6S ISO 4017 M8X16 A4 80	
190	312105-0453		2	SCREW, M6S ISO 4017 M8X25 A4 80	
200	312105-0457		2	SCREW, M6S ISO 4014 M8X35 A4 80	
270	315105-0165		6	WASHER PLAIN, 8,4X16X1,6 A4 BRB	
310	312115-0449		1	SCREW ISO4762 M8X16 A4 80	
Common Parts					
020	2861978-0000		1	ADJUSTING PLATE	
060	90335-0036		1	COMP. SPRING, 22450, 1,6X14,1X24	
080	1144976-0000		1	STOP SCREW	
090	1144979-0000		1	WASHER	
170	312105-0368		2	SCREW, M6S ISO 4017 M6X16 A4 80	
210	312605-0316		4	HEXAGON NUT, M6M M6 A280	
220	312605-0322		2	HEXAGON NUT, M6M M12 A280	
240	3109510-0000		1	WASHER	
260	315105-0178		2	WASHER PLAIN, 13X24X2,5 A4 BRB	
300	90115-0137		2	ROD END, ID=6 MM, M6X1	

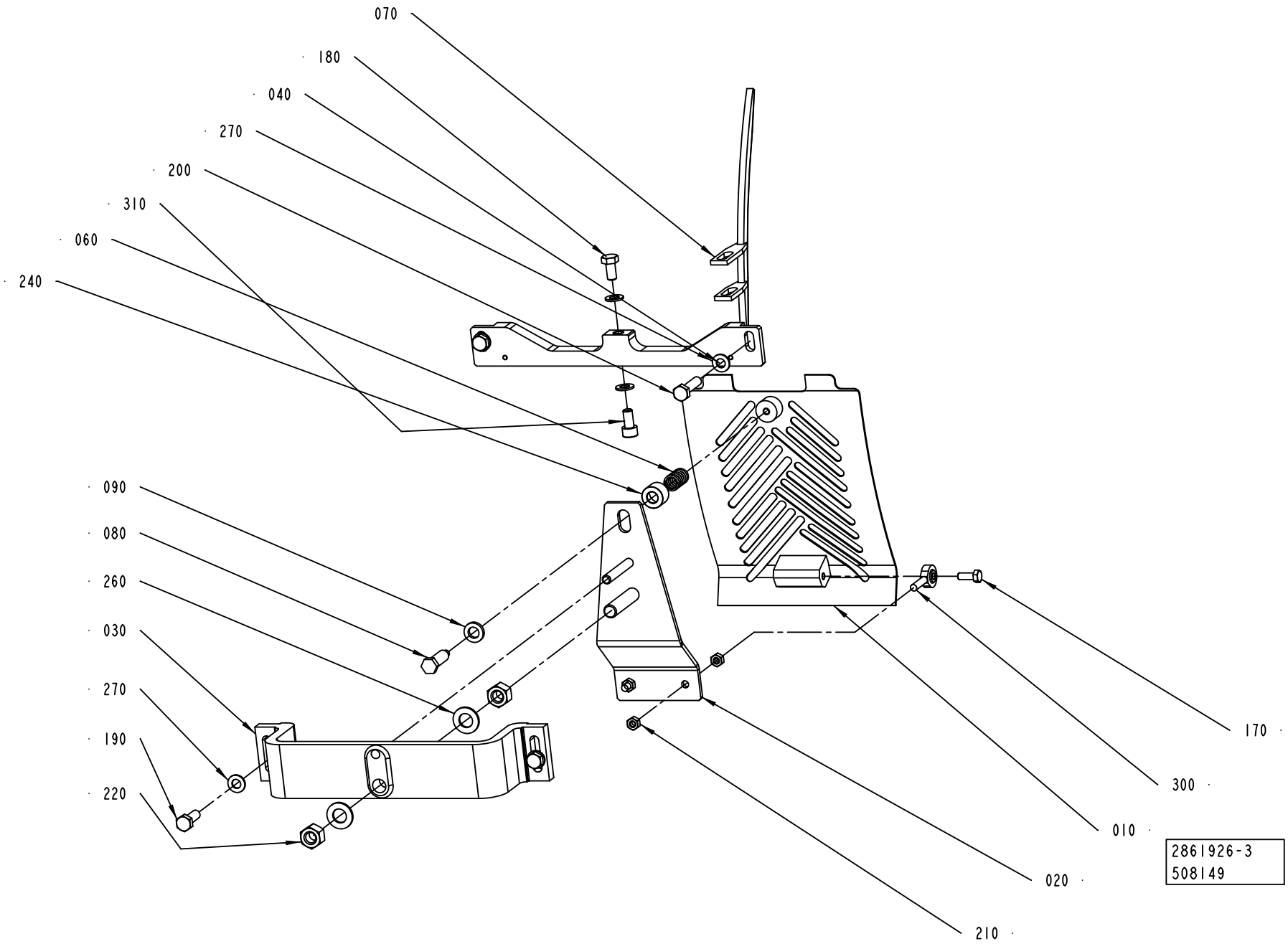
070
180
040
270
200
310
060
240
090
080
260
030
270
190
220
170
300
010
020
210
2861926-3
508149

Pos	Part No	UN	Qty	Description	Page No
TBA 0500B, TBA 1000B (See drawing on page: 1-60)					
010	2966896-0000		1	COVERING PLATE	
030	2861981-0000		1	ATTACHMENT PLATE	
040	1144902-0000		1	SUPPORT	
070	2609372-0000		1	GUIDE	
180	312105-0453		1	SCREW, M6S ISO 4017 M8X25 A4 80	
190	312105-0451		2	SCREW, M6S ISO 4017 M8X20 A4 80	
200	312105-0457		2	SCREW, M6S ISO 4014 M8X35 A4 80	
270	315105-0165		5	WASHER PLAIN, 8,4X16X1,6 A4 BRB	
TBA 0500S, TBA 1000S (See drawing on page: 1-60)					
010	2966896-0000		1	COVERING PLATE	
030	2861981-0000		1	ATTACHMENT PLATE	
040	1144902-0000		1	SUPPORT	
070	1144901-0000		1	GUIDE	
180	312105-0449		2	SCREW, M6S ISO 4017 M8X16 A4 80	
190	312105-0451		2	SCREW, M6S ISO 4017 M8X20 A4 80	
200	312105-0457		2	SCREW, M6S ISO 4014 M8X35 A4 80	
270	315105-0165		6	WASHER PLAIN, 8,4X16X1,6 A4 BRB	
TBA 0500SQ, TBA 1000SQ (See drawing on page: 1-58)					
010	2966896-0000		1	COVERING PLATE	
030	2861981-0000		1	ATTACHMENT PLATE	
190	312105-0451		2	SCREW, M6S ISO 4017 M8X20 A4 80	
270	315105-0165		2	WASHER PLAIN, 8,4X16X1,6 A4 BRB	
TBA 1500S, TBA 2000S (See drawing on page: 1-60)					
010	2966896-0000		1	COVERING PLATE	
030	2913595-0000		1	ATTACHMENT PLATE	
040	2944780-0000		1	SUPPORT	
070	1347057-0000		1	GUIDE	
180	312105-0449		2	SCREW, M6S ISO 4017 M8X16 A4 80	
190	312105-0453		2	SCREW, M6S ISO 4017 M8X25 A4 80	
200	312105-0457		2	SCREW, M6S ISO 4014 M8X35 A4 80	
270	315105-0165		6	WASHER PLAIN, 8,4X16X1,6 A4 BRB	
TPA 0500SQ (See drawing on page: 1-64)					
010	2966896-0000		1	COVERING PLATE	
030	2861981-0000		1	ATTACHMENT PLATE	
040	1144902-0000		1	SUPPORT	
070	2552022-0000		1	GUIDE	
100	2553284-0000		1	BLOCK	
180	312105-0451		2	SCREW, M6S ISO 4017 M8X20 A4 80	
190	312105-0451		2	SCREW, M6S ISO 4017 M8X20 A4 80	
200	312105-0457		2	SCREW, M6S ISO 4014 M8X35 A4 80	
270	315105-0165		6	WASHER PLAIN, 8,4X16X1,6 A4 BRB	

Pos	Part No	UN	Qty	Description	Page No
TPA 1000SQ, TPA 0750SQ (See drawing on page: 1-62)					
010	2966896-0000		1	COVERING PLATE	
030	2913595-0000		1	ATTACHMENT PLATE	
040	2647111-0000		1	SUPPORT	
070	2647112-0000		1	GUIDE	
180	312105-0449		1	SCREW, M6S ISO 4017 M8X16 A4 80	
190	312105-0453		2	SCREW, M6S ISO 4017 M8X25 A4 80	
200	312105-0457		2	SCREW, M6S ISO 4014 M8X35 A4 80	
270	315105-0165		6	WASHER PLAIN, 8,4X16X1,6 A4 BRB	
310	312115-0449		1	SCREW ISO4762 M8X16 A4 80	
Common Parts					
020	2861978-0000		1	ADJUSTING PLATE	
060	90335-0036		1	COMP. SPRING, 22450, 1,6X14,1X24	
080	1144976-0000		1	STOP SCREW	
090	1144979-0000		1	WASHER	
170	312105-0368		2	SCREW, M6S ISO 4017 M6X16 A4 80	
210	312605-0316		4	HEXAGON NUT, M6M M6 A280	
220	312605-0322		2	HEXAGON NUT, M6M M12 A280	
240	3109510-0000		1	WASHER	
260	315105-0178		2	WASHER PLAIN, 13X24X2,5 A4 BRB	
300	90115-0137		2	ROD END, ID=6 MM, M6X1	

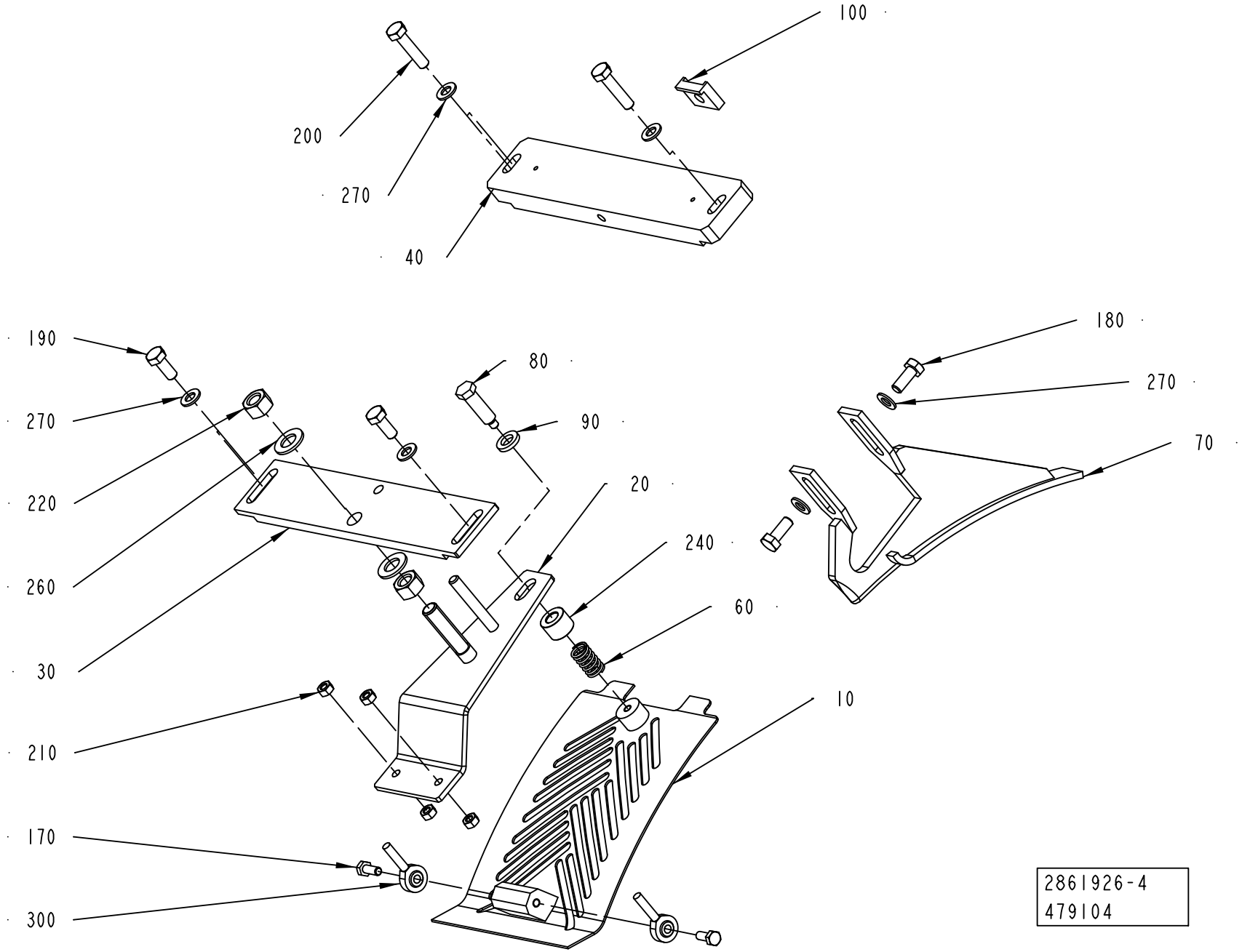
100
200
270
40
190
270
220
260
30
210
170
300
80
90
20
240
60
10
180
270
70
2861926-4
479104

ECM: 515981 - 20120101
Group number: 2861926-0100
Assembly Drawing: 2861926-4_1_AC

This list covers pages from 1-58 to 1-65

Pos	Part No	UN	Qty	Description	Page No
TBA 0500B, TBA 1000B (See drawing on page: 1-60)					
010	2966896-0000		1	COVERING PLATE	
030	2861981-0000		1	ATTACHMENT PLATE	
040	1144902-0000		1	SUPPORT	
070	2609372-0000		1	GUIDE	
180	312105-0453		1	SCREW, M6S ISO 4017 M8X25 A4 80	
190	312105-0451		2	SCREW, M6S ISO 4017 M8X20 A4 80	
200	312105-0457		2	SCREW, M6S ISO 4014 M8X35 A4 80	
270	315105-0165		5	WASHER PLAIN, 8,4X16X1,6 A4 BRB	
TBA 0500S, TBA 1000S (See drawing on page: 1-60)					
010	2966896-0000		1	COVERING PLATE	
030	2861981-0000		1	ATTACHMENT PLATE	
040	1144902-0000		1	SUPPORT	
070	1144901-0000		1	GUIDE	
180	312105-0449		2	SCREW, M6S ISO 4017 M8X16 A4 80	
190	312105-0451		2	SCREW, M6S ISO 4017 M8X20 A4 80	
200	312105-0457		2	SCREW, M6S ISO 4014 M8X35 A4 80	
270	315105-0165		6	WASHER PLAIN, 8,4X16X1,6 A4 BRB	
TBA 0500SQ, TBA 1000SQ (See drawing on page: 1-58)					
010	2966896-0000		1	COVERING PLATE	
030	2861981-0000		1	ATTACHMENT PLATE	
190	312105-0451		2	SCREW, M6S ISO 4017 M8X20 A4 80	
270	315105-0165		2	WASHER PLAIN, 8,4X16X1,6 A4 BRB	
TBA 1500S, TBA 2000S (See drawing on page: 1-60)					
010	2966896-0000		1	COVERING PLATE	
030	2913595-0000		1	ATTACHMENT PLATE	
040	2944780-0000		1	SUPPORT	
070	1347057-0000		1	GUIDE	
180	312105-0449		2	SCREW, M6S ISO 4017 M8X16 A4 80	
190	312105-0453		2	SCREW, M6S ISO 4017 M8X25 A4 80	
200	312105-0457		2	SCREW, M6S ISO 4014 M8X35 A4 80	
270	315105-0165		6	WASHER PLAIN, 8,4X16X1,6 A4 BRB	
TPA 0500SQ (See drawing on page: 1-64)					
010	2966896-0000		1	COVERING PLATE	
030	2861981-0000		1	ATTACHMENT PLATE	
040	1144902-0000		1	SUPPORT	
070	2552022-0000		1	GUIDE	
100	2553284-0000		1	BLOCK	
180	312105-0451		2	SCREW, M6S ISO 4017 M8X20 A4 80	
190	312105-0451		2	SCREW, M6S ISO 4017 M8X20 A4 80	
200	312105-0457		2	SCREW, M6S ISO 4014 M8X35 A4 80	
270	315105-0165		6	WASHER PLAIN, 8,4X16X1,6 A4 BRB	

Pos	Part No	UN	Qty	Description	Page No
TPA 1000SQ, TPA 0750SQ (See drawing on page: 1-62)					
010	2966896-0000		1	COVERING PLATE	
030	2913595-0000		1	ATTACHMENT PLATE	
040	2647111-0000		1	SUPPORT	
070	2647112-0000		1	GUIDE	
180	312105-0449		1	SCREW, M6S ISO 4017 M8X16 A4 80	
190	312105-0453		2	SCREW, M6S ISO 4017 M8X25 A4 80	
200	312105-0457		2	SCREW, M6S ISO 4014 M8X35 A4 80	
270	315105-0165		6	WASHER PLAIN, 8,4X16X1,6 A4 BRB	
310	312115-0449		1	SCREW ISO4762 M8X16 A4 80	
Common Parts					
020	2861978-0000		1	ADJUSTING PLATE	
060	90335-0036		1	COMP. SPRING, 22450, 1,6X14,1X24	
080	1144976-0000		1	STOP SCREW	
090	1144979-0000		1	WASHER	
170	312105-0368		2	SCREW, M6S ISO 4017 M6X16 A4 80	
210	312605-0316		4	HEXAGON NUT, M6M M6 A280	
220	312605-0322		2	HEXAGON NUT, M6M M12 A280	
240	3109510-0000		1	WASHER	
260	315105-0178		2	WASHER PLAIN, 13X24X2,5 A4 BRB	
300	90115-0137		2	ROD END, ID=6 MM, M6X1	

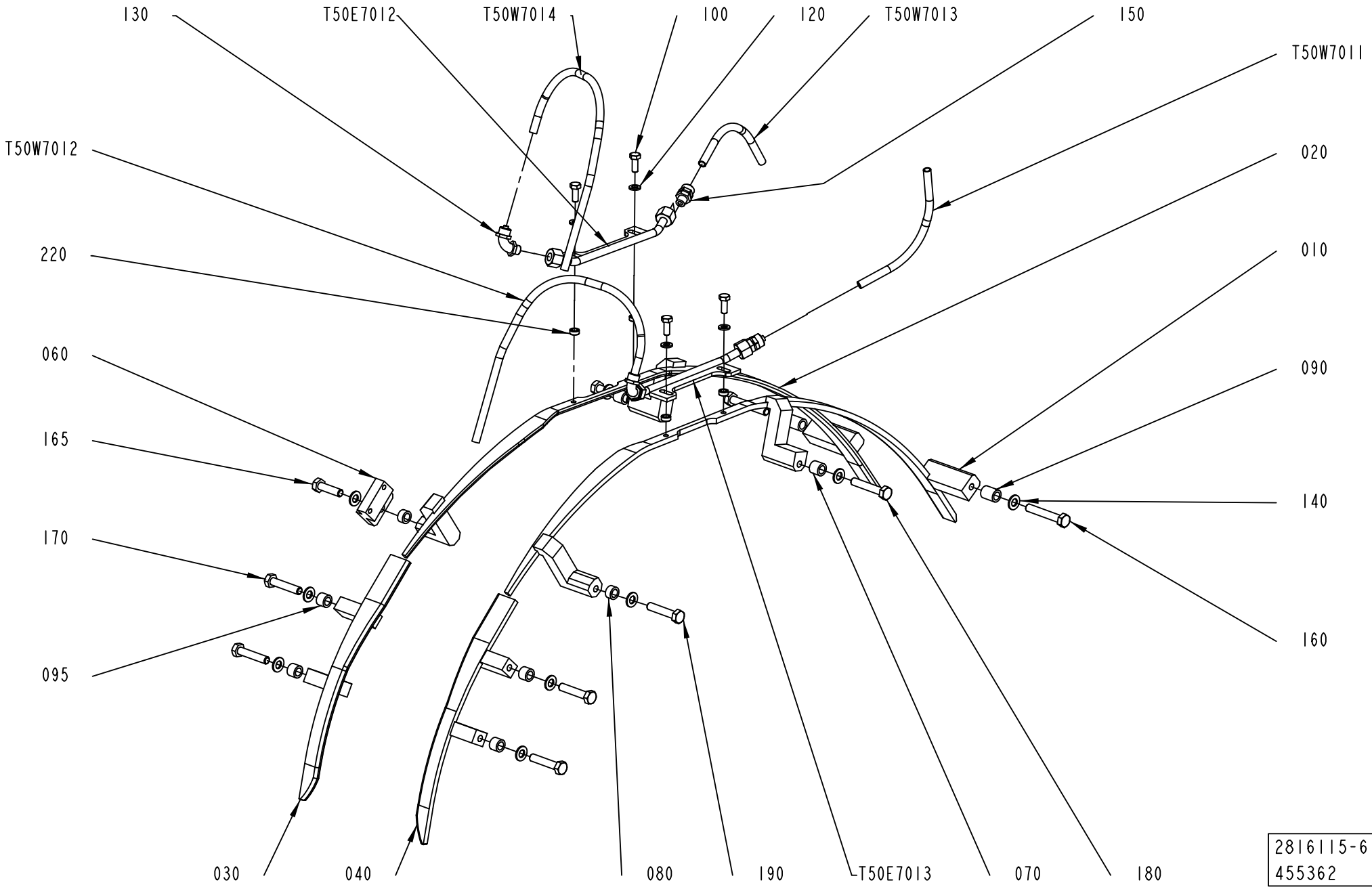
130
T50E7012
T50W7014
100
120
T50W7013
150
T50W7011
T50W7012
020
220
010
060
090
165
140
170
160
095
030
040
080
190
T50E7013
070
180
2816115-6
455362

ECM: 515979 - 20120101
Group number: 2816115-0100
Assembly Drawing: 2816115-6_1_AA

This list covers pages from 1-66 to 1-69

Pos	Part No	UN	Qty	Description	Page No
TBA 0500B, TBA 1000B					
010	2806345-0000		1	GUIDE	
020	2806346-0000		1	GUIDE	
030	1539900-0000		1	RIGHT UPPER GUIDE	
040	1549614-0000		1	LEFT UPPER GUIDE	
090	2603663-0000		6	SPACER	
095	1334447-0000		4	SPACER	
100	312105-0366		4	SCREW, M6S ISO 4017 M6X12 A4 80	
160	312105-0465		9	SCREW, M6S ISO 4014 M8X70 A4 80	
165	312105-0463		1	SCREW, M6S ISO 4014 M8X60 A4 80	
TBA 0500S					
010	2806345-0000		1	GUIDE	
020	2806346-0000		1	GUIDE	
030	1260709-0000		1	GUIDE UPPER R	
040	1260710-0000		1	GUIDE UPPER L	
070	1499071-0000		2	SPACER	
080	1499071-0000		2	SPACER	
090	1499071-0000		2	SPACER	
095	1499071-0000		4	SPACER	
100	312105-0366		4	SCREW, M6S ISO 4017 M6X12 A4 80	
160	312105-0466		2	SCREW, M6S ISO 4014 M8X75 A4 80	
165	312105-0464		1	SCREW, M6S ISO 4014 M8X65 A4 80	
170	312105-0466		4	SCREW, M6S ISO 4014 M8X75 A4 80	
180	312105-0466		2	SCREW, M6S ISO 4014 M8X75 A4 80	
190	312105-0466		1	SCREW, M6S ISO 4014 M8X75 A4 80	
TBA 0500SQ, TBA 1000SQ					
010	2806345-0000		1	GUIDE	
020	2806346-0000		1	GUIDE	
030	1549411-0000		1	PACKAGE GUIDE	
040	1549406-0000		1	PACKAGE GUIDE	
090	1499071-0000		10	SPACER	
100	312105-0366		4	SCREW, M6S ISO 4017 M6X12 A4 80	
160	312105-0466		9	SCREW, M6S ISO 4014 M8X75 A4 80	
165	312105-0464		1	SCREW, M6S ISO 4014 M8X65 A4 80	
TBA 1000S					
010	2806345-0000		1	GUIDE	
020	2806346-0000		1	GUIDE	
030	1549411-0000		1	PACKAGE GUIDE	
040	1549406-0000		1	PACKAGE GUIDE	
090	2852473-0000		6	SPACER	
095	2852463-0000		4	SPACER	
100	312105-0366		4	SCREW, M6S ISO 4017 M6X12 A4 80	
160	312105-0465		9	SCREW, M6S ISO 4014 M8X70 A4 80	
165	312105-0463		1	SCREW, M6S ISO 4014 M8X60 A4 80	
TBA 1500S					
010	2913597-0000		1	GUIDE	
020	2913596-0000		1	GUIDE	
030	2929034-0000		1	GUIDE	
040	2929035-0000		1	GUIDE	
070	2929033-0000		2	SPACER	
080	2929032-0000		2	SPACER	
090	2929031-0000		2	SPACER	
095	2929036-0000		4	SPACER	
100	312105-0368		4	SCREW, M6S ISO 4017 M6X16 A4 80	
160	312109-0461		2	SCREW, M6S ISO 4017 M8X50 A4 80	
165	312105-0455		1	SCREW, M6S ISO 4017 M8X30 A4 80	
170	312109-0459		4	SCREW, M6S ISO 4017 M8X40 A4 80	
180	312109-0460		2	SCREW, M6S ISO 4017 M8X45 A4 80	
190	312109-0459		1	SCREW, M6S ISO 4017 M8X40 A4 80	
220	1282705-0000		4	SUPPORT	
TBA 2000S					
010	2913597-0000		1	GUIDE	
020	2913596-0000		1	GUIDE	
030	2929034-0000		1	GUIDE	
040	2929035-0000		1	GUIDE	
100	312105-0368		4	SCREW, M6S ISO 4017 M6X16 A4 80	
160	312105-0457		9	SCREW, M6S ISO 4014 M8X35 A4 80	
165	312105-0453		1	SCREW, M6S ISO 4017 M8X25 A4 80	
220	1282705-0000		4	SUPPORT	
TPA 0500SQ					
010	2806345-0000		1	GUIDE	
020	2806346-0000		1	GUIDE	
030	2527530-0000		1	GUIDE UPPER R	
040	2527529-0000		1	GUIDE UPPER L	
090	1549506-0000		6	SPACER	
095	1558910-0000		4	SPACER	
100	312105-0366		4	SCREW, M6S ISO 4017 M6X12 A4 80	
160	312105-0467		9	SCREW, M6S ISO 4014 M8X80 A4 80	
165	312105-0466		1	SCREW, M6S ISO 4014 M8X75 A4 80	
TPA 1000SQ, TPA 0750SQ					
010	2913597-0000		1	GUIDE	
020	2913596-0000		1	GUIDE	
030	2913599-0000		1	GUIDE	
040	2913598-0000		1	GUIDE	

Machine Type | Group Description | Used-In | Group Number | Page No

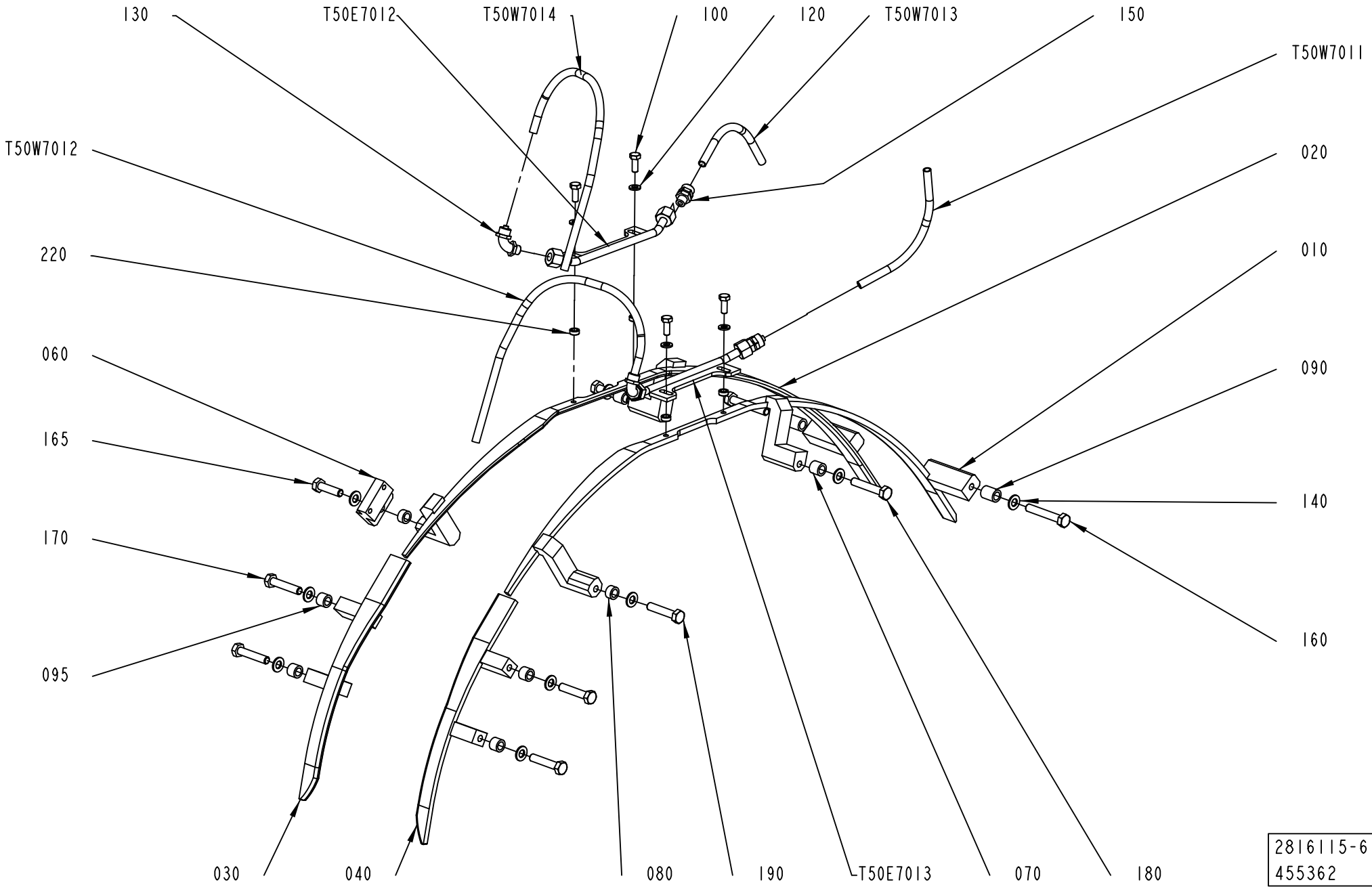
130
T50E7012
T50W7014
100
120
T50W7013
150
T50W7011
T50W7012
020
220
010
060
090
165
140
170
160
095
030
040
080
190
T50E7013
070
180
2816115-6
455362

Pos	Part No	UN	Qty	Description	Page No
TPA 1000SQ, TPA 0750SQ (Cont'd)					
090	2931384-0000		6	GUIDE	
100	312105-0368		4	SCREW, M6S ISO 4017 M6X16 A4 80	
160	312109-0463		5	SCREW, M6S ISO 4017 M8X60 A4 80	
165	312109-0461		1	SCREW, M6S ISO 4017 M8X50 A4 80	
170	312105-0457		4	SCREW, M6S ISO 4014 M8X35 A4 80	
220	1282705-0000		4	SUPPORT	
Common Parts					
060	2866896-0000		1	SUPPORT	
120	315105-0153		4	WASHER PLAIN, 6,4X12X1,5 A4 BRB	
130	342931-0121		2	ELBOW 90 COUPL., EXT. THREAD 8/6-G1/8"	
140	315105-0165		10	WASHER PLAIN, 8,4X16X1,6 A4 BRB	
150	342920-0121		2	STRAIGHT COUPLING, EXT.THREAD 8/6-R1/8	
T50E7012	2879069-0000		1	FOLDING BAR	
T50E7013	2879069-0000		1	FOLDING BAR	
T50W7011	90166-0118	MM	700	TUBE 8 MM PA BLACK	
T50W7012	90166-0118	MM	500	TUBE 8 MM PA BLACK	
T50W7013	90166-0118	MM	400	TUBE 8 MM PA BLACK	
T50W7014	90166-0118	MM	500	TUBE 8 MM PA BLACK	

Pos	Part No	UN	Qty	Description	Page No

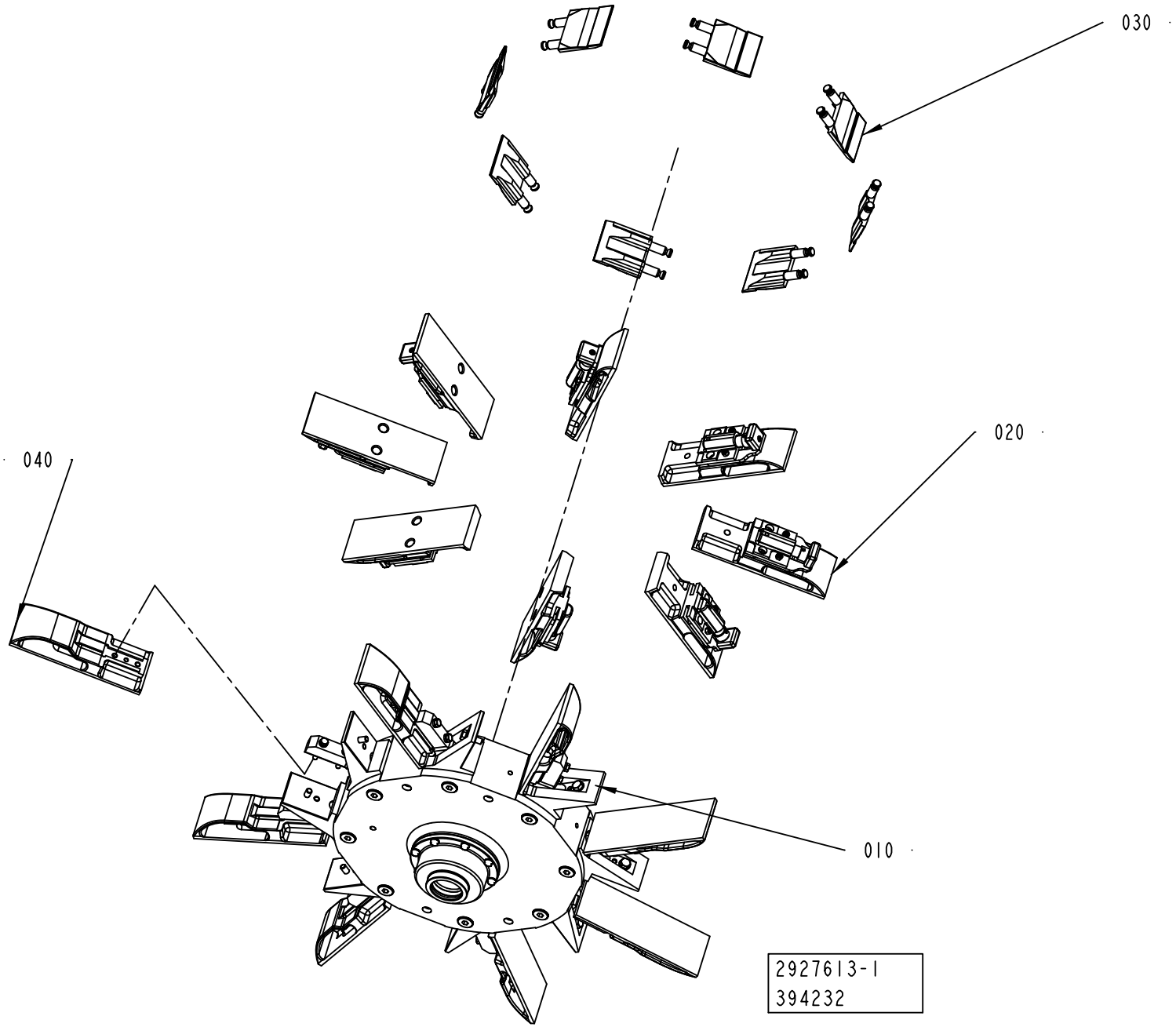
030
020
040
010
2927613-1
394232

ECM: 546712 - 20120402
Group number: 2927613-0100
Assembly Drawing: 2927613-1_1_AB

Pos	Part No	UN	Qty	Description	Page No
-					
010	2925961-0100		1	HUB	**1-73**
020	2925964-0100		1	FLAP	**1-75, 1-77, 1-79, 1-81**
030	2925965-0100		1	BOTTOM	**1-87, 1-89, 1-91, 1-93, 1-95**
040	3025636-0100		8	FLAP	**1-97, 1-99, 1-101, 1-103**

Pos	Part No	UN	Qty	Description	Page No

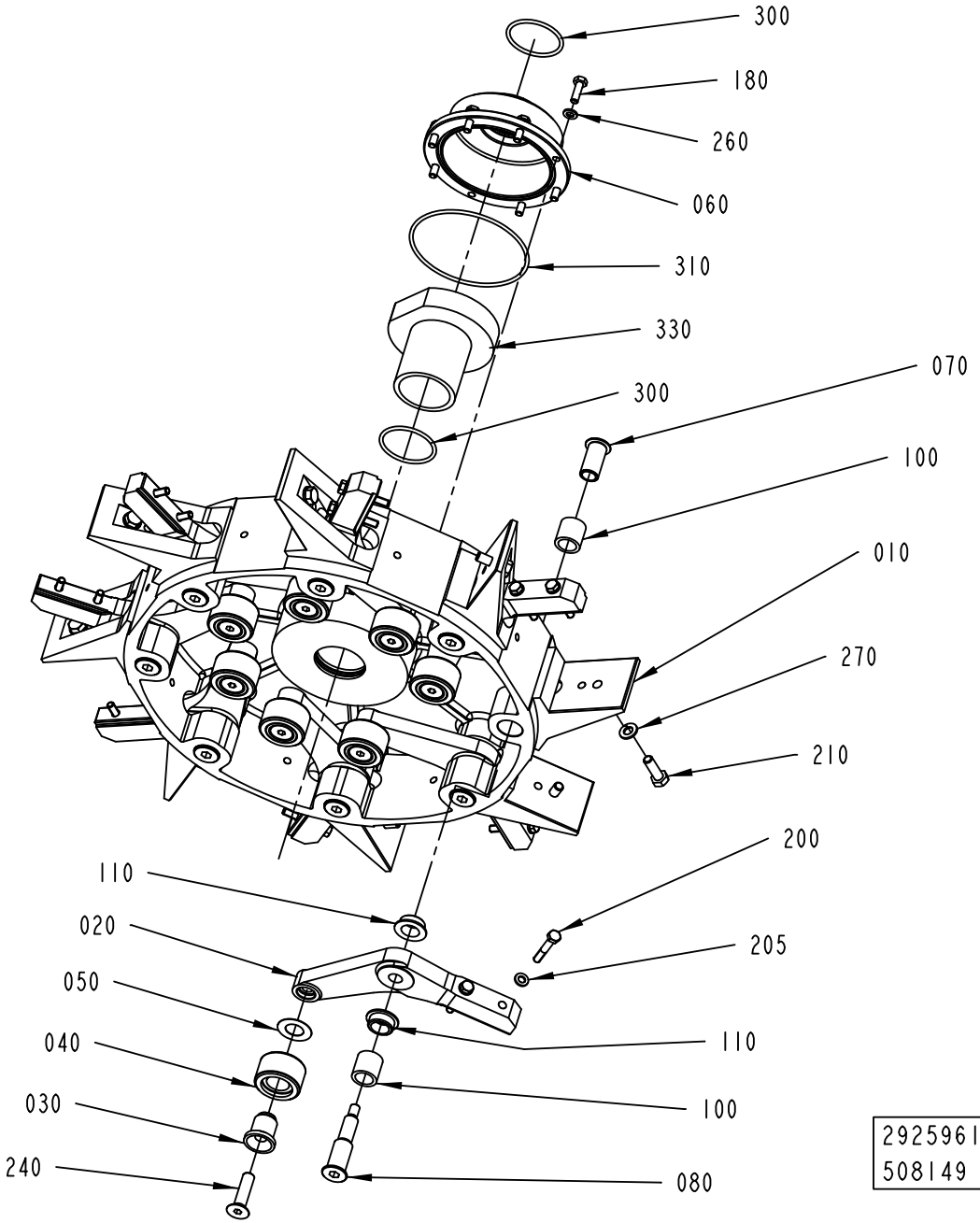
300
180
260
060
310
330
300
070
100
010
270
210
200
205
110
110
100
080
020
050
040
030
240
2925961-1
508149

ECM: 527814 - 20120401
Group number: 2925961-0100
Assembly Drawing: 2925961-1_1_AC

Pos	Part No	UN	Qty	Description	Page No
TBA 0500S, TBA 0500SQ, TBA 0500B, TBA 1000B, TBA 1000SQ, TBA 1000S, TPA 1000SQ, TPA 0500SQ, TPA 0750SQ					
010	2733999-0000		1	HUB	
200	312105-0378		16	SCREW, M6S ISO 4014 M6X40 A4 80	
205	315105-0153		16	WASHER PLAIN, 6,4X12X1,5 A4 BRB	
TBA 1500S					
010	2733999-0000		1	HUB	
200	312105-0376		16	SCREW, M6S ISO 4014 M6X35 A4 80	
205	315105-0153		16	WASHER PLAIN, 6,4X12X1,5 A4 BRB	
TBA 2000S					
010	2733999-0000		1	HUB	
200	2693200-0000		16	SCREW	
205	315115-0153		16	WASHER PLAIN, TBRB 6,4/12 H=3	
Common Parts					
020	1279559-0000		8	ARM	
030	1144312-0000		8	AXLE PIN	
040	1144335-0000		8	ROLLER	
050	1144354-0000		8	WASHER	
060	1144356-0000		1	COVER	
070	2774465-0000		8	SCREW BUSHING	
080	2774466-0000		8	SCREW HOLDER	
100	1144417-0000		16	BUSHING	
110	1282708-0000		16	BUSHING	
180	312105-0370		8	SCREW, M6S ISO 4017 M6X20 A4 80	
210	312105-0453		8	SCREW, M6S ISO 4017 M8X25 A4 80	
240	312155-0499		8	SCREW DIN 7991 MF6S M10X40 A4 70	
260	315105-0153		8	WASHER PLAIN, 6,4X12X1,5 A4 BRB	
270	315105-0165		8	WASHER PLAIN, 8,4X16X1,6 A4 BRB	
300	315202-0225		2	O-RING 44,2X3 MM	
310	315202-0311		1	O-RING 99,5X3 MM	
330	90459-5828		1	CLAMPING ELEMENT WITH SLEEVE, 45X54 MM	

Pos	Part No	UN	Qty	Description	Page No

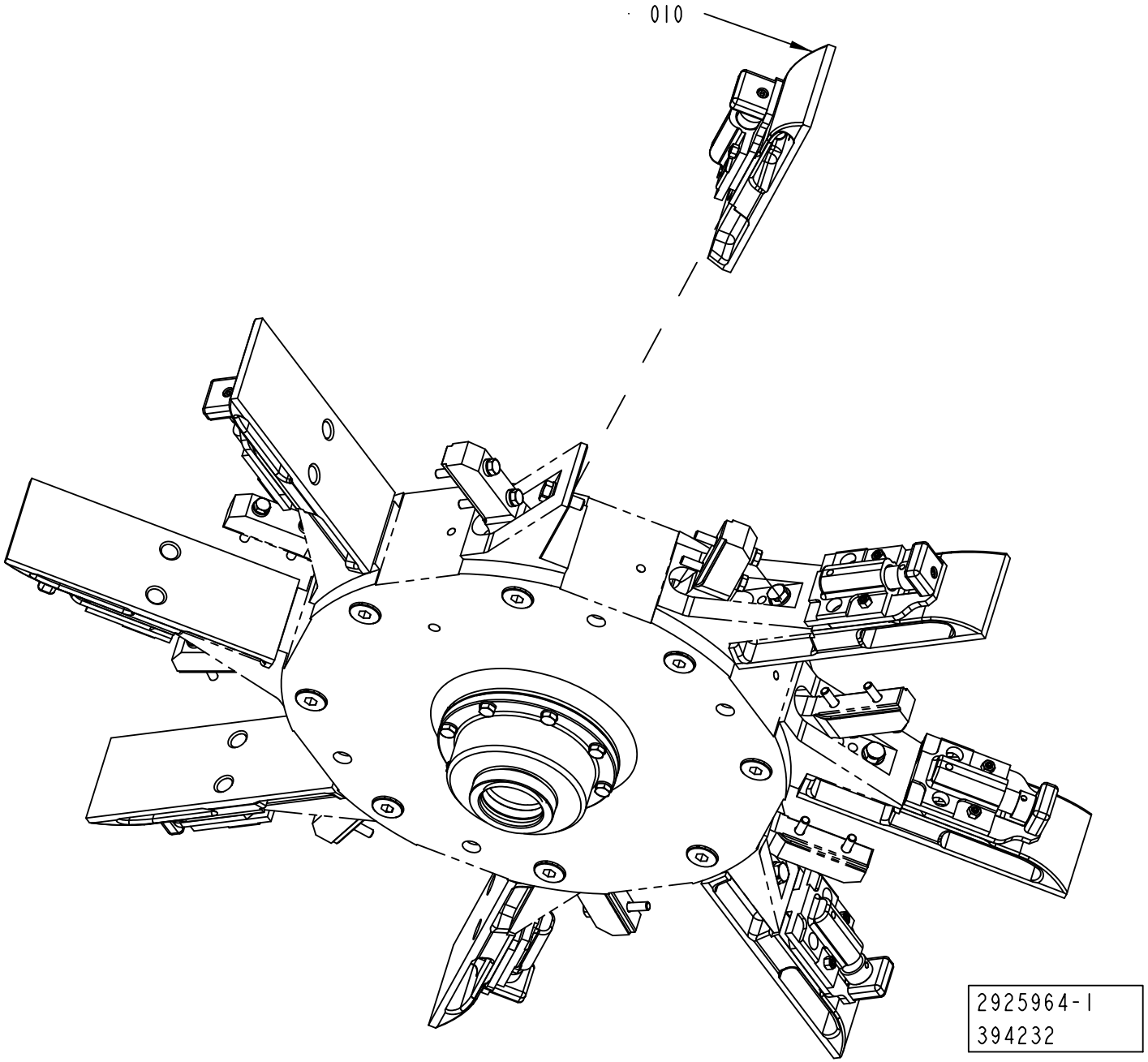
010
2925964-1
394232

ECM: 425766 - 20100401
Group number: 2925964-0100
Assembly Drawing: 2925964-1_1_AB

This list covers pages from 1-74 to 1-81

Pos	Part No	UN	Qty	Description	Page No
TBA 0500B, TBA 1000B NOMOLDEDCAP (See drawing on page: 1-74)					
010	2927548-0100		8	FLAP	**1-83, 1-85**
TBA 0500S (See drawing on page: 1-74)					
010	2984514-0000		8	FLAP	
TBA 0500SQ, TBA 1000SQ (See drawing on page: 1-74)					
010	2927548-0100		8	FLAP	**1-83, 1-85**
TBA 1000S (See drawing on page: 1-76)					
010	1144927-0000		8	FLAP	
040	2550211-0000		8	VOLUME BULGE	
110	312155-0287		16	SCREW DIN 7991 MF6S M4X8 A4 70	
TBA 1500S (See drawing on page: 1-78)					
010	1317555-0000		8	FLAP	
080	1317656-0000		8	INSERT	
120	312105-0289		16	SCREW, M6S ISO 4017 M4X10 A4 70	
130	315105-0136		16	WASHER PLAIN, 4,3X9X0,8 A4 BRB	
TBA 2000S (See drawing on page: 1-80)					
010	2566321-0000		8	FLAP	
050	2588327-0000		8	INSERT	
070	2693197-0000		16	INSERT	
120	312155-0287		16	SCREW DIN 7991 MF6S M4X8 A4 70	
TPA 0500SQ (See drawing on page: 1-74)					
010	2564347-0000		8	FLAP	
TPA 1000SQ, TPA 0750SQ (See drawing on page: 1-74)					
010	2927548-0100		8	FLAP	**1-83, 1-85**

Pos	Part No	UN	Qty	Description	Page No

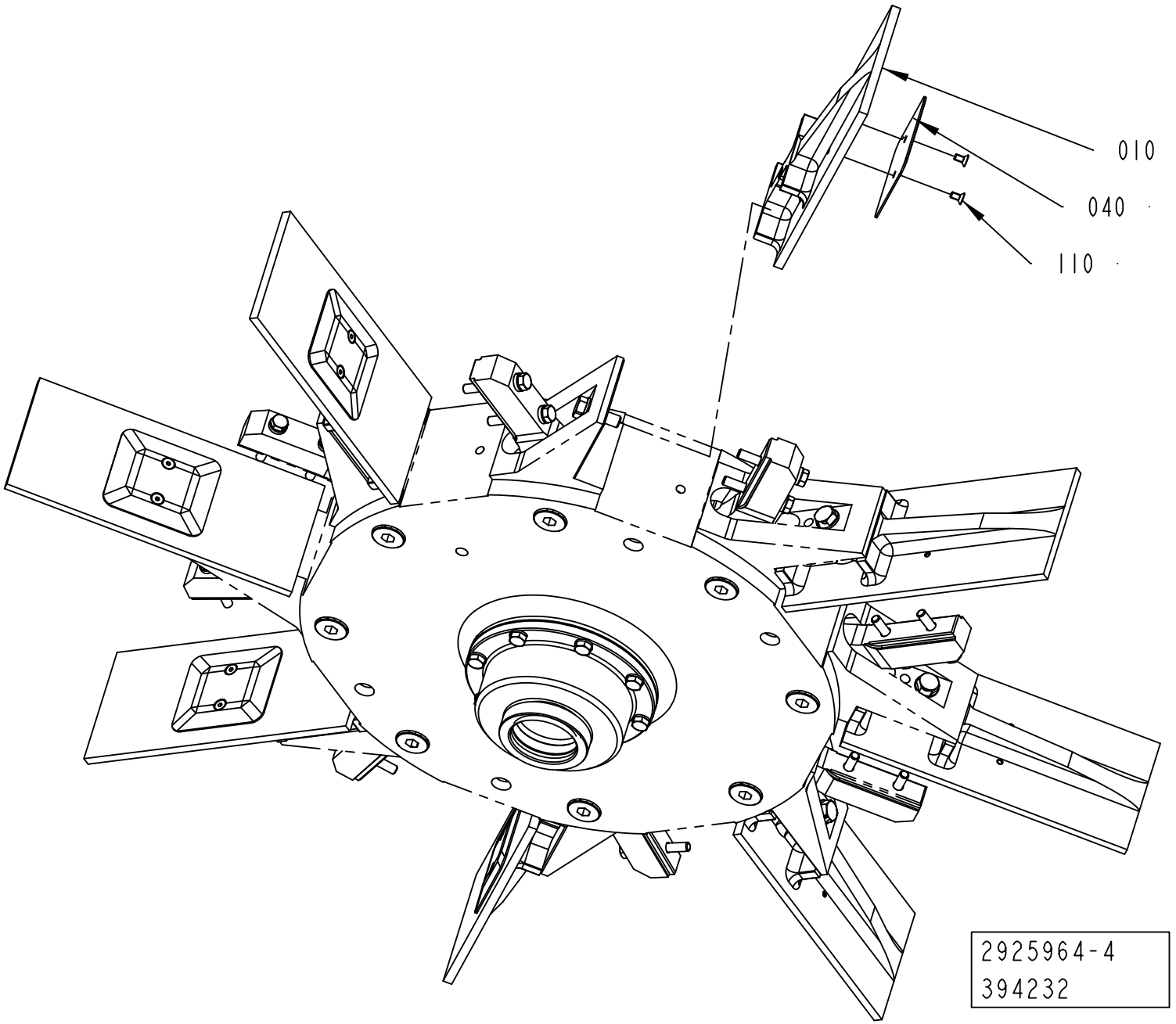
010
040
110
2925964-4
394232

ECM: 425766 - 20100401
Group number: 2925964-0100
Assembly Drawing: 2925964-4_1_AB

This list covers pages from 1-74 to 1-81

Pos	Part No	UN	Qty	Description	Page No
TBA 0500B, TBA 1000B NOMOLDEDCAP (See drawing on page: 1-74)					
010	2927548-0100		8	FLAP	**1-83, 1-85**
TBA 0500S (See drawing on page: 1-74)					
010	2984514-0000		8	FLAP	
TBA 0500SQ, TBA 1000SQ (See drawing on page: 1-74)					
010	2927548-0100		8	FLAP	**1-83, 1-85**
TBA 1000S (See drawing on page: 1-76)					
010	1144927-0000		8	FLAP	
040	2550211-0000		8	VOLUME BULGE	
110	312155-0287		16	SCREW DIN 7991 MF6S M4X8 A4 70	
TBA 1500S (See drawing on page: 1-78)					
010	1317555-0000		8	FLAP	
080	1317656-0000		8	INSERT	
120	312105-0289		16	SCREW, M6S ISO 4017 M4X10 A4 70	
130	315105-0136		16	WASHER PLAIN, 4,3X9X0,8 A4 BRB	
TBA 2000S (See drawing on page: 1-80)					
010	2566321-0000		8	FLAP	
050	2588327-0000		8	INSERT	
070	2693197-0000		16	INSERT	
120	312155-0287		16	SCREW DIN 7991 MF6S M4X8 A4 70	
TPA 0500SQ (See drawing on page: 1-74)					
010	2564347-0000		8	FLAP	
TPA 1000SQ, TPA 0750SQ (See drawing on page: 1-74)					
010	2927548-0100		8	FLAP	**1-83, 1-85**

Pos	Part No	UN	Qty	Description	Page No

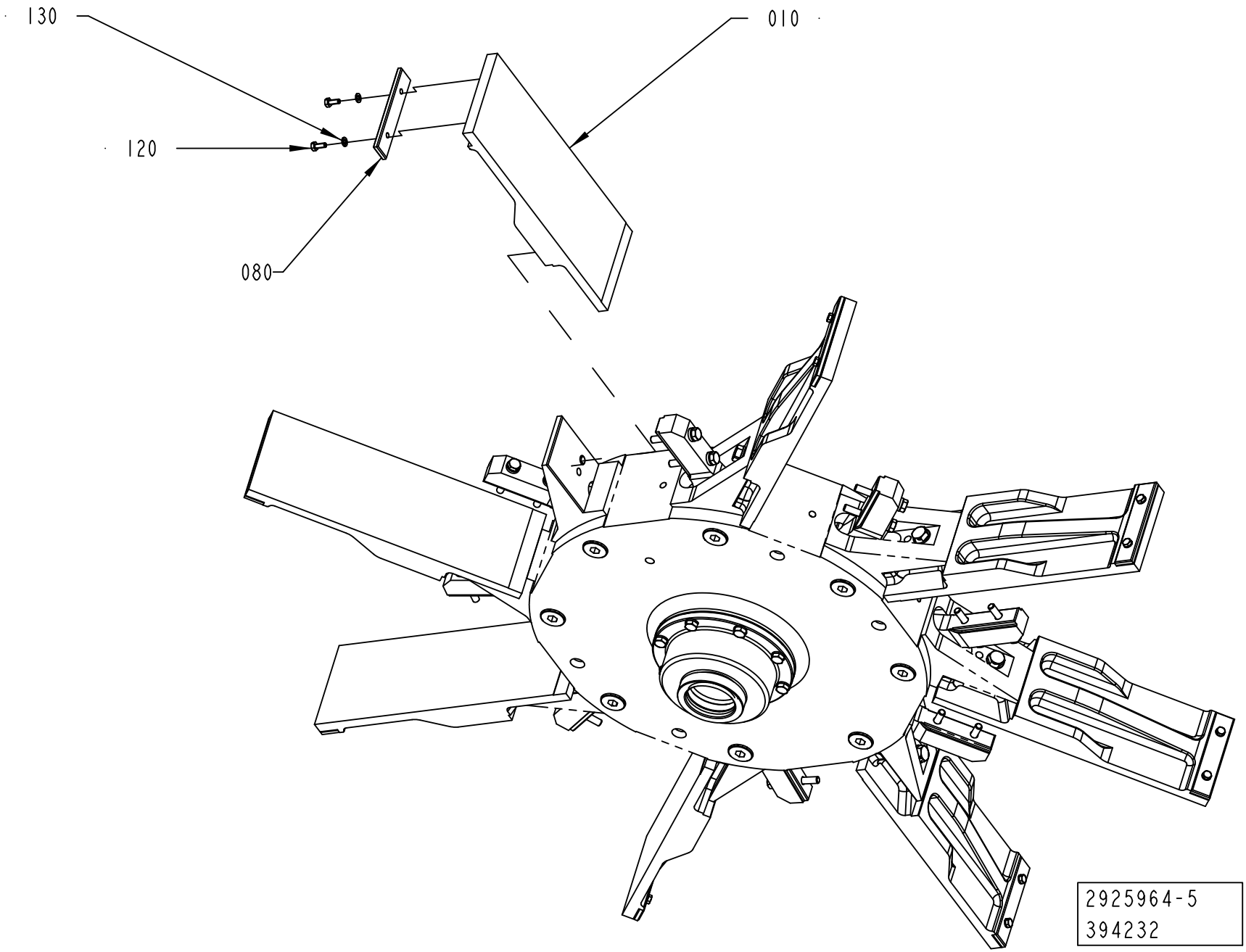
130
010
120
080
2925964-5
394232

ECM: 425766 - 20100401
Group number: 2925964-0100
Assembly Drawing: 2925964-5_1_AB

This list covers pages from 1-74 to 1-81

Pos	Part No	UN	Qty	Description	Page No
TBA 0500B, TBA 1000B NOMOLDEDCAP (See drawing on page: 1-74)					
010	2927548-0100		8	FLAP	**1-83, 1-85**
TBA 0500S (See drawing on page: 1-74)					
010	2984514-0000		8	FLAP	
TBA 0500SQ, TBA 1000SQ (See drawing on page: 1-74)					
010	2927548-0100		8	FLAP	**1-83, 1-85**
TBA 1000S (See drawing on page: 1-76)					
010	1144927-0000		8	FLAP	
040	2550211-0000		8	VOLUME BULGE	
110	312155-0287		16	SCREW DIN 7991 MF6S M4X8 A4 70	
TBA 1500S (See drawing on page: 1-78)					
010	1317555-0000		8	FLAP	
080	1317656-0000		8	INSERT	
120	312105-0289		16	SCREW, M6S ISO 4017 M4X10 A4 70	
130	315105-0136		16	WASHER PLAIN, 4,3X9X0,8 A4 BRB	
TBA 2000S (See drawing on page: 1-80)					
010	2566321-0000		8	FLAP	
050	2588327-0000		8	INSERT	
070	2693197-0000		16	INSERT	
120	312155-0287		16	SCREW DIN 7991 MF6S M4X8 A4 70	
TPA 0500SQ (See drawing on page: 1-74)					
010	2564347-0000		8	FLAP	
TPA 1000SQ, TPA 0750SQ (See drawing on page: 1-74)					
010	2927548-0100		8	FLAP	**1-83, 1-85**

Pos	Part No	UN	Qty	Description	Page No

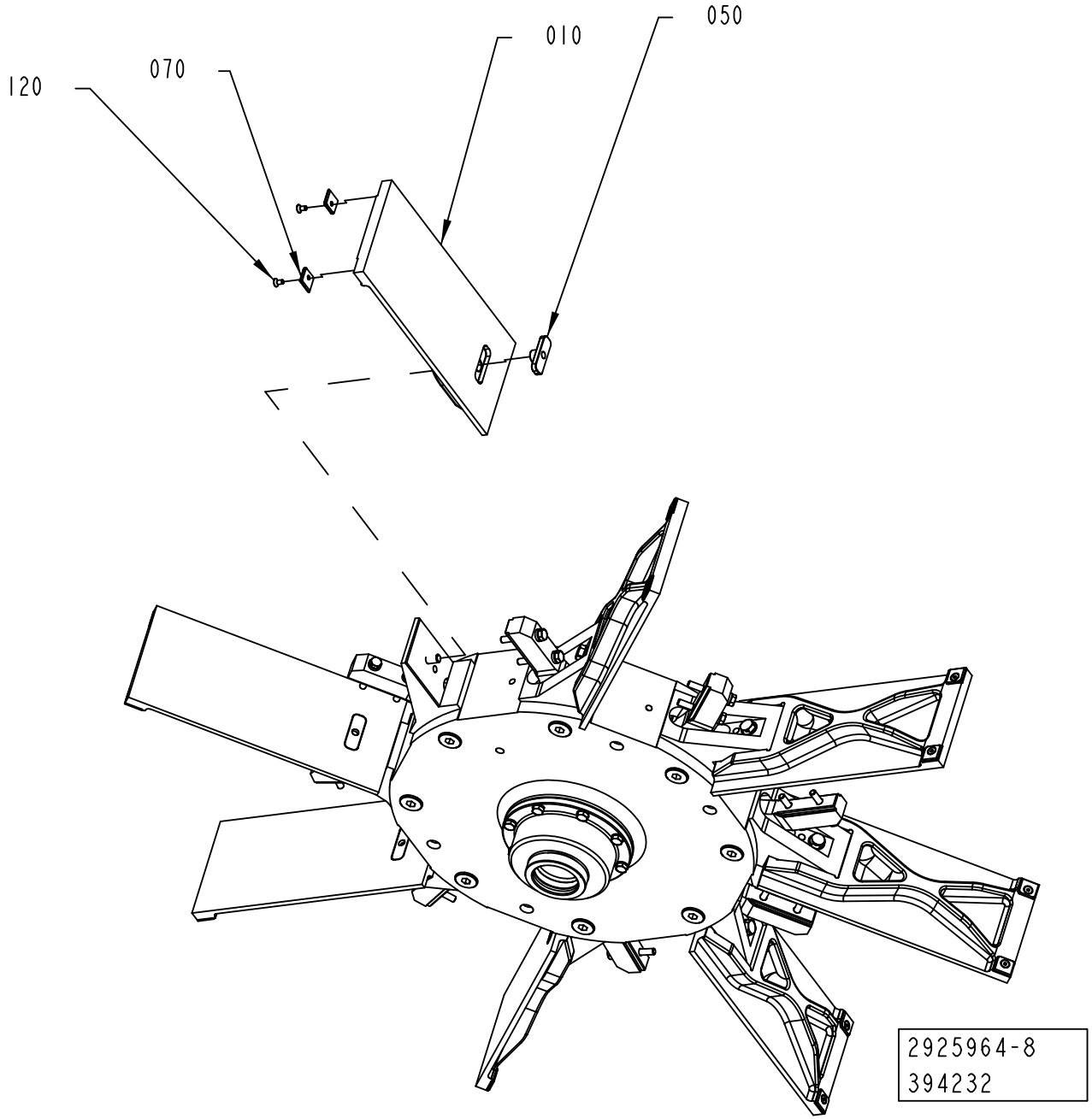
050
010
070
120
2925964-8
394232

ECM: 425766 - 20100401
Group number: 2925964-0100
Assembly Drawing: 2925964-8_1_AA

This list covers pages from 1-74 to 1-81

Pos	Part No	UN	Qty	Description	Page No
TBA 0500B, TBA 1000B NOMOLDEDCAP (See drawing on page: 1-74)					
010	2927548-0100		8	FLAP	**1-83, 1-85**
TBA 0500S (See drawing on page: 1-74)					
010	2984514-0000		8	FLAP	
TBA 0500SQ, TBA 1000SQ (See drawing on page: 1-74)					
010	2927548-0100		8	FLAP	**1-83, 1-85**
TBA 1000S (See drawing on page: 1-76)					
010	1144927-0000		8	FLAP	
040	2550211-0000		8	VOLUME BULGE	
110	312155-0287		16	SCREW DIN 7991 MF6S M4X8 A4 70	
TBA 1500S (See drawing on page: 1-78)					
010	1317555-0000		8	FLAP	
080	1317656-0000		8	INSERT	
120	312105-0289		16	SCREW, M6S ISO 4017 M4X10 A4 70	
130	315105-0136		16	WASHER PLAIN, 4,3X9X0,8 A4 BRB	
TBA 2000S (See drawing on page: 1-80)					
010	2566321-0000		8	FLAP	
050	2588327-0000		8	INSERT	
070	2693197-0000		16	INSERT	
120	312155-0287		16	SCREW DIN 7991 MF6S M4X8 A4 70	
TPA 0500SQ (See drawing on page: 1-74)					
010	2564347-0000		8	FLAP	
TPA 1000SQ, TPA 0750SQ (See drawing on page: 1-74)					
010	2927548-0100		8	FLAP	**1-83, 1-85**

Pos	Part No	UN	Qty	Description	Page No

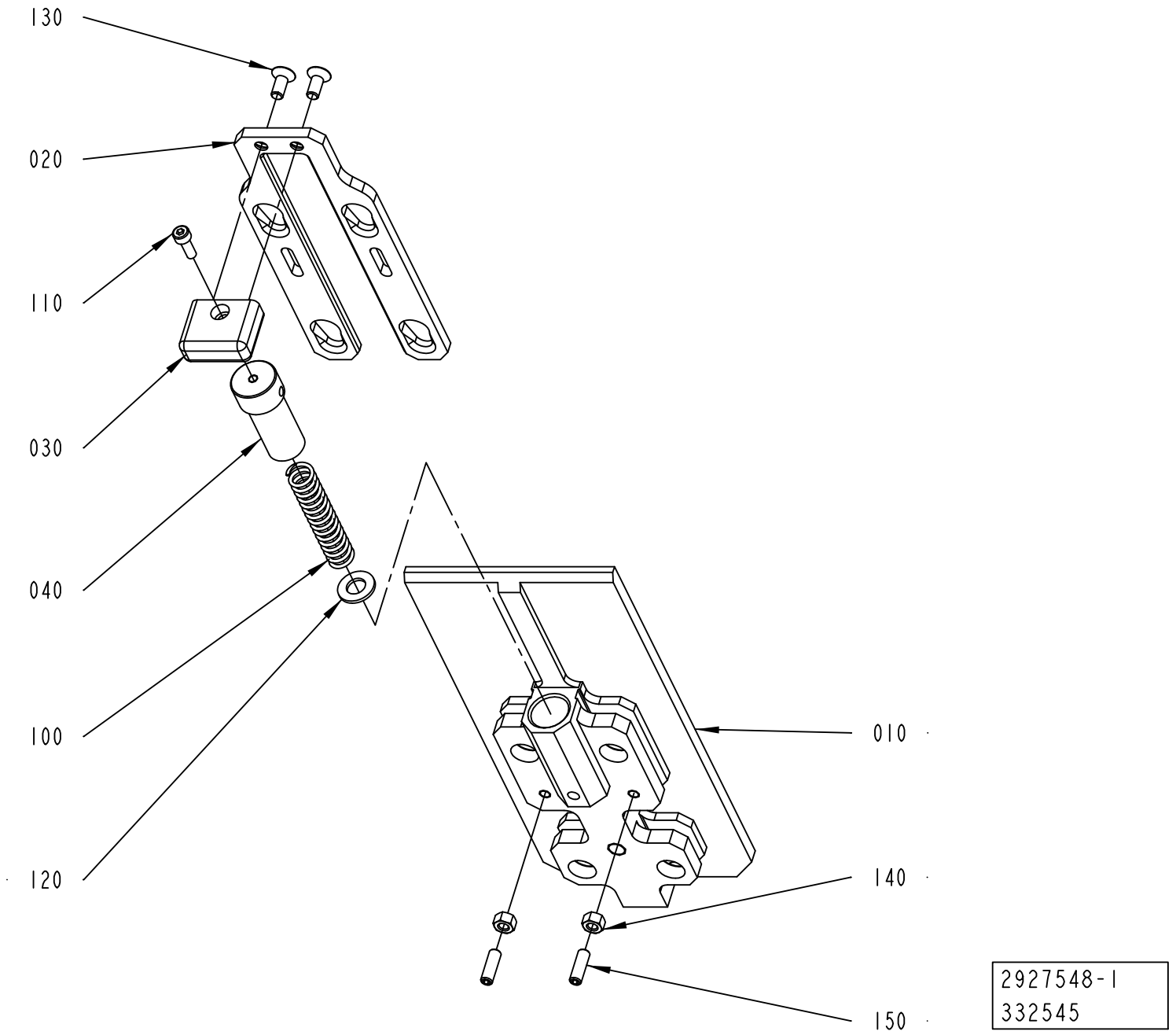
130
020
110
030
040
100
120
010
140
150
2927548-1
332545

ECM: 450448 - 20101001
Group number: 2927548-0100
Assembly Drawing: 2927548-1_1_AA

This list covers pages from 1-82 to 1-85

Pos	Part No	UN	Qty	Description	Page No
TBA 0500B, TBA 1000B NOMOLDEDCAP (See drawing on page: 1-82)					
010	2520170-0000		1	FLAP	
020	2520168-0000		1	SLIDE	
110	312115-0291		1	SCREW ISO4762 M4X12 A4 80	
TBA 0500SQ, TBA 1000SQ (See drawing on page: 1-82)					
010	2869538-0000		1	FLAP	
020	2871044-0000		1	SLIDE	
090	312115-0291		1	SCREW ISO4762 M4X12 A4 80	
TPA 1000SQ, TPA 0750SQ (See drawing on page: 1-84)					
010	2658242-0000		1	FLAP	
020	2658241-0000		1	SLIDE	
110	312115-0291		1	SCREW ISO4762 M4X12 A4 80	
Common Parts					
030	2526563-0000		1	HANDLE	
040	2526567-0000		1	CYLINDER	
100	90459-0969		1	COMP. SPRING, 22430, 1,6X11,6X58,5	
120	315105-0165		1	WASHER PLAIN, 8,4X16X1,6 A4 BRB	
130	312155-0327		2	SCREW DIN 7991 MF6S M5X12 A4 70	
140	312605-0314		2	HEXAGON NUT, M6M M5 A280	
150	312318-0329		2	SET SCREW, CUP END ISO4029 M5X16 A4	

Pos	Part No	UN	Qty	Description	Page No

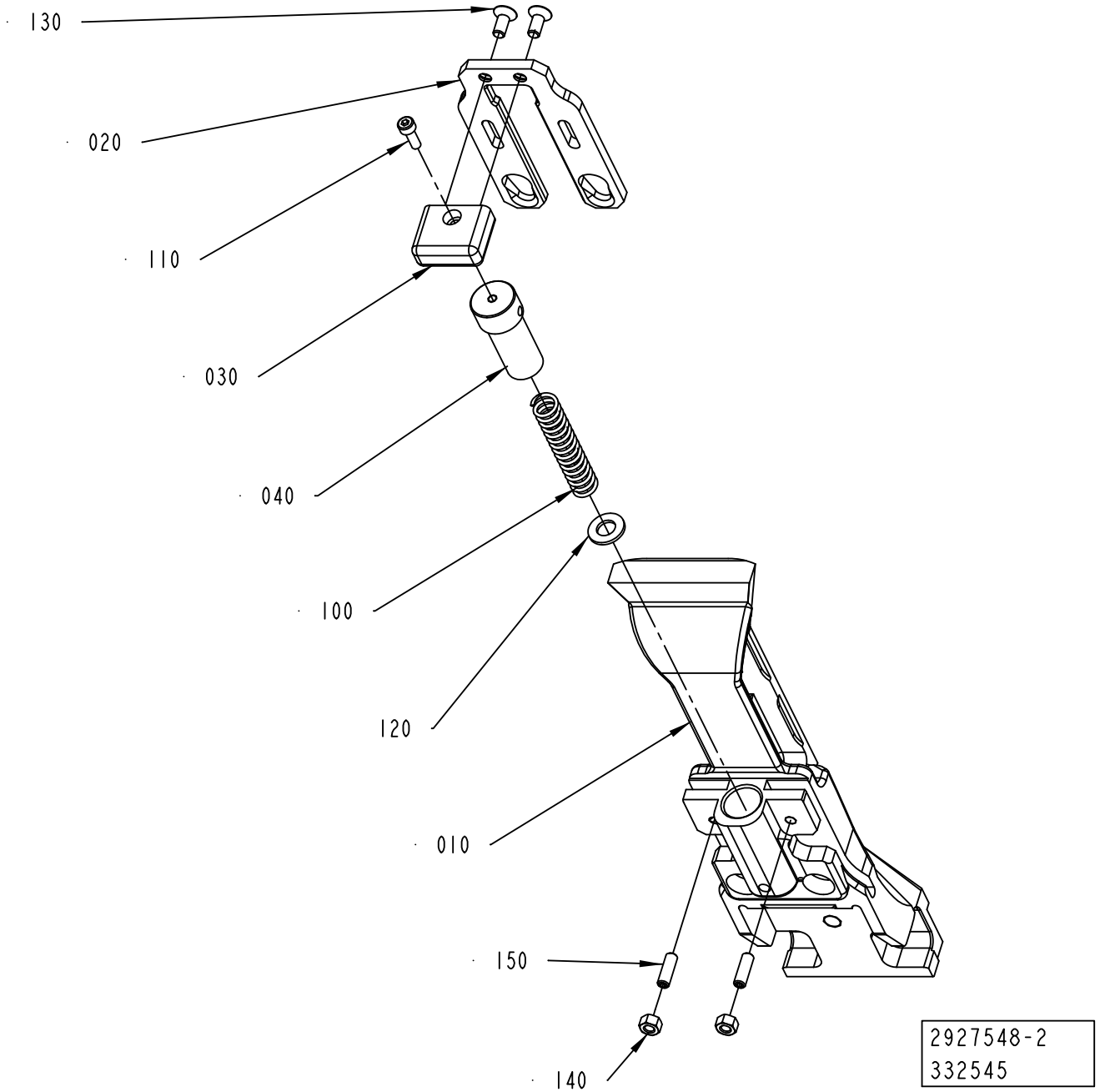
130
020
110
030
040
100
120
010
150
140
2927548-2
332545

ECM: 450448 - 20101001
Group number: 2927548-0100
Assembly Drawing: 2927548-2_1_AA

This list covers pages from 1-82 to 1-85

Pos	Part No	UN	Qty	Description	Page No
TBA 0500B, TBA 1000B NOMOLDEDCAP (See drawing on page: 1-82)					
010	2520170-0000		1	FLAP	
020	2520168-0000		1	SLIDE	
110	312115-0291		1	SCREW ISO4762 M4X12 A4 80	
TBA 0500SQ, TBA 1000SQ (See drawing on page: 1-82)					
010	2869538-0000		1	FLAP	
020	2871044-0000		1	SLIDE	
090	312115-0291		1	SCREW ISO4762 M4X12 A4 80	
TPA 1000SQ, TPA 0750SQ (See drawing on page: 1-84)					
010	2658242-0000		1	FLAP	
020	2658241-0000		1	SLIDE	
110	312115-0291		1	SCREW ISO4762 M4X12 A4 80	
Common Parts					
030	2526563-0000		1	HANDLE	
040	2526567-0000		1	CYLINDER	
100	90459-0969		1	COMP. SPRING, 22430, 1,6X11,6X58,5	
120	315105-0165		1	WASHER PLAIN, 8,4X16X1,6 A4 BRB	
130	312155-0327		2	SCREW DIN 7991 MF6S M5X12 A4 70	
140	312605-0314		2	HEXAGON NUT, M6M M5 A280	
150	312318-0329		2	SET SCREW, CUP END ISO4029 M5X16 A4	

Pos	Part No	UN	Qty	Description	Page No

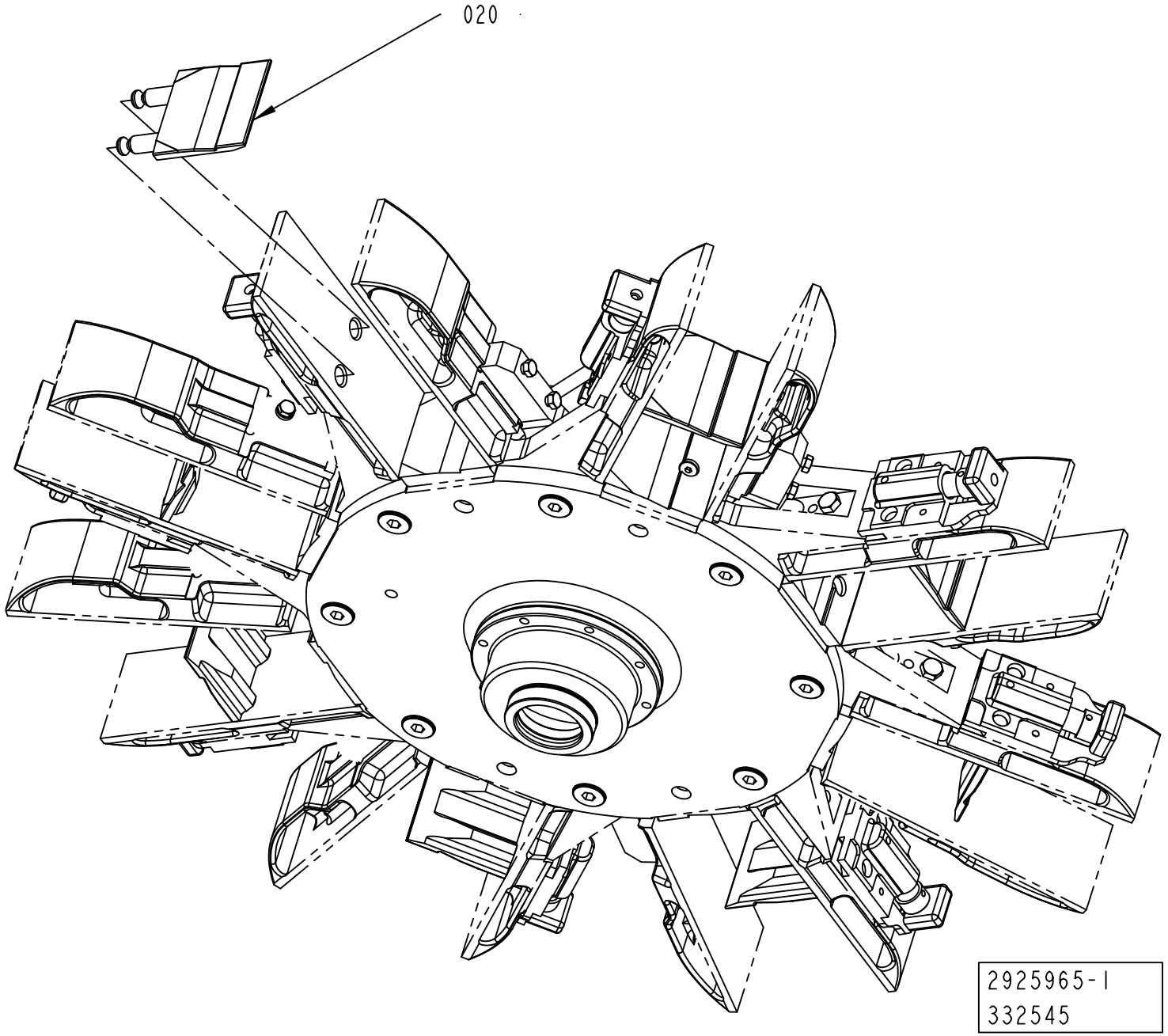
020
2925965-1
332545

ECM: 555280 - 20120701
Group number: 2925965-0100
Assembly Drawing: 2925965-1_1_AA

This list covers pages from 1-86 to 1-95

Pos	Part No	UN	Qty	Description	Page No
TPA 1000SQ (See drawing on page: 1-92)					
010	2802612-0000		8	BOTTOM	
020	2658240-0000		8	BOTTOM	
030	2658240-0000		8	BOTTOM	
100	312155-0379		8	SCREW DIN 7991 MF6S M6X45 A4 70	
TBA 0500B (See drawing on page: 1-88)					
020	2895569-0000		8	BOTTOM PLATE	
TBA 0500S (See drawing on page: 1-94)					
010	2984513-0000		8	BOTTOM	
100	312105-0368		8	SCREW, M6S ISO 4017 M6X16 A4 80	
110	315105-0153		8	WASHER PLAIN, 6,4X12X1,5 A4 BRB	
TBA 0500SQ (See drawing on page: 1-86)					
020	2871043-0000		8	BOTTOM	
TBA 1000B NOMOLDEDCAP (See drawing on page: 1-88)					
020	2895569-0000		8	BOTTOM PLATE	
TBA 1000S NOMOLDEDCAP (See drawing on page: 1-94)					
010	2818555-0000		8	BOTTOM	
100	312155-0370		8	SCREW DIN 7991 MF6S M6X20 A4 70	
TBA 1000SQ (See drawing on page: 1-94)					
010	2795264-0000		8	BOTTOM	
100	312155-0370		8	SCREW DIN 7991 MF6S M6X20 A4 70	
TBA 1500S (See drawing on page: 1-94)					
010	2929030-0000		8	BOTTOM	
100	312155-0376		8	SCREW DIN 7991 MF6S M6X35 A4 70	
TBA 2000S (See drawing on page: 1-94)					
010	2960430-0000		8	BOTTOM	
100	312155-0376		8	SCREW DIN 7991 MF6S M6X35 A4 70	
TPA 0500SQ (See drawing on page: 1-94)					
010	2602614-0000		8	BOTTOM	
100	312105-0368		8	SCREW, M6S ISO 4017 M6X16 A4 80	
110	315105-0153		8	WASHER PLAIN, 6,4X12X1,5 A4 BRB	
TPA 0750SQ (See drawing on page: 1-90)					
020	2663373-0000		8	BOTTOM	
030	2658239-0000		8	BOTTOM	

Pos	Part No	UN	Qty	Description	Page No

TBA 0500 B

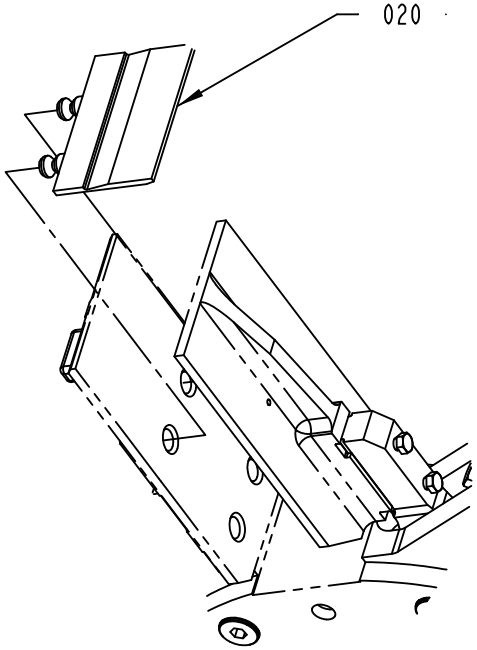

TBA 1000 B

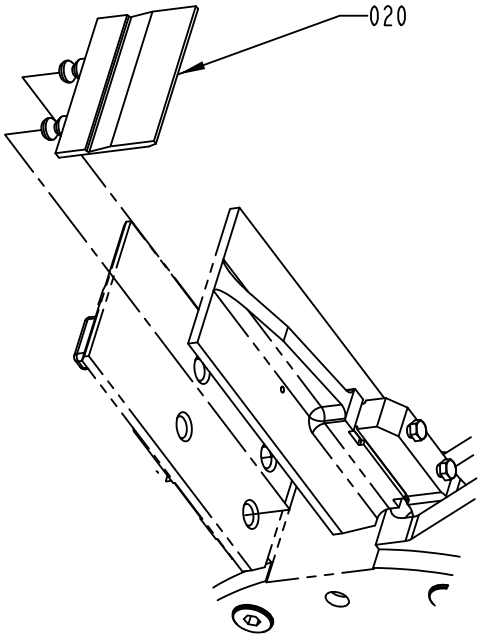

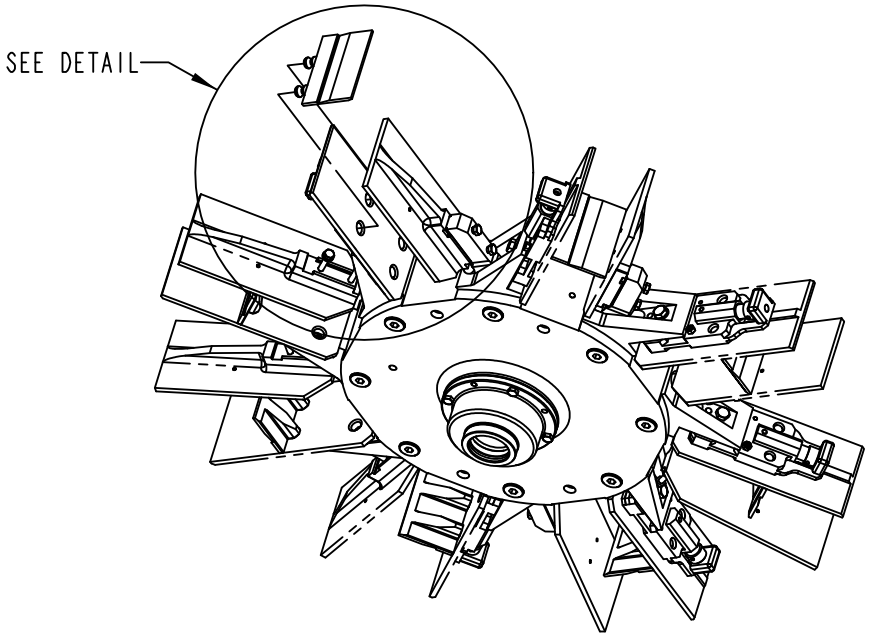

2925965-2
332545

ECM: 555280 - 20120701
Group number: 2925965-0100
Assembly Drawing: 2925965-2_1_AA

This list covers pages from 1-86 to 1-95

Pos	Part No	UN	Qty	Description	Page No
TPA 1000SQ (See drawing on page: 1-92)					
010	2802612-0000		8	BOTTOM	
020	2658240-0000		8	BOTTOM	
030	2658240-0000		8	BOTTOM	
100	312155-0379		8	SCREW DIN 7991 MF6S M6X45 A4 70	
TBA 0500B (See drawing on page: 1-88)					
020	2895569-0000		8	BOTTOM PLATE	
TBA 0500S (See drawing on page: 1-94)					
010	2984513-0000		8	BOTTOM	
100	312105-0368		8	SCREW, M6S ISO 4017 M6X16 A4 80	
110	315105-0153		8	WASHER PLAIN, 6,4X12X1,5 A4 BRB	
TBA 0500SQ (See drawing on page: 1-86)					
020	2871043-0000		8	BOTTOM	
TBA 1000B NOMOLDEDCAP (See drawing on page: 1-88)					
020	2895569-0000		8	BOTTOM PLATE	
TBA 1000S NOMOLDEDCAP (See drawing on page: 1-94)					
010	2818555-0000		8	BOTTOM	
100	312155-0370		8	SCREW DIN 7991 MF6S M6X20 A4 70	
TBA 1000SQ (See drawing on page: 1-94)					
010	2795264-0000		8	BOTTOM	
100	312155-0370		8	SCREW DIN 7991 MF6S M6X20 A4 70	
TBA 1500S (See drawing on page: 1-94)					
010	2929030-0000		8	BOTTOM	
100	312155-0376		8	SCREW DIN 7991 MF6S M6X35 A4 70	
TBA 2000S (See drawing on page: 1-94)					
010	2960430-0000		8	BOTTOM	
100	312155-0376		8	SCREW DIN 7991 MF6S M6X35 A4 70	
TPA 0500SQ (See drawing on page: 1-94)					
010	2602614-0000		8	BOTTOM	
100	312105-0368		8	SCREW, M6S ISO 4017 M6X16 A4 80	
110	315105-0153		8	WASHER PLAIN, 6,4X12X1,5 A4 BRB	
TPA 0750SQ (See drawing on page: 1-90)					
020	2663373-0000		8	BOTTOM	
030	2658239-0000		8	BOTTOM	

Pos	Part No	UN	Qty	Description	Page No

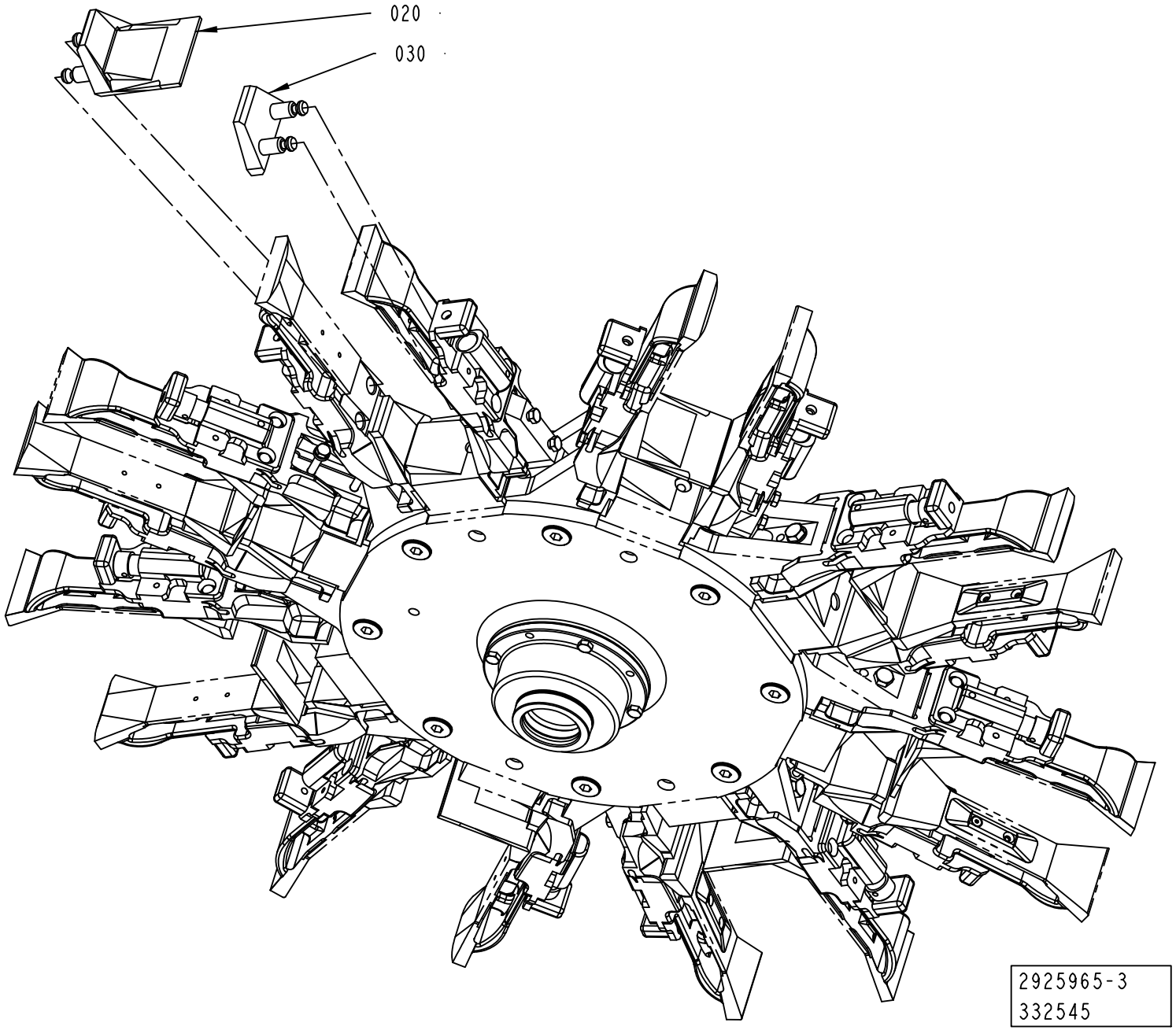
020
030
2925965-3
332545

ECM: 555280 - 20120701
Group number: 2925965-0100
Assembly Drawing: 2925965-3_1_AA

This list covers pages from 1-86 to 1-95

Pos	Part No	UN	Qty	Description	Page No
TPA 1000SQ (See drawing on page: 1-92)					
010	2802612-0000		8	BOTTOM	
020	2658240-0000		8	BOTTOM	
030	2658240-0000		8	BOTTOM	
100	312155-0379		8	SCREW DIN 7991 MF6S M6X45 A4 70	
TBA 0500B (See drawing on page: 1-88)					
020	2895569-0000		8	BOTTOM PLATE	
TBA 0500S (See drawing on page: 1-94)					
010	2984513-0000		8	BOTTOM	
100	312105-0368		8	SCREW, M6S ISO 4017 M6X16 A4 80	
110	315105-0153		8	WASHER PLAIN, 6,4X12X1,5 A4 BRB	
TBA 0500SQ (See drawing on page: 1-86)					
020	2871043-0000		8	BOTTOM	
TBA 1000B NOMOLDEDCAP (See drawing on page: 1-88)					
020	2895569-0000		8	BOTTOM PLATE	
TBA 1000S NOMOLDEDCAP (See drawing on page: 1-94)					
010	2818555-0000		8	BOTTOM	
100	312155-0370		8	SCREW DIN 7991 MF6S M6X20 A4 70	
TBA 1000SQ (See drawing on page: 1-94)					
010	2795264-0000		8	BOTTOM	
100	312155-0370		8	SCREW DIN 7991 MF6S M6X20 A4 70	
TBA 1500S (See drawing on page: 1-94)					
010	2929030-0000		8	BOTTOM	
100	312155-0376		8	SCREW DIN 7991 MF6S M6X35 A4 70	
TBA 2000S (See drawing on page: 1-94)					
010	2960430-0000		8	BOTTOM	
100	312155-0376		8	SCREW DIN 7991 MF6S M6X35 A4 70	
TPA 0500SQ (See drawing on page: 1-94)					
010	2602614-0000		8	BOTTOM	
100	312105-0368		8	SCREW, M6S ISO 4017 M6X16 A4 80	
110	315105-0153		8	WASHER PLAIN, 6,4X12X1,5 A4 BRB	
TPA 0750SQ (See drawing on page: 1-90)					
020	2663373-0000		8	BOTTOM	
030	2658239-0000		8	BOTTOM	

Pos	Part No	UN	Qty	Description	Page No

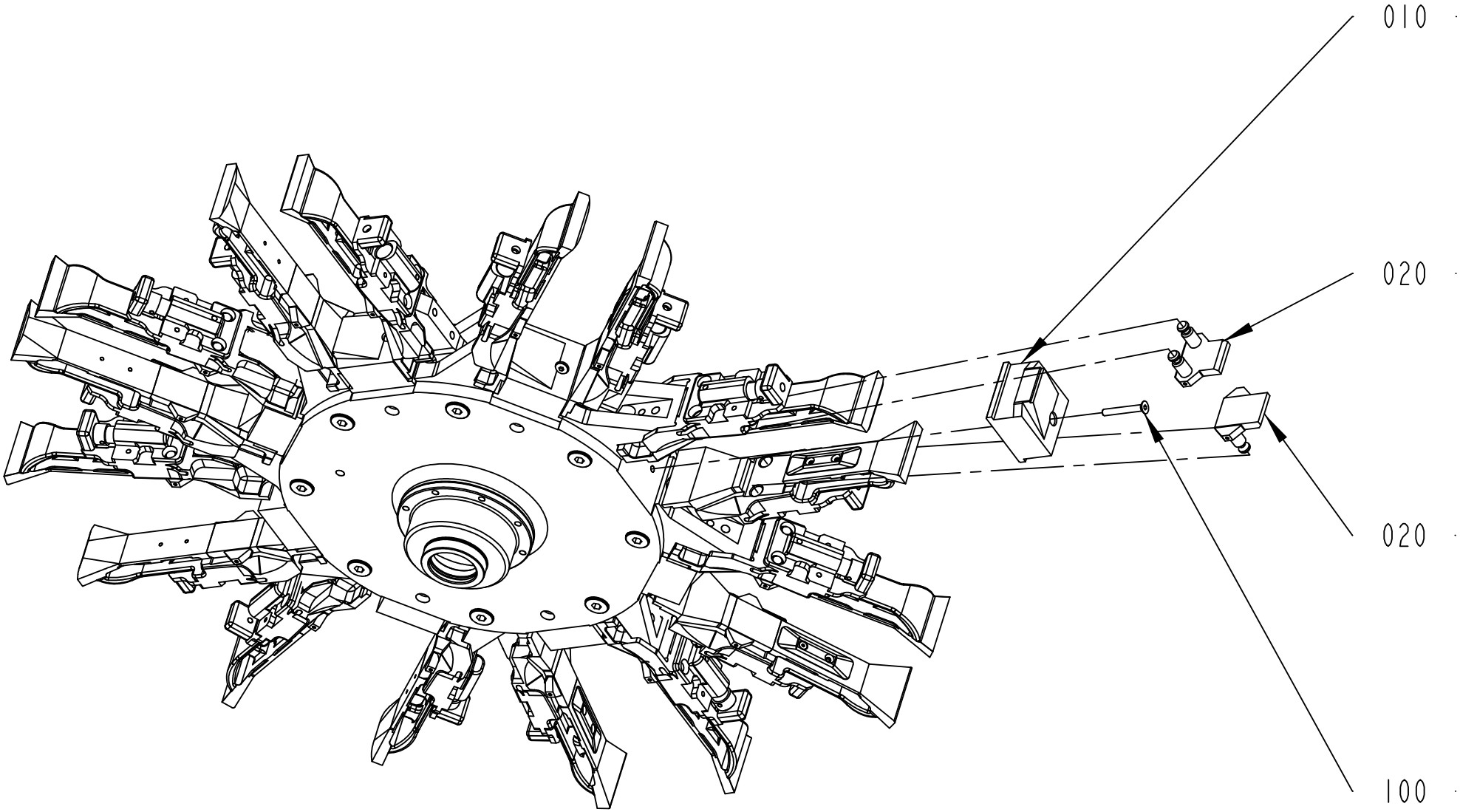

2925965-6
332545

ECM: 555280 - 20120701
Group number: 2925965-0100
Assembly Drawing: 2925965-6_1_AA

This list covers pages from 1-86 to 1-95

Pos	Part No	UN	Qty	Description	Page No
TPA 1000SQ (See drawing on page: 1-92)					
010	2802612-0000		8	BOTTOM	
020	2658240-0000		8	BOTTOM	
030	2658240-0000		8	BOTTOM	
100	312155-0379		8	SCREW DIN 7991 MF6S M6X45 A4 70	
TBA 0500B (See drawing on page: 1-88)					
020	2895569-0000		8	BOTTOM PLATE	
TBA 0500S (See drawing on page: 1-94)					
010	2984513-0000		8	BOTTOM	
100	312105-0368		8	SCREW, M6S ISO 4017 M6X16 A4 80	
110	315105-0153		8	WASHER PLAIN, 6,4X12X1,5 A4 BRB	
TBA 0500SQ (See drawing on page: 1-86)					
020	2871043-0000		8	BOTTOM	
TBA 1000B NOMOLDEDCAP (See drawing on page: 1-88)					
020	2895569-0000		8	BOTTOM PLATE	
TBA 1000S NOMOLDEDCAP (See drawing on page: 1-94)					
010	2818555-0000		8	BOTTOM	
100	312155-0370		8	SCREW DIN 7991 MF6S M6X20 A4 70	
TBA 1000SQ (See drawing on page: 1-94)					
010	2795264-0000		8	BOTTOM	
100	312155-0370		8	SCREW DIN 7991 MF6S M6X20 A4 70	
TBA 1500S (See drawing on page: 1-94)					
010	2929030-0000		8	BOTTOM	
100	312155-0376		8	SCREW DIN 7991 MF6S M6X35 A4 70	
TBA 2000S (See drawing on page: 1-94)					
010	2960430-0000		8	BOTTOM	
100	312155-0376		8	SCREW DIN 7991 MF6S M6X35 A4 70	
TPA 0500SQ (See drawing on page: 1-94)					
010	2602614-0000		8	BOTTOM	
100	312105-0368		8	SCREW, M6S ISO 4017 M6X16 A4 80	
110	315105-0153		8	WASHER PLAIN, 6,4X12X1,5 A4 BRB	
TPA 0750SQ (See drawing on page: 1-90)					
020	2663373-0000		8	BOTTOM	
030	2658239-0000		8	BOTTOM	

Pos	Part No	UN	Qty	Description	Page No

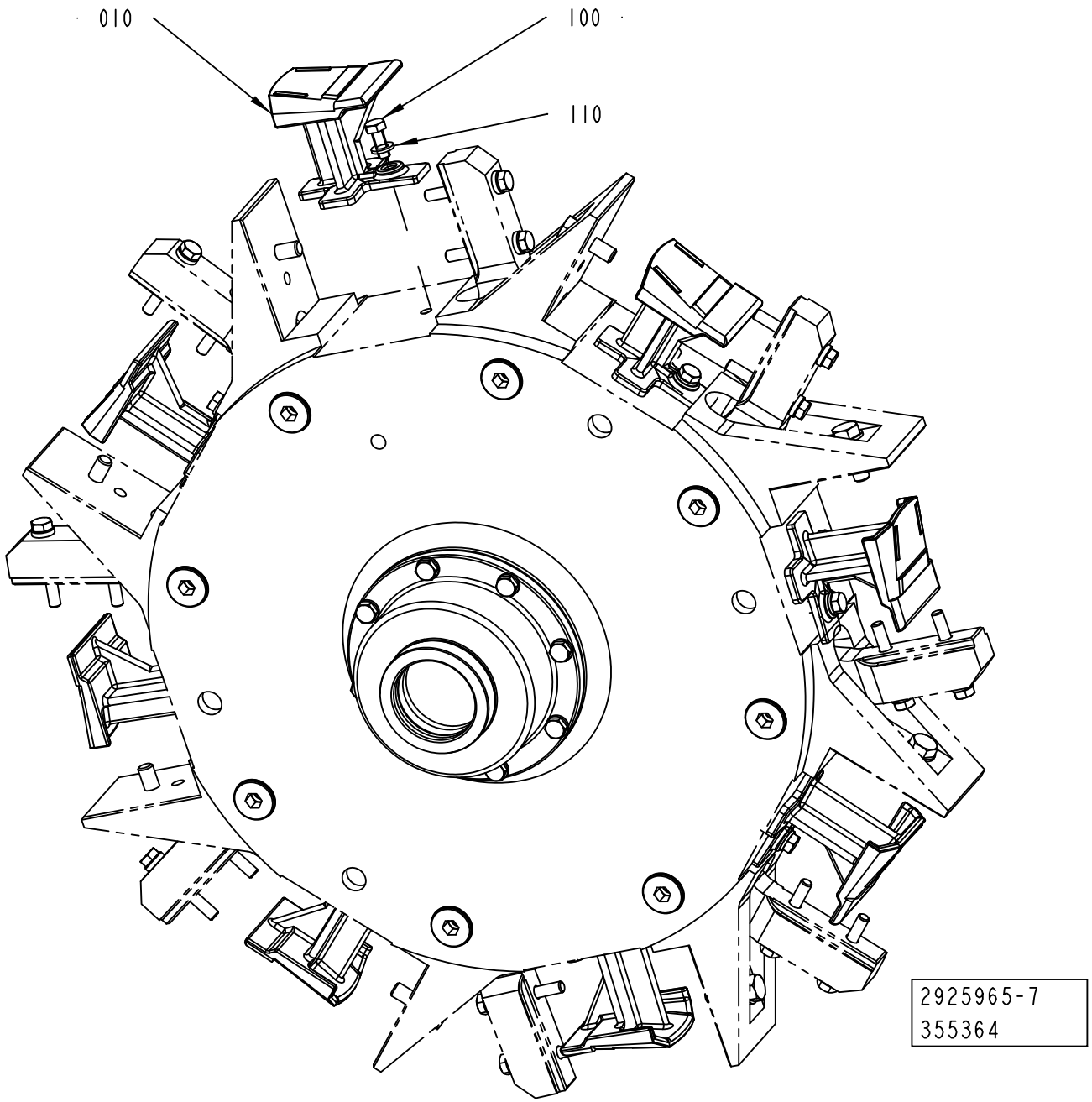
010
100
110
2925965-7
355364

ECM: 555280 - 20120701
Group number: 2925965-0100
Assembly Drawing: 2925965-7_1_AA

This list covers pages from 1-86 to 1-95

Pos	Part No	UN	Qty	Description	Page No
TPA 1000SQ (See drawing on page: 1-92)					
010	2802612-0000		8	BOTTOM	
020	2658240-0000		8	BOTTOM	
030	2658240-0000		8	BOTTOM	
100	312155-0379		8	SCREW DIN 7991 MF6S M6X45 A4 70	
TBA 0500B (See drawing on page: 1-88)					
020	2895569-0000		8	BOTTOM PLATE	
TBA 0500S (See drawing on page: 1-94)					
010	2984513-0000		8	BOTTOM	
100	312105-0368		8	SCREW, M6S ISO 4017 M6X16 A4 80	
110	315105-0153		8	WASHER PLAIN, 6,4X12X1,5 A4 BRB	
TBA 0500SQ (See drawing on page: 1-86)					
020	2871043-0000		8	BOTTOM	
TBA 1000B NOMOLDEDCAP (See drawing on page: 1-88)					
020	2895569-0000		8	BOTTOM PLATE	
TBA 1000S NOMOLDEDCAP (See drawing on page: 1-94)					
010	2818555-0000		8	BOTTOM	
100	312155-0370		8	SCREW DIN 7991 MF6S M6X20 A4 70	
TBA 1000SQ (See drawing on page: 1-94)					
010	2795264-0000		8	BOTTOM	
100	312155-0370		8	SCREW DIN 7991 MF6S M6X20 A4 70	
TBA 1500S (See drawing on page: 1-94)					
010	2929030-0000		8	BOTTOM	
100	312155-0376		8	SCREW DIN 7991 MF6S M6X35 A4 70	
TBA 2000S (See drawing on page: 1-94)					
010	2960430-0000		8	BOTTOM	
100	312155-0376		8	SCREW DIN 7991 MF6S M6X35 A4 70	
TPA 0500SQ (See drawing on page: 1-94)					
010	2602614-0000		8	BOTTOM	
100	312105-0368		8	SCREW, M6S ISO 4017 M6X16 A4 80	
110	315105-0153		8	WASHER PLAIN, 6,4X12X1,5 A4 BRB	
TPA 0750SQ (See drawing on page: 1-90)					
020	2663373-0000		8	BOTTOM	
030	2658239-0000		8	BOTTOM	

Pos	Part No	UN	Qty	Description	Page No

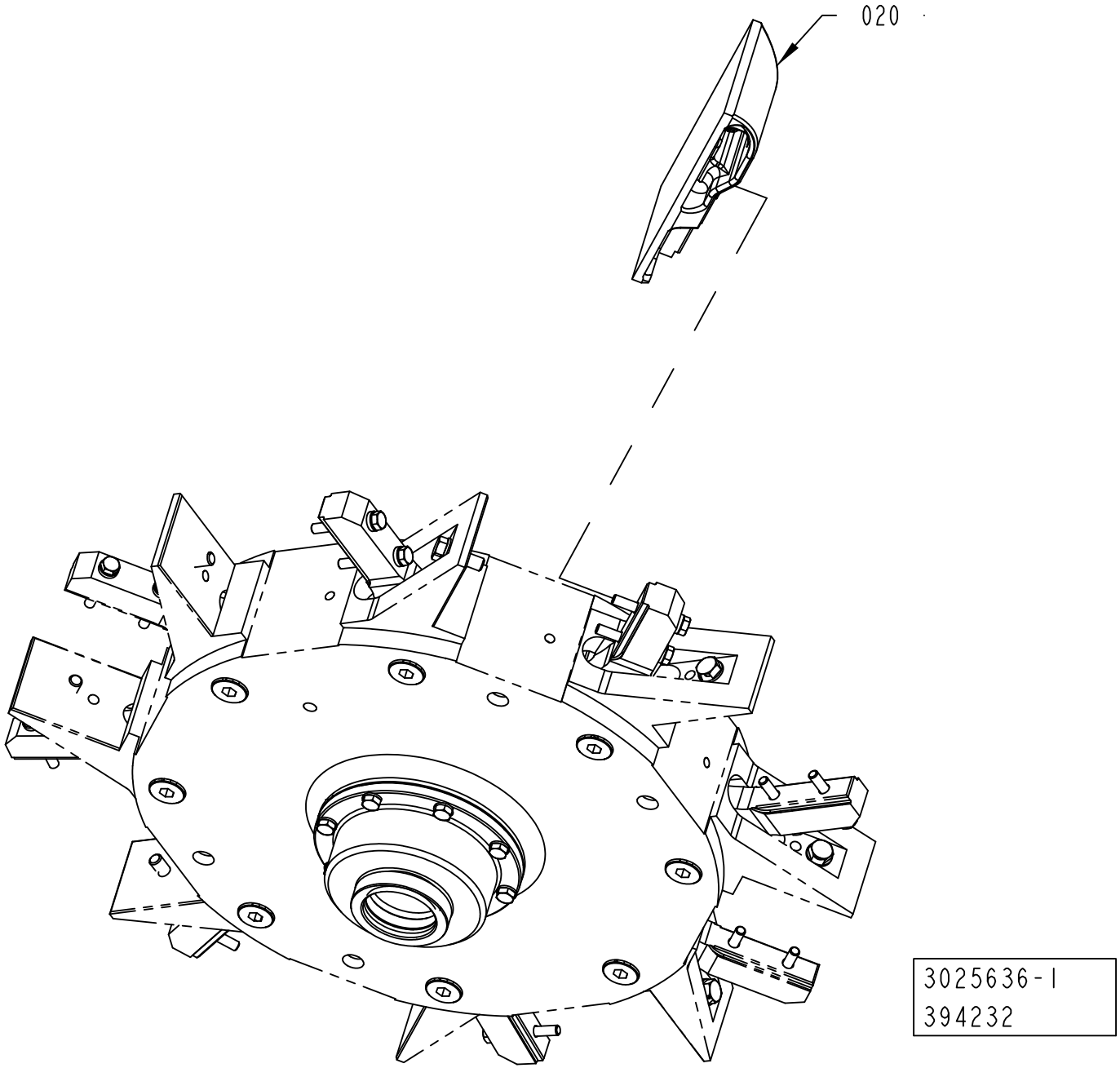
020
3025636-1
394232

Pos	Part No	UN	Qty	Description	Page No
TBA 0500B, TBA 1000B NOMOLDEDCAP (See drawing on page: 1-96)					
020	1260704-0000		1	FLAP	
TBA 0500S (See drawing on page: 1-100)					
020	1499142-0000		1	FLAP	
040	1524035-0000		1	VOLUME BULGE	
110	312155-0289		2	SCREW DIN 7991 MF6S M4X10 A4 70	
TBA 0500SQ, TBA 1000SQ (See drawing on page: 1-96)					
020	1487739-0000		1	FLAP	
TBA 1000S (See drawing on page: 1-96)					
020	1144926-0000		1	FLAP	
TBA 1500S (See drawing on page: 1-102)					
020	1317554-0000		1	FLAP	
080	1317656-0000		1	INSERT	
120	312105-0289		2	SCREW, M6S ISO 4017 M4X10 A4 70	
130	315105-0136		2	WASHER PLAIN, 4,3X9X0,8 A4 BRB	
TBA 2000S (See drawing on page: 1-98)					
020	2566323-0000		1	FLAP	
060	2638180-0000		2	INSERT	
070	2693197-0000		2	INSERT	
120	312155-0287		2	SCREW DIN 7991 MF6S M4X8 A4 70	
TPA 0500SQ (See drawing on page: 1-96)					
020	1549844-0000		1	FLAP	
TPA 1000SQ, TPA 0750SQ (See drawing on page: 1-96)					
020	2927549-0100		1	FLAP	**1-105**

Pos	Part No	UN	Qty	Description	Page No

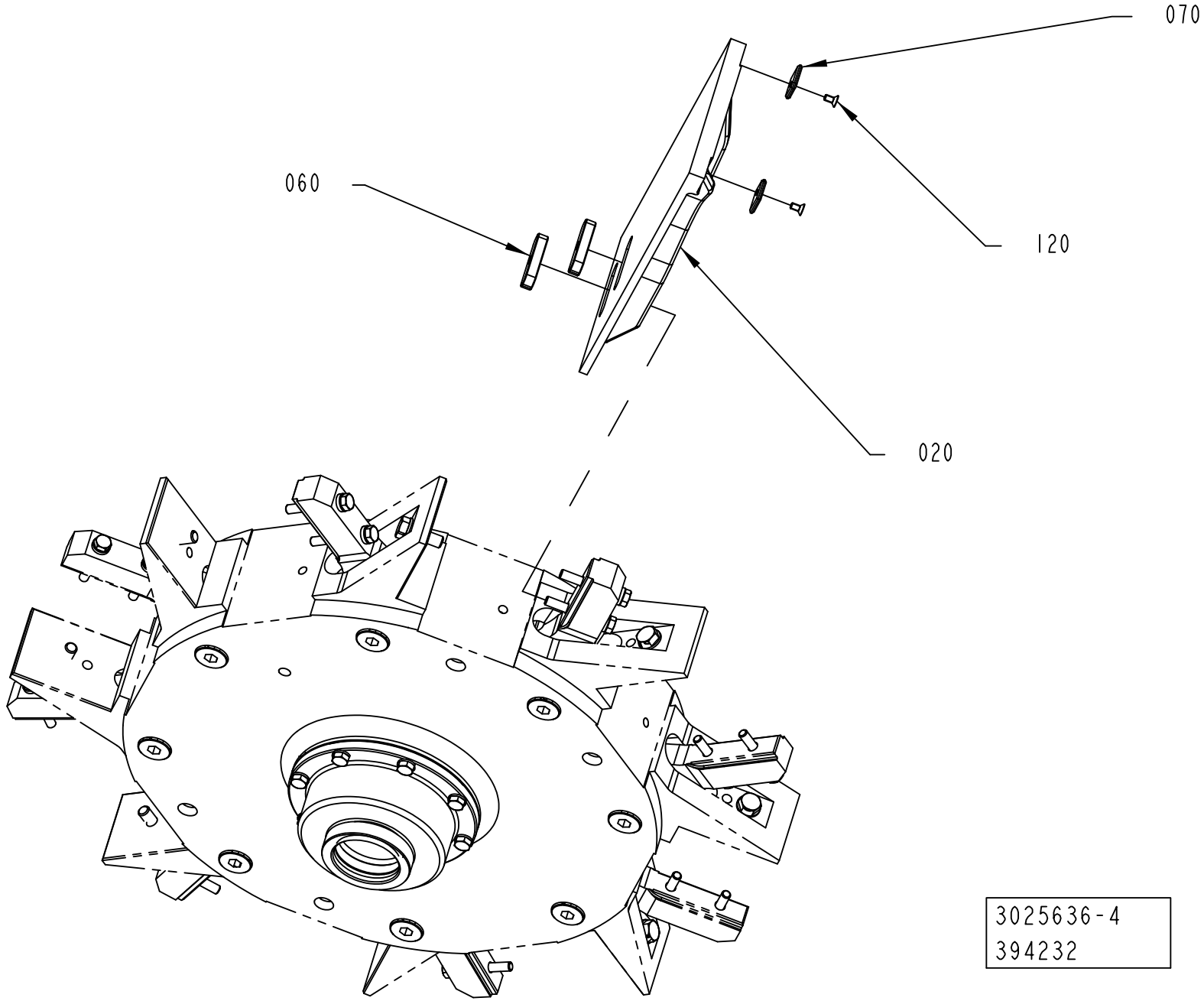
070
060
120
020
3025636-4
394232

Pos	Part No	UN	Qty	Description	Page No
TBA 0500B, TBA 1000B NOMOLDEDCAP (See drawing on page: 1-96)					
020	1260704-0000		1	FLAP	
TBA 0500S (See drawing on page: 1-100)					
020	1499142-0000		1	FLAP	
040	1524035-0000		1	VOLUME BULGE	
110	312155-0289		2	SCREW DIN 7991 MF6S M4X10 A4 70	
TBA 0500SQ, TBA 1000SQ (See drawing on page: 1-96)					
020	1487739-0000		1	FLAP	
TBA 1000S (See drawing on page: 1-96)					
020	1144926-0000		1	FLAP	
TBA 1500S (See drawing on page: 1-102)					
020	1317554-0000		1	FLAP	
080	1317656-0000		1	INSERT	
120	312105-0289		2	SCREW, M6S ISO 4017 M4X10 A4 70	
130	315105-0136		2	WASHER PLAIN, 4,3X9X0,8 A4 BRB	
TBA 2000S (See drawing on page: 1-98)					
020	2566323-0000		1	FLAP	
060	2638180-0000		2	INSERT	
070	2693197-0000		2	INSERT	
120	312155-0287		2	SCREW DIN 7991 MF6S M4X8 A4 70	
TPA 0500SQ (See drawing on page: 1-96)					
020	1549844-0000		1	FLAP	
TPA 1000SQ, TPA 0750SQ (See drawing on page: 1-96)					
020	2927549-0100		1	FLAP	**1-105**

Pos	Part No	UN	Qty	Description	Page No

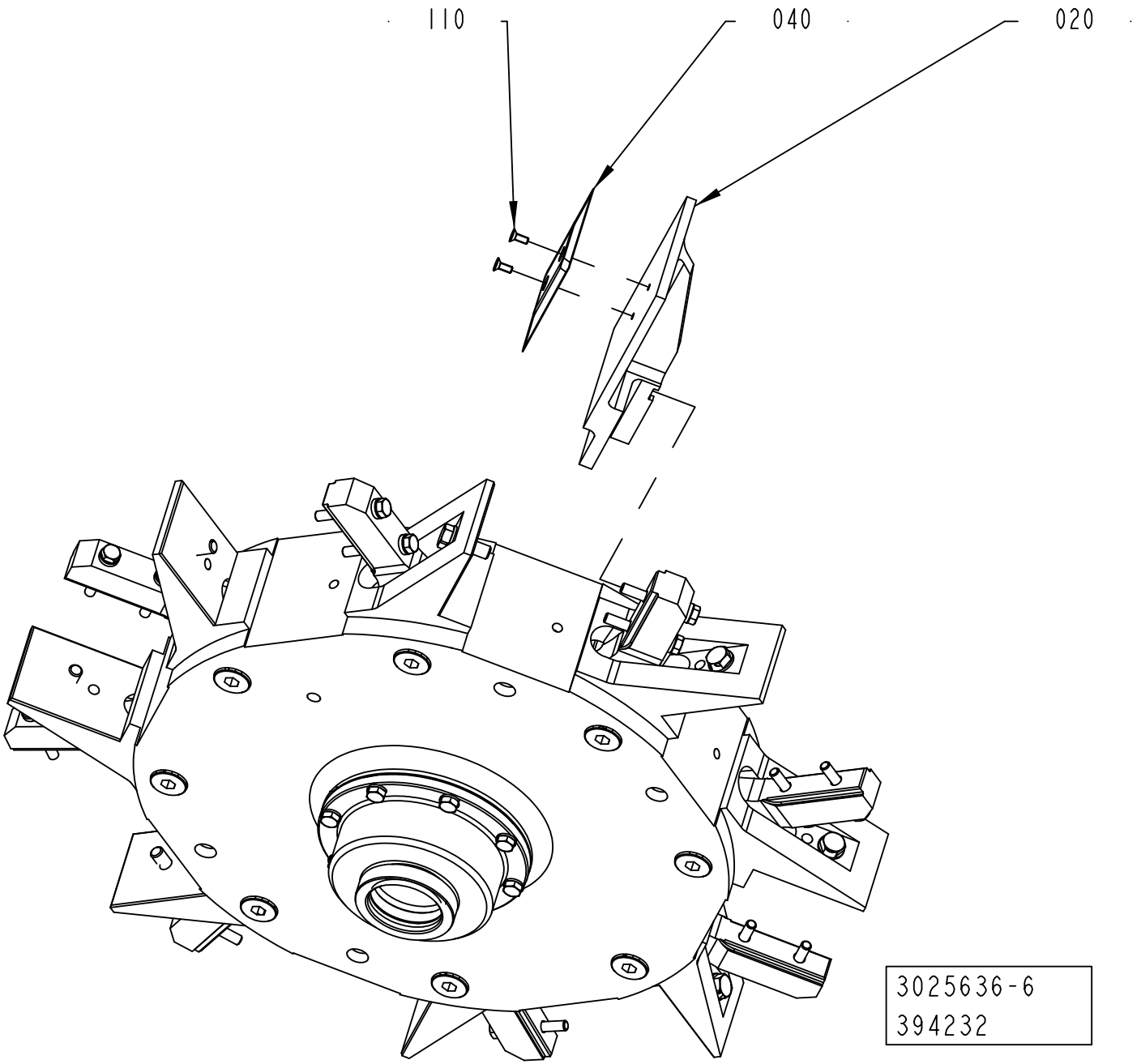
110
040
020
3025636-6
394232

Pos	Part No	UN	Qty	Description	Page No
TBA 0500B, TBA 1000B NOMOLDEDCAP (See drawing on page: 1-96)					
020	1260704-0000		1	FLAP	
TBA 0500S (See drawing on page: 1-100)					
020	1499142-0000		1	FLAP	
040	1524035-0000		1	VOLUME BULGE	
110	312155-0289		2	SCREW DIN 7991 MF6S M4X10 A4 70	
TBA 0500SQ, TBA 1000SQ (See drawing on page: 1-96)					
020	1487739-0000		1	FLAP	
TBA 1000S (See drawing on page: 1-96)					
020	1144926-0000		1	FLAP	
TBA 1500S (See drawing on page: 1-102)					
020	1317554-0000		1	FLAP	
080	1317656-0000		1	INSERT	
120	312105-0289		2	SCREW, M6S ISO 4017 M4X10 A4 70	
130	315105-0136		2	WASHER PLAIN, 4,3X9X0,8 A4 BRB	
TBA 2000S (See drawing on page: 1-98)					
020	2566323-0000		1	FLAP	
060	2638180-0000		2	INSERT	
070	2693197-0000		2	INSERT	
120	312155-0287		2	SCREW DIN 7991 MF6S M4X8 A4 70	
TPA 0500SQ (See drawing on page: 1-96)					
020	1549844-0000		1	FLAP	
TPA 1000SQ, TPA 0750SQ (See drawing on page: 1-96)					
020	2927549-0100		1	FLAP	**1-105**

Pos	Part No	UN	Qty	Description	Page No

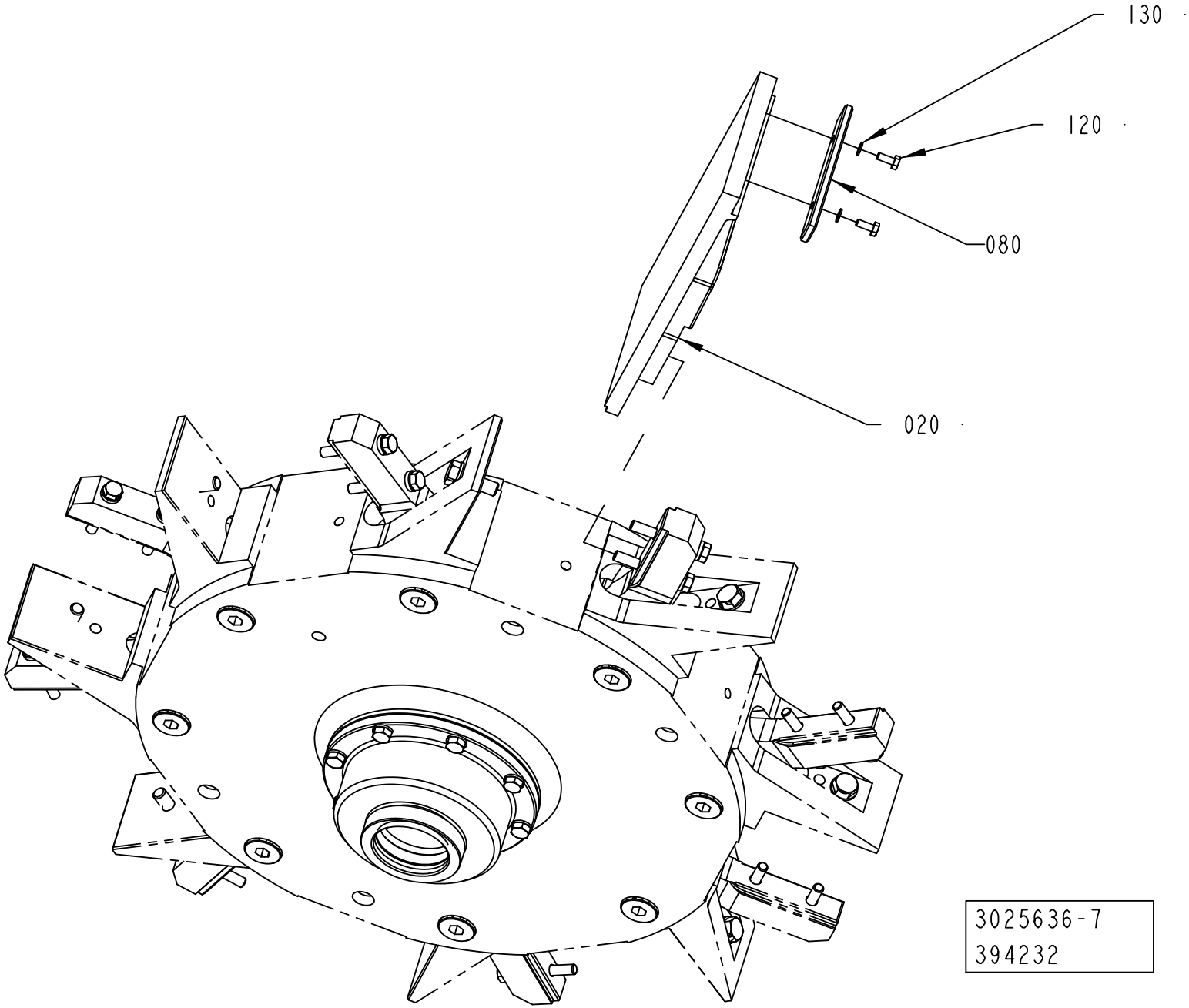
130
120
080
020
3025636-7
394232

Pos	Part No	UN	Qty	Description	Page No
TBA 0500B, TBA 1000B NOMOLDEDCAP (See drawing on page: 1-96)					
020	1260704-0000		1	FLAP	
TBA 0500S (See drawing on page: 1-100)					
020	1499142-0000		1	FLAP	
040	1524035-0000		1	VOLUME BULGE	
110	312155-0289		2	SCREW DIN 7991 MF6S M4X10 A4 70	
TBA 0500SQ, TBA 1000SQ (See drawing on page: 1-96)					
020	1487739-0000		1	FLAP	
TBA 1000S (See drawing on page: 1-96)					
020	1144926-0000		1	FLAP	
TBA 1500S (See drawing on page: 1-102)					
020	1317554-0000		1	FLAP	
080	1317656-0000		1	INSERT	
120	312105-0289		2	SCREW, M6S ISO 4017 M4X10 A4 70	
130	315105-0136		2	WASHER PLAIN, 4,3X9X0,8 A4 BRB	
TBA 2000S (See drawing on page: 1-98)					
020	2566323-0000		1	FLAP	
060	2638180-0000		2	INSERT	
070	2693197-0000		2	INSERT	
120	312155-0287		2	SCREW DIN 7991 MF6S M4X8 A4 70	
TPA 0500SQ (See drawing on page: 1-96)					
020	1549844-0000		1	FLAP	
TPA 1000SQ, TPA 0750SQ (See drawing on page: 1-96)					
020	2927549-0100		1	FLAP	**1-105**

Pos	Part No	UN	Qty	Description	Page No

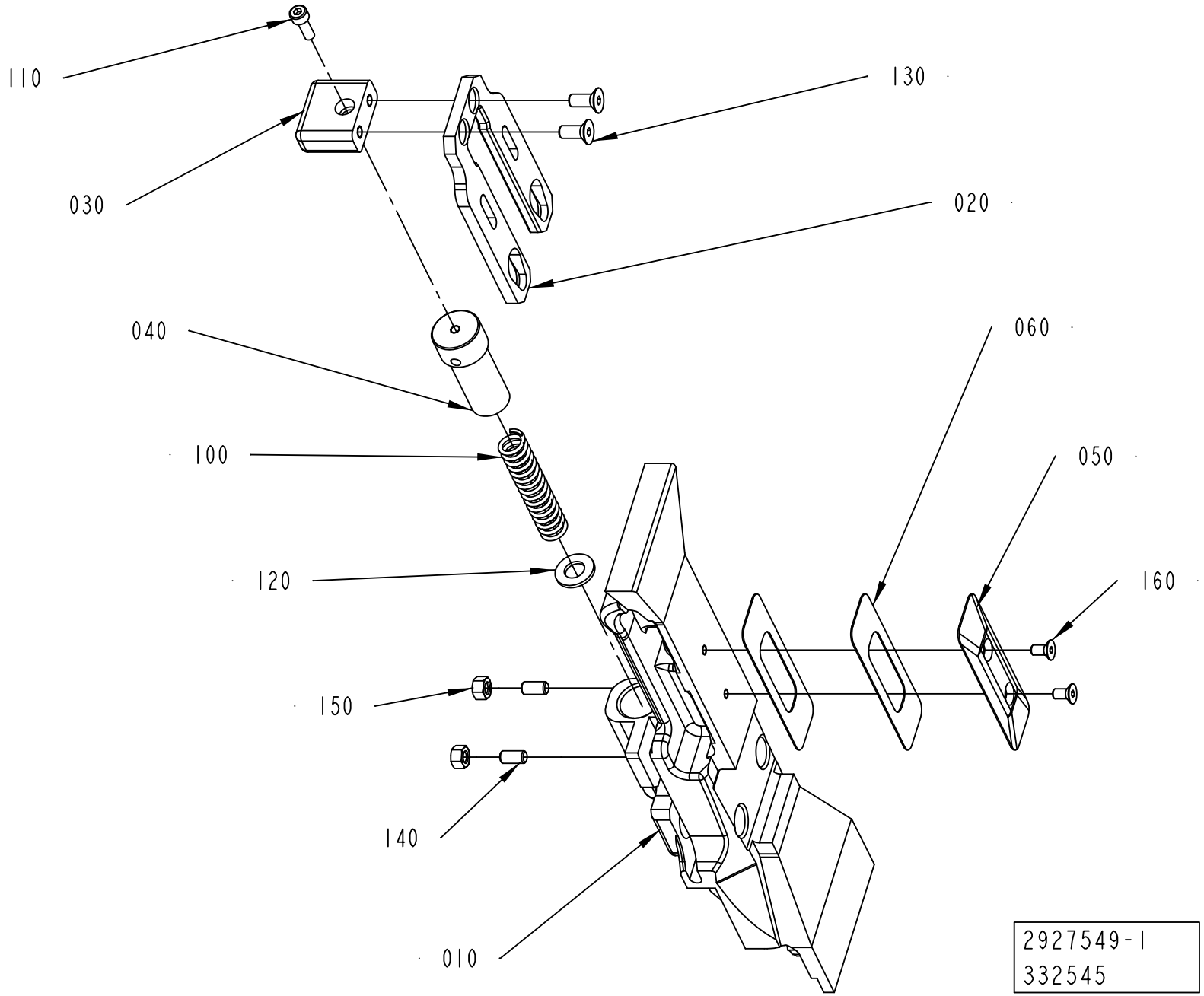
110
130
030
020
040
060
100
050
120
160
150
140
010
2927549-1
332545

ECM: 479652 - 20110401
Group number: 2927549-0100
Assembly Drawing: 2927549-1_1_AA

Pos	Part No	UN	Qty	Description	Page No
-					
010	2658238-0000		1	FLAP	
020	2658241-0000		1	SLIDE	
030	2526563-0000		1	HANDLE	
040	2526567-0000		1	CYLINDER	
050	3142195-0000		1	VOLUME BULGE	
060	2960405-0000		2	SHIM	
100	90459-0969		1	COMP. SPRING, 22430, 1,6X11,6X58,5	
110	312115-0291		1	SCREW ISO4762 M4X12 A4 80	
120	315105-0165		1	WASHER PLAIN, 8,4X16X1,6 A4 BRB	
130	312155-0327		2	SCREW DIN 7991 MF6S M5X12 A4 70	
140	312318-0329		2	SET SCREW, CUP END ISO4029 M5X16 A4	
150	312605-0314		2	HEXAGON NUT, M6M M5 A280	
160	312155-0287		2	SCREW DIN 7991 MF6S M4X8 A4 70	

Pos	Part No	UN	Qty	Description	Page No

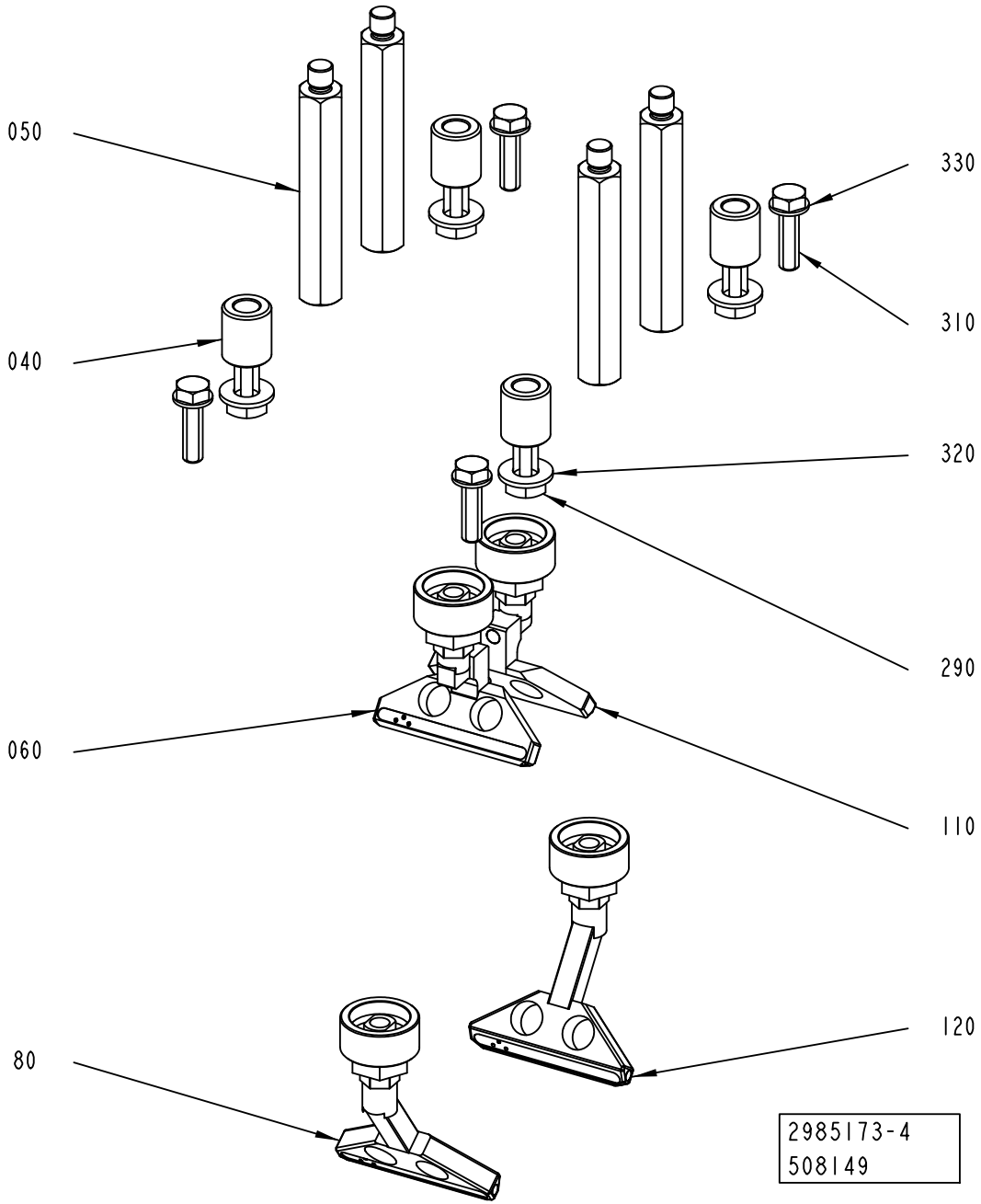
050
040
060
80
330
310
320
290
110
120
2985173-4
508149

ECM: 527815 - 20120401
Group number: 2985173-0100
Assembly Drawing: 2985173-4_1_AC

Pos	Part No	UN	Qty	Description	Page No
TBA 0500B, TBA 1000B NOMOLDEDCAP					
040	2898035-0000		4	SPACER	
050	2898028-0000		4	SPACER	
060	2898033-0000		1	AIR NOZZLE	
080	2898030-0000		1	NOZZLE	
110	2898034-0000		1	AIR NOZZLE	
120	2898029-0000		1	NOZZLE	
290	312105-0493		4	SCREW, M6S ISO 4017 M10X25 A4 80	
TBA 0500S					
040	2976051-0000		4	SPACER	
050	2976052-0000		4	SPACER	
060	2976053-0000		1	AIR NOZZLE	
080	2976054-0000		1	AIR NOZZLE	
110	2976055-0000		1	AIR NOZZLE	
120	2976056-0000		1	AIR NOZZLE	
290	312105-0497		4	SCREW, M6S ISO 4017 M10X35 A4 80	
310	312105-0455		4	SCREW, M6S ISO 4017 M8X30 A4 80	
330	315105-0165		4	WASHER PLAIN, 8,4X16X1,6 A4 BRB	
TBA 0500SQ, TBA 1000SQ					
040	2852462-0000		4	SPACER	
050	2876469-0000		4	SPACER	
060	2906166-0000		1	NOZZLE	
080	2862762-0000		1	NOZZLE	
110	2906167-0000		1	NOZZLE	
120	2862761-0000		1	NOZZLE	
290	312105-0495		4	SCREW, M6S ISO 4017 M10X30 A4 80	
TBA 1000S NOMOLDEDCAP					
040	2884994-0000		4	SPACER	
050	2878205-0000		4	SPACER	
060	2855844-0000		1	NOZZLE	
080	2855845-0000		1	NOZZLE	
110	2855843-0000		1	NOZZLE	
120	2855846-0000		1	NOZZLE	
290	312105-0495		4	SCREW, M6S ISO 4017 M10X30 A4 80	
310	312105-0455		4	SCREW, M6S ISO 4017 M8X30 A4 80	
330	315105-0165		4	WASHER PLAIN, 8,4X16X1,6 A4 BRB	
TBA 1500S					
040	2931347-0000		4	SPACER	
050	2931346-0000		4	SPACER	
060	2931193-0000		1	AIR NOZZLE	
080	2926126-0000		1	AIR NOZZLE	
110	2931194-0000		1	AIR NOZZLE	
120	2926125-0000		1	BRACKET	
290	312105-0501		4	SCREW, M6S ISO 4014 M10X50 A4 80	
310	312105-0455		4	SCREW, M6S ISO 4017 M8X30 A4 80	
330	315105-0165		4	WASHER PLAIN, 8,4X16X1,6 A4 BRB	
TBA 2000S					
040	2976577-0000		4	SPACER	
050	2919384-0000		4	SPACER	
060	2902082-0000		1	AIR NOZZLE	
080	2919381-0000		1	AIR NOZZLE	
110	2902083-0000		1	AIR NOZZLE	
120	2919382-0000		1	AIR NOZZLE	
290	312105-0503		4	SCREW, M6S ISO 4014 M10X60 A4 80	
310	312105-0455		4	SCREW, M6S ISO 4017 M8X30 A4 80	
330	315105-0165		4	WASHER PLAIN, 8,4X16X1,6 A4 BRB	
TPA 0500SQ					
040	2955152-0000		4	SPACER	
050	2958419-0000		4	SPACER	
060	2955148-0000		1	AIR NOZZLE	
080	2955149-0000		1	AIR NOZZLE	
110	2955150-0000		1	AIR NOZZLE	
120	2955151-0000		1	AIR NOZZLE	
290	312105-0497		4	SCREW, M6S ISO 4017 M10X35 A4 80	
310	312105-0455		4	SCREW, M6S ISO 4017 M8X30 A4 80	
330	315105-0165		4	WASHER PLAIN, 8,4X16X1,6 A4 BRB	
TPA 1000SQ, TPA 0750SQ					
040	2912153-0000		4	SPACER	
050	2912154-0000		4	SPACER	
060	2912157-0000		1	AIR NOZZLE	
080	2912163-0000		1	AIR NOZZLE	
110	2912158-0000		1	AIR NOZZLE	
120	2912164-0000		1	AIR NOZZLE	
290	312105-0503		4	SCREW, M6S ISO 4014 M10X60 A4 80	
Common Parts					
320	315105-0173		4	WASHER PLAIN, 10,5X22X2 A4 BRB	

Machine Type | Group Description | Used-In | Group Number | Page No

PRESSURE DEVICE

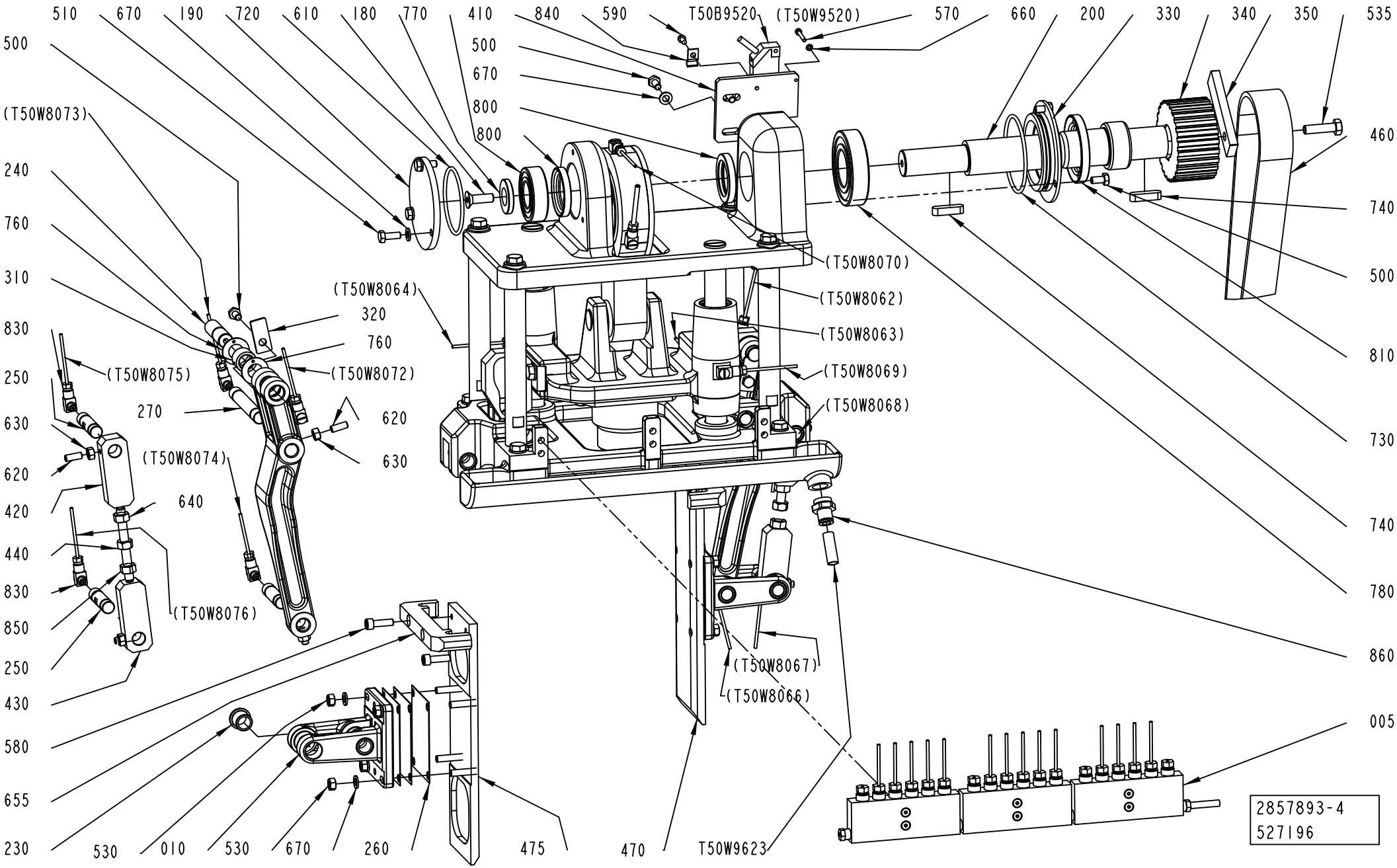

ECM: 528609 - 20120401
Group number: 2857893-0200
Assembly Drawing: 2857893-4_1_AA

This list covers pages from 1-108 to 1-115

Pos	Part No	UN	Qty	Description	Page No
TBA 0500B, TBA 1000B NOMOLDEDCAP (See drawing on pages: 1-112, 1-114)					
010	1144482-0000		2	SUPPORT	
080	1144492-0000		1	SPRING	
260	1144511-0000		15	SHIM	
450	1144978-0000		2	CAM	
470	2524512-0000		1	PUSHER	
475	2524512-0000		1	PUSHER	
480	1260702-0000		1	PLATE	
520	312105-0370		11	SCREW, M6S ISO 4017 M6X20 A4 80	
530	312105-0372		8	SCREW, M6S ISO 4017 M6X25 A4 80	
580	312115-0370		1	SCREW ISO4762 M6X20 A4 80	
TBA 0500S (See drawing on pages: 1-112, 1-114)					
010	1144482-0000		2	SUPPORT	
080	1144492-0000		1	SPRING	
260	1144511-0000		15	SHIM	
450	1144978-0000		2	CAM	
470	1499144-0000		1	PUSHER	
475	1499144-0000		1	PUSHER	
480	1499143-0000		1	PLATE	
530	312105-0370		8	SCREW, M6S ISO 4017 M6X20 A4 80	
580	312115-0370		1	SCREW ISO4762 M6X20 A4 80	
TBA 0500SQ, TBA 1000SQ (See drawing on pages: 1-112, 1-114)					
010	1144482-0000		2	SUPPORT	
080	1144492-0000		1	SPRING	
260	1144511-0000		15	SHIM	
450	1144978-0000		2	CAM	
470	2529289-0000		1	PUSHER	
475	2716534-0000		1	PUSHER	
480	1549940-0000		1	PUSHER	
530	312105-0370		11	SCREW, M6S ISO 4017 M6X20 A4 80	
580	312115-0370		1	SCREW ISO4762 M6X20 A4 80	
TBA 1000S NOMOLDEDCAP (See drawing on pages: 1-112, 1-114)					
010	1144482-0000		2	SUPPORT	
080	1144492-0000		1	SPRING	
260	1144511-0000		15	SHIM	
450	1144978-0000		2	CAM	
470	1144928-0000		1	PUSHER	
475	1144928-0000		1	PUSHER	
480	1144932-0000		1	PLATE	
520	312105-0370		11	SCREW, M6S ISO 4017 M6X20 A4 80	
530	312105-0372		8	SCREW, M6S ISO 4017 M6X25 A4 80	
580	312115-0370		1	SCREW ISO4762 M6X20 A4 80	
TBA 1500S (See drawing on pages: 1-108, 1-110)					
010	1144482-0000		2	SUPPORT	
080	1144492-0000		1	SPRING	
260	1144511-0000		15	SHIM	
450	1144978-0000		2	CAM	
470	1317654-0000		1	PUSHER	
475	1317654-0000		1	PUSHER	
480	1317655-0000		1	PLATE	
520	312105-0370		15	SCREW, M6S ISO 4017 M6X20 A4 80	
530	312105-0372		8	SCREW, M6S ISO 4017 M6X25 A4 80	
580	312115-0370		1	SCREW ISO4762 M6X20 A4 80	
655	1317787-0000		2	CATCH	
TBA 2000S (See drawing on pages: 1-108, 1-110)					
010	1144482-0000		2	SUPPORT	
080	2662142-0000		1	SPRING	
260	1144511-0000		15	SHIM	
450	1144978-0000		2	CAM	
470	2661429-0000		1	PUSHER	
475	2661429-0000		1	PUSHER	
480	2660841-0000		1	PUSHER	
520	312105-0370		3	SCREW, M6S ISO 4017 M6X20 A4 80	
530	312605-0316		8	HEXAGON NUT, M6M M6 A280	
580	312115-0370		5	SCREW ISO4762 M6X20 A4 80	
655	2594902-0000		2	CATCH	
TPA 0500SQ (See drawing on pages: 1-112, 1-114)					
010	1144482-0000		2	SUPPORT	
080	1144492-0000		1	SPRING	
260	1144511-0000		15	SHIM	
450	1144486-0000		2	CAM	
470	3060491-0100		1	PUSHER	**1-117**
475	3060492-0100		1	PUSHER	**1-119**
480	1558184-0000		1	PLATE	
520	312105-0370		3	SCREW, M6S ISO 4017 M6X20 A4 80	
530	312105-0372		8	SCREW, M6S ISO 4017 M6X25 A4 80	
580	312115-0370		1	SCREW ISO4762 M6X20 A4 80	
TPA 0750SQ (See drawing on pages: 1-112, 1-114)					
010	2647101-0000		2	SUPPORT	
040	2647099-0000		2	GUIDE	
080	1143530-0000		1	SPRING	
260	2658249-0000		6	SHIM	
450	1144486-0000		2	CAM	
470	2971903-0100		1	PUSHER	**1-121**

Machine Type | Group Description | Used-In | Group Number | Page No

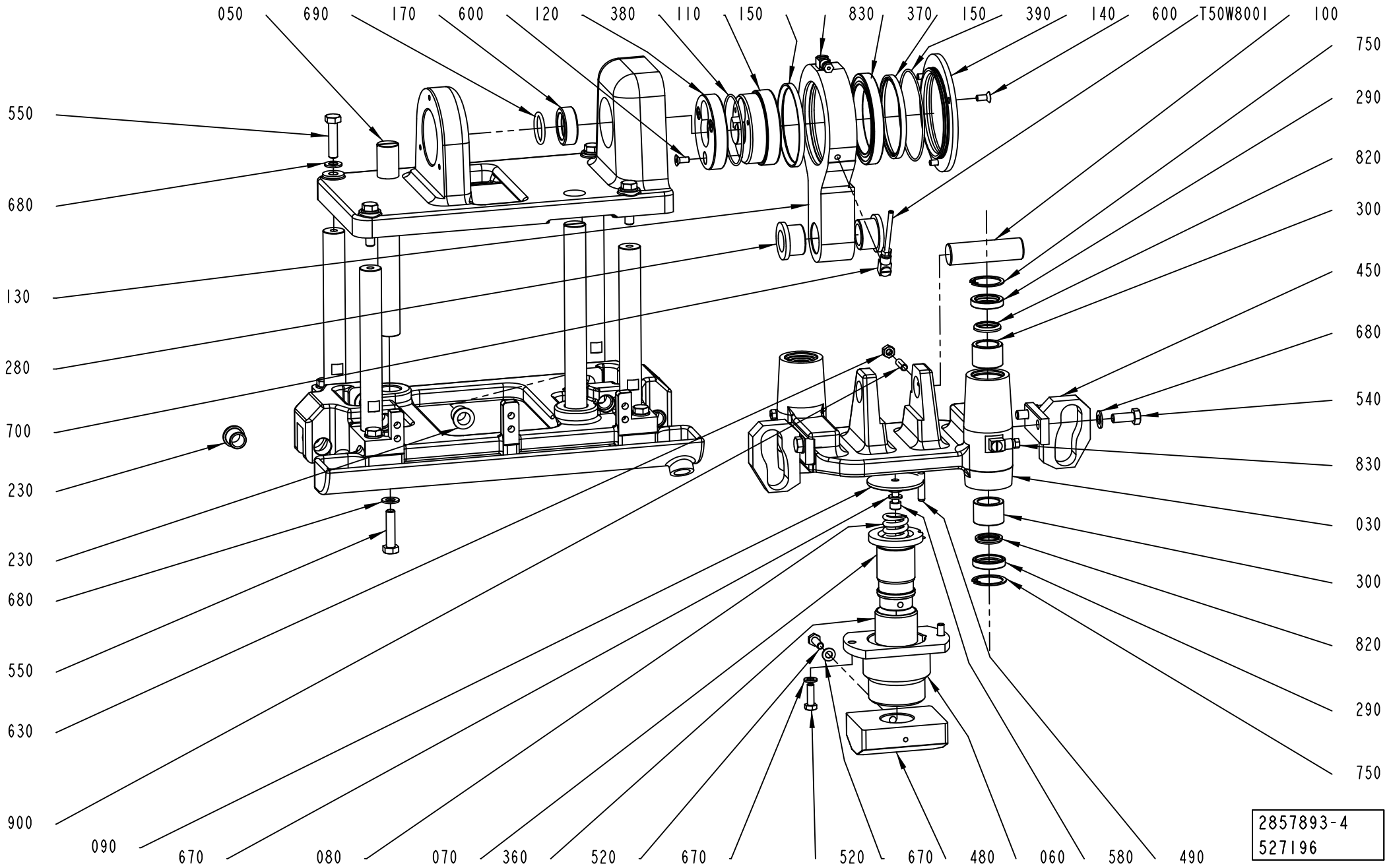
050
690
170
600
120
380
110
150
830
370
150
390
140
600
T50W8001
100
750
290
820
300
450
680
540
830
030
300
820
290
750
550
680
130
280
700
230
230
680
550
630
900
090
670
080
070
360
520
670
520
670
480
060
580
490
2857893-4
527196

ECM: 528609 - 20120401
Group number: 2857893-0200
Assembly Drawing: 2857893-4_2_AA

This list covers pages from 1-108 to 1-115

Pos	Part No	UN	Qty	Description	Page No
TPA 0750SQ (Cont'd) (See drawing on pages: 1-112, 1-114)					
480	2698300-0000		1	PLATE	
520	312105-0370		3	SCREW, M6S ISO 4017 M6X20 A4 80	
525	312105-0368		4	SCREW, M6S ISO 4017 M6X16 A4 80	
530	312105-0372		4	SCREW, M6S ISO 4017 M6X25 A4 80	
580	312115-0370		1	SCREW ISO4762 M6X20 A4 80	
905	90459-3940		2	LEVER, GN 612-6-M16X1.5-A-NI	
TPA 1000SQ (See drawing on pages: 1-112, 1-114)					
010	2647101-0000		2	SUPPORT	
040	2647099-0000		2	GUIDE	
080	1143530-0000		1	SPRING	
260	2658249-0000		6	SHIM	
450	1144486-0000		2	CAM	
470	2971903-0100		1	PUSHER	**1-121**
480	2698300-0000		1	PLATE	
520	312105-0370		3	SCREW, M6S ISO 4017 M6X20 A4 80	
525	312105-0368		4	SCREW, M6S ISO 4017 M6X16 A4 80	
530	312105-0372		4	SCREW, M6S ISO 4017 M6X25 A4 80	
580	312115-0370		1	SCREW ISO4762 M6X20 A4 80	
905	90459-3940		2	LEVER, GN 612-6-M16X1.5-A-NI	
Common Parts					
005	2861123-0200		1	DISTRIBUTOR	**1-123, 1-125, 1-127, 1-129, 1-131, 1-133**
020	2851346-0000		1	PLATE	
030	1144485-0000		1	SUPPORT	
050	1144488-0000		2	COLUMN	
060	1144489-0000		1	FLANGE	
070	1478189-0000		1	SUPPORT	
090	1144493-0000		1	WASHER	
100	1144494-0000		1	AXLE PIN	
110	1144495-0000		1	ECCENTRIC	
120	1144496-0000		1	ECCENTRIC	
130	1346539-0000		1	CONNECTING ROD	
140	1144498-0000		1	FLANGE	
150	90091-0408		2	BEARING SEAL 70X78X5 MM	
160	1144500-0000		1	SUPPORT	
170	1144501-0000		1	SPACER	
180	1144502-0000		1	WASHER	
190	1144503-0000		1	FLANGE	
200	1349516-0000		1	SHAFT	
210	1144505-0000		4	COLUMN	
220	1144506-0000		2	LEVER	
230	90458-1404		16	FLANGE BUSHING, 12X16X16 MM	
240	1144508-0000		2	AXLE PIN	
250	1317362-0000		6	SHAFT	
270	1317363-0000		2	SHAFT	
280	1144514-0000		2	BUSHING	
290	1144515-0000		4	INSERT	
300	1144517-0000		4	BUSHING	
310	2526249-0000		2	ROLLER	
320	1144521-0000		2	CLAMP	
330	1347018-0000		1	PLUG	
340	1349517-0000		1	TOOTHED PULLEY	
350	3031187-0000		1	ACTIVATOR	
360	321133-0375		1	BUSHING IGLIDUR G 35X39X30	
370	90214-0229		1	BALL BEARING 65/85X10	
380	90242-0271		1	O-RING 63,22X1,78 MM	
390	90242-0270		1	O-RING 82,27X1,78 MM	
410	3031186-0000		1	BRACKET	
420	1144914-0000		2	LEVER	
430	1144915-0000		2	LEVER	
440	1144916-0000		2	ADJUSTING SCREW	
460	1348537-0000		1	TIMING BELT	
490	1498029-0000		1	PIN	
500	312105-0366		8	SCREW, M6S ISO 4017 M6X12 A4 80	
510	312105-0368		3	SCREW, M6S ISO 4017 M6X16 A4 80	
535	312105-0455		1	SCREW, M6S ISO 4017 M8X30 A4 80	
540	312105-0451		4	SCREW, M6S ISO 4017 M8X20 A4 80	
550	312105-0457		6	SCREW, M6S ISO 4014 M8X35 A4 80	
560	312109-0460		4	SCREW, M6S ISO 4017 M8X45 A4 80	
570	312115-0230		2	SCREW ISO4762 M3X20 A4 80	
590	312125-0287		1	SLOTTED HEAD SCREW, ISO1207 M4X8 A4	
600	312155-0327		6	SCREW DIN 7991 MF6S M5X12 A4 70	
610	312155-0453		1	SCREW DIN 7991 MF6S M8X25 A4 70	
620	312318-0368		8	SET SCREW, CUP END ISO4029 M6X16 A4	
630	312605-0316		9	HEXAGON NUT, M6M M6 A280	
640	312605-0318		2	HEXAGON NUT, M6M M8 A280	
650	315103-0153		3	WASHER PLAIN, 6,4X12X1,5 BR NI PL	
660	315105-0124		2	WASHER PLAIN, 3,2X6X0,5 A4 BRB	
670	315105-0153		14	WASHER PLAIN, 6,4X12X1,5 A4 BRB	
680	315105-0165		14	WASHER PLAIN, 8,4X16X1,6 A4 BRB	
690	315202-0217		1	O-RING 24,2X3 MM	
700	90134-0068		1	CONNECTION	
720	315202-0303		1	O-RING 59,5X3 MM	
730	315202-0305		1	O-RING 69,5X3 MM	

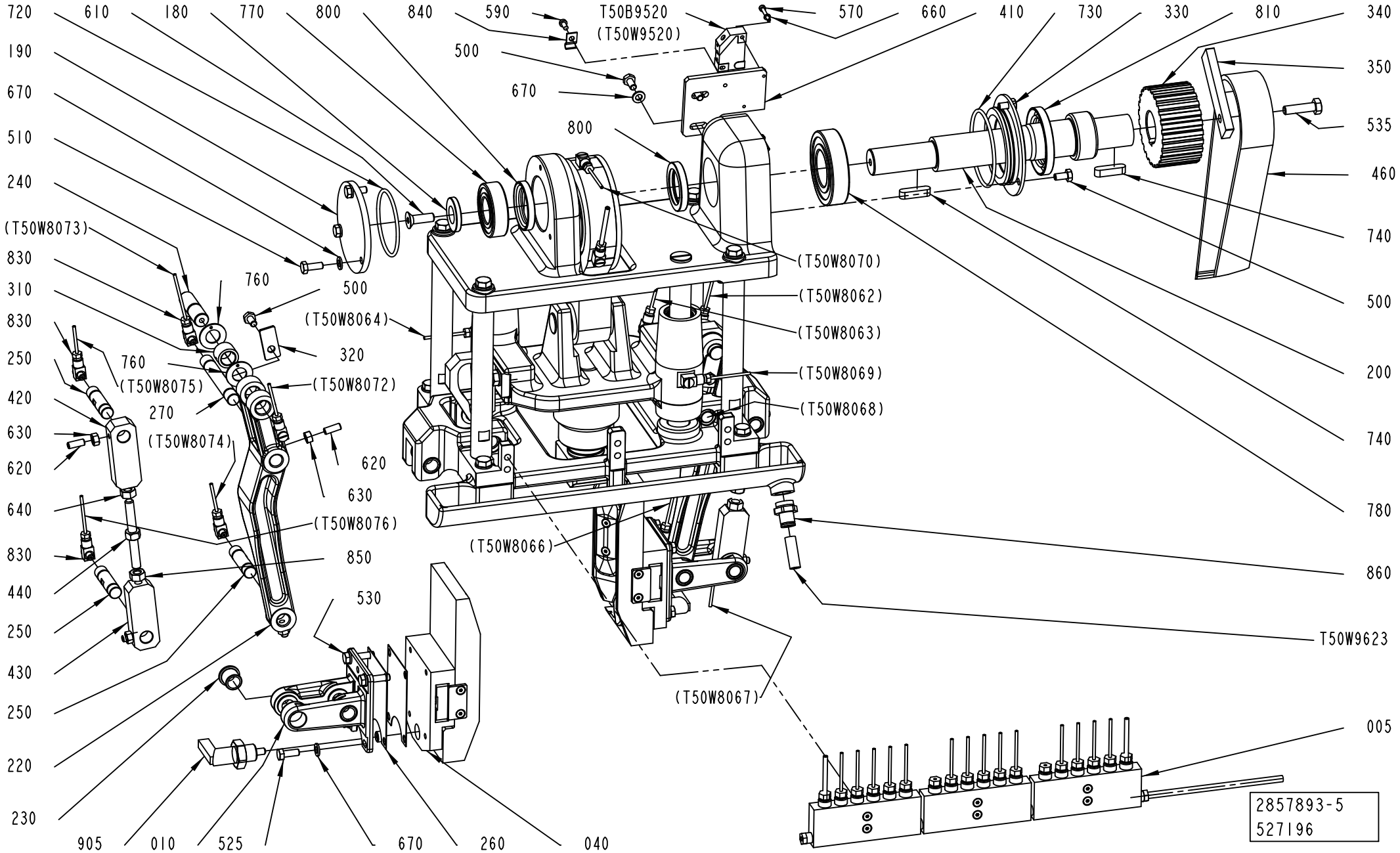
720
610
180
770
800
840
590
T50B9520
(T50W9520)
570
660
410
730
330
810
340
190
500
350
670
670
535
510
800
460
240
740
(T50W8073)
(T50W8070)
830
760
500
(T50W8062)
310
(T50W8064)
(T50W8063)
830
320
500
250
760
(T50W8069)
200
(T50W8075)
(T50W8072)
420
270
(T50W8068)
630
(T50W8074)
740
620
620
630
640
780
(T50W8076)
(T50W8066)
830
850
860
440
530
250
T50W9623
430
(T50W8067)
250
005
220
230
905
010
525
670
260
040
2857893-5
527196

Pos	Part No	UN	Qty	Description	Page No
Common Parts (Cont'd)					
740	315705-0267		2	PARALLEL KEY W. ROUND ENDS, 8X7X30 MM	
750	315753-0122		4	RETAINING RING FOR BORE DIN 472 30 SS	
760	321130-0200		4	THRUST WASHER, 14X26X1,5 MM	
770	344226-0105		1	BALL BEARING 25/52X15	
780	344226-0107		1	BALL BEARING 35/72X17	
800	90091-0297		2	RADIAL SEAL 35X47X7 MM DUST LIP	
810	90091-0298		1	RADIAL SEAL 45X65X8 MM DUST LIP	
820	90091-0380		4	SCRAPER, EXCLUDER 20X24,8X3,7 MM	
830	90134-0058		13	CONNECTION	
840	90165-0056		1	PIPE CLIP FOR TUBE, 4 MM	
850	312902-0318		2	NUT HEX. LEFT THREAD, M8 A280	
860	342722-0206		1	STRAIGHT COUPLING D=8-G3/8"	
880	352113-0102		5	CABLE TIE, BLACK 188X4,8 MM	
890	352113-0101		8	CABLE TIE, BLACK 92X2,5 MM	
900	312318-0370		1	SET SCREW, CUP END ISO4029 M6X20 A4	
T50B9520	90044-0194		1	INDUCTIVE SENSOR, IN 5329	
T50W8001	90166-0109	MM	600	TUBE 4 MM PA TRANSP.	
T50W9623	90166-0013	M	4	TUBE 8 MM PA BLUE	

Pos	Part No	UN	Qty	Description	Page No

PRESSURE DEVICE

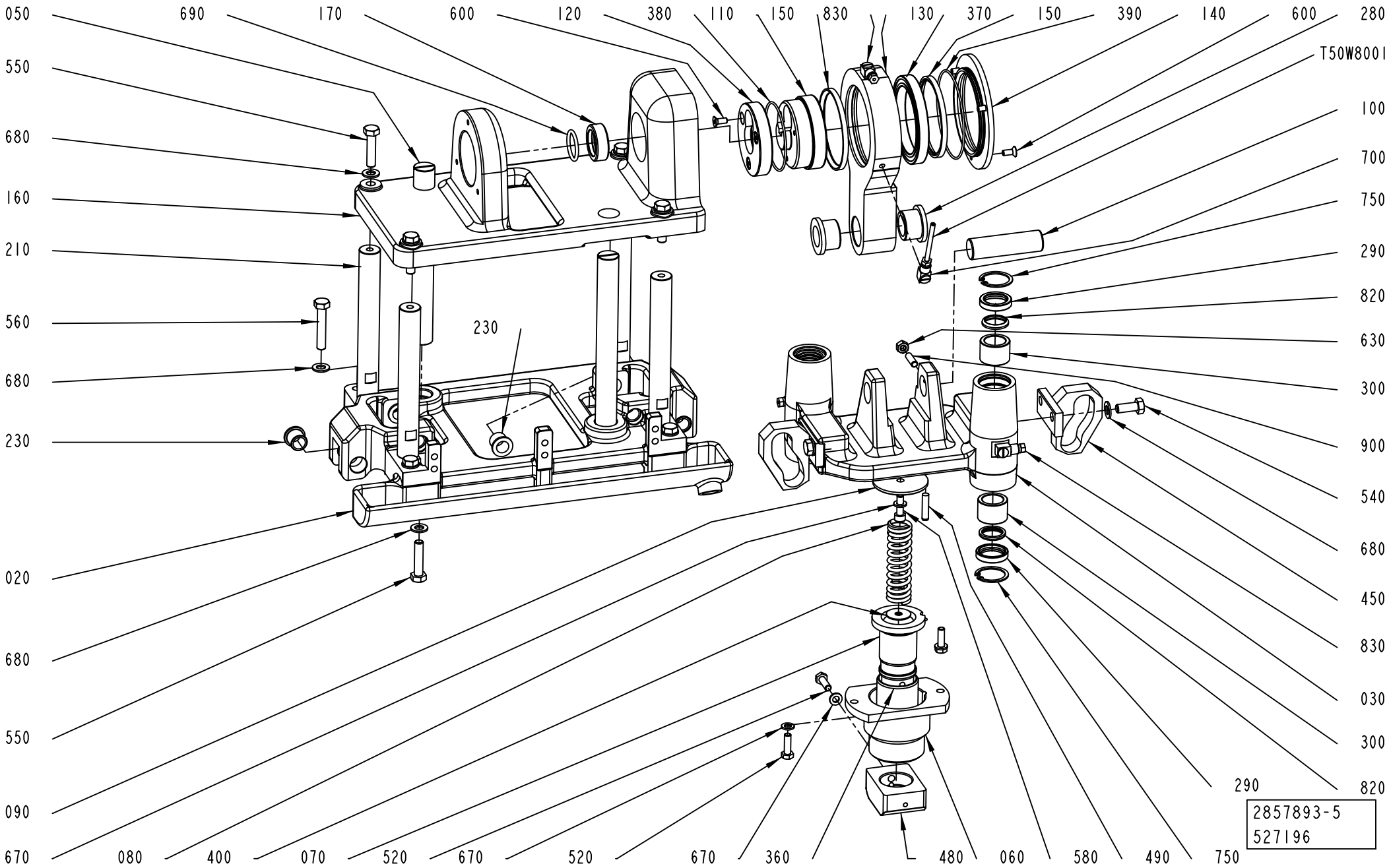

ECM: 528609 - 20120401
Group number: 2857893-0200
Assembly Drawing: 2857893-5_2_AA

This list covers pages from 1-108 to 1-115

Pos	Part No	UN	Qty	Description	Page No
SEE PREVIOUS LISTS PAGES: 1-109, 1-111, 1-113.					

Pos	Part No	UN	Qty	Description	Page No

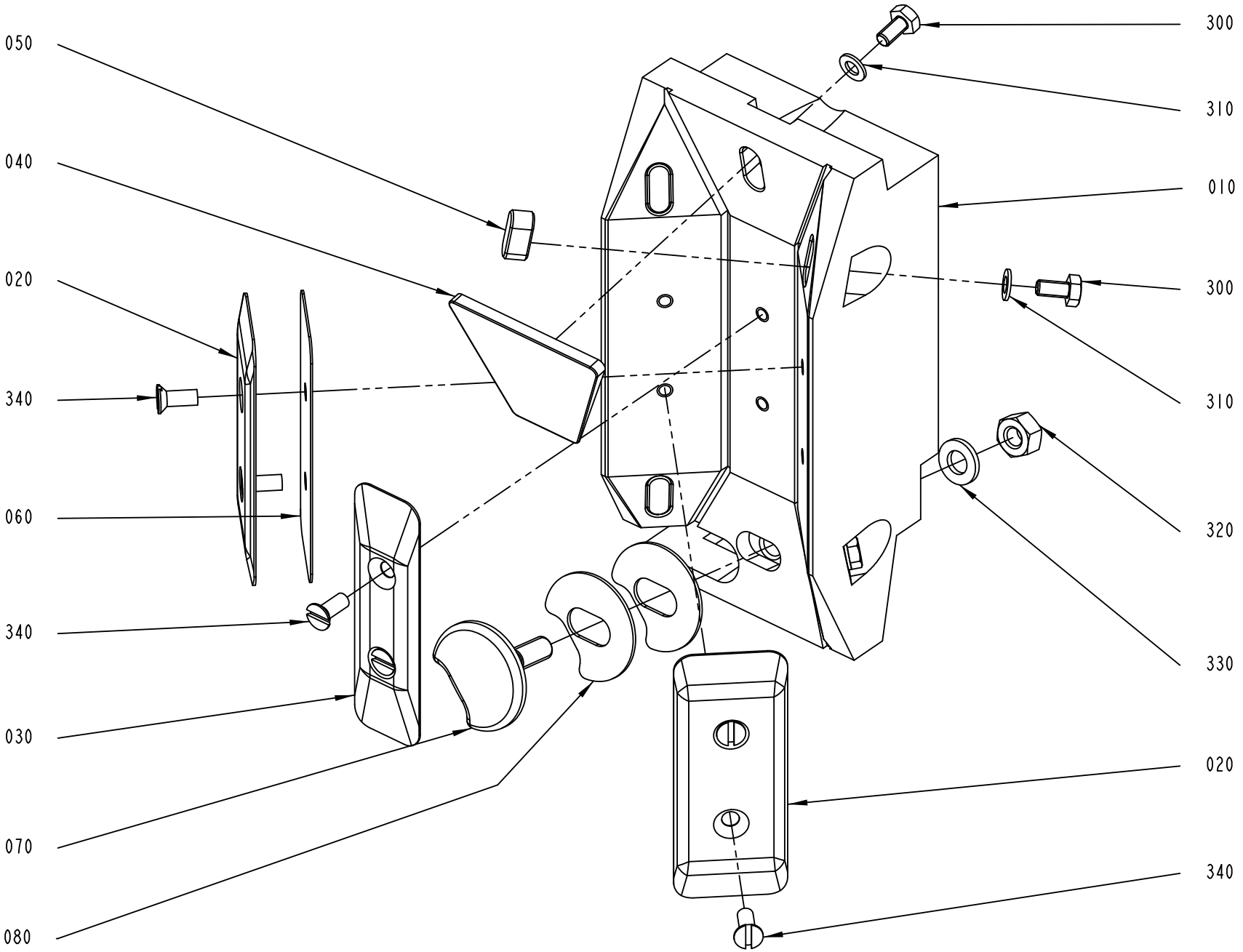
050
040
020
340
060
340
030
070
080
300
310
010
300
310
320
330
020
340
3060491-1
421792

ECM: 425752 - 20100401
Group number: 3060491-0100
Assembly Drawing: 3060491-1_1_AA

Pos	Part No	UN	Qty	Description	Page No
-					
010	1558178-0000		1	PUSHER	
020	2602613-0000		2	VOLUME BULGE	
030	2559008-0000		1	VOLUME BULGE	
040	2640075-0000		1	VOLUME BULGE	
050	2635167-0000		4	VOLUME BULGE	
060	2611875-0000		1	SHIM	
070	2541877-0000		1	NAIL	
080	2541878-0000		3	WASHER	
300	312105-0287		5	SCREW, M6S ISO 4017 M4X8 A4 70	
310	315105-0136		5	WASHER PLAIN, 4,3X9X0,8 A4 BRB	
320	312605-0316		1	HEXAGON NUT, M6M M6 A280	
330	315103-0153		1	WASHER PLAIN, 6,4X12X1,5 BR NI PL	
340	312145-0289		6	SCREW ISO 2009 MFS M4X10 A4	

Pos	Part No	UN	Qty	Description	Page No

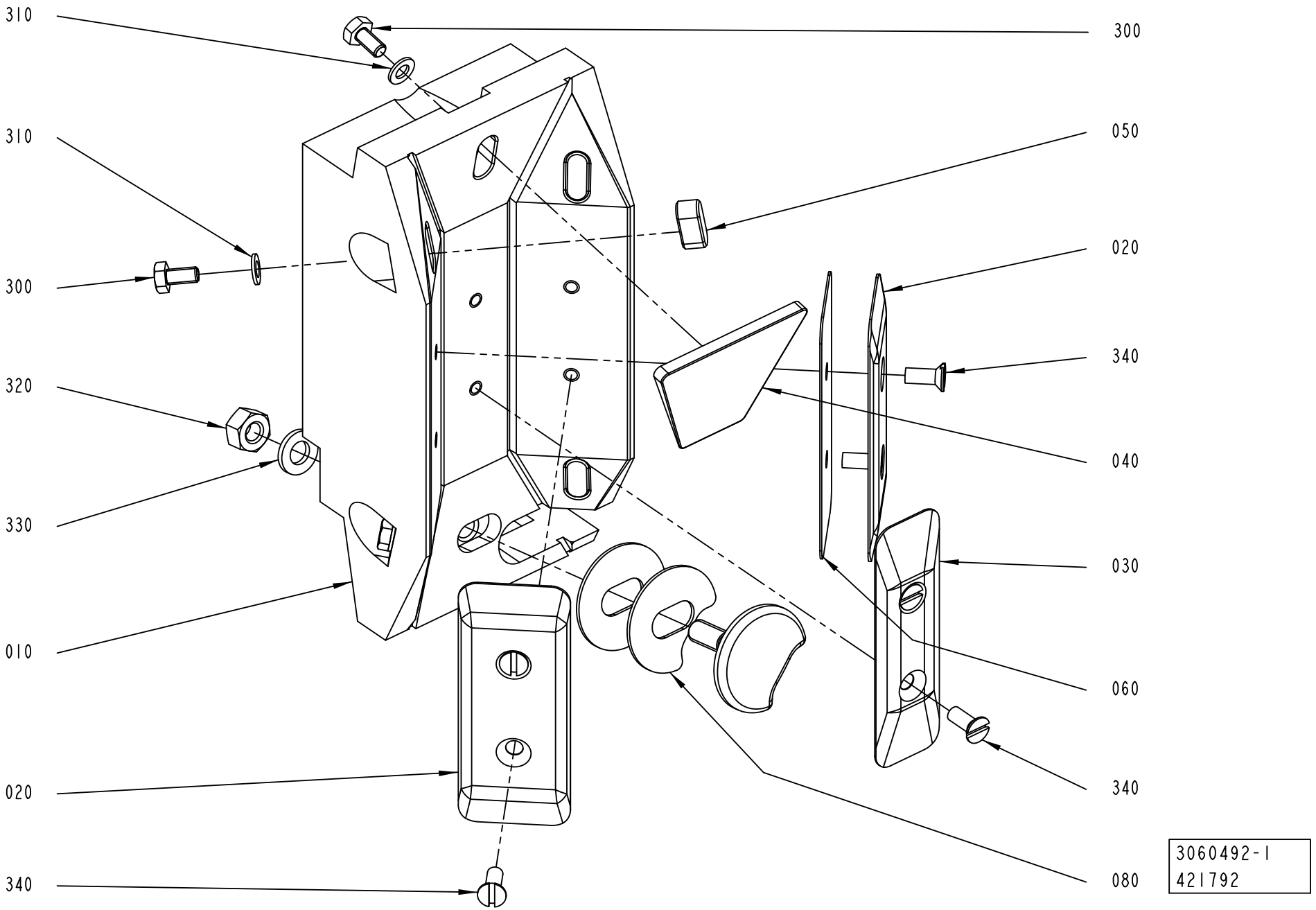
310
310
300
320
330
010
020
340
300
050
020
340
040
030
060
340
080
3060492-1
421792

ECM: 425750 - 20100401
Group number: 3060492-0100
Assembly Drawing: 3060492-1_1_AA

Pos	Part No	UN	Qty	Description	Page No
-					
010	1558047-0000		1	PUSHER	
020	2602613-0000		2	VOLUME BULGE	
030	2559008-0000		1	VOLUME BULGE	
040	2640075-0000		1	VOLUME BULGE	
050	2635167-0000		4	VOLUME BULGE	
060	2611875-0000		1	SHIM	
070	2541877-0000		1	NAIL	
080	2541878-0000		3	WASHER	
300	312105-0287		5	SCREW, M6S ISO 4017 M4X8 A4 70	
310	315105-0136		5	WASHER PLAIN, 4,3X9X0,8 A4 BRB	
320	312605-0316		1	HEXAGON NUT, M6M M6 A280	
330	315103-0153		1	WASHER PLAIN, 6,4X12X1,5 BR NI PL	
340	312145-0289		6	SCREW ISO 2009 MFS M4X10 A4	

Pos	Part No	UN	Qty	Description	Page No

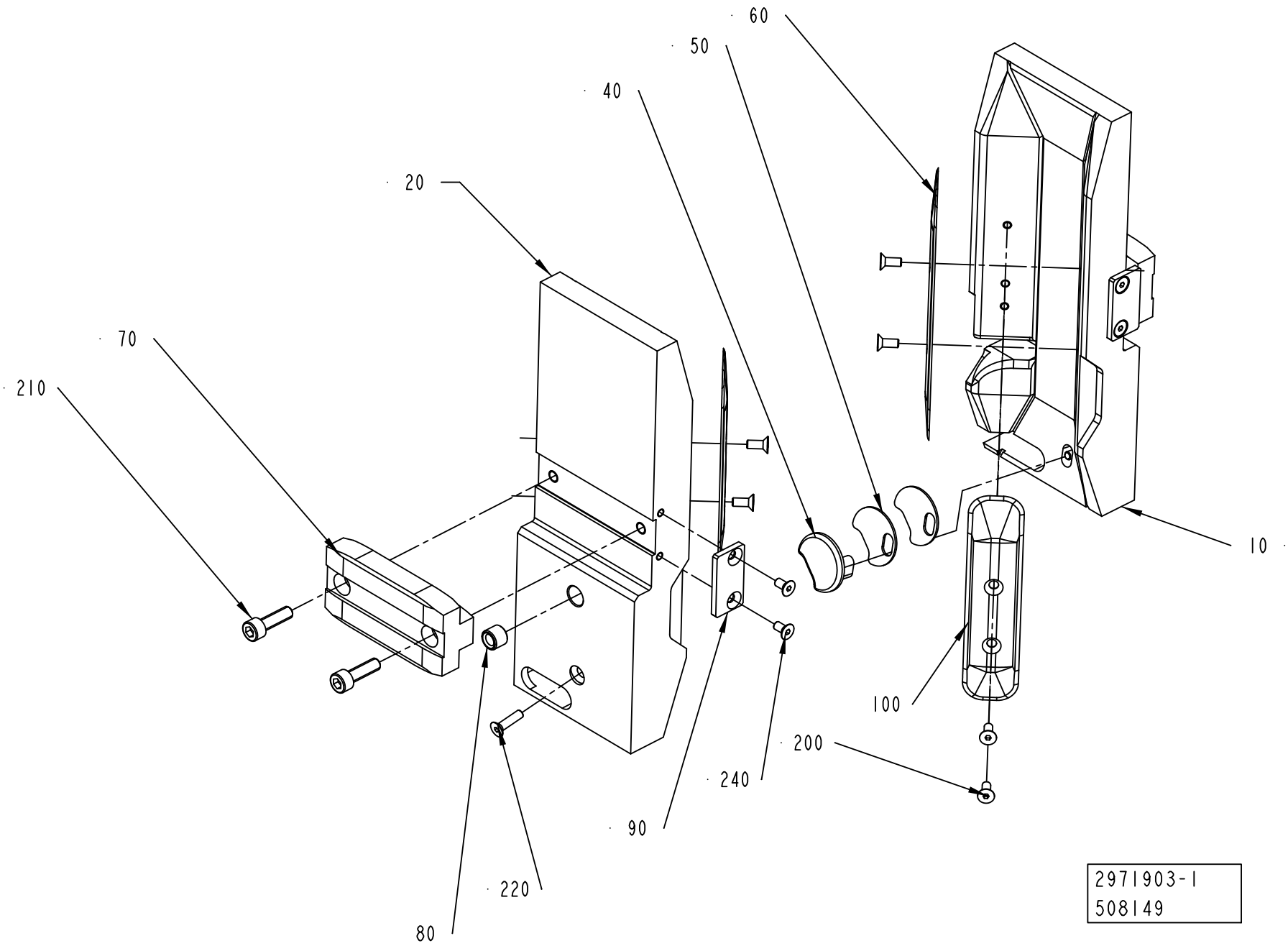
60
50
40
20
70
210
10
100
200
240
90
220
80
2971903-1
508149

ECM: 515995 - 20120101
Group number: 2971903-0100
Assembly Drawing: 2971903-1_1_AC

Pos	Part No	UN	Qty	Description	Page No
TPA 0750SQ (See drawing on page: 1-120)					
010	2647094-0000		1	PUSHER	
020	2647093-0000		1	PUSHER	
060	3096280-0000		4	VOLUME BULGE	
TPA 1000SQ (See drawing on page: 1-120)					
010	2647096-0000		1	PUSHER	
020	2647095-0000		1	PUSHER	
060	2996054-0000		2	VOLUME BULGE	
100	2996053-0000		2	VOLUME BULGE	
Common Parts					
040	2647097-0000		2	NAIL	
050	2658247-0000		6	WASHER	
070	2647098-0000		2	BLOCK	
080	2647113-0000		2	BUSHING	
090	2698319-0000		2	BLOCK	
200	312155-0289		8	SCREW DIN 7991 MF6S M4X10 A4 70	
210	312115-0370		4	SCREW ISO4762 M6X20 A4 80	
220	312155-0293		2	SCREW DIN 7991 MF6S M4X16 A4 70	
240	312155-0287		4	SCREW DIN 7991 MF6S M4X8 A4 70	

Pos	Part No	UN	Qty	Description	Page No

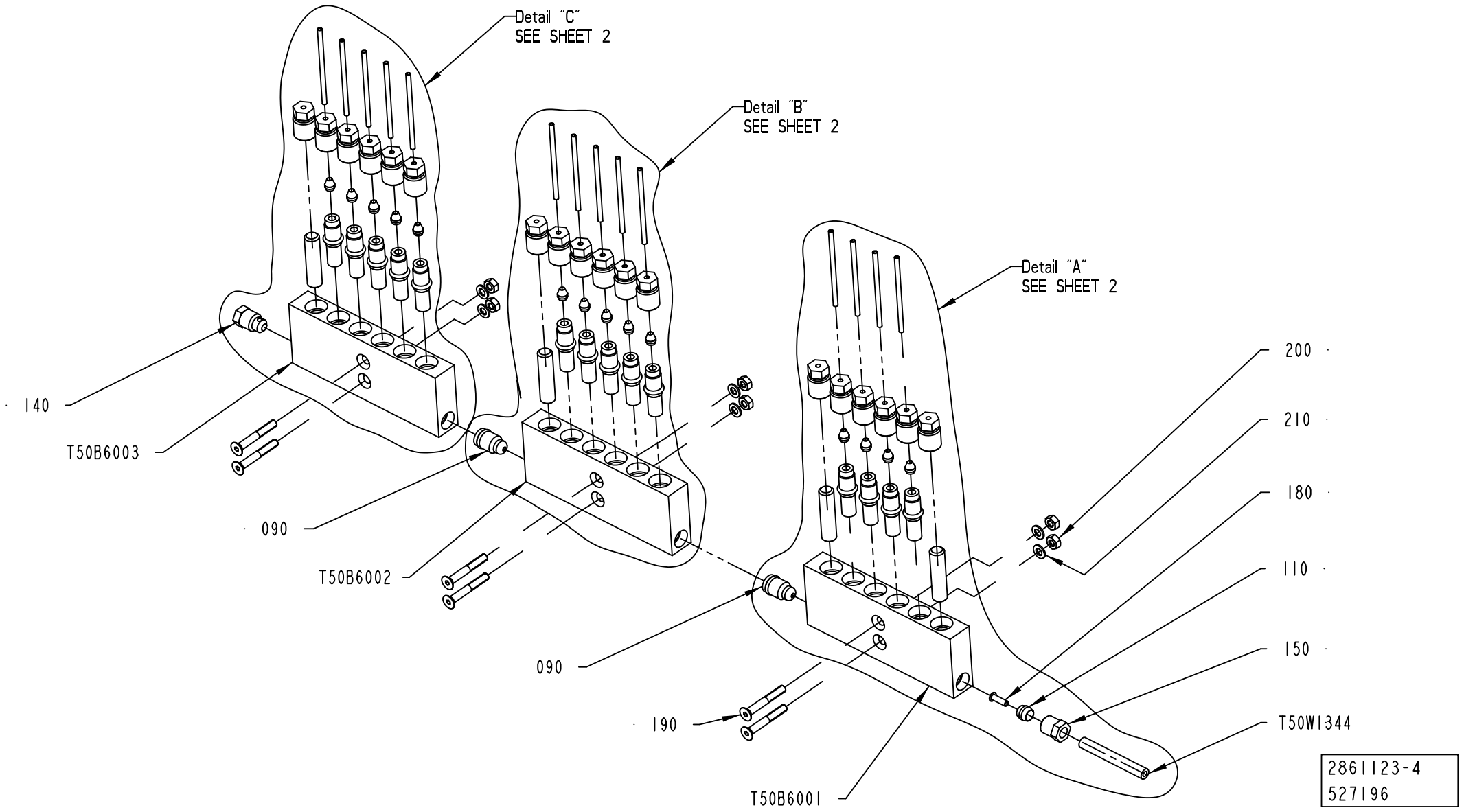
Detail "C"
SEE SHEET 2
Detail "B"
SEE SHEET 2
Detail "A"
SEE SHEET 2
140
T50B6003
090
T50B6002
090
190
T50B6001
200
210
180
110
150
T50W1344
2861123-4
527196

ECM: 535304 - 20120402
Group number: 2861123-0200
Assembly Drawing: 2861123-4_1_AA

This list covers pages from 1-122 to 1-133

Pos	Part No	UN	Qty	Description	Page No
TBA 0500S, TBA 0500B, TBA 1500S, TBA 1000S NOMOLDEDCAP, TBA 1000B NOMOLDEDCAP, TBA 2000S					
(See drawing on pages: 1-122, 1-124)					
020	90134-0039		18	BUSHING VALVE CONNECTION 2,5 MM	
030	90134-0052		4	PLUG DOSING BLOCK	
100	90028-0020		14	CONE TUBE 2,5MM	
TBA 0500SQ, TBA 1000SQ (See drawing on pages: 1-130, 1-132)					
020	90134-0039		18	BUSHING VALVE CONNECTION 2,5 MM	
100	90028-0020		18	CONE TUBE 2,5MM	
T50Q6001	90092-0052		1	METERING VALVE 10 MM3	
T50Q6011	90092-0052		1	METERING VALVE 10 MM3	
T50Q6017	90092-0052		1	METERING VALVE 10 MM3	
T50Q6023	90092-0052		1	METERING VALVE 10 MM3	
T50W8061	90166-0143	M	1	TUBE 2,5 MM PA TRANSP.	
T50W8065	90166-0143	MM	1050	TUBE 2,5 MM PA TRANSP.	
T50W8071	90166-0143	MM	1050	TUBE 2,5 MM PA TRANSP.	
T50W8077	90166-0143	M	1	TUBE 2,5 MM PA TRANSP.	
TPA 0500SQ (See drawing on pages: 1-126, 1-128)					
020	90134-0039		16	BUSHING VALVE CONNECTION 2,5 MM	
030	90134-0052		2	PLUG DOSING BLOCK	
040	90134-0040		2	BUSHING VALVE CONNECTION 4 MM	
050	90028-0021		2	CONE TUBE 4 MM	
100	90028-0020		14	CONE TUBE 2,5MM	
T50Q6001	90092-0052		1	METERING VALVE 10 MM3	
T50Q6023	90092-0052		1	METERING VALVE 10 MM3	
T50W8061	2869148-0000		1	TUBE	
T50W8077	2869149-0000		1	TUBE	
TPA 1000SQ, TPA 0750SQ (See drawing on pages: 1-126, 1-128)					
020	90134-0039		16	BUSHING VALVE CONNECTION 2,5 MM	
030	90134-0052		2	PLUG DOSING BLOCK	
040	90134-0040		2	BUSHING VALVE CONNECTION 4 MM	
050	90028-0021		2	CONE TUBE 4 MM	
100	90028-0020		14	CONE TUBE 2,5MM	
220	90134-0031		2	SLEEVE FOR PLASTIC TUBE	
T50Q6001	90092-0052		1	METERING VALVE 10 MM3	
T50Q6023	90092-0052		1	METERING VALVE 10 MM3	
T50W8061	90166-0109	M	1	TUBE 4 MM PA TRANSP.	
T50W8077	90166-0109	M	1	TUBE 4 MM PA TRANSP.	
Common Parts					
090	90134-0054		2	BLOCK CONNECTION M10X1	
110	90028-0022		1	CONE TUBE 6 MM	
140	90087-0019		1	PLUG M10X1 STAINLESS	
150	90134-0055		1	BUSHING/NUT INLET/OUTLET 6 MM	
180	90134-0030		1	SLEEVE FOR PLASTIC TUBE	
190	312155-0299		6	SCREW DIN 7991 MF6S M4X30 A4 70	
200	312602-0312		6	HEXAGON NUT, EN 24032 M6M M4 NIPLBR	
210	315105-0136		6	WASHER PLAIN, 4,3X9X0,8 A4 BRB	
T50B6001	90459-5652		1	LUBRICATION BLOCK, HFS4666	
T50B6002	90459-5652		1	LUBRICATION BLOCK, HFS4666	
T50B6003	90459-5652		1	LUBRICATION BLOCK, HFS4666	
T50Q6002	90092-0052		1	METERING VALVE 10 MM3	
T50Q6003	90092-0052		1	METERING VALVE 10 MM3	
T50Q6004	90092-0054		1	METERING VALVE 50 MM3	
T50Q6010	90092-0052		1	METERING VALVE 10 MM3	
T50Q6012	90092-0052		1	METERING VALVE 10 MM3	
T50Q6013	90092-0052		1	METERING VALVE 10 MM3	
T50Q6014	90092-0052		1	METERING VALVE 10 MM3	
T50Q6015	90092-0052		1	METERING VALVE 10 MM3	
T50Q6016	90092-0052		1	METERING VALVE 10 MM3	
T50Q6018	90092-0052		1	METERING VALVE 10 MM3	
T50Q6019	90092-0052		1	METERING VALVE 10 MM3	
T50Q6020	90092-0052		1	METERING VALVE 10 MM3	
T50Q6021	90092-0052		1	METERING VALVE 10 MM3	
T50Q6022	90092-0052		1	METERING VALVE 10 MM3	
T50W1344	90166-0108	M	4	TUBE 6 MM PA TRANSP.	
T50W8060	90166-0143	MM	1100	TUBE 2,5 MM PA TRANSP.	
T50W8062	90166-0143	MM	280	TUBE 2,5 MM PA TRANSP.	
T50W8063	90166-0143	MM	360	TUBE 2,5 MM PA TRANSP.	
T50W8064	90166-0143	MM	650	TUBE 2,5 MM PA TRANSP.	
T50W8066	90166-0143	MM	630	TUBE 2,5 MM PA TRANSP.	
T50W8067	90166-0143	MM	630	TUBE 2,5 MM PA TRANSP.	
T50W8068	90166-0143	MM	500	TUBE 2,5 MM PA TRANSP.	
T50W8069	90166-0143	MM	130	TUBE 2,5 MM PA TRANSP.	
T50W8070	90166-0143	MM	350	TUBE 2,5 MM PA TRANSP.	
T50W8072	90166-0143	MM	200	TUBE 2,5 MM PA TRANSP.	
T50W8073	90166-0143	MM	310	TUBE 2,5 MM PA TRANSP.	
T50W8074	90166-0143	MM	460	TUBE 2,5 MM PA TRANSP.	
T50W8075	90166-0143	MM	280	TUBE 2,5 MM PA TRANSP.	
T50W8076	90166-0143	MM	430	TUBE 2,5 MM PA TRANSP.	

Machine Type | Group Description | Used-In | Group Number | Page No

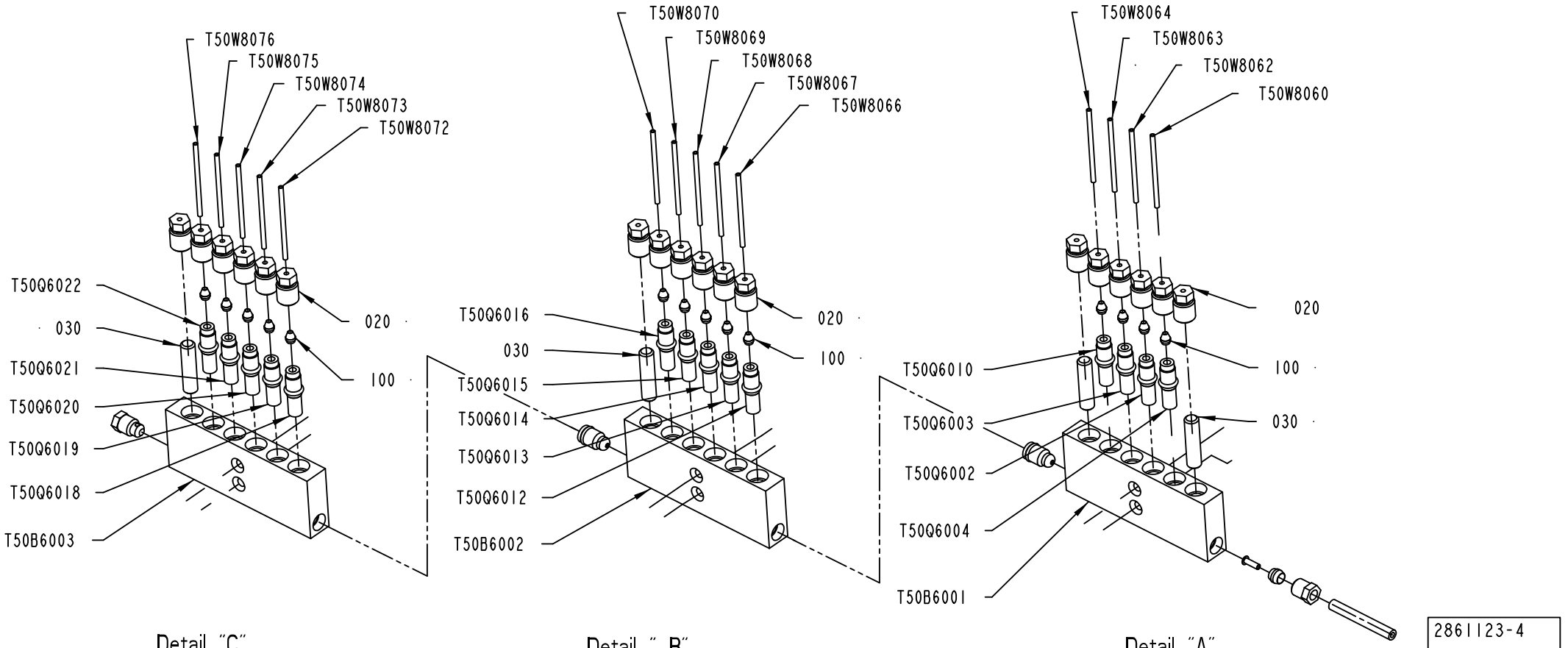

Detail "C"
SCALE 1:2

Detail " B"
SCALE 1:2

Detail "A"
SCALE 1:2

ECM: 535304 - 20120402
Group number: 2861123-0200
Assembly Drawing: 2861123-4_2_AA

This list covers pages from 1-122 to 1-133

Pos	Part No	UN	Qty	Description	Page No
TBA 0500S, TBA 0500B, TBA 1500S, TBA 1000S NOMOLDEDCAP, TBA 1000B NOMOLDEDCAP, TBA 2000S					
(See drawing on pages: 1-122, 1-124)					
020	90134-0039		18	BUSHING VALVE CONNECTION 2,5 MM	
030	90134-0052		4	PLUG DOSING BLOCK	
100	90028-0020		14	CONE TUBE 2,5MM	
TBA 0500SQ, TBA 1000SQ (See drawing on pages: 1-130, 1-132)					
020	90134-0039		18	BUSHING VALVE CONNECTION 2,5 MM	
100	90028-0020		18	CONE TUBE 2,5MM	
T50Q6001	90092-0052		1	METERING VALVE 10 MM3	
T50Q6011	90092-0052		1	METERING VALVE 10 MM3	
T50Q6017	90092-0052		1	METERING VALVE 10 MM3	
T50Q6023	90092-0052		1	METERING VALVE 10 MM3	
T50W8061	90166-0143	M	1	TUBE 2,5 MM PA TRANSP.	
T50W8065	90166-0143	MM	1050	TUBE 2,5 MM PA TRANSP.	
T50W8071	90166-0143	MM	1050	TUBE 2,5 MM PA TRANSP.	
T50W8077	90166-0143	M	1	TUBE 2,5 MM PA TRANSP.	
TPA 0500SQ (See drawing on pages: 1-126, 1-128)					
020	90134-0039		16	BUSHING VALVE CONNECTION 2,5 MM	
030	90134-0052		2	PLUG DOSING BLOCK	
040	90134-0040		2	BUSHING VALVE CONNECTION 4 MM	
050	90028-0021		2	CONE TUBE 4 MM	
100	90028-0020		14	CONE TUBE 2,5MM	
T50Q6001	90092-0052		1	METERING VALVE 10 MM3	
T50Q6023	90092-0052		1	METERING VALVE 10 MM3	
T50W8061	2869148-0000		1	TUBE	
T50W8077	2869149-0000		1	TUBE	
TPA 1000SQ, TPA 0750SQ (See drawing on pages: 1-126, 1-128)					
020	90134-0039		16	BUSHING VALVE CONNECTION 2,5 MM	
030	90134-0052		2	PLUG DOSING BLOCK	
040	90134-0040		2	BUSHING VALVE CONNECTION 4 MM	
050	90028-0021		2	CONE TUBE 4 MM	
100	90028-0020		14	CONE TUBE 2,5MM	
220	90134-0031		2	SLEEVE FOR PLASTIC TUBE	
T50Q6001	90092-0052		1	METERING VALVE 10 MM3	
T50Q6023	90092-0052		1	METERING VALVE 10 MM3	
T50W8061	90166-0109	M	1	TUBE 4 MM PA TRANSP.	
T50W8077	90166-0109	M	1	TUBE 4 MM PA TRANSP.	
Common Parts					
090	90134-0054		2	BLOCK CONNECTION M10X1	
110	90028-0022		1	CONE TUBE 6 MM	
140	90087-0019		1	PLUG M10X1 STAINLESS	
150	90134-0055		1	BUSHING/NUT INLET/OUTLET 6 MM	
180	90134-0030		1	SLEEVE FOR PLASTIC TUBE	
190	312155-0299		6	SCREW DIN 7991 MF6S M4X30 A4 70	
200	312602-0312		6	HEXAGON NUT, EN 24032 M6M M4 NIPLBR	
210	315105-0136		6	WASHER PLAIN, 4,3X9X0,8 A4 BRB	
T50B6001	90459-5652		1	LUBRICATION BLOCK, HFS4666	
T50B6002	90459-5652		1	LUBRICATION BLOCK, HFS4666	
T50B6003	90459-5652		1	LUBRICATION BLOCK, HFS4666	
T50Q6002	90092-0052		1	METERING VALVE 10 MM3	
T50Q6003	90092-0052		1	METERING VALVE 10 MM3	
T50Q6004	90092-0054		1	METERING VALVE 50 MM3	
T50Q6010	90092-0052		1	METERING VALVE 10 MM3	
T50Q6012	90092-0052		1	METERING VALVE 10 MM3	
T50Q6013	90092-0052		1	METERING VALVE 10 MM3	
T50Q6014	90092-0052		1	METERING VALVE 10 MM3	
T50Q6015	90092-0052		1	METERING VALVE 10 MM3	
T50Q6016	90092-0052		1	METERING VALVE 10 MM3	
T50Q6018	90092-0052		1	METERING VALVE 10 MM3	
T50Q6019	90092-0052		1	METERING VALVE 10 MM3	
T50Q6020	90092-0052		1	METERING VALVE 10 MM3	
T50Q6021	90092-0052		1	METERING VALVE 10 MM3	
T50Q6022	90092-0052		1	METERING VALVE 10 MM3	
T50W1344	90166-0108	M	4	TUBE 6 MM PA TRANSP.	
T50W8060	90166-0143	MM	1100	TUBE 2,5 MM PA TRANSP.	
T50W8062	90166-0143	MM	280	TUBE 2,5 MM PA TRANSP.	
T50W8063	90166-0143	MM	360	TUBE 2,5 MM PA TRANSP.	
T50W8064	90166-0143	MM	650	TUBE 2,5 MM PA TRANSP.	
T50W8066	90166-0143	MM	630	TUBE 2,5 MM PA TRANSP.	
T50W8067	90166-0143	MM	630	TUBE 2,5 MM PA TRANSP.	
T50W8068	90166-0143	MM	500	TUBE 2,5 MM PA TRANSP.	
T50W8069	90166-0143	MM	130	TUBE 2,5 MM PA TRANSP.	
T50W8070	90166-0143	MM	350	TUBE 2,5 MM PA TRANSP.	
T50W8072	90166-0143	MM	200	TUBE 2,5 MM PA TRANSP.	
T50W8073	90166-0143	MM	310	TUBE 2,5 MM PA TRANSP.	
T50W8074	90166-0143	MM	460	TUBE 2,5 MM PA TRANSP.	
T50W8075	90166-0143	MM	280	TUBE 2,5 MM PA TRANSP.	
T50W8076	90166-0143	MM	430	TUBE 2,5 MM PA TRANSP.	

Machine Type | Group Description | Used-In | Group Number | Page No

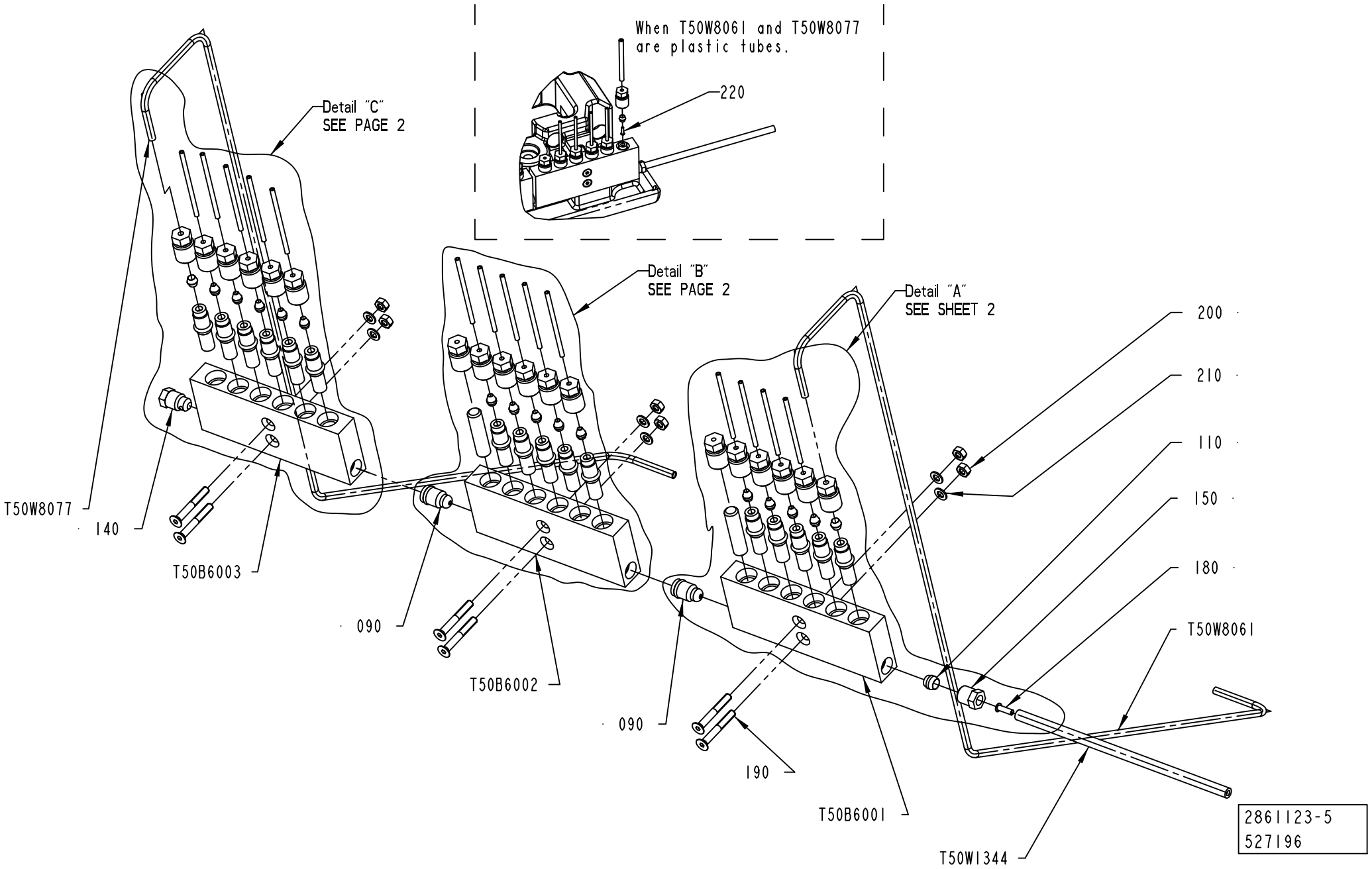
When T50W8061 and T50W8077 are plastic tubes.
220
Detail "C" SEE PAGE 2
Detail "B" SEE PAGE 2
Detail "A" SEE SHEET 2
T50W8077
140
T50B6003
090
T50B6002
090
190
T50B6001
T50W1344
200
210
110
150
180
T50W8061
2861123-5
527196

ECM: 535304 - 20120402
Group number: 2861123-0200
Assembly Drawing: 2861123-5_1_AA

This list covers pages from 1-122 to 1-133

Pos	Part No	UN	Qty	Description	Page No
TBA 0500S, TBA 0500B, TBA 1500S, TBA 1000S NOMOLDEDCAP, TBA 1000B NOMOLDEDCAP, TBA 2000S					
(See drawing on pages: 1-122, 1-124)					
020	90134-0039		18	BUSHING VALVE CONNECTION 2,5 MM	
030	90134-0052		4	PLUG DOSING BLOCK	
100	90028-0020		14	CONE TUBE 2,5MM	
TBA 0500SQ, TBA 1000SQ (See drawing on pages: 1-130, 1-132)					
020	90134-0039		18	BUSHING VALVE CONNECTION 2,5 MM	
100	90028-0020		18	CONE TUBE 2,5MM	
T50Q6001	90092-0052		1	METERING VALVE 10 MM3	
T50Q6011	90092-0052		1	METERING VALVE 10 MM3	
T50Q6017	90092-0052		1	METERING VALVE 10 MM3	
T50Q6023	90092-0052		1	METERING VALVE 10 MM3	
T50W8061	90166-0143	M	1	TUBE 2,5 MM PA TRANSP.	
T50W8065	90166-0143	MM	1050	TUBE 2,5 MM PA TRANSP.	
T50W8071	90166-0143	MM	1050	TUBE 2,5 MM PA TRANSP.	
T50W8077	90166-0143	M	1	TUBE 2,5 MM PA TRANSP.	
TPA 0500SQ (See drawing on pages: 1-126, 1-128)					
020	90134-0039		16	BUSHING VALVE CONNECTION 2,5 MM	
030	90134-0052		2	PLUG DOSING BLOCK	
040	90134-0040		2	BUSHING VALVE CONNECTION 4 MM	
050	90028-0021		2	CONE TUBE 4 MM	
100	90028-0020		14	CONE TUBE 2,5MM	
T50Q6001	90092-0052		1	METERING VALVE 10 MM3	
T50Q6023	90092-0052		1	METERING VALVE 10 MM3	
T50W8061	2869148-0000		1	TUBE	
T50W8077	2869149-0000		1	TUBE	
TPA 1000SQ, TPA 0750SQ (See drawing on pages: 1-126, 1-128)					
020	90134-0039		16	BUSHING VALVE CONNECTION 2,5 MM	
030	90134-0052		2	PLUG DOSING BLOCK	
040	90134-0040		2	BUSHING VALVE CONNECTION 4 MM	
050	90028-0021		2	CONE TUBE 4 MM	
100	90028-0020		14	CONE TUBE 2,5MM	
220	90134-0031		2	SLEEVE FOR PLASTIC TUBE	
T50Q6001	90092-0052		1	METERING VALVE 10 MM3	
T50Q6023	90092-0052		1	METERING VALVE 10 MM3	
T50W8061	90166-0109	M	1	TUBE 4 MM PA TRANSP.	
T50W8077	90166-0109	M	1	TUBE 4 MM PA TRANSP.	
Common Parts					
090	90134-0054		2	BLOCK CONNECTION M10X1	
110	90028-0022		1	CONE TUBE 6 MM	
140	90087-0019		1	PLUG M10X1 STAINLESS	
150	90134-0055		1	BUSHING/NUT INLET/OUTLET 6 MM	
180	90134-0030		1	SLEEVE FOR PLASTIC TUBE	
190	312155-0299		6	SCREW DIN 7991 MF6S M4X30 A4 70	
200	312602-0312		6	HEXAGON NUT, EN 24032 M6M M4 NIPLBR	
210	315105-0136		6	WASHER PLAIN, 4,3X9X0,8 A4 BRB	
T50B6001	90459-5652		1	LUBRICATION BLOCK, HFS4666	
T50B6002	90459-5652		1	LUBRICATION BLOCK, HFS4666	
T50B6003	90459-5652		1	LUBRICATION BLOCK, HFS4666	
T50Q6002	90092-0052		1	METERING VALVE 10 MM3	
T50Q6003	90092-0052		1	METERING VALVE 10 MM3	
T50Q6004	90092-0054		1	METERING VALVE 50 MM3	
T50Q6010	90092-0052		1	METERING VALVE 10 MM3	
T50Q6012	90092-0052		1	METERING VALVE 10 MM3	
T50Q6013	90092-0052		1	METERING VALVE 10 MM3	
T50Q6014	90092-0052		1	METERING VALVE 10 MM3	
T50Q6015	90092-0052		1	METERING VALVE 10 MM3	
T50Q6016	90092-0052		1	METERING VALVE 10 MM3	
T50Q6018	90092-0052		1	METERING VALVE 10 MM3	
T50Q6019	90092-0052		1	METERING VALVE 10 MM3	
T50Q6020	90092-0052		1	METERING VALVE 10 MM3	
T50Q6021	90092-0052		1	METERING VALVE 10 MM3	
T50Q6022	90092-0052		1	METERING VALVE 10 MM3	
T50W1344	90166-0108	M	4	TUBE 6 MM PA TRANSP.	
T50W8060	90166-0143	MM	1100	TUBE 2,5 MM PA TRANSP.	
T50W8062	90166-0143	MM	280	TUBE 2,5 MM PA TRANSP.	
T50W8063	90166-0143	MM	360	TUBE 2,5 MM PA TRANSP.	
T50W8064	90166-0143	MM	650	TUBE 2,5 MM PA TRANSP.	
T50W8066	90166-0143	MM	630	TUBE 2,5 MM PA TRANSP.	
T50W8067	90166-0143	MM	630	TUBE 2,5 MM PA TRANSP.	
T50W8068	90166-0143	MM	500	TUBE 2,5 MM PA TRANSP.	
T50W8069	90166-0143	MM	130	TUBE 2,5 MM PA TRANSP.	
T50W8070	90166-0143	MM	350	TUBE 2,5 MM PA TRANSP.	
T50W8072	90166-0143	MM	200	TUBE 2,5 MM PA TRANSP.	
T50W8073	90166-0143	MM	310	TUBE 2,5 MM PA TRANSP.	
T50W8074	90166-0143	MM	460	TUBE 2,5 MM PA TRANSP.	
T50W8075	90166-0143	MM	280	TUBE 2,5 MM PA TRANSP.	
T50W8076	90166-0143	MM	430	TUBE 2,5 MM PA TRANSP.	

Machine Type | Group Description | Used-In | Group Number | Page No

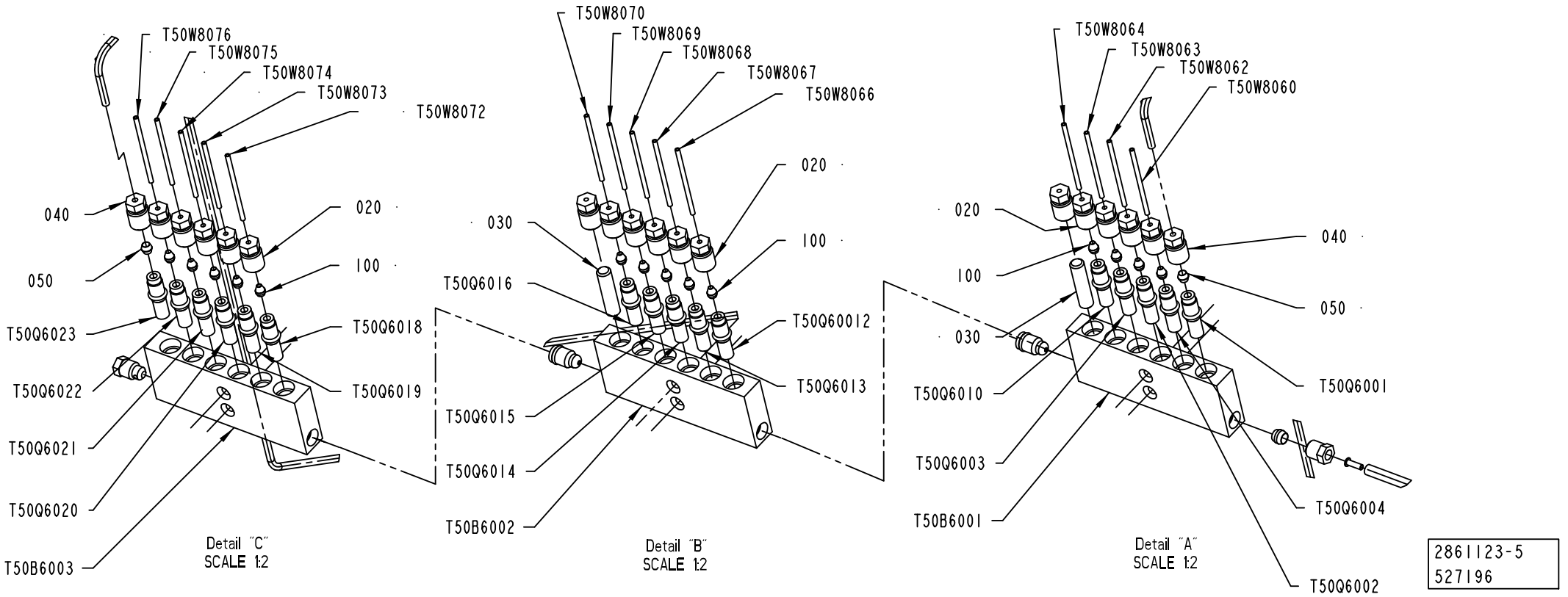
T50W8076
T50W8075
T50W8074
T50W8073
T50W8072
040
020
050
100
T50Q6023
T50Q6018
T50Q6022
T50Q6019
T50Q6021
T50Q6020
T50B6003
Detail "C"
SCALE 1:2
T50W8070
T50W8069
T50W8068
T50W8067
T50W8066
020
030
100
T50Q6016
T50Q60012
T50Q6013
T50Q6015
T50Q6014
T50B6002
Detail "B"
SCALE 1:2
T50W8064
T50W8063
T50W8062
T50W8060
020
040
100
050
030
T50Q6001
T50Q6010
T50Q6003
T50Q6004
T50B6001
T50Q6002
Detail "A"
SCALE 1:2
2861123-5
527196

Pos	Part No	UN	Qty	Description	Page No
TBA 0500S, TBA 0500B, TBA 1500S, TBA 1000S NOMOLDEDCAP, TBA 1000B NOMOLDEDCAP, TBA 2000S					
(See drawing on pages: 1-122, 1-124)					
020	90134-0039		18	BUSHING VALVE CONNECTION 2,5 MM	
030	90134-0052		4	PLUG DOSING BLOCK	
100	90028-0020		14	CONE TUBE 2,5MM	
TBA 0500SQ, TBA 1000SQ (See drawing on pages: 1-130, 1-132)					
020	90134-0039		18	BUSHING VALVE CONNECTION 2,5 MM	
100	90028-0020		18	CONE TUBE 2,5MM	
T50Q6001	90092-0052		1	METERING VALVE 10 MM3	
T50Q6011	90092-0052		1	METERING VALVE 10 MM3	
T50Q6017	90092-0052		1	METERING VALVE 10 MM3	
T50Q6023	90092-0052		1	METERING VALVE 10 MM3	
T50W8061	90166-0143	M	1	TUBE 2,5 MM PA TRANSP.	
T50W8065	90166-0143	MM	1050	TUBE 2,5 MM PA TRANSP.	
T50W8071	90166-0143	MM	1050	TUBE 2,5 MM PA TRANSP.	
T50W8077	90166-0143	M	1	TUBE 2,5 MM PA TRANSP.	
TPA 0500SQ (See drawing on pages: 1-126, 1-128)					
020	90134-0039		16	BUSHING VALVE CONNECTION 2,5 MM	
030	90134-0052		2	PLUG DOSING BLOCK	
040	90134-0040		2	BUSHING VALVE CONNECTION 4 MM	
050	90028-0021		2	CONE TUBE 4 MM	
100	90028-0020		14	CONE TUBE 2,5MM	
T50Q6001	90092-0052		1	METERING VALVE 10 MM3	
T50Q6023	90092-0052		1	METERING VALVE 10 MM3	
T50W8061	2869148-0000		1	TUBE	
T50W8077	2869149-0000		1	TUBE	
TPA 1000SQ, TPA 0750SQ (See drawing on pages: 1-126, 1-128)					
020	90134-0039		16	BUSHING VALVE CONNECTION 2,5 MM	
030	90134-0052		2	PLUG DOSING BLOCK	
040	90134-0040		2	BUSHING VALVE CONNECTION 4 MM	
050	90028-0021		2	CONE TUBE 4 MM	
100	90028-0020		14	CONE TUBE 2,5MM	
220	90134-0031		2	SLEEVE FOR PLASTIC TUBE	
T50Q6001	90092-0052		1	METERING VALVE 10 MM3	
T50Q6023	90092-0052		1	METERING VALVE 10 MM3	
T50W8061	90166-0109	M	1	TUBE 4 MM PA TRANSP.	
T50W8077	90166-0109	M	1	TUBE 4 MM PA TRANSP.	
Common Parts					
090	90134-0054		2	BLOCK CONNECTION M10X1	
110	90028-0022		1	CONE TUBE 6 MM	
140	90087-0019		1	PLUG M10X1 STAINLESS	
150	90134-0055		1	BUSHING/NUT INLET/OUTLET 6 MM	
180	90134-0030		1	SLEEVE FOR PLASTIC TUBE	
190	312155-0299		6	SCREW DIN 7991 MF6S M4X30 A4 70	
200	312602-0312		6	HEXAGON NUT, EN 24032 M6M M4 NIPLBR	
210	315105-0136		6	WASHER PLAIN, 4,3X9X0,8 A4 BRB	
T50B6001	90459-5652		1	LUBRICATION BLOCK, HFS4666	
T50B6002	90459-5652		1	LUBRICATION BLOCK, HFS4666	
T50B6003	90459-5652		1	LUBRICATION BLOCK, HFS4666	
T50Q6002	90092-0052		1	METERING VALVE 10 MM3	
T50Q6003	90092-0052		1	METERING VALVE 10 MM3	
T50Q6004	90092-0054		1	METERING VALVE 50 MM3	
T50Q6010	90092-0052		1	METERING VALVE 10 MM3	
T50Q6012	90092-0052		1	METERING VALVE 10 MM3	
T50Q6013	90092-0052		1	METERING VALVE 10 MM3	
T50Q6014	90092-0052		1	METERING VALVE 10 MM3	
T50Q6015	90092-0052		1	METERING VALVE 10 MM3	
T50Q6016	90092-0052		1	METERING VALVE 10 MM3	
T50Q6018	90092-0052		1	METERING VALVE 10 MM3	
T50Q6019	90092-0052		1	METERING VALVE 10 MM3	
T50Q6020	90092-0052		1	METERING VALVE 10 MM3	
T50Q6021	90092-0052		1	METERING VALVE 10 MM3	
T50Q6022	90092-0052		1	METERING VALVE 10 MM3	
T50W1344	90166-0108	M	4	TUBE 6 MM PA TRANSP.	
T50W8060	90166-0143	MM	1100	TUBE 2,5 MM PA TRANSP.	
T50W8062	90166-0143	MM	280	TUBE 2,5 MM PA TRANSP.	
T50W8063	90166-0143	MM	360	TUBE 2,5 MM PA TRANSP.	
T50W8064	90166-0143	MM	650	TUBE 2,5 MM PA TRANSP.	
T50W8066	90166-0143	MM	630	TUBE 2,5 MM PA TRANSP.	
T50W8067	90166-0143	MM	630	TUBE 2,5 MM PA TRANSP.	
T50W8068	90166-0143	MM	500	TUBE 2,5 MM PA TRANSP.	
T50W8069	90166-0143	MM	130	TUBE 2,5 MM PA TRANSP.	
T50W8070	90166-0143	MM	350	TUBE 2,5 MM PA TRANSP.	
T50W8072	90166-0143	MM	200	TUBE 2,5 MM PA TRANSP.	
T50W8073	90166-0143	MM	310	TUBE 2,5 MM PA TRANSP.	
T50W8074	90166-0143	MM	460	TUBE 2,5 MM PA TRANSP.	
T50W8075	90166-0143	MM	280	TUBE 2,5 MM PA TRANSP.	
T50W8076	90166-0143	MM	430	TUBE 2,5 MM PA TRANSP.	

Machine Type | Group Description | Used-In | Group Number | Page No

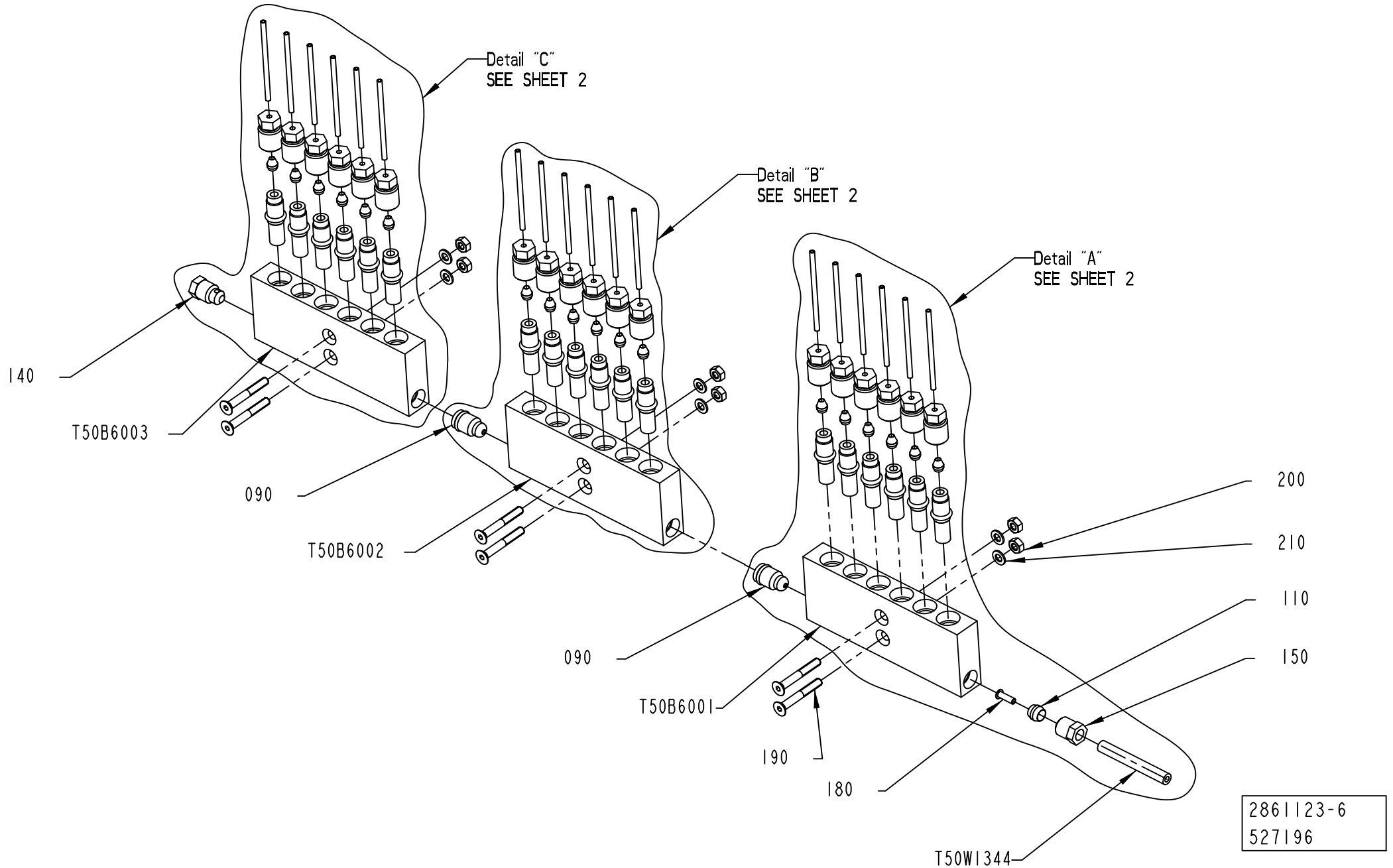
Detail "C"
SEE SHEET 2
Detail "B"
SEE SHEET 2
Detail "A"
SEE SHEET 2
140
T50B6003
090
T50B6002
090
T50B6001
190
180
T50W1344
200
210
110
150
2861123-6
527196

ECM: 535304 - 20120402
Group number: 2861123-0200
Assembly Drawing: 2861123-6_1_AA

This list covers pages from 1-122 to 1-133

Pos	Part No	UN	Qty	Description	Page No
TBA 0500S, TBA 0500B, TBA 1500S, TBA 1000S NOMOLDEDCAP, TBA 1000B NOMOLDEDCAP, TBA 2000S					
(See drawing on pages: 1-122, 1-124)					
020	90134-0039		18	BUSHING VALVE CONNECTION 2,5 MM	
030	90134-0052		4	PLUG DOSING BLOCK	
100	90028-0020		14	CONE TUBE 2,5MM	
TBA 0500SQ, TBA 1000SQ (See drawing on pages: 1-130, 1-132)					
020	90134-0039		18	BUSHING VALVE CONNECTION 2,5 MM	
100	90028-0020		18	CONE TUBE 2,5MM	
T50Q6001	90092-0052		1	METERING VALVE 10 MM3	
T50Q6011	90092-0052		1	METERING VALVE 10 MM3	
T50Q6017	90092-0052		1	METERING VALVE 10 MM3	
T50Q6023	90092-0052		1	METERING VALVE 10 MM3	
T50W8061	90166-0143	M	1	TUBE 2,5 MM PA TRANSP.	
T50W8065	90166-0143	MM	1050	TUBE 2,5 MM PA TRANSP.	
T50W8071	90166-0143	MM	1050	TUBE 2,5 MM PA TRANSP.	
T50W8077	90166-0143	M	1	TUBE 2,5 MM PA TRANSP.	
TPA 0500SQ (See drawing on pages: 1-126, 1-128)					
020	90134-0039		16	BUSHING VALVE CONNECTION 2,5 MM	
030	90134-0052		2	PLUG DOSING BLOCK	
040	90134-0040		2	BUSHING VALVE CONNECTION 4 MM	
050	90028-0021		2	CONE TUBE 4 MM	
100	90028-0020		14	CONE TUBE 2,5MM	
T50Q6001	90092-0052		1	METERING VALVE 10 MM3	
T50Q6023	90092-0052		1	METERING VALVE 10 MM3	
T50W8061	2869148-0000		1	TUBE	
T50W8077	2869149-0000		1	TUBE	
TPA 1000SQ, TPA 0750SQ (See drawing on pages: 1-126, 1-128)					
020	90134-0039		16	BUSHING VALVE CONNECTION 2,5 MM	
030	90134-0052		2	PLUG DOSING BLOCK	
040	90134-0040		2	BUSHING VALVE CONNECTION 4 MM	
050	90028-0021		2	CONE TUBE 4 MM	
100	90028-0020		14	CONE TUBE 2,5MM	
220	90134-0031		2	SLEEVE FOR PLASTIC TUBE	
T50Q6001	90092-0052		1	METERING VALVE 10 MM3	
T50Q6023	90092-0052		1	METERING VALVE 10 MM3	
T50W8061	90166-0109	M	1	TUBE 4 MM PA TRANSP.	
T50W8077	90166-0109	M	1	TUBE 4 MM PA TRANSP.	
Common Parts					
090	90134-0054		2	BLOCK CONNECTION M10X1	
110	90028-0022		1	CONE TUBE 6 MM	
140	90087-0019		1	PLUG M10X1 STAINLESS	
150	90134-0055		1	BUSHING/NUT INLET/OUTLET 6 MM	
180	90134-0030		1	SLEEVE FOR PLASTIC TUBE	
190	312155-0299		6	SCREW DIN 7991 MF6S M4X30 A4 70	
200	312602-0312		6	HEXAGON NUT, EN 24032 M6M M4 NIPLBR	
210	315105-0136		6	WASHER PLAIN, 4,3X9X0,8 A4 BRB	
T50B6001	90459-5652		1	LUBRICATION BLOCK, HFS4666	
T50B6002	90459-5652		1	LUBRICATION BLOCK, HFS4666	
T50B6003	90459-5652		1	LUBRICATION BLOCK, HFS4666	
T50Q6002	90092-0052		1	METERING VALVE 10 MM3	
T50Q6003	90092-0052		1	METERING VALVE 10 MM3	
T50Q6004	90092-0054		1	METERING VALVE 50 MM3	
T50Q6010	90092-0052		1	METERING VALVE 10 MM3	
T50Q6012	90092-0052		1	METERING VALVE 10 MM3	
T50Q6013	90092-0052		1	METERING VALVE 10 MM3	
T50Q6014	90092-0052		1	METERING VALVE 10 MM3	
T50Q6015	90092-0052		1	METERING VALVE 10 MM3	
T50Q6016	90092-0052		1	METERING VALVE 10 MM3	
T50Q6018	90092-0052		1	METERING VALVE 10 MM3	
T50Q6019	90092-0052		1	METERING VALVE 10 MM3	
T50Q6020	90092-0052		1	METERING VALVE 10 MM3	
T50Q6021	90092-0052		1	METERING VALVE 10 MM3	
T50Q6022	90092-0052		1	METERING VALVE 10 MM3	
T50W1344	90166-0108	M	4	TUBE 6 MM PA TRANSP.	
T50W8060	90166-0143	MM	1100	TUBE 2,5 MM PA TRANSP.	
T50W8062	90166-0143	MM	280	TUBE 2,5 MM PA TRANSP.	
T50W8063	90166-0143	MM	360	TUBE 2,5 MM PA TRANSP.	
T50W8064	90166-0143	MM	650	TUBE 2,5 MM PA TRANSP.	
T50W8066	90166-0143	MM	630	TUBE 2,5 MM PA TRANSP.	
T50W8067	90166-0143	MM	630	TUBE 2,5 MM PA TRANSP.	
T50W8068	90166-0143	MM	500	TUBE 2,5 MM PA TRANSP.	
T50W8069	90166-0143	MM	130	TUBE 2,5 MM PA TRANSP.	
T50W8070	90166-0143	MM	350	TUBE 2,5 MM PA TRANSP.	
T50W8072	90166-0143	MM	200	TUBE 2,5 MM PA TRANSP.	
T50W8073	90166-0143	MM	310	TUBE 2,5 MM PA TRANSP.	
T50W8074	90166-0143	MM	460	TUBE 2,5 MM PA TRANSP.	
T50W8075	90166-0143	MM	280	TUBE 2,5 MM PA TRANSP.	
T50W8076	90166-0143	MM	430	TUBE 2,5 MM PA TRANSP.	

Machine Type | Group Description | Used-In | Group Number | Page No

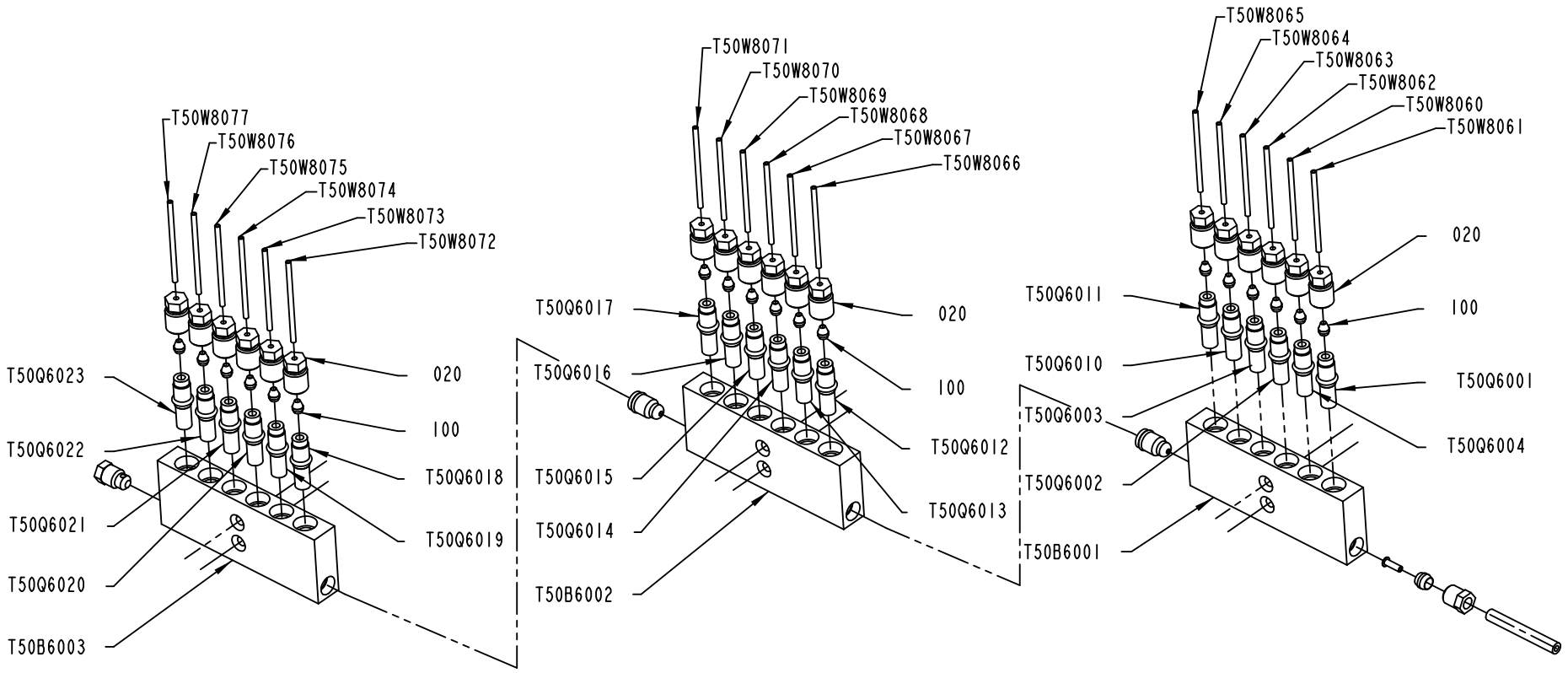

2861123-6
527196

ECM: 535304 - 20120402
Group number: 2861123-0200
Assembly Drawing: 2861123-6_2_AA

This list covers pages from 1-122 to 1-133

Pos	Part No	UN	Qty	Description	Page No
TBA 0500S, TBA 0500B, TBA 1500S, TBA 1000S NOMOLDEDCAP, TBA 1000B NOMOLDEDCAP, TBA 2000S					
(See drawing on pages: 1-122, 1-124)					
020	90134-0039		18	BUSHING VALVE CONNECTION 2,5 MM	
030	90134-0052		4	PLUG DOSING BLOCK	
100	90028-0020		14	CONE TUBE 2,5MM	
TBA 0500SQ, TBA 1000SQ (See drawing on pages: 1-130, 1-132)					
020	90134-0039		18	BUSHING VALVE CONNECTION 2,5 MM	
100	90028-0020		18	CONE TUBE 2,5MM	
T50Q6001	90092-0052		1	METERING VALVE 10 MM3	
T50Q6011	90092-0052		1	METERING VALVE 10 MM3	
T50Q6017	90092-0052		1	METERING VALVE 10 MM3	
T50Q6023	90092-0052		1	METERING VALVE 10 MM3	
T50W8061	90166-0143	M	1	TUBE 2,5 MM PA TRANSP.	
T50W8065	90166-0143	MM	1050	TUBE 2,5 MM PA TRANSP.	
T50W8071	90166-0143	MM	1050	TUBE 2,5 MM PA TRANSP.	
T50W8077	90166-0143	M	1	TUBE 2,5 MM PA TRANSP.	
TPA 0500SQ (See drawing on pages: 1-126, 1-128)					
020	90134-0039		16	BUSHING VALVE CONNECTION 2,5 MM	
030	90134-0052		2	PLUG DOSING BLOCK	
040	90134-0040		2	BUSHING VALVE CONNECTION 4 MM	
050	90028-0021		2	CONE TUBE 4 MM	
100	90028-0020		14	CONE TUBE 2,5MM	
T50Q6001	90092-0052		1	METERING VALVE 10 MM3	
T50Q6023	90092-0052		1	METERING VALVE 10 MM3	
T50W8061	2869148-0000		1	TUBE	
T50W8077	2869149-0000		1	TUBE	
TPA 1000SQ, TPA 0750SQ (See drawing on pages: 1-126, 1-128)					
020	90134-0039		16	BUSHING VALVE CONNECTION 2,5 MM	
030	90134-0052		2	PLUG DOSING BLOCK	
040	90134-0040		2	BUSHING VALVE CONNECTION 4 MM	
050	90028-0021		2	CONE TUBE 4 MM	
100	90028-0020		14	CONE TUBE 2,5MM	
220	90134-0031		2	SLEEVE FOR PLASTIC TUBE	
T50Q6001	90092-0052		1	METERING VALVE 10 MM3	
T50Q6023	90092-0052		1	METERING VALVE 10 MM3	
T50W8061	90166-0109	M	1	TUBE 4 MM PA TRANSP.	
T50W8077	90166-0109	M	1	TUBE 4 MM PA TRANSP.	
Common Parts					
090	90134-0054		2	BLOCK CONNECTION M10X1	
110	90028-0022		1	CONE TUBE 6 MM	
140	90087-0019		1	PLUG M10X1 STAINLESS	
150	90134-0055		1	BUSHING/NUT INLET/OUTLET 6 MM	
180	90134-0030		1	SLEEVE FOR PLASTIC TUBE	
190	312155-0299		6	SCREW DIN 7991 MF6S M4X30 A4 70	
200	312602-0312		6	HEXAGON NUT, EN 24032 M6M M4 NIPLBR	
210	315105-0136		6	WASHER PLAIN, 4,3X9X0,8 A4 BRB	
T50B6001	90459-5652		1	LUBRICATION BLOCK, HFS4666	
T50B6002	90459-5652		1	LUBRICATION BLOCK, HFS4666	
T50B6003	90459-5652		1	LUBRICATION BLOCK, HFS4666	
T50Q6002	90092-0052		1	METERING VALVE 10 MM3	
T50Q6003	90092-0052		1	METERING VALVE 10 MM3	
T50Q6004	90092-0054		1	METERING VALVE 50 MM3	
T50Q6010	90092-0052		1	METERING VALVE 10 MM3	
T50Q6012	90092-0052		1	METERING VALVE 10 MM3	
T50Q6013	90092-0052		1	METERING VALVE 10 MM3	
T50Q6014	90092-0052		1	METERING VALVE 10 MM3	
T50Q6015	90092-0052		1	METERING VALVE 10 MM3	
T50Q6016	90092-0052		1	METERING VALVE 10 MM3	
T50Q6018	90092-0052		1	METERING VALVE 10 MM3	
T50Q6019	90092-0052		1	METERING VALVE 10 MM3	
T50Q6020	90092-0052		1	METERING VALVE 10 MM3	
T50Q6021	90092-0052		1	METERING VALVE 10 MM3	
T50Q6022	90092-0052		1	METERING VALVE 10 MM3	
T50W1344	90166-0108	M	4	TUBE 6 MM PA TRANSP.	
T50W8060	90166-0143	MM	1100	TUBE 2,5 MM PA TRANSP.	
T50W8062	90166-0143	MM	280	TUBE 2,5 MM PA TRANSP.	
T50W8063	90166-0143	MM	360	TUBE 2,5 MM PA TRANSP.	
T50W8064	90166-0143	MM	650	TUBE 2,5 MM PA TRANSP.	
T50W8066	90166-0143	MM	630	TUBE 2,5 MM PA TRANSP.	
T50W8067	90166-0143	MM	630	TUBE 2,5 MM PA TRANSP.	
T50W8068	90166-0143	MM	500	TUBE 2,5 MM PA TRANSP.	
T50W8069	90166-0143	MM	130	TUBE 2,5 MM PA TRANSP.	
T50W8070	90166-0143	MM	350	TUBE 2,5 MM PA TRANSP.	
T50W8072	90166-0143	MM	200	TUBE 2,5 MM PA TRANSP.	
T50W8073	90166-0143	MM	310	TUBE 2,5 MM PA TRANSP.	
T50W8074	90166-0143	MM	460	TUBE 2,5 MM PA TRANSP.	
T50W8075	90166-0143	MM	280	TUBE 2,5 MM PA TRANSP.	
T50W8076	90166-0143	MM	430	TUBE 2,5 MM PA TRANSP.	

Machine Type | Group Description | Used-In | Group Number | Page No

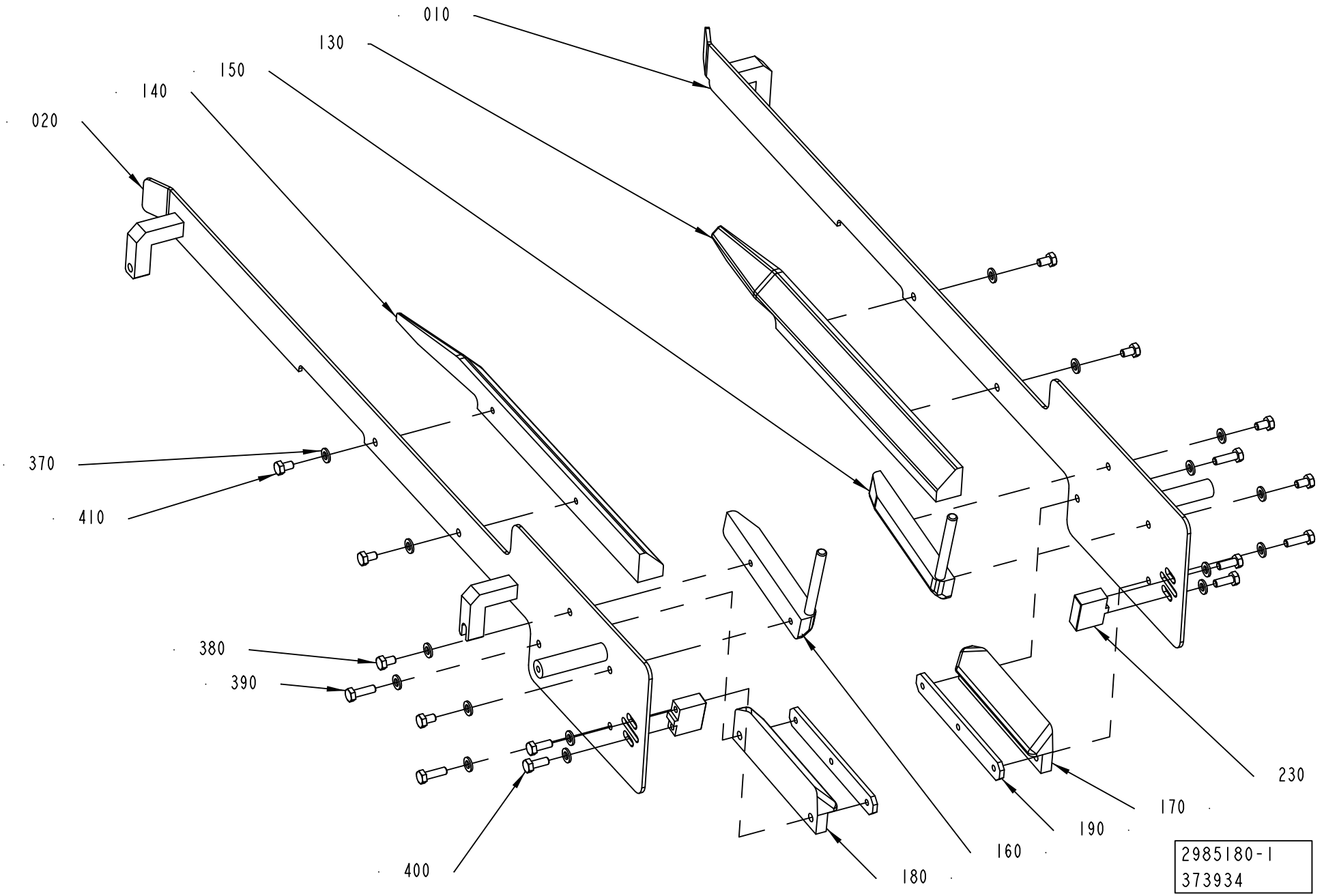
010
130
150
140
020
370
410
380
390
400
160
180
190
170
230
2985180-1
373934

ECM: 550534 - 20120701
Group number: 2985180-0100
Assembly Drawing: 2985180-1_1_AA

This list covers pages from 1-134 to 1-137

Pos	Part No	UN	Qty	Description	Page No
TBA 0500B					
010	3094049-0000		1	GUIDE	
020	3094050-0000		1	GUIDE	
150	1539877-0000		1	BAR	
160	1539878-0000		1	BAR	
170	3094051-0000		1	SLIDE	
180	3094052-0000		1	SLIDE	
190	3094053-0000		2	PLATE	
370	315105-0153		8	WASHER PLAIN, 6,4X12X1,5 A4 BRB	
380	312105-0364		4	SCREW, M6S ISO 4017 M6X10 A4 80	
390	312105-0370		4	SCREW, M6S ISO 4017 M6X20 A4 80	
TBA 0500S					
010	1499401-0000		1	GUIDE	
020	1499400-0000		1	GUIDE	
150	1499417-0000		1	BAR	
160	1499423-0000		1	BAR	
170	1499418-0000		1	SLIDE	
180	1499422-0000		1	SLIDE	
190	1144621-0000		2	PLATE	
370	315105-0153		8	WASHER PLAIN, 6,4X12X1,5 A4 BRB	
380	312105-0366		4	SCREW, M6S ISO 4017 M6X12 A4 80	
390	312105-0370		4	SCREW, M6S ISO 4017 M6X20 A4 80	
TBA 0500SQ					
010	2848493-0000		1	GUIDE	
020	2848492-0000		1	GUIDE	
130	2619728-0000		1	GUIDE	
140	2619727-0000		1	GUIDE	
150	2529277-0000		1	BAR	
160	2529278-0000		1	BAR	
170	2860106-0000		1	SLIDE	
180	2860107-0000		1	SLIDE	
190	2529279-0000		2	PLATE	
370	315105-0153		12	WASHER PLAIN, 6,4X12X1,5 A4 BRB	
380	312105-0364		4	SCREW, M6S ISO 4017 M6X10 A4 80	
390	312105-0370		4	SCREW, M6S ISO 4017 M6X20 A4 80	
410	312105-0366		4	SCREW, M6S ISO 4017 M6X12 A4 80	
TBA 1000B					
010	3094049-0000		1	GUIDE	
020	3094050-0000		1	GUIDE	
150	1348144-0000		1	BAR	
160	1348150-0000		1	BAR	
170	1348133-0000		1	SLIDE	
180	1348139-0000		1	SLIDE	
190	1279409-0000		2	PLATE	
370	315105-0153		8	WASHER PLAIN, 6,4X12X1,5 A4 BRB	
380	312105-0364		4	SCREW, M6S ISO 4017 M6X10 A4 80	
390	312105-0370		4	SCREW, M6S ISO 4017 M6X20 A4 80	
TBA 1000S					
010	1517242-0000		1	GUIDE	
020	1517243-0000		1	GUIDE	
150	1348145-0000		1	BAR	
160	1348151-0000		1	BAR	
170	1348132-0000		1	SLIDE	
180	1348138-0000		1	SLIDE	
190	1279409-0000		2	PLATE	
370	315105-0153		8	WASHER PLAIN, 6,4X12X1,5 A4 BRB	
380	312105-0364		4	SCREW, M6S ISO 4017 M6X10 A4 80	
390	312105-0370		4	SCREW, M6S ISO 4017 M6X20 A4 80	
TBA 1000SQ					
010	2848493-0000		1	GUIDE	
020	2848492-0000		1	GUIDE	
150	1490035-0000		1	BAR	
160	1490036-0000		1	BAR	
170	1490033-0000		1	SLIDE	
180	1490034-0000		1	SLIDE	
190	1144621-0000		2	PLATE	
370	315105-0153		8	WASHER PLAIN, 6,4X12X1,5 A4 BRB	
380	312105-0364		4	SCREW, M6S ISO 4017 M6X10 A4 80	
390	312105-0370		4	SCREW, M6S ISO 4017 M6X20 A4 80	
TBA 1500S					
010	2937242-0000		1	GUIDE	
020	2937243-0000		1	GUIDE	
150	1317805-0000		1	BAR	
160	1334271-0000		1	BAR	
170	1334561-0000		1	SLIDE	
180	1334562-0000		1	SLIDE	
190	1144621-0000		2	PLATE	
370	315105-0153		10	WASHER PLAIN, 6,4X12X1,5 A4 BRB	
380	312105-0364		4	SCREW, M6S ISO 4017 M6X10 A4 80	
390	312105-0374		6	SCREW, M6S ISO 4014 M6X30 A4 80	
TBA 2000S					
010	2925962-0000		1	GUIDE	
020	2925963-0000		1	GUIDE	
150	1317805-0000		1	BAR	

Machine Type | Group Description | Used-In | Group Number | Page No

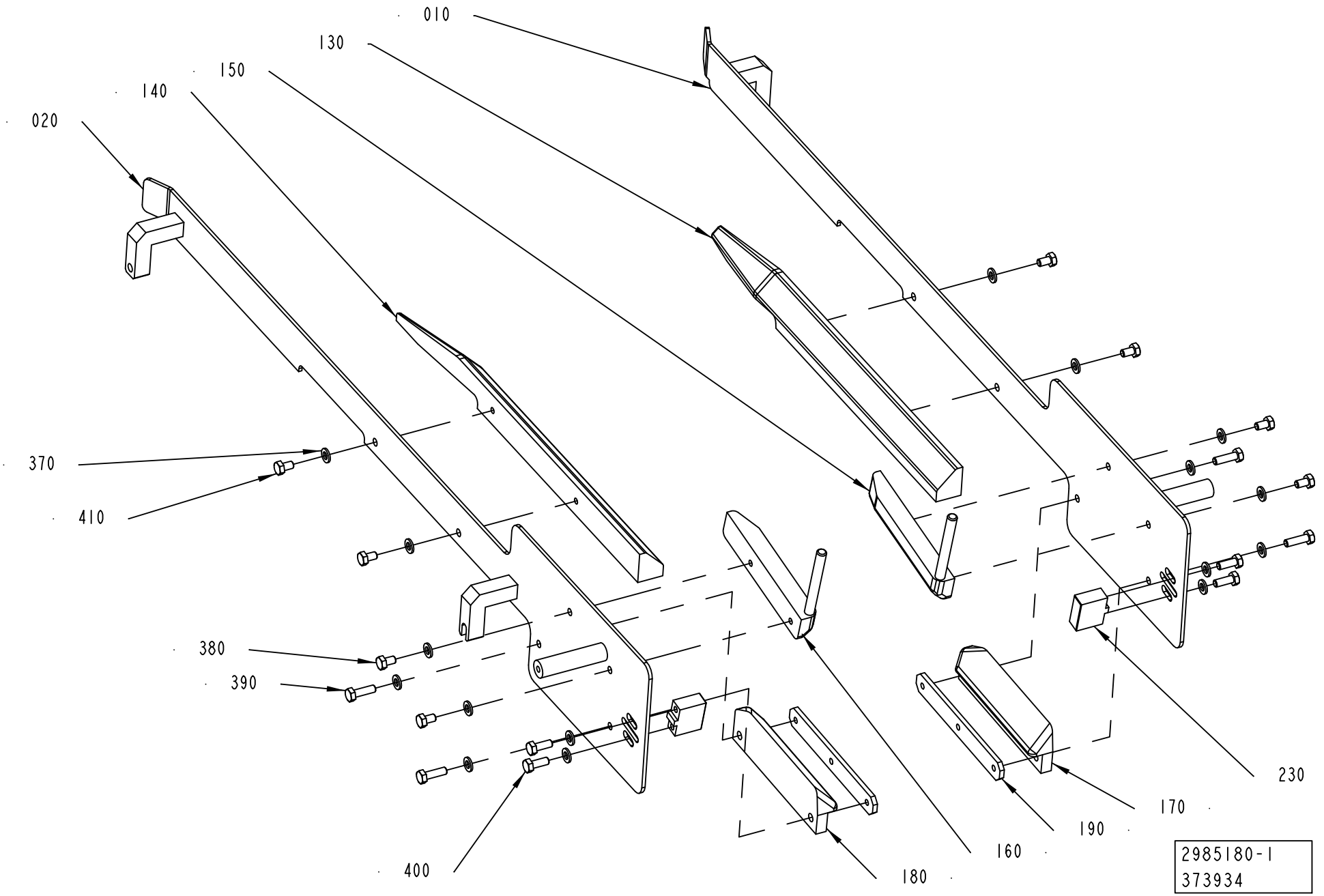
010
130
150
140
020
370
410
380
390
400
180
160
190
170
230
2985180-1
373934

ECM: 550534 - 20120701
Group number: 2985180-0100
Assembly Drawing: 2985180-1_1_AA

This list covers pages from 1-134 to 1-137

Pos	Part No	UN	Qty	Description	Page No
TBA 2000S (Cont'd)					
160	1334271-0000		1	BAR	
170	2598487-0000		1	SLIDE	
180	2598488-0000		1	SLIDE	
190	1144621-0000		2	PLATE	
370	315105-0153		10	WASHER PLAIN, 6,4X12X1,5 A4 BRB	
380	312105-0364		4	SCREW, M6S ISO 4017 M6X10 A4 80	
390	312105-0374		6	SCREW, M6S ISO 4014 M6X30 A4 80	
TPA 0500SQ					
010	1549517-0000		1	GUIDE	
020	1549518-0000		1	GUIDE	
130	1539983-0000		1	GUIDE	
140	1539984-0000		1	GUIDE	
150	1549515-0000		1	BAR	
160	1549516-0000		1	BAR	
170	1549513-0000		1	SLIDE	
180	1549514-0000		1	SLIDE	
190	1144621-0000		2	PLATE	
230	2545545-0000		2	INSERT	
370	315105-0153		16	WASHER PLAIN, 6,4X12X1,5 A4 BRB	
380	312105-0364		4	SCREW, M6S ISO 4017 M6X10 A4 80	
390	312105-0370		4	SCREW, M6S ISO 4017 M6X20 A4 80	
400	312105-0368		4	SCREW, M6S ISO 4017 M6X16 A4 80	
410	312105-0364		4	SCREW, M6S ISO 4017 M6X10 A4 80	
TPA 0750SQ					
010	2912508-0000		1	GUIDE	
020	2912507-0000		1	GUIDE	
130	2971774-0000		1	GUIDE	
140	2971773-0000		1	GUIDE	
150	2647088-0000		1	BAR	
160	2647089-0000		1	BAR	
170	2647090-0000		1	SLIDE	
180	2647091-0000		1	SLIDE	
190	2647092-0000		2	ANGLE BLOCK	
370	315105-0153		12	WASHER PLAIN, 6,4X12X1,5 A4 BRB	
380	312105-0366		4	SCREW, M6S ISO 4017 M6X12 A4 80	
390	312105-0368		4	SCREW, M6S ISO 4017 M6X16 A4 80	
410	312105-0364		4	SCREW, M6S ISO 4017 M6X10 A4 80	
TPA 1000SQ					
010	2912508-0000		1	GUIDE	
020	2912507-0000		1	GUIDE	
130	2971774-0000		1	GUIDE	
140	2971773-0000		1	GUIDE	
150	2647084-0000		1	BAR	
160	2647085-0000		1	BAR	
170	2675323-0000		1	SLIDE	
180	2675322-0000		1	SLIDE	
190	2543242-0000		2	ANGLE BLOCK	
370	315105-0153		12	WASHER PLAIN, 6,4X12X1,5 A4 BRB	
380	312105-0366		4	SCREW, M6S ISO 4017 M6X12 A4 80	
390	312105-0368		4	SCREW, M6S ISO 4017 M6X16 A4 80	
410	312105-0364		4	SCREW, M6S ISO 4017 M6X10 A4 80	

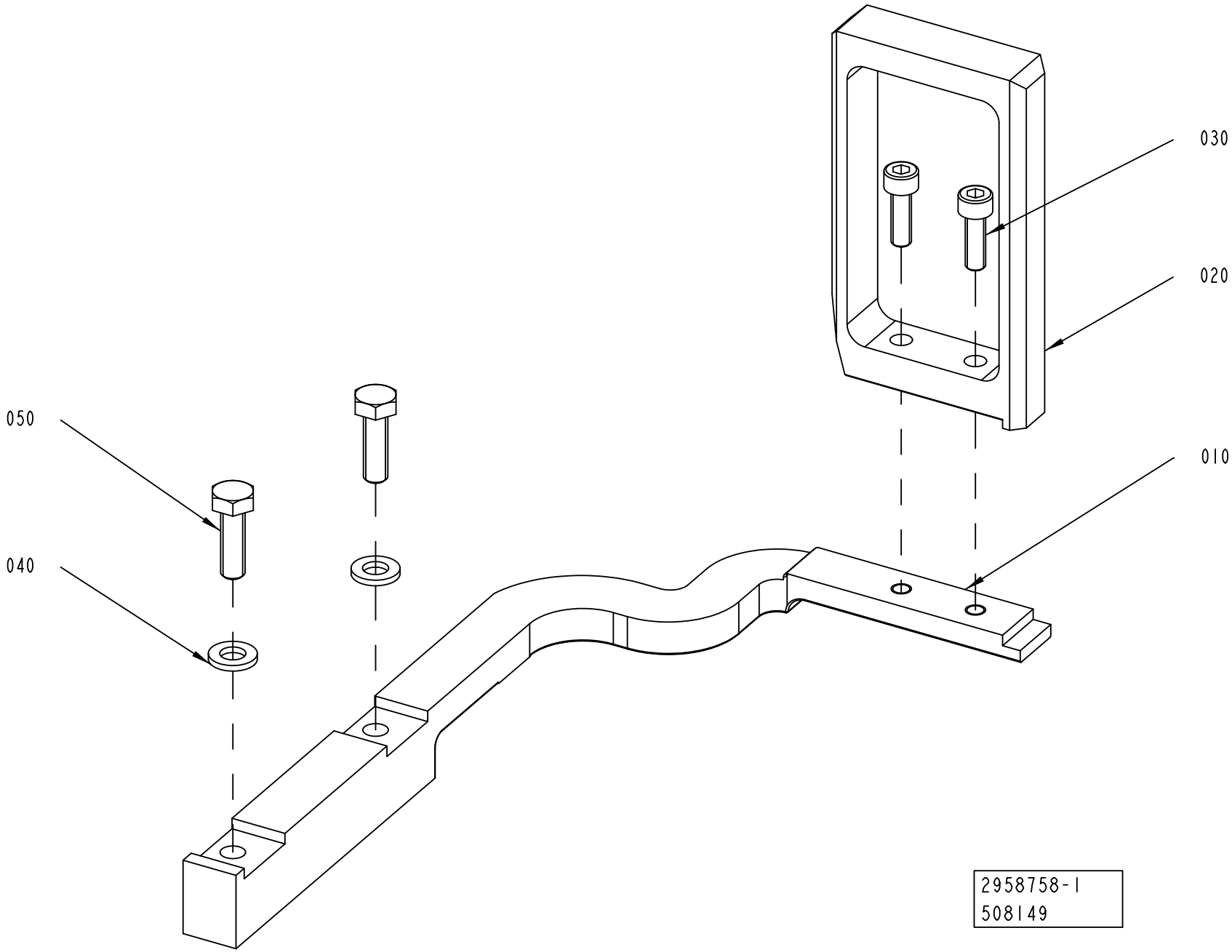
030
020
050
040
010
2958758-1
508149

ECM: 515994 - 20120101
Group number: 2958758-0100
Assembly Drawing: 2958758-1_1_AB

Pos	Part No	UN	Qty	Description	Page No
TBA 0500B QC					
010	2922976-0000		1	FINGER	
020	2947624-0100		1	PUSHER	**1-141**
030	312105-0325		2	SCREW, M6S ISO 4017 M5X10 A4 80	
TBA 0500S					
010	2948538-0000		1	FINGER	
020	2947971-0000		1	PUSHER	
030	312115-0329		1	SCREW ISO4762 M5X16 A4 80	
TBA 0500SQ, TBA 1000SQ, TBA 1000S, TBA 1500S, TPA 1000SQ, TBA 2000S, TPA 0750SQ					
010	2922976-0000		1	FINGER	
020	2774936-0000		1	PUSHER	
030	312115-0329		2	SCREW ISO4762 M5X16 A4 80	
TBA 1000B QC NOMOLDEDCAP					
010	2922976-0000		1	FINGER	
020	2947624-0100		1	PUSHER	**1-141**
030	312105-0325		2	SCREW, M6S ISO 4017 M5X10 A4 80	
TPA 0500SQ					
010	2948538-0000		1	FINGER	
020	3048516-0000		1	PUSHER	
030	312115-0329		1	SCREW ISO4762 M5X16 A4 80	
Common Parts					
040	315106-0153		2	WASHER PLAIN, M6 ISO7089-6-200 HV A4	
050	312105-0370		2	SCREW, M6S ISO 4017 M6X20 A4 80	

Pos	Part No	UN	Qty	Description	Page No

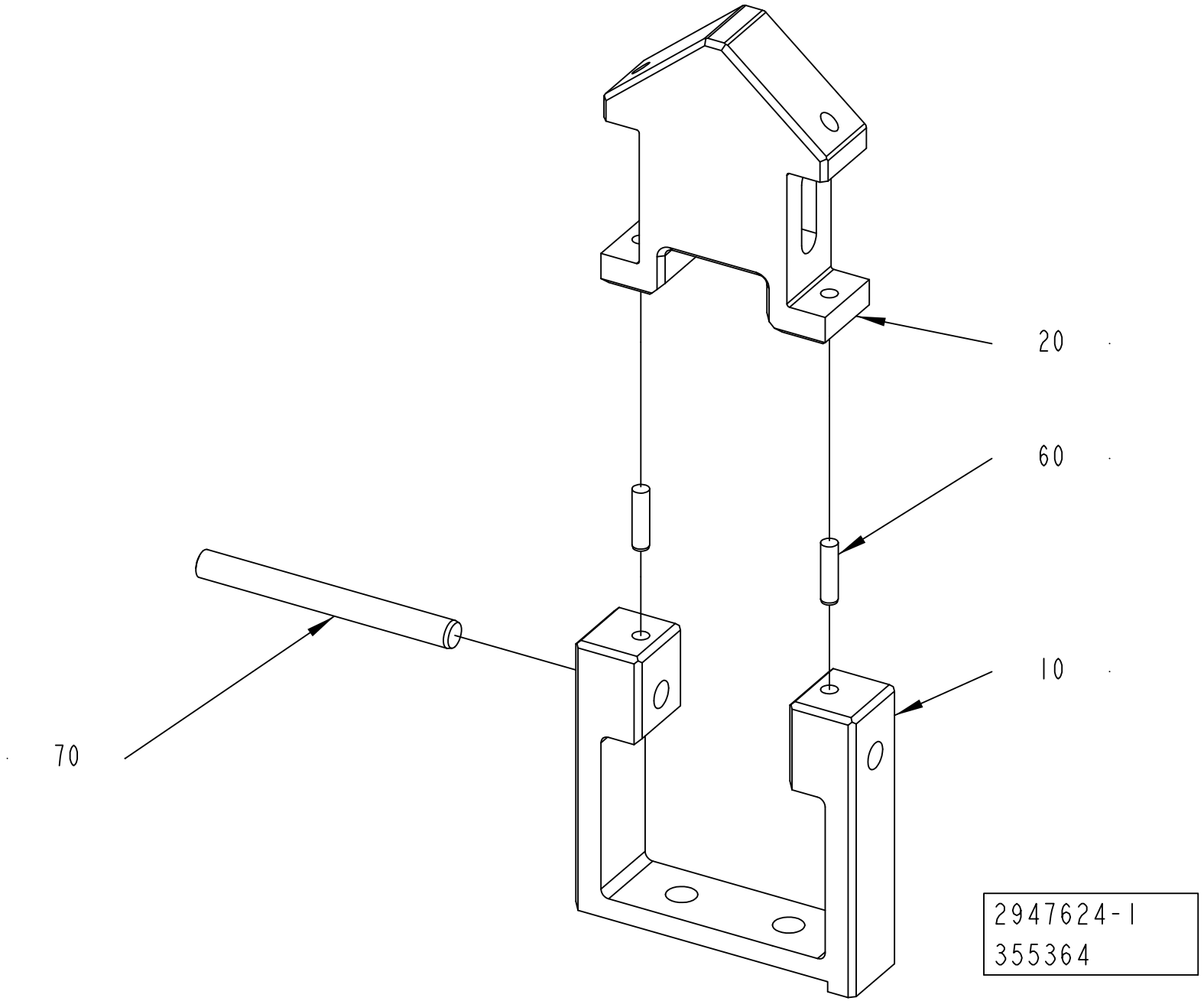
20
60
10
70
2947624-1
355364

ECM: 358058 - 20080620
Group number: 2947624-0100
Assembly Drawing: 2947624-1_1_AA

Pos	Part No	UN	Qty	Description	Page No
-					
010	2947625-0000		1	PUSHER	
020	2947626-0000		1	PUSHER	
060	311103-0234		2	PARALLEL PIN ISO 2338 3M6X12 A1	
070	311103-0322		1	PARALLEL PIN ISO 2338 5M6X50 A1	

Pos	Part No	UN	Qty	Description	Page No

This page is intentionally left blank.

ECM: 535844 - 20120401
Group number: 2634511-0300
Assembly Drawing:

Pos	Part No	UN	Qty	Description	Page No
DIFFERENT WHEEL					
010	3019102-0200		1	INFEED FRAME	**1-145**
030	2889590-0100		1	PROTECTIVE COVER	**1-151, 1-153**
080	2921646-0100		1	FOLDING PART	**1-155**
Common Parts					
040	2966905-0100		1	CRADLE	**1-157, 1-159**
060	3066567-0100		1	PT FLEX HOLES	**1-161**
070	2966900-0100		1	SPACER	**1-207**

Pos	Part No	UN	Qty	Description	Page No

This page is intentionally left blank.

ECM: 528622 - 20120401
Group number: 3019102-0200
Assembly Drawing:

Pos	Part No	UN	Qty	Description	Page No
TBA 0500S, TBA 0500SQ, TBA 0500B, TBA 1000B, TBA 1000SQ, TBA 1000S, TPA 0500SQ					
020	1517299-0500		1	INFEED CONVEYOR LONG	**1-147**
TBA 1500S, TPA 1000SQ, TBA 2000S, TPA 0750SQ					
010	2927640-0200		1	INFEED CONVEYOR SHORT	**1-149**

Pos	Part No	UN	Qty	Description	Page No

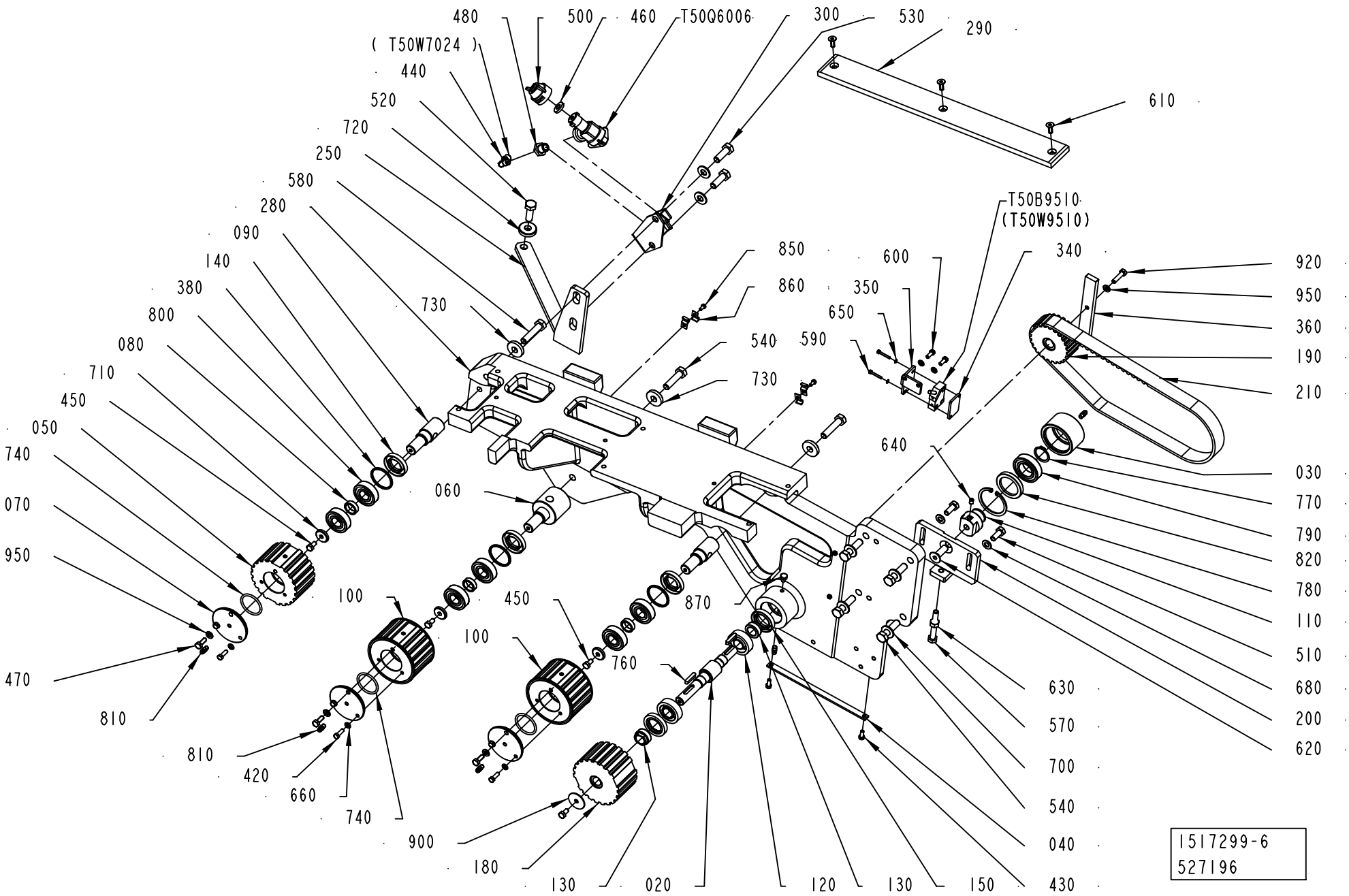

1517299-6
527196

ECM: 549127 - 20120701
Group number: 1517299-0500
Assembly Drawing: 1517299-6_1_AA

Pos	Part No	UN	Qty	Description	Page No
-					
020	2987003-0000		1	SHAFT	
030	2958240-0000		1	ROLLER	
040	1144593-0000		1	PLATE	
050	2952684-0000		1	TOOTHED PULLEY	
060	2852228-0000		1	ECCENTRIC SHAFT	
070	2955104-0000		3	PLUG	
080	1144597-0000		3	SPACER	
090	1484620-0000		2	SHAFT	
100	2952685-0000		2	TOOTHED PULLEY	
110	2958241-0000		1	SHAFT	
120	90214-0219		2	CYL.ROLLER BEARING, 17X40X12 MM	
130	2987004-0000		2	SPACER	
140	90091-0440		3	RADIAL SEAL 22X40X7 MM DUST LIP	
150	1498068-0000		2	SEAL RING	
180	2987005-0000		1	TOOTHED PULLEY	
190	2987006-0000		1	TOOTHED PULLEY	
200	1144794-0000		1	SUPPORT	
210	1144841-0000		1	TIMING BELT	
250	2552445-0000		1	SUPPORT	
280	1347699-0000		1	PLATE	
290	1260941-0000		1	SLIDE	
300	2994447-0000		1	SUPPORT	
340	3040942-0000		1	PLATE	
350	3060493-0000		1	BRACKET	
360	3031188-0000		1	ACTIVATOR	
380	2850481-0000		3	SPACER	
420	312105-0329		6	SCREW, M6S ISO 4017 M5X16 A4 80	
430	312125-0327		2	SLOTTED HEAD SCREW, ISO1207 M5X12 A4	
440	342930-0113		1	ELBOW 90COUPL., EXT. THREAD 6/4-R1/8"	
450	312105-0366		4	SCREW, M6S ISO 4017 M6X12 A4 80	
460	90005-0094		1	GASKET C 19438-EPR	
470	312105-0368		3	SCREW, M6S ISO 4017 M6X16 A4 80	
480	532413-0000		1	REDUCING NIPPLE	
500	534310-0003		1	NOZZLE	
510	312105-0451		2	SCREW, M6S ISO 4017 M8X20 A4 80	
520	312105-0495		1	SCREW, M6S ISO 4017 M10X30 A4 80	
530	312105-0495		2	SCREW, M6S ISO 4017 M10X30 A4 80	
540	312109-0499		5	SCREW, M6S ISO 4017 M10X40 A4 80	
570	312109-0463		1	SCREW, M6S ISO 4017 M8X60 A4 80	
580	312109-0500		2	SCREW, M6S ISO 4017 M10X45 A4 80	
590	312115-0230		2	SCREW ISO4762 M3X20 A4 80	
600	312125-0327		2	SLOTTED HEAD SCREW, ISO1207 M5X12 A4	
610	312155-0368		3	SCREW DIN 7991 MF6S M6X16 A4 70	
620	312155-0495		1	SCREW DIN 7991 MF6S M10X30 A4 70	
630	312605-0318		1	HEXAGON NUT, M6M M8 A280	
640	312318-0362		1	SET SCREW, CUP END ISO4029 M6X8 A4	
650	315105-0124		2	WASHER PLAIN, 3,2X6X0,5 A4 BRB	
660	315105-0146		8	WASHER PLAIN, 5,3X10X1 A4 BRB	
680	315105-0165		2	WASHER PLAIN, 8,4X16X1,6 A4 BRB	
700	315105-0173		6	WASHER PLAIN, 10,5X22X2 A4 BRB	
710	315125-0153		4	WASHER HIGH, TBRSB 6,4X22X4 A4	
720	315125-0173		1	WASHER HIGH, TBRSB 10,5X28X6 A4	
730	315125-0173		3	WASHER HIGH, TBRSB 10,5X28X6 A4	
740	315202-0221		3	O-RING 34,2X3 MM	
760	315705-0202		2	PARALLEL KEY W. ROUND ENDS, 5X5X25MM	
770	315751-0119		1	RETAINING RING FOR SHAFT DIN 471 25 SS	
780	90141-0019		1	RETAINING RING FOR BORE DIN 472 50 SS	
790	321306-0105		1	BALL BEARING 25/47X12	
800	321309-0103		6	BALL BEARING 17/40X12	
810	90286-0013		5	GREASE NIPPLE STRAIGHT, H1 M6X1 2346	
820	90091-0297		1	RADIAL SEAL 35X47X7 MM DUST LIP	
830	90603-6022	G	1	KLüBERSYNTH UH1 64-62, ONLY IN BOM	
	90603-6023		*1*	*KLüBERSYNTH UH1 64-62, 1 KG CAN*	
	90603-6024		*1*	*KLüBERSYNTH UH1 64-62, 25KG BUCKET*	
850	312125-0287		4	SLOTTED HEAD SCREW, ISO1207 M4X8 A4	
860	90165-0057		6	PIPE CLIP FOR TUBE D=6 MM	
870	312105-0362		1	SCREW, M6S ISO 4017 M6X8 A4 80	
900	90458-0073		1	WASHER 6,4/30, H=1,5	
920	312105-0372		1	SCREW, M6S ISO 4017 M6X25 A4 80	
950	315105-0153		4	WASHER PLAIN, 6,4X12X1,5 A4 BRB	
T50B9510	90044-0194		1	INDUCTIVE SENSOR, IN 5329	
T50Q6006	90230-0027		1	NON-RETURN VALVE QJ 8355-1/4"	
	90230-0300		*1*	*STRAINER*	
	90230-0301		*1*	*DIAPHRAGM*	

Machine Type | Group Description | Used-In | Group Number | Page No

INFEED CONVEYOR SHORT

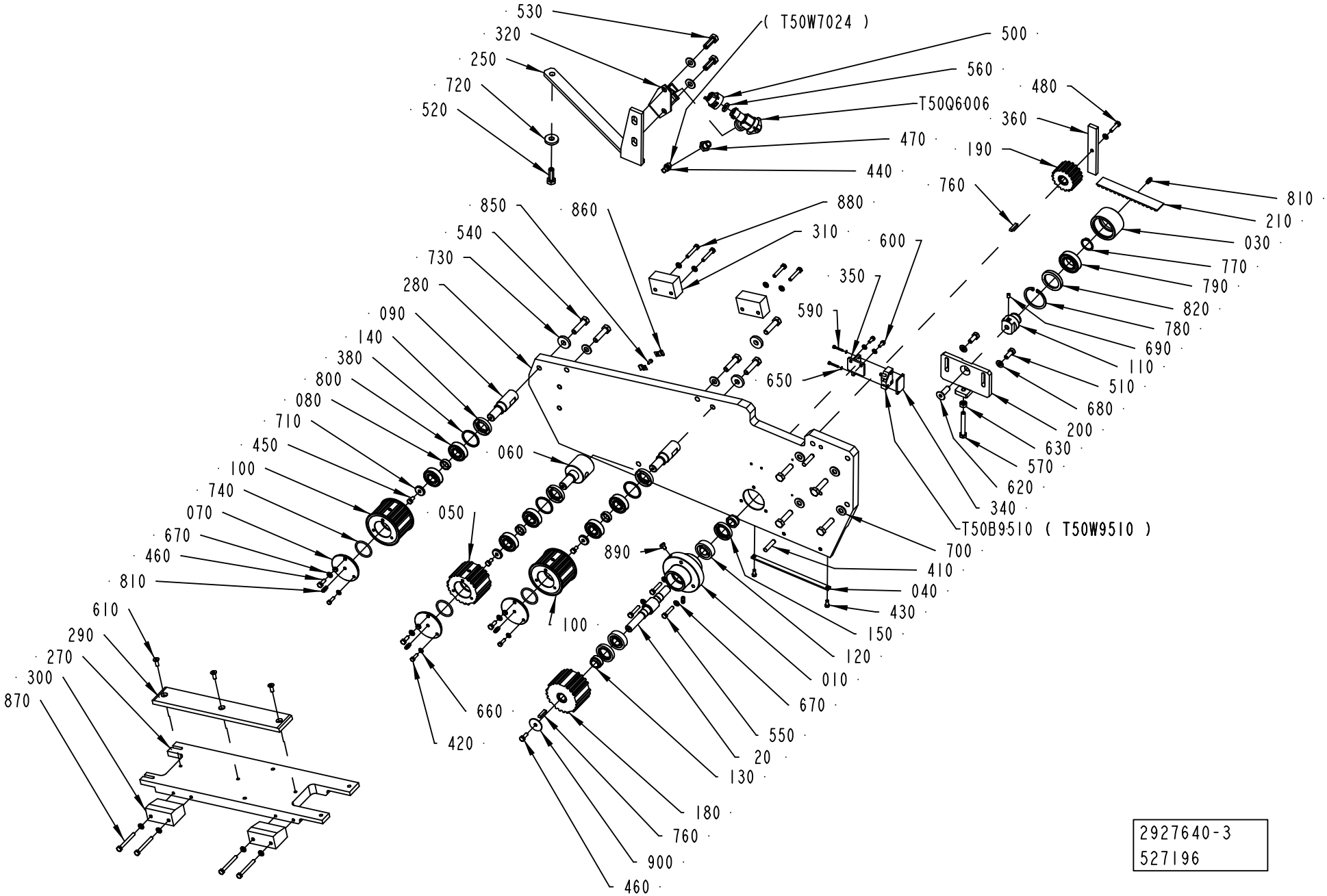

ECM: 549125 - 20120701
Group number: 2927640-0200
Assembly Drawing: 2927640-3_1_AA

Pos	Part No	UN	Qty	Description	Page No
-					
010	2955763-0000		1	BEARING HOUSING	
020	2987003-0000		1	SHAFT	
030	2958240-0000		1	ROLLER	
040	1144593-0000		1	PLATE	
050	2952687-0000		1	TOOTHED PULLEY	
060	2852228-0000		1	ECCENTRIC SHAFT	
070	2955104-0000		3	PLUG	
080	1144597-0000		3	SPACER	
090	1144598-0000		2	SHAFT	
100	2952688-0000		2	TOOTHED PULLEY	
110	2958241-0000		1	SHAFT	
120	90214-0219		2	CYL.ROLLER BEARING, 17X40X12 MM	
130	2987004-0000		2	SPACER	
140	90091-0440		3	RADIAL SEAL 22X40X7 MM DUST LIP	
150	1498068-0000		2	SEAL RING	
180	2987009-0000		1	TOOTHED PULLEY	
190	2987008-0000		1	TOOTHED PULLEY	
200	1144794-0000		1	SUPPORT	
210	1144841-0000		1	TIMING BELT	
250	2678708-0000		1	SUPPORT	
270	2665197-0000		1	BRACKET	
280	2927641-0000		1	PLATE	
290	2665199-0000		1	SLIDE	
300	1285956-0000		2	BLOCK	
310	1285955-0000		2	PLATE	
320	2994447-0000		1	SUPPORT	
340	3040942-0000		1	PLATE	
350	3040941-0000		1	BRACKET	
360	3031188-0000		1	ACTIVATOR	
380	2850481-0000		3	SPACER	
410	311103-0407		2	PARALLEL PIN ISO 2338 8M6X35 A1	
420	312105-0329		6	SCREW, M6S ISO 4017 M5X16 A4 80	
430	312125-0327		2	SLOTTED HEAD SCREW, ISO1207 M5X12 A4	
440	342930-0113		1	ELBOW 90COUPL., EXT. THREAD 6/4-R1/8"	
450	312105-0366		3	SCREW, M6S ISO 4017 M6X12 A4 80	
460	312105-0368		4	SCREW, M6S ISO 4017 M6X16 A4 80	
470	532413-0000		1	REDUCING NIPPLE	
480	312105-0372		1	SCREW, M6S ISO 4017 M6X25 A4 80	
500	534310-0003		1	NOZZLE	
510	312105-0451		2	SCREW, M6S ISO 4017 M8X20 A4 80	
520	312105-0495		1	SCREW, M6S ISO 4017 M10X30 A4 80	
530	312105-0495		2	SCREW, M6S ISO 4017 M10X30 A4 80	
540	312109-0499		9	SCREW, M6S ISO 4017 M10X40 A4 80	
550	312109-0374		3	SCREW, M6S ISO 4017 M6X30 A4 80	
560	90005-0094		1	GASKET C 19438-EPR	
570	312109-0463		1	SCREW, M6S ISO 4017 M8X60 A4 80	
590	312115-0230		2	SCREW ISO4762 M3X20 A4 80	
600	312125-0327		2	SLOTTED HEAD SCREW, ISO1207 M5X12 A4	
610	312155-0368		3	SCREW DIN 7991 MF6S M6X16 A4 70	
620	312155-0495		1	SCREW DIN 7991 MF6S M10X30 A4 70	
630	312605-0318		1	HEXAGON NUT, M6M M8 A280	
650	315105-0124		2	WASHER PLAIN, 3,2X6X0,5 A4 BRB	
660	315105-0146		8	WASHER PLAIN, 5,3X10X1 A4 BRB	
670	315105-0153		15	WASHER PLAIN, 6,4X12X1,5 A4 BRB	
680	315105-0165		2	WASHER PLAIN, 8,4X16X1,6 A4 BRB	
690	312318-0362		1	SET SCREW, CUP END ISO4029 M6X8 A4	
700	315105-0173		8	WASHER PLAIN, 10,5X22X2 A4 BRB	
710	315125-0153		4	WASHER HIGH, TBRSB 6,4X22X4 A4	
720	315125-0173		1	WASHER HIGH, TBRSB 10,5X28X6 A4	
730	315125-0173		3	WASHER HIGH, TBRSB 10,5X28X6 A4	
740	315202-0221		3	O-RING 34,2X3 MM	
760	315705-0202		2	PARALLEL KEY W. ROUND ENDS, 5X5X25MM	
770	315751-0119		1	RETAINING RING FOR SHAFT DIN 471 25 SS	
780	90141-0019		1	RETAINING RING FOR BORE DIN 472 50 SS	
790	321306-0105		1	BALL BEARING 25/47X12	
800	321309-0103		6	BALL BEARING 17/40X12	
810	90286-0013		5	GREASE NIPPLE STRAIGHT, H1 M6X1 2346	
820	90091-0297		1	RADIAL SEAL 35X47X7 MM DUST LIP	
830	90603-6022	G	1	KLüBERSYNTH UH1 64-62, ONLY IN BOM	
	90603-6023		*1*	*KLüBERSYNTH UH1 64-62, 1 KG CAN*	
	90603-6024		*1*	*KLüBERSYNTH UH1 64-62, 25KG BUCKET*	
850	312125-0287		2	SLOTTED HEAD SCREW, ISO1207 M4X8 A4	
860	90165-0057		4	PIPE CLIP FOR TUBE D=6 MM	
870	312105-0381		4	SCREW, M6S ISO 4014 M6X55 A4 80	
880	312105-0376		4	SCREW, M6S ISO 4014 M6X35 A4 80	
890	312105-0362		1	SCREW, M6S ISO 4017 M6X8 A4 80	
900	90458-0073		1	WASHER 6,4/30, H=1,5	
T50B9510	90044-0194		1	INDUCTIVE SENSOR, IN 5329	
T50Q6006	90230-0027		1	NON-RETURN VALVE QJ 8355-1/4"	
	90230-0300		*1*	*STRAINER*	
	90230-0301		*1*	*DIAPHRAGM*	

Machine Type	Group Description	Used-In	Group Number	Page No

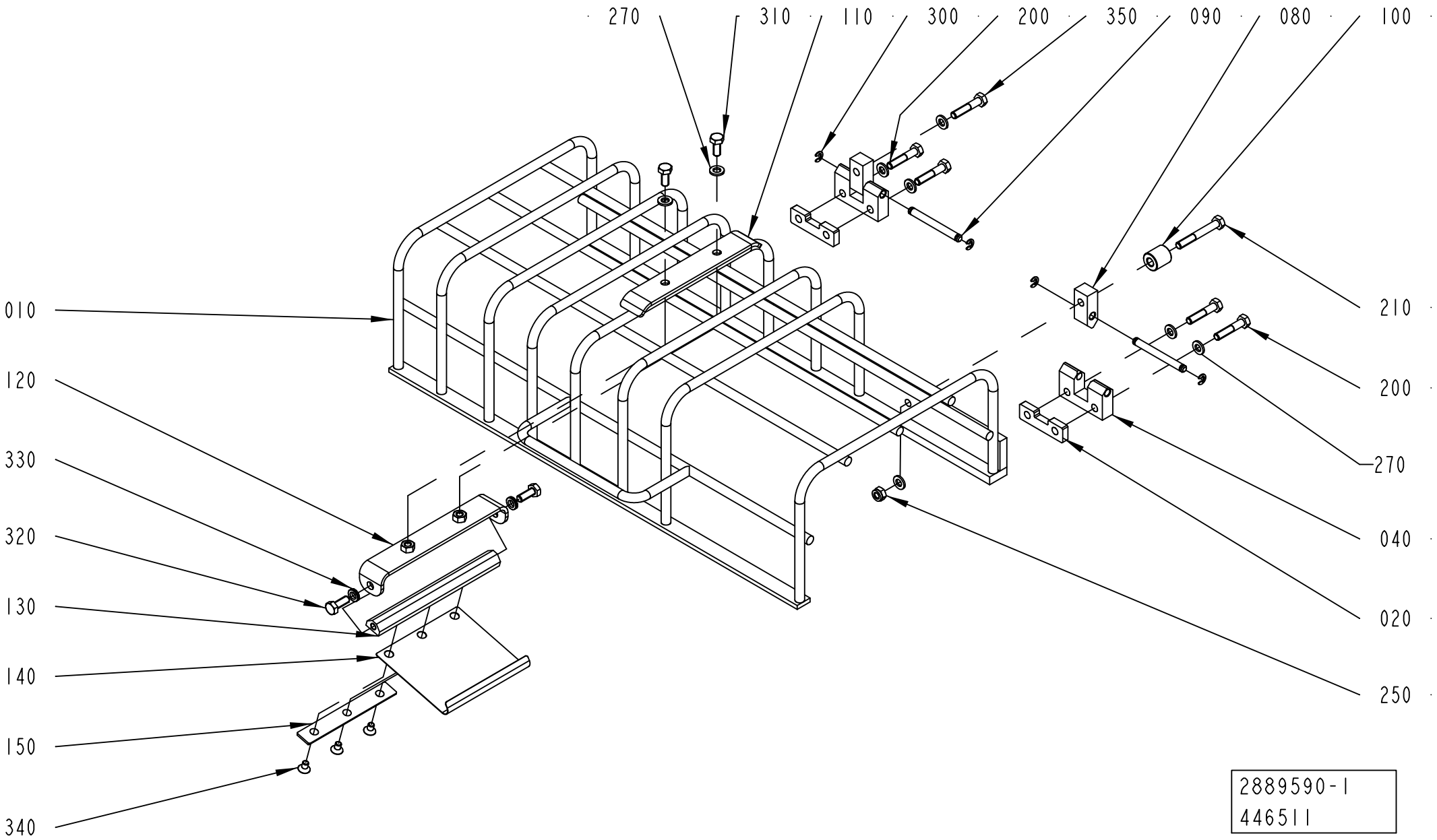
270
310
110
300
200
350
090
080
100
010
120
330
320
130
140
150
340
210
200
270
040
020
250
2889590-1
446511

ECM: 448141 - 20101001
Group number: 2889590-0100
Assembly Drawing: 2889590-1_1_AE

This list covers pages from 1-150 to 1-153

Pos	Part No	UN	Qty	Description	Page No
TBA 0500S, TBA 0500SQ, TBA 0500B, TBA 1000B, TBA 1000SQ, TBA 1000S, TPA 0500SQ (See drawing on page: 1-150)					
010	2990908-0000		1	PROTECTION	
270	315105-0153		9	WASHER PLAIN, 6,4X12X1,5 A4 BRB	
TBA 1500S, TPA 1000SQ, TBA 2000S, TPA 0750SQ (See drawing on page: 1-152)					
010	2889589-0000		1	PROTECTION	
270	315105-0153		10	WASHER PLAIN, 6,4X12X1,5 A4 BRB	
Common Parts					
020	2996045-0000		2	SPACER	
040	1144667-0000		2	HINGE	
080	1144668-0000		2	HINGE	
090	1144669-0000		2	PIN	
100	1360149-0000		1	SPACER	
110	1499476-0000		1	HOLDER	
120	2527792-0000		1	SUPPORT	
130	2527793-0000		1	SHAFT	
140	2530418-0000		1	SPRING	
150	2540612-0000		1	PLATE	
200	312105-0374		4	SCREW, M6S ISO 4014 M6X30 A4 80	
210	312105-0379		1	SCREW, M6S ISO 4014 M6X45 A4 80	
250	312812-0316		2	HEXAGON NUT, NY-LOCK M6 A4 80	
300	315755-0106		4	RETAINING RING SHAFT DIN 6799 4 SS	
310	312105-0367		2	SCREW, M6S ISO 4017 M6X14 A4 80	
320	312105-0368		2	SCREW, M6S ISO 4017 M6X16 A4 80	
330	90062-0061		2	LOCK WASHER NORD-LOCK,6,5/10,8, T=2,2	
340	312155-0323		3	SCREW DIN 7991 MF6S M5X8 A4 70	
350	312105-0374		1	SCREW, M6S ISO 4014 M6X30 A4 80	

Pos	Part No	UN	Qty	Description	Page No

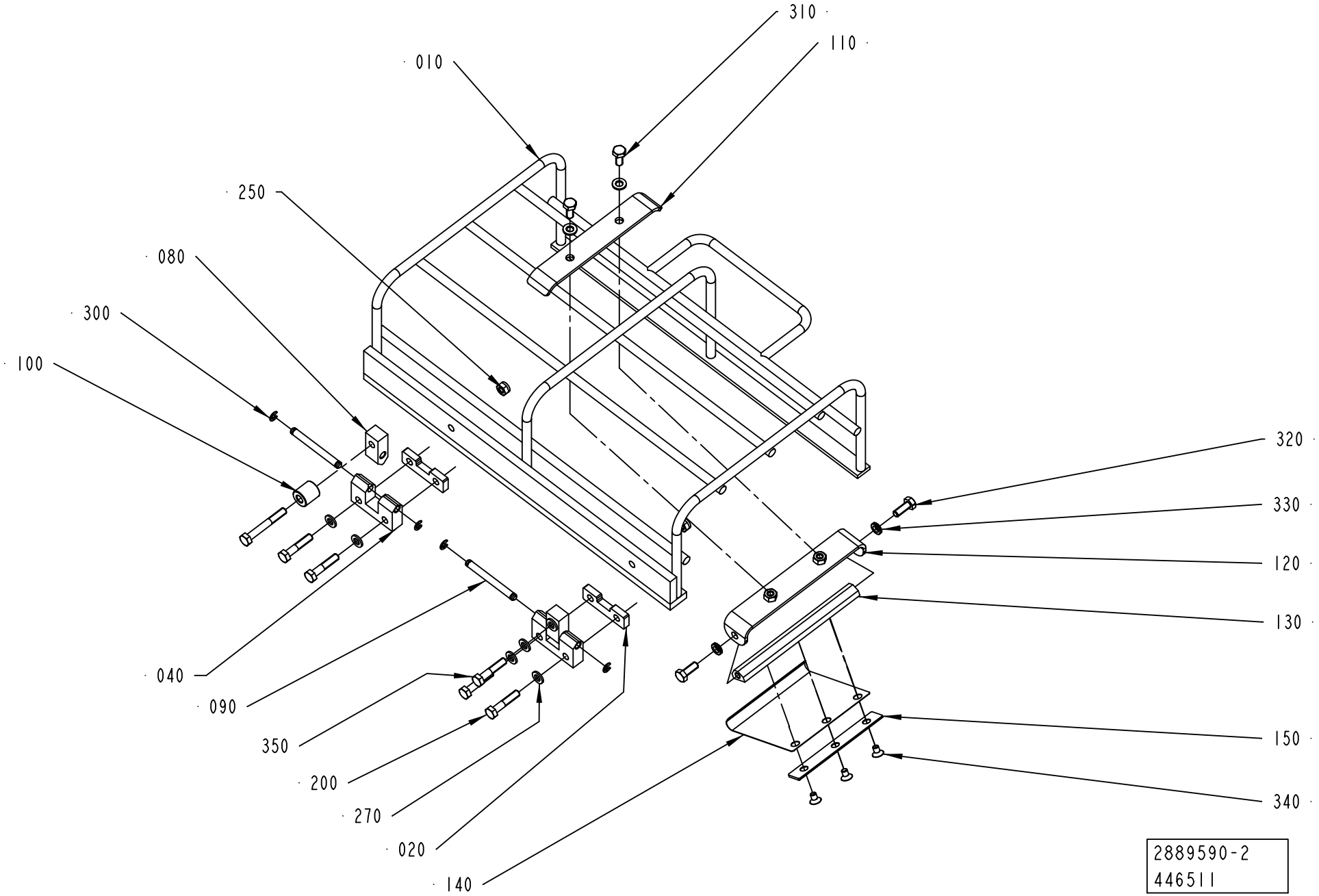
310
110
010
250
080
300
100
320
330
120
130
040
090
350
200
270
020
140
150
340
2889590-2
446511

Pos	Part No	UN	Qty	Description	Page No
TBA 0500S, TBA 0500SQ, TBA 0500B, TBA 1000B, TBA 1000SQ, TBA 1000S, TPA 0500SQ (See drawing on page: 1-150)					
010	2990908-0000		1	PROTECTION	
270	315105-0153		9	WASHER PLAIN, 6,4X12X1,5 A4 BRB	
TBA 1500S, TPA 1000SQ, TBA 2000S, TPA 0750SQ (See drawing on page: 1-152)					
010	2889589-0000		1	PROTECTION	
270	315105-0153		10	WASHER PLAIN, 6,4X12X1,5 A4 BRB	
Common Parts					
020	2996045-0000		2	SPACER	
040	1144667-0000		2	HINGE	
080	1144668-0000		2	HINGE	
090	1144669-0000		2	PIN	
100	1360149-0000		1	SPACER	
110	1499476-0000		1	HOLDER	
120	2527792-0000		1	SUPPORT	
130	2527793-0000		1	SHAFT	
140	2530418-0000		1	SPRING	
150	2540612-0000		1	PLATE	
200	312105-0374		4	SCREW, M6S ISO 4014 M6X30 A4 80	
210	312105-0379		1	SCREW, M6S ISO 4014 M6X45 A4 80	
250	312812-0316		2	HEXAGON NUT, NY-LOCK M6 A4 80	
300	315755-0106		4	RETAINING RING SHAFT DIN 6799 4 SS	
310	312105-0367		2	SCREW, M6S ISO 4017 M6X14 A4 80	
320	312105-0368		2	SCREW, M6S ISO 4017 M6X16 A4 80	
330	90062-0061		2	LOCK WASHER NORD-LOCK,6,5/10,8, T=2,2	
340	312155-0323		3	SCREW DIN 7991 MF6S M5X8 A4 70	
350	312105-0374		1	SCREW, M6S ISO 4014 M6X30 A4 80	

Pos	Part No	UN	Qty	Description	Page No

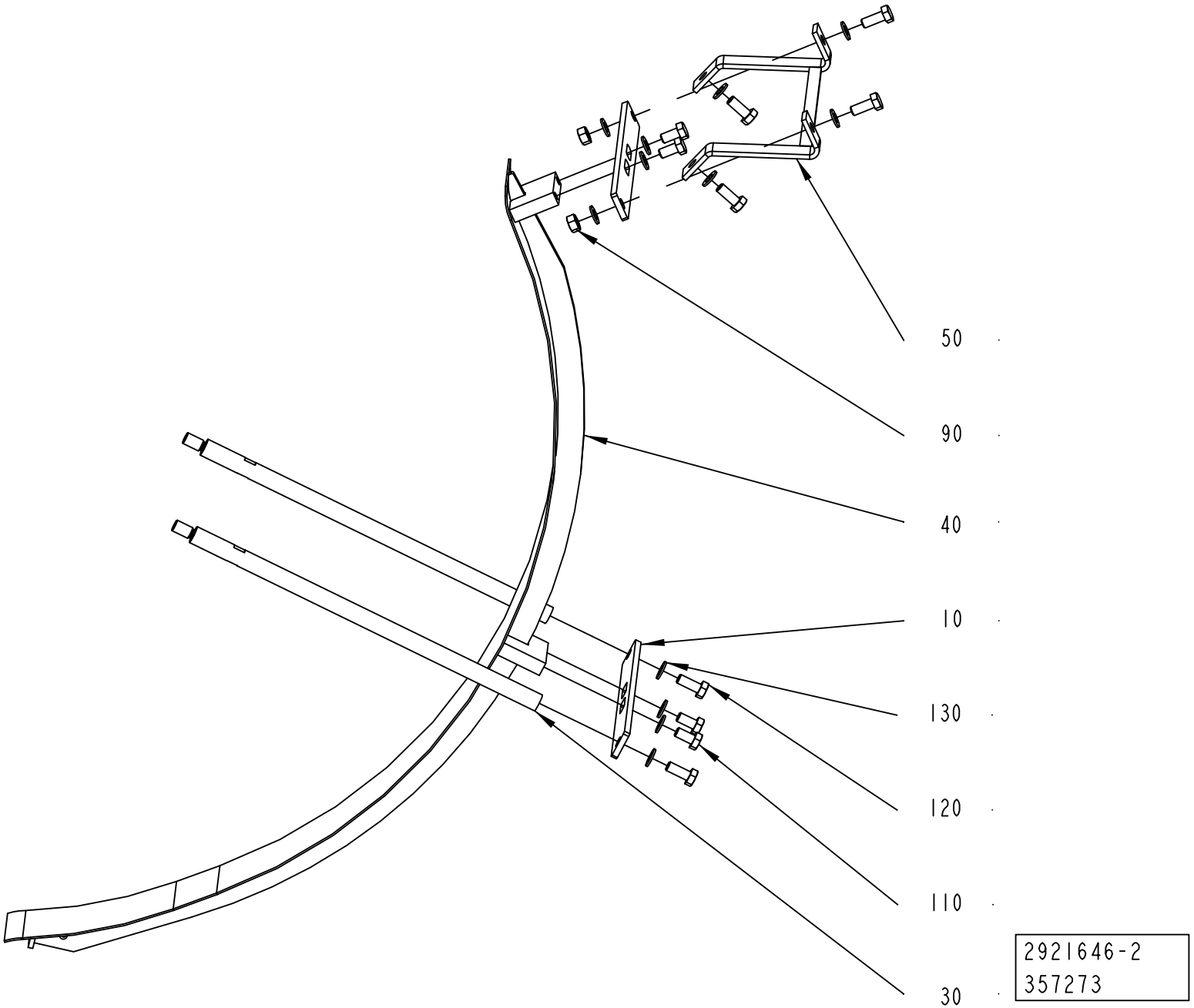
50
90
40
10
130
120
110
30
2921646-2
357273

ECM: 425764 - 20100401
Group number: 2921646-0100
Assembly Drawing: 2921646-2_1_AB

Pos	Part No	UN	Qty	Description	Page No
TBA 0500S, TBA 0500SQ, TBA 0500B, TBA 1000B, TBA 1000SQ, TBA 1000S, TPA 0500SQ					
030	1144551-0000		2	SPACER	
040	2983786-0000		1	SUPPORT	
050	1144899-0000		2	SUPPORT	
TBA 1500S, TPA 1000SQ, TBA 2000S, TPA 0750SQ					
030	2876458-0000		2	SPACER	
040	2876459-0000		1	SUPPORT	
050	2851347-0000		1	HOLDER	
Common Parts					
010	1144552-0000		2	PLATE	
090	312605-0318		2	HEXAGON NUT, M6M M8 A280	
110	312105-0449		4	SCREW, M6S ISO 4017 M8X16 A4 80	
120	312105-0451		6	SCREW, M6S ISO 4017 M8X20 A4 80	
130	315105-0165		12	WASHER PLAIN, 8,4X16X1,6 A4 BRB	

Pos	Part No	UN	Qty	Description	Page No

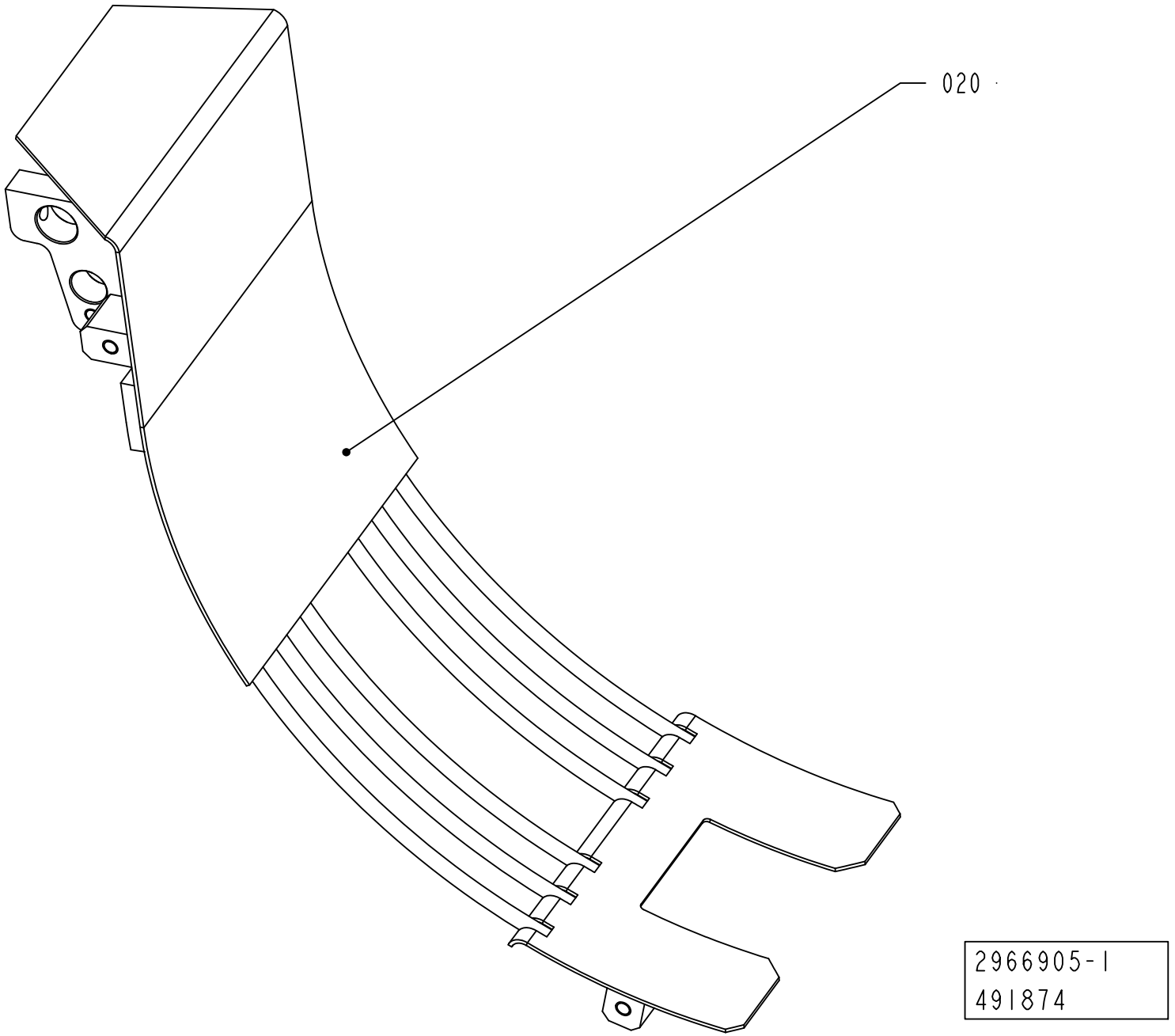
020
2966905-1
491874

Pos	Part No	UN	Qty	Description	Page No
TBA 0500S, TBA 0500SQ, TBA 0500B, TBA 1000B, TBA 1000SQ, TPA 0500SQ, TBA 1000S NOMOLDEDCAP (See drawing on page: 1-156)					
020	2751788-0000		1	CRADLE	
TBA 1500S, TBA 2000S (See drawing on page: 1-156)					
020	2665204-0000		1	CRADLE	
TGA 1000SQ, TGA 0750SQ, TGA 0500SQ (See drawing on page: 1-158)					
020	3002385-0000		1	CRADLE	
030	2883280-0000		1	COVER	
040	2864758-0000		1	NOZZLE	
1000	90457-0922		1	ELBOW PIPE JOINT, EXT.THREAD, D=6MM M5	
1010	312115-0323		2	SCREW ISO4762 M5X8 A4 80	
1020	312105-0372		2	SCREW, M6S ISO 4017 M6X25 A4 80	
TGA 1500SQ (See drawing on page: 1-158)					
020	2940972-0000		1	CRADLE	
030	2883280-0000		1	COVER	
040	2864758-0000		1	NOZZLE	
1000	90457-0922		1	ELBOW PIPE JOINT, EXT.THREAD, D=6MM M5	
1010	312115-0323		2	SCREW ISO4762 M5X8 A4 80	
1020	312105-0372		2	SCREW, M6S ISO 4017 M6X25 A4 80	
TPA 1000SQ, TPA 0750SQ (See drawing on page: 1-156)					
020	2913594-0000		1	CRADLE	

Pos	Part No	UN	Qty	Description	Page No

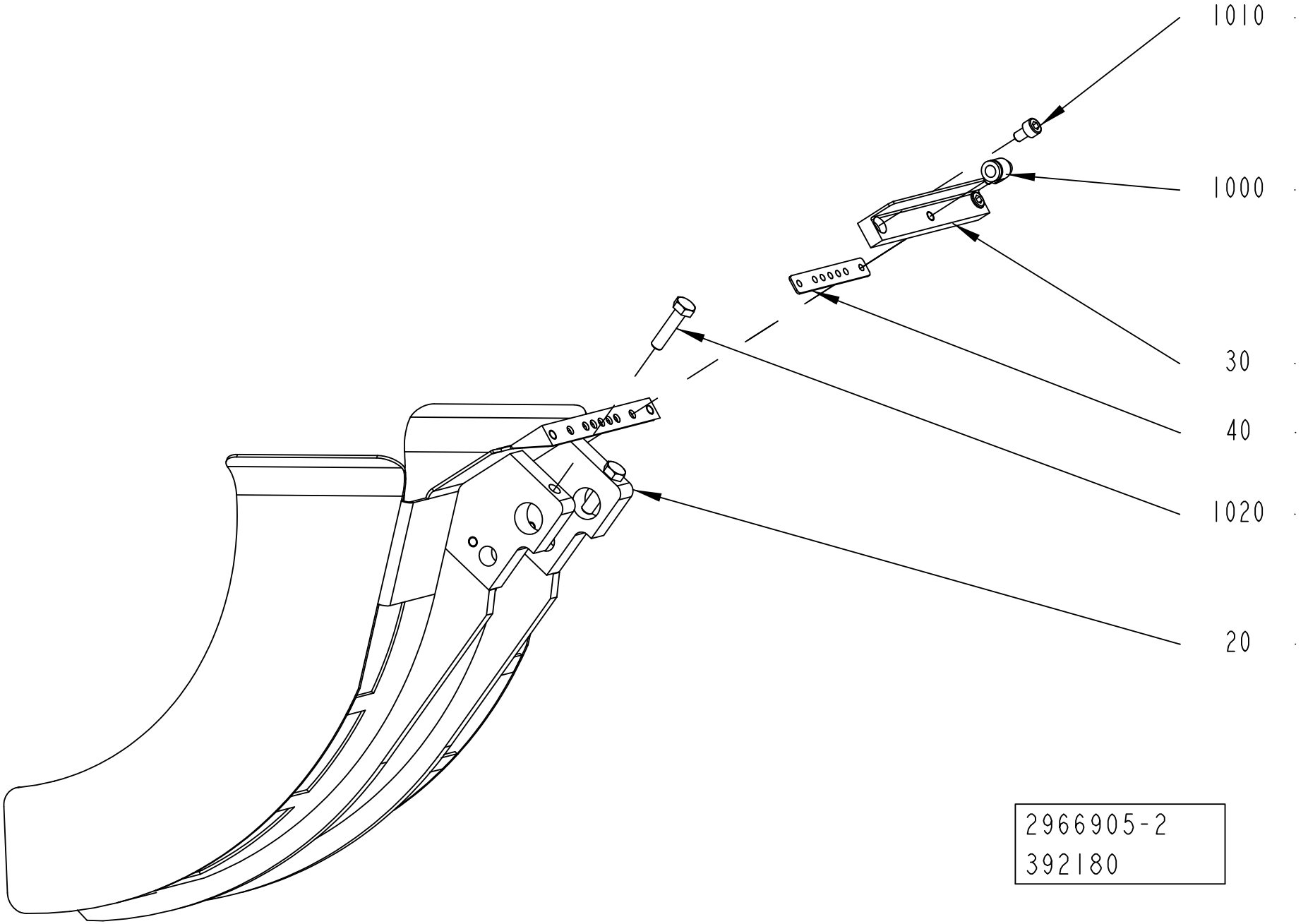
1010
1000
30
40
1020
20
2966905-2
392180

ECM: 546716 - 20120402
Group number: 2966905-0100
Assembly Drawing: 2966905-2_1_AB

This list covers pages from 1-156 to 1-159

Pos	Part No	UN	Qty	Description	Page No
TBA 0500S, TBA 0500SQ, TBA 0500B, TBA 1000B, TBA 1000SQ, TPA 0500SQ, TBA 1000S NOMOLDEDCAP (See drawing on page: 1-156)					
020	2751788-0000		1	CRADLE	
TBA 1500S, TBA 2000S (See drawing on page: 1-156)					
020	2665204-0000		1	CRADLE	
TGA 1000SQ, TGA 0750SQ, TGA 0500SQ (See drawing on page: 1-158)					
020	3002385-0000		1	CRADLE	
030	2883280-0000		1	COVER	
040	2864758-0000		1	NOZZLE	
1000	90457-0922		1	ELBOW PIPE JOINT, EXT.THREAD, D=6MM M5	
1010	312115-0323		2	SCREW ISO4762 M5X8 A4 80	
1020	312105-0372		2	SCREW, M6S ISO 4017 M6X25 A4 80	
TGA 1500SQ (See drawing on page: 1-158)					
020	2940972-0000		1	CRADLE	
030	2883280-0000		1	COVER	
040	2864758-0000		1	NOZZLE	
1000	90457-0922		1	ELBOW PIPE JOINT, EXT.THREAD, D=6MM M5	
1010	312115-0323		2	SCREW ISO4762 M5X8 A4 80	
1020	312105-0372		2	SCREW, M6S ISO 4017 M6X25 A4 80	
TPA 1000SQ, TPA 0750SQ (See drawing on page: 1-156)					
020	2913594-0000		1	CRADLE	

Pos	Part No	UN	Qty	Description	Page No

This page is intentionally left blank.

ECM: 535846 - 20120401
Group number: 3066567-0100
Assembly Drawing:

Pos	Part No	UN	Qty	Description	Page No
PT/FLEX					
	3066566-0102		1	REBUILDING MANUAL	
	3220007-0101		1	UPDATE PAGES	
010	3066565-0100		1	MECHANICAL REBUILDING	**1-163, 1-165, 1-167**
020	2564076-0100		1	START-UP KIT	**1-201**
030	2587337-0100		1	SETTING TEMPLATE	**1-203**
040	2564075-0100		1	OPENING SPECIFICATION	**1-205**

Pos	Part No	UN	Qty	Description	Page No

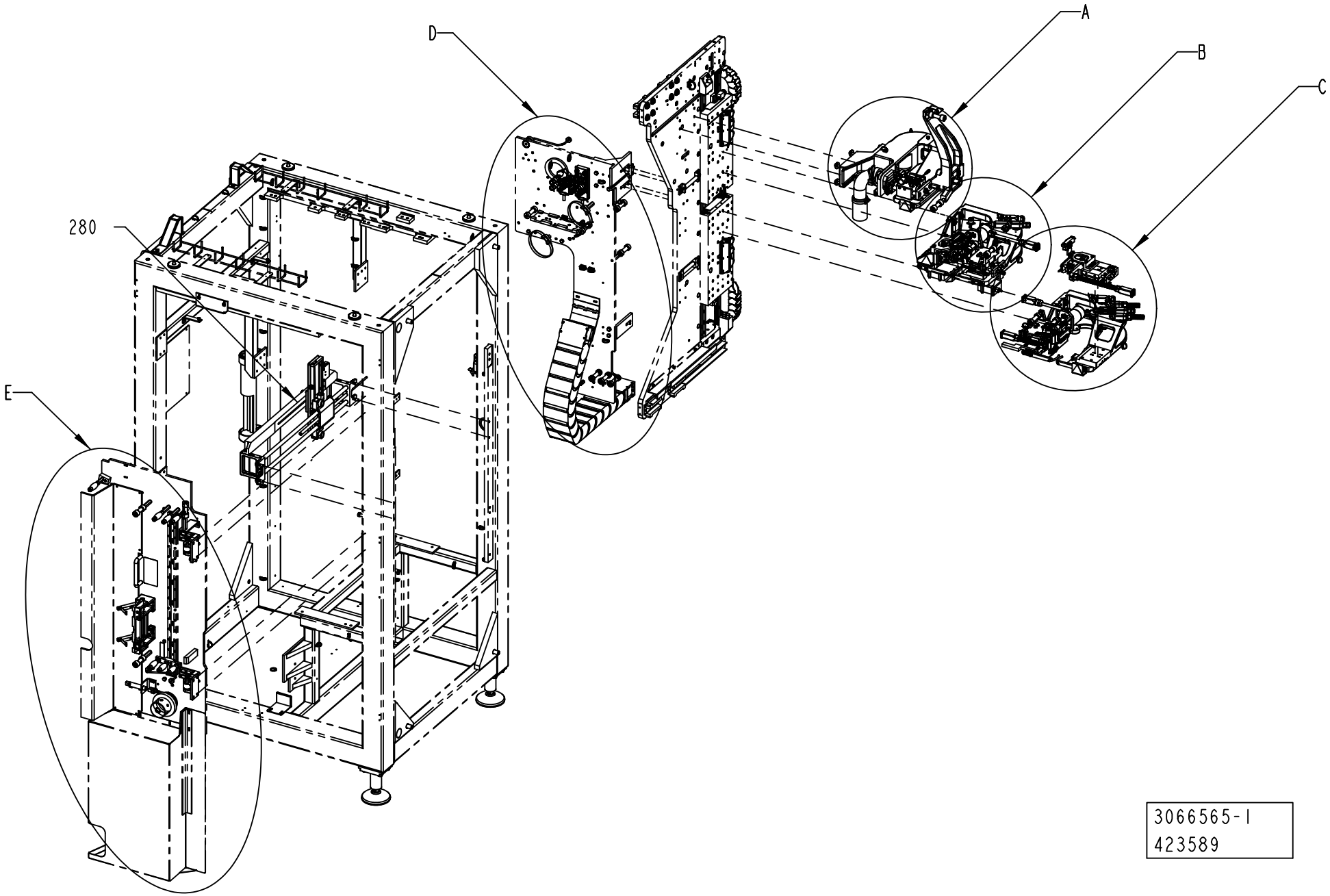
A
B
C
D
E
280
3066565-1
423589

ECM: 535845 - 20120401
Group number: 3066565-0100
Assembly Drawing: 3066565-1_1_AA

This list covers pages from 1-162 to 1-167

Pos	Part No	UN	Qty	Description	Page No
TAB FOLDING					
280	3038278-0200		1	FOLDING DEVICE	**1-169**
300	3067049-0000		1	BOX	
Common Parts					
040	2546278-0100		1	PUNCH UNIT	**1-173**
050	2564058-0100		1	TURNING DEVICE	**1-175**
080	2564059-0100		1	TAB FEEDER	**1-177**
090	2546275-0100		1	TAB FEEDER	**1-179**
100	2546271-0100		1	TAB C'JAW	**1-181**
130	2837533-0100		1	PATCH C'JAW	**1-183**
150	2564060-0100		1	PATCH FEEDER	**1-185**
200	2533684-0100		1	SPLICING TABLE	**1-187**
220	2533682-0100		1	BOBBIN HOLDER	**1-189**
230	2564057-0100		1	TAB MAGAZINE	**1-191**
240	2533681-0100		1	BOBBIN HOLDER	**1-193**
250	2533685-0100		1	SPLICING TABLE	**1-195**
260	2868038-0100		1	STRIP MAGAZINE	**1-197**
290	2710800-0100		1	PATCH MAGAZINE	**1-199**

Pos	Part No	UN	Qty	Description	Page No

DETAIL B

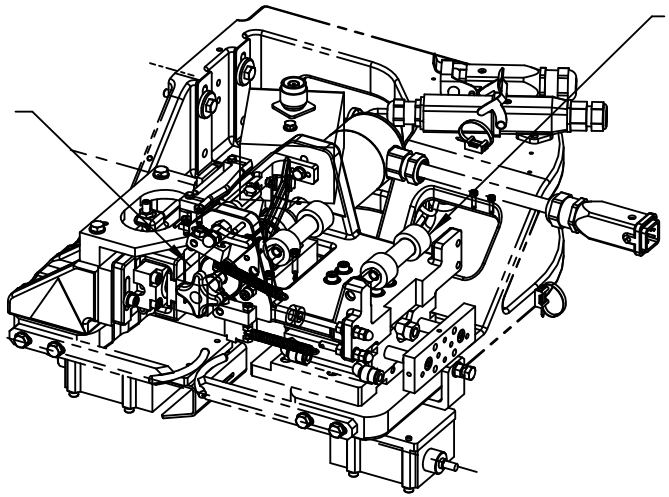

DETAIL A

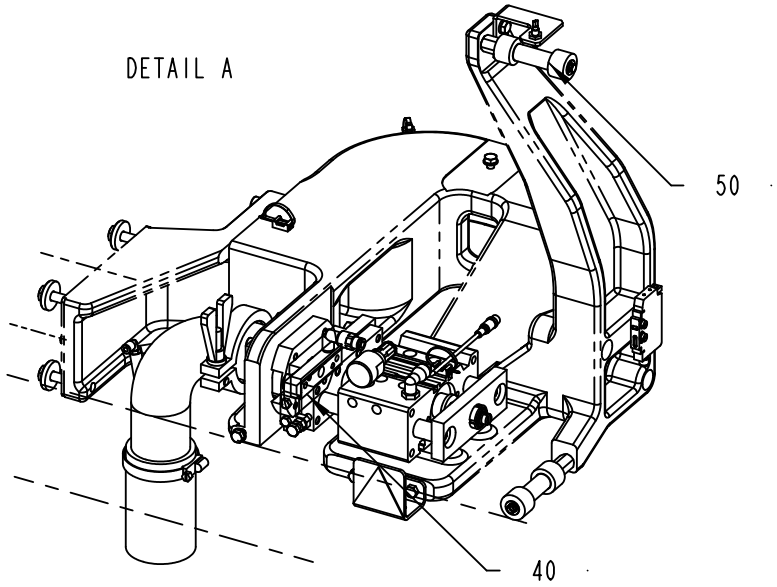

DETAIL C

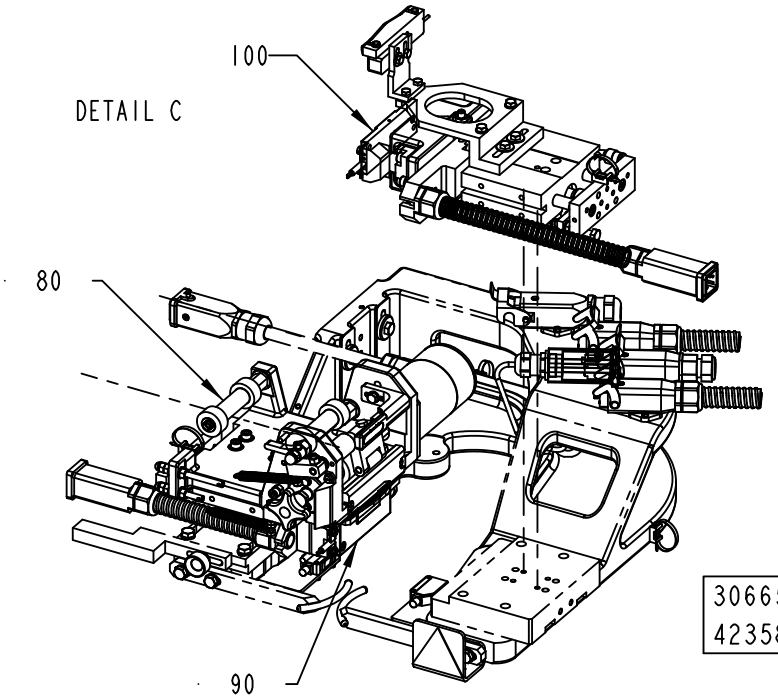

3066565-1
423589

ECM: 535845 - 20120401
Group number: 3066565-0100
Assembly Drawing: 3066565-1_2_AA

This list covers pages from 1-162 to 1-167

Pos	Part No	UN	Qty	Description	Page No
TAB FOLDING					
280	3038278-0200		1	FOLDING DEVICE	**1-169**
300	3067049-0000		1	BOX	
Common Parts					
040	2546278-0100		1	PUNCH UNIT	**1-173**
050	2564058-0100		1	TURNING DEVICE	**1-175**
080	2564059-0100		1	TAB FEEDER	**1-177**
090	2546275-0100		1	TAB FEEDER	**1-179**
100	2546271-0100		1	TAB C'JAW	**1-181**
130	2837533-0100		1	PATCH C'JAW	**1-183**
150	2564060-0100		1	PATCH FEEDER	**1-185**
200	2533684-0100		1	SPLICING TABLE	**1-187**
220	2533682-0100		1	BOBBIN HOLDER	**1-189**
230	2564057-0100		1	TAB MAGAZINE	**1-191**
240	2533681-0100		1	BOBBIN HOLDER	**1-193**
250	2533685-0100		1	SPLICING TABLE	**1-195**
260	2868038-0100		1	STRIP MAGAZINE	**1-197**
290	2710800-0100		1	PATCH MAGAZINE	**1-199**

Pos	Part No	UN	Qty	Description	Page No

DETAIL E

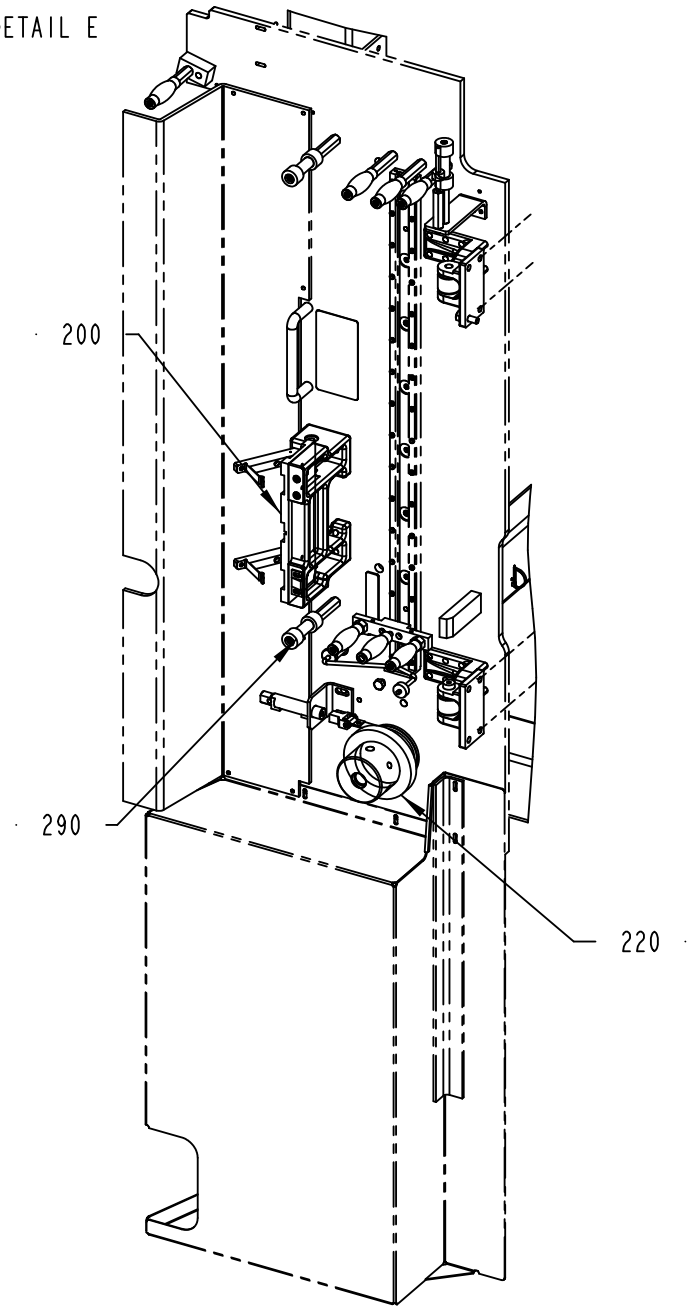

DETAIL D

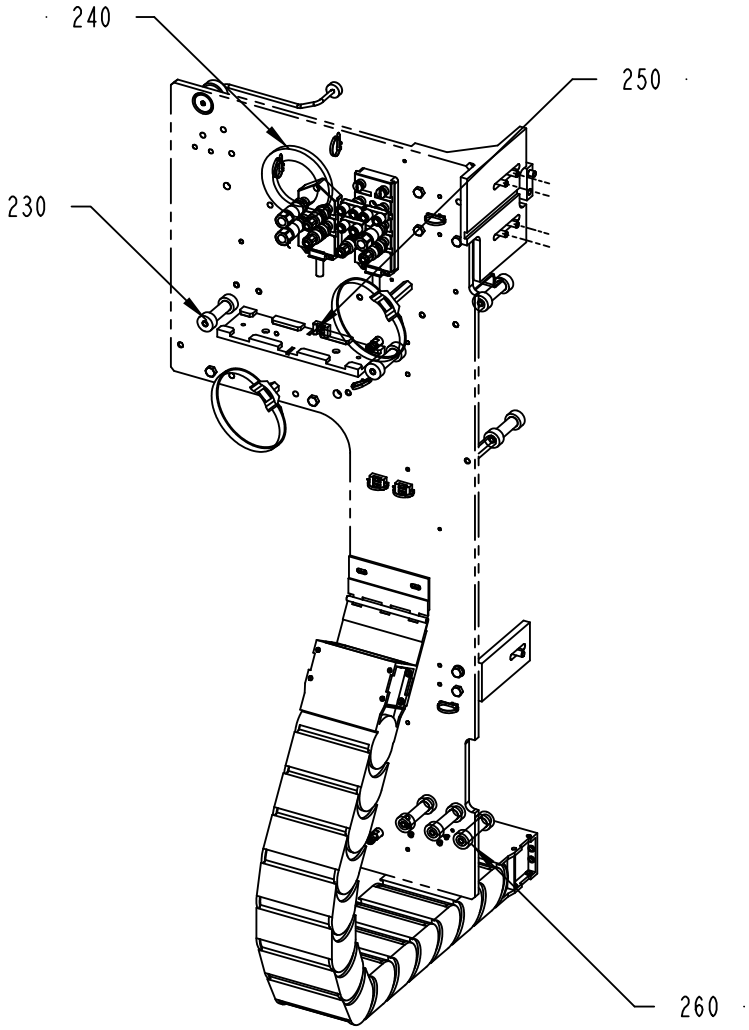

3066565-1
423589

ECM: 535845 - 20120401
Group number: 3066565-0100
Assembly Drawing: 3066565-1_3_AA

This list covers pages from 1-162 to 1-167

Pos	Part No	UN	Qty	Description	Page No
TAB FOLDING					
280	3038278-0200		1	FOLDING DEVICE	**1-169**
300	3067049-0000		1	BOX	
Common Parts					
040	2546278-0100		1	PUNCH UNIT	**1-173**
050	2564058-0100		1	TURNING DEVICE	**1-175**
080	2564059-0100		1	TAB FEEDER	**1-177**
090	2546275-0100		1	TAB FEEDER	**1-179**
100	2546271-0100		1	TAB C'JAW	**1-181**
130	2837533-0100		1	PATCH C'JAW	**1-183**
150	2564060-0100		1	PATCH FEEDER	**1-185**
200	2533684-0100		1	SPLICING TABLE	**1-187**
220	2533682-0100		1	BOBBIN HOLDER	**1-189**
230	2564057-0100		1	TAB MAGAZINE	**1-191**
240	2533681-0100		1	BOBBIN HOLDER	**1-193**
250	2533685-0100		1	SPLICING TABLE	**1-195**
260	2868038-0100		1	STRIP MAGAZINE	**1-197**
290	2710800-0100		1	PATCH MAGAZINE	**1-199**

Pos	Part No	UN	Qty	Description	Page No

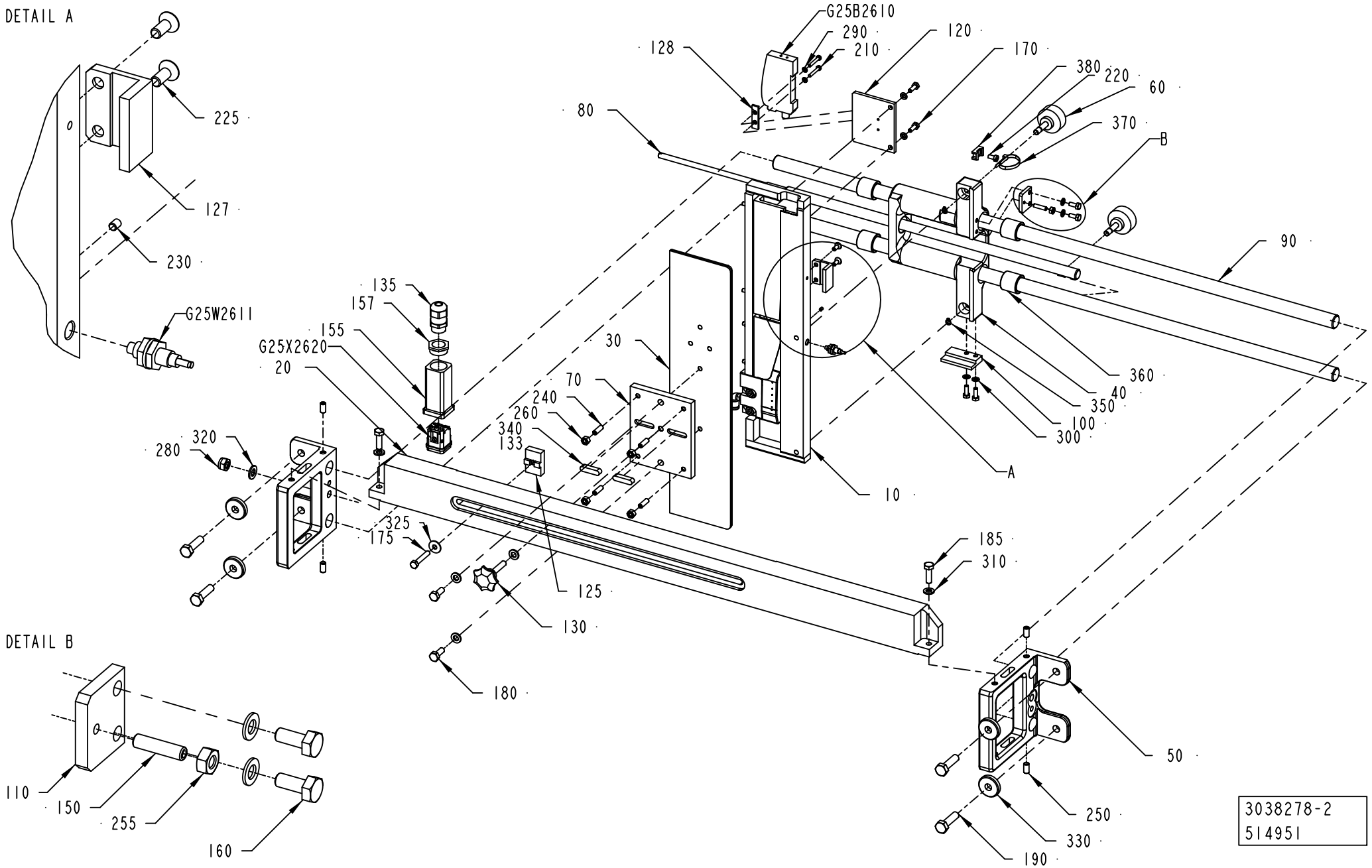
DETAIL A
225
127
230
G25W2611
DETAIL B
110
150
255
160
G25B2610
290
210
128
120
170
380
220
60
370
B
80
90
360
40
350
100
300
A
10
135
157
155
G25X2620
20
30
70
240
260
340
133
280
320
325
175
125
130
180
185
310
50
250
330
190
3038278-2
514951

ECM: 527783 - 20120401
Group number: 3038278-0200
Assembly Drawing: 3038278-2_1_AA

Pos	Part No	UN	Qty	Description	Page No
-					
010	2863962-0200		1	FOLDING UNIT	**1-171**
020	2921018-0000		1	BRACKET	
030	2691317-0000		1	PLATE	
040	2691320-0000		1	HOUSING	
050	1499216-0000		2	PLATE	
060	1532447-0000		2	HANDLE	
070	2691318-0000		1	PLATE	
080	1538668-0000		1	GUIDE ROD	
090	1538247-0000		2	AXLE PIN	
100	2691321-0000		1	SUPPORT	
110	2691322-0000		1	PLATE	
120	2691323-0000		1	PLATE	
125	2842877-0000		1	REGISTER	
127	2921016-0000		1	PLATE	
128	2984554-0000		1	PLATE	
130	90051-0090		1	KNOB, EXTERNAL THREAD. NO. WN 450GS	
133	90157-0035		1	LOCKING FLUID LOCTITE TYPE 641	
135	90458-0314		1	CABLE GLAND, M16X1,5, 5311 1110	
150	90457-0860		1	SET SCREW, CUP END ISO4029 M4X16 A4	
155	90459-3670		1	HOOD, HAN3A, 19 20 003 1440	
157	90459-7223		1	REDUCER, M20/M16	
160	312105-0289		2	SCREW, M6S ISO 4017 M4X10 A4 70	
170	312105-0291		4	SCREW, M6S ISO 4017 M4X12 A4 70	
175	312105-0335		1	SCREW, M6S ISO 4014 M5X30 A4 80	
180	312105-0368		2	SCREW, M6S ISO 4017 M6X16 A4 80	
185	312105-0370		2	SCREW, M6S ISO 4017 M6X20 A4 80	
190	312105-0455		4	SCREW, M6S ISO 4017 M8X30 A4 80	
210	312125-0230		2	SLOTTED HEAD SCREW, ISO1207 M3X20 A4	
220	312125-0287		1	SLOTTED HEAD SCREW, ISO1207 M4X8 A4	
225	312155-0289		2	SCREW DIN 7991 MF6S M4X10 A4 70	
230	312318-0218		1	SET SCREW, CUP END ISO4029 M3X4 A4	
240	312318-0329		4	SET SCREW, CUP END ISO4029 M5X16 A4	
250	312318-0366		4	SET SCREW, CUP END ISO4029 M6X12 A4	
255	312605-0312		1	HEXAGON NUT, M6M M4 A280	
260	312605-0314		4	HEXAGON NUT, M6M M5 A280	
280	312812-0318		1	HEXAGON NUT, NY-LOCK M8 A4 80	
290	315105-0124		2	WASHER PLAIN, 3,2X6X0,5 A4 BRB	
300	315105-0136		6	WASHER PLAIN, 4,3X9X0,8 A4 BRB	
310	315105-0153		5	WASHER PLAIN, 6,4X12X1,5 A4 BRB	
320	315105-0165		1	WASHER PLAIN, 8,4X16X1,6 A4 BRB	
325	315125-0146		1	WASHER HIGH, TBRSB 5.3X15X1 A4	
330	315125-0165		4	WASHER HIGH, TBRSB 8,4X26X5 A4	
340	315705-0234		2	PARALLEL KEY W. ROUND ENDS, 6X6X25 MM	
350	315750-0102		2	RETAINING RING FOR SHAFT DIN 471 5	
360	321105-0204		4	BUSHING W/O FLANGE, 16/22X20 MM	
370	352113-0101		1	CABLE TIE, BLACK 92X2,5 MM	
380	352113-0205		1	ANCHOR PLATES FOR STRIPS, TM2S8-C100	
G25B2610	90459-7361		1	FIBRE OPTIC UNIT, WLL170-2P460	
G25W2611	90232-0325		1	FIBRE, E32-DC200	
G25X2620	90459-6821		1	MALE INSERT HAN 4A, 0920 0042 611	

Machine Type	Group Description	Used-In	Group Number	Page No

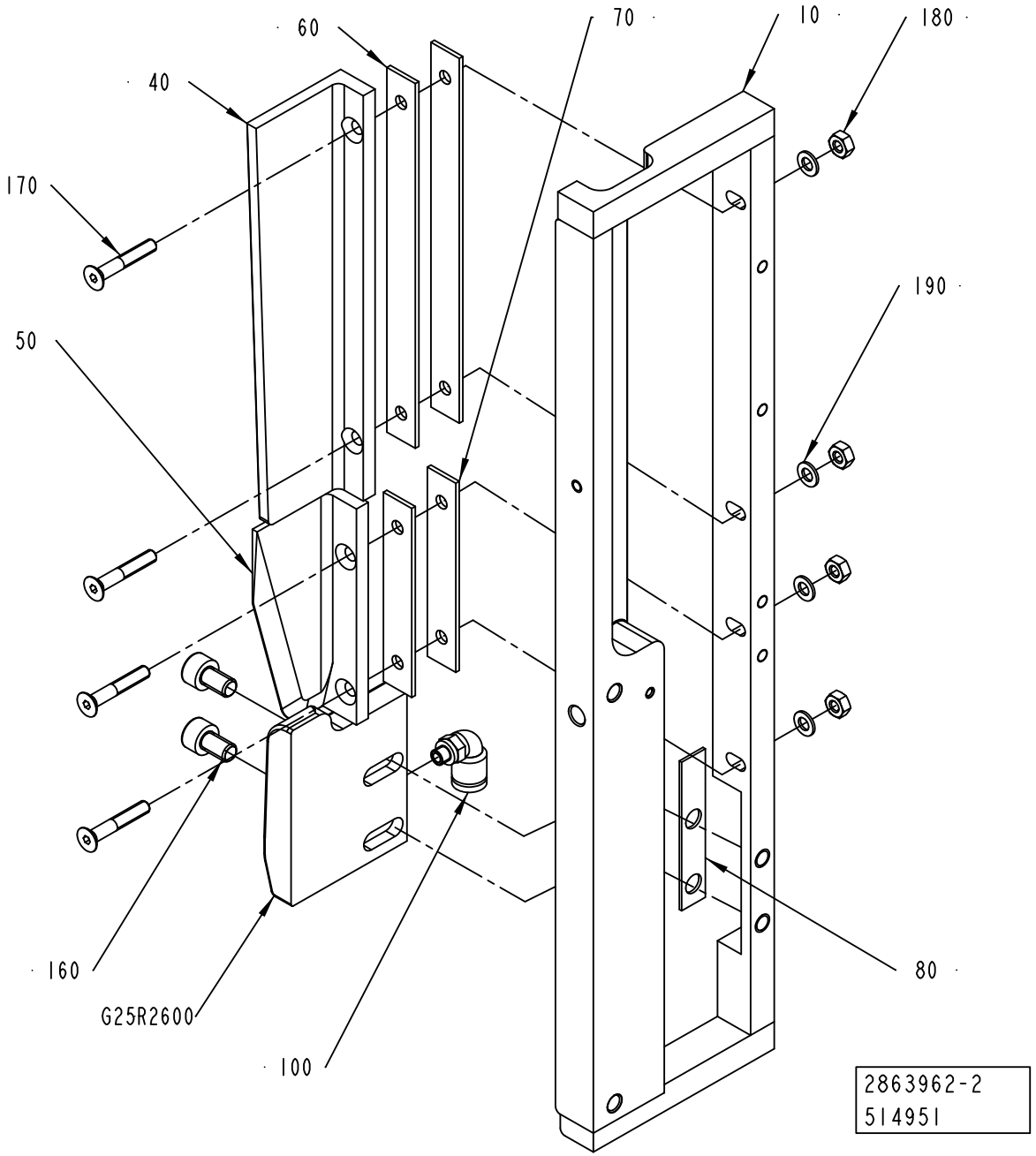
60
70
10
180
40
170
190
50
160
80
G25R2600
100
2863962-2
514951

ECM: 527784 - 20120401
Group number: 2863962-0200
Assembly Drawing: 2863962-2_1_AA

Pos	Part No	UN	Qty	Description	Page No
-					
010	2818326-0000		1	RAIL	
040	929823-0000		1	PAPER GUIDE	
050	2780314-0000		1	PAPER GUIDE	
060	1499227-0000		2	SHIM	
070	1499228-0000		2	SHIM	
080	2951588-0000		1	SHIM	
100	90457-0922		1	ELBOW PIPE JOINT, EXT.THREAD, D=6MM M5	
160	312115-0364		2	SCREW ISO4762 M6X10 A4 80	
170	312155-0297		4	SCREW DIN 7991 MF6S M4X25 A4 70	
180	312605-0312		4	HEXAGON NUT, M6M M4 A280	
190	315105-0136		4	WASHER PLAIN, 4,3X9X0,8 A4 BRB	
G25R2600	2863955-0000		1	PLATE	

Pos	Part No	UN	Qty	Description	Page No

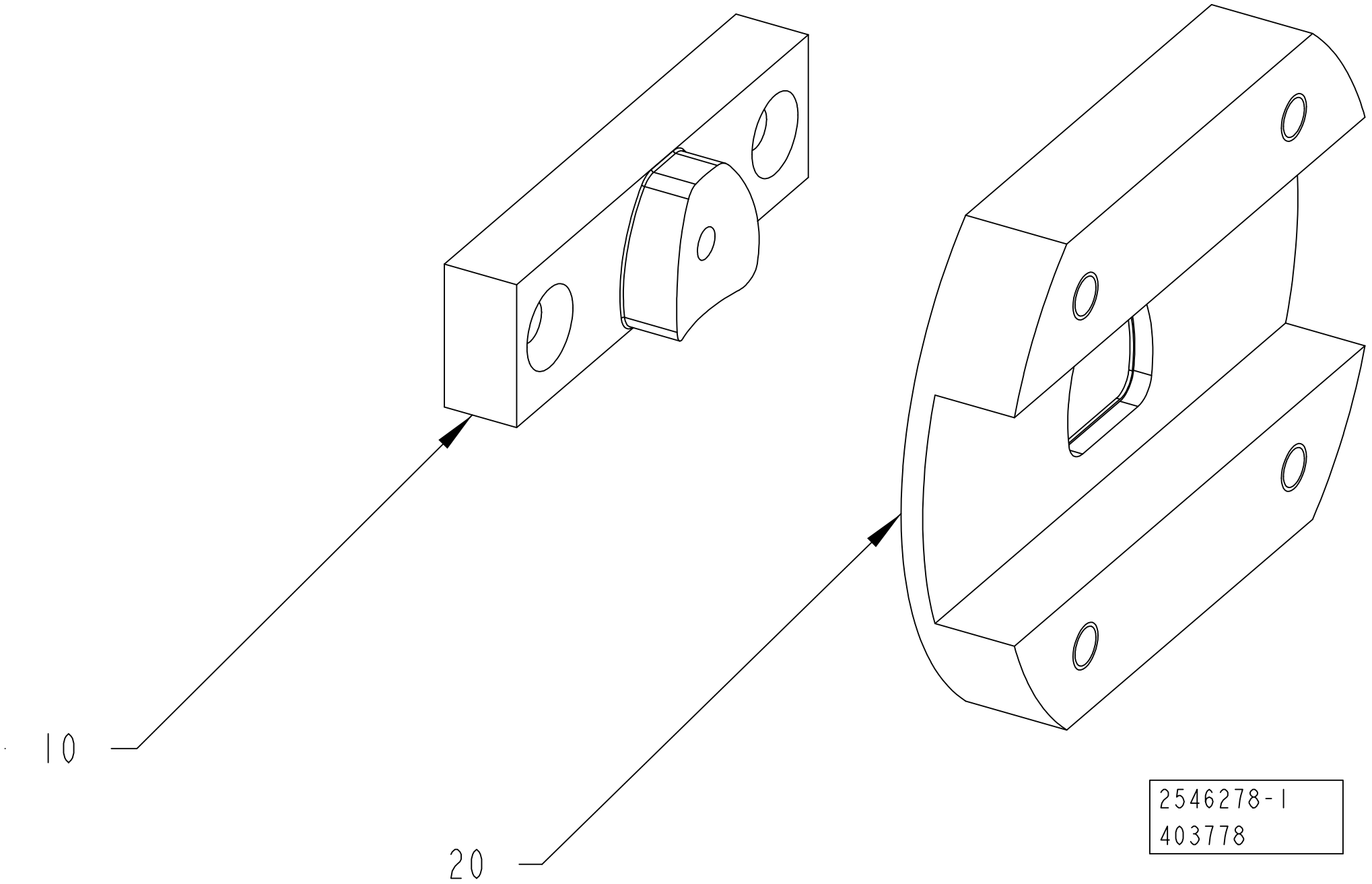
10
20
2546278-1
403778

ECM: 462540 - 20101002
Group number: 2546278-0100
Assembly Drawing: 2546278-1_1_AC

Pos	Part No	UN	Qty	Description	Page No
HOLE55					
010	1145416-0000		1	PUNCH HOLE 55	
020	1145417-0000		1	DIE HOLE 55	
HOLE91					
010	2604554-0000		1	PUNCH	
020	2604555-0000		1	DIE	
HOLE95					
010	2657828-0000		1	PUNCH	
020	2657829-0000		1	DIE	
TBA 1000S HOLE90, TBA 1500S HOLE90					
010	2603683-0000		1	PUNCH	
020	2603682-0000		1	DIE	

Pos	Part No	UN	Qty	Description	Page No

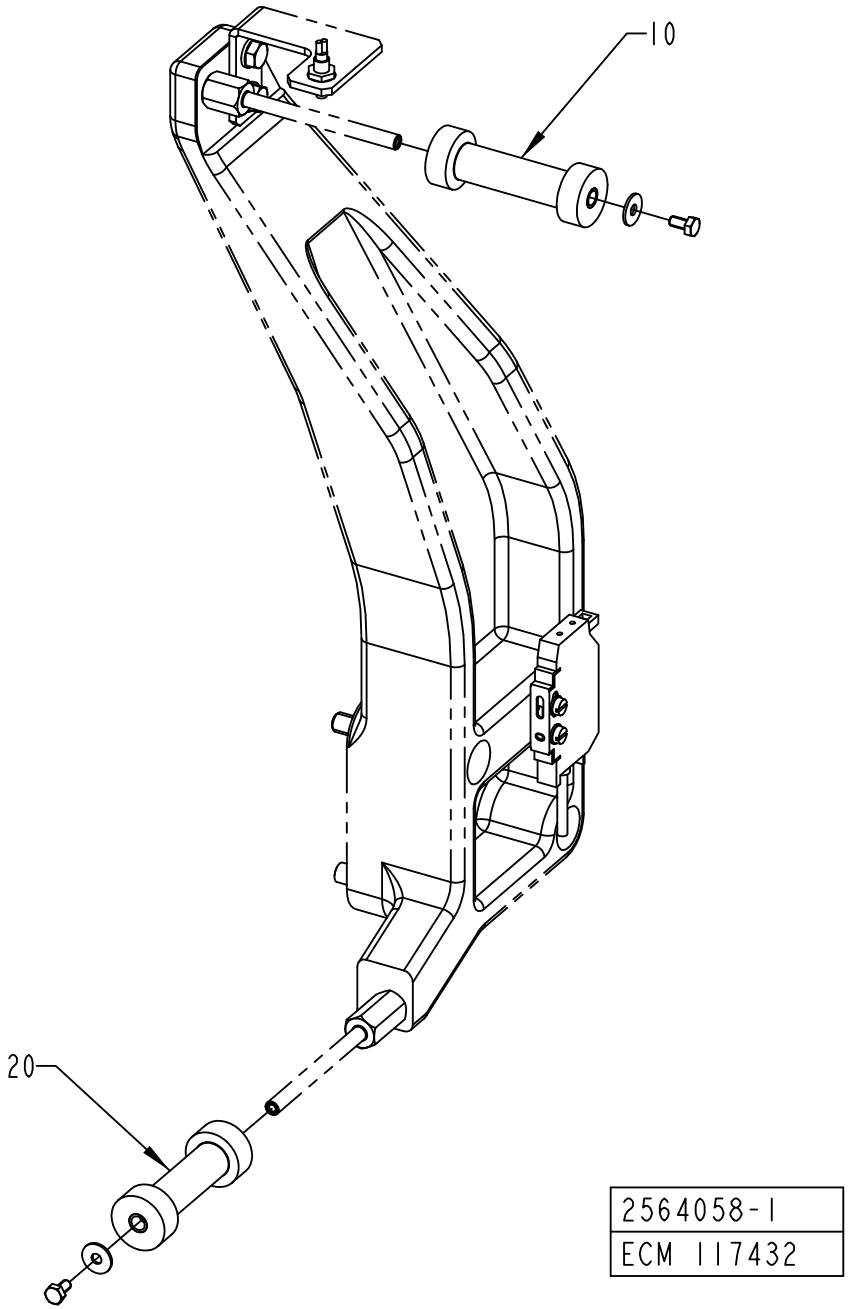
10
20
2564058-1
ECM 117432

ECM: 409593 - 20090915
Group number: 2564058-0100
Assembly Drawing: 2564058-1_1_AA

Pos	Part No	UN	Qty	Description	Page No
HOLE55					
010	2564043-0003		1	ROLLER	
020	2564044-0004		1	ROLLER	
HOLE90					
010	2564043-0004		1	ROLLER	
020	2564044-0005		1	ROLLER	
HOLE95, HOLE91					
010	2564043-0005		1	ROLLER	
020	2564044-0006		1	ROLLER	

Pos	Part No	UN	Qty	Description	Page No

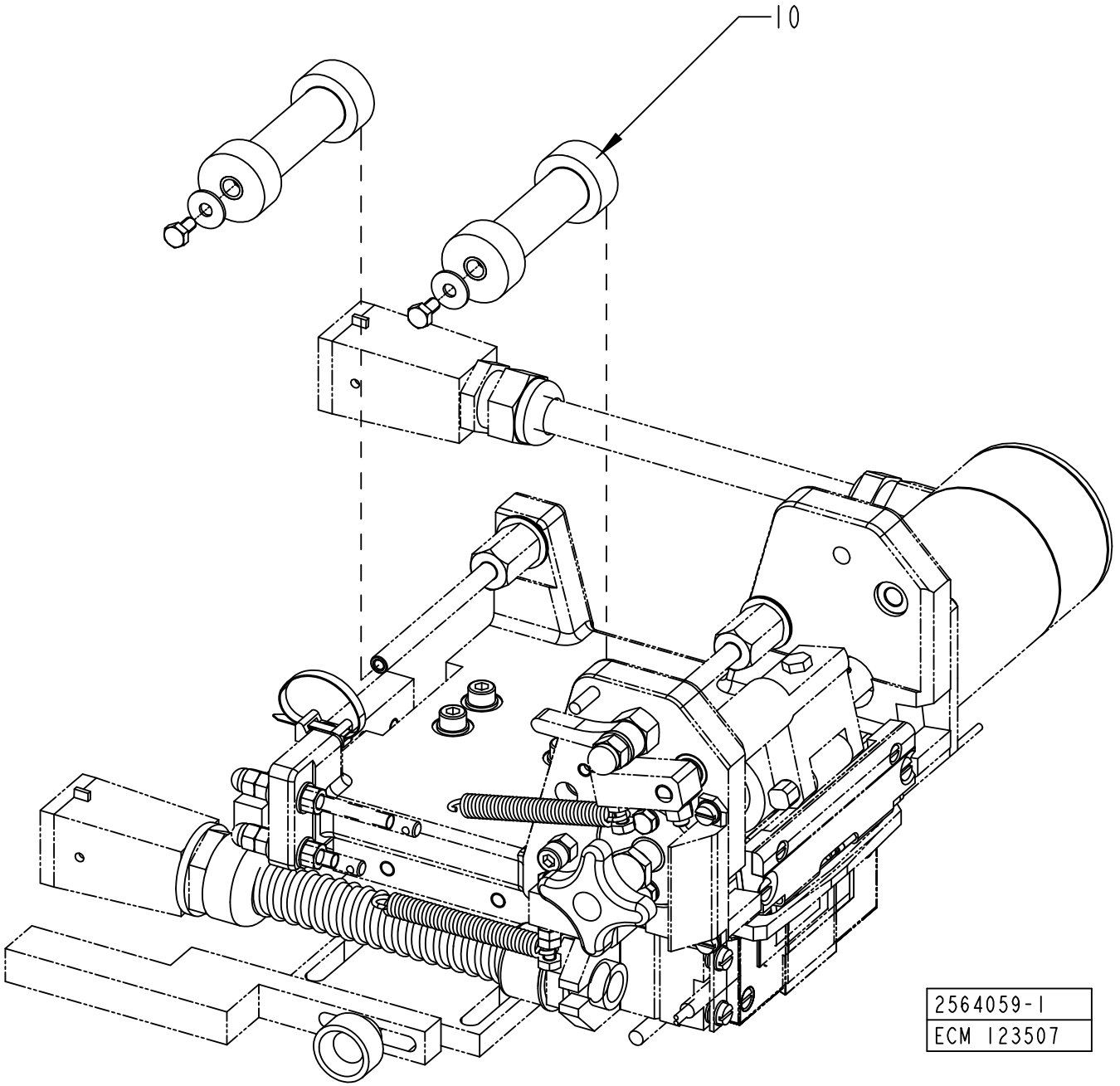
10
2564059-1
ECM 123507

ECM: 528918 - 20120401
Group number: 2564059-0100
Assembly Drawing: 2564059-1_1_AB

Pos	Part No	UN	Qty	Description	Page No
TBA 0500S HOLE95					
010	2564044-0011		2	ROLLER	
TBA 0500S HOLE55					
010	2564044-0006		2	ROLLER	
TBA 1000B HOLE95, TBA 1000S HOLE95, TBA 1000SQ HOLE95, TBA 1500S HOLE95, TBA 2000S HOLE91, TBA 2000S HOLE95					
010	2564044-0012		2	ROLLER	
TBA 1000S HOLE90, TBA 1500S HOLE90					
010	2564044-0008		2	ROLLER	

Pos	Part No	UN	Qty	Description	Page No

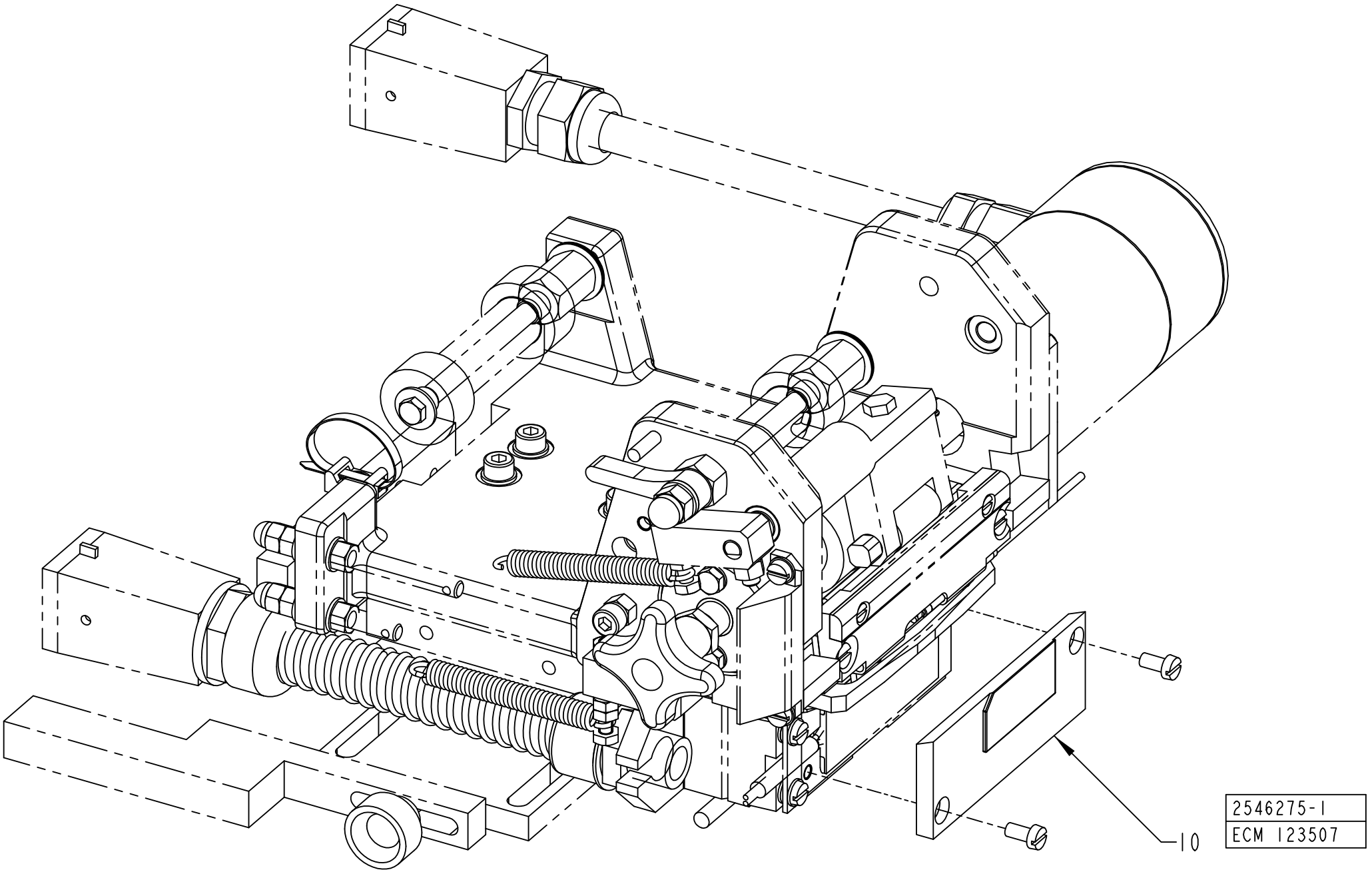
10
2546275-1
ECM 123507

ECM: 418547 - 20091028
Group number: 2546275-0100
Assembly Drawing: 2546275-1_1_AB

Pos	Part No	UN	Qty	Description	Page No
TBA 0500S HOLE95					
010	2526551-0000		1	PLATE	
TBA 0500S HOLE55					
010	2694025-0000		1	SEALING PLATE	
TBA 1000B HOLE95, TBA 1000S HOLE95, TBA 1000SQ HOLE95, TBA 1500S HOLE95, TBA 2000S HOLE95					
010	2658078-0000		1	SEALING PLATE	
TBA 1000S HOLE90, TBA 1500S HOLE90					
010	2608234-0000		1	SEALING PLATE	
TBA 2000S HOLE91					
010	2604551-0000		1	SEALING PLATE	

Pos	Part No	UN	Qty	Description	Page No

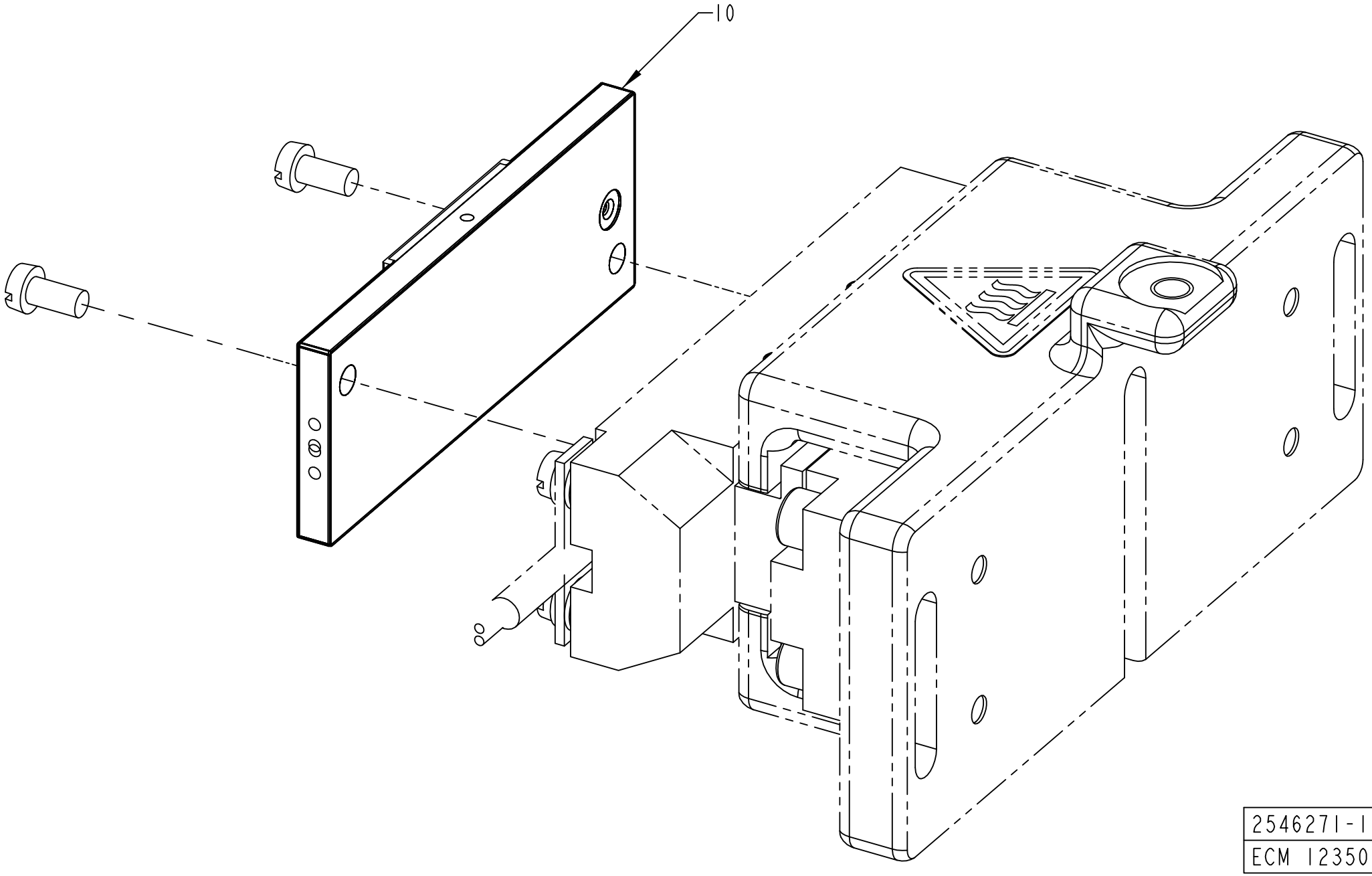

2546271-1
ECM 123507

ECM: 418545 - 20091028
Group number: 2546271-0100
Assembly Drawing: 2546271-1_1_AB

Pos	Part No	UN	Qty	Description	Page No
TBA 0500S HOLE55					
010	2579883-0000		1	SEALING PLATE	
TBA 1000B HOLE95, TBA 1000S HOLE95, TBA 1000SQ HOLE95, TBA 1500S HOLE95, TBA 2000S HOLE95, TBA 0500S HOLE95					
010	2563974-0000		1	SEALING PLATE	
TBA 1000S HOLE90, TBA 1500S HOLE90					
010	2579886-0000		1	SEALING PLATE	
TBA 2000S HOLE91					
010	2648819-0000		1	SEALING PLATE	

Pos	Part No	UN	Qty	Description	Page No

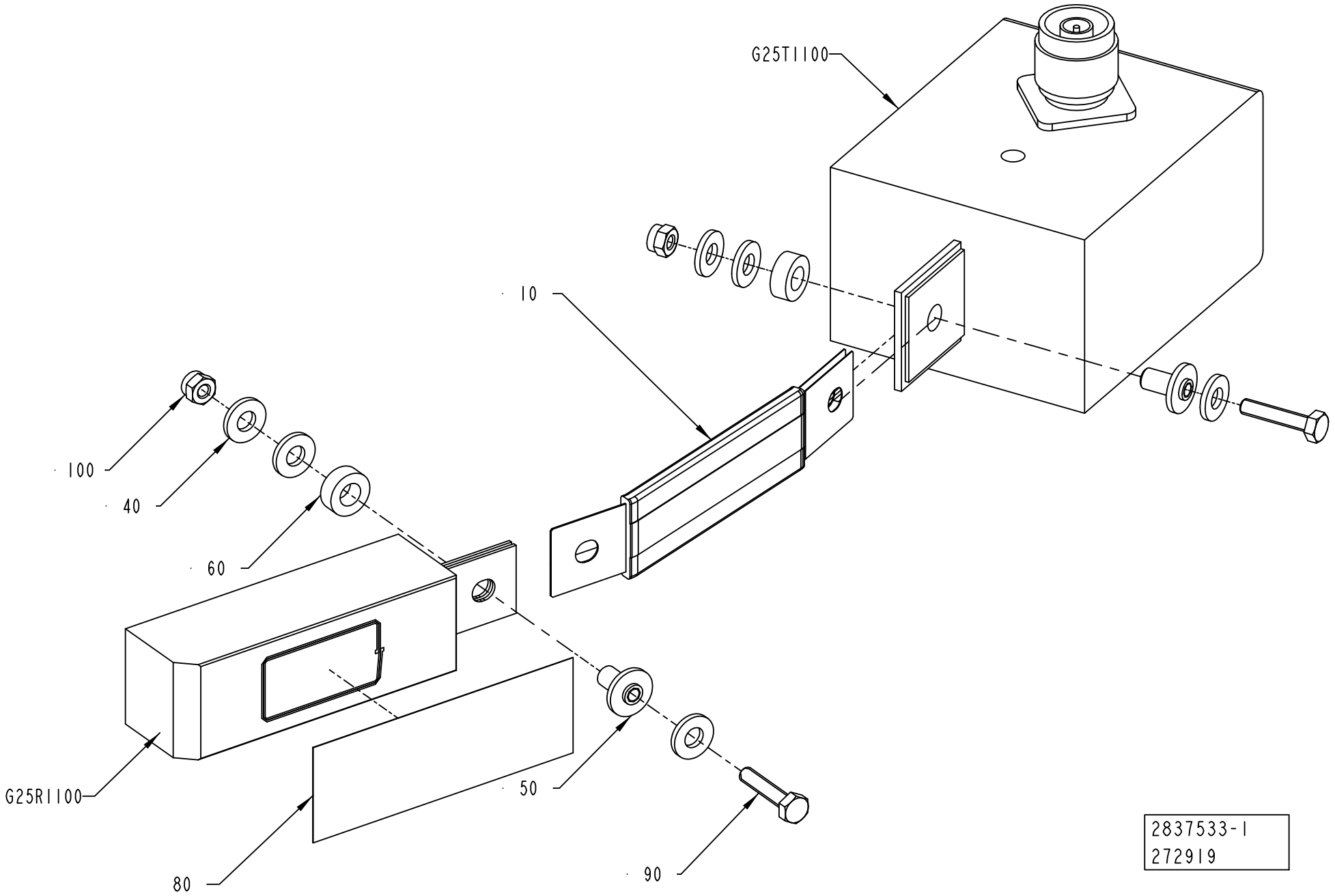
G25T1100
10
100
40
60
G25R1100
80
50
90
2837533-1
272919

ECM: 355345 - 20080616
Group number: 2837533-0100
Assembly Drawing: 2837533-1_1_AA

Pos	Part No	UN	Qty	Description	Page No
HOLE55					
G25R1100	1533362-0000		1	INDUCTOR	
G25T1100	67379-0224		1	TRANSFORMER	
HOLE90					
G25R1100	1533364-0000		1	INDUCTOR	
G25T1100	67379-0224		1	TRANSFORMER	
HOLE91					
G25R1100	1533361-0000		1	INDUCTOR	
G25T1100	67379-0216		1	TRANSFORMER	
HOLE95					
G25R1100	1533360-0000		1	INDUCTOR	
G25T1100	67379-0216		1	TRANSFORMER	
Common Parts					
010	1140889-0000		1	BUSBAR	
040	28509-0000		6	WASHER	
050	32544-0000		2	INSULATION NUT	
060	32644-0000		2	WASHER	
080	90459-2130	MM	130	TAPE, ADHESIVE SI TAPE MON3154535033CL	
090	312105-0295		2	SCREW, M6S ISO 4017 M4X20 A4 70	
100	312812-0312		2	HEXAGON NUT, NY-LOCK M4 A4 80	

Pos	Part No	UN	Qty	Description	Page No

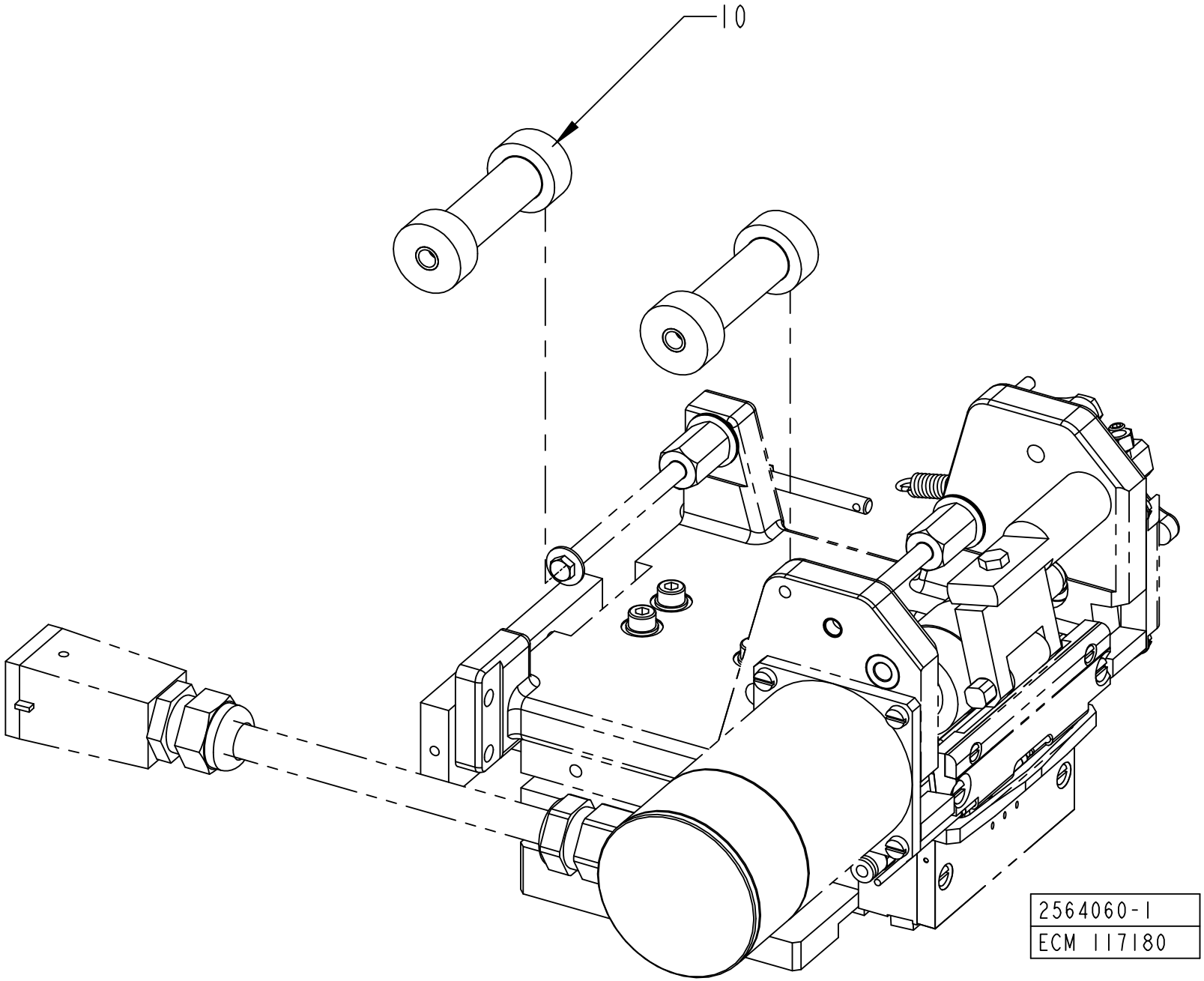
10
2564060-1
ECM 117180

ECM: 409790 - 20090915
Group number: 2564060-0100
Assembly Drawing: 2564060-1_1_AA

Pos	Part No	UN	Qty	Description	Page No
HOLE55					
010	2564044-0004		2	ROLLER	
HOLE90					
010	2564044-0005		2	ROLLER	
HOLE95, HOLE91					
010	2564044-0006		2	ROLLER	

Pos	Part No	UN	Qty	Description	Page No

SPLICING TABLE

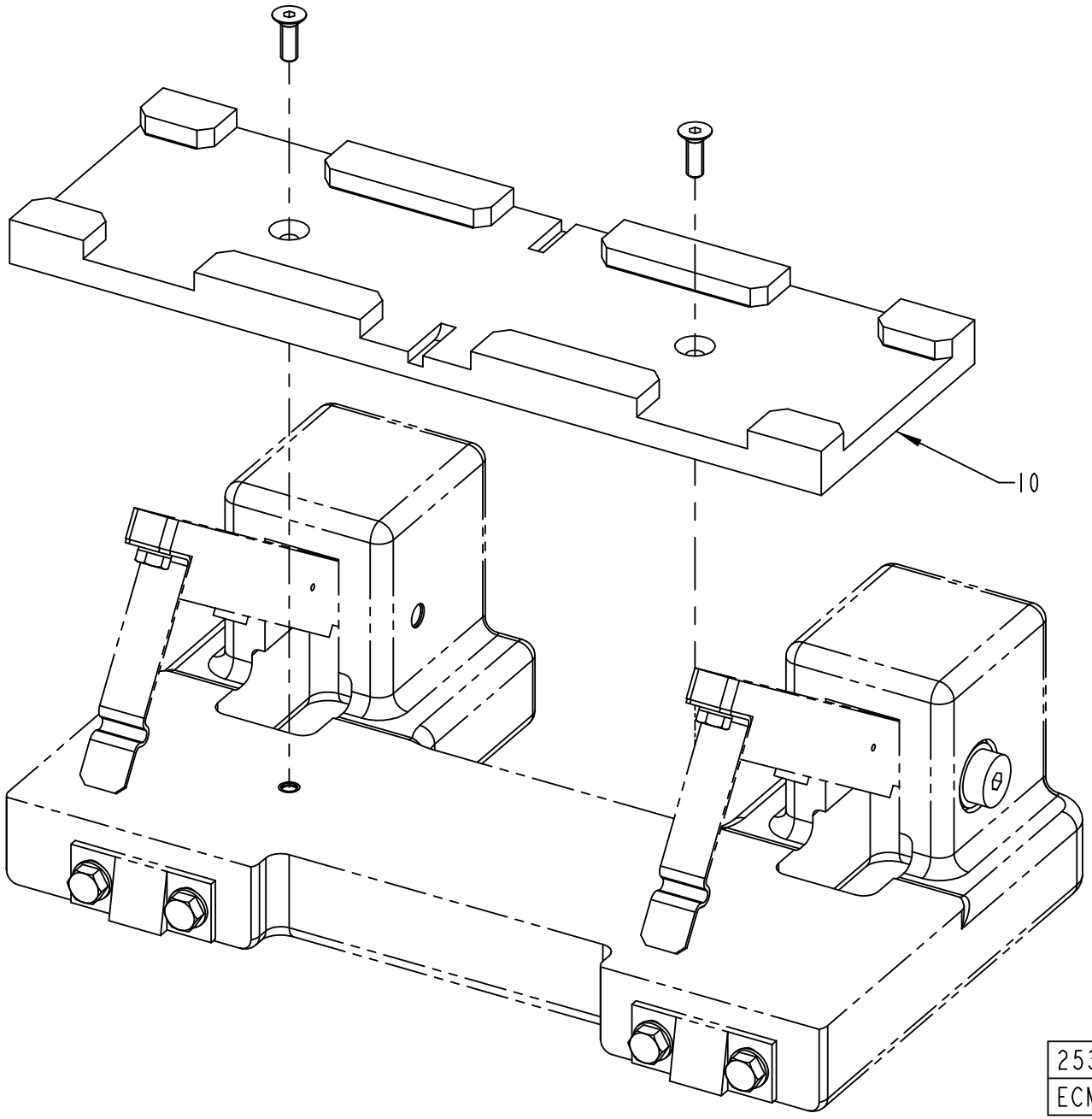

ECM: 409472 - 20090915
Group number: 2533684-0100
Assembly Drawing: 2533684-1_1_AA

Pos	Part No	UN	Qty	Description	Page No
HOLE55					
010	1499296-0002		1	GUIDE	
HOLE90					
010	1499296-0003		1	GUIDE	
HOLE95, HOLE91					
010	1499296-0004		1	GUIDE	

Pos	Part No	UN	Qty	Description	Page No

BOBBIN HOLDER

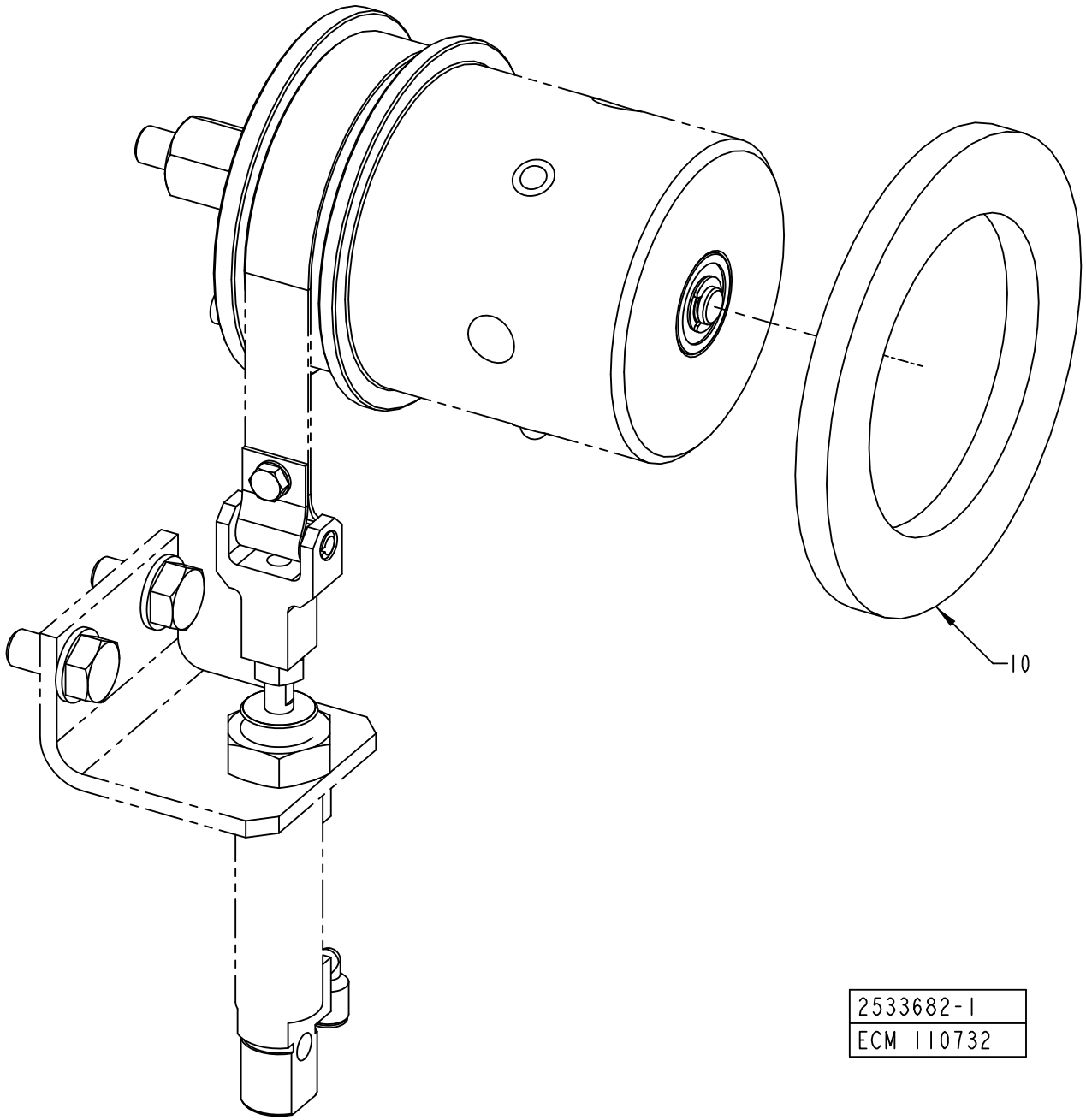

ECM: 409471 - 20090915
Group number: 2533682-0100
Assembly Drawing: 2533682-1_1_AA

Pos	Part No	UN	Qty	Description	Page No
HOLE55					
010	1347952-0003		1	SPACER	
HOLE90					
010	1347952-0004		1	SPACER	
HOLE95, HOLE91					
010	1347952-0006		1	SPACER	

Pos	Part No	UN	Qty	Description	Page No

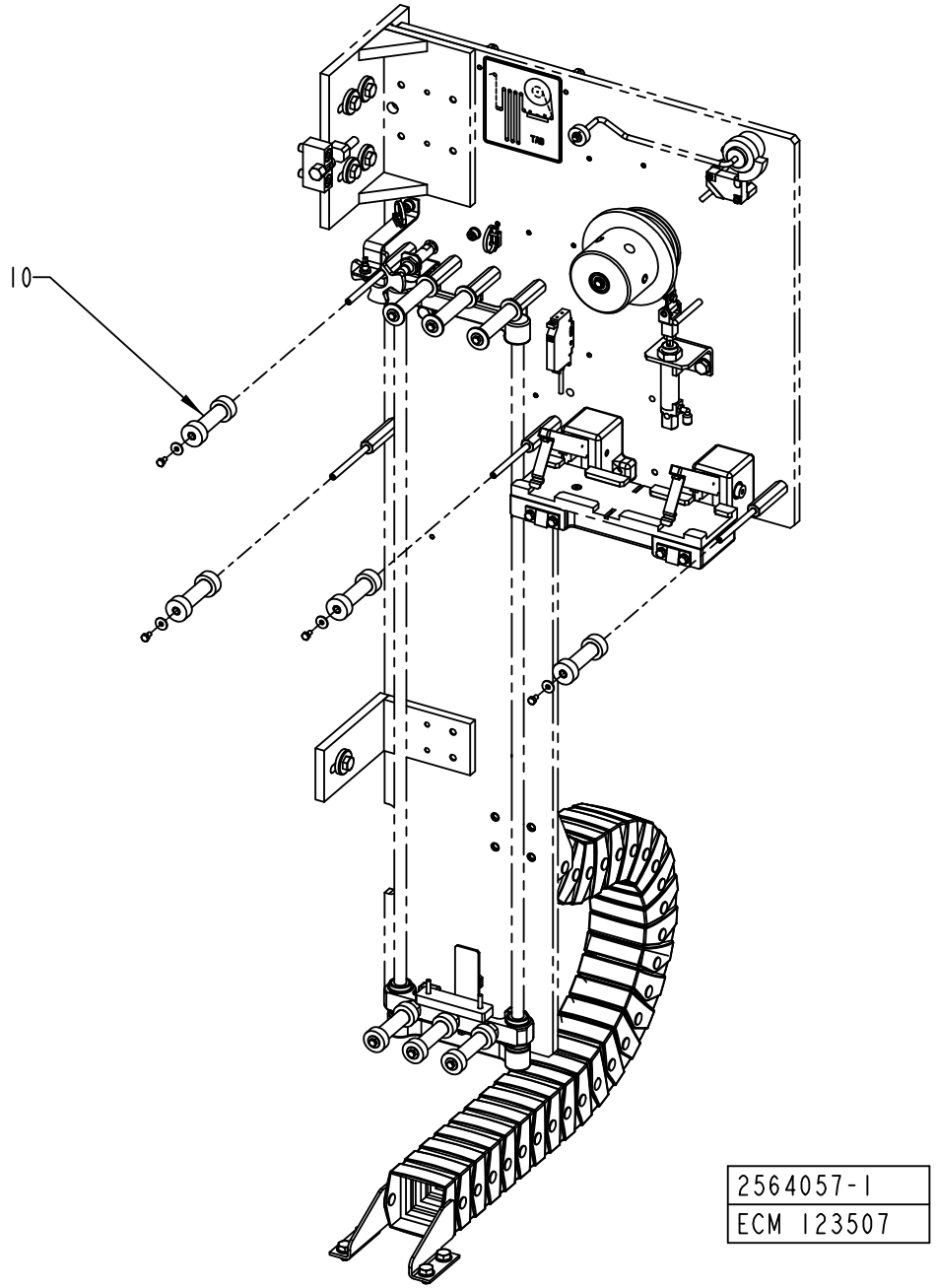
10
2564057-1
ECM 123507

ECM: 528921 - 20120401
Group number: 2564057-0100
Assembly Drawing: 2564057-1_1_AB

Pos	Part No	UN	Qty	Description	Page No
TBA 0500S HOLE95					
010	2564044-0011		4	ROLLER	
TBA 0500S HOLE55					
010	2564044-0006		4	ROLLER	
TBA 1000B HOLE95, TBA 1000S HOLE95, TBA 1000SQ HOLE95, TBA 1500S HOLE95, TBA 2000S HOLE91, TBA 2000S HOLE95					
010	2564044-0012		4	ROLLER	
TBA 1000S HOLE90, TBA 1500S HOLE90					
010	2564044-0008		4	ROLLER	

Pos	Part No	UN	Qty	Description	Page No

BOBBIN HOLDER

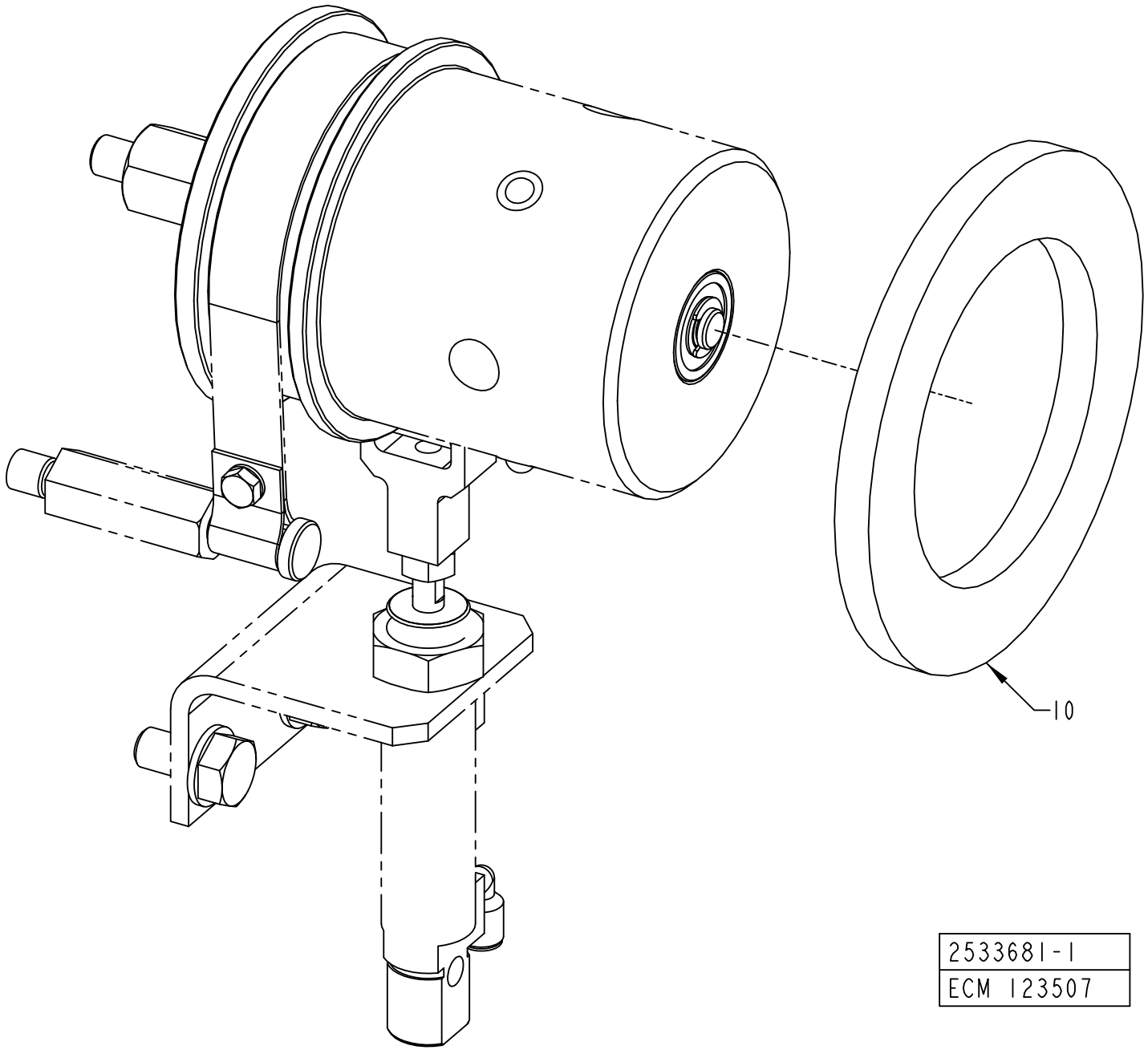

ECM: 528920 - 20120401
Group number: 2533681-0100
Assembly Drawing: 2533681-1_1_AB

Pos	Part No	UN	Qty	Description	Page No
TBA 0500S HOLE95					
010	1347952-0010		1	SPACER	
TBA 0500S HOLE55					
010	1347952-0006		1	SPACER	
TBA 1000B HOLE95, TBA 1000S HOLE95, TBA 1000SQ HOLE95, TBA 1500S HOLE95, TBA 2000S HOLE91, TBA 2000S HOLE95					
010	1347952-0011		1	SPACER	
TBA 1000S HOLE90, TBA 1500S HOLE90					
010	1347952-0008		1	SPACER	

Pos	Part No	UN	Qty	Description	Page No

SPLICING TABLE

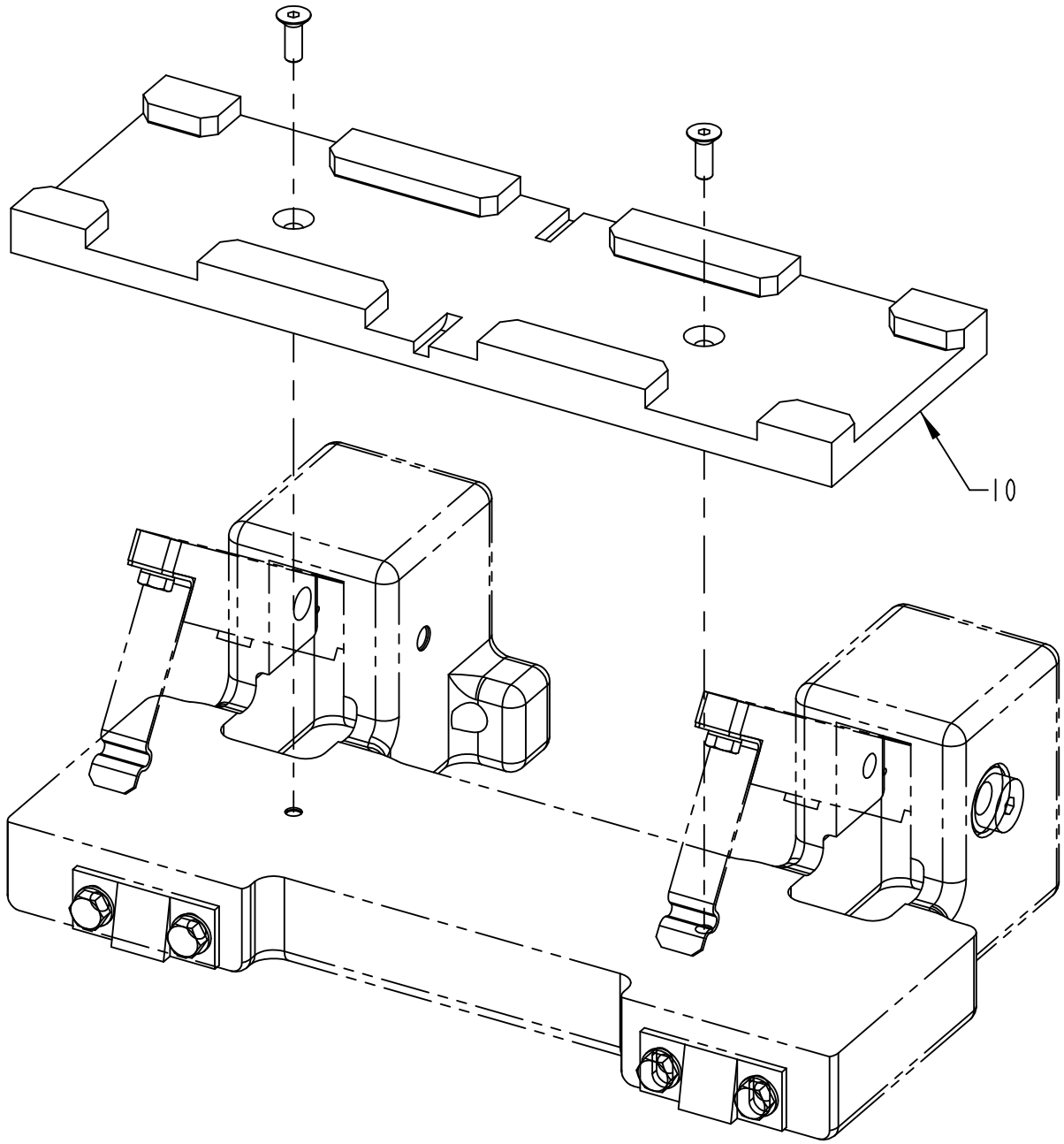

2533685-1
ECM 123507

ECM: 528922 - 20120401
Group number: 2533685-0100
Assembly Drawing: 2533685-1_1_AB

Pos	Part No	UN	Qty	Description	Page No
TBA 0500S HOLE95					
010	1499296-0007		1	GUIDE	
TBA 0500S HOLE55					
010	1499296-0004		1	GUIDE	
TBA 1000B HOLE95, TBA 1000S HOLE95, TBA 1000SQ HOLE95, TBA 1500S HOLE95, TBA 2000S HOLE91, TBA 2000S HOLE95					
010	1499296-0008		1	GUIDE	
TBA 1000S HOLE90, TBA 1500S HOLE90					
010	1499296-0015		1	GUIDE	

Pos	Part No	UN	Qty	Description	Page No

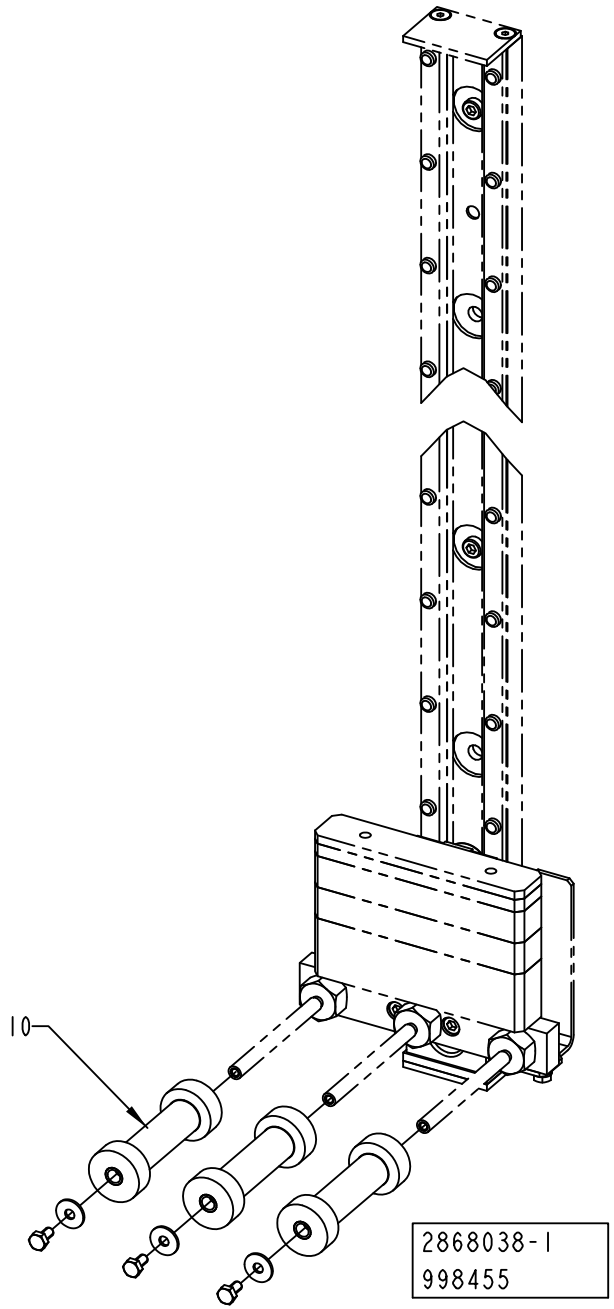
10
2868038-1
998455

ECM: 998455 - 20120401
Group number: 2868038-0100
Assembly Drawing: 2868038-1_1_AA

Pos	Part No	UN	Qty	Description	Page No
TBA 0500S HOLE95					
010	2564043-0008		3	ROLLER	
TBA 0500S HOLE55					
010	2564043-0005		3	ROLLER	
TBA 1000B HOLE95, TBA 1000S HOLE95, TBA 1000SQ HOLE95, TBA 1500S HOLE95, TBA 2000S HOLE91, TBA 2000S HOLE95					
010	2564043-0009		3	ROLLER	
TBA 1000S HOLE90, TBA 1500S HOLE90					
010	2564043-0006		3	ROLLER	

Pos	Part No	UN	Qty	Description	Page No

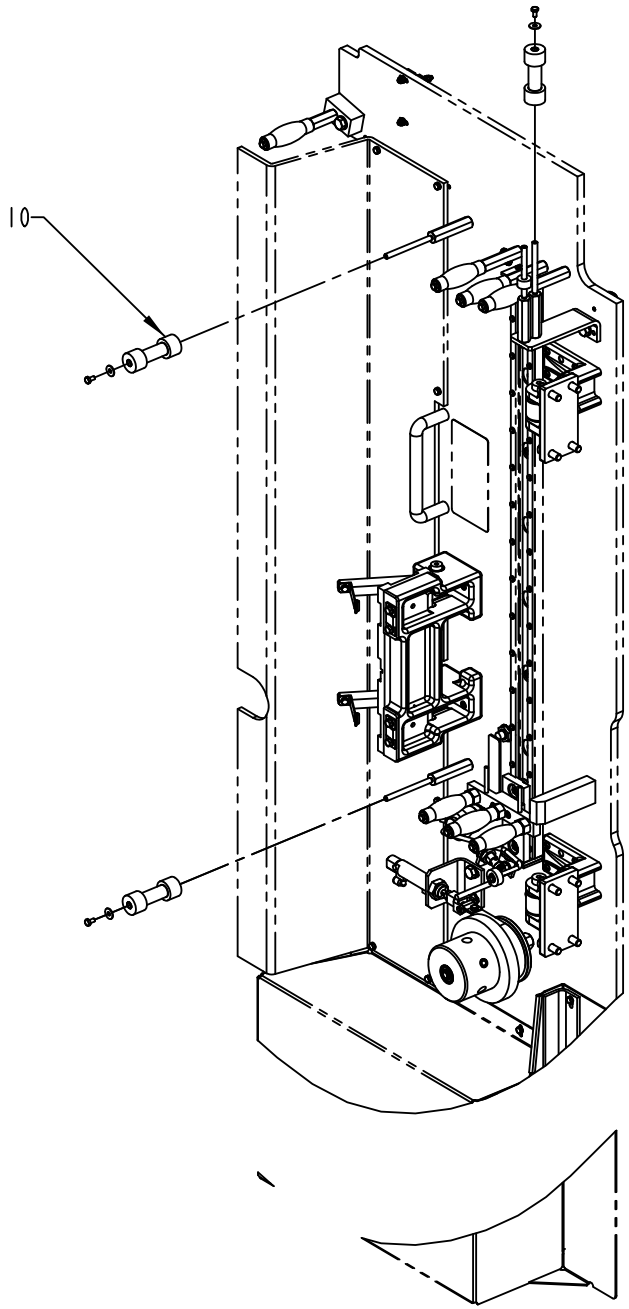

2710800-1
272674

ECM: 409478 - 20090915
Group number: 2710800-0100
Assembly Drawing: 2710800-1_1_AA

Pos	Part No	UN	Qty	Description	Page No
HOLE55					
010	2564044-0004		3	ROLLER	
HOLE90					
010	2564044-0005		3	ROLLER	
HOLE95, HOLE91					
010	2564044-0006		3	ROLLER	

Pos	Part No	UN	Qty	Description	Page No

This page is intentionally left blank.

ECM: 467340 - 20110101
Group number: 2564076-0100
Assembly Drawing:

Pos	Part No	UN	Qty	Description	Page No
HOLE55, HOLE90, HOLE95, HOLE91					
100	90602-9590		1	ADH. TAPE LABELS AL/PE,BS FOIL 100 35X16	
Common Parts					
130	90602-9550		1	ADH. TAPE LABELS AL/PET,BS SPLICE 90N 30	
200	90600-2609		1	SCOTCH-BRITE WHITE 690	

Pos	Part No	UN	Qty	Description	Page No

This page is intentionally left blank.

ECM: 419156 - 20091028
Group number: 2587337-0100
Assembly Drawing:

Pos	Part No	UN	Qty	Description	Page No
TBA 0500S HOLE55					
010	1490129-0000		1	TEMPLATE	
TBA 1000B HOLE95					
010	2672800-0000		1	TEMPLATE	
TBA 1000S HOLE90					
010	2651573-0000		1	TEMPLATE	
TBA 1000S HOLE95					
010	2672799-0000		1	TEMPLATE	
TBA 1000SQ HOLE95					
010	2672798-0000		1	TEMPLATE	
TBA 1500S HOLE90					
010	2651295-0000		1	TEMPLATE	
TBA 1500S HOLE95					
010	2672797-0000		1	TEMPLATE	
TBA 2000S HOLE91					
010	2664765-0000		1	TEMPLATE	
TBA 2000S HOLE95					
010	2664766-0000		1	TEMPLATE	

Pos	Part No	UN	Qty	Description	Page No

This page is intentionally left blank.

ECM: 418594 - 20091028
Group number: 2564075-0100
Assembly Drawing:

Pos	Part No	UN	Qty	Description	Page No
TBA 2000S HOLE91					
010	2604557-0000		1	OPENING SPECIFICATION	
TBA 2000S HOLE95					
010	2608239-0000		1	OPENING SPECIFICATION	
TBA 0500S HOLE55					
010	2514029-0000		1	OPENING SPECIFICATION	
TBA 0500S HOLE95					
010	2514032-0000		1	OPENING SPECIFICATION	
TBA 1000B HOLE95					
010	2658047-0000		1	OPENING SPECIFICATION	
TBA 1000S HOLE90					
010	2579887-0000		1	OPENING SPECIFICATION	
TBA 1000S HOLE95					
010	2658048-0000		1	OPENING SPECIFICATION	
TBA 1000SQ HOLE95					
010	2658046-0000		1	OPENING SPECIFICATION	
TBA 1500S HOLE90					
010	2635555-0000		1	OPENING SPECIFICATION	
TBA 1500S HOLE95					
010	2658045-0000		1	OPENING SPECIFICATION	

Pos	Part No	UN	Qty	Description	Page No

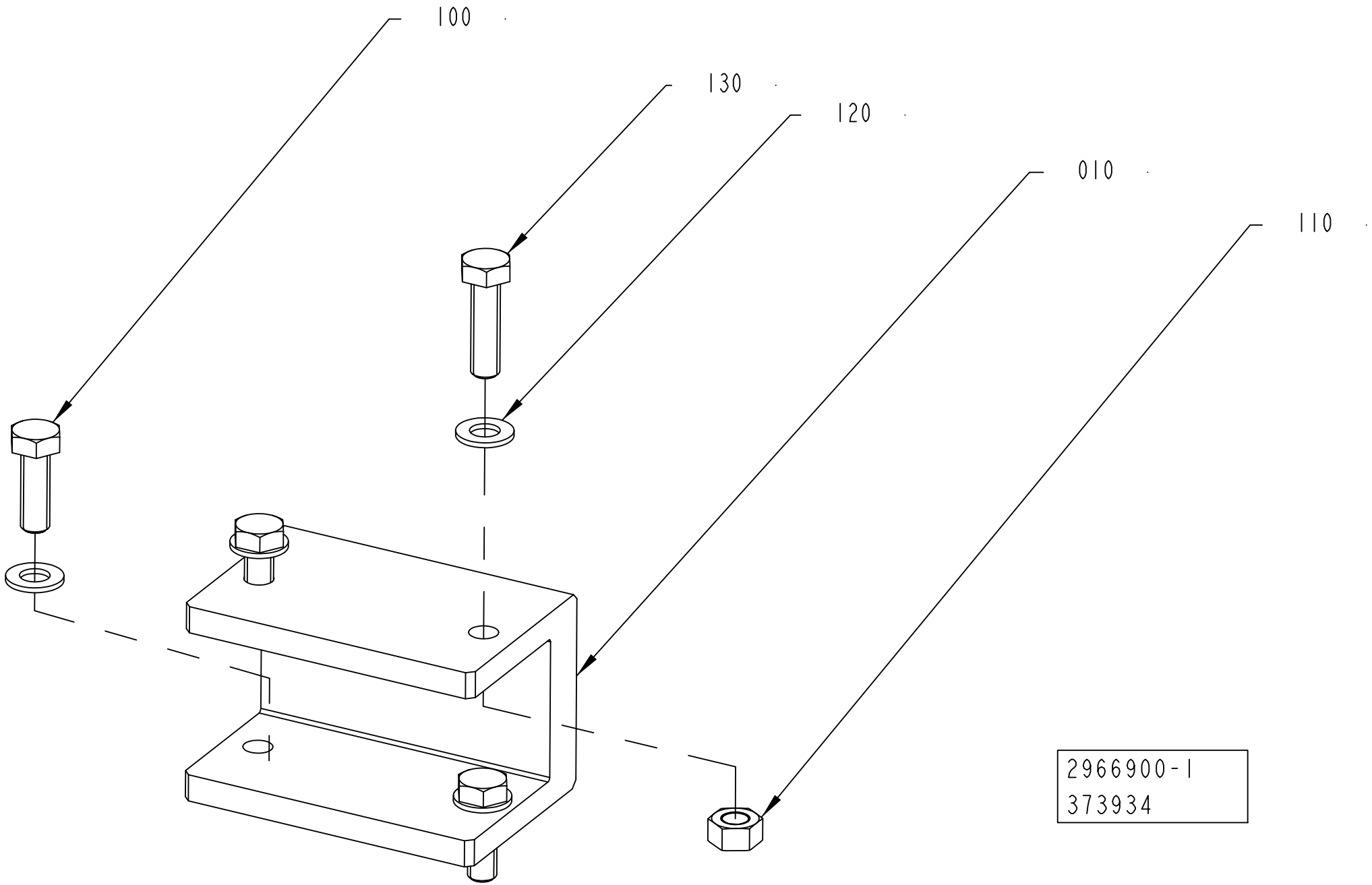
100
130
120
010
110
2966900-1
373934

ECM: 405525 - 20090703
Group number: 2966900-0100
Assembly Drawing: 2966900-1_1_AA

Pos	Part No	UN	Qty	Description	Page No
TBA 0500S, TBA 0500SQ, TBA 0500B, TBA 1000B, TBA 1000SQ, TBA 1000S, TPA 0500SQ					
010	2914987-0000		1	SPACER	
100	312105-0453		2	SCREW, M6S ISO 4017 M8X25 A4 80	
110	312607-0318		2	HEXAGON NUT, EN 24032 M6M M8 A480	
120	315105-0165		6	WASHER PLAIN, 8,4X16X1,6 A4 BRB	
TBA 1500S, TPA 1000SQ, TBA 2000S, TPA 0750SQ					
120	315105-0165		2	WASHER PLAIN, 8,4X16X1,6 A4 BRB	
Common Parts					
130	312105-0455		2	SCREW, M6S ISO 4017 M8X30 A4 80	

Pos	Part No	UN	Qty	Description	Page No

This page is intentionally left blank.

ECM: 535847 - 20120401
Group number: 3016193-0200
Assembly Drawing:

Pos	Part No	UN	Qty	Description	Page No
NOQC START FM QC					
020	2876473-0000		2	PLATE	
QC START FM NOQC					
010	2931380-0200		1	FRAME	**1-211**

Pos	Part No	UN	Qty	Description	Page No

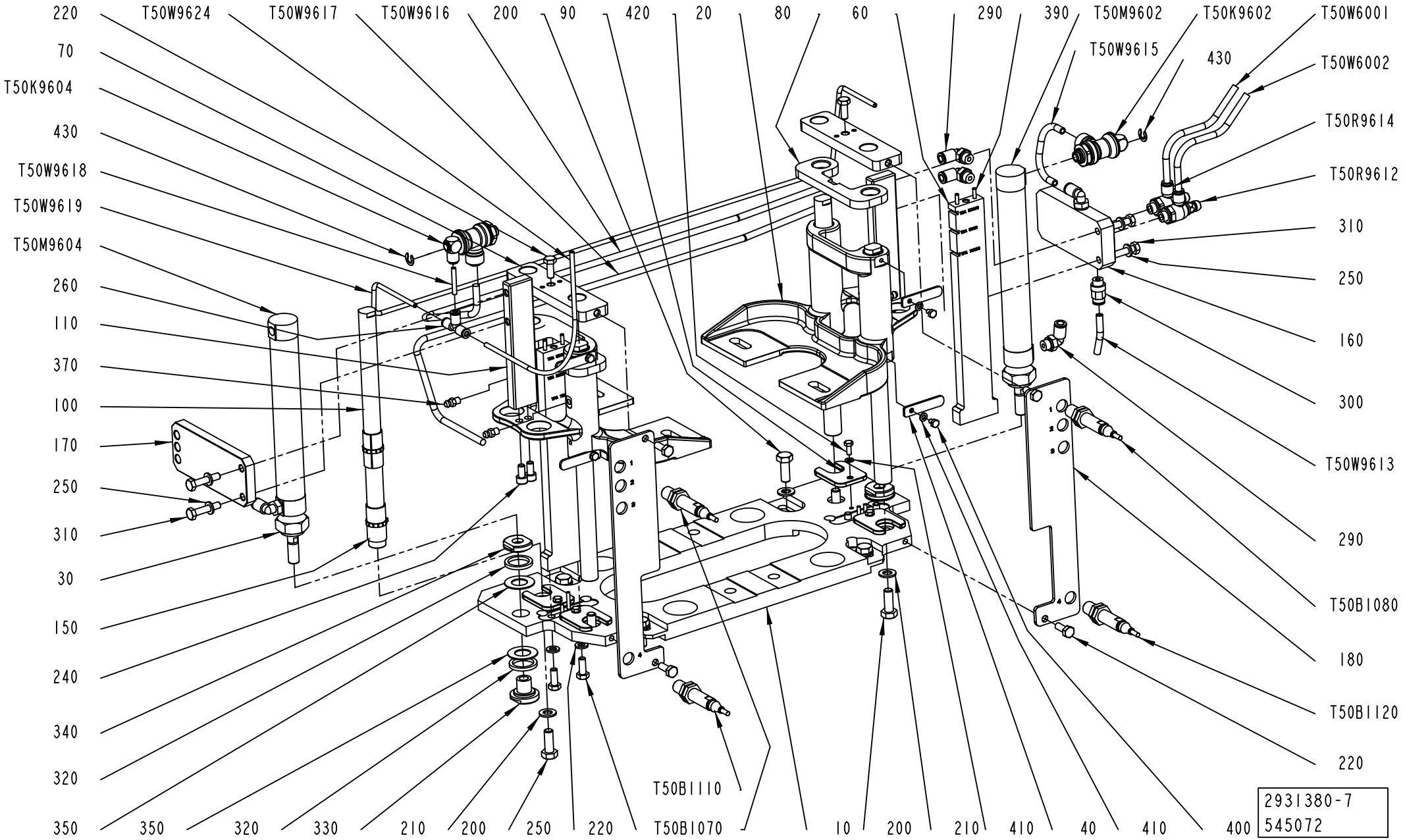
220
70
T50K9604
430
T50W9618
T50W9619
T50M9604
260
110
370
100
170
250
310
30
150
240
340
320
350
T50W9624
T50W9617
T50W9616
200
90
420
20
80
60
290
390
T50M9602
T50K9602
T50W6001
T50W9615
430
T50W6002
T50R9614
T50R9612
310
250
160
300
T50W9613
290
T50B1080
180
T50B1120
220
T50B1110
T50B1070
350
320
330
210
200
250
220
10
200
210
410
40
410
400
2931380-7
545072

ECM: 550630 - 20120701
Group number: 2931380-0200
Assembly Drawing: 2931380-7_1_AB

Pos	Part No	UN	Qty	Description	Page No
-					
010	2936209-0000		1	PLATE	
020	2852465-0000		2	BRACKET	
030	2966902-0000		2	NUT	
040	2829385-0000		4	PLATE	
060	2936210-0000		2	PLATE	
070	2760126-0000		2	SPACER	
080	2760089-0000		2	STOP	
090	2852461-0000		4	SPACER	
100	2760121-0000		4	BAR	
110	2760120-0000		2	PLATE	
150	90458-2920		8	BUSHING INSERT, JUM-01-16	
160	2936212-0000		1	PLATE	
170	2936211-0000		1	PLATE	
180	2936213-0000		2	BRACKET	
200	312105-0452		8	SCREW, M6S ISO 4017 M8X22 A4 80	
210	315105-0165		8	WASHER PLAIN, 8,4X16X1,6 A4 BRB	
220	312105-0368		10	SCREW, M6S ISO 4017 M6X16 A4 80	
240	312115-0366		4	SCREW ISO4762 M6X12 A4 80	
250	315105-0153		8	WASHER PLAIN, 6,4X12X1,5 A4 BRB	
260	350005-0001		1	PUSH-IN T-FITTING QST-F-4	
290	350002-0006		5	PUSH-IN L-FITTING QSL-F-G1/8-6	
300	350001-0006		1	PUSH-IN FITTING QS-F-G1/8-6	
310	312105-0374		4	SCREW, M6S ISO 4014 M6X30 A4 80	
320	2881044-0000		4	DAMPER	
330	2951198-0000		2	BUSHING	
340	2881047-0000		2	BUSHING	
350	2881048-0000		4	WASHER	
370	90286-0013		4	GREASE NIPPLE STRAIGHT, H1 M6X1 2346	
390	311102-0237		8	PARALLEL PIN ISO 2338 3M6X18 ST	
400	312105-0285		4	SCREW, M6S ISO 4017 M4X6 A4 70	
410	315101-0136		8	WASHER BRB, 4,3/8 H=0,8	
420	312105-0289		4	SCREW, M6S ISO 4017 M4X10 A4 70	
430	315755-0108		2	RETAINING RING SHAFT DIN 6799 6 SS	
T50B1070	90600-0464		1	INDUCTIVE SWITCH,E2A-M12LS02-WP-B1-TP 5M	
T50B1080	90600-0464		1	INDUCTIVE SWITCH,E2A-M12LS02-WP-B1-TP 5M	
T50B1110	90600-0464		1	INDUCTIVE SWITCH,E2A-M12LS02-WP-B1-TP 5M	
T50B1120	90600-0464		1	INDUCTIVE SWITCH,E2A-M12LS02-WP-B1-TP 5M	
T50K9602	90600-3222		1	PILOTED FUNCTION VALVE G1/8, 7880 06 10	
T50K9604	90600-3222		1	PILOTED FUNCTION VALVE G1/8, 7880 06 10	
T50M9602	90459-5268		1	DOUBLE ACTING, MINI-ISO, CYL. 25-130	
T50M9604	90459-5268		1	DOUBLE ACTING, MINI-ISO, CYL. 25-130	
T50R9612	90235-0846		1	THROTTLE CHECK VALVE G1/8", MANUAL, 6	
T50R9614	90235-0846		1	THROTTLE CHECK VALVE G1/8", MANUAL, 6	
T50W6001	315400-0001	MM	900	TUBE PUN-H-6X1-BL	
T50W6002	315400-0001	MM	900	TUBE PUN-H-6X1-BL	
T50W9613	90166-0081	MM	61	TUBE 6 MM PA BLUE	
T50W9615	90166-0081	MM	220	TUBE 6 MM PA BLUE	
T50W9616	315400-0016	MM	600	TUBE PUN-H-4X0,75-BL	
T50W9617	90166-0081	MM	600	TUBE 6 MM PA BLUE	
T50W9618	315400-0016	MM	100	TUBE PUN-H-4X0,75-BL	
T50W9619	90166-0013	MM	700	TUBE 8 MM PA BLUE	
T50W9624	315400-0016	MM	2000	TUBE PUN-H-4X0,75-BL	

Machine Type | Group Description | Used-In | Group Number | Page No

This page is intentionally left blank.

ECM: 536041 - 20120401
Group number: 2980903-0100
Assembly Drawing:

Pos	Part No	UN	Qty	Description	Page No
TBA 0500S, TBA 0500SQ, TBA 0500B, TBA 1000B, TBA 1000SQ, TBA 1000S, TBA 1500S, TPA 0500SQ, TBA 2000S					
040	1144511-0000		6	SHIM	
TGA 0500SQ					
010	2983123-0000		4	SHIM	
020	2983114-0000		4	SHIM	
040	2983142-0000		1	SHIM	
TGA 0750SQ					
010	2983122-0000		4	SHIM	
020	2983113-0000		4	SHIM	
040	2983142-0000		1	SHIM	
TGA 1000SQ					
010	2983121-0000		4	SHIM	
020	2963294-0000		4	SHIM	
040	2983142-0000		1	SHIM	
TGA 1500SQ					
010	2963272-0000		4	SHIM	
020	2983112-0000		4	SHIM	
040	2983142-0000		1	SHIM	
TPA 1000SQ, TPA 0750SQ					
040	2658249-0000		6	SHIM	
Common Parts					
050	2773832-0000		4	GASKET	

Pos	Part No	UN	Qty	Description	Page No

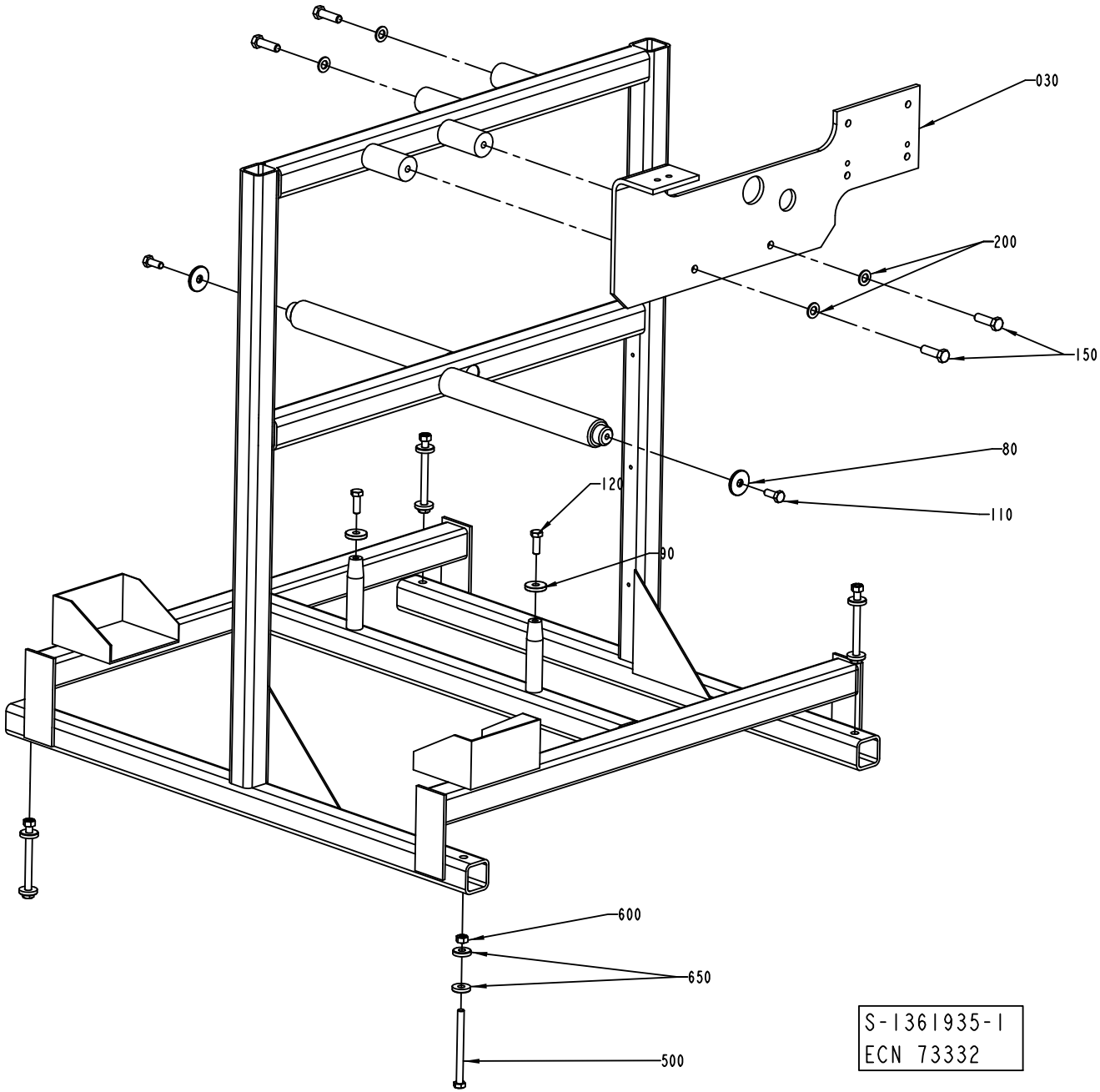
030
200
150
80
110
120
90
600
650
500
S-1361935-1
ECN 73332

ECM: 73332 - 20000411
Group number: 1361935-0100
Assembly Drawing: 1361935-1_1_AB

Pos	Part No	UN	Qty	Description	Page No
-					
020	1361934-0000		1	FRAME	
030	1363780-0000		1	CARRIER	
080	1144620-0000		2	WASHER	
090	1144681-0000		2	WASHER	
110	312105-0493		2	SCREW, M6S ISO 4017 M10X25 A4 80	
120	312105-0495		2	SCREW, M6S ISO 4017 M10X30 A4 80	
150	312105-0540		4	SCREW, M6S ISO 4017 M12X40 A4 80	
200	315105-0178		4	WASHER PLAIN, 13X24X2,5 A4 BRB	
500	312101-0515		4	SCREW M6S M10X120 FZB	
600	312601-0320		4	HEXAGON NUT, M10 8 FZB, ISO 4032	
650	315121-0173		8	WASHER PLAIN, TBRSB 10,5/28 H=6	

Pos	Part No	UN	Qty	Description	Page No

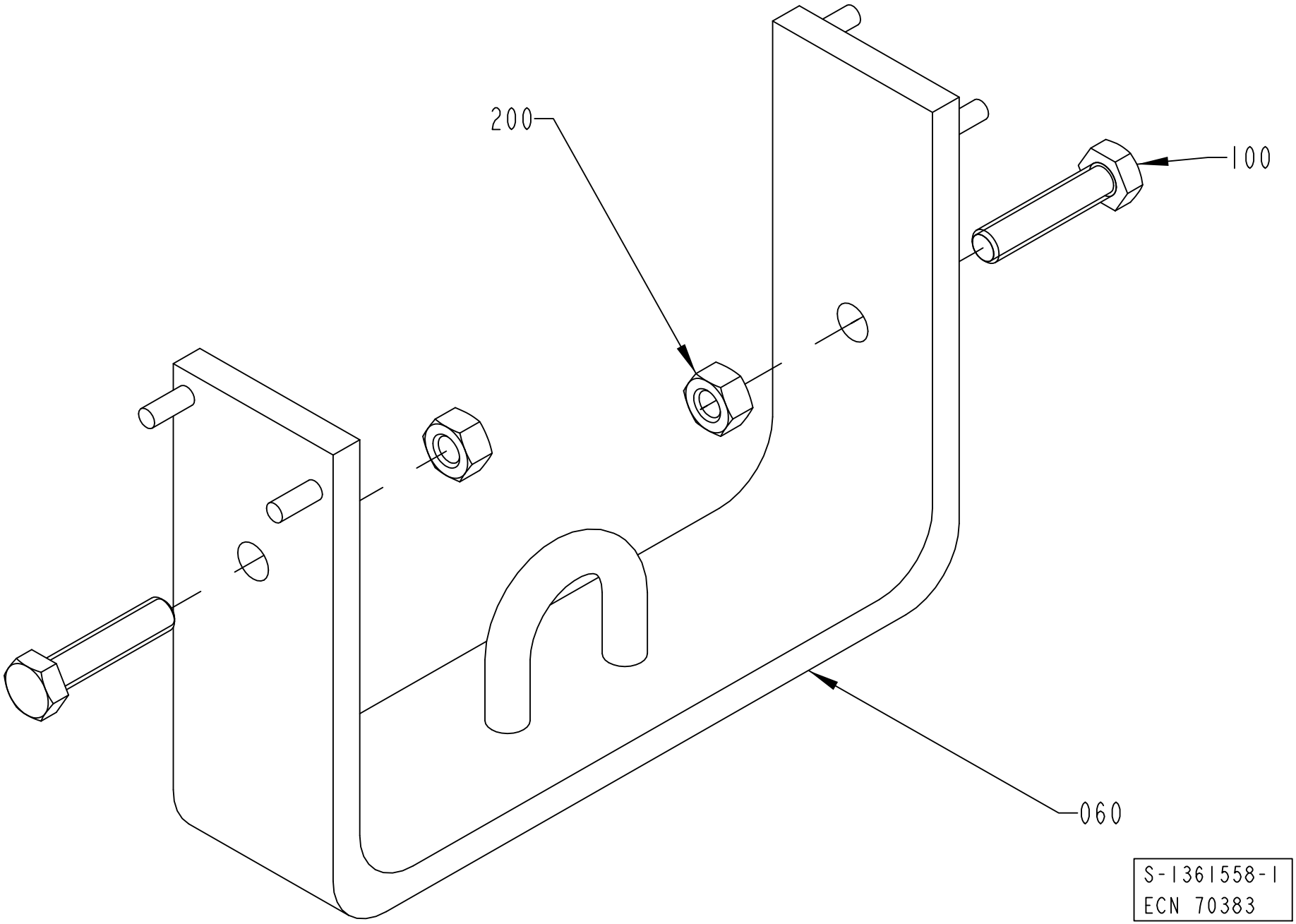
200
100
060
S-1361558-1
ECN 70383

ECM: 73332 - 20000411
Group number: 1361558-0100
Assembly Drawing: 1361558-1_1_AA

Pos	Part No	UN	Qty	Description	Page No
-					
020	1363791-0000		1	BRACKET	
100	312109-0500		2	SCREW, M6S ISO 4017 M10X45 A4 80	
200	312605-0320		2	HEXAGON NUT, M6M M10 A280	

Pos	Part No	UN	Qty	Description	Page No

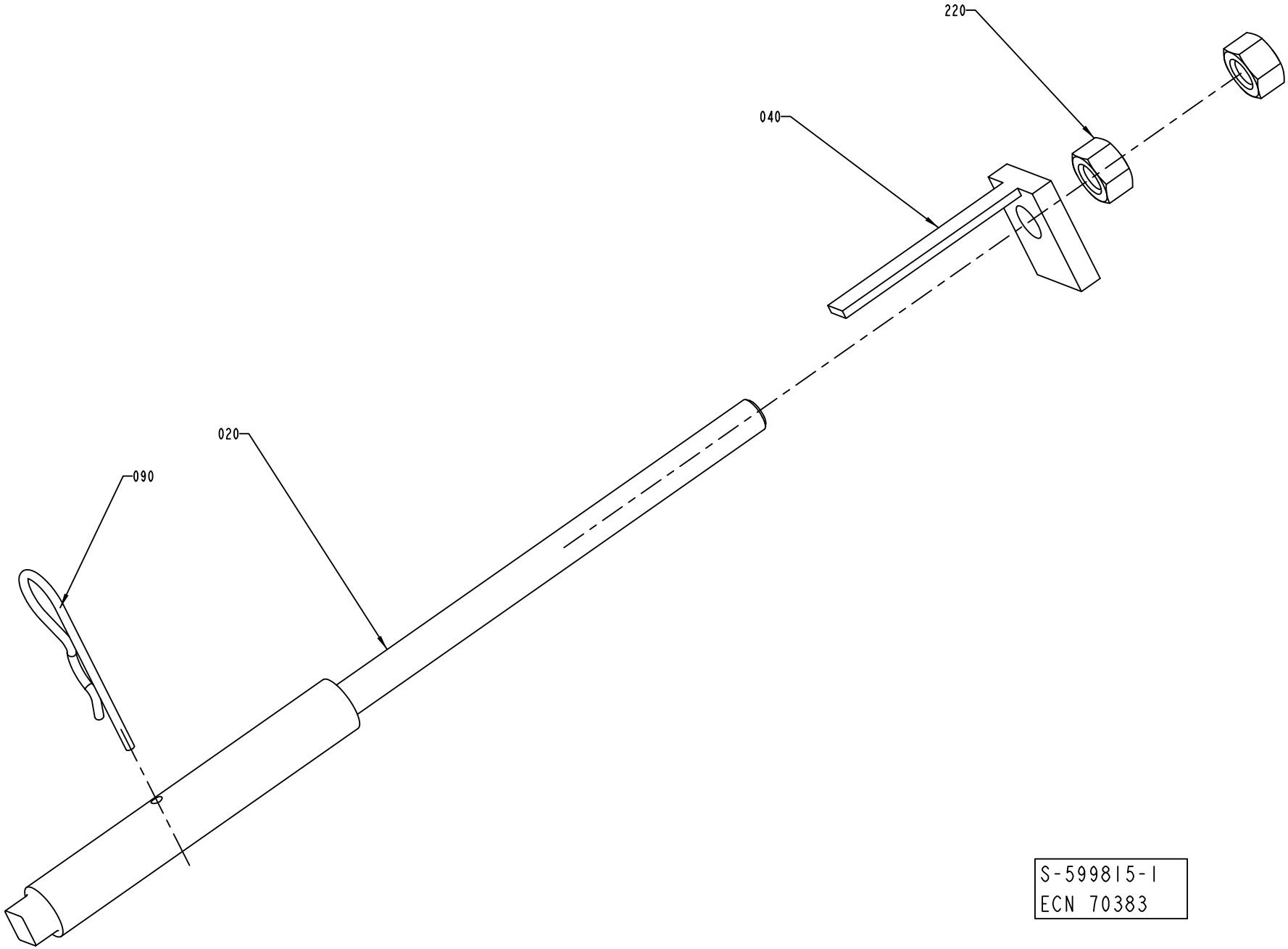

S-599815-I
ECN 70383

ECM: 118983 - 20021217
Group number: 599815-0100
Assembly Drawing: 599815-1_1_AA

Pos	Part No	UN	Qty	Description	Page No
-					
020	598095-0000		2	SCREW	
040	598096-0000		2	WASHER	
090	90258-0060		2	COTTER	
220	312605-0322		4	HEXAGON NUT, M6M M12 A280	

Pos	Part No	UN	Qty	Description	Page No

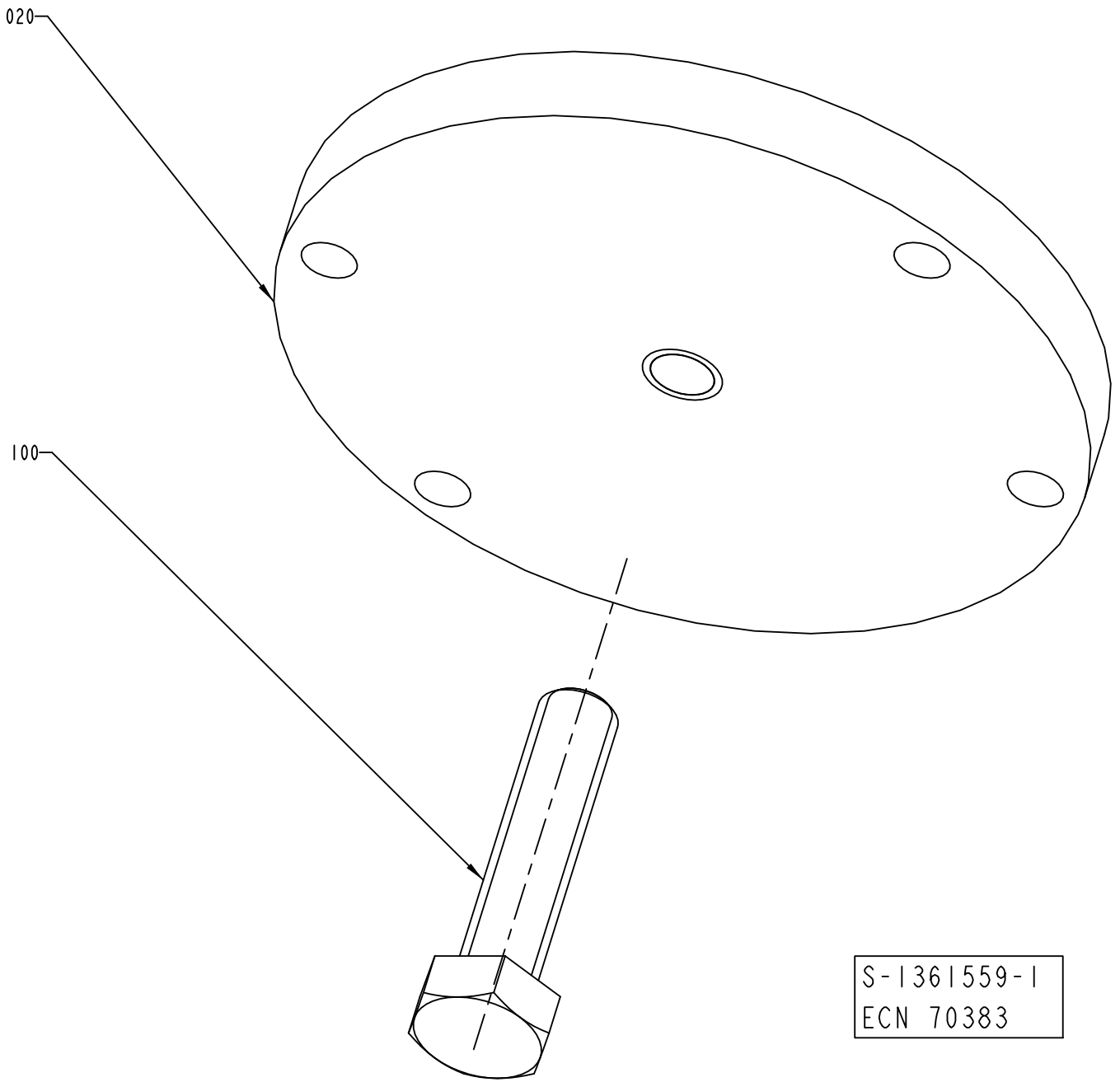
020
100
S-1361559-1
ECN 70383

ECM: 70383 - 19990301
Group number: 1361559-0100
Assembly Drawing: 1361559-1_1_AA

Pos	Part No	UN	Qty	Description	Page No
-					
020	1361547-0000		1	PULLER	
100	312109-0500		1	SCREW, M6S ISO 4017 M10X45 A4 80	

Pos	Part No	UN	Qty	Description	Page No

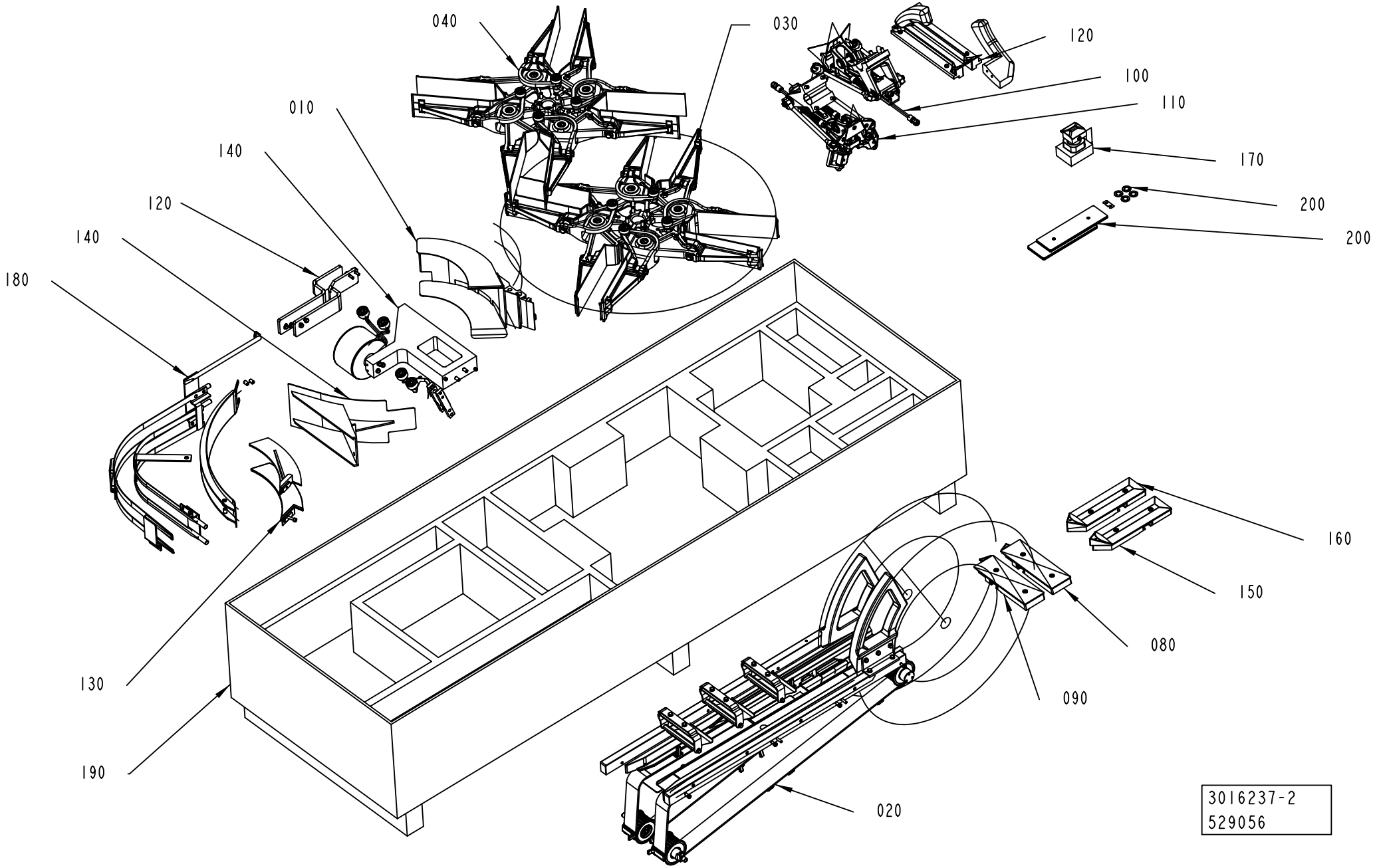
040
030
120
100
110
170
200
200
010
140
120
140
180
160
150
080
090
130
190
020
3016237-2
529056

ECM: 535854 - 20120401
Group number: 3016237-0200
Assembly Drawing: 3016237-2_1_AA

Pos	Part No	UN	Qty	Description	Page No
-					
010	2966905-0100		1	CRADLE	**1-157, 1-159**
020	2983150-0200		1	VOLUME CHANGE	**1-225**
030	2746756-0200		1	WHEEL	**1-233**
040	2746765-0200		1	WHEEL	**1-239**
080	2826710-0200		1	FORMING PLATE	**1-247**
090	2838217-0200		1	FORMING PLATE	**1-249**
100	2963300-0200		1	FOLDING UNIT	**1-251**
110	2963310-0200		1	FOLDING UNIT	**1-253**
120	2963316-0200		1	VOLUME CHANGE	**1-255**
130	2902424-0200		1	GUIDE	**1-257, 1-259**
140	2980829-0200		1	FLAP HEATER	**1-261**
150	2826720-0300		1	FORMING PLATE	**1-265**
160	2838218-0300		1	FORMING PLATE	**1-267**
170	2963317-0100		1	PRESSURE UNIT	**1-269**
180	3192386-0100		1	RAIL	**1-271, 1-273**
190	3050520-0000		1	BOX	
200	2980903-0100		1	START-UP KIT FF	**1-213**

Pos	Part No	UN	Qty	Description	Page No

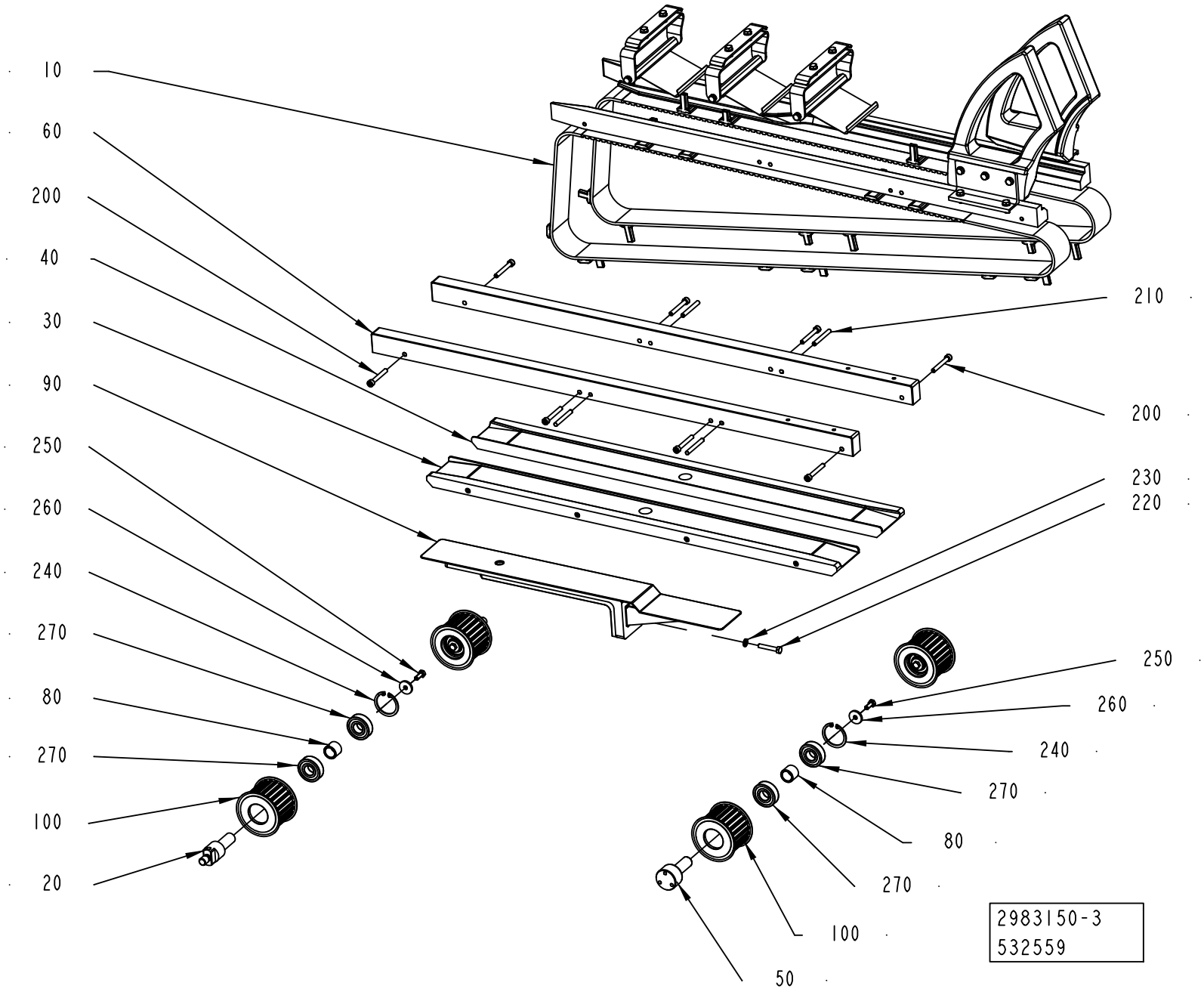
10
60
200
40
30
90
250
260
240
270
80
270
100
20
210
200
230
220
250
260
240
270
80
270
100
50
2983150-3
532559

ECM: 534016 - 20120401
Group number: 2983150-0200
Assembly Drawing: 2983150-3_1_AA

Pos	Part No	UN	Qty	Description	Page No
TGA 1000SQ, TGA 0750SQ, TGA 0500SQ					
020	2941023-0000		2	COLUMN	
030	2991546-0000		1	GUIDE	
040	2991546-0000		1	GUIDE	
050	2941022-0000		2	SHAFT	
060	2926897-0000		2	SPACER	
090	2963269-0000		1	PLATE	
200	312115-0379		8	SCREW ISO4762 M6X45 A4 80	
210	311103-0365		4	PARALLEL PIN ISO 2338 6M6X50 A1	
220	312109-0376		1	SCREW, M6S ISO 4017 M6X35 A4 80	
230	315105-0153		1	WASHER PLAIN, 6,4X12X1,5 A4 BRB	
TGA 1500SQ					
020	2926892-0000		2	COLUMN	
030	2963338-0000		1	GUIDE	
040	2963339-0000		1	GUIDE	
050	2963340-0000		2	SHAFT	
060	2941025-0000		2	SPACER	
090	2963268-0000		1	PLATE	
200	312115-0376		4	SCREW ISO4762 M6X35 A4 80	
210	311103-0361		4	PARALLEL PIN ISO 2338 6M6X40 A1	
220	312115-0372		1	SCREW ISO4762 M6X25 A4 80	
Common Parts					
010	3211686-0100		1	VOLUME CHANGE	**1-227, 1-229**
080	2926896-0000		4	SPACER	
100	2926881-0000		4	TOOTHED PULLEY	
240	315753-0127		4	RETAINING RING FOR BORE DIN 472 40X1.75C	
250	312105-0368		4	SCREW, M6S ISO 4017 M6X16 A4 80	
260	315125-0153		4	WASHER HIGH, TBRSB 6,4X22X4 A4	
270	90603-2398		8	BALL BEARING, 17X40X12	

Pos	Part No	UN	Qty	Description	Page No

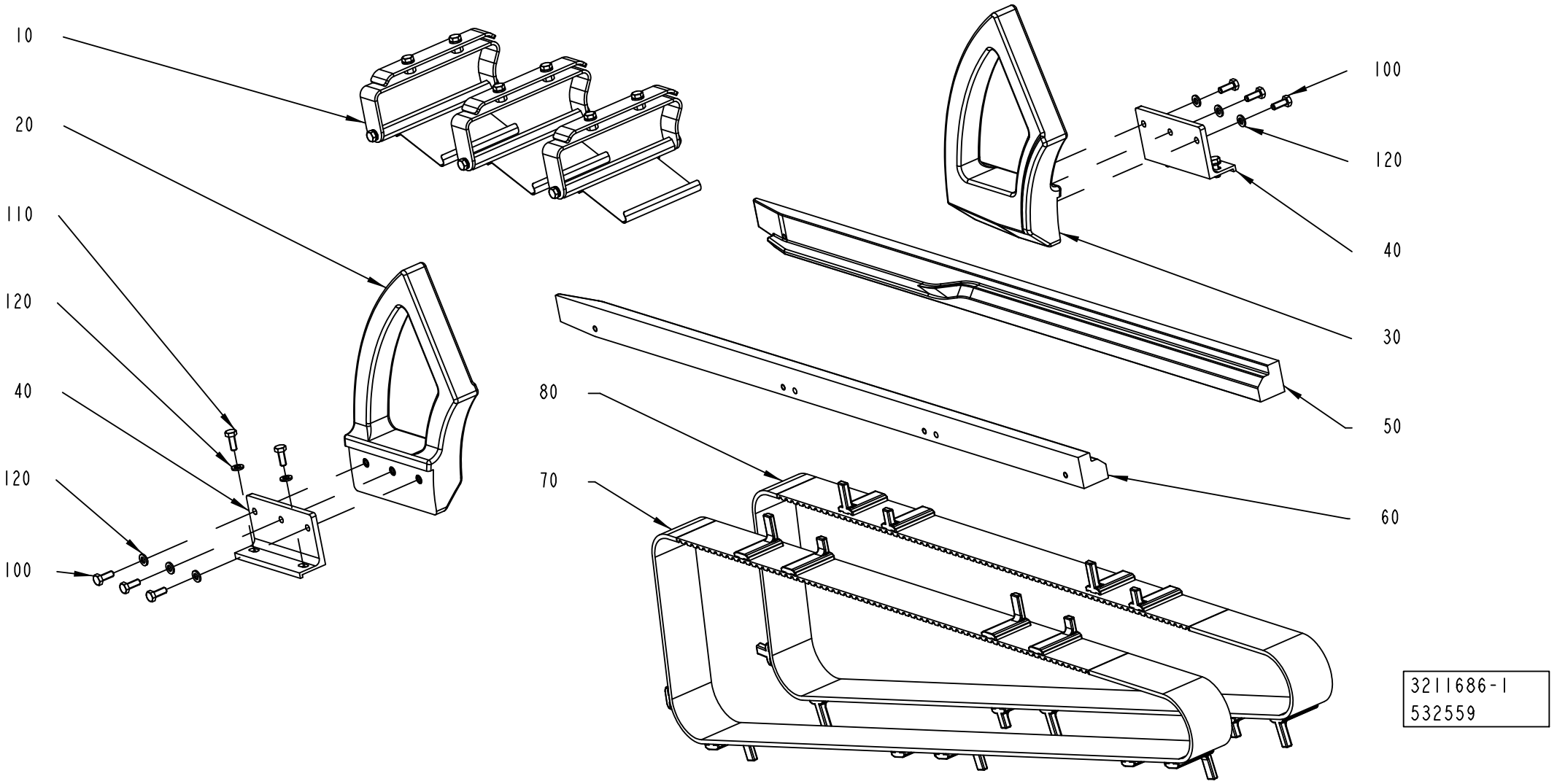
10
20
110
120
40
120
100
100
120
40
30
50
80
70
60
3211686-1
532559

ECM: 534017 - 20120401
Group number: 3211686-0100
Assembly Drawing: 3211686-1_1_AA

This list covers pages from 1-226 to 1-229

Pos	Part No	UN	Qty	Description	Page No
TGA 1000SQ, TGA 0750SQ, TGA 0500SQ (See drawing on page: 1-226)					
010	3021528-0100		1	SPRING	**1-231**
050	2963251-0000		1	GUIDE	
060	2963252-0000		1	GUIDE	
070	2940964-0000		1	BELT	
080	2940965-0000		1	BELT	
110	312105-0362		4	SCREW, M6S ISO 4017 M6X8 A4 80	
TGA 1500SQ (See drawing on page: 1-228)					
010	3021528-0100		1	SPRING	**1-231**
020	3130265-0000		1	GUIDE	
030	3130266-0000		1	GUIDE	
040	3130267-0000		2	RAIL	
050	2963251-0000		1	GUIDE	
060	2963252-0000		1	GUIDE	
070	2940964-0000		1	BELT	
080	2940965-0000		1	BELT	
100	312105-0368		4	SCREW, M6S ISO 4017 M6X16 A4 80	
110	312105-0380		4	SCREW, M6S ISO 4014 M6X50 A4 80	
120	315105-0153		8	WASHER PLAIN, 6,4X12X1,5 A4 BRB	

Pos	Part No	UN	Qty	Description	Page No

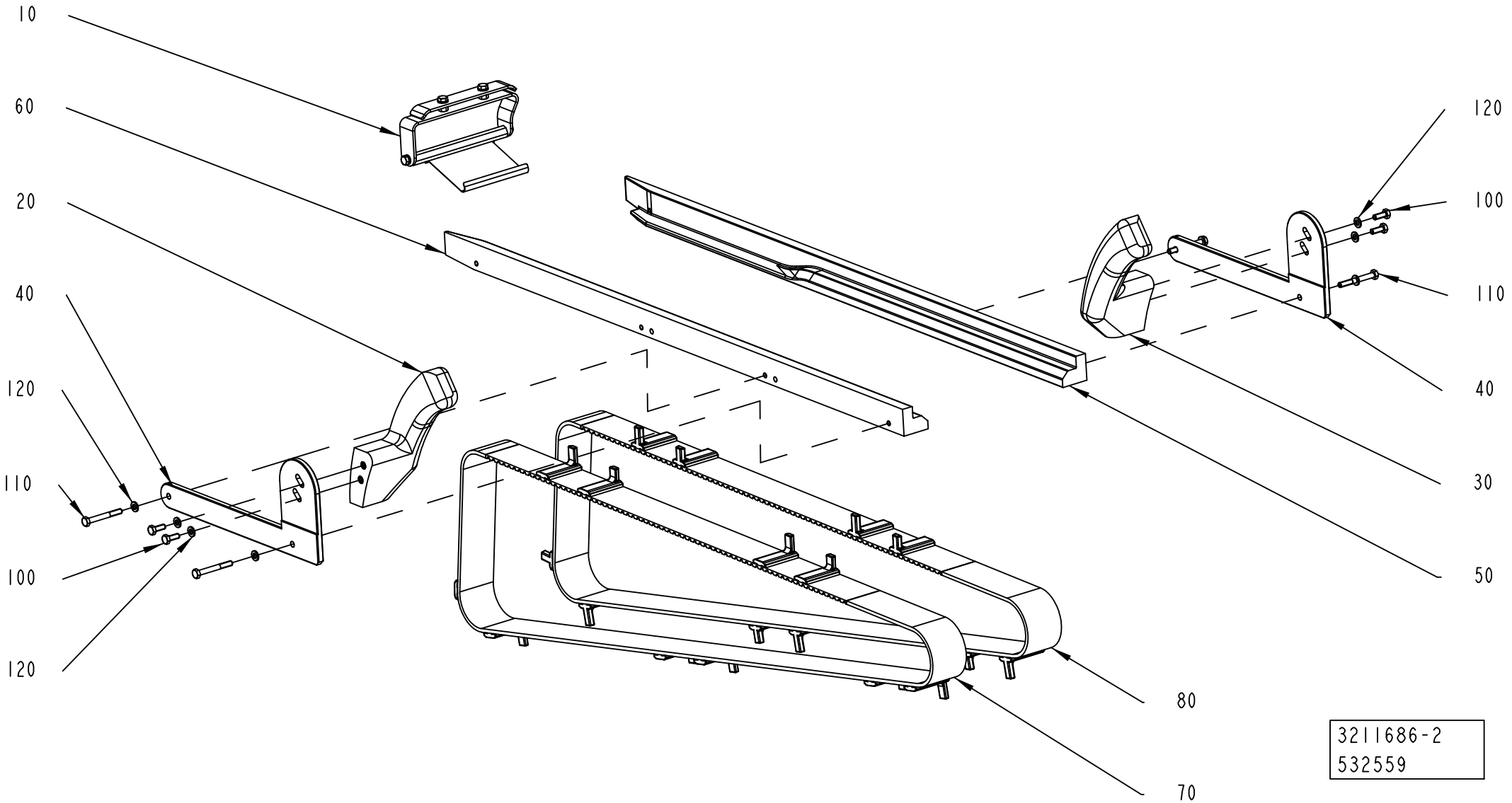
10
60
20
40
120
110
100
120
120
100
110
40
30
50
80
70
3211686-2
532559

ECM: 534017 - 20120401
Group number: 3211686-0100
Assembly Drawing: 3211686-2_1_AA

This list covers pages from 1-226 to 1-229

Pos	Part No	UN	Qty	Description	Page No
TGA 1000SQ, TGA 0750SQ, TGA 0500SQ (See drawing on page: 1-226)					
010	3021528-0100		1	SPRING	**1-231**
050	2963251-0000		1	GUIDE	
060	2963252-0000		1	GUIDE	
070	2940964-0000		1	BELT	
080	2940965-0000		1	BELT	
110	312105-0362		4	SCREW, M6S ISO 4017 M6X8 A4 80	
TGA 1500SQ (See drawing on page: 1-228)					
010	3021528-0100		1	SPRING	**1-231**
020	3130265-0000		1	GUIDE	
030	3130266-0000		1	GUIDE	
040	3130267-0000		2	RAIL	
050	2963251-0000		1	GUIDE	
060	2963252-0000		1	GUIDE	
070	2940964-0000		1	BELT	
080	2940965-0000		1	BELT	
100	312105-0368		4	SCREW, M6S ISO 4017 M6X16 A4 80	
110	312105-0380		4	SCREW, M6S ISO 4014 M6X50 A4 80	
120	315105-0153		8	WASHER PLAIN, 6,4X12X1,5 A4 BRB	

Pos	Part No	UN	Qty	Description	Page No

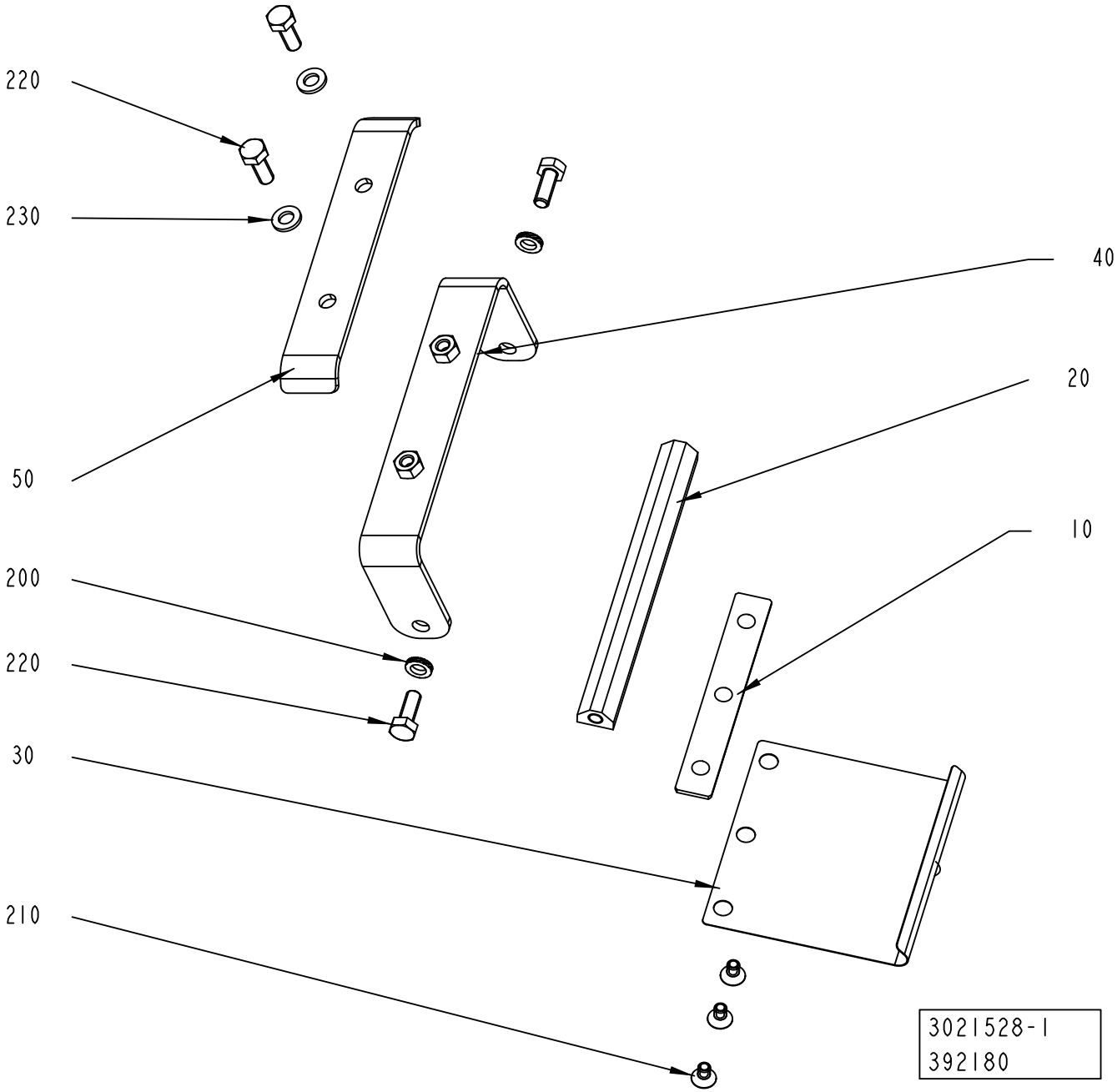
220
230
50
200
220
30
210
40
20
10
3021528-1
392180

ECM: 392208 - 20090624
Group number: 3021528-0100
Assembly Drawing: 3021528-1_1_AA

Pos	Part No	UN	Qty	Description	Page No
-					
010	2540612-0000		1	PLATE	
020	2527793-0000		1	SHAFT	
030	2530418-0000		1	SPRING	
040	3025006-0000		1	SUPPORT	
050	1499476-0000		1	HOLDER	
200	90062-0061		2	LOCK WASHER NORD-LOCK,6,5/10,8, T=2,2	
210	312155-0323		3	SCREW DIN 7991 MF6S M5X8 A4 70	
220	312105-0368		4	SCREW, M6S ISO 4017 M6X16 A4 80	
230	315105-0153		2	WASHER PLAIN, 6,4X12X1,5 A4 BRB	

Pos	Part No	UN	Qty	Description	Page No

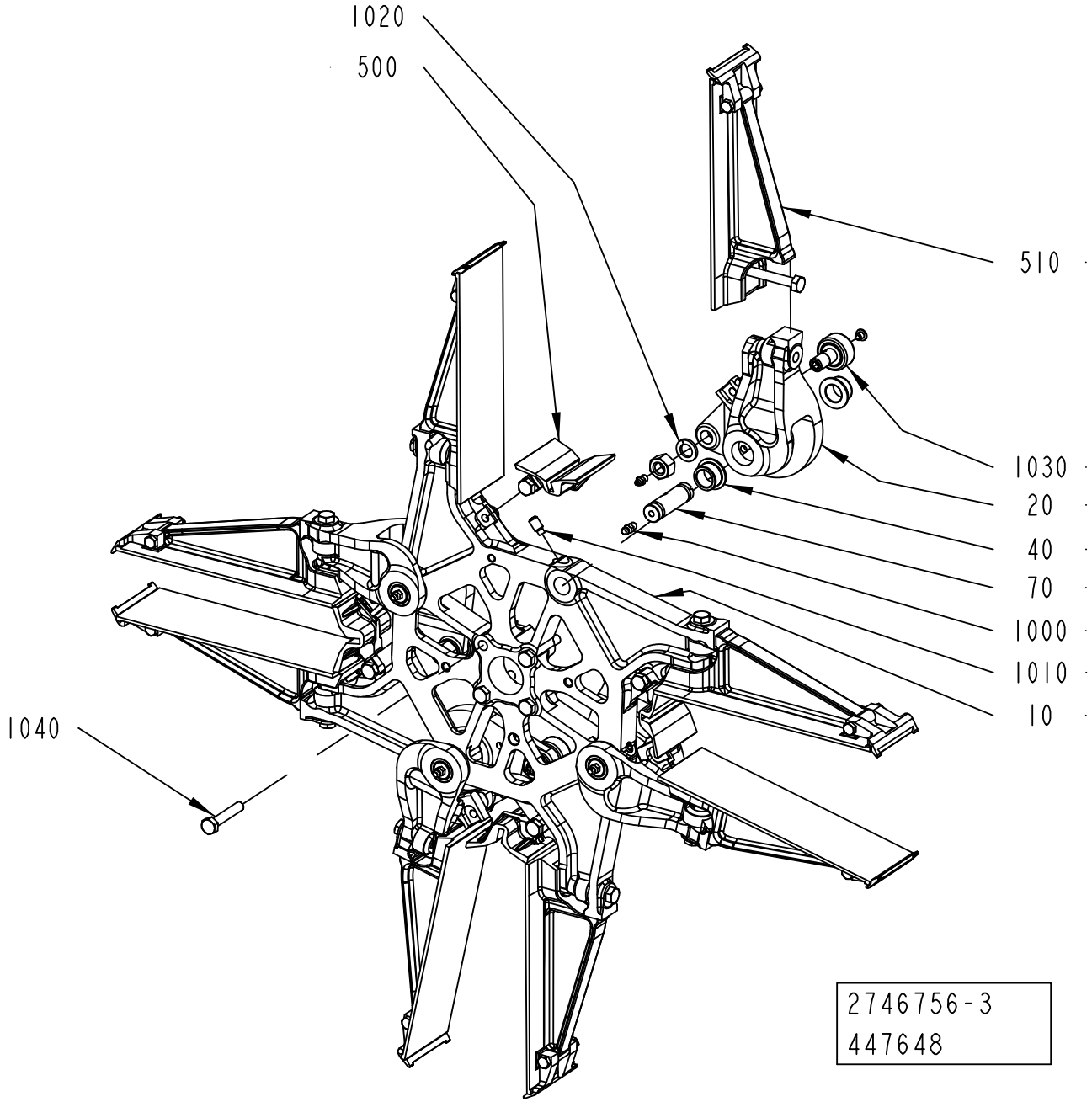
1020
500
510
1030
20
40
70
1000
1010
10
1040
2746756-3
447648

ECM: 533826 - 20120401
Group number: 2746756-0200
Assembly Drawing: 2746756-3_1_AC

Pos	Part No	UN	Qty	Description	Page No
TGA 0500SQ					
010	2798294-0000		1	WHEEL	
	2798290-0000		*1*	*WHEEL*	
020	2798295-0000		4	ARM	
	2798291-0000		*1*	*ARM*	
TGA 0750SQ					
010	2798294-0000		1	WHEEL	
	2798290-0000		*1*	*WHEEL*	
020	2798295-0000		4	ARM	
	2798291-0000		*1*	*ARM*	
TGA 1000SQ					
010	2798294-0000		1	WHEEL	
	2798290-0000		*1*	*WHEEL*	
020	2798295-0000		4	ARM	
	2798291-0000		*1*	*ARM*	
TGA 1500SQ					
010	2941026-0000		1	WHEEL	
	2798290-0000		*1*	*WHEEL*	
020	2941027-0000		4	ARM	
	2798291-0000		*1*	*ARM*	
Common Parts					
040	2805193-0000		8	BUSHING	
070	2878100-0000		4	SHAFT	
080	3093546-0000		1	PLATE	
500	2902419-0200		4	BOTTOM	**1-235**
510	2902418-0200		8	FLAP	**1-237**
520	3048557-0000		2	SHIM	
1000	90286-0013		4	GREASE NIPPLE STRAIGHT, H1 M6X1 2346	
1010	344324-0449		4	SET SCREW, DOG POINT ISO4028 M8X16 A2	
1020	315402-0178		4	LOCK WASHER, DIN127B 12,2 A4, M12	
1030	90600-0808		4	CAM ROLLER 12X30X40 MM, CFT 12 M UU N	
1040	312105-0460		4	SCREW, M6S ISO 4014 M8X45 A4 80	
1050	312105-0447		2	SCREW, M6S ISO 4017 M8X12 A4 80	

Pos	Part No	UN	Qty	Description	Page No

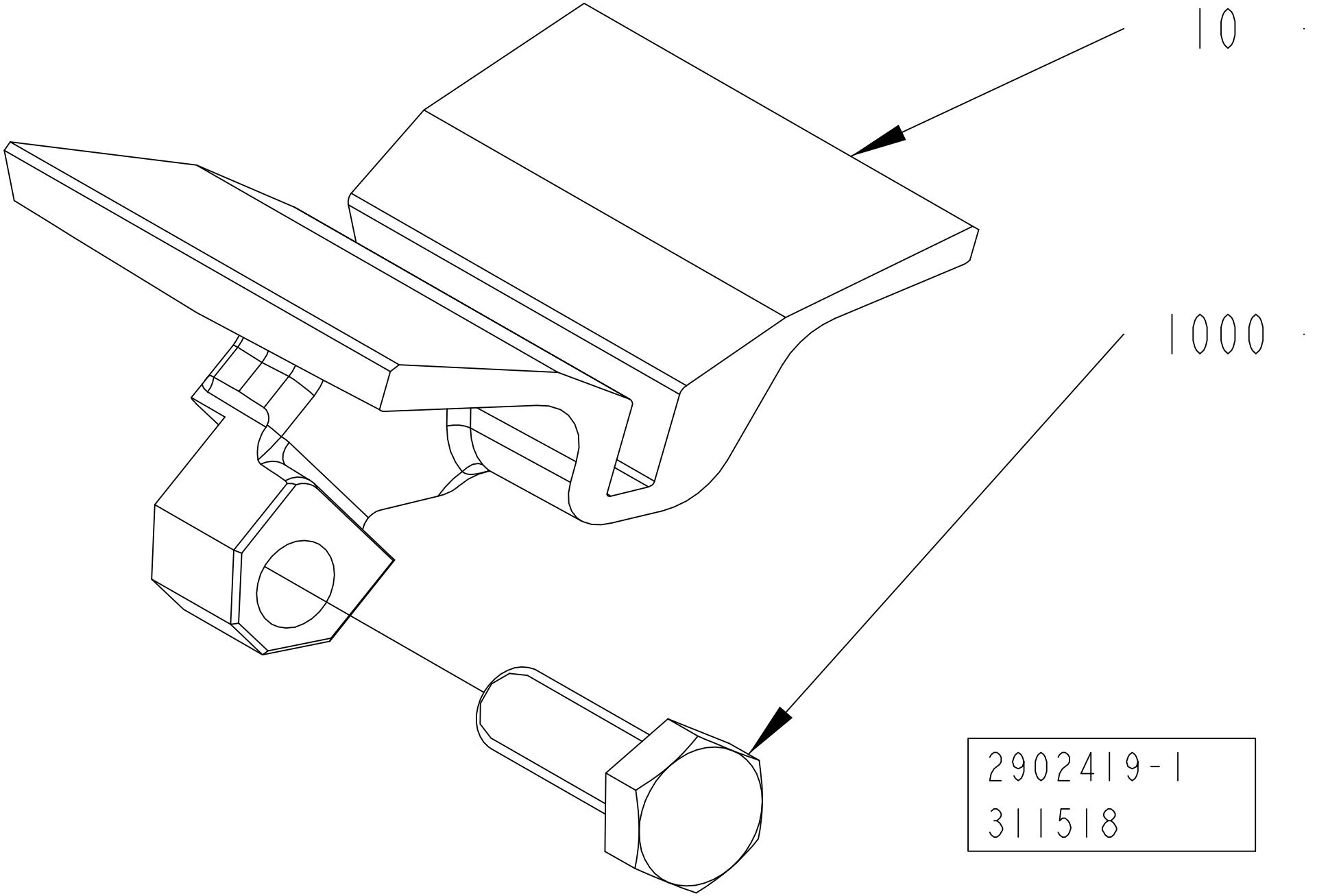
10
1000
2902419-1
311518

ECM: 534006 - 20120401
Group number: 2902419-0200
Assembly Drawing: 2902419-1_1_AA

Pos	Part No	UN	Qty	Description	Page No
TGA 0500SQ					
010	2866701-0000		1	BOTTOM	
TGA 0750SQ					
010	2866700-0000		1	BOTTOM	
TGA 1000SQ					
010	2798304-0000		1	BOTTOM	
TGA 1500SQ					
010	2963307-0000		1	BOTTOM	
	2963304-0000		*1*	*BOTTOM*	
Common Parts					
1000	312105-0453		1	SCREW, M6S ISO 4017 M8X25 A4 80	

Pos	Part No	UN	Qty	Description	Page No

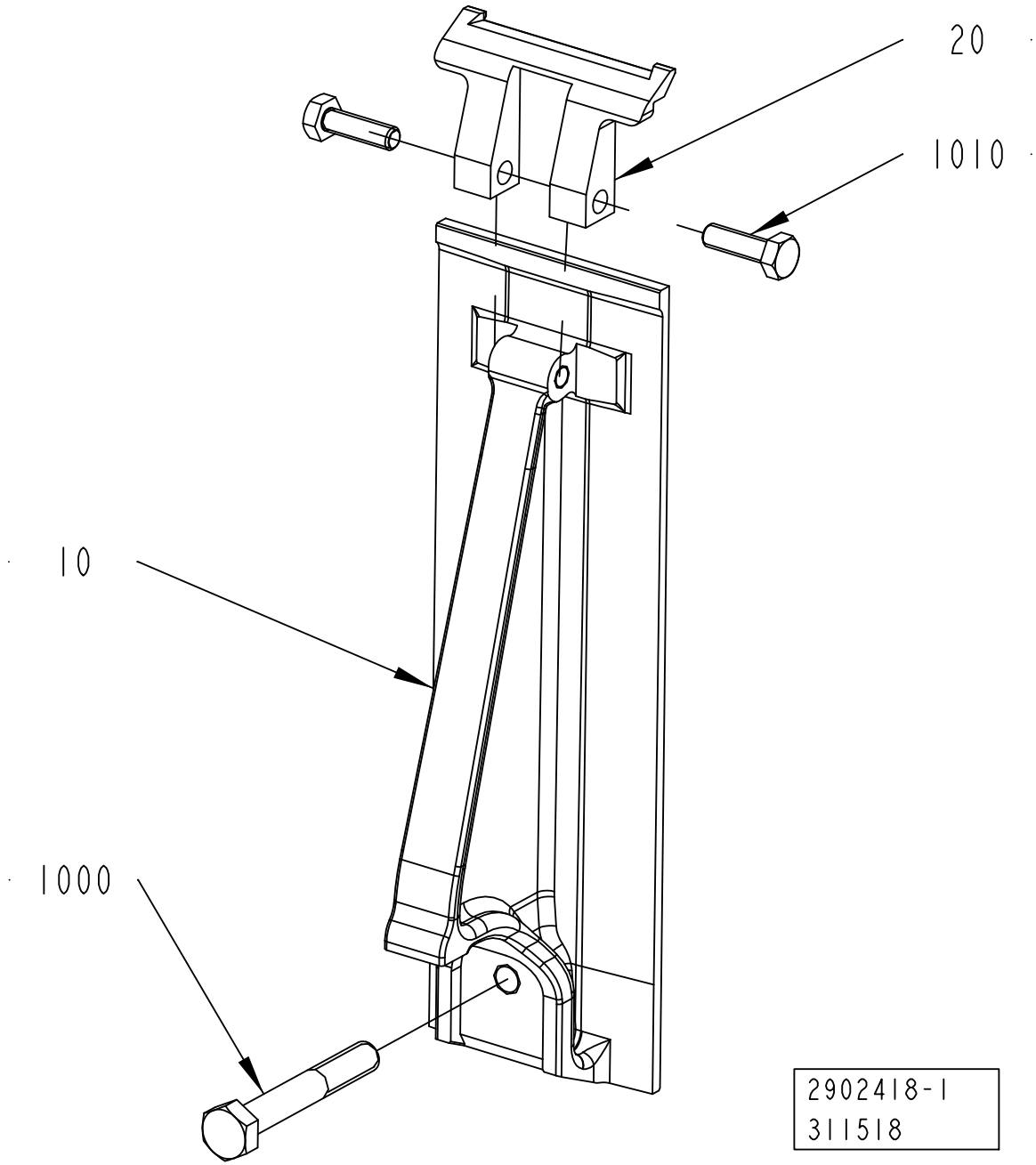
20
1010
10
1000
2902418-1
311518

ECM: 534005 - 20120401
Group number: 2902418-0200
Assembly Drawing: 2902418-1_1_AA

Pos	Part No	UN	Qty	Description	Page No
TGA 1000SQ, TGA 0750SQ, TGA 0500SQ					
010	2798296-0000		1	FLAP	
	2798292-0000		*1*	*FLAP*	
020	2764324-0000		1	HOLD-DOWN	
1000	312105-0462		1	SCREW, M6S ISO 4014 M8X55 A4 80	
1010	312105-0368		2	SCREW, M6S ISO 4017 M6X16 A4 80	
TGA 1500SQ					
010	2941028-0000		1	FLAP	
	2798292-0000		*1*	*FLAP*	
020	2764324-0000		1	HOLD-DOWN	
1000	312109-0461		1	SCREW, M6S ISO 4017 M8X50 A4 80	
1010	312105-0368		2	SCREW, M6S ISO 4017 M6X16 A4 80	

Pos	Part No	UN	Qty	Description	Page No

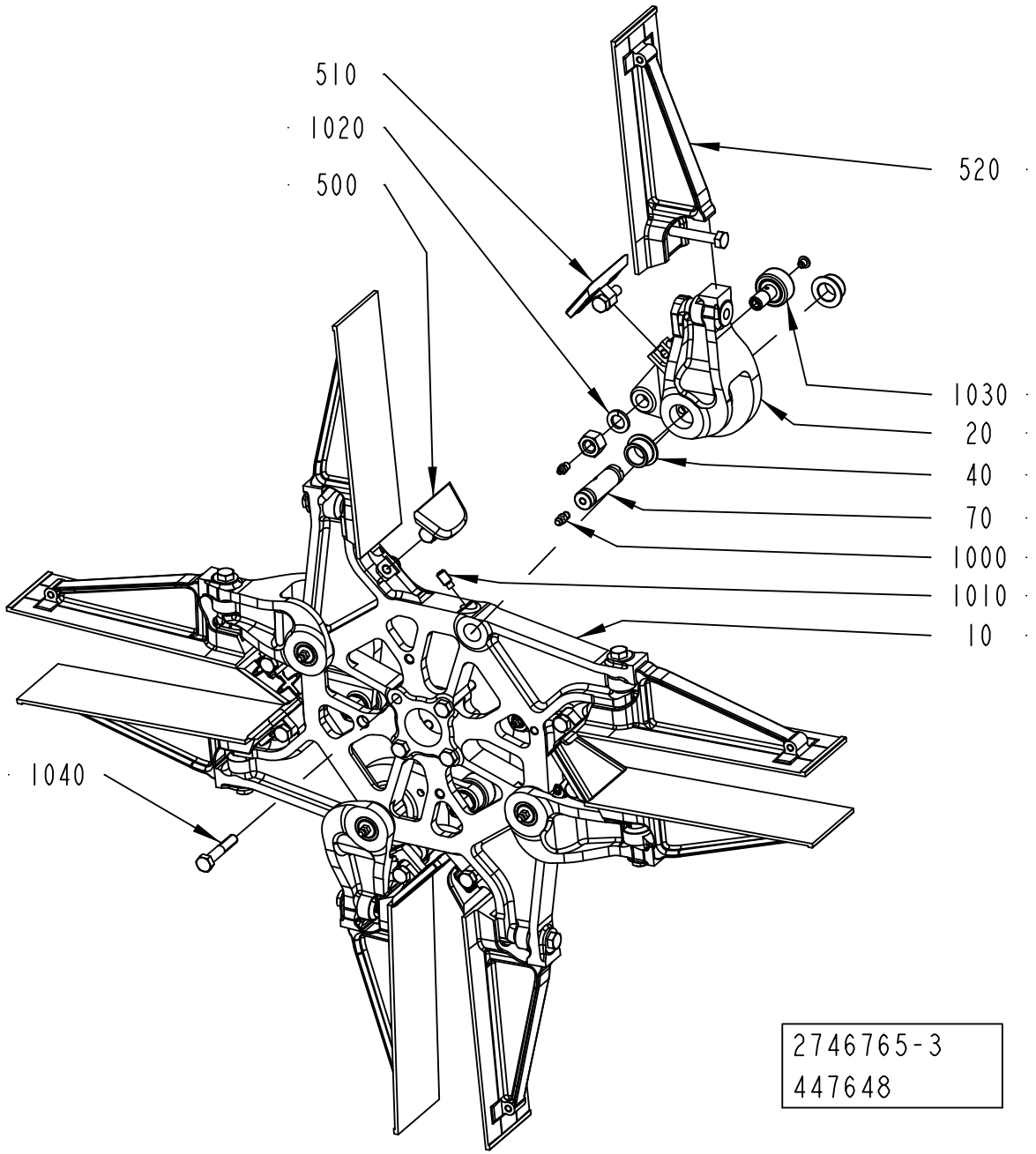
510
1020
500
520
1030
20
40
70
1000
1010
10
1040
2746765-3
447648

ECM: 551090 - 20120701
Group number: 2746765-0200
Assembly Drawing: 2746765-3_1_AC

Pos	Part No	UN	Qty	Description	Page No
TGA 0500SQ					
010	2798294-0000		1	WHEEL	
	2798290-0000		*1*	*WHEEL*	
020	2798295-0000		4	ARM	
	2798291-0000		*1*	*ARM*	
TGA 0750SQ					
010	2798294-0000		1	WHEEL	
	2798290-0000		*1*	*WHEEL*	
020	2798295-0000		4	ARM	
	2798291-0000		*1*	*ARM*	
TGA 1000SQ					
010	2798294-0000		1	WHEEL	
	2798290-0000		*1*	*WHEEL*	
020	2798295-0000		4	ARM	
	2798291-0000		*1*	*ARM*	
TGA 1500SQ					
010	2941026-0000		1	WHEEL	
	2798290-0000		*1*	*WHEEL*	
020	2941027-0000		4	ARM	
	2798291-0000		*1*	*ARM*	
Common Parts					
040	2805193-0000		8	BUSHING	
070	2878100-0000		4	SHAFT	
080	3093546-0000		1	PLATE	
500	2902422-0200		4	BOTTOM	**1-241**
510	2902423-0200		4	BOTTOM	**1-243**
520	2902421-0200		8	FLAP	**1-245**
530	3048557-0000		2	SHIM	
1000	90286-0013		4	GREASE NIPPLE STRAIGHT, H1 M6X1 2346	
1010	344324-0449		4	SET SCREW, DOG POINT ISO4028 M8X16 A2	
1020	315402-0178		4	LOCK WASHER, DIN127B 12,2 A4, M12	
1030	90600-0808		4	CAM ROLLER 12X30X40 MM, CFT 12 M UU N	
1040	312105-0460		4	SCREW, M6S ISO 4014 M8X45 A4 80	
1050	312105-0447		2	SCREW, M6S ISO 4017 M8X12 A4 80	

Pos	Part No	UN	Qty	Description	Page No

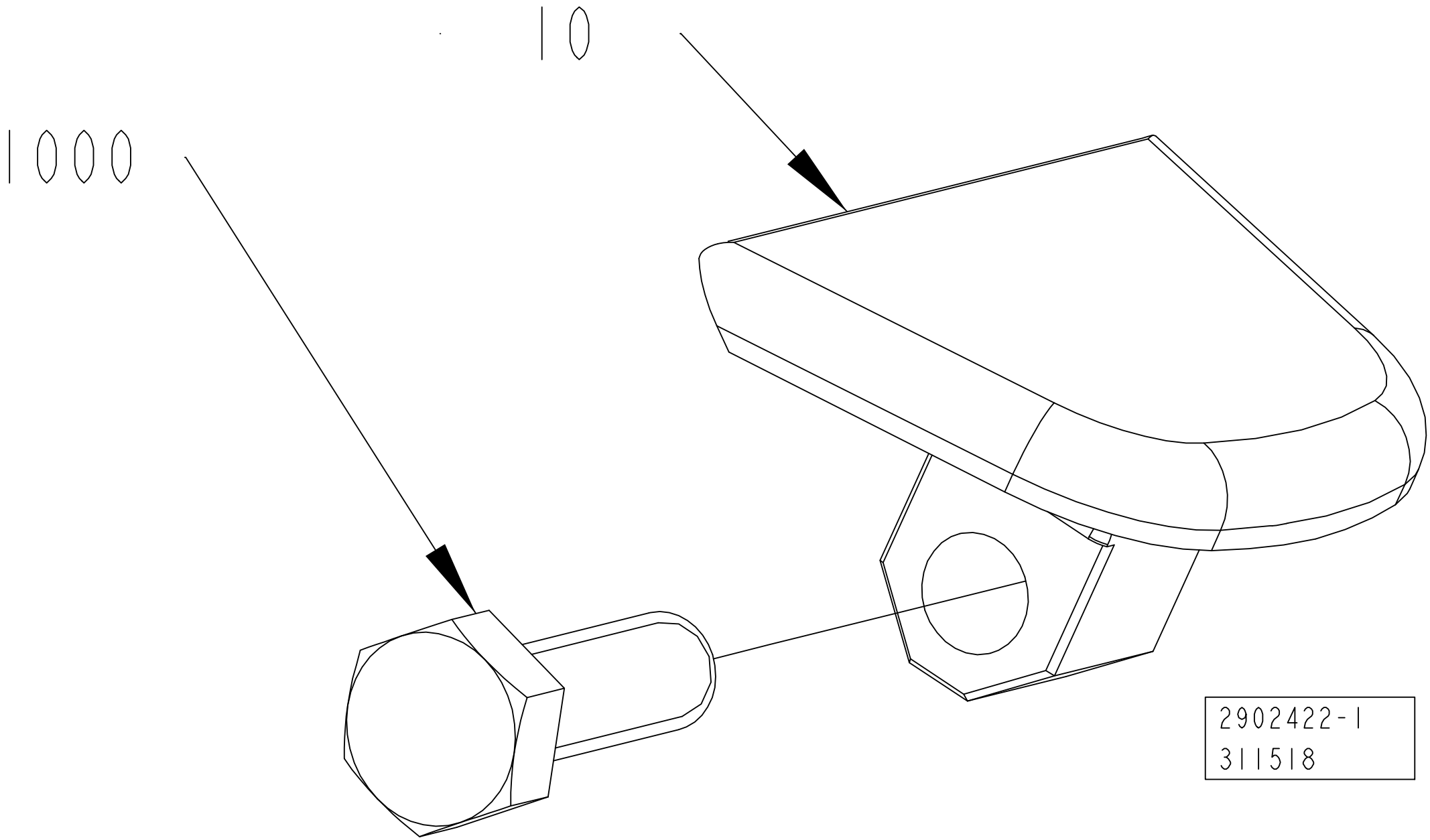
10
1000
2902422-1
311518

ECM: 534008 - 20120401
Group number: 2902422-0200
Assembly Drawing: 2902422-1_1_AA

Pos	Part No	UN	Qty	Description	Page No
TGA 0500SQ					
010	2866704-0000		1	BOTTOM	
TGA 0750SQ					
010	2866703-0000		1	BOTTOM	
TGA 1000SQ					
010	2798299-0000		1	BOTTOM	
TGA 1500SQ					
010	2963308-0000		1	BOTTOM	
	2963305-0000		*1*	*BOTTOM*	
Common Parts					
1000	312105-0453		1	SCREW, M6S ISO 4017 M8X25 A4 80	

Pos	Part No	UN	Qty	Description	Page No

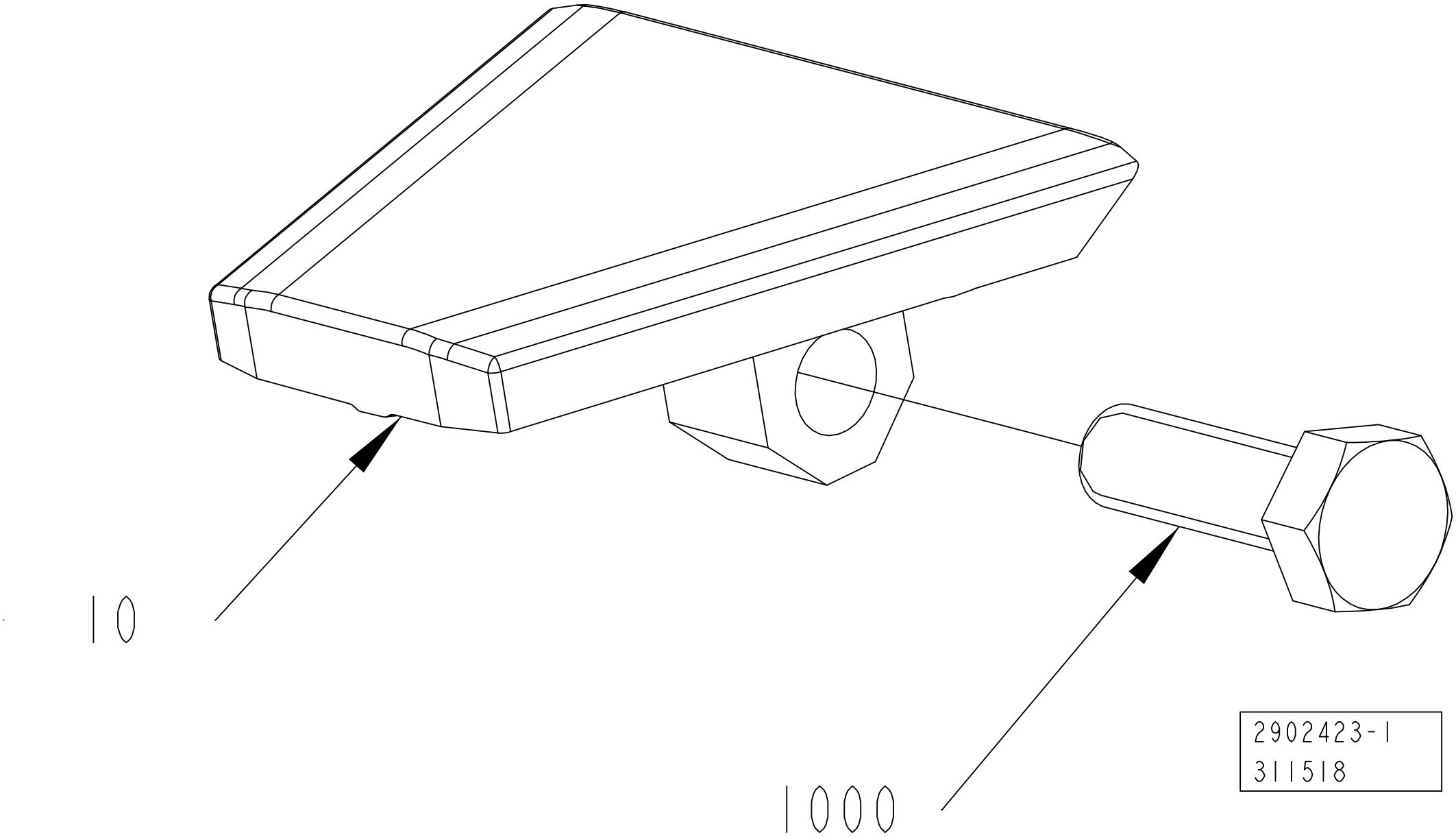
10
1000
2902423-1
311518

ECM: 534009 - 20120401
Group number: 2902423-0200
Assembly Drawing: 2902423-1_1_AA

Pos	Part No	UN	Qty	Description	Page No
TGA 0500SQ					
010	2866707-0000		1	BOTTOM	
TGA 0750SQ					
010	2866706-0000		1	BOTTOM	
TGA 1000SQ					
010	2798298-0000		1	BOTTOM	
TGA 1500SQ					
010	2963309-0000		1	BOTTOM	
	2963306-0000		*1*	*BOTTOM*	
Common Parts					
1000	312105-0453		1	SCREW, M6S ISO 4017 M8X25 A4 80	

Pos	Part No	UN	Qty	Description	Page No

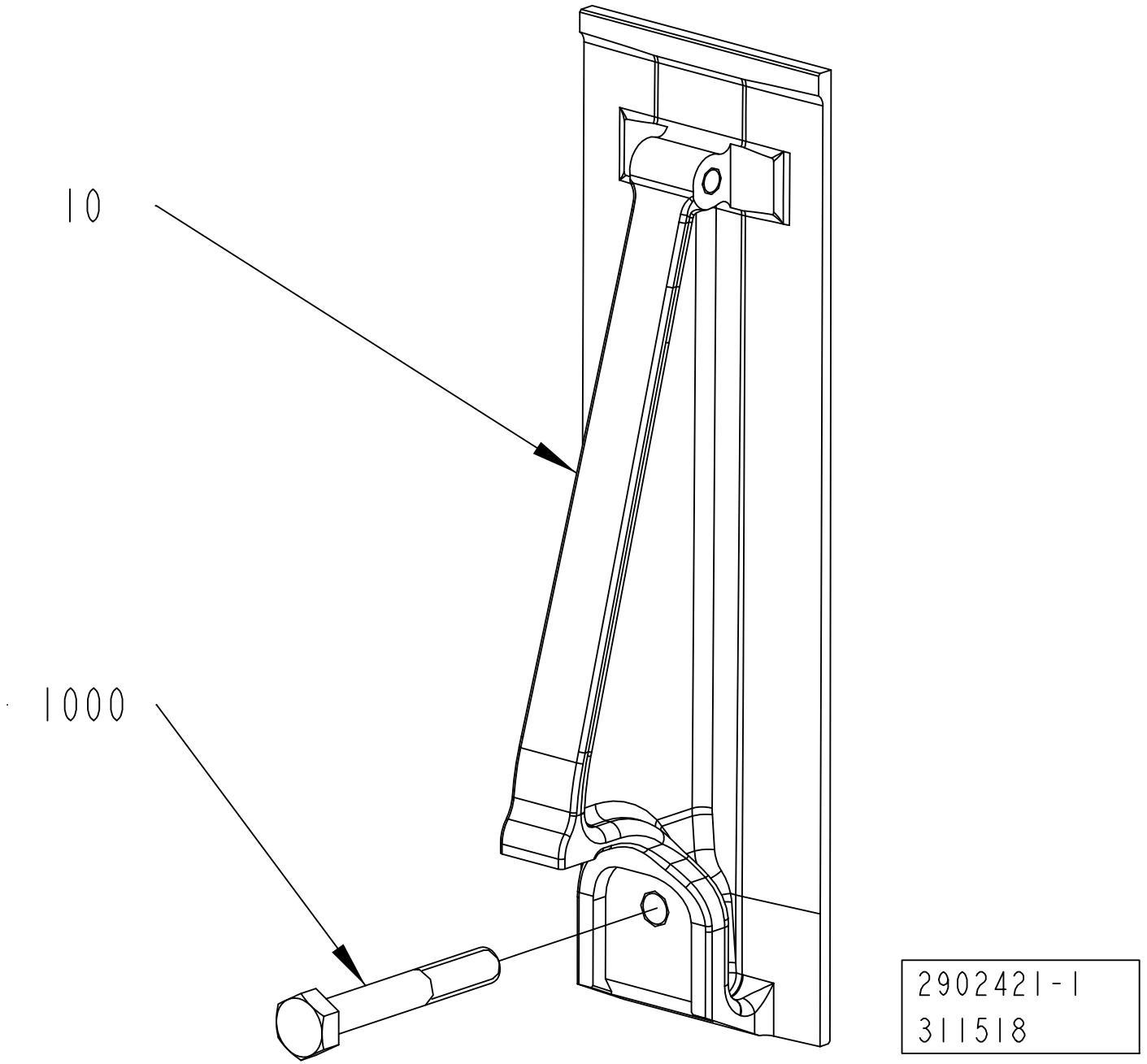
10
1000
2902421-1
311518

ECM: 534007 - 20120401
Group number: 2902421-0200
Assembly Drawing: 2902421-1_1_AA

Pos	Part No	UN	Qty	Description	Page No
TGA 1000SQ, TGA 0750SQ, TGA 0500SQ					
010	2798296-0000		1	FLAP	
	2798292-0000		*1*	*FLAP*	
1000	312105-0462		1	SCREW, M6S ISO 4014 M8X55 A4 80	
TGA 1500SQ					
010	2941028-0000		1	FLAP	
	2798292-0000		*1*	*FLAP*	
1000	312109-0461		1	SCREW, M6S ISO 4017 M8X50 A4 80	

Pos	Part No	UN	Qty	Description	Page No

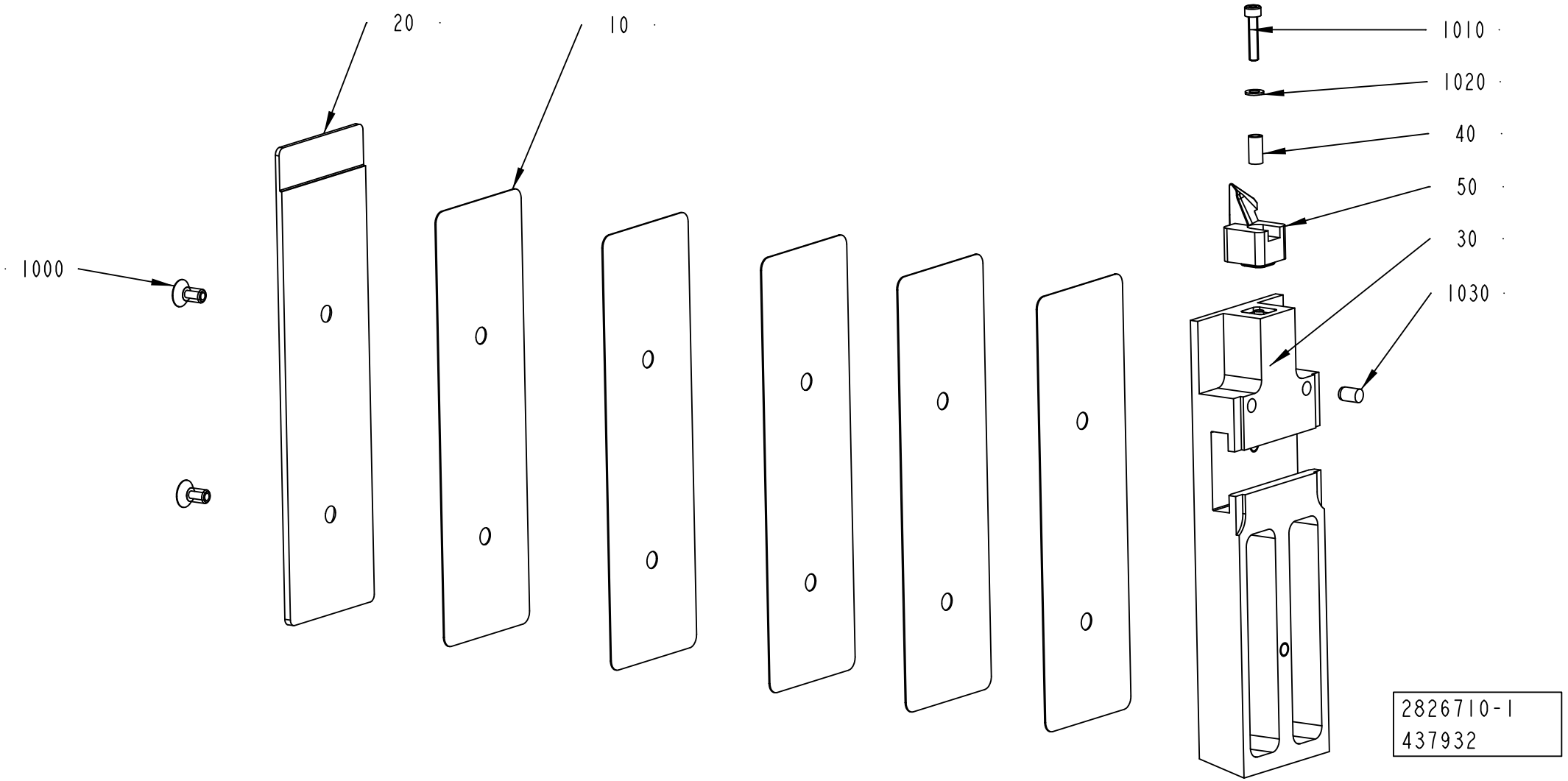
20
10
1000
1010
1020
40
50
30
1030
2826710-1
437932

ECM: 533828 - 20120401
Group number: 2826710-0200
Assembly Drawing: 2826710-1_1_AD

Pos	Part No	UN	Qty	Description	Page No
TGA 0500SQ (See drawing on page: 1-246)					
010	2983123-0000		4	SHIM	
020	3055029-0000		1	VOLUME BULGE	
030	2983126-0000		1	PUSHER	
050	2836249-0000		1	TOOL	
1000	312155-0366		2	SCREW DIN 7991 MF6S M6X12 A4 70	
TGA 0750SQ (See drawing on page: 1-246)					
010	2983122-0000		4	SHIM	
020	2983119-0000		1	VOLUME BULGE	
030	2983125-0000		1	PUSHER	
050	2836249-0000		1	TOOL	
1000	312155-0366		2	SCREW DIN 7991 MF6S M6X12 A4 70	
TGA 1000SQ (See drawing on page: 1-246)					
010	2983121-0000		5	SHIM	
020	2983118-0000		1	VOLUME BULGE	
030	2983124-0000		1	PUSHER	
050	2836249-0000		1	TOOL	
1000	312155-0366		2	SCREW DIN 7991 MF6S M6X12 A4 70	
TGA 1500SQ (See drawing on page: 1-246)					
010	2963272-0000		3	SHIM	
020	2963273-0000		1	VOLUME BULGE	
030	2963271-0000		1	PUSHER	
050	2946845-0000		1	TOOL	
1000	312155-0366		2	SCREW DIN 7991 MF6S M6X12 A4 70	
Common Parts					
040	2807152-0000		1	SPACER	
1010	312115-0295		1	SCREW ISO4762 M4X20 A4 80	
1020	315105-0136		1	WASHER PLAIN, 4,3X9X0,8 A4 BRB	
1030	311103-0348		1	PARALLEL PIN ISO 2338 6M6X10 A1	

Pos	Part No	UN	Qty	Description	Page No

FORMING PLATE

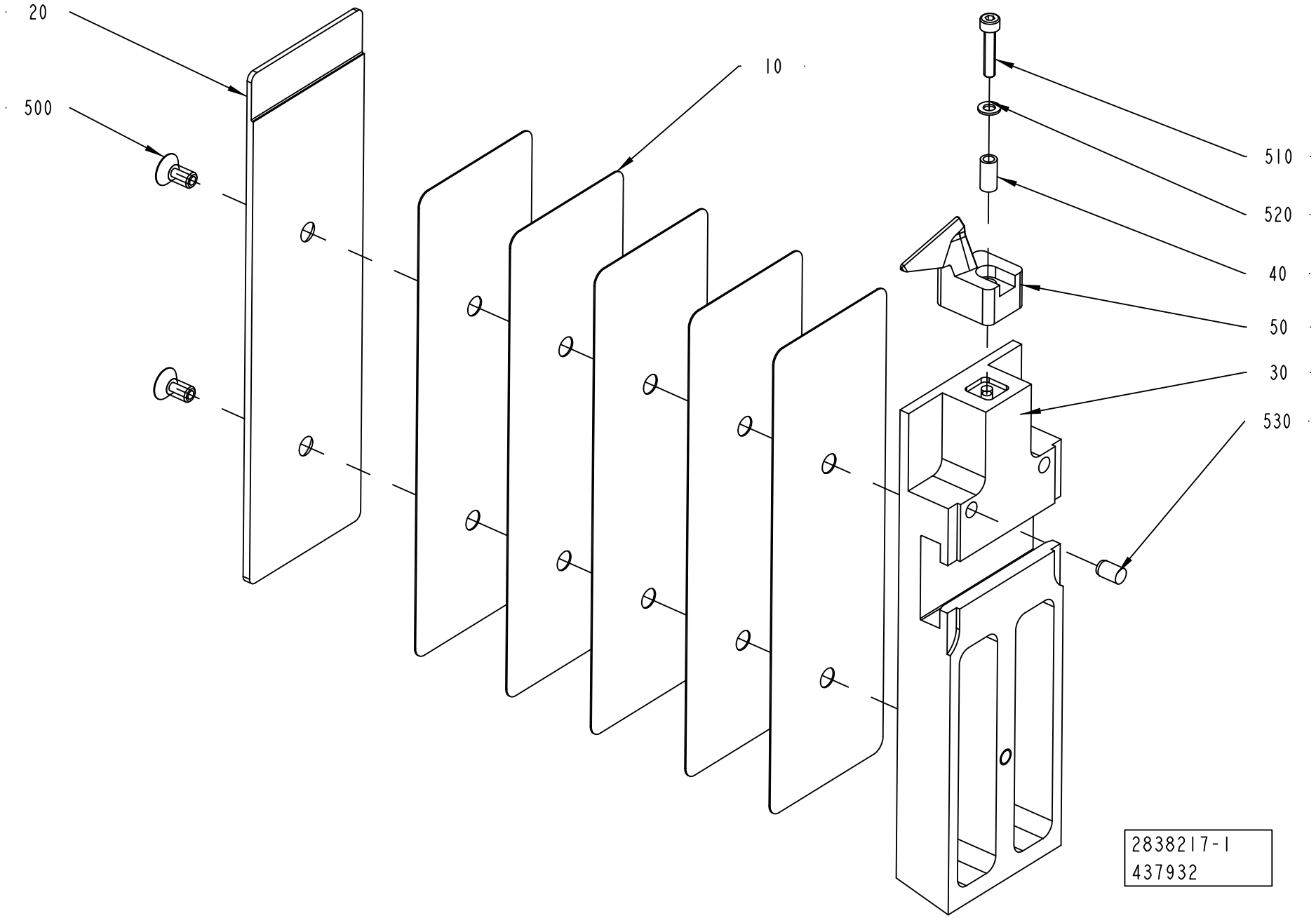

ECM: 533830 - 20120401
Group number: 2838217-0200
Assembly Drawing: 2838217-1_1_AD

Pos	Part No	UN	Qty	Description	Page No
TGA 0500SQ (See drawing on page: 1-248)					
010	2983123-0000		4	SHIM	
020	3055029-0000		1	VOLUME BULGE	
030	2983126-0000		1	PUSHER	
050	2836250-0000		1	TOOL	
500	312155-0366		2	SCREW DIN 7991 MF6S M6X12 A4 70	
TGA 0750SQ (See drawing on page: 1-248)					
010	2983122-0000		4	SHIM	
020	2983119-0000		1	VOLUME BULGE	
030	2983125-0000		1	PUSHER	
050	2836250-0000		1	TOOL	
500	312155-0366		2	SCREW DIN 7991 MF6S M6X12 A4 70	
TGA 1000SQ (See drawing on page: 1-248)					
010	2983121-0000		5	SHIM	
020	2983118-0000		1	VOLUME BULGE	
030	2983124-0000		1	PUSHER	
050	2836250-0000		1	TOOL	
500	312155-0366		2	SCREW DIN 7991 MF6S M6X12 A4 70	
TGA 1500SQ (See drawing on page: 1-248)					
010	2963272-0000		3	SHIM	
020	2963273-0000		1	VOLUME BULGE	
030	2963271-0000		1	PUSHER	
050	2946844-0000		1	TOOL	
500	312155-0366		2	SCREW DIN 7991 MF6S M6X12 A4 70	
Common Parts					
040	2807152-0000		1	SPACER	
510	312115-0295		1	SCREW ISO4762 M4X20 A4 80	
520	315105-0136		1	WASHER PLAIN, 4,3X9X0,8 A4 BRB	
530	311103-0348		1	PARALLEL PIN ISO 2338 6M6X10 A1	

Pos	Part No	UN	Qty	Description	Page No

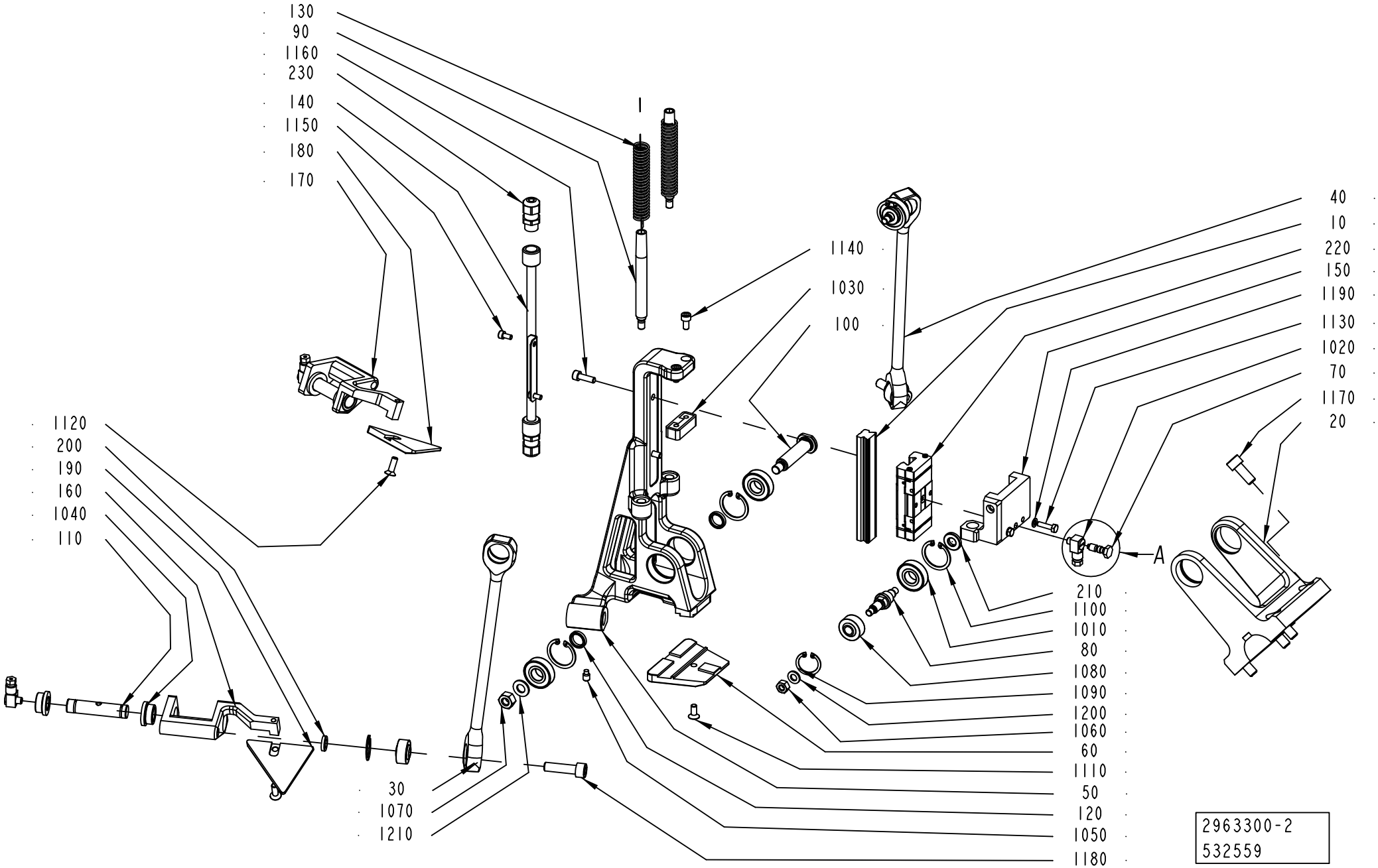
130
90
1160
230
140
1150
180
170
1
1140
1030
100
40
10
220
150
1190
1130
1020
70
1170
20
1120
200
190
160
1040
110
A
210
1100
1010
80
1080
1090
1200
1060
60
1110
50
120
1050
1180
30
1070
1210
2963300-2
532559

ECM: 533822 - 20120401
Group number: 2963300-0200
Assembly Drawing: 2963300-2_1_AA

Pos	Part No	UN	Qty	Description	Page No
TGA 1000SQ, TGA 0750SQ, TGA 0500SQ					
030	2826717-0000		1	LEVER	
040	2826718-0000		1	LEVER	
050	2991531-0000		1	MAIN BODY	
060	2805170-0000		1	PLATE	
180	2805171-0000		1	VOLUME BULGE	
190	2805172-0000		1	VOLUME BULGE	
1110	312115-0327		1	SCREW ISO4762 M5X12 A4 80	
TGA 1500SQ					
030	2940984-0000		1	LEVER	
040	2940985-0000		1	LEVER	
050	2940977-0000		1	MAIN BODY	
060	2940978-0000		1	PLATE	
180	2940979-0000		1	VOLUME BULGE	
190	2940980-0000		1	VOLUME BULGE	
1110	312155-0327		1	SCREW DIN 7991 MF6S M5X12 A4 70	
Common Parts					
010	2789231-0000		1	GUIDE	
020	2805188-0000		1	LEVER	
070	2926868-0000		1	SCREW	
080	2805164-0000		2	SHAFT	
090	2805169-0000		2	SHAFT	
100	2805210-0000		1	SHAFT	
110	2878104-0000		2	SHAFT	
120	2807149-0000		2	SPACER	
130	2807185-0000		2	SPRING	
140	2963270-0000		1	SUPPORT	
150	2826678-0000		1	SUPPORT	
160	2826713-0000		1	SUPPORT	
170	2826714-0000		1	SUPPORT	
200	541165-0000		2	WASHER	
210	2805167-0000		2	WASHER	
220	90600-0412		1	CARRIAGE, SSR15XV1 QZ SS HH FMS	
230	90458-0305		2	CABLE GLAND, M12X1,5, 5311 1000	
1010	90604-4370		4	BALL BEARING 12/28X8	
1020	90134-0058		3	CONNECTION	
1030	2983134-0000		1	DAMPER	
1040	321101-0172		4	FLANGE BUSHING, 12X18X10 MM	
1050	90287-0154		2	SET SCREW, DOGPOINT M6X10 A4	
1060	312605-0316		2	HEXAGON NUT, M6M M6 A280	
1070	312605-0318		1	HEXAGON NUT, M6M M8 A280	
1080	90600-0847		4	SPHERICAL BEARING, S8-DNIRO BMF C1	
1090	315753-0117		4	RETAINING RING FOR BORE DIN 472 22 SS	
1100	315753-0121		4	RETAINING RING FOR BORE DIN 472 28 SS	
1120	312155-0329		2	SCREW DIN 7991 MF6S M5X16 A4 70	
1130	312105-0293		2	SCREW, M6S ISO 4017 M4X16 A4 70	
1140	312115-0323		2	SCREW ISO4762 M5X8 A4 80	
1150	312115-0287		2	SCREW ISO4762 M4X8 A4 80	
1160	312115-0329		2	SCREW ISO4762 M5X16 A4 80	
1170	312115-0451		4	SCREW ISO4762 M8X20 A4 80	
1180	312115-0455		2	SCREW ISO4762 M8X30 A4 80	
1190	315105-0136		2	WASHER PLAIN, 4,3X9X0,8 A4 BRB	
1200	315105-0153		2	WASHER PLAIN, 6,4X12X1,5 A4 BRB	
1210	315105-0165		1	WASHER PLAIN, 8,4X16X1,6 A4 BRB	

Machine Type	Group Description	Used-In	Group Number	Page No

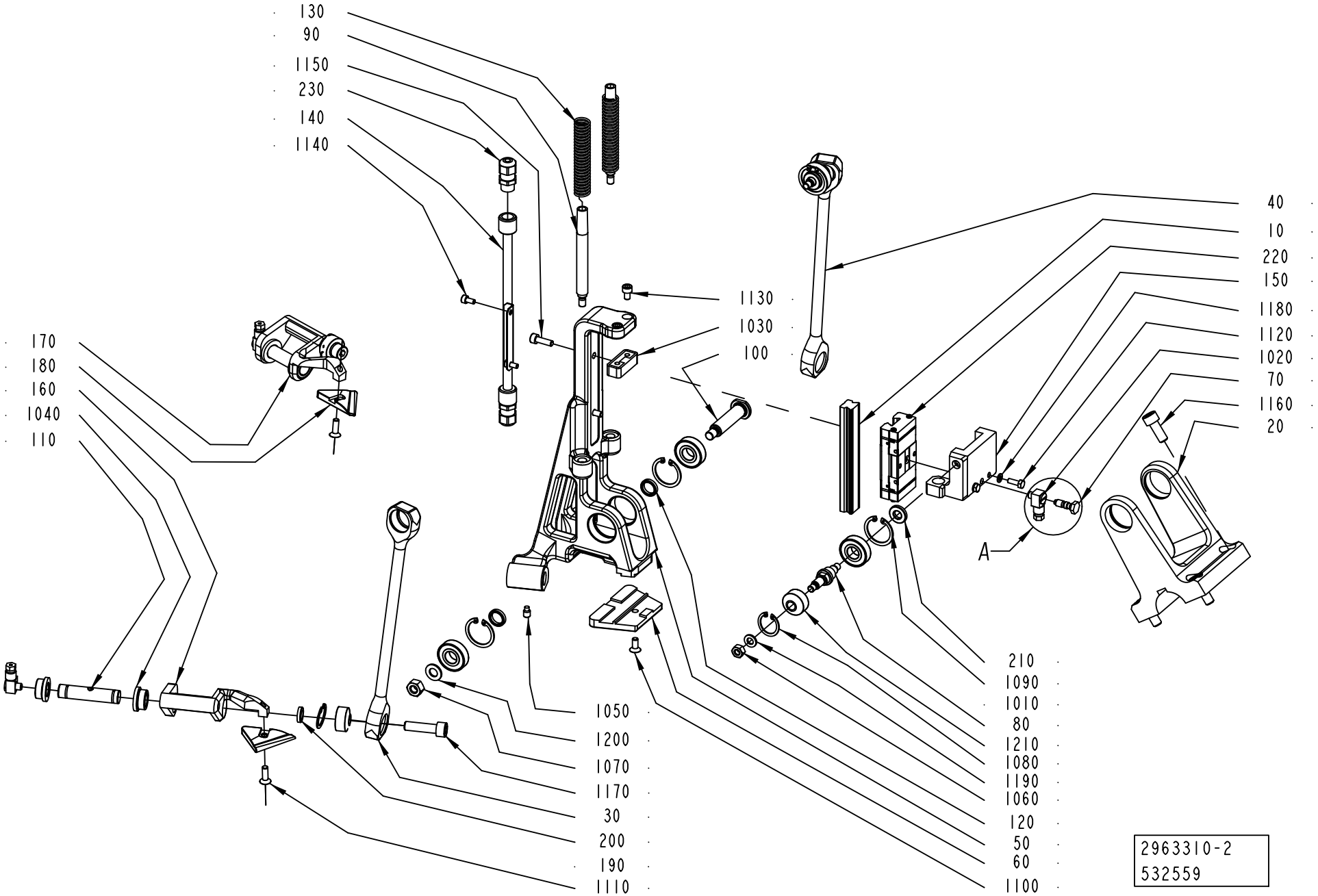
130
90
1150
230
140
1140
1130
1030
100
40
10
220
150
1180
1120
1020
70
1160
20
170
180
160
1040
110
A
210
1090
1010
80
1210
1080
1190
1060
120
50
60
1100
1050
1200
1070
1170
30
200
190
1110
2963310-2
532559

ECM: 533823 - 20120401
Group number: 2963310-0200
Assembly Drawing: 2963310-2_1_AA

Pos	Part No	UN	Qty	Description	Page No
TGA 1000SQ, TGA 0750SQ, TGA 0500SQ					
030	2826717-0000		1	LEVER	
040	2826718-0000		1	LEVER	
050	2991531-0000		1	MAIN BODY	
060	2836244-0000		1	PLATE	
180	2836247-0000		1	TOOL	
190	2836248-0000		1	TOOL	
1100	312115-0327		1	SCREW ISO4762 M5X12 A4 80	
TGA 1500SQ					
030	2940984-0000		1	LEVER	
040	2940985-0000		1	LEVER	
050	2940977-0000		1	MAIN BODY	
060	2940981-0000		1	PLATE	
180	2940982-0000		1	TOOL	
190	2940983-0000		1	TOOL	
1100	312155-0327		1	SCREW DIN 7991 MF6S M5X12 A4 70	
Common Parts					
010	2789231-0000		1	GUIDE	
020	2805188-0000		1	LEVER	
070	2926868-0000		1	SCREW	
080	2805164-0000		2	SHAFT	
090	2805169-0000		2	SHAFT	
100	2805210-0000		1	SHAFT	
110	2878104-0000		2	SHAFT	
120	2807149-0000		2	SPACER	
130	2807185-0000		2	SPRING	
140	2963270-0000		1	SUPPORT	
150	2826678-0000		1	SUPPORT	
160	2836242-0000		1	SUPPORT	
170	2836243-0000		1	SUPPORT	
200	541165-0000		2	WASHER	
210	2805167-0000		2	WASHER	
220	90600-0412		1	CARRIAGE, SSR15XV1 QZ SS HH FMS	
230	90458-0305		2	CABLE GLAND, M12X1,5, 5311 1000	
1010	90604-4370		4	BALL BEARING 12/28X8	
1020	90134-0058		3	CONNECTION	
1030	2983134-0000		1	DAMPER	
1040	321101-0172		4	FLANGE BUSHING, 12X18X10 MM	
1050	90287-0154		2	SET SCREW, DOGPOINT M6X10 A4	
1060	312605-0316		2	HEXAGON NUT, M6M M6 A280	
1070	312605-0318		1	HEXAGON NUT, M6M M8 A280	
1080	315753-0117		4	RETAINING RING FOR BORE DIN 472 22 SS	
1090	315753-0121		4	RETAINING RING FOR BORE DIN 472 28 SS	
1110	312155-0329		2	SCREW DIN 7991 MF6S M5X16 A4 70	
1120	312105-0293		2	SCREW, M6S ISO 4017 M4X16 A4 70	
1130	312115-0323		2	SCREW ISO4762 M5X8 A4 80	
1140	312115-0287		2	SCREW ISO4762 M4X8 A4 80	
1150	312115-0329		2	SCREW ISO4762 M5X16 A4 80	
1160	312115-0451		4	SCREW ISO4762 M8X20 A4 80	
1170	312115-0455		2	SCREW ISO4762 M8X30 A4 80	
1180	315105-0136		2	WASHER PLAIN, 4,3X9X0,8 A4 BRB	
1190	315105-0153		2	WASHER PLAIN, 6,4X12X1,5 A4 BRB	
1200	315105-0165		1	WASHER PLAIN, 8,4X16X1,6 A4 BRB	
1210	90600-0847		4	SPHERICAL BEARING, S8-DNIRO BMF C1	

Machine Type | Group Description | Used-In | Group Number | Page No

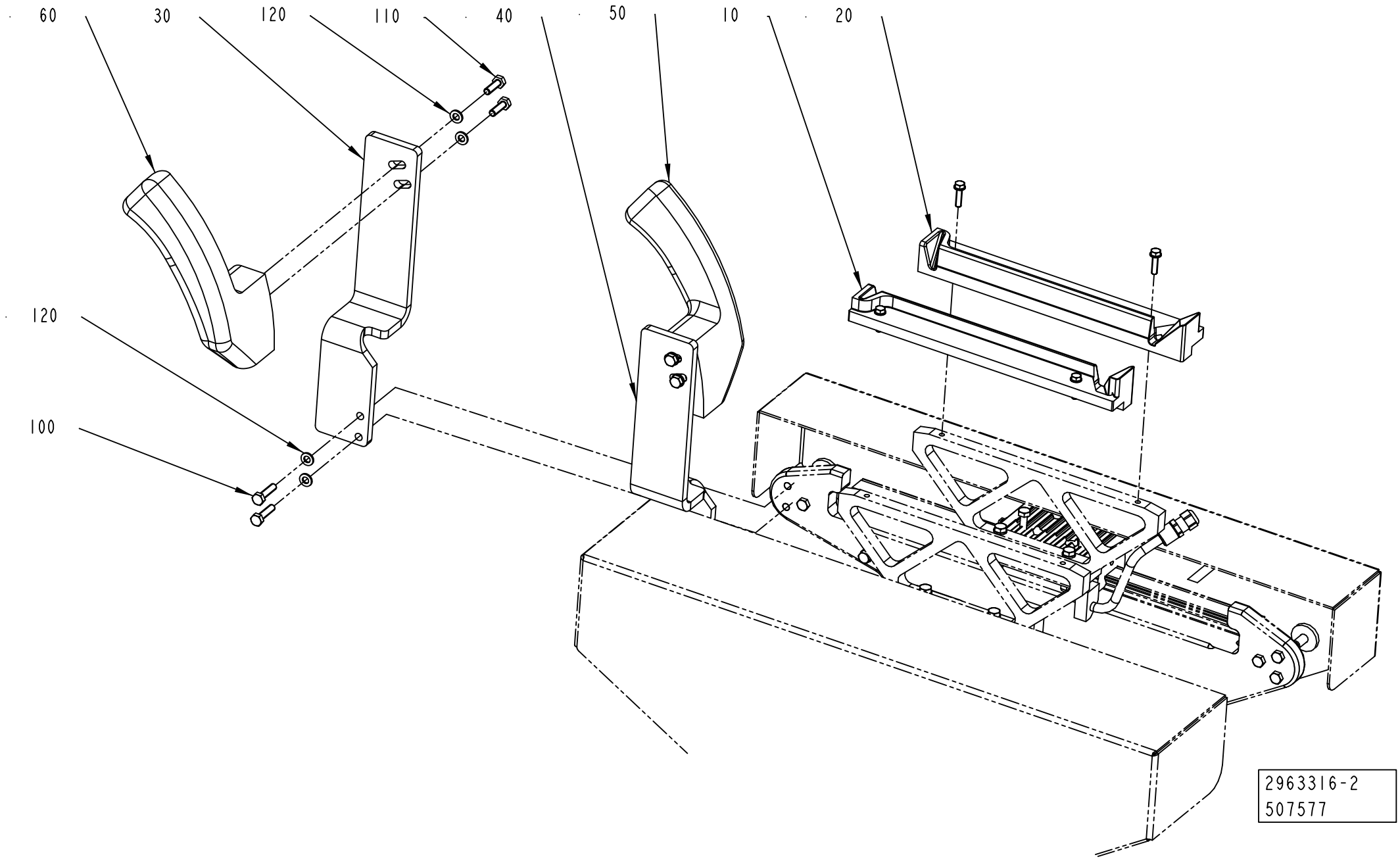
60
30
120
110
40
50
10
20
120
100
2963316-2
507577

ECM: 534011 - 20120401
Group number: 2963316-0200
Assembly Drawing: 2963316-2_1_AA

Pos	Part No	UN	Qty	Description	Page No
TGA 1000SQ, TGA 0750SQ, TGA 0500SQ					
010	2761950-0000		1	CRADLE	
020	2761951-0000		1	CRADLE	
100	312105-0370		4	SCREW, M6S ISO 4017 M6X20 A4 80	
120	315105-0153		4	WASHER PLAIN, 6,4X12X1,5 A4 BRB	
TGA 1500SQ					
010	2941010-0000		1	CRADLE	
020	2941011-0000		1	CRADLE	
030	3130845-0000		1	SUPPORT	
040	3130846-0000		1	SUPPORT	
050	3130266-0000		1	GUIDE	
060	3130265-0000		1	GUIDE	
100	312105-0372		4	SCREW, M6S ISO 4017 M6X25 A4 80	
110	312105-0370		4	SCREW, M6S ISO 4017 M6X20 A4 80	
120	315105-0153		8	WASHER PLAIN, 6,4X12X1,5 A4 BRB	

Pos	Part No	UN	Qty	Description	Page No

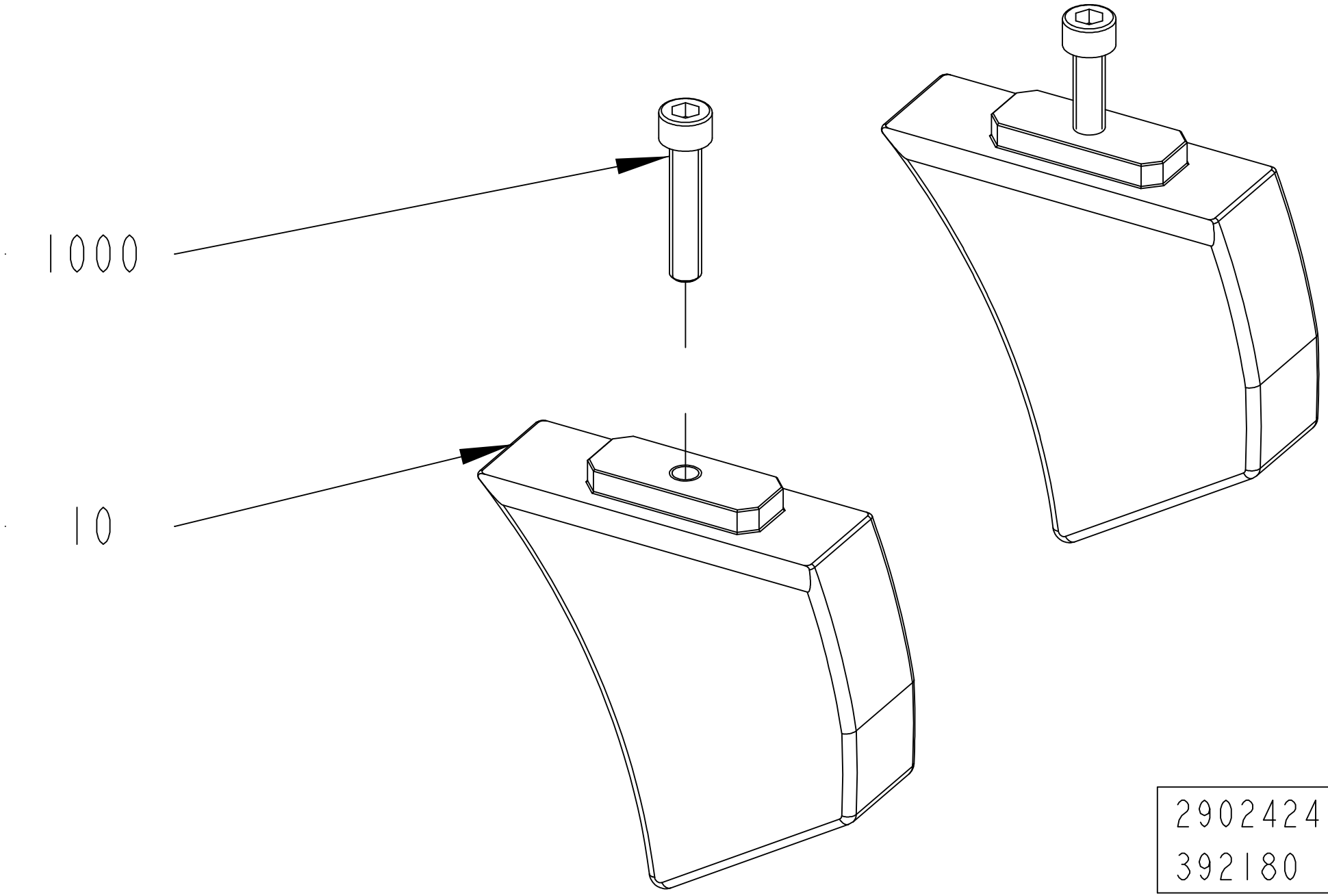

2902424-1
392180

ECM: 552284 - 20120701
Group number: 2902424-0200
Assembly Drawing: 2902424-1_1_AB

This list covers pages from 1-256 to 1-259

Pos	Part No	UN	Qty	Description	Page No
TGA 0500SQ (See drawing on page: 1-258)					
010	2902440-0000		1	GUIDE	
020	2902441-0000		1	GUIDE	
TGA 0750SQ (See drawing on page: 1-258)					
010	2902438-0000		1	GUIDE	
020	2902439-0000		1	GUIDE	
TGA 1000SQ (See drawing on page: 1-256)					
010	2878080-0000		2	GUIDE	
TGA 1500SQ (See drawing on page: 1-256)					
010	2940990-0000		2	GUIDE	
Common Parts					
1000	312115-0374		2	SCREW ISO4762 M6X30 A4 80	

Pos	Part No	UN	Qty	Description	Page No

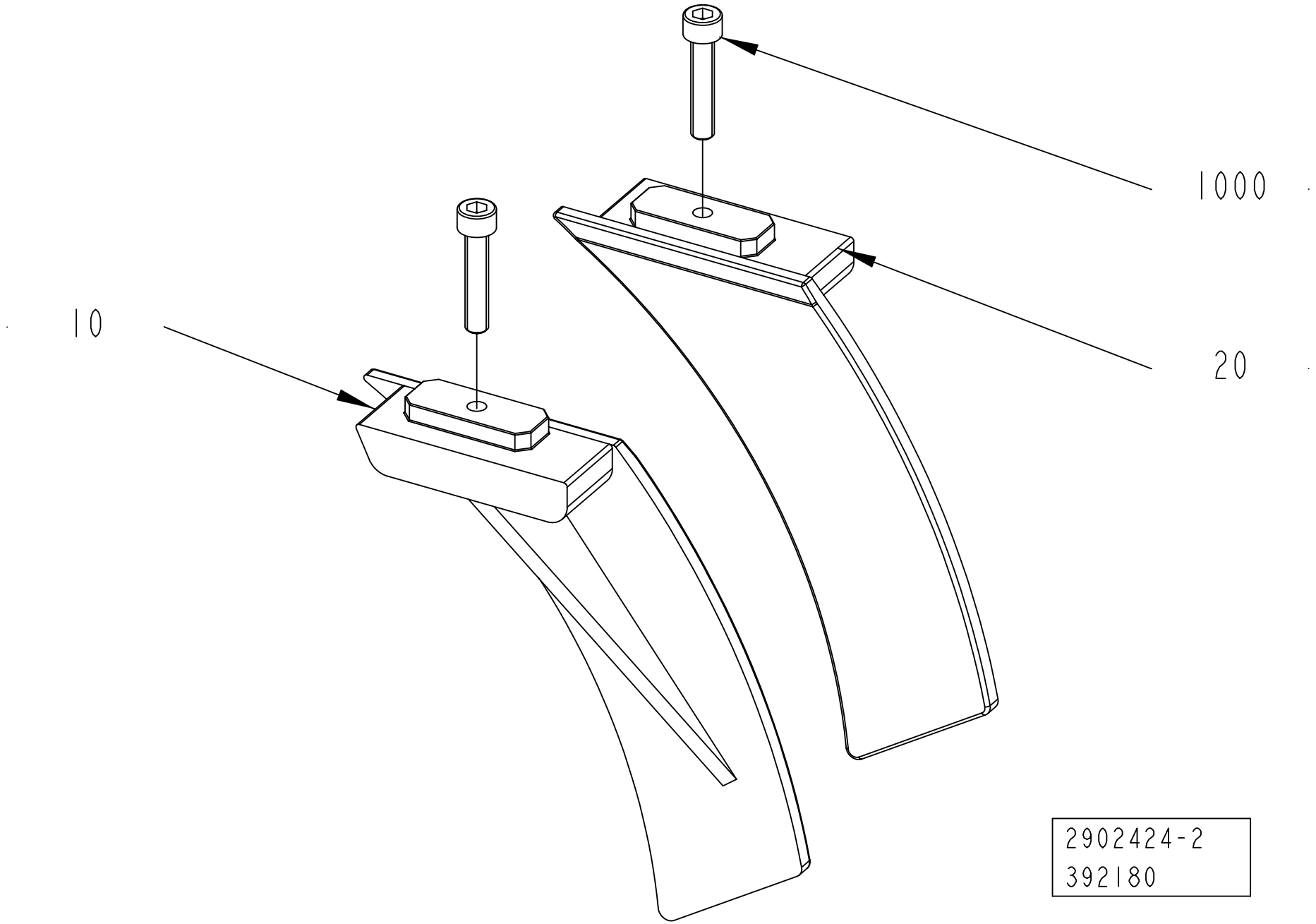
1000
10
20
2902424-2
392180

ECM: 552284 - 20120701
Group number: 2902424-0200
Assembly Drawing: 2902424-2_1_AB

This list covers pages from 1-256 to 1-259

Pos	Part No	UN	Qty	Description	Page No
TGA 0500SQ (See drawing on page: 1-258)					
010	2902440-0000		1	GUIDE	
020	2902441-0000		1	GUIDE	
TGA 0750SQ (See drawing on page: 1-258)					
010	2902438-0000		1	GUIDE	
020	2902439-0000		1	GUIDE	
TGA 1000SQ (See drawing on page: 1-256)					
010	2878080-0000		2	GUIDE	
TGA 1500SQ (See drawing on page: 1-256)					
010	2940990-0000		2	GUIDE	
Common Parts					
1000	312115-0374		2	SCREW ISO4762 M6X30 A4 80	

Pos	Part No	UN	Qty	Description	Page No

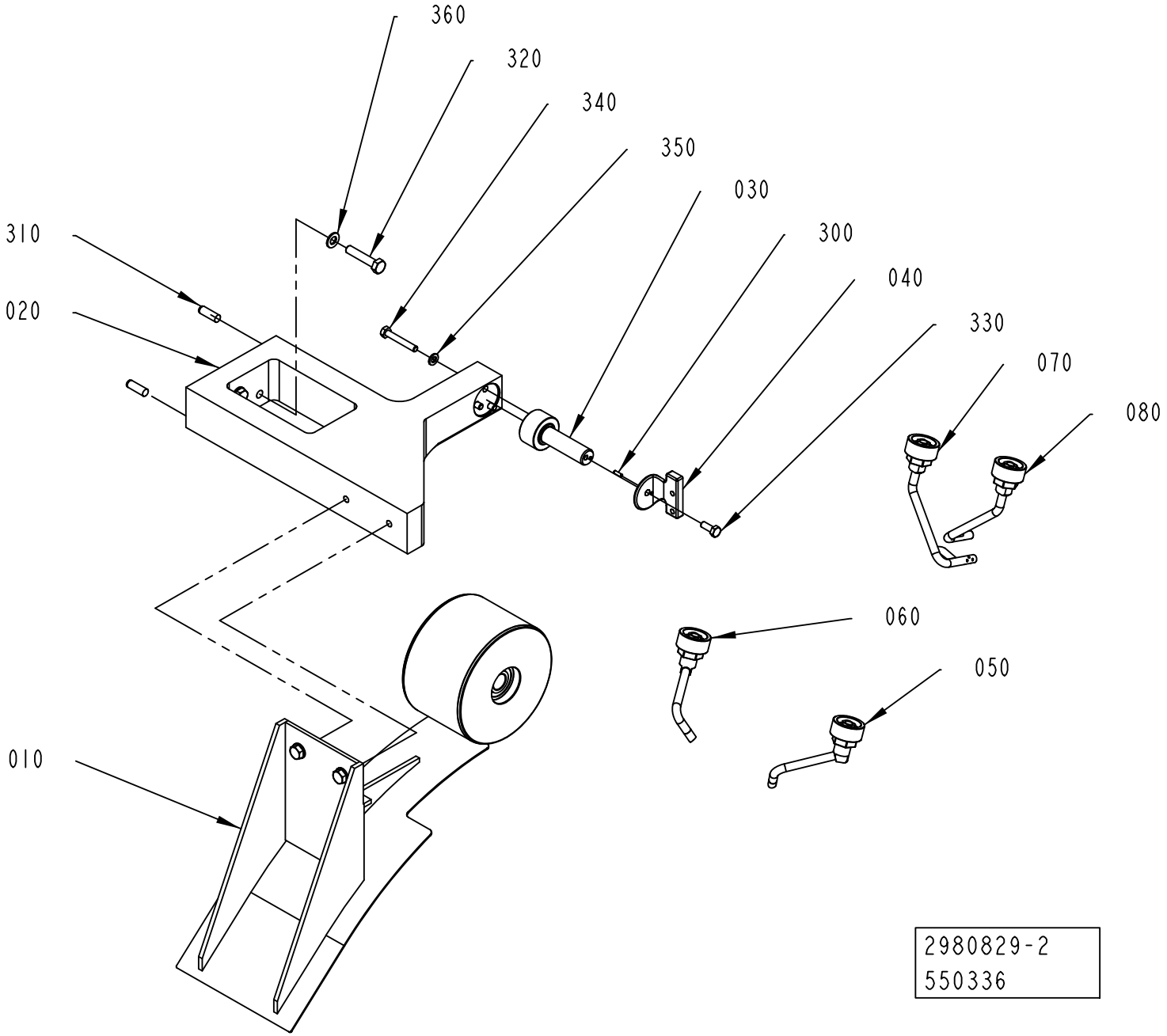
360
320
340
350
030
300
040
330
070
080
310
020
060
050
010
2980829-2
550336

ECM: 551387 - 20120402
Group number: 2980829-0200
Assembly Drawing: 2980829-2_1_AB

Pos	Part No	UN	Qty	Description	Page No
TGA 0500SQ					
020	2978606-0000		1	BRACKET	
030	2978028-0000		1	SHAFT	
040	2978782-0000		1	SUPPORT	
	2987078-0000		*1*	*GUIDE*	
050	2963288-0000		1	NOZZLE	
060	2963289-0000		1	NOZZLE	
070	2963286-0000		1	NOZZLE	
080	2963287-0000		1	NOZZLE	
TGA 0750SQ					
020	2978606-0000		1	BRACKET	
030	2978028-0000		1	SHAFT	
040	2978782-0000		1	SUPPORT	
	2987078-0000		*1*	*GUIDE*	
050	2963288-0000		1	NOZZLE	
060	2963289-0000		1	NOZZLE	
070	2963286-0000		1	NOZZLE	
080	2963287-0000		1	NOZZLE	
TGA 1000SQ					
020	2978606-0000		1	BRACKET	
030	2978028-0000		1	SHAFT	
040	2978782-0000		1	SUPPORT	
	2987078-0000		*1*	*GUIDE*	
050	2963288-0000		1	NOZZLE	
060	2963289-0000		1	NOZZLE	
070	2963286-0000		1	NOZZLE	
080	2963287-0000		1	NOZZLE	
TGA 1500SQ					
020	2963280-0000		1	BRACKET	
030	2963278-0000		1	SHAFT	
040	2977654-0000		1	SUPPORT	
	2987078-0000		*1*	*GUIDE*	
050	2940992-0000		1	NOZZLE	
060	2940999-0000		1	NOZZLE	
070	2940989-0000		1	NOZZLE	
080	2940991-0000		1	NOZZLE	
Common Parts					
010	3218554-0100		1	VOLUME CHANGE	**1-263**
300	311103-0233		1	PARALLEL PIN ISO 2338 3M6X10 A1	
310	311103-1403		2	PARALLEL PIN ISO 2338 8M6X24 A1	
320	312105-0459		2	SCREW, M6S ISO 4014 M8X40 A4 80	
330	312105-0368		1	SCREW, M6S ISO 4017 M6X16 A4 80	
340	312109-0378		3	SCREW, M6S ISO 4017 M6X40 A4 80	
350	315105-0153		3	WASHER PLAIN, 6,4X12X1,5 A4 BRB	
360	315105-0165		4	WASHER PLAIN, 8,4X16X1,6 A4 BRB	

Machine Type | Group Description | Used-In | Group Number | Page No

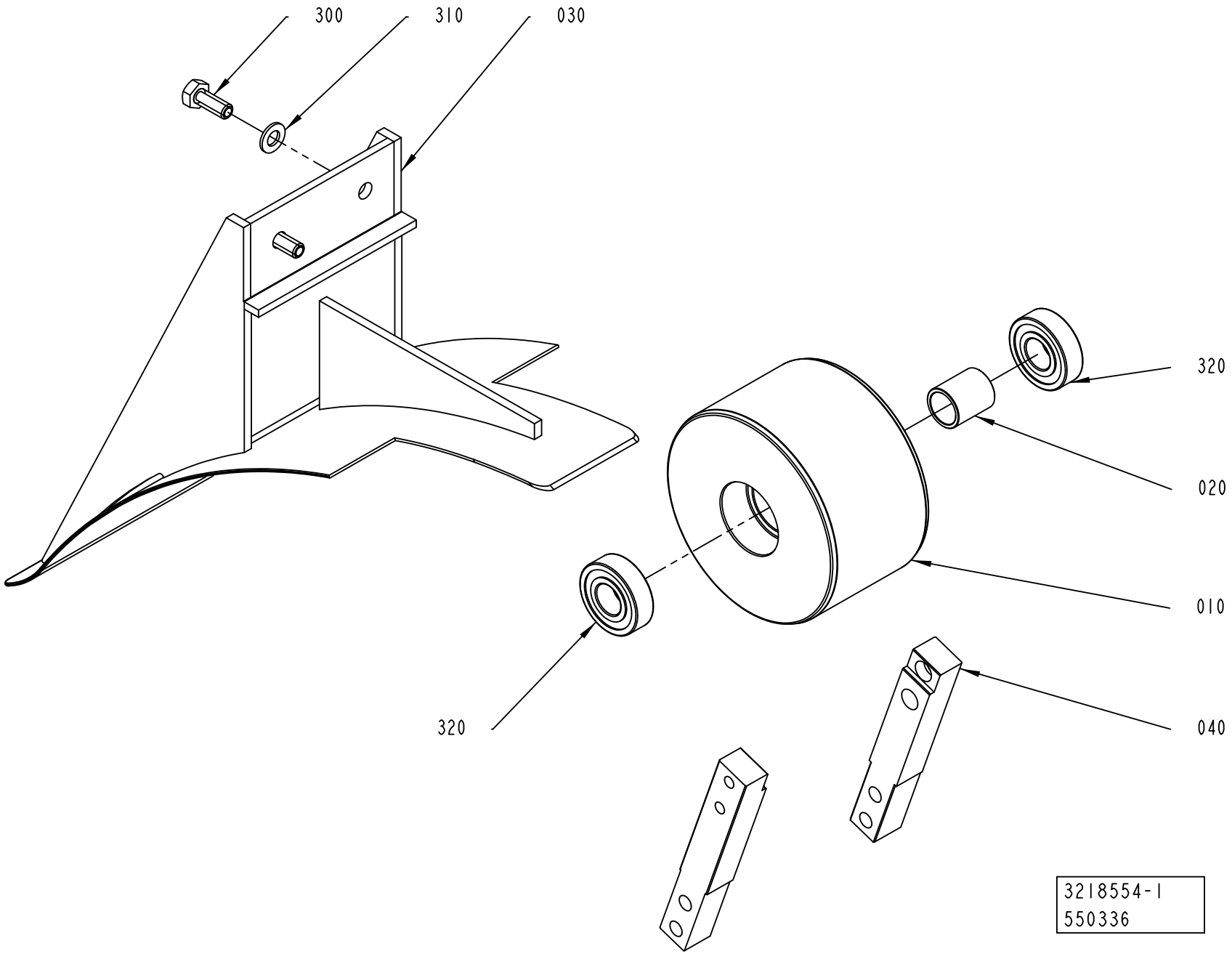
300
310
030
320
020
010
320
040
3218554-1
550336

ECM: 551386 - 20120402
Group number: 3218554-0100
Assembly Drawing: 3218554-1_1_AB

Pos	Part No	UN	Qty	Description	Page No
TGA 0500SQ					
010	2978597-0000		1	BOWL	
020	2978783-0000		1	SPACER	
030	3155456-0000		1	TOP SECTION	
040	2963290-0000		2	PLATE	
TGA 0750SQ					
010	2978597-0000		1	BOWL	
020	2978783-0000		1	SPACER	
030	3155456-0000		1	TOP SECTION	
040	2963290-0000		2	PLATE	
TGA 1000SQ					
010	2978597-0000		1	BOWL	
020	2978783-0000		1	SPACER	
030	3155456-0000		1	TOP SECTION	
040	2963290-0000		2	PLATE	
TGA 1500SQ					
010	2940994-0000		1	BOWL	
020	2963277-0000		1	SPACER	
030	3113981-0000		1	TOP SECTION	
040	2941041-0000		2	PLATE	
Common Parts					
300	312105-0451		2	SCREW, M6S ISO 4017 M8X20 A4 80	
310	315105-0165		2	WASHER PLAIN, 8,4X16X1,6 A4 BRB	
320	90603-2398		2	BALL BEARING, 17X40X12	

Pos	Part No	UN	Qty	Description	Page No

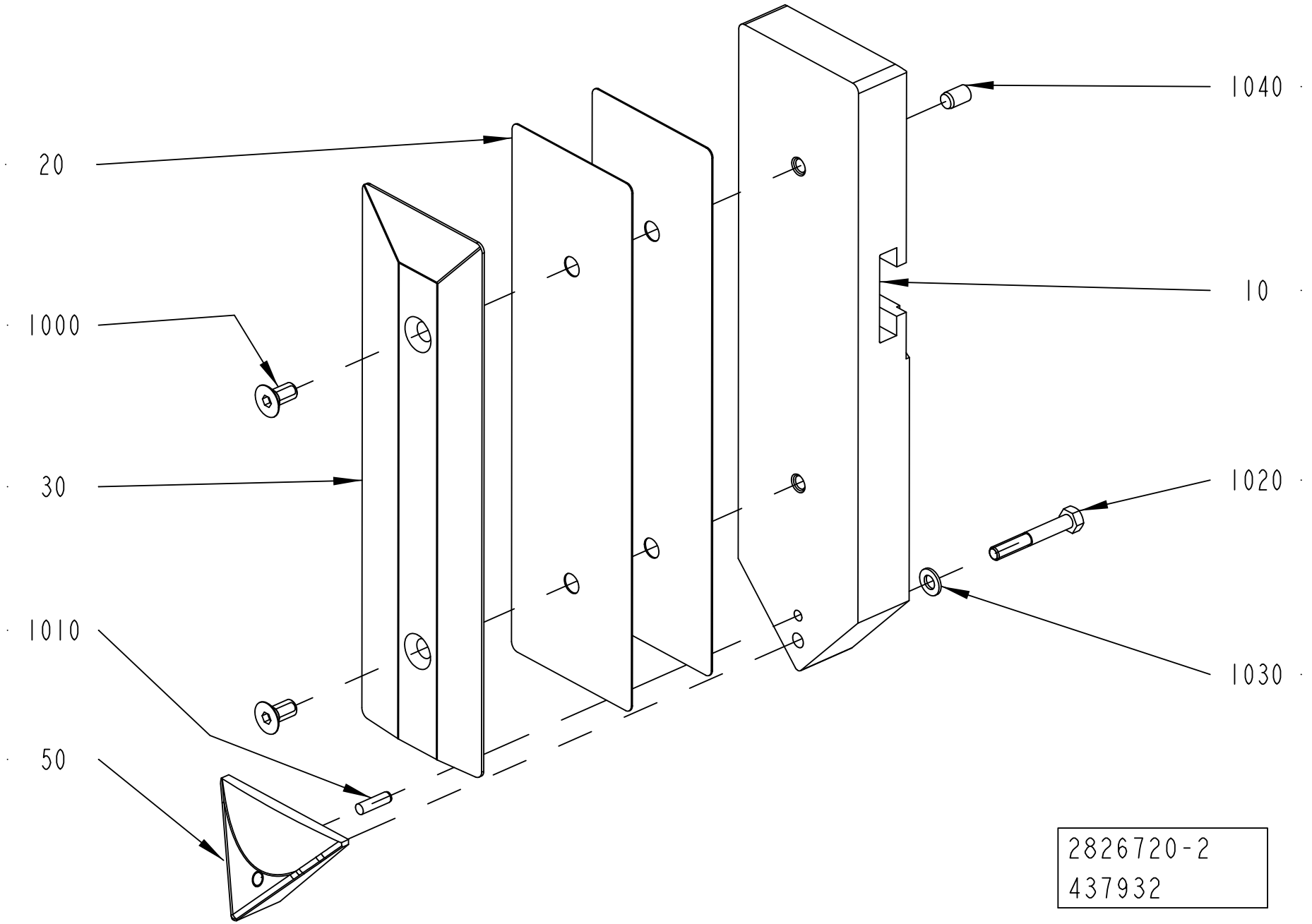
20
1000
30
1010
50
1040
10
1020
1030
2826720-2
437932

ECM: 551384 - 20120402
Group number: 2826720-0300
Assembly Drawing: 2826720-2_1_AC

Pos	Part No	UN	Qty	Description	Page No
TGA 0500SQ (See drawing on page: 1-264)					
010	2983117-0000		1	PUSHER	
020	2983114-0000		6	SHIM	
030	2983111-0000		1	VOLUME BULGE	
050	2798289-0000		1	VOLUME BULGE	
1000	312155-0366		2	SCREW DIN 7991 MF6S M6X12 A4 70	
1020	312109-0335		1	SCREW, M6S ISO 4017 M5X30 A4 80	
TGA 0750SQ (See drawing on page: 1-264)					
010	2983116-0000		1	PUSHER	
020	2983113-0000		4	SHIM	
030	2983110-0000		1	VOLUME BULGE	
050	2798289-0000		1	VOLUME BULGE	
1000	312155-0366		2	SCREW DIN 7991 MF6S M6X12 A4 70	
1020	312109-0335		1	SCREW, M6S ISO 4017 M5X30 A4 80	
TGA 1000SQ (See drawing on page: 1-264)					
010	2983115-0000		1	PUSHER	
020	2983112-0000		2	SHIM	
030	2983109-0000		1	VOLUME BULGE	
050	2798289-0000		1	VOLUME BULGE	
1000	312155-0366		2	SCREW DIN 7991 MF6S M6X12 A4 70	
1020	312109-0335		1	SCREW, M6S ISO 4017 M5X30 A4 80	
TGA 1500SQ (See drawing on page: 1-264)					
010	2963296-0000		1	PUSHER	
020	2963294-0000		4	SHIM	
030	2963295-0000		1	VOLUME BULGE	
050	2941006-0000		1	VOLUME BULGE	
1000	312155-0366		2	SCREW DIN 7991 MF6S M6X12 A4 70	
1020	312109-0335		1	SCREW, M6S ISO 4017 M5X30 A4 80	
Common Parts					
1010	311103-0269		1	PARALLEL PIN ISO 2338 4M6X14 A1	
1030	315106-0146		1	WASHER PLAIN, M5 ISO7089-5-200 HV A4	
1040	311103-0348		1	PARALLEL PIN ISO 2338 6M6X10 A1	

Pos	Part No	UN	Qty	Description	Page No

FORMING PLATE

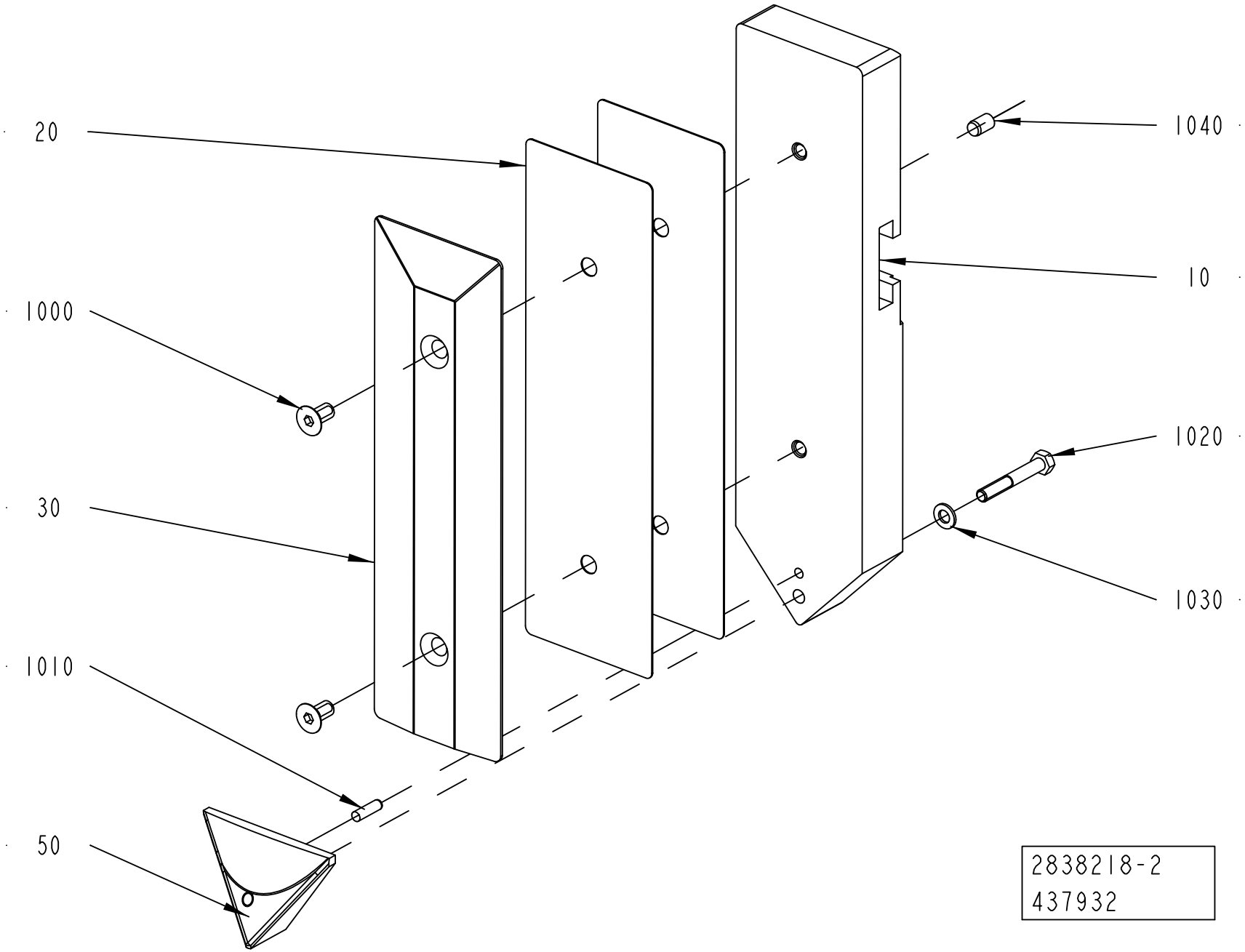

ECM: 551385 - 20120402
Group number: 2838218-0300
Assembly Drawing: 2838218-2_1_AC

Pos	Part No	UN	Qty	Description	Page No
TGA 0500SQ (See drawing on page: 1-266)					
010	2983117-0000		1	PUSHER	
020	2983114-0000		6	SHIM	
030	2983111-0000		1	VOLUME BULGE	
050	2798288-0000		1	VOLUME BULGE	
1000	312155-0366		2	SCREW DIN 7991 MF6S M6X12 A4 70	
1020	312109-0335		1	SCREW, M6S ISO 4017 M5X30 A4 80	
TGA 0750SQ (See drawing on page: 1-266)					
010	2983116-0000		1	PUSHER	
020	2983113-0000		4	SHIM	
030	2983110-0000		1	VOLUME BULGE	
050	2798288-0000		1	VOLUME BULGE	
1000	312155-0366		2	SCREW DIN 7991 MF6S M6X12 A4 70	
1020	312109-0335		1	SCREW, M6S ISO 4017 M5X30 A4 80	
TGA 1000SQ (See drawing on page: 1-266)					
010	2983115-0000		1	PUSHER	
020	2983112-0000		2	SHIM	
030	2983109-0000		1	VOLUME BULGE	
050	2798288-0000		1	VOLUME BULGE	
1000	312155-0366		2	SCREW DIN 7991 MF6S M6X12 A4 70	
1020	312109-0335		1	SCREW, M6S ISO 4017 M5X30 A4 80	
TGA 1500SQ (See drawing on page: 1-266)					
010	2963296-0000		1	PUSHER	
020	2963294-0000		4	SHIM	
030	2963295-0000		1	VOLUME BULGE	
050	2941005-0000		1	VOLUME BULGE	
1000	312155-0366		2	SCREW DIN 7991 MF6S M6X12 A4 70	
1020	312109-0335		1	SCREW, M6S ISO 4017 M5X30 A4 80	
Common Parts					
1010	311103-0269		1	PARALLEL PIN ISO 2338 4M6X14 A1	
1030	315106-0146		1	WASHER PLAIN, M5 ISO7089-5-200 HV A4	
1040	311103-0348		1	PARALLEL PIN ISO 2338 6M6X10 A1	

Pos	Part No	UN	Qty	Description	Page No

Machine Type	Group Description	Used-In	Group Number	Page No

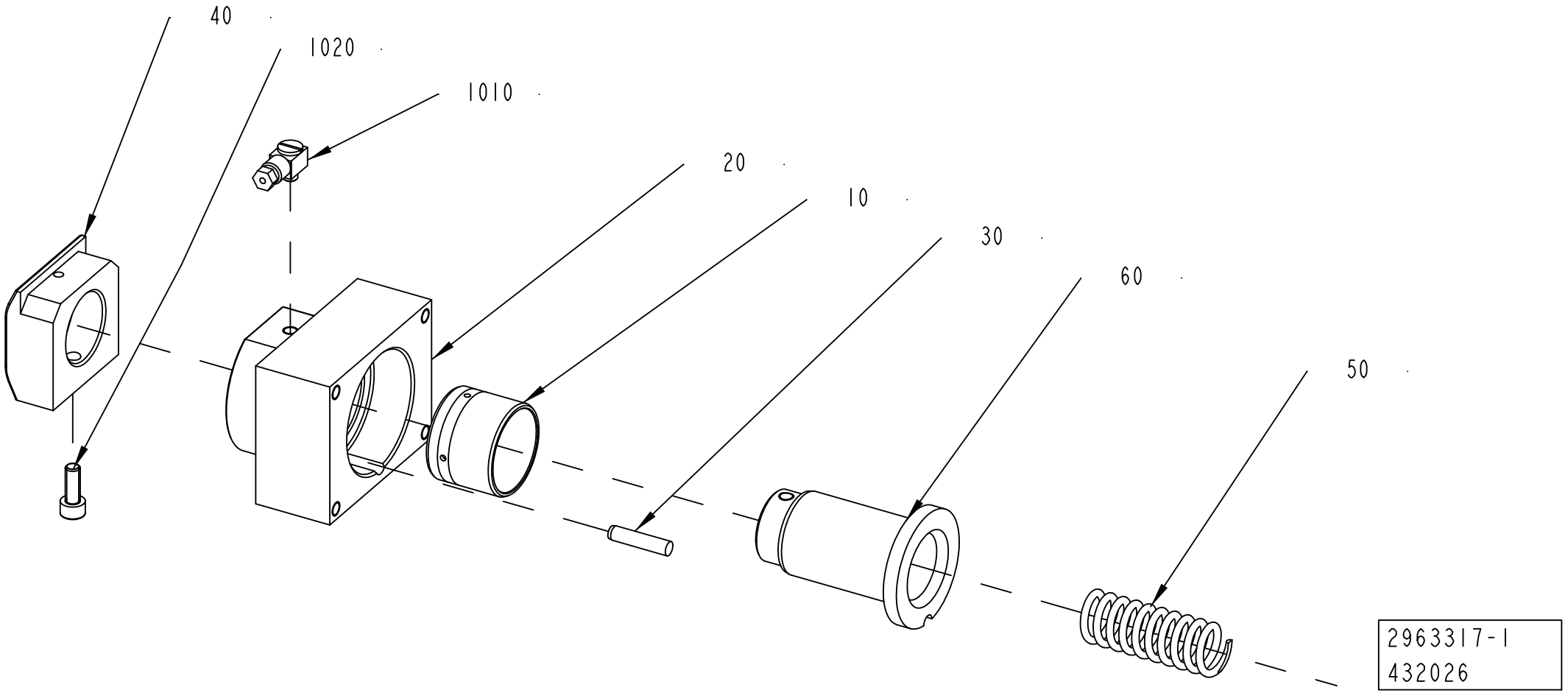
40
1020
1010
20
10
30
60
50
2963317-1
432026

ECM: 534012 - 20120401
Group number: 2963317-0100
Assembly Drawing: 2963317-1_1_AB

Pos	Part No	UN	Qty	Description	Page No
TGA 1000SQ, TGA 0750SQ, TGA 0500SQ					
040	2997607-0000		1	PUSHER	
050	1260895-0000		1	SPRING	
TGA 1500SQ					
040	2963292-0000		1	PUSHER	
050	1144492-0000		1	SPRING	
Common Parts					
010	2958089-0000		1	BUSHING	
020	2963293-0000		1	FLANGE	
030	1498029-0000		1	PIN	
060	2997640-0000		1	SUPPORT	
1010	90134-0058		1	CONNECTION	
1020	312115-0368		1	SCREW ISO4762 M6X16 A4 80	

Pos	Part No	UN	Qty	Description	Page No

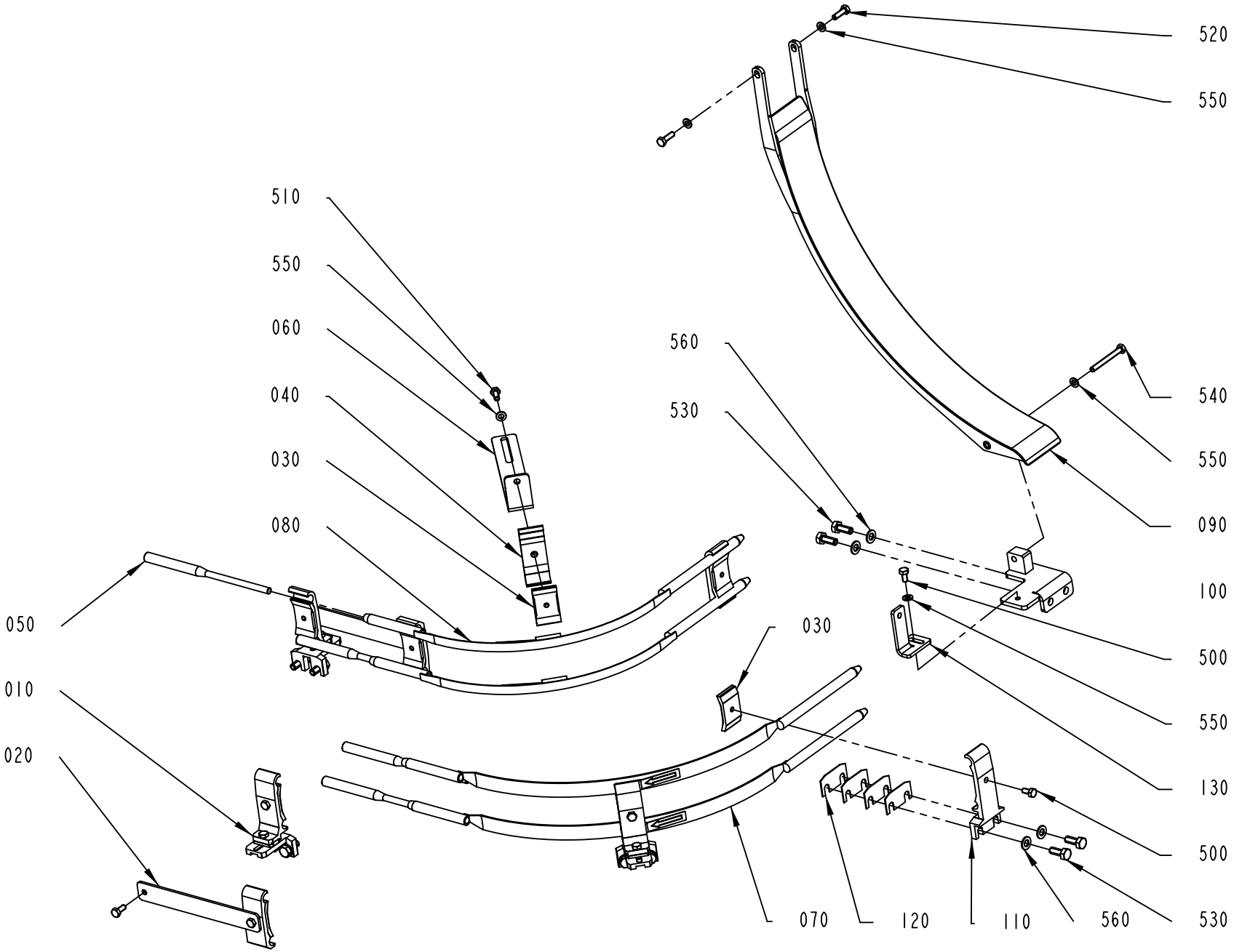

3192386-1
532559

ECM: 535430 - 20120401
Group number: 3192386-0100
Assembly Drawing: 3192386-1_1_AA

This list covers pages from 1-270 to 1-273

Pos	Part No	UN	Qty	Description	Page No
TGA 1000SQ, TGA 0750SQ, TGA 0500SQ (See drawing on page: 1-270)					
010	1550743-0200		3	RAIL HOLDER	**1-275**
020	2561602-0100		2	RAIL HOLDER KIT	**1-277**
030	1366727-0000		3	CLAMP	
040	1366750-0000		2	HOLDER	
050	1550664-0000		4	DOWEL	
060	1550666-0000		1	HOLDER	
070	3044462-0000		2	ARCH	
080	3044463-0000		2	ARCH	
090	3160995-0000		1	GUIDE	
100	3192413-0000		1	BRACKET	
110	3193975-0000		1	RAIL HOLDER	
120	3193976-0000		4	SHIM	
130	3211685-0000		1	BRACKET	
500	312105-0366		2	SCREW, M6S ISO 4017 M6X12 A4 80	
510	312105-0368		2	SCREW, M6S ISO 4017 M6X16 A4 80	
530	312105-0451		4	SCREW, M6S ISO 4017 M8X20 A4 80	
550	315105-0153		5	WASHER PLAIN, 6,4X12X1,5 A4 BRB	
560	315105-0165		4	WASHER PLAIN, 8,4X16X1,6 A4 BRB	
TGA 1500SQ (See drawing on page: 1-272)					
070	2941033-0000		1	GUIDE	
080	2941015-0000		1	GUIDE	
090	3218963-0000		1	GUIDE	
100	2774938-0000		1	GUIDE	
530	312105-0451		2	SCREW, M6S ISO 4017 M8X20 A4 80	
550	315105-0153		3	WASHER PLAIN, 6,4X12X1,5 A4 BRB	
560	315105-0165		2	WASHER PLAIN, 8,4X16X1,6 A4 BRB	
Common Parts					
520	312105-0370		2	SCREW, M6S ISO 4017 M6X20 A4 80	
540	312109-0381		1	SCREW, M6S ISO 4017 M6X55 A4 80	
570	90459-4735		4	SCREW, M6S ISO 4017 M8X10 A4 80	

Pos	Part No	UN	Qty	Description	Page No

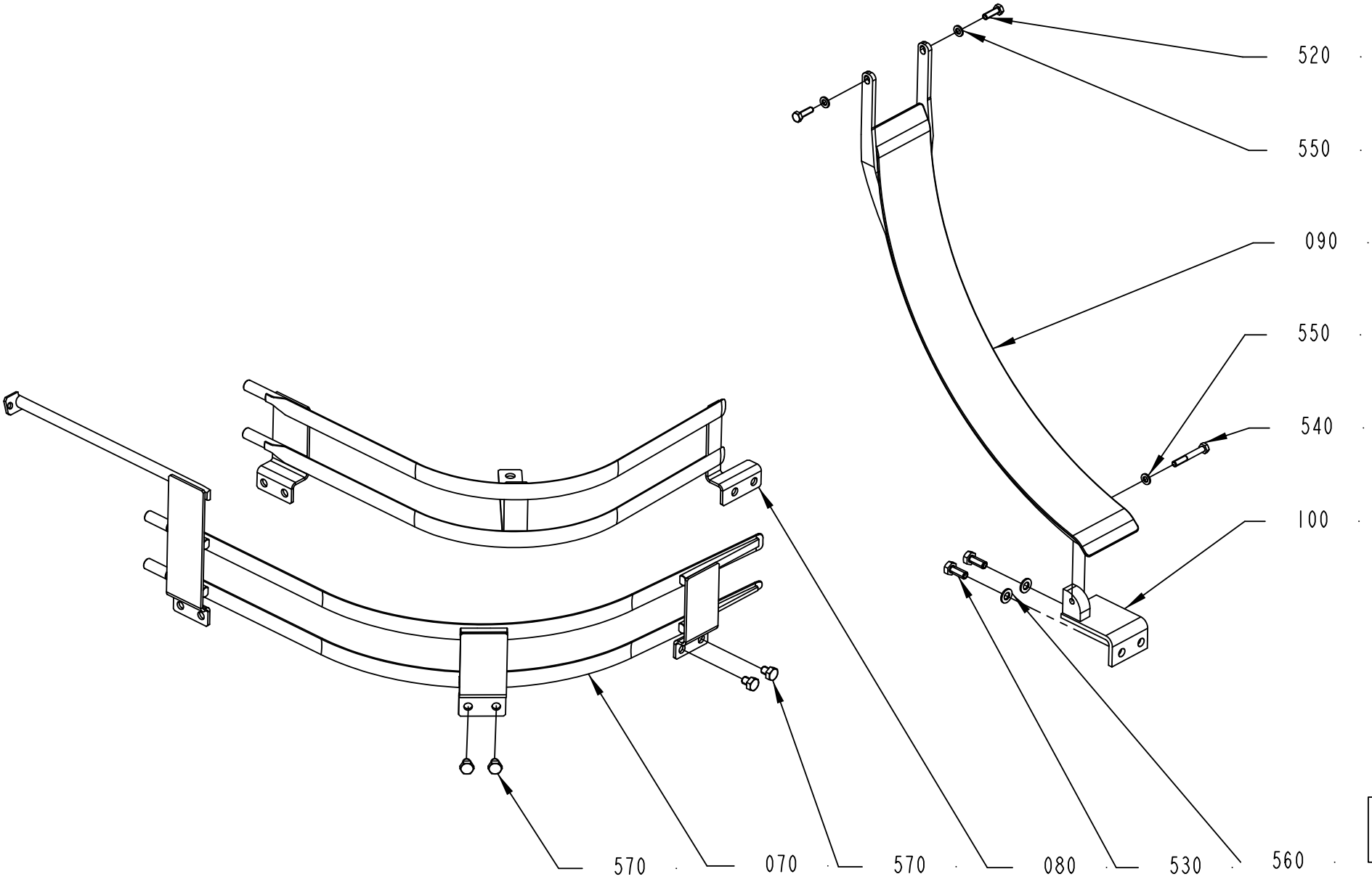

3192386-2
532559

ECM: 535430 - 20120401
Group number: 3192386-0100
Assembly Drawing: 3192386-2_1_AA

This list covers pages from 1-270 to 1-273

Pos	Part No	UN	Qty	Description	Page No
TGA 1000SQ, TGA 0750SQ, TGA 0500SQ (See drawing on page: 1-270)					
010	1550743-0200		3	RAIL HOLDER	**1-275**
020	2561602-0100		2	RAIL HOLDER KIT	**1-277**
030	1366727-0000		3	CLAMP	
040	1366750-0000		2	HOLDER	
050	1550664-0000		4	DOWEL	
060	1550666-0000		1	HOLDER	
070	3044462-0000		2	ARCH	
080	3044463-0000		2	ARCH	
090	3160995-0000		1	GUIDE	
100	3192413-0000		1	BRACKET	
110	3193975-0000		1	RAIL HOLDER	
120	3193976-0000		4	SHIM	
130	3211685-0000		1	BRACKET	
500	312105-0366		2	SCREW, M6S ISO 4017 M6X12 A4 80	
510	312105-0368		2	SCREW, M6S ISO 4017 M6X16 A4 80	
530	312105-0451		4	SCREW, M6S ISO 4017 M8X20 A4 80	
550	315105-0153		5	WASHER PLAIN, 6,4X12X1,5 A4 BRB	
560	315105-0165		4	WASHER PLAIN, 8,4X16X1,6 A4 BRB	
TGA 1500SQ (See drawing on page: 1-272)					
070	2941033-0000		1	GUIDE	
080	2941015-0000		1	GUIDE	
090	3218963-0000		1	GUIDE	
100	2774938-0000		1	GUIDE	
530	312105-0451		2	SCREW, M6S ISO 4017 M8X20 A4 80	
550	315105-0153		3	WASHER PLAIN, 6,4X12X1,5 A4 BRB	
560	315105-0165		2	WASHER PLAIN, 8,4X16X1,6 A4 BRB	
Common Parts					
520	312105-0370		2	SCREW, M6S ISO 4017 M6X20 A4 80	
540	312109-0381		1	SCREW, M6S ISO 4017 M6X55 A4 80	
570	90459-4735		4	SCREW, M6S ISO 4017 M8X10 A4 80	

Pos	Part No	UN	Qty	Description	Page No

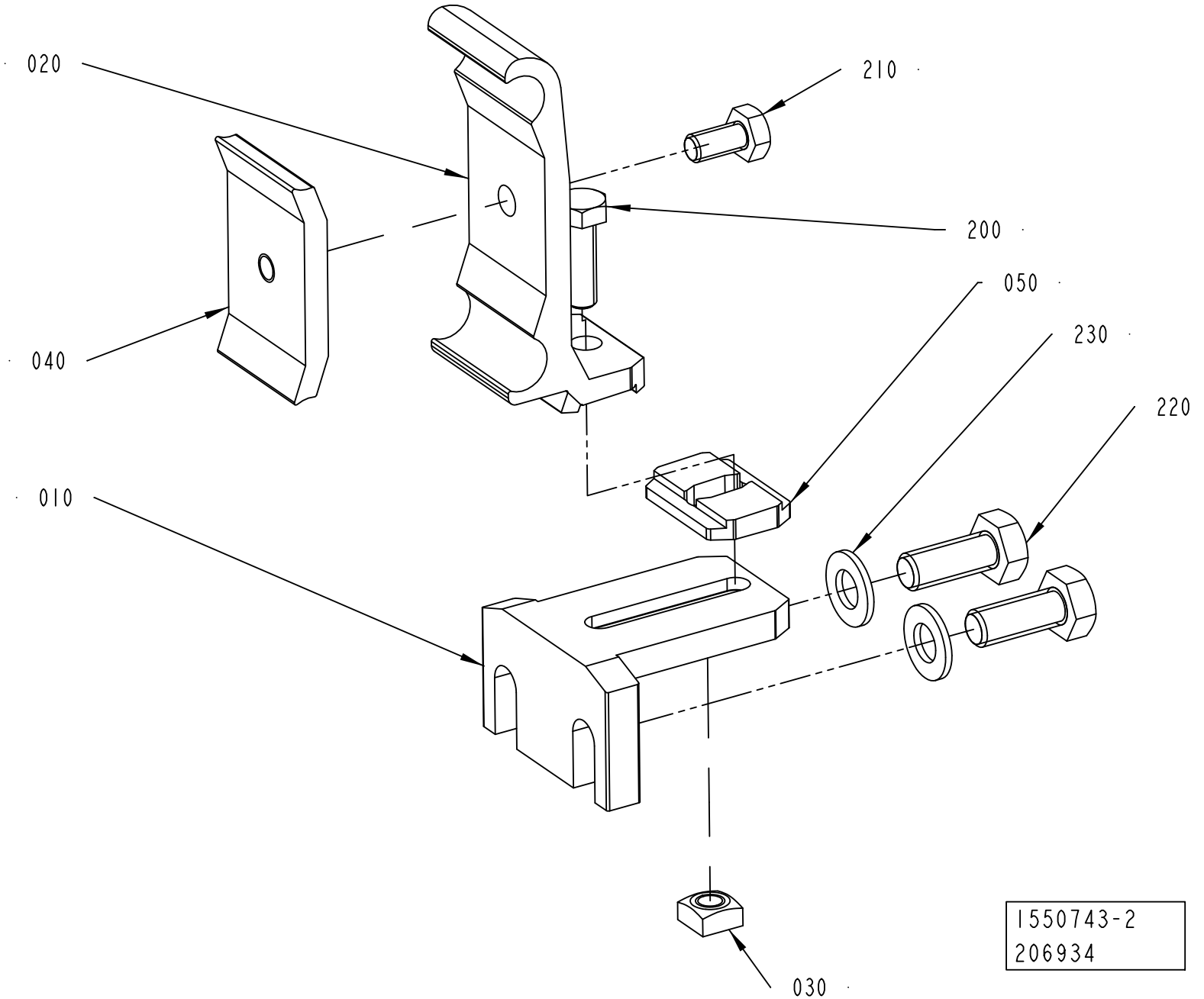
020
210
200
040
050
230
220
010
030
1550743-2
206934

ECM: 429045 - 20091201
Group number: 1550743-0200
Assembly Drawing: 1550743-2_1_AA

Pos	Part No	UN	Qty	Description	Page No
-					
010	1550772-0000		1	HOLDER	
020	2699437-0000		1	RAIL HOLDER	
030	1359565-0000		1	NUT	
040	1366727-0000		1	CLAMP	
050	2699436-0000		1	SPACER	
200	312105-0370		1	SCREW, M6S ISO 4017 M6X20 A4 80	
210	312105-0366		1	SCREW, M6S ISO 4017 M6X12 A4 80	
220	312105-0451		2	SCREW, M6S ISO 4017 M8X20 A4 80	
230	315105-0165		2	WASHER PLAIN, 8,4X16X1,6 A4 BRB	

Pos	Part No	UN	Qty	Description	Page No

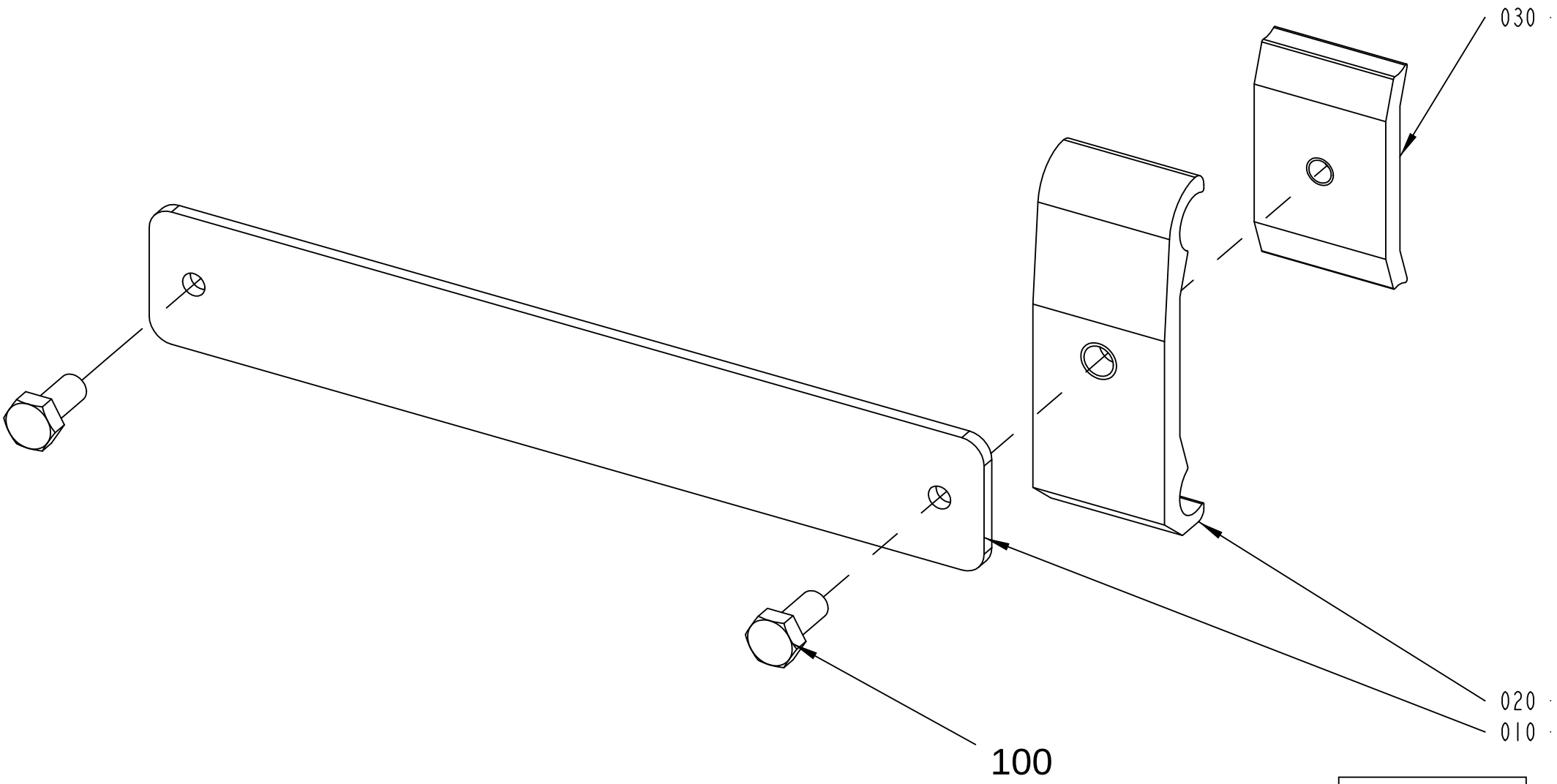

2561602-1
ECM 153837

ECM: 255321 - 20060302
Group number: 2561602-0100
Assembly Drawing: 2561602-1_1_AB

Pos	Part No	UN	Qty	Description	Page No
-					
010	2561596-0000		1	RAIL HOLDER KIT	
020	1366750-0000		1	HOLDER	
030	1366727-0000		1	CLAMP	
100	312105-0367		2	SCREW, M6S ISO 4017 M6X14 A4 80	

Pos	Part No	UN	Qty	Description	Page No

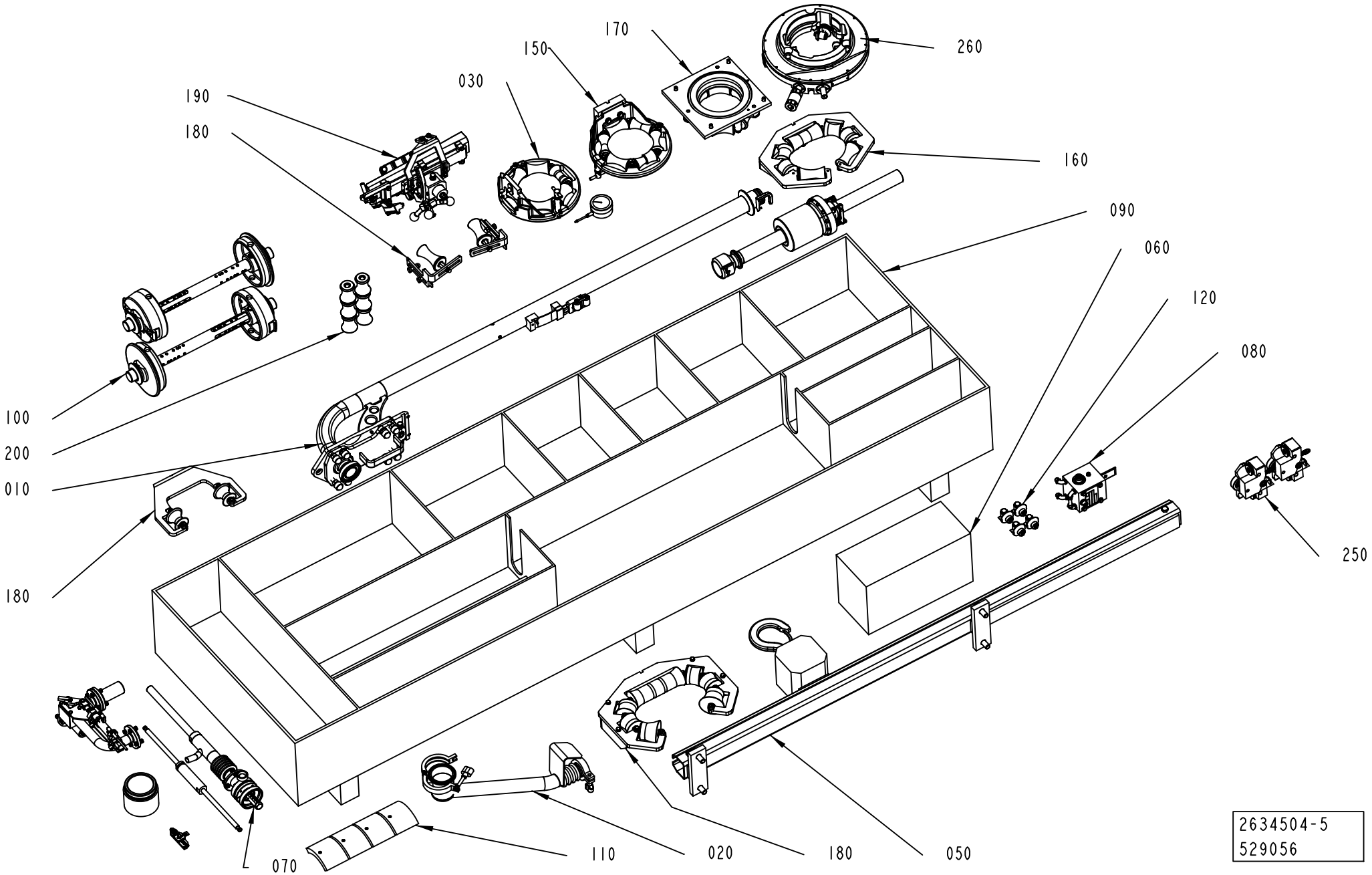
170
150
030
190
180
260
160
090
060
120
080
100
200
010
180
250
070
110
020
180
050
2634504-5
529056

ECM: 535839 - 20120401
Group number: 2634504-0300
Assembly Drawing: 2634504-5_1_AA

Pos	Part No	UN	Qty	Description	Page No
START FM TBA 1000SQ, START FM TBA 0500SQ					
080	2902378-0100		1	TRANSFORMER	**1-281**
260	3026440-0200		1	STEERING RING	**1-283, 1-285**
TBA 0500S, TBA 0500SQ, TBA 1000SQ, START FM TBA 0500S					
080	2902378-0100		1	TRANSFORMER	**1-281**
Common Parts					
010	2501310-0300		1	FILLING PIPE	**1-289, 1-291, 1-293**
020	2512936-0200		1	CLEANING CUP	**1-295**
030	2912699-0100		1	LOWER FORMING RING	**1-297, 1-299**
050	2575120-0100		1	LIFTING UNIT	**1-319**
060	2979589-0200		1	START-UP KIT SS	**1-321**
070	3035150-0200		1	STERILE AIR BLOWER	**1-335**
090	3010408-0000		1	BOX	
100	2731217-0200		2	PAPER REEL HOLDER	**1-343**
110	3019537-0100		1	BENDING ROLLER	**1-345**
120	3044267-0100		4	ROLLER BRACKET	**1-287**
150	2912700-0100		1	UPPER FORMING RING	**1-347**
160	2912702-0100		1	FORMING RING	**1-365**
170	3191259-0100		1	SEAL	**1-377**
180	2912703-0100		1	EDGE ROLLER	**1-389**
190	2657873-0200		1	LONGITUDINAL SEALING	**1-399, 1-401, 1-403**
200	3093221-0100		1	TRIMMING ROLLER	**1-407**

Pos	Part No	UN	Qty	Description	Page No

Machine Type | Group Description | Used-In | Group Number | Page No

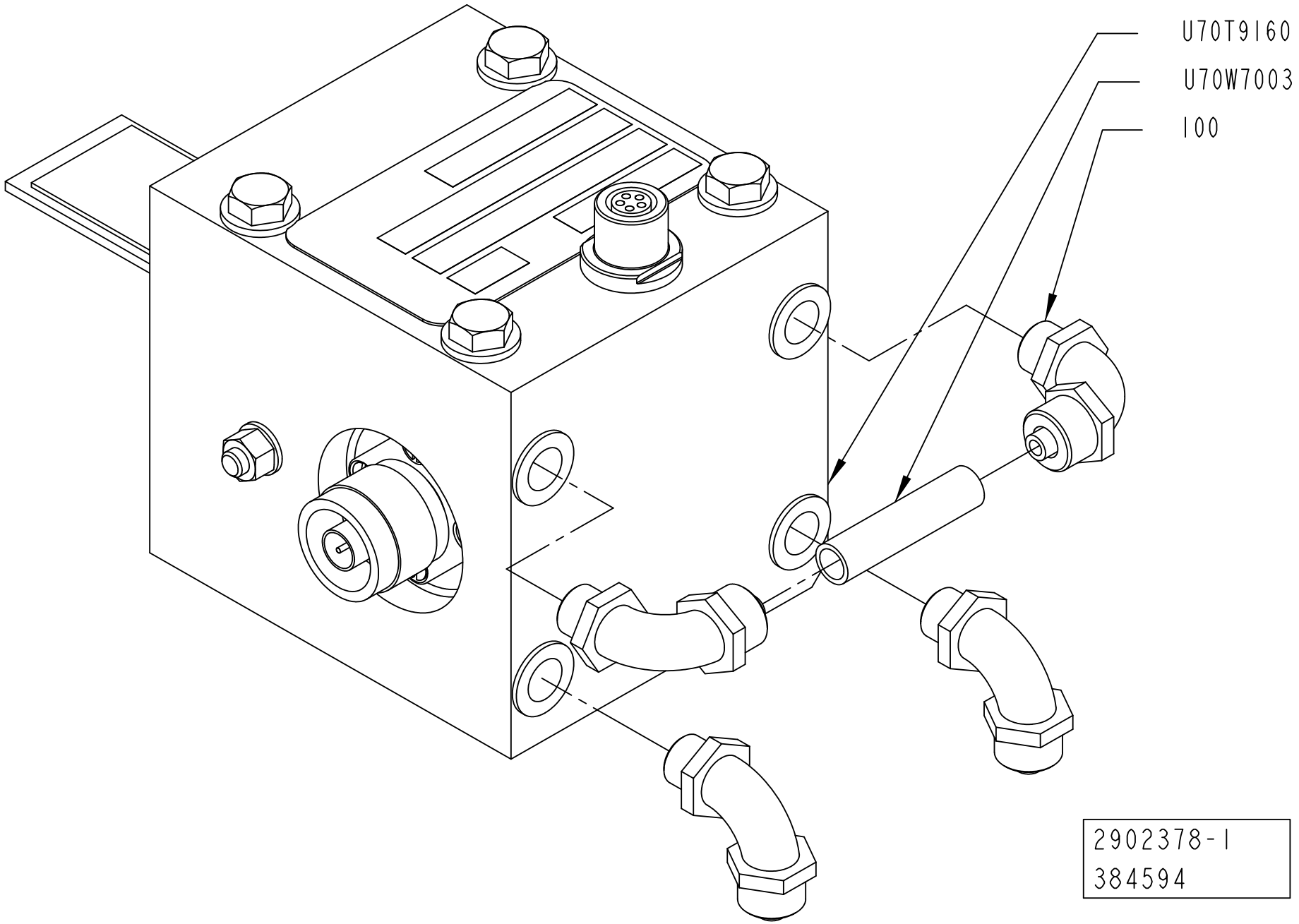
U70T9160
U70W7003
100
2902378-1
384594

ECM: 530455 - 20120416
Group number: 2902378-0100
Assembly Drawing: 2902378-1_1_AA

Pos	Part No	UN	Qty	Description	Page No
A3/FLEX TBA 0500B, A3/FLEX TBA 1000B, A3/FLEX TBA 1000S, A3/FLEX TPA 1000SQ, A3/FLEX TBA 1500S, A3/FLEX TPA 0500SQ, A3/FLEX TBA 2000S, A3/FLEX TPA 0750SQ, A3/FLEX TGA 1500SQ					
U70T9160	2888970-0524		1	TRANSFORMER VMN	
A3/FLEX TBA 0500S					
U70T9160	2888970-0619		1	TRANSFORMER VMN	
A3/FLEX TBA 1000SQ, A3/FLEX TBA 0500SQ, A3/FLEX TGA 1000SQ, A3/FLEX TGA 0500SQ, A3/FLEX TGA 0750SQ, A3/FLEX TGA 1000CR, A3/FLEX TGA 1000LF					
U70T9160	2888970-0438		1	TRANSFORMER VMN	
Common Parts					
100	342931-0121		4	ELBOW 90 COUPL., EXT. THREAD 8/6-G1/8"	
U70W7003	90166-0118	MM	50	TUBE 8 MM PA BLACK	

Pos	Part No	UN	Qty	Description	Page No

STEERING RING

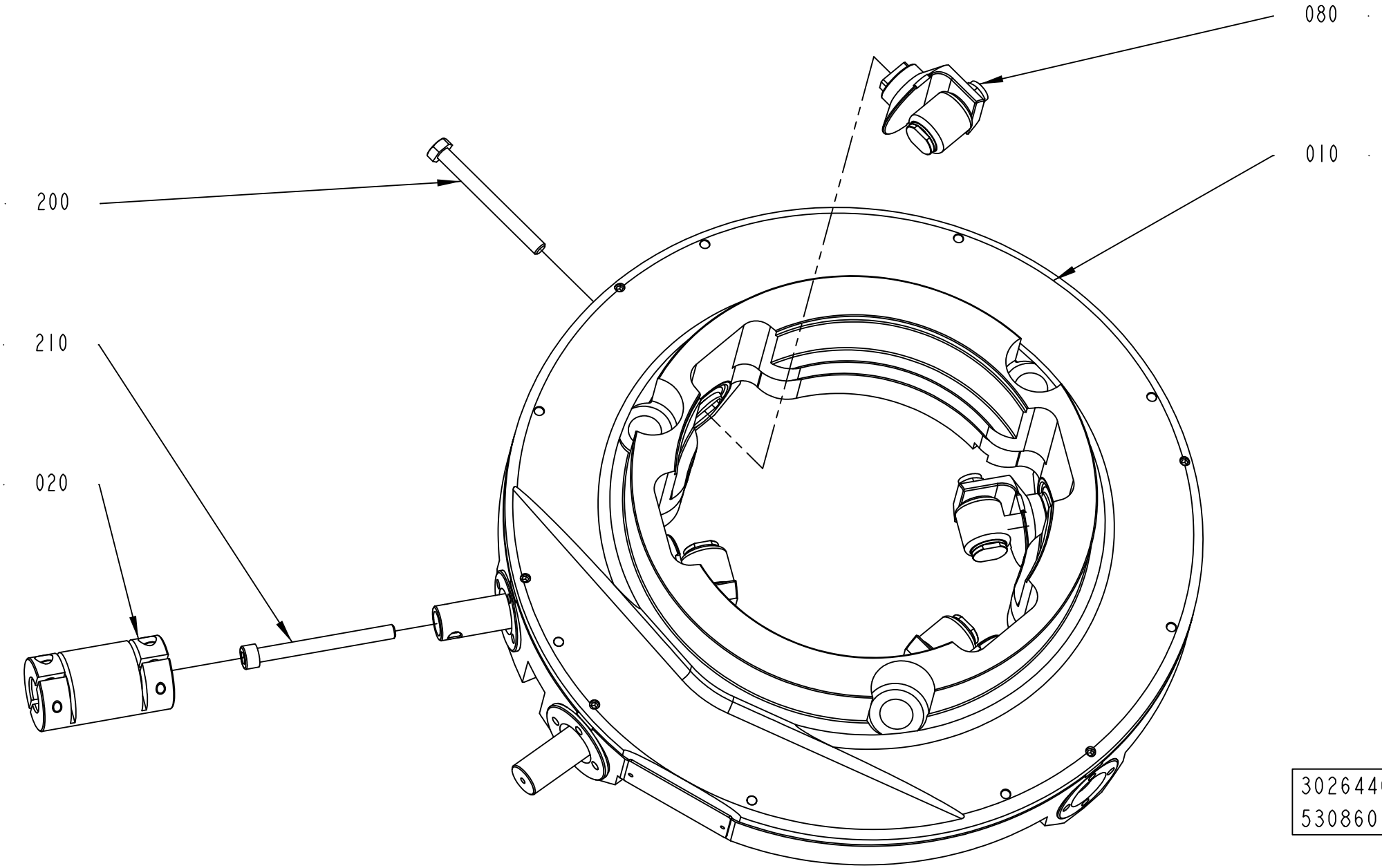

3026440-5
530860

ECM: 530860 - 20120401
Group number: 3026440-0200
Assembly Drawing: 3026440-5_1_AA

This list covers pages from 1-282 to 1-285

Pos	Part No	UN	Qty	Description	Page No
-					
010	3178571-0000		1	STEERING DEVICE	
020	2932052-0000		1	JOINT	
080	3044267-0100		4	ROLLER BRACKET	**1-287**
200	312105-0382		3	SCREW, M6S ISO 4014 M6X60 A4 80	
210	312115-0382		1	SCREW ISO4762 M6X60 A4 80	

Pos	Part No	UN	Qty	Description	Page No

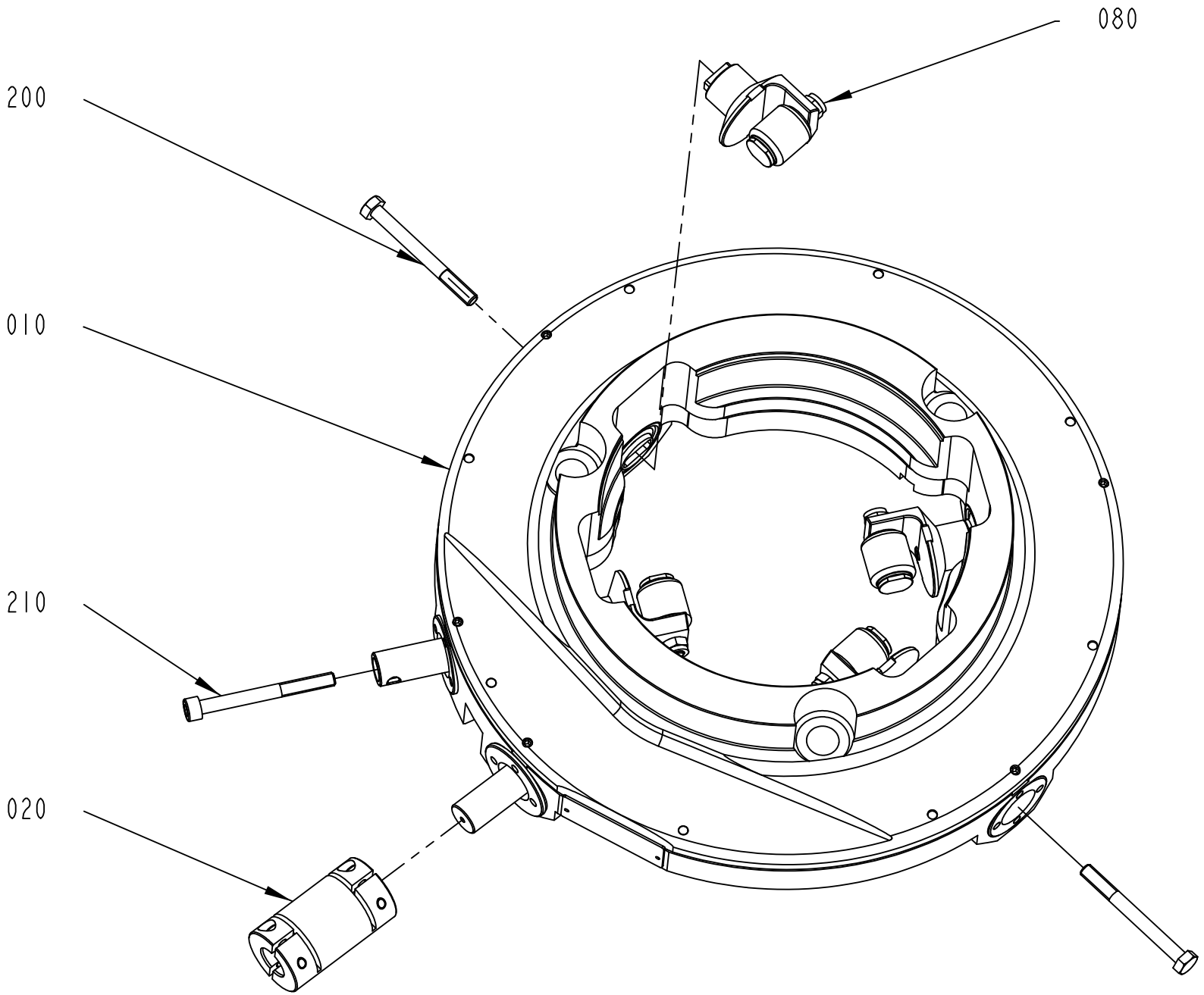

3026440-6
530860

ECM: 530860 - 20120401
Group number: 3026440-0200
Assembly Drawing: 3026440-6_1_AA

This list covers pages from 1-282 to 1-285

Pos	Part No	UN	Qty	Description	Page No
-					
010	3178571-0000		1	STEERING DEVICE	
020	2932052-0000		1	JOINT	
080	3044267-0100		4	ROLLER BRACKET	**1-287**
200	312105-0382		3	SCREW, M6S ISO 4014 M6X60 A4 80	
210	312115-0382		1	SCREW ISO4762 M6X60 A4 80	

Pos	Part No	UN	Qty	Description	Page No

ROLLER BRACKET

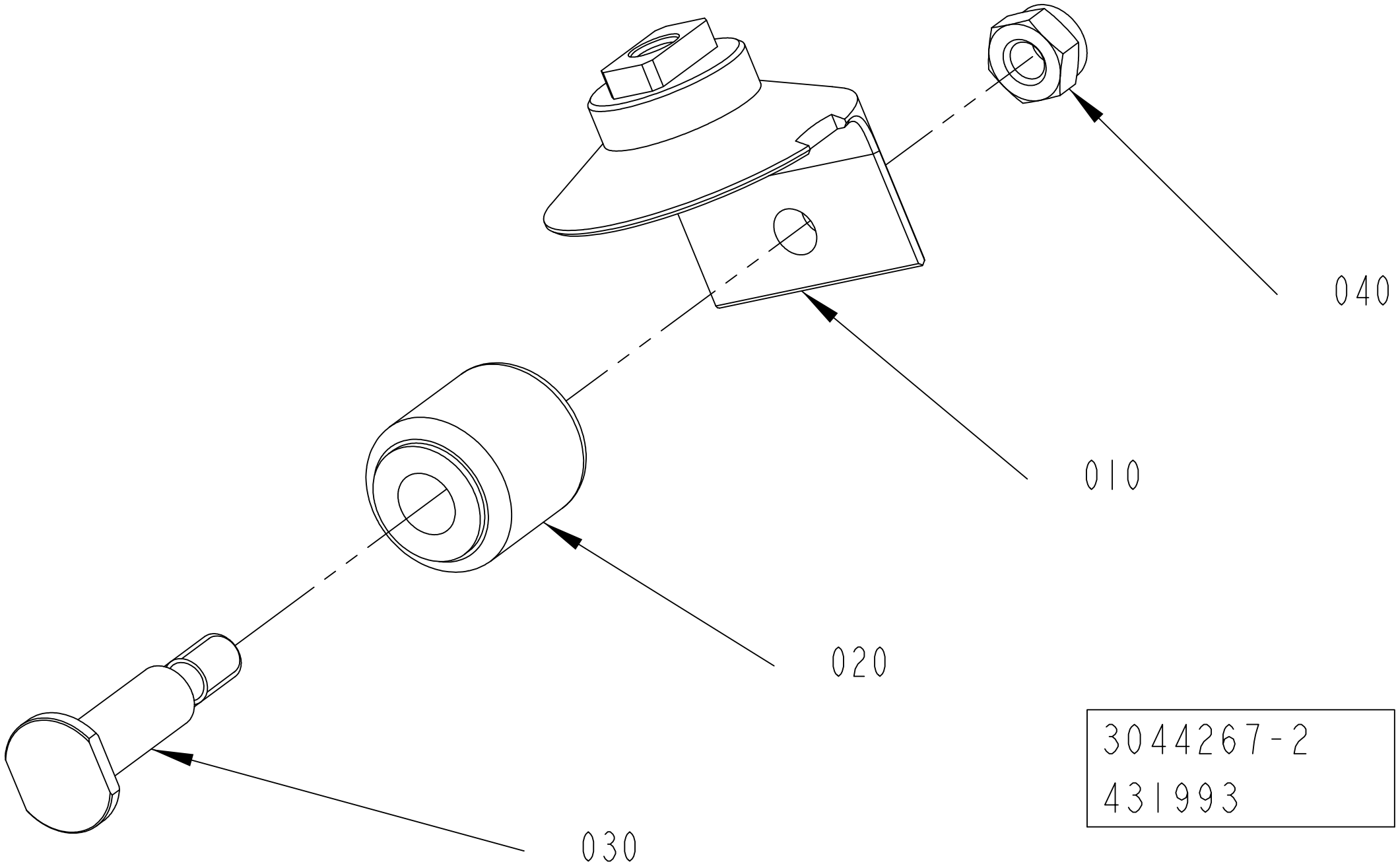

3044267-2
431993

ECM: 530452 - 20120416
Group number: 3044267-0100
Assembly Drawing: 3044267-2_1_AA

Pos	Part No	UN	Qty	Description	Page No
TBA 0500B, TBA 1000B, TBA 1500S, TGA 1500SQ					
010	2944647-0000		1	BRACKET	
TBA 0500S					
010	2921394-0000		1	BRACKET	
TBA 1000S					
010	3026932-0000		1	BRACKET	
TBA 2000S					
010	2878634-0000		1	BRACKET	
TGA 1000SQ, TGA 0750SQ, TGA 0500SQ					
010	3018395-0000		1	BRACKET	
TPA 0500SQ					
010	2878625-0000		1	BRACKET	
TPA 1000SQ, TPA 0750SQ					
010	2921394-0000		1	BRACKET	
Common Parts					
020	2832867-0000		1	ROLLER	
030	2872065-0000		1	PIN	
040	312812-0316		1	HEXAGON NUT, NY-LOCK M6 A4 80	

Pos	Part No	UN	Qty	Description	Page No

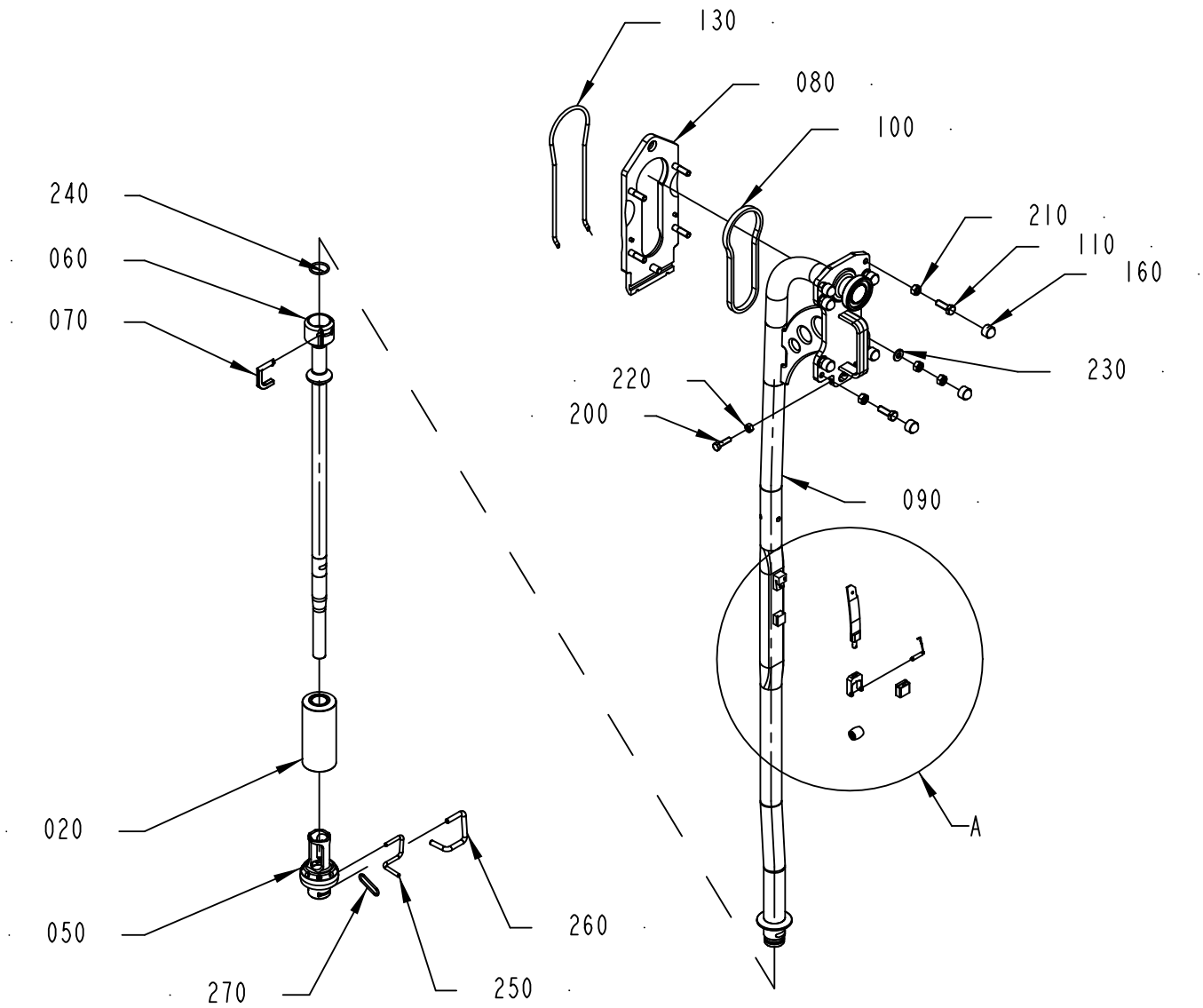



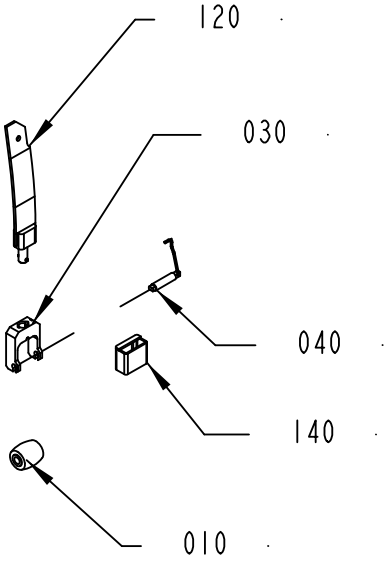

A
1:5

2501310-18
397493

ECM: 530435 - 20120416
Group number: 2501310-0300
Assembly Drawing: 2501310-18_1_AA

This list covers pages from 1-288 to 1-293

Pos	Part No	UN	Qty	Description	Page No
TBA 0500B, TBA 1000B NODIMC (See drawing on page: 1-290)					
010	2932252-0000		2	PRESSURE ROLLER QUANT MINIMA 10PCS	
020	2597531-0000		1	FLOAT	
	90602-0330		*1*	*SAFETY CUTTER, RUCK-ZUCK 55337*	
030	2846311-0000		1	FORK	
040	1538953-0000		1	SHAFT	
050	3025700-0000		1	PRESSURE FLANGE	
060	3025699-0000		1	LOWER FILLING TUBE	
070	2809846-0000		1	STOP PIN	
090	2826478-0000		1	UPPER FILLING PIPE	
120	2946917-0000		1	SPRING	
140	2572071-0000		1	HOOD	
170	24928-0000		4	LOCKING RUBBER	
185	2638077-0000		2	SHAFT	
190	2846309-0000		1	BRACKET	
240	90603-0848		1	O-RING 29,2X3 MM FDA, 3-A	
260	2976089-0000		1	LOCKING DEVICE	
TBA 0500S (See drawing on page: 1-292)					
010	2909367-0000		2	PRESSURE ROLLER (PACK 10)	
020	3095351-0000		1	FLOAT	
	90602-0330		*1*	*SAFETY CUTTER, RUCK-ZUCK 55337*	
030	2887735-0000		1	FORK	
040	2634972-0000		1	SHAFT	
050	2601468-0000		1	PRESSURE FLANGE	
060	2866755-0000		1	LOWER FILLING PIPE	
070	2809846-0000		1	STOP PIN	
090	2832555-0000		1	FILLING PIPE	
120	2946917-0000		1	SPRING	
140	2572071-0000		1	HOOD	
170	24928-0000		4	LOCKING RUBBER	
185	499011-0000		2	SHAFT	
190	2715569-0000		1	BRACKET	
240	90603-0848		1	O-RING 29,2X3 MM FDA, 3-A	
250	2803986-0000		1	STOP PIN	
260	2803987-0000		1	STOP PIN	
270	2886173-0000		1	LOCKING RING	
TBA 0500SQ, TBA 1000SQ (See drawing on page: 1-290)					
010	2909368-0000		2	PRESSURE ROLLER (PACK 10)	
020	3095377-0000		1	FLOAT	
	90602-0330		*1*	*SAFETY CUTTER, RUCK-ZUCK 55337*	
030	2887735-0000		1	FORK	
040	2634972-0000		1	SHAFT	
050	2977549-0000		1	PRESSURE FLANGE	
060	2977546-0000		1	LOWER FILLING TUBE	
070	2809846-0000		1	STOP PIN	
090	2826478-0000		1	UPPER FILLING PIPE	
120	2826398-0000		1	SPRING	
140	2787568-0000		1	HOOD	
170	24928-0000		4	LOCKING RUBBER	
185	499011-0000		2	SHAFT	
190	2887736-0000		1	BRACKET	
240	90603-0848		1	O-RING 29,2X3 MM FDA, 3-A	
260	2976089-0000		1	LOCKING DEVICE	
TBA 1000S NODIMC (See drawing on page: 1-290)					
010	2909368-0000		2	PRESSURE ROLLER (PACK 10)	
020	2597531-0000		1	FLOAT	
	90602-0330		*1*	*SAFETY CUTTER, RUCK-ZUCK 55337*	
030	2659364-0000		1	FORK	
040	2634972-0000		1	SHAFT	
050	3052589-0000		1	PRESSURE FLANGE	
060	2977546-0000		1	LOWER FILLING TUBE	
070	2809846-0000		1	STOP PIN	
090	2826478-0000		1	UPPER FILLING PIPE	
120	2826399-0000		1	SPRING	
140	2572071-0000		1	HOOD	
170	24928-0000		4	LOCKING RUBBER	
185	499011-0000		2	SHAFT	
190	2672995-0000		1	BRACKET	
240	90603-0848		1	O-RING 29,2X3 MM FDA, 3-A	
260	2976089-0000		1	LOCKING DEVICE	
TBA 1500S (See drawing on page: 1-290)					
010	2932252-0000		2	PRESSURE ROLLER QUANT MINIMA 10PCS	
020	2597531-0000		1	FLOAT	
	90602-0330		*1*	*SAFETY CUTTER, RUCK-ZUCK 55337*	
030	2846311-0000		1	FORK	
040	1538953-0000		1	SHAFT	
050	3025705-0000		1	PRESSURE FLANGE	
060	3031513-0000		1	LOWER FILLING TUBE	
070	2809846-0000		1	STOP PIN	
090	2826478-0000		1	UPPER FILLING PIPE	
120	2946917-0000		1	SPRING	
140	2572071-0000		1	HOOD	
170	24928-0000		4	LOCKING RUBBER	
185	2638077-0000		2	SHAFT	

Machine Type | Group Description | Used-In | Group Number | Page No

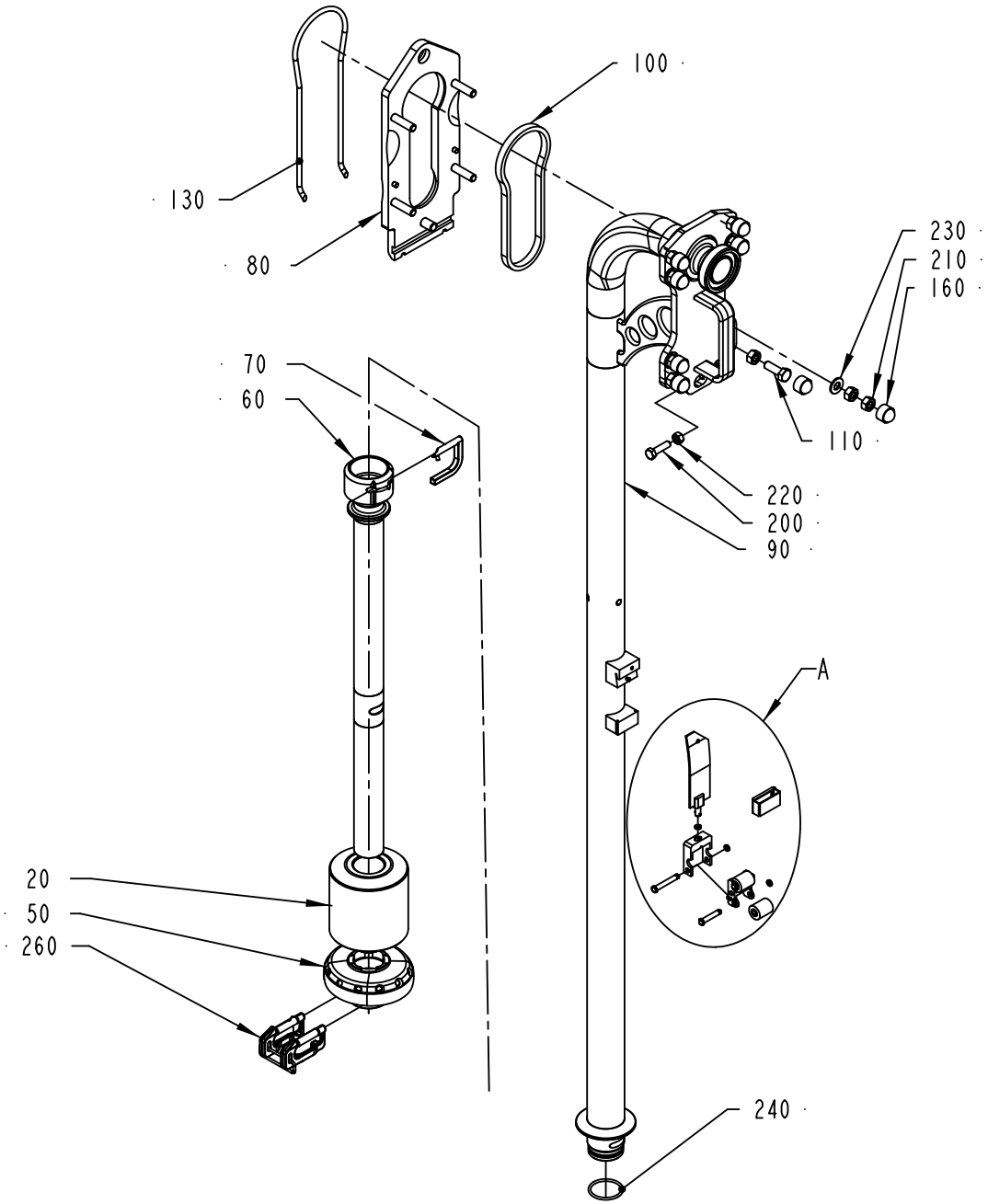

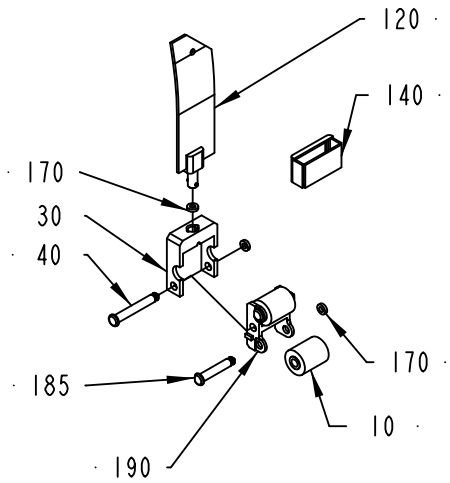

DETAIL A
SCALE 1:4

2501310-20
397493

ECM: 530435 - 20120416
Group number: 2501310-0300
Assembly Drawing: 2501310-20_1_AA

This list covers pages from 1-288 to 1-293

Pos	Part No	UN	Qty	Description	Page No
TBA 1500S (Cont'd) (See drawing on page: 1-290)					
190	2846309-0000		1	BRACKET	
240	90603-0848		1	O-RING 29,2X3 MM FDA, 3-A	
260	2976089-0000		1	LOCKING DEVICE	
TBA 2000S (See drawing on page: 1-290)					
010	2932252-0000		2	PRESSURE ROLLER QUANT MINIMA 10PCS	
020	3106890-0000		1	FLOAT	
030	2846308-0000		1	FORK	
040	1538953-0000		1	SHAFT	
050	2879238-0000		1	PRESSURE FLANGE	
060	2879239-0000		1	FILLING PIPE	
070	2809849-0000		1	STOP PIN	
090	2961246-0000		1	UPPER FILLING PIPE	
120	2978673-0000		1	SPRING	
140	2672994-0000		1	HOOD	
170	24928-0000		4	LOCKING RUBBER	
185	2638077-0000		2	SHAFT	
190	2971486-0000		1	BRACKET	
240	90603-0849		1	O-RING 39,2X3 MM FDA, 3-A	
260	2881463-0000		1	LOCKING DEVICE	
TGA 1000SQ, TGA 0750SQ, TGA 0500SQ (See drawing on page: 1-290)					
010	2909368-0000		2	PRESSURE ROLLER (PACK 10)	
020	3106887-0000		1	FLOAT	
030	2715652-0000		1	FORK	
040	2634972-0000		1	SHAFT	
050	3025701-0000		1	PRESSURE FLANGE	
060	3025702-0000		1	LOWER FILLING TUBE	
070	2809846-0000		1	STOP PIN	
090	2960579-0000		1	UPPER FILLING PIPE	
120	2826390-0000		1	SPRING	
140	2572071-0000		1	HOOD	
170	24928-0000		4	LOCKING RUBBER	
185	499011-0000		2	SHAFT	
190	2715569-0000		1	BRACKET	
240	90603-0848		1	O-RING 29,2X3 MM FDA, 3-A	
260	2976089-0000		1	LOCKING DEVICE	
TGA 1500SQ (See drawing on page: 1-290)					
010	2932252-0000		2	PRESSURE ROLLER QUANT MINIMA 10PCS	
020	3106892-0000		1	FLOAT	
030	2846311-0000		1	FORK	
040	1538953-0000		1	SHAFT	
050	3012056-0000		1	PRESSURE FLANGE	
060	3012046-0000		1	LOWER FILLING TUBE	
070	2809849-0000		1	STOP PIN	
090	2944644-0000		1	FILLING PIPE	
120	2946917-0000		1	SPRING	
140	2572071-0000		1	HOOD	
170	24928-0000		4	LOCKING RUBBER	
185	2638077-0000		2	SHAFT	
190	2846309-0000		1	BRACKET	
240	90603-0849		1	O-RING 39,2X3 MM FDA, 3-A	
260	3012771-0000		1	LOCKING DEVICE	
TPA 0500SQ (See drawing on page: 1-288)					
010	2909367-0000		1	PRESSURE ROLLER (PACK 10)	
020	2610042-0000		1	FLOAT	
	90602-0330		*1*	*SAFETY CUTTER, RUCK-ZUCK 55337*	
030	2673015-0000		1	FORK	
040	2673021-0000		1	SHAFT	
050	2601474-0000		1	PRESSURE FLANGE	
060	2885429-0000		1	LOWER FILLING PIPE	
070	2809847-0000		1	STOP PIN	
090	2832555-0000		1	FILLING PIPE	
120	2959681-0000		1	SPRING	
140	2959682-0000		1	HOOD	
240	90603-0848		1	O-RING 29,2X3 MM FDA, 3-A	
250	2803986-0000		1	STOP PIN	
260	2803987-0000		1	STOP PIN	
270	2886173-0000		1	LOCKING RING	
TPA 1000SQ, TPA 0750SQ (See drawing on page: 1-290)					
010	2909367-0000		2	PRESSURE ROLLER (PACK 10)	
020	3106884-0000		1	FLOAT	
030	2715652-0000		1	FORK	
040	2634972-0000		1	SHAFT	
050	2977415-0000		1	PRESSURE FLANGE	
060	3031512-0000		1	LOWER FILLING TUBE	
070	2809846-0000		1	STOP PIN	
090	2832553-0000		1	UPPER FILLING PIPE	
120	2826390-0000		1	SPRING	
140	2572071-0000		1	HOOD	
170	24928-0000		4	LOCKING RUBBER	
185	499011-0000		2	SHAFT	
190	2715569-0000		1	BRACKET	
240	90603-0848		1	O-RING 29,2X3 MM FDA, 3-A	
260	2976089-0000		1	LOCKING DEVICE	

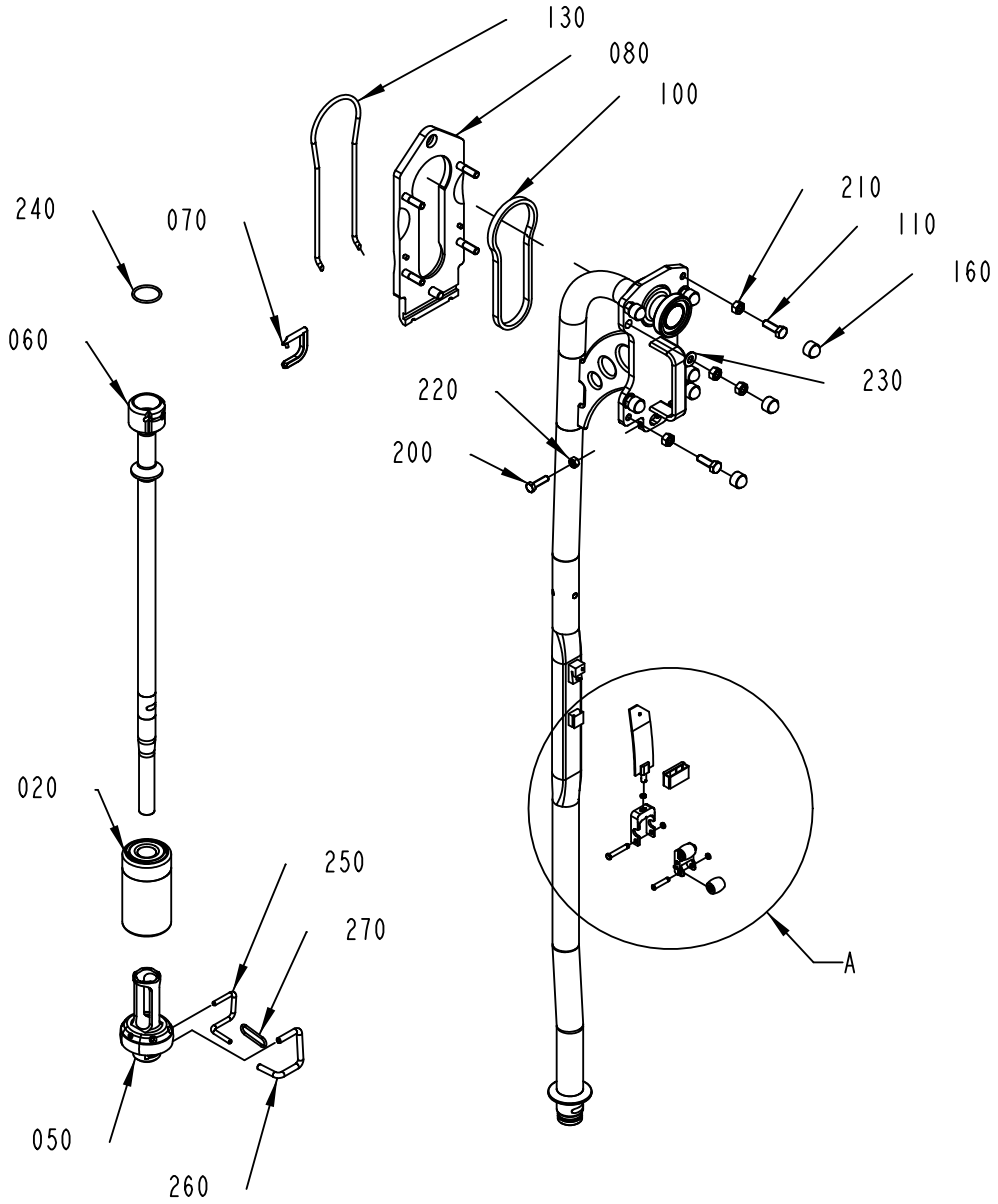

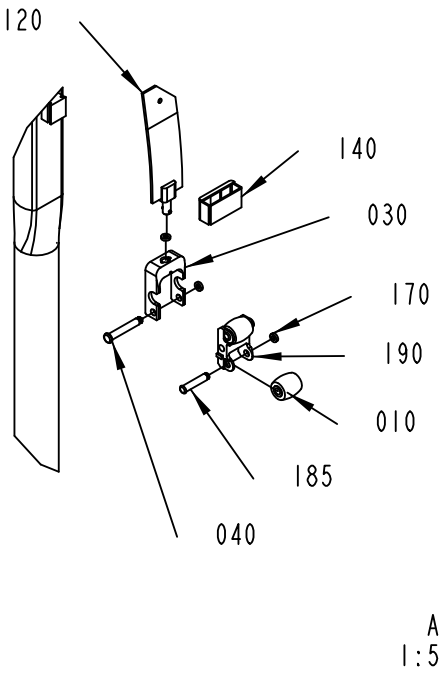

A
1:5

2501310-23
460047

Pos	Part No	UN	Qty	Description	Page No
TPA 1000SQ, TPA 0750SQ (Cont'd) (See drawing on page: 1-290)					
260	2976089-0000		1	LOCKING DEVICE	
Common Parts					
080	2500082-0000		1	MOUNTING PLATE	
100	2507048-0000		1	GASKET	
110	312105-0495		4	SCREW, M6S ISO 4017 M10X30 A4 80	
130	2500071-0000		1	O-RING	
160	90459-0729		8	HEXAGONAL PROTECTIVE CAP GPN 1000	
200	312105-0455		2	SCREW, M6S ISO 4017 M8X30 A4 80	
210	312605-0320		12	HEXAGON NUT, M6M M10 A280	
220	312605-0318		2	HEXAGON NUT, M6M M8 A280	
230	315105-0173		4	WASHER PLAIN, 10,5X22X2 A4 BRB	

Pos	Part No	UN	Qty	Description	Page No

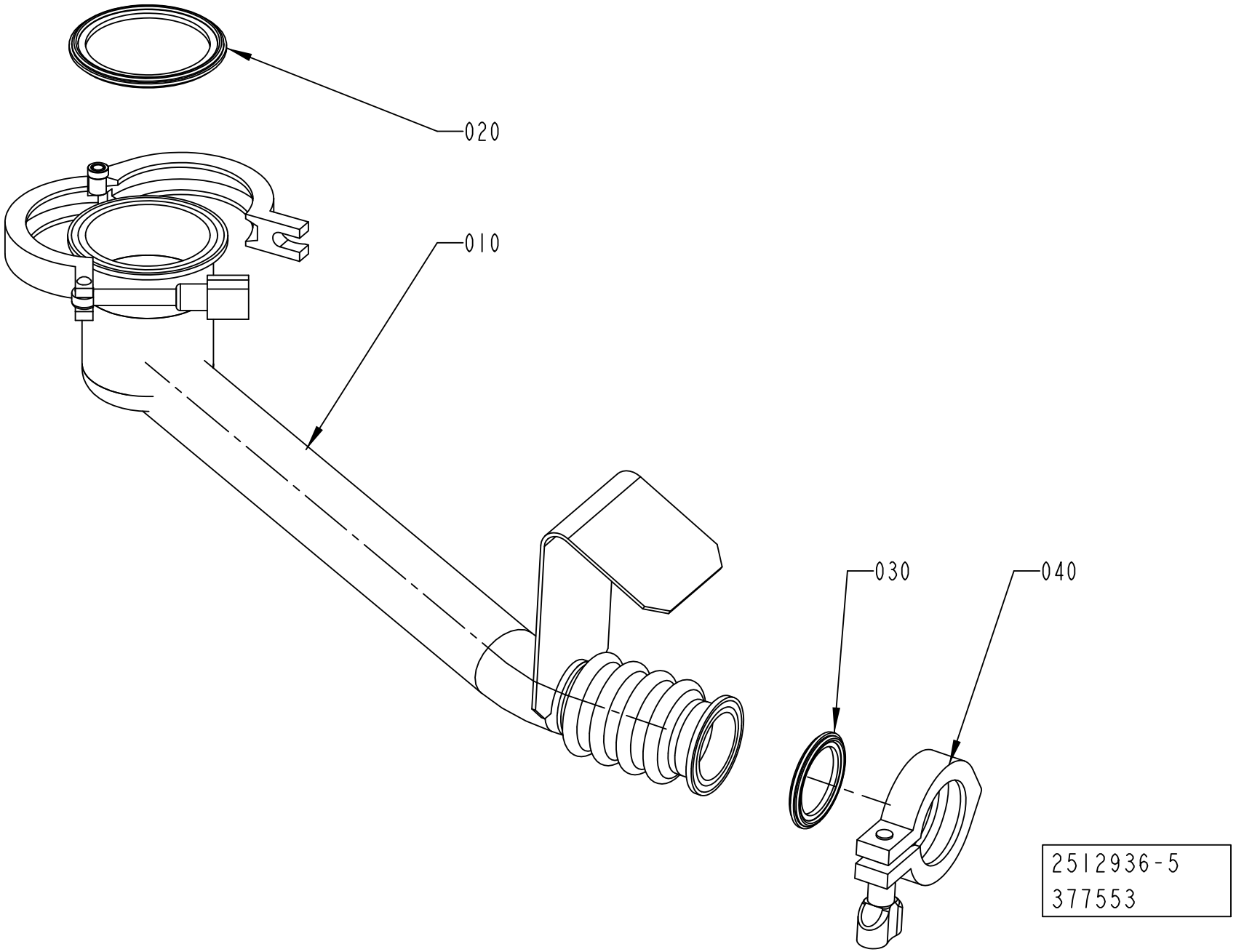
020
010
030
040
2512936-5
377553

ECM: 530437 - 20120416
Group number: 2512936-0200
Assembly Drawing: 2512936-5_1_AA

Pos	Part No	UN	Qty	Description	Page No
TBA 0500S, TPA 1000SQ, TPA 0500SQ, TPA 0750SQ					
010	3007551-0000		1	CLEANING CUP	
020	342850-0305		1	GASKET 47,8X62,6X5,2 MM 2" FDA 3-A	
TBA 0500SQ, TBA 0500B, TBA 1000B, TBA 1000SQ, TBA 1000S, TBA 1500S, TBA 2000S					
010	3007550-0000		1	CLEANING CUP	
020	342850-0306		1	GASKET 60,3X76,1X5,2 MM 2"1/2 FDA 3-A	
TGA 1000SQ, TGA 0750SQ, TGA 0500SQ					
010	3007552-0000		1	CLEANING CUP	
020	342850-0305		1	GASKET 47,8X62,6X5,2 MM 2" FDA 3-A	
TGA 1500SQ					
010	3007553-0000		1	CLEANING CUP	
020	342850-0306		1	GASKET 60,3X76,1X5,2 MM 2"1/2 FDA 3-A	
Common Parts					
030	342850-0304		1	GASKET 35,4X49,1X5,2 1"1/2 FDA, 3-A	
040	342840-0103		1	CLAMPING PIECE DN 1-11/2, GH13LAH112304N	

Pos	Part No	UN	Qty	Description	Page No

LOWER FORMING RING

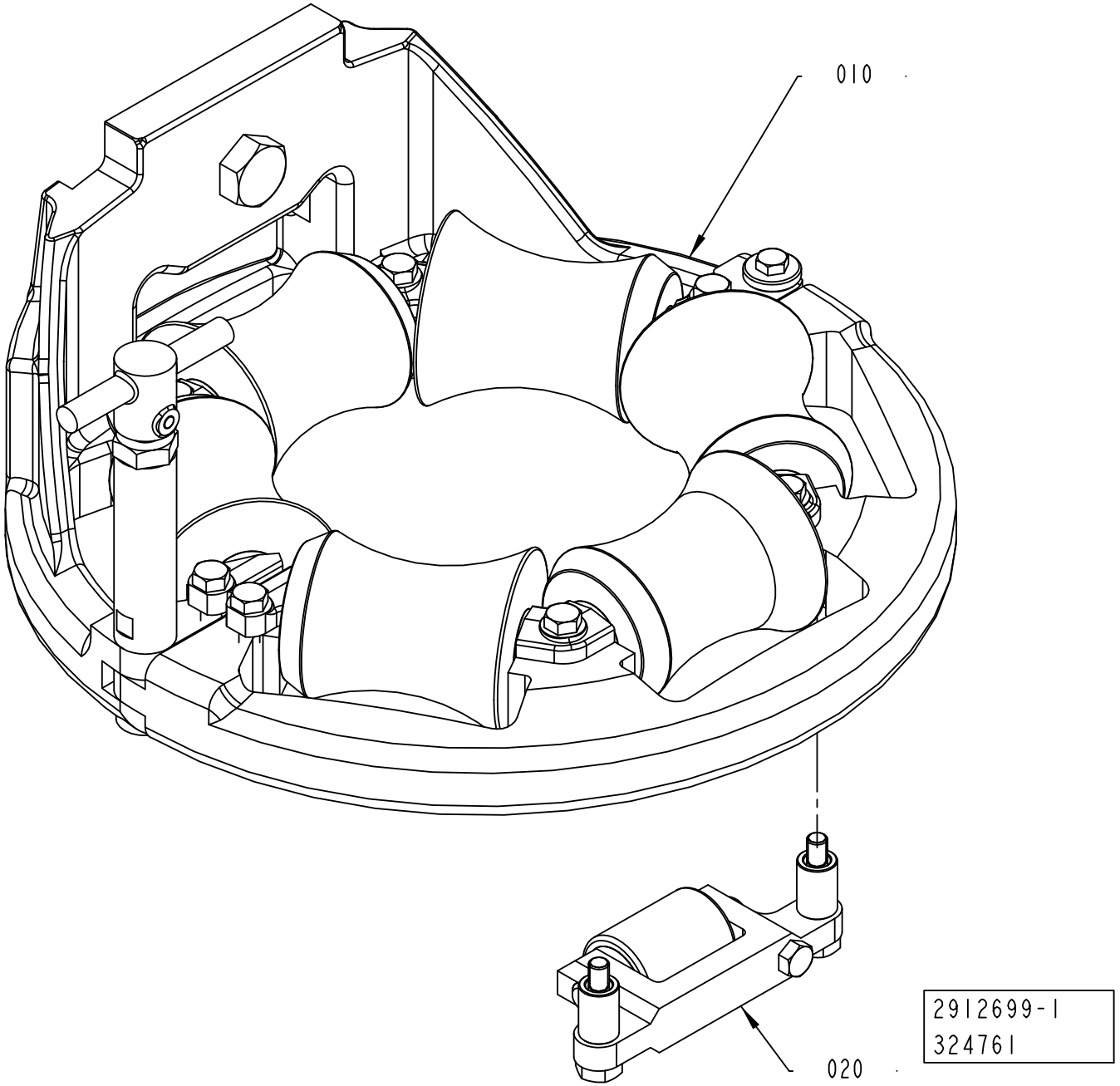

Pos	Part No	UN	Qty	Description	Page No
TBA 1000B NODIMC, TBA 1000S NODIMC, TPA 1000SQ NODIMC, TBA 1000SQ NODIMC, TPA 0750SQ NODIMC, TBA 0500B NODIMC, TBA 1500S NODIMC, TBA 0500SQ NODIMC, TBA 2000S NODIMC, TGA 0750SQ NODIMC, TGA 0500SQ NODIMC, TGA 1000SQ NODIMC, TGA 1500SQ NODIMC, TBA 0500S NODIMC (See drawing on page: 1-296)					
010	2559062-0300		1	LOWER FORMING RING	**1-301, 1-303, 1-305, 1-307, 1-309, 1-311, 1-313, 1-315**
020	2555627-0200		1	PRESSURE ROLLER	**1-317**
TPA 0500SQ NODIMC (See drawing on page: 1-298)					
010	2559062-0300		1	LOWER FORMING RING	**1-301, 1-303, 1-305, 1-307, 1-309, 1-311, 1-313, 1-315**

Pos	Part No	UN	Qty	Description	Page No

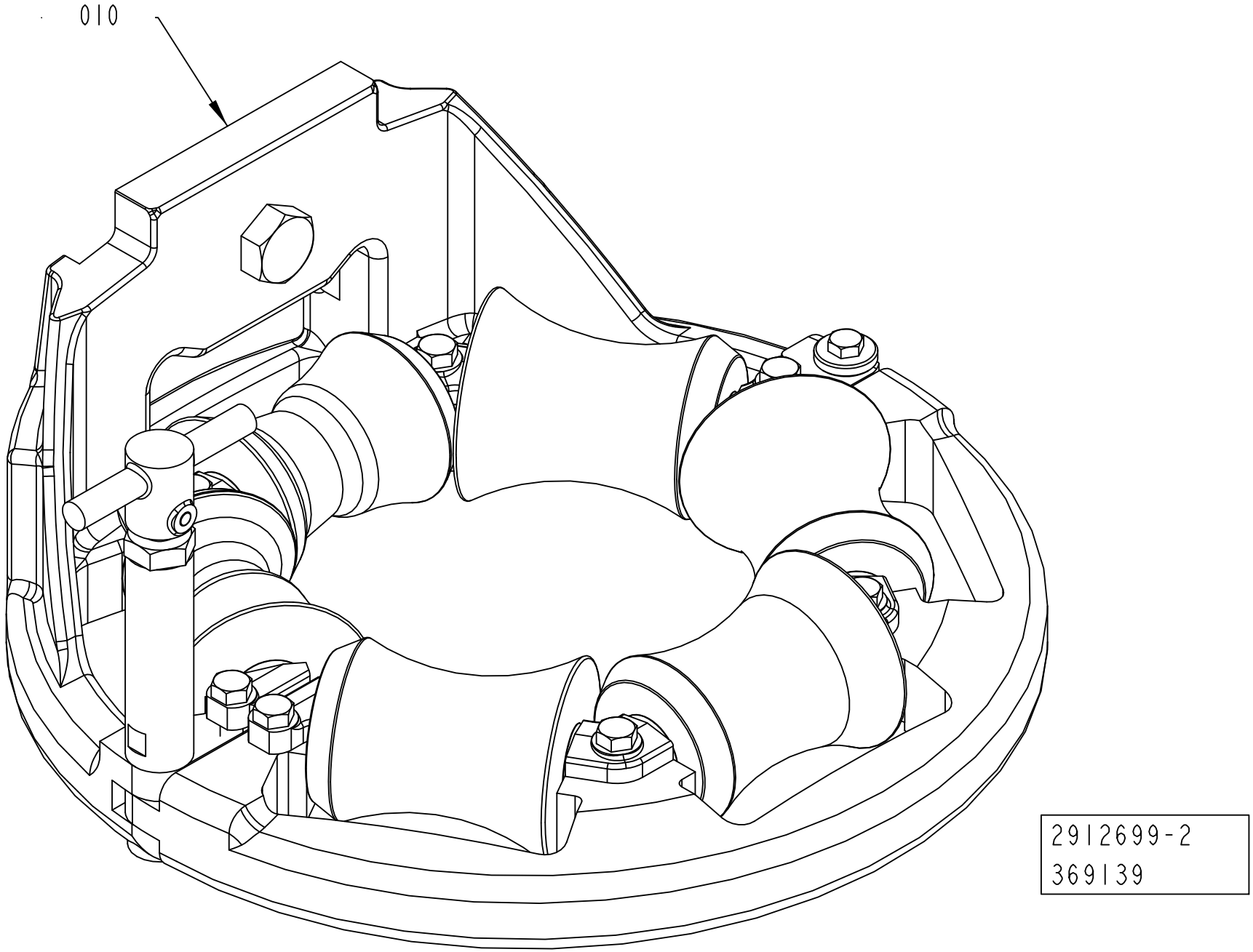
010
2912699-2
369139

Pos	Part No	UN	Qty	Description	Page No
TBA 1000B NODIMC, TBA 1000S NODIMC, TPA 1000SQ NODIMC, TBA 1000SQ NODIMC, TPA 0750SQ NODIMC, TBA 0500B NODIMC, TBA 1500S NODIMC, TBA 0500SQ NODIMC, TBA 2000S NODIMC, TGA 0750SQ NODIMC, TGA 0500SQ NODIMC, TGA 1000SQ NODIMC, TGA 1500SQ NODIMC, TBA 0500S NODIMC (See drawing on page: 1-296)					
010	2559062-0300		1	LOWER FORMING RING	**1-301, 1-303, 1-305, 1-307, 1-309, 1-311, 1-313, 1-315**
020	2555627-0200		1	PRESSURE ROLLER	**1-317**
TPA 0500SQ NODIMC (See drawing on page: 1-298)					
010	2559062-0300		1	LOWER FORMING RING	**1-301, 1-303, 1-305, 1-307, 1-309, 1-311, 1-313, 1-315**

Pos	Part No	UN	Qty	Description	Page No

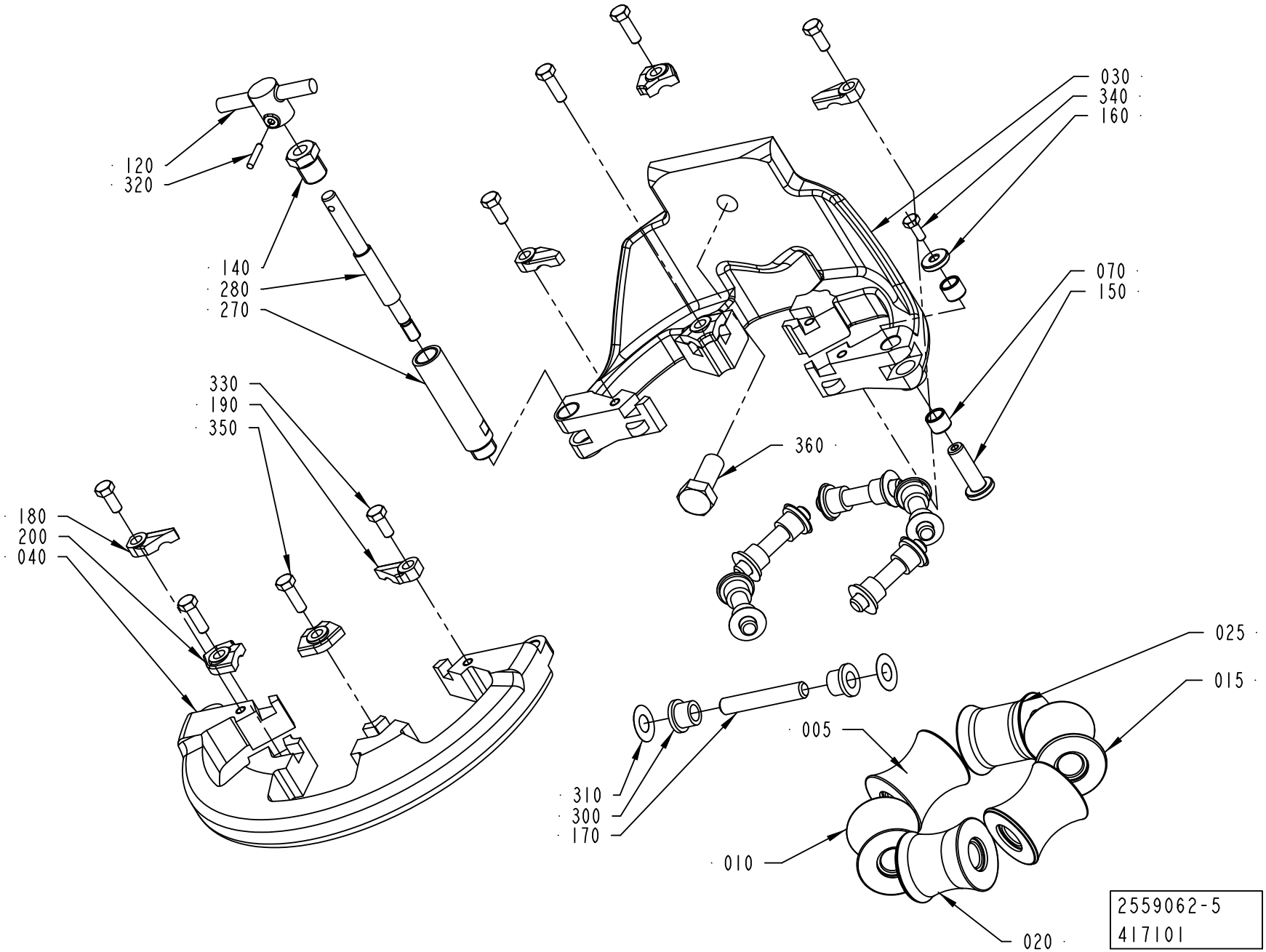
120
320
140
280
270
330
190
350
180
200
040
030
340
160
070
150
360
025
015
005
310
300
170
010
020
2559062-5
417101

ECM: 530444 - 20120416
Group number: 2559062-0300
Assembly Drawing: 2559062-5_1_AB

This list covers pages from 1-300 to 1-315

Pos	Part No	UN	Qty	Description	Page No
TBA 0500B, TBA 1000B, TBA 1500S (See drawing on page: 1-306)					
010	1349851-0000		2	ROLL	
015	3079094-0001		1	ROLLER	
020	2876664-0000		1	COUNTER ROLLER	
030	2764026-0000		1	LOWER FORMING RING	
040	2700546-0000		1	FRONT RING	
050	3079095-0001		2	ROLLER	
170	752186-0014		6	SHAFT	
180	2528119-0004		2	LOCK PLATE	
190	2528118-0004		2	LOCK PLATE	
200	2528123-0004		4	LOCK PLATE	
350	312105-0329		4	SCREW, M6S ISO 4017 M5X16 A4 80	
TBA 0500S (See drawing on page: 1-314)					
010	1499636-0000		2	ROLLER	
015	3079096-0001		3	ROLLER	
020	2709785-0000		1	ROLLER	
030	2764025-0000		1	LOWER FORMING RING	
040	2731503-0000		1	LOWER FORMING RING	
170	2522213-0006		6	SHAFT	
180	2528119-0005		2	LOCK PLATE	
190	2528118-0005		2	LOCK PLATE	
200	2528123-0004		4	LOCK PLATE	
350	312105-0329		4	SCREW, M6S ISO 4017 M5X16 A4 80	
TBA 0500SQ, TBA 1000SQ (See drawing on page: 1-304)					
010	2897901-0000		1	ROLLER	
020	2898309-0000		1	ROLLER	
030	2764023-0000		1	LOWER FORMING RING	
040	2736705-0000		1	LOWER FORMING RING	
050	2898310-0000		1	ROLLER	
060	3079097-0001		3	ROLLER	
170	752186-0016		6	SHAFT	
180	2528119-0004		2	LOCK PLATE	
190	2528118-0004		2	LOCK PLATE	
200	2528123-0004		4	LOCK PLATE	
350	312105-0329		4	SCREW, M6S ISO 4017 M5X16 A4 80	
TBA 1000S (See drawing on page: 1-312)					
010	567746-0001		4	ROLLER (STANDARD SIZE)	
015	3099423-0000		1	ROLLER	
020	3099422-0000		1	ROLLER	
030	2764027-0000		1	LOWER FORMING RING	
040	3099424-0000		1	FORMING RING	
165	752186-0019		1	SHAFT	
170	752186-0016		4	SHAFT	
175	752186-0007		1	SHAFT	
180	2528119-0005		2	LOCK PLATE	
190	2528118-0005		2	LOCK PLATE	
200	2528123-0004		3	LOCK PLATE	
210	3099425-0000		1	LOCK PLATE	
350	312105-0329		3	SCREW, M6S ISO 4017 M5X16 A4 80	
370	312105-0331		1	SCREW, M6S ISO 4017 M5X20 A4 80	
TBA 2000S (See drawing on page: 1-302)					
010	2565513-0000		2	ROLLER	
015	3079098-0001		3	ROLLER	
020	2657923-0000		1	COUNTER ROLLER	
030	2764029-0000		1	LOWER FORMING RING	
040	2673023-0000		1	LOWER FORMING RING	
170	752186-0015		6	SHAFT	
180	2528119-0004		2	LOCK PLATE	
190	2528118-0004		2	LOCK PLATE	
200	2528123-0004		4	LOCK PLATE	
350	312105-0329		4	SCREW, M6S ISO 4017 M5X16 A4 80	
TGA 1000SQ, TGA 0750SQ, TGA 0500SQ (See drawing on page: 1-310)					
010	3061501-0001		5	ROLLER	
020	3061502-0000		1	ROLLER	
030	2764025-0000		1	LOWER FORMING RING	
040	2731503-0000		1	LOWER FORMING RING	
170	2522213-0006		6	SHAFT	
180	2528119-0005		2	LOCK PLATE	
190	2528118-0005		2	LOCK PLATE	
200	2528123-0004		4	LOCK PLATE	
350	312105-0329		4	SCREW, M6S ISO 4017 M5X16 A4 80	
TGA 1500SQ (See drawing on page: 1-314)					
010	1349851-0000		2	ROLL	
020	2876664-0000		1	COUNTER ROLLER	
030	2764026-0000		1	LOWER FORMING RING	
040	2700546-0000		1	FRONT RING	
050	3079095-0001		3	ROLLER	
170	752186-0014		6	SHAFT	
180	2528119-0004		2	LOCK PLATE	
190	2528118-0004		2	LOCK PLATE	
200	2528123-0004		4	LOCK PLATE	
350	312105-0329		4	SCREW, M6S ISO 4017 M5X16 A4 80	
TPA 0500SQ (See drawing on page: 1-300)					
005	3031818-0000		1	ROLLER	

Machine Type | Group Description | Used-In | Group Number | Page No

LOWER FORMING RING

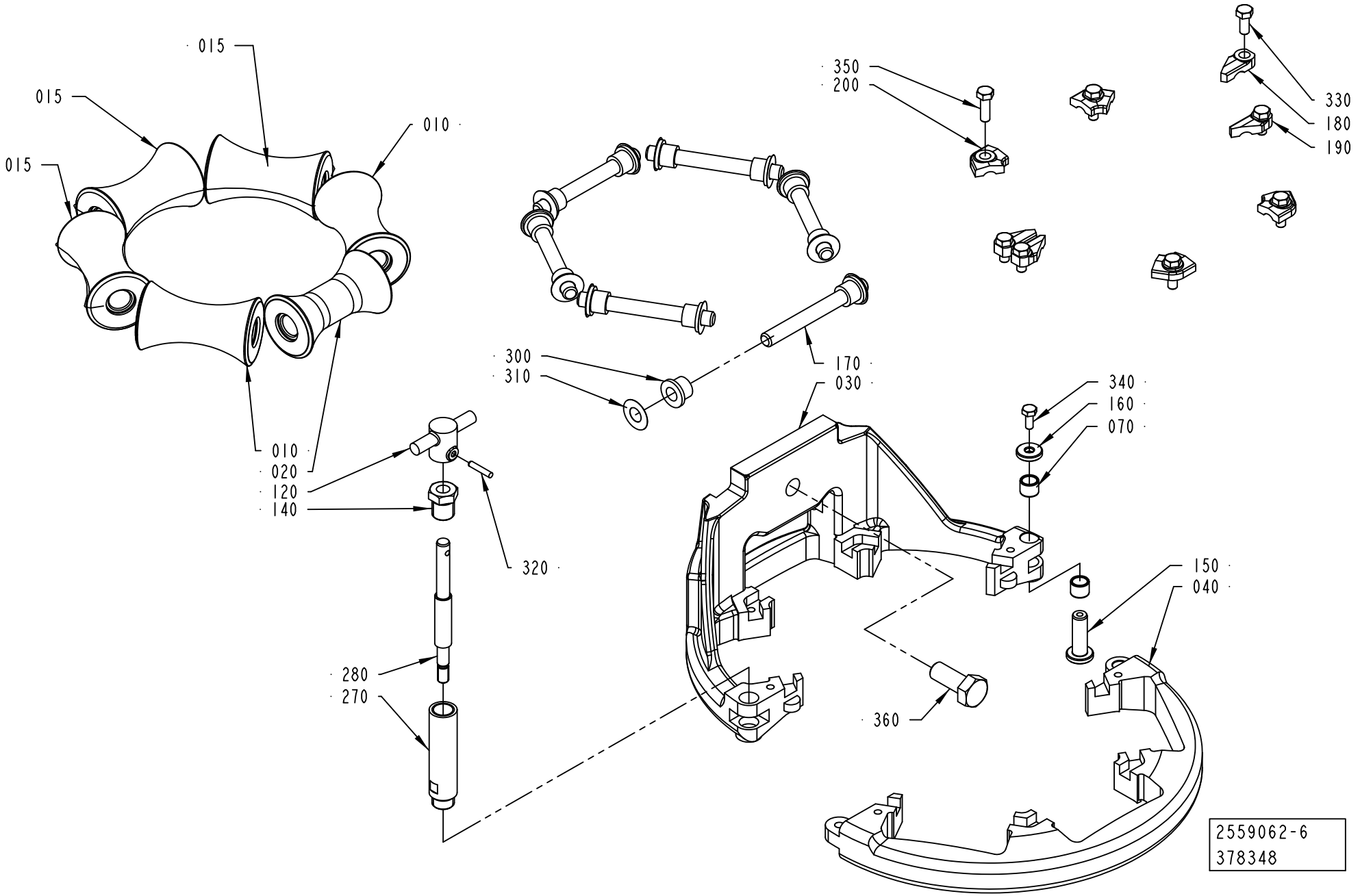

Pos	Part No	UN	Qty	Description	Page No
TPA 0500SQ (Cont'd) (See drawing on page: 1-300)					
010	2601328-0000		2	ROLLER	
015	3031819-0000		1	ROLLER	
020	2686861-0000		1	ROLLER	
025	3031817-0000		1	ROLLER	
030	2764031-0000		1	LOWER FORMING RING	
040	2731506-0000		1	LOWER FORMING RING	
170	752186-0005		6	SHAFT	
180	2528119-0004		2	LOCK PLATE	
190	2528118-0004		2	LOCK PLATE	
200	2528123-0003		4	LOCK PLATE	
350	312105-0329		4	SCREW, M6S ISO 4017 M5X16 A4 80	
TPA 1000SQ, TPA 0750SQ (See drawing on page: 1-308)					
010	1524156-0000		2	ROLLER	
020	1524547-0000		1	COUNTER ROLLER	
025	2833215-0000		1	ROLLER	
030	2764025-0000		1	LOWER FORMING RING	
040	2731503-0000		1	LOWER FORMING RING	
050	3079119-0001		1	ROLLER	
060	3079118-0001		1	ROLLER	
170	2522213-0006		6	SHAFT	
180	2528119-0005		2	LOCK PLATE	
190	2528118-0005		2	LOCK PLATE	
200	2528123-0004		4	LOCK PLATE	
350	312105-0329		4	SCREW, M6S ISO 4017 M5X16 A4 80	
Common Parts					
070	2526826-0000		2	BUSHING	
120	2764036-0000		1	KNOB	
140	2731428-0000		1	NUT	
150	2526827-0000		1	SHAFT	
160	2526825-0000		1	WASHER	
270	2764032-0000		1	SHAFT	
280	2764033-0000		1	SHAFT	
300	90240-0172		12	FLANGE BUSHING, 8X12X10 MM	
310	2033-0011		12	WASHER	
320	311103-0236		1	PARALLEL PIN ISO 2338 3M6X16 A1	
330	312105-0327		4	SCREW, M6S ISO 4017 M5X12 A4 80	
340	312105-0289		1	SCREW, M6S ISO 4017 M4X10 A4 70	
360	312105-0493		1	SCREW, M6S ISO 4017 M10X25 A4 80	

Pos	Part No	UN	Qty	Description	Page No

LOWER FORMING RING

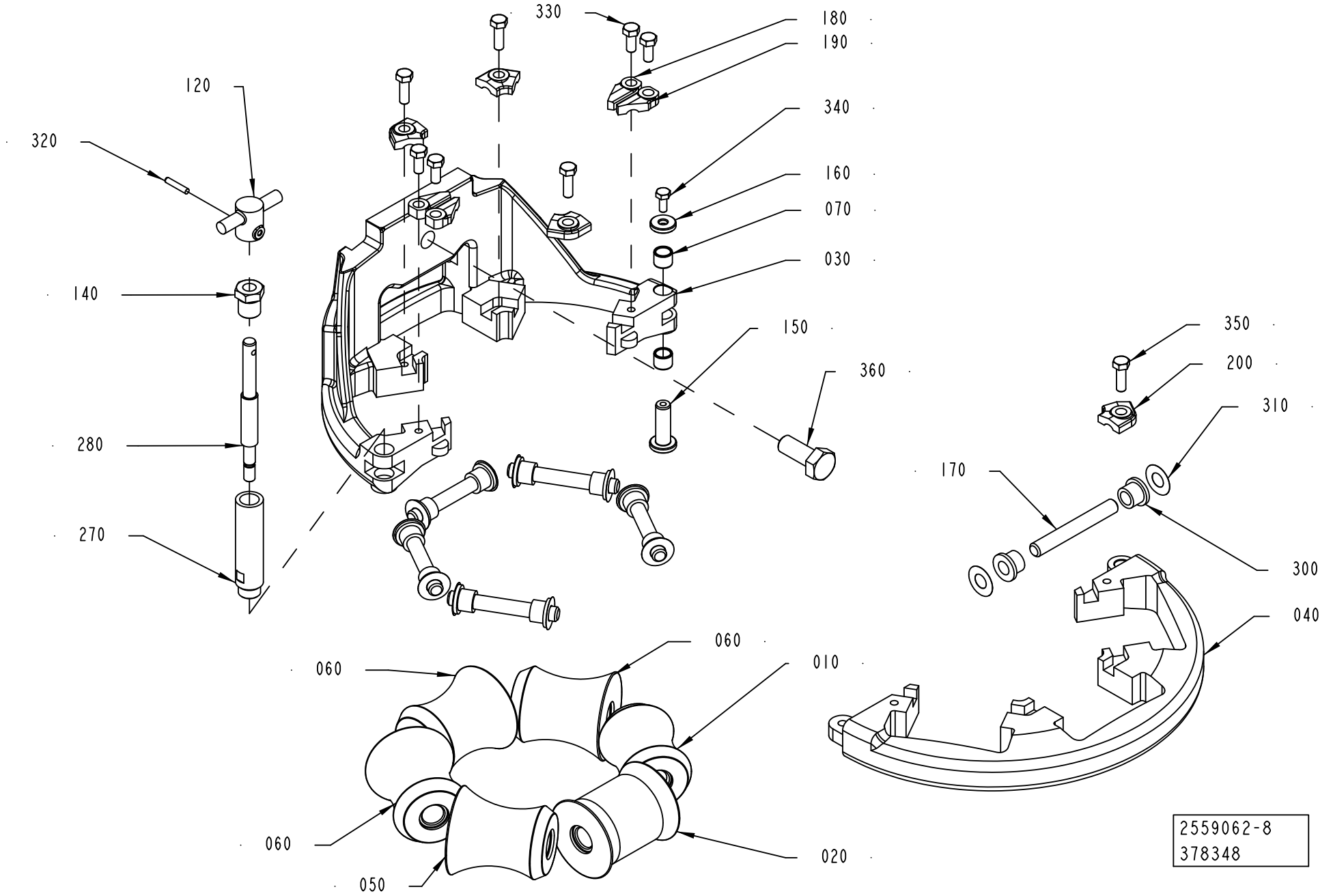

ECM: 530444 - 20120416
Group number: 2559062-0300
Assembly Drawing: 2559062-8_1_AB

This list covers pages from 1-300 to 1-315

Pos	Part No	UN	Qty	Description	Page No
SEE PREVIOUS LISTS PAGES: 1-301, 1-303.					

Pos	Part No	UN	Qty	Description	Page No

LOWER FORMING RING

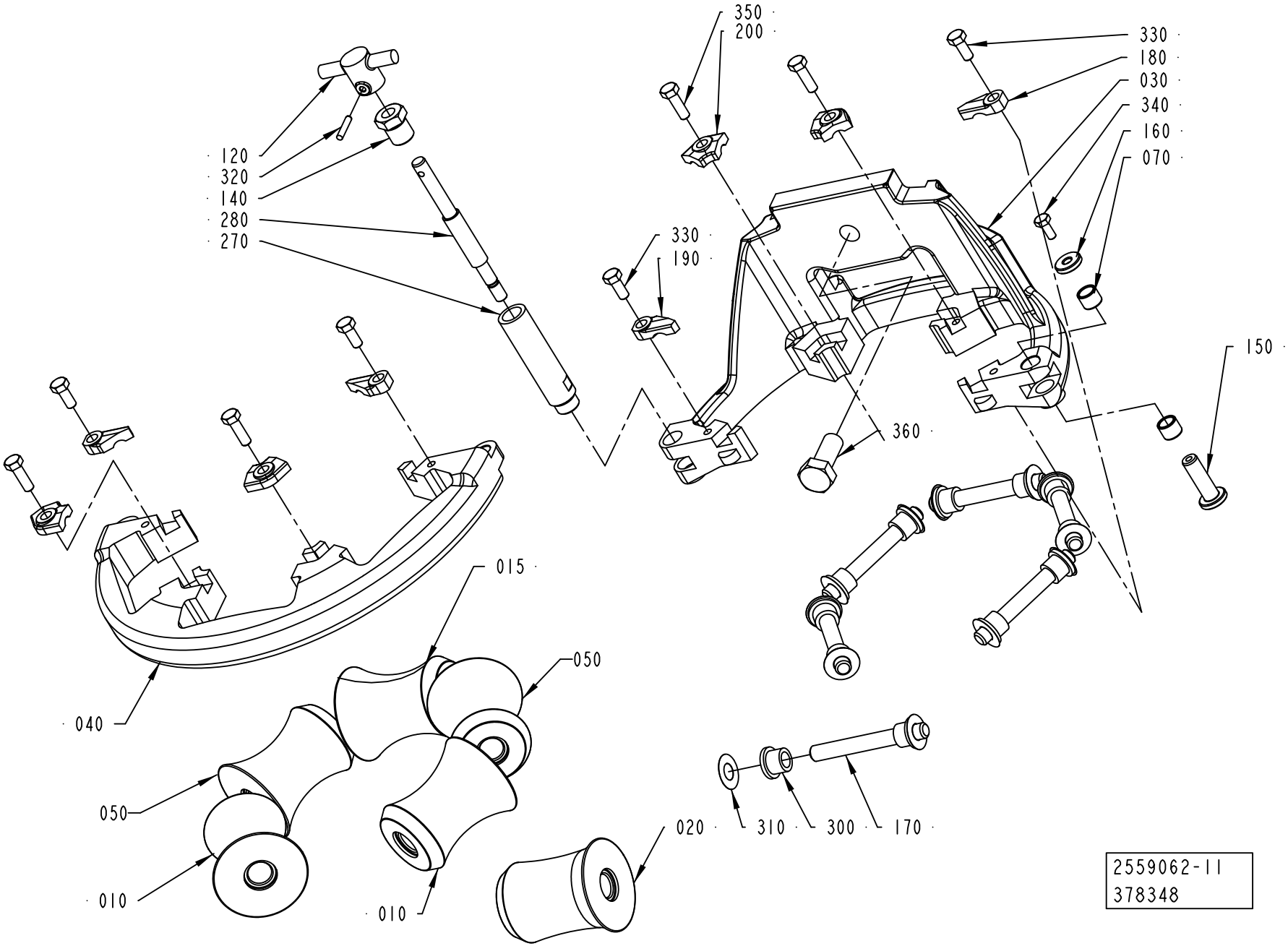

ECM: 530444 - 20120416
Group number: 2559062-0300
Assembly Drawing: 2559062-11_1_AB

This list covers pages from 1-300 to 1-315

Pos	Part No	UN	Qty	Description	Page No
SEE PREVIOUS LISTS PAGES: 1-301, 1-303.					

Pos	Part No	UN	Qty	Description	Page No

LOWER FORMING RING

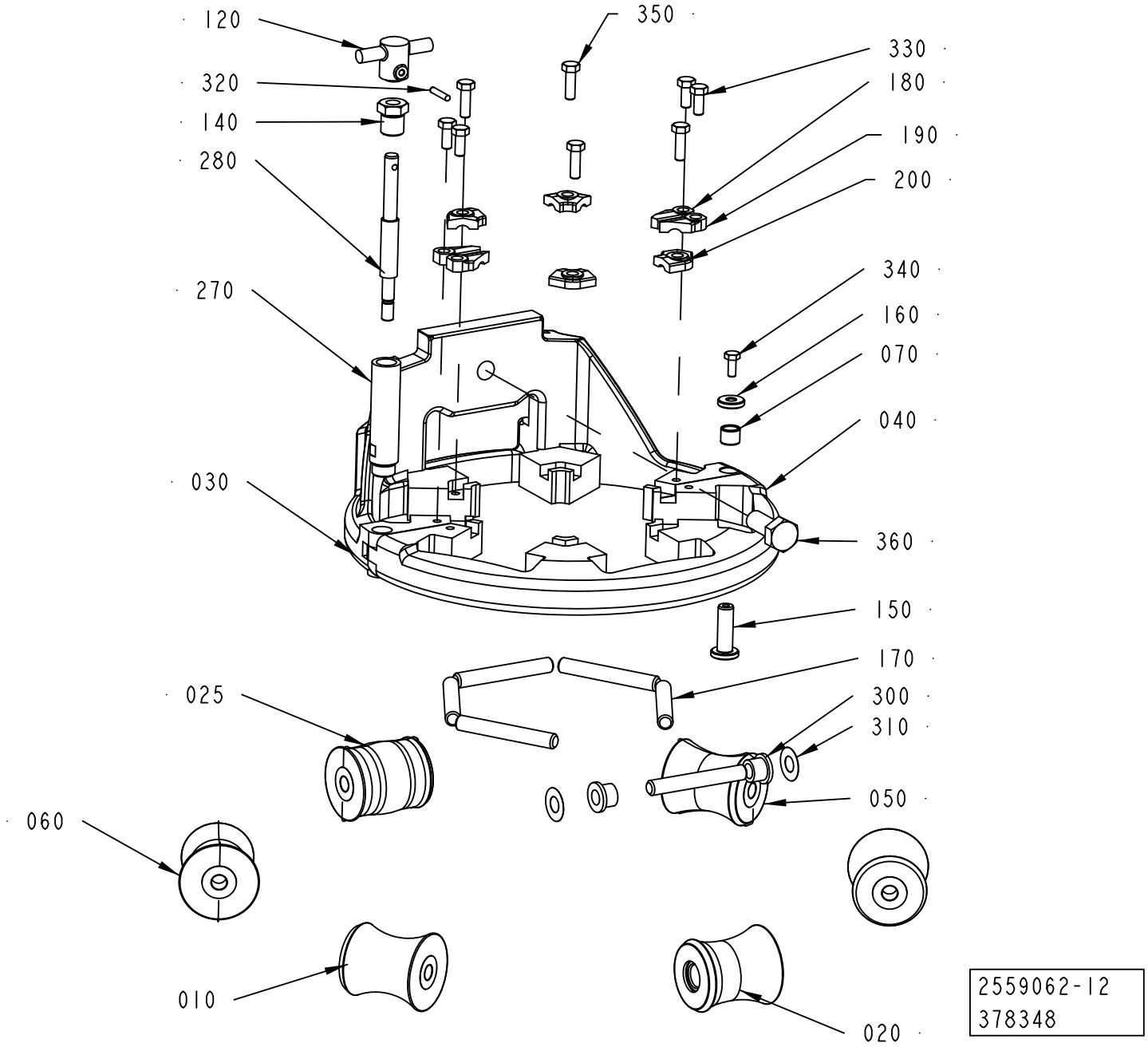

ECM: 530444 - 20120416
Group number: 2559062-0300
Assembly Drawing: 2559062-12_1_AC

This list covers pages from 1-300 to 1-315

Pos	Part No	UN	Qty	Description	Page No
SEE PREVIOUS LISTS PAGES: 1-301, 1-303.					

Pos	Part No	UN	Qty	Description	Page No

LOWER FORMING RING

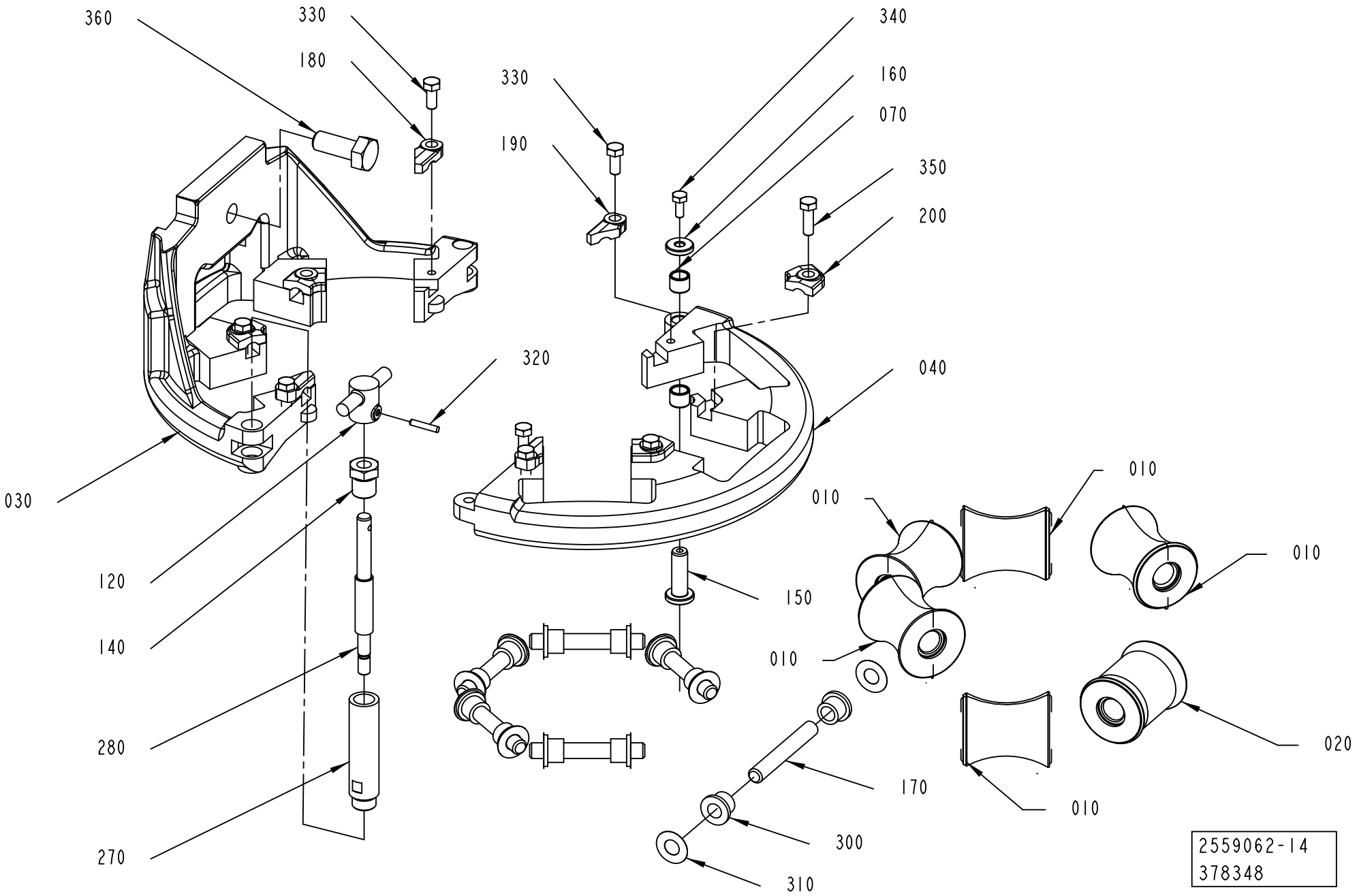

ECM: 530444 - 20120416
Group number: 2559062-0300
Assembly Drawing: 2559062-14_1_AB

This list covers pages from 1-300 to 1-315

Pos	Part No	UN	Qty	Description	Page No
SEE PREVIOUS LISTS PAGES: 1-301, 1-303.					

Pos	Part No	UN	Qty	Description	Page No

LOWER FORMING RING

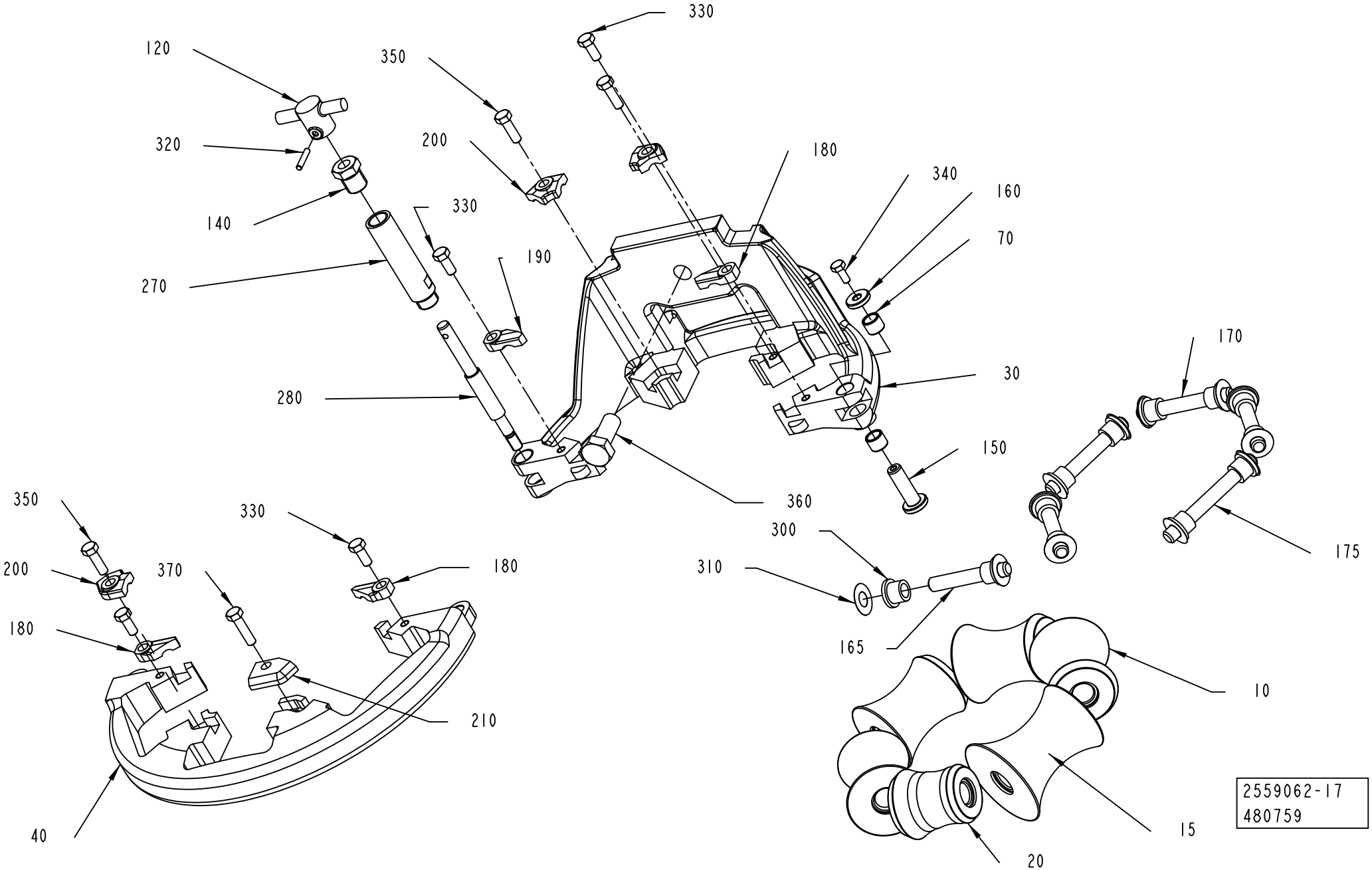

ECM: 530444 - 20120416
Group number: 2559062-0300
Assembly Drawing: 2559062-17_1_AA

This list covers pages from 1-300 to 1-315

Pos	Part No	UN	Qty	Description	Page No
SEE PREVIOUS LISTS PAGES: 1-301, 1-303.					

Pos	Part No	UN	Qty	Description	Page No

LOWER FORMING RING

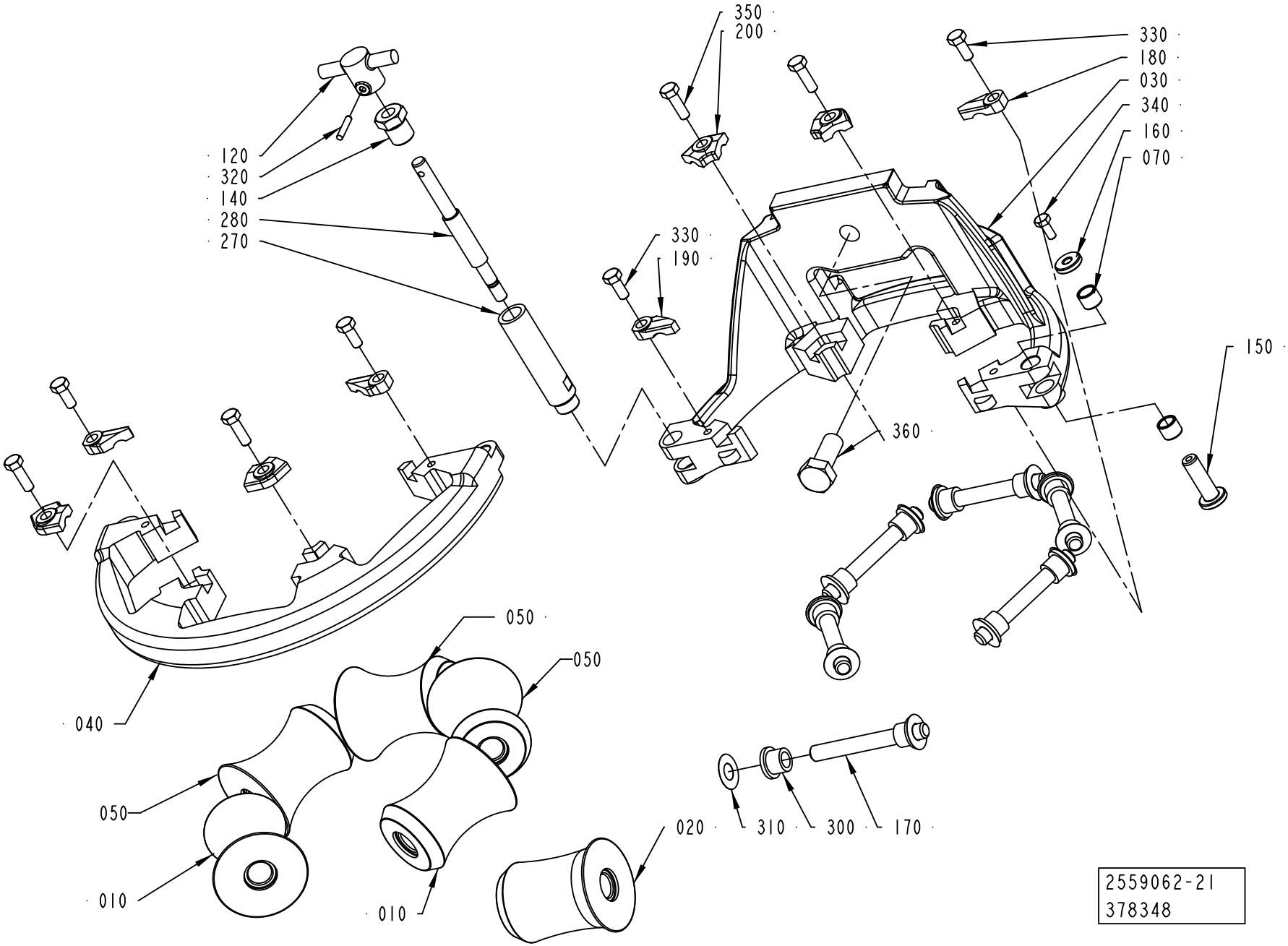

ECM: 530444 - 20120416
Group number: 2559062-0300
Assembly Drawing: 2559062-21_1_AA

This list covers pages from 1-300 to 1-315

Pos	Part No	UN	Qty	Description	Page No
SEE PREVIOUS LISTS PAGES: 1-301, 1-303.					

Pos	Part No	UN	Qty	Description	Page No

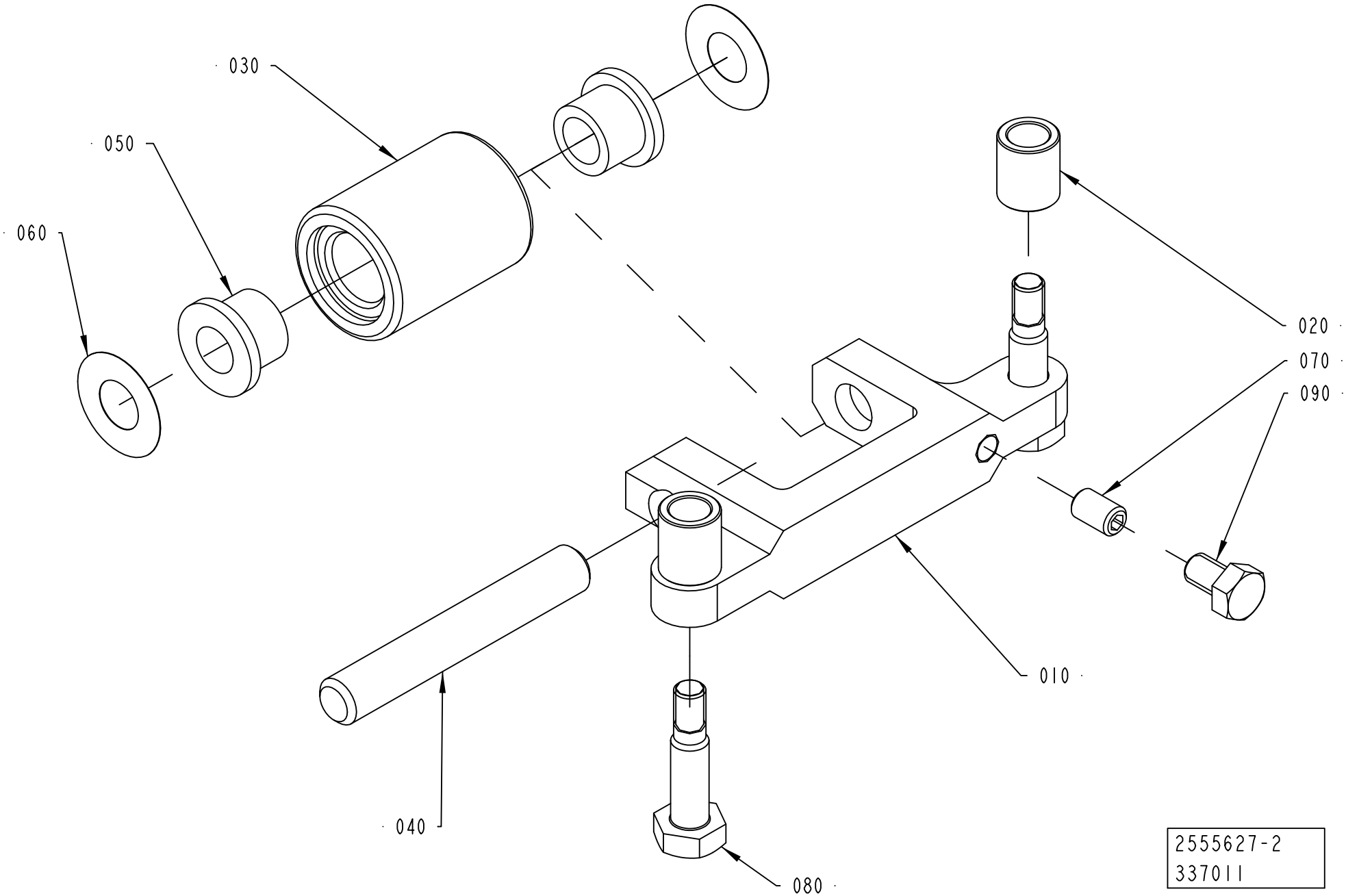
030
050
060
020
070
090
010
040
080
2555627-2
337011

ECM: 530443 - 20120416
Group number: 2555627-0200
Assembly Drawing: 2555627-2_1_AA

Pos	Part No	UN	Qty	Description	Page No
A3/FLEX TBA 0500B, A3/FLEX TBA 1000B, A3/FLEX TGA 1500SQ, A3/FLEX TBA 1500S					
010	2764009-0000		1	BRACKET	
020	2715649-0005		2	SPACER	
030	2826410-0000		1	ROLLER	
040	2522213-0015		1	SHAFT	
050	90240-0172		2	FLANGE BUSHING, 8X12X10 MM	
080	2715650-0003		2	SCREW	
A3/FLEX TBA 0500S					
010	2715567-0000		1	BRACKET	
020	2715649-0008		2	SPACER	
030	2826410-0000		1	ROLLER	
040	3016972-0007		1	SHAFT	
050	90601-2446		2	FLANGE BUSHING, 8X12X10 MM	
080	2715650-0003		2	SCREW	
A3/FLEX TBA 1000S					
010	2611052-0000		1	BRACKET	
020	2715649-0003		2	SPACER	
030	1538950-0000		1	ROLLER	
040	2522213-0015		1	SHAFT	
050	90240-0172		2	FLANGE BUSHING, 8X12X10 MM	
080	2715650-0002		2	SCREW	
A3/FLEX TBA 1000SQ, A3/FLEX TBA 0500SQ					
010	2659361-0000		1	BRACKET	
020	2715649-0005		2	SPACER	
030	2715570-0000		1	ROLLER	
040	2522213-0015		1	SHAFT	
050	90240-0172		2	FLANGE BUSHING, 8X12X10 MM	
080	2715650-0009		2	SCREW	
A3/FLEX TBA 2000S					
010	2594596-0000		1	BRACKET	
020	2715649-0004		2	SPACER	
030	2657925-0000		1	ROLLER	
040	2522213-0015		1	SHAFT	
050	90240-0172		2	FLANGE BUSHING, 8X12X10 MM	
080	2715650-0002		2	SCREW	
A3/FLEX TGA 1000SQ, A3/FLEX TGA 0500SQ, A3/FLEX TGA 0750SQ, A3/FLEX TGA 1000CR, A3/FLEX TGA 1000LF					
010	2715567-0000		1	BRACKET	
020	2715649-0005		2	SPACER	
030	2888118-0000		1	ROLLER	
040	2522213-0015		1	SHAFT	
050	90240-0172		2	FLANGE BUSHING, 8X12X10 MM	
080	2715650-0006		2	SCREW	
A3/FLEX TPA 1000SQ, A3/FLEX TPA 0750SQ					
010	2715567-0000		1	BRACKET	
020	2715649-0005		2	SPACER	
030	2715570-0000		1	ROLLER	
040	2522213-0015		1	SHAFT	
050	90240-0172		2	FLANGE BUSHING, 8X12X10 MM	
080	2715650-0006		2	SCREW	
Common Parts					
060	2033-0011		2	WASHER	
070	312318-0323		1	SET SCREW, CUP END ISO4029 M5X8 A4	
090	312105-0323		1	SCREW, M6S ISO 4017 M5X8 A4 80	

Machine Type	Group Description	Used-In	Group Number	Page No

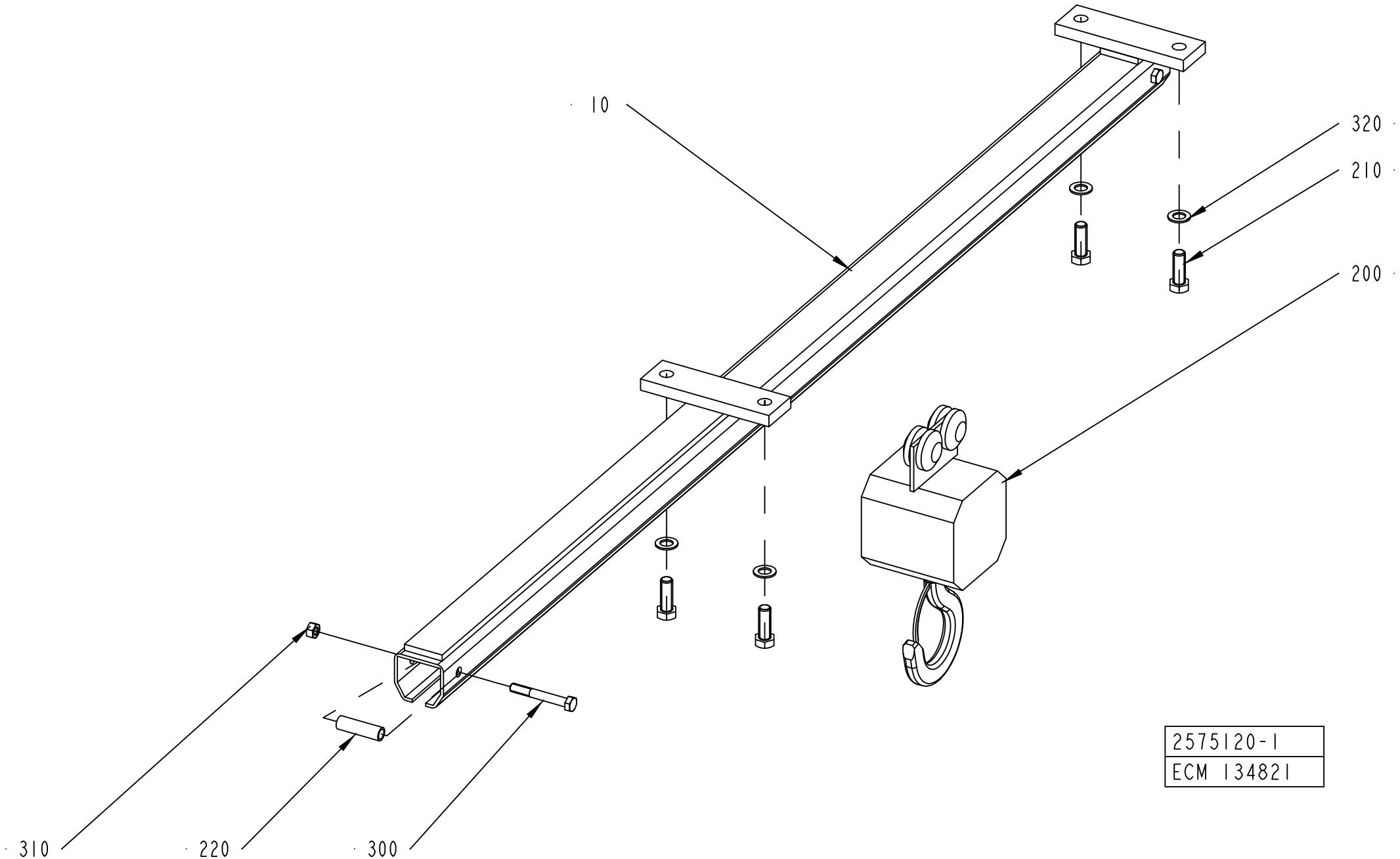
10
320
210
200
310
220
300
2575120-1
ECM 134821

ECM: 136051 - 20030704
Group number: 2575120-0100
Assembly Drawing: 2575120-1_1_AA

Pos	Part No	UN	Qty	Description	Page No
-					
10	2575119-0000		1	GUIDE	
200	90039-0022		1	TACKLE BLOCK, NO. BV-225/500	
210	90287-0322		4	SCREW M6S M14X40 70	
220	90287-0347		2	BOLT	
300	312105-0506		2	SCREW, M6S ISO 4014 M10X75 A4 80	
310	312605-0320		2	HEXAGON NUT, M6M M10 A280	
320	315101-0182		4	WASHER PLAIN, BRB, 15/26 H=2	

Pos	Part No	UN	Qty	Description	Page No

This page is intentionally left blank.

ECM: 555372 - 20120402
Group number: 2979589-0200
Assembly Drawing:

Pos	Part No	UN	Qty	Description	Page No
TBA 0500B, TBA 1000B NODIMC, TGA 1500SQ					
010	2932252-0000		6	PRESSURE ROLLER QUANT MINIMA 10PCS	
020	24928-0000		12	LOCKING RUBBER	
030	90603-0848		3	O-RING 29,2X3 MM FDA, 3-A	
190	3035340-0002		1	TEMPLATE	
200	2930778-0000		1	TOOL	
210	3037777-0100		1	TOOL	**1-323**
TBA 0500S					
010	2909367-0000		3	PRESSURE ROLLER (PACK 10)	
030	90603-0848		3	O-RING 29,2X3 MM FDA, 3-A	
190	3035340-0005		1	TEMPLATE	
200	2930778-0000		1	TOOL	
210	3037777-0100		1	TOOL	**1-323**
TBA 0500SQ, TBA 1000SQ					
010	2909368-0000		6	PRESSURE ROLLER (PACK 10)	
020	24928-0000		12	LOCKING RUBBER	
030	90603-0848		3	O-RING 29,2X3 MM FDA, 3-A	
TBA 1000S NODIMC					
010	2909368-0000		6	PRESSURE ROLLER (PACK 10)	
020	24928-0000		12	LOCKING RUBBER	
030	90603-0848		3	O-RING 29,2X3 MM FDA, 3-A	
190	3035340-0006		1	TEMPLATE	
200	2930778-0000		1	TOOL	
210	3037777-0100		1	TOOL	**1-323**
TBA 1500S					
010	2932252-0000		6	PRESSURE ROLLER QUANT MINIMA 10PCS	
030	90603-0848		3	O-RING 29,2X3 MM FDA, 3-A	
190	3035340-0002		1	TEMPLATE	
200	2930778-0000		1	TOOL	
210	3037777-0100		1	TOOL	**1-323**
TBA 2000S					
010	2932252-0000		6	PRESSURE ROLLER QUANT MINIMA 10PCS	
020	24928-0000		12	LOCKING RUBBER	
030	90603-0849		3	O-RING 39,2X3 MM FDA, 3-A	
190	3035340-0001		1	TEMPLATE	
200	2930778-0000		1	TOOL	
210	3037777-0100		1	TOOL	**1-323**
TGA 1000SQ, TGA 0750SQ, TGA 0500SQ					
010	2909368-0000		6	PRESSURE ROLLER (PACK 10)	
030	90603-0848		3	O-RING 29,2X3 MM FDA, 3-A	
190	3035340-0003		1	TEMPLATE	
200	2930778-0000		1	TOOL	
210	3037777-0100		1	TOOL	**1-323**
TPA 0500SQ					
010	2909367-0000		3	PRESSURE ROLLER (PACK 10)	
030	90603-0849		3	O-RING 39,2X3 MM FDA, 3-A	
190	3035340-0007		1	TEMPLATE	
200	2930778-0000		1	TOOL	
210	3037777-0100		1	TOOL	**1-323**
TPA 1000SQ, TPA 0750SQ					
010	2909367-0000		6	PRESSURE ROLLER (PACK 10)	
020	24928-0000		12	LOCKING RUBBER	
030	90603-0848		3	O-RING 29,2X3 MM FDA, 3-A	
190	3035340-0008		1	TEMPLATE	
200	2930778-0000		1	TOOL	
210	3037777-0100		1	TOOL	**1-323**
Common Parts					
050	2725145-0000		2	DIAPHRAGM	
060	3024322-0000		6	GASKET	
070	90459-4179		4	GASKET 30,5X42X4 MM FDA	
100	1296877-0100		1	SEAL KIT	**1-325**
110	1296878-0100		1	SEAL KIT	**1-327**
120	1296879-0100		1	SEAL KIT	**1-329**
130	342850-0304		9	GASKET 35,4X49,1X5,2 1"1/2 FDA, 3-A	
140	342850-0306		4	GASKET 60,3X76,1X5,2 MM 2"1/2 FDA 3-A	
160	90296-0009		1	SILICONE GREASE DOW CORNING 150 GR.	
170	1349914-0200		1	TEMPLATE	**1-331**
180	2793320-0300		1	TEMPLATE	**1-333**

Machine Type | Group Description | Used-In | Group Number | Page No

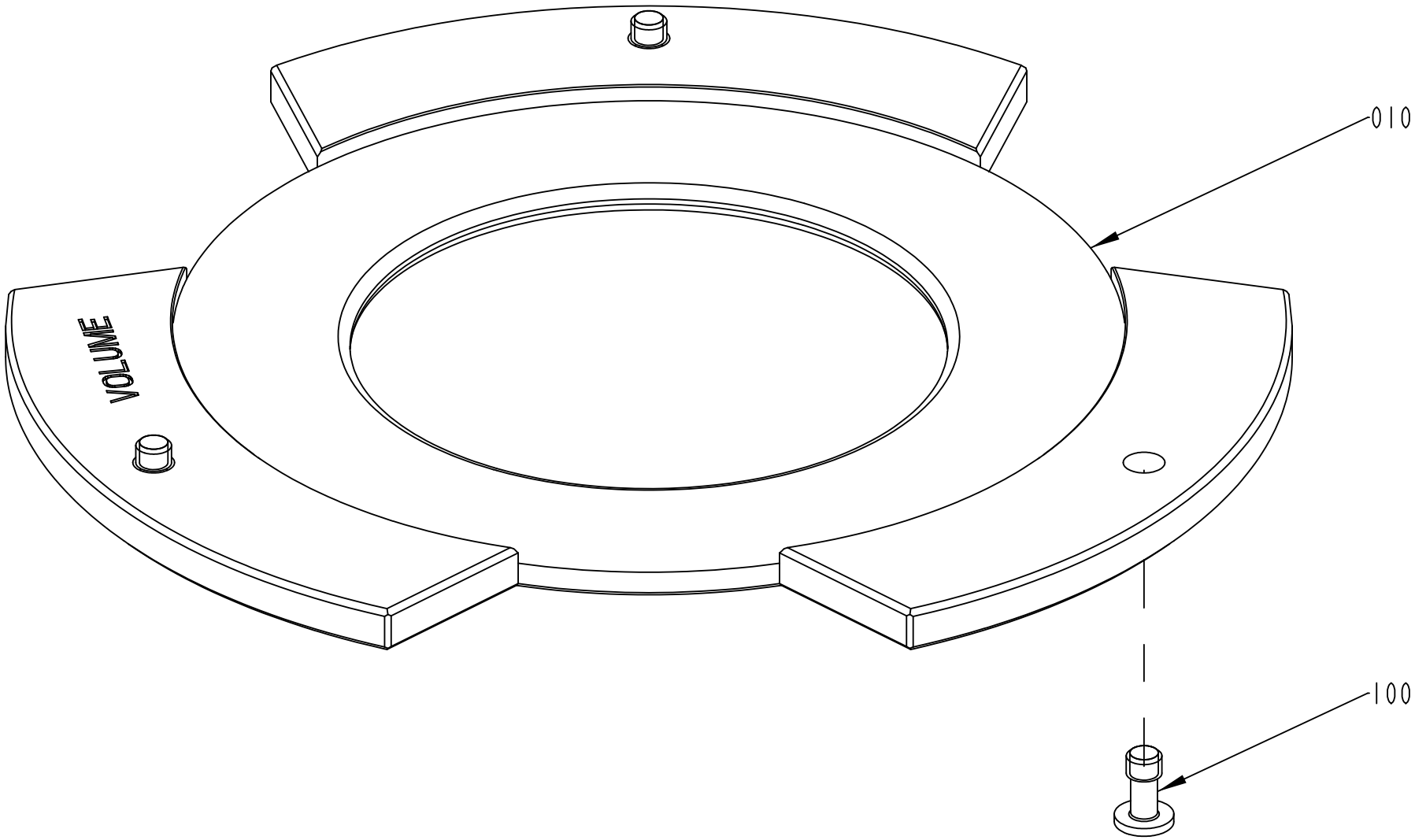

3037777-1
404753

ECM: 434123 - 20100115
Group number: 3037777-0100
Assembly Drawing: 3037777-1_1_AA

Pos	Part No	UN	Qty	Description	Page No
A3/FLEX TBA 0500B, A3/FLEX TBA 1000B, A3/FLEX TBA 1500S, A3/FLEX TGA 1500SQ					
010	3037778-0001		1	TOOL	
A3/FLEX TBA 0500S					
010	3037778-0004		1	TOOL	
A3/FLEX TBA 1000S					
010	3037778-0005		1	TOOL	
A3/FLEX TBA 2000S					
010	3037778-0006		1	TOOL	
A3/FLEX TGA 1000SQ, A3/FLEX TGA 0500SQ, A3/FLEX TGA 0750SQ					
010	3037778-0002		1	TOOL	
A3/FLEX TPA 0500SQ					
010	3037778-0007		1	TOOL	
A3/FLEX TPA 1000SQ, A3/FLEX TPA 0750SQ					
010	3037778-0008		1	TOOL	
Common Parts					
100	90601-2046		3	CAPTIVE SCREW M6, GUTBG 6-4-12	

Pos	Part No	UN	Qty	Description	Page No

This page is intentionally left blank.

ECM: 348443 - 20091001
Group number: 1296877-0100
Assembly Drawing:

Pos	Part No	UN	Qty	Description	Page No	Pos	Part No	UN	Qty	Description	Page No
-											
010	2826441-0000		4	SEAL RING							
020	2826440-0000		1	SEAL RING							
030	2826443-0000		1	DIAPHRAGM							
040	539212-0000		1	GASKET							
050	90091-0266		2	SEAL RING 10,4X16,3X2,5 MM							
060	90207-0363		1	GASKET 75X85X1,8 MM 3" FDA 3-A							
070	90207-0365		1	GASKET 53X63X1,8 MM 2,5" FDA 3-A							
100	315204-0215		1	O-RING 19,2X3 MM							
110	315204-0301		1	O-RING 49,5X3 MM							

This page is intentionally left blank.

ECM: 348442 - 20101001
Group number: 1296878-0100
Assembly Drawing:

Pos	Part No	UN	Qty	Description	Page No
-					
080	90030-0336		2	CONN. STRAIGHT, 316L-12M-BVCO-3	
090	90091-0237		5	ROD SEAL GLYD RING 20X27,5X3 MM	
100	315204-0215		2	O-RING 19,2X3 MM	
120	90091-0238		4	WEAR RING 20X22X10 MM	
140	315204-0308		2	O-RING 84,5X3 MM	

Pos	Part No	UN	Qty	Description	Page No

This page is intentionally left blank.

ECM: 348441 - 20101001
Group number: 1296879-0100
Assembly Drawing:

Pos	Part No	UN	Qty	Description	Page No
-					
090	90091-0237		3	ROD SEAL GLYD RING 20X27,5X3 MM	
100	315204-0215		1	O-RING 19,2X3 MM	
120	90091-0238		2	WEAR RING 20X22X10 MM	
130	90091-0335		1	PISTON SEAL GLYD RING 62,5X70X3,2 MM	
150	90091-0304		1	RADIAL SEAL 45X65X8 MM DUST LIP	

Pos	Part No	UN	Qty	Description	Page No

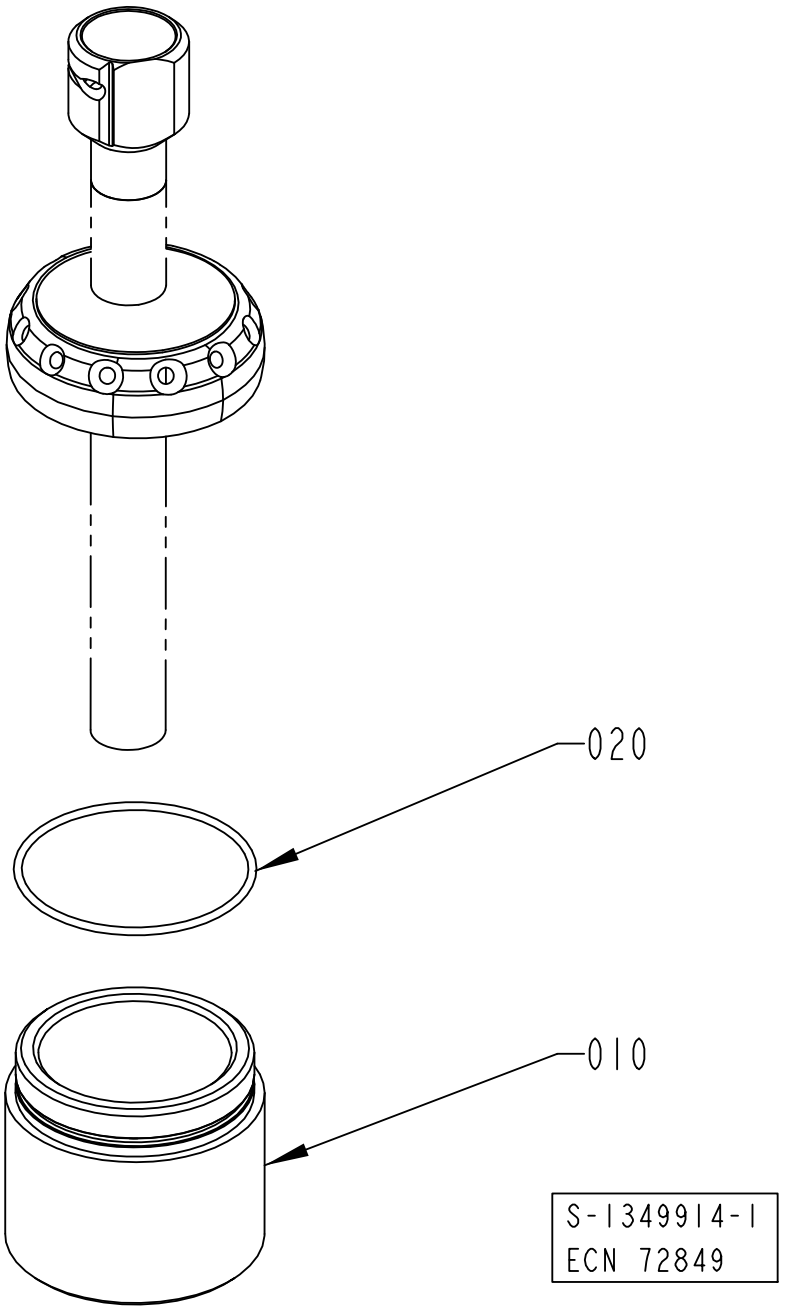
020
010
S-1349914-1
ECN 72849

ECM: 449224 - 20110401
Group number: 1349914-0200
Assembly Drawing: 1349914-1_1_AA

Pos	Part No	UN	Qty	Description	Page No
TBA 0500B, TBA 1000B					
010	2774372-0000		1	TEMPLATE	
020	315202-0233		1	O-RING 79,2X5,7 MM	
TBA 0500S					
010	1524840-0000		1	TEMPLATE	
020	315202-0303		1	O-RING 59,5X3 MM	
TBA 0500SQ, TBA 1000SQ					
010	1517987-0000		1	TEMPLATE	
020	315202-0305		1	O-RING 69,5X3 MM	
TBA 1000S NOMOLDEDCAP					
010	1498151-0000		1	TEMPLATE	
020	315202-0307		1	O-RING 79,5X3 MM	
TBA 1500S, TGA 1500SQ					
010	1498150-0000		1	TEMPLATE	
020	315202-0308		1	O-RING 84,5X3 MM	
TBA 2000S					
010	2660843-0000		1	TEMPLATE	
020	315202-0310		1	O-RING 94,5X3 MM	
TGA 1000SQ, TGA 0750SQ, TGA 0500SQ					
010	2878187-0000		1	TEMPLATE	
020	315202-0304		1	O-RING 64,5X3 MM	
TPA 1000SQ, TPA 0750SQ					
010	1524841-0000		1	TEMPLATE	
020	315202-0303		1	O-RING 59,5X3 MM	
TPA 500SQ NOMOLDEDCAP					
010	2545352-0000		1	TEMPLATE	
020	315202-0302		1	O-RING 54,5X3 MM	

Pos	Part No	UN	Qty	Description	Page No

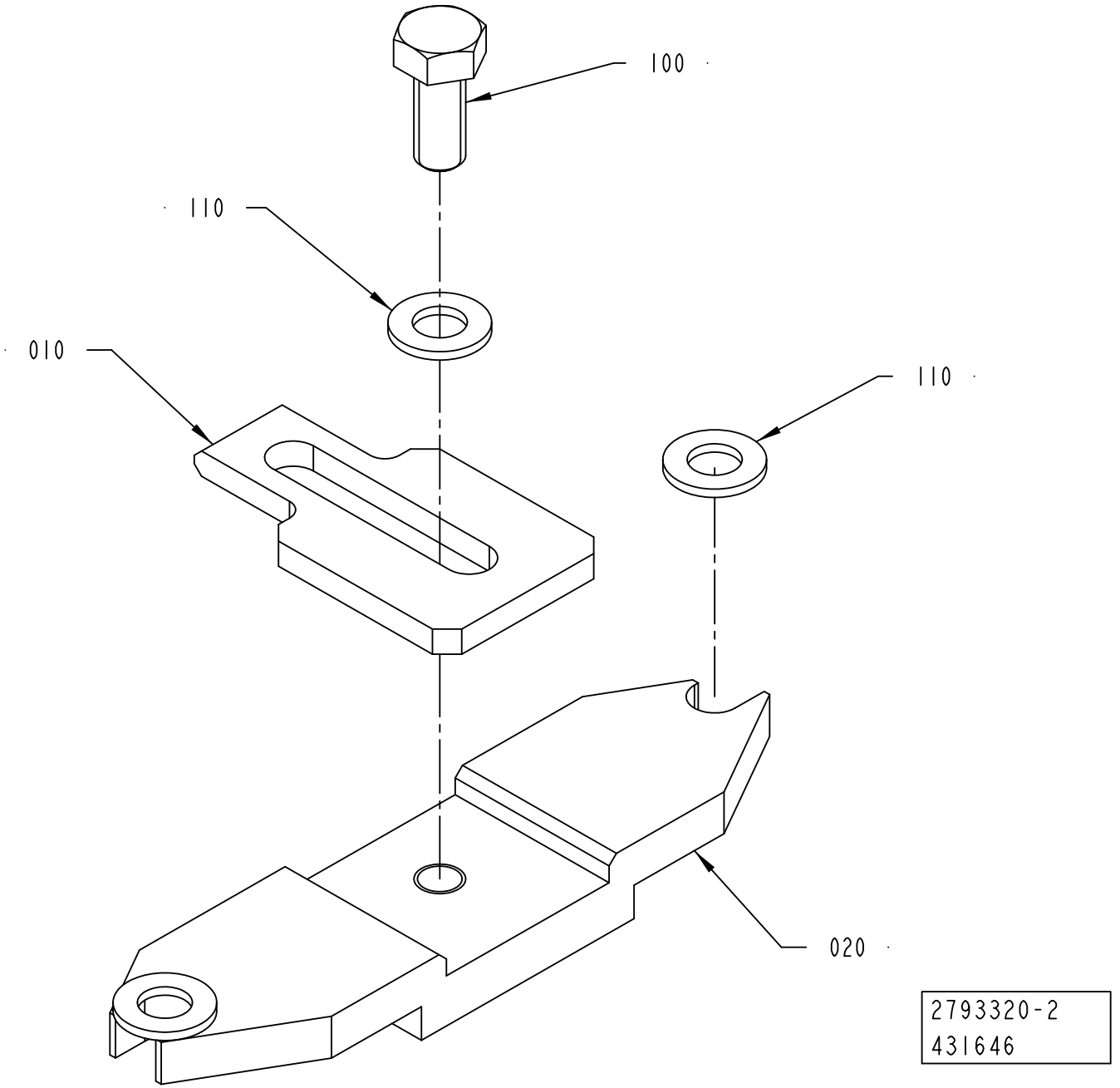
100
110
010
110
020
2793320-2
431646

ECM: 519422 - 20111003
Group number: 2793320-0300
Assembly Drawing: 2793320-2_1_AA

Pos	Part No	UN	Qty	Description	Page No
A3/FLEX TBA 0500B, A3/FLEX TBA 1000B NOMOLDEDCAP, A3/FLEX TBA 1500S, A3/FLEX TGA 1500SQ (See drawing on page: 1-332)					
020	3060468-0000		1	PLATE	
110	315105-0146		3	WASHER PLAIN, 5,3X10X1 A4 BRB	
A3/FLEX TBA 0500S (See drawing on page: 1-332)					
020	3109139-0000		1	PLATE	
110	315105-0146		3	WASHER PLAIN, 5,3X10X1 A4 BRB	
A3/FLEX TBA 1000S (See drawing on page: 1-332)					
020	3187185-0000		1	PLATE	
110	315105-0146		3	WASHER PLAIN, 5,3X10X1 A4 BRB	
A3/FLEX TBA 1000SQ, A3/FLEX TBA 0500SQ (See drawing on page: 1-332)					
020	3060470-0000		1	PLATE	
110	315105-0146		3	WASHER PLAIN, 5,3X10X1 A4 BRB	
A3/FLEX TBA 2000S (See drawing on page: 1-332)					
020	3079086-0000		1	PLATE	
110	315105-0146		3	WASHER PLAIN, 5,3X10X1 A4 BRB	
A3/FLEX TPA 0500SQ (See drawing on page: 1-332)					
020	3060476-0000		1	PLATE	
110	315105-0146		3	WASHER PLAIN, 5,3X10X1 A4 BRB	
A3/FLEX TPA 1000SQ, A3/FLEX TPA 0750SQ, A3/FLEX TGA 1000SQ, A3/FLEX TGA 0500SQ, A3/FLEX TGA 0750SQ (See drawing on page: 1-332)					
020	3060475-0000		1	PLATE	
110	315105-0146		3	WASHER PLAIN, 5,3X10X1 A4 BRB	
Common Parts					
010	2736719-0000		1	PLATE	
100	312105-0327		1	SCREW, M6S ISO 4017 M5X12 A4 80	

Pos	Part No	UN	Qty	Description	Page No

Machine Type	Group Description	Used-In	Group Number	Page No

This page is intentionally left blank.

ECM: 535840 - 20120401
Group number: 3035150-0200
Assembly Drawing:

Pos	Part No	UN	Qty	Description	Page No
STREAMCAP1000 NOPT and START FM NOPT NOCAP, STREAMCAP500 NOPT and START FM NOPT NOCAP, HELICAP 23 NOPT and START FM NOPT NOCAP, HELICAP 27 NOPT and START FM NOPT NOCAP					
010	2783088-0400		1	STERILE AIR PIPE	**1-337**
STREAMCAP1000 NOPT and START FM PT/FLEX, STREAMCAP500 NOPT and START FM PT/FLEX, PT/FLEX START FM PT/FLEX, HELICAP 23 NOPT and START FM PT/FLEX, HELICAP 27 NOPT and START FM PT/FLEX					
020	2902379-0100		1	PIPE	**1-339, 1-341**

Pos	Part No	UN	Qty	Description	Page No

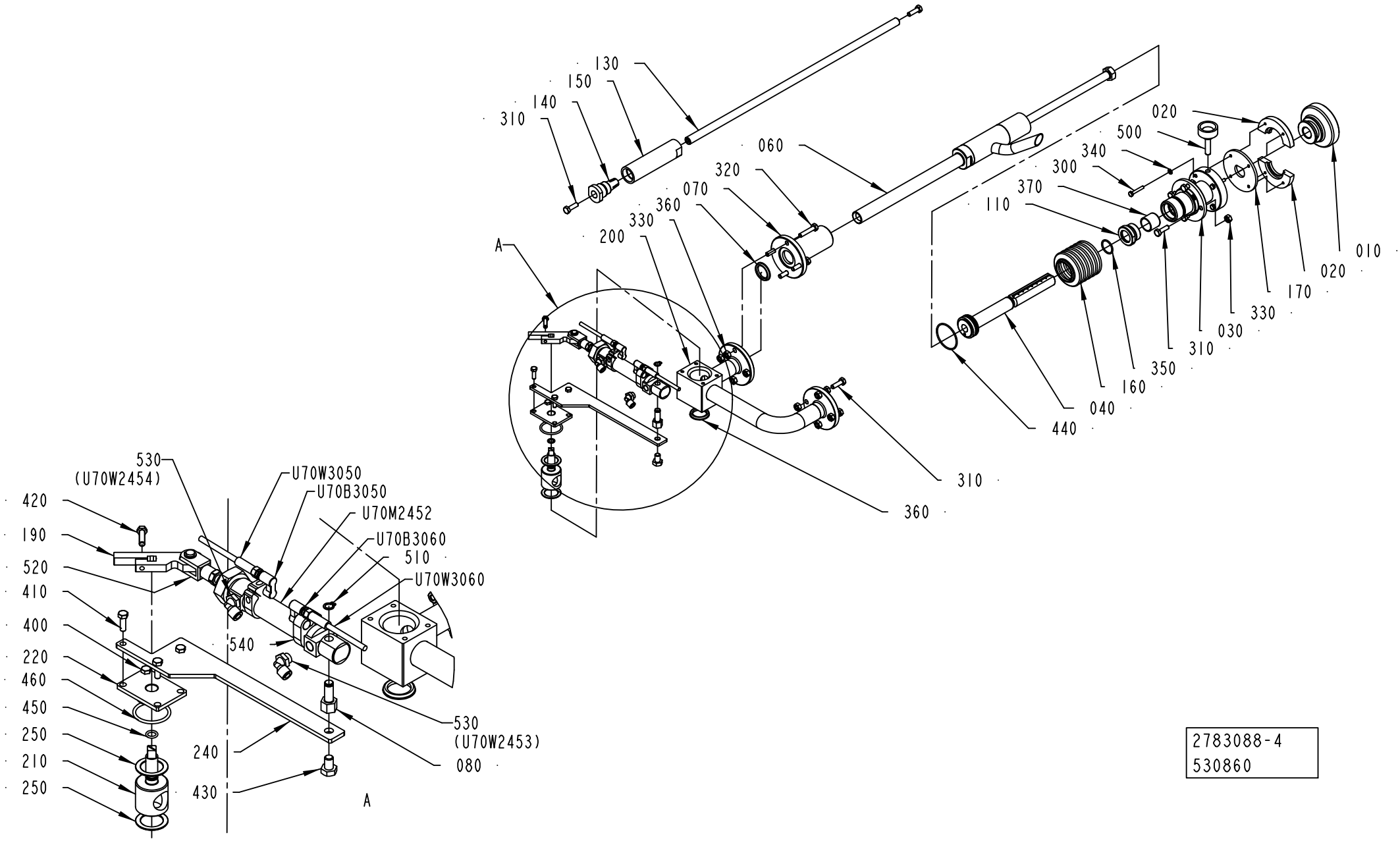

2783088-4
530860

ECM: 530860 - 20120401
Group number: 2783088-0400
Assembly Drawing: 2783088-4_1_AA

Pos	Part No	UN	Qty	Description	Page No
-					
010	2758728-0000		1	HANDLE	
020	2758729-0000		2	CLAMPING LINK	
030	2758730-0000		1	HUB	
040	2758731-0000		1	ADJUSTING SCREW	
060	2902379-0100		1	PIPE	**1-339, 1-341**
070	2758734-0000		1	HUB	
080	1349762-0000		1	SHAFT	
110	2758739-0000		1	PLUG	
130	2763959-0000		1	SHAFT	
140	2793317-0000		1	PLUG	
150	2793318-0000		1	SLIDE	
160	2763963-0000		1	SLEEVE	
170	2764007-0000		1	SPACER	
190	2523665-0000		1	ARM	
200	2946887-0000		1	BODY	
210	2946888-0000		1	SHUTTER	
220	2946889-0000		1	LID	
240	2946914-0000		1	BRACKET	
250	2946915-0000		2	WASHER	
300	312105-0297		4	SCREW, M6S ISO 4017 M4X25 A4 70	
310	312105-0370		10	SCREW, M6S ISO 4017 M6X20 A4 80	
320	312109-0374		4	SCREW, M6S ISO 4017 M6X30 A4 80	
330	312605-0316		12	HEXAGON NUT, M6M M6 A280	
340	315105-0136		4	WASHER PLAIN, 4,3X9X0,8 A4 BRB	
350	315205-0707		1	O-RING 20,35X1,78 MM	
360	315229-0203		2	GASKET 22,1X30,1X3,7 MM 1"	
370	321134-0260		1	BUSHING, IGLIDUR W300 20X23X20	
400	312105-0327		1	SCREW, M6S ISO 4017 M5X12 A4 80	
410	312105-0329		3	SCREW, M6S ISO 4017 M5X16 A4 80	
420	312105-0331		1	SCREW, M6S ISO 4017 M5X20 A4 80	
430	312105-0447		1	SCREW, M6S ISO 4017 M8X12 A4 80	
440	315205-0802		1	O-RING 41,00X1,78 MM	
450	315207-0506		1	O-RING 7,65X1,78 MM	
460	315207-0723		1	O-RING 29,82X2,62 MM	
500	90051-0059		1	KNOB, EXTERNAL THREAD. NO. 8308-1550	
510	90141-0015		1	RETAINING RING FOR SHAFT DIN 471 8 SS	
520	90239-0532		1	ROD END, CLEVIS WITH AXLE M8X1,25	
530	90458-2956		2	ELBOW PIPE JOINT, EXT.THREAD, D=6MM-G1/8	
540	90600-5788		2	SENSOR BRACKET, SMBR-20	
U70B3050	90600-0362		1	PROX. SENSOR, SMTO-4U-PS-S-LED-24	
U70B3060	90600-0362		1	PROX. SENSOR, SMTO-4U-PS-S-LED-24	
U70M2452	90603-5802		1	DOUBLE ACTING, MINI-ISO, CYL. 20-50	
U70W3050	344245-0050		1	SENSOR CABLE, EVT123	
U70W3060	344245-0050		1	SENSOR CABLE, EVT123	

Machine Type	Group Description	Used-In	Group Number	Page No

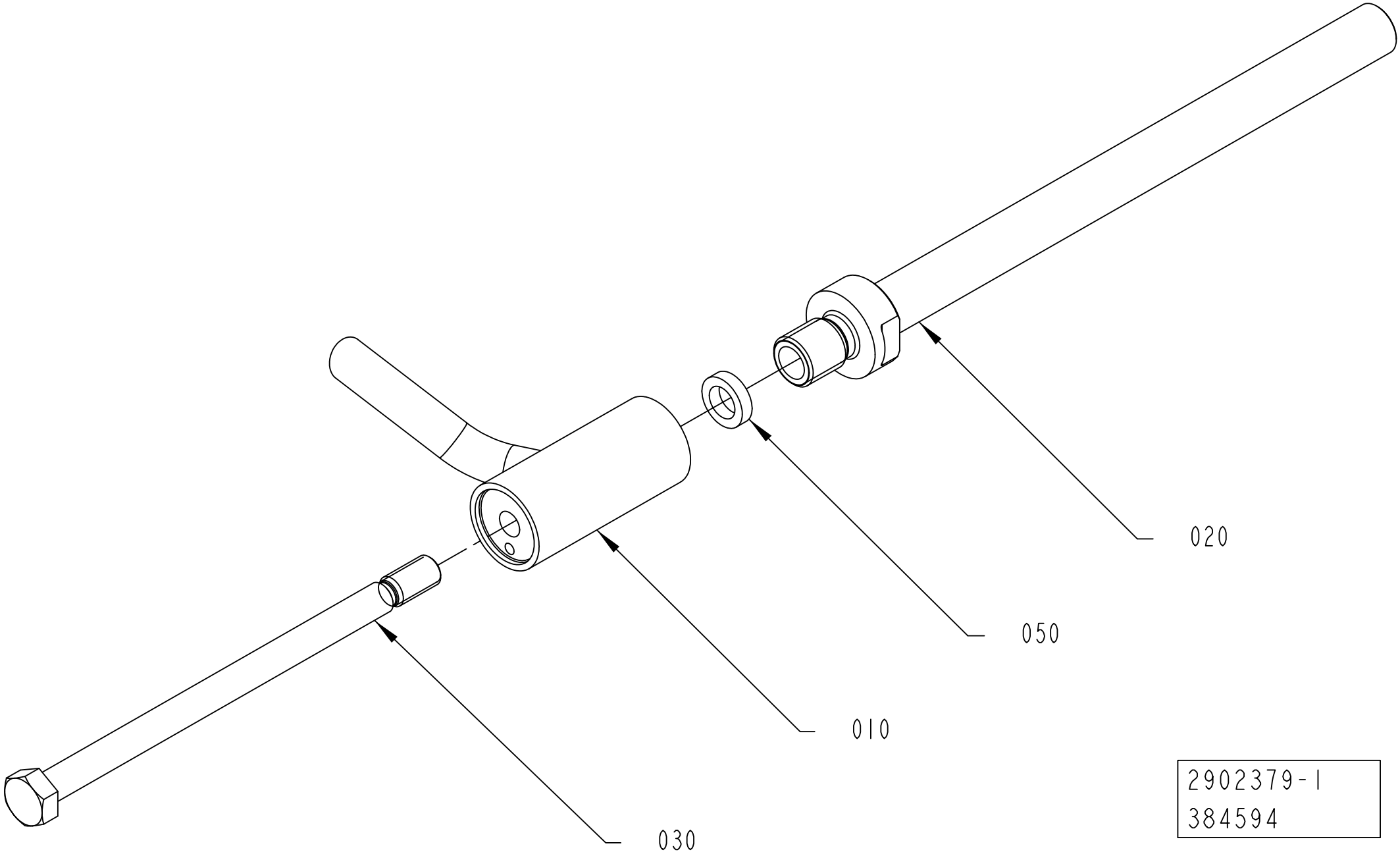

2902379-1
384594

ECM: 530448 - 20120416
Group number: 2902379-0100
Assembly Drawing: 2902379-1_1_AA

This list covers pages from 1-338 to 1-341

Pos	Part No	UN	Qty	Description	Page No
TBA 0500S, TBA 1000B, TBA 1000S (See drawing on page: 1-340)					
020	2758733-0002		1	AIR PIPE	
030	2758738-0002		1	SCREW	
040	2758740-0001		1	SPACER	
TBA 0500SQ, TBA 1000SQ, TPA 1000SQ, TPA 0500SQ, TPA 0750SQ, TGA 1000SQ, TGA 0750SQ, TGA 0500SQ, TGA 1500SQ (See drawing on page: 1-340)					
020	2758733-0003		1	AIR PIPE	
030	2758738-0003		1	SCREW	
040	2758740-0002		1	SPACER	
TBA 1500S, TBA 2000S (See drawing on page: 1-338)					
020	2758733-0001		1	AIR PIPE	
030	2758738-0001		1	SCREW	
Common Parts					
010	2758732-0000		1	AIR NOZZLE	
050	2758737-0000		1	SEAL	

Pos	Part No	UN	Qty	Description	Page No

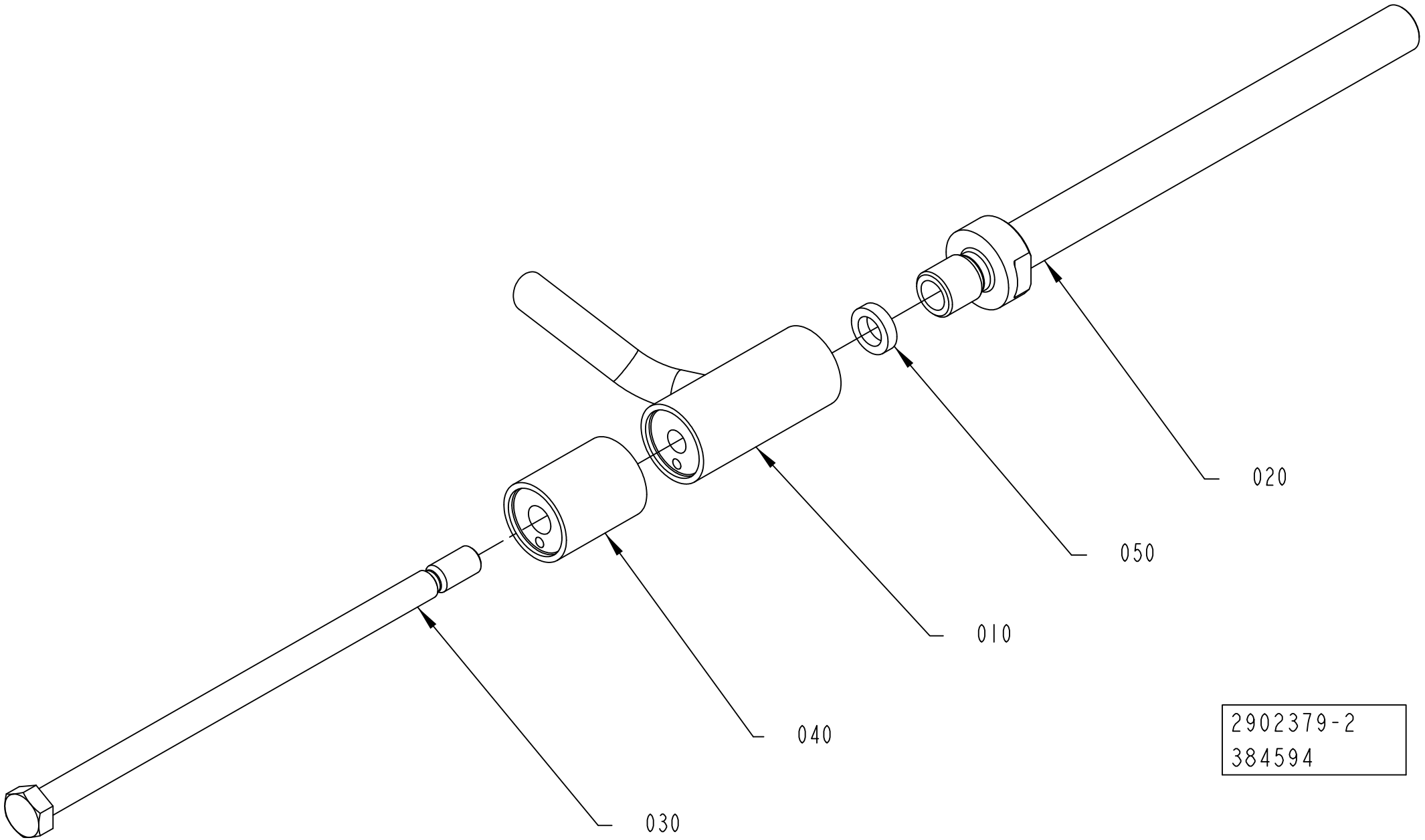
020
050
010
040
030
2902379-2
384594

ECM: 530448 - 20120416
Group number: 2902379-0100
Assembly Drawing: 2902379-2_1_AA

This list covers pages from 1-338 to 1-341

Pos	Part No	UN	Qty	Description	Page No
TBA 0500S, TBA 1000B, TBA 1000S (See drawing on page: 1-340)					
020	2758733-0002		1	AIR PIPE	
030	2758738-0002		1	SCREW	
040	2758740-0001		1	SPACER	
TBA 0500SQ, TBA 1000SQ, TPA 1000SQ, TPA 0500SQ, TPA 0750SQ, TGA 1000SQ, TGA 0750SQ, TGA 0500SQ, TGA 1500SQ (See drawing on page: 1-340)					
020	2758733-0003		1	AIR PIPE	
030	2758738-0003		1	SCREW	
040	2758740-0002		1	SPACER	
TBA 1500S, TBA 2000S (See drawing on page: 1-338)					
020	2758733-0001		1	AIR PIPE	
030	2758738-0001		1	SCREW	
Common Parts					
010	2758732-0000		1	AIR NOZZLE	
050	2758737-0000		1	SEAL	

Pos	Part No	UN	Qty	Description	Page No

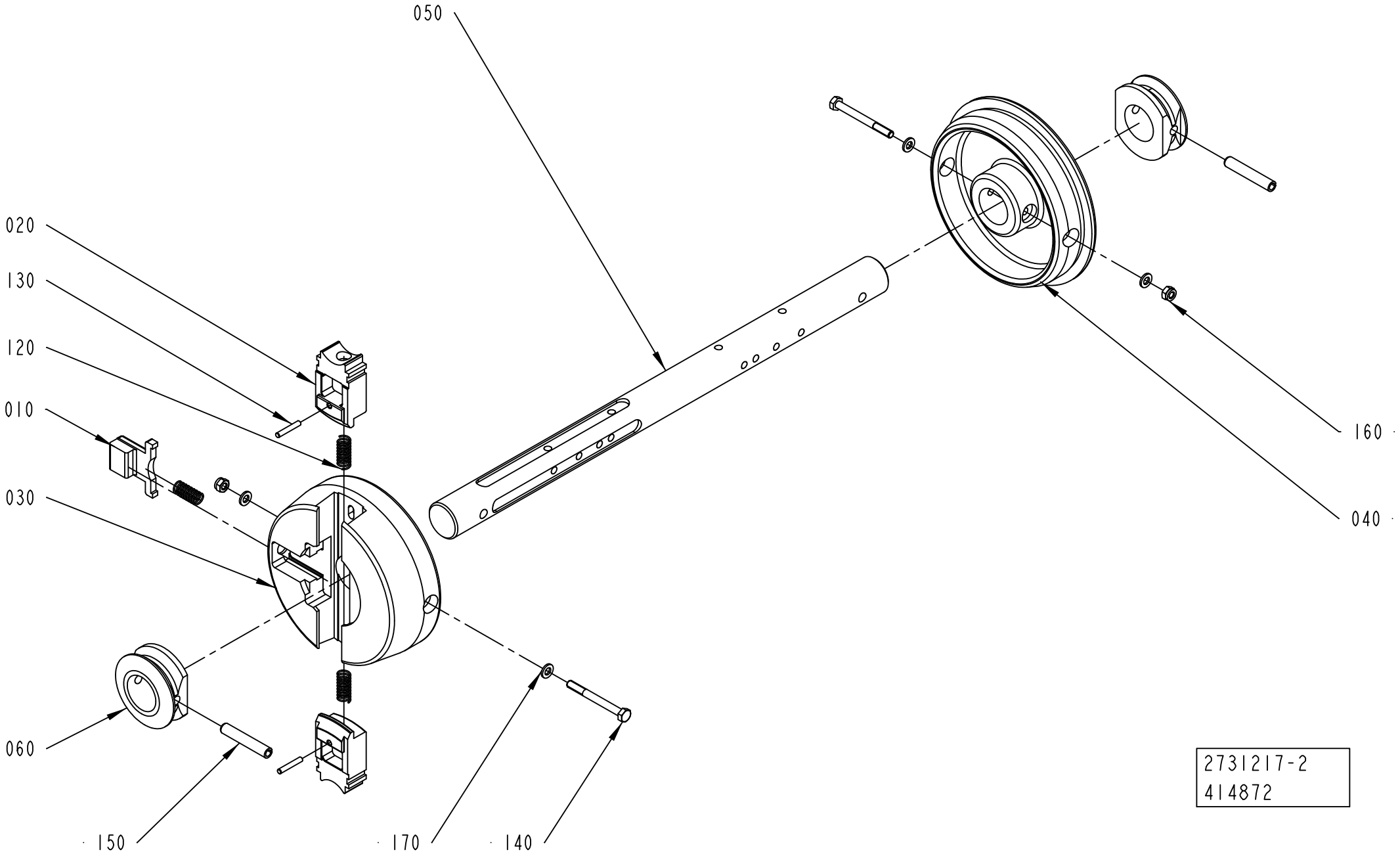
050
020
130
120
010
030
060
150
170
140
160
040
2731217-2
414872

ECM: 533795 - 20120401
Group number: 2731217-0200
Assembly Drawing: 2731217-2_1_AA

Pos	Part No	UN	Qty	Description	Page No
TBA 1000S, TPA 1000SQ, TPA 0750SQ					
050	3051914-0001		1	SHAFT	
TBA 0500S, TBA 0500SQ, TBA 0500B, TBA 1000B, TBA 1000SQ, TBA 1500S, TPA 0500SQ, TBA 2000S, TGA 1000SQ, TGA 0750SQ, TGA 0500SQ, TGA 1500SQ					
050	3051914-0002		1	SHAFT	
Common Parts					
010	272728-0000		1	BARRIER	
020	2851385-0000		2	PLUNGER	
030	2790925-0000		1	SLEEVE	
040	2731210-0000		1	SLEEVE	
060	2731212-0000		2	RING	
120	90335-0025		3	COMP. SPRING, 22010, 1X11X26	
130	311103-1274		2	PARALLEL PIN ISO 2338 4M6X24 A1	
140	312105-0382		2	SCREW, M6S ISO 4014 M6X60 A4 80	
150	311112-0385		2	SPRING PIN, ISO 8752 8X50 A2	
160	312812-0316		2	HEXAGON NUT, NY-LOCK M6 A4 80	
170	315105-0153		4	WASHER PLAIN, 6,4X12X1,5 A4 BRB	

Pos	Part No	UN	Qty	Description	Page No

This page is intentionally left blank.

ECM: 397006 - 20100104
Group number: 3019537-0100
Assembly Drawing:

Pos	Part No	UN	Qty	Description	Page No
TBA 0500S					
010	2523766-0005		4	BRACKET	
TBA 0500SQ, TBA 1000SQ					
010	2523766-0003		4	BRACKET	
TBA 1000B, TBA 1500S, TGA 1500SQ					
010	2523766-0001		4	BRACKET	
TBA 1000S					
010	2523766-0002		4	BRACKET	
TBA 2000S					
010	2701881-0000		4	BRACKET	
TGA 1000SQ, TGA 0750SQ, TGA 0500SQ					
010	2523766-0013		4	BRACKET	
TPA 0500SQ					
010	2523766-0006		4	BRACKET	
TPA 1000SQ, TPA 0750SQ					
010	2523766-0012		4	BRACKET	

Pos	Part No	UN	Qty	Description	Page No

This page is intentionally left blank.

ECM: 369142 - 20081001
Group number: 2912700-0100
Assembly Drawing:

Pos	Part No	UN	Qty	Description	Page No
NODIMC					
010	2547422-0300		1	UPPER FORMING RING	**1-349, 1-351, 1-353, 1-355, 1-357, 1-359 ..... 1-361, 1-363**

Pos	Part No	UN	Qty	Description	Page No

UPPER FORMING RING

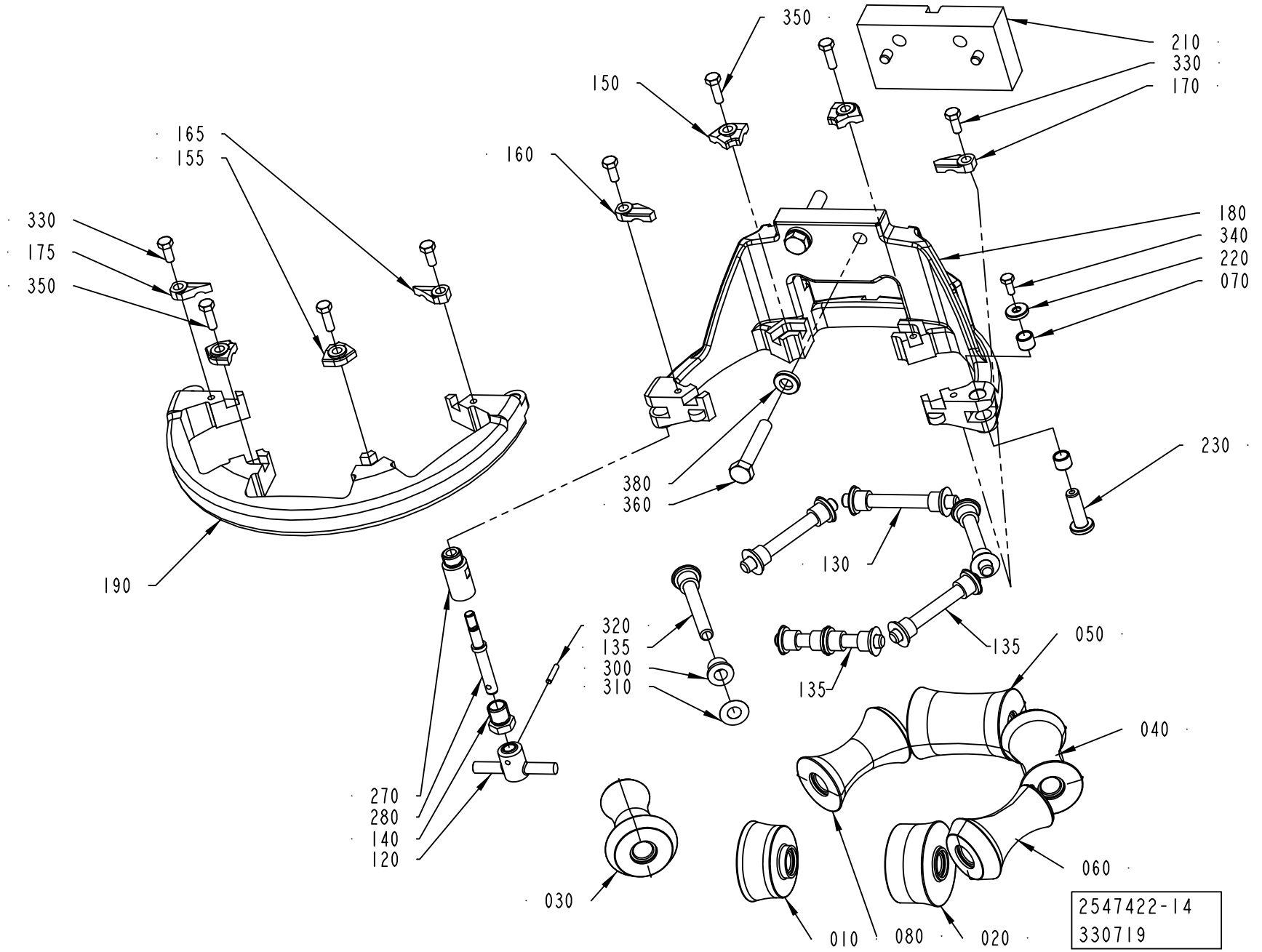

ECM: 530442 - 20120416
Group number: 2547422-0300
Assembly Drawing: 2547422-14_1_AA

This list covers pages from 1-348 to 1-363

Pos	Part No	UN	Qty	Description	Page No
TBA 0500B, TBA 1000B, TBA 1500S (See drawing on page: 1-362)					
010	2998412-0000		1	ROLLER	
020	2998413-0000		1	ROLLER	
030	2998411-0000		1	ROLLER	
040	2998507-0000		1	ROLLER	
050	2998506-0000		1	ROLLER	
060	2998414-0000		1	ROLLER	
080	2998505-0000		1	ROLLER	
130	752186-0015		3	SHAFT	
135	752186-0007		3	SHAFT	
150	2528123-0004		2	LOCK PLATE	
155	2528123-0008		2	LOCK PLATE	
160	2528118-0005		1	LOCK PLATE	
165	2528118-0001		1	LOCK PLATE	
170	2528119-0005		1	LOCK PLATE	
175	2528119-0001		1	LOCK PLATE	
180	2764022-0000		1	UPPER FORMING RING	
190	2736677-0000		1	UPPER FORMING RING	
210	2696412-0000		1	SPACER	
300	90240-0172		14	FLANGE BUSHING, 8X12X10 MM	
360	312109-0460		2	SCREW, M6S ISO 4017 M8X45 A4 80	
380	315115-0165		2	WASHER PLAIN, TBRB 8,4/16 H=3	
TBA 0500S (See drawing on page: 1-360)					
010	2611020-0000		1	ROLLER	
020	2720717-0000		1	ROLLER	
030	2672980-0000		1	ROLLER	
040	2672979-0000		2	ROLLER	
050	2672978-0000		1	ROLLER	
060	2672981-0000		1	ROLLER	
130	2522213-0007		6	SHAFT	
150	2528123-0005		4	LOCK PLATE	
160	2528118-0005		2	LOCK PLATE	
170	2528119-0005		2	LOCK PLATE	
180	2764021-0000		1	UPPER FORMING RING	
190	2736631-0000		1	UPPER FORMING RING	
210	2532914-0000		1	SPACER	
300	90240-0172		14	FLANGE BUSHING, 8X12X10 MM	
360	312109-0459		2	SCREW, M6S ISO 4017 M8X40 A4 80	
TBA 0500SQ, TBA 1000SQ (See drawing on page: 1-356)					
010	2532965-0000		1	ROLLER	
020	1548541-0000		1	ROLLER	
030	1548531-0000		4	ROLLER	
060	1548540-0000		1	ROLLER	
130	752186-0007		6	SHAFT	
150	2528123-0004		4	LOCK PLATE	
160	2528118-0004		2	LOCK PLATE	
170	2528119-0004		2	LOCK PLATE	
180	2764013-0000		1	UPPER FORMING RING	
190	2736697-0000		1	UPPER FORMING RING	
210	2532914-0000		1	SPACER	
300	90240-0172		14	FLANGE BUSHING, 8X12X10 MM	
360	312109-0459		2	SCREW, M6S ISO 4017 M8X40 A4 80	
TBA 1000S (See drawing on page: 1-358)					
010	2512737-0000		1	ROLLER	
020	2512738-0000		1	ROLLER	
030	2512740-0000		1	ROLLER	
040	2512741-0000		2	ROLLER	
050	2512742-0000		2	ROLLER	
130	752186-0007		6	SHAFT	
150	2528123-0001		4	LOCK PLATE	
160	2528118-0001		2	LOCK PLATE	
170	2528119-0001		2	LOCK PLATE	
180	2764014-0000		1	UPPER FORMING RING	
190	2736676-0000		1	UPPER FORMING RING	
210	2532914-0000		1	SPACER	
300	90240-0172		14	FLANGE BUSHING, 8X12X10 MM	
360	312109-0459		2	SCREW, M6S ISO 4017 M8X40 A4 80	
TBA 2000S (See drawing on page: 1-354)					
010	2970963-0000		1	ROLLER	
020	2970964-0000		1	ROLLER	
030	2970962-0000		1	ROLLER	
040	2978674-0000		2	ROLLER	
050	2978675-0000		1	ROLLER	
060	2970965-0000		1	ROLLER	
130	752186-0015		6	SHAFT	
150	2528123-0002		4	LOCK PLATE	
160	2528118-0003		2	LOCK PLATE	
170	2528119-0003		2	LOCK PLATE	
180	2764019-0000		1	UPPER FORMING RING	
190	2736633-0000		1	UPPER FORMING RING	
210	3076826-0000		1	SPACER	
300	90240-0172		14	FLANGE BUSHING, 8X12X10 MM	
360	312109-0459		2	SCREW, M6S ISO 4017 M8X40 A4 80	
380	315105-0165		2	WASHER PLAIN, 8,4X16X1,6 A4 BRB	

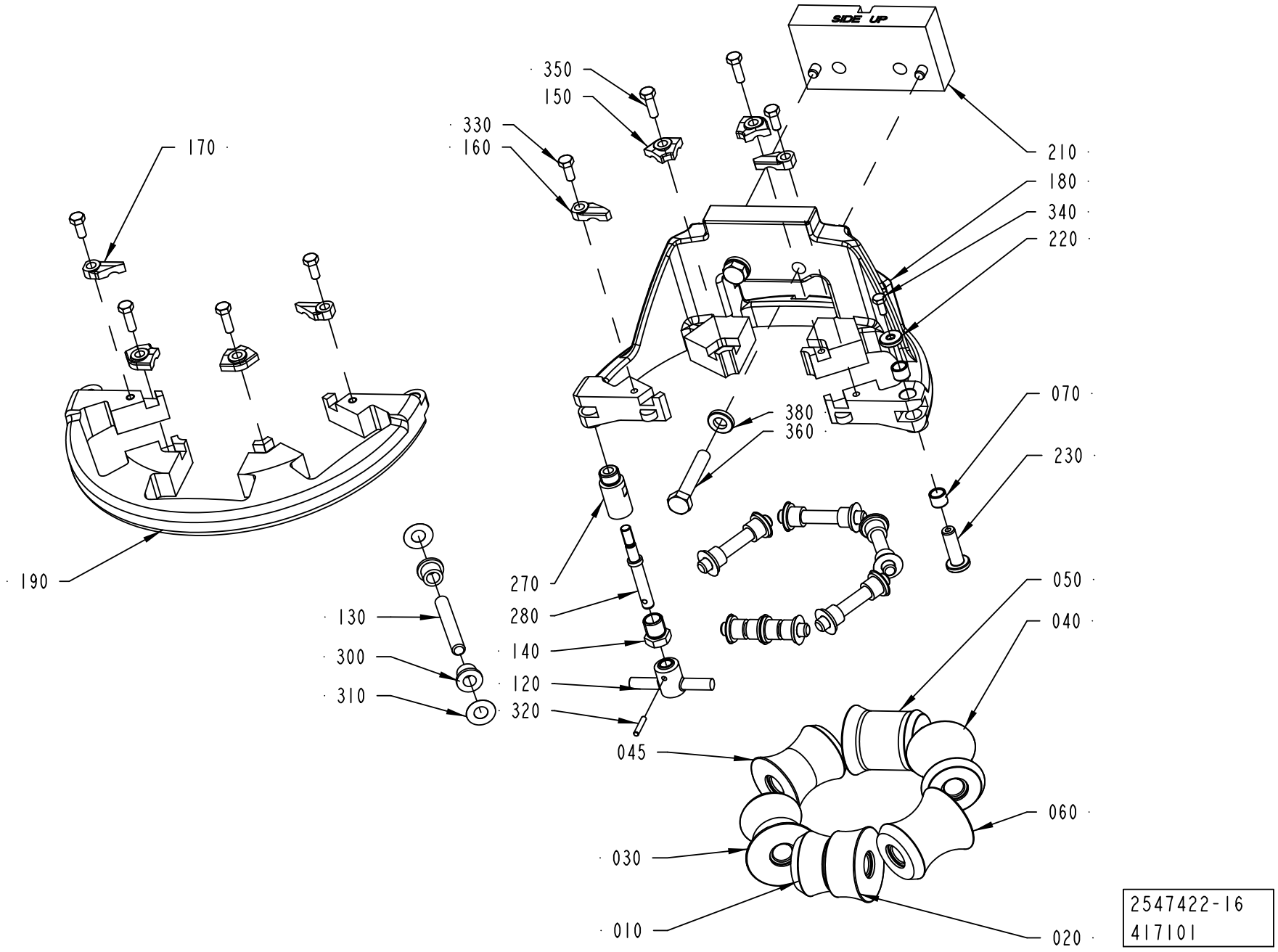
SIDE UP
350
150
330
160
170
210
180
340
220
070
230
380
360
190
270
280
140
120
320
130
300
310
045
050
040
060
030
010
020
2547422-16
417101

Pos	Part No	UN	Qty	Description	Page No
TGA 1000SQ, TGA 0750SQ, TGA 0500SQ (Cont'd) (See drawing on page: 1-348)					
010	2905058-0000		1	ROLLER	
020	2905061-0000		1	ROLLER	
030	2909001-0000		1	ROLLER	
040	2908998-0000		2	ROLLER	
050	2905055-0000		1	ROLLER	
060	2908999-0000		2	ROLLER	
080	2909000-0000		1	ROLLER	
130	2522213-0007		6	SHAFT	
150	2528123-0005		4	LOCK PLATE	
160	2528118-0005		2	LOCK PLATE	
170	2528119-0005		2	LOCK PLATE	
180	2793351-0000		1	UPPER FORMING RING	
190	2736631-0000		1	UPPER FORMING RING	
210	2532914-0000		1	SPACER	
300	90240-0172		14	FLANGE BUSHING, 8X12X10 MM	
360	312109-0459		2	SCREW, M6S ISO 4017 M8X40 A4 80	
TGA 1500SQ (See drawing on page: 1-348)					
010	2895460-0000		1	ROLLER	
020	2895463-0000		1	ROLLER	
030	2895459-0000		1	ROLLER	
040	2895461-0000		1	ROLLER	
050	2895457-0000		1	ROLLER	
060	2895462-0000		1	ROLLER	
080	2895458-0000		1	ROLLER	
130	752186-0015		3	SHAFT	
135	752186-0007		3	SHAFT	
150	2528123-0004		2	LOCK PLATE	
155	2528123-0008		2	LOCK PLATE	
160	2528118-0005		1	LOCK PLATE	
165	2528118-0001		1	LOCK PLATE	
170	2528119-0005		1	LOCK PLATE	
175	2528119-0001		1	LOCK PLATE	
180	2764022-0000		1	UPPER FORMING RING	
190	2736677-0000		1	UPPER FORMING RING	
210	2696412-0000		1	SPACER	
300	90240-0172		14	FLANGE BUSHING, 8X12X10 MM	
360	312109-0460		2	SCREW, M6S ISO 4017 M8X45 A4 80	
380	315115-0165		2	WASHER PLAIN, TBRB 8,4/16 H=3	
TPA 0500SQ (See drawing on page: 1-350)					
010	3031824-0000		1	ROLLER	
020	3031825-0000		1	ROLLER	
030	3031823-0000		1	ROLLER	
040	2611016-0000		1	ROLLER	
045	2680196-0000		1	ROLLER	
050	2680195-0000		1	ROLLER	
060	3031826-0000		1	ROLLER	
130	752186-0006		6	SHAFT	
150	2528123-0003		4	LOCK PLATE	
160	2528118-0004		2	LOCK PLATE	
170	2528119-0004		2	LOCK PLATE	
180	2764017-0000		1	UPPER FORMING RING	
190	2736632-0000		1	UPPER FORMING RING	
210	2611024-0000		1	SPACER	
300	90240-0172		14	FLANGE BUSHING, 8X12X10 MM	
360	312109-0460		2	SCREW, M6S ISO 4017 M8X45 A4 80	
380	315115-0165		2	WASHER PLAIN, TBRB 8,4/16 H=3	
TPA 1000SQ, TPA 0750SQ (See drawing on page: 1-352)					
010	2851583-0000		1	ROLLER	
020	2851586-0000		1	ROLLER	
030	1524151-0000		2	ROLLER	
040	2833088-0000		2	ROLLER	
050	2833212-0000		1	ROLLER	
130	2522213-0007		6	SHAFT	
150	2528123-0005		4	LOCK PLATE	
160	2528118-0005		2	LOCK PLATE	
170	2528119-0005		2	LOCK PLATE	
180	2764015-0000		1	UPPER FORMING RING	
190	2736631-0000		1	UPPER FORMING RING	
210	2696411-0000		1	SPACER	
300	90240-0172		14	FLANGE BUSHING, 8X12X10 MM	
360	312109-0459		2	SCREW, M6S ISO 4017 M8X40 A4 80	
Common Parts					
070	2526826-0000		2	BUSHING	
120	2764036-0000		1	KNOB	
140	2731428-0000		1	NUT	
220	2526825-0000		1	WASHER	
230	2526827-0000		1	SHAFT	
270	2764034-0000		1	SHAFT	
280	2764035-0000		1	SHAFT	
310	2033-0011		14	WASHER	
320	311103-0236		1	PARALLEL PIN ISO 2338 3M6X16 A1	
330	312105-0327		4	SCREW, M6S ISO 4017 M5X12 A4 80	
340	312105-0289		1	SCREW, M6S ISO 4017 M4X10 A4 70	

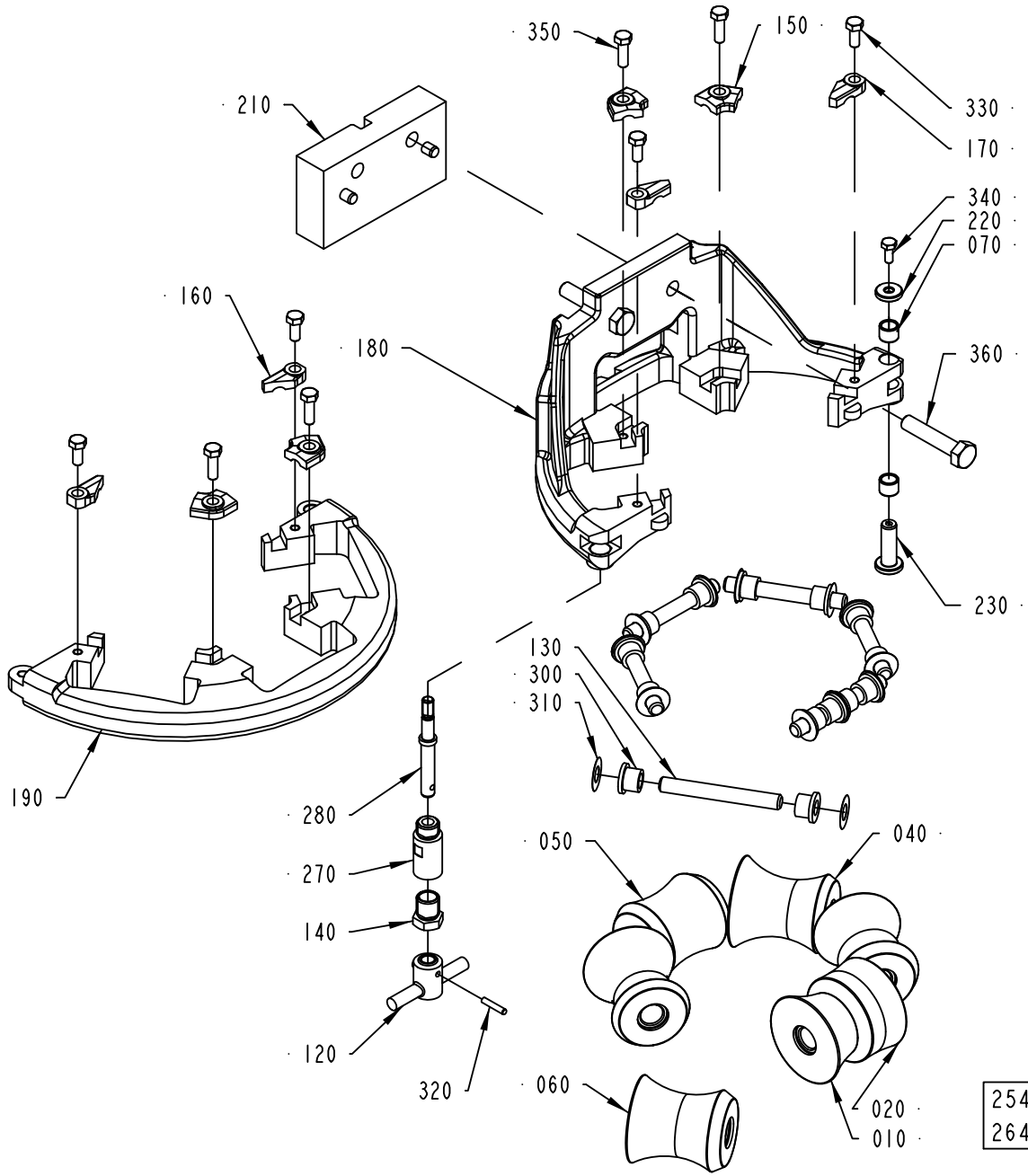
350
150
210
330
170
340
220
070
160
180
360
230
130
300
310
190
280
270
140
120
320
050
040
060
020
010
2547422-17
264087

Pos	Part No	UN	Qty	Description	Page No
Common Parts (Cont'd)					
350	312105-0329		4	SCREW, M6S ISO 4017 M5X16 A4 80	

Pos	Part No	UN	Qty	Description	Page No

UPPER FORMING RING

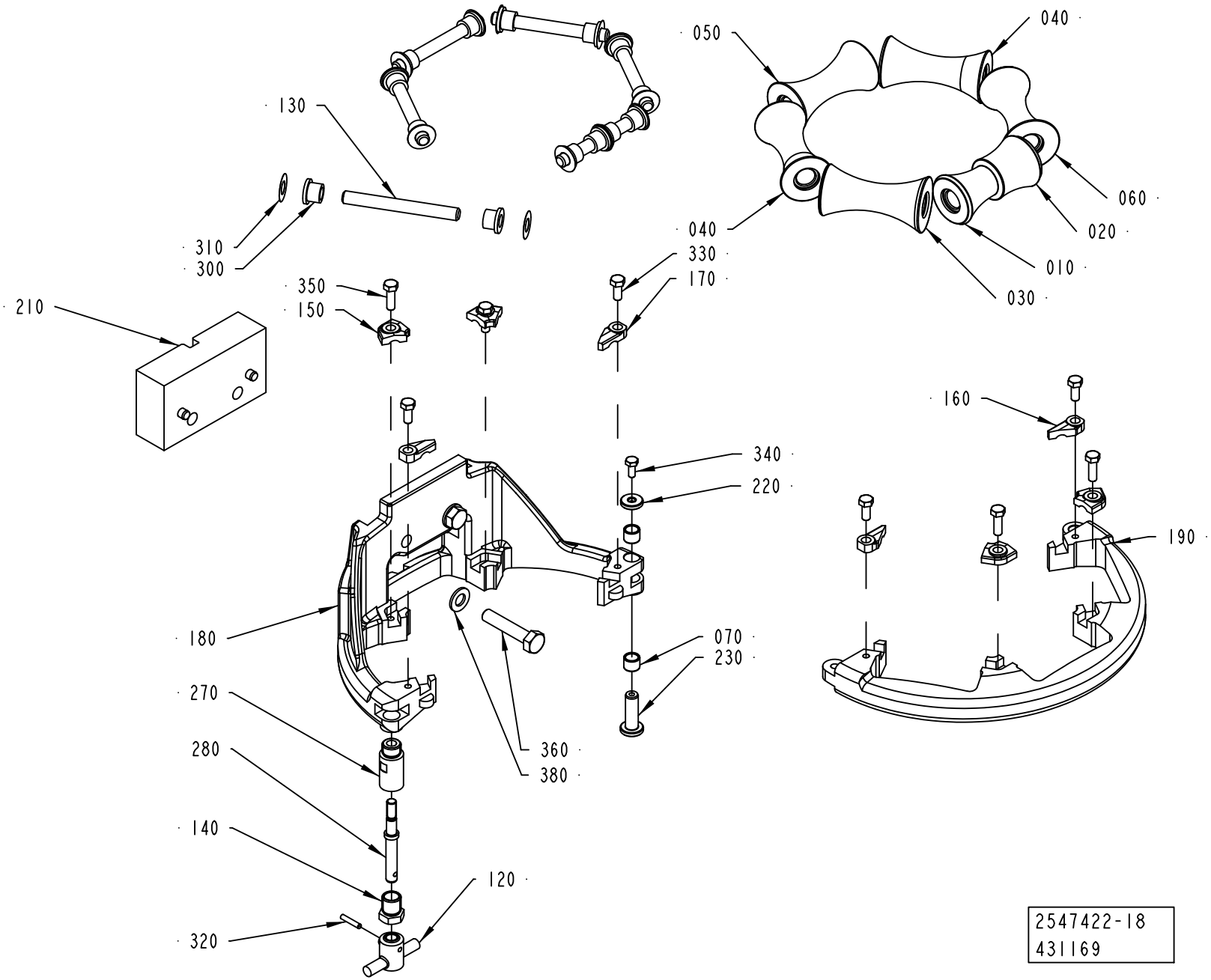

Pos	Part No	UN	Qty	Description	Page No
SEE PREVIOUS LISTS PAGES: 1-349, 1-351, 1-353.					

Pos	Part No	UN	Qty	Description	Page No

UPPER FORMING RING

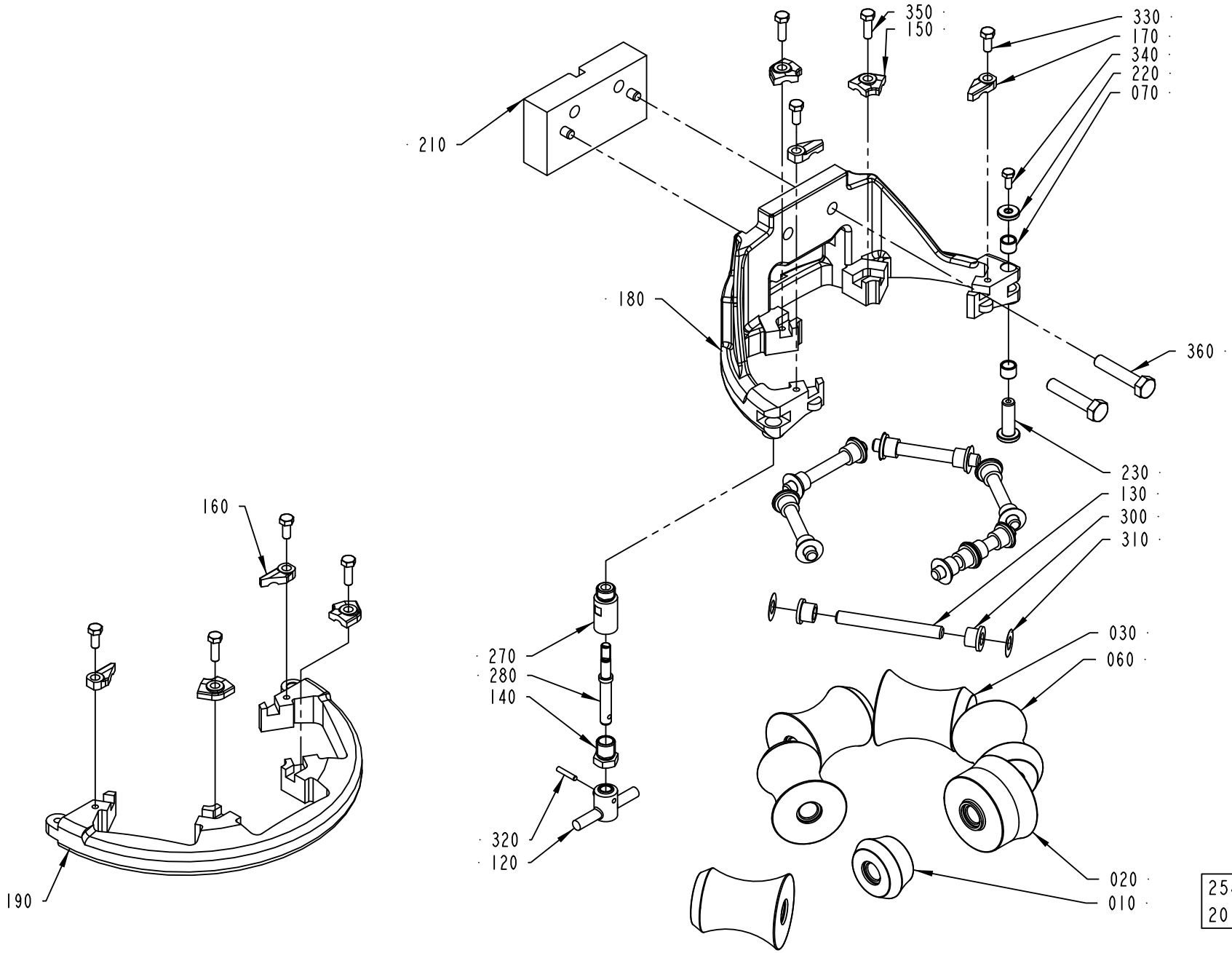

Pos	Part No	UN	Qty	Description	Page No
SEE PREVIOUS LISTS PAGES: 1-349, 1-351, 1-353.					

Pos	Part No	UN	Qty	Description	Page No

UPPER FORMING RING

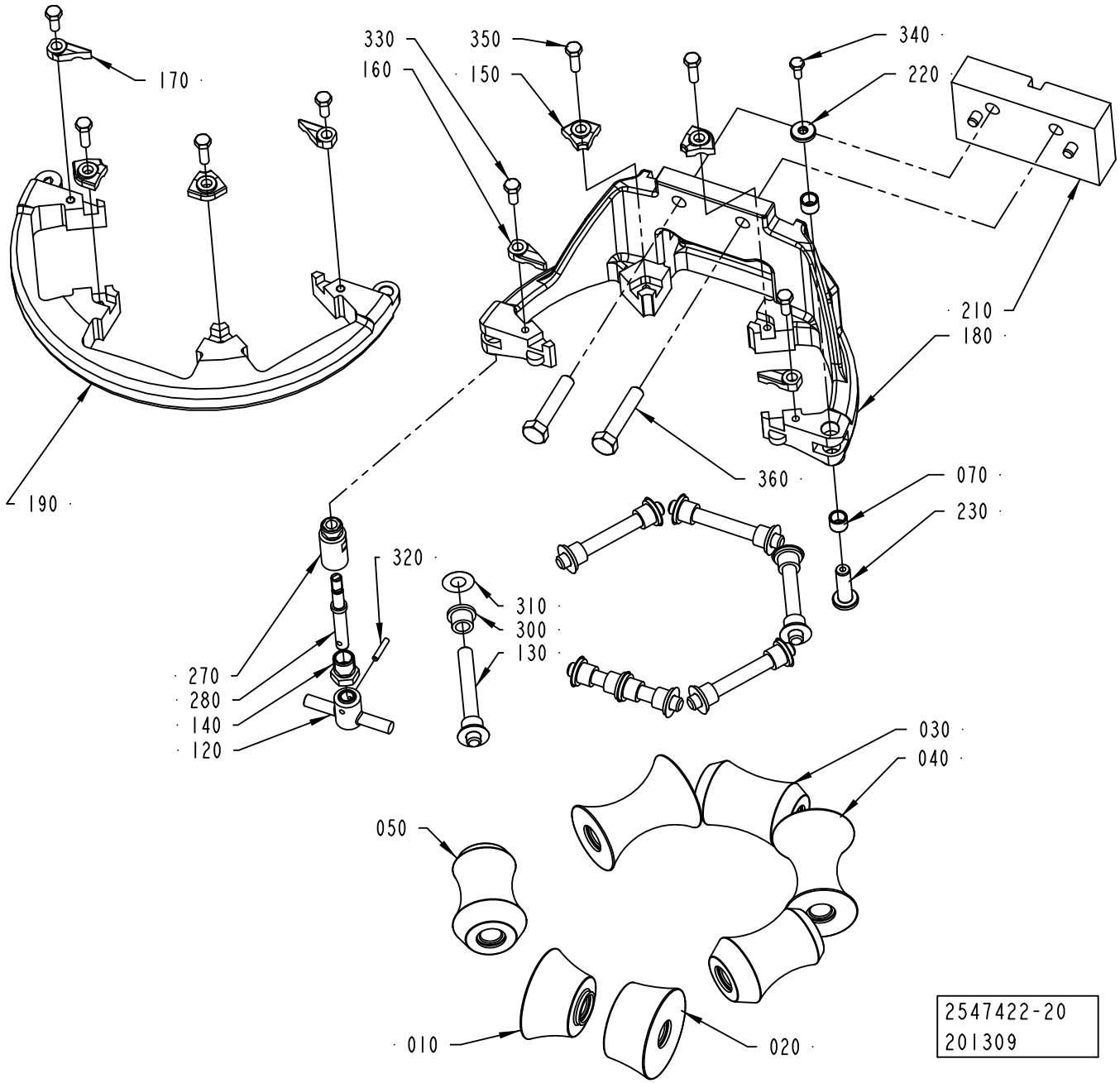

ECM: 530442 - 20120416
Group number: 2547422-0300
Assembly Drawing: 2547422-20_1_AA

This list covers pages from 1-348 to 1-363

Pos	Part No	UN	Qty	Description	Page No
SEE PREVIOUS LISTS PAGES: 1-349, 1-351, 1-353.					

Pos	Part No	UN	Qty	Description	Page No

UPPER FORMING RING

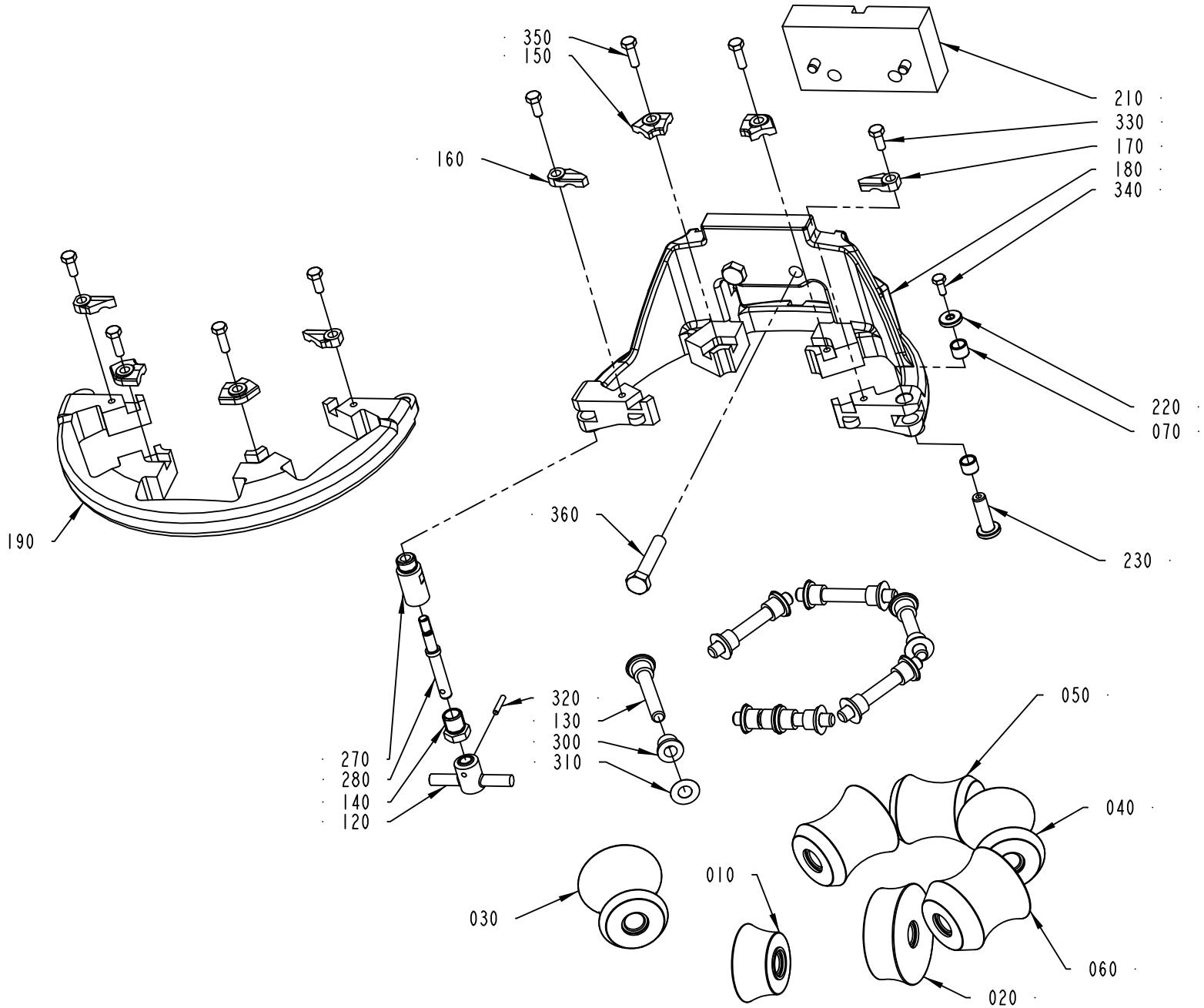

ECM: 530442 - 20120416
Group number: 2547422-0300
Assembly Drawing: 2547422-21_1_AA

This list covers pages from 1-348 to 1-363

Pos	Part No	UN	Qty	Description	Page No
SEE PREVIOUS LISTS PAGES: 1-349, 1-351, 1-353.					

Pos	Part No	UN	Qty	Description	Page No

UPPER FORMING RING

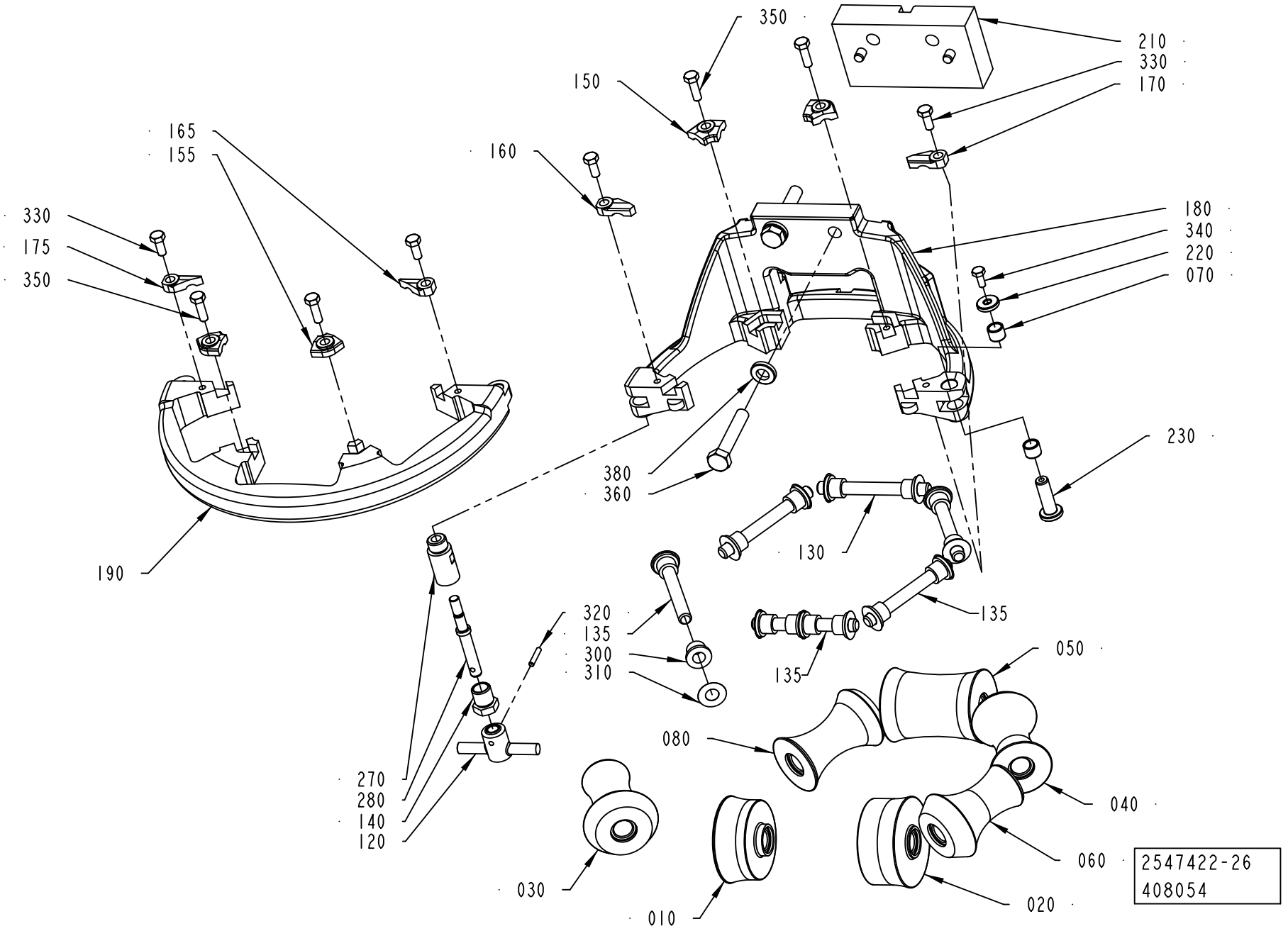

ECM: 530442 - 20120416
Group number: 2547422-0300
Assembly Drawing: 2547422-26_1_AA

This list covers pages from 1-348 to 1-363

Pos	Part No	UN	Qty	Description	Page No
SEE PREVIOUS LISTS PAGES: 1-349, 1-351, 1-353.					

Pos	Part No	UN	Qty	Description	Page No

This page is intentionally left blank.

ECM: 369143 - 20081001
Group number: 2912702-0100
Assembly Drawing:

Pos	Part No	UN	Qty	Description	Page No
NODIMC					
010	2547421-0200		1	FORMING RING	**1-367, 1-369, 1-371, 1-373, 1-375**

Pos	Part No	UN	Qty	Description	Page No

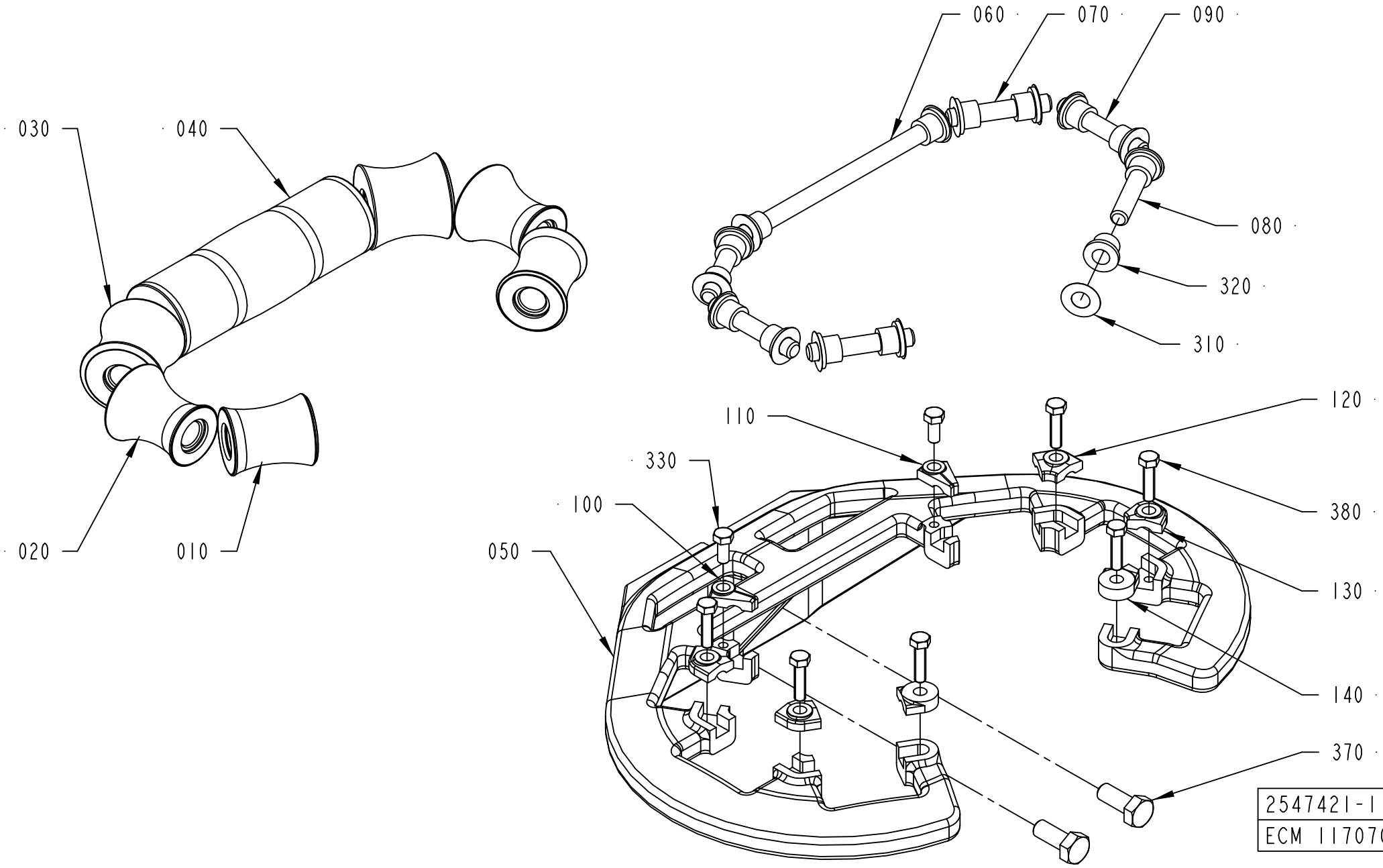
060
070
090
080
320
310
030
040
020
010
110
120
330
380
100
130
050
140
370
2547421-1
ECM 117070

ECM: 530441 - 20120416
Group number: 2547421-0200
Assembly Drawing: 2547421-1_1_AA

This list covers pages from 1-366 to 1-375

Pos	Part No	UN	Qty	Description	Page No
A3/FLEX TBA 1000S (See drawing on page: 1-366)					
010	2512748-0000		2	ROLLER	
020	2512749-0000		2	ROLLER	
030	2512746-0000		2	ROLLER	
040	2514521-0000		2	ROLLER	
050	2552161-0000		1	SUPPORT RING	
060	2522213-0005		1	SHAFT	
070	752186-0005		2	SHAFT	
080	2522213-0004		2	SHAFT	
090	752186-0019		2	SHAFT	
100	2552176-0003		1	LOCK PLATE	
110	2552177-0003		1	LOCK PLATE	
120	2528123-0007		2	LOCK PLATE	
130	2528123-0001		2	LOCK PLATE	
140	2532895-0003		2	LOCK PLATE	
310	2033-0011		16	WASHER	
320	90240-0172		16	FLANGE BUSHING, 8X12X10 MM	
330	312105-0327		2	SCREW, M6S ISO 4017 M5X12 A4 80	
370	312105-0451		2	SCREW, M6S ISO 4017 M8X20 A4 80	
380	312105-0331		6	SCREW, M6S ISO 4017 M5X20 A4 80	
TBA 0500B, TBA 1000B, TBA 1500S, TGA 1500SQ (See drawing on page: 1-366)					
010	2552206-0000		2	ROLLER	
020	2552205-0000		2	ROLLER	
030	2552188-0000		2	ROLLER	
040	2552187-0000		1	ROLLER	
050	2552160-0000		1	SUPPORT RING	
060	2522213-0005		1	SHAFT	
070	752186-0005		2	SHAFT	
080	2522213-0004		2	SHAFT	
090	752186-0019		2	SHAFT	
100	2552176-0001		1	LOCK PLATE	
110	2552177-0001		1	LOCK PLATE	
120	2528123-0002		2	LOCK PLATE	
130	2528123-0008		2	LOCK PLATE	
140	2532895-0004		2	LOCK PLATE	
310	2033-0011		14	WASHER	
320	90240-0172		14	FLANGE BUSHING, 8X12X10 MM	
330	312105-0327		2	SCREW, M6S ISO 4017 M5X12 A4 80	
370	312105-0451		2	SCREW, M6S ISO 4017 M8X20 A4 80	
380	312105-0331		6	SCREW, M6S ISO 4017 M5X20 A4 80	
TBA 0500S (See drawing on page: 1-366)					
010	2672986-0000		2	ROLLER	
020	2672985-0000		2	ROLLER	
030	2672970-0000		2	ROLLER	
040	2709302-0000		1	ROLLER	
050	2611038-0000		1	SUPPORT RING	
060	752186-0009		1	SHAFT	
070	752186-0012		2	SHAFT	
080	752186-0012		2	SHAFT	
090	752186-0002		2	SHAFT	
120	2562667-0008		6	LOCK PLATE	
140	2532895-0001		2	LOCK PLATE	
310	2033-0011		14	WASHER	
320	90240-0172		14	FLANGE BUSHING, 8X12X10 MM	
370	312105-0451		2	SCREW, M6S ISO 4017 M8X20 A4 80	
380	312105-0331		8	SCREW, M6S ISO 4017 M5X20 A4 80	
TBA 0500SQ, TBA 1000SQ (See drawing on page: 1-370)					
010	2896520-0000		2	ROLLER	
020	2634970-0000		2	ROLLER	
030	2634969-0000		2	ROLLER	
040	2634968-0000		1	ROLLER	
050	2909791-0000		1	SUPPORT	
060	2522213-0008		1	SHAFT	
070	752186-0005		2	SHAFT	
080	2522213-0009		2	SHAFT	
090	752186-0012		2	SHAFT	
120	2532895-0007		2	LOCK PLATE	
130	2562667-0009		6	LOCK PLATE	
160	2916867-0000		1	SUPPORT RING	
310	2033-0011		14	WASHER	
320	90240-0172		14	FLANGE BUSHING, 8X12X10 MM	
370	312105-0451		2	SCREW, M6S ISO 4017 M8X20 A4 80	
380	312105-0329		8	SCREW, M6S ISO 4017 M5X16 A4 80	
400	312109-0374		4	SCREW, M6S ISO 4017 M6X30 A4 80	
TBA 2000S (See drawing on page: 1-368)					
010	2601286-0000		2	ROLLER	
020	2601285-0000		2	ROLLER	
030	2601279-0000		2	ROLLER	
040	2601278-0000		1	ROLLER	
050	2634926-0000		1	SUPPORT ROLLER	
060	2522213-0019		1	SHAFT	
070	752186-0006		2	SHAFT	
080	2522213-0020		2	SHAFT	
090	752186-0019		2	SHAFT	

Machine Type | Group Description | Used-In | Group Number | Page No

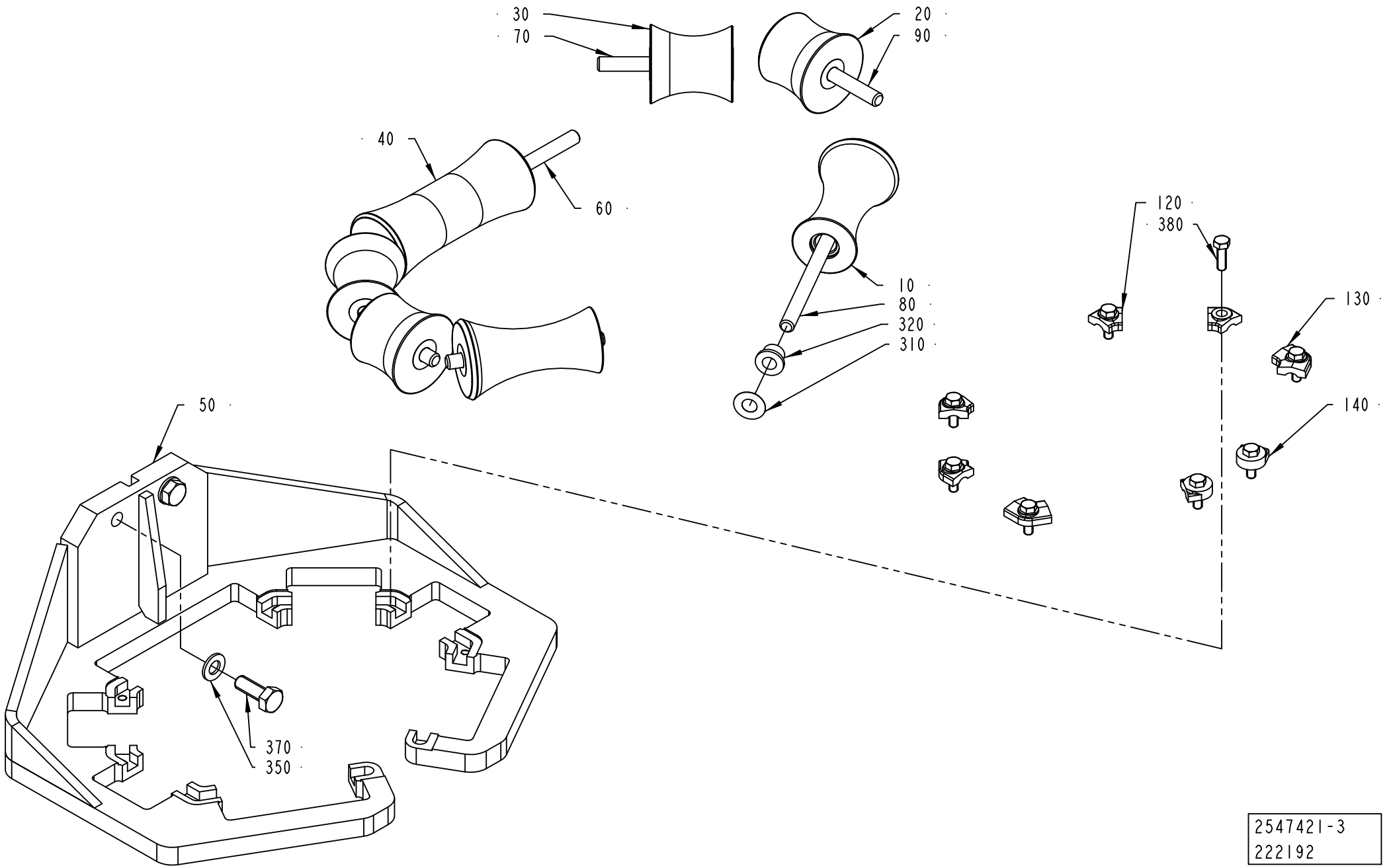

2547421-3
222192

Pos	Part No	UN	Qty	Description	Page No
TBA 2000S (Cont'd) (See drawing on page: 1-368)					
120	2562667-0008		4	LOCK PLATE	
130	2528123-0007		2	LOCK PLATE	
140	2532895-0002		2	LOCK PLATE	
310	2033-0011		14	WASHER	
320	90240-0172		14	FLANGE BUSHING, 8X12X10 MM	
350	315105-0165		2	WASHER PLAIN, 8,4X16X1,6 A4 BRB	
370	312105-0453		2	SCREW, M6S ISO 4017 M8X25 A4 80	
380	312105-0329		8	SCREW, M6S ISO 4017 M5X16 A4 80	
TGA 1000SQ, TGA 0750SQ, TGA 0500SQ (See drawing on page: 1-372)					
010	2916129-0000		2	ROLLER	
020	2916128-0000		2	ROLLER	
030	2916127-0000		2	ROLLER	
040	2912169-0000		1	ROLLER	
050	2944619-0000		1	SUPPORT RING	
060	2522213-0008		1	SHAFT	
070	752186-0019		2	SHAFT	
080	752186-0004		2	SHAFT	
090	752186-0012		2	SHAFT	
120	2532895-0001		2	LOCK PLATE	
130	2562667-0008		6	LOCK PLATE	
160	2944618-0000		1	SUPPORT RING	
310	2033-0011		14	WASHER	
320	90240-0172		14	FLANGE BUSHING, 8X12X10 MM	
370	312105-0449		2	SCREW, M6S ISO 4017 M8X16 A4 80	
380	312105-0329		8	SCREW, M6S ISO 4017 M5X16 A4 80	
400	312109-0374		4	SCREW, M6S ISO 4017 M6X30 A4 80	
TPA 0500SQ (See drawing on page: 1-374)					
010	3038244-0000		2	ROLLER	
020	3038245-0000		2	ROLLER	
030	2998859-0000		1	ROLLER	
050	3016809-0000		1	SUPPORT RING	
060	752186-0012		1	SHAFT	
070	752186-0022		2	SHAFT	
080	752186-0014		2	SHAFT	
100	2552176-0003		1	LOCK PLATE	
110	2552177-0003		1	LOCK PLATE	
120	2528123-0005		2	LOCK PLATE	
140	2532895-0002		2	LOCK PLATE	
160	3016808-0000		1	FRAME	
310	2033-0011		10	WASHER	
320	90240-0172		10	FLANGE BUSHING, 8X12X10 MM	
370	312105-0451		2	SCREW, M6S ISO 4017 M8X20 A4 80	
380	312105-0331		8	SCREW, M6S ISO 4017 M5X20 A4 80	
380	312105-0329		6	SCREW, M6S ISO 4017 M5X16 A4 80	
400	312109-0374		4	SCREW, M6S ISO 4017 M6X30 A4 80	
TPA 1000SQ, TPA 0750SQ (See drawing on page: 1-370)					
010	2889461-0000		2	ROLLER	
020	2901229-0000		2	ROLLER	
030	2901228-0000		2	ROLLER	
040	2901291-0000		1	ROLLER	
050	2907975-0000		1	BRACKET	
060	2889464-0000		1	SHAFT	
070	752186-0006		2	SHAFT	
080	752186-0001		2	SHAFT	
090	752186-0004		2	SHAFT	
120	2889463-0000		2	LOCK PLATE	
130	2889462-0000		6	PLATE	
160	2907974-0000		1	FRAME	
310	2033-0011		14	WASHER	
320	90240-0172		14	FLANGE BUSHING, 8X12X10 MM	
370	312105-0449		2	SCREW, M6S ISO 4017 M8X16 A4 80	
380	312105-0325		6	SCREW, M6S ISO 4017 M5X10 A4 80	
400	312109-0374		4	SCREW, M6S ISO 4017 M6X30 A4 80	

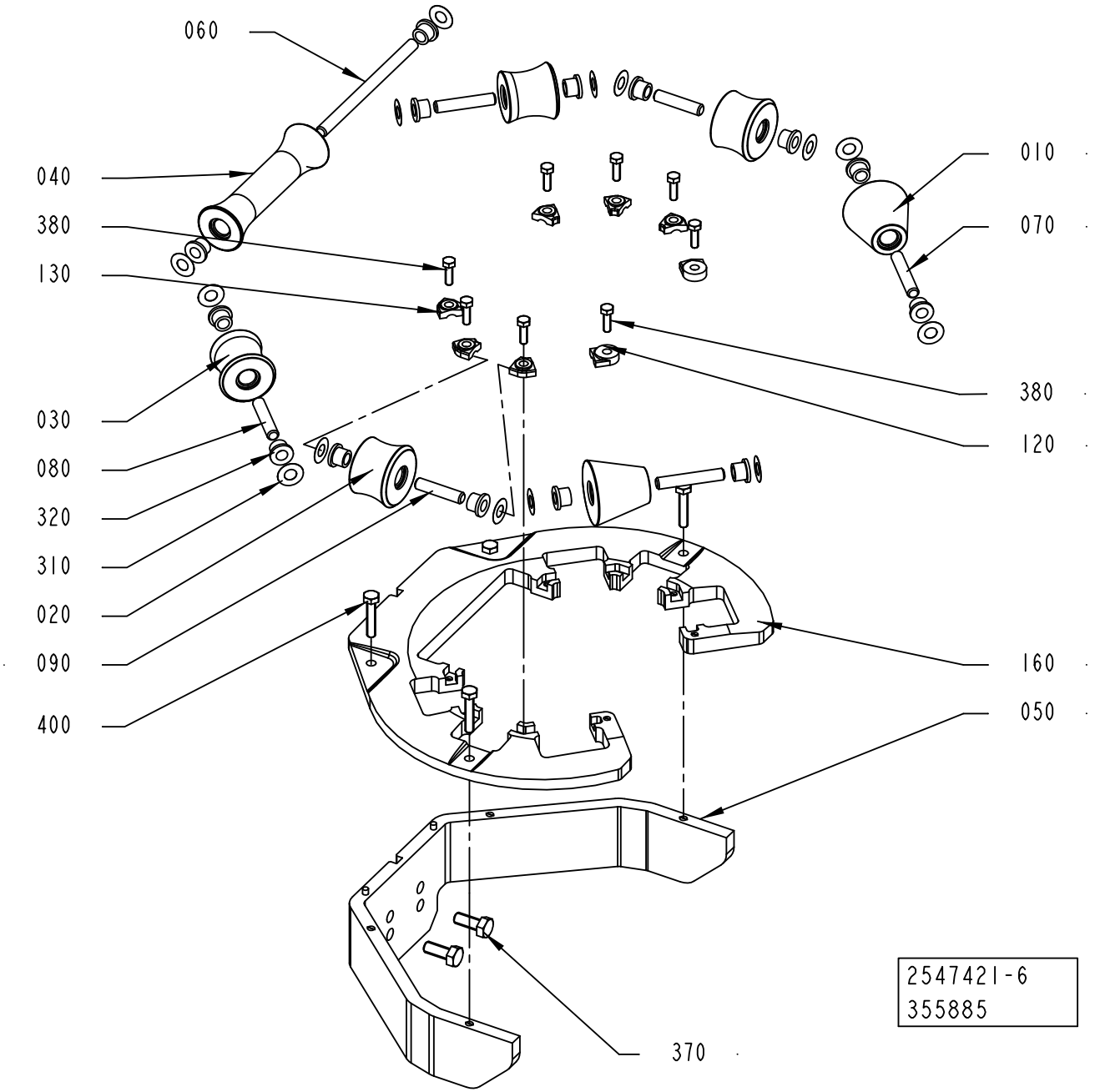
060
040
380
130
030
080
320
310
020
090
400
010
070
380
120
160
050
370
2547421-6
355885

ECM: 530441 - 20120416
Group number: 2547421-0200
Assembly Drawing: 2547421-6_1_AC

This list covers pages from 1-366 to 1-375

Pos	Part No	UN	Qty	Description	Page No	Pos	Part No	UN	Qty	Description	Page No

SEE PREVIOUS LISTS PAGES: 1-367, 1-369.

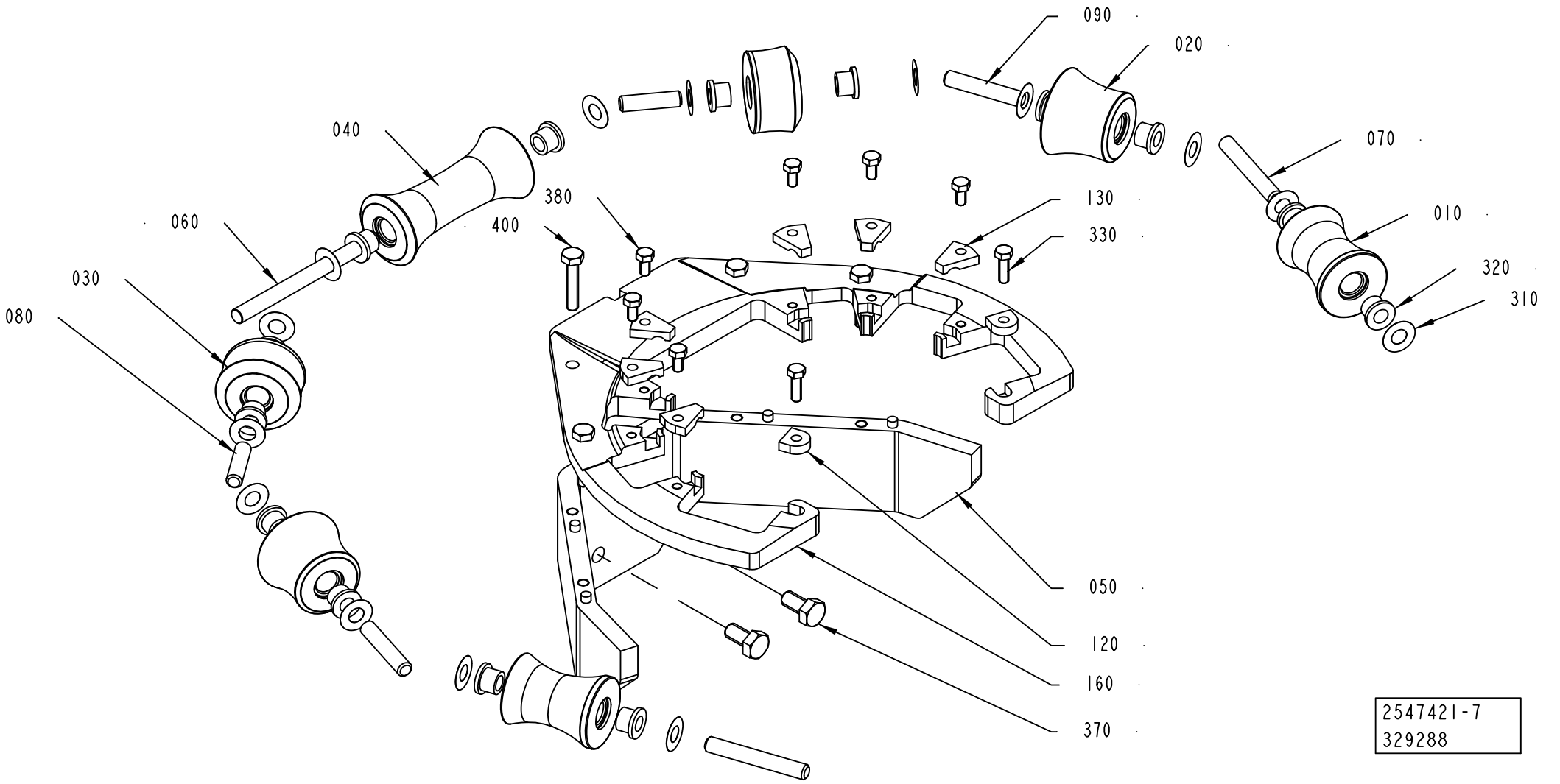
090
020
040
070
060
380
130
010
400
330
030
320
080
310
050
120
160
370
2547421-7
329288

Pos	Part No	UN	Qty	Description	Page No
SEE PREVIOUS LISTS PAGES: 1-367, 1-369.					

Pos	Part No	UN	Qty	Description	Page No

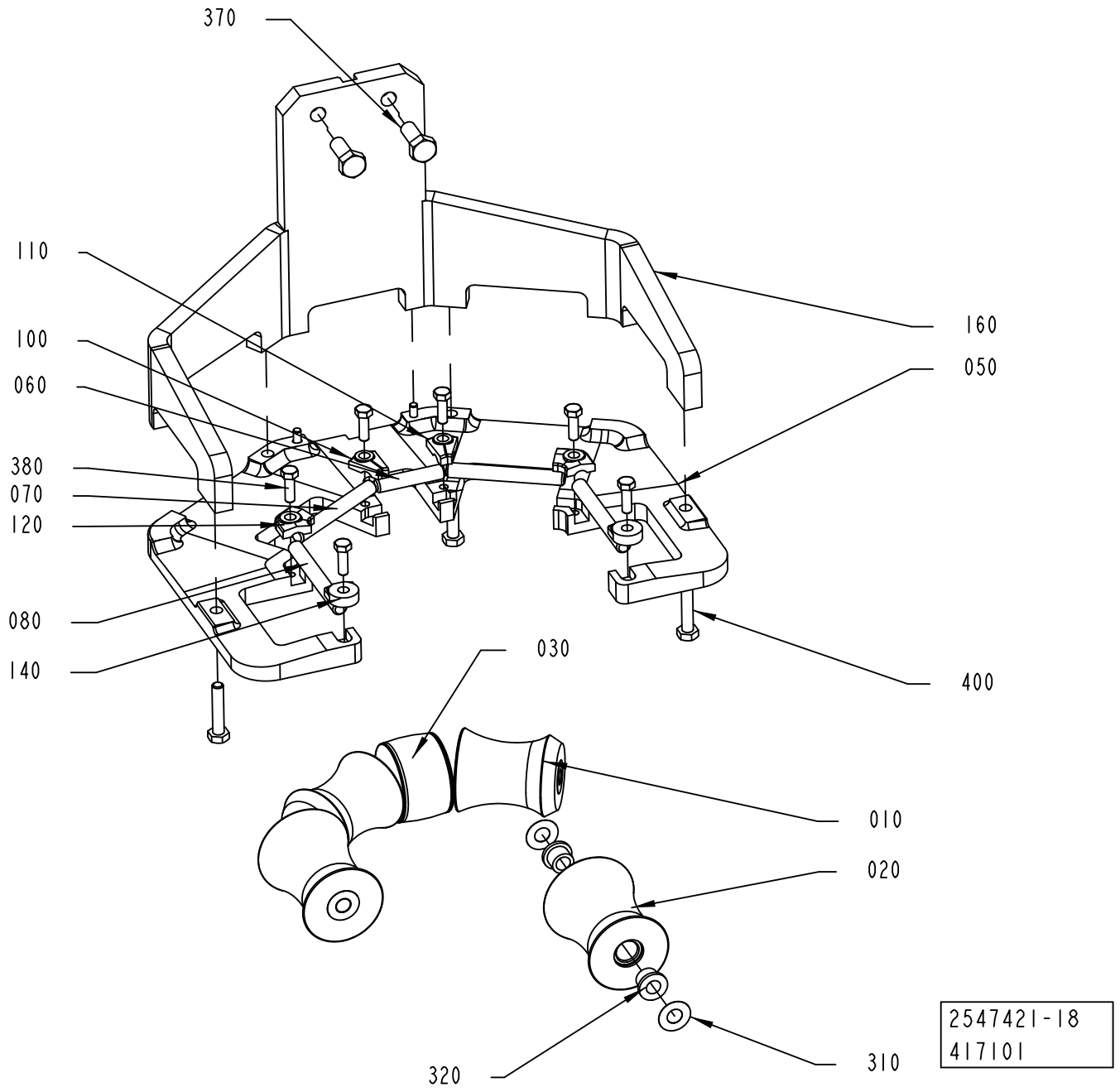
370
110
100
060
380
070
120
080
140
160
050
400
030
010
020
310
320
2547421-18
417101

ECM: 530441 - 20120416
Group number: 2547421-0200
Assembly Drawing: 2547421-18_1_AA

This list covers pages from 1-366 to 1-375

Pos	Part No	UN	Qty	Description	Page No	Pos	Part No	UN	Qty	Description	Page No

SEE PREVIOUS LISTS PAGES: 1-367, 1-369.

This page is intentionally left blank.

ECM: 536271 - 20120401
Group number: 3191259-0100
Assembly Drawing:

Pos	Part No	UN	Qty	Description	Page No
TBA 0500SQ START FM A3/F-0400, TBA 1000SQ START FM A3/F-0400					
020	2512780-0200		1	SEAL	**1-379, 1-381, 1-383**
TBA 0500B START FM A3/F-0400, TBA 0500S START FM A3/F-0400, TBA 1000B START FM A3/F-0400, TBA 1000S START FM A3/F-0400, TBA 1500S START FM A3/F-0400, TBA 2000S START FM A3/F-0400, TGA START FM A3/F-0400, TPA 0500SQ START FM A3/F-0400, TPA 0750SQ START FM A3/F-0400, TPA 1000SQ START FM A3/F-0400					
020	3035341-0200		1	SEAL	**1-385, 1-387**

Pos	Part No	UN	Qty	Description	Page No

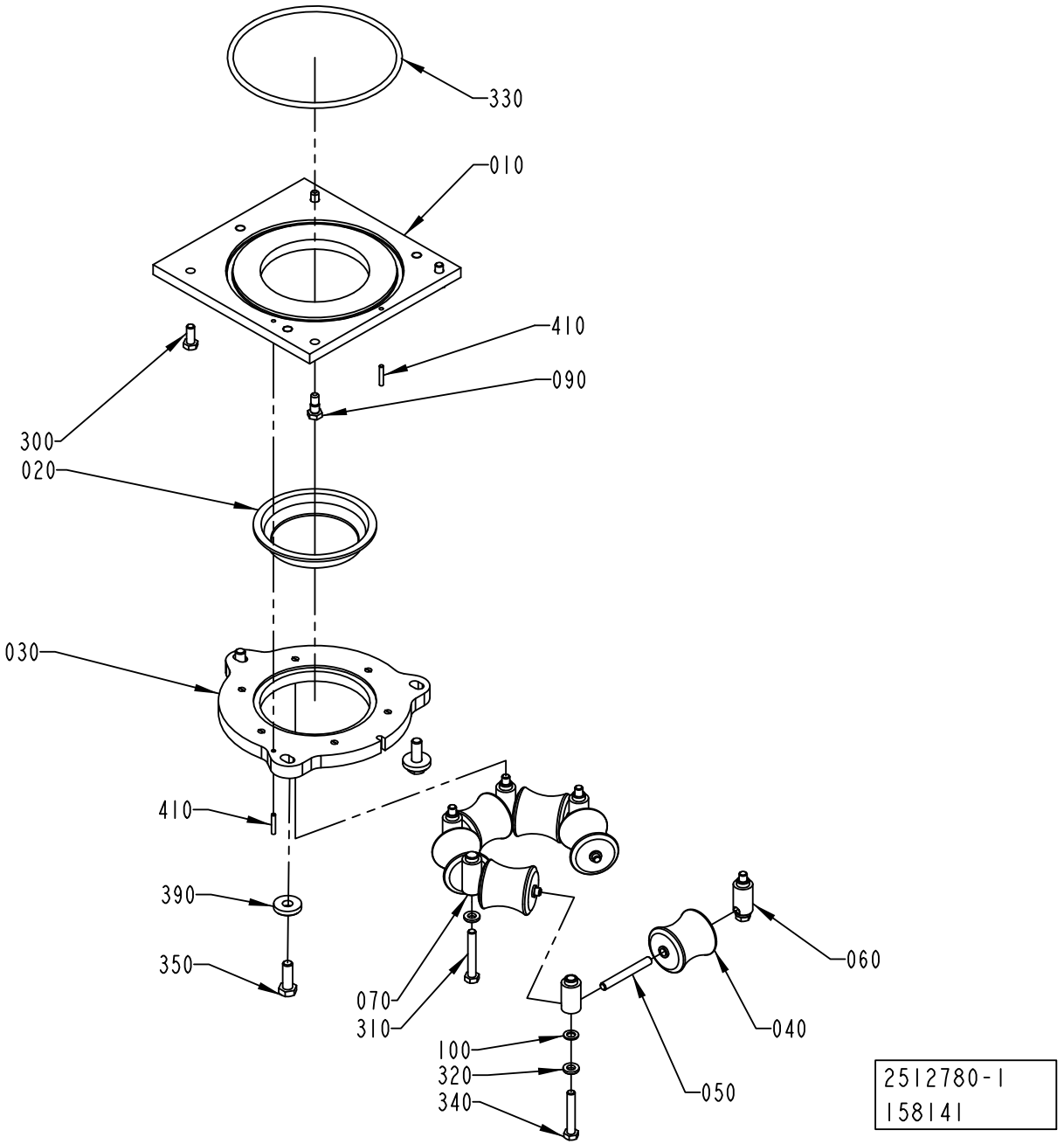
330
010
410
090
300
020
030
410
390
350
070
310
100
320
340
060
040
050
2512780-1
158141

ECM: 530436 - 20120416
Group number: 2512780-0200
Assembly Drawing: 2512780-1_1_AB

This list covers pages from 1-378 to 1-383

Pos	Part No	UN	Qty	Description	Page No
TBA 0500B, TBA 1000B, TBA 1500S (See drawing on page: 1-378)					
010	2559104-0000		1	PLATE	
020	466042-0000		1	SEAL	
030	2512779-0000		1	RING	
040	466046-0000		6	ROLLER	
050	263655-0009		6	SHAFT	
060	1036954-0000		4	AXLE SUPPORT	
070	1036955-0000		2	AXLE SUPPORT	
100	1129431-0000		4	WASHER	
310	312105-0462		2	SCREW, M6S ISO 4014 M8X55 A4 80	
320	315115-0165		6	WASHER PLAIN, TBRB 8,4/16 H=3	
340	312109-0461		4	SCREW, M6S ISO 4017 M8X50 A4 80	
350	312105-0495		3	SCREW, M6S ISO 4017 M10X30 A4 80	
390	315125-0173		3	WASHER HIGH, TBRSB 10,5X28X6 A4	
410	311103-1274		2	PARALLEL PIN ISO 2338 4M6X24 A1	
TBA 0500S (See drawing on page: 1-378)					
010	2559103-0000		1	PLATE	
020	466089-0000		1	SEAL	
030	2559102-0000		1	RING	
040	466092-0000		6	ROLL	
050	263655-0007		6	SHAFT	
060	1036954-0000		4	AXLE SUPPORT	
070	1036955-0000		2	AXLE SUPPORT	
100	1129431-0000		4	WASHER	
310	312105-0462		2	SCREW, M6S ISO 4014 M8X55 A4 80	
320	315115-0165		6	WASHER PLAIN, TBRB 8,4/16 H=3	
340	312109-0461		4	SCREW, M6S ISO 4017 M8X50 A4 80	
350	312105-0495		3	SCREW, M6S ISO 4017 M10X30 A4 80	
390	315125-0173		3	WASHER HIGH, TBRSB 10,5X28X6 A4	
410	311103-1274		2	PARALLEL PIN ISO 2338 4M6X24 A1	
TBA 0500SQ, TBA 1000SQ (See drawing on page: 1-378)					
010	2559104-0000		1	PLATE	
020	579318-0000		1	SEAL	
030	2512779-0000		1	RING	
040	1490762-0000		6	ROLLER	
050	263655-0009		6	SHAFT	
060	1036954-0000		4	AXLE SUPPORT	
070	1036955-0000		2	AXLE SUPPORT	
100	1129431-0000		4	WASHER	
310	312105-0462		2	SCREW, M6S ISO 4014 M8X55 A4 80	
320	315115-0165		6	WASHER PLAIN, TBRB 8,4/16 H=3	
340	312109-0461		4	SCREW, M6S ISO 4017 M8X50 A4 80	
350	312105-0495		3	SCREW, M6S ISO 4017 M10X30 A4 80	
390	315125-0173		3	WASHER HIGH, TBRSB 10,5X28X6 A4	
410	311103-1274		2	PARALLEL PIN ISO 2338 4M6X24 A1	
TBA 1000S (See drawing on page: 1-378)					
010	2559104-0000		1	PLATE	
020	567743-0000		1	SEAL	
030	2512779-0000		1	RING	
040	573504-0000		6	ROLLER	
050	263655-0009		6	SHAFT	
060	1036954-0000		4	AXLE SUPPORT	
070	1036955-0000		2	AXLE SUPPORT	
100	1129431-0000		4	WASHER	
310	312105-0462		2	SCREW, M6S ISO 4014 M8X55 A4 80	
320	315115-0165		6	WASHER PLAIN, TBRB 8,4/16 H=3	
340	312109-0461		4	SCREW, M6S ISO 4017 M8X50 A4 80	
350	312105-0495		3	SCREW, M6S ISO 4017 M10X30 A4 80	
390	315125-0173		3	WASHER HIGH, TBRSB 10,5X28X6 A4	
410	311103-1274		2	PARALLEL PIN ISO 2338 4M6X24 A1	
TBA 2000S (See drawing on page: 1-378)					
010	2582616-0000		1	PLATE	
020	2582623-0000		1	SEAL	
030	2582629-0000		1	RING	
040	2582630-0000		6	ROLLER	
050	263655-0015		6	SHAFT	
060	1036954-0000		4	AXLE SUPPORT	
070	1036955-0000		2	AXLE SUPPORT	
100	1129431-0000		4	WASHER	
310	312105-0462		2	SCREW, M6S ISO 4014 M8X55 A4 80	
320	315115-0165		6	WASHER PLAIN, TBRB 8,4/16 H=3	
340	312109-0461		4	SCREW, M6S ISO 4017 M8X50 A4 80	
350	312105-0495		3	SCREW, M6S ISO 4017 M10X30 A4 80	
390	315125-0173		3	WASHER HIGH, TBRSB 10,5X28X6 A4	
410	311103-1274		2	PARALLEL PIN ISO 2338 4M6X24 A1	
TGA 1000SQ, TGA 0750SQ, TGA 0500SQ (See drawing on page: 1-382)					
010	3018414-0000		1	PLATE	
020	2641271-0000		1	SEAL	
410	311103-1274		1	PARALLEL PIN ISO 2338 4M6X24 A1	
TGA 1500SQ (See drawing on page: 1-382)					
010	2968252-0000		1	PLATE	
020	466042-0000		1	SEAL	
410	311103-1274		1	PARALLEL PIN ISO 2338 4M6X24 A1	
TPA 0500SQ (See drawing on page: 1-380)					

Machine Type | Group Description | Used-In | Group Number | Page No

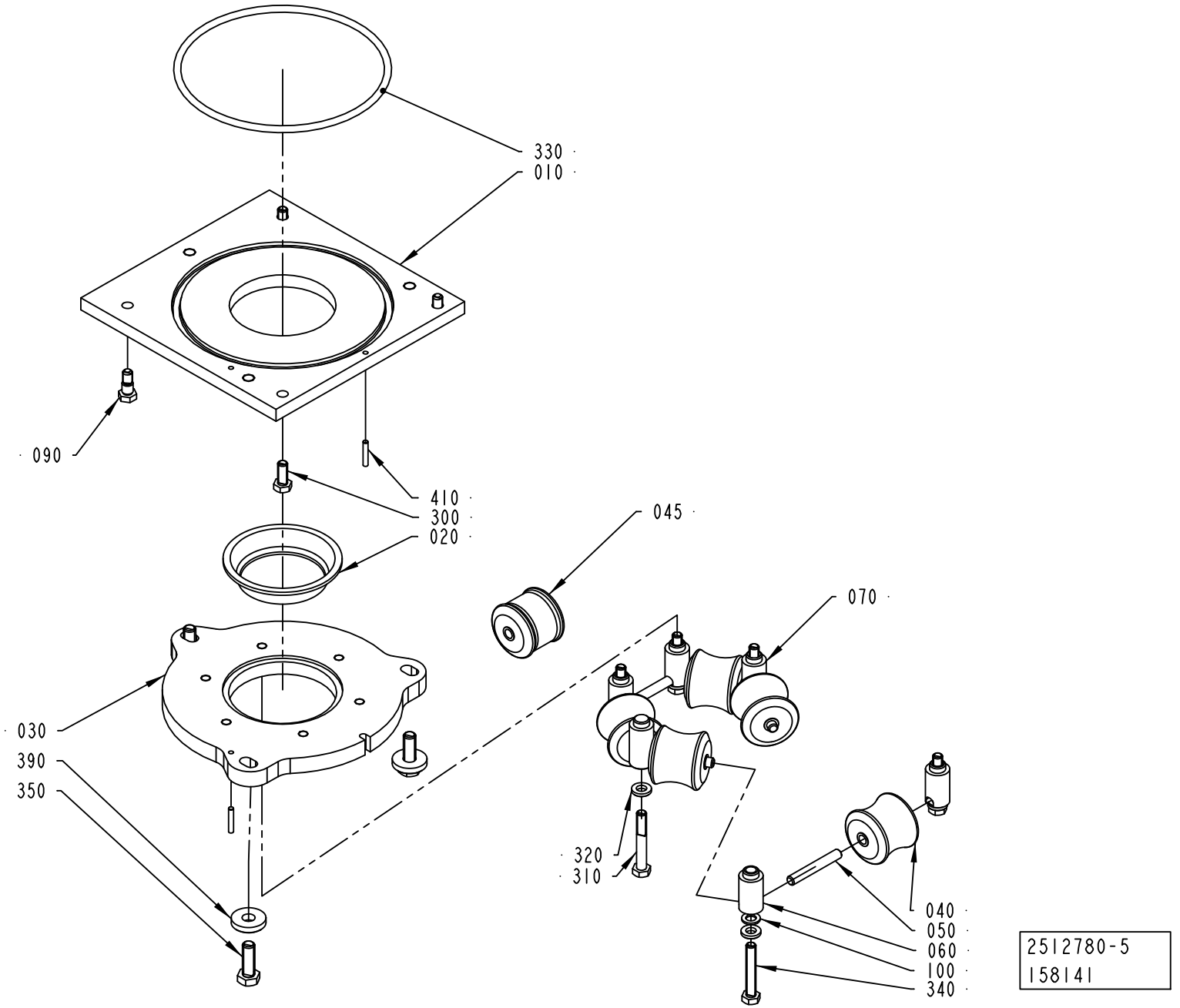
330
010
090
410
300
020
045
070
030
390
350
320
310
040
050
060
100
340
2512780-5
158141

ECM: 530436 - 20120416
Group number: 2512780-0200
Assembly Drawing: 2512780-5_1_AB

This list covers pages from 1-378 to 1-383

Pos	Part No	UN	Qty	Description	Page No
TPA 0500SQ (Cont'd) (See drawing on page: 1-380)					
010	2611046-0000		1	PLATE	
020	2718901-0000		1	SEAL	
030	2611047-0000		1	RING	
040	2552655-0000		5	ROLLER	
045	2552656-0000		1	ROLLER	
050	263655-0007		6	SHAFT	
060	1036954-0000		4	AXLE SUPPORT	
070	1036955-0000		2	AXLE SUPPORT	
100	1129431-0000		4	WASHER	
310	312105-0462		2	SCREW, M6S ISO 4014 M8X55 A4 80	
320	315115-0165		6	WASHER PLAIN, TBRB 8,4/16 H=3	
340	312109-0461		4	SCREW, M6S ISO 4017 M8X50 A4 80	
350	312105-0495		3	SCREW, M6S ISO 4017 M10X30 A4 80	
390	315125-0173		3	WASHER HIGH, TBRSB 10,5X28X6 A4	
410	311103-1274		2	PARALLEL PIN ISO 2338 4M6X24 A1	
TPA 1000SQ, TPA 0750SQ (See drawing on page: 1-378)					
010	2559103-0000		1	PLATE	
020	1524414-0000		1	SEAL	
030	2559102-0000		1	RING	
040	1524416-0000		6	ROLLER	
050	263655-0007		6	SHAFT	
060	1036954-0000		4	AXLE SUPPORT	
070	1036955-0000		2	AXLE SUPPORT	
100	1129431-0000		4	WASHER	
310	312105-0462		2	SCREW, M6S ISO 4014 M8X55 A4 80	
320	315115-0165		6	WASHER PLAIN, TBRB 8,4/16 H=3	
340	312109-0461		4	SCREW, M6S ISO 4017 M8X50 A4 80	
350	312105-0495		3	SCREW, M6S ISO 4017 M10X30 A4 80	
390	315125-0173		3	WASHER HIGH, TBRSB 10,5X28X6 A4	
410	311103-1274		2	PARALLEL PIN ISO 2338 4M6X24 A1	
Common Parts					
090	1037885-0000		2	REAMED BOLT	
300	312105-0451		2	SCREW, M6S ISO 4017 M8X20 A4 80	
330	315204-0324		1	O-RING 164,3X5,7 MM	

Pos	Part No	UN	Qty	Description	Page No

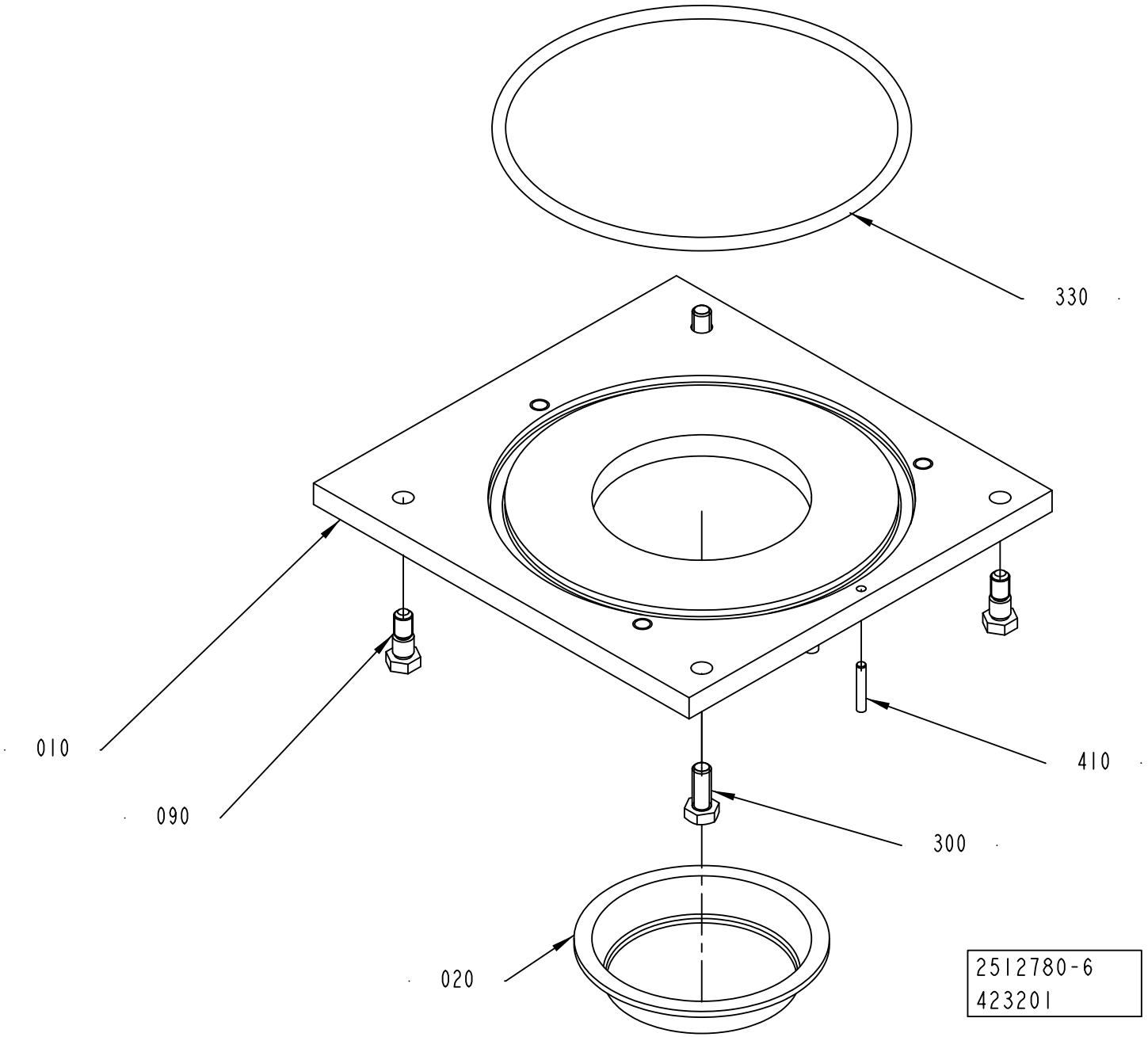
330
010
090
410
300
020
2512780-6
423201

Pos	Part No	UN	Qty	Description	Page No	Pos	Part No	UN	Qty	Description	Page No

SEE PREVIOUS LISTS PAGES: 1-379, 1-381.

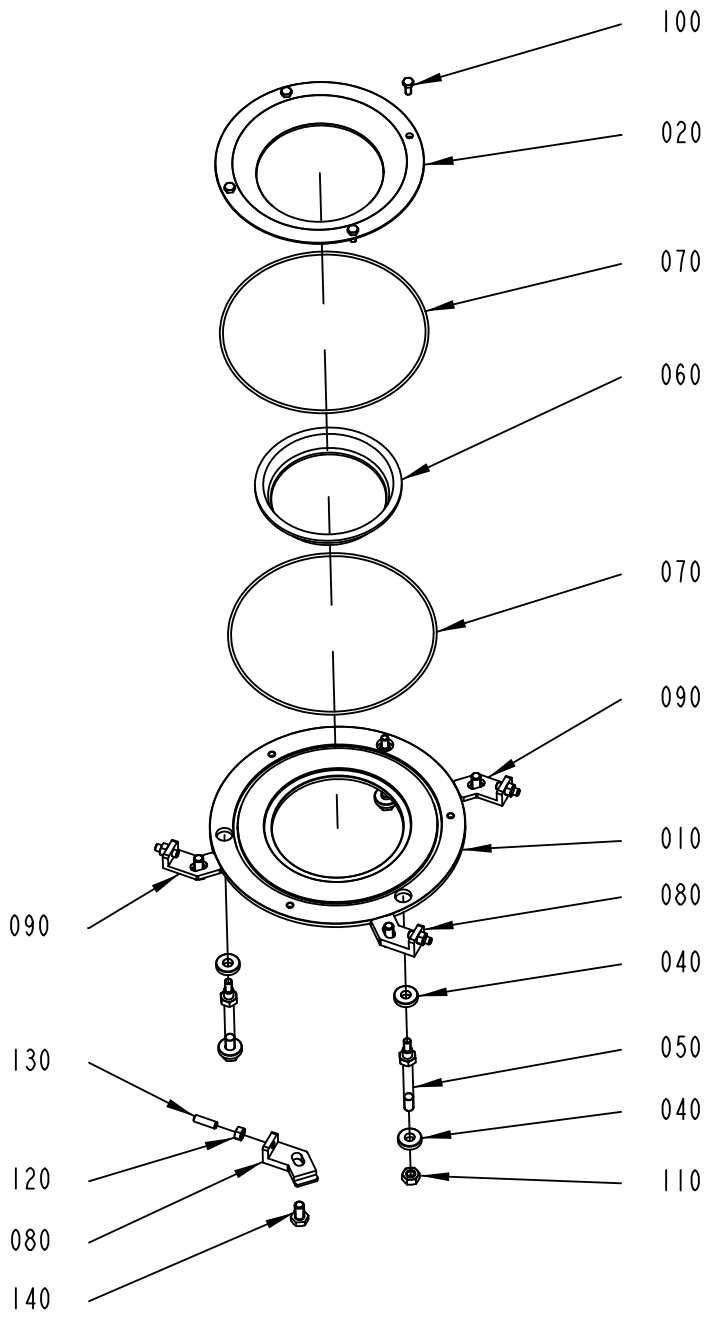

3035341-8
445709

Pos	Part No	UN	Qty	Description	Page No
TBA 0500B, TBA 1000B, TBA 1500S (See drawing on page: 1-384)					
010	3093243-0000		1	PLATE	
020	3093227-0000		1	FLANGE	
030	466042-0000		1	SEAL	
050	3035342-0000		3	STUD SCREW	
TBA 0500S (See drawing on page: 1-384)					
010	3093244-0000		1	PLATE	
020	3093228-0000		1	FLANGE	
030	466089-0000		1	SEAL	
050	3035342-0000		3	STUD SCREW	
TBA 1000S (See drawing on page: 1-384)					
010	3093243-0000		1	PLATE	
020	3093227-0000		1	FLANGE	
030	567743-0000		1	SEAL	
050	3035342-0000		3	STUD SCREW	
TBA 2000S (See drawing on page: 1-384)					
010	3093242-0000		1	PLATE	
020	3093226-0000		1	FLANGE	
030	2582623-0000		1	SEAL	
050	3035342-0000		3	STUD SCREW	
TGA 1000SQ, TGA 0750SQ, TGA 0500SQ (See drawing on page: 1-384)					
010	3093244-0000		1	PLATE	
020	3093228-0000		1	FLANGE	
030	2641271-0000		1	SEAL	
050	3035342-0000		3	STUD SCREW	
TGA 1500SQ (See drawing on page: 1-384)					
010	3093243-0000		1	PLATE	
020	3093227-0000		1	FLANGE	
030	466042-0000		1	SEAL	
050	3035342-0000		3	STUD SCREW	
TPA 0500SQ (See drawing on page: 1-386)					
010	3093245-0000		1	PLATE	
020	3093229-0000		1	FLANGE	
030	2718901-0000		1	SEAL	
050	3037779-0000		3	STUD SCREW	
TPA 1000SQ, TPA 0750SQ (See drawing on page: 1-386)					
010	3093244-0000		1	PLATE	
020	3093228-0000		1	FLANGE	
030	1524414-0000		1	SEAL	
050	3037779-0000		3	STUD SCREW	
Common Parts					
040	2821398-0000		6	WASHER	
060	3039010-0000		2	BRACKET	
070	3039011-0000		2	BRACKET	
200	312105-0327		4	SCREW, M6S ISO 4017 M5X12 A4 80	
210	312605-0318		3	HEXAGON NUT, M6M M8 A280	
220	312605-0316		4	HEXAGON NUT, M6M M6 A280	
230	312318-0370		4	SET SCREW, CUP END ISO4029 M6X20 A4	
240	312105-0449		4	SCREW, M6S ISO 4017 M8X16 A4 80	
250	90601-4830		2	O-RING 171,12X2,62 MM	

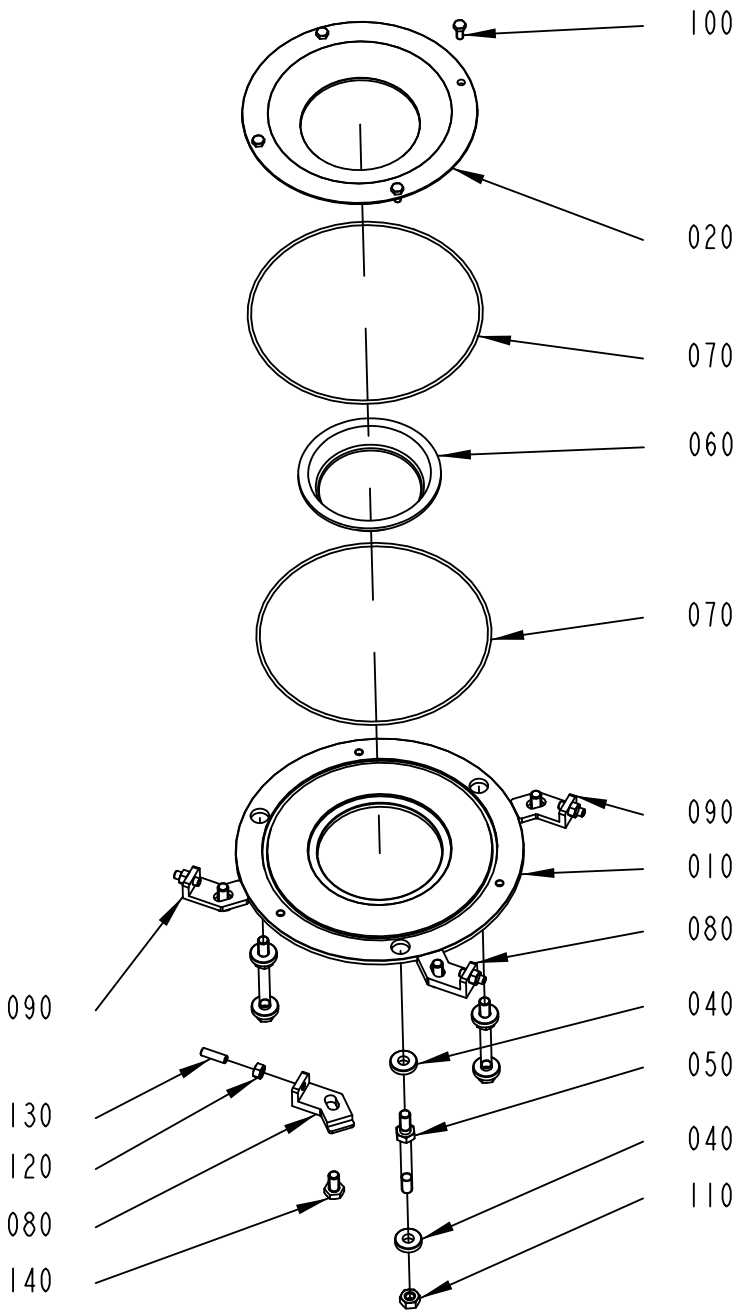

3035341-9
445709

Pos	Part No	UN	Qty	Description	Page No
TBA 0500B, TBA 1000B, TBA 1500S (See drawing on page: 1-384)					
010	3093243-0000		1	PLATE	
020	3093227-0000		1	FLANGE	
030	466042-0000		1	SEAL	
050	3035342-0000		3	STUD SCREW	
TBA 0500S (See drawing on page: 1-384)					
010	3093244-0000		1	PLATE	
020	3093228-0000		1	FLANGE	
030	466089-0000		1	SEAL	
050	3035342-0000		3	STUD SCREW	
TBA 1000S (See drawing on page: 1-384)					
010	3093243-0000		1	PLATE	
020	3093227-0000		1	FLANGE	
030	567743-0000		1	SEAL	
050	3035342-0000		3	STUD SCREW	
TBA 2000S (See drawing on page: 1-384)					
010	3093242-0000		1	PLATE	
020	3093226-0000		1	FLANGE	
030	2582623-0000		1	SEAL	
050	3035342-0000		3	STUD SCREW	
TGA 1000SQ, TGA 0750SQ, TGA 0500SQ (See drawing on page: 1-384)					
010	3093244-0000		1	PLATE	
020	3093228-0000		1	FLANGE	
030	2641271-0000		1	SEAL	
050	3035342-0000		3	STUD SCREW	
TGA 1500SQ (See drawing on page: 1-384)					
010	3093243-0000		1	PLATE	
020	3093227-0000		1	FLANGE	
030	466042-0000		1	SEAL	
050	3035342-0000		3	STUD SCREW	
TPA 0500SQ (See drawing on page: 1-386)					
010	3093245-0000		1	PLATE	
020	3093229-0000		1	FLANGE	
030	2718901-0000		1	SEAL	
050	3037779-0000		3	STUD SCREW	
TPA 1000SQ, TPA 0750SQ (See drawing on page: 1-386)					
010	3093244-0000		1	PLATE	
020	3093228-0000		1	FLANGE	
030	1524414-0000		1	SEAL	
050	3037779-0000		3	STUD SCREW	
Common Parts					
040	2821398-0000		6	WASHER	
060	3039010-0000		2	BRACKET	
070	3039011-0000		2	BRACKET	
200	312105-0327		4	SCREW, M6S ISO 4017 M5X12 A4 80	
210	312605-0318		3	HEXAGON NUT, M6M M8 A280	
220	312605-0316		4	HEXAGON NUT, M6M M6 A280	
230	312318-0370		4	SET SCREW, CUP END ISO4029 M6X20 A4	
240	312105-0449		4	SCREW, M6S ISO 4017 M8X16 A4 80	
250	90601-4830		2	O-RING 171,12X2,62 MM	

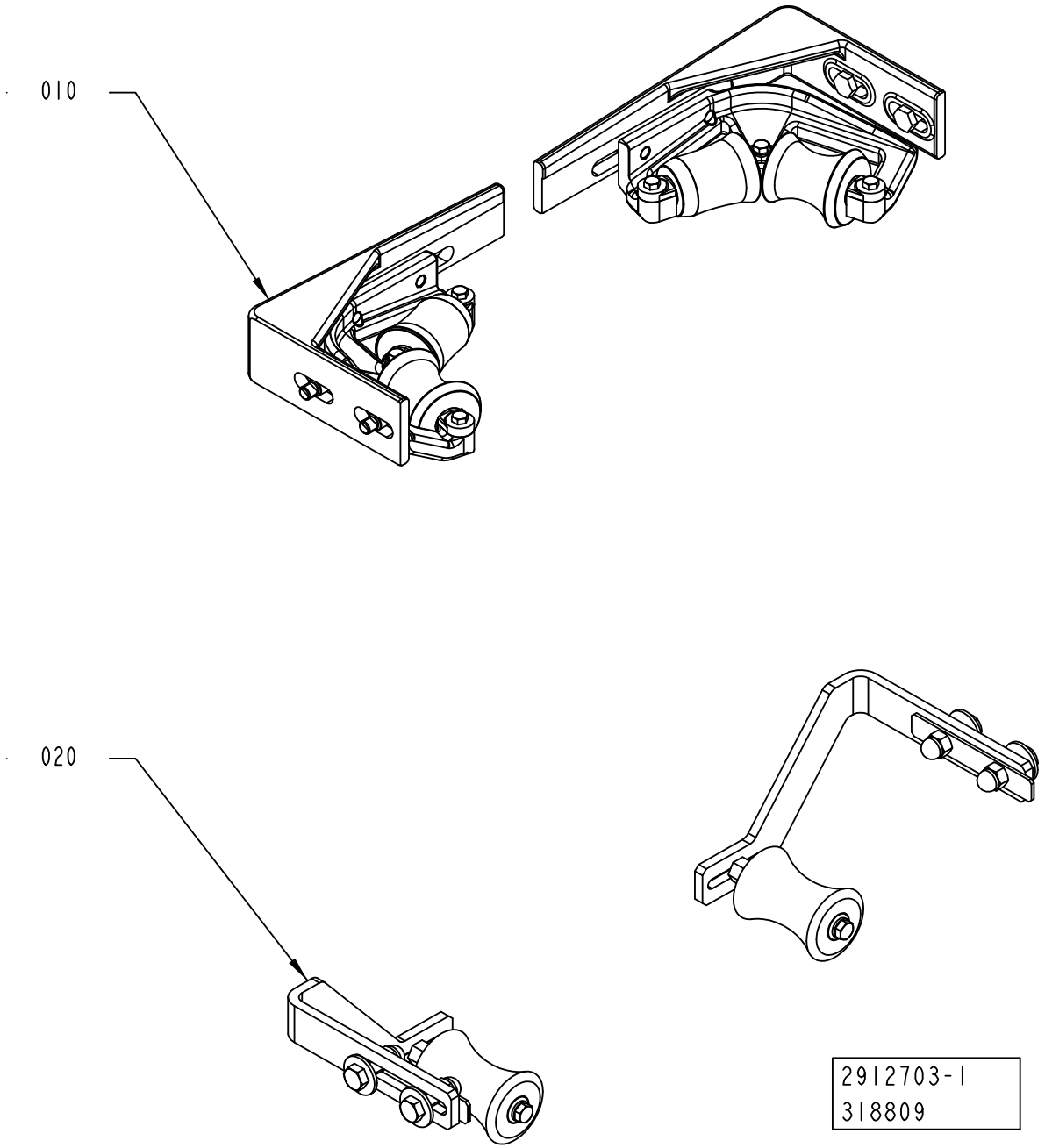
010
020
2912703-1
318809

ECM: 530454 - 20120416
Group number: 2912703-0100
Assembly Drawing: 2912703-1_1_AA

Pos	Part No	UN	Qty	Description	Page No
A3/FLEX TBA 0500B, A3/FLEX TBA 1000B, A3/FLEX TBA 1000S, A3/FLEX TBA 1000SQ, A3/FLEX TPA 1000SQ, A3/FLEX TBA 1500S, A3/FLEX TPA 0500SQ, A3/FLEX TBA 0500S, A3/FLEX TPA 0750SQ, A3/FLEX TBA 0500SQ, A3/FLEX TGA 1000SQ, A3/FLEX TGA 0500SQ, A3/FLEX TGA 0750SQ, A3/FLEX TGA 1500SQ, A3/FLEX TGA 1000CR, A3/FLEX TGA 1000LF (See drawing on page: 1-388)					
020	2541634-0200		1	EDGE ROLLER	**1-391, 1-393**
A3/FLEX TBA 2000S (See drawing on page: 1-388)					
010	2547420-0200		1	EDGE ROLLER	**1-395, 1-397**
020	2541634-0200		1	EDGE ROLLER	**1-391, 1-393**

Pos	Part No	UN	Qty	Description	Page No

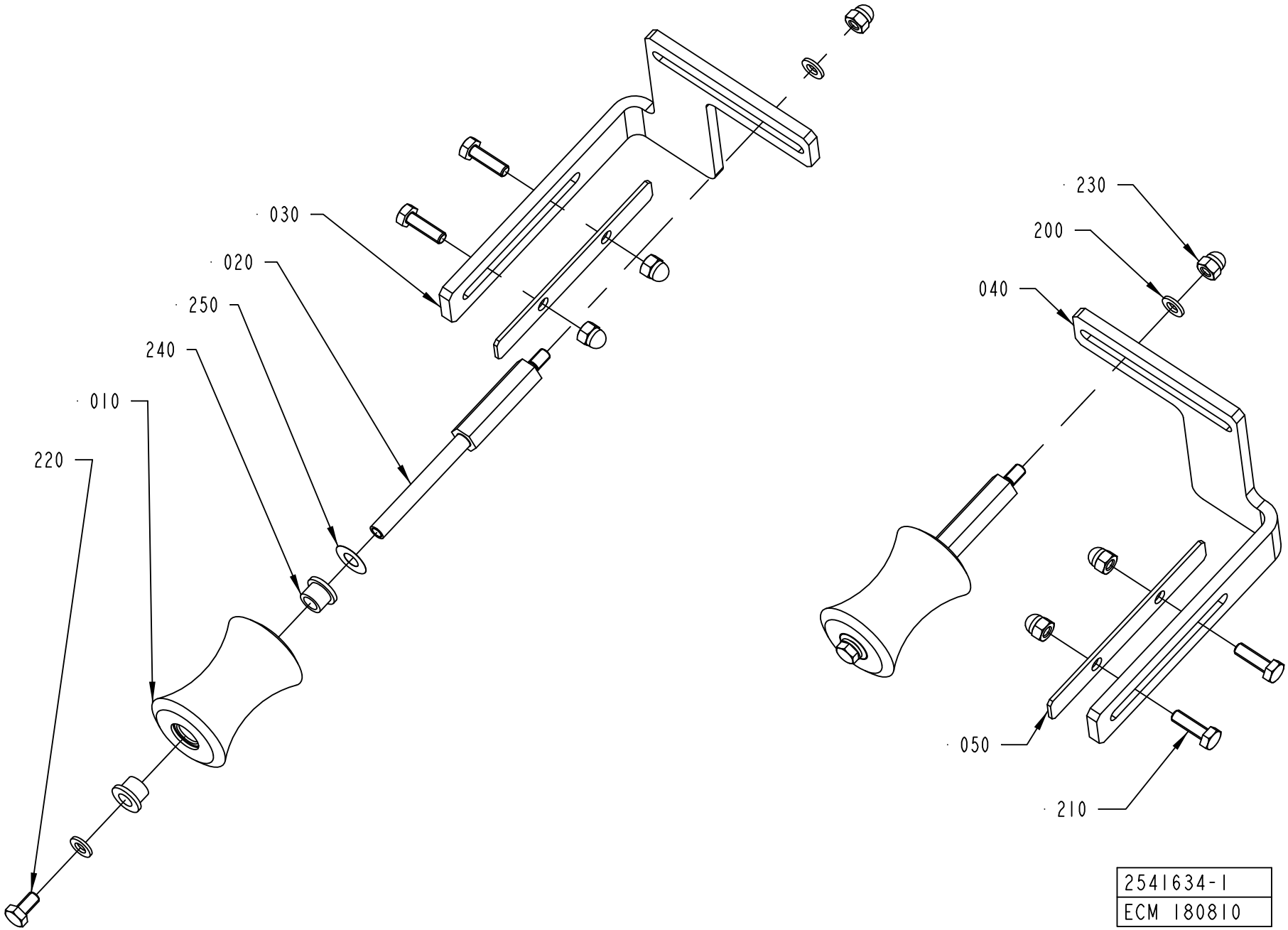
030
020
250
240
010
220
230
200
040
050
210
2541634-1
ECM 180810

Pos	Part No	UN	Qty	Description	Page No
A3/FLEX TBA 0500B, A3/FLEX TBA 1000B, A3/FLEX TBA 1000SQ, A3/FLEX TBA 1500S, A3/FLEX TPA 0500SQ, A3/FLEX TBA 0500S, A3/FLEX TBA 0500SQ, A3/FLEX TGA 1000SQ, A3/FLEX TGA 0500SQ, A3/FLEX TGA 0750SQ, A3/FLEX TGA 1500SQ, A3/FLEX TGA 1000CR, A3/FLEX TGA 1000LF, A3/FLEX TBA 1000S (See drawing on page: 1-390)					
010	1478359-0000		2	ROLLER	
020	1511492-0000		2	SHAFT	
030	2528112-0000		1	BRACKET	
040	2528113-0000		1	BRACKET	
050	2528114-0000		2	COVER PLATE	
200	315105-0153		4	WASHER PLAIN, 6,4X12X1,5 A4 BRB	
210	312105-0370		4	SCREW, M6S ISO 4017 M6X20 A4 80	
220	312105-0366		2	SCREW, M6S ISO 4017 M6X12 A4 80	
230	312705-0316		6	HEX. DOMED CAP MHM-6 M6 A280	
240	90240-0172		4	FLANGE BUSHING, 8X12X10 MM	
A3/FLEX TBA 2000S (See drawing on page: 1-392)					
010	2601286-0000		2	ROLLER	
020	2634934-0000		2	SHAFT	
030	2634932-0000		1	BRACKET	
040	2634933-0000		1	BRACKET	
050	2651695-0000		2	COVER PLATE	
200	315105-0153		4	WASHER PLAIN, 6,4X12X1,5 A4 BRB	
210	312105-0453		4	SCREW, M6S ISO 4017 M8X25 A4 80	
220	312105-0366		2	SCREW, M6S ISO 4017 M6X12 A4 80	
230	312705-0316		2	HEX. DOMED CAP MHM-6 M6 A280	
240	90240-0172		4	FLANGE BUSHING, 8X12X10 MM	
260	312705-0318		4	NUT HEX. DOMED CAP MHM-6 M8 A280	
A3/FLEX TPA 1000SQ, A3/FLEX TPA 0750SQ (See drawing on page: 1-390)					
010	2885029-0000		2	ROLLER	
020	1511492-0000		2	SHAFT	
030	2528112-0000		1	BRACKET	
040	2528113-0000		1	BRACKET	
050	2528114-0000		2	COVER PLATE	
200	315105-0153		4	WASHER PLAIN, 6,4X12X1,5 A4 BRB	
210	312105-0370		4	SCREW, M6S ISO 4017 M6X20 A4 80	
220	312105-0366		2	SCREW, M6S ISO 4017 M6X12 A4 80	
230	312705-0316		6	HEX. DOMED CAP MHM-6 M6 A280	
240	90240-0172		4	FLANGE BUSHING, 8X12X10 MM	
Common Parts					
250	2033-0011		2	WASHER	

Pos	Part No	UN	Qty	Description	Page No

Machine Type | Group Description | Used-In | Group Number | Page No

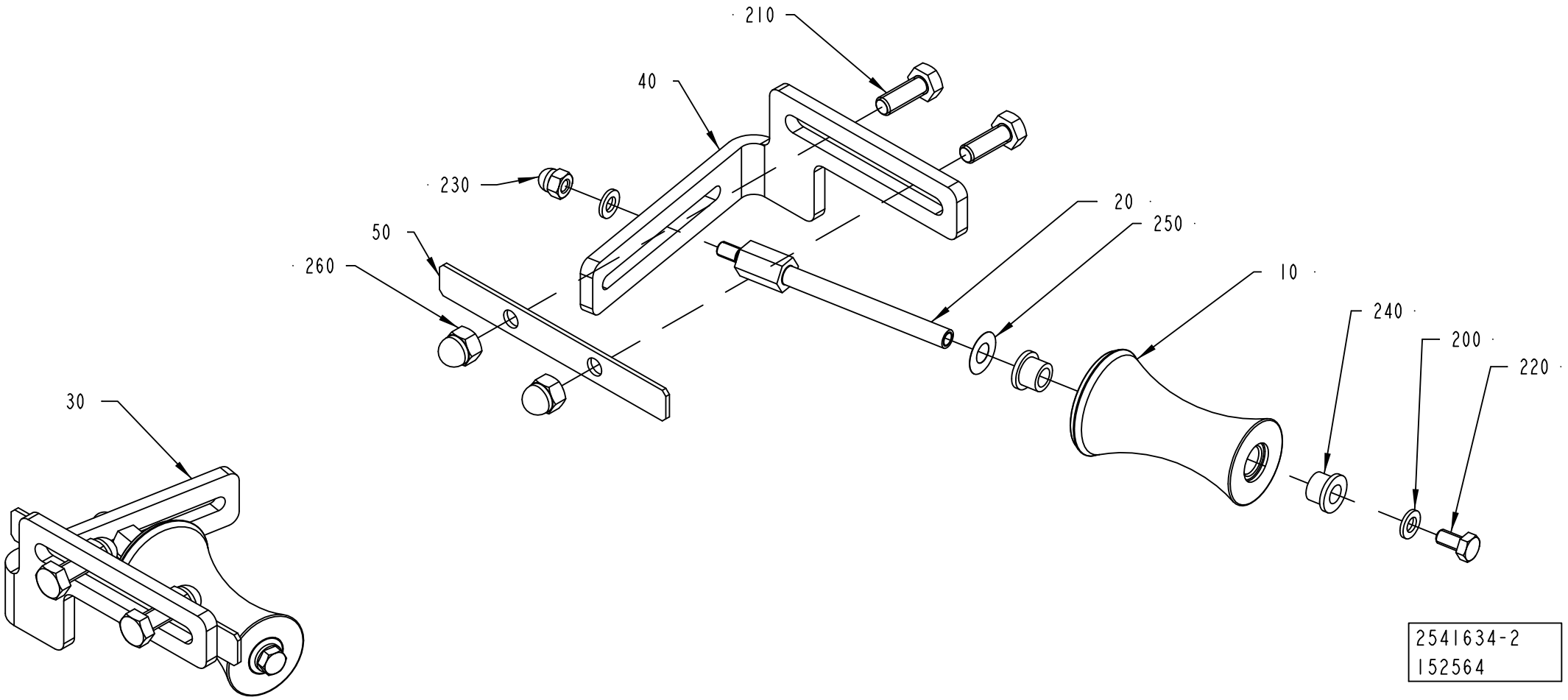
210
40
230
50
260
20
250
10
240
200
220
30
2541634-2
152564

Pos	Part No	UN	Qty	Description	Page No
A3/FLEX TBA 0500B, A3/FLEX TBA 1000B, A3/FLEX TBA 1000SQ, A3/FLEX TBA 1500S, A3/FLEX TPA 0500SQ, A3/FLEX TBA 0500S, A3/FLEX TBA 0500SQ, A3/FLEX TGA 1000SQ, A3/FLEX TGA 0500SQ, A3/FLEX TGA 0750SQ, A3/FLEX TGA 1500SQ, A3/FLEX TGA 1000CR, A3/FLEX TGA 1000LF, A3/FLEX TBA 1000S (See drawing on page: 1-390)					
010	1478359-0000		2	ROLLER	
020	1511492-0000		2	SHAFT	
030	2528112-0000		1	BRACKET	
040	2528113-0000		1	BRACKET	
050	2528114-0000		2	COVER PLATE	
200	315105-0153		4	WASHER PLAIN, 6,4X12X1,5 A4 BRB	
210	312105-0370		4	SCREW, M6S ISO 4017 M6X20 A4 80	
220	312105-0366		2	SCREW, M6S ISO 4017 M6X12 A4 80	
230	312705-0316		6	HEX. DOMED CAP MHM-6 M6 A280	
240	90240-0172		4	FLANGE BUSHING, 8X12X10 MM	
A3/FLEX TBA 2000S (See drawing on page: 1-392)					
010	2601286-0000		2	ROLLER	
020	2634934-0000		2	SHAFT	
030	2634932-0000		1	BRACKET	
040	2634933-0000		1	BRACKET	
050	2651695-0000		2	COVER PLATE	
200	315105-0153		4	WASHER PLAIN, 6,4X12X1,5 A4 BRB	
210	312105-0453		4	SCREW, M6S ISO 4017 M8X25 A4 80	
220	312105-0366		2	SCREW, M6S ISO 4017 M6X12 A4 80	
230	312705-0316		2	HEX. DOMED CAP MHM-6 M6 A280	
240	90240-0172		4	FLANGE BUSHING, 8X12X10 MM	
260	312705-0318		4	NUT HEX. DOMED CAP MHM-6 M8 A280	
A3/FLEX TPA 1000SQ, A3/FLEX TPA 0750SQ (See drawing on page: 1-390)					
010	2885029-0000		2	ROLLER	
020	1511492-0000		2	SHAFT	
030	2528112-0000		1	BRACKET	
040	2528113-0000		1	BRACKET	
050	2528114-0000		2	COVER PLATE	
200	315105-0153		4	WASHER PLAIN, 6,4X12X1,5 A4 BRB	
210	312105-0370		4	SCREW, M6S ISO 4017 M6X20 A4 80	
220	312105-0366		2	SCREW, M6S ISO 4017 M6X12 A4 80	
230	312705-0316		6	HEX. DOMED CAP MHM-6 M6 A280	
240	90240-0172		4	FLANGE BUSHING, 8X12X10 MM	
Common Parts					
250	2033-0011		2	WASHER	

Pos	Part No	UN	Qty	Description	Page No

EDGE ROLLER

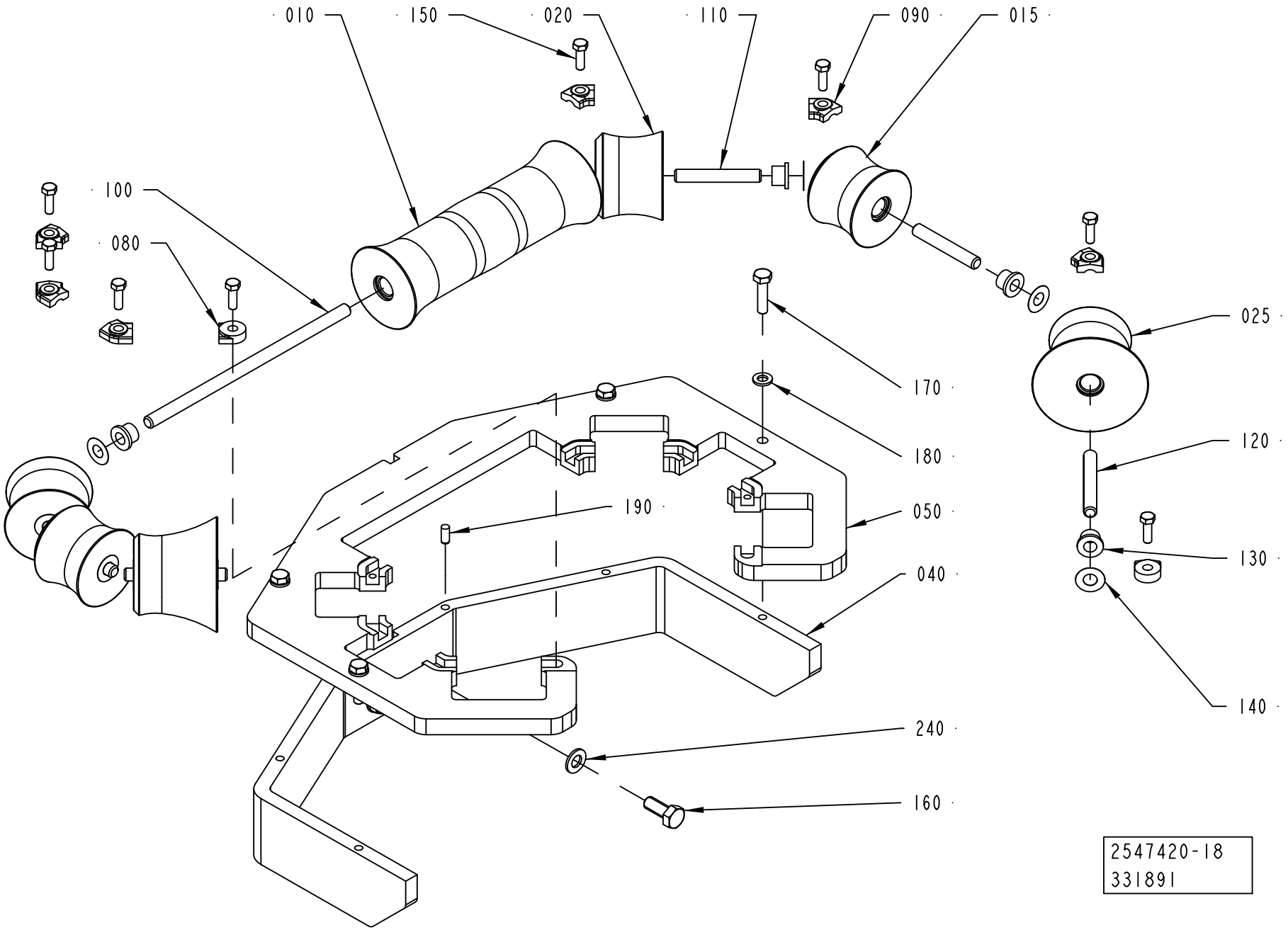
010
150
020
110
090
015
100
080
025
170
180
120
190
050
130
040
240
140
160
2547420-18
331891

ECM: 451980 - 20100702
Group number: 2547420-0200
Assembly Drawing: 2547420-18_1_AA

This list covers pages from 1-394 to 1-397

Pos	Part No	UN	Qty	Description	Page No
TBA 0500B, TBA 1000B (See drawing on page: 1-396)					
010	2651790-0000		2	ROLLER	
020	2651789-0000		2	ROLLER	
030	2552140-0000		1	BRACKET	
040	2552141-0000		1	BRACKET	
050	3079112-0000		1	BRACKET	
060	3079114-0000		1	BRACKET	
080	2532895-0008		4	LOCK PLATE	
090	2528123-0006		2	LOCK PLATE	
110	752186-0016		4	SHAFT	
130	90240-0172		8	FLANGE BUSHING, 8X12X10 MM	
140	2033-0011		8	WASHER	
150	312105-0331		6	SCREW, M6S ISO 4017 M5X20 A4 80	
TBA 1000S, TBA 1500S (See drawing on page: 1-396)					
010	2552144-0000		2	ROLLER	
020	2562664-0000		2	ROLLER	
030	2552140-0000		1	BRACKET	
040	2552141-0000		1	BRACKET	
050	3079112-0000		1	BRACKET	
060	3079114-0000		1	BRACKET	
080	2532895-0008		4	LOCK PLATE	
090	2528123-0006		2	LOCK PLATE	
110	752186-0016		4	SHAFT	
130	90240-0172		8	FLANGE BUSHING, 8X12X10 MM	
140	2033-0011		8	WASHER	
150	312105-0331		6	SCREW, M6S ISO 4017 M5X20 A4 80	
TBA 1000SQ (See drawing on page: 1-396)					
010	2552155-0000		2	ROLLER	
020	2562684-0000		2	ROLLER	
030	2552140-0000		1	BRACKET	
040	2552141-0000		1	BRACKET	
050	3079112-0000		1	BRACKET	
060	3079114-0000		1	BRACKET	
080	2532895-0008		4	LOCK PLATE	
090	2528123-0006		2	LOCK PLATE	
110	752186-0016		4	SHAFT	
130	90240-0172		8	FLANGE BUSHING, 8X12X10 MM	
140	2033-0011		8	WASHER	
150	312105-0331		6	SCREW, M6S ISO 4017 M5X20 A4 80	
TBA 2000S (See drawing on page: 1-394)					
010	2601269-0000		1	ROLLER	
015	2601272-0000		2	ROLLER	
020	2601271-0000		2	ROLLER	
025	2601273-0000		2	ROLLER	
040	2946885-0000		1	BRACKET	
050	2946884-0000		1	SUPPORT ROLLER	
080	2532895-0004		2	LOCK PLATE	
090	2562667-0002		6	LOCK PLATE	
100	2522213-0016		1	SHAFT	
110	2522213-0015		4	SHAFT	
120	2522213-0017		2	SHAFT	
130	90240-0172		14	FLANGE BUSHING, 8X12X10 MM	
140	2033-0011		14	WASHER	
150	312105-0329		8	SCREW, M6S ISO 4017 M5X16 A4 80	
160	312105-0451		2	SCREW, M6S ISO 4017 M8X20 A4 80	
170	312105-0372		4	SCREW, M6S ISO 4017 M6X25 A4 80	
180	315105-0153		4	WASHER PLAIN, 6,4X12X1,5 A4 BRB	
190	311103-0306		2	PARALLEL PIN ISO 2338 5M6X12 A1	
TPA 1000SQ, TPA 0750SQ (See drawing on page: 1-396)					
010	2562694-0000		2	ROLLER	
020	2562695-0000		2	ROLLER	
030	2562696-0000		1	BRACKET	
040	2562697-0000		1	BRACKET	
050	3079113-0000		1	BRACKET	
060	3079115-0000		1	BRACKET	
080	2532895-0008		4	LOCK PLATE	
090	2528123-0009		2	LOCK PLATE	
110	752186-0016		4	SHAFT	
130	90240-0172		8	FLANGE BUSHING, 8X12X10 MM	
140	2033-0011		8	WASHER	
150	312105-0331		6	SCREW, M6S ISO 4017 M5X20 A4 80	
Common Parts					
070	312105-0449		4	SCREW, M6S ISO 4017 M8X16 A4 80	
230	312105-0455		4	SCREW, M6S ISO 4017 M8X30 A4 80	
240	315105-0165		4	WASHER PLAIN, 8,4X16X1,6 A4 BRB	
250	312605-0318		4	HEXAGON NUT, M6M M8 A280	

Machine Type | Group Description | Used-In | Group Number | Page No

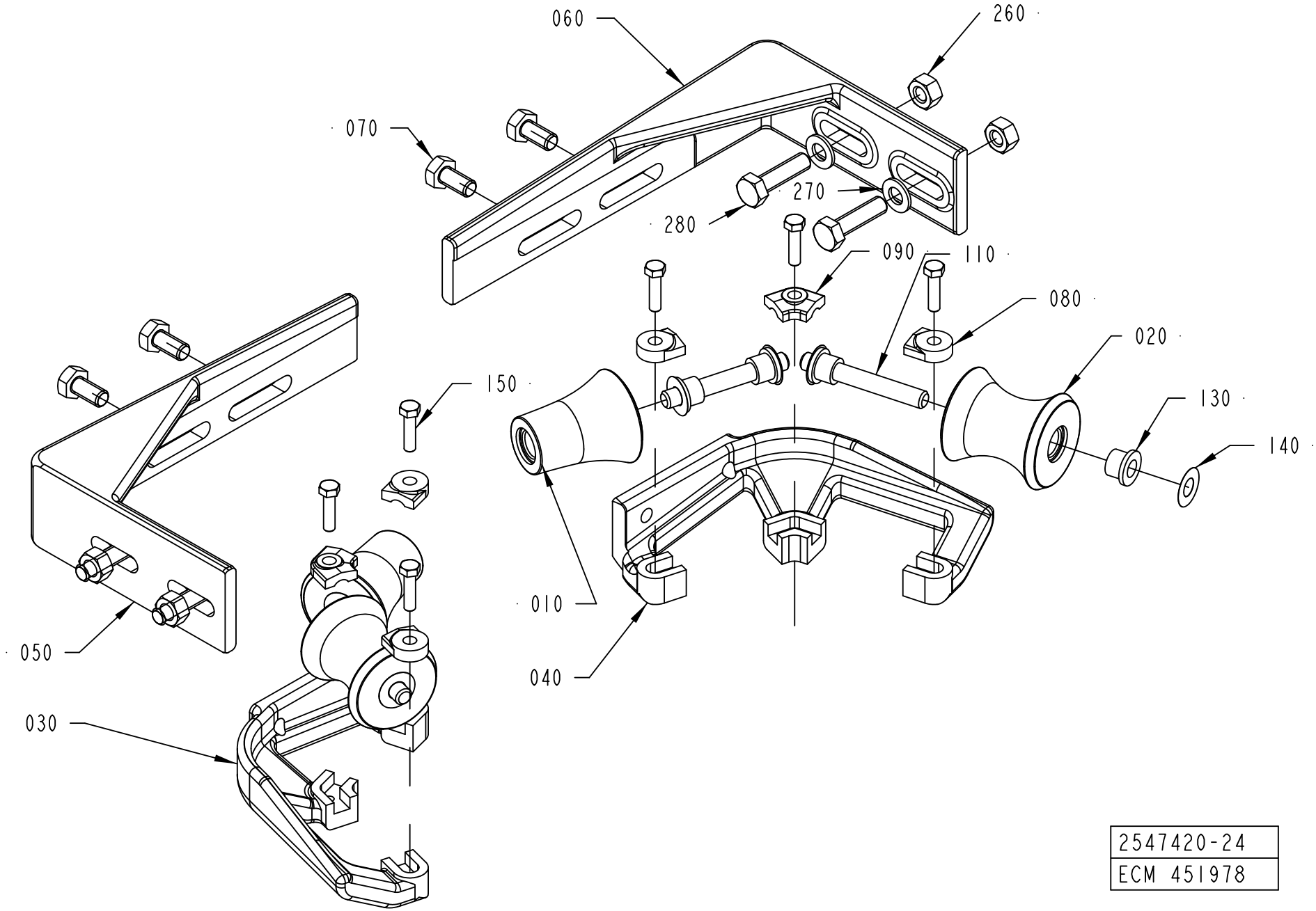

2547420-24
ECM 451978

Pos	Part No	UN	Qty	Description	Page No
TBA 0500B, TBA 1000B (See drawing on page: 1-396)					
010	2651790-0000		2	ROLLER	
020	2651789-0000		2	ROLLER	
030	2552140-0000		1	BRACKET	
040	2552141-0000		1	BRACKET	
050	3079112-0000		1	BRACKET	
060	3079114-0000		1	BRACKET	
080	2532895-0008		4	LOCK PLATE	
090	2528123-0006		2	LOCK PLATE	
110	752186-0016		4	SHAFT	
130	90240-0172		8	FLANGE BUSHING, 8X12X10 MM	
140	2033-0011		8	WASHER	
150	312105-0331		6	SCREW, M6S ISO 4017 M5X20 A4 80	
TBA 1000S, TBA 1500S (See drawing on page: 1-396)					
010	2552144-0000		2	ROLLER	
020	2562664-0000		2	ROLLER	
030	2552140-0000		1	BRACKET	
040	2552141-0000		1	BRACKET	
050	3079112-0000		1	BRACKET	
060	3079114-0000		1	BRACKET	
080	2532895-0008		4	LOCK PLATE	
090	2528123-0006		2	LOCK PLATE	
110	752186-0016		4	SHAFT	
130	90240-0172		8	FLANGE BUSHING, 8X12X10 MM	
140	2033-0011		8	WASHER	
150	312105-0331		6	SCREW, M6S ISO 4017 M5X20 A4 80	
TBA 1000SQ (See drawing on page: 1-396)					
010	2552155-0000		2	ROLLER	
020	2562684-0000		2	ROLLER	
030	2552140-0000		1	BRACKET	
040	2552141-0000		1	BRACKET	
050	3079112-0000		1	BRACKET	
060	3079114-0000		1	BRACKET	
080	2532895-0008		4	LOCK PLATE	
090	2528123-0006		2	LOCK PLATE	
110	752186-0016		4	SHAFT	
130	90240-0172		8	FLANGE BUSHING, 8X12X10 MM	
140	2033-0011		8	WASHER	
150	312105-0331		6	SCREW, M6S ISO 4017 M5X20 A4 80	
TBA 2000S (See drawing on page: 1-394)					
010	2601269-0000		1	ROLLER	
015	2601272-0000		2	ROLLER	
020	2601271-0000		2	ROLLER	
025	2601273-0000		2	ROLLER	
040	2946885-0000		1	BRACKET	
050	2946884-0000		1	SUPPORT ROLLER	
080	2532895-0004		2	LOCK PLATE	
090	2562667-0002		6	LOCK PLATE	
100	2522213-0016		1	SHAFT	
110	2522213-0015		4	SHAFT	
120	2522213-0017		2	SHAFT	
130	90240-0172		14	FLANGE BUSHING, 8X12X10 MM	
140	2033-0011		14	WASHER	
150	312105-0329		8	SCREW, M6S ISO 4017 M5X16 A4 80	
160	312105-0451		2	SCREW, M6S ISO 4017 M8X20 A4 80	
170	312105-0372		4	SCREW, M6S ISO 4017 M6X25 A4 80	
180	315105-0153		4	WASHER PLAIN, 6,4X12X1,5 A4 BRB	
190	311103-0306		2	PARALLEL PIN ISO 2338 5M6X12 A1	
TPA 1000SQ, TPA 0750SQ (See drawing on page: 1-396)					
010	2562694-0000		2	ROLLER	
020	2562695-0000		2	ROLLER	
030	2562696-0000		1	BRACKET	
040	2562697-0000		1	BRACKET	
050	3079113-0000		1	BRACKET	
060	3079115-0000		1	BRACKET	
080	2532895-0008		4	LOCK PLATE	
090	2528123-0009		2	LOCK PLATE	
110	752186-0016		4	SHAFT	
130	90240-0172		8	FLANGE BUSHING, 8X12X10 MM	
140	2033-0011		8	WASHER	
150	312105-0331		6	SCREW, M6S ISO 4017 M5X20 A4 80	
Common Parts					
070	312105-0449		4	SCREW, M6S ISO 4017 M8X16 A4 80	
230	312105-0455		4	SCREW, M6S ISO 4017 M8X30 A4 80	
240	315105-0165		4	WASHER PLAIN, 8,4X16X1,6 A4 BRB	
250	312605-0318		4	HEXAGON NUT, M6M M8 A280	

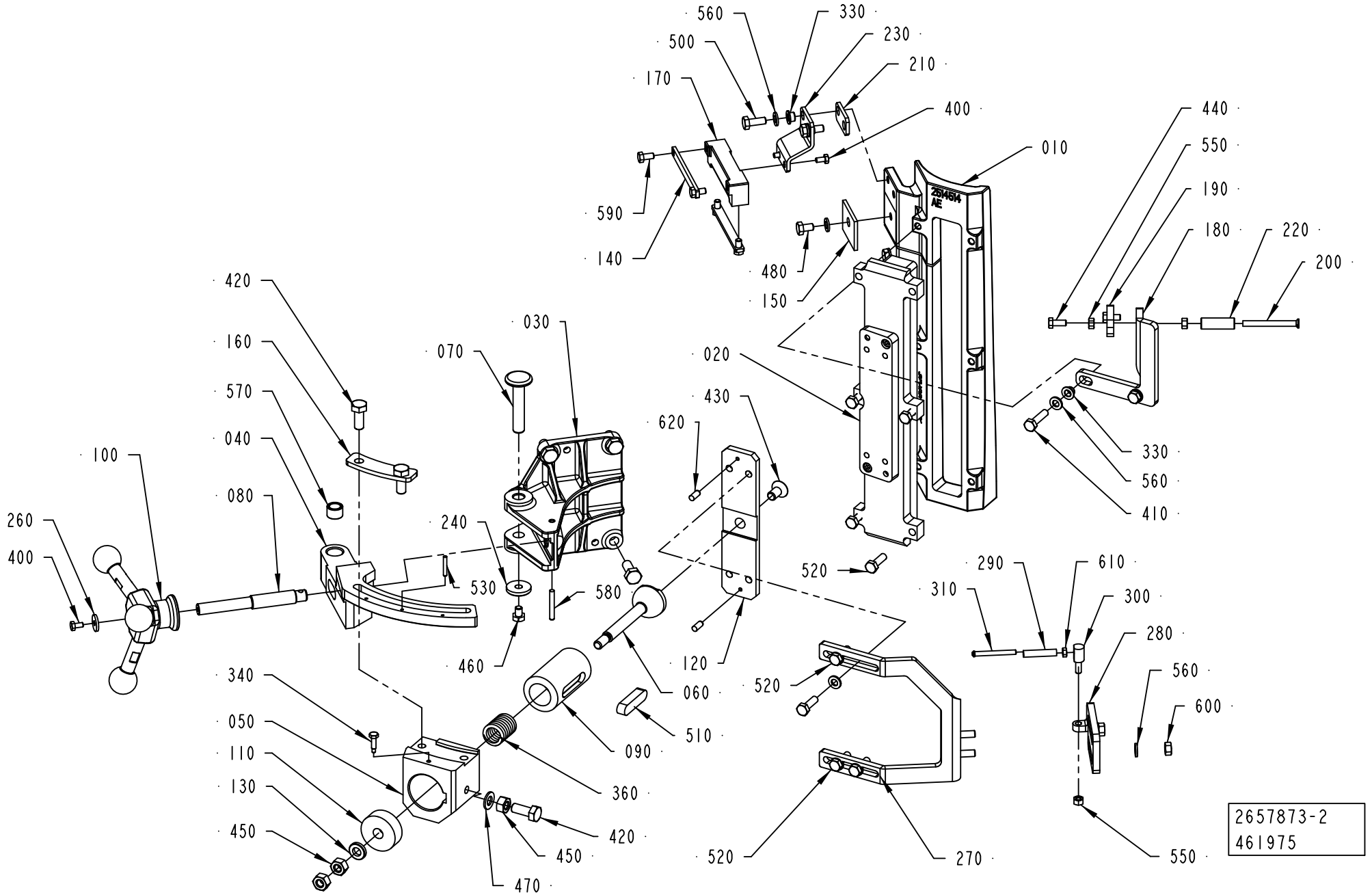
560
330
500
230
210
170
400
010
590
140
480
150
440
550
190
180
220
200
420
160
570
040
100
080
260
400
070
030
240
530
580
460
620
430
020
330
560
410
520
290
610
310
300
280
560
600
340
050
110
130
450
090
360
420
450
470
060
510
120
520
520
270
550
2657873-2
461975

ECM: 541390 - 20120401
Group number: 2657873-0200
Assembly Drawing: 2657873-2_1_AC

This list covers pages from 1-398 to 1-403

Pos	Part No	UN	Qty	Description	Page No
TPA 0500SQ (See drawing on page: 1-400)					
010	2897152-0000		1	INDUCTOR	
020	2897150-0000		1	INSULATING PLATE	
180	3079827-0000		1	BRACKET	
200	2887790-0000		1	SHAFT	
240	315125-0153		2	WASHER HIGH, TBRSB 6,4X22X4 A4	
265	3013546-0000		1	BRACKET	
270	3042533-0000		1	BRACKET	
280	3052683-0000		1	BRACKET	
290	2555616-0000		2	ROLLER	
300	2555617-0000		1	PIN	
310	2555618-0000		1	SHAFT	
330	2508292-0000		4	BUSHING	
370	3042534-0000		1	HOLDER	
410	312105-0372		2	SCREW, M6S ISO 4017 M6X25 A4 80	
460	312105-0362		2	SCREW, M6S ISO 4017 M6X8 A4 80	
480	312105-0364		3	SCREW, M6S ISO 4017 M6X10 A4 80	
500	312105-0368		4	SCREW, M6S ISO 4017 M6X16 A4 80	
520	312105-0370		6	SCREW, M6S ISO 4017 M6X20 A4 80	
550	312605-0314		1	HEXAGON NUT, M6M M5 A280	
560	315105-0153		12	WASHER PLAIN, 6,4X12X1,5 A4 BRB	
600	312605-0316		2	HEXAGON NUT, M6M M6 A280	
610	312605-0312		5	HEXAGON NUT, M6M M4 A280	
640	315105-0136		2	WASHER PLAIN, 4,3X9X0,8 A4 BRB	
TPA 1000SQ, TPA 0750SQ (See drawing on page: 1-398)					
010	2601289-0000		1	INDUCTOR	
020	2862748-0000		1	INSULATING PLATE	
180	2547404-0000		1	BRACKET	
190	2547405-0000		1	BRACKET	
200	269151-0000		1	SHAFT	
220	2555625-0000		1	ROLL	
240	315125-0153		1	WASHER HIGH, TBRSB 6,4X22X4 A4	
270	2982295-0000		1	BRACKET	
280	3042553-0000		1	BRACKET	
290	2555616-0000		1	ROLLER	
300	2555617-0000		1	PIN	
310	2555618-0000		1	SHAFT	
330	2508292-0000		4	BUSHING	
410	312105-0372		2	SCREW, M6S ISO 4017 M6X25 A4 80	
440	312105-0327		2	SCREW, M6S ISO 4017 M5X12 A4 80	
460	312105-0362		1	SCREW, M6S ISO 4017 M6X8 A4 80	
480	312105-0364		2	SCREW, M6S ISO 4017 M6X10 A4 80	
500	312105-0368		2	SCREW, M6S ISO 4017 M6X16 A4 80	
520	312105-0370		8	SCREW, M6S ISO 4017 M6X20 A4 80	
550	312605-0314		3	HEXAGON NUT, M6M M5 A280	
560	315105-0153		12	WASHER PLAIN, 6,4X12X1,5 A4 BRB	
600	312605-0316		2	HEXAGON NUT, M6M M6 A280	
610	312605-0312		1	HEXAGON NUT, M6M M4 A280	
TBA 0500B, TBA 1000B, TBA 1500S (See drawing on page: 1-398)					
010	2514514-0000		1	INDUCTOR	
020	2998017-0000		1	INSULATING PLATE	
180	2547404-0000		1	BRACKET	
190	2547405-0000		1	BRACKET	
200	269151-0000		1	SHAFT	
220	2555625-0000		1	ROLL	
240	315125-0153		1	WASHER HIGH, TBRSB 6,4X22X4 A4	
270	2982295-0000		1	BRACKET	
280	3042553-0000		1	BRACKET	
290	2555616-0000		1	ROLLER	
300	2555617-0000		1	PIN	
310	2555618-0000		1	SHAFT	
330	2508292-0000		4	BUSHING	
410	312105-0372		2	SCREW, M6S ISO 4017 M6X25 A4 80	
440	312105-0327		2	SCREW, M6S ISO 4017 M5X12 A4 80	
460	312105-0362		1	SCREW, M6S ISO 4017 M6X8 A4 80	
480	312105-0364		2	SCREW, M6S ISO 4017 M6X10 A4 80	
500	312105-0368		2	SCREW, M6S ISO 4017 M6X16 A4 80	
520	312105-0370		8	SCREW, M6S ISO 4017 M6X20 A4 80	
550	312605-0314		3	HEXAGON NUT, M6M M5 A280	
560	315105-0153		12	WASHER PLAIN, 6,4X12X1,5 A4 BRB	
600	312605-0316		2	HEXAGON NUT, M6M M6 A280	
610	312605-0312		1	HEXAGON NUT, M6M M4 A280	
TBA 0500S (See drawing on page: 1-398)					
010	2672984-0000		1	INDUCTOR	
020	2862743-0000		1	INSULATING PLATE	
180	2547404-0000		1	BRACKET	
190	2547405-0000		1	BRACKET	
200	269151-0000		1	SHAFT	
220	2555625-0000		1	ROLL	
240	315125-0153		1	WASHER HIGH, TBRSB 6,4X22X4 A4	
270	2982295-0000		1	BRACKET	
290	2555616-0000		1	ROLLER	
300	2555617-0000		1	PIN	
310	2555618-0000		1	SHAFT	

Machine Type | Group Description | Used-In | Group Number | Page No

LONGITUDINAL SEALING

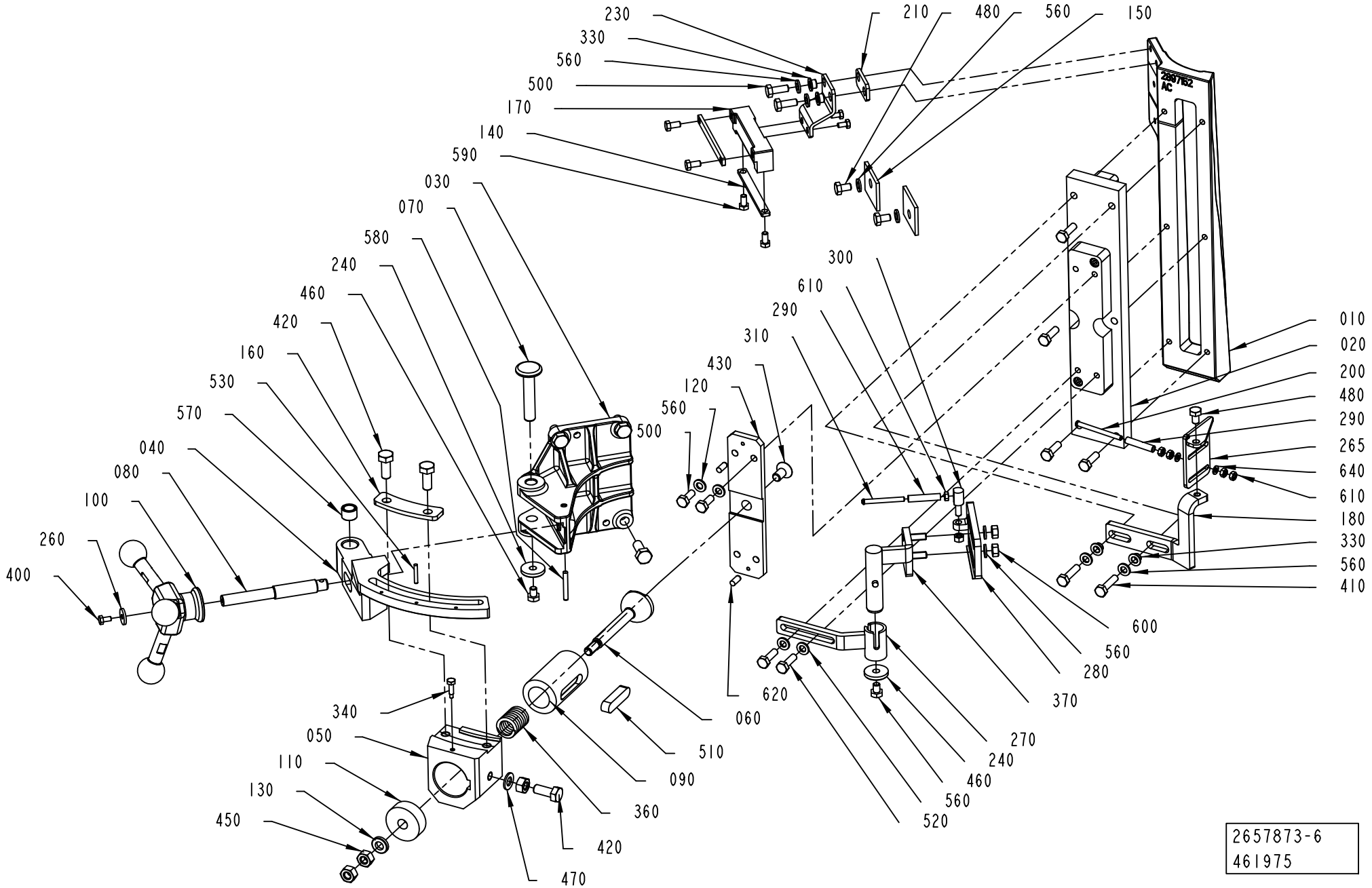

2657873-6
461975

Pos	Part No	UN	Qty	Description	Page No
TBA 0500S (Cont'd) (See drawing on page: 1-398)					
330	2508292-0000		4	BUSHING	
410	312105-0372		2	SCREW, M6S ISO 4017 M6X25 A4 80	
440	312105-0327		2	SCREW, M6S ISO 4017 M5X12 A4 80	
460	312105-0362		1	SCREW, M6S ISO 4017 M6X8 A4 80	
480	312105-0364		2	SCREW, M6S ISO 4017 M6X10 A4 80	
500	312105-0368		2	SCREW, M6S ISO 4017 M6X16 A4 80	
520	312105-0370		8	SCREW, M6S ISO 4017 M6X20 A4 80	
550	312605-0314		3	HEXAGON NUT, M6M M5 A280	
560	315105-0153		12	WASHER PLAIN, 6,4X12X1,5 A4 BRB	
600	312605-0316		2	HEXAGON NUT, M6M M6 A280	
610	312605-0312		1	HEXAGON NUT, M6M M4 A280	
TBA 0500SQ, TBA 1000SQ (See drawing on page: 1-398)					
010	2532925-0000		1	INDUCTOR	
020	2862744-0000		1	INSULATING PLATE	
180	2547404-0000		1	BRACKET	
190	2547405-0000		1	BRACKET	
200	269151-0000		1	SHAFT	
220	2555625-0000		1	ROLL	
240	315125-0153		1	WASHER HIGH, TBRSB 6,4X22X4 A4	
270	2982295-0000		1	BRACKET	
280	3042553-0000		1	BRACKET	
290	2555616-0000		1	ROLLER	
300	2555617-0000		1	PIN	
310	2555618-0000		1	SHAFT	
330	2508292-0000		4	BUSHING	
410	312105-0372		2	SCREW, M6S ISO 4017 M6X25 A4 80	
440	312105-0327		2	SCREW, M6S ISO 4017 M5X12 A4 80	
460	312105-0362		1	SCREW, M6S ISO 4017 M6X8 A4 80	
480	312105-0364		2	SCREW, M6S ISO 4017 M6X10 A4 80	
500	312105-0368		2	SCREW, M6S ISO 4017 M6X16 A4 80	
520	312105-0370		8	SCREW, M6S ISO 4017 M6X20 A4 80	
550	312605-0314		3	HEXAGON NUT, M6M M5 A280	
560	315105-0153		12	WASHER PLAIN, 6,4X12X1,5 A4 BRB	
600	312605-0316		2	HEXAGON NUT, M6M M6 A280	
610	312605-0312		1	HEXAGON NUT, M6M M4 A280	
TBA 1000S (See drawing on page: 1-398)					
010	2514522-0000		1	INDUCTOR	
020	2862745-0000		1	INSULATING PLATE	
180	2547404-0000		1	BRACKET	
190	2547405-0000		1	BRACKET	
200	269151-0000		1	SHAFT	
220	2555625-0000		1	ROLL	
240	315125-0153		1	WASHER HIGH, TBRSB 6,4X22X4 A4	
270	2982295-0000		1	BRACKET	
280	3042553-0000		1	BRACKET	
290	2555616-0000		1	ROLLER	
300	2555617-0000		1	PIN	
310	2555618-0000		1	SHAFT	
330	2508292-0000		4	BUSHING	
410	312105-0372		2	SCREW, M6S ISO 4017 M6X25 A4 80	
440	312105-0327		2	SCREW, M6S ISO 4017 M5X12 A4 80	
460	312105-0362		1	SCREW, M6S ISO 4017 M6X8 A4 80	
480	312105-0364		2	SCREW, M6S ISO 4017 M6X10 A4 80	
500	312105-0368		2	SCREW, M6S ISO 4017 M6X16 A4 80	
520	312105-0370		7	SCREW, M6S ISO 4017 M6X20 A4 80	
550	312605-0314		3	HEXAGON NUT, M6M M5 A280	
560	315105-0153		12	WASHER PLAIN, 6,4X12X1,5 A4 BRB	
600	312605-0316		2	HEXAGON NUT, M6M M6 A280	
TBA 2000S (See drawing on page: 1-398)					
010	2601247-0000		1	INDUCTOR	
020	2862746-0000		1	INSULATING PLATE	
180	2601249-0000		1	BRACKET	
190	2547405-0000		1	BRACKET	
200	269151-0000		1	SHAFT	
220	2555625-0000		1	ROLL	
240	315125-0153		1	WASHER HIGH, TBRSB 6,4X22X4 A4	
270	2594636-0000		1	BRACKET	
280	2555615-0000		1	BRACKET	
290	2555616-0000		1	ROLLER	
300	2555617-0000		1	PIN	
310	2555618-0000		1	SHAFT	
330	2508292-0000		4	BUSHING	
410	312105-0372		2	SCREW, M6S ISO 4017 M6X25 A4 80	
440	312105-0327		2	SCREW, M6S ISO 4017 M5X12 A4 80	
460	312105-0362		1	SCREW, M6S ISO 4017 M6X8 A4 80	
480	312105-0364		2	SCREW, M6S ISO 4017 M6X10 A4 80	
500	312105-0368		2	SCREW, M6S ISO 4017 M6X16 A4 80	
520	312105-0370		7	SCREW, M6S ISO 4017 M6X20 A4 80	
550	312605-0314		3	HEXAGON NUT, M6M M5 A280	
560	315105-0153		12	WASHER PLAIN, 6,4X12X1,5 A4 BRB	
600	312605-0316		2	HEXAGON NUT, M6M M6 A280	

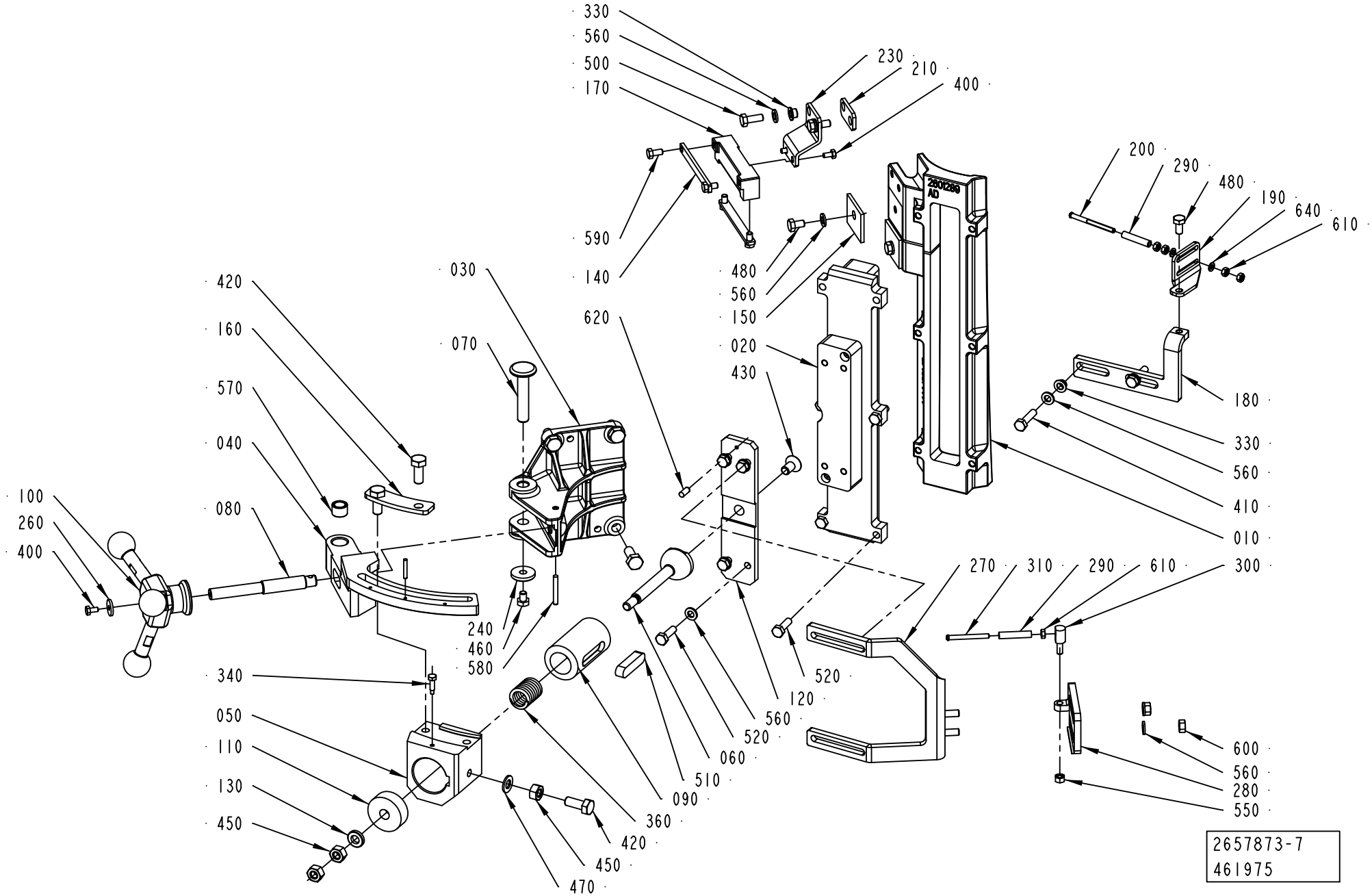
330
560
500
170
230
210
400
590
140
480
560
150
620
030
070
020
430
420
160
570
040
080
100
260
400
240
460
580
340
050
110
130
450
470
420
450
360
090
510
060
520
560
120
520
270
310
290
610
300
200
290
480
190
640
610
180
330
560
410
010
600
560
280
550
260/280 AD
2657873-7
461975

Pos	Part No	UN	Qty	Description	Page No
TBA 2000S (Cont'd) (See drawing on page: 1-398)					
610	312605-0312		1	HEXAGON NUT, M6M M4 A280	
TGA 1000SQ, TGA 0750SQ, TGA 0500SQ (See drawing on page: 1-402)					
010	2601289-0000		1	INDUCTOR	
020	2912633-0000		1	PLATE	
180	3067607-0000		1	BRACKET	
190	3067608-0000		1	BRACKET	
200	2887790-0000		1	SHAFT	
240	315125-0153		1	WASHER HIGH, TBRSB 6,4X22X4 A4	
270	2982295-0000		1	BRACKET	
280	3042553-0000		1	BRACKET	
290	2555616-0000		2	ROLLER	
300	2555617-0000		1	PIN	
310	2555618-0000		1	SHAFT	
330	2508292-0000		4	BUSHING	
410	312105-0372		2	SCREW, M6S ISO 4017 M6X25 A4 80	
460	312105-0362		1	SCREW, M6S ISO 4017 M6X8 A4 80	
480	312105-0364		3	SCREW, M6S ISO 4017 M6X10 A4 80	
500	312105-0368		2	SCREW, M6S ISO 4017 M6X16 A4 80	
520	312105-0370		8	SCREW, M6S ISO 4017 M6X20 A4 80	
550	312605-0314		1	HEXAGON NUT, M6M M5 A280	
560	315105-0153		12	WASHER PLAIN, 6,4X12X1,5 A4 BRB	
600	312605-0316		2	HEXAGON NUT, M6M M6 A280	
610	312605-0312		5	HEXAGON NUT, M6M M4 A280	
640	315105-0136		2	WASHER PLAIN, 4,3X9X0,8 A4 BRB	
TGA 1500SQ (See drawing on page: 1-398)					
010	2514514-0000		1	INDUCTOR	
020	2974365-0000		1	INSULATING PLATE	
180	2547404-0000		1	BRACKET	
190	2547405-0000		1	BRACKET	
200	269151-0000		1	SHAFT	
220	2555625-0000		1	ROLL	
240	315125-0153		1	WASHER HIGH, TBRSB 6,4X22X4 A4	
270	2982295-0000		1	BRACKET	
280	3042553-0000		1	BRACKET	
290	2555616-0000		1	ROLLER	
300	2555617-0000		1	PIN	
310	2555618-0000		1	SHAFT	
330	2508292-0000		4	BUSHING	
410	312105-0372		2	SCREW, M6S ISO 4017 M6X25 A4 80	
440	312105-0327		2	SCREW, M6S ISO 4017 M5X12 A4 80	
460	312105-0362		1	SCREW, M6S ISO 4017 M6X8 A4 80	
480	312105-0364		2	SCREW, M6S ISO 4017 M6X10 A4 80	
500	312105-0368		2	SCREW, M6S ISO 4017 M6X16 A4 80	
520	312105-0370		8	SCREW, M6S ISO 4017 M6X20 A4 80	
550	312605-0314		3	HEXAGON NUT, M6M M5 A280	
560	315105-0153		12	WASHER PLAIN, 6,4X12X1,5 A4 BRB	
600	312605-0316		2	HEXAGON NUT, M6M M6 A280	
610	312605-0312		1	HEXAGON NUT, M6M M4 A280	
Common Parts					
030	2544897-0000		1	BRACKET	
040	2694714-0000		1	GUIDE	
050	3050604-0000		1	SUPPORT	
060	3047472-0000		1	SHAFT	
070	2547388-0000		1	AXLE PIN	
080	2544898-0000		1	SHAFT	
090	3047470-0000		1	SLIDE	
100	2547376-0200		1	KNOB	**1-405**
110	3047471-0000		1	SLIDE	
120	2640993-0000		1	PLATE	
130	315115-0165		1	WASHER PLAIN, TBRB 8,4/16 H=3	
140	2508309-0000		2	PLATE	
150	2508311-0000		2	PLATE	
160	2694716-0000		1	PLATE	
170	2531060-0000		1	BRACKET	
210	2532898-0000		1	BRACKET	
230	2532899-0000		1	BRACKET	
260	2547377-0000		1	WASHER	
340	2725526-0000		1	SCREW	
360	90600-8306		1	COMP. SPRING 3887, 3X20X40,2	
400	312105-0287		3	SCREW, M6S ISO 4017 M4X8 A4 70	
420	312105-0451		7	SCREW, M6S ISO 4017 M8X20 A4 80	
430	312155-0449		1	SCREW DIN 7991 MF6S M8X16 A4 70	
450	312605-0318		3	HEXAGON NUT, M6M M8 A280	
470	315105-0165		1	WASHER PLAIN, 8,4X16X1,6 A4 BRB	
510	315705-0301		1	PARALLEL KEY W. ROUND ENDS, 10X8X40 MM	
530	311103-0238		1	PARALLEL PIN ISO 2338 3M6X20 A1	
570	90600-3313		2	BUSHING, 10X14X10 MM	
580	311103-0276		1	PARALLEL PIN ISO 2338 4M6X30 A1	
590	312105-0325		4	SCREW, M6S ISO 4017 M5X10 A4 80	
620	311103-0306		2	PARALLEL PIN ISO 2338 5M6X12 A1	

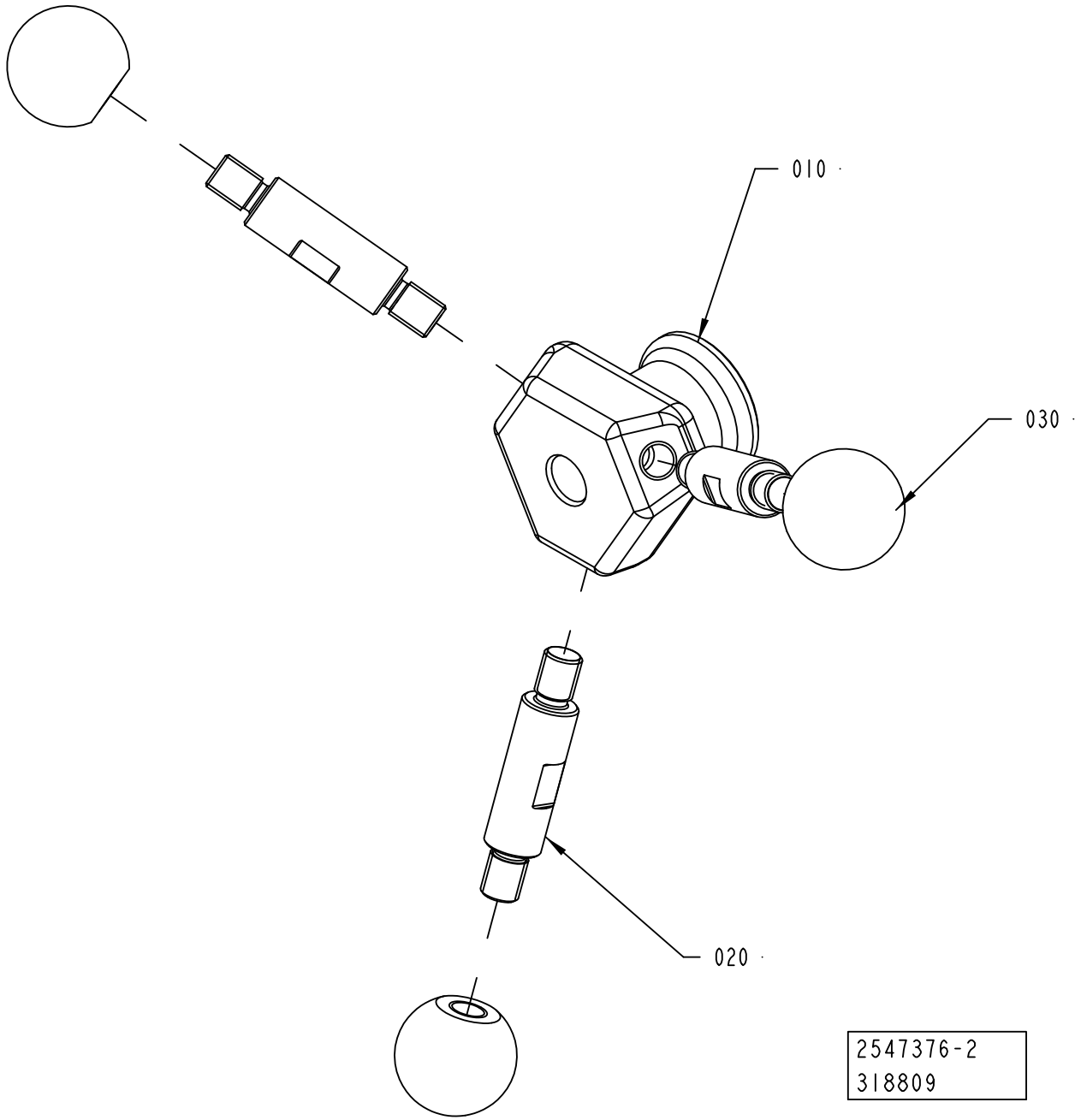
010
030
020
2547376-2
318809

ECM: 318865 - 20070913
Group number: 2547376-0200
Assembly Drawing: 2547376-2_1_AA

Pos	Part No	UN	Qty	Description	Page No
-					
010	2874716-0000		1	BODY	
020	2874715-0000		3	STUD SCREW	
030	2874717-0000		3	KNOB	

Pos	Part No	UN	Qty	Description	Page No

This page is intentionally left blank.

ECM: 530453 - 20120416
Group number: 3093221-0100
Assembly Drawing:

Pos	Part No	UN	Qty	Description	Page No
TBA 0500B, TBA 1500S, TBA 1000B NODIMC					
010	3079094-0002		1	ROLLER	
015	3079094-0003		1	ROLLER	
020	3079095-0002		2	ROLLER	
025	3079095-0003		2	ROLLER	
TBA 0500S					
010	3079096-0002		3	ROLLER	
015	3079096-0003		3	ROLLER	
TBA 0500SQ, TBA 1000SQ					
010	3079097-0002		3	ROLLER	
015	3079097-0003		3	ROLLER	
TBA 1000S NODIMC					
010	567746-0002		3	TRIMMING ROLLER PLUS	
015	567746-0003		3	TRIMMING ROLLER MINUS	
TBA 2000S					
010	3079098-0002		3	ROLLER	
015	3079098-0003		3	ROLLER	
TGA 1000SQ, TGA 0750SQ, TGA 0500SQ					
010	3061501-0002		3	ROLLER	
015	3061501-0003		3	ROLLER	
TGA 1500SQ					
010	3079095-0002		3	ROLLER	
015	3079095-0003		3	ROLLER	
TPA 1000SQ, TPA 0750SQ					
020	3079118-0002		3	ROLLER	
025	3079118-0003		3	ROLLER	
030	3079119-0002		3	ROLLER	
035	3079119-0003		3	ROLLER	

Pos	Part No	UN	Qty	Description	Page No

Machine Type | Group Description | Used-In | Group Number | Page No

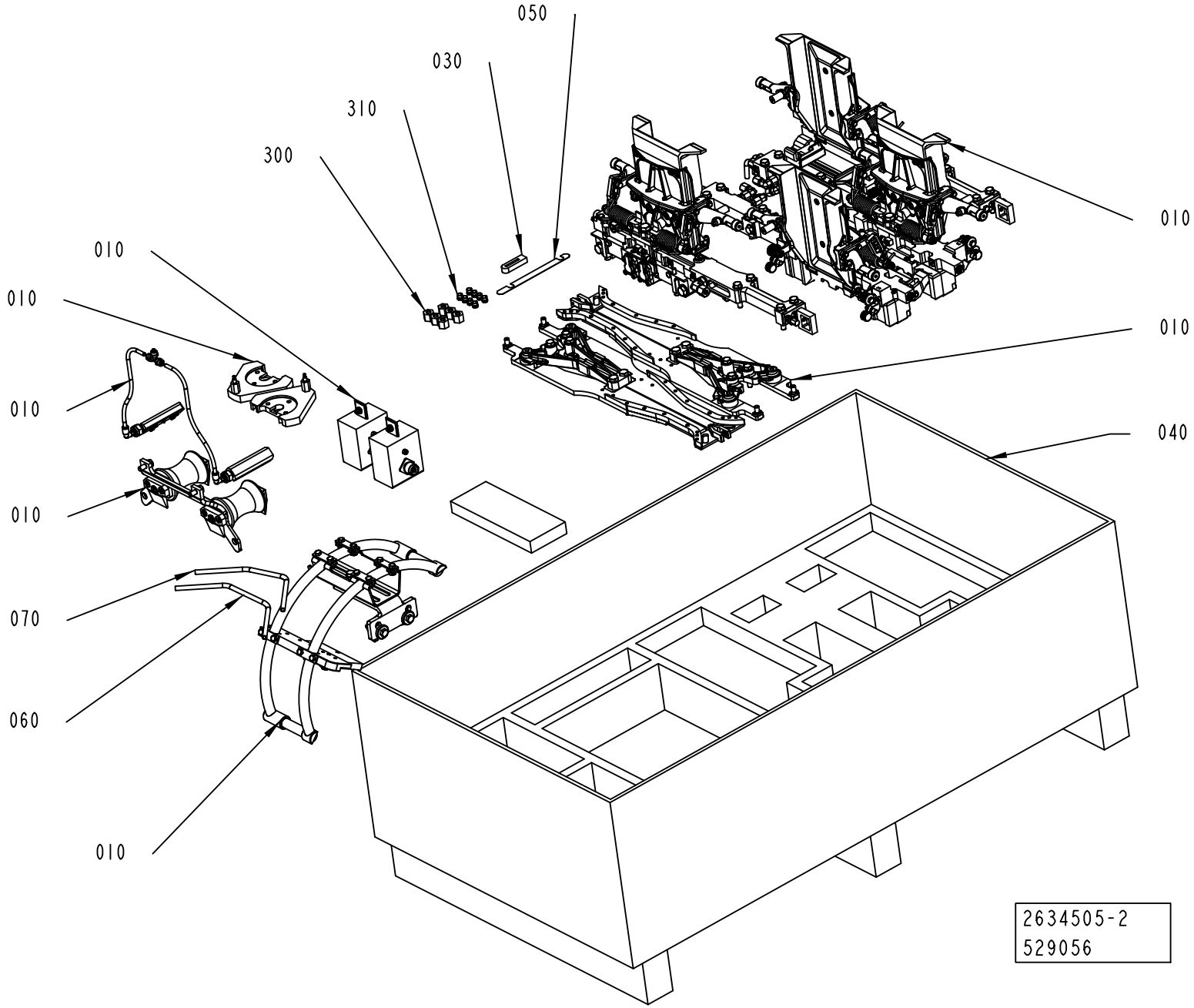
050
030
310
300
010
010
010
010
010
010
040
070
060
010
2634505-2
529056

ECM: 535841 - 20120401
Group number: 2634505-0300
Assembly Drawing: 2634505-2_1_AA

Pos	Part No	UN	Qty	Description	Page No
-					
010	2552003-0400		1	FORMING UNIT	**1-411**
020	2979548-0100		1	START-UP KIT JS	**1-591, 1-593**
030	1036483-0000		1	SEAL	
040	3056161-0000		1	BOX	
050	1037254-0000		1	SHIM	
300	342703-0208		6	CONE NUT M8, NUT M-8 SS	
310	90030-0098		8	PROGRESSIVE RING 8	

Pos	Part No	UN	Qty	Description	Page No

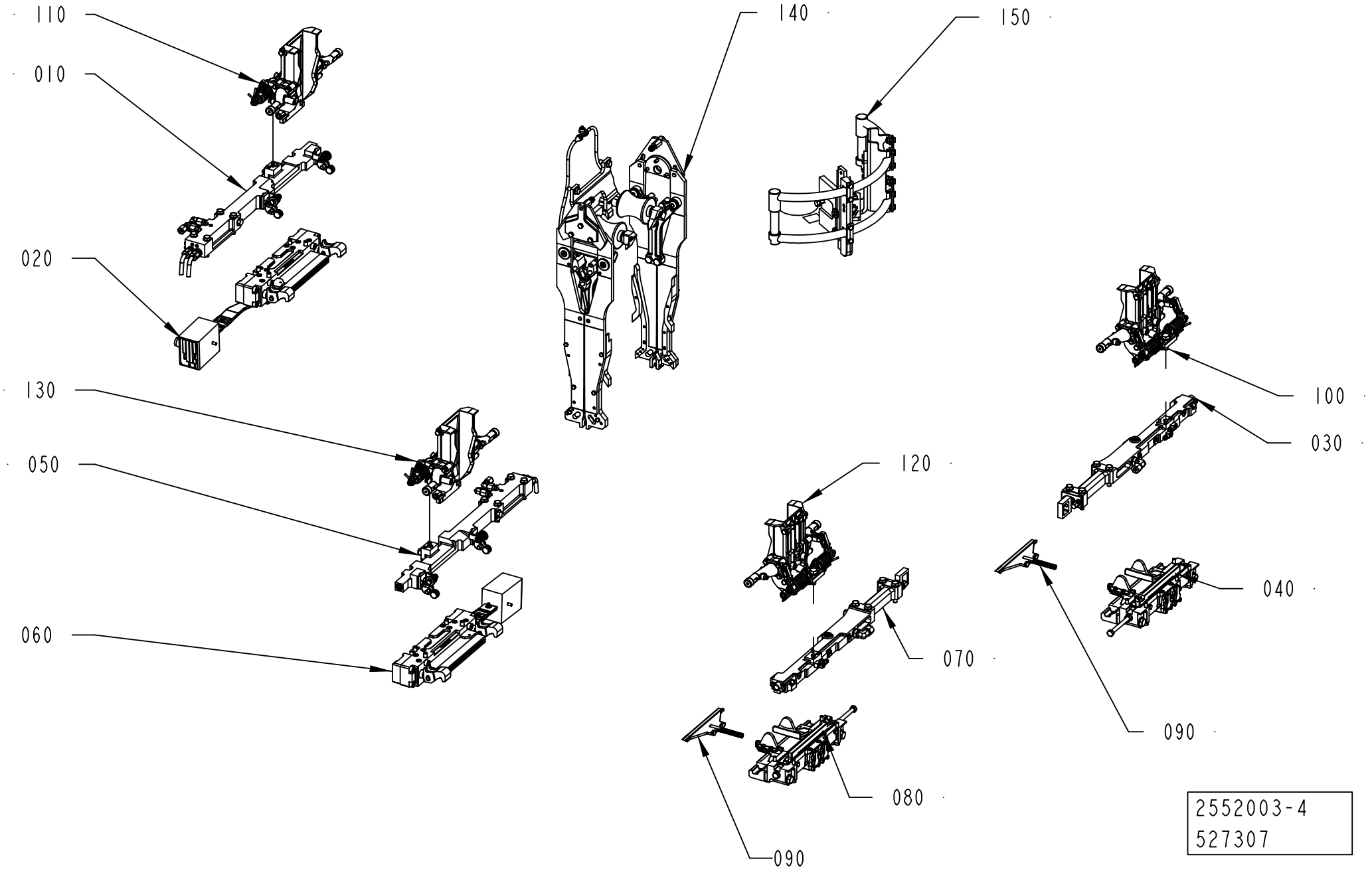
110
010
020
130
050
060
140
150
100
030
120
070
040
090
080
090
2552003-4
527307

ECM: 546692 - 20120402
Group number: 2552003-0400
Assembly Drawing: 2552003-4_1_AA

Pos	Part No	UN	Qty	Description	Page No
TGA 1000SQ					
150	3155711-0100		1	PHOTOCELL BRACKET	**1-413**
TGA 1500SQ					
150	3155711-0100		1	PHOTOCELL BRACKET	**1-413**
TPA 0500SQ					
150	2876313-0200		1	PHOTOCELL BRACKET	**1-415, 1-417, 1-419**
TPA 0750SQ					
150	2876313-0200		1	PHOTOCELL BRACKET	**1-415, 1-417, 1-419**
TPA 1000SQ					
150	2876313-0200		1	PHOTOCELL BRACKET	**1-415, 1-417, 1-419**
TBA 0500B					
150	2876313-0200		1	PHOTOCELL BRACKET	**1-415, 1-417, 1-419**
TBA 0500S					
150	2876313-0200		1	PHOTOCELL BRACKET	**1-415, 1-417, 1-419**
TBA 0500SQ					
150	2876313-0200		1	PHOTOCELL BRACKET	**1-415, 1-417, 1-419**
TBA 1000B NOMOLDEDCAP					
150	2876313-0200		1	PHOTOCELL BRACKET	**1-415, 1-417, 1-419**
TBA 1000S NOMOLDEDCAP HELICAP2 23					
150	2876313-0200		1	PHOTOCELL BRACKET	**1-415, 1-417, 1-419**
TBA 1000S NOMOLDEDCAP NOCAP, TBA 1000S NOMOLDEDCAP RECAP3, TBA 1000S NOMOLDEDCAP SLIMCAP 1000					
150	2876313-0200		1	PHOTOCELL BRACKET	**1-415, 1-417, 1-419**
TBA 1000SQ					
150	2876313-0200		1	PHOTOCELL BRACKET	**1-415, 1-417, 1-419**
TBA 1500S					
150	2876313-0200		1	PHOTOCELL BRACKET	**1-415, 1-417, 1-419**
TBA 2000S					
150	2876313-0200		1	PHOTOCELL BRACKET	**1-415, 1-417, 1-419**
TGA 0500SQ					
150	3155711-0100		1	PHOTOCELL BRACKET	**1-413**
TGA 0750SQ					
150	3155711-0100		1	PHOTOCELL BRACKET	**1-413**
Common Parts					
010	3035771-0100		1	CARRIER PRESSURE LEFT	**1-427, 1-429**
020	2832241-0200		1	PRESSURE JAW LEFT	**1-431**
030	3035770-0100		1	CARRIER CUTTING LEFT	**1-443, 1-445**
040	2832818-0200		1	CUTTING JAW LEFT	**1-449**
050	3035773-0100		1	CARRIER PRESSURE RIGHT	**1-467, 1-469**
060	2832242-0200		1	PRESSURE JAW RIGHT	**1-471**
070	3035772-0100		1	CARRIER CUTTING RIGHT	**1-481, 1-483**
080	2832819-0200		1	CUTTING JAW RIGHT	**1-485**
090	2588317-0100		2	KNIFE	**1-491**
100	2810640-0100		1	SUPPORT FLAP CUTTING	**1-493**
110	2810641-0100		1	SUPPORT FLAP PRESSURE	**1-523**
120	2993980-0100		1	SUPPORT FLAP CUTTING	**1-551**
130	2993981-0100		1	SUPPORT FLAP PRESSURE	**1-563**
140	2855528-0100		1	VOLUME CURVE PIECE	**1-575**

Machine Type	Group Description	Used-In	Group Number	Page No

PHOTOCELL BRACKET

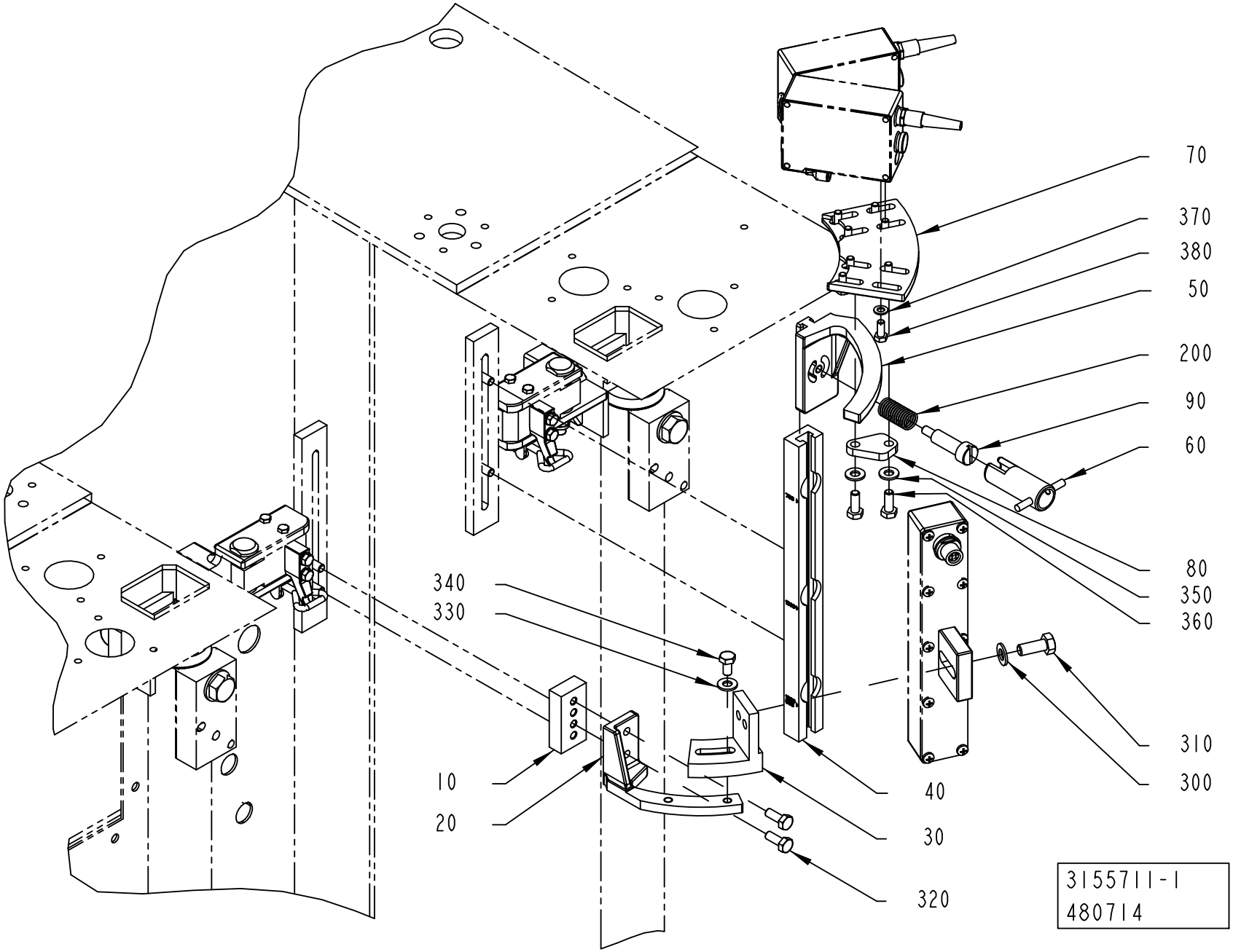

ECM: 481046 - 20110701
Group number: 3155711-0100
Assembly Drawing: 3155711-1_1_AA

Pos	Part No	UN	Qty	Description	Page No
-					
010	3031530-0000		1	SPACER	
020	457361-0000		1	CANTILEVER	
030	2949203-0000		1	SUPPORT	
040	3031528-0000		1	SLIDE	
050	3031527-0000		1	CANTILEVER	
060	2724929-0000		1	KNOB	
070	3073532-0000		1	SUPPORT	
080	3073531-0000		1	PLATE	
090	2993209-0000		1	SCREW	
200	90335-0024		1	COMP. SPRING, 22250, 1,25X13,75X27	
220	315105-0146		8	WASHER PLAIN, 5,3X10X1 A4 BRB	
230	312105-0327		8	SCREW, M6S ISO 4017 M5X12 A4 80	
300	315105-0165		1	WASHER PLAIN, 8,4X16X1,6 A4 BRB	
310	312105-0451		1	SCREW, M6S ISO 4017 M8X20 A4 80	
320	312105-0368		2	SCREW, M6S ISO 4017 M6X16 A4 80	
330	315105-0156		1	WASHER PLAIN, 6,7X14X1,5 A4 BRB	
340	312105-0366		1	SCREW, M6S ISO 4017 M6X12 A4 80	
350	312105-0368		2	SCREW, M6S ISO 4017 M6X16 A4 80	
360	315105-0156		2	WASHER PLAIN, 6,7X14X1,5 A4 BRB	

Pos	Part No	UN	Qty	Description	Page No

PHOTOCELL BRACKET

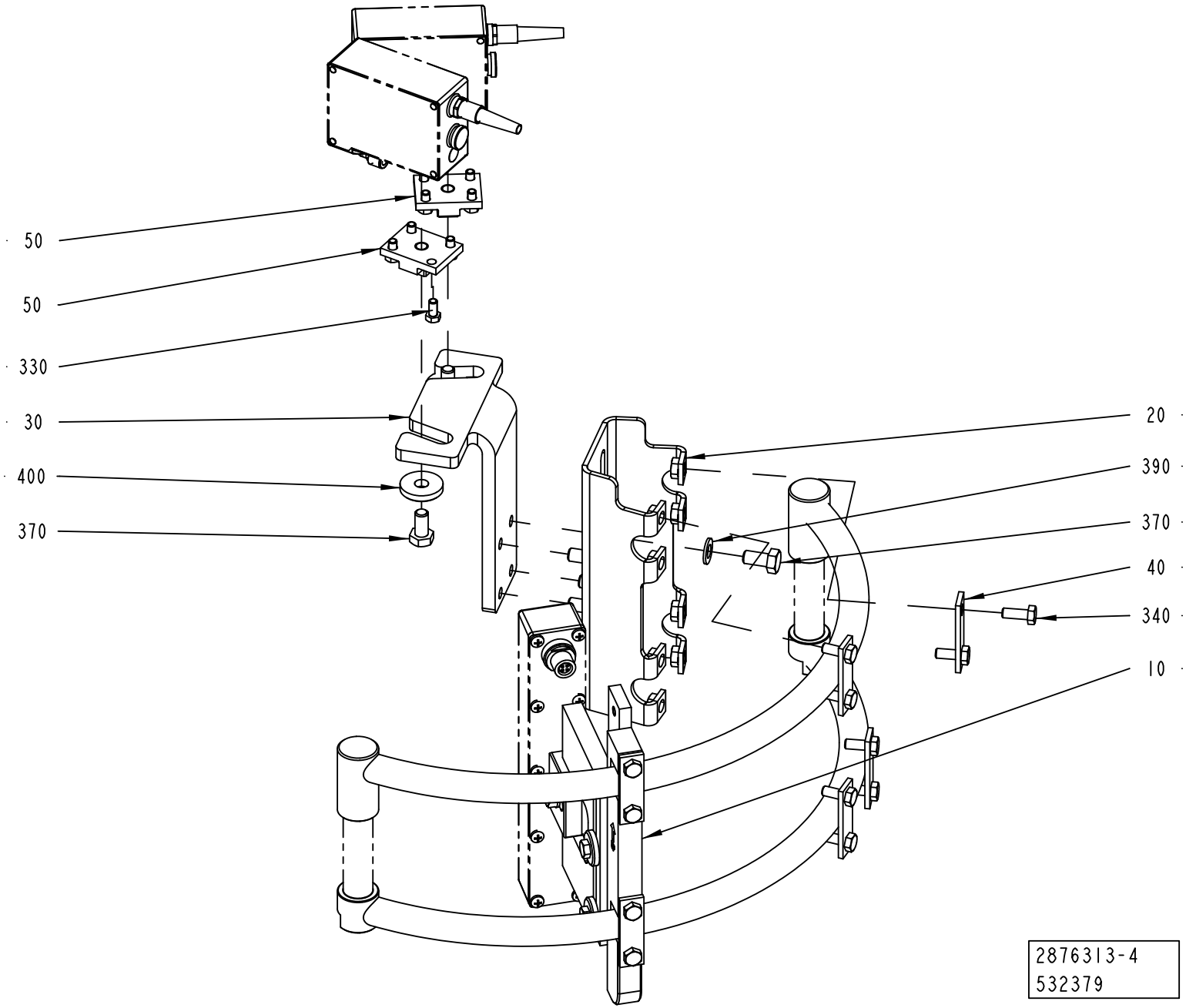

ECM: 533203 - 20120101
Group number: 2876313-0200
Assembly Drawing: 2876313-4_1_AA

This list covers pages from 1-414 to 1-419

Pos	Part No	UN	Qty	Description	Page No
TBA 0500B, TBA 1000B (See drawing on page: 1-414)					
020	2715295-0000		1	BRACKET	
030	1254109-0000		1	BRACKET	
040	1036673-0000		4	WASHER	
340	312105-0368		8	SCREW, M6S ISO 4017 M6X16 A4 80	
TBA 0500S (See drawing on page: 1-418)					
020	2715295-0000		1	BRACKET	
030	2719081-0000		1	BRACKET	
040	1036673-0000		4	WASHER	
340	312105-0368		8	SCREW, M6S ISO 4017 M6X16 A4 80	
TBA 0500SQ, TBA 1000SQ (See drawing on page: 1-418)					
020	2715295-0000		1	BRACKET	
030	2694095-0000		1	BRACKET	
040	1036673-0000		4	WASHER	
340	312105-0368		8	SCREW, M6S ISO 4017 M6X16 A4 80	
TBA 1000S (See drawing on page: 1-414)					
020	2715295-0000		1	BRACKET	
030	2694095-0000		1	BRACKET	
040	1036673-0000		4	WASHER	
340	312105-0368		8	SCREW, M6S ISO 4017 M6X16 A4 80	
TBA 1500S (See drawing on page: 1-418)					
020	2955548-0000		1	BRACKET	
030	1254109-0000		1	BRACKET	
060	2797439-0000		2	FASTENING PLATE	
340	312105-0368		4	SCREW, M6S ISO 4017 M6X16 A4 80	
TBA 2000S (See drawing on page: 1-418)					
020	2955548-0000		1	BRACKET	
030	3219182-0000		1	BRACKET	
060	2797439-0000		2	FASTENING PLATE	
340	312105-0368		4	SCREW, M6S ISO 4017 M6X16 A4 80	
TPA 0500SQ (See drawing on page: 1-418)					
020	2715295-0000		1	BRACKET	
030	1254111-0000		1	BRACKET	
040	1036673-0000		4	WASHER	
340	312105-0368		8	SCREW, M6S ISO 4017 M6X16 A4 80	
TPA 1000SQ, TPA 0750SQ (See drawing on page: 1-416)					
020	2715295-0000		1	BRACKET	
030	2986655-0000		1	BRACKET	
040	1036673-0000		4	WASHER	
070	2986656-0000		1	SLIDE	
080	2724929-0000		1	KNOB	
090	2993210-0000		1	NUT	
100	2993209-0000		1	SCREW	
300	90335-0024		1	COMP. SPRING, 22250, 1,25X13,75X27	
310	90287-0148		4	SCREW SPRINGLOAD. SLOTTED HEAD M5X12	
320	312318-0321		4	SET SCREW, CUP END ISO4029 M5X6 A4	
340	312105-0368		8	SCREW, M6S ISO 4017 M6X16 A4 80	
360	312105-0447		4	SCREW, M6S ISO 4017 M8X12 A4 80	
Common Parts					
010	1487338-0200		1	SUPPORT LEVEL DETECTOR	**1-421, 1-423, 1-425**
050	1036674-0000		2	FASTENING PLATE	
330	312105-0325		8	SCREW, M6S ISO 4017 M5X10 A4 80	
370	312105-0449		6	SCREW, M6S ISO 4017 M8X16 A4 80	
390	315105-0165		4	WASHER PLAIN, 8,4X16X1,6 A4 BRB	
400	315125-0165		2	WASHER HIGH, TBRSB 8,4X26X5 A4	

PHOTOCELL BRACKET

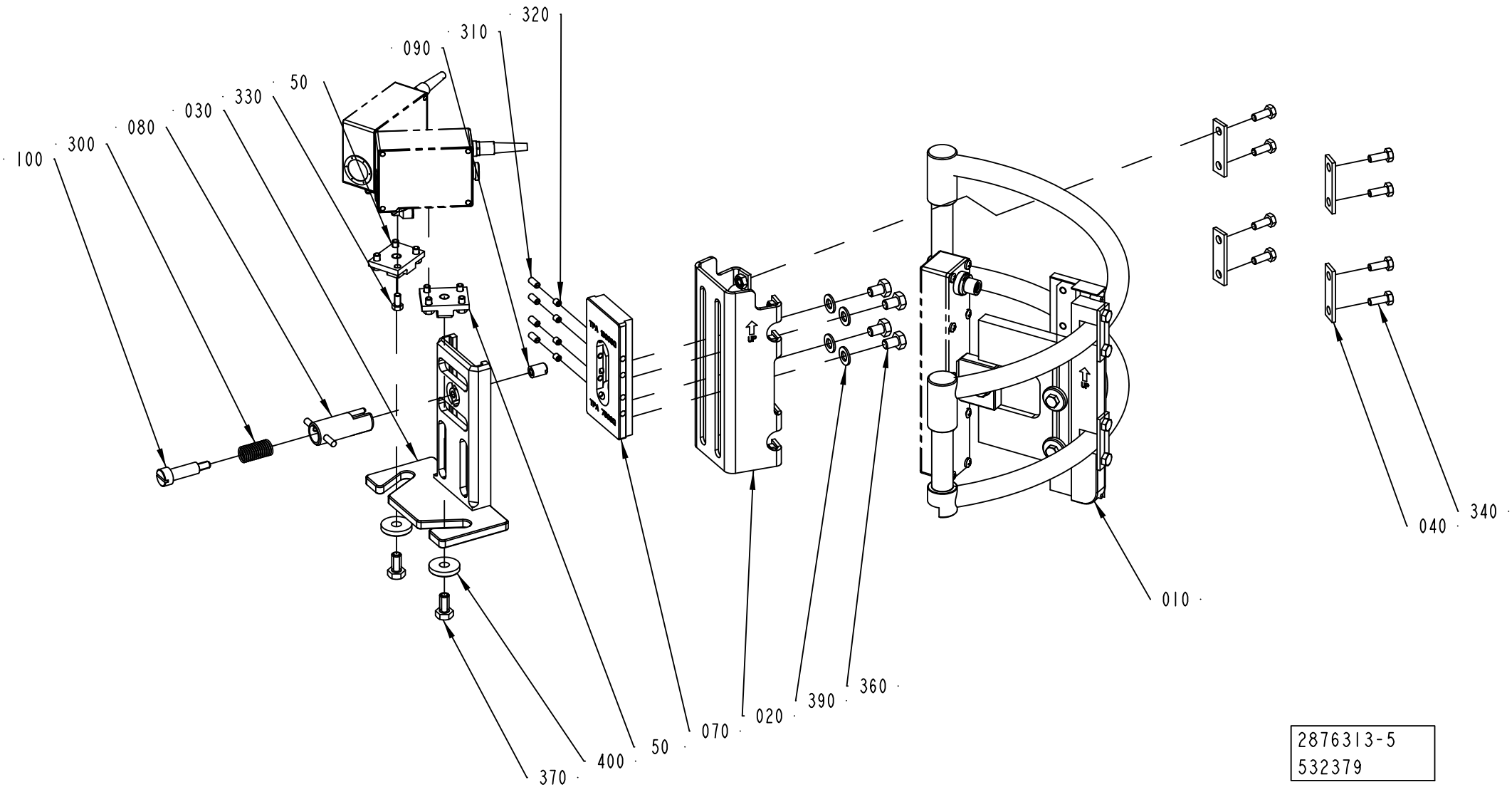

2876313-5
532379

ECM: 533203 - 20120101
Group number: 2876313-0200
Assembly Drawing: 2876313-5_1_AA

This list covers pages from 1-414 to 1-419

Pos	Part No	UN	Qty	Description	Page No
TBA 0500B, TBA 1000B (See drawing on page: 1-414)					
020	2715295-0000		1	BRACKET	
030	1254109-0000		1	BRACKET	
040	1036673-0000		4	WASHER	
340	312105-0368		8	SCREW, M6S ISO 4017 M6X16 A4 80	
TBA 0500S (See drawing on page: 1-418)					
020	2715295-0000		1	BRACKET	
030	2719081-0000		1	BRACKET	
040	1036673-0000		4	WASHER	
340	312105-0368		8	SCREW, M6S ISO 4017 M6X16 A4 80	
TBA 0500SQ, TBA 1000SQ (See drawing on page: 1-418)					
020	2715295-0000		1	BRACKET	
030	2694095-0000		1	BRACKET	
040	1036673-0000		4	WASHER	
340	312105-0368		8	SCREW, M6S ISO 4017 M6X16 A4 80	
TBA 1000S (See drawing on page: 1-414)					
020	2715295-0000		1	BRACKET	
030	2694095-0000		1	BRACKET	
040	1036673-0000		4	WASHER	
340	312105-0368		8	SCREW, M6S ISO 4017 M6X16 A4 80	
TBA 1500S (See drawing on page: 1-418)					
020	2955548-0000		1	BRACKET	
030	1254109-0000		1	BRACKET	
060	2797439-0000		2	FASTENING PLATE	
340	312105-0368		4	SCREW, M6S ISO 4017 M6X16 A4 80	
TBA 2000S (See drawing on page: 1-418)					
020	2955548-0000		1	BRACKET	
030	3219182-0000		1	BRACKET	
060	2797439-0000		2	FASTENING PLATE	
340	312105-0368		4	SCREW, M6S ISO 4017 M6X16 A4 80	
TPA 0500SQ (See drawing on page: 1-418)					
020	2715295-0000		1	BRACKET	
030	1254111-0000		1	BRACKET	
040	1036673-0000		4	WASHER	
340	312105-0368		8	SCREW, M6S ISO 4017 M6X16 A4 80	
TPA 1000SQ, TPA 0750SQ (See drawing on page: 1-416)					
020	2715295-0000		1	BRACKET	
030	2986655-0000		1	BRACKET	
040	1036673-0000		4	WASHER	
070	2986656-0000		1	SLIDE	
080	2724929-0000		1	KNOB	
090	2993210-0000		1	NUT	
100	2993209-0000		1	SCREW	
300	90335-0024		1	COMP. SPRING, 22250, 1,25X13,75X27	
310	90287-0148		4	SCREW SPRINGLOAD. SLOTTED HEAD M5X12	
320	312318-0321		4	SET SCREW, CUP END ISO4029 M5X6 A4	
340	312105-0368		8	SCREW, M6S ISO 4017 M6X16 A4 80	
360	312105-0447		4	SCREW, M6S ISO 4017 M8X12 A4 80	
Common Parts					
010	1487338-0200		1	SUPPORT LEVEL DETECTOR	**1-421, 1-423, 1-425**
050	1036674-0000		2	FASTENING PLATE	
330	312105-0325		8	SCREW, M6S ISO 4017 M5X10 A4 80	
370	312105-0449		6	SCREW, M6S ISO 4017 M8X16 A4 80	
390	315105-0165		4	WASHER PLAIN, 8,4X16X1,6 A4 BRB	
400	315125-0165		2	WASHER HIGH, TBRSB 8,4X26X5 A4	

PHOTOCELL BRACKET

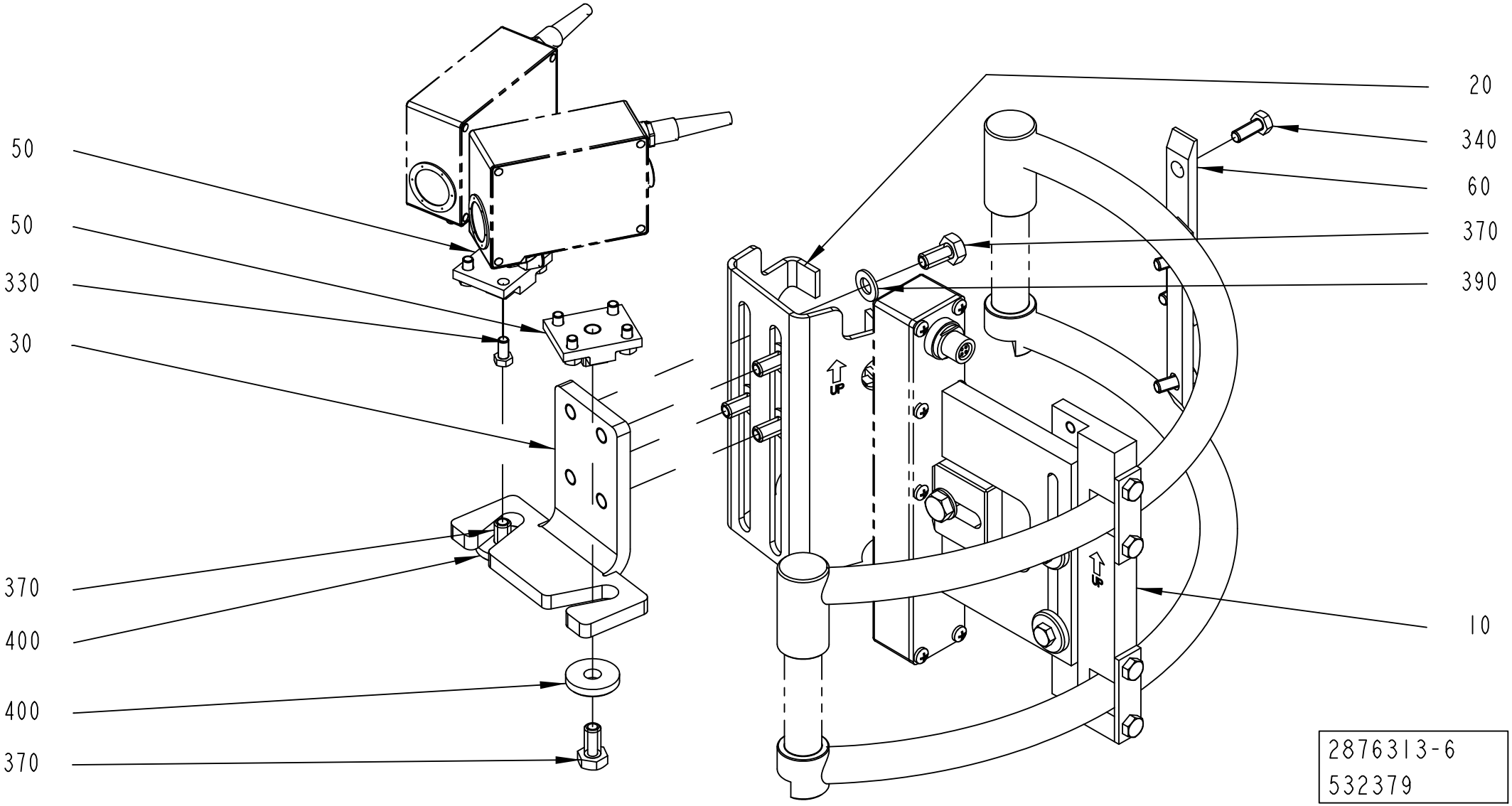

ECM: 533203 - 20120101
Group number: 2876313-0200
Assembly Drawing: 2876313-6_1_AA

This list covers pages from 1-414 to 1-419

Pos	Part No	UN	Qty	Description	Page No
TBA 0500B, TBA 1000B (See drawing on page: 1-414)					
020	2715295-0000		1	BRACKET	
030	1254109-0000		1	BRACKET	
040	1036673-0000		4	WASHER	
340	312105-0368		8	SCREW, M6S ISO 4017 M6X16 A4 80	
TBA 0500S (See drawing on page: 1-418)					
020	2715295-0000		1	BRACKET	
030	2719081-0000		1	BRACKET	
040	1036673-0000		4	WASHER	
340	312105-0368		8	SCREW, M6S ISO 4017 M6X16 A4 80	
TBA 0500SQ, TBA 1000SQ (See drawing on page: 1-418)					
020	2715295-0000		1	BRACKET	
030	2694095-0000		1	BRACKET	
040	1036673-0000		4	WASHER	
340	312105-0368		8	SCREW, M6S ISO 4017 M6X16 A4 80	
TBA 1000S (See drawing on page: 1-414)					
020	2715295-0000		1	BRACKET	
030	2694095-0000		1	BRACKET	
040	1036673-0000		4	WASHER	
340	312105-0368		8	SCREW, M6S ISO 4017 M6X16 A4 80	
TBA 1500S (See drawing on page: 1-418)					
020	2955548-0000		1	BRACKET	
030	1254109-0000		1	BRACKET	
060	2797439-0000		2	FASTENING PLATE	
340	312105-0368		4	SCREW, M6S ISO 4017 M6X16 A4 80	
TBA 2000S (See drawing on page: 1-418)					
020	2955548-0000		1	BRACKET	
030	3219182-0000		1	BRACKET	
060	2797439-0000		2	FASTENING PLATE	
340	312105-0368		4	SCREW, M6S ISO 4017 M6X16 A4 80	
TPA 0500SQ (See drawing on page: 1-418)					
020	2715295-0000		1	BRACKET	
030	1254111-0000		1	BRACKET	
040	1036673-0000		4	WASHER	
340	312105-0368		8	SCREW, M6S ISO 4017 M6X16 A4 80	
TPA 1000SQ, TPA 0750SQ (See drawing on page: 1-416)					
020	2715295-0000		1	BRACKET	
030	2986655-0000		1	BRACKET	
040	1036673-0000		4	WASHER	
070	2986656-0000		1	SLIDE	
080	2724929-0000		1	KNOB	
090	2993210-0000		1	NUT	
100	2993209-0000		1	SCREW	
300	90335-0024		1	COMP. SPRING, 22250, 1,25X13,75X27	
310	90287-0148		4	SCREW SPRINGLOAD. SLOTTED HEAD M5X12	
320	312318-0321		4	SET SCREW, CUP END ISO4029 M5X6 A4	
340	312105-0368		8	SCREW, M6S ISO 4017 M6X16 A4 80	
360	312105-0447		4	SCREW, M6S ISO 4017 M8X12 A4 80	
Common Parts					
010	1487338-0200		1	SUPPORT LEVEL DETECTOR	**1-421, 1-423, 1-425**
050	1036674-0000		2	FASTENING PLATE	
330	312105-0325		8	SCREW, M6S ISO 4017 M5X10 A4 80	
370	312105-0449		6	SCREW, M6S ISO 4017 M8X16 A4 80	
390	315105-0165		4	WASHER PLAIN, 8,4X16X1,6 A4 BRB	
400	315125-0165		2	WASHER HIGH, TBRSB 8,4X26X5 A4	

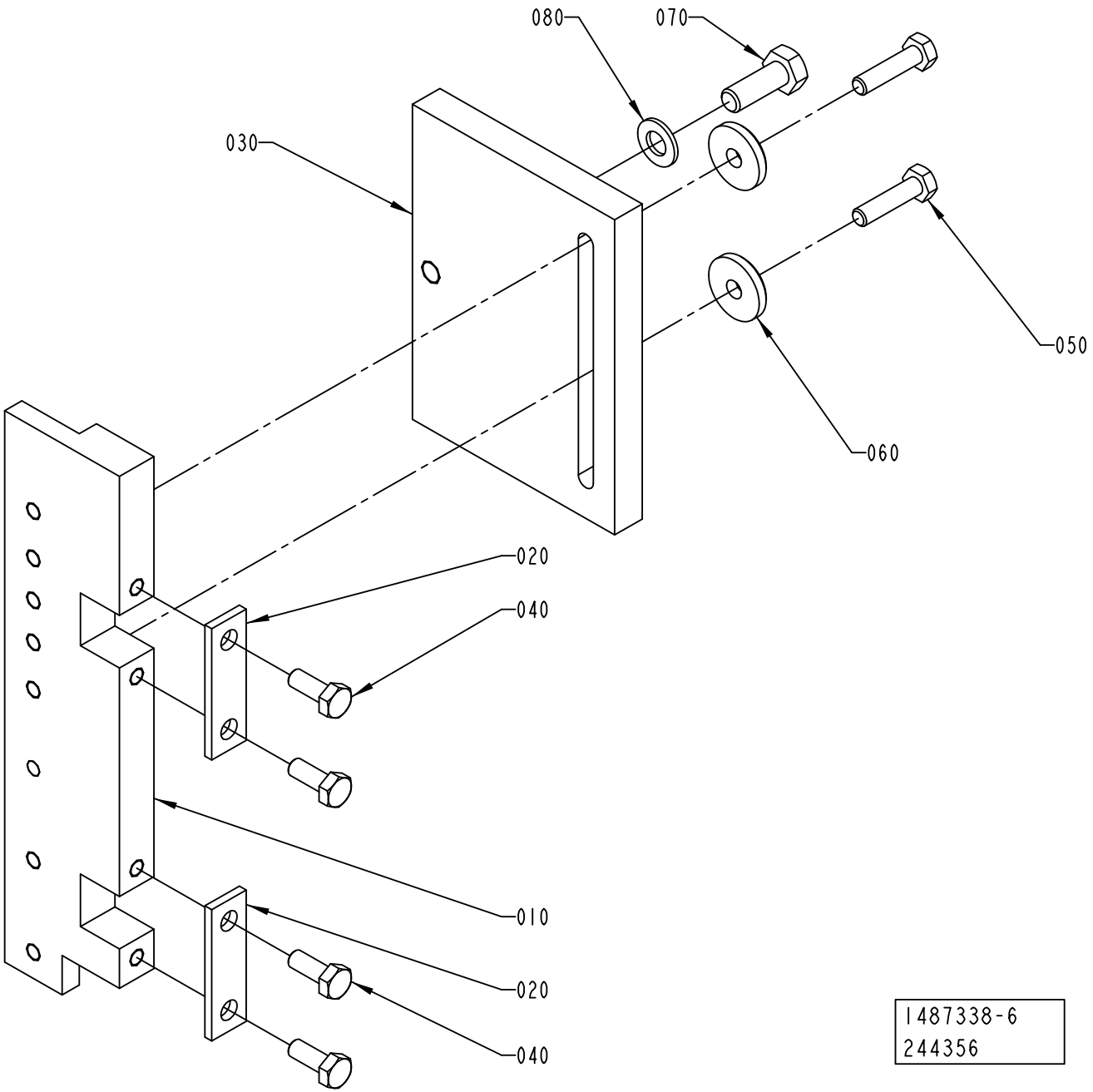
080
070
030
050
060
020
040
010
020
040
1487338-6
244356

ECM: 535471 - 20120101
Group number: 1487338-0200
Assembly Drawing: 1487338-6_1_AA

This list covers pages from 1-420 to 1-425

Pos	Part No	UN	Qty	Description	Page No
TPA 0500SQ (See drawing on page: 1-422)					
010	2715298-0000		1	BRACKET	
020	1036673-0000		2	WASHER	
030	2874952-0000		1	BRACKET	
040	312105-0368		4	SCREW, M6S ISO 4017 M6X16 A4 80	
TBA 0500S, TBA 0500SQ, TBA 0500B, TBA 1000B, TBA 1000SQ, TBA 1000S, TBA 1500S, TPA 1000SQ NOQC (See drawing on page: 1-420)					
010	2715298-0000		1	BRACKET	
020	1036673-0000		2	WASHER	
030	1317475-0000		1	BRACKET	
040	312105-0368		4	SCREW, M6S ISO 4017 M6X16 A4 80	
TBA 2000S (See drawing on page: 1-420)					
010	2715299-0000		1	BRACKET	
020	1036673-0000		2	WASHER	
030	2656899-0000		1	BRACKET	
040	312105-0368		4	SCREW, M6S ISO 4017 M6X16 A4 80	
TGA 1000SQ, TGA 0750SQ, TGA 0500SQ (See drawing on page: 1-424)					
010	2888153-0000		1	BRACKET	
020	2797439-0000		1	FASTENING PLATE	
030	1317475-0000		1	BRACKET	
040	312105-0368		2	SCREW, M6S ISO 4017 M6X16 A4 80	
TPA 1000SQ QC, TPA 0750SQ QC (See drawing on page: 1-420)					
010	2715299-0000		1	BRACKET	
020	1036673-0000		2	WASHER	
030	1317475-0000		1	BRACKET	
040	312105-0368		4	SCREW, M6S ISO 4017 M6X16 A4 80	
Common Parts					
050	312105-0372		2	SCREW, M6S ISO 4017 M6X25 A4 80	
060	315125-0153		2	WASHER HIGH, TBRSB 6,4X22X4 A4	
070	312105-0451		1	SCREW, M6S ISO 4017 M8X20 A4 80	
080	315105-0165		1	WASHER PLAIN, 8,4X16X1,6 A4 BRB	

Pos	Part No	UN	Qty	Description	Page No

SUPPORT LEVEL DETECTOR

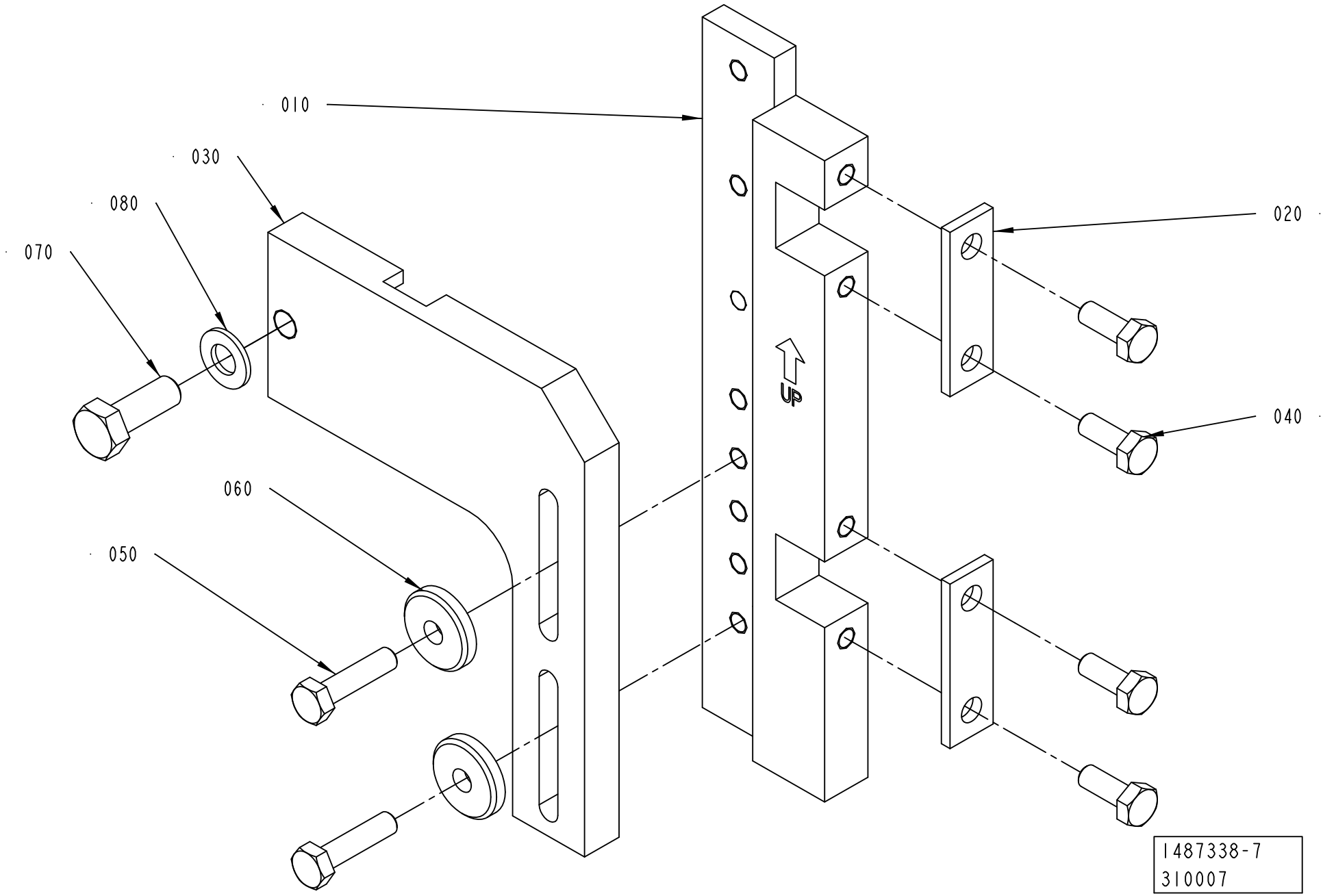

Pos	Part No	UN	Qty	Description	Page No
TPA 0500SQ (See drawing on page: 1-422)					
010	2715298-0000		1	BRACKET	
020	1036673-0000		2	WASHER	
030	2874952-0000		1	BRACKET	
040	312105-0368		4	SCREW, M6S ISO 4017 M6X16 A4 80	
TBA 0500S, TBA 0500SQ, TBA 0500B, TBA 1000B, TBA 1000SQ, TBA 1000S, TBA 1500S, TPA 1000SQ NOQC (See drawing on page: 1-420)					
010	2715298-0000		1	BRACKET	
020	1036673-0000		2	WASHER	
030	1317475-0000		1	BRACKET	
040	312105-0368		4	SCREW, M6S ISO 4017 M6X16 A4 80	
TBA 2000S (See drawing on page: 1-420)					
010	2715299-0000		1	BRACKET	
020	1036673-0000		2	WASHER	
030	2656899-0000		1	BRACKET	
040	312105-0368		4	SCREW, M6S ISO 4017 M6X16 A4 80	
TGA 1000SQ, TGA 0750SQ, TGA 0500SQ (See drawing on page: 1-424)					
010	2888153-0000		1	BRACKET	
020	2797439-0000		1	FASTENING PLATE	
030	1317475-0000		1	BRACKET	
040	312105-0368		2	SCREW, M6S ISO 4017 M6X16 A4 80	
TPA 1000SQ QC, TPA 0750SQ QC (See drawing on page: 1-420)					
010	2715299-0000		1	BRACKET	
020	1036673-0000		2	WASHER	
030	1317475-0000		1	BRACKET	
040	312105-0368		4	SCREW, M6S ISO 4017 M6X16 A4 80	
Common Parts					
050	312105-0372		2	SCREW, M6S ISO 4017 M6X25 A4 80	
060	315125-0153		2	WASHER HIGH, TBRSB 6,4X22X4 A4	
070	312105-0451		1	SCREW, M6S ISO 4017 M8X20 A4 80	
080	315105-0165		1	WASHER PLAIN, 8,4X16X1,6 A4 BRB	

Pos	Part No	UN	Qty	Description	Page No

SUPPORT LEVEL DETECTOR

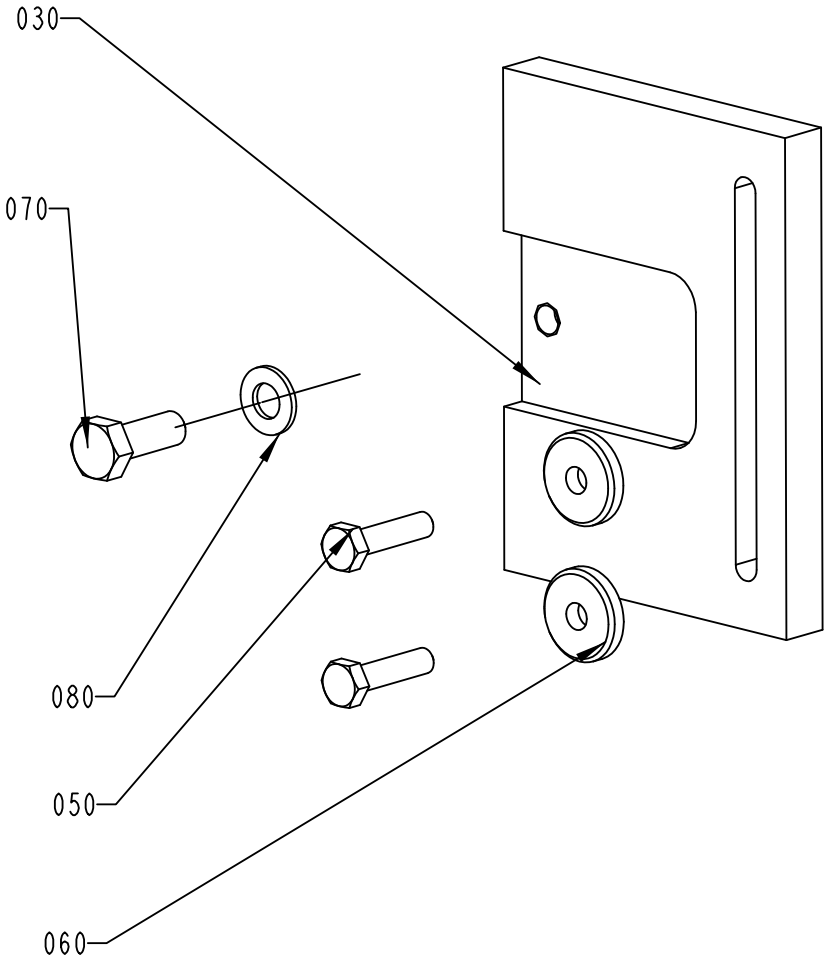

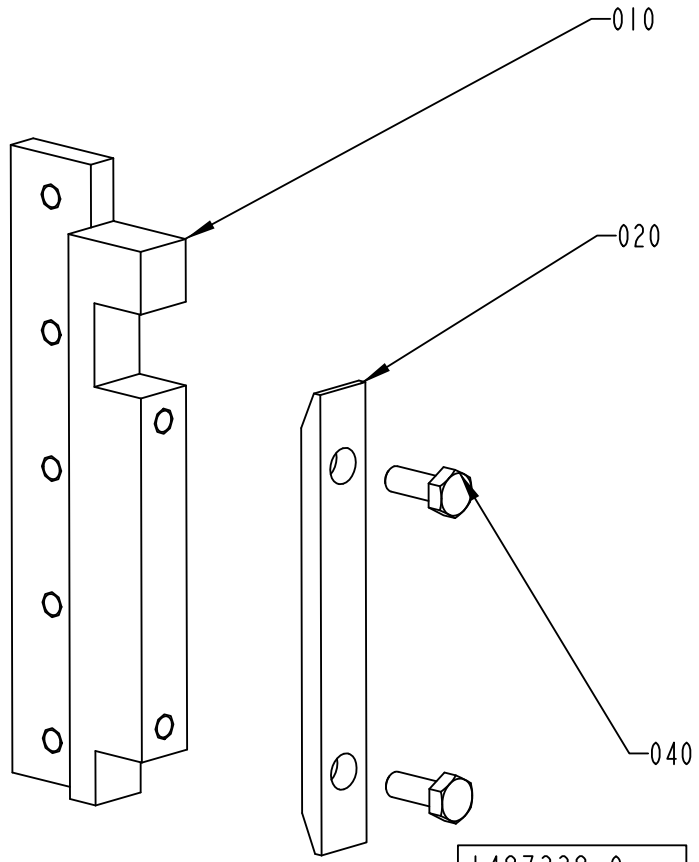

Pos	Part No	UN	Qty	Description	Page No
TPA 0500SQ (See drawing on page: 1-422)					
010	2715298-0000		1	BRACKET	
020	1036673-0000		2	WASHER	
030	2874952-0000		1	BRACKET	
040	312105-0368		4	SCREW, M6S ISO 4017 M6X16 A4 80	
TBA 0500S, TBA 0500SQ, TBA 0500B, TBA 1000B, TBA 1000SQ, TBA 1000S, TBA 1500S, TPA 1000SQ NOQC (See drawing on page: 1-420)					
010	2715298-0000		1	BRACKET	
020	1036673-0000		2	WASHER	
030	1317475-0000		1	BRACKET	
040	312105-0368		4	SCREW, M6S ISO 4017 M6X16 A4 80	
TBA 2000S (See drawing on page: 1-420)					
010	2715299-0000		1	BRACKET	
020	1036673-0000		2	WASHER	
030	2656899-0000		1	BRACKET	
040	312105-0368		4	SCREW, M6S ISO 4017 M6X16 A4 80	
TGA 1000SQ, TGA 0750SQ, TGA 0500SQ (See drawing on page: 1-424)					
010	2888153-0000		1	BRACKET	
020	2797439-0000		1	FASTENING PLATE	
030	1317475-0000		1	BRACKET	
040	312105-0368		2	SCREW, M6S ISO 4017 M6X16 A4 80	
TPA 1000SQ QC, TPA 0750SQ QC (See drawing on page: 1-420)					
010	2715299-0000		1	BRACKET	
020	1036673-0000		2	WASHER	
030	1317475-0000		1	BRACKET	
040	312105-0368		4	SCREW, M6S ISO 4017 M6X16 A4 80	
Common Parts					
050	312105-0372		2	SCREW, M6S ISO 4017 M6X25 A4 80	
060	315125-0153		2	WASHER HIGH, TBRSB 6,4X22X4 A4	
070	312105-0451		1	SCREW, M6S ISO 4017 M8X20 A4 80	
080	315105-0165		1	WASHER PLAIN, 8,4X16X1,6 A4 BRB	

Pos	Part No	UN	Qty	Description	Page No

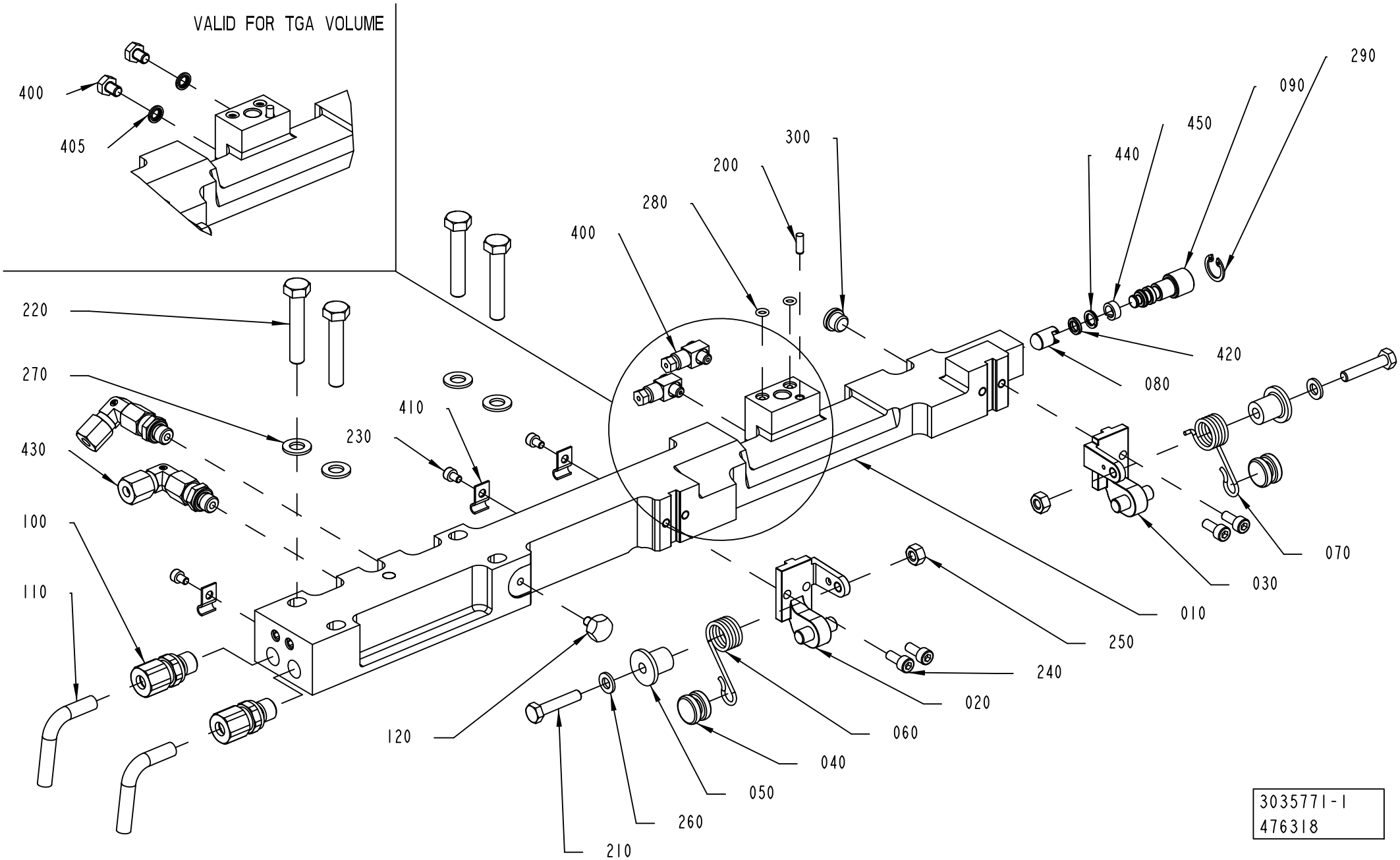
VALID FOR TGA VOLUME
400
405
220
270
430
100
110
120
210
260
050
040
060
020
240
250
010
030
070
080
420
440
450
090
290
300
200
280
400
410
230
3035771-1
476318

ECM: 535049 - 20120102
Group number: 3035771-0100
Assembly Drawing: 3035771-1_1_AC

This list covers pages from 1-426 to 1-429

Pos	Part No	UN	Qty	Description	Page No
TBA 0500S, TBA 0500SQ, TBA 0500B, TBA 1000B, TBA 1000SQ, TBA 1000S, TBA 1500S, TPA 1000SQ, TPA 0500SQ, TPA 0750SQ (See drawing on page: 1-426)					
010	3014103-0000		1	CARRIER PRESSURE LEFT	
400	90134-0058		2	CONNECTION	
TBA 2000S (See drawing on page: 1-428)					
010	3038401-0000		1	CARRIER PRESSURE LEFT	
400	90134-0058		2	CONNECTION	
TGA 1000SQ, TGA 0750SQ, TGA 0500SQ, TGA 1500SQ (See drawing on page: 1-426)					
010	3014103-0000		1	CARRIER PRESSURE LEFT	
400	312105-0362		2	SCREW, M6S ISO 4017 M6X8 A4 80	
405	315211-0103		2	BONDED SEAL SS/NBR90 M6	
Common Parts					
020	2530292-0000		1	BRACKET	
030	2530293-0000		1	BRACKET	
040	2530296-0000		2	ROLLER	
050	2532531-0000		2	ROLLER	
060	2547588-0000		1	SPRING	
070	2547589-0000		1	SPRING	
080	2995752-0000		1	HEAD	
090	2995753-0000		1	SHAFT	
100	3039948-0000		2	CONNECTOR	
110	3039949-0000		2	TUBE	
120	3047361-0000		1	SETTING KNOB	
200	311103-0268		1	PARALLEL PIN ISO 2338 4M6X12 A1	
210	312105-0374		2	SCREW, M6S ISO 4014 M6X30 A4 80	
220	312105-0460		4	SCREW, M6S ISO 4014 M8X45 A4 80	
230	312115-0285		3	SCREW ISO4762 M4X6 A4 80	
240	312115-0327		4	SCREW ISO4762 M5X12 A4 80	
250	312605-0316		2	HEXAGON NUT, M6M M6 A280	
260	315105-0153		2	WASHER PLAIN, 6,4X12X1,5 A4 BRB	
270	315105-0165		4	WASHER PLAIN, 8,4X16X1,6 A4 BRB	
280	315202-0102		2	O-RING 4,1X1,6 MM	
290	315753-0112		1	RETAINING RING FOR BORE DIN 472 15 SS	
300	342713-0209		1	PLUG, EXT THREAD HEX SOCKET 8638-00-180	
410	90165-0056		3	PIPE CLIP FOR TUBE, 4 MM	
420	90459-1861		1	X-SEAL 6,07X2,62 MM	
430	90600-1991		2	ADJUSTABLE ELBOW CONNECTION 6-G1/8	
440	90601-3689		1	BACK-UP RING 7X1,4 MM	
450	90601-3688		1	WEAR RING 6,9X10X4 MM	
460	90602-4847		1	THREAD LOCKING, LOCTITE 243 50 ML	

Pos	Part No	UN	Qty	Description	Page No

CARRIER PRESSURE LEFT

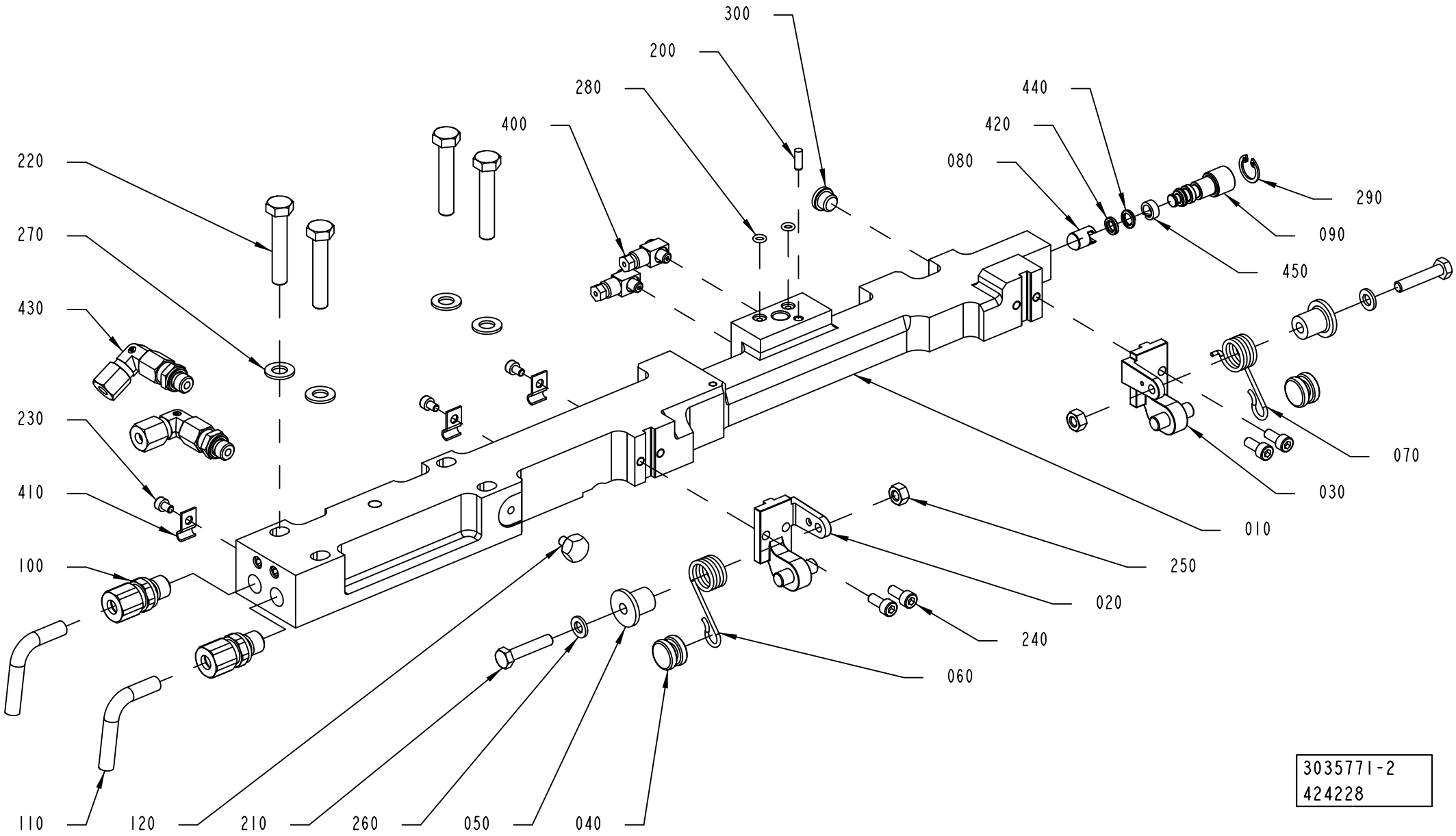

ECM: 535049 - 20120102
Group number: 3035771-0100
Assembly Drawing: 3035771-2_1_AA

This list covers pages from 1-426 to 1-429

Pos	Part No	UN	Qty	Description	Page No
TBA 0500S, TBA 0500SQ, TBA 0500B, TBA 1000B, TBA 1000SQ, TBA 1000S, TBA 1500S, TPA 1000SQ, TPA 0500SQ, TPA 0750SQ (See drawing on page: 1-426)					
010	3014103-0000		1	CARRIER PRESSURE LEFT	
400	90134-0058		2	CONNECTION	
TBA 2000S (See drawing on page: 1-428)					
010	3038401-0000		1	CARRIER PRESSURE LEFT	
400	90134-0058		2	CONNECTION	
TGA 1000SQ, TGA 0750SQ, TGA 0500SQ, TGA 1500SQ (See drawing on page: 1-426)					
010	3014103-0000		1	CARRIER PRESSURE LEFT	
400	312105-0362		2	SCREW, M6S ISO 4017 M6X8 A4 80	
405	315211-0103		2	BONDED SEAL SS/NBR90 M6	
Common Parts					
020	2530292-0000		1	BRACKET	
030	2530293-0000		1	BRACKET	
040	2530296-0000		2	ROLLER	
050	2532531-0000		2	ROLLER	
060	2547588-0000		1	SPRING	
070	2547589-0000		1	SPRING	
080	2995752-0000		1	HEAD	
090	2995753-0000		1	SHAFT	
100	3039948-0000		2	CONNECTOR	
110	3039949-0000		2	TUBE	
120	3047361-0000		1	SETTING KNOB	
200	311103-0268		1	PARALLEL PIN ISO 2338 4M6X12 A1	
210	312105-0374		2	SCREW, M6S ISO 4014 M6X30 A4 80	
220	312105-0460		4	SCREW, M6S ISO 4014 M8X45 A4 80	
230	312115-0285		3	SCREW ISO4762 M4X6 A4 80	
240	312115-0327		4	SCREW ISO4762 M5X12 A4 80	
250	312605-0316		2	HEXAGON NUT, M6M M6 A280	
260	315105-0153		2	WASHER PLAIN, 6,4X12X1,5 A4 BRB	
270	315105-0165		4	WASHER PLAIN, 8,4X16X1,6 A4 BRB	
280	315202-0102		2	O-RING 4,1X1,6 MM	
290	315753-0112		1	RETAINING RING FOR BORE DIN 472 15 SS	
300	342713-0209		1	PLUG, EXT THREAD HEX SOCKET 8638-00-180	
410	90165-0056		3	PIPE CLIP FOR TUBE, 4 MM	
420	90459-1861		1	X-SEAL 6,07X2,62 MM	
430	90600-1991		2	ADJUSTABLE ELBOW CONNECTION 6-G1/8	
440	90601-3689		1	BACK-UP RING 7X1,4 MM	
450	90601-3688		1	WEAR RING 6,9X10X4 MM	
460	90602-4847		1	THREAD LOCKING, LOCTITE 243 50 ML	

Pos	Part No	UN	Qty	Description	Page No

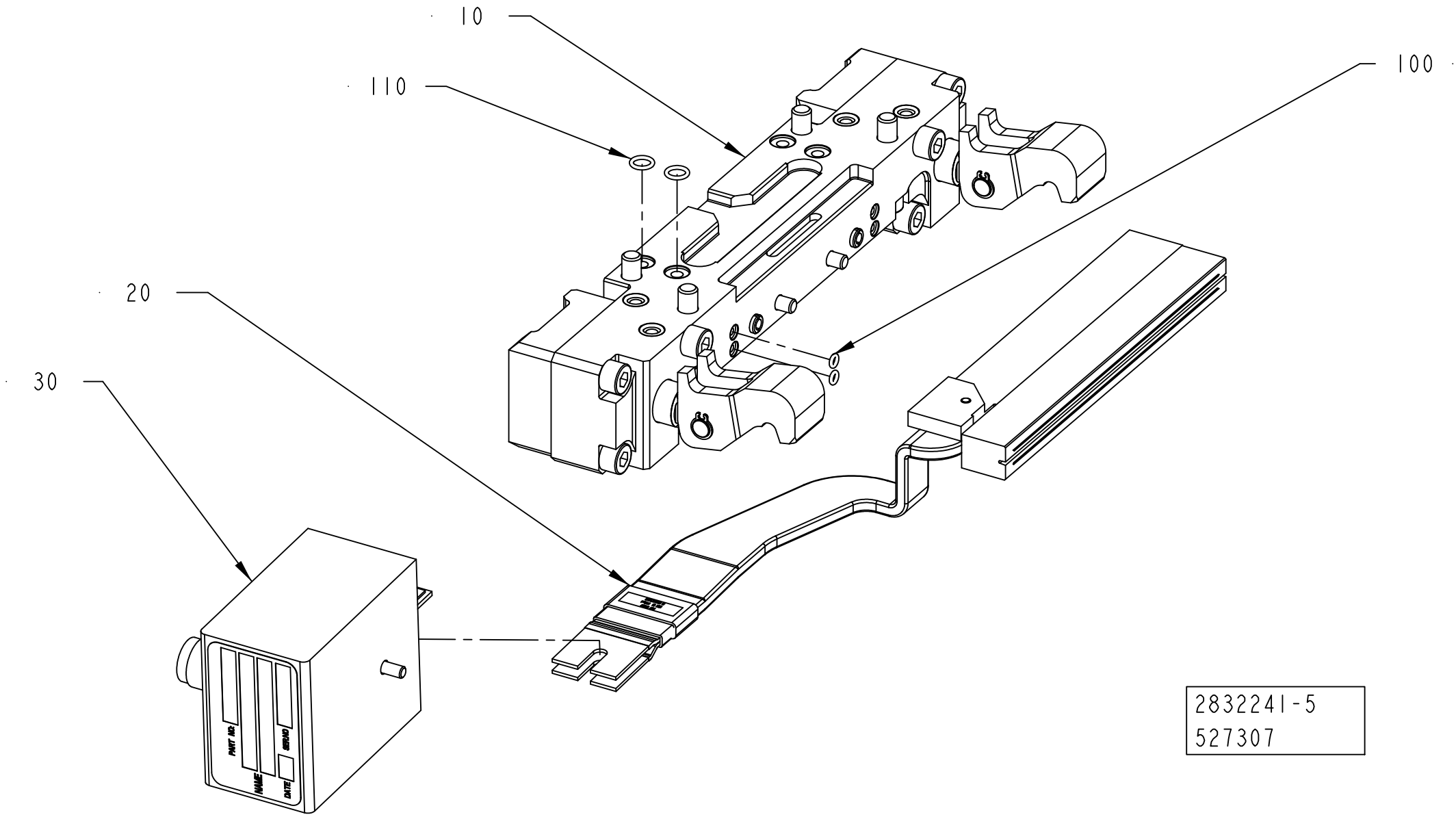
10
110
100
20
30
PART NO.
SERIAL
NAME
DATE
2832241-5
527307

ECM: 546693 - 20120402
Group number: 2832241-0200
Assembly Drawing: 2832241-5_1_AA

Pos	Part No	UN	Qty	Description	Page No
-					
010	2832243-0100		1	PRESSURE JAW	**1-433**
020	2832244-0200		1	INDUCTOR LEFT	**1-435, 1-437, 1-439**
030	2875994-0100		1	ADAPTION TRANSFORMER	**1-441**
100	315202-0101		2	O-RING 3,1X1,6 MM	
110	315202-0105		2	O-RING 7,1X1,6 MM	

Pos	Part No	UN	Qty	Description	Page No

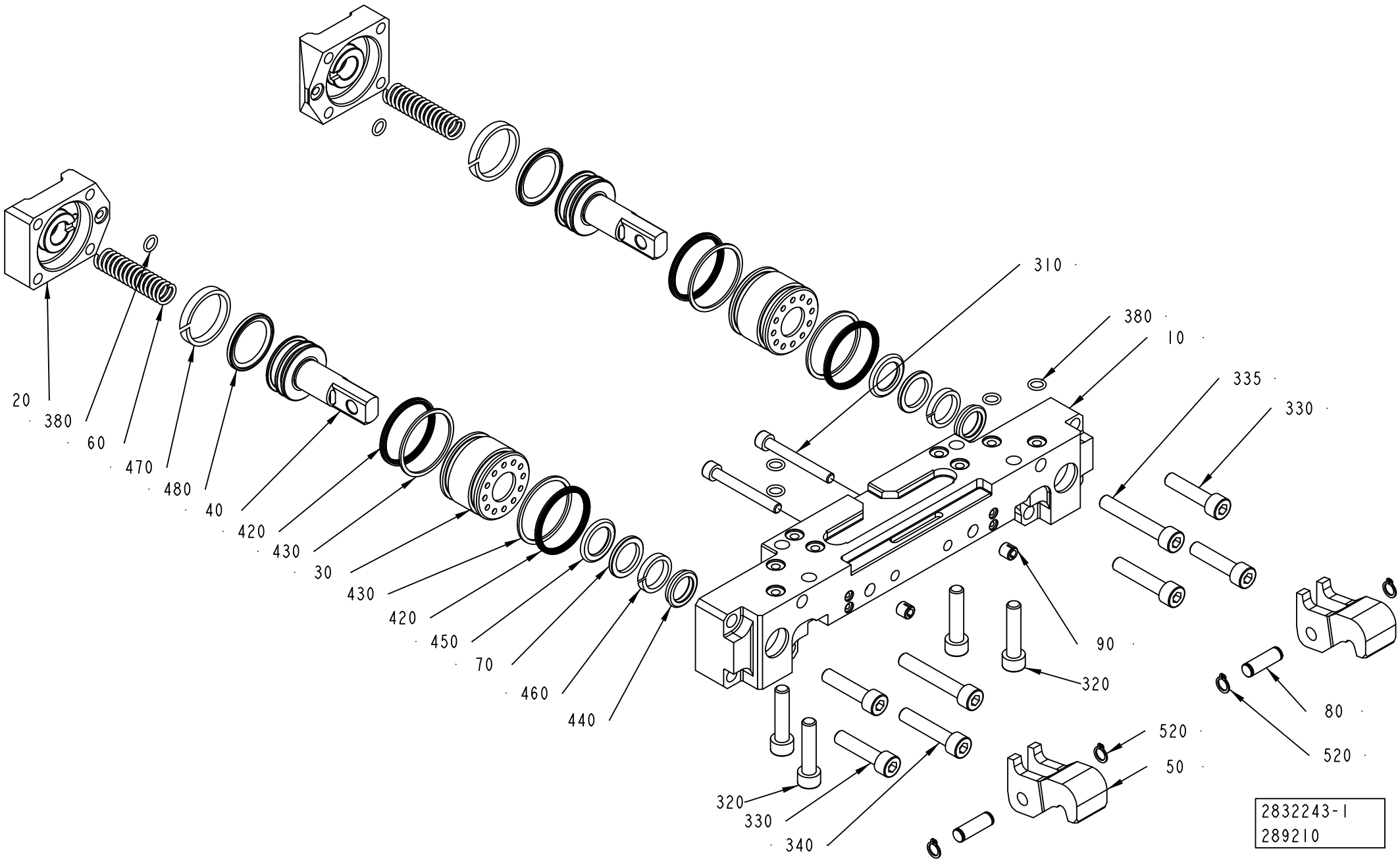
20
380
60
470
480
40
420
430
30
430
420
450
70
460
440
310
380
10
335
330
90
320
80
520
520
50
320
330
340
2832243-1
289210

ECM: 533736 - 20120102
Group number: 2832243-0100
Assembly Drawing: 2832243-1_1_AA

Pos	Part No	UN	Qty	Description	Page No
TBA 0500S					
010	2813731-0000		1	BEARING HOUSING	
020	2813730-0000		2	LID	
030	3103391-0000		2	SLEEVE	
040	3103390-0000		2	PISTON	
050	1538349-0000		2	CATCH	
060	1260328-0000		2	SPRING	
080	950351-0000		2	SHAFT	
310	312115-0380		2	SCREW ISO4762 M6X50 A4 80	
320	312115-0457		4	SCREW ISO4762 M8X35 A4 80	
330	312115-0457		4	SCREW ISO4762 M8X35 A4 80	
335	312115-0461		2	SCREW ISO4762 M8X50 A4 80	
340	312115-0459		2	SCREW ISO4762 M8X40 A4 80	
420	90091-0359		4	X-SEAL 36,17X2,62 MM	
430	90091-0360		4	BACK-UP RING 37,5X1,4 MM	
470	90603-4532		2	WEAR RING 25X30X5,6 MM	
480	90603-4541		2	PISTON SEAL GLYD RING 22,5X30X3,2 MM	
TBA 0500SQ, TBA 0500B, TBA 1000B, TBA 1000SQ, TBA 1000S, TBA 1500S, TPA 1000SQ, TPA 0500SQ, TPA 0750SQ, TGA 1500SQ					
010	2813731-0000		1	BEARING HOUSING	
020	2813730-0000		2	LID	
030	1348504-0000		2	SLEEVE	
040	1349612-0000		2	PISTON	
050	1538349-0000		2	CATCH	
060	1260328-0000		2	SPRING	
080	950351-0000		2	SHAFT	
310	312115-0380		2	SCREW ISO4762 M6X50 A4 80	
320	312115-0457		4	SCREW ISO4762 M8X35 A4 80	
330	312115-0457		4	SCREW ISO4762 M8X35 A4 80	
335	312115-0461		2	SCREW ISO4762 M8X50 A4 80	
340	312115-0459		2	SCREW ISO4762 M8X40 A4 80	
420	90091-0359		4	X-SEAL 36,17X2,62 MM	
430	90091-0360		4	BACK-UP RING 37,5X1,4 MM	
470	90091-0368		2	WEAR RING 30X35X5,3 MM	
480	90091-0428		2	PISTON SEAL GLYD RING T 27,5X34,5X3,2 MM	
TBA 2000S					
010	3002560-0000		1	BEARING HOUSING	
020	2907795-0000		2	LID	
030	2588295-0000		2	SLEEVE	
040	2588296-0000		2	PISTON	
050	2566338-0000		2	CATCH	
060	2594892-0000		2	SPRING	
080	2588297-0000		2	SHAFT	
310	312115-0376		3	SCREW ISO4762 M6X35 A4 80	
320	312115-0455		4	SCREW ISO4762 M8X30 A4 80	
330	312115-0457		4	SCREW ISO4762 M8X35 A4 80	
335	312115-0461		2	SCREW ISO4762 M8X50 A4 80	
340	312115-0459		2	SCREW ISO4762 M8X40 A4 80	
420	90459-2146		4	X-SEAL 42,52X2,62 MM	
430	90459-2145		4	BACK-UP RING 43,5X1,4 MM	
470	90091-0074		2	WEAR RING 35X40X5,3 MM	
480	90459-2173		2	PISTON SEAL GLYD RING T 32,5X40X3,2 MM	
TGA 1000SQ, TGA 0750SQ, TGA 0500SQ					
010	2612745-0000		1	BEARING HOUSING	
020	2700151-0000		2	LID	
030	1348504-0000		2	SLEEVE	
040	1349612-0000		2	PISTON	
050	1538349-0000		2	CATCH	
060	1260328-0000		2	SPRING	
080	950351-0000		2	SHAFT	
310	312115-0380		2	SCREW ISO4762 M6X50 A4 80	
320	312115-0457		4	SCREW ISO4762 M8X35 A4 80	
330	312115-0459		4	SCREW ISO4762 M8X40 A4 80	
335	312115-0461		4	SCREW ISO4762 M8X50 A4 80	
420	90091-0359		4	X-SEAL 36,17X2,62 MM	
430	90091-0360		4	BACK-UP RING 37,5X1,4 MM	
470	90091-0368		2	WEAR RING 30X35X5,3 MM	
480	90091-0428		2	PISTON SEAL GLYD RING T 27,5X34,5X3,2 MM	
Common Parts					
070	1038240-0000		2	SPACER	
090	107426-0000		2	GUIDE SLEEVE	
380	315202-0105		6	O-RING 7,1X1,6 MM	
440	90091-0362		2	SCRAPER, EXCLUDER 18X22,8X3,7 MM	
450	90091-0364		2	ROD SEAL, STEPSEAL 18X25,3X3,2 MM	
460	90091-0366		2	WEAR RING 18X23X3,9 MM	
520	90141-0015		4	RETAINING RING FOR SHAFT DIN 471 8 SS	

Machine Type | Group Description | Used-In | Group Number | Page No

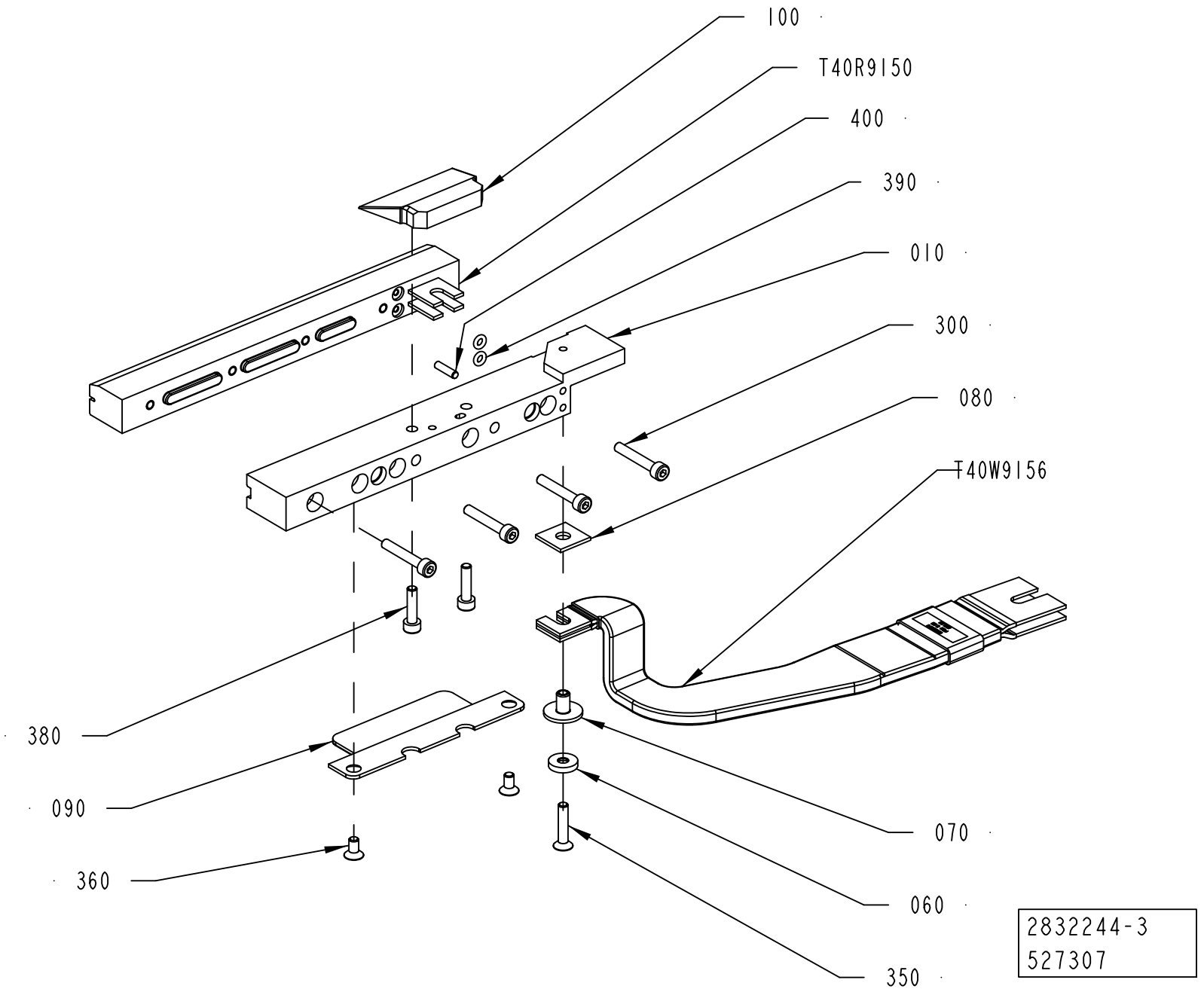
100
T40R9150
400
390
010
300
080
T40W9156
380
090
360
070
060
350
2832244-3
527307

ECM: 546695 - 20120402
Group number: 2832244-0200
Assembly Drawing: 2832244-3_1_AA

This list covers pages from 1-434 to 1-439

Pos	Part No	UN	Qty	Description	Page No
TPA 0500SQ (See drawing on page: 1-434)					
010	2903761-0000		1	RAIL	
060	2836239-0000		1	WASHER	
070	2836238-0000		1	INSULATION NUT	
080	1036584-0000		1	WASHER	
090	2958748-0000		1	VOLUME BULGE	
100	2968248-0000		1	VOLUME BULGE	
300	312115-0297		4	SCREW ISO4762 M4X25 A4 80	
360	312155-0287		2	SCREW DIN 7991 MF6S M4X8 A4 70	
380	312115-0293		2	SCREW ISO4762 M4X16 A4 80	
390	315202-0101		2	O-RING 3,1X1,6 MM	
400	311103-0234		1	PARALLEL PIN ISO 2338 3M6X12 A1	
T40R9150	2587466-0000		1	INDUCTOR	
T40W9156	2830430-0000		1	BUSBAR	
TPA 1000SQ, TPA 0750SQ (See drawing on page: 1-434)					
010	2903761-0000		1	RAIL	
060	2836239-0000		1	WASHER	
070	2836238-0000		1	INSULATION NUT	
080	1036584-0000		1	WASHER	
090	2944194-0000		1	VOLUME BULGE	
100	2944193-0000		1	VOLUME BULGE	
300	312115-0297		4	SCREW ISO4762 M4X25 A4 80	
360	312155-0287		2	SCREW DIN 7991 MF6S M4X8 A4 70	
380	312115-0293		2	SCREW ISO4762 M4X16 A4 80	
390	315202-0101		2	O-RING 3,1X1,6 MM	
400	311103-0234		1	PARALLEL PIN ISO 2338 3M6X12 A1	
T40R9150	2663378-0000		1	INDUCTOR	
T40W9156	2830430-0000		1	BUSBAR	
TBA 0500B, TBA 1000B NOMOLDEDCAP (See drawing on page: 1-434)					
010	2903761-0000		1	RAIL	
060	2836239-0000		1	WASHER	
070	2836238-0000		1	INSULATION NUT	
080	1036584-0000		1	WASHER	
090	1558734-0000		1	VOLUME BULGE	
300	312115-0297		4	SCREW ISO4762 M4X25 A4 80	
360	312155-0287		2	SCREW DIN 7991 MF6S M4X8 A4 70	
390	315202-0101		2	O-RING 3,1X1,6 MM	
T40R9150	1110938-0000		1	INDUCTOR	
T40W9156	2830430-0000		1	BUSBAR	
TBA 0500S (See drawing on page: 1-434)					
010	2815964-0000		1	RAIL	
060	2836239-0000		1	WASHER	
070	2836238-0000		1	INSULATION NUT	
080	1036584-0000		1	WASHER	
300	312115-0297		4	SCREW ISO4762 M4X25 A4 80	
390	315202-0101		2	O-RING 3,1X1,6 MM	
T40R9150	1110934-0000		1	INDUCTOR	
T40W9156	2830430-0000		1	BUSBAR	
TBA 0500SQ, TBA 1000SQ (See drawing on page: 1-434)					
010	2815964-0000		1	RAIL	
060	2836239-0000		1	WASHER	
070	2836238-0000		1	INSULATION NUT	
080	1036584-0000		1	WASHER	
300	312115-0297		4	SCREW ISO4762 M4X25 A4 80	
390	315202-0101		2	O-RING 3,1X1,6 MM	
T40R9150	1110936-0000		1	INDUCTOR	
T40W9156	2830430-0000		1	BUSBAR	
TBA 1000S NOMOLDEDCAP HELICAP2 23 (See drawing on page: 1-434)					
010	2815964-0000		1	RAIL	
060	2836239-0000		1	WASHER	
070	2836238-0000		1	INSULATION NUT	
080	1036584-0000		1	WASHER	
300	312115-0297		4	SCREW ISO4762 M4X25 A4 80	
390	315202-0101		2	O-RING 3,1X1,6 MM	
T40R9150	3124821-0000		1	INDUCTOR	
T40W9156	2830430-0000		1	BUSBAR	
TBA 1000S NOMOLDEDCAP NOCAP, TBA 1000S NOMOLDEDCAP RECAP3, TBA 1000S NOMOLDEDCAP SLIMCAP 1000 (See drawing on page: 1-434)					
010	2815964-0000		1	RAIL	
060	2836239-0000		1	WASHER	
070	2836238-0000		1	INSULATION NUT	
080	1036584-0000		1	WASHER	
300	312115-0297		4	SCREW ISO4762 M4X25 A4 80	
390	315202-0101		2	O-RING 3,1X1,6 MM	
T40R9150	1110937-0000		1	INDUCTOR	
T40W9156	2830430-0000		1	BUSBAR	
TBA 1500S (See drawing on page: 1-434)					
010	2815964-0000		1	RAIL	
060	2836239-0000		1	WASHER	
070	2836238-0000		1	INSULATION NUT	
080	1036584-0000		1	WASHER	
300	312115-0297		4	SCREW ISO4762 M4X25 A4 80	
390	315202-0101		2	O-RING 3,1X1,6 MM	
T40R9150	1110938-0000		1	INDUCTOR	
070	2836238-0000		1	INSULATION NUT	
080	1036584-0000		1	WASHER	
300	312115-0297		4	SCREW ISO4762 M4X25 A4 80	
390	315202-0101		2	O-RING 3,1X1,6 MM	
T40R9150	1110934-0000		1	INDUCTOR	
T40W9156	2830430-0000		1	BUSBAR	
TBA 0500SQ, TBA 1000SQ (See drawing on page: 1-434)					
010	2815964-0000		1	RAIL	
060	2836239-0000		1	WASHER	
070	2836238-0000		1	INSULATION NUT	
080	1036584-0000		1	WASHER	
300	312115-0297		4	SCREW ISO4762 M4X25 A4 80	
390	315202-0101		2	O-RING 3,1X1,6 MM	
T40R9150	1110936-0000		1	INDUCTOR	
T40W9156	2830430-0000		1	BUSBAR	
TBA 1000S NOMOLDEDCAP HELICAP2 23 (See drawing on page: 1-434)					
010	2815964-0000		1	RAIL	
060	2836239-0000		1	WASHER	
070	2836238-0000		1	INSULATION NUT	
080	1036584-0000		1	WASHER	
300	312115-0297		4	SCREW ISO4762 M4X25 A4 80	
390	315202-0101		2	O-RING 3,1X1,6 MM	
T40R9150	3124821-0000		1	INDUCTOR	
T40W9156	2830430-0000		1	BUSBAR	
TBA 1000S NOMOLDEDCAP NOCAP, TBA 1000S NOMOLDEDCAP RECAP3, TBA 1000S NOMOLDEDCAP SLIMCAP 1000 (See drawing on page: 1-434)					
010	2815964-0000		1	RAIL	
060	2836239-0000		1	WASHER	
070	2836238-0000		1	INSULATION NUT	
080	1036584-0000		1	WASHER	
300	312115-0297		4	SCREW ISO4762 M4X25 A4 80	
390	315202-0101		2	O-RING 3,1X1,6 MM	
T40R9150	1110937-0000		1	INDUCTOR	
T40W9156	2830430-0000		1	BUSBAR	
TBA 1500S (See drawing on page: 1-434)					
010	2815964-0000		1	RAIL	
060	2836239-0000		1	WASHER	
070	2836238-0000		1	INSULATION NUT	
080	1036584-0000		1	WASHER	
300	312115-0297		4	SCREW ISO4762 M4X25 A4 80	
390	315202-0101		2	O-RING 3,1X1,6 MM	
T40R9150	1110938-0000		1	INDUCTOR	

Machine Type | Group Description | Used-In | Group Number | Page No

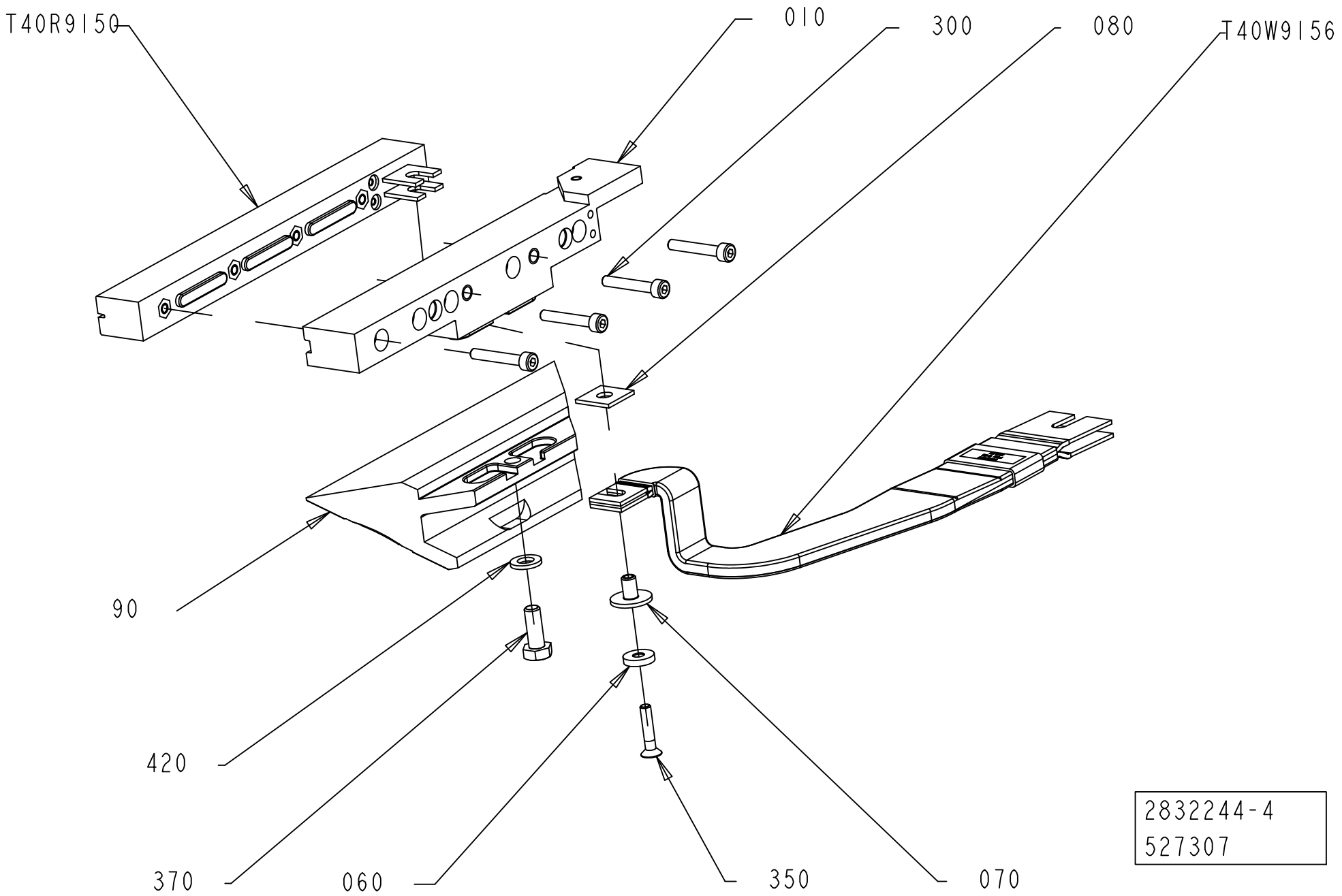
T40R9150
010
300
080
T40W9156
90
420
370
060
350
070
2832244-4
527307

Pos	Part No	UN	Qty	Description	Page No
TBA 1500S (Cont'd) (See drawing on page: 1-434)					
T40W9156	2830430-0000		1	BUSBAR	
TBA 2000S (See drawing on page: 1-434)					
010	3002559-0000		1	RAIL	
060	3002499-0000		1	WASHER	
070	3002497-0000		1	INSULATION NUT	
080	3002498-0000		1	WASHER	
300	312115-0295		5	SCREW ISO4762 M4X20 A4 80	
390	315202-0101		2	O-RING 3,1X1,6 MM	
400	311103-0267		1	PARALLEL PIN ISO 2338 4M6X10 A1	
T40R9150	2879535-0000		1	INDUCTOR	
T40W9156	2909301-0000		1	BUSBAR	
TGA 1000SQ, TGA 0750SQ, TGA 0500SQ (See drawing on page: 1-438)					
010	3213755-0000		1	RAIL	
060	28509-0000		1	WASHER	
070	32544-0000		1	INSULATION NUT	
080	1036584-0000		2	WASHER	
090	2698631-0000		1	VOLUME BULGE	
100	3213757-0000		1	PLATE	
300	312115-0297		4	SCREW ISO4762 M4X25 A4 80	
370	312105-0370		1	SCREW, M6S ISO 4017 M6X20 A4 80	
400	311103-0306		1	PARALLEL PIN ISO 2338 5M6X12 A1	
T40R9150	1566783-0000		1	INDUCTOR	
T40W9156	1498849-0000		1	BUSBAR	
TGA 1500SQ (See drawing on page: 1-436)					
010	2928240-0000		1	RAIL	
060	2836239-0000		1	WASHER	
070	2836238-0000		1	INSULATION NUT	
080	1036584-0000		1	WASHER	
090	2928252-0000		1	VOLUME BULGE	
300	312115-0297		4	SCREW ISO4762 M4X25 A4 80	
370	312105-0368		1	SCREW, M6S ISO 4017 M6X16 A4 80	
390	315202-0101		2	O-RING 3,1X1,6 MM	
420	315105-0153		1	WASHER PLAIN, 6,4X12X1,5 A4 BRB	
T40R9150	1110938-0000		1	INDUCTOR	
T40W9156	2830430-0000		1	BUSBAR	
Common Parts					
350	312155-0295		1	SCREW DIN 7991 MF6S M4X20 A4 70	

Pos	Part No	UN	Qty	Description	Page No

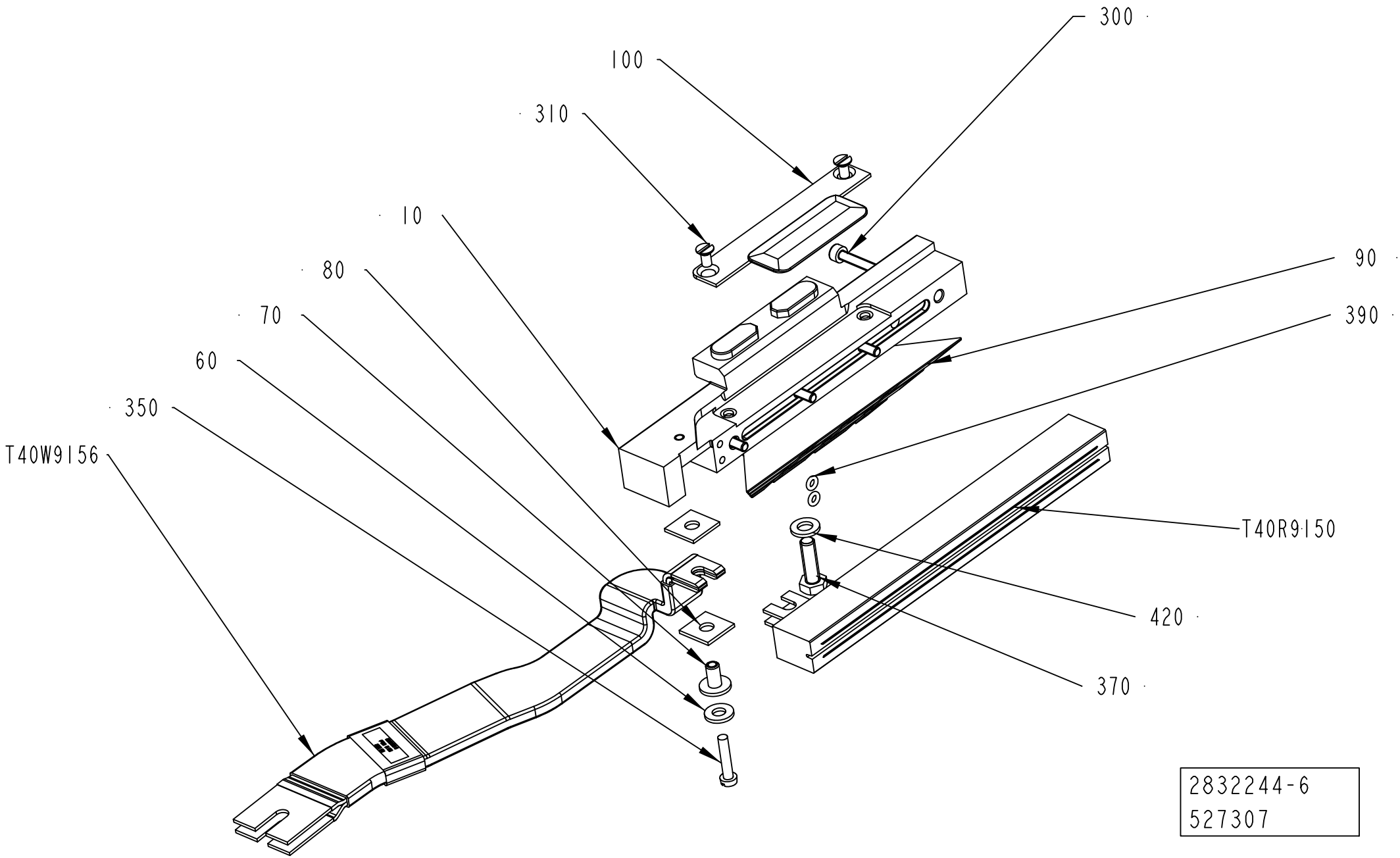
300
100
310
10
80
90
70
390
60
350
T40W9156
T40R9150
420
370
2832244-6
527307

ECM: 546695 - 20120402
Group number: 2832244-0200
Assembly Drawing: 2832244-6_1_AA

This list covers pages from 1-434 to 1-439

Pos	Part No	UN	Qty	Description	Page No
SEE PREVIOUS LISTS PAGES: 1-435, 1-437.					

Pos	Part No	UN	Qty	Description	Page No

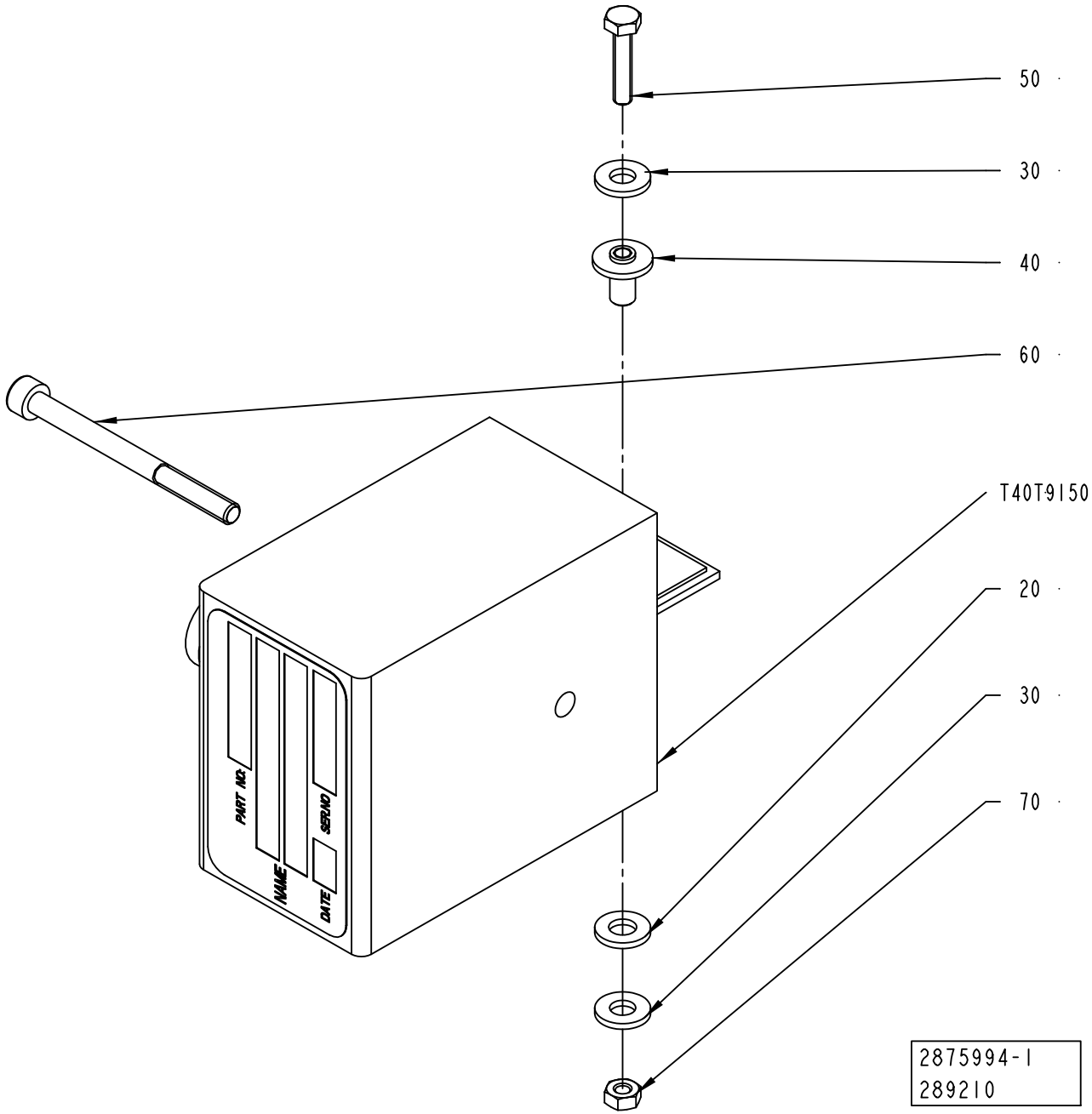
50
30
40
60
T40T9150
20
30
70
PART NO.
SERNO
NAME
DATE
2875994-1
289210

ECM: 533723 - 20120102
Group number: 2875994-0100
Assembly Drawing: 2875994-1_1_AA

Pos	Part No	UN	Qty	Description	Page No
TBA 0500S, TPA 1000SQ, TBA 2000S, TPA 0750SQ					
T40T9150	67379-0106		1	TRANSFORMER	
TBA 0500SQ, TBA 0500B, TBA 1000B, TBA 1000SQ, TBA 1000S, TBA 1500S, TGA 1500SQ					
T40T9150	67379-0101		1	TRANSFORMER	
TGA 1000SQ, TGA 0750SQ, TGA 0500SQ					
T40T9150	67379-0249		1	TRANSFORMER	
TPA 0500SQ					
T40T9150	67379-0268		1	TRANSFORMER	
Common Parts					
020	32079-0000		1	WASHER	
030	28509-0000		2	WASHER	
040	32544-0000		2	INSULATION NUT	
050	312105-0295		1	SCREW, M6S ISO 4017 M4X20 A4 70	
060	90458-0058		1	SCREW M5X60 A280	
070	312605-0312		2	HEXAGON NUT, M6M M4 A280	

Pos	Part No	UN	Qty	Description	Page No

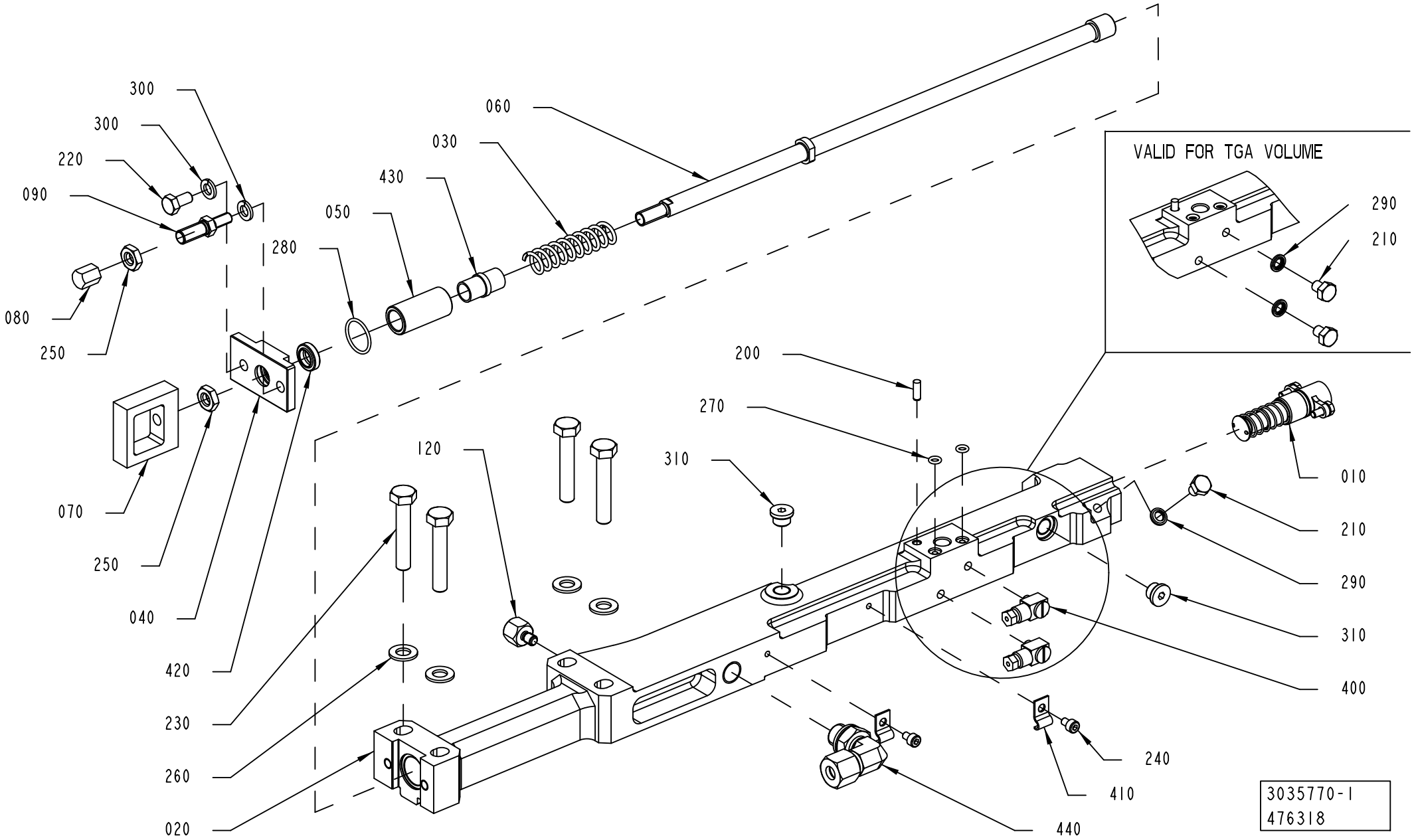
300
300
220
090
080
250
280
050
430
030
060
070
250
040
420
230
260
020
120
200
270
310
VALID FOR TGA VOLUME
290
210
010
210
290
310
400
240
410
440
3035770-1
476318

ECM: 535048 - 20120102
Group number: 3035770-0100
Assembly Drawing: 3035770-1_1_AC

This list covers pages from 1-442 to 1-445

Pos	Part No	UN	Qty	Description	Page No
TBA 0500S, TBA 0500SQ, TBA 0500B, TBA 1000B, TBA 1000SQ, TBA 1000S, TBA 1500S, TPA 1000SQ, TPA 0500SQ, TPA 0750SQ (See drawing on page: 1-442)					
020	3014102-0000		1	CARRIER CUTTING LEFT	
040	2774802-0000		1	COVER	
210	312105-0362		1	SCREW, M6S ISO 4017 M6X8 A4 80	
290	315211-0103		1	BONDED SEAL SS/NBR90 M6	
400	90134-0058		2	CONNECTION	
TBA 2000S (See drawing on page: 1-444)					
020	3038400-0000		1	CARRIER CUTTING LEFT	
040	3048521-0000		1	COVER	
100	2922438-0000		1	PLATE	
110	2922439-0000		1	SHIM	
210	312105-0362		1	SCREW, M6S ISO 4017 M6X8 A4 80	
290	315211-0103		1	BONDED SEAL SS/NBR90 M6	
350	312155-0287		3	SCREW DIN 7991 MF6S M4X8 A4 70	
400	90134-0058		2	CONNECTION	
TGA 1000SQ, TGA 0750SQ, TGA 0500SQ, TGA 1500SQ (See drawing on page: 1-442)					
020	3014102-0000		1	CARRIER CUTTING LEFT	
040	2774802-0000		1	COVER	
210	312105-0362		3	SCREW, M6S ISO 4017 M6X8 A4 80	
290	315211-0103		3	BONDED SEAL SS/NBR90 M6	
Common Parts					
010	2854078-0100		1	PISTON	**1-447**
030	1548940-0000		1	SPRING	
050	2774803-0000		1	SEAT	
060	2803174-0000		1	TIE ROD	
070	2986941-0000		1	EAR	
080	2997337-0000		1	STOP SCREW	
090	2997340-0000		1	SCREW	
120	3047360-0000		1	SETTING KNOB	
200	311103-0268		1	PARALLEL PIN ISO 2338 4M6X12 A1	
220	312105-0366		1	SCREW, M6S ISO 4017 M6X12 A4 80	
230	312105-0460		4	SCREW, M6S ISO 4014 M8X45 A4 80	
240	312115-0285		2	SCREW ISO4762 M4X6 A4 80	
250	312625-0318		2	HEXAGON THIN NUT, EN 24035 ML6M M8 A4	
260	315105-0165		4	WASHER PLAIN, 8,4X16X1,6 A4 BRB	
270	315202-0102		2	O-RING 4,1X1,6 MM	
280	315202-0116		1	O-RING 18,1X1,6 MM	
300	315402-0156		2	LOCK WASHER, DIN127B 6,5 A4, 1/4	
310	342713-0209		2	PLUG, EXT THREAD HEX SOCKET 8638-00-180	
360	90602-4847		1	THREAD LOCKING, LOCTITE 243 50 ML	
410	90165-0056		2	PIPE CLIP FOR TUBE, 4 MM	
420	90459-3388		1	SCRAPER 10X16X4,7 MM	
430	90600-2011		1	BUSHING INSERT, JUM-02-10	
440	90601-3686		1	ELBOW FITTING ADJ., WEE08LR71	

Machine Type	Group Description	Used-In	Group Number	Page No

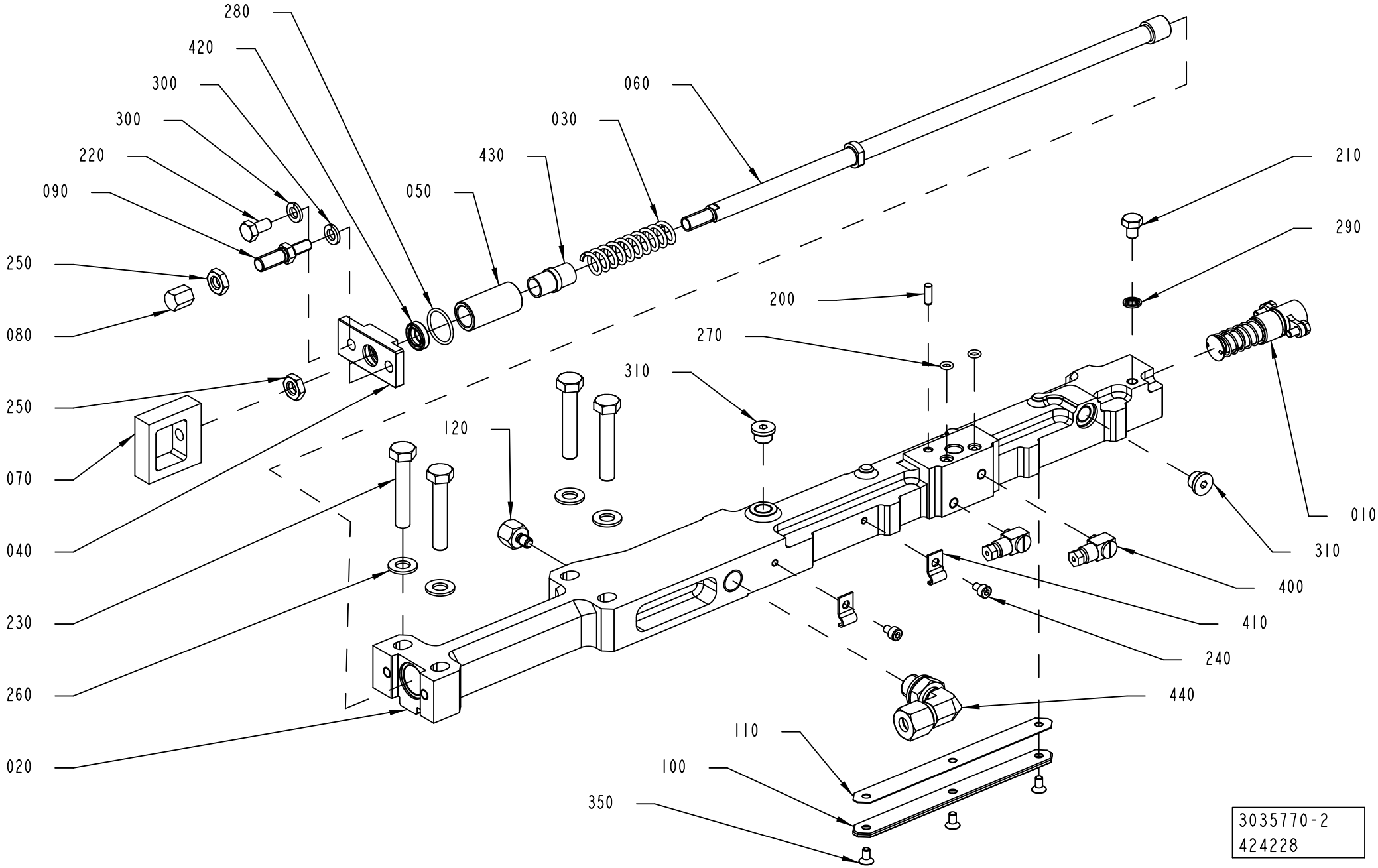
280
420
300
300
220
090
250
080
250
070
040
230
260
020
060
030
430
050
120
310
270
200
210
290
010
310
400
410
240
440
110
100
350
3035770-2
424228

ECM: 535048 - 20120102
Group number: 3035770-0100
Assembly Drawing: 3035770-2_1_AA

This list covers pages from 1-442 to 1-445

Pos	Part No	UN	Qty	Description	Page No
TBA 0500S, TBA 0500SQ, TBA 0500B, TBA 1000B, TBA 1000SQ, TBA 1000S, TBA 1500S, TPA 1000SQ, TPA 0500SQ, TPA 0750SQ (See drawing on page: 1-442)					
020	3014102-0000		1	CARRIER CUTTING LEFT	
040	2774802-0000		1	COVER	
210	312105-0362		1	SCREW, M6S ISO 4017 M6X8 A4 80	
290	315211-0103		1	BONDED SEAL SS/NBR90 M6	
400	90134-0058		2	CONNECTION	
TBA 2000S (See drawing on page: 1-444)					
020	3038400-0000		1	CARRIER CUTTING LEFT	
040	3048521-0000		1	COVER	
100	2922438-0000		1	PLATE	
110	2922439-0000		1	SHIM	
210	312105-0362		1	SCREW, M6S ISO 4017 M6X8 A4 80	
290	315211-0103		1	BONDED SEAL SS/NBR90 M6	
350	312155-0287		3	SCREW DIN 7991 MF6S M4X8 A4 70	
400	90134-0058		2	CONNECTION	
TGA 1000SQ, TGA 0750SQ, TGA 0500SQ, TGA 1500SQ (See drawing on page: 1-442)					
020	3014102-0000		1	CARRIER CUTTING LEFT	
040	2774802-0000		1	COVER	
210	312105-0362		3	SCREW, M6S ISO 4017 M6X8 A4 80	
290	315211-0103		3	BONDED SEAL SS/NBR90 M6	
Common Parts					
010	2854078-0100		1	PISTON	**1-447**
030	1548940-0000		1	SPRING	
050	2774803-0000		1	SEAT	
060	2803174-0000		1	TIE ROD	
070	2986941-0000		1	EAR	
080	2997337-0000		1	STOP SCREW	
090	2997340-0000		1	SCREW	
120	3047360-0000		1	SETTING KNOB	
200	311103-0268		1	PARALLEL PIN ISO 2338 4M6X12 A1	
220	312105-0366		1	SCREW, M6S ISO 4017 M6X12 A4 80	
230	312105-0460		4	SCREW, M6S ISO 4014 M8X45 A4 80	
240	312115-0285		2	SCREW ISO4762 M4X6 A4 80	
250	312625-0318		2	HEXAGON THIN NUT, EN 24035 ML6M M8 A4	
260	315105-0165		4	WASHER PLAIN, 8,4X16X1,6 A4 BRB	
270	315202-0102		2	O-RING 4,1X1,6 MM	
280	315202-0116		1	O-RING 18,1X1,6 MM	
300	315402-0156		2	LOCK WASHER, DIN127B 6,5 A4, 1/4	
310	342713-0209		2	PLUG, EXT THREAD HEX SOCKET 8638-00-180	
360	90602-4847		1	THREAD LOCKING, LOCTITE 243 50 ML	
410	90165-0056		2	PIPE CLIP FOR TUBE, 4 MM	
420	90459-3388		1	SCRAPER 10X16X4,7 MM	
430	90600-2011		1	BUSHING INSERT, JUM-02-10	
440	90601-3686		1	ELBOW FITTING ADJ., WEE08LR71	

Machine Type | Group Description | Used-In | Group Number | Page No

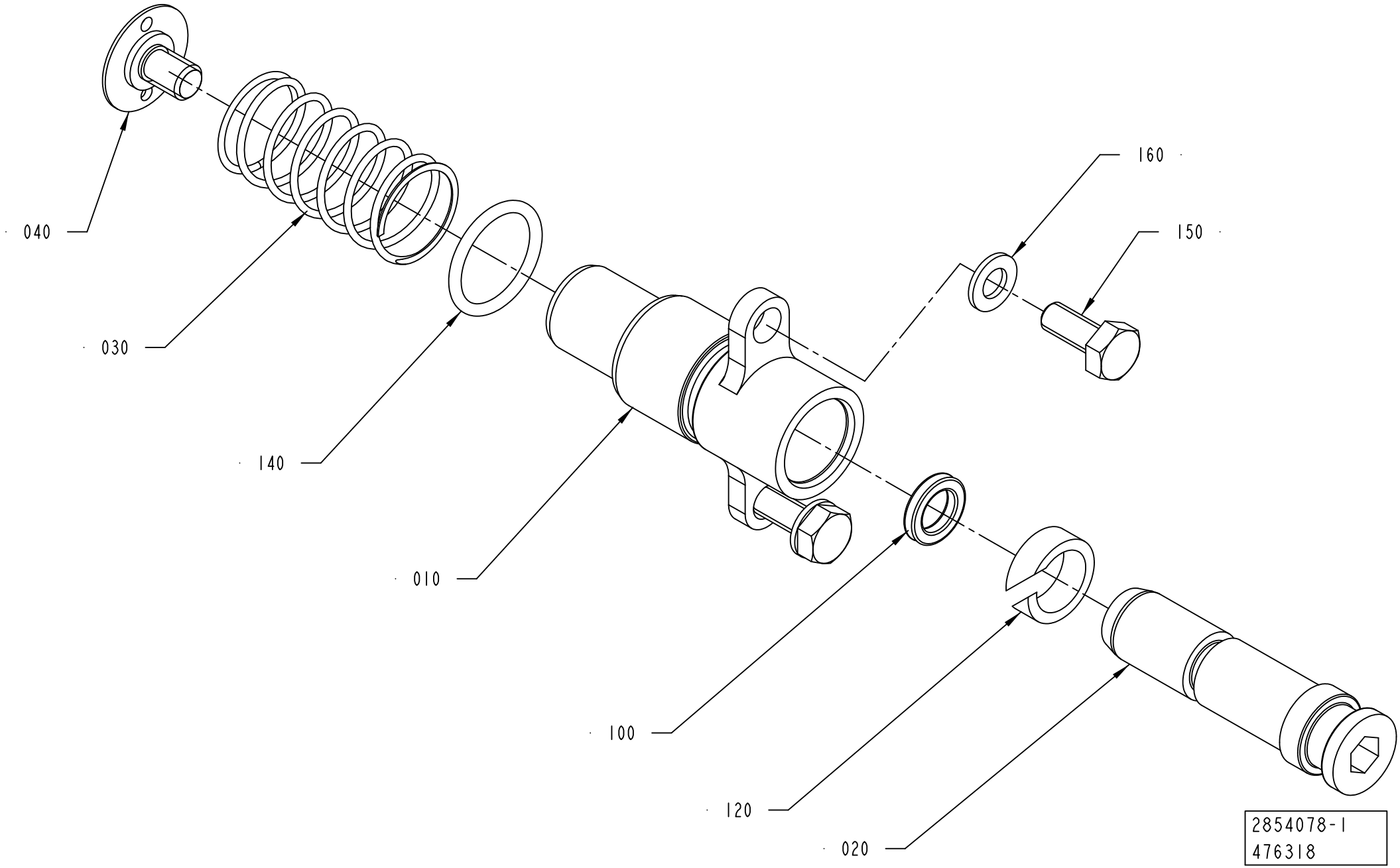
040
030
140
010
160
150
100
120
020
2854078-1
476318

ECM: 483515 - 20101215
Group number: 2854078-0100
Assembly Drawing: 2854078-1_1_AD

Pos	Part No	UN	Qty	Description	Page No
-					
010	2955605-0000		1	SLEEVE	
020	2955606-0000		1	PISTON	
030	2845139-0000		1	COMPRESSION SPRING	
040	2845142-0000		1	STOP	
100	90459-1861		1	X-SEAL 6,07X2,62 MM	
120	90600-2014		1	WEAR RING 8,9X12X4 MM	
130	90602-4847		1	THREAD LOCKING, LOCTITE 243 50 ML	
140	315202-0111		1	O-RING 13,1X1,6 MM	
150	312105-0289		2	SCREW, M6S ISO 4017 M4X10 A4 70	
160	315105-0136		2	WASHER PLAIN, 4,3X9X0,8 A4 BRB	

Pos	Part No	UN	Qty	Description	Page No

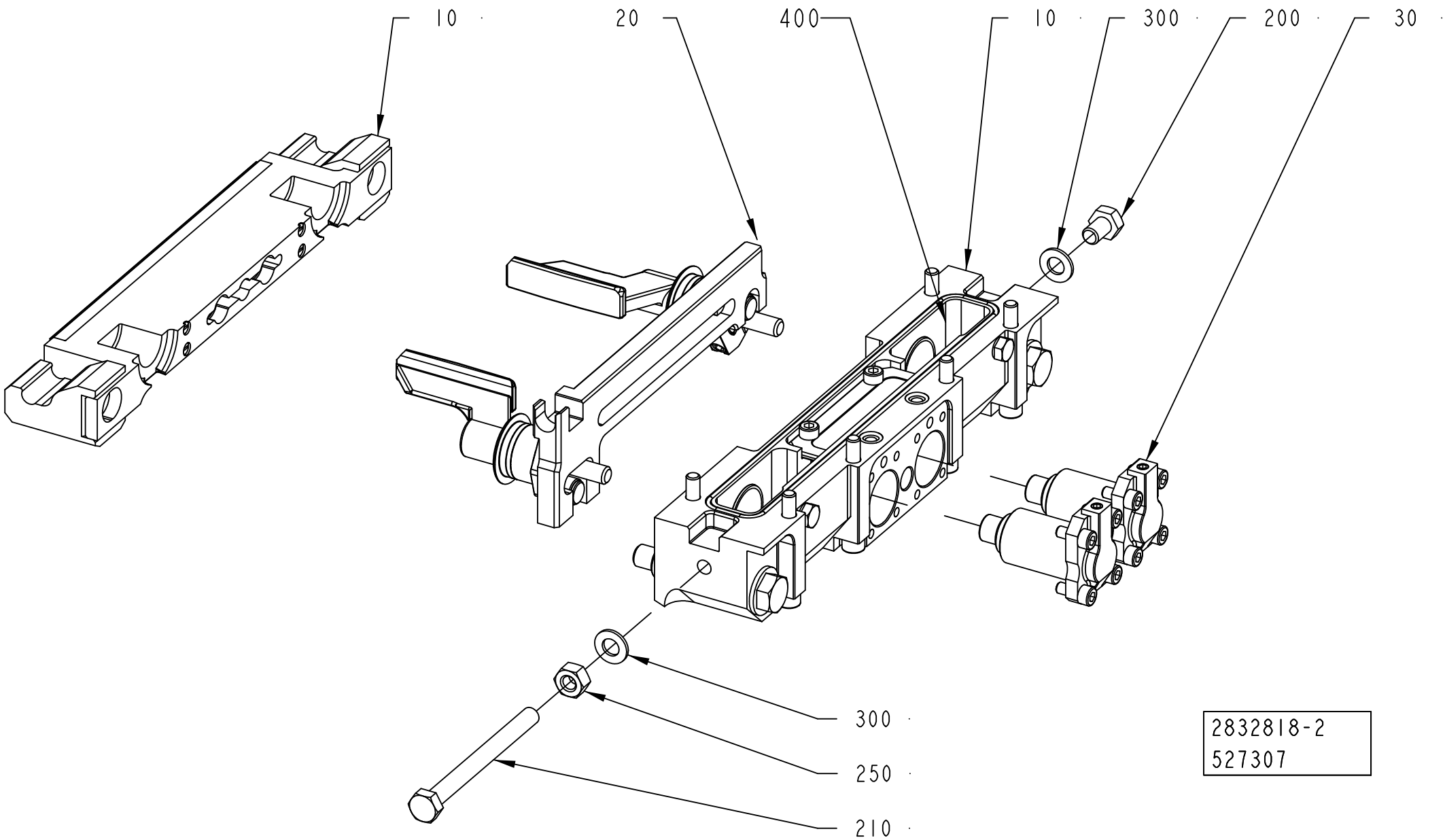
10
20
400
10
300
200
30
300
250
210
2832818-2
527307

ECM: 528852 - 20120102
Group number: 2832818-0200
Assembly Drawing: 2832818-2_1_AA

Pos	Part No	UN	Qty	Description	Page No
TBA 0500B, TBA 1000B					
030	2772645-0100		2	PISTON	**1-451**
210	312105-0469		1	SCREW, M6S ISO 4014 M8X90 A4 80	
TBA 0500S					
030	2772645-0100		2	PISTON	**1-451**
210	312105-0469		1	SCREW, M6S ISO 4014 M8X90 A4 80	
TBA 0500SQ, TBA 1000SQ					
030	2772645-0100		2	PISTON	**1-451**
210	312105-0469		1	SCREW, M6S ISO 4014 M8X90 A4 80	
TBA 1000S					
030	2772645-0100		2	PISTON	**1-451**
210	312105-0469		1	SCREW, M6S ISO 4014 M8X90 A4 80	
TBA 1500S					
030	2772645-0100		2	PISTON	**1-451**
210	312105-0469		1	SCREW, M6S ISO 4014 M8X90 A4 80	
TBA 2000S					
030	2772645-0100		2	PISTON	**1-451**
210	312105-0466		1	SCREW, M6S ISO 4014 M8X75 A4 80	
TGA 1000SQ, TGA 0750SQ, TGA 0500SQ					
030	2552010-0300		2	PISTON	**1-453**
210	312105-0469		1	SCREW, M6S ISO 4014 M8X90 A4 80	
TGA 1500SQ					
030	2772645-0100		2	PISTON	**1-451**
210	312105-0469		1	SCREW, M6S ISO 4014 M8X90 A4 80	
TPA 0500SQ					
030	2772645-0100		2	PISTON	**1-451**
210	312105-0469		1	SCREW, M6S ISO 4014 M8X90 A4 80	
TPA 1000SQ, TPA 0750SQ					
030	2772645-0100		2	PISTON	**1-451**
210	312105-0469		1	SCREW, M6S ISO 4014 M8X90 A4 80	
Common Parts					
010	2832935-0100		1	CUTTING JAW	**1-455, 1-457, 1-459, 1-461**
020	2832936-0100		1	FOLDING FLAP LEFT	**1-463, 1-465**
200	312105-0447		1	SCREW, M6S ISO 4017 M8X12 A4 80	
250	312605-0318		1	HEXAGON NUT, M6M M8 A280	
300	315105-0165		2	WASHER PLAIN, 8,4X16X1,6 A4 BRB	
400	90603-5339	L	1	KLüBEROIL 4 UH1 320 N, ONLY IN BOM	
	90603-6434		*1*	*KLUBEROIL 4 UH1 320 N, 5 L CANISTER*	
	90603-6454		*1*	*KLüBEROIL 4 UH1 320 N, 20 L CANISTER*	

Pos	Part No	UN	Qty	Description	Page No

Machine Type | Group Description | Used-In | Group Number | Page No

PISTON

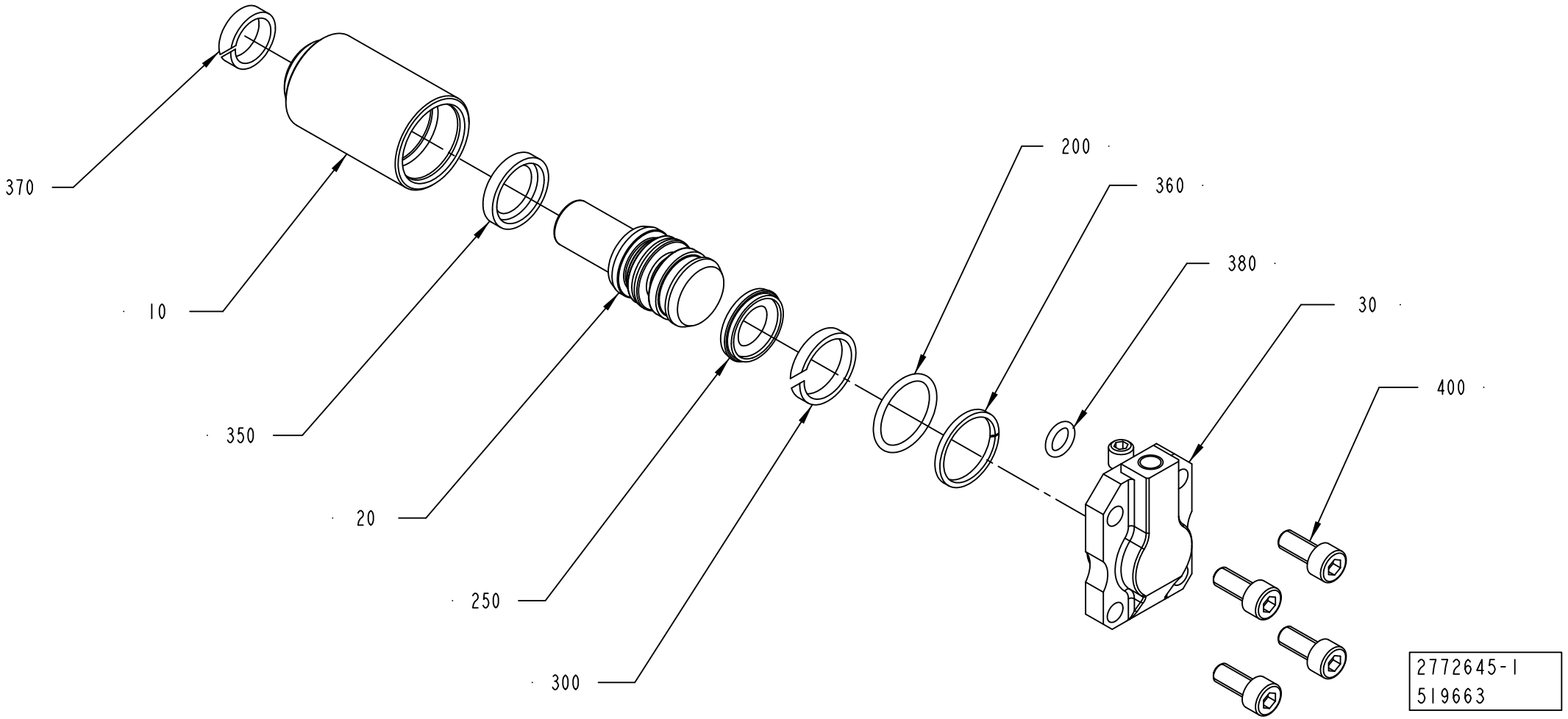

ECM: 523915 - 20111001
Group number: 2772645-0100
Assembly Drawing: 2772645-1_1_AB

Pos	Part No	UN	Qty	Description	Page No
TBA 0500S, TBA 0500SQ, TBA 0500B, TBA 1000B, TBA 1000SQ, TBA 1000S, TPA 1000SQ, TPA 0500SQ, TPA 0750SQ, TGA 1500SQ					
010	2772647-0000		1	SLEEVE	
020	2772646-0000		1	PLUNGER	
030	2772648-0000		1	COVER	
200	315202-0705		1	O-RING 17,17X1,78 MM	
250	90459-6019		1	PISTON SEAL STEPSEAL 11,5X19X3,2 MM	
300	90459-6026		1	WEAR RING 16X19X3,2 MM	
350	90459-6023		1	PISTON SEAL 13,5X19X3,2 MM	
360	90600-2016		1	BACK-UP RING 17,4X1,4 MM	
370	90600-2015		1	WEAR RING 12X15,1X4 MM	
380	315202-0104		1	O-RING 6,1X1,6 MM	
TBA 2000S					
010	2909308-0000		1	SLEEVE	
020	2909309-0000		1	PLUNGER	
030	2909310-0000		1	COVER	
200	315202-0706		1	O-RING 18,77X1,78 MM.	
250	90459-6022		1	PISTON SEAL STEPSEAL 14,5X22X3,2 MM	
300	90459-5968		1	WEAR RING 19X22X3,2 MM	
350	90459-6024		1	PISTON SEAL 16X22X3,2 MM	
360	90600-5087		1	BACK-UP RING 19,4X1,4 MM	
370	90600-2018		1	SCRAPER 12X18,6X5,4 MM	
380	315202-0105		1	O-RING 7,1X1,6 MM	
Common Parts					
400	312115-0327		4	SCREW ISO4762 M5X12 A4 80	

Pos	Part No	UN	Qty	Description	Page No

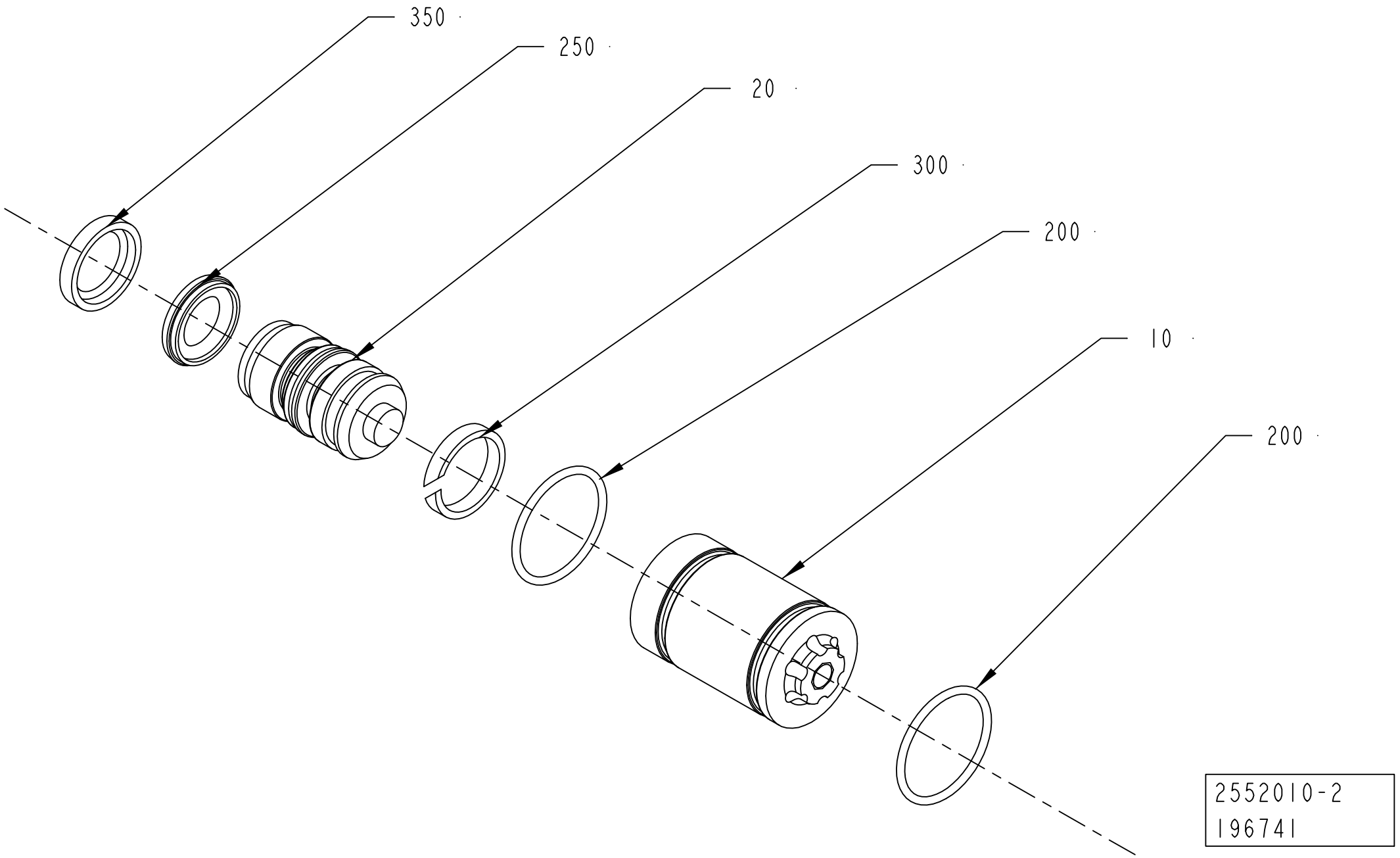
350
250
20
300
200
10
200
2552010-2
196741

ECM: 535039 - 20120102
Group number: 2552010-0300
Assembly Drawing: 2552010-2_1_AA

Pos	Part No	UN	Qty	Description	Page No
-					
010	1036278-0000		1	SLEEVE	
020	2737773-0000		1	PLUNGER	
200	315202-0118		2	O-RING 22,1X1,6 MM	
250	90459-6019		1	PISTON SEAL STEPSEAL 11,5X19X3,2 MM	
300	90459-6026		1	WEAR RING 16X19X3,2 MM	
350	90459-6023		1	PISTON SEAL 13,5X19X3,2 MM	

Pos	Part No	UN	Qty	Description	Page No

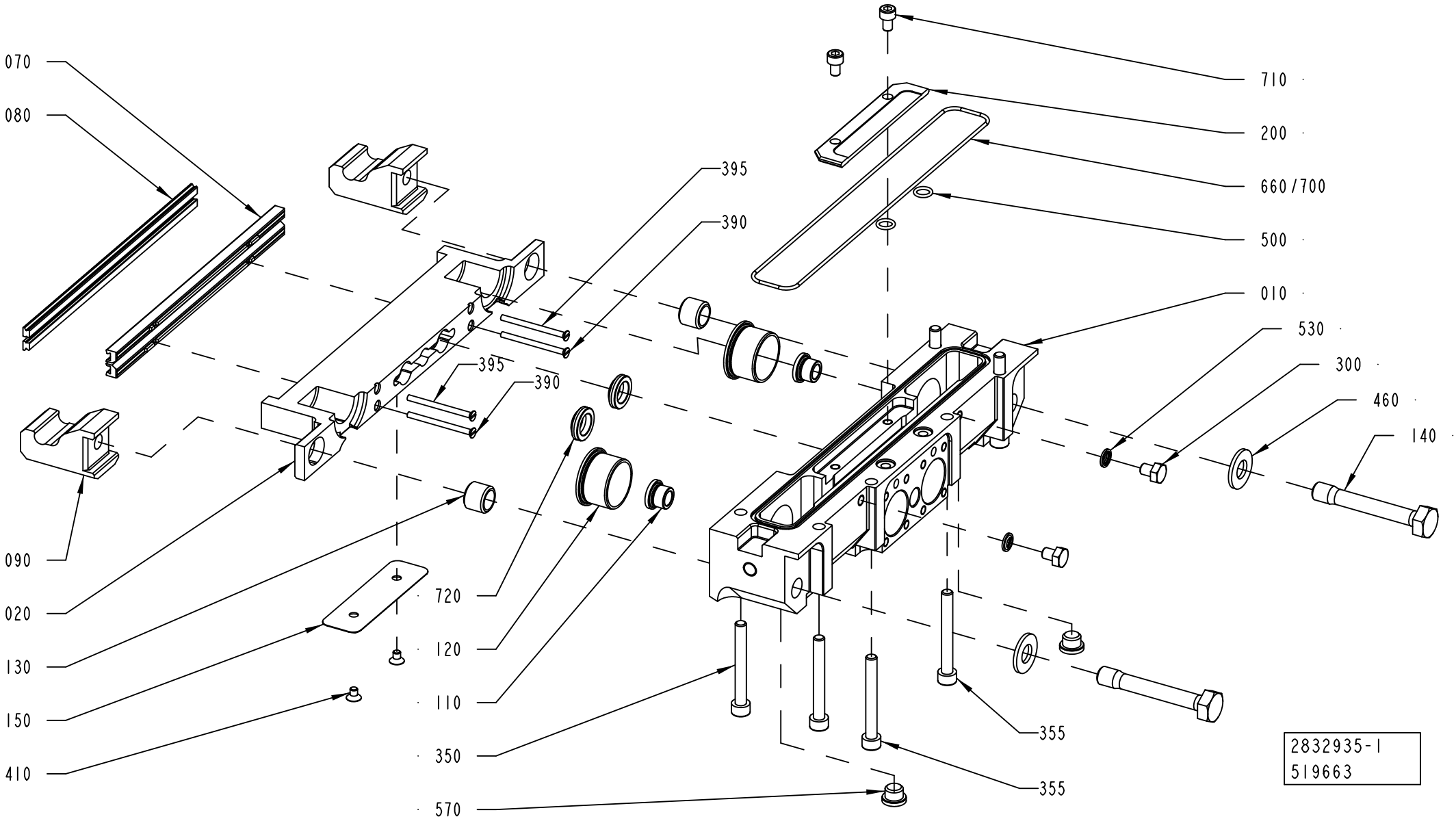
070
080
090
020
130
150
410
395
390
395
390
720
120
110
350
570
710
200
660/700
500
010
530
300
460
140
355
355
2832935-1
519663

ECM: 535042 - 20120102
Group number: 2832935-0100
Assembly Drawing: 2832935-1_1_AD

This list covers pages from 1-454 to 1-461

Pos	Part No	UN	Qty	Description	Page No
TBA 0500B, TBA 1000B (See drawing on page: 1-454)					
010	2898564-0000		1	BEARING HOUSING	
020	2898565-0000		1	CUTTING JAW	
070	1520455-0000		2	CUTTING RAIL	
080	1110083-0002		2	DOLLY	
090	1538348-0000		2	CATCH	
120	2815967-0000		2	BUSHING	
140	2798473-0000		2	SCREW	
150	1558733-0000		1	VOLUME BULGE	
200	2784290-0000		1	PLATE	
300	312105-0362		2	SCREW, M6S ISO 4017 M6X8 A4 80	
350	312115-0380		4	SCREW ISO4762 M6X50 A4 80	
355	312115-0380		2	SCREW ISO4762 M6X50 A4 80	
390	312145-0238		2	SCREW ISO 2009 MFS M3X40 A4	
395	312145-0238		2	SCREW ISO 2009 MFS M3X40 A4	
410	312155-0285		2	SCREW DIN 7991 MF6S M4X6 A4 70	
500	315202-0105		2	O-RING 7,1X1,6 MM	
530	315211-0103		2	BONDED SEAL SS/NBR90 M6	
710	312115-0323		2	SCREW ISO4762 M5X8 A4 80	
720	90600-2018		2	SCRAPER 12X18,6X5,4 MM	
TBA 0500S (See drawing on page: 1-454)					
010	2996362-0000		1	BEARING HOUSING	
020	2996363-0000		1	CUTTING JAW	
070	3124990-0000		2	CUTTING RAIL	
080	1110083-0002		2	DOLLY	
090	1538348-0000		2	CATCH	
120	2815967-0000		2	BUSHING	
140	2798473-0000		2	SCREW	
200	2996364-0000		1	PLATE	
300	312105-0362		2	SCREW, M6S ISO 4017 M6X8 A4 80	
350	312115-0380		4	SCREW ISO4762 M6X50 A4 80	
355	312115-0374		2	SCREW ISO4762 M6X30 A4 80	
390	312145-0238		2	SCREW ISO 2009 MFS M3X40 A4	
395	312145-0236		2	SCREW ISO 2009 MFS M3X35 A4	
500	315202-0105		2	O-RING 7,1X1,6 MM	
530	315211-0103		2	BONDED SEAL SS/NBR90 M6	
710	312115-0323		2	SCREW ISO4762 M5X8 A4 80	
720	90600-2018		2	SCRAPER 12X18,6X5,4 MM	
TBA 0500SQ, TBA 1000SQ (See drawing on page: 1-454)					
010	2847228-0000		1	BEARING HOUSING	
020	2847229-0000		1	CUTTING JAW	
070	3124990-0000		2	CUTTING RAIL	
080	1520633-0002		2	DOLLY	
090	1538348-0000		2	CATCH	
120	2815967-0000		2	BUSHING	
140	2798473-0000		2	SCREW	
200	2759019-0000		1	PLATE	
300	312105-0362		2	SCREW, M6S ISO 4017 M6X8 A4 80	
350	312115-0380		4	SCREW ISO4762 M6X50 A4 80	
355	312115-0374		2	SCREW ISO4762 M6X30 A4 80	
390	312145-0238		2	SCREW ISO 2009 MFS M3X40 A4	
395	312145-0238		2	SCREW ISO 2009 MFS M3X40 A4	
500	315202-0105		2	O-RING 7,1X1,6 MM	
530	315211-0103		2	BONDED SEAL SS/NBR90 M6	
710	312115-0323		2	SCREW ISO4762 M5X8 A4 80	
720	90600-2018		2	SCRAPER 12X18,6X5,4 MM	
TBA 1000S (See drawing on page: 1-454)					
010	2813723-0000		1	BEARING HOUSING	
020	2813725-0000		1	CUTTING JAW	
070	1520455-0000		2	CUTTING RAIL	
080	1110083-0002		2	DOLLY	
090	1538348-0000		2	CATCH	
120	2815967-0000		2	BUSHING	
140	2798473-0000		2	SCREW	
200	2813724-0000		1	PLATE	
300	312105-0362		2	SCREW, M6S ISO 4017 M6X8 A4 80	
350	312115-0380		4	SCREW ISO4762 M6X50 A4 80	
355	312115-0380		2	SCREW ISO4762 M6X50 A4 80	
390	312145-0238		2	SCREW ISO 2009 MFS M3X40 A4	
395	312145-0238		2	SCREW ISO 2009 MFS M3X40 A4	
500	315202-0105		2	O-RING 7,1X1,6 MM	
530	315211-0103		2	BONDED SEAL SS/NBR90 M6	
710	312115-0323		2	SCREW ISO4762 M5X8 A4 80	
720	90600-2018		2	SCRAPER 12X18,6X5,4 MM	
TBA 1500S (See drawing on page: 1-454)					
010	2898564-0000		1	BEARING HOUSING	
020	2898565-0000		1	CUTTING JAW	
070	1520455-0000		2	CUTTING RAIL	
080	1110083-0002		2	DOLLY	
090	1538348-0000		2	CATCH	
120	2815967-0000		2	BUSHING	
140	2798473-0000		2	SCREW	
200	2784290-0000		1	PLATE	
300	312105-0362		2	SCREW, M6S ISO 4017 M6X8 A4 80	

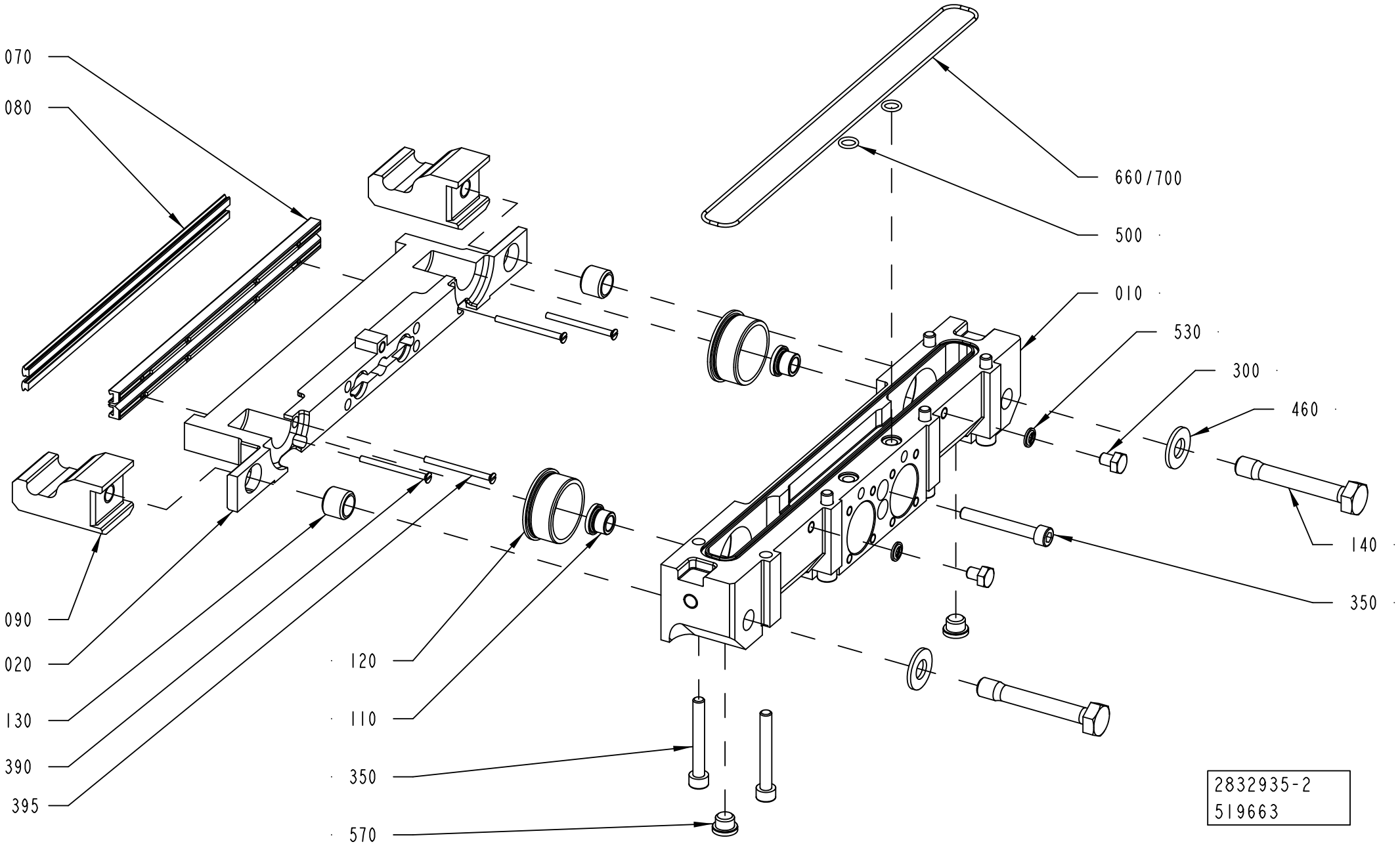
070
080
660/700
500
010
530
300
460
140
350
090
020
130
390
395
120
110
350
570
2832935-2
519663

ECM: 535042 - 20120102
Group number: 2832935-0100
Assembly Drawing: 2832935-2_1_AB

This list covers pages from 1-454 to 1-461

Pos	Part No	UN	Qty	Description	Page No
TBA 1500S (Cont'd) (See drawing on page: 1-454)					
350	312115-0380		4	SCREW ISO4762 M6X50 A4 80	
355	312115-0380		2	SCREW ISO4762 M6X50 A4 80	
390	312145-0238		2	SCREW ISO 2009 MFS M3X40 A4	
395	312145-0238		2	SCREW ISO 2009 MFS M3X40 A4	
500	315202-0105		2	O-RING 7,1X1,6 MM	
530	315211-0103		2	BONDED SEAL SS/NBR90 M6	
710	312115-0323		2	SCREW ISO4762 M5X8 A4 80	
720	90600-2018		2	SCRAPER 12X18,6X5,4 MM	
TBA 2000S (See drawing on page: 1-456)					
010	2909304-0000		1	BEARING HOUSING	
020	2909305-0000		1	CUTTING JAW	
070	1533051-0000		2	CUTTING RAIL	
080	1520633-0005		2	DOLLY	
090	2566339-0000		2	CATCH	
120	2588299-0000		2	BUSHING	
140	2588303-0000		2	SCREW	
300	312105-0362		2	SCREW, M6S ISO 4017 M6X8 A4 80	
350	312115-0379		7	SCREW ISO4762 M6X45 A4 80	
390	312145-0238		2	SCREW ISO 2009 MFS M3X40 A4	
395	312145-0238		2	SCREW ISO 2009 MFS M3X40 A4	
500	315204-0105		2	O-RING 7,1X1,6 MM	
530	315211-0103		2	BONDED SEAL SS/NBR90 M6	
TGA 1000SQ, TGA 0750SQ, TGA 0500SQ (See drawing on page: 1-460)					
010	2993289-0000		1	BEARING HOUSING	
020	3213758-0000		1	CUTTING JAW	
040	1349925-0000		1	PLATE	
070	3124990-0000		2	CUTTING RAIL	
080	1520633-0002		2	DOLLY	
090	1538348-0000		2	CATCH	
120	2612738-0000		2	BUSHING	
140	1035871-0000		2	SCREW	
150	2698631-0000		1	VOLUME BULGE	
160	3213760-0000		1	VOLUME BULGE	
200	2993288-0000		1	PLATE	
300	312105-0366		2	SCREW, M6S ISO 4017 M6X12 A4 80	
350	312115-0380		4	SCREW ISO4762 M6X50 A4 80	
390	312145-0236		2	SCREW ISO 2009 MFS M3X35 A4	
395	312145-0224		2	SCREW ISO 2009 MFS M3X10 A4	
410	312105-0368		1	SCREW, M6S ISO 4017 M6X16 A4 80	
420	315105-0153		1	WASHER PLAIN, 6,4X12X1,5 A4 BRB	
430	312145-0287		2	SCREW ISO 2009 MFS M4X8 A4	
500	315202-0105		2	O-RING 7,1X1,6 MM	
530	315211-0103		2	BONDED SEAL SS/NBR90 M6	
710	312115-0323		2	SCREW ISO4762 M5X8 A4 80	
TGA 1500SQ (See drawing on page: 1-458)					
010	2898564-0000		1	BEARING HOUSING	
020	2939718-0000		1	CUTTING JAW	
070	1520455-0000		2	CUTTING RAIL	
080	1520633-0002		2	DOLLY	
090	1538348-0000		2	CATCH	
120	2815967-0000		2	BUSHING	
140	2798473-0000		2	SCREW	
150	2928252-0000		1	VOLUME BULGE	
200	2784290-0000		1	PLATE	
300	312105-0362		2	SCREW, M6S ISO 4017 M6X8 A4 80	
350	312115-0380		4	SCREW ISO4762 M6X50 A4 80	
355	312115-0380		2	SCREW ISO4762 M6X50 A4 80	
390	312145-0238		4	SCREW ISO 2009 MFS M3X40 A4	
410	312105-0368		1	SCREW, M6S ISO 4017 M6X16 A4 80	
420	315105-0153		1	WASHER PLAIN, 6,4X12X1,5 A4 BRB	
500	315202-0105		2	O-RING 7,1X1,6 MM	
530	315211-0103		2	BONDED SEAL SS/NBR90 M6	
710	312115-0323		2	SCREW ISO4762 M5X8 A4 80	
720	90600-2018		2	SCRAPER 12X18,6X5,4 MM	
TPA 0500SQ (See drawing on page: 1-454)					
010	2958751-0000		1	BEARING HOUSING	
020	2958750-0000		1	CUTTING JAW	
070	1520493-0000		2	CUTTING RAIL	
080	1110083-0002		2	DOLLY	
090	1538348-0000		2	CATCH	
120	2912007-0000		2	BUSHING	
140	2798473-0000		2	SCREW	
200	2958752-0000		1	PLATE	
300	312105-0362		2	SCREW, M6S ISO 4017 M6X8 A4 80	
350	312115-0380		4	SCREW ISO4762 M6X50 A4 80	
355	312115-0380		2	SCREW ISO4762 M6X50 A4 80	
390	312145-0238		2	SCREW ISO 2009 MFS M3X40 A4	
395	312145-0238		2	SCREW ISO 2009 MFS M3X40 A4	
500	315202-0105		2	O-RING 7,1X1,6 MM	
530	315211-0103		2	BONDED SEAL SS/NBR90 M6	
710	312115-0323		2	SCREW ISO4762 M5X8 A4 80	
720	90600-2018		2	SCRAPER 12X18,6X5,4 MM	
TPA 1000SQ, TPA 0750SQ (See drawing on page: 1-454)					

Machine Type | Group Description | Used-In | Group Number | Page No

CUTTING JAW

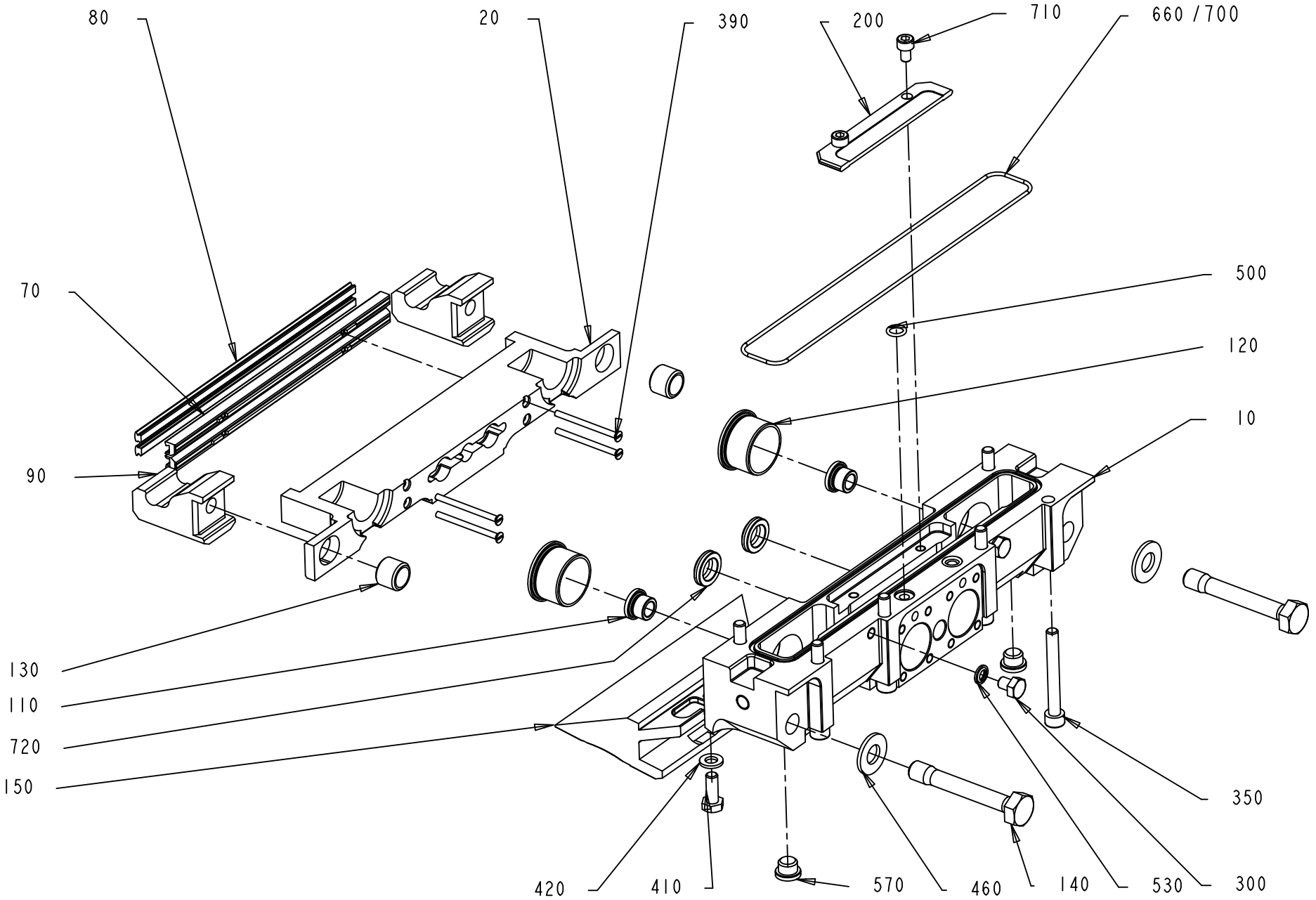

2832935-3
519663

ECM: 535042 - 20120102
Group number: 2832935-0100
Assembly Drawing: 2832935-3_1_AB

This list covers pages from 1-454 to 1-461

Pos	Part No	UN	Qty	Description	Page No
TPA 1000SQ, TPA 0750SQ (Cont'd) (See drawing on page: 1-454)					
010	2912355-0000		1	BEARING HOUSING	
020	2912356-0000		1	CUTTING JAW	
070	3124990-0000		2	CUTTING RAIL	
080	1520633-0002		2	DOLLY	
090	1538348-0000		2	CATCH	
120	2912007-0000		2	BUSHING	
140	2798473-0000		2	SCREW	
150	2503699-0000		1	VOLUME BULGE	
200	2912354-0000		1	PLATE	
300	312105-0362		2	SCREW, M6S ISO 4017 M6X8 A4 80	
350	312115-0380		4	SCREW ISO4762 M6X50 A4 80	
355	312115-0380		2	SCREW ISO4762 M6X50 A4 80	
390	312145-0238		2	SCREW ISO 2009 MFS M3X40 A4	
395	312145-0236		2	SCREW ISO 2009 MFS M3X35 A4	
410	312155-0287		2	SCREW DIN 7991 MF6S M4X8 A4 70	
500	315202-0105		2	O-RING 7,1X1,6 MM	
530	315211-0103		2	BONDED SEAL SS/NBR90 M6	
710	312115-0323		2	SCREW ISO4762 M5X8 A4 80	
720	90600-2018		2	SCRAPER 12X18,6X5,4 MM	
Common Parts					
110	1255390-0000		2	BUSHING	
130	1036494-0000		2	GUIDE BUSHING	
460	315105-0173		2	WASHER PLAIN, 10,5X22X2 A4 BRB	
570	342713-0209		2	PLUG, EXT THREAD HEX SOCKET 8638-00-180	
660	90459-2363		1	O-RING MATERIAL 1,78 MM LENGHT 600 MM	
700	90153-0015		1	ADHESIVE,LOCTITE IS 496/CYANOLOT 303	

Pos	Part No	UN	Qty	Description	Page No

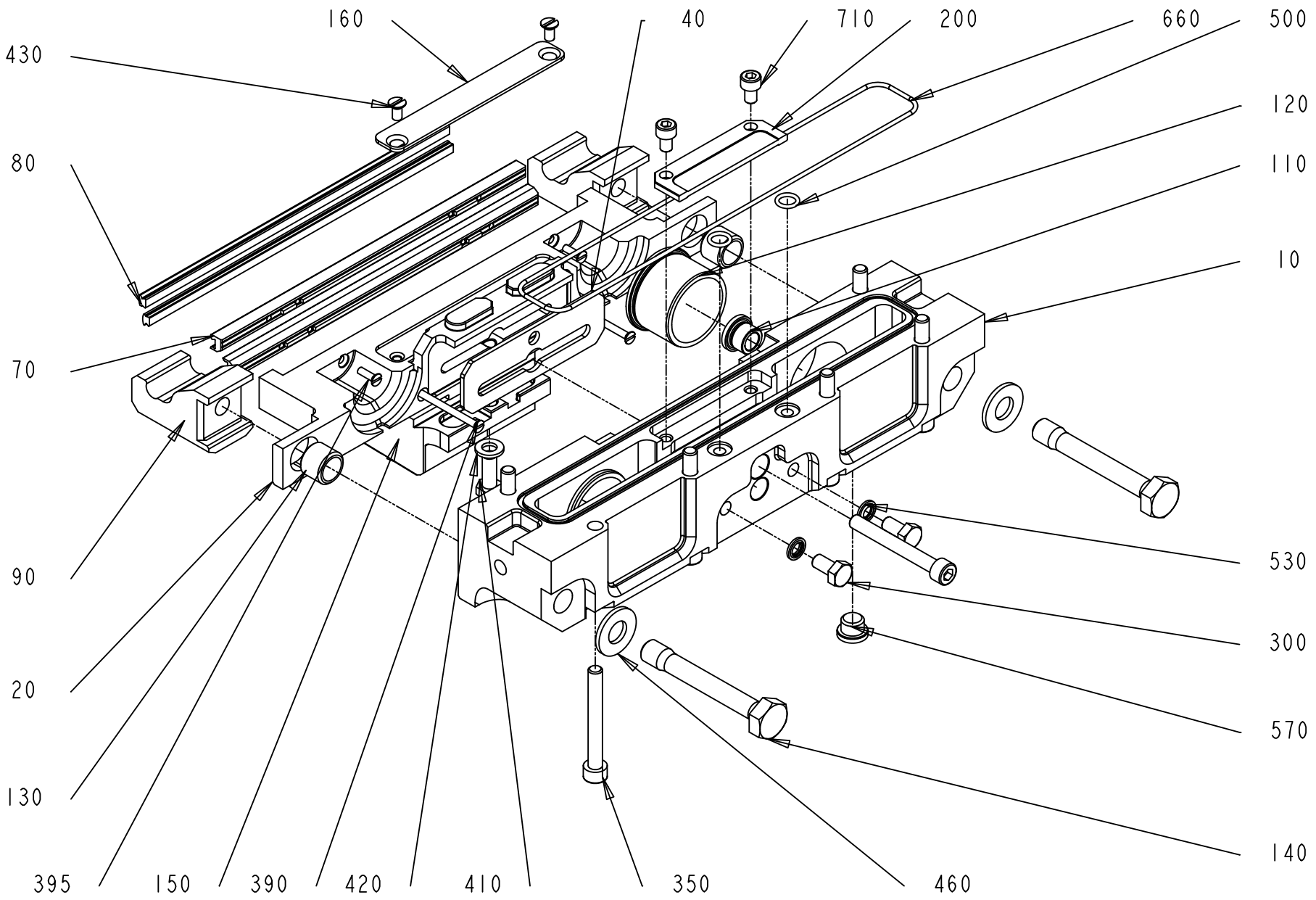

2832935-5
527307

ECM: 535042 - 20120102
Group number: 2832935-0100
Assembly Drawing: 2832935-5_1_AC

This list covers pages from 1-454 to 1-461

Pos	Part No	UN	Qty	Description	Page No	Pos	Part No	UN	Qty	Description	Page No

SEE PREVIOUS LISTS PAGES: 1-455, 1-457, 1-459.

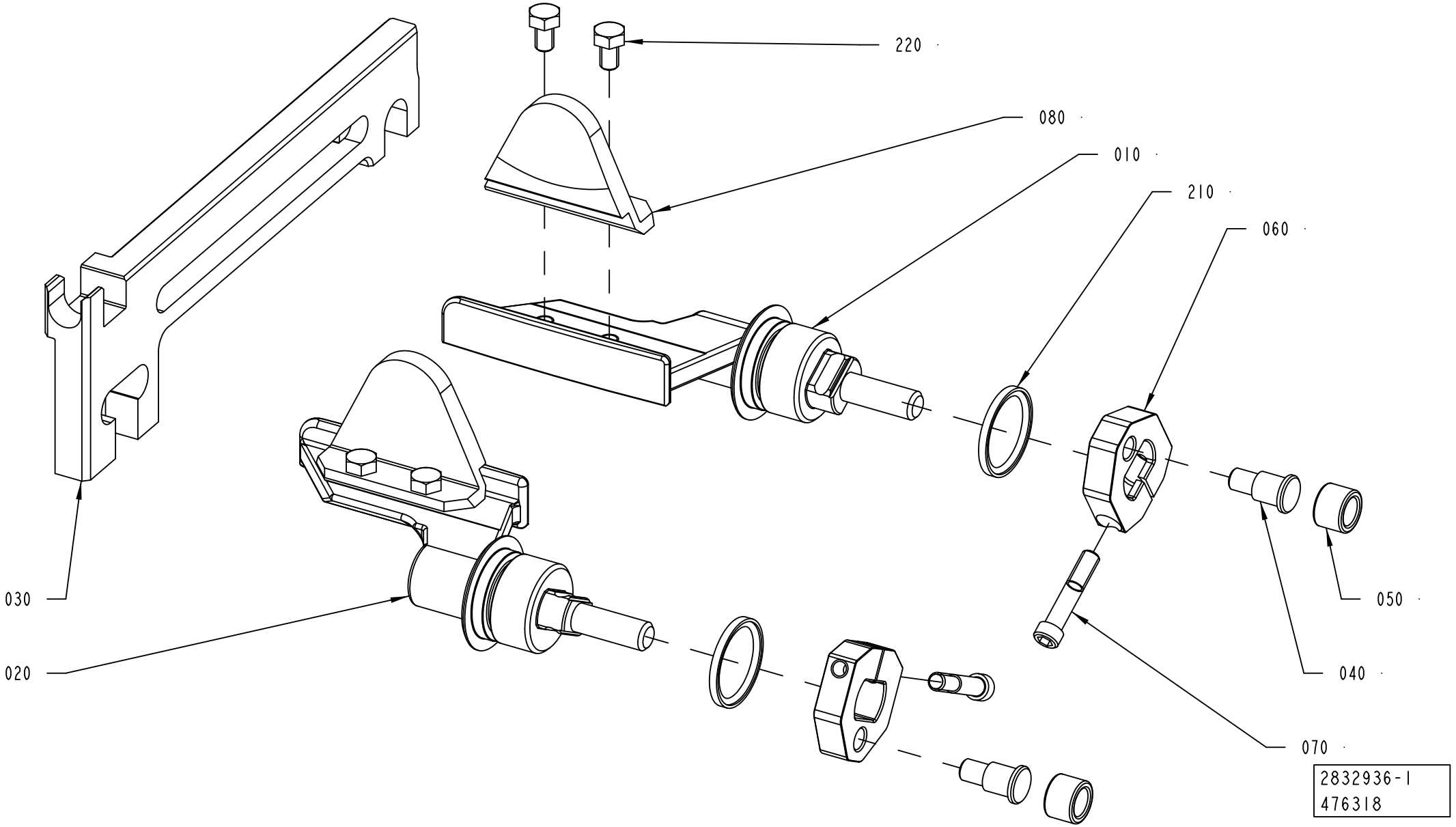
220
080
010
210
060
030
020
050
040
070
2832936-1
476318

ECM: 548449 - 20120701
Group number: 2832936-0100
Assembly Drawing: 2832936-1_1_AC

This list covers pages from 1-462 to 1-465

Pos	Part No	UN	Qty	Description	Page No
TBA 0500B, TBA 1000B (See drawing on page: 1-462)					
010	2898569-0000		1	FOLDING FLAP	
020	2898568-0000		1	FOLDING FLAP	
030	2948633-0000		1	CARRIER RULER	
040	2948627-0000		2	SHAFT	
050	2948626-0000		2	ROLLER	
060	2948628-0000		2	CARRIER	
070	2833952-0000		2	SCREW	
210	90600-2017		2	PISTON SEAL ROTOGLYD RING 20,1X25X2,2 MM	
TBA 0500S (See drawing on page: 1-462)					
010	2996358-0000		1	FOLDING FLAP	
020	2996359-0000		1	FOLDING FLAP	
030	2996360-0000		1	CARRIER RULER	
040	2948627-0000		2	SHAFT	
050	2948626-0000		2	ROLLER	
060	2948628-0000		2	CARRIER	
070	2833952-0000		2	SCREW	
210	90600-2017		2	PISTON SEAL ROTOGLYD RING 20,1X25X2,2 MM	
TBA 1000SQ, TBA 0500SQ (See drawing on page: 1-462)					
010	2847230-0000		1	FOLDING FLAP	
020	2847231-0000		1	FOLDING FLAP	
030	2948629-0000		1	CARRIER RULER	
040	2948627-0000		2	SHAFT	
050	2948626-0000		2	ROLLER	
060	2948628-0000		2	CARRIER	
070	2833952-0000		2	SCREW	
080	2843780-0000		2	PLATE	
210	90600-2017		2	PISTON SEAL ROTOGLYD RING 20,1X25X2,2 MM	
220	312105-0323		4	SCREW, M6S ISO 4017 M5X8 A4 80	
230	90602-4847		1	THREAD LOCKING, LOCTITE 243 50 ML	
TBA 1000S (See drawing on page: 1-462)					
010	2813728-0000		1	FOLDING FLAP	
020	2813729-0000		1	FOLDING FLAP	
030	2948631-0000		1	CARRIER RULER	
040	2948627-0000		2	SHAFT	
050	2948626-0000		2	ROLLER	
060	2948628-0000		2	CARRIER	
070	2833952-0000		2	SCREW	
210	90600-2017		2	PISTON SEAL ROTOGLYD RING 20,1X25X2,2 MM	
TBA 1500S (See drawing on page: 1-462)					
010	2928342-0000		1	FOLDING FLAP	
	3021645-0000		*1*	*FOLDING FLAP*	
020	2928343-0000		1	FOLDING FLAP	
	3021646-0000		*1*	*FOLDING FLAP*	
030	2948633-0000		1	CARRIER RULER	
040	2948627-0000		2	SHAFT	
050	2948626-0000		2	ROLLER	
060	2948628-0000		2	CARRIER	
070	2833952-0000		2	SCREW	
210	90600-2017		2	PISTON SEAL ROTOGLYD RING 20,1X25X2,2 MM	
TBA 2000S (See drawing on page: 1-464)					
010	2566319-0000		1	FOLDING FLAP	
020	2566320-0000		1	FOLDING FLAP	
030	2948637-0000		1	CARRIER RULER	
040	22462-0000		2	SHAFT	
050	22463-0000		2	ROLL	
200	90141-0029		2	CIRCLIP	
210	90459-2258		2	PISTON SEAL ROTOGLYD RING 25,1X30X2,2 MM	
TGA 1000SQ, TGA 0750SQ, TGA 0500SQ (See drawing on page: 1-464)					
010	2660291-0000		1	FOLDING FLAP	
020	2660290-0000		1	FOLDING FLAP	
030	2994205-0000		1	CARRIER RULER	
040	22462-0000		2	SHAFT	
050	22463-0000		2	ROLL	
200	90141-0029		2	CIRCLIP	
210	90459-2258		2	PISTON SEAL ROTOGLYD RING 25,1X30X2,2 MM	
TGA 1500SQ (See drawing on page: 1-462)					
010	2939719-0000		1	FOLDING FLAP	
	3021645-0000		*1*	*FOLDING FLAP*	
020	2939720-0000		1	FOLDING FLAP	
	3021646-0000		*1*	*FOLDING FLAP*	
030	2948633-0000		1	CARRIER RULER	
040	2948627-0000		2	SHAFT	
050	2948626-0000		2	ROLLER	
060	2948628-0000		2	CARRIER	
070	2833952-0000		2	SCREW	
210	90600-2017		2	PISTON SEAL ROTOGLYD RING 20,1X25X2,2 MM	
TPA 0500SQ (See drawing on page: 1-462)					
010	2958754-0000		1	FOLDING FLAP	
020	2958753-0000		1	FOLDING FLAP	
030	2958755-0000		1	CARRIER RULER	
040	2948627-0000		2	SHAFT	
050	2948626-0000		2	ROLLER	
060	2948628-0000		2	CARRIER	

Machine Type | Group Description | Used-In | Group Number | Page No

FOLDING FLAP LEFT

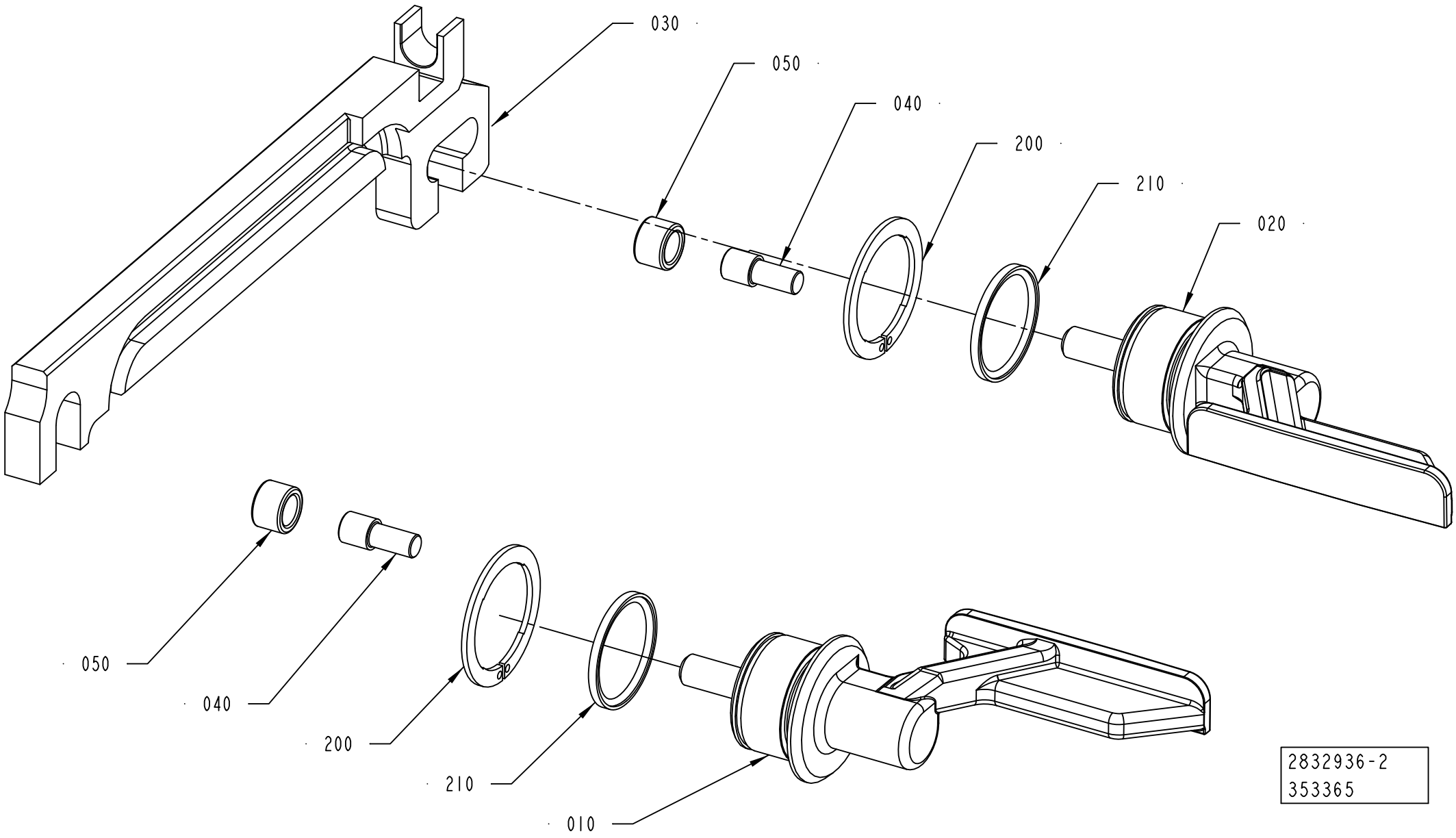

Pos	Part No	UN	Qty	Description	Page No
TPA 0500SQ (Cont'd) (See drawing on page: 1-462)					
070	2833952-0000		2	SCREW	
210	90600-2017		2	PISTON SEAL ROTOGLYD RING 20,1X25X2,2 MM	
TPA 1000SQ, TPA 0750SQ (See drawing on page: 1-462)					
010	2912359-0000		1	FOLDING FLAP	
020	2912360-0000		1	FOLDING FLAP	
030	2948635-0000		1	CARRIER RULER	
040	2948627-0000		2	SHAFT	
050	2948626-0000		2	ROLLER	
060	2948628-0000		2	CARRIER	
070	2833952-0000		2	SCREW	
210	90600-2017		2	PISTON SEAL ROTOGLYD RING 20,1X25X2,2 MM	

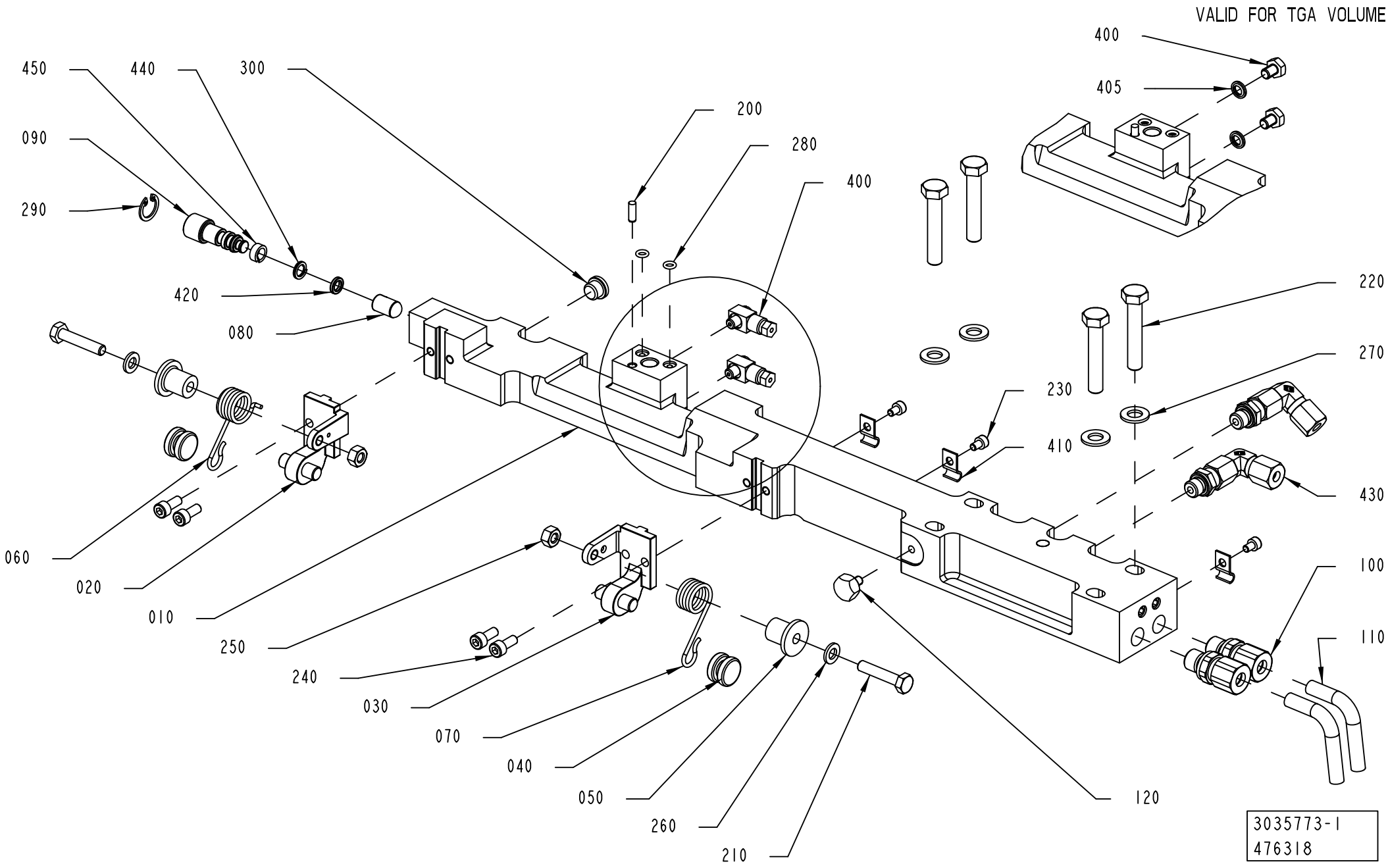
VALID FOR TGA VOLUME
450
440
300
200
280
400
400
405
090
290
420
080
220
270
230
410
430
060
020
010
250
240
030
070
040
050
260
210
120
100
110
3035773-1
476318

ECM: 535038 - 20120102
Group number: 3035773-0100
Assembly Drawing: 3035773-1_1_AC

This list covers pages from 1-466 to 1-469

Pos	Part No	UN	Qty	Description	Page No
TBA 0500S, TBA 0500SQ, TBA 0500B, TBA 1000B, TBA 1000SQ, TBA 1000S, TBA 1500S, TPA 1000SQ, TPA 0500SQ, TPA 0750SQ (See drawing on page: 1-466)					
010	3014105-0000		1	CARRIER PRESSURE RIGHT	
400	90134-0058		2	CONNECTION	
TBA 2000S (See drawing on page: 1-468)					
010	3038403-0000		1	CARRIER PRESSURE RIGHT	
400	90134-0058		2	CONNECTION	
TGA 1000SQ, TGA 0750SQ, TGA 0500SQ, TGA 1500SQ (See drawing on page: 1-466)					
010	3014105-0000		1	CARRIER PRESSURE RIGHT	
400	312105-0362		2	SCREW, M6S ISO 4017 M6X8 A4 80	
405	315211-0103		2	BONDED SEAL SS/NBR90 M6	
Common Parts					
020	2530292-0000		1	BRACKET	
030	2530293-0000		1	BRACKET	
040	2530296-0000		2	ROLLER	
050	2532531-0000		2	ROLLER	
060	2547588-0000		1	SPRING	
070	2547589-0000		1	SPRING	
080	2995752-0000		1	HEAD	
090	2995753-0000		1	SHAFT	
100	3039948-0000		2	CONNECTOR	
110	3039949-0000		2	TUBE	
120	3047361-0000		1	SETTING KNOB	
200	311103-0268		1	PARALLEL PIN ISO 2338 4M6X12 A1	
210	312105-0374		2	SCREW, M6S ISO 4014 M6X30 A4 80	
220	312105-0460		4	SCREW, M6S ISO 4014 M8X45 A4 80	
230	312115-0285		3	SCREW ISO4762 M4X6 A4 80	
240	312115-0327		4	SCREW ISO4762 M5X12 A4 80	
250	312605-0316		2	HEXAGON NUT, M6M M6 A280	
260	315105-0153		2	WASHER PLAIN, 6,4X12X1,5 A4 BRB	
270	315105-0165		4	WASHER PLAIN, 8,4X16X1,6 A4 BRB	
280	315202-0102		2	O-RING 4,1X1,6 MM	
290	315753-0112		1	RETAINING RING FOR BORE DIN 472 15 SS	
300	342713-0209		1	PLUG, EXT THREAD HEX SOCKET 8638-00-180	
410	90165-0056		3	PIPE CLIP FOR TUBE, 4 MM	
420	90459-1861		1	X-SEAL 6,07X2,62 MM	
430	90600-1991		2	ADJUSTABLE ELBOW CONNECTION 6-G1/8	
440	90601-3689		1	BACK-UP RING 7X1,4 MM	
450	90601-3688		1	WEAR RING 6,9X10X4 MM	
460	90602-4847		1	THREAD LOCKING, LOCTITE 243 50 ML	

Pos	Part No	UN	Qty	Description	Page No

CARRIER PRESSURE RIGHT

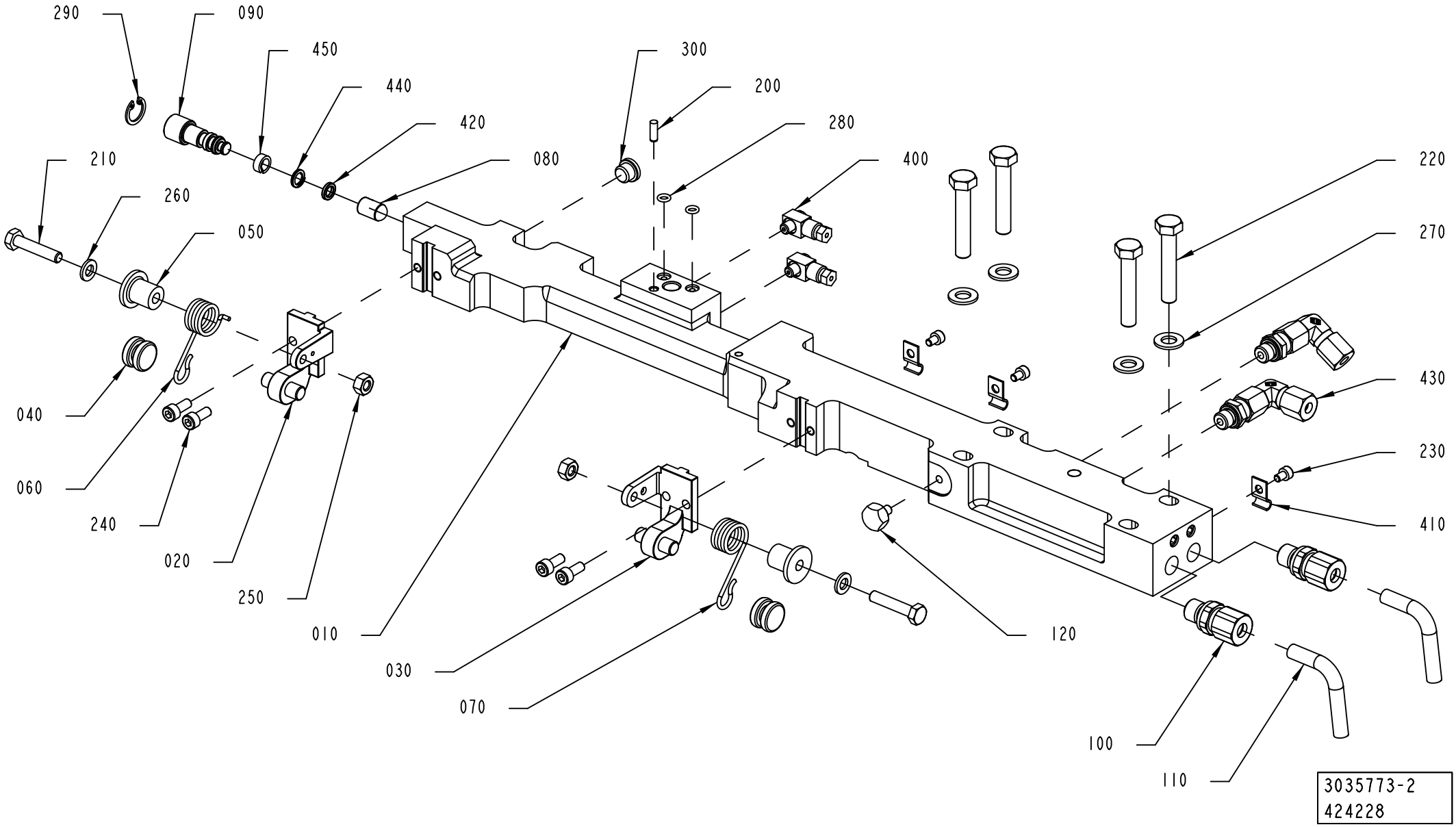

Pos	Part No	UN	Qty	Description	Page No
TBA 0500S, TBA 0500SQ, TBA 0500B, TBA 1000B, TBA 1000SQ, TBA 1000S, TBA 1500S, TPA 1000SQ, TPA 0500SQ, TPA 0750SQ (See drawing on page: 1-466)					
010	3014105-0000		1	CARRIER PRESSURE RIGHT	
400	90134-0058		2	CONNECTION	
TBA 2000S (See drawing on page: 1-468)					
010	3038403-0000		1	CARRIER PRESSURE RIGHT	
400	90134-0058		2	CONNECTION	
TGA 1000SQ, TGA 0750SQ, TGA 0500SQ, TGA 1500SQ (See drawing on page: 1-466)					
010	3014105-0000		1	CARRIER PRESSURE RIGHT	
400	312105-0362		2	SCREW, M6S ISO 4017 M6X8 A4 80	
405	315211-0103		2	BONDED SEAL SS/NBR90 M6	
Common Parts					
020	2530292-0000		1	BRACKET	
030	2530293-0000		1	BRACKET	
040	2530296-0000		2	ROLLER	
050	2532531-0000		2	ROLLER	
060	2547588-0000		1	SPRING	
070	2547589-0000		1	SPRING	
080	2995752-0000		1	HEAD	
090	2995753-0000		1	SHAFT	
100	3039948-0000		2	CONNECTOR	
110	3039949-0000		2	TUBE	
120	3047361-0000		1	SETTING KNOB	
200	311103-0268		1	PARALLEL PIN ISO 2338 4M6X12 A1	
210	312105-0374		2	SCREW, M6S ISO 4014 M6X30 A4 80	
220	312105-0460		4	SCREW, M6S ISO 4014 M8X45 A4 80	
230	312115-0285		3	SCREW ISO4762 M4X6 A4 80	
240	312115-0327		4	SCREW ISO4762 M5X12 A4 80	
250	312605-0316		2	HEXAGON NUT, M6M M6 A280	
260	315105-0153		2	WASHER PLAIN, 6,4X12X1,5 A4 BRB	
270	315105-0165		4	WASHER PLAIN, 8,4X16X1,6 A4 BRB	
280	315202-0102		2	O-RING 4,1X1,6 MM	
290	315753-0112		1	RETAINING RING FOR BORE DIN 472 15 SS	
300	342713-0209		1	PLUG, EXT THREAD HEX SOCKET 8638-00-180	
410	90165-0056		3	PIPE CLIP FOR TUBE, 4 MM	
420	90459-1861		1	X-SEAL 6,07X2,62 MM	
430	90600-1991		2	ADJUSTABLE ELBOW CONNECTION 6-G1/8	
440	90601-3689		1	BACK-UP RING 7X1,4 MM	
450	90601-3688		1	WEAR RING 6,9X10X4 MM	
460	90602-4847		1	THREAD LOCKING, LOCTITE 243 50 ML	

Pos	Part No	UN	Qty	Description	Page No

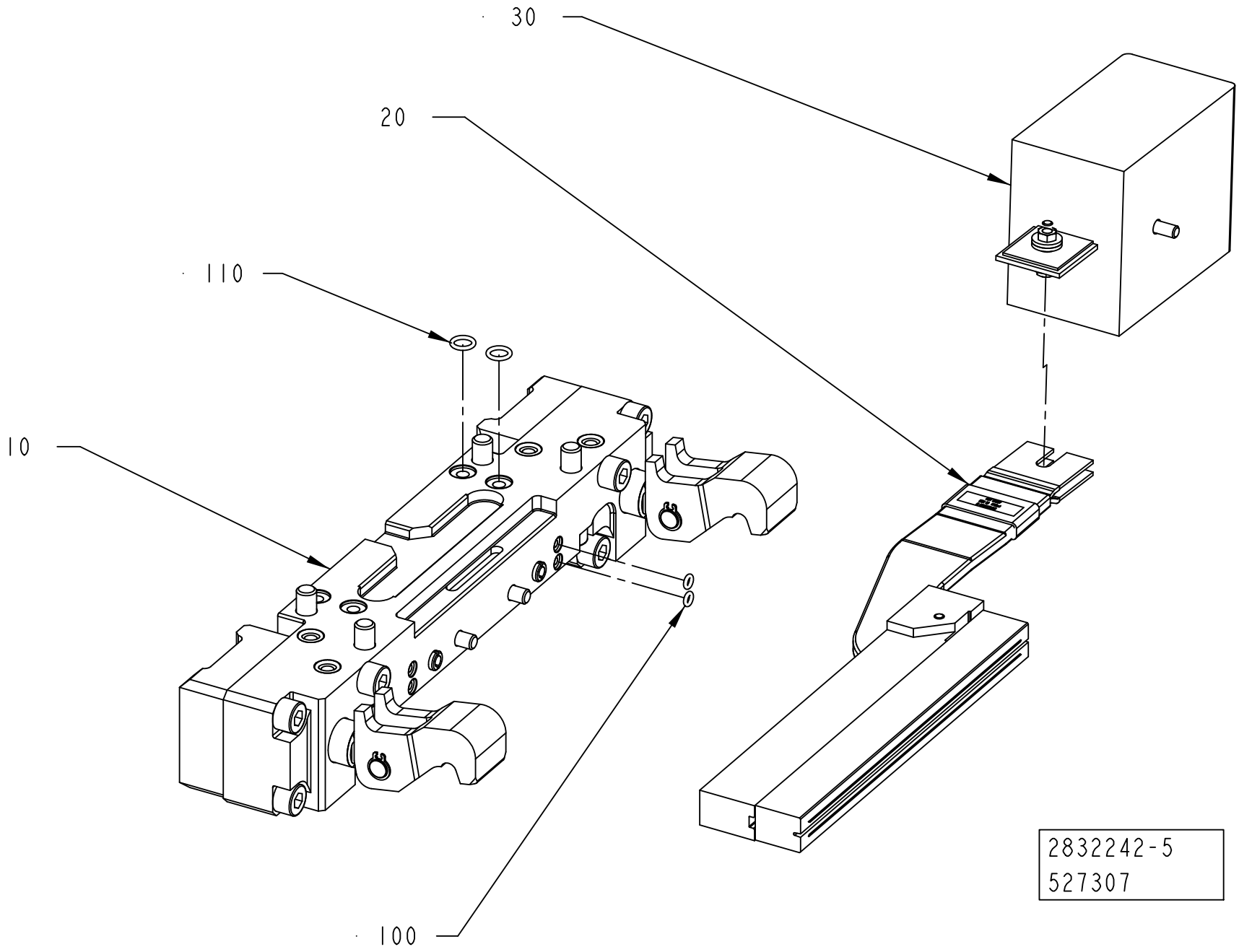
30
20
110
10
100
2832242-5
527307

ECM: 546694 - 20120402
Group number: 2832242-0200
Assembly Drawing: 2832242-5_1_AA

Pos	Part No	UN	Qty	Description	Page No
-					
010	2832243-0100		1	PRESSURE JAW	**1-433**
020	2832245-0200		1	INDUCTOR RIGHT	**1-473, 1-475, 1-477**
030	2875995-0100		1	ADAPTION TRANSFORMER	**1-479**
100	315202-0101		2	O-RING 3,1X1,6 MM	
110	315202-0105		2	O-RING 7,1X1,6 MM	

Pos	Part No	UN	Qty	Description	Page No

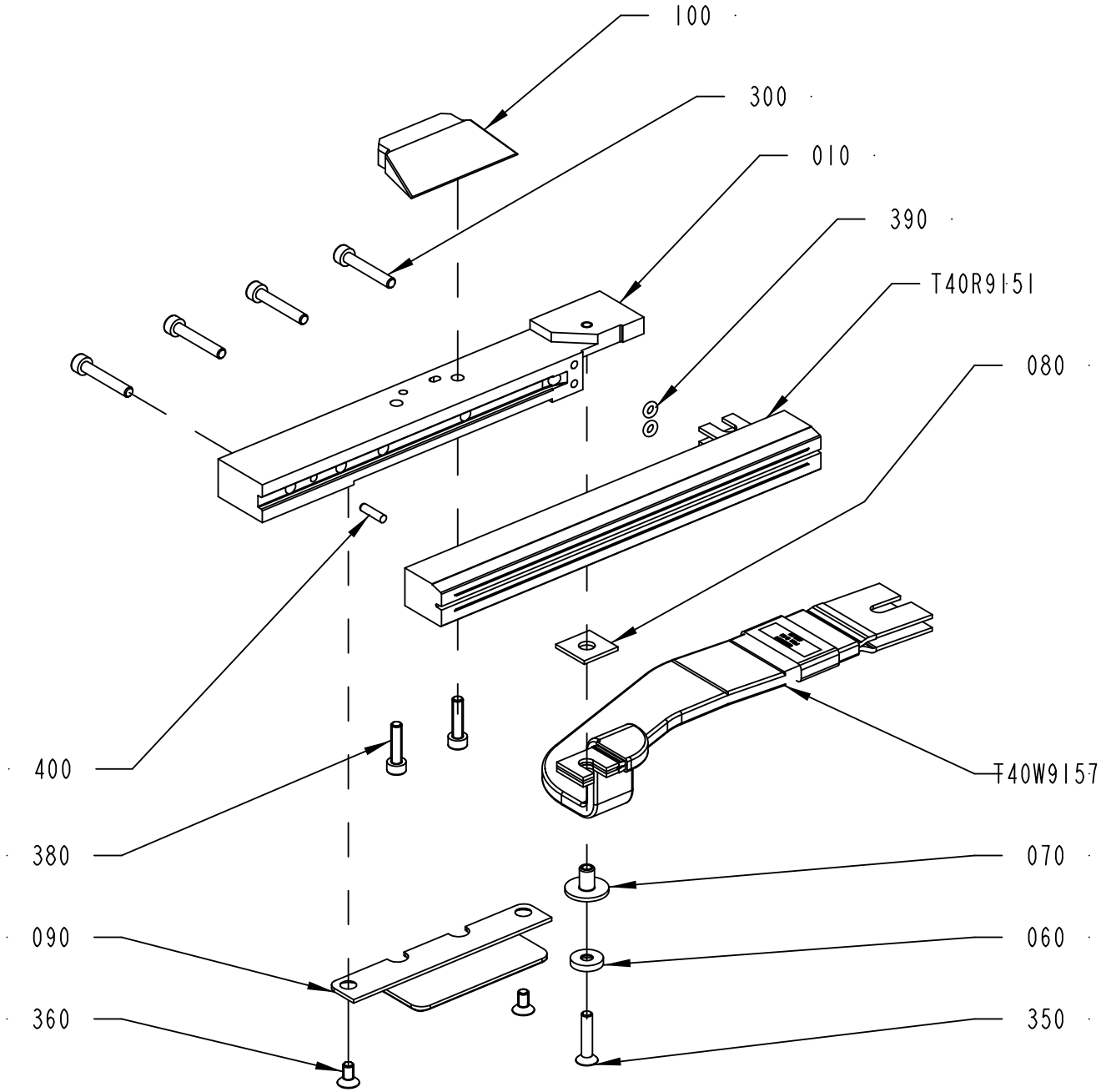

2832245-3
527307

ECM: 546696 - 20120402
Group number: 2832245-0200
Assembly Drawing: 2832245-3_1_AA

This list covers pages from 1-472 to 1-477

Pos	Part No	UN	Qty	Description	Page No
TPA 0500SQ (See drawing on page: 1-472)					
010	2903762-0000		1	RAIL	
060	2836239-0000		1	WASHER	
070	2836238-0000		1	INSULATION NUT	
080	1036584-0000		1	WASHER	
090	2958748-0000		1	VOLUME BULGE	
100	2968248-0000		1	VOLUME BULGE	
300	312115-0297		4	SCREW ISO4762 M4X25 A4 80	
360	312155-0287		2	SCREW DIN 7991 MF6S M4X8 A4 70	
380	312115-0293		2	SCREW ISO4762 M4X16 A4 80	
390	315202-0101		2	O-RING 3,1X1,6 MM	
400	311103-0234		1	PARALLEL PIN ISO 2338 3M6X12 A1	
T40R9151	2587467-0000		1	INDUCTOR	
T40W9157	2831048-0000		1	BUSBAR	
TPA 1000SQ, TPA 0750SQ (See drawing on page: 1-472)					
010	2903762-0000		1	RAIL	
060	2836239-0000		1	WASHER	
070	2836238-0000		1	INSULATION NUT	
080	1036584-0000		1	WASHER	
090	2944194-0000		1	VOLUME BULGE	
100	2944193-0000		1	VOLUME BULGE	
300	312115-0297		4	SCREW ISO4762 M4X25 A4 80	
360	312155-0287		2	SCREW DIN 7991 MF6S M4X8 A4 70	
380	312115-0293		2	SCREW ISO4762 M4X16 A4 80	
390	315202-0101		2	O-RING 3,1X1,6 MM	
400	311103-0234		1	PARALLEL PIN ISO 2338 3M6X12 A1	
T40R9151	2663377-0000		1	INDUCTOR	
T40W9157	2831048-0000		1	BUSBAR	
TBA 0500B, TBA 1000B NOMOLDEDCAP (See drawing on page: 1-472)					
010	2903762-0000		1	RAIL	
060	2836239-0000		1	WASHER	
070	2836238-0000		1	INSULATION NUT	
080	1036584-0000		1	WASHER	
090	1558734-0000		1	VOLUME BULGE	
300	312115-0297		4	SCREW ISO4762 M4X25 A4 80	
360	312155-0287		2	SCREW DIN 7991 MF6S M4X8 A4 70	
390	315202-0101		2	O-RING 3,1X1,6 MM	
T40R9151	1110938-0000		1	INDUCTOR	
T40W9157	2831048-0000		1	BUSBAR	
TBA 0500S (See drawing on page: 1-472)					
010	2832076-0000		1	RAIL	
060	2836239-0000		1	WASHER	
070	2836238-0000		1	INSULATION NUT	
080	1036584-0000		1	WASHER	
300	312115-0297		4	SCREW ISO4762 M4X25 A4 80	
390	315202-0101		2	O-RING 3,1X1,6 MM	
T40R9151	1110934-0000		1	INDUCTOR	
T40W9157	2831048-0000		1	BUSBAR	
TBA 0500SQ, TBA 1000SQ (See drawing on page: 1-472)					
010	2832076-0000		1	RAIL	
060	2836239-0000		1	WASHER	
070	2836238-0000		1	INSULATION NUT	
080	1036584-0000		1	WASHER	
300	312115-0297		4	SCREW ISO4762 M4X25 A4 80	
390	315202-0101		2	O-RING 3,1X1,6 MM	
T40R9151	1110936-0000		1	INDUCTOR	
T40W9157	2831048-0000		1	BUSBAR	
TBA 1000S NOMOLDEDCAP HELICAP2 23 (See drawing on page: 1-472)					
010	2832076-0000		1	RAIL	
060	2836239-0000		1	WASHER	
070	2836238-0000		1	INSULATION NUT	
080	1036584-0000		1	WASHER	
300	312115-0297		4	SCREW ISO4762 M4X25 A4 80	
390	315202-0101		2	O-RING 3,1X1,6 MM	
T40R9151	3124821-0000		1	INDUCTOR	
T40W9157	2831048-0000		1	BUSBAR	
TBA 1000S NOMOLDEDCAP NOCAP, TBA 1000S NOMOLDEDCAP RECAP3, TBA 1000S NOMOLDEDCAP SLIMCAP 1000 (See drawing on page: 1-472)					
010	2832076-0000		1	RAIL	
060	2836239-0000		1	WASHER	
070	2836238-0000		1	INSULATION NUT	
080	1036584-0000		1	WASHER	
300	312115-0297		4	SCREW ISO4762 M4X25 A4 80	
390	315202-0101		2	O-RING 3,1X1,6 MM	
T40R9151	1110937-0000		1	INDUCTOR	
T40W9157	2831048-0000		1	BUSBAR	
TBA 1500S (See drawing on page: 1-472)					
010	2832076-0000		1	RAIL	
060	2836239-0000		1	WASHER	
070	2836238-0000		1	INSULATION NUT	
080	1036584-0000		1	WASHER	
300	312115-0297		4	SCREW ISO4762 M4X25 A4 80	
390	315202-0101		2	O-RING 3,1X1,6 MM	
T40R9151	1110938-0000		1	INDUCTOR	
070	2836238-0000		1	INSULATION NUT	
080	1036584-0000		1	WASHER	
300	312115-0297		4	SCREW ISO4762 M4X25 A4 80	
390	315202-0101		2	O-RING 3,1X1,6 MM	
T40R9151	1110934-0000		1	INDUCTOR	
T40W9157	2831048-0000		1	BUSBAR	

Machine Type | Group Description | Used-In | Group Number | Page No

INDUCTOR RIGHT

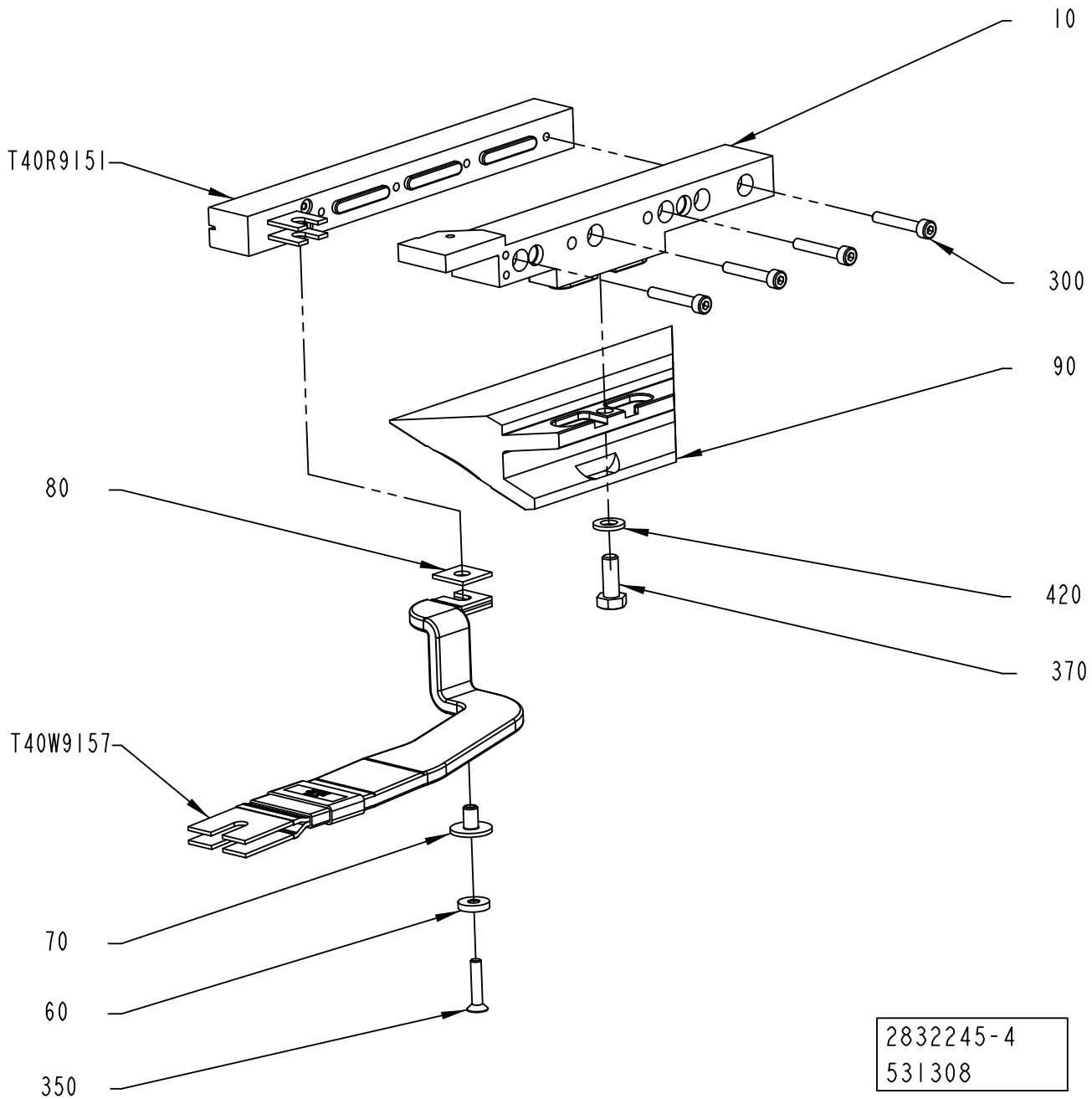

Pos	Part No	UN	Qty	Description	Page No
TBA 1500S (Cont'd) (See drawing on page: 1-472)					
T40W9157	2831048-0000		1	BUSBAR	
TBA 2000S (See drawing on page: 1-472)					
010	3002561-0000		1	RAIL	
060	3002499-0000		1	WASHER	
070	3002497-0000		1	INSULATION NUT	
080	3002498-0000		1	WASHER	
300	312115-0295		5	SCREW ISO4762 M4X20 A4 80	
390	315202-0101		2	O-RING 3,1X1,6 MM	
400	311103-0267		1	PARALLEL PIN ISO 2338 4M6X10 A1	
T40R9151	2879535-0000		1	INDUCTOR	
T40W9157	2909302-0000		1	BUSBAR	
TGA 1000SQ, TGA 0750SQ, TGA 0500SQ (See drawing on page: 1-476)					
010	3213756-0000		1	RAIL	
060	28509-0000		1	WASHER	
070	32544-0000		1	INSULATION NUT	
080	1036584-0000		2	WASHER	
090	2698631-0000		1	VOLUME BULGE	
100	3213757-0000		1	PLATE	
300	312115-0297		4	SCREW ISO4762 M4X25 A4 80	
370	312105-0370		1	SCREW, M6S ISO 4017 M6X20 A4 80	
420	315105-0153		1	WASHER PLAIN, 6,4X12X1,5 A4 BRB	
T40R9151	1566783-0000		1	INDUCTOR	
T40W9157	1498850-0000		1	BUSBAR	
TGA 1500SQ (See drawing on page: 1-474)					
010	2928241-0000		1	RAIL	
060	2836239-0000		1	WASHER	
070	2836238-0000		1	INSULATION NUT	
080	1036584-0000		1	WASHER	
090	2928252-0000		1	VOLUME BULGE	
300	312115-0297		4	SCREW ISO4762 M4X25 A4 80	
370	312105-0368		1	SCREW, M6S ISO 4017 M6X16 A4 80	
390	315202-0101		2	O-RING 3,1X1,6 MM	
420	315105-0153		1	WASHER PLAIN, 6,4X12X1,5 A4 BRB	
T40R9151	1110938-0000		1	INDUCTOR	
T40W9157	2831048-0000		1	BUSBAR	
Common Parts					
350	312155-0295		1	SCREW DIN 7991 MF6S M4X20 A4 70	

Pos	Part No	UN	Qty	Description	Page No

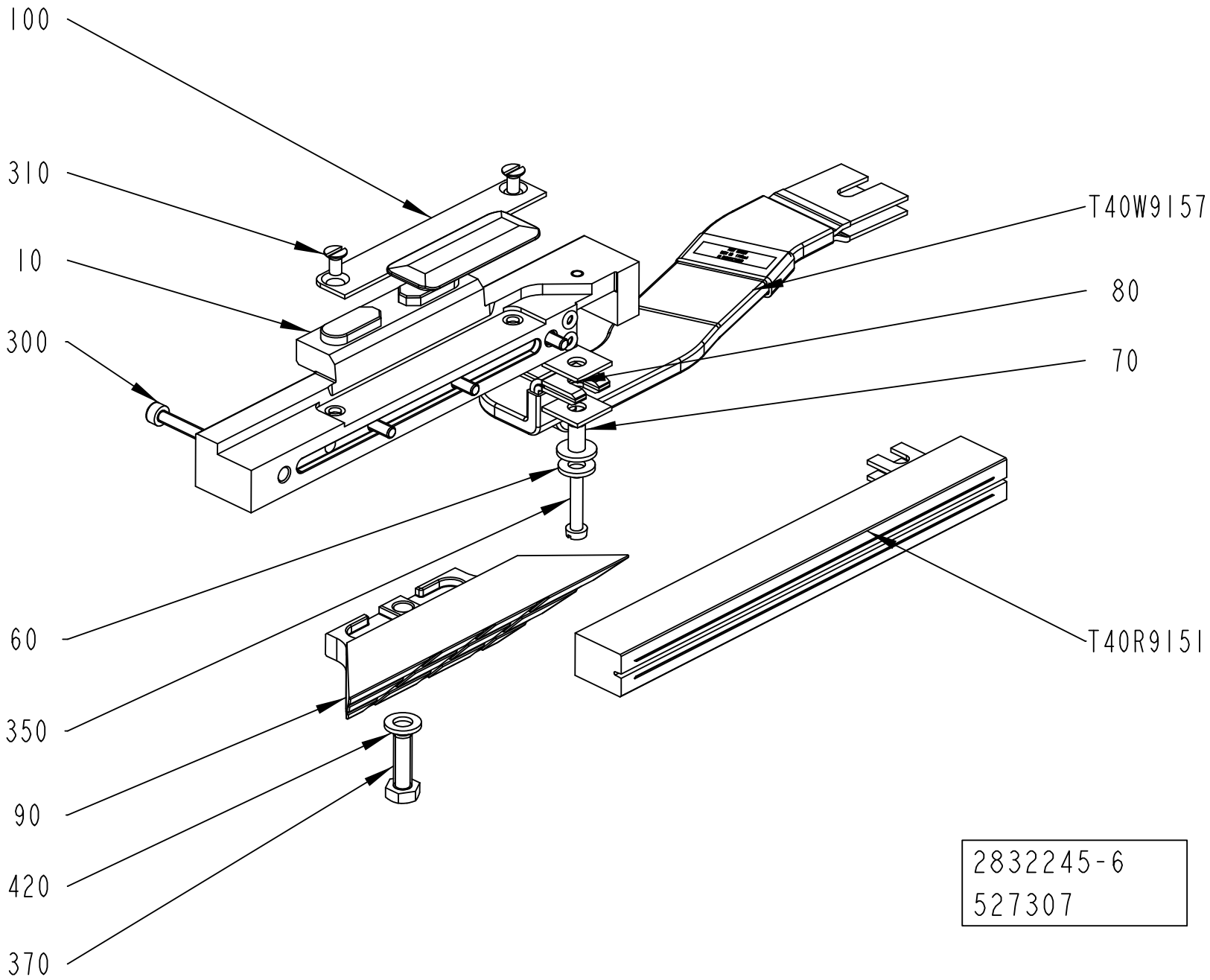
100
310
10
300
T40W9157
80
70
60
T40R9151
350
90
420
370
2832245-6
527307

ECM: 546696 - 20120402
Group number: 2832245-0200
Assembly Drawing: 2832245-6_1_AA

This list covers pages from 1-472 to 1-477

Pos	Part No	UN	Qty	Description	Page No
SEE PREVIOUS LISTS PAGES: 1-473, 1-475.					

Pos	Part No	UN	Qty	Description	Page No

ADAPTION TRANSFORMER

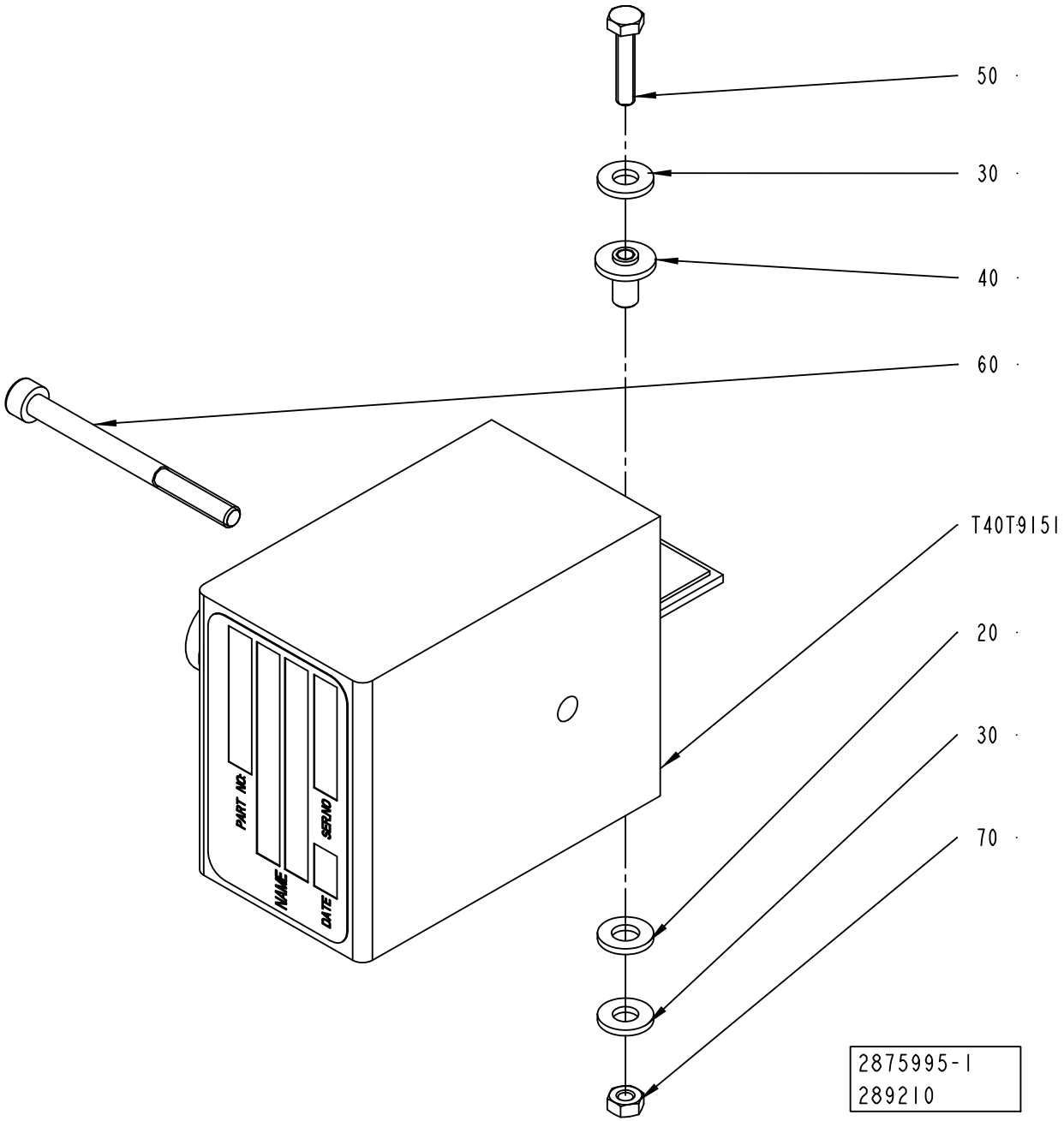

ECM: 533724 - 20120102
Group number: 2875995-0100
Assembly Drawing: 2875995-1_1_AA

Pos	Part No	UN	Qty	Description	Page No
TBA 0500S, TPA 1000SQ, TBA 2000S, TPA 0750SQ					
T40T9151	67379-0106		1	TRANSFORMER	
TBA 0500SQ, TBA 0500B, TBA 1000B, TBA 1000SQ, TBA 1000S, TBA 1500S, TGA 1500SQ					
T40T9151	67379-0101		1	TRANSFORMER	
TGA 1000SQ, TGA 0750SQ, TGA 0500SQ					
T40T9151	67379-0249		1	TRANSFORMER	
TPA 0500SQ					
T40R9151	67379-0268		1	TRANSFORMER	
Common Parts					
020	32079-0000		1	WASHER	
030	28509-0000		2	WASHER	
040	32544-0000		2	INSULATION NUT	
050	312105-0295		1	SCREW, M6S ISO 4017 M4X20 A4 70	
060	90458-0058		1	SCREW M5X60 A280	
070	312605-0312		2	HEXAGON NUT, M6M M4 A280	

Pos	Part No	UN	Qty	Description	Page No

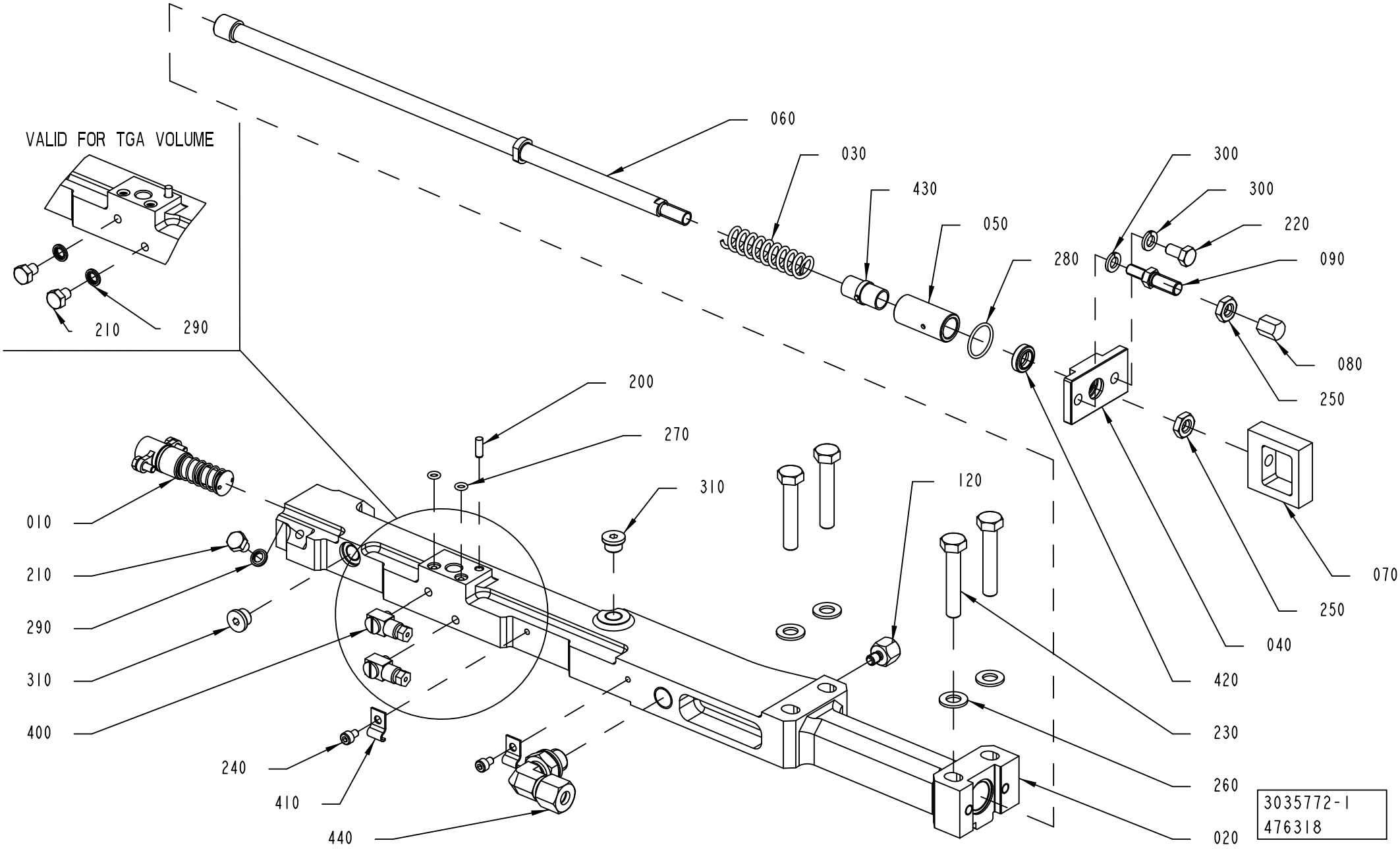
VALID FOR TGA VOLUME
060
030
430
050
280
300
300
220
090
080
250
070
250
040
420
230
260
020
200
270
310
120
010
210
290
310
400
240
410
440
210
290
3035772-1
476318

ECM: 533738 - 20120102
Group number: 3035772-0100
Assembly Drawing: 3035772-1_1_AC

This list covers pages from 1-480 to 1-483

Pos	Part No	UN	Qty	Description	Page No
TBA 0500S, TBA 0500SQ, TBA 0500B, TBA 1000B, TBA 1000SQ, TBA 1000S, TBA 1500S, TPA 1000SQ, TPA 0500SQ, TPA 0750SQ (See drawing on page: 1-480)					
020	3014104-0000		1	CARRIER CUTTING RIGHT	
040	2774802-0000		1	COVER	
210	312105-0362		1	SCREW, M6S ISO 4017 M6X8 A4 80	
290	315211-0103		1	BONDED SEAL SS/NBR90 M6	
400	90134-0058		2	CONNECTION	
TBA 2000S (See drawing on page: 1-482)					
020	3038402-0000		1	CARRIER CUTTING RIGHT	
040	3048521-0000		1	COVER	
100	2922438-0000		1	PLATE	
110	2922439-0000		1	SHIM	
210	312105-0362		1	SCREW, M6S ISO 4017 M6X8 A4 80	
290	315211-0103		1	BONDED SEAL SS/NBR90 M6	
350	312155-0287		3	SCREW DIN 7991 MF6S M4X8 A4 70	
400	90134-0058		2	CONNECTION	
TGA 1000SQ, TGA 0750SQ, TGA 0500SQ, TGA 1500SQ (See drawing on page: 1-480)					
020	3014104-0000		1	CARRIER CUTTING RIGHT	
040	2774802-0000		1	COVER	
210	312105-0362		3	SCREW, M6S ISO 4017 M6X8 A4 80	
290	315211-0103		3	BONDED SEAL SS/NBR90 M6	
Common Parts					
010	2854078-0100		1	PISTON	**1-447**
030	1548940-0000		1	SPRING	
050	2774803-0000		1	SEAT	
060	2803174-0000		1	TIE ROD	
070	2986941-0000		1	EAR	
080	2997337-0000		1	STOP SCREW	
090	2997340-0000		1	SCREW	
120	3047360-0000		1	SETTING KNOB	
200	311103-0268		1	PARALLEL PIN ISO 2338 4M6X12 A1	
220	312105-0366		1	SCREW, M6S ISO 4017 M6X12 A4 80	
230	312105-0460		4	SCREW, M6S ISO 4014 M8X45 A4 80	
240	312115-0285		2	SCREW ISO4762 M4X6 A4 80	
250	312625-0318		2	HEXAGON THIN NUT, EN 24035 ML6M M8 A4	
260	315105-0165		4	WASHER PLAIN, 8,4X16X1,6 A4 BRB	
270	315202-0102		2	O-RING 4,1X1,6 MM	
280	315202-0116		1	O-RING 18,1X1,6 MM	
300	315402-0156		2	LOCK WASHER, DIN127B 6,5 A4, 1/4	
310	342713-0209		2	PLUG, EXT THREAD HEX SOCKET 8638-00-180	
360	90602-4847		1	THREAD LOCKING, LOCTITE 243 50 ML	
410	90165-0056		2	PIPE CLIP FOR TUBE, 4 MM	
420	90459-3388		1	SCRAPER 10X16X4,7 MM	
430	90600-2011		1	BUSHING INSERT, JUM-02-10	
440	90601-3686		1	ELBOW FITTING ADJ., WEE08LR71	

Machine Type	Group Description	Used-In	Group Number	Page No

CARRIER CUTTING RIGHT

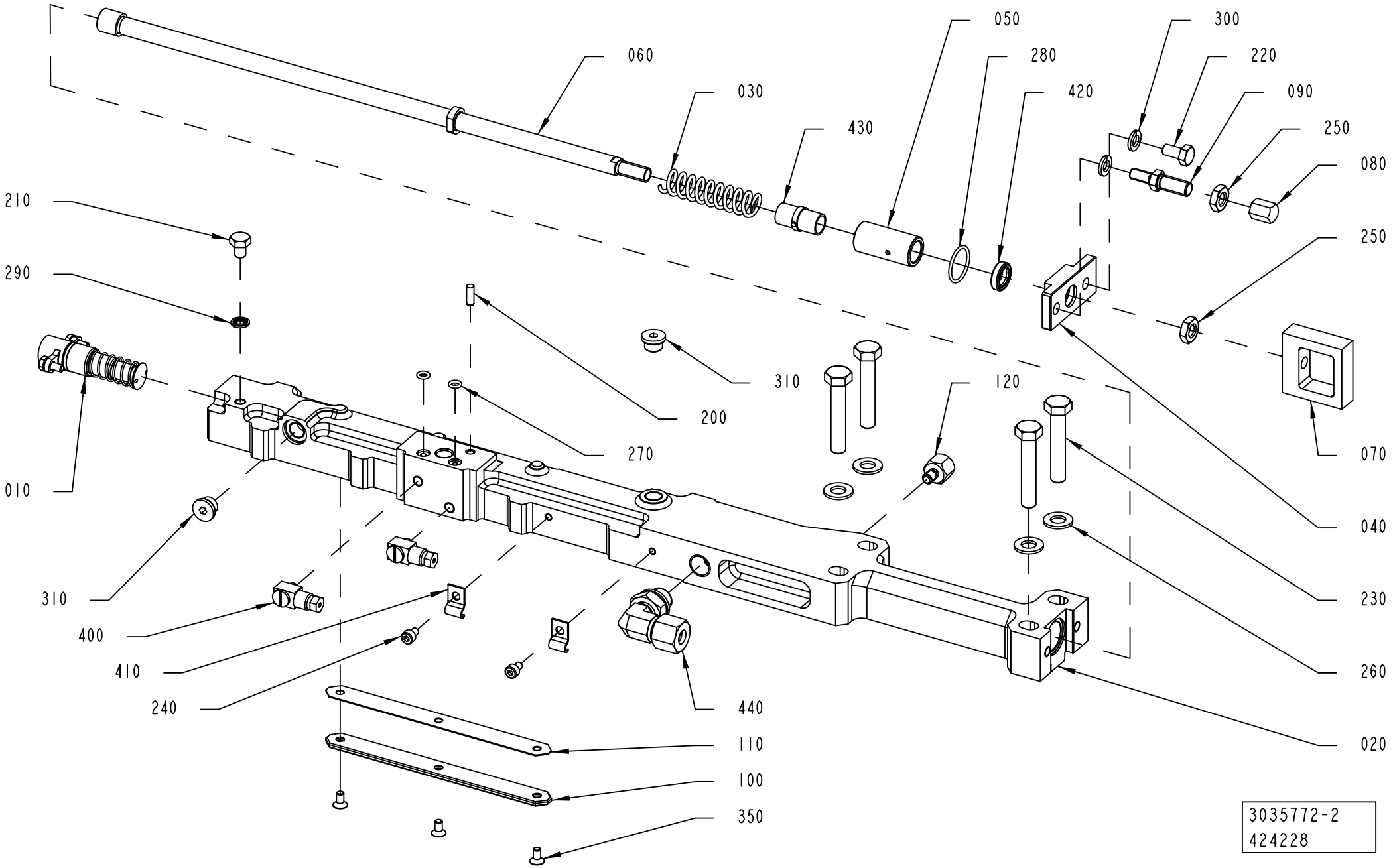

ECM: 533738 - 20120102
Group number: 3035772-0100
Assembly Drawing: 3035772-2_1_AA

This list covers pages from 1-480 to 1-483

Pos	Part No	UN	Qty	Description	Page No
TBA 0500S, TBA 0500SQ, TBA 0500B, TBA 1000B, TBA 1000SQ, TBA 1000S, TBA 1500S, TPA 1000SQ, TPA 0500SQ, TPA 0750SQ (See drawing on page: 1-480)					
020	3014104-0000		1	CARRIER CUTTING RIGHT	
040	2774802-0000		1	COVER	
210	312105-0362		1	SCREW, M6S ISO 4017 M6X8 A4 80	
290	315211-0103		1	BONDED SEAL SS/NBR90 M6	
400	90134-0058		2	CONNECTION	
TBA 2000S (See drawing on page: 1-482)					
020	3038402-0000		1	CARRIER CUTTING RIGHT	
040	3048521-0000		1	COVER	
100	2922438-0000		1	PLATE	
110	2922439-0000		1	SHIM	
210	312105-0362		1	SCREW, M6S ISO 4017 M6X8 A4 80	
290	315211-0103		1	BONDED SEAL SS/NBR90 M6	
350	312155-0287		3	SCREW DIN 7991 MF6S M4X8 A4 70	
400	90134-0058		2	CONNECTION	
TGA 1000SQ, TGA 0750SQ, TGA 0500SQ, TGA 1500SQ (See drawing on page: 1-480)					
020	3014104-0000		1	CARRIER CUTTING RIGHT	
040	2774802-0000		1	COVER	
210	312105-0362		3	SCREW, M6S ISO 4017 M6X8 A4 80	
290	315211-0103		3	BONDED SEAL SS/NBR90 M6	
Common Parts					
010	2854078-0100		1	PISTON	**1-447**
030	1548940-0000		1	SPRING	
050	2774803-0000		1	SEAT	
060	2803174-0000		1	TIE ROD	
070	2986941-0000		1	EAR	
080	2997337-0000		1	STOP SCREW	
090	2997340-0000		1	SCREW	
120	3047360-0000		1	SETTING KNOB	
200	311103-0268		1	PARALLEL PIN ISO 2338 4M6X12 A1	
220	312105-0366		1	SCREW, M6S ISO 4017 M6X12 A4 80	
230	312105-0460		4	SCREW, M6S ISO 4014 M8X45 A4 80	
240	312115-0285		2	SCREW ISO4762 M4X6 A4 80	
250	312625-0318		2	HEXAGON THIN NUT, EN 24035 ML6M M8 A4	
260	315105-0165		4	WASHER PLAIN, 8,4X16X1,6 A4 BRB	
270	315202-0102		2	O-RING 4,1X1,6 MM	
280	315202-0116		1	O-RING 18,1X1,6 MM	
300	315402-0156		2	LOCK WASHER, DIN127B 6,5 A4, 1/4	
310	342713-0209		2	PLUG, EXT THREAD HEX SOCKET 8638-00-180	
360	90602-4847		1	THREAD LOCKING, LOCTITE 243 50 ML	
410	90165-0056		2	PIPE CLIP FOR TUBE, 4 MM	
420	90459-3388		1	SCRAPER 10X16X4,7 MM	
430	90600-2011		1	BUSHING INSERT, JUM-02-10	
440	90601-3686		1	ELBOW FITTING ADJ., WEE08LR71	

Machine Type	Group Description	Used-In	Group Number	Page No

CUTTING JAW RIGHT

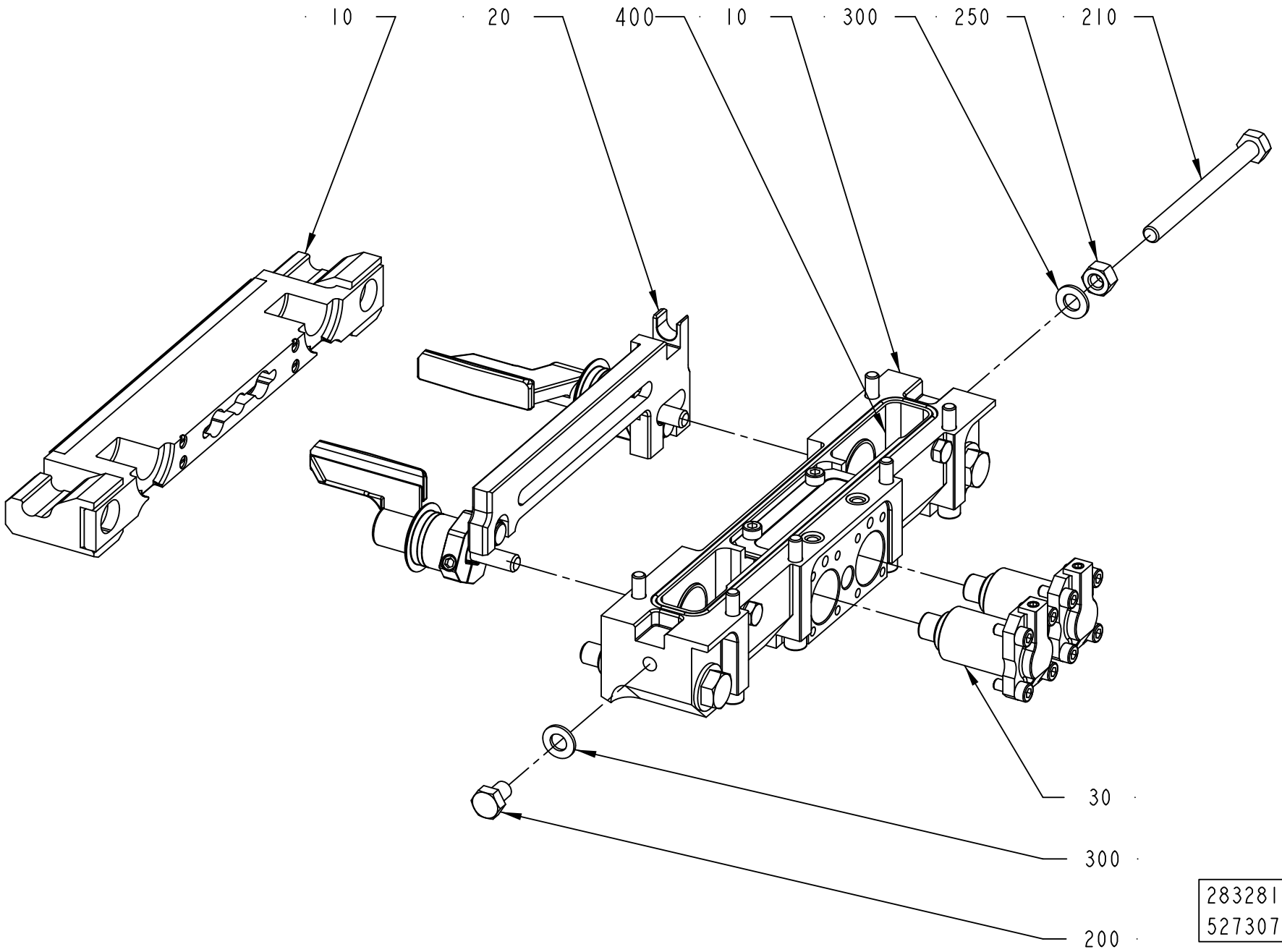

ECM: 528853 - 20120102
Group number: 2832819-0200
Assembly Drawing: 2832819-2_1_AA

Pos	Part No	UN	Qty	Description	Page No
TBA 0500B, TBA 1000B					
030	2772645-0100		2	PISTON	**1-451**
210	312105-0469		1	SCREW, M6S ISO 4014 M8X90 A4 80	
TBA 0500S					
030	2772645-0100		2	PISTON	**1-451**
210	312105-0469		1	SCREW, M6S ISO 4014 M8X90 A4 80	
TBA 0500SQ, TBA 1000SQ					
030	2772645-0100		2	PISTON	**1-451**
210	312105-0469		1	SCREW, M6S ISO 4014 M8X90 A4 80	
TBA 1000S					
030	2772645-0100		2	PISTON	**1-451**
210	312105-0469		1	SCREW, M6S ISO 4014 M8X90 A4 80	
TBA 1500S					
030	2772645-0100		2	PISTON	**1-451**
210	312105-0469		1	SCREW, M6S ISO 4014 M8X90 A4 80	
TBA 2000S					
030	2772645-0100		2	PISTON	**1-451**
210	312105-0466		1	SCREW, M6S ISO 4014 M8X75 A4 80	
TGA 1000SQ, TGA 0750SQ, TGA 0500SQ					
030	2552010-0300		2	PISTON	**1-453**
210	312105-0469		1	SCREW, M6S ISO 4014 M8X90 A4 80	
TGA 1500SQ					
030	2772645-0100		2	PISTON	**1-451**
210	312105-0469		1	SCREW, M6S ISO 4014 M8X90 A4 80	
TPA 0500SQ					
030	2772645-0100		2	PISTON	**1-451**
210	312105-0469		1	SCREW, M6S ISO 4014 M8X90 A4 80	
TPA 1000SQ, TPA 0750SQ					
030	2772645-0100		2	PISTON	**1-451**
210	312105-0469		1	SCREW, M6S ISO 4014 M8X90 A4 80	
Common Parts					
010	2832935-0100		1	CUTTING JAW	**1-455, 1-457, 1-459, 1-461**
020	2832937-0100		1	FOLDING FLAP RIGHT	**1-487, 1-489**
200	312105-0447		1	SCREW, M6S ISO 4017 M8X12 A4 80	
250	312605-0318		1	HEXAGON NUT, M6M M8 A280	
300	315105-0165		2	WASHER PLAIN, 8,4X16X1,6 A4 BRB	
400	90603-5339	L	1	KLüBEROIL 4 UH1 320 N, ONLY IN BOM	
	90603-6434		*1*	*KLUBEROIL 4 UH1 320 N, 5 L CANISTER*	
	90603-6454		*1*	*KLüBEROIL 4 UH1 320 N, 20 L CANISTER*	

Pos	Part No	UN	Qty	Description	Page No

Machine Type | Group Description | Used-In | Group Number | Page No

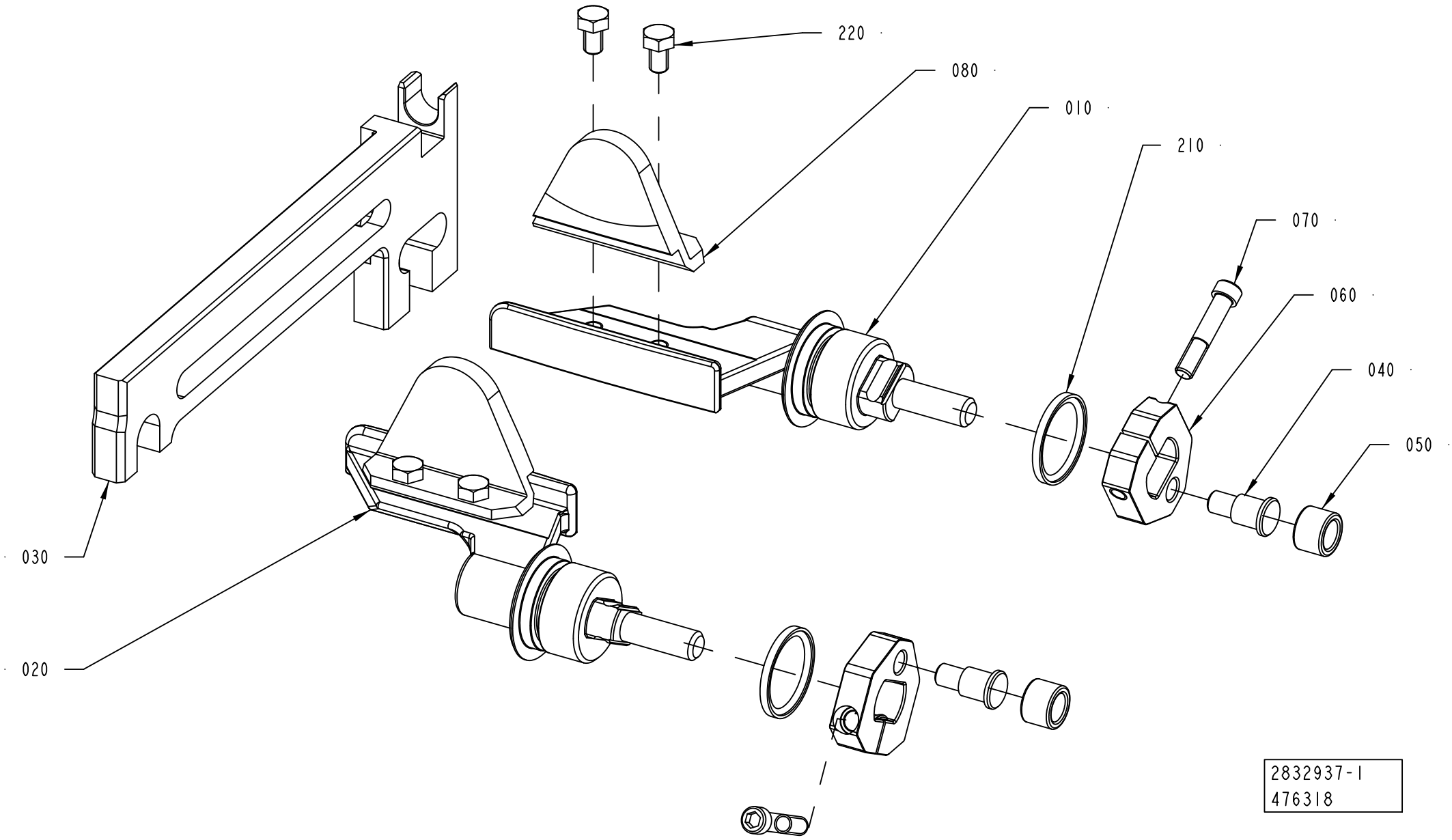
220
080
010
210
070
060
040
050
030
020
2832937-1
476318

ECM: 548448 - 20120701
Group number: 2832937-0100
Assembly Drawing: 2832937-1_1_AC

This list covers pages from 1-486 to 1-489

Pos	Part No	UN	Qty	Description	Page No
TBA 0500B, TBA 1000B (See drawing on page: 1-486)					
010	2898569-0000		1	FOLDING FLAP	
020	2898568-0000		1	FOLDING FLAP	
030	2948634-0000		1	CARRIER RULER	
040	2948627-0000		2	SHAFT	
050	2948626-0000		2	ROLLER	
060	2948628-0000		2	CARRIER	
070	2833952-0000		2	SCREW	
210	90600-2017		2	PISTON SEAL ROTOGLYD RING 20,1X25X2,2 MM	
TBA 0500S (See drawing on page: 1-486)					
010	2996358-0000		1	FOLDING FLAP	
020	2996359-0000		1	FOLDING FLAP	
030	2996361-0000		1	CARRIER RULER	
040	2948627-0000		2	SHAFT	
050	2948626-0000		2	ROLLER	
060	2948628-0000		2	CARRIER	
070	2833952-0000		2	SCREW	
210	90600-2017		2	PISTON SEAL ROTOGLYD RING 20,1X25X2,2 MM	
TBA 1000SQ, TBA 0500SQ (See drawing on page: 1-486)					
010	2847230-0000		1	FOLDING FLAP	
020	2847231-0000		1	FOLDING FLAP	
030	2948630-0000		1	CARRIER RULER	
040	2948627-0000		2	SHAFT	
050	2948626-0000		2	ROLLER	
060	2948628-0000		2	CARRIER	
070	2833952-0000		2	SCREW	
080	2843780-0000		2	PLATE	
210	90600-2017		2	PISTON SEAL ROTOGLYD RING 20,1X25X2,2 MM	
220	312105-0323		4	SCREW, M6S ISO 4017 M5X8 A4 80	
230	90602-4847		1	THREAD LOCKING, LOCTITE 243 50 ML	
TBA 1000S (See drawing on page: 1-486)					
010	2813728-0000		1	FOLDING FLAP	
020	2813729-0000		1	FOLDING FLAP	
030	2948632-0000		1	CARRIER RULER	
040	2948627-0000		2	SHAFT	
050	2948626-0000		2	ROLLER	
060	2948628-0000		2	CARRIER	
070	2833952-0000		2	SCREW	
210	90600-2017		2	PISTON SEAL ROTOGLYD RING 20,1X25X2,2 MM	
TBA 1500S (See drawing on page: 1-486)					
010	2928342-0000		1	FOLDING FLAP	
	3021645-0000		*1*	*FOLDING FLAP*	
020	2928343-0000		1	FOLDING FLAP	
	3021646-0000		*1*	*FOLDING FLAP*	
030	2948634-0000		1	CARRIER RULER	
040	2948627-0000		2	SHAFT	
050	2948626-0000		2	ROLLER	
060	2948628-0000		2	CARRIER	
070	2833952-0000		2	SCREW	
210	90600-2017		2	PISTON SEAL ROTOGLYD RING 20,1X25X2,2 MM	
TBA 2000S (See drawing on page: 1-488)					
010	2566319-0000		1	FOLDING FLAP	
020	2566320-0000		1	FOLDING FLAP	
030	2948638-0000		1	CARRIER RULER	
040	22462-0000		2	SHAFT	
050	22463-0000		2	ROLL	
200	90141-0029		2	CIRCLIP	
210	90459-2258		2	PISTON SEAL ROTOGLYD RING 25,1X30X2,2 MM	
TGA 1000SQ, TGA 0750SQ, TGA 0500SQ (See drawing on page: 1-488)					
010	2660291-0000		1	FOLDING FLAP	
020	2660290-0000		1	FOLDING FLAP	
030	2994206-0000		1	CARRIER RULER	
040	22462-0000		2	SHAFT	
050	22463-0000		2	ROLL	
200	90141-0029		2	CIRCLIP	
210	90459-2258		2	PISTON SEAL ROTOGLYD RING 25,1X30X2,2 MM	
TGA 1500SQ (See drawing on page: 1-486)					
010	2939719-0000		1	FOLDING FLAP	
	3021645-0000		*1*	*FOLDING FLAP*	
020	2939720-0000		1	FOLDING FLAP	
	3021646-0000		*1*	*FOLDING FLAP*	
030	2948634-0000		1	CARRIER RULER	
040	2948627-0000		2	SHAFT	
050	2948626-0000		2	ROLLER	
060	2948628-0000		2	CARRIER	
070	2833952-0000		2	SCREW	
210	90600-2017		2	PISTON SEAL ROTOGLYD RING 20,1X25X2,2 MM	
TPA 0500SQ (See drawing on page: 1-486)					
010	2958754-0000		1	FOLDING FLAP	
020	2958753-0000		1	FOLDING FLAP	
030	2958756-0000		1	CARRIER RULER	
040	2948627-0000		2	SHAFT	
050	2948626-0000		2	ROLLER	
060	2948628-0000		2	CARRIER	

Machine Type | Group Description | Used-In | Group Number | Page No

FOLDING FLAP RIGHT

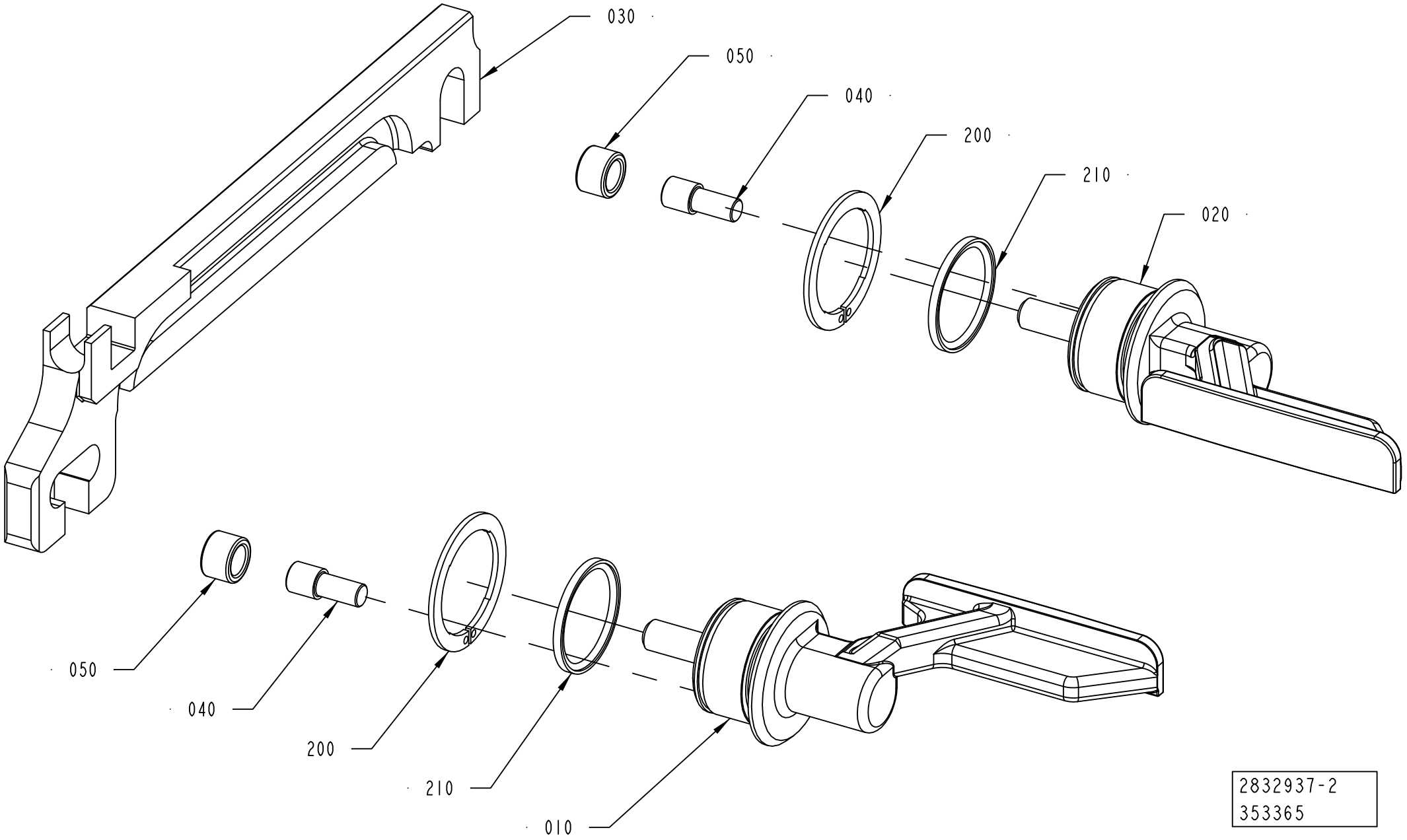

2832937-2
353365

Pos	Part No	UN	Qty	Description	Page No
TPA 0500SQ (Cont'd) (See drawing on page: 1-486)					
070	2833952-0000		2	SCREW	
210	90600-2017		2	PISTON SEAL ROTOGLYD RING 20,1X25X2,2 MM	
TPA 1000SQ, TPA 0750SQ (See drawing on page: 1-486)					
010	2912359-0000		1	FOLDING FLAP	
020	2912360-0000		1	FOLDING FLAP	
030	2948636-0000		1	CARRIER RULER	
040	2948627-0000		2	SHAFT	
050	2948626-0000		2	ROLLER	
060	2948628-0000		2	CARRIER	
070	2833952-0000		2	SCREW	
210	90600-2017		2	PISTON SEAL ROTOGLYD RING 20,1X25X2,2 MM	

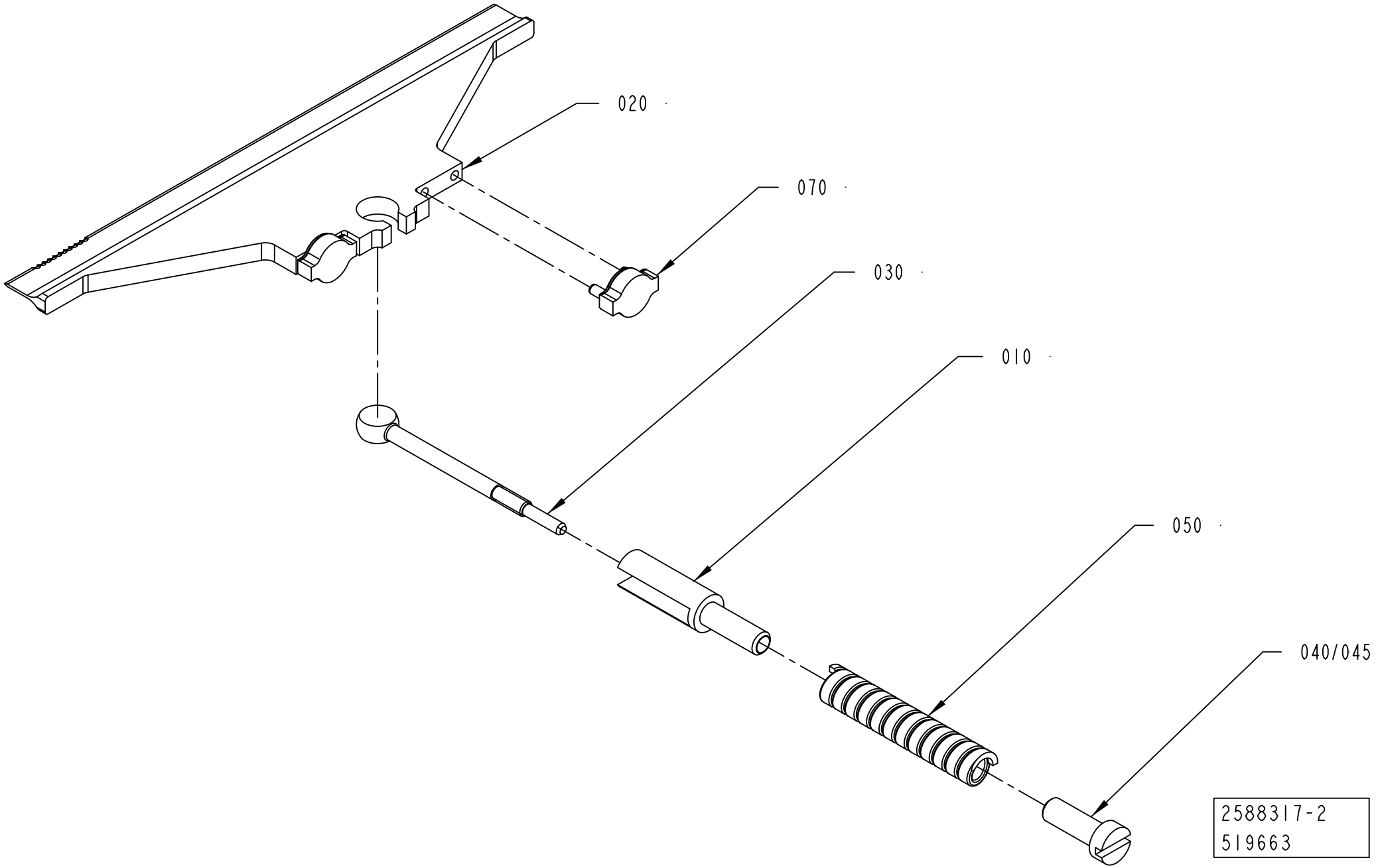
020
070
030
010
050
040/045
2588317-2
519663

ECM: 535040 - 20120102
Group number: 2588317-0100
Assembly Drawing: 2588317-2_1_AB

Pos	Part No	UN	Qty	Description	Page No
TBA 0500S, TPA 1000SQ, TPA 0750SQ					
020	2912006-0000		1	KNIFE	
070	2774799-0000		2	BLOCK	
TBA 0500SQ, TBA 0500B, TBA 1000B, TBA 1000SQ, TBA 1000S, TBA 1500S, TGA 1500SQ					
020	2774798-0000		1	KNIFE	
070	2774799-0000		2	BLOCK	
TBA 2000S					
020	2909311-0000		1	KNIFE	
TGA 1000SQ, TGA 0750SQ, TGA 0500SQ					
020	1348956-0000		1	KNIFE	
TPA 0500SQ					
020	2958757-0000		1	KNIFE	
070	2774799-0000		2	BLOCK	
Common Parts					
010	1285006-0000		1	SPACER	
030	1285003-0000		1	LINK	
040	1285005-0000		1	NUT	
045	90153-0015	G	1	ADHESIVE,LOCTITE IS 496/CYANOLOT 303	
050	1538109-0000		1	COMPRESSION SPRING	

Pos	Part No	UN	Qty	Description	Page No

SUPPORT FLAP CUTTING

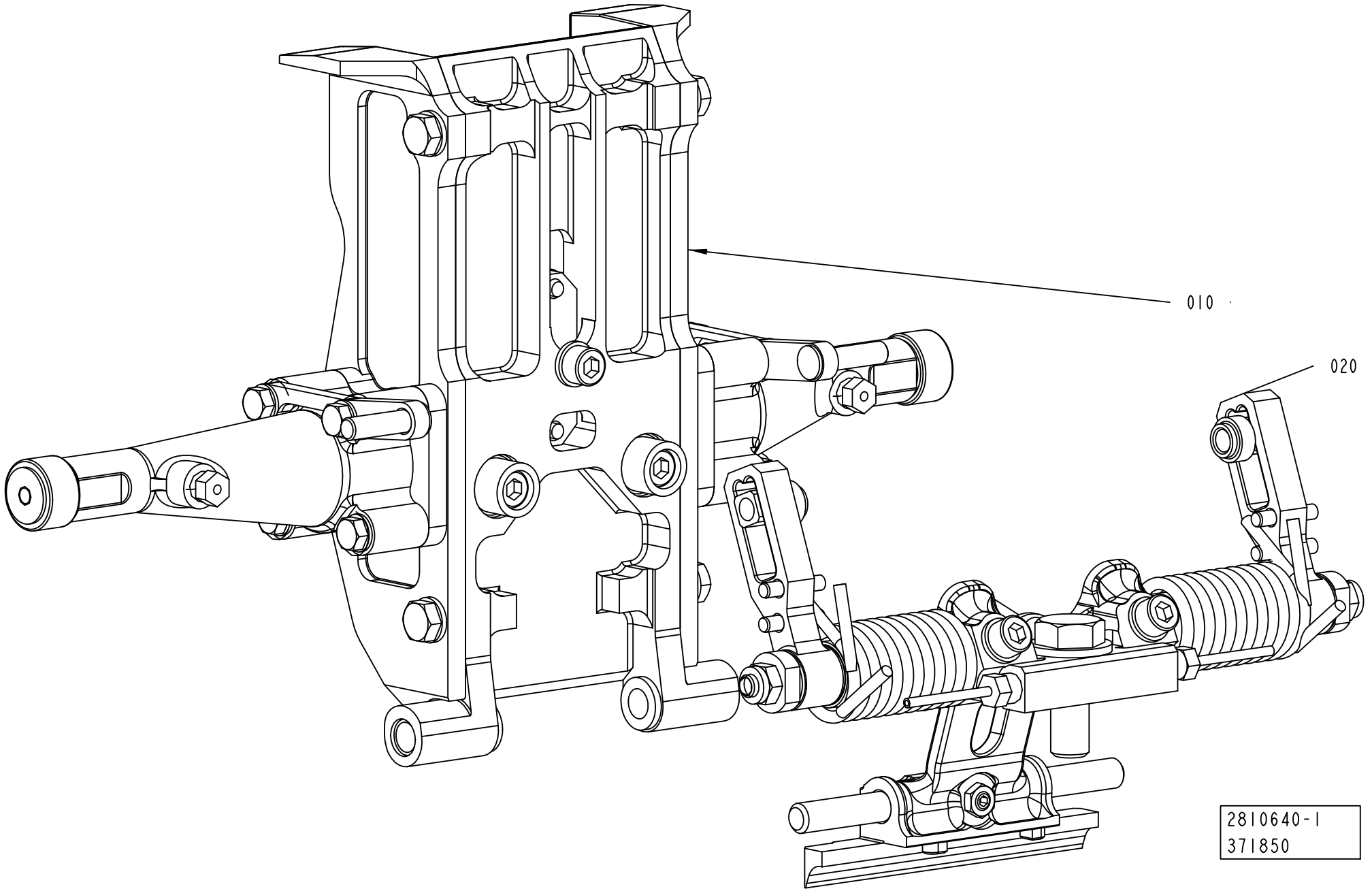

ECM: 533727 - 20120102
Group number: 2810640-0100
Assembly Drawing: 2810640-1_1_AB

Pos	Part No	UN	Qty	Description	Page No
TPA 0750SQ					
010	2808800-0100		1	VOLUME FLAP CUTTING	**1-495, 1-497, 1-499, 1-501, 1-503, 1-505, 1-507**
020	2842772-0100		1	SHOCK ABSORBER CUTTING	**1-511, 1-513, 1-515, 1-517**
TPA 1000SQ					
010	2808800-0100		1	VOLUME FLAP CUTTING	**1-495, 1-497, 1-499, 1-501, 1-503, 1-505, 1-507**
020	2842772-0100		1	SHOCK ABSORBER CUTTING	**1-511, 1-513, 1-515, 1-517**
TBA 0500B					
010	2808800-0100		1	VOLUME FLAP CUTTING	**1-495, 1-497, 1-499, 1-501, 1-503, 1-505, 1-507**
020	2842772-0100		1	SHOCK ABSORBER CUTTING	**1-511, 1-513, 1-515, 1-517**
TBA 0500S					
010	2808800-0100		1	VOLUME FLAP CUTTING	**1-495, 1-497, 1-499, 1-501, 1-503, 1-505, 1-507**
020	2842772-0100		1	SHOCK ABSORBER CUTTING	**1-511, 1-513, 1-515, 1-517**
TBA 0500SQ					
010	2808800-0100		1	VOLUME FLAP CUTTING	**1-495, 1-497, 1-499, 1-501, 1-503, 1-505, 1-507**
020	2842772-0100		1	SHOCK ABSORBER CUTTING	**1-511, 1-513, 1-515, 1-517**
TBA 1000B					
010	2808800-0100		1	VOLUME FLAP CUTTING	**1-495, 1-497, 1-499, 1-501, 1-503, 1-505, 1-507**
020	2842772-0100		1	SHOCK ABSORBER CUTTING	**1-511, 1-513, 1-515, 1-517**
TBA 1000S					
010	2808800-0100		1	VOLUME FLAP CUTTING	**1-495, 1-497, 1-499, 1-501, 1-503, 1-505, 1-507**
020	2842772-0100		1	SHOCK ABSORBER CUTTING	**1-511, 1-513, 1-515, 1-517**
TBA 1000SQ					
010	2808800-0100		1	VOLUME FLAP CUTTING	**1-495, 1-497, 1-499, 1-501, 1-503, 1-505, 1-507**
020	2842772-0100		1	SHOCK ABSORBER CUTTING	**1-511, 1-513, 1-515, 1-517**
TBA 1500S					
010	2808800-0100		1	VOLUME FLAP CUTTING	**1-495, 1-497, 1-499, 1-501, 1-503, 1-505, 1-507**
020	2842772-0100		1	SHOCK ABSORBER CUTTING	**1-511, 1-513, 1-515, 1-517**
TBA 2000S					
010	2808800-0100		1	VOLUME FLAP CUTTING	**1-495, 1-497, 1-499, 1-501, 1-503, 1-505, 1-507**
020	2842772-0100		1	SHOCK ABSORBER CUTTING	**1-511, 1-513, 1-515, 1-517**
TGA 0500SQ					
010	2928232-0200		1	VOLUME FLAP CUTTING LEFT	**1-519**
TGA 0750SQ					
010	2698638-0200		1	VOLUME FLAP CUTTING	**1-521**
020	2842772-0100		1	SHOCK ABSORBER CUTTING	**1-511, 1-513, 1-515, 1-517**
TGA 1000SQ					
010	2698638-0200		1	VOLUME FLAP CUTTING	**1-521**
020	2842772-0100		1	SHOCK ABSORBER CUTTING	**1-511, 1-513, 1-515, 1-517**
TGA 1500SQ					
010	2698638-0200		1	VOLUME FLAP CUTTING	**1-521**
020	2842772-0100		1	SHOCK ABSORBER CUTTING	**1-511, 1-513, 1-515, 1-517**
TPA 0500SQ					
010	2808800-0100		1	VOLUME FLAP CUTTING	**1-495, 1-497, 1-499, 1-501, 1-503, 1-505, 1-507**
020	2842772-0100		1	SHOCK ABSORBER CUTTING	**1-511, 1-513, 1-515, 1-517**

Machine Type	Group Description	Used-In	Group Number	Page No

VALID FOR TBA 1000B TBA 0500S AND TBA 1000M

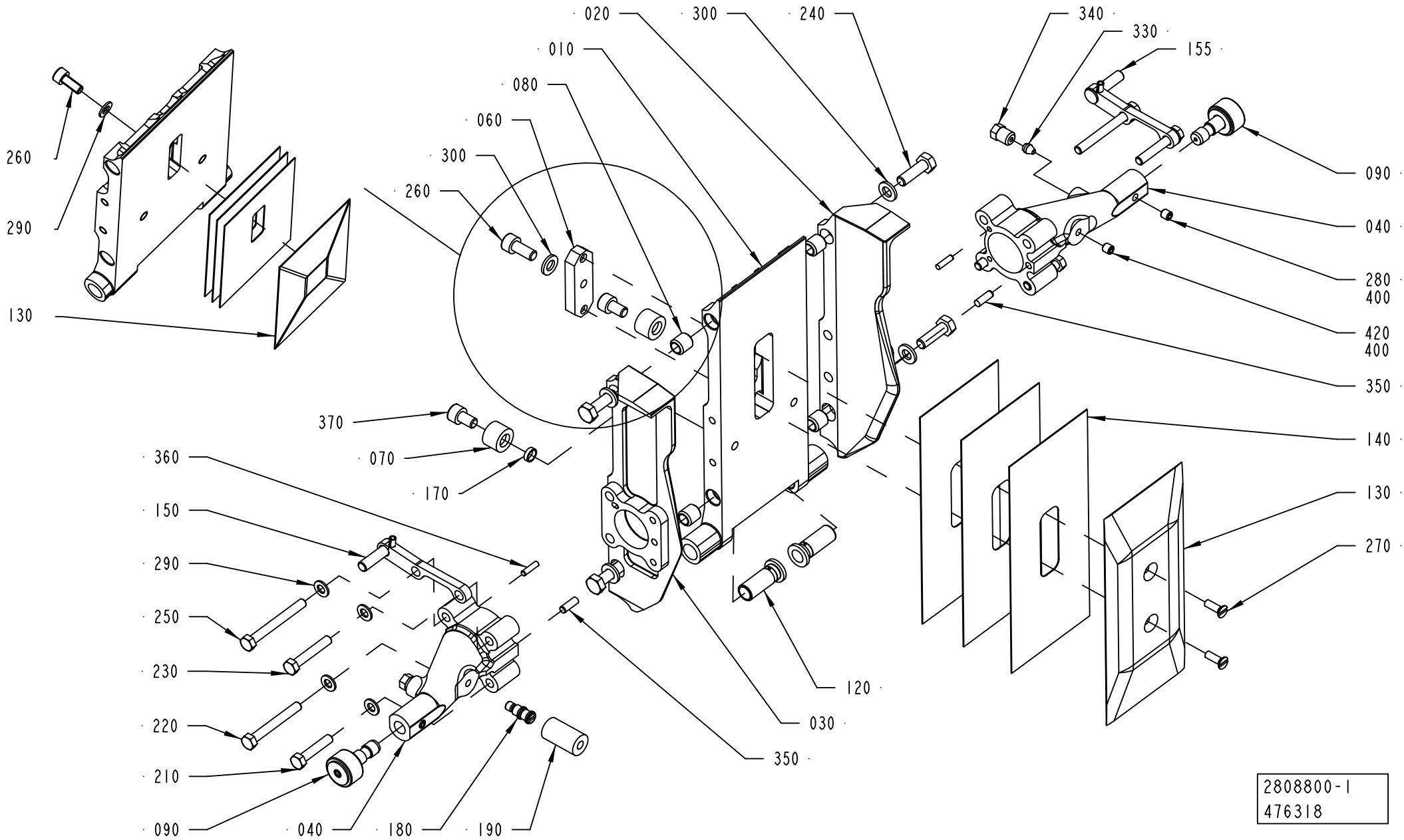

ECM: 560350 - 20120702
Group number: 2808800-0100
Assembly Drawing: 2808800-1_1_AE

This list covers pages from 1-494 to 1-507

Pos	Part No	UN	Qty	Description	Page No
TBA 0500B (See drawing on page: 1-498)					
010	2902007-0000		1	VOLUME FLAP	
040	2905200-0000		1	ARM	
045	2906172-0000		1	ARM	
120	1558701-0000		2	BUSHING	
130	2786059-0000		1	VOLUME BULGE	
140	2790818-0000		3	VOLUME SHIM	
150	2905201-0000		2	SPACER SCREW	
160	2905199-0000		2	HOLDER	
170	2842779-0000		2	SPACER	
180	2872048-0000		1	PIN	
185	2872091-0000		1	PIN	
190	2846667-0000		1	DAMPER	
210	312105-0327		4	SCREW, M6S ISO 4017 M5X12 A4 80	
230	312105-0285		2	SCREW, M6S ISO 4017 M4X6 A4 70	
260	312115-0325		1	SCREW ISO4762 M5X10 A4 80	
290	315105-0146		9	WASHER PLAIN, 5,3X10X1 A4 BRB	
300	315106-0136		2	WASHER PLAIN, M4 ISO7089-4-200 HV A4	
360	311103-0234		4	PARALLEL PIN ISO 2338 3M6X12 A1	
370	312115-0364		2	SCREW ISO4762 M6X10 A4 80	
390	312812-0314		2	HEXAGON NUT, NY-LOCK M5 A4 80	
TBA 0500S (See drawing on page: 1-494)					
010	2997720-0000		1	VOLUME FLAP	
020	2997721-0000		1	SIDE PLATE	
030	2997722-0000		1	SIDE PLATE	
040	2809061-0010		2	ARM	
080	2778960-0000		4	BUSHING	
120	1511254-0000		2	BUSHING	
130	2997725-0000		1	VOLUME BULGE	
140	2997717-0000		3	SHIM	
150	2997719-0000		1	BRACKET	
155	2997718-0000		1	BRACKET	
170	2842779-0000		2	SPACER	
180	2842776-0000		1	PIN	
190	2846667-0000		1	DAMPER	
210	312105-0333		2	SCREW, M6S ISO 4017 M5X25 A4 80	
220	312105-0339		2	SCREW, M6S ISO 4014 M5X40 A4 80	
230	312105-0335		2	SCREW, M6S ISO 4014 M5X30 A4 80	
240	312105-0370		4	SCREW, M6S ISO 4017 M6X20 A4 80	
250	312105-0340		2	SCREW, M6S ISO 4014 M5X45 A4 80	
260	312115-0328		1	SCREW ISO4762 M5X14 A4 80	
290	315105-0146		9	WASHER PLAIN, 5,3X10X1 A4 BRB	
300	315105-0153		4	WASHER PLAIN, 6,4X12X1,5 A4 BRB	
350	311103-0268		2	PARALLEL PIN ISO 2338 4M6X12 A1	
360	311103-0234		2	PARALLEL PIN ISO 2338 3M6X12 A1	
370	312115-0364		2	SCREW ISO4762 M6X10 A4 80	
420	312318-0320		1	SET SCREW, CUP END ISO4029 M5X5 A4	
TBA 0500SQ (See drawing on page: 1-496)					
010	2860036-0000		1	VOLUME FLAP	
040	2872047-0000		1	ARM	
045	2952710-0000		1	ARM	
120	1558701-0000		2	BUSHING	
130	2860037-0000		1	VOLUME BULGE	
140	2860038-0000		3	VOLUME SHIM	
150	2959867-0000		2	SPACER SCREW	
160	2905199-0000		2	HOLDER	
170	2842779-0000		2	SPACER	
180	2872048-0000		1	PIN	
185	2872091-0000		1	PIN	
190	2846667-0000		1	DAMPER	
210	312105-0327		2	SCREW, M6S ISO 4017 M5X12 A4 80	
220	312105-0329		4	SCREW, M6S ISO 4017 M5X16 A4 80	
230	312105-0285		2	SCREW, M6S ISO 4017 M4X6 A4 70	
260	312115-0325		1	SCREW ISO4762 M5X10 A4 80	
290	315105-0146		13	WASHER PLAIN, 5,3X10X1 A4 BRB	
300	315106-0136		2	WASHER PLAIN, M4 ISO7089-4-200 HV A4	
360	311103-0234		4	PARALLEL PIN ISO 2338 3M6X12 A1	
370	312115-0364		2	SCREW ISO4762 M6X10 A4 80	
390	312812-0314		2	HEXAGON NUT, NY-LOCK M5 A4 80	
TBA 1000B (See drawing on page: 1-494)					
010	2902008-0000		1	VOLUME FLAP	
020	2902009-0000		1	SIDE PLATE	
030	2902010-0000		1	SIDE PLATE	
040	2809061-0006		2	ARM	
080	2778960-0000		4	BUSHING	
120	1558701-0000		2	BUSHING	
130	2795078-0000		1	VOLUME BULGE	
140	2795079-0000		3	VOLUME SHIM	
150	2902012-0000		1	BRACKET	
155	2902011-0000		1	BRACKET	
170	2842779-0000		2	SPACER	
180	2842776-0000		1	PIN	
190	2846667-0000		1	DAMPER	
210	312105-0328		2	SCREW M6S ISO 4017 M5X14 A4 80	

Machine Type | Group Description | Used-In | Group Number | Page No

VOLUME FLAP CUTTING

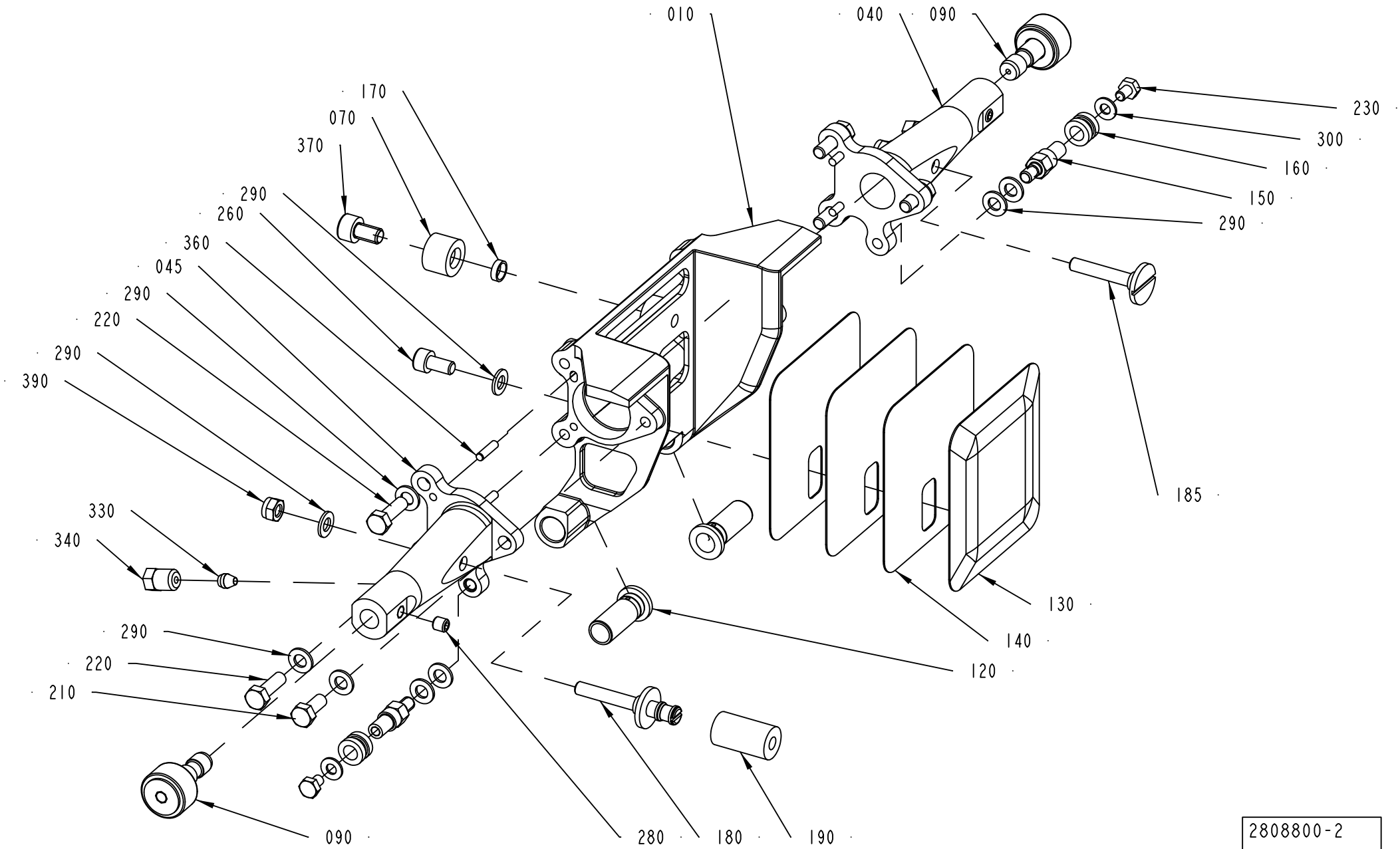

2808800-2
341004

Pos	Part No	UN	Qty	Description	Page No
TBA 1000B (Cont'd) (See drawing on page: 1-494)					
220	312105-0335		2	SCREW, M6S ISO 4014 M5X30 A4 80	
230	312105-0331		2	SCREW, M6S ISO 4017 M5X20 A4 80	
240	312105-0370		4	SCREW, M6S ISO 4017 M6X20 A4 80	
250	312105-0337		2	SCREW, M6S ISO 4014 M5X35 A4 80	
260	312115-0327		1	SCREW ISO4762 M5X12 A4 80	
290	315105-0146		9	WASHER PLAIN, 5,3X10X1 A4 BRB	
300	315105-0153		4	WASHER PLAIN, 6,4X12X1,5 A4 BRB	
350	311103-0268		2	PARALLEL PIN ISO 2338 4M6X12 A1	
360	311103-0234		2	PARALLEL PIN ISO 2338 3M6X12 A1	
370	312115-0364		2	SCREW ISO4762 M6X10 A4 80	
420	312318-0320		1	SET SCREW, CUP END ISO4029 M5X5 A4	
TBA 1000S (See drawing on page: 1-494)					
010	2814896-0000		1	VOLUME FLAP	
020	2814897-0000		1	SIDE PLATE	
030	2814898-0000		1	SIDE PLATE	
040	2809061-0002		2	ARM	
060	1040756-0000		1	WEDGE	
080	2778960-0000		4	BUSHING	
120	1558701-0000		2	BUSHING	
130	1040754-0000		1	VOLUME BULGE	
140	1040755-0000		3	VOLUME SHIM	
150	2916135-0000		1	BRACKET	
155	2916134-0000		1	BRACKET	
170	2842779-0000		2	SPACER	
180	2842776-0000		1	PIN	
190	2846667-0000		1	DAMPER	
210	312105-0329		2	SCREW, M6S ISO 4017 M5X16 A4 80	
220	312105-0335		2	SCREW, M6S ISO 4014 M5X30 A4 80	
230	312105-0331		2	SCREW, M6S ISO 4017 M5X20 A4 80	
240	312105-0370		4	SCREW, M6S ISO 4017 M6X20 A4 80	
250	312105-0337		2	SCREW, M6S ISO 4014 M5X35 A4 80	
260	312115-0367		1	SCREW ISO4762 M6X14 A4 80	
270	312145-0291		2	SCREW ISO 2009 MFS M4X12 A4	
290	315105-0146		8	WASHER PLAIN, 5,3X10X1 A4 BRB	
300	315105-0153		5	WASHER PLAIN, 6,4X12X1,5 A4 BRB	
350	311103-0268		2	PARALLEL PIN ISO 2338 4M6X12 A1	
360	311103-0234		2	PARALLEL PIN ISO 2338 3M6X12 A1	
370	312115-0364		2	SCREW ISO4762 M6X10 A4 80	
420	312318-0320		1	SET SCREW, CUP END ISO4029 M5X5 A4	
TBA 1000SQ (See drawing on page: 1-494)					
010	2808802-0000		1	VOLUME FLAP	
020	2808803-0000		1	SIDE PLATE	
030	2808804-0000		1	SIDE PLATE	
040	2809061-0001		2	ARM	
060	1040756-0000		1	WEDGE	
080	2778960-0000		4	BUSHING	
120	1558701-0000		2	BUSHING	
130	1487626-0000		1	VOLUME BULGE	
140	1487627-0000		3	VOLUME SHIM	
150	2916133-0000		1	BRACKET	
155	2916132-0000		1	BRACKET	
170	2842779-0000		2	SPACER	
180	2842776-0000		1	PIN	
190	2846667-0000		1	DAMPER	
210	312105-0333		2	SCREW, M6S ISO 4017 M5X25 A4 80	
220	312105-0339		2	SCREW, M6S ISO 4014 M5X40 A4 80	
230	312105-0335		2	SCREW, M6S ISO 4014 M5X30 A4 80	
240	312105-0370		4	SCREW, M6S ISO 4017 M6X20 A4 80	
250	312105-0340		2	SCREW, M6S ISO 4014 M5X45 A4 80	
260	312115-0367		1	SCREW ISO4762 M6X14 A4 80	
270	312145-0291		2	SCREW ISO 2009 MFS M4X12 A4	
290	315105-0146		8	WASHER PLAIN, 5,3X10X1 A4 BRB	
300	315105-0153		5	WASHER PLAIN, 6,4X12X1,5 A4 BRB	
350	311103-0268		2	PARALLEL PIN ISO 2338 4M6X12 A1	
360	311103-0234		2	PARALLEL PIN ISO 2338 3M6X12 A1	
370	312115-0364		2	SCREW ISO4762 M6X10 A4 80	
420	312318-0320		1	SET SCREW, CUP END ISO4029 M5X5 A4	
TBA 1500S (See drawing on page: 1-500)					
010	2969141-0000		1	VOLUME FLAP	
015	2969139-0000		1	VOLUME FLAP	
120	1558701-0000		2	BUSHING	
130	2969142-0000		1	VOLUME BULGE	
140	2987038-0000		3	VOLUME SHIM	
150	2969143-0000		2	BRACKET	
170	2842779-0000		2	SPACER	
200	312105-0366		2	SCREW, M6S ISO 4017 M6X12 A4 80	
270	312155-0329		2	SCREW DIN 7991 MF6S M5X16 A4 70	
275	312155-0327		4	SCREW DIN 7991 MF6S M5X12 A4 70	
290	315105-0146		4	WASHER PLAIN, 5,3X10X1 A4 BRB	
370	312115-0362		2	SCREW ISO4762 M6X8 A4 80	
390	312812-0314		4	HEXAGON NUT, NY-LOCK M5 A4 80	
TBA 2000S (See drawing on page: 1-502)					
010	2978341-0000		1	VOLUME FLAP	

VOLUME FLAP CUTTING

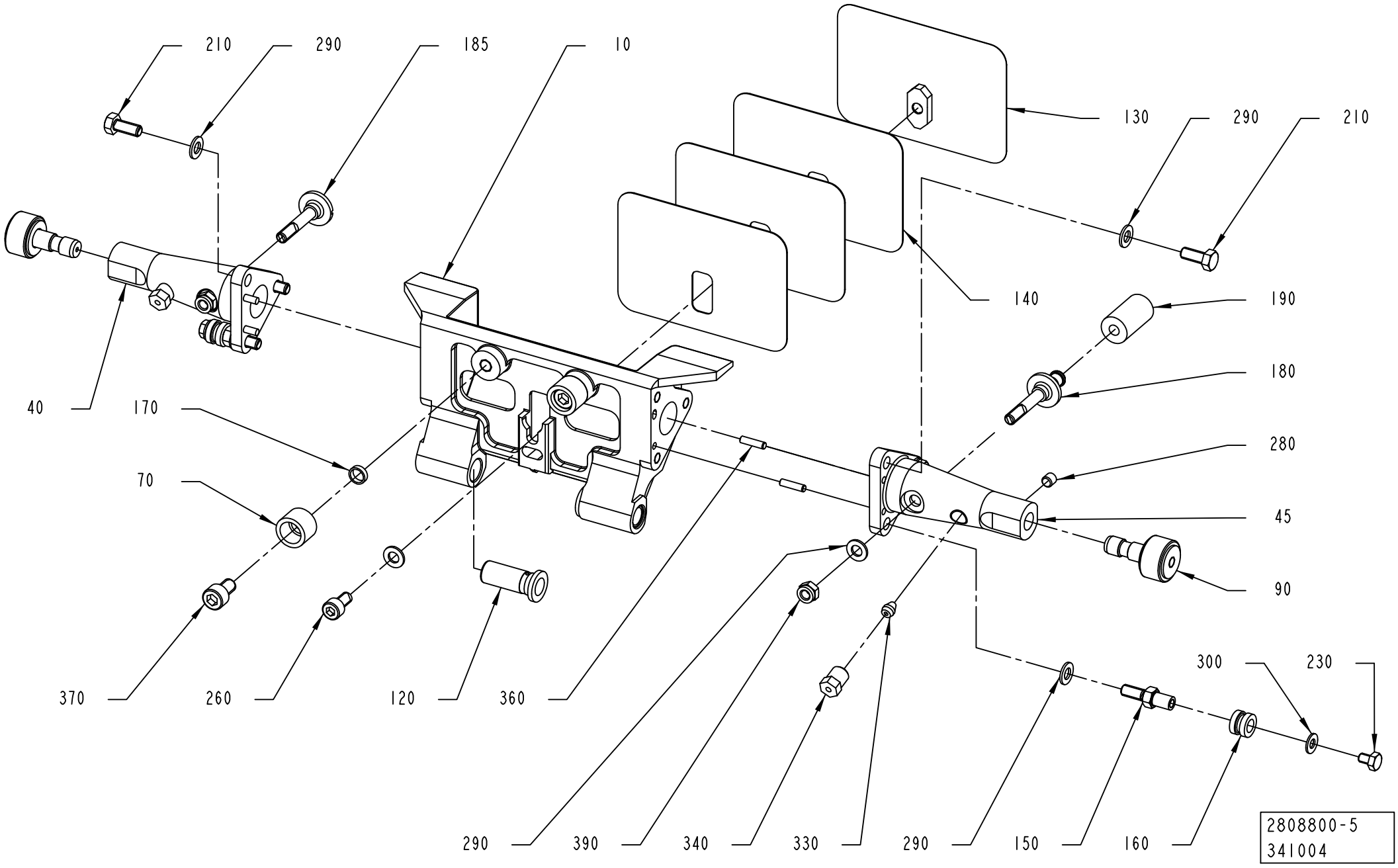

ECM: 560350 - 20120702
Group number: 2808800-0100
Assembly Drawing: 2808800-5_1_AA

This list covers pages from 1-494 to 1-507

Pos	Part No	UN	Qty	Description	Page No
TBA 2000S (Cont'd) (See drawing on page: 1-502)					
015	2978340-0000		1	VOLUME FLAP	
040	2809061-0011		2	ARM	
120	2917307-0000		2	BUSHING	
130	2978344-0000		1	VOLUME BULGE	
140	2978343-0000		3	VOLUME SHIM	
150	2907809-0000		1	BRACKET	
155	2907808-0000		1	BRACKET	
170	2842779-0000		2	SPACER	
180	2842776-0000		1	PIN	
190	2846667-0000		1	DAMPER	
210	312105-0329		4	SCREW, M6S ISO 4017 M5X16 A4 80	
230	312105-0331		4	SCREW, M6S ISO 4017 M5X20 A4 80	
270	312155-0329		2	SCREW DIN 7991 MF6S M5X16 A4 70	
275	312155-0327		4	SCREW DIN 7991 MF6S M5X12 A4 70	
290	315105-0146		12	WASHER PLAIN, 5,3X10X1 A4 BRB	
350	311103-0267		2	PARALLEL PIN ISO 2338 4M6X10 A1	
360	311103-0233		2	PARALLEL PIN ISO 2338 3M6X10 A1	
370	312115-0362		2	SCREW ISO4762 M6X8 A4 80	
390	312812-0314		4	HEXAGON NUT, NY-LOCK M5 A4 80	
420	312318-0320		1	SET SCREW, CUP END ISO4029 M5X5 A4	
TPA 0500SQ (See drawing on page: 1-506)					
010	3053271-0000		1	VOLUME FLAP	
015	3053273-0001		1	FRAME	
040	3053488-0000		2	ARM	
120	2530313-0000		2	BUSHING	
135	1549829-0000		2	VOLUME BULGE	
145	1549830-0000		4	VOLUME SHIM	
150	2964448-0000		2	SCREW	
180	2842776-0000		1	PIN	
190	2846667-0000		1	DAMPER	
200	312605-0318		2	HEXAGON NUT, M6M M8 A280	
210	312155-0455		2	SCREW DIN 7991 MF6S M8X30 A4 70	
230	312318-0323		2	SET SCREW, CUP END ISO4029 M5X8 A4	
265	312155-0299		4	SCREW DIN 7991 MF6S M4X30 A4 70	
275	312155-0333		2	SCREW DIN 7991 MF6S M5X25 A4 70	
370	312115-0362		2	SCREW ISO4762 M6X8 A4 80	
410	311103-0267		1	PARALLEL PIN ISO 2338 4M6X10 A1	
420	312318-0320		1	SET SCREW, CUP END ISO4029 M5X5 A4	
TPA 0750SQ (See drawing on page: 1-504)					
010	2995602-0000		1	VOLUME FLAP	
015	2995596-0000		1	FRAME	
040	2995608-0000		2	ARM	
120	2530313-0000		2	BUSHING	
130	2995605-0000		1	VOLUME BULGE	
135	2995606-0000		2	VOLUME BULGE	
140	2995603-0000		3	VOLUME SHIM	
145	2995604-0000		6	VOLUME SHIM	
150	2995655-0000		2	SCREW	
170	2842779-0000		2	SPACER	
180	2842776-0000		1	PIN	
190	2846667-0000		1	DAMPER	
200	312605-0320		2	HEXAGON NUT, M6M M10 A280	
210	312115-0329		2	SCREW ISO4762 M5X16 A4 80	
230	90459-1906		2	SHOULDER SCREW, 6X10/M5 SS	
265	312155-0299		4	SCREW DIN 7991 MF6S M4X30 A4 70	
270	312145-0293		2	SCREW ISO 2009 MFS M4X16 A4	
275	312115-0331		2	SCREW ISO4762 M5X20 A4 80	
290	315105-0146		4	WASHER PLAIN, 5,3X10X1 A4 BRB	
370	312115-0362		2	SCREW ISO4762 M6X8 A4 80	
410	311103-0267		1	PARALLEL PIN ISO 2338 4M6X10 A1	
420	312318-0320		1	SET SCREW, CUP END ISO4029 M5X5 A4	
TPA 1000SQ (See drawing on page: 1-504)					
010	2995598-0000		1	VOLUME FLAP	
015	2995595-0000		1	FRAME	
040	2995597-0000		2	ARM	
120	2530313-0000		2	BUSHING	
130	2995600-0000		1	VOLUME BULGE	
135	2968854-0000		2	VOLUME BULGE	
140	2995599-0000		3	VOLUME SHIM	
145	2968863-0000		6	VOLUME SHIM	
150	2995655-0000		2	SCREW	
170	2842779-0000		2	SPACER	
180	2842776-0000		1	PIN	
190	2846667-0000		1	DAMPER	
200	312605-0320		2	HEXAGON NUT, M6M M10 A280	
210	312115-0329		2	SCREW ISO4762 M5X16 A4 80	
230	90459-1906		2	SHOULDER SCREW, 6X10/M5 SS	
265	312155-0299		4	SCREW DIN 7991 MF6S M4X30 A4 70	
270	312145-0293		2	SCREW ISO 2009 MFS M4X16 A4	
275	312115-0331		2	SCREW ISO4762 M5X20 A4 80	
290	315105-0146		4	WASHER PLAIN, 5,3X10X1 A4 BRB	
370	312115-0362		2	SCREW ISO4762 M6X8 A4 80	
410	311103-0267		1	PARALLEL PIN ISO 2338 4M6X10 A1	

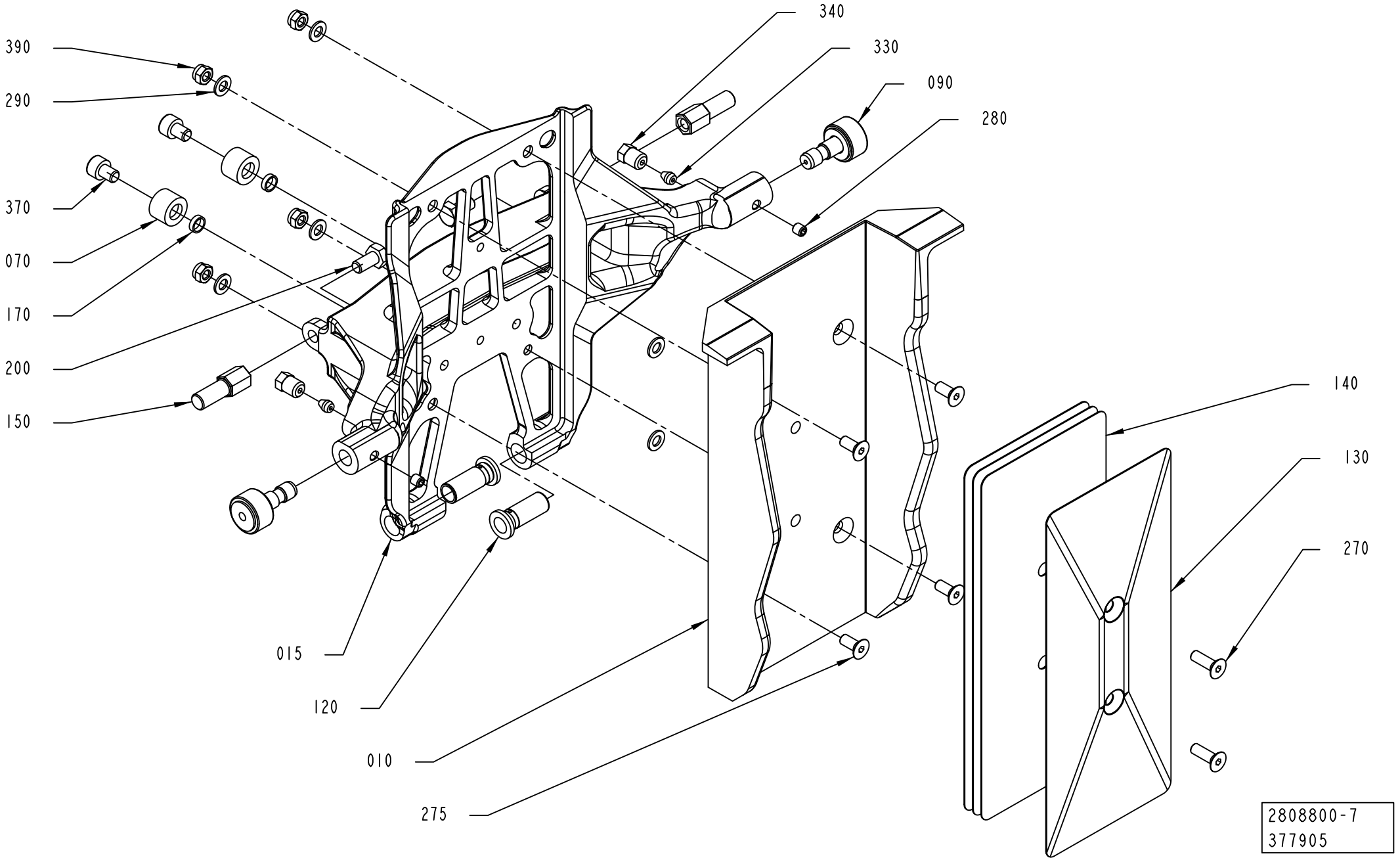
340
330
090
280
390
290
370
070
170
200
150
140
130
270
015
120
010
275
2808800-7
377905

Pos	Part No	UN	Qty	Description	Page No
TPA 1000SQ (Cont'd) (See drawing on page: 1-504)					
420	312318-0320		1	SET SCREW, CUP END ISO4029 M5X5 A4	
Common Parts					
070	2842778-0000		2	DAMPER	
090	2952691-0100		2	ROLLER	**1-509**
280	312318-0320		2	SET SCREW, CUP END ISO4029 M5X5 A4	
330	90028-0020		2	CONE TUBE 2,5MM	
340	90134-0063		2	BUSHING/NUT M8X1, D=2,5 MM	
400	90602-4847		1	THREAD LOCKING, LOCTITE 243 50 ML	

Pos	Part No	UN	Qty	Description	Page No

VOLUME FLAP CUTTING

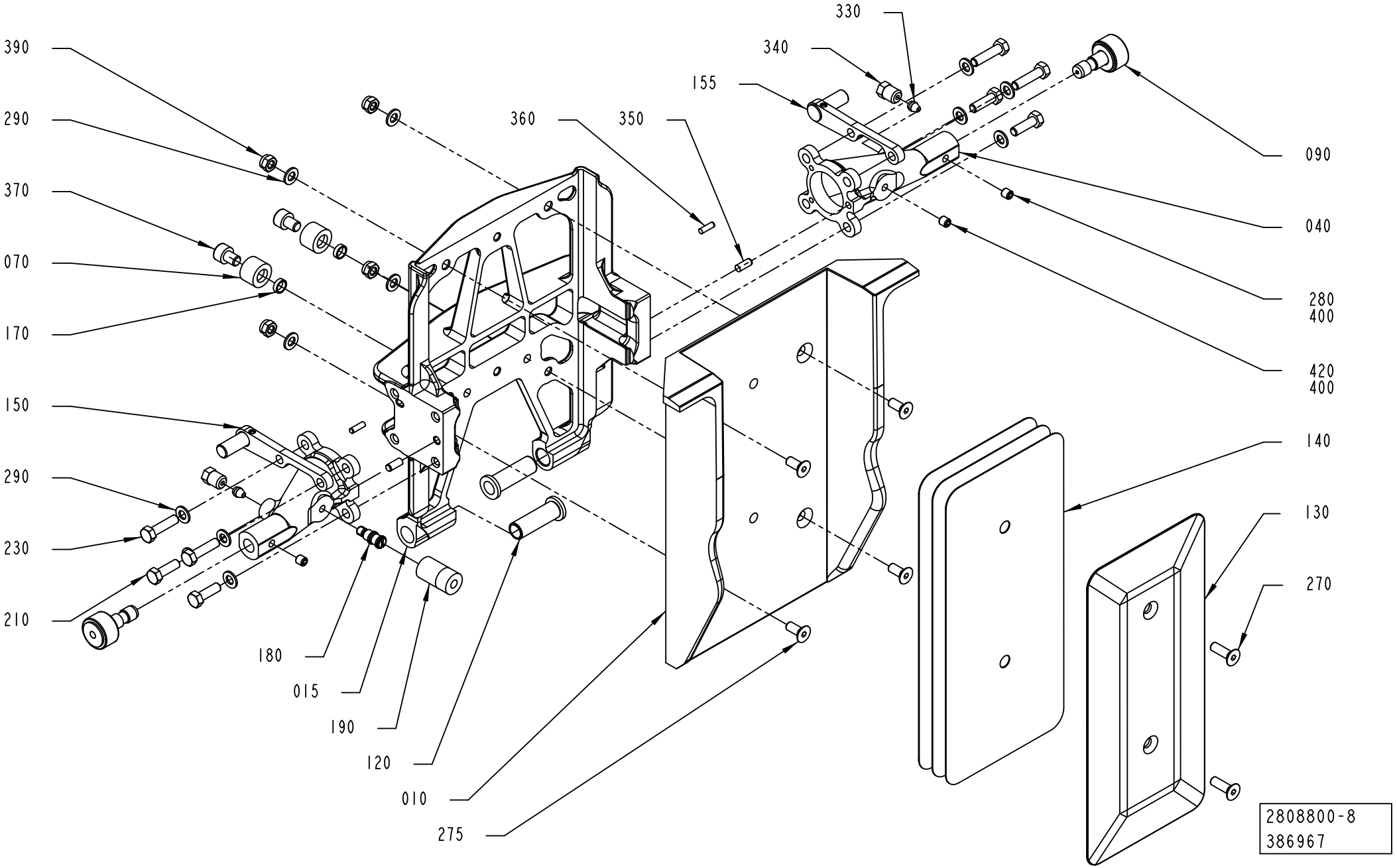

ECM: 560350 - 20120702
Group number: 2808800-0100
Assembly Drawing: 2808800-8_1_AB

This list covers pages from 1-494 to 1-507

Pos	Part No	UN	Qty	Description	Page No
SEE PREVIOUS LISTS PAGES: 1-495, 1-497, 1-499, 1-501.					

Pos	Part No	UN	Qty	Description	Page No

VOLUME FLAP CUTTING

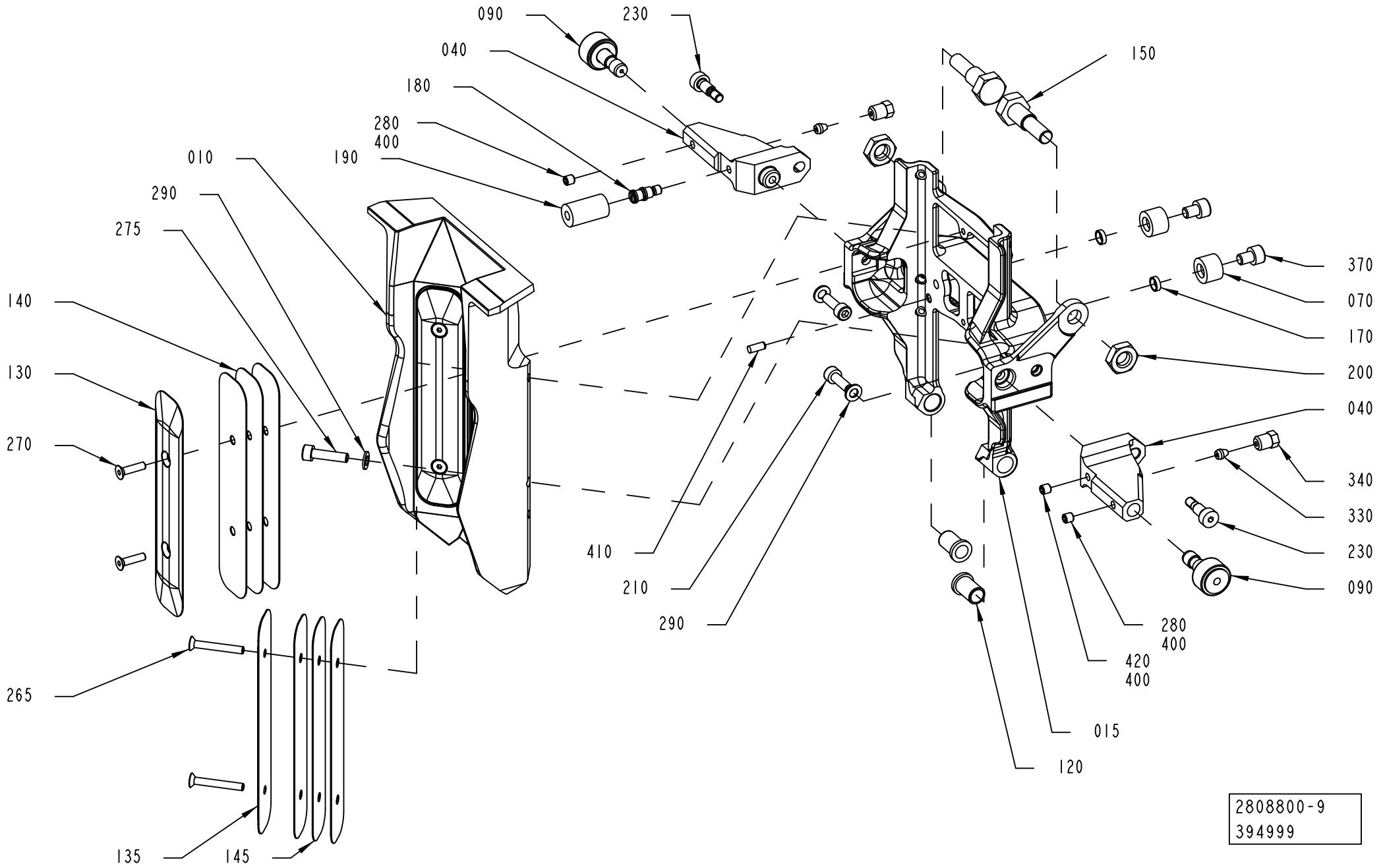

Pos	Part No	UN	Qty	Description	Page No
SEE PREVIOUS LISTS PAGES: 1-495, 1-497, 1-499, 1-501.					

Pos	Part No	UN	Qty	Description	Page No

VOLUME FLAP CUTTING

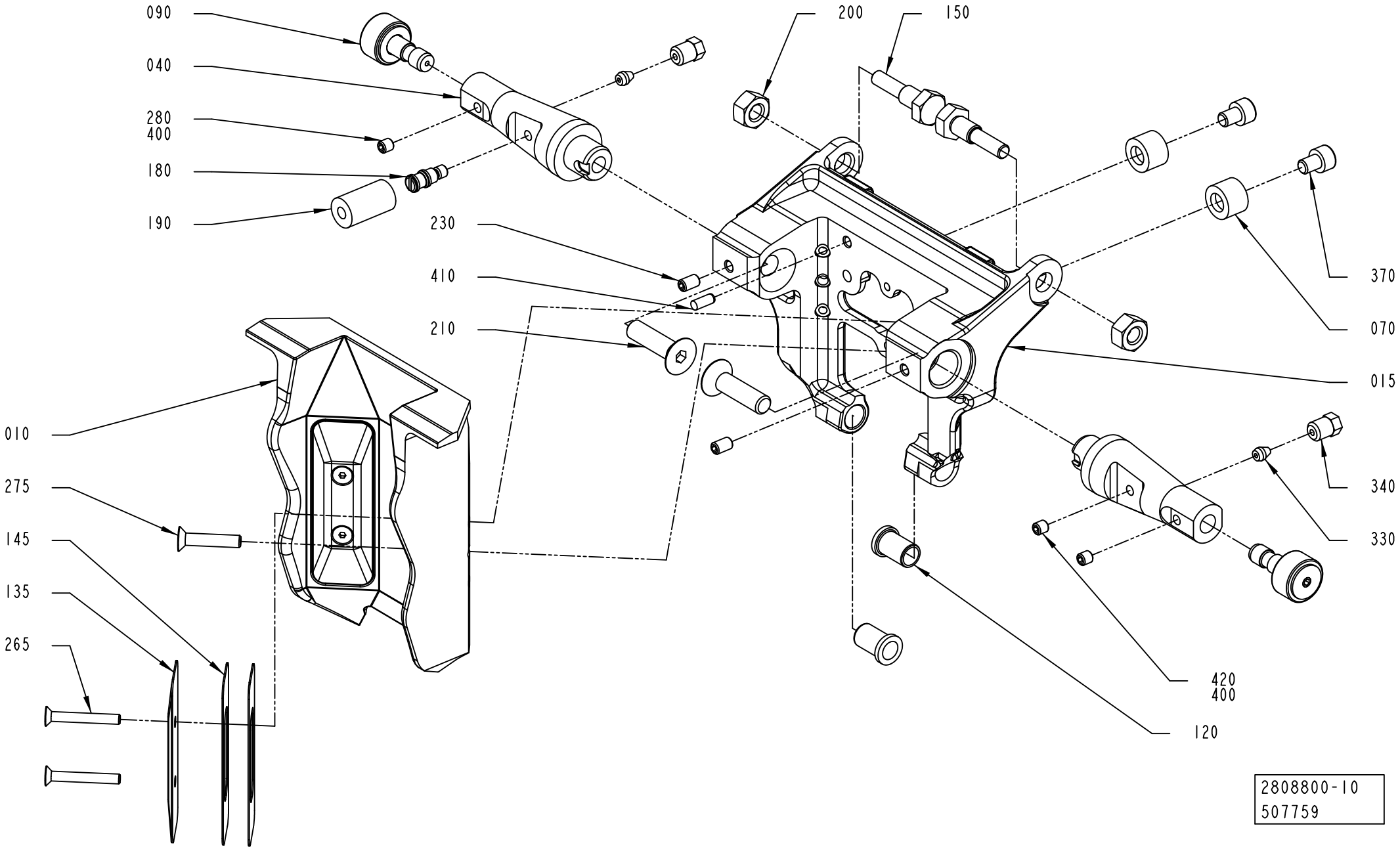

ECM: 560350 - 20120702
Group number: 2808800-0100
Assembly Drawing: 2808800-10_1_AA

This list covers pages from 1-494 to 1-507

Pos	Part No	UN	Qty	Description	Page No
SEE PREVIOUS LISTS PAGES: 1-495, 1-497, 1-499, 1-501.					

Pos	Part No	UN	Qty	Description	Page No

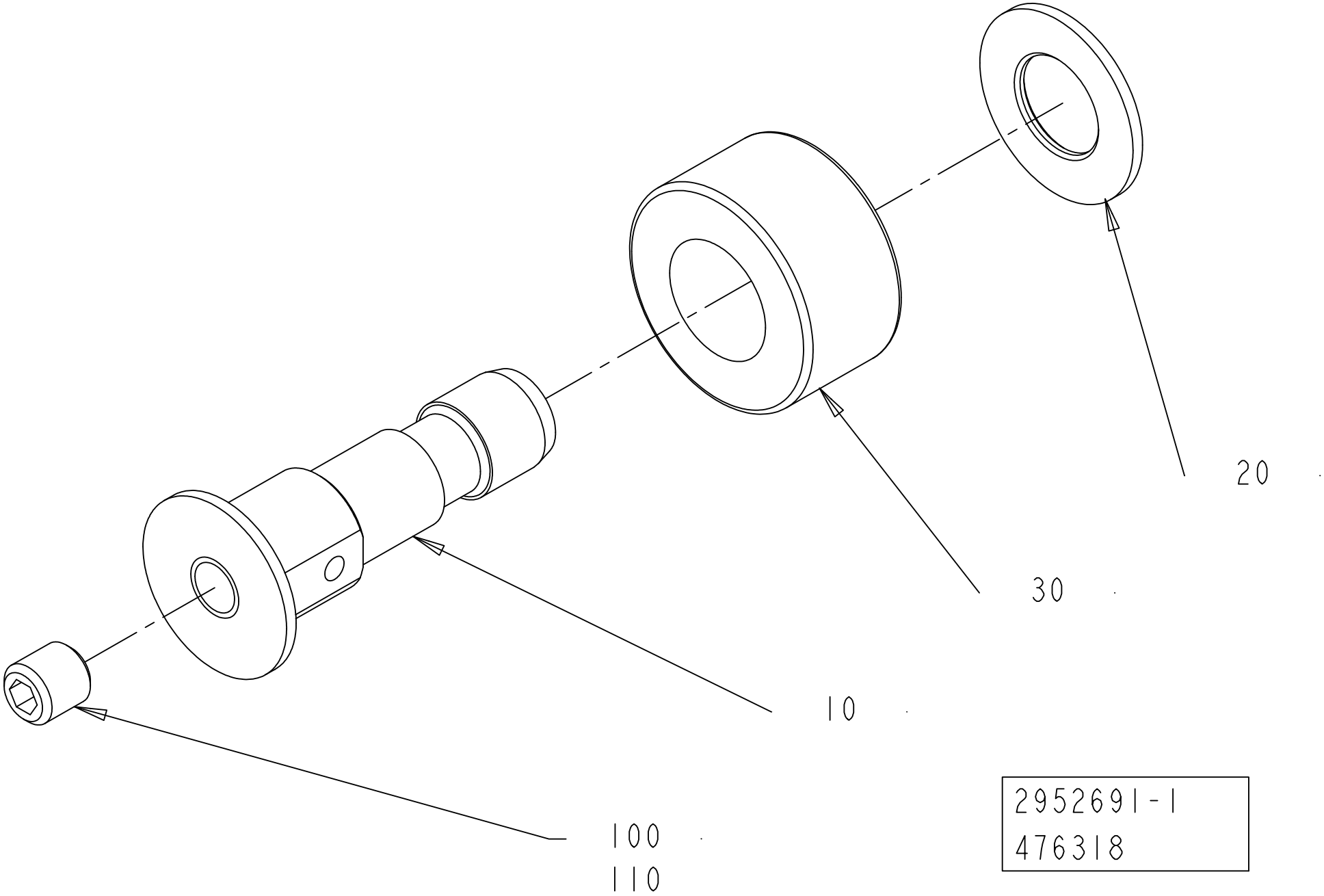
20
30
10
100
110
2952691-1
476318

ECM: 483520 - 20101215
Group number: 2952691-0100
Assembly Drawing: 2952691-1_1_AB

Pos	Part No	UN	Qty	Description	Page No
-					
010	2909137-0000		1	AXLE PIN	
020	19972-0000		1	WASHER	
030	2909138-0000		1	ROLLER	
100	312318-0320		1	SET SCREW, CUP END ISO4029 M5X5 A4	
110	90602-4847		1	THREAD LOCKING, LOCTITE 243 50 ML	

Pos	Part No	UN	Qty	Description	Page No

SHOCK ABSORBER CUTTING

Drawing file: 2842772-1_1_AD.hpgl

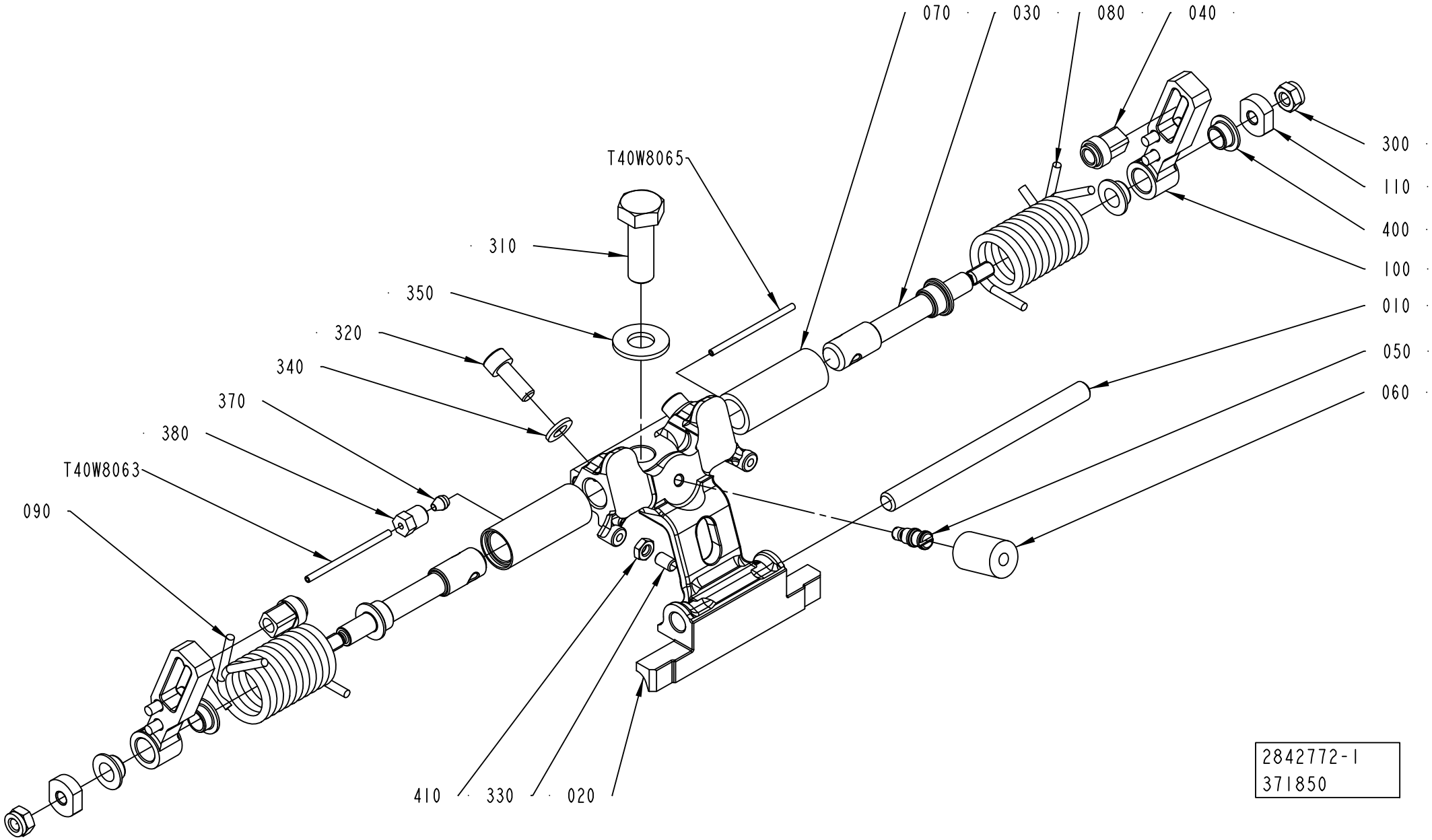

ECM: 551282 - 20120103
Group number: 2842772-0100
Assembly Drawing: 2842772-1_1_AD

This list covers pages from 1-510 to 1-517

Pos	Part No	UN	Qty	Description	Page No
TBA 0500B (See drawing on page: 1-512)					
010	2773510-0000		1	SHAFT	
020	3038000-0001		1	HOLDER	
030	2902006-0000		2	SHAFT	
050	2842776-0000		1	PIN	
060	2842777-0001		1	DAMPER	
080	2961953-0000		2	TENSION SPRING	
120	2905199-0000		2	HOLDER	
300	312105-0285		2	SCREW, M6S ISO 4017 M4X6 A4 70	
310	312105-0495		1	SCREW, M6S ISO 4017 M10X30 A4 80	
320	312115-0368		2	SCREW ISO4762 M6X16 A4 80	
330	312318-0325		1	SET SCREW, CUP END ISO4029 M5X10 A4	
360	315106-0136		2	WASHER PLAIN, M4 ISO7089-4-200 HV A4	
370	90028-0020		2	CONE TUBE 2,5MM	
380	90134-0063		2	BUSHING/NUT M8X1, D=2,5 MM	
410	312625-0314		1	HEXAGON THIN NUT, EN 24035 ML6M M5 A4	
T40W8063	90166-0143	MM	220	TUBE 2,5 MM PA TRANSP.	
T40W8065	90166-0143	MM	220	TUBE 2,5 MM PA TRANSP.	
TBA 0500S (See drawing on page: 1-510)					
010	2916971-0000		1	SHAFT	
020	3024712-0001		1	HOLDER	
030	2911622-0000		2	SHAFT	
040	2916130-0000		2	SLIDER	
050	2842776-0000		1	PIN	
060	2842777-0001		1	DAMPER	
070	2842780-0000		2	BUSHING	
080	2842781-0000		1	SPRING	
090	2842782-0000		1	SPRING	
100	2916131-0000		2	LEVER	
110	2911623-0000		2	WASHER	
300	312812-0316		2	HEXAGON NUT, NY-LOCK M6 A4 80	
310	312105-0495		1	SCREW, M6S ISO 4017 M10X30 A4 80	
320	312115-0368		2	SCREW ISO4762 M6X16 A4 80	
330	312318-0325		1	SET SCREW, CUP END ISO4029 M5X10 A4	
370	90028-0020		2	CONE TUBE 2,5MM	
380	90134-0063		2	BUSHING/NUT M8X1, D=2,5 MM	
400	90600-2013		4	FLANGE BUSHING, IGLIDUR X 8X10X5,5	
410	312625-0314		1	HEXAGON THIN NUT, EN 24035 ML6M M5 A4	
T40W8063	90166-0143	MM	220	TUBE 2,5 MM PA TRANSP.	
T40W8065	90166-0143	MM	220	TUBE 2,5 MM PA TRANSP.	
TBA 0500SQ (See drawing on page: 1-512)					
010	2773510-0000		1	SHAFT	
020	3037996-0001		1	HOLDER	
030	2863119-0000		2	SHAFT	
050	2842776-0000		1	PIN	
060	2842777-0001		1	DAMPER	
080	2959868-0000		2	TENSION SPRING	
120	2905199-0000		2	HOLDER	
300	312105-0285		2	SCREW, M6S ISO 4017 M4X6 A4 70	
310	312105-0495		1	SCREW, M6S ISO 4017 M10X30 A4 80	
320	312115-0368		2	SCREW ISO4762 M6X16 A4 80	
330	312318-0323		1	SET SCREW, CUP END ISO4029 M5X8 A4	
360	315106-0136		2	WASHER PLAIN, M4 ISO7089-4-200 HV A4	
370	90028-0020		2	CONE TUBE 2,5MM	
380	90134-0063		2	BUSHING/NUT M8X1, D=2,5 MM	
410	312625-0314		1	HEXAGON THIN NUT, EN 24035 ML6M M5 A4	
T40W8063	90166-0143	MM	220	TUBE 2,5 MM PA TRANSP.	
T40W8065	90166-0143	MM	220	TUBE 2,5 MM PA TRANSP.	
TBA 1000B (See drawing on page: 1-510)					
010	2773510-0000		1	SHAFT	
020	3038000-0001		1	HOLDER	
030	2911622-0000		2	SHAFT	
040	2916130-0000		2	SLIDER	
050	2842776-0000		1	PIN	
060	2842777-0001		1	DAMPER	
070	2842780-0000		2	BUSHING	
080	2842781-0000		1	SPRING	
090	2842782-0000		1	SPRING	
100	2916131-0000		2	LEVER	
110	2911623-0000		2	WASHER	
300	312812-0316		2	HEXAGON NUT, NY-LOCK M6 A4 80	
310	312105-0495		1	SCREW, M6S ISO 4017 M10X30 A4 80	
320	312115-0368		2	SCREW ISO4762 M6X16 A4 80	
330	312318-0325		1	SET SCREW, CUP END ISO4029 M5X10 A4	
370	90028-0020		2	CONE TUBE 2,5MM	
380	90134-0063		2	BUSHING/NUT M8X1, D=2,5 MM	
400	90600-2013		4	FLANGE BUSHING, IGLIDUR X 8X10X5,5	
410	312625-0314		1	HEXAGON THIN NUT, EN 24035 ML6M M5 A4	
T40W8063	90166-0143	MM	220	TUBE 2,5 MM PA TRANSP.	
T40W8065	90166-0143	MM	220	TUBE 2,5 MM PA TRANSP.	
TBA 1000S (See drawing on page: 1-510)					
010	2773510-0000		1	SHAFT	
020	3037998-0001		1	HOLDER	
030	2911622-0000		2	SHAFT	

Machine Type | Group Description | Used-In | Group Number | Page No

SHOCK ABSORBER CUTTING

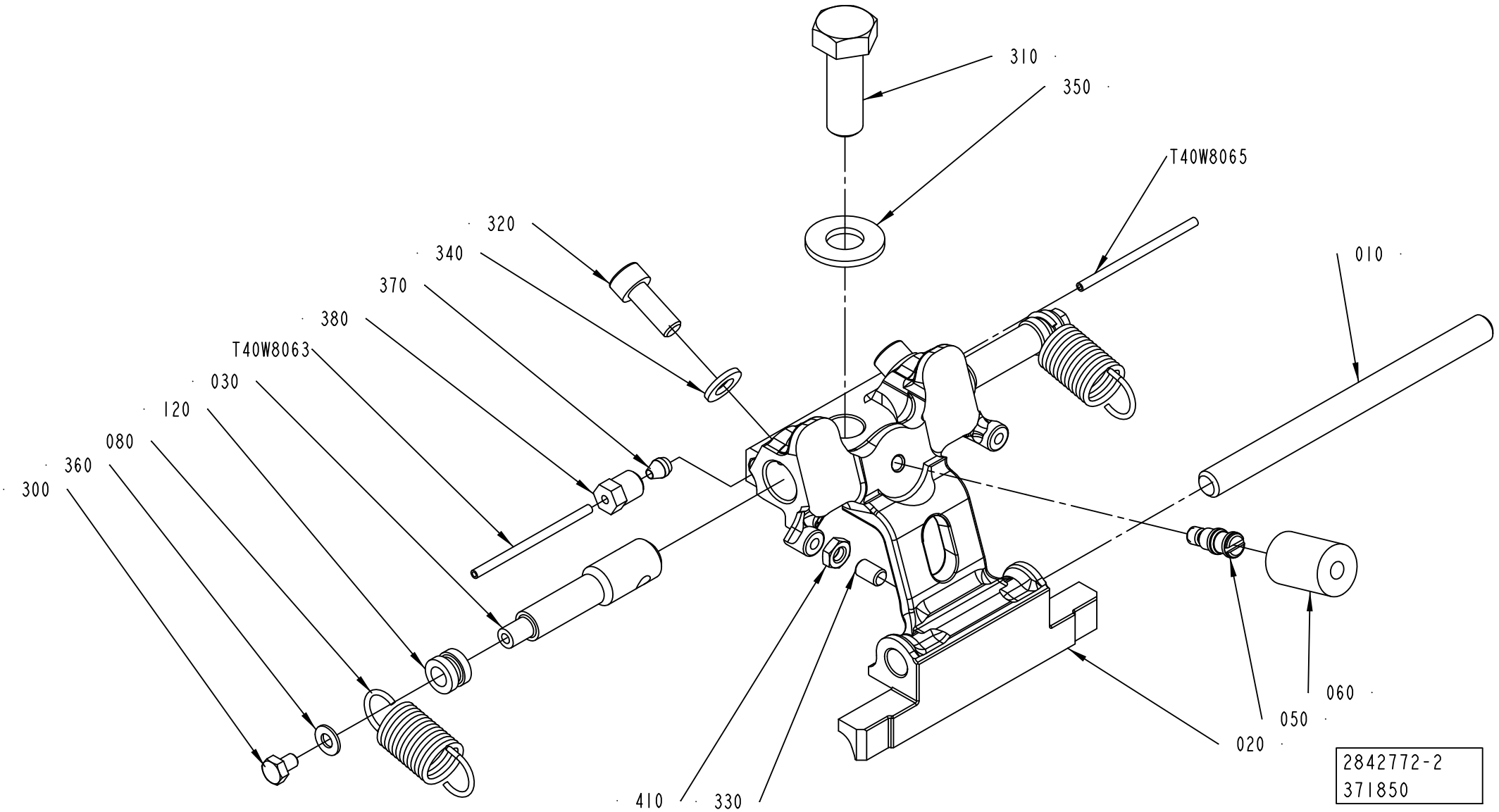

Pos	Part No	UN	Qty	Description	Page No
TBA 1000S (Cont'd) (See drawing on page: 1-510)					
040	2916130-0000		2	SLIDER	
050	2842776-0000		1	PIN	
060	2842777-0001		1	DAMPER	
070	2842780-0000		2	BUSHING	
080	2842781-0000		1	SPRING	
090	2842782-0000		1	SPRING	
100	2916131-0000		2	LEVER	
110	2911623-0000		2	WASHER	
300	312812-0316		2	HEXAGON NUT, NY-LOCK M6 A4 80	
310	312105-0495		1	SCREW, M6S ISO 4017 M10X30 A4 80	
320	312115-0368		2	SCREW ISO4762 M6X16 A4 80	
330	312318-0325		1	SET SCREW, CUP END ISO4029 M5X10 A4	
370	90028-0020		2	CONE TUBE 2,5MM	
380	90134-0063		2	BUSHING/NUT M8X1, D=2,5 MM	
400	90600-2013		4	FLANGE BUSHING, IGLIDUR X 8X10X5,5	
410	312625-0314		1	HEXAGON THIN NUT, EN 24035 ML6M M5 A4	
T40W8063	90166-0143	MM	220	TUBE 2,5 MM PA TRANSP.	
T40W8065	90166-0143	MM	220	TUBE 2,5 MM PA TRANSP.	
TBA 1000SQ (See drawing on page: 1-510)					
010	2773510-0000		1	SHAFT	
020	3037996-0001		1	HOLDER	
030	2911622-0000		2	SHAFT	
040	2916130-0000		2	SLIDER	
050	2842776-0000		1	PIN	
060	2842777-0001		1	DAMPER	
070	2842780-0000		2	BUSHING	
080	2842781-0000		1	SPRING	
090	2842782-0000		1	SPRING	
100	2916131-0000		2	LEVER	
110	2911623-0000		2	WASHER	
300	312812-0316		2	HEXAGON NUT, NY-LOCK M6 A4 80	
310	312105-0495		1	SCREW, M6S ISO 4017 M10X30 A4 80	
320	312115-0368		2	SCREW ISO4762 M6X16 A4 80	
330	312318-0323		1	SET SCREW, CUP END ISO4029 M5X8 A4	
370	90028-0020		2	CONE TUBE 2,5MM	
380	90134-0063		2	BUSHING/NUT M8X1, D=2,5 MM	
400	90600-2013		4	FLANGE BUSHING, IGLIDUR X 8X10X5,5	
410	312625-0314		1	HEXAGON THIN NUT, EN 24035 ML6M M5 A4	
T40W8063	90166-0143	MM	220	TUBE 2,5 MM PA TRANSP.	
T40W8065	90166-0143	MM	220	TUBE 2,5 MM PA TRANSP.	
TBA 1500S (See drawing on page: 1-510)					
010	2773510-0000		1	SHAFT	
020	3024941-0001		1	HOLDER	
030	2907800-0000		2	SHAFT	
040	2907807-0000		2	SLIDER	
050	2907797-0000		1	PIN	
060	2842777-0005		1	DAMPER	
070	2916984-0000		2	BUSHING	
080	2907805-0000		1	SPRING	
090	2907804-0000		1	SPRING	
100	2907806-0000		2	LEVER	
110	2911623-0000		2	WASHER	
300	312812-0316		2	HEXAGON NUT, NY-LOCK M6 A4 80	
310	312105-0499		1	SCREW, M6S ISO 4014 M10X40 A4 80	
320	312115-0368		2	SCREW ISO4762 M6X16 A4 80	
330	312318-0325		1	SET SCREW, CUP END ISO4029 M5X10 A4	
370	90028-0020		2	CONE TUBE 2,5MM	
380	90134-0063		2	BUSHING/NUT M8X1, D=2,5 MM	
400	90600-2013		4	FLANGE BUSHING, IGLIDUR X 8X10X5,5	
410	312625-0314		1	HEXAGON THIN NUT, EN 24035 ML6M M5 A4	
T40W8063	90166-0143	MM	220	TUBE 2,5 MM PA TRANSP.	
T40W8065	90166-0143	MM	220	TUBE 2,5 MM PA TRANSP.	
TBA 2000S (See drawing on page: 1-510)					
010	2907798-0000		1	SHAFT	
020	3024939-0001		1	HOLDER	
030	2907800-0000		2	SHAFT	
040	2907807-0000		2	SLIDER	
050	2907797-0000		1	PIN	
060	2842777-0005		1	DAMPER	
070	2916984-0000		2	BUSHING	
080	2907805-0000		1	SPRING	
090	2907804-0000		1	SPRING	
100	2907806-0000		2	LEVER	
110	2911623-0000		2	WASHER	
300	312812-0316		2	HEXAGON NUT, NY-LOCK M6 A4 80	
310	312105-0499		1	SCREW, M6S ISO 4014 M10X40 A4 80	
320	312115-0368		2	SCREW ISO4762 M6X16 A4 80	
330	312318-0325		1	SET SCREW, CUP END ISO4029 M5X10 A4	
370	90028-0020		2	CONE TUBE 2,5MM	
380	90134-0063		2	BUSHING/NUT M8X1, D=2,5 MM	
400	90600-2013		4	FLANGE BUSHING, IGLIDUR X 8X10X5,5	
410	312625-0314		1	HEXAGON THIN NUT, EN 24035 ML6M M5 A4	
T40W8063	90166-0143	MM	220	TUBE 2,5 MM PA TRANSP.	

SHOCK ABSORBER CUTTING

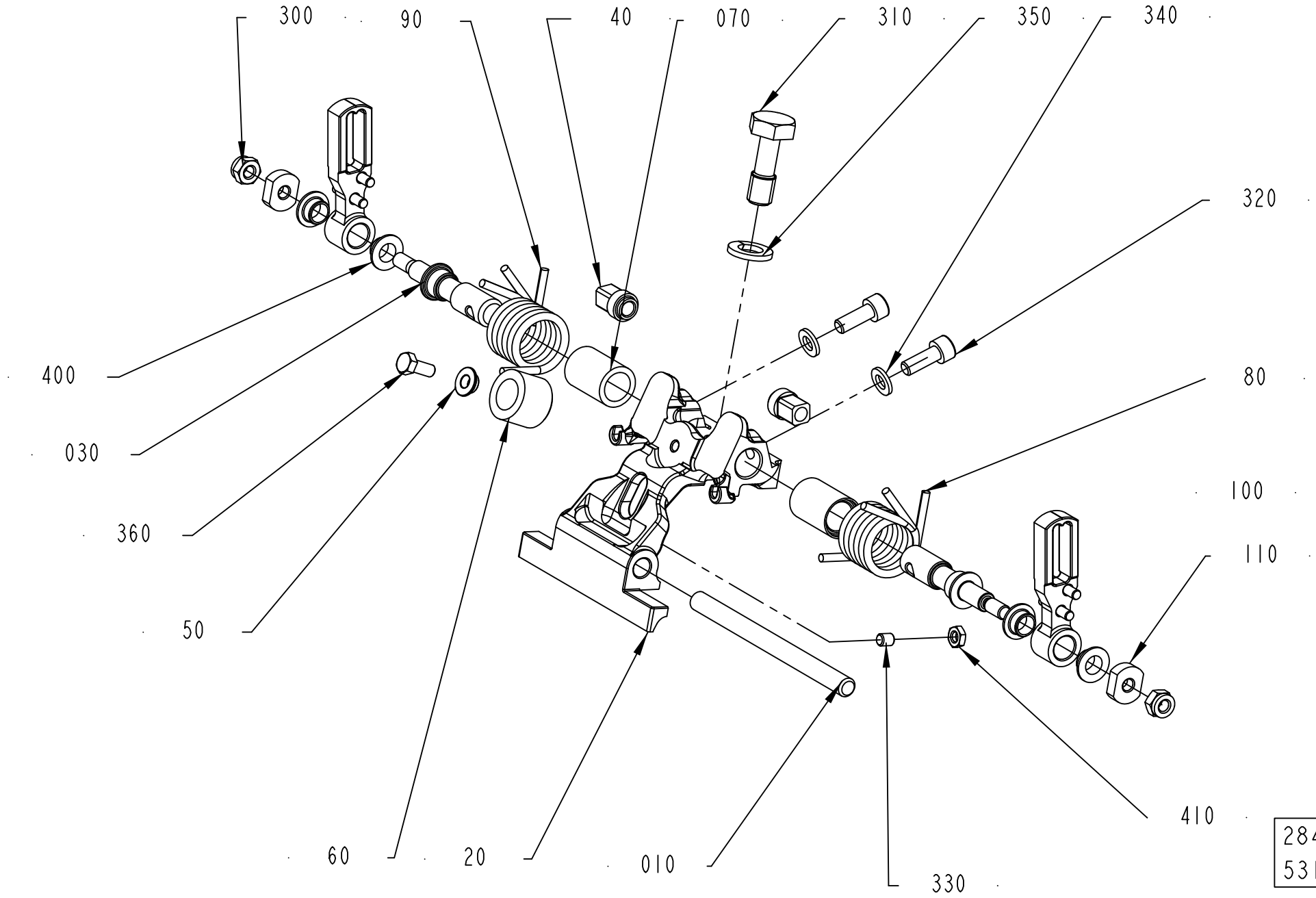

2842772-4
531308

ECM: 551282 - 20120103
Group number: 2842772-0100
Assembly Drawing: 2842772-4_1_AC

This list covers pages from 1-510 to 1-517

Pos	Part No	UN	Qty	Description	Page No
TBA 2000S (Cont'd) (See drawing on page: 1-510)					
T40W8065	90166-0143	MM	220	TUBE 2,5 MM PA TRANSP.	
TGA 1000SQ, TGA 0750SQ (See drawing on page: 1-514)					
010	2649660-0000		1	SHAFT	
020	2993285-0002		1	HOLDER	
	3021650-0000		*1*	*HOLDER*	
030	2948028-0000		2	SHAFT	
040	2916130-0000		2	SLIDER	
050	2572197-0000		1	SPACER	
060	2649677-0000		1	DAMPER	
070	2948027-0000		2	BUSHING	
080	2949214-0000		1	SPRING	
090	2949215-0000		1	SPRING	
100	3018752-0000		2	LEVER	
110	2911623-0000		2	WASHER	
300	312812-0316		2	HEXAGON NUT, NY-LOCK M6 A4 80	
310	2922524-0000		1	SCREW	
320	312105-0368		2	SCREW, M6S ISO 4017 M6X16 A4 80	
330	311103-0268		1	PARALLEL PIN ISO 2338 4M6X12 A1	
360	312105-0327		1	SCREW, M6S ISO 4017 M5X12 A4 80	
400	90600-2013		4	FLANGE BUSHING, IGLIDUR X 8X10X5,5	
TGA 1500SQ (See drawing on page: 1-514)					
010	2773510-0000		1	SHAFT	
020	2948025-0001		1	HOLDER	
030	2948028-0000		2	SHAFT	
040	2916130-0000		2	SLIDER	
050	2572197-0000		1	SPACER	
060	3030308-0000		1	DAMPER	
070	2948027-0000		2	BUSHING	
080	2949214-0000		1	SPRING	
090	2949215-0000		1	SPRING	
100	2916131-0000		2	LEVER	
110	2911623-0000		2	WASHER	
300	312812-0316		2	HEXAGON NUT, NY-LOCK M6 A4 80	
310	2922524-0000		1	SCREW	
320	312115-0368		2	SCREW ISO4762 M6X16 A4 80	
330	312318-0321		1	SET SCREW, CUP END ISO4029 M5X6 A4	
360	312105-0327		1	SCREW, M6S ISO 4017 M5X12 A4 80	
400	90600-2013		4	FLANGE BUSHING, IGLIDUR X 8X10X5,5	
410	312625-0314		1	HEXAGON THIN NUT, EN 24035 ML6M M5 A4	
TPA 0500SQ (See drawing on page: 1-510)					
010	2962640-0000		1	SHAFT	
020	3024710-0001		1	HOLDER	
030	2911622-0000		2	SHAFT	
040	2916130-0000		2	SLIDER	
050	2842776-0000		1	PIN	
060	2842777-0001		1	DAMPER	
070	2842780-0000		2	BUSHING	
080	2842781-0000		1	SPRING	
090	2842782-0000		1	SPRING	
100	2916131-0000		2	LEVER	
110	2911623-0000		2	WASHER	
300	312812-0316		2	HEXAGON NUT, NY-LOCK M6 A4 80	
310	312105-0495		1	SCREW, M6S ISO 4017 M10X30 A4 80	
320	312115-0368		2	SCREW ISO4762 M6X16 A4 80	
330	312318-0325		1	SET SCREW, CUP END ISO4029 M5X10 A4	
370	90028-0020		2	CONE TUBE 2,5MM	
380	90134-0063		2	BUSHING/NUT M8X1, D=2,5 MM	
400	90600-2013		4	FLANGE BUSHING, IGLIDUR X 8X10X5,5	
410	312625-0314		1	HEXAGON THIN NUT, EN 24035 ML6M M5 A4	
T40W8063	90166-0143	MM	220	TUBE 2,5 MM PA TRANSP.	
T40W8065	90166-0143	MM	220	TUBE 2,5 MM PA TRANSP.	
TPA 1000SQ, TPA 0750SQ (See drawing on page: 1-510)					
010	2916971-0000		1	SHAFT	
020	3024937-0001		1	HOLDER	
030	2907800-0000		2	SHAFT	
040	2907807-0000		2	SLIDER	
050	2907797-0000		1	PIN	
060	2842777-0004		1	DAMPER	
070	2916984-0000		2	BUSHING	
080	2907805-0000		1	SPRING	
090	2907804-0000		1	SPRING	
100	2907806-0000		2	LEVER	
110	2911623-0000		2	WASHER	
300	312812-0316		2	HEXAGON NUT, NY-LOCK M6 A4 80	
310	312105-0499		1	SCREW, M6S ISO 4014 M10X40 A4 80	
320	312115-0368		2	SCREW ISO4762 M6X16 A4 80	
330	312318-0325		1	SET SCREW, CUP END ISO4029 M5X10 A4	
370	90028-0020		2	CONE TUBE 2,5MM	
380	90134-0063		2	BUSHING/NUT M8X1, D=2,5 MM	
400	90600-2013		4	FLANGE BUSHING, IGLIDUR X 8X10X5,5	
410	312625-0314		1	HEXAGON THIN NUT, EN 24035 ML6M M5 A4	
T40W8063	90166-0143	MM	220	TUBE 2,5 MM PA TRANSP.	
T40W8065	90166-0143	MM	220	TUBE 2,5 MM PA TRANSP.	

Machine Type | Group Description | Used-In | Group Number | Page No

See previous drawings pages: 1-510, 1-512, 1-514.

Pos	Part No	UN	Qty	Description	Page No
Common Parts (Cont'd)					
340	315105-0153		2	WASHER PLAIN, 6,4X12X1,5 A4 BRB	
350	315105-0173		1	WASHER PLAIN, 10,5X22X2 A4 BRB	

Pos	Part No	UN	Qty	Description	Page No

VOLUME FLAP CUTTING LEFT

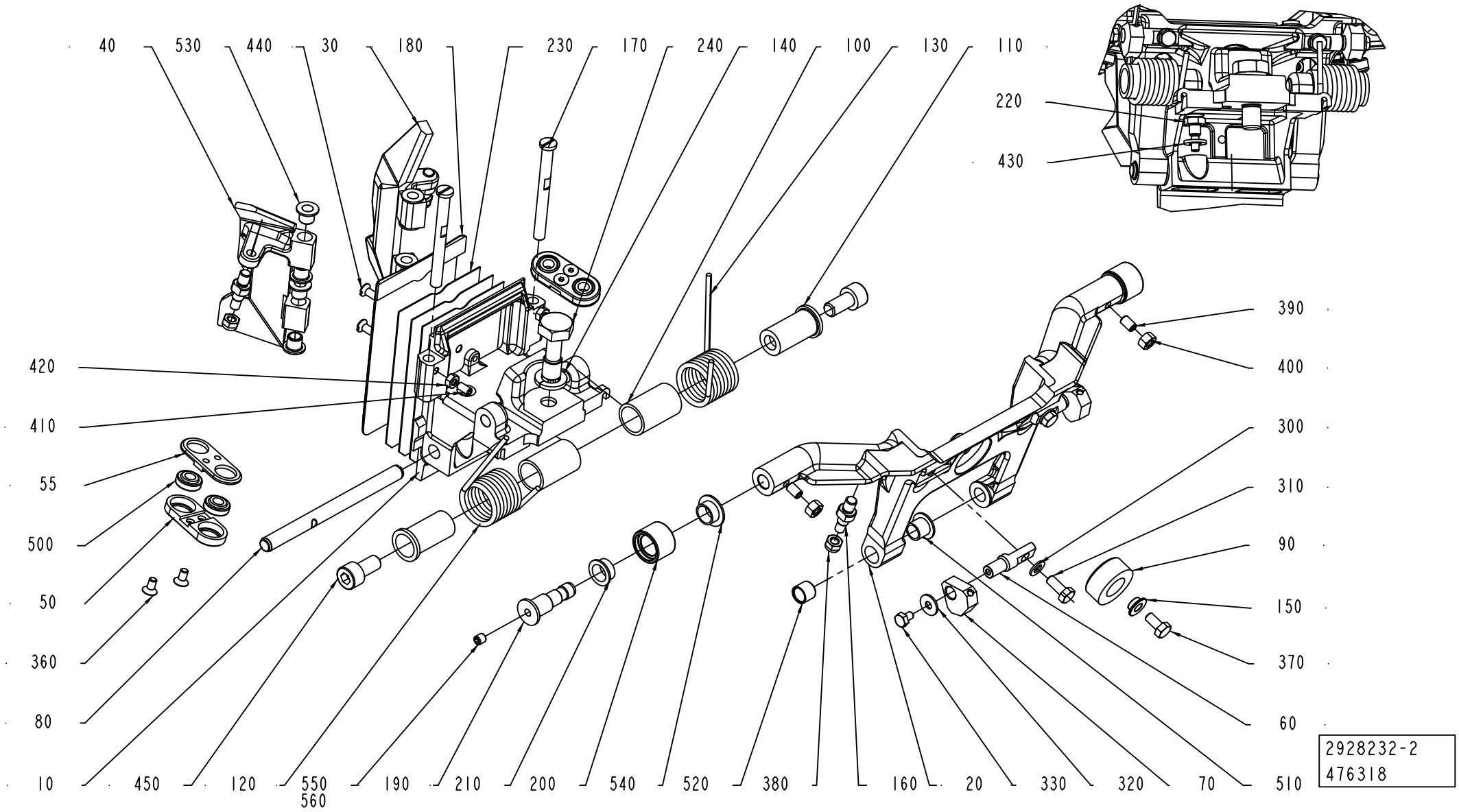

ECM: 483518 - 20101215
Group number: 2928232-0200
Assembly Drawing: 2928232-2_1_AC

Pos	Part No	UN	Qty	Description	Page No
-					
010	2998822-0002		1	FLAP HOLDER	
020	2917413-0000		1	FRAME	
030	3053569-0000		1	FLAP	
040	3053570-0000		1	FLAP	
050	3046743-0000		2	ROD	
055	3046744-0000		2	ROD	
060	2917418-0000		2	PIN	
070	2928239-0000		2	HOLDER	
080	2649660-0000		1	SHAFT	
090	2862308-0000		1	DAMPER	
100	1538521-0000		2	BUSHING	
110	2917419-0000		2	PIN	
120	2922536-0000		1	SPRING	
130	2922537-0000		1	SPRING	
140	315105-0173		1	WASHER PLAIN, 10,5X22X2 A4 BRB	
150	2572197-0000		1	SPACER	
160	2909850-0000		4	SPACER SCREW	
170	2866740-0000		2	SHAFT	
180	3031532-0000		1	VOLUME BULGE	
190	2868844-0000		2	AXLE PIN	
200	2660295-0000		2	ROLLER	
210	2660296-0000		2	BUSHING	
220	2922489-0000		1	PIN	
230	3041582-0000		3	SHIM	
240	2922524-0000		1	SCREW	
300	315105-0146		2	WASHER PLAIN, 5,3X10X1 A4 BRB	
310	312105-0327		2	SCREW, M6S ISO 4017 M5X12 A4 80	
320	90005-0082		2	WASHER PLAIN ROUND 4,3(M4)/12,H=1	
330	312105-0285		2	SCREW, M6S ISO 4017 M4X6 A4 70	
360	312155-0287		4	SCREW DIN 7991 MF6S M4X8 A4 70	
370	312105-0325		1	SCREW, M6S ISO 4017 M5X10 A4 80	
380	312812-0314		4	HEXAGON NUT, NY-LOCK M5 A4 80	
390	312318-0323		2	SET SCREW, CUP END ISO4029 M5X8 A4	
400	312605-0314		2	HEXAGON NUT, M6M M5 A280	
410	312318-0287		2	SET SCREW, CUP END ISO4029 M4X8 A4	
420	312605-0312		2	HEXAGON NUT, M6M M4 A280	
430	315105-0153		1	WASHER PLAIN, 6,4X12X1,5 A4 BRB	
440	312145-0291		2	SCREW ISO 2009 MFS M4X12 A4	
450	312115-0449		2	SCREW ISO4762 M8X16 A4 80	
500	90600-3582		4	SPHERICAL BEARING, GE 6 TGR	
510	90240-0260		2	FLANGE BUSHING, IGLIDUR X 8X10X9	
520	90458-0353		2	BUSHING, IGLIDUR X 8X10X8	
530	321155-0062		8	FLANGE BUSHING, IGLIDUR X 6X8X8	
540	90240-0289		2	FLANGE BUSHING, IGLIDUR X 10X12X6	
550	312318-0320		2	SET SCREW, CUP END ISO4029 M5X5 A4	
560	90602-4847		1	THREAD LOCKING, LOCTITE 243 50 ML	

Machine Type	Group Description	Used-In	Group Number	Page No

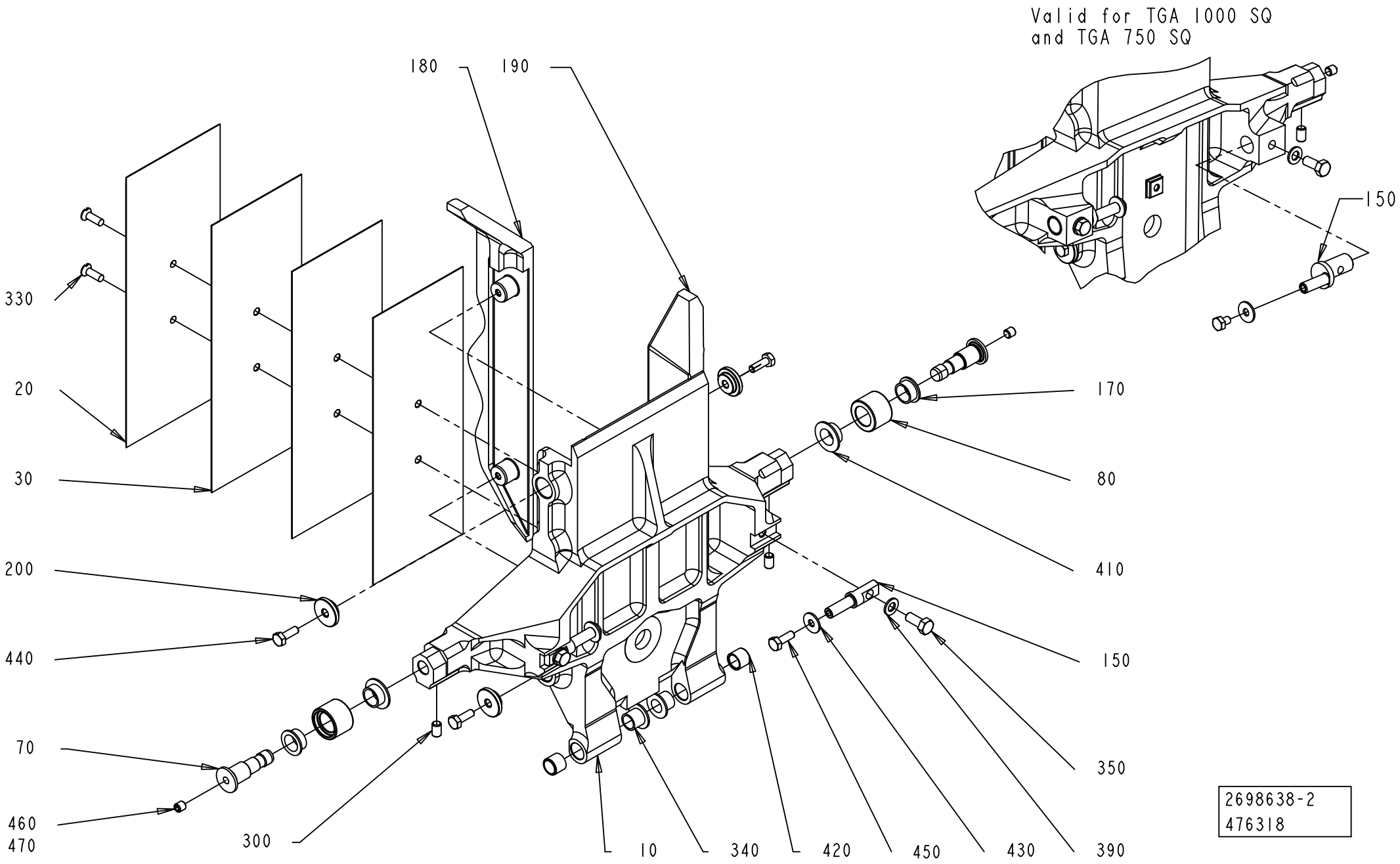
Valid for TGA 1000 SQ
and TGA 750 SQ
180
190
150
330
20
30
200
440
70
460
470
300
170
80
410
150
350
10
340
420
450
430
390
2698638-2
476318

ECM: 483502 - 20101215
Group number: 2698638-0200
Assembly Drawing: 2698638-2_1_AD

Pos	Part No	UN	Qty	Description	Page No
A3/FLEX TGA 0750SQ					
010	2682187-0000		1	VOLUME FLAP	
020	2909851-0000		1	VOLUME BULGE	
030	2909852-0000		3	SHIM	
150	2997338-0000		2	ECCENTRIC SHAFT	
180	2682190-0000		1	FLAP	
190	2682191-0000		1	FLAP	
A3/FLEX TGA 1000SQ					
010	2660289-0000		1	VOLUME FLAP	
020	2660292-0000		1	VOLUME BULGE	
030	2660293-0000		3	VOLUME SHIM	
150	2997338-0000		2	ECCENTRIC SHAFT	
180	2682172-0000		1	FLAP	
190	2682173-0000		1	FLAP	
A3/FLEX TGA 1500SQ					
010	2948019-0000		1	VOLUME FLAP	
020	2660292-0000		1	VOLUME BULGE	
030	2660293-0000		3	VOLUME SHIM	
150	2948024-0000		2	SHAFT	
180	2948020-0000		1	FLAP	
190	2948021-0000		1	FLAP	
Common Parts					
070	2868844-0000		2	AXLE PIN	
080	2660295-0000		2	ROLLER	
170	2660296-0000		2	BUSHING	
200	2682174-0000		4	WASHER	
300	312318-0323		2	SET SCREW, CUP END ISO4029 M5X8 A4	
330	312145-0291		2	SCREW ISO 2009 MFS M4X12 A4	
340	90240-0260		2	FLANGE BUSHING, IGLIDUR X 8X10X9	
350	312105-0327		2	SCREW, M6S ISO 4017 M5X12 A4 80	
390	315105-0146		2	WASHER PLAIN, 5,3X10X1 A4 BRB	
410	90240-0289		2	FLANGE BUSHING, IGLIDUR X 10X12X6	
420	90458-0353		2	BUSHING, IGLIDUR X 8X10X8	
430	90005-0082		2	WASHER PLAIN ROUND 4,3(M4)/12,H=1	
440	312105-0291		4	SCREW, M6S ISO 4017 M4X12 A4 70	
450	312105-0285		2	SCREW, M6S ISO 4017 M4X6 A4 70	
460	312318-0320		2	SET SCREW, CUP END ISO4029 M5X5 A4	
470	90602-4847		1	THREAD LOCKING, LOCTITE 243 50 ML	

Pos	Part No	UN	Qty	Description	Page No

SUPPORT FLAP PRESSURE

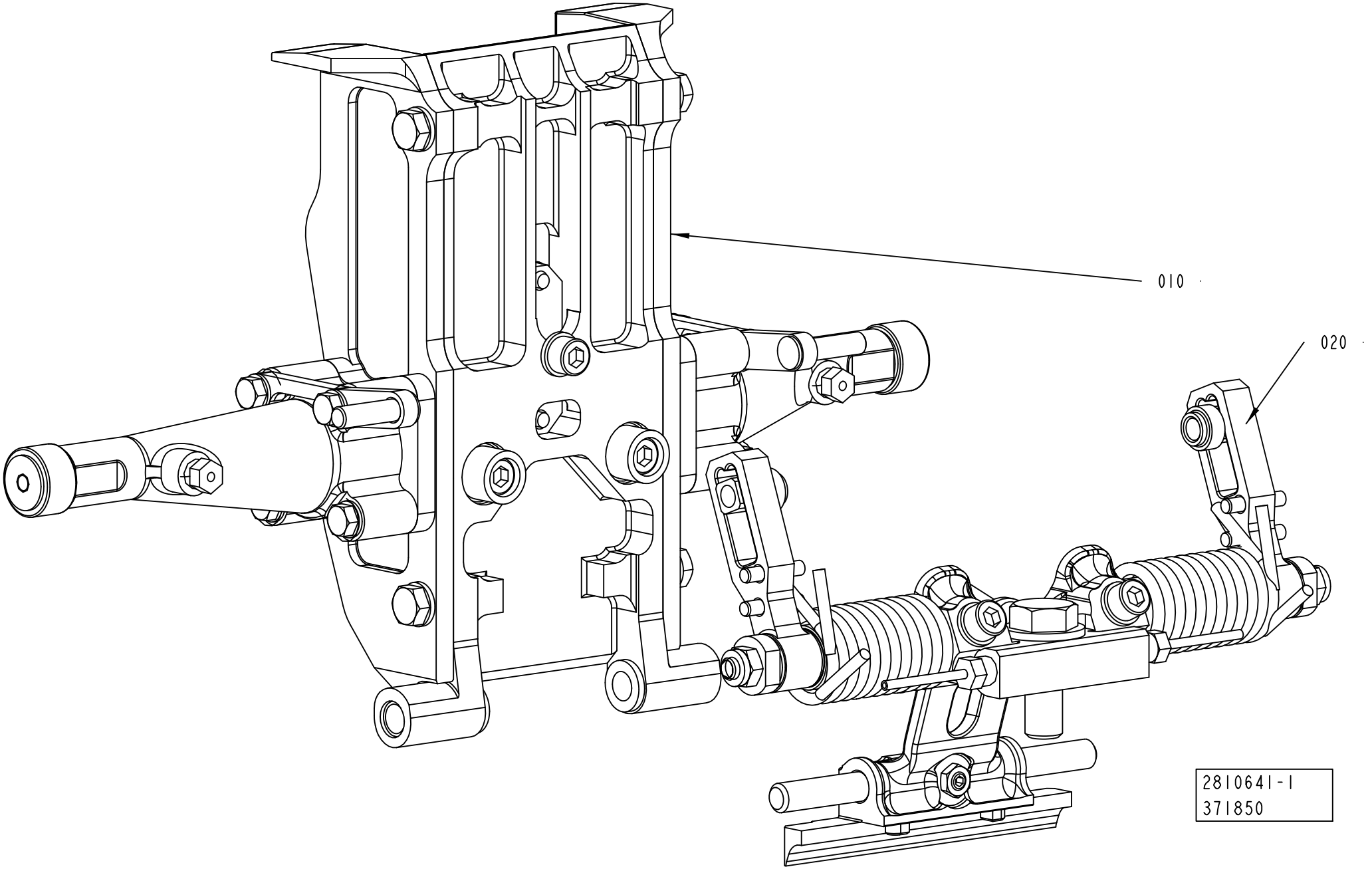

ECM: 533735 - 20120102
Group number: 2810641-0100
Assembly Drawing: 2810641-1_1_AB

Pos	Part No	UN	Qty	Description	Page No
TPA 0750SQ					
010	2810637-0100		1	VOLUME FLAP PRESSURE	**1-525, 1-527, 1-529, 1-531, 1-533, 1-535, 1-537**
020	2842862-0100		1	SHOCK ABSORBER PRESSURE	**1-539, 1-541, 1-543, 1-545**
TPA 1000SQ					
010	2810637-0100		1	VOLUME FLAP PRESSURE	**1-525, 1-527, 1-529, 1-531, 1-533, 1-535, 1-537**
020	2842862-0100		1	SHOCK ABSORBER PRESSURE	**1-539, 1-541, 1-543, 1-545**
TBA 0500B					
010	2810637-0100		1	VOLUME FLAP PRESSURE	**1-525, 1-527, 1-529, 1-531, 1-533, 1-535, 1-537**
020	2842862-0100		1	SHOCK ABSORBER PRESSURE	**1-539, 1-541, 1-543, 1-545**
TBA 0500S					
010	2810637-0100		1	VOLUME FLAP PRESSURE	**1-525, 1-527, 1-529, 1-531, 1-533, 1-535, 1-537**
020	2842862-0100		1	SHOCK ABSORBER PRESSURE	**1-539, 1-541, 1-543, 1-545**
TBA 0500SQ					
010	2810637-0100		1	VOLUME FLAP PRESSURE	**1-525, 1-527, 1-529, 1-531, 1-533, 1-535, 1-537**
020	2842862-0100		1	SHOCK ABSORBER PRESSURE	**1-539, 1-541, 1-543, 1-545**
TBA 1000B					
010	2810637-0100		1	VOLUME FLAP PRESSURE	**1-525, 1-527, 1-529, 1-531, 1-533, 1-535, 1-537**
020	2842862-0100		1	SHOCK ABSORBER PRESSURE	**1-539, 1-541, 1-543, 1-545**
TBA 1000S					
010	2810637-0100		1	VOLUME FLAP PRESSURE	**1-525, 1-527, 1-529, 1-531, 1-533, 1-535, 1-537**
020	2842862-0100		1	SHOCK ABSORBER PRESSURE	**1-539, 1-541, 1-543, 1-545**
TBA 1000SQ					
010	2810637-0100		1	VOLUME FLAP PRESSURE	**1-525, 1-527, 1-529, 1-531, 1-533, 1-535, 1-537**
020	2842862-0100		1	SHOCK ABSORBER PRESSURE	**1-539, 1-541, 1-543, 1-545**
TBA 1500S					
010	2810637-0100		1	VOLUME FLAP PRESSURE	**1-525, 1-527, 1-529, 1-531, 1-533, 1-535, 1-537**
020	2842862-0100		1	SHOCK ABSORBER PRESSURE	**1-539, 1-541, 1-543, 1-545**
TBA 2000S					
010	2810637-0100		1	VOLUME FLAP PRESSURE	**1-525, 1-527, 1-529, 1-531, 1-533, 1-535, 1-537**
020	2842862-0100		1	SHOCK ABSORBER PRESSURE	**1-539, 1-541, 1-543, 1-545**
TGA 0500SQ					
010	2928233-0200		1	VOLUME FLAP PRESSURE LEFT	**1-547**
TGA 0750SQ					
010	2698639-0200		1	VOLUME FLAP PRESSURE	**1-549**
020	2842862-0100		1	SHOCK ABSORBER PRESSURE	**1-539, 1-541, 1-543, 1-545**
TGA 1000SQ					
010	2698639-0200		1	VOLUME FLAP PRESSURE	**1-549**
020	2842862-0100		1	SHOCK ABSORBER PRESSURE	**1-539, 1-541, 1-543, 1-545**
TGA 1500SQ					
010	2698639-0200		1	VOLUME FLAP PRESSURE	**1-549**
020	2842862-0100		1	SHOCK ABSORBER PRESSURE	**1-539, 1-541, 1-543, 1-545**
TPA 0500SQ					
010	2810637-0100		1	VOLUME FLAP PRESSURE	**1-525, 1-527, 1-529, 1-531, 1-533, 1-535, 1-537**
020	2842862-0100		1	SHOCK ABSORBER PRESSURE	**1-539, 1-541, 1-543, 1-545**

Machine Type | Group Description | Used-In | Group Number | Page No

VOLUME FLAP PRESSURE

VALID FOR TBA 1000B TBA 0500S AND TBA 1000M

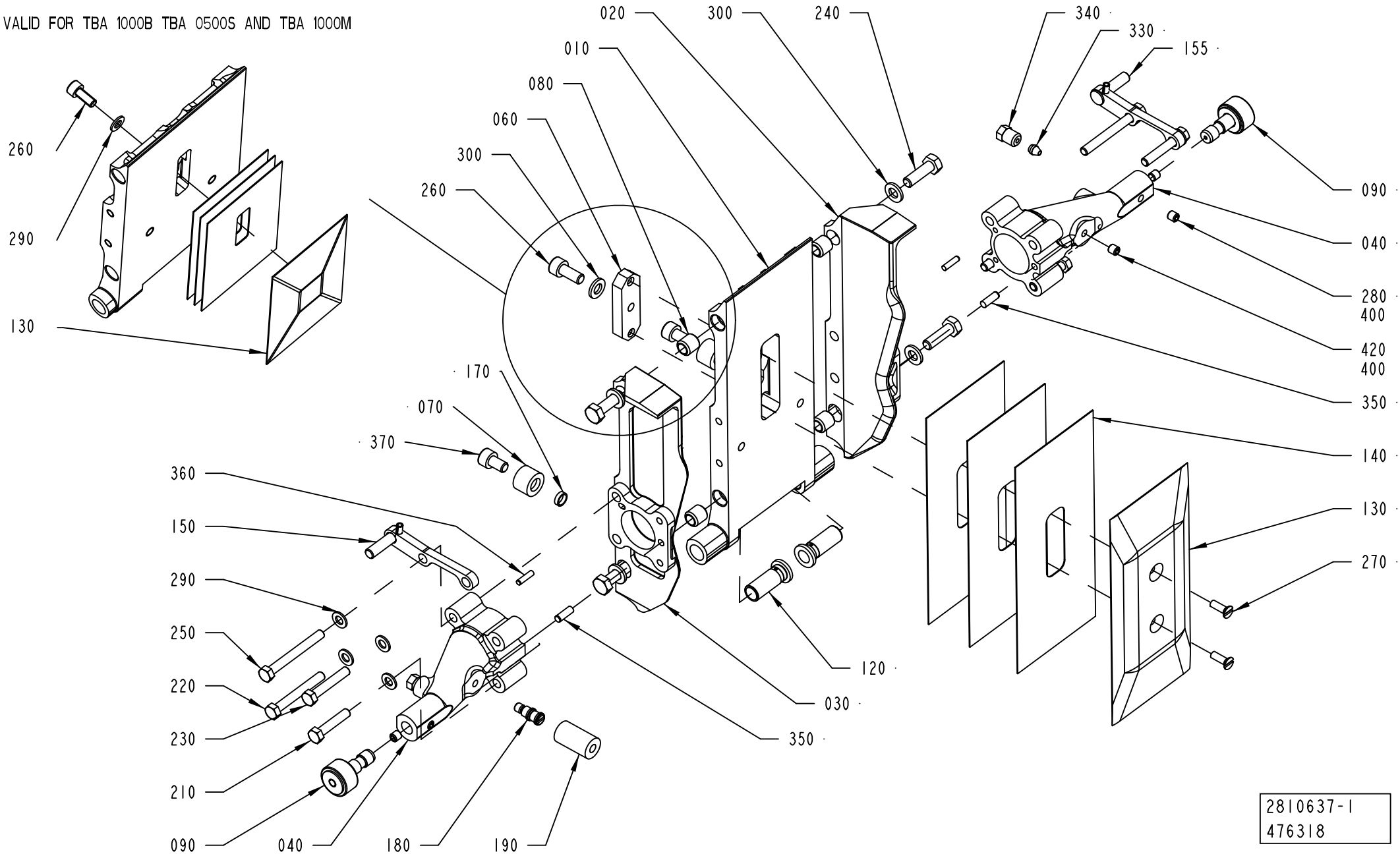

ECM: 548451 - 20120701
Group number: 2810637-0100
Assembly Drawing: 2810637-1_1_AE

This list covers pages from 1-524 to 1-537

Pos	Part No	UN	Qty	Description	Page No
TBA 0500B (See drawing on page: 1-528)					
010	2902007-0000		1	VOLUME FLAP	
040	2905200-0000		1	ARM	
045	2906172-0000		1	ARM	
120	1558701-0000		2	BUSHING	
130	2786059-0000		1	VOLUME BULGE	
140	2790818-0000		3	VOLUME SHIM	
150	2905201-0000		2	SPACER SCREW	
160	2905199-0000		2	HOLDER	
170	2842779-0000		2	SPACER	
180	2872048-0000		1	PIN	
185	2872091-0000		1	PIN	
190	2846667-0000		1	DAMPER	
210	312105-0327		4	SCREW, M6S ISO 4017 M5X12 A4 80	
230	312105-0285		2	SCREW, M6S ISO 4017 M4X6 A4 70	
260	312115-0325		1	SCREW ISO4762 M5X10 A4 80	
290	315105-0146		9	WASHER PLAIN, 5,3X10X1 A4 BRB	
300	315106-0136		2	WASHER PLAIN, M4 ISO7089-4-200 HV A4	
360	311103-0234		4	PARALLEL PIN ISO 2338 3M6X12 A1	
370	312115-0364		2	SCREW ISO4762 M6X10 A4 80	
390	312812-0314		2	HEXAGON NUT, NY-LOCK M5 A4 80	
TBA 0500S (See drawing on page: 1-524)					
010	2997720-0000		1	VOLUME FLAP	
020	2997723-0000		1	SIDE PLATE	
030	2997724-0000		1	SIDE PLATE	
040	2809061-0010		2	ARM	
080	2778960-0000		4	BUSHING	
120	1511254-0000		2	BUSHING	
130	2997725-0000		1	VOLUME BULGE	
140	2997717-0000		3	SHIM	
150	2997719-0000		1	BRACKET	
155	2997718-0000		1	BRACKET	
170	2842779-0000		2	SPACER	
180	2842776-0000		1	PIN	
190	2846667-0000		1	DAMPER	
210	312105-0333		2	SCREW, M6S ISO 4017 M5X25 A4 80	
220	312105-0339		2	SCREW, M6S ISO 4014 M5X40 A4 80	
230	312105-0335		2	SCREW, M6S ISO 4014 M5X30 A4 80	
240	312105-0370		4	SCREW, M6S ISO 4017 M6X20 A4 80	
250	312105-0340		2	SCREW, M6S ISO 4014 M5X45 A4 80	
260	312115-0328		1	SCREW ISO4762 M5X14 A4 80	
290	315105-0146		9	WASHER PLAIN, 5,3X10X1 A4 BRB	
300	315105-0153		4	WASHER PLAIN, 6,4X12X1,5 A4 BRB	
350	311103-0268		2	PARALLEL PIN ISO 2338 4M6X12 A1	
360	311103-0234		2	PARALLEL PIN ISO 2338 3M6X12 A1	
370	312115-0364		2	SCREW ISO4762 M6X10 A4 80	
420	312318-0320		1	SET SCREW, CUP END ISO4029 M5X5 A4	
TBA 0500SQ (See drawing on page: 1-526)					
010	2860036-0000		1	VOLUME FLAP	
040	2872047-0000		1	ARM	
045	2952710-0000		1	ARM	
120	1558701-0000		2	BUSHING	
130	2860037-0000		1	VOLUME BULGE	
140	2860038-0000		3	VOLUME SHIM	
150	2959867-0000		2	SPACER SCREW	
160	2905199-0000		2	HOLDER	
170	2842779-0000		2	SPACER	
180	2872048-0000		1	PIN	
185	2872091-0000		1	PIN	
190	2846667-0000		1	DAMPER	
210	312105-0327		2	SCREW, M6S ISO 4017 M5X12 A4 80	
220	312105-0329		4	SCREW, M6S ISO 4017 M5X16 A4 80	
230	312105-0285		2	SCREW, M6S ISO 4017 M4X6 A4 70	
260	312115-0325		1	SCREW ISO4762 M5X10 A4 80	
290	315105-0146		13	WASHER PLAIN, 5,3X10X1 A4 BRB	
300	315106-0136		2	WASHER PLAIN, M4 ISO7089-4-200 HV A4	
360	311103-0234		4	PARALLEL PIN ISO 2338 3M6X12 A1	
370	312115-0364		2	SCREW ISO4762 M6X10 A4 80	
390	312812-0314		2	HEXAGON NUT, NY-LOCK M5 A4 80	
TBA 1000B (See drawing on page: 1-524)					
010	2902008-0000		1	VOLUME FLAP	
020	2902009-0000		1	SIDE PLATE	
030	2902010-0000		1	SIDE PLATE	
040	2809061-0006		2	ARM	
080	2778960-0000		4	BUSHING	
120	1558701-0000		2	BUSHING	
130	2795078-0000		1	VOLUME BULGE	
140	2795079-0000		3	VOLUME SHIM	
150	2902012-0000		1	BRACKET	
155	2902011-0000		1	BRACKET	
170	2842779-0000		2	SPACER	
180	2842776-0000		1	PIN	
190	2846667-0000		1	DAMPER	
210	312105-0328		2	SCREW M6S ISO 4017 M5X14 A4 80	

Machine Type | Group Description | Used-In | Group Number | Page No

VOLUME FLAP PRESSURE

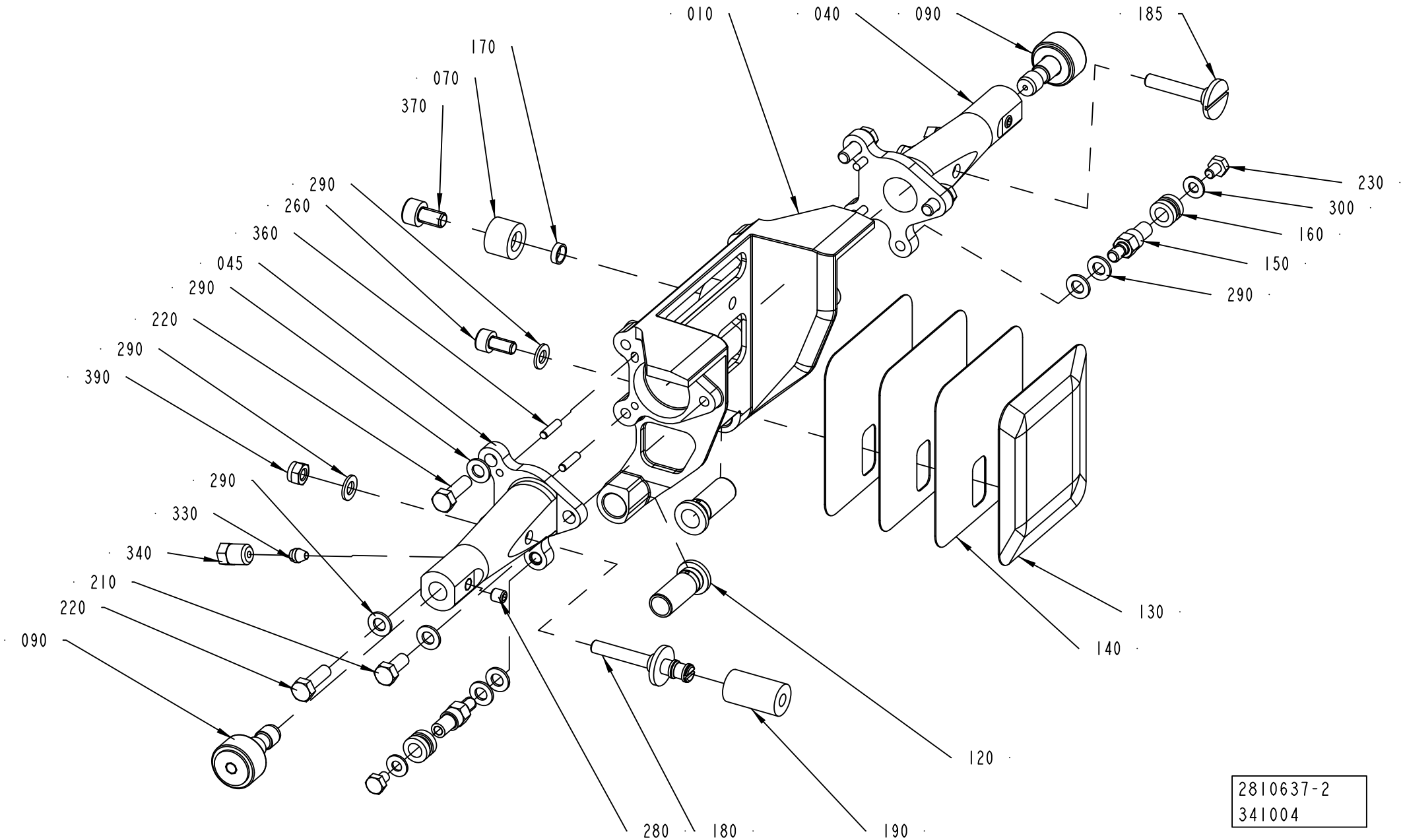

Pos	Part No	UN	Qty	Description	Page No
TBA 1000B (Cont'd) (See drawing on page: 1-524)					
220	312105-0335		2	SCREW, M6S ISO 4014 M5X30 A4 80	
230	312105-0331		2	SCREW, M6S ISO 4017 M5X20 A4 80	
240	312105-0370		4	SCREW, M6S ISO 4017 M6X20 A4 80	
250	312105-0337		2	SCREW, M6S ISO 4014 M5X35 A4 80	
260	312115-0327		1	SCREW ISO4762 M5X12 A4 80	
290	315105-0146		9	WASHER PLAIN, 5,3X10X1 A4 BRB	
300	315105-0153		4	WASHER PLAIN, 6,4X12X1,5 A4 BRB	
350	311103-0268		2	PARALLEL PIN ISO 2338 4M6X12 A1	
360	311103-0234		2	PARALLEL PIN ISO 2338 3M6X12 A1	
370	312115-0364		2	SCREW ISO4762 M6X10 A4 80	
420	312318-0320		1	SET SCREW, CUP END ISO4029 M5X5 A4	
TBA 1000S (See drawing on page: 1-524)					
010	2814896-0000		1	VOLUME FLAP	
020	2814899-0000		1	SIDE PLATE	
030	2814900-0000		1	SIDE PLATE	
040	2809061-0002		2	ARM	
060	1040756-0000		1	WEDGE	
080	2778960-0000		4	BUSHING	
120	1558701-0000		2	BUSHING	
130	1040754-0000		1	VOLUME BULGE	
140	1040755-0000		3	VOLUME SHIM	
150	2916135-0000		1	BRACKET	
155	2916134-0000		1	BRACKET	
170	2842779-0000		2	SPACER	
180	2842776-0000		1	PIN	
190	2846667-0000		1	DAMPER	
210	312105-0329		2	SCREW, M6S ISO 4017 M5X16 A4 80	
220	312105-0335		2	SCREW, M6S ISO 4014 M5X30 A4 80	
230	312105-0331		2	SCREW, M6S ISO 4017 M5X20 A4 80	
240	312105-0370		4	SCREW, M6S ISO 4017 M6X20 A4 80	
250	312105-0337		2	SCREW, M6S ISO 4014 M5X35 A4 80	
260	312115-0367		1	SCREW ISO4762 M6X14 A4 80	
270	312145-0291		2	SCREW ISO 2009 MFS M4X12 A4	
290	315105-0146		8	WASHER PLAIN, 5,3X10X1 A4 BRB	
300	315105-0153		5	WASHER PLAIN, 6,4X12X1,5 A4 BRB	
350	311103-0268		2	PARALLEL PIN ISO 2338 4M6X12 A1	
360	311103-0234		2	PARALLEL PIN ISO 2338 3M6X12 A1	
370	312115-0364		2	SCREW ISO4762 M6X10 A4 80	
420	312318-0320		1	SET SCREW, CUP END ISO4029 M5X5 A4	
TBA 1000SQ (See drawing on page: 1-524)					
010	2808802-0000		1	VOLUME FLAP	
020	2810642-0000		1	SIDE PLATE	
030	2810643-0000		1	SIDE PLATE	
040	2809061-0001		2	ARM	
060	1040756-0000		1	WEDGE	
080	2778960-0000		4	BUSHING	
120	1558701-0000		2	BUSHING	
130	1487626-0000		1	VOLUME BULGE	
140	1487627-0000		3	VOLUME SHIM	
150	2916133-0000		1	BRACKET	
155	2916132-0000		1	BRACKET	
170	2842779-0000		2	SPACER	
180	2842776-0000		1	PIN	
190	2846667-0000		1	DAMPER	
210	312105-0333		2	SCREW, M6S ISO 4017 M5X25 A4 80	
220	312105-0339		2	SCREW, M6S ISO 4014 M5X40 A4 80	
230	312105-0335		2	SCREW, M6S ISO 4014 M5X30 A4 80	
240	312105-0370		4	SCREW, M6S ISO 4017 M6X20 A4 80	
250	312105-0340		2	SCREW, M6S ISO 4014 M5X45 A4 80	
260	312115-0367		1	SCREW ISO4762 M6X14 A4 80	
270	312145-0291		2	SCREW ISO 2009 MFS M4X12 A4	
290	315105-0146		8	WASHER PLAIN, 5,3X10X1 A4 BRB	
300	315105-0153		5	WASHER PLAIN, 6,4X12X1,5 A4 BRB	
350	311103-0268		2	PARALLEL PIN ISO 2338 4M6X12 A1	
360	311103-0234		2	PARALLEL PIN ISO 2338 3M6X12 A1	
370	312115-0364		2	SCREW ISO4762 M6X10 A4 80	
420	312318-0320		1	SET SCREW, CUP END ISO4029 M5X5 A4	
TBA 1500S (See drawing on page: 1-530)					
010	2969140-0000		1	VOLUME FLAP	
015	2969139-0000		1	VOLUME FLAP	
120	1558701-0000		2	BUSHING	
130	2969142-0000		1	VOLUME BULGE	
140	2987038-0000		3	VOLUME SHIM	
150	2969143-0000		2	BRACKET	
170	2842779-0000		2	SPACER	
200	312105-0366		2	SCREW, M6S ISO 4017 M6X12 A4 80	
270	312155-0329		2	SCREW DIN 7991 MF6S M5X16 A4 70	
275	312155-0327		4	SCREW DIN 7991 MF6S M5X12 A4 70	
290	315105-0146		4	WASHER PLAIN, 5,3X10X1 A4 BRB	
370	312115-0362		2	SCREW ISO4762 M6X8 A4 80	
390	312812-0314		4	HEXAGON NUT, NY-LOCK M5 A4 80	
TBA 2000S (See drawing on page: 1-532)					
010	2978342-0000		1	VOLUME FLAP	

Machine Type	Group Description	Used-In	Group Number	Page No

VOLUME FLAP PRESSURE

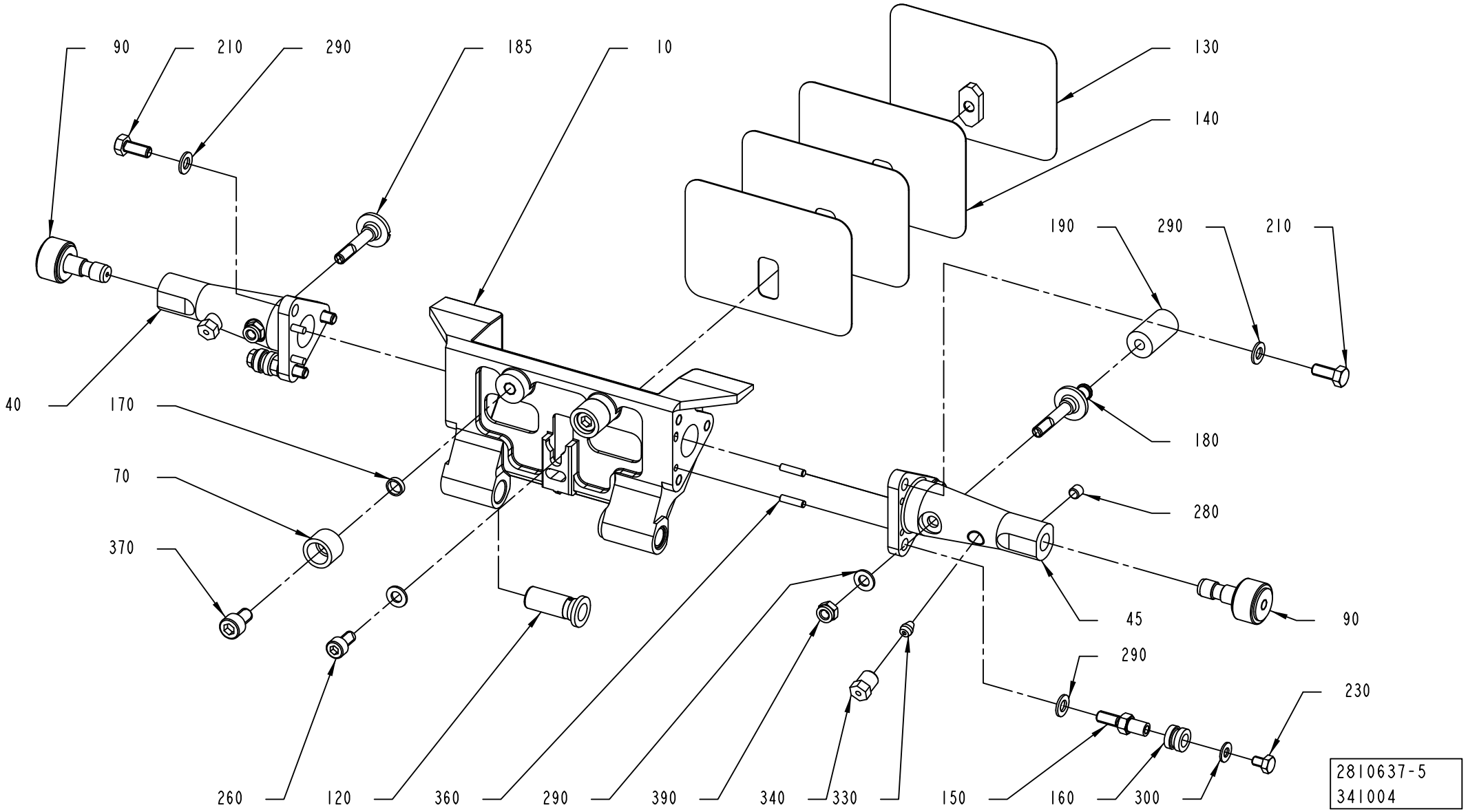

ECM: 548451 - 20120701
Group number: 2810637-0100
Assembly Drawing: 2810637-5_1_AA

This list covers pages from 1-524 to 1-537

Pos	Part No	UN	Qty	Description	Page No
TBA 2000S (Cont'd) (See drawing on page: 1-532)					
015	2978340-0000		1	VOLUME FLAP	
040	2809061-0011		2	ARM	
120	2917307-0000		2	BUSHING	
130	2978344-0000		1	VOLUME BULGE	
140	2978343-0000		3	VOLUME SHIM	
150	2907809-0000		1	BRACKET	
155	2907808-0000		1	BRACKET	
170	2842779-0000		2	SPACER	
180	2842776-0000		1	PIN	
190	2846667-0000		1	DAMPER	
210	312105-0329		4	SCREW, M6S ISO 4017 M5X16 A4 80	
230	312105-0331		4	SCREW, M6S ISO 4017 M5X20 A4 80	
270	312155-0329		2	SCREW DIN 7991 MF6S M5X16 A4 70	
275	312155-0327		4	SCREW DIN 7991 MF6S M5X12 A4 70	
290	315105-0146		12	WASHER PLAIN, 5,3X10X1 A4 BRB	
350	311103-0267		2	PARALLEL PIN ISO 2338 4M6X10 A1	
360	311103-0233		2	PARALLEL PIN ISO 2338 3M6X10 A1	
370	312115-0362		2	SCREW ISO4762 M6X8 A4 80	
390	312812-0314		4	HEXAGON NUT, NY-LOCK M5 A4 80	
420	312318-0320		1	SET SCREW, CUP END ISO4029 M5X5 A4	
TPA 0500SQ (See drawing on page: 1-536)					
010	3053272-0000		1	VOLUME FLAP	
015	3053273-0002		1	FRAME	
040	3053488-0000		2	ARM	
120	2530313-0000		2	BUSHING	
130	1549829-0000		1	VOLUME BULGE	
135	1549829-0000		2	VOLUME BULGE	
140	1549830-0000		2	VOLUME SHIM	
145	1549830-0000		4	VOLUME SHIM	
150	2964448-0000		2	SCREW	
180	2842776-0000		1	PIN	
190	2846667-0000		1	DAMPER	
200	312605-0318		2	HEXAGON NUT, M6M M8 A280	
210	312155-0455		2	SCREW DIN 7991 MF6S M8X30 A4 70	
230	312318-0323		2	SET SCREW, CUP END ISO4029 M5X8 A4	
265	312155-0299		4	SCREW DIN 7991 MF6S M4X30 A4 70	
270	312145-0291		2	SCREW ISO 2009 MFS M4X12 A4	
270	312155-0291		2	SCREW DIN 7991 MF6S M4X12 A4 70	
275	312155-0333		2	SCREW DIN 7991 MF6S M5X25 A4 70	
370	312115-0362		2	SCREW ISO4762 M6X8 A4 80	
410	311103-0267		1	PARALLEL PIN ISO 2338 4M6X10 A1	
420	312318-0320		1	SET SCREW, CUP END ISO4029 M5X5 A4	
TPA 0750SQ (See drawing on page: 1-534)					
010	2995607-0000		1	VOLUME FLAP	
015	2995596-0000		1	FRAME	
040	2995608-0000		2	ARM	
120	2530313-0000		2	BUSHING	
130	2995605-0000		1	VOLUME BULGE	
135	2995606-0000		2	VOLUME BULGE	
140	2995603-0000		3	VOLUME SHIM	
145	2995604-0000		6	VOLUME SHIM	
150	2995655-0000		2	SCREW	
170	2842779-0000		2	SPACER	
180	2842776-0000		1	PIN	
190	2846667-0000		1	DAMPER	
200	312605-0320		2	HEXAGON NUT, M6M M10 A280	
210	312115-0329		2	SCREW ISO4762 M5X16 A4 80	
230	90459-1906		2	SHOULDER SCREW, 6X10/M5 SS	
265	312155-0299		4	SCREW DIN 7991 MF6S M4X30 A4 70	
270	312145-0293		2	SCREW ISO 2009 MFS M4X16 A4	
275	312115-0331		2	SCREW ISO4762 M5X20 A4 80	
290	315105-0146		4	WASHER PLAIN, 5,3X10X1 A4 BRB	
370	312115-0362		2	SCREW ISO4762 M6X8 A4 80	
410	311103-0267		1	PARALLEL PIN ISO 2338 4M6X10 A1	
420	312318-0320		1	SET SCREW, CUP END ISO4029 M5X5 A4	
TPA 1000SQ (See drawing on page: 1-534)					
010	2995601-0000		1	VOLUME FLAP	
015	2995595-0000		1	FRAME	
040	2995597-0000		2	ARM	
120	2530313-0000		2	BUSHING	
130	2995600-0000		1	VOLUME BULGE	
135	2968854-0000		2	VOLUME BULGE	
140	2995599-0000		3	VOLUME SHIM	
145	2968863-0000		6	VOLUME SHIM	
150	2995655-0000		2	SCREW	
170	2842779-0000		2	SPACER	
180	2842776-0000		1	PIN	
190	2846667-0000		1	DAMPER	
200	312605-0320		2	HEXAGON NUT, M6M M10 A280	
210	312115-0329		2	SCREW ISO4762 M5X16 A4 80	
230	90459-1906		2	SHOULDER SCREW, 6X10/M5 SS	
265	312155-0299		4	SCREW DIN 7991 MF6S M4X30 A4 70	
270	312145-0293		2	SCREW ISO 2009 MFS M4X16 A4	

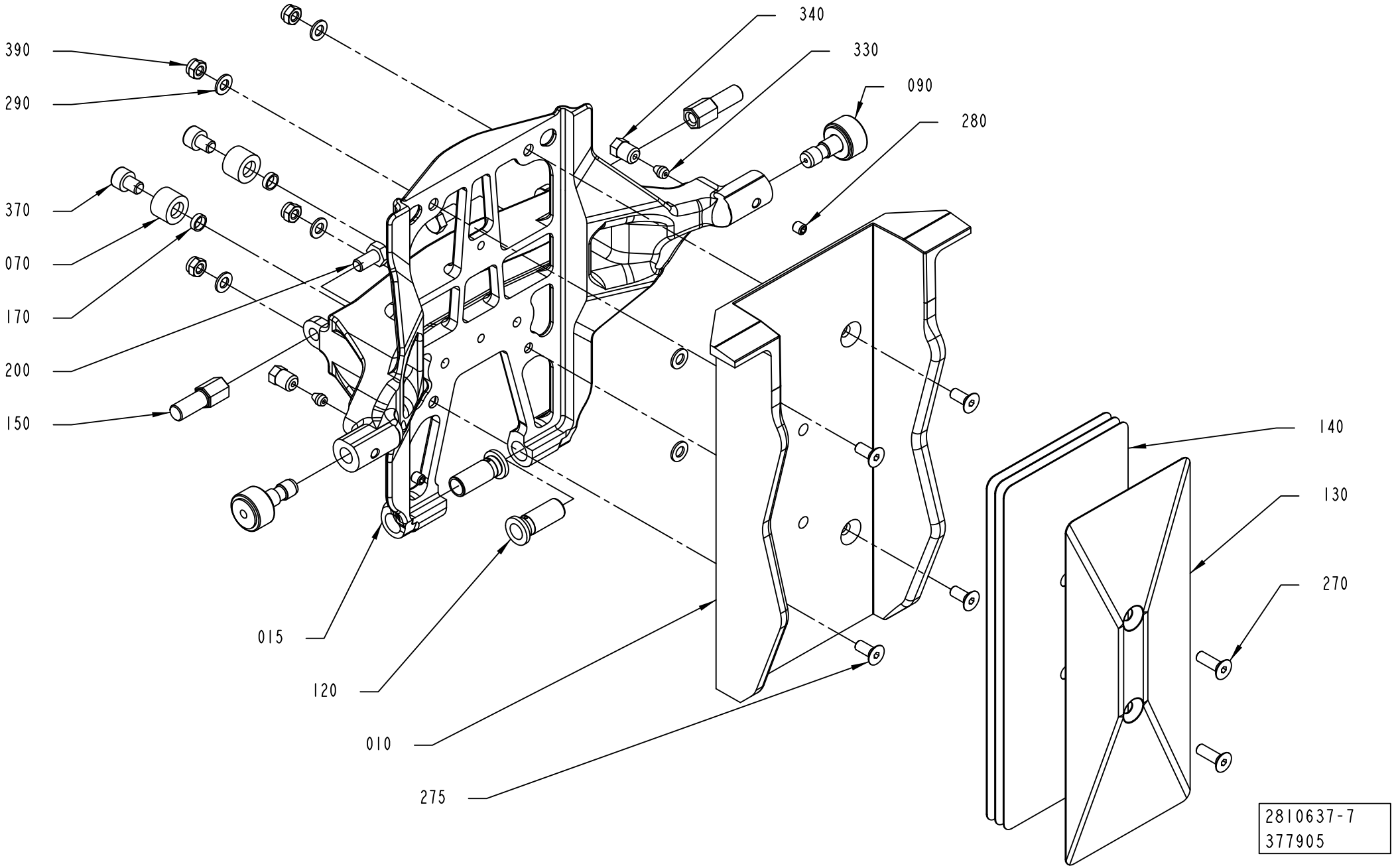
340
330
090
280
390
290
370
070
170
200
150
140
130
270
015
120
010
275
2810637-7
377905

Pos	Part No	UN	Qty	Description	Page No
TPA 1000SQ (Cont'd) (See drawing on page: 1-534)					
275	312115-0331		2	SCREW ISO4762 M5X20 A4 80	
290	315105-0146		4	WASHER PLAIN, 5,3X10X1 A4 BRB	
370	312115-0362		2	SCREW ISO4762 M6X8 A4 80	
410	311103-0267		1	PARALLEL PIN ISO 2338 4M6X10 A1	
420	312318-0320		1	SET SCREW, CUP END ISO4029 M5X5 A4	
Common Parts					
070	2842778-0000		2	DAMPER	
090	2952691-0100		2	ROLLER	**1-509**
280	312318-0320		2	SET SCREW, CUP END ISO4029 M5X5 A4	
330	90028-0020		2	CONE TUBE 2,5MM	
340	90134-0063		2	BUSHING/NUT M8X1, D=2,5 MM	
400	90602-4847		1	THREAD LOCKING, LOCTITE 243 50 ML	

Pos	Part No	UN	Qty	Description	Page No

VOLUME FLAP PRESSURE

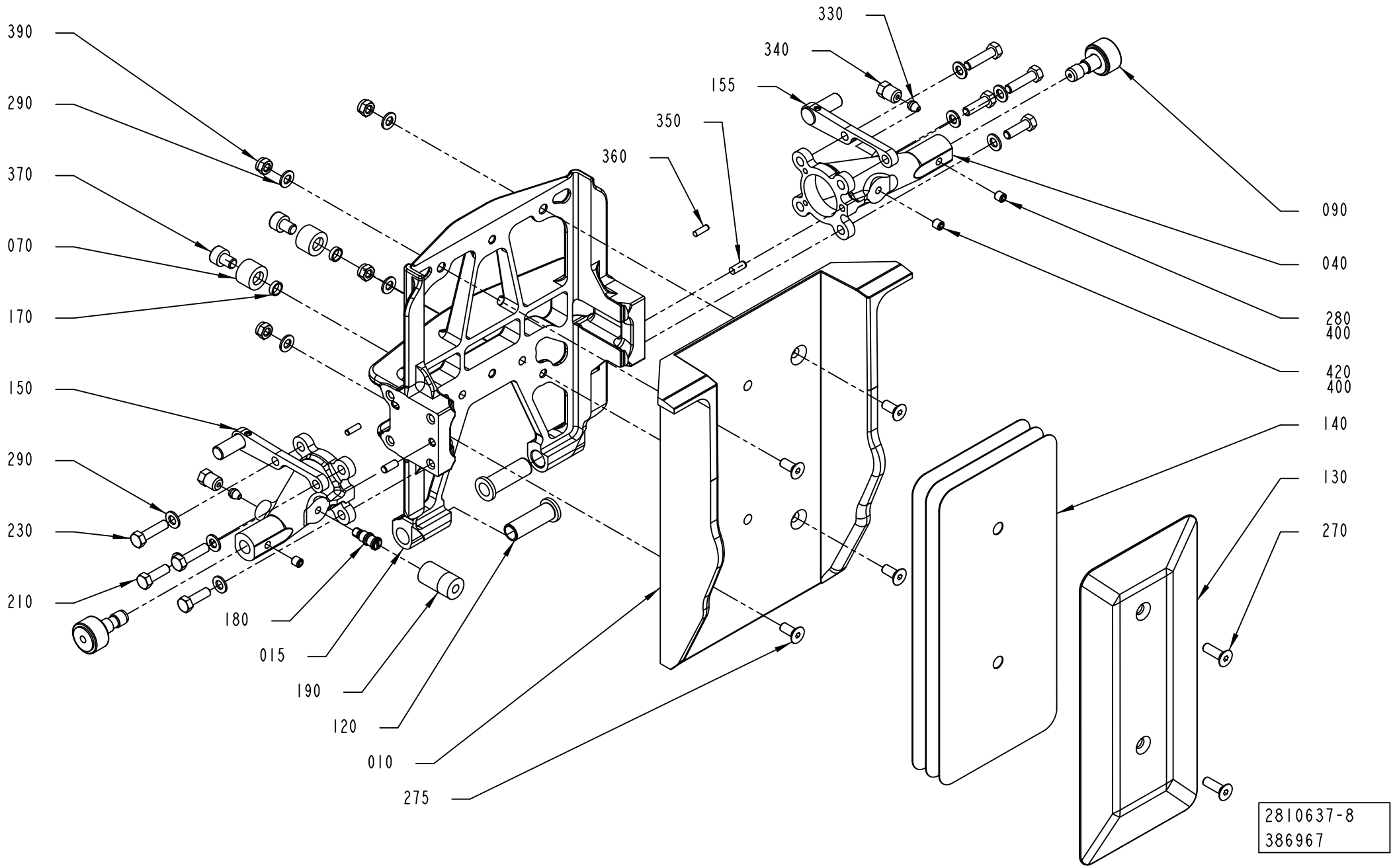

ECM: 548451 - 20120701
Group number: 2810637-0100
Assembly Drawing: 2810637-8_1_AB

This list covers pages from 1-524 to 1-537

Pos	Part No	UN	Qty	Description	Page No
SEE PREVIOUS LISTS PAGES: 1-525, 1-527, 1-529, 1-531.					

Pos	Part No	UN	Qty	Description	Page No

VOLUME FLAP PRESSURE

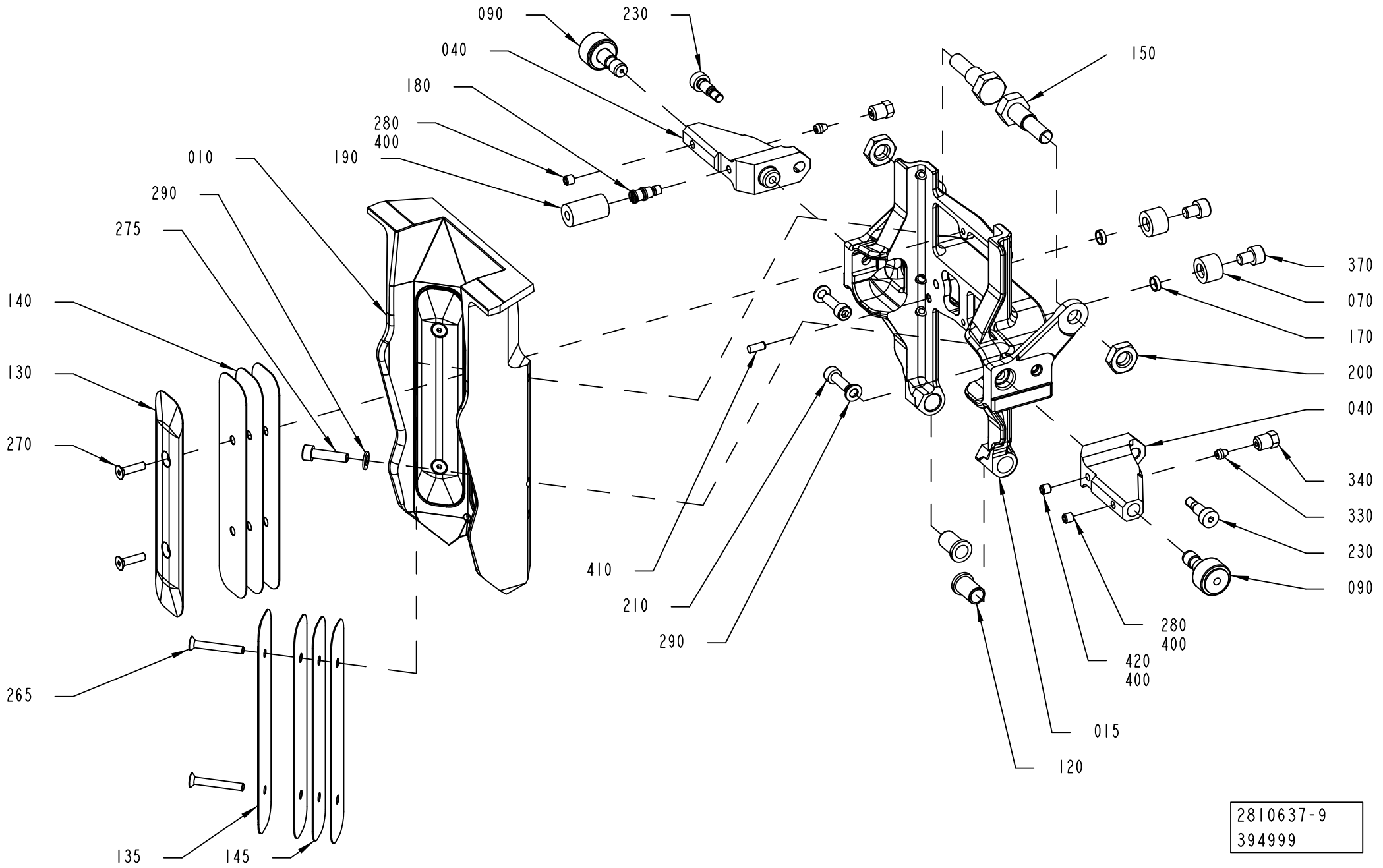

ECM: 548451 - 20120701
Group number: 2810637-0100
Assembly Drawing: 2810637-9_1_AA

This list covers pages from 1-524 to 1-537

Pos	Part No	UN	Qty	Description	Page No
SEE PREVIOUS LISTS PAGES: 1-525, 1-527, 1-529, 1-531.					

Pos	Part No	UN	Qty	Description	Page No

VOLUME FLAP PRESSURE

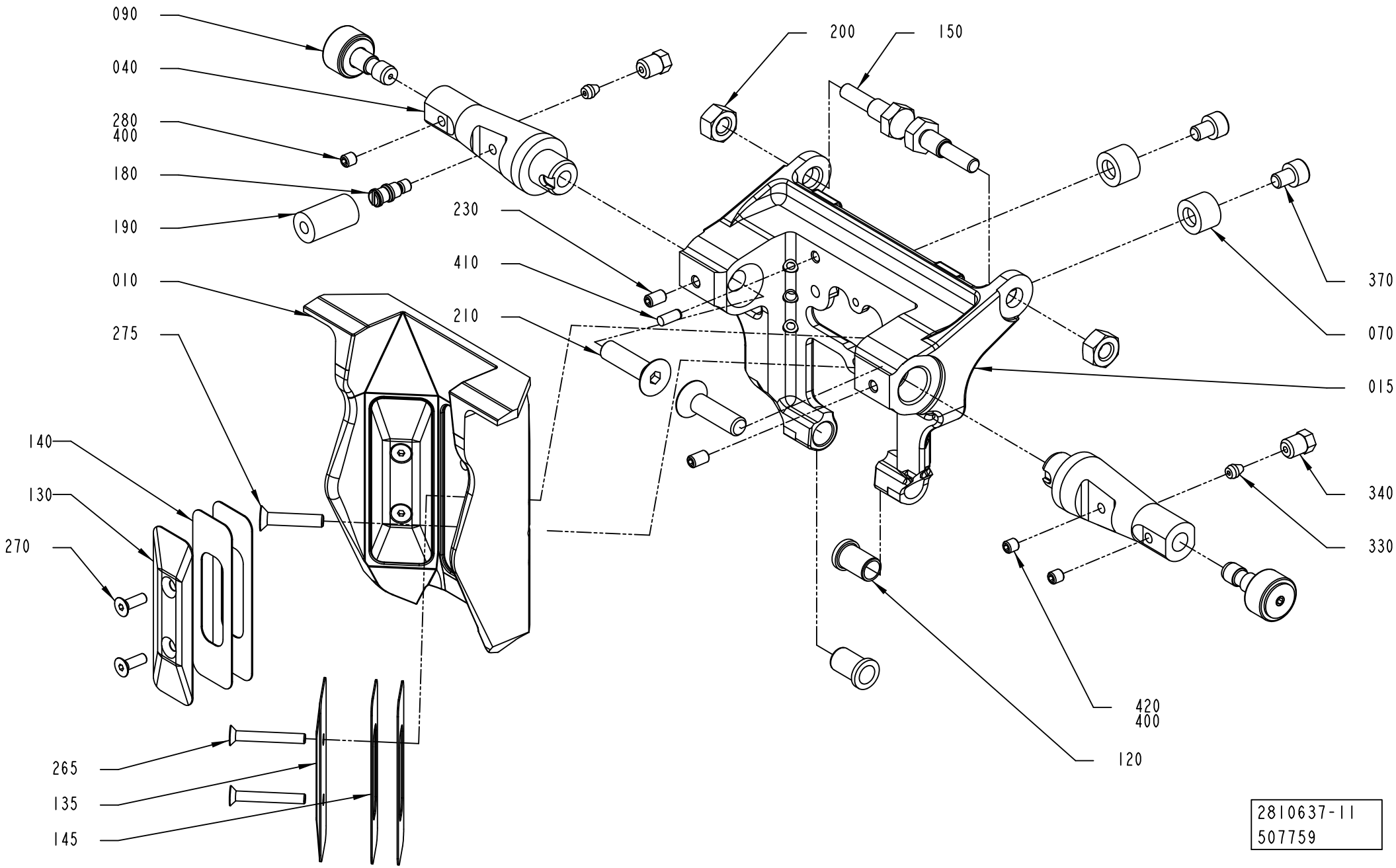

ECM: 548451 - 20120701
Group number: 2810637-0100
Assembly Drawing: 2810637-11_1_AA

This list covers pages from 1-524 to 1-537

Pos	Part No	UN	Qty	Description	Page No
SEE PREVIOUS LISTS PAGES: 1-525, 1-527, 1-529, 1-531.					

Pos	Part No	UN	Qty	Description	Page No

SHOCK ABSORBER PRESSURE

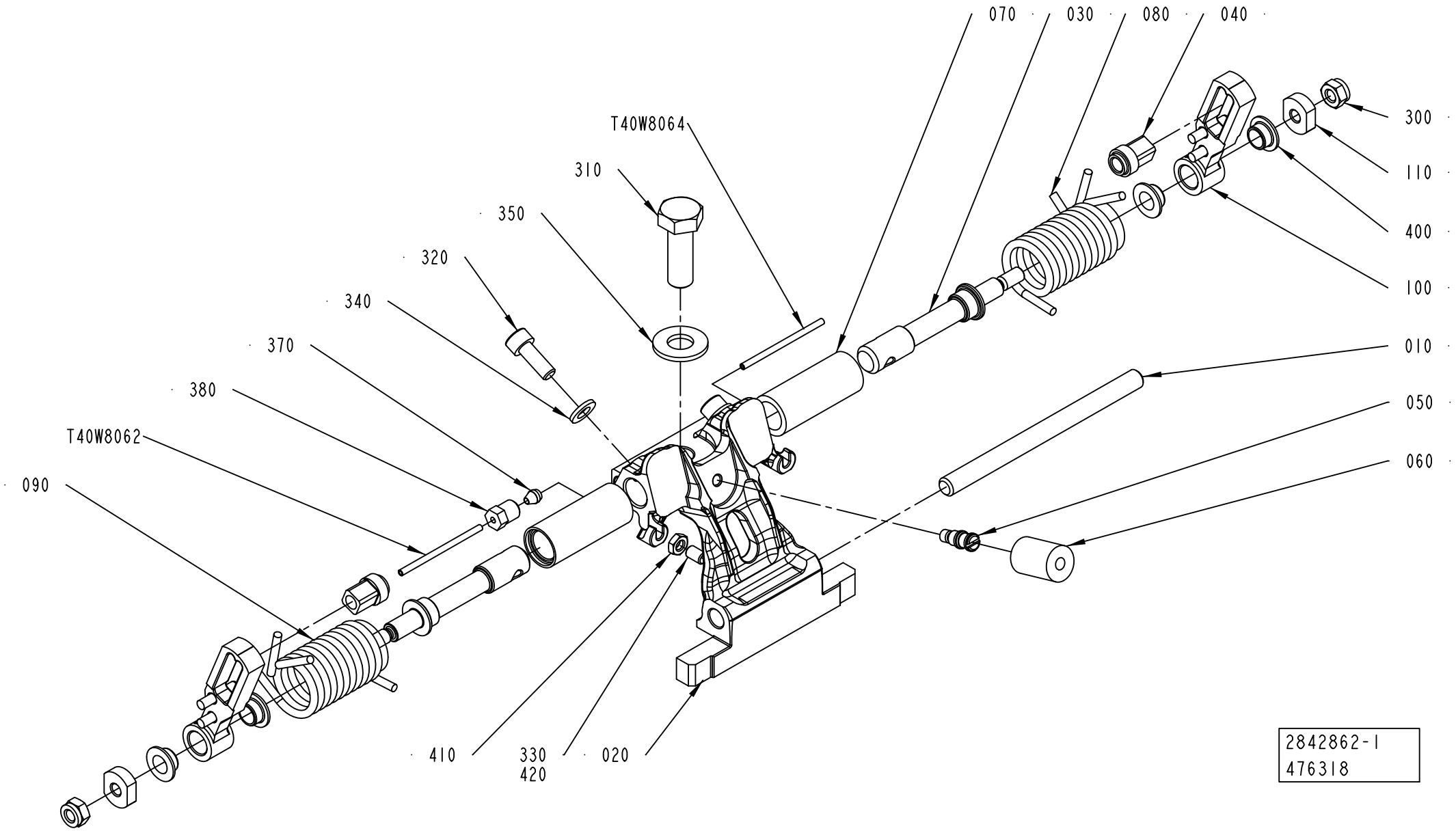

ECM: 548452 - 20120701
Group number: 2842862-0100
Assembly Drawing: 2842862-1_1_AE

This list covers pages from 1-538 to 1-545

Pos	Part No	UN	Qty	Description	Page No
TBA 0500B (See drawing on page: 1-540)					
010	2773510-0000		1	SHAFT	
020	3037999-0001		1	HOLDER	
030	2902006-0000		2	SHAFT	
050	2842776-0000		1	PIN	
060	2842777-0001		1	DAMPER	
080	2961953-0000		2	TENSION SPRING	
120	2905199-0000		2	HOLDER	
300	312105-0285		2	SCREW, M6S ISO 4017 M4X6 A4 70	
310	312105-0495		1	SCREW, M6S ISO 4017 M10X30 A4 80	
320	312115-0368		2	SCREW ISO4762 M6X16 A4 80	
330	312318-0325		1	SET SCREW, CUP END ISO4029 M5X10 A4	
360	315106-0136		2	WASHER PLAIN, M4 ISO7089-4-200 HV A4	
370	90028-0020		2	CONE TUBE 2,5MM	
380	90134-0063		2	BUSHING/NUT M8X1, D=2,5 MM	
410	312625-0314		1	HEXAGON THIN NUT, EN 24035 ML6M M5 A4	
T40W8062	90166-0143	MM	220	TUBE 2,5 MM PA TRANSP.	
T40W8064	90166-0143	MM	220	TUBE 2,5 MM PA TRANSP.	
TBA 0500S (See drawing on page: 1-538)					
010	2916971-0000		1	SHAFT	
020	3024713-0001		1	HOLDER	
030	2911622-0000		2	SHAFT	
040	2916130-0000		2	SLIDER	
050	2842776-0000		1	PIN	
060	2842777-0001		1	DAMPER	
070	2842780-0000		2	BUSHING	
080	2842781-0000		1	SPRING	
090	2842782-0000		1	SPRING	
100	2916131-0000		2	LEVER	
110	2911623-0000		2	WASHER	
300	312812-0316		2	HEXAGON NUT, NY-LOCK M6 A4 80	
310	312105-0495		1	SCREW, M6S ISO 4017 M10X30 A4 80	
320	312115-0368		2	SCREW ISO4762 M6X16 A4 80	
330	312318-0325		1	SET SCREW, CUP END ISO4029 M5X10 A4	
370	90028-0020		2	CONE TUBE 2,5MM	
380	90134-0063		2	BUSHING/NUT M8X1, D=2,5 MM	
400	90600-2013		4	FLANGE BUSHING, IGLIDUR X 8X10X5,5	
410	312625-0314		1	HEXAGON THIN NUT, EN 24035 ML6M M5 A4	
T40W8062	90166-0143	MM	220	TUBE 2,5 MM PA TRANSP.	
T40W8064	90166-0143	MM	220	TUBE 2,5 MM PA TRANSP.	
TBA 0500SQ (See drawing on page: 1-540)					
010	2773510-0000		1	SHAFT	
020	3037995-0001		1	HOLDER	
030	2863119-0000		2	SHAFT	
050	2842776-0000		1	PIN	
060	2842777-0001		1	DAMPER	
080	2959868-0000		2	TENSION SPRING	
120	2905199-0000		2	HOLDER	
300	312105-0285		2	SCREW, M6S ISO 4017 M4X6 A4 70	
310	312105-0495		1	SCREW, M6S ISO 4017 M10X30 A4 80	
320	312115-0368		2	SCREW ISO4762 M6X16 A4 80	
330	312318-0323		1	SET SCREW, CUP END ISO4029 M5X8 A4	
360	315106-0136		2	WASHER PLAIN, M4 ISO7089-4-200 HV A4	
370	90028-0020		2	CONE TUBE 2,5MM	
380	90134-0063		2	BUSHING/NUT M8X1, D=2,5 MM	
410	312625-0314		1	HEXAGON THIN NUT, EN 24035 ML6M M5 A4	
T40W8062	90166-0143	MM	220	TUBE 2,5 MM PA TRANSP.	
T40W8064	90166-0143	MM	220	TUBE 2,5 MM PA TRANSP.	
TBA 1000B (See drawing on page: 1-538)					
010	2773510-0000		1	SHAFT	
020	3037999-0001		1	HOLDER	
030	2911622-0000		2	SHAFT	
040	2916130-0000		2	SLIDER	
050	2842776-0000		1	PIN	
060	2842777-0001		1	DAMPER	
070	2842780-0000		2	BUSHING	
080	2842781-0000		1	SPRING	
090	2842782-0000		1	SPRING	
100	2916131-0000		2	LEVER	
110	2911623-0000		2	WASHER	
300	312812-0316		2	HEXAGON NUT, NY-LOCK M6 A4 80	
310	312105-0495		1	SCREW, M6S ISO 4017 M10X30 A4 80	
320	312115-0368		2	SCREW ISO4762 M6X16 A4 80	
330	312318-0325		1	SET SCREW, CUP END ISO4029 M5X10 A4	
370	90028-0020		2	CONE TUBE 2,5MM	
380	90134-0063		2	BUSHING/NUT M8X1, D=2,5 MM	
400	90600-2013		4	FLANGE BUSHING, IGLIDUR X 8X10X5,5	
410	312625-0314		1	HEXAGON THIN NUT, EN 24035 ML6M M5 A4	
T40W8062	90166-0143	MM	220	TUBE 2,5 MM PA TRANSP.	
T40W8064	90166-0143	MM	220	TUBE 2,5 MM PA TRANSP.	
TBA 1000S (See drawing on page: 1-538)					
010	2773510-0000		1	SHAFT	
020	3037997-0001		1	HOLDER	
030	2911622-0000		2	SHAFT	

Machine Type | Group Description | Used-In | Group Number | Page No

SHOCK ABSORBER PRESSURE

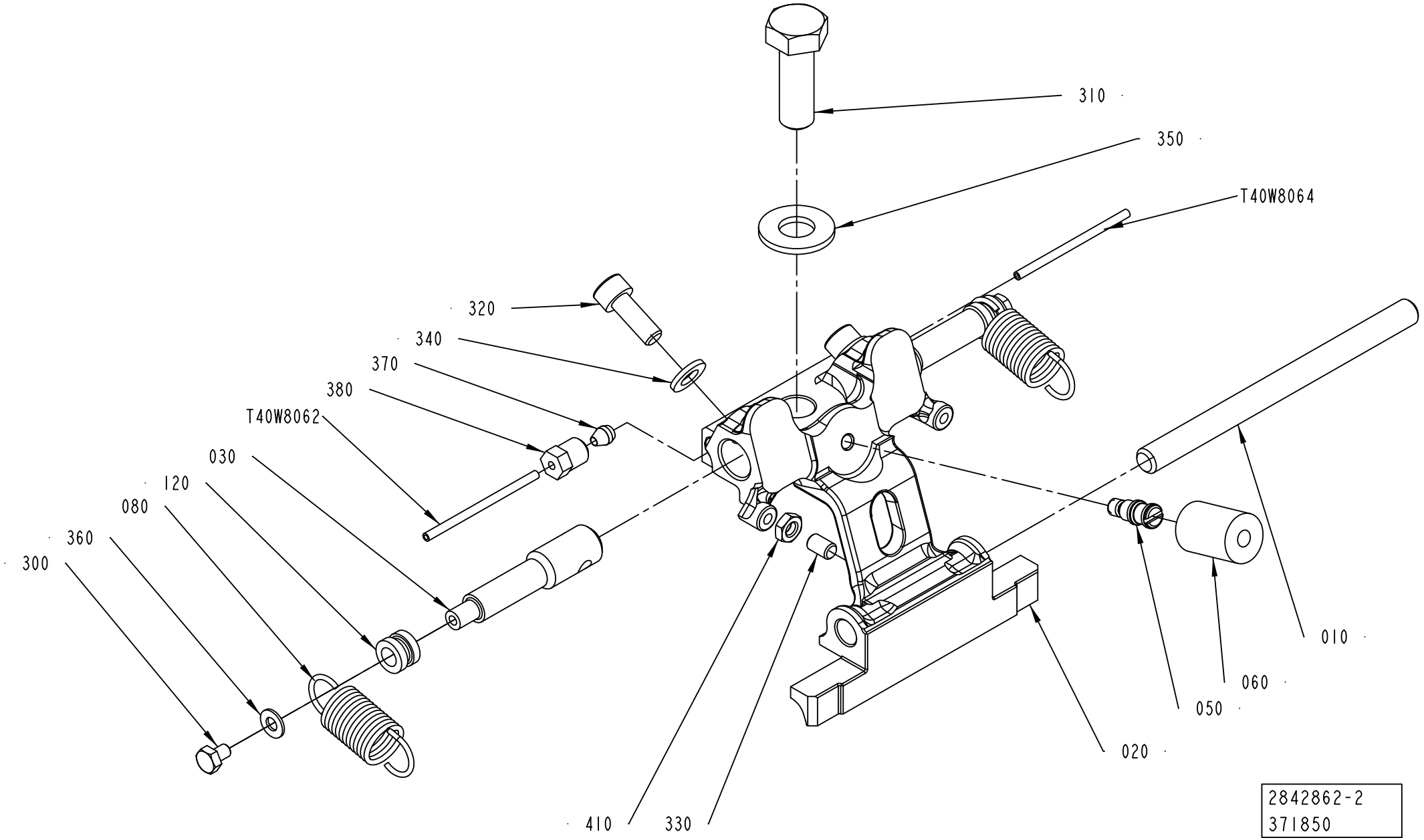

ECM: 548452 - 20120701
Group number: 2842862-0100
Assembly Drawing: 2842862-2_1_AC

This list covers pages from 1-538 to 1-545

Pos	Part No	UN	Qty	Description	Page No
TBA 1000S (Cont'd) (See drawing on page: 1-538)					
040	2916130-0000		2	SLIDER	
050	2842776-0000		1	PIN	
060	2842777-0001		1	DAMPER	
070	2842780-0000		2	BUSHING	
080	2842781-0000		1	SPRING	
090	2842782-0000		1	SPRING	
100	2916131-0000		2	LEVER	
110	2911623-0000		2	WASHER	
300	312812-0316		2	HEXAGON NUT, NY-LOCK M6 A4 80	
310	312105-0495		1	SCREW, M6S ISO 4017 M10X30 A4 80	
320	312115-0368		2	SCREW ISO4762 M6X16 A4 80	
330	312318-0325		1	SET SCREW, CUP END ISO4029 M5X10 A4	
370	90028-0020		2	CONE TUBE 2,5MM	
380	90134-0063		2	BUSHING/NUT M8X1, D=2,5 MM	
400	90600-2013		4	FLANGE BUSHING, IGLIDUR X 8X10X5,5	
410	312625-0314		1	HEXAGON THIN NUT, EN 24035 ML6M M5 A4	
T40W8062	90166-0143	MM	220	TUBE 2,5 MM PA TRANSP.	
T40W8064	90166-0143	MM	220	TUBE 2,5 MM PA TRANSP.	
TBA 1000SQ (See drawing on page: 1-538)					
010	2773510-0000		1	SHAFT	
020	3037995-0001		1	HOLDER	
030	2911622-0000		2	SHAFT	
040	2916130-0000		2	SLIDER	
050	2842776-0000		1	PIN	
060	2842777-0001		1	DAMPER	
070	2842780-0000		2	BUSHING	
080	2842781-0000		1	SPRING	
090	2842782-0000		1	SPRING	
100	2916131-0000		2	LEVER	
110	2911623-0000		2	WASHER	
300	312812-0316		2	HEXAGON NUT, NY-LOCK M6 A4 80	
310	312105-0495		1	SCREW, M6S ISO 4017 M10X30 A4 80	
320	312115-0368		2	SCREW ISO4762 M6X16 A4 80	
330	312318-0323		1	SET SCREW, CUP END ISO4029 M5X8 A4	
370	90028-0020		2	CONE TUBE 2,5MM	
380	90134-0063		2	BUSHING/NUT M8X1, D=2,5 MM	
400	90600-2013		4	FLANGE BUSHING, IGLIDUR X 8X10X5,5	
410	312625-0314		1	HEXAGON THIN NUT, EN 24035 ML6M M5 A4	
T40W8062	90166-0143	MM	220	TUBE 2,5 MM PA TRANSP.	
T40W8064	90166-0143	MM	220	TUBE 2,5 MM PA TRANSP.	
TBA 1500S (See drawing on page: 1-538)					
010	2773510-0000		1	SHAFT	
020	3024942-0001		1	HOLDER	
030	2907800-0000		2	SHAFT	
040	2907807-0000		2	SLIDER	
050	2907797-0000		1	PIN	
060	2842777-0005		1	DAMPER	
070	2916984-0000		2	BUSHING	
080	2907805-0000		1	SPRING	
090	2907804-0000		1	SPRING	
100	2907806-0000		2	LEVER	
110	2911623-0000		2	WASHER	
300	312812-0316		2	HEXAGON NUT, NY-LOCK M6 A4 80	
310	312105-0499		1	SCREW, M6S ISO 4014 M10X40 A4 80	
320	312115-0368		2	SCREW ISO4762 M6X16 A4 80	
330	312318-0325		1	SET SCREW, CUP END ISO4029 M5X10 A4	
370	90028-0020		2	CONE TUBE 2,5MM	
380	90134-0063		2	BUSHING/NUT M8X1, D=2,5 MM	
400	90600-2013		4	FLANGE BUSHING, IGLIDUR X 8X10X5,5	
410	312625-0314		1	HEXAGON THIN NUT, EN 24035 ML6M M5 A4	
T40W8062	90166-0143	MM	220	TUBE 2,5 MM PA TRANSP.	
T40W8064	90166-0143	MM	220	TUBE 2,5 MM PA TRANSP.	
TBA 2000S (See drawing on page: 1-538)					
010	2907798-0000		1	SHAFT	
020	3024940-0001		1	HOLDER	
030	2907800-0000		2	SHAFT	
040	2907807-0000		2	SLIDER	
050	2907797-0000		1	PIN	
060	2842777-0005		1	DAMPER	
070	2916984-0000		2	BUSHING	
080	2907805-0000		1	SPRING	
090	2907804-0000		1	SPRING	
100	2907806-0000		2	LEVER	
110	2911623-0000		2	WASHER	
300	312812-0316		2	HEXAGON NUT, NY-LOCK M6 A4 80	
310	312105-0499		1	SCREW, M6S ISO 4014 M10X40 A4 80	
320	312115-0368		2	SCREW ISO4762 M6X16 A4 80	
330	312318-0325		1	SET SCREW, CUP END ISO4029 M5X10 A4	
370	90028-0020		2	CONE TUBE 2,5MM	
380	90134-0063		2	BUSHING/NUT M8X1, D=2,5 MM	
400	90600-2013		4	FLANGE BUSHING, IGLIDUR X 8X10X5,5	
410	312625-0314		1	HEXAGON THIN NUT, EN 24035 ML6M M5 A4	
T40W8062	90166-0143	MM	220	TUBE 2,5 MM PA TRANSP.	

SHOCK ABSORBER PRESSURE

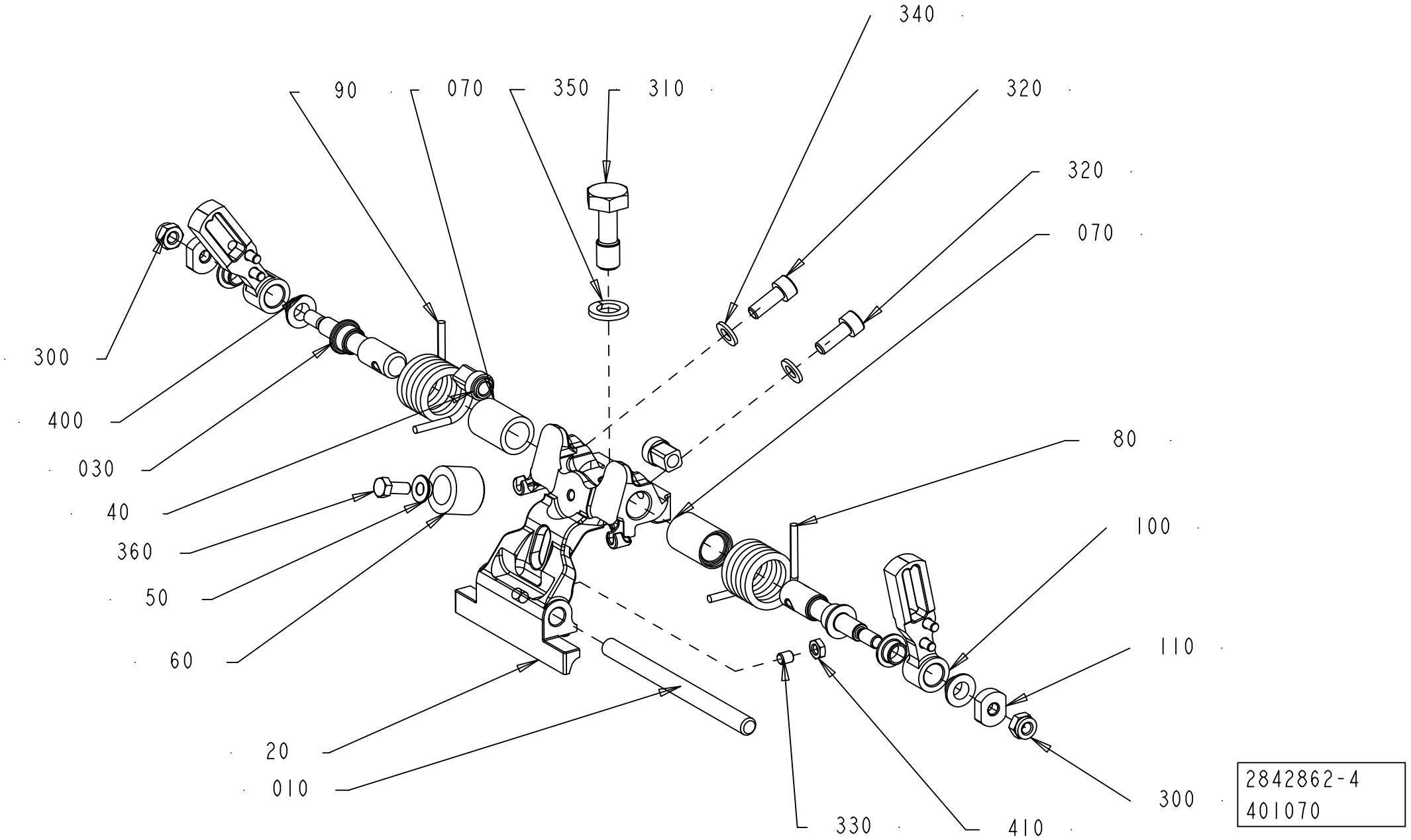

ECM: 548452 - 20120701
Group number: 2842862-0100
Assembly Drawing: 2842862-4_1_AB

This list covers pages from 1-538 to 1-545

Pos	Part No	UN	Qty	Description	Page No
TBA 2000S (Cont'd) (See drawing on page: 1-538)					
T40W8064	90166-0143	MM	220	TUBE 2,5 MM PA TRANSP.	
TGA 1000SQ, TGA 0750SQ (See drawing on page: 1-542)					
010	2649660-0000		1	SHAFT	
020	2993285-0004		1	HOLDER	
	3021650-0000		*1*	*HOLDER*	
030	2948028-0000		2	SHAFT	
040	2916130-0000		2	SLIDER	
050	2572197-0000		1	SPACER	
060	2649677-0000		1	DAMPER	
070	2948027-0000		2	BUSHING	
080	2949214-0000		1	SPRING	
090	2949215-0000		1	SPRING	
100	3018752-0000		2	LEVER	
110	2911623-0000		2	WASHER	
300	312812-0316		2	HEXAGON NUT, NY-LOCK M6 A4 80	
310	2922524-0000		1	SCREW	
320	312105-0368		2	SCREW, M6S ISO 4017 M6X16 A4 80	
330	311103-0268		1	PARALLEL PIN ISO 2338 4M6X12 A1	
360	312105-0327		1	SCREW, M6S ISO 4017 M5X12 A4 80	
400	90600-2013		4	FLANGE BUSHING, IGLIDUR X 8X10X5,5	
TGA 1500SQ (See drawing on page: 1-542)					
010	2773510-0000		1	SHAFT	
020	2949206-0001		1	HOLDER	
030	2948028-0000		2	SHAFT	
040	2916130-0000		2	SLIDER	
050	2572197-0000		1	SPACER	
060	3030308-0000		1	DAMPER	
070	2948027-0000		2	BUSHING	
080	2949214-0000		1	SPRING	
090	2949215-0000		1	SPRING	
100	2916131-0000		2	LEVER	
110	2911623-0000		2	WASHER	
300	312812-0316		2	HEXAGON NUT, NY-LOCK M6 A4 80	
310	2922524-0000		1	SCREW	
320	312115-0368		2	SCREW ISO4762 M6X16 A4 80	
330	312318-0321		1	SET SCREW, CUP END ISO4029 M5X6 A4	
360	312105-0327		1	SCREW, M6S ISO 4017 M5X12 A4 80	
400	90600-2013		4	FLANGE BUSHING, IGLIDUR X 8X10X5,5	
410	312625-0314		1	HEXAGON THIN NUT, EN 24035 ML6M M5 A4	
TPA 0500SQ (See drawing on page: 1-538)					
010	2962640-0000		1	SHAFT	
020	3024711-0001		1	HOLDER	
030	2911622-0000		2	SHAFT	
040	2916130-0000		2	SLIDER	
050	2842776-0000		1	PIN	
060	2842777-0001		1	DAMPER	
070	2842780-0000		2	BUSHING	
080	2842781-0000		1	SPRING	
090	2842782-0000		1	SPRING	
100	2916131-0000		2	LEVER	
110	2911623-0000		2	WASHER	
300	312812-0316		2	HEXAGON NUT, NY-LOCK M6 A4 80	
310	312105-0495		1	SCREW, M6S ISO 4017 M10X30 A4 80	
320	312115-0368		2	SCREW ISO4762 M6X16 A4 80	
330	312318-0325		1	SET SCREW, CUP END ISO4029 M5X10 A4	
370	90028-0020		2	CONE TUBE 2,5MM	
380	90134-0063		2	BUSHING/NUT M8X1, D=2,5 MM	
400	90600-2013		4	FLANGE BUSHING, IGLIDUR X 8X10X5,5	
410	312625-0314		1	HEXAGON THIN NUT, EN 24035 ML6M M5 A4	
T40W8062	90166-0143	MM	220	TUBE 2,5 MM PA TRANSP.	
T40W8064	90166-0143	MM	220	TUBE 2,5 MM PA TRANSP.	
TPA 1000SQ, TPA 0750SQ (See drawing on page: 1-538)					
010	2916971-0000		1	SHAFT	
020	3024938-0001		1	HOLDER	
030	2907800-0000		2	SHAFT	
040	2907807-0000		2	SLIDER	
050	2907797-0000		1	PIN	
060	2842777-0004		1	DAMPER	
070	2916984-0000		2	BUSHING	
080	2907805-0000		1	SPRING	
090	2907804-0000		1	SPRING	
100	2907806-0000		2	LEVER	
110	2911623-0000		2	WASHER	
300	312812-0316		2	HEXAGON NUT, NY-LOCK M6 A4 80	
310	312105-0499		1	SCREW, M6S ISO 4014 M10X40 A4 80	
320	312115-0368		2	SCREW ISO4762 M6X16 A4 80	
330	312318-0325		1	SET SCREW, CUP END ISO4029 M5X10 A4	
370	90028-0020		2	CONE TUBE 2,5MM	
380	90134-0063		2	BUSHING/NUT M8X1, D=2,5 MM	
400	90600-2013		4	FLANGE BUSHING, IGLIDUR X 8X10X5,5	
410	312625-0314		1	HEXAGON THIN NUT, EN 24035 ML6M M5 A4	
T40W8062	90166-0143	MM	220	TUBE 2,5 MM PA TRANSP.	
T40W8064	90166-0143	MM	220	TUBE 2,5 MM PA TRANSP.	

See previous drawings pages: 1-538, 1-540, 1-542.

Pos	Part No	UN	Qty	Description	Page No
Common Parts (Cont'd)					
340	315105-0153		2	WASHER PLAIN, 6,4X12X1,5 A4 BRB	
350	315105-0173		1	WASHER PLAIN, 10,5X22X2 A4 BRB	

Pos	Part No	UN	Qty	Description	Page No

VOLUME FLAP PRESSURE LEFT

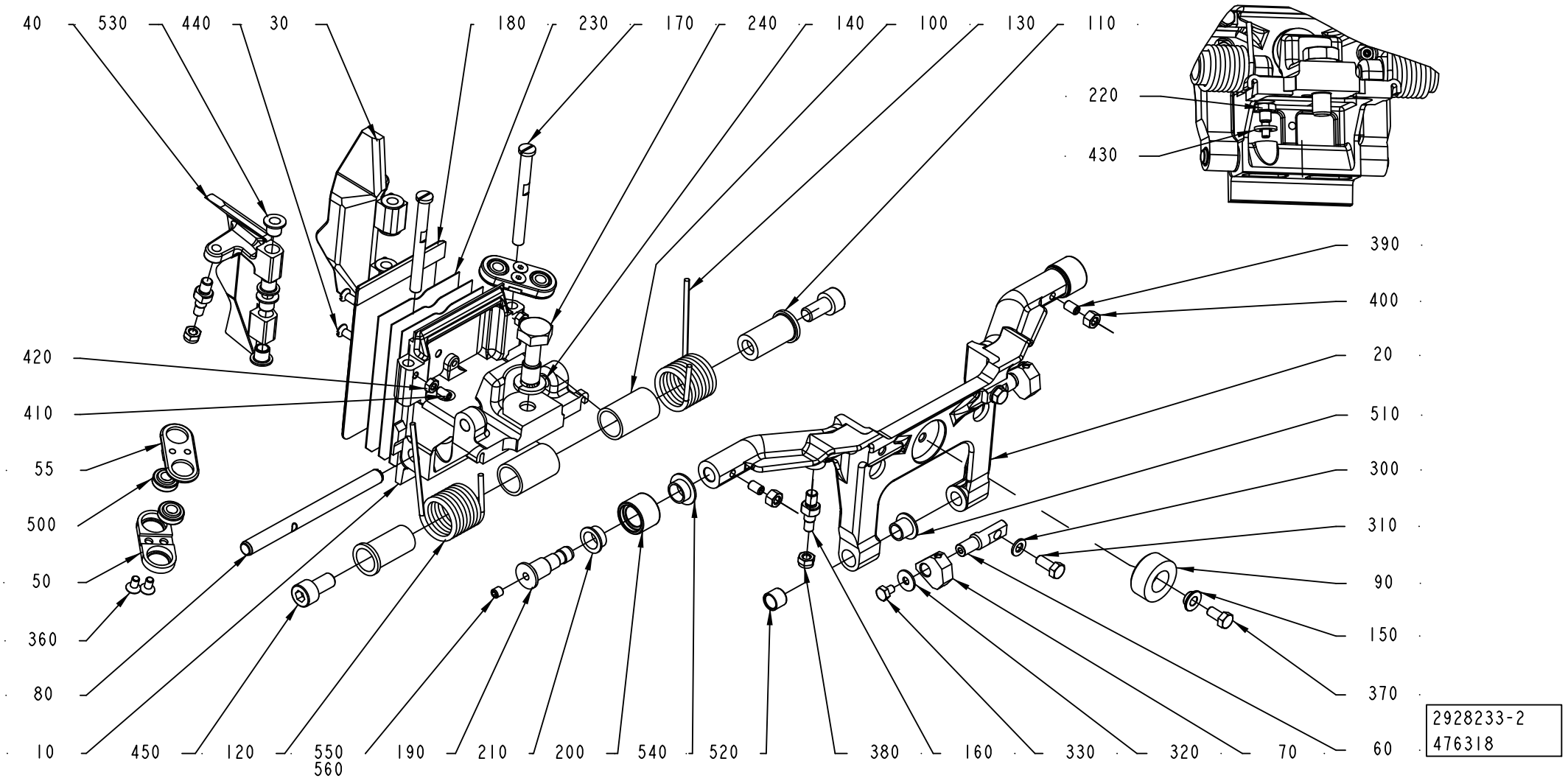

ECM: 483519 - 20101215
Group number: 2928233-0200
Assembly Drawing: 2928233-2_1_AC

Pos	Part No	UN	Qty	Description	Page No
-					
010	2998822-0004		1	FLAP HOLDER	
020	2917413-0000		1	FRAME	
030	3053567-0000		1	FLAP	
040	3053568-0000		1	FLAP	
050	3046743-0000		2	ROD	
055	3046744-0000		2	ROD	
060	2917418-0000		2	PIN	
070	2928239-0000		2	HOLDER	
080	2649660-0000		1	SHAFT	
090	2862308-0000		1	DAMPER	
100	1538521-0000		2	BUSHING	
110	2917419-0000		2	PIN	
120	2922536-0000		1	SPRING	
130	2922537-0000		1	SPRING	
140	315105-0173		1	WASHER PLAIN, 10,5X22X2 A4 BRB	
150	2572197-0000		1	SPACER	
160	2909850-0000		4	SPACER SCREW	
170	2866740-0000		2	SHAFT	
180	3031531-0000		1	VOLUME BULGE	
190	2868844-0000		2	AXLE PIN	
200	2660295-0000		2	ROLLER	
210	2660296-0000		2	BUSHING	
220	2922489-0000		1	PIN	
230	3041582-0000		3	SHIM	
240	2922524-0000		1	SCREW	
300	315105-0146		2	WASHER PLAIN, 5,3X10X1 A4 BRB	
310	312105-0327		2	SCREW, M6S ISO 4017 M5X12 A4 80	
320	90005-0082		2	WASHER PLAIN ROUND 4,3(M4)/12,H=1	
330	312105-0285		2	SCREW, M6S ISO 4017 M4X6 A4 70	
360	312155-0287		4	SCREW DIN 7991 MF6S M4X8 A4 70	
370	312105-0325		1	SCREW, M6S ISO 4017 M5X10 A4 80	
380	312812-0314		4	HEXAGON NUT, NY-LOCK M5 A4 80	
390	312318-0323		2	SET SCREW, CUP END ISO4029 M5X8 A4	
400	312605-0314		2	HEXAGON NUT, M6M M5 A280	
410	312318-0287		2	SET SCREW, CUP END ISO4029 M4X8 A4	
420	312605-0312		2	HEXAGON NUT, M6M M4 A280	
430	315105-0153		1	WASHER PLAIN, 6,4X12X1,5 A4 BRB	
440	312145-0291		2	SCREW ISO 2009 MFS M4X12 A4	
450	312115-0449		2	SCREW ISO4762 M8X16 A4 80	
500	90600-3582		4	SPHERICAL BEARING, GE 6 TGR	
510	90240-0260		2	FLANGE BUSHING, IGLIDUR X 8X10X9	
520	90458-0353		2	BUSHING, IGLIDUR X 8X10X8	
530	321155-0062		8	FLANGE BUSHING, IGLIDUR X 6X8X8	
540	90240-0289		2	FLANGE BUSHING, IGLIDUR X 10X12X6	
550	312318-0320		2	SET SCREW, CUP END ISO4029 M5X5 A4	
560	90602-4847		1	THREAD LOCKING, LOCTITE 243 50 ML	

Machine Type Group Description Used-In Group Number Page No

VOLUME FLAP PRESSURE

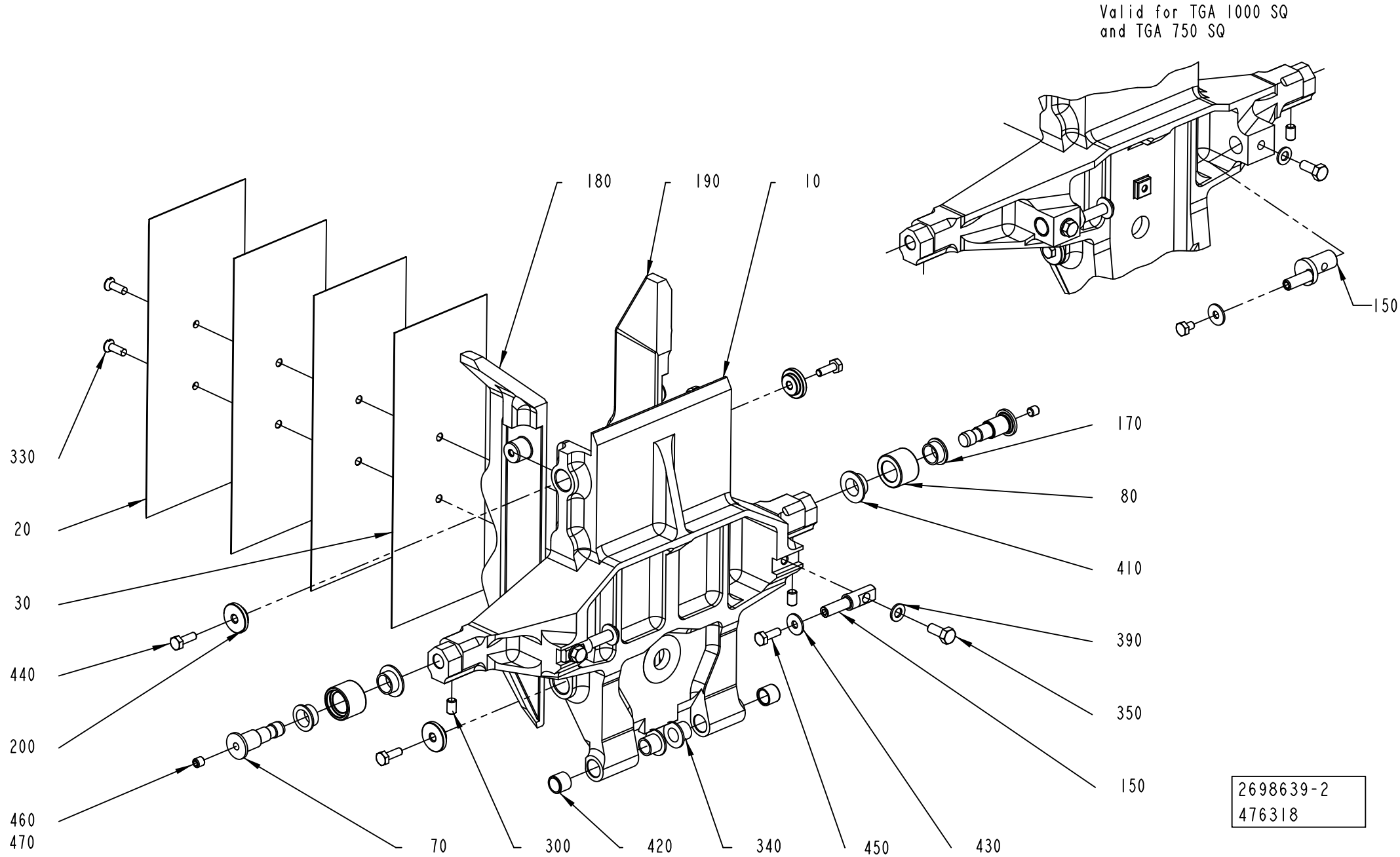

ECM: 483503 - 20101215
Group number: 2698639-0200
Assembly Drawing: 2698639-2_1_AD

Pos	Part No	UN	Qty	Description	Page No
A3/FLEX TGA 0750SQ					
010	2682187-0000		1	VOLUME FLAP	
020	2909851-0000		1	VOLUME BULGE	
030	2909852-0000		3	SHIM	
150	2997338-0000		2	ECCENTRIC SHAFT	
180	2682188-0000		1	FLAP	
190	2682189-0000		1	FLAP	
A3/FLEX TGA 1000SQ					
010	2660289-0000		1	VOLUME FLAP	
020	2660292-0000		1	VOLUME BULGE	
030	2660293-0000		3	VOLUME SHIM	
150	2997338-0000		2	ECCENTRIC SHAFT	
180	2660308-0000		1	FLAP	
190	2660309-0000		1	FLAP	
A3/FLEX TGA 1500SQ					
010	2948019-0000		1	VOLUME FLAP	
020	2660292-0000		1	VOLUME BULGE	
030	2660293-0000		3	VOLUME SHIM	
150	2948024-0000		2	SHAFT	
180	2948022-0000		1	FLAP	
190	2948023-0000		1	FLAP	
Common Parts					
070	2868844-0000		2	AXLE PIN	
080	2660295-0000		2	ROLLER	
170	2660296-0000		2	BUSHING	
200	2682174-0000		4	WASHER	
300	312318-0323		2	SET SCREW, CUP END ISO4029 M5X8 A4	
330	312145-0291		2	SCREW ISO 2009 MFS M4X12 A4	
340	90240-0260		2	FLANGE BUSHING, IGLIDUR X 8X10X9	
350	312105-0327		2	SCREW, M6S ISO 4017 M5X12 A4 80	
390	315105-0146		2	WASHER PLAIN, 5,3X10X1 A4 BRB	
410	90240-0289		2	FLANGE BUSHING, IGLIDUR X 10X12X6	
420	90458-0353		2	BUSHING, IGLIDUR X 8X10X8	
430	90005-0082		2	WASHER PLAIN ROUND 4,3(M4)/12,H=1	
440	312105-0291		4	SCREW, M6S ISO 4017 M4X12 A4 70	
450	312105-0285		2	SCREW, M6S ISO 4017 M4X6 A4 70	
460	312318-0320		2	SET SCREW, CUP END ISO4029 M5X5 A4	
470	90602-4847		1	THREAD LOCKING, LOCTITE 243 50 ML	

Pos	Part No	UN	Qty	Description	Page No

SUPPORT FLAP CUTTING

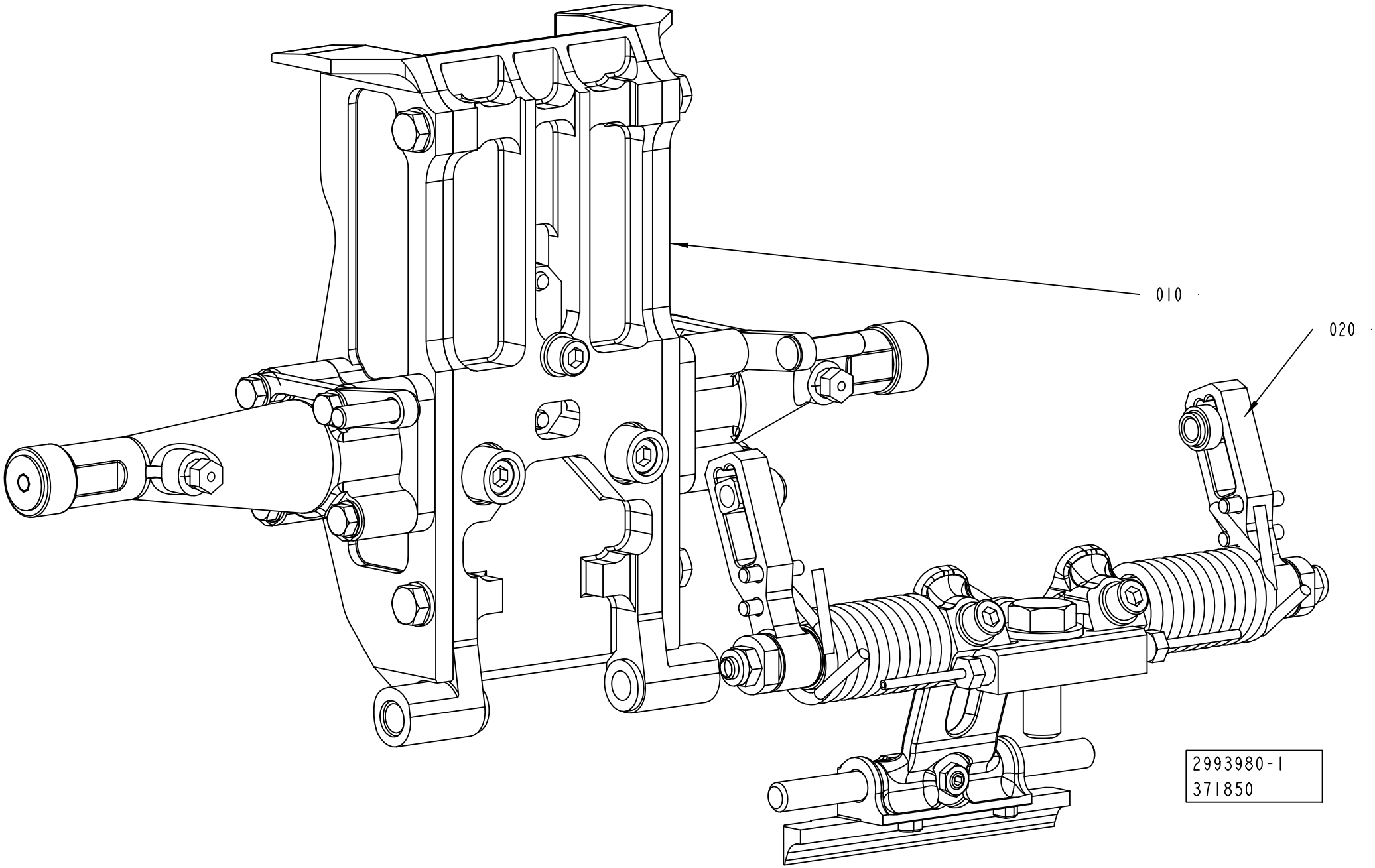

ECM: 533725 - 20120102
Group number: 2993980-0100
Assembly Drawing: 2993980-1_1_AA

Pos	Part No	UN	Qty	Description	Page No
TPA 0750SQ					
010	2808800-0100		1	VOLUME FLAP CUTTING	**1-495, 1-497, 1-499, 1-501, 1-503, 1-505, 1-507**
020	2993979-0100		1	SHOCK ABSORBER CUTTING	**1-553, 1-555, 1-557, 1-559**
TPA 1000SQ					
010	2808800-0100		1	VOLUME FLAP CUTTING	**1-495, 1-497, 1-499, 1-501, 1-503, 1-505, 1-507**
020	2993979-0100		1	SHOCK ABSORBER CUTTING	**1-553, 1-555, 1-557, 1-559**
TBA 0500B					
010	2808800-0100		1	VOLUME FLAP CUTTING	**1-495, 1-497, 1-499, 1-501, 1-503, 1-505, 1-507**
020	2993979-0100		1	SHOCK ABSORBER CUTTING	**1-553, 1-555, 1-557, 1-559**
TBA 0500S					
010	2808800-0100		1	VOLUME FLAP CUTTING	**1-495, 1-497, 1-499, 1-501, 1-503, 1-505, 1-507**
020	2993979-0100		1	SHOCK ABSORBER CUTTING	**1-553, 1-555, 1-557, 1-559**
TBA 0500SQ					
010	2808800-0100		1	VOLUME FLAP CUTTING	**1-495, 1-497, 1-499, 1-501, 1-503, 1-505, 1-507**
020	2993979-0100		1	SHOCK ABSORBER CUTTING	**1-553, 1-555, 1-557, 1-559**
TBA 1000B					
010	2808800-0100		1	VOLUME FLAP CUTTING	**1-495, 1-497, 1-499, 1-501, 1-503, 1-505, 1-507**
020	2993979-0100		1	SHOCK ABSORBER CUTTING	**1-553, 1-555, 1-557, 1-559**
TBA 1000S					
010	2808800-0100		1	VOLUME FLAP CUTTING	**1-495, 1-497, 1-499, 1-501, 1-503, 1-505, 1-507**
020	2993979-0100		1	SHOCK ABSORBER CUTTING	**1-553, 1-555, 1-557, 1-559**
TBA 1000SQ					
010	2808800-0100		1	VOLUME FLAP CUTTING	**1-495, 1-497, 1-499, 1-501, 1-503, 1-505, 1-507**
020	2993979-0100		1	SHOCK ABSORBER CUTTING	**1-553, 1-555, 1-557, 1-559**
TBA 1500S					
010	2808800-0100		1	VOLUME FLAP CUTTING	**1-495, 1-497, 1-499, 1-501, 1-503, 1-505, 1-507**
020	2993979-0100		1	SHOCK ABSORBER CUTTING	**1-553, 1-555, 1-557, 1-559**
TBA 2000S					
010	2808800-0100		1	VOLUME FLAP CUTTING	**1-495, 1-497, 1-499, 1-501, 1-503, 1-505, 1-507**
020	2993979-0100		1	SHOCK ABSORBER CUTTING	**1-553, 1-555, 1-557, 1-559**
TGA 0500SQ					
010	2922540-0200		1	VOLUME FLAP CUTTING RIGHT	**1-561**
TGA 0750SQ					
010	2698638-0200		1	VOLUME FLAP CUTTING	**1-521**
020	2993979-0100		1	SHOCK ABSORBER CUTTING	**1-553, 1-555, 1-557, 1-559**
TGA 1000SQ					
010	2698638-0200		1	VOLUME FLAP CUTTING	**1-521**
020	2993979-0100		1	SHOCK ABSORBER CUTTING	**1-553, 1-555, 1-557, 1-559**
TGA 1500SQ					
010	2698638-0200		1	VOLUME FLAP CUTTING	**1-521**
020	2993979-0100		1	SHOCK ABSORBER CUTTING	**1-553, 1-555, 1-557, 1-559**
TPA 0500SQ					
010	2808800-0100		1	VOLUME FLAP CUTTING	**1-495, 1-497, 1-499, 1-501, 1-503, 1-505, 1-507**
020	2993979-0100		1	SHOCK ABSORBER CUTTING	**1-553, 1-555, 1-557, 1-559**

Machine Type	Group Description	Used-In	Group Number	Page No

SHOCK ABSORBER CUTTING

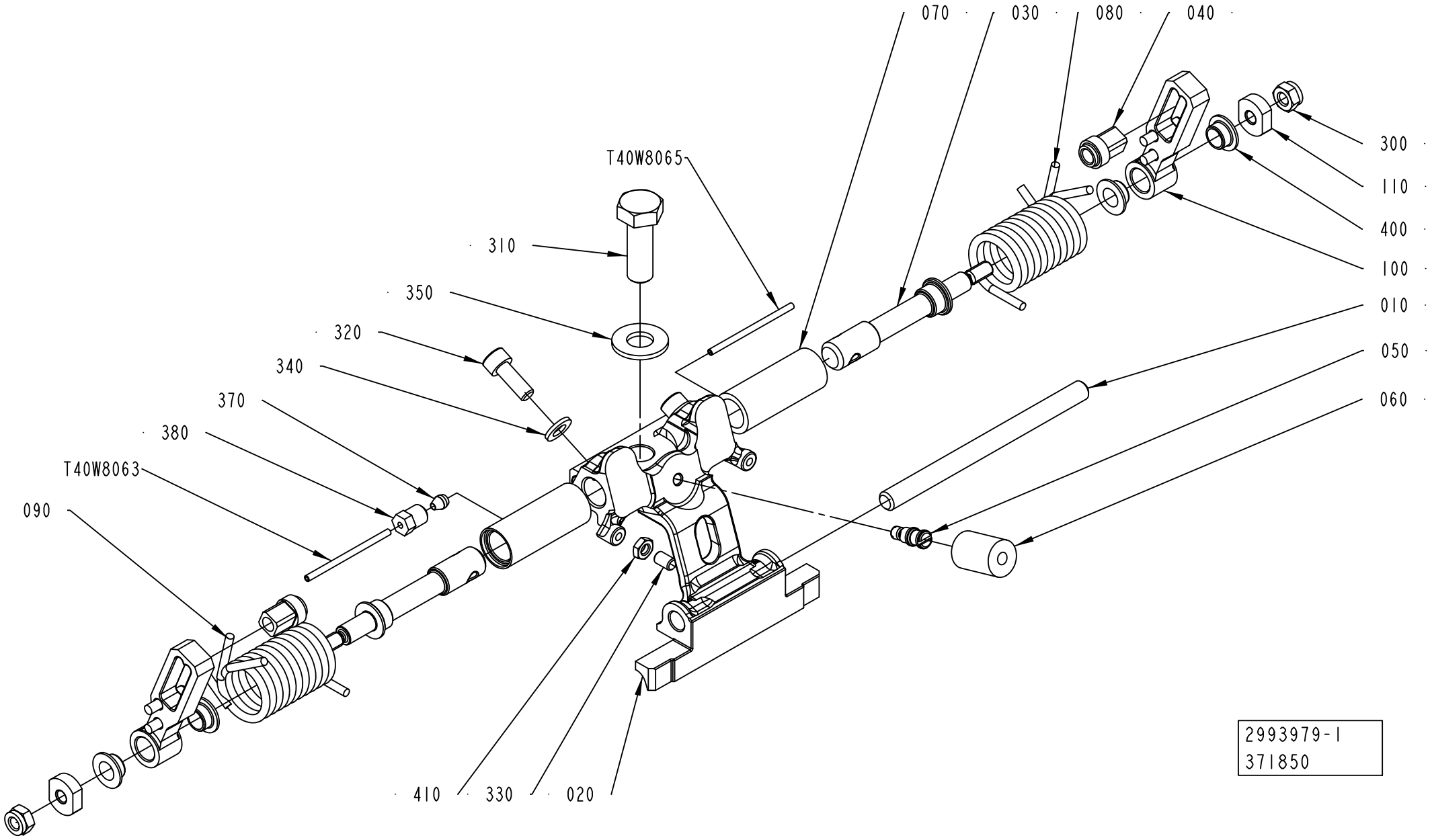

ECM: 535051 - 20120102
Group number: 2993979-0100
Assembly Drawing: 2993979-1_1_AA

This list covers pages from 1-552 to 1-559

Pos	Part No	UN	Qty	Description	Page No
TBA 0500B (See drawing on page: 1-554)					
010	2773510-0000		1	SHAFT	
020	3038000-0002		1	HOLDER	
030	2902006-0000		2	SHAFT	
050	2842776-0000		1	PIN	
060	2842777-0001		1	DAMPER	
080	2961953-0000		2	TENSION SPRING	
120	2905199-0000		2	HOLDER	
300	312105-0285		2	SCREW, M6S ISO 4017 M4X6 A4 70	
310	312105-0495		1	SCREW, M6S ISO 4017 M10X30 A4 80	
320	312115-0368		2	SCREW ISO4762 M6X16 A4 80	
330	312318-0325		1	SET SCREW, CUP END ISO4029 M5X10 A4	
360	315106-0136		2	WASHER PLAIN, M4 ISO7089-4-200 HV A4	
370	90028-0020		2	CONE TUBE 2,5MM	
380	90134-0063		2	BUSHING/NUT M8X1, D=2,5 MM	
410	312625-0314		1	HEXAGON THIN NUT, EN 24035 ML6M M5 A4	
T40W8063	90166-0143	MM	220	TUBE 2,5 MM PA TRANSP.	
T40W8065	90166-0143	MM	220	TUBE 2,5 MM PA TRANSP.	
TBA 0500S (See drawing on page: 1-552)					
010	2916971-0000		1	SHAFT	
020	3024712-0002		1	HOLDER	
030	2911622-0000		2	SHAFT	
040	2916130-0000		2	SLIDER	
050	2842776-0000		1	PIN	
060	2842777-0001		1	DAMPER	
070	2842780-0000		2	BUSHING	
080	2842781-0000		1	SPRING	
090	2842782-0000		1	SPRING	
100	2916131-0000		2	LEVER	
110	2911623-0000		2	WASHER	
300	312812-0316		2	HEXAGON NUT, NY-LOCK M6 A4 80	
310	312105-0495		1	SCREW, M6S ISO 4017 M10X30 A4 80	
320	312115-0368		2	SCREW ISO4762 M6X16 A4 80	
330	312318-0325		1	SET SCREW, CUP END ISO4029 M5X10 A4	
370	90028-0020		2	CONE TUBE 2,5MM	
380	90134-0063		2	BUSHING/NUT M8X1, D=2,5 MM	
400	90600-2013		4	FLANGE BUSHING, IGLIDUR X 8X10X5,5	
410	312625-0314		1	HEXAGON THIN NUT, EN 24035 ML6M M5 A4	
T40W8063	90166-0143	MM	220	TUBE 2,5 MM PA TRANSP.	
T40W8065	90166-0143	MM	220	TUBE 2,5 MM PA TRANSP.	
TBA 0500SQ (See drawing on page: 1-554)					
010	2773510-0000		1	SHAFT	
020	3037996-0002		1	HOLDER	
030	2863119-0000		2	SHAFT	
050	2842776-0000		1	PIN	
060	2842777-0001		1	DAMPER	
080	2959868-0000		2	TENSION SPRING	
120	2905199-0000		2	HOLDER	
300	312105-0285		2	SCREW, M6S ISO 4017 M4X6 A4 70	
310	312105-0495		1	SCREW, M6S ISO 4017 M10X30 A4 80	
320	312115-0368		2	SCREW ISO4762 M6X16 A4 80	
330	312318-0323		1	SET SCREW, CUP END ISO4029 M5X8 A4	
360	315106-0136		2	WASHER PLAIN, M4 ISO7089-4-200 HV A4	
370	90028-0020		2	CONE TUBE 2,5MM	
380	90134-0063		2	BUSHING/NUT M8X1, D=2,5 MM	
410	312625-0314		1	HEXAGON THIN NUT, EN 24035 ML6M M5 A4	
T40W8063	90166-0143	MM	220	TUBE 2,5 MM PA TRANSP.	
T40W8065	90166-0143	MM	220	TUBE 2,5 MM PA TRANSP.	
TBA 1000B (See drawing on page: 1-552)					
010	2773510-0000		1	SHAFT	
020	3038000-0002		1	HOLDER	
030	2911622-0000		2	SHAFT	
040	2916130-0000		2	SLIDER	
050	2842776-0000		1	PIN	
060	2842777-0001		1	DAMPER	
070	2842780-0000		2	BUSHING	
080	2842781-0000		1	SPRING	
090	2842782-0000		1	SPRING	
100	2916131-0000		2	LEVER	
110	2911623-0000		2	WASHER	
300	312812-0316		2	HEXAGON NUT, NY-LOCK M6 A4 80	
310	312105-0495		1	SCREW, M6S ISO 4017 M10X30 A4 80	
320	312115-0368		2	SCREW ISO4762 M6X16 A4 80	
330	312318-0325		1	SET SCREW, CUP END ISO4029 M5X10 A4	
370	90028-0020		2	CONE TUBE 2,5MM	
380	90134-0063		2	BUSHING/NUT M8X1, D=2,5 MM	
400	90600-2013		4	FLANGE BUSHING, IGLIDUR X 8X10X5,5	
410	312625-0314		1	HEXAGON THIN NUT, EN 24035 ML6M M5 A4	
T40W8063	90166-0143	MM	220	TUBE 2,5 MM PA TRANSP.	
T40W8065	90166-0143	MM	220	TUBE 2,5 MM PA TRANSP.	
TBA 1000S (See drawing on page: 1-552)					
010	2773510-0000		1	SHAFT	
020	3037998-0002		1	HOLDER	
030	2911622-0000		2	SHAFT	

Machine Type | Group Description | Used-In | Group Number | Page No

SHOCK ABSORBER CUTTING

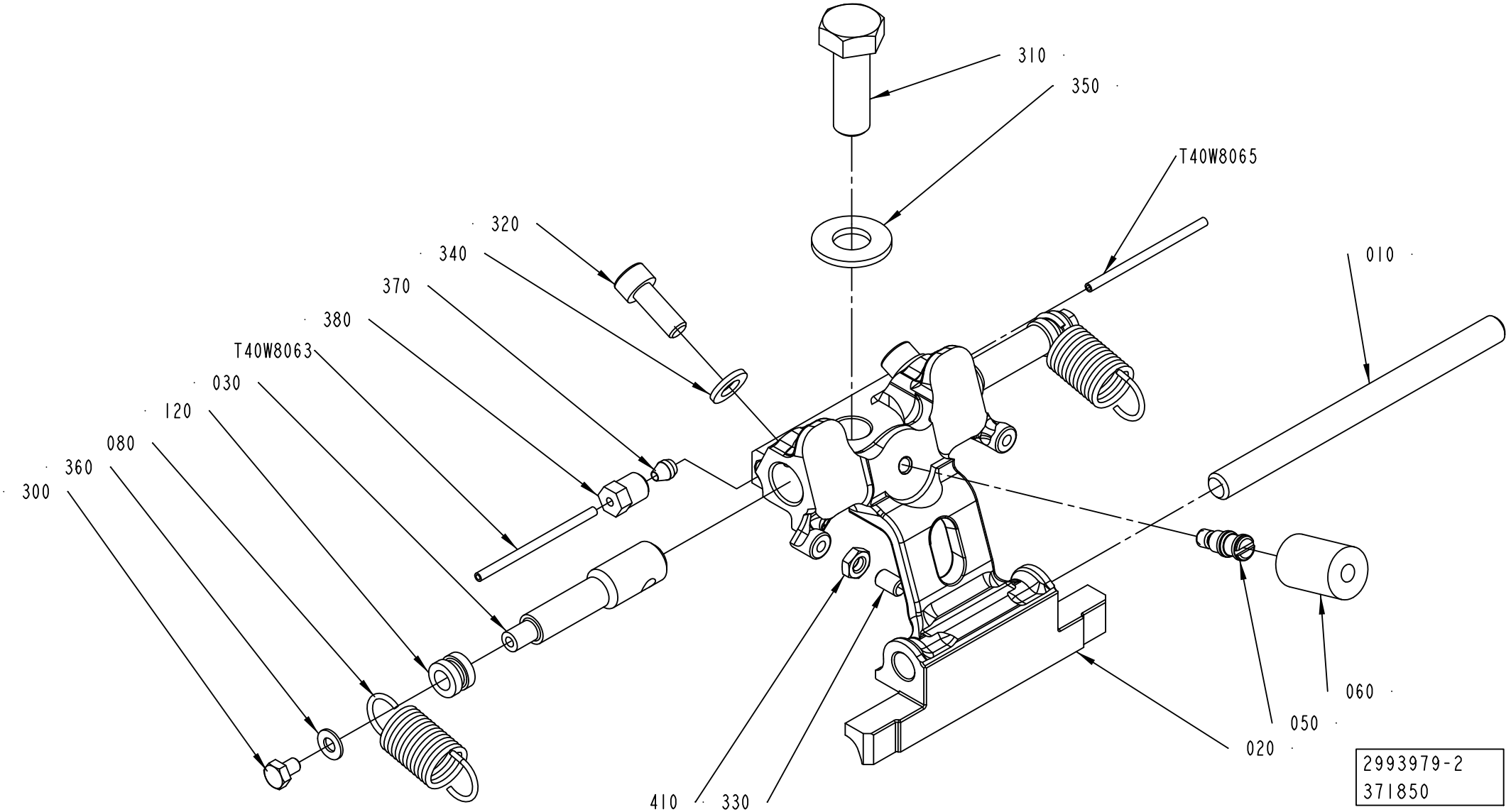

ECM: 535051 - 20120102
Group number: 2993979-0100
Assembly Drawing: 2993979-2_1_AA

This list covers pages from 1-552 to 1-559

Pos	Part No	UN	Qty	Description	Page No
TBA 1000S (Cont'd) (See drawing on page: 1-552)					
040	2916130-0000		2	SLIDER	
050	2842776-0000		1	PIN	
060	2842777-0001		1	DAMPER	
070	2842780-0000		2	BUSHING	
080	2842781-0000		1	SPRING	
090	2842782-0000		1	SPRING	
100	2916131-0000		2	LEVER	
110	2911623-0000		2	WASHER	
300	312812-0316		2	HEXAGON NUT, NY-LOCK M6 A4 80	
310	312105-0495		1	SCREW, M6S ISO 4017 M10X30 A4 80	
320	312115-0368		2	SCREW ISO4762 M6X16 A4 80	
330	312318-0325		1	SET SCREW, CUP END ISO4029 M5X10 A4	
370	90028-0020		2	CONE TUBE 2,5MM	
380	90134-0063		2	BUSHING/NUT M8X1, D=2,5 MM	
400	90600-2013		4	FLANGE BUSHING, IGLIDUR X 8X10X5,5	
410	312625-0314		1	HEXAGON THIN NUT, EN 24035 ML6M M5 A4	
T40W8063	90166-0143	MM	220	TUBE 2,5 MM PA TRANSP.	
T40W8065	90166-0143	MM	220	TUBE 2,5 MM PA TRANSP.	
TBA 1000SQ (See drawing on page: 1-552)					
010	2773510-0000		1	SHAFT	
020	3037996-0002		1	HOLDER	
030	2911622-0000		2	SHAFT	
040	2916130-0000		2	SLIDER	
050	2842776-0000		1	PIN	
060	2842777-0001		1	DAMPER	
070	2842780-0000		2	BUSHING	
080	2842781-0000		1	SPRING	
090	2842782-0000		1	SPRING	
100	2916131-0000		2	LEVER	
110	2911623-0000		2	WASHER	
300	312812-0316		2	HEXAGON NUT, NY-LOCK M6 A4 80	
310	312105-0495		1	SCREW, M6S ISO 4017 M10X30 A4 80	
320	312115-0368		2	SCREW ISO4762 M6X16 A4 80	
330	312318-0323		1	SET SCREW, CUP END ISO4029 M5X8 A4	
370	90028-0020		2	CONE TUBE 2,5MM	
380	90134-0063		2	BUSHING/NUT M8X1, D=2,5 MM	
400	90600-2013		4	FLANGE BUSHING, IGLIDUR X 8X10X5,5	
410	312625-0314		1	HEXAGON THIN NUT, EN 24035 ML6M M5 A4	
T40W8063	90166-0143	MM	220	TUBE 2,5 MM PA TRANSP.	
T40W8065	90166-0143	MM	220	TUBE 2,5 MM PA TRANSP.	
TBA 1500S (See drawing on page: 1-552)					
010	2773510-0000		1	SHAFT	
020	3024941-0002		1	HOLDER	
030	2907800-0000		2	SHAFT	
040	2907807-0000		2	SLIDER	
050	2907797-0000		1	PIN	
060	2842777-0005		1	DAMPER	
070	2916984-0000		2	BUSHING	
080	2907805-0000		1	SPRING	
090	2907804-0000		1	SPRING	
100	2907806-0000		2	LEVER	
110	2911623-0000		2	WASHER	
300	312812-0316		2	HEXAGON NUT, NY-LOCK M6 A4 80	
310	312105-0499		1	SCREW, M6S ISO 4014 M10X40 A4 80	
320	312115-0368		2	SCREW ISO4762 M6X16 A4 80	
330	312318-0325		1	SET SCREW, CUP END ISO4029 M5X10 A4	
370	90028-0020		2	CONE TUBE 2,5MM	
380	90134-0063		2	BUSHING/NUT M8X1, D=2,5 MM	
400	90600-2013		4	FLANGE BUSHING, IGLIDUR X 8X10X5,5	
410	312625-0314		1	HEXAGON THIN NUT, EN 24035 ML6M M5 A4	
T40W8063	90166-0143	MM	220	TUBE 2,5 MM PA TRANSP.	
T40W8065	90166-0143	MM	220	TUBE 2,5 MM PA TRANSP.	
TBA 2000S (See drawing on page: 1-552)					
010	2907798-0000		1	SHAFT	
020	3024939-0002		1	HOLDER	
030	2907800-0000		2	SHAFT	
040	2907807-0000		2	SLIDER	
050	2907797-0000		1	PIN	
060	2842777-0005		1	DAMPER	
070	2916984-0000		2	BUSHING	
080	2907805-0000		1	SPRING	
090	2907804-0000		1	SPRING	
100	2907806-0000		2	LEVER	
110	2911623-0000		2	WASHER	
300	312812-0316		2	HEXAGON NUT, NY-LOCK M6 A4 80	
310	312105-0499		1	SCREW, M6S ISO 4014 M10X40 A4 80	
320	312115-0368		2	SCREW ISO4762 M6X16 A4 80	
330	312318-0325		1	SET SCREW, CUP END ISO4029 M5X10 A4	
370	90028-0020		2	CONE TUBE 2,5MM	
380	90134-0063		2	BUSHING/NUT M8X1, D=2,5 MM	
400	90600-2013		4	FLANGE BUSHING, IGLIDUR X 8X10X5,5	
410	312625-0314		1	HEXAGON THIN NUT, EN 24035 ML6M M5 A4	
T40W8063	90166-0143	MM	220	TUBE 2,5 MM PA TRANSP.	

SHOCK ABSORBER CUTTING

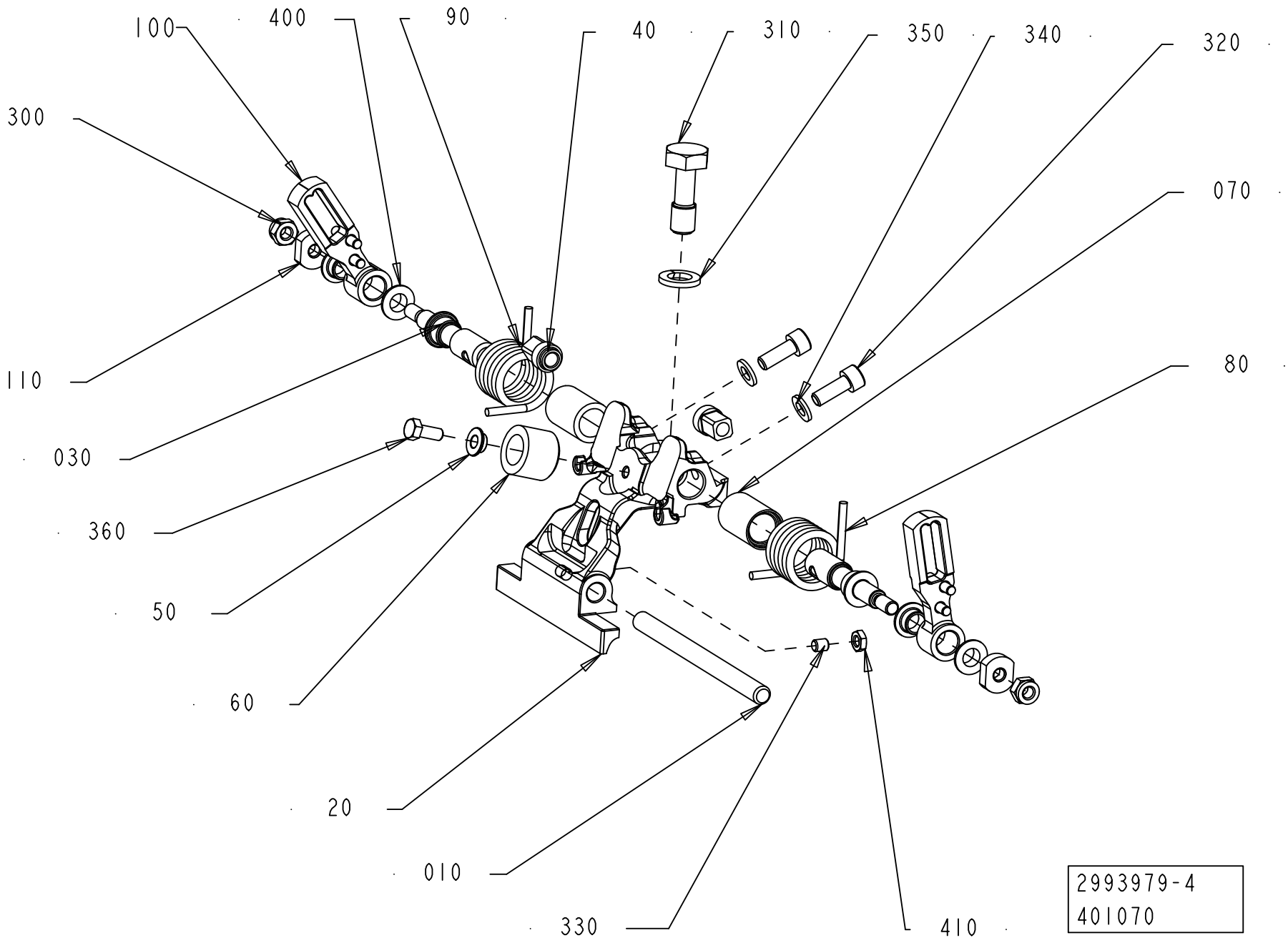

Pos	Part No	UN	Qty	Description	Page No
TBA 2000S (Cont'd) (See drawing on page: 1-552)					
T40W8065	90166-0143	MM	220	TUBE 2,5 MM PA TRANSP.	
TGA 1000SQ, TGA 0750SQ (See drawing on page: 1-556)					
010	2649660-0000		1	SHAFT	
020	2993285-0001		1	HOLDER	
	3021650-0000		*1*	*HOLDER*	
030	2948028-0000		2	SHAFT	
040	2916130-0000		2	SLIDER	
050	2572197-0000		1	SPACER	
060	2649677-0000		1	DAMPER	
070	2948027-0000		2	BUSHING	
080	2949214-0000		1	SPRING	
090	2949215-0000		1	SPRING	
100	3018752-0000		2	LEVER	
110	2911623-0000		2	WASHER	
300	312812-0316		2	HEXAGON NUT, NY-LOCK M6 A4 80	
310	2922524-0000		1	SCREW	
320	312105-0368		2	SCREW, M6S ISO 4017 M6X16 A4 80	
330	311103-0268		1	PARALLEL PIN ISO 2338 4M6X12 A1	
360	312105-0327		1	SCREW, M6S ISO 4017 M5X12 A4 80	
400	90600-2013		4	FLANGE BUSHING, IGLIDUR X 8X10X5,5	
TGA 1500SQ (See drawing on page: 1-556)					
010	2773510-0000		1	SHAFT	
020	2948025-0002		1	HOLDER	
030	2948028-0000		2	SHAFT	
040	2916130-0000		2	SLIDER	
050	2572197-0000		1	SPACER	
060	3030308-0000		1	DAMPER	
070	2948027-0000		2	BUSHING	
080	2949214-0000		1	SPRING	
090	2949215-0000		1	SPRING	
100	2916131-0000		2	LEVER	
110	2911623-0000		2	WASHER	
300	312812-0316		2	HEXAGON NUT, NY-LOCK M6 A4 80	
310	2922524-0000		1	SCREW	
320	312115-0368		2	SCREW ISO4762 M6X16 A4 80	
330	312318-0321		1	SET SCREW, CUP END ISO4029 M5X6 A4	
360	312105-0327		1	SCREW, M6S ISO 4017 M5X12 A4 80	
400	90600-2013		4	FLANGE BUSHING, IGLIDUR X 8X10X5,5	
410	312625-0314		1	HEXAGON THIN NUT, EN 24035 ML6M M5 A4	
TPA 0500SQ (See drawing on page: 1-552)					
010	2962640-0000		1	SHAFT	
020	3024710-0002		1	HOLDER	
030	2911622-0000		2	SHAFT	
040	2916130-0000		2	SLIDER	
050	2842776-0000		1	PIN	
060	2842777-0001		1	DAMPER	
070	2842780-0000		2	BUSHING	
080	2842781-0000		1	SPRING	
090	2842782-0000		1	SPRING	
100	2916131-0000		2	LEVER	
110	2911623-0000		2	WASHER	
300	312812-0316		2	HEXAGON NUT, NY-LOCK M6 A4 80	
310	312105-0495		1	SCREW, M6S ISO 4017 M10X30 A4 80	
320	312115-0368		2	SCREW ISO4762 M6X16 A4 80	
330	312318-0325		1	SET SCREW, CUP END ISO4029 M5X10 A4	
370	90028-0020		2	CONE TUBE 2,5MM	
380	90134-0063		2	BUSHING/NUT M8X1, D=2,5 MM	
400	90600-2013		4	FLANGE BUSHING, IGLIDUR X 8X10X5,5	
410	312625-0314		1	HEXAGON THIN NUT, EN 24035 ML6M M5 A4	
T40W8063	90166-0143	MM	220	TUBE 2,5 MM PA TRANSP.	
T40W8065	90166-0143	MM	220	TUBE 2,5 MM PA TRANSP.	
TPA 1000SQ, TPA 0750SQ (See drawing on page: 1-552)					
010	2916971-0000		1	SHAFT	
020	3024937-0002		1	HOLDER	
030	2907800-0000		2	SHAFT	
040	2907807-0000		2	SLIDER	
050	2907797-0000		1	PIN	
060	2842777-0004		1	DAMPER	
070	2916984-0000		2	BUSHING	
080	2907805-0000		1	SPRING	
090	2907804-0000		1	SPRING	
100	2907806-0000		2	LEVER	
110	2911623-0000		2	WASHER	
300	312812-0316		2	HEXAGON NUT, NY-LOCK M6 A4 80	
310	312105-0499		1	SCREW, M6S ISO 4014 M10X40 A4 80	
320	312115-0368		2	SCREW ISO4762 M6X16 A4 80	
330	312318-0325		1	SET SCREW, CUP END ISO4029 M5X10 A4	
370	90028-0020		2	CONE TUBE 2,5MM	
380	90134-0063		2	BUSHING/NUT M8X1, D=2,5 MM	
400	90600-2013		4	FLANGE BUSHING, IGLIDUR X 8X10X5,5	
410	312625-0314		1	HEXAGON THIN NUT, EN 24035 ML6M M5 A4	
T40W8063	90166-0143	MM	220	TUBE 2,5 MM PA TRANSP.	
T40W8065	90166-0143	MM	220	TUBE 2,5 MM PA TRANSP.	

See previous drawings pages: 1-552, 1-554, 1-556.

Pos	Part No	UN	Qty	Description	Page No
Common Parts (Cont'd)					
340	315105-0153		2	WASHER PLAIN, 6,4X12X1,5 A4 BRB	
350	315105-0173		1	WASHER PLAIN, 10,5X22X2 A4 BRB	

Pos	Part No	UN	Qty	Description	Page No

VOLUME FLAP CUTTING RIGHT

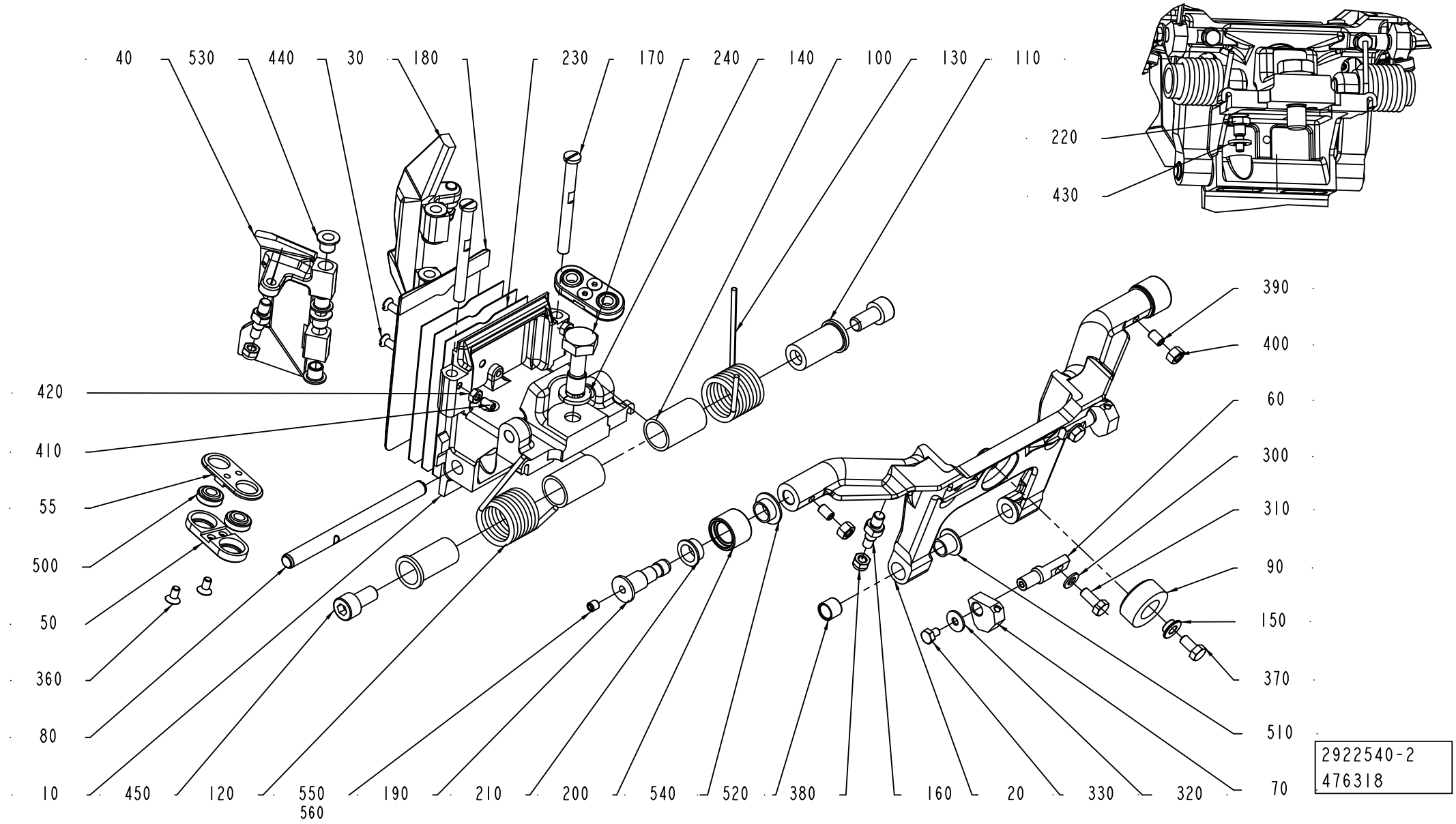

ECM: 483517 - 20101215
Group number: 2922540-0200
Assembly Drawing: 2922540-2_1_AC

Pos	Part No	UN	Qty	Description	Page No
-					
010	2998822-0001		1	FLAP HOLDER	
020	2917413-0000		1	FRAME	
030	3053569-0000		1	FLAP	
040	3053570-0000		1	FLAP	
050	3046743-0000		2	ROD	
055	3046744-0000		2	ROD	
060	2917418-0000		2	PIN	
070	2928239-0000		2	HOLDER	
080	2649660-0000		1	SHAFT	
090	2862308-0000		1	DAMPER	
100	1538521-0000		2	BUSHING	
110	2917419-0000		2	PIN	
120	2922536-0000		1	SPRING	
130	2922537-0000		1	SPRING	
140	315105-0173		1	WASHER PLAIN, 10,5X22X2 A4 BRB	
150	2572197-0000		1	SPACER	
160	2909850-0000		4	SPACER SCREW	
170	2866740-0000		2	SHAFT	
180	3031532-0000		1	VOLUME BULGE	
190	2868844-0000		2	AXLE PIN	
200	2660295-0000		2	ROLLER	
210	2660296-0000		2	BUSHING	
220	2922489-0000		1	PIN	
230	3041582-0000		3	SHIM	
240	2922524-0000		1	SCREW	
300	315105-0146		2	WASHER PLAIN, 5,3X10X1 A4 BRB	
310	312105-0327		2	SCREW, M6S ISO 4017 M5X12 A4 80	
320	90005-0082		2	WASHER PLAIN ROUND 4,3(M4)/12,H=1	
330	312105-0285		2	SCREW, M6S ISO 4017 M4X6 A4 70	
360	312155-0287		4	SCREW DIN 7991 MF6S M4X8 A4 70	
370	312105-0325		1	SCREW, M6S ISO 4017 M5X10 A4 80	
380	312812-0314		4	HEXAGON NUT, NY-LOCK M5 A4 80	
390	312318-0323		2	SET SCREW, CUP END ISO4029 M5X8 A4	
400	312605-0314		2	HEXAGON NUT, M6M M5 A280	
410	312318-0287		2	SET SCREW, CUP END ISO4029 M4X8 A4	
420	312605-0312		2	HEXAGON NUT, M6M M4 A280	
430	315105-0153		1	WASHER PLAIN, 6,4X12X1,5 A4 BRB	
440	312145-0291		2	SCREW ISO 2009 MFS M4X12 A4	
450	312115-0449		2	SCREW ISO4762 M8X16 A4 80	
500	90600-3582		4	SPHERICAL BEARING, GE 6 TGR	
510	90240-0260		2	FLANGE BUSHING, IGLIDUR X 8X10X9	
520	90458-0353		2	BUSHING, IGLIDUR X 8X10X8	
530	321155-0062		8	FLANGE BUSHING, IGLIDUR X 6X8X8	
540	90240-0289		2	FLANGE BUSHING, IGLIDUR X 10X12X6	
550	312318-0320		2	SET SCREW, CUP END ISO4029 M5X5 A4	
560	90602-4847		1	THREAD LOCKING, LOCTITE 243 50 ML	

Machine Type Group Description Used-In Group Number Page No

SUPPORT FLAP PRESSURE

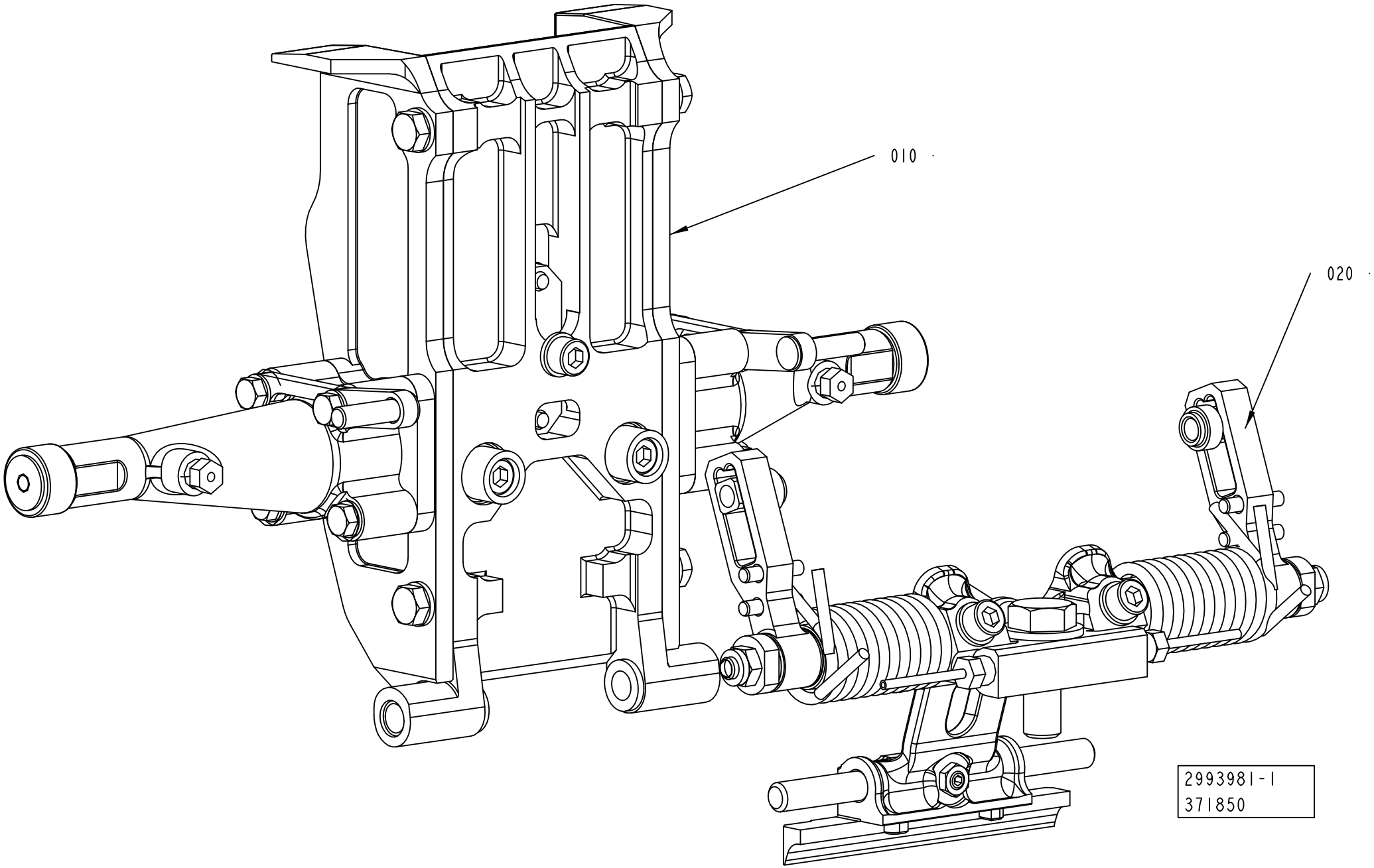

ECM: 533726 - 20120102
Group number: 2993981-0100
Assembly Drawing: 2993981-1_1_AA

Pos	Part No	UN	Qty	Description	Page No
TPA 0750SQ					
010	2810637-0100		1	VOLUME FLAP PRESSURE	**1-525, 1-527, 1-529, 1-531, 1-533, 1-535, 1-537**
020	2993982-0100		1	SHOCK ABSORBER PRESSURE	**1-565, 1-567, 1-569, 1-571**
TPA 1000SQ					
010	2810637-0100		1	VOLUME FLAP PRESSURE	**1-525, 1-527, 1-529, 1-531, 1-533, 1-535, 1-537**
020	2993982-0100		1	SHOCK ABSORBER PRESSURE	**1-565, 1-567, 1-569, 1-571**
TBA 0500B					
010	2810637-0100		1	VOLUME FLAP PRESSURE	**1-525, 1-527, 1-529, 1-531, 1-533, 1-535, 1-537**
020	2993982-0100		1	SHOCK ABSORBER PRESSURE	**1-565, 1-567, 1-569, 1-571**
TBA 0500S					
010	2810637-0100		1	VOLUME FLAP PRESSURE	**1-525, 1-527, 1-529, 1-531, 1-533, 1-535, 1-537**
020	2993982-0100		1	SHOCK ABSORBER PRESSURE	**1-565, 1-567, 1-569, 1-571**
TBA 0500SQ					
010	2810637-0100		1	VOLUME FLAP PRESSURE	**1-525, 1-527, 1-529, 1-531, 1-533, 1-535, 1-537**
020	2993982-0100		1	SHOCK ABSORBER PRESSURE	**1-565, 1-567, 1-569, 1-571**
TBA 1000B					
010	2810637-0100		1	VOLUME FLAP PRESSURE	**1-525, 1-527, 1-529, 1-531, 1-533, 1-535, 1-537**
020	2993982-0100		1	SHOCK ABSORBER PRESSURE	**1-565, 1-567, 1-569, 1-571**
TBA 1000S					
010	2810637-0100		1	VOLUME FLAP PRESSURE	**1-525, 1-527, 1-529, 1-531, 1-533, 1-535, 1-537**
020	2993982-0100		1	SHOCK ABSORBER PRESSURE	**1-565, 1-567, 1-569, 1-571**
TBA 1000SQ					
010	2810637-0100		1	VOLUME FLAP PRESSURE	**1-525, 1-527, 1-529, 1-531, 1-533, 1-535, 1-537**
020	2993982-0100		1	SHOCK ABSORBER PRESSURE	**1-565, 1-567, 1-569, 1-571**
TBA 1500S					
010	2810637-0100		1	VOLUME FLAP PRESSURE	**1-525, 1-527, 1-529, 1-531, 1-533, 1-535, 1-537**
020	2993982-0100		1	SHOCK ABSORBER PRESSURE	**1-565, 1-567, 1-569, 1-571**
TBA 2000S					
010	2810637-0100		1	VOLUME FLAP PRESSURE	**1-525, 1-527, 1-529, 1-531, 1-533, 1-535, 1-537**
020	2993982-0100		1	SHOCK ABSORBER PRESSURE	**1-565, 1-567, 1-569, 1-571**
TGA 0500SQ					
010	2922539-0200		1	VOLUME FLAP PRESSURE RIGHT	**1-573**
TGA 0750SQ					
010	2698639-0200		1	VOLUME FLAP PRESSURE	**1-549**
020	2993982-0100		1	SHOCK ABSORBER PRESSURE	**1-565, 1-567, 1-569, 1-571**
TGA 1000SQ					
010	2698639-0200		1	VOLUME FLAP PRESSURE	**1-549**
020	2993982-0100		1	SHOCK ABSORBER PRESSURE	**1-565, 1-567, 1-569, 1-571**
TGA 1500SQ					
010	2698639-0200		1	VOLUME FLAP PRESSURE	**1-549**
020	2993982-0100		1	SHOCK ABSORBER PRESSURE	**1-565, 1-567, 1-569, 1-571**
TPA 0500SQ					
010	2810637-0100		1	VOLUME FLAP PRESSURE	**1-525, 1-527, 1-529, 1-531, 1-533, 1-535, 1-537**
020	2993982-0100		1	SHOCK ABSORBER PRESSURE	**1-565, 1-567, 1-569, 1-571**

Machine Type | Group Description | Used-In | Group Number | Page No

SHOCK ABSORBER PRESSURE

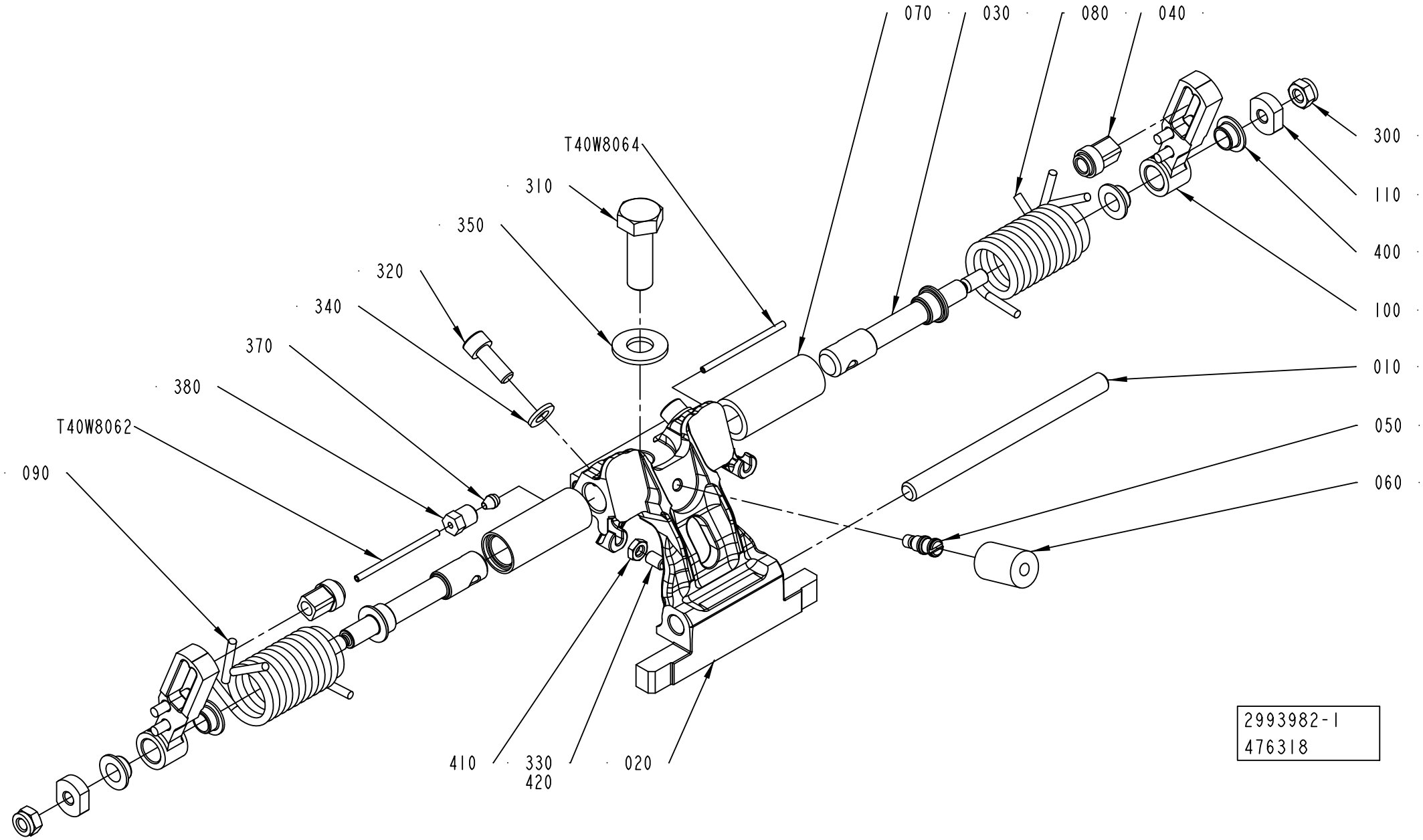

ECM: 548453 - 20120701
Group number: 2993982-0100
Assembly Drawing: 2993982-1_1_AB

This list covers pages from 1-564 to 1-571

Pos	Part No	UN	Qty	Description	Page No
TBA 0500B (See drawing on page: 1-566)					
010	2773510-0000		1	SHAFT	
020	3037999-0002		1	HOLDER	
030	2902006-0000		2	SHAFT	
050	2842776-0000		1	PIN	
060	2842777-0001		1	DAMPER	
080	2961953-0000		2	TENSION SPRING	
120	2905199-0000		2	HOLDER	
300	312105-0285		2	SCREW, M6S ISO 4017 M4X6 A4 70	
310	312105-0495		1	SCREW, M6S ISO 4017 M10X30 A4 80	
320	312115-0368		2	SCREW ISO4762 M6X16 A4 80	
330	312318-0325		1	SET SCREW, CUP END ISO4029 M5X10 A4	
360	315106-0136		2	WASHER PLAIN, M4 ISO7089-4-200 HV A4	
370	90028-0020		2	CONE TUBE 2,5MM	
380	90134-0063		2	BUSHING/NUT M8X1, D=2,5 MM	
410	312625-0314		1	HEXAGON THIN NUT, EN 24035 ML6M M5 A4	
T40W8062	90166-0143	MM	220	TUBE 2,5 MM PA TRANSP.	
T40W8064	90166-0143	MM	220	TUBE 2,5 MM PA TRANSP.	
TBA 0500S (See drawing on page: 1-564)					
010	2916971-0000		1	SHAFT	
020	3024713-0002		1	HOLDER	
030	2911622-0000		2	SHAFT	
040	2916130-0000		2	SLIDER	
050	2842776-0000		1	PIN	
060	2842777-0001		1	DAMPER	
070	2842780-0000		2	BUSHING	
080	2842781-0000		1	SPRING	
090	2842782-0000		1	SPRING	
100	2916131-0000		2	LEVER	
110	2911623-0000		2	WASHER	
300	312812-0316		2	HEXAGON NUT, NY-LOCK M6 A4 80	
310	312105-0495		1	SCREW, M6S ISO 4017 M10X30 A4 80	
320	312115-0368		2	SCREW ISO4762 M6X16 A4 80	
330	312318-0325		1	SET SCREW, CUP END ISO4029 M5X10 A4	
370	90028-0020		2	CONE TUBE 2,5MM	
380	90134-0063		2	BUSHING/NUT M8X1, D=2,5 MM	
400	90600-2013		4	FLANGE BUSHING, IGLIDUR X 8X10X5,5	
410	312625-0314		1	HEXAGON THIN NUT, EN 24035 ML6M M5 A4	
T40W8062	90166-0143	MM	220	TUBE 2,5 MM PA TRANSP.	
T40W8064	90166-0143	MM	220	TUBE 2,5 MM PA TRANSP.	
TBA 0500SQ (See drawing on page: 1-566)					
010	2773510-0000		1	SHAFT	
020	3037995-0002		1	HOLDER	
030	2863119-0000		2	SHAFT	
050	2842776-0000		1	PIN	
060	2842777-0001		1	DAMPER	
080	2959868-0000		2	TENSION SPRING	
120	2905199-0000		2	HOLDER	
300	312105-0285		2	SCREW, M6S ISO 4017 M4X6 A4 70	
310	312105-0495		1	SCREW, M6S ISO 4017 M10X30 A4 80	
320	312115-0368		2	SCREW ISO4762 M6X16 A4 80	
330	312318-0323		1	SET SCREW, CUP END ISO4029 M5X8 A4	
360	315106-0136		2	WASHER PLAIN, M4 ISO7089-4-200 HV A4	
370	90028-0020		2	CONE TUBE 2,5MM	
380	90134-0063		2	BUSHING/NUT M8X1, D=2,5 MM	
410	312625-0314		1	HEXAGON THIN NUT, EN 24035 ML6M M5 A4	
T40W8062	90166-0143	MM	220	TUBE 2,5 MM PA TRANSP.	
T40W8064	90166-0143	MM	220	TUBE 2,5 MM PA TRANSP.	
TBA 1000B (See drawing on page: 1-564)					
010	2773510-0000		1	SHAFT	
020	3037999-0002		1	HOLDER	
030	2911622-0000		2	SHAFT	
040	2916130-0000		2	SLIDER	
050	2842776-0000		1	PIN	
060	2842777-0001		1	DAMPER	
070	2842780-0000		2	BUSHING	
080	2842781-0000		1	SPRING	
090	2842782-0000		1	SPRING	
100	2916131-0000		2	LEVER	
110	2911623-0000		2	WASHER	
300	312812-0316		2	HEXAGON NUT, NY-LOCK M6 A4 80	
310	312105-0495		1	SCREW, M6S ISO 4017 M10X30 A4 80	
320	312115-0368		2	SCREW ISO4762 M6X16 A4 80	
330	312318-0325		1	SET SCREW, CUP END ISO4029 M5X10 A4	
370	90028-0020		2	CONE TUBE 2,5MM	
380	90134-0063		2	BUSHING/NUT M8X1, D=2,5 MM	
400	90600-2013		4	FLANGE BUSHING, IGLIDUR X 8X10X5,5	
410	312625-0314		1	HEXAGON THIN NUT, EN 24035 ML6M M5 A4	
T40W8062	90166-0143	MM	220	TUBE 2,5 MM PA TRANSP.	
T40W8064	90166-0143	MM	220	TUBE 2,5 MM PA TRANSP.	
TBA 1000S (See drawing on page: 1-564)					
010	2773510-0000		1	SHAFT	
020	3037997-0002		1	HOLDER	
030	2911622-0000		2	SHAFT	

Machine Type | Group Description | Used-In | Group Number | Page No

SHOCK ABSORBER PRESSURE

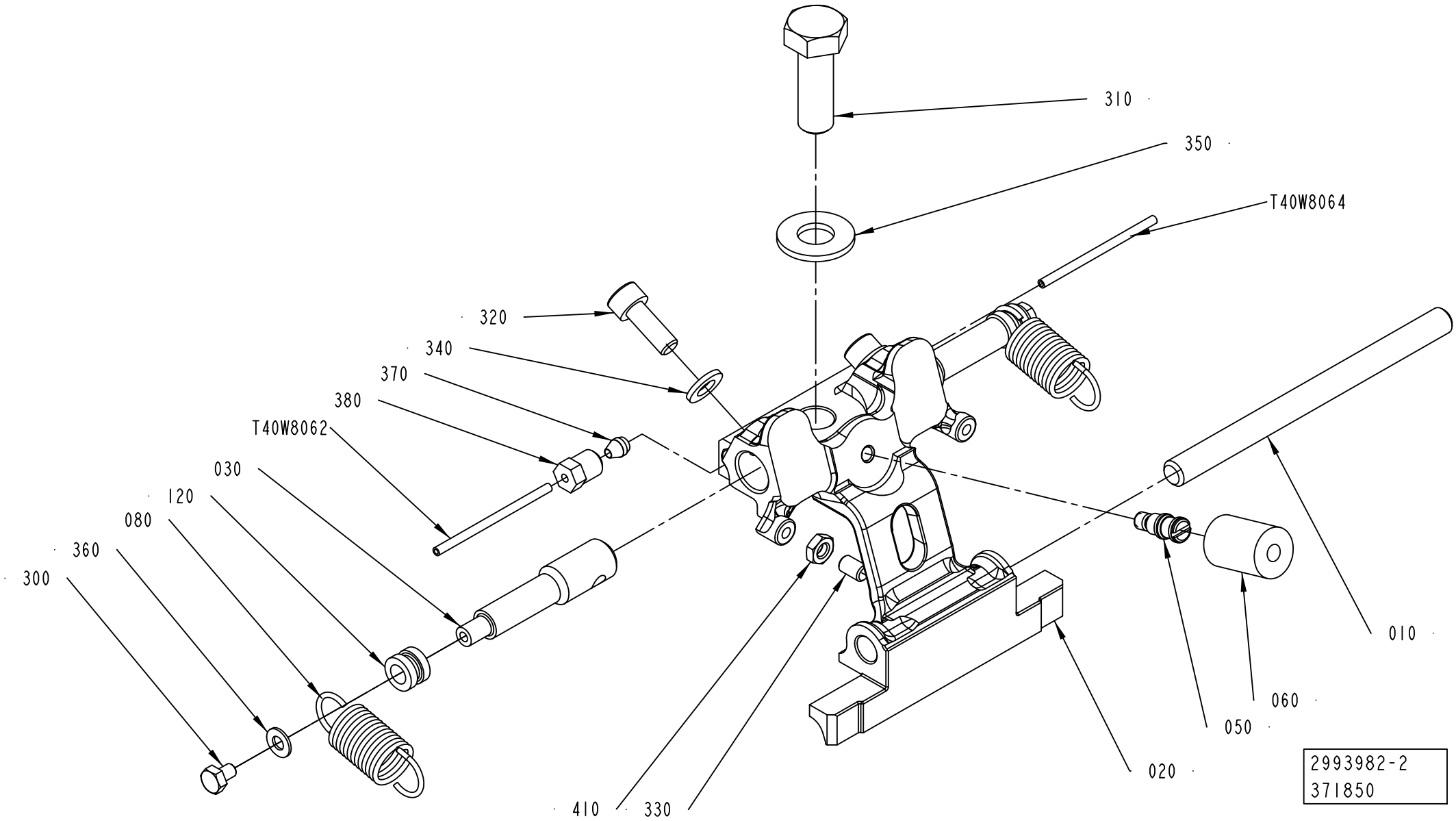

ECM: 548453 - 20120701
Group number: 2993982-0100
Assembly Drawing: 2993982-2_1_AA

This list covers pages from 1-564 to 1-571

Pos	Part No	UN	Qty	Description	Page No
TBA 1000S (Cont'd) (See drawing on page: 1-564)					
040	2916130-0000		2	SLIDER	
050	2842776-0000		1	PIN	
060	2842777-0001		1	DAMPER	
070	2842780-0000		2	BUSHING	
080	2842781-0000		1	SPRING	
090	2842782-0000		1	SPRING	
100	2916131-0000		2	LEVER	
110	2911623-0000		2	WASHER	
300	312812-0316		2	HEXAGON NUT, NY-LOCK M6 A4 80	
310	312105-0495		1	SCREW, M6S ISO 4017 M10X30 A4 80	
320	312115-0368		2	SCREW ISO4762 M6X16 A4 80	
330	312318-0325		1	SET SCREW, CUP END ISO4029 M5X10 A4	
370	90028-0020		2	CONE TUBE 2,5MM	
380	90134-0063		2	BUSHING/NUT M8X1, D=2,5 MM	
400	90600-2013		4	FLANGE BUSHING, IGLIDUR X 8X10X5,5	
410	312625-0314		1	HEXAGON THIN NUT, EN 24035 ML6M M5 A4	
T40W8062	90166-0143	MM	220	TUBE 2,5 MM PA TRANSP.	
T40W8064	90166-0143	MM	220	TUBE 2,5 MM PA TRANSP.	
TBA 1000SQ (See drawing on page: 1-564)					
010	2773510-0000		1	SHAFT	
020	3037995-0002		1	HOLDER	
030	2911622-0000		2	SHAFT	
040	2916130-0000		2	SLIDER	
050	2842776-0000		1	PIN	
060	2842777-0001		1	DAMPER	
070	2842780-0000		2	BUSHING	
080	2842781-0000		1	SPRING	
090	2842782-0000		1	SPRING	
100	2916131-0000		2	LEVER	
110	2911623-0000		2	WASHER	
300	312812-0316		2	HEXAGON NUT, NY-LOCK M6 A4 80	
310	312105-0495		1	SCREW, M6S ISO 4017 M10X30 A4 80	
320	312115-0368		2	SCREW ISO4762 M6X16 A4 80	
330	312318-0323		1	SET SCREW, CUP END ISO4029 M5X8 A4	
370	90028-0020		2	CONE TUBE 2,5MM	
380	90134-0063		2	BUSHING/NUT M8X1, D=2,5 MM	
400	90600-2013		4	FLANGE BUSHING, IGLIDUR X 8X10X5,5	
410	312625-0314		1	HEXAGON THIN NUT, EN 24035 ML6M M5 A4	
T40W8062	90166-0143	MM	220	TUBE 2,5 MM PA TRANSP.	
T40W8064	90166-0143	MM	220	TUBE 2,5 MM PA TRANSP.	
TBA 1500S (See drawing on page: 1-564)					
010	2773510-0000		1	SHAFT	
020	3024942-0002		1	HOLDER	
030	2907800-0000		2	SHAFT	
040	2907807-0000		2	SLIDER	
050	2907797-0000		1	PIN	
060	2842777-0005		1	DAMPER	
070	2916984-0000		2	BUSHING	
080	2907805-0000		1	SPRING	
090	2907804-0000		1	SPRING	
100	2907806-0000		2	LEVER	
110	2911623-0000		2	WASHER	
300	312812-0316		2	HEXAGON NUT, NY-LOCK M6 A4 80	
310	312105-0499		1	SCREW, M6S ISO 4014 M10X40 A4 80	
320	312115-0368		2	SCREW ISO4762 M6X16 A4 80	
330	312318-0325		1	SET SCREW, CUP END ISO4029 M5X10 A4	
370	90028-0020		2	CONE TUBE 2,5MM	
380	90134-0063		2	BUSHING/NUT M8X1, D=2,5 MM	
400	90600-2013		4	FLANGE BUSHING, IGLIDUR X 8X10X5,5	
410	312625-0314		1	HEXAGON THIN NUT, EN 24035 ML6M M5 A4	
T40W8062	90166-0143	MM	220	TUBE 2,5 MM PA TRANSP.	
T40W8064	90166-0143	MM	220	TUBE 2,5 MM PA TRANSP.	
TBA 2000S (See drawing on page: 1-564)					
010	2907798-0000		1	SHAFT	
020	3024940-0002		1	HOLDER	
030	2907800-0000		2	SHAFT	
040	2907807-0000		2	SLIDER	
050	2907797-0000		1	PIN	
060	2842777-0005		1	DAMPER	
070	2916984-0000		2	BUSHING	
080	2907805-0000		1	SPRING	
090	2907804-0000		1	SPRING	
100	2907806-0000		2	LEVER	
110	2911623-0000		2	WASHER	
300	312812-0316		2	HEXAGON NUT, NY-LOCK M6 A4 80	
310	312105-0499		1	SCREW, M6S ISO 4014 M10X40 A4 80	
320	312115-0368		2	SCREW ISO4762 M6X16 A4 80	
330	312318-0325		1	SET SCREW, CUP END ISO4029 M5X10 A4	
370	90028-0020		2	CONE TUBE 2,5MM	
380	90134-0063		2	BUSHING/NUT M8X1, D=2,5 MM	
400	90600-2013		4	FLANGE BUSHING, IGLIDUR X 8X10X5,5	
410	312625-0314		1	HEXAGON THIN NUT, EN 24035 ML6M M5 A4	
T40W8062	90166-0143	MM	220	TUBE 2,5 MM PA TRANSP.	

SHOCK ABSORBER PRESSURE

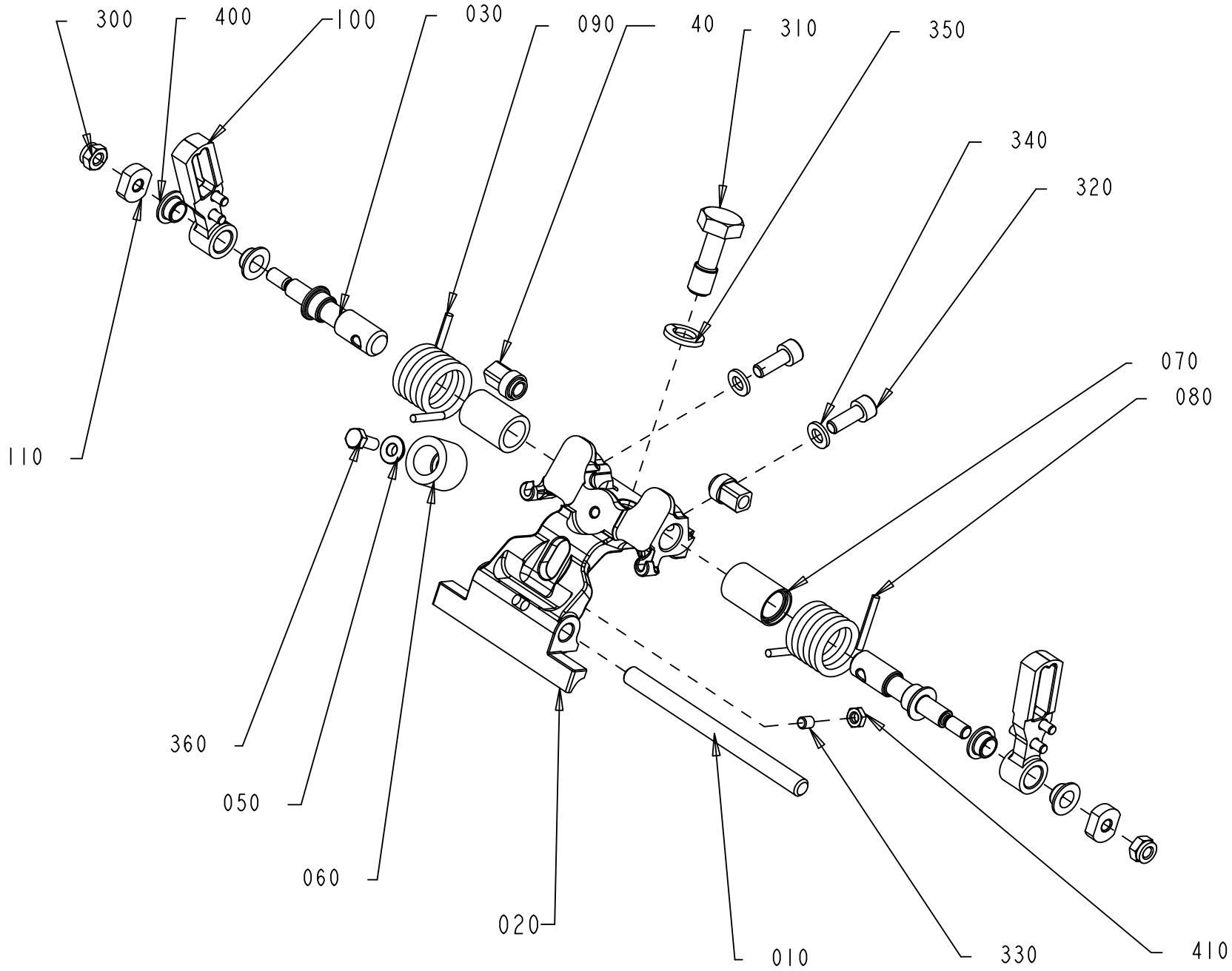

2993982-4
401070

ECM: 548453 - 20120701
Group number: 2993982-0100
Assembly Drawing: 2993982-4_1_AB

This list covers pages from 1-564 to 1-571

Pos	Part No	UN	Qty	Description	Page No
TBA 2000S (Cont'd) (See drawing on page: 1-564)					
T40W8064	90166-0143	MM	220	TUBE 2,5 MM PA TRANSP.	
TGA 1000SQ, TGA 0750SQ (See drawing on page: 1-568)					
010	2649660-0000		1	SHAFT	
020	2993285-0003		1	HOLDER	
	3021650-0000		*1*	*HOLDER*	
030	2948028-0000		2	SHAFT	
040	2916130-0000		2	SLIDER	
050	2572197-0000		1	SPACER	
060	2649677-0000		1	DAMPER	
070	2948027-0000		2	BUSHING	
080	2949214-0000		1	SPRING	
090	2949215-0000		1	SPRING	
100	3018752-0000		2	LEVER	
110	2911623-0000		2	WASHER	
300	312812-0316		2	HEXAGON NUT, NY-LOCK M6 A4 80	
310	2922524-0000		1	SCREW	
320	312105-0368		2	SCREW, M6S ISO 4017 M6X16 A4 80	
330	311103-0268		1	PARALLEL PIN ISO 2338 4M6X12 A1	
360	312105-0327		1	SCREW, M6S ISO 4017 M5X12 A4 80	
400	90600-2013		4	FLANGE BUSHING, IGLIDUR X 8X10X5,5	
TGA 1500SQ (See drawing on page: 1-568)					
010	2773510-0000		1	SHAFT	
020	2949206-0002		1	HOLDER	
030	2948028-0000		2	SHAFT	
040	2916130-0000		2	SLIDER	
050	2572197-0000		1	SPACER	
060	3030308-0000		1	DAMPER	
070	2948027-0000		2	BUSHING	
080	2949214-0000		1	SPRING	
090	2949215-0000		1	SPRING	
100	2916131-0000		2	LEVER	
110	2911623-0000		2	WASHER	
300	312812-0316		2	HEXAGON NUT, NY-LOCK M6 A4 80	
310	2922524-0000		1	SCREW	
320	312115-0368		2	SCREW ISO4762 M6X16 A4 80	
330	312318-0321		1	SET SCREW, CUP END ISO4029 M5X6 A4	
360	312105-0327		1	SCREW, M6S ISO 4017 M5X12 A4 80	
400	90600-2013		4	FLANGE BUSHING, IGLIDUR X 8X10X5,5	
410	312625-0314		1	HEXAGON THIN NUT, EN 24035 ML6M M5 A4	
TPA 0500SQ (See drawing on page: 1-564)					
010	2962640-0000		1	SHAFT	
020	3024711-0002		1	HOLDER	
030	2911622-0000		2	SHAFT	
040	2916130-0000		2	SLIDER	
050	2842776-0000		1	PIN	
060	2842777-0001		1	DAMPER	
070	2842780-0000		2	BUSHING	
080	2842781-0000		1	SPRING	
090	2842782-0000		1	SPRING	
100	2916131-0000		2	LEVER	
110	2911623-0000		2	WASHER	
300	312812-0316		2	HEXAGON NUT, NY-LOCK M6 A4 80	
310	312105-0495		1	SCREW, M6S ISO 4017 M10X30 A4 80	
320	312115-0368		2	SCREW ISO4762 M6X16 A4 80	
330	312318-0325		1	SET SCREW, CUP END ISO4029 M5X10 A4	
370	90028-0020		2	CONE TUBE 2,5MM	
380	90134-0063		2	BUSHING/NUT M8X1, D=2,5 MM	
400	90600-2013		4	FLANGE BUSHING, IGLIDUR X 8X10X5,5	
410	312625-0314		1	HEXAGON THIN NUT, EN 24035 ML6M M5 A4	
T40W8062	90166-0143	MM	220	TUBE 2,5 MM PA TRANSP.	
T40W8064	90166-0143	MM	220	TUBE 2,5 MM PA TRANSP.	
TPA 1000SQ, TPA 0750SQ (See drawing on page: 1-564)					
010	2916971-0000		1	SHAFT	
020	3024938-0002		1	HOLDER	
030	2907800-0000		2	SHAFT	
040	2907807-0000		2	SLIDER	
050	2907797-0000		1	PIN	
060	2842777-0004		1	DAMPER	
070	2916984-0000		2	BUSHING	
080	2907805-0000		1	SPRING	
090	2907804-0000		1	SPRING	
100	2907806-0000		2	LEVER	
110	2911623-0000		2	WASHER	
300	312812-0316		2	HEXAGON NUT, NY-LOCK M6 A4 80	
310	312105-0499		1	SCREW, M6S ISO 4014 M10X40 A4 80	
320	312115-0368		2	SCREW ISO4762 M6X16 A4 80	
330	312318-0325		1	SET SCREW, CUP END ISO4029 M5X10 A4	
370	90028-0020		2	CONE TUBE 2,5MM	
380	90134-0063		2	BUSHING/NUT M8X1, D=2,5 MM	
400	90600-2013		4	FLANGE BUSHING, IGLIDUR X 8X10X5,5	
410	312625-0314		1	HEXAGON THIN NUT, EN 24035 ML6M M5 A4	
T40W8062	90166-0143	MM	220	TUBE 2,5 MM PA TRANSP.	
T40W8064	90166-0143	MM	220	TUBE 2,5 MM PA TRANSP.	

Machine Type | Group Description | Used-In | Group Number | Page No

See previous drawings pages: 1-564, 1-566, 1-568.

Pos	Part No	UN	Qty	Description	Page No
Common Parts (Cont'd)					
340	315105-0153		2	WASHER PLAIN, 6,4X12X1,5 A4 BRB	
350	315105-0173		1	WASHER PLAIN, 10,5X22X2 A4 BRB	

Pos	Part No	UN	Qty	Description	Page No

VOLUME FLAP PRESSURE RIGHT

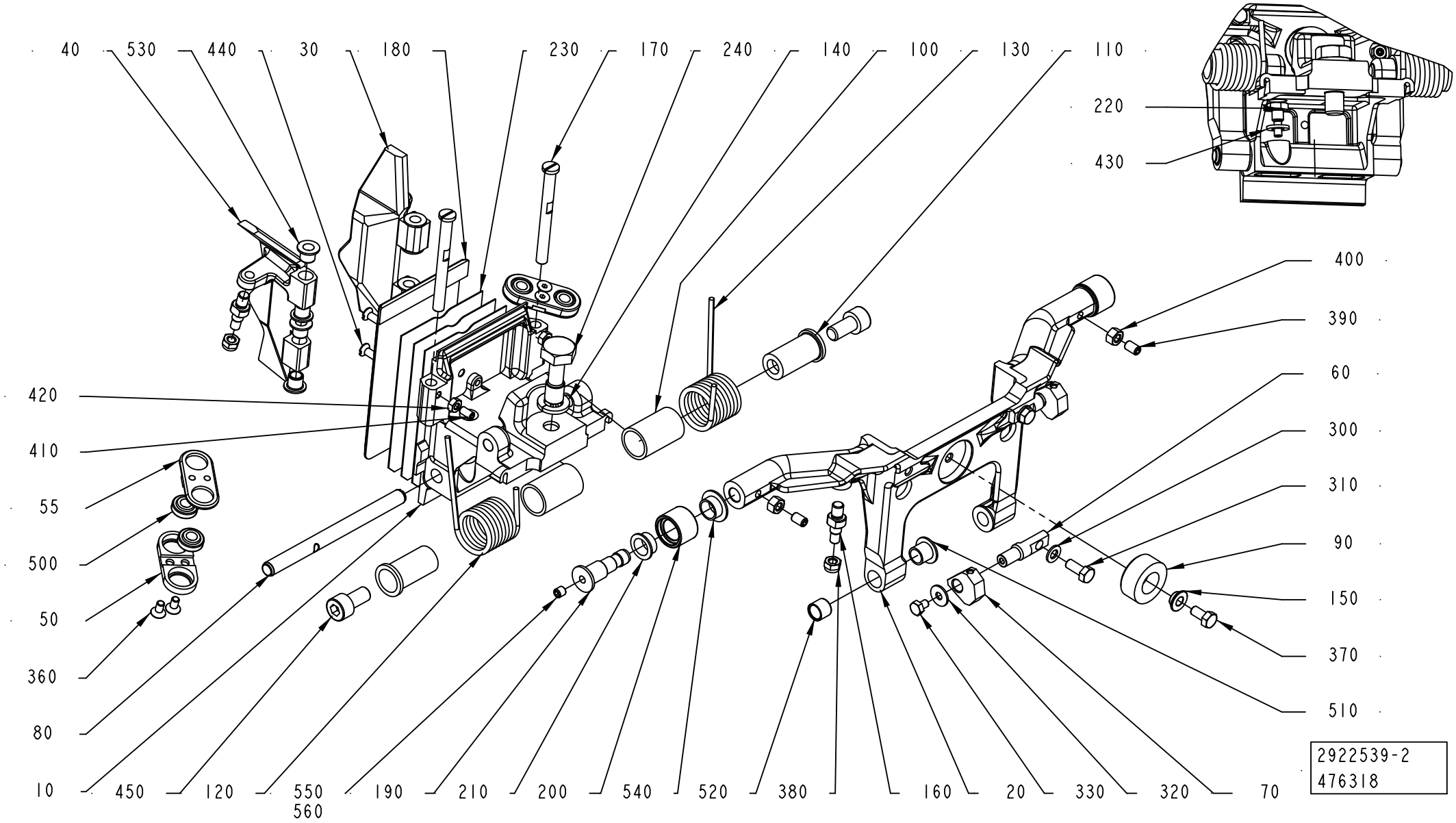

ECM: 483516 - 20101215
Group number: 2922539-0200
Assembly Drawing: 2922539-2_1_AC

Pos	Part No	UN	Qty	Description	Page No
-					
010	2998822-0003		1	FLAP HOLDER	
020	2917413-0000		1	FRAME	
030	3053567-0000		1	FLAP	
040	3053568-0000		1	FLAP	
050	3046743-0000		2	ROD	
055	3046744-0000		2	ROD	
060	2917418-0000		2	PIN	
070	2928239-0000		2	HOLDER	
080	2649660-0000		1	SHAFT	
090	2862308-0000		1	DAMPER	
100	1538521-0000		2	BUSHING	
110	2917419-0000		2	PIN	
120	2922536-0000		1	SPRING	
130	2922537-0000		1	SPRING	
140	315105-0173		1	WASHER PLAIN, 10,5X22X2 A4 BRB	
150	2572197-0000		1	SPACER	
160	2909850-0000		4	SPACER SCREW	
170	2866740-0000		2	SHAFT	
180	3031531-0000		1	VOLUME BULGE	
190	2868844-0000		2	AXLE PIN	
200	2660295-0000		2	ROLLER	
210	2660296-0000		2	BUSHING	
220	2922489-0000		1	PIN	
230	3041582-0000		3	SHIM	
240	2922524-0000		1	SCREW	
300	315105-0146		2	WASHER PLAIN, 5,3X10X1 A4 BRB	
310	312105-0327		2	SCREW, M6S ISO 4017 M5X12 A4 80	
320	90005-0082		2	WASHER PLAIN ROUND 4,3(M4)/12,H=1	
330	312105-0285		2	SCREW, M6S ISO 4017 M4X6 A4 70	
360	312155-0287		4	SCREW DIN 7991 MF6S M4X8 A4 70	
370	312105-0325		1	SCREW, M6S ISO 4017 M5X10 A4 80	
380	312812-0314		4	HEXAGON NUT, NY-LOCK M5 A4 80	
390	312318-0323		2	SET SCREW, CUP END ISO4029 M5X8 A4	
400	312605-0314		2	HEXAGON NUT, M6M M5 A280	
410	312318-0287		2	SET SCREW, CUP END ISO4029 M4X8 A4	
420	312605-0312		2	HEXAGON NUT, M6M M4 A280	
430	315105-0153		1	WASHER PLAIN, 6,4X12X1,5 A4 BRB	
440	312145-0291		2	SCREW ISO 2009 MFS M4X12 A4	
450	312115-0449		2	SCREW ISO4762 M8X16 A4 80	
500	90600-3582		4	SPHERICAL BEARING, GE 6 TGR	
510	90240-0260		2	FLANGE BUSHING, IGLIDUR X 8X10X9	
520	90458-0353		2	BUSHING, IGLIDUR X 8X10X8	
530	321155-0062		8	FLANGE BUSHING, IGLIDUR X 6X8X8	
540	90240-0289		2	FLANGE BUSHING, IGLIDUR X 10X12X6	
550	312318-0320		2	SET SCREW, CUP END ISO4029 M5X5 A4	
560	90602-4847		1	THREAD LOCKING, LOCTITE 243 50 ML	

Machine Type	Group Description	Used-In	Group Number	Page No

VOLUME CURVE PIECE

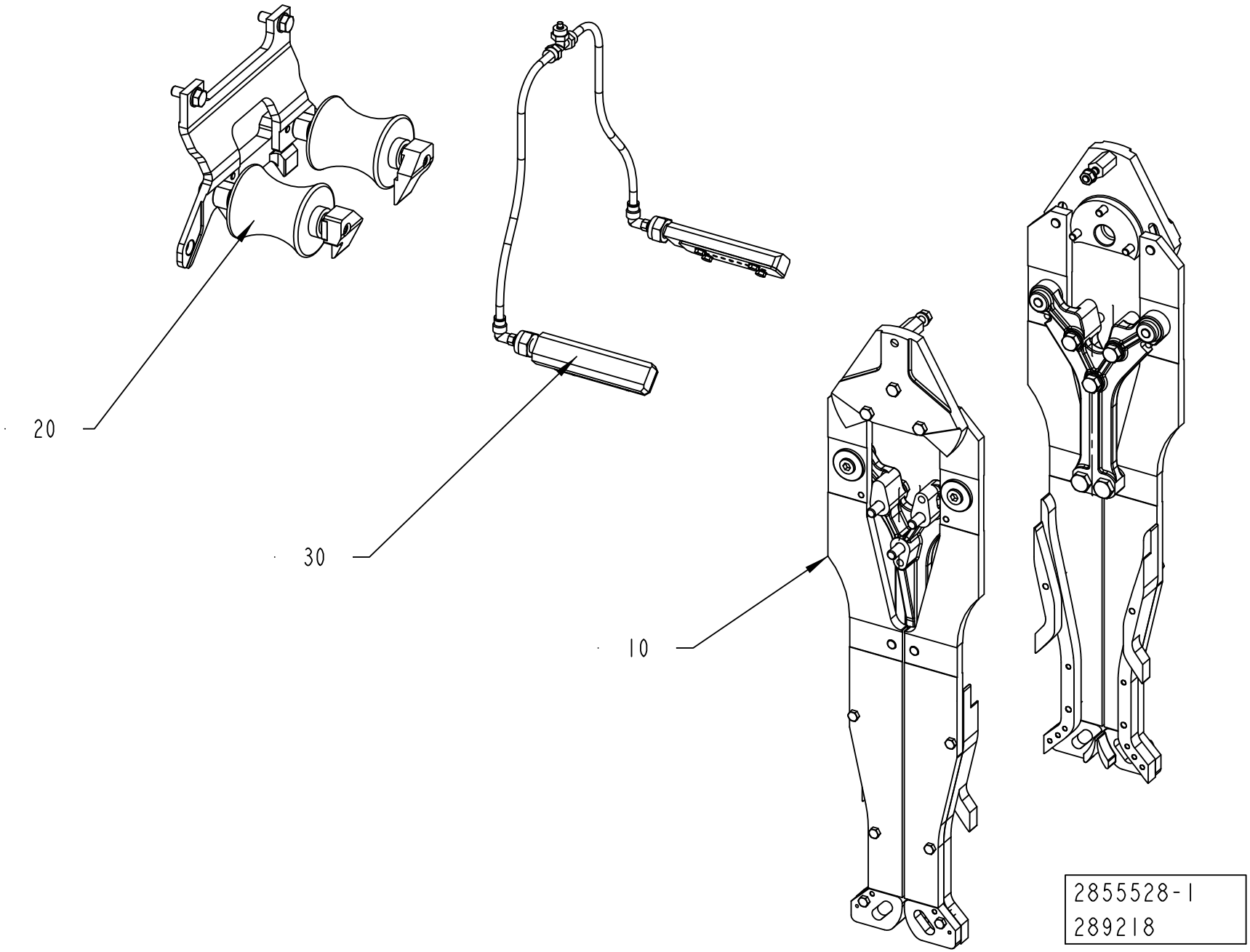

ECM: 535046 - 20120102
Group number: 2855528-0100
Assembly Drawing: 2855528-1_1_AA

Pos	Part No	UN	Qty	Description	Page No
-					
010	2835897-0100		1	CURVE UNIT	**1-577, 1-579, 1-581, 1-583**
020	2812896-0100		1	SUPPORT ROLLER	**1-585, 1-587**
030	2885034-0100		1	TUBE FLUSHING	**1-589**

Pos	Part No	UN	Qty	Description	Page No

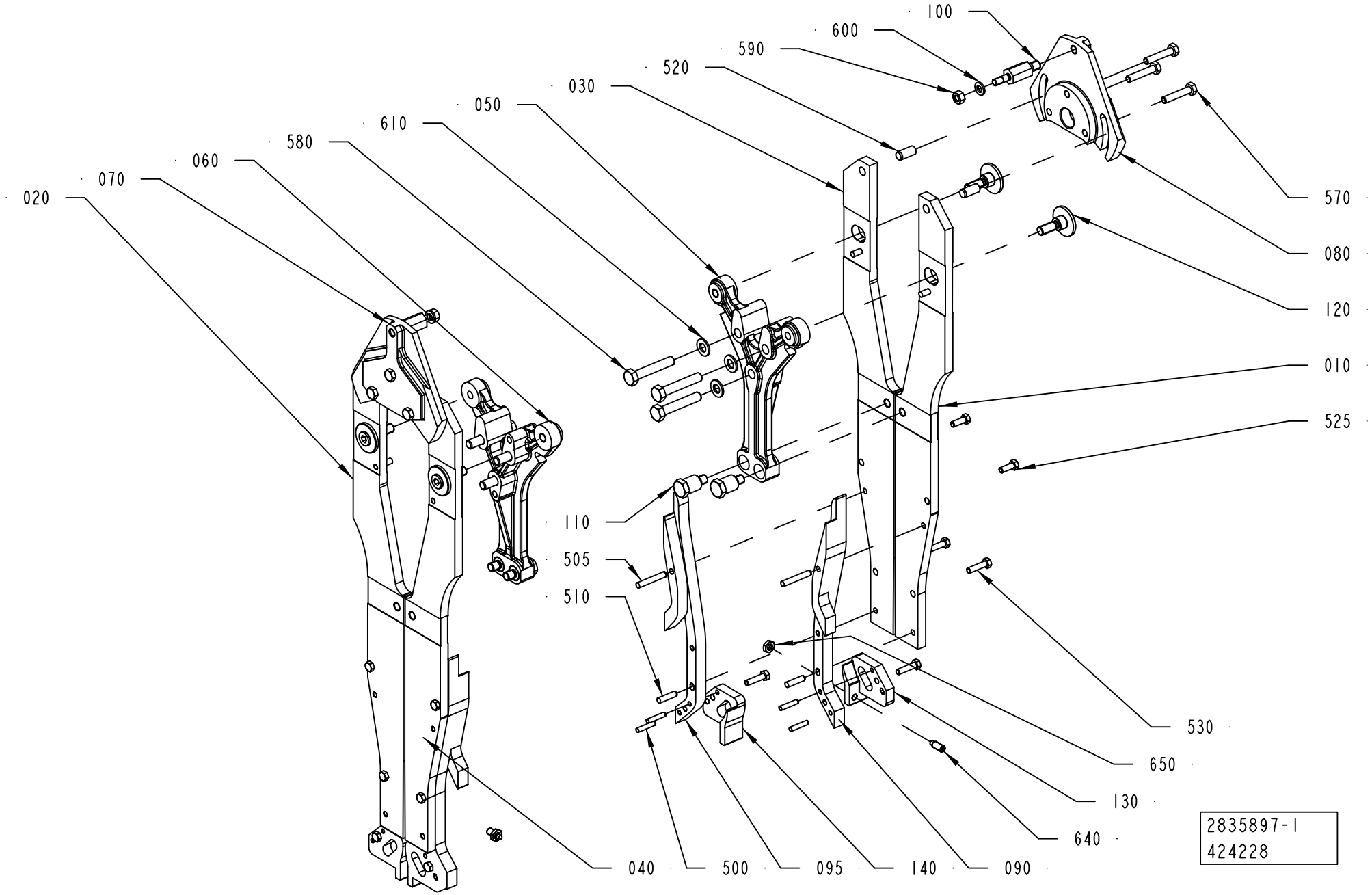
100
600
590
520
030
050
610
580
060
070
020
570
080
120
010
525
110
505
510
530
650
130
640
040
500
095
140
090
2835897-1
424228

Pos	Part No	UN	Qty	Description	Page No
TBA 0500B, TBA 1000B (See drawing on page: 1-576)					
010	2900398-0001		1	RAIL BRACKET	
020	2900398-0002		1	RAIL BRACKET	
030	2900398-0003		1	RAIL BRACKET	
040	2900398-0004		1	RAIL BRACKET	
050	2835895-0001		1	SPACER	
	3030311-0000		*1*	*SPACER*	
060	2835895-0002		1	SPACER	
	3030311-0000		*1*	*SPACER*	
070	2780752-0000		1	ECCENTRIC	
080	2780751-0000		1	ECCENTRIC	
090	2900399-0000		2	VOLUME CAM	
095	2900400-0000		2	VOLUME CAM	
100	2780753-0000		2	PIVOT PIN	
110	2835893-0000		4	PIN	
120	2835894-0000		4	PIN	
130	2900401-0000		2	PULLER CAM	
140	2900402-0000		2	PULLER CAM	
500	311103-0272		8	PARALLEL PIN ISO 2338 4M6X20 A1	
510	311103-0310		8	PARALLEL PIN ISO 2338 5M6X20 A1	
520	311103-0400		4	PARALLEL PIN ISO 2338 8M6X18 A	
530	312105-0331		12	SCREW, M6S ISO 4017 M5X20 A4 80	
570	312109-0374		6	SCREW, M6S ISO 4017 M6X30 A4 80	
580	312105-0460		6	SCREW, M6S ISO 4014 M8X45 A4 80	
590	312605-0316		2	HEXAGON NUT, M6M M6 A280	
600	315101-0153		2	WASHER PLAIN, BRB, 6,4/12 H=1,5	
640	90287-0159		2	SET SCREW, DOGPOINT M6X16 A4	
TBA 0500S (See drawing on page: 1-576)					
010	2997728-0001		1	RAIL BRACKET	
020	2997728-0002		1	RAIL BRACKET	
030	2997728-0003		1	RAIL BRACKET	
040	2997728-0004		1	RAIL BRACKET	
050	2835895-0001		1	SPACER	
	3030311-0000		*1*	*SPACER*	
060	2835895-0002		1	SPACER	
	3030311-0000		*1*	*SPACER*	
070	2780752-0000		1	ECCENTRIC	
080	2780751-0000		1	ECCENTRIC	
090	3009336-0000		4	VOLUME CAM	
100	2780753-0000		2	PIVOT PIN	
110	2835893-0000		4	PIN	
120	2835894-0000		4	PIN	
130	3009338-0000		2	PULLER CAM	
140	3009337-0000		2	PULLER CAM	
500	311103-0277		8	PARALLEL PIN ISO 2338 4M6X32 A1	
510	311103-0310		8	PARALLEL PIN ISO 2338 5M6X20 A1	
520	311103-0400		4	PARALLEL PIN ISO 2338 8M6X18 A	
530	312105-0331		12	SCREW, M6S ISO 4017 M5X20 A4 80	
570	312109-0374		6	SCREW, M6S ISO 4017 M6X30 A4 80	
580	312105-0460		6	SCREW, M6S ISO 4014 M8X45 A4 80	
590	312605-0316		2	HEXAGON NUT, M6M M6 A280	
600	315101-0153		2	WASHER PLAIN, BRB, 6,4/12 H=1,5	
640	90287-0159		2	SET SCREW, DOGPOINT M6X16 A4	
TBA 1000SQ, TBA 0500SQ (See drawing on page: 1-576)					
010	2835896-0001		1	RAIL BRACKET	
020	2835896-0002		1	RAIL BRACKET	
030	2835896-0003		1	RAIL BRACKET	
040	2835896-0004		1	RAIL BRACKET	
050	2835895-0001		1	SPACER	
	3030311-0000		*1*	*SPACER*	
060	2835895-0002		1	SPACER	
	3030311-0000		*1*	*SPACER*	
070	2780752-0000		1	ECCENTRIC	
080	2780751-0000		1	ECCENTRIC	
090	2874249-0000		2	VOLUME CAM	
095	2874250-0000		2	VOLUME CAM	
100	2780753-0000		2	PIVOT PIN	
110	2835893-0000		4	PIN	
120	2835894-0000		4	PIN	
130	2844888-0000		2	PULLER CAM	
140	2844889-0000		2	PULLER CAM	
500	311103-0272		8	PARALLEL PIN ISO 2338 4M6X20 A1	
505	311103-0315		4	PARALLEL PIN ISO 2338 5M6X32 A1	
510	311103-0310		4	PARALLEL PIN ISO 2338 5M6X20 A1	
520	311103-0400		4	PARALLEL PIN ISO 2338 8M6X18 A	
525	312105-0328		4	SCREW M6S ISO 4017 M5X14 A4 80	
530	312105-0331		8	SCREW, M6S ISO 4017 M5X20 A4 80	
570	312109-0374		6	SCREW, M6S ISO 4017 M6X30 A4 80	
580	312105-0460		6	SCREW, M6S ISO 4014 M8X45 A4 80	
590	312605-0316		2	HEXAGON NUT, M6M M6 A280	
600	315101-0153		2	WASHER PLAIN, BRB, 6,4/12 H=1,5	
640	90287-0159		2	SET SCREW, DOGPOINT M6X16 A4	
TBA 1000S (See drawing on page: 1-576)					
010	2871884-0001		1	RAIL BRACKET	

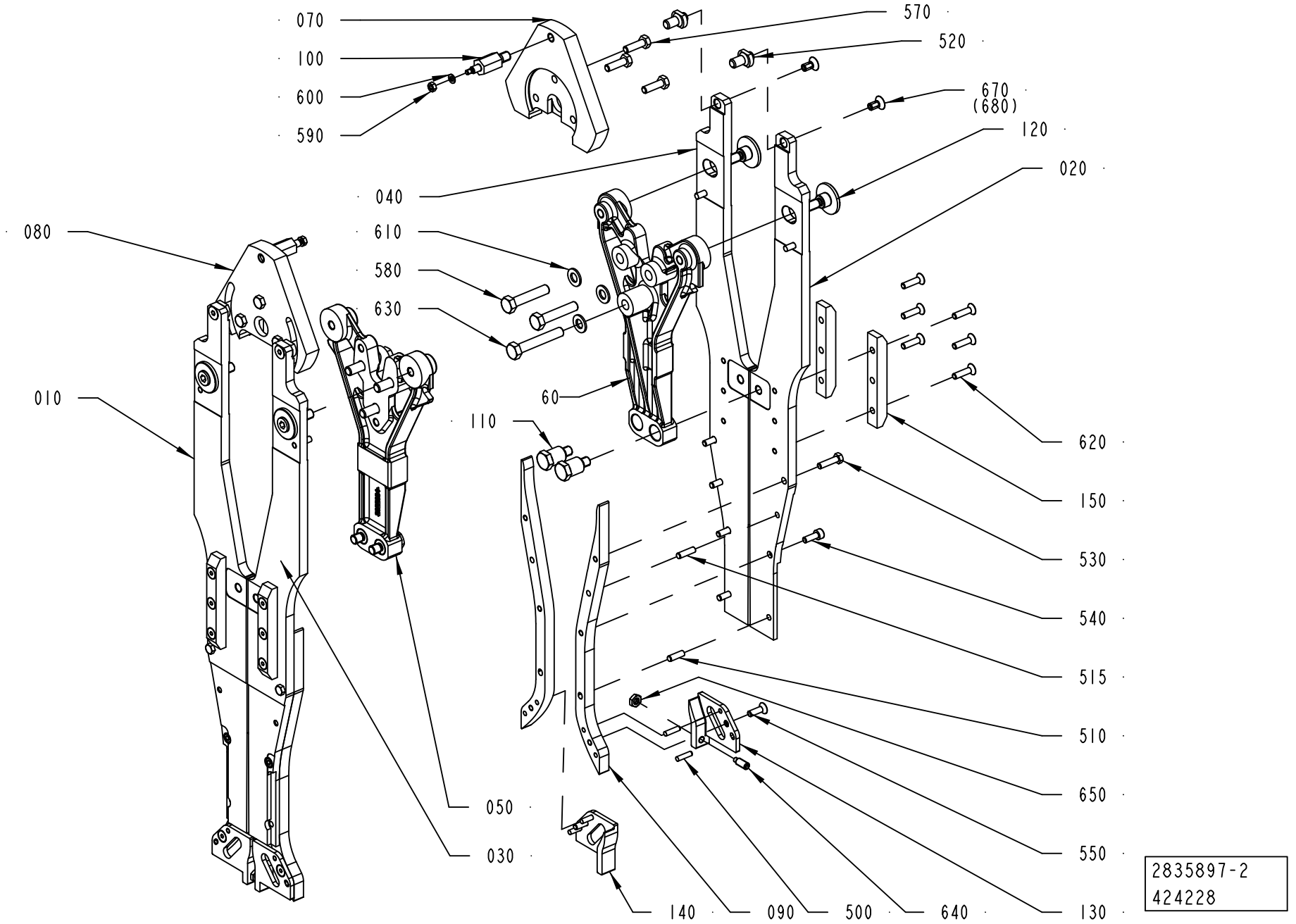
070
100
600
590
570
520
670
(680)
120
020
040
610
580
630
080
010
60
110
620
150
530
540
515
510
650
550
130
050
030
140
090
500
640
2835897-2
424228

Pos	Part No	UN	Qty	Description	Page No
TBA 1000S (Cont'd) (See drawing on page: 1-576)					
020	2871884-0002		1	RAIL BRACKET	
030	2871884-0003		1	RAIL BRACKET	
040	2871884-0004		1	RAIL BRACKET	
050	2835895-0001		1	SPACER	
	3030311-0000		*1*	*SPACER*	
060	2835895-0002		1	SPACER	
	3030311-0000		*1*	*SPACER*	
070	2780752-0000		1	ECCENTRIC	
080	2780751-0000		1	ECCENTRIC	
090	2871040-0000		4	VOLUME CAM	
100	2780753-0000		2	PIVOT PIN	
110	2835893-0000		4	PIN	
120	2835894-0000		4	PIN	
130	2871038-0000		2	PULLER CAM	
140	2871039-0000		2	PULLER CAM	
500	311103-0272		8	PARALLEL PIN ISO 2338 4M6X20 A1	
510	311103-0310		8	PARALLEL PIN ISO 2338 5M6X20 A1	
520	311103-0400		4	PARALLEL PIN ISO 2338 8M6X18 A	
530	312105-0331		12	SCREW, M6S ISO 4017 M5X20 A4 80	
570	312109-0374		6	SCREW, M6S ISO 4017 M6X30 A4 80	
580	312105-0460		6	SCREW, M6S ISO 4014 M8X45 A4 80	
590	312605-0316		2	HEXAGON NUT, M6M M6 A280	
600	315101-0153		2	WASHER PLAIN, BRB, 6,4/12 H=1,5	
640	90287-0159		2	SET SCREW, DOGPOINT M6X16 A4	
TBA 1500S (See drawing on page: 1-576)					
010	2930279-0001		1	RAIL BRACKET	
020	2930279-0002		1	RAIL BRACKET	
030	2930279-0003		1	RAIL BRACKET	
040	2930279-0004		1	RAIL BRACKET	
050	2835895-0001		1	SPACER	
	3030311-0000		*1*	*SPACER*	
060	2835895-0002		1	SPACER	
	3030311-0000		*1*	*SPACER*	
070	2968867-0000		1	ECCENTRIC	
080	2968868-0000		1	ECCENTRIC	
090	2955618-0000		2	VOLUME CAM	
095	2955619-0000		2	VOLUME CAM	
100	2780753-0000		2	PIVOT PIN	
110	2835893-0000		4	PIN	
120	2835894-0000		4	PIN	
140	2930283-0000		2	PULLER CAM	
500	311103-0272		4	PARALLEL PIN ISO 2338 4M6X20 A1	
510	311103-0310		8	PARALLEL PIN ISO 2338 5M6X20 A1	
520	311103-0400		4	PARALLEL PIN ISO 2338 8M6X18 A	
525	312105-0331		4	SCREW, M6S ISO 4017 M5X20 A4 80	
530	312105-0331		6	SCREW, M6S ISO 4017 M5X20 A4 80	
570	312109-0374		6	SCREW, M6S ISO 4017 M6X30 A4 80	
580	312105-0460		6	SCREW, M6S ISO 4014 M8X45 A4 80	
590	312605-0316		2	HEXAGON NUT, M6M M6 A280	
600	315101-0153		2	WASHER PLAIN, BRB, 6,4/12 H=1,5	
640	90287-0159		2	SET SCREW, DOGPOINT M6X16 A4	
TBA 2000S (See drawing on page: 1-578)					
010	2909315-0001		1	RAIL BRACKET	
020	2909315-0002		1	RAIL BRACKET	
030	2936881-0003		1	RAIL BRACKET	
040	2936881-0004		1	RAIL BRACKET	
050	2922694-0001		1	SPACER	
060	2922694-0002		1	SPACER	
070	2909317-0000		1	ECCENTRIC	
080	2909318-0000		1	ECCENTRIC	
090	2909316-0000		4	VOLUME CAM	
100	2535443-0000		2	PIVOT PIN	
110	2835893-0000		4	PIN	
120	2835894-0000		4	PIN	
130	2922700-0000		2	PULLER CAM	
140	2922701-0000		2	PULLER CAM	
150	2922698-0000		4	PLATE	
500	311103-0270		8	PARALLEL PIN ISO 2338 4M6X16 A1	
510	311103-0308		4	PARALLEL PIN ISO 2338 5M6X16 A1	
515	311103-0309		4	PARALLEL PIN ISO 2338 5M6X18 A1	
520	3055884-0000		4	PIN	
530	312105-0331		4	SCREW, M6S ISO 4017 M5X20 A4 80	
540	312115-0328		4	SCREW ISO4762 M5X14 A4 80	
550	312155-0329		4	SCREW DIN 7991 MF6S M5X16 A4 70	
570	312105-0370		6	SCREW, M6S ISO 4017 M6X20 A4 80	
580	312105-0459		4	SCREW, M6S ISO 4014 M8X40 A4 80	
590	312605-0312		2	HEXAGON NUT, M6M M4 A280	
600	315105-0136		2	WASHER PLAIN, 4,3X9X0,8 A4 BRB	
620	312155-0331		12	SCREW DIN 7991 MF6S M5X20 A4 70	
630	312105-0461		2	SCREW, M6S ISO 4014 M8X50 A4 80	
640	90287-0159		2	SET SCREW, DOGPOINT M6X16 A4	
670	312155-0366		4	SCREW DIN 7991 MF6S M6X12 A4 70	
680	90157-0021		1	LOCKING FLUID LOCTITE 270	

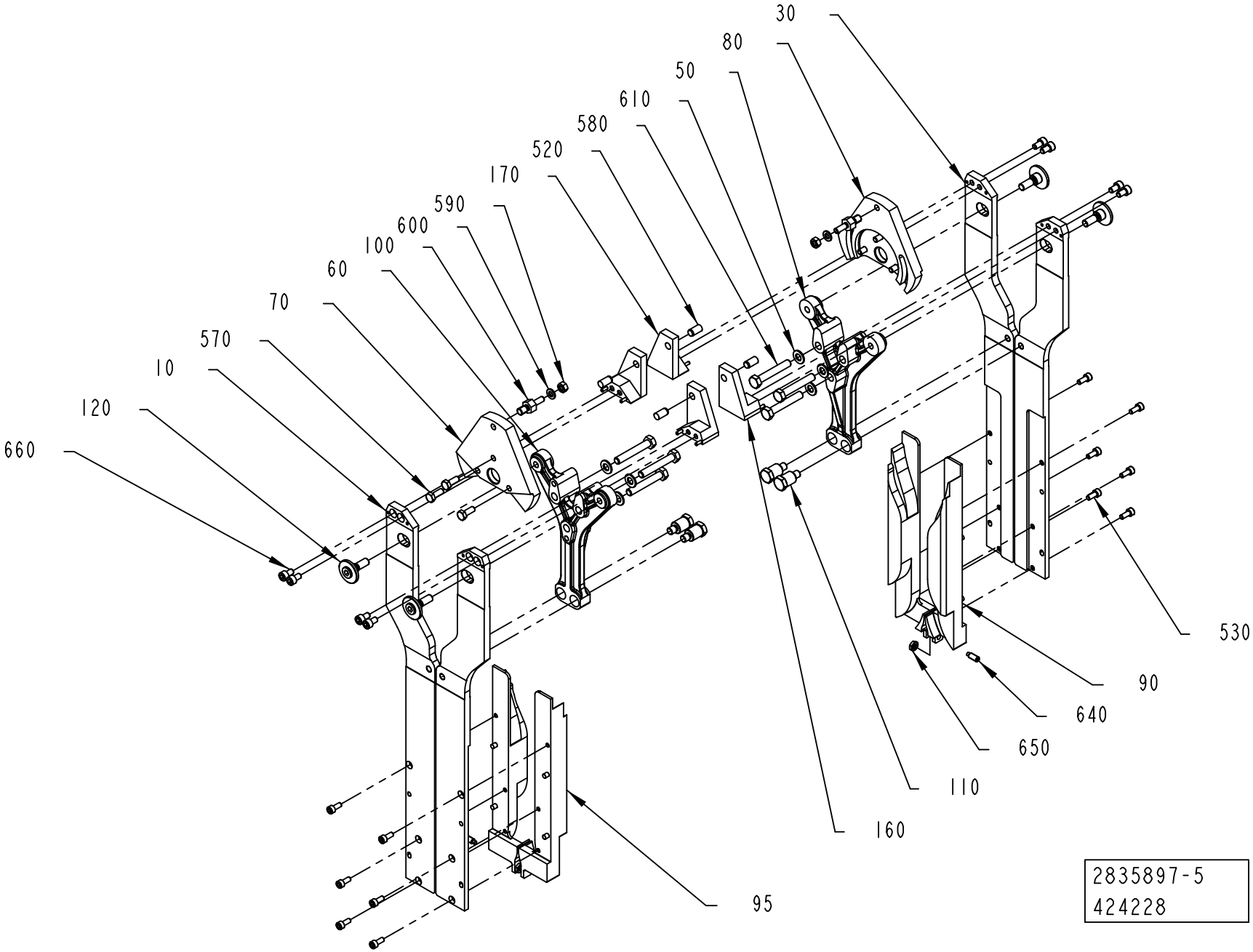
30
80
50
610
580
520
170
590
600
100
60
70
570
10
120
660
530
90
640
650
110
160
95
2835897-5
424228

ECM: 535045 - 20120102
Group number: 2835897-0100
Assembly Drawing: 2835897-5_1_AB

This list covers pages from 1-576 to 1-583

Pos	Part No	UN	Qty	Description	Page No
TGA 1000SQ, TGA 0750SQ, TGA 0500SQ (Cont'd) (See drawing on page: 1-580)					
010	3004138-0000		2	RAIL BRACKET	
030	3004139-0000		2	RAIL BRACKET	
050	3004144-0001		1	SPACER	
	3030311-0000		*1*	*SPACER*	
060	3004144-0002		1	SPACER	
	3030311-0000		*1*	*SPACER*	
070	2618378-0000		1	ECCENTRIC	
080	2618377-0000		1	ECCENTRIC	
090	3030304-0000		2	VOLUME CAM	
095	3030305-0000		2	VOLUME CAM	
100	2624544-0000		2	PIVOT PIN	
110	2835893-0000		4	PIN	
120	2835894-0000		4	PIN	
160	2867643-0000		2	BRACKET	
170	2854056-0000		2	BRACKET	
520	311103-0399		4	PARALLEL PIN ISO 2338 8M6X16 A1	
530	312115-0327		12	SCREW ISO4762 M5X12 A4 80	
570	312105-0368		6	SCREW, M6S ISO 4017 M6X16 A4 80	
580	312105-0461		6	SCREW, M6S ISO 4014 M8X50 A4 80	
590	312605-0316		2	HEXAGON NUT, M6M M6 A280	
600	315101-0153		2	WASHER PLAIN, BRB, 6,4/12 H=1,5	
640	90287-0159		2	SET SCREW, DOGPOINT M6X16 A4	
660	312115-0364		4	SCREW ISO4762 M6X10 A4 80	
TGA 1500SQ (See drawing on page: 1-576)					
010	2949208-0001		1	RAIL BRACKET	
020	2949208-0003		1	RAIL BRACKET	
030	2949208-0002		1	RAIL BRACKET	
040	2949208-0004		1	RAIL BRACKET	
050	2835895-0001		1	SPACER	
	3030311-0000		*1*	*SPACER*	
060	2835895-0002		1	SPACER	
	3030311-0000		*1*	*SPACER*	
070	2780752-0000		1	ECCENTRIC	
080	2780751-0000		1	ECCENTRIC	
090	2976259-0000		2	VOLUME CAM	
095	2976260-0000		2	VOLUME CAM	
100	2780753-0000		2	PIVOT PIN	
110	2835893-0000		4	PIN	
120	2835894-0000		4	PIN	
520	311103-0400		4	PARALLEL PIN ISO 2338 8M6X18 A	
530	312105-0331		12	SCREW, M6S ISO 4017 M5X20 A4 80	
570	312109-0374		6	SCREW, M6S ISO 4017 M6X30 A4 80	
580	312105-0460		6	SCREW, M6S ISO 4014 M8X45 A4 80	
590	312605-0316		2	HEXAGON NUT, M6M M6 A280	
600	315101-0153		2	WASHER PLAIN, BRB, 6,4/12 H=1,5	
640	90287-0159		2	SET SCREW, DOGPOINT M6X16 A4	
TPA 0500SQ (See drawing on page: 1-576)					
010	2962059-0001		1	RAIL BRACKET	
020	2962059-0002		1	RAIL BRACKET	
030	2962059-0003		1	RAIL BRACKET	
040	2962059-0004		1	RAIL BRACKET	
050	2835895-0001		1	SPACER	
	3030311-0000		*1*	*SPACER*	
060	2835895-0002		1	SPACER	
	3030311-0000		*1*	*SPACER*	
070	2780752-0000		1	ECCENTRIC	
080	2780751-0000		1	ECCENTRIC	
090	2978784-0000		4	VOLUME CAM	
100	2780753-0000		2	PIVOT PIN	
110	2835893-0000		4	PIN	
120	2835894-0000		4	PIN	
130	2978786-0000		2	PULLER CAM	
140	2978785-0000		2	PULLER CAM	
500	311103-0277		8	PARALLEL PIN ISO 2338 4M6X32 A1	
510	311103-0310		8	PARALLEL PIN ISO 2338 5M6X20 A1	
520	311103-0400		4	PARALLEL PIN ISO 2338 8M6X18 A	
530	312105-0331		12	SCREW, M6S ISO 4017 M5X20 A4 80	
570	312109-0374		6	SCREW, M6S ISO 4017 M6X30 A4 80	
580	312105-0460		6	SCREW, M6S ISO 4014 M8X45 A4 80	
590	312605-0316		2	HEXAGON NUT, M6M M6 A280	
600	315101-0153		2	WASHER PLAIN, BRB, 6,4/12 H=1,5	
640	312318-0370		2	SET SCREW, CUP END ISO4029 M6X20 A4	
TPA 1000SQ, TPA 0750SQ (See drawing on page: 1-576)					
010	2916978-0001		1	RAIL BRACKET	
020	2916978-0002		1	RAIL BRACKET	
030	2916978-0003		1	RAIL BRACKET	
040	2916978-0004		1	RAIL BRACKET	
050	2835895-0001		1	SPACER	
	3030311-0000		*1*	*SPACER*	
060	2835895-0002		1	SPACER	
	3030311-0000		*1*	*SPACER*	
070	2780752-0000		1	ECCENTRIC	
080	2780751-0000		1	ECCENTRIC	

Machine Type | Group Description | Used-In | Group Number | Page No

See previous drawings pages: 1-576, 1-578, 1-580.

Pos	Part No	UN	Qty	Description	Page No
TPA 1000SQ, TPA 0750SQ (Cont'd) (See drawing on page: 1-576)					
090	2916979-0000		2	VOLUME CAM	
095	2916980-0000		2	VOLUME CAM	
100	2780753-0000		2	PIVOT PIN	
110	2835893-0000		4	PIN	
120	2835894-0000		4	PIN	
130	2916981-0000		2	PULLER CAM	
140	2916982-0000		2	PULLER CAM	
500	311103-0272		8	PARALLEL PIN ISO 2338 4M6X20 A1	
510	311103-0310		8	PARALLEL PIN ISO 2338 5M6X20 A1	
520	311103-0400		4	PARALLEL PIN ISO 2338 8M6X18 A	
530	312105-0331		12	SCREW, M6S ISO 4017 M5X20 A4 80	
570	312109-0374		6	SCREW, M6S ISO 4017 M6X30 A4 80	
580	312105-0460		6	SCREW, M6S ISO 4014 M8X45 A4 80	
590	312605-0316		2	HEXAGON NUT, M6M M6 A280	
600	315101-0153		2	WASHER PLAIN, BRB, 6,4/12 H=1,5	
640	90287-0159		2	SET SCREW, DOGPOINT M6X16 A4	
Common Parts					
610	315105-0165		6	WASHER PLAIN, 8,4X16X1,6 A4 BRB	
650	312625-0316		2	HEXAGON THIN NUT, EN 24035 ML6M M6 A4	

Pos	Part No	UN	Qty	Description	Page No

SUPPORT ROLLER

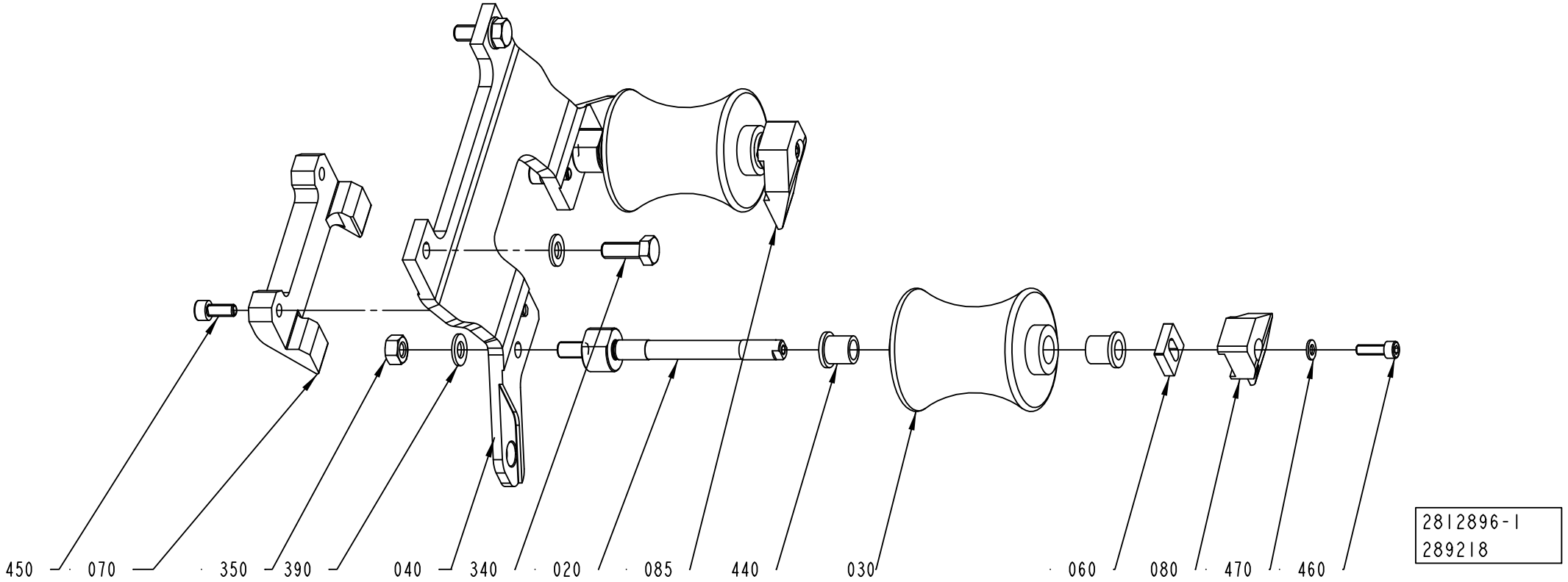

ECM: 552295 - 20120402
Group number: 2812896-0100
Assembly Drawing: 2812896-1_1_AA

This list covers pages from 1-584 to 1-587

Pos	Part No	UN	Qty	Description	Page No
TBA 0500B, TBA 1000B NOMOLDEDCAP					
020	2837095-0000		2	SHAFT	
030	2619199-0000		2	ROLLER	
040	2900397-0000		1	PLATE	
070	2812899-0000		1	CAM	
080	2837097-0000		1	CAM	
085	2837108-0000		1	CAM	
350	312605-0318		2	HEXAGON NUT, M6M M8 A280	
390	315105-0165		4	WASHER PLAIN, 8,4X16X1,6 A4 BRB	
450	312115-0367		2	SCREW ISO4762 M6X14 A4 80	
460	312115-0329		2	SCREW ISO4762 M5X16 A4 80	
470	315105-0146		2	WASHER PLAIN, 5,3X10X1 A4 BRB	
TBA 0500S					
020	2837095-0000		2	SHAFT	
030	1512484-0000		2	ROLLER	
040	2916977-0000		1	PLATE	
460	312155-0327		2	SCREW DIN 7991 MF6S M5X12 A4 70	
470	315105-0146		2	WASHER PLAIN, 5,3X10X1 A4 BRB	
TBA 0500SQ, TBA 1000SQ					
020	2837095-0000		2	SHAFT	
030	1499678-0000		2	ROLLER	
040	2812897-0000		1	PLATE	
070	2812899-0000		1	CAM	
080	2837097-0000		1	CAM	
085	2837108-0000		1	CAM	
350	312605-0318		2	HEXAGON NUT, M6M M8 A280	
390	315105-0165		4	WASHER PLAIN, 8,4X16X1,6 A4 BRB	
450	312115-0367		2	SCREW ISO4762 M6X14 A4 80	
460	312115-0329		2	SCREW ISO4762 M5X16 A4 80	
470	315105-0146		2	WASHER PLAIN, 5,3X10X1 A4 BRB	
TBA 1000S NOMOLDEDCAP					
020	2837095-0000		2	SHAFT	
030	569058-0000		2	SUPPORT ROLLER	
040	2812897-0000		1	PLATE	
070	2812899-0000		1	CAM	
080	2837097-0000		1	CAM	
085	2837108-0000		1	CAM	
350	312605-0318		2	HEXAGON NUT, M6M M8 A280	
390	315105-0165		4	WASHER PLAIN, 8,4X16X1,6 A4 BRB	
450	312115-0367		2	SCREW ISO4762 M6X14 A4 80	
460	312115-0329		2	SCREW ISO4762 M5X16 A4 80	
470	315105-0146		2	WASHER PLAIN, 5,3X10X1 A4 BRB	
TBA 1500S					
020	2945841-0000		2	SHAFT	
030	560122-0000		2	SUPPORT ROLLER	
040	2930293-0000		1	PLATE	
080	2931344-0000		2	CAM	
350	312605-0318		2	HEXAGON NUT, M6M M8 A280	
390	315105-0165		4	WASHER PLAIN, 8,4X16X1,6 A4 BRB	
460	312155-0327		2	SCREW DIN 7991 MF6S M5X12 A4 70	
TBA 2000S					
020	2922696-0000		2	SHAFT	
030	2602655-0000		2	ROLLER	
040	2922201-0000		1	PLATE	
070	2931345-0000		2	CAM	
080	2931344-0000		2	CAM	
350	312605-0318		2	HEXAGON NUT, M6M M8 A280	
390	315105-0165		4	WASHER PLAIN, 8,4X16X1,6 A4 BRB	
450	312155-0368		4	SCREW DIN 7991 MF6S M6X16 A4 70	
460	312155-0327		2	SCREW DIN 7991 MF6S M5X12 A4 70	
TGA 1000SQ, TGA 0750SQ, TGA 0500SQ					
020	2698625-0000		2	SHAFT	
030	2677383-0000		2	ROLLER	
040	2982495-0000		1	PLATE	
390	315105-0165		2	WASHER PLAIN, 8,4X16X1,6 A4 BRB	
460	312705-0316		2	HEX. DOMED CAP MHM-6 M6 A280	
TGA 1500SQ					
020	2945841-0000		2	SHAFT	
030	560122-0000		2	SUPPORT ROLLER	
040	2949207-0000		1	PLATE	
080	2931344-0000		2	CAM	
350	312605-0318		2	HEXAGON NUT, M6M M8 A280	
390	315105-0165		4	WASHER PLAIN, 8,4X16X1,6 A4 BRB	
460	312115-0329		2	SCREW ISO4762 M5X16 A4 80	
TPA 0500SQ					
020	2837095-0000		2	SHAFT	
030	2688917-0000		2	ROLLER	
040	2916977-0000		1	PLATE	
460	312115-0327		2	SCREW ISO4762 M5X12 A4 80	
470	315105-0146		2	WASHER PLAIN, 5,3X10X1 A4 BRB	
TPA 1000SQ, TPA 0750SQ					
020	2837095-0000		2	SHAFT	
030	1524421-0000		2	ROLLER	
040	2916977-0000		1	PLATE	

Machine Type | Group Description | Used-In | Group Number | Page No

SUPPORT ROLLER

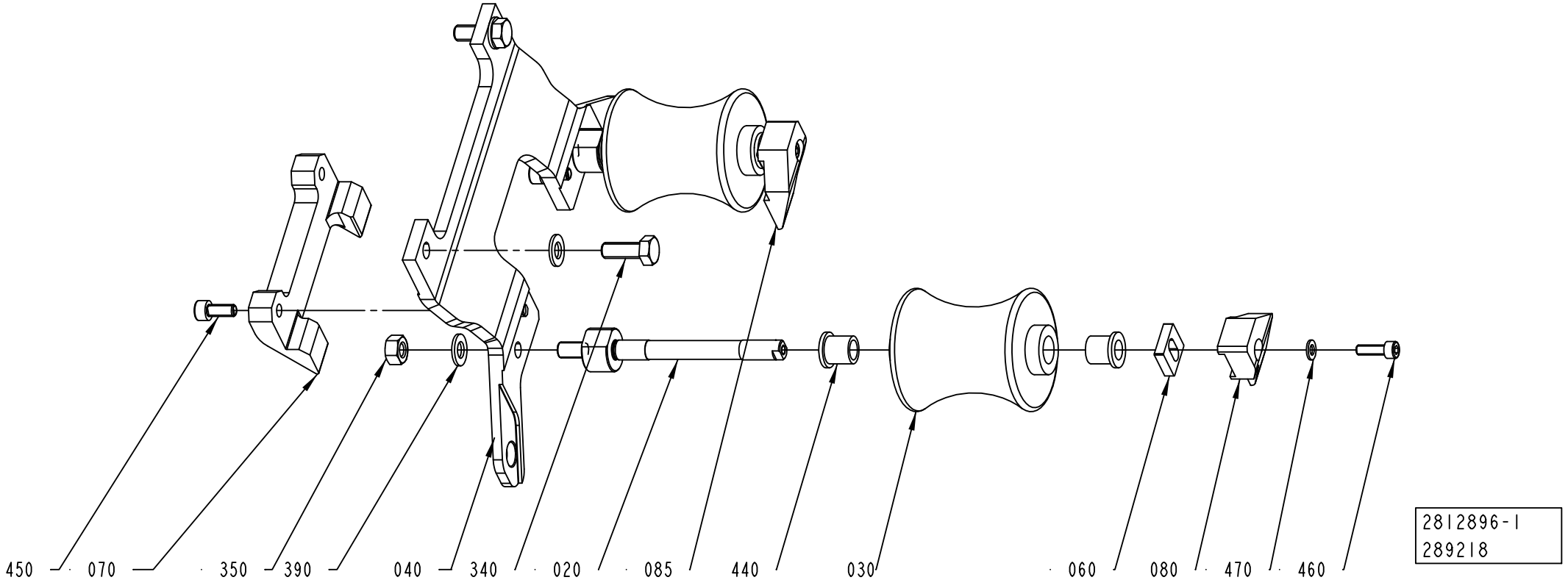

Pos	Part No	UN	Qty	Description	Page No
TPA 1000SQ, TPA 0750SQ (Cont'd)					
070	2916983-0000		1	CAM	
080	2837097-0000		1	CAM	
085	2837108-0000		1	CAM	
350	312605-0318		2	HEXAGON NUT, M6M M8 A280	
390	315105-0165		4	WASHER PLAIN, 8,4X16X1,6 A4 BRB	
450	312115-0367		2	SCREW ISO4762 M6X14 A4 80	
460	312115-0329		2	SCREW ISO4762 M5X16 A4 80	
470	315105-0146		2	WASHER PLAIN, 5,3X10X1 A4 BRB	
Common Parts					
060	2837096-0000		2	WASHER	
340	312105-0452		2	SCREW, M6S ISO 4017 M8X22 A4 80	
440	90240-0180		4	FLANGE BUSHING 10X14X15MM	

Pos	Part No	UN	Qty	Description	Page No

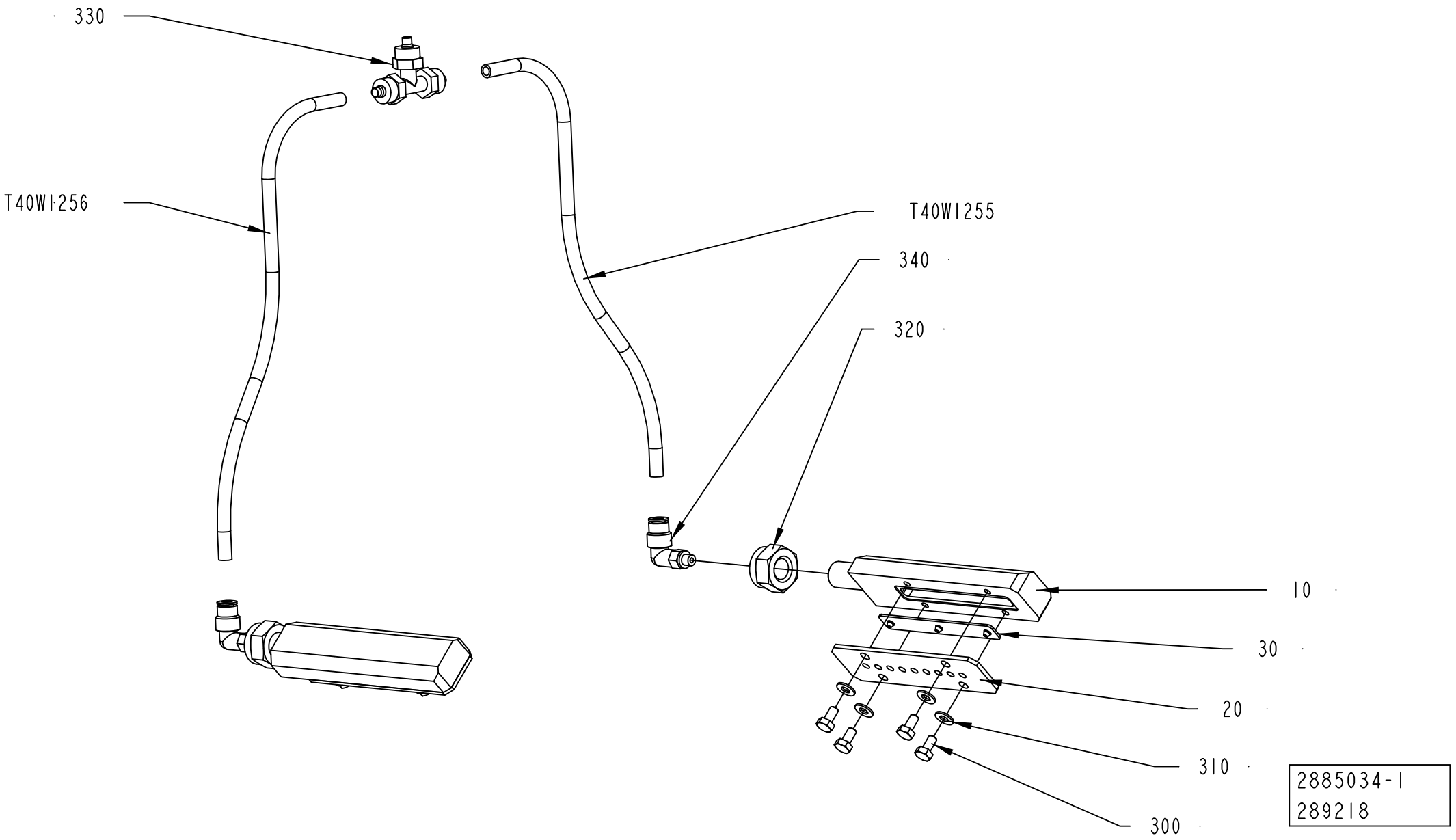
330
T40W1256
T40W1255
340
320
10
30
20
310
300
2885034-1
289218

ECM: 535047 - 20120102
Group number: 2885034-0100
Assembly Drawing: 2885034-1_1_AA

Pos	Part No	UN	Qty	Description	Page No
TBA 0500S, TBA 0500SQ, TBA 0500B, TBA 1000B, TBA 1000SQ, TBA 1000S, TPA 1000SQ, TPA 0500SQ, TPA 0750SQ, TGA 1000SQ, TGA 0750SQ, TGA 0500SQ					
010	2886417-0000		2	DISTRIBUTOR	
TBA 1500S, TGA 1500SQ					
010	2922695-0000		2	DISTRIBUTOR	
TBA 2000S					
010	2922695-0000		2	DISTRIBUTOR	
Common Parts					
020	2931944-0000		2	COVER	
030	2931945-0000		2	NOZZLE	
300	312105-0287		8	SCREW, M6S ISO 4017 M4X8 A4 70	
310	315106-0136		8	WASHER PLAIN, M4 ISO7089-4-200 HV A4	
320	312812-0322		2	HEXAGON NUT, NY-LOCK M12 A4 80	
330	342946-0112		1	T-COUPLING,UNION 6/4	
340	350002-0002		2	PUSH-IN L-FITTING QSL-F-M5-6	
T40W1255	315400-0003	MM	500	TUBE PUN-H-6X1-SW	
T40W1256	315400-0003	MM	500	TUBE PUN-H-6X1-SW	

Pos	Part No	UN	Qty	Description	Page No

This page is intentionally left blank.

ECM: 555366 - 20120402
Group number: 2979548-0100
Assembly Drawing:

This list covers pages from 1-590 to 1-593

Pos	Part No	UN	Qty	Description	Page No
TGA 0750SQ					
010	1520633-0002		12	DOLLY	
020	1566783-0000		2	INDUCTOR	
030	2909852-0000		8	SHIM	
040	1348956-0000		2	KNIFE	
TGA 1000SQ					
010	1520633-0002		12	DOLLY	
020	1566783-0000		2	INDUCTOR	
030	2660293-0000		8	VOLUME SHIM	
040	1348956-0000		2	KNIFE	
TGA 1500SQ					
010	1520633-0002		12	DOLLY	
020	1110938-0000		2	INDUCTOR	
030	2949205-0000		8	SHIM	
040	2774798-0000		2	KNIFE	
050	2774799-0000		4	BLOCK	
TPA 0500SQ					
010	1110083-0002		12	DOLLY	
020	2587467-0000		1	INDUCTOR	
020	2587466-0000		1	INDUCTOR	
030	1549830-0000		24	VOLUME SHIM	
040	2958757-0000		2	KNIFE	
050	2774799-0000		4	BLOCK	
TPA 0750SQ					
010	1520633-0002		12	DOLLY	
020	2663377-0000		1	INDUCTOR	
020	2663378-0000		1	INDUCTOR	
030	2995603-0000		8	VOLUME SHIM	
030	2995604-0000		16	VOLUME SHIM	
040	2912006-0000		2	KNIFE	
050	2774799-0000		4	BLOCK	
TPA 1000SQ					
010	1520633-0002		12	DOLLY	
020	2663378-0000		1	INDUCTOR	
020	2663377-0000		1	INDUCTOR	
030	2995599-0000		8	VOLUME SHIM	
030	2968863-0000		16	VOLUME SHIM	
040	2912006-0000		2	KNIFE	
050	2774799-0000		4	BLOCK	
TBA 0500B					
010	1110083-0002		12	DOLLY	
020	1110938-0000		2	INDUCTOR	
030	2790818-0000		8	VOLUME SHIM	
040	2774798-0000		2	KNIFE	
050	2774799-0000		4	BLOCK	
TBA 0500S					
010	1110083-0002		12	DOLLY	
020	1110934-0000		2	INDUCTOR	
030	2997717-0000		8	SHIM	
040	2912006-0000		2	KNIFE	
050	2774799-0000		4	BLOCK	
TBA 0500SQ					
010	1520633-0002		12	DOLLY	
020	1110936-0000		2	INDUCTOR	
030	2860038-0000		8	VOLUME SHIM	
040	2774798-0000		2	KNIFE	
050	2774799-0000		4	BLOCK	
TBA 1000B NOMOLDEDCAP					
010	1110083-0002		12	DOLLY	
020	1110938-0000		2	INDUCTOR	
030	2795079-0000		8	VOLUME SHIM	
040	2774798-0000		2	KNIFE	
050	2774799-0000		4	BLOCK	
TBA 1000S NOMOLDEDCAP HELICAP2 23					
010	1110083-0002		12	DOLLY	
020	3124821-0000		2	INDUCTOR	
030	1040755-0000		8	VOLUME SHIM	
040	2774798-0000		2	KNIFE	
050	2774799-0000		4	BLOCK	
TBA 1000S NOMOLDEDCAP NOCAP, TBA 1000S NOMOLDEDCAP RECAP3, TBA 1000S NOMOLDEDCAP SLIMCAP 1000					
010	1110083-0002		12	DOLLY	
020	1110937-0000		2	INDUCTOR	
030	1040755-0000		8	VOLUME SHIM	
040	2774798-0000		2	KNIFE	
050	2774799-0000		4	BLOCK	
TBA 1000SQ					
010	1520633-0002		12	DOLLY	
020	1110936-0000		2	INDUCTOR	
030	1487627-0000		8	VOLUME SHIM	
040	2774798-0000		2	KNIFE	
050	2774799-0000		4	BLOCK	
TBA 1500S					
010	1110083-0002		12	DOLLY	

Machine Type | Group Description | Used-In | Group Number | Page No

This page is intentionally left blank.

ECM: 555366 - 20120402
Group number: 2979548-0100
Assembly Drawing:

This list covers pages from 1-590 to 1-593

Pos	Part No	UN	Qty	Description	Page No
TBA 1500S (Cont'd)					
020	1110938-0000		2	INDUCTOR	
030	2987038-0000		8	VOLUME SHIM	
040	2774798-0000		2	KNIFE	
050	2774799-0000		4	BLOCK	
TBA 2000S					
010	1520633-0005		12	DOLLY	
020	2879535-0000		2	INDUCTOR	
030	2978343-0000		8	VOLUME SHIM	
040	2909311-0000		2	KNIFE	
TGA 0500SQ					
010	1520633-0002		12	DOLLY	
020	1566783-0000		2	INDUCTOR	
030	3041582-0000		8	SHIM	
040	1348956-0000		2	KNIFE	
Common Parts					
070	1538109-0000		2	COMPRESSION SPRING	
080	1037254-0000		12	SHIM	
090	28509-0000		2	WASHER	
100	32544-0000		2	INSULATION NUT	
110	2836239-0000		2	WASHER	
120	107426-0000		4	GUIDE SLEEVE	
130	2836238-0000		2	INSULATION NUT	
140	1036584-0000		4	WASHER	
150	315211-0104		4	BONDED SEAL SS/NBR90 M8	
160	312115-0297		8	SCREW ISO4762 M4X25 A4 80	
170	312125-0295		2	SLOTTED HEAD SCREW, ISO1207 M4X20 A4	
180	315211-0103		4	BONDED SEAL SS/NBR90 M6	
190	315202-0101		8	O-RING 3,1X1,6 MM	
200	315202-0102		8	O-RING 4,1X1,6 MM	

Pos	Part No	UN	Qty	Description	Page No

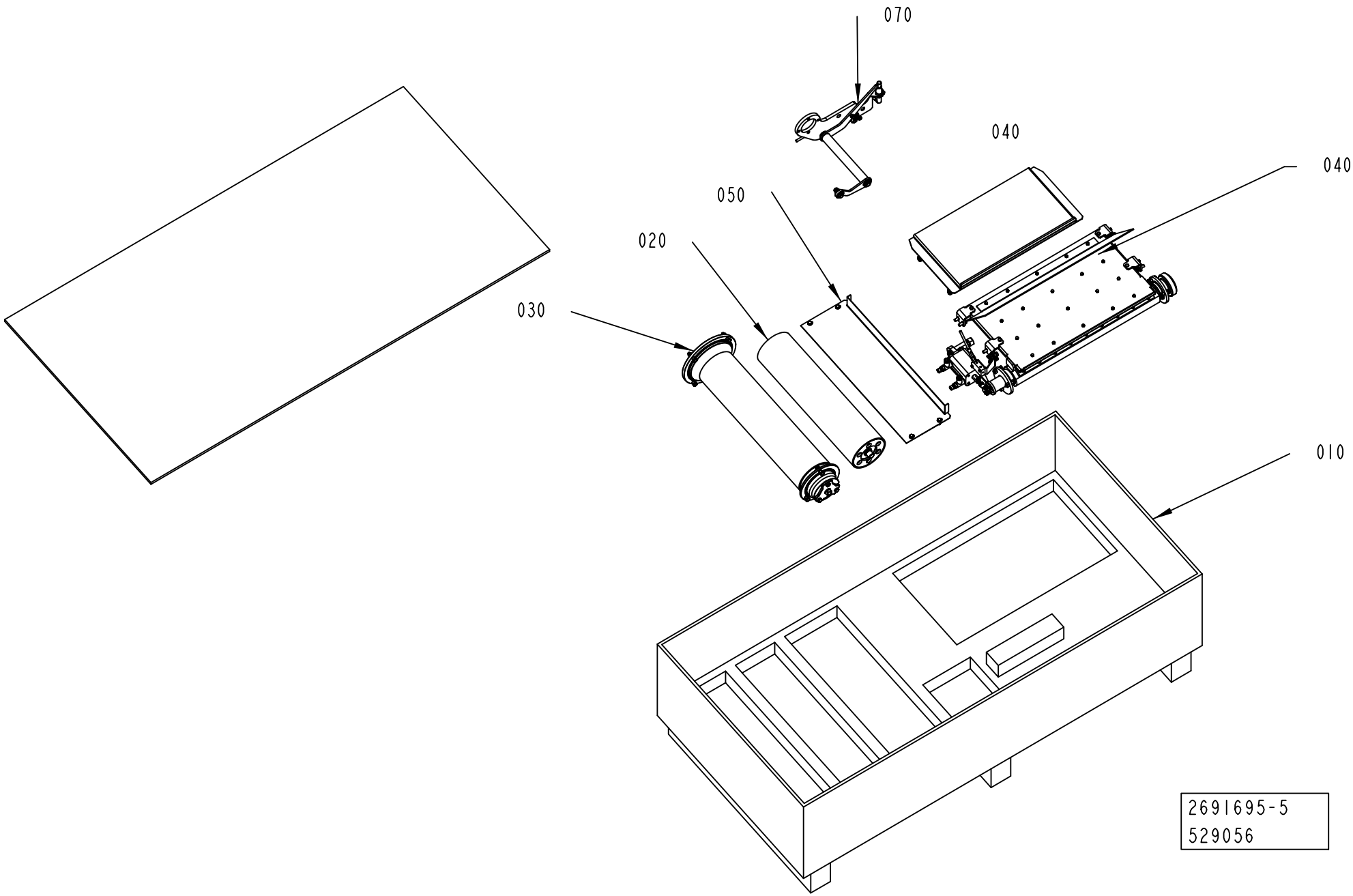
070
040
040
050
020
030
010
2691695-5
529056

ECM: 535855 - 20120401
Group number: 2691695-0300
Assembly Drawing: 2691695-5_1_AA

This list covers pages from 1-594 to 1-597

Pos	Part No	UN	Qty	Description	Page No
START FM TBA 2000S (See drawing on page: 1-594)					
010	3010407-0000		1	BOX	
020	2532911-0000		1	ROLLER	
030	2763999-0200		1	BENDING ROLLER	**1-599, 1-601**
040	2532934-0300		1	AIR KNIFE	**1-603, 1-605**
050	2783102-0100		1	PLATE	**1-607**
070	1558356-0300		1	SPLICE DETECTOR	**1-609**
TBA 2000S (See drawing on page: 1-596)					
010	3010407-0000		1	BOX	
020	2662639-0000		1	ROLLER	
040	2532934-0300		1	AIR KNIFE	**1-603, 1-605**
050	2783102-0100		1	PLATE	**1-607**
060	3022705-0200		1	BOX	**1-611**
070	3100550-0100		1	SPLICE DETECTOR	**1-621**
080	3100547-0000		1	FLANGE	
090	312105-0378		2	SCREW, M6S ISO 4014 M6X40 A4 80	

Pos	Part No	UN	Qty	Description	Page No

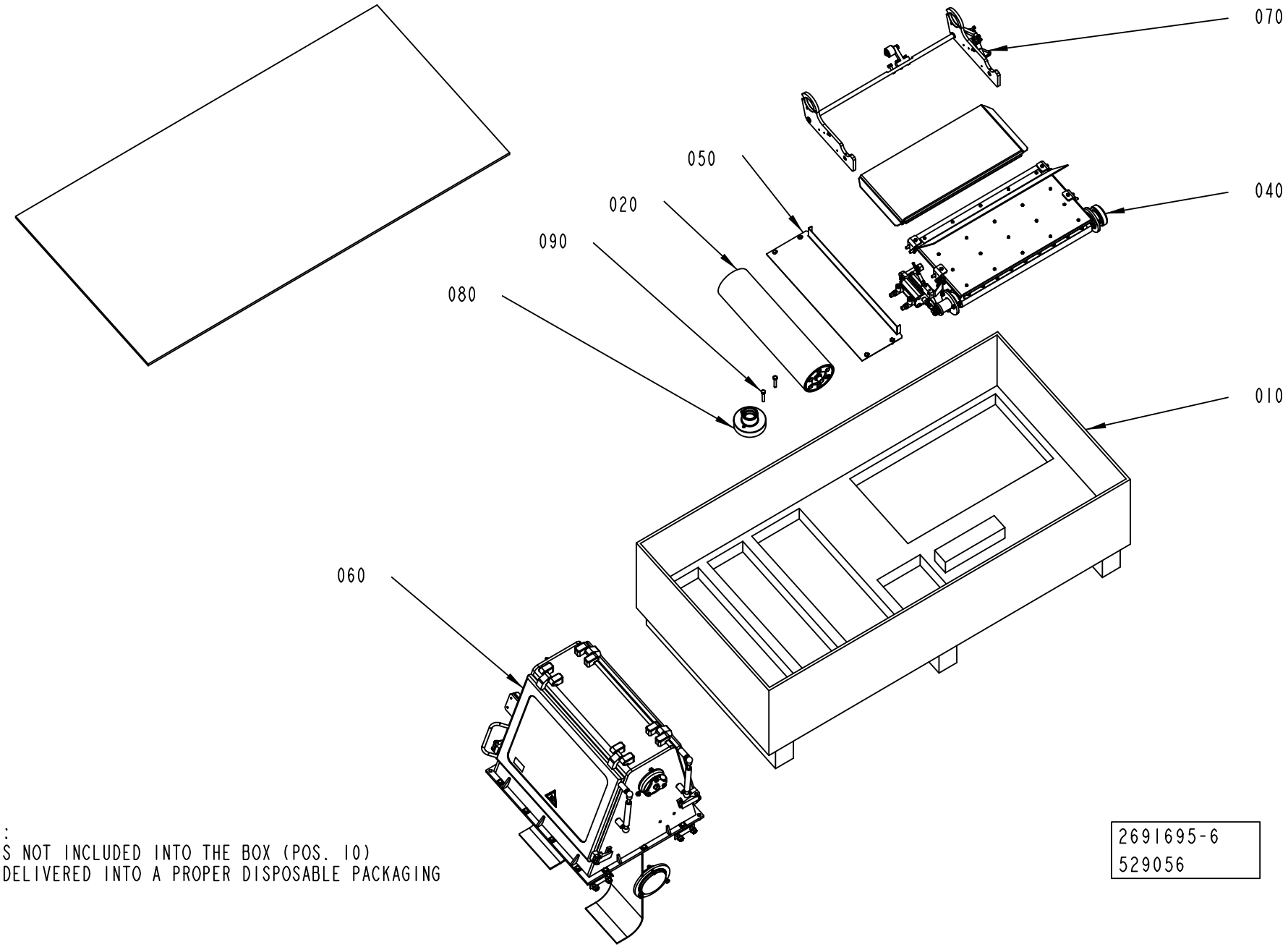

ATTENTION:
POS. 60 IS NOT INCLUDED INTO THE BOX (POS. 10)
BUT IT'S DELIVERED INTO A PROPER DISPOSABLE PACKAGING

2691695-6
529056

ECM: 535855 - 20120401
Group number: 2691695-0300
Assembly Drawing: 2691695-6_1_AA

This list covers pages from 1-594 to 1-597

Pos	Part No	UN	Qty	Description	Page No
START FM TBA 2000S (See drawing on page: 1-594)					
010	3010407-0000		1	BOX	
020	2532911-0000		1	ROLLER	
030	2763999-0200		1	BENDING ROLLER	**1-599, 1-601**
040	2532934-0300		1	AIR KNIFE	**1-603, 1-605**
050	2783102-0100		1	PLATE	**1-607**
070	1558356-0300		1	SPLICE DETECTOR	**1-609**
TBA 2000S (See drawing on page: 1-596)					
010	3010407-0000		1	BOX	
020	2662639-0000		1	ROLLER	
040	2532934-0300		1	AIR KNIFE	**1-603, 1-605**
050	2783102-0100		1	PLATE	**1-607**
060	3022705-0200		1	BOX	**1-611**
070	3100550-0100		1	SPLICE DETECTOR	**1-621**
080	3100547-0000		1	FLANGE	
090	312105-0378		2	SCREW, M6S ISO 4014 M6X40 A4 80	

Pos	Part No	UN	Qty	Description	Page No

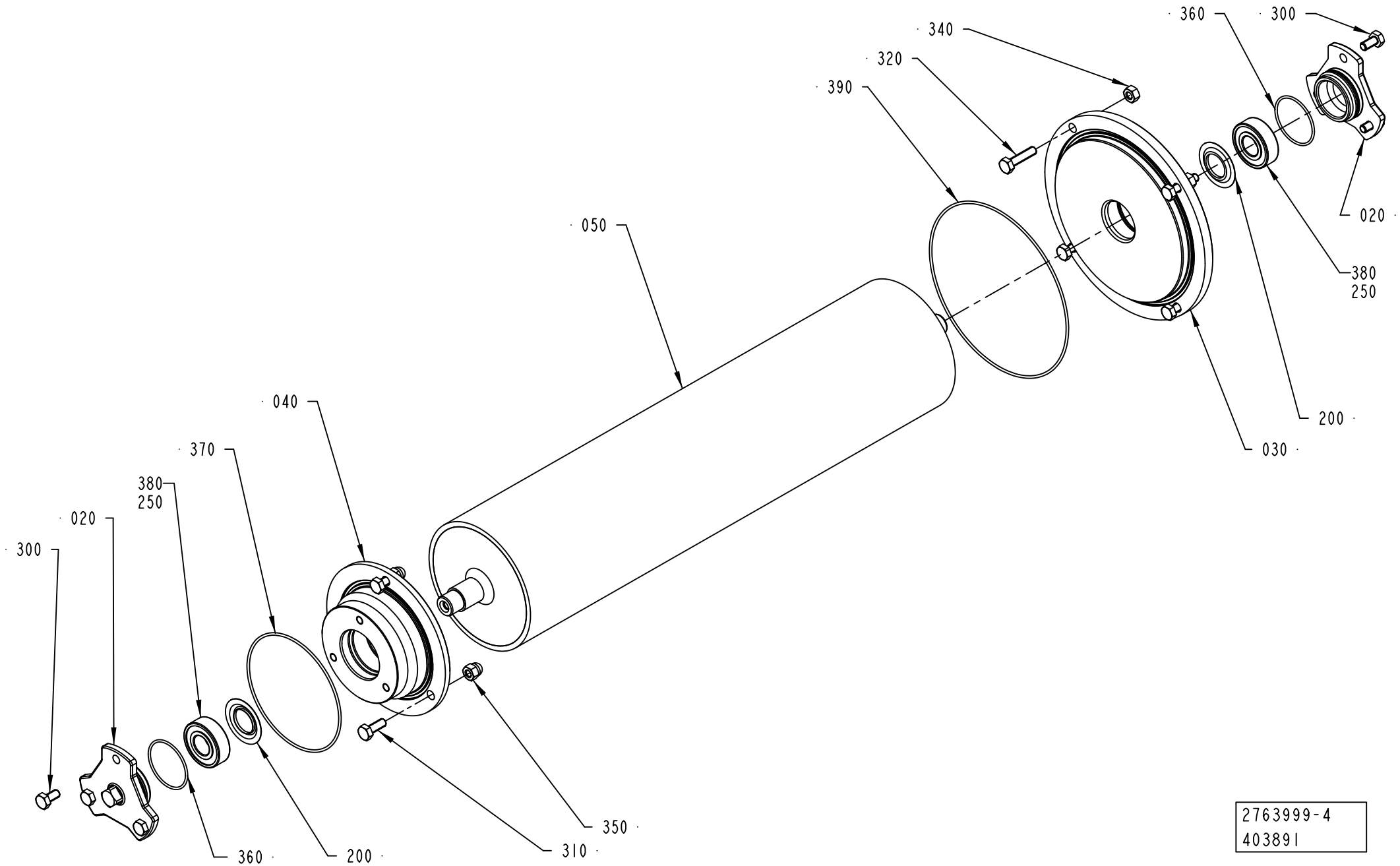

2763999-4
403891

ECM: 522097 - 20120403
Group number: 2763999-0200
Assembly Drawing: 2763999-4_1_AA

This list covers pages from 1-598 to 1-601

Pos	Part No	UN	Qty	Description	Page No
A3/FLEX NODIMC (See drawing on page: 1-598)					
020	2951058-0000		2	LID	
030	3042501-0000		1	FLANGE	
040	3042503-0000		1	FLANGE	
050	3042491-0000		1	BENDING ROLLER	
300	312105-0366		6	SCREW, M6S ISO 4017 M6X12 A4 80	
320	312105-0372		4	SCREW, M6S ISO 4017 M6X25 A4 80	
340	312605-0316		4	HEXAGON NUT, M6M M6 A280	
360	315204-0123		2	O-RING 35,1X1,6 MM	
370	90458-0640		1	O-RING 88,62X1,78 MM	
390	90459-0094		1	O-RING 133,07X1,78 MM	
A3/FLEX TBA 1000M LIGHTCAP 24 (See drawing on page: 1-600)					
020	2951058-0000		1	LID	
025	3166551-0000		1	LID	
030	3166549-0000		1	FLANGE	
040	3166550-0000		1	FLANGE	
050	3042548-0000		1	BENDING ROLLER	
300	312105-0366		6	SCREW, M6S ISO 4017 M6X12 A4 80	
320	312105-0372		4	SCREW, M6S ISO 4017 M6X25 A4 80	
325	312115-0366		3	SCREW ISO4762 M6X12 A4 80	
340	312605-0316		4	HEXAGON NUT, M6M M6 A280	
360	315204-0123		2	O-RING 35,1X1,6 MM	
370	90458-0640		1	O-RING 88,62X1,78 MM	
390	90459-0094		1	O-RING 133,07X1,78 MM	
Common Parts					
200	90214-0303		2	SEALING RING, 18,6X35X2 MM	
250	90296-0091		1	LUBRICATION GREASE, FLUOLUB 210	
310	312105-0368		3	SCREW, M6S ISO 4017 M6X16 A4 80	
350	312705-0316		3	HEX. DOMED CAP MHM-6 M6 A280	
380	90458-1704		2	BALL BEARING 15/35X11	

Pos	Part No	UN	Qty	Description	Page No

BENDING ROLLER

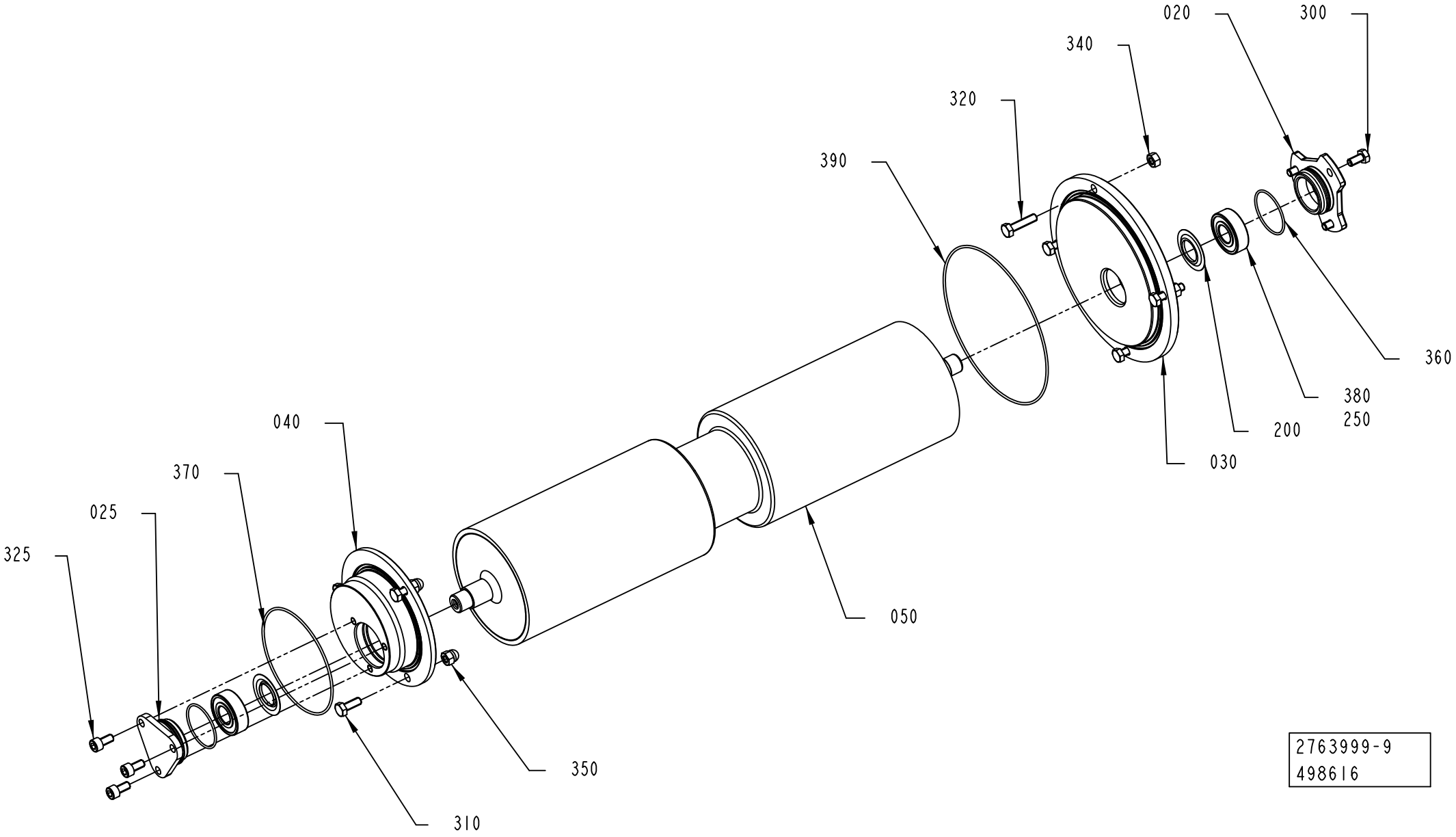

ECM: 522097 - 20120403
Group number: 2763999-0200
Assembly Drawing: 2763999-9_1_AA

This list covers pages from 1-598 to 1-601

Pos	Part No	UN	Qty	Description	Page No
A3/FLEX NODIMC (See drawing on page: 1-598)					
020	2951058-0000		2	LID	
030	3042501-0000		1	FLANGE	
040	3042503-0000		1	FLANGE	
050	3042491-0000		1	BENDING ROLLER	
300	312105-0366		6	SCREW, M6S ISO 4017 M6X12 A4 80	
320	312105-0372		4	SCREW, M6S ISO 4017 M6X25 A4 80	
340	312605-0316		4	HEXAGON NUT, M6M M6 A280	
360	315204-0123		2	O-RING 35,1X1,6 MM	
370	90458-0640		1	O-RING 88,62X1,78 MM	
390	90459-0094		1	O-RING 133,07X1,78 MM	
A3/FLEX TBA 1000M LIGHTCAP 24 (See drawing on page: 1-600)					
020	2951058-0000		1	LID	
025	3166551-0000		1	LID	
030	3166549-0000		1	FLANGE	
040	3166550-0000		1	FLANGE	
050	3042548-0000		1	BENDING ROLLER	
300	312105-0366		6	SCREW, M6S ISO 4017 M6X12 A4 80	
320	312105-0372		4	SCREW, M6S ISO 4017 M6X25 A4 80	
325	312115-0366		3	SCREW ISO4762 M6X12 A4 80	
340	312605-0316		4	HEXAGON NUT, M6M M6 A280	
360	315204-0123		2	O-RING 35,1X1,6 MM	
370	90458-0640		1	O-RING 88,62X1,78 MM	
390	90459-0094		1	O-RING 133,07X1,78 MM	
Common Parts					
200	90214-0303		2	SEALING RING, 18,6X35X2 MM	
250	90296-0091		1	LUBRICATION GREASE, FLUOLUB 210	
310	312105-0368		3	SCREW, M6S ISO 4017 M6X16 A4 80	
350	312705-0316		3	HEX. DOMED CAP MHM-6 M6 A280	
380	90458-1704		2	BALL BEARING 15/35X11	

Pos	Part No	UN	Qty	Description	Page No

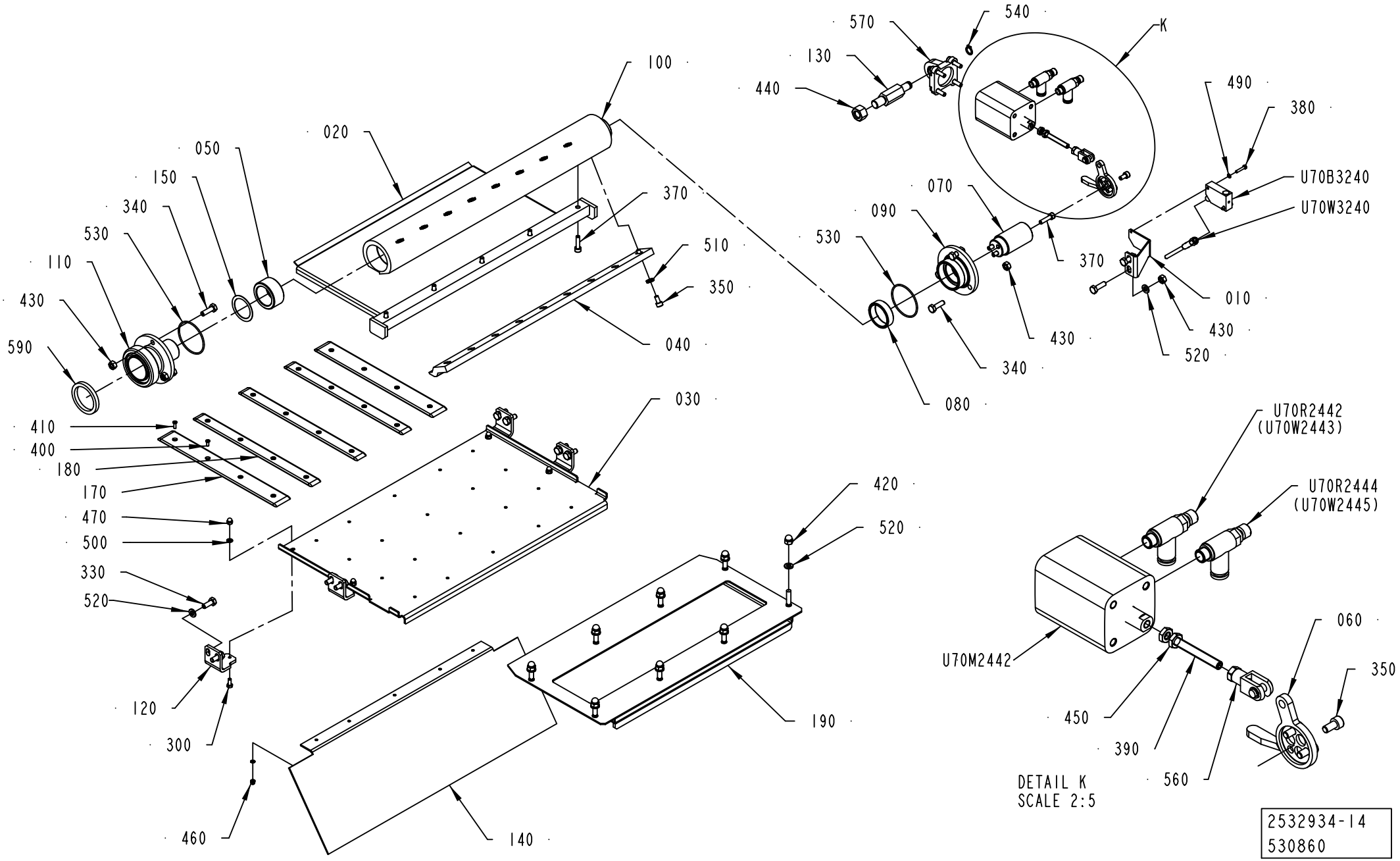
100
020
050
150
340
530
110
430
590
370
510
350
040
030
410
400
180
170
470
500
330
520
120
300
460
140
420
520
190
570
540
K
130
440
490
380
U70B3240
U70W3240
070
090
530
370
010
430
520
340
430
080
U70R2442
(U70W2443)
U70R2444
(U70W2445)
U70M2442
060
350
450
390
560
DETAIL K
SCALE 2:5
2532934-14
530860

ECM: 530860 - 20120403
Group number: 2532934-0300
Assembly Drawing: 2532934-14_1_AA

This list covers pages from 1-602 to 1-605

Pos	Part No	UN	Qty	Description	Page No
TBA 1000B NODIMC, TBA 1000S NODIMC, TPA 1000SQ NODIMC, TBA 1000SQ NODIMC, TPA 0750SQ NODIMC, TBA 0500B NODIMC, TBA 1500S NODIMC, TBA 0500SQ NODIMC, TGA 0750SQ NODIMC, TGA 0500SQ NODIMC, TGA 1000SQ NODIMC, TGA 1500SQ NODIMC, TPA 0500SQ NODIMC, TBA 0500S NODIMC (See drawing on page: 1-602)					
020	2867470-0000		1	AIR GUIDE	
030	2874772-0000		1	PLATE	
040	2509681-0000		1	RAIL	
120	2532918-0000		4	HOLDER	
140	2532919-0000		1	PLATE	
180	2894560-0000		3	SLIDE PLATE	
190	2874771-0000		1	PLATE	
300	312105-0289		4	SCREW, M6S ISO 4017 M4X10 A4 70	
400	312145-0222		15	SCREW ISO 2009 MFS M3X8 A4	
410	312145-0224		5	SCREW ISO 2009 MFS M3X10 A4	
420	312705-0316		8	HEX. DOMED CAP MHM-6 M6 A280	
460	312705-0310		20	NUT HEX. DOMED CAP MHM-6 M3 A2	
470	312705-0312		4	NUT HEX. DOMED CAP MHM-6 M4 A280	
490	315105-0124		22	WASHER PLAIN, 3,2X6X0,5 A4 BRB	
500	315105-0136		4	WASHER PLAIN, 4,3X9X0,8 A4 BRB	
520	315105-0153		18	WASHER PLAIN, 6,4X12X1,5 A4 BRB	
TBA 2000S NODIMC (See drawing on page: 1-604)					
020	2894606-0000		1	AIR GUIDE	
030	2894605-0000		1	BOTTOM PLATE	
040	2594601-0000		1	RAIL	
120	2582655-0000		4	HOLDER	
140	2582654-0000		1	PLATE	
180	2894560-0000		3	SLIDE PLATE	
190	2894604-0000		1	PLATE	
300	312105-0289		4	SCREW, M6S ISO 4017 M4X10 A4 70	
400	312145-0222		15	SCREW ISO 2009 MFS M3X8 A4	
410	312145-0224		5	SCREW ISO 2009 MFS M3X10 A4	
420	312705-0316		8	HEX. DOMED CAP MHM-6 M6 A280	
460	312705-0310		20	NUT HEX. DOMED CAP MHM-6 M3 A2	
470	312705-0312		4	NUT HEX. DOMED CAP MHM-6 M4 A280	
490	315105-0124		22	WASHER PLAIN, 3,2X6X0,5 A4 BRB	
500	315105-0136		4	WASHER PLAIN, 4,3X9X0,8 A4 BRB	
520	315105-0153		18	WASHER PLAIN, 6,4X12X1,5 A4 BRB	
Common Parts					
010	2936344-0000		1	BRACKET	
050	1519166-0000		1	BUSHING	
060	2936343-0000		1	ARM	
070	1519160-0000		1	SHAFT	
080	1519159-0000		1	BUSHING	
090	1519158-0000		1	LID	
100	1519156-0000		1	AIR DISTRIBUTOR	
110	1532231-0000		1	CONNECTION	
130	1498132-0000		1	SHAFT	
150	2532915-0000		1	WASHER	
170	2894561-0000		2	SLIDE PLATE	
330	312105-0368		8	SCREW, M6S ISO 4017 M6X16 A4 80	
340	312105-0370		8	SCREW, M6S ISO 4017 M6X20 A4 80	
350	312115-0325		12	SCREW ISO4762 M5X10 A4 80	
370	312115-0331		12	SCREW ISO4762 M5X20 A4 80	
380	312125-0228		2	SLOTTED HEAD SCREW, ISO1207 M3X16 A4	
390	90459-1728		1	SET SCREW, CUP END ISO4029 M6X45 A4	
430	312605-0316		8	HEXAGON NUT, M6M M6 A280	
440	312605-0322		1	HEXAGON NUT, M6M M12 A280	
450	312625-0316		2	HEXAGON THIN NUT, EN 24035 ML6M M6 A4	
510	90062-0061		9	LOCK WASHER NORD-LOCK,6,5/10,8, T=2,2	
530	315205-0804		2	O-RING 47,35X1,78 MM	
540	90141-0016		1	RETAINING RING FOR SHAFT DIN 471 10 SS	
560	90239-0489		1	ROD END, CLEVIS WITH AXLE M6X1,25	
570	90459-2650		1	SWIVEL FLANGE 32	
590	12242-0003		1	GASKET 48X38X5,5	
U70B3240	90459-2409		1	INDUCTIVE SENSOR, IN 5230	
U70M2442	90604-3127		1	DOUBLE ACTING, COMPACT, 32-25	
U70R2442	90459-3528		1	ONE WAY FLOW CONTROL, G1/8, MANUAL	
U70R2444	90459-3528		1	ONE WAY FLOW CONTROL, G1/8, MANUAL	
U70W3240	344245-0050		1	SENSOR CABLE, EVT123	

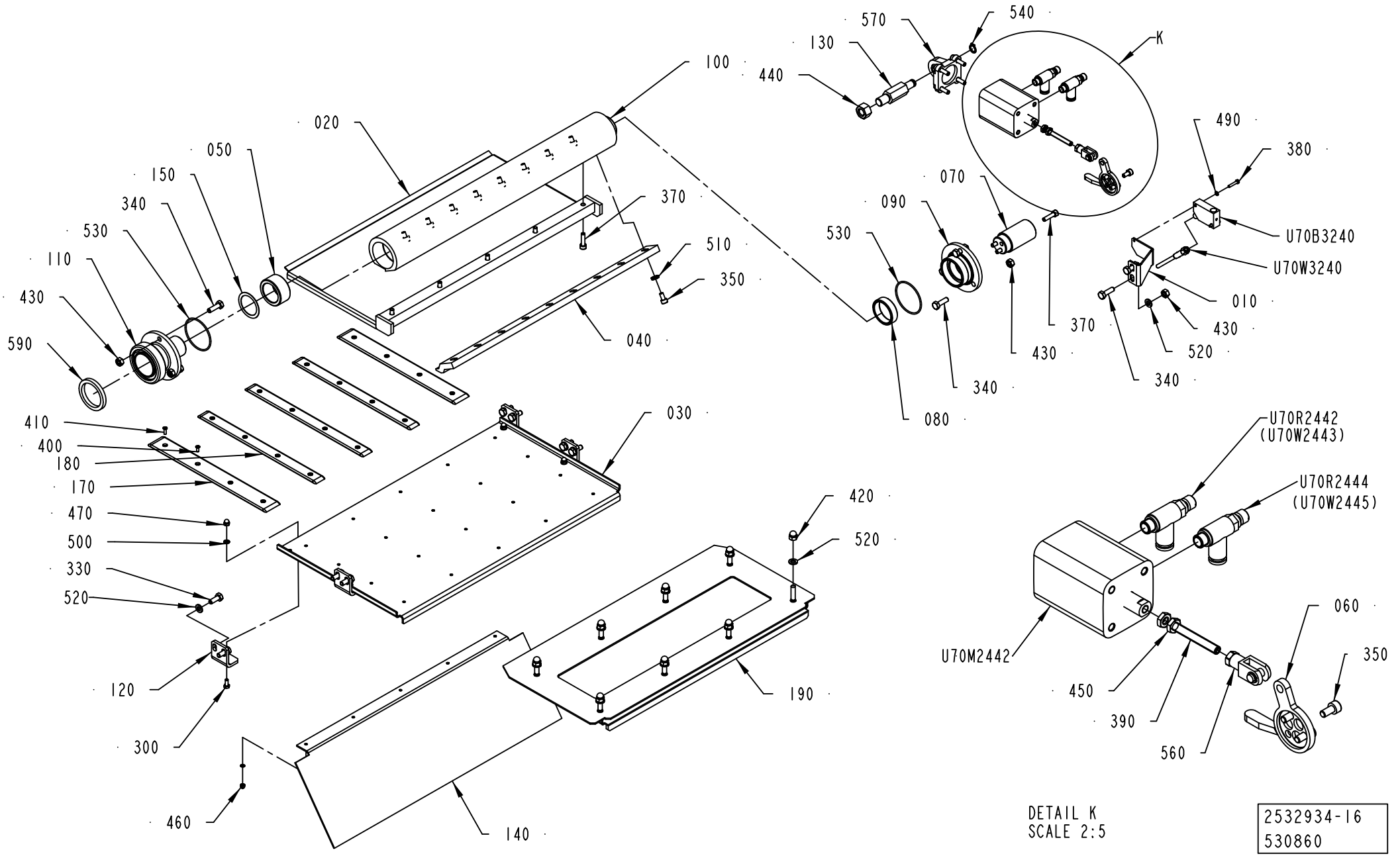

DETAIL K
SCALE 2:5

2532934-16
530860

ECM: 530860 - 20120403
Group number: 2532934-0300
Assembly Drawing: 2532934-16_1_AA

This list covers pages from 1-602 to 1-605

Pos	Part No	UN	Qty	Description	Page No
TBA 1000B NODIMC, TBA 1000S NODIMC, TPA 1000SQ NODIMC, TBA 1000SQ NODIMC, TPA 0750SQ NODIMC, TBA 0500B NODIMC, TBA 1500S NODIMC, TBA 0500SQ NODIMC, TGA 0750SQ NODIMC, TGA 0500SQ NODIMC, TGA 1000SQ NODIMC, TGA 1500SQ NODIMC, TPA 0500SQ NODIMC, TBA 0500S NODIMC (See drawing on page: 1-602)					
020	2867470-0000		1	AIR GUIDE	
030	2874772-0000		1	PLATE	
040	2509681-0000		1	RAIL	
120	2532918-0000		4	HOLDER	
140	2532919-0000		1	PLATE	
180	2894560-0000		3	SLIDE PLATE	
190	2874771-0000		1	PLATE	
300	312105-0289		4	SCREW, M6S ISO 4017 M4X10 A4 70	
400	312145-0222		15	SCREW ISO 2009 MFS M3X8 A4	
410	312145-0224		5	SCREW ISO 2009 MFS M3X10 A4	
420	312705-0316		8	HEX. DOMED CAP MHM-6 M6 A280	
460	312705-0310		20	NUT HEX. DOMED CAP MHM-6 M3 A2	
470	312705-0312		4	NUT HEX. DOMED CAP MHM-6 M4 A280	
490	315105-0124		22	WASHER PLAIN, 3,2X6X0,5 A4 BRB	
500	315105-0136		4	WASHER PLAIN, 4,3X9X0,8 A4 BRB	
520	315105-0153		18	WASHER PLAIN, 6,4X12X1,5 A4 BRB	
TBA 2000S NODIMC (See drawing on page: 1-604)					
020	2894606-0000		1	AIR GUIDE	
030	2894605-0000		1	BOTTOM PLATE	
040	2594601-0000		1	RAIL	
120	2582655-0000		4	HOLDER	
140	2582654-0000		1	PLATE	
180	2894560-0000		3	SLIDE PLATE	
190	2894604-0000		1	PLATE	
300	312105-0289		4	SCREW, M6S ISO 4017 M4X10 A4 70	
400	312145-0222		15	SCREW ISO 2009 MFS M3X8 A4	
410	312145-0224		5	SCREW ISO 2009 MFS M3X10 A4	
420	312705-0316		8	HEX. DOMED CAP MHM-6 M6 A280	
460	312705-0310		20	NUT HEX. DOMED CAP MHM-6 M3 A2	
470	312705-0312		4	NUT HEX. DOMED CAP MHM-6 M4 A280	
490	315105-0124		22	WASHER PLAIN, 3,2X6X0,5 A4 BRB	
500	315105-0136		4	WASHER PLAIN, 4,3X9X0,8 A4 BRB	
520	315105-0153		18	WASHER PLAIN, 6,4X12X1,5 A4 BRB	
Common Parts					
010	2936344-0000		1	BRACKET	
050	1519166-0000		1	BUSHING	
060	2936343-0000		1	ARM	
070	1519160-0000		1	SHAFT	
080	1519159-0000		1	BUSHING	
090	1519158-0000		1	LID	
100	1519156-0000		1	AIR DISTRIBUTOR	
110	1532231-0000		1	CONNECTION	
130	1498132-0000		1	SHAFT	
150	2532915-0000		1	WASHER	
170	2894561-0000		2	SLIDE PLATE	
330	312105-0368		8	SCREW, M6S ISO 4017 M6X16 A4 80	
340	312105-0370		8	SCREW, M6S ISO 4017 M6X20 A4 80	
350	312115-0325		12	SCREW ISO4762 M5X10 A4 80	
370	312115-0331		12	SCREW ISO4762 M5X20 A4 80	
380	312125-0228		2	SLOTTED HEAD SCREW, ISO1207 M3X16 A4	
390	90459-1728		1	SET SCREW, CUP END ISO4029 M6X45 A4	
430	312605-0316		8	HEXAGON NUT, M6M M6 A280	
440	312605-0322		1	HEXAGON NUT, M6M M12 A280	
450	312625-0316		2	HEXAGON THIN NUT, EN 24035 ML6M M6 A4	
510	90062-0061		9	LOCK WASHER NORD-LOCK,6,5/10,8, T=2,2	
530	315205-0804		2	O-RING 47,35X1,78 MM	
540	90141-0016		1	RETAINING RING FOR SHAFT DIN 471 10 SS	
560	90239-0489		1	ROD END, CLEVIS WITH AXLE M6X1,25	
570	90459-2650		1	SWIVEL FLANGE 32	
590	12242-0003		1	GASKET 48X38X5,5	
U70B3240	90459-2409		1	INDUCTIVE SENSOR, IN 5230	
U70M2442	90604-3127		1	DOUBLE ACTING, COMPACT, 32-25	
U70R2442	90459-3528		1	ONE WAY FLOW CONTROL, G1/8, MANUAL	
U70R2444	90459-3528		1	ONE WAY FLOW CONTROL, G1/8, MANUAL	
U70W3240	344245-0050		1	SENSOR CABLE, EVT123	

Machine Type | Group Description | Used-In | Group Number | Page No

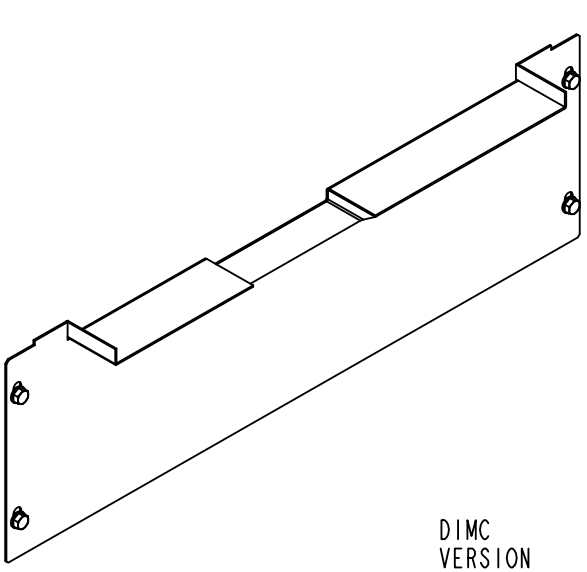

DIMC
VERSION

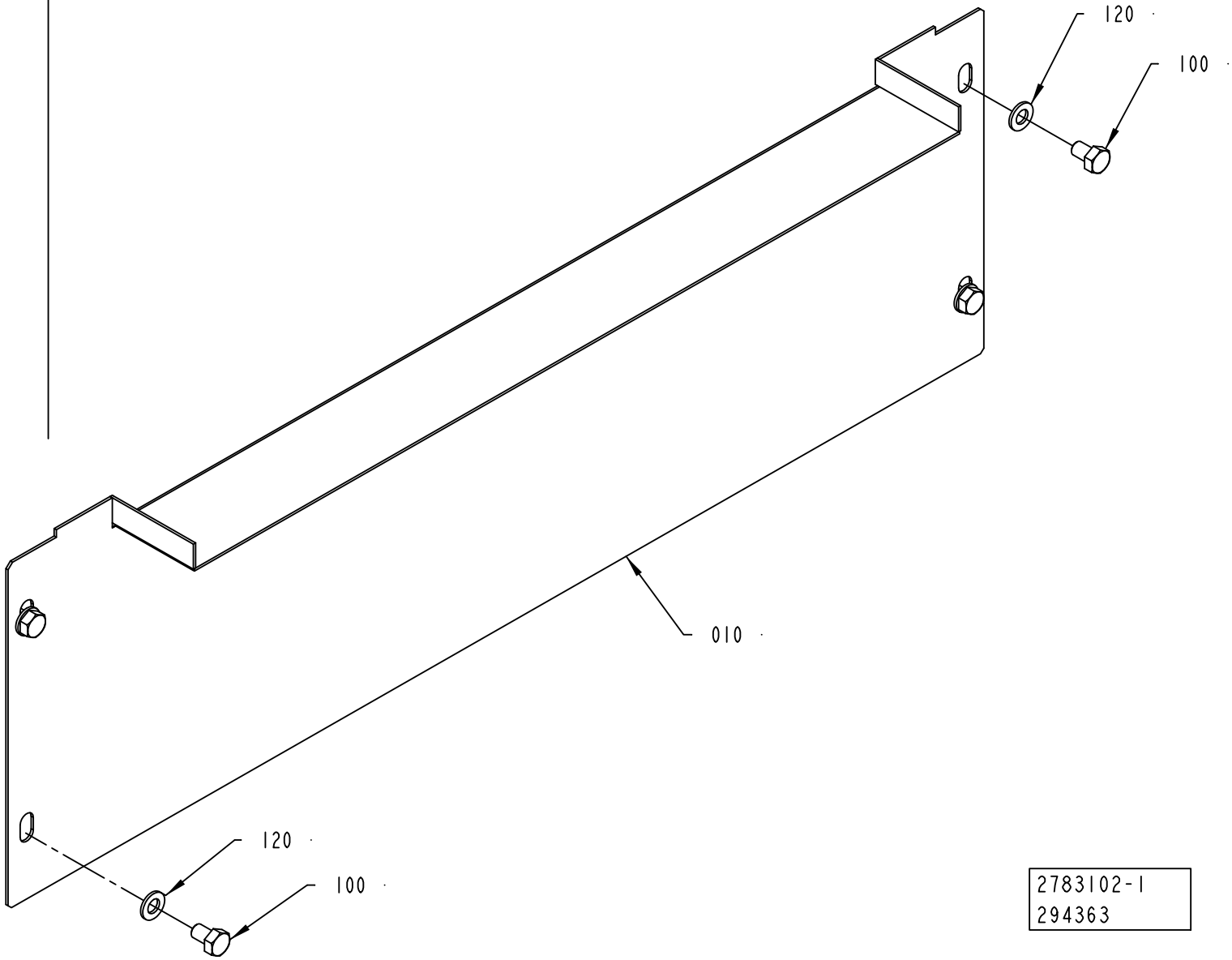

2783102-1
294363

ECM: 530456 - 20120416
Group number: 2783102-0100
Assembly Drawing: 2783102-1_1_AA

Pos	Part No	UN	Qty	Description	Page No
A3/FLEX TBA 1000M LIGHTCAP 24					
010	3152478-0000		1	PLATE	
A3/FLEX TBA 1000SQ NODIMC, A3/FLEX TBA 1000S NODIMC, A3/FLEX TBA 1000B NODIMC, A3/FLEX TBA 0500B NODIMC, A3/FLEX TPA 1000SQ NODIMC, A3/FLEX TBA 1500S NODIMC, A3/FLEX TPA 0500SQ NODIMC, A3/FLEX TBA 0500S NODIMC, A3/FLEX TPA 0750SQ NODIMC, A3/FLEX TGA 1000SQ NODIMC, A3/FLEX TBA 0500SQ NODIMC, A3/FLEX TGA 0500SQ NODIMC, A3/FLEX TGA 0750SQ NODIMC, A3/FLEX TGA 1500SQ NODIMC, A3/FLEX TGA 1000CR NODIMC, A3/FLEX TGA 1000LF NODIMC					
010	2867482-0000		1	PLATE	
A3/FLEX TBA 2000S NODIMC					
010	2894609-0000		1	PLATE	
Common Parts					
100	312105-0323		4	SCREW, M6S ISO 4017 M5X8 A4 80	
120	315105-0146		4	WASHER PLAIN, 5,3X10X1 A4 BRB	

Pos	Part No	UN	Qty	Description	Page No

SPLICE DETECTOR

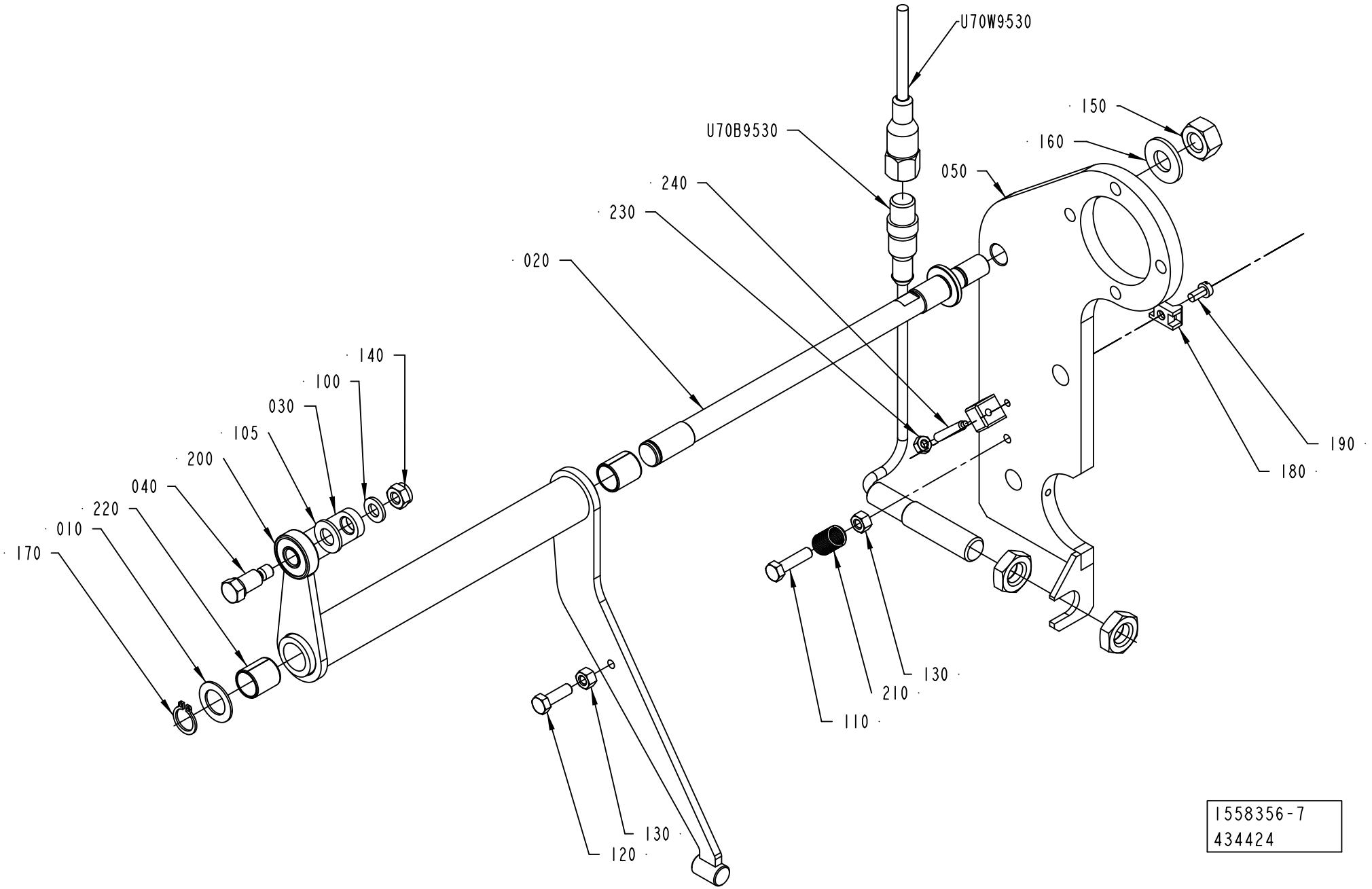

ECM: 442228 - 20100701
Group number: 1558356-0300
Assembly Drawing: 1558356-7_1_AD

Pos	Part No	UN	Qty	Description	Page No
-					
010	266737-0000		1	WASHER	
020	3008114-0000		1	SHAFT	
030	2946876-0000		1	BRACKET	
040	2946878-0000		1	SHAFT	
050	2946880-0000		1	PLATE	
100	315105-0153		1	WASHER PLAIN, 6,4X12X1,5 A4 BRB	
105	315105-0165		1	WASHER PLAIN, 8,4X16X1,6 A4 BRB	
110	312105-0331		1	SCREW, M6S ISO 4017 M5X20 A4 80	
120	312105-0329		1	SCREW, M6S ISO 4017 M5X16 A4 80	
130	312605-0314		2	HEXAGON NUT, M6M M5 A280	
140	312812-0316		1	HEXAGON NUT, NY-LOCK M6 A4 80	
150	312605-0320		1	HEXAGON NUT, M6M M10 A280	
160	315105-0173		1	WASHER PLAIN, 10,5X22X2 A4 BRB	
170	315751-0109		1	RETAINING RING FOR SHAFT DIN 471 12 SS	
180	352113-0205		1	ANCHOR PLATES FOR STRIPS, TM2S8-C100	
190	312125-0287		1	SLOTTED HEAD SCREW, ISO1207 M4X8 A4	
200	90459-6335		1	BALL BEARING 8/22X7	
210	90335-0089		1	TENSION SPRING, 41490, 0,9X10X23	
220	321141-0183		2	BEARING BUSHING, 12X14X15 MM	
230	312605-0312		1	HEXAGON NUT, M6M M4 A280	
240	90459-6480		1	SET SCREW, DOGPOINT ISO4028 M4X25 A2	
U70B9530	90600-2233		1	INDUCTIVE SENSOR	
U70W9530	351309-0100		1	ACTUATOR/SENSOR CABLE PRKT 4-07/10M	

Pos	Part No	UN	Qty	Description	Page No

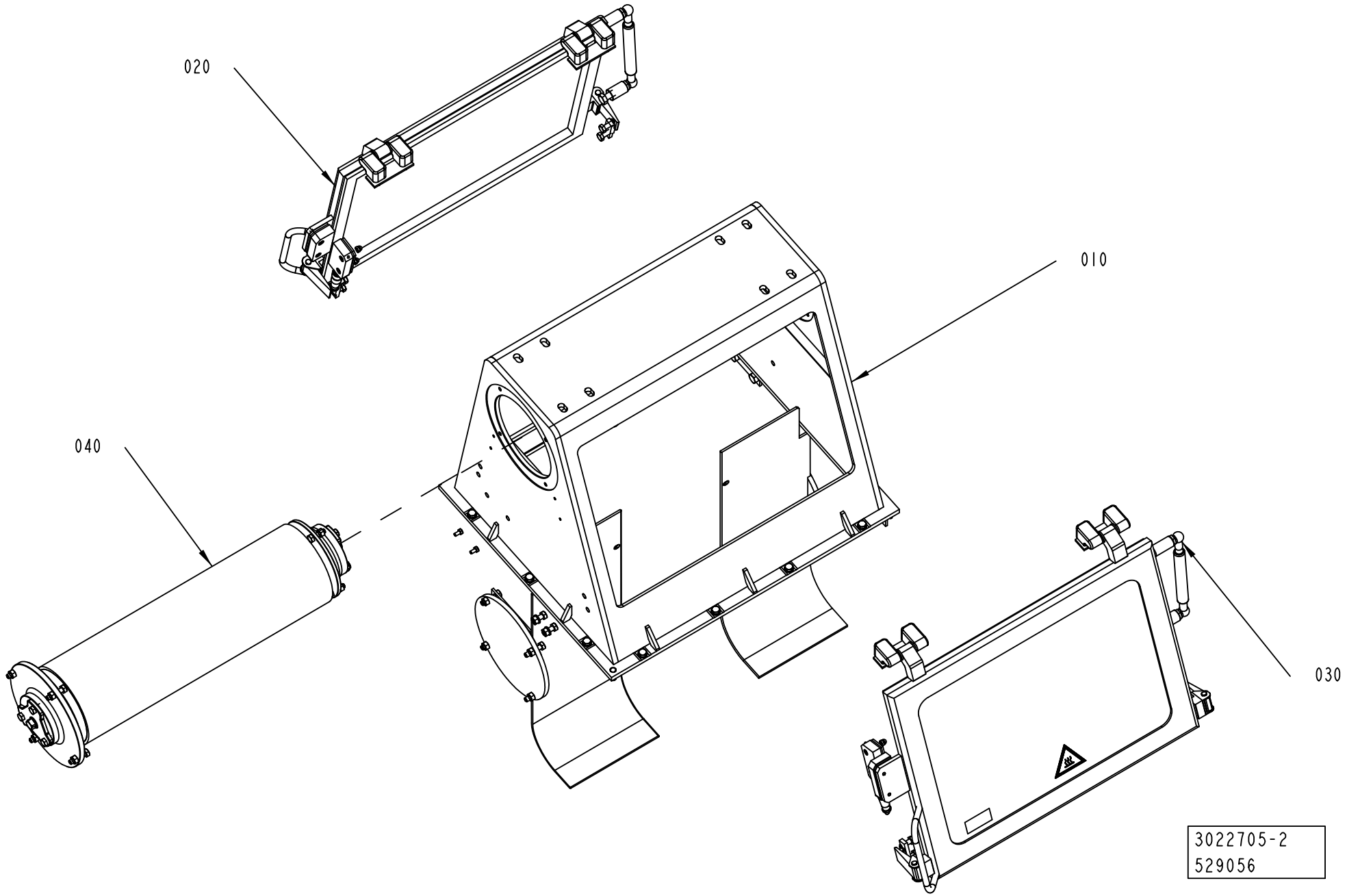
020
010
040
030
3022705-2
529056

ECM: 535856 - 20120401
Group number: 3022705-0200
Assembly Drawing: 3022705-2_1_AA

Pos	Part No	UN	Qty	Description	Page No
-					
010	2531043-0200		1	HOUSING	**1-613**
020	2531039-0300		1	DOOR	**1-615**
030	2528145-0300		1	DOOR	**1-617**
040	2685390-0300		1	BENDING ROLLER	**1-619**

Pos	Part No	UN	Qty	Description	Page No

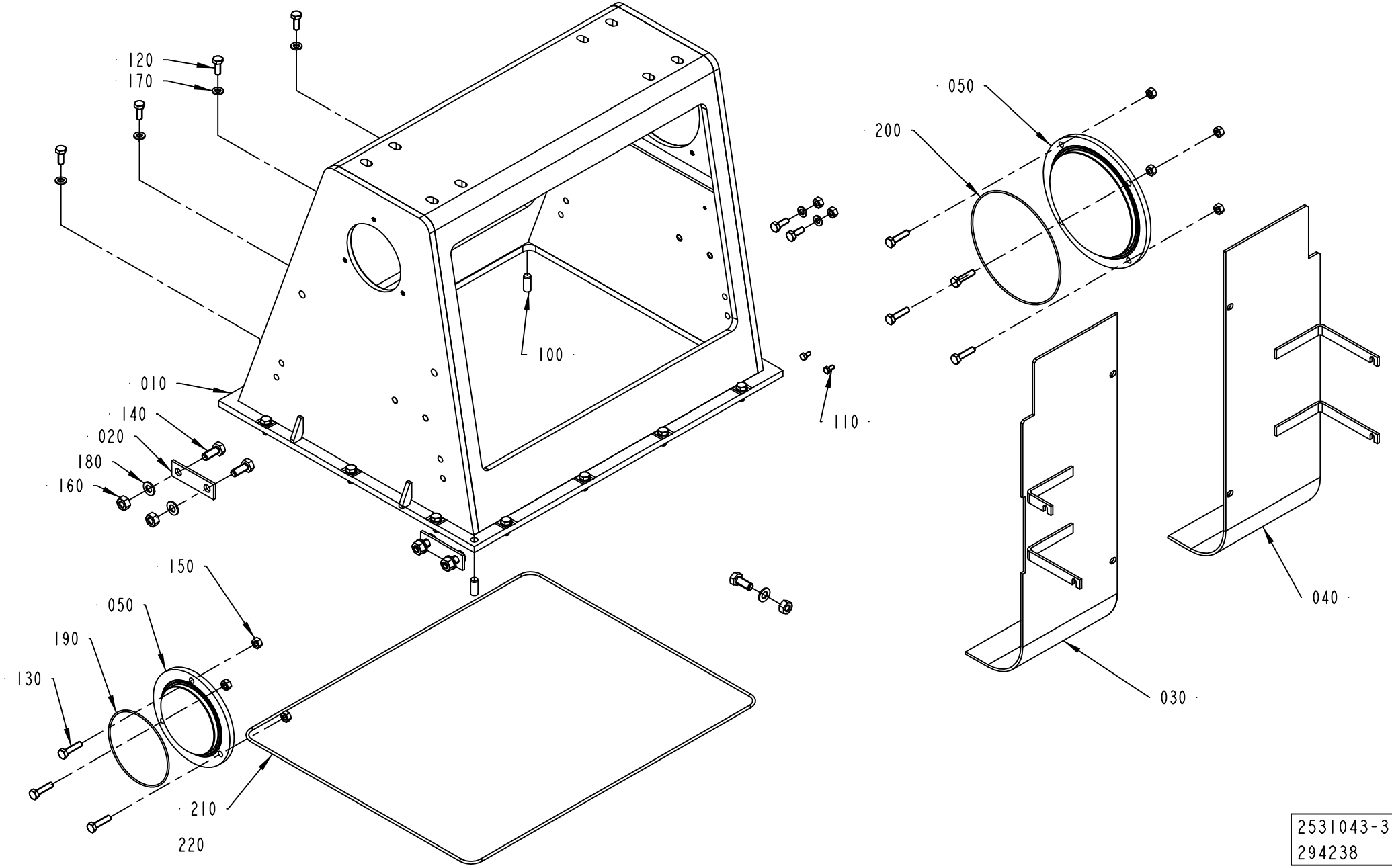

2531043-3
294238

ECM: 294248 - 20070704
Group number: 2531043-0200
Assembly Drawing: 2531043-3_1_AA

Pos	Part No	UN	Qty	Description	Page No
-					
010	2788639-0000		1	BOX FRAME	
020	441737-0000		2	WASHER	
030	2867477-0000		1	DEFLECTOR	
040	2867478-0000		1	DEFLECTOR	
050	2547398-0000		1	LID	
060	2547399-0000		1	LID	
100	311103-0401		2	PARALLEL PIN ISO 2338 8M6X20 A1	
110	312105-0287		2	SCREW, M6S ISO 4017 M4X8 A4 70	
120	312105-0368		16	SCREW, M6S ISO 4017 M6X16 A4 80	
130	312105-0372		7	SCREW, M6S ISO 4017 M6X25 A4 80	
140	312105-0451		5	SCREW, M6S ISO 4017 M8X20 A4 80	
150	312605-0316		9	HEXAGON NUT, M6M M6 A280	
160	312605-0318		5	HEXAGON NUT, M6M M8 A280	
170	315105-0153		16	WASHER PLAIN, 6,4X12X1,5 A4 BRB	
180	315105-0165		5	WASHER PLAIN, 8,4X16X1,6 A4 BRB	
190	90458-0640		1	O-RING 88,62X1,78 MM	
200	90459-0094		1	O-RING 133,07X1,78 MM	
210	90459-1314		1	O-RING 491X3 MM	
220	90153-0023		1	ADHESIVE, SILICON 251470 TUB 90CC(UN1993	

Pos	Part No	UN	Qty	Description	Page No

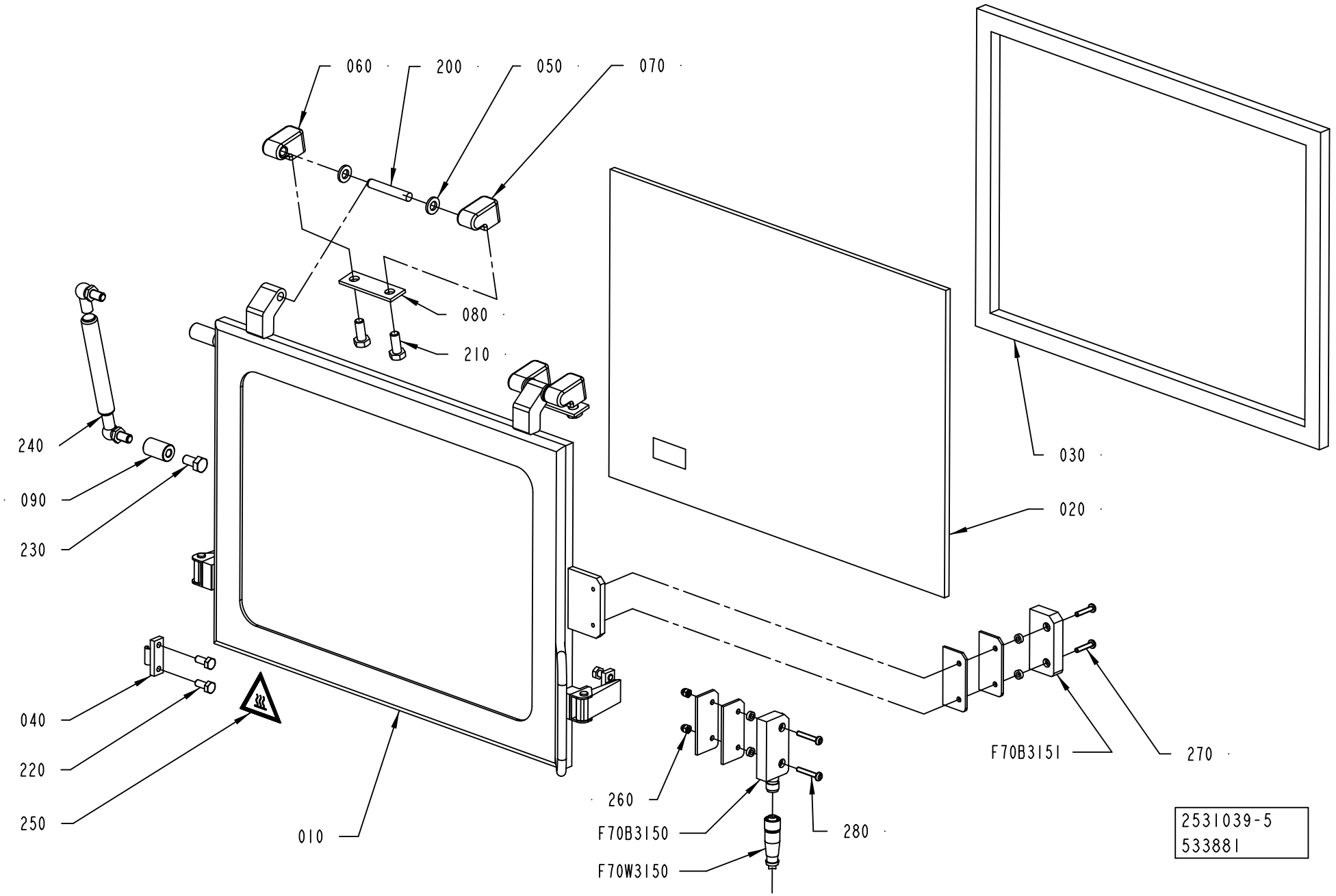
060
200
050
070
080
210
240
090
230
040
220
250
010
260
F70B3150
F70W3150
280
F70B3151
270
030
020
2531039-5
533881

ECM: 535614 - 20120402
Group number: 2531039-0300
Assembly Drawing: 2531039-5_1_AB

Pos	Part No	UN	Qty	Description	Page No
ANSI					
250	90459-7458		1	WARNING SIGN ANSI (H), HOT SURFACE	
ISO					
250	359705-0007		1	WARNING SIGN ISO, HOT SURFACE	
Common Parts					
010	2788640-0000		1	WINDOW FRAME	
020	2833178-0000		1	GLASS PANE	
030	2833177-0000		1	GASKET	
040	271860-0000		2	CLAMP BLOCK	
050	441739-0000		4	WASHER	
060	1549992-0000		2	HINGE FLANGE	
070	1549993-0000		2	HINGE FLANGE	
080	441737-0000		2	WASHER	
090	1549994-0000		1	SPACER	
200	311103-0413		2	PARALLEL PIN ISO 2338 8M6X50 A1	
210	312105-0451		4	SCREW, M6S ISO 4017 M8X20 A4 80	
220	312105-0368		4	SCREW, M6S ISO 4017 M6X16 A4 80	
230	312105-0449		1	SCREW, M6S ISO 4017 M8X16 A4 80	
240	90604-4924		1	GAS SPRING G6-15-80-1-235-WX22-WX22-200	
260	312705-0312		2	NUT HEX. DOMED CAP MHM-6 M4 A280	
270	90459-4164		2	SAFETY SCREW, 2TLA020053R4200	
280	90459-4165		2	SAFETY SCREW, SM4X25	
F70B3150	90459-4142		1	SAFETY SENSOR, ADAM M12, 20-051-00	
F70B3151	90458-2794		1	SAFETY SENSOR, EVA 20-046-00	
F70W3150	90459-4252		1	CABLE M12-C101, 20-056-10	

Pos	Part No	UN	Qty	Description	Page No

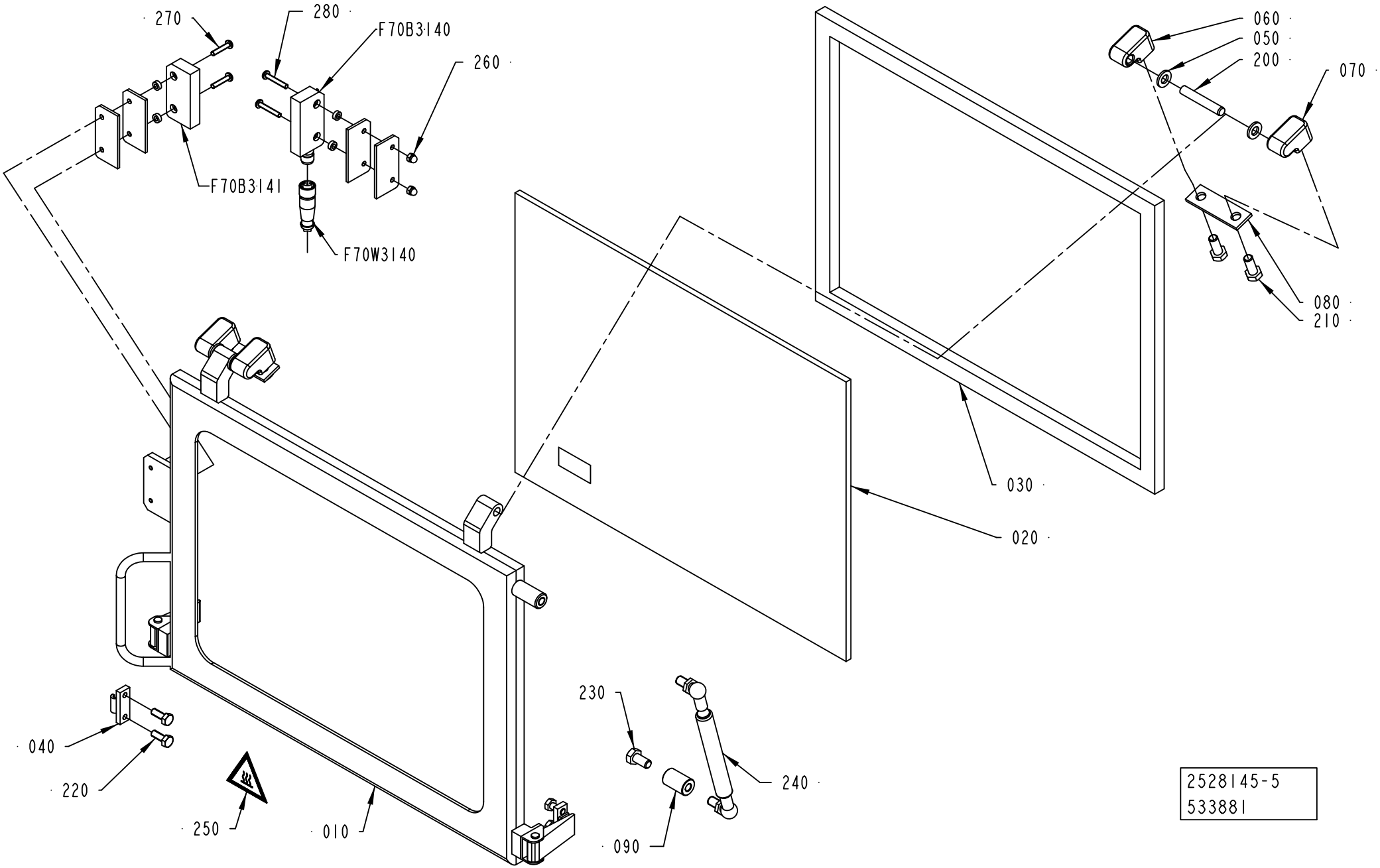
270
280
F70B3140
260
F70B3141
F70W3140
060
050
200
070
080
210
030
020
040
220
250
010
230
240
090
2528145-5
533881

ECM: 535612 - 20120402
Group number: 2528145-0300
Assembly Drawing: 2528145-5_1_AA

Pos	Part No	UN	Qty	Description	Page No
ANSI					
250	90459-7458		1	WARNING SIGN ANSI (H), HOT SURFACE	
ISO					
250	359705-0007		1	WARNING SIGN ISO, HOT SURFACE	
Common Parts					
010	2788641-0000		1	WINDOW FRAME	
020	2833178-0000		1	GLASS PANE	
030	2833177-0000		1	GASKET	
040	271860-0000		2	CLAMP BLOCK	
050	441739-0000		4	WASHER	
060	1549992-0000		2	HINGE FLANGE	
070	1549993-0000		2	HINGE FLANGE	
080	441737-0000		2	WASHER	
090	1549994-0000		1	SPACER	
200	311103-0413		2	PARALLEL PIN ISO 2338 8M6X50 A1	
210	312105-0451		4	SCREW, M6S ISO 4017 M8X20 A4 80	
220	312105-0368		2	SCREW, M6S ISO 4017 M6X16 A4 80	
230	312105-0449		1	SCREW, M6S ISO 4017 M8X16 A4 80	
240	90604-4924		1	GAS SPRING G6-15-80-1-235-WX22-WX22-200	
260	312705-0312		2	NUT HEX. DOMED CAP MHM-6 M4 A280	
270	90459-4164		2	SAFETY SCREW, 2TLA020053R4200	
280	90459-4165		2	SAFETY SCREW, SM4X25	
F70B3140	90459-4142		1	SAFETY SENSOR, ADAM M12, 20-051-00	
F70B3141	90458-2794		1	SAFETY SENSOR, EVA 20-046-00	
F70W3140	90459-4252		1	CABLE M12-C101, 20-056-10	

Pos	Part No	UN	Qty	Description	Page No

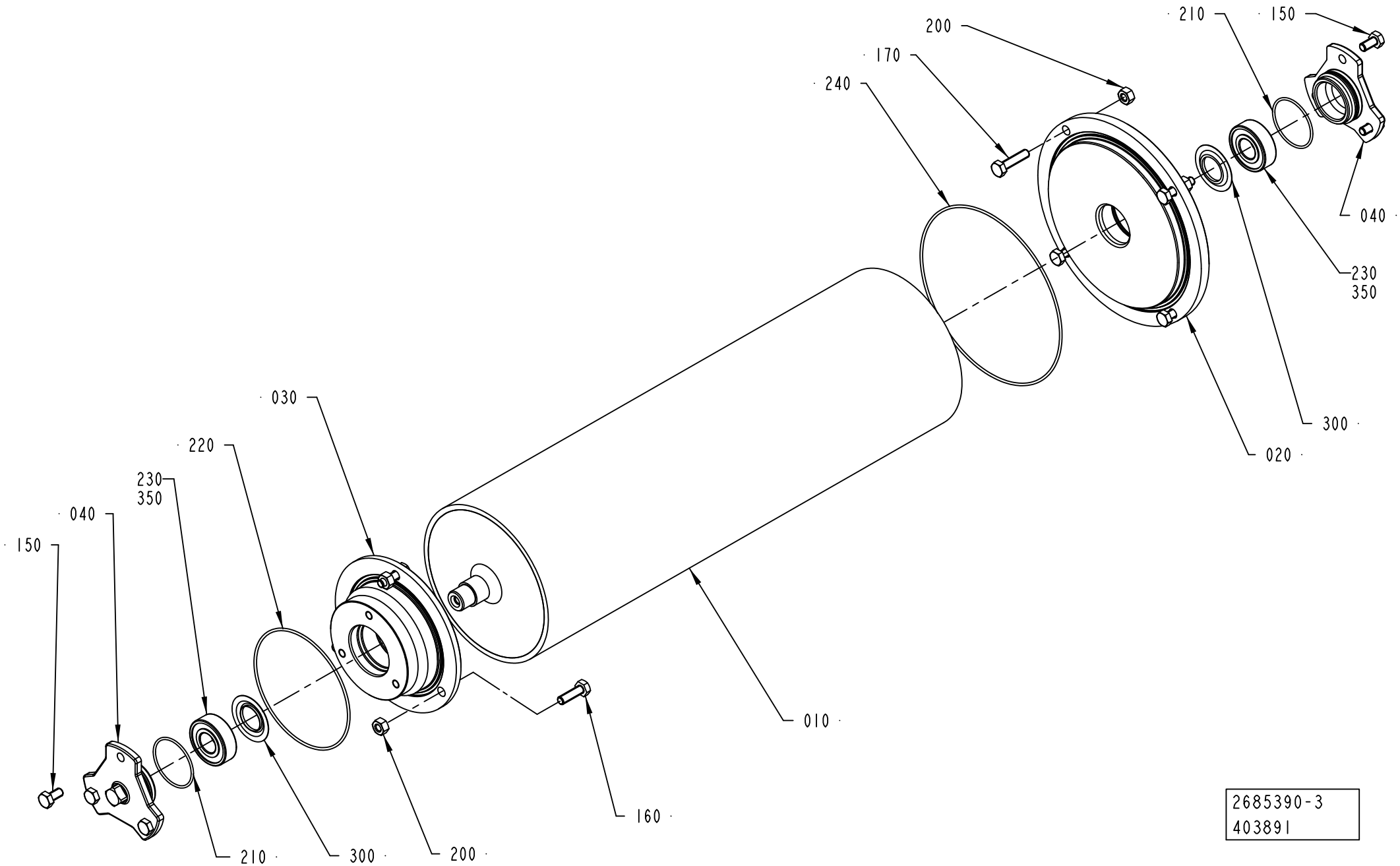
200
170
240
210
150
040
230
350
300
020
030
220
230
350
040
150
010
160
210
300
200
2685390-3
403891

ECM: 437215 - 20100403
Group number: 2685390-0300
Assembly Drawing: 2685390-3_1_AA

Pos	Part No	UN	Qty	Description	Page No
-					
010	3043309-0000		1	BENDING ROLLER	
020	3042501-0000		1	FLANGE	
030	3042503-0000		1	FLANGE	
040	2951058-0000		2	LID	
150	312105-0366		6	SCREW, M6S ISO 4017 M6X12 A4 80	
160	312105-0370		3	SCREW, M6S ISO 4017 M6X20 A4 80	
170	312105-0372		4	SCREW, M6S ISO 4017 M6X25 A4 80	
200	312605-0316		7	HEXAGON NUT, M6M M6 A280	
210	315204-0123		2	O-RING 35,1X1,6 MM	
220	90458-0640		1	O-RING 88,62X1,78 MM	
230	90458-1704		2	BALL BEARING 15/35X11	
240	90459-0094		1	O-RING 133,07X1,78 MM	
300	90214-0303		2	SEALING RING, 18,6X35X2 MM	
350	90296-0091		1	LUBRICATION GREASE, FLUOLUB 210	

Pos	Part No	UN	Qty	Description	Page No

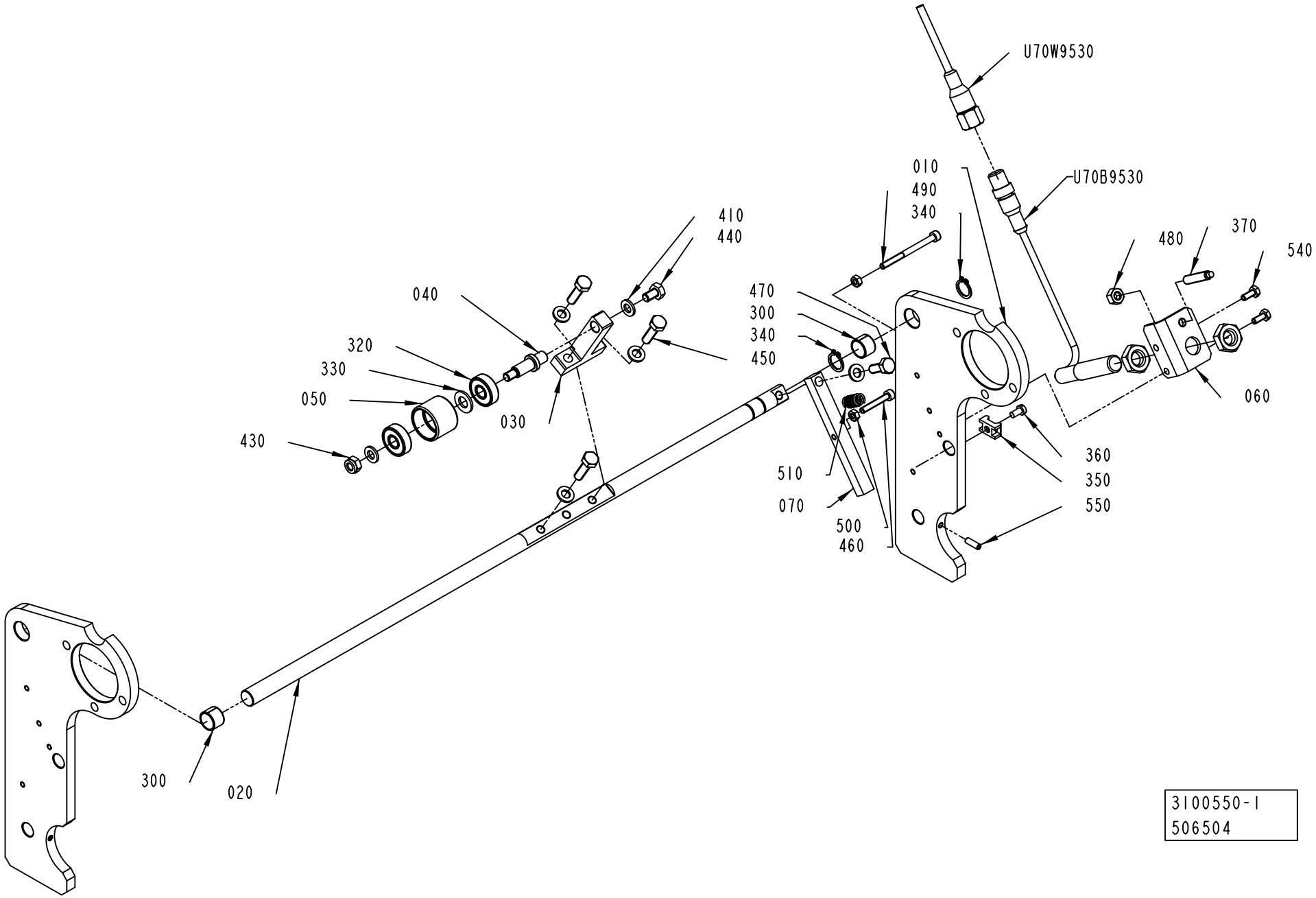
U70W9530
U70B9530
010
490
340
410
440
040
320
330
050
430
030
470
300
340
450
480
370
540
060
360
350
550
510
070
500
460
300
020
3100550-1
506504

ECM: 506646 - 20111001
Group number: 3100550-0100
Assembly Drawing: 3100550-1_1_AA

Pos	Part No	UN	Qty	Description	Page No
-					
010	3100548-0000		2	PLATE	
020	3100549-0000		1	SHAFT	
030	3100551-0000		1	SUPPORT	
040	3100552-0000		1	SHAFT	
050	3105734-0000		1	ROLLER	
060	3105735-0000		1	PLATE	
070	3105736-0000		1	LEVER	
300	321141-0178		2	BEARING BUSHING, 12X14X10 MM	
320	90459-6335		2	BALL BEARING 8/22X7	
330	315105-0165		1	WASHER PLAIN, 8,4X16X1,6 A4 BRB	
340	315751-0109		2	RETAINING RING FOR SHAFT DIN 471 12 SS	
350	352113-0205		1	ANCHOR PLATES FOR STRIPS, TM2S8-C100	
360	312125-0287		1	SLOTTED HEAD SCREW, ISO1207 M4X8 A4	
370	90459-6378		1	SET SCREW, DOGPOINT ISO4028 M6X30 A2 80	
410	315105-0153		6	WASHER PLAIN, 6,4X12X1,5 A4 BRB	
430	312812-0316		1	HEXAGON NUT, NY-LOCK M6 A4 80	
440	312105-0364		1	SCREW, M6S ISO 4017 M6X10 A4 80	
450	312105-0370		3	SCREW, M6S ISO 4017 M6X20 A4 80	
460	312115-0297		1	SCREW ISO4762 M4X25 A4 80	
470	312105-0368		1	SCREW, M6S ISO 4017 M6X16 A4 80	
480	312605-0316		1	HEXAGON NUT, M6M M6 A280	
490	312115-0305		1	SCREW ISO4762 M4X50 A4 80	
500	312605-0312		2	HEXAGON NUT, M6M M4 A280	
510	90459-5581		1	TENSION SPRING 1,2X23X8,5	
540	312105-0289		2	SCREW, M6S ISO 4017 M4X10 A4 70	
550	312318-0291		1	SET SCREW, CUP END ISO4029 M4X12 A4	
U70B9530	90600-2233		1	INDUCTIVE SENSOR	
U70W9530	351309-0100		1	ACTUATOR/SENSOR CABLE PRKT 4-07/10M	

Pos	Part No	UN	Qty	Description	Page No

BOX6 - VOLUME KIT

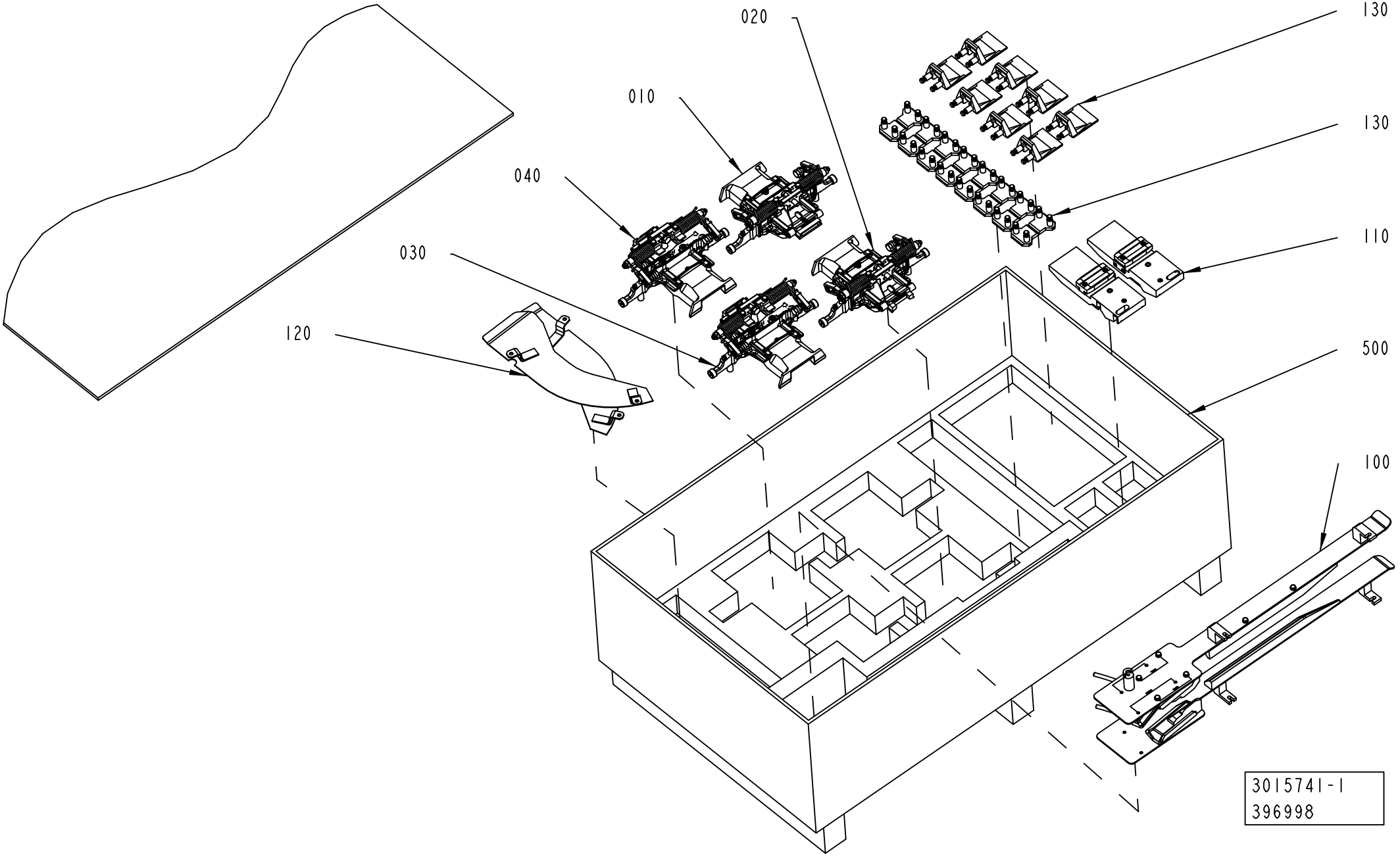

ECM: 397003 - 20100104
Group number: 3015741-0100
Assembly Drawing: 3015741-1_1_AA

This list covers pages from 1-622 to 1-625

Pos	Part No	UN	Qty	Description	Page No
TBA (See drawing on page: 1-622)					
100	2985180-0100		1	BELT INFEED GUIDE	**1-135, 1-137**
120	2984516-0100		1	SIDE PLATE	**1-11**
130	2925965-0100		1	BOTTOM	**1-87, 1-89, 1-91, 1-93, 1-95**
TGA (See drawing on page: 1-624)					
200	2902419-0200		4	BOTTOM	**1-235**
210	2902422-0200		4	BOTTOM	**1-241**
220	2902423-0200		4	BOTTOM	**1-243**
230	2826710-0200		1	FORMING PLATE	**1-247**
240	2838217-0200		1	FORMING PLATE	**1-249**
250	2902424-0200		1	GUIDE	**1-257, 1-259**
260	2826720-0300		1	FORMING PLATE	**1-265**
270	2838218-0300		1	FORMING PLATE	**1-267**
TPA (See drawing on page: 1-622)					
100	2985180-0100		1	BELT INFEED GUIDE	**1-135, 1-137**
110	2971903-0100		1	PUSHER	**1-121**
120	2984516-0100		1	SIDE PLATE	**1-11**
130	2925965-0100		1	BOTTOM	**1-87, 1-89, 1-91, 1-93, 1-95**
Common Parts					
010	2810640-0100		1	SUPPORT FLAP CUTTING	**1-493**
020	2810641-0100		1	SUPPORT FLAP PRESSURE	**1-523**
030	2993980-0100		1	SUPPORT FLAP CUTTING	**1-551**
040	2993981-0100		1	SUPPORT FLAP PRESSURE	**1-563**
500	3016563-0000		1	BOX	

Pos	Part No	UN	Qty	Description	Page No

BOX6 - VOLUME KIT

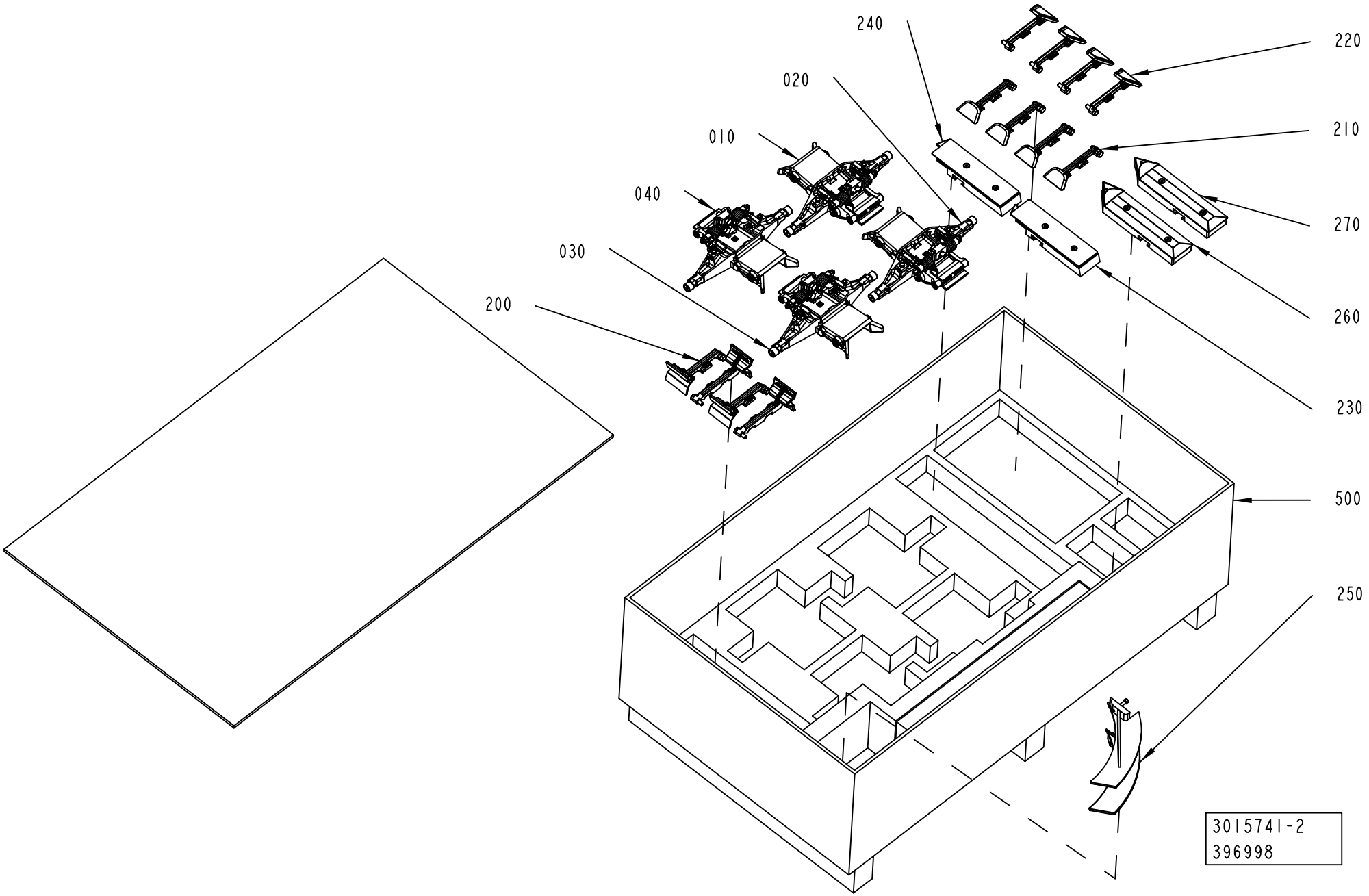

ECM: 397003 - 20100104
Group number: 3015741-0100
Assembly Drawing: 3015741-2_1_AA

This list covers pages from 1-622 to 1-625

Pos	Part No	UN	Qty	Description	Page No
TBA (See drawing on page: 1-622)					
100	2985180-0100		1	BELT INFEED GUIDE	**1-135, 1-137**
120	2984516-0100		1	SIDE PLATE	**1-11**
130	2925965-0100		1	BOTTOM	**1-87, 1-89, 1-91, 1-93, 1-95**
TGA (See drawing on page: 1-624)					
200	2902419-0200		4	BOTTOM	**1-235**
210	2902422-0200		4	BOTTOM	**1-241**
220	2902423-0200		4	BOTTOM	**1-243**
230	2826710-0200		1	FORMING PLATE	**1-247**
240	2838217-0200		1	FORMING PLATE	**1-249**
250	2902424-0200		1	GUIDE	**1-257, 1-259**
260	2826720-0300		1	FORMING PLATE	**1-265**
270	2838218-0300		1	FORMING PLATE	**1-267**
TPA (See drawing on page: 1-622)					
100	2985180-0100		1	BELT INFEED GUIDE	**1-135, 1-137**
110	2971903-0100		1	PUSHER	**1-121**
120	2984516-0100		1	SIDE PLATE	**1-11**
130	2925965-0100		1	BOTTOM	**1-87, 1-89, 1-91, 1-93, 1-95**
Common Parts					
010	2810640-0100		1	SUPPORT FLAP CUTTING	**1-493**
020	2810641-0100		1	SUPPORT FLAP PRESSURE	**1-523**
030	2993980-0100		1	SUPPORT FLAP CUTTING	**1-551**
040	2993981-0100		1	SUPPORT FLAP PRESSURE	**1-563**
500	3016563-0000		1	BOX	

Pos	Part No	UN	Qty	Description	Page No

Tetra Pak

SPC
Spare Parts Catalogue

Part No	Description	Page No
2033-0011	WASHER	1-301, 1-303, 1-317, 1-349, 1-351, 1-353, 1-367, 1-369, 1-391, 1-393, 1-395, 1-397
12242-0003	GASKET 48X38X5,5	1-603, 1-605
19972-0000	WASHER	1-509
22462-0000	SHAFT	1-463, 1-465, 1-487, 1-489
22463-0000	ROLL	1-463, 1-465, 1-487, 1-489
24928-0000	LOCKING RUBBER	1-289, 1-291, 1-293, 1-321
28509-0000	WASHER	1-183, 1-435, 1-437, 1-441, 1-473, 1-475, 1-479, 1-591, 1-593
32079-0000	WASHER	1-441, 1-479
32544-0000	INSULATION NUT	1-183, 1-435, 1-437, 1-441, 1-473, 1-475, 1-479, 1-591, 1-593
32644-0000	WASHER	1-183
67379-0101	TRANSFORMER	1-441, 1-479
67379-0106	TRANSFORMER	1-441, 1-479
67379-0216	TRANSFORMER	1-183
67379-0224	TRANSFORMER	1-183
67379-0249	TRANSFORMER	1-441, 1-479
67379-0268	TRANSFORMER	1-441, 1-479
90005-0082	WASHER PLAIN ROUND 4,3(M4)/12,H=1	1-519, 1-521, 1-547, 1-549, 1-561, 1-573
90005-0094	GASKET C 19438-EPR	1-147, 1-149
90028-0020	CONE TUBE 2,5MM	1-123, 1-125, 1-127, 1-129, 1-131, 1-133, 1-495, 1-497, 1-499, 1-501, 1-511 1-513, 1-515, 1-517, 1-525, 1-527, 1-529, 1-531, 1-539, 1-541, 1-543, 1-545, 1-553, 1-555, 1-557 1-559, 1-565, 1-567, 1-569, 1-571
90028-0021	CONE TUBE 4 MM	1-123, 1-125, 1-127, 1-129, 1-131, 1-133
90028-0022	CONE TUBE 6 MM	1-123, 1-125, 1-127, 1-129, 1-131, 1-133
90030-0098	PROGRESSIVE RING 8	1-409
90030-0336	CONN. STRAIGHT, 316L-12M-BVCO-3	1-327
90039-0022	TACKLE BLOCK, NO. BV-225/500	1-319
90044-0194	INDUCTIVE SENSOR, IN 5329	1-109, 1-111, 1-113, 1-147, 1-149
90051-0059	KNOB, EXTERNAL THREAD. NO. 8308-1550	1-337
90051-0090	KNOB, EXTERNAL THREAD. NO. WN 450GS	1-169
90062-0061	LOCK WASHER NORD-LOCK,6,5/10,8, T=2,3	1-21, 1-15, 1-17, 1-19, 1-151, 1-153, 1-231, 1-603, 1-605
90087-0019	PLUG M10X1 STAINLESS	1-123, 1-125, 1-127, 1-129, 1-131, 1-133
90091-0074	WEAR RING 35X40X5,3 MM	1-433
90091-0237	ROD SEAL GLYD RING 20X27,5X3 MM	1-327, 1-329
90091-0238	WEAR RING 20X22X10 MM	1-327, 1-329
90091-0266	SEAL RING 10,4X16,3X2,5 MM	1-325
90091-0297	RADIAL SEAL 35X47X7 MM DUST LIP	1-21, 1-23, 1-25, 1-109, 1-111, 1-113, 1-147, 1-149
90091-0298	RADIAL SEAL 45X65X8 MM DUST LIP	1-109, 1-111, 1-113
90091-0299	RADIAL SEAL 30X52X7 MM DUST LIP	1-23, 1-25
90091-0304	RADIAL SEAL 45X65X8 MM DUST LIP	1-329
90091-0335	PISTON SEAL GLYD RING 62,5X70X3,2 MM	1-329
90091-0359	X-SEAL 36,17X2,62 MM	1-433
90091-0360	BACK-UP RING 37,5X1,4 MM	1-433
90091-0362	SCRAPER, EXCLUDER 18X22,8X3,7 MM	1-433
90091-0364	ROD SEAL, STEPSEAL 18X25,3X3,2 MM	1-433
90091-0366	WEAR RING 18X23X3,9 MM	1-433
90091-0368	WEAR RING 30X35X5,3 MM	1-433
90091-0380	SCRAPER, EXCLUDER 20X24,8X3,7 MM	1-109, 1-111, 1-113
90091-0408	BEARING SEAL 70X78X5 MM	1-109, 1-111, 1-113
90091-0428	PISTON SEAL GLYD RING T 27,5X34,5X3,2 MM	1-433
90091-0440	RADIAL SEAL 22X40X7 MM DUST LIP	1-147, 1-149
90092-0052	METERING VALVE 10 MM3	1-123, 1-125, 1-127, 1-129, 1-131, 1-133
90092-0054	METERING VALVE 50 MM3	1-123, 1-125, 1-127, 1-129, 1-131, 1-133
90115-0020	ROD END, ID=8 MM, M8X1,25	1-33, 1-35
90115-0021	ROD END, ID=8 MM, M8X1,25 LH	1-33, 1-35
90115-0137	ROD END, ID=6 MM, M6X1	1-59, 1-61, 1-63, 1-65
90115-0139	ROD END, ID=8 MM, M8X1,25	1-27, 1-29
90115-0180	ROD END, ID=8 MM, M8X1,25 LH	1-27, 1-29
90115-0181	ROD END, ID=10 MM M10X1,5	1-23, 1-25
90115-0182	ROD END, ID=10 MM M10X1,5LH	1-23, 1-25
90134-0030	SLEEVE FOR PLASTIC TUBE	1-123, 1-125, 1-127, 1-129, 1-131, 1-133
90134-0031	SLEEVE FOR PLASTIC TUBE	1-123, 1-125, 1-127, 1-129, 1-131, 1-133
90134-0039	BUSHING VALVE CONNECTION 2,5 MM	1-123, 1-125, 1-127, 1-129, 1-131, 1-133
90134-0040	BUSHING VALVE CONNECTION 4 MM	1-123, 1-125, 1-127, 1-129, 1-131, 1-133
90134-0052	PLUG DOSING BLOCK	1-123, 1-125, 1-127, 1-129, 1-131, 1-133
90134-0054	BLOCK CONNECTION M10X1	1-123, 1-125, 1-127, 1-129, 1-131, 1-133
90134-0055	BUSHING/NUT INLET/OUTLET 6 MM	1-123, 1-125, 1-127, 1-129, 1-131, 1-133
90134-0058	CONNECTION	1-27, 1-37, 1-39, 1-109, 1-111, 1-113, 1-251, 1-253, 1-269, 1-427, 1-429, 1-443 1-445, 1-467, 1-469, 1-481, 1-483
90134-0063	BUSHING/NUT M8X1, D=2,5 MM	1-495, 1-497, 1-499, 1-501, 1-511, 1-513, 1-515, 1-517, 1-525 1-527, 1-529, 1-531, 1-539, 1-541, 1-543, 1-545, 1-553, 1-555, 1-557, 1-559, 1-565, 1-567, 1-569 1-571
90134-0065	CONNECTION M6 TUBE 2,5 MM	1-37, 1-39
90134-0068	CONNECTION	1-29, 1-109, 1-111, 1-113
90141-0015	RETAINING RING FOR SHAFT DIN 471 8 SS	1-33, 1-35, 1-337, 1-433
90141-0016	RETAINING RING FOR SHAFT DIN 471 10 SS	1-33, 1-35, 1-603, 1-605
90141-0019	RETAINING RING FOR BORE DIN 472 50 SS	1-21, 1-147, 1-149
90141-0029	CIRCLIP	1-463, 1-465, 1-487, 1-489
90153-0015	ADHESIVE,LOCTITE IS 496/CYANOLOT 303	1-455, 1-457, 1-459, 1-491
90153-0023	ADHESIVE, SILICON 251470 TUB 90CC(UN1993	1-613
90157-0021	LOCKING FLUID LOCTITE 270	1-577, 1-579, 1-581, 1-583
90157-0035	LOCKING FLUID LOCTITE TYPE 641	1-169
90165-0056	PIPE CLIP FOR TUBE, 4 MM	1-109, 1-111, 1-113, 1-427, 1-429, 1-443, 1-445, 1-467, 1-469 1-481, 1-483
90165-0057	PIPE CLIP FOR TUBE D=6 MM	1-147, 1-149

Part No	Description	Page No
90166-0013	TUBE 8 MM PA BLUE	1-109, 1-111, 1-113, 1-211
90166-0081	TUBE 6 MM PA BLUE	1-211
90166-0108	TUBE 6 MM PA TRANSP.	1-123, 1-125, 1-127, 1-129, 1-131, 1-133
90166-0109	TUBE 4 MM PA TRANSP.	1-109, 1-111, 1-113, 1-123, 1-125, 1-127, 1-129, 1-131, 1-133
90166-0118	TUBE 8 MM PA BLACK	1-49, 1-51, 1-53, 1-55, 1-57, 1-67, 1-69, 1-281
90166-0143	TUBE 2,5 MM PA TRANSP.	1-123, 1-125, 1-127, 1-129, 1-131, 1-133, 1-511, 1-513, 1-515 ..... 1-517, 1-539, 1-541, 1-543, 1-545, 1-553, 1-555, 1-557, 1-559, 1-565, 1-567, 1-569, 1-571
90207-0363	GASKET 75X85X1,8 MM 3" FDA 3-A	1-325
90207-0365	GASKET 53X63X1,8 MM 2,5" FDA 3-A	1-325
90214-0219	CYL.ROLLER BEARING, 17X40X12 MM	1-147, 1-149
90214-0229	BALL BEARING 65/85X10	1-109, 1-111, 1-113
90214-0303	SEALING RING, 18,6X35X2 MM	1-599, 1-601, 1-619
90230-0027	NON-RETURN VALVE QJ 8355-1/4"	1-147, 1-149
90232-0325	FIBRE, E32-DC200	1-169
90235-0846	THROTTLE CHECK VALVE G1/8", MANUAL, 6	1-211
90239-0489	ROD END, CLEVIS WITH AXLE M6X1,25	1-603, 1-605
90239-0532	ROD END, CLEVIS WITH AXLE M8X1,25	1-337
90240-0172	FLANGE BUSHING, 8X12X10 MM	1-301, 1-303, 1-317, 1-349, 1-351, 1-353, 1-367, 1-369, 1-391 ..... 1-393, 1-395, 1-397
90240-0180	FLANGE BUSHING 10X14X15MM	1-585, 1-587
90240-0260	FLANGE BUSHING, IGLIDUR X 8X10X9	1-519, 1-521, 1-547, 1-549, 1-561, 1-573
90240-0289	FLANGE BUSHING, IGLIDUR X 10X12X6	1-519, 1-521, 1-547, 1-549, 1-561, 1-573
90242-0270	O-RING 82,27X1,78 MM	1-109, 1-111, 1-113
90242-0271	O-RING 63,22X1,78 MM	1-109, 1-111, 1-113
90258-0060	COTTER	1-219
90286-0013	GREASE NIPPLE STRAIGHT, H1 M6X1 2346	1-21, 1-147, 1-149, 1-211, 1-233, 1-239
90287-0148	SCREW SPRINGLOAD. SLOTTED HEAD M5X12	1-415, 1-417, 1-419
90287-0154	SET SCREW, DOGPOINT M6X10 A4	1-251, 1-253
90287-0159	SET SCREW, DOGPOINT M6X16 A4	1-577, 1-579, 1-581, 1-583
90287-0196	THREADED ROD MHGS M8 SS	1-53, 1-55, 1-57
90287-0322	SCREW M6S M14X40 70	1-319
90287-0347	BOLT	1-319
90296-0009	SILICONE GREASE DOW CORNING 150 GR.	1-321
90296-0091	LUBRICATION GREASE, FLUOLUB 210	1-599, 1-601, 1-619
90335-0024	COMP. SPRING, 22250, 1,25X13,75X27	1-413, 1-415, 1-417, 1-419
90335-0025	COMP. SPRING, 22010, 1X11X26	1-343
90335-0036	COMP. SPRING, 22450, 1,6X14,1X24	1-59, 1-61, 1-63, 1-65
90335-0089	TENSION SPRING, 41490, 0,9X10X23	1-609
90457-0860	SET SCREW, CUP END ISO4029 M4X16 A4	1-169
90457-0922	ELBOW PIPE JOINT, EXT.THREAD, D=6MM M5	1-23, 1-25, 1-157, 1-159, 1-171
90458-0058	SCREW M5X60 A280	1-441, 1-479
90458-0073	WASHER 6,4/30, H=1,5	1-147, 1-149
90458-0305	CABLE GLAND, M12X1,5, 5311 1000	1-251, 1-253
90458-0314	CABLE GLAND, M16X1,5, 5311 1110	1-169
90458-0353	BUSHING, IGLIDUR X 8X10X8	1-519, 1-521, 1-547, 1-549, 1-561, 1-573
90458-0640	O-RING 88,62X1,78 MM	1-599, 1-601, 1-613, 1-619
90458-1404	FLANGE BUSHING, 12X16X16 MM	1-109, 1-111, 1-113
90458-1704	BALL BEARING 15/35X11	1-599, 1-601, 1-619
90458-2794	SAFETY SENSOR, EVA 20-046-00	1-615, 1-617
90458-2920	BUSHING INSERT, JUM-01-16	1-211
90458-2956	ELBOW PIPE JOINT, EXT.THREAD, D=6MM-G1/8	1-337
90459-0094	O-RING 133,07X1,78 MM	1-599, 1-601, 1-613, 1-619
90459-0729	HEXAGONAL PROTECTIVE CAP GPN 1000	1-289, 1-291, 1-293
90459-0969	COMP. SPRING, 22430, 1,6X11,6X58,5	1-83, 1-85, 1-105
90459-1314	O-RING 491X3 MM	1-613
90459-1728	SET SCREW, CUP END ISO4029 M6X45 A4	1-603, 1-605
90459-1861	X-SEAL 6,07X2,62 MM	1-427, 1-429, 1-447, 1-467, 1-469
90459-1906	SHOULDER SCREW, 6X10/M5 SS	1-495, 1-497, 1-499, 1-501, 1-525, 1-527, 1-529, 1-531
90459-2130	TAPE, ADHESIVE SI TAPE MON3154535033CL	1-183
90459-2145	BACK-UP RING 43,5X1,4 MM	1-433
90459-2146	X-SEAL 42,52X2,62 MM	1-433
90459-2173	PISTON SEAL GLYD RING T 32,5X40X3,2 MM	1-433
90459-2258	PISTON SEAL ROTOGLYD RING 25,1X30X2,2 MM	1-463, 1-465, 1-487, 1-489
90459-2363	O-RING MATERIAL 1,78 MM LENGHT 600 MM	1-455, 1-457, 1-459
90459-2409	INDUCTIVE SENSOR, IN 5230	1-603, 1-605
90459-2650	SWIVEL FLANGE 32	1-603, 1-605
90459-3388	SCRAPER 10X16X4,7 MM	1-443, 1-445, 1-481, 1-483
90459-3528	ONE WAY FLOW CONTROL, G1/8, MANUAL	1-603, 1-605
90459-3670	HOOD, HAN3A, 19 20 003 1440	1-169
90459-3940	LEVER, GN 612-6-M16X1.5-A-NI	1-109, 1-111, 1-113
90459-4142	SAFETY SENSOR, ADAM M12, 20-051-00	1-615, 1-617
90459-4164	SAFETY SCREW, 2TLA020053R4200	1-615, 1-617
90459-4165	SAFETY SCREW, SM4X25	1-615, 1-617
90459-4179	GASKET 30,5X42X4 MM FDA	1-321
90459-4252	CABLE M12-C101, 20-056-10	1-615, 1-617
90459-4735	SCREW, M6S ISO 4017 M8X10 A4 80	1-271, 1-273
90459-5268	DOUBLE ACTING, MINI-ISO, CYL. 25-130	1-211
90459-5581	TENSION SPRING 1,2X23X8,5	1-621
90459-5652	LUBRICATION BLOCK, HFS4666	1-123, 1-125, 1-127, 1-129, 1-131, 1-133
90459-5828	CLAMPING ELEMENT WITH SLEEVE, 45X54 MM	1-73
90459-5968	WEAR RING 19X22X3,2 MM	1-451
90459-6019	PISTON SEAL STEPSEAL 11,5X19X3,2 MM	1-451, 1-453
90459-6022	PISTON SEAL STEPSEAL 14,5X22X3,2 MM	1-451
90459-6023	PISTON SEAL 13,5X19X3,2 MM	1-451, 1-453

Part No	Description	Page No
90459-6024	PISTON SEAL 16X22X3,2 MM	1-451
90459-6026	WEAR RING 16X19X3,2 MM	1-451, 1-453
90459-6335	BALL BEARING 8/22X7	1-609, 1-621
90459-6378	SET SCREW, DOGPOINT ISO4028 M6X30 A2 80	1-621
90459-6480	SET SCREW, DOGPOINT ISO4028 M4X25 A2	1-609
90459-6821	MALE INSERT HAN 4A, 0920 0042 611	1-169
90459-7223	REDUCER, M20/M16	1-169
90459-7361	FIBRE OPTIC UNIT, WLL170-2P460	1-169
90459-7458	WARNING SIGN ANSI (H), HOT SURFACE	1-615, 1-617
90600-0362	PROX. SENSOR, SMTO-4U-PS-S-LED-24	1-337
90600-0412	CARRIAGE, SSR15XV1 QZ SS HH FMS	1-251, 1-253
90600-0464	INDUCTIVE SWITCH,E2A-M12LS02-WP-B1-TP 5M	1-211
90600-0808	CAM ROLLER 12X30X40 MM, CFT 12 M UU N	1-233, 1-239
90600-0847	SPHERICAL BEARING, S8-DNIRO BMF C1	1-251, 1-253
90600-1991	ADJUSTABLE ELBOW CONNECTION 6-G1/8	1-427, 1-429, 1-467, 1-469
90600-2011	BUSHING INSERT, JUM-02-10	1-443, 1-445, 1-481, 1-483
90600-2013	FLANGE BUSHING, IGLIDUR X 8X10X5,5	1-511, 1-513, 1-515, 1-517, 1-539, 1-541, 1-543, 1-545, 1-553, 1-555, 1-557, 1-559, 1-565, 1-567, 1-569, 1-571
90600-2014	WEAR RING 8,9X12X4 MM	1-447
90600-2015	WEAR RING 12X15,1X4 MM	1-451
90600-2016	BACK-UP RING 17,4X1,4 MM	1-451
90600-2017	PISTON SEAL ROTOGLYD RING 20,1X25X2,2 MM	1-463, 1-465, 1-487, 1-489
90600-2018	SCRAPER 12X18,6X5,4 MM	1-451, 1-455, 1-457, 1-459
90600-2233	INDUCTIVE SENSOR	1-609, 1-621
90600-2609	SCOTCH-BRITE WHITE 690	1-201
90600-3222	PILOTED FUNCTION VALVE G1/8, 7880 06 10	1-211
90600-3313	BUSHING, 10X14X10 MM	1-399, 1-401, 1-403
90600-3582	SPHERICAL BEARING, GE 6 TGR	1-519, 1-547, 1-561, 1-573
90600-5087	BACK-UP RING 19,4X1,4 MM	1-451
90600-5788	SENSOR BRACKET, SMBR-20	1-337
90600-8306	COMP. SPRING 3887, 3X20X40,2	1-399, 1-401, 1-403
90601-2046	CAPTIVE SCREW M6, GUTBG 6-4-12	1-323
90601-2446	FLANGE BUSHING, 8X12X10 MM	1-317
90601-3686	ELBOW FITTING ADJ., WEE08LR71	1-443, 1-445, 1-481, 1-483
90601-3688	WEAR RING 6,9X10X4 MM	1-427, 1-429, 1-467, 1-469
90601-3689	BACK-UP RING 7X1,4 MM	1-427, 1-429, 1-467, 1-469
90601-4830	O-RING 171,12X2,62 MM	1-385, 1-387
90602-4847	THREAD LOCKING, LOCTITE 243 50 ML	1-427, 1-429, 1-443, 1-445, 1-447, 1-463, 1-465, 1-467, 1-469, 1-481, 1-483, 1-487, 1-489, 1-495, 1-497, 1-499, 1-501, 1-509, 1-519, 1-521, 1-525, 1-527, 1-529, 1-531, 1-547, 1-549, 1-561, 1-573
90602-9550	ADH. TAPE LABELS AL/PET,BS SPLICE 90N 30	1-201
90602-9590	ADH. TAPE LABELS AL/PE,BS FOIL 100 35X16	1-201
90603-0848	O-RING 29,2X3 MM FDA, 3-A	1-289, 1-291, 1-293, 1-321
90603-0849	O-RING 39,2X3 MM FDA, 3-A	1-289, 1-291, 1-293, 1-321
90603-2398	BALL BEARING, 17X40X12	1-225, 1-263
90603-4532	WEAR RING 25X30X5,6 MM	1-433
90603-4541	PISTON SEAL GLYD RING 22,5X30X3,2 MM	1-433
90603-5339	KLüBEROIL 4 UH1 320 N, ONLY IN BOM	1-449, 1-485
90603-5802	DOUBLE ACTING, MINI-ISO, CYL. 20-50	1-337
90603-6022	KLüBERSYNTH UH1 64-62, ONLY IN BOM	1-21, 1-147, 1-149
90604-3127	DOUBLE ACTING, COMPACT, 32-25	1-603, 1-605
90604-4370	BALL BEARING 12/28X8	1-251, 1-253
90604-4924	GAS SPRING G6-15-80-1-235-WX22-WX22-200	1-615, 1-617
107426-0000	GUIDE SLEEVE	1-433, 1-591, 1-593
263655-0007	SHAFT	1-379, 1-381
263655-0009	SHAFT	1-379, 1-381
263655-0015	SHAFT	1-379, 1-381
266737-0000	WASHER	1-609
269151-0000	SHAFT	1-399, 1-401, 1-403
271860-0000	CLAMP BLOCK	1-615, 1-617
272728-0000	BARRIER	1-343
311102-0237	PARALLEL PIN ISO 2338 3M6X18 ST	1-211
311103-0233	PARALLEL PIN ISO 2338 3M6X10 A1	1-261, 1-495, 1-497, 1-499, 1-501, 1-525, 1-527, 1-529, 1-531
311103-0234	PARALLEL PIN ISO 2338 3M6X12 A1	1-141, 1-435, 1-437, 1-473, 1-475, 1-495, 1-497, 1-499, 1-501, 1-525, 1-527, 1-529, 1-531
311103-0236	PARALLEL PIN ISO 2338 3M6X16 A1	1-301, 1-303, 1-349, 1-351, 1-353
311103-0238	PARALLEL PIN ISO 2338 3M6X20 A1	1-399, 1-401, 1-403
311103-0267	PARALLEL PIN ISO 2338 4M6X10 A1	1-435, 1-437, 1-473, 1-475, 1-495, 1-497, 1-499, 1-501, 1-525, 1-527, 1-529, 1-531
311103-0268	PARALLEL PIN ISO 2338 4M6X12 A1	1-427, 1-429, 1-443, 1-445, 1-467, 1-469, 1-481, 1-483, 1-495, 1-497, 1-499, 1-501, 1-511, 1-513, 1-515, 1-517, 1-525, 1-527, 1-529, 1-531, 1-539, 1-541, 1-543, 1-545, 1-553, 1-555, 1-557, 1-559, 1-565, 1-567, 1-569, 1-571
311103-0269	PARALLEL PIN ISO 2338 4M6X14 A1	1-265, 1-267
311103-0270	PARALLEL PIN ISO 2338 4M6X16 A1	1-577, 1-579, 1-581, 1-583
311103-0272	PARALLEL PIN ISO 2338 4M6X20 A1	1-577, 1-579, 1-581, 1-583
311103-0276	PARALLEL PIN ISO 2338 4M6X30 A1	1-399, 1-401, 1-403
311103-0277	PARALLEL PIN ISO 2338 4M6X32 A1	1-577, 1-579, 1-581, 1-583
311103-0306	PARALLEL PIN ISO 2338 5M6X12 A1	1-395, 1-397, 1-399, 1-401, 1-403, 1-435, 1-437
311103-0308	PARALLEL PIN ISO 2338 5M6X16 A1	1-577, 1-579, 1-581, 1-583
311103-0309	PARALLEL PIN ISO 2338 5M6X18 A1	1-577, 1-579, 1-581, 1-583
311103-0310	PARALLEL PIN ISO 2338 5M6X20 A1	1-577, 1-579, 1-581, 1-583
311103-0315	PARALLEL PIN ISO 2338 5M6X32 A1	1-577, 1-579, 1-581, 1-583
311103-0322	PARALLEL PIN ISO 2338 5M6X50 A1	1-141
311103-0348	PARALLEL PIN ISO 2338 6M6X10 A1	1-247, 1-249, 1-265, 1-267

Part No	Description	Page No
311103-0361 ..	PARALLEL PIN ISO 2338 6M6X40 A1	1-225
311103-0365 ..	PARALLEL PIN ISO 2338 6M6X50 A1	1-225
311103-0399 ..	PARALLEL PIN ISO 2338 8M6X16 A1	1-577, 1-579, 1-581, 1-583
311103-0400 ..	PARALLEL PIN ISO 2338 8M6X18 A	1-577, 1-579, 1-581, 1-583
311103-0401 ..	PARALLEL PIN ISO 2338 8M6X20 A1	1-613
311103-0407 ..	PARALLEL PIN ISO 2338 8M6X35 A1	1-149
311103-0413 ..	PARALLEL PIN ISO 2338 8M6X50 A1	1-615, 1-617
311103-1274 ..	PARALLEL PIN ISO 2338 4M6X24 A1	1-343, 1-379, 1-381
311103-1403 ..	PARALLEL PIN ISO 2338 8M6X24 A1	1-261
311112-0385 ..	SPRING PIN, ISO 8752 8X50 A2	1-343
312101-0515 ..	SCREW M6S M10X120 FZB	1-215
312105-0285 ..	SCREW, M6S ISO 4017 M4X6 A4 70	1-211, 1-495, 1-497, 1-499, 1-501, 1-511, 1-513, 1-515, 1-517, 1-519, 1-521, 1-525, 1-527, 1-529, 1-531, 1-539, 1-541, 1-543, 1-545, 1-547, 1-549, 1-553, 1-555, 1-557, 1-559, 1-561, 1-565, 1-567, 1-569, 1-571, 1-573
312105-0287 ..	SCREW, M6S ISO 4017 M4X8 A4 70	1-21, 1-117, 1-119, 1-399, 1-401, 1-403, 1-589, 1-613
312105-0289 ..	SCREW, M6S ISO 4017 M4X10 A4 70	1-75, 1-77, 1-79, 1-81, 1-97, 1-99, 1-101, 1-103, 1-169, 1-211, 1-301, 1-303, 1-349, 1-351, 1-353, 1-447, 1-603, 1-605, 1-621
312105-0291 ..	SCREW, M6S ISO 4017 M4X12 A4 70	1-169, 1-521, 1-549
312105-0293 ..	SCREW, M6S ISO 4017 M4X16 A4 70	1-251, 1-253
312105-0295 ..	SCREW, M6S ISO 4017 M4X20 A4 70	1-183, 1-441, 1-479
312105-0297 ..	SCREW, M6S ISO 4017 M4X25 A4 70	1-337
312105-0323 ..	SCREW, M6S ISO 4017 M5X8 A4 80	1-317, 1-463, 1-465, 1-487, 1-489, 1-607
312105-0325 ..	SCREW, M6S ISO 4017 M5X10 A4 80	1-31, 1-139, 1-367, 1-369, 1-399, 1-401, 1-403, 1-415, 1-417, 1-419, 1-519, 1-547, 1-561, 1-573
312105-0327 ..	SCREW, M6S ISO 4017 M5X12 A4 80	1-301, 1-303, 1-333, 1-337, 1-349, 1-351, 1-353, 1-367, 1-369, 1-385, 1-387, 1-399, 1-401, 1-403, 1-413, 1-495, 1-497, 1-499, 1-501, 1-511, 1-513, 1-515, 1-517, 1-519, 1-521, 1-525, 1-527, 1-529, 1-531, 1-539, 1-541, 1-543, 1-545, 1-547, 1-549, 1-553, 1-555, 1-557, 1-559, 1-561, 1-565, 1-567, 1-569, 1-571, 1-573
312105-0328 ..	SCREW M6S ISO 4017 M5X14 A4 80	1-495, 1-497, 1-499, 1-501, 1-525, 1-527, 1-529, 1-531, 1-577, 1-579, 1-581, 1-583
312105-0329 ..	SCREW, M6S ISO 4017 M5X16 A4 80	1-147, 1-149, 1-301, 1-303, 1-337, 1-349, 1-351, 1-353, 1-367, 1-369, 1-395, 1-397, 1-495, 1-497, 1-499, 1-501, 1-525, 1-527, 1-529, 1-531, 1-609
312105-0331 ..	SCREW, M6S ISO 4017 M5X20 A4 80	1-301, 1-303, 1-337, 1-367, 1-369, 1-395, 1-397, 1-495, 1-497, 1-499, 1-501, 1-525, 1-527, 1-529, 1-531, 1-577, 1-579, 1-581, 1-583, 1-609
312105-0333 ..	SCREW, M6S ISO 4017 M5X25 A4 80	1-495, 1-497, 1-499, 1-501, 1-525, 1-527, 1-529, 1-531
312105-0335 ..	SCREW, M6S ISO 4014 M5X30 A4 80	1-169, 1-495, 1-497, 1-499, 1-501, 1-525, 1-527, 1-529, 1-531
312105-0337 ..	SCREW, M6S ISO 4014 M5X35 A4 80	1-495, 1-497, 1-499, 1-501, 1-525, 1-527, 1-529, 1-531
312105-0339 ..	SCREW, M6S ISO 4014 M5X40 A4 80	1-495, 1-497, 1-499, 1-501, 1-525, 1-527, 1-529, 1-531
312105-0340 ..	SCREW, M6S ISO 4014 M5X45 A4 80	1-495, 1-497, 1-499, 1-501, 1-525, 1-527, 1-529, 1-531
312105-0362 ..	SCREW, M6S ISO 4017 M6X8 A4 80	1-147, 1-149, 1-227, 1-229, 1-399, 1-401, 1-403, 1-427, 1-429, 1-443, 1-445, 1-455, 1-457, 1-459, 1-467, 1-469, 1-481, 1-483
312105-0364 ..	SCREW, M6S ISO 4017 M6X10 A4 80	1-13, 1-15, 1-49, 1-51, 1-135, 1-137, 1-399, 1-401, 1-403, 1-621
312105-0366 ..	SCREW, M6S ISO 4017 M6X12 A4 80	1-13, 1-15, 1-31, 1-67, 1-69, 1-109, 1-111, 1-113, 1-135, 1-137, 1-147, 1-149, 1-271, 1-273, 1-275, 1-391, 1-393, 1-413, 1-443, 1-445, 1-455, 1-457, 1-459, 1-481, 1-483, 1-495, 1-497, 1-499, 1-501, 1-525, 1-527, 1-529, 1-531, 1-599, 1-601, 1-619
312105-0367 ..	SCREW, M6S ISO 4017 M6X14 A4 80	1-17, 1-19, 1-151, 1-153, 1-277
312105-0368 ..	SCREW, M6S ISO 4017 M6X16 A4 80	1-13, 1-15, 1-17, 1-19, 1-23, 1-25, 1-43, 1-45, 1-47, 1-59, 1-61, 1-63, 1-65, 1-67, 1-69, 1-87, 1-89, 1-91, 1-93, 1-95, 1-109, 1-111, 1-113, 1-135, 1-137, 1-147, 1-149, 1-151, 1-153, 1-169, 1-211, 1-225, 1-227, 1-229, 1-231, 1-237, 1-261, 1-271, 1-273, 1-399, 1-401, 1-403, 1-413, 1-415, 1-417, 1-419, 1-421, 1-423, 1-425, 1-435, 1-437, 1-455, 1-457, 1-459, 1-473, 1-475, 1-511, 1-513, 1-515, 1-517, 1-539, 1-541, 1-543, 1-545, 1-553, 1-555, 1-557, 1-559, 1-565, 1-567, 1-569, 1-571, 1-577, 1-579, 1-581, 1-583, 1-599, 1-601, 1-603, 1-605, 1-613, 1-615, 1-617, 1-621
312105-0370 ..	SCREW, M6S ISO 4017 M6X20 A4 80	1-17, 1-19, 1-21, 1-73, 1-109, 1-111, 1-113, 1-135, 1-137, 1-139, 1-169, 1-255, 1-271, 1-273, 1-275, 1-337, 1-391, 1-393, 1-399, 1-401, 1-403, 1-435, 1-437, 1-473, 1-475, 1-495, 1-497, 1-499, 1-501, 1-525, 1-527, 1-529, 1-531, 1-577, 1-579, 1-581, 1-583, 1-603, 1-605, 1-619, 1-621
312105-0372 ..	SCREW, M6S ISO 4017 M6X25 A4 80	1-13, 1-15, 1-17, 1-19, 1-33, 1-35, 1-109, 1-111, 1-113, 1-147, 1-149, 1-157, 1-159, 1-255, 1-395, 1-397, 1-399, 1-401, 1-403, 1-421, 1-423, 1-425, 1-599, 1-601, 1-613, 1-619
312105-0374 ..	SCREW, M6S ISO 4014 M6X30 A4 80	1-13, 1-15, 1-135, 1-137, 1-151, 1-153, 1-211, 1-399, 1-401, 1-403, 1-427, 1-429, 1-467, 1-469
312105-0376 ..	SCREW, M6S ISO 4014 M6X35 A4 80	1-17, 1-19, 1-49, 1-51, 1-73, 1-149
312105-0378 ..	SCREW, M6S ISO 4014 M6X40 A4 80	1-13, 1-15, 1-73, 1-595, 1-597
312105-0379 ..	SCREW, M6S ISO 4014 M6X45 A4 80	1-151, 1-153
312105-0380 ..	SCREW, M6S ISO 4014 M6X50 A4 80	1-227, 1-229
312105-0381 ..	SCREW, M6S ISO 4014 M6X55 A4 80	1-13, 1-15, 1-149
312105-0382 ..	SCREW, M6S ISO 4014 M6X60 A4 80	1-283, 1-285, 1-343
312105-0447 ..	SCREW, M6S ISO 4017 M8X12 A4 80	1-27, 1-29, 1-37, 1-39, 1-233, 1-239, 1-337, 1-415, 1-417, 1-419, 1-449, 1-485
312105-0449 ..	SCREW, M6S ISO 4017 M8X16 A4 80	1-43, 1-45, 1-47, 1-59, 1-61, 1-63, 1-65, 1-155, 1-367, 1-369, 1-385, 1-387, 1-395, 1-397, 1-415, 1-417, 1-419, 1-615, 1-617
312105-0451 ..	SCREW, M6S ISO 4017 M8X20 A4 80	1-27, 1-29, 1-37, 1-53, 1-55, 1-57, 1-59, 1-61, 1-63, 1-65, 1-109, 1-111, 1-113, 1-147, 1-149, 1-155, 1-263, 1-271, 1-273, 1-275, 1-367, 1-369, 1-379, 1-381, 1-395, 1-397, 1-399, 1-401, 1-403, 1-413, 1-421, 1-423, 1-425, 1-613, 1-615, 1-617
312105-0452 ..	SCREW, M6S ISO 4017 M8X22 A4 80	1-211, 1-585, 1-587
312105-0453 ..	SCREW, M6S ISO 4017 M8X25 A4 80	1-43, 1-45, 1-47, 1-53, 1-55, 1-57, 1-59, 1-61, 1-63, 1-65, 1-67, 1-69, 1-73, 1-207, 1-235, 1-241, 1-243, 1-367, 1-369, 1-391, 1-393
312105-0455 ..	SCREW, M6S ISO 4017 M8X30 A4 80	1-21, 1-23, 1-25, 1-27, 1-31, 1-43, 1-45, 1-47, 1-67, 1-69, 1-107, 1-109, 1-111, 1-113, 1-169, 1-207, 1-289, 1-291, 1-293, 1-395, 1-397
312105-0457 ..	SCREW, M6S ISO 4014 M8X35 A4 80	1-43, 1-45, 1-47, 1-59, 1-61, 1-63, 1-65, 1-67, 1-69, 1-109, 1-111, 1-113
312105-0459 ..	SCREW, M6S ISO 4014 M8X40 A4 80	1-261, 1-577, 1-579, 1-581, 1-583

Part No	Description	Page No
312105-0460 ..	SCREW, M6S ISO 4014 M8X45 A4 80	1-53, 1-55, 1-57, 1-233, 1-239, 1-427, 1-429, 1-443, 1-445, 1-467, 1-469, 1-481, 1-483, 1-577, 1-579, 1-581, 1-583
312105-0461 ..	SCREW, M6S ISO 4014 M8X50 A4 80	1-577, 1-579, 1-581, 1-583
312105-0462 ..	SCREW, M6S ISO 4014 M8X55 A4 80	1-43, 1-45, 1-47, 1-237, 1-245, 1-379, 1-381
312105-0463 ..	SCREW, M6S ISO 4014 M8X60 A4 80	1-67, 1-69
312105-0464 ..	SCREW, M6S ISO 4014 M8X65 A4 80	1-67, 1-69
312105-0465 ..	SCREW, M6S ISO 4014 M8X70 A4 80	1-53, 1-55, 1-57, 1-67, 1-69
312105-0466 ..	SCREW, M6S ISO 4014 M8X75 A4 80	1-67, 1-69, 1-449, 1-485
312105-0467 ..	SCREW, M6S ISO 4014 M8X80 A4 80	1-53, 1-55, 1-57, 1-67, 1-69
312105-0469 ..	SCREW, M6S ISO 4014 M8X90 A4 80	1-449, 1-485
312105-0489 ..	SCREW, M6S ISO 4017 M10X16 A4 80	1-23, 1-25
312105-0493 ..	SCREW, M6S ISO 4017 M10X25 A4 80	1-21, 1-107, 1-215, 1-301, 1-303
312105-0495 ..	SCREW, M6S ISO 4017 M10X30 A4 80	1-23, 1-25, 1-31, 1-107, 1-147, 1-149, 1-215, 1-289, 1-291, 1-293, 1-379, 1-381, 1-511, 1-513, 1-515, 1-517, 1-539, 1-541, 1-543, 1-545, 1-553, 1-555, 1-557, 1-559, 1-565, 1-567, 1-569, 1-571
312105-0497 ..	SCREW, M6S ISO 4017 M10X35 A4 80	1-107
312105-0499 ..	SCREW, M6S ISO 4014 M10X40 A4 80	1-511, 1-513, 1-515, 1-517, 1-539, 1-541, 1-543, 1-545, 1-553, 1-555, 1-557, 1-559, 1-565, 1-567, 1-569, 1-571
312105-0501 ..	SCREW, M6S ISO 4014 M10X50 A4 80	1-107
312105-0503 ..	SCREW, M6S ISO 4014 M10X60 A4 80	1-107
312105-0506 ..	SCREW, M6S ISO 4014 M10X75 A4 80	1-319
312105-0540 ..	SCREW, M6S ISO 4017 M12X40 A4 80	1-215
312109-0335 ..	SCREW, M6S ISO 4017 M5X30 A4 80	1-265, 1-267
312109-0374 ..	SCREW, M6S ISO 4017 M6X30 A4 80	1-17, 1-19, 1-149, 1-337, 1-367, 1-369, 1-577, 1-579, 1-581, 1-583
312109-0376 ..	SCREW, M6S ISO 4017 M6X35 A4 80	1-17, 1-19, 1-21, 1-225
312109-0378 ..	SCREW, M6S ISO 4017 M6X40 A4 80	1-261
312109-0381 ..	SCREW, M6S ISO 4017 M6X55 A4 80	1-271, 1-273
312109-0457 ..	SCREW, M6S ISO 4017 M8X35 A4 80	1-53, 1-55, 1-57
312109-0459 ..	SCREW, M6S ISO 4017 M8X40 A4 80	1-27, 1-67, 1-69, 1-349, 1-351, 1-353
312109-0460 ..	SCREW, M6S ISO 4017 M8X45 A4 80	1-23, 1-25, 1-53, 1-55, 1-57, 1-67, 1-69, 1-109, 1-111, 1-113, 1-349, 1-351, 1-353
312109-0461 ..	SCREW, M6S ISO 4017 M8X50 A4 80	1-31, 1-53, 1-55, 1-57, 1-67, 1-69, 1-237, 1-245, 1-379, 1-381
312109-0463 ..	SCREW, M6S ISO 4017 M8X60 A4 80	1-21, 1-67, 1-69, 1-147, 1-149
312109-0499 ..	SCREW, M6S ISO 4017 M10X40 A4 80	1-147, 1-149
312109-0500 ..	SCREW, M6S ISO 4017 M10X45 A4 80	1-147, 1-217, 1-221
312115-0230 ..	SCREW ISO4762 M3X20 A4 80	1-109, 1-111, 1-113, 1-147, 1-149
312115-0232 ..	SCREW ISO4762 M3X25 A4 80	1-23, 1-25
312115-0285 ..	SCREW ISO4762 M4X6 A4 80	1-427, 1-429, 1-443, 1-445, 1-467, 1-469, 1-481, 1-483
312115-0287 ..	SCREW ISO4762 M4X8 A4 80	1-251, 1-253
312115-0291 ..	SCREW ISO4762 M4X12 A4 80	1-83, 1-85, 1-105
312115-0293 ..	SCREW ISO4762 M4X16 A4 80	1-435, 1-437, 1-473, 1-475
312115-0295 ..	SCREW ISO4762 M4X20 A4 80	1-247, 1-249, 1-435, 1-437, 1-473, 1-475
312115-0297 ..	SCREW ISO4762 M4X25 A4 80	1-435, 1-437, 1-473, 1-475, 1-591, 1-593, 1-621
312115-0305 ..	SCREW ISO4762 M4X50 A4 80	1-621
312115-0323 ..	SCREW ISO4762 M5X8 A4 80	1-157, 1-159, 1-251, 1-253, 1-455, 1-457, 1-459
312115-0325 ..	SCREW ISO4762 M5X10 A4 80	1-495, 1-497, 1-499, 1-501, 1-525, 1-527, 1-529, 1-531, 1-603, 1-605
312115-0327 ..	SCREW ISO4762 M5X12 A4 80	1-251, 1-253, 1-427, 1-429, 1-451, 1-467, 1-469, 1-495, 1-497, 1-499, 1-501, 1-525, 1-527, 1-529, 1-531, 1-577, 1-579, 1-581, 1-583, 1-585, 1-587
312115-0328 ..	SCREW ISO4762 M5X14 A4 80	1-495, 1-497, 1-499, 1-501, 1-525, 1-527, 1-529, 1-531, 1-577, 1-579, 1-581, 1-583
312115-0329 ..	SCREW ISO4762 M5X16 A4 80	1-139, 1-251, 1-253, 1-495, 1-497, 1-499, 1-501, 1-525, 1-527, 1-529, 1-531, 1-585, 1-587
312115-0331 ..	SCREW ISO4762 M5X20 A4 80	1-495, 1-497, 1-499, 1-501, 1-525, 1-527, 1-529, 1-531, 1-603, 1-605
312115-0362 ..	SCREW ISO4762 M6X8 A4 80	1-495, 1-497, 1-499, 1-501, 1-525, 1-527, 1-529, 1-531
312115-0364 ..	SCREW ISO4762 M6X10 A4 80	1-171, 1-495, 1-497, 1-499, 1-501, 1-525, 1-527, 1-529, 1-531, 1-577, 1-579, 1-581, 1-583
312115-0366 ..	SCREW ISO4762 M6X12 A4 80	1-27, 1-29, 1-37, 1-39, 1-211, 1-599, 1-601
312115-0367 ..	SCREW ISO4762 M6X14 A4 80	1-495, 1-497, 1-499, 1-501, 1-525, 1-527, 1-529, 1-531, 1-585, 1-587
312115-0368 ..	SCREW ISO4762 M6X16 A4 80	1-269, 1-511, 1-513, 1-515, 1-517, 1-539, 1-541, 1-543, 1-545, 1-553, 1-555, 1-557, 1-559, 1-565, 1-567, 1-569, 1-571
312115-0370 ..	SCREW ISO4762 M6X20 A4 80	1-109, 1-111, 1-113, 1-121
312115-0372 ..	SCREW ISO4762 M6X25 A4 80	1-225
312115-0374 ..	SCREW ISO4762 M6X30 A4 80	1-257, 1-259, 1-455, 1-457, 1-459
312115-0376 ..	SCREW ISO4762 M6X35 A4 80	1-225, 1-433
312115-0379 ..	SCREW ISO4762 M6X45 A4 80	1-225, 1-455, 1-457, 1-459
312115-0380 ..	SCREW ISO4762 M6X50 A4 80	1-433, 1-455, 1-457, 1-459
312115-0382 ..	SCREW ISO4762 M6X60 A4 80	1-283, 1-285
312115-0449 ..	SCREW ISO4762 M8X16 A4 80	1-59, 1-61, 1-63, 1-65, 1-519, 1-547, 1-561, 1-573
312115-0451 ..	SCREW ISO4762 M8X20 A4 80	1-39, 1-251, 1-253
312115-0455 ..	SCREW ISO4762 M8X30 A4 80	1-251, 1-253, 1-433
312115-0457 ..	SCREW ISO4762 M8X35 A4 80	1-433
312115-0459 ..	SCREW ISO4762 M8X40 A4 80	1-433
312115-0461 ..	SCREW ISO4762 M8X50 A4 80	1-433
312125-0228 ..	SLOTTED HEAD SCREW, ISO1207 M3X16 A4	1-603, 1-605
312125-0230 ..	SLOTTED HEAD SCREW, ISO1207 M3X20 A4	1-23, 1-25, 1-169
312125-0234 ..	SLOTTED HEAD SCREW, ISO1207 M3X30 A4	1-23, 1-25
312125-0287 ..	SLOTTED HEAD SCREW, ISO1207 M4X8 A4	1-109, 1-111, 1-113, 1-147, 1-149, 1-169, 1-609, 1-621
312125-0295 ..	SLOTTED HEAD SCREW, ISO1207 M4X20 A4	1-591, 1-593
312125-0327 ..	SLOTTED HEAD SCREW, ISO1207 M5X12 A4	1-147, 1-149
312145-0222 ..	SCREW ISO 2009 MFS M3X8 A4	1-603, 1-605
312145-0224 ..	SCREW ISO 2009 MFS M3X10 A4	1-455, 1-457, 1-459, 1-603, 1-605

Part No	Description	Page No
312145-0236 ..	SCREW ISO 2009 MFS M3X35 A4	1-455, 1-457, 1-459
312145-0238 ..	SCREW ISO 2009 MFS M3X40 A4	1-455, 1-457, 1-459
312145-0287 ..	SCREW ISO 2009 MFS M4X8 A4	1-455, 1-457, 1-459
312145-0289 ..	SCREW ISO 2009 MFS M4X10 A4	1-117, 1-119
312145-0291 ..	SCREW ISO 2009 MFS M4X12 A4	1-495, 1-497, 1-499, 1-501, 1-519, 1-521, 1-525, 1-527, 1-529, 1-531, 1-547, 1-549, 1-561, 1-573
312145-0293 ..	SCREW ISO 2009 MFS M4X16 A4	1-495, 1-497, 1-499, 1-501, 1-525, 1-527, 1-529, 1-531
312155-0285 ..	SCREW DIN 7991 MF6S M4X6 A4 70	1-455, 1-457, 1-459
312155-0287 ..	SCREW DIN 7991 MF6S M4X8 A4 70	1-75, 1-77, 1-79, 1-81, 1-97, 1-99, 1-101, 1-103, 1-105, 1-121, 1-435, 1-437, 1-443, 1-445, 1-455, 1-457, 1-459, 1-473, 1-475, 1-481, 1-483, 1-519, 1-547, 1-561, 1-573
312155-0289 ..	SCREW DIN 7991 MF6S M4X10 A4 70	1-97, 1-99, 1-101, 1-103, 1-121, 1-169
312155-0291 ..	SCREW DIN 7991 MF6S M4X12 A4 70	1-525, 1-527, 1-529, 1-531
312155-0293 ..	SCREW DIN 7991 MF6S M4X16 A4 70	1-121
312155-0295 ..	SCREW DIN 7991 MF6S M4X20 A4 70	1-435, 1-437, 1-473, 1-475
312155-0297 ..	SCREW DIN 7991 MF6S M4X25 A4 70	1-171
312155-0299 ..	SCREW DIN 7991 MF6S M4X30 A4 70	1-123, 1-125, 1-127, 1-129, 1-131, 1-133, 1-495, 1-497, 1-499, 1-501, 1-525, 1-527, 1-529, 1-531
312155-0323 ..	SCREW DIN 7991 MF6S M5X8 A4 70	1-17, 1-19, 1-151, 1-153, 1-231
312155-0327 ..	SCREW DIN 7991 MF6S M5X12 A4 70	1-83, 1-85, 1-105, 1-109, 1-111, 1-113, 1-251, 1-253, 1-495, 1-497, 1-499, 1-501, 1-525, 1-527, 1-529, 1-531, 1-585, 1-587
312155-0329 ..	SCREW DIN 7991 MF6S M5X16 A4 70	1-251, 1-253, 1-495, 1-497, 1-499, 1-501, 1-525, 1-527, 1-529, 1-531, 1-577, 1-579, 1-581, 1-583
312155-0331 ..	SCREW DIN 7991 MF6S M5X20 A4 70	1-577, 1-579, 1-581, 1-583
312155-0333 ..	SCREW DIN 7991 MF6S M5X25 A4 70	1-495, 1-497, 1-499, 1-501, 1-525, 1-527, 1-529, 1-531
312155-0366 ..	SCREW DIN 7991 MF6S M6X12 A4 70	1-43, 1-45, 1-47, 1-247, 1-249, 1-265, 1-267, 1-577, 1-579, 1-581, 1-583
312155-0368 ..	SCREW DIN 7991 MF6S M6X16 A4 70	1-147, 1-149, 1-585, 1-587
312155-0370 ..	SCREW DIN 7991 MF6S M6X20 A4 70	1-87, 1-89, 1-91, 1-93, 1-95
312155-0376 ..	SCREW DIN 7991 MF6S M6X35 A4 70	1-87, 1-89, 1-91, 1-93, 1-95
312155-0379 ..	SCREW DIN 7991 MF6S M6X45 A4 70	1-87, 1-89, 1-91, 1-93, 1-95
312155-0447 ..	SCREW DIN 7991 MF6S M8X12 A4 70	1-27
312155-0449 ..	SCREW DIN 7991 MF6S M8X16 A4 70	1-399, 1-401, 1-403
312155-0453 ..	SCREW DIN 7991 MF6S M8X25 A4 70	1-109, 1-111, 1-113
312155-0455 ..	SCREW DIN 7991 MF6S M8X30 A4 70	1-495, 1-497, 1-499, 1-501, 1-525, 1-527, 1-529, 1-531
312155-0459 ..	SCREW DIN 7991 MF6S M8X40 A4 70	1-53, 1-55, 1-57
312155-0495 ..	SCREW DIN 7991 MF6S M10X30 A4 70	1-21, 1-147, 1-149
312155-0499 ..	SCREW DIN 7991 MF6S M10X40 A4 70	1-73
312318-0218 ..	SET SCREW, CUP END ISO4029 M3X4 A4	1-169
312318-0287 ..	SET SCREW, CUP END ISO4029 M4X8 A4	1-519, 1-547, 1-561, 1-573
312318-0291 ..	SET SCREW, CUP END ISO4029 M4X12 A4	1-621
312318-0320 ..	SET SCREW, CUP END ISO4029 M5X5 A4	1-495, 1-497, 1-499, 1-501, 1-509, 1-519, 1-521, 1-525, 1-527, 1-529, 1-531, 1-547, 1-549, 1-561, 1-573
312318-0321 ..	SET SCREW, CUP END ISO4029 M5X6 A4	1-415, 1-417, 1-419, 1-511, 1-513, 1-515, 1-517, 1-539, 1-541, 1-543, 1-545, 1-553, 1-555, 1-557, 1-559, 1-565, 1-567, 1-569, 1-571
312318-0323 ..	SET SCREW, CUP END ISO4029 M5X8 A4	1-317, 1-495, 1-497, 1-499, 1-501, 1-511, 1-513, 1-515, 1-517, 1-519, 1-521, 1-525, 1-527, 1-529, 1-531, 1-539, 1-541, 1-543, 1-545, 1-547, 1-549, 1-553, 1-555, 1-557, 1-559, 1-561, 1-565, 1-567, 1-569, 1-571, 1-573
312318-0325 ..	SET SCREW, CUP END ISO4029 M5X10 A4	1-511, 1-513, 1-515, 1-517, 1-539, 1-541, 1-543, 1-545, 1-553, 1-555, 1-557, 1-559, 1-565, 1-567, 1-569, 1-571
312318-0329 ..	SET SCREW, CUP END ISO4029 M5X16 A4	1-83, 1-85, 1-105, 1-169
312318-0362 ..	SET SCREW, CUP END ISO4029 M6X8 A4	1-21, 1-23, 1-25, 1-31, 1-147, 1-149
312318-0366 ..	SET SCREW, CUP END ISO4029 M6X12 A4	1-169
312318-0368 ..	SET SCREW, CUP END ISO4029 M6X16 A4	1-109, 1-111, 1-113
312318-0370 ..	SET SCREW, CUP END ISO4029 M6X20 A4	1-109, 1-111, 1-113, 1-385, 1-387, 1-577, 1-579, 1-581, 1-583
312601-0320 ..	HEXAGON NUT, M10 8 FZB, ISO 4032	1-215
312602-0312 ..	HEXAGON NUT, EN 24032 M6M M4 NIPLBR	1-123, 1-125, 1-127, 1-129, 1-131, 1-133
312605-0312 ..	HEXAGON NUT, M6M M4 A280	1-169, 1-171, 1-399, 1-401, 1-403, 1-441, 1-479, 1-519, 1-547, 1-561, 1-573, 1-577, 1-579, 1-581, 1-583, 1-609, 1-621
312605-0314 ..	HEXAGON NUT, M6M M5 A280	1-83, 1-85, 1-105, 1-169, 1-399, 1-401, 1-403, 1-519, 1-547, 1-561, 1-573, 1-609
312605-0316 ..	HEXAGON NUT, M6M M6 A280	1-33, 1-35, 1-59, 1-61, 1-63, 1-65, 1-109, 1-111, 1-113, 1-117, 1-119, 1-251, 1-253, 1-337, 1-385, 1-387, 1-399, 1-401, 1-403, 1-427, 1-429, 1-467, 1-469, 1-577, 1-579, 1-581, 1-583, 1-599, 1-601, 1-603, 1-605, 1-613, 1-619, 1-621
312605-0318 ..	HEXAGON NUT, M6M M8 A280	1-27, 1-29, 1-31, 1-33, 1-35, 1-53, 1-55, 1-57, 1-109, 1-111, 1-113, 1-147, 1-149, 1-155, 1-251, 1-253, 1-289, 1-291, 1-293, 1-385, 1-387, 1-395, 1-397, 1-399, 1-401, 1-403, 1-449, 1-485, 1-495, 1-497, 1-499, 1-501, 1-525, 1-527, 1-529, 1-531, 1-585, 1-587, 1-613
312605-0320 ..	HEXAGON NUT, M6M M10 A280	1-21, 1-23, 1-25, 1-217, 1-289, 1-291, 1-293, 1-319, 1-495, 1-497, 1-499, 1-501, 1-525, 1-527, 1-529, 1-531, 1-609
312605-0322 ..	HEXAGON NUT, M6M M12 A280	1-21, 1-31, 1-59, 1-61, 1-63, 1-65, 1-219, 1-603, 1-605
312607-0318 ..	HEXAGON NUT, EN 24032 M6M M8 A480	1-207
312625-0314 ..	HEXAGON THIN NUT, EN 24035 ML6M M5 A4	1-511, 1-513, 1-515, 1-517, 1-539, 1-541, 1-543, 1-545, 1-553, 1-555, 1-557, 1-559, 1-565, 1-567, 1-569, 1-571
312625-0316 ..	HEXAGON THIN NUT, EN 24035 ML6M M6 A4	1-577, 1-579, 1-581, 1-583, 1-603, 1-605
312625-0318 ..	HEXAGON THIN NUT, EN 24035 ML6M M8 A4	1-443, 1-445, 1-481, 1-483
312705-0310 ..	NUT HEX. DOMED CAP MHM-6 M3 A2	1-603, 1-605
312705-0312 ..	NUT HEX. DOMED CAP MHM-6 M4 A280	1-603, 1-605, 1-615, 1-617
312705-0316 ..	HEX. DOMED CAP MHM-6 M6 A280	1-391, 1-393, 1-585, 1-587, 1-599, 1-601, 1-603, 1-605
312705-0318 ..	NUT HEX. DOMED CAP MHM-6 M8 A280	1-391, 1-393
312812-0312 ..	HEXAGON NUT, NY-LOCK M4 A4 80	1-17, 1-19, 1-183
312812-0314 ..	HEXAGON NUT, NY-LOCK M5 A4 80	1-495, 1-497, 1-499, 1-501, 1-519, 1-525, 1-527, 1-529, 1-531, 1-547, 1-561, 1-573
312812-0316 ..	HEXAGON NUT, NY-LOCK M6 A4 80	1-151, 1-153, 1-287, 1-343, 1-511, 1-513, 1-515, 1-517

Part No	Description	Page No
		1-539, 1-541, 1-543, 1-545, 1-553, 1-555, 1-557, 1-559, 1-565, 1-567, 1-569, 1-571, 1-609, 1-621
312812-0318 ..	HEXAGON NUT, NY-LOCK M8 A4 80	1-27, 1-29, 1-169
312812-0322 ..	HEXAGON NUT, NY-LOCK M12 A4 80	1-589
312902-0318 ..	NUT HEX. LEFT THREAD, M8 A280	1-27, 1-29, 1-33, 1-35, 1-109, 1-111, 1-113
312902-0320 ..	NUT HEX. LEFT THREAD, M10 A280	1-23, 1-25
315101-0136 ..	WASHER BRB, 4,3/8 H=0,8	1-211
315101-0153 ..	WASHER PLAIN, BRB, 6,4/12 H=1,5	1-37, 1-39, 1-577, 1-579, 1-581, 1-583
315101-0182 ..	WASHER PLAIN, BRB, 15/26 H=2	1-319
315103-0153 ..	WASHER PLAIN, 6,4X12X1,5 BR NI PL	1-109, 1-111, 1-113, 1-117, 1-119
315105-0124 ..	WASHER PLAIN, 3,2X6X0,5 A4 BRB	1-23, 1-25, 1-109, 1-111, 1-113, 1-147, 1-149, 1-169, 1-603, 1-605
315105-0136 ..	WASHER PLAIN, 4,3X9X0,8 A4 BRB	1-21, 1-75, 1-77, 1-79, 1-81, 1-97, 1-99, 1-101, 1-103, 1-117, 1-119, 1-123, 1-125, 1-127, 1-129, 1-131, 1-133, 1-169, 1-171, 1-247, 1-249, 1-251, 1-253, 1-337, 1-399, 1-401, 1-403, 1-447, 1-577, 1-579, 1-581, 1-583, 1-603, 1-605
315105-0146 ..	WASHER PLAIN, 5,3X10X1 A4 BRB	1-147, 1-149, 1-333, 1-413, 1-495, 1-497, 1-499, 1-501, 1-519, 1-521, 1-525, 1-527, 1-529, 1-531, 1-547, 1-549, 1-561, 1-573, 1-585, 1-587, 1-607
315105-0153 ..	WASHER PLAIN, 6,4X12X1,5 A4 BRB	1-17, 1-19, 1-21, 1-23, 1-25, 1-31, 1-43, 1-45, 1-47, 1-49, 1-51, 1-67, 1-69, 1-73, 1-87, 1-89, 1-91, 1-93, 1-95, 1-109, 1-111, 1-113, 1-135, 1-137, 1-147, 1-149, 1-151, 1-153, 1-169, 1-211, 1-225, 1-227, 1-229, 1-231, 1-251, 1-253, 1-255, 1-261, 1-271, 1-273, 1-343, 1-391, 1-393, 1-395, 1-397, 1-399, 1-401, 1-403, 1-427, 1-429, 1-435, 1-437, 1-455, 1-457, 1-459, 1-467, 1-469, 1-473, 1-475, 1-495, 1-497, 1-499, 1-501, 1-511, 1-513, 1-515, 1-517, 1-519, 1-525, 1-527, 1-529, 1-531, 1-539, 1-541, 1-543, 1-545, 1-547, 1-553, 1-555, 1-557, 1-559, 1-561, 1-565, 1-567, 1-569, 1-571, 1-573, 1-603, 1-605, 1-609, 1-613, 1-621
315105-0156 ..	WASHER PLAIN, 6,7X14X1,5 A4 BRB	1-49, 1-51, 1-413
315105-0165 ..	WASHER PLAIN, 8,4X16X1,6 A4 BRB	1-21, 1-23, 1-25, 1-27, 1-29, 1-31, 1-37, 1-39, 1-43, 1-45, 1-47, 1-53, 1-55, 1-57, 1-59, 1-61, 1-63, 1-65, 1-67, 1-69, 1-73, 1-83, 1-85, 1-105, 1-107, 1-109, 1-111, 1-113, 1-147, 1-149, 1-155, 1-169, 1-207, 1-211, 1-251, 1-253, 1-261, 1-263, 1-271, 1-273, 1-275, 1-349, 1-351, 1-353, 1-367, 1-369, 1-395, 1-397, 1-399, 1-401, 1-403, 1-413, 1-415, 1-417, 1-419, 1-421, 1-423, 1-425, 1-427, 1-429, 1-443, 1-445, 1-449, 1-467, 1-469, 1-481, 1-483, 1-485, 1-577, 1-579, 1-581, 1-583, 1-585, 1-587, 1-609, 1-613, 1-621
315105-0171 ..	WASHER PLAIN, 10X18X2 A4 BRB	1-23, 1-25
315105-0173 ..	WASHER PLAIN, 10,5X22X2 A4 BRB	1-23, 1-25, 1-31, 1-107, 1-147, 1-149, 1-289, 1-291, 1-293, 1-455, 1-457, 1-459, 1-511, 1-513, 1-515, 1-517, 1-519, 1-539, 1-541, 1-543, 1-545, 1-547, 1-553, 1-555, 1-557, 1-559, 1-561, 1-565, 1-567, 1-569, 1-571, 1-573, 1-609
315105-0178 ..	WASHER PLAIN, 13X24X2,5 A4 BRB	1-21, 1-59, 1-61, 1-63, 1-65, 1-215
315106-0136 ..	WASHER PLAIN, M4 ISO7089-4-200 HV A4	1-495, 1-497, 1-499, 1-501, 1-511, 1-513, 1-515, 1-517, 1-525, 1-527, 1-529, 1-531, 1-539, 1-541, 1-543, 1-545, 1-553, 1-555, 1-557, 1-559, 1-565, 1-567, 1-569, 1-571, 1-589
315106-0146 ..	WASHER PLAIN, M5 ISO7089-5-200 HV A4	1-265, 1-267
315106-0153 ..	WASHER PLAIN, M6 ISO7089-6-200 HV A4	1-139
315115-0153 ..	WASHER PLAIN, TBRB 6,4/12 H=3	1-73
315115-0165 ..	WASHER PLAIN, TBRB 8,4/16 H=3	1-349, 1-351, 1-353, 1-379, 1-381, 1-399, 1-401, 1-403
315121-0173 ..	WASHER PLAIN, TBRSB 10,5/28 H=6	1-215
315125-0146 ..	WASHER HIGH, TBRSB 5.3X15X1 A4	1-169
315125-0153 ..	WASHER HIGH, TBRSB 6,4X22X4 A4	1-31, 1-147, 1-149, 1-225, 1-399, 1-401, 1-403, 1-421, 1-423, 1-425
315125-0165 ..	WASHER HIGH, TBRSB 8,4X26X5 A4	1-169, 1-415, 1-417, 1-419
315125-0173 ..	WASHER HIGH, TBRSB 10,5X28X6 A4	1-147, 1-149, 1-379, 1-381
315202-0101 ..	O-RING 3,1X1,6 MM	1-431, 1-435, 1-437, 1-471, 1-473, 1-475, 1-591, 1-593
315202-0102 ..	O-RING 4,1X1,6 MM	1-427, 1-429, 1-443, 1-445, 1-467, 1-469, 1-481, 1-483, 1-591, 1-593
315202-0104 ..	O-RING 6,1X1,6 MM	1-451
315202-0105 ..	O-RING 7,1X1,6 MM	1-431, 1-433, 1-451, 1-455, 1-457, 1-459, 1-471
315202-0107 ..	O-RING 9,1X1,6 MM	1-27, 1-29, 1-37, 1-39
315202-0111 ..	O-RING 13,1X1,6 MM	1-447
315202-0116 ..	O-RING 18,1X1,6 MM	1-443, 1-445, 1-481, 1-483
315202-0118 ..	O-RING 22,1X1,6 MM	1-453
315202-0217 ..	O-RING 24,2X3 MM	1-23, 1-25, 1-109, 1-111, 1-113
315202-0221 ..	O-RING 34,2X3 MM	1-147, 1-149
315202-0225 ..	O-RING 44,2X3 MM	1-73
315202-0233 ..	O-RING 79,2X5,7 MM	1-331
315202-0302 ..	O-RING 54,5X3 MM	1-331
315202-0303 ..	O-RING 59,5X3 MM	1-109, 1-111, 1-113, 1-331
315202-0304 ..	O-RING 64,5X3 MM	1-331
315202-0305 ..	O-RING 69,5X3 MM	1-21, 1-109, 1-111, 1-113, 1-331
315202-0307 ..	O-RING 79,5X3 MM	1-331
315202-0308 ..	O-RING 84,5X3 MM	1-331
315202-0310 ..	O-RING 94,5X3 MM	1-331
315202-0311 ..	O-RING 99,5X3 MM	1-73
315202-0705 ..	O-RING 17,17X1,78 MM	1-451
315202-0706 ..	O-RING 18,77X1,78 MM.	1-451
315204-0105 ..	O-RING 7,1X1,6 MM	1-455, 1-457, 1-459
315204-0123 ..	O-RING 35,1X1,6 MM	1-599, 1-601, 1-619
315204-0215 ..	O-RING 19,2X3 MM	1-325, 1-327, 1-329
315204-0301 ..	O-RING 49,5X3 MM	1-325
315204-0308 ..	O-RING 84,5X3 MM	1-327
315204-0324 ..	O-RING 164,3X5,7 MM	1-379, 1-381
315205-0707 ..	O-RING 20,35X1,78 MM	1-337
315205-0802 ..	O-RING 41,00X1,78 MM	1-337
315205-0804 ..	O-RING 47,35X1,78 MM	1-603, 1-605
315207-0506 ..	O-RING 7,65X1,78 MM	1-337
315207-0723 ..	O-RING 29,82X2,62 MM	1-337
315211-0103 ..	BONDED SEAL SS/NBR90 M6	1-427, 1-429, 1-443, 1-445, 1-455, 1-457, 1-459, 1-467, 1-469, 1-481, 1-483, 1-591, 1-593
315211-0104 ..	BONDED SEAL SS/NBR90 M8	1-591, 1-593

Part No	Description	Page No
315229-0203	GASKET 22,1X30,1X3,7 MM 1"	1-337
315400-0001	TUBE PUN-H-6X1-BL	1-211
315400-0003	TUBE PUN-H-6X1-SW	1-589
315400-0016	TUBE PUN-H-4X0,75-BL	1-211
315402-0156	LOCK WASHER, DIN127B 6,5 A4, 1/4	1-443, 1-445, 1-481, 1-483
315402-0178	LOCK WASHER, DIN127B 12,2 A4, M12	1-233, 1-239
315705-0202	PARALLEL KEY W. ROUND ENDS, 5X5X25MM	1-147, 1-149
315705-0234	PARALLEL KEY W. ROUND ENDS, 6X6X25 MM	1-169
315705-0267	PARALLEL KEY W. ROUND ENDS, 8X7X30 MM	1-23, 1-25, 1-109, 1-111, 1-113
315705-0270	PARALLEL KEY W. ROUND ENDS, 8X7X40 MM	1-23, 1-25
315705-0301	PARALLEL KEY W. ROUND ENDS, 10X8X40 MM	1-399, 1-401, 1-403
315741-0216	RETAINING RING, DIN 705 A4 20	1-31
315750-0102	RETAINING RING FOR SHAFT DIN 471 5	1-169
315751-0109	RETAINING RING FOR SHAFT DIN 471 12 SS	1-609, 1-621
315751-0119	RETAINING RING FOR SHAFT DIN 471 25 SS	1-21, 1-147, 1-149
315753-0112	RETAINING RING FOR BORE DIN 472 15 SS	1-427, 1-429, 1-467, 1-469
315753-0117	RETAINING RING FOR BORE DIN 472 22 SS	1-251, 1-253
315753-0121	RETAINING RING FOR BORE DIN 472 28 SS	1-251, 1-253
315753-0122	RETAINING RING FOR BORE DIN 472 30 SS	1-109, 1-111, 1-113
315753-0127	RETAINING RING FOR BORE DIN 472 40X1.75C	1-225
315753-0132	RETAINING RING FOR BORE DIN 472 52 SS	1-23, 1-25
315755-0106	RETAINING RING SHAFT DIN 6799 4 SS	1-151, 1-153
315755-0108	RETAINING RING SHAFT DIN 6799 6 SS	1-211
316810-0106	PIPE CLIP FOR TUBE D=8 MM	1-21
318856-0115	KNOB, EXTERNAL THREAD. NO. 8306-0278	1-31
318871-0105	KNOB CIRCULAR, EXT THREAD, NO. 8302-6150	1-31
321101-0172	FLANGE BUSHING, 12X18X10 MM	1-251, 1-253
321101-0173	FLANGE BUSHING, 12X18X12 MM	1-37, 1-39
321105-0204	BUSHING W/O FLANGE, 16/22X20 MM	1-169
321111-0302	FLANGE BUSHING, 20/26X15-32X3 MM	1-31
321130-0200	THRUST WASHER, 14X26X1,5 MM	1-109, 1-111, 1-113
321133-0375	BUSHING IGLIDUR G 35X39X30	1-109, 1-111, 1-113
321134-0260	BUSHING, IGLIDUR W300 20X23X20	1-337
321141-0104	BEARING BUSHING, 8X10X12 MM	1-33, 1-35
321141-0178	BEARING BUSHING, 12X14X10 MM	1-621
321141-0183	BEARING BUSHING, 12X14X15 MM	1-609
321155-0062	FLANGE BUSHING, IGLIDUR X 6X8X8	1-519, 1-547, 1-561, 1-573
321306-0105	BALL BEARING 25/47X12	1-21, 1-147, 1-149
321309-0103	BALL BEARING 17/40X12	1-147, 1-149
342703-0208	CONE NUT M8, NUT M-8 SS	1-409
342713-0209	PLUG, EXT THREAD HEX SOCKET 8638-00-180	1-427, 1-429, 1-443, 1-445, 1-455, 1-457, 1-459, 1-467, 1-469, 1-481, 1-483
342722-0206	STRAIGHT COUPLING D=8-G3/8"	1-109, 1-111, 1-113
342840-0103	CLAMPING PIECE DN 1-11/2, GH13LAH112304N	1-295
342850-0304	GASKET 35,4X49,1X5,2 1"1/2 FDA, 3-A	1-295, 1-321
342850-0305	GASKET 47,8X62,6X5,2 MM 2" FDA 3-A	1-295
342850-0306	GASKET 60,3X76,1X5,2 MM 2"1/2 FDA 3-A	1-295, 1-321
342920-0121	STRAIGHT COUPLING, EXT.THREAD 8/6-R1/8	1-53, 1-55, 1-57, 1-67, 1-69
342930-0113	ELBOW 90COUPL., EXT. THREAD 6/4-R1/8"	1-147, 1-149
342931-0121	ELBOW 90 COUPL., EXT. THREAD 8/6-G1/8"	1-49, 1-51, 1-53, 1-55, 1-57, 1-67, 1-69, 1-281
342946-0112	T-COUPLING,UNION 6/4	1-589
344224-0205	BALL BEARING 25/47X12	1-23, 1-25
344226-0105	BALL BEARING 25/52X15	1-23, 1-25, 1-109, 1-111, 1-113
344226-0107	BALL BEARING 35/72X17	1-109, 1-111, 1-113
344227-0206	BALL BEARING 30/72X19	1-21
344245-0050	SENSOR CABLE, EVT123	1-337, 1-603, 1-605
344324-0449	SET SCREW, DOG POINT ISO4028 M8X16 A2	1-233, 1-239
350001-0006	PUSH-IN FITTING QS-F-G1/8-6	1-211
350002-0002	PUSH-IN L-FITTING QSL-F-M5-6	1-589
350002-0006	PUSH-IN L-FITTING QSL-F-G1/8-6	1-211
350005-0001	PUSH-IN T-FITTING QST-F-4	1-211
351309-0100	ACTUATOR/SENSOR CABLE PRKT 4-07/10M	1-609, 1-621
352113-0101	CABLE TIE, BLACK 92X2,5 MM	1-21, 1-109, 1-111, 1-113, 1-169
352113-0102	CABLE TIE, BLACK 188X4,8 MM	1-21, 1-109, 1-111, 1-113
352113-0205	ANCHOR PLATES FOR STRIPS, TM2S8-C100	1-169, 1-609, 1-621
359705-0007	WARNING SIGN ISO, HOT SURFACE	1-615, 1-617
441737-0000	WASHER	1-613, 1-615, 1-617
441739-0000	WASHER	1-615, 1-617
457361-0000	CANTILEVER	1-413
466042-0000	SEAL	1-379, 1-381, 1-385, 1-387
466046-0000	ROLLER	1-379, 1-381
466089-0000	SEAL	1-379, 1-381, 1-385, 1-387
466092-0000	ROLL	1-379, 1-381
499011-0000	SHAFT	1-289, 1-291, 1-293
532413-0000	REDUCING NIPPLE	1-147, 1-149
534310-0003	NOZZLE	1-147, 1-149
539212-0000	GASKET	1-325
541165-0000	WASHER	1-251, 1-253
560122-0000	SUPPORT ROLLER	1-585, 1-587
567743-0000	SEAL	1-379, 1-381, 1-385, 1-387
567746-0001	ROLLER (STANDARD SIZE)	1-301, 1-303
567746-0002	TRIMMING ROLLER PLUS	1-407
567746-0003	TRIMMING ROLLER MINUS	1-407
569058-0000	SUPPORT ROLLER	1-585, 1-587

Part No	Description	Page No
573504-0000 ..	ROLLER	1-379, 1-381
579318-0000 ..	SEAL	1-379, 1-381
598095-0000 ..	SCREW	1-219
598096-0000 ..	WASHER	1-219
599815-0100 ..	HOLDING FIXTURE	1-7
752186-0001 ..	SHAFT	1-367, 1-369
752186-0002 ..	SHAFT	1-367, 1-369
752186-0004 ..	SHAFT	1-367, 1-369
752186-0005 ..	SHAFT	1-301, 1-303, 1-367, 1-369
752186-0006 ..	SHAFT	1-349, 1-351, 1-353, 1-367, 1-369
752186-0007 ..	SHAFT	1-301, 1-303, 1-349, 1-351, 1-353
752186-0009 ..	SHAFT	1-367, 1-369
752186-0012 ..	SHAFT	1-367, 1-369
752186-0014 ..	SHAFT	1-301, 1-303, 1-367, 1-369
752186-0015 ..	SHAFT	1-301, 1-303, 1-349, 1-351, 1-353
752186-0016 ..	SHAFT	1-301, 1-303, 1-395, 1-397
752186-0019 ..	SHAFT	1-301, 1-303, 1-367, 1-369
752186-0022 ..	SHAFT	1-367, 1-369
929823-0000 ..	PAPER GUIDE	1-171
950351-0000 ..	SHAFT	1-433
1035871-0000 .	SCREW	1-455, 1-457, 1-459
1036278-0000 .	SLEEVE	1-453
1036483-0000 .	SEAL	1-409
1036494-0000 .	GUIDE BUSHING	1-455, 1-457, 1-459
1036584-0000 .	WASHER	1-435, 1-437, 1-473, 1-475, 1-591, 1-593
1036673-0000 .	WASHER	1-415, 1-417, 1-419, 1-421, 1-423, 1-425
1036674-0000 .	FASTENING PLATE	1-415, 1-417, 1-419
1036954-0000 .	AXLE SUPPORT	1-379, 1-381
1036955-0000 .	AXLE SUPPORT	1-379, 1-381
1037254-0000 .	SHIM	1-409, 1-591, 1-593
1037885-0000 .	REAMED BOLT	1-379, 1-381
1038240-0000 .	SPACER	1-433
1040754-0000 .	VOLUME BULGE	1-495, 1-497, 1-499, 1-501, 1-525, 1-527, 1-529, 1-531
1040755-0000 .	VOLUME SHIM	1-495, 1-497, 1-499, 1-501, 1-525, 1-527, 1-529, 1-531, 1-591, 1-593
1040756-0000 .	WEDGE	1-495, 1-497, 1-499, 1-501, 1-525, 1-527, 1-529, 1-531
1110083-0002 .	DOLLY	1-455, 1-457, 1-459, 1-591, 1-593
1110934-0000 .	INDUCTOR	1-435, 1-437, 1-473, 1-475, 1-591, 1-593
1110936-0000 .	INDUCTOR	1-435, 1-437, 1-473, 1-475, 1-591, 1-593
1110937-0000 .	INDUCTOR	1-435, 1-437, 1-473, 1-475, 1-591, 1-593
1110938-0000 .	INDUCTOR	1-435, 1-437, 1-473, 1-475, 1-591, 1-593
1129431-0000 .	WASHER	1-379, 1-381
1140889-0000 .	BUSBAR	1-183
1143530-0000 .	SPRING	1-109, 1-111, 1-113
1144312-0000 .	AXLE PIN	1-73
1144335-0000 .	ROLLER	1-73
1144354-0000 .	WASHER	1-73
1144356-0000 .	COVER	1-73
1144417-0000 .	BUSHING	1-73
1144472-0000 .	LEVER	1-23, 1-25
1144473-0000 .	LEVER	1-23, 1-25
1144475-0000 .	BRACKET	1-23, 1-25
1144476-0000 .	BRACKET	1-23, 1-25
1144482-0000 .	SUPPORT	1-109, 1-111, 1-113
1144485-0000 .	SUPPORT	1-109, 1-111, 1-113
1144486-0000 .	CAM	1-109, 1-111, 1-113
1144488-0000 .	COLUMN	1-109, 1-111, 1-113
1144489-0000 .	FLANGE	1-109, 1-111, 1-113
1144492-0000 .	SPRING	1-109, 1-111, 1-113, 1-269
1144493-0000 .	WASHER	1-109, 1-111, 1-113
1144494-0000 .	AXLE PIN	1-109, 1-111, 1-113
1144495-0000 .	ECCENTRIC	1-109, 1-111, 1-113
1144496-0000 .	ECCENTRIC	1-109, 1-111, 1-113
1144498-0000 .	FLANGE	1-109, 1-111, 1-113
1144500-0000 .	SUPPORT	1-109, 1-111, 1-113
1144501-0000 .	SPACER	1-109, 1-111, 1-113
1144502-0000 .	WASHER	1-109, 1-111, 1-113
1144503-0000 .	FLANGE	1-109, 1-111, 1-113
1144505-0000 .	COLUMN	1-109, 1-111, 1-113
1144506-0000 .	LEVER	1-109, 1-111, 1-113
1144508-0000 .	AXLE PIN	1-109, 1-111, 1-113
1144511-0000 .	SHIM	1-109, 1-111, 1-113, 1-213
1144514-0000 .	BUSHING	1-109, 1-111, 1-113
1144515-0000 .	INSERT	1-109, 1-111, 1-113
1144517-0000 .	BUSHING	1-109, 1-111, 1-113
1144521-0000 .	CLAMP	1-109, 1-111, 1-113
1144551-0000 .	SPACER	1-155
1144552-0000 .	PLATE	1-155
1144566-0000 .	FLANGE	1-23, 1-25
1144593-0000 .	PLATE	1-147, 1-149
1144597-0000 .	SPACER	1-147, 1-149
1144598-0000 .	SHAFT	1-149
1144620-0000 .	WASHER	1-21, 1-215
1144621-0000 .	PLATE	1-135, 1-137
1144665-0000 .	SEAL RING	1-21

Part No	Description	Page No
1144667-0000	.HINGE	1-151, 1-153
1144668-0000	.HINGE	1-151, 1-153
1144669-0000	.PIN	1-151, 1-153
1144678-0000	.SHAFT	1-23, 1-25
1144681-0000	.WASHER	1-23, 1-25, 1-215
1144683-0000	.AXLE PIN	1-23, 1-25
1144684-0000	.SPACER	1-23, 1-25
1144685-0000	.SCREW	1-23, 1-25
1144686-0000	.TIE ROD	1-23, 1-25
1144687-0000	.TIE ROD	1-23, 1-25
1144688-0000	.SCREW	1-23, 1-25
1144719-0000	.RAIL	1-53, 1-55, 1-57
1144783-0000	.TIMING BELT	1-17, 1-19
1144794-0000	.SUPPORT	1-147, 1-149
1144797-0000	.SUPPORT	1-21
1144839-0000	.BLOCK	1-21
1144841-0000	.TIMING BELT	1-147, 1-149
1144899-0000	.SUPPORT	1-155
1144901-0000	.GUIDE	1-59, 1-61, 1-63, 1-65
1144902-0000	.SUPPORT	1-59, 1-61, 1-63, 1-65
1144914-0000	.LEVER	1-109, 1-111, 1-113
1144915-0000	.LEVER	1-109, 1-111, 1-113
1144916-0000	.ADJUSTING SCREW	1-109, 1-111, 1-113
1144918-0000	.PLATE	1-17, 1-19
1144919-0000	.CARRIER	1-17, 1-19
1144926-0000	.FLAP	1-97, 1-99, 1-101, 1-103
1144927-0000	.FLAP	1-75, 1-77, 1-79, 1-81
1144928-0000	.PUSHER	1-109, 1-111, 1-113
1144932-0000	.PLATE	1-109, 1-111, 1-113
1144976-0000	.STOP SCREW	1-59, 1-61, 1-63, 1-65
1144978-0000	.CAM	1-109, 1-111, 1-113
1144979-0000	.WASHER	1-59, 1-61, 1-63, 1-65
1145416-0000	.PUNCH HOLE 55	1-173
1145417-0000	.DIE HOLE 55	1-173
1254109-0000	.BRACKET	1-415, 1-417, 1-419
1254111-0000	.BRACKET	1-415, 1-417, 1-419
1255390-0000	.BUSHING	1-455, 1-457, 1-459
1260328-0000	.SPRING	1-433
1260702-0000	.PLATE	1-109, 1-111, 1-113
1260704-0000	.FLAP	1-97, 1-99, 1-101, 1-103
1260709-0000	.GUIDE UPPER R	1-67, 1-69
1260710-0000	.GUIDE UPPER L	1-67, 1-69
1260824-0000	.SPACER RING	1-23, 1-25
1260895-0000	.SPRING	1-269
1260931-0000	.SCREW	1-21
1260941-0000	.SLIDE	1-147
1260944-0000	.BUSHING	1-23, 1-25
1279409-0000	.PLATE	1-135, 1-137
1279559-0000	.ARM	1-73
1279670-0000	.SPACER	1-13, 1-15
1282287-0000	.CARRIER	1-17, 1-19
1282705-0000	.SUPPORT	1-67, 1-69
1282708-0000	.BUSHING	1-27, 1-29, 1-37, 1-39, 1-73
1282848-0000	.CARRIER	1-17, 1-19
1285003-0000	.LINK	1-491
1285005-0000	.NUT	1-491
1285006-0000	.SPACER	1-491
1285022-0000	.SIDE PLATE	1-11
1285023-0000	.SIDE PLATE	1-11
1285955-0000	.PLATE	1-149
1285956-0000	.BLOCK	1-149
1296877-0100	.SEAL KIT	1-321
1296878-0100	.SEAL KIT	1-321
1296879-0100	.SEAL KIT	1-321
1317042-0000	.RAIL	1-53, 1-55, 1-57
1317043-0000	.SUPPORT	1-53, 1-55, 1-57
1317047-0000	.RAIL	1-53, 1-55, 1-57
1317362-0000	.SHAFT	1-109, 1-111, 1-113
1317363-0000	.SHAFT	1-109, 1-111, 1-113
1317475-0000	.BRACKET	1-421, 1-423, 1-425
1317554-0000	.FLAP	1-97, 1-99, 1-101, 1-103
1317555-0000	.FLAP	1-75, 1-77, 1-79, 1-81
1317650-0000	.GUIDE	1-17, 1-19
1317651-0000	.GUIDE	1-17, 1-19
1317654-0000	.PUSHER	1-109, 1-111, 1-113
1317655-0000	.PLATE	1-109, 1-111, 1-113
1317656-0000	.INSERT	1-75, 1-77, 1-79, 1-81, 1-97, 1-99, 1-101, 1-103
1317787-0000	.CATCH	1-109, 1-111, 1-113
1317805-0000	.BAR	1-135, 1-137
1334018-0000	.SHIM	1-23, 1-25
1334271-0000	.BAR	1-135, 1-137
1334328-0000	.SPACER	1-23, 1-25
1334447-0000	.SPACER	1-67, 1-69
1334561-0000	.SLIDE	1-135, 1-137

Part No	Description	Page No
1334562-0000	.SLIDE	1-135, 1-137
1334718-0000	.SPACER	1-53, 1-55, 1-57
1346471-0000	.WEDGE	1-17, 1-19
1346539-0000	.CONNECTING ROD	1-109, 1-111, 1-113
1346736-0000	.WEDGE	1-17, 1-19
1347018-0000	.PLUG	1-109, 1-111, 1-113
1347057-0000	.GUIDE	1-59, 1-61, 1-63, 1-65
1347495-0000	.AXLE PIN	1-27, 1-29
1347496-0000	.SCREW	1-27, 1-29, 1-37, 1-39
1347699-0000	.PLATE	1-147
1347952-0003	.SPACER	1-189
1347952-0004	.SPACER	1-189
1347952-0006	.SPACER	1-189, 1-193
1347952-0008	.SPACER	1-193
1347952-0010	.SPACER	1-193
1347952-0011	.SPACER	1-193
1348132-0000	.SLIDE	1-135, 1-137
1348133-0000	.SLIDE	1-135, 1-137
1348138-0000	.SLIDE	1-135, 1-137
1348139-0000	.SLIDE	1-135, 1-137
1348144-0000	.BAR	1-135, 1-137
1348145-0000	.BAR	1-135, 1-137
1348150-0000	.BAR	1-135, 1-137
1348151-0000	.BAR	1-135, 1-137
1348504-0000	.SLEEVE	1-433
1348537-0000	.TIMING BELT	1-109, 1-111, 1-113
1348956-0000	.KNIFE	1-491, 1-591, 1-593
1349516-0000	.SHAFT	1-109, 1-111, 1-113
1349517-0000	.TOOTHED PULLEY	1-109, 1-111, 1-113
1349612-0000	.PISTON	1-433
1349762-0000	.SHAFT	1-337
1349851-0000	.ROLL	1-301, 1-303
1349914-0200	.TEMPLATE	1-321
1349925-0000	.PLATE	1-455, 1-457, 1-459
1350440-0000	.LEVER	1-27, 1-37, 1-39
1359565-0000	.NUT	1-275
1360149-0000	.SPACER	1-151, 1-153
1361547-0000	.PULLER	1-221
1361558-0100	.LIFTING KIT-WHEEL	1-7
1361559-0100	.PULLER	1-7
1361934-0000	.FRAME	1-215
1361935-0100	.FRAME	1-7
1363768-0000	.BOX	1-7
1363780-0000	.CARRIER	1-215
1363791-0000	.BRACKET	1-217
1366727-0000	.CLAMP	1-271, 1-273, 1-275, 1-277
1366750-0000	.HOLDER	1-271, 1-273, 1-277
1478189-0000	.SUPPORT	1-109, 1-111, 1-113
1478359-0000	.ROLLER	1-391, 1-393
1484620-0000	.SHAFT	1-147
1487338-0200	.SUPPORT LEVEL DETECTOR	1-415, 1-417, 1-419
1487626-0000	.VOLUME BULGE	1-495, 1-497, 1-499, 1-501, 1-525, 1-527, 1-529, 1-531
1487627-0000	.VOLUME SHIM	1-495, 1-497, 1-499, 1-501, 1-525, 1-527, 1-529, 1-531, 1-591, 1-593
1487739-0000	.FLAP	1-97, 1-99, 1-101, 1-103
1487922-0000	.FOLDING DEVICE	1-27, 1-37
1487923-0000	.FOLDING DEVICE	1-27, 1-39
1490033-0000	.SLIDE	1-135, 1-137
1490034-0000	.SLIDE	1-135, 1-137
1490035-0000	.BAR	1-135, 1-137
1490036-0000	.BAR	1-135, 1-137
1490129-0000	.TEMPLATE	1-203
1490762-0000	.ROLLER	1-379, 1-381
1498029-0000	.PIN	1-109, 1-111, 1-113, 1-269
1498068-0000	.SEAL RING	1-147, 1-149
1498132-0000	.SHAFT	1-603, 1-605
1498150-0000	.TEMPLATE	1-331
1498151-0000	.TEMPLATE	1-331
1498849-0000	.BUSBAR	1-435, 1-437
1498850-0000	.BUSBAR	1-473, 1-475
1499071-0000	.SPACER	1-67, 1-69
1499072-0000	.SPACER	1-53, 1-55, 1-57
1499140-0000	.SPACER	1-13, 1-15
1499142-0000	.FLAP	1-97, 1-99, 1-101, 1-103
1499143-0000	.PLATE	1-109, 1-111, 1-113
1499144-0000	.PUSHER	1-109, 1-111, 1-113
1499150-0000	.RAIL	1-53, 1-55, 1-57
1499151-0000	.RAIL	1-53, 1-55, 1-57
1499216-0000	.PLATE	1-169
1499227-0000	.SHIM	1-171
1499228-0000	.SHIM	1-171
1499296-0002	.GUIDE	1-187
1499296-0003	.GUIDE	1-187
1499296-0004	.GUIDE	1-187, 1-195
1499296-0007	.GUIDE	1-195

Part No	Description	Page No
1499296-0008	.GUIDE	1-195
1499296-0015	.GUIDE	1-195
1499400-0000	.GUIDE	1-135, 1-137
1499401-0000	.GUIDE	1-135, 1-137
1499417-0000	.BAR	1-135, 1-137
1499418-0000	.SLIDE	1-135, 1-137
1499422-0000	.SLIDE	1-135, 1-137
1499423-0000	.BAR	1-135, 1-137
1499476-0000	.HOLDER	1-17, 1-19, 1-151, 1-153, 1-231
1499635-0000	.LEVER	1-23, 1-25
1499636-0000	.ROLLER	1-301, 1-303
1499678-0000	.ROLLER	1-585, 1-587
1511254-0000	.BUSHING	1-495, 1-497, 1-499, 1-501, 1-525, 1-527, 1-529, 1-531
1511492-0000	.SHAFT	1-391, 1-393
1512484-0000	.ROLLER	1-585, 1-587
1517242-0000	.GUIDE	1-135, 1-137
1517243-0000	.GUIDE	1-135, 1-137
1517299-0500	.INFEED CONVEYOR LONG	1-145
1517476-0000	.WEDGE	1-17, 1-19
1517477-0000	.PLATE	1-17, 1-19
1517987-0000	.TEMPLATE	1-331
1519156-0000	.AIR DISTRIBUTOR	1-603, 1-605
1519158-0000	.LID	1-603, 1-605
1519159-0000	.BUSHING	1-603, 1-605
1519160-0000	.SHAFT	1-603, 1-605
1519166-0000	.BUSHING	1-603, 1-605
1519355-0000	.SPACER	1-43, 1-45, 1-47
1520455-0000	.CUTTING RAIL	1-455, 1-457, 1-459
1520493-0000	.CUTTING RAIL	1-455, 1-457, 1-459
1520633-0002	.DOLLY	1-455, 1-457, 1-459, 1-591, 1-593
1520633-0005	.DOLLY	1-455, 1-457, 1-459, 1-591, 1-593
1524035-0000	.VOLUME BULGE	1-97, 1-99, 1-101, 1-103
1524151-0000	.ROLLER	1-349, 1-351, 1-353
1524156-0000	.ROLLER	1-301, 1-303
1524414-0000	.SEAL	1-379, 1-381, 1-385, 1-387
1524416-0000	.ROLLER	1-379, 1-381
1524421-0000	.ROLLER	1-585, 1-587
1524547-0000	.COUNTER ROLLER	1-301, 1-303
1524840-0000	.TEMPLATE	1-331
1524841-0000	.TEMPLATE	1-331
1532231-0000	.CONNECTION	1-603, 1-605
1532256-0000	.CARRIER	1-17, 1-19
1532268-0000	.AXLE LINK	1-29
1532447-0000	.HANDLE	1-169
1533051-0000	.CUTTING RAIL	1-455, 1-457, 1-459
1533360-0000	.INDUCTOR	1-183
1533361-0000	.INDUCTOR	1-183
1533362-0000	.INDUCTOR	1-183
1533364-0000	.INDUCTOR	1-183
1538109-0000	.COMPRESSION SPRING	1-491, 1-591, 1-593
1538247-0000	.AXLE PIN	1-169
1538348-0000	.CATCH	1-455, 1-457, 1-459
1538349-0000	.CATCH	1-433
1538521-0000	.BUSHING	1-519, 1-547, 1-561, 1-573
1538668-0000	.GUIDE ROD	1-169
1538950-0000	.ROLLER	1-317
1538953-0000	.SHAFT	1-289, 1-291, 1-293
1539877-0000	.BAR	1-135, 1-137
1539878-0000	.BAR	1-135, 1-137
1539900-0000	.RIGHT UPPER GUIDE	1-67, 1-69
1539983-0000	.GUIDE	1-135, 1-137
1539984-0000	.GUIDE	1-135, 1-137
1548531-0000	.ROLLER	1-349, 1-351, 1-353
1548540-0000	.ROLLER	1-349, 1-351, 1-353
1548541-0000	.ROLLER	1-349, 1-351, 1-353
1548940-0000	.SPRING	1-443, 1-445, 1-481, 1-483
1549406-0000	.PACKAGE GUIDE	1-67, 1-69
1549411-0000	.PACKAGE GUIDE	1-67, 1-69
1549506-0000	.SPACER	1-67, 1-69
1549508-0000	.SPACER SCREW	1-53, 1-55, 1-57
1549512-0000	.SPACER	1-13, 1-15
1549513-0000	.SLIDE	1-135, 1-137
1549514-0000	.SLIDE	1-135, 1-137
1549515-0000	.BAR	1-135, 1-137
1549516-0000	.BAR	1-135, 1-137
1549517-0000	.GUIDE	1-135, 1-137
1549518-0000	.GUIDE	1-135, 1-137
1549522-0000	.GUIDE	1-17, 1-19
1549523-0000	.GUIDE	1-17, 1-19
1549614-0000	.LEFT UPPER GUIDE	1-67, 1-69
1549829-0000	.VOLUME BULGE	1-495, 1-497, 1-499, 1-501, 1-525, 1-527, 1-529, 1-531
1549830-0000	.VOLUME SHIM	1-495, 1-497, 1-499, 1-501, 1-525, 1-527, 1-529, 1-531, 1-591, 1-593
1549844-0000	.FLAP	1-97, 1-99, 1-101, 1-103
1549940-0000	.PUSHER	1-109, 1-111, 1-113

Machine Type Group Description Page No

Part No	Description	Page No
1549992-0000	.HINGE FLANGE	1-615, 1-617
1549993-0000	.HINGE FLANGE	1-615, 1-617
1549994-0000	.SPACER	1-615, 1-617
1550664-0000	.DOWEL	1-271, 1-273
1550666-0000	.HOLDER	1-271, 1-273
1550743-0200	.RAIL HOLDER	1-271, 1-273
1550772-0000	.HOLDER	1-275
1558047-0000	.PUSHER	1-119
1558178-0000	.PUSHER	1-117
1558184-0000	.PLATE	1-109, 1-111, 1-113
1558356-0300	.SPLICE DETECTOR	1-595, 1-597
1558701-0000	.BUSHING	1-495, 1-497, 1-499, 1-501, 1-525, 1-527, 1-529, 1-531
1558733-0000	.VOLUME BULGE	1-455, 1-457, 1-459
1558734-0000	.VOLUME BULGE	1-435, 1-437, 1-473, 1-475
1558910-0000	.SPACER	1-67, 1-69
1566783-0000	.INDUCTOR	1-435, 1-437, 1-473, 1-475, 1-591, 1-593
2500071-0000	.O-RING	1-289, 1-291, 1-293
2500082-0000	.MOUNTING PLATE	1-289, 1-291, 1-293
2501310-0300	.FILLING PIPE	1-279
2503699-0000	.VOLUME BULGE	1-455, 1-457, 1-459
2507048-0000	.GASKET	1-289, 1-291, 1-293
2508292-0000	.BUSHING	1-399, 1-401, 1-403
2508309-0000	.PLATE	1-399, 1-401, 1-403
2508311-0000	.PLATE	1-399, 1-401, 1-403
2509681-0000	.RAIL	1-603, 1-605
2512737-0000	.ROLLER	1-349, 1-351, 1-353
2512738-0000	.ROLLER	1-349, 1-351, 1-353
2512740-0000	.ROLLER	1-349, 1-351, 1-353
2512741-0000	.ROLLER	1-349, 1-351, 1-353
2512742-0000	.ROLLER	1-349, 1-351, 1-353
2512746-0000	.ROLLER	1-367, 1-369
2512748-0000	.ROLLER	1-367, 1-369
2512749-0000	.ROLLER	1-367, 1-369
2512779-0000	.RING	1-379, 1-381
2512780-0200	.SEAL	1-377
2512936-0200	.CLEANING CUP	1-279
2514029-0000	.OPENING SPECIFICATION	1-205
2514032-0000	.OPENING SPECIFICATION	1-205
2514514-0000	.INDUCTOR	1-399, 1-401, 1-403
2514521-0000	.ROLLER	1-367, 1-369
2514522-0000	.INDUCTOR	1-399, 1-401, 1-403
2520160-0000	.CLAMP	1-17, 1-19
2520168-0000	.SLIDE	1-83, 1-85
2520170-0000	.FLAP	1-83, 1-85
2522213-0004	.SHAFT	1-367, 1-369
2522213-0005	.SHAFT	1-367, 1-369
2522213-0006	.SHAFT	1-301, 1-303
2522213-0007	.SHAFT	1-349, 1-351, 1-353
2522213-0008	.SHAFT	1-367, 1-369
2522213-0009	.SHAFT	1-367, 1-369
2522213-0015	.SHAFT	1-317, 1-395, 1-397
2522213-0016	.SHAFT	1-395, 1-397
2522213-0017	.SHAFT	1-395, 1-397
2522213-0019	.SHAFT	1-367, 1-369
2522213-0020	.SHAFT	1-367, 1-369
2523665-0000	.ARM	1-337
2523766-0001	.BRACKET	1-345
2523766-0002	.BRACKET	1-345
2523766-0003	.BRACKET	1-345
2523766-0005	.BRACKET	1-345
2523766-0006	.BRACKET	1-345
2523766-0012	.BRACKET	1-345
2523766-0013	.BRACKET	1-345
2524512-0000	.PUSHER	1-109, 1-111, 1-113
2526249-0000	.ROLLER	1-109, 1-111, 1-113
2526551-0000	.PLATE	1-179
2526563-0000	.HANDLE	1-83, 1-85, 1-105
2526567-0000	.CYLINDER	1-83, 1-85, 1-105
2526825-0000	.WASHER	1-301, 1-303, 1-349, 1-351, 1-353
2526826-0000	.BUSHING	1-301, 1-303, 1-349, 1-351, 1-353
2526827-0000	.SHAFT	1-301, 1-303, 1-349, 1-351, 1-353
2527529-0000	.GUIDE UPPER L	1-67, 1-69
2527530-0000	.GUIDE UPPER R	1-67, 1-69
2527531-0000	.TIE ROD	1-29
2527792-0000	.SUPPORT	1-17, 1-19, 1-151, 1-153
2527793-0000	.SHAFT	1-17, 1-19, 1-151, 1-153, 1-231
2528112-0000	.BRACKET	1-391, 1-393
2528113-0000	.BRACKET	1-391, 1-393
2528114-0000	.COVER PLATE	1-391, 1-393
2528118-0001	.LOCK PLATE	1-349, 1-351, 1-353
2528118-0003	.LOCK PLATE	1-349, 1-351, 1-353
2528118-0004	.LOCK PLATE	1-301, 1-303, 1-349, 1-351, 1-353
2528118-0005	.LOCK PLATE	1-301, 1-303, 1-349, 1-351, 1-353
2528119-0001	.LOCK PLATE	1-349, 1-351, 1-353

Part No	Description	Page No
2528119-0003	.LOCK PLATE	1-349, 1-351, 1-353
2528119-0004	.LOCK PLATE	1-301, 1-303, 1-349, 1-351, 1-353
2528119-0005	.LOCK PLATE	1-301, 1-303, 1-349, 1-351, 1-353
2528123-0001	.LOCK PLATE	1-349, 1-351, 1-353, 1-367, 1-369
2528123-0002	.LOCK PLATE	1-349, 1-351, 1-353, 1-367, 1-369
2528123-0003	.LOCK PLATE	1-301, 1-303, 1-349, 1-351, 1-353
2528123-0004	.LOCK PLATE	1-301, 1-303, 1-349, 1-351, 1-353
2528123-0005	.LOCK PLATE	1-349, 1-351, 1-353, 1-367, 1-369
2528123-0006	.LOCK PLATE	1-395, 1-397
2528123-0007	.LOCK PLATE	1-367, 1-369
2528123-0008	.LOCK PLATE	1-349, 1-351, 1-353, 1-367, 1-369
2528123-0009	.LOCK PLATE	1-395, 1-397
2528145-0300	.DOOR	1-611
2529277-0000	.BAR	1-135, 1-137
2529278-0000	.BAR	1-135, 1-137
2529279-0000	.PLATE	1-135, 1-137
2529289-0000	.PUSHER	1-109, 1-111, 1-113
2529671-0000	.FOLDING DEVICE	1-37
2529672-0000	.FOLDING DEVICE	1-39
2529673-0000	.SUPPORT	1-29
2529674-0000	.SUPPORT	1-29
2529675-0000	.LEVER	1-29
2529676-0000	.LEVER	1-29
2529785-0000	.KNOB	1-17, 1-19
2529786-0000	.KNOB	1-17, 1-19
2530292-0000	.BRACKET	1-427, 1-429, 1-467, 1-469
2530293-0000	.BRACKET	1-427, 1-429, 1-467, 1-469
2530296-0000	.ROLLER	1-427, 1-429, 1-467, 1-469
2530313-0000	.BUSHING	1-495, 1-497, 1-499, 1-501, 1-525, 1-527, 1-529, 1-531
2530418-0000	.SPRING	1-17, 1-19, 1-151, 1-153, 1-231
2531039-0300	.DOOR	1-611
2531043-0200	.HOUSING	1-611
2531060-0000	.BRACKET	1-399, 1-401, 1-403
2532531-0000	.ROLLER	1-427, 1-429, 1-467, 1-469
2532895-0001	.LOCK PLATE	1-367, 1-369
2532895-0002	.LOCK PLATE	1-367, 1-369
2532895-0003	.LOCK PLATE	1-367, 1-369
2532895-0004	.LOCK PLATE	1-367, 1-369, 1-395, 1-397
2532895-0007	.LOCK PLATE	1-367, 1-369
2532895-0008	.LOCK PLATE	1-395, 1-397
2532898-0000	.BRACKET	1-399, 1-401, 1-403
2532899-0000	.BRACKET	1-399, 1-401, 1-403
2532911-0000	.ROLLER	1-595, 1-597
2532914-0000	.SPACER	1-349, 1-351, 1-353
2532915-0000	.WASHER	1-603, 1-605
2532918-0000	.HOLDER	1-603, 1-605
2532919-0000	.PLATE	1-603, 1-605
2532925-0000	.INDUCTOR	1-399, 1-401, 1-403
2532934-0300	.AIR KNIFE	1-595, 1-597
2532965-0000	.ROLLER	1-349, 1-351, 1-353
2533681-0100	.BOBBIN HOLDER	1-163, 1-165, 1-167
2533682-0100	.BOBBIN HOLDER	1-163, 1-165, 1-167
2533684-0100	.SPLICING TABLE	1-163, 1-165, 1-167
2533685-0100	.SPLICING TABLE	1-163, 1-165, 1-167
2535443-0000	.PIVOT PIN	1-577, 1-579, 1-581, 1-583
2537129-0000	.SPACER	1-13, 1-15
2540609-0000	.KNOB	1-13, 1-15
2540612-0000	.PLATE	1-17, 1-19, 1-151, 1-153, 1-231
2541634-0200	.EDGE ROLLER	1-389
2541877-0000	.NAIL	1-117, 1-119
2541878-0000	.WASHER	1-117, 1-119
2543242-0000	.ANGLE BLOCK	1-135, 1-137
2544342-0000	.BRACKET	1-43, 1-45, 1-47
2544897-0000	.BRACKET	1-399, 1-401, 1-403
2544898-0000	.SHAFT	1-399, 1-401, 1-403
2545352-0000	.TEMPLATE	1-331
2545545-0000	.INSERT	1-135, 1-137
2546271-0100	.TAB C'JAW	1-163, 1-165, 1-167
2546275-0100	.TAB FEEDER	1-163, 1-165, 1-167
2546278-0100	.PUNCH UNIT	1-163, 1-165, 1-167
2547376-0200	.KNOB	1-399, 1-401, 1-403
2547377-0000	.WASHER	1-399, 1-401, 1-403
2547388-0000	.AXLE PIN	1-399, 1-401, 1-403
2547398-0000	.LID	1-613
2547399-0000	.LID	1-613
2547404-0000	.BRACKET	1-399, 1-401, 1-403
2547405-0000	.BRACKET	1-399, 1-401, 1-403
2547420-0200	.EDGE ROLLER	1-389
2547421-0200	.FORMING RING	1-365
2547422-0300	.UPPER FORMING RING	1-347
2547588-0000	.SPRING	1-427, 1-429, 1-467, 1-469
2547589-0000	.SPRING	1-427, 1-429, 1-467, 1-469
2550211-0000	.VOLUME BULGE	1-75, 1-77, 1-79, 1-81
2552003-0400	.FORMING UNIT	1-409

Part No	Description	Page No
2552010-0300	.PISTON	1-449, 1-485
2552022-0000	.GUIDE	1-59, 1-61, 1-63, 1-65
2552140-0000	.BRACKET	1-395, 1-397
2552141-0000	.BRACKET	1-395, 1-397
2552144-0000	.ROLLER	1-395, 1-397
2552155-0000	.ROLLER	1-395, 1-397
2552160-0000	.SUPPORT RING	1-367, 1-369
2552161-0000	.SUPPORT RING	1-367, 1-369
2552176-0001	.LOCK PLATE	1-367, 1-369
2552176-0003	.LOCK PLATE	1-367, 1-369
2552177-0001	.LOCK PLATE	1-367, 1-369
2552177-0003	.LOCK PLATE	1-367, 1-369
2552187-0000	.ROLLER	1-367, 1-369
2552188-0000	.ROLLER	1-367, 1-369
2552205-0000	.ROLLER	1-367, 1-369
2552206-0000	.ROLLER	1-367, 1-369
2552445-0000	.SUPPORT	1-147
2552655-0000	.ROLLER	1-379, 1-381
2552656-0000	.ROLLER	1-379, 1-381
2553284-0000	.BLOCK	1-59, 1-61, 1-63, 1-65
2555615-0000	.BRACKET	1-399, 1-401, 1-403
2555616-0000	.ROLLER	1-399, 1-401, 1-403
2555617-0000	.PIN	1-399, 1-401, 1-403
2555618-0000	.SHAFT	1-399, 1-401, 1-403
2555625-0000	.ROLL	1-399, 1-401, 1-403
2555627-0200	.PRESSURE ROLLER	1-297, 1-299
2559008-0000	.VOLUME BULGE	1-117, 1-119
2559062-0300	.LOWER FORMING RING	1-297, 1-299
2559102-0000	.RING	1-379, 1-381
2559103-0000	.PLATE	1-379, 1-381
2559104-0000	.PLATE	1-379, 1-381
2561596-0000	.RAIL HOLDER KIT	1-277
2561602-0100	.RAIL HOLDER KIT	1-271, 1-273
2562664-0000	.ROLLER	1-395, 1-397
2562667-0002	.LOCK PLATE	1-395, 1-397
2562667-0008	.LOCK PLATE	1-367, 1-369
2562667-0009	.LOCK PLATE	1-367, 1-369
2562684-0000	.ROLLER	1-395, 1-397
2562694-0000	.ROLLER	1-395, 1-397
2562695-0000	.ROLLER	1-395, 1-397
2562696-0000	.BRACKET	1-395, 1-397
2562697-0000	.BRACKET	1-395, 1-397
2563974-0000	.SEALING PLATE	1-181
2564043-0003	.ROLLER	1-175
2564043-0004	.ROLLER	1-175
2564043-0005	.ROLLER	1-175, 1-197
2564043-0006	.ROLLER	1-197
2564043-0008	.ROLLER	1-197
2564043-0009	.ROLLER	1-197
2564044-0004	.ROLLER	1-175, 1-185, 1-199
2564044-0005	.ROLLER	1-175, 1-185, 1-199
2564044-0006	.ROLLER	1-175, 1-177, 1-185, 1-191, 1-199
2564044-0008	.ROLLER	1-177, 1-191
2564044-0011	.ROLLER	1-177, 1-191
2564044-0012	.ROLLER	1-177, 1-191
2564057-0100	.TAB MAGAZINE	1-163, 1-165, 1-167
2564058-0100	.TURNING DEVICE	1-163, 1-165, 1-167
2564059-0100	.TAB FEEDER	1-163, 1-165, 1-167
2564060-0100	.PATCH FEEDER	1-163, 1-165, 1-167
2564075-0100	.OPENING SPECIFICATION	1-161
2564076-0100	.START-UP KIT	1-161
2564347-0000	.FLAP	1-75, 1-77, 1-79, 1-81
2565513-0000	.ROLLER	1-301, 1-303
2566319-0000	.FOLDING FLAP	1-463, 1-465, 1-487, 1-489
2566320-0000	.FOLDING FLAP	1-463, 1-465, 1-487, 1-489
2566321-0000	.FLAP	1-75, 1-77, 1-79, 1-81
2566323-0000	.FLAP	1-97, 1-99, 1-101, 1-103
2566338-0000	.CATCH	1-433
2566339-0000	.CATCH	1-455, 1-457, 1-459
2572071-0000	.HOOD	1-289, 1-291, 1-293
2572197-0000	.SPACER	1-511, 1-513, 1-515, 1-517, 1-519, 1-539, 1-541, 1-543, 1-545, 1-547, 1-553, 1-555, 1-557, 1-559, 1-561, 1-565, 1-567, 1-569, 1-571, 1-573
2575119-0000	.GUIDE	1-319
2575120-0100	.LIFTING UNIT	1-279
2579883-0000	.SEALING PLATE	1-181
2579886-0000	.SEALING PLATE	1-181
2579887-0000	.OPENING SPECIFICATION	1-205
2582616-0000	.PLATE	1-379, 1-381
2582623-0000	.SEAL	1-379, 1-381, 1-385, 1-387
2582629-0000	.RING	1-379, 1-381
2582630-0000	.ROLLER	1-379, 1-381
2582654-0000	.PLATE	1-603, 1-605
2582655-0000	.HOLDER	1-603, 1-605
2587337-0100	.SETTING TEMPLATE	1-161

Part No	Description	Page No
2587466-0000	.INDUCTOR	1-435, 1-437, 1-591, 1-593
2587467-0000	.INDUCTOR	1-473, 1-475, 1-591, 1-593
2588127-0000	.AXLE PIN	1-31
2588134-0000	.YOKE	1-31
2588218-0000	.STRUT	1-43, 1-45, 1-47
2588295-0000	.SLEEVE	1-433
2588296-0000	.PISTON	1-433
2588297-0000	.SHAFT	1-433
2588299-0000	.BUSHING	1-455, 1-457, 1-459
2588303-0000	.SCREW	1-455, 1-457, 1-459
2588317-0100	.KNIFE	1-411
2588327-0000	.INSERT	1-75, 1-77, 1-79, 1-81
2594596-0000	.BRACKET	1-317
2594601-0000	.RAIL	1-603, 1-605
2594636-0000	.BRACKET	1-399, 1-401, 1-403
2594892-0000	.SPRING	1-433
2594902-0000	.CATCH	1-109, 1-111, 1-113
2597531-0000	.FLOAT	1-289, 1-291, 1-293
2598487-0000	.SLIDE	1-135, 1-137
2598488-0000	.SLIDE	1-135, 1-137
2598706-0000	.BAR	1-23, 1-25
2598820-0000	.SPACER	1-13, 1-15
2598880-0000	.SETTING SCREW	1-33, 1-35
2598890-0000	.AXLE PIN	1-37, 1-39
2601247-0000	.INDUCTOR	1-399, 1-401, 1-403
2601249-0000	.BRACKET	1-399, 1-401, 1-403
2601269-0000	.ROLLER	1-395, 1-397
2601271-0000	.ROLLER	1-395, 1-397
2601272-0000	.ROLLER	1-395, 1-397
2601273-0000	.ROLLER	1-395, 1-397
2601278-0000	.ROLLER	1-367, 1-369
2601279-0000	.ROLLER	1-367, 1-369
2601285-0000	.ROLLER	1-367, 1-369
2601286-0000	.ROLLER	1-367, 1-369, 1-391, 1-393
2601289-0000	.INDUCTOR	1-399, 1-401, 1-403
2601328-0000	.ROLLER	1-301, 1-303
2601468-0000	.PRESSURE FLANGE	1-289, 1-291, 1-293
2601474-0000	.PRESSURE FLANGE	1-289, 1-291, 1-293
2602613-0000	.VOLUME BULGE	1-117, 1-119
2602614-0000	.BOTTOM	1-87, 1-89, 1-91, 1-93, 1-95
2602655-0000	.ROLLER	1-585, 1-587
2603547-0000	.FOLDING PART	1-43, 1-45, 1-47
2603548-0000	.FOLDING PART	1-43, 1-45, 1-47
2603661-0000	.BRACKET	1-43, 1-45, 1-47
2603662-0000	.BRACKET	1-43, 1-45, 1-47
2603663-0000	.SPACER	1-67, 1-69
2603682-0000	.DIE	1-173
2603683-0000	.PUNCH	1-173
2604551-0000	.SEALING PLATE	1-179
2604554-0000	.PUNCH	1-173
2604555-0000	.DIE	1-173
2604557-0000	.OPENING SPECIFICATION	1-205
2605993-0000	.SIDE PLATE	1-11
2605994-0000	.SIDE PLATE	1-11
2606277-0000	.FOLDING DEVICE	1-29
2606278-0000	.FOLDING DEVICE	1-29
2608234-0000	.SEALING PLATE	1-179
2608239-0000	.OPENING SPECIFICATION	1-205
2609372-0000	.GUIDE	1-59, 1-61, 1-63, 1-65
2610042-0000	.FLOAT	1-289, 1-291, 1-293
2611016-0000	.ROLLER	1-349, 1-351, 1-353
2611020-0000	.ROLLER	1-349, 1-351, 1-353
2611024-0000	.SPACER	1-349, 1-351, 1-353
2611038-0000	.SUPPORT RING	1-367, 1-369
2611046-0000	.PLATE	1-379, 1-381
2611047-0000	.RING	1-379, 1-381
2611052-0000	.BRACKET	1-317
2611875-0000	.SHIM	1-117, 1-119
2612738-0000	.BUSHING	1-455, 1-457, 1-459
2612745-0000	.BEARING HOUSING	1-433
2618377-0000	.ECCENTRIC	1-577, 1-579, 1-581, 1-583
2618378-0000	.ECCENTRIC	1-577, 1-579, 1-581, 1-583
2619199-0000	.ROLLER	1-585, 1-587
2619528-0000	.LOCKING CIRCLIP	1-33, 1-35
2619529-0000	.SLEEVE	1-33, 1-35
2619530-0000	.SLEEVE	1-33, 1-35
2619531-0000	.SHAFT	1-33, 1-35
2619574-0000	.SPACER	1-13, 1-15
2619584-0100	.STRUT	1-31
2619591-0000	.SLIDER	1-37, 1-39
2619596-0000	.HANDLE	1-33, 1-35
2619597-0100	.FLAP GUIDE	1-31
2619598-0100	.FLAP GUIDE	1-31
2619727-0000	.GUIDE	1-135, 1-137

Part No	Description	Page No
2619728-0000	.GUIDE	1-135, 1-137
2624544-0000	.PIVOT PIN	1-577, 1-579, 1-581, 1-583
2629344-0000	.SPACER	1-53, 1-55, 1-57
2634504-0300	.BOX2 - SUPERSTRUCTURE	1-5
2634505-0300	.BOX3 - JAW SYSTEM	1-5
2634506-0300	.BOX4 - FINAL FOLDER	1-5
2634509-0300	.VOLUME KIT	1-7
2634511-0300	.MECHANICAL DIFFERENCES	1-9
2634926-0000	.SUPPORT ROLLER	1-367, 1-369
2634932-0000	.BRACKET	1-391, 1-393
2634933-0000	.BRACKET	1-391, 1-393
2634934-0000	.SHAFT	1-391, 1-393
2634968-0000	.ROLLER	1-367, 1-369
2634969-0000	.ROLLER	1-367, 1-369
2634970-0000	.ROLLER	1-367, 1-369
2634972-0000	.SHAFT	1-289, 1-291, 1-293
2635167-0000	.VOLUME BULGE	1-117, 1-119
2635555-0000	.OPENING SPECIFICATION	1-205
2638077-0000	.SHAFT	1-289, 1-291, 1-293
2638180-0000	.INSERT	1-97, 1-99, 1-101, 1-103
2640075-0000	.VOLUME BULGE	1-117, 1-119
2640993-0000	.PLATE	1-399, 1-401, 1-403
2641271-0000	.SEAL	1-379, 1-381, 1-385, 1-387
2644368-0000	.BRACKET	1-43, 1-45, 1-47
2647084-0000	.BAR	1-135, 1-137
2647085-0000	.BAR	1-135, 1-137
2647088-0000	.BAR	1-135, 1-137
2647089-0000	.BAR	1-135, 1-137
2647090-0000	.SLIDE	1-135, 1-137
2647091-0000	.SLIDE	1-135, 1-137
2647092-0000	.ANGLE BLOCK	1-135, 1-137
2647093-0000	.PUSHER	1-121
2647094-0000	.PUSHER	1-121
2647095-0000	.PUSHER	1-121
2647096-0000	.PUSHER	1-121
2647097-0000	.NAIL	1-121
2647098-0000	.BLOCK	1-121
2647099-0000	.GUIDE	1-109, 1-111, 1-113
2647101-0000	.SUPPORT	1-109, 1-111, 1-113
2647103-0000	.SHAFT	1-31
2647104-0000	.LEVER	1-37, 1-39
2647105-0000	.AXLE PIN	1-37, 1-39
2647106-0000	.SLIDER	1-39
2647107-0000	.SLIDER	1-37
2647108-0000	.STRUT	1-33, 1-35
2647109-0000	.SHAFT	1-33, 1-35
2647111-0000	.SUPPORT	1-59, 1-61, 1-63, 1-65
2647112-0000	.GUIDE	1-59, 1-61, 1-63, 1-65
2647113-0000	.BUSHING	1-121
2647126-0000	.BRACKET	1-43, 1-45, 1-47
2647127-0000	.FOLDING PART	1-43, 1-45, 1-47
2647128-0000	.FOLDING PART	1-43, 1-45, 1-47
2647129-0000	.FOLDING PART	1-43, 1-45, 1-47
2647130-0000	.FOLDING PART	1-43, 1-45, 1-47
2647131-0000	.GUIDE	1-49, 1-51
2648819-0000	.SEALING PLATE	1-181
2649660-0000	.SHAFT	1-511, 1-513, 1-515, 1-517, 1-519, 1-539, 1-541, 1-543, 1-545, 1-547, 1-553, 1-555, 1-557, 1-559, 1-561, 1-565, 1-567, 1-569, 1-571, 1-573
2649677-0000	.DAMPER	1-511, 1-513, 1-515, 1-517, 1-539, 1-541, 1-543, 1-545, 1-553, 1-555, 1-557, 1-559, 1-565, 1-567, 1-569, 1-571
2651295-0000	.TEMPLATE	1-203
2651573-0000	.TEMPLATE	1-203
2651695-0000	.COVER PLATE	1-391, 1-393
2651789-0000	.ROLLER	1-395, 1-397
2651790-0000	.ROLLER	1-395, 1-397
2656899-0000	.BRACKET	1-421, 1-423, 1-425
2657828-0000	.PUNCH	1-173
2657829-0000	.DIE	1-173
2657873-0200	.LONGITUDINAL SEALING	1-279
2657923-0000	.COUNTER ROLLER	1-301, 1-303
2657925-0000	.ROLLER	1-317
2658045-0000	.OPENING SPECIFICATION	1-205
2658046-0000	.OPENING SPECIFICATION	1-205
2658047-0000	.OPENING SPECIFICATION	1-205
2658048-0000	.OPENING SPECIFICATION	1-205
2658078-0000	.SEALING PLATE	1-179
2658238-0000	.FLAP	1-105
2658239-0000	.BOTTOM	1-87, 1-89, 1-91, 1-93, 1-95
2658240-0000	.BOTTOM	1-87, 1-89, 1-91, 1-93, 1-95
2658241-0000	.SLIDE	1-83, 1-85, 1-105
2658242-0000	.FLAP	1-83, 1-85
2658247-0000	.WASHER	1-121
2658249-0000	.SHIM	1-109, 1-111, 1-113, 1-213
2659361-0000	.BRACKET	1-317

Part No	Description	Page No
2659364-0000	.FORK	1-289, 1-291, 1-293
2660289-0000	.VOLUME FLAP	1-521, 1-549
2660290-0000	.FOLDING FLAP	1-463, 1-465, 1-487, 1-489
2660291-0000	.FOLDING FLAP	1-463, 1-465, 1-487, 1-489
2660292-0000	.VOLUME BULGE	1-521, 1-549
2660293-0000	.VOLUME SHIM	1-521, 1-549, 1-591, 1-593
2660295-0000	.ROLLER	1-519, 1-521, 1-547, 1-549, 1-561, 1-573
2660296-0000	.BUSHING	1-519, 1-521, 1-547, 1-549, 1-561, 1-573
2660308-0000	.FLAP	1-549
2660309-0000	.FLAP	1-549
2660841-0000	.PUSHER	1-109, 1-111, 1-113
2660843-0000	.TEMPLATE	1-331
2661153-0000	.SPACER	1-13, 1-15
2661429-0000	.PUSHER	1-109, 1-111, 1-113
2662142-0000	.SPRING	1-109, 1-111, 1-113
2662639-0000	.ROLLER	1-595, 1-597
2663370-0000	.SUPPORT	1-31
2663373-0000	.BOTTOM	1-87, 1-89, 1-91, 1-93, 1-95
2663377-0000	.INDUCTOR	1-473, 1-475, 1-591, 1-593
2663378-0000	.INDUCTOR	1-435, 1-437, 1-591, 1-593
2664765-0000	.TEMPLATE	1-203
2664766-0000	.TEMPLATE	1-203
2665197-0000	.BRACKET	1-149
2665199-0000	.SLIDE	1-149
2665200-0000	.GUIDE	1-17, 1-19
2665201-0000	.GUIDE	1-17, 1-19
2665204-0000	.CRADLE	1-157, 1-159
2665205-0000	.PLATE	1-11
2665206-0000	.PLATE	1-11
2672797-0000	.TEMPLATE	1-203
2672798-0000	.TEMPLATE	1-203
2672799-0000	.TEMPLATE	1-203
2672800-0000	.TEMPLATE	1-203
2672970-0000	.ROLLER	1-367, 1-369
2672978-0000	.ROLLER	1-349, 1-351, 1-353
2672979-0000	.ROLLER	1-349, 1-351, 1-353
2672980-0000	.ROLLER	1-349, 1-351, 1-353
2672981-0000	.ROLLER	1-349, 1-351, 1-353
2672984-0000	.INDUCTOR	1-399, 1-401, 1-403
2672985-0000	.ROLLER	1-367, 1-369
2672986-0000	.ROLLER	1-367, 1-369
2672994-0000	.HOOD	1-289, 1-291, 1-293
2672995-0000	.BRACKET	1-289, 1-291, 1-293
2673015-0000	.FORK	1-289, 1-291, 1-293
2673021-0000	.SHAFT	1-289, 1-291, 1-293
2673023-0000	.LOWER FORMING RING	1-301, 1-303
2675322-0000	.SLIDE	1-135, 1-137
2675323-0000	.SLIDE	1-135, 1-137
2677383-0000	.ROLLER	1-585, 1-587
2678708-0000	.SUPPORT	1-149
2680195-0000	.ROLLER	1-349, 1-351, 1-353
2680196-0000	.ROLLER	1-349, 1-351, 1-353
2682172-0000	.FLAP	1-521
2682173-0000	.FLAP	1-521
2682174-0000	.WASHER	1-521, 1-549
2682187-0000	.VOLUME FLAP	1-521, 1-549
2682188-0000	.FLAP	1-549
2682189-0000	.FLAP	1-549
2682190-0000	.FLAP	1-521
2682191-0000	.FLAP	1-521
2685390-0300	.BENDING ROLLER	1-611
2686861-0000	.ROLLER	1-301, 1-303
2688917-0000	.ROLLER	1-585, 1-587
2691317-0000	.PLATE	1-169
2691318-0000	.PLATE	1-169
2691320-0000	.HOUSING	1-169
2691321-0000	.SUPPORT	1-169
2691322-0000	.PLATE	1-169
2691323-0000	.PLATE	1-169
2691695-0300	.BOX5 - SUPERSTRUCTURE	1-5
2693197-0000	.INSERT	1-75, 1-77, 1-79, 1-81, 1-97, 1-99, 1-101, 1-103
2693200-0000	.SCREW	1-73
2694025-0000	.SEALING PLATE	1-179
2694095-0000	.BRACKET	1-415, 1-417, 1-419
2694714-0000	.GUIDE	1-399, 1-401, 1-403
2694716-0000	.PLATE	1-399, 1-401, 1-403
2696411-0000	.SPACER	1-349, 1-351, 1-353
2696412-0000	.SPACER	1-349, 1-351, 1-353
2698300-0000	.PLATE	1-109, 1-111, 1-113
2698319-0000	.BLOCK	1-121
2698625-0000	.SHAFT	1-585, 1-587
2698631-0000	.VOLUME BULGE	1-435, 1-437, 1-455, 1-457, 1-459, 1-473, 1-475
2698638-0200	.VOLUME FLAP CUTTING	1-493, 1-551
2698639-0200	.VOLUME FLAP PRESSURE	1-523, 1-563

Part No	Description	Page No
2699436-0000	.SPACER	1-275
2699437-0000	.RAIL HOLDER	1-275
2700151-0000	.LID	1-433
2700546-0000	.FRONT RING	1-301, 1-303
2701881-0000	.BRACKET	1-345
2709302-0000	.ROLLER	1-367, 1-369
2709785-0000	.ROLLER	1-301, 1-303
2710800-0100	.PATCH MAGAZINE	1-163, 1-165, 1-167
2715295-0000	.BRACKET	1-415, 1-417, 1-419
2715298-0000	.BRACKET	1-421, 1-423, 1-425
2715299-0000	.BRACKET	1-421, 1-423, 1-425
2715567-0000	.BRACKET	1-317
2715569-0000	.BRACKET	1-289, 1-291, 1-293
2715570-0000	.ROLLER	1-317
2715649-0003	.SPACER	1-317
2715649-0004	.SPACER	1-317
2715649-0005	.SPACER	1-317
2715649-0008	.SPACER	1-317
2715650-0002	.SCREW	1-317
2715650-0003	.SCREW	1-317
2715650-0006	.SCREW	1-317
2715650-0009	.SCREW	1-317
2715652-0000	.FORK	1-289, 1-291, 1-293
2716534-0000	.PUSHER	1-109, 1-111, 1-113
2718901-0000	.SEAL	1-379, 1-381, 1-385, 1-387
2719081-0000	.BRACKET	1-415, 1-417, 1-419
2720717-0000	.ROLLER	1-349, 1-351, 1-353
2724929-0000	.KNOB	1-413, 1-415, 1-417, 1-419
2725145-0000	.DIAPHRAGM	1-321
2725526-0000	.SCREW	1-399, 1-401, 1-403
2731210-0000	.SLEEVE	1-343
2731212-0000	.RING	1-343
2731217-0200	.PAPER REEL HOLDER	1-279
2731428-0000	.NUT	1-301, 1-303, 1-349, 1-351, 1-353
2731503-0000	.LOWER FORMING RING	1-301, 1-303
2731506-0000	.LOWER FORMING RING	1-301, 1-303
2733999-0000	.HUB	1-73
2736631-0000	.UPPER FORMING RING	1-349, 1-351, 1-353
2736632-0000	.UPPER FORMING RING	1-349, 1-351, 1-353
2736633-0000	.UPPER FORMING RING	1-349, 1-351, 1-353
2736676-0000	.UPPER FORMING RING	1-349, 1-351, 1-353
2736677-0000	.UPPER FORMING RING	1-349, 1-351, 1-353
2736697-0000	.UPPER FORMING RING	1-349, 1-351, 1-353
2736705-0000	.LOWER FORMING RING	1-301, 1-303
2736719-0000	.PLATE	1-333
2737773-0000	.PLUNGER	1-453
2746756-0200	.WHEEL	1-223
2746765-0200	.WHEEL	1-223
2751788-0000	.CRADLE	1-157, 1-159
2758728-0000	.HANDLE	1-337
2758729-0000	.CLAMPING LINK	1-337
2758730-0000	.HUB	1-337
2758731-0000	.ADJUSTING SCREW	1-337
2758732-0000	.AIR NOZZLE	1-339, 1-341
2758733-0001	.AIR PIPE	1-339, 1-341
2758733-0002	.AIR PIPE	1-339, 1-341
2758733-0003	.AIR PIPE	1-339, 1-341
2758734-0000	.HUB	1-337
2758737-0000	.SEAL	1-339, 1-341
2758738-0001	.SCREW	1-339, 1-341
2758738-0002	.SCREW	1-339, 1-341
2758738-0003	.SCREW	1-339, 1-341
2758739-0000	.PLUG	1-337
2758740-0001	.SPACER	1-339, 1-341
2758740-0002	.SPACER	1-339, 1-341
2759019-0000	.PLATE	1-455, 1-457, 1-459
2760089-0000	.STOP	1-211
2760120-0000	.PLATE	1-211
2760121-0000	.BAR	1-211
2760126-0000	.SPACER	1-211
2761950-0000	.CRADLE	1-255
2761951-0000	.CRADLE	1-255
2763959-0000	.SHAFT	1-337
2763963-0000	.SLEEVE	1-337
2763999-0200	.BENDING ROLLER	1-595, 1-597
2764007-0000	.SPACER	1-337
2764009-0000	.BRACKET	1-317
2764013-0000	.UPPER FORMING RING	1-349, 1-351, 1-353
2764014-0000	.UPPER FORMING RING	1-349, 1-351, 1-353
2764015-0000	.UPPER FORMING RING	1-349, 1-351, 1-353
2764017-0000	.UPPER FORMING RING	1-349, 1-351, 1-353
2764019-0000	.UPPER FORMING RING	1-349, 1-351, 1-353
2764021-0000	.UPPER FORMING RING	1-349, 1-351, 1-353
2764022-0000	.UPPER FORMING RING	1-349, 1-351, 1-353

Part No	Description	Page No
2764023-0000	.LOWER FORMING RING	1-301, 1-303
2764025-0000	.LOWER FORMING RING	1-301, 1-303
2764026-0000	.LOWER FORMING RING	1-301, 1-303
2764027-0000	.LOWER FORMING RING	1-301, 1-303
2764029-0000	.LOWER FORMING RING	1-301, 1-303
2764031-0000	.LOWER FORMING RING	1-301, 1-303
2764032-0000	.SHAFT	1-301, 1-303
2764033-0000	.SHAFT	1-301, 1-303
2764034-0000	.SHAFT	1-349, 1-351, 1-353
2764035-0000	.SHAFT	1-349, 1-351, 1-353
2764036-0000	.KNOB	1-301, 1-303, 1-349, 1-351, 1-353
2764324-0000	.HOLD-DOWN	1-237
2767295-0000	.BLOCK	1-31
2767296-0000	.SPACER SCREW	1-31
2769842-0200	.PULL-DOWN DEVICE	1-9
2769843-0000	.BLOCK	1-23, 1-25
2769844-0000	.GRUB SCREW	1-23, 1-25
2772645-0100	.PISTON	1-449, 1-485
2772646-0000	.PLUNGER	1-451
2772647-0000	.SLEEVE	1-451
2772648-0000	.COVER	1-451
2773510-0000	.SHAFT	1-511, 1-513, 1-515, 1-517, 1-539, 1-541, 1-543, 1-545, 1-553, 1-555, 1-557, 1-559, 1-565, 1-567, 1-569, 1-571
2773832-0000	.GASKET	1-213
2774372-0000	.TEMPLATE	1-331
2774465-0000	.SCREW BUSHING	1-73
2774466-0000	.SCREW HOLDER	1-73
2774798-0000	.KNIFE	1-491, 1-591, 1-593
2774799-0000	.BLOCK	1-491, 1-591, 1-593
2774802-0000	.COVER	1-443, 1-445, 1-481, 1-483
2774803-0000	.SEAT	1-443, 1-445, 1-481, 1-483
2774936-0000	.PUSHER	1-139
2774938-0000	.GUIDE	1-271, 1-273
2778960-0000	.BUSHING	1-495, 1-497, 1-499, 1-501, 1-525, 1-527, 1-529, 1-531
2779738-0000	.GUIDE	1-17, 1-19
2779739-0000	.GUIDE	1-17, 1-19
2780314-0000	.PAPER GUIDE	1-171
2780751-0000	.ECCENTRIC	1-577, 1-579, 1-581, 1-583
2780752-0000	.ECCENTRIC	1-577, 1-579, 1-581, 1-583
2780753-0000	.PIVOT PIN	1-577, 1-579, 1-581, 1-583
2783088-0400	.STERILE AIR PIPE	1-335
2783102-0100	.PLATE	1-595, 1-597
2784290-0000	.PLATE	1-455, 1-457, 1-459
2786059-0000	.VOLUME BULGE	1-495, 1-497, 1-499, 1-501, 1-525, 1-527, 1-529, 1-531
2787568-0000	.HOOD	1-289, 1-291, 1-293
2788639-0000	.BOX FRAME	1-613
2788640-0000	.WINDOW FRAME	1-615
2788641-0000	.WINDOW FRAME	1-617
2789231-0000	.GUIDE	1-251, 1-253
2790818-0000	.VOLUME SHIM	1-495, 1-497, 1-499, 1-501, 1-525, 1-527, 1-529, 1-531, 1-591, 1-593
2790925-0000	.SLEEVE	1-343
2793317-0000	.PLUG	1-337
2793318-0000	.SLIDE	1-337
2793320-0300	.TEMPLATE	1-321
2793351-0000	.UPPER FORMING RING	1-349, 1-351, 1-353
2795078-0000	.VOLUME BULGE	1-495, 1-497, 1-499, 1-501, 1-525, 1-527, 1-529, 1-531
2795079-0000	.VOLUME SHIM	1-495, 1-497, 1-499, 1-501, 1-525, 1-527, 1-529, 1-531, 1-591, 1-593
2795264-0000	.BOTTOM	1-87, 1-89, 1-91, 1-93, 1-95
2797439-0000	.FASTENING PLATE	1-415, 1-417, 1-419, 1-421, 1-423, 1-425
2798288-0000	.VOLUME BULGE	1-267
2798289-0000	.VOLUME BULGE	1-265
2798294-0000	.WHEEL	1-233, 1-239
2798295-0000	.ARM	1-233, 1-239
2798296-0000	.FLAP	1-237, 1-245
2798298-0000	.BOTTOM	1-243
2798299-0000	.BOTTOM	1-241
2798304-0000	.BOTTOM	1-235
2798473-0000	.SCREW	1-455, 1-457, 1-459
2802612-0000	.BOTTOM	1-87, 1-89, 1-91, 1-93, 1-95
2803174-0000	.TIE ROD	1-443, 1-445, 1-481, 1-483
2803986-0000	.STOP PIN	1-289, 1-291, 1-293
2803987-0000	.STOP PIN	1-289, 1-291, 1-293
2805164-0000	.SHAFT	1-251, 1-253
2805167-0000	.WASHER	1-251, 1-253
2805169-0000	.SHAFT	1-251, 1-253
2805170-0000	.PLATE	1-251
2805171-0000	.VOLUME BULGE	1-251
2805172-0000	.VOLUME BULGE	1-251
2805188-0000	.LEVER	1-251, 1-253
2805193-0000	.BUSHING	1-233, 1-239
2805210-0000	.SHAFT	1-251, 1-253
2806345-0000	.GUIDE	1-67, 1-69
2806346-0000	.GUIDE	1-67, 1-69
2807149-0000	.SPACER	1-251, 1-253

Part No	Description	Page No
2807152-0000	.SPACER	1-247, 1-249
2807185-0000	.SPRING	1-251, 1-253
2808800-0100	.VOLUME FLAP CUTTING	1-493, 1-551
2808802-0000	.VOLUME FLAP	1-495, 1-497, 1-499, 1-501, 1-525, 1-527, 1-529, 1-531
2808803-0000	.SIDE PLATE	1-495, 1-497, 1-499, 1-501
2808804-0000	.SIDE PLATE	1-495, 1-497, 1-499, 1-501
2809061-0001	.ARM	1-495, 1-497, 1-499, 1-501, 1-525, 1-527, 1-529, 1-531
2809061-0002	.ARM	1-495, 1-497, 1-499, 1-501, 1-525, 1-527, 1-529, 1-531
2809061-0006	.ARM	1-495, 1-497, 1-499, 1-501, 1-525, 1-527, 1-529, 1-531
2809061-0010	.ARM	1-495, 1-497, 1-499, 1-501, 1-525, 1-527, 1-529, 1-531
2809061-0011	.ARM	1-495, 1-497, 1-499, 1-501, 1-525, 1-527, 1-529, 1-531
2809846-0000	.STOP PIN	1-289, 1-291, 1-293
2809847-0000	.STOP PIN	1-289, 1-291, 1-293
2809849-0000	.STOP PIN	1-289, 1-291, 1-293
2810637-0100	.VOLUME FLAP PRESSURE	1-523, 1-563
2810640-0100	.SUPPORT FLAP CUTTING	1-411, 1-623, 1-625
2810641-0100	.SUPPORT FLAP PRESSURE	1-411, 1-623, 1-625
2810642-0000	.SIDE PLATE	1-525, 1-527, 1-529, 1-531
2810643-0000	.SIDE PLATE	1-525, 1-527, 1-529, 1-531
2812896-0100	.SUPPORT ROLLER	1-575
2812897-0000	.PLATE	1-585, 1-587
2812899-0000	.CAM	1-585, 1-587
2813723-0000	.BEARING HOUSING	1-455, 1-457, 1-459
2813724-0000	.PLATE	1-455, 1-457, 1-459
2813725-0000	.CUTTING JAW	1-455, 1-457, 1-459
2813728-0000	.FOLDING FLAP	1-463, 1-465, 1-487, 1-489
2813729-0000	.FOLDING FLAP	1-463, 1-465, 1-487, 1-489
2813730-0000	.LID	1-433
2813731-0000	.BEARING HOUSING	1-433
2814896-0000	.VOLUME FLAP	1-495, 1-497, 1-499, 1-501, 1-525, 1-527, 1-529, 1-531
2814897-0000	.SIDE PLATE	1-495, 1-497, 1-499, 1-501
2814898-0000	.SIDE PLATE	1-495, 1-497, 1-499, 1-501
2814899-0000	.SIDE PLATE	1-525, 1-527, 1-529, 1-531
2814900-0000	.SIDE PLATE	1-525, 1-527, 1-529, 1-531
2815964-0000	.RAIL	1-435, 1-437
2815967-0000	.BUSHING	1-455, 1-457, 1-459
2816115-0100	.TOP RAIL	1-41
2818326-0000	.RAIL	1-171
2818555-0000	.BOTTOM	1-87, 1-89, 1-91, 1-93, 1-95
2818556-0000	.BLOCK	1-23, 1-25
2821398-0000	.WASHER	1-385, 1-387
2826390-0000	.SPRING	1-289, 1-291, 1-293
2826398-0000	.SPRING	1-289, 1-291, 1-293
2826399-0000	.SPRING	1-289, 1-291, 1-293
2826410-0000	.ROLLER	1-317
2826440-0000	.SEAL RING	1-325
2826441-0000	.SEAL RING	1-325
2826443-0000	.DIAPHRAGM	1-325
2826478-0000	.UPPER FILLING PIPE	1-289, 1-291, 1-293
2826678-0000	.SUPPORT	1-251, 1-253
2826710-0200	.FORMING PLATE	1-223, 1-623, 1-625
2826713-0000	.SUPPORT	1-251
2826714-0000	.SUPPORT	1-251
2826717-0000	.LEVER	1-251, 1-253
2826718-0000	.LEVER	1-251, 1-253
2826720-0300	.FORMING PLATE	1-223, 1-623, 1-625
2829385-0000	.PLATE	1-211
2830430-0000	.BUSBAR	1-435, 1-437
2831048-0000	.BUSBAR	1-473, 1-475
2832076-0000	.RAIL	1-473, 1-475
2832241-0200	.PRESSURE JAW LEFT	1-411
2832242-0200	.PRESSURE JAW RIGHT	1-411
2832243-0100	.PRESSURE JAW	1-431, 1-471
2832244-0200	.INDUCTOR LEFT	1-431
2832245-0200	.INDUCTOR RIGHT	1-471
2832553-0000	.UPPER FILLING PIPE	1-289, 1-291, 1-293
2832555-0000	.FILLING PIPE	1-289, 1-291, 1-293
2832818-0200	.CUTTING JAW LEFT	1-411
2832819-0200	.CUTTING JAW RIGHT	1-411
2832867-0000	.ROLLER	1-287
2832935-0100	.CUTTING JAW	1-449, 1-485
2832936-0100	.FOLDING FLAP LEFT	1-449
2832937-0100	.FOLDING FLAP RIGHT	1-485
2833088-0000	.ROLLER	1-349, 1-351, 1-353
2833177-0000	.GASKET	1-615, 1-617
2833178-0000	.GLASS PANE	1-615, 1-617
2833212-0000	.ROLLER	1-349, 1-351, 1-353
2833215-0000	.ROLLER	1-301, 1-303
2833952-0000	.SCREW	1-463, 1-465, 1-487, 1-489
2835893-0000	.PIN	1-577, 1-579, 1-581, 1-583
2835894-0000	.PIN	1-577, 1-579, 1-581, 1-583
2835895-0001	.SPACER	1-577, 1-579, 1-581, 1-583
2835895-0002	.SPACER	1-577, 1-579, 1-581, 1-583
2835896-0001	.RAIL BRACKET	1-577, 1-579, 1-581, 1-583

Part No	Description	Page No
2835896-0002	.RAIL BRACKET	1-577, 1-579, 1-581, 1-583
2835896-0003	.RAIL BRACKET	1-577, 1-579, 1-581, 1-583
2835896-0004	.RAIL BRACKET	1-577, 1-579, 1-581, 1-583
2835897-0100	.CURVE UNIT	1-575
2836238-0000	.INSULATION NUT	1-435, 1-437, 1-473, 1-475, 1-591, 1-593
2836239-0000	.WASHER	1-435, 1-437, 1-473, 1-475, 1-591, 1-593
2836242-0000	.SUPPORT	1-253
2836243-0000	.SUPPORT	1-253
2836244-0000	.PLATE	1-253
2836247-0000	.TOOL	1-253
2836248-0000	.TOOL	1-253
2836249-0000	.TOOL	1-247
2836250-0000	.TOOL	1-249
2837095-0000	.SHAFT	1-585, 1-587
2837096-0000	.WASHER	1-585, 1-587
2837097-0000	.CAM	1-585, 1-587
2837108-0000	.CAM	1-585, 1-587
2837533-0100	.PATCH C'JAW	1-163, 1-165, 1-167
2838217-0200	.FORMING PLATE	1-223, 1-623, 1-625
2838218-0300	.FORMING PLATE	1-223, 1-623, 1-625
2842772-0100	.SHOCK ABSORBER CUTTING	1-493
2842776-0000	.PIN	1-495, 1-497, 1-499, 1-501, 1-511, 1-513, 1-515, 1-517, 1-525, 1-527, 1-529, 1-531, 1-539, 1-541, 1-543, 1-545, 1-553, 1-555, 1-557, 1-559, 1-565, 1-567, 1-569, 1-571
2842777-0001	.DAMPER	1-511, 1-513, 1-515, 1-517, 1-539, 1-541, 1-543, 1-545, 1-553, 1-555, 1-557, 1-559, 1-565, 1-567, 1-569, 1-571
2842777-0004	.DAMPER	1-511, 1-513, 1-515, 1-517, 1-539, 1-541, 1-543, 1-545, 1-553, 1-555, 1-557, 1-559, 1-565, 1-567, 1-569, 1-571
2842777-0005	.DAMPER	1-511, 1-513, 1-515, 1-517, 1-539, 1-541, 1-543, 1-545, 1-553, 1-555, 1-557, 1-559, 1-565, 1-567, 1-569, 1-571
2842778-0000	.DAMPER	1-495, 1-497, 1-499, 1-501, 1-525, 1-527, 1-529, 1-531
2842779-0000	.SPACER	1-495, 1-497, 1-499, 1-501, 1-525, 1-527, 1-529, 1-531
2842780-0000	.BUSHING	1-511, 1-513, 1-515, 1-517, 1-539, 1-541, 1-543, 1-545, 1-553, 1-555, 1-557, 1-559, 1-565, 1-567, 1-569, 1-571
2842781-0000	.SPRING	1-511, 1-513, 1-515, 1-517, 1-539, 1-541, 1-543, 1-545, 1-553, 1-555, 1-557, 1-559, 1-565, 1-567, 1-569, 1-571
2842782-0000	.SPRING	1-511, 1-513, 1-515, 1-517, 1-539, 1-541, 1-543, 1-545, 1-553, 1-555, 1-557, 1-559, 1-565, 1-567, 1-569, 1-571
2842862-0100	.SHOCK ABSORBER PRESSURE	1-523
2842877-0000	.REGISTER	1-169
2843780-0000	.PLATE	1-463, 1-465, 1-487, 1-489
2844575-0000	.BAR	1-23, 1-25
2844888-0000	.PULLER CAM	1-577, 1-579, 1-581, 1-583
2844889-0000	.PULLER CAM	1-577, 1-579, 1-581, 1-583
2845139-0000	.COMPRESSION SPRING	1-447
2845142-0000	.STOP	1-447
2846308-0000	.FORK	1-289, 1-291, 1-293
2846309-0000	.BRACKET	1-289, 1-291, 1-293
2846311-0000	.FORK	1-289, 1-291, 1-293
2846667-0000	.DAMPER	1-495, 1-497, 1-499, 1-501, 1-525, 1-527, 1-529, 1-531
2847228-0000	.BEARING HOUSING	1-455, 1-457, 1-459
2847229-0000	.CUTTING JAW	1-455, 1-457, 1-459
2847230-0000	.FOLDING FLAP	1-463, 1-465, 1-487, 1-489
2847231-0000	.FOLDING FLAP	1-463, 1-465, 1-487, 1-489
2848492-0000	.GUIDE	1-135, 1-137
2848493-0000	.GUIDE	1-135, 1-137
2850481-0000	.SPACER	1-147, 1-149
2851346-0000	.PLATE	1-109, 1-111, 1-113
2851347-0000	.HOLDER	1-155
2851385-0000	.PLUNGER	1-343
2851583-0000	.ROLLER	1-349, 1-351, 1-353
2851586-0000	.ROLLER	1-349, 1-351, 1-353
2851929-0000	.STRUT	1-33, 1-35
2852228-0000	.ECCENTRIC SHAFT	1-147, 1-149
2852461-0000	.SPACER	1-211
2852462-0000	.SPACER	1-107
2852463-0000	.SPACER	1-67, 1-69
2852465-0000	.BRACKET	1-211
2852472-0000	.SPACER	1-53, 1-55, 1-57
2852473-0000	.SPACER	1-67, 1-69
2854056-0000	.BRACKET	1-577, 1-579, 1-581, 1-583
2854078-0100	.PISTON	1-443, 1-445, 1-481, 1-483
2855528-0100	.VOLUME CURVE PIECE	1-411
2855843-0000	.NOZZLE	1-107
2855844-0000	.NOZZLE	1-107
2855845-0000	.NOZZLE	1-107
2855846-0000	.NOZZLE	1-107
2857893-0200	.PRESSURE DEVICE	1-9
2858421-0000	.BAR	1-23, 1-25
2860036-0000	.VOLUME FLAP	1-495, 1-497, 1-499, 1-501, 1-525, 1-527, 1-529, 1-531
2860037-0000	.VOLUME BULGE	1-495, 1-497, 1-499, 1-501, 1-525, 1-527, 1-529, 1-531
2860038-0000	.VOLUME SHIM	1-495, 1-497, 1-499, 1-501, 1-525, 1-527, 1-529, 1-531, 1-591, 1-593
2860106-0000	.SLIDE	1-135, 1-137
2860107-0000	.SLIDE	1-135, 1-137
2861123-0200	.DISTRIBUTOR	1-109, 1-111, 1-113

Part No	Description	Page No
2861926-0100	.TOP SECTION	1-41
2861978-0000	.ADJUSTING PLATE	1-59, 1-61, 1-63, 1-65
2861981-0000	.ATTACHMENT PLATE	1-59, 1-61, 1-63, 1-65
2862308-0000	.DAMPER	1-519, 1-547, 1-561, 1-573
2862626-0000	.FLANGE	1-21
2862627-0000	.BEARING HOUSING	1-21
2862743-0000	.INSULATING PLATE	1-399, 1-401, 1-403
2862744-0000	.INSULATING PLATE	1-399, 1-401, 1-403
2862745-0000	.INSULATING PLATE	1-399, 1-401, 1-403
2862746-0000	.INSULATING PLATE	1-399, 1-401, 1-403
2862748-0000	.INSULATING PLATE	1-399, 1-401, 1-403
2862761-0000	.NOZZLE	1-107
2862762-0000	.NOZZLE	1-107
2863119-0000	.SHAFT	1-511, 1-513, 1-515, 1-517, 1-539, 1-541, 1-543, 1-545, 1-553, 1-555, 1-557, 1-559, 1-565, 1-567, 1-569, 1-571
2863123-0100	.FOLDING PART	1-23, 1-25
2863138-0000	.PLATE	1-21
2863955-0000	.PLATE	1-171
2863962-0200	.FOLDING UNIT	1-169
2864758-0000	.NOZZLE	1-157, 1-159
2866604-0100	.FOLDING PART	1-9
2866605-0100	.FLAP GUIDE	1-41
2866700-0000	.BOTTOM	1-235
2866701-0000	.BOTTOM	1-235
2866703-0000	.BOTTOM	1-241
2866704-0000	.BOTTOM	1-241
2866706-0000	.BOTTOM	1-243
2866707-0000	.BOTTOM	1-243
2866740-0000	.SHAFT	1-519, 1-547, 1-561, 1-573
2866755-0000	.LOWER FILLING PIPE	1-289, 1-291, 1-293
2866896-0000	.SUPPORT	1-67, 1-69
2867470-0000	.AIR GUIDE	1-603, 1-605
2867477-0000	.DEFLECTOR	1-613
2867478-0000	.DEFLECTOR	1-613
2867482-0000	.PLATE	1-607
2867643-0000	.BRACKET	1-577, 1-579, 1-581, 1-583
2868038-0100	.STRIP MAGAZINE	1-163, 1-165, 1-167
2868213-0000	.AXLE LINK	1-27
2868214-0000	.TIE ROD	1-27
2868215-0000	.TIE ROD	1-27
2868216-0000	.BRACKET	1-27
2868844-0000	.AXLE PIN	1-519, 1-521, 1-547, 1-549, 1-561, 1-573
2869148-0000	.TUBE	1-123, 1-125, 1-127, 1-129, 1-131, 1-133
2869149-0000	.TUBE	1-123, 1-125, 1-127, 1-129, 1-131, 1-133
2869538-0000	.FLAP	1-83, 1-85
2871038-0000	.PULLER CAM	1-577, 1-579, 1-581, 1-583
2871039-0000	.PULLER CAM	1-577, 1-579, 1-581, 1-583
2871040-0000	.VOLUME CAM	1-577, 1-579, 1-581, 1-583
2871043-0000	.BOTTOM	1-87, 1-89, 1-91, 1-93, 1-95
2871044-0000	.SLIDE	1-83, 1-85
2871884-0001	.RAIL BRACKET	1-577, 1-579, 1-581, 1-583
2871884-0002	.RAIL BRACKET	1-577, 1-579, 1-581, 1-583
2871884-0003	.RAIL BRACKET	1-577, 1-579, 1-581, 1-583
2871884-0004	.RAIL BRACKET	1-577, 1-579, 1-581, 1-583
2872047-0000	.ARM	1-495, 1-497, 1-499, 1-501, 1-525, 1-527, 1-529, 1-531
2872048-0000	.PIN	1-495, 1-497, 1-499, 1-501, 1-525, 1-527, 1-529, 1-531
2872065-0000	.PIN	1-287
2872091-0000	.PIN	1-495, 1-497, 1-499, 1-501, 1-525, 1-527, 1-529, 1-531
2874249-0000	.VOLUME CAM	1-577, 1-579, 1-581, 1-583
2874250-0000	.VOLUME CAM	1-577, 1-579, 1-581, 1-583
2874715-0000	.STUD SCREW	1-405
2874716-0000	.BODY	1-405
2874717-0000	.KNOB	1-405
2874771-0000	.PLATE	1-603, 1-605
2874772-0000	.PLATE	1-603, 1-605
2874952-0000	.BRACKET	1-421, 1-423, 1-425
2875994-0100	.ADAPTION TRANSFORMER	1-431
2875995-0100	.ADAPTION TRANSFORMER	1-471
2876313-0200	.PHOTOCELL BRACKET	1-411
2876334-0000	.HOLDER	1-43, 1-45, 1-47
2876458-0000	.SPACER	1-155
2876459-0000	.SUPPORT	1-155
2876469-0000	.SPACER	1-107
2876473-0000	.PLATE	1-209
2876664-0000	.COUNTER ROLLER	1-301, 1-303
2878080-0000	.GUIDE	1-257, 1-259
2878100-0000	.SHAFT	1-233, 1-239
2878104-0000	.SHAFT	1-251, 1-253
2878187-0000	.TEMPLATE	1-331
2878205-0000	.SPACER	1-107
2878625-0000	.BRACKET	1-287
2878634-0000	.BRACKET	1-287
2879069-0000	.FOLDING BAR	1-67, 1-69
2879238-0000	.PRESSURE FLANGE	1-289, 1-291, 1-293

Part No	Description	Page No
2879239-0000	.FILLING PIPE	1-289, 1-291, 1-293
2879535-0000	.INDUCTOR	1-435, 1-437, 1-473, 1-475, 1-591, 1-593
2881044-0000	.DAMPER	1-211
2881047-0000	.BUSHING	1-211
2881048-0000	.WASHER	1-211
2881463-0000	.LOCKING DEVICE	1-289, 1-291, 1-293
2883280-0000	.COVER	1-157, 1-159
2884994-0000	.SPACER	1-107
2885029-0000	.ROLLER	1-391, 1-393
2885034-0100	.TUBE FLUSHING	1-575
2885429-0000	.LOWER FILLING PIPE	1-289, 1-291, 1-293
2886173-0000	.LOCKING RING	1-289, 1-291, 1-293
2886417-0000	.DISTRIBUTOR	1-589
2887081-0100	.FLAP GUIDE	1-41
2887735-0000	.FORK	1-289, 1-291, 1-293
2887736-0000	.BRACKET	1-289, 1-291, 1-293
2887770-0000	.CLAMP	1-49, 1-51
2887771-0000	.CLAMP	1-49, 1-51
2887772-0000	.BRACKET	1-49, 1-51
2887773-0000	.BRACKET	1-49, 1-51
2887790-0000	.SHAFT	1-399, 1-401, 1-403
2887887-0100	.FOLDING PART	1-41
2888118-0000	.ROLLER	1-317
2888153-0000	.BRACKET	1-421, 1-423, 1-425
2888970-0438	.TRANSFORMER VMN	1-281
2888970-0524	.TRANSFORMER VMN	1-281
2888970-0619	.TRANSFORMER VMN	1-281
2889461-0000	.ROLLER	1-367, 1-369
2889462-0000	.PLATE	1-367, 1-369
2889463-0000	.LOCK PLATE	1-367, 1-369
2889464-0000	.SHAFT	1-367, 1-369
2889589-0000	.PROTECTION	1-151, 1-153
2889590-0100	.PROTECTIVE COVER	1-143
2894560-0000	.SLIDE PLATE	1-603, 1-605
2894561-0000	.SLIDE PLATE	1-603, 1-605
2894604-0000	.PLATE	1-603, 1-605
2894605-0000	.BOTTOM PLATE	1-603, 1-605
2894606-0000	.AIR GUIDE	1-603, 1-605
2894609-0000	.PLATE	1-607
2895457-0000	.ROLLER	1-349, 1-351, 1-353
2895458-0000	.ROLLER	1-349, 1-351, 1-353
2895459-0000	.ROLLER	1-349, 1-351, 1-353
2895460-0000	.ROLLER	1-349, 1-351, 1-353
2895461-0000	.ROLLER	1-349, 1-351, 1-353
2895462-0000	.ROLLER	1-349, 1-351, 1-353
2895463-0000	.ROLLER	1-349, 1-351, 1-353
2895566-0000	.BLOCK	1-23, 1-25
2895567-0000	.BAR	1-23, 1-25
2895568-0200	.FRAMEWORK	1-9
2895569-0000	.BOTTOM PLATE	1-87, 1-89, 1-91, 1-93, 1-95
2895570-0000	.PLATE	1-21
2896520-0000	.ROLLER	1-367, 1-369
2897150-0000	.INSULATING PLATE	1-399, 1-401, 1-403
2897152-0000	.INDUCTOR	1-399, 1-401, 1-403
2897901-0000	.ROLLER	1-301, 1-303
2898028-0000	.SPACER	1-107
2898029-0000	.NOZZLE	1-107
2898030-0000	.NOZZLE	1-107
2898033-0000	.AIR NOZZLE	1-107
2898034-0000	.AIR NOZZLE	1-107
2898035-0000	.SPACER	1-107
2898309-0000	.ROLLER	1-301, 1-303
2898310-0000	.ROLLER	1-301, 1-303
2898564-0000	.BEARING HOUSING	1-455, 1-457, 1-459
2898565-0000	.CUTTING JAW	1-455, 1-457, 1-459
2898568-0000	.FOLDING FLAP	1-463, 1-465, 1-487, 1-489
2898569-0000	.FOLDING FLAP	1-463, 1-465, 1-487, 1-489
2900397-0000	.PLATE	1-585, 1-587
2900398-0001	.RAIL BRACKET	1-577, 1-579, 1-581, 1-583
2900398-0002	.RAIL BRACKET	1-577, 1-579, 1-581, 1-583
2900398-0003	.RAIL BRACKET	1-577, 1-579, 1-581, 1-583
2900398-0004	.RAIL BRACKET	1-577, 1-579, 1-581, 1-583
2900399-0000	.VOLUME CAM	1-577, 1-579, 1-581, 1-583
2900400-0000	.VOLUME CAM	1-577, 1-579, 1-581, 1-583
2900401-0000	.PULLER CAM	1-577, 1-579, 1-581, 1-583
2900402-0000	.PULLER CAM	1-577, 1-579, 1-581, 1-583
2901065-0000	.BRACKET	1-49, 1-51
2901066-0000	.GUIDE	1-43, 1-45, 1-47
2901067-0000	.GUIDE	1-43, 1-45, 1-47
2901068-0000	.GUIDE	1-43, 1-45, 1-47
2901069-0000	.GUIDE	1-43, 1-45, 1-47
2901228-0000	.ROLLER	1-367, 1-369
2901229-0000	.ROLLER	1-367, 1-369
2901291-0000	.ROLLER	1-367, 1-369

Part No	Description	Page No
2902006-0000	.SHAFT	1-511, 1-513, 1-515, 1-517, 1-539, 1-541, 1-543, 1-545, 1-553, 1-555, 1-557, 1-559, 1-565, 1-567, 1-569, 1-571
2902007-0000	.VOLUME FLAP	1-495, 1-497, 1-499, 1-501, 1-525, 1-527, 1-529, 1-531
2902008-0000	.VOLUME FLAP	1-495, 1-497, 1-499, 1-501, 1-525, 1-527, 1-529, 1-531
2902009-0000	.SIDE PLATE	1-495, 1-497, 1-499, 1-501, 1-525, 1-527, 1-529, 1-531
2902010-0000	.SIDE PLATE	1-495, 1-497, 1-499, 1-501, 1-525, 1-527, 1-529, 1-531
2902011-0000	.BRACKET	1-495, 1-497, 1-499, 1-501, 1-525, 1-527, 1-529, 1-531
2902012-0000	.BRACKET	1-495, 1-497, 1-499, 1-501, 1-525, 1-527, 1-529, 1-531
2902082-0000	.AIR NOZZLE	1-107
2902083-0000	.AIR NOZZLE	1-107
2902378-0100	.TRANSFORMER	1-279
2902379-0100	.PIPE	1-335, 1-337
2902418-0200	.FLAP	1-233
2902419-0200	.BOTTOM	1-233, 1-623, 1-625
2902421-0200	.FLAP	1-239
2902422-0200	.BOTTOM	1-239, 1-623, 1-625
2902423-0200	.BOTTOM	1-239, 1-623, 1-625
2902424-0200	.GUIDE	1-223, 1-623, 1-625
2902438-0000	.GUIDE	1-257, 1-259
2902439-0000	.GUIDE	1-257, 1-259
2902440-0000	.GUIDE	1-257, 1-259
2902441-0000	.GUIDE	1-257, 1-259
2903581-0000	.GUIDE	1-49, 1-51
2903582-0000	.GUIDE	1-43, 1-45, 1-47
2903583-0000	.GUIDE	1-43, 1-45, 1-47
2903584-0000	.GUIDE	1-43, 1-45, 1-47
2903585-0000	.GUIDE	1-43, 1-45, 1-47
2903761-0000	.RAIL	1-435, 1-437
2903762-0000	.RAIL	1-473, 1-475
2905055-0000	.ROLLER	1-349, 1-351, 1-353
2905058-0000	.ROLLER	1-349, 1-351, 1-353
2905061-0000	.ROLLER	1-349, 1-351, 1-353
2905199-0000	.HOLDER	1-495, 1-497, 1-499, 1-501, 1-511, 1-513, 1-515, 1-517, 1-525, 1-527, 1-529, 1-531, 1-539, 1-541, 1-543, 1-545, 1-553, 1-555, 1-557, 1-559, 1-565, 1-567, 1-569, 1-571
2905200-0000	.ARM	1-495, 1-497, 1-499, 1-501, 1-525, 1-527, 1-529, 1-531
2905201-0000	.SPACER SCREW	1-495, 1-497, 1-499, 1-501, 1-525, 1-527, 1-529, 1-531
2906004-0000	.GUIDE	1-49, 1-51
2906006-0000	.RAIL	1-43, 1-45, 1-47
2906007-0000	.RAIL	1-43, 1-45, 1-47
2906008-0000	.GUIDE	1-43, 1-45, 1-47
2906009-0000	.GUIDE	1-43, 1-45, 1-47
2906011-0000	.HOLDER	1-43, 1-45, 1-47
2906166-0000	.NOZZLE	1-107
2906167-0000	.NOZZLE	1-107
2906172-0000	.ARM	1-495, 1-497, 1-499, 1-501, 1-525, 1-527, 1-529, 1-531
2907795-0000	.LID	1-433
2907797-0000	.PIN	1-511, 1-513, 1-515, 1-517, 1-539, 1-541, 1-543, 1-545, 1-553, 1-555, 1-557, 1-559, 1-565, 1-567, 1-569, 1-571
2907798-0000	.SHAFT	1-511, 1-513, 1-515, 1-517, 1-539, 1-541, 1-543, 1-545, 1-553, 1-555, 1-557, 1-559, 1-565, 1-567, 1-569, 1-571
2907800-0000	.SHAFT	1-511, 1-513, 1-515, 1-517, 1-539, 1-541, 1-543, 1-545, 1-553, 1-555, 1-557, 1-559, 1-565, 1-567, 1-569, 1-571
2907804-0000	.SPRING	1-511, 1-513, 1-515, 1-517, 1-539, 1-541, 1-543, 1-545, 1-553, 1-555, 1-557, 1-559, 1-565, 1-567, 1-569, 1-571
2907805-0000	.SPRING	1-511, 1-513, 1-515, 1-517, 1-539, 1-541, 1-543, 1-545, 1-553, 1-555, 1-557, 1-559, 1-565, 1-567, 1-569, 1-571
2907806-0000	.LEVER	1-511, 1-513, 1-515, 1-517, 1-539, 1-541, 1-543, 1-545, 1-553, 1-555, 1-557, 1-559, 1-565, 1-567, 1-569, 1-571
2907807-0000	.SLIDER	1-511, 1-513, 1-515, 1-517, 1-539, 1-541, 1-543, 1-545, 1-553, 1-555, 1-557, 1-559, 1-565, 1-567, 1-569, 1-571
2907808-0000	.BRACKET	1-495, 1-497, 1-499, 1-501, 1-525, 1-527, 1-529, 1-531
2907809-0000	.BRACKET	1-495, 1-497, 1-499, 1-501, 1-525, 1-527, 1-529, 1-531
2907974-0000	.FRAME	1-367, 1-369
2907975-0000	.BRACKET	1-367, 1-369
2908998-0000	.ROLLER	1-349, 1-351, 1-353
2908999-0000	.ROLLER	1-349, 1-351, 1-353
2909000-0000	.ROLLER	1-349, 1-351, 1-353
2909001-0000	.ROLLER	1-349, 1-351, 1-353
2909028-0000	.GUIDE PIN	1-43, 1-45, 1-47
2909029-0000	.GUIDE PIN	1-43, 1-45, 1-47
2909030-0000	.FOLDING BAR	1-43, 1-45, 1-47
2909137-0000	.AXLE PIN	1-509
2909138-0000	.ROLLER	1-509
2909301-0000	.BUSBAR	1-435, 1-437
2909302-0000	.BUSBAR	1-473, 1-475
2909304-0000	.BEARING HOUSING	1-455, 1-457, 1-459
2909305-0000	.CUTTING JAW	1-455, 1-457, 1-459
2909308-0000	.SLEEVE	1-451
2909309-0000	.PLUNGER	1-451
2909310-0000	.COVER	1-451
2909311-0000	.KNIFE	1-491, 1-591, 1-593
2909315-0001	.RAIL BRACKET	1-577, 1-579, 1-581, 1-583
2909315-0002	.RAIL BRACKET	1-577, 1-579, 1-581, 1-583
2909316-0000	.VOLUME CAM	1-577, 1-579, 1-581, 1-583

Part No	Description	Page No
2909317-0000	.ECCENTRIC	1-577, 1-579, 1-581, 1-583
2909318-0000	.ECCENTRIC	1-577, 1-579, 1-581, 1-583
2909367-0000	.PRESSURE ROLLER (PACK 10)	1-289, 1-291, 1-293, 1-321
2909368-0000	.PRESSURE ROLLER (PACK 10)	1-289, 1-291, 1-293, 1-321
2909506-0000	.FOLDING BAR	1-43, 1-45, 1-47
2909791-0000	.SUPPORT	1-367, 1-369
2909850-0000	.SPACER SCREW	1-519, 1-547, 1-561, 1-573
2909851-0000	.VOLUME BULGE	1-521, 1-549
2909852-0000	.SHIM	1-521, 1-549, 1-591, 1-593
2911509-0000	.BAR	1-23, 1-25
2911510-0000	.BLOCK	1-23, 1-25
2911622-0000	.SHAFT	1-511, 1-513, 1-515, 1-517, 1-539, 1-541, 1-543, 1-545, 1-553, 1-555, 1-557, 1-559, 1-565, 1-567, 1-569, 1-571
2911623-0000	.WASHER	1-511, 1-513, 1-515, 1-517, 1-539, 1-541, 1-543, 1-545, 1-553, 1-555, 1-557, 1-559, 1-565, 1-567, 1-569, 1-571
2912006-0000	.KNIFE	1-491, 1-591, 1-593
2912007-0000	.BUSHING	1-455, 1-457, 1-459
2912153-0000	.SPACER	1-107
2912154-0000	.SPACER	1-107
2912157-0000	.AIR NOZZLE	1-107
2912158-0000	.AIR NOZZLE	1-107
2912163-0000	.AIR NOZZLE	1-107
2912164-0000	.AIR NOZZLE	1-107
2912169-0000	.ROLLER	1-367, 1-369
2912354-0000	.PLATE	1-455, 1-457, 1-459
2912355-0000	.BEARING HOUSING	1-455, 1-457, 1-459
2912356-0000	.CUTTING JAW	1-455, 1-457, 1-459
2912359-0000	.FOLDING FLAP	1-463, 1-465, 1-487, 1-489
2912360-0000	.FOLDING FLAP	1-463, 1-465, 1-487, 1-489
2912505-0000	.GUIDE	1-17, 1-19
2912506-0000	.GUIDE	1-17, 1-19
2912507-0000	.GUIDE	1-135, 1-137
2912508-0000	.GUIDE	1-135, 1-137
2912511-0000	.BLOCKING PIECE	1-31
2912633-0000	.PLATE	1-399, 1-401, 1-403
2912699-0100	.LOWER FORMING RING	1-279
2912700-0100	.UPPER FORMING RING	1-279
2912702-0100	.FORMING RING	1-279
2912703-0100	.EDGE ROLLER	1-279
2913594-0000	.CRADLE	1-157, 1-159
2913595-0000	.ATTACHMENT PLATE	1-59, 1-61, 1-63, 1-65
2913596-0000	.GUIDE	1-67, 1-69
2913597-0000	.GUIDE	1-67, 1-69
2913598-0000	.GUIDE	1-67, 1-69
2913599-0000	.GUIDE	1-67, 1-69
2913600-0000	.FOLDING PART	1-43, 1-45, 1-47
2913601-0000	.FOLDING PART	1-43, 1-45, 1-47
2914987-0000	.SPACER	1-207
2916127-0000	.ROLLER	1-367, 1-369
2916128-0000	.ROLLER	1-367, 1-369
2916129-0000	.ROLLER	1-367, 1-369
2916130-0000	.SLIDER	1-511, 1-513, 1-515, 1-517, 1-539, 1-541, 1-543, 1-545, 1-553, 1-555, 1-557, 1-559, 1-565, 1-567, 1-569, 1-571
2916131-0000	.LEVER	1-511, 1-513, 1-515, 1-517, 1-539, 1-541, 1-543, 1-545, 1-553, 1-555, 1-557, 1-559, 1-565, 1-567, 1-569, 1-571
2916132-0000	.BRACKET	1-495, 1-497, 1-499, 1-501, 1-525, 1-527, 1-529, 1-531
2916133-0000	.BRACKET	1-495, 1-497, 1-499, 1-501, 1-525, 1-527, 1-529, 1-531
2916134-0000	.BRACKET	1-495, 1-497, 1-499, 1-501, 1-525, 1-527, 1-529, 1-531
2916135-0000	.BRACKET	1-495, 1-497, 1-499, 1-501, 1-525, 1-527, 1-529, 1-531
2916867-0000	.SUPPORT RING	1-367, 1-369
2916971-0000	.SHAFT	1-511, 1-513, 1-515, 1-517, 1-539, 1-541, 1-543, 1-545, 1-553, 1-555, 1-557, 1-559, 1-565, 1-567, 1-569, 1-571
2916977-0000	.PLATE	1-585, 1-587
2916978-0001	.RAIL BRACKET	1-577, 1-579, 1-581, 1-583
2916978-0002	.RAIL BRACKET	1-577, 1-579, 1-581, 1-583
2916978-0003	.RAIL BRACKET	1-577, 1-579, 1-581, 1-583
2916978-0004	.RAIL BRACKET	1-577, 1-579, 1-581, 1-583
2916979-0000	.VOLUME CAM	1-577, 1-579, 1-581, 1-583
2916980-0000	.VOLUME CAM	1-577, 1-579, 1-581, 1-583
2916981-0000	.PULLER CAM	1-577, 1-579, 1-581, 1-583
2916982-0000	.PULLER CAM	1-577, 1-579, 1-581, 1-583
2916983-0000	.CAM	1-585, 1-587
2916984-0000	.BUSHING	1-511, 1-513, 1-515, 1-517, 1-539, 1-541, 1-543, 1-545, 1-553, 1-555, 1-557, 1-559, 1-565, 1-567, 1-569, 1-571
2917307-0000	.BUSHING	1-495, 1-497, 1-499, 1-501, 1-525, 1-527, 1-529, 1-531
2917413-0000	.FRAME	1-519, 1-547, 1-561, 1-573
2917418-0000	.PIN	1-519, 1-547, 1-561, 1-573
2917419-0000	.PIN	1-519, 1-547, 1-561, 1-573
2918659-0000	.PIPE	1-31
2918660-0000	.PIPE	1-31
2919381-0000	.AIR NOZZLE	1-107
2919382-0000	.AIR NOZZLE	1-107
2919384-0000	.SPACER	1-107
2921016-0000	.PLATE	1-169

Part No	Description	Page No
2921018-0000	.BRACKET	1-169
2921394-0000	.BRACKET	1-287
2921646-0100	.FOLDING PART	1-143
2922201-0000	.PLATE	1-585, 1-587
2922438-0000	.PLATE	1-443, 1-445, 1-481, 1-483
2922439-0000	.SHIM	1-443, 1-445, 1-481, 1-483
2922489-0000	.PIN	1-519, 1-547, 1-561, 1-573
2922524-0000	.SCREW	1-511, 1-513, 1-515, 1-517, 1-519, 1-539, 1-541, 1-543, 1-545, 1-547, 1-553, 1-555, 1-557, 1-559, 1-561, 1-565, 1-567, 1-569, 1-571, 1-573
2922536-0000	.SPRING	1-519, 1-547, 1-561, 1-573
2922537-0000	.SPRING	1-519, 1-547, 1-561, 1-573
2922539-0200	.VOLUME FLAP PRESSURE RIGHT	1-563
2922540-0200	.VOLUME FLAP CUTTING RIGHT	1-551
2922694-0001	.SPACER	1-577, 1-579, 1-581, 1-583
2922694-0002	.SPACER	1-577, 1-579, 1-581, 1-583
2922695-0000	.DISTRIBUTOR	1-589
2922696-0000	.SHAFT	1-585, 1-587
2922698-0000	.PLATE	1-577, 1-579, 1-581, 1-583
2922700-0000	.PULLER CAM	1-577, 1-579, 1-581, 1-583
2922701-0000	.PULLER CAM	1-577, 1-579, 1-581, 1-583
2922911-0000	.BLOCK	1-23, 1-25
2922976-0000	.FINGER	1-139
2925961-0100	.HUB	1-71
2925962-0000	.GUIDE	1-135, 1-137
2925963-0000	.GUIDE	1-135, 1-137
2925964-0100	.FLAP	1-71
2925965-0100	.BOTTOM	1-71, 1-623, 1-625
2926125-0000	.BRACKET	1-107
2926126-0000	.AIR NOZZLE	1-107
2926868-0000	.SCREW	1-251, 1-253
2926881-0000	.TOOTHED PULLEY	1-225
2926892-0000	.COLUMN	1-225
2926896-0000	.SPACER	1-225
2926897-0000	.SPACER	1-225
2927548-0100	.FLAP	1-75, 1-77, 1-79, 1-81
2927549-0100	.FLAP	1-97, 1-99, 1-101, 1-103
2927613-0100	.WHEEL	1-9
2927638-0000	.TIMING BELT	1-17, 1-19
2927639-0000	.TIMING BELT	1-17, 1-19
2927640-0200	.INFEED CONVEYOR SHORT	1-145
2927641-0000	.PLATE	1-149
2928232-0200	.VOLUME FLAP CUTTING LEFT	1-493
2928233-0200	.VOLUME FLAP PRESSURE LEFT	1-523
2928239-0000	.HOLDER	1-519, 1-547, 1-561, 1-573
2928240-0000	.RAIL	1-435, 1-437
2928241-0000	.RAIL	1-473, 1-475
2928252-0000	.VOLUME BULGE	1-435, 1-437, 1-455, 1-457, 1-459, 1-473, 1-475
2928342-0000	.FOLDING FLAP	1-463, 1-465, 1-487, 1-489
2928343-0000	.FOLDING FLAP	1-463, 1-465, 1-487, 1-489
2929028-0000	.BLOCK	1-23, 1-25
2929029-0000	.BAR	1-23, 1-25
2929030-0000	.BOTTOM	1-87, 1-89, 1-91, 1-93, 1-95
2929031-0000	.SPACER	1-67, 1-69
2929032-0000	.SPACER	1-67, 1-69
2929033-0000	.SPACER	1-67, 1-69
2929034-0000	.GUIDE	1-67, 1-69
2929035-0000	.GUIDE	1-67, 1-69
2929036-0000	.SPACER	1-67, 1-69
2930279-0001	.RAIL BRACKET	1-577, 1-579, 1-581, 1-583
2930279-0002	.RAIL BRACKET	1-577, 1-579, 1-581, 1-583
2930279-0003	.RAIL BRACKET	1-577, 1-579, 1-581, 1-583
2930279-0004	.RAIL BRACKET	1-577, 1-579, 1-581, 1-583
2930283-0000	.PULLER CAM	1-577, 1-579, 1-581, 1-583
2930293-0000	.PLATE	1-585, 1-587
2930778-0000	.TOOL	1-321
2931193-0000	.AIR NOZZLE	1-107
2931194-0000	.AIR NOZZLE	1-107
2931344-0000	.CAM	1-585, 1-587
2931345-0000	.CAM	1-585, 1-587
2931346-0000	.SPACER	1-107
2931347-0000	.SPACER	1-107
2931380-0200	.FRAME	1-209
2931384-0000	.GUIDE	1-67, 1-69
2931388-0100	.FOLDING DEVICE	1-23, 1-25
2931944-0000	.COVER	1-589
2931945-0000	.NOZZLE	1-589
2932052-0000	.JOINT	1-283, 1-285
2932252-0000	.PRESSURE ROLLER QUANT MINIMA 10PCS	1-289, 1-291, 1-293, 1-321
2933180-0000	.FOLDING BAR	1-53, 1-55, 1-57
2933181-0000	.FOLDING BAR	1-53, 1-55, 1-57
2936209-0000	.PLATE	1-211
2936210-0000	.PLATE	1-211
2936211-0000	.PLATE	1-211
2936212-0000	.PLATE	1-211

Part No	Description	Page No
2936213-0000	.BRACKET	1-211
2936343-0000	.ARM	1-603, 1-605
2936344-0000	.BRACKET	1-603, 1-605
2936881-0003	.RAIL BRACKET	1-577, 1-579, 1-581, 1-583
2936881-0004	.RAIL BRACKET	1-577, 1-579, 1-581, 1-583
2937242-0000	.GUIDE	1-135, 1-137
2937243-0000	.GUIDE	1-135, 1-137
2937351-0000	.FOLDING BAR	1-53, 1-55, 1-57
2937352-0000	.FOLDING BAR	1-53, 1-55, 1-57
2939718-0000	.CUTTING JAW	1-455, 1-457, 1-459
2939719-0000	.FOLDING FLAP	1-463, 1-465, 1-487, 1-489
2939720-0000	.FOLDING FLAP	1-463, 1-465, 1-487, 1-489
2940964-0000	.BELT	1-227, 1-229
2940965-0000	.BELT	1-227, 1-229
2940972-0000	.CRADLE	1-157, 1-159
2940977-0000	.MAIN BODY	1-251, 1-253
2940978-0000	.PLATE	1-251
2940979-0000	.VOLUME BULGE	1-251
2940980-0000	.VOLUME BULGE	1-251
2940981-0000	.PLATE	1-253
2940982-0000	.TOOL	1-253
2940983-0000	.TOOL	1-253
2940984-0000	.LEVER	1-251, 1-253
2940985-0000	.LEVER	1-251, 1-253
2940989-0000	.NOZZLE	1-261
2940990-0000	.GUIDE	1-257, 1-259
2940991-0000	.NOZZLE	1-261
2940992-0000	.NOZZLE	1-261
2940994-0000	.BOWL	1-263
2940999-0000	.NOZZLE	1-261
2941005-0000	.VOLUME BULGE	1-267
2941006-0000	.VOLUME BULGE	1-265
2941010-0000	.CRADLE	1-255
2941011-0000	.CRADLE	1-255
2941015-0000	.GUIDE	1-271, 1-273
2941022-0000	.SHAFT	1-225
2941023-0000	.COLUMN	1-225
2941025-0000	.SPACER	1-225
2941026-0000	.WHEEL	1-233, 1-239
2941027-0000	.ARM	1-233, 1-239
2941028-0000	.FLAP	1-237, 1-245
2941033-0000	.GUIDE	1-271, 1-273
2941041-0000	.PLATE	1-263
2944193-0000	.VOLUME BULGE	1-435, 1-437, 1-473, 1-475
2944194-0000	.VOLUME BULGE	1-435, 1-437, 1-473, 1-475
2944618-0000	.SUPPORT RING	1-367, 1-369
2944619-0000	.SUPPORT RING	1-367, 1-369
2944644-0000	.FILLING PIPE	1-289, 1-291, 1-293
2944647-0000	.BRACKET	1-287
2944780-0000	.SUPPORT	1-59, 1-61, 1-63, 1-65
2945841-0000	.SHAFT	1-585, 1-587
2946844-0000	.TOOL	1-249
2946845-0000	.TOOL	1-247
2946876-0000	.BRACKET	1-609
2946878-0000	.SHAFT	1-609
2946880-0000	.PLATE	1-609
2946884-0000	.SUPPORT ROLLER	1-395, 1-397
2946885-0000	.BRACKET	1-395, 1-397
2946887-0000	.BODY	1-337
2946888-0000	.SHUTTER	1-337
2946889-0000	.LID	1-337
2946914-0000	.BRACKET	1-337
2946915-0000	.WASHER	1-337
2946917-0000	.SPRING	1-289, 1-291, 1-293
2947624-0100	.PUSHER	1-139
2947625-0000	.PUSHER	1-141
2947626-0000	.PUSHER	1-141
2947971-0000	.PUSHER	1-139
2948019-0000	.VOLUME FLAP	1-521, 1-549
2948020-0000	.FLAP	1-521
2948021-0000	.FLAP	1-521
2948022-0000	.FLAP	1-549
2948023-0000	.FLAP	1-549
2948024-0000	.SHAFT	1-521, 1-549
2948025-0001	.HOLDER	1-511, 1-513, 1-515, 1-517
2948025-0002	.HOLDER	1-553, 1-555, 1-557, 1-559
2948027-0000	.BUSHING	1-511, 1-513, 1-515, 1-517, 1-539, 1-541, 1-543, 1-545, 1-553, 1-555, 1-557, 1-559, 1-565, 1-567, 1-569, 1-571
2948028-0000	.SHAFT	1-511, 1-513, 1-515, 1-517, 1-539, 1-541, 1-543, 1-545, 1-553, 1-555, 1-557, 1-559, 1-565, 1-567, 1-569, 1-571
2948538-0000	.FINGER	1-139
2948626-0000	.ROLLER	1-463, 1-465, 1-487, 1-489
2948627-0000	.SHAFT	1-463, 1-465, 1-487, 1-489
2948628-0000	.CARRIER	1-463, 1-465, 1-487, 1-489

Part No	Description	Page No
2948629-0000	.CARRIER RULER	1-463, 1-465
2948630-0000	.CARRIER RULER	1-487, 1-489
2948631-0000	.CARRIER RULER	1-463, 1-465
2948632-0000	.CARRIER RULER	1-487, 1-489
2948633-0000	.CARRIER RULER	1-463, 1-465
2948634-0000	.CARRIER RULER	1-487, 1-489
2948635-0000	.CARRIER RULER	1-463, 1-465
2948636-0000	.CARRIER RULER	1-487, 1-489
2948637-0000	.CARRIER RULER	1-463, 1-465
2948638-0000	.CARRIER RULER	1-487, 1-489
2949203-0000	.SUPPORT	1-413
2949205-0000	.SHIM	1-591, 1-593
2949206-0001	.HOLDER	1-539, 1-541, 1-543, 1-545
2949206-0002	.HOLDER	1-565, 1-567, 1-569, 1-571
2949207-0000	.PLATE	1-585, 1-587
2949208-0001	.RAIL BRACKET	1-577, 1-579, 1-581, 1-583
2949208-0002	.RAIL BRACKET	1-577, 1-579, 1-581, 1-583
2949208-0003	.RAIL BRACKET	1-577, 1-579, 1-581, 1-583
2949208-0004	.RAIL BRACKET	1-577, 1-579, 1-581, 1-583
2949214-0000	.SPRING	1-511, 1-513, 1-515, 1-517, 1-539, 1-541, 1-543, 1-545, 1-553, 1-555, 1-557, 1-559, 1-565, 1-567, 1-569, 1-571
2949215-0000	.SPRING	1-511, 1-513, 1-515, 1-517, 1-539, 1-541, 1-543, 1-545, 1-553, 1-555, 1-557, 1-559, 1-565, 1-567, 1-569, 1-571
2951058-0000	.LID	1-599, 1-601, 1-619
2951198-0000	.BUSHING	1-211
2951588-0000	.SHIM	1-171
2952684-0000	.TOOTHED PULLEY	1-147
2952685-0000	.TOOTHED PULLEY	1-147
2952687-0000	.TOOTHED PULLEY	1-149
2952688-0000	.TOOTHED PULLEY	1-149
2952691-0100	.ROLLER	1-495, 1-497, 1-499, 1-501, 1-525, 1-527, 1-529, 1-531
2952710-0000	.ARM	1-495, 1-497, 1-499, 1-501, 1-525, 1-527, 1-529, 1-531
2953135-0000	.BLOCK	1-23, 1-25
2953136-0000	.FOLDING BAR	1-53, 1-55, 1-57
2953137-0000	.FOLDING BAR	1-53, 1-55, 1-57
2955104-0000	.PLUG	1-147, 1-149
2955148-0000	.AIR NOZZLE	1-107
2955149-0000	.AIR NOZZLE	1-107
2955150-0000	.AIR NOZZLE	1-107
2955151-0000	.AIR NOZZLE	1-107
2955152-0000	.SPACER	1-107
2955548-0000	.BRACKET	1-415, 1-417, 1-419
2955605-0000	.SLEEVE	1-447
2955606-0000	.PISTON	1-447
2955618-0000	.VOLUME CAM	1-577, 1-579, 1-581, 1-583
2955619-0000	.VOLUME CAM	1-577, 1-579, 1-581, 1-583
2955763-0000	.BEARING HOUSING	1-149
2958089-0000	.BUSHING	1-269
2958240-0000	.ROLLER	1-147, 1-149
2958241-0000	.SHAFT	1-147, 1-149
2958419-0000	.SPACER	1-107
2958748-0000	.VOLUME BULGE	1-435, 1-437, 1-473, 1-475
2958750-0000	.CUTTING JAW	1-455, 1-457, 1-459
2958751-0000	.BEARING HOUSING	1-455, 1-457, 1-459
2958752-0000	.PLATE	1-455, 1-457, 1-459
2958753-0000	.FOLDING FLAP	1-463, 1-465, 1-487, 1-489
2958754-0000	.FOLDING FLAP	1-463, 1-465, 1-487, 1-489
2958755-0000	.CARRIER RULER	1-463, 1-465
2958756-0000	.CARRIER RULER	1-487, 1-489
2958757-0000	.KNIFE	1-491, 1-591, 1-593
2958758-0100	.PUSHER	1-9
2959681-0000	.SPRING	1-289, 1-291, 1-293
2959682-0000	.HOOD	1-289, 1-291, 1-293
2959867-0000	.SPACER SCREW	1-495, 1-497, 1-499, 1-501, 1-525, 1-527, 1-529, 1-531
2959868-0000	.TENSION SPRING	1-511, 1-513, 1-515, 1-517, 1-539, 1-541, 1-543, 1-545, 1-553, 1-555, 1-557, 1-559, 1-565, 1-567, 1-569, 1-571
2960405-0000	.SHIM	1-105
2960430-0000	.BOTTOM	1-87, 1-89, 1-91, 1-93, 1-95
2960431-0000	.FOLDING BAR	1-53, 1-55, 1-57
2960432-0000	.FOLDING BAR	1-53, 1-55, 1-57
2960579-0000	.UPPER FILLING PIPE	1-289, 1-291, 1-293
2961246-0000	.UPPER FILLING PIPE	1-289, 1-291, 1-293
2961953-0000	.TENSION SPRING	1-511, 1-513, 1-515, 1-517, 1-539, 1-541, 1-543, 1-545, 1-553, 1-555, 1-557, 1-559, 1-565, 1-567, 1-569, 1-571
2962059-0001	.RAIL BRACKET	1-577, 1-579, 1-581, 1-583
2962059-0002	.RAIL BRACKET	1-577, 1-579, 1-581, 1-583
2962059-0003	.RAIL BRACKET	1-577, 1-579, 1-581, 1-583
2962059-0004	.RAIL BRACKET	1-577, 1-579, 1-581, 1-583
2962640-0000	.SHAFT	1-511, 1-513, 1-515, 1-517, 1-539, 1-541, 1-543, 1-545, 1-553, 1-555, 1-557, 1-559, 1-565, 1-567, 1-569, 1-571
2963251-0000	.GUIDE	1-227, 1-229
2963252-0000	.GUIDE	1-227, 1-229
2963268-0000	.PLATE	1-225
2963269-0000	.PLATE	1-225

Part No	Description	Page No
2963270-0000	.SUPPORT	1-251, 1-253
2963271-0000	.PUSHER	1-247, 1-249
2963272-0000	.SHIM	1-213, 1-247, 1-249
2963273-0000	.VOLUME BULGE	1-247, 1-249
2963277-0000	.SPACER	1-263
2963278-0000	.SHAFT	1-261
2963280-0000	.BRACKET	1-261
2963286-0000	.NOZZLE	1-261
2963287-0000	.NOZZLE	1-261
2963288-0000	.NOZZLE	1-261
2963289-0000	.NOZZLE	1-261
2963290-0000	.PLATE	1-263
2963292-0000	.PUSHER	1-269
2963293-0000	.FLANGE	1-269
2963294-0000	.SHIM	1-213, 1-265, 1-267
2963295-0000	.VOLUME BULGE	1-265, 1-267
2963296-0000	.PUSHER	1-265, 1-267
2963300-0200	.FOLDING UNIT	1-223
2963307-0000	.BOTTOM	1-235
2963308-0000	.BOTTOM	1-241
2963309-0000	.BOTTOM	1-243
2963310-0200	.FOLDING UNIT	1-223
2963316-0200	.VOLUME CHANGE	1-223
2963317-0100	.PRESSURE UNIT	1-223
2963338-0000	.GUIDE	1-225
2963339-0000	.GUIDE	1-225
2963340-0000	.SHAFT	1-225
2963360-0000	.ROLLER	1-21
2963361-0000	.SHAFT	1-21
2964448-0000	.SCREW	1-495, 1-497, 1-499, 1-501, 1-525, 1-527, 1-529, 1-531
2966896-0000	.COVERING PLATE	1-59, 1-61, 1-63, 1-65
2966900-0100	.SPACER	1-143
2966902-0000	.NUT	1-211
2966905-0100	.CRADLE	1-143, 1-223
2968248-0000	.VOLUME BULGE	1-435, 1-437, 1-473, 1-475
2968252-0000	.PLATE	1-379, 1-381
2968854-0000	.VOLUME BULGE	1-495, 1-497, 1-499, 1-501, 1-525, 1-527, 1-529, 1-531
2968863-0000	.VOLUME SHIM	1-495, 1-497, 1-499, 1-501, 1-525, 1-527, 1-529, 1-531, 1-591, 1-593
2968867-0000	.ECCENTRIC	1-577, 1-579, 1-581, 1-583
2968868-0000	.ECCENTRIC	1-577, 1-579, 1-581, 1-583
2969139-0000	.VOLUME FLAP	1-495, 1-497, 1-499, 1-501, 1-525, 1-527, 1-529, 1-531
2969140-0000	.VOLUME FLAP	1-525, 1-527, 1-529, 1-531
2969141-0000	.VOLUME FLAP	1-495, 1-497, 1-499, 1-501
2969142-0000	.VOLUME BULGE	1-495, 1-497, 1-499, 1-501, 1-525, 1-527, 1-529, 1-531
2969143-0000	.BRACKET	1-495, 1-497, 1-499, 1-501, 1-525, 1-527, 1-529, 1-531
2970962-0000	.ROLLER	1-349, 1-351, 1-353
2970963-0000	.ROLLER	1-349, 1-351, 1-353
2970964-0000	.ROLLER	1-349, 1-351, 1-353
2970965-0000	.ROLLER	1-349, 1-351, 1-353
2971484-0000	.BLOCK	1-23, 1-25
2971485-0000	.BAR	1-23, 1-25
2971486-0000	.BRACKET	1-289, 1-291, 1-293
2971773-0000	.GUIDE	1-135, 1-137
2971774-0000	.GUIDE	1-135, 1-137
2971903-0100	.PUSHER	1-109, 1-111, 1-113, 1-623, 1-625
2974365-0000	.INSULATING PLATE	1-399, 1-401, 1-403
2976051-0000	.SPACER	1-107
2976052-0000	.SPACER	1-107
2976053-0000	.AIR NOZZLE	1-107
2976054-0000	.AIR NOZZLE	1-107
2976055-0000	.AIR NOZZLE	1-107
2976056-0000	.AIR NOZZLE	1-107
2976089-0000	.LOCKING DEVICE	1-289, 1-291, 1-293
2976259-0000	.VOLUME CAM	1-577, 1-579, 1-581, 1-583
2976260-0000	.VOLUME CAM	1-577, 1-579, 1-581, 1-583
2976577-0000	.SPACER	1-107
2977415-0000	.PRESSURE FLANGE	1-289, 1-291, 1-293
2977546-0000	.LOWER FILLING TUBE	1-289, 1-291, 1-293
2977549-0000	.PRESSURE FLANGE	1-289, 1-291, 1-293
2977654-0000	.SUPPORT	1-261
2978028-0000	.SHAFT	1-261
2978340-0000	.VOLUME FLAP	1-495, 1-497, 1-499, 1-501, 1-525, 1-527, 1-529, 1-531
2978341-0000	.VOLUME FLAP	1-495, 1-497, 1-499, 1-501
2978342-0000	.VOLUME FLAP	1-525, 1-527, 1-529, 1-531
2978343-0000	.VOLUME SHIM	1-495, 1-497, 1-499, 1-501, 1-525, 1-527, 1-529, 1-531, 1-591, 1-593
2978344-0000	.VOLUME BULGE	1-495, 1-497, 1-499, 1-501, 1-525, 1-527, 1-529, 1-531
2978597-0000	.BOWL	1-263
2978606-0000	.BRACKET	1-261
2978673-0000	.SPRING	1-289, 1-291, 1-293
2978674-0000	.ROLLER	1-349, 1-351, 1-353
2978675-0000	.ROLLER	1-349, 1-351, 1-353
2978782-0000	.SUPPORT	1-261
2978783-0000	.SPACER	1-263
2978784-0000	.VOLUME CAM	1-577, 1-579, 1-581, 1-583

Part No	Description	Page No
2978785-0000	.PULLER CAM	1-577, 1-579, 1-581, 1-583
2978786-0000	.PULLER CAM	1-577, 1-579, 1-581, 1-583
2979548-0100	.START-UP KIT JS	1-409
2979589-0200	.START-UP KIT SS	1-279
2980829-0200	.FLAP HEATER	1-223
2980903-0100	.START-UP KIT FF	1-9, 1-223
2982295-0000	.BRACKET	1-399, 1-401, 1-403
2982495-0000	.PLATE	1-585, 1-587
2983109-0000	.VOLUME BULGE	1-265, 1-267
2983110-0000	.VOLUME BULGE	1-265, 1-267
2983111-0000	.VOLUME BULGE	1-265, 1-267
2983112-0000	.SHIM	1-213, 1-265, 1-267
2983113-0000	.SHIM	1-213, 1-265, 1-267
2983114-0000	.SHIM	1-213, 1-265, 1-267
2983115-0000	.PUSHER	1-265, 1-267
2983116-0000	.PUSHER	1-265, 1-267
2983117-0000	.PUSHER	1-265, 1-267
2983118-0000	.VOLUME BULGE	1-247, 1-249
2983119-0000	.VOLUME BULGE	1-247, 1-249
2983121-0000	.SHIM	1-213, 1-247, 1-249
2983122-0000	.SHIM	1-213, 1-247, 1-249
2983123-0000	.SHIM	1-213, 1-247, 1-249
2983124-0000	.PUSHER	1-247, 1-249
2983125-0000	.PUSHER	1-247, 1-249
2983126-0000	.PUSHER	1-247, 1-249
2983134-0000	.DAMPER	1-251, 1-253
2983142-0000	.SHIM	1-213
2983150-0200	.VOLUME CHANGE	1-223
2983786-0000	.SUPPORT	1-155
2983789-0000	.FOLDING BAR	1-53, 1-55, 1-57
2983790-0000	.FOLDING BAR	1-53, 1-55, 1-57
2984513-0000	.BOTTOM	1-87, 1-89, 1-91, 1-93, 1-95
2984514-0000	.FLAP	1-75, 1-77, 1-79, 1-81
2984516-0100	.SIDE PLATE	1-9, 1-623, 1-625
2984518-0100	.SPACER	1-9
2984554-0000	.PLATE	1-169
2985173-0100	.NOZZLE	1-9
2985175-0100	.INFEED CONVEYOR VARIANT	1-9
2985180-0100	.BELT INFEED GUIDE	1-9, 1-623, 1-625
2986655-0000	.BRACKET	1-415, 1-417, 1-419
2986656-0000	.SLIDE	1-415, 1-417, 1-419
2986941-0000	.EAR	1-443, 1-445, 1-481, 1-483
2987003-0000	.SHAFT	1-147, 1-149
2987004-0000	.SPACER	1-147, 1-149
2987005-0000	.TOOTHED PULLEY	1-147
2987006-0000	.TOOTHED PULLEY	1-147
2987008-0000	.TOOTHED PULLEY	1-149
2987009-0000	.TOOTHED PULLEY	1-149
2987038-0000	.VOLUME SHIM	1-495, 1-497, 1-499, 1-501, 1-525, 1-527, 1-529, 1-531, 1-591, 1-593
2990908-0000	.PROTECTION	1-151, 1-153
2991531-0000	.MAIN BODY	1-251, 1-253
2991546-0000	.GUIDE	1-225
2993209-0000	.SCREW	1-413, 1-415, 1-417, 1-419
2993210-0000	.NUT	1-415, 1-417, 1-419
2993285-0001	.HOLDER	1-553, 1-555, 1-557, 1-559
2993285-0002	.HOLDER	1-511, 1-513, 1-515, 1-517
2993285-0003	.HOLDER	1-565, 1-567, 1-569, 1-571
2993285-0004	.HOLDER	1-539, 1-541, 1-543, 1-545
2993288-0000	.PLATE	1-455, 1-457, 1-459
2993289-0000	.BEARING HOUSING	1-455, 1-457, 1-459
2993979-0100	.SHOCK ABSORBER CUTTING	1-551
2993980-0100	.SUPPORT FLAP CUTTING	1-411, 1-623, 1-625
2993981-0100	.SUPPORT FLAP PRESSURE	1-411, 1-623, 1-625
2993982-0100	.SHOCK ABSORBER PRESSURE	1-563
2994205-0000	.CARRIER RULER	1-463, 1-465
2994206-0000	.CARRIER RULER	1-487, 1-489
2994447-0000	.SUPPORT	1-147, 1-149
2995595-0000	.FRAME	1-495, 1-497, 1-499, 1-501, 1-525, 1-527, 1-529, 1-531
2995596-0000	.FRAME	1-495, 1-497, 1-499, 1-501, 1-525, 1-527, 1-529, 1-531
2995597-0000	.ARM	1-495, 1-497, 1-499, 1-501, 1-525, 1-527, 1-529, 1-531
2995598-0000	.VOLUME FLAP	1-495, 1-497, 1-499, 1-501
2995599-0000	.VOLUME SHIM	1-495, 1-497, 1-499, 1-501, 1-525, 1-527, 1-529, 1-531, 1-591, 1-593
2995600-0000	.VOLUME BULGE	1-495, 1-497, 1-499, 1-501, 1-525, 1-527, 1-529, 1-531
2995601-0000	.VOLUME FLAP	1-525, 1-527, 1-529, 1-531
2995602-0000	.VOLUME FLAP	1-495, 1-497, 1-499, 1-501
2995603-0000	.VOLUME SHIM	1-495, 1-497, 1-499, 1-501, 1-525, 1-527, 1-529, 1-531, 1-591, 1-593
2995604-0000	.VOLUME SHIM	1-495, 1-497, 1-499, 1-501, 1-525, 1-527, 1-529, 1-531, 1-591, 1-593
2995605-0000	.VOLUME BULGE	1-495, 1-497, 1-499, 1-501, 1-525, 1-527, 1-529, 1-531
2995606-0000	.VOLUME BULGE	1-495, 1-497, 1-499, 1-501, 1-525, 1-527, 1-529, 1-531
2995607-0000	.VOLUME FLAP	1-525, 1-527, 1-529, 1-531
2995608-0000	.ARM	1-495, 1-497, 1-499, 1-501, 1-525, 1-527, 1-529, 1-531
2995655-0000	.SCREW	1-495, 1-497, 1-499, 1-501, 1-525, 1-527, 1-529, 1-531
2995752-0000	.HEAD	1-427, 1-429, 1-467, 1-469
2995753-0000	.SHAFT	1-427, 1-429, 1-467, 1-469

Part No	Description	Page No
2996045-0000	.SPACER	1-151, 1-153
2996053-0000	.VOLUME BULGE	1-121
2996054-0000	.VOLUME BULGE	1-121
2996358-0000	.FOLDING FLAP	1-463, 1-465, 1-487, 1-489
2996359-0000	.FOLDING FLAP	1-463, 1-465, 1-487, 1-489
2996360-0000	.CARRIER RULER	1-463, 1-465
2996361-0000	.CARRIER RULER	1-487, 1-489
2996362-0000	.BEARING HOUSING	1-455, 1-457, 1-459
2996363-0000	.CUTTING JAW	1-455, 1-457, 1-459
2996364-0000	.PLATE	1-455, 1-457, 1-459
2997337-0000	.STOP SCREW	1-443, 1-445, 1-481, 1-483
2997338-0000	.ECCENTRIC SHAFT	1-521, 1-549
2997340-0000	.SCREW	1-443, 1-445, 1-481, 1-483
2997607-0000	.PUSHER	1-269
2997640-0000	.SUPPORT	1-269
2997717-0000	.SHIM	1-495, 1-497, 1-499, 1-501, 1-525, 1-527, 1-529, 1-531, 1-591, 1-593
2997718-0000	.BRACKET	1-495, 1-497, 1-499, 1-501, 1-525, 1-527, 1-529, 1-531
2997719-0000	.BRACKET	1-495, 1-497, 1-499, 1-501, 1-525, 1-527, 1-529, 1-531
2997720-0000	.VOLUME FLAP	1-495, 1-497, 1-499, 1-501, 1-525, 1-527, 1-529, 1-531
2997721-0000	.SIDE PLATE	1-495, 1-497, 1-499, 1-501
2997722-0000	.SIDE PLATE	1-495, 1-497, 1-499, 1-501
2997723-0000	.SIDE PLATE	1-525, 1-527, 1-529, 1-531
2997724-0000	.SIDE PLATE	1-525, 1-527, 1-529, 1-531
2997725-0000	.VOLUME BULGE	1-495, 1-497, 1-499, 1-501, 1-525, 1-527, 1-529, 1-531
2997728-0001	.RAIL BRACKET	1-577, 1-579, 1-581, 1-583
2997728-0002	.RAIL BRACKET	1-577, 1-579, 1-581, 1-583
2997728-0003	.RAIL BRACKET	1-577, 1-579, 1-581, 1-583
2997728-0004	.RAIL BRACKET	1-577, 1-579, 1-581, 1-583
2998017-0000	.INSULATING PLATE	1-399, 1-401, 1-403
2998411-0000	.ROLLER	1-349, 1-351, 1-353
2998412-0000	.ROLLER	1-349, 1-351, 1-353
2998413-0000	.ROLLER	1-349, 1-351, 1-353
2998414-0000	.ROLLER	1-349, 1-351, 1-353
2998505-0000	.ROLLER	1-349, 1-351, 1-353
2998506-0000	.ROLLER	1-349, 1-351, 1-353
2998507-0000	.ROLLER	1-349, 1-351, 1-353
2998822-0001	.FLAP HOLDER	1-561
2998822-0002	.FLAP HOLDER	1-519
2998822-0003	.FLAP HOLDER	1-573
2998822-0004	.FLAP HOLDER	1-547
2998859-0000	.ROLLER	1-367, 1-369
3002385-0000	.CRADLE	1-157, 1-159
3002497-0000	.INSULATION NUT	1-435, 1-437, 1-473, 1-475
3002498-0000	.WASHER	1-435, 1-437, 1-473, 1-475
3002499-0000	.WASHER	1-435, 1-437, 1-473, 1-475
3002559-0000	.RAIL	1-435, 1-437
3002560-0000	.BEARING HOUSING	1-433
3002561-0000	.RAIL	1-473, 1-475
3004138-0000	.RAIL BRACKET	1-577, 1-579, 1-581, 1-583
3004139-0000	.RAIL BRACKET	1-577, 1-579, 1-581, 1-583
3004144-0001	.SPACER	1-577, 1-579, 1-581, 1-583
3004144-0002	.SPACER	1-577, 1-579, 1-581, 1-583
3007550-0000	.CLEANING CUP	1-295
3007551-0000	.CLEANING CUP	1-295
3007552-0000	.CLEANING CUP	1-295
3007553-0000	.CLEANING CUP	1-295
3008114-0000	.SHAFT	1-609
3009336-0000	.VOLUME CAM	1-577, 1-579, 1-581, 1-583
3009337-0000	.PULLER CAM	1-577, 1-579, 1-581, 1-583
3009338-0000	.PULLER CAM	1-577, 1-579, 1-581, 1-583
3010407-0000	.BOX	1-595, 1-597
3010408-0000	.BOX	1-279
3012046-0000	.LOWER FILLING TUBE	1-289, 1-291, 1-293
3012056-0000	.PRESSURE FLANGE	1-289, 1-291, 1-293
3012771-0000	.LOCKING DEVICE	1-289, 1-291, 1-293
3013546-0000	.BRACKET	1-399, 1-401, 1-403
3014102-0000	.CARRIER CUTTING LEFT	1-443, 1-445
3014103-0000	.CARRIER PRESSURE LEFT	1-427, 1-429
3014104-0000	.CARRIER CUTTING RIGHT	1-481, 1-483
3014105-0000	.CARRIER PRESSURE RIGHT	1-467, 1-469
3015740-0200	.VOLUME CONVERSION KIT	1-3
3015741-0100	.BOX6 - VOLUME KIT	1-3
3016193-0200	.FLAP HEATER	1-9
3016237-0200	.BOX4 - FINAL FOLDER	1-5
3016563-0000	.BOX	1-623, 1-625
3016808-0000	.FRAME	1-367, 1-369
3016809-0000	.SUPPORT RING	1-367, 1-369
3016972-0007	.SHAFT	1-317
3018395-0000	.BRACKET	1-287
3018414-0000	.PLATE	1-379, 1-381
3018752-0000	.LEVER	1-511, 1-513, 1-515, 1-517, 1-539, 1-541, 1-543, 1-545, 1-553, 1-555, 1-557, 1-559, 1-565, 1-567, 1-569, 1-571
3019102-0200	.INFEED FRAME	1-143
3019537-0100	.BENDING ROLLER	1-279

Part No	Description	Page No
3021528-0100	.SPRING	1-227, 1-229
3022705-0200	.BOX	1-595, 1-597
3024322-0000	.GASKET	1-321
3024710-0001	.HOLDER	1-511, 1-513, 1-515, 1-517
3024710-0002	.HOLDER	1-553, 1-555, 1-557, 1-559
3024711-0001	.HOLDER	1-539, 1-541, 1-543, 1-545
3024711-0002	.HOLDER	1-565, 1-567, 1-569, 1-571
3024712-0001	.HOLDER	1-511, 1-513, 1-515, 1-517
3024712-0002	.HOLDER	1-553, 1-555, 1-557, 1-559
3024713-0001	.HOLDER	1-539, 1-541, 1-543, 1-545
3024713-0002	.HOLDER	1-565, 1-567, 1-569, 1-571
3024937-0001	.HOLDER	1-511, 1-513, 1-515, 1-517
3024937-0002	.HOLDER	1-553, 1-555, 1-557, 1-559
3024938-0001	.HOLDER	1-539, 1-541, 1-543, 1-545
3024938-0002	.HOLDER	1-565, 1-567, 1-569, 1-571
3024939-0001	.HOLDER	1-511, 1-513, 1-515, 1-517
3024939-0002	.HOLDER	1-553, 1-555, 1-557, 1-559
3024940-0001	.HOLDER	1-539, 1-541, 1-543, 1-545
3024940-0002	.HOLDER	1-565, 1-567, 1-569, 1-571
3024941-0001	.HOLDER	1-511, 1-513, 1-515, 1-517
3024941-0002	.HOLDER	1-553, 1-555, 1-557, 1-559
3024942-0001	.HOLDER	1-539, 1-541, 1-543, 1-545
3024942-0002	.HOLDER	1-565, 1-567, 1-569, 1-571
3025006-0000	.SUPPORT	1-231
3025636-0100	.FLAP	1-71
3025644-0000	.CARRIER	1-17, 1-19
3025699-0000	.LOWER FILLING TUBE	1-289, 1-291, 1-293
3025700-0000	.PRESSURE FLANGE	1-289, 1-291, 1-293
3025701-0000	.PRESSURE FLANGE	1-289, 1-291, 1-293
3025702-0000	.LOWER FILLING TUBE	1-289, 1-291, 1-293
3025705-0000	.PRESSURE FLANGE	1-289, 1-291, 1-293
3026440-0200	.STEERING RING	1-279
3026932-0000	.BRACKET	1-287
3030304-0000	.VOLUME CAM	1-577, 1-579, 1-581, 1-583
3030305-0000	.VOLUME CAM	1-577, 1-579, 1-581, 1-583
3030308-0000	.DAMPER	1-511, 1-513, 1-515, 1-517, 1-539, 1-541, 1-543, 1-545, 1-553, 1-555, 1-557, 1-559, 1-565, 1-567, 1-569, 1-571
3031186-0000	.BRACKET	1-109, 1-111, 1-113
3031187-0000	.ACTIVATOR	1-109, 1-111, 1-113
3031188-0000	.ACTIVATOR	1-147, 1-149
3031512-0000	.LOWER FILLING TUBE	1-289, 1-291, 1-293
3031513-0000	.LOWER FILLING TUBE	1-289, 1-291, 1-293
3031527-0000	.CANTILEVER	1-413
3031528-0000	.SLIDE	1-413
3031530-0000	.SPACER	1-413
3031531-0000	.VOLUME BULGE	1-547, 1-573
3031532-0000	.VOLUME BULGE	1-519, 1-561
3031817-0000	.ROLLER	1-301, 1-303
3031818-0000	.ROLLER	1-301, 1-303
3031819-0000	.ROLLER	1-301, 1-303
3031823-0000	.ROLLER	1-349, 1-351, 1-353
3031824-0000	.ROLLER	1-349, 1-351, 1-353
3031825-0000	.ROLLER	1-349, 1-351, 1-353
3031826-0000	.ROLLER	1-349, 1-351, 1-353
3035150-0200	.STERILE AIR BLOWER	1-279
3035340-0001	.TEMPLATE	1-321
3035340-0002	.TEMPLATE	1-321
3035340-0003	.TEMPLATE	1-321
3035340-0005	.TEMPLATE	1-321
3035340-0006	.TEMPLATE	1-321
3035340-0007	.TEMPLATE	1-321
3035340-0008	.TEMPLATE	1-321
3035341-0200	.SEAL	1-377
3035342-0000	.STUD SCREW	1-385, 1-387
3035770-0100	.CARRIER CUTTING LEFT	1-411
3035771-0100	.CARRIER PRESSURE LEFT	1-411
3035772-0100	.CARRIER CUTTING RIGHT	1-411
3035773-0100	.CARRIER PRESSURE RIGHT	1-411
3037777-0100	.TOOL	1-321
3037778-0001	.TOOL	1-323
3037778-0002	.TOOL	1-323
3037778-0004	.TOOL	1-323
3037778-0005	.TOOL	1-323
3037778-0006	.TOOL	1-323
3037778-0007	.TOOL	1-323
3037778-0008	.TOOL	1-323
3037779-0000	.STUD SCREW	1-385, 1-387
3037995-0001	.HOLDER	1-539, 1-541, 1-543, 1-545
3037995-0002	.HOLDER	1-565, 1-567, 1-569, 1-571
3037996-0001	.HOLDER	1-511, 1-513, 1-515, 1-517
3037996-0002	.HOLDER	1-553, 1-555, 1-557, 1-559
3037997-0001	.HOLDER	1-539, 1-541, 1-543, 1-545
3037997-0002	.HOLDER	1-565, 1-567, 1-569, 1-571
3037998-0001	.HOLDER	1-511, 1-513, 1-515, 1-517

Part No	Description	Page No
3037998-0002	.HOLDER	1-553, 1-555, 1-557, 1-559
3037999-0001	.HOLDER	1-539, 1-541, 1-543, 1-545
3037999-0002	.HOLDER	1-565, 1-567, 1-569, 1-571
3038000-0001	.HOLDER	1-511, 1-513, 1-515, 1-517
3038000-0002	.HOLDER	1-553, 1-555, 1-557, 1-559
3038244-0000	.ROLLER	1-367, 1-369
3038245-0000	.ROLLER	1-367, 1-369
3038278-0200	.FOLDING DEVICE	1-163, 1-165, 1-167
3038400-0000	.CARRIER CUTTING LEFT	1-443, 1-445
3038401-0000	.CARRIER PRESSURE LEFT	1-427, 1-429
3038402-0000	.CARRIER CUTTING RIGHT	1-481, 1-483
3038403-0000	.CARRIER PRESSURE RIGHT	1-467, 1-469
3039010-0000	.BRACKET	1-385, 1-387
3039011-0000	.BRACKET	1-385, 1-387
3039948-0000	.CONNECTOR	1-427, 1-429, 1-467, 1-469
3039949-0000	.TUBE	1-427, 1-429, 1-467, 1-469
3040941-0000	.BRACKET	1-149
3040942-0000	.PLATE	1-147, 1-149
3041582-0000	.SHIM	1-519, 1-547, 1-561, 1-573, 1-591, 1-593
3042491-0000	.BENDING ROLLER	1-599, 1-601
3042501-0000	.FLANGE	1-599, 1-601, 1-619
3042503-0000	.FLANGE	1-599, 1-601, 1-619
3042533-0000	.BRACKET	1-399, 1-401, 1-403
3042534-0000	.HOLDER	1-399, 1-401, 1-403
3042548-0000	.BENDING ROLLER	1-599, 1-601
3042553-0000	.BRACKET	1-399, 1-401, 1-403
3043309-0000	.BENDING ROLLER	1-619
3044267-0100	.ROLLER BRACKET	1-279, 1-283, 1-285
3044462-0000	.ARCH	1-271, 1-273
3044463-0000	.ARCH	1-271, 1-273
3046743-0000	.ROD	1-519, 1-547, 1-561, 1-573
3046744-0000	.ROD	1-519, 1-547, 1-561, 1-573
3047360-0000	.SETTING KNOB	1-443, 1-445, 1-481, 1-483
3047361-0000	.SETTING KNOB	1-427, 1-429, 1-467, 1-469
3047470-0000	.SLIDE	1-399, 1-401, 1-403
3047471-0000	.SLIDE	1-399, 1-401, 1-403
3047472-0000	.SHAFT	1-399, 1-401, 1-403
3048516-0000	.PUSHER	1-139
3048521-0000	.COVER	1-443, 1-445, 1-481, 1-483
3048557-0000	.SHIM	1-233, 1-239
3050520-0000	.BOX	1-223
3050604-0000	.SUPPORT	1-399, 1-401, 1-403
3051914-0001	.SHAFT	1-343
3051914-0002	.SHAFT	1-343
3052589-0000	.PRESSURE FLANGE	1-289, 1-291, 1-293
3052683-0000	.BRACKET	1-399, 1-401, 1-403
3053271-0000	.VOLUME FLAP	1-495, 1-497, 1-499, 1-501
3053272-0000	.VOLUME FLAP	1-525, 1-527, 1-529, 1-531
3053273-0001	.FRAME	1-495, 1-497, 1-499, 1-501
3053273-0002	.FRAME	1-525, 1-527, 1-529, 1-531
3053488-0000	.ARM	1-495, 1-497, 1-499, 1-501, 1-525, 1-527, 1-529, 1-531
3053567-0000	.FLAP	1-547, 1-573
3053568-0000	.FLAP	1-547, 1-573
3053569-0000	.FLAP	1-519, 1-561
3053570-0000	.FLAP	1-519, 1-561
3055029-0000	.VOLUME BULGE	1-247, 1-249
3055884-0000	.PIN	1-577, 1-579, 1-581, 1-583
3056161-0000	.BOX	1-409
3060468-0000	.PLATE	1-333
3060470-0000	.PLATE	1-333
3060475-0000	.PLATE	1-333
3060476-0000	.PLATE	1-333
3060490-0100	.FOLDING PART	1-23, 1-25
3060491-0100	.PUSHER	1-109, 1-111, 1-113
3060492-0100	.PUSHER	1-109, 1-111, 1-113
3060493-0000	.BRACKET	1-147
3061501-0001	.ROLLER	1-301, 1-303
3061501-0002	.ROLLER	1-407
3061501-0003	.ROLLER	1-407
3061502-0000	.ROLLER	1-301, 1-303
3066565-0100	.MECHANICAL REBUILDING	1-161
3066566-0102	.REBUILDING MANUAL	1-161
3066567-0100	.PT FLEX HOLES	1-143
3067049-0000	.BOX	1-163, 1-165, 1-167
3067607-0000	.BRACKET	1-399, 1-401, 1-403
3067608-0000	.BRACKET	1-399, 1-401, 1-403
3073531-0000	.PLATE	1-413
3073532-0000	.SUPPORT	1-413
3076826-0000	.SPACER	1-349, 1-351, 1-353
3079086-0000	.PLATE	1-333
3079094-0001	.ROLLER	1-301, 1-303
3079094-0002	.ROLLER	1-407
3079094-0003	.ROLLER	1-407
3079095-0001	.ROLLER	1-301, 1-303

Part No	Description	Page No
3079095-0002	.ROLLER	1-407
3079095-0003	.ROLLER	1-407
3079096-0001	.ROLLER	1-301, 1-303
3079096-0002	.ROLLER	1-407
3079096-0003	.ROLLER	1-407
3079097-0001	.ROLLER	1-301, 1-303
3079097-0002	.ROLLER	1-407
3079097-0003	.ROLLER	1-407
3079098-0001	.ROLLER	1-301, 1-303
3079098-0002	.ROLLER	1-407
3079098-0003	.ROLLER	1-407
3079112-0000	.BRACKET	1-395, 1-397
3079113-0000	.BRACKET	1-395, 1-397
3079114-0000	.BRACKET	1-395, 1-397
3079115-0000	.BRACKET	1-395, 1-397
3079118-0001	.ROLLER	1-301, 1-303
3079118-0002	.ROLLER	1-407
3079118-0003	.ROLLER	1-407
3079119-0001	.ROLLER	1-301, 1-303
3079119-0002	.ROLLER	1-407
3079119-0003	.ROLLER	1-407
3079827-0000	.BRACKET	1-399, 1-401, 1-403
3093221-0100	.TRIMMING ROLLER	1-279
3093226-0000	.FLANGE	1-385, 1-387
3093227-0000	.FLANGE	1-385, 1-387
3093228-0000	.FLANGE	1-385, 1-387
3093229-0000	.FLANGE	1-385, 1-387
3093242-0000	.PLATE	1-385, 1-387
3093243-0000	.PLATE	1-385, 1-387
3093244-0000	.PLATE	1-385, 1-387
3093245-0000	.PLATE	1-385, 1-387
3093546-0000	.PLATE	1-233, 1-239
3094049-0000	.GUIDE	1-135, 1-137
3094050-0000	.GUIDE	1-135, 1-137
3094051-0000	.SLIDE	1-135, 1-137
3094052-0000	.SLIDE	1-135, 1-137
3094053-0000	.PLATE	1-135, 1-137
3095351-0000	.FLOAT	1-289, 1-291, 1-293
3095377-0000	.FLOAT	1-289, 1-291, 1-293
3096280-0000	.VOLUME BULGE	1-121
3099422-0000	.ROLLER	1-301, 1-303
3099423-0000	.ROLLER	1-301, 1-303
3099424-0000	.FORMING RING	1-301, 1-303
3099425-0000	.LOCK PLATE	1-301, 1-303
3100547-0000	.FLANGE	1-595, 1-597
3100548-0000	.PLATE	1-621
3100549-0000	.SHAFT	1-621
3100550-0100	.SPLICE DETECTOR	1-595, 1-597
3100551-0000	.SUPPORT	1-621
3100552-0000	.SHAFT	1-621
3103390-0000	.PISTON	1-433
3103391-0000	.SLEEVE	1-433
3105734-0000	.ROLLER	1-621
3105735-0000	.PLATE	1-621
3105736-0000	.LEVER	1-621
3106884-0000	.FLOAT	1-289, 1-291, 1-293
3106887-0000	.FLOAT	1-289, 1-291, 1-293
3106890-0000	.FLOAT	1-289, 1-291, 1-293
3106892-0000	.FLOAT	1-289, 1-291, 1-293
3109139-0000	.PLATE	1-333
3109510-0000	.WASHER	1-59, 1-61, 1-63, 1-65
3113981-0000	.TOP SECTION	1-263
3124821-0000	.INDUCTOR	1-435, 1-437, 1-473, 1-475, 1-591, 1-593
3124990-0000	.CUTTING RAIL	1-455, 1-457, 1-459
3130265-0000	.GUIDE	1-227, 1-229, 1-255
3130266-0000	.GUIDE	1-227, 1-229, 1-255
3130267-0000	.RAIL	1-227, 1-229
3130845-0000	.SUPPORT	1-255
3130846-0000	.SUPPORT	1-255
3142195-0000	.VOLUME BULGE	1-105
3152478-0000	.PLATE	1-607
3155456-0000	.TOP SECTION	1-263
3155711-0100	.PHOTOCELL BRACKET	1-411
3160995-0000	.GUIDE	1-271, 1-273
3166549-0000	.FLANGE	1-599, 1-601
3166550-0000	.FLANGE	1-599, 1-601
3166551-0000	.LID	1-599, 1-601
3178571-0000	.STEERING DEVICE	1-283, 1-285
3187185-0000	.PLATE	1-333
3191259-0100	.SEAL	1-279
3192386-0100	.RAIL	1-223
3192413-0000	.BRACKET	1-271, 1-273
3193975-0000	.RAIL HOLDER	1-271, 1-273
3193976-0000	.SHIM	1-271, 1-273

Part No	Description	Page No	Part No	Description	Page No

Machine Type	Group Description	Page No

Tetra Pak

SPC
Spare Parts Catalogue

Pos	Part No	Description	Page No
B			
F70B3140	90459-4142	SAFETY SENSOR, ADAM M12, 20-051-00	1-617
F70B3141	90458-2794	SAFETY SENSOR, EVA 20-046-00	1-617
F70B3150	90459-4142	SAFETY SENSOR, ADAM M12, 20-051-00	1-615
F70B3151	90458-2794	SAFETY SENSOR, EVA 20-046-00	1-615
G25B2610	90459-7361	FIBRE OPTIC UNIT, WLL170-2P460	1-169
T50B1070	90600-0464	INDUCTIVE SWITCH,E2A-M12LS02-WP-B1-TP 5M	1-211
T50B1080	90600-0464	INDUCTIVE SWITCH,E2A-M12LS02-WP-B1-TP 5M	1-211
T50B1110	90600-0464	INDUCTIVE SWITCH,E2A-M12LS02-WP-B1-TP 5M	1-211
T50B1120	90600-0464	INDUCTIVE SWITCH,E2A-M12LS02-WP-B1-TP 5M	1-211
T50B6001	90459-5652	LUBRICATION BLOCK, HFS4666	1-123, 1-125, 1-127, 1-129, 1-131, 1-133
T50B6002	90459-5652	LUBRICATION BLOCK, HFS4666	1-123, 1-125, 1-127, 1-129, 1-131, 1-133
T50B6003	90459-5652	LUBRICATION BLOCK, HFS4666	1-123, 1-125, 1-127, 1-129, 1-131, 1-133
T50B9510	90044-0194	INDUCTIVE SENSOR, IN 5329	1-147, 1-149
T50B9520	90044-0194	INDUCTIVE SENSOR, IN 5329	1-109, 1-111, 1-113
U70B3050	90600-0362	PROX. SENSOR, SMTO-4U-PS-S-LED-24	1-337
U70B3060	90600-0362	PROX. SENSOR, SMTO-4U-PS-S-LED-24	1-337
U70B3240	90459-2409	INDUCTIVE SENSOR, IN 5230	1-603, 1-605
U70B9530	90600-2233	INDUCTIVE SENSOR	1-609, 1-621
E			
T50E7011	2647131-0000	GUIDE	1-49, 1-51
T50E7011	2903581-0000	GUIDE	1-49, 1-51
T50E7011	2906004-0000	GUIDE	1-49, 1-51
T50E7011	2933181-0000	FOLDING BAR	1-53, 1-55, 1-57
T50E7011	2937351-0000	FOLDING BAR	1-53, 1-55, 1-57
T50E7011	2953137-0000	FOLDING BAR	1-53, 1-55, 1-57
T50E7011	2960431-0000	FOLDING BAR	1-53, 1-55, 1-57
T50E7011	2983790-0000	FOLDING BAR	1-53, 1-55, 1-57
T50E7012	2879069-0000	FOLDING BAR	1-67, 1-69
T50E7013	2879069-0000	FOLDING BAR	1-67, 1-69
T50E7014	2647131-0000	GUIDE	1-49, 1-51
T50E7014	2903581-0000	GUIDE	1-51
T50E7014	2906004-0000	GUIDE	1-51
T50E7014	2933180-0000	FOLDING BAR	1-53, 1-55, 1-57
T50E7014	2937352-0000	FOLDING BAR	1-53, 1-55, 1-57
T50E7014	2953136-0000	FOLDING BAR	1-53, 1-55, 1-57
T50E7014	2960432-0000	FOLDING BAR	1-53, 1-55, 1-57
T50E7014	2983789-0000	FOLDING BAR	1-53, 1-55, 1-57
K			
T50K9602	90600-3222	PILOTED FUNCTION VALVE G1/8, 7880 06 10	1-211
T50K9604	90600-3222	PILOTED FUNCTION VALVE G1/8, 7880 06 10	1-211
M			
T50M9602	90459-5268	DOUBLE ACTING, MINI-ISO, CYL. 25-130	1-211
T50M9604	90459-5268	DOUBLE ACTING, MINI-ISO, CYL. 25-130	1-211
U70M2442	90604-3127	DOUBLE ACTING, COMPACT, 32-25	1-603, 1-605
U70M2452	90603-5802	DOUBLE ACTING, MINI-ISO, CYL. 20-50	1-337
Q			
T50Q6001	90092-0052	METERING VALVE 10 MM3	1-123, 1-125, 1-127, 1-129, 1-131, 1-133
T50Q6002	90092-0052	METERING VALVE 10 MM3	1-123, 1-125, 1-127, 1-129, 1-131, 1-133
T50Q6003	90092-0052	METERING VALVE 10 MM3	1-123, 1-125, 1-127, 1-129, 1-131, 1-133
T50Q6004	90092-0054	METERING VALVE 50 MM3	1-123, 1-125, 1-127, 1-129, 1-131, 1-133
T50Q6006	90230-0027	NON-RETURN VALVE QJ 8355-1/4"	1-147, 1-149
T50Q6010	90092-0052	METERING VALVE 10 MM3	1-123, 1-125, 1-127, 1-129, 1-131, 1-133
T50Q6011	90092-0052	METERING VALVE 10 MM3	1-123, 1-125, 1-127, 1-129, 1-131, 1-133
T50Q6012	90092-0052	METERING VALVE 10 MM3	1-123, 1-125, 1-127, 1-129, 1-131, 1-133
T50Q6013	90092-0052	METERING VALVE 10 MM3	1-123, 1-125, 1-127, 1-129, 1-131, 1-133
T50Q6014	90092-0052	METERING VALVE 10 MM3	1-123, 1-125, 1-127, 1-129, 1-131, 1-133
T50Q6015	90092-0052	METERING VALVE 10 MM3	1-123, 1-125, 1-127, 1-129, 1-131, 1-133
T50Q6016	90092-0052	METERING VALVE 10 MM3	1-123, 1-125, 1-127, 1-129, 1-131, 1-133
T50Q6017	90092-0052	METERING VALVE 10 MM3	1-123, 1-125, 1-127, 1-129, 1-131, 1-133
T50Q6018	90092-0052	METERING VALVE 10 MM3	1-123, 1-125, 1-127, 1-129, 1-131, 1-133
T50Q6019	90092-0052	METERING VALVE 10 MM3	1-123, 1-125, 1-127, 1-129, 1-131, 1-133
T50Q6020	90092-0052	METERING VALVE 10 MM3	1-123, 1-125, 1-127, 1-129, 1-131, 1-133
T50Q6021	90092-0052	METERING VALVE 10 MM3	1-123, 1-125, 1-127, 1-129, 1-131, 1-133
T50Q6022	90092-0052	METERING VALVE 10 MM3	1-123, 1-125, 1-127, 1-129, 1-131, 1-133
T50Q6023	90092-0052	METERING VALVE 10 MM3	1-123, 1-125, 1-127, 1-129, 1-131, 1-133
R			
G25R1100	1533360-0000	INDUCTOR	1-183
G25R1100	1533361-0000	INDUCTOR	1-183
G25R1100	1533362-0000	INDUCTOR	1-183
G25R1100	1533364-0000	INDUCTOR	1-183
G25R2600	2863955-0000	PLATE	1-171
T40R9150	1110934-0000	INDUCTOR	1-435, 1-437
T40R9150	1110936-0000	INDUCTOR	1-435, 1-437
T40R9150	1110937-0000	INDUCTOR	1-435, 1-437
T40R9150	1110938-0000	INDUCTOR	1-435, 1-437
T40R9150	1566783-0000	INDUCTOR	1-435, 1-437
T40R9150	2587466-0000	INDUCTOR	1-435, 1-437
T40R9150	2663378-0000	INDUCTOR	1-435, 1-437
T40R9150	2879535-0000	INDUCTOR	1-435, 1-437
T40R9150	3124821-0000	INDUCTOR	1-435, 1-437
T40R9151	67379-0268	TRANSFORMER	1-479
T40R9151	1110934-0000	INDUCTOR	1-473, 1-475

Pos	Part No	Description	Page No
R			
T40R9151	1110936-0000	INDUCTOR	1-473, 1-475
T40R9151	1110937-0000	INDUCTOR	1-473, 1-475
T40R9151	1110938-0000	INDUCTOR	1-473, 1-475
T40R9151	1566783-0000	INDUCTOR	1-473, 1-475
T40R9151	2587467-0000	INDUCTOR	1-473, 1-475
T40R9151	2663377-0000	INDUCTOR	1-473, 1-475
T40R9151	2879535-0000	INDUCTOR	1-473, 1-475
T40R9151	3124821-0000	INDUCTOR	1-473, 1-475
T50R9612	90235-0846	THROTTLE CHECK VALVE G1/8", MANUAL, 6	1-211
T50R9614	90235-0846	THROTTLE CHECK VALVE G1/8", MANUAL, 6	1-211
U70R2442	90459-3528	ONE WAY FLOW CONTROL, G1/8, MANUAL	1-603, 1-605
U70R2444	90459-3528	ONE WAY FLOW CONTROL, G1/8, MANUAL	1-603, 1-605
T			
G25T1100	67379-0216	TRANSFORMER	1-183
G25T1100	67379-0224	TRANSFORMER	1-183
T40T9150	67379-0101	TRANSFORMER	1-441
T40T9150	67379-0106	TRANSFORMER	1-441
T40T9150	67379-0249	TRANSFORMER	1-441
T40T9150	67379-0268	TRANSFORMER	1-441
T40T9151	67379-0101	TRANSFORMER	1-479
T40T9151	67379-0106	TRANSFORMER	1-479
T40T9151	67379-0249	TRANSFORMER	1-479
U70T9160	2888970-0438	TRANSFORMER VMN	1-281
U70T9160	2888970-0524	TRANSFORMER VMN	1-281
U70T9160	2888970-0619	TRANSFORMER VMN	1-281
W			
F70W3140	90459-4252	CABLE M12-C101, 20-056-10	1-617
F70W3150	90459-4252	CABLE M12-C101, 20-056-10	1-615
G25W2611	90232-0325	FIBRE, E32-DC200	1-169
T40W1255	315400-0003	TUBE PUN-H-6X1-SW	1-589
T40W1256	315400-0003	TUBE PUN-H-6X1-SW	1-589
T40W8062	90166-0143	TUBE 2,5 MM PA TRANSP.	1-539, 1-541, 1-543, 1-545, 1-565, 1-567, 1-569, 1-571
T40W8063	90166-0143	TUBE 2,5 MM PA TRANSP.	1-511, 1-513, 1-515, 1-517, 1-553, 1-555, 1-557, 1-559
T40W8064	90166-0143	TUBE 2,5 MM PA TRANSP.	1-539, 1-541, 1-543, 1-545, 1-565, 1-567, 1-569, 1-571
T40W8065	90166-0143	TUBE 2,5 MM PA TRANSP.	1-511, 1-513, 1-515, 1-517, 1-553, 1-555, 1-557, 1-559
T40W9156	1498849-0000	BUSBAR	1-435, 1-437
T40W9156	2830430-0000	BUSBAR	1-435, 1-437
T40W9156	2909301-0000	BUSBAR	1-435, 1-437
T40W9157	1498850-0000	BUSBAR	1-473, 1-475
T40W9157	2831048-0000	BUSBAR	1-473, 1-475
T40W9157	2909302-0000	BUSBAR	1-473, 1-475
T50W1344	90166-0108	TUBE 6 MM PA TRANSP.	1-123, 1-125, 1-127, 1-129, 1-131, 1-133
T50W6001	315400-0001	TUBE PUN-H-6X1-BL	1-211
T50W6002	315400-0001	TUBE PUN-H-6X1-BL	1-211
T50W7011	90166-0118	TUBE 8 MM PA BLACK	1-67, 1-69
T50W7012	90166-0118	TUBE 8 MM PA BLACK	1-49, 1-51, 1-53, 1-55, 1-57, 1-67, 1-69
T50W8001	90166-0109	TUBE 4 MM PA TRANSP.	1-109, 1-111, 1-113
T50W8060	90166-0143	TUBE 2,5 MM PA TRANSP.	1-123, 1-125, 1-127, 1-129, 1-131, 1-133
T50W8061	90166-0109	TUBE 4 MM PA TRANSP.	1-123, 1-125, 1-127, 1-129, 1-131, 1-133
T50W8061	90166-0143	TUBE 2,5 MM PA TRANSP.	1-123, 1-125, 1-127, 1-129, 1-131, 1-133
T50W8061	2869148-0000	TUBE	1-123, 1-125, 1-127, 1-129, 1-131, 1-133
T50W8062	90166-0143	TUBE 2,5 MM PA TRANSP.	1-123, 1-125, 1-127, 1-129, 1-131, 1-133
T50W8063	90166-0143	TUBE 2,5 MM PA TRANSP.	1-123, 1-125, 1-127, 1-129, 1-131, 1-133
T50W8064	90166-0143	TUBE 2,5 MM PA TRANSP.	1-123, 1-125, 1-127, 1-129, 1-131, 1-133
T50W8065	90166-0143	TUBE 2,5 MM PA TRANSP.	1-123, 1-125, 1-127, 1-129, 1-131, 1-133
T50W8066	90166-0143	TUBE 2,5 MM PA TRANSP.	1-123, 1-125, 1-127, 1-129, 1-131, 1-133
T50W8067	90166-0143	TUBE 2,5 MM PA TRANSP.	1-123, 1-125, 1-127, 1-129, 1-131, 1-133
T50W8068	90166-0143	TUBE 2,5 MM PA TRANSP.	1-123, 1-125, 1-127, 1-129, 1-131, 1-133
T50W8069	90166-0143	TUBE 2,5 MM PA TRANSP.	1-123, 1-125, 1-127, 1-129, 1-131, 1-133
T50W8070	90166-0143	TUBE 2,5 MM PA TRANSP.	1-123, 1-125, 1-127, 1-129, 1-131, 1-133
T50W8071	90166-0143	TUBE 2,5 MM PA TRANSP.	1-123, 1-125, 1-127, 1-129, 1-131, 1-133
T50W8072	90166-0143	TUBE 2,5 MM PA TRANSP.	1-123, 1-125, 1-127, 1-129, 1-131, 1-133
T50W8073	90166-0143	TUBE 2,5 MM PA TRANSP.	1-123, 1-125, 1-127, 1-129, 1-131, 1-133
T50W8074	90166-0143	TUBE 2,5 MM PA TRANSP.	1-123, 1-125, 1-127, 1-129, 1-131, 1-133
T50W8075	90166-0143	TUBE 2,5 MM PA TRANSP.	1-123, 1-125, 1-127, 1-129, 1-131, 1-133
T50W8076	90166-0143	TUBE 2,5 MM PA TRANSP.	1-123, 1-125, 1-127, 1-129, 1-131, 1-133
T50W8077	90166-0109	TUBE 4 MM PA TRANSP.	1-123, 1-125, 1-127, 1-129, 1-131, 1-133
T50W8077	90166-0143	TUBE 2,5 MM PA TRANSP.	1-123, 1-125, 1-127, 1-129, 1-131, 1-133
T50W8077	2869149-0000	TUBE	1-123, 1-125, 1-127, 1-129, 1-131, 1-133
T50W9613	90166-0081	TUBE 6 MM PA BLUE	1-211
T50W9615	90166-0081	TUBE 6 MM PA BLUE	1-211
T50W9616	315400-0016	TUBE PUN-H-4X0,75-BL	1-211
T50W9617	90166-0081	TUBE 6 MM PA BLUE	1-211
T50W9618	315400-0016	TUBE PUN-H-4X0,75-BL	1-211
T50W9619	90166-0013	TUBE 8 MM PA BLUE	1-211
T50W9623	90166-0013	TUBE 8 MM PA BLUE	1-109, 1-111, 1-113
T50W9624	315400-0016	TUBE PUN-H-4X0,75-BL	1-211
U70W3050	344245-0050	SENSOR CABLE, EVT123	1-337

Pos	Part No	Description	Page No
W			
U70W3060	344245-0050	SENSOR CABLE, EVT123	1-337
U70W3240	344245-0050	SENSOR CABLE, EVT123	1-603, 1-605
U70W7003	90166-0118	TUBE 8 MM PA BLACK	1-281
U70W9530	351309-0100	ACTUATOR/SENSOR CABLE PRKT 4-07/10M	1-609, 1-621
X			
G25X2620	90459-6821	MALE INSERT HAN 4A, 0920 0042 611	1-169

Pos	Part No	Description	Page No

Pos	Part No	Description	Page No	Pos	Part No	Description	Page No

Machine Type	Group Description	Page No

Tetra Pak

Label for 80 mm binder **Note!** *This page is generated* **automatically.**

VCK A3/Flex 040V
648597-0400 Issue 2012-06
Doc No. SPC-3212463-0102

VCK A3/Flex 040V
648597-0400 Issue 2012-06
Doc No. SPC-3212463-0102

VCK A3/Flex 040V
648597-0400 Issue 2012-06
Doc No. SPC-3212463-0102

VCK A3/Flex 040V 1(3)
648597-0400 Issue 2012-06
Doc No. SPC-3212463-0102

VCK A3/Flex 040V 1(2)
648597-0400 Issue 2012-06
Doc No. SPC-3212463-0102

VCK A3/Flex 040V 2(3)
648597-0400 Issue 2012-06
Doc No. SPC-3212463-0102

VCK A3/Flex 040V 2(2)
648597-0400 Issue 2012-06
Doc No. SPC-3212463-0102

VCK A3/Flex 040V 3(3)
648597-0400 Issue 2012-06
Doc No. SPC-3212463-0102

Label for 55 mm binder **Note!** *This page is generated* **automatically.**

VCK A3/Flex 040V
648597-0400 Issue 2012-06
Doc No. SPC-3212463-0102

VCK A3/Flex 040V 1(2)
648597-0400 Issue 2012-06
Doc No. SPC-3212463-0102

VCK A3/Flex 040V
648597-0400 Issue 2012-06
Doc No. SPC-3212463-0102

VCK A3/Flex 040V 2(2)
648597-0400 Issue 2012-06
Doc No. SPC-3212463-0102

VCK A3/Flex 040V
648597-0400 Issue 2012-06
Doc No. SPC-3212463-0102

VCK A3/Flex 040V 1(3)
648597-0400 Issue 2012-06
Doc No. SPC-3212463-0102

VCK A3/Flex 040V
648597-0400 Issue 2012-06
Doc No. SPC-3212463-0102

VCK A3/Flex 040V 2(3)
648597-0400 Issue 2012-06
Doc No. SPC-3212463-0102

VCK A3/Flex 040V
648597-0400 Issue 2012-06
Doc No. SPC-3212463-0102

VCK A3/Flex 040V 3(3)
648597-0400 Issue 2012-06
Doc No. SPC-3212463-0102

VCK A3/Flex 040V
648597-0400 Issue 2012-06
Doc No. SPC-3212463-0102

VCK A3/Flex 040V 3(3)
648597-0400 Issue 2012-06
Doc No. SPC-3212463-0102

Label for 40 mm binder **Note!** *This page is generated* **automatically.**

VCK A3/Flex 040V
648597-0400 Issue 2012-06
Doc No. SPC-3212463-0102

VCK A3/Flex 040V 1(2)
648597-0400 Issue 2012-06
Doc No. SPC-3212463-0102

VCK A3/Flex 040V
648597-0400 Issue 2012-06
Doc No. SPC-3212463-0102

VCK A3/Flex 040V 2(2)
648597-0400 Issue 2012-06
Doc No. SPC-3212463-0102

VCK A3/Flex 040V
648597-0400 Issue 2012-06
Doc No. SPC-3212463-0102

VCK A3/Flex 040V 1(2)
648597-0400 Issue 2012-06
Doc No. SPC-3212463-0102

VCK A3/Flex 040V
648597-0400 Issue 2012-06
Doc No. SPC-3212463-0102

VCK A3/Flex 040V 2(2)
648597-0400 Issue 2012-06
Doc No. SPC-3212463-0102

VCK A3/Flex 040V
648597-0400 Issue 2012-06
Doc No. SPC-3212463-0102

VCK A3/Flex 040V 1(3)
648597-0400 Issue 2012-06
Doc No. SPC-3212463-0102

VCK A3/Flex 040V
648597-0400 Issue 2012-06
Doc No. SPC-3212463-0102

VCK A3/Flex 040V 2(3)
648597-0400 Issue 2012-06
Doc No. SPC-3212463-0102

VCK A3/Flex 040V
648597-0400 Issue 2012-06
Doc No. SPC-3212463-0102

VCK A3/Flex 040V 3(3)
648597-0400 Issue 2012-06
Doc No. SPC-3212463-0102

VCK A3/Flex 040V
648597-0400 Issue 2012-06
Doc No. SPC-3212463-0102

VCK A3/Flex 040V 3(3)
648597-0400 Issue 2012-06
Doc No. SPC-3212463-0102