SPC

Spare Parts Catalogue

VCK A3/Flex 040V

648597-0400

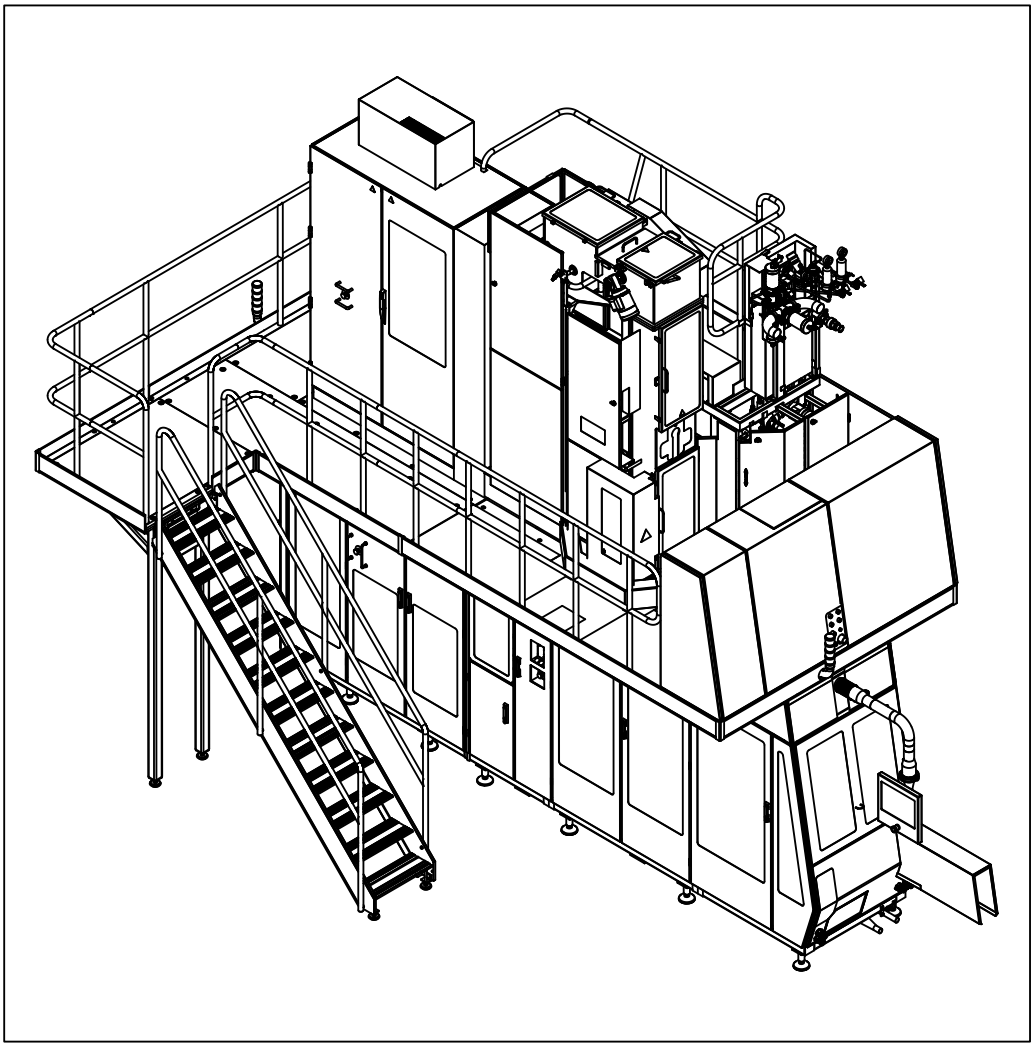

Tetra Pak®

Doc. No: SPC-3212463-0110

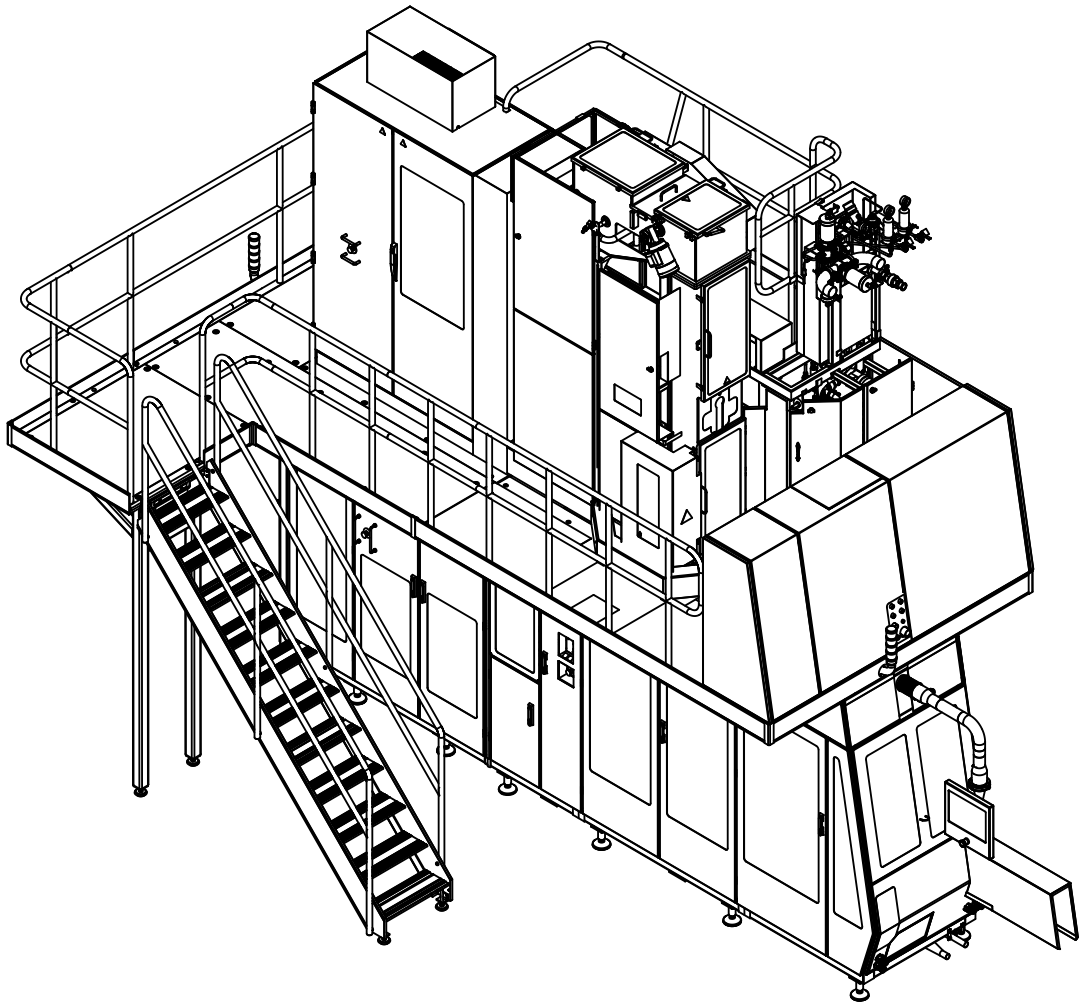

The position numbers in the illustration correspond with the chapter numbers listed on the next page.

Copyright © 2014 Tetra Pak International SA

All rights reserved. No part of this document may be reproduced or copied in any form or by any means without written permission from Tetra Pak Packaging Solutions

, Tetra Pak, and all other trademarks displayed in this document are the property of the Tetra Pak International SA. Tetra Pak Packaging Solutions together with Tetra Pak International SA form part of 'the Tetra Pak Group'. The content of this manual is in accordance with the design and construction of the machine or equipment at the time of publishing. Tetra Pak Group reserves the right to introduce design modifications without prior notice.

This document was produced and printed by:

Tetra Pak Packaging Solutions
Via Delfini 1
41123 Modena
ITALY

Doc. No. SPC-3212463-0110

Issue 2014-09

This document is valid for:

Series No. / Machine No.
Year of Manufacture Sign.

i Introduction
1 VCK A3/Flex
ii Part Number Index
iii Ref. Des. Parts Index

SPC

Spare Parts Catalogue

VCK A3/Flex 040V
648597-0400

Machine or equipment configurations that this catalogue is valid for are described on the next page.

Doc. No: SPC-3212463-0110

Issue 2014-09

Tetra Pak®
Tetra Pak Packaging Solutions

Valid for:

Name	Drawing Specification and Development Step	Additional Information
Volume Conversion Kit A3/Flex 040V	6458597-0400	Valid from T-order: 22375/00064

Update Log for Doc. No. SPC-3212463-0110

This table shows all changes made to this catalogue, including installed rebuilding kits, added or removed pages. Page numbering on added pages begins with UP.

Date	Installed Kit	Added Pages (Doc. No.)	Removed Pages	Signature

Date	Installed Kit	Added Pages (Doc. No.)	Removed Pages	Signature

i Introduction

en About the Introduction Chapter
This chapter contains basic information about this catalogue and related Tetra Pak® equipment.

bg За уводната глава
Тази глава съдържа основна информация за този каталог и приложимото Tetra Pak® оборудване.

cs O kapitole Úvod
Tato kapitola obsahuje základní informace o této příručce a souvisejícím zařízení Tetra Pak®.

da Om indledningen
Kapitlet indeholder grundlæggende oplysninger om dette katalog og tilhørende Tetra Pak®-udstyr.

de Über das Einleitungskapitel
Diese Kapitel enthält grundlegende Informationen über diesen Katalog und die zugehörige Tetra Pak®-Ausrüstung.

el Σχετικά με το Κεφάλαιο 'Εισαγωγή'
Αυτό το κεφάλαιο περιέχει βασικές πληροφορίες για τον παρόντα κατάλογο και τον σχετικό εξοπλισμό της Tetra Pak®.

es Acerca del capítulo Introducción
Este capítulo contiene información básica sobre este catálogo y el equipo Tetra Pak® relacionado.

et Sissejuhatava peatüki kohta
See peatükk sisaldab teavet käesoleva kataloogi ja sellega seonduva Tetra Pak®i seadme kohta.

fi Tietoja Johdanto-luvusta
Tässä luvussa on perustietoja tästä luettelosta ja Tetra Pak®-laitteesta.

fr À propos du chapitre Introduction
Ce chapitre contient les informations de base à propos de ce catalogue et de l'équipement Tetra Pak® concerné.

hr O uvodnom poglavlju
Ovo poglavlje sadrži osnovne informacije o ovome Katalogu i o povezanoj Tetra Pak® opremi.

hu A Bevezetés fejezetről
Ez a fejezet alapvető információkat tartalmaz a katalógusról és a hozzá tartozó Tetra Pak® berendezésről.

is Um inngangskaflann
Þessi kafli inniheldur grundvallarupplýsingar um þennan vörulista og tengdan Tetra Pak® búnað.

it Informazioni sul capitolo Introduzione
Questo capitolo contiene informazioni generali sul presente catalogo e sulla relativa macchina Tetra Pak®.

lt Apie įvadinį skyrių
Šiame skyriuje pateikta pagrindinė informacija apie šį katalogą ir su juo susijusią "Tetra Pak®" įrangą.

lv Par Ievada nodaļu
Šī nodaļa ietver galveno informāciju par šo katalogu un saistītajām Tetra Pak® iekārtām.

nl Over de inleiding
Dit hoofdstuk bevat basisinformatie omtrent deze catalogus en aanverwante Tetra Pak®-installatie.

no Om kapitlet Introduksjon
Dette kapitlet inneholder grunnleggende informasjon om denne katalogen og relatert Tetra Pak®-ustyr.

pl Informacje na temat rozdziału wprowadzającego
Rozdział wprowadzający zawiera podstawowe informacje dotyczące niniejszego katalogu i związanej z nim maszyny Tetra Pak®.

pt Acerca do Capítulo de Introdução
Este capítulo contém informações básicas sobre este catálogo e os equipamentos relacionados da Tetra Pak®.

pt-br Sobre o capítulo Introdução
Este capítulo contém as informações básicas sobre este manual e o relativo equipamento Tetra Pak®.

ro Despre capitolul introductiv
Acest capitol conţine informaţii de bază despre acest catalog şi despre echipamentul Tetra Pak® corelat.

sk O kapitole Úvod
Táto kapitola obsahuje základné informácie o tomto návode a informácie súvisiace so zariadením Tetra Pak®.

sl O uvodnem poglavju
To poglavje vsebuje osnovne informacije o tem katalogu in opremi Tetra Pak®.

sv Om inledningskapitlet
Det här kapitlet innehåller grundläggande information om katalogen och Tetra Pak®-utrustningen.

This page intentionally left blank

Manual Information

Illustrations . . . . . i - 9

English Text . . . . . i - 11

Информация за ръководството

Илюстрации . . . . . i - 9

Текст на български език . . . . . i - 17

Informace o příručce

Obrázky . . . . . i - 9

Český text . . . . . i - 23

Oplysninger om vejledninger

Illustrationer . . . . . i - 9

Dansk tekst . . . . . i - 29

Handbuch-Informationen

Abbildungen . . . . . i - 9

Deutscher Text . . . . . i - 35

Πληροφορίες εγχειριδίου

Εικόνες . . . . . i - 9

Ελληνικό Κείμενο . . . . . i - 41

Información del manual

Ilustraciones . . . . . i - 9

Texto en español . . . . . i - 47

Manuaali informatsioon

Joonised . . . . . i - 9

Eestikeelne tekst . . . . . i - 53

Tiedot käsikirjasta

Kuvat . . . . . i - 9

Suomenkielinen teksti . . . . . i - 59

Information sur le manuel

Illustrations . . . . . i - 9

Texte français . . . . . i - 65

Informacije o priručnicima

Ilustracije . . . . . i - 9

Hrvatska tekst . . . . . i - 71

Kézikönyv információ

Ábrák . . . . . i - 9

Magyar szöveg . . . . . i - 77

Handbókaupplýsingar

Skýringarmyndir . . . . . i - 9

Íslenskur texti . . . . . i - 83

Informazioni sul manuale

Figure . . . . . i - 9

Testo in italiano . . . . . i - 89

Vadovo informacija

Paveikslėliai . . . . . i - 9

Lietuviškas tekstas . . . . . i - 95

Informācija par instrukciju

Ilustrācijas . . . . . i - 9

Teksts latviešu valodā . . . . . i - 101

Handboekinformatie

Afbeeldingen . . . . . i - 9

Nederlands tekst . . . . . i - 107

Informasjon om manualen

Illustrasjoner . . . . . i - 9

Norsk tekst . . . . . i - 113

Informacje na temat instrukcji

Rysunki . . . . . i - 9

Tekst polski . . . . . i - 119

Informação do Manual

Ilustrações . . . . . i - 9

Texto em português . . . . . i - 125

Informações sobre os manuais

Ilustrações . . . . . i - 9

Texto Brasileiro-Português . . . . . i - 131

Informaţiile de manual

Ilustraţii . . . . . i - 9

Text în limba română . . . . . i - 137

Informácie o príručke

Ilustrácie . . . . . i - 9

Slovenský text . . . . . i - 143

Informacije o navodilu

Slike . . . . . i - 9

Slovensko besedilo . . . . . i - 149

Information om handboken

Bilder . . . . . i - 9

Svensk text . . . . . i - 155

This page intentionally left blank

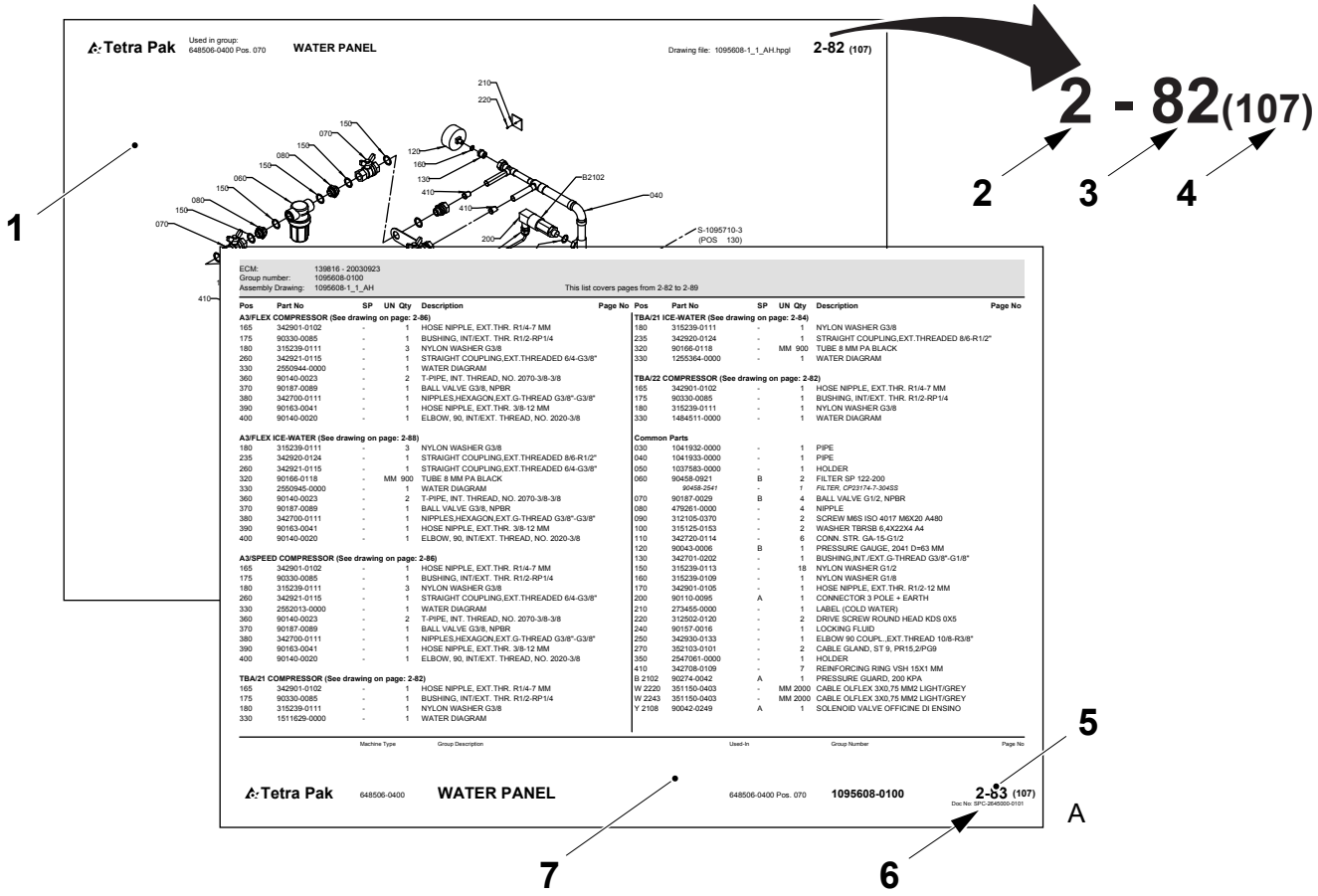
Tetra Pak
Used in group:
648506-0400 Pos. 070
WATER PANEL
Drawing file: 1095608-1_1_AH.hpgl
2-82 (107)
2 - 82(107)
1
2
3
4
5
6
7
A
ECM: 139816 - 20030923
Group number: 1095608-0100
Assembly Drawing: 1095608-1_1_AH
This list covers pages from 2-82 to 2-89
Tetra Pak 648506-0400 WATER PANEL 648506-0400 Pos. 070 1095608-0100 2-83 (107)

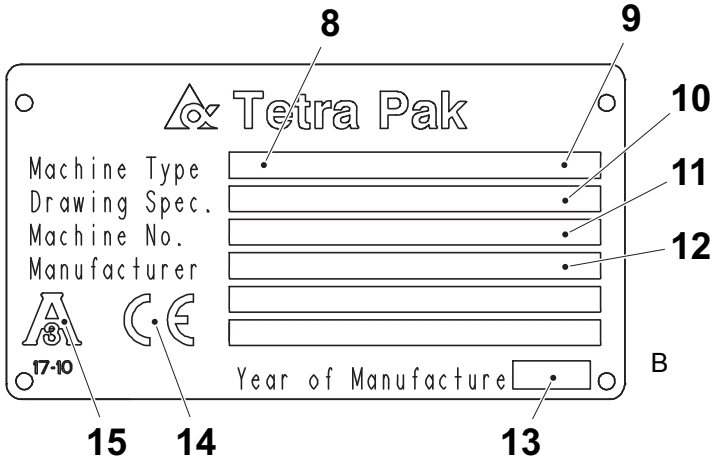
8
9
10
11
12
Tetra Pak
Machine Type
Drawing Spec.
Machine No.
Manufacturer
17-10
Year of Manufacture
B
15
14
13

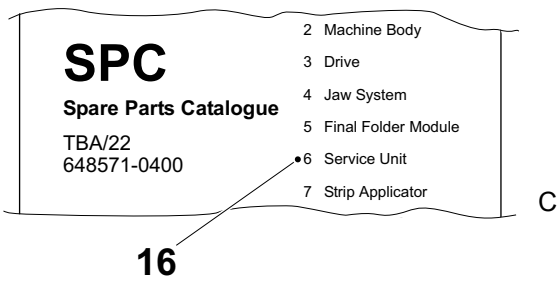
SPC
Spare Parts Catalogue
TBA/22
648571-0400
2 Machine Body
3 Drive
4 Jaw System
5 Final Folder Module
6 Service Unit
7 Strip Applicator
C
16

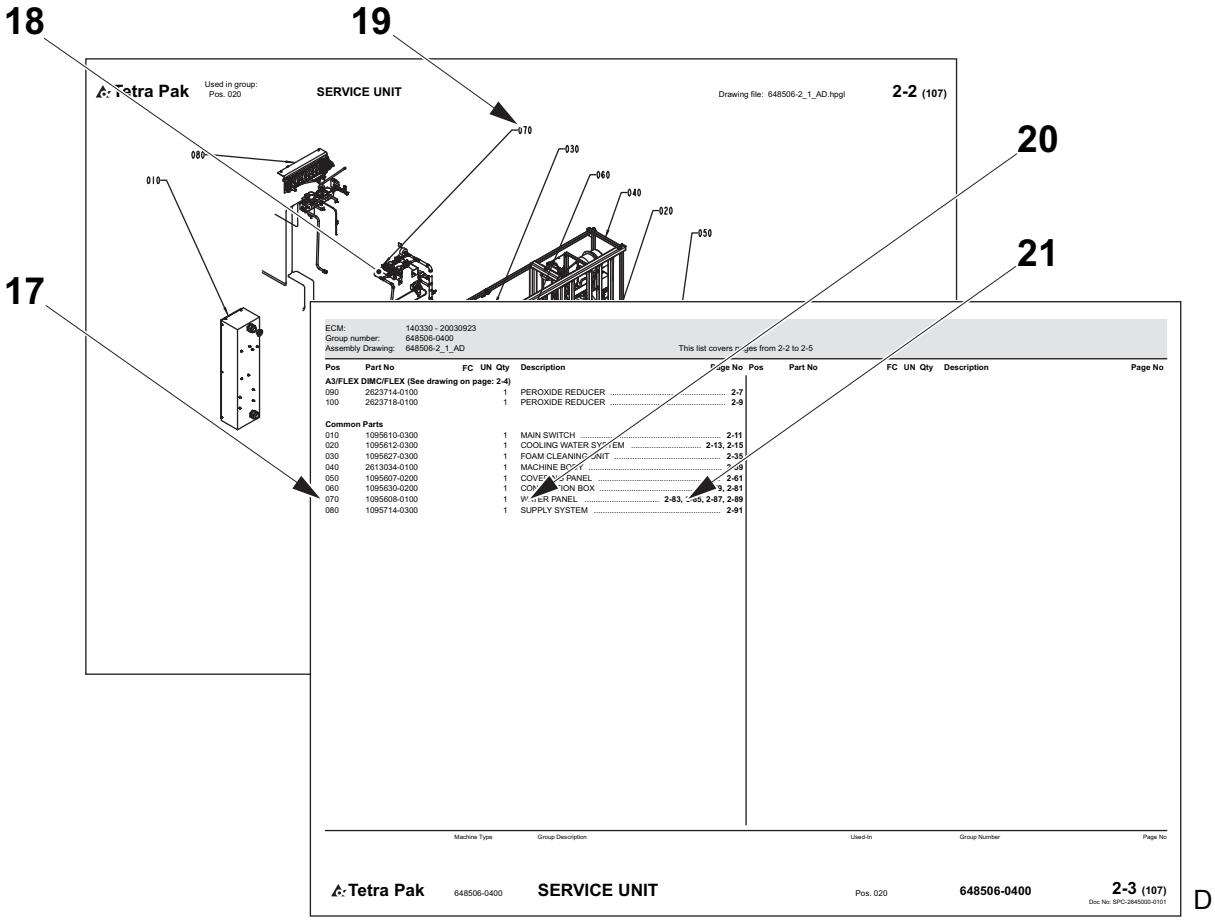
18
19
20
21
17
Tetra Pak
Used in group:
Pos. 020
SERVICE UNIT
Drawing file: 648506-2_1_AD.hpgl
2-2 (107)
070
030
060
040
020
050
080
010
ECM: 140330 - 20030923
Group number: 648506-0400
Assembly Drawing: 648506-2_1_AD
This list covers pages from 2-2 to 2-5
Pos Part No FC UN Qty Description Page No
A3/FLEX DIMC/FLEX (See drawing on page: 2-4)
090 2623714-0100 1 PEROXIDE REDUCER 2-7
100 2623718-0100 1 PEROXIDE REDUCER 2-9
Common Parts
010 1095610-0300 1 MAIN SWITCH 2-11
020 1095612-0300 1 COOLING WATER SYSTEM 2-13, 2-15
030 1095627-0300 1 FOAM CLEANING UNIT 2-35
040 2613034-0100 1 MACHINE BODY 2-39
050 1095607-0200 1 COVER, SIDE PANEL 2-61
060 1095630-0200 1 CONNECTION BOX 2-81
070 1095608-0100 1 WATER PANEL 2-83, 2-85, 2-87, 2-89
080 1095714-0300 1 SUPPLY SYSTEM 2-91
Pos Part No FC UN Qty Description Page No
Machine Type
Group Description
Used-In
Group Number
Page No
Tetra Pak
648506-0400
SERVICE UNIT
Pos. 020
648506-0400
2-3 (107)
Doc No: SPC-2645000-0101

D

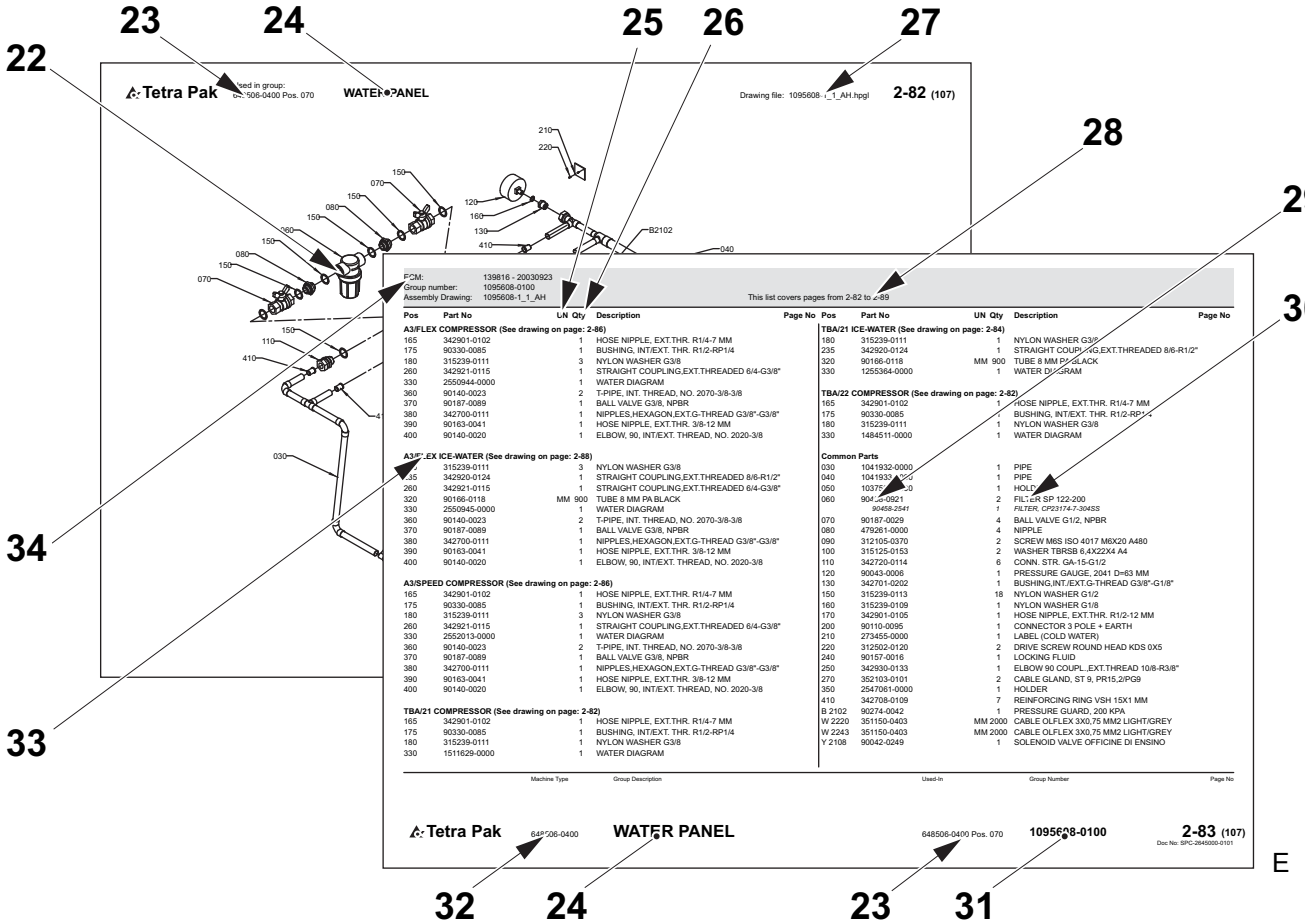
23
24
25
26
27
22
28
29
30
34
33
Tetra Pak
Used in group:
Pos. 070
WATER PANEL
Drawing file: 1095608-1_1_AH.hpgl
2-82 (107)
210
220
150
070
080
060
120
160
130
B2102
410
040
110
030
ECM: 139816 - 20030923
Group number: 1095608-0100
Assembly Drawing: 1095608-1_1_AH
This list covers pages from 2-82 to 2-89
Pos Part No UN Qty Description Page No
A3/FLEX COMPRESSOR (See drawing on page: 2-86)
165 342901-0102 1 HOSE NIPPLE, EXT.THR. R1/4-7 MM
175 90330-0085 1 BUSHING, INT/EXT. THR. R1/2-RP1/4
180 315239-0111 3 NYLON WASHER G3/8
260 342921-0115 1 STRAIGHT COUPLING,EXT.THREADED 6/4-G3/8"
330 2550944-0000 1 WATER DIAGRAM
360 90140-0023 2 T-PIPE, INT. THREAD, NO. 2070-3/8-3/8
370 90187-0089 1 BALL VALVE G3/8, NPBR
380 342700-0111 1 NIPPLES,HEXAGON,EXT.G-THREAD G3/8"-G3/8"
390 90163-0041 1 HOSE NIPPLE, EXT.THR. 3/8-12 MM
400 90140-0020 1 ELBOW, 90, INT/EXT. THREAD, NO. 2020-3/8
A3/FLEX ICE-WATER (See drawing on page: 2-88)
235 315239-0111 3 NYLON WASHER G3/8
240 342920-0124 1 STRAIGHT COUPLING,EXT.THREADED 8/6-R1/2"
260 342921-0115 1 STRAIGHT COUPLING,EXT.THREADED 6/4-G3/8"
320 90166-0118 MM 900 TUBE 8 MM PA BLACK
330 2550945-0000 1 WATER DIAGRAM
360 90140-0023 2 T-PIPE, INT. THREAD, NO. 2070-3/8-3/8
370 90187-0089 1 BALL VALVE G3/8, NPBR
380 342700-0111 1 NIPPLES,HEXAGON,EXT.G-THREAD G3/8"-G3/8"
390 90163-0041 1 HOSE NIPPLE, EXT.THR. 3/8-12 MM
400 90140-0020 1 ELBOW, 90, INT/EXT. THREAD, NO. 2020-3/8
A3/SPEED COMPRESSOR (See drawing on page: 2-86)
165 342901-0102 1 HOSE NIPPLE, EXT.THR. R1/4-7 MM
175 90330-0085 1 BUSHING, INT/EXT. THR. R1/2-RP1/4
180 315239-0111 3 NYLON WASHER G3/8
260 342921-0115 1 STRAIGHT COUPLING,EXT.THREADED 6/4-G3/8"
330 2552013-0000 1 WATER DIAGRAM
360 90140-0023 2 T-PIPE, INT. THREAD, NO. 2070-3/8-3/8
370 90187-0089 1 BALL VALVE G3/8, NPBR
380 342700-0111 1 NIPPLES,HEXAGON,EXT.G-THREAD G3/8"-G3/8"
390 90163-0041 1 HOSE NIPPLE, EXT.THR. 3/8-12 MM
400 90140-0020 1 ELBOW, 90, INT/EXT. THREAD, NO. 2020-3/8
TBA/21 COMPRESSOR (See drawing on page: 2-82)
165 342901-0102 1 HOSE NIPPLE, EXT.THR. R1/4-7 MM
175 90330-0085 1 BUSHING, INT/EXT. THR. R1/2-RP1/4
180 315239-0111 1 NYLON WASHER G3/8
330 1511629-0000 1 WATER DIAGRAM
TBA/21 ICE-WATER (See drawing on page: 2-84)
180 315239-0111 1 NYLON WASHER G3/8
235 342920-0124 1 STRAIGHT COUPLING,EXT.THREADED 8/6-R1/2"
320 90166-0118 MM 900 TUBE 8 MM PA BLACK
330 1255364-0000 1 WATER DIAGRAM
TBA/22 COMPRESSOR (See drawing on page: 2-82)
165 342901-0102 1 HOSE NIPPLE, EXT.THR. R1/4-7 MM
175 90330-0085 1 BUSHING, INT/EXT. THR. R1/2-RP1/4
180 315239-0111 1 NYLON WASHER G3/8
330 1484511-0000 1 WATER DIAGRAM
Common Parts
030 1041932-0000 1 PIPE
040 1041933-0000 1 PIPE
050 1037[illegible] 1 HOLDER
060 90458-0821 2 FILTER SP 122-200
90458-2541 1 FILTER, CP23174-7-3045S
070 90187-0029 4 BALL VALVE G1/2, NPBR
080 479261-0000 4 NIPPLE
090 312105-0370 2 SCREW M6S ISO 4017 M6X20 A480
100 315125-0153 2 WASHER TBRSB 6,4X22X4 A4
110 342720-0114 6 CONN. STR. GA-15-G1/2
120 90043-0006 1 PRESSURE GAUGE, 2041 D=63 MM
130 342701-0202 1 BUSHING,INT./EXT.G-THREAD G3/8"-G1/8"
150 315239-0113 18 NYLON WASHER G1/2
160 315239-0109 1 NYLON WASHER G1/8
170 342901-0105 1 HOSE NIPPLE, EXT.THR. R1/2-12 MM
200 90110-0095 1 CONNECTOR 3 POLE + EARTH
210 273455-0000 1 LABEL (COLD WATER)
220 312502-0120 2 DRIVE SCREW ROUND HEAD KDS 0X5
240 90157-0016 1 LOCKING FLUID
250 342930-0133 1 ELBOW 90 COUPL.,EXT.THREAD 10/8-R3/8"
270 352103-0101 2 CABLE GLAND, ST 9, PR15,2/PG9
350 2547061-0000 1 HOLDER
410 342708-0109 7 REINFORCING RING VSH 15X1 MM
B 2102 90274-0042 1 PRESSURE GUARD, 200 KPA
W 2220 351150-0403 MM 2000 CABLE OLFLEX 3X0,75 MM2 LIGHT/GREY
W 2243 351150-0403 MM 2000 CABLE OLFLEX 3X0,75 MM2 LIGHT/GREY
Y 2108 90042-0249 1 SOLENOID VALVE OFFICINE DI ENSINO
Pos Part No UN Qty Description Page No
Machine Type
Group Description
Used-In
Group Number
Page No
Tetra Pak
648506-0400
WATER PANEL
648506-0400 Pos. 070
1095608-0100
2-83 (107)
Doc No: SPC-2645000-0101
32
24
23
31

E

Manual Information

The Tetra Pak Group recommends reading all delivered manuals carefully. Make sure that the delivered manuals are available to personnel who operate or maintain the equipment.

It is important to keep this catalogue for the lifetime of the equipment and to pass the catalogue on to any subsequent holder or user.

The Tetra Pak Group will not be held responsible for any damage, loss, injury, or death caused by not following the instructions in the manuals that accompany this equipment.

Delivered Manuals

Manuals delivered with this equipment:

CM

The Conversion Manual provides technicians with information on converting the equipment between different production modes.

EM

The Electrical Manual provides technicians with information about the equipment's electrical system.

IM

The Installation Manual provides technicians with information required to safely install the equipment.

MaSP

The Maintenance & Spare Parts Manual provides information on how to maintain the component. It also provides the information necessary to order spare parts from the Tetra Pak Group for the component.

MM

The Maintenance Manual provides technicians with information on maintaining the equipment.

OM

The Operation Manual provides the operator with information on handling and operating the equipment before, during, and after production.

RM

The Rebuilding Manual provides technicians with information required to safely install a kit to an installed machine or equipment.

(Cont'd)

(Cont'd)

SPC

The Spare Parts Catalogue provides the information necessary to order spare parts from the Tetra Pak Group.

TeM

The Technical Manual provides technicians with information which can be:

- information required to safely install the equipment
- information required to maintaining the equipment
- information about the machine's/equipment's electrical system
- information necessary to order spare parts from the Tetra Pak Group
- other technical information

UP

The Update Pages provides new pages to update existing machine manuals.

Page Layout

Refer to the illustration (A) on page i-9: The main pages in a Spare Parts Catalogue consist of an illustration page (1) and a corresponding list page (7). The page number (5) is shown in the header of an illustration page and in the footer of a list page. The document number (6) is shown in the footer of a list page.

Page Numbering

Refer to the illustration (A) on page i-9: A page number (5) has three parts:

- chapter number (2)
- consecutive page number within the chapter (3)
- total number of pages in the chapter (4)

Note! The letters UP may replace the chapter number (2) if the manual includes update pages. The consecutive page number (3) and the total number of pages (4) of update pages do not follow the existing sequential page numbering of the chapter.

Machine Introduction

Manufacturer

For the manufacturer’s name and address, see the second page of this catalogue.

Service

The Tetra Pak Group does not accept responsibility for any damages or any injuries to equipment, staff or consumers that is caused by spare parts that are not genuine Tetra Pak® spare parts.

To order genuine Tetra Pak spare parts for this machine contact the nearest Tetra Pak office.

Identification

CE Classification

This equipment complies with the basic health and safety regulations of the European Economic Area (EEA).

(Cont'd)

(Cont'd)

3-A Compliance

If the machine plate contains the 3-A mark (15) (see illustration (B) on page i-9), this equipment complies with the 3-A Sanitary Standards for Formers, Fillers, and Sealers of Containers for Fluid Milk and Fluid Milk Products, Number 17-10.

Machine Plate

The illustration (B) on page i-9 shows an example of a machine plate.
An illustration of the valid machine plate and its location on the equipment is shown in the Introduction chapter of the manuals delivered with this equipment. The machine plate contains the data listed below, needed when contacting the Tetra Pak Group concerning this specific equipment.

- Machine type (8)
- Volume (9)
- Drawing specifications (10)
- Machine serial number (11)
- Manufacturer (12)
- Year of manufacture (13)
- CE mark (14)
- 3-A mark (if applicable) (15)

Make sure that the equipment data in the front pages of this manual corresponds to the machine plate data and the machine specification.

How to Use This Spare Parts Catalogue

Locate a Spare Part Number

a) Refer to the illustration (C) on page i-9: Go to the chapter number (16) indicated beside the main group that contains the part you want to locate.

Items b) and c) refer to the illustration (D) on page i-10.

b) On the main group illustration, look for the machine subgroup (18) that contains the part or subgroup you are looking for. Note the position number (19) and go to the list page that follows the illustration.

c) Look for the position number/reference designation (17) or the subgroup name (20). Go to the corresponding page number (21) listed in the right-hand column. The Tetra Pak Group has chosen to always use the function oriented structure for reference designation. The prefix indicating function oriented structure (=) is not shown in the reference designation

(Cont'd)

(Cont'd)

Items d) and e) refer to the illustration (E) on page i-10.

d) Locate the part (22) that you are looking for on the subgroup illustration and note the part's position number.

e) The part number (29) and part description (30) are listed beside the position number on the list page.

Information Listed in a Spare Parts Catalogue

The list below refers to the illustration (E) on page i-10. A Spare Parts Catalogue contains the following information about groups, subgroups, and spare parts for the equipment:

- Group structure reference (23). Indicates the next higher group in the equipment list structure.
- Group name (24)
- Unit of measure (25)
- Quantity (26)
- Assembly drawing number (27)
- List page range (28). Included if there are multiple pages in the group illustration or list.
- Part or subgroup number (29)
- Subgroup name or part description (30)
- Group number (31)
- Equipment number (32)
- Group information heading (33). Indicates if the section below the heading is for a specific machine variant or if it is a list of common parts. If a list has more than one variant and each variant has its own assembly drawing, a page reference to the variant's assembly drawing is shown.
- Internal information (34)

Assistance and Inquiries

For assistance when operating this equipment, or other inquiries, comments, or suggestions, submit the questions or give feedback by using the QuTI-P tool. Type QuTI-P in the address field of your browser. If access to QuTI-P is not available, request access by contacting the Global Service Desk.

If access to the Tetra Pak® intranet is not available, contact the nearest Tetra Pak representative.

Информация за ръководството

Tetra Pak Group препоръчва внимателното прочитане на всички доставени ръководства. Уверете се, че всички доставени ръководства са достъпни за персонала, който работи с оборудването или го поддържа.

Важно е да съхранявате това ръководство през целия експлоатационен срок на оборудването и да го предадете на всеки следващ собственик или ползвател.

Tetra Pak Group няма да носи отговорност за никакви повреди на оборудването, предизвикани от неспазването на инструкциите, дадени в ръководството, което придружава това оборудване.

Доставени ръководства

Ръководства, доставени с това оборудване:

CM

Ръководството за преустройство предоставя на техниците информация за преустройство на оборудването за различните производствени режими.

EM

Електрическият наръчник осигурява на техниците информация за електрическата система на оборудването.

IM

Наръчникът за инсталацията осигурява на техниците информация за безопасно инсталиране на оборудването.

MaSP

Ръководството за техническо обслужване и резервни части предоставя информация относно техническото обслужване на компонента. То предоставя и необходимата информация за заявка на резервни части за компонента от Tetra Pak Group.

MM

Наръчникът за поддръжка осигурява на техниците информация за поддържане на оборудването.

OM

Ръководството за експлоатация предоставя на оператора информацията, която му е необходима за работата и експлоатацията на оборудването, преди, по време на и след производство.

RM

Ръководството за възстановяване предоставя на техниците информация, необходима за безопасно монтиране на .принадлежности на инсталирана машина или оборудване.

(Продължение)

(Продължение)

SPC

Каталогът за резервни части осигурява информация за поръчка на резервни части от Tetra Pak Group.

TeM

Техническите ръководства, осигуряват на техниците информация, която може да бъде:

- информация, необходима за безопасното инсталиране на оборудването
- информация, необходима за поддръжката на оборудването
- информацията за електрическата система на оборудването/машината
- предоставя информацията необходима за поръчката на резервни части от Tetra Pak Group
- друга техническа информация.

UP

Страниците с актуализации предоставят нови страници за актуализиране на вече съществуващите ръководства за машината.

Разположение на страниците

Вижте илюстрация (A) на страница i-9: Основните страници на Каталога с резервни части съдържат страница с илюстрация (1) и страница със съответен списък (7). Номерът на страниците (5) е даден в горната част на илюстрованата страница и в долната част на страниците със списък.. Номерът на документа (6) е даден в долната част на списъчната страница.

Номериране на страниците

Вижте илюстрация (A) на страница i-9: Номерът на страница (5) има три части:

- номер на глава (2)
- пореден номер на страница (3) в рамките на главата
- общ брой страници (4) в главата.

Забележка! Буквите UP може да заместват номера на главата (2), ако ръководството включва страници с актуализации. Поредният номер на страница (3) и общият брой страници (4) на страниците с актуализации не следват съществуващата поредност в номерата на страниците на главата.

Въведение на машината

Производител

За името на производителя и адреса му, виж на втора страница от този каталог.

Обслужване

Tetra Pak Group не носи отговорност за щети или наранявания на оборудване, персонал или клиенти, които са причинени от резервни части, които не са оригинални резервни части Tetra Pak®.

За да поръчате оригинални резервни части Tetra Pak за тази машина, свържете се с най-близкия офис на Tetra Pak.

Идентификация

CE Класификация

Това оборудване съответства на основните разпоредби за опазване на здравето и безопасност на Европейската Икономическа Зона (EEA).

(Продължение)

(Продължение)

3-A Съответствие

Ако табелката на машината съдържа означението 3-A (15) (виж илюстрация (B) на страница i-7), оборудването съответства на 3-A Санитарните стандарти за формоващи, пълнещи и запечатващи устройства за контейнери за течно мляко и течни млечни продукти, номер 17-10.

Табела с технически данни на машината

Илюстрация (B) на страница i-9 показва примерна табела с технически данни на машината.
Илюстрация на реална табела с технически данни на машината и нейното местоположение върху оборудването е дадена в глава Въведение на ръководството, придружаващо оборудването. Табелата с технически данни за машината съдържа данните, описани по-долу, необходими, когато се свързвате с Tetra Pak Group относно това оборудване.

- Тип на машината (8)
- Обем (9)
- Спецификации (10)
- Сериен номер на машината (11)
- Производител (12)
- Година на производство (13)
- CE маркировка (14)
- 3-A маркировка (ако е приложимо) (15)

Уверете се, че данните за оборудването, дадени на първите страници на това ръководство съответстват на данните върху табелата с технически спецификации, и спецификацията на машината.

Как да ползвате Каталога за резервни части

Откриване номер на резервна част

a) Вижте илюстрация (C) на страница i-9: Преминете на глава номер (16), посочена .до основната група, която съдържа частта, която желаете да откриете.

Позиции b) и c) вижте на илюстрации (D) на страница i-10.

b) На главната илюстрация на група, потърсете машинната подгрупа (18), която съдържа частта или подгрупата, която търсите. Отбележете номера на позицията (19) и отидете на страницата със списъка, който следва илюстрацията.

c) Потърсете номера на позиция/вижте обозначението (17) или наименованието на подгрупата (20). Преминете на съответния номер на страница (21), вписан в дясната колона.
От Tetra Pak Group са избрали, винаги да се използва функционално ориентирана структура за обозначение препратка.
Представката посочва функционално ориентирана структура (=) не се показва в обозначението препратка.

(Продължение)

(Продължение)

Позиции d) и e) вижте на илюстрация (E) на страница i-10.

d) Открийте частта (22), която търсите на илюстрацията с подгрупи и отбележете номера на позицията на частта.

e) Номерът на частта (29) и описанието на частта (30) са вписани до номера на позицията на страницата със списъка.

Информация в Каталога за резервни части

Списъкът по-долу се отнася за илюстрация (E) на страница i-10. Каталогът за резервни части съдържа следната информация за групи, подгрупи и резервни части за оборудването:

- Препратка към структура на групата (23). Посочва по-горната група в структурата на оборудването.
- Наименование на групата (24)
- Мерна единица (25)
- Количество (26)
- Номер от сборния чертеж (27)
- Серия страници със списък (28). Включен, ако има няколко страници в групова илюстрация или списък
- Част или номер на подгрупа (29)
- Наименование на подгрупа или описание на част (30)
- Номер на група (31)
- Номер на оборудването (32)
- Информационен надпис за група (33). Индицира, че раздела под заглавието е за определен модел машина или че е списък на унифицирани части. Ако списъкът има повече от един вариант и всеки вариант има своя монтажна схема, е показана препратка към страница със сборния чертеж.
- Международна информация (34)

Помощ и съдействие

За помощ при експлоатация на оборудването, запитвания, коментари или предложения, отправяйте вашите въпроси или предоставяйте обратна информация, като използвате инструмента QuTI-P. Въведете QuTI-P в адресното поле на вашия браузер. Ако няма достъп до QuTI-P, направете искане за такъв достъп от Гишето за глобална техническа помощ.

Ако няма достъп до интранет мрежата на Tetra Pak®, свържете се с най-близкия представител на Tetra Pak.

Informace o příručce

Skupina Tetra Pak Group doporučuje se důkladně seznámit se všemi dodanými příručkami. Dodané příručky musí být k dispozici pracovníkům, kteří provádějí obsluhu nebo údržbu zařízení.

Tento katalog je třeba uchovávat po celou dobu životnosti zařízení a předat jej každému dalšímu vlastníkovi nebo uživateli.

Skupina Tetra Pak Group nezodpovídá za škody na zařízení způsobené nedodržováním pokynů uvedených v příručkách, které doprovází toto zařízení.

Dodané příručky

Příručky dodávané s tímto zařízením:

CM

Příručka pro konverzi poskytuje technikům informace o konverzi zařízení mezi různými produkčními režimy.

EM

Příručka elektrického zařízení (EM) poskytuje technikům informace o elektrickém systému zařízení.

IM

Montážní příručka (IM) poskytuje technikům informace nutné pro bezpečné provedení montáže zařízení.

MaSP

Příručka pro údržbu a náhradní díly poskytuje informace o způsobu údržby komponent. Podává také informace, potřebné pro objednání náhradních dílů daných komponent u společnosti Tetra Pak Group.

MM

Příručky údržby (MM) poskytuje technikům informace o údržbě zařízení.

OM

Návod k obsluze poskytuje technikům informace o manipulaci a provozu zařízení před, během a po ukončení výroby.

RM

Příručka pro rekonstrukci poskytuje technikům informace požadované pro bezpečnou instalaci soupravy na nainstalovaný stroj nebo zařízení.

(Pokračování)

(Pokračování)

SPC

Katalog náhradních dílů (SPC) obsahuje informace nezbytné pro objednávání náhradních dílů od Tetra Pak Group.

TeM

Technická příručka poskytuje technikům informace, kterými mohou být:

- potřebné informace pro bezpečnou instalaci zařízení
- potřebné pro údržbu zařízení
- informace o elektrickém systému zařízení/stroje
- informace nezbytné pro objednávání náhradních dílů od Tetra Pak Group
- ostatní technické informace

UP

Aktualizované stránky poskytují nové stránky k existujícím příručkám k zařízení.

Vzhled stránky

Podívejte se na obrázek (A) na straně i-9: hlavní stránky v Katalogu náhradních dílů tvoří stránky s ilustracemi (1) a odpovídající stránka se seznamem (7). Číslo stránky (5) je uvedeno v záhlaví stránky s ilustrací a v zápatí stránky se seznamem. Číslo dokumentu (6) je uvedeno v zápatí stránky se seznamem.

Číslování stránek

Podívejte se na obrázek (A) na straně i-9: číslo stránky (5) má tři části:

- číslo kapitoly (2)
- číslo další stránky v rámci kapitoly (3),
- celkového počtu stránek v kapitole (4)

Poznámka! Písmena UP mohou nahradit číslo kapitoly (2) v případě, že manuál obsahuje aktualizované stránky. Následující číslo stránky (3) a celkový počet stran (4) aktualizovaných stránek se nedrží existujícího sekvenčního číslování stránek v této kapitole.

Seznámení se zařízením

Výrobce

Jméno a adresu výrobce najdete na druhé straně tohoto katalogu.

Servis

Skupina Tetra Pak Group nepřebírá odpovědnost za jakékoli škody na zařízení nebo za zranění zaměstnance nebo spotřebitele, které budou způsobeny tím, že se nepoužijí originální náhradní díly Tetra Pak®.

Chcete-li pro tento stroj objednat originální náhradní díly Tetra Pak, kontaktujte nejbližší kancelář společnosti Tetra Pak.

Označení

Klasifikace CE

Toto zařízení vyhovuje základním zdravotním a bezpečnostním směrnicím EU.

(Pokračování)

(Pokračování)

3-A Soulad

Pokud štítek stroje obsahuje označení 3-A (15) (viz obrázek (B) na straně i-7), pak je toto zařízení v souladu s hygienickými normami 3-A pro formování, plnění a uzavírání obalů pro tekuté mléko a tekuté mléčné výrobky, číslo 17-10.

Typový štítek

Obrázek (B) na straně i-9 ukazuje příklad typového štítku.
Obrázek platného typového štítku a jeho umístění na zařízení je uvedeno v úvodní kapitole příruček dodaných s tímto zařízením.
Typový štítek obsahuje údaje uvedené níže, tyto údaje jsou zapotřebí, když kontaktujete Tetra Pak Group ve věci týkající se tohoto specifického vybavení.

- Typ stroje (8)
- Objem (9)
- Specifikace výkresů (10)
- Sériové číslo stroje (11)
- Výrobce (12)
- Rok výroby (13)
- Symbol CE (14)
- Symbol 3-A (pokud se používá) (15)

Údaje o zařízení uvedené na předních stránkách této příručky musí souhlasit s údaji na typovém štítku a specifikacím zařízení.

Jak používat tento katalog náhradních dílů

Vyhledat číslo náhradního dílu

a) Viz obrázek (C) na straně i-9: Přejít na číslo kapitoly (16) uvedené vedle hlavní skupiny, která obsahuje díl, který chcete najít.

Položky b) a c) se vztahují k obrázku (D) na straně i-10.

b) Na obrázku hlavní skupiny se podívejte na podskupinu stroje (18), která obsahuje díly nebo podskupiny, které hledáte. Poznamenejte si číslo pozice (19) a přejděte na stránku seznamu, který následuje za obrázkem.

c) Podívejte se na číslo pozice/označení reference (17) nebo na název podskupiny (20). Přejděte na odpovídající číslo strany (21) uvedené v seznamu ve sloupci na pravé straně. Skupina Tetra Pak Group si pro referenční označení zvolila vždy používat funkčně orientovanou strukturu. Předpona označující funkčně orientovanou strukturu (=) není uvedena v referenčním označení.

(Pokračování)

(Pokračování)

Položky d) a e) se vztahují k obrázku (E) na straně i-10.

d) Lokalizujte díl (22), který hledáte, na obrázku podskupiny a poznamenejte si číslo pozice dílu.

e) Číslo dílu (29) a popis dílu (30) jsou uvedeny vedle čísla pozice na stránce se seznamem.

Informace uvedené v katalogu náhradních dílů

Níže uvedený seznam se odkazuje na obrázek (E) na stránce i-10.
Katalog náhradních dílů obsahuje následující informace o skupinách, podskupinách a náhradních dílech pro zařízení:

- Reference struktury skupiny (23). Označuje následující vyšší skupinu ve struktuře seznamu výbavy.
- Název skupiny (24)
- Měrná jednotka (25)
- Množství (26)
- Číslo montážního výkresu (27)
- Rozsah stránek se seznamem (28). Zahrnuty, pokud existuje více stránek ve skupině obrázků nebo seznamu.
- Číslo dílu nebo podskupiny (29)
- Název podskupiny nebo popis dílu (30)
- Číslo skupiny (31)
- Číslo výbavy (32)
- Záhlaví informací o skupině (33). Označuje, zdali se část pod záhlavím týká konkrétní varianty stroje, nebo zdali se jedná o seznam společných dílů. Pokud seznam obsahuje více než jednu variantu a každá varianta má své vlastní montážní výkresy, je zobrazen odkaz na stránku s montážním výkresem varianty.
- Vnitřní informace (34)

Podpora a zpětná vazba

Vyžadujete-li pomoc s činností tohoto zařízení, nebo máte jiné požadavky, poznámky nebo návrhy, položte otázku, nebo získejte zpětnou vazbu pomocí nástroje QuTI-P. Do adresního řádku svého prohlížeče napište QuTI-P. Pokud přístup k QuTI-P není dostupný, vyžádejte si přístup kontaktováním Global Service Desk.

Pokud nemáte přístup na intranet Tetra Pak®, kontaktujte nejbližšího zástupce Tetra Pak.

Oplysninger om vejledninger

Tetra Pak Group anbefaler, at alle leverede vejledninger læses grundigt.
Sørg for, at de leverede vejledninger er til rådighed for det personale, som betjener eller vedligeholder udstyret.

Det er vigtigt, at dette katalog opbevares i hele udstyrets levetid og overdrages til en efterfølgende ejer eller bruger.

Tetra Pak Group kan ikke holdes ansvarlig for skader, tab, kvæstelser eller dødsfald forårsaget af, at anvisningerne i de vejledninger, der følger med dette udstyr, ikke overholdes.

Leverede vejledninger

Vejledninger, der leveres sammen med dette udstyr:

CM

Konverteringsvejledningen forsyner teknikere med oplysninger om konvertering af udstyret mellem forskellige produktionstilstande.

EM

Den elektriske vejledning forsyner teknikere med oplysninger om udstyrets elektriske system.

IM

Installationsvejledningen forsyner teknikere med oplysninger, som er nødvendige til sikker installation af udstyret.

MaSP

Vedligeholdelses- og reservedelsvejledningen giver oplysninger om vedligeholdelse af komponenter. Den giver også oplysninger, der er nødvendige til bestilling af reservedele fra Tetra Pak Group.

MM

Vedligeholdelsesvejledningen forsyner teknikere med oplysninger om vedligeholdelsen af udstyret.

OM

Driftsvejledningen forsyner operatøren med oplysninger om håndteringen og betjeningen af udstyret før, under og efter produktion.

RM

Ombygningsvejledningen forsyner teknikere med oplysninger, der er nødvendige til sikker installation af et sæt på en installeret maskine eller installeret udstyr.

(Forts.)

(Forts.)

SPC

Reservedelskataloget indeholder de oplysninger, som er nødvendige til at bestille reservedele fra Tetra Pak Group.

TeM

Den Tekniske vejledning forsyner tekniker med oplysninger, der kan være:

- nødvendige oplysninger til sikker installation af udstyret
- nødvendige oplysninger til vedligeholdelse af udstyret
- oplysninger om maskinens/udstyrets elektriske system
- oplysninger, som er nødvendige til bestilling af reservedele fra Tetra Pak Group
- andre tekniske oplysninger

UP

Opdateringssiderne indeholder nye sider til opdatering af eksisterende maskinvejledninger.

Sidelayout

Se illustrationen (A) på side i-9: Hovedsiden i et reservedelskatalog består af en illustrationsside (1) og en tilsvarende listeside (7). Sidetallet (5) vises i overskriften på en illustrationsside og i fodteksten på en listeside. Dokumentnumret (6) vises i fodteksten på en listeside.

Sidenummerering

Se illustrationen (A) på side i-9: Et sidetal (5) har tre dele:

- kapitelnummer (2)
- fortløbende sidetal inden for kapitlet (3)
- det samlede antal sider i kapitlet (4)

Bemærk! Bogstaverne UP kan erstatte kapitelnumret (2), hvis vejledningen inkluderer opdateringssider. Det fortløbende sidetal (3) og det samlede antal sider (4) af opdateringssider følger ikke kapitlets eksisterende fortløbende sidenummerering.

Præsentation af maskinen

Producent

For producentens navn og adresse se anden side i dette katalog.

Service

Tetra Pak Group påtager sig intet ansvar for skader på udstyret eller kvæstelser af personale eller forbrugere, som forårsages af reservedele, der ikke er ægte reservedele fra Tetra Pak®.

For at bestille ægte reservedele fra Tetra Pak til denne maskine kontakt det nærmeste Tetra Pak-kontor.

Identifikation

CE-klassificering

Dette udstyr overholder det Europæiske Økonomiske Samarbejdsområdes (EØS) grundlæggende sundheds- og sikkerhedsbestemmelser.

(Forts.)

(Forts.)

3-A overholdelse

Hvis typeskiltet indeholder 3-A-mærket (15) (se illustration (B) på side i-7), overholder dette udstyr 3-A-sanitetsstandarderne for formnings-, fylde- og forseglingsmaskiner for beholdere til flydende mælk og flydende mælkeprodukter, nummer 17-10.

Maskinens typeskilt

Illustration (B) på side i-9 viser et eksempel på et typeskilt.
En illustration af maskinens gældende typeskilt og dens placering på udstyret vises i kapitlet Indledning af de vejledninger, der leveres sammen med dette udstyr.
Maskinens typeskilt indeholder de data, der opføres nedenfor og om der er brug for, hvis der rettes henvendelse til Tetra Pak Group vedrørende det specifikke udstyr.

- Maskintype (8)
- Volumen (9)
- Tegningsspecifikationer (10)
- Maskinens serienummer (11)
- Producent (12)
- Fremstillingsår (13)
- CE-mærke (14)
- 3-A mærke (i givet fald) (15)

Kontrollér, at udstyrsdataene på de første sider i denne vejledning svarer til dataene på typeskiltet og maskinens specifikation.

Sådan bruges dette reservedelskatalog

Sådan finder men et reservedelsnummer

a) Se illustrationen (C) på side i-9: Gå til kapitelnumret (16), der vises ved siden af hovedgruppen, som indeholder den del, der skal findes.

Punkterne b) og c) refererer til illustrationen (D) på side i-10.

b) På hovedgruppens illustration søg efter den maskinundergruppe (18), der indeholder den del eller undergruppe, der ledes efter.
Notér positionsnumret (19) og gå til den listeside, der følger illustrationen.

c) Søg efter positionsnumret/henvisningsbetegnelsen (17) eller undergruppens navn (20). Gå til det tilsvarende sidetal (21), der er opført i højre spalte.
Tetra Pak Group har valgt altid at bruge funktionen orienteret struktur til henvisningsbetegnelse. Det præfiks, der angiver funktionsorienteret struktur (=) vises ikke i henvisningsbetegnelsen.

(Forts.)

(Forts.)

Punkterne d) og e) refererer til illustrationen (E) på side i-10.

d) Find den del (22), der ledes efter, på undergruppens illustration og notér delens positionsnummer.

e) Delnumret (29) og delbeskrivelsen (30) er opført ved siden af positionsnumret på listesiden.

Oplysninger, der er opført i et reservedelskatalog

Listen nedenfor refererer til illustrationen (E) på side i-10.
Et reservedelskatalog indeholder følgende oplysninger om grupper, undergrupper og reservedele for udstyret:

- Gruppens strukturhenvisning (23). Viser den næste højere gruppe i udstyrets listestruktur.
- Gruppenavn (24)
- Måleenhed (25)
- Mængde (26)
- Monteringstegningens nummer (27)
- Listesideområde (28). Inkluderet, hvis gruppeillustrationen eller listen har flere sider.
- Del- eller undergruppenummer (29)
- Undergruppenavn eller delbeskrivelse (30)
- Gruppenummer (31)
- Udstyrsnummer (32)
- Gruppeinformationsoverskrift (33). Angiver, om afsnittet under overskriften gælder for en bestemt maskinversion eller om det er en liste over fælles dele. Hvis en liste har mere end en version og hver version har en egen monteringstegning, vises der en sidehenvisning til versionens monteringstegning.
- Interne oplysninger (34)

Hjælp og forespørgsler

Hvis man har brug for hjælp med betjeningen af dette udstyr eller har andre forespørgsler, kommentarer eller forslag, kan man stille spørgsmål eller give feedback ved hjælp af værktøjet QuTI-P. Indtast QuTI-P i browserens adressefelt. Hvis man ikke har adgang til QuTI-P, kan man bede om adgang ved at kontakte den globale Service Desk.

Hvis adgang til Tetra Pak® intranet ikke er til rådighed, kontakt den nærmeste Tetra Pak®-repræsentant.

Handbuch-Informationen

Die Tetra Pak Group empfiehlt, alle gelieferten Handbücher sorgfältig zu lesen. Es muss sichergestellt werden, dass die gelieferten Handbücher dem Bediener- oder Wartungspersonal der Ausrüstung verfügbar sind.

Es ist wichtig, diesen Katalog während der Lebensdauer der Ausrüstung vorzuhalten und an nachfolgende Halter oder Benutzer weiterzugeben.

Die Tetra Pak Group übernimmt keine Verantwortung für Schäden, Verluste, erletzungen oder Todesfälle, die sich aus der Nichteinhaltung der Anweisungen in den dieser Ausrüstung beigefügten Handbüchern ergeben.

Gelieferte Handbücher

Mit dieser Ausrüstung gelieferte Handbücher

CM

Das Umbauhandbuch liefert den Technikern Informationen über den Umbau der Ausrüstung zwischen den verschiedenen Produktionsweisen.

EM

Das Elektrohandbuch liefert den Technikern Informationen zum Elektrosystem der Ausrüstung.

IM

Das Installationshandbuch liefert den Technikern Informationen für die sichere Installation der Ausrüstung.

MaSP

Das Wartungs- und Ersatzteilhandbuch liefert Informationen über die Wartung der Bauteile. Darüber hinaus enthält es die notwendigen Daten zur Bestellung von Ersatzteilen für die betreffenden Bauteile bei Tetra Pak Group.

MM

Das Wartungshandbuch liefert den Technikern Informationen über die Wartung der Ausrüstung.

OM

Das Betriebshandbuch enthält Informationen für den Bediener zu Handhabung und Betrieb der Ausrüstung vor, während und nach der Produktion.

RM

Das Umbauhandbuchliefert Informationen an die Techniker, die diese benötigen, um die Ausrüstung aus dem Kit sicher zu installieren.

(Forts.)

(Forts.)

SPC

Der Ersatzteilkatalog liefert die für die Bestellung von Ersatzteilen bei die Tetra Pak Group erforderlichen Informationen.

TeM

Das Technische Handbuch liefert den Technikern folgende Informationen:

- Informationen für die sichere Installation der Ausrüstung
- Informationen für die Wartung der Ausrüstung
- Informationen über das Elektrosystem der Maschine/Ausrüstung.
- Notwendige Informationen für die Bestellung von Ersatzteilen bei die Tetra Pak Group.
- andere technische Informationen

UP

Die Aktualisierungsseiten sind neu, um die Maschinenhandbücher zu aktualisieren.

Seitenlayout

Siehe die Abbildung (A) auf Seite i-9: Die Hauptseiten in einem Ersatzteilkatalog bestehen auf dem Abbildungsseite (1) und einer entsprechenden Listenseite (7). Die Seitennummer (5) ist im Kopf einer Abbildungsseite und im Fuß einer Listenseite aufgeführt.
Die Dokumentennummer (6) ist im Fuß einer Listenseite angegeben.

Seitennummerierung

Siehe die Abbildung (A) auf Seite i-9: Eine Seitennummer (5) hat drei Teile

- Kapitel Nummer (2)
- Fortlaufende Seitennummer (2) innerhalb des Kapitels (3)
- Gesamtanzahl der Seiten im Kapitel (4)

Hinweis! Die Buchstaben UP können die Kapitelnummer (2) ersetzen, wenn das Handbuch aktualisierte Seiten enthält. Die fortlaufende Seitennummer (3) und die Gesamtanzahl der Seiten (4) der aktualisierten Seiten folgen nicht der laufenden Seitennummerierung des Kapitels.

Einführung in die Maschine

Hersteller

Die zweite Seite des Katalogs enthält Name und Anschrift des Herstellers.

Service

Die Tetra Pak Group übernimmt keine Verantwortung für Schäden an Ausrüstungen und Verletzungen von Personen, verursacht durch Ersatzteile, die keine echten Tetra Pak®-Ersatzteile sind.

Für die Bestellung echter Tetra Pak-Ersatzteile für die Maschine wende man sich an die nächstgelegene Tetra Pak-Stelle.

Identifizierung

CE-Klassifizierung

Diese Ausrüstung entspricht den grundlegenden Gesundheits- und Sicherheitsvorschriften des Europäischen Wirtschaftsraumes (EWR).

(Forts.)

(Forts.)

3-A Erfüllung

Wenn die Maschinenplatte eine 3-A Markierung (15) enthält (siehe Abbildung (B) auf Seite i-7), entspricht diese Ausrüstung den 3-A Sanitärnormen für Former, Füller und Versiegler von Containern für lose Milch und Milchprodukte Nummer 17-10.

Maschinenschild

Die Abbildung (B) auf Seite i-9 zeigt ein Beispiel eines Maschinenschildes.
Eine Abbildung eines gültigen Maschinenschildes und dessen Lage an der Ausrüstung finden Sie in der Einleitung zu dem mit der Ausrüstung gelieferten Handbuch. Das Maschinenschild enthält die nachstehenden Daten, erforderlich für die Kontaktnahme mit die Tetra Pak Group bezüglich dieser spezifischen Ausrüstung.

- Maschinentyp (8)
- Volumen (9)
- Zeichnungsspezifikationen (10)
- Serien-Nummer der Maschine (11)
- Hersteller (12)
- Baujahr (13)
- CE-Markierung (14)
- 3-A Markierung (falls zutreffend) (15)

Es muss sichergestellt sein, dass die in den Frontseiten dieses Handbuchs aufgeführten Ausrüstungsdaten mit den Daten des Maschinenschildes und der Maschinenspezifikation übereinstimmen.

Benutzung dieses Ersatzteilkatalogs

Lokalisieren einer Teilenummer

a) Bezugnahme auf Abbildung (C) auf Seite i-9: Weiter zu Kapitel Nummer (16) neben der Hauptgruppe, die das entsprechende Teil enthält.

Pos. b) und c) beziehen sich auf die Abb. (D) auf Seite i-10.

b) Auf der Abbildung der Hauptgruppe die Untergruppe (18) der Maschine suchen, welche das Teil oder die Untergruppe enthält, das/die Sie suchen. Die Positionsnummer (19) notieren und zu der Listenseite gehen, die auf die Abbildung folgt.

c) Suchen Sie die Positionsnummer/Referenzbezeichnung (17) oder den Untergruppennamen (20). Weiter zur entsprechenden Seitennummer (21) in der rechten Spalte. Die Tetra Pak Group verwendet die funktionsorientierte Struktur für die Referenzbezeichnung. Präfix zur funktionsorientierten Struktur (=) ist in der Referenzbezeichnung nicht dargestellt.

(Forts.)

(Forts.)

Pos. d) und e) beziehen sich auf die Abbildung (E) auf Seite i-10.

d) Das gesuchte Teil (22) auf der Untergruppen-Abbildung suchen und die Positionsnummer (060) des Teils notieren.

e) Die Teilenummer (29) und die Beschreibung (30) des Teils sind neben der Positionsnummer auf der Listenseite angegeben.

Information in einem Ersatzteilkatalog

Nachstehende Liste bezieht sich auf die Abbildung (E) auf Seite i-10.
Ein Ersatzteilkatalog enthält folgende Informationen zu Gruppen, Untergruppen und Ersatzteile der Ausrüstung.

- Verweis auf Gruppenstruktur (23). zeigt die nächsthöhere Gruppe in der Listenstruktur.
- Gruppenbezeichnung (24)
- Maßeinheit (25)
- Menge (26)
- Nummer der Montagezeichnung (27)
- Liste Seitenbereich (28). vorhanden, wenn mehrere Seiten in der Gruppenabbildung oder Liste vorhanden sind.
- Teile- oder Untergruppen-Nummer (29)
- Untergruppenbezeichnung oder Beschreibung des Teils (30)
- Gruppennummer (31)
- Gerätenummer (32)
- Gruppeninformations-Überschrift (33). erläutert, ob der Abschnitt unter der Überschrift für eine spezifische Maschinenvariante gilt oder ob es sich um eine Liste allgemeiner Teile handelt. Hat eine Liste mehr als eine Variante und ist jeder Variante eine eigene Montagezeichnung zugeordnet, wird ein Seiten-Querverweis auf die Montagezeichnung der Variante angegeben.
- Interne Informationen (34)

Unterstützung und Nachfragen

Für Unterstützung beim Betrieb dieser Ausrüstung oder Nachfragen, Kommentare oder Anregungen verwenden Sie bitte das QuTI-P Tool. Geben Sie hierzu QuTI-P in das Adressfeld Ihres Browsers ein. Wenn kein Zugang zu QuTI-P verfügbar ist, wenden Sie sich hierzu bitte an den Global Service Desk.

Wenn kein Zugang zum Tetra Pak® Intranet verfügbar ist, wenden Sie sich an den Tetra Pak Vertreter in Ihrer Nähe.

Πληροφορίες εγχειριδίου

Ο Όμιλος Tetra Pak συνιστά να διαβάζετε προσεκτικά όλα τα παρεχόμενα εγχειρίδια. Βεβαιωθείτε ότι τα παρεχόμενα εγχειρίδια είναι διαθέσιμα στο προσωπικό που χειρίζεται ή συντηρεί τον εξοπλισμό.

Είναι σημαντικό να διατηρήσετε το εγχειρίδιο αυτό καθ' όλη τη διάρκεια ζωής του εξοπλισμού και να το μεταβιβάσετε σε οποιονδήποτε επακόλουθο κάτοχο ή χρήστη.

Ο Όμιλος Tetra Pak δεν μπορεί να καταστεί υπεύθυνη για οποιαδήποτε ζημιά στον εξοπλισμό που οφείλεται σε μη τήρηση των οδηγιών που παρατίθενται στα εγχειρίδια που συνοδεύουν τον εξοπλισμό.

Παρεχόμενα εγχειρίδια

Τα εγχειρίδια παρέχονται μαζί με αυτό τον εξοπλισμό:

CM

Το Εγχειρίδιο Μετατροπών (CM) παρέχει πληροφορίες στους τεχνικούς σχετικά με τη μετατροπή του εξοπλισμού για τους διαφορετικούς τρόπους παραγωγής.

EM

Το Ηλεκτρολογικό Εγχειρίδιο (EM) παρέχει στους τεχνικούς τις πληροφορίες για το ηλεκτρικό σύστημα του εξοπλισμού.

IM

Το Εγχειρίδιο Εγκατάστασης (IM) παρέχει στους τεχνικούς τις πληροφορίες που απαιτούνται για την ασφαλή τοποθέτηση του εξοπλισμού.

MaSP

Το εγχειρίδιο συντήρησης & ανταλλακτικών παρέχει πληροφορίες για τον τρόπο συντήρησης του στοιχείου. Παρέχει επίσης τος πληροφορίες που απαιτούνται για την παραγγελία ανταλλακτικών για το στοιχείο από τον Όμιλο Tetra Pak.

MM

Το Εγχειρίδιο Συντήρησης (MM) παρέχει στους τεχνικούς πληροφορίες σχετικά με τη συντήρηση του εξοπλισμού.

OM

Το Εγχειρίδιο Χειρισμού (OM) παρέχει στο χειριστή πληροφορίες σχετικά με το χειρισμό και τη λειτουργία του εξοπλισμού πριν, κατά και μετά την παραγωγή.

RM

Το Εγχειρίδιο Μετασκευής (RM) παρέχει πληροφορίες στους τεχνικούς σχετικά με την ασφαλή εγκατάσταση ενός κιτ σε μια εγκατεστημένη μηχανή ή εξοπλισμό.

(Συνέχεια)

(Συνέχεια)

SPC

Ο Κατάλογος Ανταλλακτικών (SPC) παρέχει πληροφορίες που είναι απαραίτητες για την παραγγελία ανταλλακτικών από την Ο Όμιλος Tetra Pak.

TeM

Το Τεχνικό Εγχειρίδιο (TeM) παρέχει στους τεχνικούς πληροφορίες που μπορεί να είναι:

- πληροφορίες που είναι απαραίτητες για την ασφαλή εγκατάσταση του εξοπλισμού
- πληροφορίες που απαιτούνται για τη συντήρηση του εξοπλισμού
- πληροφορίες σχετικά με το ηλεκτρικό σύστημα της μηχανής/εξοπλισμού.
- απαραίτητες πληροφορίες για να παραγγείλετε ανταλλακτικά από την Ο Όμιλος Tetra Pak.
- άλλες τεχνικές πληροφορίες

UP

Οι Σελίδες Ενημέρωσης παρέχουν νέες σελίδες για την ενημέρωση των υφιστάμενων εγχειριδίων της μηχανής.

Διάταξη σελίδας

Βλέπε εικόνα (A) στη σελίδα i-9: Οι κύριες σελίδες του Καταλόγου Ανταλλακτικών αποτελούνται από μία σελίδα με εικόνα (1) και μια σελίδα με αντίστοιχη λίστα (7). Ο αριθμός σελίδας (5) αναγράφεται στο πάνω μέρος της σελίδας με την εικόνα και στο κάτω μέρος της σελίδες με τη λίστα.
Ο αριθμός εγγράφου (6) αναγράφεται στο κάτω μέρος της σελίδας με τη λίστα.

Αρίθμηση σελίδων

Βλέπε εικόνα (A) στη σελίδα i-9: Ο αριθμός σελίδας (5) αποτελείται από τρία μέρη:

- τον αριθμό κεφαλαίου (2)
- τον αύξοντα αριθμό σελίδας (3) εντός του κεφαλαίου
- τον συνολικό αριθμό σελίδων (4) στο κεφάλαιο

Σημειωση! Αν το εγχειρίδιο περιέχει σελίδες ενημέρωσης, ο αριθμός κεφαλαίου (2) μπορεί να αντικαθίσταται με τα γράμματα «UP».
Ο αύξων αριθμός σελίδας (3) και ο συνολικός αριθμός σελίδων (4) των σελίδων ενημέρωσης δεν ακολουθούν την αρχική αύξουσα αρίθμηση σελίδων του κεφαλαίου.

Εισαγωγικές πληροφορίες για τη μηχανή

Κατασκευαστής

Για το όνομα και τη διεύθυνση του κατασκευαστή, βλέπε τη δεύτερη σελίδα αυτού του καταλόγου.

Τεχνική εξυπηρέτηση

Ο Όμιλος Tetra Pak δεν αναλαμβάνει καμία ευθύνη για οποιαδήποτε ζημιά στον εξοπλισμό ή τραυματισμό του προσωπικού ή των καταναλωτών που οφείλεται σε χρήση ανταλλακτικών που δεν είναι γνήσια ανταλλακτικά της Tetra Pak®.

Για να παραγγείλετε γνήσια ανταλλακτικά της Tetra Pak για αυτή τη μηχανή, επικοινωνήστε με το πλησιέστερο γραφείο Tetra Pak.

Αναγνώριση

Ταξινόμηση CE

Ο εξοπλισμός αυτός συμμορφώνεται με τους βασικούς κανονισμούς υγείας και ασφάλειας του Ευρωπαϊκού Οικονομικού Χώρου (EEA).

(Συνέχεια)

(Συνέχεια)

Συμμόρφωση 3-A

Αν η πλάκα μηχανής περιλαμβάνει το σήμα 3-A (15) (βλέπε απεικόνιση (B) στη σελίδα i-7), ο εξοπλισμός αυτός συμμορφώνεται με τα υγειονομικά πρότυπα για διαμορφωτές, γεμιστικές μηχανές και διατάξεις σφράγισης των περιεκτών για υγρό γάλα και προϊόντα υγρού γάλακτος, αριθμός 17-10.

Πινακίδα χαρακτηριστικών μηχανής

Η εικόνα (B) στη σελίδα i-9 δείχνει ένα παράδειγμα μιας πινακίδας τύπου.
Για μια εικόνα της πινακίδας τύπου της συγκεκριμένης μηχανής και της θέσης της πάνω στον εξοπλισμό, βλέπε το κεφάλαιο «Εισαγωγή» των εγχειριδίων που παραδίδονται μαζί με τον εξοπλισμό. Η πινακίδα τύπου περιέχει τα παρακάτω στοιχεία, τα οποία θα χρειάζεστε όταν επικοινωνείτε με την Ο Όμιλος Tetra Pak σχετικά με τον συγκεκριμένο εξοπλισμό.

- Τύπος μηχανής (8)
- Όγκος (9)
- Στοιχεία σχεδίου (10)
- Αριθμός σειράς μηχανής (11)
- Κατασκευαστής (12)
- Έτος κατασκευής (13)
- Σήμανση CE (14)
- Σήμανση 3-A (εάν εφαρμόζεται) (15)

Βεβαιωθείτε ότι τα δεδομένα εξοπλισμού στις μπροστινές σελίδες αυτού του εγχειριδίου αντιστοιχούν στην πινακίδα χαρακτηριστικών της μηχανής και τις προδιαγραφής αυτής.

Πως να χρησιμοποιήσετε αυτό τον Κατάλογο Ανταλλακτικών

Παράδειγμα: Εντοπισμός αριθμού ανταλλακτικού

a) Βλέπε εικόνα (C) στη σελίδα i-9: Ανοίξτε το κεφάλαιο (16) που αναφέρεται δίπλα στην κυρίως ομάδα που περιέχει το εξάρτημα που θέλετε να εντοπίσετε.

Τα στοιχεία b) και c) αναφέρονται στην εικόνα (D) στη σελίδα i-10.

b) Στην απεικόνιση της k:yriaw ομάδας αναζητήστε την υπoομάδα της μηχανής (18) που περιλαμβάνει το εξάρτημα ή την υποομάδα που αναζητάτε. Σημειώστε τον αριθμό θέσης (19) και μεταβείτε στη σελίδα λίστας που ακολουθεί την απεικόνιση.

c) Αναζητήστε τον αριθμό θέσης / χαρακτηρισμό αναφοράς (17) ή το όνομα της υπο-ομάδας (20). Ανοίξτε την αντίστοιχη σελίδα (21) που αναφέρεται στη δεξιά στήλη. Ο Όμιλος Tetra Pak έχει επιλέξει να χρησιμοποιεί πάντα τη διάρθρωση που προσανατολίζεται στη λειτουργία για τον ορισμό αναφοράς. Το πρόθεμα που υποδεικνύει διάρθρωση που προσανατολίζεται στη λειτουργία (=) δεν εμφανίζεται στον ορισμό αναφοράς.

(Συνέχεια)

(Συνέχεια)

Τα στοιχεία d) και e) αναφέρονται στην εικόνα (E) στη σελίδα i-10.

d) Εντοπίστε το εξάρτημα (22) που αναζητάτε στην απεικόνιση της υποομάδας και σημειώστε τον αριθμο θέσης του εξαρτήματος.

e) Ο αριθμός εξαρτήματος (29) και η περιγραφή εξαρτήματος (30) παρατίθενται δίπλα στον αριθμό θέσης στη σελίδα λίστας.

Πληροφορίες που αναφέρονται στον Κατάλογο ανταλλακτικών

Η λίστα που ακολουθεί παραπέμπει στην εικόνα (E) στη σελίδα i-10.
Ο Κατάλογος Ανταλλακτικών περιέχει τις εξής πληροφορίες σχετικά με ομάδες, υπο-ομάδες και ανταλλακτικά για τον εξοπλισμό:

- Αναφορά στη δομή της ομάδας (23). Δείχνει την αμέσως μεγαλύτερη ομάδα στη δομή του καταλόγου του εξοπλισμού.
- Όνομα ομάδας (24)
- Μονάδα μέτρησης (25)
- Ποσότητα (26)
- Αριθμός σχεδίου συναρμολόγησης (27)
- Εύρος σελίδων της λίστας (28). Περιλαμβάνεται όταν υπάρχουν πολλαπλές σελίδες στην ομάδα ή στη λίστα.
- Αριθμός εξαρτήματος ή υποομάδας (29)
- Όνομα υποομάδας ή περιγραφή εξαρτήματος (30)
- Αριθμός ομάδας (31)
- Αριθμός εξοπλισμού (32)
- Επικεφαλίδα πληροφοριών ομάδας (33). Δείχνει αν το τμήμα της λίστας κάτω από την επικεφαλίδα ισχύει για συγκεκριμένη παραλλαγή της μηχανής ή αν πρόκειται για κατάλογο κοινών εξαρτημάτων.
  Αν μια λίστα αναφέρεται σε περισσότερες από μία παραλλαγές και κάθε παραλλαγή έχει το δικό της σχέδιο συναρμολόγησης, υπάρχει εδώ μια παραμπομπή στη σελίδα που δείχνει το σχέδιο συναρμολόγησης της παραλλαγής.
- Εσωτερικές πληροφορίες (34)

Βοήθεια και απορίες

Για βοήθεια κατά τη χρήση αυτού του εξοπλισμού ή άλλα ερωτήματα, σχόλια ή προτάσεις, υποβάλλετε τα ερωτήματα ή τα σχόλια μέσω του εργαλείου QuTI-P. Πληκτρολογήστε QuTI-P στη γραμμή διεύθυνσης του προγράμματος περιήγησης. Αν η πρόσβαση στο QuTI-P δεν είναι διαθέσιμη, κάντε αίτηση πρόσβασης επικοινωνώντας με το Γραφείο Παγκόσμιας Εξυπηρέτησης.

Αν δεν έχετε πρόσβαση στο Intranet της Tetra Pak® επικοινωνήστε με τον πλησιέστερο αντιπρόσωπο της Tetra Pak.

Información del manual

Tetra Pak Group recomienda que se lean cuidadosamente todos los manuales entregados. Comprobar que todos los manuales entregados estén disponibles para el personal que efectúe la operación o el mantenimiento del equipo.

Es importante conservar este manual durante la vida útil del equipo, así como facilitárselo a cualquier propietario o usuario posterior.

Tetra Pak Group no será responsable de cualquier daño, pérdida, lesión o muerte causada por no seguir las instrucciones en los manuales que acompañan a este equipo.

Manuales entregados

Manuales entregados con este equipo:

CM

El Manual de conversión proporciona a los técnicos información sobre cómo convertir el equipo entre diferentes modos de producción.

EM

El Manual eléctrico proporciona a los técnicos información acerca del sistema eléctrico del equipo.

IM

El Manual de instalación proporciona a los técnicos la información requerida para instalar el equipo con seguridad.

MaSP

El Manual de Mantenimiento y Piezas de Recambio proporciona información sobre el mantenimiento del componente específico. Además, proporciona información necesaria para pedir piezas de recambio del componente específico a Tetra Pak Group.

MM

El Manual de mantenimiento proporciona a los técnicos información sobre el mantenimiento del equipo.

OM

El Manual de servicio proporciona a los operadores información sobre la manipulación y operación del equipo antes, durante y después de la producción.

RM

El Manual de Modificación provee la información necesaria a los técnicos para instalar con seguridad un kit en una máquina o equipo ya instalado.

(Continúa)

(Continuación)

SPC

El Catálogo de piezas de recambio proporciona la información necesaria para pedir piezas de recambio de Tetra Pak Group.

TeM

El Manual técnico proporciona información a los técnicos, que puede ser:

- la información requerida para instalar el equipo con seguridad
- información requerida para el mantenimiento del equipo
- información acerca del sistema eléctrico de la máquina/del equipo
- la información necesaria para pedir piezas de recambio a Tetra Pak Group
- otras informaciones técnicas

UP

Las Páginas de Actualización suministran nuevas páginas para actualizar los manuales de máquinas ya existentes.

Organización de las páginas

Remitirse a la ilustración (A) en la página i-9: Las páginas principales en un Catálogo de piezas de recambio se componen de una página de ilustración (1) y una página de lista correspondiente (7). El número de la página (5) se muestra en el encabezado de una página de ilustración y en el pie de página de una página de lista. El número del documento (6) se muestra en el pie de página de una página de lista.

Numeración de las páginas

Remitirse a la ilustración (A) en la página i-9:
Un número de página (5) se compone de tres partes:

- Número de capítulo (2)
- número de página consecutivo dentro del capítulo (3)
- número total de páginas del capítulo (4).

¡Nota! Las letras UP pueden reemplazar el número del capítulo (2) si el manual incluye páginas de actualización. El número de página consecutivo (3) y el número total de páginas (4) de páginas de actualización no siguen la numeración secuencial de páginas del capítulo.

Introducción a la máquina

Fabricante

Para el nombre y la dirección del fabricante, ver la segunda página de este catálogo.

Servicio

Tetra Pak Group no se hace responsable de cualquier daño o lesión al equipo, personal o consumidores que sea causado por piezas de recambio que no sean piezas Tetra Pak® genuinas.

Para pedir piezas de recambio Tetra Pak genuinas para esta máquina, comunicarse con la oficina de Tetra Pak más cercana.

Identificación

Clasificación de la CE

Este equipo cumple los requisitos esenciales relativos a la salud y la seguridad del Área Económica Europea (EEA).

(Continúa)

(Continuación)

Conformidad con 3-A

Si la placa de la máquina contiene la marca 3-A (15) (consultar la ilustración (B) en la página i-7), este equipo cumple con las Normas sanitarias 3-A para formadoras, llenadoras y selladoras de envases para para leche fluida y productos de leche fluida 17-10.

Placa de la máquina

La ilustración (B) en la página i-9 muestra un ejemplo de placa de máquina.
En la Introducción del capítulo de los manuales entregados con este equipo se muestra una ilustración de la placa de máquina válida y su ubicación en el equipo
La placa de máquina contiene los datos listados a continuación requeridos al contactar con Tetra Pak Group en relación a este equipo específico.

- Tipo de máquina (8)
- Volumen (9)
- Especificaciones de plano (10)
- Número de serie de la máquina (11)
- Fabricante (12)
- Año de fabricación (13)
- Marca de la CE (14)
- Marca 3-A (si procede) (15)

Asegúrese que los datos de equipo listados en las páginas de cubierta de este manual corresponden a los datos de la placa de máquina y a la especificación máquina.

Cómo utilizar este Catálogo de piezas de recambio

Localizar un número de pieza de recambio

a) Remitirse a la ilustración (C) en la página i-9: Ir al número de capítulo (16) indicado al lado del grupo principal que contiene la pieza que usted desea localizar.

Los items b) y c) se refieren a la ilustración (D) en la página i-10.

b) En la ilustración del grupo principal, buscar el subgrupo máquina (18) que contiene la pieza o subgrupo que usted busca.
Anote el número de posición (19) y vaya a la página de lista que sigue a la ilustración.

c) Buscar el número de posición/designación de referencia (17) o el nombre del subgrupo (20). Vaya al número de página correspondiente (21) listado en la columna de la derecha. Tetra Pak Group ha elegido utilizar siempre la estructura orientada a la función para la designación de referencia. El prefijo que indica la estructura orientada a la función (=) no se muestra en la designación de referencia

(Continúa)

(Continuación)

Los Items d) y e) se refieren a la ilustración (E) en la página i-10.

d) Localizar la pieza (22) que busca en la ilustración del subgrupo y anotar el número de posición de la pieza.

e) El número de la pieza (29) y la descripción de la pieza (30) están listados al lado del número de posición en la página de lista.

Información listada en un Catálogo de piezas de recambio

La lista a continuación remite a la ilustración (E) en la página i-10.
Un Catálogo de piezas de recambio contiene la siguiente información sobre grupos, subgrupos y piezas de recambio para el equipo:

- Referencia de estructura de grupo (23). Indica el siguiente grupo más alto en la estructura de lista del equipo.
- Nombre de grupo (24)
- Unidad de medida (25)
- Cantidad (26)
- Número de plano de montaje (27)
- Rango de la página de lista (28). Incluida si hay páginas múltiples en la ilustración o lista de grupo.
- Número de pieza o subgrupo (29)
- Nombre del subgrupo o descripción de la pieza (30)
- Número de grupo (31)
- Número de equipo (32)
- Encabezado de información de grupo (33). Indica si la sección debajo del encabezado es para una variante máquina específica o si es una lista de piezas comunes. Si la lista tiene más de una variante y cada variante tiene su propio plano de conjunto, se muestra una referencia página para el plano de conjunto de la variante.
- Información interna (34)

Asistencia y consultas

Para obtener asistencia al trabajar con este equipo, o para otras consultas, comentarios o sugerencias, envíe las preguntas o los comentarios utilizando la herramienta QuTI-P. Escriba QuTI-P en el campo de la dirección del navegador. Si el acceso a QuTI-P no estuviera disponible, solicite el acceso poniéndose en contacto con Global Service Desk.

Si el acceso a la intranet de Tetra Pak® no estuviera disponible, póngase en contacto con el representante de Tetra Pak más cercano.

Manuaali informatsioon

Tetra Pak Group soovitab kõiki saadetud manuaale hoolikalt lugeda. Kindlustage saadetud manuaalide kättesaadavus seadmetega töötavale või neid hooldavale personalile.

Kataloog tuleb seadmete eluea jooksul alles hoida ning anda üle seadmete järgmisele omanikule või kasutajale.

Tetra Pak Group ei vastuta seadmete kahjustuste eest, mis on tekkinud seadmetega kaasapandud juhendites antud juhiste eiramise tagajärjel.

Kättetoimetatud manuaalid

Antud seadmega kaasasolevad manuaalid:

CM

Muutmise juhend annab tehnikutele informatsiooni seadmete muutmiseks vastavalt erinevatele tootmisrežiimidele.

EM

Elektrialane kasutusjuhend annab tehnikutele informatsiooni seadmete elektrisüsteemi kohta.

IM

Paigaldusjuhend annab tehnikutele seadmete turvaliseks paigaldamiseks vajalikku informatsiooni.

MaSP

Hoolduse ja varuosade juhendist saate teavet komponendi hoolduse kohta. Sealt leiate ka vajalikku infot selle kohta kuidas Tetra Pak Grouplit komponendile varuosasid tellida.

MM

Hooldusjuhend annab tehnikutele informatsiooni seadmete hooldamiseks.

OM

Kasutusjuhend annab operaatorile informatsiooni seadmete käsitsemiseks ja nendega töötamiseks enne tootmise alustamist, tootmise ajal ja pärast selle lõpetamist.

RM

Ümberehituse juhend annab tehnikutele vajalikku informatsiooni komplekti ohutuks paigaldamiseks eelnevalt paigaldatud masinale või seadmetele.

(Jätkub)

(Jätkub)

SPC

Varuosade kataloog annab vajalikku informatsiooni Tetra Pak Group varuosade tellimiseks.

TeM

Tehniline juhend annab tehnikutele informatsiooni, mis võib olla näiteks:

- vajalik informatsioon seadmete ohutuks paigaldamiseks
- vajalik informatsioon seadmete hooldamiseks
- informatsioon masina/seadmestiku elektrisüsteemi kohta
- vajalik informatsioon tagavaraosade tellimiseks Tetra Pak Group
- muu tehniline informatsioon

UP

Ajakohastatud leheküljed sisaldavad uusi lehekülgi olemasolevate masina juhendite ajakohastamiseks.

Lehekülje kujundus

Vaadake joonist (A) leheküljel i-9: varuosade kataloogi põhileheküljed koosnevad joonise leheküljest (1) ja vastava loendi leheküljest (7).
Lehekülje number (5) näidatakse joonise lehekülje päises ja loendi lehekülje jaluses. Dokumendi number (6) näidatakse loendi lehekülje jaluses.

Lehekülgede nummerdamine

Vaadake joonist (A) leheküljel i-9: lehekülje numbril (5) on kolm osa:

- peatüki number (2)
- järjestikune lehekülje number peatükis (3)
- lehekülgede koguarv (4) peatükis

Pange tähele! Kui juhend sisaldab ajakohastatud lehekülgi, võivad peatüki numbrit (2) asendada tähed UP. Ajakohastatud lehekülgede järjestikune lehekülje number (3) ja lehekülgede koguarv (4) ei järgi peatüki olemasolevat järjestikust lehekülgede nummerdamist.

Masina sissejuhatus

Tootja

Tootja nime ja aadressi leiate kataloogi teiselt leheküljelt.

Teenindus

Tetra Pak Group ei vastuta seadmetele, töötajatele või tarbijatele põhjustatud kahjustuste või kehavigastuste eest, mis on tekkinud selliste varuosade kasutamise tagajärjel, mis ei ole Tetra Paki originaalvaruosad.

Tetra Pak®i originaalvaruosade tellimiseks käesoleva masina jaoks pöörduge lähimasse Tetra Paki kontorisse.

Identifikatsioon

CE klassifikatsioon

Need seadmed on vastavuses Euroopa Majanduspiirkonna (EEA) tervisekaitse ja ohutusmeetmete põhireeglitega.

(Jätkub)

(Jätkub)

3-A vastavus

Kui masina andmeplaadil on märk "3-A" (15) (vt joonist (B) lk i-7), vastab käesolev seadmestik piima- ja piimatoodete mahutite vormimis-, villimis- ja sulgemisseadmete sanitaarnormidele 3-A, number 17-10.

Seadmeplaat

Masina andmeplaadi näidis on toodud leheküljel i-9 oleval joonisel (B).
Kehtiv andmeplaat ja selle asukoht seadmel on näidatud joonisel, mille leiate koos seadmestikuga tarnitud juhendite sissejuhatavast peatükist.
Masina andmeplaat sisaldab allpool loetletud andmeid, mida Te vajate antud seadme asjus Tetra Pak Group ühenduse võtmisel.

- Masina tüüp (8)
- Maht (9)
- Joonise spetsifikatsioonid (10)
- Masina seerianumber (11)
- Tootja (12)
- Valmistamise aasta (13)
- CE-märgistus (14)
- 3-A-märgistus (kui on asjakohane) (15)

Veenduge, et antud juhendi esilehtedel olevad andmed vastaksid masina andmesildil olevatele andmetele ja masina tehnilistele andmetele.

Varuosade kataloogi kasutamine

Leidke varuosa number

a) Vaadake joonist (C) leheküljel i-9: minge peatüki juurde, mille number (16) on näidatud selle põhigrupi kõrval, mis sisaldab Teie poolt otsitavat varuosa.

Elemendid b) ja c) viitavad joonisele (D) leheküljel i-10.

b) Põhigrupi joonisel otsige masina alamgruppi (18), mis sisaldab Teie poolt otsitavat varuosa või alamgruppi. Märkige üles positsiooni number (19) ja minge loendi leheküljele, mis järgneb joonisele.

c) Otsige üles positsiooni number/viitetähis (17) või alamgrupi nimi (20). Minge vastavale leheküljele, mille numbri (21) leiate parempoolses veerus olevast loetelust. Tetra Pak Group kasutab viitetähistes alati funktsioonile orienteeritud struktuuri. Prefiksit, mis näitab funktsioonile orienteeritud struktuuri (=), viitetähises ei näidata.

(Jätkub)

(Jätkub)

Elemendid d) ja e) viitavad joonisele (E) leheküljel i-10.

d) Leidke alamgrupi jooniselt üles otsitav varuosa (22) ja pange kirja varuosa positsiooni number.

e) Varuosa numbri (29) ja varuosa kirjelduse (30) leiate loendi leheküljelt positsiooni numbri kõrvalt.

Varuosade kataloogis loetletud informatsioon

Allpool antud loend viitab joonisele (E) leheküljel i-10.
Varuosade kataloog sisaldab alljärgnevat informatsiooni seadmete gruppide, alamgruppide ja varuosade kohta:

- Grupi struktuuri viide (23). Näitab järgmist kõrgemat gruppi seadmete loetelu struktuuris.
- Grupi nimetus (24)
- Mõõtühik (25)
- Kogus (26)
- Koostejoonise number (27)
- Loendi lehekülgede vahemik (28). Lisatakse juhul, kui grupi joonis või loend paiknevad mitmel leheküljel.
- Varuosa või alamgrupi number (29)
- Alamgrupi nimetus või varuosa kirjeldus (30)
- Grupi number (31)
- Seadme number (32)
- Grupis sisalduva informatsiooni pealkiri (33). Näitab, kas pealkirja all olev lõik puudutab konkreetset masina varianti või sisaldab see üldiste varuosade loendit. Kui loendis on variante rohkem kui üks ning nendel kõigil on eraldi koostejoonised, siis näidatakse konkreetse variandi koostejoonise lehekülgede numbrid.
- Siseinformatsioon (34)

Abi ja päringud

Kui vajate selle seadmega töötamisel abi või soovite esitada muid küsimusi, kommentaare või soovitusi, saatke oma küsimused või tagasiside QuTI-Pi tööriista kaudu. Sisestage oma brauseri aadressiväljale QuTI-P. Kui juurdepääs üksusesse QuTI-P pole saadaval, paluge endale juurdepääs, pöördudes ülemaailmse teeninduse infolaua Global Service Desk poole.

Kui juurdepääs Tetra Pak®i intranetile puudub, võtke ühendust lähima Tetra Paki esindajaga.

Tiedot käsikirjasta

Tetra Pak Group suosittelee kaikkien toimitettujen käyttöohjeiden huolellista lukemista. Varmista että toimitetut käsikirjat ovat niiden henkilöiden käytettävissä, jotka käyttävät tai huoltavat laitetta.

On tärkeää, että käsikirjaa pidetään tallella koko laitteen käyttöiän ajan ja että käsikirja annetaan jokaiselle laitteen tulevalle omistajalle tai käyttäjälle.

Tetra Pak Group ei ole vastuussa mistään laitteille aiheutuneista vahingoista, jotka ovat johtuneet tämän käsikirjan ohjeiden noudattamatta jättämisestä.

Toimitetut käsikirjat

Laitteen mukana toimitetut käsikirjat:

CM

Muunnoskäsikirja (CM) palvelee teknikoita antamalla tiedot laitteen muuntamisesta erilaisiin tuotantotiloihin.

EM

Sähkökäsikirja (EM) palvelee teknikoita antamalla tiedot laitteen sähköjärjestelmästä.

IM

Asennuskäsikirja (IM) palvelee teknikoita antamalla tiedot laitteiden turvalliseksi asentamiseksi.

MaSP

Huolto - & varaosaoppaasta löytyvät tiedot komponentin huoltoa varten. Sieltä saa myös tarvittavat ohjeet komponetin varaosien tilaamista varten Tetra Pak Groupilta.

MM

Huoltokäsikirja (MM) palvelee teknikoita antamalla tiedot laitteiden huoltamisesta.

OM

Käyttäjän käsikirja (OM) palvelee käyttäjää antamalla tiedot laitteen käyttämisestä ennen tuotantoa, sen aikana ja sen jälkeen.

RM

Korjaus käsikirja antaa teknikoille vaadittavat tiedot turvallisesti asentaa rakennussarja valmiiseen koneeseen tai laitteeseen.

(Jatkuu)

(Jatkoa)

SPC

Varaosaluettelo antaa ne tarpeelliset tiedot, joiden avulla voi tilata varaosia Tetra Pak Group

TeM

Tekninen käsikirja antaa teknikoille tietoja, joka voi olla:

- tietoja laitteen turvallista asennusta varten
- tietoja, joita tarvitaan laitteita huollettaessa
- tietoja koneen/laitteen sähköjärjestelmästä
- tietoja, joita tarvitaan tilattaessa varaosia Tetra Pak Group
- muita teknisiä tietoja.

UP

Sivujen Päivitys tarjoaa uusia sivuja jo olemassa oleviin koneen käyttöohjeisiin.

Sivutaitto

Katso kuvaa (A) sivulla i-9: Varaosaluettelon pääsivut koostuvat kuvitetusta sivusta (1) ja sitä vastaavasta luettelo sivusta (7). Sivunumero (5) näkyy kuvasivun otsikossa ja luettelo sivun alatunnisteessa.
Dokumentin numero (6) näkyy luettelo sivun alatunnisteessa.

Sivunumerointi

Katso kuvaa (A) sivulla i-9: sivunumerossa (5) on kolme osaa:

- kappaleen numero (2)
- juokseva sivunumero kappaleessa (2)
- kappaleen kokonaissivumäärä (3)

Huom! Kirjaimet SP voivat korvata kappaleen numeron (2) jos sivujen päivitys sisältyy käyttöohjeisiin. Peräkkäisten sivujen numero (3) ja päivitys sivujen kokonaismäärä (4) eivät noudata käytössä olevaa kappaleiden juoksevaa sivunumerointia.

Koneen esittely

Valmistaja

Katso valmistajan nimi ja osoite tämän luettelon toiselta sivulta.

Huolto

Tetra Pak Group ei vastaa sellaisista vahingoista tai mistään työvälineiden, henkilöstön tai kuluttajien vaurioista, jotka johtuvat varaosista, jotka eivät ole aitoja Tetra Pak®in varaosia.

Aitoja Tetra Pakin tämän laitteen varaosia voi tilata ottamalla yhteys lähimpään Tetra Pak toimistoon.

Koneen tunnistaminen

CE-luokitus

Tämä laite täyttää Euroopan talousalueen (ETA) perus turvallisuus- ja terveysvaatimukset.

(Jatkuu)

(Jatkoa)

3-A Soveltuvuus

Jos konekilvessä on merkintä A-3 (15) (ks. kuvasta (B) sivulla i-7) se tarkoittaa, että laite täyttää A-3 -standardin puhtausvaatimukset muotoilimille, täyttimille ja tiivisteille astioissa, jotka on tarkoitettu maidolle ja maitotuotteille, numero 17-10.

Konekilpi

Kuva (B) sivulla i-9 näyttää esimerkin konekilvestä.
Esimerkki voimassa olevasta konekilvestä ja sen sijainnista laitteessa näkyy tämän laitteen mukana toimitettujen käyttöohjeiden johdanto luvussa. Konekilpi sisältää alla luetellut tiedot, joita tarvitaan kun otetaan yhteyttä Tetra Pak Group koskien erityisesti tätä laitetta.

- Koneen tyyppi (8)
- Teho (9)
- Piirustus erittelyt (10)
- Koneen sarjanumero (11)
- Valmistaja (12)
- Valmistusvuosi (13)
- CE-merkintä (14)
- 3-A merkintä (tarvittaessa) (15)

Varmista, että tämän käsikirjan etusivuilla olevat tuotetiedot vastaavat konekilven tietoja ja laitteen teknistä erittelyä.

Kuinka tätä varaosaluetteloa käytetään

Löydä ensin varaosan numero

a) Katso kuvaa (C) sivulla i-9: Mene pääryhmän vieressä ilmoitettuun kappaleeseen (16), joka sisältää sen osan, jonka haluat löytää.

Osat b) ja c) katso kuvaa (D) sivulla i-10.

b) Pääryhmän kuvassa etsi sitä koneen alaryhmää (18), joka sisältää etsimäsi osan tai alaryhmän. Huomioi sijaintinumero (19) ja siirry kuvaa seuraavaa luettelosivulle.

c) Etsi sijaintinumeroa/viitenimitystä (17) tai alaryhmän nimeä (20).
Siirry vastaavalle sivunumerolle (21), joka on mainittu oikeanpuoleisessa sarakkeessa. Tetra Pak Group käyttää aina viitteissä toiminnallisia rakenteita. Prefiksi ilmaisin toiminto rakenne (=) ei näy viitenimityksissä.

(Jatkuu)

(Jatkoa)

Osat d) ja e) katso kuvaa (E) sivulla i-10.

d) Paikanna etsimäsi osa (22) alaryhmän piirroksessa ja huomioi osan sijaintinumero.

e) Osanumero (29) ja osan kuvaus (30) on luetteloitu sijaintinumeron vieressä luettelosivulla.

Varaosaluettelossa luetellut tiedot

Seuraava luettelo viittaa kuvaan (E) sivulla i-10. Varaosaluettelo sisältää seuraavat tiedot ryhmistä, alaryhmistä ja varaosista laitteelle:

- Viite ryhmän rakenteeseen (23). Osoittaa seuraavan ylemmän ryhmän laiteluettelon rakenteessa.
- Ryhmän nimi (24)
- Mittayksikkö (25)
- Määrä (26)
- Kokoamispiirustus numero (27)
- Luettelon sivualue (28). Sisällytetty, jos ryhmän kuvissa tai luetteloisssa on useita sivuja.
- Osan tai alaryhmän numero (29)
- Alaryhmän nimi tai osan kuvaus (30)
- Ryhmän numero (31)
- Laitteen numero (32)
- Ryhmätietojen otsikko (33). Ilmoittaa, onko otsikon alla oleva kohta erityiselle konevaihtoehdolle vai onko se luettelo yhteisistä osista.
  Jos luettelossa on useampi kuin yksi muunnos ja kullakin muunnoksella on oma asennuspiirroksensa, näytetään sivuviite muunnoksen asennuspiirustukseen.
- Sisäinen tiedotus (34)

Tuki ja kysymykset

Jos tarvitset tukea laitteen käyttämiseen, sinulla on muuta kysyttävää tai haluat esittää kommentteja tai ehdotuksia, lähetä kysymykset tai anna palautetta käyttämällä QuTI-P työkalua. Kirjoita QuTI-P selaimesi osoitekenttään. Jos QuTI-P-sovellus ei ole käytettävissä, pyydä käyttöoikeutta ottamalla yhteyttä maailmanlaajuiseen tukipalveluun.

Jos Tetra Pakin intranet ei ole käytettävissä, ota yhteyttä lähimpään Tetra Pakin edustajaan.

Information sur le manuel

Le Groupe Tetra Pak recommande de lire attentivement tous les manuels fournis. S'assurer que les manuels fournis sont accessibles au personnel qui s'occupe du fonctionnement ou de la maintenance de l'équipement.

Il est important de conserver ce manuel pendant toute la durée d'utilisation de la machine et de le transmettre à tout détenteur ou utilisateur ultérieur.

Le Groupe Tetra Pak ne sera pas tenu pour responsable d'un dommage, d'une perte, d'une blessure ou d'un décès survenus à cause du non-respect des instructions contenues dans les manuels qui accompagnent cet équipement.

Manuels fournis

Manuels fournis avec l'équipement:

CM

Le Manuel de Conversion fournit aux techniciens les informations nécessaires pour convertir la machine en vue des différents modes de production.

EM

Ce manuel électrique fournit aux techniciens les informations sur le système électrique de la machine.

IM

Ce manuel de Mise en place fournit aux techniciens les informations nécessaires pour l'installation de la machine en toute sécurité.

MaSP

Le Manuel de Maintenance et de Pièces de Rechange fournit des informations sur la maintenance du composant. Il fournit également les informations nécessaires à la commande de pièces de rechange auprès de Tetra Pak Group pour le composant.

MM

Ce manuel de Maintenance fournit aux techniciens les informations pour la maintenance.

OM

Le Manuel d'Opérateur fournit à l'opérateur les informations sur la manutention et le fonctionnement de l'équipement avant, pendant et après la production.

RM

Le Manuel de Conversion fournit aux techniciens les renseignements nécessaires pour installer en toute sécurité un ensemble sur une machine ou un équipement mis en place.

(Suite à la page suivante)

(Suite de la page précédente)

SPC

Le Catalogue de pièces de rechange fournit les renseignements nécessaires pour commander les pièces de rechange chez le Groupe Tetra Pak.

TeM

Le Manuel technique offre aux techniciens des informations qui peuvent être:

- des informations nécessaires pour installer l'équipement en toute sécurité,
- des informations nécessaires pour entretenir l'équipement
- des informations concernant le système électrique de l'équipement/des machines.
- des informations nécessaires à la commande de pièces de rechange auprès de le Groupe Tetra Pak
- d'autres informations techniques.

UP

Les pages de Mise à Jour fournissent de nouvelles pages pour mettre à jour les manuels de machine existants.

Présentation d'une page

Se référer à la figure (A) à la page i-9: Les pages principales du Catalogue des Pièces de Rechange sont composées d'une page de figure (1) et d'une page de liste correspondante (7). Le numéro de page (5) est indiqué dans le titre de la page de figure et dans le bas de page d'une page de liste.
Le numéro de document (6) est indiqué dans le bas de page de la page de liste.

Numérotation de page

Se référer (A) à la page i-9: Un numéro de page (5) possède trois parties:

- Numéro de chapitre (2)
- numéro de page consécutif (2) à l'intérieur du chapitre (3)
- nombre total de pages dans le chapitre (4)

Remarque! Les lettres UP peuvent remplacer le numéro de chapitre (2), si le manuel comprend des pages de mise à jour. Le numéro de page consécutif (3) et le nombre total de pages (4) des pages de mise à jour ne suivent pas la pagination séquentielle du chapitre.

Présentation de la machine

Fabricant

Pour le nom et l'adresse du fabricant, voir la deuxième page de ce catalogue.

Assistance technique

Le Groupe Tetra Pak ne sera pas tenu responsable des dommages sur l'équipement ou des blessures au personnel ou aux consommateurs qui pourraient être causés par des pièces de rechange qui ne sont pas des pièces de rechange Tetra Pak® originales.

Pour commander les pièces de rechange originales de cette machine, prendre contact avec le bureau Tetra Pak le plus proche.

Identification

Certification CE

Cet équipement est conforme aux réglementations essentielles d'hygiène et de sécurité de la Communauté Économique Européenne (CEE).

(Suite à la page suivante)

(Suite de la page précédente)

3-A Conformité

Si la plaque de machine contient le repère 3-A (15) (voir la figure (B) à la page i-7), cet équipement est conforme aux Normes Sanitaires 3-A pour les moules, les remplisseuses et systèmes de soudure de conteneurs pour lait liquide et produits laitiers liquides, Numéro 17-10.

Plaque signalétique de la machine

La figure (B) à la page i-9 montre un exemple d'une plaque signalétique de machine.
Une représentation de la plaque de machine valable et son emplacement sur l'équipement est indiquée au chapitre Introduction des manuels fournis avec l'équipement. La plaque de machine contient les caractéristiques figurant dans la liste ci-dessous, nécessaires pour prendre contact avec le Groupe Tetra Pak au sujet de cet équipement spécifique.

- Type de machine (8)
- Volume (9)
- Spécifications du plan (10)
- Numéro de série de la machine (11)
- Fabricant (12)
- Année de fabrication (13)
- Marquage CE (14)
- Repère 3-A (s'il y a lieu) (15)

S'assurer que les caractéristiques de l'équipement figurant dans la liste des pages de garde de ce manuel correspondent aux caractéristiques de la plaque signalétique de la machine et à ses spécifications.

Comment utiliser ce Catalogue de Pièces de Rechange

Localiser un Numéro de Pièce de rechange.

a) Se référer à la figure (C) à la page i-9: Aller au numéro de chapitre (16) indiqué à côté du groupe principal qui contient la pièce que vous souhaitez localiser.

Les articles b) et c) se réfèrent à la figure (D) à la page i-10.

b) Sur la figure du groupe principal, chercher la sous-groupe de machine (18) qui contient la pièce ou le sous-groupe que recherché. Noter le numéro de repère (19) et aller à la page de liste qui suit la figure.

c) Rechercher le numéro de repère/la désignation de référence (17) ou le nom de sous-groupe (20). Aller au numéro de page correspondant (21) figurant dans la liste de la colonne de droite. Le Groupe Tetra Pak a choisi de toujours utiliser la structure orientée vers la fonction pour la désignation de référence. Le préfixe indiquant la structure orientée vers la fonction (=) n'est pas indiquée dans la désignation de référence.

(Suite à la page suivante)

(Suite de la page précédente)

Les articles d) et e) se réfèrent à la figure (E) à la page i-10.

d) Localiser la pièce (22) recherchée sur la figure de sous-groupe et noter le numéro de repère de la pièce.

e) Le numéro de pièce (29) et la description de la pièce (30) figurent dans la liste à côté du numéro de repère sur la page de liste.

Informations figurant dans la Liste dans un Catalogue de Pièces de Rechange.

La liste ci-dessous se réfère à la figure (E) à la page i-10. Un Catalogue de Pièces de Rechange contient les renseignements suivants relatifs aux groupes, sous-groupes et pièces de rechange de l'équipement.

- Référence de structure de groupe (23). Indique le groupe supérieur suivant dans la structure de liste d'équipement.
- Nom du groupe (24)
- Unité de mesure (25)
- Quantité (26)
- Numéro de plan de montage (27)
- Gamme de la page de liste (28). Incluse s'il y a des pages multiples dans la figure de groupe ou dans la liste.
- Numéro de pièce ou de sous-groupe (29)
- Nom de sous-groupe ou description de la pièce (30)
- No. de groupe (31)
- Numéro de l'équipement (32)
- Titre des informations de groupe (33). Indique si la section sous le titre est pour une variante de machine spécifique ou s'il y a une liste de pièces communes. Si une liste comporte plus d'une variante et que chaque variante possède son propre plan de montage, une référence de page au plan de montage de la variante est alors indiqué.
- Informations internes (34)

Assistance et demandes

Pour toute assistance relative au fonctionnement de cet équipement, ou autres demandes, commentaires, ou suggestions, envoyez vos questions ou vos réactions par le biais de l'outil QuTI-P. Saisir QuTI-P dans le champ d'adresse de votre navigateur. Si l'accès à QuTI-P est indisponible, contactez le service après vente global pour solliciter un accès.

Si l'accès Intranet de Tetra Pak® est indisponible, contactez votre représentant Tetra Pak le plus proche.

Informacije o priručnicima

Grupa Tetra Pak preporučuje da temeljito pročitate sve isporučene priručnike. Osigurajte da su isporučeni priručnici na raspolaganju osobama koje će rukovati ili održavati uređaj.

Sačuvajte ovaj priručnik do isteka radnog vijeka opreme te ga predajte budućim vlasnicima ili korisnicima.

Grupa Tetra Pak ne prihvaća odgovornost za štetu, gubitke, ozljede ili smrtne slučajeve nastale zbog nepridržavanja uputa u priručnicima uz opremu.

Isporučeni priručnici

Priručnici isporučeni uz ovu opremu:

CM

Priručnik pruža tehničarima informacije o načinu prebacivanja opreme u različite načine rada.

EM

Priručnik pruža tehničarima informacije o električnom sustavu opreme.

IM

Priručnik pruža tehničarima informacije potrebne za sigurnu ugradnju opreme.

MaSP

Priručnik za održavanje i rezervne dijelove pruža informacije o održavanju komponenti. Također pruža informacije potrebne za naručivanje rezervnih dijelova komponenti od tvrtke Tetra Pak Group.

MM

Priručnik pruža tehničarimainformacije potrebne za održavanje opreme.

OM

Priručnik za rukovanje pruža rukovateljima informacije o rukovanju i radu opreme prije, za vrijeme i nakon proizvodnje.

RM

Pruža tehničarima informacije potrebne za sigurnu montažu novih komponenti na već instalirani stroj ili opremu.

(nastavak)

(nastavak)

SPC

Daje informacije potrebne za naručivanje rezervnih dijelova od tvrtke Grupa Tetra Pak.

TeM

Daje tehničarima informacije koje mogu biti sljedeće naravi:

- informacije potrebne za sigurno instaliranje opreme
- informacije potrebne za održavanje opreme
- informacije o električnom sustavu stroja/opreme
- informacije potrebne za naručivanje rezervnih dijelova od tvrtke Grupa Tetra Pak
- ostale tehničke informacije

UP

Sadrži nove stranice za ažuriranje postojećih priručnika uz stroj.

Izgled stranica

Pogledajte sliku (A) na stranici i-9: glavne stranice Kataloga rezervnih dijelova sastoje se od stranice s ilustracijom (1) i stranice s odgovarajućim popisom (7). Broj stranice (5) prikazan je u zaglavlju ilustracijske stranice i u podnožju stranice s popisom. Broj dokumenta (6) nalazi se u podnožju stranice s popisom.

Numeriranje stranica

Pogledajte sliku (A) na strani i-9: broj stranice (5) sastoji se od tri dijela:

- broja poglavlja (2)
- rednog broja stranice (3) u poglavlju
- ukupnog broja stranica (4) u poglavlju

Napomena! Slova UP mogu zamijeniti broj poglavlja (2) ako priručnik sadrži ažurirane stranice. Redni broj stranice (3) i ukupni broj stranica (4) ažuriranih stranica ne prate uzastopnu numeraciju poglavlja.

Uvodno o stroju

Proizvođač

Za naziv i adresu proizvođača vidjeti drugu stranicu ovog priručnika.

Rad

Grupa Tetra Pak ne preuzima odgovornost za bilo kakove štete ili ozljede nastale po opremu, osoblje ili potrošače zbog nekorištenja originalnih rezervnih dijelova proizvođača Tetra Pak®.

Za nabavu originalnih Tetra Pak rezervnih dijelova za ovaj stroj obratite se najbližem uredu Tetra Pak.

Identifikacija

CE klasifikacija

Ovaj uređaj usklađen je s osnovnim propisima za zdravlje i sigurnost Europske ekonomske zone (EEZ).

(nastavak)

(nastavak)

3-A usklađenost

Ako se na natpisnoj pločici stroja nalazi oznaka 3-A (15) (vidjeti sliku (B) na stranici i-9), oprema je sukladna s 3-A Sanitarnim normama za proizvođače, punitelje i zatvaratelje ambalaže za tekuće mlijeko i tekuće mliječne proizvode, broj 17-10.

Natpisna pločica

Ilustracija (B) na stranici i-9 prikazuje primjer natpisne pločice.
Ilustracija valjane natpisne pločice i njenog smještaja na opremi nalazi se u uvodnim poglavljima priručnika isporučenih uz ovu opremu.
Natpisna pločica sadrži dolje navedene podatke, potrebne za kontakt s tvrtkom Grupa Tetra Pak u vezi s konkretnom opremom.

- Tip stroja (8)
- Volumen (9)
- Specifikacija tehničkog crteža (10)
- Serijski broj stroja (11)
- Proizvođač (12)
- Godina proizvodnje (13)
- CE oznaka (14)
- 3-A oznaka (ako je primjenjivo) (15)

Provjerite da li podaci o uređaju na početnim stranicama ovoga priručnika odgovaraju podacima na natpisnoj pločici stroja i tehničkim karakteristikama stroja.

Kako se koristiti ovim Katalogom rezervnih dijelova

Pronađite broj rezervnog dijela

a) Pogledajte ilustraciju (C) na stranici i-9: idite na broj poglavlja (16) naveden uz glavnu skupinu koja sadrži dio koji želite pronaći.

Stavci b) i c) odnose se na ilustraciju (D) na stranici i-10.

b) Na prikazu glavne skupine pronađite podskupinu stroja (18) koja sadrži dio ili podgrupu koju tražite. Zabilježite broj pozicije (19) i pogledajte stranicu s popisom koja se nalazi iza stranice s ilustracijom.

c) Potražite broj pozicije/referentnu oznaku (17) ili naziv podskupine (20). Otiđite na odgovarajući broj stranice (21) naveden u desnom stupcu. Grupa Tetra Pak uvijek koristi funkcijski usmjereno strukturiranje referentnih oznaka. Prefiks koji pokazuje funkcijski usmjerenu strukturu (=) nije sadržan u referentnoj oznaci.

(nastavak)

(nastavak)

Stavci d) i e) odnose se na ilustraciju (E) na stranici i-10.

d) Na ilustraciji podskupine pronađite dio (22) koji tražite i zabilježite njegov broj pozicije.

e) Broj dijela (29) i opis (30) nalaze se uz broj pozicije na stranici s popisom.

Informacije navedene u Katalogu rezervnih dijelova

Donji popis odnosi se na sliku (E) na stranici i-10. U Katalogu rezervnih dijelova nalaze se sljedeći podaci o skupinama, podskupinama i rezervnim dijelovima opreme:

- Strukturna referenca skupine (23).
  Označava sljedeću višu skupinu u strukturi popisa opreme.
- Naziv skupine (24)
- Jedinica mjere (25)
- Količina (26)
- Broj konstrukcijskog crteža (27)
- Slijed stranice s popisom (28).
  Naveden je ako se u ilustraciji skupine ili popisu nalazi više stranica.
- Broj dijela ili podskupine (29)
- Naziv podskupine ili opis dijela (30)
- Broj skupine (31)
- Broj opreme (32)
- Naslov informacije o skupini (33). Ukazuje odnosi li se odjeljak ispod naslova na određeni tip stroja ili je to popis zajedničkih dijelova.
  Ako se na popisu nalazi više tipova i svaki ima svoj vlastiti konstrukcijski crtež, navedena je uputa na stranicu na kojoj je prikazan konstrukcijski crtež.
- Interne informacije (34)

Pomoć i upiti

Za pomoć u radu s ovom opremom ili za druge upite, komentare i prijedloge, pošaljite pitanja ili pružite povratne informacije korištenjem alata QuTI-P. Upišite QuTI-P u polje za adresu na svom pregledniku. Ako nemate pristup za QuTI-P, zatražite ga kontaktiranjem globalne servisne službe.

Ako nemate pristup intranetu tvrtke Tetra Pak®, obratite se najbližem predstavniku tvrtke Tetra Pak.

Kézikönyv információ

A Tetra Pak Group az összes leszállított kézikönyv alapos átolvasását javasolja. Gondoskodjon arról, hogy a készüléket üzemeltető és karbantartó személyzet számára elérhetőek legyenek a leszállított kézikönyvek.

Fontos, hogy a kézikönyvet a berendezés teljes élettartama alatt megőrizzék, és továbbadják azt minden későbbi tulajdonosnak és felhasználónak.

A Tetra Pak Group nem felel semmilyen kárért, veszteségért vagy sérülésért, melyek jelen berendezéshez mellékelt kézikönyvben lévő utasítások be nem tartásának következménye.

Leszállított kézikönyvek

A berendezéssel leszállított kézikönyvek:

CM

A CM Átállítási kézikönyv ellátja a szakembereket a különböző gyártási üzemmódokra való átállításról szóló információkkal.

EM

Az EM Elektromossági kézikönyv ellátja a szakembereket a készülék elektromos rendszerével kapcsolatos információkkal.

IM

Az IM Telepítési kézikönyv a készülék biztonságos telepítéséhez szolgáltat információkat a szakemberek számára.

MaSP

A Karbantartás és pótalkatrészek kézikönyv tájékoztatást nyújt a gépegység karbantartásáról. Emellett tartalmazza azokat az információkat is, amelyek ahhoz szükségesek, hogy pótalkatrészeket rendeljen a gépegységhez a Tetra Pak Csoporttól.

MM

Az MM Karbantartási kézikönyv a készülék karbantartásával kapcsolatosan szolgáltat információkat a szakemberek számára.

OM

Az OM Üzemeltetési kézikönyv a kezelők részére szolgáltat információkat a berendezés kezeléséről és működtetéséről a gyártás előtt, alatt és után.

RM

Az RM újraépítési kézikönyv ellátja a szakembereket azokkal az információkkal, amelyek egy készletnek a már telepített gépre való biztonságos felszereléséhez szükségesek.

(Folyt.)

(Folyt.)

SPC

Az SPC Alkatrész-katalógus a Tetra Pak Group megrendelhető alkatrészek megrendeléséhez szükséges információkat tartalmazza.

TeM

A TeM Műszaki útmutató az alábbi információkkal látja el a technikusokat:

- a berendezés biztonságos felszereléséhez szükséges információkkal,
- a berendezés karbantartásához szükséges információkkal,
- a gép/berendezés elektromos rendszerével kapcsolatos információkkal,
- A Tetra Pak Group történő cserealkatrész rendeléshez szükséges információkkal,
- egyéb műszaki információkkal.

UP

A UP Termékfrissítési oldalak új oldalakkal frissíti a gépkönyveket.

Oldal elrendezés

Lásd az (A) ábrát a(z) i-9 oldalon: Az Alkatrész-katalógus fő oldalai egy ábrákat tartalmazó oldalból (1) és a megfelelő listát tartalmazó oldalból (7) állnak. Az oldalszám (5) az ábrákat tartalmazó oldal fejlécében és a listát tartalmazó oldal láblécében jelenik meg. A dokumentumszám a listát tartalmazó oldal (6) láblécében jelenik meg.

Oldalszámozás

Lásd az ábrát (A) a(z) i-9 oldalon: Az oldalszám (5) három részből áll:

- fejezetszám (2)
- fejezeten belüli egymást követő oldalak száma (3)
- a fejezet összoldalszáma (4)

Megjegyzés! A UP betűk helyettesíthetik a fejezetszámot (2), ha a kézikönyv termékfrissítési oldalakat tartalmaz. A termékfrissítési oldalak egymást követő oldalai (3) és összoldalszáma (4) nem igazodik a fejezet egymást követő oldalszámozásához.

Gép bevezetés

Gyártó

A gyártó neve és címe a katalógus második oldalán található.

Szerviz

A Tetra Pak Group nem vállal felelősséget a berendezés, személyzet vagy fogyasztók olyan sérüléseiért, amelyet nem eredeti Tetra Pak® pótalkatrészek használata okozott.

Eredeti Tetra Pak pótalkatrészeket a legközelebbi Tetra Pak irodából rendelhet.

Azonosítás

CE besorolás

A berendezés megfelel az Európai Gazdasági Térség (EEA) alapvető egészségügyi és biztonsági előírásainak.

(Folyt.)

(Folyt.)

3-A megfelelőség

Ha a gép adattáblája tartalmazza a 3-A jelzést (15) (lásd (B) ábra az i-7 oldalon), akkor ez a berendezés megfelelő a 3-A Egészségügyi szabványok folyékony tej és folyékony tejtermékek csomagolásának alakító, töltő és lezáró eszközeire, 17-10. sz.

Géptábla

A (B) ábra a(z) i-9 oldalon egy példa a géptáblára.
Az érvényes géptáblát és annak a gépen elfoglalt helyét bemutató ábra a berendezéshez mellékelt kézikönyvek bevezető fejezetében található. A géptábla az alább felsorolt adatokat tartalmazza, amelyekre akkor van szükség, amikor felveszi a kapcsolatot a Tetra Pak Group ezzel a sajátos berendezéssel kapcsolatban.

- Géptípus (8)
- Térfogat (9)
- Tervrajz specifikációk (10)
- Gép gyártási száma (11)
- Gyártó (12)
- Gyártási év (13)
- CE jelölés (14)
- 3-A jelölés (ha van ilyen) (15)

Bizonyosodjon meg arról, hogy a kézikönyv első oldalán található berendezés-adatok megfelelnek a géptábla adatainak és a gép specifikációinak.

Az Alkatrész-katalógus használata

Keresse meg az alkatrész-számot

a) Lásd a (C) ábrát a(z) i-9 oldalon: Ugorjon a fejezetszámra (16), amely a keresett alkatrészt tartalmazó fő csoport mellett található.

A(z) b) és c) adatok a(z) i-10 oldalon található (D) ábrára vonatkoznak.

b) A főcsoport ábráját lásd a gép alcsoportban (18), amely a keresett alkatrészt vagy alcsoportot tartalmazza. Jegyezze fel a pozíció számot (19) és ugorjon az illusztrációt követő lista oldalra.

c) Keresse a pozíció számot/referencia elnevezést (17) vagy az alcsoport nevét (20). Ugorjon a jobboldali oszlopban feltüntetett megfelelő oldalszámra (21). A Tetra Pak Group úgy döntött, hogy referencia elnevezésre mindig a funkcióorientált szerkezetet alkalmazza. A funkcióorientált szerkezetet jelző előtag (=) nem jelenik meg a referencia elnevezésben.

(Folyt.)

(Folyt.)

A(z) d) és e) adatok a(z) i-10 oldalon található (E) ábrára vonatkoznak.

d) Keresse meg az alkatrészt (22) az alcsoport ábrán és jegyezze fel az alkatrész pozíció számát.

e) Az alkatrész-szám (29) és az alkatrész leírása (30) a lista oldalon a pozíció szám mellett van feltüntetve.

Az Alkatrész-katalógusban feltüntetett információk

Az alábbi lista a(z) i-10 oldalon lévő (E) ábrára vonatkozik.
Az Alkatrész-katalógus a következő információkat tartalmazza a berendezés alcsoportokról, csoportokról és alkatrészekről.

- Csoportszerkezet referencia (23). A következő nagyobb csoportot jelzi a berendezés listaszerkezetében.
- Csoportnév (24)
- Mértékegység (25)
- Mennyiség (26)
- Szerelési rajz száma (27)
- Listaoldal tartomány (28). Akkor található meg, ha több oldalt tartalmaz a csoportábrában vagy a listában.
- Alkatrész vagy alcsoport szám (29)
- Alcsoport név vagy alkatrész leírás (30)
- Csoportszám (31)
- Berendezés szám (32)
- Csoportinformáció címsor (33). Azt jelzi, hogy az alábbi szakaszban a címsor egy bizonyos gépváltozatra vonatkozik, vagy általános alkatrészek egy listája Ha egy lista egynél több változattal rendelkezik, és mindegyik változatnak saját összeszerelési rajza van, a változatok szerelési rajzának egy oldal-hivatkozása jelenik meg.
- Belső információk (34)

Segítség és tájékoztatás

Jelen berendezés használata során a QuTI-P eszköz segítségével kérhet segítséget, illetve más tájékoztatást, valamint feltehet kérdéseket és visszajelzést is adhat. Böngészőjén a címmezőbe írja be a QuTI-P szöveget. Ha a QuTI-P nem elérhető, a hozzáférést a globális internetes ügyfélszolgálattól (Global Service Desk) kérheti.

Ha a Tetra Pak® intranet nem érhető el, forduljon a legközelebbi Tetra Pak képviselethez.

Handbókaupplýsingar

Tetra Pak Group mælir með því að allar handbækur séu lesnar vandlega. Gangið úr skugga um að afhentar handbækur séu tiltækar starfsmönnum sem reka tækin eða viðhalda þeim.

Mikilvægt er geyma þessa handbók á endingartíma búnaðarins og afhenda hana arftökum eða öðrum notendum.

Tetra Pak Group ber ekki ábyrgð á neinu tjóni á tækjunum sem stafar af því að ekki var farið eftir leiðbeiningum í þessari handbók.

Afhentar handbækur

Handbækur sem afhentar voru með þessum tækjum:

CM

Breytingahandbók veitir tæknimönnum upplýsingar um breytingar á tækjunum svo að þau hæfi hinum ýmsu framleiðsluháttum.

EM

Raftækjahandbók veitir tæknimönnum upplýsingar um rafkerfi tækjanna.

IM

Uppsetningarhandbók veitir tæknimönnum nauðsynlegar upplýsingar um örugga uppsetningu tækjanna.

MaSP

Handbækur um viðhald og varahluti veita upplýsingar um hvernig eigi að viðhalda íhlutnum. Þær veita líka nauðsynlegar upplýsingar um hvernig skuli panta varahluti frá Tetra Pak Group fyrir íhlutinn.

MM

Viðhaldshandbók veitir tæknimönnum upplýsingar um viðhald tækjanna.

OM

Rekstrarhandbók veitir stjórnanda upplýsingar um meðhöndlun og rekstur tækjanna fyrir og eftir framleiðslu.

RM

Endurbyggingarhandbók veitir tæknimönnum nauðsynlegar upplýsingar um örugga uppsetningu viðbótarbúnaðar við þegar uppsetta vél eða tæki.

(frh.)

(frh.)

SPC

Varahlutalisti veitir upplýsingar sem nauðsynlegar eru til að panta varahluti frá Tetra Pak Group.

TeM

Í Tæknihandbókinni eru tæknimönnum veittar upplýsingar, svo sem:

- upplýsingar um örugga uppsetningu tækjanna
- upplýsingar um viðhald tækjanna
- upplýsingar um rafkerfi vélarinnar/búnaðarins
- nauðsynlegar upplýsingar um pantanir varahluta frá Tetra Pak Group
- aðrar tæknilegar upplýsingar

UP

Uppfærslublaðsíður eru nýjar blaðsíður til að uppfæra eldri vélahandbækur.

Umbrot

Vísað er til myndar (A) á bls. i-9: Meginblaðsíður í Varahlutalistanum eru myndablaðsíða (1) og samsvarandi listablaðsíða (7). Blaðsíða númer (5) er sýnd í fyrirsögn myndablaðsíðu og neðst á listablaðsíðu. Skjalsnúmer (6) er neðst á listablaðsíðu.

Blaðsíðunúmer

Vísað er til myndar (A) á blaðsíðu i-9: Blaðsíðunúmer (5) skiptist í þrjá hluta:

- kaflanúmer (2)
- raðnúmer (3) innan kaflans
- heildarfjölda blaðsíðna (4) í kaflanum.

Ath.! Stafirnir UP kunna að koma í stað kaflanúmers (2) ef uppfærslublaðsíður eru í handbókinni. Raðnúmer blaðsíðu (3) og heildarfjöldi síðna (4) af uppfærslublaðsíðum sýna ekki eldri raðnúmer í kaflanum.

Inngangur um vélina

Framleiðandi

Nafn og heimilisfang framleiðanda er birt á 2. bls. þessa vörulista.

Þjónusta

Tetra Pak Group ber enga ábyrgð á tjóni eða slysum á tækjum, starfsmönnum eða neytendum af völdum varahluta sem eru ekki ekta Tetra Pak®-varahlutir.

Pantanir á ekta Tetra Pak-varahlutum í þessa vél skulu sendar næstu skrifstofu Tetra Pak.

Auðkenni

CE flokkun

Þessi tæki fullnægja grundvallarheilbrigðis- og öryggisreglugerðum Evrópska efnahagssvæðisins (EES).

(frh.)

(frh.)

3-A samræmi

Ef vélarplatan inniheldur 3-A merkingu (15) (sjá mynd (B) á bls. i-7) er þessi búnaður í samræmi við 3-A hreinlætisstaðla fyrir mótara, áfyllara og lokara íláta fyrir mjólkurvökva og mjólkurvökvavörur, nr. 17-10.

Vélarskilti

Myndin (B) á bls. i-9 sýnir dæmi um vélarskilti.
Mynd af gildandi vélarskilti og staðsetning þess á búnaðinun er birt í inngangskafla handbókanna sem afhentar eru með þessum búnaði.
Á vélarskiltinu er að finna þau gögn sem talin eru upp hér að neðan og þörf er fyrir þegar haft er samband við Tetra Pak Group vegna þessa sérstaka búnaðar.

- Vélargerð (8)
- Magn (9)
- Tækniteikningar (10)
- Raðnúmer vélar (11)
- Framleiðandi vélar (12)
- Framleiðsluár(13)
- CE-merki (14)
- 3-A-merki (ef við á) (15)

Gangið úr skugga um að gögn um búnaðinn á fyrstu blaðsíðum þessarar handbókar komi heim og saman við vélarskiltið og tæknilýsingu vélarinnar.

Notkun þessa varahlutalista

Finna ber númer varahlutar

a) Vísað er til myndar (C) á bls. i-9: Fletta skal upp á kafla (16) sem birtist við hlið meginhópsins sem hefur að geyma þann hlut sem ætlunin er að finna.

Atriði b) og c) vísa til myndar (D) á bls. i-10.

b) Á mynd af meginhópnum ber að gá að undirflokki (18) vélar sem hefur að geyma hlut eða undirflokk sem leitað er að.
Aðgæta skal staðsetningarnúmerið (19) og fletta upp á listablaðsíðu sem fylgir myndinni.

c) Finna ber staðsetningarnúmer/tilvísaða skilgreiningu (17) eða heiti undirhóps (20). Aðgæta skal viðeigandi blaðsíðunúmer (21) sem birt er í dálkinum hægra megin. Tetra Pak Group hefur valið að nota ávallt virkniform sem skilgreiningarhlut. Forskeytið, sem bendir til virkniformsins (=), er ekki sýnt í skilgreiningarhlutnum

(frh.)

(frh.)

Atriði d) og e) eiga við um mynd (E) á bls. i-10.

d) Finna ber hlutinn (22) sem leitað er að í undirhópsmyndinni og aðgæta hvert er staðsetningarnúmer hlutarins.

e) Hlutarnúmerið (29) og lýsing hlutarins (30) eru listuð við hlið staðsetningarnúmersins á listablaðsíðunni.

Upplýsingar sem birtar eru í Varahlutalistanum

Listinn hér að neðan á við um mynd (E) á bls. i-10. Í Varahlutalista er að finna eftirfarandi upplýsingar um hópa, undirhópa og varahluti fyrir tækin:

- Skilgreining uppbyggingar hóps (23). Bendir til næsta hóps fyrir ofan í uppbyggingu hlutalistans.
- Heiti hóps (24)
- Mælieiningar (25)
- Magn (26)
- Númer á samsetningarteikningu (27)
- Svið listablaðsíðu (28). Fylgir með ef um er að ræða margar blaðsíður á hópmyndninni eða listanum.
- Númer hlutar eða undirflokks (29)
- Heiti undirhóps eða lýsing hlutar (30)
- Hópnúmer (31)
- Númer búnaðar (32)
- Fyrirsögn upplýsingar um hóp (33). Bendir til þess hvort kaflinn undir fyrirsögninni fjalli um sérstaka gerð vélar eða í honum sé listi yfir almenna hluti. Ef í listanum er að finna fleiri en einn frábrugðinn hlut og birt er samsetningarteikning fyrir sérhvern frábrugðinn hlut er vísað til blaðsíðunnar með samsetningarteikningu hins frábrugðna hlutar.
- Innri upplýsingar (34)

Aðstoð og fyrirspurnir

Þegar þörf er á aðstoð þegar þessi búnaður er notaður eða aðstoð vegna fyrirspurna, athugasemda eða tillagna, sendið spurningar eða athugasemdir með því að nota QuTI-P-tækið. Skráið QuTI-P í reitinn fyrir vistfang í vafrann þinn. Ef aðgangur að QuTI-P er ekki í boði skal óska eftir aðgangi með því að hafa samband við Global Service Desk (þjónustuborð).

Ef ekki er um að ræða aðgang að Tetra Pak® heimasíðunni ber að hafa samband við næsta umboðsmann Tetra Pak.

Informazioni sul manuale

Tetra Pak Group raccomanda di leggere con attenzione tutti i manuali forniti. Assicurarsi che i manuali forniti siano disponibili per il personale che opera o mantiene in efficienza l'equipaggiamento.

E' importante conservare questo catalogo per tutta la durata dell'equipaggiamento e consegnarlo ad ogni successivo possessore o utilizzatore.

Tetra Pak Group non si assume alcuna responsabilità per eventuali danni, perdite, lesioni o morte causati dall'inosservanza delle istruzioni contenute nei manuali forniti con questo equipaggiamento.

Manuali forniti

Manuali forniti con questo equipaggiamento:

CM

Il Manuale di Conversione fornisce ai tecnici le informazioni sulla conversione dell'equipaggiamento tra i diversi modi di produzione.

EM

Il Manuale Elettrico fornisce ai tecnici le informazioni sul sistema elettrico dell'equipaggiamento.

IM

Il Manuale d'Installazione fornisce ai tecnici le informazioni necessarie per installare facilmente l'equipaggiamento.

MaSP

Il Manuale di Manutenzione e Parti di ricambio fornisce informazioni su come effettuare la manutenzione del componente. Inoltre fornisce le informazioni necessarie per ordinare al Gruppo Tetra Pak pezzi di ricambio per il componente.

MM

Il Manuale di Manutenzione fornisce ai tecnici le informazioni sulla manutenzione dell'equipaggiamento.

OM

Il Manuale Operativo fornisce all'operatore informazioni su come movimentare ed azionare l'equipaggiamento prima, durante e dopo la produzione.

RM

Il Manuale di modifica fornisce ai tecnici le informazioni necessarie per installare facilmente un kit ad una macchina o ad un equipaggiamento.

(Continua)

(Continuazione)

SPC

Il Catalogo parti di ricambio fornisce informazioni necessarie per ordinare le parti di ricambio da Tetra Pak Group.

TeM

Il Manuale Tecnico fornisce le informazioni ai tecnici che possono essere:

- informazioni necessarie per installare in modo sicuro l'equipaggiamento
- informazioni necessarie per la manutenzione dell'equipaggiamento
- informazioni sul sistema elettrico della macchina/equipaggiamento
- informazioni necessarie per ordinare le parti di ricambio a Tetra Pak Group.
- altre informazioni tecniche

UP

Le pagine di aggiornamento forniscono nuove pagine per aggiornare i manuali delle macchine esistenti.

Schema pagina

Fare riferimento alla figura (A) a pagina i-9: Le pagine principali in un catalogo parti di ricambio consistono di una pagina di illustrazione (1) ed una corrispondente pagina della lista (7). Il numero di pagina (5) è indicato nell'intestazione di una pagina di illustrazione e nel piè di pagina di una pagina della lista. Il numero di documento (6) è indicato nel piè di pagina di una pagina della lista.

Numerazione pagina

Fare riferimento alla figura (A) a pagina i-9: Un numero di pagina (5) ha tre parti:

- numero capitolo (2)
- numero pagina consecutivo nel capitolo (3)
- numero totale di pagine nel capitolo (4)

Nota! Le lettere UP possono sostituire il numero del capitolo (2) se il manuale include le pagine di aggiornamento. Il numero di pagina consecutivo (3) ed il numero totale di pagine (4) delle pagine di aggiornamento non seguono la numerazione esistente sequenziale delle pagine del capitolo.

Introduzione macchina

Fabbricante

Per il nome e l'indirizzo del fabbricante, vedere la seconda pagina di questo catalogo.

Assistenza

Tetra Pak Group non si assume alcuna responsabilità per qualsiasi danno all'equipaggiamento, o lesioni al personale o ai clienti che sia stato causato da parti di ricambio non originali Tetra Pak®.

Per ordinare le parti di ricambio originali Tetra Pak per questa macchina, contattare l'ufficio Tetra Pak più vicino.

Identificazione

Classificazione CE

Questa macchina è conforme alle norme sanitarie e di sicurezza dell'Area Economica Europea (EEA).

(Continua)

(Continuazione)

Conformità 3-A

Se la targhetta macchina contiene il marchio 3-A (15) (vedere la figura (B) a pagina i-7), questo equipaggiamento è conforme alle norme sanitarie 3-A per formatrici, riempitrici e saldatori di contenitori per latte liquido e prodotti lattiero-caseari liquidi, numero 17-10.

Targhetta macchina

La figura (B) a pagina i-9 mostra un esempio della targhetta della macchina. Una figura della targhetta della macchina valida e la relativa posizione sull'equipaggiamento è mostrata nel capitolo Introduzione dei manuali forniti con questo equipaggiamento. La targhetta della macchina contiene i dati elencati in basso, necessari quando si contatta Tetra Pak® in merito a questo specifico equipaggiamento.

- Tipo di macchina (8)
- Volume (9)
- Specifiche disegni (10)
- Numero di serie della macchina (11)
- Fabbricante (12)
- Anno di fabbricazione (13)
- Sigla CE (14)
- Marcatura 3-A (se applicabile) (15)

Assicurarsi che i dati dell'equipaggiamento nelle pagine anteriori di questo manuale corrispondano alla targhetta della macchina ed alle specifiche della macchina stessa.

Come usare questo catalogo parti di ricambio

Individuazione di un numero di parte di ricambio

a) Fare riferimento alla figura (C) a pagina i-9: Passare al numero del capitolo (16) indicato accanto al gruppo principale che contiene la parte che si vuole individuare.

Punti b) e c) fare riferimento alla figura (D) a pagina i-10.

b) Sulla figura del gruppo principale, cercare il sottogruppo della macchina (18) che contiene la parte o il sottogruppo che si sta cercando. Annotare il numero di posizione (19) e passare alla pagina della lista che segue la figura.

c) Cercare il numero di posizione/denominazione di riferimento (17) o il nome del sottogruppo (20). Passare al numero di pagina corrispondente (21) elencato nella colonna destra. Tetra Pak Group ha scelto di utilizzare sempre la funzione della struttura orientata per la denominazione di riferimento. Il prefisso che indica la funzione della struttura orientata (=) non è mostrato nella denominazione di riferimento

(Continua)

(Continuazione)

Punti d) e e) fare riferimento alla figura (E) a pagina i-10 .

d) Individuare la parte (22) che si sta cercando sulla figura del sottogruppo ed annotare il numero di posizione della parte.

e) Il numero della parte (29) e la descrizione della parte (30) sono elencati accanto al numero di posizione nella pagina della lista.

Informazioni elencate nel catalogo parti di ricambio

La lista in basso si riferisce alla figura (E) a pagina i-10. Un catalogo parti di ricambio contiene le seguenti informazioni sui gruppi, sottogruppi e parti di ricambio per l'equipaggiamento:

- Riferimento struttura gruppo (23). Indica il gruppo successivo superiore nella struttura della lista dell'equipaggiamento.
- Nome del gruppo (24)
- Unità di misura (25)
- Quantità (26)
- Numero disegno di montaggio (27)
- Gamma di pagine della lista (28). Inclusa se ci sono pagine multiple nella figura del gruppo o della lista.
- Numero della parte o del sottogruppo (29)
- Nome del sottogruppo o descrizione della parte (30)
- Numero gruppo (31)
- Numero dell'equipaggiamento (32)
- Sezione informazioni del gruppo (33). Indica se la sezione sotto l'intestazione è per una variante macchina specifica o se è una lista di parti comuni. Se una lista ha più di una variante e ogni variante ha il proprio disegno di montaggio, un riferimento della pagina è indicato nel disegno di montaggio della variante.
- Informazioni interne (34)

Assistenza e richieste di informazioni

Per ricevere assistenza durante l'utilizzo della macchina o formulare altre richieste, commenti o suggerimenti, utilizzare lo strumento QuTI-P. Digitare QuTI-P nel campo dell'indirizzo del browser. Se l'accesso a QuTI-P non è disponibile, richiederlo contattando il servizio di assistenza globale.

Se l'accesso all'intranet Tetra Pak® non è disponibile, contattare il rappresentante Tetra Pak più vicino.

Vadovo informacija

Tetra Pak Group rekomenduoja atidžiai perskaityti visus pristatomus vadovus. Įsitikinkite, kad pristatomi vadovai yra prieinami personalui, kuris dirba su įranga arba ją prižiūri.

Svarbu saugoti šį vadovą visam įrangos gyvavimo laikotarpiui ir perduoti vadovą kiekvienam sekančiam savininkui arba naudotojui.

Tetra Pak Group neatsako už bet kokius įrangos gedimus, atsiradusius nesilaikant šią įrangą lydinčiuose vadovuose pateiktų instrukcijų.

Pristatomi vadovai

Kartu su šia įranga pristatomi vadovai:

CM

Perjungimų vadove specialistams suteikiama informacija apie įrangos perjungimą tarp įvairių gamybos režimų.

EM

Elektrinės dalies vadove pateikiama informacija specialistams apie įrangos elektros sistemą.

IM

Montavimo vadove pateikiama specialistams informacija, reikalinga saugiam įrangos montavimui.

MaSP

Techninės priežiūros ir atsarginių dalių vadove pateikiama informacija, kaip prižiūrėti komponentą. Jame taip pat pateikiama informacija, reikalinga norint iš „Tetra Pak Group“ užsisakyti komponento atsarginių dalių.

MM

Priežiūros vadove pateikiama specialistams informacija, reikalinga prižiūrint įrangą.

OM

Darbo vadove pateikiama informacija operatoriams apie darbą su įranga ir įrangos valdymą prieš gamybą, gamybos metu ir po gamybos.

RM

Restauravimo vadove pateikiama specialistams informacija, reikalinga saugiai sumontuoti komplektą dalių į sumontuotą mašiną ar įrangą.

(Tęsiama)

(Tęsiama)

SPC

Atsarginių dalių kataloge pateikiama informacija, reikalinga užsakant atsargines dalis iš Tetra Pak Group.

TeM

Techniniame vadove pateikiama specialistams informacija, kuri gali būti:

- informacija, reikalinga saugiam įrangos montavimui
- informacija, reikalinga atliekant techninę įrangos priežiūrą
- informacija apie mašinos / įrangos elektros sistemą
- informacija, reikalinga užsakant atsargines dalis iš Tetra Pak Group
- kitokia techninė informacija

UP

Nauji puslapiai skirti esamų mašinos vadovų atnaujinimui naujais puslapiais.

Puslapio išdėstymas

Vadovaukitės (A) paveikslėliu i-9 puslapyje: atsarginių dalių katalogo pagrindinius puslapius sudaro paveikslėlių puslapis (1) ir atitinkamo sąrašo puslapis (7). Puslapio numeris (5) nurodytas paveikslėlių puslapio antraštėje ir apatinėje sąrašo puslapio poraštėje. Dokumento numeris (6) nurodytas apatinėje sąrašo puslapio poraštėje.

Puslapių numeravimas

Vadovaukitės (A) paveikslėliu i-9 puslapyje: puslapio numerį (5) sudaro trys dalys:

- skyriaus numeris (2)
- puslapio eilės numeris (3) skyriuje
- bendras puslapių skaičius (4) skyriuje

Pastaba! Jei vadove yra atnaujinimų puslapiai, UP raidės gali būti vietoje skyriaus numerio (2). Atnaujinimo puslapio eilės numeris (3) ir bendras atnaujinimo puslapių skaičius (4) neatitinka nuoseklios skyriaus puslapių numeracijos.

Mašinos įvadas

Gamintojas

Apie gamintojo įmonės pavadinimą ir adresą skaitykite antrame šio katalogo puslapyje.

Aptarnavimas

Tetra Pak Group neprisiims jokios atsakomybės už žalą ir įrangos gedimus ar darbuotojų arba vartotojų traumas, patirtas naudojant atsargines dalis, kurios nėra originalios Tetra Pak® atsarginės dalys.

Norėdami užsakyti originalias Tetra Pak atsargines dalis susisiekite su artimiausia Tetra Pak įstaiga.

Identifikacija

CE klasifikacija

Ši įranga tenkina pagrindines Europos Ekonominės Zonos (EEA) sveikatos ir saugumo taisykles.

(Tęsiama)

(Tęsiama)

3-A atitiktis

Jei mašinos lentelėje yra ženklas 3-A (15) (žr. (B) iliustraciją i-7 puslapyje), ši įranga atitinka 3-A higienos standartus skysto pieno ir skysto prieno produktų talpyklų formuotojams, pripildytojams ir sandarikliams, numeris 17-10.

Mašinos plokštė

Paveikslėlyje (B), esančiame i-9 puslapyje, pavaizduotas įrenginio kortelės pavyzdys.
Mašinos galiojančios kortelės paveikslėlis ir kortelės vieta ant įrangos nurodyta kartu su įranga tiekiamų vadovų įžanginiame skyriuje. Įrangos kortelėje pateikiami išvardinti duomenys, kurių reikia kreipiantis į Tetra Pak Group dėl konkrečios įrangos.

- Mašinos tipas (8)
- Tūris (9)
- Brėžinio specifikacijos (10)
- Mašinos serijos numeris (11)
- Gamintojas (12)
- Pagaminimo metai (13)
- CE ženklas (14)
- 3-A ženklas (jei taikomas) (15)

Įsitikinkite, kad šio vadovo pirmuose puslapiuose pateikti įrangos duomenis atitinka duomenis pateiktus mašinos informacinėje lentelėje ir mašinos specifikacijoje.

Kaip naudotis šiuo atsarginių dalių katalogu?

Nustatykite atsarginės dalies numerį

a) Vadovaukitės (C) paveikslėliu, esančiu i-9 puslapyje: atsiverskite skyrių, kurio numeris (16) nurodytas prieš pagrindinę grupę, kurioje yra reikiama surasti dalis.

Elementai b) ir c) atitinka (D) paveikslėlį, esantį i-10 puslapyje.

b) Pagrindinės grupės paveikslėlyje ieškokite mašinos dalinės grupės (18), kurioje yra ieškoma dalis ar dalinė grupė. Įsidėmėkite pozicijos numerį (19) ir atsiverskite už paveikslėlio esantį sąrašo puslapį.

c) Suraskite pozicijos numerio / nuorodos aprašymą (17) ar dalinės grupės pavadinimą (20). Atsiverskite atitinkamą puslapio numerį (21), nurodytą dešiniajame stulpelyje. Tetra Pak Group nuorodų aprašymams pasirinko visuomet naudoti su atliekama funkcija susietą struktūrą. Nuorodos aprašyme nenaudojamas priešdėlis, pažymintis su atliekama funkciją susietą struktūrą (=)

(Tęsiama)

(Tęsiama)

Elementai d) ir e) atitinka (E) paveikslėlį, esantį i-10 puslapyje.

d) Ieškomą dalį (22) suraskite dalinės grupės paveikslėlyje ir įsidėmėkite dalies pozicijos numerį.

e) Dalies numeris (29) ir dalies aprašymas (30) nurodyti sąrašo puslapyje prie pozicijos numerio.

Atsarginių dalių kataloge pateikiama informacija

Pateiktas sąrašas atitinka (E) paveikslėlį, esantį i-10 puslapyje. Atsarginių dalių kataloge pateikiama tokia informacija apie įrangos grupes, dalines grupes ir atsargines dalis:

- Grupės struktūros apibūdinimas (23). Nurodo kitą aukščiausią grupę įrangos sąrašo struktūroje.
- Grupės pavadinimas (24)
- Mato vienetas (25)
- Kiekis (26)
- Surinkimo brėžinio numeris (27)
- Sąrašo puslapių intervalas (28). Nurodomas tuomet, kai grupės paveikslėlį ar sąrašą sudaro keli puslapiai.
- Dalies ar dalinės grupės numeris (29)
- Dalinės grupės pavadinimas arba dalies aprašymas (30)
- Grupės numeris (31)
- Įrangos numeris (32)
- Grupės informacijos antraštė (33). Pažymi, ar po antrašte esantis skyrius skirtas konkrečiam mašinos variantui, ar tai bendrų dalių sąrašas. Jei sąrašą sudaro daugiau kaip vienas variantas ir kiekvienas iš jų atitinka skirtingą surinkimo numerį, pateikiama varianto surinkimo brėžinio puslapio nuoroda.
- Vidinė informacija (34)

Pagalba ir užklausos

Jei reikia pagalbos dėl šios įrangos eksploatacijos arba turite kitų užklausų, komentarų ar pasiūlymų, pateikite klausimus arba atsiliepimus naudodamiesi priemone „QuTI-P“. Įveskite „QuTI-P“ į savo naršyklės adreso lauką. Jei „QuTI-P“ prieigos neturite, paprašykite jos susisiekę su Pasauliniu aptarnavimo centru.

Jei neturite prieigos prie „Tetra Pak®“ intraneto, susisiekite su artimiausiu „Tetra Pak“ atstovu.

Informācija par instrukciju

Tetra Pak Group iesaka uzmanīgi izlasīt visas piegādātās instrukcijas. Nodrošiniet, lai piegādātās instrukcijas būtu pieejamas personālam, kurš ekspluatē un apkalpo iekārtu.

Ir svarīgi saglabāt šo katalogu visā ierīces kalpošanas laikā un nodot to jebkuram sekojošam īpašniekam vai lietotājam.

Tetra Pak Group neuzņemas atbildību par jebkādiem šīs iekārtas bojājumiem, ko izraisa šim aprīkojumam pievienotajās rokasgrāmatās sniegto instrukciju neievērošana.

Piegādātās instrukcijas

Ar iekārtu piegādātās instrukcijas:

CM

Šī Maiņas instrukcija (CM) nodrošina tehnisko personālu ar informāciju par iekārtas pārvēršanu dažādiem ražošanas režīmiem.

EM

Elektrisko savienojumu instrukcija (EM) nodrošina tehniķus ar informāciju par iekārtas elektrisko sistēmu.

IM

Instalācijas instrukcija (IM) nodrošina tehniķus ar informāciju, kas ir nepieciešama drošai iekārtas instalācijai.

MaSP

Apkopes un rezerves daļu rokasgrāmatā sniegta informācija, kā uzturēt komponentu labā tehniskā stāvoklī. Šajā rokasgrāmatā sniegta arī informācija, kas nepieciešama komponenta rezerves daļu pasūtīšanai no Tetra Pak Group.

MM

Tehniskās apkopes instrukcija (MM) sniedz tehniķiem informāciju par aprīkojuma tehnisko apkopi.

OM

Ekspluatācijas instrukcija (OM) nodrošina operatorus ar informāciju par rīcību ar iekārtu un tās ekspluatāciju pirms un pēc ražošanas procesa, kā arī tā laikā.

RM

Pārveidošanas instrukcija (RM) sniedz tehniķiem informāciju, kas nepieciešama, lai uz uzstādītas iekārtas vai aprīkojuma droši uzstādītu komplektu.

(Turpinājums seko)

(Turpinājums seko)

SPC

Rezerves daļu katalogs (SPC) sniedz informāciju, kas ir nepieciešama rezerves daļu pasūtīšanai no Tetra Pak Group.

TeM

Tehniskā instrukcija (TeM) sniedz tehniķiem informāciju, kas var būt:

- informācija, kura nepieciešama, lai droši uzstādītu aprīkojumu;
- informācija, kura nepieciešama, lai veiktu aprīkojuma tehnisko apkopi;
- informācija par iekārtas/ aprīkojuma elektrosistēmu;
- informācija, kura nepieciešama rezerves daļu pasūtīšanai no Tetra Pak Group;
- cita tehniskā informācija.

UP

Atjauninājuma lappuses ir jaunas lapas, kas nepieciešamas, lai atjauninātu iekārtas esošās rokasgrāmatas.

Lappuses formāts

Skatiet attēlu (A) lappusē i-9: Rezerves daļu kataloga (SPC) galvenās lapas iekļauj ilustrāciju lapu (1) un attiecīgo saraksta lapu (7). Lappuses numurs (5) ir attēlots ilustrācijas lapas galvenes daļā un saraksta lapas kājenes daļā. Dokumenta numurs (6) ir attēlots saraksta lapas kājenes daļā.

Lappušu numerācija

Skatiet attēlu (A) lappusē i-9: lappuses numuram (5) ir trīs daļas:

- sadaļas numurs (2);
- lappuses kārtas numurs (2) sadaļā;
- kopējais lappušu skaits (3) sadaļā.

Piezīme! Burti UP var aizvietot sadaļas numuru (2), ja rokasgrāmata iekļauj atjauninājumu lappuses. Lappuses kārtas numurs (3) un atjauninājumu lappušu kopējais lappušu skaits (4) neatbilst sadaļas esošajai secīgajai lappušu numerācijai.

Ievads par ierīci

Ražotājs

Ražotāja nosaukumu un adresi skatiet šī kataloga otrajā lappusē.

Serviss

Tetra Pak Group neuzņemas atbildību par bojājumiem vai kaitējumu aprīkojumam, personālam vai klientiem, ko rada tādu rezerves daļu izmantošana, kas nav oriģinālas Tetra Pak® rezerves daļas.

Lai pasūtītu oriģinālas Tetra Pak rezerves daļas šai iekārtai, sazinieties ar tuvāko Tetra Pak biroju.

Identifikācija

CE klasifikācija

Šī iekārta atbilst Eiropas Ekonomiskās Telpas (EEA) galvenajiem veselības un drošības noteikumiem.

(Turpinājums seko)

(Turpinājums seko)

3-A atbilstība

Ja uz iekārtas datu plāksnītes ir 3-A marķējums (15) (skatīt attēlu (B) lappusē i-7), šāds aprīkojums atbilst 3-A Šķidrā piena un šķidro piena produktu iepakojuma formētāju, pildītāju un sakausētāju sanitārajām normām Nr. 17-10.

Iekārtas datu plāksne

Attēlā (B) lappusē i-9 ir attēlots iekārtas datu plāksnes piemērs.
Iekārtas datu plāksnes attēls, kā arī šīs plāksnes atrašanās vieta uz aprīkojuma ir attēlota līdz ar šo iekārtu piegādāto rokasgrāmatu ievada sadaļā. Iekārtas datu plāksnē ir iekļauti tālāk norādītie dati, kas ir nepieciešami, sazinoties ar Tetra Pak Group jautājumos, kuri saistīti ar šo specifisko aprīkojumu.

- Iekārtas tips (8)
- Tilpums (9)
- Rasējuma specifikācijas (10)
- Iekārtas sērijas numurs (11)
- Ražotājs (12)
- Ražošanas gads (13)
- CE marķējums (14)
- 3-A marķējums (ja piemērojams) (15)

Pārliecinieties, vai iekārtas dati šīs instrukcijas pirmajā lappusē atbilst datiem iekārtas datu plāksnē un iekārtas specifikācijai.

Kā lietot šo Rezerves daļu katalogu

Atrodiet rezerves daļas numuru

a) Skatiet attēlu (C) lappusē i-9: atrodiet sadaļas numuru (16), kas norādīts līdzās galvenajai grupai, kur atrodas meklējamā detaļa.

Punkti b) un c) attiecas uz attēlu (D) lappusē i-10.

b) Galvenās grupas attēlā atrodiet iekārtas apakšgrupu (18), kur atrodas meklējamā detaļa vai apakšgrupa. Atcerieties pozīcijas numuru (19) un skatiet sarakstu, kas seko pēc šī attēla.

c) Atrodiet pozīcijas numuru/ atsauces apzīmējumu (17) vai apakšgrupas nosaukumu (20). Atšķiriet attiecīgo lappusi (21), kas norādīta labajā ailē. Atsauču apzīmējumiem Tetra Pak Group vienmēr izvēlas lietot uz funkciju orientētu struktūru. Prefikss, kas apzīmē uz funkciju orientēto struktūru (=), atsauču apzīmējumos nav norādīts.

(Turpinājums seko)

(Turpinājums seko)

Punkti d) un e) attiecas uz attēlu (E) lappusē i-10.

d) Apakšgrupas attēlā atrodiet meklēto detaļu (22) un atcerieties detaļas pozīcijas numuru.

e) Detaļas numurs (29) un detaļas apraksts (30) ir sniegts saraksta lapā blakus pozīcijas numuram.

Informācija, kas sniegta Rezerves daļu katalogā

Tālāk sniegtais saraksts attiecas uz attēlu (E) lappusē i-10.
Rezerves daļu katalogs satur šādu informāciju par grupām, apakšgrupām un aprīkojuma rezerves daļām:

- grupas struktūras atsauci (23). Norāda uz aprīkojuma saraksta struktūras nākamo augstāko grupu.
- Grupas nosaukumu (24).
- Mērvienība (25)
- Daudzums (26)
- Montāžas rasējuma numurs (27)
- Saraksta lappušu diapazons (28). Ja grupas attēli vai saraksts iekļauj vairākas lappuses.
- Detaļas vai apakšgrupas numurs (29)
- Apakšgrupas nosaukums vai detaļas apraksts (30)
- Grupas numurs (31)
- Aprīkojuma numurs (32)
- Grupas informācijas virsraksts (33). Ja sadaļa, kas seko pēc virsraksta, attiecas uz specifisku iekārtas versiju, vai kopēju detaļu saraksta gadījumā. Ja sarakstā ir vairāk nekā viena versija un katrai versijai ir savs montāžas rasējums, ir sniegta atsauce uz konkrētās versijas montāžas rasējuma lappusi.
- Iekšējā informācija (34)

Palīdzība un jautājumi

Lai šīs iekārtas izmantošanas laikā saņemtu palīdzību vai ja radušies citi jautājumi, komentāri vai ierosinājumi, iesniedziet jautājumus vai sniedziet atsauksmes, izmantojot QuTI-P rīku. Pārlūkprogrammas adreses laukā ierakstiet QuTI-P. Ja QuTI-P nav pieejams, pieprasiet tam piekļuvi, sazinoties ar vispasaules klientu apkalpošanas daļu.

Ja piekļuve Tetra Pak® iekštīklam nav iespējama, sazinieties ar tuvāko Tetra Pak pārstāvniecību.

Handboekinformatie

De Tetra Pak Groep raadt aan alle geleverde documentatie zorgvuldig te lezen. Ga na of de geleverde documentatie ter beschikking is van het personeel dat de machine moet bedienen of servicewerkzaamheden moet uitvoeren.

Het is belangrijk deze catalogus voor de duur van de machine te bewaren en de catalogus door te geven aan elke volgende eigenaar of gebruiker.

De Tetra Pak Groep aanvaardt geen verantwoordelijkheid voor om het even welke soort beschadiging aan de machine als gevolg van het niet opvolgen van de in dit handboek gegeven instructies.

Meegeleverde handboeken

Met deze apparatuur meegeleverde handboeken:

CM

Dit conversiehandboek geeft technici informatie over het ombouwen van de apparatuur tussen verschillende productiemodi.

EM

Het Elektrisch Handboek geeft technici informatie betreffende het elektrisch systeem van de apparatuur.

IM

Het Installatiehandboek geeft technici informatie om op veilige wijze de apparatuur te installeren.

MaSP

Het Onderhouds- en reserveonderdelenhandboek geeft informatie over het onderhoud van de component. Verder geeft het informatie die nodig is om reserveonderdelen voor de component te bestellen bij de Tetra Pak Group.

MM

Het Onderhoudshandboek geeft technici informatie over het onderhoud van de apparatuur.

OM

Het Bedieningshandboek geeft operators informatie over hoe de machine moet worden bediend en hoe ermee moet worden omgegaan voor, tijdens en na productie.

RM

Het Ombouwhandboek bevat de nodige informatie voor technici om een kit veilig aan een geïnstalleerde machine of apparatuur te installeren.

(Zie volg. blz.)

(Vervolg)

SPC

De Catalogus Reservedelen geeft informatie die nodig is om reserveonderdelen bij de Tetra Pak Groep bestellen.

TeM

Het Technische Handboek bevat informatie voor technici betreffende:

- het veilig installeren van de apparatuur
- het onderhoud van de apparatuur
- het elektrische systeem van de machine/apparatuur.
- het bestellen van reserveonderdelen bij de Tetra Pak Groep
- andere technische informatie

UP

De Update Pages bevat nieuwe bladzijden voor het updaten van de bestaande machinehandboeken.

Pagina lay-out

Zie de illustratie (A) op bladzijde i-9: De belangrijkste bladzijden van een Catalogus Reserveonderdelen bestaan uit een bladzijde met een illustratie (1) en een corresponderende bladzijde met een lijst (7).
Het bladzijdenummer (5) is te vinden in de kop van een illustratiebladzijde en in de voetnoot van de lijstbladzijde. Het documentnummer (6) is te vinden in de voetnoot van een lijstbladzijde.

Bladzijdenummering

Zie de illustratie (A) op bladzijde i-9: een bladzijdenummer (5) bestaat uit drie delen.

- hoofdstuknummer (2)
- opeenvolgende bladzijdenummer in het hoofdstuk (3)
- totaal aantal bladzijden in het hoofdstuk (4)

N.B.! De letters UP kunnen het hoofdstuknummer (2) vervangen als het handboek update-bladzijden omvat. Het opeenvolgende bladzijdenummer (3) en het totale aantal bladzijden (4) van de updatebladzijden volgen niet de bestaande volgordenummering van het hoofdstuk.

Introductie van de machine

Fabrikant

Voor naam en adres van de fabrikant, zie de tweede bladzijde van deze catalogus.

Service

De Tetra Pak Groep wijst elke verantwoordelijkheid af voor schade aan machines of letsels aan personeel of consumenten die zijn veroorzaakt door reserveonderdelen die geen originele Tetra Pak®-reserveonderdelen zijn.

Neem voor het bestellen van originele Tetra Pak-reserveonderdelen voor deze machine contact op met het dichtstbijzijnde Tetra Pak-kantoor.

Identificatie

CE-classificatie

Deze apparatuur voldoet aan de basiseisen voor gezondheid en veiligheid voor de Europese Economische Ruimte (EEA).

(Zie volg. blz.)

(Vervolg)

3-A Naleving

Als het machineplaatje het 3-A merkteken bevat (15) (zie illustratie (B) op bladzijde i-7), voldoet deze apparatuur aan de 3-A hygiënenormen voor vorm-, vul- en sluitmachines van containers voor vloeibare melk en vloeibare melkproducten, nummer 17-10.

Machineplaatje

De illustratie (B) op bladzijde i-9 toont een voorbeeld van een machineplaatje.
Een illustratie van het wettige machineplaatje en de plaatsing ervan wordt getoond in het hoofdstuk Introductie van de handboeken, meegeleverd met deze apparatuur.
Het machineplaatje bevat onderstaande gegevens die nodig zijn wanneer de Tetra Pak Groep moet worden gecontacteerd betreffende deze apparatuur.

- Machinetype (8)
- Volume (9)
- Tekeningspecificaties (10)
- Serienummer machine (11)
- Fabrikant (12)
- Fabricagejaar (13)
- CE-markering (14)
- Markering 3-A (indien van toepassing) (15)

Controleer of de gegevens betreffende de apparatuur in de voorste bladzijden van dit handboek overeenkomen met de gegevens op het machineplaatje en de machinespecificatie.

Hoe dient deze catalogus reserveonderdelen te worden gebruikt.

Lokaliseren van een nummer van een reserveonderdeel

a) Zie de illustratie (C) op bladzijde i-9: ga naar het hoofdstuknummer (16), naast de hoofdgroep die het gewenste deel bevat.

Items b) en c) refereren naar de illustratie (D) op bladzijde i-10.

b) Zoek in de illustratie van de hoofdgroep de machinesubgroep (18) op die het deel van de gewenste subgroep bevat. Noteer het positienummer (19) en ga naar de lijstbladzijde die op de illustratie volgt.

c) Zoek het positienummer/referentiebenaming (17) of de naam van de subgroep (20). Ga naar het corresponderende bladzijdenummer (21), aangegeven in de rechterkolom. De Tetra Pak Groep heeft altijd gekozen voor een functiegerichte structuur voor referentiebenaming. Het prefix dat de functiegerichte structuur aangeeft (=) wordt niet getoond in de referentiebenaming.

(Zie volg. blz.)

(Vervolg)

Items d) en e) refereren naar de illustratie (E) op bladzijde i-10.

d) Lokaliseer het gewenste onderdeel (22) in de illustratie van de subgroep en noteer het positienummer van het onderdeel.

e) Het onderdeelnummer (29) en de beschrijving ervan (30) worden naast het positienummer op de lijstbladzijde weergegeven.

Informatie die in een Catalogus reserveonderdelen wordt gegeven

Onderstaande lijst verwijst naar de illustratie (E) op bladzijde i-10.
Een Catalogus reserveonderdelen bevat de volgende informatie betreffende groepen, subgroepen en reserveonderdelen voor de apparatuur.

- Referentie groepsstructuur (23). Geeft de volgende hoogste groep in de structuur van de apparatuur aan.
- Groepsnaam (24)
- Meeteenheid (25)
- Hoeveelheid (26)
- Nummer montagetekening (27)
- Bereik lijstbladzijde (28). Inclusief indien er meerdere bladzijden in de groepsillustratie of lijst voorkomen.
- Onderdeel of subgroepsnummer (29)
- Naam subgroep of beschrijving onderdeel (30)
- Groepsnummer (31)
- Apparatuurnummer (32)
- Kopregel groepsinformatie (33). Geeft aan of het deel onder de titel bedoeld is voor een specifieke machinevariant dan wel of het een lijst is met algemene onderdelen. Indien een lijst meer dan één variant bevat en elke variant heeft zijn eigen montagetekening, wordt een bladzijdereferentie naar de montagetekening van de variant gegeven.
- Interne informatie (34)

Ondersteuning en vragen

Voor ondersteuning bij het gebruik van deze apparatuur, of voor andere vragen, commentaar of suggesties, kunt u de vragen stellen of feedback geven met behulp van het QuTI-P-instrument. Typ QuTI-P in het adresveld van uw browser. Vraag, als toegang tot QuTI-P niet beschikbaar is, toegang aan door contact op te nemen met de Global Service Desk.

Neem contact op met de dichtstbijzijnde vertegenwoordiger van Tetra Pak® als het intranet van Tetra Pak niet beschikbaar is.

Informasjon om manualen

Tetra Pak Group anbefaler at du leser alle medfølgende manualer nøye. Kontroller at personalet som bruker eller vedlikeholder utstyret har adgang til de medfølgende manualene.

Det er viktig at denne manualen oppbevares trygt gjennom hele utstyrets levetid, og at den gis videre til senere eiere eller brukere av utstyret.

Tetra Pak Group kan ikke holdes ansvarlig for skader på utstyr som skyldes at instruksjonene i manualene som følger dette utstyret ikke er fulgt.

Medfølgende manualer

Manualer som følger med dette utstyret:

CM

Konverteringsmanualen gir teknikere opplysninger om konvertering av utstyret mellom forskjellige produksjonsmodus.

EM

Denne manualen gir teknikere opplysninger om utstyrets elektriske system.

IM

Denne manualen gir teknikere informasjonen som trengs for sikker installasjon av utstyret.

MaSP

Vedlikeholds- og reservedelshåndboken gir informasjon om vedlikehold av komponenten. Her finner du også nødvendig informasjon om bestilling av reservedeler til komponenten fra Tetra Pak Group.

MM

Denne manualen gir teknikere informasjon om vedlikehold av utstyret.

OM

Driftsmanualen gir operatørene informasjon om håndtering og drift av utstyret før, under og etter produksjon.

RM

Ombyggingsmanualen gir teknikere informasjon som kreves for å installere et sett trygt på en installert maskin eller et utstyr.

(Forts.)

(Forts.)

SPC

Reservedelskatalogen gir nødvendige opplysninger for å kunne bestille reservedeler fra Tetra Pak Group.

TeM

Den tekniske manualen gir teknikerne informasjon som kan være:

- informasjon som kreves for en trygg installering av utstyret
- informasjon som kreves for vedlikehold av utstyret
- informasjon om maskinens/utstyrets elektriske system
- nødvendig informasjon for å bestille reservedeler fra Tetra Pak Group.
- annen teknisk informasjon

UP

Oppdateringssidene har nye sider for å oppdatere eksisterende maskinmanualer.

Sideoppsett

Gå til illustrasjonen (A) på side i-9: Hovedsidene i en reservedelskatalog består av en illustrasjonsside (1) og en korresponderende oversiktsside (7). Sidenummeret (5) vises i overskriften på en illustrasjonsside og i fotnoten på en oversiktsside. Dokumentnummeret (6) vises i fotnoten på en oversiktsside.

Sidenummerering

Gå til illustrasjon (A) på side i-9: Et sidenummer (5) har tre deler:

- kapittelnummer (2)
- neste sidenummer innen kapitlet (3)
- totalt antall sider i kapitlet (4)

Merk! Bokstavene UP kan erstatte kapittelnummer (2) hvis manualen inkluderer oppdateringssidene. Følgende sidenummer (3) og totalt antall sider (4) på oppdateringssidene følger ikke eksisterende sekvensnummerering av sidene i kapitlet.

Innføring i maskinen

Produsent

For produsentens navn og adresse, se andre siden i denne katalogen.

Service

Tetra Pak Group aksepter ikke ansvar for skader eller personskader på utstyr, ansatte eller brukere forårsaket av reservedeler som ikke er originale Tetra Pak® reservedeler.

For å bestille originale Tetra Pak reservedeler til denne maskinen, kontakt nærmeste Tetra Pak kontor.

Identifikasjon

CE-klassifisering

Dette utstyret tilfredsstiller grunnleggende helse- og sikkerhetskrav i Det europeiske økonomiske samarbeidsområde (EØS).

(Forts.)

(Forts.)

3-A samsvar

Hvis maskinplaten er 3-A-merket (15) (se illustrasjon (B) på side i-7), er dette utstyret i samsvar med 3-A Sanitærstandarder for formings-, påfyllings-, og tetningssystemer for beholdere for flytende melkeprodukter, nummer 17-10.

Merkeplate

Illustrasjonen (B) på side i-9 viser et eksempel på en maskinplate.
En illustrasjon av gyldig maskinplate og dennes plassering på utstyret vises i introduksjonskapitlet i manualene som følger dette utstyret.
Maskinplaten inneholder dataen som er oppført under, som er nødvendig når du kontakter Tetra Pak Group om dette spesifikke utstyret.

- Maskintype (8)
- Volum (9)
- Tegnespesifikasjoner (10)
- Maskinens serienummer (11)
- Produsent (12)
- Produksjonsår (13)
- CE merke (14)
- 3-A merke (hvis relevant) (15)

Pass på at utstyrsdataen på forsidene i denne manualen stemmer overens med merkeplaten og maskinspesifikasjonen.

Hvordan bruke denne reservedelskatalogen

Finn et reservedelsnummer

a) Gå til illustrasjonen (C) på side i-9: Gå til kapittelnummer (16) som er indikert ved siden av hovedgruppen som inneholder delen du ønsker å lokalisere.

Deler b) og c) viser til illustrasjonen (D) på side i-10.

b) På hovedgruppeillustrasjonen, se etter maskinundergruppen (18) som inneholder delen eller undergruppen du ser etter.
Merk posisjonsnummeret (19) og gå til oversiktssiden som følger illustrasjonen.

c) Se etter posisjonsnummer /referanseanvisning (17) eller undergruppenavnet (20). Gå til korresponderende sidenummer (21) oppført i søylen på høyre hånd.
Tetra Pak Group har valgt alltid å bruke funksjonsorientert struktur for referansebestemmelse.
Forinnstilt indikering av funksjonsorientert struktur (=) vises ikke i referansehenvisningen

(Forts.)

(Forts.)

Deler d) og e) viser til illustrasjonen (E) på side i-10.

d) Finn delen (22) som du leter etter i undergruppeillustrasjonen og merk delens posisjonsnummer.

e) Delenummeret (29) og delebeskrivelsen (30) er oppført ved siden av posisjonsnummeret på listesiden.

Informasjon oppført i en reservedelskatalog

Listen under viser til illustrasjonen (E) på side i-10. En reservedelskatalog inneholder følgende informasjon om grupper, undergrupper og reservedeler for utstyret:

- Gruppestrukturreferanse (23). Indikerer den neste gruppen over i utstyrslistestrukturen.
- Gruppenavn (24)
- Måleenhet (25)
- Antall (26)
- Monteringstegningens nummer (27)
- Oversiktssideomfang (28). Inkludert hvis det er mange sider i gruppeillustrasjonen eller listen.
- Delenummer eller undergruppenummer (29)
- Undergruppenavn eller delebeskrivelse (30)
- Gruppenavn (31)
- Utstyrsnummer (32)
- Gruppeinformasjon overskrift (33). Indikerer om seksjonen under overskriften er for en spesiell maskinvariant eller om det er en liste med fellesdeler. Hvis en liste har mer enn en variant og hver variant har sin egen monteringstegning, vil det vises en sidereferanse til denne variantens monteringstegning.
- Intern informasjon (34)

Assistanse og spørsmål

For hjelp ved drift av dette utstyret eller for andre spørsmål, kommentarer eller forslag, send spørsmålene eller kom med tilbakemeldinger ved å bruke QuTI-P-verktøyet. Skriv inn QuTI-P i din nettlesers adressefelt. Hvis du ikke har tilgang til QuTI-P, be om tilgang ved å ta kontakt med det internasjonale servicekontoret (Global Service Desk).

Hvis du ikke har tilgang til Tetra Pak® intranett, ta kontakt med din nærmeste Tetra Pak-representant.

Informacje na temat instrukcji

Tetra Pak Group zaleca, aby uważnie przeczytano dostarczone instrukcje. Należy dopilnować, aby instrukcje zostały udostępnione pracownikom, którzy obsługują lub wykonują przeglądy urządzenia.

Ważne jest, aby zachować niniejszy katalog przez okres użytkowania maszyny i przekazać go kolejnemu właścicielowi lub użytkownikowi.

Tetra Pak Group nie ponosi odpowiedzialności za uszkodzenia maszyny spowodowane nieprzestrzeganiem wskazówek podanych w niniejszej instrukcji dołączonej do maszyny.

Dostarczone instrukcje

Instrukcje dostarczone w raz z maszyną:

CM

Instrukcja przestawienia dostarcza technikom informacji na temat przestawiania maszyny między różnymi trybami produkcji.

EM

Instrukcja elektryczna dostarcza technikom informacji na temat układu elektrycznego maszyny.

IM

Instrukcja instalacyjna dostarcza technikom informacji niezbędnych do bezpiecznej instalacji maszyny.

MaSP

Instrukcja konserwacji i części zapasowych przedstawia informacje na temat serwisowania podzespołów. Zawiera także informacje niezbędne do zamawiania części zamiennych do podzespołu w firmie Tetra Pak Group.

MM

Instrukcja serwisowa dostarcza technikom informacji na temat przeglądów i napraw maszyny.

OM

Instrukcja obsługi dostarcza operatorowi informacji na temat obsługi maszyny przed, w trakcie i po zakończeniu produkcji.

RM

Instrukcja przebudowy dostarcza technikom informacji niezbędnych do wykonania bezpiecznej instalacji zestawu do przebudowy w zainstalowanej maszynie lub wyposażeniu.

(Ciąg dalszy)

(Ciąg dalszy)

SPC

Katalog części zamiennych dostarcza informacji niezbędnych do zamawiania części zamiennych w Tetra Pak Group.

TeM

Instrukcja techniczna dostarcza technikom informacji, które mogą być:

- informacjami wymaganymi do bezpiecznej instalacji wyposażenia
- informacjami wymaganymi do wykonywania przeglądów i napraw wyposażenia
- informacjami o systemie elektrycznym maszyny/wyposażenia.
- informacjami niezbędnymi do zamawiania części zamiennych w Tetra Pak Group.
- innymi informacjami technicznymi

UP

Rozdział Strony aktualizacji zawiera nowe strony użyte do aktualizacji istniejących instrukcji maszyny.

Układ strony

Zapoznaj się z rysunkiem (A) na stronie i-9: Główne strony w Katalogu Części Zamiennych zawierają stronę z rysunkiem (1) i odpowiednią stronę z wykazem (7). Numer strony (5) znajduje się w nagłówku strony z rysunkiem oraz w stopce strony z wykazem.
Numer dokumentu (6) znajduje się w stopce strony z wykazem.

Numeracja stron

Zapoznaj się z rysunkiem (A) na stronie i-9: Numer strony (5) składa się z trzech części:

- numer rozdziału (2)
- kolejny numer strony (3) w danym rozdziale
- całkowita ilość stron (4) w rozdziale

Uwaga! Litery UP mogą zastępować numer rozdziału (2) jeśli instrukcja zawiera strony aktualizacji. Kolejny numer strony (3) i całkowita ilość stron (4) aktualizacji nie odpowiada istniejącej numeracji stron rozdziału.

Informacje na temat maszyny

Producent

Nazwa i adres producenta, patrz druga strona niniejszego katalogu.

Serwis

Tetra Pak Group nie odpowiada za wszelkie uszkodzenia wyposażenia, obrażenia personelu lub konsumentów spowodowane przez części zamienne, które nie są oryginalnymi częściami zamiennymi Tetra Pak®.

W celu zamówienia oryginalnych części zamiennych Tetra Pak dla maszyny, skontaktuj się z najbliższym biurem Tetra Pak.

Identyfikacja

Znak CE

Oznacza on, iż urządzenie spełnia wymagania określone w podstawowych przepisach dotyczących bezpieczeństwa i zdrowia, obowiązujących w Europejskiej Strefie Ekonomicznej (EEA).

(Ciąg dalszy)

(Ciąg dalszy)

Zgodność z normą 3-A

Jeśli tabliczka znamionowa maszyny zawiera znak 3-A (15) (patrz rysunek (B) na stronie i-7), oznacza to, że wyposażenie jest zgodne z normami sanitarnymi 3-A dla jednostek formowania, maszyn napełniających i zgrzewarek pojemników dla mleka płynnego i płynnych produktów mlecznych, numer 17-10.

Tabliczka znamionowa

Na rysunku (B) na stronie i-9 pokazano przykład tabliczki znamionowej.
Rysunek tabliczki znamionowej i jej lokalizacja na wyposażeniu znajduje się w rozdziale Wstęp instrukcji dostarczonych wraz z wyposażeniem. Tabliczka znamionowa zawiera dane przedstawione poniżej, które trzeba podać kontaktując się z Tetra Pak Group w sprawach dotyczących określonego wyposażenia.

- Typ maszyny (8)
- Pojemność (9)
- Specyfikacje rysunkowe (10)
- Numer seryjny maszyny (11)
- Producent (12)
- Rok produkcji (13)
- Znak CE (14)
- Znak 3-A (jeśli ma zastosowanie) (15)

Upewnij się, czy dane wyposażenia na pierwszych stronach niniejszej instrukcji odpowiadają danym przedstawionym na tabliczce znamionowej maszyny i specyfikacji maszyny.

Jak korzystać z Katalogu Części Zamiennych

Lokalizacja numeru części zamiennej

a) Zapoznaj się z rysunkiem (C) na stronie i-9: Przejdź do numeru rozdziału (16) wskazanego obok głównej grupy, która zawiera część, którą chcesz zlokalizować.

Pozycje b) i c) dotyczą rysunku (D) na stronie i-10.

b) Na rysunku głównej grupy, poszukaj podgrupy maszyny (18), która zawiera część lub podgrupę, której szukasz. Zanotuj numer pozycji (19) i przejdź na stronę z wykazem odpowiadającym rysunkowi.

c) Poszukaj numeru pozycji/oznaczenia referencyjnego (17) lub nazwy podgrupy (20). Przejdź na odpowiedni numer strony (21) podany w prawej kolumnie. Do oznaczania referencyjnego firma Tetra Pak Group zdecydowała się zawsze wykorzystywać strukturę zorientowaną na funkcję. Przedrostek wskazujący strukturę zorientowaną na funkcję (=) nie jest uwzględniony w oznaczeniu referencyjnym.

(Ciąg dalszy)

(Ciąg dalszy)

Pozycje d) i e) dotyczą rysunku (E) na stronie i-10.

d) Zlokalizuj część (22), której szukasz na rysunku podgrupy i zanotuj jej numer pozycji.

e) Numer części (29) i opis części (30) znajdują się obok numeru pozycji na stronie z wykazem.

Informacje podane w Katalogu Części Zamiennych

Poniższy wykaz dotyczy rysunku (E) na stronie i-10.
Katalog Części Zamiennych zawiera następujące informacje o grupach, podgrupach i częściach zamiennych wyposażenia.

- Odnośnik struktury grupy (23). Wskazuje następną wyższą grupę w strukturze wykazu wyposażenia.
- Nazwa grupy (24)
- Jednostka miary (25)
- Ilość (26)
- Numer rysunku zespołu (27)
- Zakres stron (28). Dołączony, jeśli na wykazie lub rysunku grupy znajdują się strony o numerach wieloczęściowych.
- Numer części lub podgrupy (29)
- Nazwa podgrupy lub opis części (30)
- Numer grupy (31)
- Numer wyposażenia (32)
- Nagłówek z informacją o grupie (33). Wskazuje czy sekcja poniżej nagłówka przynależy do określonej wersji maszyny, lub czy jest wykazem części. Jeśli wykaz ma więcej niż jedną wersję i każda wersja ma swój własny rysunek montażowy, podany będzie numer strony z rysunkiem montażowym danej wersji.
- Informacje wewnętrzne (34)

Pomoc i pytania

Pomoc w zakresie obsługi tego sprzętu lub inne zapytania, komentarze czy sugestie można przekazywać za pośrednictwem narzędzia QuTI-P. Wpisz QuTI-P w pasku adresu przeglądarki internetowej. W przypadku braku dostępu do QuTI-P prosimy o kontakt za pośrednictwem globalnego działu obsługi.

W przypadku braku dostępu do sieci intranet firmy Tetra Pak®, prosimy o kontakt z najbliższym przedstawicielem firmy Tetra Pak.

Informação do Manual

O Grupo Tetra Pak recomenda ler cuidadosamente todos os manuais fornecidos. Verificar se os manuais fornecidos estão ao dispor do pessoal que trabalha com o equipamento ou que faz a manutenção do mesmo.

É importante guardar este catálogo durante o tempo útil de vida da máquina ou do equipamento e de entregar o catálogo a qualquer proprietário ou utilizador subsequente.

O Grupo Tetra Pak não toma a responsabilidade por quaisquer danos no equipamento causados devido ao facto de que as instruções dadas nos manuais que acompanham este equipamento não foram seguidas.

Manuais fornecidos

Manuais fornecidos com este equipamento:

CM

O Manual de conversão fornece aos técnicos as informações sobre a conversão do equipamento entre os diferentes modos de produção.

EM

Este Manual Eléctrico fornece aos técnicos as informações sobre o sistema eléctrico do equipamento.

IM

Este Manual de Instalação fornece aos técnicos as informações necessárias para instalar seguramente o equipamento.

MaSP

O Manual de Manutenção e Peças Sobresselentes fornece informações sobre como realizar a manutenção do componente. Também fornece as informações necessárias para encomendar peças sobresselentes à Tetra Pak Group para o componente em questão.

MM

Este Manual de Manutenção fornece aos técnicos as informações para a manutenção do equipamento.

OM

O Manual de Operação fornece ao operador as informações que ele necessita para manusear e accionar o equipamento antes, durante e depois da produção.

RM

O Manual de Remodelação fornece aos técnicos as informações necessárias para instalar seguramente um conjunto numa máquina ou equipamento instalado.

(Cont.)

(Cont.)

SPC

O Catálogo de Peças Sobressalentes fornece as informações necessárias para se encomendar peças sobressalentes o Grupo Tetra Pak.

TeM

O Manual Técnico fornece os técnicos com informações que podem ser:

- informações necessárias para instalar seguramente o equipamento,
- informações necessárias para a manutenção do equipamento
- informações sobre o sistema eléctrico da máquina/do equipamento.
- informações necessárias para encomendar peças sobressalentes o Grupo Tetra Pak.
- outras informações técnicas

UP

As Páginas de Actualização fornecem novas páginas para actualizar os manuais existentes da máquina.

Disposição da página

Referência à ilustração (A) na página i-9: As páginas principais num Catálogo de Peças Sobressalentes consistem numa página ilustrada (1) e numa página com a lista correspondente (7). O número da página (5) é mostrado no cabeçalho de uma página ilustrada e no rodapé de uma página com lista. O número do documento (6) é mostrado no rodapé de uma página com lista.

Numeração da página

Referência à ilustração (A) na página i-9: Um número de página (5) tem três partes:

- Número do capítulo (2)
- número consecutivo da página dentro do capítulo (3)
- número total de páginas no capítulo (4)

Nota! As letras UP podem substituir o número do capítulo (2) se o manual incluir páginas de actualização. O número consecutivo da página (3) e o número total de páginas (4) das páginas de actualização não seguem a numeração sequente das páginas do capítulo.

Introdução da máquina

Fabricante

Para o nome e morada do fabricante, ver a segunda página deste catálogo.

Assistência técnica

O Grupo Tetra Pak não aceita responsabilidade por quaisquer danos ou prejuízos no equipamento, equipa ou consumidores que sejam causados por peças sobressalentes não originais da Tetra Pak®.

Para encomendar as peças sobressalentes originais para esta máquina, contactar o representante Tetra Pak mais próximo.

Identificação

Classificação CE

Este equipamento está de acordo com os regulamentos de segurança e saúde da Área Económica Europeia (EEA).

(Cont.)

(Cont.)

3-A Concordância

Se a placa da máquina conter a marca 3-A (15) (ver a ilustração (B) na página i-7), este equipamento cumpre com as Normas Sanitárias 3-A para Formadores, Enchedores e Vedadores de Recipientes para Leite Líquido e Produtos de Leite Líquido, Número 17-10.

Placa da máquina

A ilustração (B) na página i-9 mostra um exemplo de uma placa da máquina. Uma ilustração da placa da máquina válida e a sua localização no equipamento é mostrada no capítulo Introdução dos manuais fornecidos com este equipamento. A placa da máquina contem os dados alistados em baixo, necessários quando se contactar o Grupo Tetra Pak relacionando-se a este equipamento em específico.

- Tipo da máquina (8)
- Volume (9)
- Especificações dos desenhos (10)
- Número de série da máquina (11)
- Fabricante (12)
- Ano de construção (13)
- Marca CE (14)
- Marca 3-A (se aplicável) (15)

Verificar se os dados do equipamento indicados nas páginas da frente deste manual correspondem aos dados na placa da máquina e à especificação da máquina.

Como usar este Catálogo de Peças Sobressalentes

Localizar um Número da peça sobressalente

a) Referência à ilustração (C) na página i-9: Para o número do capítulo (16) indicado ao lado do grupo principal que contem a peça que quer localizar.

Itens b) e c) referem-se à ilustração (D) na página i-10.

b) Na ilustração do grupo principal, procurar o subgrupo da máquina (18) que contem a peça ou subgrupo que está à procura. Anotar o número da posição (19) e passar para a página da lista que segue a ilustração.

c) Procurar o número/referência da posição (17) ou o nome do subgrupo (20). Passar para o número da página correspondente (21) alistado na coluna do lado direito. O Grupo Tetra Pak escolheu para usar sempre a estrutura orientada na função para a designação da referência.
O prefixo indicando a estrutura orientada na função (=) não está mostrada na designação de referência.

(Cont.)

(Cont.)

Itens d) e e) referem-se à ilustração (E) na página i-10.

d) Localizar a peça (22) que está à procura na ilustração do subgrupo e anotar o número da posição da peça.

e) O número da peça (29) e a descrição da peça (30) estão alistados ao lado do número da posição na página da lista.

Informações indicadas num Catálogo de Peças Sobressalentes

A lista em baixo refere-se à ilustração (E) na página i-10.
Um Catálogo de Peças Sobressalentes contem as seguintes informações sobre grupos, subgrupos e peças sobressalentes para o equipamento:

- Referência da estrutura do grupo (23). Indica o grupo a seguir mais elevado na estrutura da lista do equipamento.
- Nome do grupo (24)
- Unidade de medição (25)
- Quantidade (26)
- Número do desenho de montagem (27)
- Gama da página de lista (28). Incluída se houver páginas múltiplas na ilustração do grupo ou lista.
- Número da peça ou do subgrupo (29)
- Nome do subgrupo ou descrição da peça (30)
- Número do grupo (31)
- Número do equipamento (32)
- Título da informação do grupo (33). Indica se a secção abaixo do título é para uma variante de máquina específica ou se é uma lista de peças comuns. Se uma lista tiver mais do que uma variante e cada variante tiver o seu próprio desenho de montagem, é mostrada uma referência para a página do desenho de montagem da variante.
- Informação interna (34)

Assistência e apoio

Para assistência durante a utilização deste equipamento ou outras questões, comentários ou sugestões, enviar as perguntas ou transmitir informações utilizando a ferramenta QuTI-P. Digitar QuTI-P no campo de endereço do seu navegador. Se o acesso a QuTI-P não estiver disponível, contactar o Global Service Desk para pedir o acesso.

Se o acesso à intranet da Tetra Pak® não estiver disponível, contactar o representante Tetra Pak mais próximo.

Informações sobre os manuais

O Grupo Tetra Pak recomenda a leitura atenta de todos os manuais fornecidos. Certificar-se de que todos os manuais fornecidos estejam disponíveis ao pessoal que trabalha com o equipamento ou que realiza a sua manutenção.

É muito importante conservar este catálogo durante toda a vida útil do equipamento e entregá-lo a qualquer proprietário ou usuário subsequente do equipamento.

O Grupo A Tetra Pak declina toda e qualquer responsabilidade por danos, perdas, ferimentos ou morte decorrentes do descumprimento das instruções fornecidas nos manuais que acompanham o equipamento.

Manuais fornecidos

Manuais fornecidos com este equipamento:

CM

O Manual de Conversão fornece aos técnicos as informações acerca da possibilidade de conversão do equipamento para diferentes modos de produção.

EM

O Manual Elétrico fornece aos técnicos as informações sobre o sistema elétrico do equipamento.

IM

O Manual de Instalação fornece aos técnicos as informações necessárias para instalar o equipamento em condições de segurança.

MaSP

O Manual de Manutenção e Peças de reposição fornece informações sobre como efetuar a manutenção do componente. Além disso, fornece as informações necessárias para a encomenda de peças de reposição ao Grupo Tetra Pak.

MM

O Manual de Manutenção fornece aos técnicos as informações sobre como realizar a manutenção do equipamento.

OM

O Manual de Operação fornece ao operador as informações que ele necessita para gerenciar e trabalhar com o equipamento antes, durante e depois da produção.

RM

O Manual de Reforma fornece aos técnicos as informações necessárias para instalar um kit em uma máquina ou um equipamento instalado, em condições de segurança.

(Cont.)

(Cont'd)

SPC

O Catálogo de Peças de Reposição fornece as informações necessárias para encomenda de peças de reposição ao Grupo Tetra Pak.

TeM

O Manual Técnico fornece aos técnicos informações que podem ser:

- as informações necessárias para instalar o equipamento em condições de segurança
- as informações necessárias para fazer a manutenção do equipamento
- as informações acerca do sistema elétrico da máquina/equipamento
- as informações necessárias para encomendar peças de reposição ao Grupo Tetra Pak
- outras informações técnicas

UP

As Páginas de atualização fornecem as novas páginas para atualizar os manuais existentes da máquina.

Esquema das páginas

Consultar a figura (A) na página i-9: As páginas principais em um Catálogo de Peças Sobressalentes (SPC) consistem de uma página de ilustração (1) e de uma página com a lista correspondente (7). O número da página (5) é exibido no cabeçalho da página de ilustração e no rodapé da página de lista. O número do documento (6) é exibido no rodapé da página de lista.

Numeração das páginas

Consultar a figura (A) na página i-9: Um número das página (5) é composto por três partes:

- número do capítulo (2)
- número consecutivo da página dentro do capítulo (3)
- número total de páginas (4) no capítulo.

Nota! As letras UP podem substituir o número do capítulo (2) caso o manual inclua páginas de atualização. O número consecutivo da página (3) e o número total de páginas (4) das páginas de atualização não seguem a numeração sequencial existente das páginas do capítulo.

Introdução relativa à máquina

Fabricante

Para ver o nome e endereço do fabricante, consultar a segunda página deste catálogo.

Serviço

O Grupo Tetra Pak não aceita a responsabilidade por quaisquer danos ou lesões causadas ao equipamento, equipe ou consumidores, causadas por peças de reposição que não sejam peças de reposição originais Tetra Pak®.

Para encomendar peças de reposição originais Tetra Pak para este equipamento, entrar em contato com o escritório mais próximo da Tetra Pak.

Identificação

Classificação CE

Este equipamento está em conformidade com os regulamentos básicos de segurança e saúde da Área Econômica Europeia (AEE).

(Cont.)

(Cont'd)

Conformidade com as normas 3-A

Se a placa de identificação da máquina apresentar a marca 3-A (15) (ver a figura (B) na página i-9), este equipamento cumpre os requisitos das normas sanitárias 3-A para máquinas de formar, encher e soldar recipientes para leite líquido e para produtos lácteos líquidos, número 17-10.

Placa de identificação da máquina

A ilustração (B) na página i-9 mostra um exemplo de uma placa de identificação da máquina.
Uma ilustração da placa de identificação válida da máquina e a sua localização no equipamento é mostrada no capítulo Introdução dos manuais fornecidos com este equipamento. A placa de identificação da máquina contém os dados necessários quando contatar a Tetra Pak referindo-se especificamente a este equipamento.

- Tipo de máquina (8)
- Volume (9)
- Especificações dos desenhos (10)
- Número de série da máquina (11)
- Fabricante (12)
- Ano de fabricação (13)
- Marca CE (14)
- Marca 3-A (se aplicável) (15)

Certificar-se de que os dados do equipamento, indicados nas páginas frontais deste manual, coincidam com os dados indicados na placa de identificação da máquina e com a especificação da máquina.

Como usar este Catálogo de Peças de Reposição

Localizar um número de peça de reposição

a) Consultar a ilustração (C) na página i-9: Ir para o número do capítulo (16) indicado ao lado do grupo principal que contém a peça sendo procurado.

Os itens b) e c) referem-se à ilustração (D) na página i-10:

b) Na ilustração do grupo principal, procurar o subgrupo da máquina (18) que contém a peça ou o subgrupo sendo procurado. Anotar o número da posição (19) e passar para a página da lista que segue a figura.

c) Procurara o número de posição/designação de referência (17) ou o nome do subgrupo (20). Ir para o número de página correspondente (21) listado na coluna da direita. O Grupo Tetra Pak optou por utilizar sempre uma estrutura baseada em funções para a designação de referência. O prefixo que indica a estrutura baseada em funções (=) não é mostrado na designação de referência.

(Cont.)

(Cont'd)

Os itens d) e e) referem-se à ilustração (E) na página i-10:

d) Localizar a peça (22) sendo procurada na ilustração do subgrupo e anotar o número de posição da peça.

e) O número da peça (29) e a descrição da peça (30) estão indicadas ao lado do número de posição na página da lista.

Informações listadas no Catálogo de Peças de Reposição

A lista abaixo refere-se à ilustração (E) na página i-10: Um Catálogo de Peças de Reposição contém as seguintes informações sobre grupos, subgrupos e peças de reposição para a equipamento:

- Referência da estrutura do grupo (23). Indica o grupo seguinte mais elevado na estrutura da lista do equipamento.
- Nome do grupo (24)
- Unidade de medida (25)
- Quantidade (26)
- Número do desenho de montagem (27)
- Gama da página de lista (28). Incluída se houver páginas múltiplas na ilustração do grupo ou na lista.
- Número da peça ou do subgrupo (29)
- Nome do subgrupo ou descrição da peça (30)
- Número do grupo (31)
- Número do equipamento (32)
- Cabeçalho de informações do grupo (33) Indica se a seção abaixo do cabeçalho é para uma variante de máquina específica ou se é uma lista de peças comuns. Se uma lista tiver mais do que uma variante e cada variante tiver o seu próprio desenho de montagem, uma referência da página para o desenho de montagem da variante é mostrada.
- Informações internas (34)

Assistência e consultas

Para obter assistência ao trabalhar com este equipamento ou para quaisquer outras necessidades, comentários ou sugestões, formular as perguntas ou fornecer o feedback usando a ferramenta QuTI-P. Digitar QuTI-P no campo de endereço do seu navegador. Se o acesso a QuTI-P não estiver disponível, pedir acesso entrando em contato com Global Service Desk.

Se o acesso à intranet da Tetra Pak® não estiver disponível, entrar em contato com o representante Tetra Pak mais próximo.

Informaţiile de manual

Tetra Pak Group recomandă citirea cu atenţie a tuturor manualelor livrate. Asiguraţi-vă că manualele livrate sunt adecvate pentru personalul ce manipulează sau întreţine instalaţia.

Este important să păstraţi acest catalog pe tot parcursul funcţionării instalaţiei şi să-l transmiteţi următorului utilizator sau proprietar.

Tetra Pak Group nu îşi asumă nicio responsabilitate pentru nicio defecţiune a instalaţiei cauzată de nerespectarea instrucţiunilor din manualul care însoţeşte instalaţia.

Manuale livrate

Manualele livrate împreună cu instalaţia

CM

Manualul de conversie (CM) furnizează tehnicienilor informaţii pentru conversia (adaptarea) echipamentului la diferite moduri de producţie.

EM

Manualul electric oferă tehnicienilor informaţii despre sistemul electric al instalaţiei.

IM

Manualul de instalare oferă tehnicienilor informaţii legate de montarea în siguranţă a instalaţiei.

MaSP

Manualul de întreţinere şi piese de schimb oferă informaţii despre întreţinerea componentei. De asemenea, manualul oferă informaţiile necesare pentru a comanda piese de schimb de la Tetra Pak Group pentru această componentă.

MM

Manualul de întreţinere oferă tehnicienilor informaţii privind întreţinerea instalaţiei.

OM

Manualul de funcţionare (OM) oferă operatorului informaţii despre manipularea şi funcţionarea echipamentului înainte, în timpul şi după procesul tehnologic.

RM

Manualul de reconstrucţie oferă tehnicienilor informaţii necesare pentru montarea în siguranţă a unui set pe un utilaj sau echipament montat.

(se continuă)

(se continuă)

SPC

Catalogul cu piese de schimb oferă informaţii necesare pentru comandarea pieselor de schimb de la Tetra Pak Group.

TeM

Manualul tehnic furnizează informaţii tehnicienilor ca de exemplu:

- informaţii necesare pentru a instala în condiţii de siguranţă echipamentul
- informaţii necesare pentru a întreţine echipamentul
- informaţii privind sistemul electric al utilajului/echipamentului
- informaţiile necesare pentru a comanda piesele de schimb de la Tetra Pak Group.
- alte informaţii tehnice

UP

Paginile pentru actualizare furnizează pagini noi pentru actualizarea manualelor existente ale utilajelor.

Configuraţia paginii

Consultaţi ilustraţia (A) de la pagina i-9: Paginile principale din Catalogul pieselor de schimb sunt formate dintr-o pagină a ilustraţiilor (1) şi o pagină a listei corespunzătoare (7). Numărul paginii (5) este prezentat în antetul unei pagini cu ilustraţii şi în subsolul unei pagini cu lista.
Numărul documentului (6) este prezentat în subsolul unei pagini cu lista.

Numerotarea paginilor

Consultaţi ilustraţia (A) de la pagina i-9: Numărul paginii (5) are trei părţi:

- numărul capitolului (2)
- numărul consecutiv al paginii din cadrul capitolului (3)
- numărul total de pagini din capitol (4)

Notă! Literele UP pot înlocui numărul capitolului (2) dacă manualul include pagini actualizate. Numărul consecutiv al paginii (3) şi numărul total de pagini (4) al paginilor actualizate nu urmează numerotarea existentă, secvenţială a paginilor din cadrul capitolului.

Prezentarea aparatului

Producător

Pentru numele şi adresa producătorului, vezi pagina a doua a acestui catalog.

Service

Tetra Pak Group nu îşi asumă responsabilitatea pentru nicio avarie sau rănire asupra echipamentului, personalului sau clienţilor, produsă de piese de schimb care nu sunt piese de schimb originale Tetra Pak®.

Pentru a comanda piese de schimb originale Tetra Pak pentru acest utilaj, adresaţi-vă celui mai apropiat birou Tetra Pak.

Identificare

Clasificare CE

Acest echipament este în conformitate cu regulamentele de bază sanitare şi de protecţie ale Agenţie Europene de Mediu (EEA).

(se continuă)

(se continuă)

Conformitatea 3-A

Dacă plăcuţa cu numele utilajului conţine marcajul 3-A (15) (vezi ilustraţia (B) de la pagina i-7), acest echipament respectă standardele sanitare 3-A pentru dispozitive de formare, umplere şi etanşare a containerelor pentru lapte lichid şi produse lactate lichide, numărul 17-10.

Plăcuţa maşinii

Ilustraţia (B) de la pagina i-9 prezintă un exemplu al plăcuţei maşinii.
O ilustraţie a plăcuţei valabile a maşinii şi a amplasării sale pe echipament este prezentată în capitolul Introducere al manualelor livrate cu acest echipament.
Plăcuţa maşinii conţine datele prezentate mai jos, necesare când vă adresaţi Tetra Pak Group referitor la acest echipament.

- Tipul utilajului (8)
- Volum (9)
- Specificaţiile desenului (10)
- Numărul de serie al utilajului (11)
- Producător (12)
- Anul de fabricaţie (13)
- Marcaj CE (14)
- Marcaj 3-A (dacă este cazul) (15)

Verificaţi dacă datele instalaţiei din primele pagini ale acestui manual corespund cu datele de pe plăcuţa maşinii şi cu specificaţia maşinii.

Cum să folosiţi acest catalog pentru piese de schimb

Localizaţi numărul piesei de schimb

a) Consultaţi ilustraţia (C) de la pagina i-9: Mergeţi la numărul capitolului (16) indicat lângă grupul principal care conţine piesa pe care doriţi să o localizaţi.

Elementele b) şi c) se referă la ilustraţia (D) de la pagina i-10.

b) Pe ilustraţia grupului principal, căutaţi subgrupul maşinii (18) care conţine piesa sau subgrupul pe care îl căutaţi. Notaţi numărul poziţiei (19) şi mergeţi la pagina listei de după ilustraţie.

c) Căutaţi numărul poziţiei/denumirea referinţei (17) sau numele subgrupului (20). Mergeţi la numărul corespunzător al paginii (21) precizat în coloana din dreapta. Tetra Pak Group a ales să utilizeze întotdeuana structura orientată pe funcţii pentru denumirea referinţei. Prefixul care indică structura orientată pe funcţii (=) nu este prezentat în denumirea referinţei.

(se continuă)

(se continuă)

Elementele d) şi e) se referă la ilustraţia (E) de la pagina i-10.

d) Localizaţi piesa (22) pe care o căutaţi în ilustraţia subgrupului şi notaţi numărul poziţiei piesei.

e) Numărul piesei (29) şi descrierea piesei (30) sunt listate lângă numărul poziţiei de pe pagina listei.

Informaţiile enumerate în catalogul pentru piese de schimb

Lista de mai jos se referă la ilustraţia (E) de la pagina i-10.
Un Catalog cu piese de schimb conţine următoarele informaţii despre grupuri, subgrupuri şi piese de schimb pentru echipament.

- Referinţa structurii grupului (23). Indică următorul grup superior din structura listei echipamentului.
- Numele grupului (24)
- Unitate de măsură (25)
- Cantitate (26)
- Numărul desenului de ansamblu (27)
- Domeniul paginii listei (28). Inclus dacă există mai multe pagini în ilustraţia sau lista grupului.
- Numărul piesei sau subgrupului (29)
- Numele subgrupului sau descrierea piesei (30)
- Numărul grupului (31)
- Numărul echipamentului (32)
- Titlul cu informaţiile grupului (33). Indică dacă secţiunea de sub titlu este pentru o anumită variantă de maşină sau este o listă de piese comune. Dacă o maşină are mai mult de o variantă şi fiecare variantă îşi are propriul desen de ansamblu, este prezentată o referinţă a paginii la desenul de ansamblu al variantei.
- Informaţii interne (34)

Asistenţă şi întrebări

Pentru asistenţă în timpul operării acestui echipament sau alte întrebări, comentarii ori sugestii, trimiteţi întrebările sau feedback-ul utilizând unealta QuTI-P. Tastaţi QuTI-P în câmpul pentru adresă al browserului dvs. Dacă nu este disponibil accesul la QuTI-P, solicitaţi accesul contactând Reprezentanţa tehnică globală.

Dacă nu este disponibil accesul la intranetul Tetra Pak®, adresaţi-vă celui mai apropiat reprezentant Tetra Pak.

Informácie o príručke

Tetra Pak Group odporúča, aby ste si pozorne prečítali všetky dodané príručky. Presvedčite sa, či sú dodané príručky k dispozícii personálu, ktorý obsluhuje alebo vykonáva údržbu zariadenia.

Je dôležité, aby ste uchovávali tento katalóg po celý čas životnosti zariadenia, a odovzdali katalóg každému ďalšiemu vlastníkovi alebo užívateľovi zariadenia.

Spoločnosť Tetra Pak Group nezodpovedá za škody na zariadení spôsobené nedodržaním pokynov uvedených v príručkách, ktoré doprevádzajú toto zariadenie.

Dodané príručky

Príručky dodávané s týmto zariadením:

CM

Príručka na adaptáciu poskytuje technikom informácie o adaptácii zariadenia medzi rôznymi výrobnými režimami.

EM

Táto Elektrická príručka poskytuje technikom informácie o elektrickom systéme zariadenia.

IM

Táto Inštalačná príručka poskytuje technikom informácie potrebné pre bezpečnú inštaláciu zariadenia.

MaSP

Príručka o údržbe a náhradných dieloch poskytuje informácie o údržbe komponentu zariadenia. Okrem toho poskytuje informácie potrebné pri objednávaní náhradných dielov komponentu od spoločnosti Tetra Pak Group.

MM

Táto Údržbárska príručka poskytuje technikom informácie o vykonávaní údržby zariadenia.

OM

Tento Návod na obsluhu poskytuje operátorovi informácie o tom, ako treba manipulovať so strojom a obsluhovať ho pred, počas a po výrobe.

RM

Príručka na prestavbu poskytuje technikom informácie potrebné pre bezpečnú inštaláciu súpravy na nainštalovaný stroj alebo zariadenie.

(Pokrač.)

(Pokrač.)

SPC

Katalóg náhradných dielov poskytuje informácie potrebné pre objednanie náhradných dielov od Tetra Pak Group.

TeM

Technická príručka poskytuje technikom informácie, ktorými môžu byť:

- potrebné informácie pre bezpečnú inštaláciu zariadenia
- potrebné informácie pre údržbu zariadenia
- informácie o elektrickom systéme stroja/zariadenia.
- poskytuje informácie potrebné na objednanie náhradných dielov od firmy Tetra Pak Group
- ostatné technické informácie

UP

Aktualizované stránky poskytujú nové stránky k existujúcim príručkám na zariadenie.

Usporiadanie strany

Pozrite sa na obrázok (A) na strane i-9: hlavné stránky v Katalógu náhradných dielov tvorí stránky s ilustráciami (1) a odpovedajúca stránka so zoznamom (7). Číslo stránky (5) je uvedené v záhlaví stránky s obrázkom a v zápätí stránky so zoznamom. Číslo dokumentu (6) je uvedené v zápätí stránky so zoznamom.

Číslovanie strán

Pozrite sa na obrázok (A) na strane i-9: číslo stránky (5) má tri časti:

- číslo kapitoly (2)
- číslo ďalšej stránky v rámci kapitoly (3),
- celkový počet stránok v kapitole (4)

Poznámka! Písmena UP môžu nahradiť číslo kapitoly (2) v prípade, že manuál obsahuje aktualizované stránky. Nasledujúce číslo stránky (3) a celkový počet strán (4) aktualizovaných stránok sa nedrží existujúceho sekvenčného číslovania stránok v tejto kapitole.

Úvod k zariadeniu

Výrobca

Meno a adresu výrobcu nájdete na druhej strane tohto katalógu.

Servis

Tetra Pak Group nepreberá zodpovednosť za akúkoľvek škodu na zariadení alebo za zranení zamestnanca alebo spotrebiteľa, ktoré budú spôsobené tým, že sa nepoužijú originálne náhradné diele Tetra Pak®.

Ak chcete pre tento stroj objednať originálne náhradné diely Tetra Pak, kontaktujte najbližšiu kanceláriu spoločnosti Tetra Pak.

Identifikácia

Klasifikácia CE

Toto zariadenie vyhovuje základným zdravotným a bezpečnostným predpisom Európskej hospodárskej oblasti (EEA).

(Pokrač.)

(Pokrač.)

3-A Súlad

Ak štítok stroja obsahuje označenie 3-A (15) (pozri obrázok (B) na strane i-7), potom je toto zariadenie v súlade s hygienickými normami 3-A pre formovanie, plnenie a uzatváranie obalov na tekuté mlieko a tekuté mliečne výrobky, číslo 17 -10.

Štítok zariadenia

Obrázok (B) na strane i-9 ukazuje príklad typového štítku.
Obrázok platného typového štítku a jeho umiestnenia na zariadení je uvedený v úvodnej kapitole príručiek dodaných s týmto zariadením.
Typový štítok obsahuje údaje uvedené niže, tieto údaje sú treba, keď kontaktujete spoločnosť Tetra Pak Group vo veci týkajúcej sa tohto špecifického vybavenia.

- Typ stroja (8)
- Objem (9)
- Špecifikácie výkresov (10)
- Sériové číslo stroja (11)
- Výrobca (12)
- Rok výroby (13)
- Symbol CE (14)
- Symbol 3-A (ak sa používa) (15)

Presvedčte sa, či dáta uvedené na čelnej strane tohoto manuálu korešpondujú s údajmi na identifikačnom typovom štítku stroja a so špecifikáciou stroja.

Ako používať tento katalóg náhradných dielov

Vyhľadať číslo náhradného dielu

a) Pozrite obrázok (C) na strane i-9: Prejsť na číslo kapitoly (16) uvedené vedľa hlavnej skupiny, ktorá obsahuje diel, ktorý chcete nájsť.

Položky b) a c) sa vzťahujú na obrázok (D) na strane i-10.

b) Na obrázku hlavnej skupiny sa pozrite na podskupinu stroja (18), ktorá obsahuje diely alebo podskupiny, ktoré hľadáte. Poznamenajte si číslo pozície (19) a prejdite na stránku zoznamu, ktorý nasleduje za obrázkom.

c) Pozrite sa na číslo pozície/označenie referencie (17) alebo na názov podskupiny (20). Prejdite na odpovedajúce číslo strany (21) uvedené v zozname v stĺpci na pravej strane. Spoločnosť Tetra Pak Group si zvolila vždy používať pre referenčné označenie štruktúru zameranú na funkciu. Predpona označujúca funkčne orientovanú štruktúru (=) nie je uvedená v referenčnom označení.

(Pokrač.)

(Pokrač.)

Položky d) a e) sa vzťahujú na obrázok (E) na strane i-10.

d) Lokalizujte diel (22), ktorý hľadáte, na obrázku podskupiny a poznamenajte si číslo pozície dielu.

e) Číslo dielu (29) a popis dielu (30) sú uvedené vedľa čísla pozície na stránke so zoznamom.

Informácie uvedené v katalógu náhradných dielov

Niže uvedený zoznam sa odkazuje na obrázok (E) na stránke i-10.
Katalóg náhradných dielov obsahuje nasledujúce informácie o skupinách, podskupinách a náhradných dieloch pre zariadenie:

- Referencia štruktúry skupiny (23). Označuje nasledujúcu vyššiu skupinu vo štruktúre zoznamu výbavy.
- Názov skupiny (24)
- Merná jednotka (25)
- Množstvo (26)
- Číslo montážneho výkresu (27)
- Rozsah stránok so zoznamom (28). Zahrnuté, ak existuje viac stránok v skupine obrázkov alebo v zozname.
- Číslo dielu alebo podskupiny (29)
- Názov podskupiny alebo popis dielu (30)
- Číslo skupiny (31)
- Číslo výbavy (32)
- Záhlavie informácií o skupine (33). Označuje, či sa časť pod záhlavím týka konkrétneho variantu stroja, alebo či sa jedná o zoznam spoločných dielov. Ak zoznam obsahuje viac ako jeden variant a každý variant má svoje vlastné montážne výkresy, je zobrazený odkaz na stránku s montážnym výkresom variantu.
- Vnútorné informácie (34)

Pomoc a otázky

Ak potrebujete pomoc pri obsluhe tohto zariadenia, ak máte ďalšie otázky, pripomienky alebo odporúčania, alebo ak chcete položiť otázky či poskytnúť svoj vlastný názor, použite nástroj QuTI-P. V poli svojho prehliadača pre adresu zadajte QuTI-P. Ak nemáte prístup ku QuTI-P, požiadajte o prístup kontaktovaním Global Service Desk (Globálne servisné oddelenie).

Ak nemáte prístup na internú sieť Tetra Pak®, kontaktujte najbližšieho zástupcu spoločnosti Tetra Pak.

Informacije o navodilu

Tetra Pak Group priporoča, da vsa dobavljena navodila pazljivo prebrete. Prepričajte se, da so dobavljena navodila na razpolagu osebju, ki dela s strojem ali pa izvaja vzdrževalna dela na opremi.

Ta navodila je potrebno shraniti do konca življenjske dobe opreme in navodilo predati vsakemu naslednjemu imetniku ali uporabniku.

Tetra Pak Group ne nosi odgovornosti za poškodbo na opremi, do katere je prišlo zaradi neupoštevanja teh navodilih.

Dobavljena navodila

Navodila, ki se dobavljajo s to opremo:

CM

Navodila za spremembo (CM) oskrbujejo tehnike z informacijami glede zamenjav opreme med različnimi načini proizvodnje.

EM

Električna navodila oskrbujejo tehnike z informacijami glede električnega sistema opreme.

IM

Navodila za inštalacijo oskrbujejo tehnike z informacijami, ki so potrebne za varno inštalacijo opreme.

MaSP

Priročnik z navodili za vzdrževanje in naročanje nadomestnih delov vsebuje informacije o načinu vzdrževanja komponente. Poleg tega vsebuje tudi podatke, ki so potrebni za naročanje nadomestnih delov komponente pri družbi Tetra Pak Group.

MM

Navodila za vzdrževanje oskrbujejo tehnika z informacijami glede vzdrževanja opreme.

OM

Navodila za delovanje (OM) oskrbijo strojnike z informacijami glede rokovanja z opremo in delovanjem le-te pred, med in po proizvodnji.

RM

Navodila za predelavo (RM) oskrbujejo tehnike z informacijami, ki so potrebne za varno inštalacijo opreme na inštalirani stroj ali opremo.

(Obrnite)

(Obrnite)

SPC

Katalog rezervnih delov prinaša informacije, ki so potrebne za naročanje rezervnih delov iz podjetja Tetra Pak Group.

TeM

Tehnološka navodila tehnikom podajo informacije, ki so lahko:

- potrebne za varno inštalacijo opreme
- potrebne za vzdževanje opreme
- vezane na električni sistem stroja/opreme
- ponujajo informacije, ki so potrebna za naročanje nadomestnih delov pri Tetra Pak Group
- druge tehnične informacije

UP

Strani za posodobitev podajo nove strani za posodabljanje obstoječih navodil stroja.

Ureditev strani

Sklicujte se na ilustracijo (A) na strani i-9: Glavne strani v katalogu rezervnih delov so sestavljene iz strani z ilustracijami (1) in stranjo s seznamom (7). Številka strani (5) je prikazana v glavi strani z ilustracijo in v nogi strani s seznamom. Številka dokumenta (6) je prikazana v nogi strani s seznamom.

Oštevilčenje strani

Sklicujte se na ilustracijo (A) na strani i-9: Številka strani (5) ima tri dele:

- številko poglavja (2)
- zaporedno številko strani (2) znotraj poglavja (3)
- skupno število strani v poglavju (4)

Opomba! Črke UP lahko zamenjajo številko poglavja (2), če so v navodilih vključene posodobljene strani. Zaporedna številka strani (3) in skupno število strani (4) posodobljenih strani se ne ujemajo z obstoječim zaporedjem strani v poglavju.

Predstavitev stroja

Proizvajalec

Ime in naslov proizvajalca se nahajata na drugi strani tega kataloga.

Servisiranje

Tetra Pak Group ne prevzema odgovornosti za okvare ali poškodbe opreme, osebja ali potrošnikov, ki ga povzročijo rezervni deli, ki niso originalni Tetra Pak® rezervni deli.

Za naročanje originalnih Tetra Pak rezervnih delov kontaktirajte najbližjo pisarno Tetra Pak.

Identifikacija

CE klasifikacija

Ta oprema izpolnjuje osnovne zdravstvene in varnostne ukrepe Evropskega ekonomskega prostora (EEA).

(Obrnite)

(Obrnite)

3-A Skladnost

Če ploščica stroja vsebuje oznako 3-A (15) (glejte ilustracijo (B) na strani i-7), ta oprema ustreza sanitetnim standardom 3-A za kalupe, polnilce in tesnila zbiralnikov za tekoče mleko in izdelke iz tekočega mleka, številka 17-10.

Strojna plošča

Ilustracija (B) na strani i-9 prikazuje primer ploščice za identifikacijo stroja. Ilustracija veljavne ploščice za identifikacijo stroja in njene lokacije na opremi je prikazana v uvodnem poglavju navodil, ki so bila dostavljena s to opremo. Ploščica za identifikacijo stroja vsebuje spodaj navedene podatke, ki so potrebni ob kontaktiranju podjetja 9 glede te specifične opreme.

- Tip stroja (8)
- Prostornina (9)
- Specifikacije skice (10)
- Serijska številka stroja (11)
- Proizvajalec (12)
- Leto izdelave (13)
- CE oznaka (14)
- 3-A oznaka (če obstaja) (15)

Prepričajte se, da se podatki o opremi, ki se nahajajo na sprednjih straneh teh navodil, v skladu s podatki strojne plošče in specifikacije stroja.

Kako uporabljati ta katalog rezrevnih delov

Poiščite številko rezervnega dela

a) Sklicujte se na ilustracijo (C) na strani i-9: Pojdite na številko poglavja (16), ki se nahaja poleg glavne skupine in ki vsebuje del, ki ga želite poiskati.

Predmeti b) in c) se nanašajo na ilustracijo (D) na strani i-10.

b) Na ilustraciji glavne skupine poiščite podskupino stroja (18), ki vsebuje del ali podskupino, ki jo iščete. Opazite položaj številke (19) in pojdite na stran seznama, ki sledi ilustraciji.

c) Poiščite številko lokacije/referenco (17) ali pa ime podskupine (20). Pojdite na ustrezno številko strani (21), ki je navedena v stolpcu na desni strani. Tetra Pak Group se je odločil za to, da vedno uporablja funkcijsko naravnano strukturo kot referenco. Predpona, ki nakazuje funkcijsko naravnano strukturo (=), ni prikazana v referenci.

(Obrnite)

(Obrnite)

Predmeti d) in e) se nanašajo na ilustracijo (E) na strani i-10.

d) Poiščite del (22), ki ga iščete, na ilustraciji podskupine in zabeležite številko lokacije dela.

e) Številka dela (29) in opis dela (30) sta navedena poleg lokacije številke na strani s seznamom.

Informacije, ki so navedene v katalogu rezervnih delov

Spodnji seznam se nanaša na ilustracijo (E) na strani i-10. Katalog rezervnih delov vsebuje naslednje informacije o skupinah, podskupinah in rezervnih delih za opremo.

- Referenca strukture skupine (23). Določa naslednjo višjo skupino v strukturi seznama opreme.
- Ime skupine (24)
- Enota merjenja (25)
- Količina (26)
- Številka skice sistema (27)
- Razpon seznama strani (28). Vključeno, če obstaja več strani v ilustraciji skupine ali na seznamu.
- Del ali številka podskupine (29)
- Ime podskupine ali opis dela (30)
- Številka skupine (31)
- Številka opreme (32)
- Naslov informacije o skupini (33). Nakazuje ali je spodnji odsek naslov specifične različice stroja ali pa če gre za seznam splošnih delov.
  Če ima seznam več kot eno različico in ima vsaka različica svojo skico sistema, je prikazana referenca strani na skici sistema vsake različice.
- Notranje informacije (34)

Pomoč in poizvedbe

Če potrebujete pomoč pri delu s to opremo ali imate kakršne koli druge zahteve, pripombe ali predloge, lahko vprašanja ali povratne informacije posredujete s pomočjo orodja QuTI-P. Vstipkajte QuTI-P v naslovno vrstico vašega brskalnika Če dostop do QuTI-P ni na voljo, stopite v stik z oddelkom za pomoč in zaprosite za dostop.

Če dostop do intraneta Tetra Pak® ni na voljo, stopite v stik z najbližjim zastopnikom podjetja Tetra Pak.

Information om handboken

Tetra Pak Group rekommenderar att alla handböcker läses noggrant.
Se till att handböckerna är tillgängliga för personalen som använder eller underhåller utrustningen.

Det är viktigt att denna katalog behålls under utrustningens livslängd, och att katalogen överlämnas till varje efterföljande innehavare eller användare.

Tetra Pak Group kan inte hållas ansvarig för eventuell egendomsskada, förlust, personskada eller dödsfall som orsakas av man inte följer de instruktioner som ges i de handböcker som medföljer denna utrustning.

Medföljande handböcker

Handböcker som levereras tillsammans med denna utrustning:

CM

Konverteringshandboken ger tekniker information om konvertering av utrustningen mellan olika produktionssätt.

EM

Den elektriska handboken ger teknikerna information om utrustningens elektriska system.

IM

Installationshandboken ger teknikerna information som krävs för att kunna installera utrustningen säkert.

MaSP

I underhålls- & reservdelsmanualen finns information om underhåll av komponenten. Den innehåller också information om hur man beställer reservdelar för komponenten från Tetra Pak Group.

MM

Underhållshandboken ger teknikerna information om hur utrustningen ska underhållas.

OM

Drifthandboken ger operatören information om hur utrustningen ska hanteras före, under och efter produktion.

RM

Ombyggnadshandboken ger teknikerna den information som krävs för att säkert installera en sats på en installerad maskin eller utrustning.

(Forts.)

(Forts.)

SPC

Reservdelskatalogen (SPC) ger den information som krävs för att kunna beställa reservdelar från Tetra Pak Group.

TeM

Teknisk handbok ger tekniker information i form av:

- information som krävs för att säkert kunna installera utrustningen
- information som krävs för att underhålla utrustningen
- information om maskinens/utrustningens elsystem
- information som krävs för beställning av reservdelar från Tetra Pak Group
- annan teknisk information

UP

Uppdateringssidorna innehåller nya sidor för att uppdatera befintliga maskinhandböcker.

Sidlayout

Se illustration (A) på sidan i-9: Huvudsidorna i en Reservdelskatalog består av en illustrationssida (1) och en tillhörande listsida (7).
Sidnumret (5) visas i sidhuvudet på en illustrationssida och i sidfoten på en listsida.
Dokumentnumret (6) visas i sidfoten på listsidan.

Sidnumrering

Se illustration (A) på sidan i-9: Ett sidnummer (5) har tre delar:

- kapitelnummer (2)
- löpande sidnummer inom kapitlet (3)
- totalt sidantal i kapitlet (4)

OBS! Bokstäverna UP kan ersätta kapitelnumret (2) om handboken innehåller uppdateringssidor. Det löpande sidnumret (3) och det totala antalet sidor (4) för uppdateringssidor följer inte den befintliga löpande sidnumreringen av kapitlet.

Introduktion till maskinen

Tillverkare

För tillverkarens namn and adress, se andra sidan i denna katalog.

Service

Tetra Pak Group tar inte något ansvar för eventuella skador eller eventuella personskador på utrustning, personal eller konsumenter som orsakas av att reservdelarna inte är original Tetra Pak® reservdelar.

Vid beställning av original Tetra Pak reservdelar för denna maskin, kontakta närmaste Tetra Pak-kontor.

Identifiering

CE-klassificering

Denna utrustning uppfyller de grundläggande hälso- och säkerhetskraven inom European Economic Area (EEA).

(Forts.)

(Forts.)

3-A överensstämmelse

Om maskinskylten är märkt med 3-A (15) (se bild (B) på sidan i-7), uppfyller denna utrustning 3-A Hygienstandarder för resare, fyllare och förseglare av behållare för flytande mjölk och flytande mjölkprodukter, Nummer 17-10.

Maskinskylt

Illustration (B) på sidan i-9 visar ett exempel på en maskinskylt.
En illustration av gällande maskinskylt och dess placering på utrustningen visas i Introduktion-kapitlet i de handböcker som levereras med denna utrustning.
Maskinskylten innehåller data som listas nedan, vilken behövs för att kontakta Tetra Pak Group rörande denna specifika utrustning.

- Maskintyp (8)
- Volym (9)
- Ritningsspecifikationer (10)
- Maskinnummer (11)
- Tillverkare (12)
- Tillverkningsår (13)
- CE-märkning (14)
- 3A-märke (om tillämpligt) (15)

Kontrollera att utrustningsdata som finns på de inledande sidorna i denna handbok överensstämmer med maskinskyltens data och maskinspecifikationen.

Hur man använder denna reservdelskatalog

Hitta ett reservdelsnummer

a) Se illustration (C) på sidan i-9: Gå till det kapitelnummer (16) som anges bredvid huvudgruppen som innehåller delen du vill lokalisera.

Punkterna b) och c) refererar till illustration (D) på sidan i-10.

b) Leta på huvudgruppens bild upp den undergrupp (18) i maskinen som innehåller delen eller undergruppen du letar efter. Notera positionsnumret (19) och gå till listsidan som följer på bilden.

c) Leta upp positionsnummer/referensbeteckning (17) eller undergruppens namn (20). Gå till motsvarande sidnummer (21) som anges i den högra kolumnen. Tetra Pak Group har valt att alltid använda en funktionsorienterad struktur för referensbeteckning. Prefix som anger funktionsorienterad struktur (=) visas inte i referensbeteckningen.

(Forts.)

(Forts.)

Punkterna d) och e) refererar till illustration (E) på sidan i-10.

d) Leta upp den del (22) som du letar efter på undergruppens bild och notera delens positionsnummer.

e) Artikelnumret (29) och artikelbeskrivningen (30) anges bredvid positionsnumret på listsidan.

Information som anges i en Reservdelskatalog

Listan nedan refererar till illustration (E) på sidan i-10. En Reservdelskatalog innehåller följande information om grupper, undergrupper och reservdelar för utrustningen:

- Gruppstrukturreferens (23). Anger närmast högre grupp i utrustningens liststruktur.
- Gruppnamn (24)
- Måttenhet (25)
- Antal (26)
- Sammanställningsritningens nummer (27)
- Listans sidomfång (28). Anges om det finns flera sidor i gruppens bild eller lista.
- Artikel- eller undergruppnummer (29)
- Undergruppens namn eller beskrivning av delen (30)
- Gruppnummer (31)
- Utrustningsnummer (32)
- Gruppinformationsrubrik (33). Anger om avsnittet under rubriken gäller för en specifik maskinvariant eller om det är en lista över gemensamma delar. Om en lista har mer än en variant och varje variant har sin egen sammanställningsritning, visas en sidreferens till variantens sammanställningsritning.
- Intern information (34)

Assistans och förfrågningar

För assistans vid användning av denna utrustning, eller för andra förfrågningar, kommentarer eller förslag, kan ni ställa frågor eller ge feedback genom att använda QuTI-P verktyget. Skriv QuTI-P din webbläsares adressfält. Om tillgång till QuTI-P inte föreligger, begär tillgång genom att kontakta Global Service Desk.

Om tillgång till Tetra Pak® intranät inte föreligger, kontakta närmaste Tetra Pak-representant.

SPC
Spare Parts Catalogue

This page is intentionally left blank.

ECM: 675524 - 20140701
Group number: 648597-0400
Assembly Drawing:

Pos	Part No	UN	Qty	Description	Page No
	List Remark				
	List - 648597-0400				
	Remark : Machine variant "VCK QC" collects ONLY following conversion:				
	From TBA 1000B NOCAP to TBA 0500B and viceversa				
	From TBA 1000SQ to TBA 0500SQ and viceversa				
	From TPA 1000SQ to TPA 0750SQ and viceversa				
	From TGA 0500SQ to TGA 1000SQ and viceversa				
	From TGA 0750SQ to TGA 1000SQ and viceversa				
	From TGA 0500SQ to TGA 0750SQ and viceversa				
	From TBA 1000E to TBA 0500E and viceversa				
	Machine variant "VCK NOQC INTERM" collects ONLY following conversions:				
	From TGA 0500SQ to TGA 1000CR and viceversa				
	From TGA 0750SQ to TGA 1000CR and viceversa				
	From TGA 1000SQ to TGA 1000CR and viceversa				
	From TGA 0500SQ to TGA 1000LF and viceversa				
	From TGA 0750SQ to TGA 1000LF and viceversa				
	From TGA 1000SQ to TGA 1000LF and viceversa				
	From TGA 1000CR to TGA 1000LF and viceversa				
	All other are considered as "VCK NOQC".				
VCK NOQC DIMC/FLEX START FM DIMC/FLEX					
010	3015740-0200		1	VOLUME CONVERSION KIT	**1-5**
030	3272912-0200		1	VOLUME CONVERSION KIT WITH DIMC	**1-803**
VCK NOQC INTERM					
010	3015741-0100		1	BOX6 - VOLUME KIT	**1-1039, 1-1041**
020	3256949-0100		1	NO QUICKCHANGE INTERMEDIATE	**1-1045**
VCK NOQC NODIMC, VCK NOQC DIMC/FLEX START FM NODIMC					
010	3015740-0200		1	VOLUME CONVERSION KIT	**1-5**
VCK QC					
010	3015741-0100		1	BOX6 - VOLUME KIT	**1-1039, 1-1041**

Pos	Part No	UN	Qty	Description	Page No

Machine Type | Group Description | Used-In | Group Number | Page No

This page is intentionally left blank.

ECM: 535838 - 20120401
Group number: 3015740-0200
Assembly Drawing:

Pos	Part No	UN	Qty	Description	Page No
TBA, TPA					
030	2634506-0300		1	BOX4 - FINAL FOLDER	**1-7**
TGA					
030	3016237-0200		1	BOX4 - FINAL FOLDER	**1-255**
Common Parts					
010	2634504-0300		1	BOX2 - SUPERSTRUCTURE	**1-323**
020	2634505-0300		1	BOX3 - JAW SYSTEM	**1-509**
040	2691695-0300		1	BOX5 - SUPERSTRUCTURE	**1-763, 1-765**

Pos	Part No	UN	Qty	Description	Page No

BOX4 - FINAL FOLDER

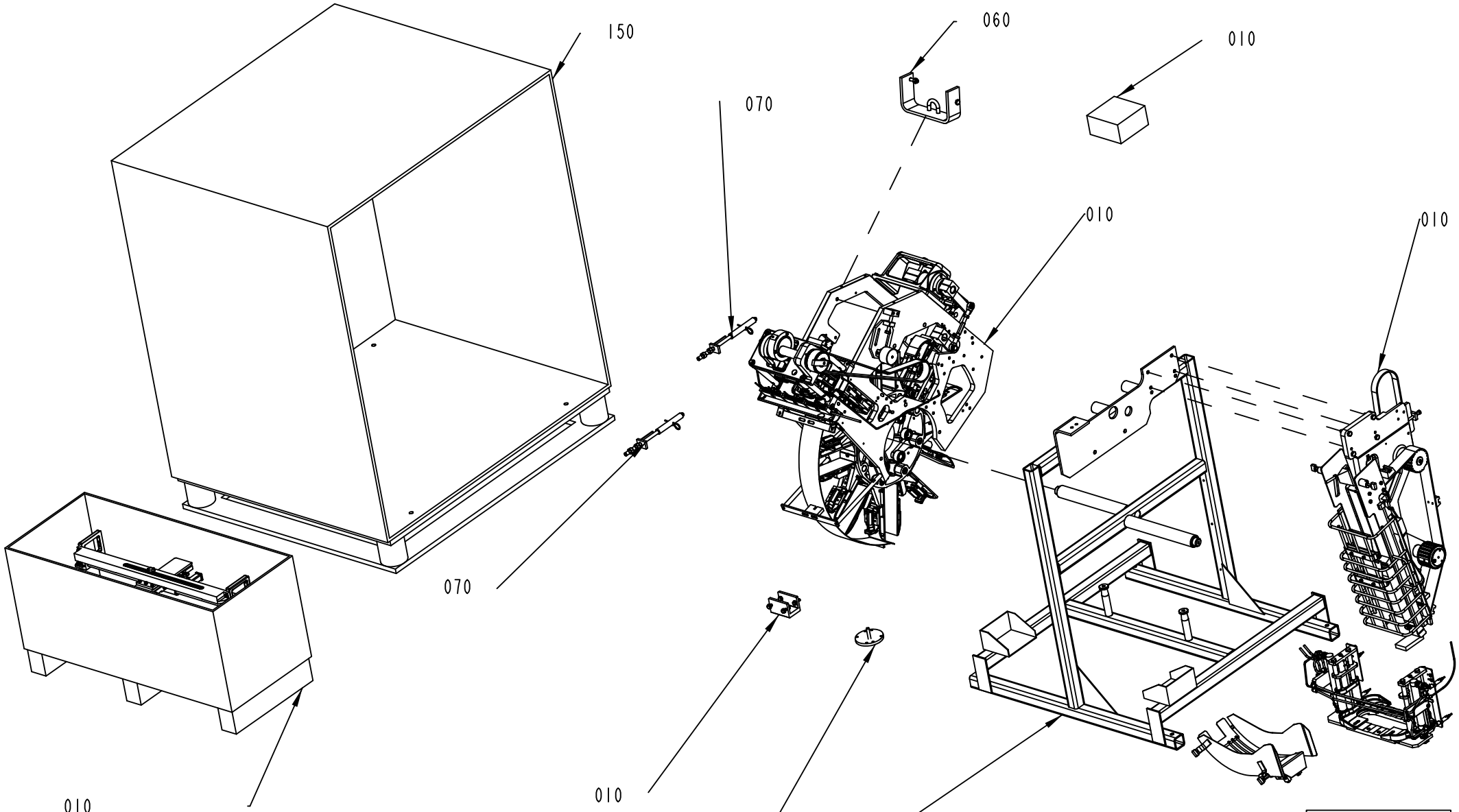

ECM: 535842 - 20120401
Group number: 2634506-0300
Assembly Drawing: 2634506-2_1_AA

Pos	Part No	UN	Qty	Description	Page No
-					
010	2634509-0300		1	VOLUME KIT	**1-9**
050	1361935-0100		1	FRAME	**1-247**
060	1361558-0100		1	LIFTING KIT-WHEEL	**1-249**
070	599815-0100		2	HOLDING FIXTURE	**1-251**
080	1361559-0100		1	PULLER	**1-253**
150	1363768-0000		1	BOX	

Pos	Part No	UN	Qty	Description	Page No

This page is intentionally left blank.

ECM: 535843 - 20120401
Group number: 2634509-0300
Assembly Drawing:

Pos	Part No	UN	Qty	Description	Page No
-					
010	2984516-0100		1	SIDE PLATE	**1-11**
015	2984518-0100		1	SPACER	**1-13, 1-15**
020	2985175-0100		1	INFEED CONVEYOR VARIANT	**1-17, 1-19, 1-21**
030	2895568-0200		1	FRAMEWORK	**1-23**
040	2769842-0200		1	PULL-DOWN DEVICE	**1-25, 1-27**
050	2866604-0100		1	FOLDING PART	**1-47**
060	2927613-0100		1	WHEEL	**1-79**
070	2985173-0100		1	NOZZLE	**1-117, 1-119**
080	2857893-0200		1	PRESSURE DEVICE	**1-121, 1-123, 1-125, 1-127**
090	2985180-0100		1	BELT INFEED GUIDE	**1-165, 1-167, 1-169**
100	2958758-0100		1	PUSHER	**1-171**
120	2634511-0300		1	MECHANICAL DIFFERENCES	**1-175**
130	3016193-0200		1	FLAP HEATER	**1-241**
140	2980903-0100		1	START-UP KIT FF	**1-245**

Pos	Part No	UN	Qty	Description	Page No

SIDE PLATE

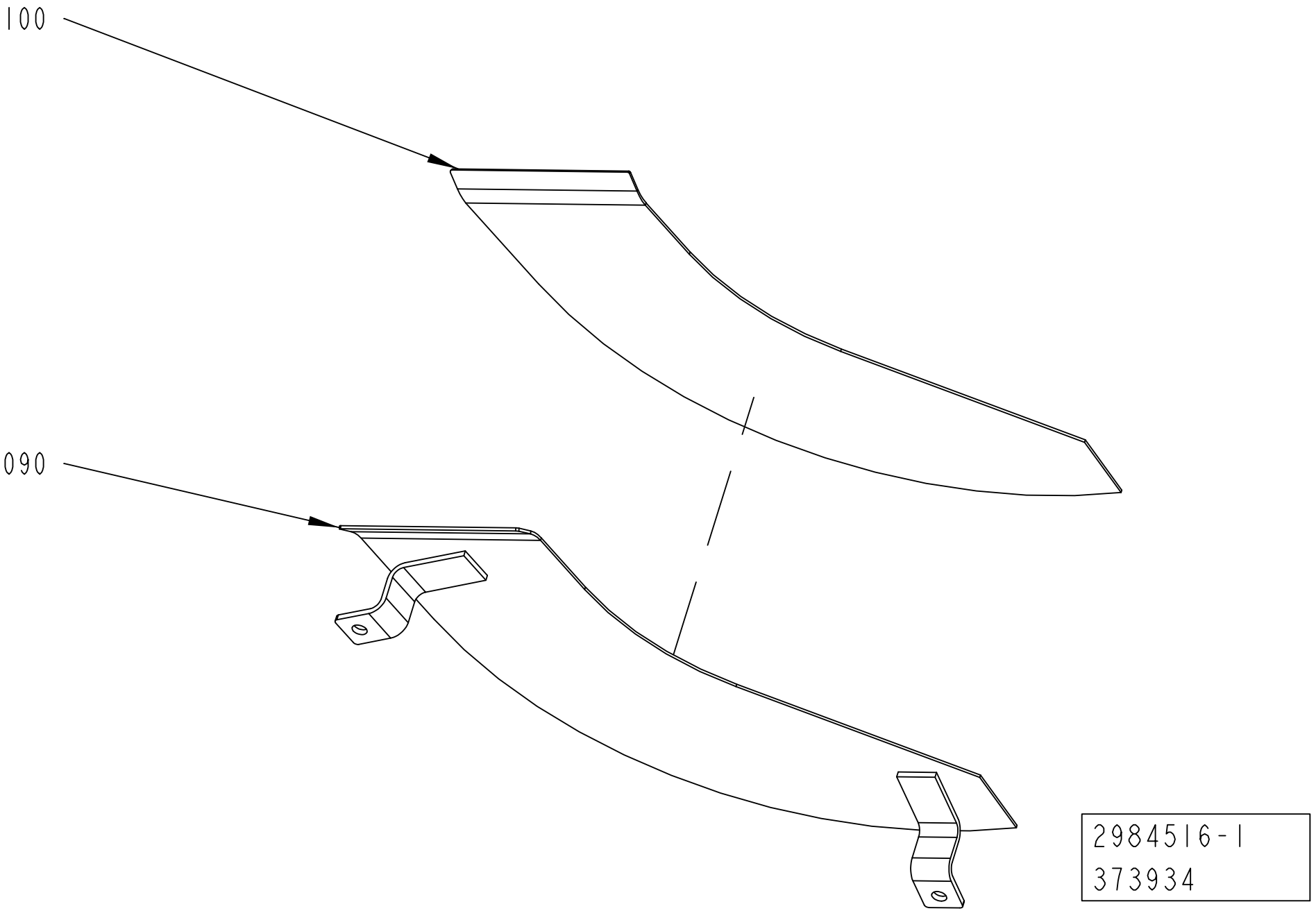

ECM: 641982 - 20140401
Group number: 2984516-0100
Assembly Drawing: 2984516-1_1_AA

Pos	Part No	UN	Qty	Description	Page No
TBA 0500B					
090	2605993-0000		1	SIDE PLATE	
100	2605994-0000		1	SIDE PLATE	
TBA 0500S					
090	1285023-0000		1	SIDE PLATE	
100	1285022-0000		1	SIDE PLATE	
TBA 0500SQ, TBA 1000SQ, TBA 1000E, TBA 0500E					
090	1285023-0000		1	SIDE PLATE	
100	1285022-0000		1	SIDE PLATE	
TBA 1000B					
090	1285023-0000		1	SIDE PLATE	
100	1285022-0000		1	SIDE PLATE	
TBA 1000M					
090	1285023-0000		1	SIDE PLATE	
100	1285022-0000		1	SIDE PLATE	
TBA 1000S					
090	1285023-0000		1	SIDE PLATE	
100	1285022-0000		1	SIDE PLATE	
TBA 1500S					
090	2665205-0000		1	PLATE	
100	2665206-0000		1	PLATE	
TBA 2000S					
090	2665205-0000		1	PLATE	
100	2665206-0000		1	PLATE	
TPA 0500SQ					
090	1285023-0000		1	SIDE PLATE	
100	1285022-0000		1	SIDE PLATE	

Pos	Part No	UN	Qty	Description	Page No

Machine Type | Group Description | Used-In | Group Number | Page No

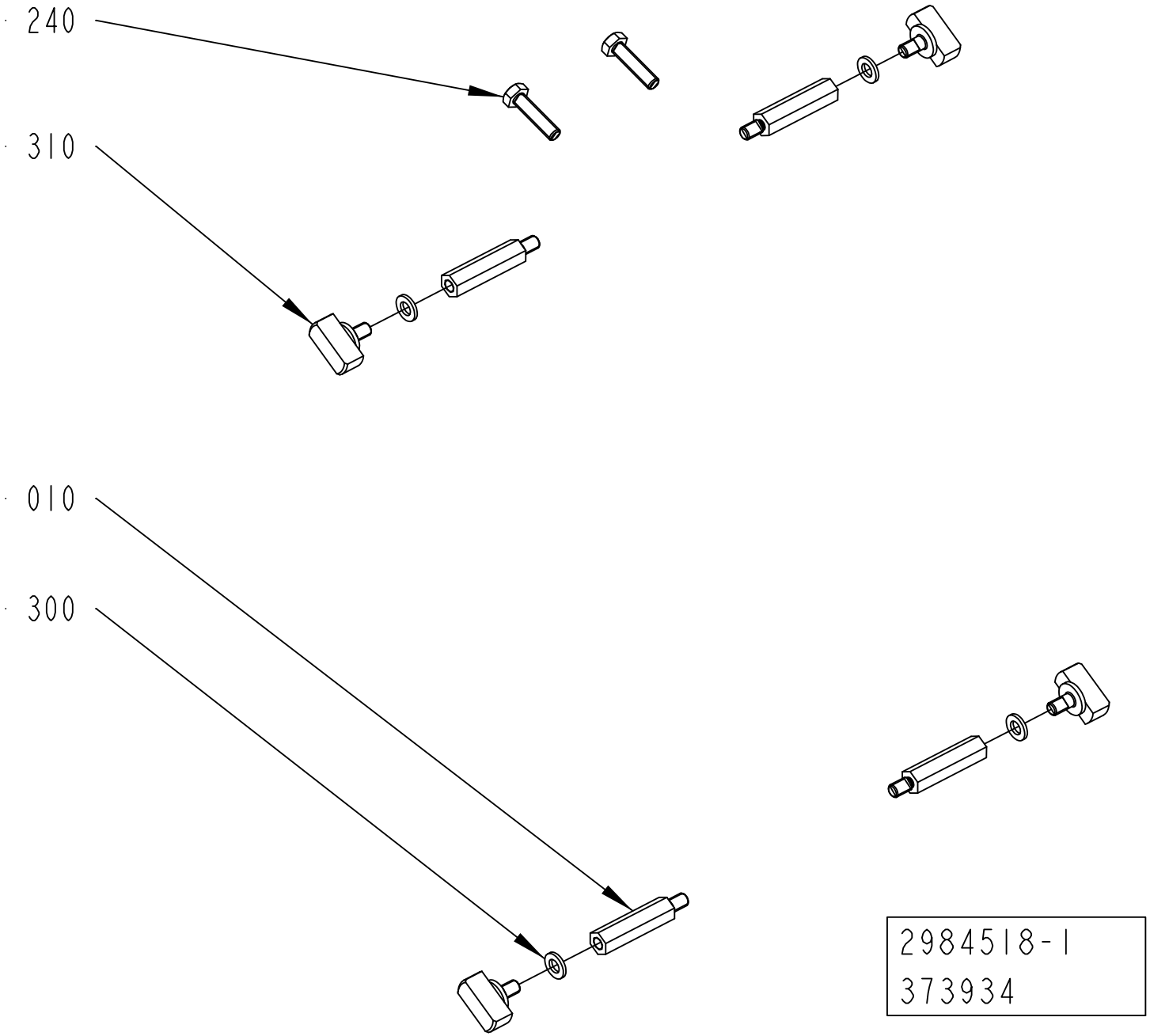

2984518-1
373934

ECM: 641983 - 20140401
Group number: 2984518-0100
Assembly Drawing: 2984518-1_1_AA

This list covers pages from 1-12 to 1-15

Pos	Part No	UN	Qty	Description	Page No
TBA 0500B, TBA 1000B (See drawing on page: 1-12)					
010	2537129-0000		4	SPACER	
240	312105-0372		2	SCREW, M6S ISO 4017 M6X25 A4 80	
300	90062-0061		4	LOCK WASHER NORD-LOCK,6,5/10,8, T=2,2	
310	2540609-0000		4	KNOB	
TBA 0500S (See drawing on page: 1-12)					
010	1499140-0000		4	SPACER	
240	312105-0372		2	SCREW, M6S ISO 4017 M6X25 A4 80	
300	90062-0061		4	LOCK WASHER NORD-LOCK,6,5/10,8, T=2,2	
310	312105-0378		4	SCREW, M6S ISO 4014 M6X40 A4 80	
TBA 0500SQ, TBA 1000SQ, TBA 1000E, TBA 0500E (See drawing on page: 1-14)					
010	2598820-0000		2	SPACER	
030	2619574-0000		2	SPACER	
240	312105-0372		2	SCREW, M6S ISO 4017 M6X25 A4 80	
300	90062-0061		4	LOCK WASHER NORD-LOCK,6,5/10,8, T=2,2	
310	2540609-0000		4	KNOB	
TBA 1000M (See drawing on page: 1-12)					
010	2998812-0000		4	SPACER	
240	312105-0372		2	SCREW, M6S ISO 4017 M6X25 A4 80	
300	90062-0061		4	LOCK WASHER NORD-LOCK,6,5/10,8, T=2,2	
310	312105-0381		4	SCREW, M6S ISO 4014 M6X55 A4 80	
TBA 1000S (See drawing on page: 1-12)					
010	1279670-0000		4	SPACER	
240	312105-0372		2	SCREW, M6S ISO 4017 M6X25 A4 80	
300	90062-0061		4	LOCK WASHER NORD-LOCK,6,5/10,8, T=2,2	
310	312105-0381		4	SCREW, M6S ISO 4014 M6X55 A4 80	
TBA 1500S (See drawing on page: 1-12)					
240	312105-0372		2	SCREW, M6S ISO 4017 M6X25 A4 80	
310	312105-0366		4	SCREW, M6S ISO 4017 M6X12 A4 80	
TBA 2000S (See drawing on page: 1-14)					
010	3230137-0000		2	SPACER	
030	2661153-0000		2	SPACER	
240	312105-0372		2	SCREW, M6S ISO 4017 M6X25 A4 80	
310	312105-0364		4	"SCREW, M6S ISO 4017 M6X10 A4 80"	
TPA 0500SQ (See drawing on page: 1-12)					
010	1549512-0000		4	SPACER	
240	312105-0372		2	SCREW, M6S ISO 4017 M6X25 A4 80	
300	90062-0061		4	LOCK WASHER NORD-LOCK,6,5/10,8, T=2,2	
310	312105-0374		4	SCREW, M6S ISO 4014 M6X30 A4 80	
TPA 1000SQ, TPA 0750SQ (See drawing on page: 1-12)					
240	312105-0368		2	"SCREW, M6S ISO 4017 M6X16 A4 80"	

Pos	Part No	UN	Qty	Description	Page No

Machine Type | Group Description | Used-In | Group Number | Page No

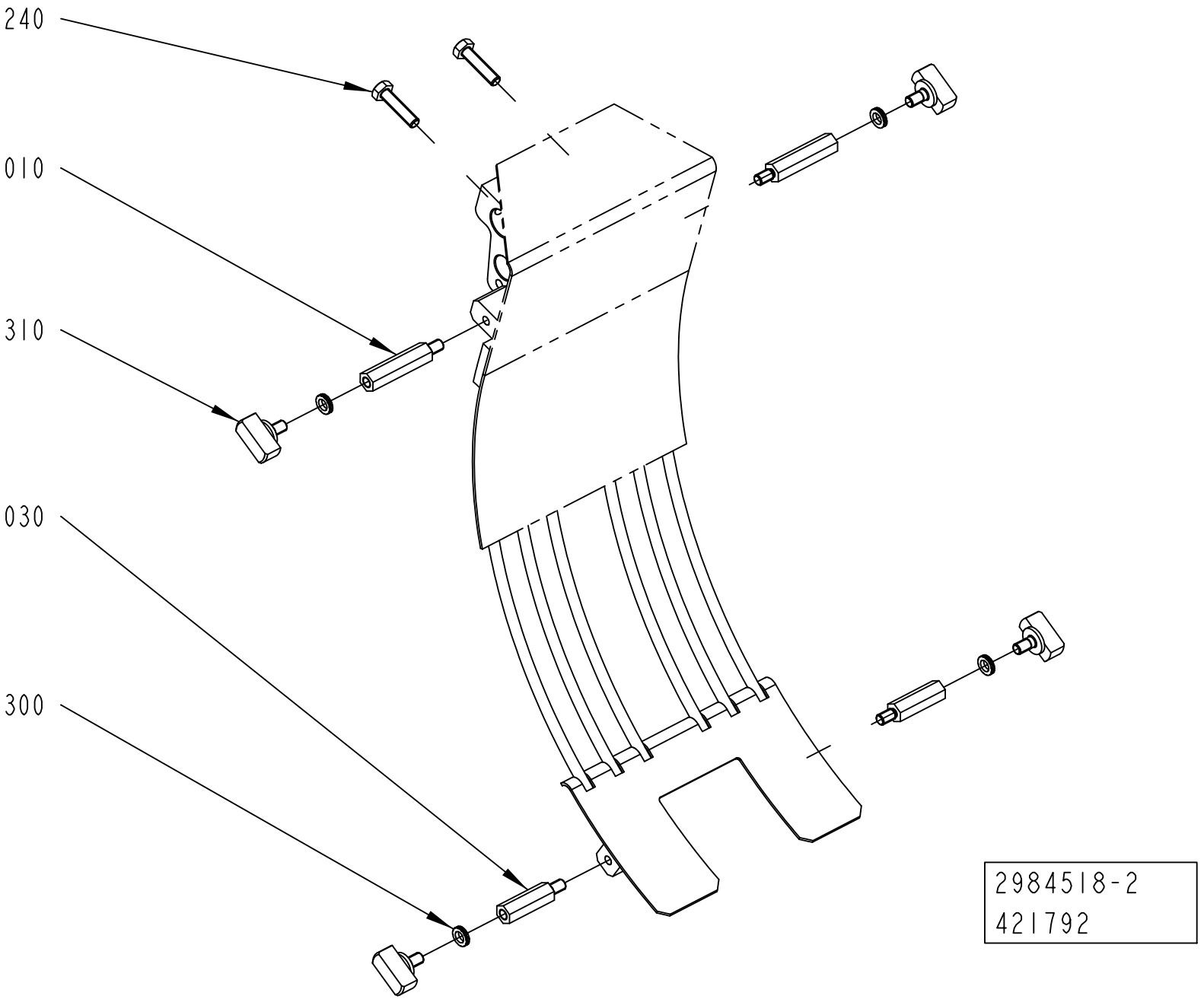
240
010
310
030
300
2984518-2
421792

Pos	Part No	UN	Qty	Description	Page No
TBA 0500B, TBA 1000B (See drawing on page: 1-12)					
010	2537129-0000		4	SPACER	
240	312105-0372		2	SCREW, M6S ISO 4017 M6X25 A4 80	
300	90062-0061		4	LOCK WASHER NORD-LOCK,6,5/10,8, T=2,2	
310	2540609-0000		4	KNOB	
TBA 0500S (See drawing on page: 1-12)					
010	1499140-0000		4	SPACER	
240	312105-0372		2	SCREW, M6S ISO 4017 M6X25 A4 80	
300	90062-0061		4	LOCK WASHER NORD-LOCK,6,5/10,8, T=2,2	
310	312105-0378		4	SCREW, M6S ISO 4014 M6X40 A4 80	
TBA 0500SQ, TBA 1000SQ, TBA 1000E, TBA 0500E (See drawing on page: 1-14)					
010	2598820-0000		2	SPACER	
030	2619574-0000		2	SPACER	
240	312105-0372		2	SCREW, M6S ISO 4017 M6X25 A4 80	
300	90062-0061		4	LOCK WASHER NORD-LOCK,6,5/10,8, T=2,2	
310	2540609-0000		4	KNOB	
TBA 1000M (See drawing on page: 1-12)					
010	2998812-0000		4	SPACER	
240	312105-0372		2	SCREW, M6S ISO 4017 M6X25 A4 80	
300	90062-0061		4	LOCK WASHER NORD-LOCK,6,5/10,8, T=2,2	
310	312105-0381		4	SCREW, M6S ISO 4014 M6X55 A4 80	
TBA 1000S (See drawing on page: 1-12)					
010	1279670-0000		4	SPACER	
240	312105-0372		2	SCREW, M6S ISO 4017 M6X25 A4 80	
300	90062-0061		4	LOCK WASHER NORD-LOCK,6,5/10,8, T=2,2	
310	312105-0381		4	SCREW, M6S ISO 4014 M6X55 A4 80	
TBA 1500S (See drawing on page: 1-12)					
240	312105-0372		2	SCREW, M6S ISO 4017 M6X25 A4 80	
310	312105-0366		4	SCREW, M6S ISO 4017 M6X12 A4 80	
TBA 2000S (See drawing on page: 1-14)					
010	3230137-0000		2	SPACER	
030	2661153-0000		2	SPACER	
240	312105-0372		2	SCREW, M6S ISO 4017 M6X25 A4 80	
310	312105-0364		4	"SCREW, M6S ISO 4017 M6X10 A4 80"	
TPA 0500SQ (See drawing on page: 1-12)					
010	1549512-0000		4	SPACER	
240	312105-0372		2	SCREW, M6S ISO 4017 M6X25 A4 80	
300	90062-0061		4	LOCK WASHER NORD-LOCK,6,5/10,8, T=2,2	
310	312105-0374		4	SCREW, M6S ISO 4014 M6X30 A4 80	
TPA 1000SQ, TPA 0750SQ (See drawing on page: 1-12)					
240	312105-0368		2	"SCREW, M6S ISO 4017 M6X16 A4 80"	

Pos	Part No	UN	Qty	Description	Page No

INFEED CONVEYOR VARIANT

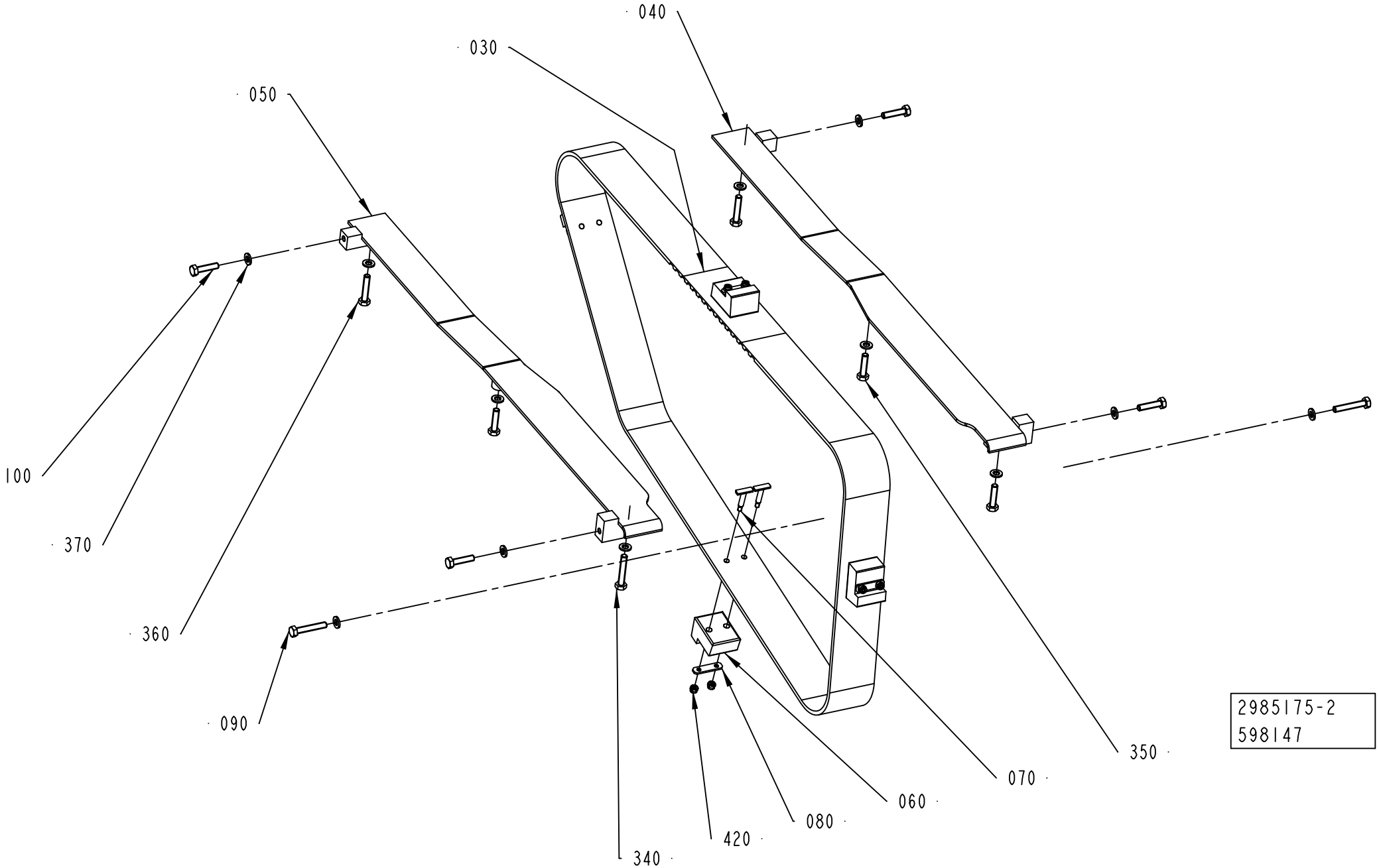

ECM: 663705 - 20140701
Group number: 2985175-0100
Assembly Drawing: 2985175-2_1_AB

This list covers pages from 1-16 to 1-21

Pos	Part No	UN	Qty	Description	Page No
TBA 0500B, TBA 1000B (See drawing on page: 1-20)					
030	1144783-0000		1	TIMING BELT	
040	2779739-0000		1	GUIDE	
050	2779738-0000		1	GUIDE	
060	1144919-0000		4	CARRIER	
070	1346471-0000		8	WEDGE	
080	1144918-0000		4	PLATE	
090	2529785-0000		2	KNOB	
100	2529786-0000		4	KNOB	
110	2520160-0000		2	CLAMP	
120	1499476-0000		1	HOLDER	
200	2527792-0000		1	SUPPORT	
210	2527793-0000		1	SHAFT	
220	2540612-0000		1	PLATE	
240	2530418-0000		1	SPRING	
300	312105-0368		2	"SCREW, M6S ISO 4017 M6X16 A4 80"	
310	312105-0368		2	"SCREW, M6S ISO 4017 M6X16 A4 80"	
320	312155-0323		3	SCREW DIN 7991 MF6S M5X8 A4 70	
330	90062-0061		2	LOCK WASHER NORD-LOCK,6,5/10,8, T=2,2	
340	312109-0376		1	SCREW, M6S ISO 4017 M6X35 A4 80	
350	312105-0372		3	SCREW, M6S ISO 4017 M6X25 A4 80	
360	312109-0374		2	SCREW, M6S ISO 4017 M6X30 A4 80	
370	315105-0153		10	WASHER PLAIN, 6,4X12X1,5 A4 BRB	
420	312812-0312		8	HEXAGON NUT, NY-LOCK M4 A4 80	
TBA 0500S (See drawing on page: 1-16)					
030	1144783-0000		1	TIMING BELT	
040	1317651-0000		1	GUIDE	
050	1317650-0000		1	GUIDE	
060	1282287-0000		4	CARRIER	
070	1346736-0000		8	WEDGE	
080	1144918-0000		4	PLATE	
090	312105-0376		2	SCREW, M6S ISO 4014 M6X35 A4 80	
100	312105-0368		4	"SCREW, M6S ISO 4017 M6X16 A4 80"	
340	312109-0376		1	SCREW, M6S ISO 4017 M6X35 A4 80	
350	312105-0372		3	SCREW, M6S ISO 4017 M6X25 A4 80	
360	312109-0374		2	SCREW, M6S ISO 4017 M6X30 A4 80	
370	315105-0153		12	WASHER PLAIN, 6,4X12X1,5 A4 BRB	
420	312812-0312		8	HEXAGON NUT, NY-LOCK M4 A4 80	
TBA 0500SQ, TBA 1000SQ (See drawing on page: 1-20)					
030	1144783-0000		1	TIMING BELT	
040	1317651-0000		1	GUIDE	
050	1317650-0000		1	GUIDE	
060	1282848-0000		4	CARRIER	
070	1346471-0000		8	WEDGE	
080	1144918-0000		4	PLATE	
090	2529785-0000		2	KNOB	
100	2529786-0000		4	KNOB	
110	2520160-0000		2	CLAMP	
120	1499476-0000		1	HOLDER	
200	2527792-0000		1	SUPPORT	
210	2527793-0000		1	SHAFT	
220	2540612-0000		1	PLATE	
240	2530418-0000		1	SPRING	
300	312105-0368		2	"SCREW, M6S ISO 4017 M6X16 A4 80"	
310	312105-0368		2	"SCREW, M6S ISO 4017 M6X16 A4 80"	
320	312155-0323		3	SCREW DIN 7991 MF6S M5X8 A4 70	
330	90062-0061		2	LOCK WASHER NORD-LOCK,6,5/10,8, T=2,2	
340	312109-0376		1	SCREW, M6S ISO 4017 M6X35 A4 80	
350	312105-0372		3	SCREW, M6S ISO 4017 M6X25 A4 80	
360	312109-0374		2	SCREW, M6S ISO 4017 M6X30 A4 80	
370	315105-0153		10	WASHER PLAIN, 6,4X12X1,5 A4 BRB	
420	312812-0312		8	HEXAGON NUT, NY-LOCK M4 A4 80	
TBA 1000E, TBA 0500E (See drawing on page: 1-20)					
030	1144783-0000		1	TIMING BELT	
040	3223123-0000		1	GUIDE	
050	3223122-0000		1	GUIDE	
060	3223254-0000		4	CARRIER	
070	1346736-0000		8	WEDGE	
080	1144918-0000		4	PLATE	
090	2529785-0000		2	KNOB	
100	2529786-0000		4	KNOB	
110	2520160-0000		2	CLAMP	
120	1499476-0000		2	HOLDER	
200	2527792-0000		2	SUPPORT	
210	2527793-0000		2	SHAFT	
220	2540612-0000		2	PLATE	
240	2530418-0000		2	SPRING	
300	312105-0368		4	"SCREW, M6S ISO 4017 M6X16 A4 80"	
310	312105-0368		4	"SCREW, M6S ISO 4017 M6X16 A4 80"	
320	312155-0323		6	SCREW DIN 7991 MF6S M5X8 A4 70	
330	90062-0061		4	LOCK WASHER NORD-LOCK,6,5/10,8, T=2,2	
340	312109-0376		1	SCREW, M6S ISO 4017 M6X35 A4 80	
350	312105-0372		3	SCREW, M6S ISO 4017 M6X25 A4 80	
360	312109-0374		2	SCREW, M6S ISO 4017 M6X30 A4 80	

Machine Type | Group Description | Used-In | Group Number | Page No

INFEED CONVEYOR VARIANT

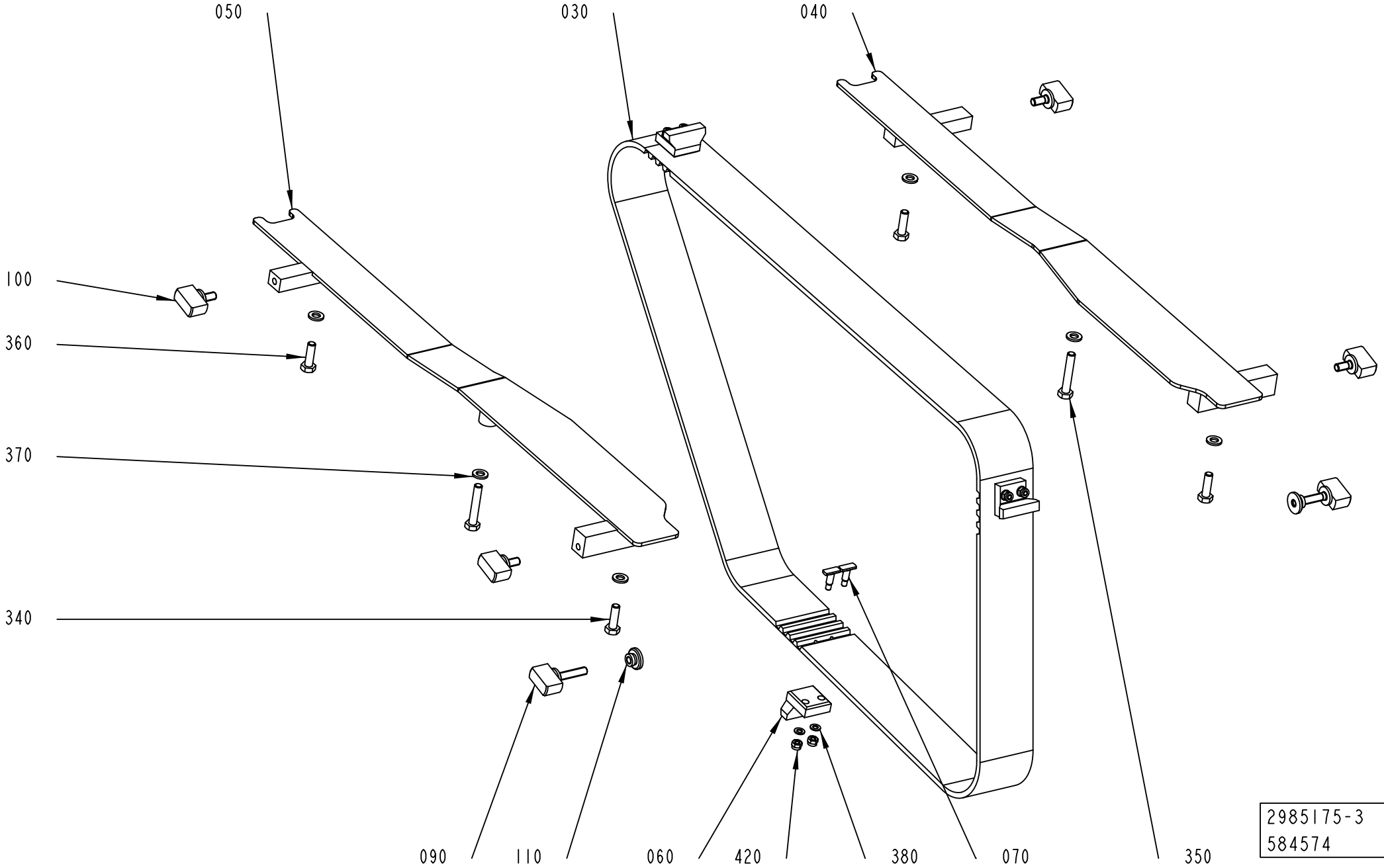

Pos	Part No	UN	Qty	Description	Page No
TBA 1000E, TBA 0500E (Cont'd) (See drawing on page: 1-20)					
370	315105-0153		14	WASHER PLAIN, 6,4X12X1,5 A4 BRB	
420	312812-0312		8	HEXAGON NUT, NY-LOCK M4 A4 80	
TBA 1000M (See drawing on page: 1-20)					
030	1144783-0000		1	TIMING BELT	
040	2779739-0000		1	GUIDE	
050	2779738-0000		1	GUIDE	
060	1144919-0000		4	CARRIER	
070	1346471-0000		8	WEDGE	
080	1144918-0000		4	PLATE	
090	2529785-0000		2	KNOB	
100	2529786-0000		4	KNOB	
110	2520160-0000		2	CLAMP	
120	1499476-0000		1	HOLDER	
200	2527792-0000		1	SUPPORT	
210	2527793-0000		1	SHAFT	
220	2540612-0000		1	PLATE	
240	2530418-0000		1	SPRING	
300	312105-0368		2	"SCREW, M6S ISO 4017 M6X16 A4 80"	
310	312105-0368		2	"SCREW, M6S ISO 4017 M6X16 A4 80"	
320	312155-0323		3	SCREW DIN 7991 MF6S M5X8 A4 70	
330	90062-0061		2	LOCK WASHER NORD-LOCK,6,5/10,8, T=2,2	
340	312109-0376		1	SCREW, M6S ISO 4017 M6X35 A4 80	
350	312105-0372		3	SCREW, M6S ISO 4017 M6X25 A4 80	
360	312109-0374		2	SCREW, M6S ISO 4017 M6X30 A4 80	
370	315105-0153		10	WASHER PLAIN, 6,4X12X1,5 A4 BRB	
420	312812-0312		8	HEXAGON NUT, NY-LOCK M4 A4 80	
TBA 1000S (See drawing on page: 1-16)					
030	1144783-0000		1	TIMING BELT	
040	1317651-0000		1	GUIDE	
050	1317650-0000		1	GUIDE	
060	1144919-0000		4	CARRIER	
070	1346471-0000		8	WEDGE	
080	1144918-0000		4	PLATE	
090	312109-0376		2	SCREW, M6S ISO 4017 M6X35 A4 80	
100	312105-0368		4	"SCREW, M6S ISO 4017 M6X16 A4 80"	
340	312109-0376		1	SCREW, M6S ISO 4017 M6X35 A4 80	
350	312105-0372		3	SCREW, M6S ISO 4017 M6X25 A4 80	
360	312109-0374		2	SCREW, M6S ISO 4017 M6X30 A4 80	
370	315105-0153		12	WASHER PLAIN, 6,4X12X1,5 A4 BRB	
420	312812-0312		8	HEXAGON NUT, NY-LOCK M4 A4 80	
TBA 1500S (See drawing on page: 1-16)					
030	2927638-0000		1	TIMING BELT	
040	2665201-0000		1	GUIDE	
050	2665200-0000		1	GUIDE	
060	1282848-0000		3	CARRIER	
070	1346471-0000		6	WEDGE	
080	1144918-0000		3	PLATE	
090	312109-0376		2	SCREW, M6S ISO 4017 M6X35 A4 80	
100	312105-0368		4	"SCREW, M6S ISO 4017 M6X16 A4 80"	
340	312105-0370		2	SCREW, M6S ISO 4017 M6X20 A4 80	
350	312105-0376		2	SCREW, M6S ISO 4014 M6X35 A4 80	
360	312105-0370		2	SCREW, M6S ISO 4017 M6X20 A4 80	
370	315105-0153		12	WASHER PLAIN, 6,4X12X1,5 A4 BRB	
420	312812-0312		6	HEXAGON NUT, NY-LOCK M4 A4 80	
TBA 2000S (See drawing on page: 1-16)					
030	2927638-0000		1	TIMING BELT	
040	2665201-0000		1	GUIDE	
050	2665200-0000		1	GUIDE	
060	1282848-0000		3	CARRIER	
070	1346471-0000		6	WEDGE	
080	1144918-0000		3	PLATE	
090	312109-0376		2	SCREW, M6S ISO 4017 M6X35 A4 80	
100	312105-0368		4	"SCREW, M6S ISO 4017 M6X16 A4 80"	
340	312105-0370		2	SCREW, M6S ISO 4017 M6X20 A4 80	
350	312105-0376		2	SCREW, M6S ISO 4014 M6X35 A4 80	
360	312105-0370		2	SCREW, M6S ISO 4017 M6X20 A4 80	
370	315105-0153		12	WASHER PLAIN, 6,4X12X1,5 A4 BRB	
420	312812-0312		6	HEXAGON NUT, NY-LOCK M4 A4 80	
TPA 0500SQ (See drawing on page: 1-16)					
030	1144783-0000		1	TIMING BELT	
040	1549523-0000		1	GUIDE	
050	1549522-0000		1	GUIDE	
060	1532256-0000		4	CARRIER	
070	1346471-0000		8	WEDGE	
080	1144918-0000		4	PLATE	
090	312109-0376		2	SCREW, M6S ISO 4017 M6X35 A4 80	
100	312105-0372		4	SCREW, M6S ISO 4017 M6X25 A4 80	
340	312109-0376		1	SCREW, M6S ISO 4017 M6X35 A4 80	
350	312105-0372		3	SCREW, M6S ISO 4017 M6X25 A4 80	
360	312109-0374		2	SCREW, M6S ISO 4017 M6X30 A4 80	
370	315105-0153		12	WASHER PLAIN, 6,4X12X1,5 A4 BRB	
420	312812-0312		8	HEXAGON NUT, NY-LOCK M4 A4 80	
TPA 1000SQ, TPA 0750SQ (See drawing on page: 1-18)					

INFEED CONVEYOR VARIANT

Drawing file: 2985175-4_1_AA.hpgl

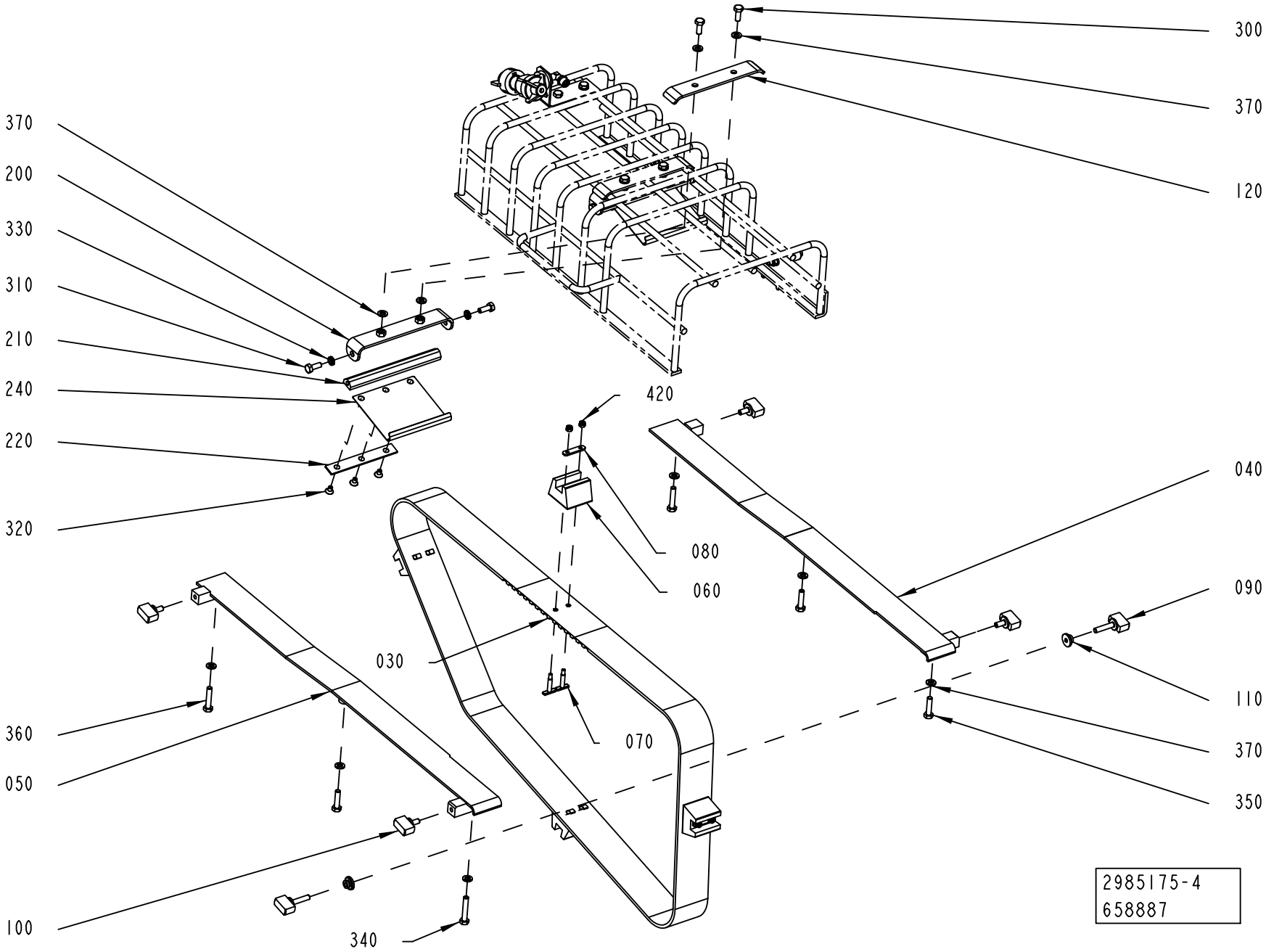

Pos	Part No	UN	Qty	Description	Page No
TPA 1000SQ, TPA 0750SQ (Cont'd) (See drawing on page: 1-18)					
030	2927639-0000		1	TIMING BELT	
040	2912506-0000		1	GUIDE	
050	2912505-0000		1	GUIDE	
060	3260575-0000		3	CARRIER	
070	3269836-0000		6	WEDGE	
090	2529785-0000		2	KNOB	
100	2529786-0000		4	KNOB	
110	2520160-0000		2	CLAMP	
340	312105-0370		2	SCREW, M6S ISO 4017 M6X20 A4 80	
350	312105-0376		2	SCREW, M6S ISO 4014 M6X35 A4 80	
360	312105-0370		2	SCREW, M6S ISO 4017 M6X20 A4 80	
370	315105-0153		6	WASHER PLAIN, 6,4X12X1,5 A4 BRB	
380	315105-0136		6	WASHER PLAIN, 4,3X8X0,8 A4 BRB	
420	312812-0312		6	HEXAGON NUT, NY-LOCK M4 A4 80	

Pos	Part No	UN	Qty	Description	Page No

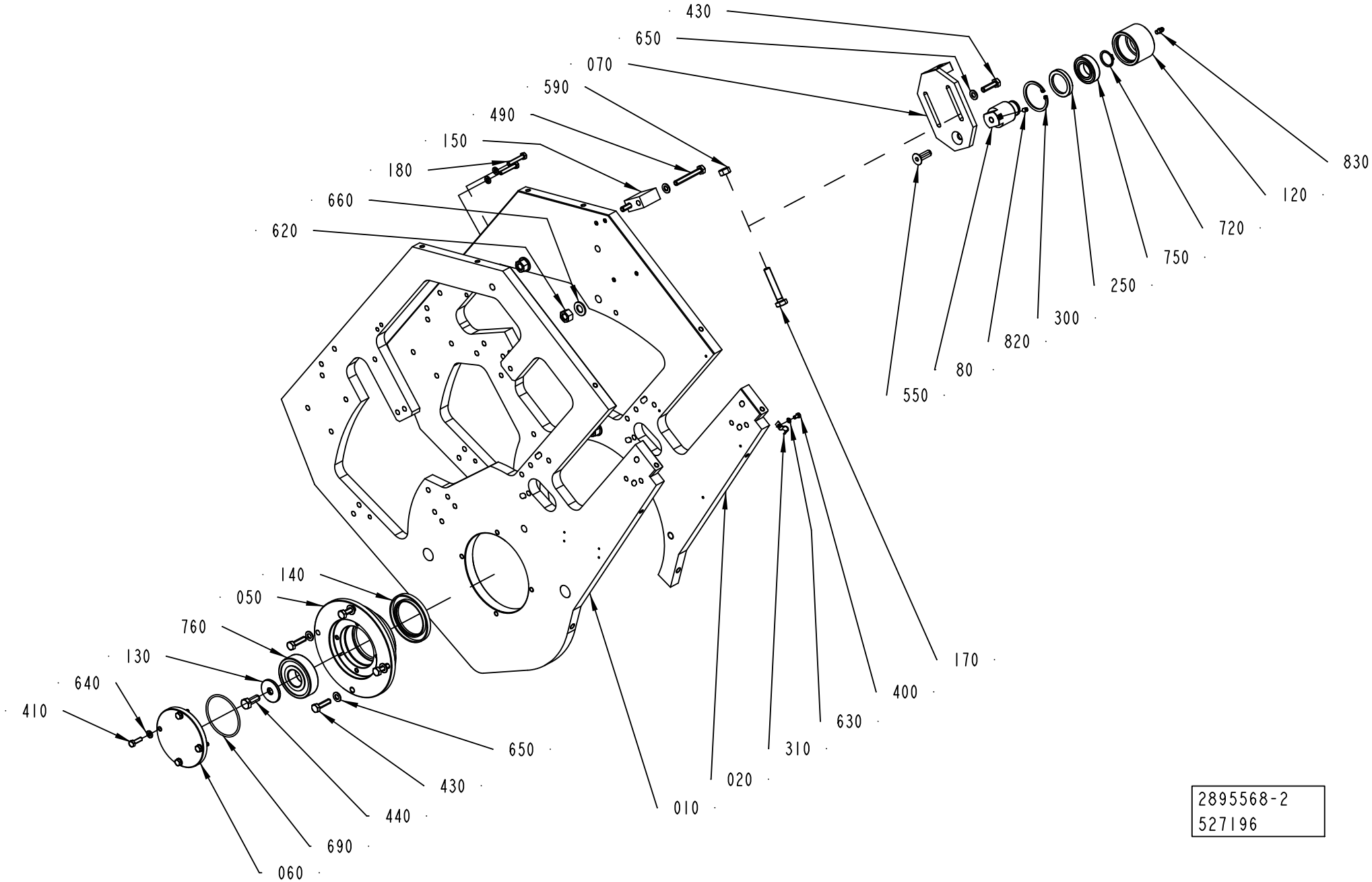
430
650
070
590
490
150
180
660
620
830
120
720
750
250
300
820
80
550
140
050
760
130
640
410
170
400
630
310
020
010
650
430
440
690
060
2895568-2
527196

ECM: 549123 - 20120701
Group number: 2895568-0200
Assembly Drawing: 2895568-2_1_AA

Pos	Part No	UN	Qty	Description	Page No
-					
010	2895570-0000		1	PLATE	
020	2863138-0000		1	PLATE	
050	2862627-0000		1	BEARING HOUSING	
060	2862626-0000		1	FLANGE	
070	1144797-0000		1	SUPPORT	
080	2963361-0000		1	SHAFT	
120	2963360-0000		1	ROLLER	
130	1144620-0000		1	WASHER	
140	1144665-0000		1	SEAL RING	
150	1144839-0000		1	BLOCK	
170	1260931-0000		1	SCREW	
180	312109-0376		2	SCREW, M6S ISO 4017 M6X35 A4 80	
250	90091-0297		1	RADIAL SEAL 35X47X7 MM DUST LIP	
300	90141-0019		1	RETAINING RING FOR BORE DIN 472 50 SS	
310	316810-0106		5	PIPE CLIP FOR TUBE D=8 MM	
400	312105-0287		5	SCREW, M6S ISO 4017 M4X8 A4 70	
410	312105-0370		4	SCREW, M6S ISO 4017 M6X20 A4 80	
430	312105-0455		6	SCREW, M6S ISO 4017 M8X30 A4 80	
440	312105-0493		1	SCREW, M6S ISO 4017 M10X25 A4 80	
490	312109-0463		2	SCREW, M6S ISO 4017 M8X60 A4 80	
550	312155-0495		1	SCREW DIN 7991 MF6S M10X30 A4 70	
590	312605-0320		1	HEXAGON NUT, M6M M10 A280	
620	312605-0322		3	HEXAGON NUT, M6M M12 A280	
630	315105-0136		5	WASHER PLAIN, 4,3X8X0,8 A4 BRB	
640	315105-0153		6	WASHER PLAIN, 6,4X12X1,5 A4 BRB	
650	315105-0165		8	FWAS080G0-0S, WASHER PLAIN	
660	315105-0178		3	WASHER PLAIN, 13X24X2,5 A4 BRB	
690	315202-0305		1	O-RING 69,5X3 MM	
720	315751-0119		1	RETAINING RING FOR SHAFT DIN 471 25 SS	
750	321306-0105		1	BALL BEARING 25/47X12	
760	344227-0206		1	BALL BEARING 30/72X19	
780	352113-0102		3	CABLE TIE, BLACK 188X4,8 MM	
790	352113-0101		7	CABLE TIE,BLACK 92X	
820	312318-0362		1	SET SCREW, CUP END ISO4029 M6X8 A4	
830	90286-0013		1	GREASE NIPPLE STRAIGHT, H1 M6X1 2346	
840	90603-6022	G	1	KLüBERSYNTH UH1 64-62, ONLY IN BOM	
	90603-6023		*1*	*KLüBERSYNTH UH1 64-62, 1 KG CAN*	
	90603-6024		*1*	*KLüBERSYNTH UH1 64-62, 25KG BUCKET*	

Pos	Part No	UN	Qty	Description	Page No

Machine Type | Group Description | Used-In | Group Number | Page No

PULL-DOWN DEVICE

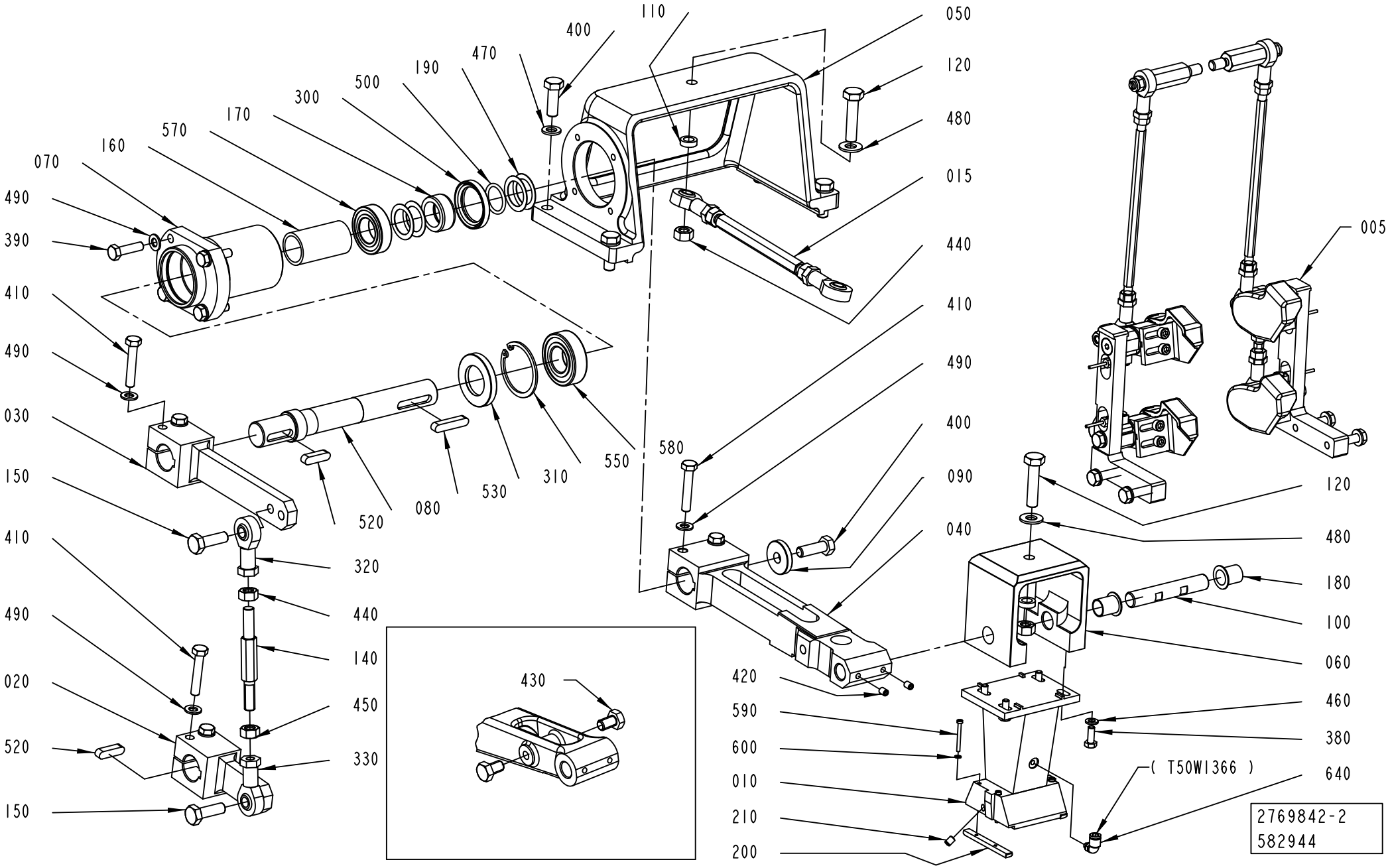

ECM: 641849 - 20140401
Group number: 2769842-0200
Assembly Drawing: 2769842-2_1_AB

This list covers pages from 1-24 to 1-27

Pos	Part No	UN	Qty	Description	Page No
TBA 0500B, TBA 1000B NOMOLDEDCAP					
010	2895566-0000		1	BLOCK	
200	2895567-0000		2	BAR	
430	312105-0489		2	SCREW, M6S ISO 4017 M10X16 A4 80	
590	312125-0234		4	SLOTTED HEAD SCREW, ISO1207 M3X30 A4	
600	315105-0124		4	WASHER PLAIN, 3,2X6X0,5 A4 BRB	
TBA 0500S					
010	2971484-0000		1	BLOCK	
200	2971485-0000		2	BAR	
430	312105-0489		2	SCREW, M6S ISO 4017 M10X16 A4 80	
590	312125-0230		4	SLOTTED HEAD SCREW, ISO1207 M3X20 A4	
600	315105-0124		4	WASHER PLAIN, 3,2X6X0,5 A4 BRB	
TBA 0500SQ, TBA 1000SQ					
005	2863123-0100		1	FOLDING PART	**1-29**
010	2769843-0000		1	BLOCK	
200	2844575-0000		2	BAR	
590	312125-0234		4	SLOTTED HEAD SCREW, ISO1207 M3X30 A4	
600	315105-0124		4	WASHER PLAIN, 3,2X6X0,5 A4 BRB	
TBA 1000B STDA7					
005	3060490-0100		1	FOLDING PART	**1-31, 1-33**
010	2895566-0000		1	BLOCK	
200	2895567-0000		2	BAR	
590	312125-0234		4	SLOTTED HEAD SCREW, ISO1207 M3X30 A4	
600	315105-0124		4	WASHER PLAIN, 3,2X6X0,5 A4 BRB	
TBA 1000E, TBA 0500E					
005	2863123-0100		1	FOLDING PART	**1-29**
010	2769843-0000		1	BLOCK	
200	2960186-0000		2	BAR	
590	312125-0234		4	SLOTTED HEAD SCREW, ISO1207 M3X30 A4	
600	315105-0124		4	WASHER PLAIN, 3,2X6X0,5 A4 BRB	
TBA 1000M					
005	3060490-0100		1	FOLDING PART	**1-31, 1-33**
010	2998819-0000		1	BLOCK	
200	2895567-0000		2	BAR	
590	312125-0234		4	SLOTTED HEAD SCREW, ISO1207 M3X30 A4	
600	315105-0124		4	WASHER PLAIN, 3,2X6X0,5 A4 BRB	
TBA 1000S NOMOLDEDCAP					
010	2818556-0000		1	BLOCK	
200	2858421-0000		2	BAR	
430	312105-0489		2	SCREW, M6S ISO 4017 M10X16 A4 80	
590	312125-0234		4	SLOTTED HEAD SCREW, ISO1207 M3X30 A4	
600	315105-0124		4	WASHER PLAIN, 3,2X6X0,5 A4 BRB	
TBA 1000S STDA7, TBA 1000S LIGHTCAP24					
005	3060490-0100		1	FOLDING PART	**1-31, 1-33**
010	2818556-0000		1	BLOCK	
200	2858421-0000		2	BAR	
590	312125-0234		4	SLOTTED HEAD SCREW, ISO1207 M3X30 A4	
600	315105-0124		4	WASHER PLAIN, 3,2X6X0,5 A4 BRB	
TBA 1500S					
010	2929028-0000		1	BLOCK	
200	2929029-0000		2	BAR	
430	312105-0489		2	SCREW, M6S ISO 4017 M10X16 A4 80	
590	312115-0232		4	SCREW ISO4762 M3X25 A4 80	
600	315105-0124		4	WASHER PLAIN, 3,2X6X0,5 A4 BRB	
TBA 2000S					
010	2922911-0000		1	BLOCK	
430	312105-0489		2	SCREW, M6S ISO 4017 M10X16 A4 80	
TPA 0500SQ					
005	3060490-0100		1	FOLDING PART	**1-31, 1-33**
010	2953135-0000		1	BLOCK	
200	2598706-0000		2	BAR	
590	312125-0230		4	SLOTTED HEAD SCREW, ISO1207 M3X20 A4	
600	315105-0124		4	WASHER PLAIN, 3,2X6X0,5 A4 BRB	
TPA 0750SQ					
005	2931388-0100		1	FOLDING DEVICE	**1-35**
010	2911510-0000		1	BLOCK	
200	2911509-0000		2	BAR	
590	312115-0232		4	SCREW ISO4762 M3X25 A4 80	
600	315105-0124		4	WASHER PLAIN, 3,2X6X0,5 A4 BRB	
TPA 1000SQ					
005	2931388-0100		1	FOLDING DEVICE	**1-35**
010	2911510-0000		1	BLOCK	
200	2911509-0000		2	BAR	
590	312115-0232		4	SCREW ISO4762 M3X25 A4 80	
600	315105-0124		4	WASHER PLAIN, 3,2X6X0,5 A4 BRB	
Common Parts					
015	3267943-0100		1	TIE ROD	**1-45**
020	1144472-0000		1	LEVER	
030	1144473-0000		1	LEVER	
040	1499635-0000		1	LEVER	
050	1144475-0000		1	BRACKET	
060	1144476-0000		1	BRACKET	
070	1144566-0000		1	FLANGE	
080	1144678-0000		1	SHAFT	

Machine Type | Group Description | Used-In | Group Number | Page No

PULL-DOWN DEVICE

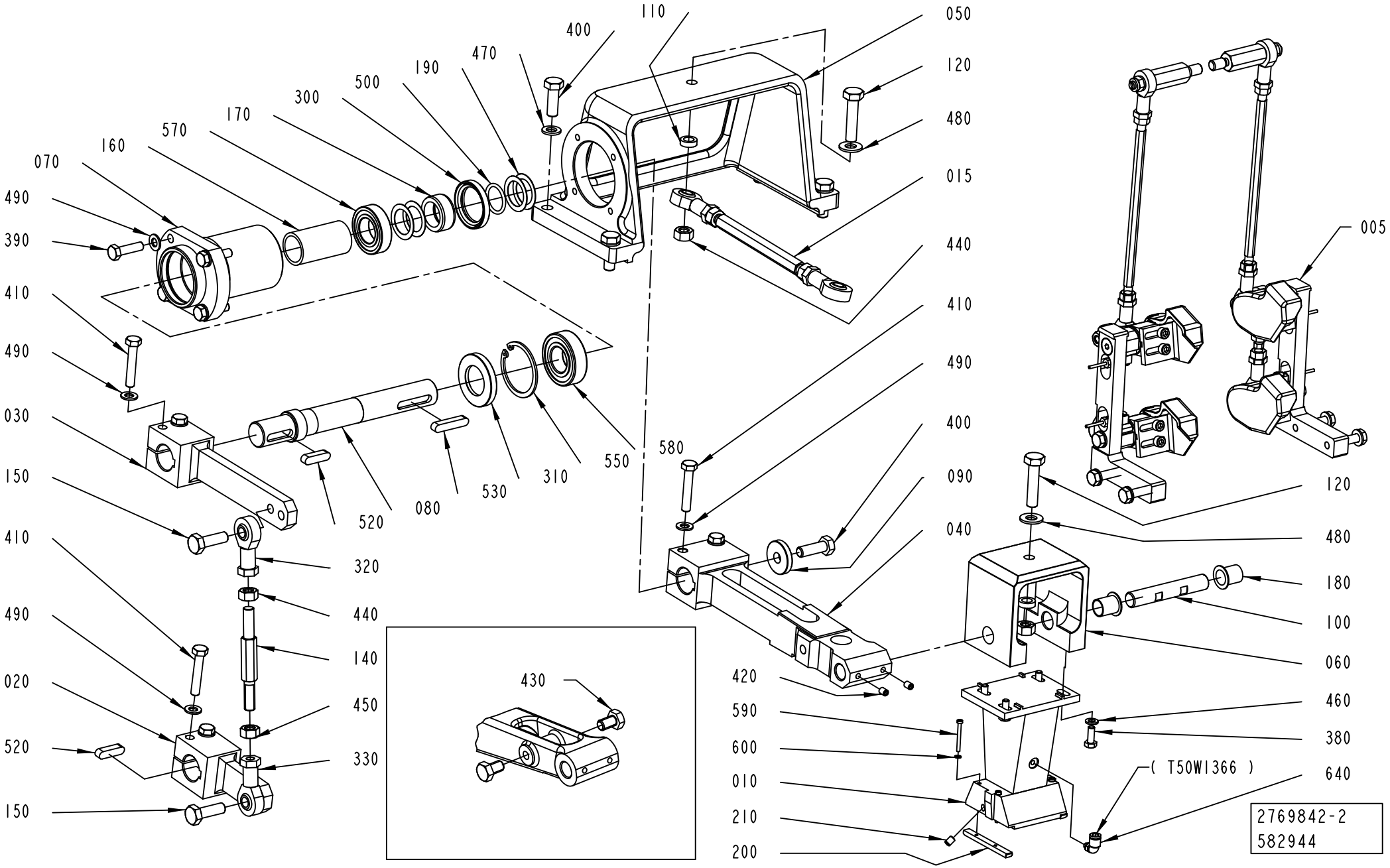

Pos	Part No	UN	Qty	Description	Page No
Common Parts (Cont'd)					
090	1144681-0000		1	WASHER	
100	1144683-0000		1	AXLE PIN	
110	1144684-0000		2	SPACER	
120	1144685-0000		2	SCREW	
140	1144687-0000		1	TIE ROD	
150	1144688-0000		2	SCREW	
160	1260824-0000		1	SPACER RING	
170	1334328-0000		1	SPACER	
180	1260944-0000		2	BUSHING	
190	1334018-0000		4	SHIM	
210	2769844-0000		4	GRUB SCREW	
300	90091-0297		1	RADIAL SEAL 35X47X7 MM DUST LIP	
310	90091-0299		1	RADIAL SEAL 30X52X7 MM DUST LIP	
320	90115-0181		1	ROD END, ID=10 MM M10X1,5	
330	90115-0182		1	ROD END, ID=10 MM M10X1,5LH	
380	312105-0368		4	"SCREW, M6S ISO 4017 M6X16 A4 80"	
390	312105-0455		4	SCREW, M6S ISO 4017 M8X30 A4 80	
400	312105-0495		5	SCREW, M6S ISO 4017 M10X30 A4 80	
410	312109-0460		6	SCREW, M6S ISO 4017 M8X45 A4 80	
420	312318-0362		2	SET SCREW, CUP END ISO4029 M6X8 A4	
440	312605-0320		3	HEXAGON NUT, M6M M10 A280	
450	312902-0320		1	NUT HEX. LEFT THREAD, M10 A280	
460	315105-0153		4	WASHER PLAIN, 6,4X12X1,5 A4 BRB	
470	315105-0171		4	WASHER PLAIN, 10X18X2 A4 BRB	
480	315105-0173		2	WASHER PLAIN, 10,5X22X2 A4 BRB	
490	315105-0165		10	FWAS080G0-0S, WASHER PLAIN	
500	315202-0217		1	O-RING 24,2X3 MM	
520	315705-0267		2	PARALLEL KEY W. ROUND ENDS, 8X7X30 MM	
530	315705-0270		1	PARALLEL KEY W. ROUND ENDS, 8X7X40 MM	
550	315753-0132		1	RETAINING RING FOR BORE DIN 472 52 SS	
570	344224-0205		1	BALL BEARING 25/47X12	
580	344226-0105		1	BALL BEARING 25/52X15	
640	90457-0922		1	ELBOW PIPE JOINT, EXT.THREAD, D=6MM M5	

Pos	Part No	UN	Qty	Description	Page No

FOLDING PART

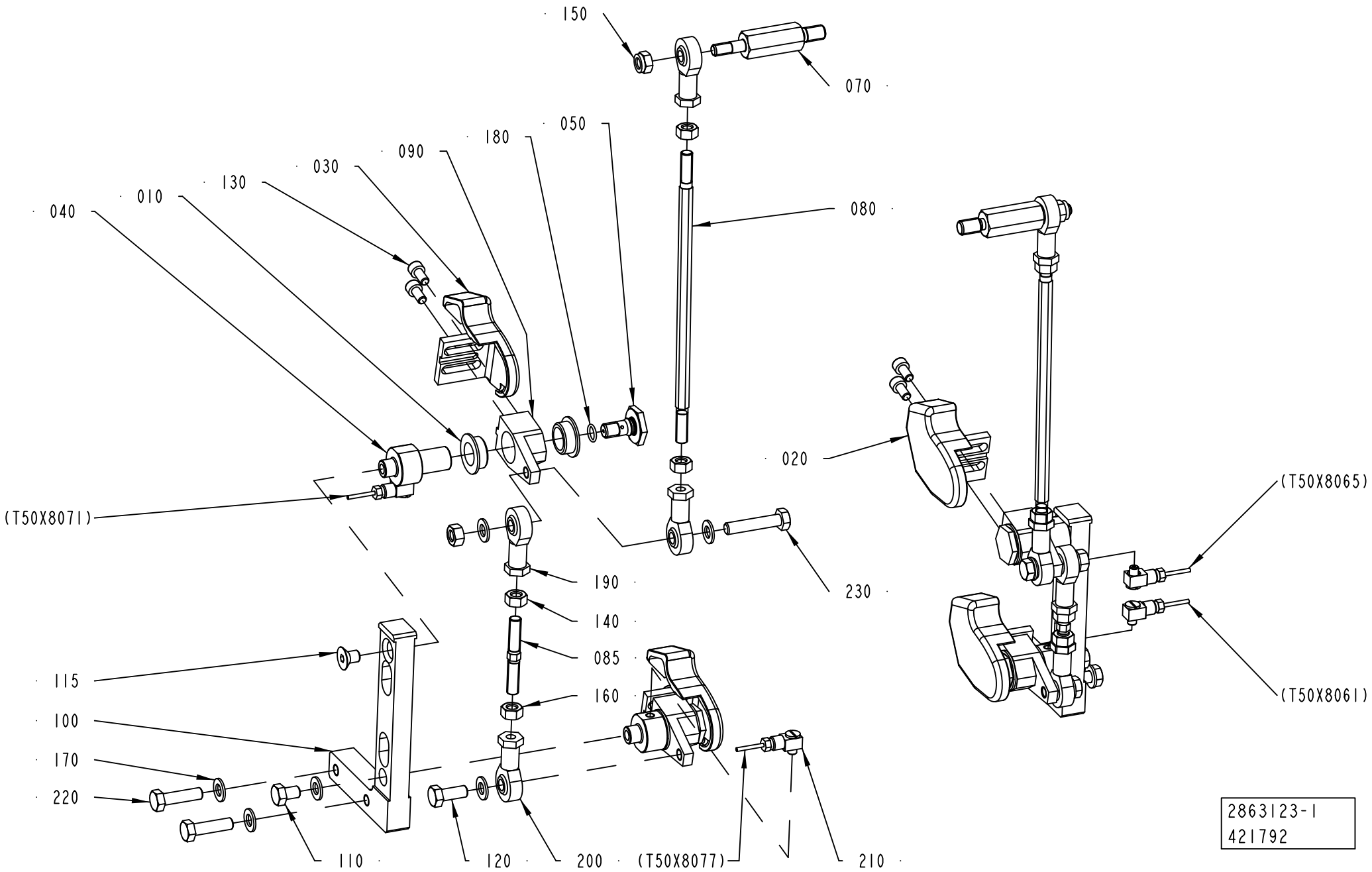

ECM: 641854 - 20140401
Group number: 2863123-0100
Assembly Drawing: 2863123-1_1_AC

Pos	Part No	UN	Qty	Description	Page No
TBA 0500SQ QC, TBA 1000SQ QC (See drawing on page: 1-28)					
010	1282708-0000		8	BUSHING	
020	1487922-0000		2	FOLDING DEVICE	
030	1487923-0000		2	FOLDING DEVICE	
040	1347495-0000		4	AXLE PIN	
050	1347496-0000		4	SCREW	
070	2868213-0000		2	AXLE LINK	
080	2868214-0000		2	TIE ROD	
085	2868215-0000		2	TIE ROD	
090	1350440-0000		4	LEVER	
100	2868216-0000		2	BRACKET	
115	312155-0447		2	SCREW DIN 7991 MF6S M8X12 A4 70	
130	312115-0366		8	SCREW ISO4762 M6X12 A4 80	
140	312605-0318		6	HEXAGON NUT, M6M M8 A280	
160	312902-0318		4	NUT HEX. LEFT THREAD, M8 A280	
170	315105-0165		12	FWAS080G0-0S, WASHER PLAIN	
180	315202-0107		4	O-RING 9,1X1,6 MM	
190	90115-0139		4	ROD END, ID=8 MM, M8X1,25	
200	90115-0180		4	ROD END, ID=8 MM, M8X1,25 LH	
210	90134-0058		4	CONNECTION	
230	312109-0459		2	SCREW, M6S ISO 4017 M8X40 A4 80	
TBA 1000E, TBA 0500E (See drawing on page: 1-28)					
010	1282708-0000		8	BUSHING	
020	2796908-0000		2	FOLDING DEVICE	
030	2796909-0000		2	FOLDING DEVICE	
040	1347495-0000		4	AXLE PIN	
050	1347496-0000		4	SCREW	
070	2868213-0000		2	AXLE LINK	
080	2868214-0000		2	TIE ROD	
085	3302702-0000		2	TIE ROD	
090	1350440-0000		4	LEVER	
100	3259793-0000		2	BRACKET	
115	312155-0447		2	SCREW DIN 7991 MF6S M8X12 A4 70	
130	312115-0366		8	SCREW ISO4762 M6X12 A4 80	
140	312605-0318		6	HEXAGON NUT, M6M M8 A280	
160	312902-0318		2	NUT HEX. LEFT THREAD, M8 A280	
170	315105-0165		12	FWAS080G0-0S, WASHER PLAIN	
180	315202-0107		4	O-RING 9,1X1,6 MM	
190	90115-0139		4	ROD END, ID=8 MM, M8X1,25	
200	90115-0180		4	ROD END, ID=8 MM, M8X1,25 LH	
210	90134-0058		4	CONNECTION	
230	312109-0459		2	SCREW, M6S ISO 4017 M8X40 A4 80	

Pos	Part No	UN	Qty	Description	Page No
Common Parts					
110	312105-0447		2	SCREW M6S ISO 4017 M8X12 A480	
120	312105-0451		2	SCREW, M6S ISO 4017 M8X20 A4 80	
150	312812-0318		2	HEXAGON NUT, NY-LOCK M8 A4 80	
220	312105-0455		4	SCREW, M6S ISO 4017 M8X30 A4 80	

FOLDING PART

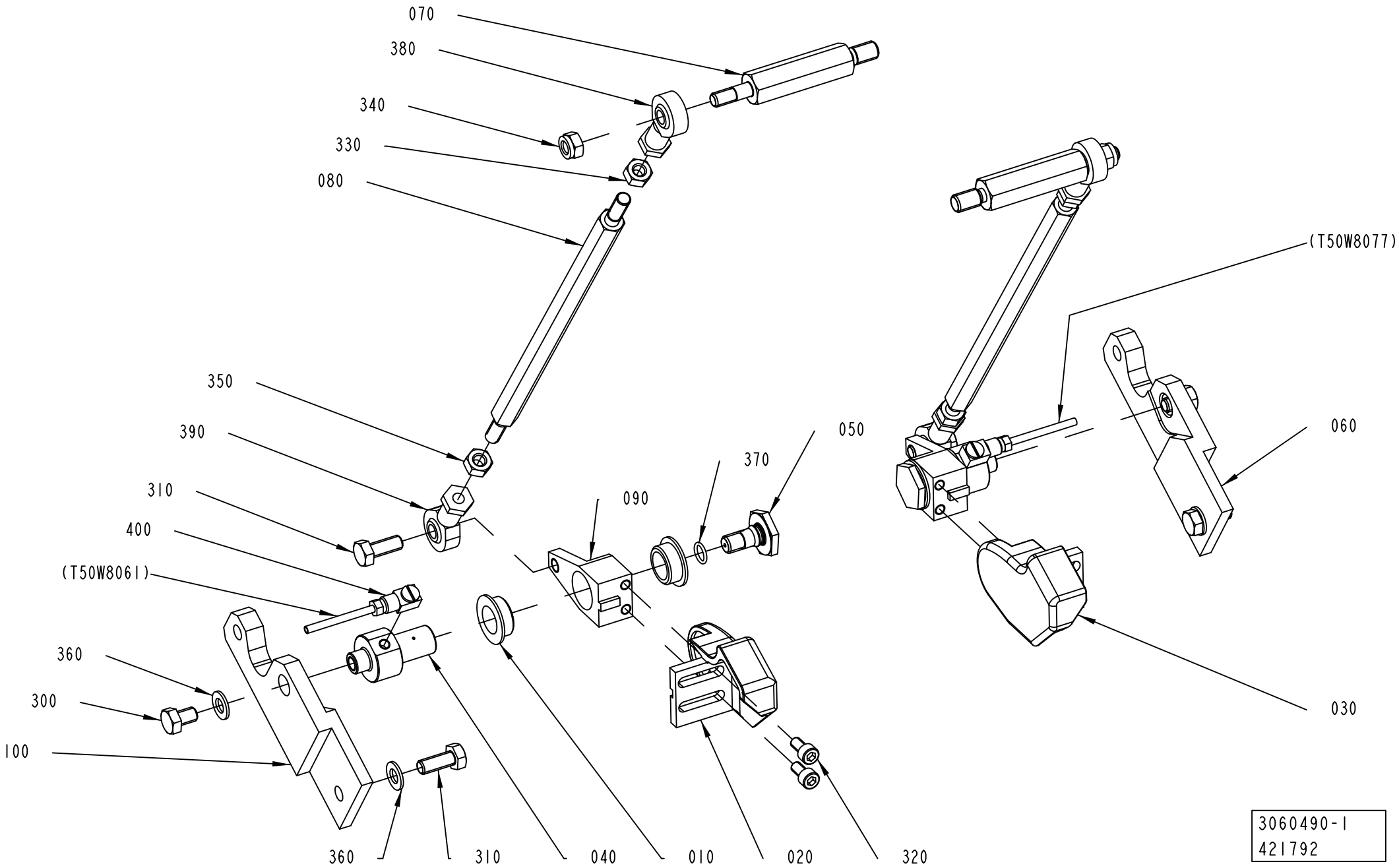

ECM: 425751 - 20100401
Group number: 3060490-0100
Assembly Drawing: 3060490-1_1_AA

This list covers pages from 1-30 to 1-33

Pos	Part No	UN	Qty	Description	Page No
TBA 1000B STDA7 (See drawing on page: 1-30)					
020	1487922-0000		1	FOLDING DEVICE	
030	1487923-0000		1	FOLDING DEVICE	
060	1347600-0000		1	SUPPORT	
070	1499765-0000		2	AXLE LINK	
080	2609368-0000		2	TIE ROD	
090	1350440-0000		2	LEVER	
100	1350441-0000		1	SUPPORT	
TBA 1000M (See drawing on page: 1-30)					
020	1487922-0000		1	FOLDING DEVICE	
030	1487923-0000		1	FOLDING DEVICE	
060	2993153-0000		1	SUPPORT	
070	1499765-0000		2	AXLE LINK	
080	2993152-0000		2	TIE ROD	
090	1350440-0000		2	LEVER	
100	2993154-0000		1	SUPPORT	
TBA 1000S STDA7, TBA 1000S LIGHTCAP24 (See drawing on page: 1-30)					
020	1487922-0000		1	FOLDING DEVICE	
030	1487923-0000		1	FOLDING DEVICE	
060	1347600-0000		1	SUPPORT	
070	1499765-0000		2	AXLE LINK	
080	1499103-0000		2	TIE ROD	
090	1350440-0000		2	LEVER	
100	1350441-0000		1	SUPPORT	
TPA 0500SQ SMILE (See drawing on page: 1-32)					
020	2606277-0000		1	FOLDING DEVICE	
030	2606278-0000		1	FOLDING DEVICE	
060	2529673-0000		1	SUPPORT	
070	1532268-0000		2	AXLE LINK	
080	2527531-0000		2	TIE ROD	
090	2529676-0000		1	LEVER	
100	2529674-0000		1	SUPPORT	
110	2529675-0000		1	LEVER	
Common Parts					
010	1282708-0000		4	BUSHING	
040	1347495-0000		2	AXLE PIN	
050	1347496-0000		2	SCREW	
300	312105-0447		2	SCREW M6S ISO 4017 M8X12 A480	
310	312105-0451		4	SCREW, M6S ISO 4017 M8X20 A4 80	
320	312115-0366		4	SCREW ISO4762 M6X12 A4 80	
330	312605-0318		2	HEXAGON NUT, M6M M8 A280	
340	312812-0318		2	HEXAGON NUT, NY-LOCK M8 A4 80	
350	312902-0318		2	NUT HEX. LEFT THREAD, M8 A280	
360	315105-0165		4	FWAS080G0-0S, WASHER PLAIN	
370	315202-0107		2	O-RING 9,1X1,6 MM	
380	90115-0139		2	ROD END, ID=8 MM, M8X1,25	
390	90115-0180		2	ROD END, ID=8 MM, M8X1,25 LH	
400	90134-0068		2	CONNECTION	

Machine Type | Group Description | Used-In | Group Number | Page No

FOLDING PART

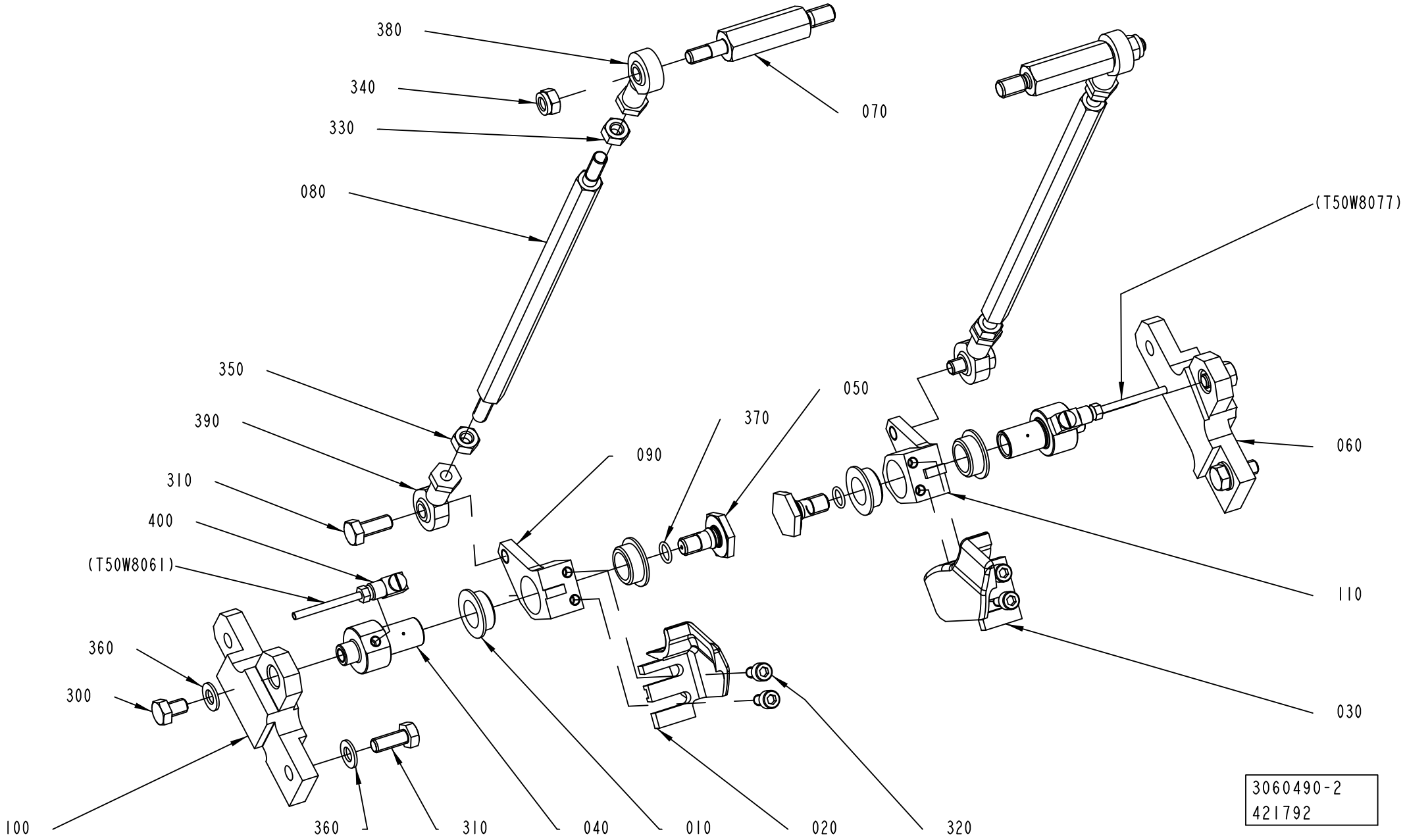

ECM: 425751 - 20100401
Group number: 3060490-0100
Assembly Drawing: 3060490-2_1_AA

This list covers pages from 1-30 to 1-33

Pos	Part No	UN	Qty	Description	Page No
TBA 1000B STDA7 (See drawing on page: 1-30)					
020	1487922-0000		1	FOLDING DEVICE	
030	1487923-0000		1	FOLDING DEVICE	
060	1347600-0000		1	SUPPORT	
070	1499765-0000		2	AXLE LINK	
080	2609368-0000		2	TIE ROD	
090	1350440-0000		2	LEVER	
100	1350441-0000		1	SUPPORT	
TBA 1000M (See drawing on page: 1-30)					
020	1487922-0000		1	FOLDING DEVICE	
030	1487923-0000		1	FOLDING DEVICE	
060	2993153-0000		1	SUPPORT	
070	1499765-0000		2	AXLE LINK	
080	2993152-0000		2	TIE ROD	
090	1350440-0000		2	LEVER	
100	2993154-0000		1	SUPPORT	
TBA 1000S STDA7, TBA 1000S LIGHTCAP24 (See drawing on page: 1-30)					
020	1487922-0000		1	FOLDING DEVICE	
030	1487923-0000		1	FOLDING DEVICE	
060	1347600-0000		1	SUPPORT	
070	1499765-0000		2	AXLE LINK	
080	1499103-0000		2	TIE ROD	
090	1350440-0000		2	LEVER	
100	1350441-0000		1	SUPPORT	
TPA 0500SQ SMILE (See drawing on page: 1-32)					
020	2606277-0000		1	FOLDING DEVICE	
030	2606278-0000		1	FOLDING DEVICE	
060	2529673-0000		1	SUPPORT	
070	1532268-0000		2	AXLE LINK	
080	2527531-0000		2	TIE ROD	
090	2529676-0000		1	LEVER	
100	2529674-0000		1	SUPPORT	
110	2529675-0000		1	LEVER	
Common Parts					
010	1282708-0000		4	BUSHING	
040	1347495-0000		2	AXLE PIN	
050	1347496-0000		2	SCREW	
300	312105-0447		2	SCREW M6S ISO 4017 M8X12 A480	
310	312105-0451		4	SCREW, M6S ISO 4017 M8X20 A4 80	
320	312115-0366		4	SCREW ISO4762 M6X12 A4 80	
330	312605-0318		2	HEXAGON NUT, M6M M8 A280	
340	312812-0318		2	HEXAGON NUT, NY-LOCK M8 A4 80	
350	312902-0318		2	NUT HEX. LEFT THREAD, M8 A280	
360	315105-0165		4	FWAS080G0-0S, WASHER PLAIN	
370	315202-0107		2	O-RING 9,1X1,6 MM	
380	90115-0139		2	ROD END, ID=8 MM, M8X1,25	
390	90115-0180		2	ROD END, ID=8 MM, M8X1,25 LH	
400	90134-0068		2	CONNECTION	

Machine Type | Group Description | Used-In | Group Number | Page No

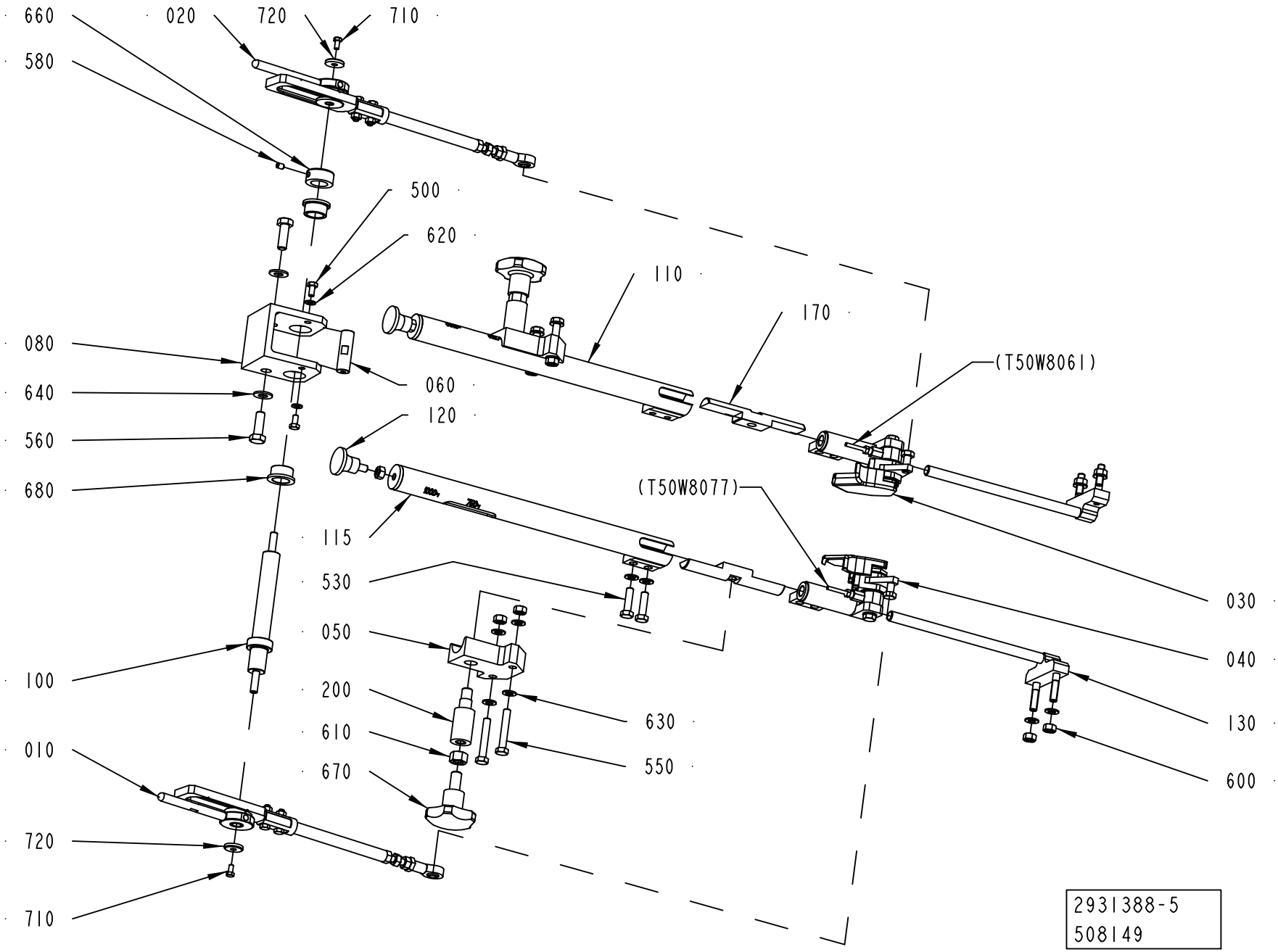
660
020
720
710
580
500
620
110
170
080
(T50W8061)
640
060
120
560
680
(T50W8077)
115
530
030
050
040
100
200
630
130
610
550
670
600
010
720
710
2931388-5
508149

ECM: 515992 - 20120101
Group number: 2931388-0100
Assembly Drawing: 2931388-5_1_AC

Pos	Part No	UN	Qty	Description	Page No
-					
010	2619584-0100		1	STRUT	**1-37, 1-39**
020	2619584-0100		1	STRUT	**1-37, 1-39**
030	2619597-0100		1	FLAP GUIDE	**1-41**
040	2619598-0100		1	FLAP GUIDE	**1-43**
050	2767295-0000		2	BLOCK	
060	2588127-0000		1	AXLE PIN	
080	2588134-0000		1	YOKE	
100	2647103-0000		1	SHAFT	
110	2918659-0000		1	PIPE	
115	2918660-0000		1	PIPE	
120	318871-0105		2	KNOB CIRCULAR, EXT THREAD, NO. 8302-6150	
130	2663370-0000		2	SUPPORT	
170	2912511-0000		2	BLOCKING PIECE	
200	2767296-0000		2	SPACER SCREW	
500	312105-0366		2	SCREW, M6S ISO 4017 M6X12 A4 80	
530	312105-0455		4	SCREW, M6S ISO 4017 M8X30 A4 80	
550	312109-0461		4	SCREW, M6S ISO 4017 M8X50 A4 80	
560	312105-0495		2	SCREW, M6S ISO 4017 M10X30 A4 80	
580	312318-0362		1	SET SCREW, CUP END ISO4029 M6X8 A4	
600	312605-0318		10	HEXAGON NUT, M6M M8 A280	
610	312605-0322		2	HEXAGON NUT, M6M M12 A280	
620	315105-0153		2	WASHER PLAIN, 6,4X12X1,5 A4 BRB	
630	315105-0165		16	FWAS080G0-0S, WASHER PLAIN	
640	315105-0173		2	WASHER PLAIN, 10,5X22X2 A4 BRB	
660	315741-0216		1	RETAINING RING, DIN 705 A4 20	
670	318856-0115		2	KNOB, EXTERNAL THREAD. NO. 8306-0278	
680	321111-0302		2	FLANGE BUSHING, 20/26X15-32X3 MM	
710	312105-0325		2	SCREW, M6S ISO 4017 M5X10 A4 80	
720	315125-0153		2	WASHER HIGH, TBRSB 6,4X22X4 A4	

Pos	Part No	UN	Qty	Description	Page No

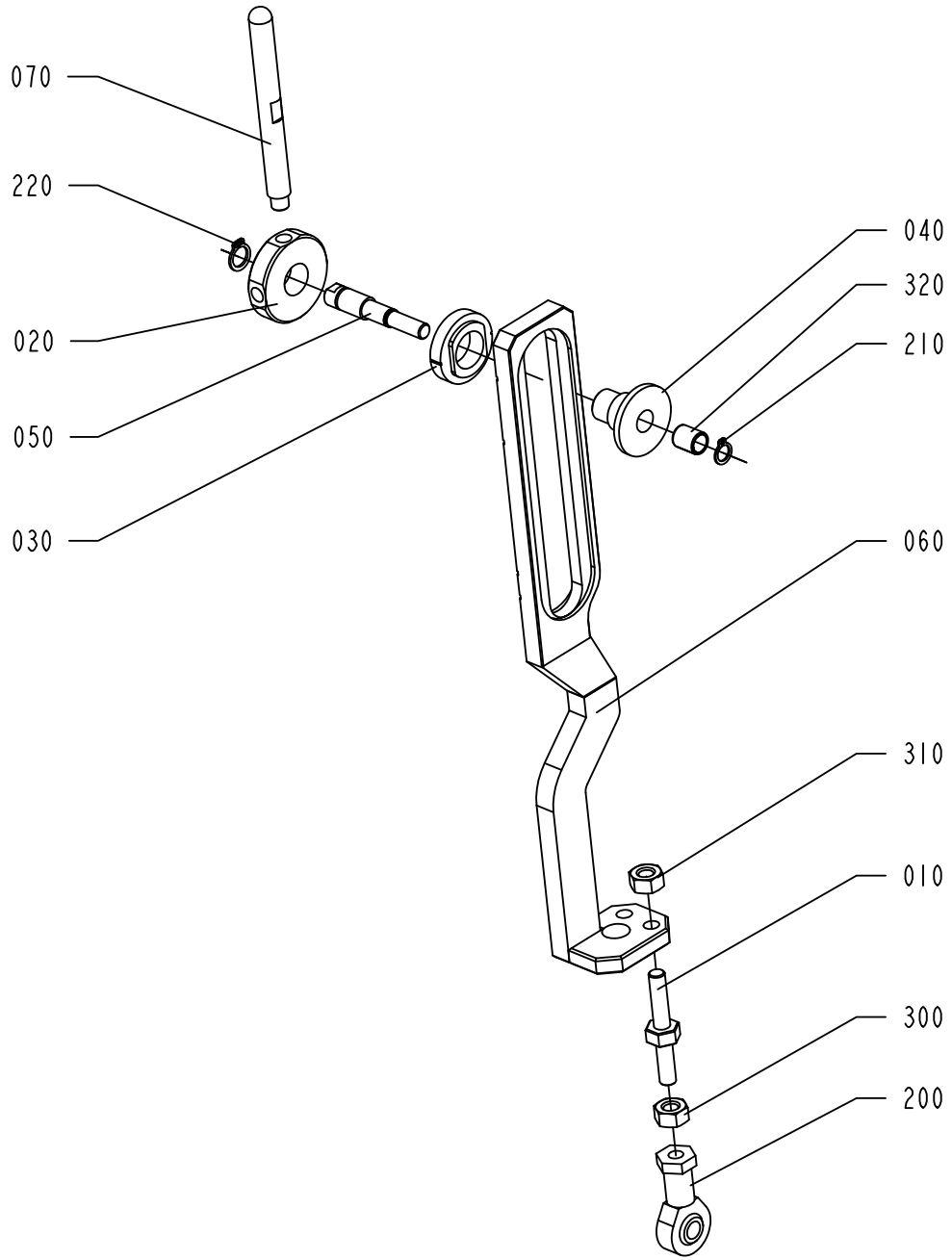
070
220
020
050
030
040
320
210
060
310
010
300
200
2619584-1
ECM 174515

Pos	Part No	UN	Qty	Description	Page No
TBA 0500SQ, TBA 1000SQ (See drawing on page: 1-36)					
050	2619531-0000		1	SHAFT	
060	2851929-0000		1	STRUT	
200	90115-0020		1	ROD END, ID=8 MM, M8X1,25	
210	90141-0015		1	RETAINING RING FOR SHAFT DIN 471 8 SS	
220	90141-0016		1	RETAINING RING FOR SHAFT DIN 471 10 SS	
TPA 0750SQ (See drawing on page: 1-38)					
060	2647108-0000		1	STRUT	
080	2647109-0000		1	SHAFT	
200	90115-0021		1	ROD END, ID=8 MM, M8X1,25 LH	
330	312105-0372		2	SCREW, M6S ISO 4017 M6X25 A4 80	
340	312605-0316		2	HEXAGON NUT, M6M M6 A280	
TPA 1000SQ (See drawing on page: 1-38)					
060	2647108-0000		1	STRUT	
080	2647109-0000		1	SHAFT	
200	90115-0021		1	ROD END, ID=8 MM, M8X1,25 LH	
330	312105-0372		2	SCREW, M6S ISO 4017 M6X25 A4 80	
340	312605-0316		2	HEXAGON NUT, M6M M6 A280	
Common Parts					
010	2598880-0000		1	SETTING SCREW	
020	2619528-0000		1	LOCKING CIRCLIP	
030	2619529-0000		1	SLEEVE	
040	2619530-0000		1	SLEEVE	
070	2619596-0000		1	HANDLE	
300	312605-0318		1	HEXAGON NUT, M6M M8 A280	
310	312902-0318		1	NUT HEX. LEFT THREAD, M8 A280	
320	321141-0104		1	BEARING BUSHING, 8X10X12 MM	

Pos	Part No	UN	Qty	Description	Page No

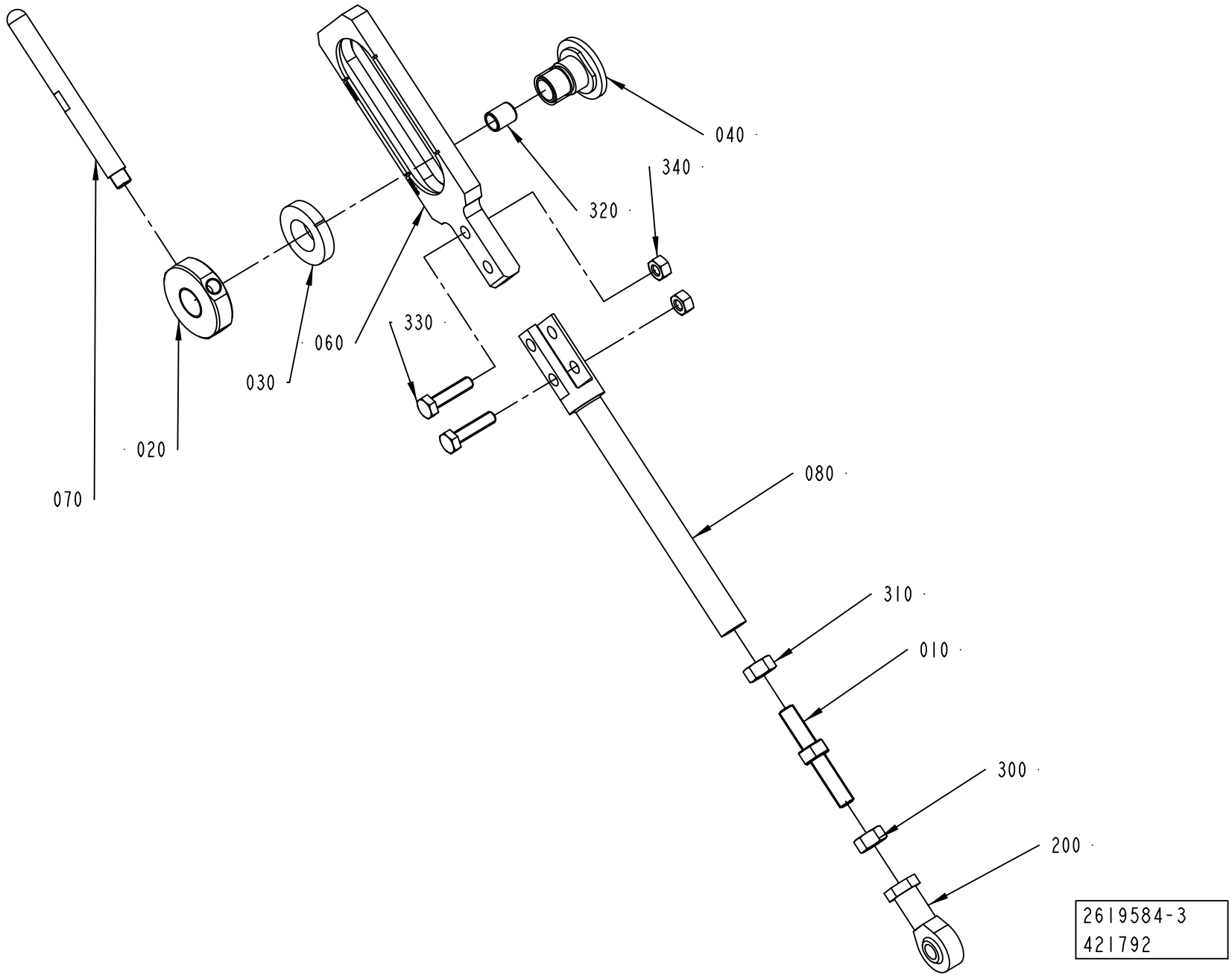
040
340
320
330
060
030
020
070
080
310
010
300
200
2619584-3
421792

ECM: 425754 - 20100401
Group number: 2619584-0100
Assembly Drawing: 2619584-3_1_AB

This list covers pages from 1-36 to 1-39

Pos	Part No	UN	Qty	Description	Page No
TBA 0500SQ, TBA 1000SQ (See drawing on page: 1-36)					
050	2619531-0000		1	SHAFT	
060	2851929-0000		1	STRUT	
200	90115-0020		1	ROD END, ID=8 MM, M8X1,25	
210	90141-0015		1	RETAINING RING FOR SHAFT DIN 471 8 SS	
220	90141-0016		1	RETAINING RING FOR SHAFT DIN 471 10 SS	
TPA 0750SQ (See drawing on page: 1-38)					
060	2647108-0000		1	STRUT	
080	2647109-0000		1	SHAFT	
200	90115-0021		1	ROD END, ID=8 MM, M8X1,25 LH	
330	312105-0372		2	SCREW, M6S ISO 4017 M6X25 A4 80	
340	312605-0316		2	HEXAGON NUT, M6M M6 A280	
TPA 1000SQ (See drawing on page: 1-38)					
060	2647108-0000		1	STRUT	
080	2647109-0000		1	SHAFT	
200	90115-0021		1	ROD END, ID=8 MM, M8X1,25 LH	
330	312105-0372		2	SCREW, M6S ISO 4017 M6X25 A4 80	
340	312605-0316		2	HEXAGON NUT, M6M M6 A280	
Common Parts					
010	2598880-0000		1	SETTING SCREW	
020	2619528-0000		1	LOCKING CIRCLIP	
030	2619529-0000		1	SLEEVE	
040	2619530-0000		1	SLEEVE	
070	2619596-0000		1	HANDLE	
300	312605-0318		1	HEXAGON NUT, M6M M8 A280	
310	312902-0318		1	NUT HEX. LEFT THREAD, M8 A280	
320	321141-0104		1	BEARING BUSHING, 8X10X12 MM	

Pos	Part No	UN	Qty	Description	Page No

FLAP GUIDE

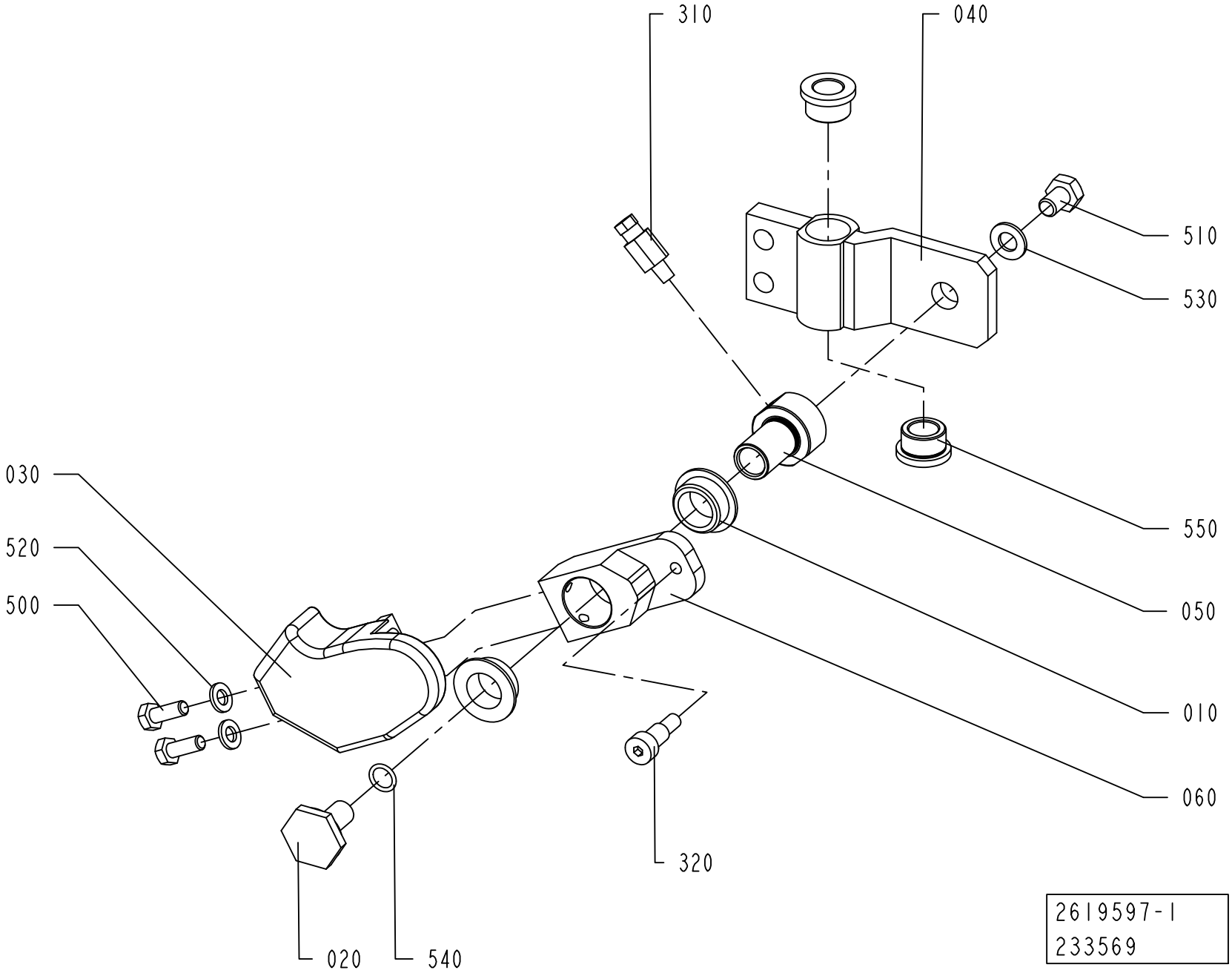
310
040
510
530
030
520
500
550
050
010
060
320
020
540
2619597-1
233569

ECM: 408999 - 20100402
Group number: 2619597-0100
Assembly Drawing: 2619597-1_1_AB

Pos	Part No	UN	Qty	Description	Page No
TBA 0500SQ, TBA 1000SQ					
030	1487922-0000		1	FOLDING DEVICE	
040	2619591-0000		1	SLIDER	
050	2598890-0000		1	AXLE PIN	
060	1350440-0000		1	LEVER	
310	90134-0065		1	CONNECTION M6 TUBE 2,5 MM	
320	312105-0451		1	SCREW, M6S ISO 4017 M8X20 A4 80	
510	312105-0447		1	SCREW M6S ISO 4017 M8X12 A480	
TPA 1000SQ, TPA 0750SQ					
030	2529671-0000		1	FOLDING DEVICE	
040	2647107-0000		1	SLIDER	
050	2647105-0000		1	AXLE PIN	
060	2647104-0000		1	LEVER	
310	90134-0058		1	CONNECTION	
320	312105-0451		1	SCREW, M6S ISO 4017 M8X20 A4 80	
510	312105-0447		1	SCREW M6S ISO 4017 M8X12 A480	
Common Parts					
010	1282708-0000		2	BUSHING	
020	1347496-0000		1	SCREW	
500	312115-0366		2	SCREW ISO4762 M6X12 A4 80	
520	315101-0153		2	WASHER PLAIN, BRB, 6,4/12 H=1,5	
530	315105-0165		1	FWAS080G0-0S, WASHER PLAIN	
540	315202-0107		1	O-RING 9,1X1,6 MM	
550	321101-0173		2	FLANGE BUSHING, 12X18X12 MM	

Pos	Part No	UN	Qty	Description	Page No

FLAP GUIDE

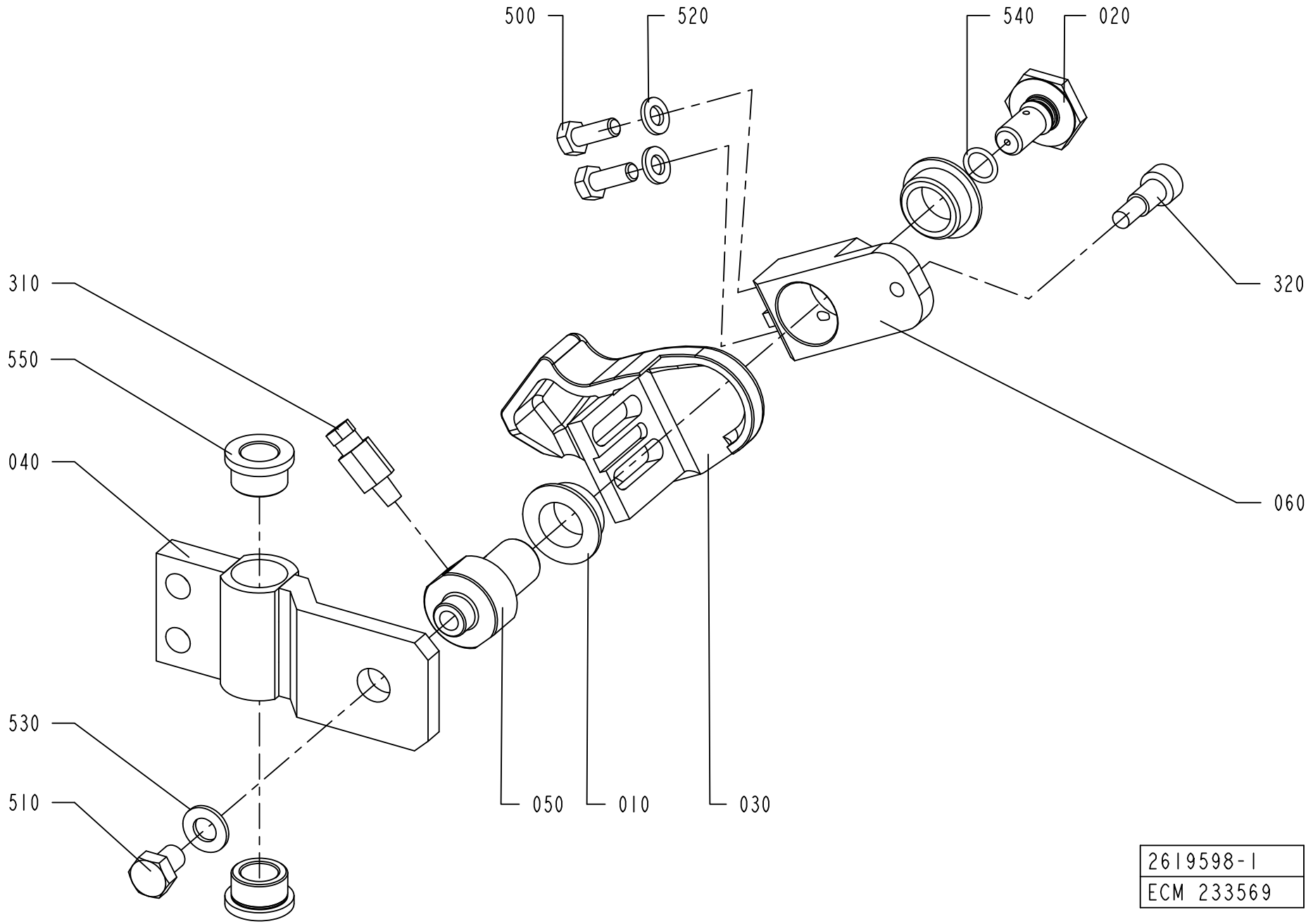

2619598-1
ECM 233569

ECM: 409000 - 20100402
Group number: 2619598-0100
Assembly Drawing: 2619598-1_1_AB

Pos	Part No	UN	Qty	Description	Page No
TBA 0500SQ, TBA 1000SQ					
030	1487923-0000		1	FOLDING DEVICE	
040	2619591-0000		1	SLIDER	
050	2598890-0000		1	AXLE PIN	
060	1350440-0000		1	LEVER	
310	90134-0065		1	CONNECTION M6 TUBE 2,5 MM	
320	312115-0451		1	SCREW ISO4762 M8X20 A4 80	
510	312105-0447		1	SCREW M6S ISO 4017 M8X12 A480	
TPA 1000SQ, TPA 0750SQ					
030	2529672-0000		1	FOLDING DEVICE	
040	2647106-0000		1	SLIDER	
050	2647105-0000		1	AXLE PIN	
060	2647104-0000		1	LEVER	
310	90134-0058		1	CONNECTION	
320	312115-0451		1	SCREW ISO4762 M8X20 A4 80	
510	312105-0447		1	SCREW M6S ISO 4017 M8X12 A480	
Common Parts					
010	1282708-0000		2	BUSHING	
020	1347496-0000		1	SCREW	
500	312115-0366		2	SCREW ISO4762 M6X12 A4 80	
520	315101-0153		2	WASHER PLAIN, BRB, 6,4/12 H=1,5	
530	315105-0165		1	FWAS080G0-0S, WASHER PLAIN	
540	315202-0107		1	O-RING 9,1X1,6 MM	
550	321101-0173		2	FLANGE BUSHING, 12X18X12 MM	

Pos	Part No	UN	Qty	Description	Page No

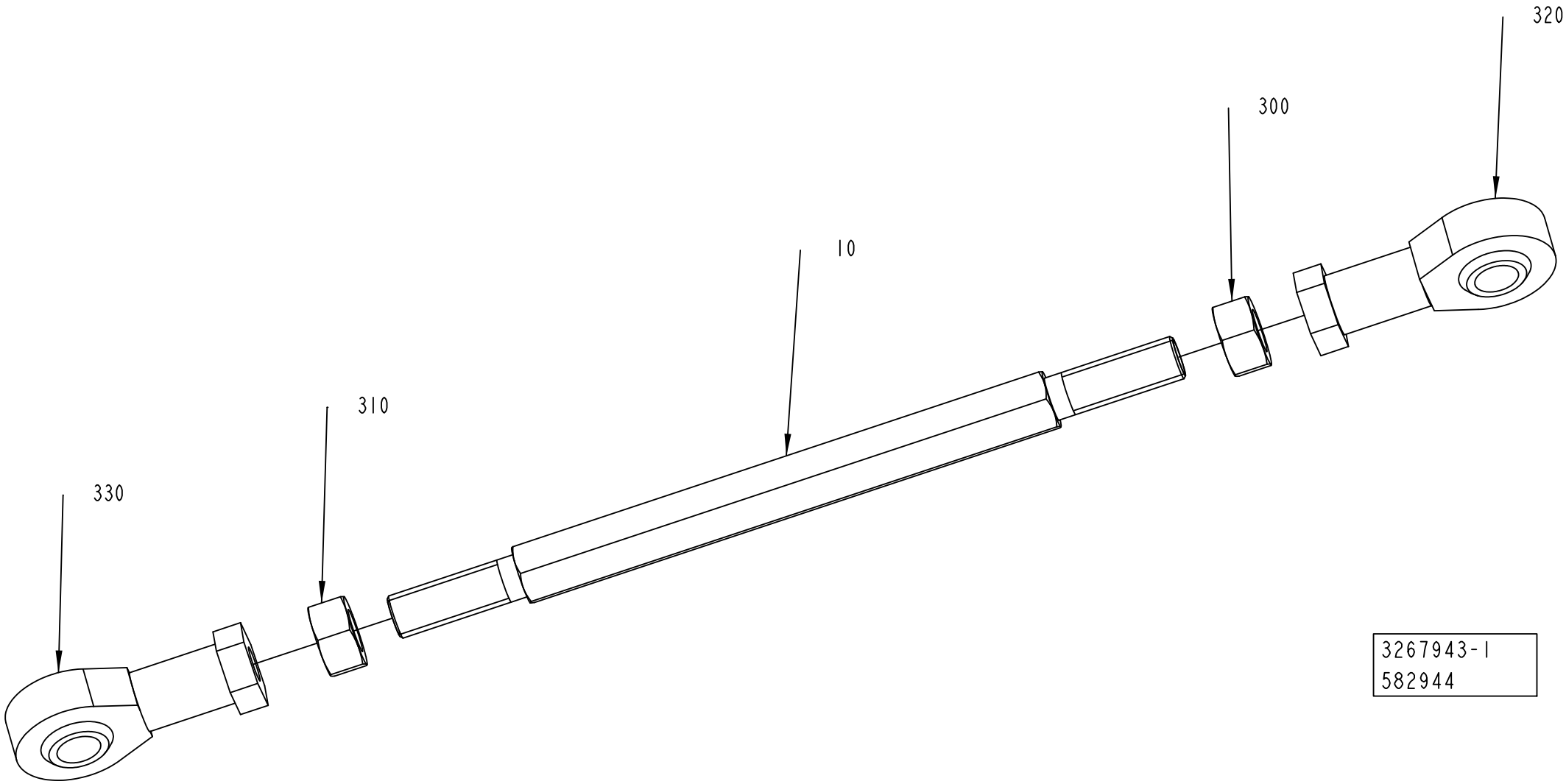
320
300
10
310
330
3267943-1
582944

ECM: 589229 - 20130401
Group number: 3267943-0100
Assembly Drawing: 3267943-1_1_AA

Pos	Part No	UN	Qty	Description	Page No
-					
010	1144686-0000		1	TIE ROD	
300	312605-0320		1	HEXAGON NUT, M6M M10 A280	
310	312902-0320		1	NUT HEX. LEFT THREAD, M10 A280	
320	90115-0181		1	ROD END, ID=10 MM M10X1,5	
330	90115-0182		1	ROD END, ID=10 MM M10X1,5LH	

Pos	Part No	UN	Qty	Description	Page No

FOLDING PART

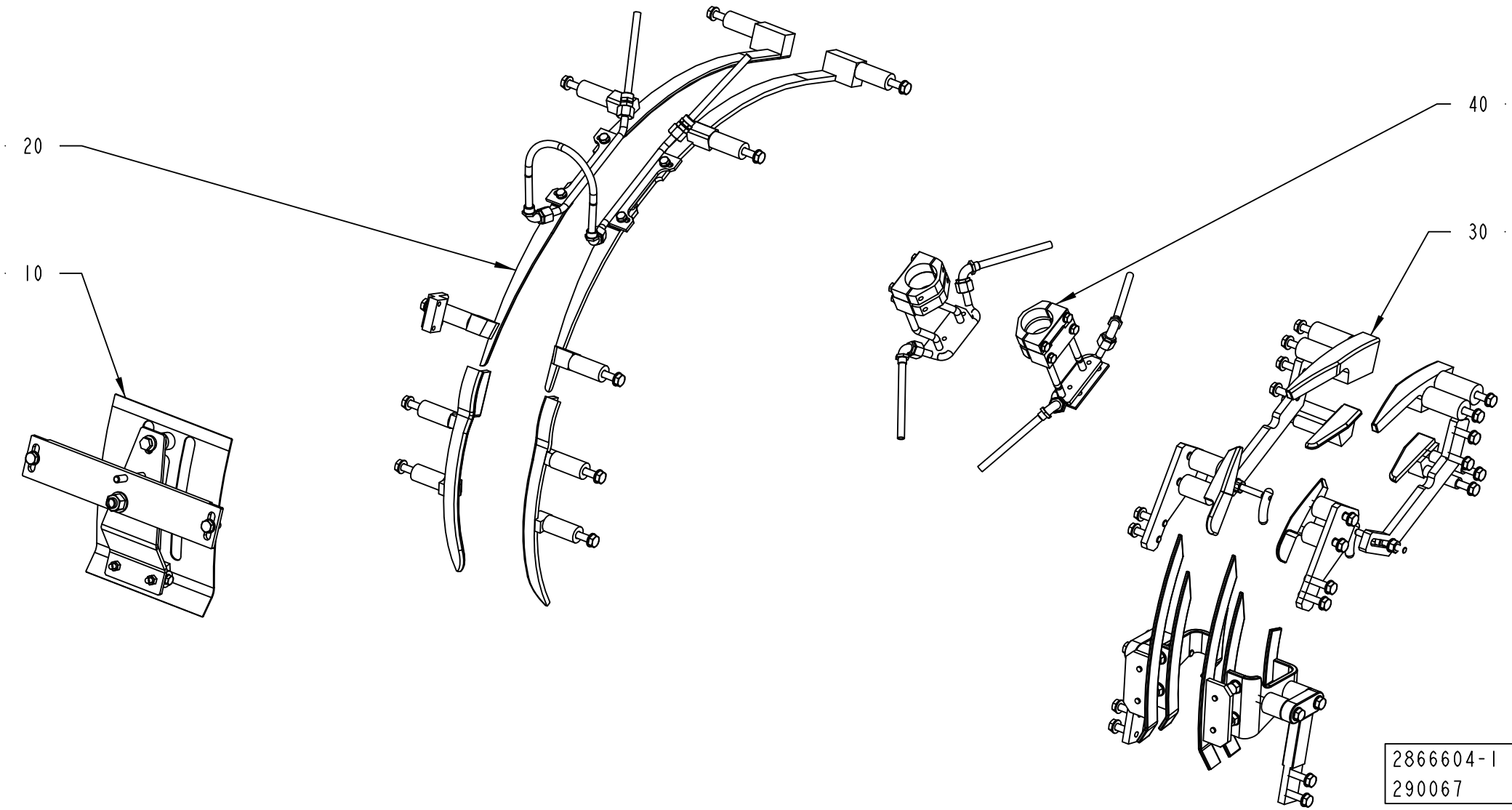

ECM: 641855 - 20140401
Group number: 2866604-0100
Assembly Drawing: 2866604-1_1_AA

Pos	Part No	UN	Qty	Description	Page No
TBA 0500B, TBA 1000B NOMOLDEDCAP					
030	2866605-0100		1	FLAP GUIDE	**1-49, 1-51, 1-53, 1-55**
040	2887887-0100		1	FOLDING PART	**1-57, 1-59**
TBA 0500E					
030	2866605-0100		1	FLAP GUIDE	**1-49, 1-51, 1-53, 1-55**
040	2887887-0100		1	FOLDING PART	**1-57, 1-59**
TBA 0500S					
030	2887081-0100		1	FLAP GUIDE	**1-61, 1-63, 1-65**
TBA 0500SQ, TBA 1000SQ					
030	2866605-0100		1	FLAP GUIDE	**1-49, 1-51, 1-53, 1-55**
040	2887887-0100		1	FOLDING PART	**1-57, 1-59**
TBA 1000B STDA7					
030	2887081-0100		1	FLAP GUIDE	**1-61, 1-63, 1-65**
TBA 1000E NOQC					
030	2866605-0100		1	FLAP GUIDE	**1-49, 1-51, 1-53, 1-55**
040	2887887-0100		1	FOLDING PART	**1-57, 1-59**
TBA 1000E QC					
030	2866605-0100		1	FLAP GUIDE	**1-49, 1-51, 1-53, 1-55**
040	2887887-0100		1	FOLDING PART	**1-57, 1-59**
TBA 1000M					
030	2887081-0100		1	FLAP GUIDE	**1-61, 1-63, 1-65**
TBA 1000S NOMOLDEDCAP					
030	2887081-0100		1	FLAP GUIDE	**1-61, 1-63, 1-65**
TBA 1000S STDA7, TBA 1000S LIGHTCAP24					
030	2887081-0100		1	FLAP GUIDE	**1-61, 1-63, 1-65**
TBA 1500S					
030	2887081-0100		1	FLAP GUIDE	**1-61, 1-63, 1-65**
TBA 2000S					
030	2887081-0100		1	FLAP GUIDE	**1-61, 1-63, 1-65**
TPA 0500SQ					
030	2887081-0100		1	FLAP GUIDE	**1-61, 1-63, 1-65**
TPA 1000SQ, TPA 0750SQ					
030	2866605-0100		1	FLAP GUIDE	**1-49, 1-51, 1-53, 1-55**
040	2887887-0100		1	FOLDING PART	**1-57, 1-59**
Common Parts					
010	2861926-0100		1	TOP SECTION	**1-67, 1-69, 1-71, 1-73**
020	2816115-0100		1	TOP RAIL	**1-75, 1-77**

Pos	Part No	UN	Qty	Description	Page No

Machine Type | Group Description | Used-In | Group Number | Page No

FLAP GUIDE

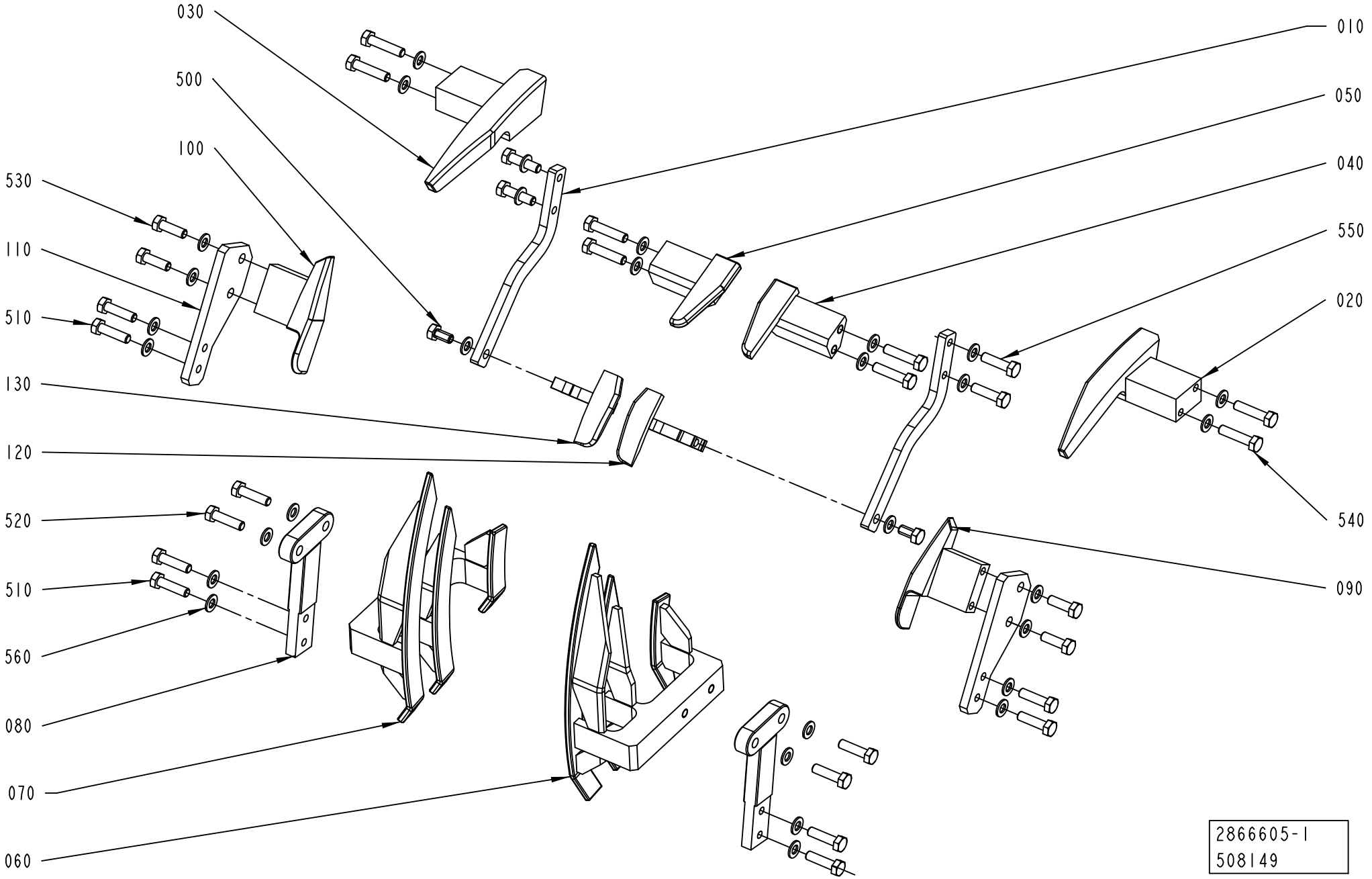
030
500
100
530
110
510
130
120
520
510
560
080
070
060
010
050
040
550
020
540
090
2866605-1
508149

ECM: 641856 - 20140401
Group number: 2866605-0100
Assembly Drawing: 2866605-1_1_AD

This list covers pages from 1-48 to 1-55

Pos	Part No	UN	Qty	Description	Page No
TBA 1000E NOQC (See drawing on page: 1-54)					
020	3285106-0000		1	GUIDE	
030	3285107-0000		1	GUIDE	
040	2862118-0000		1	FOLDING BAR	
050	2862117-0000		1	FOLDING BAR	
060	2903583-0000		1	GUIDE	
070	2903582-0000		1	GUIDE	
080	2588218-0000		2	STRUT	
090	3285103-0000		1	GUIDE	
100	3285104-0000		1	GUIDE	
110	3285105-0000		2	HOLDER	
210	315105-0153		4	WASHER PLAIN, 6,4X12X1,5 A4 BRB	
510	312105-0455		8	SCREW, M6S ISO 4017 M8X30 A4 80	
530	312105-0370		4	SCREW, M6S ISO 4017 M6X20 A4 80	
560	315105-0165		12	FWAS080G0-0S, WASHER PLAIN	
TBA 0500B, TBA 1000B (See drawing on page: 1-50)					
010	2901067-0000		1	GUIDE	
020	2901066-0000		1	GUIDE	
030	2901068-0000		1	GUIDE	
040	2901069-0000		1	GUIDE	
050	2603661-0000		2	BRACKET	
060	2903584-0000		1	GUIDE	
070	2903585-0000		1	GUIDE	
080	2588218-0000		2	STRUT	
090	2544342-0000		2	BRACKET	
110	2603662-0000		4	BRACKET	
120	2603548-0000		1	FOLDING PART	
130	2603547-0000		1	FOLDING PART	
200	312155-0366		10	SCREW DIN 7991 MF6S M6X12 A4 70	
210	315105-0153		6	WASHER PLAIN, 6,4X12X1,5 A4 BRB	
220	312105-0368		6	"SCREW, M6S ISO 4017 M6X16 A4 80"	
510	312105-0455		4	SCREW, M6S ISO 4017 M8X30 A4 80	
520	312105-0455		4	SCREW, M6S ISO 4017 M8X30 A4 80	
560	315105-0165		12	FWAS080G0-0S, WASHER PLAIN	
TBA 0500E, TBA 1000E QC (See drawing on page: 1-48)					
020	3285106-0000		1	GUIDE	
030	3285107-0000		1	GUIDE	
040	2862118-0000		1	FOLDING BAR	
050	2862117-0000		1	FOLDING BAR	
060	2903583-0000		1	GUIDE	
070	2903582-0000		1	GUIDE	
080	2588218-0000		2	STRUT	
090	3285103-0000		1	GUIDE	
100	3285104-0000		1	GUIDE	
110	3285105-0000		2	HOLDER	
210	315105-0153		4	WASHER PLAIN, 6,4X12X1,5 A4 BRB	
510	312105-0455		20	SCREW, M6S ISO 4017 M8X30 A4 80	
530	312105-0370		4	SCREW, M6S ISO 4017 M6X20 A4 80	
560	315105-0165		20	FWAS080G0-0S, WASHER PLAIN	
TBA 0500SQ, TBA 1000SQ (See drawing on page: 1-48)					
010	2906011-0000		2	HOLDER	
020	2906006-0000		1	RAIL	
030	2906007-0000		1	RAIL	
040	2909030-0000		1	FOLDING BAR	
050	2909506-0000		1	FOLDING BAR	
060	2903583-0000		1	GUIDE	
070	2903582-0000		1	GUIDE	
080	2588218-0000		2	STRUT	
090	2906008-0000		1	GUIDE	
100	2906009-0000		1	GUIDE	
110	2876334-0000		2	HOLDER	
120	2909028-0000		1	GUIDE PIN	
130	2909029-0000		1	GUIDE PIN	
500	312105-0449		2	SCREW, M6S ISO 4017 M8X16 A4 80	
510	312105-0455		8	SCREW, M6S ISO 4017 M8X30 A4 80	
520	312105-0455		4	SCREW, M6S ISO 4017 M8X30 A4 80	
530	312105-0453		4	SCREW, M6S ISO 4017 M8X25 A4 80	
540	312105-0457		4	SCREW, M6S ISO 4014 M8X35 A4 80	
550	312105-0455		4	SCREW, M6S ISO 4017 M8X30 A4 80	
560	315105-0165		30	FWAS080G0-0S, WASHER PLAIN	
660	312105-0457		4	SCREW, M6S ISO 4014 M8X35 A4 80	
TPA 1000SQ, TPA 0750SQ (See drawing on page: 1-52)					
010	2647128-0000		1	FOLDING PART	
020	2647127-0000		1	FOLDING PART	
030	2913601-0000		1	FOLDING PART	
040	2913600-0000		1	FOLDING PART	
050	2644368-0000		2	BRACKET	
060	2647129-0000		1	FOLDING PART	
070	2647130-0000		1	FOLDING PART	
080	2647126-0000		2	BRACKET	
140	1519355-0000		12	SPACER	
510	312105-0455		6	SCREW, M6S ISO 4017 M8X30 A4 80	
520	312105-0462		12	SCREW, M6S ISO 4014 M8X55 A4 8002	
560	315105-0165		18	FWAS080G0-0S, WASHER PLAIN	

Machine Type | Group Description | Used-In | Group Number | Page No

FLAP GUIDE

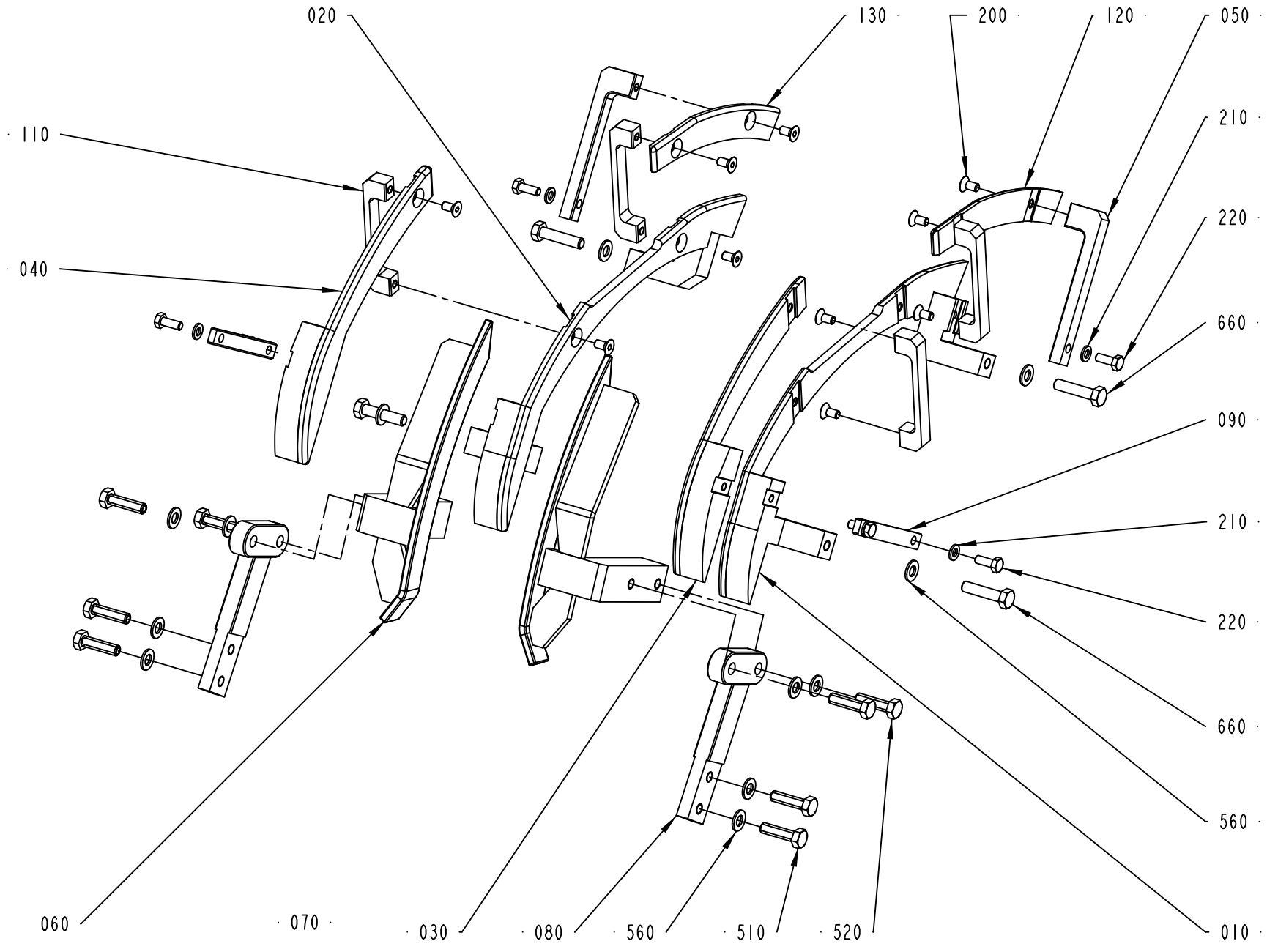

2866605-2
508149

ECM: 641856 - 20140401
Group number: 2866605-0100
Assembly Drawing: 2866605-2_1_AC

This list covers pages from 1-48 to 1-55

Pos	Part No	UN	Qty	Description	Page No
TBA 1000E NOQC (See drawing on page: 1-54)					
020	3285106-0000		1	GUIDE	
030	3285107-0000		1	GUIDE	
040	2862118-0000		1	FOLDING BAR	
050	2862117-0000		1	FOLDING BAR	
060	2903583-0000		1	GUIDE	
070	2903582-0000		1	GUIDE	
080	2588218-0000		2	STRUT	
090	3285103-0000		1	GUIDE	
100	3285104-0000		1	GUIDE	
110	3285105-0000		2	HOLDER	
210	315105-0153		4	WASHER PLAIN, 6,4X12X1,5 A4 BRB	
510	312105-0455		8	SCREW, M6S ISO 4017 M8X30 A4 80	
530	312105-0370		4	SCREW, M6S ISO 4017 M6X20 A4 80	
560	315105-0165		12	FWAS080G0-0S, WASHER PLAIN	
TBA 0500B, TBA 1000B (See drawing on page: 1-50)					
010	2901067-0000		1	GUIDE	
020	2901066-0000		1	GUIDE	
030	2901068-0000		1	GUIDE	
040	2901069-0000		1	GUIDE	
050	2603661-0000		2	BRACKET	
060	2903584-0000		1	GUIDE	
070	2903585-0000		1	GUIDE	
080	2588218-0000		2	STRUT	
090	2544342-0000		2	BRACKET	
110	2603662-0000		4	BRACKET	
120	2603548-0000		1	FOLDING PART	
130	2603547-0000		1	FOLDING PART	
200	312155-0366		10	SCREW DIN 7991 MF6S M6X12 A4 70	
210	315105-0153		6	WASHER PLAIN, 6,4X12X1,5 A4 BRB	
220	312105-0368		6	"SCREW, M6S ISO 4017 M6X16 A4 80"	
510	312105-0455		4	SCREW, M6S ISO 4017 M8X30 A4 80	
520	312105-0455		4	SCREW, M6S ISO 4017 M8X30 A4 80	
560	315105-0165		12	FWAS080G0-0S, WASHER PLAIN	
TBA 0500E, TBA 1000E QC (See drawing on page: 1-48)					
020	3285106-0000		1	GUIDE	
030	3285107-0000		1	GUIDE	
040	2862118-0000		1	FOLDING BAR	
050	2862117-0000		1	FOLDING BAR	
060	2903583-0000		1	GUIDE	
070	2903582-0000		1	GUIDE	
080	2588218-0000		2	STRUT	
090	3285103-0000		1	GUIDE	
100	3285104-0000		1	GUIDE	
110	3285105-0000		2	HOLDER	
210	315105-0153		4	WASHER PLAIN, 6,4X12X1,5 A4 BRB	
510	312105-0455		20	SCREW, M6S ISO 4017 M8X30 A4 80	
530	312105-0370		4	SCREW, M6S ISO 4017 M6X20 A4 80	
560	315105-0165		20	FWAS080G0-0S, WASHER PLAIN	
TBA 0500SQ, TBA 1000SQ (See drawing on page: 1-48)					
010	2906011-0000		2	HOLDER	
020	2906006-0000		1	RAIL	
030	2906007-0000		1	RAIL	
040	2909030-0000		1	FOLDING BAR	
050	2909506-0000		1	FOLDING BAR	
060	2903583-0000		1	GUIDE	
070	2903582-0000		1	GUIDE	
080	2588218-0000		2	STRUT	
090	2906008-0000		1	GUIDE	
100	2906009-0000		1	GUIDE	
110	2876334-0000		2	HOLDER	
120	2909028-0000		1	GUIDE PIN	
130	2909029-0000		1	GUIDE PIN	
500	312105-0449		2	SCREW, M6S ISO 4017 M8X16 A4 80	
510	312105-0455		8	SCREW, M6S ISO 4017 M8X30 A4 80	
520	312105-0455		4	SCREW, M6S ISO 4017 M8X30 A4 80	
530	312105-0453		4	SCREW, M6S ISO 4017 M8X25 A4 80	
540	312105-0457		4	SCREW, M6S ISO 4014 M8X35 A4 80	
550	312105-0455		4	SCREW, M6S ISO 4017 M8X30 A4 80	
560	315105-0165		30	FWAS080G0-0S, WASHER PLAIN	
660	312105-0457		4	SCREW, M6S ISO 4014 M8X35 A4 80	
TPA 1000SQ, TPA 0750SQ (See drawing on page: 1-52)					
010	2647128-0000		1	FOLDING PART	
020	2647127-0000		1	FOLDING PART	
030	2913601-0000		1	FOLDING PART	
040	2913600-0000		1	FOLDING PART	
050	2644368-0000		2	BRACKET	
060	2647129-0000		1	FOLDING PART	
070	2647130-0000		1	FOLDING PART	
080	2647126-0000		2	BRACKET	
140	1519355-0000		12	SPACER	
510	312105-0455		6	SCREW, M6S ISO 4017 M8X30 A4 80	
520	312105-0462		12	SCREW, M6S ISO 4014 M8X55 A4 8002	
560	315105-0165		18	FWAS080G0-0S, WASHER PLAIN	

Machine Type | Group Description | Used-In | Group Number | Page No

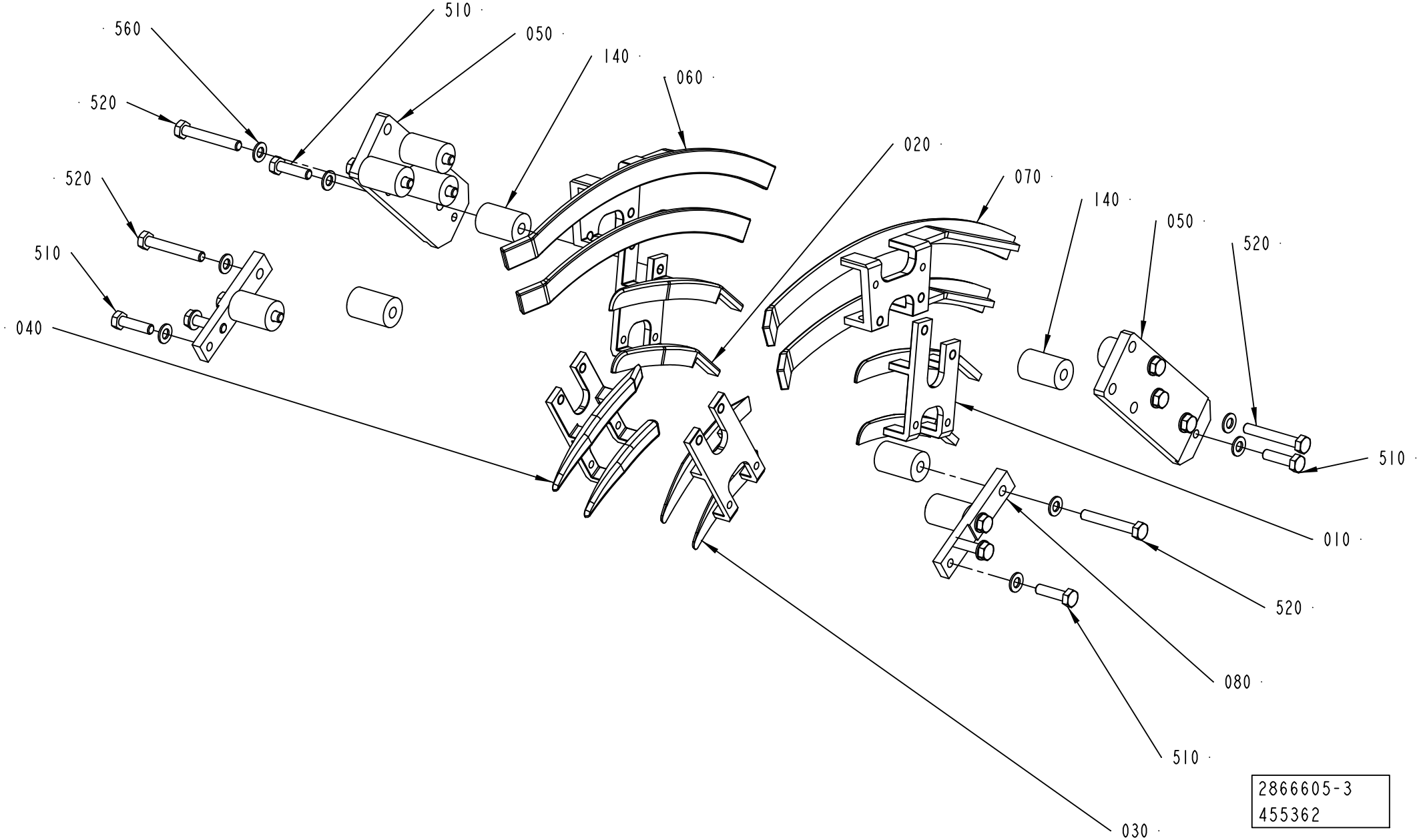
560
510
050
140
060
520
520
510
040
020
070
140
050
520
510
010
520
080
510
030
2866605-3
455362

ECM: 641856 - 20140401
Group number: 2866605-0100
Assembly Drawing: 2866605-3_1_AB

This list covers pages from 1-48 to 1-55

Pos	Part No	UN	Qty	Description	Page No
TBA 1000E NOQC (See drawing on page: 1-54)					
020	3285106-0000		1	GUIDE	
030	3285107-0000		1	GUIDE	
040	2862118-0000		1	FOLDING BAR	
050	2862117-0000		1	FOLDING BAR	
060	2903583-0000		1	GUIDE	
070	2903582-0000		1	GUIDE	
080	2588218-0000		2	STRUT	
090	3285103-0000		1	GUIDE	
100	3285104-0000		1	GUIDE	
110	3285105-0000		2	HOLDER	
210	315105-0153		4	WASHER PLAIN, 6,4X12X1,5 A4 BRB	
510	312105-0455		8	SCREW, M6S ISO 4017 M8X30 A4 80	
530	312105-0370		4	SCREW, M6S ISO 4017 M6X20 A4 80	
560	315105-0165		12	FWAS080G0-0S, WASHER PLAIN	
TBA 0500B, TBA 1000B (See drawing on page: 1-50)					
010	2901067-0000		1	GUIDE	
020	2901066-0000		1	GUIDE	
030	2901068-0000		1	GUIDE	
040	2901069-0000		1	GUIDE	
050	2603661-0000		2	BRACKET	
060	2903584-0000		1	GUIDE	
070	2903585-0000		1	GUIDE	
080	2588218-0000		2	STRUT	
090	2544342-0000		2	BRACKET	
110	2603662-0000		4	BRACKET	
120	2603548-0000		1	FOLDING PART	
130	2603547-0000		1	FOLDING PART	
200	312155-0366		10	SCREW DIN 7991 MF6S M6X12 A4 70	
210	315105-0153		6	WASHER PLAIN, 6,4X12X1,5 A4 BRB	
220	312105-0368		6	"SCREW, M6S ISO 4017 M6X16 A4 80"	
510	312105-0455		4	SCREW, M6S ISO 4017 M8X30 A4 80	
520	312105-0455		4	SCREW, M6S ISO 4017 M8X30 A4 80	
560	315105-0165		12	FWAS080G0-0S, WASHER PLAIN	
TBA 0500E, TBA 1000E QC (See drawing on page: 1-48)					
020	3285106-0000		1	GUIDE	
030	3285107-0000		1	GUIDE	
040	2862118-0000		1	FOLDING BAR	
050	2862117-0000		1	FOLDING BAR	
060	2903583-0000		1	GUIDE	
070	2903582-0000		1	GUIDE	
080	2588218-0000		2	STRUT	
090	3285103-0000		1	GUIDE	
100	3285104-0000		1	GUIDE	
110	3285105-0000		2	HOLDER	
210	315105-0153		4	WASHER PLAIN, 6,4X12X1,5 A4 BRB	
510	312105-0455		20	SCREW, M6S ISO 4017 M8X30 A4 80	
530	312105-0370		4	SCREW, M6S ISO 4017 M6X20 A4 80	
560	315105-0165		20	FWAS080G0-0S, WASHER PLAIN	
TBA 0500SQ, TBA 1000SQ (See drawing on page: 1-48)					
010	2906011-0000		2	HOLDER	
020	2906006-0000		1	RAIL	
030	2906007-0000		1	RAIL	
040	2909030-0000		1	FOLDING BAR	
050	2909506-0000		1	FOLDING BAR	
060	2903583-0000		1	GUIDE	
070	2903582-0000		1	GUIDE	
080	2588218-0000		2	STRUT	
090	2906008-0000		1	GUIDE	
100	2906009-0000		1	GUIDE	
110	2876334-0000		2	HOLDER	
120	2909028-0000		1	GUIDE PIN	
130	2909029-0000		1	GUIDE PIN	
500	312105-0449		2	SCREW, M6S ISO 4017 M8X16 A4 80	
510	312105-0455		8	SCREW, M6S ISO 4017 M8X30 A4 80	
520	312105-0455		4	SCREW, M6S ISO 4017 M8X30 A4 80	
530	312105-0453		4	SCREW, M6S ISO 4017 M8X25 A4 80	
540	312105-0457		4	SCREW, M6S ISO 4014 M8X35 A4 80	
550	312105-0455		4	SCREW, M6S ISO 4017 M8X30 A4 80	
560	315105-0165		30	FWAS080G0-0S, WASHER PLAIN	
660	312105-0457		4	SCREW, M6S ISO 4014 M8X35 A4 80	
TPA 1000SQ, TPA 0750SQ (See drawing on page: 1-52)					
010	2647128-0000		1	FOLDING PART	
020	2647127-0000		1	FOLDING PART	
030	2913601-0000		1	FOLDING PART	
040	2913600-0000		1	FOLDING PART	
050	2644368-0000		2	BRACKET	
060	2647129-0000		1	FOLDING PART	
070	2647130-0000		1	FOLDING PART	
080	2647126-0000		2	BRACKET	
140	1519355-0000		12	SPACER	
510	312105-0455		6	SCREW, M6S ISO 4017 M8X30 A4 80	
520	312105-0462		12	SCREW, M6S ISO 4014 M8X55 A4 8002	
560	315105-0165		18	FWAS080G0-0S, WASHER PLAIN	

Machine Type | Group Description | Used-In | Group Number | Page No

FLAP GUIDE

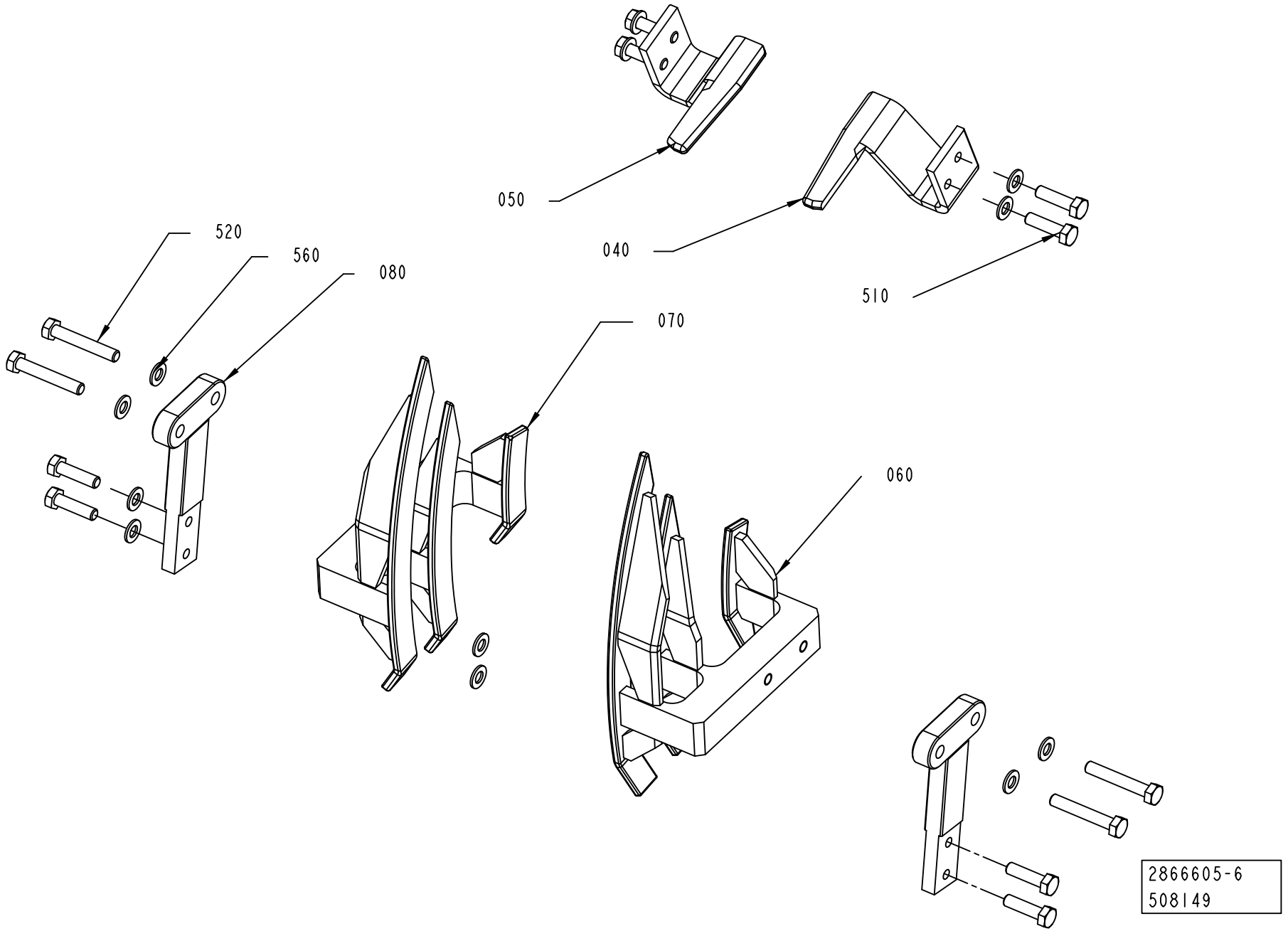

ECM: 641856 - 20140401
Group number: 2866605-0100
Assembly Drawing: 2866605-6_1_AB

This list covers pages from 1-48 to 1-55

Pos	Part No	UN	Qty	Description	Page No
TBA 1000E NOQC (See drawing on page: 1-54)					
020	3285106-0000		1	GUIDE	
030	3285107-0000		1	GUIDE	
040	2862118-0000		1	FOLDING BAR	
050	2862117-0000		1	FOLDING BAR	
060	2903583-0000		1	GUIDE	
070	2903582-0000		1	GUIDE	
080	2588218-0000		2	STRUT	
090	3285103-0000		1	GUIDE	
100	3285104-0000		1	GUIDE	
110	3285105-0000		2	HOLDER	
210	315105-0153		4	WASHER PLAIN, 6,4X12X1,5 A4 BRB	
510	312105-0455		8	SCREW, M6S ISO 4017 M8X30 A4 80	
530	312105-0370		4	SCREW, M6S ISO 4017 M6X20 A4 80	
560	315105-0165		12	FWAS080G0-0S, WASHER PLAIN	
TBA 0500B, TBA 1000B (See drawing on page: 1-50)					
010	2901067-0000		1	GUIDE	
020	2901066-0000		1	GUIDE	
030	2901068-0000		1	GUIDE	
040	2901069-0000		1	GUIDE	
050	2603661-0000		2	BRACKET	
060	2903584-0000		1	GUIDE	
070	2903585-0000		1	GUIDE	
080	2588218-0000		2	STRUT	
090	2544342-0000		2	BRACKET	
110	2603662-0000		4	BRACKET	
120	2603548-0000		1	FOLDING PART	
130	2603547-0000		1	FOLDING PART	
200	312155-0366		10	SCREW DIN 7991 MF6S M6X12 A4 70	
210	315105-0153		6	WASHER PLAIN, 6,4X12X1,5 A4 BRB	
220	312105-0368		6	"SCREW, M6S ISO 4017 M6X16 A4 80"	
510	312105-0455		4	SCREW, M6S ISO 4017 M8X30 A4 80	
520	312105-0455		4	SCREW, M6S ISO 4017 M8X30 A4 80	
560	315105-0165		12	FWAS080G0-0S, WASHER PLAIN	
TBA 0500E, TBA 1000E QC (See drawing on page: 1-48)					
020	3285106-0000		1	GUIDE	
030	3285107-0000		1	GUIDE	
040	2862118-0000		1	FOLDING BAR	
050	2862117-0000		1	FOLDING BAR	
060	2903583-0000		1	GUIDE	
070	2903582-0000		1	GUIDE	
080	2588218-0000		2	STRUT	
090	3285103-0000		1	GUIDE	
100	3285104-0000		1	GUIDE	
110	3285105-0000		2	HOLDER	
210	315105-0153		4	WASHER PLAIN, 6,4X12X1,5 A4 BRB	
510	312105-0455		20	SCREW, M6S ISO 4017 M8X30 A4 80	
530	312105-0370		4	SCREW, M6S ISO 4017 M6X20 A4 80	
560	315105-0165		20	FWAS080G0-0S, WASHER PLAIN	
TBA 0500SQ, TBA 1000SQ (See drawing on page: 1-48)					
010	2906011-0000		2	HOLDER	
020	2906006-0000		1	RAIL	
030	2906007-0000		1	RAIL	
040	2909030-0000		1	FOLDING BAR	
050	2909506-0000		1	FOLDING BAR	
060	2903583-0000		1	GUIDE	
070	2903582-0000		1	GUIDE	
080	2588218-0000		2	STRUT	
090	2906008-0000		1	GUIDE	
100	2906009-0000		1	GUIDE	
110	2876334-0000		2	HOLDER	
120	2909028-0000		1	GUIDE PIN	
130	2909029-0000		1	GUIDE PIN	
500	312105-0449		2	SCREW, M6S ISO 4017 M8X16 A4 80	
510	312105-0455		8	SCREW, M6S ISO 4017 M8X30 A4 80	
520	312105-0455		4	SCREW, M6S ISO 4017 M8X30 A4 80	
530	312105-0453		4	SCREW, M6S ISO 4017 M8X25 A4 80	
540	312105-0457		4	SCREW, M6S ISO 4014 M8X35 A4 80	
550	312105-0455		4	SCREW, M6S ISO 4017 M8X30 A4 80	
560	315105-0165		30	FWAS080G0-0S, WASHER PLAIN	
660	312105-0457		4	SCREW, M6S ISO 4014 M8X35 A4 80	
TPA 1000SQ, TPA 0750SQ (See drawing on page: 1-52)					
010	2647128-0000		1	FOLDING PART	
020	2647127-0000		1	FOLDING PART	
030	2913601-0000		1	FOLDING PART	
040	2913600-0000		1	FOLDING PART	
050	2644368-0000		2	BRACKET	
060	2647129-0000		1	FOLDING PART	
070	2647130-0000		1	FOLDING PART	
080	2647126-0000		2	BRACKET	
140	1519355-0000		12	SPACER	
510	312105-0455		6	SCREW, M6S ISO 4017 M8X30 A4 80	
520	312105-0462		12	SCREW, M6S ISO 4014 M8X55 A4 8002	
560	315105-0165		18	FWAS080G0-0S, WASHER PLAIN	

Machine Type | Group Description | Used-In | Group Number | Page No

FOLDING PART

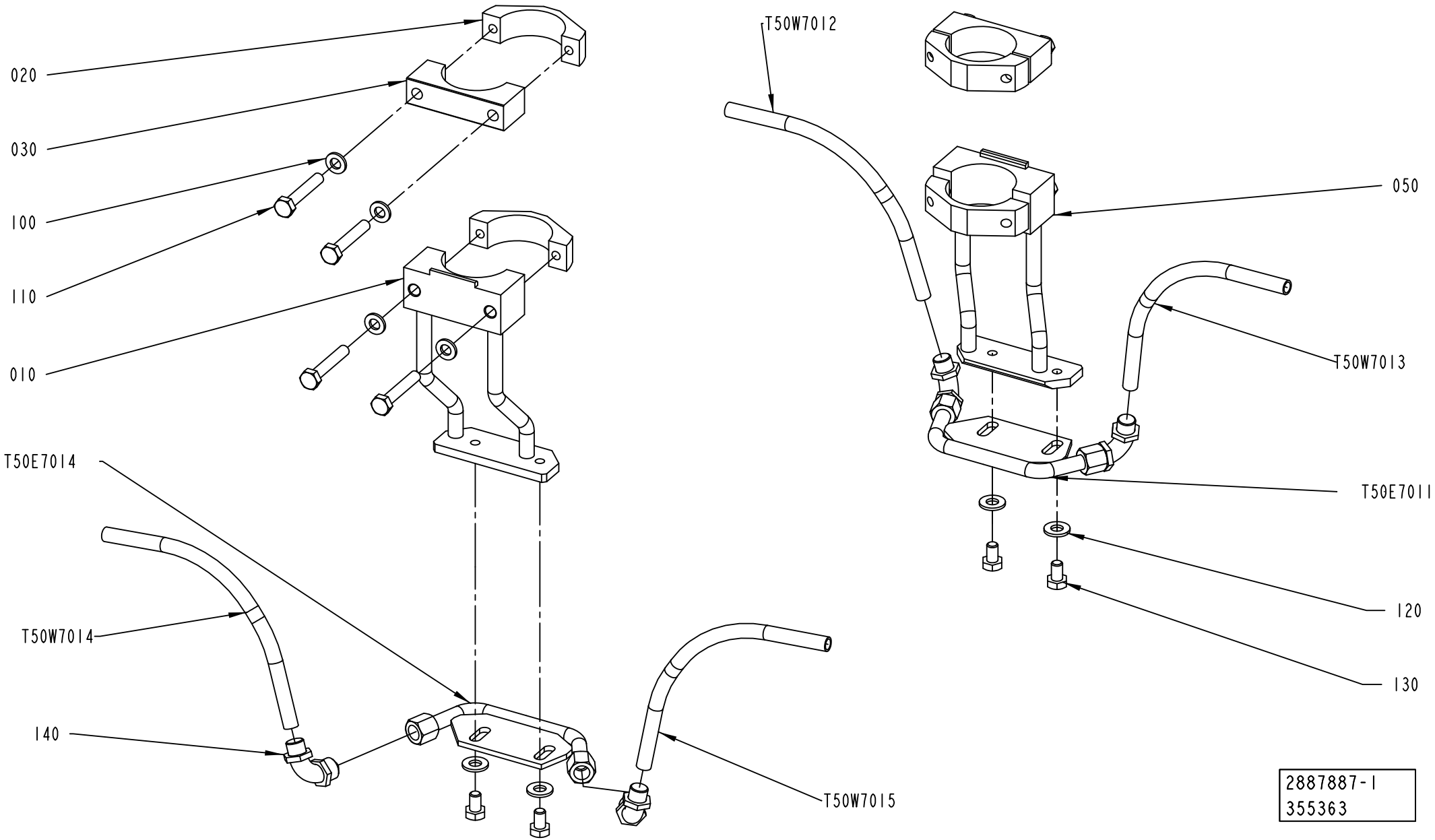

ECM: 641858 - 20140401
Group number: 2887887-0100
Assembly Drawing: 2887887-1_1_AC

This list covers pages from 1-56 to 1-59

Pos	Part No	UN	Qty	Description	Page No
TBA 0500B, TBA 1000B (See drawing on page: 1-58)					
010	2901065-0000		2	BRACKET	
100	315105-0153		8	WASHER PLAIN, 6,4X12X1,5 A4 BRB	
120	315105-0156		4	WASHER PLAIN, 6,7X14X1,5 A4 BRB	
T50E7011	2903581-0000		1	GUIDE	
T50E7014	2903581-0000		1	GUIDE	
TBA 0500SQ, TBA 1000SQ (See drawing on page: 1-56)					
010	2887773-0000		1	BRACKET	
050	2887772-0000		1	BRACKET	
100	315105-0153		8	WASHER PLAIN, 6,4X12X1,5 A4 BRB	
120	315105-0156		4	WASHER PLAIN, 6,7X14X1,5 A4 BRB	
T50E7011	2906004-0000		1	GUIDE	
T50E7014	2906004-0000		1	GUIDE	
TBA 1000E, TBA 0500E (See drawing on page: 1-56)					
010	2862267-0000		1	BRACKET	
050	2862266-0000		1	BRACKET	
100	315105-0153		12	WASHER PLAIN, 6,4X12X1,5 A4 BRB	
T50E7011	2862155-0000		1	GUIDE	
T50E7014	2862156-0000		1	GUIDE	
TPA 1000SQ, TPA 0750SQ (See drawing on page: 1-58)					
010	2901065-0000		2	BRACKET	
100	315105-0153		8	WASHER PLAIN, 6,4X12X1,5 A4 BRB	
120	315105-0156		4	WASHER PLAIN, 6,7X14X1,5 A4 BRB	
T50E7011	2647131-0000		1	GUIDE	
T50E7014	2647131-0000		1	GUIDE	
Common Parts					
020	2887770-0000		4	CLAMP	
030	2887771-0000		2	CLAMP	
110	312105-0376		8	SCREW, M6S ISO 4014 M6X35 A4 80	
130	312105-0364		4	"SCREW, M6S ISO 4017 M6X10 A4 80"	
140	342931-0121		4	ELBOW 90 COUPL., EXT. THREAD 8/6-G1/8"	
T50W7012	90166-0118	MM	400	TUBE 8 MM PA BLACK	
T50W7013	90166-0118	MM	400	TUBE 8 MM PA BLACK	
T50W7014	90166-0118	MM	400	TUBE 8 MM PA BLACK	
T50W7015	90166-0118	MM	850	TUBE 8 MM PA BLACK	

Pos	Part No	UN	Qty	Description	Page No

Machine Type | Group Description | Used-In | Group Number | Page No

FOLDING PART

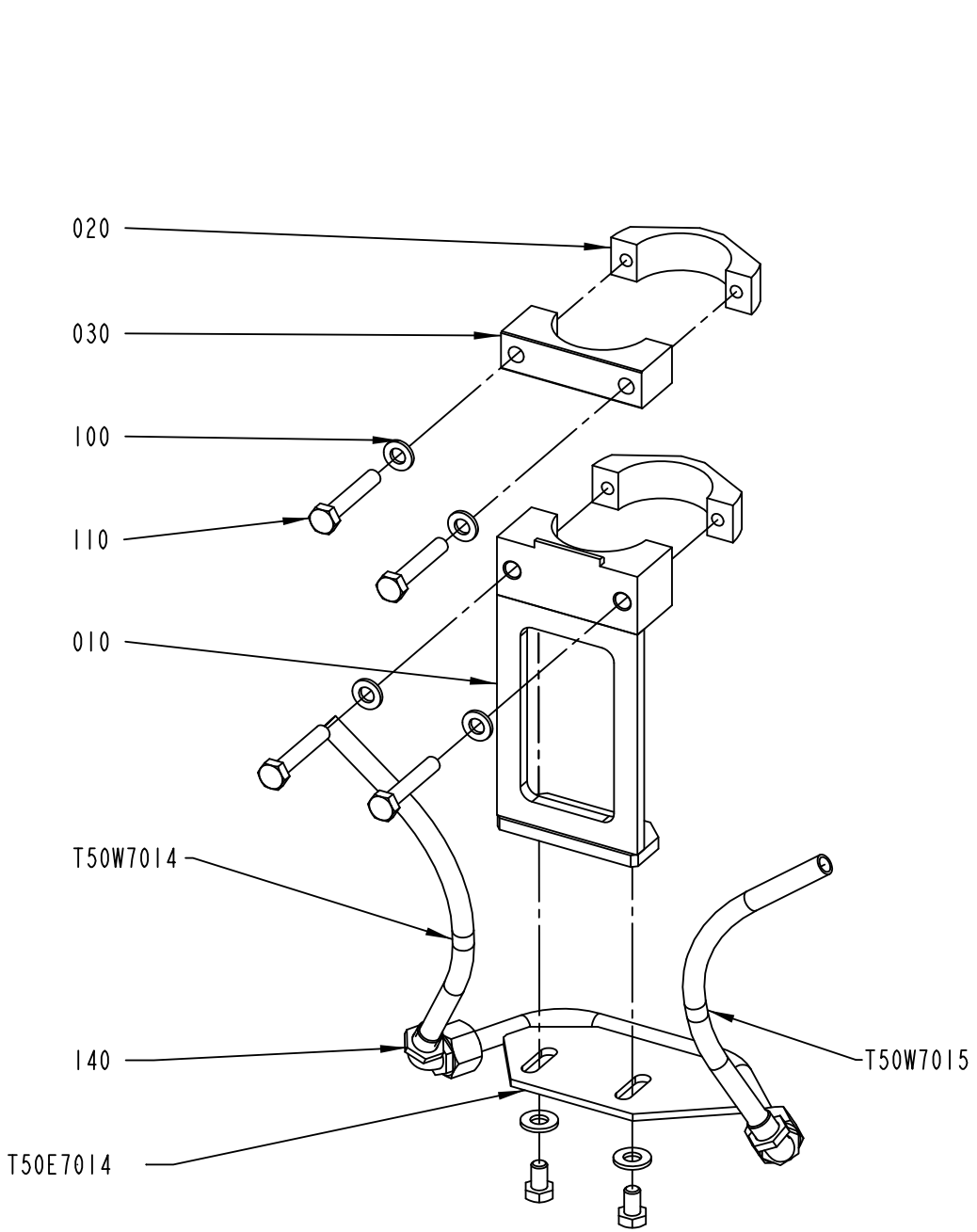

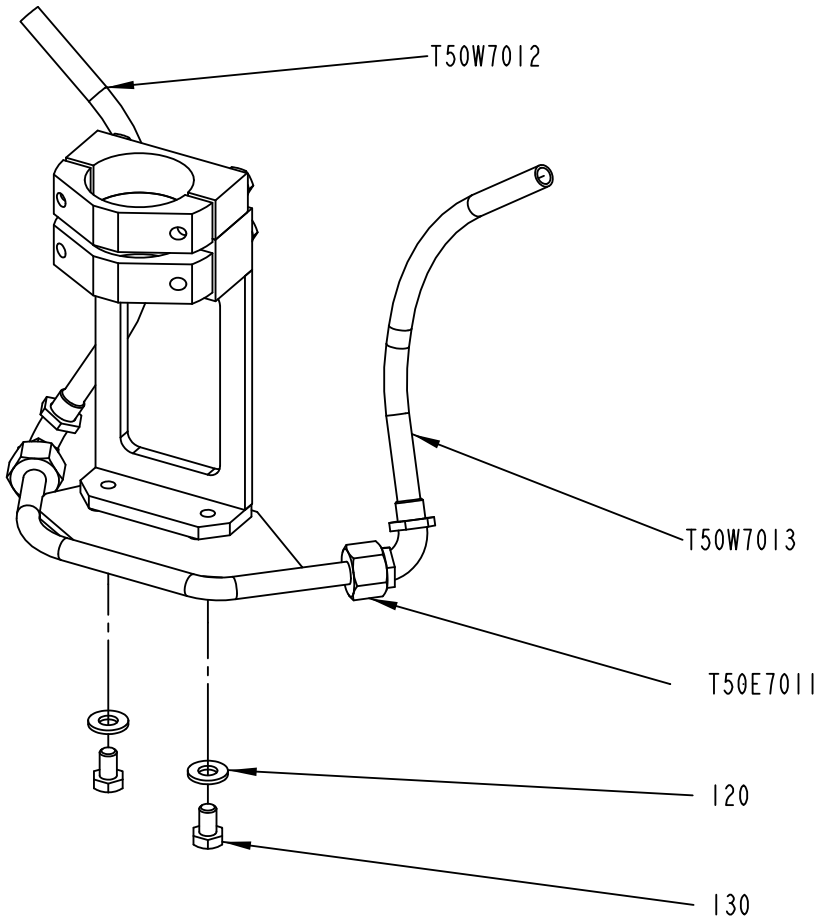

2887887-2
355363

Pos	Part No	UN	Qty	Description	Page No
TBA 0500B, TBA 1000B (See drawing on page: 1-58)					
010	2901065-0000		2	BRACKET	
100	315105-0153		8	WASHER PLAIN, 6,4X12X1,5 A4 BRB	
120	315105-0156		4	WASHER PLAIN, 6,7X14X1,5 A4 BRB	
T50E7011	2903581-0000		1	GUIDE	
T50E7014	2903581-0000		1	GUIDE	
TBA 0500SQ, TBA 1000SQ (See drawing on page: 1-56)					
010	2887773-0000		1	BRACKET	
050	2887772-0000		1	BRACKET	
100	315105-0153		8	WASHER PLAIN, 6,4X12X1,5 A4 BRB	
120	315105-0156		4	WASHER PLAIN, 6,7X14X1,5 A4 BRB	
T50E7011	2906004-0000		1	GUIDE	
T50E7014	2906004-0000		1	GUIDE	
TBA 1000E, TBA 0500E (See drawing on page: 1-56)					
010	2862267-0000		1	BRACKET	
050	2862266-0000		1	BRACKET	
100	315105-0153		12	WASHER PLAIN, 6,4X12X1,5 A4 BRB	
T50E7011	2862155-0000		1	GUIDE	
T50E7014	2862156-0000		1	GUIDE	
TPA 1000SQ, TPA 0750SQ (See drawing on page: 1-58)					
010	2901065-0000		2	BRACKET	
100	315105-0153		8	WASHER PLAIN, 6,4X12X1,5 A4 BRB	
120	315105-0156		4	WASHER PLAIN, 6,7X14X1,5 A4 BRB	
T50E7011	2647131-0000		1	GUIDE	
T50E7014	2647131-0000		1	GUIDE	
Common Parts					
020	2887770-0000		4	CLAMP	
030	2887771-0000		2	CLAMP	
110	312105-0376		8	SCREW, M6S ISO 4014 M6X35 A4 80	
130	312105-0364		4	"SCREW, M6S ISO 4017 M6X10 A4 80"	
140	342931-0121		4	ELBOW 90 COUPL., EXT. THREAD 8/6-G1/8"	
T50W7012	90166-0118	MM	400	TUBE 8 MM PA BLACK	
T50W7013	90166-0118	MM	400	TUBE 8 MM PA BLACK	
T50W7014	90166-0118	MM	400	TUBE 8 MM PA BLACK	
T50W7015	90166-0118	MM	850	TUBE 8 MM PA BLACK	

Pos	Part No	UN	Qty	Description	Page No

FLAP GUIDE

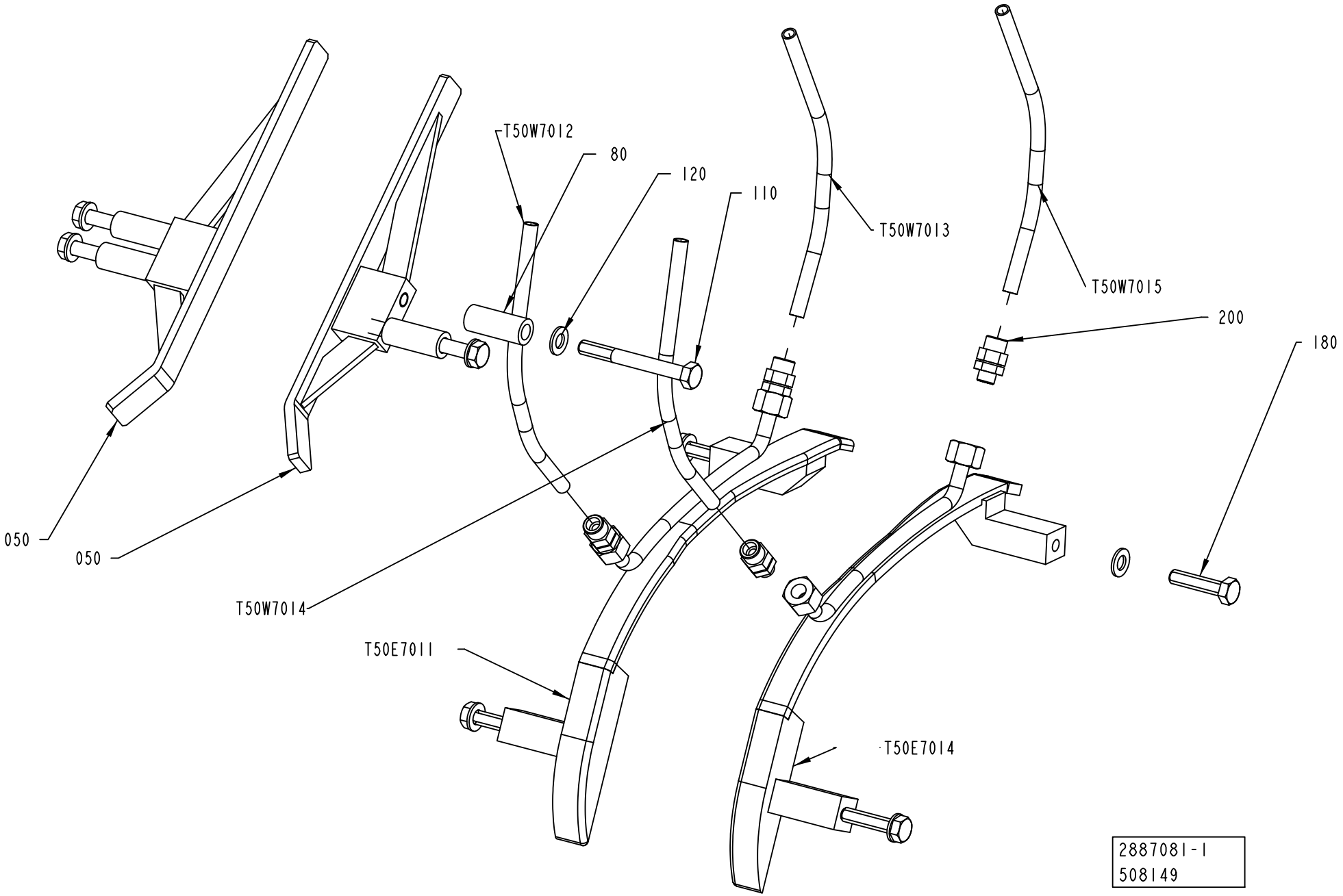
T50W7012
80
120
110
T50W7013
T50W7015
200
180
050
050
T50W7014
T50E7011
T50E7014
2887081-1
508149

ECM: 549122 - 20120701
Group number: 2887081-0100
Assembly Drawing: 2887081-1_1_AE

This list covers pages from 1-60 to 1-65

Pos	Part No	UN	Qty	Description	Page No
TBA 0500S (See drawing on page: 1-62)					
030	1317043-0000		2	SUPPORT	
040	1499150-0000		1	RAIL	
050	1499151-0000		1	RAIL	
080	1499072-0000		4	SPACER	
100	312109-0457		4	SCREW, M6S ISO 4017 M8X35 A4 80	
110	312105-0467		4	SCREW, M6S ISO 4014 M8X80 A4 80	
120	315105-0165		12	FWAS080G0-0S, WASHER PLAIN	
130	312605-0318		1	HEXAGON NUT, M6M M8 A280	
140	90287-0196	MM	65	THREADED ROD MHGS M8 SS	
180	312105-0460		3	SCREW, M6S ISO 4014 M8X45 A4 80	
200	342920-0121		4	STRAIGHT COUPLING, EXT.THREAD 8/6-R1/8	
T50E7011	2983790-0000		1	FOLDING BAR	
T50E7014	2983789-0000		1	FOLDING BAR	
TBA 1000B STDA7 (See drawing on page: 1-62)					
030	1317043-0000		2	SUPPORT	
040	1499150-0000		1	RAIL	
050	1499151-0000		1	RAIL	
080	2609371-0000		4	SPACER	
100	312109-0457		4	SCREW, M6S ISO 4017 M8X35 A4 80	
110	312105-0462		4	SCREW, M6S ISO 4014 M8X55 A4 8002	
120	315105-0165		14	FWAS080G0-0S, WASHER PLAIN	
130	312605-0318		2	HEXAGON NUT, M6M M8 A280	
160	312155-0459		2	SCREW DIN 7991 MF6S M8X40 A4 70	
170	312105-0453		2	SCREW, M6S ISO 4017 M8X25 A4 80	
180	312109-0457		2	SCREW, M6S ISO 4017 M8X35 A4 80	
200	342931-0121		4	ELBOW 90 COUPL., EXT. THREAD 8/6-G1/8"	
T50E7011	2938200-0000		1	FOLDING BAR	
T50E7014	2938199-0000		1	FOLDING BAR	
TBA 1000M (See drawing on page: 1-62)					
030	1317043-0000		2	SUPPORT	
040	1499150-0000		1	RAIL	
050	1499151-0000		1	RAIL	
080	2998813-0000		4	SPACER	
100	312109-0457		4	SCREW, M6S ISO 4017 M8X35 A4 80	
110	312105-0462		4	SCREW, M6S ISO 4014 M8X55 A4 8002	
120	315105-0165		14	FWAS080G0-0S, WASHER PLAIN	
130	312605-0318		2	HEXAGON NUT, M6M M8 A280	
160	312155-0459		2	SCREW DIN 7991 MF6S M8X40 A4 70	
170	312105-0453		2	SCREW, M6S ISO 4017 M8X25 A4 80	
180	312109-0457		2	SCREW, M6S ISO 4017 M8X35 A4 80	
200	342931-0121		4	ELBOW 90 COUPL., EXT. THREAD 8/6-G1/8"	
T50E7011	2998815-0000		1	FOLDING BAR	
T50E7014	2998814-0000		1	FOLDING BAR	
TBA 1000S NOMOLDEDCAP (See drawing on page: 1-60)					
050	1144719-0000		2	RAIL	
080	2852472-0000		4	SPACER	
110	312105-0465		4	SCREW, M6S ISO 4014 M8X70 A4 80	
120	315105-0165		8	FWAS080G0-0S, WASHER PLAIN	
180	312109-0457		4	SCREW, M6S ISO 4017 M8X35 A4 80	
200	342920-0121		4	STRAIGHT COUPLING, EXT.THREAD 8/6-R1/8	
T50E7011	2937351-0000		1	FOLDING BAR	
T50E7014	2937352-0000		1	FOLDING BAR	
TBA 1000S STDA7, TBA 1000S LIGHTCAP24 (See drawing on page: 1-62)					
030	1317043-0000		2	SUPPORT	
040	1317042-0000		1	RAIL	
050	1317047-0000		1	RAIL	
060	2509936-0000		2	SPACER SCREW	
080	2509937-0000		4	SPACER	
090	3124026-0000		2	SPACER	
100	312109-0457		4	SCREW, M6S ISO 4017 M8X35 A4 80	
110	312109-0461		4	SCREW, M6S ISO 4017 M8X50 A4 80	
120	315105-0165		14	FWAS080G0-0S, WASHER PLAIN	
130	312605-0318		2	HEXAGON NUT, M6M M8 A280	
160	312155-0459		2	SCREW DIN 7991 MF6S M8X40 A4 70	
170	312105-0451		2	SCREW, M6S ISO 4017 M8X20 A4 80	
180	312105-0464		2	SCREW, M6S ISO 4014 M8X65 A4 80	
200	342931-0121		4	ELBOW 90 COUPL., EXT. THREAD 8/6-G1/8"	
T50E7011	3128968-0000		1	FOLDING BAR	
T50E7014	3128969-0000		1	FOLDING BAR	
TBA 1500S (See drawing on page: 1-64)					
030	1317043-0000		2	SUPPORT	
040	1317042-0000		1	RAIL	
050	1317047-0000		1	RAIL	
080	1334718-0000		4	SPACER	
100	312109-0457		4	SCREW, M6S ISO 4017 M8X35 A4 80	
110	312109-0461		4	SCREW, M6S ISO 4017 M8X50 A4 80	
120	315105-0165		12	FWAS080G0-0S, WASHER PLAIN	
130	312605-0318		2	HEXAGON NUT, M6M M8 A280	
140	90287-0196	MM	65	THREADED ROD MHGS M8 SS	
170	312109-0460		1	SCREW, M6S ISO 4017 M8X45 A4 80	
180	312109-0457		2	SCREW, M6S ISO 4017 M8X35 A4 80	
200	342931-0121		4	ELBOW 90 COUPL., EXT. THREAD 8/6-G1/8"	
T50E7011	2933181-0000		1	FOLDING BAR	

Machine Type | Group Description | Used-In | Group Number | Page No

FLAP GUIDE

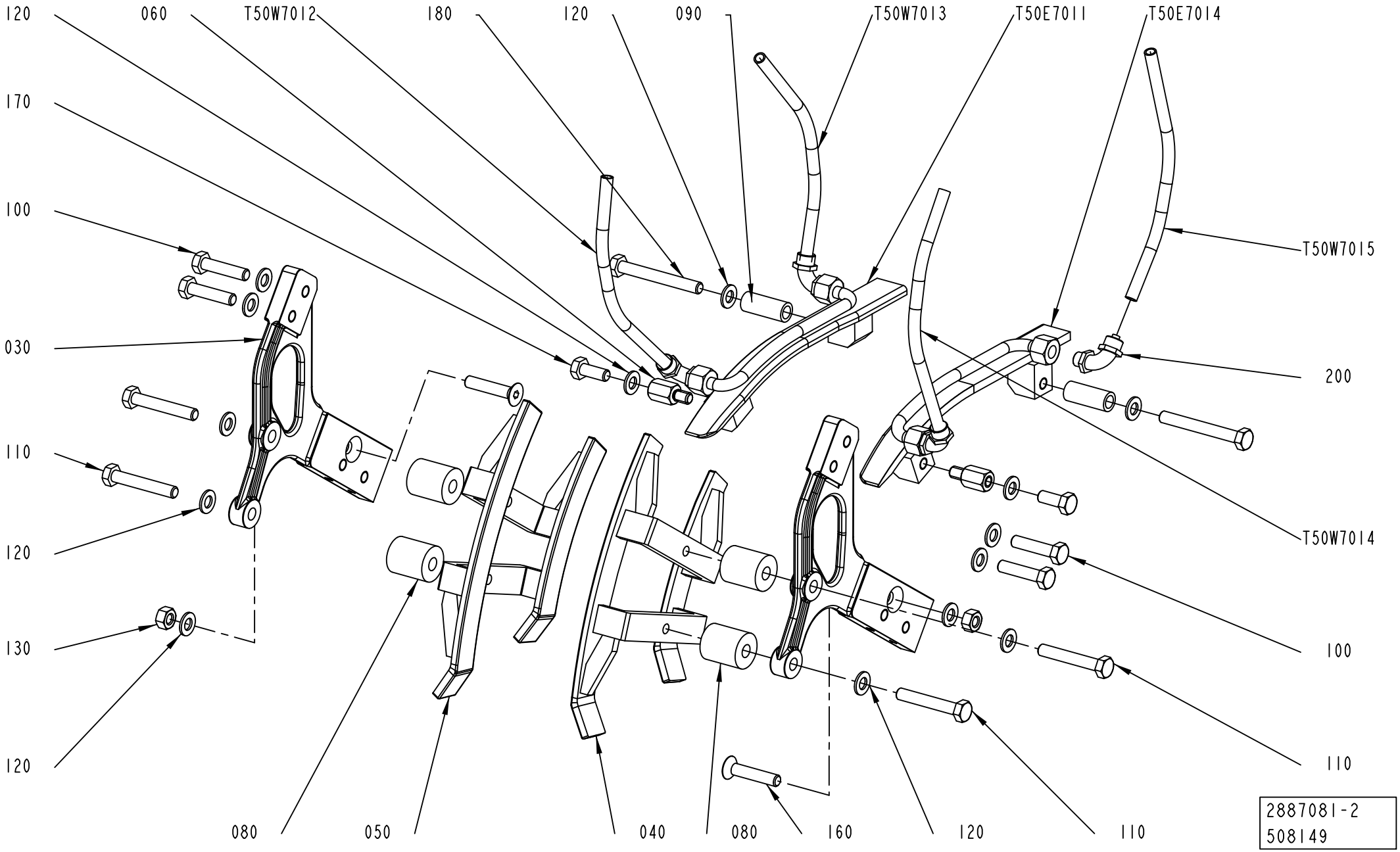
120
060
T50W7012
180
120
090
T50W7013
T50E7011
T50E7014
170
100
T50W7015
030
200
110
120
T50W7014
130
100
120
110
080
050
040
080
160
120
110
2887081-2
508149

Pos	Part No	UN	Qty	Description	Page No
TBA 1500S (Cont'd) (See drawing on page: 1-64)					
T50E7014	2933180-0000		1	FOLDING BAR	
TBA 2000S (See drawing on page: 1-64)					
030	1317043-0000		2	SUPPORT	
040	1499150-0000		1	RAIL	
050	1499151-0000		1	RAIL	
080	2629344-0000		4	SPACER	
100	312109-0457		4	SCREW, M6S ISO 4017 M8X35 A4 80	
110	312109-0460		4	SCREW, M6S ISO 4017 M8X45 A4 80	
120	315105-0165		12	FWAS080G0-0S, WASHER PLAIN	
130	312605-0318		2	HEXAGON NUT, M6M M8 A280	
140	90287-0196	MM	65	THREADED ROD MHGS M8 SS	
170	312109-0460		1	SCREW, M6S ISO 4017 M8X45 A4 80	
180	312109-0457		2	SCREW, M6S ISO 4017 M8X35 A4 80	
200	342931-0121		4	ELBOW 90 COUPL., EXT. THREAD 8/6-G1/8"	
T50E7011	2960431-0000		1	FOLDING BAR	
T50E7014	2960432-0000		1	FOLDING BAR	
TPA 0500SQ (See drawing on page: 1-62)					
030	1317043-0000		2	SUPPORT	
040	1499150-0000		1	RAIL	
050	1499151-0000		1	RAIL	
080	1549508-0000		4	SPACER SCREW	
100	312109-0457		4	SCREW, M6S ISO 4017 M8X35 A4 80	
110	312105-0451		4	SCREW, M6S ISO 4017 M8X20 A4 80	
120	315105-0165		14	FWAS080G0-0S, WASHER PLAIN	
130	312605-0318		2	HEXAGON NUT, M6M M8 A280	
160	312155-0459		2	SCREW DIN 7991 MF6S M8X40 A4 70	
170	312105-0453		2	SCREW, M6S ISO 4017 M8X25 A4 80	
180	312109-0457		2	SCREW, M6S ISO 4017 M8X35 A4 80	
200	342931-0121		4	ELBOW 90 COUPL., EXT. THREAD 8/6-G1/8"	
T50E7011	2953137-0000		1	FOLDING BAR	
T50E7014	2953136-0000		1	FOLDING BAR	
Common Parts					
T50W7012	90166-0118	MM	300	TUBE 8 MM PA BLACK	
T50W7013	90166-0118	MM	700	TUBE 8 MM PA BLACK	
T50W7014	90166-0118	MM	300	TUBE 8 MM PA BLACK	
T50W7015	90166-0118	MM	850	TUBE 8 MM PA BLACK	

Pos	Part No	UN	Qty	Description	Page No

FLAP GUIDE

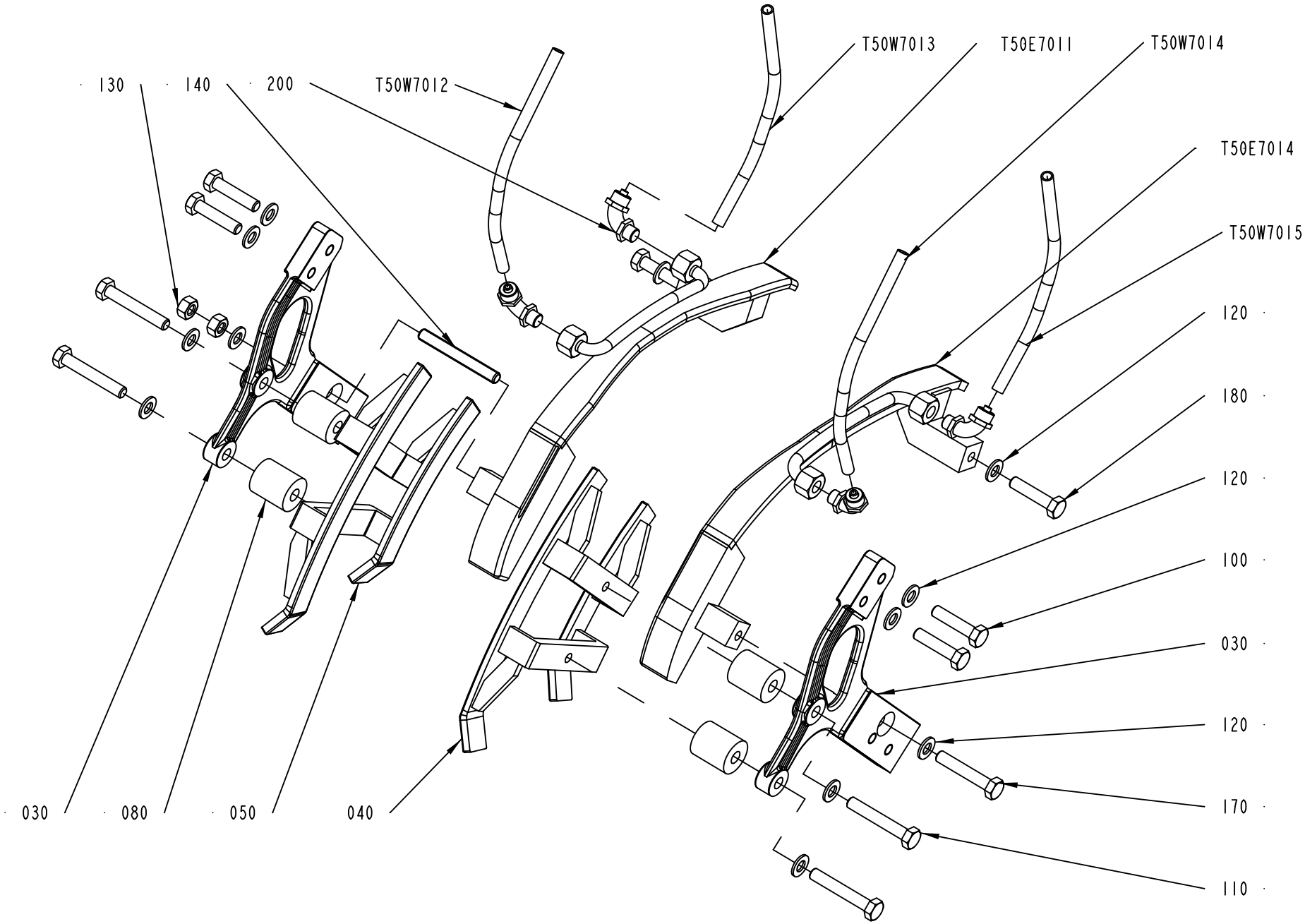
130
140
200
T50W7012
T50W7013
T50E7011
T50W7014
T50E7014
T50W7015
120
180
120
100
030
120
170
110
030
080
050
040
2887081-3
455362

ECM: 549122 - 20120701
Group number: 2887081-0100
Assembly Drawing: 2887081-3_1_AD

This list covers pages from 1-60 to 1-65

Pos	Part No	UN	Qty	Description	Page No	Pos	Part No	UN	Qty	Description	Page No

SEE PREVIOUS LISTS PAGES: 1-61, 1-63.

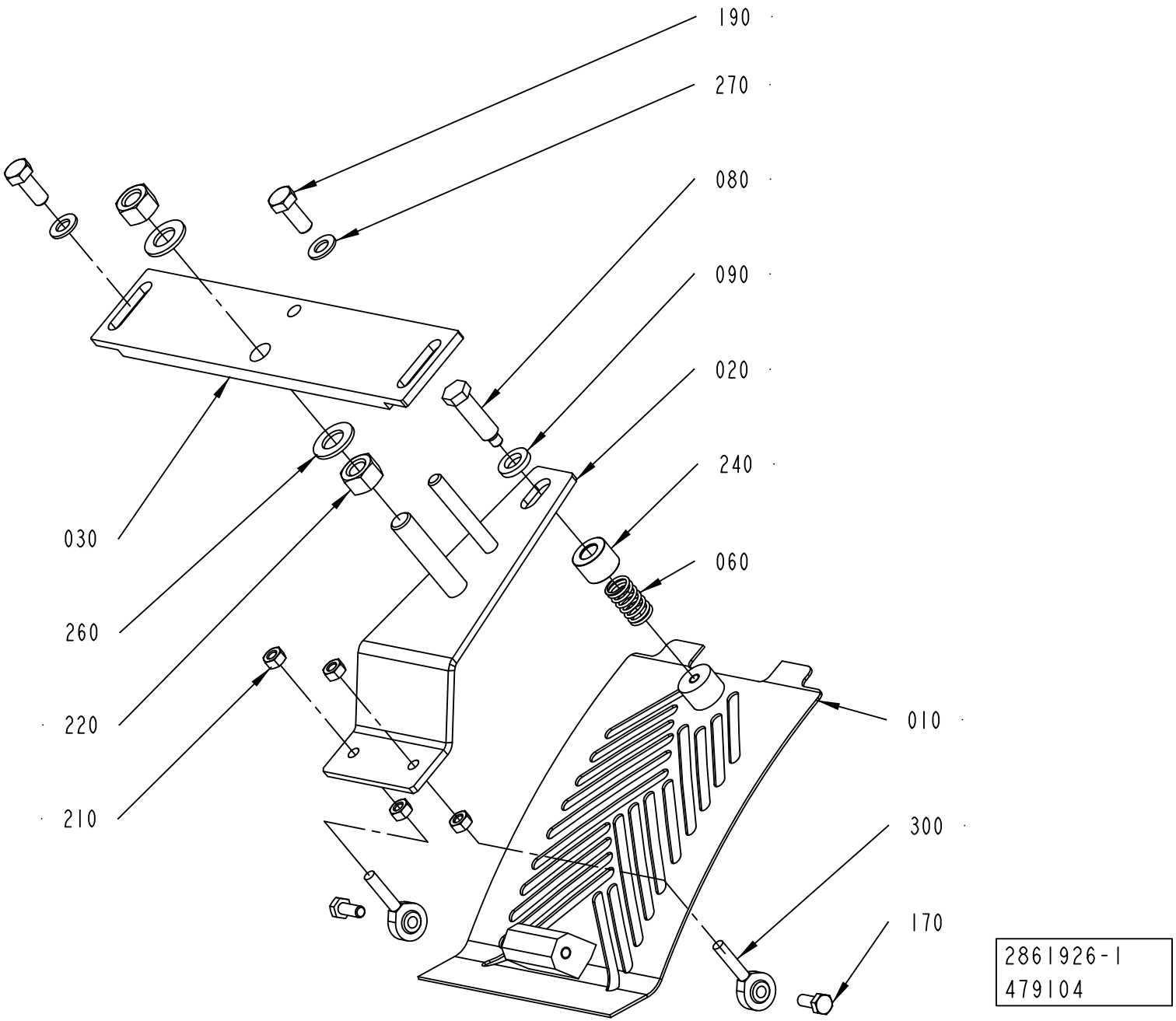
190
270
080
090
020
240
060
030
260
220
210
010
300
170
2861926-1
479104

ECM: 641853 - 20140401
Group number: 2861926-0100
Assembly Drawing: 2861926-1_1_AB

This list covers pages from 1-66 to 1-73

Pos	Part No	UN	Qty	Description	Page No
TBA 0500B, TBA 1000B, TBA 1000M (See drawing on page: 1-68)					
010	2966896-0000		1	COVERING PLATE	
030	2861981-0000		1	ATTACHMENT PLATE	
040	1144902-0000		1	SUPPORT	
070	2609372-0000		1	GUIDE	
180	312105-0453		1	SCREW, M6S ISO 4017 M8X25 A4 80	
190	312105-0451		2	SCREW, M6S ISO 4017 M8X20 A4 80	
200	312105-0457		2	SCREW, M6S ISO 4014 M8X35 A4 80	
270	315105-0165		5	FWAS080G0-0S, WASHER PLAIN	
TBA 0500E, TBA 1000E QC (See drawing on page: 1-68)					
010	1144941-0000		1	COVERING PLATE	
030	2861981-0000		1	ATTACHMENT PLATE	
190	312105-0451		2	SCREW, M6S ISO 4017 M8X20 A4 80	
270	315105-0165		2	FWAS080G0-0S, WASHER PLAIN	
TBA 0500S, TBA 1000S (See drawing on page: 1-68)					
010	2966896-0000		1	COVERING PLATE	
030	2861981-0000		1	ATTACHMENT PLATE	
040	1144902-0000		1	SUPPORT	
070	1144901-0000		1	GUIDE	
180	312105-0449		2	SCREW, M6S ISO 4017 M8X16 A4 80	
190	312105-0451		2	SCREW, M6S ISO 4017 M8X20 A4 80	
200	312105-0457		2	SCREW, M6S ISO 4014 M8X35 A4 80	
270	315105-0165		6	FWAS080G0-0S, WASHER PLAIN	
TBA 0500SQ, TBA 1000SQ, TBA 1000E NOQC (See drawing on page: 1-66)					
010	2966896-0000		1	COVERING PLATE	
030	2861981-0000		1	ATTACHMENT PLATE	
190	312105-0451		2	SCREW, M6S ISO 4017 M8X20 A4 80	
270	315105-0165		2	FWAS080G0-0S, WASHER PLAIN	
TBA 1500S, TBA 2000S (See drawing on page: 1-68)					
010	2966896-0000		1	COVERING PLATE	
030	2913595-0000		1	ATTACHMENT PLATE	
040	2944780-0000		1	SUPPORT	
070	1347057-0000		1	GUIDE	
180	312105-0449		2	SCREW, M6S ISO 4017 M8X16 A4 80	
190	312105-0453		2	SCREW, M6S ISO 4017 M8X25 A4 80	
200	312105-0457		2	SCREW, M6S ISO 4014 M8X35 A4 80	
270	315105-0165		6	FWAS080G0-0S, WASHER PLAIN	
TPA 0500SQ (See drawing on page: 1-72)					
010	2966896-0000		1	COVERING PLATE	
030	2861981-0000		1	ATTACHMENT PLATE	
040	1144902-0000		1	SUPPORT	
070	2552022-0000		1	GUIDE	
100	2553284-0000		1	BLOCK	
180	312105-0451		2	SCREW, M6S ISO 4017 M8X20 A4 80	
190	312105-0451		2	SCREW, M6S ISO 4017 M8X20 A4 80	
200	312105-0457		2	SCREW, M6S ISO 4014 M8X35 A4 80	
270	315105-0165		6	FWAS080G0-0S, WASHER PLAIN	
TPA 1000SQ, TPA 0750SQ (See drawing on page: 1-70)					
010	2966896-0000		1	COVERING PLATE	
030	2913595-0000		1	ATTACHMENT PLATE	
040	2647111-0000		1	SUPPORT	
070	2647112-0000		1	GUIDE	
180	312105-0449		1	SCREW, M6S ISO 4017 M8X16 A4 80	
190	312105-0453		2	SCREW, M6S ISO 4017 M8X25 A4 80	
200	312105-0457		2	SCREW, M6S ISO 4014 M8X35 A4 80	
270	315105-0165		6	FWAS080G0-0S, WASHER PLAIN	
310	312115-0449		1	SCREW ISO4762 M8X16 A4 80	
Common Parts					
020	2861978-0000		1	ADJUSTING PLATE	
060	90335-0036		1	COMP. SPRING, 22450, 1,6X14,1X24	
080	1144976-0000		1	STOP SCREW	
090	1144979-0000		1	WASHER	
170	312105-0368		2	"SCREW, M6S ISO 4017 M6X16 A4 80"	
210	312605-0316		4	HEXAGON NUT, M6M M6 A280	
220	312605-0322		2	HEXAGON NUT, M6M M12 A280	
240	3109510-0000		1	WASHER	
260	315105-0178		2	WASHER PLAIN, 13X24X2,5 A4 BRB	
300	90115-0137		2	ROD END, ID=6 MM, M6X1	

Machine Type | Group Description | Used-In | Group Number | Page No

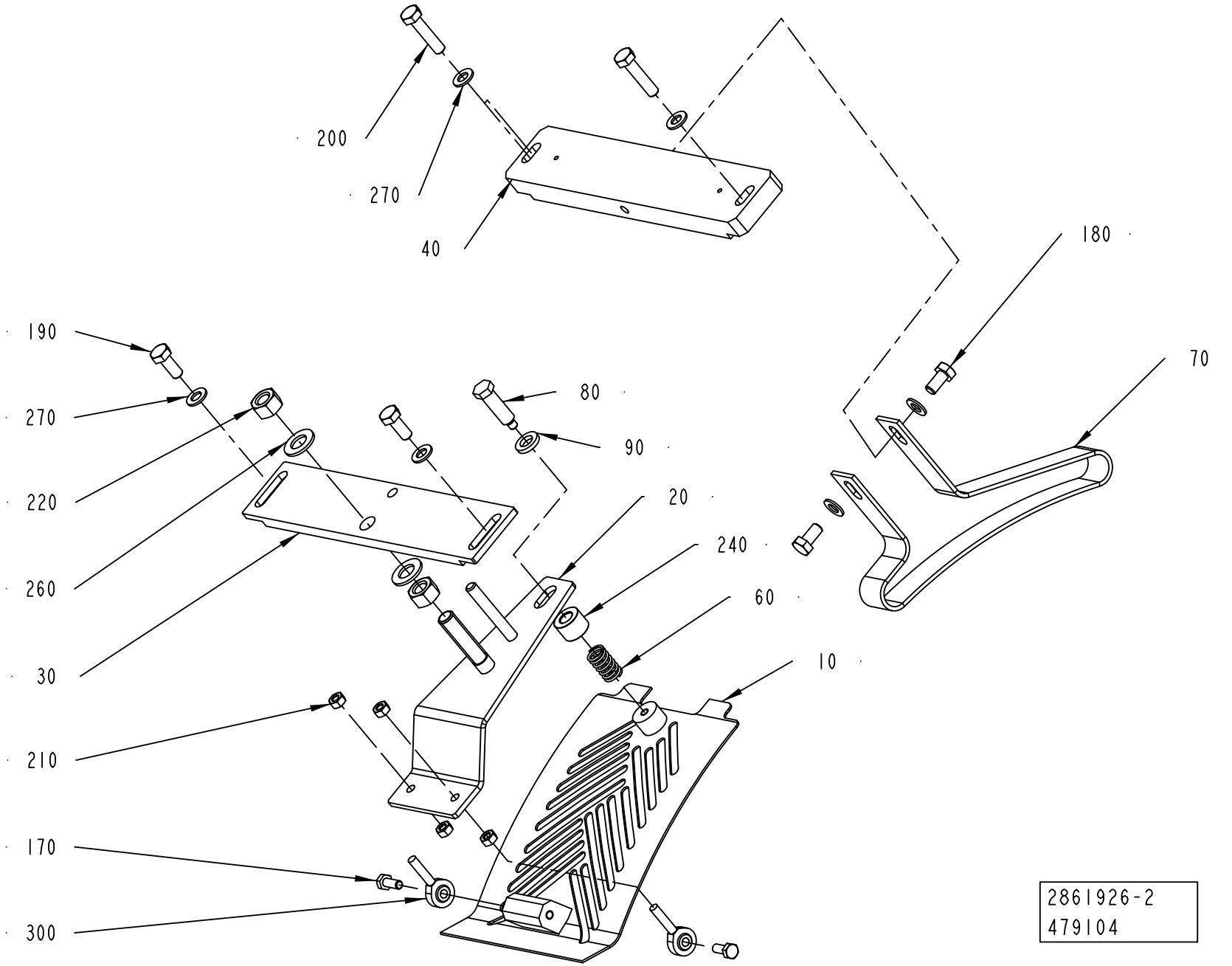
200
270
40
180
70
190
270
220
260
30
210
170
300
80
90
20
240
60
10
2861926-2
479104

ECM: 641853 - 20140401
Group number: 2861926-0100
Assembly Drawing: 2861926-2_1_AB

This list covers pages from 1-66 to 1-73

Pos	Part No	UN	Qty	Description	Page No
TBA 0500B, TBA 1000B, TBA 1000M (See drawing on page: 1-68)					
010	2966896-0000		1	COVERING PLATE	
030	2861981-0000		1	ATTACHMENT PLATE	
040	1144902-0000		1	SUPPORT	
070	2609372-0000		1	GUIDE	
180	312105-0453		1	SCREW, M6S ISO 4017 M8X25 A4 80	
190	312105-0451		2	SCREW, M6S ISO 4017 M8X20 A4 80	
200	312105-0457		2	SCREW, M6S ISO 4014 M8X35 A4 80	
270	315105-0165		5	FWAS080G0-0S, WASHER PLAIN	
TBA 0500E, TBA 1000E QC (See drawing on page: 1-68)					
010	1144941-0000		1	COVERING PLATE	
030	2861981-0000		1	ATTACHMENT PLATE	
190	312105-0451		2	SCREW, M6S ISO 4017 M8X20 A4 80	
270	315105-0165		2	FWAS080G0-0S, WASHER PLAIN	
TBA 0500S, TBA 1000S (See drawing on page: 1-68)					
010	2966896-0000		1	COVERING PLATE	
030	2861981-0000		1	ATTACHMENT PLATE	
040	1144902-0000		1	SUPPORT	
070	1144901-0000		1	GUIDE	
180	312105-0449		2	SCREW, M6S ISO 4017 M8X16 A4 80	
190	312105-0451		2	SCREW, M6S ISO 4017 M8X20 A4 80	
200	312105-0457		2	SCREW, M6S ISO 4014 M8X35 A4 80	
270	315105-0165		6	FWAS080G0-0S, WASHER PLAIN	
TBA 0500SQ, TBA 1000SQ, TBA 1000E NOQC (See drawing on page: 1-66)					
010	2966896-0000		1	COVERING PLATE	
030	2861981-0000		1	ATTACHMENT PLATE	
190	312105-0451		2	SCREW, M6S ISO 4017 M8X20 A4 80	
270	315105-0165		2	FWAS080G0-0S, WASHER PLAIN	
TBA 1500S, TBA 2000S (See drawing on page: 1-68)					
010	2966896-0000		1	COVERING PLATE	
030	2913595-0000		1	ATTACHMENT PLATE	
040	2944780-0000		1	SUPPORT	
070	1347057-0000		1	GUIDE	
180	312105-0449		2	SCREW, M6S ISO 4017 M8X16 A4 80	
190	312105-0453		2	SCREW, M6S ISO 4017 M8X25 A4 80	
200	312105-0457		2	SCREW, M6S ISO 4014 M8X35 A4 80	
270	315105-0165		6	FWAS080G0-0S, WASHER PLAIN	
TPA 0500SQ (See drawing on page: 1-72)					
010	2966896-0000		1	COVERING PLATE	
030	2861981-0000		1	ATTACHMENT PLATE	
040	1144902-0000		1	SUPPORT	
070	2552022-0000		1	GUIDE	
100	2553284-0000		1	BLOCK	
180	312105-0451		2	SCREW, M6S ISO 4017 M8X20 A4 80	
190	312105-0451		2	SCREW, M6S ISO 4017 M8X20 A4 80	
200	312105-0457		2	SCREW, M6S ISO 4014 M8X35 A4 80	
270	315105-0165		6	FWAS080G0-0S, WASHER PLAIN	
TPA 1000SQ, TPA 0750SQ (See drawing on page: 1-70)					
010	2966896-0000		1	COVERING PLATE	
030	2913595-0000		1	ATTACHMENT PLATE	
040	2647111-0000		1	SUPPORT	
070	2647112-0000		1	GUIDE	
180	312105-0449		1	SCREW, M6S ISO 4017 M8X16 A4 80	
190	312105-0453		2	SCREW, M6S ISO 4017 M8X25 A4 80	
200	312105-0457		2	SCREW, M6S ISO 4014 M8X35 A4 80	
270	315105-0165		6	FWAS080G0-0S, WASHER PLAIN	
310	312115-0449		1	SCREW ISO4762 M8X16 A4 80	
Common Parts					
020	2861978-0000		1	ADJUSTING PLATE	
060	90335-0036		1	COMP. SPRING, 22450, 1,6X14,1X24	
080	1144976-0000		1	STOP SCREW	
090	1144979-0000		1	WASHER	
170	312105-0368		2	"SCREW, M6S ISO 4017 M6X16 A4 80"	
210	312605-0316		4	HEXAGON NUT, M6M M6 A280	
220	312605-0322		2	HEXAGON NUT, M6M M12 A280	
240	3109510-0000		1	WASHER	
260	315105-0178		2	WASHER PLAIN, 13X24X2,5 A4 BRB	
300	90115-0137		2	ROD END, ID=6 MM, M6X1	

Machine Type | Group Description | Used-In | Group Number | Page No

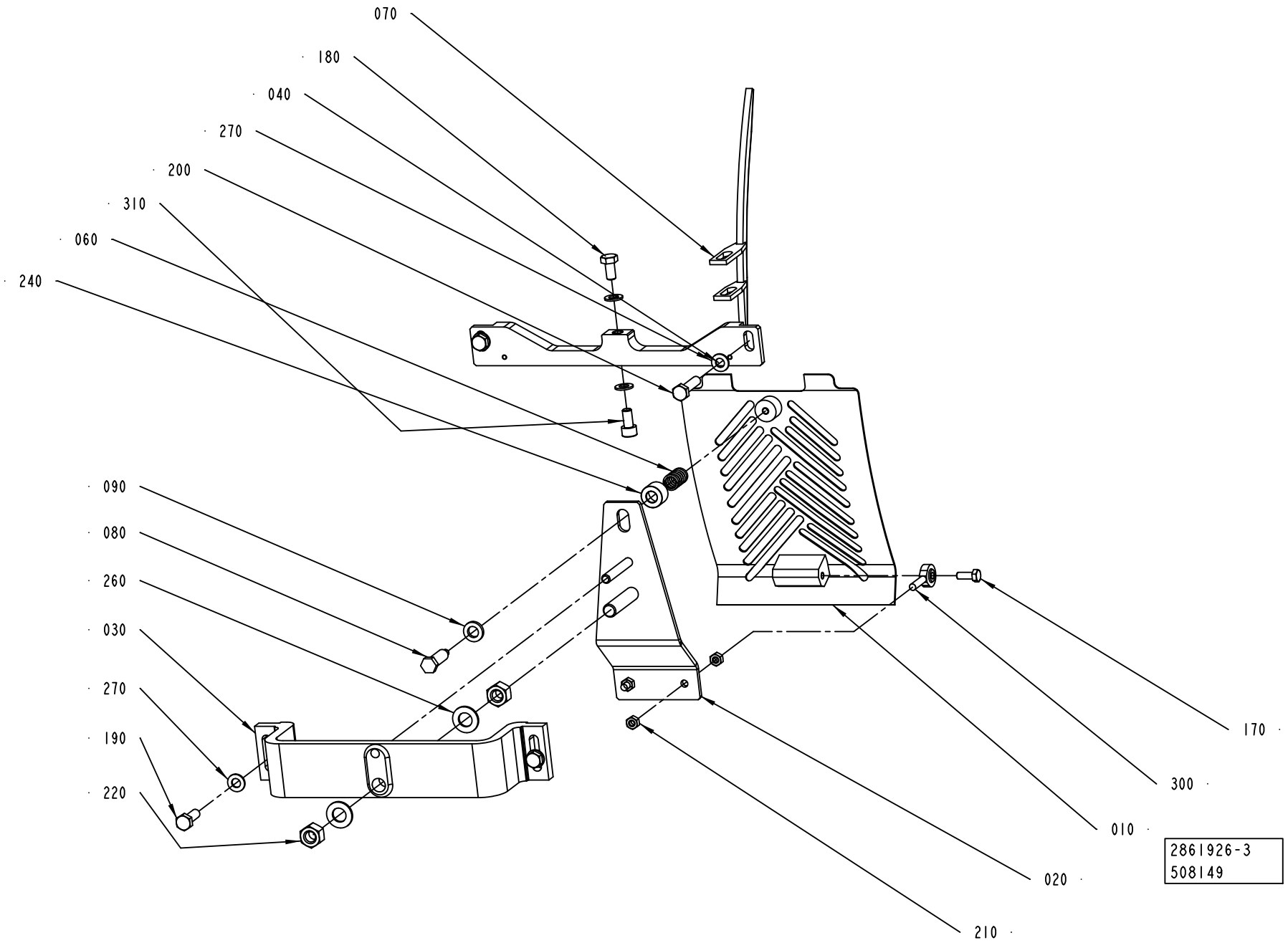
070
180
040
270
200
310
060
240
090
080
260
030
270
190
220
170
300
010
020
210
2861926-3
508149

ECM: 641853 - 20140401
Group number: 2861926-0100
Assembly Drawing: 2861926-3_1_AC

This list covers pages from 1-66 to 1-73

Pos	Part No	UN	Qty	Description	Page No
TBA 0500B, TBA 1000B, TBA 1000M (See drawing on page: 1-68)					
010	2966896-0000		1	COVERING PLATE	
030	2861981-0000		1	ATTACHMENT PLATE	
040	1144902-0000		1	SUPPORT	
070	2609372-0000		1	GUIDE	
180	312105-0453		1	SCREW, M6S ISO 4017 M8X25 A4 80	
190	312105-0451		2	SCREW, M6S ISO 4017 M8X20 A4 80	
200	312105-0457		2	SCREW, M6S ISO 4014 M8X35 A4 80	
270	315105-0165		5	FWAS080G0-0S, WASHER PLAIN	
TBA 0500E, TBA 1000E QC (See drawing on page: 1-68)					
010	1144941-0000		1	COVERING PLATE	
030	2861981-0000		1	ATTACHMENT PLATE	
190	312105-0451		2	SCREW, M6S ISO 4017 M8X20 A4 80	
270	315105-0165		2	FWAS080G0-0S, WASHER PLAIN	
TBA 0500S, TBA 1000S (See drawing on page: 1-68)					
010	2966896-0000		1	COVERING PLATE	
030	2861981-0000		1	ATTACHMENT PLATE	
040	1144902-0000		1	SUPPORT	
070	1144901-0000		1	GUIDE	
180	312105-0449		2	SCREW, M6S ISO 4017 M8X16 A4 80	
190	312105-0451		2	SCREW, M6S ISO 4017 M8X20 A4 80	
200	312105-0457		2	SCREW, M6S ISO 4014 M8X35 A4 80	
270	315105-0165		6	FWAS080G0-0S, WASHER PLAIN	
TBA 0500SQ, TBA 1000SQ, TBA 1000E NOQC (See drawing on page: 1-66)					
010	2966896-0000		1	COVERING PLATE	
030	2861981-0000		1	ATTACHMENT PLATE	
190	312105-0451		2	SCREW, M6S ISO 4017 M8X20 A4 80	
270	315105-0165		2	FWAS080G0-0S, WASHER PLAIN	
TBA 1500S, TBA 2000S (See drawing on page: 1-68)					
010	2966896-0000		1	COVERING PLATE	
030	2913595-0000		1	ATTACHMENT PLATE	
040	2944780-0000		1	SUPPORT	
070	1347057-0000		1	GUIDE	
180	312105-0449		2	SCREW, M6S ISO 4017 M8X16 A4 80	
190	312105-0453		2	SCREW, M6S ISO 4017 M8X25 A4 80	
200	312105-0457		2	SCREW, M6S ISO 4014 M8X35 A4 80	
270	315105-0165		6	FWAS080G0-0S, WASHER PLAIN	
TPA 0500SQ (See drawing on page: 1-72)					
010	2966896-0000		1	COVERING PLATE	
030	2861981-0000		1	ATTACHMENT PLATE	
040	1144902-0000		1	SUPPORT	
070	2552022-0000		1	GUIDE	
100	2553284-0000		1	BLOCK	
180	312105-0451		2	SCREW, M6S ISO 4017 M8X20 A4 80	
190	312105-0451		2	SCREW, M6S ISO 4017 M8X20 A4 80	
200	312105-0457		2	SCREW, M6S ISO 4014 M8X35 A4 80	
270	315105-0165		6	FWAS080G0-0S, WASHER PLAIN	
TPA 1000SQ, TPA 0750SQ (See drawing on page: 1-70)					
010	2966896-0000		1	COVERING PLATE	
030	2913595-0000		1	ATTACHMENT PLATE	
040	2647111-0000		1	SUPPORT	
070	2647112-0000		1	GUIDE	
180	312105-0449		1	SCREW, M6S ISO 4017 M8X16 A4 80	
190	312105-0453		2	SCREW, M6S ISO 4017 M8X25 A4 80	
200	312105-0457		2	SCREW, M6S ISO 4014 M8X35 A4 80	
270	315105-0165		6	FWAS080G0-0S, WASHER PLAIN	
310	312115-0449		1	SCREW ISO4762 M8X16 A4 80	
Common Parts					
020	2861978-0000		1	ADJUSTING PLATE	
060	90335-0036		1	COMP. SPRING, 22450, 1,6X14,1X24	
080	1144976-0000		1	STOP SCREW	
090	1144979-0000		1	WASHER	
170	312105-0368		2	"SCREW, M6S ISO 4017 M6X16 A4 80"	
210	312605-0316		4	HEXAGON NUT, M6M M6 A280	
220	312605-0322		2	HEXAGON NUT, M6M M12 A280	
240	3109510-0000		1	WASHER	
260	315105-0178		2	WASHER PLAIN, 13X24X2,5 A4 BRB	
300	90115-0137		2	ROD END, ID=6 MM, M6X1	

Machine Type | Group Description | Used-In | Group Number | Page No

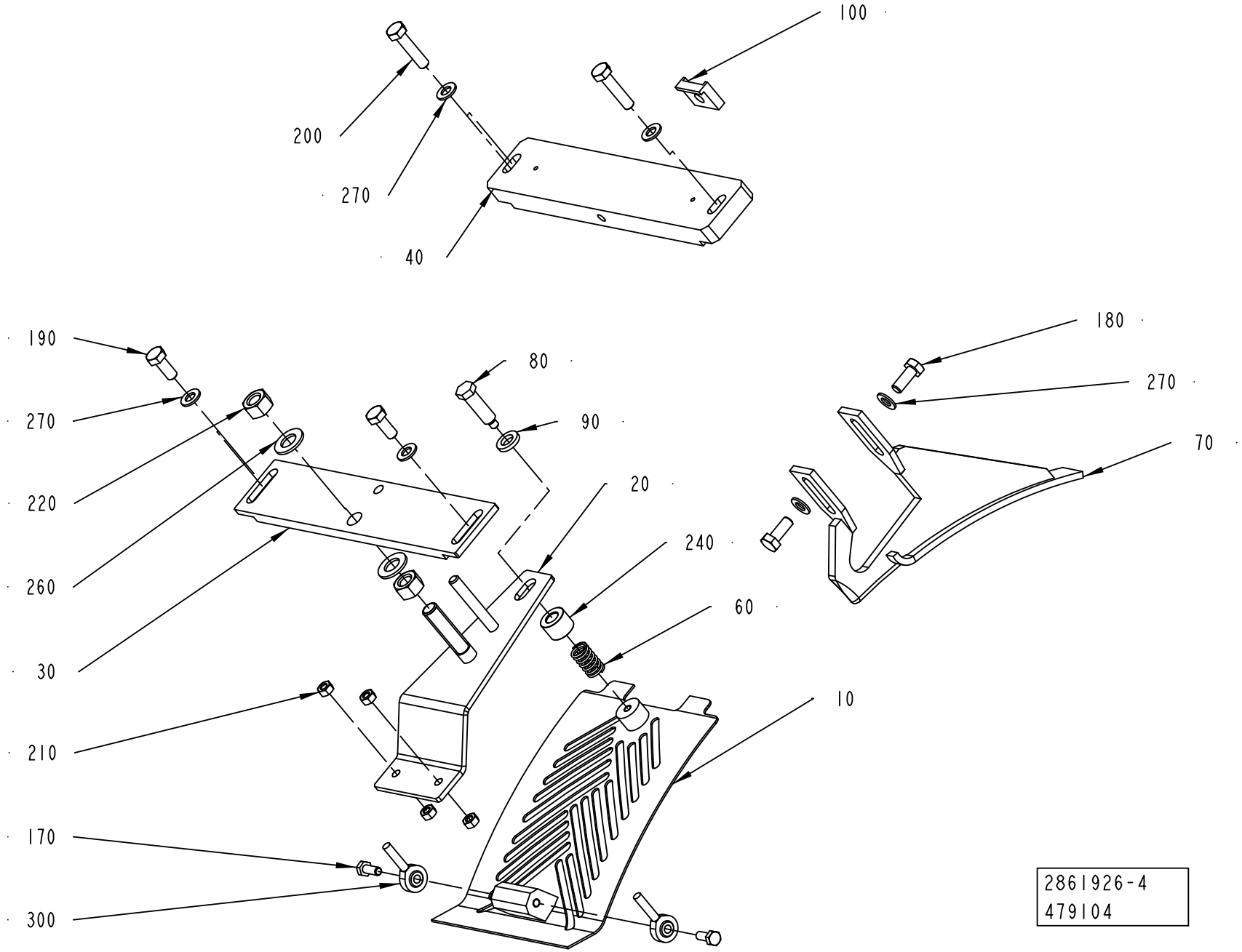
100
200
270
40
190
270
220
260
30
210
170
300
80
90
20
240
60
10
180
270
70
2861926-4
479104

ECM: 641853 - 20140401
Group number: 2861926-0100
Assembly Drawing: 2861926-4_1_AC

This list covers pages from 1-66 to 1-73

Pos	Part No	UN	Qty	Description	Page No
TBA 0500B, TBA 1000B, TBA 1000M (See drawing on page: 1-68)					
010	2966896-0000		1	COVERING PLATE	
030	2861981-0000		1	ATTACHMENT PLATE	
040	1144902-0000		1	SUPPORT	
070	2609372-0000		1	GUIDE	
180	312105-0453		1	SCREW, M6S ISO 4017 M8X25 A4 80	
190	312105-0451		2	SCREW, M6S ISO 4017 M8X20 A4 80	
200	312105-0457		2	SCREW, M6S ISO 4014 M8X35 A4 80	
270	315105-0165		5	FWAS080G0-0S, WASHER PLAIN	
TBA 0500E, TBA 1000E QC (See drawing on page: 1-68)					
010	1144941-0000		1	COVERING PLATE	
030	2861981-0000		1	ATTACHMENT PLATE	
190	312105-0451		2	SCREW, M6S ISO 4017 M8X20 A4 80	
270	315105-0165		2	FWAS080G0-0S, WASHER PLAIN	
TBA 0500S, TBA 1000S (See drawing on page: 1-68)					
010	2966896-0000		1	COVERING PLATE	
030	2861981-0000		1	ATTACHMENT PLATE	
040	1144902-0000		1	SUPPORT	
070	1144901-0000		1	GUIDE	
180	312105-0449		2	SCREW, M6S ISO 4017 M8X16 A4 80	
190	312105-0451		2	SCREW, M6S ISO 4017 M8X20 A4 80	
200	312105-0457		2	SCREW, M6S ISO 4014 M8X35 A4 80	
270	315105-0165		6	FWAS080G0-0S, WASHER PLAIN	
TBA 0500SQ, TBA 1000SQ, TBA 1000E NOQC (See drawing on page: 1-66)					
010	2966896-0000		1	COVERING PLATE	
030	2861981-0000		1	ATTACHMENT PLATE	
190	312105-0451		2	SCREW, M6S ISO 4017 M8X20 A4 80	
270	315105-0165		2	FWAS080G0-0S, WASHER PLAIN	
TBA 1500S, TBA 2000S (See drawing on page: 1-68)					
010	2966896-0000		1	COVERING PLATE	
030	2913595-0000		1	ATTACHMENT PLATE	
040	2944780-0000		1	SUPPORT	
070	1347057-0000		1	GUIDE	
180	312105-0449		2	SCREW, M6S ISO 4017 M8X16 A4 80	
190	312105-0453		2	SCREW, M6S ISO 4017 M8X25 A4 80	
200	312105-0457		2	SCREW, M6S ISO 4014 M8X35 A4 80	
270	315105-0165		6	FWAS080G0-0S, WASHER PLAIN	
TPA 0500SQ (See drawing on page: 1-72)					
010	2966896-0000		1	COVERING PLATE	
030	2861981-0000		1	ATTACHMENT PLATE	
040	1144902-0000		1	SUPPORT	
070	2552022-0000		1	GUIDE	
100	2553284-0000		1	BLOCK	
180	312105-0451		2	SCREW, M6S ISO 4017 M8X20 A4 80	
190	312105-0451		2	SCREW, M6S ISO 4017 M8X20 A4 80	
200	312105-0457		2	SCREW, M6S ISO 4014 M8X35 A4 80	
270	315105-0165		6	FWAS080G0-0S, WASHER PLAIN	
TPA 1000SQ, TPA 0750SQ (See drawing on page: 1-70)					
010	2966896-0000		1	COVERING PLATE	
030	2913595-0000		1	ATTACHMENT PLATE	
040	2647111-0000		1	SUPPORT	
070	2647112-0000		1	GUIDE	
180	312105-0449		1	SCREW, M6S ISO 4017 M8X16 A4 80	
190	312105-0453		2	SCREW, M6S ISO 4017 M8X25 A4 80	
200	312105-0457		2	SCREW, M6S ISO 4014 M8X35 A4 80	
270	315105-0165		6	FWAS080G0-0S, WASHER PLAIN	
310	312115-0449		1	SCREW ISO4762 M8X16 A4 80	
Common Parts					
020	2861978-0000		1	ADJUSTING PLATE	
060	90335-0036		1	COMP. SPRING, 22450, 1,6X14,1X24	
080	1144976-0000		1	STOP SCREW	
090	1144979-0000		1	WASHER	
170	312105-0368		2	"SCREW, M6S ISO 4017 M6X16 A4 80"	
210	312605-0316		4	HEXAGON NUT, M6M M6 A280	
220	312605-0322		2	HEXAGON NUT, M6M M12 A280	
240	3109510-0000		1	WASHER	
260	315105-0178		2	WASHER PLAIN, 13X24X2,5 A4 BRB	
300	90115-0137		2	ROD END, ID=6 MM, M6X1	

TOP RAIL

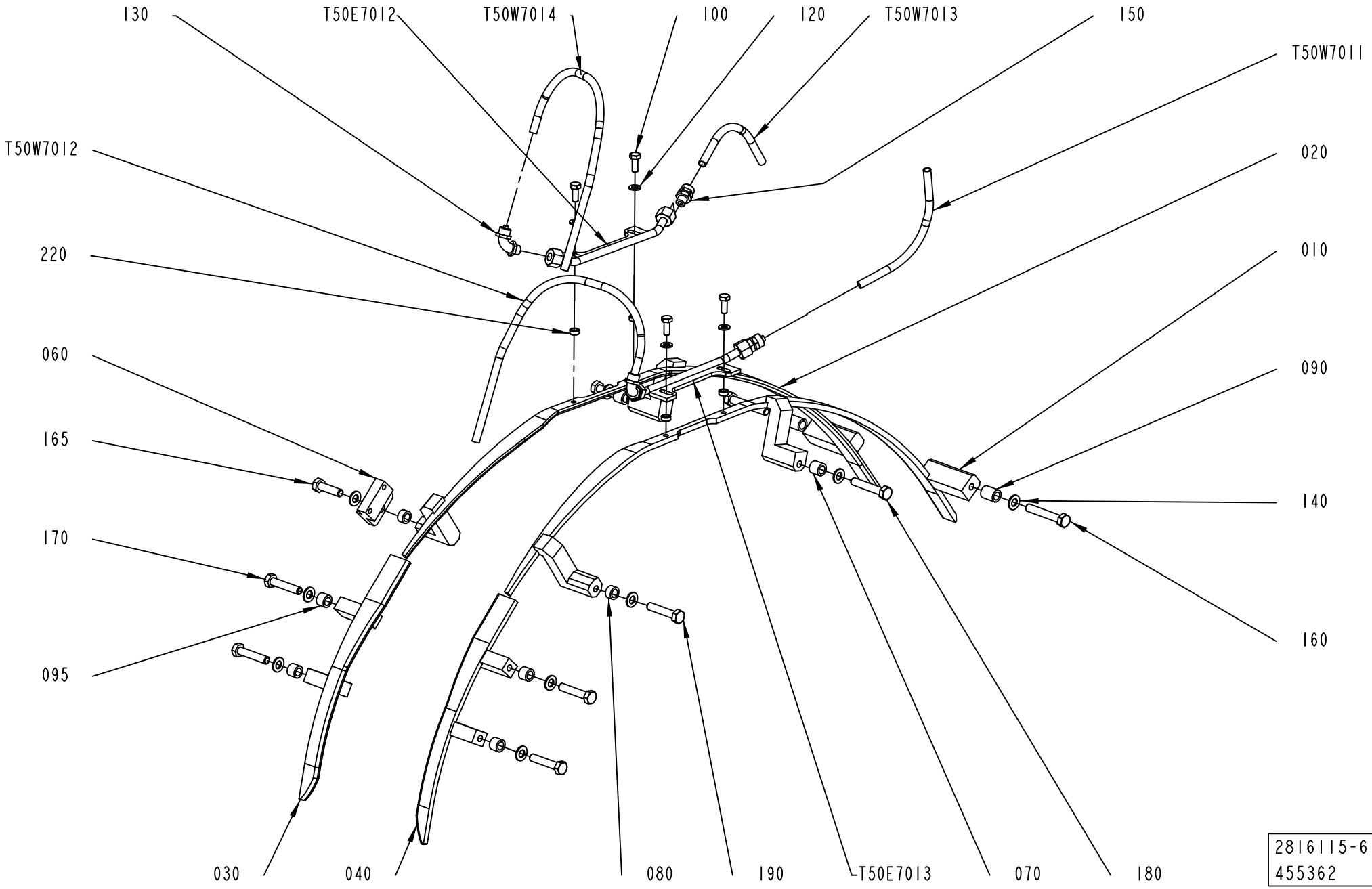
130
T50E7012
T50W7014
100
120
T50W7013
150
T50W7011
T50W7012
020
220
010
060
090
165
140
170
160
095
030
040
080
190
T50E7013
070
180
2816115-6
455362

ECM: 641850 - 20140401
Group number: 2816115-0100
Assembly Drawing: 2816115-6_1_AA

This list covers pages from 1-74 to 1-77

Pos	Part No	UN	Qty	Description	Page No
TBA 0500B, TBA 1000B					
010	2806345-0000		1	GUIDE	
020	2806346-0000		1	GUIDE	
030	1539900-0000		1	RIGHT UPPER GUIDE	
040	1549614-0000		1	LEFT UPPER GUIDE	
090	2603663-0000		6	SPACER	
095	1334447-0000		4	SPACER	
100	312105-0366		4	SCREW, M6S ISO 4017 M6X12 A4 80	
160	312105-0465		9	SCREW, M6S ISO 4014 M8X70 A4 80	
165	312105-0463		1	SCREW, M6S ISO 4014 M8X60 A4 80	
TBA 0500S					
010	2806345-0000		1	GUIDE	
020	2806346-0000		1	GUIDE	
030	1260709-0000		1	GUIDE UPPER R	
040	1260710-0000		1	GUIDE UPPER L	
070	1499071-0000		2	SPACER	
080	1499071-0000		2	SPACER	
090	1499071-0000		2	SPACER	
095	1499071-0000		4	SPACER	
100	312105-0366		4	SCREW, M6S ISO 4017 M6X12 A4 80	
160	312105-0466		2	SCREW, M6S ISO 4014 M8X75 A4 80	
165	312105-0464		1	SCREW, M6S ISO 4014 M8X65 A4 80	
170	312105-0466		4	SCREW, M6S ISO 4014 M8X75 A4 80	
180	312105-0466		2	SCREW, M6S ISO 4014 M8X75 A4 80	
190	312105-0466		1	SCREW, M6S ISO 4014 M8X75 A4 80	
TBA 0500SQ, TBA 1000SQ, TBA 1000E, TBA 0500E					
010	2806345-0000		1	GUIDE	
020	2806346-0000		1	GUIDE	
030	1549411-0000		1	PACKAGE GUIDE	
040	1549406-0000		1	PACKAGE GUIDE	
080	3337477-0000		2	SPACER	
090	1499071-0000		10	SPACER	
100	312105-0366		4	SCREW, M6S ISO 4017 M6X12 A4 80	
160	312105-0466		9	SCREW, M6S ISO 4014 M8X75 A4 80	
165	312105-0464		1	SCREW, M6S ISO 4014 M8X65 A4 80	
TBA 1000M					
010	2806345-0000		1	GUIDE	
020	2806346-0000		1	GUIDE	
030	1539900-0000		1	RIGHT UPPER GUIDE	
040	1549614-0000		1	LEFT UPPER GUIDE	
090	2998817-0000		6	SPACER	
095	2998816-0000		4	SPACER	
100	312105-0366		4	SCREW, M6S ISO 4017 M6X12 A4 80	
160	312105-0465		9	SCREW, M6S ISO 4014 M8X70 A4 80	
165	312105-0463		1	SCREW, M6S ISO 4014 M8X60 A4 80	
TBA 1000S					
010	2806345-0000		1	GUIDE	
020	2806346-0000		1	GUIDE	
030	1549411-0000		1	PACKAGE GUIDE	
040	1549406-0000		1	PACKAGE GUIDE	
090	2852473-0000		6	SPACER	
095	2852463-0000		4	SPACER	
100	312105-0366		4	SCREW, M6S ISO 4017 M6X12 A4 80	
160	312105-0465		9	SCREW, M6S ISO 4014 M8X70 A4 80	
165	312105-0463		1	SCREW, M6S ISO 4014 M8X60 A4 80	
TBA 1500S					
010	2913597-0000		1	GUIDE	
020	2913596-0000		1	GUIDE	
030	2929034-0000		1	GUIDE	
040	2929035-0000		1	GUIDE	
070	2929033-0000		2	SPACER	
080	2929032-0000		2	SPACER	
090	2929031-0000		2	SPACER	
095	2929036-0000		4	SPACER	
100	312105-0368		4	"SCREW, M6S ISO 4017 M6X16 A4 80"	
160	312109-0461		2	SCREW, M6S ISO 4017 M8X50 A4 80	
165	312105-0455		1	SCREW, M6S ISO 4017 M8X30 A4 80	
170	312109-0459		4	SCREW, M6S ISO 4017 M8X40 A4 80	
180	312109-0460		2	SCREW, M6S ISO 4017 M8X45 A4 80	
190	312109-0459		1	SCREW, M6S ISO 4017 M8X40 A4 80	
220	1282705-0000		4	SUPPORT	
TBA 2000S					
010	2913597-0000		1	GUIDE	
020	2913596-0000		1	GUIDE	
030	2929034-0000		1	GUIDE	
040	2929035-0000		1	GUIDE	
100	312105-0368		4	"SCREW, M6S ISO 4017 M6X16 A4 80"	
160	312105-0457		9	SCREW, M6S ISO 4014 M8X35 A4 80	
165	312105-0453		1	SCREW, M6S ISO 4017 M8X25 A4 80	
220	1282705-0000		4	SUPPORT	
TPA 0500SQ					
010	2806345-0000		1	GUIDE	
020	2806346-0000		1	GUIDE	
030	2527530-0000		1	GUIDE UPPER R	

Machine Type | Group Description | Used-In | Group Number | Page No

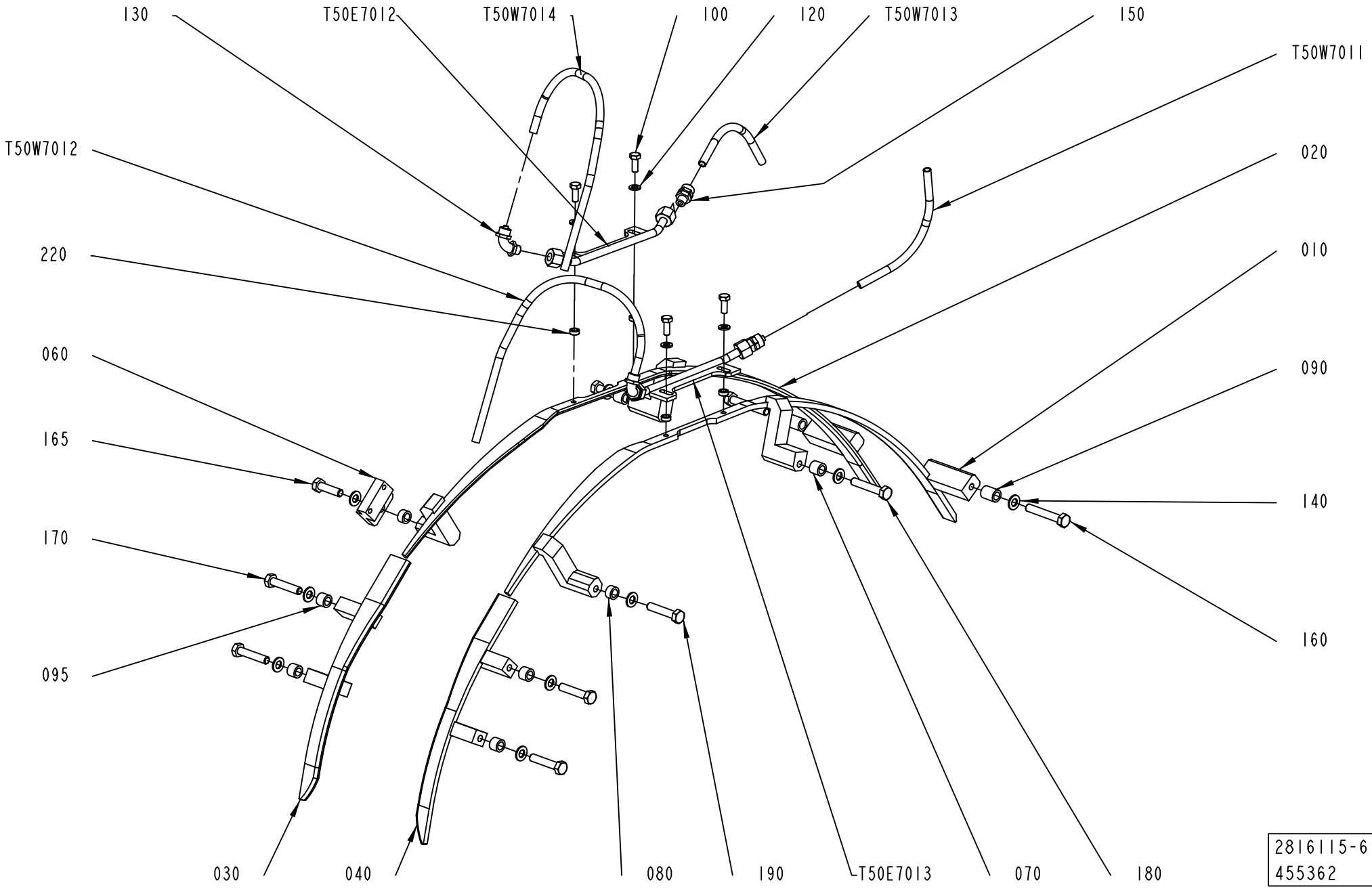
130
T50E7012
T50W7014
100
120
T50W7013
150
T50W7011
T50W7012
020
220
010
060
090
165
140
170
160
095
030
040
080
190
T50E7013
070
180
2816115-6
455362

Pos	Part No	UN	Qty	Description	Page No
TPA 0500SQ (Cont'd)					
040	2527529-0000		1	GUIDE UPPER L	
090	1549506-0000		6	SPACER	
095	1558910-0000		4	SPACER	
100	312105-0366		4	SCREW, M6S ISO 4017 M6X12 A4 80	
160	312105-0467		9	SCREW, M6S ISO 4014 M8X80 A4 80	
165	312105-0466		1	SCREW, M6S ISO 4014 M8X75 A4 80	
TPA 1000SQ, TPA 0750SQ					
010	2913597-0000		1	GUIDE	
020	2913596-0000		1	GUIDE	
030	2913599-0000		1	GUIDE	
040	2913598-0000		1	GUIDE	
090	2931384-0000		6	GUIDE	
100	312105-0368		4	"SCREW, M6S ISO 4017 M6X16 A4 80"	
160	312109-0463		5	SCREW, M6S ISO 4017 M8X60 A4 80	
165	312109-0461		1	SCREW, M6S ISO 4017 M8X50 A4 80	
170	312105-0457		4	SCREW, M6S ISO 4014 M8X35 A4 80	
220	1282705-0000		4	SUPPORT	
Common Parts					
060	2866896-0000		1	SUPPORT	
120	315105-0153		4	WASHER PLAIN, 6,4X12X1,5 A4 BRB	
130	342931-0121		2	ELBOW 90 COUPL., EXT. THREAD 8/6-G1/8"	
140	315105-0165		10	FWAS080G0-0S, WASHER PLAIN	
150	342920-0121		2	STRAIGHT COUPLING, EXT.THREAD 8/6-R1/8	
T50E7012	2879069-0000		1	FOLDING BAR	
T50E7013	2879069-0000		1	FOLDING BAR	
T50W7011	90166-0118	MM	700	TUBE 8 MM PA BLACK	
T50W7012	90166-0118	MM	500	TUBE 8 MM PA BLACK	
T50W7013	90166-0118	MM	400	TUBE 8 MM PA BLACK	
T50W7014	90166-0118	MM	500	TUBE 8 MM PA BLACK	

Pos	Part No	UN	Qty	Description	Page No

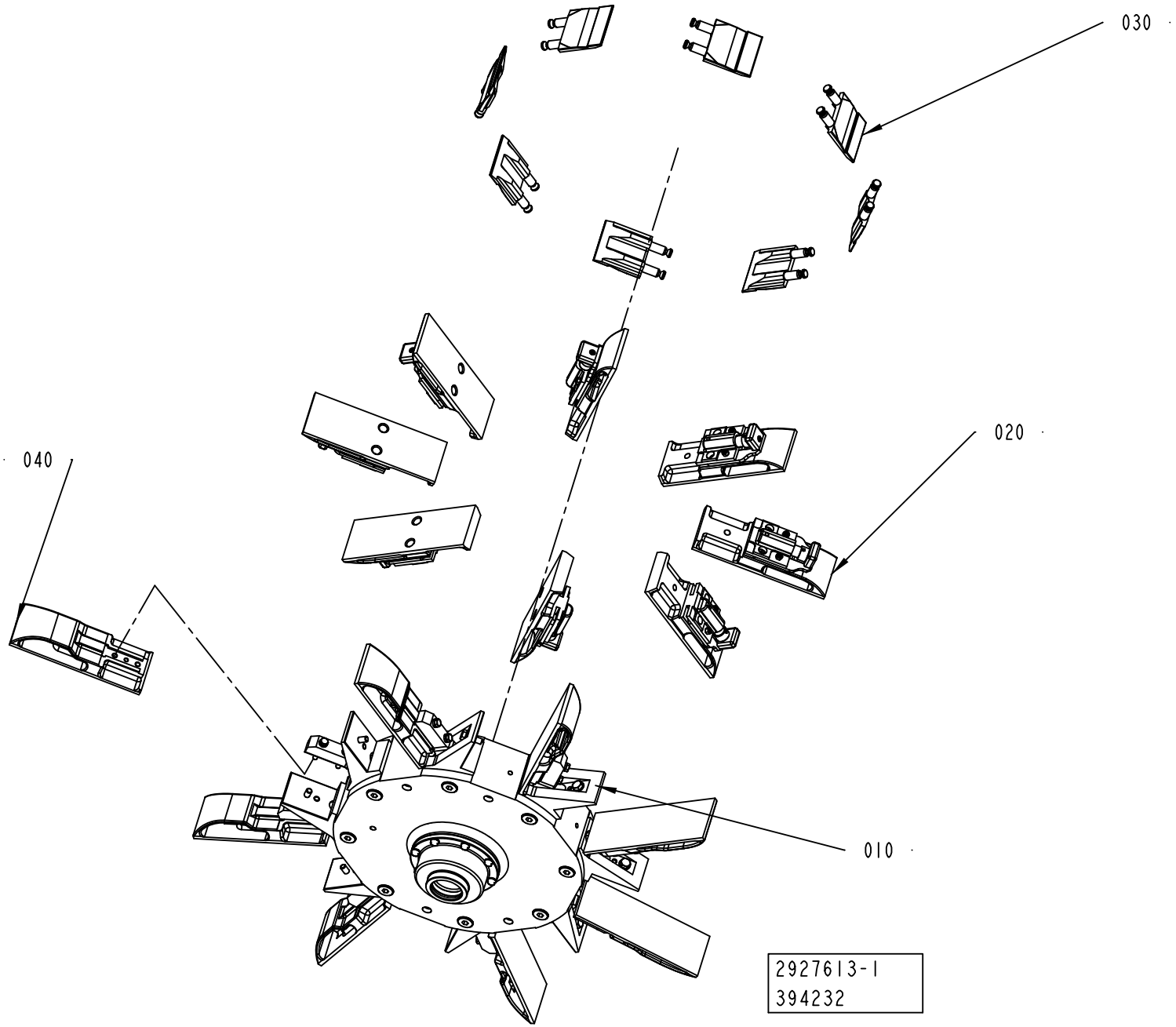
030
020
040
010
2927613-1
394232

ECM: 641974 - 20140401
Group number: 2927613-0100
Assembly Drawing: 2927613-1_1_AB

Pos	Part No	UN	Qty	Description	Page No
-					
010	2925961-0100		1	HUB	**1-81**
020	2925964-0100		1	FLAP	**1-83, 1-85, 1-87, 1-89**
030	2925965-0100		1	BOTTOM	**1-95, 1-97, 1-99, 1-101, 1-103**
040	3025636-0100		8	FLAP	**1-105, 1-107, 1-109, 1-111, 1-113**

Pos	Part No	UN	Qty	Description	Page No

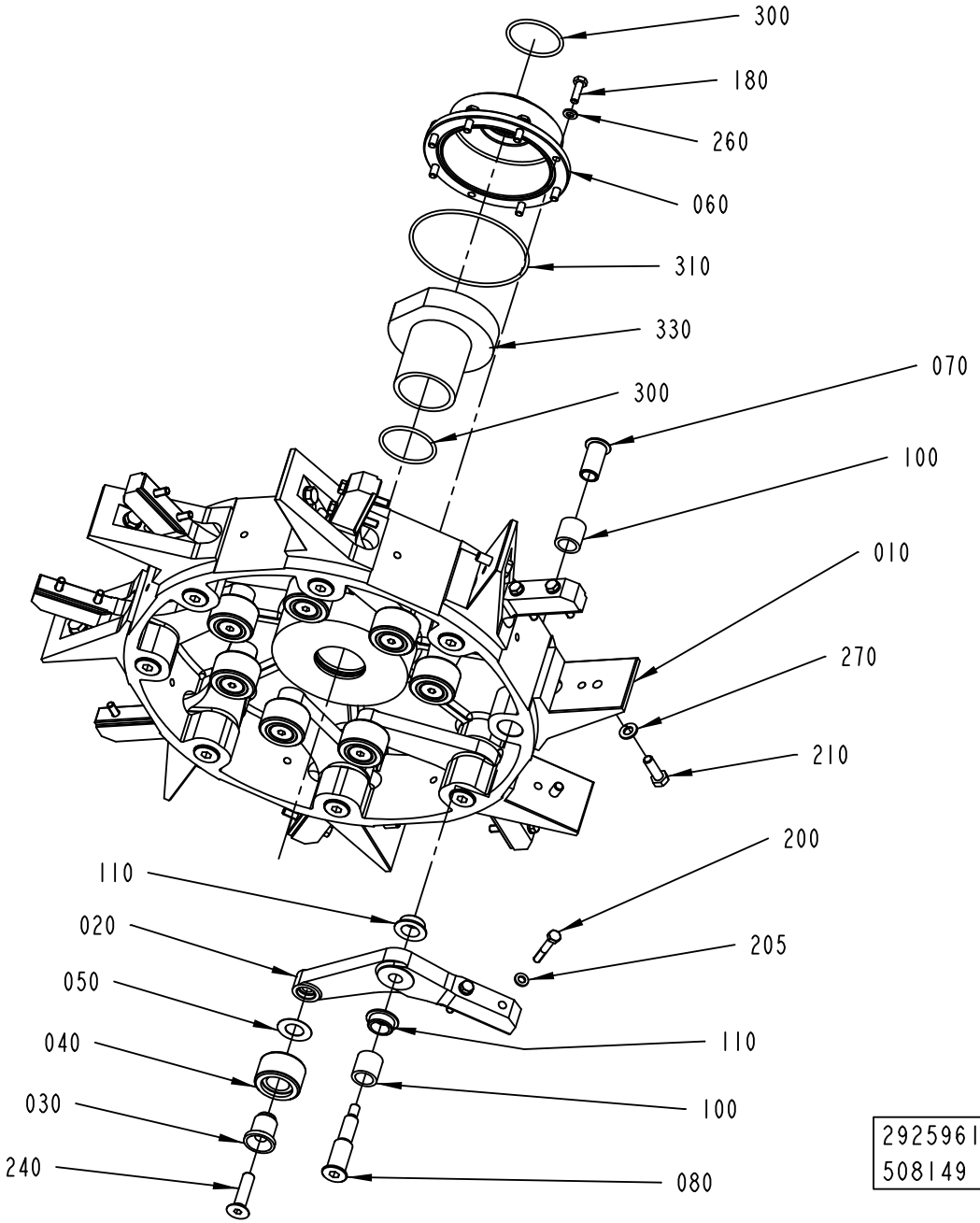
300
180
260
060
310
330
300
070
100
010
270
210
200
205
110
110
100
080
020
050
040
030
240
2925961-1
508149

ECM: 641864 - 20140401
Group number: 2925961-0100
Assembly Drawing: 2925961-1_1_AC

Pos	Part No	UN	Qty	Description	Page No
TBA 0500S, TBA 0500SQ, TBA 0500B, TBA 1000B, TBA 1000SQ, TBA 1000S, TPA 1000SQ, TPA 0500SQ, TPA 0750SQ, TBA 1000M					
010	2733999-0000		1	HUB	
200	312105-0378		16	SCREW, M6S ISO 4014 M6X40 A4 80	
205	315105-0153		16	WASHER PLAIN, 6,4X12X1,5 A4 BRB	
TBA 1000E, TBA 0500E					
010	2862227-0000		1	HUB	
200	312105-0376		16	SCREW, M6S ISO 4014 M6X35 A4 80	
205	315105-0153		16	WASHER PLAIN, 6,4X12X1,5 A4 BRB	
TBA 1500S					
010	2733999-0000		1	HUB	
200	312105-0376		16	SCREW, M6S ISO 4014 M6X35 A4 80	
205	315105-0153		16	WASHER PLAIN, 6,4X12X1,5 A4 BRB	
TBA 2000S					
010	2733999-0000		1	HUB	
200	2693200-0000		16	SCREW	
205	315115-0153		16	WASHER PLAIN, TBRB 6,4/12 H=3	
Common Parts					
020	1279559-0000		8	ARM	
030	1144312-0000		8	AXLE PIN	
040	1144335-0000		8	ROLLER	
050	1144354-0000		8	WASHER	
060	1144356-0000		1	COVER	
070	2774465-0000		8	SCREW BUSHING	
080	2774466-0000		8	SCREW HOLDER	
100	1144417-0000		16	BUSHING	
110	1282708-0000		16	BUSHING	
180	312105-0370		8	SCREW, M6S ISO 4017 M6X20 A4 80	
210	312105-0453		8	SCREW, M6S ISO 4017 M8X25 A4 80	
240	312155-0499		8	SCREW DIN 7991 MF6S M10X40 A4 70	
260	315105-0153		8	WASHER PLAIN, 6,4X12X1,5 A4 BRB	
270	315105-0165		8	FWAS080G0-0S, WASHER PLAIN	
300	315202-0225		2	O-RING 44,2X3 MM	
310	315202-0311		1	O-RING 99,5X3 MM	
330	90459-5828		1	CLAMPING ELEMENT WITH SLEEVE, 45X54 MM	

Pos	Part No	UN	Qty	Description	Page No

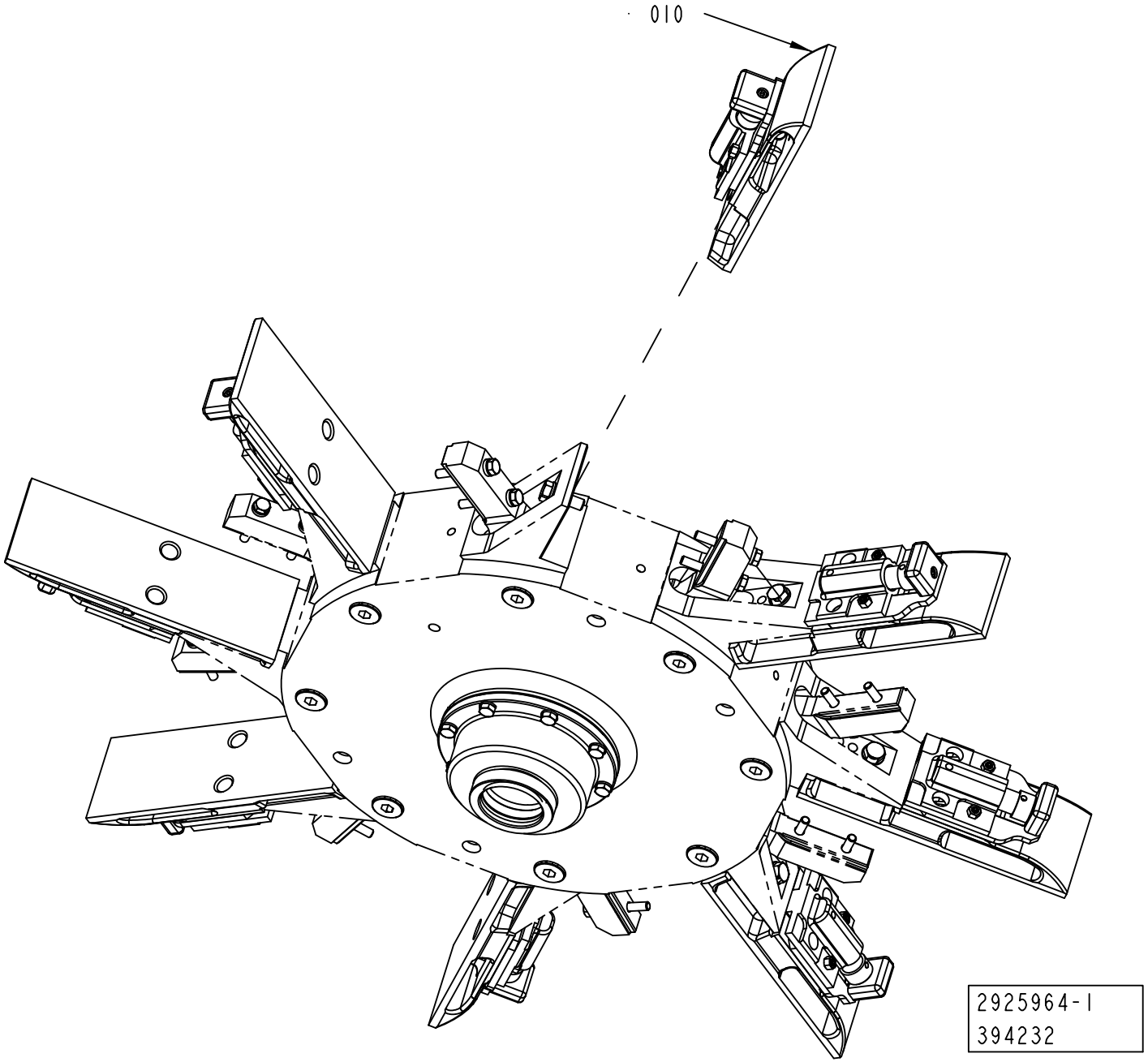
010
2925964-1
394232

Pos	Part No	UN	Qty	Description	Page No
TBA 0500B, TBA 1000B NOMOLDEDCAP (See drawing on page: 1-82)					
010	2927548-0100		8	FLAP	**1-91, 1-93**
TBA 0500S (See drawing on page: 1-82)					
010	2984514-0000		8	FLAP	
TBA 0500SQ, TBA 1000SQ (See drawing on page: 1-82)					
010	2927548-0100		8	FLAP	**1-91, 1-93**
TBA 1000B STDA7 (See drawing on page: 1-82)					
010	1260705-0000		8	FLAP	
TBA 1000E, TBA 0500E (See drawing on page: 1-82)					
010	2927548-0100		8	FLAP	**1-91, 1-93**
TBA 1000M (See drawing on page: 1-82)					
010	2998803-0000		8	FLAP	
TBA 1000S (See drawing on page: 1-84)					
010	1144927-0000		8	FLAP	
040	2550211-0000		8	VOLUME BULGE	
110	312155-0287		16	SCREW DIN 7991 MF6S M4X8 A4 70	
TBA 1500S (See drawing on page: 1-86)					
010	1317555-0000		8	FLAP	
080	1317656-0000		8	INSERT	
120	312105-0289		16	SCREW, M6S ISO 4017 M4X10 A4 70	
130	315105-0136		16	WASHER PLAIN, 4,3X8X0,8 A4 BRB	
TBA 2000S (See drawing on page: 1-88)					
010	2566321-0000		8	FLAP	
050	2588327-0000		8	INSERT	
070	2693197-0000		16	INSERT	
120	312155-0287		16	SCREW DIN 7991 MF6S M4X8 A4 70	
TPA 0500SQ (See drawing on page: 1-82)					
010	2564347-0000		8	FLAP	
TPA 1000SQ, TPA 0750SQ (See drawing on page: 1-82)					
010	2927548-0100		8	FLAP	**1-91, 1-93**

Pos	Part No	UN	Qty	Description	Page No

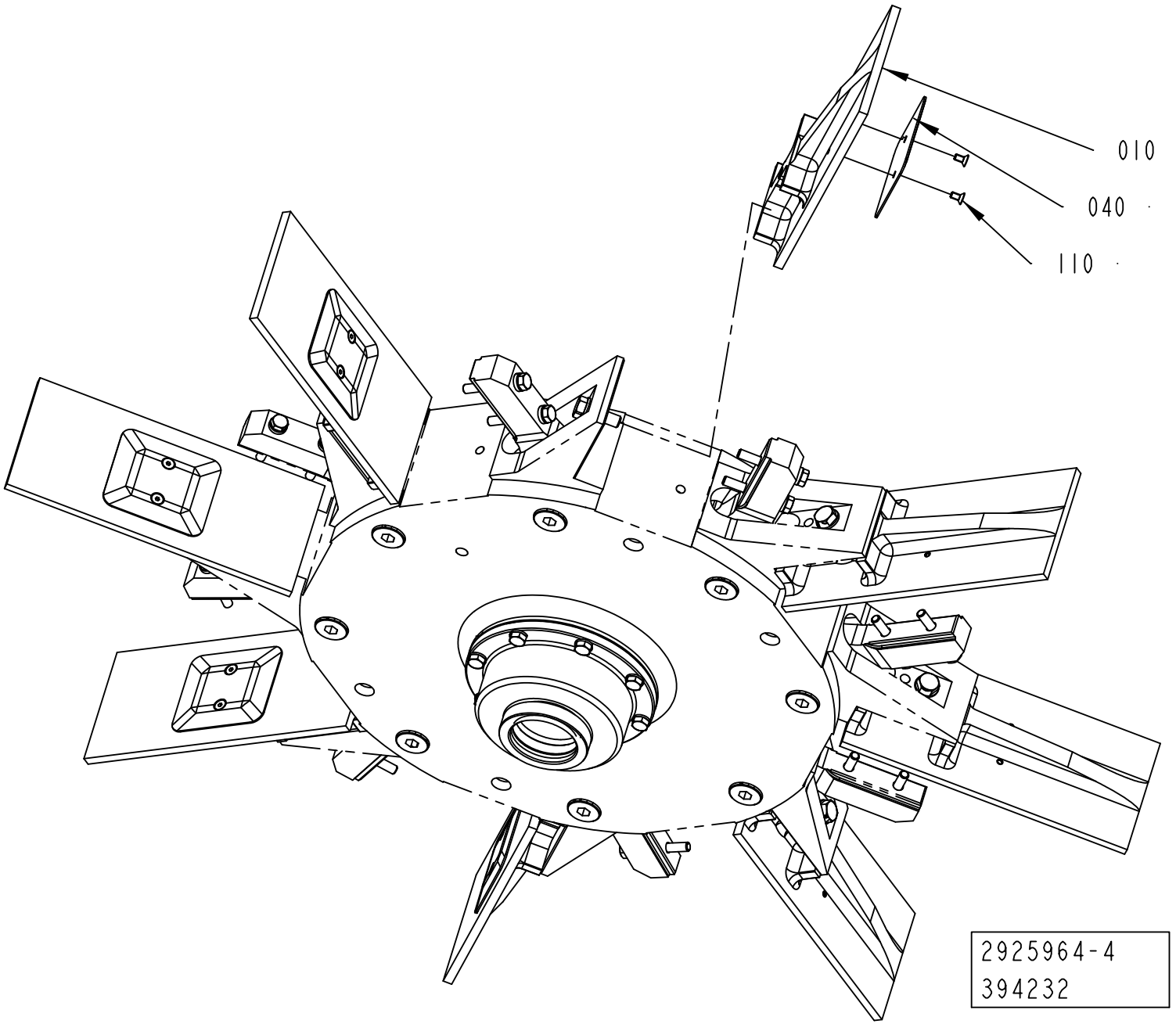
010
040
110
2925964-4
394232

Pos	Part No	UN	Qty	Description	Page No
TBA 0500B, TBA 1000B NOMOLDEDCAP (See drawing on page: 1-82)					
010	2927548-0100		8	FLAP	**1-91, 1-93**
TBA 0500S (See drawing on page: 1-82)					
010	2984514-0000		8	FLAP	
TBA 0500SQ, TBA 1000SQ (See drawing on page: 1-82)					
010	2927548-0100		8	FLAP	**1-91, 1-93**
TBA 1000B STDA7 (See drawing on page: 1-82)					
010	1260705-0000		8	FLAP	
TBA 1000E, TBA 0500E (See drawing on page: 1-82)					
010	2927548-0100		8	FLAP	**1-91, 1-93**
TBA 1000M (See drawing on page: 1-82)					
010	2998803-0000		8	FLAP	
TBA 1000S (See drawing on page: 1-84)					
010	1144927-0000		8	FLAP	
040	2550211-0000		8	VOLUME BULGE	
110	312155-0287		16	SCREW DIN 7991 MF6S M4X8 A4 70	
TBA 1500S (See drawing on page: 1-86)					
010	1317555-0000		8	FLAP	
080	1317656-0000		8	INSERT	
120	312105-0289		16	SCREW, M6S ISO 4017 M4X10 A4 70	
130	315105-0136		16	WASHER PLAIN, 4,3X8X0,8 A4 BRB	
TBA 2000S (See drawing on page: 1-88)					
010	2566321-0000		8	FLAP	
050	2588327-0000		8	INSERT	
070	2693197-0000		16	INSERT	
120	312155-0287		16	SCREW DIN 7991 MF6S M4X8 A4 70	
TPA 0500SQ (See drawing on page: 1-82)					
010	2564347-0000		8	FLAP	
TPA 1000SQ, TPA 0750SQ (See drawing on page: 1-82)					
010	2927548-0100		8	FLAP	**1-91, 1-93**

Pos	Part No	UN	Qty	Description	Page No

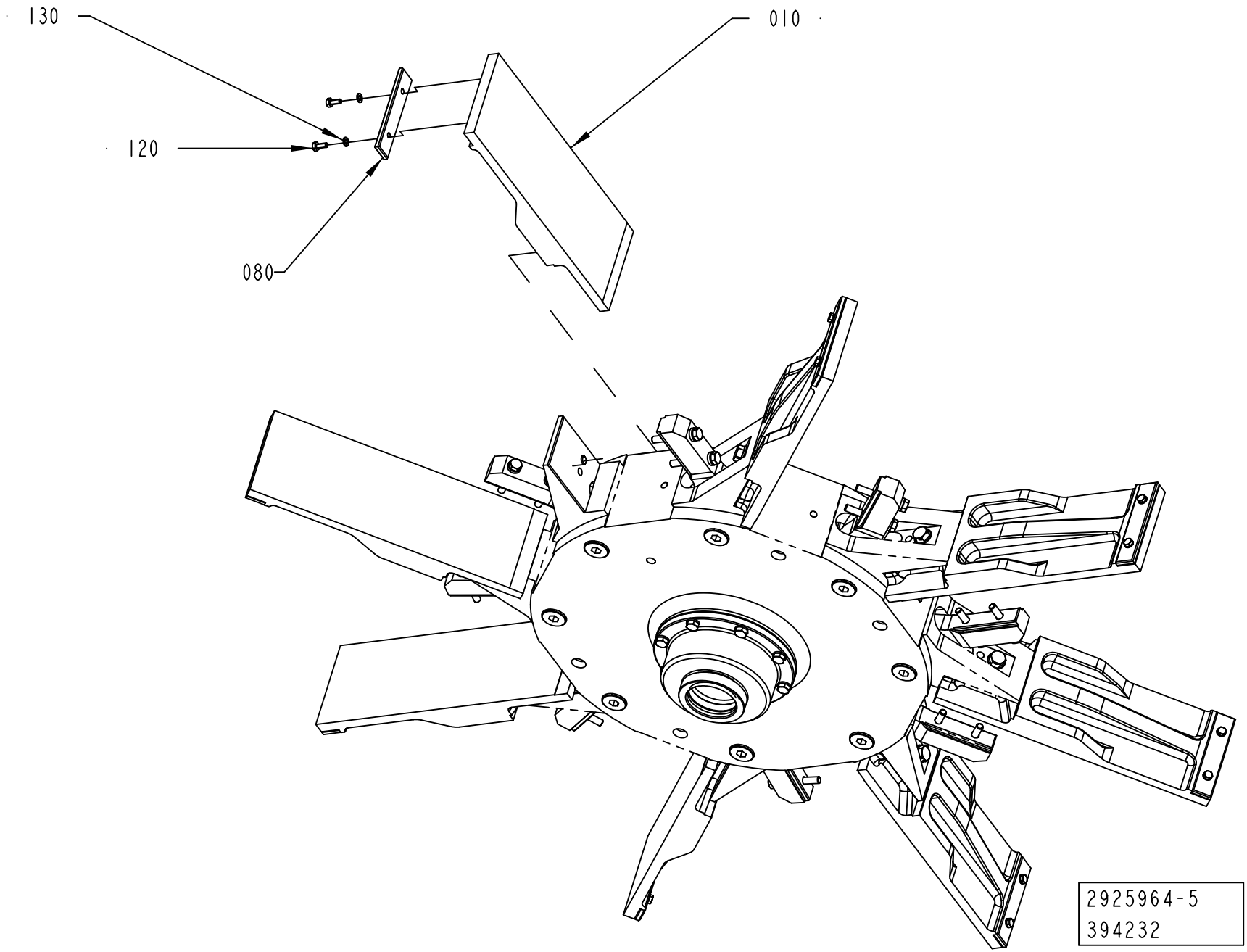
130
010
120
080
2925964-5
394232

Pos	Part No	UN	Qty	Description	Page No
TBA 0500B, TBA 1000B NOMOLDEDCAP (See drawing on page: 1-82)					
010	2927548-0100		8	FLAP	**1-91, 1-93**
TBA 0500S (See drawing on page: 1-82)					
010	2984514-0000		8	FLAP	
TBA 0500SQ, TBA 1000SQ (See drawing on page: 1-82)					
010	2927548-0100		8	FLAP	**1-91, 1-93**
TBA 1000B STDA7 (See drawing on page: 1-82)					
010	1260705-0000		8	FLAP	
TBA 1000E, TBA 0500E (See drawing on page: 1-82)					
010	2927548-0100		8	FLAP	**1-91, 1-93**
TBA 1000M (See drawing on page: 1-82)					
010	2998803-0000		8	FLAP	
TBA 1000S (See drawing on page: 1-84)					
010	1144927-0000		8	FLAP	
040	2550211-0000		8	VOLUME BULGE	
110	312155-0287		16	SCREW DIN 7991 MF6S M4X8 A4 70	
TBA 1500S (See drawing on page: 1-86)					
010	1317555-0000		8	FLAP	
080	1317656-0000		8	INSERT	
120	312105-0289		16	SCREW, M6S ISO 4017 M4X10 A4 70	
130	315105-0136		16	WASHER PLAIN, 4,3X8X0,8 A4 BRB	
TBA 2000S (See drawing on page: 1-88)					
010	2566321-0000		8	FLAP	
050	2588327-0000		8	INSERT	
070	2693197-0000		16	INSERT	
120	312155-0287		16	SCREW DIN 7991 MF6S M4X8 A4 70	
TPA 0500SQ (See drawing on page: 1-82)					
010	2564347-0000		8	FLAP	
TPA 1000SQ, TPA 0750SQ (See drawing on page: 1-82)					
010	2927548-0100		8	FLAP	**1-91, 1-93**

Pos	Part No	UN	Qty	Description	Page No

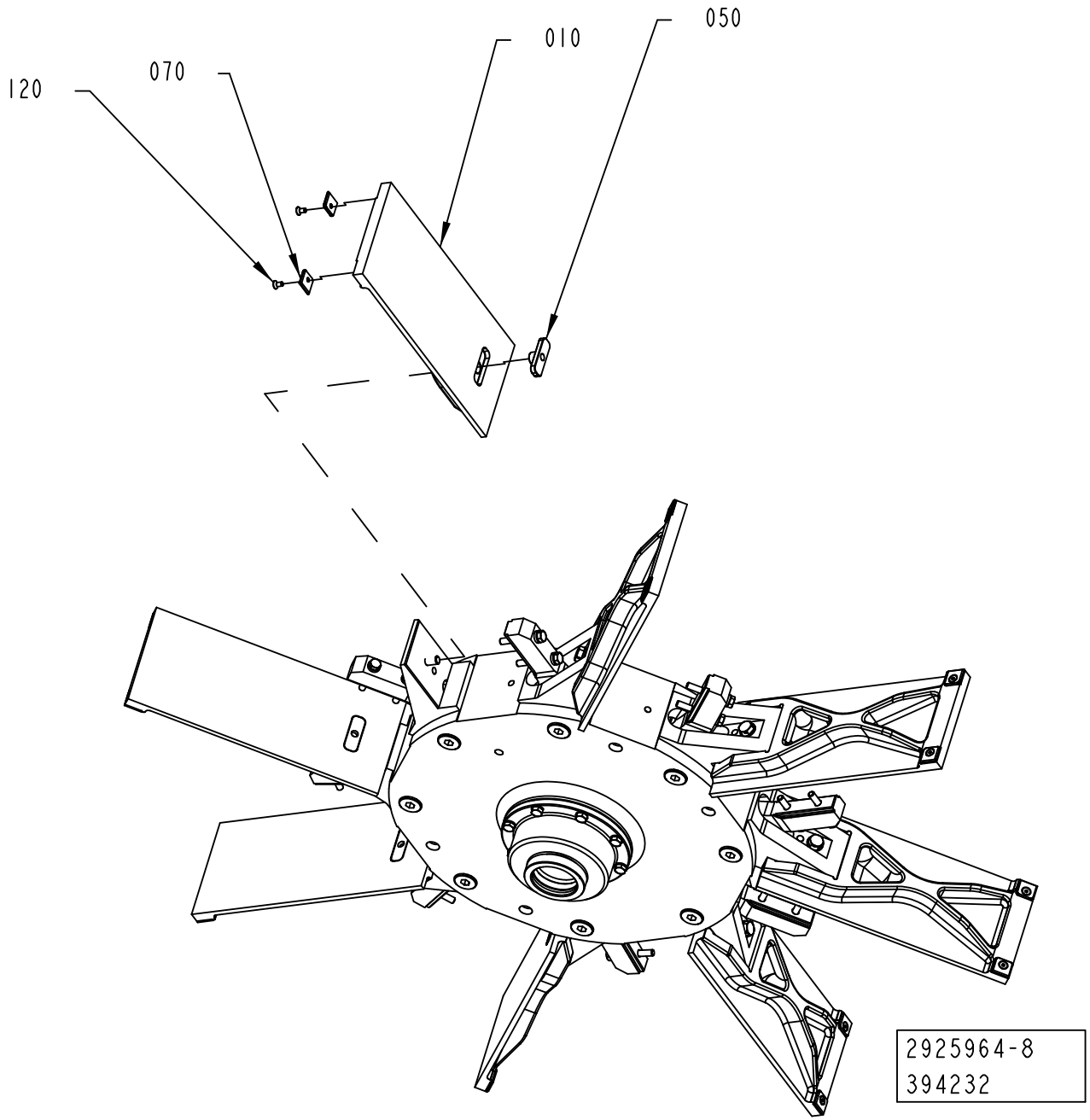
050
010
070
120
2925964-8
394232

Pos	Part No	UN	Qty	Description	Page No
TBA 0500B, TBA 1000B NOMOLDEDCAP (See drawing on page: 1-82)					
010	2927548-0100		8	FLAP	**1-91, 1-93**
TBA 0500S (See drawing on page: 1-82)					
010	2984514-0000		8	FLAP	
TBA 0500SQ, TBA 1000SQ (See drawing on page: 1-82)					
010	2927548-0100		8	FLAP	**1-91, 1-93**
TBA 1000B STDA7 (See drawing on page: 1-82)					
010	1260705-0000		8	FLAP	
TBA 1000E, TBA 0500E (See drawing on page: 1-82)					
010	2927548-0100		8	FLAP	**1-91, 1-93**
TBA 1000M (See drawing on page: 1-82)					
010	2998803-0000		8	FLAP	
TBA 1000S (See drawing on page: 1-84)					
010	1144927-0000		8	FLAP	
040	2550211-0000		8	VOLUME BULGE	
110	312155-0287		16	SCREW DIN 7991 MF6S M4X8 A4 70	
TBA 1500S (See drawing on page: 1-86)					
010	1317555-0000		8	FLAP	
080	1317656-0000		8	INSERT	
120	312105-0289		16	SCREW, M6S ISO 4017 M4X10 A4 70	
130	315105-0136		16	WASHER PLAIN, 4,3X8X0,8 A4 BRB	
TBA 2000S (See drawing on page: 1-88)					
010	2566321-0000		8	FLAP	
050	2588327-0000		8	INSERT	
070	2693197-0000		16	INSERT	
120	312155-0287		16	SCREW DIN 7991 MF6S M4X8 A4 70	
TPA 0500SQ (See drawing on page: 1-82)					
010	2564347-0000		8	FLAP	
TPA 1000SQ, TPA 0750SQ (See drawing on page: 1-82)					
010	2927548-0100		8	FLAP	**1-91, 1-93**

Pos	Part No	UN	Qty	Description	Page No

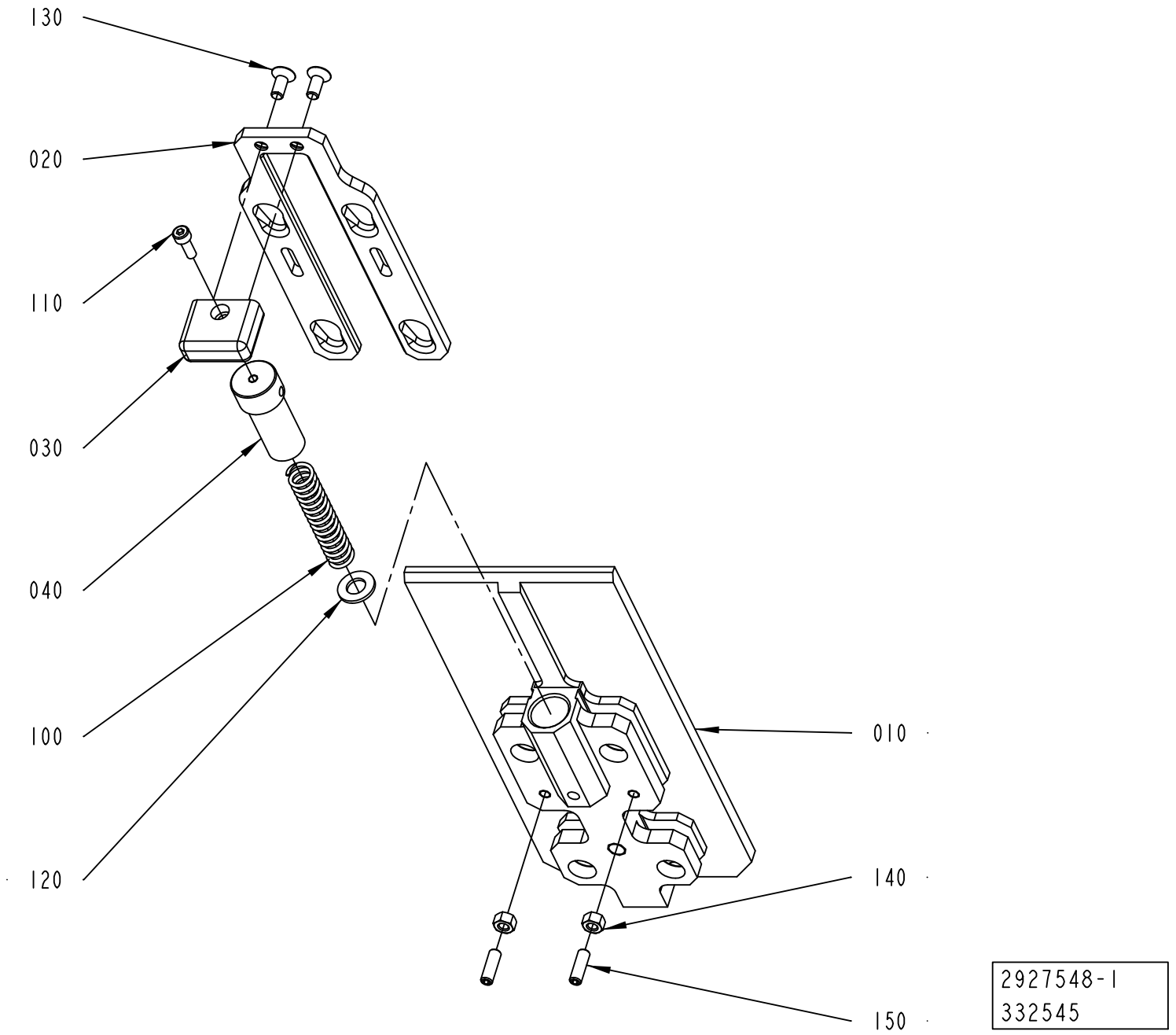
130
020
110
030
040
100
120
010
140
150
2927548-1
332545

ECM: 641973 - 20140401
Group number: 2927548-0100
Assembly Drawing: 2927548-1_1_AA

This list covers pages from 1-90 to 1-93

Pos	Part No	UN	Qty	Description	Page No
TBA 0500B, TBA 1000B NOMOLDEDCAP (See drawing on page: 1-90)					
010	2520170-0000		1	FLAP	
020	2520168-0000		1	SLIDE	
110	312115-0291		1	SCREW ISO4762 M4X12 A4 80	
TBA 0500SQ, TBA 1000SQ, TBA 1000E, TBA 0500E (See drawing on page: 1-90)					
010	2869538-0000		1	FLAP	
020	2871044-0000		1	SLIDE	
090	312115-0291		1	SCREW ISO4762 M4X12 A4 80	
TPA 1000SQ, TPA 0750SQ (See drawing on page: 1-92)					
010	2658242-0000		1	FLAP	
020	2658241-0000		1	SLIDE	
110	312115-0291		1	SCREW ISO4762 M4X12 A4 80	
Common Parts					
030	2526563-0000		1	HANDLE	
040	2526567-0000		1	CYLINDER	
100	90459-0969		1	COMP. SPRING, 22430, 1,6X11,6X58,5	
120	315105-0165		1	FWAS080G0-0S, WASHER PLAIN	
130	312155-0327		2	SCREW DIN 7991 MF6S M5X12 A4 70	
140	312605-0314		2	HEXAGON NUT, M6M M5 A280	
150	312318-0329		2	SET SCREW, CUP END ISO4029 M5X16 A4	

Pos	Part No	UN	Qty	Description	Page No

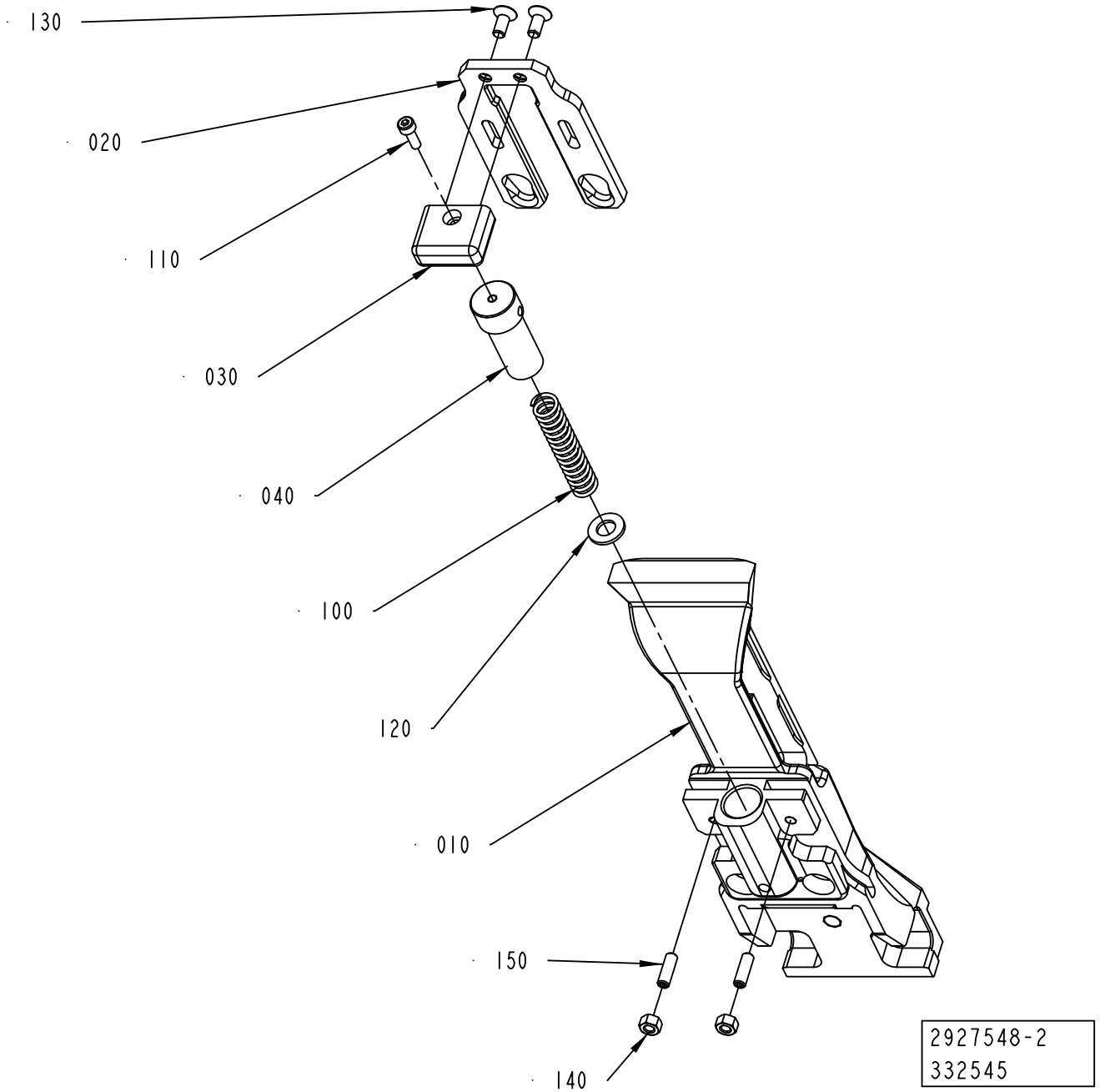
130
020
110
030
040
100
120
010
150
140
2927548-2
332545

ECM: 641973 - 20140401
Group number: 2927548-0100
Assembly Drawing: 2927548-2_1_AA

This list covers pages from 1-90 to 1-93

Pos	Part No	UN	Qty	Description	Page No
TBA 0500B, TBA 1000B NOMOLDEDCAP (See drawing on page: 1-90)					
010	2520170-0000		1	FLAP	
020	2520168-0000		1	SLIDE	
110	312115-0291		1	SCREW ISO4762 M4X12 A4 80	
TBA 0500SQ, TBA 1000SQ, TBA 1000E, TBA 0500E (See drawing on page: 1-90)					
010	2869538-0000		1	FLAP	
020	2871044-0000		1	SLIDE	
090	312115-0291		1	SCREW ISO4762 M4X12 A4 80	
TPA 1000SQ, TPA 0750SQ (See drawing on page: 1-92)					
010	2658242-0000		1	FLAP	
020	2658241-0000		1	SLIDE	
110	312115-0291		1	SCREW ISO4762 M4X12 A4 80	
Common Parts					
030	2526563-0000		1	HANDLE	
040	2526567-0000		1	CYLINDER	
100	90459-0969		1	COMP. SPRING, 22430, 1,6X11,6X58,5	
120	315105-0165		1	FWAS080G0-0S, WASHER PLAIN	
130	312155-0327		2	SCREW DIN 7991 MF6S M5X12 A4 70	
140	312605-0314		2	HEXAGON NUT, M6M M5 A280	
150	312318-0329		2	SET SCREW, CUP END ISO4029 M5X16 A4	

Pos	Part No	UN	Qty	Description	Page No

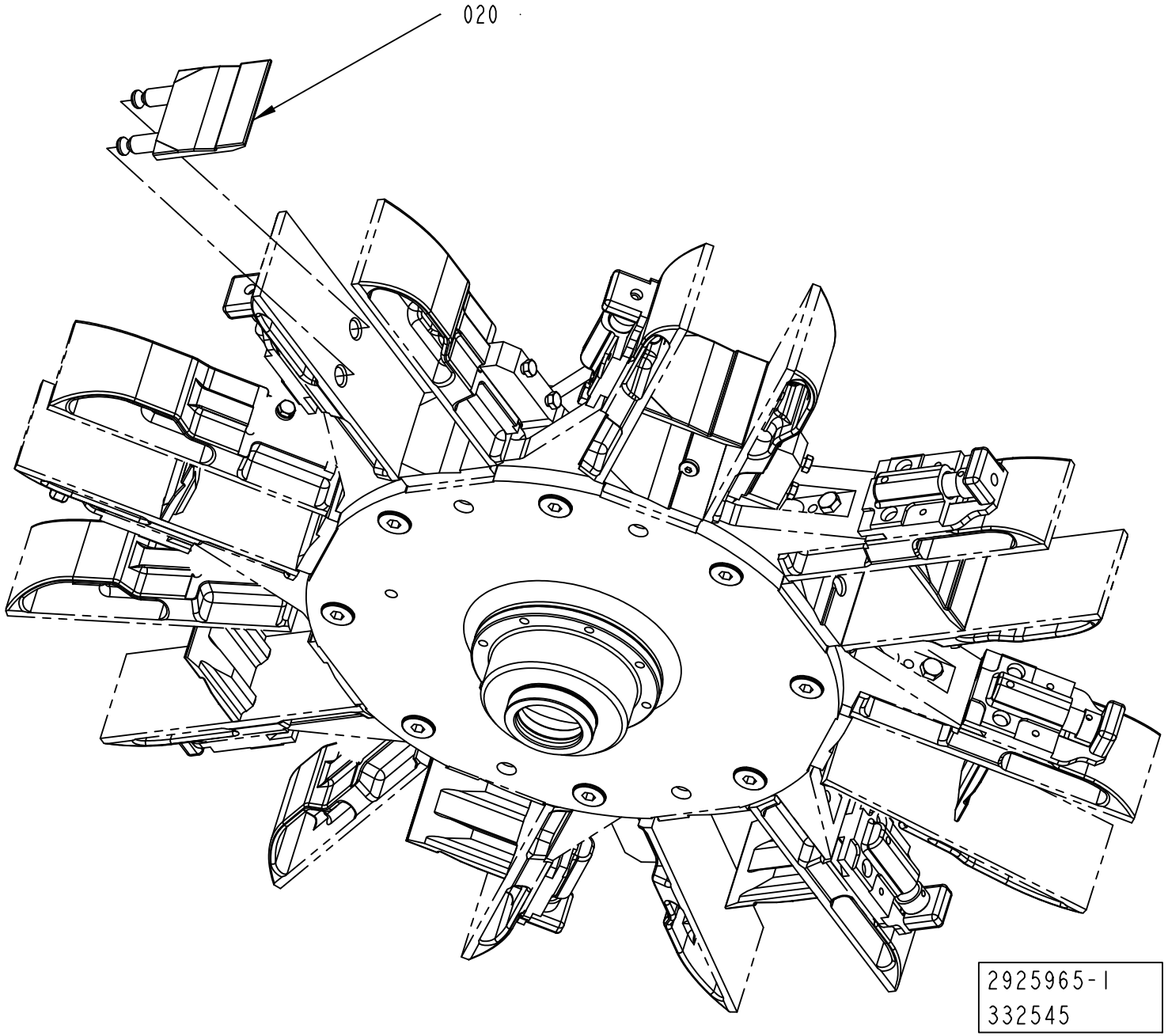
020
2925965-1
332545

Pos	Part No	UN	Qty	Description	Page No
TPA 0750SQ (See drawing on page: 1-98)					
020	2663373-0000		8	BOTTOM	
030	2658239-0000		8	BOTTOM	
TPA 1000SQ (See drawing on page: 1-100)					
010	2802612-0000		8	BOTTOM	
020	2658240-0000		8	BOTTOM	
030	2658240-0000		8	BOTTOM	
100	312155-0379		8	SCREW DIN 7991 MF6S M6X45 A4 70	
TBA 0500B (See drawing on page: 1-96)					
020	2895569-0000		8	BOTTOM PLATE	
TBA 0500E (See drawing on page: 1-94)					
020	3252309-0000		8	BOTTOM	
TBA 0500S (See drawing on page: 1-102)					
010	2984513-0000		8	BOTTOM	
100	312105-0368		8	"SCREW, M6S ISO 4017 M6X16 A4 80"	
110	315105-0153		8	WASHER PLAIN, 6,4X12X1,5 A4 BRB	
TBA 0500SQ (See drawing on page: 1-94)					
020	2871043-0000		8	BOTTOM	
TBA 1000B NOMOLDEDCAP (See drawing on page: 1-96)					
020	2895569-0000		8	BOTTOM PLATE	
TBA 1000B STDA7 (See drawing on page: 1-102)					
010	2932827-0000		8	BOTTOM	
100	312155-0380		8	SCREW DIN 7991 MF6S M6X50 A4 70	
TBA 1000E (See drawing on page: 1-102)					
010	3243102-0000		8	BOTTOM	
100	312155-0370		8	SCREW DIN 7991 MF6S M6X20 A4 70	
TBA 1000M (See drawing on page: 1-102)					
010	2998801-0000		8	BOTTOM	
100	312155-0376		8	SCREW DIN 7991 MF6S M6X35 A4 70	
TBA 1000M LIGHTCAP24 (See drawing on page: 1-102)					
010	3094296-0000		8	BOTTOM	
TBA 1000S LIGHTCAP24 (See drawing on page: 1-102)					
010	3128967-0000		8	BOTTOM	
100	312155-0370		8	SCREW DIN 7991 MF6S M6X20 A4 70	
TBA 1000S NOMOLDEDCAP (See drawing on page: 1-102)					
010	2818555-0000		8	BOTTOM	
100	312155-0370		8	SCREW DIN 7991 MF6S M6X20 A4 70	
TBA 1000S STDA7 (See drawing on page: 1-102)					
010	2818554-0000		8	BOTTOM	
100	312155-0370		8	SCREW DIN 7991 MF6S M6X20 A4 70	
TBA 1000SQ (See drawing on page: 1-102)					
010	2795264-0000		8	BOTTOM	
100	312155-0370		8	SCREW DIN 7991 MF6S M6X20 A4 70	
TBA 1500S (See drawing on page: 1-102)					
010	2929030-0000		8	BOTTOM	
100	312155-0376		8	SCREW DIN 7991 MF6S M6X35 A4 70	
TBA 2000S (See drawing on page: 1-102)					
010	2960430-0000		8	BOTTOM	
100	312155-0376		8	SCREW DIN 7991 MF6S M6X35 A4 70	
TPA 0500SQ (See drawing on page: 1-102)					
010	2602614-0000		8	BOTTOM	
100	312105-0368		8	"SCREW, M6S ISO 4017 M6X16 A4 80"	
110	315105-0153		8	WASHER PLAIN, 6,4X12X1,5 A4 BRB	

TBA 0500 B

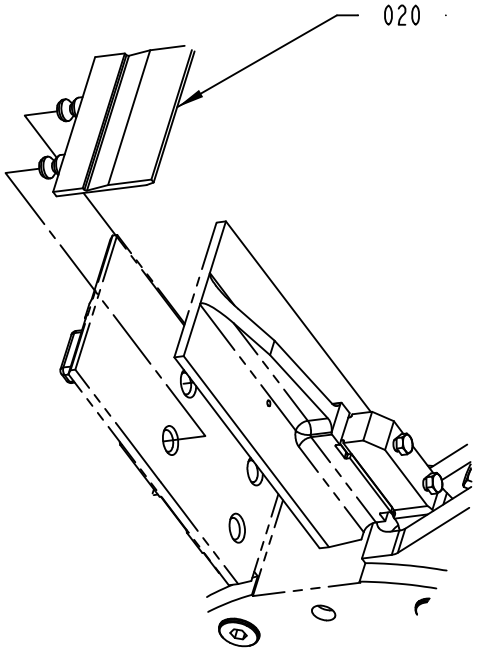

TBA 1000 B

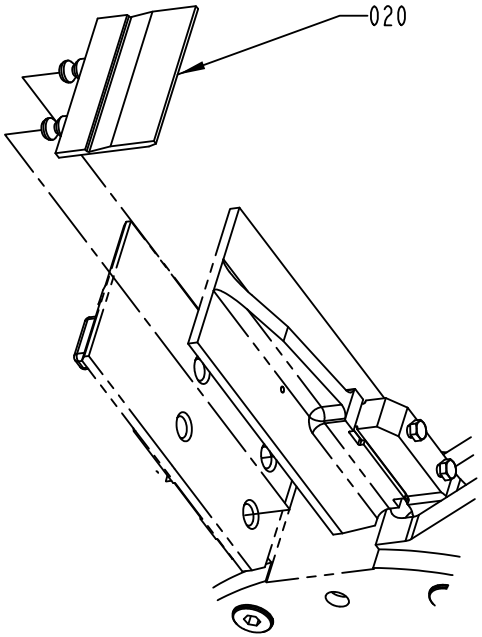

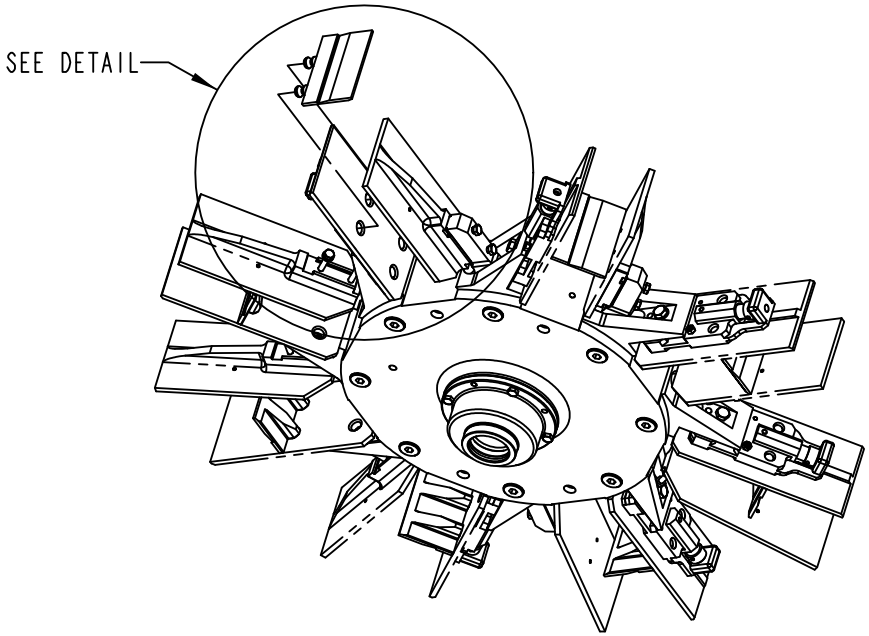

2925965-2
332545

Pos	Part No	UN	Qty	Description	Page No
TPA 0750SQ (See drawing on page: 1-98)					
020	2663373-0000		8	BOTTOM	
030	2658239-0000		8	BOTTOM	
TPA 1000SQ (See drawing on page: 1-100)					
010	2802612-0000		8	BOTTOM	
020	2658240-0000		8	BOTTOM	
030	2658240-0000		8	BOTTOM	
100	312155-0379		8	SCREW DIN 7991 MF6S M6X45 A4 70	
TBA 0500B (See drawing on page: 1-96)					
020	2895569-0000		8	BOTTOM PLATE	
TBA 0500E (See drawing on page: 1-94)					
020	3252309-0000		8	BOTTOM	
TBA 0500S (See drawing on page: 1-102)					
010	2984513-0000		8	BOTTOM	
100	312105-0368		8	"SCREW, M6S ISO 4017 M6X16 A4 80"	
110	315105-0153		8	WASHER PLAIN, 6,4X12X1,5 A4 BRB	
TBA 0500SQ (See drawing on page: 1-94)					
020	2871043-0000		8	BOTTOM	
TBA 1000B NOMOLDEDCAP (See drawing on page: 1-96)					
020	2895569-0000		8	BOTTOM PLATE	
TBA 1000B STDA7 (See drawing on page: 1-102)					
010	2932827-0000		8	BOTTOM	
100	312155-0380		8	SCREW DIN 7991 MF6S M6X50 A4 70	
TBA 1000E (See drawing on page: 1-102)					
010	3243102-0000		8	BOTTOM	
100	312155-0370		8	SCREW DIN 7991 MF6S M6X20 A4 70	
TBA 1000M (See drawing on page: 1-102)					
010	2998801-0000		8	BOTTOM	
100	312155-0376		8	SCREW DIN 7991 MF6S M6X35 A4 70	
TBA 1000M LIGHTCAP24 (See drawing on page: 1-102)					
010	3094296-0000		8	BOTTOM	
TBA 1000S LIGHTCAP24 (See drawing on page: 1-102)					
010	3128967-0000		8	BOTTOM	
100	312155-0370		8	SCREW DIN 7991 MF6S M6X20 A4 70	
TBA 1000S NOMOLDEDCAP (See drawing on page: 1-102)					
010	2818555-0000		8	BOTTOM	
100	312155-0370		8	SCREW DIN 7991 MF6S M6X20 A4 70	
TBA 1000S STDA7 (See drawing on page: 1-102)					
010	2818554-0000		8	BOTTOM	
100	312155-0370		8	SCREW DIN 7991 MF6S M6X20 A4 70	
TBA 1000SQ (See drawing on page: 1-102)					
010	2795264-0000		8	BOTTOM	
100	312155-0370		8	SCREW DIN 7991 MF6S M6X20 A4 70	
TBA 1500S (See drawing on page: 1-102)					
010	2929030-0000		8	BOTTOM	
100	312155-0376		8	SCREW DIN 7991 MF6S M6X35 A4 70	
TBA 2000S (See drawing on page: 1-102)					
010	2960430-0000		8	BOTTOM	
100	312155-0376		8	SCREW DIN 7991 MF6S M6X35 A4 70	
TPA 0500SQ (See drawing on page: 1-102)					
010	2602614-0000		8	BOTTOM	
100	312105-0368		8	"SCREW, M6S ISO 4017 M6X16 A4 80"	
110	315105-0153		8	WASHER PLAIN, 6,4X12X1,5 A4 BRB	

BOTTOM

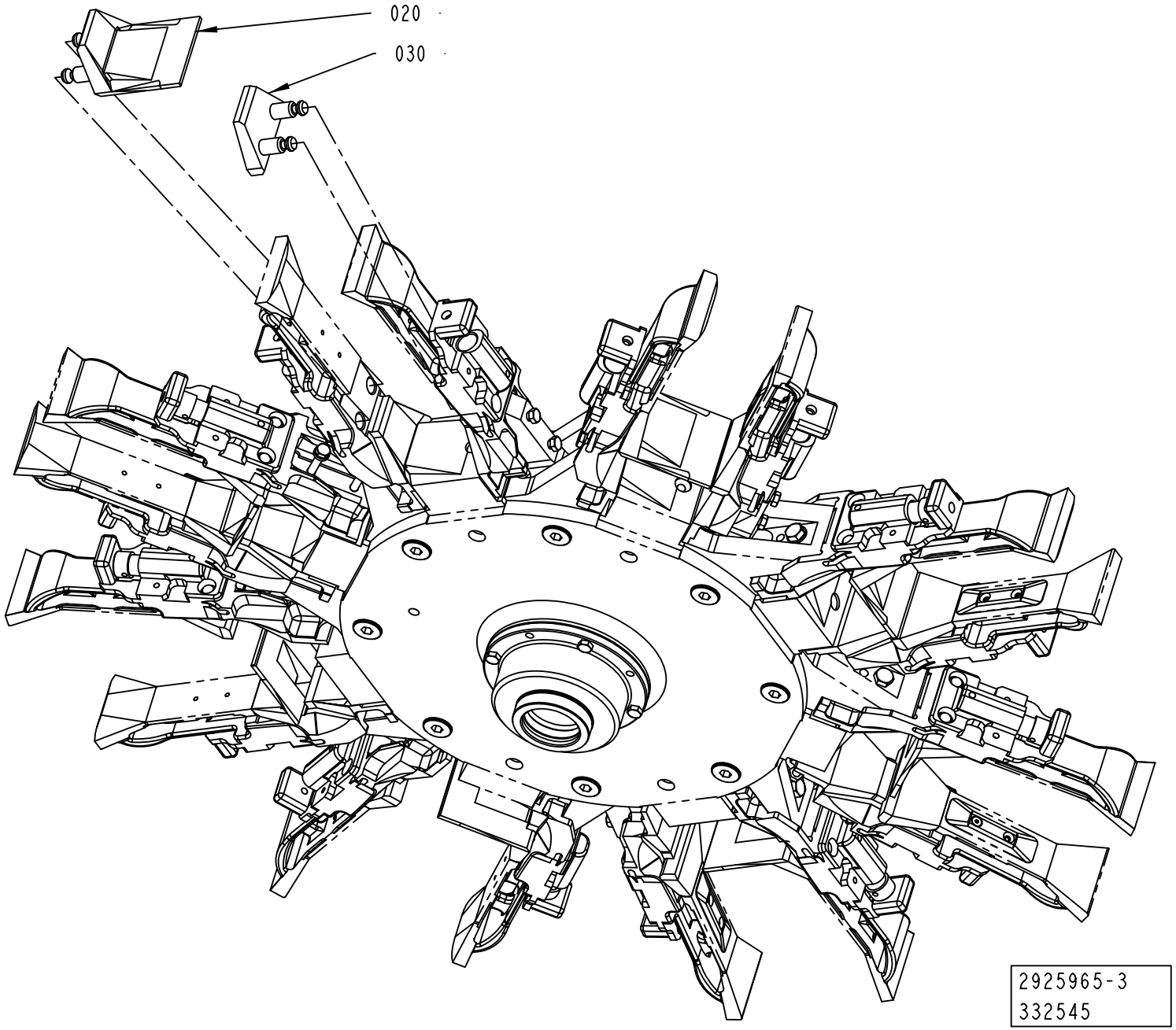

Pos	Part No	UN	Qty	Description	Page No
TPA 0750SQ (See drawing on page: 1-98)					
020	2663373-0000		8	BOTTOM	
030	2658239-0000		8	BOTTOM	
TPA 1000SQ (See drawing on page: 1-100)					
010	2802612-0000		8	BOTTOM	
020	2658240-0000		8	BOTTOM	
030	2658240-0000		8	BOTTOM	
100	312155-0379		8	SCREW DIN 7991 MF6S M6X45 A4 70	
TBA 0500B (See drawing on page: 1-96)					
020	2895569-0000		8	BOTTOM PLATE	
TBA 0500E (See drawing on page: 1-94)					
020	3252309-0000		8	BOTTOM	
TBA 0500S (See drawing on page: 1-102)					
010	2984513-0000		8	BOTTOM	
100	312105-0368		8	"SCREW, M6S ISO 4017 M6X16 A4 80"	
110	315105-0153		8	WASHER PLAIN, 6,4X12X1,5 A4 BRB	
TBA 0500SQ (See drawing on page: 1-94)					
020	2871043-0000		8	BOTTOM	
TBA 1000B NOMOLDEDCAP (See drawing on page: 1-96)					
020	2895569-0000		8	BOTTOM PLATE	
TBA 1000B STDA7 (See drawing on page: 1-102)					
010	2932827-0000		8	BOTTOM	
100	312155-0380		8	SCREW DIN 7991 MF6S M6X50 A4 70	
TBA 1000E (See drawing on page: 1-102)					
010	3243102-0000		8	BOTTOM	
100	312155-0370		8	SCREW DIN 7991 MF6S M6X20 A4 70	
TBA 1000M (See drawing on page: 1-102)					
010	2998801-0000		8	BOTTOM	
100	312155-0376		8	SCREW DIN 7991 MF6S M6X35 A4 70	
TBA 1000M LIGHTCAP24 (See drawing on page: 1-102)					
010	3094296-0000		8	BOTTOM	
TBA 1000S LIGHTCAP24 (See drawing on page: 1-102)					
010	3128967-0000		8	BOTTOM	
100	312155-0370		8	SCREW DIN 7991 MF6S M6X20 A4 70	
TBA 1000S NOMOLDEDCAP (See drawing on page: 1-102)					
010	2818555-0000		8	BOTTOM	
100	312155-0370		8	SCREW DIN 7991 MF6S M6X20 A4 70	
TBA 1000S STDA7 (See drawing on page: 1-102)					
010	2818554-0000		8	BOTTOM	
100	312155-0370		8	SCREW DIN 7991 MF6S M6X20 A4 70	
TBA 1000SQ (See drawing on page: 1-102)					
010	2795264-0000		8	BOTTOM	
100	312155-0370		8	SCREW DIN 7991 MF6S M6X20 A4 70	
TBA 1500S (See drawing on page: 1-102)					
010	2929030-0000		8	BOTTOM	
100	312155-0376		8	SCREW DIN 7991 MF6S M6X35 A4 70	
TBA 2000S (See drawing on page: 1-102)					
010	2960430-0000		8	BOTTOM	
100	312155-0376		8	SCREW DIN 7991 MF6S M6X35 A4 70	
TPA 0500SQ (See drawing on page: 1-102)					
010	2602614-0000		8	BOTTOM	
100	312105-0368		8	"SCREW, M6S ISO 4017 M6X16 A4 80"	
110	315105-0153		8	WASHER PLAIN, 6,4X12X1,5 A4 BRB	

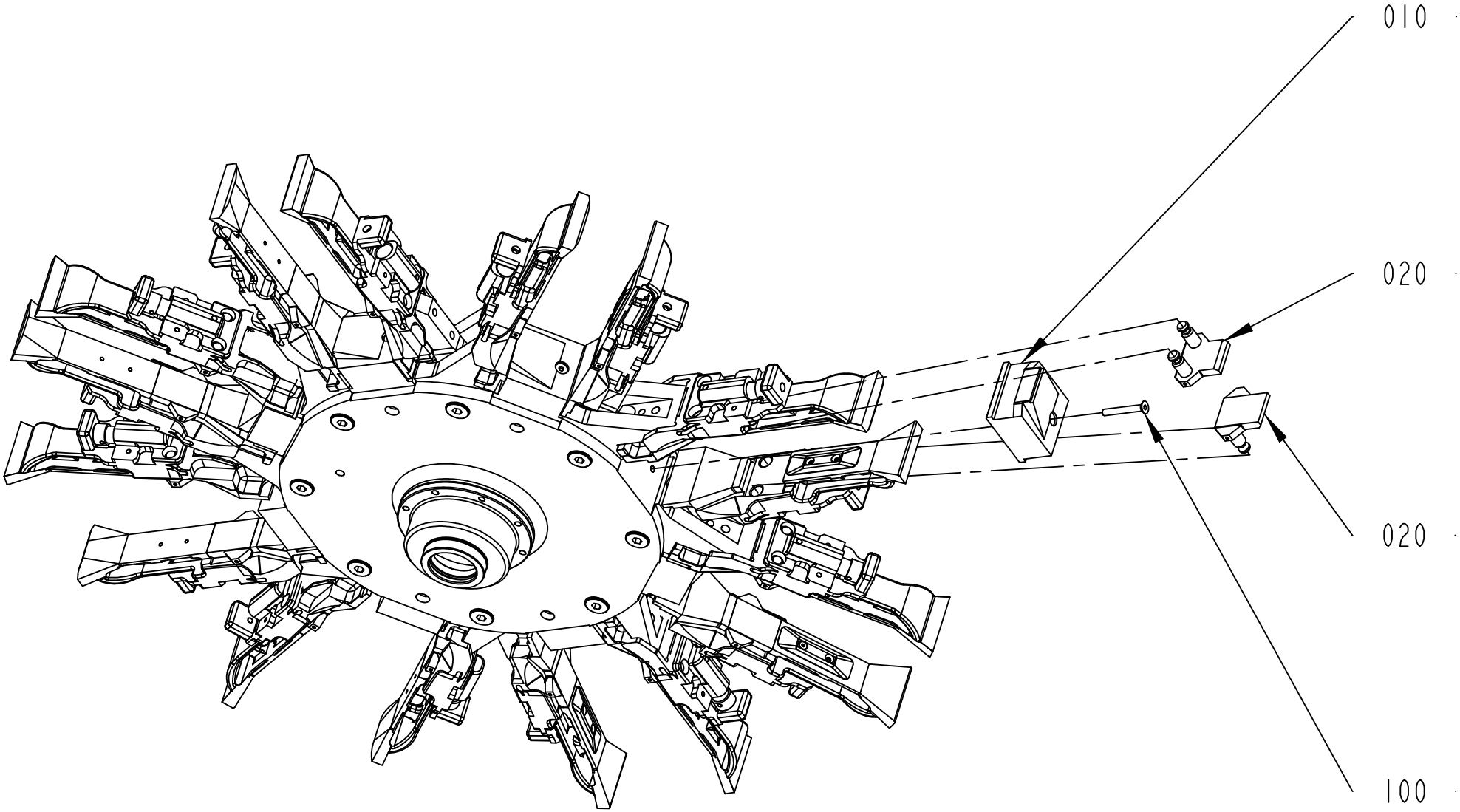

2925965-6
332545

ECM: 641866 - 20140401
Group number: 2925965-0100
Assembly Drawing: 2925965-6_1_AA

This list covers pages from 1-94 to 1-103

Pos	Part No	UN	Qty	Description	Page No
TPA 0750SQ (See drawing on page: 1-98)					
020	2663373-0000		8	BOTTOM	
030	2658239-0000		8	BOTTOM	
TPA 1000SQ (See drawing on page: 1-100)					
010	2802612-0000		8	BOTTOM	
020	2658240-0000		8	BOTTOM	
030	2658240-0000		8	BOTTOM	
100	312155-0379		8	SCREW DIN 7991 MF6S M6X45 A4 70	
TBA 0500B (See drawing on page: 1-96)					
020	2895569-0000		8	BOTTOM PLATE	
TBA 0500E (See drawing on page: 1-94)					
020	3252309-0000		8	BOTTOM	
TBA 0500S (See drawing on page: 1-102)					
010	2984513-0000		8	BOTTOM	
100	312105-0368		8	"SCREW, M6S ISO 4017 M6X16 A4 80"	
110	315105-0153		8	WASHER PLAIN, 6,4X12X1,5 A4 BRB	
TBA 0500SQ (See drawing on page: 1-94)					
020	2871043-0000		8	BOTTOM	
TBA 1000B NOMOLDEDCAP (See drawing on page: 1-96)					
020	2895569-0000		8	BOTTOM PLATE	
TBA 1000B STDA7 (See drawing on page: 1-102)					
010	2932827-0000		8	BOTTOM	
100	312155-0380		8	SCREW DIN 7991 MF6S M6X50 A4 70	
TBA 1000E (See drawing on page: 1-102)					
010	3243102-0000		8	BOTTOM	
100	312155-0370		8	SCREW DIN 7991 MF6S M6X20 A4 70	
TBA 1000M (See drawing on page: 1-102)					
010	2998801-0000		8	BOTTOM	
100	312155-0376		8	SCREW DIN 7991 MF6S M6X35 A4 70	
TBA 1000M LIGHTCAP24 (See drawing on page: 1-102)					
010	3094296-0000		8	BOTTOM	
TBA 1000S LIGHTCAP24 (See drawing on page: 1-102)					
010	3128967-0000		8	BOTTOM	
100	312155-0370		8	SCREW DIN 7991 MF6S M6X20 A4 70	
TBA 1000S NOMOLDEDCAP (See drawing on page: 1-102)					
010	2818555-0000		8	BOTTOM	
100	312155-0370		8	SCREW DIN 7991 MF6S M6X20 A4 70	
TBA 1000S STDA7 (See drawing on page: 1-102)					
010	2818554-0000		8	BOTTOM	
100	312155-0370		8	SCREW DIN 7991 MF6S M6X20 A4 70	
TBA 1000SQ (See drawing on page: 1-102)					
010	2795264-0000		8	BOTTOM	
100	312155-0370		8	SCREW DIN 7991 MF6S M6X20 A4 70	
TBA 1500S (See drawing on page: 1-102)					
010	2929030-0000		8	BOTTOM	
100	312155-0376		8	SCREW DIN 7991 MF6S M6X35 A4 70	
TBA 2000S (See drawing on page: 1-102)					
010	2960430-0000		8	BOTTOM	
100	312155-0376		8	SCREW DIN 7991 MF6S M6X35 A4 70	
TPA 0500SQ (See drawing on page: 1-102)					
010	2602614-0000		8	BOTTOM	
100	312105-0368		8	"SCREW, M6S ISO 4017 M6X16 A4 80"	
110	315105-0153		8	WASHER PLAIN, 6,4X12X1,5 A4 BRB	

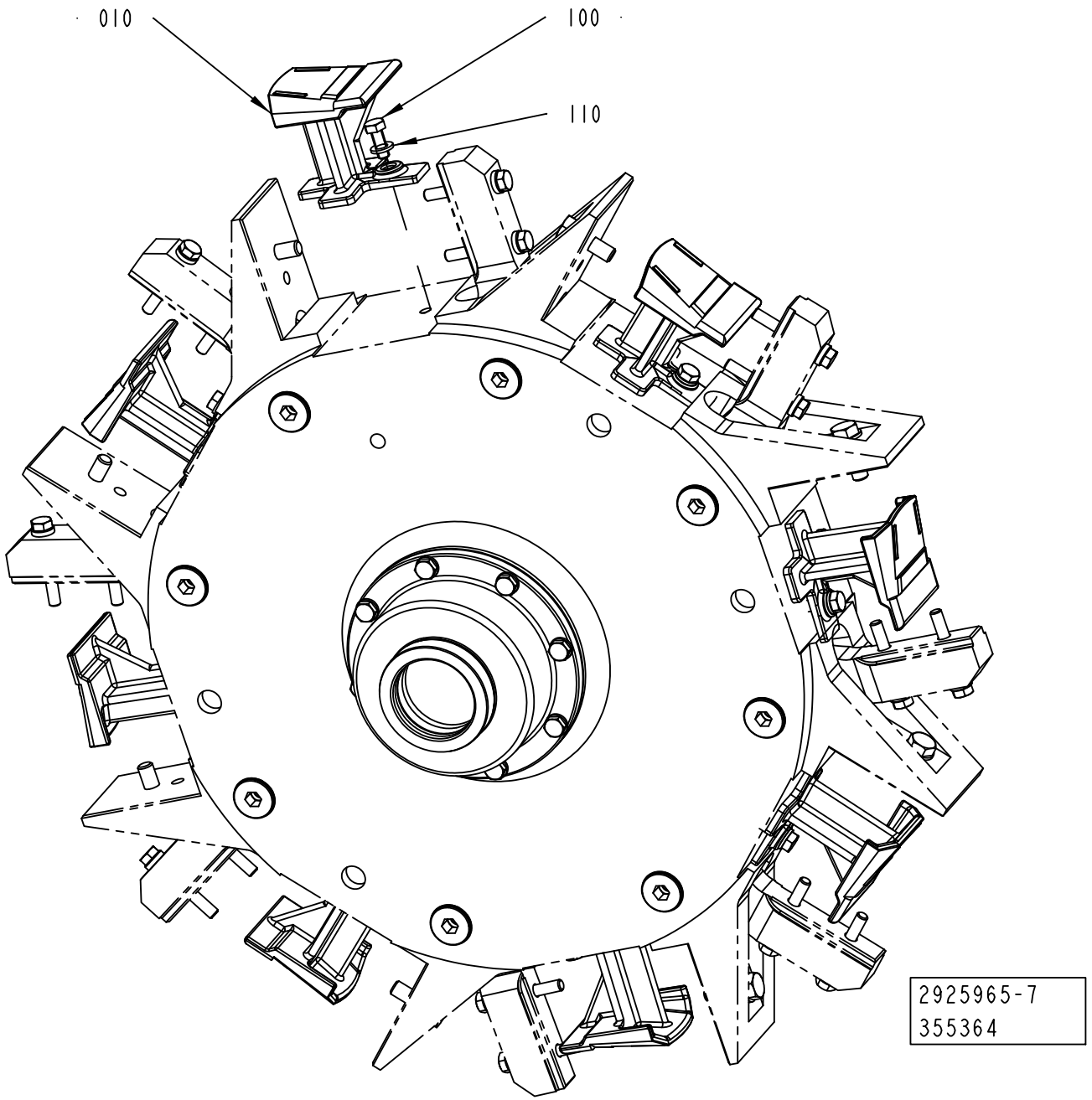
010
100
110
2925965-7
355364

ECM: 641866 - 20140401
Group number: 2925965-0100
Assembly Drawing: 2925965-7_1_AA

This list covers pages from 1-94 to 1-103

Pos	Part No	UN	Qty	Description	Page No
TPA 0750SQ (See drawing on page: 1-98)					
020	2663373-0000		8	BOTTOM	
030	2658239-0000		8	BOTTOM	
TPA 1000SQ (See drawing on page: 1-100)					
010	2802612-0000		8	BOTTOM	
020	2658240-0000		8	BOTTOM	
030	2658240-0000		8	BOTTOM	
100	312155-0379		8	SCREW DIN 7991 MF6S M6X45 A4 70	
TBA 0500B (See drawing on page: 1-96)					
020	2895569-0000		8	BOTTOM PLATE	
TBA 0500E (See drawing on page: 1-94)					
020	3252309-0000		8	BOTTOM	
TBA 0500S (See drawing on page: 1-102)					
010	2984513-0000		8	BOTTOM	
100	312105-0368		8	"SCREW, M6S ISO 4017 M6X16 A4 80"	
110	315105-0153		8	WASHER PLAIN, 6,4X12X1,5 A4 BRB	
TBA 0500SQ (See drawing on page: 1-94)					
020	2871043-0000		8	BOTTOM	
TBA 1000B NOMOLDEDCAP (See drawing on page: 1-96)					
020	2895569-0000		8	BOTTOM PLATE	
TBA 1000B STDA7 (See drawing on page: 1-102)					
010	2932827-0000		8	BOTTOM	
100	312155-0380		8	SCREW DIN 7991 MF6S M6X50 A4 70	
TBA 1000E (See drawing on page: 1-102)					
010	3243102-0000		8	BOTTOM	
100	312155-0370		8	SCREW DIN 7991 MF6S M6X20 A4 70	
TBA 1000M (See drawing on page: 1-102)					
010	2998801-0000		8	BOTTOM	
100	312155-0376		8	SCREW DIN 7991 MF6S M6X35 A4 70	
TBA 1000M LIGHTCAP24 (See drawing on page: 1-102)					
010	3094296-0000		8	BOTTOM	
TBA 1000S LIGHTCAP24 (See drawing on page: 1-102)					
010	3128967-0000		8	BOTTOM	
100	312155-0370		8	SCREW DIN 7991 MF6S M6X20 A4 70	
TBA 1000S NOMOLDEDCAP (See drawing on page: 1-102)					
010	2818555-0000		8	BOTTOM	
100	312155-0370		8	SCREW DIN 7991 MF6S M6X20 A4 70	
TBA 1000S STDA7 (See drawing on page: 1-102)					
010	2818554-0000		8	BOTTOM	
100	312155-0370		8	SCREW DIN 7991 MF6S M6X20 A4 70	
TBA 1000SQ (See drawing on page: 1-102)					
010	2795264-0000		8	BOTTOM	
100	312155-0370		8	SCREW DIN 7991 MF6S M6X20 A4 70	
TBA 1500S (See drawing on page: 1-102)					
010	2929030-0000		8	BOTTOM	
100	312155-0376		8	SCREW DIN 7991 MF6S M6X35 A4 70	
TBA 2000S (See drawing on page: 1-102)					
010	2960430-0000		8	BOTTOM	
100	312155-0376		8	SCREW DIN 7991 MF6S M6X35 A4 70	
TPA 0500SQ (See drawing on page: 1-102)					
010	2602614-0000		8	BOTTOM	
100	312105-0368		8	"SCREW, M6S ISO 4017 M6X16 A4 80"	
110	315105-0153		8	WASHER PLAIN, 6,4X12X1,5 A4 BRB	

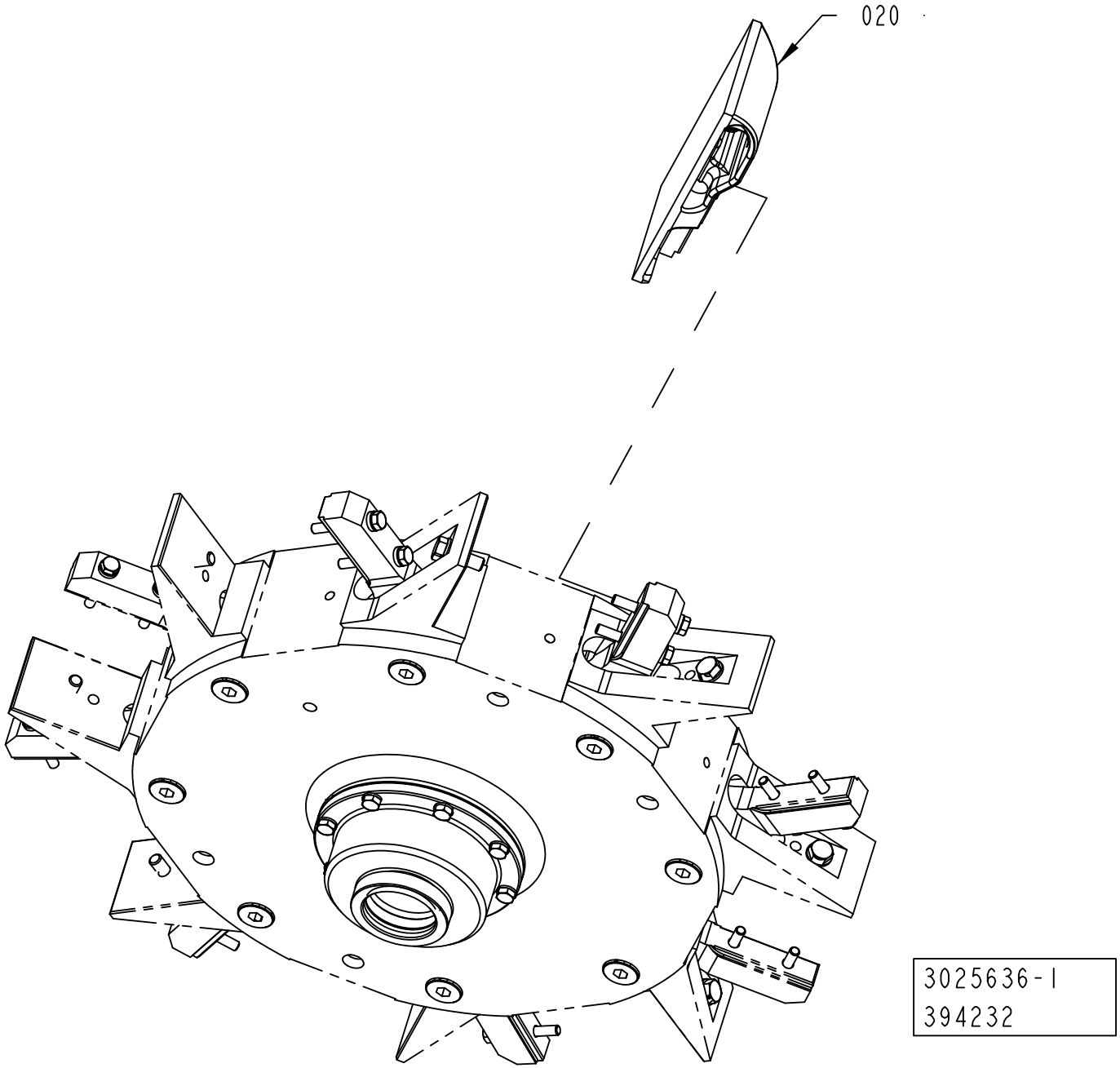
020
3025636-1
394232

Pos	Part No	UN	Qty	Description	Page No
TBA 0500B, TBA 1000B NOMOLDEDCAP (See drawing on page: 1-104)					
020	1260704-0000		1	FLAP	
TBA 0500E (See drawing on page: 1-106)					
020	2827042-0000		1	FLAP	
090	3325827-0000		2	VOLUME SHIM	
100	3325828-0000		1	VOLUME SHIM	
TBA 0500S (See drawing on page: 1-110)					
020	1499142-0000		1	FLAP	
040	1524035-0000		1	VOLUME BULGE	
110	312155-0289		2	SCREW DIN 7991 MF6S M4X10 A4 70	
TBA 0500SQ, TBA 1000SQ (See drawing on page: 1-104)					
020	1487739-0000		1	FLAP	
TBA 1000B STDA7 (See drawing on page: 1-104)					
020	1260704-0000		1	FLAP	
TBA 1000E (See drawing on page: 1-104)					
020	2827042-0000		1	FLAP	
TBA 1000M (See drawing on page: 1-104)					
020	2998802-0000		1	FLAP	
TBA 1000S (See drawing on page: 1-104)					
020	1144926-0000		1	FLAP	
TBA 1500S (See drawing on page: 1-112)					
020	1317554-0000		1	FLAP	
080	1317656-0000		1	INSERT	
120	312105-0289		2	SCREW, M6S ISO 4017 M4X10 A4 70	
130	315105-0136		2	WASHER PLAIN, 4,3X8X0,8 A4 BRB	
TBA 2000S (See drawing on page: 1-108)					
020	2566323-0000		1	FLAP	
060	2638180-0000		2	INSERT	
070	2693197-0000		2	INSERT	
120	312155-0287		2	SCREW DIN 7991 MF6S M4X8 A4 70	
TPA 0500SQ (See drawing on page: 1-104)					
020	1549844-0000		1	FLAP	
TPA 1000SQ, TPA 0750SQ (See drawing on page: 1-104)					
020	2927549-0100		1	FLAP	**1-115**

Pos	Part No	UN	Qty	Description	Page No

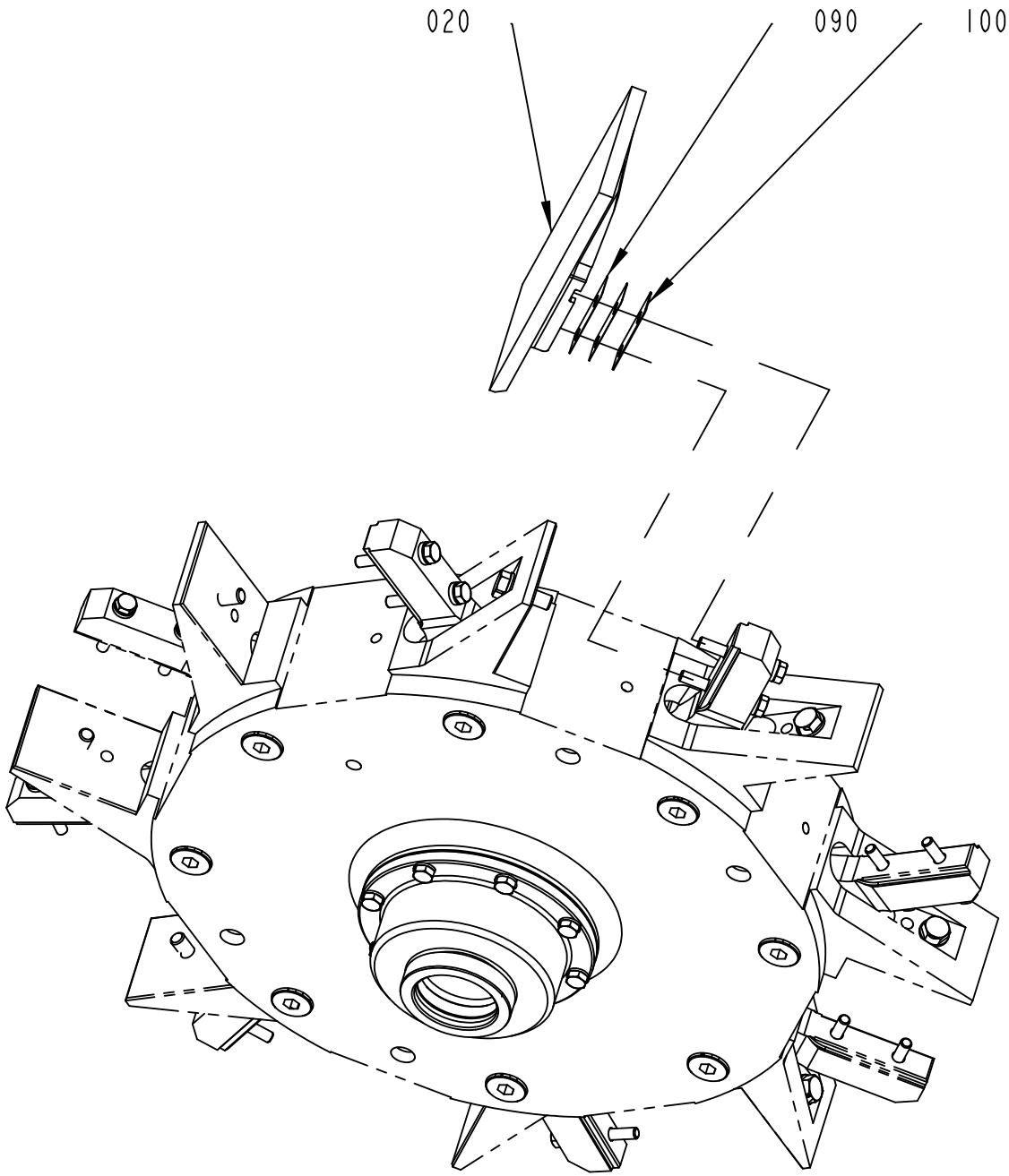

3025636-2
638868

Pos	Part No	UN	Qty	Description	Page No
TBA 0500B, TBA 1000B NOMOLDEDCAP (See drawing on page: 1-104)					
020	1260704-0000		1	FLAP	
TBA 0500E (See drawing on page: 1-106)					
020	2827042-0000		1	FLAP	
090	3325827-0000		2	VOLUME SHIM	
100	3325828-0000		1	VOLUME SHIM	
TBA 0500S (See drawing on page: 1-110)					
020	1499142-0000		1	FLAP	
040	1524035-0000		1	VOLUME BULGE	
110	312155-0289		2	SCREW DIN 7991 MF6S M4X10 A4 70	
TBA 0500SQ, TBA 1000SQ (See drawing on page: 1-104)					
020	1487739-0000		1	FLAP	
TBA 1000B STDA7 (See drawing on page: 1-104)					
020	1260704-0000		1	FLAP	
TBA 1000E (See drawing on page: 1-104)					
020	2827042-0000		1	FLAP	
TBA 1000M (See drawing on page: 1-104)					
020	2998802-0000		1	FLAP	
TBA 1000S (See drawing on page: 1-104)					
020	1144926-0000		1	FLAP	
TBA 1500S (See drawing on page: 1-112)					
020	1317554-0000		1	FLAP	
080	1317656-0000		1	INSERT	
120	312105-0289		2	SCREW, M6S ISO 4017 M4X10 A4 70	
130	315105-0136		2	WASHER PLAIN, 4,3X8X0,8 A4 BRB	
TBA 2000S (See drawing on page: 1-108)					
020	2566323-0000		1	FLAP	
060	2638180-0000		2	INSERT	
070	2693197-0000		2	INSERT	
120	312155-0287		2	SCREW DIN 7991 MF6S M4X8 A4 70	
TPA 0500SQ (See drawing on page: 1-104)					
020	1549844-0000		1	FLAP	
TPA 1000SQ, TPA 0750SQ (See drawing on page: 1-104)					
020	2927549-0100		1	FLAP	**1-115**

Pos	Part No	UN	Qty	Description	Page No

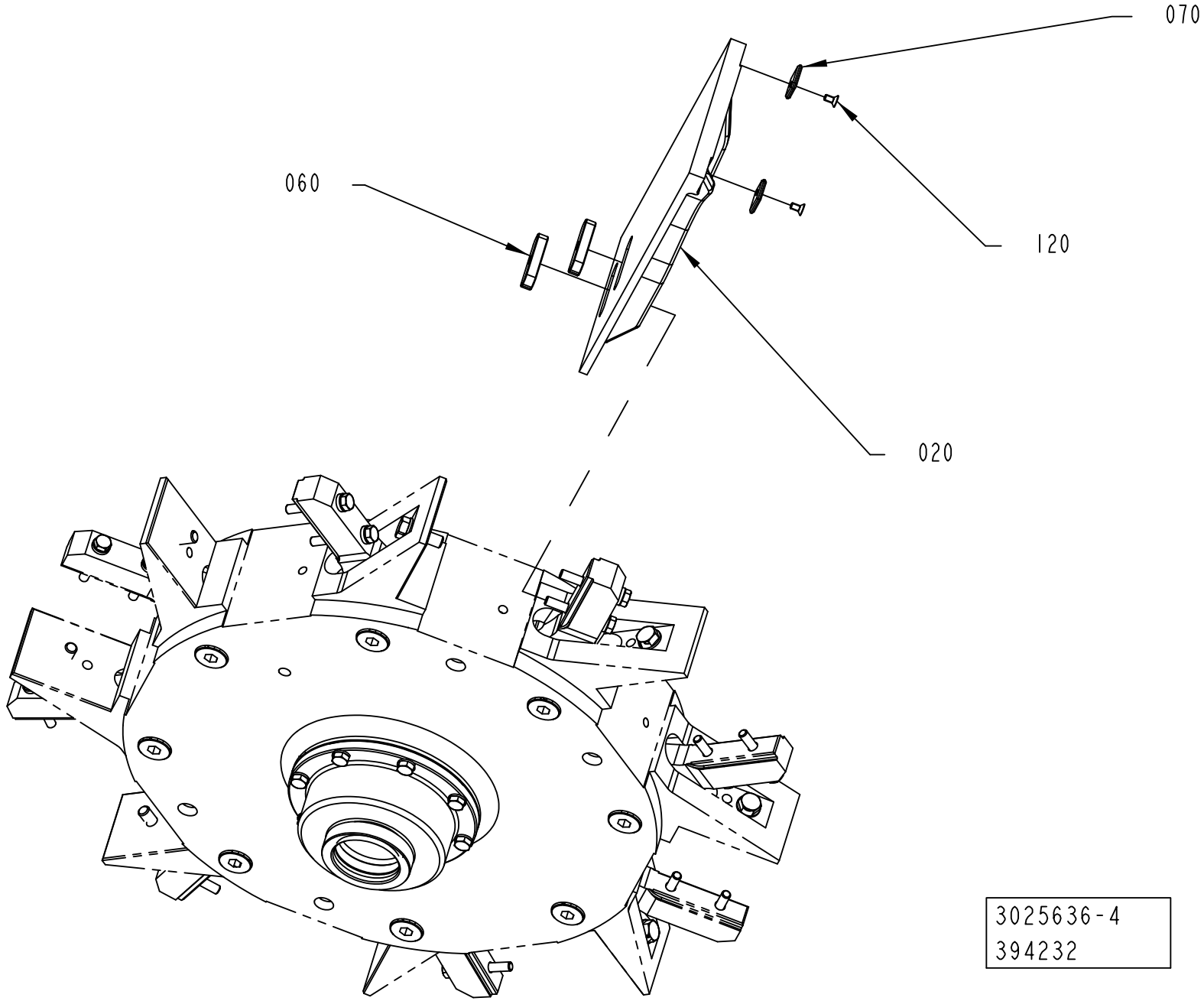

3025636-4
394232

Pos	Part No	UN	Qty	Description	Page No
TBA 0500B, TBA 1000B NOMOLDEDCAP (See drawing on page: 1-104)					
020	1260704-0000		1	FLAP	
TBA 0500E (See drawing on page: 1-106)					
020	2827042-0000		1	FLAP	
090	3325827-0000		2	VOLUME SHIM	
100	3325828-0000		1	VOLUME SHIM	
TBA 0500S (See drawing on page: 1-110)					
020	1499142-0000		1	FLAP	
040	1524035-0000		1	VOLUME BULGE	
110	312155-0289		2	SCREW DIN 7991 MF6S M4X10 A4 70	
TBA 0500SQ, TBA 1000SQ (See drawing on page: 1-104)					
020	1487739-0000		1	FLAP	
TBA 1000B STDA7 (See drawing on page: 1-104)					
020	1260704-0000		1	FLAP	
TBA 1000E (See drawing on page: 1-104)					
020	2827042-0000		1	FLAP	
TBA 1000M (See drawing on page: 1-104)					
020	2998802-0000		1	FLAP	
TBA 1000S (See drawing on page: 1-104)					
020	1144926-0000		1	FLAP	
TBA 1500S (See drawing on page: 1-112)					
020	1317554-0000		1	FLAP	
080	1317656-0000		1	INSERT	
120	312105-0289		2	SCREW, M6S ISO 4017 M4X10 A4 70	
130	315105-0136		2	WASHER PLAIN, 4,3X8X0,8 A4 BRB	
TBA 2000S (See drawing on page: 1-108)					
020	2566323-0000		1	FLAP	
060	2638180-0000		2	INSERT	
070	2693197-0000		2	INSERT	
120	312155-0287		2	SCREW DIN 7991 MF6S M4X8 A4 70	
TPA 0500SQ (See drawing on page: 1-104)					
020	1549844-0000		1	FLAP	
TPA 1000SQ, TPA 0750SQ (See drawing on page: 1-104)					
020	2927549-0100		1	FLAP	**1-115**

Pos	Part No	UN	Qty	Description	Page No

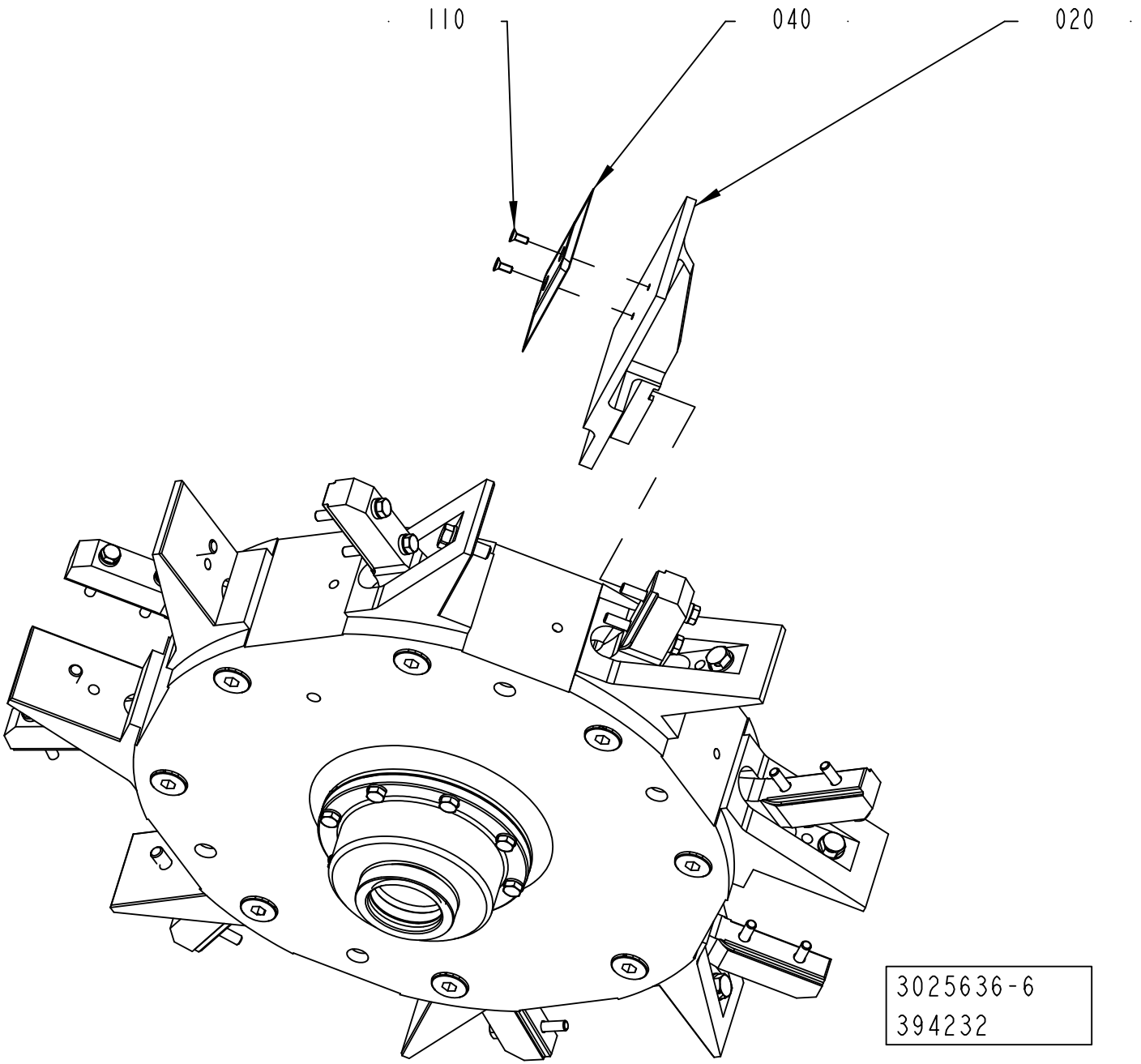
110
040
020
3025636-6
394232

Pos	Part No	UN	Qty	Description	Page No
TBA 0500B, TBA 1000B NOMOLDEDCAP (See drawing on page: 1-104)					
020	1260704-0000		1	FLAP	
TBA 0500E (See drawing on page: 1-106)					
020	2827042-0000		1	FLAP	
090	3325827-0000		2	VOLUME SHIM	
100	3325828-0000		1	VOLUME SHIM	
TBA 0500S (See drawing on page: 1-110)					
020	1499142-0000		1	FLAP	
040	1524035-0000		1	VOLUME BULGE	
110	312155-0289		2	SCREW DIN 7991 MF6S M4X10 A4 70	
TBA 0500SQ, TBA 1000SQ (See drawing on page: 1-104)					
020	1487739-0000		1	FLAP	
TBA 1000B STDA7 (See drawing on page: 1-104)					
020	1260704-0000		1	FLAP	
TBA 1000E (See drawing on page: 1-104)					
020	2827042-0000		1	FLAP	
TBA 1000M (See drawing on page: 1-104)					
020	2998802-0000		1	FLAP	
TBA 1000S (See drawing on page: 1-104)					
020	1144926-0000		1	FLAP	
TBA 1500S (See drawing on page: 1-112)					
020	1317554-0000		1	FLAP	
080	1317656-0000		1	INSERT	
120	312105-0289		2	SCREW, M6S ISO 4017 M4X10 A4 70	
130	315105-0136		2	WASHER PLAIN, 4,3X8X0,8 A4 BRB	
TBA 2000S (See drawing on page: 1-108)					
020	2566323-0000		1	FLAP	
060	2638180-0000		2	INSERT	
070	2693197-0000		2	INSERT	
120	312155-0287		2	SCREW DIN 7991 MF6S M4X8 A4 70	
TPA 0500SQ (See drawing on page: 1-104)					
020	1549844-0000		1	FLAP	
TPA 1000SQ, TPA 0750SQ (See drawing on page: 1-104)					
020	2927549-0100		1	FLAP	**1-115**

Pos	Part No	UN	Qty	Description	Page No

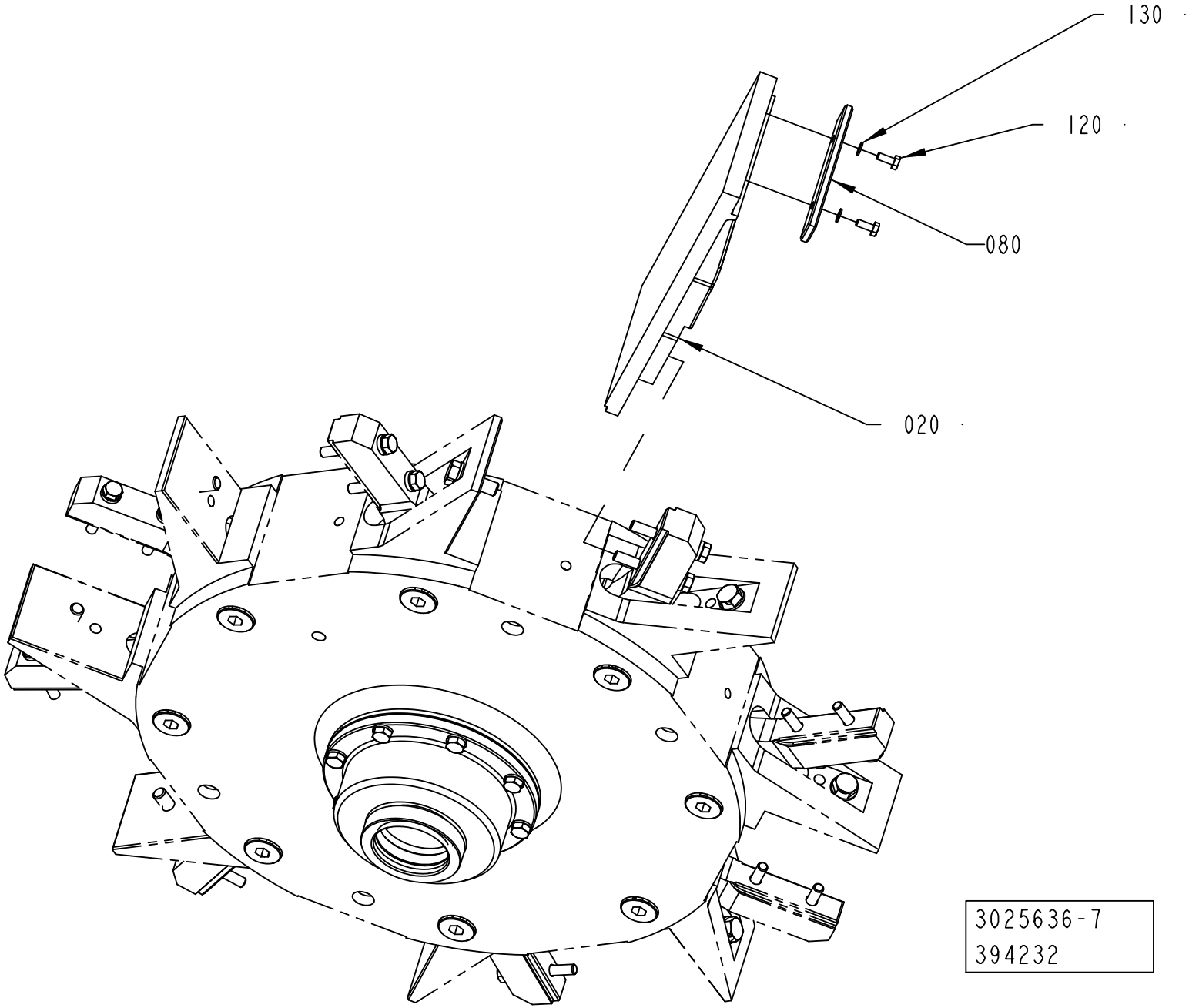
130
120
080
020
3025636-7
394232

Pos	Part No	UN	Qty	Description	Page No
TBA 0500B, TBA 1000B NOMOLDEDCAP (See drawing on page: 1-104)					
020	1260704-0000		1	FLAP	
TBA 0500E (See drawing on page: 1-106)					
020	2827042-0000		1	FLAP	
090	3325827-0000		2	VOLUME SHIM	
100	3325828-0000		1	VOLUME SHIM	
TBA 0500S (See drawing on page: 1-110)					
020	1499142-0000		1	FLAP	
040	1524035-0000		1	VOLUME BULGE	
110	312155-0289		2	SCREW DIN 7991 MF6S M4X10 A4 70	
TBA 0500SQ, TBA 1000SQ (See drawing on page: 1-104)					
020	1487739-0000		1	FLAP	
TBA 1000B STDA7 (See drawing on page: 1-104)					
020	1260704-0000		1	FLAP	
TBA 1000E (See drawing on page: 1-104)					
020	2827042-0000		1	FLAP	
TBA 1000M (See drawing on page: 1-104)					
020	2998802-0000		1	FLAP	
TBA 1000S (See drawing on page: 1-104)					
020	1144926-0000		1	FLAP	
TBA 1500S (See drawing on page: 1-112)					
020	1317554-0000		1	FLAP	
080	1317656-0000		1	INSERT	
120	312105-0289		2	SCREW, M6S ISO 4017 M4X10 A4 70	
130	315105-0136		2	WASHER PLAIN, 4,3X8X0,8 A4 BRB	
TBA 2000S (See drawing on page: 1-108)					
020	2566323-0000		1	FLAP	
060	2638180-0000		2	INSERT	
070	2693197-0000		2	INSERT	
120	312155-0287		2	SCREW DIN 7991 MF6S M4X8 A4 70	
TPA 0500SQ (See drawing on page: 1-104)					
020	1549844-0000		1	FLAP	
TPA 1000SQ, TPA 0750SQ (See drawing on page: 1-104)					
020	2927549-0100		1	FLAP	**1-115**

Pos	Part No	UN	Qty	Description	Page No

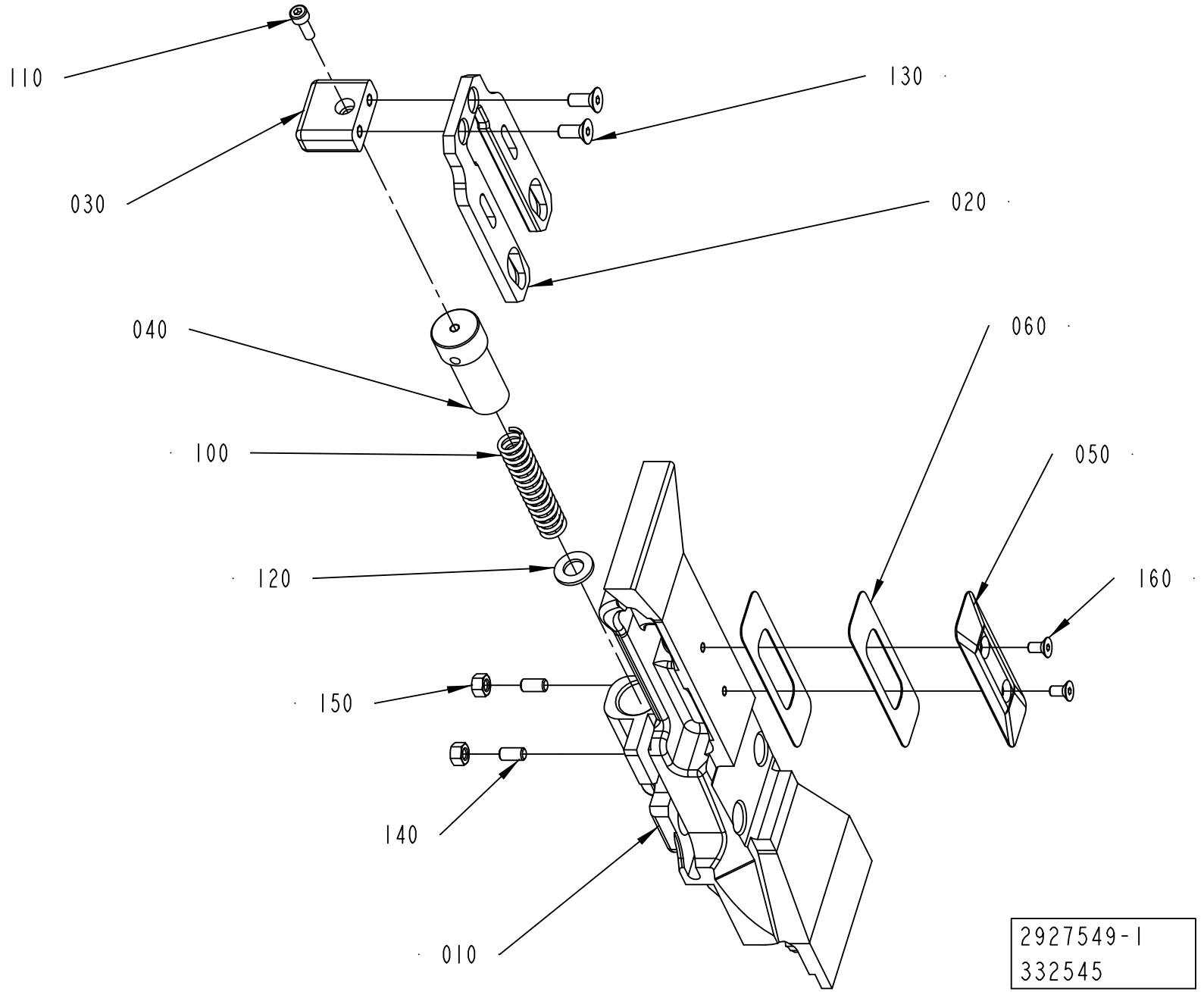
110
130
030
020
040
060
100
050
120
160
150
140
010
2927549-1
332545

ECM: 479652 - 20110401
Group number: 2927549-0100
Assembly Drawing: 2927549-1_1_AA

Pos	Part No	UN	Qty	Description	Page No
-					
010	2658238-0000		1	FLAP	
020	2658241-0000		1	SLIDE	
030	2526563-0000		1	HANDLE	
040	2526567-0000		1	CYLINDER	
050	3142195-0000		1	VOLUME BULGE	
060	2960405-0000		2	SHIM	
100	90459-0969		1	COMP. SPRING, 22430, 1,6X11,6X58,5	
110	312115-0291		1	SCREW ISO4762 M4X12 A4 80	
120	315105-0165		1	FWAS080G0-0S, WASHER PLAIN	
130	312155-0327		2	SCREW DIN 7991 MF6S M5X12 A4 70	
140	312318-0329		2	SET SCREW, CUP END ISO4029 M5X16 A4	
150	312605-0314		2	HEXAGON NUT, M6M M5 A280	
160	312155-0287		2	SCREW DIN 7991 MF6S M4X8 A4 70	

Pos	Part No	UN	Qty	Description	Page No

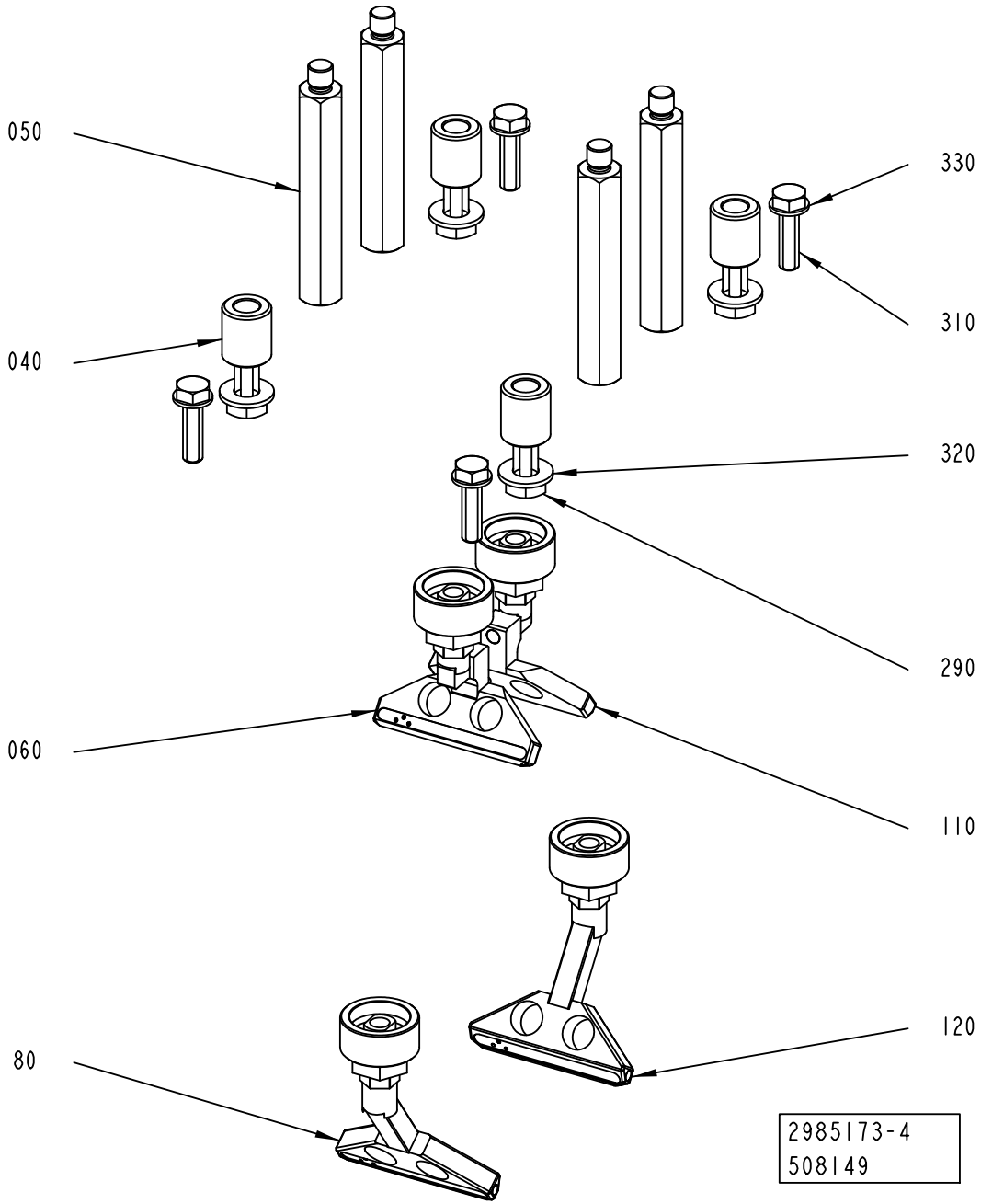
050
040
060
80
330
310
320
290
110
120
2985173-4
508149

ECM: 641984 - 20140401
Group number: 2985173-0100
Assembly Drawing: 2985173-4_1_AC

This list covers pages from 1-116 to 1-119

Pos	Part No	UN	Qty	Description	Page No
TBA 0500B, TBA 1000B NOMOLDEDCAP					
040	2898035-0000		4	SPACER	
050	2898028-0000		4	SPACER	
060	2898033-0000		1	AIR NOZZLE	
080	2898030-0000		1	NOZZLE	
110	2898034-0000		1	AIR NOZZLE	
120	2898029-0000		1	NOZZLE	
290	312105-0493		4	SCREW, M6S ISO 4017 M10X25 A4 80	
TBA 0500E					
040	2960114-0000		4	SPACER	
050	2876469-0000		4	SPACER	
060	2906166-0000		1	NOZZLE	
080	2862268-0000		1	AIR NOZZLE	
110	2906167-0000		1	NOZZLE	
120	2862269-0000		1	AIR NOZZLE	
290	312105-0497		4	SCREW, M6S ISO 4017 M10X35 A4 80	
TBA 0500S					
040	2976051-0000		4	SPACER	
050	2976052-0000		4	SPACER	
060	2976053-0000		1	AIR NOZZLE	
080	2976054-0000		1	AIR NOZZLE	
110	2976055-0000		1	AIR NOZZLE	
120	2976056-0000		1	AIR NOZZLE	
290	312105-0497		4	SCREW, M6S ISO 4017 M10X35 A4 80	
310	312105-0455		4	SCREW, M6S ISO 4017 M8X30 A4 80	
330	315105-0165		4	FWAS080G0-0S, WASHER PLAIN	
TBA 0500SQ, TBA 1000SQ					
040	2852462-0000		4	SPACER	
050	2876469-0000		4	SPACER	
060	2906166-0000		1	NOZZLE	
080	2862762-0000		1	NOZZLE	
110	2906167-0000		1	NOZZLE	
120	2862761-0000		1	NOZZLE	
290	312105-0495		4	SCREW, M6S ISO 4017 M10X30 A4 80	
TBA 1000B STDA7					
040	2931386-0000		4	SPACER	
050	2898028-0000		4	SPACER	
060	2898033-0000		1	AIR NOZZLE	
080	2898030-0000		1	NOZZLE	
110	2898034-0000		1	AIR NOZZLE	
120	2898029-0000		1	NOZZLE	
290	312105-0497		4	SCREW, M6S ISO 4017 M10X35 A4 80	
310	312105-0455		4	SCREW, M6S ISO 4017 M8X30 A4 80	
330	315105-0165		4	FWAS080G0-0S, WASHER PLAIN	
TBA 1000E					
040	2960114-0000		4	SPACER	
050	2876469-0000		4	SPACER	
060	2906166-0000		1	NOZZLE	
080	2862268-0000		1	AIR NOZZLE	
110	2906167-0000		1	NOZZLE	
120	2862269-0000		1	AIR NOZZLE	
290	312105-0497		4	SCREW, M6S ISO 4017 M10X35 A4 80	
TBA 1000M					
040	2998818-0000		4	SPACER	
050	2898028-0000		4	SPACER	
060	2898033-0000		1	AIR NOZZLE	
080	2898030-0000		1	NOZZLE	
110	2898034-0000		1	AIR NOZZLE	
120	2898029-0000		1	NOZZLE	
290	312105-0497		4	SCREW, M6S ISO 4017 M10X35 A4 80	
310	312105-0455		4	SCREW, M6S ISO 4017 M8X30 A4 80	
330	315105-0165		4	FWAS080G0-0S, WASHER PLAIN	
TBA 1000S NOMOLDEDCAP, TBA 1000S STDA7, TBA 1000S LIGHTCAP24					
040	2884994-0000		4	SPACER	
050	2878205-0000		4	SPACER	
060	2855844-0000		1	NOZZLE	
080	2855845-0000		1	NOZZLE	
110	2855843-0000		1	NOZZLE	
120	2855846-0000		1	NOZZLE	
290	312105-0495		4	SCREW, M6S ISO 4017 M10X30 A4 80	
310	312105-0455		4	SCREW, M6S ISO 4017 M8X30 A4 80	
330	315105-0165		4	FWAS080G0-0S, WASHER PLAIN	
TBA 1500S					
040	2931347-0000		4	SPACER	
050	2931346-0000		4	SPACER	
060	2931193-0000		1	AIR NOZZLE	
080	2926126-0000		1	AIR NOZZLE	
110	2931194-0000		1	AIR NOZZLE	
120	2926125-0000		1	BRACKET	
290	312105-0501		4	SCREW, M6S ISO 4014 M10X50 A4 80	
310	312105-0455		4	SCREW, M6S ISO 4017 M8X30 A4 80	
330	315105-0165		4	FWAS080G0-0S, WASHER PLAIN	
TBA 2000S					
040	2976577-0000		4	SPACER	

Machine Type | Group Description | Used-In | Group Number | Page No

NOZZLE

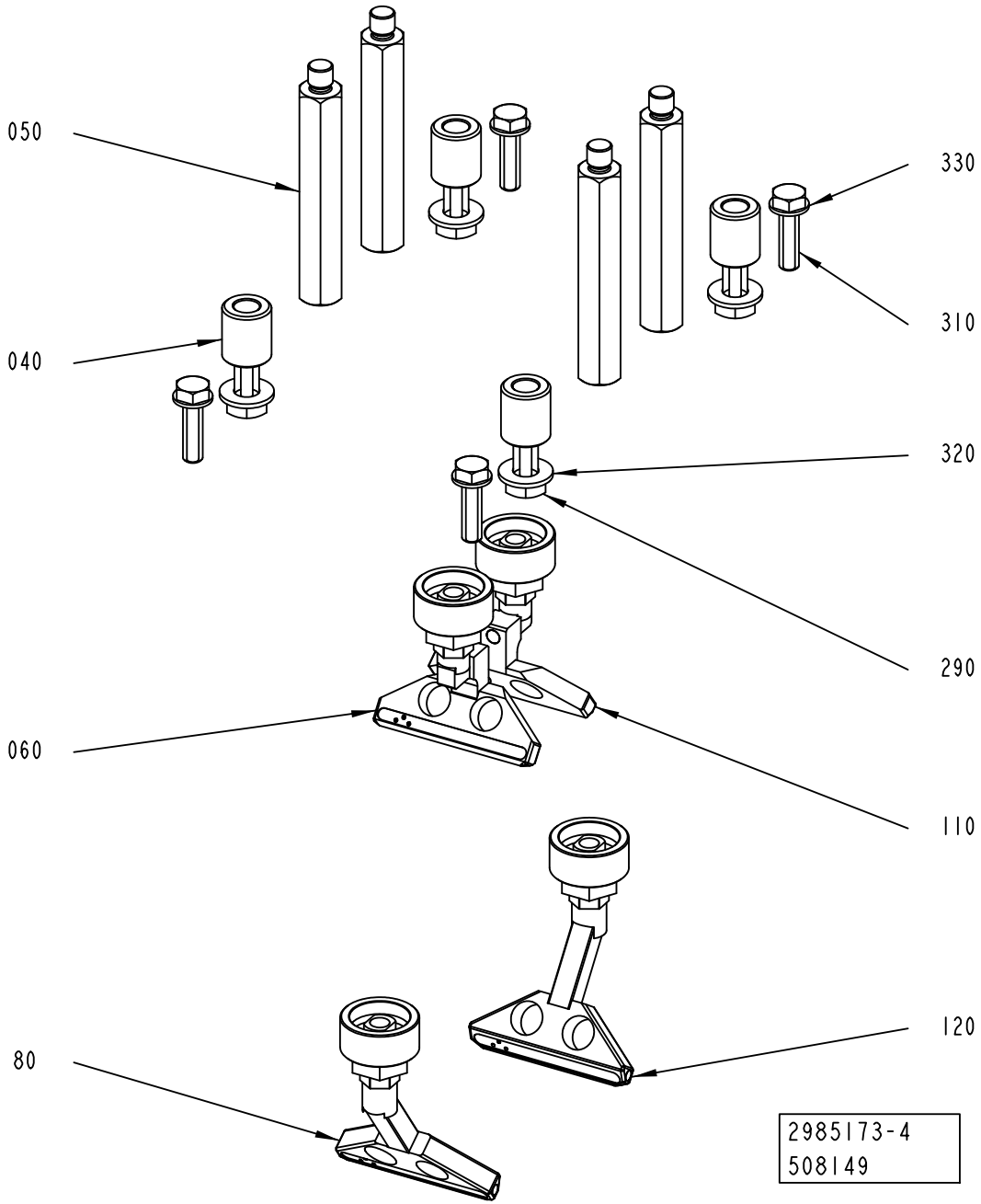

Pos	Part No	UN	Qty	Description	Page No
TBA 2000S (Cont'd)					
050	2919384-0000		4	SPACER	
060	2902082-0000		1	AIR NOZZLE	
080	2919381-0000		1	AIR NOZZLE	
110	2902083-0000		1	AIR NOZZLE	
120	2919382-0000		1	AIR NOZZLE	
290	312105-0503		4	SCREW, M6S ISO 4014 M10X60 A4 80	
310	312105-0455		4	SCREW, M6S ISO 4017 M8X30 A4 80	
330	315105-0165		4	FWAS080G0-0S, WASHER PLAIN	
TPA 0500SQ					
040	2955152-0000		4	SPACER	
050	2958419-0000		4	SPACER	
060	2955148-0000		1	AIR NOZZLE	
080	2955149-0000		1	AIR NOZZLE	
110	2955150-0000		1	AIR NOZZLE	
120	2955151-0000		1	AIR NOZZLE	
290	312105-0497		4	SCREW, M6S ISO 4017 M10X35 A4 80	
310	312105-0455		4	SCREW, M6S ISO 4017 M8X30 A4 80	
330	315105-0165		4	FWAS080G0-0S, WASHER PLAIN	
TPA 1000SQ, TPA 0750SQ					
040	2912153-0000		4	SPACER	
050	2912154-0000		4	SPACER	
060	2912157-0000		1	AIR NOZZLE	
080	2912163-0000		1	AIR NOZZLE	
110	2912158-0000		1	AIR NOZZLE	
120	2912164-0000		1	AIR NOZZLE	
290	312105-0503		4	SCREW, M6S ISO 4014 M10X60 A4 80	
Common Parts					
320	315105-0173		4	WASHER PLAIN, 10,5X22X2 A4 BRB	

Pos	Part No	UN	Qty	Description	Page No

PRESSURE DEVICE

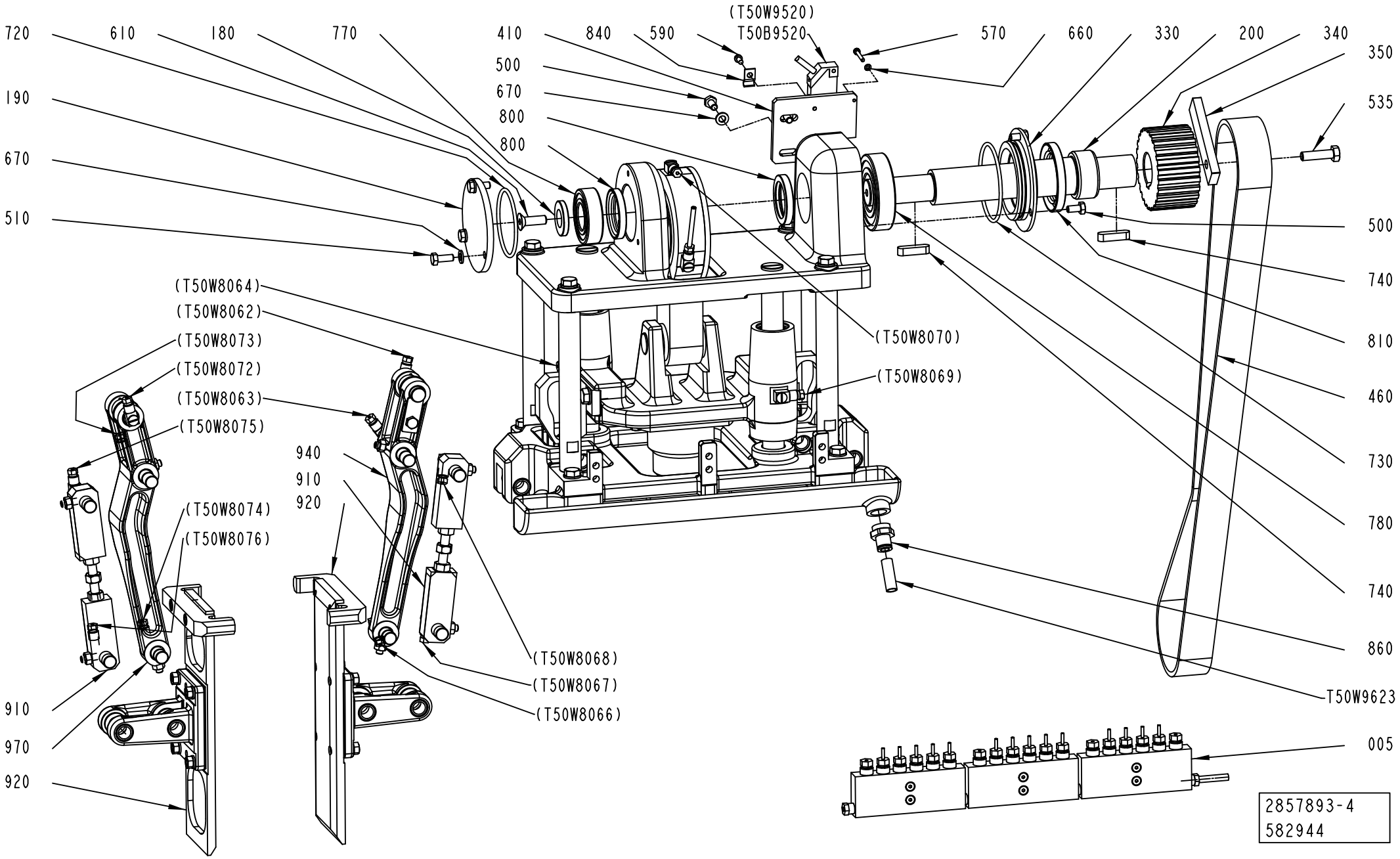

ECM: 641851 - 20140401
Group number: 2857893-0200
Assembly Drawing: 2857893-4_1_AB

This list covers pages from 1-120 to 1-127

Pos	Part No	UN	Qty	Description	Page No
TBA 0500B, TBA 1000B NOMOLDEDCAP (See drawing on pages: 1-124, 1-126)					
920	3269827-0100		2	PUSHER	**1-129, 1-131, 1-133**
TBA 0500S (See drawing on pages: 1-124, 1-126)					
920	3269827-0100		2	PUSHER	**1-129, 1-131, 1-133**
TBA 0500SQ, TBA 1000SQ (See drawing on pages: 1-124, 1-126)					
920	3269827-0100		1	PUSHER	**1-129, 1-131, 1-133**
930	3269829-0100		1	PUSHER	**1-135, 1-137, 1-139**
TBA 1000B STDA7 (See drawing on pages: 1-124, 1-126)					
920	3269827-0100		2	PUSHER	**1-129, 1-131, 1-133**
TBA 1000E, TBA 0500E (See drawing on pages: 1-124, 1-126)					
920	3269827-0100		1	PUSHER	**1-129, 1-131, 1-133**
930	3269829-0100		1	PUSHER	**1-135, 1-137, 1-139**
TBA 1000M (See drawing on pages: 1-124, 1-126)					
920	3269827-0100		2	PUSHER	**1-129, 1-131, 1-133**
TBA 1000S LIGHTCAP24 (See drawing on pages: 1-124, 1-126)					
920	3269827-0100		2	PUSHER	**1-129, 1-131, 1-133**
TBA 1000S NOMOLDEDCAP (See drawing on pages: 1-124, 1-126)					
920	3269827-0100		2	PUSHER	**1-129, 1-131, 1-133**
TBA 1000S STDA7 (See drawing on pages: 1-124, 1-126)					
920	3269827-0100		2	PUSHER	**1-129, 1-131, 1-133**
TBA 1500S (See drawing on pages: 1-120, 1-122)					
920	3269827-0100		2	PUSHER	**1-129, 1-131, 1-133**
TBA 2000S (See drawing on pages: 1-120, 1-122)					
920	3269827-0100		2	PUSHER	**1-129, 1-131, 1-133**
TPA 0500SQ (See drawing on pages: 1-124, 1-126)					
920	3269827-0100		1	PUSHER	**1-129, 1-131, 1-133**
930	3269829-0100		1	PUSHER	**1-135, 1-137, 1-139**
TPA 0750SQ (See drawing on pages: 1-124, 1-126)					
920	3269827-0100		1	PUSHER	**1-129, 1-131, 1-133**
930	3269829-0100		1	PUSHER	**1-135, 1-137, 1-139**
TPA 1000SQ (See drawing on pages: 1-124, 1-126)					
920	3269827-0100		1	PUSHER	**1-129, 1-131, 1-133**
930	3269829-0100		1	PUSHER	**1-135, 1-137, 1-139**
Common Parts					
005	2861123-0200		1	DISTRIBUTOR	**1-141, 1-143, 1-145, 1-147, 1-149, 1-151**
020	2851346-0000		1	PLATE	
050	1144488-0000		2	COLUMN	
110	1144495-0000		1	ECCENTRIC	
120	1144496-0000		1	ECCENTRIC	
160	1144500-0000		1	SUPPORT	
170	1144501-0000		1	SPACER	
180	1144502-0000		1	WASHER	
190	1144503-0000		1	FLANGE	
200	1349516-0000		1	SHAFT	
210	1144505-0000		4	COLUMN	
230	90458-1404		8	FLANGE BUSHING, 12X16X16 MM	
330	1347018-0000		1	PLUG	
340	1349517-0000		1	TOOTHED PULLEY	
350	3031187-0000		1	ACTIVATOR	
380	90242-0271		1	O-RING 63,22X1,78 MM	
410	3031186-0000		1	BRACKET	
460	1348537-0000		1	TIMING BELT	
500	312105-0366		6	SCREW, M6S ISO 4017 M6X12 A4 80	
510	312105-0368		3	"SCREW, M6S ISO 4017 M6X16 A4 80"	
535	312105-0455		1	SCREW, M6S ISO 4017 M8X30 A4 80	
550	312105-0457		6	SCREW, M6S ISO 4014 M8X35 A4 80	
560	312109-0460		4	SCREW, M6S ISO 4017 M8X45 A4 80	
570	312115-0230		2	SCREW ISO4762 M3X20 A4 80	
590	312125-0287		1	SLOTTED HEAD SCREW, ISO1207 M4X8 A4	
600	312155-0327		3	SCREW DIN 7991 MF6S M5X12 A4 70	
610	312155-0453		1	SCREW DIN 7991 MF6S M8X25 A4 70	
660	315105-0124		2	WASHER PLAIN, 3,2X6X0,5 A4 BRB	
670	315105-0153		5	WASHER PLAIN, 6,4X12X1,5 A4 BRB	
680	315105-0165		10	FWAS080G0-0S, WASHER PLAIN	
690	315202-0217		1	O-RING 24,2X3 MM	
720	315202-0303		1	O-RING 59,5X3 MM	
730	315202-0305		1	O-RING 69,5X3 MM	
740	315705-0267		2	PARALLEL KEY W. ROUND ENDS, 8X7X30 MM	
770	344226-0105		1	BALL BEARING 25/52X15	
780	344226-0107		1	BALL BEARING 35/72X17	
800	90091-0297		2	RADIAL SEAL 35X47X7 MM DUST LIP	
810	90091-0298		1	RADIAL SEAL 45X65X8 MM DUST LIP	
840	90165-0056		1	PIPE CLIP FOR TUBE, 4 MM	
860	342722-0206		1	STRAIGHT COUPLING D=8-G3/8"	
880	352113-0102		5	CABLE TIE, BLACK 188X4,8 MM	
890	352113-0101		8	CABLE TIE,BLACK 92X	
910	3267944-0100		2	TIE ROD	**1-153**
940	3269824-0100		1	LEVER	**1-155**
950	3267945-0100		1	PUSHER	**1-157**
960	3269825-0100		1	CONNECTING ROD	**1-159**
970	3269828-0100		1	LEVER	**1-161**
980	3269826-0100		1	PUSHER	**1-163**
T50B9520	90044-0194		1	INDUCTIVE SENSOR, IN 5329	
T50W9623	315400-0004	M	4	TUBE PUN-H-8X1,25-BL	

Machine Type | Group Description | Used-In | Group Number | Page No

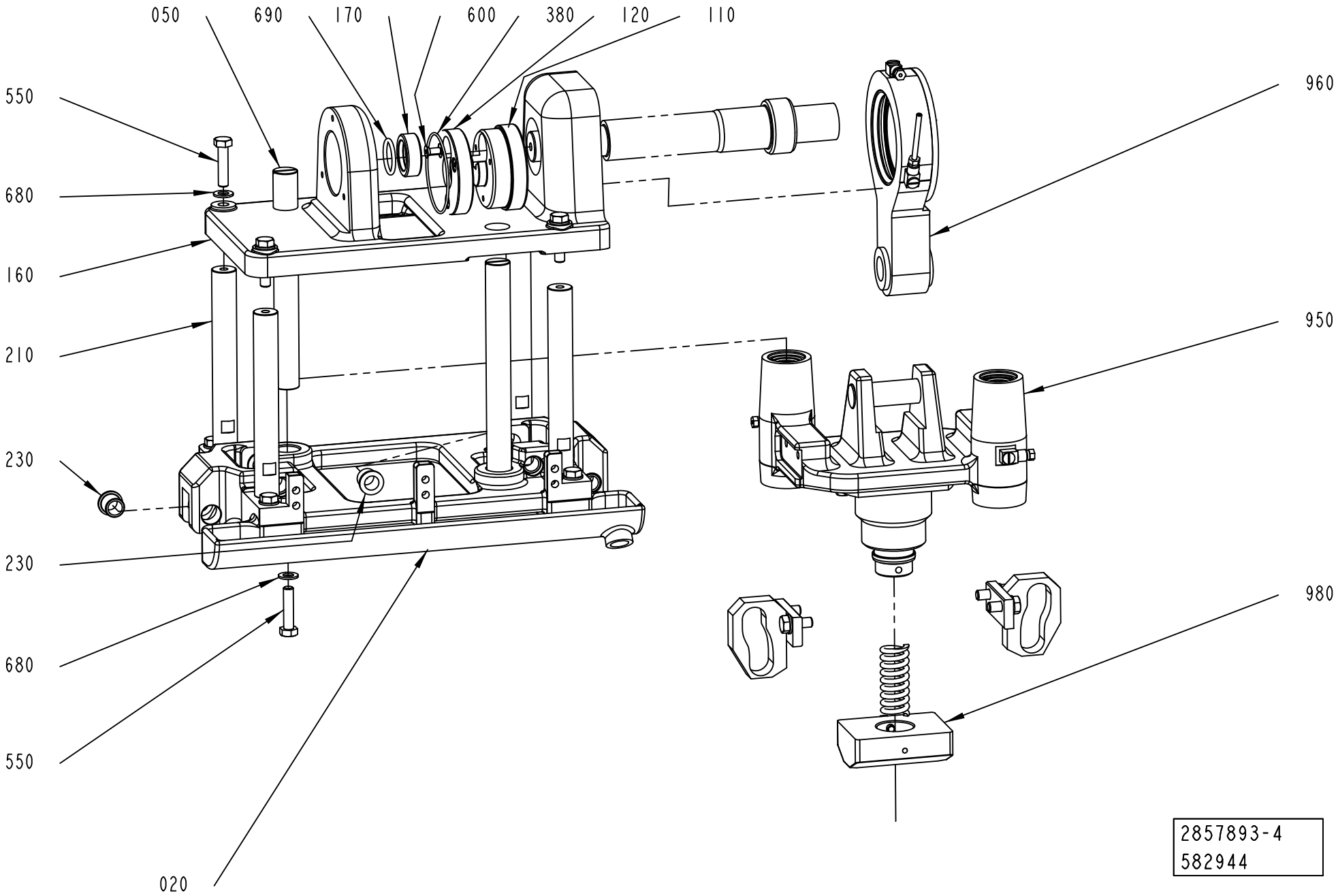
050
690
170
600
380
120
110
550
680
160
210
230
230
680
550
020
960
950
980
2857893-4
582944

ECM: 641851 - 20140401
Group number: 2857893-0200
Assembly Drawing: 2857893-4_2_AB

This list covers pages from 1-120 to 1-127

Pos	Part No	UN	Qty	Description	Page No
TBA 0500B, TBA 1000B NOMOLDEDCAP (See drawing on pages: 1-124, 1-126)					
920	3269827-0100		2	PUSHER	**1-129, 1-131, 1-133**
TBA 0500S (See drawing on pages: 1-124, 1-126)					
920	3269827-0100		2	PUSHER	**1-129, 1-131, 1-133**
TBA 0500SQ, TBA 1000SQ (See drawing on pages: 1-124, 1-126)					
920	3269827-0100		1	PUSHER	**1-129, 1-131, 1-133**
930	3269829-0100		1	PUSHER	**1-135, 1-137, 1-139**
TBA 1000B STDA7 (See drawing on pages: 1-124, 1-126)					
920	3269827-0100		2	PUSHER	**1-129, 1-131, 1-133**
TBA 1000E, TBA 0500E (See drawing on pages: 1-124, 1-126)					
920	3269827-0100		1	PUSHER	**1-129, 1-131, 1-133**
930	3269829-0100		1	PUSHER	**1-135, 1-137, 1-139**
TBA 1000M (See drawing on pages: 1-124, 1-126)					
920	3269827-0100		2	PUSHER	**1-129, 1-131, 1-133**
TBA 1000S LIGHTCAP24 (See drawing on pages: 1-124, 1-126)					
920	3269827-0100		2	PUSHER	**1-129, 1-131, 1-133**
TBA 1000S NOMOLDEDCAP (See drawing on pages: 1-124, 1-126)					
920	3269827-0100		2	PUSHER	**1-129, 1-131, 1-133**
TBA 1000S STDA7 (See drawing on pages: 1-124, 1-126)					
920	3269827-0100		2	PUSHER	**1-129, 1-131, 1-133**
TBA 1500S (See drawing on pages: 1-120, 1-122)					
920	3269827-0100		2	PUSHER	**1-129, 1-131, 1-133**
TBA 2000S (See drawing on pages: 1-120, 1-122)					
920	3269827-0100		2	PUSHER	**1-129, 1-131, 1-133**
TPA 0500SQ (See drawing on pages: 1-124, 1-126)					
920	3269827-0100		1	PUSHER	**1-129, 1-131, 1-133**
930	3269829-0100		1	PUSHER	**1-135, 1-137, 1-139**
TPA 0750SQ (See drawing on pages: 1-124, 1-126)					
920	3269827-0100		1	PUSHER	**1-129, 1-131, 1-133**
930	3269829-0100		1	PUSHER	**1-135, 1-137, 1-139**
TPA 1000SQ (See drawing on pages: 1-124, 1-126)					
920	3269827-0100		1	PUSHER	**1-129, 1-131, 1-133**
930	3269829-0100		1	PUSHER	**1-135, 1-137, 1-139**
Common Parts					
005	2861123-0200		1	DISTRIBUTOR	**1-141, 1-143, 1-145, 1-147, 1-149, 1-151**
020	2851346-0000		1	PLATE	
050	1144488-0000		2	COLUMN	
110	1144495-0000		1	ECCENTRIC	
120	1144496-0000		1	ECCENTRIC	
160	1144500-0000		1	SUPPORT	
170	1144501-0000		1	SPACER	
180	1144502-0000		1	WASHER	
190	1144503-0000		1	FLANGE	
200	1349516-0000		1	SHAFT	
210	1144505-0000		4	COLUMN	
230	90458-1404		8	FLANGE BUSHING, 12X16X16 MM	
330	1347018-0000		1	PLUG	
340	1349517-0000		1	TOOTHED PULLEY	
350	3031187-0000		1	ACTIVATOR	
380	90242-0271		1	O-RING 63,22X1,78 MM	
410	3031186-0000		1	BRACKET	
460	1348537-0000		1	TIMING BELT	
500	312105-0366		6	SCREW, M6S ISO 4017 M6X12 A4 80	
510	312105-0368		3	"SCREW, M6S ISO 4017 M6X16 A4 80"	
535	312105-0455		1	SCREW, M6S ISO 4017 M8X30 A4 80	
550	312105-0457		6	SCREW, M6S ISO 4014 M8X35 A4 80	
560	312109-0460		4	SCREW, M6S ISO 4017 M8X45 A4 80	
570	312115-0230		2	SCREW ISO4762 M3X20 A4 80	
590	312125-0287		1	SLOTTED HEAD SCREW, ISO1207 M4X8 A4	
600	312155-0327		3	SCREW DIN 7991 MF6S M5X12 A4 70	
610	312155-0453		1	SCREW DIN 7991 MF6S M8X25 A4 70	
660	315105-0124		2	WASHER PLAIN, 3,2X6X0,5 A4 BRB	
670	315105-0153		5	WASHER PLAIN, 6,4X12X1,5 A4 BRB	
680	315105-0165		10	FWAS080G0-0S, WASHER PLAIN	
690	315202-0217		1	O-RING 24,2X3 MM	
720	315202-0303		1	O-RING 59,5X3 MM	
730	315202-0305		1	O-RING 69,5X3 MM	
740	315705-0267		2	PARALLEL KEY W. ROUND ENDS, 8X7X30 MM	
770	344226-0105		1	BALL BEARING 25/52X15	
780	344226-0107		1	BALL BEARING 35/72X17	
800	90091-0297		2	RADIAL SEAL 35X47X7 MM DUST LIP	
810	90091-0298		1	RADIAL SEAL 45X65X8 MM DUST LIP	
840	90165-0056		1	PIPE CLIP FOR TUBE, 4 MM	
860	342722-0206		1	STRAIGHT COUPLING D=8-G3/8"	
880	352113-0102		5	CABLE TIE, BLACK 188X4,8 MM	
890	352113-0101		8	CABLE TIE,BLACK 92X	
910	3267944-0100		2	TIE ROD	**1-153**
940	3269824-0100		1	LEVER	**1-155**
950	3267945-0100		1	PUSHER	**1-157**
960	3269825-0100		1	CONNECTING ROD	**1-159**
970	3269828-0100		1	LEVER	**1-161**
980	3269826-0100		1	PUSHER	**1-163**
T50B9520	90044-0194		1	INDUCTIVE SENSOR, IN 5329	
T50W9623	315400-0004	M	4	TUBE PUN-H-8X1,25-BL	

Machine Type | Group Description | Used-In | Group Number | Page No

PRESSURE DEVICE

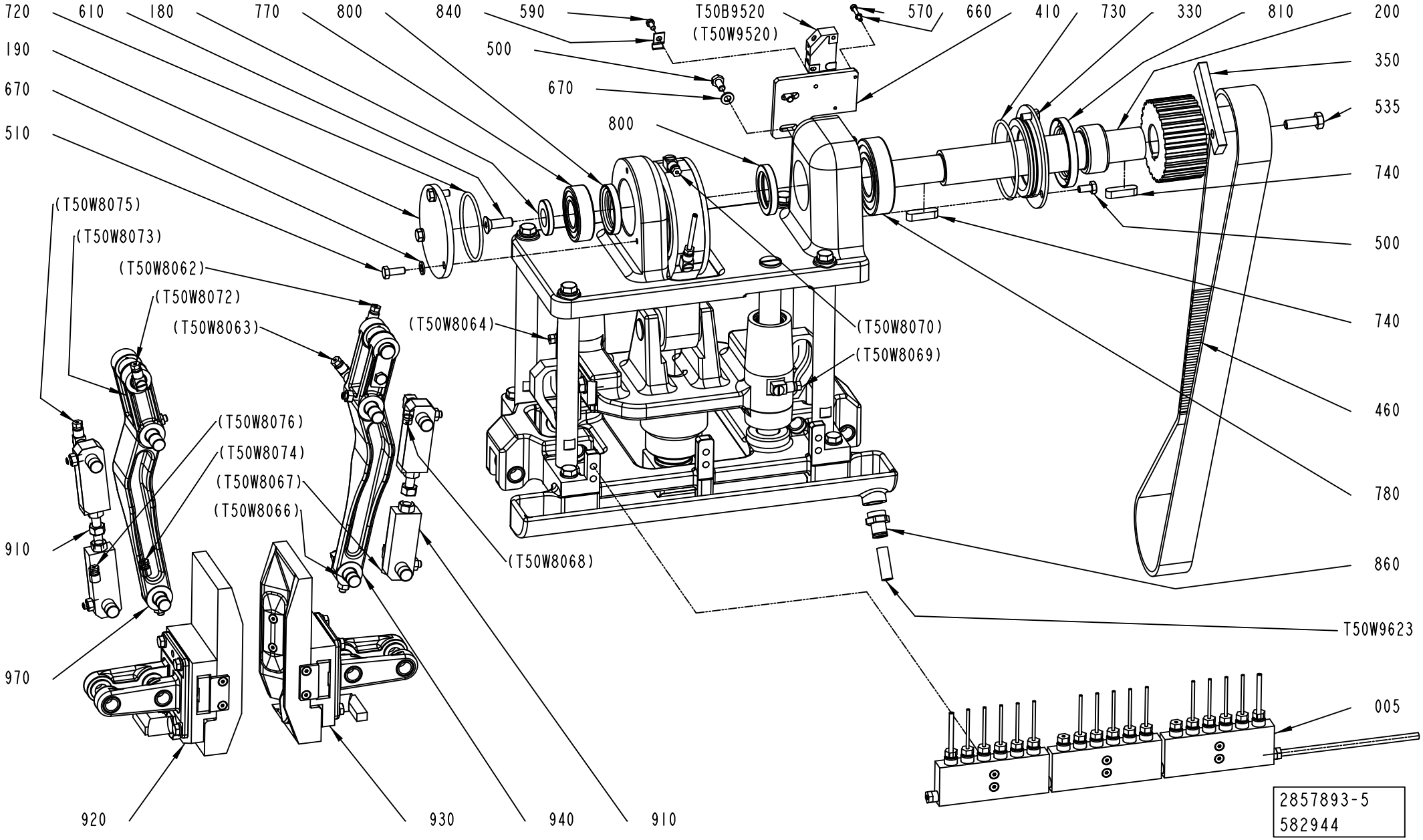

ECM: 641851 - 20140401
Group number: 2857893-0200
Assembly Drawing: 2857893-5_1_AB

This list covers pages from 1-120 to 1-127

Pos	Part No	UN	Qty	Description	Page No
TBA 0500B, TBA 1000B NOMOLDEDCAP (See drawing on pages: 1-124, 1-126)					
920	3269827-0100		2	PUSHER	**1-129, 1-131, 1-133**
TBA 0500S (See drawing on pages: 1-124, 1-126)					
920	3269827-0100		2	PUSHER	**1-129, 1-131, 1-133**
TBA 0500SQ, TBA 1000SQ (See drawing on pages: 1-124, 1-126)					
920	3269827-0100		1	PUSHER	**1-129, 1-131, 1-133**
930	3269829-0100		1	PUSHER	**1-135, 1-137, 1-139**
TBA 1000B STDA7 (See drawing on pages: 1-124, 1-126)					
920	3269827-0100		2	PUSHER	**1-129, 1-131, 1-133**
TBA 1000E, TBA 0500E (See drawing on pages: 1-124, 1-126)					
920	3269827-0100		1	PUSHER	**1-129, 1-131, 1-133**
930	3269829-0100		1	PUSHER	**1-135, 1-137, 1-139**
TBA 1000M (See drawing on pages: 1-124, 1-126)					
920	3269827-0100		2	PUSHER	**1-129, 1-131, 1-133**
TBA 1000S LIGHTCAP24 (See drawing on pages: 1-124, 1-126)					
920	3269827-0100		2	PUSHER	**1-129, 1-131, 1-133**
TBA 1000S NOMOLDEDCAP (See drawing on pages: 1-124, 1-126)					
920	3269827-0100		2	PUSHER	**1-129, 1-131, 1-133**
TBA 1000S STDA7 (See drawing on pages: 1-124, 1-126)					
920	3269827-0100		2	PUSHER	**1-129, 1-131, 1-133**
TBA 1500S (See drawing on pages: 1-120, 1-122)					
920	3269827-0100		2	PUSHER	**1-129, 1-131, 1-133**
TBA 2000S (See drawing on pages: 1-120, 1-122)					
920	3269827-0100		2	PUSHER	**1-129, 1-131, 1-133**
TPA 0500SQ (See drawing on pages: 1-124, 1-126)					
920	3269827-0100		1	PUSHER	**1-129, 1-131, 1-133**
930	3269829-0100		1	PUSHER	**1-135, 1-137, 1-139**
TPA 0750SQ (See drawing on pages: 1-124, 1-126)					
920	3269827-0100		1	PUSHER	**1-129, 1-131, 1-133**
930	3269829-0100		1	PUSHER	**1-135, 1-137, 1-139**
TPA 1000SQ (See drawing on pages: 1-124, 1-126)					
920	3269827-0100		1	PUSHER	**1-129, 1-131, 1-133**
930	3269829-0100		1	PUSHER	**1-135, 1-137, 1-139**
Common Parts					
005	2861123-0200		1	DISTRIBUTOR	**1-141, 1-143, 1-145, 1-147, 1-149, 1-151**
020	2851346-0000		1	PLATE	
050	1144488-0000		2	COLUMN	
110	1144495-0000		1	ECCENTRIC	
120	1144496-0000		1	ECCENTRIC	
160	1144500-0000		1	SUPPORT	
170	1144501-0000		1	SPACER	
180	1144502-0000		1	WASHER	
190	1144503-0000		1	FLANGE	
200	1349516-0000		1	SHAFT	
210	1144505-0000		4	COLUMN	
230	90458-1404		8	FLANGE BUSHING, 12X16X16 MM	
330	1347018-0000		1	PLUG	
340	1349517-0000		1	TOOTHED PULLEY	
350	3031187-0000		1	ACTIVATOR	
380	90242-0271		1	O-RING 63,22X1,78 MM	
410	3031186-0000		1	BRACKET	
460	1348537-0000		1	TIMING BELT	
500	312105-0366		6	SCREW, M6S ISO 4017 M6X12 A4 80	
510	312105-0368		3	"SCREW, M6S ISO 4017 M6X16 A4 80"	
535	312105-0455		1	SCREW, M6S ISO 4017 M8X30 A4 80	
550	312105-0457		6	SCREW, M6S ISO 4014 M8X35 A4 80	
560	312109-0460		4	SCREW, M6S ISO 4017 M8X45 A4 80	
570	312115-0230		2	SCREW ISO4762 M3X20 A4 80	
590	312125-0287		1	SLOTTED HEAD SCREW, ISO1207 M4X8 A4	
600	312155-0327		3	SCREW DIN 7991 MF6S M5X12 A4 70	
610	312155-0453		1	SCREW DIN 7991 MF6S M8X25 A4 70	
660	315105-0124		2	WASHER PLAIN, 3,2X6X0,5 A4 BRB	
670	315105-0153		5	WASHER PLAIN, 6,4X12X1,5 A4 BRB	
680	315105-0165		10	FWAS080G0-0S, WASHER PLAIN	
690	315202-0217		1	O-RING 24,2X3 MM	
720	315202-0303		1	O-RING 59,5X3 MM	
730	315202-0305		1	O-RING 69,5X3 MM	
740	315705-0267		2	PARALLEL KEY W. ROUND ENDS, 8X7X30 MM	
770	344226-0105		1	BALL BEARING 25/52X15	
780	344226-0107		1	BALL BEARING 35/72X17	
800	90091-0297		2	RADIAL SEAL 35X47X7 MM DUST LIP	
810	90091-0298		1	RADIAL SEAL 45X65X8 MM DUST LIP	
840	90165-0056		1	PIPE CLIP FOR TUBE, 4 MM	
860	342722-0206		1	STRAIGHT COUPLING D=8-G3/8"	
880	352113-0102		5	CABLE TIE, BLACK 188X4,8 MM	
890	352113-0101		8	CABLE TIE,BLACK 92X	
910	3267944-0100		2	TIE ROD	**1-153**
940	3269824-0100		1	LEVER	**1-155**
950	3267945-0100		1	PUSHER	**1-157**
960	3269825-0100		1	CONNECTING ROD	**1-159**
970	3269828-0100		1	LEVER	**1-161**
980	3269826-0100		1	PUSHER	**1-163**
T50B9520	90044-0194		1	INDUCTIVE SENSOR, IN 5329	
T50W9623	315400-0004	M	4	TUBE PUN-H-8X1,25-BL	

Machine Type | Group Description | Used-In | Group Number | Page No

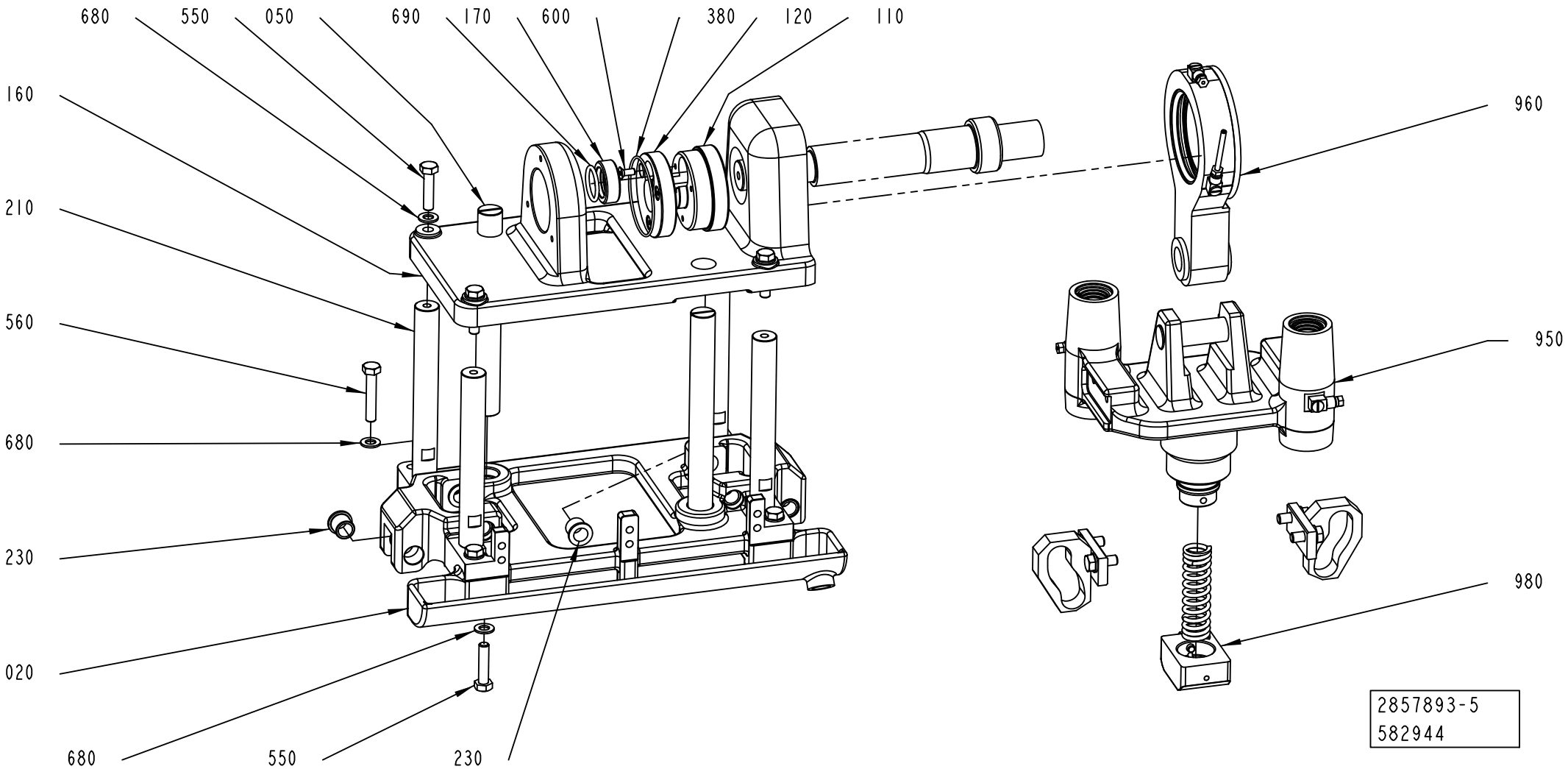
680
550
050
690
170
600
380
120
110
160
210
560
680
230
020
680
550
230
960
950
980
2857893-5
582944

ECM: 641851 - 20140401
Group number: 2857893-0200
Assembly Drawing: 2857893-5_2_AB

This list covers pages from 1-120 to 1-127

Pos	Part No	UN	Qty	Description	Page No
TBA 0500B, TBA 1000B NOMOLDEDCAP (See drawing on pages: 1-124, 1-126)					
920	3269827-0100		2	PUSHER	**1-129, 1-131, 1-133**
TBA 0500S (See drawing on pages: 1-124, 1-126)					
920	3269827-0100		2	PUSHER	**1-129, 1-131, 1-133**
TBA 0500SQ, TBA 1000SQ (See drawing on pages: 1-124, 1-126)					
920	3269827-0100		1	PUSHER	**1-129, 1-131, 1-133**
930	3269829-0100		1	PUSHER	**1-135, 1-137, 1-139**
TBA 1000B STDA7 (See drawing on pages: 1-124, 1-126)					
920	3269827-0100		2	PUSHER	**1-129, 1-131, 1-133**
TBA 1000E, TBA 0500E (See drawing on pages: 1-124, 1-126)					
920	3269827-0100		1	PUSHER	**1-129, 1-131, 1-133**
930	3269829-0100		1	PUSHER	**1-135, 1-137, 1-139**
TBA 1000M (See drawing on pages: 1-124, 1-126)					
920	3269827-0100		2	PUSHER	**1-129, 1-131, 1-133**
TBA 1000S LIGHTCAP24 (See drawing on pages: 1-124, 1-126)					
920	3269827-0100		2	PUSHER	**1-129, 1-131, 1-133**
TBA 1000S NOMOLDEDCAP (See drawing on pages: 1-124, 1-126)					
920	3269827-0100		2	PUSHER	**1-129, 1-131, 1-133**
TBA 1000S STDA7 (See drawing on pages: 1-124, 1-126)					
920	3269827-0100		2	PUSHER	**1-129, 1-131, 1-133**
TBA 1500S (See drawing on pages: 1-120, 1-122)					
920	3269827-0100		2	PUSHER	**1-129, 1-131, 1-133**
TBA 2000S (See drawing on pages: 1-120, 1-122)					
920	3269827-0100		2	PUSHER	**1-129, 1-131, 1-133**
TPA 0500SQ (See drawing on pages: 1-124, 1-126)					
920	3269827-0100		1	PUSHER	**1-129, 1-131, 1-133**
930	3269829-0100		1	PUSHER	**1-135, 1-137, 1-139**
TPA 0750SQ (See drawing on pages: 1-124, 1-126)					
920	3269827-0100		1	PUSHER	**1-129, 1-131, 1-133**
930	3269829-0100		1	PUSHER	**1-135, 1-137, 1-139**
TPA 1000SQ (See drawing on pages: 1-124, 1-126)					
920	3269827-0100		1	PUSHER	**1-129, 1-131, 1-133**
930	3269829-0100		1	PUSHER	**1-135, 1-137, 1-139**
Common Parts					
005	2861123-0200		1	DISTRIBUTOR	**1-141, 1-143, 1-145, 1-147, 1-149, 1-151**
020	2851346-0000		1	PLATE	
050	1144488-0000		2	COLUMN	
110	1144495-0000		1	ECCENTRIC	
120	1144496-0000		1	ECCENTRIC	
160	1144500-0000		1	SUPPORT	
170	1144501-0000		1	SPACER	
180	1144502-0000		1	WASHER	
190	1144503-0000		1	FLANGE	
200	1349516-0000		1	SHAFT	
210	1144505-0000		4	COLUMN	
230	90458-1404		8	FLANGE BUSHING, 12X16X16 MM	
330	1347018-0000		1	PLUG	
340	1349517-0000		1	TOOTHED PULLEY	
350	3031187-0000		1	ACTIVATOR	
380	90242-0271		1	O-RING 63,22X1,78 MM	
410	3031186-0000		1	BRACKET	
460	1348537-0000		1	TIMING BELT	
500	312105-0366		6	SCREW, M6S ISO 4017 M6X12 A4 80	
510	312105-0368		3	"SCREW, M6S ISO 4017 M6X16 A4 80"	
535	312105-0455		1	SCREW, M6S ISO 4017 M8X30 A4 80	
550	312105-0457		6	SCREW, M6S ISO 4014 M8X35 A4 80	
560	312109-0460		4	SCREW, M6S ISO 4017 M8X45 A4 80	
570	312115-0230		2	SCREW ISO4762 M3X20 A4 80	
590	312125-0287		1	SLOTTED HEAD SCREW, ISO1207 M4X8 A4	
600	312155-0327		3	SCREW DIN 7991 MF6S M5X12 A4 70	
610	312155-0453		1	SCREW DIN 7991 MF6S M8X25 A4 70	
660	315105-0124		2	WASHER PLAIN, 3,2X6X0,5 A4 BRB	
670	315105-0153		5	WASHER PLAIN, 6,4X12X1,5 A4 BRB	
680	315105-0165		10	FWAS080G0-0S, WASHER PLAIN	
690	315202-0217		1	O-RING 24,2X3 MM	
720	315202-0303		1	O-RING 59,5X3 MM	
730	315202-0305		1	O-RING 69,5X3 MM	
740	315705-0267		2	PARALLEL KEY W. ROUND ENDS, 8X7X30 MM	
770	344226-0105		1	BALL BEARING 25/52X15	
780	344226-0107		1	BALL BEARING 35/72X17	
800	90091-0297		2	RADIAL SEAL 35X47X7 MM DUST LIP	
810	90091-0298		1	RADIAL SEAL 45X65X8 MM DUST LIP	
840	90165-0056		1	PIPE CLIP FOR TUBE, 4 MM	
860	342722-0206		1	STRAIGHT COUPLING D=8-G3/8"	
880	352113-0102		5	CABLE TIE, BLACK 188X4,8 MM	
890	352113-0101		8	CABLE TIE,BLACK 92X	
910	3267944-0100		2	TIE ROD	**1-153**
940	3269824-0100		1	LEVER	**1-155**
950	3267945-0100		1	PUSHER	**1-157**
960	3269825-0100		1	CONNECTING ROD	**1-159**
970	3269828-0100		1	LEVER	**1-161**
980	3269826-0100		1	PUSHER	**1-163**
T50B9520	90044-0194		1	INDUCTIVE SENSOR, IN 5329	
T50W9623	315400-0004	M	4	TUBE PUN-H-8X1,25-BL	

Machine Type | Group Description | Used-In | Group Number | Page No

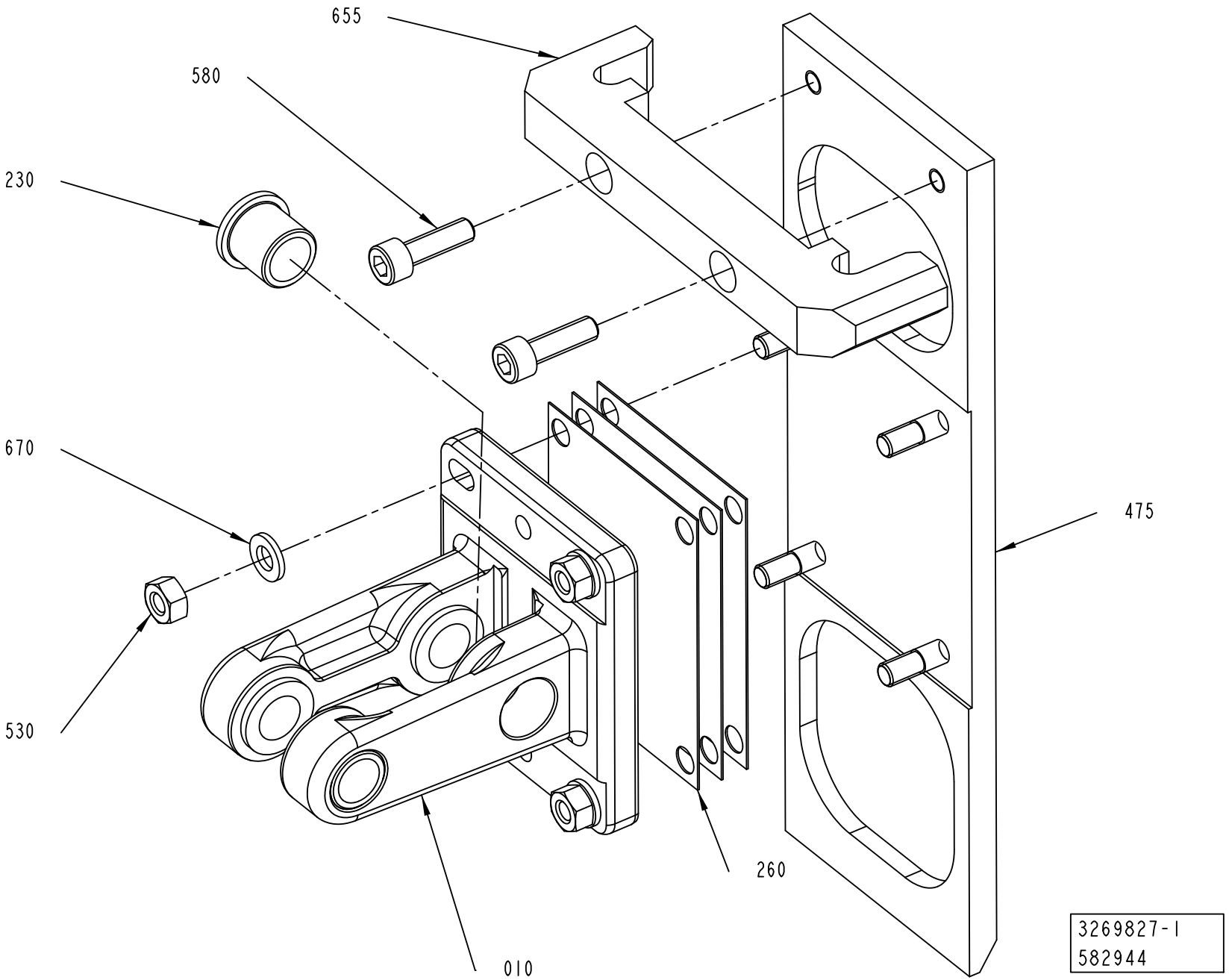
655
580
230
670
530
475
260
010
3269827-1
582944

ECM: 641990 - 20140401
Group number: 3269827-0100
Assembly Drawing: 3269827-1_1_AA

This list covers pages from 1-128 to 1-133

Pos	Part No	UN	Qty	Description	Page No
TBA 0500B, TBA 1000B NOMOLDEDCAP (See drawing on page: 1-128)					
010	1144482-0000		1	SUPPORT	
260	1144511-0000		8	SHIM	
475	2524512-0000		1	PUSHER	
530	312105-0372		4	SCREW, M6S ISO 4017 M6X25 A4 80	
TBA 0500S (See drawing on page: 1-128)					
010	1144482-0000		1	SUPPORT	
260	1144511-0000		8	SHIM	
475	1499144-0000		1	PUSHER	
530	312105-0370		4	SCREW, M6S ISO 4017 M6X20 A4 80	
TBA 0500SQ, TBA 1000SQ (See drawing on page: 1-128)					
010	1144482-0000		1	SUPPORT	
260	1144511-0000		8	SHIM	
475	2716534-0000		1	PUSHER	
475	2716534-0000		1	PUSHER	
530	312105-0370		4	SCREW, M6S ISO 4017 M6X20 A4 80	
TBA 1000B STDA7 (See drawing on page: 1-128)					
010	1144482-0000		1	SUPPORT	
260	1144511-0000		8	SHIM	
475	2524512-0000		1	PUSHER	
530	312105-0372		4	SCREW, M6S ISO 4017 M6X25 A4 80	
TBA 1000E, TBA 0500E (See drawing on page: 1-128)					
010	1144482-0000		1	SUPPORT	
260	1144511-0000		8	SHIM	
475	2861996-0000		1	PUSHER	
530	312105-0370		4	SCREW, M6S ISO 4017 M6X20 A4 80	
TBA 1000M (See drawing on page: 1-128)					
010	1144482-0000		1	SUPPORT	
260	1144511-0000		8	SHIM	
475	2998821-0000		1	PUSHER	
530	312105-0370		4	SCREW, M6S ISO 4017 M6X20 A4 80	
TBA 1000S LIGHTCAP24 (See drawing on page: 1-128)					
010	1144482-0000		1	SUPPORT	
260	1144511-0000		8	SHIM	
475	1144928-0000		1	PUSHER	
530	312105-0372		4	SCREW, M6S ISO 4017 M6X25 A4 80	
TBA 1000S NOMOLDEDCAP (See drawing on page: 1-128)					
010	1144482-0000		1	SUPPORT	
260	1144511-0000		8	SHIM	
475	1144928-0000		1	PUSHER	
530	312105-0372		4	SCREW, M6S ISO 4017 M6X25 A4 80	
TBA 1000S STDA7 (See drawing on page: 1-128)					
010	1144482-0000		1	SUPPORT	
260	1144511-0000		8	SHIM	
475	1317654-0000		1	PUSHER	
530	312105-0370		4	SCREW, M6S ISO 4017 M6X20 A4 80	
580	312105-0370		2	SCREW, M6S ISO 4017 M6X20 A4 80	
655	1317787-0000		1	CATCH	
TBA 2000S (See drawing on page: 1-128)					
010	1144482-0000		1	SUPPORT	
260	1144511-0000		8	SHIM	
475	2661429-0000		1	PUSHER	
530	312605-0316		4	HEXAGON NUT, M6M M6 A280	
580	312115-0370		2	SCREW ISO4762 M6X20 A4 80	
655	2594902-0000		1	CATCH	
TPA 0500SQ (See drawing on page: 1-130)					
010	1144482-0000		1	SUPPORT	
045	2640075-0000		1	VOLUME BULGE	
050	2541878-0000		3	WASHER	
055	2541877-0000		1	NAIL	
060	2602613-0000		2	VOLUME BULGE	
065	2635167-0000		4	VOLUME BULGE	
200	312145-0289		6	SCREW ISO 2009 MFS M4X10 A4	
220	312605-0316		1	HEXAGON NUT, M6M M6 A280	
260	1144511-0000		8	SHIM	
300	312105-0287		5	SCREW, M6S ISO 4017 M4X8 A4 70	
305	2559008-0000		1	VOLUME BULGE	
310	315105-0136		5	WASHER PLAIN, 4,3X8X0,8 A4 BRB	
330	315103-0153		1	WASHER PLAIN, 6,4X12X1,5 BR NI PL	
475	1558047-0000		1	PUSHER	
530	312105-0372		4	SCREW, M6S ISO 4017 M6X25 A4 80	
605	2611875-0000		1	SHIM	
TPA 0750SQ (See drawing on page: 1-132)					
010	2647101-0000		1	SUPPORT	
040	2647099-0000		1	GUIDE	
050	2658247-0000		4	WASHER	
055	2647097-0000		1	NAIL	
060	3096280-0000		2	VOLUME BULGE	
070	2647098-0000		1	BLOCK	

Machine Type	Group Description	Used-In	Group Number	Page No

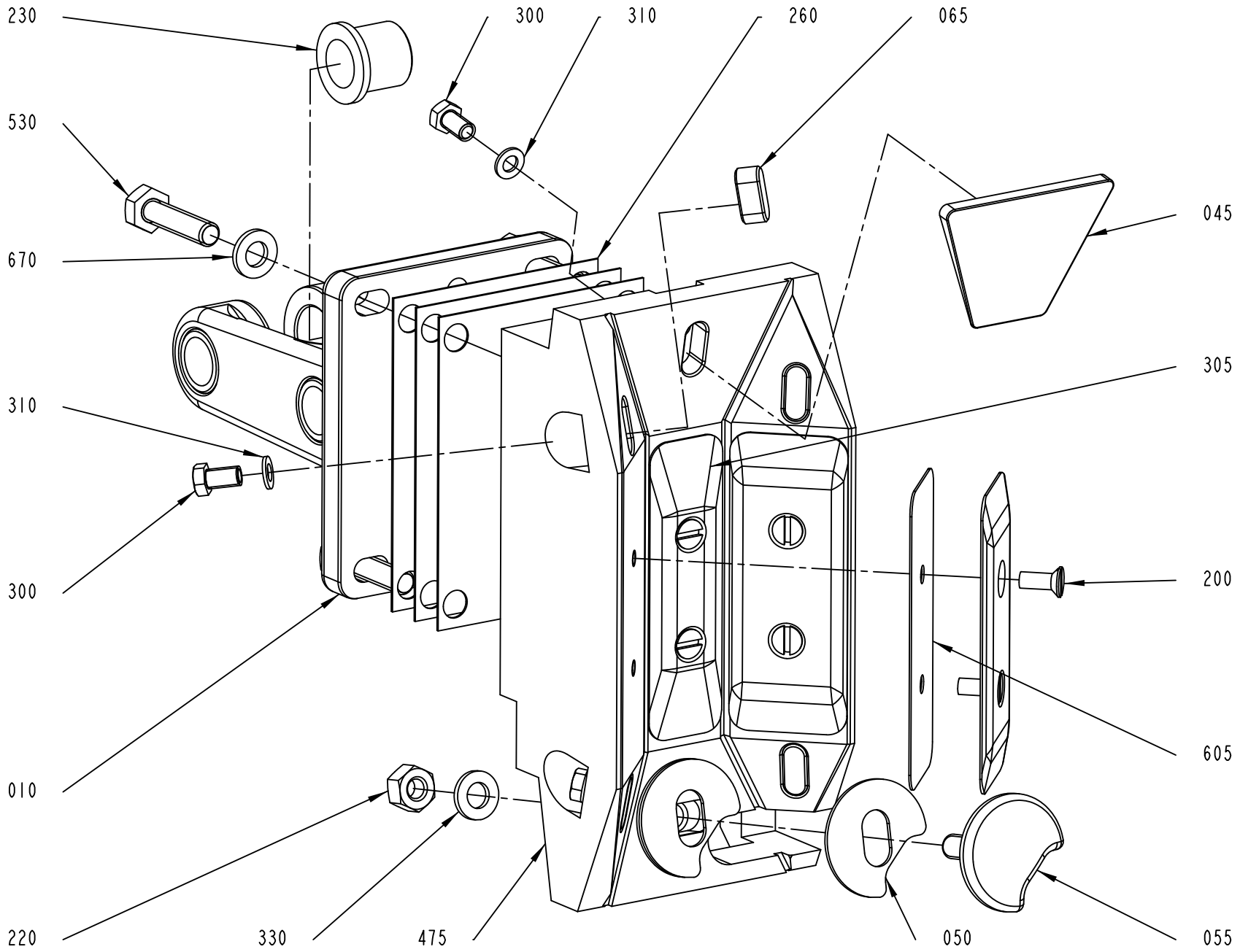

3269827-2
582944

Pos	Part No	UN	Qty	Description	Page No
TPA 0750SQ (Cont'd) (See drawing on page: 1-132)					
080	2647113-0000		1	BUSHING	
090	2698319-0000		1	BLOCK	
200	312155-0289		4	SCREW DIN 7991 MF6S M4X10 A4 70	
220	312155-0293		1	SCREW DIN 7991 MF6S M4X16 A4 70	
240	312155-0287		2	SCREW DIN 7991 MF6S M4X8 A4 70	
260	2658249-0000		3	SHIM	
475	2647093-0000		1	PUSHER	
525	312105-0368		2	"SCREW, M6S ISO 4017 M6X16 A4 80"	
530	312105-0372		2	SCREW, M6S ISO 4017 M6X25 A4 80	
580	312115-0370		2	SCREW ISO4762 M6X20 A4 80	
905	90459-3940		1	LEVER, GN 612-6-M16X1.5-A-NI	
TPA 1000SQ (See drawing on page: 1-132)					
010	2647101-0000		1	SUPPORT	
040	2647099-0000		1	GUIDE	
050	2658247-0000		4	WASHER	
055	2647097-0000		1	NAIL	
060	2996054-0000		1	VOLUME BULGE	
070	2647098-0000		1	BLOCK	
080	2647113-0000		1	BUSHING	
090	2698319-0000		1	BLOCK	
100	2996053-0000		1	VOLUME BULGE	
200	312155-0289		4	SCREW DIN 7991 MF6S M4X10 A4 70	
220	312155-0293		1	SCREW DIN 7991 MF6S M4X16 A4 70	
240	312155-0287		2	SCREW DIN 7991 MF6S M4X8 A4 70	
260	2658249-0000		3	SHIM	
475	2647095-0000		1	PUSHER	
525	312105-0368		2	"SCREW, M6S ISO 4017 M6X16 A4 80"	
530	312105-0372		2	SCREW, M6S ISO 4017 M6X25 A4 80	
580	312115-0370		2	SCREW ISO4762 M6X20 A4 80	
905	90459-3940		1	LEVER, GN 612-6-M16X1.5-A-NI	
Common Parts					
230	90458-1404		4	FLANGE BUSHING, 12X16X16 MM	
670	315105-0153		4	WASHER PLAIN, 6,4X12X1,5 A4 BRB	

Pos	Part No	UN	Qty	Description	Page No

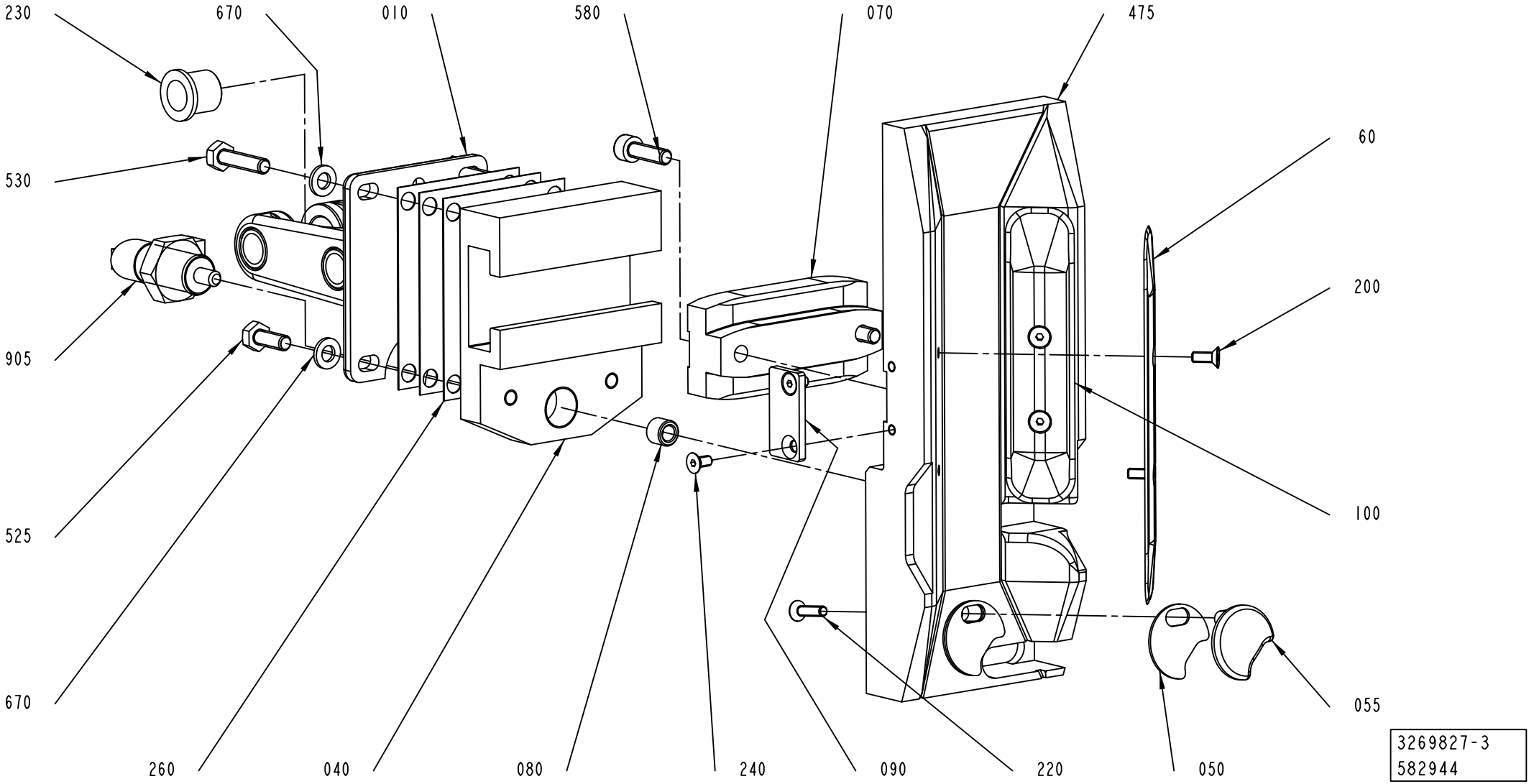
230
670
010
580
070
475
530
905
525
670
60
200
100
055
260
040
080
240
090
220
050
3269827-3
582944

Pos	Part No	UN	Qty	Description	Page No

SEE PREVIOUS LISTS PAGES: 1-129, 1-131.

Pos	Part No	UN	Qty	Description	Page No

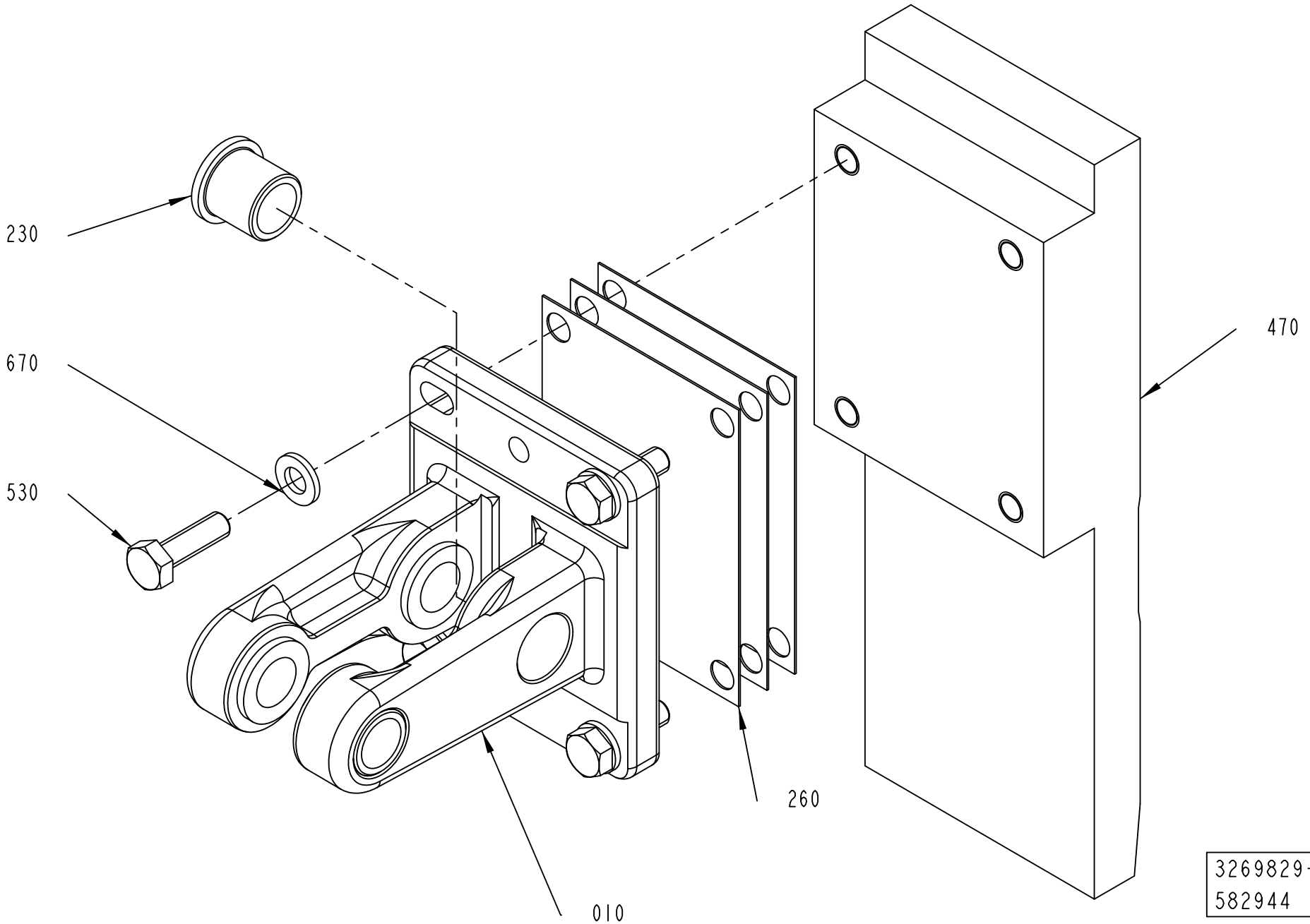
230
670
530
470
260
010
3269829-1
582944

ECM: 641991 - 20140401
Group number: 3269829-0100
Assembly Drawing: 3269829-1_1_AA

This list covers pages from 1-134 to 1-139

Pos	Part No	UN	Qty	Description	Page No
TBA 0500SQ, TBA 1000SQ (See drawing on page: 1-134)					
010	1144482-0000		1	SUPPORT	
260	1144511-0000		8	SHIM	
470	2529289-0000		1	PUSHER	
470	2529289-0000		1	PUSHER	
530	312105-0370		4	SCREW, M6S ISO 4017 M6X20 A4 80	
TBA 1000E, TBA 0500E (See drawing on page: 1-134)					
010	1144482-0000		1	SUPPORT	
260	1144511-0000		8	SHIM	
470	2861995-0000		1	PUSHER	
530	312105-0370		4	SCREW, M6S ISO 4017 M6X20 A4 80	
TPA 0500SQ (See drawing on page: 1-136)					
010	1144482-0000		1	SUPPORT	
045	2640075-0000		1	VOLUME BULGE	
050	2541878-0000		3	WASHER	
055	2541877-0000		1	NAIL	
060	2602613-0000		2	VOLUME BULGE	
065	2635167-0000		4	VOLUME BULGE	
200	312145-0289		6	SCREW ISO 2009 MFS M4X10 A4	
220	312605-0316		1	HEXAGON NUT, M6M M6 A280	
260	1144511-0000		8	SHIM	
300	312105-0287		5	SCREW, M6S ISO 4017 M4X8 A4 70	
305	2559008-0000		1	VOLUME BULGE	
310	315105-0136		5	WASHER PLAIN, 4,3X8X0,8 A4 BRB	
330	315103-0153		1	WASHER PLAIN, 6,4X12X1,5 BR NI PL	
470	1558178-0000		1	PUSHER	
530	312105-0372		4	SCREW, M6S ISO 4017 M6X25 A4 80	
605	2611875-0000		1	SHIM	
TPA 0750SQ (See drawing on page: 1-138)					
010	2647101-0000		1	SUPPORT	
040	2647099-0000		1	GUIDE	
050	2658247-0000		4	WASHER	
055	2647097-0000		1	NAIL	
060	3096280-0000		2	VOLUME BULGE	
070	2647098-0000		1	BLOCK	
080	2647113-0000		1	BUSHING	
090	2698319-0000		1	BLOCK	
200	312155-0289		4	SCREW DIN 7991 MF6S M4X10 A4 70	
220	312155-0293		1	SCREW DIN 7991 MF6S M4X16 A4 70	
240	312155-0287		2	SCREW DIN 7991 MF6S M4X8 A4 70	
260	2658249-0000		3	SHIM	
470	2647094-0000		1	PUSHER	
525	312105-0368		2	"SCREW, M6S ISO 4017 M6X16 A4 80"	
530	312105-0372		2	SCREW, M6S ISO 4017 M6X25 A4 80	
580	312115-0370		2	SCREW ISO4762 M6X20 A4 80	
905	90459-3940		1	LEVER, GN 612-6-M16X1.5-A-NI	
TPA 1000SQ (See drawing on page: 1-138)					
010	2647101-0000		1	SUPPORT	
040	2647099-0000		1	GUIDE	
050	2658247-0000		4	WASHER	
055	2647097-0000		1	NAIL	
060	2996054-0000		1	VOLUME BULGE	
070	2647098-0000		1	BLOCK	
080	2647113-0000		1	BUSHING	
090	2698319-0000		1	BLOCK	
100	2996053-0000		1	VOLUME BULGE	
200	312155-0289		4	SCREW DIN 7991 MF6S M4X10 A4 70	
220	312155-0293		1	SCREW DIN 7991 MF6S M4X16 A4 70	
240	312155-0287		2	SCREW DIN 7991 MF6S M4X8 A4 70	
260	2658249-0000		3	SHIM	
470	2647096-0000		1	PUSHER	
525	312105-0368		2	"SCREW, M6S ISO 4017 M6X16 A4 80"	
530	312105-0372		2	SCREW, M6S ISO 4017 M6X25 A4 80	
580	312115-0370		2	SCREW ISO4762 M6X20 A4 80	
905	90459-3940		1	LEVER, GN 612-6-M16X1.5-A-NI	
Common Parts					
230	90458-1404		4	FLANGE BUSHING, 12X16X16 MM	
670	315105-0153		4	WASHER PLAIN, 6,4X12X1,5 A4 BRB	

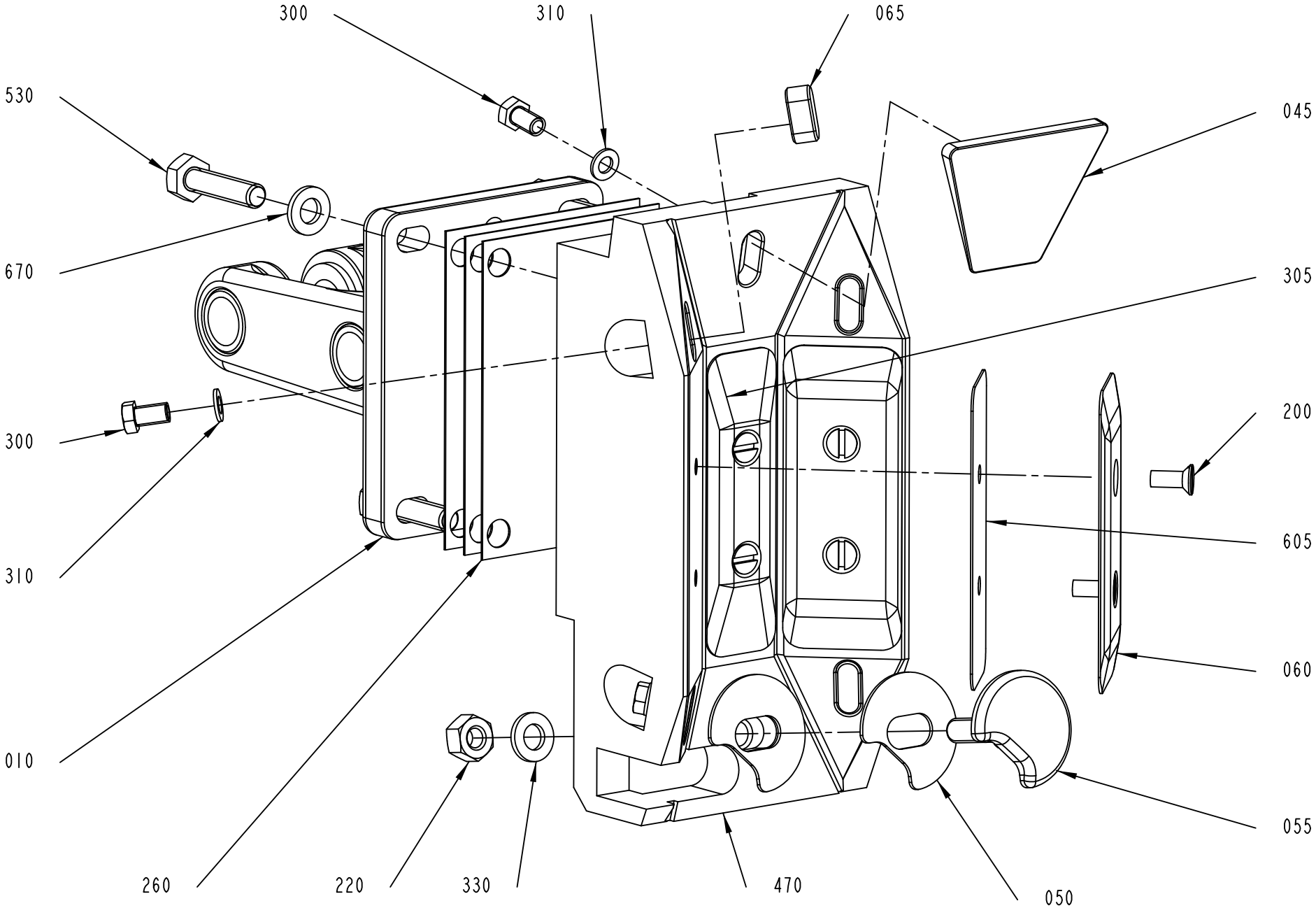

3269829-2
582944

ECM: 641991 - 20140401
Group number: 3269829-0100
Assembly Drawing: 3269829-2_1_AA

This list covers pages from 1-134 to 1-139

Pos	Part No	UN	Qty	Description	Page No
TBA 0500SQ, TBA 1000SQ (See drawing on page: 1-134)					
010	1144482-0000		1	SUPPORT	
260	1144511-0000		8	SHIM	
470	2529289-0000		1	PUSHER	
470	2529289-0000		1	PUSHER	
530	312105-0370		4	SCREW, M6S ISO 4017 M6X20 A4 80	
TBA 1000E, TBA 0500E (See drawing on page: 1-134)					
010	1144482-0000		1	SUPPORT	
260	1144511-0000		8	SHIM	
470	2861995-0000		1	PUSHER	
530	312105-0370		4	SCREW, M6S ISO 4017 M6X20 A4 80	
TPA 0500SQ (See drawing on page: 1-136)					
010	1144482-0000		1	SUPPORT	
045	2640075-0000		1	VOLUME BULGE	
050	2541878-0000		3	WASHER	
055	2541877-0000		1	NAIL	
060	2602613-0000		2	VOLUME BULGE	
065	2635167-0000		4	VOLUME BULGE	
200	312145-0289		6	SCREW ISO 2009 MFS M4X10 A4	
220	312605-0316		1	HEXAGON NUT, M6M M6 A280	
260	1144511-0000		8	SHIM	
300	312105-0287		5	SCREW, M6S ISO 4017 M4X8 A4 70	
305	2559008-0000		1	VOLUME BULGE	
310	315105-0136		5	WASHER PLAIN, 4,3X8X0,8 A4 BRB	
330	315103-0153		1	WASHER PLAIN, 6,4X12X1,5 BR NI PL	
470	1558178-0000		1	PUSHER	
530	312105-0372		4	SCREW, M6S ISO 4017 M6X25 A4 80	
605	2611875-0000		1	SHIM	
TPA 0750SQ (See drawing on page: 1-138)					
010	2647101-0000		1	SUPPORT	
040	2647099-0000		1	GUIDE	
050	2658247-0000		4	WASHER	
055	2647097-0000		1	NAIL	
060	3096280-0000		2	VOLUME BULGE	
070	2647098-0000		1	BLOCK	
080	2647113-0000		1	BUSHING	
090	2698319-0000		1	BLOCK	
200	312155-0289		4	SCREW DIN 7991 MF6S M4X10 A4 70	
220	312155-0293		1	SCREW DIN 7991 MF6S M4X16 A4 70	
240	312155-0287		2	SCREW DIN 7991 MF6S M4X8 A4 70	
260	2658249-0000		3	SHIM	
470	2647094-0000		1	PUSHER	
525	312105-0368		2	"SCREW, M6S ISO 4017 M6X16 A4 80"	
530	312105-0372		2	SCREW, M6S ISO 4017 M6X25 A4 80	
580	312115-0370		2	SCREW ISO4762 M6X20 A4 80	
905	90459-3940		1	LEVER, GN 612-6-M16X1.5-A-NI	
TPA 1000SQ (See drawing on page: 1-138)					
010	2647101-0000		1	SUPPORT	
040	2647099-0000		1	GUIDE	
050	2658247-0000		4	WASHER	
055	2647097-0000		1	NAIL	
060	2996054-0000		1	VOLUME BULGE	
070	2647098-0000		1	BLOCK	
080	2647113-0000		1	BUSHING	
090	2698319-0000		1	BLOCK	
100	2996053-0000		1	VOLUME BULGE	
200	312155-0289		4	SCREW DIN 7991 MF6S M4X10 A4 70	
220	312155-0293		1	SCREW DIN 7991 MF6S M4X16 A4 70	
240	312155-0287		2	SCREW DIN 7991 MF6S M4X8 A4 70	
260	2658249-0000		3	SHIM	
470	2647096-0000		1	PUSHER	
525	312105-0368		2	"SCREW, M6S ISO 4017 M6X16 A4 80"	
530	312105-0372		2	SCREW, M6S ISO 4017 M6X25 A4 80	
580	312115-0370		2	SCREW ISO4762 M6X20 A4 80	
905	90459-3940		1	LEVER, GN 612-6-M16X1.5-A-NI	
Common Parts					
230	90458-1404		4	FLANGE BUSHING, 12X16X16 MM	
670	315105-0153		4	WASHER PLAIN, 6,4X12X1,5 A4 BRB	

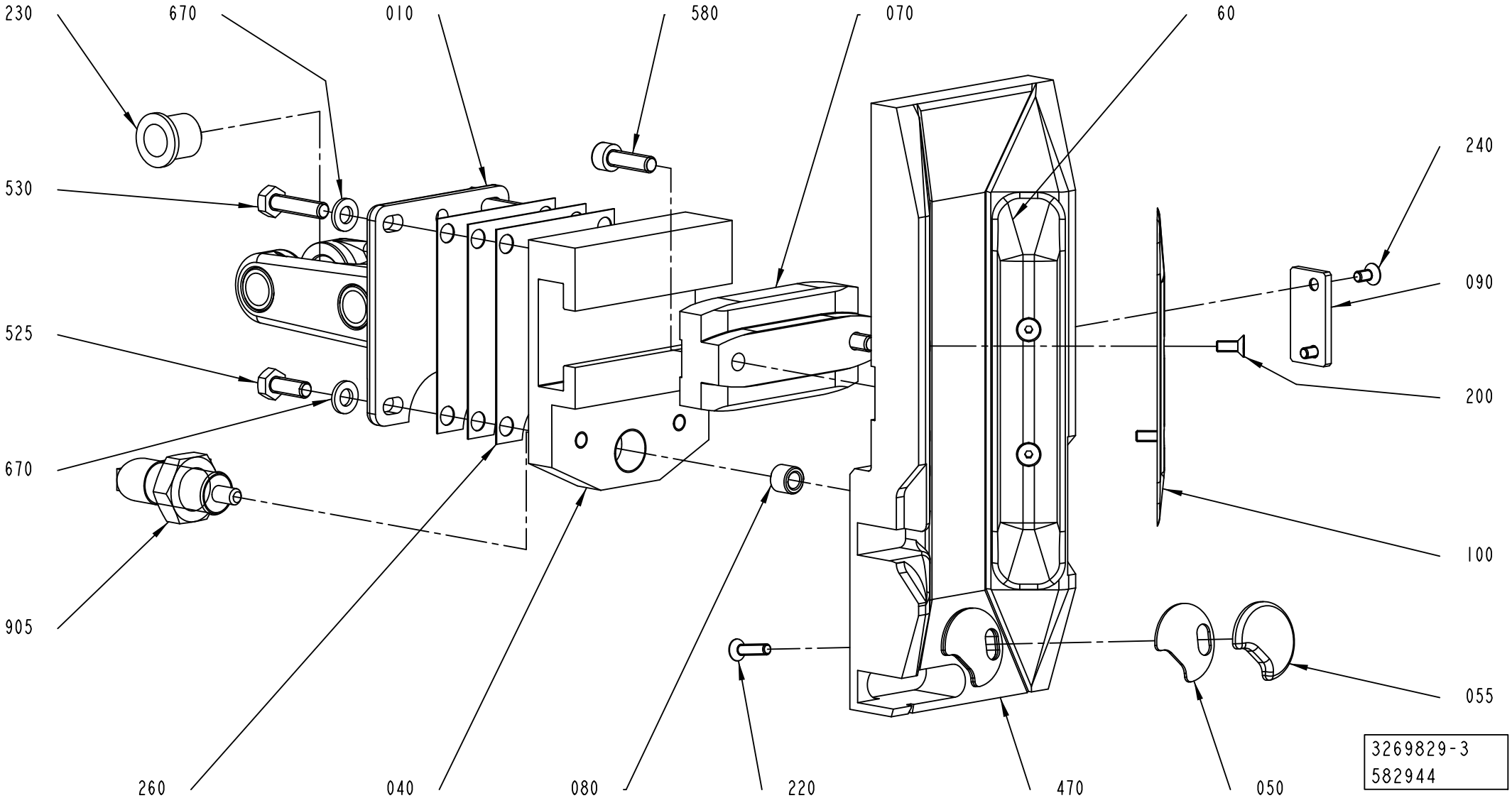
230
670
010
580
070
60
240
530
090
525
200
670
100
905
055
260
040
080
220
470
050
3269829-3
582944

ECM: 641991 - 20140401
Group number: 3269829-0100
Assembly Drawing: 3269829-3_1_AA

This list covers pages from 1-134 to 1-139

Pos	Part No	UN	Qty	Description	Page No
TBA 0500SQ, TBA 1000SQ (See drawing on page: 1-134)					
010	1144482-0000		1	SUPPORT	
260	1144511-0000		8	SHIM	
470	2529289-0000		1	PUSHER	
470	2529289-0000		1	PUSHER	
530	312105-0370		4	SCREW, M6S ISO 4017 M6X20 A4 80	
TBA 1000E, TBA 0500E (See drawing on page: 1-134)					
010	1144482-0000		1	SUPPORT	
260	1144511-0000		8	SHIM	
470	2861995-0000		1	PUSHER	
530	312105-0370		4	SCREW, M6S ISO 4017 M6X20 A4 80	
TPA 0500SQ (See drawing on page: 1-136)					
010	1144482-0000		1	SUPPORT	
045	2640075-0000		1	VOLUME BULGE	
050	2541878-0000		3	WASHER	
055	2541877-0000		1	NAIL	
060	2602613-0000		2	VOLUME BULGE	
065	2635167-0000		4	VOLUME BULGE	
200	312145-0289		6	SCREW ISO 2009 MFS M4X10 A4	
220	312605-0316		1	HEXAGON NUT, M6M M6 A280	
260	1144511-0000		8	SHIM	
300	312105-0287		5	SCREW, M6S ISO 4017 M4X8 A4 70	
305	2559008-0000		1	VOLUME BULGE	
310	315105-0136		5	WASHER PLAIN, 4,3X8X0,8 A4 BRB	
330	315103-0153		1	WASHER PLAIN, 6,4X12X1,5 BR NI PL	
470	1558178-0000		1	PUSHER	
530	312105-0372		4	SCREW, M6S ISO 4017 M6X25 A4 80	
605	2611875-0000		1	SHIM	
TPA 0750SQ (See drawing on page: 1-138)					
010	2647101-0000		1	SUPPORT	
040	2647099-0000		1	GUIDE	
050	2658247-0000		4	WASHER	
055	2647097-0000		1	NAIL	
060	3096280-0000		2	VOLUME BULGE	
070	2647098-0000		1	BLOCK	
080	2647113-0000		1	BUSHING	
090	2698319-0000		1	BLOCK	
200	312155-0289		4	SCREW DIN 7991 MF6S M4X10 A4 70	
220	312155-0293		1	SCREW DIN 7991 MF6S M4X16 A4 70	
240	312155-0287		2	SCREW DIN 7991 MF6S M4X8 A4 70	
260	2658249-0000		3	SHIM	
470	2647094-0000		1	PUSHER	
525	312105-0368		2	"SCREW, M6S ISO 4017 M6X16 A4 80"	
530	312105-0372		2	SCREW, M6S ISO 4017 M6X25 A4 80	
580	312115-0370		2	SCREW ISO4762 M6X20 A4 80	
905	90459-3940		1	LEVER, GN 612-6-M16X1.5-A-NI	
TPA 1000SQ (See drawing on page: 1-138)					
010	2647101-0000		1	SUPPORT	
040	2647099-0000		1	GUIDE	
050	2658247-0000		4	WASHER	
055	2647097-0000		1	NAIL	
060	2996054-0000		1	VOLUME BULGE	
070	2647098-0000		1	BLOCK	
080	2647113-0000		1	BUSHING	
090	2698319-0000		1	BLOCK	
100	2996053-0000		1	VOLUME BULGE	
200	312155-0289		4	SCREW DIN 7991 MF6S M4X10 A4 70	
220	312155-0293		1	SCREW DIN 7991 MF6S M4X16 A4 70	
240	312155-0287		2	SCREW DIN 7991 MF6S M4X8 A4 70	
260	2658249-0000		3	SHIM	
470	2647096-0000		1	PUSHER	
525	312105-0368		2	"SCREW, M6S ISO 4017 M6X16 A4 80"	
530	312105-0372		2	SCREW, M6S ISO 4017 M6X25 A4 80	
580	312115-0370		2	SCREW ISO4762 M6X20 A4 80	
905	90459-3940		1	LEVER, GN 612-6-M16X1.5-A-NI	
Common Parts					
230	90458-1404		4	FLANGE BUSHING, 12X16X16 MM	
670	315105-0153		4	WASHER PLAIN, 6,4X12X1,5 A4 BRB	

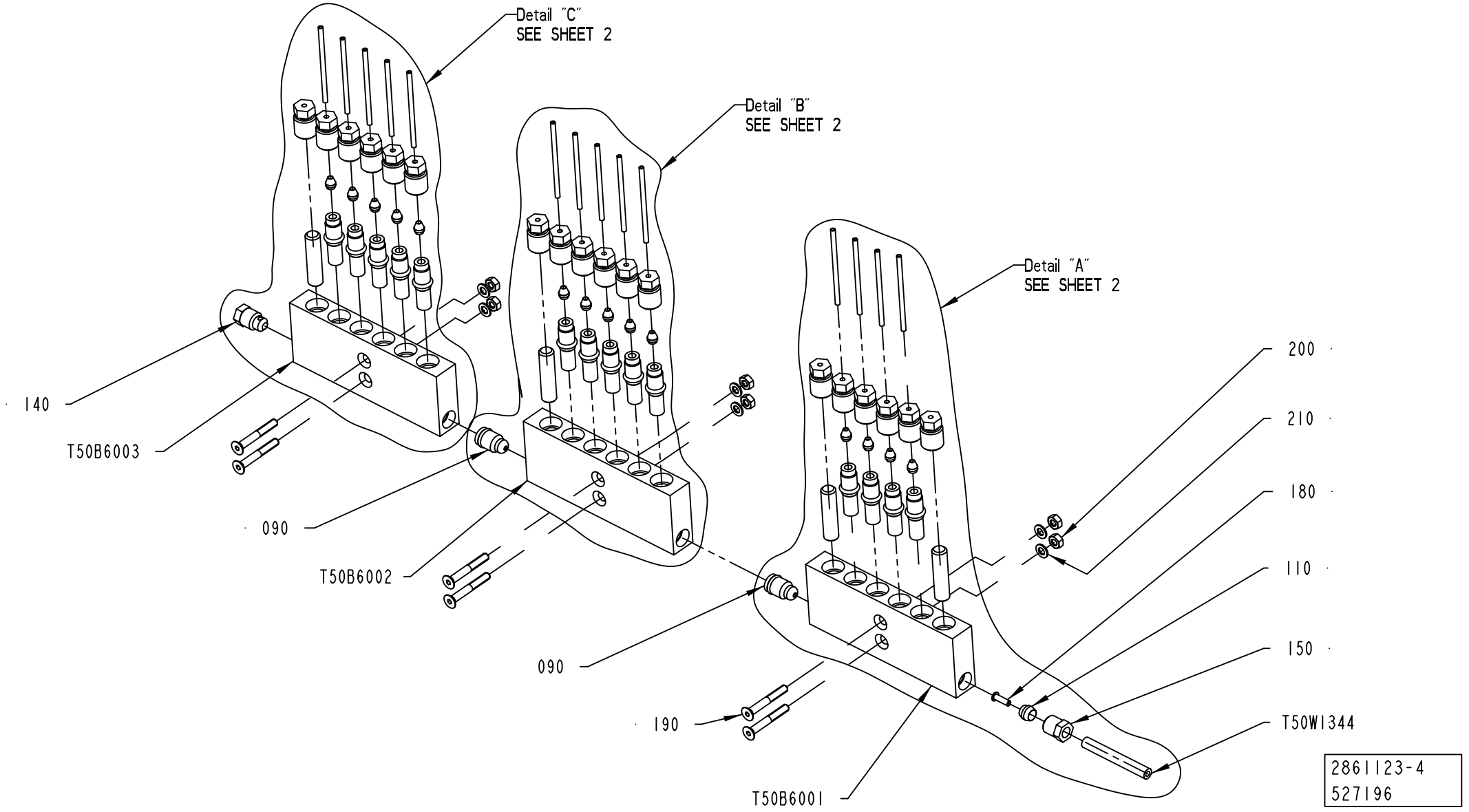
Detail "C"
SEE SHEET 2
Detail "B"
SEE SHEET 2
Detail "A"
SEE SHEET 2
140
T50B6003
090
T50B6002
090
190
T50B6001
200
210
180
110
150
T50W1344
2861123-4
527196

ECM: 641852 - 20140401
Group number: 2861123-0200
Assembly Drawing: 2861123-4_1_AA

This list covers pages from 1-140 to 1-151

Pos	Part No	UN	Qty	Description	Page No
TBA 0500S, TBA 0500B, TBA 1500S, TBA 1000S NOMOLDEDCAP, TBA 1000B NOMOLDEDCAP, TBA 2000S (See drawing on pages: 1-140, 1-142)					
020	90134-0039		18	BUSHING VALVE CONNECTION 2,5 MM	
030	90134-0052		4	PLUG DOSING BLOCK	
100	90028-0020		14	CONE TUBE 2,5MM	
TBA 0500SQ, TBA 1000SQ, TBA 1000E, TBA 0500E (See drawing on pages: 1-148, 1-150)					
020	90134-0039		18	BUSHING VALVE CONNECTION 2,5 MM	
100	90028-0020		18	CONE TUBE 2,5MM	
T50Q6001	90092-0052		1	METERING VALVE 10 MM3	
T50Q6011	90092-0052		1	METERING VALVE 10 MM3	
T50Q6017	90092-0052		1	METERING VALVE 10 MM3	
T50Q6023	90092-0052		1	METERING VALVE 10 MM3	
T50W8061	90166-0143	M	1	TUBE 2,5 MM PA TRANSP.	
T50W8065	90166-0143	MM	1050	TUBE 2,5 MM PA TRANSP.	
T50W8071	90166-0143	MM	1050	TUBE 2,5 MM PA TRANSP.	
T50W8077	90166-0143	M	1	TUBE 2,5 MM PA TRANSP.	
TPA 0500SQ, TBA 1000S STDA7, TBA 1000B STDA7, TBA 1000S LIGHTCAP24, TBA 1000M (See drawing on pages: 1-144, 1-146)					
020	90134-0039		16	BUSHING VALVE CONNECTION 2,5 MM	
030	90134-0052		2	PLUG DOSING BLOCK	
040	90134-0040		2	BUSHING VALVE CONNECTION 4 MM	
050	90028-0021		2	CONE TUBE 4 MM	
100	90028-0020		14	CONE TUBE 2,5MM	
T50Q6001	90092-0052		1	METERING VALVE 10 MM3	
T50Q6023	90092-0052		1	METERING VALVE 10 MM3	
T50W8061	2869148-0000		1	TUBE	
T50W8077	2869149-0000		1	TUBE	
TPA 1000SQ, TPA 0750SQ (See drawing on pages: 1-144, 1-146)					
020	90134-0039		16	BUSHING VALVE CONNECTION 2,5 MM	
030	90134-0052		2	PLUG DOSING BLOCK	
040	90134-0040		2	BUSHING VALVE CONNECTION 4 MM	
050	90028-0021		2	CONE TUBE 4 MM	
100	90028-0020		14	CONE TUBE 2,5MM	
220	90134-0031		2	SLEEVE FOR PLASTIC TUBE	
T50Q6001	90092-0052		1	METERING VALVE 10 MM3	
T50Q6023	90092-0052		1	METERING VALVE 10 MM3	
T50W8061	90166-0109	M	1	TUBE 4 MM PA TRANSP.	
T50W8077	90166-0109	M	1	TUBE 4 MM PA TRANSP.	
Common Parts					
090	90134-0054		2	BLOCK CONNECTION M10X1	
110	90028-0022		1	CONE TUBE 6 MM	
140	90087-0019		1	PLUG M10X1 STAINLESS	
150	90134-0055		1	BUSHING/NUT INLET/OUTLET 6 MM	
180	90134-0030		1	SLEEVE FOR PLASTIC TUBE	
190	312155-0299		6	SCREW DIN 7991 MF6S M4X30 A4 70	
200	312602-0312		6	HEXAGON NUT, EN 24032 M6M M4 NIPLBR	
210	315105-0136		6	WASHER PLAIN, 4,3X8X0,8 A4 BRB	
T50B6001	90459-5652		1	LUBRICATION BLOCK, HFS4666	
T50B6002	90459-5652		1	LUBRICATION BLOCK, HFS4666	
T50B6003	90459-5652		1	LUBRICATION BLOCK, HFS4666	
T50Q6002	90092-0052		1	METERING VALVE 10 MM3	
T50Q6003	90092-0052		1	METERING VALVE 10 MM3	
T50Q6004	90092-0054		1	METERING VALVE 50 MM3	
T50Q6010	90092-0052		1	METERING VALVE 10 MM3	
T50Q6012	90092-0052		1	METERING VALVE 10 MM3	
T50Q6013	90092-0052		1	METERING VALVE 10 MM3	
T50Q6014	90092-0052		1	METERING VALVE 10 MM3	
T50Q6015	90092-0052		1	METERING VALVE 10 MM3	
T50Q6016	90092-0052		1	METERING VALVE 10 MM3	
T50Q6018	90092-0052		1	METERING VALVE 10 MM3	
T50Q6019	90092-0052		1	METERING VALVE 10 MM3	
T50Q6020	90092-0052		1	METERING VALVE 10 MM3	
T50Q6021	90092-0052		1	METERING VALVE 10 MM3	
T50Q6022	90092-0052		1	METERING VALVE 10 MM3	
T50W1344	90166-0108	M	4	TUBE 6 MM PA TRANSP.	
T50W8060	90166-0143	MM	1100	TUBE 2,5 MM PA TRANSP.	
T50W8062	90166-0143	MM	280	TUBE 2,5 MM PA TRANSP.	
T50W8063	90166-0143	MM	360	TUBE 2,5 MM PA TRANSP.	
T50W8064	90166-0143	MM	650	TUBE 2,5 MM PA TRANSP.	
T50W8066	90166-0143	MM	630	TUBE 2,5 MM PA TRANSP.	
T50W8067	90166-0143	MM	630	TUBE 2,5 MM PA TRANSP.	
T50W8068	90166-0143	MM	500	TUBE 2,5 MM PA TRANSP.	
T50W8069	90166-0143	MM	130	TUBE 2,5 MM PA TRANSP.	
T50W8070	90166-0143	MM	350	TUBE 2,5 MM PA TRANSP.	
T50W8072	90166-0143	MM	200	TUBE 2,5 MM PA TRANSP.	
T50W8073	90166-0143	MM	310	TUBE 2,5 MM PA TRANSP.	
T50W8074	90166-0143	MM	460	TUBE 2,5 MM PA TRANSP.	
T50W8075	90166-0143	MM	280	TUBE 2,5 MM PA TRANSP.	
T50W8076	90166-0143	MM	430	TUBE 2,5 MM PA TRANSP.	

Machine Type | Group Description | Used-In | Group Number | Page No

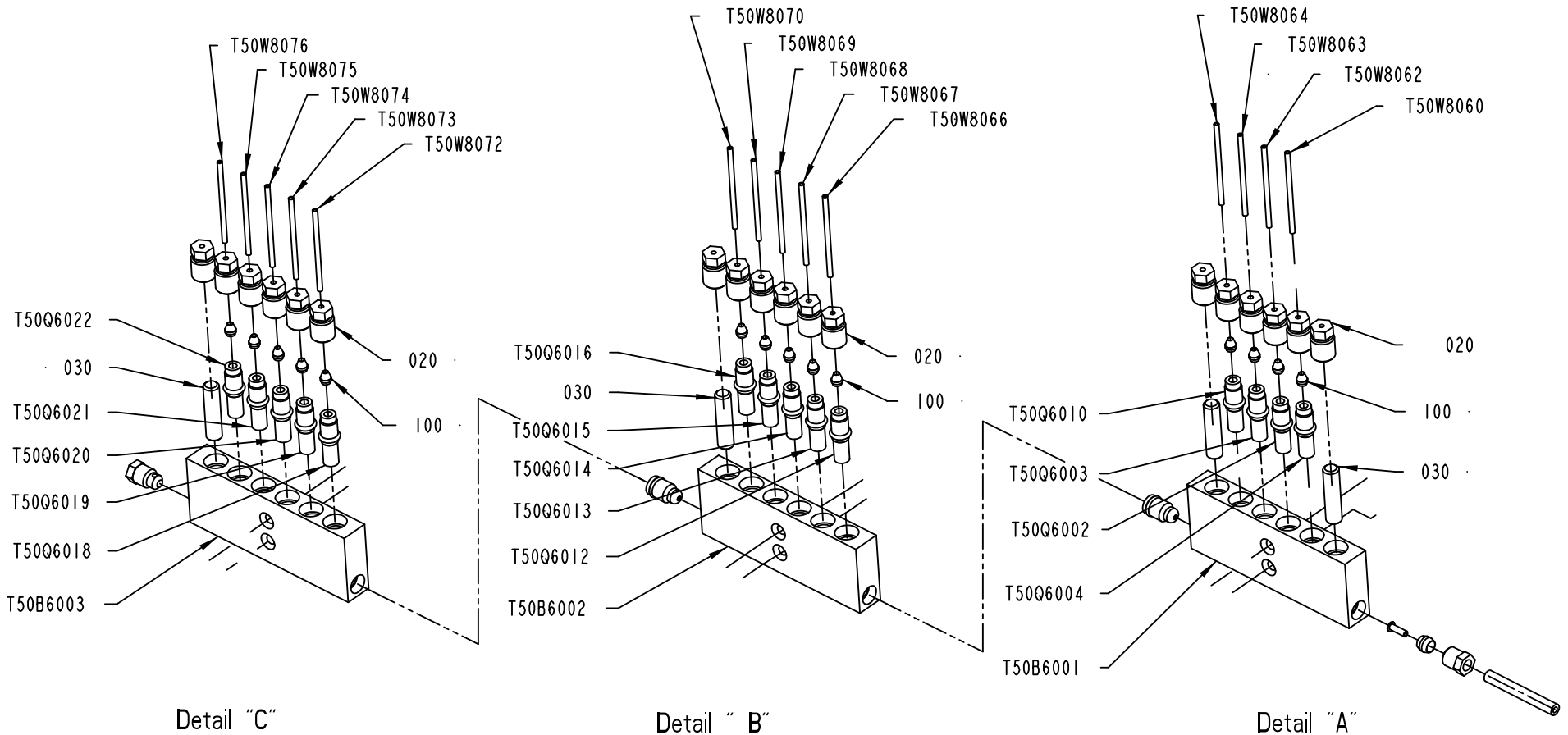

Detail "C"
SCALE 1:2

Detail " B"
SCALE 1:2

Detail "A"
SCALE 1:2

2861123-4
527196

ECM: 641852 - 20140401
Group number: 2861123-0200
Assembly Drawing: 2861123-4_2_AA

This list covers pages from 1-140 to 1-151

Pos	Part No	UN	Qty	Description	Page No
TBA 0500S, TBA 0500B, TBA 1500S, TBA 1000S NOMOLDEDCAP, TBA 1000B NOMOLDEDCAP, TBA 2000S (See drawing on pages: 1-140, 1-142)					
020	90134-0039		18	BUSHING VALVE CONNECTION 2,5 MM	
030	90134-0052		4	PLUG DOSING BLOCK	
100	90028-0020		14	CONE TUBE 2,5MM	
TBA 0500SQ, TBA 1000SQ, TBA 1000E, TBA 0500E (See drawing on pages: 1-148, 1-150)					
020	90134-0039		18	BUSHING VALVE CONNECTION 2,5 MM	
100	90028-0020		18	CONE TUBE 2,5MM	
T50Q6001	90092-0052		1	METERING VALVE 10 MM3	
T50Q6011	90092-0052		1	METERING VALVE 10 MM3	
T50Q6017	90092-0052		1	METERING VALVE 10 MM3	
T50Q6023	90092-0052		1	METERING VALVE 10 MM3	
T50W8061	90166-0143	M	1	TUBE 2,5 MM PA TRANSP.	
T50W8065	90166-0143	MM	1050	TUBE 2,5 MM PA TRANSP.	
T50W8071	90166-0143	MM	1050	TUBE 2,5 MM PA TRANSP.	
T50W8077	90166-0143	M	1	TUBE 2,5 MM PA TRANSP.	
TPA 0500SQ, TBA 1000S STDA7, TBA 1000B STDA7, TBA 1000S LIGHTCAP24, TBA 1000M (See drawing on pages: 1-144, 1-146)					
020	90134-0039		16	BUSHING VALVE CONNECTION 2,5 MM	
030	90134-0052		2	PLUG DOSING BLOCK	
040	90134-0040		2	BUSHING VALVE CONNECTION 4 MM	
050	90028-0021		2	CONE TUBE 4 MM	
100	90028-0020		14	CONE TUBE 2,5MM	
T50Q6001	90092-0052		1	METERING VALVE 10 MM3	
T50Q6023	90092-0052		1	METERING VALVE 10 MM3	
T50W8061	2869148-0000		1	TUBE	
T50W8077	2869149-0000		1	TUBE	
TPA 1000SQ, TPA 0750SQ (See drawing on pages: 1-144, 1-146)					
020	90134-0039		16	BUSHING VALVE CONNECTION 2,5 MM	
030	90134-0052		2	PLUG DOSING BLOCK	
040	90134-0040		2	BUSHING VALVE CONNECTION 4 MM	
050	90028-0021		2	CONE TUBE 4 MM	
100	90028-0020		14	CONE TUBE 2,5MM	
220	90134-0031		2	SLEEVE FOR PLASTIC TUBE	
T50Q6001	90092-0052		1	METERING VALVE 10 MM3	
T50Q6023	90092-0052		1	METERING VALVE 10 MM3	
T50W8061	90166-0109	M	1	TUBE 4 MM PA TRANSP.	
T50W8077	90166-0109	M	1	TUBE 4 MM PA TRANSP.	
Common Parts					
090	90134-0054		2	BLOCK CONNECTION M10X1	
110	90028-0022		1	CONE TUBE 6 MM	
140	90087-0019		1	PLUG M10X1 STAINLESS	
150	90134-0055		1	BUSHING/NUT INLET/OUTLET 6 MM	
180	90134-0030		1	SLEEVE FOR PLASTIC TUBE	
190	312155-0299		6	SCREW DIN 7991 MF6S M4X30 A4 70	
200	312602-0312		6	HEXAGON NUT, EN 24032 M6M M4 NIPLBR	
210	315105-0136		6	WASHER PLAIN, 4,3X8X0,8 A4 BRB	
T50B6001	90459-5652		1	LUBRICATION BLOCK, HFS4666	
T50B6002	90459-5652		1	LUBRICATION BLOCK, HFS4666	
T50B6003	90459-5652		1	LUBRICATION BLOCK, HFS4666	
T50Q6002	90092-0052		1	METERING VALVE 10 MM3	
T50Q6003	90092-0052		1	METERING VALVE 10 MM3	
T50Q6004	90092-0054		1	METERING VALVE 50 MM3	
T50Q6010	90092-0052		1	METERING VALVE 10 MM3	
T50Q6012	90092-0052		1	METERING VALVE 10 MM3	
T50Q6013	90092-0052		1	METERING VALVE 10 MM3	
T50Q6014	90092-0052		1	METERING VALVE 10 MM3	
T50Q6015	90092-0052		1	METERING VALVE 10 MM3	
T50Q6016	90092-0052		1	METERING VALVE 10 MM3	
T50Q6018	90092-0052		1	METERING VALVE 10 MM3	
T50Q6019	90092-0052		1	METERING VALVE 10 MM3	
T50Q6020	90092-0052		1	METERING VALVE 10 MM3	
T50Q6021	90092-0052		1	METERING VALVE 10 MM3	
T50Q6022	90092-0052		1	METERING VALVE 10 MM3	
T50W1344	90166-0108	M	4	TUBE 6 MM PA TRANSP.	
T50W8060	90166-0143	MM	1100	TUBE 2,5 MM PA TRANSP.	
T50W8062	90166-0143	MM	280	TUBE 2,5 MM PA TRANSP.	
T50W8063	90166-0143	MM	360	TUBE 2,5 MM PA TRANSP.	
T50W8064	90166-0143	MM	650	TUBE 2,5 MM PA TRANSP.	
T50W8066	90166-0143	MM	630	TUBE 2,5 MM PA TRANSP.	
T50W8067	90166-0143	MM	630	TUBE 2,5 MM PA TRANSP.	
T50W8068	90166-0143	MM	500	TUBE 2,5 MM PA TRANSP.	
T50W8069	90166-0143	MM	130	TUBE 2,5 MM PA TRANSP.	
T50W8070	90166-0143	MM	350	TUBE 2,5 MM PA TRANSP.	
T50W8072	90166-0143	MM	200	TUBE 2,5 MM PA TRANSP.	
T50W8073	90166-0143	MM	310	TUBE 2,5 MM PA TRANSP.	
T50W8074	90166-0143	MM	460	TUBE 2,5 MM PA TRANSP.	
T50W8075	90166-0143	MM	280	TUBE 2,5 MM PA TRANSP.	
T50W8076	90166-0143	MM	430	TUBE 2,5 MM PA TRANSP.	

Machine Type | Group Description | Used-In | Group Number | Page No

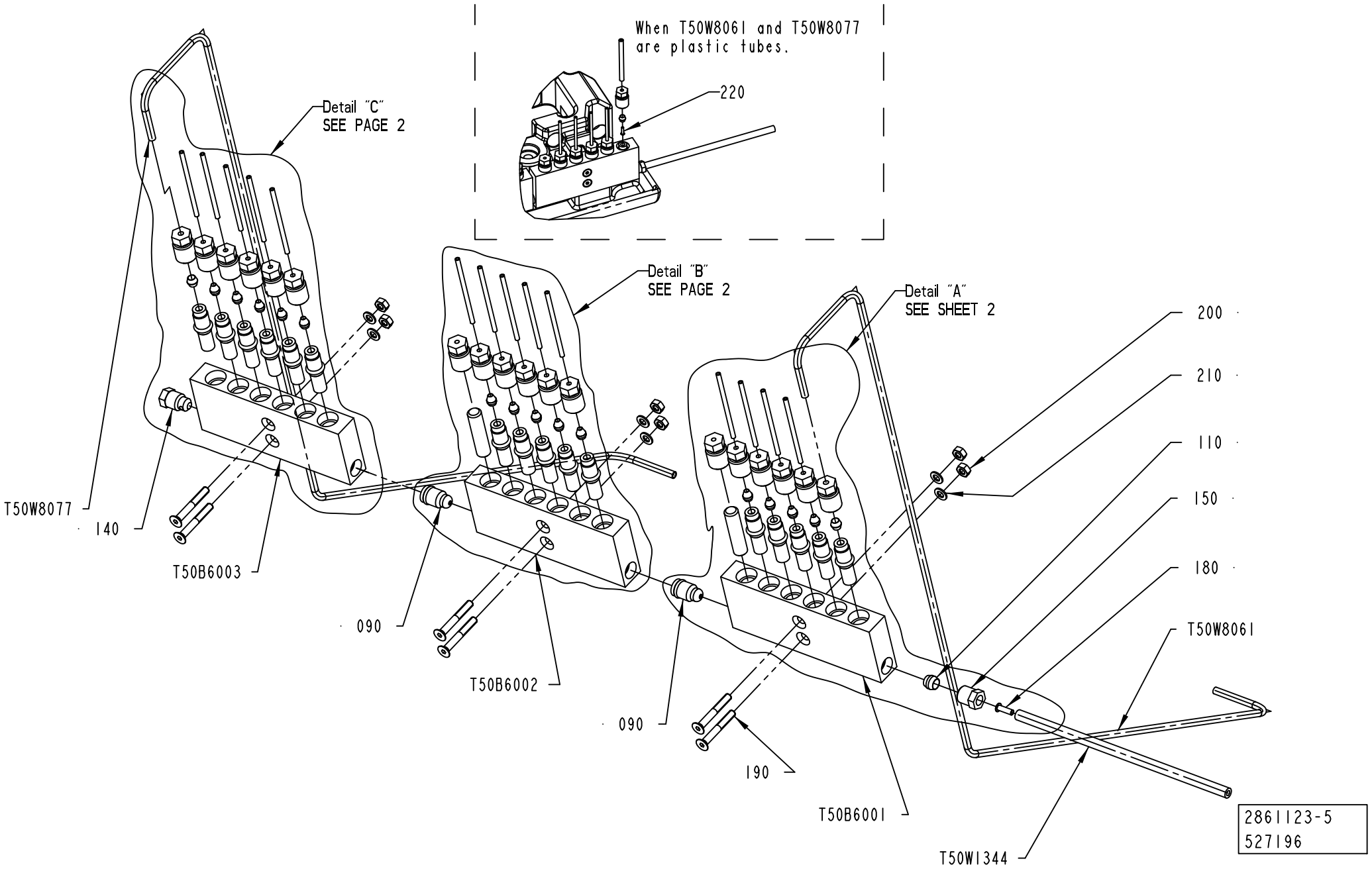
When T50W8061 and T50W8077 are plastic tubes.
220
Detail "C" SEE PAGE 2
Detail "B" SEE PAGE 2
Detail "A" SEE SHEET 2
200
210
110
150
180
T50W8061
T50W8077
140
T50B6003
090
T50B6002
090
190
T50B6001
T50W1344
2861123-5
527196

ECM: 641852 - 20140401
Group number: 2861123-0200
Assembly Drawing: 2861123-5_1_AA

This list covers pages from 1-140 to 1-151

Pos	Part No	UN	Qty	Description	Page No
TBA 0500S, TBA 0500B, TBA 1500S, TBA 1000S NOMOLDEDCAP, TBA 1000B NOMOLDEDCAP, TBA 2000S (See drawing on pages: 1-140, 1-142)					
020	90134-0039		18	BUSHING VALVE CONNECTION 2,5 MM	
030	90134-0052		4	PLUG DOSING BLOCK	
100	90028-0020		14	CONE TUBE 2,5MM	
TBA 0500SQ, TBA 1000SQ, TBA 1000E, TBA 0500E (See drawing on pages: 1-148, 1-150)					
020	90134-0039		18	BUSHING VALVE CONNECTION 2,5 MM	
100	90028-0020		18	CONE TUBE 2,5MM	
T50Q6001	90092-0052		1	METERING VALVE 10 MM3	
T50Q6011	90092-0052		1	METERING VALVE 10 MM3	
T50Q6017	90092-0052		1	METERING VALVE 10 MM3	
T50Q6023	90092-0052		1	METERING VALVE 10 MM3	
T50W8061	90166-0143	M	1	TUBE 2,5 MM PA TRANSP.	
T50W8065	90166-0143	MM	1050	TUBE 2,5 MM PA TRANSP.	
T50W8071	90166-0143	MM	1050	TUBE 2,5 MM PA TRANSP.	
T50W8077	90166-0143	M	1	TUBE 2,5 MM PA TRANSP.	
TPA 0500SQ, TBA 1000S STDA7, TBA 1000B STDA7, TBA 1000S LIGHTCAP24, TBA 1000M (See drawing on pages: 1-144, 1-146)					
020	90134-0039		16	BUSHING VALVE CONNECTION 2,5 MM	
030	90134-0052		2	PLUG DOSING BLOCK	
040	90134-0040		2	BUSHING VALVE CONNECTION 4 MM	
050	90028-0021		2	CONE TUBE 4 MM	
100	90028-0020		14	CONE TUBE 2,5MM	
T50Q6001	90092-0052		1	METERING VALVE 10 MM3	
T50Q6023	90092-0052		1	METERING VALVE 10 MM3	
T50W8061	2869148-0000		1	TUBE	
T50W8077	2869149-0000		1	TUBE	
TPA 1000SQ, TPA 0750SQ (See drawing on pages: 1-144, 1-146)					
020	90134-0039		16	BUSHING VALVE CONNECTION 2,5 MM	
030	90134-0052		2	PLUG DOSING BLOCK	
040	90134-0040		2	BUSHING VALVE CONNECTION 4 MM	
050	90028-0021		2	CONE TUBE 4 MM	
100	90028-0020		14	CONE TUBE 2,5MM	
220	90134-0031		2	SLEEVE FOR PLASTIC TUBE	
T50Q6001	90092-0052		1	METERING VALVE 10 MM3	
T50Q6023	90092-0052		1	METERING VALVE 10 MM3	
T50W8061	90166-0109	M	1	TUBE 4 MM PA TRANSP.	
T50W8077	90166-0109	M	1	TUBE 4 MM PA TRANSP.	
Common Parts					
090	90134-0054		2	BLOCK CONNECTION M10X1	
110	90028-0022		1	CONE TUBE 6 MM	
140	90087-0019		1	PLUG M10X1 STAINLESS	
150	90134-0055		1	BUSHING/NUT INLET/OUTLET 6 MM	
180	90134-0030		1	SLEEVE FOR PLASTIC TUBE	
190	312155-0299		6	SCREW DIN 7991 MF6S M4X30 A4 70	
200	312602-0312		6	HEXAGON NUT, EN 24032 M6M M4 NIPLBR	
210	315105-0136		6	WASHER PLAIN, 4,3X8X0,8 A4 BRB	
T50B6001	90459-5652		1	LUBRICATION BLOCK, HFS4666	
T50B6002	90459-5652		1	LUBRICATION BLOCK, HFS4666	
T50B6003	90459-5652		1	LUBRICATION BLOCK, HFS4666	
T50Q6002	90092-0052		1	METERING VALVE 10 MM3	
T50Q6003	90092-0052		1	METERING VALVE 10 MM3	
T50Q6004	90092-0054		1	METERING VALVE 50 MM3	
T50Q6010	90092-0052		1	METERING VALVE 10 MM3	
T50Q6012	90092-0052		1	METERING VALVE 10 MM3	
T50Q6013	90092-0052		1	METERING VALVE 10 MM3	
T50Q6014	90092-0052		1	METERING VALVE 10 MM3	
T50Q6015	90092-0052		1	METERING VALVE 10 MM3	
T50Q6016	90092-0052		1	METERING VALVE 10 MM3	
T50Q6018	90092-0052		1	METERING VALVE 10 MM3	
T50Q6019	90092-0052		1	METERING VALVE 10 MM3	
T50Q6020	90092-0052		1	METERING VALVE 10 MM3	
T50Q6021	90092-0052		1	METERING VALVE 10 MM3	
T50Q6022	90092-0052		1	METERING VALVE 10 MM3	
T50W1344	90166-0108	M	4	TUBE 6 MM PA TRANSP.	
T50W8060	90166-0143	MM	1100	TUBE 2,5 MM PA TRANSP.	
T50W8062	90166-0143	MM	280	TUBE 2,5 MM PA TRANSP.	
T50W8063	90166-0143	MM	360	TUBE 2,5 MM PA TRANSP.	
T50W8064	90166-0143	MM	650	TUBE 2,5 MM PA TRANSP.	
T50W8066	90166-0143	MM	630	TUBE 2,5 MM PA TRANSP.	
T50W8067	90166-0143	MM	630	TUBE 2,5 MM PA TRANSP.	
T50W8068	90166-0143	MM	500	TUBE 2,5 MM PA TRANSP.	
T50W8069	90166-0143	MM	130	TUBE 2,5 MM PA TRANSP.	
T50W8070	90166-0143	MM	350	TUBE 2,5 MM PA TRANSP.	
T50W8072	90166-0143	MM	200	TUBE 2,5 MM PA TRANSP.	
T50W8073	90166-0143	MM	310	TUBE 2,5 MM PA TRANSP.	
T50W8074	90166-0143	MM	460	TUBE 2,5 MM PA TRANSP.	
T50W8075	90166-0143	MM	280	TUBE 2,5 MM PA TRANSP.	
T50W8076	90166-0143	MM	430	TUBE 2,5 MM PA TRANSP.	

Machine Type | Group Description | Used-In | Group Number | Page No

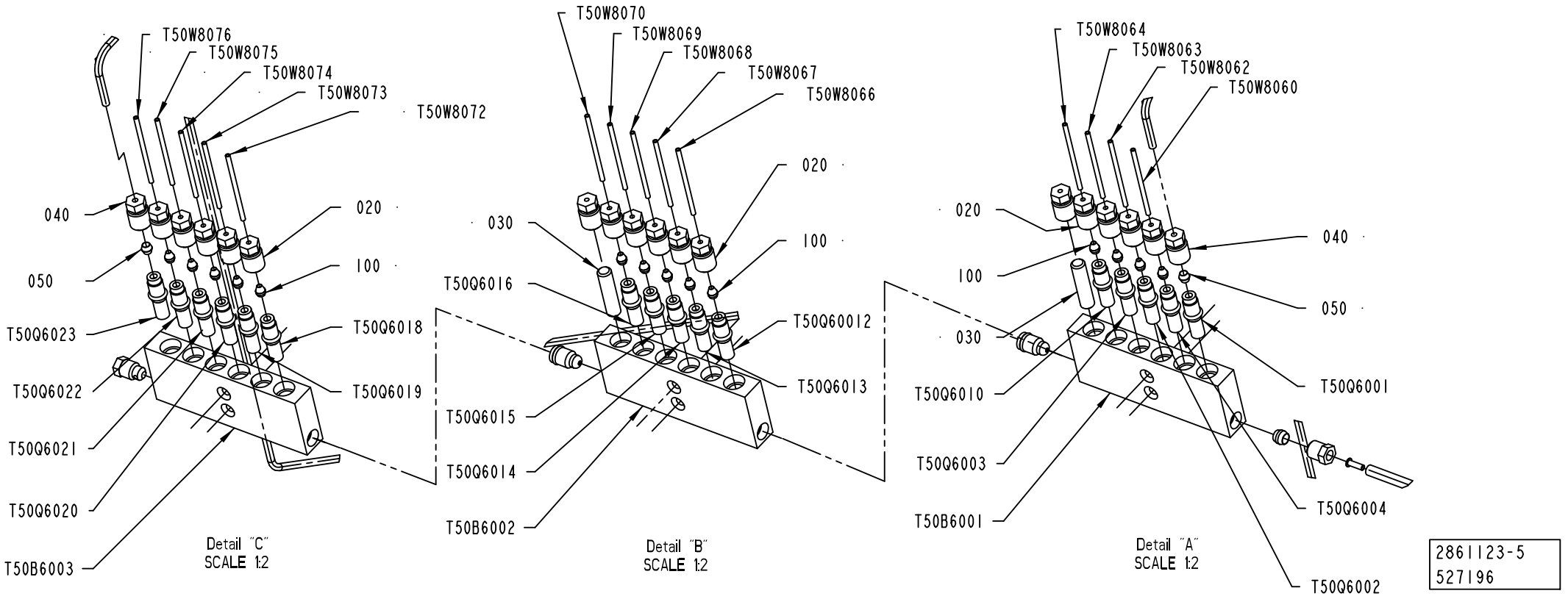
T50W8076
T50W8075
T50W8074
T50W8073
T50W8072
040
020
050
100
T50Q6023
T50Q6018
T50Q6022
T50Q6019
T50Q6021
T50Q6020
T50B6003
Detail "C"
SCALE 1:2
T50W8070
T50W8069
T50W8068
T50W8067
T50W8066
020
030
100
T50Q6016
T50Q60012
T50Q6013
T50Q6015
T50Q6014
T50B6002
Detail "B"
SCALE 1:2
T50W8064
T50W8063
T50W8062
T50W8060
020
040
100
050
030
T50Q6001
T50Q6010
T50Q6003
T50Q6004
T50B6001
T50Q6002
Detail "A"
SCALE 1:2
2861123-5
527196

ECM: 641852 - 20140401
Group number: 2861123-0200
Assembly Drawing: 2861123-5_2_AA

This list covers pages from 1-140 to 1-151

Pos	Part No	UN	Qty	Description	Page No
TBA 0500S, TBA 0500B, TBA 1500S, TBA 1000S NOMOLDEDCAP, TBA 1000B NOMOLDEDCAP, TBA 2000S (See drawing on pages: 1-140, 1-142)					
020	90134-0039		18	BUSHING VALVE CONNECTION 2,5 MM	
030	90134-0052		4	PLUG DOSING BLOCK	
100	90028-0020		14	CONE TUBE 2,5MM	
TBA 0500SQ, TBA 1000SQ, TBA 1000E, TBA 0500E (See drawing on pages: 1-148, 1-150)					
020	90134-0039		18	BUSHING VALVE CONNECTION 2,5 MM	
100	90028-0020		18	CONE TUBE 2,5MM	
T50Q6001	90092-0052		1	METERING VALVE 10 MM3	
T50Q6011	90092-0052		1	METERING VALVE 10 MM3	
T50Q6017	90092-0052		1	METERING VALVE 10 MM3	
T50Q6023	90092-0052		1	METERING VALVE 10 MM3	
T50W8061	90166-0143	M	1	TUBE 2,5 MM PA TRANSP.	
T50W8065	90166-0143	MM	1050	TUBE 2,5 MM PA TRANSP.	
T50W8071	90166-0143	MM	1050	TUBE 2,5 MM PA TRANSP.	
T50W8077	90166-0143	M	1	TUBE 2,5 MM PA TRANSP.	
TPA 0500SQ, TBA 1000S STDA7, TBA 1000B STDA7, TBA 1000S LIGHTCAP24, TBA 1000M (See drawing on pages: 1-144, 1-146)					
020	90134-0039		16	BUSHING VALVE CONNECTION 2,5 MM	
030	90134-0052		2	PLUG DOSING BLOCK	
040	90134-0040		2	BUSHING VALVE CONNECTION 4 MM	
050	90028-0021		2	CONE TUBE 4 MM	
100	90028-0020		14	CONE TUBE 2,5MM	
T50Q6001	90092-0052		1	METERING VALVE 10 MM3	
T50Q6023	90092-0052		1	METERING VALVE 10 MM3	
T50W8061	2869148-0000		1	TUBE	
T50W8077	2869149-0000		1	TUBE	
TPA 1000SQ, TPA 0750SQ (See drawing on pages: 1-144, 1-146)					
020	90134-0039		16	BUSHING VALVE CONNECTION 2,5 MM	
030	90134-0052		2	PLUG DOSING BLOCK	
040	90134-0040		2	BUSHING VALVE CONNECTION 4 MM	
050	90028-0021		2	CONE TUBE 4 MM	
100	90028-0020		14	CONE TUBE 2,5MM	
220	90134-0031		2	SLEEVE FOR PLASTIC TUBE	
T50Q6001	90092-0052		1	METERING VALVE 10 MM3	
T50Q6023	90092-0052		1	METERING VALVE 10 MM3	
T50W8061	90166-0109	M	1	TUBE 4 MM PA TRANSP.	
T50W8077	90166-0109	M	1	TUBE 4 MM PA TRANSP.	
Common Parts					
090	90134-0054		2	BLOCK CONNECTION M10X1	
110	90028-0022		1	CONE TUBE 6 MM	
140	90087-0019		1	PLUG M10X1 STAINLESS	
150	90134-0055		1	BUSHING/NUT INLET/OUTLET 6 MM	
180	90134-0030		1	SLEEVE FOR PLASTIC TUBE	
190	312155-0299		6	SCREW DIN 7991 MF6S M4X30 A4 70	
200	312602-0312		6	HEXAGON NUT, EN 24032 M6M M4 NIPLBR	
210	315105-0136		6	WASHER PLAIN, 4,3X8X0,8 A4 BRB	
T50B6001	90459-5652		1	LUBRICATION BLOCK, HFS4666	
T50B6002	90459-5652		1	LUBRICATION BLOCK, HFS4666	
T50B6003	90459-5652		1	LUBRICATION BLOCK, HFS4666	
T50Q6002	90092-0052		1	METERING VALVE 10 MM3	
T50Q6003	90092-0052		1	METERING VALVE 10 MM3	
T50Q6004	90092-0054		1	METERING VALVE 50 MM3	
T50Q6010	90092-0052		1	METERING VALVE 10 MM3	
T50Q6012	90092-0052		1	METERING VALVE 10 MM3	
T50Q6013	90092-0052		1	METERING VALVE 10 MM3	
T50Q6014	90092-0052		1	METERING VALVE 10 MM3	
T50Q6015	90092-0052		1	METERING VALVE 10 MM3	
T50Q6016	90092-0052		1	METERING VALVE 10 MM3	
T50Q6018	90092-0052		1	METERING VALVE 10 MM3	
T50Q6019	90092-0052		1	METERING VALVE 10 MM3	
T50Q6020	90092-0052		1	METERING VALVE 10 MM3	
T50Q6021	90092-0052		1	METERING VALVE 10 MM3	
T50Q6022	90092-0052		1	METERING VALVE 10 MM3	
T50W1344	90166-0108	M	4	TUBE 6 MM PA TRANSP.	
T50W8060	90166-0143	MM	1100	TUBE 2,5 MM PA TRANSP.	
T50W8062	90166-0143	MM	280	TUBE 2,5 MM PA TRANSP.	
T50W8063	90166-0143	MM	360	TUBE 2,5 MM PA TRANSP.	
T50W8064	90166-0143	MM	650	TUBE 2,5 MM PA TRANSP.	
T50W8066	90166-0143	MM	630	TUBE 2,5 MM PA TRANSP.	
T50W8067	90166-0143	MM	630	TUBE 2,5 MM PA TRANSP.	
T50W8068	90166-0143	MM	500	TUBE 2,5 MM PA TRANSP.	
T50W8069	90166-0143	MM	130	TUBE 2,5 MM PA TRANSP.	
T50W8070	90166-0143	MM	350	TUBE 2,5 MM PA TRANSP.	
T50W8072	90166-0143	MM	200	TUBE 2,5 MM PA TRANSP.	
T50W8073	90166-0143	MM	310	TUBE 2,5 MM PA TRANSP.	
T50W8074	90166-0143	MM	460	TUBE 2,5 MM PA TRANSP.	
T50W8075	90166-0143	MM	280	TUBE 2,5 MM PA TRANSP.	
T50W8076	90166-0143	MM	430	TUBE 2,5 MM PA TRANSP.	

Machine Type	Group Description	Used-In	Group Number	Page No

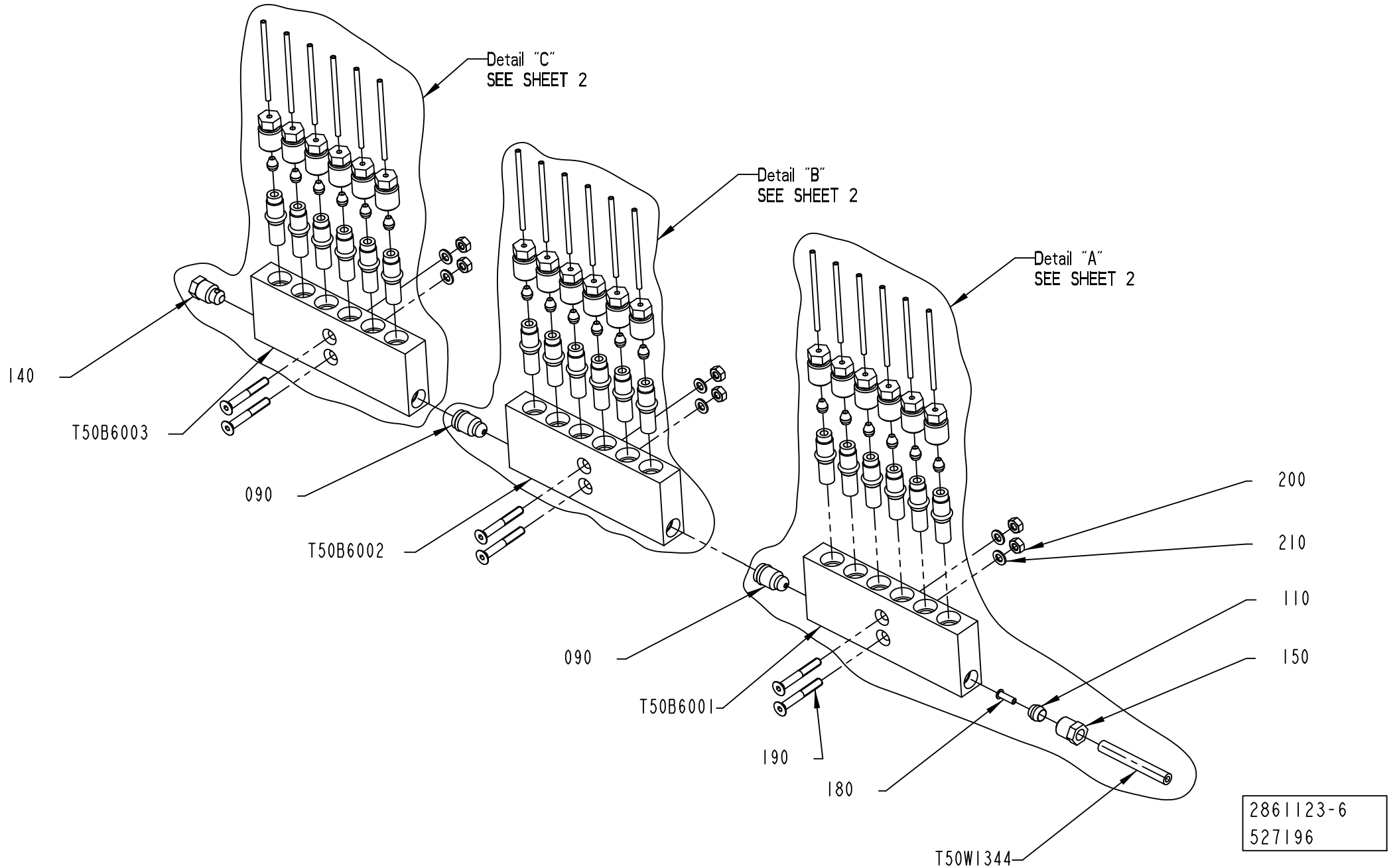
Detail "C"
SEE SHEET 2
Detail "B"
SEE SHEET 2
Detail "A"
SEE SHEET 2
140
T50B6003
090
T50B6002
090
T50B6001
190
180
T50W1344
200
210
110
150
2861123-6
527196

ECM: 641852 - 20140401
Group number: 2861123-0200
Assembly Drawing: 2861123-6_1_AA

This list covers pages from 1-140 to 1-151

Pos	Part No	UN	Qty	Description	Page No
TBA 0500S, TBA 0500B, TBA 1500S, TBA 1000S NOMOLDEDCAP, TBA 1000B NOMOLDEDCAP, TBA 2000S (See drawing on pages: 1-140, 1-142)					
020	90134-0039		18	BUSHING VALVE CONNECTION 2,5 MM	
030	90134-0052		4	PLUG DOSING BLOCK	
100	90028-0020		14	CONE TUBE 2,5MM	
TBA 0500SQ, TBA 1000SQ, TBA 1000E, TBA 0500E (See drawing on pages: 1-148, 1-150)					
020	90134-0039		18	BUSHING VALVE CONNECTION 2,5 MM	
100	90028-0020		18	CONE TUBE 2,5MM	
T50Q6001	90092-0052		1	METERING VALVE 10 MM3	
T50Q6011	90092-0052		1	METERING VALVE 10 MM3	
T50Q6017	90092-0052		1	METERING VALVE 10 MM3	
T50Q6023	90092-0052		1	METERING VALVE 10 MM3	
T50W8061	90166-0143	M	1	TUBE 2,5 MM PA TRANSP.	
T50W8065	90166-0143	MM	1050	TUBE 2,5 MM PA TRANSP.	
T50W8071	90166-0143	MM	1050	TUBE 2,5 MM PA TRANSP.	
T50W8077	90166-0143	M	1	TUBE 2,5 MM PA TRANSP.	
TPA 0500SQ, TBA 1000S STDA7, TBA 1000B STDA7, TBA 1000S LIGHTCAP24, TBA 1000M (See drawing on pages: 1-144, 1-146)					
020	90134-0039		16	BUSHING VALVE CONNECTION 2,5 MM	
030	90134-0052		2	PLUG DOSING BLOCK	
040	90134-0040		2	BUSHING VALVE CONNECTION 4 MM	
050	90028-0021		2	CONE TUBE 4 MM	
100	90028-0020		14	CONE TUBE 2,5MM	
T50Q6001	90092-0052		1	METERING VALVE 10 MM3	
T50Q6023	90092-0052		1	METERING VALVE 10 MM3	
T50W8061	2869148-0000		1	TUBE	
T50W8077	2869149-0000		1	TUBE	
TPA 1000SQ, TPA 0750SQ (See drawing on pages: 1-144, 1-146)					
020	90134-0039		16	BUSHING VALVE CONNECTION 2,5 MM	
030	90134-0052		2	PLUG DOSING BLOCK	
040	90134-0040		2	BUSHING VALVE CONNECTION 4 MM	
050	90028-0021		2	CONE TUBE 4 MM	
100	90028-0020		14	CONE TUBE 2,5MM	
220	90134-0031		2	SLEEVE FOR PLASTIC TUBE	
T50Q6001	90092-0052		1	METERING VALVE 10 MM3	
T50Q6023	90092-0052		1	METERING VALVE 10 MM3	
T50W8061	90166-0109	M	1	TUBE 4 MM PA TRANSP.	
T50W8077	90166-0109	M	1	TUBE 4 MM PA TRANSP.	
Common Parts					
090	90134-0054		2	BLOCK CONNECTION M10X1	
110	90028-0022		1	CONE TUBE 6 MM	
140	90087-0019		1	PLUG M10X1 STAINLESS	
150	90134-0055		1	BUSHING/NUT INLET/OUTLET 6 MM	
180	90134-0030		1	SLEEVE FOR PLASTIC TUBE	
190	312155-0299		6	SCREW DIN 7991 MF6S M4X30 A4 70	
200	312602-0312		6	HEXAGON NUT, EN 24032 M6M M4 NIPLBR	
210	315105-0136		6	WASHER PLAIN, 4,3X8X0,8 A4 BRB	
T50B6001	90459-5652		1	LUBRICATION BLOCK, HFS4666	
T50B6002	90459-5652		1	LUBRICATION BLOCK, HFS4666	
T50B6003	90459-5652		1	LUBRICATION BLOCK, HFS4666	
T50Q6002	90092-0052		1	METERING VALVE 10 MM3	
T50Q6003	90092-0052		1	METERING VALVE 10 MM3	
T50Q6004	90092-0054		1	METERING VALVE 50 MM3	
T50Q6010	90092-0052		1	METERING VALVE 10 MM3	
T50Q6012	90092-0052		1	METERING VALVE 10 MM3	
T50Q6013	90092-0052		1	METERING VALVE 10 MM3	
T50Q6014	90092-0052		1	METERING VALVE 10 MM3	
T50Q6015	90092-0052		1	METERING VALVE 10 MM3	
T50Q6016	90092-0052		1	METERING VALVE 10 MM3	
T50Q6018	90092-0052		1	METERING VALVE 10 MM3	
T50Q6019	90092-0052		1	METERING VALVE 10 MM3	
T50Q6020	90092-0052		1	METERING VALVE 10 MM3	
T50Q6021	90092-0052		1	METERING VALVE 10 MM3	
T50Q6022	90092-0052		1	METERING VALVE 10 MM3	
T50W1344	90166-0108	M	4	TUBE 6 MM PA TRANSP.	
T50W8060	90166-0143	MM	1100	TUBE 2,5 MM PA TRANSP.	
T50W8062	90166-0143	MM	280	TUBE 2,5 MM PA TRANSP.	
T50W8063	90166-0143	MM	360	TUBE 2,5 MM PA TRANSP.	
T50W8064	90166-0143	MM	650	TUBE 2,5 MM PA TRANSP.	
T50W8066	90166-0143	MM	630	TUBE 2,5 MM PA TRANSP.	
T50W8067	90166-0143	MM	630	TUBE 2,5 MM PA TRANSP.	
T50W8068	90166-0143	MM	500	TUBE 2,5 MM PA TRANSP.	
T50W8069	90166-0143	MM	130	TUBE 2,5 MM PA TRANSP.	
T50W8070	90166-0143	MM	350	TUBE 2,5 MM PA TRANSP.	
T50W8072	90166-0143	MM	200	TUBE 2,5 MM PA TRANSP.	
T50W8073	90166-0143	MM	310	TUBE 2,5 MM PA TRANSP.	
T50W8074	90166-0143	MM	460	TUBE 2,5 MM PA TRANSP.	
T50W8075	90166-0143	MM	280	TUBE 2,5 MM PA TRANSP.	
T50W8076	90166-0143	MM	430	TUBE 2,5 MM PA TRANSP.	

Machine Type | Group Description | Used-In | Group Number | Page No

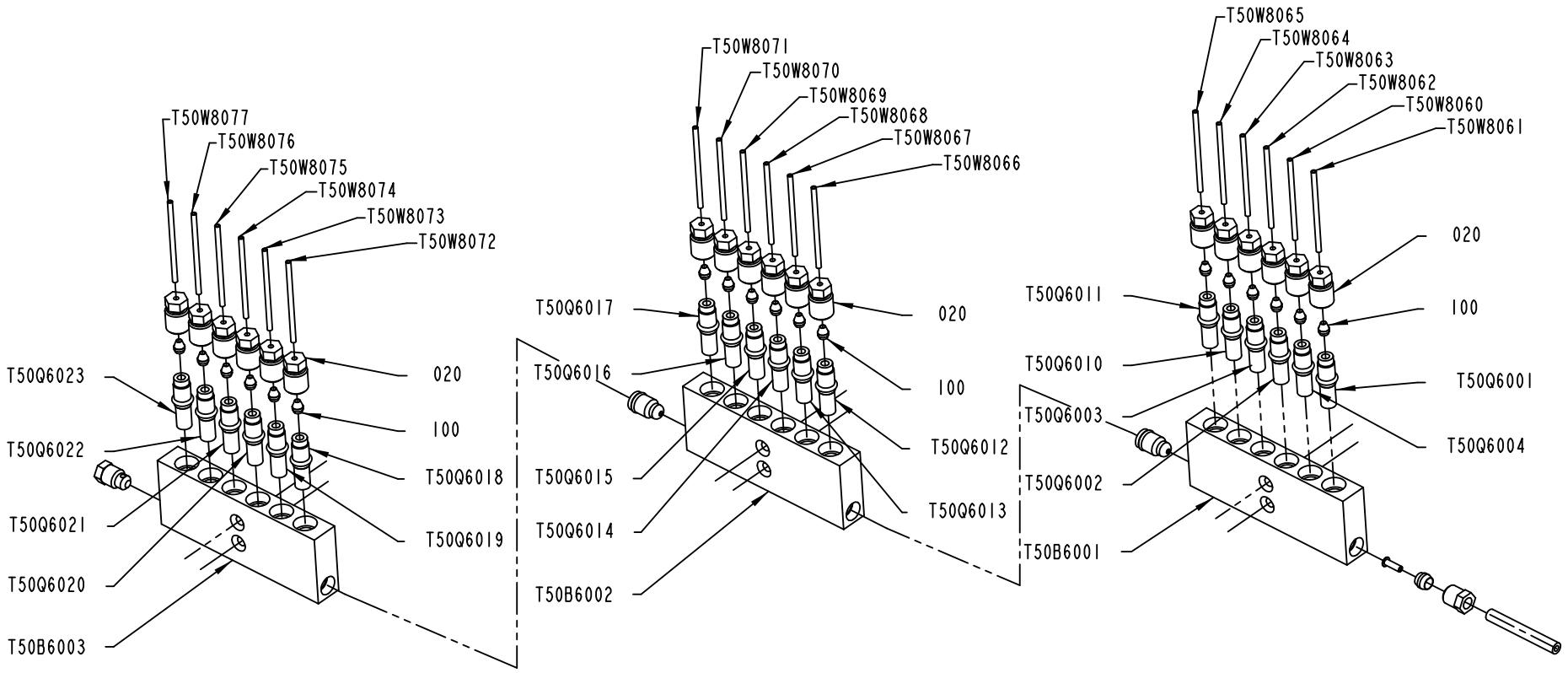

2861123-6
527196

ECM: 641852 - 20140401
Group number: 2861123-0200
Assembly Drawing: 2861123-6_2_AA

This list covers pages from 1-140 to 1-151

Pos	Part No	UN	Qty	Description	Page No
TBA 0500S, TBA 0500B, TBA 1500S, TBA 1000S NOMOLDEDCAP, TBA 1000B NOMOLDEDCAP, TBA 2000S (See drawing on pages: 1-140, 1-142)					
020	90134-0039		18	BUSHING VALVE CONNECTION 2,5 MM	
030	90134-0052		4	PLUG DOSING BLOCK	
100	90028-0020		14	CONE TUBE 2,5MM	
TBA 0500SQ, TBA 1000SQ, TBA 1000E, TBA 0500E (See drawing on pages: 1-148, 1-150)					
020	90134-0039		18	BUSHING VALVE CONNECTION 2,5 MM	
100	90028-0020		18	CONE TUBE 2,5MM	
T50Q6001	90092-0052		1	METERING VALVE 10 MM3	
T50Q6011	90092-0052		1	METERING VALVE 10 MM3	
T50Q6017	90092-0052		1	METERING VALVE 10 MM3	
T50Q6023	90092-0052		1	METERING VALVE 10 MM3	
T50W8061	90166-0143	M	1	TUBE 2,5 MM PA TRANSP.	
T50W8065	90166-0143	MM	1050	TUBE 2,5 MM PA TRANSP.	
T50W8071	90166-0143	MM	1050	TUBE 2,5 MM PA TRANSP.	
T50W8077	90166-0143	M	1	TUBE 2,5 MM PA TRANSP.	
TPA 0500SQ, TBA 1000S STDA7, TBA 1000B STDA7, TBA 1000S LIGHTCAP24, TBA 1000M (See drawing on pages: 1-144, 1-146)					
020	90134-0039		16	BUSHING VALVE CONNECTION 2,5 MM	
030	90134-0052		2	PLUG DOSING BLOCK	
040	90134-0040		2	BUSHING VALVE CONNECTION 4 MM	
050	90028-0021		2	CONE TUBE 4 MM	
100	90028-0020		14	CONE TUBE 2,5MM	
T50Q6001	90092-0052		1	METERING VALVE 10 MM3	
T50Q6023	90092-0052		1	METERING VALVE 10 MM3	
T50W8061	2869148-0000		1	TUBE	
T50W8077	2869149-0000		1	TUBE	
TPA 1000SQ, TPA 0750SQ (See drawing on pages: 1-144, 1-146)					
020	90134-0039		16	BUSHING VALVE CONNECTION 2,5 MM	
030	90134-0052		2	PLUG DOSING BLOCK	
040	90134-0040		2	BUSHING VALVE CONNECTION 4 MM	
050	90028-0021		2	CONE TUBE 4 MM	
100	90028-0020		14	CONE TUBE 2,5MM	
220	90134-0031		2	SLEEVE FOR PLASTIC TUBE	
T50Q6001	90092-0052		1	METERING VALVE 10 MM3	
T50Q6023	90092-0052		1	METERING VALVE 10 MM3	
T50W8061	90166-0109	M	1	TUBE 4 MM PA TRANSP.	
T50W8077	90166-0109	M	1	TUBE 4 MM PA TRANSP.	
Common Parts					
090	90134-0054		2	BLOCK CONNECTION M10X1	
110	90028-0022		1	CONE TUBE 6 MM	
140	90087-0019		1	PLUG M10X1 STAINLESS	
150	90134-0055		1	BUSHING/NUT INLET/OUTLET 6 MM	
180	90134-0030		1	SLEEVE FOR PLASTIC TUBE	
190	312155-0299		6	SCREW DIN 7991 MF6S M4X30 A4 70	
200	312602-0312		6	HEXAGON NUT, EN 24032 M6M M4 NIPLBR	
210	315105-0136		6	WASHER PLAIN, 4,3X8X0,8 A4 BRB	
T50B6001	90459-5652		1	LUBRICATION BLOCK, HFS4666	
T50B6002	90459-5652		1	LUBRICATION BLOCK, HFS4666	
T50B6003	90459-5652		1	LUBRICATION BLOCK, HFS4666	
T50Q6002	90092-0052		1	METERING VALVE 10 MM3	
T50Q6003	90092-0052		1	METERING VALVE 10 MM3	
T50Q6004	90092-0054		1	METERING VALVE 50 MM3	
T50Q6010	90092-0052		1	METERING VALVE 10 MM3	
T50Q6012	90092-0052		1	METERING VALVE 10 MM3	
T50Q6013	90092-0052		1	METERING VALVE 10 MM3	
T50Q6014	90092-0052		1	METERING VALVE 10 MM3	
T50Q6015	90092-0052		1	METERING VALVE 10 MM3	
T50Q6016	90092-0052		1	METERING VALVE 10 MM3	
T50Q6018	90092-0052		1	METERING VALVE 10 MM3	
T50Q6019	90092-0052		1	METERING VALVE 10 MM3	
T50Q6020	90092-0052		1	METERING VALVE 10 MM3	
T50Q6021	90092-0052		1	METERING VALVE 10 MM3	
T50Q6022	90092-0052		1	METERING VALVE 10 MM3	
T50W1344	90166-0108	M	4	TUBE 6 MM PA TRANSP.	
T50W8060	90166-0143	MM	1100	TUBE 2,5 MM PA TRANSP.	
T50W8062	90166-0143	MM	280	TUBE 2,5 MM PA TRANSP.	
T50W8063	90166-0143	MM	360	TUBE 2,5 MM PA TRANSP.	
T50W8064	90166-0143	MM	650	TUBE 2,5 MM PA TRANSP.	
T50W8066	90166-0143	MM	630	TUBE 2,5 MM PA TRANSP.	
T50W8067	90166-0143	MM	630	TUBE 2,5 MM PA TRANSP.	
T50W8068	90166-0143	MM	500	TUBE 2,5 MM PA TRANSP.	
T50W8069	90166-0143	MM	130	TUBE 2,5 MM PA TRANSP.	
T50W8070	90166-0143	MM	350	TUBE 2,5 MM PA TRANSP.	
T50W8072	90166-0143	MM	200	TUBE 2,5 MM PA TRANSP.	
T50W8073	90166-0143	MM	310	TUBE 2,5 MM PA TRANSP.	
T50W8074	90166-0143	MM	460	TUBE 2,5 MM PA TRANSP.	
T50W8075	90166-0143	MM	280	TUBE 2,5 MM PA TRANSP.	
T50W8076	90166-0143	MM	430	TUBE 2,5 MM PA TRANSP.	

Machine Type	Group Description	Used-In	Group Number	Page No

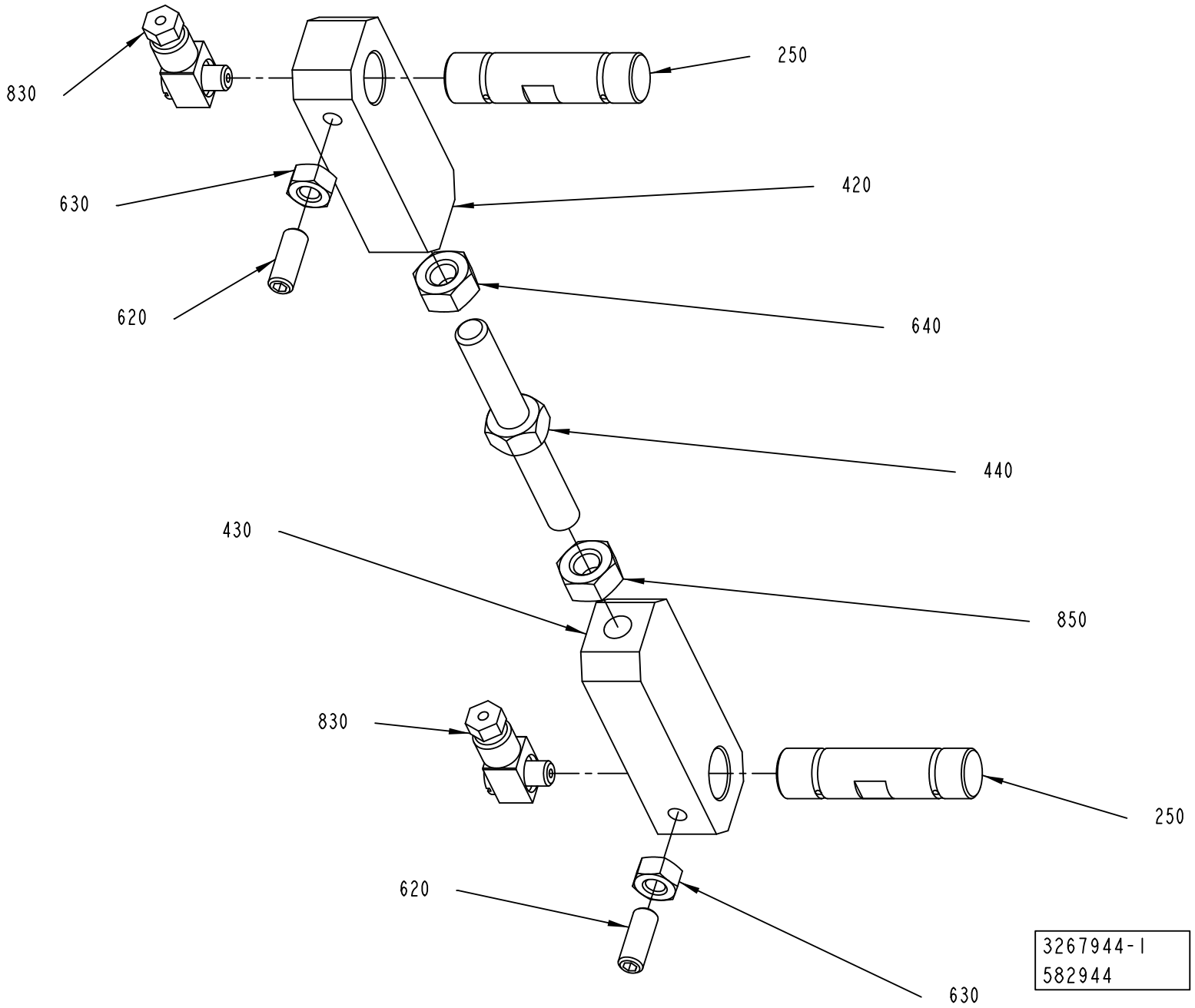
830
250
630
420
620
640
440
430
850
830
250
620
630
3267944-1
582944

ECM: 589230 - 20130401
Group number: 3267944-0100
Assembly Drawing: 3267944-1_1_AA

Pos	Part No	UN	Qty	Description	Page No
-					
250	1317362-0000		2	SHAFT	
420	1144914-0000		1	LEVER	
430	1144915-0000		1	LEVER	
440	1144916-0000		1	ADJUSTING SCREW	
620	312318-0368		2	SET SCREW, CUP END ISO4029 M6X16 A4	
630	312605-0316		2	HEXAGON NUT, M6M M6 A280	
640	312605-0318		1	HEXAGON NUT, M6M M8 A280	
830	90134-0058		2	CONNECTION	
850	312902-0318		1	NUT HEX. LEFT THREAD, M8 A280	

Pos	Part No	UN	Qty	Description	Page No

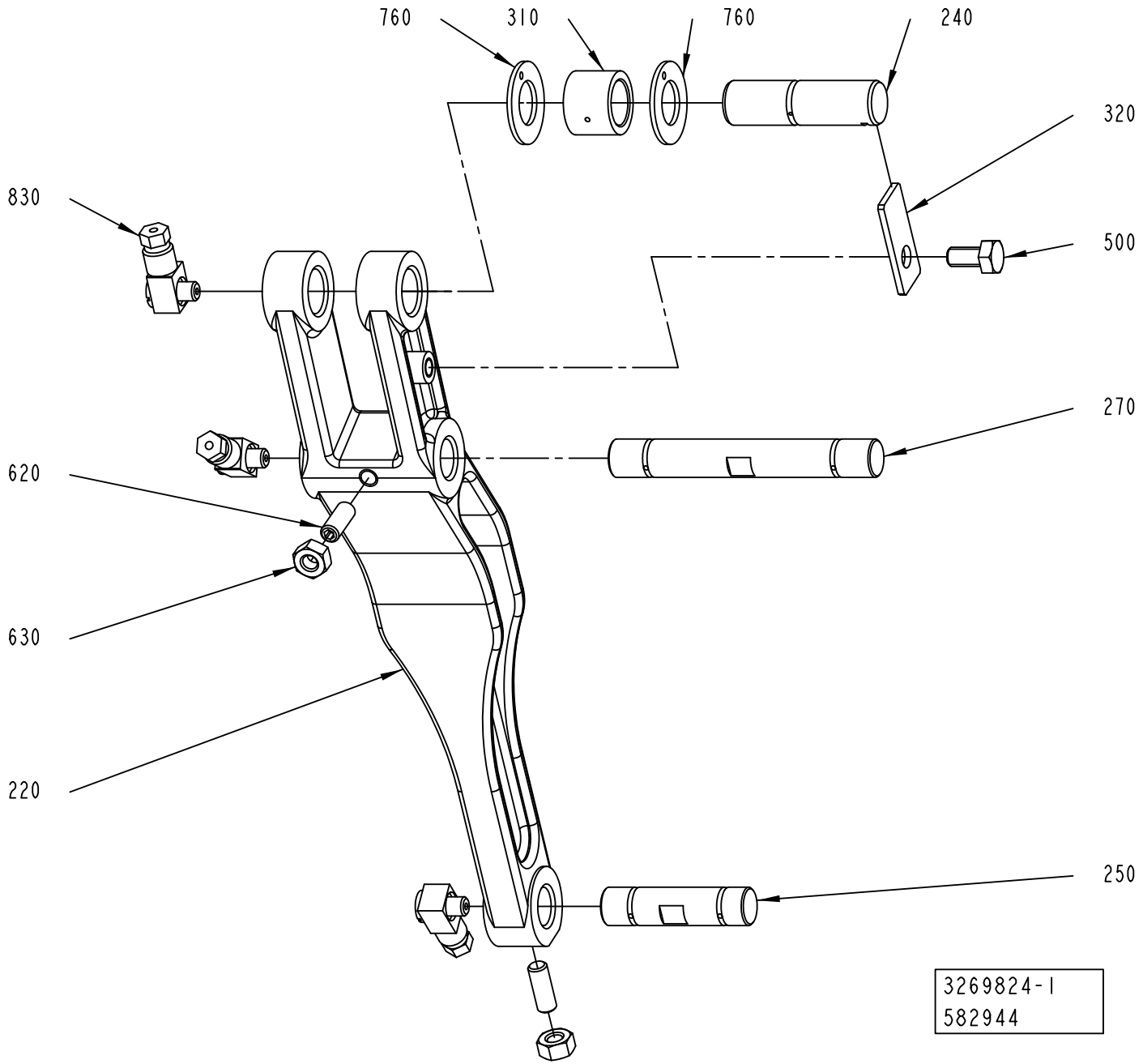
760
310
760
240
320
830
500
270
620
630
220
250
3269824-1
582944

ECM: 589232 - 20130401
Group number: 3269824-0100
Assembly Drawing: 3269824-1_1_AA

Pos	Part No	UN	Qty	Description	Page No
-					
220	1144506-0000		1	LEVER	
240	1144508-0000		1	AXLE PIN	
250	1317362-0000		1	SHAFT	
270	1317363-0000		1	SHAFT	
310	2526249-0000		1	ROLLER	
320	1144521-0000		1	CLAMP	
500	312105-0366		1	SCREW, M6S ISO 4017 M6X12 A4 80	
620	312318-0368		2	SET SCREW, CUP END ISO4029 M6X16 A4	
630	312605-0316		2	HEXAGON NUT, M6M M6 A280	
760	321130-0200		2	THRUST WASHER, 14X26X1,5 MM	
830	90134-0058		3	CONNECTION	

Pos	Part No	UN	Qty	Description	Page No

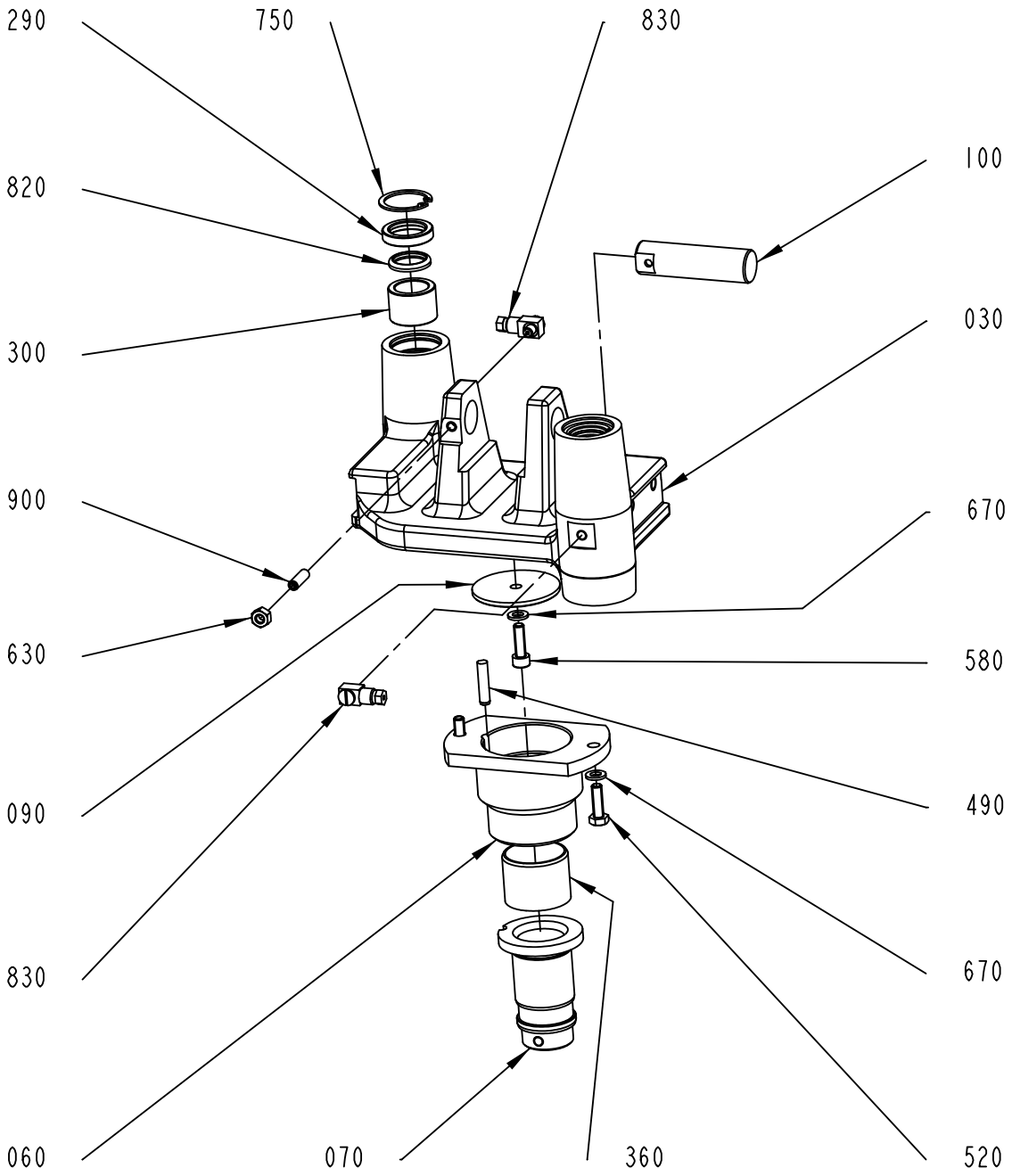
290
750
830
820
100
300
030
900
670
630
580
090
490
830
670
060
070
360
520
3267945-1
582944

ECM: 599940 - 20130701
Group number: 3267945-0100
Assembly Drawing: 3267945-1_1_AA

Pos	Part No	UN	Qty	Description	Page No
-					
030	1144485-0000		1	SUPPORT	
060	1144489-0000		1	FLANGE	
070	1478189-0000		1	SUPPORT	
090	1144493-0000		1	WASHER	
100	1144494-0000		1	AXLE PIN	
290	1144515-0000		4	INSERT	
300	1144517-0000		4	BUSHING	
360	321133-0375		1	BUSHING IGLIDUR G 35X39X30	
490	1498029-0000		1	PIN	
520	312105-0370		2	SCREW, M6S ISO 4017 M6X20 A4 80	
580	312115-0370		1	SCREW ISO4762 M6X20 A4 80	
630	312605-0316		1	HEXAGON NUT, M6M M6 A280	
670	315105-0153		3	WASHER PLAIN, 6,4X12X1,5 A4 BRB	
750	315753-0122		4	RETAINING RING FOR BORE DIN 472 30 SS	
820	90091-0380		4	SCRAPER, EXCLUDER 20X24,8X3,7 MM	
830	90134-0058		2	CONNECTION	
900	312318-0370		1	SET SCREW, CUP END ISO4029 M6X20 A4	

Pos	Part No	UN	Qty	Description	Page No

CONNECTING ROD

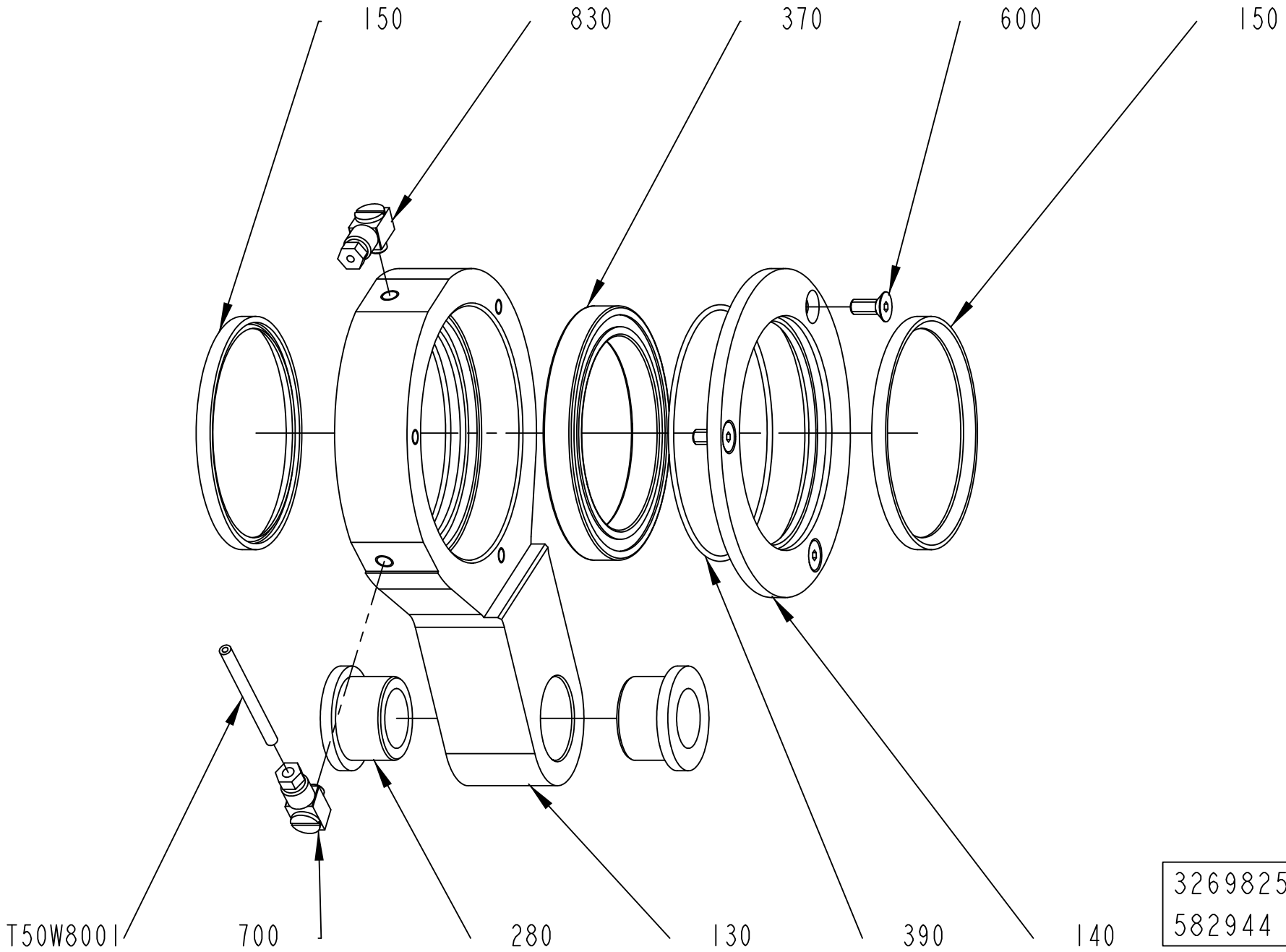

3269825-1
582944

ECM: 599941 - 20130701
Group number: 3269825-0100
Assembly Drawing: 3269825-1_1_AA

Pos	Part No	UN	Qty	Description	Page No
-					
130	1346539-0000		1	CONNECTING ROD	
140	1144498-0000		1	FLANGE	
150	90091-0408		2	BEARING SEAL 70X78X5 MM	
280	1144514-0000		2	BUSHING	
370	90214-0229		1	BALL BEARING 65/85X10	
390	90242-0270		1	O-RING 82,27X1,78 MM	
600	312155-0327		3	SCREW DIN 7991 MF6S M5X12 A4 70	
700	90134-0068		1	CONNECTION	
830	90134-0058		1	CONNECTION	
T50W8001	90166-0109	MM	600	TUBE 4 MM PA TRANSP.	

Pos	Part No	UN	Qty	Description	Page No

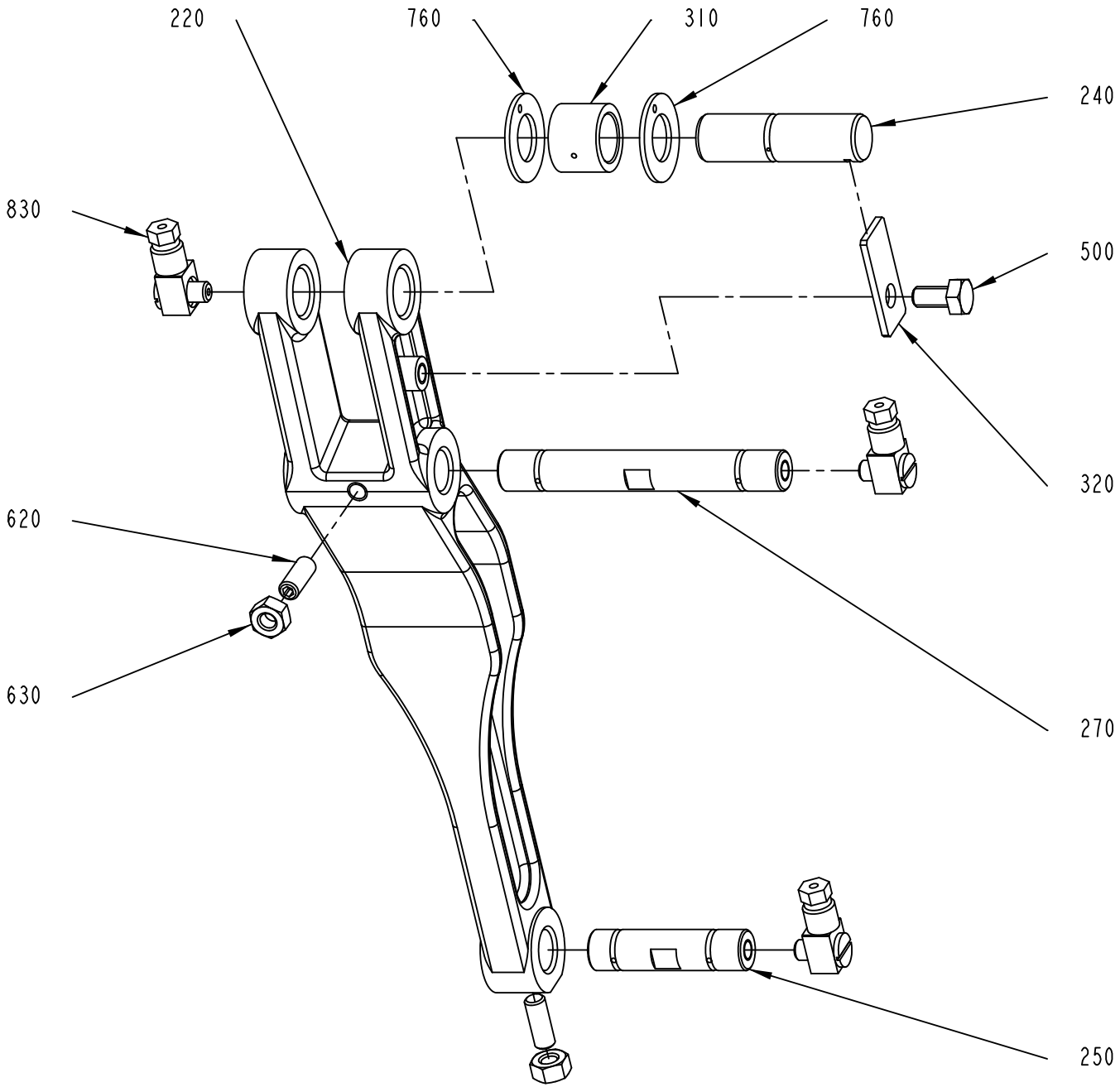

3269828-1
582944

ECM: 589236 - 20130401
Group number: 3269828-0100
Assembly Drawing: 3269828-1_1_AA

Pos	Part No	UN	Qty	Description	Page No
-					
220	1144506-0000		1	LEVER	
240	1144508-0000		1	AXLE PIN	
250	1317362-0000		1	SHAFT	
270	1317363-0000		1	SHAFT	
310	2526249-0000		1	ROLLER	
320	1144521-0000		1	CLAMP	
500	312105-0366		1	SCREW, M6S ISO 4017 M6X12 A4 80	
620	312318-0368		2	SET SCREW, CUP END ISO4029 M6X16 A4	
630	312605-0316		2	HEXAGON NUT, M6M M6 A280	
760	321130-0200		2	THRUST WASHER, 14X26X1,5 MM	
830	90134-0058		3	CONNECTION	

Pos	Part No	UN	Qty	Description	Page No

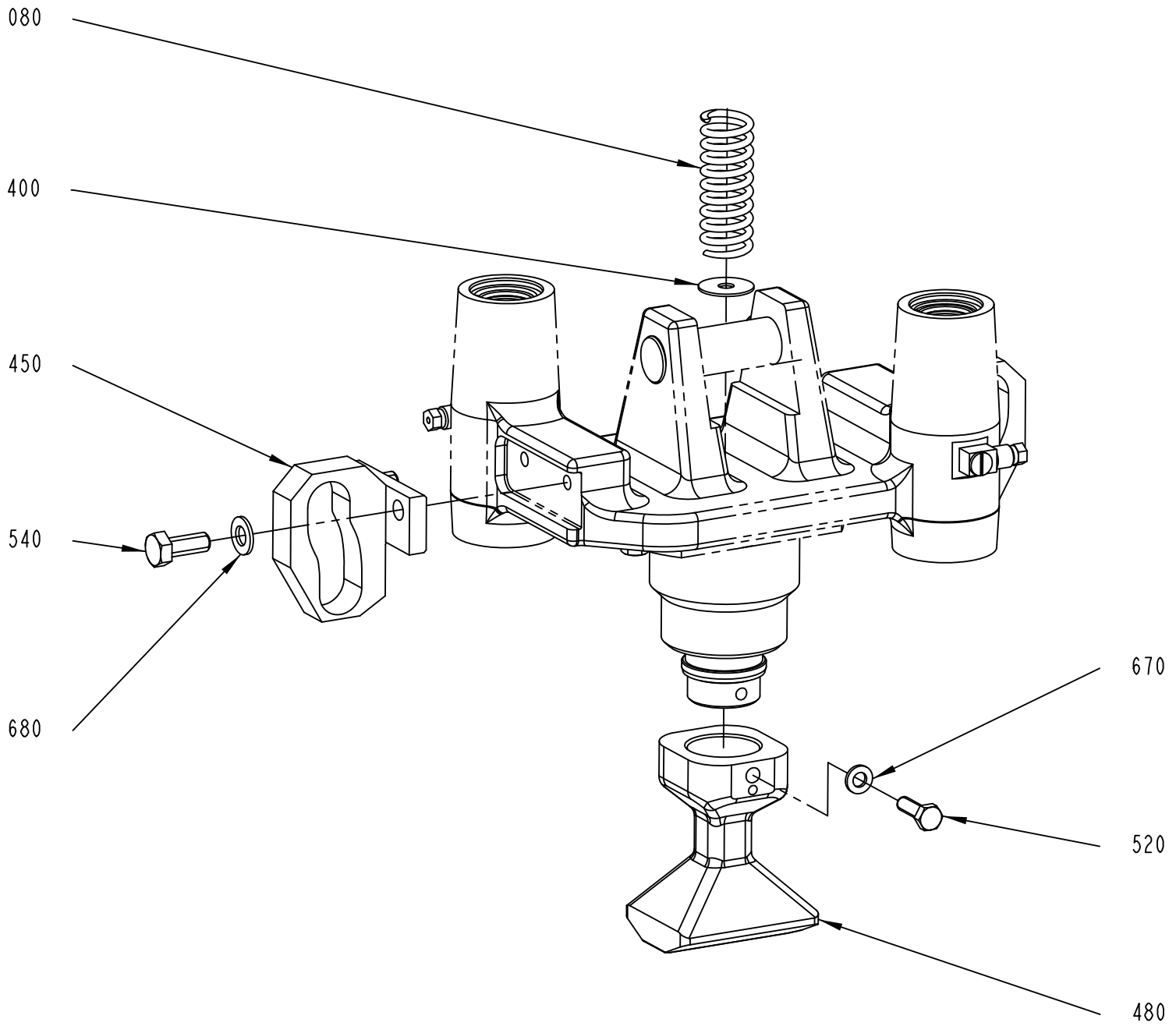
080
400
450
540
680
670
520
480
3269826-1
582944

ECM: 641989 - 20140401
Group number: 3269826-0100
Assembly Drawing: 3269826-1_1_AA

Pos	Part No	UN	Qty	Description	Page No
TBA 0500B, TBA 1000B NOMOLDEDCAP					
080	1144492-0000		1	SPRING	
450	1144978-0000		2	CAM	
480	1260702-0000		1	PLATE	
TBA 0500S					
080	1144492-0000		1	SPRING	
450	1144978-0000		2	CAM	
480	1499143-0000		1	PLATE	
TBA 0500SQ, TBA 1000SQ					
080	1144492-0000		1	SPRING	
450	1144978-0000		2	CAM	
480	1549940-0000		1	PUSHER	
480	1549940-0000		1	PUSHER	
TBA 1000B STDA7					
080	1144492-0000		1	SPRING	
450	1144978-0000		2	CAM	
480	1260702-0000		1	PLATE	
TBA 1000E, TBA 0500E					
080	1144492-0000		1	SPRING	
450	1144978-0000		2	CAM	
480	2960166-0000		1	PUSHER	
TBA 1000M					
080	1144492-0000		1	SPRING	
450	1144978-0000		2	CAM	
480	2998820-0000		1	PLATE	
TBA 1000S LIGHTCAP24					
080	1144492-0000		1	SPRING	
400	3022804-0000		1	WASHER	
450	1144978-0000		2	CAM	
480	1144932-0000		1	PLATE	
TBA 1000S NOMOLDEDCAP					
080	1144492-0000		1	SPRING	
450	1144978-0000		2	CAM	
480	1144932-0000		1	PLATE	
TBA 1000S STDA7					
080	1144492-0000		1	SPRING	
450	1144978-0000		2	CAM	
480	1144932-0000		1	PLATE	
TBA 1500S					
080	1144492-0000		1	SPRING	
450	1144978-0000		2	CAM	
480	1317655-0000		1	PLATE	

Pos	Part No	UN	Qty	Description	Page No
TBA 2000S					
080	2662142-0000		1	SPRING	
450	1144978-0000		2	CAM	
480	2660841-0000		1	PUSHER	
TPA 0500SQ					
080	1144492-0000		1	SPRING	
450	1144486-0000		2	CAM	
480	1558184-0000		1	PLATE	
TPA 1000SQ, TPA 0750SQ					
080	1143530-0000		1	SPRING	
450	1144486-0000		2	CAM	
480	2698300-0000		1	PLATE	
Common Parts					
520	312105-0370		1	SCREW, M6S ISO 4017 M6X20 A4 80	
540	312105-0451		4	SCREW, M6S ISO 4017 M8X20 A4 80	
670	315105-0153		1	WASHER PLAIN, 6,4X12X1,5 A4 BRB	
680	315105-0165		4	FWAS080G0-0S, WASHER PLAIN	

Machine Type | Group Description | Used-In | Group Number | Page No

BELT INFEED GUIDE

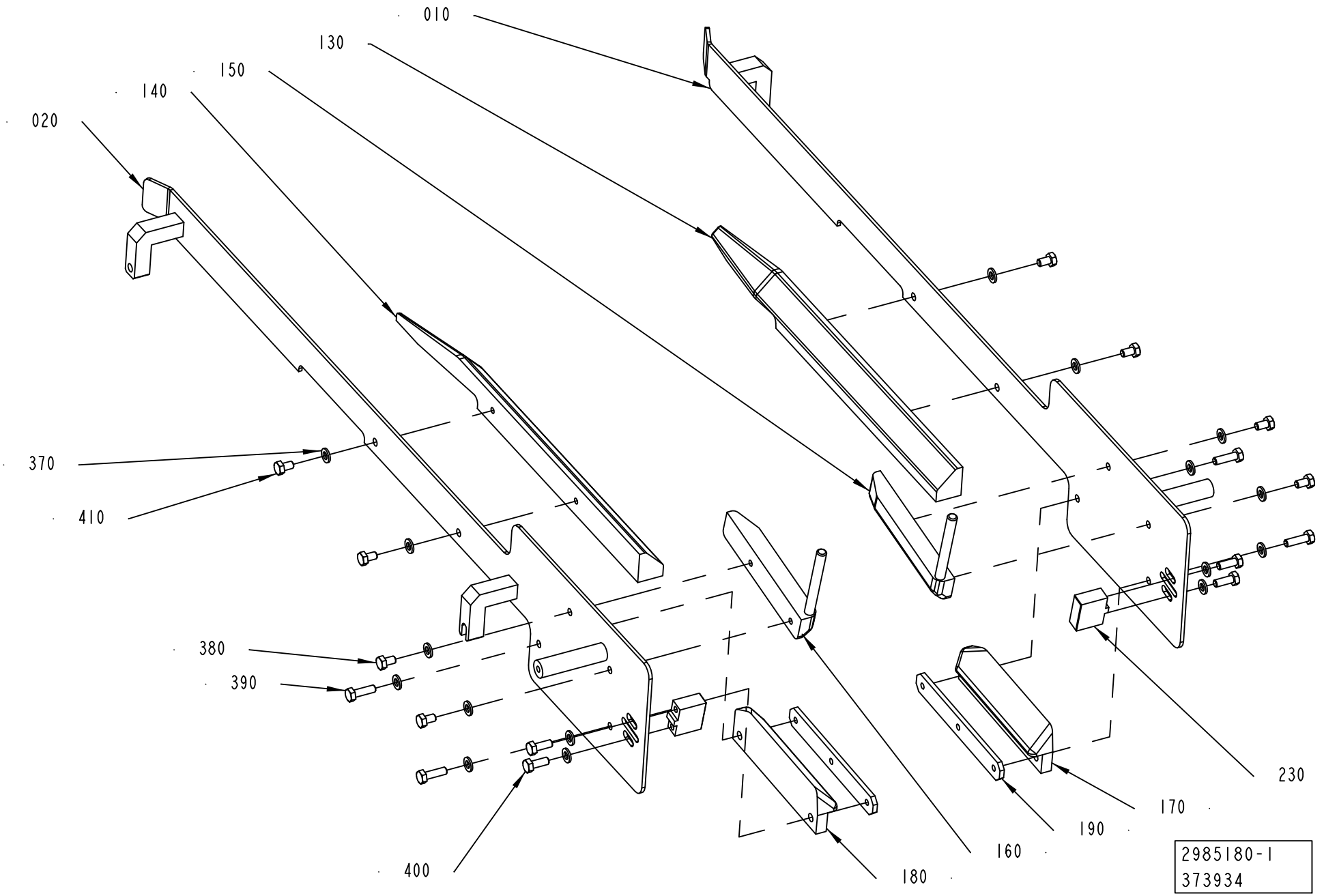

ECM: 641986 - 20140401
Group number: 2985180-0100
Assembly Drawing: 2985180-1_1_AA

This list covers pages from 1-164 to 1-169

Pos	Part No	UN	Qty	Description	Page No
TBA 0500B (See drawing on page: 1-164)					
010	3094049-0000		1	GUIDE	
020	3094050-0000		1	GUIDE	
150	1539877-0000		1	BAR	
160	1539878-0000		1	BAR	
170	3094051-0000		1	SLIDE	
180	3094052-0000		1	SLIDE	
190	3094053-0000		2	PLATE	
370	315105-0153		8	WASHER PLAIN, 6,4X12X1,5 A4 BRB	
380	312105-0364		4	"SCREW, M6S ISO 4017 M6X10 A4 80"	
390	312105-0370		4	SCREW, M6S ISO 4017 M6X20 A4 80	
TBA 0500E (See drawing on page: 1-164)					
010	3274682-0000		1	GUIDE	
020	3274681-0000		1	GUIDE	
150	2529277-0000		1	BAR	
160	2529278-0000		1	BAR	
170	3330336-0000		1	SLIDER	
180	3330335-0000		1	SLIDER	
190	2529279-0000		2	PLATE	
370	315105-0153		8	WASHER PLAIN, 6,4X12X1,5 A4 BRB	
380	312105-0364		4	"SCREW, M6S ISO 4017 M6X10 A4 80"	
390	312105-0370		4	SCREW, M6S ISO 4017 M6X20 A4 80	
TBA 0500S (See drawing on page: 1-164)					
010	1499401-0000		1	GUIDE	
020	1499400-0000		1	GUIDE	
150	1499417-0000		1	BAR	
160	1499423-0000		1	BAR	
170	1499418-0000		1	SLIDE	
180	1499422-0000		1	SLIDE	
190	1144621-0000		2	PLATE	
370	315105-0153		8	WASHER PLAIN, 6,4X12X1,5 A4 BRB	
380	312105-0366		4	SCREW, M6S ISO 4017 M6X12 A4 80	
390	312105-0370		4	SCREW, M6S ISO 4017 M6X20 A4 80	
TBA 0500SQ (See drawing on page: 1-164)					
010	2848493-0000		1	GUIDE	
020	2848492-0000		1	GUIDE	
130	2619728-0000		1	GUIDE	
140	2619727-0000		1	GUIDE	
150	2529277-0000		1	BAR	
160	2529278-0000		1	BAR	
170	2860106-0000		1	SLIDE	
180	2860107-0000		1	SLIDE	
190	2529279-0000		2	PLATE	
370	315105-0153		12	WASHER PLAIN, 6,4X12X1,5 A4 BRB	
380	312105-0364		4	"SCREW, M6S ISO 4017 M6X10 A4 80"	
390	312105-0370		4	SCREW, M6S ISO 4017 M6X20 A4 80	
410	312105-0366		4	SCREW, M6S ISO 4017 M6X12 A4 80	
TBA 1000B (See drawing on page: 1-164)					
010	3094049-0000		1	GUIDE	
020	3094050-0000		1	GUIDE	
150	1348144-0000		1	BAR	
160	1348150-0000		1	BAR	
170	1348133-0000		1	SLIDE	
180	1348139-0000		1	SLIDE	
190	1279409-0000		2	PLATE	
370	315105-0153		8	WASHER PLAIN, 6,4X12X1,5 A4 BRB	
380	312105-0364		4	"SCREW, M6S ISO 4017 M6X10 A4 80"	
390	312105-0370		4	SCREW, M6S ISO 4017 M6X20 A4 80	
TBA 1000E (See drawing on page: 1-164)					
010	3274682-0000		1	GUIDE	
020	3274681-0000		1	GUIDE	
150	1490035-0000		1	BAR	
160	1490036-0000		1	BAR	
170	3204602-0000		1	SLIDER	
180	3204601-0000		1	SLIDER	
190	1144621-0000		2	PLATE	
370	315105-0153		8	WASHER PLAIN, 6,4X12X1,5 A4 BRB	
380	312105-0364		4	"SCREW, M6S ISO 4017 M6X10 A4 80"	
390	312105-0370		4	SCREW, M6S ISO 4017 M6X20 A4 80	
TBA 1000M (See drawing on page: 1-164)					
010	3094049-0000		1	GUIDE	
020	3094050-0000		1	GUIDE	
150	2998800-0000		1	GUIDE	
160	2998807-0000		1	GUIDE	
170	2998799-0000		1	GUIDE	
180	2998806-0000		1	GUIDE	
190	1279409-0000		2	PLATE	
370	315105-0153		8	WASHER PLAIN, 6,4X12X1,5 A4 BRB	
380	90099-0205		4	NUT PREV.TORQ.HEX.FULL METAL M6 A2	
390	312105-0370		4	SCREW, M6S ISO 4017 M6X20 A4 80	
TBA 1000S (See drawing on page: 1-164)					
010	1517242-0000		1	GUIDE	
020	1517243-0000		1	GUIDE	
150	1348145-0000		1	BAR	

Machine Type | Group Description | Used-In | Group Number | Page No

BELT INFEED GUIDE

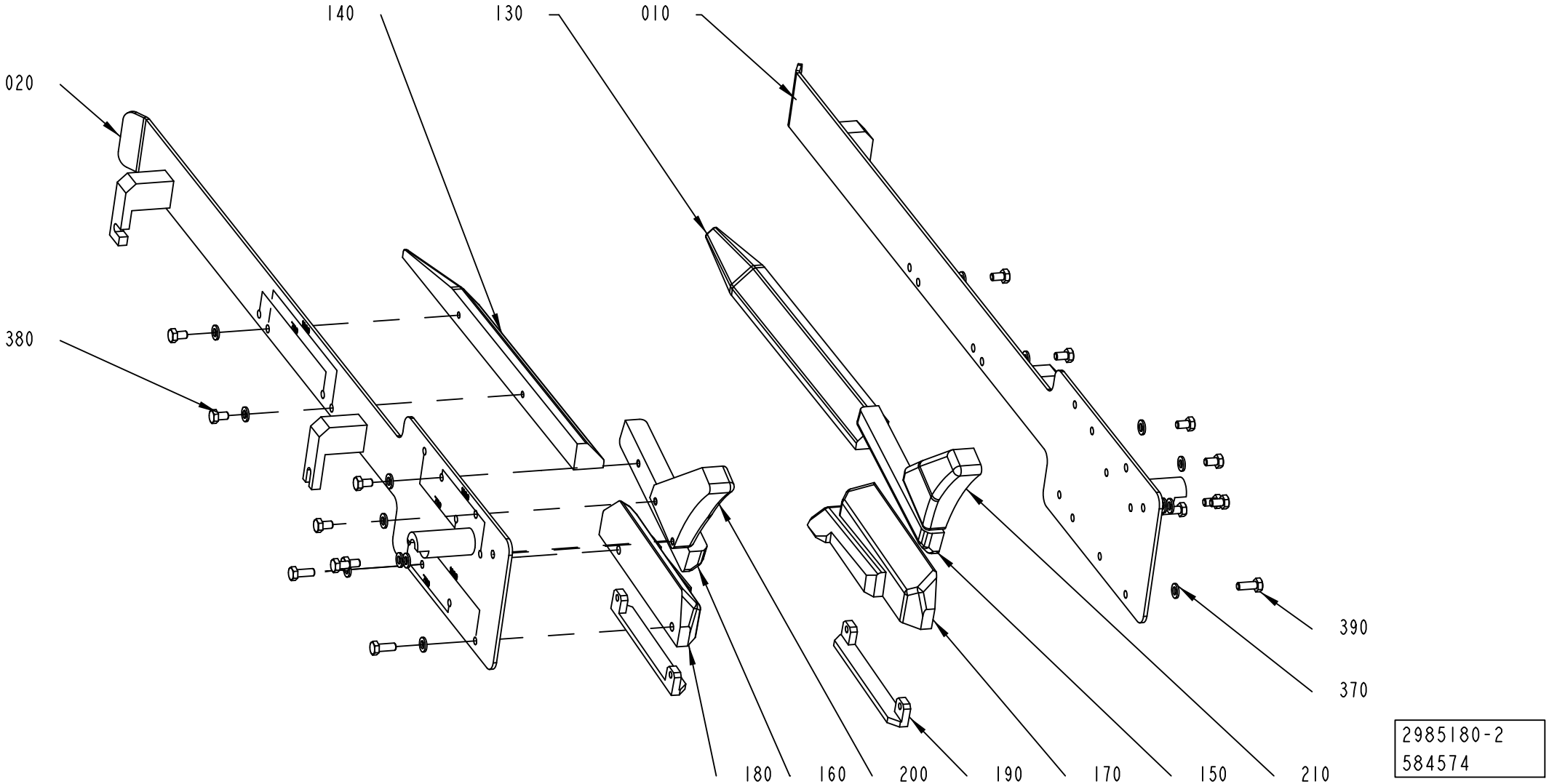

Pos	Part No	UN	Qty	Description	Page No
TBA 1000S (Cont'd) (See drawing on page: 1-164)					
160	1348151-0000		1	BAR	
170	1348132-0000		1	SLIDE	
180	1348138-0000		1	SLIDE	
190	1279409-0000		2	PLATE	
370	315105-0153		8	WASHER PLAIN, 6,4X12X1,5 A4 BRB	
380	312105-0364		4	"SCREW, M6S ISO 4017 M6X10 A4 80"	
390	312105-0370		4	SCREW, M6S ISO 4017 M6X20 A4 80	
TBA 1000SQ (See drawing on page: 1-164)					
010	2848493-0000		1	GUIDE	
020	2848492-0000		1	GUIDE	
150	1490035-0000		1	BAR	
160	1490036-0000		1	BAR	
170	1490033-0000		1	SLIDE	
180	1490034-0000		1	SLIDE	
190	1144621-0000		2	PLATE	
370	315105-0153		8	WASHER PLAIN, 6,4X12X1,5 A4 BRB	
380	312105-0364		4	"SCREW, M6S ISO 4017 M6X10 A4 80"	
390	312105-0370		4	SCREW, M6S ISO 4017 M6X20 A4 80	
TBA 1500S (See drawing on page: 1-164)					
010	2937242-0000		1	GUIDE	
020	2937243-0000		1	GUIDE	
150	1317805-0000		1	BAR	
160	1334271-0000		1	BAR	
170	1334561-0000		1	SLIDE	
180	1334562-0000		1	SLIDE	
190	1144621-0000		2	PLATE	
370	315105-0153		10	WASHER PLAIN, 6,4X12X1,5 A4 BRB	
380	312105-0364		4	"SCREW, M6S ISO 4017 M6X10 A4 80"	
390	312105-0374		6	SCREW, M6S ISO 4014 M6X30 A4 80	
TBA 2000S (See drawing on page: 1-164)					
010	2925962-0000		1	GUIDE	
020	2925963-0000		1	GUIDE	
150	1317805-0000		1	BAR	
160	1334271-0000		1	BAR	
170	2598487-0000		1	SLIDE	
180	2598488-0000		1	SLIDE	
190	1144621-0000		2	PLATE	
370	315105-0153		10	WASHER PLAIN, 6,4X12X1,5 A4 BRB	
380	312105-0364		4	"SCREW, M6S ISO 4017 M6X10 A4 80"	
390	312105-0374		6	SCREW, M6S ISO 4014 M6X30 A4 80	
TPA 0500SQ (See drawing on page: 1-164)					
010	1549517-0000		1	GUIDE	
020	1549518-0000		1	GUIDE	
130	1539983-0000		1	GUIDE	
140	1539984-0000		1	GUIDE	
150	1549515-0000		1	BAR	
160	1549516-0000		1	BAR	
170	1549513-0000		1	SLIDE	
180	1549514-0000		1	SLIDE	
190	1144621-0000		2	PLATE	
230	2545545-0000		2	INSERT	
370	315105-0153		16	WASHER PLAIN, 6,4X12X1,5 A4 BRB	
380	312105-0364		4	"SCREW, M6S ISO 4017 M6X10 A4 80"	
390	312105-0370		4	SCREW, M6S ISO 4017 M6X20 A4 80	
400	312105-0368		4	"SCREW, M6S ISO 4017 M6X16 A4 80"	
410	312105-0364		4	"SCREW, M6S ISO 4017 M6X10 A4 80"	
TPA 0750SQ (See drawing on page: 1-164)					
010	3210808-0000		1	GUIDE	
020	3210809-0000		1	GUIDE	
130	2971774-0000		1	GUIDE	
140	2971773-0000		1	GUIDE	
150	2647088-0000		1	BAR	
160	2647089-0000		1	BAR	
170	2647090-0000		1	SLIDE	
180	2647091-0000		1	SLIDE	
190	2647092-0000		2	ANGLE BLOCK	
370	315105-0153		12	WASHER PLAIN, 6,4X12X1,5 A4 BRB	
380	312105-0366		4	SCREW, M6S ISO 4017 M6X12 A4 80	
390	312105-0368		4	"SCREW, M6S ISO 4017 M6X16 A4 80"	
TPA 1000SQ (See drawing on page: 1-166)					
010	3210808-0000		1	GUIDE	
020	3210809-0000		1	GUIDE	
130	2971774-0000		1	GUIDE	
140	2971773-0000		1	GUIDE	
150	3135276-0000		1	GUIDE	
160	3135275-0000		1	GUIDE	
170	2675323-0000		1	SLIDE	
180	2675322-0000		1	SLIDE	
190	2543242-0000		2	ANGLE BLOCK	
200	3135277-0000		1	GUIDE	
210	3135278-0000		1	GUIDE	
370	315105-0153		16	WASHER PLAIN, 6,4X12X1,5 A4 BRB	
380	312105-0364		12	"SCREW, M6S ISO 4017 M6X10 A4 80"	

See previous drawings pages: 1-164, 1-166.

Pos	Part No	UN	Qty	Description	Page No
TPA 1000SQ (Cont'd) (See drawing on page: 1-166)					
390	312105-0368		4	"SCREW, M6S ISO 4017 M6X16 A4 80"	

Pos	Part No	UN	Qty	Description	Page No

PUSHER

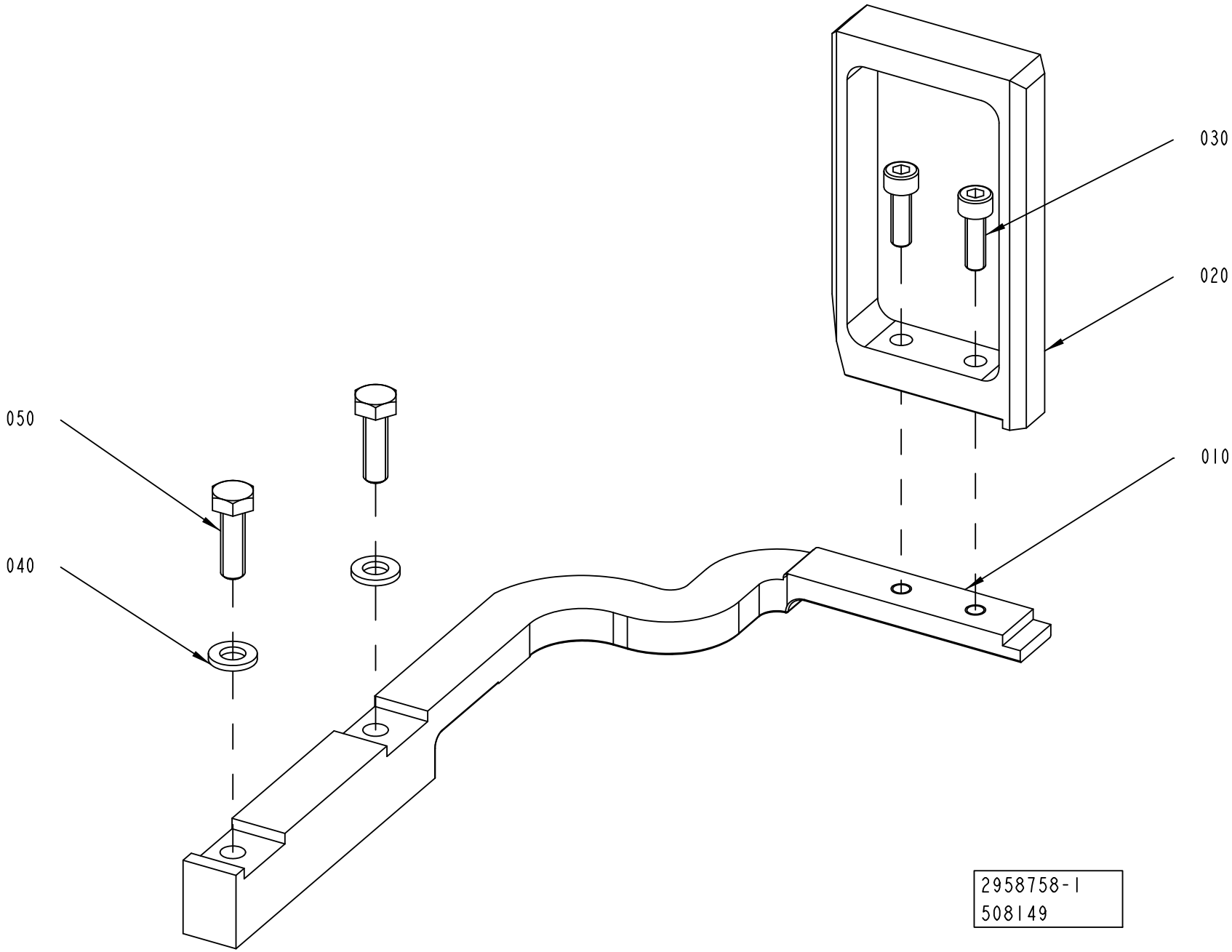

ECM: 641977 - 20140401
Group number: 2958758-0100
Assembly Drawing: 2958758-1_1_AB

Pos	Part No	UN	Qty	Description	Page No
TBA 0500B QC					
010	2922976-0000		1	FINGER	
020	2947624-0100		1	PUSHER	**1-173**
030	312105-0325		2	SCREW, M6S ISO 4017 M5X10 A4 80	
TBA 0500S					
010	2948538-0000		1	FINGER	
020	2947971-0000		1	PUSHER	
030	312115-0329		1	SCREW ISO4762 M5X16 A4 80	
TBA 0500SQ, TBA 1000SQ, TBA 1000S, TBA 1500S, TPA 1000SQ, TBA 1000B STDA7, TBA 2000S, TPA 0750SQ, TBA 1000E, TBA 1000M, TBA 0500E					
010	2922976-0000		1	FINGER	
020	2774936-0000		1	PUSHER	
030	312115-0329		2	SCREW ISO4762 M5X16 A4 80	
TBA 1000B QC NOMOLDEDCAP					
010	2922976-0000		1	FINGER	
020	2947624-0100		1	PUSHER	**1-173**
030	312105-0325		2	SCREW, M6S ISO 4017 M5X10 A4 80	
TPA 0500SQ					
010	2948538-0000		1	FINGER	
020	3048516-0000		1	PUSHER	
030	312115-0329		1	SCREW ISO4762 M5X16 A4 80	
Common Parts					
040	315106-0153		2	WASHER PLAIN, M6 ISO7089-6-200 HV A4	
050	312105-0370		2	SCREW, M6S ISO 4017 M6X20 A4 80	

Pos	Part No	UN	Qty	Description	Page No

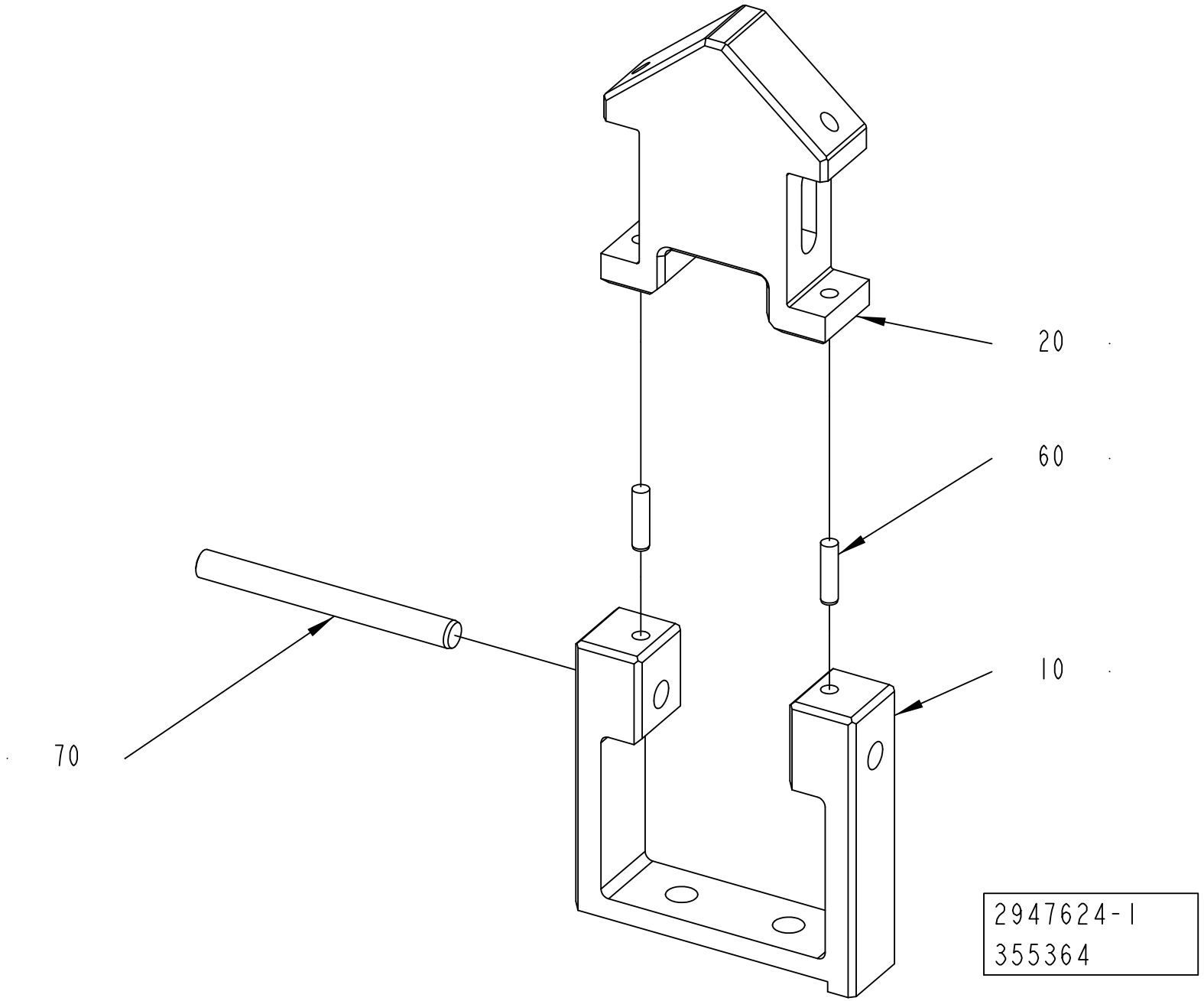
20
60
10
70
2947624-1
355364

ECM: 358058 - 20080620
Group number: 2947624-0100
Assembly Drawing: 2947624-1_1_AA

Pos	Part No	UN	Qty	Description	Page No
-					
010	2947625-0000		1	PUSHER	
020	2947626-0000		1	PUSHER	
060	311103-0234		2	PARALLEL PIN ISO 2338 3M6X12 A1	
070	311103-0322		1	PARALLEL PIN ISO 2338 5M6X50 A1	

Pos	Part No	UN	Qty	Description	Page No

This page is intentionally left blank.

ECM: 535844 - 20120401
Group number: 2634511-0300
Assembly Drawing:

Pos	Part No	UN	Qty	Description	Page No
DIFFERENT WHEEL					
010	3019102-0200		1	INFEED FRAME	**1-177**
030	2889590-0100		1	PROTECTIVE COVER	**1-183, 1-185**
080	2921646-0100		1	FOLDING PART	**1-187**
Common Parts					
040	2966905-0100		1	CRADLE	**1-189, 1-191**
060	3066567-0100		1	PT FLEX HOLES	**1-193**
070	2966900-0100		1	SPACER	**1-239**

Pos	Part No	UN	Qty	Description	Page No

This page is intentionally left blank.

ECM: 688679 - 20140901
Group number: 3019102-0200
Assembly Drawing:

Pos	Part No	UN	Qty	Description	Page No
TBA 1500S, TPA 1000SQ, TBA 2000S, TPA 0750SQ					
010	2927640-0200		1	INFEED CONVEYOR SHORT	**1-179**
Common Parts					
020	1517299-0600		1	INFEED CONVEYOR LONG	**1-181**

Pos	Part No	UN	Qty	Description	Page No

Machine Type | Group Description | Used-In | Group Number | Page No

INFEED CONVEYOR SHORT

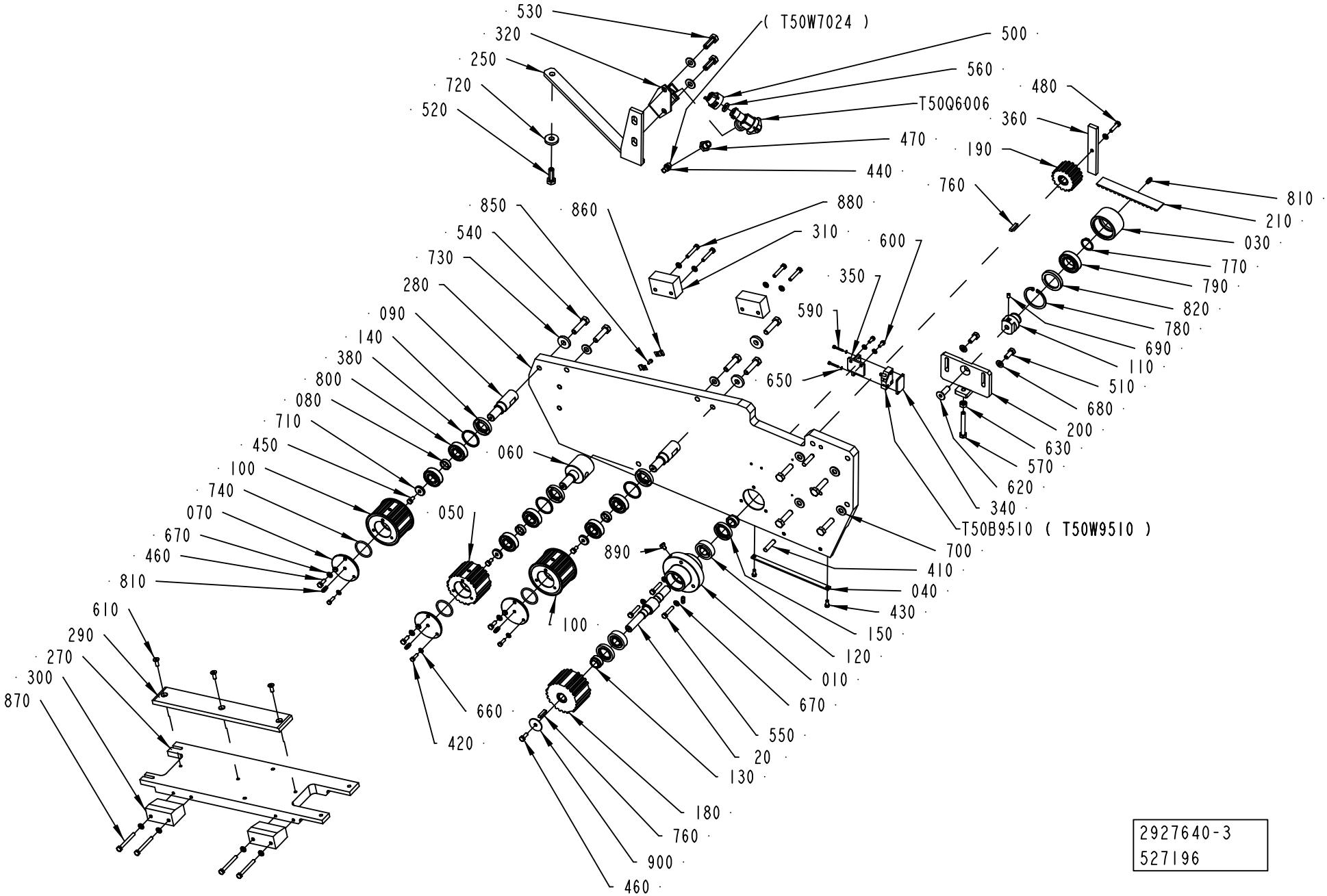

ECM: 549125 - 20120701
Group number: 2927640-0200
Assembly Drawing: 2927640-3_1_AA

Pos	Part No	UN	Qty	Description	Page No
-					
010	2955763-0000		1	BEARING HOUSING	
020	2987003-0000		1	SHAFT	
030	2958240-0000		1	ROLLER	
040	1144593-0000		1	PLATE	
050	2952687-0000		1	TOOTHED PULLEY	
060	2852228-0000		1	ECCENTRIC SHAFT	
070	2955104-0000		3	PLUG	
080	1144597-0000		3	SPACER	
090	1144598-0000		2	SHAFT	
100	2952688-0000		2	TOOTHED PULLEY	
110	2958241-0000		1	SHAFT	
120	90214-0219		2	CYL.ROLLER BEARING, 17X40X12 MM	
130	2987004-0000		2	SPACER	
140	90091-0440		3	RADIAL SEAL 22X40X7 MM DUST LIP	
150	1498068-0000		2	SEAL RING	
180	2987009-0000		1	TOOTHED PULLEY	
190	2987008-0000		1	TOOTHED PULLEY	
200	1144794-0000		1	SUPPORT	
210	1144841-0000		1	TIMING BELT	
250	2678708-0000		1	SUPPORT	
270	2665197-0000		1	BRACKET	
280	2927641-0000		1	PLATE	
290	2665199-0000		1	SLIDE	
300	1285956-0000		2	BLOCK	
310	1285955-0000		2	PLATE	
320	2994447-0000		1	SUPPORT	
340	3040942-0000		1	PLATE	
350	3040941-0000		1	BRACKET	
360	3031188-0000		1	ACTIVATOR	
380	2850481-0000		3	SPACER	
410	311103-0407		2	PARALLEL PIN ISO 2338 8M6X35 A1	
420	312105-0329		6	SCREW, M6S ISO 4017 M5X16 A4 80	
430	312125-0327		2	SLOTTED HEAD SCREW, ISO1207 M5X12 A4	
440	342930-0113		1	ELBOW 90COUPL., EXT. THREAD 6/4-R1/8"	
450	312105-0366		3	SCREW, M6S ISO 4017 M6X12 A4 80	
460	312105-0368		4	"SCREW, M6S ISO 4017 M6X16 A4 80"	
470	532413-0000		1	REDUCING NIPPLE	
480	312105-0372		1	SCREW, M6S ISO 4017 M6X25 A4 80	
500	534310-0003		1	NOZZLE	
510	312105-0451		2	SCREW, M6S ISO 4017 M8X20 A4 80	
520	312105-0495		1	SCREW, M6S ISO 4017 M10X30 A4 80	
530	312105-0495		2	SCREW, M6S ISO 4017 M10X30 A4 80	
540	312109-0499		9	SCREW, M6S ISO 4017 M10X40 A4 80	
550	312109-0374		3	SCREW, M6S ISO 4017 M6X30 A4 80	
560	90005-0094		1	GASKET C 19438-EPR	
570	312109-0463		1	SCREW, M6S ISO 4017 M8X60 A4 80	
590	312115-0230		2	SCREW ISO4762 M3X20 A4 80	
600	312125-0327		2	SLOTTED HEAD SCREW, ISO1207 M5X12 A4	
610	312155-0368		3	SCREW DIN 7991 MF6S M6X16 A4 70	
620	312155-0495		1	SCREW DIN 7991 MF6S M10X30 A4 70	
630	312605-0318		1	HEXAGON NUT, M6M M8 A280	
650	315105-0124		2	WASHER PLAIN, 3,2X6X0,5 A4 BRB	
660	315105-0146		8	WASHER PLAIN, 5,3X10X1 A4 BRB	
670	315105-0153		15	WASHER PLAIN, 6,4X12X1,5 A4 BRB	
680	315105-0165		2	FWAS080G0-0S, WASHER PLAIN	
690	312318-0362		1	SET SCREW, CUP END ISO4029 M6X8 A4	
700	315105-0173		8	WASHER PLAIN, 10,5X22X2 A4 BRB	
710	315125-0153		4	WASHER HIGH, TBRSB 6,4X22X4 A4	
720	315125-0173		1	WASHER HIGH, TBRSB 10,5X28X6 A4	
730	315125-0173		3	WASHER HIGH, TBRSB 10,5X28X6 A4	
740	315202-0221		3	O-RING 34,2X3 MM	
760	315705-0202		2	PARALLEL KEY W. ROUND ENDS, 5X5X25MM	
770	315751-0119		1	RETAINING RING FOR SHAFT DIN 471 25 SS	
780	90141-0019		1	RETAINING RING FOR BORE DIN 472 50 SS	
790	321306-0105		1	BALL BEARING 25/47X12	
800	321309-0103		6	BALL BEARING 17/40X12	
810	90286-0013		5	GREASE NIPPLE STRAIGHT, H1 M6X1 2346	
820	90091-0297		1	RADIAL SEAL 35X47X7 MM DUST LIP	
830	90603-6022	G	1	KLüBERSYNTH UH1 64-62, ONLY IN BOM	
	90603-6023		*1*	*KLüBERSYNTH UH1 64-62, 1 KG CAN*	
	90603-6024		*1*	*KLüBERSYNTH UH1 64-62, 25KG BUCKET*	
850	312125-0287		2	SLOTTED HEAD SCREW, ISO1207 M4X8 A4	
860	90165-0057		4	PIPE CLIP FOR TUBE D=6 MM	
870	312105-0381		4	SCREW, M6S ISO 4014 M6X55 A4 80	
880	312105-0376		4	SCREW, M6S ISO 4014 M6X35 A4 80	
890	312105-0362		1	SCREW, M6S ISO 4017 M6X8 A4 80	
900	90458-0073		1	WASHER 6,4/30, H=1,5	
T50B9510	90044-0194		1	INDUCTIVE SENSOR, IN 5329	
T50Q6006	90230-0027		1	NON-RETURN VALVE QJ 8355-1/4"	
	90230-0300		*1*	*STRAINER*	
	90230-0301		*1*	*DIAPHRAGM*	

Machine Type	Group Description	Used-In	Group Number	Page No

INFEED CONVEYOR LONG

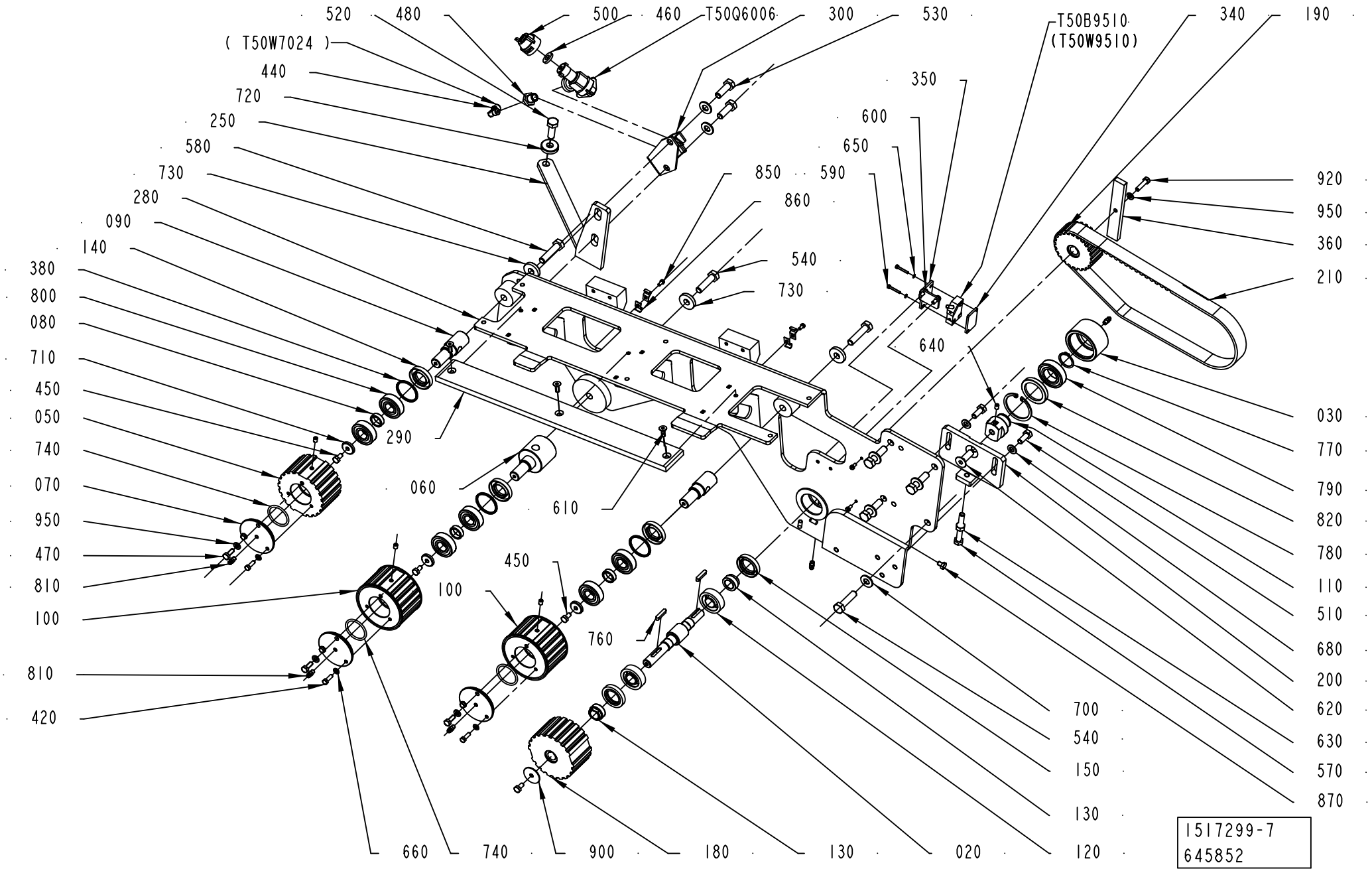

ECM: 645931 - 20131202
Group number: 1517299-0600
Assembly Drawing: 1517299-7_1_AA

Pos	Part No	UN	Qty	Description	Page No
-					
020	2987003-0000		1	SHAFT	
030	2958240-0000		1	ROLLER	
050	2952684-0000		1	TOOTHED PULLEY	
060	2852228-0000		1	ECCENTRIC SHAFT	
070	2955104-0000		3	PLUG	
080	1144597-0000		3	SPACER	
090	1484620-0000		2	SHAFT	
100	2952685-0000		2	TOOTHED PULLEY	
110	2958241-0000		1	SHAFT	
120	90214-0219		2	CYL.ROLLER BEARING, 17X40X12 MM	
130	2987004-0000		2	SPACER	
140	90091-0440		3	RADIAL SEAL 22X40X7 MM DUST LIP	
150	1498068-0000		2	SEAL RING	
180	2987005-0000		1	TOOTHED PULLEY	
190	2987006-0000		1	TOOTHED PULLEY	
200	1144794-0000		1	SUPPORT	
210	1144841-0000		1	TIMING BELT	
250	2552445-0000		1	SUPPORT	
280	3290427-0000		1	PLATE	
290	1260941-0000		1	SLIDE	
300	2994447-0000		1	SUPPORT	
340	3040942-0000		1	PLATE	
350	3060493-0000		1	BRACKET	
360	3031188-0000		1	ACTIVATOR	
380	2850481-0000		3	SPACER	
420	312105-0329		6	SCREW, M6S ISO 4017 M5X16 A4 80	
440	342930-0113		1	ELBOW 90COUPL., EXT. THREAD 6/4-R1/8"	
450	312105-0366		4	SCREW, M6S ISO 4017 M6X12 A4 80	
460	90005-0094		1	GASKET C 19438-EPR	
470	312105-0368		3	"SCREW, M6S ISO 4017 M6X16 A4 80"	
480	532413-0000		1	REDUCING NIPPLE	
500	534310-0003		1	NOZZLE	
510	312105-0451		2	SCREW, M6S ISO 4017 M8X20 A4 80	
520	312105-0495		3	SCREW, M6S ISO 4017 M10X30 A4 80	
540	312109-0499		5	SCREW, M6S ISO 4017 M10X40 A4 80	
570	312109-0463		1	SCREW, M6S ISO 4017 M8X60 A4 80	
580	312109-0500		2	SCREW, M6S ISO 4017 M10X45 A4 80	
590	312115-0230		2	SCREW ISO4762 M3X20 A4 80	
600	312125-0327		2	SLOTTED HEAD SCREW, ISO1207 M5X12 A4	
610	312155-0368		3	SCREW DIN 7991 MF6S M6X16 A4 70	
620	312155-0495		1	SCREW DIN 7991 MF6S M10X30 A4 70	
630	312605-0318		1	HEXAGON NUT, M6M M8 A280	
640	312318-0362		1	SET SCREW, CUP END ISO4029 M6X8 A4	
650	315105-0124		2	WASHER PLAIN, 3,2X6X0,5 A4 BRB	
660	315105-0146		8	WASHER PLAIN, 5,3X10X1 A4 BRB	
680	315105-0165		2	FWAS080G0-0S, WASHER PLAIN	
700	315105-0173		6	WASHER PLAIN, 10,5X22X2 A4 BRB	
710	315125-0153		3	WASHER HIGH, TBRSB 6,4X22X4 A4	
730	315125-0173		4	WASHER HIGH, TBRSB 10,5X28X6 A4	
740	315202-0221		3	O-RING 34,2X3 MM	
760	315705-0202		2	PARALLEL KEY W. ROUND ENDS, 5X5X25MM	
770	315751-0119		1	RETAINING RING FOR SHAFT DIN 471 25 SS	
780	90141-0019		1	RETAINING RING FOR BORE DIN 472 50 SS	
790	321306-0105		1	BALL BEARING 25/47X12	
800	321309-0103		6	BALL BEARING 17/40X12	
810	90286-0013		5	GREASE NIPPLE STRAIGHT, H1 M6X1 2346	
820	90091-0297		1	RADIAL SEAL 35X47X7 MM DUST LIP	
830	90603-6022	G	1	KLüBERSYNTH UH1 64-62, ONLY IN BOM	
	90603-6023		*1*	*KLüBERSYNTH UH1 64-62, 1 KG CAN*	
	90603-6024		*1*	*KLüBERSYNTH UH1 64-62, 25KG BUCKET*	
850	312125-0287		4	SLOTTED HEAD SCREW, ISO1207 M4X8 A4	
860	90165-0057		4	PIPE CLIP FOR TUBE D=6 MM	
870	312105-0362		1	SCREW, M6S ISO 4017 M6X8 A4 80	
900	90458-0073		1	WASHER 6,4/30, H=1,5	
920	312105-0372		1	SCREW, M6S ISO 4017 M6X25 A4 80	
950	315105-0153		4	WASHER PLAIN, 6,4X12X1,5 A4 BRB	
T50B9510	90044-0194		1	INDUCTIVE SENSOR, IN 5329	
T50Q6006	90230-0027		1	NON-RETURN VALVE QJ 8355-1/4"	
	90230-0300		*1*	*STRAINER*	
	90230-0301		*1*	*DIAPHRAGM*	

Machine Type | Group Description | Used-In | Group Number | Page No

PROTECTIVE COVER

Drawing file: 2889590-1_1_AF.hpgl

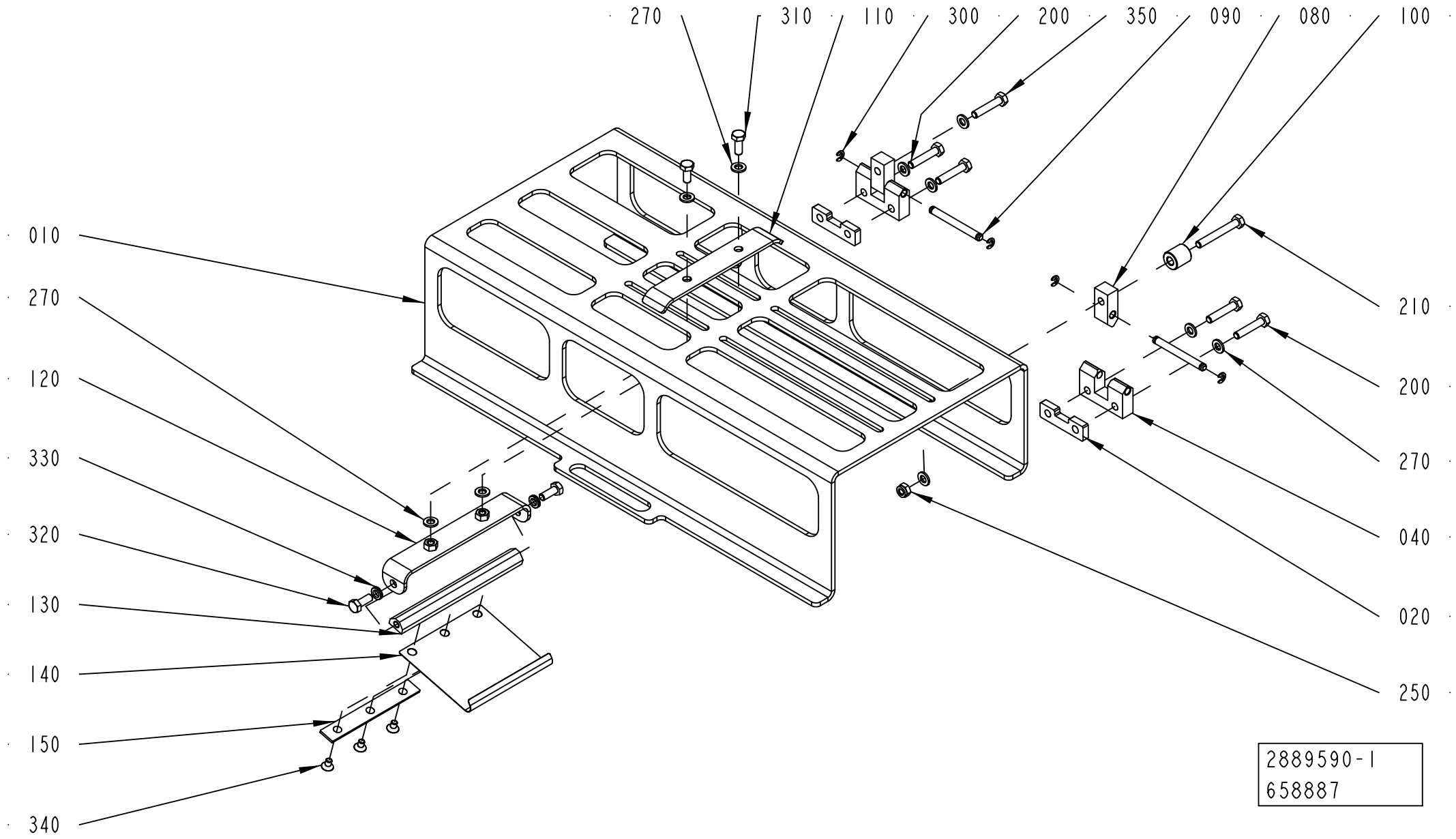

Pos	Part No	UN	Qty	Description	Page No
TBA 0500S, TBA 0500SQ, TBA 0500B, TBA 1000B, TBA 1000SQ, TBA 1000S, TPA 0500SQ, TBA 1000E, TBA 1000M, TBA 0500E (See drawing on page: 1-182)					
010	3333088-0000		1	COVER	
270	315105-0153		11	WASHER PLAIN, 6,4X12X1,5 A4 BRB	
TBA 1500S, TPA 1000SQ, TBA 2000S, TPA 0750SQ (See drawing on page: 1-184)					
010	3341240-0000		1	COVER	
270	315105-0153		12	WASHER PLAIN, 6,4X12X1,5 A4 BRB	
Common Parts					
020	2996045-0000		2	SPACER	
040	1144667-0000		2	HINGE	
080	1144668-0000		2	HINGE	
090	1144669-0000		2	PIN	
100	1360149-0000		1	SPACER	
110	1499476-0000		1	HOLDER	
120	2527792-0000		1	SUPPORT	
130	2527793-0000		1	SHAFT	
140	2530418-0000		1	SPRING	
150	2540612-0000		1	PLATE	
200	312105-0374		4	SCREW, M6S ISO 4014 M6X30 A4 80	
210	312105-0379		1	SCREW, M6S ISO 4014 M6X45 A4 80	
250	312812-0316		2	HEXAGON NUT, NY-LOCK M6 A4 80	
300	315755-0106		4	RETAINING RING SHAFT DIN 6799 4 SS	
310	312105-0368		2	"SCREW, M6S ISO 4017 M6X16 A4 80"	
320	312105-0368		2	"SCREW, M6S ISO 4017 M6X16 A4 80"	
330	90062-0061		2	LOCK WASHER NORD-LOCK,6,5/10,8, T=2,2	
340	312155-0323		3	SCREW DIN 7991 MF6S M5X8 A4 70	
350	312105-0374		1	SCREW, M6S ISO 4014 M6X30 A4 80	

Pos	Part No	UN	Qty	Description	Page No

PROTECTIVE COVER

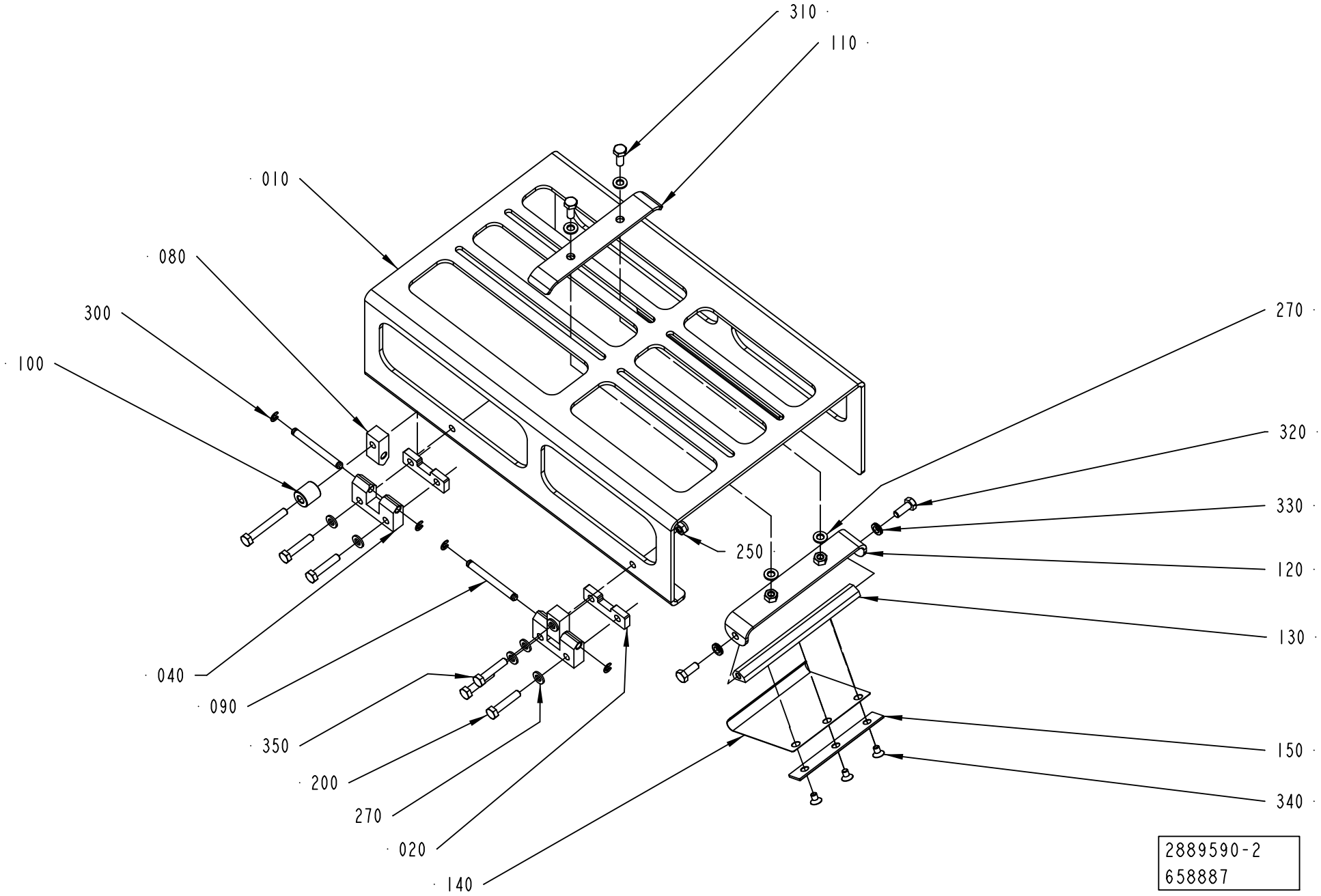

Pos	Part No	UN	Qty	Description	Page No
TBA 0500S, TBA 0500SQ, TBA 0500B, TBA 1000B, TBA 1000SQ, TBA 1000S, TPA 0500SQ, TBA 1000E, TBA 1000M, TBA 0500E (See drawing on page: 1-182)					
010	3333088-0000		1	COVER	
270	315105-0153		11	WASHER PLAIN, 6,4X12X1,5 A4 BRB	
TBA 1500S, TPA 1000SQ, TBA 2000S, TPA 0750SQ (See drawing on page: 1-184)					
010	3341240-0000		1	COVER	
270	315105-0153		12	WASHER PLAIN, 6,4X12X1,5 A4 BRB	
Common Parts					
020	2996045-0000		2	SPACER	
040	1144667-0000		2	HINGE	
080	1144668-0000		2	HINGE	
090	1144669-0000		2	PIN	
100	1360149-0000		1	SPACER	
110	1499476-0000		1	HOLDER	
120	2527792-0000		1	SUPPORT	
130	2527793-0000		1	SHAFT	
140	2530418-0000		1	SPRING	
150	2540612-0000		1	PLATE	
200	312105-0374		4	SCREW, M6S ISO 4014 M6X30 A4 80	
210	312105-0379		1	SCREW, M6S ISO 4014 M6X45 A4 80	
250	312812-0316		2	HEXAGON NUT, NY-LOCK M6 A4 80	
300	315755-0106		4	RETAINING RING SHAFT DIN 6799 4 SS	
310	312105-0368		2	"SCREW, M6S ISO 4017 M6X16 A4 80"	
320	312105-0368		2	"SCREW, M6S ISO 4017 M6X16 A4 80"	
330	90062-0061		2	LOCK WASHER NORD-LOCK,6,5/10,8, T=2,2	
340	312155-0323		3	SCREW DIN 7991 MF6S M5X8 A4 70	
350	312105-0374		1	SCREW, M6S ISO 4014 M6X30 A4 80	

Pos	Part No	UN	Qty	Description	Page No

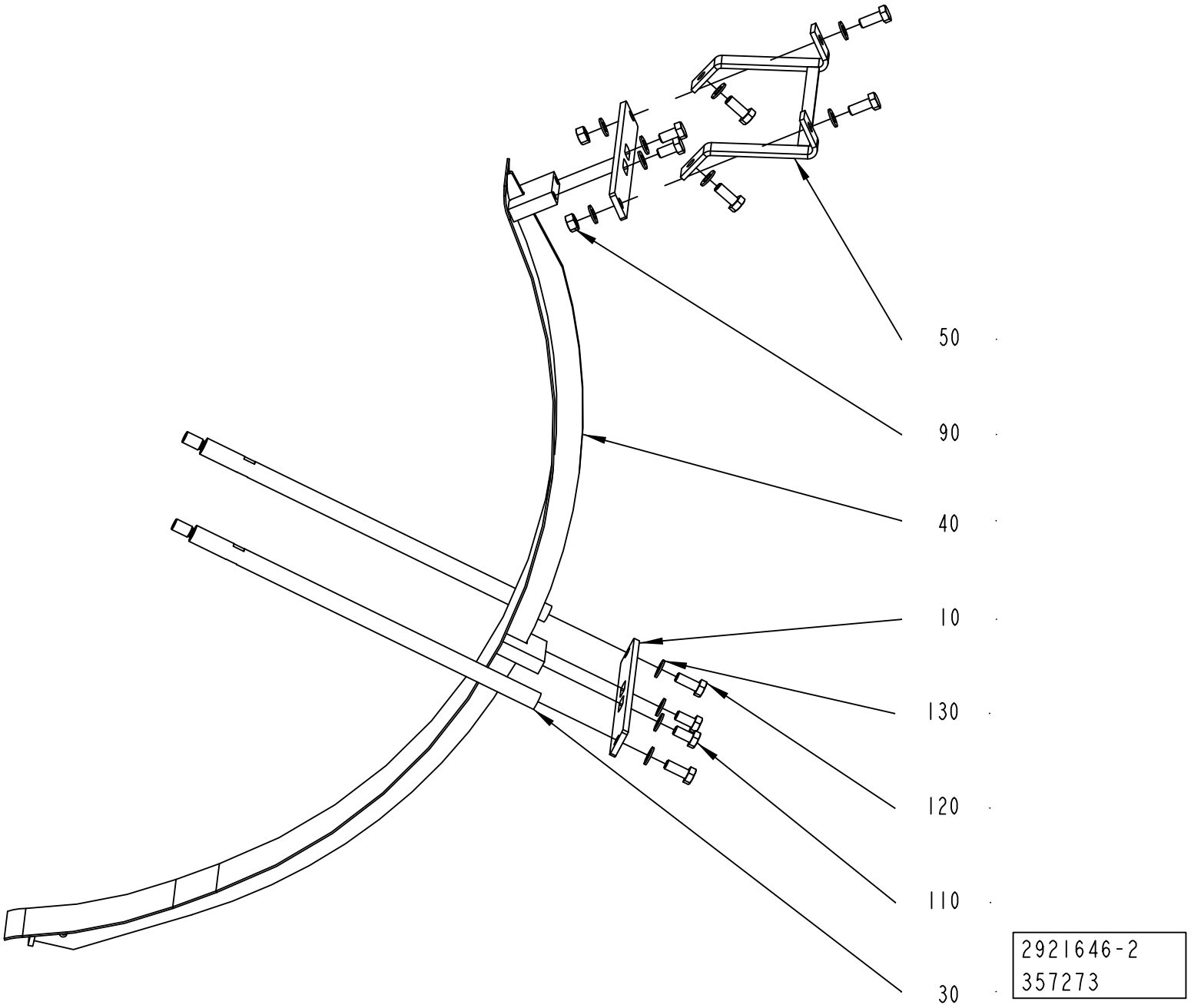
50
90
40
10
130
120
110
30
2921646-2
357273

ECM: 641862 - 20140401
Group number: 2921646-0100
Assembly Drawing: 2921646-2_1_AB

Pos	Part No	UN	Qty	Description	Page No
TBA 0500S, TBA 0500SQ, TBA 0500B, TBA 1000B, TBA 1000SQ, TBA 1000S, TPA 0500SQ, TBA 1000E, TBA 1000M, TBA 0500E					
030	1144551-0000		2	SPACER	
040	2983786-0000		1	SUPPORT	
050	1144899-0000		2	SUPPORT	
TBA 1500S, TPA 1000SQ, TBA 2000S, TPA 0750SQ					
030	2876458-0000		2	SPACER	
040	2876459-0000		1	SUPPORT	
050	2851347-0000		1	HOLDER	
Common Parts					
010	1144552-0000		2	PLATE	
090	312605-0318		2	HEXAGON NUT, M6M M8 A280	
110	312105-0449		4	SCREW, M6S ISO 4017 M8X16 A4 80	
120	312105-0451		6	SCREW, M6S ISO 4017 M8X20 A4 80	
130	315105-0165		12	FWAS080G0-0S, WASHER PLAIN	

Pos	Part No	UN	Qty	Description	Page No

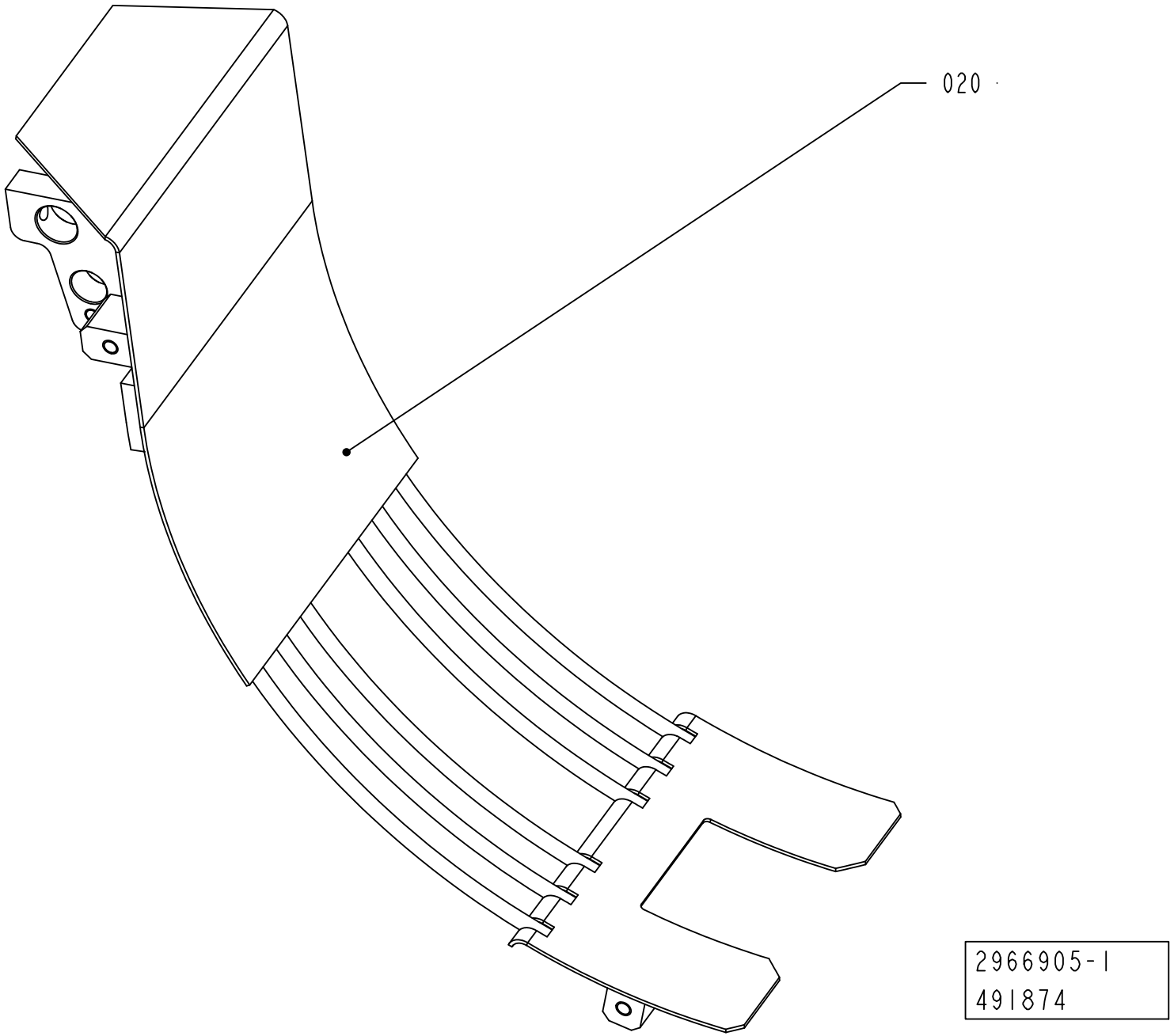
020
2966905-1
491874

Pos	Part No	UN	Qty	Description	Page No
TBA 0500S, TBA 0500SQ, TBA 0500B, TBA 1000B, TBA 1000SQ, TPA 0500SQ, TBA 1000S NOMOLDEDCAP, TBA 1000S STDA7, TBA 1000M STDA7 (See drawing on page: 1-188)					
020	2751788-0000		1	CRADLE	
TBA 1000E, TBA 0500E (See drawing on page: 1-188)					
020	3051275-0000		1	CRADLE	
TBA 1000S LIGHTCAP24, TBA 1000M LIGHTCAP24 (See drawing on page: 1-188)					
020	2748115-0000		1	CRADLE	
TBA 1500S, TBA 2000S (See drawing on page: 1-188)					
020	2665204-0000		1	CRADLE	
TGA 1000SQ, TGA 0750SQ, TGA 0500SQ, TGA 1000CR, TGA 1000LF (See drawing on page: 1-190)					
020	3002385-0000		1	CRADLE	
030	2883280-0000		1	COVER	
040	2864758-0000		1	NOZZLE	
1000	90457-0922		1	ELBOW PIPE JOINT, EXT.THREAD, D=6MM M5	
1010	312115-0323		2	SCREW ISO4762 M5X8 A4 80	
1020	312105-0372		2	SCREW, M6S ISO 4017 M6X25 A4 80	
TGA 1500SQ (See drawing on page: 1-190)					
020	2940972-0000		1	CRADLE	
030	2883280-0000		1	COVER	
040	2864758-0000		1	NOZZLE	
1000	90457-0922		1	ELBOW PIPE JOINT, EXT.THREAD, D=6MM M5	
1010	312115-0323		2	SCREW ISO4762 M5X8 A4 80	
1020	312105-0372		2	SCREW, M6S ISO 4017 M6X25 A4 80	
TPA 1000SQ, TPA 0750SQ (See drawing on page: 1-188)					
020	2913594-0000		1	CRADLE	

Pos	Part No	UN	Qty	Description	Page No

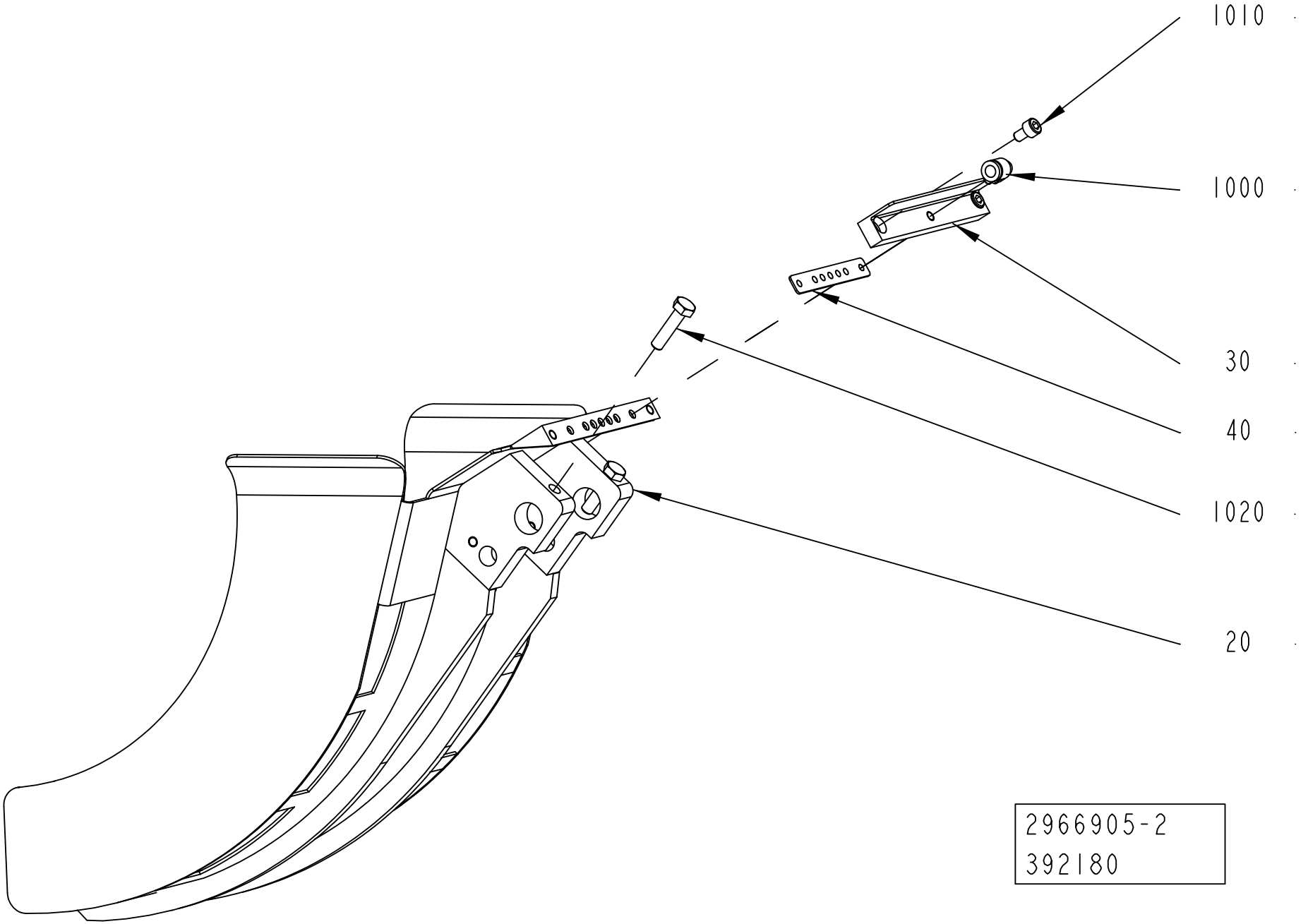
1010
1000
30
40
1020
20
2966905-2
392180

Pos	Part No	UN	Qty	Description	Page No
TBA 0500S, TBA 0500SQ, TBA 0500B, TBA 1000B, TBA 1000SQ, TPA 0500SQ, TBA 1000S NOMOLDEDCAP, TBA 1000S STDA7, TBA 1000M STDA7 (See drawing on page: 1-188)					
020	2751788-0000		1	CRADLE	
TBA 1000E, TBA 0500E (See drawing on page: 1-188)					
020	3051275-0000		1	CRADLE	
TBA 1000S LIGHTCAP24, TBA 1000M LIGHTCAP24 (See drawing on page: 1-188)					
020	2748115-0000		1	CRADLE	
TBA 1500S, TBA 2000S (See drawing on page: 1-188)					
020	2665204-0000		1	CRADLE	
TGA 1000SQ, TGA 0750SQ, TGA 0500SQ, TGA 1000CR, TGA 1000LF (See drawing on page: 1-190)					
020	3002385-0000		1	CRADLE	
030	2883280-0000		1	COVER	
040	2864758-0000		1	NOZZLE	
1000	90457-0922		1	ELBOW PIPE JOINT, EXT.THREAD, D=6MM M5	
1010	312115-0323		2	SCREW ISO4762 M5X8 A4 80	
1020	312105-0372		2	SCREW, M6S ISO 4017 M6X25 A4 80	
TGA 1500SQ (See drawing on page: 1-190)					
020	2940972-0000		1	CRADLE	
030	2883280-0000		1	COVER	
040	2864758-0000		1	NOZZLE	
1000	90457-0922		1	ELBOW PIPE JOINT, EXT.THREAD, D=6MM M5	
1010	312115-0323		2	SCREW ISO4762 M5X8 A4 80	
1020	312105-0372		2	SCREW, M6S ISO 4017 M6X25 A4 80	
TPA 1000SQ, TPA 0750SQ (See drawing on page: 1-188)					
020	2913594-0000		1	CRADLE	

Pos	Part No	UN	Qty	Description	Page No

This page is intentionally left blank.

ECM: 535846 - 20120401
Group number: 3066567-0100
Assembly Drawing:

Pos	Part No	UN	Qty	Description	Page No
PT/FLEX					
	3066566-0102		1	REBUILDING MANUAL	
	3220007-0101		1	UPDATE PAGES	
010	3066565-0100		1	MECHANICAL REBUILDING	**1-195, 1-197, 1-199**
020	2564076-0100		1	START-UP KIT	**1-233**
030	2587337-0100		1	SETTING TEMPLATE	**1-235**
040	2564075-0100		1	OPENING SPECIFICATION	**1-237**

Pos	Part No	UN	Qty	Description	Page No

Machine Type | Group Description | Used-In | Group Number | Page No

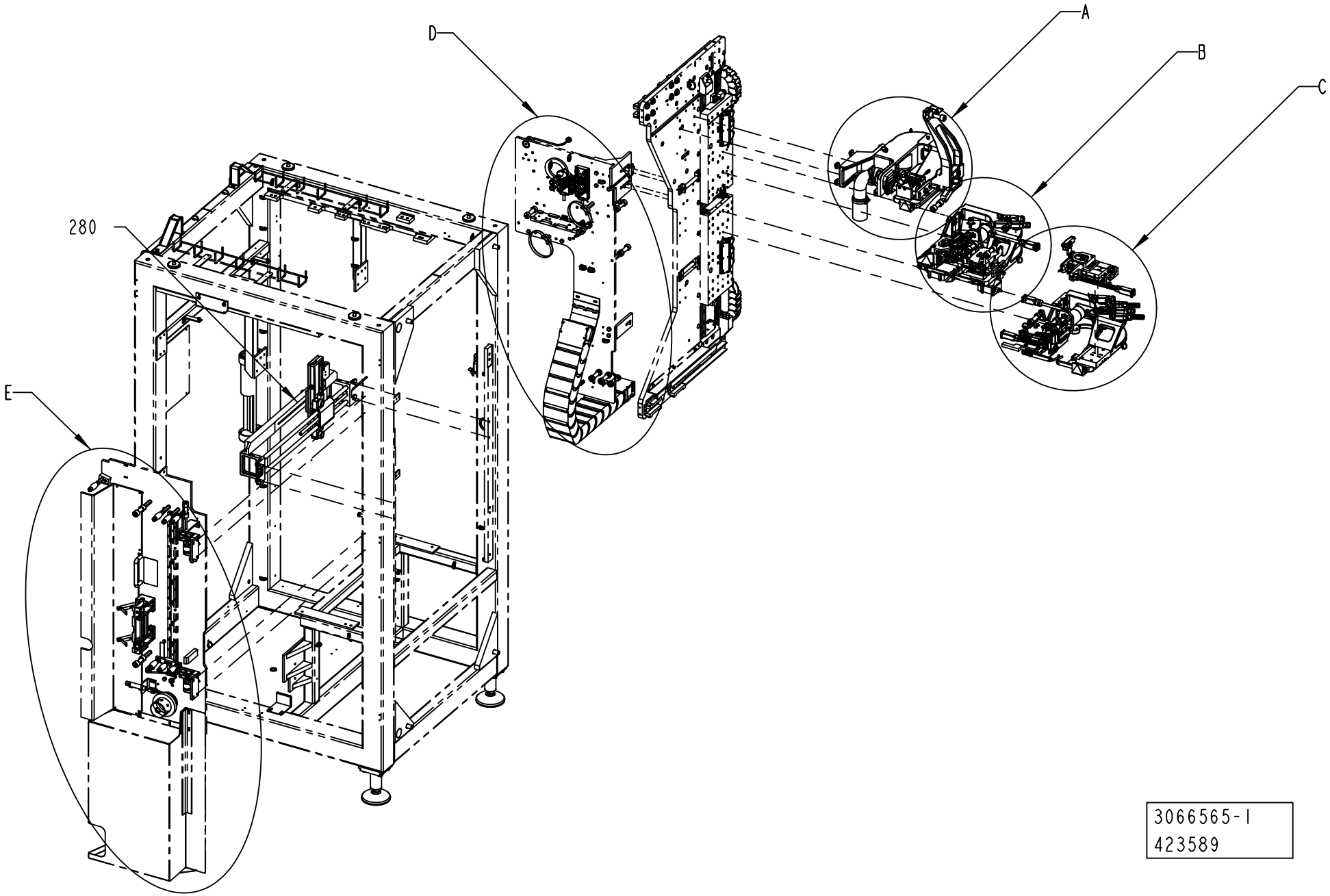
A
B
C
D
E
280
3066565-1
423589

Pos	Part No	UN	Qty	Description	Page No
TAB FOLDING					
280	3038278-0200		1	FOLDING DEVICE	**1-201**
300	3067049-0000		1	BOX	
Common Parts					
040	2546278-0100		1	PUNCH UNIT	**1-205**
050	2564058-0100		1	TURNING DEVICE	**1-207**
080	2564059-0100		1	TAB FEEDER	**1-209**
090	2546275-0100		1	TAB FEEDER	**1-211**
100	2546271-0100		1	TAB C'JAW	**1-213**
130	2837533-0100		1	PATCH C'JAW	**1-215**
150	2564060-0100		1	PATCH FEEDER	**1-217**
200	2533684-0100		1	SPLICING TABLE	**1-219**
220	2533682-0100		1	BOBBIN HOLDER	**1-221**
230	2564057-0100		1	TAB MAGAZINE	**1-223**
240	2533681-0100		1	BOBBIN HOLDER	**1-225**
250	2533685-0100		1	SPLICING TABLE	**1-227**
260	2868038-0100		1	STRIP MAGAZINE	**1-229**
290	2710800-0100		1	PATCH MAGAZINE	**1-231**

Pos	Part No	UN	Qty	Description	Page No

DETAIL B

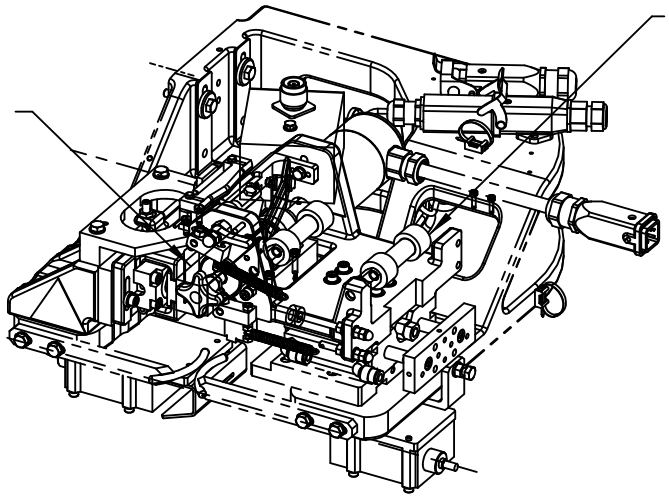

DETAIL A

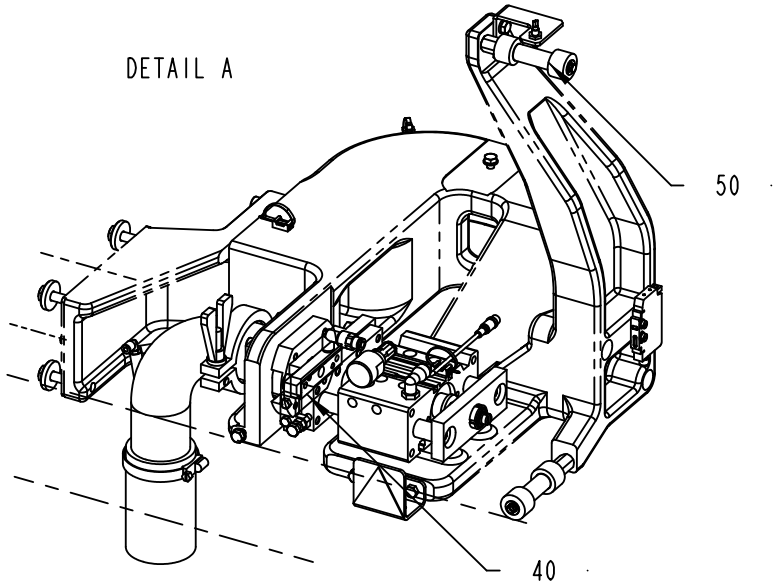

DETAIL C

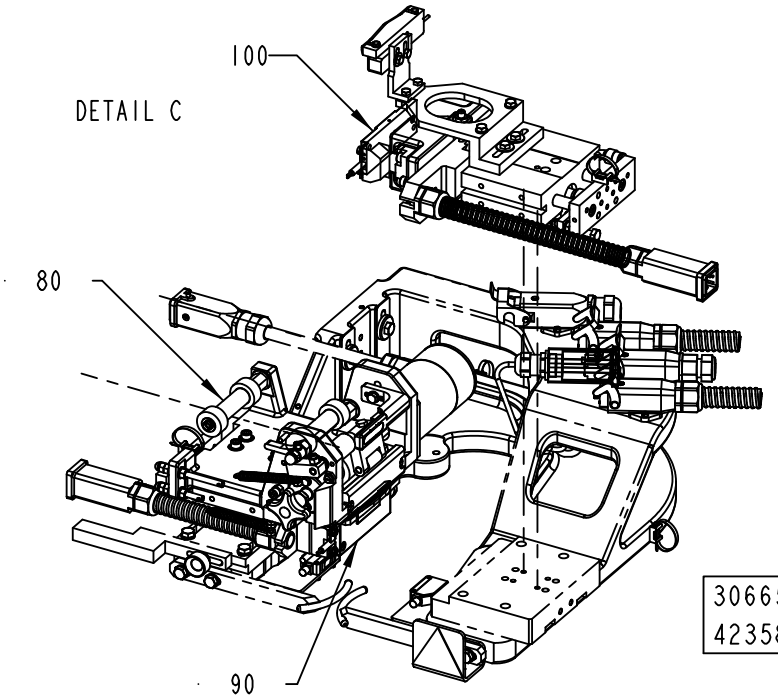

3066565-1
423589

Pos	Part No	UN	Qty	Description	Page No
TAB FOLDING					
280	3038278-0200		1	FOLDING DEVICE	**1-201**
300	3067049-0000		1	BOX	
Common Parts					
040	2546278-0100		1	PUNCH UNIT	**1-205**
050	2564058-0100		1	TURNING DEVICE	**1-207**
080	2564059-0100		1	TAB FEEDER	**1-209**
090	2546275-0100		1	TAB FEEDER	**1-211**
100	2546271-0100		1	TAB C'JAW	**1-213**
130	2837533-0100		1	PATCH C'JAW	**1-215**
150	2564060-0100		1	PATCH FEEDER	**1-217**
200	2533684-0100		1	SPLICING TABLE	**1-219**
220	2533682-0100		1	BOBBIN HOLDER	**1-221**
230	2564057-0100		1	TAB MAGAZINE	**1-223**
240	2533681-0100		1	BOBBIN HOLDER	**1-225**
250	2533685-0100		1	SPLICING TABLE	**1-227**
260	2868038-0100		1	STRIP MAGAZINE	**1-229**
290	2710800-0100		1	PATCH MAGAZINE	**1-231**

Pos	Part No	UN	Qty	Description	Page No

DETAIL E

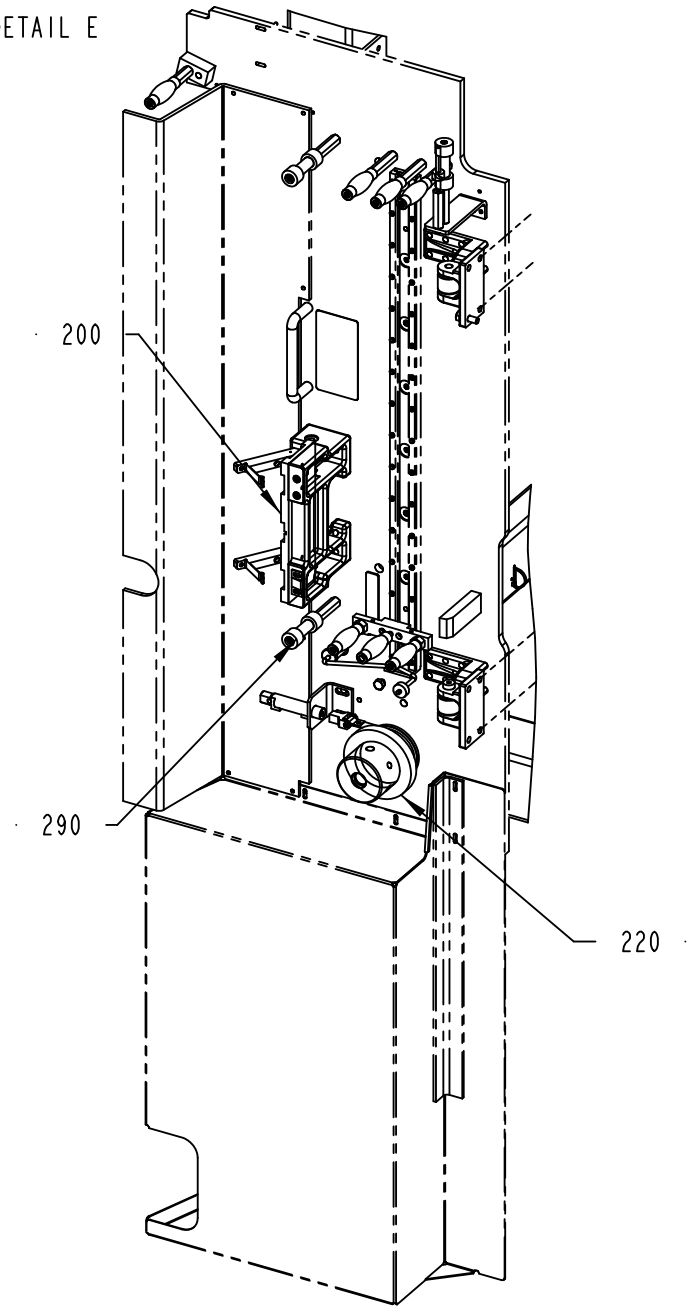

DETAIL D

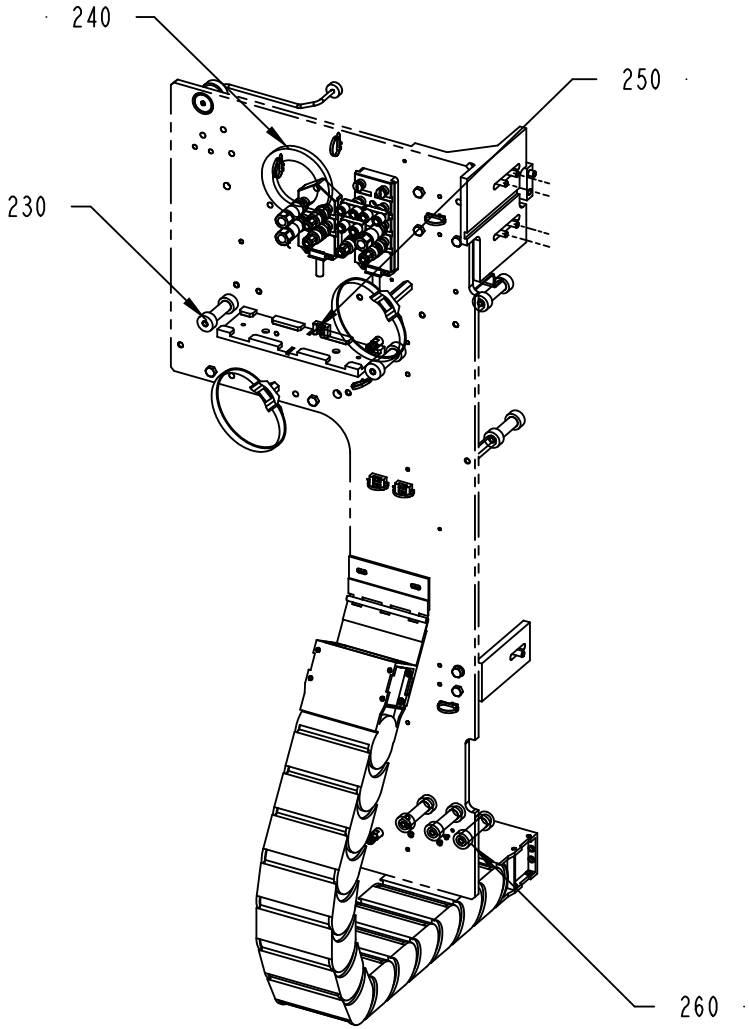

3066565-1
423589

Pos	Part No	UN	Qty	Description	Page No
TAB FOLDING					
280	3038278-0200		1	FOLDING DEVICE	**1-201**
300	3067049-0000		1	BOX	
Common Parts					
040	2546278-0100		1	PUNCH UNIT	**1-205**
050	2564058-0100		1	TURNING DEVICE	**1-207**
080	2564059-0100		1	TAB FEEDER	**1-209**
090	2546275-0100		1	TAB FEEDER	**1-211**
100	2546271-0100		1	TAB C'JAW	**1-213**
130	2837533-0100		1	PATCH C'JAW	**1-215**
150	2564060-0100		1	PATCH FEEDER	**1-217**
200	2533684-0100		1	SPLICING TABLE	**1-219**
220	2533682-0100		1	BOBBIN HOLDER	**1-221**
230	2564057-0100		1	TAB MAGAZINE	**1-223**
240	2533681-0100		1	BOBBIN HOLDER	**1-225**
250	2533685-0100		1	SPLICING TABLE	**1-227**
260	2868038-0100		1	STRIP MAGAZINE	**1-229**
290	2710800-0100		1	PATCH MAGAZINE	**1-231**

Pos	Part No	UN	Qty	Description	Page No

FOLDING DEVICE

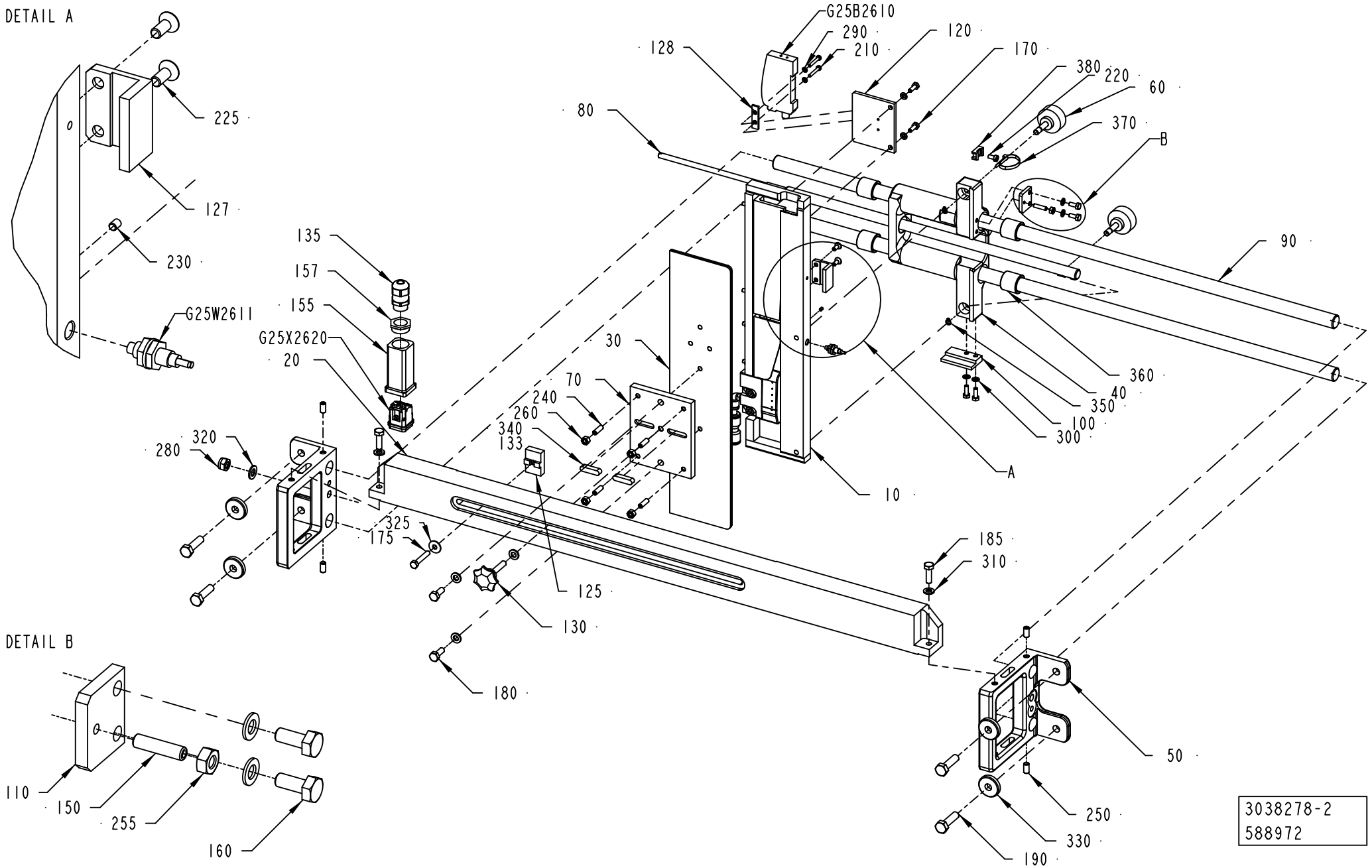

ECM: 590360 - 20130401
Group number: 3038278-0200
Assembly Drawing: 3038278-2_1_AB

Pos	Part No	UN	Qty	Description	Page No
-					
010	3285654-0100		1	FOLDING UNIT	**1-203**
020	2921018-0000		1	BRACKET	
030	2691317-0000		1	PLATE	
040	2691320-0000		1	HOUSING	
050	1499216-0000		2	PLATE	
060	1532447-0000		2	HANDLE	
070	2691318-0000		1	PLATE	
080	1538668-0000		1	GUIDE ROD	
090	1538247-0000		2	AXLE PIN	
100	2691321-0000		1	SUPPORT	
110	2691322-0000		1	PLATE	
120	2691323-0000		1	PLATE	
125	2842877-0000		1	REGISTER	
127	2921016-0000		1	PLATE	
128	2984554-0000		1	PLATE	
130	90051-0090		1	KNOB, EXTERNAL THREAD. NO. WN 450GS	
133	90157-0035		1	LOCKING FLUID LOCTITE TYPE 641, 50ML	
135	90458-0314		1	CABLE GLAND, M16X1,5, 5311 1110	
150	90457-0860		1	SET SCREW, CUP END ISO4029 M4X16 A4	
155	90459-3670		1	HOOD, HAN3A, 19 20 003 1440	
157	90459-7223		1	REDUCER, M20/M16	
160	312105-0289		2	SCREW, M6S ISO 4017 M4X10 A4 70	
170	312105-0291		4	SCREW, M6S ISO 4017 M4X12 A4 70	
175	312105-0335		1	SCREW, M6S ISO 4014 M5X30 A4 80	
180	312105-0368		2	"SCREW, M6S ISO 4017 M6X16 A4 80"	
185	312105-0370		2	SCREW, M6S ISO 4017 M6X20 A4 80	
190	312105-0455		4	SCREW, M6S ISO 4017 M8X30 A4 80	
210	312125-0230		2	SLOTTED HEAD SCREW, ISO1207 M3X20 A4	
220	312125-0287		1	SLOTTED HEAD SCREW, ISO1207 M4X8 A4	
225	312155-0289		2	SCREW DIN 7991 MF6S M4X10 A4 70	
230	312318-0218		1	SET SCREW, CUP END ISO4029 M3X4 A4	
240	312318-0329		4	SET SCREW, CUP END ISO4029 M5X16 A4	
250	312318-0366		4	SET SCREW, CUP END ISO4029 M6X12 A4	
255	312605-0312		1	HEXAGON NUT, M6M M4 A280	
260	312605-0314		4	HEXAGON NUT, M6M M5 A280	
280	312812-0318		1	HEXAGON NUT, NY-LOCK M8 A4 80	
290	315105-0124		2	WASHER PLAIN, 3,2X6X0,5 A4 BRB	
300	315105-0136		6	WASHER PLAIN, 4,3X8X0,8 A4 BRB	
310	315105-0153		5	WASHER PLAIN, 6,4X12X1,5 A4 BRB	
320	315105-0165		1	FWAS080G0-0S, WASHER PLAIN	
325	315125-0146		1	WASHER HIGH, TBRSB 5.3X15X1 A4	
330	315125-0165		4	WASHER HIGH, TBRSB 8,4X26X5 A4	
340	315705-0234		2	PARALLEL KEY W. ROUND ENDS, 6X6X25 MM	
350	315750-0102		2	RETAINING RING FOR SHAFT DIN 471 5	
360	321105-0204		4	BUSHING W/O FLANGE, 16/22X20 MM	
370	352113-0101		1	CABLE TIE,BLACK 92X	
380	352113-0205		1	ANCHOR PLATES FOR STRIPS, TM2S8-C100	
G25B2610	90459-7361		1	FIBRE OPTIC UNIT, WLL170-2P460	
G25W2611	90232-0325		1	FIBRE, E32-DC200	
G25X2620	90459-6821		1	MALE INSERT HAN 4A, 0920 0042 611	

Machine Type	Group Description	Used-In	Group Number	Page No

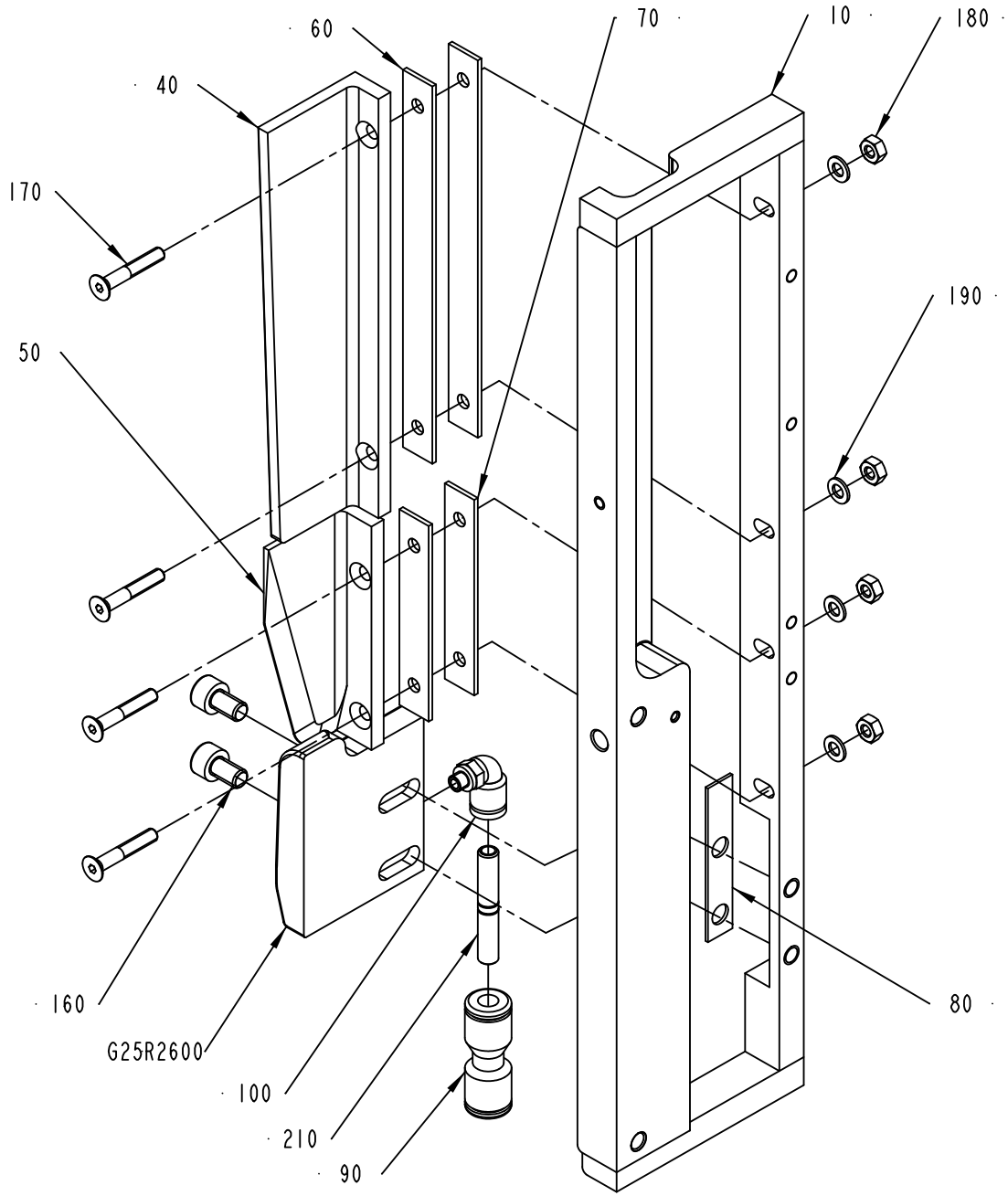

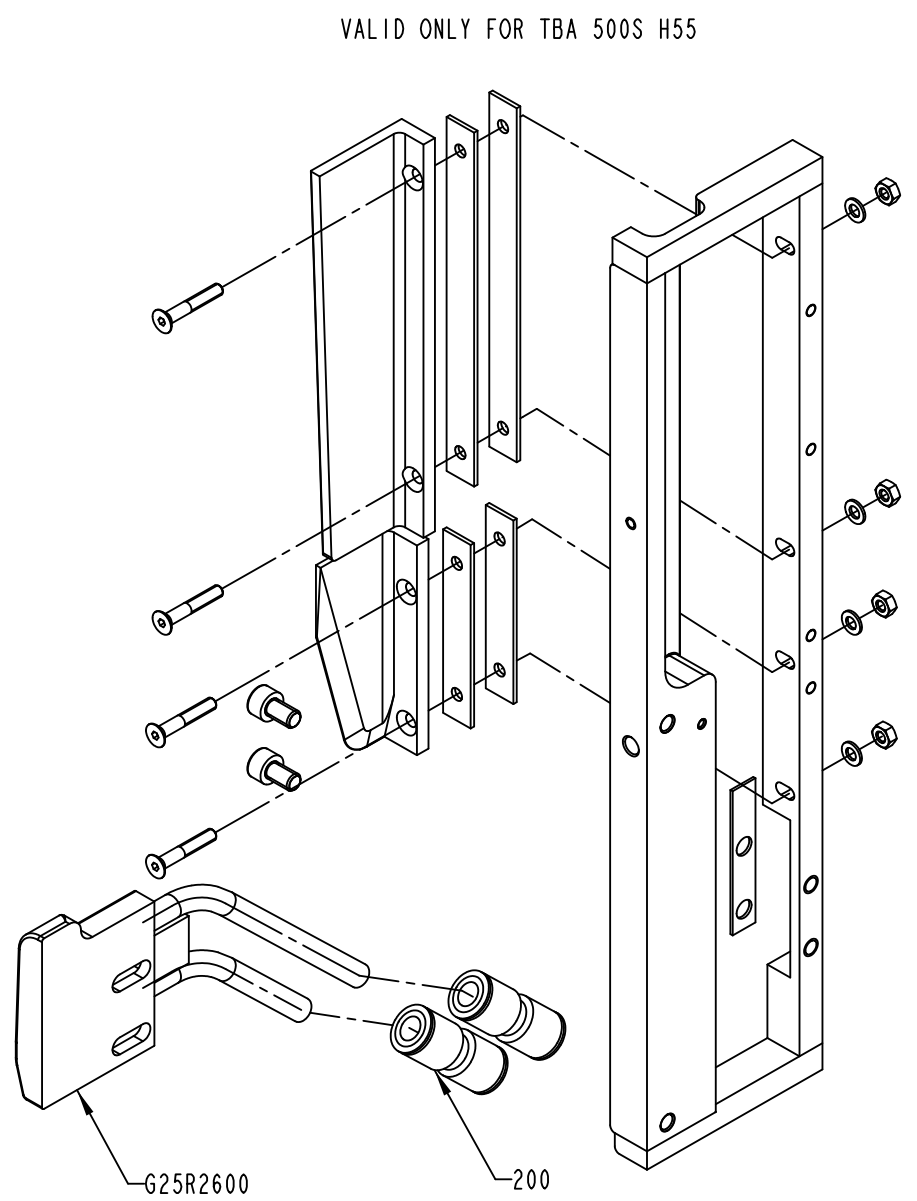

3285654-1
588972

ECM: 590356 - 20130401
Group number: 3285654-0100
Assembly Drawing: 3285654-1_1_AA

Pos	Part No	UN	Qty	Description	Page No
TBA 0500S HOLE55					
200	350009-0003		2	PUSH-IN FITTING QS-F-8	
G25R2600	3091602-0000		1	AIR NOZZLE	
TBA 1000S HOLE90, TBA 1500S HOLE90, TBA 1000B HOLE95, TBA 1000S HOLE95, TBA 1000SQ HOLE95, TBA 1500S HOLE95, TBA 2000S HOLE91, TBA 2000S HOLE95					
090	90055-0189		1	HOSE,NIPPLE,REDUCER,TUBE, 6/8M	
100	90457-0922		1	ELBOW PIPE JOINT, EXT.THREAD, D=6MM M5	
210	350012-0002		1	SLEEVE QSH-F-6	
G25R2600	2863955-0000		1	PLATE	
Common Parts					
010	2818326-0000		1	RAIL	
040	929823-0000		1	PAPER GUIDE	
050	2780314-0000		1	PAPER GUIDE	
060	1499227-0000		2	SHIM	
070	1499228-0000		2	SHIM	
080	2951588-0000		1	SHIM	
160	312115-0364		2	SCREW ISO4762 M6X10 A4 80	
170	312155-0297		4	SCREW DIN 7991 MF6S M4X25 A4 70	
180	312605-0312		4	HEXAGON NUT, M6M M4 A280	
190	315105-0136		4	WASHER PLAIN, 4,3X8X0,8 A4 BRB	

Pos	Part No	UN	Qty	Description	Page No

Machine Type | Group Description | Used-In | Group Number | Page No

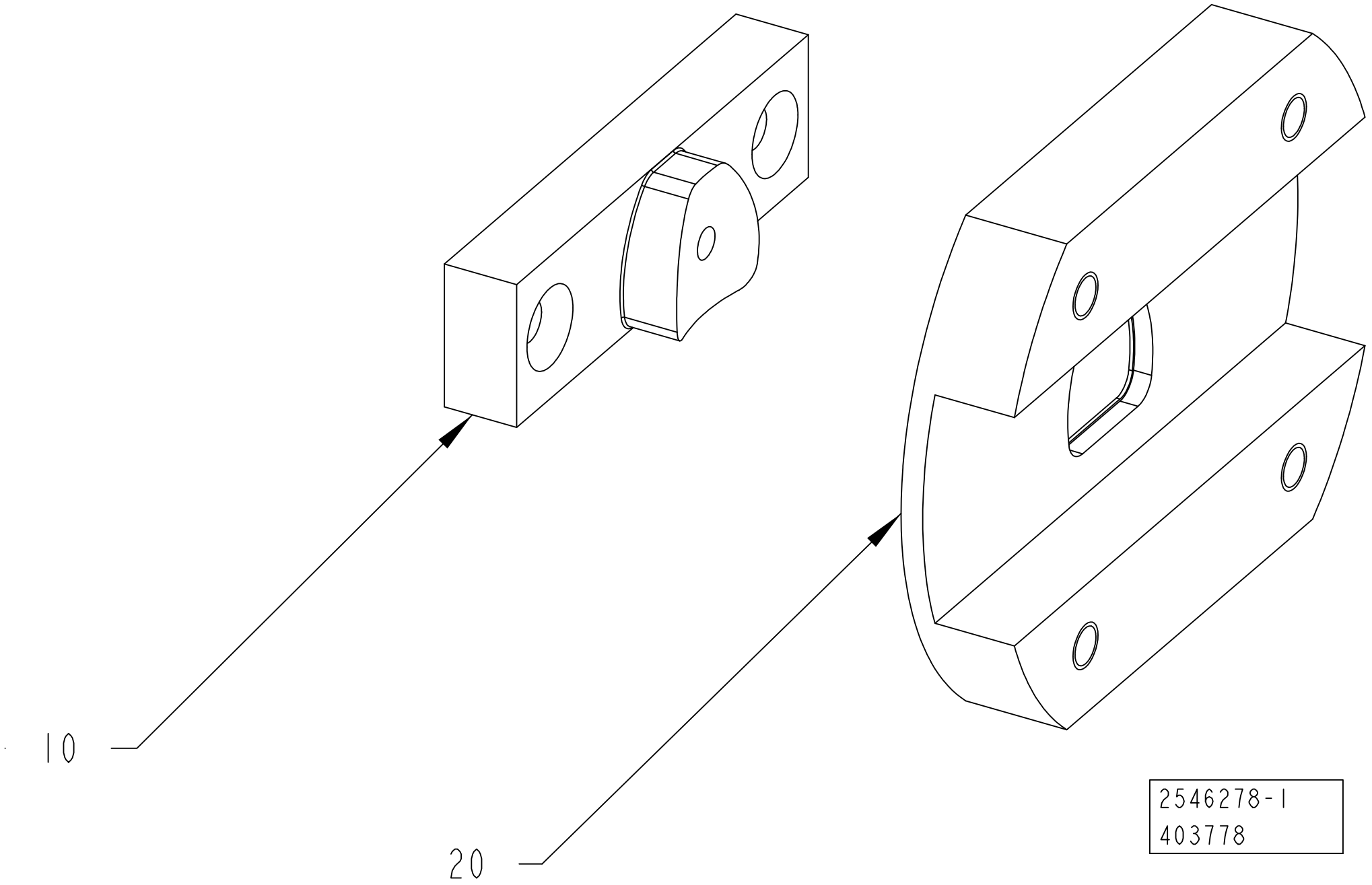
10
20
2546278-1
403778

ECM: 462540 - 20101002
Group number: 2546278-0100
Assembly Drawing: 2546278-1_1_AC

Pos	Part No	UN	Qty	Description	Page No
HOLE55					
010	1145416-0000		1	PUNCH HOLE 55	
020	1145417-0000		1	DIE HOLE 55	
HOLE91					
010	2604554-0000		1	PUNCH	
020	2604555-0000		1	DIE	
HOLE95					
010	2657828-0000		1	PUNCH	
020	2657829-0000		1	DIE	
TBA 1000S HOLE90, TBA 1500S HOLE90					
010	2603683-0000		1	PUNCH	
020	2603682-0000		1	DIE	

Pos	Part No	UN	Qty	Description	Page No

TURNING DEVICE

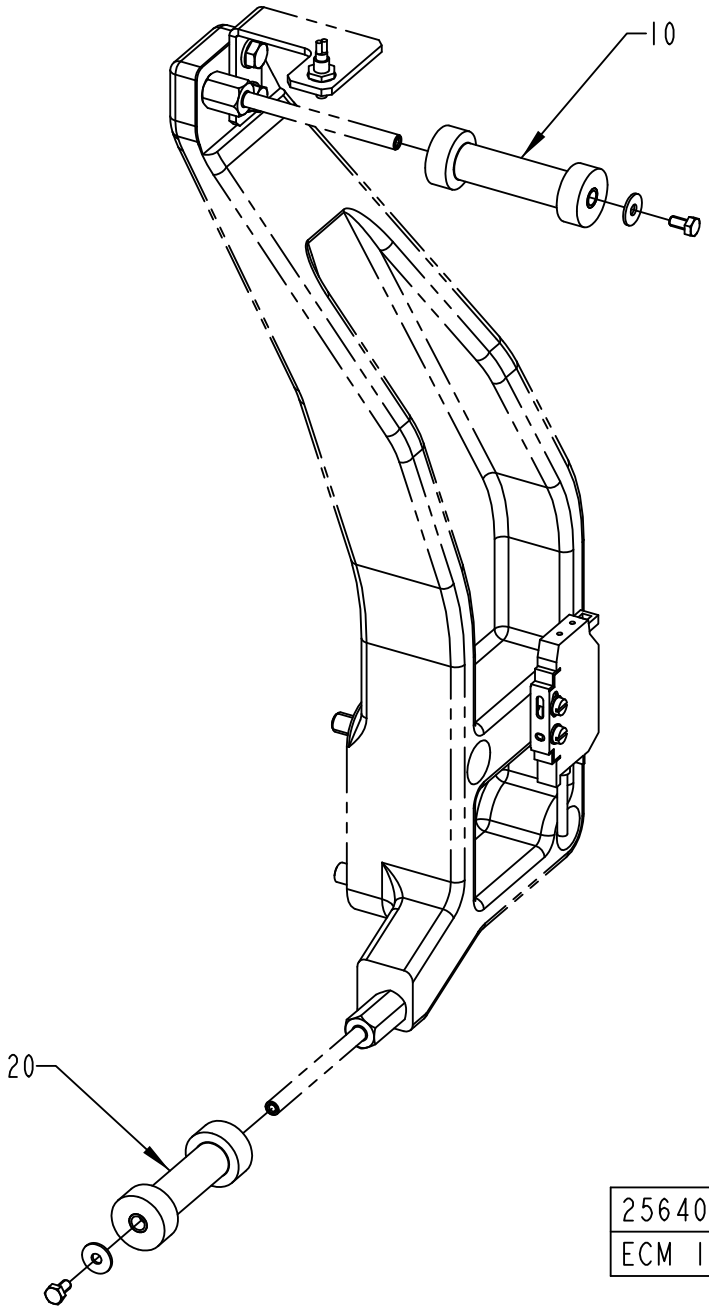

ECM: 409593 - 20090915
Group number: 2564058-0100
Assembly Drawing: 2564058-1_1_AA

Pos	Part No	UN	Qty	Description	Page No
HOLE55					
010	2564043-0003		1	ROLLER	
020	2564044-0004		1	ROLLER	
HOLE90					
010	2564043-0004		1	ROLLER	
020	2564044-0005		1	ROLLER	
HOLE95, HOLE91					
010	2564043-0005		1	ROLLER	
020	2564044-0006		1	ROLLER	

Pos	Part No	UN	Qty	Description	Page No

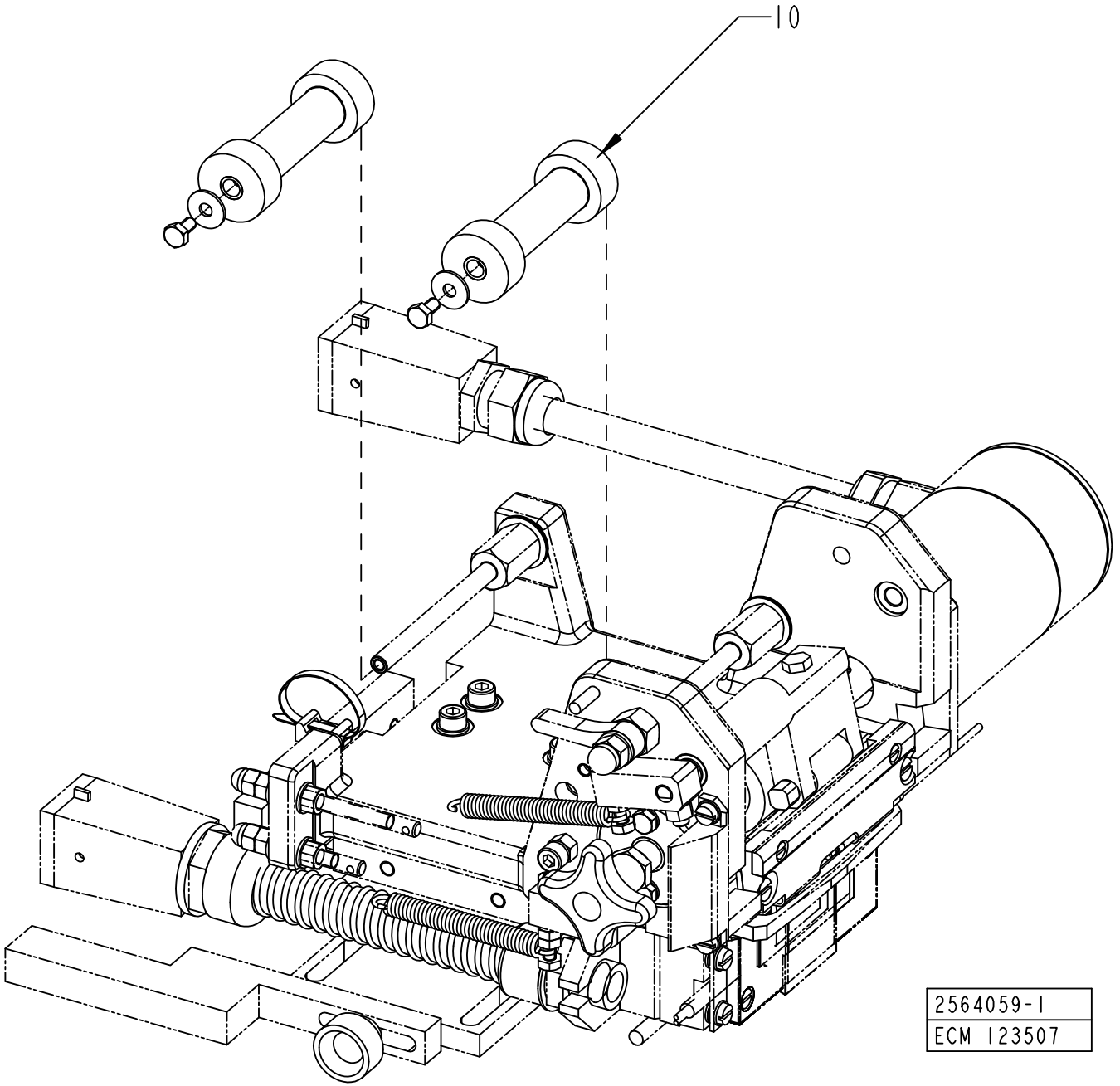
10
2564059-1
ECM 123507

ECM: 608629 - 20130514
Group number: 2564059-0100
Assembly Drawing: 2564059-1_1_AB

Pos	Part No	UN	Qty	Description	Page No
TBA 0500S HOLE95					
010	2564044-0011		2	ROLLER	
TBA 0500S HOLE55					
010	2564044-0006		2	ROLLER	
TBA 1000B HOLE95, TBA 1000S HOLE95, TBA 1000SQ HOLE95, TBA 1500S HOLE95, TBA 2000S HOLE91, TBA 2000S HOLE95					
010	2564044-0012		2	ROLLER	
TBA 1000S HOLE90, TBA 1500S HOLE90					
010	2564044-0008		2	ROLLER	

Pos	Part No	UN	Qty	Description	Page No

TAB FEEDER

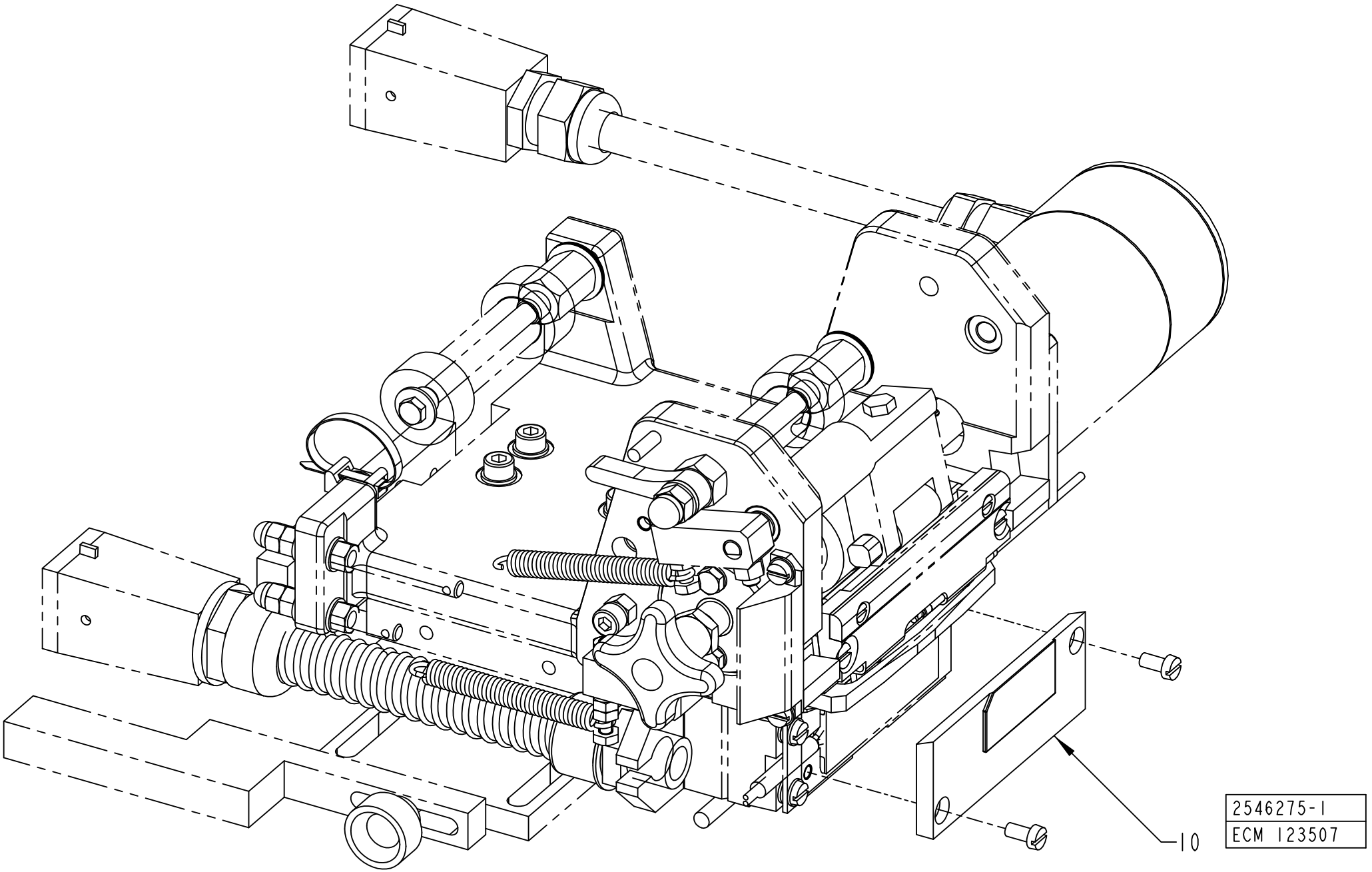

ECM: 418547 - 20091028
Group number: 2546275-0100
Assembly Drawing: 2546275-1_1_AB

Pos	Part No	UN	Qty	Description	Page No
TBA 0500S HOLE95					
010	2526551-0000		1	PLATE	
TBA 0500S HOLE55					
010	2694025-0000		1	SEALING PLATE	
TBA 1000B HOLE95, TBA 1000S HOLE95, TBA 1000SQ HOLE95, TBA 1500S HOLE95, TBA 2000S HOLE95					
010	2658078-0000		1	SEALING PLATE	
TBA 1000S HOLE90, TBA 1500S HOLE90					
010	2608234-0000		1	SEALING PLATE	
TBA 2000S HOLE91					
010	2604551-0000		1	SEALING PLATE	

Pos	Part No	UN	Qty	Description	Page No

TAB C'JAW

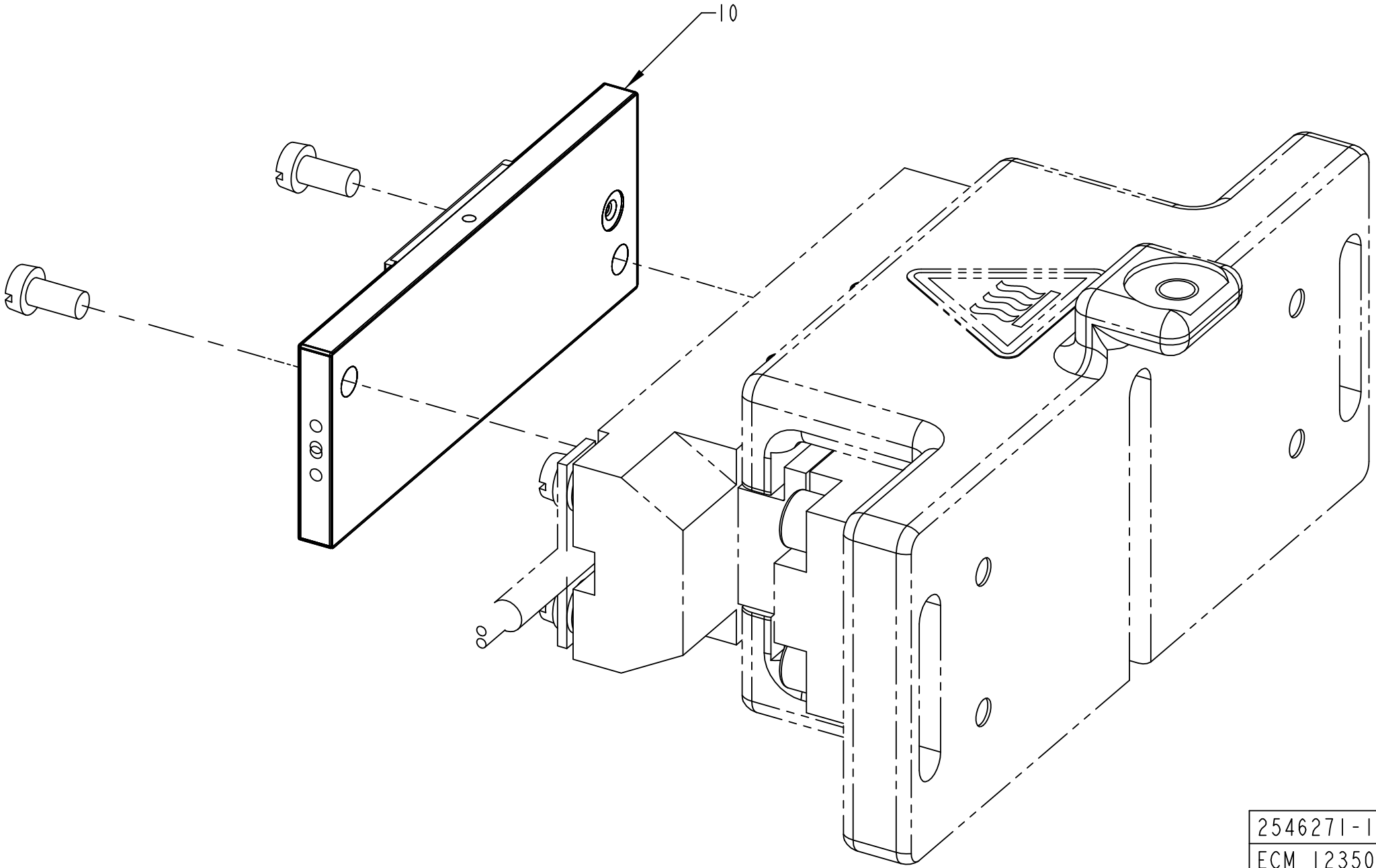

2546271-1
ECM 123507

ECM: 418545 - 20091028
Group number: 2546271-0100
Assembly Drawing: 2546271-1_1_AB

Pos	Part No	UN	Qty	Description	Page No
TBA 0500S HOLE55					
010	2579883-0000		1	SEALING PLATE	
TBA 1000B HOLE95, TBA 1000S HOLE95, TBA 1000SQ HOLE95, TBA 1500S HOLE95, TBA 2000S HOLE95, TBA 0500S HOLE95					
010	2563974-0000		1	SEALING PLATE	
TBA 1000S HOLE90, TBA 1500S HOLE90					
010	2579886-0000		1	SEALING PLATE	
TBA 2000S HOLE91					
010	2648819-0000		1	SEALING PLATE	

Pos	Part No	UN	Qty	Description	Page No

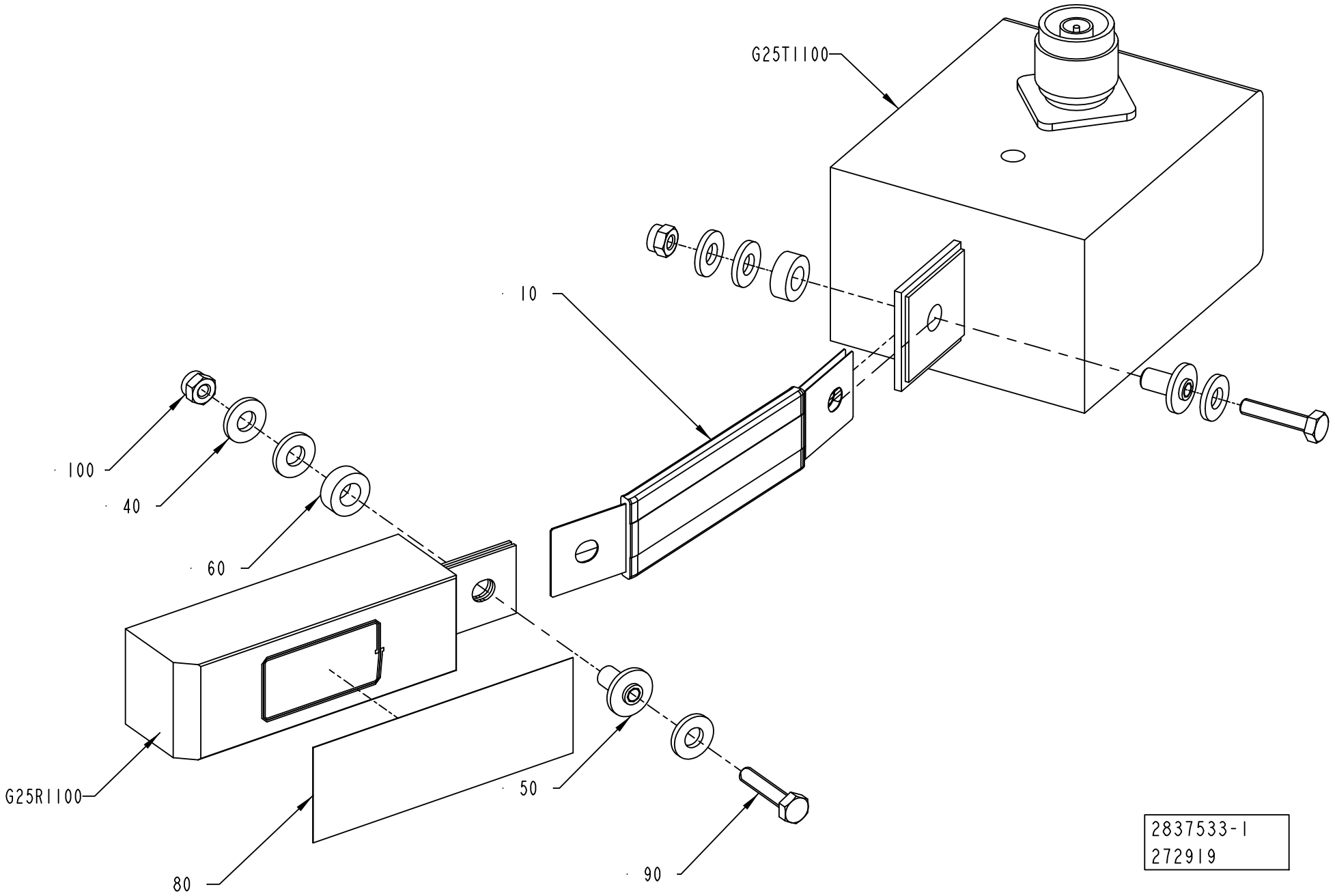
G25T1100
10
100
40
60
G25R1100
80
50
90
2837533-1
272919

ECM: 355345 - 20080616
Group number: 2837533-0100
Assembly Drawing: 2837533-1_1_AA

Pos	Part No	UN	Qty	Description	Page No
HOLE55					
G25R1100	1533362-0000		1	INDUCTOR	
G25T1100	67379-0224		1	TRANSFORMER	
HOLE90					
G25R1100	1533364-0000		1	INDUCTOR	
G25T1100	67379-0224		1	TRANSFORMER	
HOLE91					
G25R1100	1533361-0000		1	INDUCTOR	
G25T1100	67379-0216		1	TRANSFORMER	
HOLE95					
G25R1100	1533360-0000		1	INDUCTOR	
G25T1100	67379-0216		1	TRANSFORMER	
Common Parts					
010	1140889-0000		1	BUSBAR	
040	28509-0000		6	WASHER	
050	32544-0000		2	INSULATION NUT	
060	32644-0000		2	WASHER	
080	90459-2130	MM	130	TAPE, ADHESIVE SI TAPE MON3154535033CL	
090	312105-0295		2	SCREW, M6S ISO 4017 M4X20 A4 70	
100	312812-0312		2	HEXAGON NUT, NY-LOCK M4 A4 80	

Pos	Part No	UN	Qty	Description	Page No

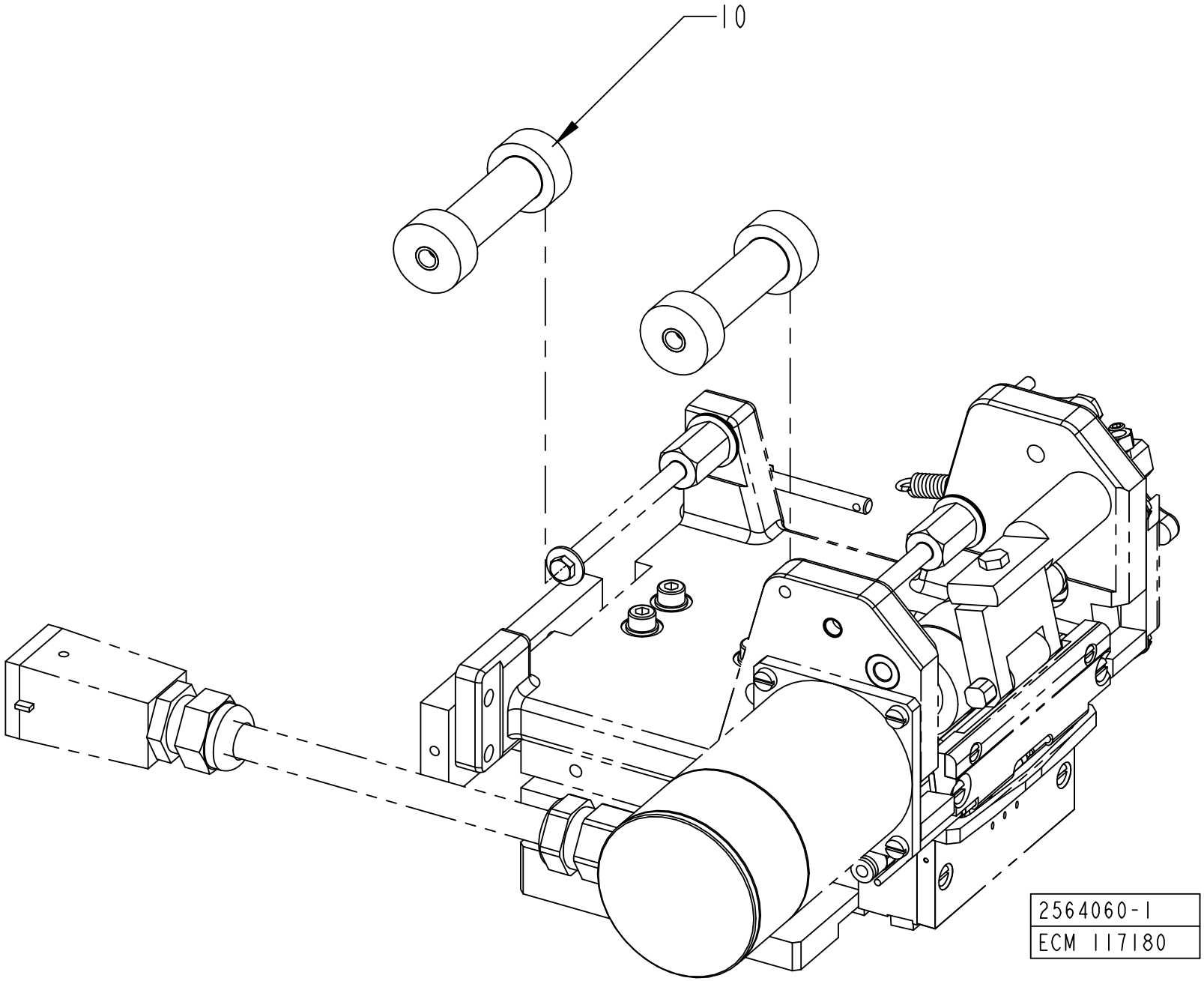
10
2564060-1
ECM 117180

ECM: 409790 - 20090915
Group number: 2564060-0100
Assembly Drawing: 2564060-1_1_AA

Pos	Part No	UN	Qty	Description	Page No
HOLE55					
010	2564044-0004		2	ROLLER	
HOLE90					
010	2564044-0005		2	ROLLER	
HOLE95, HOLE91					
010	2564044-0006		2	ROLLER	

Pos	Part No	UN	Qty	Description	Page No

SPLICING TABLE

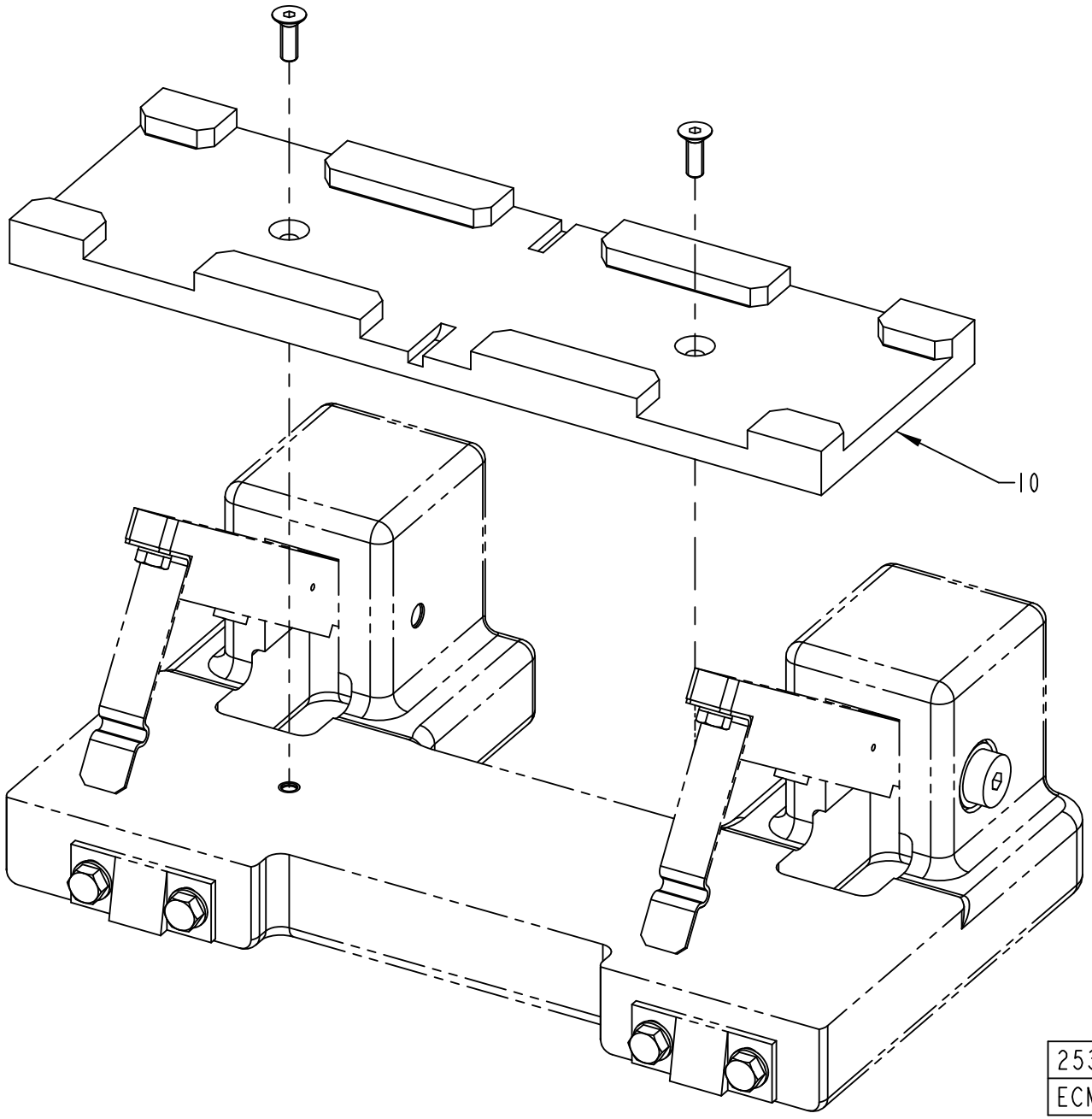

ECM: 409472 - 20090915
Group number: 2533684-0100
Assembly Drawing: 2533684-1_1_AA

Pos	Part No	UN	Qty	Description	Page No
HOLE55					
010	1499296-0002		1	GUIDE	
HOLE90					
010	1499296-0003		1	GUIDE	
HOLE95, HOLE91					
010	1499296-0004		1	GUIDE	

Pos	Part No	UN	Qty	Description	Page No

BOBBIN HOLDER

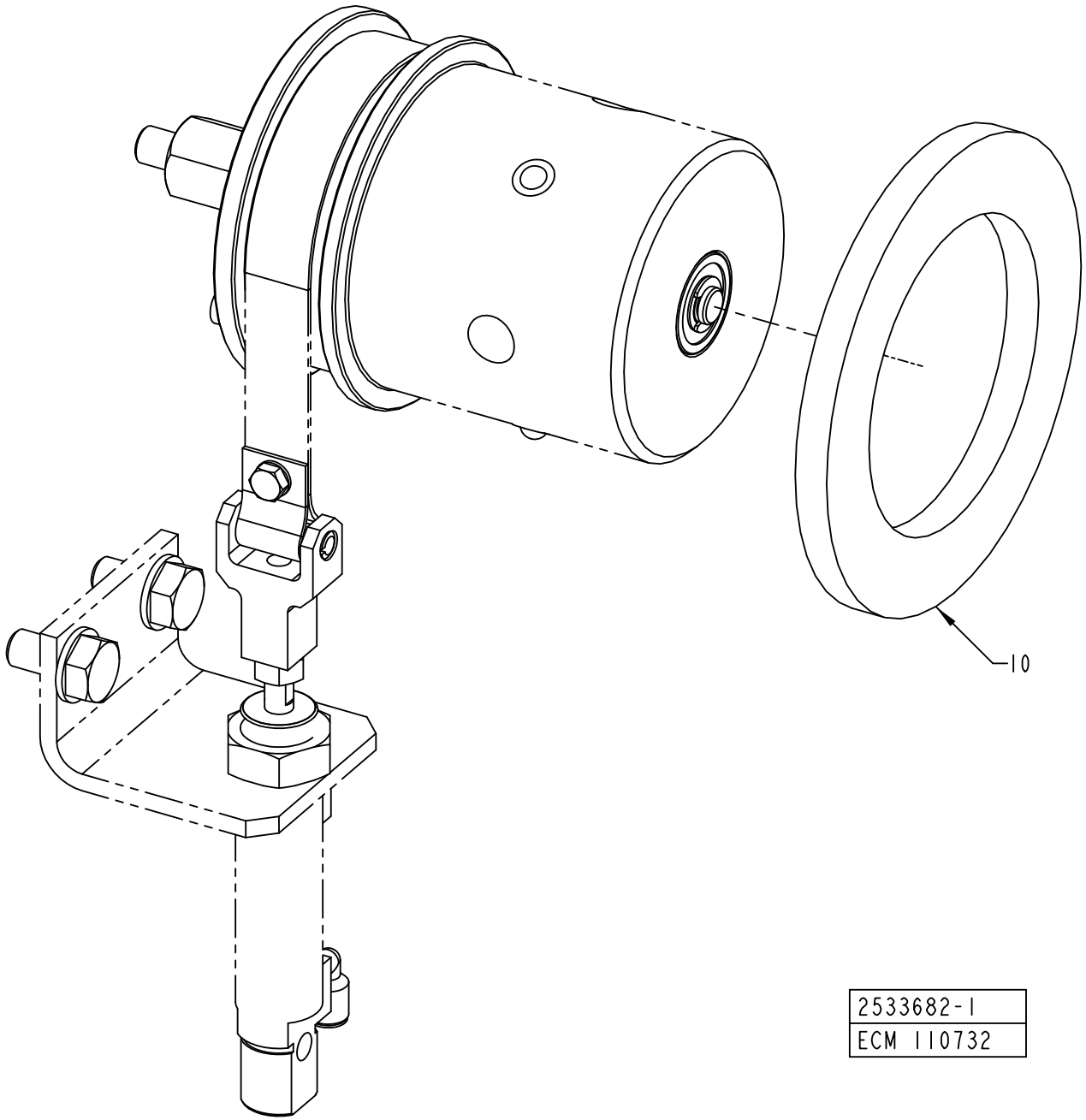

ECM: 409471 - 20090915
Group number: 2533682-0100
Assembly Drawing: 2533682-1_1_AA

Pos	Part No	UN	Qty	Description	Page No
HOLE55					
010	1347952-0003		1	SPACER	
HOLE90					
010	1347952-0004		1	SPACER	
HOLE95, HOLE91					
010	1347952-0006		1	SPACER	

Pos	Part No	UN	Qty	Description	Page No

Machine Type | Group Description | Used-In | Group Number | Page No

TAB MAGAZINE

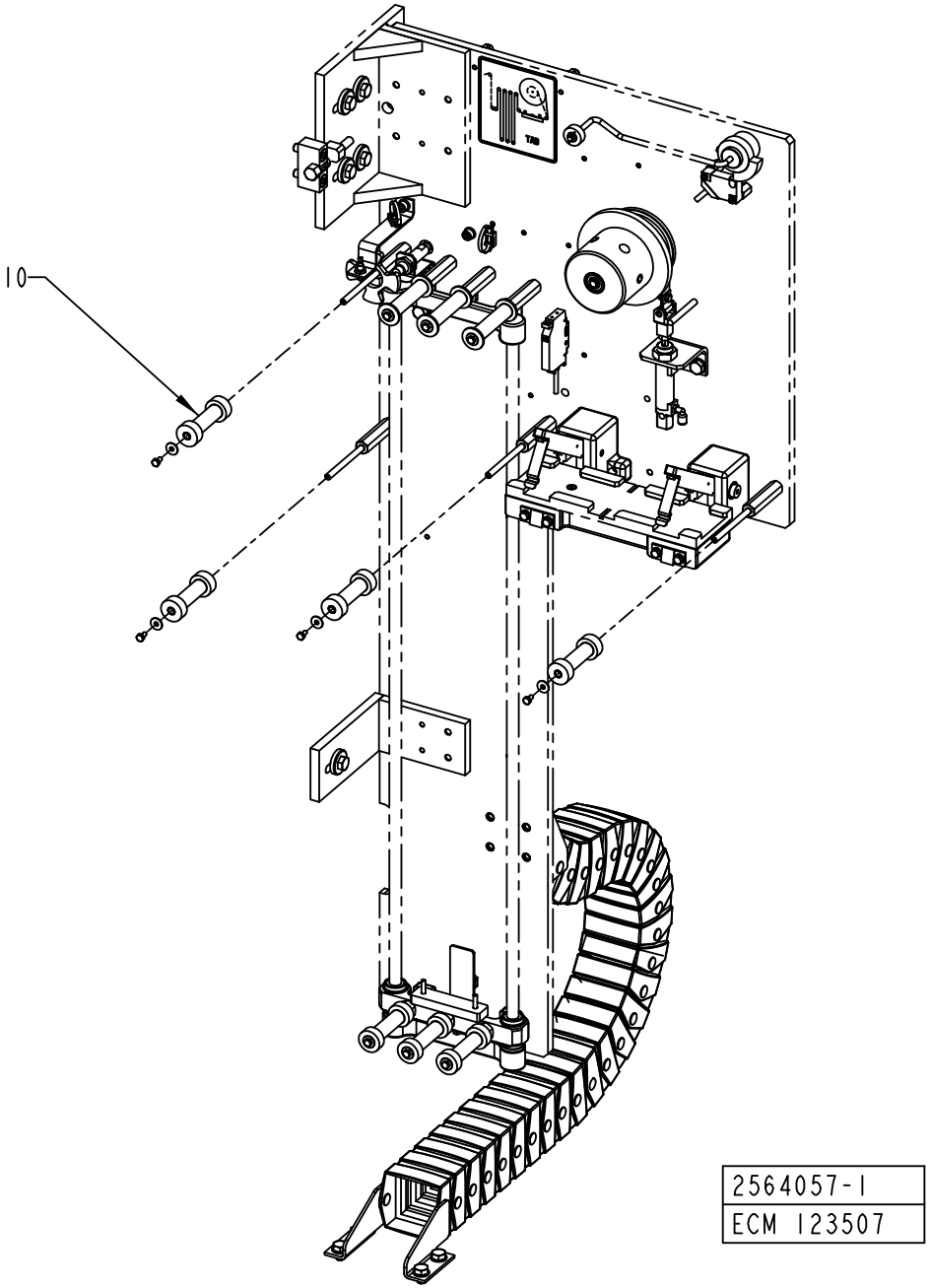

ECM: 608625 - 20130514
Group number: 2564057-0100
Assembly Drawing: 2564057-1_1_AB

Pos	Part No	UN	Qty	Description	Page No
TBA 0500S HOLE95					
010	2564044-0011		4	ROLLER	
TBA 0500S HOLE55					
010	2564044-0006		4	ROLLER	
TBA 1000B HOLE95, TBA 1000S HOLE95, TBA 1000SQ HOLE95, TBA 1500S HOLE95, TBA 2000S HOLE91, TBA 2000S HOLE95					
010	2564044-0012		4	ROLLER	
TBA 1000S HOLE90, TBA 1500S HOLE90					
010	2564044-0008		4	ROLLER	

Pos	Part No	UN	Qty	Description	Page No

BOBBIN HOLDER

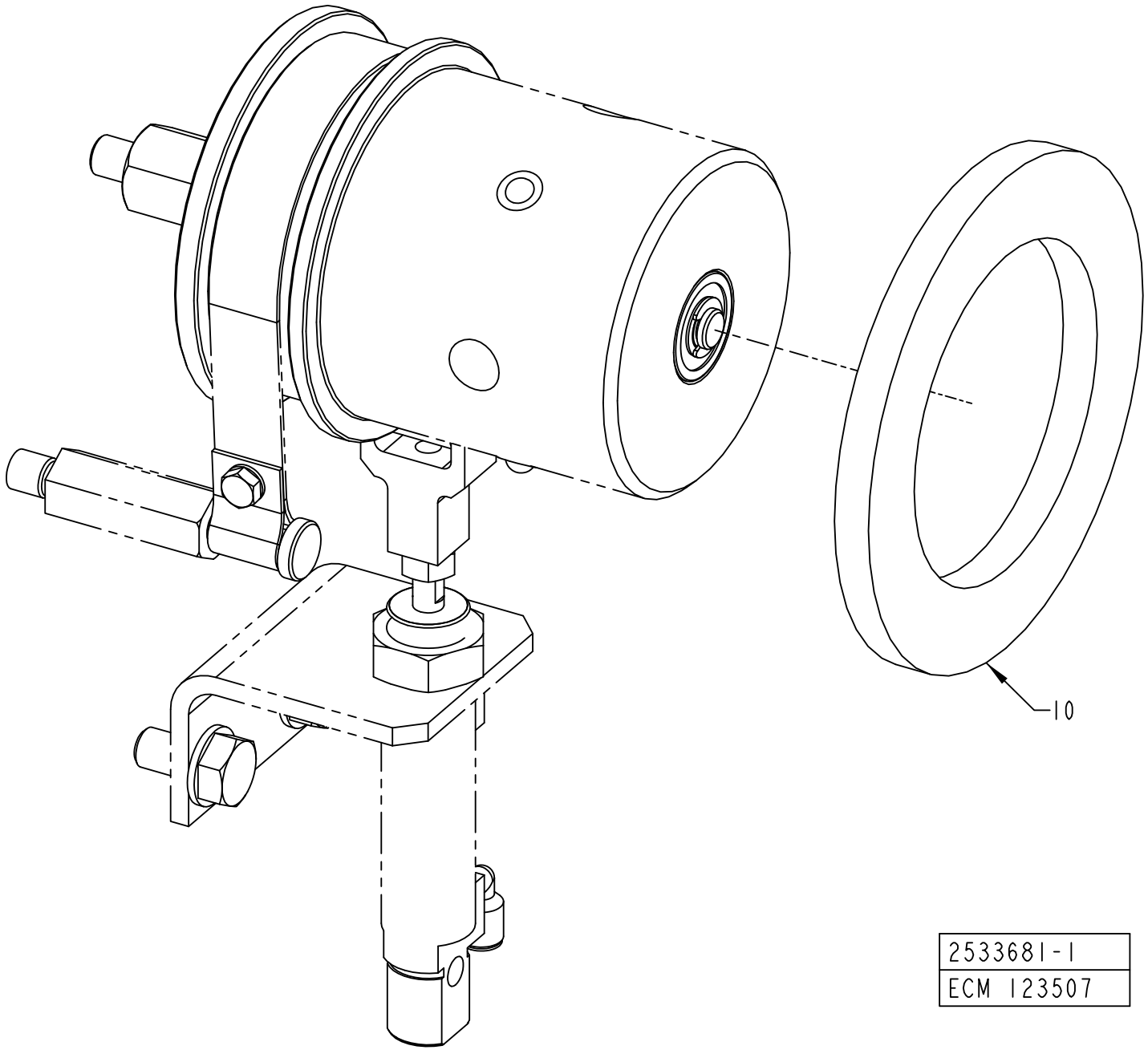

ECM: 608627 - 20130514
Group number: 2533681-0100
Assembly Drawing: 2533681-1_1_AB

Pos	Part No	UN	Qty	Description	Page No
TBA 0500S HOLE95					
010	1347952-0010		1	SPACER	
TBA 0500S HOLE55					
010	1347952-0006		1	SPACER	
TBA 1000B HOLE95, TBA 1000S HOLE95, TBA 1000SQ HOLE95, TBA 1500S HOLE95, TBA 2000S HOLE91, TBA 2000S HOLE95					
010	1347952-0011		1	SPACER	
TBA 1000S HOLE90, TBA 1500S HOLE90					
010	1347952-0008		1	SPACER	

Pos	Part No	UN	Qty	Description	Page No

SPLICING TABLE

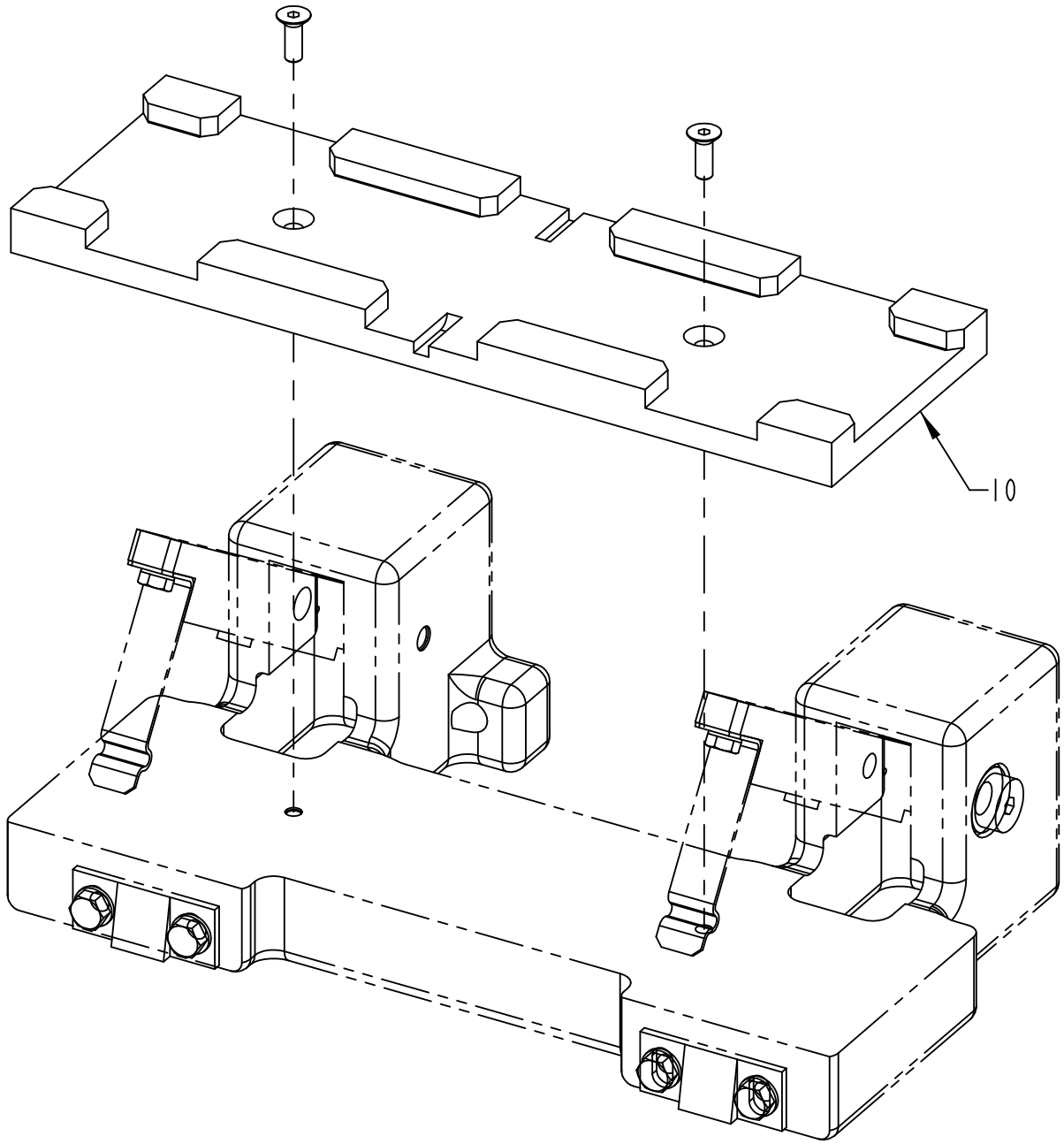

2533685-1
ECM 123507

ECM: 608626 - 20130514
Group number: 2533685-0100
Assembly Drawing: 2533685-1_1_AB

Pos	Part No	UN	Qty	Description	Page No
TBA 0500S HOLE95					
010	1499296-0007		1	GUIDE	
TBA 0500S HOLE55					
010	1499296-0004		1	GUIDE	
TBA 1000B HOLE95, TBA 1000S HOLE95, TBA 1000SQ HOLE95, TBA 1500S HOLE95, TBA 2000S HOLE91, TBA 2000S HOLE95					
010	1499296-0008		1	GUIDE	
TBA 1000S HOLE90, TBA 1500S HOLE90					
010	1499296-0015		1	GUIDE	

Pos	Part No	UN	Qty	Description	Page No

Machine Type	Group Description	Used-In	Group Number	Page No

STRIP MAGAZINE

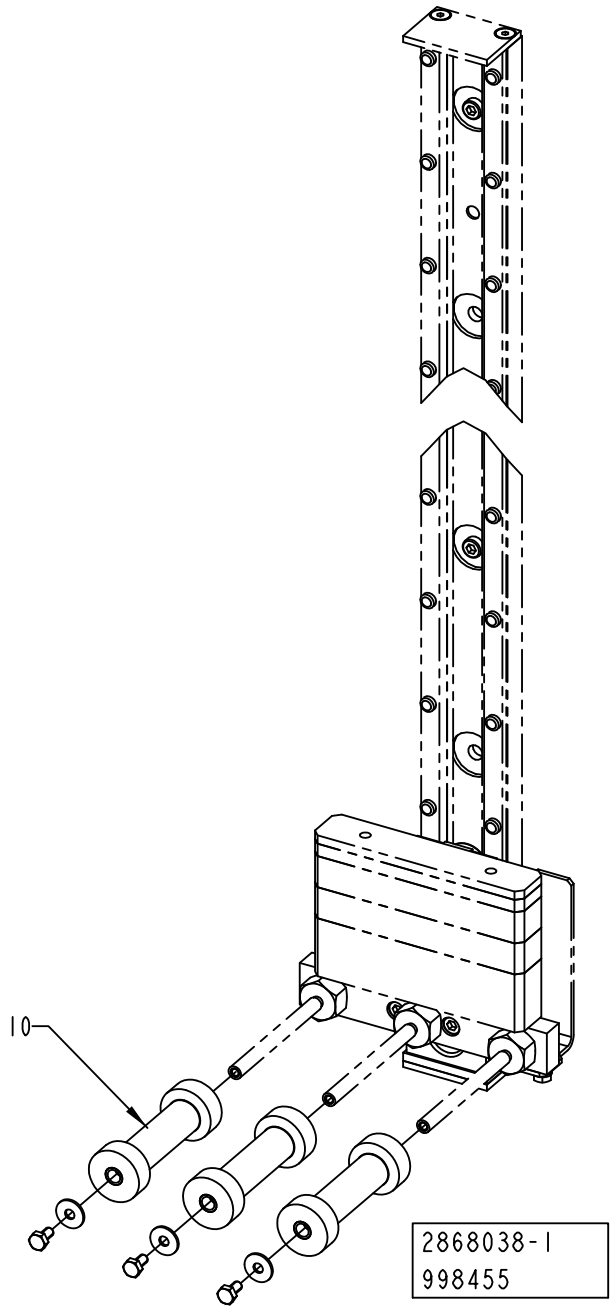

ECM: 998455 - 20130514
Group number: 2868038-0100
Assembly Drawing: 2868038-1_1_AA

Pos	Part No	UN	Qty	Description	Page No
TBA 0500S HOLE95					
010	2564043-0008		3	ROLLER	
TBA 0500S HOLE55					
010	2564043-0005		3	ROLLER	
TBA 1000B HOLE95, TBA 1000S HOLE95, TBA 1000SQ HOLE95, TBA 1500S HOLE95, TBA 2000S HOLE91, TBA 2000S HOLE95					
010	2564043-0009		3	ROLLER	
TBA 1000S HOLE90, TBA 1500S HOLE90					
010	2564043-0006		3	ROLLER	

Pos	Part No	UN	Qty	Description	Page No

PATCH MAGAZINE

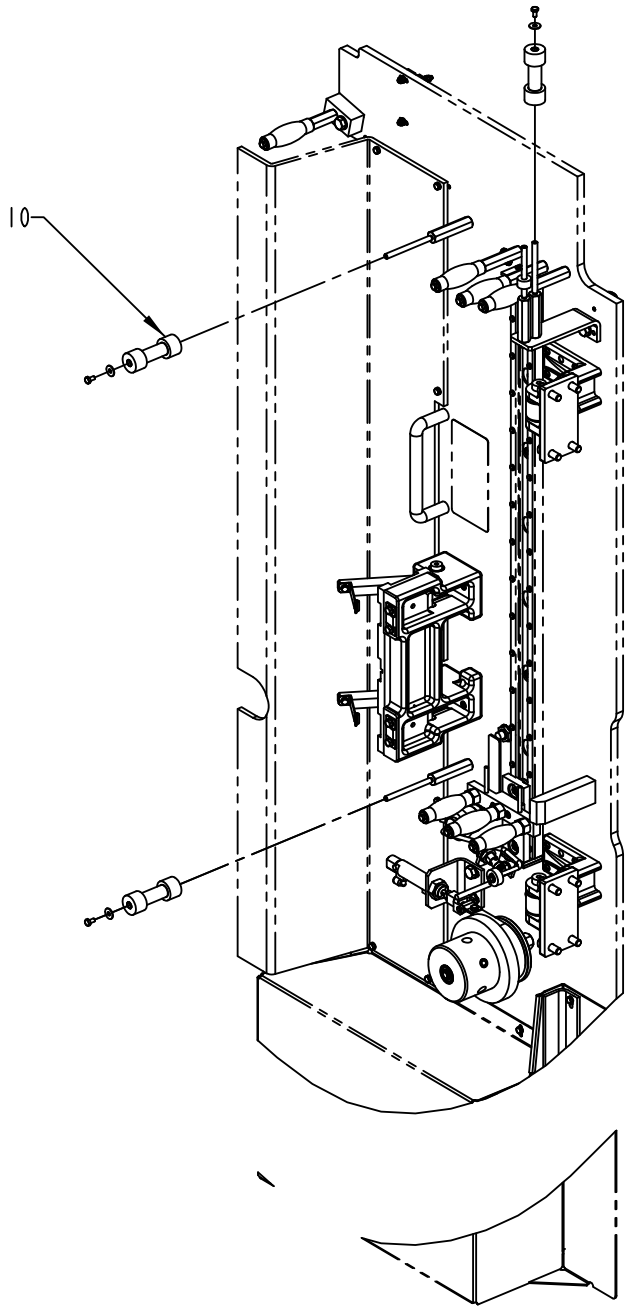

2710800-1
272674

ECM: 409478 - 20090915
Group number: 2710800-0100
Assembly Drawing: 2710800-1_1_AA

Pos	Part No	UN	Qty	Description	Page No
HOLE55					
010	2564044-0004		3	ROLLER	
HOLE90					
010	2564044-0005		3	ROLLER	
HOLE95, HOLE91					
010	2564044-0006		3	ROLLER	

Pos	Part No	UN	Qty	Description	Page No

This page is intentionally left blank.

ECM: 467340 - 20110101
Group number: 2564076-0100
Assembly Drawing:

Pos	Part No	UN	Qty	Description	Page No
HOLE55, HOLE90, HOLE95, HOLE91					
100	90602-9590		1	ADH. TAPE LABELS AL/PE,BS FOIL 100 35X16	
Common Parts					
130	90602-9550		1	ADH. TAPE LABELS AL/PET,BS SPLICE 90N 30	
200	90600-2609		1	SCOTCH-BRITE WHITE 690	

Pos	Part No	UN	Qty	Description	Page No

This page is intentionally left blank.

ECM: 419156 - 20091028
Group number: 2587337-0100
Assembly Drawing:

Pos	Part No	UN	Qty	Description	Page No
TBA 0500S HOLE55					
010	1490129-0000		1	TEMPLATE	
TBA 1000B HOLE95					
010	2672800-0000		1	TEMPLATE	
TBA 1000S HOLE90					
010	2651573-0000		1	TEMPLATE	
TBA 1000S HOLE95					
010	2672799-0000		1	TEMPLATE	
TBA 1000SQ HOLE95					
010	2672798-0000		1	TEMPLATE	
TBA 1500S HOLE90					
010	2651295-0000		1	TEMPLATE	
TBA 1500S HOLE95					
010	2672797-0000		1	TEMPLATE	
TBA 2000S HOLE91					
010	2664765-0000		1	TEMPLATE	
TBA 2000S HOLE95					
010	2664766-0000		1	TEMPLATE	

Pos	Part No	UN	Qty	Description	Page No

This page is intentionally left blank.

ECM: 418594 - 20091028
Group number: 2564075-0100
Assembly Drawing:

Pos	Part No	UN	Qty	Description	Page No
TBA 2000S HOLE91					
010	2604557-0000		1	OPENING SPECIFICATION	
TBA 2000S HOLE95					
010	2608239-0000		1	OPENING SPECIFICATION	
TBA 0500S HOLE55					
010	2514029-0000		1	OPENING SPECIFICATION	
TBA 0500S HOLE95					
010	2514032-0000		1	OPENING SPECIFICATION	
TBA 1000B HOLE95					
010	2658047-0000		1	OPENING SPECIFICATION	
TBA 1000S HOLE90					
010	2579887-0000		1	OPENING SPECIFICATION	
TBA 1000S HOLE95					
010	2658048-0000		1	OPENING SPECIFICATION	
TBA 1000SQ HOLE95					
010	2658046-0000		1	OPENING SPECIFICATION	
TBA 1500S HOLE90					
010	2635555-0000		1	OPENING SPECIFICATION	
TBA 1500S HOLE95					
010	2658045-0000		1	OPENING SPECIFICATION	

Pos	Part No	UN	Qty	Description	Page No

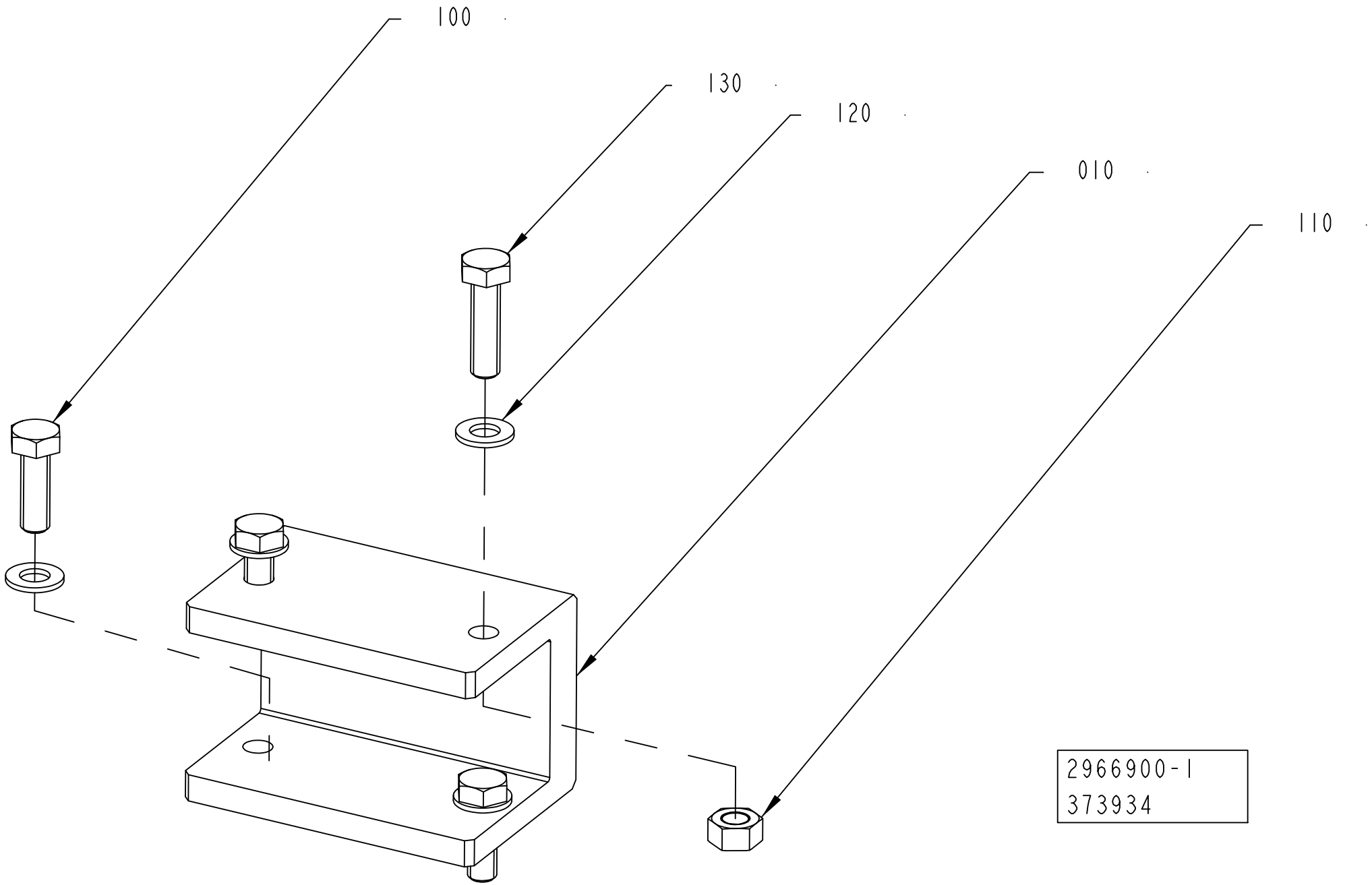
100
130
120
010
110
2966900-1
373934

ECM: 641978 - 20140401
Group number: 2966900-0100
Assembly Drawing: 2966900-1_1_AA

Pos	Part No	UN	Qty	Description	Page No
TBA 0500S, TBA 0500SQ, TBA 0500B, TBA 1000B, TBA 1000SQ, TBA 1000S, TPA 0500SQ, TBA 1000E, TBA 1000M, TBA 0500E					
010	2914987-0000		1	SPACER	
100	312105-0453		2	SCREW, M6S ISO 4017 M8X25 A4 80	
110	312607-0318		2	HEXAGON NUT, EN 24032 M6M M8 A480	
120	315105-0165		6	FWAS080G0-0S, WASHER PLAIN	
TBA 1500S, TPA 1000SQ, TBA 2000S, TPA 0750SQ					
120	315105-0165		2	FWAS080G0-0S, WASHER PLAIN	
Common Parts					
130	312105-0455		2	SCREW, M6S ISO 4017 M8X30 A4 80	

Pos	Part No	UN	Qty	Description	Page No

This page is intentionally left blank.

ECM: 535847 - 20120401
Group number: 3016193-0200
Assembly Drawing:

Pos	Part No	UN	Qty	Description	Page No
NOQC START FM QC					
020	2876473-0000		2	PLATE	
QC START FM NOQC					
010	2931380-0200		1	FRAME	**1-243**

Pos	Part No	UN	Qty	Description	Page No

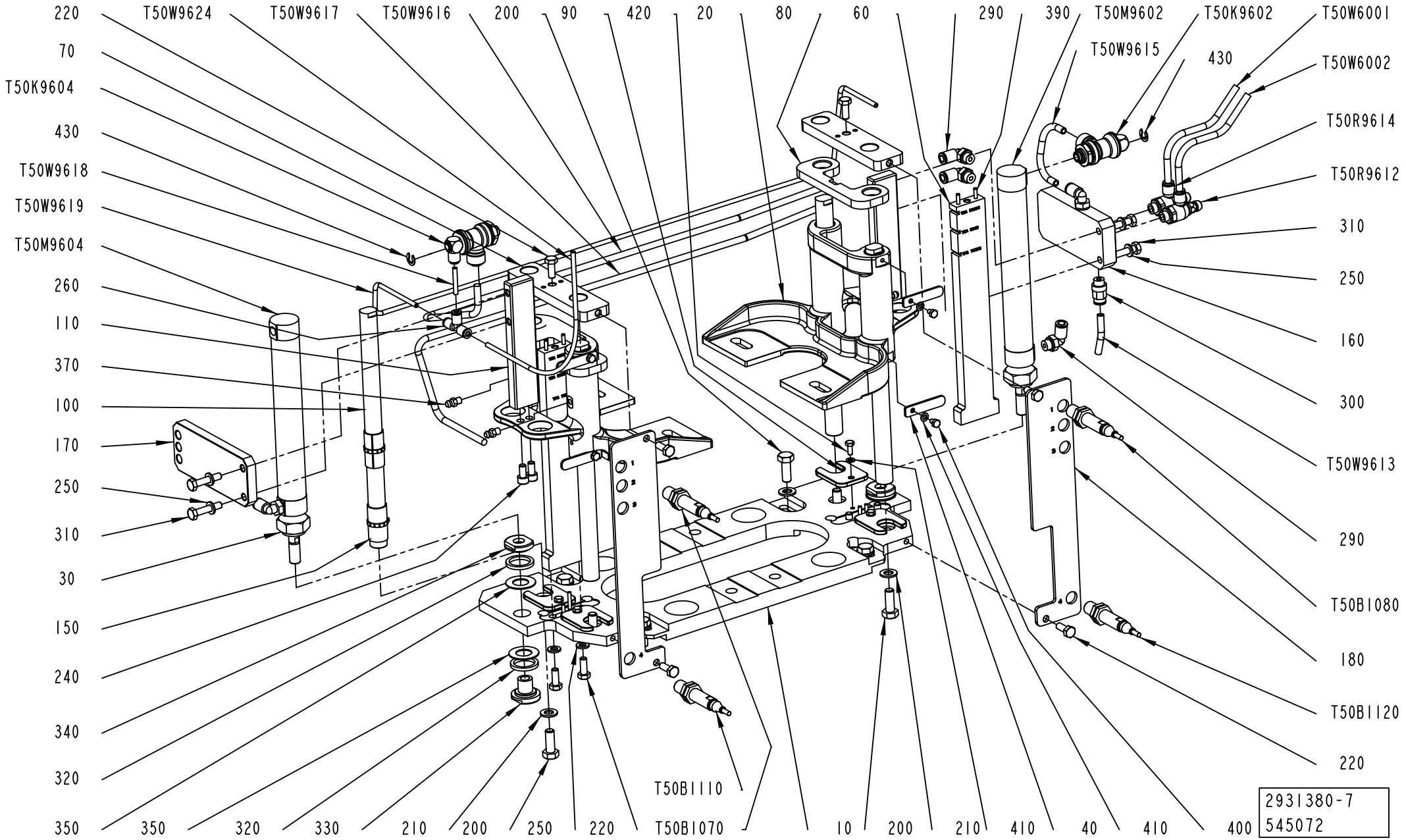
220
70
T50K9604
430
T50W9618
T50W9619
T50M9604
260
110
370
100
170
250
310
30
150
240
340
320
350
T50W9624
T50W9617
T50W9616
200
90
420
20
80
60
290
390
T50M9602
T50K9602
T50W6001
T50W9615
430
T50W6002
T50R9614
T50R9612
310
250
160
300
T50W9613
290
T50B1080
180
T50B1120
220
T50B1110
T50B1070
350
320
330
210
200
250
220
10
200
210
410
40
410
400
2931380-7
545072

ECM: 641975 - 20140401
Group number: 2931380-0200
Assembly Drawing: 2931380-7_1_AB

Pos	Part No	UN	Qty	Description	Page No
-					
010	2936209-0000		1	PLATE	
020	2852465-0000		2	BRACKET	
030	2966902-0000		2	NUT	
040	2829385-0000		4	PLATE	
060	2936210-0000		2	PLATE	
070	2760126-0000		2	SPACER	
080	2760089-0000		2	STOP	
090	2852461-0000		4	SPACER	
100	2760121-0000		4	BAR	
110	2760120-0000		2	PLATE	
150	90458-2920		8	BUSHING INSERT, JUM-01-16	
160	2936212-0000		1	PLATE	
170	2936211-0000		1	PLATE	
180	2936213-0000		2	BRACKET	
200	312105-0452		8	SCREW, M6S ISO 4017 M8X22 A4 80	
210	315105-0165		8	FWAS080G0-0S, WASHER PLAIN	
220	312105-0368		10	"SCREW, M6S ISO 4017 M6X16 A4 80"	
240	312115-0366		4	SCREW ISO4762 M6X12 A4 80	
250	315105-0153		8	WASHER PLAIN, 6,4X12X1,5 A4 BRB	
260	350005-0001		1	PUSH-IN T-FITTING QST-F-4	
290	350002-0006		5	PUSH-IN L-FITTING QSL-F-G1/8-6	
300	350001-0006		1	PUSH-IN FITTING QS-F-G1/8-6	
310	312105-0374		4	SCREW, M6S ISO 4014 M6X30 A4 80	
320	2881044-0000		4	DAMPER	
330	2951198-0000		2	BUSHING	
340	2881047-0000		2	BUSHING	
350	2881048-0000		4	WASHER	
370	90286-0013		4	GREASE NIPPLE STRAIGHT, H1 M6X1 2346	
390	311102-0237		8	PARALLEL PIN ISO 2338 3M6X18 ST	
400	312105-0285		4	SCREW, M6S ISO 4017 M4X6 A4 70	
410	315101-0136		8	WASHER BRB, 4,3/8 H=0,8	
420	312105-0289		4	SCREW, M6S ISO 4017 M4X10 A4 70	
430	315755-0108		2	RETAINING RING SHAFT DIN 6799 6 SS	
T50B1070	90600-0464		1	INDUCTIVE SWITCH,E2A-M12LS02-WP-B1-TP 5M	
T50B1080	90600-0464		1	INDUCTIVE SWITCH,E2A-M12LS02-WP-B1-TP 5M	
T50B1110	90600-0464		1	INDUCTIVE SWITCH,E2A-M12LS02-WP-B1-TP 5M	
T50B1120	90600-0464		1	INDUCTIVE SWITCH,E2A-M12LS02-WP-B1-TP 5M	
T50K9602	90600-3222		1	PILOTED FUNCTION VALVE G1/8, 7880 06 10	
T50K9604	90600-3222		1	PILOTED FUNCTION VALVE G1/8, 7880 06 10	
T50M9602	90459-5268		1	DOUBLE ACTING, MINI-ISO, CYL. 25-130	
T50M9604	90459-5268		1	DOUBLE ACTING, MINI-ISO, CYL. 25-130	
T50R9612	90235-0846		1	THROTTLE CHECK VALVE G1/8", MANUAL, 6	
T50R9614	90235-0846		1	THROTTLE CHECK VALVE G1/8", MANUAL, 6	
T50W6001	315400-0001	MM	900	6-4E PUN-H-6X1-BL	
T50W6002	315400-0001	MM	900	6-4E PUN-H-6X1-BL	
T50W9613	315400-0001	MM	61	6-4E PUN-H-6X1-BL	
T50W9615	315400-0001	MM	220	6-4E PUN-H-6X1-BL	
T50W9616	315400-0001	MM	600	6-4E PUN-H-6X1-BL	
T50W9617	315400-0001	MM	600	6-4E PUN-H-6X1-BL	
T50W9618	315400-0016	MM	100	TUBE PUN-H-4X0,75-BL	
T50W9619	315400-0016	MM	700	TUBE PUN-H-4X0,75-BL	
T50W9624	315400-0016	MM	2000	TUBE PUN-H-4X0,75-BL	

Machine Type	Group Description	Used-In	Group Number	Page No

This page is intentionally left blank.

ECM: 637023 - 20140101
Group number: 2980903-0100
Assembly Drawing:

Pos	Part No	UN	Qty	Description	Page No
TBA 0500S, TBA 0500SQ, TBA 0500B, TBA 1000B, TBA 1000SQ, TBA 1000S, TBA 1500S, TPA 0500SQ, TBA 2000S, TBA 1000E, TBA 1000M					
040	1144511-0000		6	SHIM	
TGA 0500SQ					
010	2983123-0000		4	SHIM	
020	2983114-0000		4	SHIM	
040	2983142-0000		1	SHIM	
TGA 0750SQ					
010	2983122-0000		4	SHIM	
020	2983113-0000		4	SHIM	
040	2983142-0000		1	SHIM	
TGA 1000CR					
010	3121516-0000		4	SHIM	
020	3121516-0000		4	SHIM	
040	2983142-0000		1	SHIM	
060	3121516-0000		4	SHIM	
TGA 1000LF					
010	3124760-0000		4	SHIM	
020	3124760-0000		4	SHIM	
040	2983142-0000		1	SHIM	
TGA 1000SQ					
010	2983121-0000		4	SHIM	
020	2963294-0000		4	SHIM	
040	2983142-0000		1	SHIM	
TGA 1500SQ					
010	2963272-0000		4	SHIM	
020	2983112-0000		4	SHIM	
040	2983142-0000		1	SHIM	
TPA 1000SQ, TPA 0750SQ					
040	2658249-0000		6	SHIM	
Common Parts					
050	2773832-0000		4	GASKET	

Pos	Part No	UN	Qty	Description	Page No

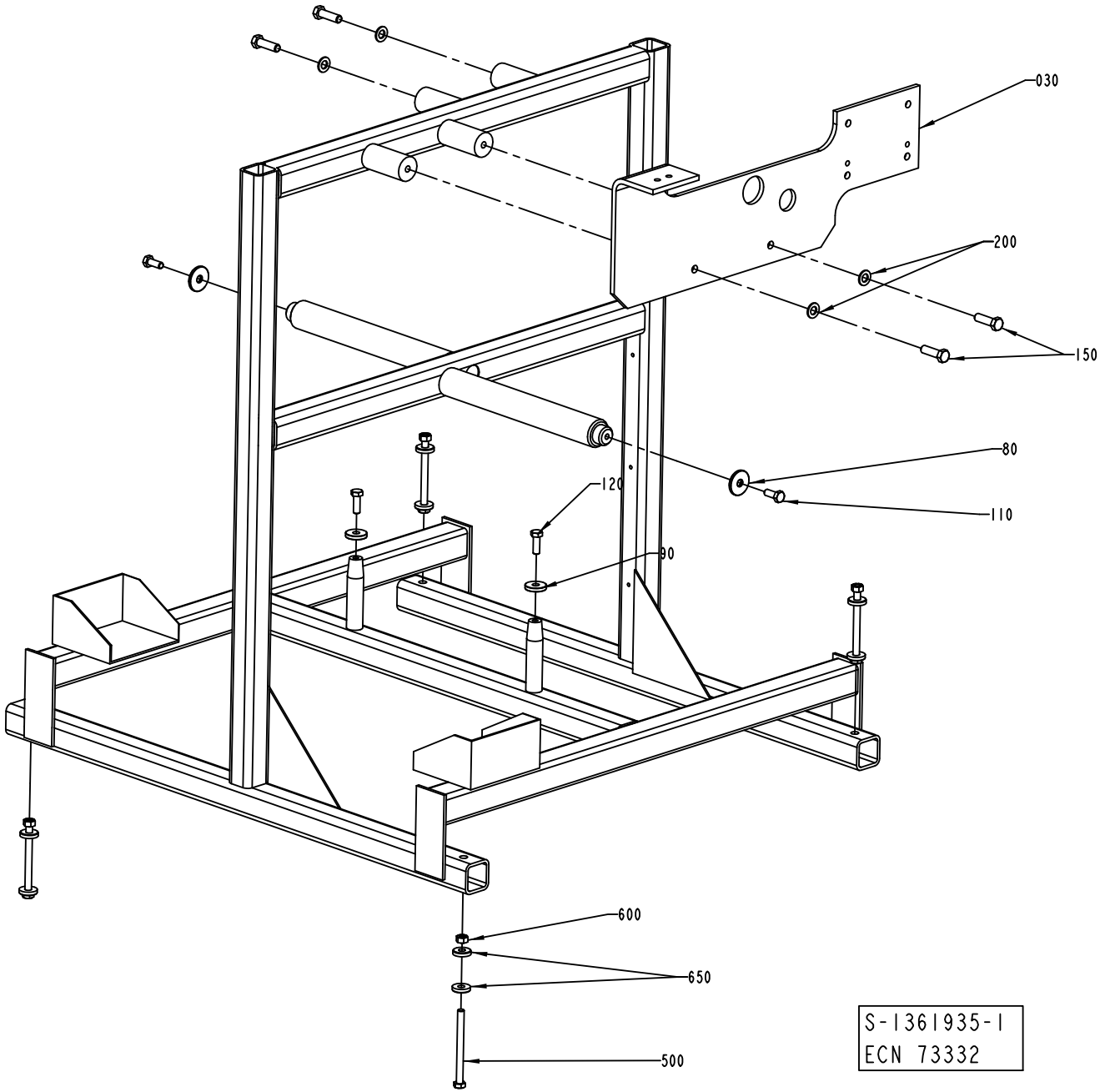
030
200
150
80
120
110
90
600
650
500
S-1361935-1
ECN 73332

ECM: 73332 - 20000411
Group number: 1361935-0100
Assembly Drawing: 1361935-1_1_AB

Pos	Part No	UN	Qty	Description	Page No
-					
020	1361934-0000		1	FRAME	
030	1363780-0000		1	CARRIER	
080	1144620-0000		2	WASHER	
090	1144681-0000		2	WASHER	
110	312105-0493		2	SCREW, M6S ISO 4017 M10X25 A4 80	
120	312105-0495		2	SCREW, M6S ISO 4017 M10X30 A4 80	
150	312105-0540		4	SCREW, M6S ISO 4017 M12X40 A4 80	
200	315105-0178		4	WASHER PLAIN, 13X24X2,5 A4 BRB	
500	312101-0515		4	SCREW M6S M10X120 FZB	
600	312601-0320		4	HEXAGON NUT, DIN 934 M10 8 FZB	
650	315121-0173		8	WASHER PLAIN, TBRSB 10,5/28 H=6	

Pos	Part No	UN	Qty	Description	Page No

LIFTING KIT-WHEEL

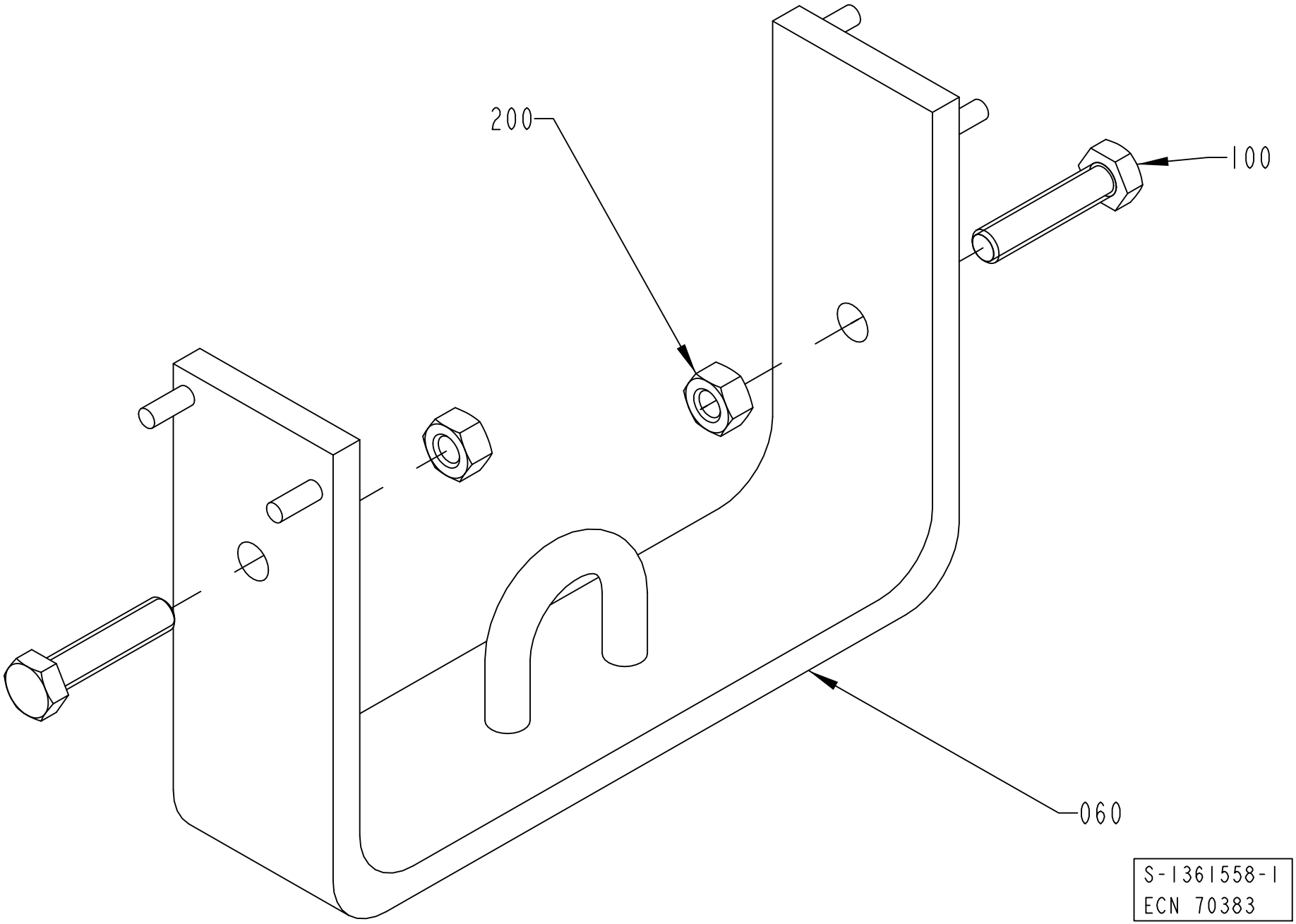

ECM: 73332 - 20000411
Group number: 1361558-0100
Assembly Drawing: 1361558-1_1_AA

Pos	Part No	UN	Qty	Description	Page No
-					
020	1363791-0000		1	BRACKET	
100	312109-0500		2	SCREW, M6S ISO 4017 M10X45 A4 80	
200	312605-0320		2	HEXAGON NUT, M6M M10 A280	

Pos	Part No	UN	Qty	Description	Page No

HOLDING FIXTURE

Drawing file: 599815-1_1_AA.hpgl

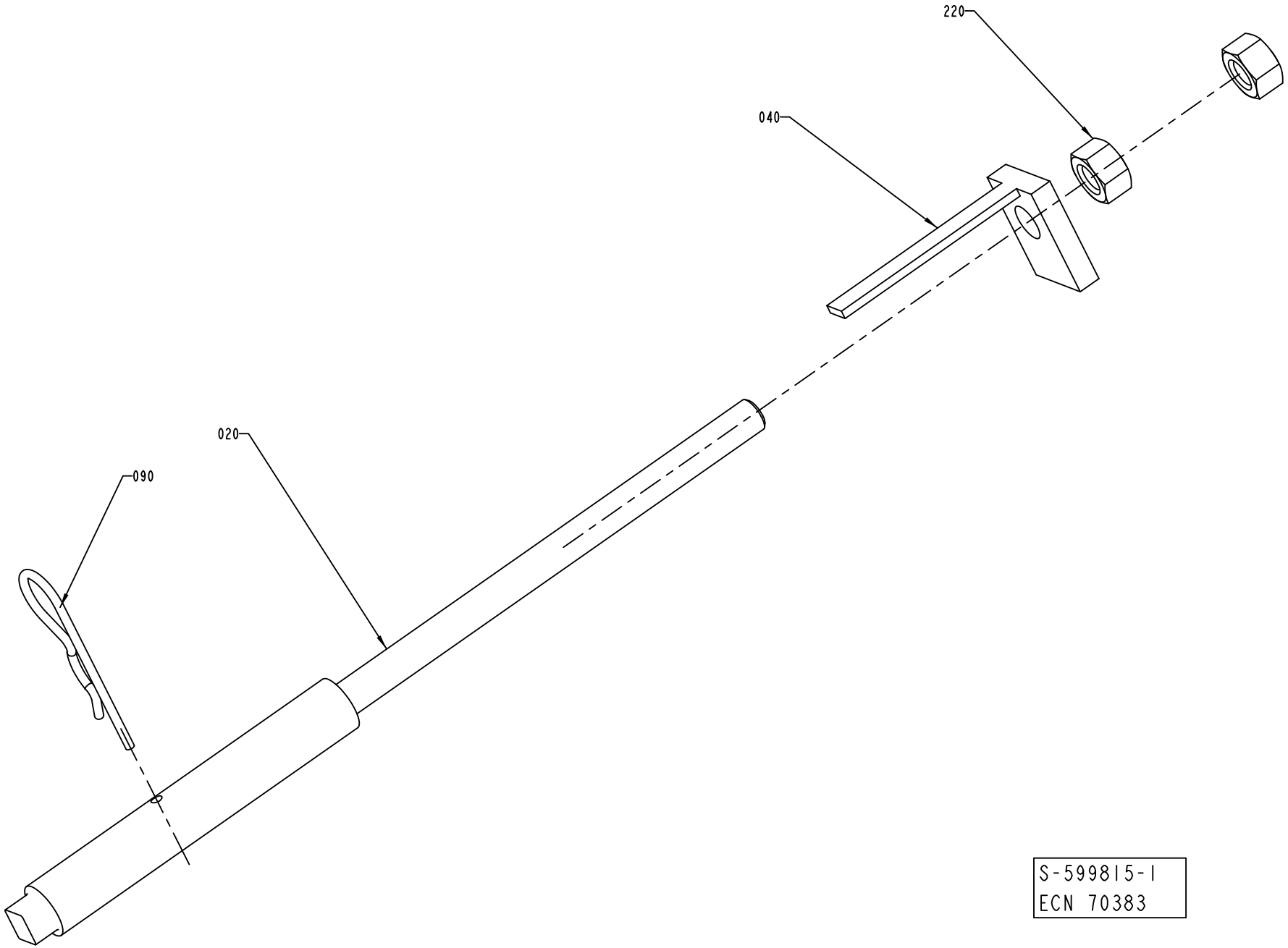

S-599815-I
ECN 70383

ECM: 118983 - 20021217
Group number: 599815-0100
Assembly Drawing: 599815-1_1_AA

Pos	Part No	UN	Qty	Description	Page No
-					
020	598095-0000		2	SCREW	
040	598096-0000		2	WASHER	
090	90258-0060		2	COTTER	
220	312605-0322		4	HEXAGON NUT, M6M M12 A280	

Pos	Part No	UN	Qty	Description	Page No

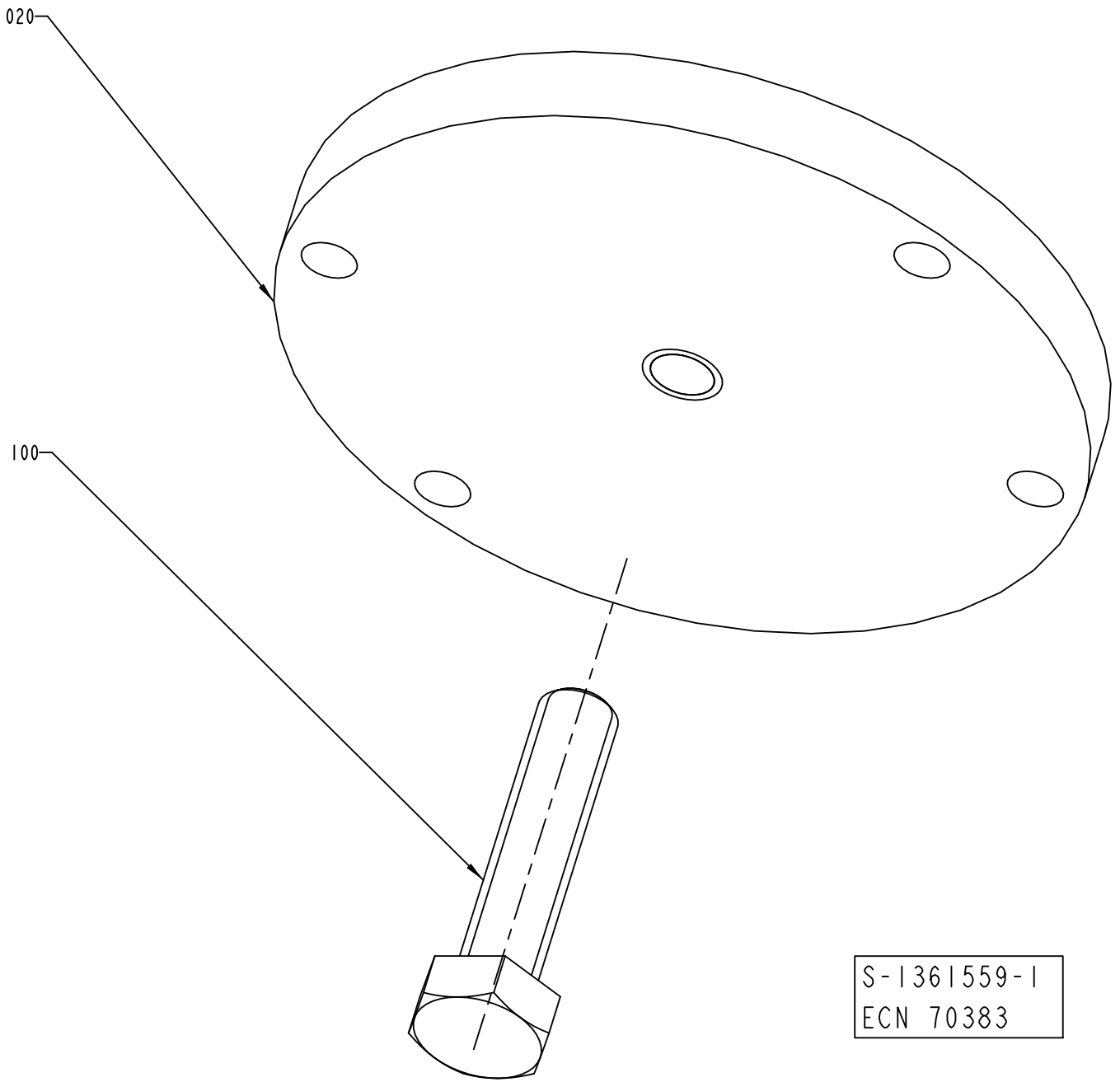
020
100
S-1361559-1
ECN 70383

ECM: 70383 - 19990301
Group number: 1361559-0100
Assembly Drawing: 1361559-1_1_AA

Pos	Part No	UN	Qty	Description	Page No
-					
020	1361547-0000		1	PULLER	
100	312109-0500		1	SCREW, M6S ISO 4017 M10X45 A4 80	

Pos	Part No	UN	Qty	Description	Page No

BOX4 - FINAL FOLDER

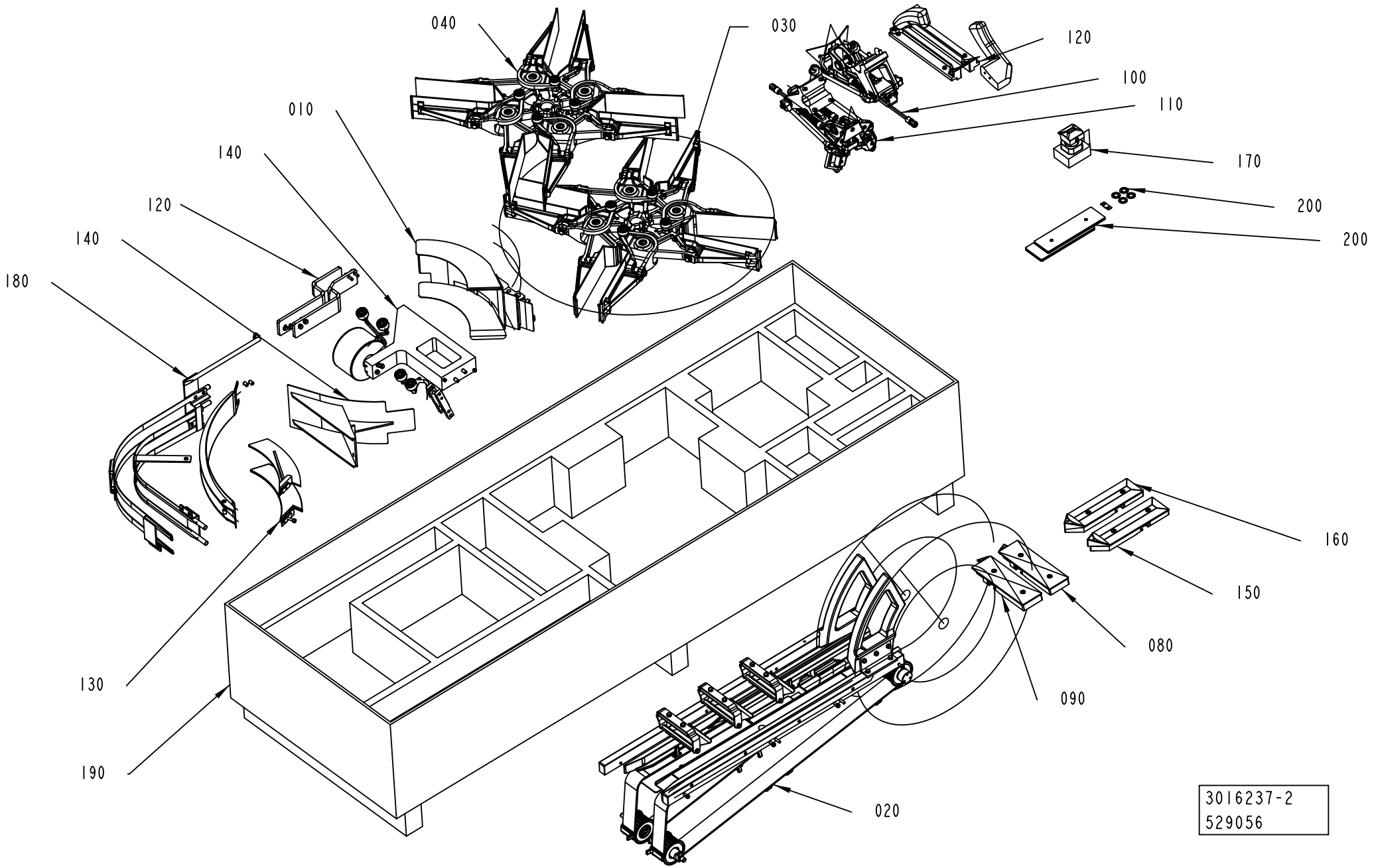

ECM: 535854 - 20120401
Group number: 3016237-0200
Assembly Drawing: 3016237-2_1_AA

Pos	Part No	UN	Qty	Description	Page No
-					
010	2966905-0100		1	CRADLE	**1-189, 1-191**
020	2983150-0200		1	VOLUME CHANGE	**1-257**
030	2746756-0200		1	WHEEL	**1-265**
040	2746765-0200		1	WHEEL	**1-271**
080	2826710-0200		1	FORMING PLATE	**1-279, 1-281**
090	2838217-0200		1	FORMING PLATE	**1-283, 1-285**
100	2963300-0200		1	FOLDING UNIT	**1-287**
110	2963310-0200		1	FOLDING UNIT	**1-289**
120	2963316-0200		1	VOLUME CHANGE	**1-291, 1-293**
130	2902424-0200		1	GUIDE	**1-295, 1-297**
140	2980829-0200		1	FLAP HEATER	**1-299**
150	2826720-0300		1	FORMING PLATE	**1-305, 1-307**
160	2838218-0300		1	FORMING PLATE	**1-309, 1-311**
170	2963317-0100		1	PRESSURE UNIT	**1-313**
180	3192386-0100		1	RAIL	**1-315, 1-317**
190	3050520-0000		1	BOX	
200	2980903-0100		1	START-UP KIT FF	**1-245**

Pos	Part No	UN	Qty	Description	Page No

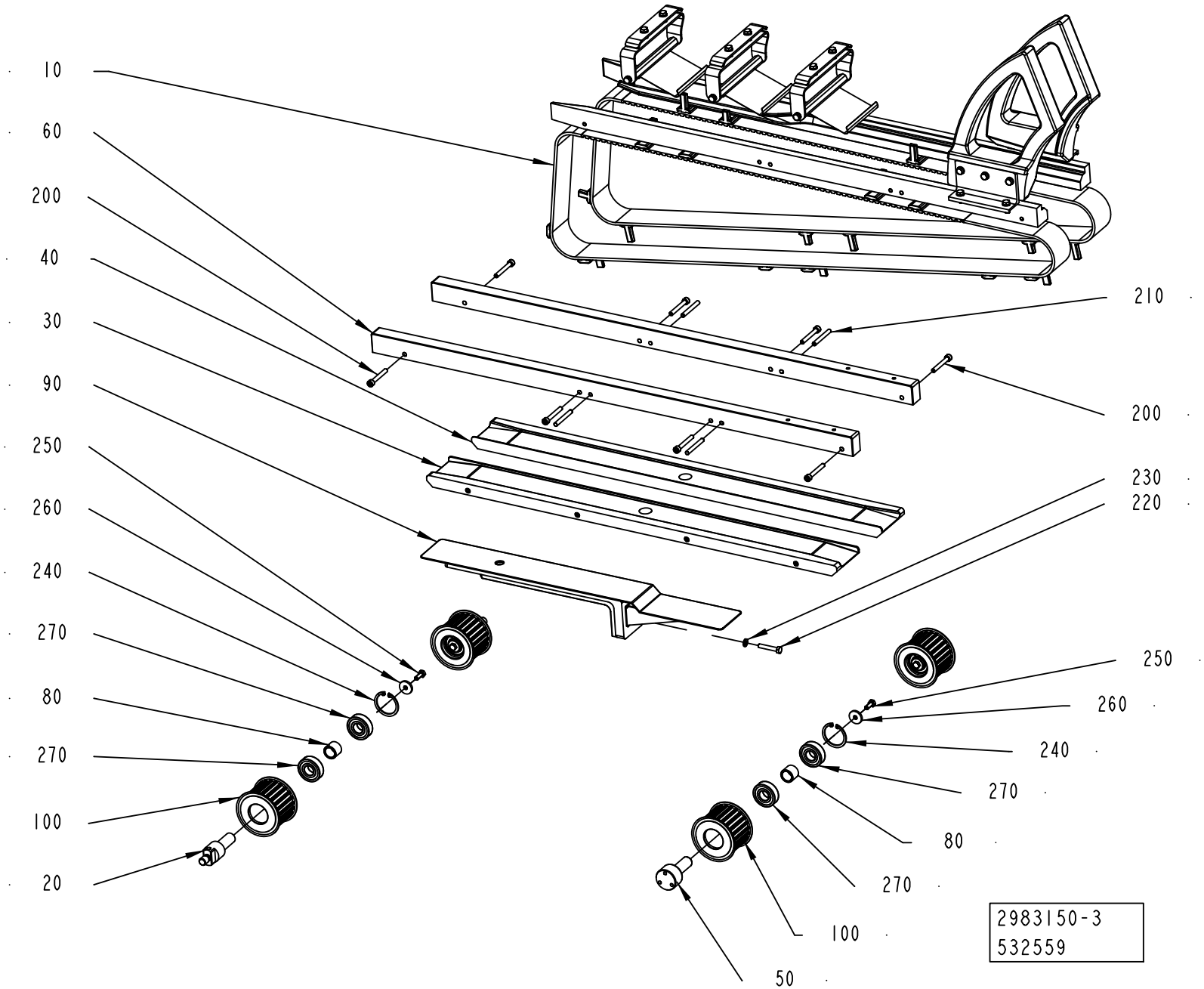
10
60
200
40
30
90
250
260
240
270
80
270
100
20
210
200
230
220
250
260
240
270
80
270
100
50
2983150-3
532559

ECM: 561534 - 20121002
Group number: 2983150-0200
Assembly Drawing: 2983150-3_1_AA

Pos	Part No	UN	Qty	Description	Page No
TGA 1000CR, TGA 1000LF					
020	2941023-0000		2	COLUMN	
030	2991546-0000		1	GUIDE	
040	2991546-0000		1	GUIDE	
050	2941022-0000		2	SHAFT	
060	2926897-0000		2	SPACER	
090	2963269-0000		1	PLATE	
200	312115-0379		8	SCREW ISO4762 M6X45 A4 80	
210	311103-0365		4	PARALLEL PIN ISO 2338 6M6X50 A1	
220	312109-0376		1	SCREW, M6S ISO 4017 M6X35 A4 80	
230	315105-0153		1	WASHER PLAIN, 6,4X12X1,5 A4 BRB	
TGA 1000SQ, TGA 0750SQ, TGA 0500SQ					
020	2941023-0000		2	COLUMN	
030	2991546-0000		1	GUIDE	
040	2991546-0000		1	GUIDE	
050	2941022-0000		2	SHAFT	
060	2926897-0000		2	SPACER	
090	2963269-0000		1	PLATE	
200	312115-0379		8	SCREW ISO4762 M6X45 A4 80	
210	311103-0365		4	PARALLEL PIN ISO 2338 6M6X50 A1	
220	312109-0376		1	SCREW, M6S ISO 4017 M6X35 A4 80	
230	315105-0153		1	WASHER PLAIN, 6,4X12X1,5 A4 BRB	
TGA 1500SQ					
020	2926892-0000		2	COLUMN	
030	2963338-0000		1	GUIDE	
040	2963339-0000		1	GUIDE	
050	2963340-0000		2	SHAFT	
060	2941025-0000		2	SPACER	
090	2963268-0000		1	PLATE	
200	312115-0376		4	SCREW ISO4762 M6X35 A4 80	
210	311103-0361		4	PARALLEL PIN ISO 2338 6M6X40 A1	
220	312115-0372		1	SCREW ISO4762 M6X25 A4 80	
Common Parts					
010	3211686-0100		1	VOLUME CHANGE	**1-259, 1-261**
080	2926896-0000		4	SPACER	
100	2926881-0000		4	TOOTHED PULLEY	
240	315753-0127		4	RETAINING RING FOR BORE DIN 472 40X1.75C	
250	312105-0368		4	"SCREW, M6S ISO 4017 M6X16 A4 80"	
260	315125-0153		4	WASHER HIGH, TBRSB 6,4X22X4 A4	
270	90603-2398		8	BALL BEARING, 17X40X12	

Pos	Part No	UN	Qty	Description	Page No

Machine Type | Group Description | Used-In | Group Number | Page No

VOLUME CHANGE

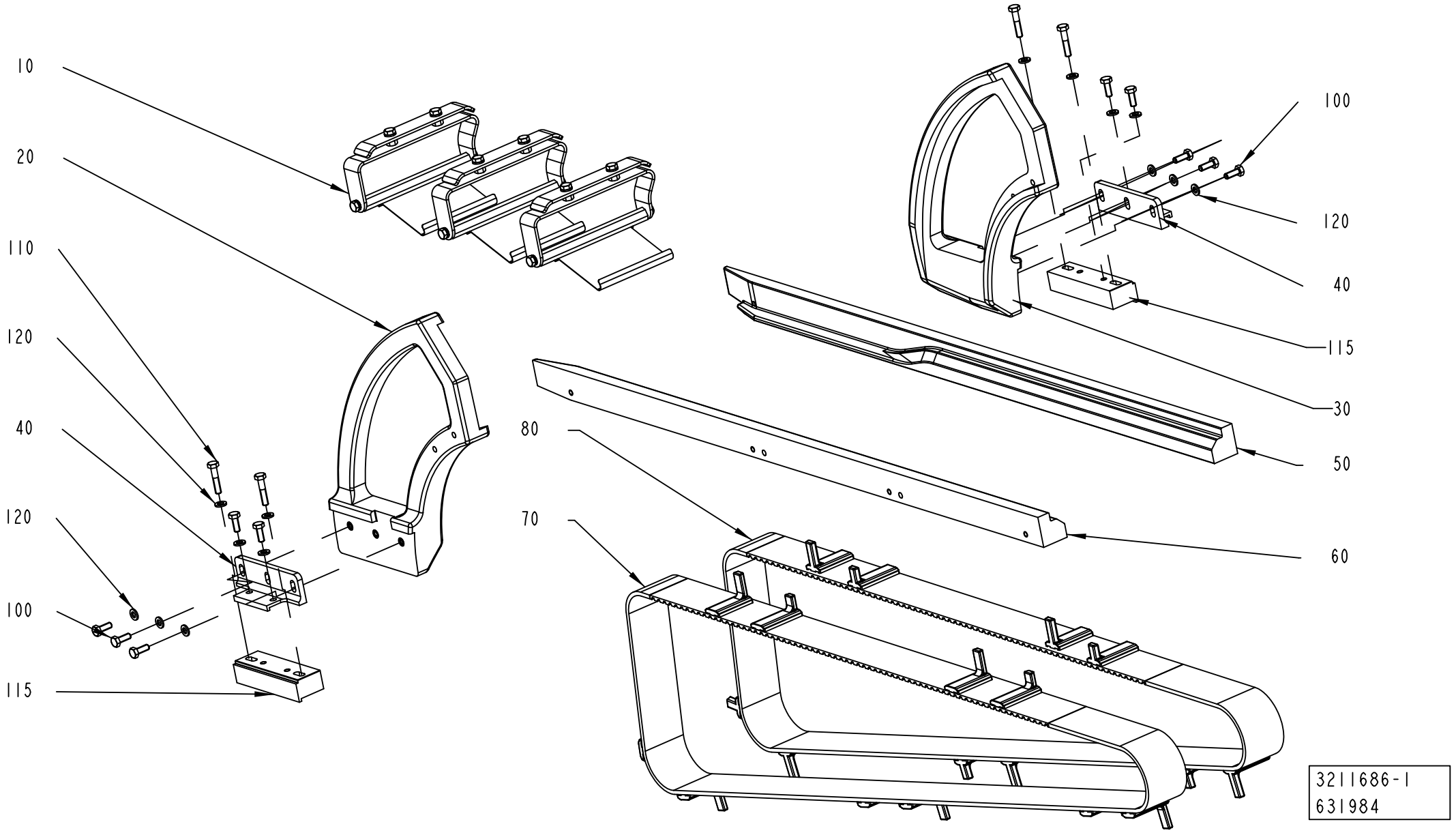

Pos	Part No	UN	Qty	Description	Page No
TGA 1000CR, TGA 1000LF (See drawing on page: 1-258)					
010	3021528-0100		3	SPRING	**1-263**
020	3211679-0000		1	GUIDE	
030	3211682-0000		1	GUIDE	
040	3299622-0000		2	BRACKET	
050	3159856-0000		1	GUIDE	
060	3159857-0000		1	GUIDE	
070	3159859-0000		1	BELT	
080	3159858-0000		1	BELT	
100	312105-0368		10	"SCREW, M6S ISO 4017 M6X16 A4 80"	
110	312105-0374		4	SCREW, M6S ISO 4014 M6X30 A4 80	
115	3299623-0000		2	BRACKET	
120	315105-0153		14	WASHER PLAIN, 6,4X12X1,5 A4 BRB	
TGA 1000SQ, TGA 0750SQ, TGA 0500SQ (See drawing on page: 1-258)					
010	3021528-0100		1	SPRING	**1-263**
050	2963251-0000		1	GUIDE	
060	2963252-0000		1	GUIDE	
070	2940964-0000		1	BELT	
080	2940965-0000		1	BELT	
110	312105-0362		4	SCREW, M6S ISO 4017 M6X8 A4 80	
TGA 1500SQ (See drawing on page: 1-260)					
010	3021528-0100		1	SPRING	**1-263**
020	3130265-0000		1	GUIDE	
030	3130266-0000		1	GUIDE	
040	3130267-0000		2	RAIL	
050	2963251-0000		1	GUIDE	
060	2963252-0000		1	GUIDE	
070	2940964-0000		1	BELT	
080	2940965-0000		1	BELT	
100	312105-0368		4	"SCREW, M6S ISO 4017 M6X16 A4 80"	
110	312105-0380		4	SCREW, M6S ISO 4014 M6X50 A4 80	
120	315105-0153		8	WASHER PLAIN, 6,4X12X1,5 A4 BRB	

Pos	Part No	UN	Qty	Description	Page No

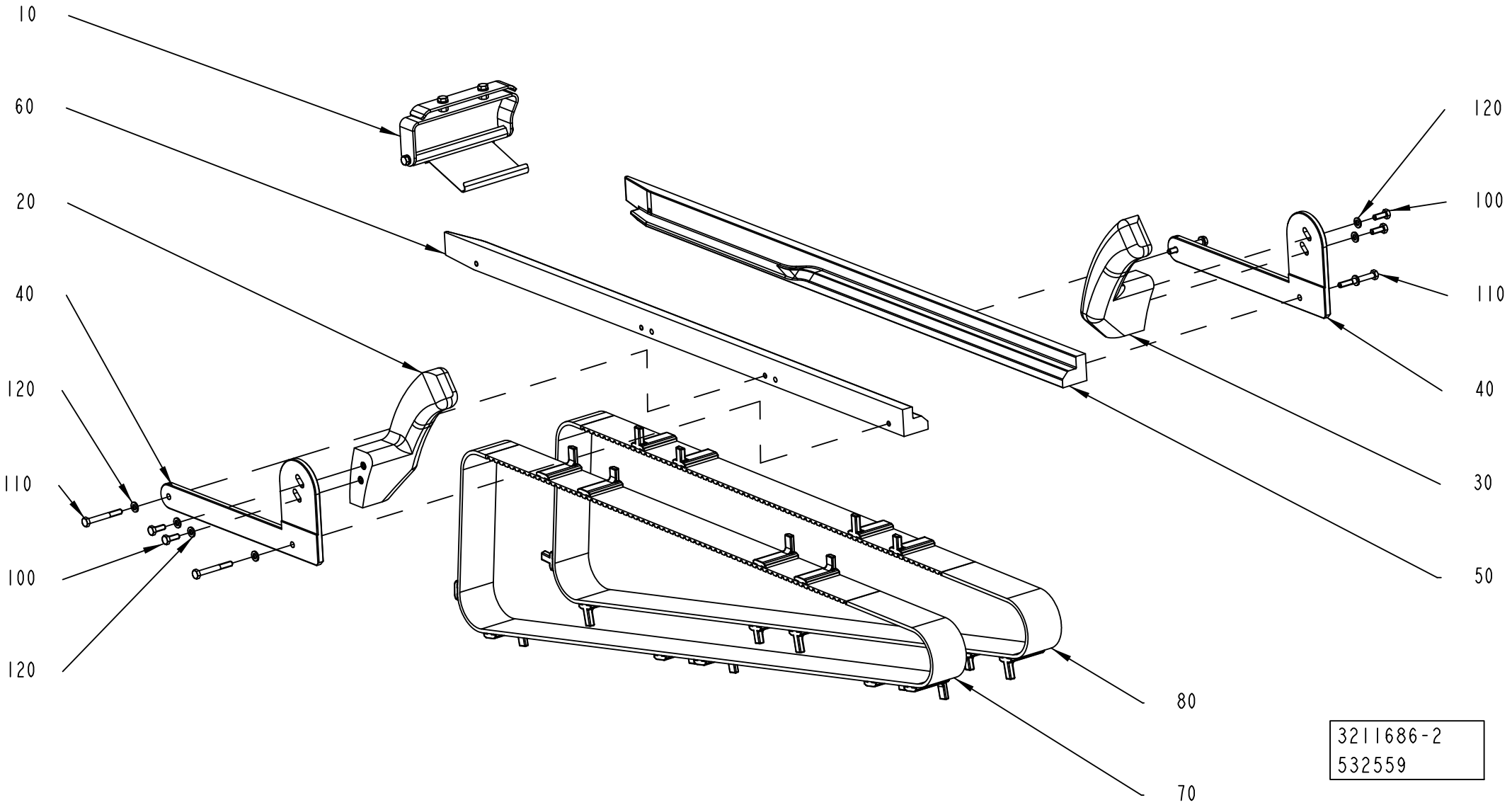
10
60
20
40
120
110
100
120
120
100
110
40
30
50
80
70
3211686-2
532559

ECM: 664027 - 20140701
Group number: 3211686-0100
Assembly Drawing: 3211686-2_1_AA

This list covers pages from 1-258 to 1-261

Pos	Part No	UN	Qty	Description	Page No
TGA 1000CR, TGA 1000LF (See drawing on page: 1-258)					
010	3021528-0100		3	SPRING	**1-263**
020	3211679-0000		1	GUIDE	
030	3211682-0000		1	GUIDE	
040	3299622-0000		2	BRACKET	
050	3159856-0000		1	GUIDE	
060	3159857-0000		1	GUIDE	
070	3159859-0000		1	BELT	
080	3159858-0000		1	BELT	
100	312105-0368		10	"SCREW, M6S ISO 4017 M6X16 A4 80"	
110	312105-0374		4	SCREW, M6S ISO 4014 M6X30 A4 80	
115	3299623-0000		2	BRACKET	
120	315105-0153		14	WASHER PLAIN, 6,4X12X1,5 A4 BRB	
TGA 1000SQ, TGA 0750SQ, TGA 0500SQ (See drawing on page: 1-258)					
010	3021528-0100		1	SPRING	**1-263**
050	2963251-0000		1	GUIDE	
060	2963252-0000		1	GUIDE	
070	2940964-0000		1	BELT	
080	2940965-0000		1	BELT	
110	312105-0362		4	SCREW, M6S ISO 4017 M6X8 A4 80	
TGA 1500SQ (See drawing on page: 1-260)					
010	3021528-0100		1	SPRING	**1-263**
020	3130265-0000		1	GUIDE	
030	3130266-0000		1	GUIDE	
040	3130267-0000		2	RAIL	
050	2963251-0000		1	GUIDE	
060	2963252-0000		1	GUIDE	
070	2940964-0000		1	BELT	
080	2940965-0000		1	BELT	
100	312105-0368		4	"SCREW, M6S ISO 4017 M6X16 A4 80"	
110	312105-0380		4	SCREW, M6S ISO 4014 M6X50 A4 80	
120	315105-0153		8	WASHER PLAIN, 6,4X12X1,5 A4 BRB	

Pos	Part No	UN	Qty	Description	Page No

Machine Type | Group Description | Used-In | Group Number | Page No

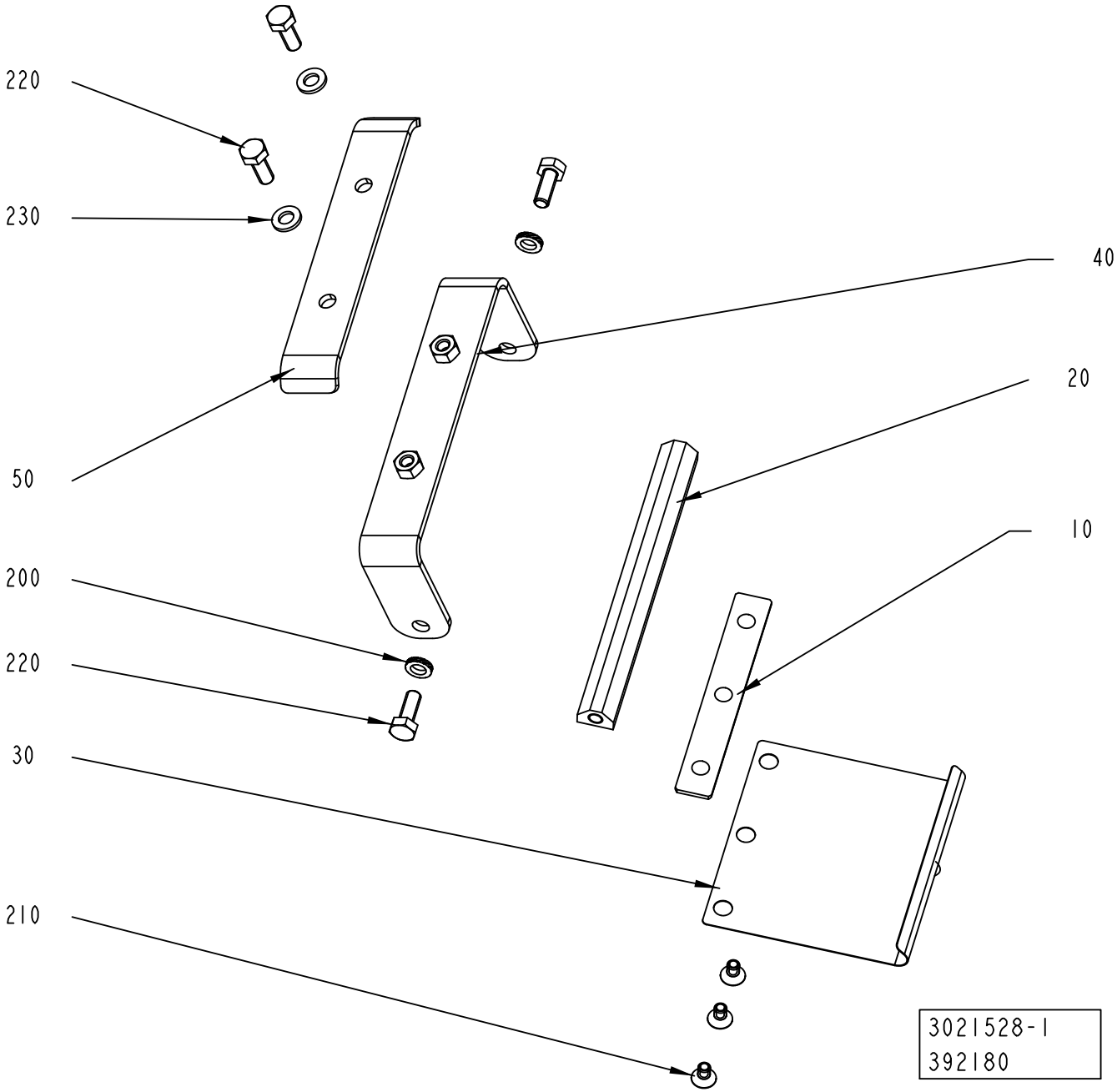
220
230
50
200
220
30
210
40
20
10
3021528-1
392180

ECM: 392208 - 20090624
Group number: 3021528-0100
Assembly Drawing: 3021528-1_1_AA

Pos	Part No	UN	Qty	Description	Page No
-					
010	2540612-0000		1	PLATE	
020	2527793-0000		1	SHAFT	
030	2530418-0000		1	SPRING	
040	3025006-0000		1	SUPPORT	
050	1499476-0000		1	HOLDER	
200	90062-0061		2	LOCK WASHER NORD-LOCK,6,5/10,8, T=2,2	
210	312155-0323		3	SCREW DIN 7991 MF6S M5X8 A4 70	
220	312105-0368		4	"SCREW, M6S ISO 4017 M6X16 A4 80"	
230	315105-0153		2	WASHER PLAIN, 6,4X12X1,5 A4 BRB	

Pos	Part No	UN	Qty	Description	Page No

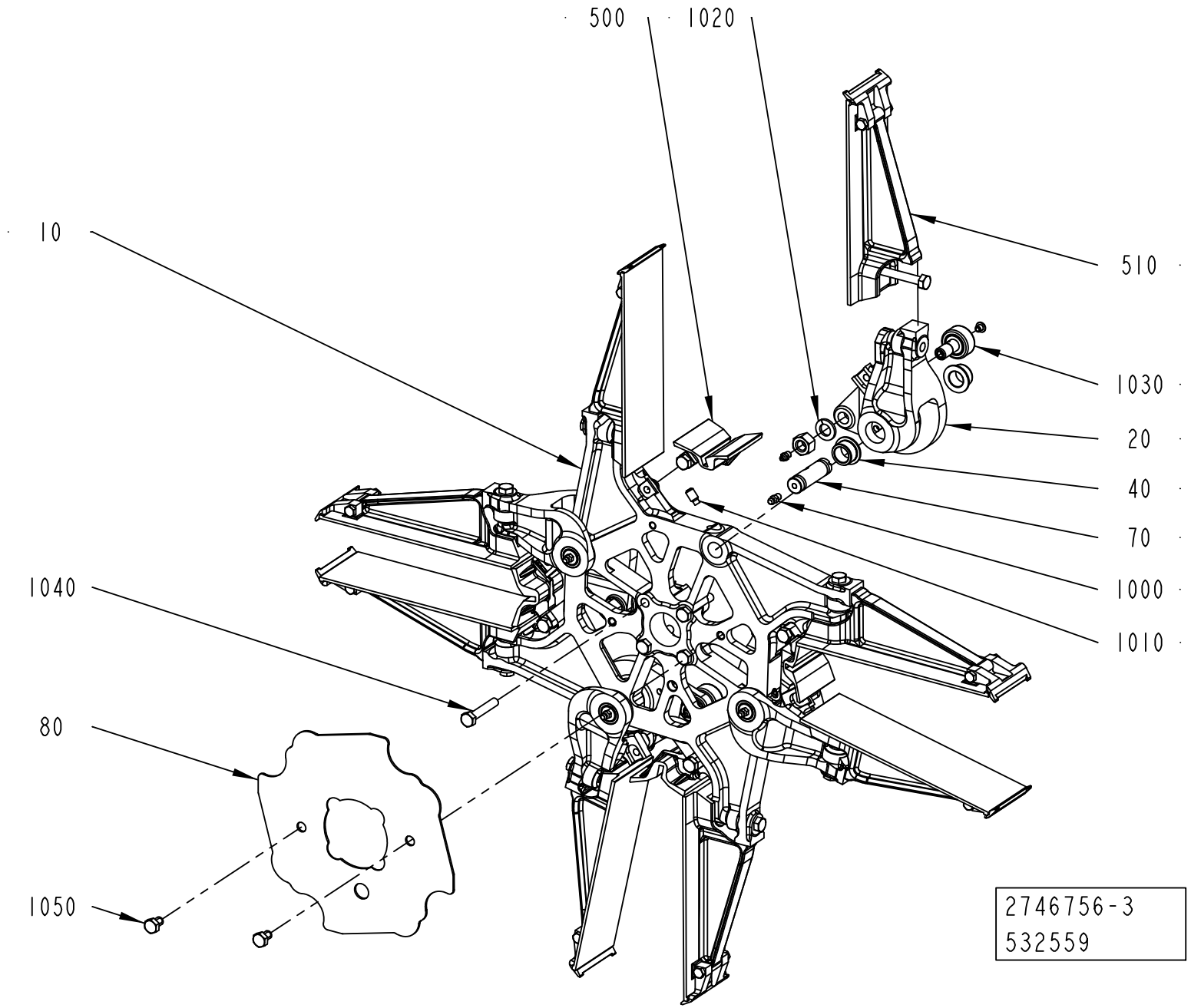
500
1020
10
510
1030
20
40
70
1000
1010
1040
80
1050
2746756-3
532559

ECM: 561513 - 20121002
Group number: 2746756-0200
Assembly Drawing: 2746756-3_1_AD

Pos	Part No	UN	Qty	Description	Page No
TGA 0500SQ					
010	2798294-0000		1	WHEEL	
	2798290-0000		*1*	*WHEEL*	
020	2798295-0000		4	ARM	
	2798291-0000		*1*	*ARM*	
TGA 0750SQ					
010	2798294-0000		1	WHEEL	
	2798290-0000		*1*	*WHEEL*	
020	2798295-0000		4	ARM	
	2798291-0000		*1*	*ARM*	
TGA 1000CR					
010	2798294-0000		1	WHEEL	
	2798290-0000		*1*	*WHEEL*	
020	2798295-0000		4	ARM	
	2798291-0000		*1*	*ARM*	
TGA 1000LF					
010	2798294-0000		1	WHEEL	
	2798290-0000		*1*	*WHEEL*	
020	2798295-0000		4	ARM	
	2798291-0000		*1*	*ARM*	
TGA 1000SQ					
010	2798294-0000		1	WHEEL	
	2798290-0000		*1*	*WHEEL*	
020	2798295-0000		4	ARM	
	2798291-0000		*1*	*ARM*	
TGA 1500SQ					
010	2941026-0000		1	WHEEL	
	2798290-0000		*1*	*WHEEL*	
020	2941027-0000		4	ARM	
	2798291-0000		*1*	*ARM*	
Common Parts					
040	2805193-0000		8	BUSHING	
070	2878100-0000		4	SHAFT	
080	3093546-0000		1	PLATE	
500	2902419-0200		4	BOTTOM	**1-267**
510	2902418-0200		8	FLAP	**1-269**
520	3048557-0000		2	SHIM	
1000	90286-0013		4	GREASE NIPPLE STRAIGHT, H1 M6X1 2346	
1010	344324-0449		4	SET SCREW, DOG POINT ISO4028 M8X16 A2	
1020	315402-0178		4	LOCK WASHER, DIN127B 12,2 A4, M12	
1030	90600-0808		4	CAM ROLLER 12X30X40 MM, CFT 12 M UU N	
1040	312105-0460		4	SCREW, M6S ISO 4014 M8X45 A4 80	
1050	312105-0447		2	SCREW M6S ISO 4017 M8X12 A480	

Machine Type | Group Description | Used-In | Group Number | Page No

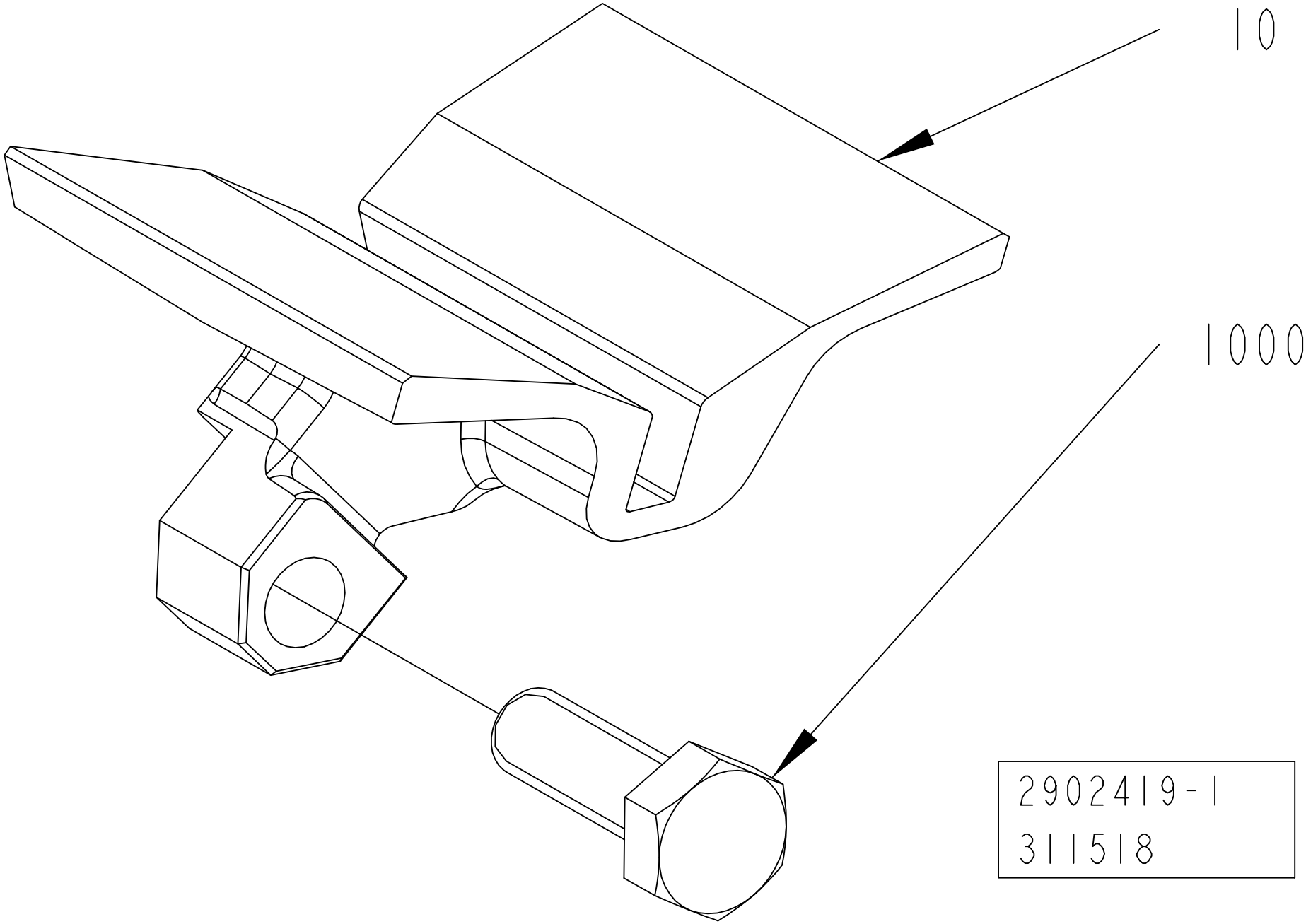
10
1000
2902419-1
311518

ECM: 561523 - 20121002
Group number: 2902419-0200
Assembly Drawing: 2902419-1_1_AA

Pos	Part No	UN	Qty	Description	Page No
TGA 0500SQ					
010	2866701-0000		1	BOTTOM	
TGA 0750SQ					
010	2866700-0000		1	BOTTOM	
TGA 1000CR, TGA 1000LF					
010	3123898-0000		1	BOTTOM	
TGA 1000SQ					
010	2798304-0000		1	BOTTOM	
TGA 1500SQ					
010	2963307-0000		1	BOTTOM	
	2963304-0000		*1*	*BOTTOM*	
Common Parts					
1000	312105-0453		1	SCREW, M6S ISO 4017 M8X25 A4 80	

Pos	Part No	UN	Qty	Description	Page No

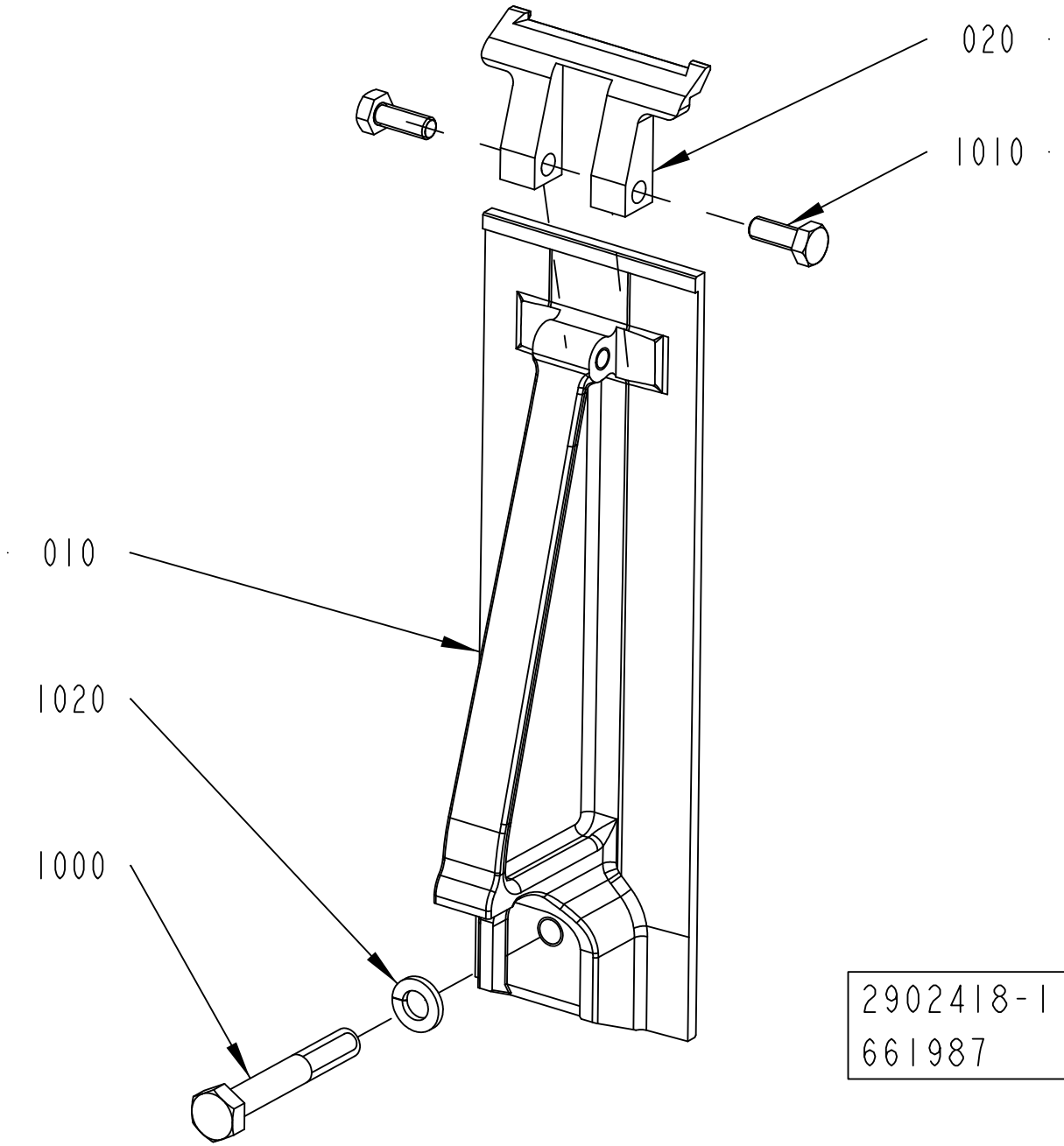

2902418-1
661987

ECM: 664029 - 20140701
Group number: 2902418-0200
Assembly Drawing: 2902418-1_1_AB

Pos	Part No	UN	Qty	Description	Page No
TGA 1000CR					
010	3149943-0000		1	FLAP	
1000	312105-0462		1	SCREW, M6S ISO 4014 M8X55 A4 8002	
1020	315402-0165		1	LOCK WASHER, DIN127B 8,1 A4, M8-5/16	
TGA 1000LF					
010	3234934-0000		1	FLAP	
1000	312105-0462		1	SCREW, M6S ISO 4014 M8X55 A4 8002	
1020	315402-0165		1	LOCK WASHER, DIN127B 8,1 A4, M8-5/16	
TGA 1000SQ, TGA 0750SQ, TGA 0500SQ					
010	2798296-0000		1	FLAP	
	2798292-0000		*1*	*FLAP*	
020	2764324-0000		1	HOLD-DOWN	
1000	312105-0462		1	SCREW, M6S ISO 4014 M8X55 A4 8002	
1010	312105-0368		2	"SCREW, M6S ISO 4017 M6X16 A4 80"	
1020	315402-0165		1	LOCK WASHER, DIN127B 8,1 A4, M8-5/16	
TGA 1500SQ					
010	2941028-0000		1	FLAP	
	2798292-0000		*1*	*FLAP*	
020	2764324-0000		1	HOLD-DOWN	
1000	312109-0461		1	SCREW, M6S ISO 4017 M8X50 A4 80	
1010	312105-0368		2	"SCREW, M6S ISO 4017 M6X16 A4 80"	

Pos	Part No	UN	Qty	Description	Page No

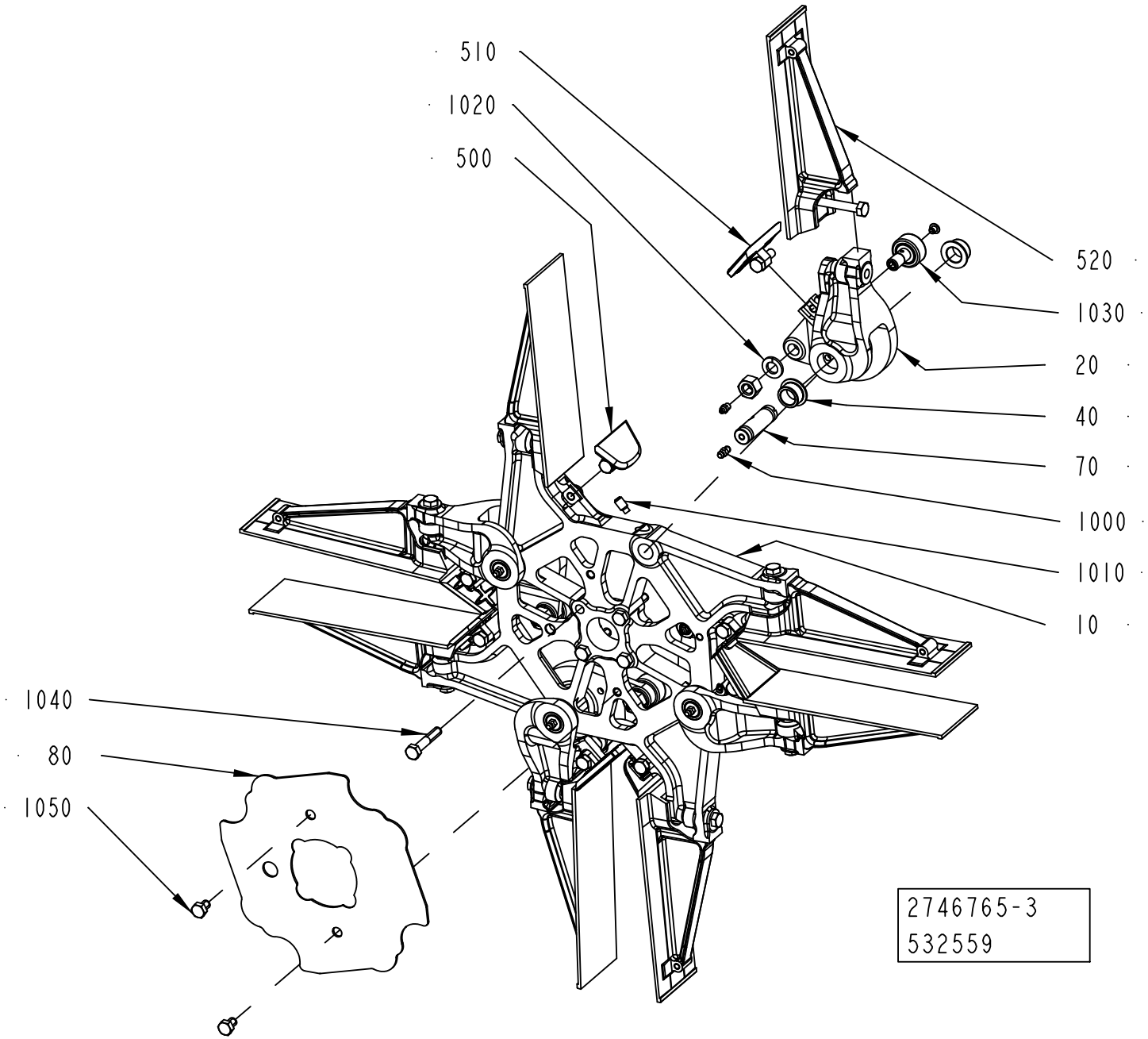
510
1020
500
520
1030
20
40
70
1000
1010
10
1040
80
1050
2746765-3
532559

ECM: 561514 - 20121002
Group number: 2746765-0200
Assembly Drawing: 2746765-3_1_AD

Pos	Part No	UN	Qty	Description	Page No
TGA 0500SQ					
010	2798294-0000		1	WHEEL	
	2798290-0000		*1*	*WHEEL*	
020	2798295-0000		4	ARM	
	2798291-0000		*1*	*ARM*	
TGA 0750SQ					
010	2798294-0000		1	WHEEL	
	2798290-0000		*1*	*WHEEL*	
020	2798295-0000		4	ARM	
	2798291-0000		*1*	*ARM*	
TGA 1000CR					
010	2798294-0000		1	WHEEL	
	2798290-0000		*1*	*WHEEL*	
020	2798295-0000		4	ARM	
	2798291-0000		*1*	*ARM*	
TGA 1000LF					
010	2798294-0000		1	WHEEL	
	2798290-0000		*1*	*WHEEL*	
020	2798295-0000		4	ARM	
	2798291-0000		*1*	*ARM*	
TGA 1000SQ					
010	2798294-0000		1	WHEEL	
	2798290-0000		*1*	*WHEEL*	
020	2798295-0000		4	ARM	
	2798291-0000		*1*	*ARM*	
TGA 1500SQ					
010	2941026-0000		1	WHEEL	
	2798290-0000		*1*	*WHEEL*	
020	2941027-0000		4	ARM	
	2798291-0000		*1*	*ARM*	
Common Parts					
040	2805193-0000		8	BUSHING	
070	2878100-0000		4	SHAFT	
080	3093546-0000		1	PLATE	
500	2902422-0200		4	BOTTOM	**1-273**
510	2902423-0200		4	BOTTOM	**1-275**
520	2902421-0200		8	FLAP	**1-277**
530	3048557-0000		2	SHIM	
1000	90286-0013		4	GREASE NIPPLE STRAIGHT, H1 M6X1 2346	
1010	344324-0449		4	SET SCREW, DOG POINT ISO4028 M8X16 A2	
1020	315402-0178		4	LOCK WASHER, DIN127B 12,2 A4, M12	
1030	90600-0808		4	CAM ROLLER 12X30X40 MM, CFT 12 M UU N	
1040	312105-0460		4	SCREW, M6S ISO 4014 M8X45 A4 80	
1050	312105-0447		2	SCREW M6S ISO 4017 M8X12 A480	

Machine Type | Group Description | Used-In | Group Number | Page No

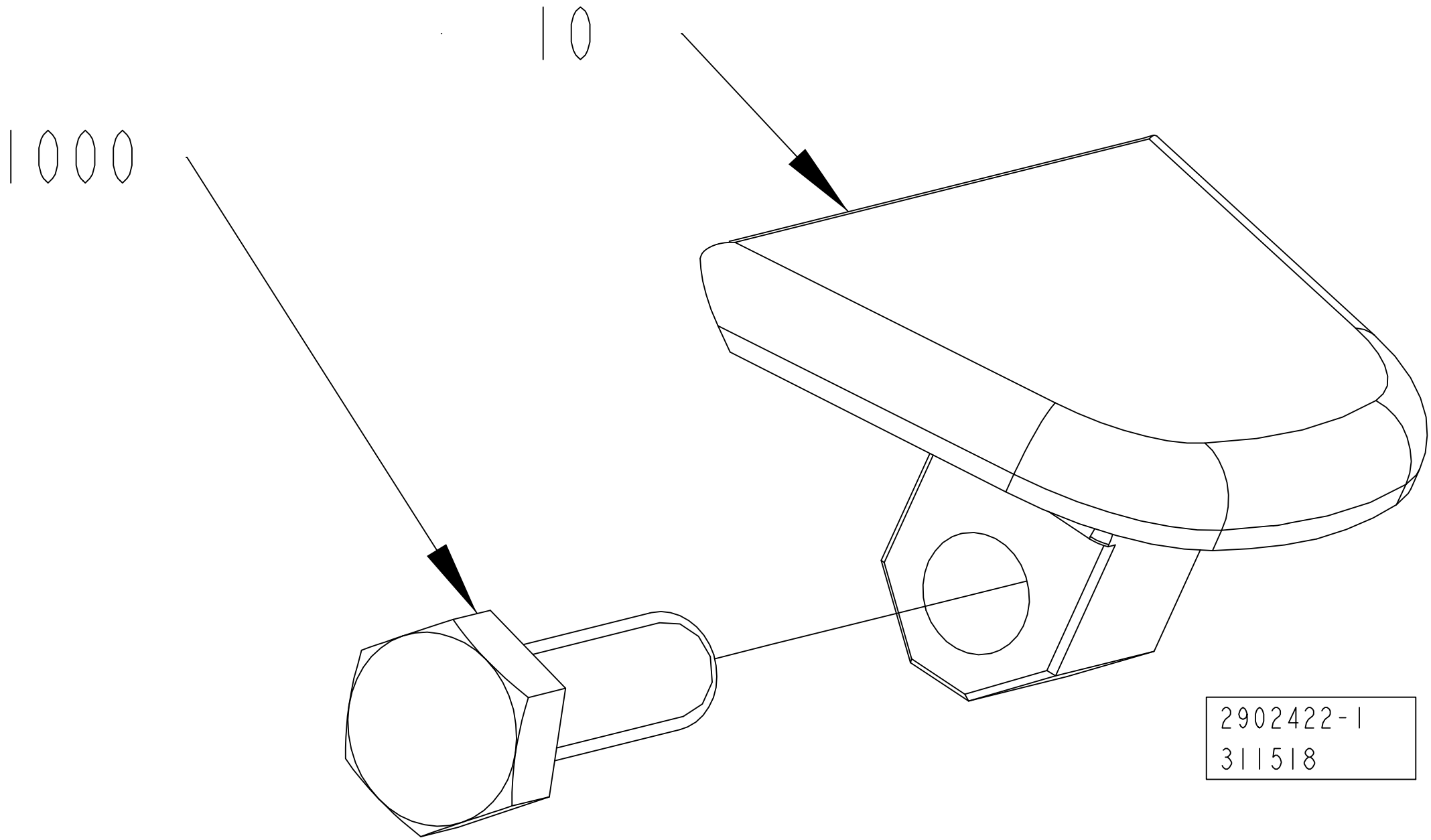
10
1000
2902422-1
311518

ECM: 561525 - 20121002
Group number: 2902422-0200
Assembly Drawing: 2902422-1_1_AA

Pos	Part No	UN	Qty	Description	Page No
TGA 0500SQ					
010	2866704-0000		1	BOTTOM	
TGA 0750SQ					
010	2866703-0000		1	BOTTOM	
TGA 1000CR, TGA 1000LF					
010	3110481-0000		1	BOTTOM	
TGA 1000SQ					
010	2798299-0000		1	BOTTOM	
TGA 1500SQ					
010	2963308-0000		1	BOTTOM	
	2963305-0000		*1*	*BOTTOM*	
Common Parts					
1000	312105-0453		1	SCREW, M6S ISO 4017 M8X25 A4 80	

Pos	Part No	UN	Qty	Description	Page No

BOTTOM

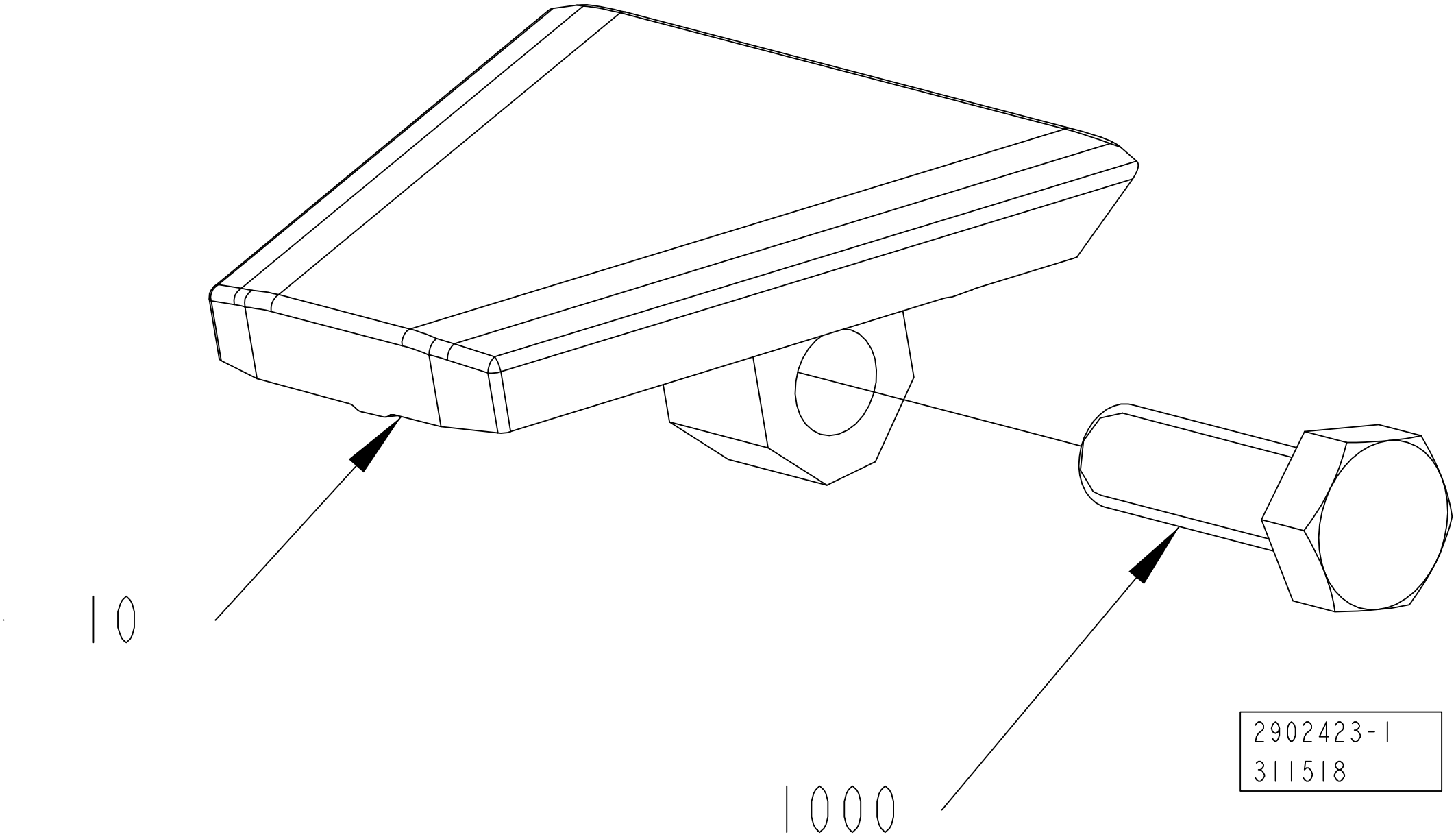

ECM: 561526 - 20121002
Group number: 2902423-0200
Assembly Drawing: 2902423-1_1_AA

Pos	Part No	UN	Qty	Description	Page No
TGA 0500SQ					
010	2866707-0000		1	BOTTOM	
TGA 0750SQ					
010	2866706-0000		1	BOTTOM	
TGA 1000CR, TGA 1000LF					
010	3155712-0000		1	BOTTOM	
TGA 1000SQ					
010	2798298-0000		1	BOTTOM	
TGA 1500SQ					
010	2963309-0000		1	BOTTOM	
	2963306-0000		*1*	*BOTTOM*	
Common Parts					
1000	312105-0453		1	SCREW, M6S ISO 4017 M8X25 A4 80	

Pos	Part No	UN	Qty	Description	Page No

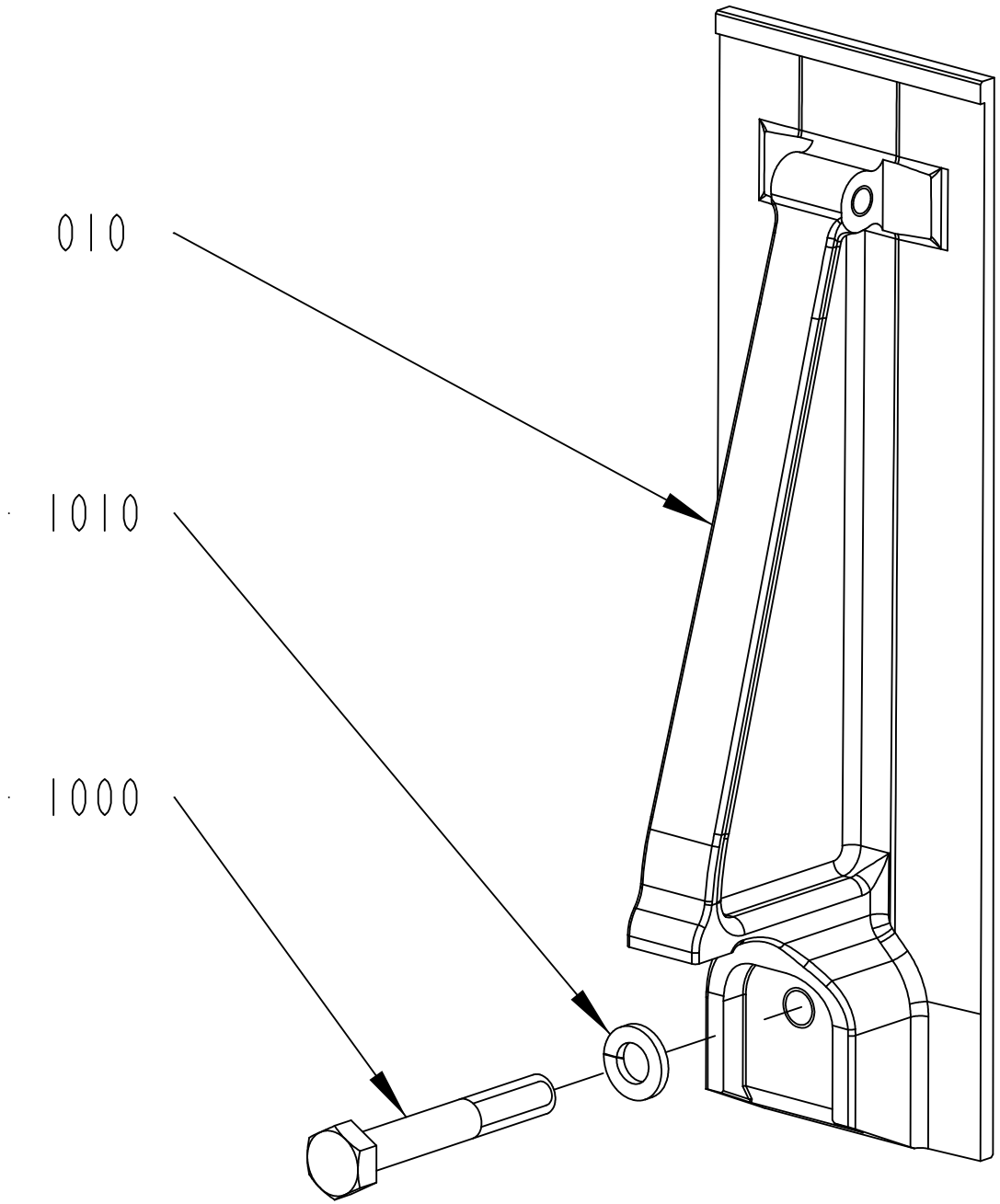

2902421-1
661987

ECM: 664030 - 20140701
Group number: 2902421-0200
Assembly Drawing: 2902421-1_1_AB

Pos	Part No	UN	Qty	Description	Page No
TGA 1000CR					
010	3149942-0000		1	FLAP	
1000	312105-0462		1	SCREW, M6S ISO 4014 M8X55 A4 8002	
1010	315402-0165		1	LOCK WASHER, DIN127B 8,1 A4, M8-5/16	
TGA 1000LF					
010	3234935-0000		1	FLAP	
1000	312105-0462		1	SCREW, M6S ISO 4014 M8X55 A4 8002	
1010	315402-0165		1	LOCK WASHER, DIN127B 8,1 A4, M8-5/16	
TGA 1000SQ, TGA 0750SQ, TGA 0500SQ					
010	2798296-0000		1	FLAP	
	2798292-0000		*1*	*FLAP*	
1000	312105-0462		1	SCREW, M6S ISO 4014 M8X55 A4 8002	
1010	315402-0165		1	LOCK WASHER, DIN127B 8,1 A4, M8-5/16	
TGA 1500SQ					
010	2941028-0000		1	FLAP	
	2798292-0000		*1*	*FLAP*	
1000	312109-0461		1	SCREW, M6S ISO 4017 M8X50 A4 80	

Pos	Part No	UN	Qty	Description	Page No

FORMING PLATE

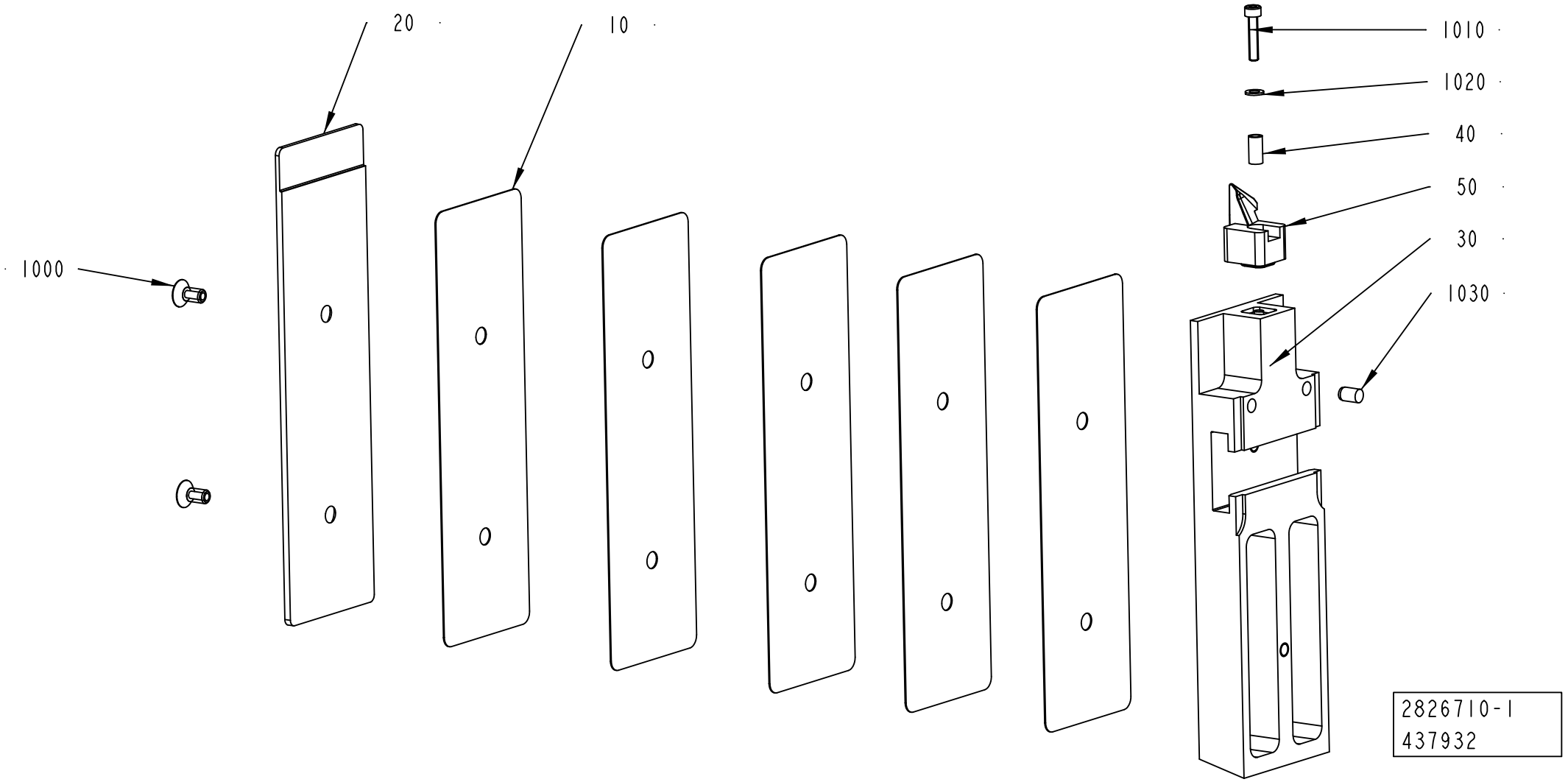

ECM: 638527 - 20140101
Group number: 2826710-0200
Assembly Drawing: 2826710-1_1_AD

This list covers pages from 1-278 to 1-281

Pos	Part No	UN	Qty	Description	Page No
TGA 0500SQ (See drawing on page: 1-278)					
010	2983123-0000		4	SHIM	
020	3055029-0000		1	VOLUME BULGE	
030	2983126-0000		1	PUSHER	
050	2836249-0000		1	TOOL	
1000	312155-0366		2	SCREW DIN 7991 MF6S M6X12 A4 70	
TGA 0750SQ (See drawing on page: 1-278)					
010	2983122-0000		4	SHIM	
020	2983119-0000		1	VOLUME BULGE	
030	2983125-0000		1	PUSHER	
050	2836249-0000		1	TOOL	
1000	312155-0366		2	SCREW DIN 7991 MF6S M6X12 A4 70	
TGA 1000CR (See drawing on page: 1-280)					
010	3121516-0000		4	SHIM	
020	3204305-0000		1	VOLUME BULGE	
030	3202899-0000		1	PUSHER	
050	3146837-0000		1	TOOL	
070	3220065-0000		1	VOLUME BULGE	
1000	312155-0368		2	SCREW DIN 7991 MF6S M6X16 A4 70	
1050	312155-0287		2	SCREW DIN 7991 MF6S M4X8 A4 70	
TGA 1000LF					
010	3124760-0000		4	SHIM	
020	3237844-0000		1	VOLUME BULGE	
030	3239081-0000		1	PUSHER	
050	3146837-0000		1	TOOL	
1000	312155-0368		2	SCREW DIN 7991 MF6S M6X16 A4 70	
TGA 1000SQ (See drawing on page: 1-278)					
010	2983121-0000		5	SHIM	
020	2983118-0000		1	VOLUME BULGE	
030	2983124-0000		1	PUSHER	
050	2836249-0000		1	TOOL	
1000	312155-0366		2	SCREW DIN 7991 MF6S M6X12 A4 70	
TGA 1500SQ (See drawing on page: 1-278)					
010	2963272-0000		3	SHIM	
020	2963273-0000		1	VOLUME BULGE	
030	2963271-0000		1	PUSHER	
050	2946845-0000		1	TOOL	
1000	312155-0366		2	SCREW DIN 7991 MF6S M6X12 A4 70	
Common Parts					
040	2807152-0000		1	SPACER	
1010	312115-0295		1	SCREW ISO4762 M4X20 A4 80	
1020	315105-0136		1	WASHER PLAIN, 4,3X8X0,8 A4 BRB	
1030	311103-0348		1	PARALLEL PIN ISO 2338 6M6X10 A1	

Machine Type | Group Description | Used-In | Group Number | Page No

FORMING PLATE

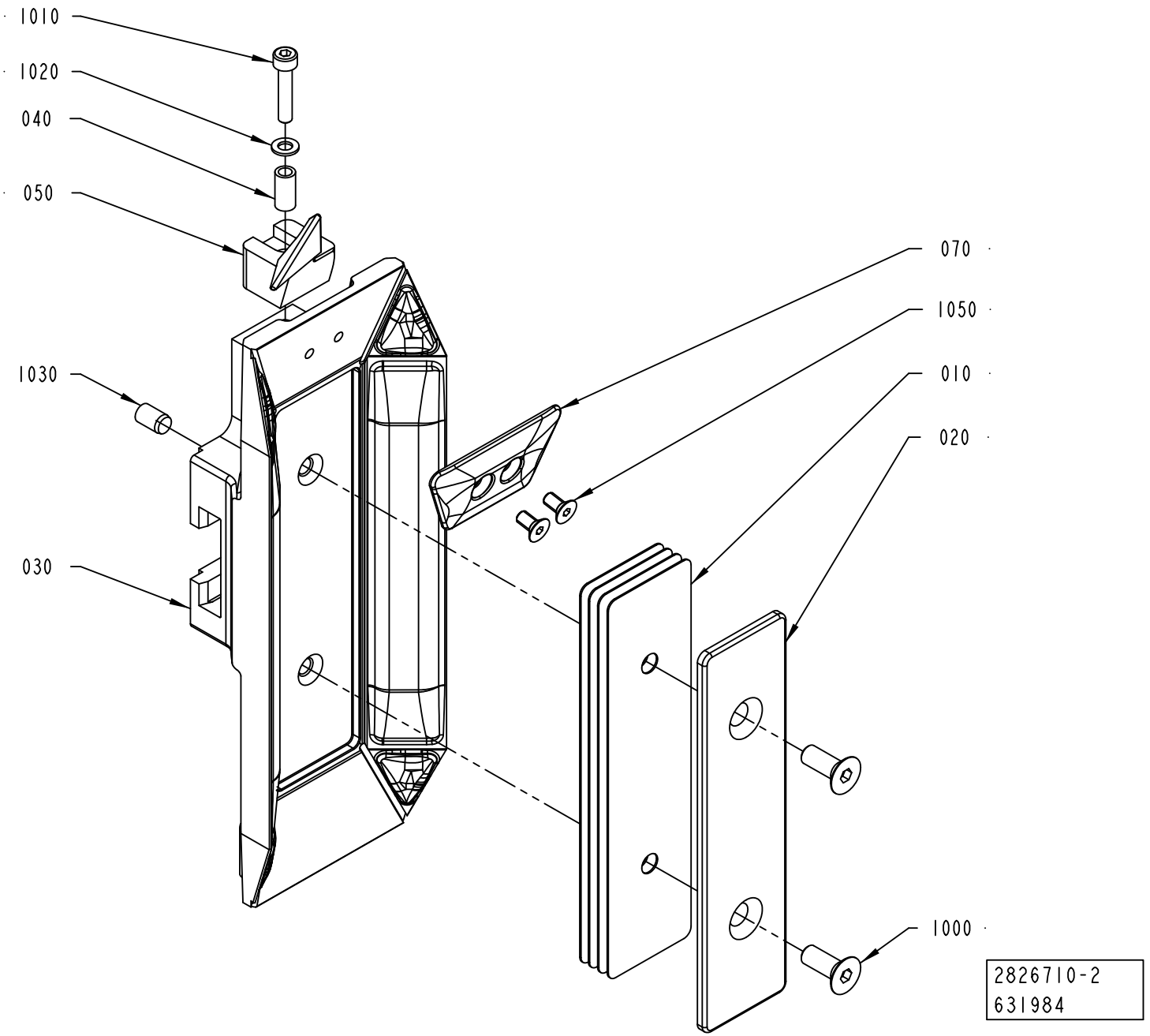

ECM: 638527 - 20140101
Group number: 2826710-0200
Assembly Drawing: 2826710-2_1_AB

This list covers pages from 1-278 to 1-281

Pos	Part No	UN	Qty	Description	Page No
TGA 0500SQ (See drawing on page: 1-278)					
010	2983123-0000		4	SHIM	
020	3055029-0000		1	VOLUME BULGE	
030	2983126-0000		1	PUSHER	
050	2836249-0000		1	TOOL	
1000	312155-0366		2	SCREW DIN 7991 MF6S M6X12 A4 70	
TGA 0750SQ (See drawing on page: 1-278)					
010	2983122-0000		4	SHIM	
020	2983119-0000		1	VOLUME BULGE	
030	2983125-0000		1	PUSHER	
050	2836249-0000		1	TOOL	
1000	312155-0366		2	SCREW DIN 7991 MF6S M6X12 A4 70	
TGA 1000CR (See drawing on page: 1-280)					
010	3121516-0000		4	SHIM	
020	3204305-0000		1	VOLUME BULGE	
030	3202899-0000		1	PUSHER	
050	3146837-0000		1	TOOL	
070	3220065-0000		1	VOLUME BULGE	
1000	312155-0368		2	SCREW DIN 7991 MF6S M6X16 A4 70	
1050	312155-0287		2	SCREW DIN 7991 MF6S M4X8 A4 70	
TGA 1000LF					
010	3124760-0000		4	SHIM	
020	3237844-0000		1	VOLUME BULGE	
030	3239081-0000		1	PUSHER	
050	3146837-0000		1	TOOL	
1000	312155-0368		2	SCREW DIN 7991 MF6S M6X16 A4 70	
TGA 1000SQ (See drawing on page: 1-278)					
010	2983121-0000		5	SHIM	
020	2983118-0000		1	VOLUME BULGE	
030	2983124-0000		1	PUSHER	
050	2836249-0000		1	TOOL	
1000	312155-0366		2	SCREW DIN 7991 MF6S M6X12 A4 70	
TGA 1500SQ (See drawing on page: 1-278)					
010	2963272-0000		3	SHIM	
020	2963273-0000		1	VOLUME BULGE	
030	2963271-0000		1	PUSHER	
050	2946845-0000		1	TOOL	
1000	312155-0366		2	SCREW DIN 7991 MF6S M6X12 A4 70	
Common Parts					
040	2807152-0000		1	SPACER	
1010	312115-0295		1	SCREW ISO4762 M4X20 A4 80	
1020	315105-0136		1	WASHER PLAIN, 4,3X8X0,8 A4 BRB	
1030	311103-0348		1	PARALLEL PIN ISO 2338 6M6X10 A1	

Machine Type | Group Description | Used-In | Group Number | Page No

FORMING PLATE

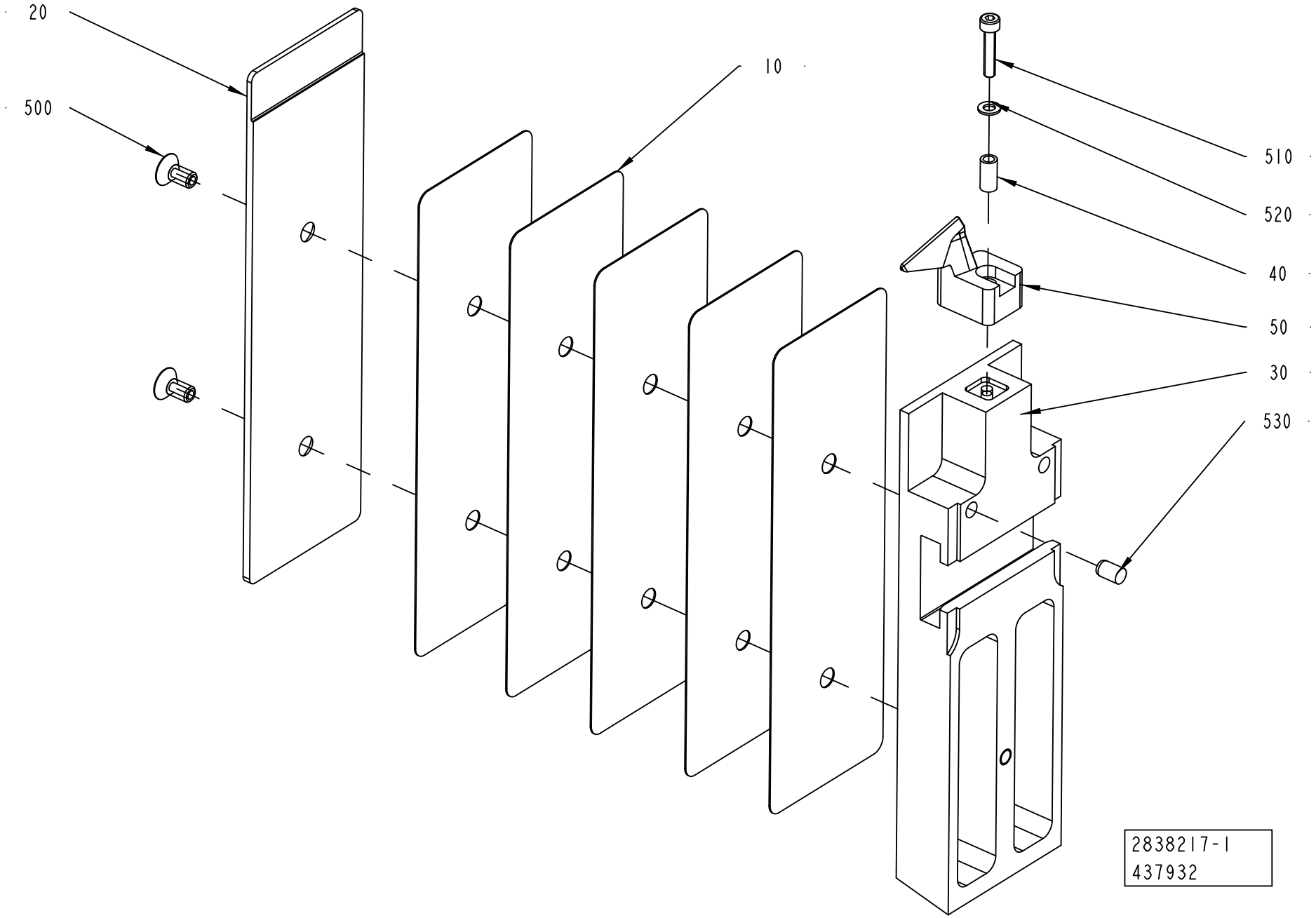

ECM: 638525 - 20140101
Group number: 2838217-0200
Assembly Drawing: 2838217-1_1_AD

This list covers pages from 1-282 to 1-285

Pos	Part No	UN	Qty	Description	Page No
TGA 0500SQ (See drawing on page: 1-282)					
010	2983123-0000		4	SHIM	
020	3055029-0000		1	VOLUME BULGE	
030	2983126-0000		1	PUSHER	
050	2836250-0000		1	TOOL	
500	312155-0366		2	SCREW DIN 7991 MF6S M6X12 A4 70	
TGA 0750SQ (See drawing on page: 1-282)					
010	2983122-0000		4	SHIM	
020	2983119-0000		1	VOLUME BULGE	
030	2983125-0000		1	PUSHER	
050	2836250-0000		1	TOOL	
500	312155-0366		2	SCREW DIN 7991 MF6S M6X12 A4 70	
TGA 1000CR (See drawing on page: 1-284)					
010	3121516-0000		4	SHIM	
020	3204305-0000		1	VOLUME BULGE	
030	3202899-0000		1	PUSHER	
050	3146838-0000		1	TOOL	
070	3220065-0000		1	VOLUME BULGE	
500	312155-0368		2	SCREW DIN 7991 MF6S M6X16 A4 70	
540	312155-0287		2	SCREW DIN 7991 MF6S M4X8 A4 70	
TGA 1000LF (See drawing on page: 1-284)					
010	3124760-0000		4	SHIM	
020	3237844-0000		1	VOLUME BULGE	
030	3239081-0000		1	PUSHER	
050	3146838-0000		1	TOOL	
500	312155-0368		2	SCREW DIN 7991 MF6S M6X16 A4 70	
TGA 1000SQ (See drawing on page: 1-282)					
010	2983121-0000		5	SHIM	
020	2983118-0000		1	VOLUME BULGE	
030	2983124-0000		1	PUSHER	
050	2836250-0000		1	TOOL	
500	312155-0366		2	SCREW DIN 7991 MF6S M6X12 A4 70	
TGA 1500SQ (See drawing on page: 1-282)					
010	2963272-0000		3	SHIM	
020	2963273-0000		1	VOLUME BULGE	
030	2963271-0000		1	PUSHER	
050	2946844-0000		1	TOOL	
500	312155-0366		2	SCREW DIN 7991 MF6S M6X12 A4 70	
Common Parts					
040	2807152-0000		1	SPACER	
510	312115-0295		1	SCREW ISO4762 M4X20 A4 80	
520	315105-0136		1	WASHER PLAIN, 4,3X8X0,8 A4 BRB	
530	311103-0348		1	PARALLEL PIN ISO 2338 6M6X10 A1	

Machine Type | Group Description | Used-In | Group Number | Page No

FORMING PLATE

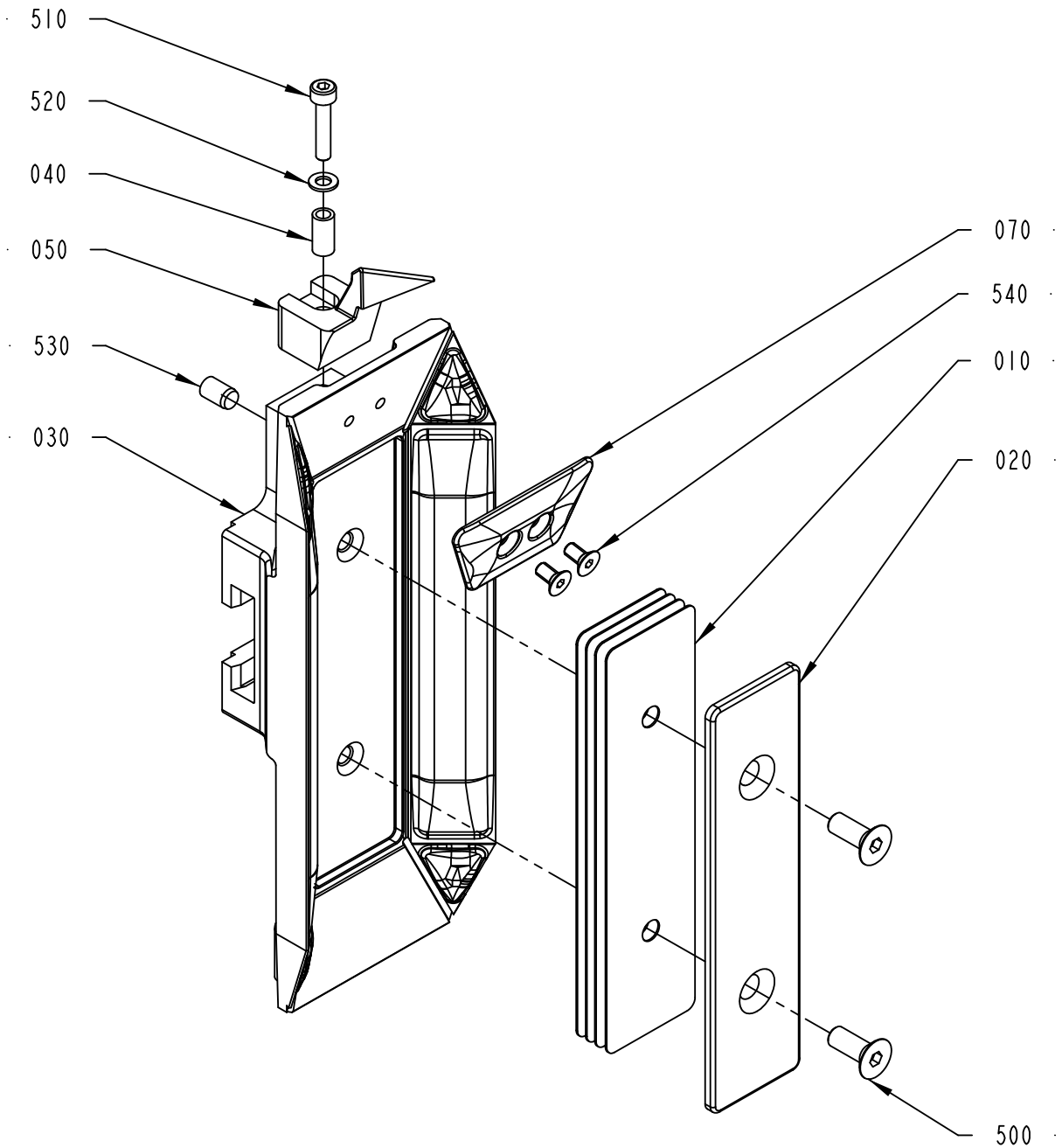

Pos	Part No	UN	Qty	Description	Page No
TGA 0500SQ (See drawing on page: 1-282)					
010	2983123-0000		4	SHIM	
020	3055029-0000		1	VOLUME BULGE	
030	2983126-0000		1	PUSHER	
050	2836250-0000		1	TOOL	
500	312155-0366		2	SCREW DIN 7991 MF6S M6X12 A4 70	
TGA 0750SQ (See drawing on page: 1-282)					
010	2983122-0000		4	SHIM	
020	2983119-0000		1	VOLUME BULGE	
030	2983125-0000		1	PUSHER	
050	2836250-0000		1	TOOL	
500	312155-0366		2	SCREW DIN 7991 MF6S M6X12 A4 70	
TGA 1000CR (See drawing on page: 1-284)					
010	3121516-0000		4	SHIM	
020	3204305-0000		1	VOLUME BULGE	
030	3202899-0000		1	PUSHER	
050	3146838-0000		1	TOOL	
070	3220065-0000		1	VOLUME BULGE	
500	312155-0368		2	SCREW DIN 7991 MF6S M6X16 A4 70	
540	312155-0287		2	SCREW DIN 7991 MF6S M4X8 A4 70	
TGA 1000LF (See drawing on page: 1-284)					
010	3124760-0000		4	SHIM	
020	3237844-0000		1	VOLUME BULGE	
030	3239081-0000		1	PUSHER	
050	3146838-0000		1	TOOL	
500	312155-0368		2	SCREW DIN 7991 MF6S M6X16 A4 70	
TGA 1000SQ (See drawing on page: 1-282)					
010	2983121-0000		5	SHIM	
020	2983118-0000		1	VOLUME BULGE	
030	2983124-0000		1	PUSHER	
050	2836250-0000		1	TOOL	
500	312155-0366		2	SCREW DIN 7991 MF6S M6X12 A4 70	
TGA 1500SQ (See drawing on page: 1-282)					
010	2963272-0000		3	SHIM	
020	2963273-0000		1	VOLUME BULGE	
030	2963271-0000		1	PUSHER	
050	2946844-0000		1	TOOL	
500	312155-0366		2	SCREW DIN 7991 MF6S M6X12 A4 70	
Common Parts					
040	2807152-0000		1	SPACER	
510	312115-0295		1	SCREW ISO4762 M4X20 A4 80	
520	315105-0136		1	WASHER PLAIN, 4,3X8X0,8 A4 BRB	
530	311103-0348		1	PARALLEL PIN ISO 2338 6M6X10 A1	

FOLDING UNIT

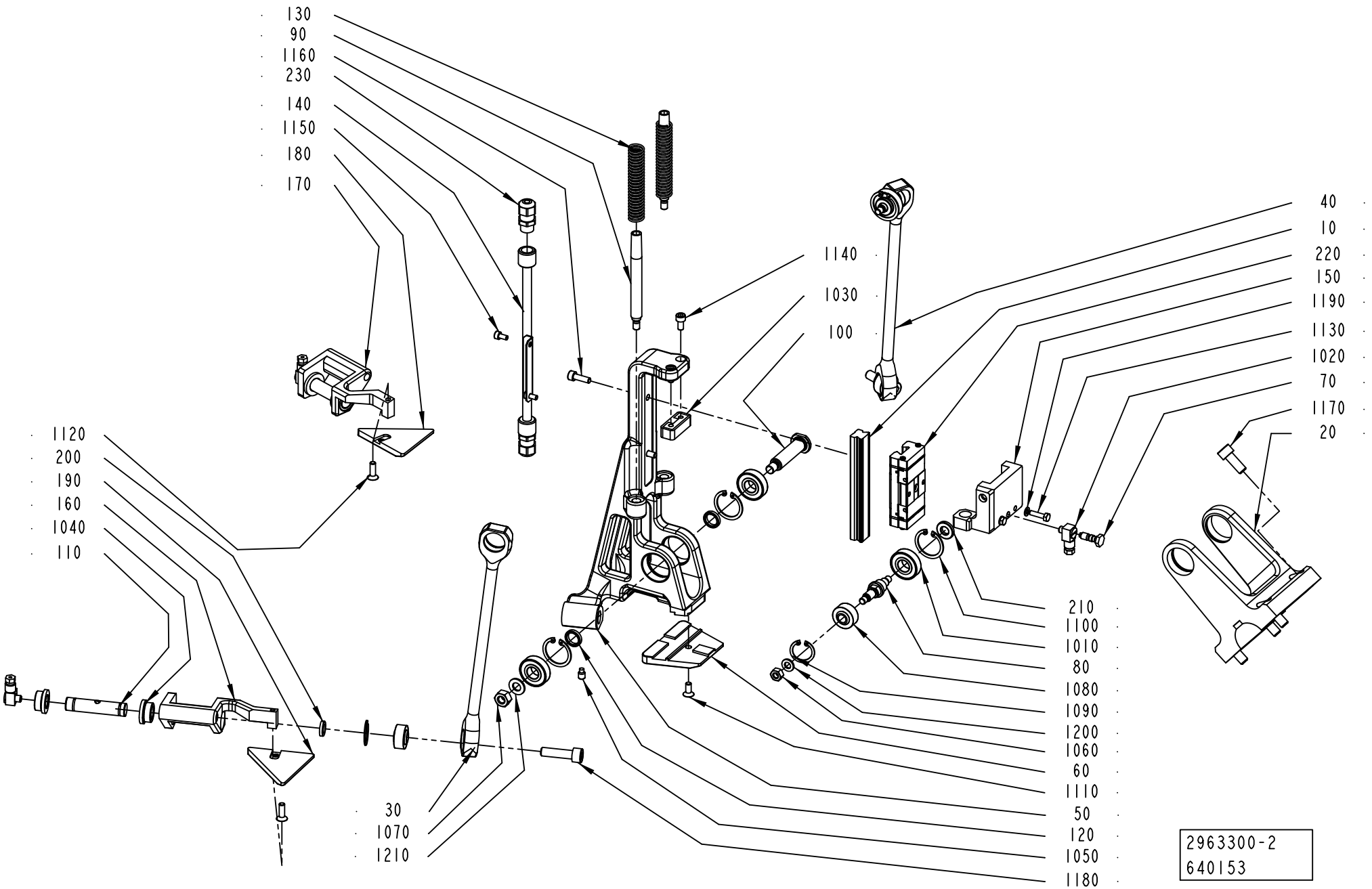

ECM: 650889 - 20140401
Group number: 2963300-0200
Assembly Drawing: 2963300-2_1_AB

Pos	Part No	UN	Qty	Description	Page No
TGA 1000SQ, TGA 0750SQ, TGA 0500SQ, TGA 1000CR, TGA 1000LF					
030	2826717-0000		1	LEVER	
040	2826718-0000		1	LEVER	
050	2991531-0000		1	MAIN BODY	
060	2805170-0000		1	PLATE	
180	2805171-0000		1	VOLUME BULGE	
190	2805172-0000		1	VOLUME BULGE	
1110	312115-0327		1	SCREW ISO4762 M5X12 A4 80	
TGA 1500SQ					
030	2940984-0000		1	LEVER	
040	2940985-0000		1	LEVER	
050	2940977-0000		1	MAIN BODY	
060	2940978-0000		1	PLATE	
180	2940979-0000		1	VOLUME BULGE	
190	2940980-0000		1	VOLUME BULGE	
1110	312155-0327		1	SCREW DIN 7991 MF6S M5X12 A4 70	
Common Parts					
010	2789231-0000		1	GUIDE	
020	2805188-0000		1	LEVER	
070	2926868-0000		1	SCREW	
080	2805164-0000		2	SHAFT	
090	2805169-0000		2	SHAFT	
100	2805210-0000		1	SHAFT	
110	2878104-0000		2	SHAFT	
120	2807149-0000		2	SPACER	
130	2807185-0000		2	SPRING	
140	2963270-0000		1	SUPPORT	
150	2826678-0000		1	SUPPORT	
160	2826713-0000		1	SUPPORT	
170	2826714-0000		1	SUPPORT	
200	541165-0000		2	WASHER	
210	2805167-0000		2	WASHER	
220	90604-8446		1	CARRIAGE, SSR15XV1QZSSHHFMS(B) BLOCK	
230	90458-0305		2	CABLE GLAND, M12X1,5, 5311 1000	
1010	90604-4370		4	BALL BEARING 12/28X8	
1020	90134-0058		3	CONNECTION	
1030	2983134-0000		1	DAMPER	
1040	321101-0172		4	FLANGE BUSHING, 12X18X10 MM	
1050	90287-0154		2	SET SCREW, DOGPOINT M6X10 A4	
1060	312605-0316		2	HEXAGON NUT, M6M M6 A280	
1070	312605-0318		1	HEXAGON NUT, M6M M8 A280	
1080	90600-0847		4	SPHERICAL BEARING, S8-DNIRO BMF C1	
1090	315753-0117		4	RETAINING RING FOR BORE DIN 472 22 SS	
1100	315753-0121		4	RETAINING RING FOR BORE DIN 472 28 SS	
1120	312155-0329		2	SCREW DIN 7991 MF6S M5X16 A4 70	
1130	312105-0293		2	SCREW, M6S ISO 4017 M4X16 A4 70	
1140	312115-0323		2	SCREW ISO4762 M5X8 A4 80	
1150	312115-0287		2	SCREW ISO4762 M4X8 A4 80	
1160	312115-0329		2	SCREW ISO4762 M5X16 A4 80	
1170	312115-0451		4	SCREW ISO4762 M8X20 A4 80	
1180	312115-0455		2	SCREW ISO4762 M8X30 A4 80	
1190	315105-0136		2	WASHER PLAIN, 4,3X8X0,8 A4 BRB	
1200	315105-0153		2	WASHER PLAIN, 6,4X12X1,5 A4 BRB	
1210	315105-0165		1	FWAS080G0-0S, WASHER PLAIN	

Machine Type	Group Description	Used-In	Group Number	Page No

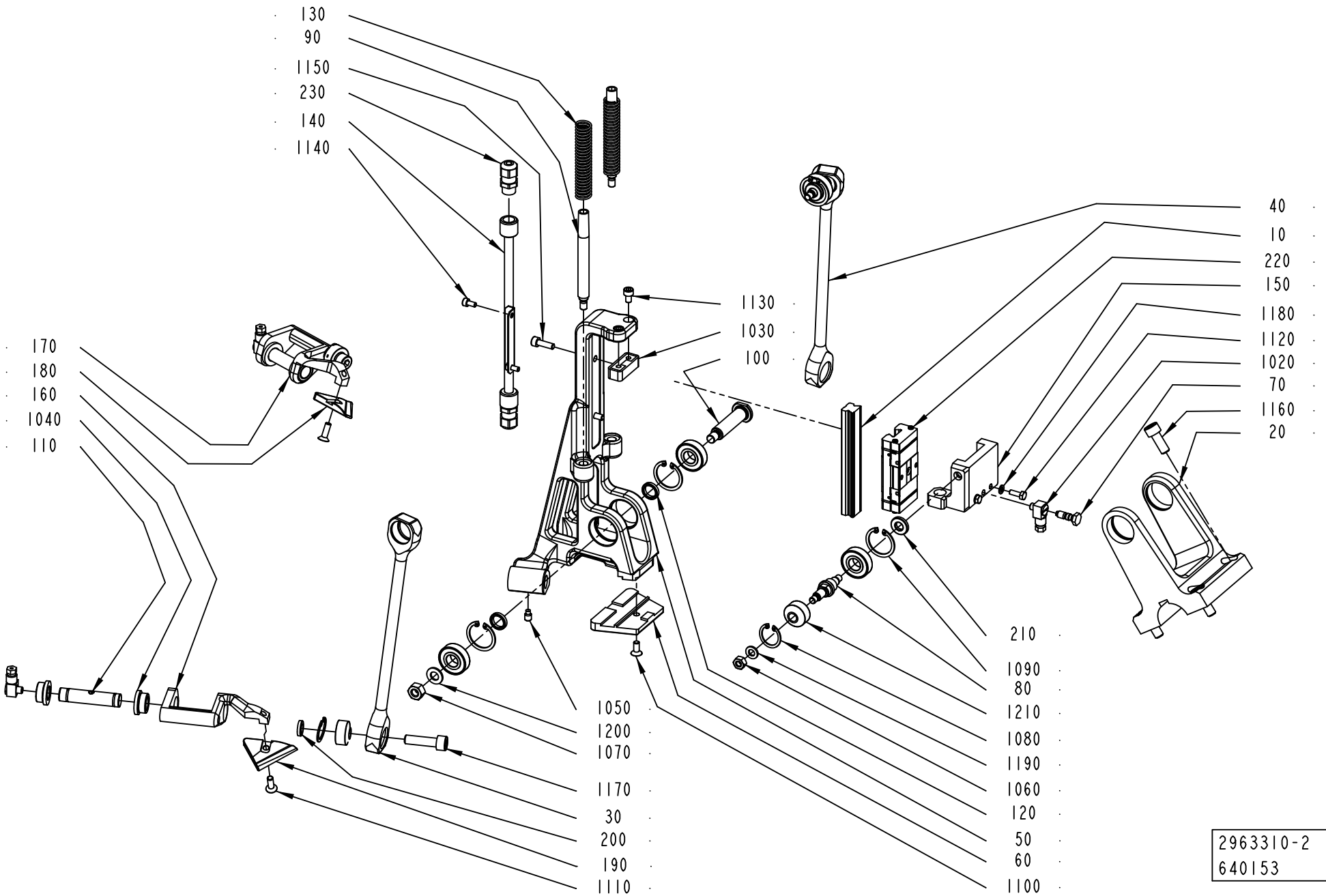
130
90
1150
230
140
1140
170
180
160
1040
110
1130
1030
100
40
10
220
150
1180
1120
1020
70
1160
20
210
1090
80
1210
1080
1190
1060
120
50
60
1100
1050
1200
1070
1170
30
200
190
1110
2963310-2
640153

ECM: 650890 - 20140401
Group number: 2963310-0200
Assembly Drawing: 2963310-2_1_AB

Pos	Part No	UN	Qty	Description	Page No
TGA 1000SQ, TGA 0750SQ, TGA 0500SQ, TGA 1000CR, TGA 1000LF					
030	2826717-0000		1	LEVER	
040	2826718-0000		1	LEVER	
050	2991531-0000		1	MAIN BODY	
060	2836244-0000		1	PLATE	
180	2836247-0000		1	TOOL	
190	2836248-0000		1	TOOL	
1100	312115-0327		1	SCREW ISO4762 M5X12 A4 80	
TGA 1500SQ					
030	2940984-0000		1	LEVER	
040	2940985-0000		1	LEVER	
050	2940977-0000		1	MAIN BODY	
060	2940981-0000		1	PLATE	
180	2940982-0000		1	TOOL	
190	2940983-0000		1	TOOL	
1100	312155-0327		1	SCREW DIN 7991 MF6S M5X12 A4 70	
Common Parts					
010	2789231-0000		1	GUIDE	
020	2805188-0000		1	LEVER	
070	2926868-0000		1	SCREW	
080	2805164-0000		2	SHAFT	
090	2805169-0000		2	SHAFT	
100	2805210-0000		1	SHAFT	
110	2878104-0000		2	SHAFT	
120	2807149-0000		2	SPACER	
130	2807185-0000		2	SPRING	
140	2963270-0000		1	SUPPORT	
150	2826678-0000		1	SUPPORT	
160	2836242-0000		1	SUPPORT	
170	2836243-0000		1	SUPPORT	
200	541165-0000		2	WASHER	
210	2805167-0000		2	WASHER	
220	90604-8446		1	CARRIAGE, SSR15XV1QZSSHHFMS(B) BLOCK	
230	90458-0305		2	CABLE GLAND, M12X1,5, 5311 1000	
1010	90604-4370		4	BALL BEARING 12/28X8	
1020	90134-0058		3	CONNECTION	
1030	2983134-0000		1	DAMPER	
1040	321101-0172		4	FLANGE BUSHING, 12X18X10 MM	
1050	90287-0154		2	SET SCREW, DOGPOINT M6X10 A4	
1060	312605-0316		2	HEXAGON NUT, M6M M6 A280	
1070	312605-0318		1	HEXAGON NUT, M6M M8 A280	
1080	315753-0117		4	RETAINING RING FOR BORE DIN 472 22 SS	
1090	315753-0121		4	RETAINING RING FOR BORE DIN 472 28 SS	
1110	312155-0329		2	SCREW DIN 7991 MF6S M5X16 A4 70	
1120	312105-0293		2	SCREW, M6S ISO 4017 M4X16 A4 70	
1130	312115-0323		2	SCREW ISO4762 M5X8 A4 80	
1140	312115-0287		2	SCREW ISO4762 M4X8 A4 80	
1150	312115-0329		2	SCREW ISO4762 M5X16 A4 80	
1160	312115-0451		4	SCREW ISO4762 M8X20 A4 80	
1170	312115-0455		2	SCREW ISO4762 M8X30 A4 80	
1180	315105-0136		2	WASHER PLAIN, 4,3X8X0,8 A4 BRB	
1190	315105-0153		2	WASHER PLAIN, 6,4X12X1,5 A4 BRB	
1200	315105-0165		1	FWAS080G0-0S, WASHER PLAIN	
1210	90600-0847		4	SPHERICAL BEARING, S8-DNIRO BMF C1	

Machine Type | Group Description | Used-In | Group Number | Page No

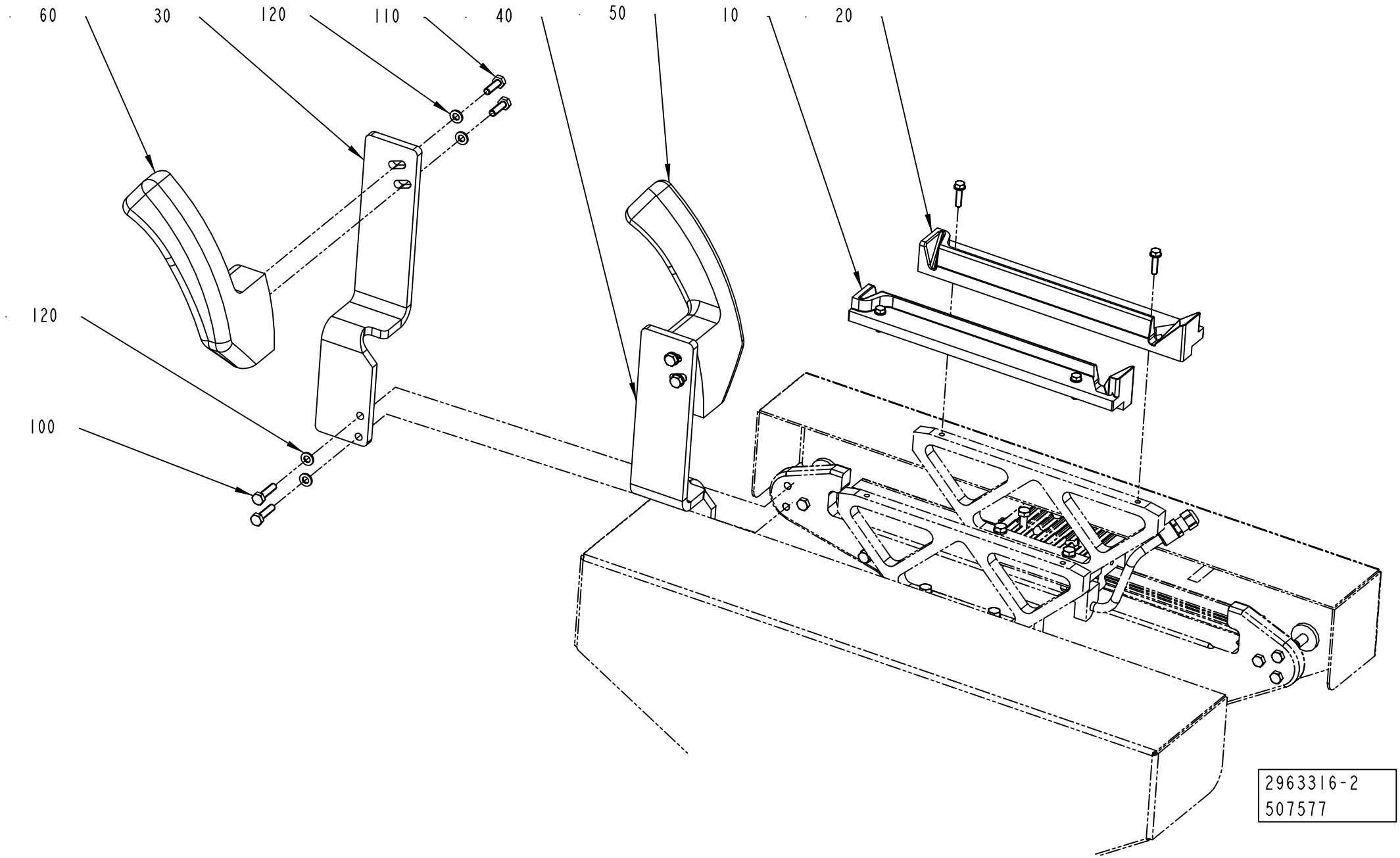
60
30
120
110
40
50
10
20
120
100
2963316-2
507577

ECM: 654374 - 20140102
Group number: 2963316-0200
Assembly Drawing: 2963316-2_1_AA

This list covers pages from 1-290 to 1-293

Pos	Part No	UN	Qty	Description	Page No
TGA 1000CR, TGA 1000LF (See drawing on page: 1-292)					
010	3115223-0000		1	CRADLE	
020	3115395-0000		1	CRADLE	
030	3299621-0000		1	GUIDE	
040	3228266-0000		1	SUPPORT	
050	3228268-0000		1	GUIDE	
060	3228269-0000		1	GUIDE	
070	3301268-0000		1	BRACKET	
100	312105-0372		4	SCREW, M6S ISO 4017 M6X25 A4 80	
110	312105-0370		5	SCREW, M6S ISO 4017 M6X20 A4 80	
120	315105-0153		9	WASHER PLAIN, 6,4X12X1,5 A4 BRB	
TGA 1000SQ, TGA 0750SQ, TGA 0500SQ (See drawing on page: 1-290)					
010	2761950-0000		1	CRADLE	
020	2761951-0000		1	CRADLE	
TGA 1500SQ (See drawing on page: 1-290)					
010	2941010-0000		1	CRADLE	
020	2941011-0000		1	CRADLE	
030	3130845-0000		1	SUPPORT	
040	3130846-0000		1	SUPPORT	
050	3130266-0000		1	GUIDE	
060	3130265-0000		1	GUIDE	
100	312105-0372		4	SCREW, M6S ISO 4017 M6X25 A4 80	
110	312105-0370		4	SCREW, M6S ISO 4017 M6X20 A4 80	
120	315105-0153		8	WASHER PLAIN, 6,4X12X1,5 A4 BRB	

Pos	Part No	UN	Qty	Description	Page No

VOLUME CHANGE

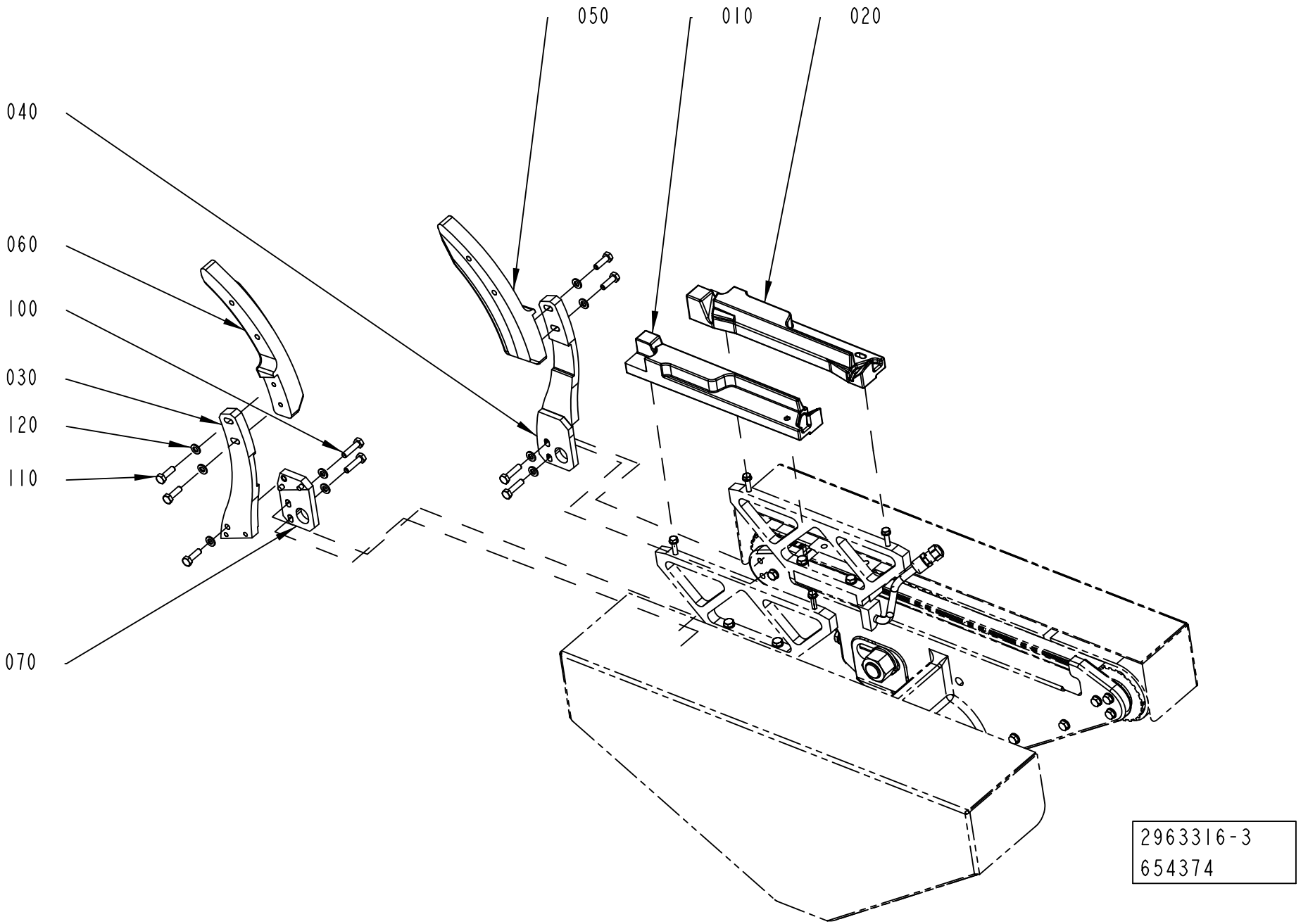

Pos	Part No	UN	Qty	Description	Page No
TGA 1000CR, TGA 1000LF (See drawing on page: 1-292)					
010	3115223-0000		1	CRADLE	
020	3115395-0000		1	CRADLE	
030	3299621-0000		1	GUIDE	
040	3228266-0000		1	SUPPORT	
050	3228268-0000		1	GUIDE	
060	3228269-0000		1	GUIDE	
070	3301268-0000		1	BRACKET	
100	312105-0372		4	SCREW, M6S ISO 4017 M6X25 A4 80	
110	312105-0370		5	SCREW, M6S ISO 4017 M6X20 A4 80	
120	315105-0153		9	WASHER PLAIN, 6,4X12X1,5 A4 BRB	
TGA 1000SQ, TGA 0750SQ, TGA 0500SQ (See drawing on page: 1-290)					
010	2761950-0000		1	CRADLE	
020	2761951-0000		1	CRADLE	
TGA 1500SQ (See drawing on page: 1-290)					
010	2941010-0000		1	CRADLE	
020	2941011-0000		1	CRADLE	
030	3130845-0000		1	SUPPORT	
040	3130846-0000		1	SUPPORT	
050	3130266-0000		1	GUIDE	
060	3130265-0000		1	GUIDE	
100	312105-0372		4	SCREW, M6S ISO 4017 M6X25 A4 80	
110	312105-0370		4	SCREW, M6S ISO 4017 M6X20 A4 80	
120	315105-0153		8	WASHER PLAIN, 6,4X12X1,5 A4 BRB	

Pos	Part No	UN	Qty	Description	Page No

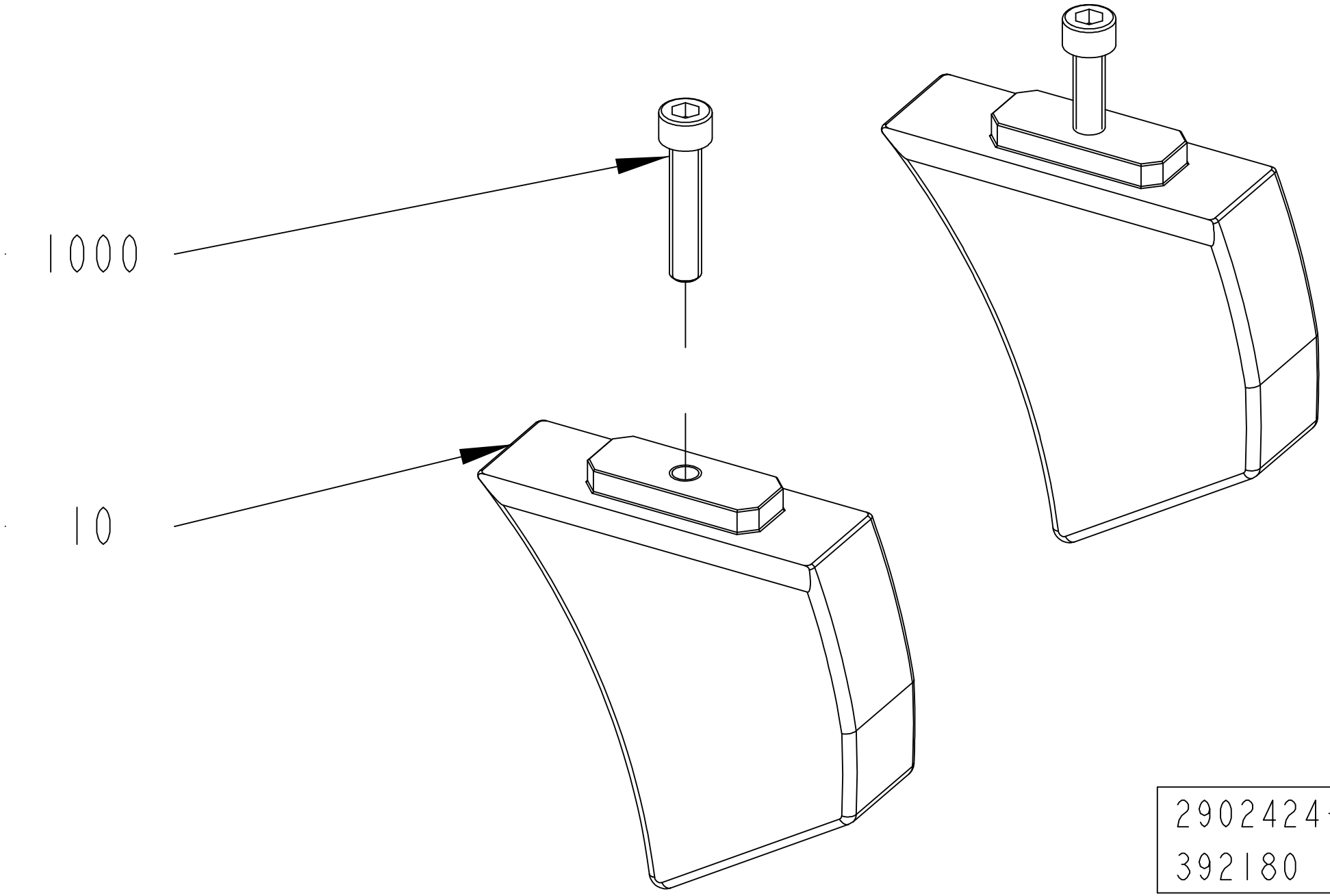

2902424-1
392180

ECM: 562189 - 20121002
Group number: 2902424-0200
Assembly Drawing: 2902424-1_1_AB

This list covers pages from 1-294 to 1-297

Pos	Part No	UN	Qty	Description	Page No
TGA 0500SQ (See drawing on page: 1-296)					
010	2902440-0000		1	GUIDE	
020	2902441-0000		1	GUIDE	
TGA 0750SQ (See drawing on page: 1-296)					
010	2902438-0000		1	GUIDE	
020	2902439-0000		1	GUIDE	
TGA 1000CR, TGA 1000LF (See drawing on page: 1-294)					
010	2902494-0000		2	GUIDE	
TGA 1000SQ (See drawing on page: 1-294)					
010	2878080-0000		2	GUIDE	
TGA 1500SQ (See drawing on page: 1-294)					
010	2940990-0000		2	GUIDE	
Common Parts					
1000	312115-0374		2	SCREW ISO4762 M6X30 A4 80	

Pos	Part No	UN	Qty	Description	Page No

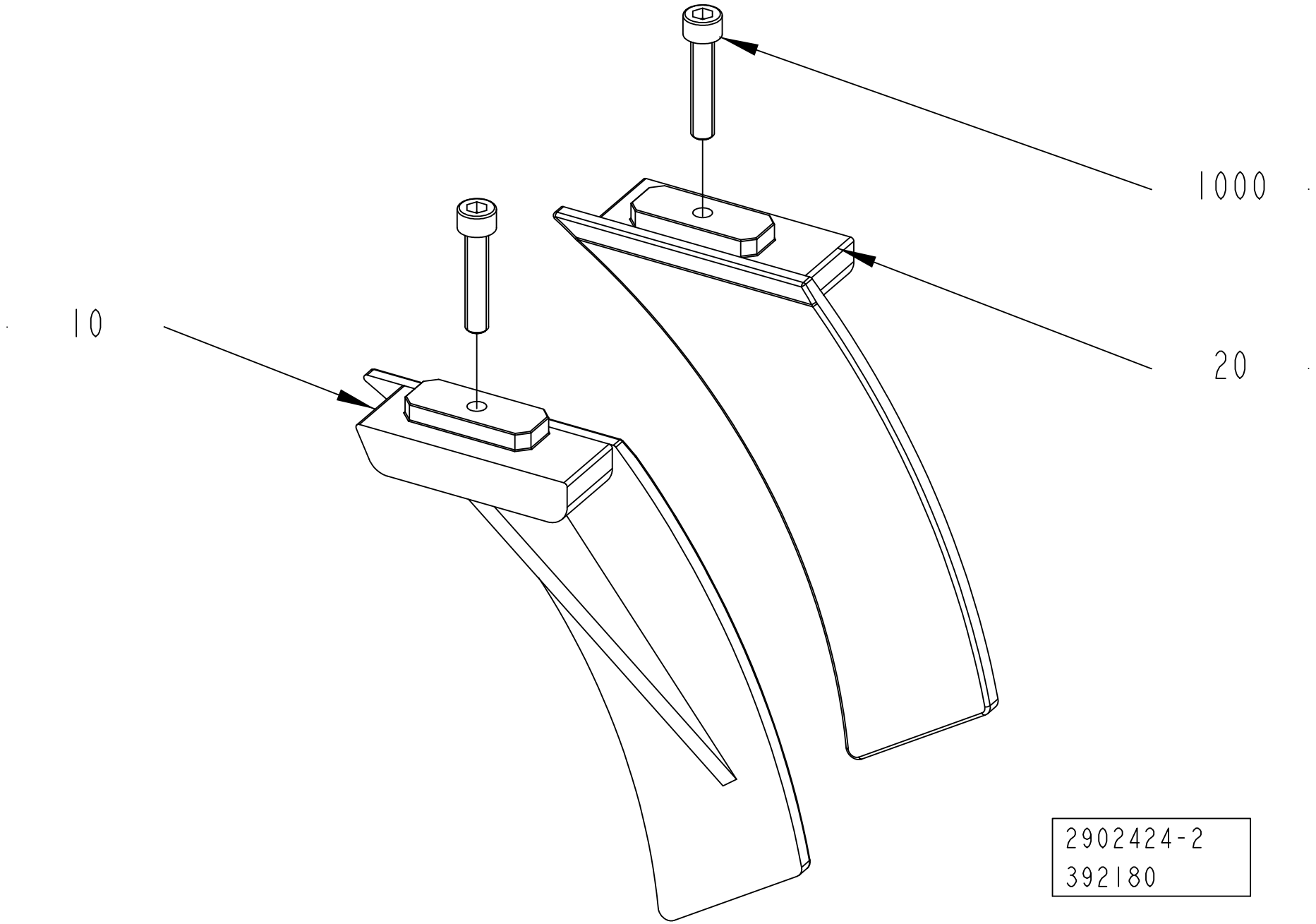
1000
10
20
2902424-2
392180

ECM: 562189 - 20121002
Group number: 2902424-0200
Assembly Drawing: 2902424-2_1_AB

This list covers pages from 1-294 to 1-297

Pos	Part No	UN	Qty	Description	Page No
TGA 0500SQ (See drawing on page: 1-296)					
010	2902440-0000		1	GUIDE	
020	2902441-0000		1	GUIDE	
TGA 0750SQ (See drawing on page: 1-296)					
010	2902438-0000		1	GUIDE	
020	2902439-0000		1	GUIDE	
TGA 1000CR, TGA 1000LF (See drawing on page: 1-294)					
010	2902494-0000		2	GUIDE	
TGA 1000SQ (See drawing on page: 1-294)					
010	2878080-0000		2	GUIDE	
TGA 1500SQ (See drawing on page: 1-294)					
010	2940990-0000		2	GUIDE	
Common Parts					
1000	312115-0374		2	SCREW ISO4762 M6X30 A4 80	

Pos	Part No	UN	Qty	Description	Page No

FLAP HEATER

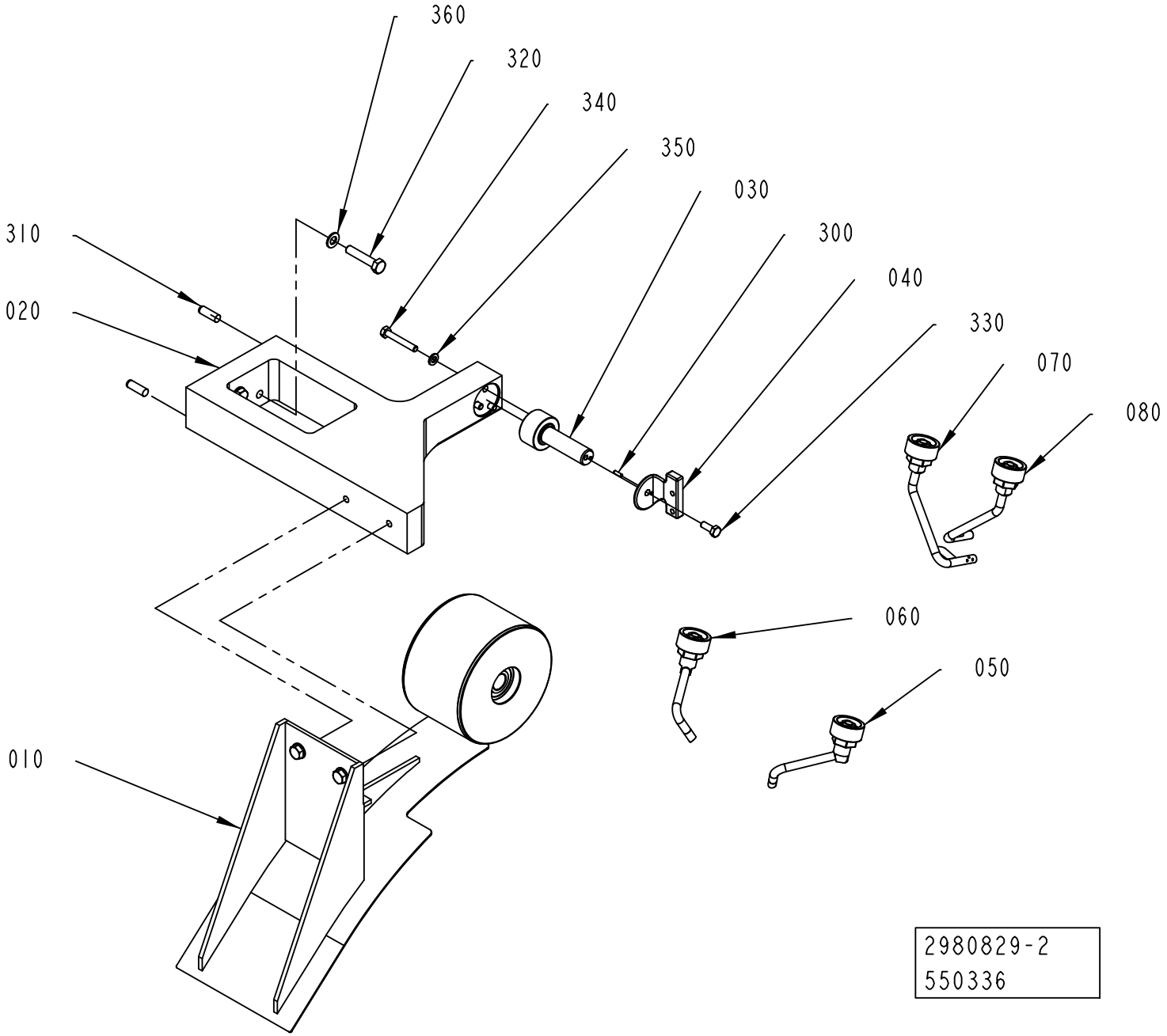
360
320
340
350
030
300
040
330
070
080
310
020
060
050
010
2980829-2
550336

ECM: 562193 - 20121002
Group number: 2980829-0200
Assembly Drawing: 2980829-2_1_AB

Pos	Part No	UN	Qty	Description	Page No
TGA 0500SQ					
020	2978606-0000		1	BRACKET	
030	2978028-0000		1	SHAFT	
040	2978782-0000		1	SUPPORT	
	2987078-0000		*1*	*GUIDE*	
050	2963288-0000		1	NOZZLE	
060	2963289-0000		1	NOZZLE	
070	2963286-0000		1	NOZZLE	
080	2963287-0000		1	NOZZLE	
TGA 0750SQ					
020	2978606-0000		1	BRACKET	
030	2978028-0000		1	SHAFT	
040	2978782-0000		1	SUPPORT	
	2987078-0000		*1*	*GUIDE*	
050	2963288-0000		1	NOZZLE	
060	2963289-0000		1	NOZZLE	
070	2963286-0000		1	NOZZLE	
080	2963287-0000		1	NOZZLE	
TGA 1000CR, TGA 1000LF					
020	2978606-0000		1	BRACKET	
030	2978028-0000		1	SHAFT	
040	2978782-0000		1	SUPPORT	
	2987078-0000		*1*	*GUIDE*	
050	2963288-0000		1	NOZZLE	
060	2963289-0000		1	NOZZLE	
070	2963286-0000		1	NOZZLE	
080	2963287-0000		1	NOZZLE	
TGA 1000SQ					
020	2978606-0000		1	BRACKET	
030	2978028-0000		1	SHAFT	
040	2978782-0000		1	SUPPORT	
	2987078-0000		*1*	*GUIDE*	
050	2963288-0000		1	NOZZLE	
060	2963289-0000		1	NOZZLE	
070	2963286-0000		1	NOZZLE	
080	2963287-0000		1	NOZZLE	
TGA 1500SQ					
020	2963280-0000		1	BRACKET	
030	2963278-0000		1	SHAFT	
040	2977654-0000		1	SUPPORT	
	2987078-0000		*1*	*GUIDE*	
050	2940992-0000		1	NOZZLE	
060	2940999-0000		1	NOZZLE	
070	2940989-0000		1	NOZZLE	
080	2940991-0000		1	NOZZLE	
Common Parts					
010	3218554-0100		1	VOLUME CHANGE	**1-301, 1-303**
300	311103-0233		1	PARALLEL PIN ISO 2338 3M6X10 A1	
310	311103-1403		2	PARALLEL PIN ISO 2338 8M6X24 A1	
320	312105-0459		2	SCREW, M6S ISO 4014 M8X40 A4 80	
330	312105-0368		1	"SCREW, M6S ISO 4017 M6X16 A4 80"	
340	312109-0378		3	SCREW, M6S ISO 4017 M6X40 A4 80	
350	315105-0153		3	WASHER PLAIN, 6,4X12X1,5 A4 BRB	
360	315105-0165		4	FWAS080G0-0S, WASHER PLAIN	

Machine Type | Group Description | Used-In | Group Number | Page No

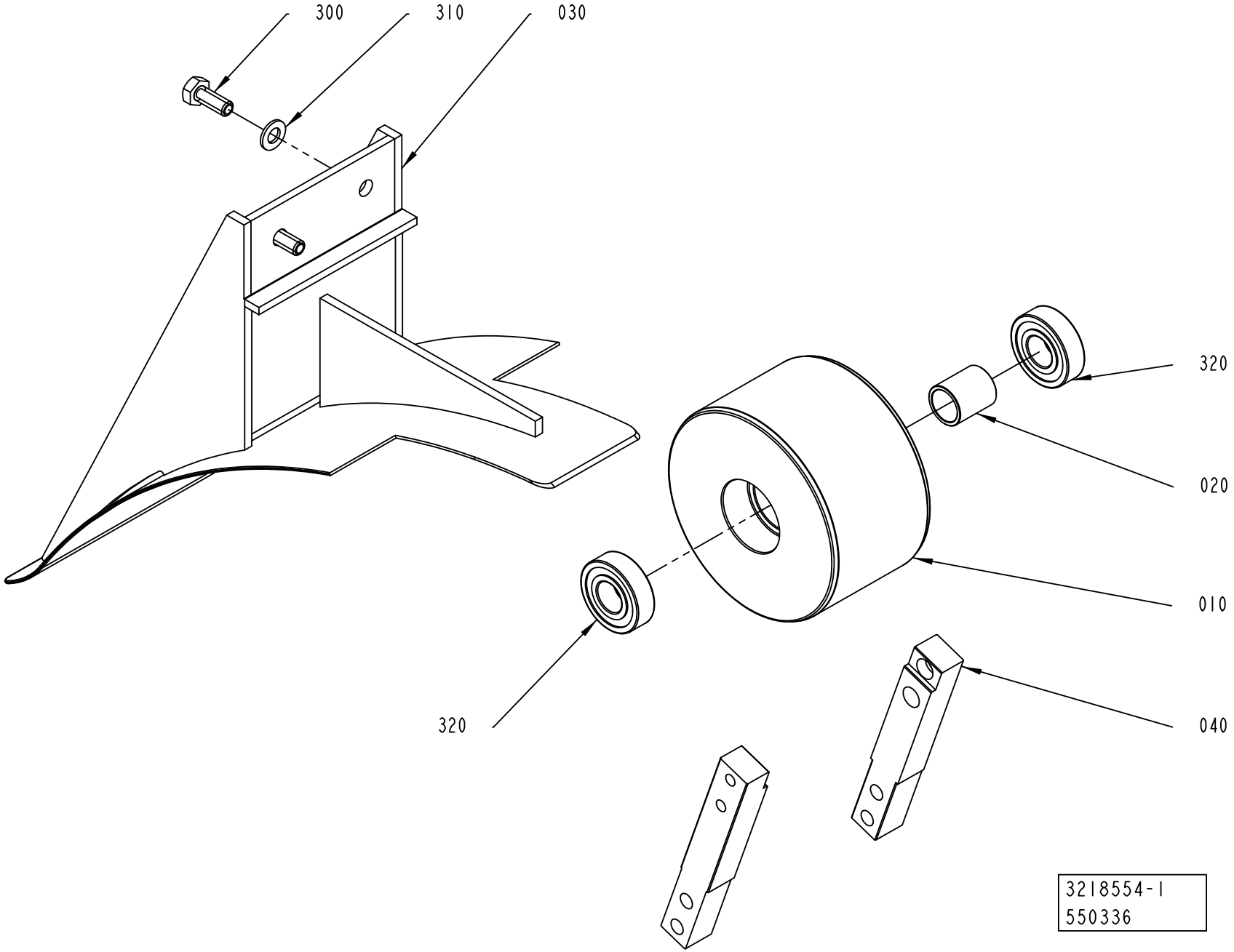
300
310
030
320
020
010
320
040
3218554-1
550336

ECM: 575161 - 20130101
Group number: 3218554-0100
Assembly Drawing: 3218554-1_1_AB

This list covers pages from 1-300 to 1-303

Pos	Part No	UN	Qty	Description	Page No
TGA 0500SQ (See drawing on page: 1-300)					
010	3133493-0000		1	BOWL	
020	2978783-0000		1	SPACER	
030	3133652-0000		1	TOP SECTION	
040	2963290-0000		2	PLATE	
TGA 0750SQ (See drawing on page: 1-300)					
010	3133493-0000		1	BOWL	
020	2978783-0000		1	SPACER	
030	3133652-0000		1	TOP SECTION	
040	2963290-0000		2	PLATE	
TGA 1000CR, TGA 1000LF (See drawing on page: 1-302)					
010	3133493-0000		1	BOWL	
020	2978783-0000		1	SPACER	
030	3247072-0000		1	TOP SECTION	
040	3238190-0000		2	PLATE	
050	3258444-0000		2	PLATE	
060	3235930-0000		6	STUD SCREW	
330	312605-0318		8	HEXAGON NUT, M6M M8 A280	
340	315105-0165		4	FWAS080G0-0S, WASHER PLAIN	
350	312105-0457		4	SCREW, M6S ISO 4014 M8X35 A4 80	
360	315105-0153		12	WASHER PLAIN, 6,4X12X1,5 A4 BRB	
370	312605-0316		12	HEXAGON NUT, M6M M6 A280	
380	342931-0121		8	ELBOW 90 COUPL., EXT. THREAD 8/6-G1/8"	
T50E7015	3257396-0000		1	GUIDE	
T50E7016	3257395-0000		1	GUIDE	
T50E7034	3235931-0000		1	GUIDE	
T50E7035	3235932-0000		1	GUIDE	
T50W7025	90166-0118	MM	60	TUBE 8 MM PA BLACK	
T50W7026	90166-0118	MM	60	TUBE 8 MM PA BLACK	
T50W7032	90166-0118	MM	130	TUBE 8 MM PA BLACK	
T50W7033	90166-0118	MM	130	TUBE 8 MM PA BLACK	
TGA 1000SQ (See drawing on page: 1-300)					
010	3133493-0000		1	BOWL	
020	2978783-0000		1	SPACER	
030	3133652-0000		1	TOP SECTION	
040	2963290-0000		2	PLATE	
TGA 1500SQ (See drawing on page: 1-300)					
010	2940994-0000		1	BOWL	
020	2963277-0000		1	SPACER	
030	3113981-0000		1	TOP SECTION	
040	2941041-0000		2	PLATE	
Common Parts					
300	312105-0451		2	SCREW, M6S ISO 4017 M8X20 A4 80	
310	315105-0165		2	FWAS080G0-0S, WASHER PLAIN	
320	90603-2398		2	BALL BEARING, 17X40X12	

Machine Type | Group Description | Used-In | Group Number | Page No

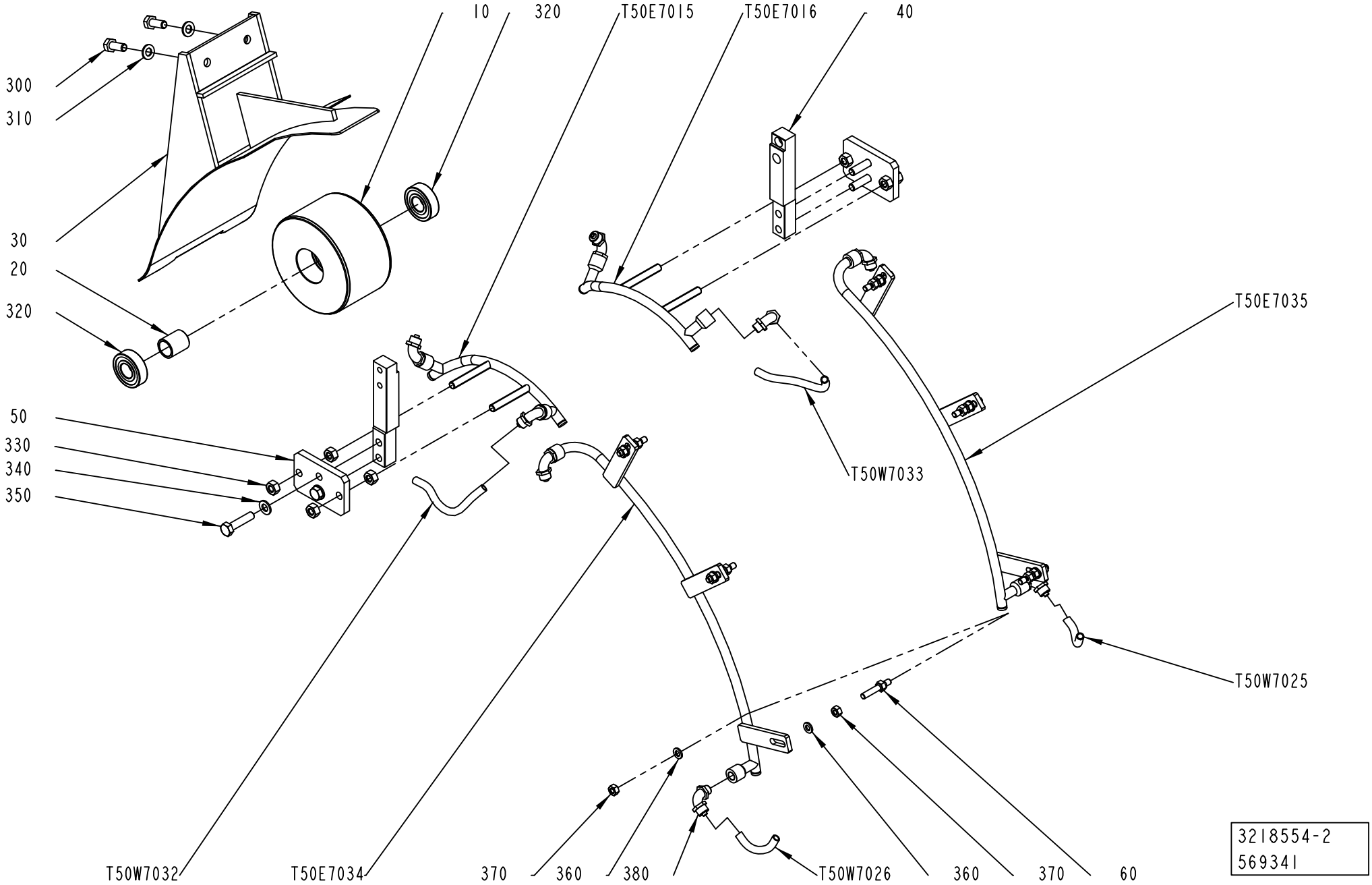
10
320
T50E7015
T50E7016
40
300
310
30
20
320
T50E7035
50
330
340
350
T50W7033
T50W7025
T50W7032
T50E7034
370
360
380
T50W7026
360
370
60
3218554-2
569341

ECM: 575161 - 20130101
Group number: 3218554-0100
Assembly Drawing: 3218554-2_1_AB

This list covers pages from 1-300 to 1-303

Pos	Part No	UN	Qty	Description	Page No
TGA 0500SQ (See drawing on page: 1-300)					
010	3133493-0000		1	BOWL	
020	2978783-0000		1	SPACER	
030	3133652-0000		1	TOP SECTION	
040	2963290-0000		2	PLATE	
TGA 0750SQ (See drawing on page: 1-300)					
010	3133493-0000		1	BOWL	
020	2978783-0000		1	SPACER	
030	3133652-0000		1	TOP SECTION	
040	2963290-0000		2	PLATE	
TGA 1000CR, TGA 1000LF (See drawing on page: 1-302)					
010	3133493-0000		1	BOWL	
020	2978783-0000		1	SPACER	
030	3247072-0000		1	TOP SECTION	
040	3238190-0000		2	PLATE	
050	3258444-0000		2	PLATE	
060	3235930-0000		6	STUD SCREW	
330	312605-0318		8	HEXAGON NUT, M6M M8 A280	
340	315105-0165		4	FWAS080G0-0S, WASHER PLAIN	
350	312105-0457		4	SCREW, M6S ISO 4014 M8X35 A4 80	
360	315105-0153		12	WASHER PLAIN, 6,4X12X1,5 A4 BRB	
370	312605-0316		12	HEXAGON NUT, M6M M6 A280	
380	342931-0121		8	ELBOW 90 COUPL., EXT. THREAD 8/6-G1/8"	
T50E7015	3257396-0000		1	GUIDE	
T50E7016	3257395-0000		1	GUIDE	
T50E7034	3235931-0000		1	GUIDE	
T50E7035	3235932-0000		1	GUIDE	
T50W7025	90166-0118	MM	60	TUBE 8 MM PA BLACK	
T50W7026	90166-0118	MM	60	TUBE 8 MM PA BLACK	
T50W7032	90166-0118	MM	130	TUBE 8 MM PA BLACK	
T50W7033	90166-0118	MM	130	TUBE 8 MM PA BLACK	
TGA 1000SQ (See drawing on page: 1-300)					
010	3133493-0000		1	BOWL	
020	2978783-0000		1	SPACER	
030	3133652-0000		1	TOP SECTION	
040	2963290-0000		2	PLATE	
TGA 1500SQ (See drawing on page: 1-300)					
010	2940994-0000		1	BOWL	
020	2963277-0000		1	SPACER	
030	3113981-0000		1	TOP SECTION	
040	2941041-0000		2	PLATE	
Common Parts					
300	312105-0451		2	SCREW, M6S ISO 4017 M8X20 A4 80	
310	315105-0165		2	FWAS080G0-0S, WASHER PLAIN	
320	90603-2398		2	BALL BEARING, 17X40X12	

Machine Type | Group Description | Used-In | Group Number | Page No

FORMING PLATE

Drawing file: 2826720-2_1_AC.hpgl

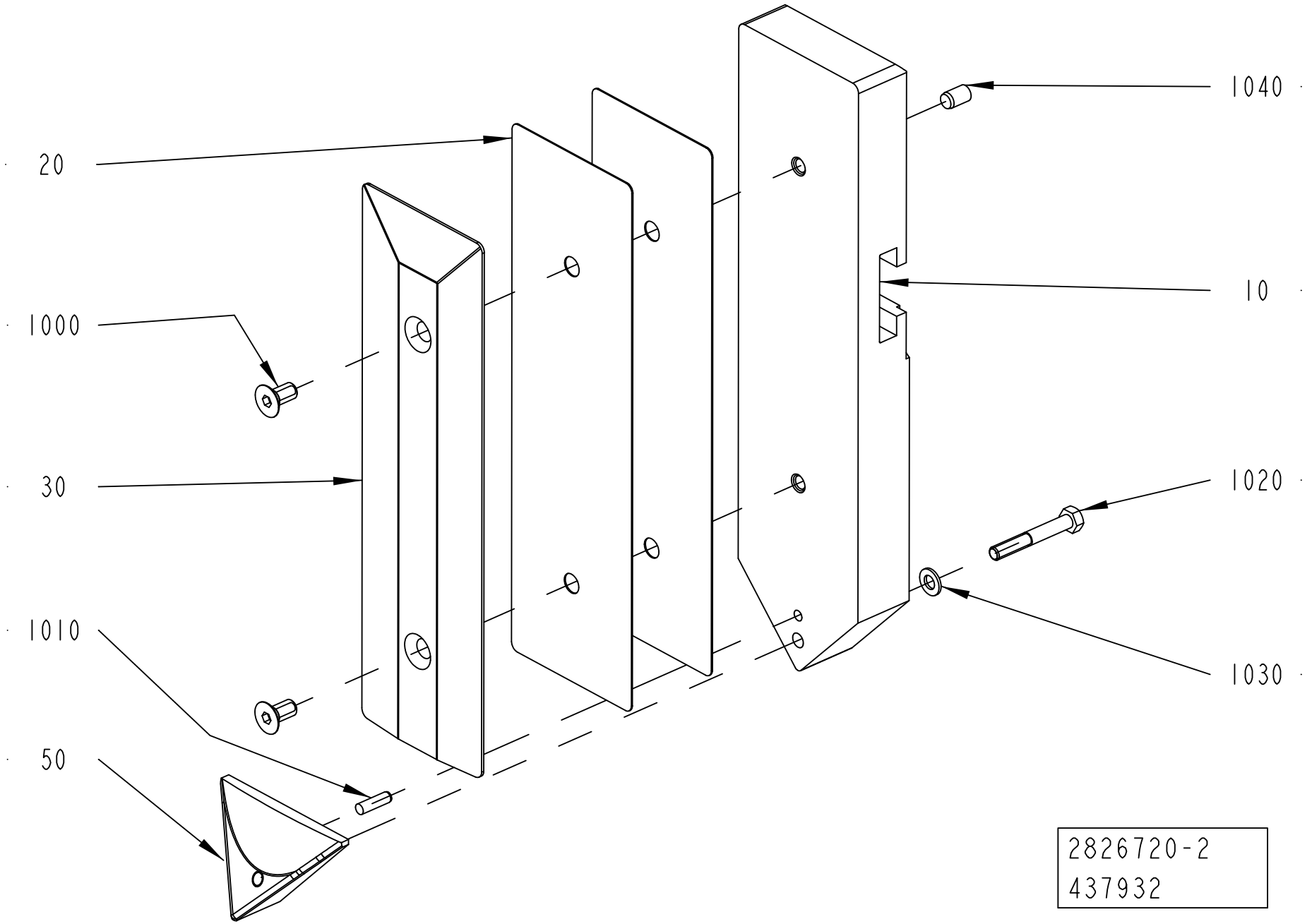

ECM: 663981 - 20140701
Group number: 2826720-0300
Assembly Drawing: 2826720-2_1_AC

This list covers pages from 1-304 to 1-307

Pos	Part No	UN	Qty	Description	Page No
TGA 0500SQ (See drawing on page: 1-304)					
010	2983117-0000		1	PUSHER	
020	2983114-0000		6	SHIM	
030	2983111-0000		1	VOLUME BULGE	
050	2798289-0000		1	VOLUME BULGE	
1000	312155-0366		2	SCREW DIN 7991 MF6S M6X12 A4 70	
1020	312109-0335		1	SCREW, M6S ISO 4017 M5X30 A4 80	
TGA 0750SQ (See drawing on page: 1-304)					
010	2983116-0000		1	PUSHER	
020	2983113-0000		4	SHIM	
030	2983110-0000		1	VOLUME BULGE	
050	2798289-0000		1	VOLUME BULGE	
1000	312155-0366		2	SCREW DIN 7991 MF6S M6X12 A4 70	
1020	312109-0335		1	SCREW, M6S ISO 4017 M5X30 A4 80	
TGA 1000CR (See drawing on page: 1-306)					
010	3202901-0000		1	PUSHER	
020	3121516-0000		2	SHIM	
030	3204305-0000		1	VOLUME BULGE	
040	3276469-0000		1	SHIM	
050	3270463-0000		1	VOLUME BULGE	
1000	312155-0368		2	SCREW DIN 7991 MF6S M6X16 A4 70	
1020	312105-0331		1	SCREW, M6S ISO 4017 M5X20 A4 80	
TGA 1000LF (See drawing on page: 1-306)					
010	3236771-0000		1	PUSHER	
020	3124760-0000		3	SHIM	
030	3237844-0000		1	VOLUME BULGE	
040	3276469-0000		1	SHIM	
050	3270463-0000		1	VOLUME BULGE	
1000	312155-0368		2	SCREW DIN 7991 MF6S M6X16 A4 70	
1020	312105-0331		1	SCREW, M6S ISO 4017 M5X20 A4 80	
TGA 1000SQ (See drawing on page: 1-304)					
010	2983115-0000		1	PUSHER	
020	2983112-0000		2	SHIM	
030	2983109-0000		1	VOLUME BULGE	
050	2798289-0000		1	VOLUME BULGE	
1000	312155-0366		2	SCREW DIN 7991 MF6S M6X12 A4 70	
1020	312109-0335		1	SCREW, M6S ISO 4017 M5X30 A4 80	
TGA 1500SQ (See drawing on page: 1-304)					
010	2963296-0000		1	PUSHER	
020	2963294-0000		4	SHIM	
030	2963295-0000		1	VOLUME BULGE	
040	3276469-0000		1	SHIM	
050	3328606-0000		1	VOLUME BULGE	
1000	312155-0366		2	SCREW DIN 7991 MF6S M6X12 A4 70	
1020	312109-0335		1	SCREW, M6S ISO 4017 M5X30 A4 80	
Common Parts					
1010	311103-0269		1	PARALLEL PIN ISO 2338 4M6X14 A1	
1030	315106-0146		1	"WASHER PLAIN, M5 ISO7089-5-200 HV A4"	
1040	311103-0348		1	PARALLEL PIN ISO 2338 6M6X10 A1	

FORMING PLATE

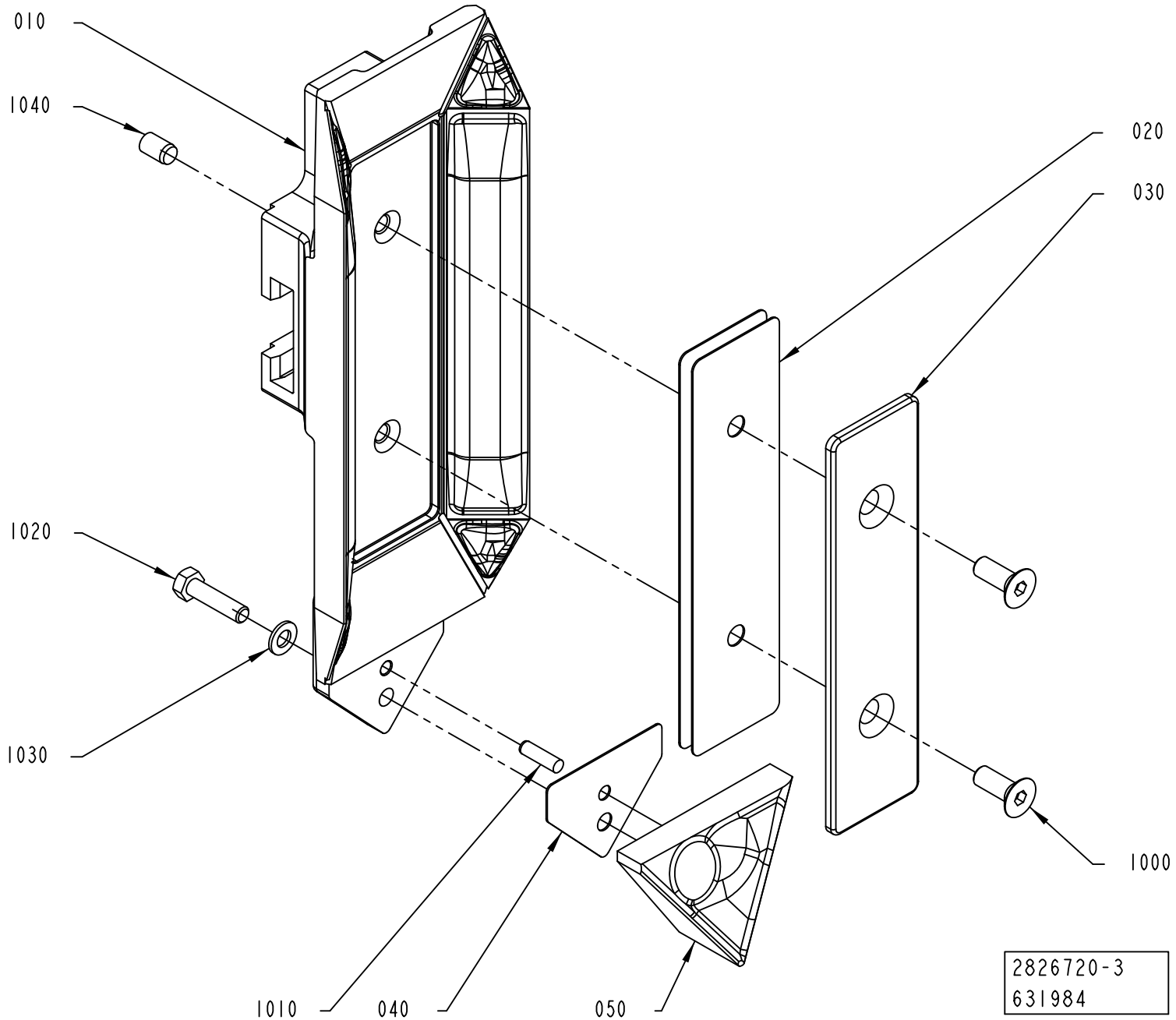

ECM: 663981 - 20140701
Group number: 2826720-0300
Assembly Drawing: 2826720-3_1_AE

This list covers pages from 1-304 to 1-307

Pos	Part No	UN	Qty	Description	Page No
TGA 0500SQ (See drawing on page: 1-304)					
010	2983117-0000		1	PUSHER	
020	2983114-0000		6	SHIM	
030	2983111-0000		1	VOLUME BULGE	
050	2798289-0000		1	VOLUME BULGE	
1000	312155-0366		2	SCREW DIN 7991 MF6S M6X12 A4 70	
1020	312109-0335		1	SCREW, M6S ISO 4017 M5X30 A4 80	
TGA 0750SQ (See drawing on page: 1-304)					
010	2983116-0000		1	PUSHER	
020	2983113-0000		4	SHIM	
030	2983110-0000		1	VOLUME BULGE	
050	2798289-0000		1	VOLUME BULGE	
1000	312155-0366		2	SCREW DIN 7991 MF6S M6X12 A4 70	
1020	312109-0335		1	SCREW, M6S ISO 4017 M5X30 A4 80	
TGA 1000CR (See drawing on page: 1-306)					
010	3202901-0000		1	PUSHER	
020	3121516-0000		2	SHIM	
030	3204305-0000		1	VOLUME BULGE	
040	3276469-0000		1	SHIM	
050	3270463-0000		1	VOLUME BULGE	
1000	312155-0368		2	SCREW DIN 7991 MF6S M6X16 A4 70	
1020	312105-0331		1	SCREW, M6S ISO 4017 M5X20 A4 80	
TGA 1000LF (See drawing on page: 1-306)					
010	3236771-0000		1	PUSHER	
020	3124760-0000		3	SHIM	
030	3237844-0000		1	VOLUME BULGE	
040	3276469-0000		1	SHIM	
050	3270463-0000		1	VOLUME BULGE	
1000	312155-0368		2	SCREW DIN 7991 MF6S M6X16 A4 70	
1020	312105-0331		1	SCREW, M6S ISO 4017 M5X20 A4 80	
TGA 1000SQ (See drawing on page: 1-304)					
010	2983115-0000		1	PUSHER	
020	2983112-0000		2	SHIM	
030	2983109-0000		1	VOLUME BULGE	
050	2798289-0000		1	VOLUME BULGE	
1000	312155-0366		2	SCREW DIN 7991 MF6S M6X12 A4 70	
1020	312109-0335		1	SCREW, M6S ISO 4017 M5X30 A4 80	
TGA 1500SQ (See drawing on page: 1-304)					
010	2963296-0000		1	PUSHER	
020	2963294-0000		4	SHIM	
030	2963295-0000		1	VOLUME BULGE	
040	3276469-0000		1	SHIM	
050	3328606-0000		1	VOLUME BULGE	
1000	312155-0366		2	SCREW DIN 7991 MF6S M6X12 A4 70	
1020	312109-0335		1	SCREW, M6S ISO 4017 M5X30 A4 80	
Common Parts					
1010	311103-0269		1	PARALLEL PIN ISO 2338 4M6X14 A1	
1030	315106-0146		1	"WASHER PLAIN, M5 ISO7089-5-200 HV A4"	
1040	311103-0348		1	PARALLEL PIN ISO 2338 6M6X10 A1	

Machine Type | Group Description | Used-In | Group Number | Page No

FORMING PLATE

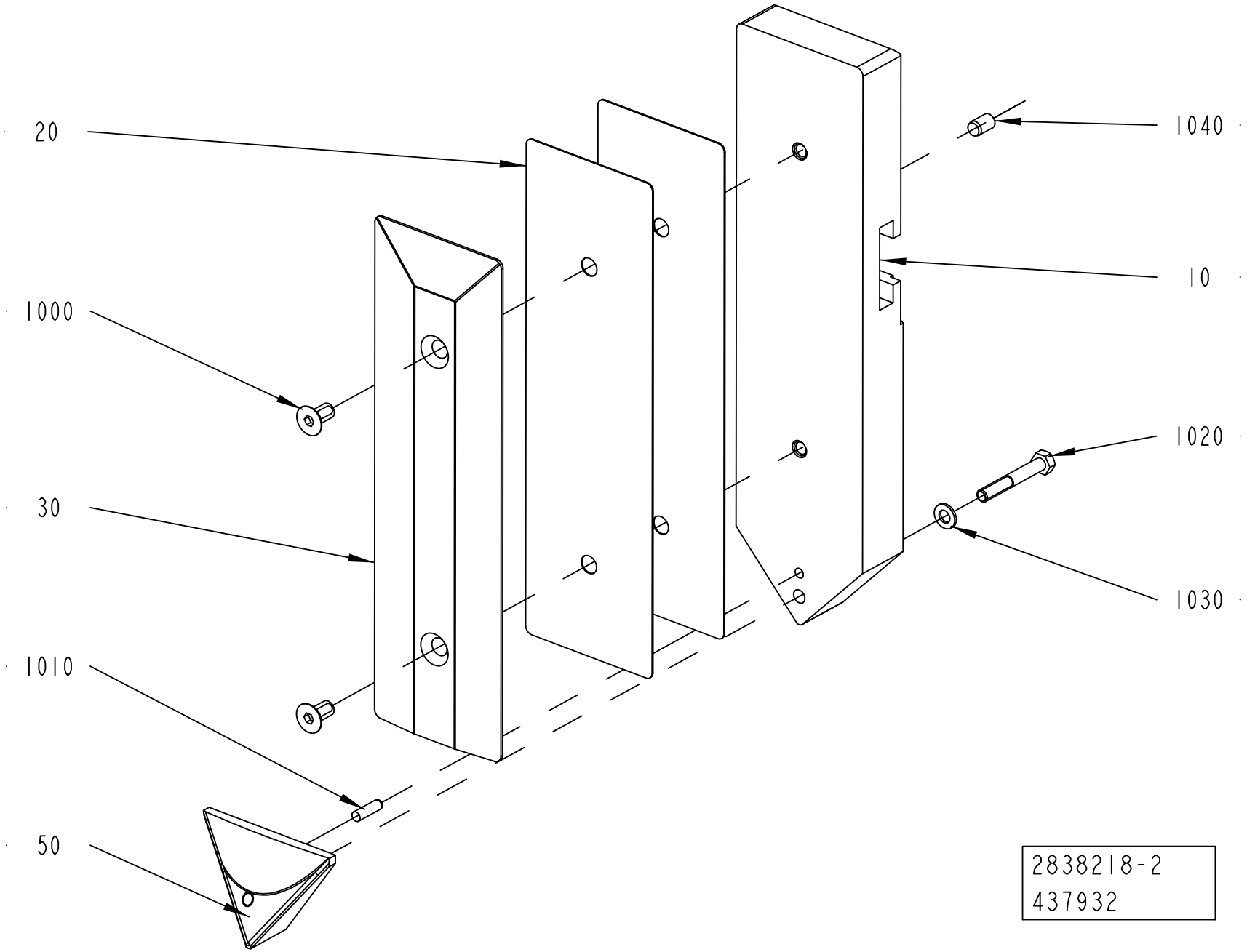

ECM: 663980 - 20140701
Group number: 2838218-0300
Assembly Drawing: 2838218-2_1_AC

This list covers pages from 1-308 to 1-311

Pos	Part No	UN	Qty	Description	Page No
TGA 0500SQ (See drawing on page: 1-308)					
010	2983117-0000		1	PUSHER	
020	2983114-0000		6	SHIM	
030	2983111-0000		1	VOLUME BULGE	
050	2798288-0000		1	VOLUME BULGE	
1000	312155-0366		2	SCREW DIN 7991 MF6S M6X12 A4 70	
1020	312109-0335		1	SCREW, M6S ISO 4017 M5X30 A4 80	
TGA 0750SQ (See drawing on page: 1-308)					
010	2983116-0000		1	PUSHER	
020	2983113-0000		4	SHIM	
030	2983110-0000		1	VOLUME BULGE	
050	2798288-0000		1	VOLUME BULGE	
1000	312155-0366		2	SCREW DIN 7991 MF6S M6X12 A4 70	
1020	312109-0335		1	SCREW, M6S ISO 4017 M5X30 A4 80	
TGA 1000CR (See drawing on page: 1-310)					
010	3202901-0000		1	PUSHER	
020	3121516-0000		2	SHIM	
030	3204305-0000		1	VOLUME BULGE	
040	3276469-0000		1	SHIM	
050	3270464-0000		1	VOLUME BULGE	
1000	312155-0368		2	SCREW DIN 7991 MF6S M6X16 A4 70	
1020	312105-0331		1	SCREW, M6S ISO 4017 M5X20 A4 80	
TGA 1000LF (See drawing on page: 1-310)					
010	3236771-0000		1	PUSHER	
020	3124760-0000		3	SHIM	
030	3237844-0000		1	VOLUME BULGE	
040	3276469-0000		1	SHIM	
050	3270464-0000		1	VOLUME BULGE	
1000	312155-0368		2	SCREW DIN 7991 MF6S M6X16 A4 70	
1020	312105-0331		1	SCREW, M6S ISO 4017 M5X20 A4 80	
TGA 1000SQ (See drawing on page: 1-308)					
010	2983115-0000		1	PUSHER	
020	2983112-0000		2	SHIM	
030	2983109-0000		1	VOLUME BULGE	
050	2798288-0000		1	VOLUME BULGE	
1000	312155-0366		2	SCREW DIN 7991 MF6S M6X12 A4 70	
1020	312109-0335		1	SCREW, M6S ISO 4017 M5X30 A4 80	
TGA 1500SQ (See drawing on page: 1-308)					
010	2963296-0000		1	PUSHER	
020	2963294-0000		4	SHIM	
030	2963295-0000		1	VOLUME BULGE	
040	3276469-0000		1	SHIM	
050	3328605-0000		1	VOLUME BULGE	
1000	312155-0366		2	SCREW DIN 7991 MF6S M6X12 A4 70	
1020	312109-0335		1	SCREW, M6S ISO 4017 M5X30 A4 80	
Common Parts					
1010	311103-0269		1	PARALLEL PIN ISO 2338 4M6X14 A1	
1030	315106-0146		1	"WASHER PLAIN, M5 ISO7089-5-200 HV A4"	
1040	311103-0348		1	PARALLEL PIN ISO 2338 6M6X10 A1	

Machine Type | Group Description | Used-In | Group Number | Page No

FORMING PLATE

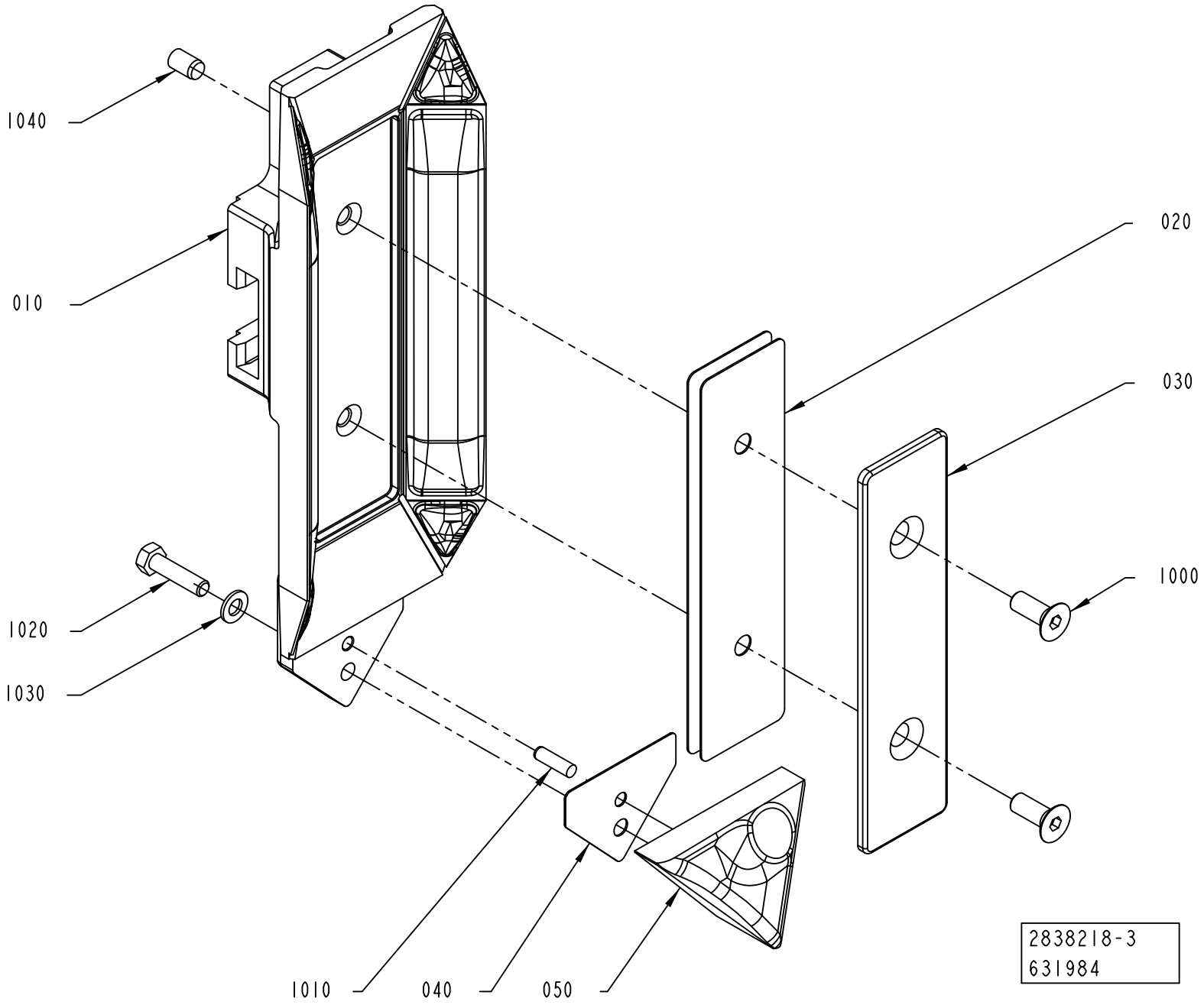

ECM: 663980 - 20140701
Group number: 2838218-0300
Assembly Drawing: 2838218-3_1_AE

This list covers pages from 1-308 to 1-311

Pos	Part No	UN	Qty	Description	Page No
TGA 0500SQ (See drawing on page: 1-308)					
010	2983117-0000		1	PUSHER	
020	2983114-0000		6	SHIM	
030	2983111-0000		1	VOLUME BULGE	
050	2798288-0000		1	VOLUME BULGE	
1000	312155-0366		2	SCREW DIN 7991 MF6S M6X12 A4 70	
1020	312109-0335		1	SCREW, M6S ISO 4017 M5X30 A4 80	
TGA 0750SQ (See drawing on page: 1-308)					
010	2983116-0000		1	PUSHER	
020	2983113-0000		4	SHIM	
030	2983110-0000		1	VOLUME BULGE	
050	2798288-0000		1	VOLUME BULGE	
1000	312155-0366		2	SCREW DIN 7991 MF6S M6X12 A4 70	
1020	312109-0335		1	SCREW, M6S ISO 4017 M5X30 A4 80	
TGA 1000CR (See drawing on page: 1-310)					
010	3202901-0000		1	PUSHER	
020	3121516-0000		2	SHIM	
030	3204305-0000		1	VOLUME BULGE	
040	3276469-0000		1	SHIM	
050	3270464-0000		1	VOLUME BULGE	
1000	312155-0368		2	SCREW DIN 7991 MF6S M6X16 A4 70	
1020	312105-0331		1	SCREW, M6S ISO 4017 M5X20 A4 80	
TGA 1000LF (See drawing on page: 1-310)					
010	3236771-0000		1	PUSHER	
020	3124760-0000		3	SHIM	
030	3237844-0000		1	VOLUME BULGE	
040	3276469-0000		1	SHIM	
050	3270464-0000		1	VOLUME BULGE	
1000	312155-0368		2	SCREW DIN 7991 MF6S M6X16 A4 70	
1020	312105-0331		1	SCREW, M6S ISO 4017 M5X20 A4 80	
TGA 1000SQ (See drawing on page: 1-308)					
010	2983115-0000		1	PUSHER	
020	2983112-0000		2	SHIM	
030	2983109-0000		1	VOLUME BULGE	
050	2798288-0000		1	VOLUME BULGE	
1000	312155-0366		2	SCREW DIN 7991 MF6S M6X12 A4 70	
1020	312109-0335		1	SCREW, M6S ISO 4017 M5X30 A4 80	
TGA 1500SQ (See drawing on page: 1-308)					
010	2963296-0000		1	PUSHER	
020	2963294-0000		4	SHIM	
030	2963295-0000		1	VOLUME BULGE	
040	3276469-0000		1	SHIM	
050	3328605-0000		1	VOLUME BULGE	
1000	312155-0366		2	SCREW DIN 7991 MF6S M6X12 A4 70	
1020	312109-0335		1	SCREW, M6S ISO 4017 M5X30 A4 80	
Common Parts					
1010	311103-0269		1	PARALLEL PIN ISO 2338 4M6X14 A1	
1030	315106-0146		1	"WASHER PLAIN, M5 ISO7089-5-200 HV A4"	
1040	311103-0348		1	PARALLEL PIN ISO 2338 6M6X10 A1	

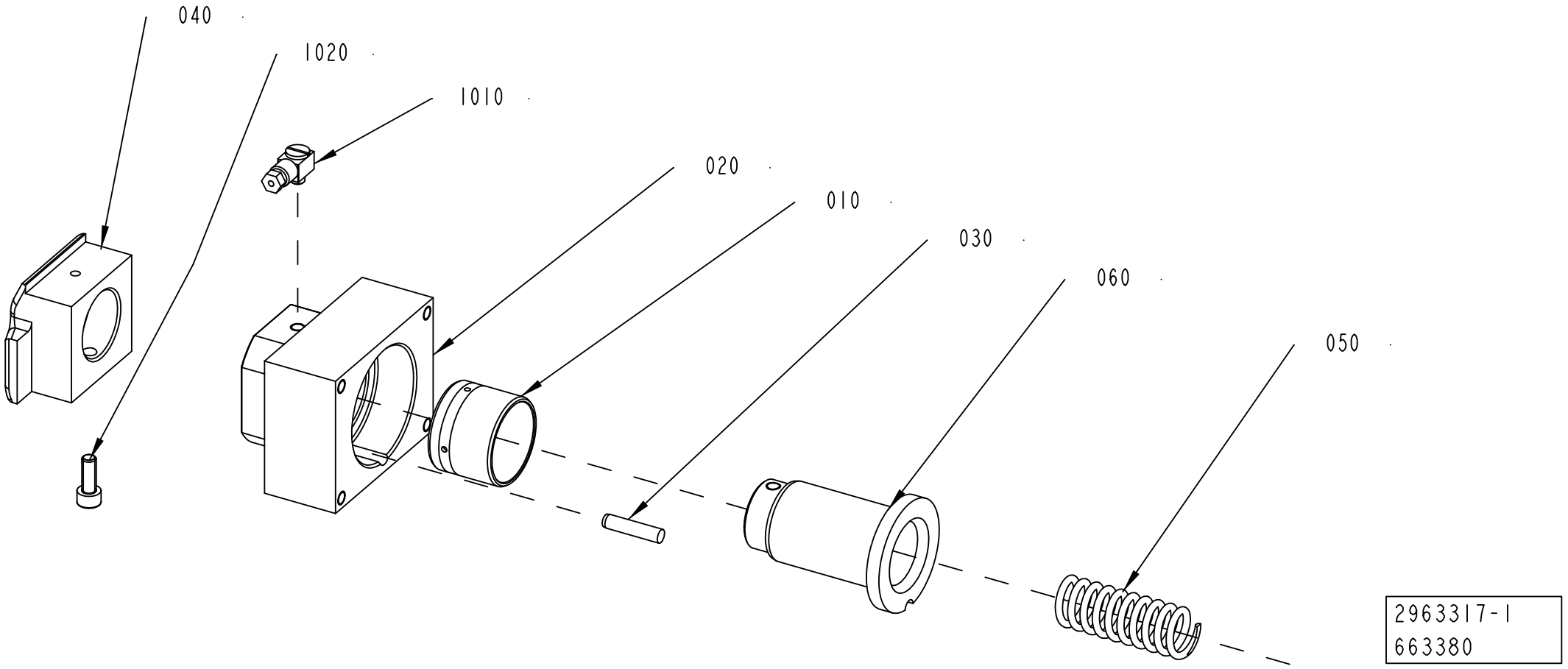
040
1020
1010
020
010
030
060
050
2963317-1
663380

ECM: 663982 - 20140701
Group number: 2963317-0100
Assembly Drawing: 2963317-1_1_AC

Pos	Part No	UN	Qty	Description	Page No
TGA 1000CR, TGA 1000LF					
040	3183626-0000		1	PUSHER	
050	1144492-0000		1	SPRING	
TGA 1000SQ, TGA 0750SQ, TGA 0500SQ					
040	2997607-0000		1	PUSHER	
050	1260895-0000		1	SPRING	
TGA 1500SQ					
040	3328608-0000		1	PUSHER	
050	1144492-0000		1	SPRING	
Common Parts					
010	2958089-0000		1	BUSHING	
020	2963293-0000		1	FLANGE	
030	1498029-0000		1	PIN	
060	2997640-0000		1	SUPPORT	
1010	90134-0058		1	CONNECTION	
1020	312115-0368		1	SCREW ISO4762 M6X16 A4 80	

Pos	Part No	UN	Qty	Description	Page No

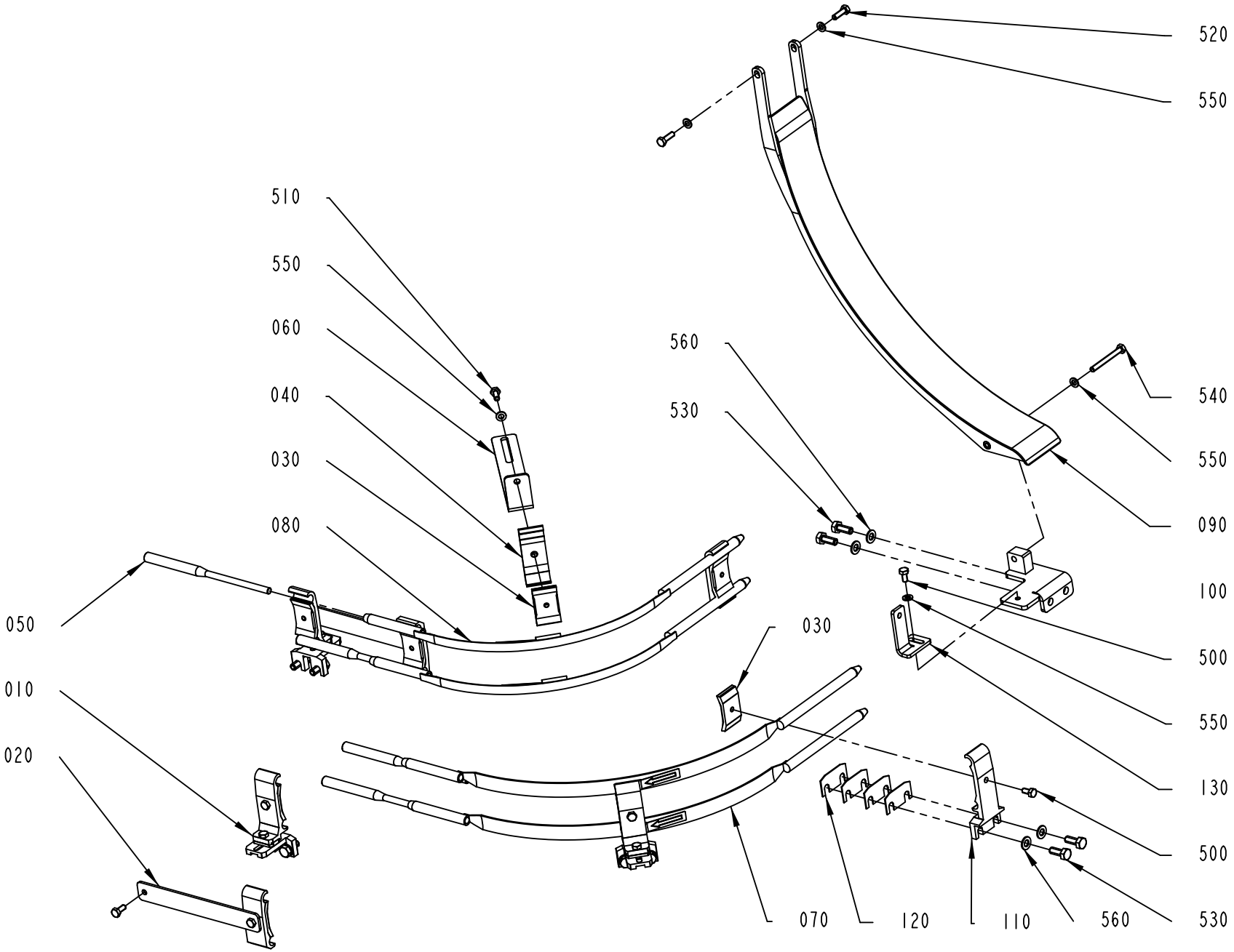

3192386-1
532559

ECM: 561536 - 20121002
Group number: 3192386-0100
Assembly Drawing: 3192386-1_1_AA

This list covers pages from 1-314 to 1-317

Pos	Part No	UN	Qty	Description	Page No
TGA 1000CR, TGA 1000LF (See drawing on page: 1-314)					
010	1550743-0200		3	RAIL HOLDER	**1-319**
020	2561602-0100		2	RAIL HOLDER KIT	**1-321**
030	1366727-0000		3	CLAMP	
040	1366750-0000		2	HOLDER	
050	1550664-0000		4	DOWEL	
060	1550666-0000		1	HOLDER	
070	3044462-0000		2	ARCH	
080	3044463-0000		2	ARCH	
090	3246439-0000		1	GUIDE	
100	3192413-0000		1	BRACKET	
110	3193975-0000		1	RAIL HOLDER	
120	3193976-0000		4	SHIM	
130	3211685-0000		1	BRACKET	
500	312105-0366		2	SCREW, M6S ISO 4017 M6X12 A4 80	
510	312105-0368		2	"SCREW, M6S ISO 4017 M6X16 A4 80"	
530	312105-0451		4	SCREW, M6S ISO 4017 M8X20 A4 80	
550	315105-0153		5	WASHER PLAIN, 6,4X12X1,5 A4 BRB	
560	315105-0165		4	FWAS080G0-0S, WASHER PLAIN	
TGA 1000SQ, TGA 0750SQ, TGA 0500SQ (See drawing on page: 1-314)					
010	1550743-0200		3	RAIL HOLDER	**1-319**
020	2561602-0100		2	RAIL HOLDER KIT	**1-321**
030	1366727-0000		3	CLAMP	
040	1366750-0000		2	HOLDER	
050	1550664-0000		4	DOWEL	
060	1550666-0000		1	HOLDER	
070	3044462-0000		2	ARCH	
080	3044463-0000		2	ARCH	
090	3160995-0000		1	GUIDE	
100	3192413-0000		1	BRACKET	
110	3193975-0000		1	RAIL HOLDER	
120	3193976-0000		4	SHIM	
130	3211685-0000		1	BRACKET	
500	312105-0366		2	SCREW, M6S ISO 4017 M6X12 A4 80	
510	312105-0368		2	"SCREW, M6S ISO 4017 M6X16 A4 80"	
530	312105-0451		4	SCREW, M6S ISO 4017 M8X20 A4 80	
550	315105-0153		5	WASHER PLAIN, 6,4X12X1,5 A4 BRB	
560	315105-0165		4	FWAS080G0-0S, WASHER PLAIN	
TGA 1500SQ (See drawing on page: 1-316)					
070	2941033-0000		1	GUIDE	
080	2941015-0000		1	GUIDE	
090	3218963-0000		1	GUIDE	
100	2774938-0000		1	GUIDE	
530	312105-0451		2	SCREW, M6S ISO 4017 M8X20 A4 80	
550	315105-0153		3	WASHER PLAIN, 6,4X12X1,5 A4 BRB	
560	315105-0165		2	FWAS080G0-0S, WASHER PLAIN	
Common Parts					
520	312105-0370		2	SCREW, M6S ISO 4017 M6X20 A4 80	
540	312109-0381		1	SCREW, M6S ISO 4017 M6X55 A4 80	
570	90459-4735		4	SCREW, M6S ISO 4017 M8X10 A4 80	

Machine Type | Group Description | Used-In | Group Number | Page No

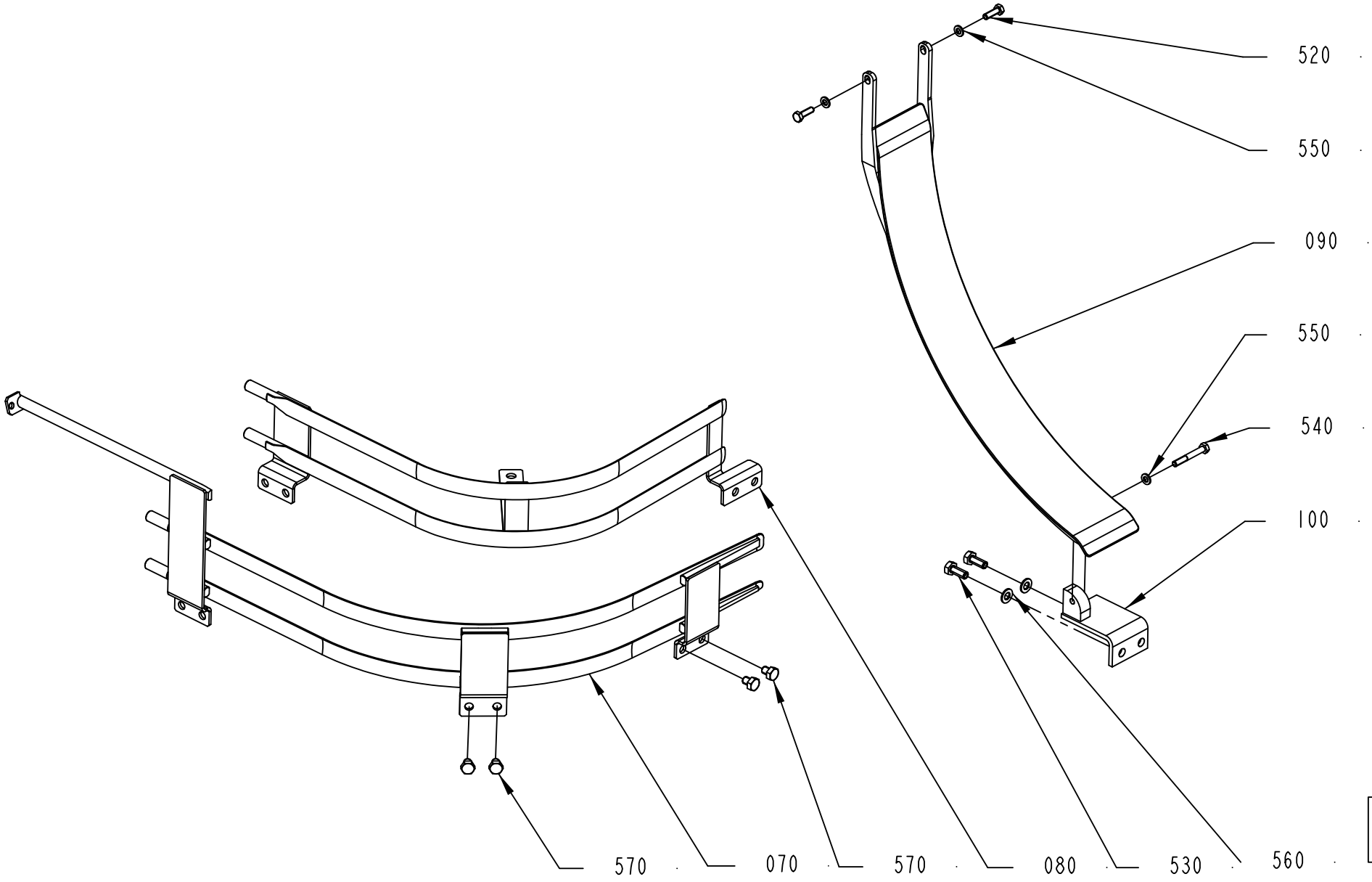

3192386-2
532559

ECM: 561536 - 20121002
Group number: 3192386-0100
Assembly Drawing: 3192386-2_1_AA

This list covers pages from 1-314 to 1-317

Pos	Part No	UN	Qty	Description	Page No
TGA 1000CR, TGA 1000LF (See drawing on page: 1-314)					
010	1550743-0200		3	RAIL HOLDER	**1-319**
020	2561602-0100		2	RAIL HOLDER KIT	**1-321**
030	1366727-0000		3	CLAMP	
040	1366750-0000		2	HOLDER	
050	1550664-0000		4	DOWEL	
060	1550666-0000		1	HOLDER	
070	3044462-0000		2	ARCH	
080	3044463-0000		2	ARCH	
090	3246439-0000		1	GUIDE	
100	3192413-0000		1	BRACKET	
110	3193975-0000		1	RAIL HOLDER	
120	3193976-0000		4	SHIM	
130	3211685-0000		1	BRACKET	
500	312105-0366		2	SCREW, M6S ISO 4017 M6X12 A4 80	
510	312105-0368		2	"SCREW, M6S ISO 4017 M6X16 A4 80"	
530	312105-0451		4	SCREW, M6S ISO 4017 M8X20 A4 80	
550	315105-0153		5	WASHER PLAIN, 6,4X12X1,5 A4 BRB	
560	315105-0165		4	FWAS080G0-0S, WASHER PLAIN	
TGA 1000SQ, TGA 0750SQ, TGA 0500SQ (See drawing on page: 1-314)					
010	1550743-0200		3	RAIL HOLDER	**1-319**
020	2561602-0100		2	RAIL HOLDER KIT	**1-321**
030	1366727-0000		3	CLAMP	
040	1366750-0000		2	HOLDER	
050	1550664-0000		4	DOWEL	
060	1550666-0000		1	HOLDER	
070	3044462-0000		2	ARCH	
080	3044463-0000		2	ARCH	
090	3160995-0000		1	GUIDE	
100	3192413-0000		1	BRACKET	
110	3193975-0000		1	RAIL HOLDER	
120	3193976-0000		4	SHIM	
130	3211685-0000		1	BRACKET	
500	312105-0366		2	SCREW, M6S ISO 4017 M6X12 A4 80	
510	312105-0368		2	"SCREW, M6S ISO 4017 M6X16 A4 80"	
530	312105-0451		4	SCREW, M6S ISO 4017 M8X20 A4 80	
550	315105-0153		5	WASHER PLAIN, 6,4X12X1,5 A4 BRB	
560	315105-0165		4	FWAS080G0-0S, WASHER PLAIN	
TGA 1500SQ (See drawing on page: 1-316)					
070	2941033-0000		1	GUIDE	
080	2941015-0000		1	GUIDE	
090	3218963-0000		1	GUIDE	
100	2774938-0000		1	GUIDE	
530	312105-0451		2	SCREW, M6S ISO 4017 M8X20 A4 80	
550	315105-0153		3	WASHER PLAIN, 6,4X12X1,5 A4 BRB	
560	315105-0165		2	FWAS080G0-0S, WASHER PLAIN	
Common Parts					
520	312105-0370		2	SCREW, M6S ISO 4017 M6X20 A4 80	
540	312109-0381		1	SCREW, M6S ISO 4017 M6X55 A4 80	
570	90459-4735		4	SCREW, M6S ISO 4017 M8X10 A4 80	

RAIL HOLDER

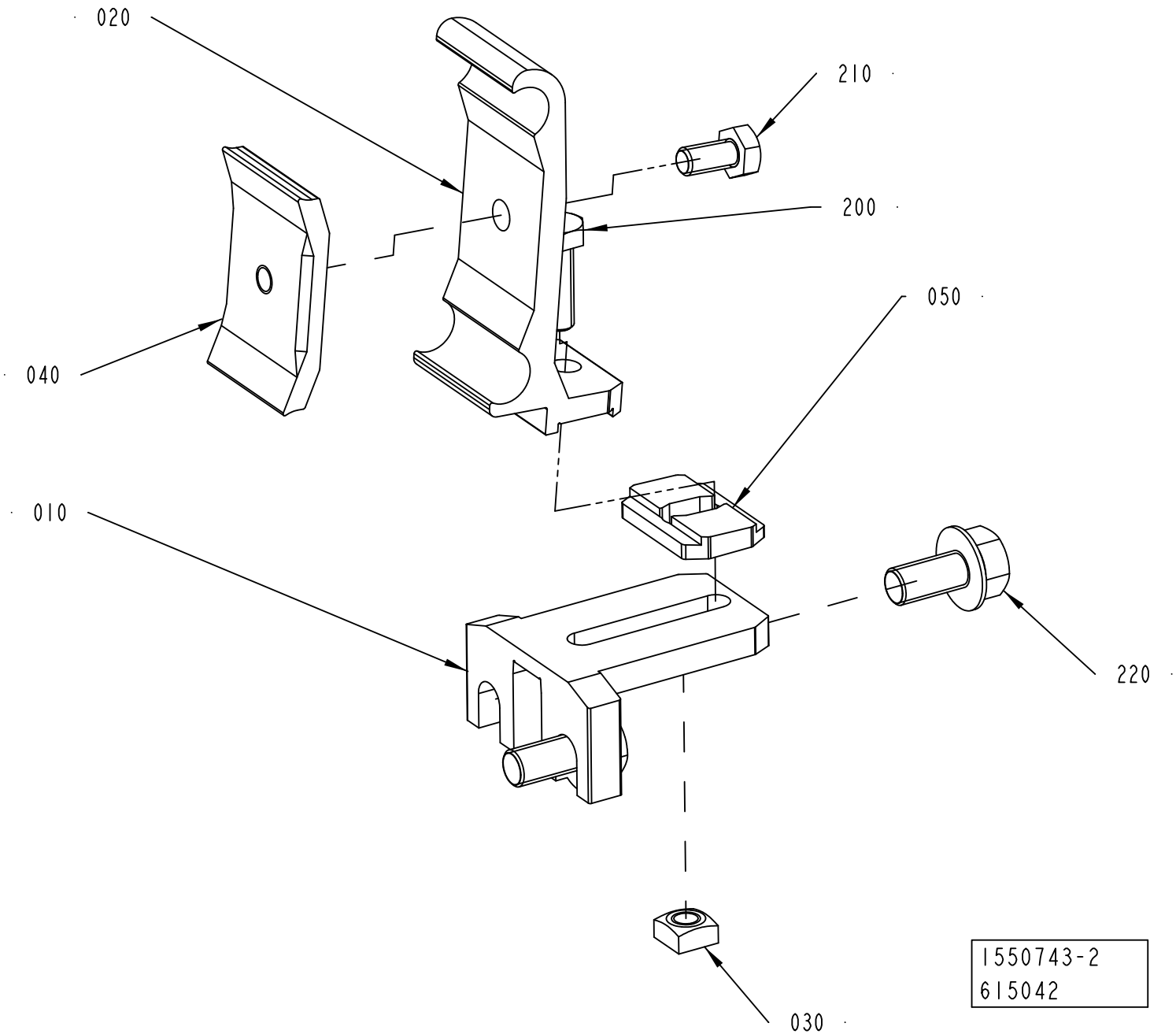

ECM: 626475 - 20140301
Group number: 1550743-0200
Assembly Drawing: 1550743-2_1_AB

Pos	Part No	UN	Qty	Description	Page No
-					
010	1550772-0000		1	HOLDER	
020	2699437-0000		1	RAIL HOLDER	
030	1359565-0000		1	NUT	
040	1366727-0000		1	CLAMP	
050	2699436-0000		1	SPACER	
200	312105-0370		1	SCREW, M6S ISO 4017 M6X20 A4 80	
210	312105-0366		1	SCREW, M6S ISO 4017 M6X12 A4 80	
220	312108-0449		2	SCREW EN 1665 TYPE F M8X16 A270	

Pos	Part No	UN	Qty	Description	Page No

RAIL HOLDER KIT

Drawing file: 2561602-1_1_AD.hpgl

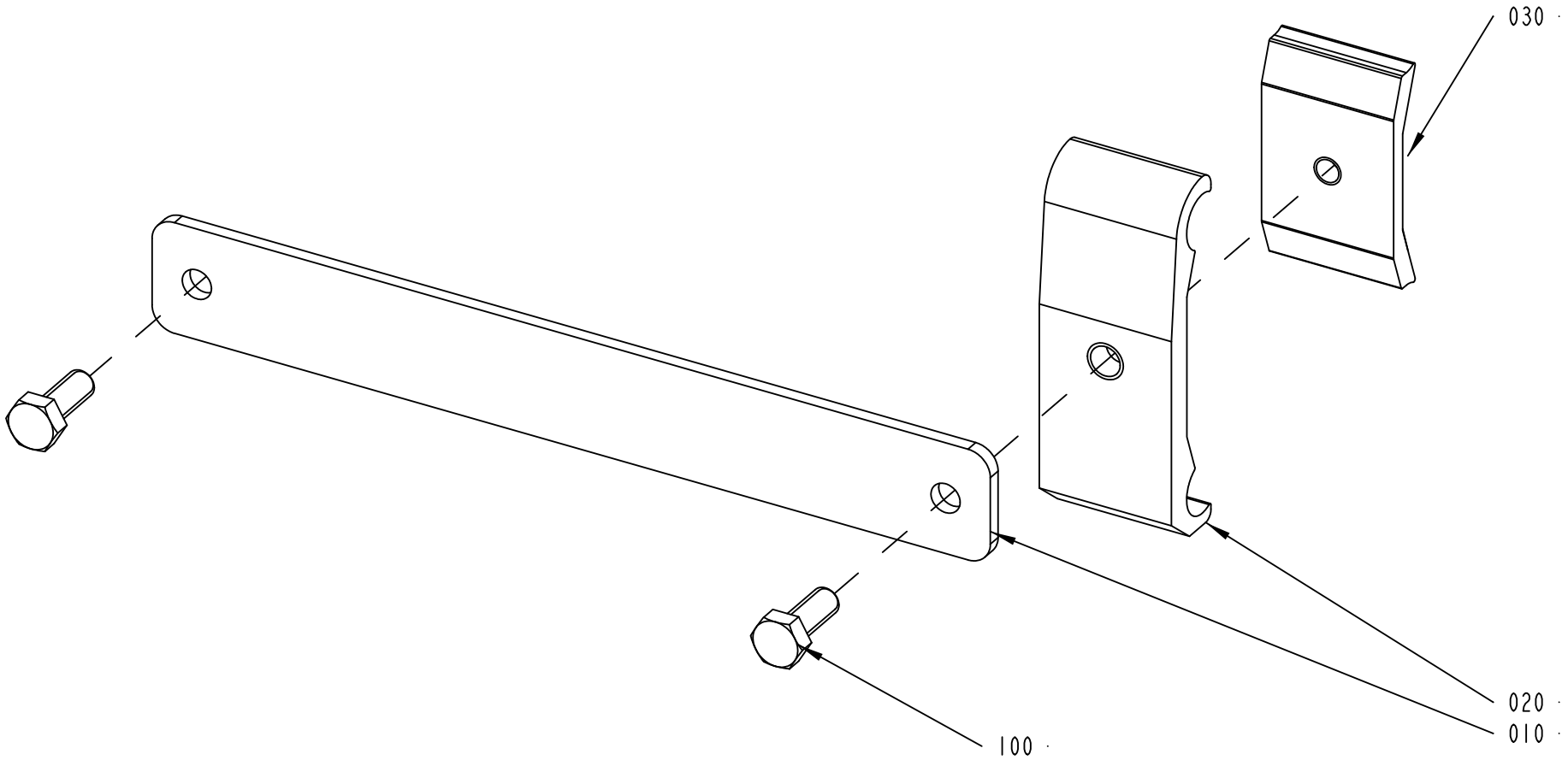

2561602-1
597922

ECM: 599495 - 20130418
Group number: 2561602-0100
Assembly Drawing: 2561602-1_1_AD

Pos	Part No	UN	Qty	Description	Page No
-					
010	2561596-0000		1	RAIL HOLDER KIT	
020	1366750-0000		1	HOLDER	
030	1366727-0000		1	CLAMP	
100	312105-0368		2	"SCREW, M6S ISO 4017 M6X16 A4 80"	

Pos	Part No	UN	Qty	Description	Page No

Machine Type	Group Description	Used-In	Group Number	Page No

BOX2 - SUPERSTRUCTURE

Drawing file: 2634504-5_1_AB.hpgl

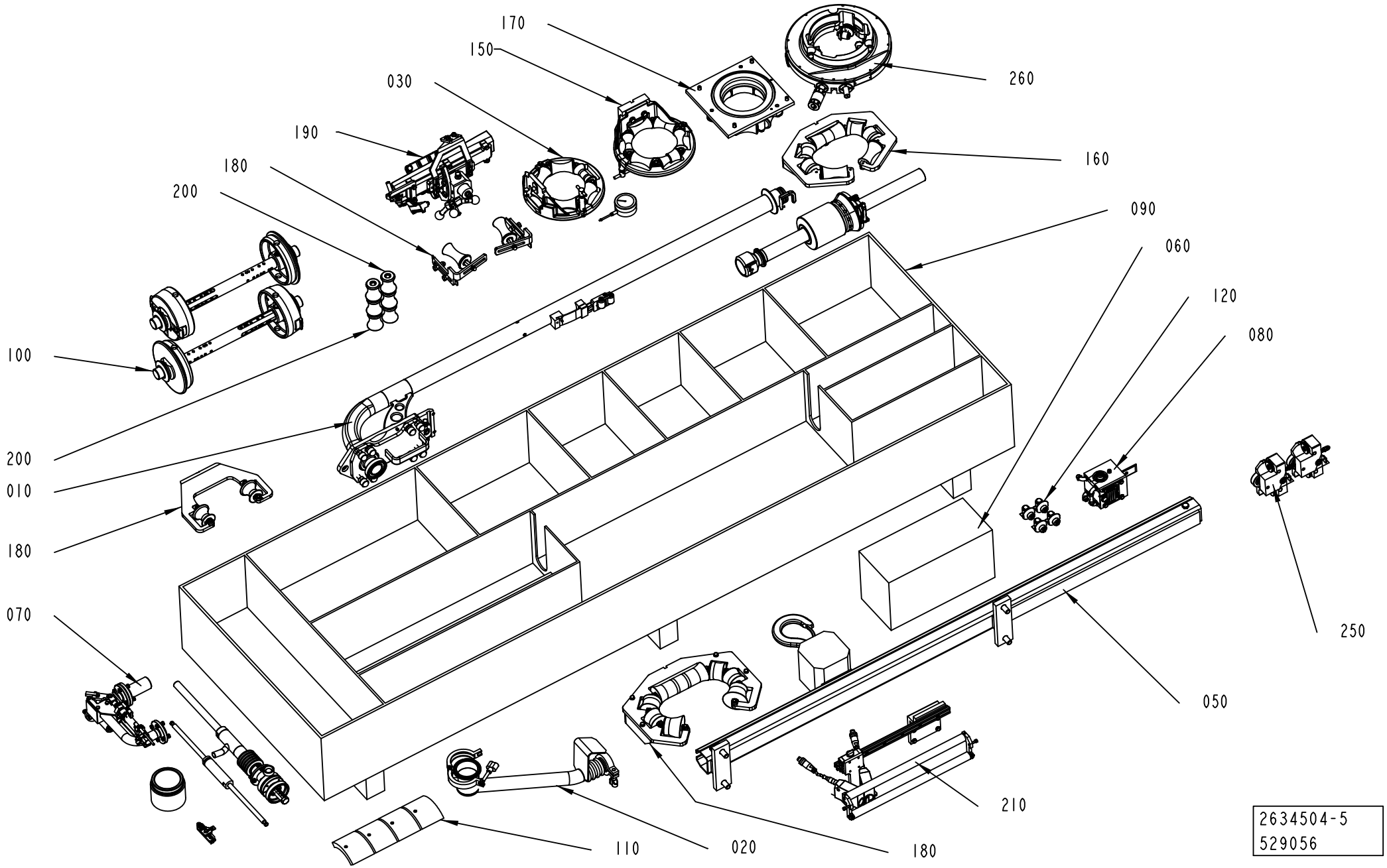

2634504-5
529056

ECM: 648403 - 20140401
Group number: 2634504-0300
Assembly Drawing: 2634504-5_1_AB

Pos	Part No	UN	Qty	Description	Page No
NODIMC START FM TBA 0500SQ, NODIMC START FM TBA 1000SQ					
080	2902378-0100		1	TRANSFORMER	**1-325**
260	3026440-0200		1	STEERING RING	**1-327, 1-329**
TBA 1000SQ NODIMC, TBA 0500SQ NODIMC, TGA 1500SQ NODIMC, TBA 0500S NODIMC, DIMC/FLEX START FM TBA 1000SQ, DIMC/FLEX START FM TBA 0500SQ, NODIMC START FM TBA 0500S, NODIMC START FM TGA 1500SQ					
080	2902378-0100		1	TRANSFORMER	**1-325**
Common Parts					
010	2501310-0300		1	FILLING PIPE	**1-333, 1-335, 1-337, 1-339**
020	2512936-0200		1	CLEANING CUP	**1-341**
030	2912699-0100		1	LOWER FORMING RING	**1-343, 1-345**
050	2575120-0100		1	LIFTING UNIT	**1-373**
060	2979589-0200		1	START-UP KIT SS	**1-375, 1-377**
070	3035150-0200		1	STERILE AIR BLOWER	**1-393**
090	3010408-0000		1	BOX	
100	2731217-0200		2	PAPER REEL HOLDER	**1-401**
110	3019537-0100		1	BENDING ROLLER	**1-403**
120	3044267-0100		4	ROLLER BRACKET	**1-331**
150	2912700-0100		1	UPPER FORMING RING	**1-405**
160	2912702-0100		1	FORMING RING	**1-433**
170	3191259-0100		1	SEAL	**1-449**
180	2912703-0100		1	EDGE ROLLER	**1-469**
190	2657873-0200		1	LONGITUDINAL SEALING	**1-479, 1-481, 1-483, 1-485, 1-487**
200	3093221-0100		1	TRIMMING ROLLER	**1-493**
210	3333753-0100		1	SPLICING DEVICE	**1-495, 1-497**

Pos	Part No	UN	Qty	Description	Page No

Machine Type | Group Description | Used-In | Group Number | Page No

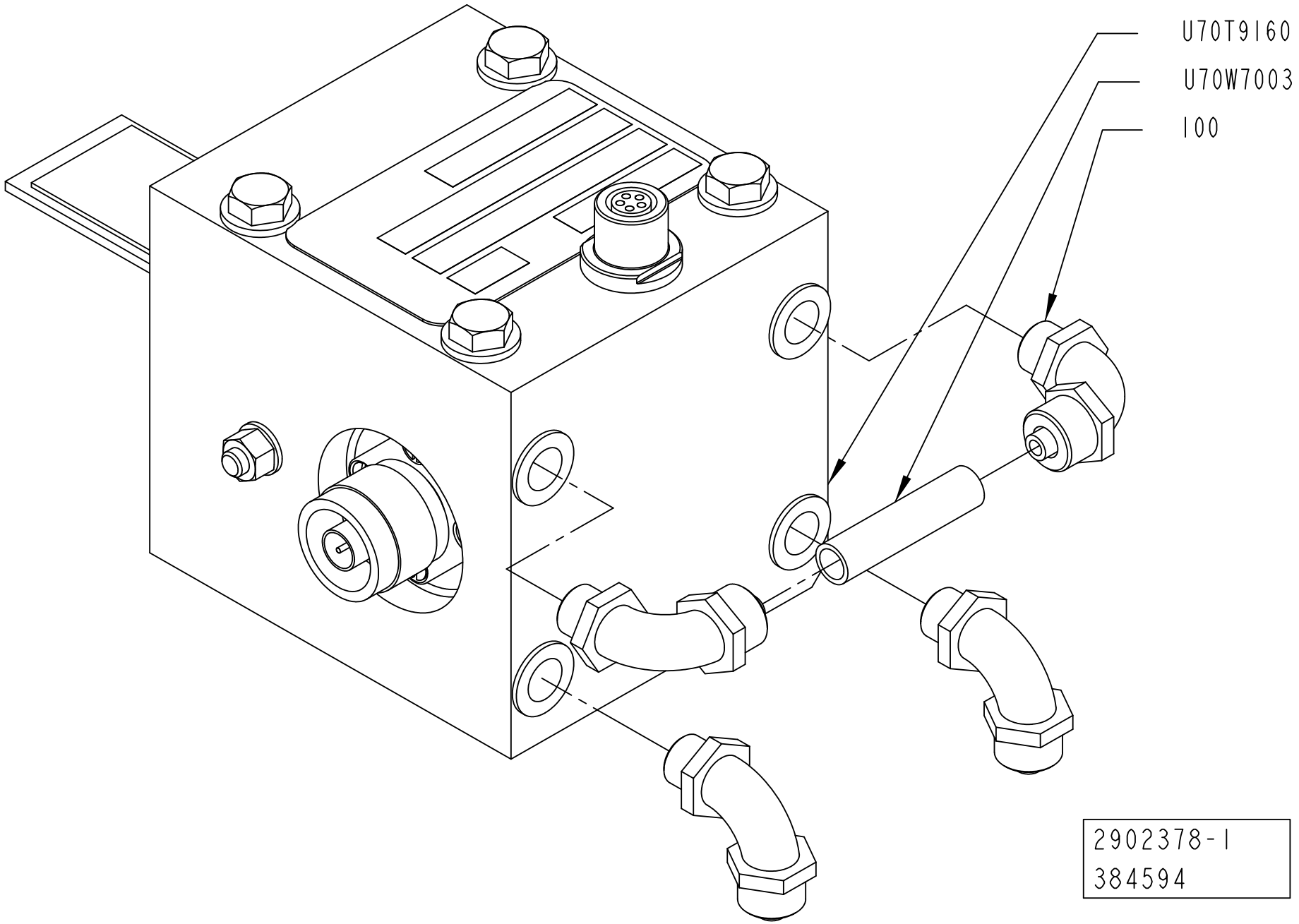
U70T9160
U70W7003
100
2902378-1
384594

ECM: 668193 - 20140702
Group number: 2902378-0100
Assembly Drawing: 2902378-1_1_AA

Pos	Part No	UN	Qty	Description	Page No
A3/FLEX TBA 0500B, A3/FLEX TBA 1000B, A3/FLEX TBA 1000S, A3/FLEX TPA 1000SQ, A3/FLEX TBA 1500S, A3/FLEX TPA 0500SQ, A3/FLEX TBA 2000S, A3/FLEX TPA 0750SQ, A3/FLEX TGA 1500SQ, A3/FLEX TBA 1000E, A3/FLEX TBA 1000M, A3/FLEX TBA 0500E, A3/SPEED TBA 0200E					
U70T9160	2888970-0524		1	TRANSFORMER VMN	
A3/FLEX TBA 0500S					
U70T9160	2888970-0619		1	TRANSFORMER VMN	
A3/FLEX TBA 1000SQ, A3/FLEX TBA 0500SQ, A3/FLEX TGA 1000SQ, A3/FLEX TGA 0500SQ, A3/FLEX TGA 0750SQ, A3/FLEX TGA 1000CR, A3/FLEX TGA 1000LF, A3/SPEED TBA 0250BL					
U70T9160	2888970-0438		1	TRANSFORMER VMN	
Common Parts					
100	342931-0121		4	ELBOW 90 COUPL., EXT. THREAD 8/6-G1/8"	
U70W7003	90166-0118	MM	50	TUBE 8 MM PA BLACK	

Pos	Part No	UN	Qty	Description	Page No

STEERING RING

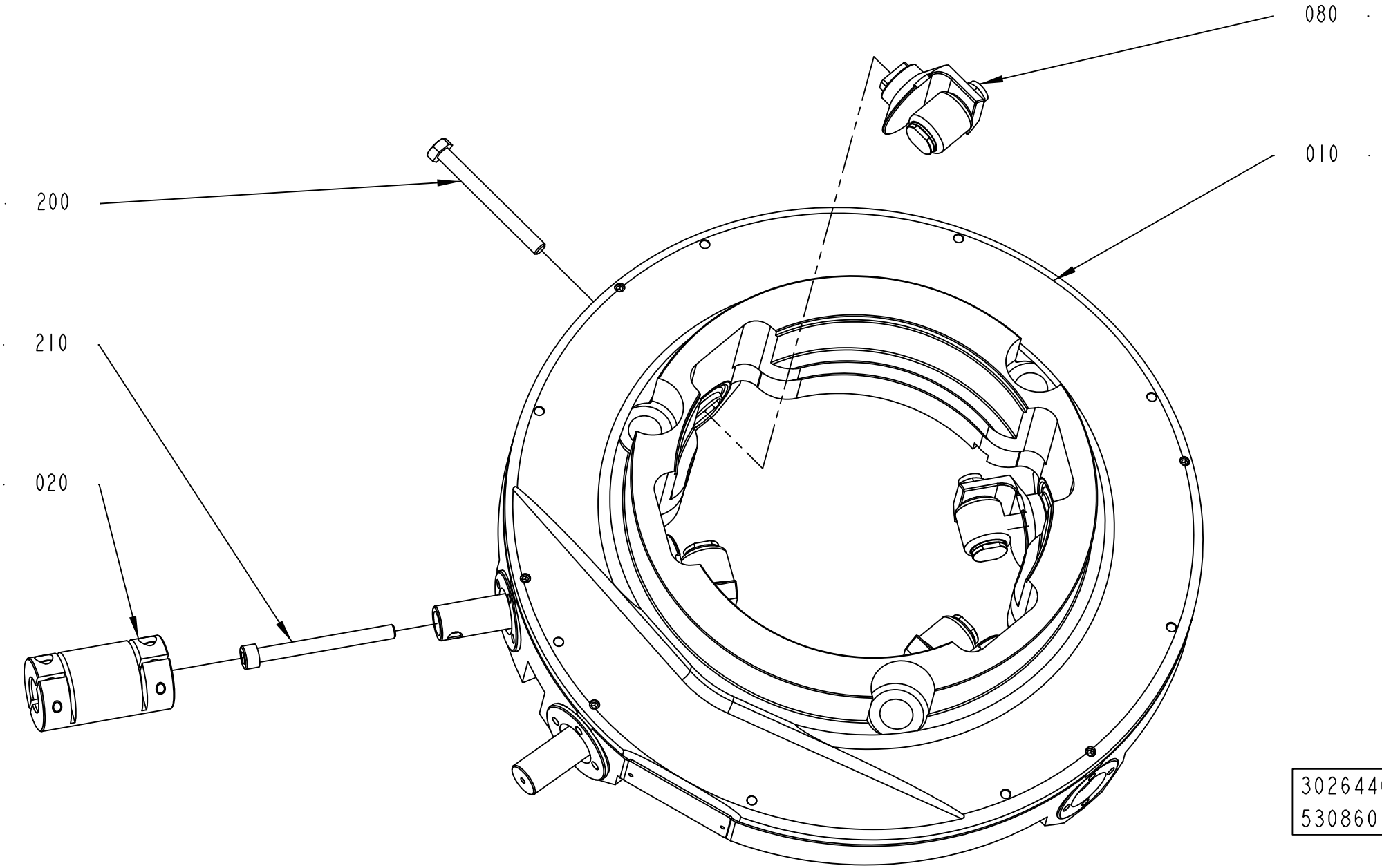

3026440-5
530860

ECM: 530860 - 20120401
Group number: 3026440-0200
Assembly Drawing: 3026440-5_1_AA

This list covers pages from 1-326 to 1-329

Pos	Part No	UN	Qty	Description	Page No
-					
010	3178571-0000		1	STEERING DEVICE	
020	2932052-0000		1	JOINT	
080	3044267-0100		4	ROLLER BRACKET	**1-331**
200	312105-0382		3	SCREW, M6S ISO 4014 M6X60 A4 80	
210	312115-0382		1	SCREW ISO4762 M6X60 A4 80	

Pos	Part No	UN	Qty	Description	Page No

STEERING RING

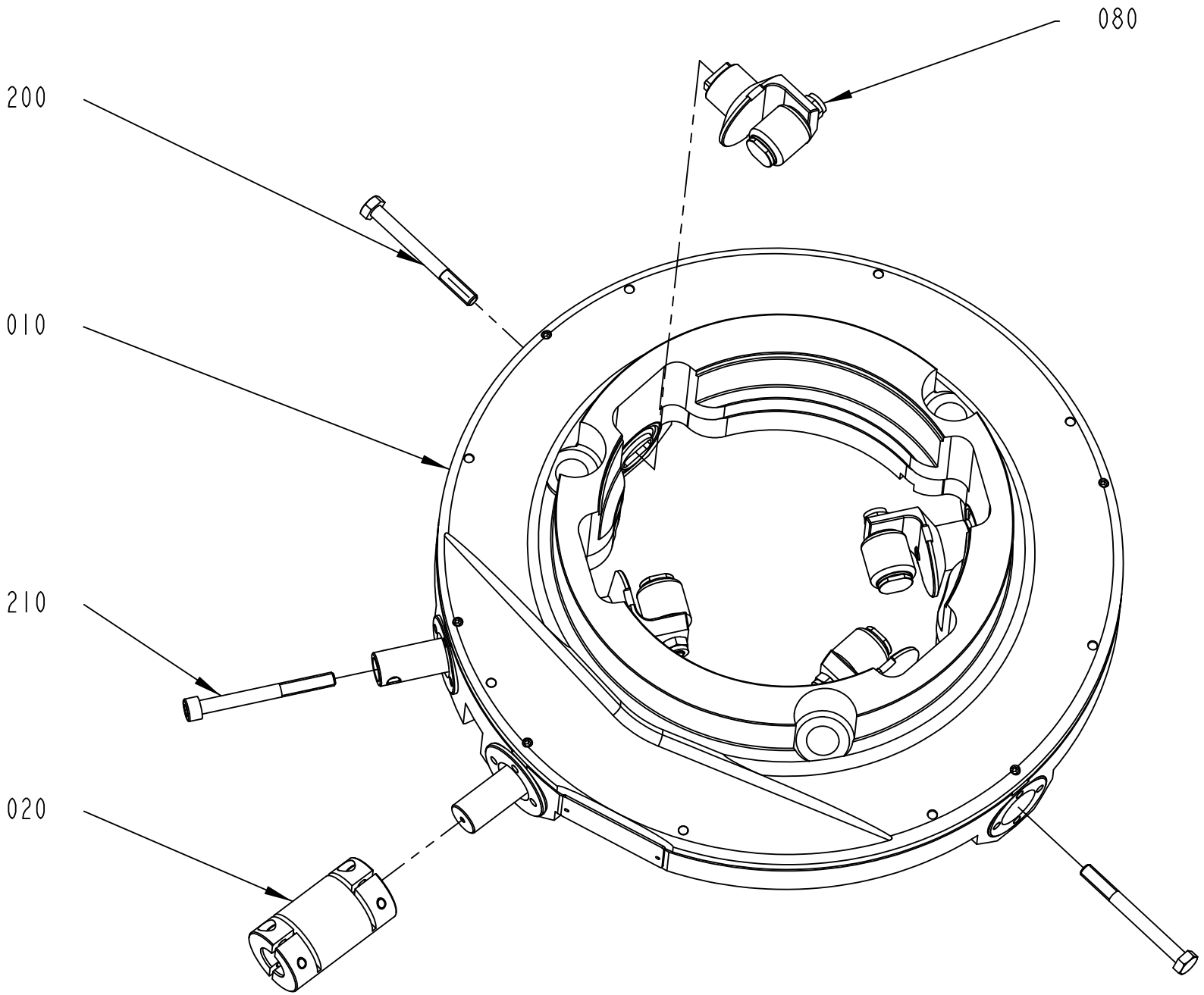

3026440-6
530860

ECM: 530860 - 20120401
Group number: 3026440-0200
Assembly Drawing: 3026440-6_1_AA

This list covers pages from 1-326 to 1-329

Pos	Part No	UN	Qty	Description	Page No
-					
010	3178571-0000		1	STEERING DEVICE	
020	2932052-0000		1	JOINT	
080	3044267-0100		4	ROLLER BRACKET	**1-331**
200	312105-0382		3	SCREW, M6S ISO 4014 M6X60 A4 80	
210	312115-0382		1	SCREW ISO4762 M6X60 A4 80	

Pos	Part No	UN	Qty	Description	Page No

ROLLER BRACKET

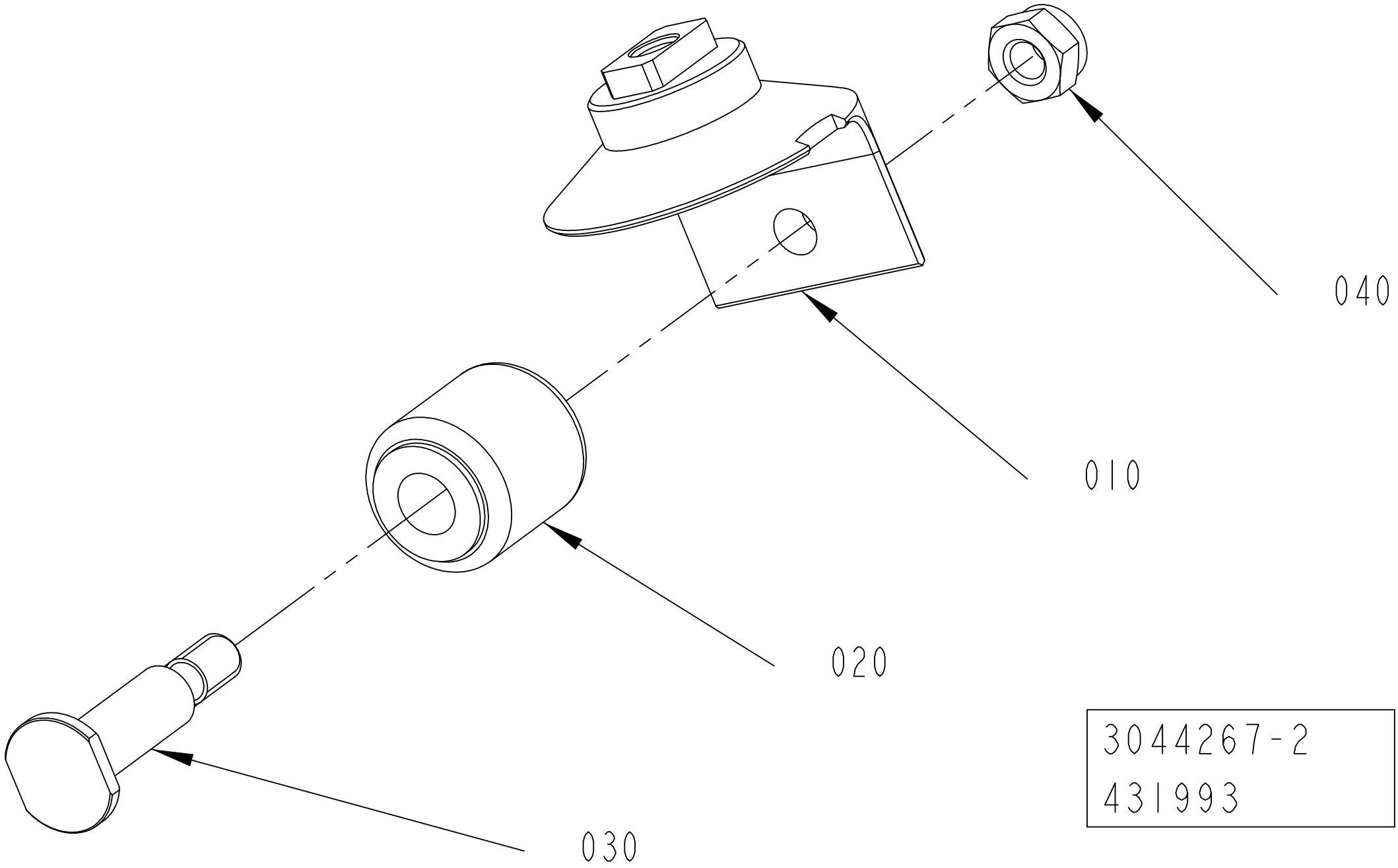

3044267-2
431993

ECM: 530452 - 20120416
Group number: 3044267-0100
Assembly Drawing: 3044267-2_1_AA

Pos	Part No	UN	Qty	Description	Page No
TBA 0500B, TBA 1000B, TBA 1500S, TGA 1500SQ					
010	2944647-0000		1	BRACKET	
TBA 0500S					
010	2921394-0000		1	BRACKET	
TBA 1000S					
010	3026932-0000		1	BRACKET	
TBA 2000S					
010	2878634-0000		1	BRACKET	
TGA 1000SQ, TGA 0750SQ, TGA 0500SQ, TGA 1000CR, TGA 1000LF					
010	3018395-0000		1	BRACKET	
TPA 0500SQ					
010	2878625-0000		1	BRACKET	
TPA 1000SQ, TPA 0750SQ					
010	2921394-0000		1	BRACKET	
Common Parts					
020	2832867-0000		1	ROLLER	
030	2872065-0000		1	PIN	
040	312812-0316		1	HEXAGON NUT, NY-LOCK M6 A4 80	

Pos	Part No	UN	Qty	Description	Page No

FILLING PIPE

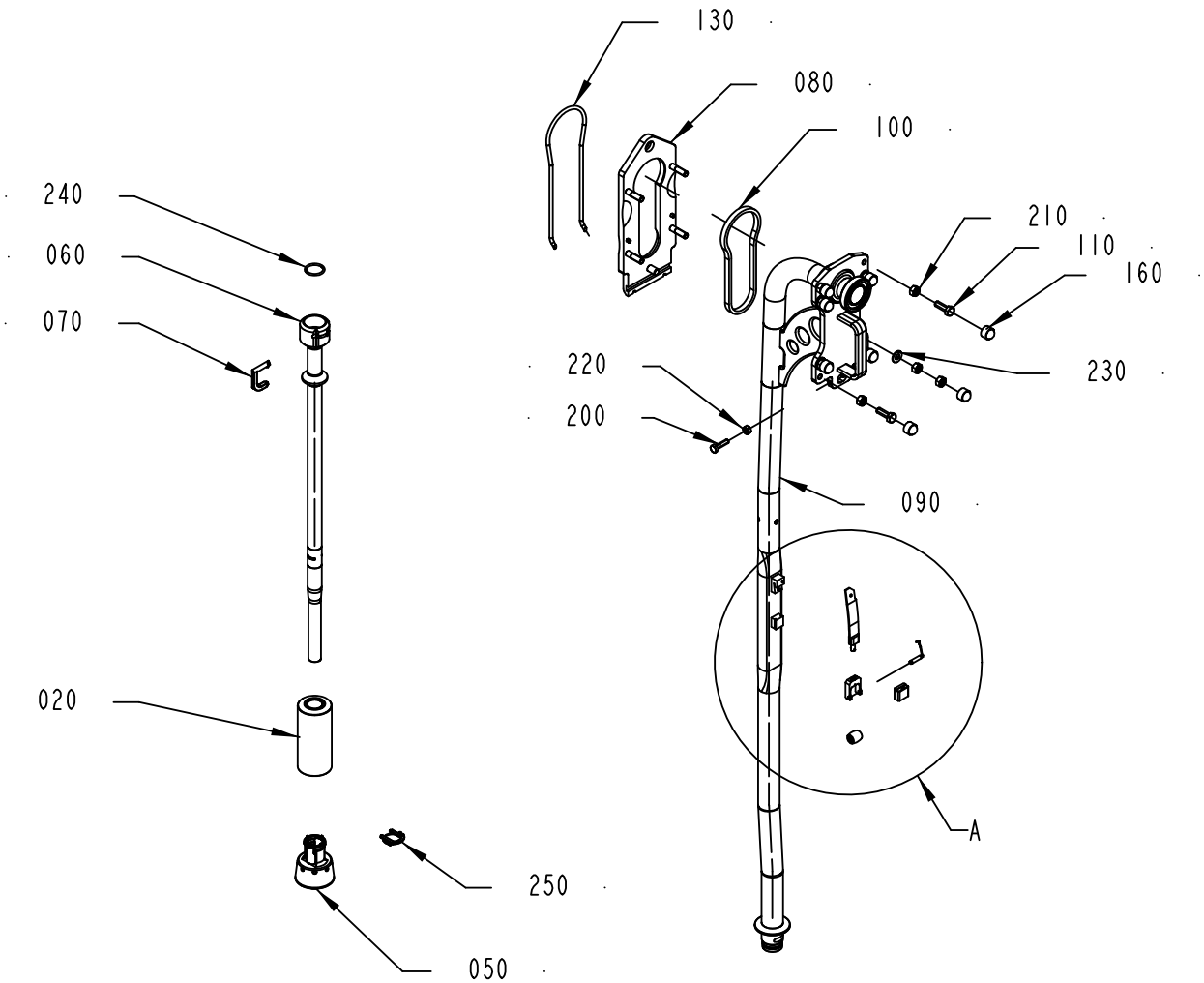

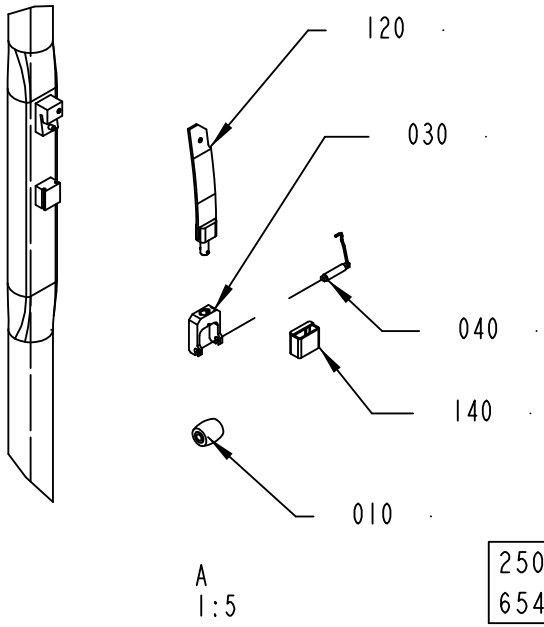

A
1:5

2501310-18
654372

ECM: 680009 - 20140702
Group number: 2501310-0300
Assembly Drawing: 2501310-18_1_AB

This list covers pages from 1-332 to 1-339

Pos	Part No	UN	Qty	Description	Page No
TBA 0500B, TBA 1000B NODIMC (See drawing on page: 1-334)					
010	2932252-0000		2	PRESSURE ROLLER QUANT MINIMA 10PCS	
020	2597531-0000		1	FLOAT	
	90602-0330		*1*	*SAFETY CUTTER, RUCK-ZUCK 55337*	
030	2846311-0000		1	FORK	
040	1538953-0000		1	SHAFT	
050	3025700-0000		1	PRESSURE FLANGE	
060	3025699-0000		1	LOWER FILLING TUBE	
070	2809846-0000		1	STOP PIN	
090	2826478-0000		1	UPPER FILLING PIPE	
120	2946917-0000		1	SPRING	
140	2572071-0000		1	HOOD	
170	24928-0000		4	LOCKING RUBBER	
185	2638077-0000		2	SHAFT	
190	2846309-0000		1	BRACKET	
240	344210-0219		1	O-RING 29,2X3,0 MM FDA, 3-A	
260	2976089-0000		1	LOCKING DEVICE	
TBA 0500S (See drawing on page: 1-338)					
010	2909367-0000		2	PRESSURE ROLLER	
020	3095351-0000		1	FLOAT	
	90602-0330		*1*	*SAFETY CUTTER, RUCK-ZUCK 55337*	
030	2887735-0000		1	FORK	
040	2634972-0000		1	SHAFT	
050	2601468-0000		1	PRESSURE FLANGE	
060	2866755-0000		1	LOWER FILLING PIPE	
070	2809846-0000		1	STOP PIN	
090	2832555-0000		1	FILLING PIPE	
120	2946917-0000		1	SPRING	
140	2572071-0000		1	HOOD	
170	24928-0000		4	LOCKING RUBBER	
185	499011-0000		2	SHAFT	
190	2715569-0000		1	BRACKET	
240	344210-0219		1	O-RING 29,2X3,0 MM FDA, 3-A	
250	2803986-0000		1	STOP PIN	
260	2803987-0000		1	STOP PIN	
270	2886173-0000		1	LOCKING RING	
TBA 0500SQ, TBA 1000SQ (See drawing on page: 1-334)					
010	2909368-0000		2	PRESSURE ROLLER (PACK 10)	
020	3095377-0000		1	FLOAT	
	90602-0330		*1*	*SAFETY CUTTER, RUCK-ZUCK 55337*	
030	2887735-0000		1	FORK	
040	2634972-0000		1	SHAFT	
050	3266045-0000		1	PRESSURE FLANGE	
060	2977546-0000		1	LOWER FILLING TUBE	
070	2809846-0000		1	STOP PIN	
090	2826478-0000		1	UPPER FILLING PIPE	
120	2826398-0000		1	SPRING	
140	2787568-0000		1	HOOD	
170	24928-0000		4	LOCKING RUBBER	
185	499011-0000		2	SHAFT	
190	2887736-0000		1	BRACKET	
240	344210-0219		1	O-RING 29,2X3,0 MM FDA, 3-A	
260	2976089-0000		1	LOCKING DEVICE	
TBA 1000B DIMC/FLEX (See drawing on page: 1-336)					
010	2932252-0000		1	PRESSURE ROLLER QUANT MINIMA 10PCS	
020	2597531-0000		1	FLOAT	
	90602-0330		*1*	*SAFETY CUTTER, RUCK-ZUCK 55337*	
030	1348048-0000		1	FORK	
040	2523268-0000		1	SHAFT	
050	3025700-0000		1	PRESSURE FLANGE	
060	3025699-0000		1	LOWER FILLING TUBE	
070	2809846-0000		1	STOP PIN	
090	2826478-0000		1	UPPER FILLING PIPE	
120	2826393-0000		1	SPRING	
140	14600-0000		1	HOOD	
240	344210-0219		1	O-RING 29,2X3,0 MM FDA, 3-A	
260	2976089-0000		1	LOCKING DEVICE	
TBA 1000E NOQC (See drawing on page: 1-334)					
010	3157309-0000		2	PRESSURE ROLLER	
020	3095377-0000		1	FLOAT	
	90602-0330		*1*	*SAFETY CUTTER, RUCK-ZUCK 55337*	
030	3189332-0000		1	FORK	
040	3189234-0000		1	SHAFT	
050	3266045-0000		1	PRESSURE FLANGE	
060	2977546-0000		1	LOWER FILLING TUBE	
070	2809846-0000		1	STOP PIN	
090	2826478-0000		1	UPPER FILLING PIPE	
120	2826398-0000		1	SPRING	
140	2787568-0000		1	HOOD	
170	24928-0000		4	LOCKING RUBBER	
185	499011-0000		2	SHAFT	
190	3012904-0000		1	BRACKET	
240	344210-0219		1	O-RING 29,2X3,0 MM FDA, 3-A	
260	2976089-0000		1	LOCKING DEVICE	

Machine Type | Group Description | Used-In | Group Number | Page No

FILLING PIPE

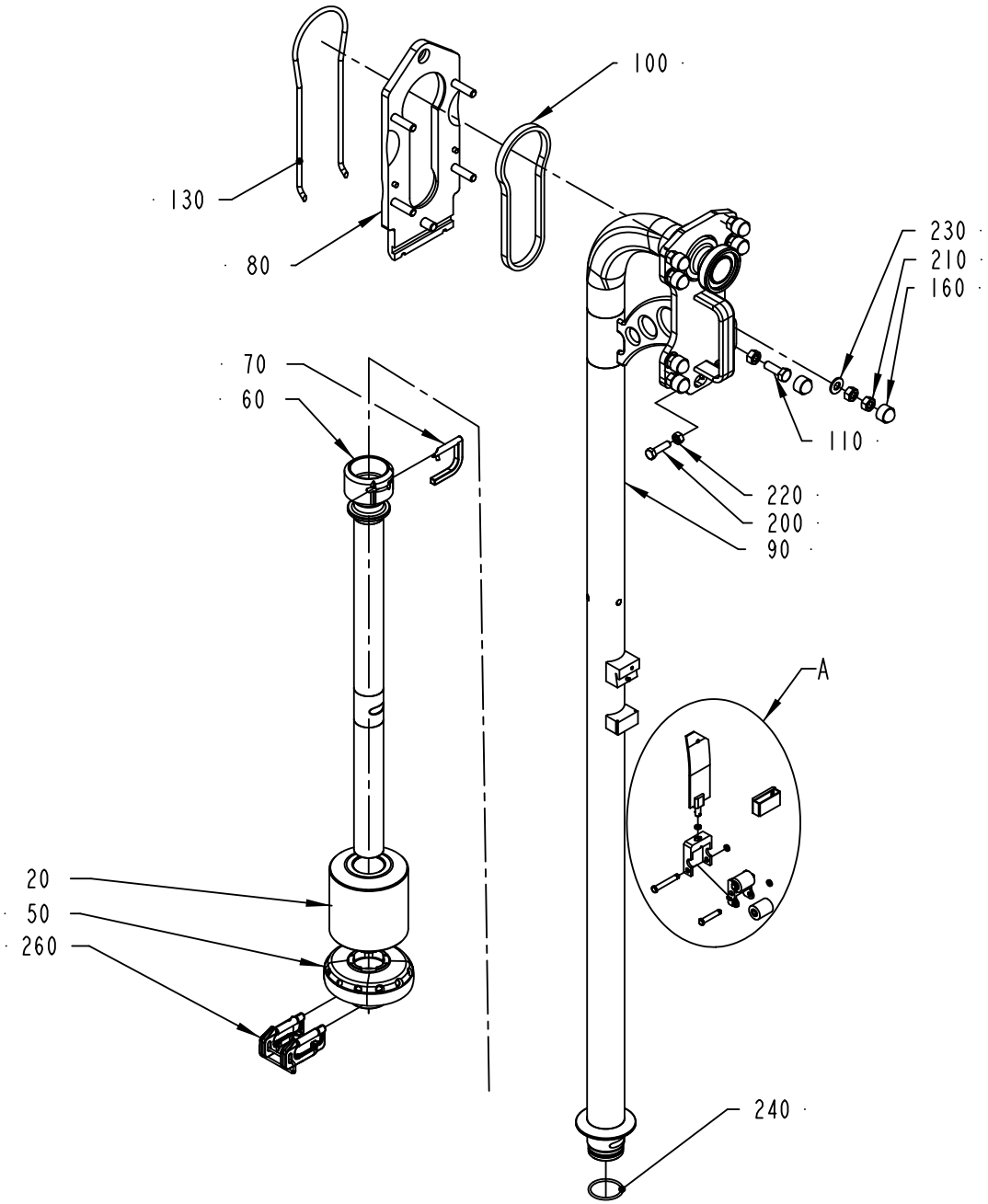

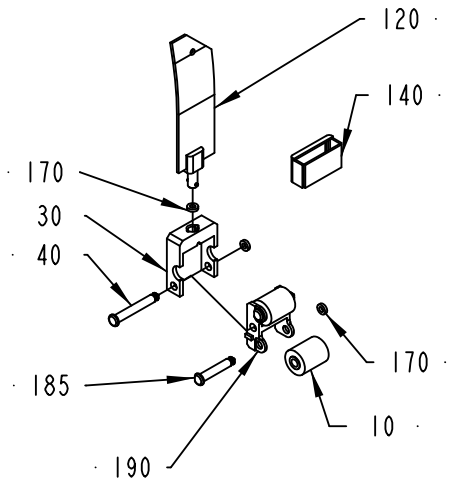

DETAIL A
SCALE 1:4

2501310-20
397493

Pos	Part No	UN	Qty	Description	Page No
TBA 1000E QC, TBA 0500E QC (Cont'd) (See drawing on page: 1-334)					
010	3157309-0000		2	PRESSURE ROLLER	
020	3095377-0000		1	FLOAT	
	90602-0330		*1*	*SAFETY CUTTER, RUCK-ZUCK 55337*	
030	3189332-0000		1	FORK	
040	3189234-0000		1	SHAFT	
050	3266045-0000		1	PRESSURE FLANGE	
060	3304527-0000		1	LOWER FILLING PIPE	
070	2809846-0000		1	STOP PIN	
090	2826478-0000		1	UPPER FILLING PIPE	
120	2826398-0000		1	SPRING	
140	2787568-0000		1	HOOD	
170	24928-0000		4	LOCKING RUBBER	
185	499011-0000		2	SHAFT	
190	3012904-0000		1	BRACKET	
240	344210-0219		1	O-RING 29,2X3,0 MM FDA, 3-A	
260	2976089-0000		1	LOCKING DEVICE	
TBA 1000M (See drawing on page: 1-336)					
010	2966871-0000		1	PRESSURE ROLLER	
020	2597531-0000		1	FLOAT	
	90602-0330		*1*	*SAFETY CUTTER, RUCK-ZUCK 55337*	
030	1348047-0000		1	FORK	
040	2529419-0000		1	SHAFT	
050	3047954-0000		1	PRESSURE FLANGE	
060	3047955-0000		1	LOWER FILLING TUBE	
070	2809846-0000		1	STOP PIN	
090	2826478-0000		1	UPPER FILLING PIPE	
120	2826393-0000		1	SPRING	
140	14600-0000		1	HOOD	
240	344210-0219		1	O-RING 29,2X3,0 MM FDA, 3-A	
260	2976089-0000		1	LOCKING DEVICE	
TBA 1000S DIMC/FLEX (See drawing on page: 1-336)					
010	2909368-0000		1	PRESSURE ROLLER (PACK 10)	
020	2597531-0000		1	FLOAT	
	90602-0330		*1*	*SAFETY CUTTER, RUCK-ZUCK 55337*	
030	1348047-0000		1	FORK	
040	2529419-0000		1	SHAFT	
050	3273748-0000		1	PRESSURE FLANGE	
060	2977546-0000		1	LOWER FILLING TUBE	
070	2809846-0000		1	STOP PIN	
090	2826478-0000		1	UPPER FILLING PIPE	
120	2826395-0000		1	SPRING	
140	434665-0000		1	HOOD	
240	344210-0219		1	O-RING 29,2X3,0 MM FDA, 3-A	
260	2976089-0000		1	LOCKING DEVICE	
TBA 1000S NODIMC (See drawing on page: 1-334)					
010	2909368-0000		2	PRESSURE ROLLER (PACK 10)	
020	2597531-0000		1	FLOAT	
	90602-0330		*1*	*SAFETY CUTTER, RUCK-ZUCK 55337*	
030	2659364-0000		1	FORK	
040	2634972-0000		1	SHAFT	
050	3273748-0000		1	PRESSURE FLANGE	
060	2977546-0000		1	LOWER FILLING TUBE	
070	2809846-0000		1	STOP PIN	
090	2826478-0000		1	UPPER FILLING PIPE	
120	2826399-0000		1	SPRING	
140	2572071-0000		1	HOOD	
170	24928-0000		4	LOCKING RUBBER	
185	499011-0000		2	SHAFT	
190	2672995-0000		1	BRACKET	
240	344210-0219		1	O-RING 29,2X3,0 MM FDA, 3-A	
260	2976089-0000		1	LOCKING DEVICE	
TBA 1500S (See drawing on page: 1-334)					
010	2932252-0000		2	PRESSURE ROLLER QUANT MINIMA 10PCS	
020	2597531-0000		1	FLOAT	
	90602-0330		*1*	*SAFETY CUTTER, RUCK-ZUCK 55337*	
030	2846311-0000		1	FORK	
040	1538953-0000		1	SHAFT	
050	3025705-0000		1	PRESSURE FLANGE	
060	3031513-0000		1	LOWER FILLING TUBE	
070	2809846-0000		1	STOP PIN	
090	2826478-0000		1	UPPER FILLING PIPE	
120	2946917-0000		1	SPRING	
140	2572071-0000		1	HOOD	
170	24928-0000		4	LOCKING RUBBER	
185	2638077-0000		2	SHAFT	
190	2846309-0000		1	BRACKET	
240	344210-0219		1	O-RING 29,2X3,0 MM FDA, 3-A	
260	2976089-0000		1	LOCKING DEVICE	
TBA 2000S (See drawing on page: 1-334)					
010	2932252-0000		2	PRESSURE ROLLER QUANT MINIMA 10PCS	
020	3106890-0000		1	FLOAT	
030	2846308-0000		1	FORK	
040	1538953-0000		1	SHAFT	

Machine Type | Group Description | Used-In | Group Number | Page No

FILLING PIPE

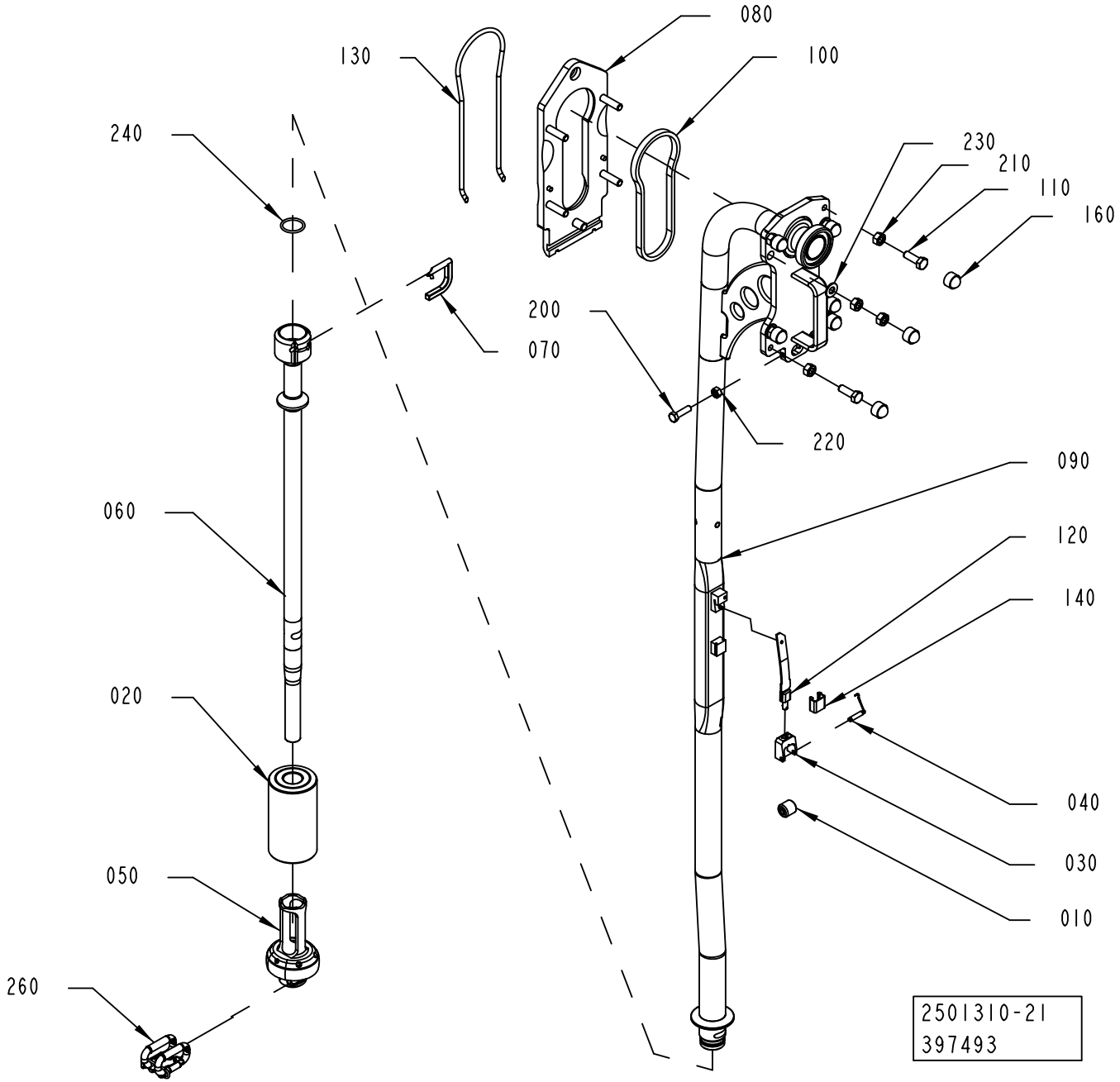

Pos	Part No	UN	Qty	Description	Page No
TBA 2000S (Cont'd) (See drawing on page: 1-334)					
050	2879238-0000		1	PRESSURE FLANGE	
060	2879239-0000		1	FILLING PIPE	
070	2809849-0000		1	STOP PIN	
090	2961246-0000		1	UPPER FILLING PIPE	
120	2978673-0000		1	SPRING	
140	2672994-0000		1	HOOD	
170	24928-0000		4	LOCKING RUBBER	
185	2638077-0000		2	SHAFT	
190	2971486-0000		1	BRACKET	
240	344210-0223		1	O-RING 39,2X3,0 MM FDA, 3-A	
260	2881463-0000		1	LOCKING DEVICE	
TGA 1000SQ, TGA 0750SQ, TGA 0500SQ, TGA 1000CR, TGA 1000LF (See drawing on page: 1-334)					
010	2909368-0000		2	PRESSURE ROLLER (PACK 10)	
020	3106887-0000		1	FLOAT	
030	2715652-0000		1	FORK	
040	2634972-0000		1	SHAFT	
050	3025701-0000		1	PRESSURE FLANGE	
060	3025702-0000		1	LOWER FILLING TUBE	
070	2809846-0000		1	STOP PIN	
090	2960579-0000		1	UPPER FILLING PIPE	
120	2826390-0000		1	SPRING	
140	2572071-0000		1	HOOD	
170	24928-0000		4	LOCKING RUBBER	
185	499011-0000		2	SHAFT	
190	2715569-0000		1	BRACKET	
240	344210-0219		1	O-RING 29,2X3,0 MM FDA, 3-A	
260	2976089-0000		1	LOCKING DEVICE	
TGA 1500SQ (See drawing on page: 1-334)					
010	2932252-0000		2	PRESSURE ROLLER QUANT MINIMA 10PCS	
020	3106892-0000		1	FLOAT	
030	2846311-0000		1	FORK	
040	1538953-0000		1	SHAFT	
050	3012056-0000		1	PRESSURE FLANGE	
060	3012046-0000		1	LOWER FILLING TUBE	
070	2809849-0000		1	STOP PIN	
090	2944644-0000		1	FILLING PIPE	
120	2946917-0000		1	SPRING	
140	2572071-0000		1	HOOD	
170	24928-0000		4	LOCKING RUBBER	
185	2638077-0000		2	SHAFT	
190	2846309-0000		1	BRACKET	
240	344210-0223		1	O-RING 39,2X3,0 MM FDA, 3-A	
260	3012771-0000		1	LOCKING DEVICE	
TPA 0500SQ (See drawing on page: 1-332)					
010	2909367-0000		1	PRESSURE ROLLER	
020	2610042-0000		1	FLOAT	
	90602-0330		*1*	*SAFETY CUTTER, RUCK-ZUCK 55337*	
030	2673015-0000		1	FORK	
040	2673021-0000		1	SHAFT	
050	3317946-0000		1	PRESSURE FLANGE	
060	3317949-0000		1	LOWER FILLING PIPE	
070	2809847-0000		1	STOP PIN	
090	2832555-0000		1	FILLING PIPE	
120	2959681-0000		1	SPRING	
140	2959682-0000		1	HOOD	
240	344210-0219		1	O-RING 29,2X3,0 MM FDA, 3-A	
250	3271429-0000		1	FORK	
TPA 1000SQ, TPA 0750SQ (See drawing on page: 1-334)					
010	2909367-0000		2	PRESSURE ROLLER	
020	3106884-0000		1	FLOAT	
030	2715652-0000		1	FORK	
040	2634972-0000		1	SHAFT	
050	2977415-0000		1	PRESSURE FLANGE	
060	3031512-0000		1	LOWER FILLING TUBE	
070	2809846-0000		1	STOP PIN	
090	2832553-0000		1	UPPER FILLING PIPE	
120	2826390-0000		1	SPRING	
140	2572071-0000		1	HOOD	
170	24928-0000		4	LOCKING RUBBER	
185	499011-0000		2	SHAFT	
190	2715569-0000		1	BRACKET	
240	344210-0219		1	O-RING 29,2X3,0 MM FDA, 3-A	
260	2976089-0000		1	LOCKING DEVICE	
Common Parts					
080	2500082-0000		1	MOUNTING PLATE	
100	2507048-0000		1	GASKET	
110	312105-0495		4	SCREW, M6S ISO 4017 M10X30 A4 80	
130	2500071-0000		1	O-RING	
160	90459-0729		8	HEXAGONAL PROTECTIVE CAP GPN 1000	
200	312105-0455		2	SCREW, M6S ISO 4017 M8X30 A4 80	
210	312605-0320		12	HEXAGON NUT, M6M M10 A280	
220	312605-0318		2	HEXAGON NUT, M6M M8 A280	
230	315105-0173		4	WASHER PLAIN, 10,5X22X2 A4 BRB	

FILLING PIPE

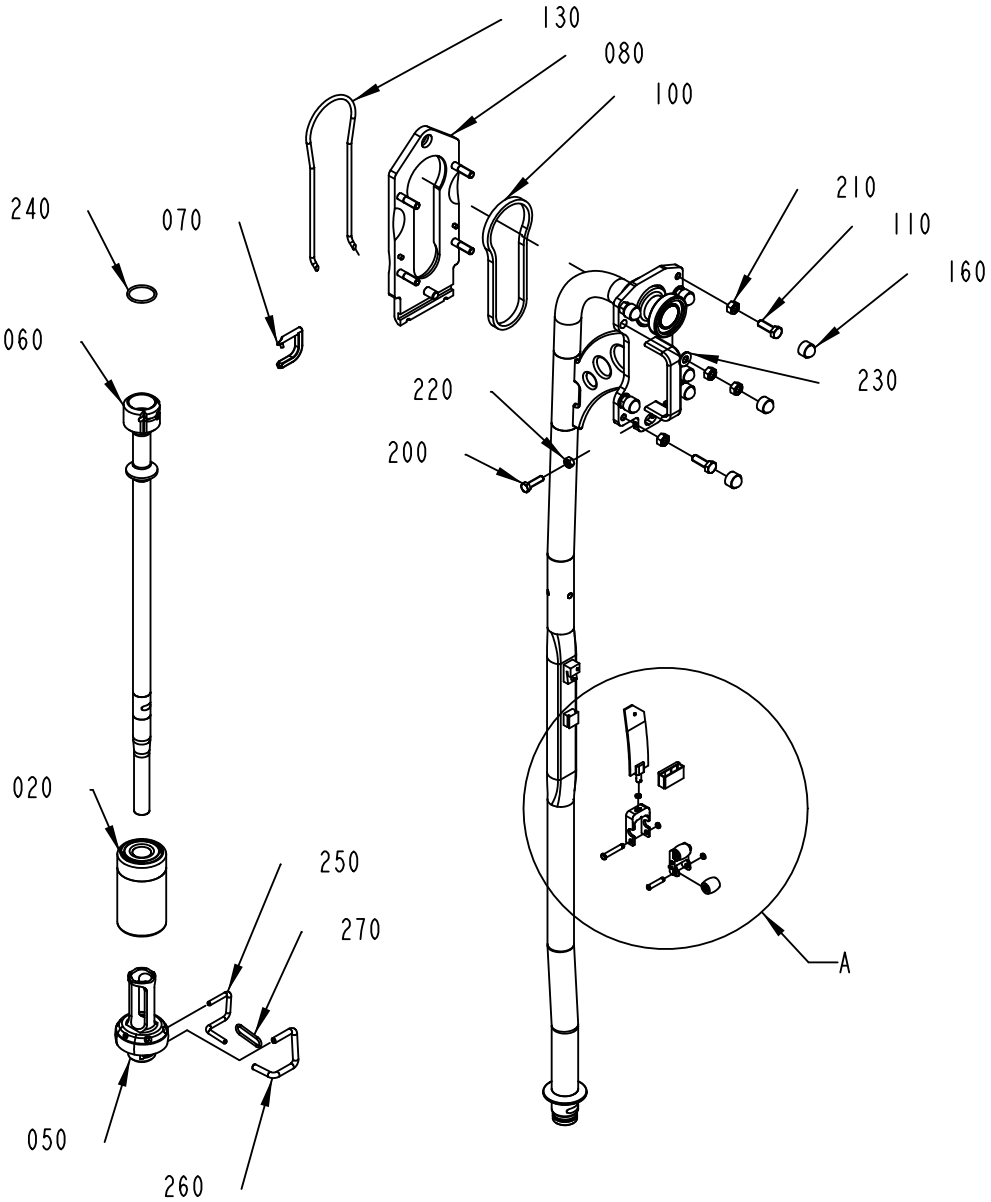

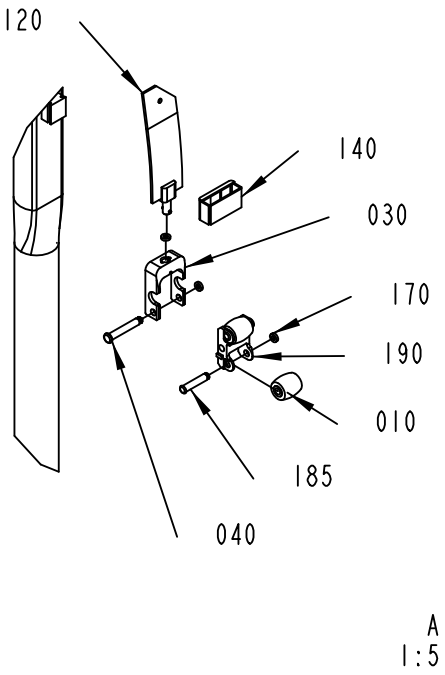

2501310-23
460047

Pos	Part No	UN	Qty	Description	Page No
Common Parts (Cont'd)					
230	315105-0173		4	WASHER PLAIN, 10,5X22X2 A4 BRB	

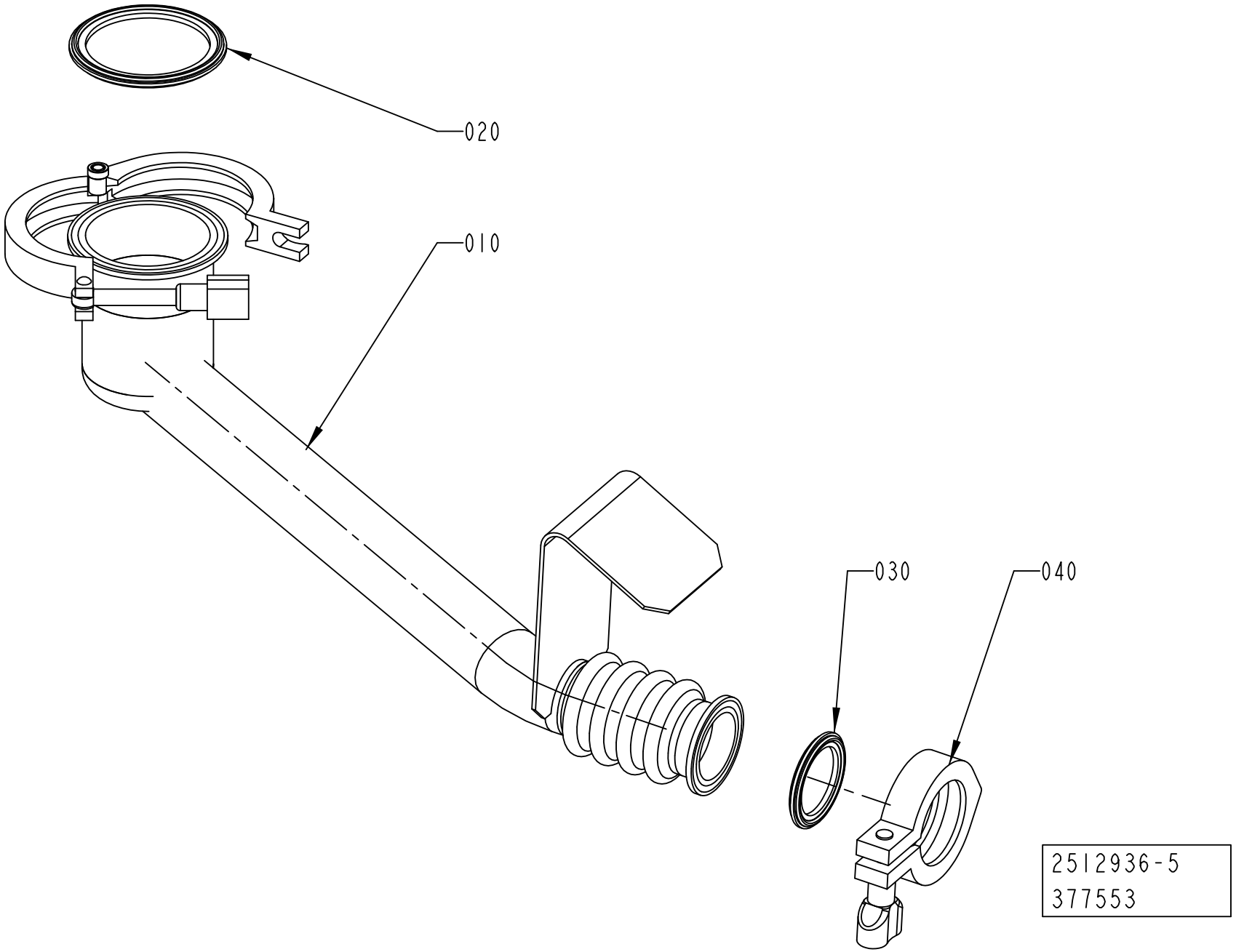
020
010
030
040
2512936-5
377553

ECM: 644408 - 20140401
Group number: 2512936-0200
Assembly Drawing: 2512936-5_1_AA

Pos	Part No	UN	Qty	Description	Page No
TBA 0500S, TPA 1000SQ, TPA 0500SQ, TPA 0750SQ					
010	3007551-0000		1	CLEANING CUP	
020	342850-0305		1	GASKET 47,8X62,6X5,2 MM 2" FDA 3-A	
TBA 0500SQ, TBA 0500B, TBA 1000B, TBA 1000SQ, TBA 1000S, TBA 1500S, TBA 2000S, TBA 1000E, TBA 1000M, TBA 0500E					
010	3007550-0000		1	CLEANING CUP	
020	342850-0306		1	GASKET 60,3X76,1X5,2 MM 2"1/2 FDA 3-A	
TGA 1000SQ, TGA 0750SQ, TGA 0500SQ, TGA 1000CR, TGA 1000LF					
010	3007552-0000		1	CLEANING CUP	
020	342850-0305		1	GASKET 47,8X62,6X5,2 MM 2" FDA 3-A	
TGA 1500SQ					
010	3007553-0000		1	CLEANING CUP	
020	342850-0306		1	GASKET 60,3X76,1X5,2 MM 2"1/2 FDA 3-A	
Common Parts					
030	342850-0304		1	GASKET 35,4X49,1X5,2 1"1/2 FDA, 3-A	
040	342840-0103		1	CLAMPING PIECE DN 1-11/2, GH13LAH112304N	

Pos	Part No	UN	Qty	Description	Page No

LOWER FORMING RING

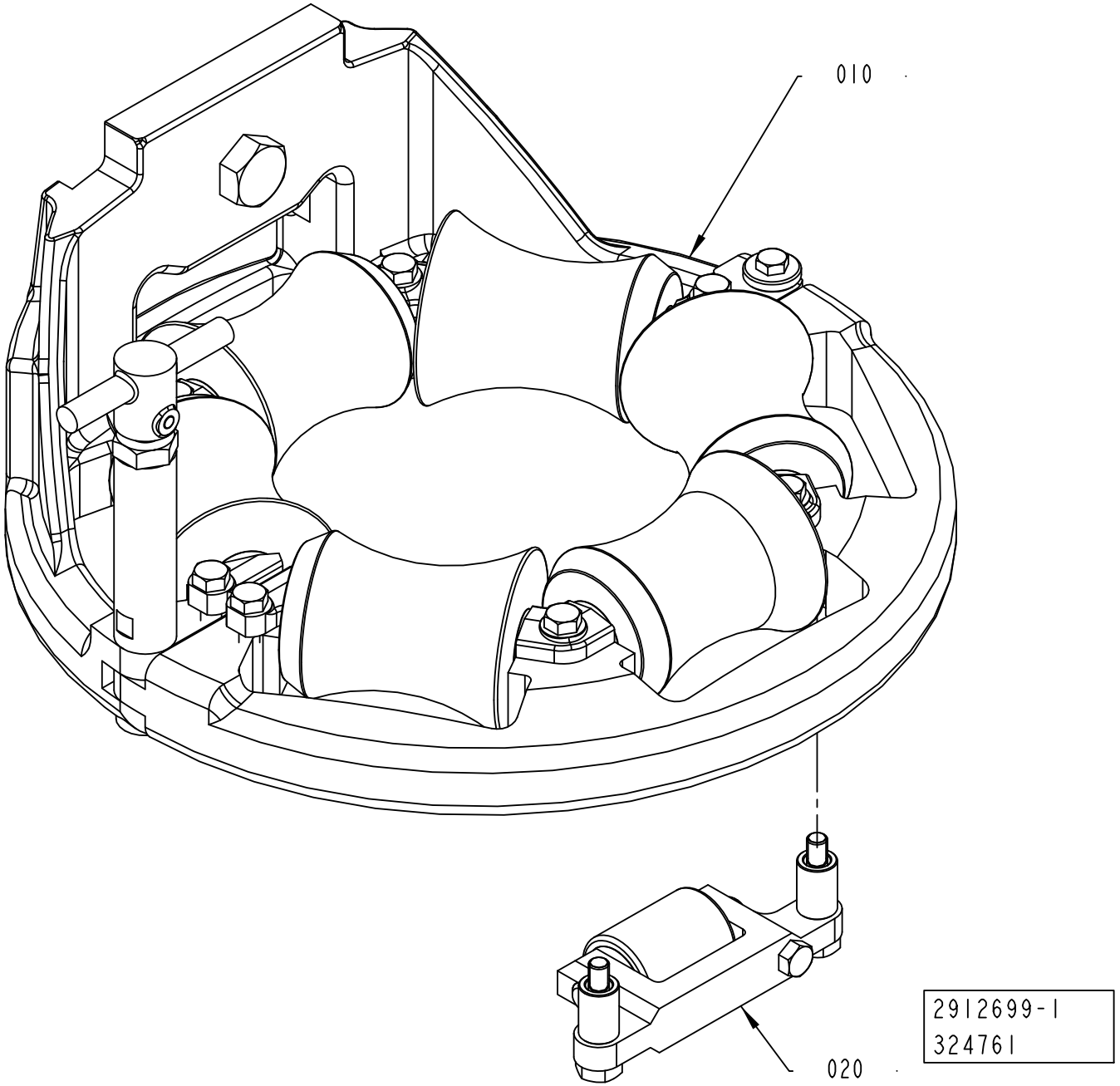

Pos	Part No	UN	Qty	Description	Page No
TBA 1000B DIMC/FLEX, TBA 1000S DIMC/FLEX, TPA 0500SQ DIMC/FLEX, TBA 1000M DIMC/FLEX (See drawing on page: 1-344)					
010	2559063-0200		1	LOWER FORMING RING	**1-347, 1-349, 1-351**
TBA 1000B NODIMC, TBA 1000S NODIMC, TPA 1000SQ NODIMC, TBA 1000SQ NODIMC, TPA 0750SQ NODIMC, TBA 0500B NODIMC, TBA 1500S NODIMC, TBA 0500SQ NODIMC, TBA 2000S NODIMC, TGA 0750SQ NODIMC, TGA 0500SQ NODIMC, TGA 1000SQ NODIMC, TGA 1500SQ NODIMC, TBA 0500S NODIMC, TGA 1000CR NODIMC, TGA 1000LF NODIMC (See drawing on page: 1-342)					
010	2559062-0300		1	LOWER FORMING RING	**1-353, 1-355, 1-357, 1-359, 1-361, 1-363**
				.....	**1-365, 1-367, 1-369**
020	2555627-0200		1	PRESSURE ROLLER	**1-371**
TBA 1000E DIMC/FLEX, TBA 0500E DIMC/FLEX (See drawing on page: 1-342)					
010	2559063-0200		1	LOWER FORMING RING	**1-347, 1-349, 1-351**
020	2555627-0200		1	PRESSURE ROLLER	**1-371**
TPA 0500SQ NODIMC (See drawing on page: 1-344)					
010	2559062-0300		1	LOWER FORMING RING	**1-353, 1-355, 1-357, 1-359, 1-361, 1-363**
				.....	**1-365, 1-367, 1-369**

Pos	Part No	UN	Qty	Description	Page No

LOWER FORMING RING

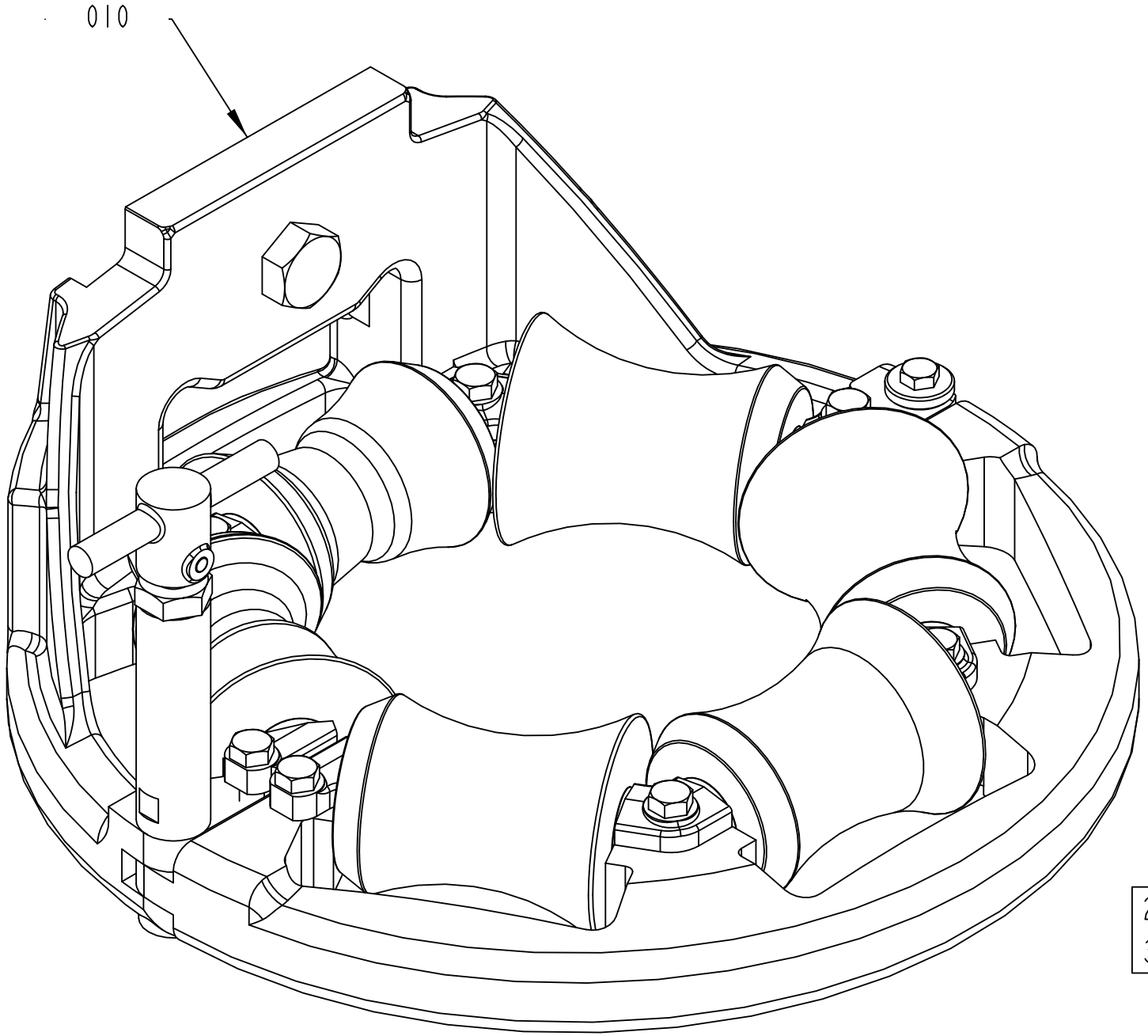

2912699-2
369139

Pos	Part No	UN	Qty	Description	Page No
TBA 1000B DIMC/FLEX, TBA 1000S DIMC/FLEX, TPA 0500SQ DIMC/FLEX, TBA 1000M DIMC/FLEX (See drawing on page: 1-344)					
010	2559063-0200		1	LOWER FORMING RING	**1-347, 1-349, 1-351**
TBA 1000B NODIMC, TBA 1000S NODIMC, TPA 1000SQ NODIMC, TBA 1000SQ NODIMC, TPA 0750SQ NODIMC, TBA 0500B NODIMC, TBA 1500S NODIMC, TBA 0500SQ NODIMC, TBA 2000S NODIMC, TGA 0750SQ NODIMC, TGA 0500SQ NODIMC, TGA 1000SQ NODIMC, TGA 1500SQ NODIMC, TBA 0500S NODIMC, TGA 1000CR NODIMC, TGA 1000LF NODIMC (See drawing on page: 1-342)					
010	2559062-0300		1	LOWER FORMING RING	**1-353, 1-355, 1-357, 1-359, 1-361, 1-363**
				.....	**1-365, 1-367, 1-369**
020	2555627-0200		1	PRESSURE ROLLER	**1-371**
TBA 1000E DIMC/FLEX, TBA 0500E DIMC/FLEX (See drawing on page: 1-342)					
010	2559063-0200		1	LOWER FORMING RING	**1-347, 1-349, 1-351**
020	2555627-0200		1	PRESSURE ROLLER	**1-371**
TPA 0500SQ NODIMC (See drawing on page: 1-344)					
010	2559062-0300		1	LOWER FORMING RING	**1-353, 1-355, 1-357, 1-359, 1-361, 1-363**
				.....	**1-365, 1-367, 1-369**

LOWER FORMING RING

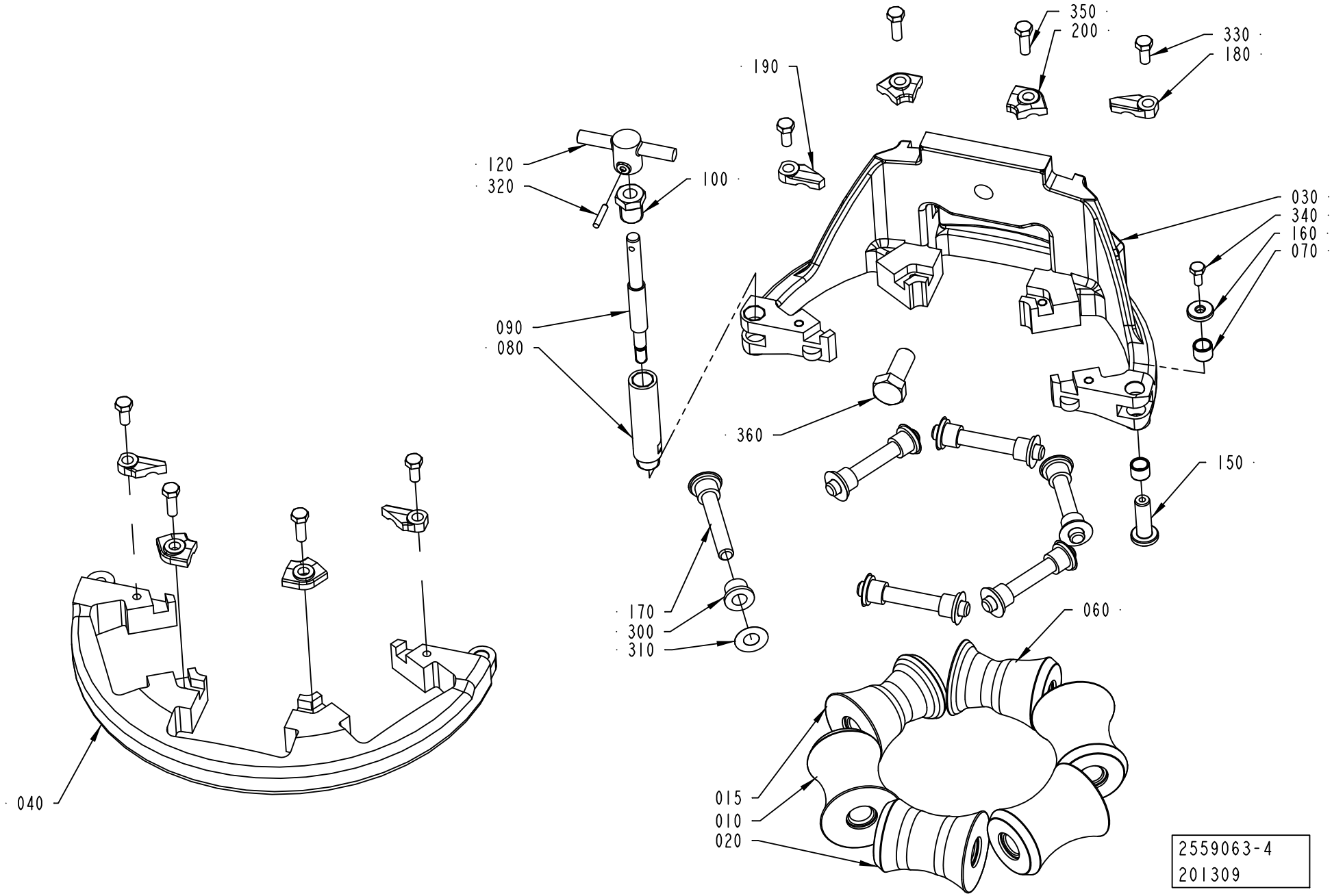

ECM: 644414 - 20140401
Group number: 2559063-0200
Assembly Drawing: 2559063-4_1_AA

This list covers pages from 1-346 to 1-351

Pos	Part No	UN	Qty	Description	Page No
TBA 1000B STDA7 (See drawing on page: 1-346)					
010	3079094-0001		3	ROLLER	
015	2592540-0000		1	ROLLER	
020	2518098-0000		1	COUNTER ROLLER	
030	2764026-0000		1	LOWER FORMING RING	
040	2700546-0000		1	FRONT RING	
060	2592539-0000		1	ROLLER	
170	752186-0014		6	SHAFT	
180	2528119-0004		2	LOCK PLATE	
190	2528118-0004		2	LOCK PLATE	
200	2528123-0004		4	LOCK PLATE	
300	90240-0172		12	FLANGE BUSHING, 8X12X10 MM	
TBA 1000E LIGHTCAP30, TBA 1000E LIGHTCAP30B, TBA 0500E LIGHTCAP30, TBA 0500E LIGHTCAP30B (See drawing on page: 1-350)					
010	3079097-0001		4	ROLLER	
020	3184873-0000		1	COUNTER ROLLER	
030	2764023-0000		1	LOWER FORMING RING	
040	2736705-0000		1	LOWER FORMING RING	
060	2968257-0000		1	ROLLER	
170	752186-0016		6	SHAFT	
180	2528119-0004		2	LOCK PLATE	
190	2528118-0004		2	LOCK PLATE	
200	2528123-0004		4	LOCK PLATE	
300	90240-0172		12	FLANGE BUSHING, 8X12X10 MM	
TBA 1000M LIGHTCAP24 (See drawing on page: 1-346)					
010	3016566-0000		3	ROLLER	
015	3298714-0000		1	ROLLER	
020	3016910-0000		1	COUNTER ROLLER	
030	2764026-0000		1	LOWER FORMING RING	
040	2700546-0000		1	FRONT RING	
060	3298713-0000		1	ROLLER	
170	752186-0014		6	SHAFT	
180	2528119-0004		2	LOCK PLATE	
190	2528118-0004		2	LOCK PLATE	
200	2528123-0004		4	LOCK PLATE	
300	90240-0172		12	FLANGE BUSHING, 8X12X10 MM	
TBA 1000M STDA7 (See drawing on page: 1-346)					
010	3016566-0000		3	ROLLER	
015	3016908-0000		1	ROLLER	
020	3016910-0000		1	COUNTER ROLLER	
030	2764026-0000		1	LOWER FORMING RING	
040	2700546-0000		1	FRONT RING	
060	3016707-0000		1	ROLLER	
170	752186-0014		6	SHAFT	
180	2528119-0004		2	LOCK PLATE	
190	2528118-0004		2	LOCK PLATE	
200	2528123-0004		4	LOCK PLATE	
300	90240-0172		12	FLANGE BUSHING, 8X12X10 MM	
TBA 1000S LIGHTCAP24 (See drawing on page: 1-348)					
010	3093182-0001		3	ROLLER	
015	3093184-0001		1	ROLLER	
020	1334856-0000		1	COUNTER ROLLER	
030	2764027-0000		1	LOWER FORMING RING	
040	2721423-0000		1	FORMING RING	
060	3093183-0001		1	ROLLER	
170	752186-0016		6	SHAFT	
180	2528119-0005		2	LOCK PLATE	
190	2528118-0005		2	LOCK PLATE	
200	2528123-0004		4	LOCK PLATE	
300	90240-0172		12	FLANGE BUSHING, 8X12X10 MM	
TBA 1000S STDA7 (See drawing on page: 1-346)					
010	567746-0001		3	ROLLER (STANDARD SIZE)	
015	1523664-0001		1	ROLLER (STANDARD SIZE)	
020	1334856-0000		1	COUNTER ROLLER	
030	2764027-0000		1	LOWER FORMING RING	
040	2721423-0000		1	FORMING RING	
060	1523665-0001		1	ROLLER (STANDARD SIZE)	
170	752186-0016		6	SHAFT	
180	2528119-0005		2	LOCK PLATE	
190	2528118-0005		2	LOCK PLATE	
200	2528123-0004		4	LOCK PLATE	
300	90240-0172		12	FLANGE BUSHING, 8X12X10 MM	
Common Parts					
070	2526826-0000		2	BUSHING	
080	2764032-0000		1	SHAFT	
090	2764033-0000		1	SHAFT	
100	2731428-0000		1	NUT	
120	2764036-0000		1	KNOB	
150	2526827-0000		1	SHAFT	
160	2526825-0000		1	WASHER	
310	2033-0011		12	WASHER	
320	311103-0236		1	PARALLEL PIN ISO 2338 3M6X16 A1	
330	312105-0327		4	"SCREW, M6S ISO 4017 M5X12 A4 80"	
340	312105-0289		1	SCREW, M6S ISO 4017 M4X10 A4 70	

Machine Type | Group Description | Used-In | Group Number | Page No

LOWER FORMING RING

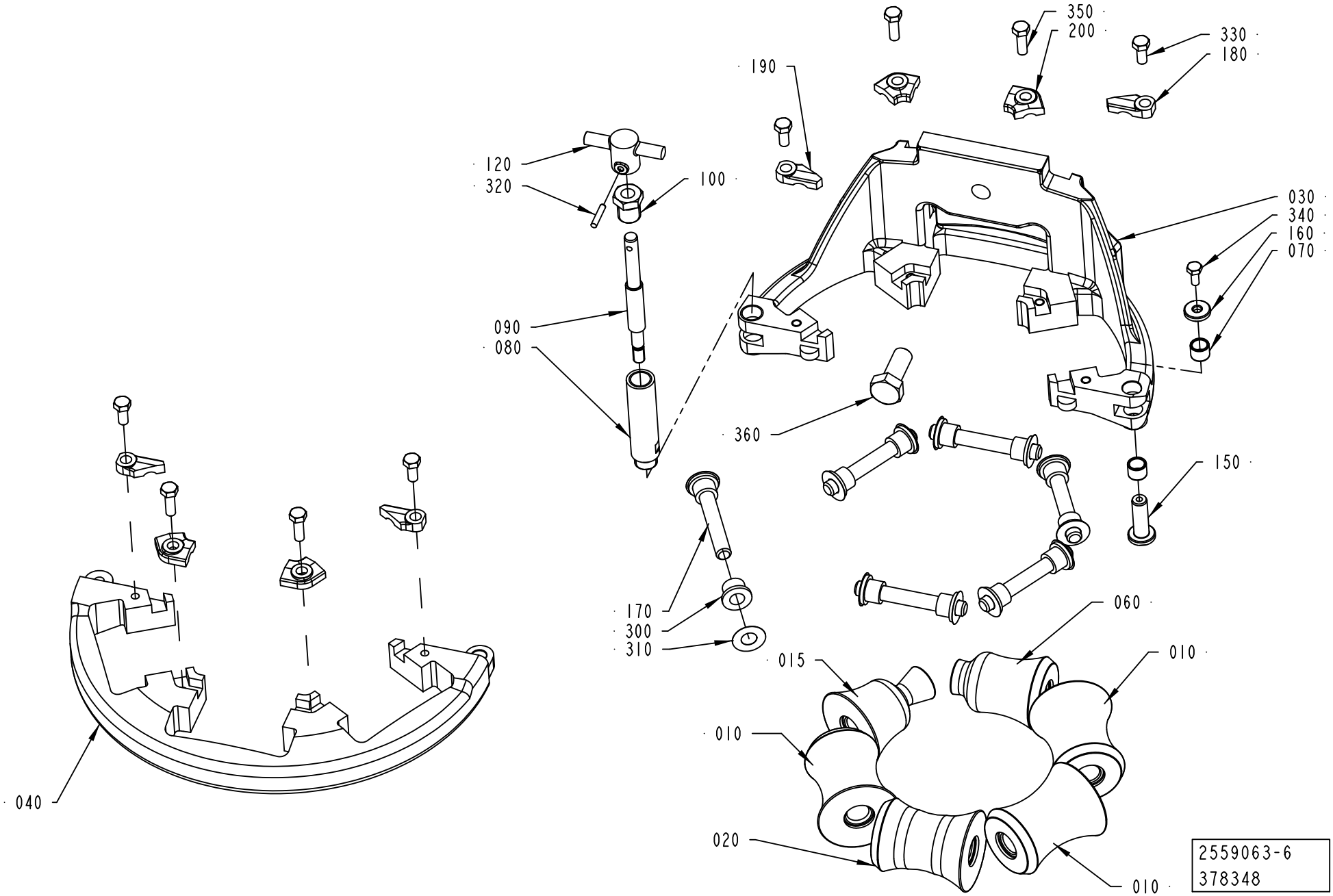

Pos	Part No	UN	Qty	Description	Page No
Common Parts (Cont'd)					
350	312105-0329		4	SCREW, M6S ISO 4017 M5X16 A4 80	
360	312105-0493		1	SCREW, M6S ISO 4017 M10X25 A4 80	

Pos	Part No	UN	Qty	Description	Page No

LOWER FORMING RING

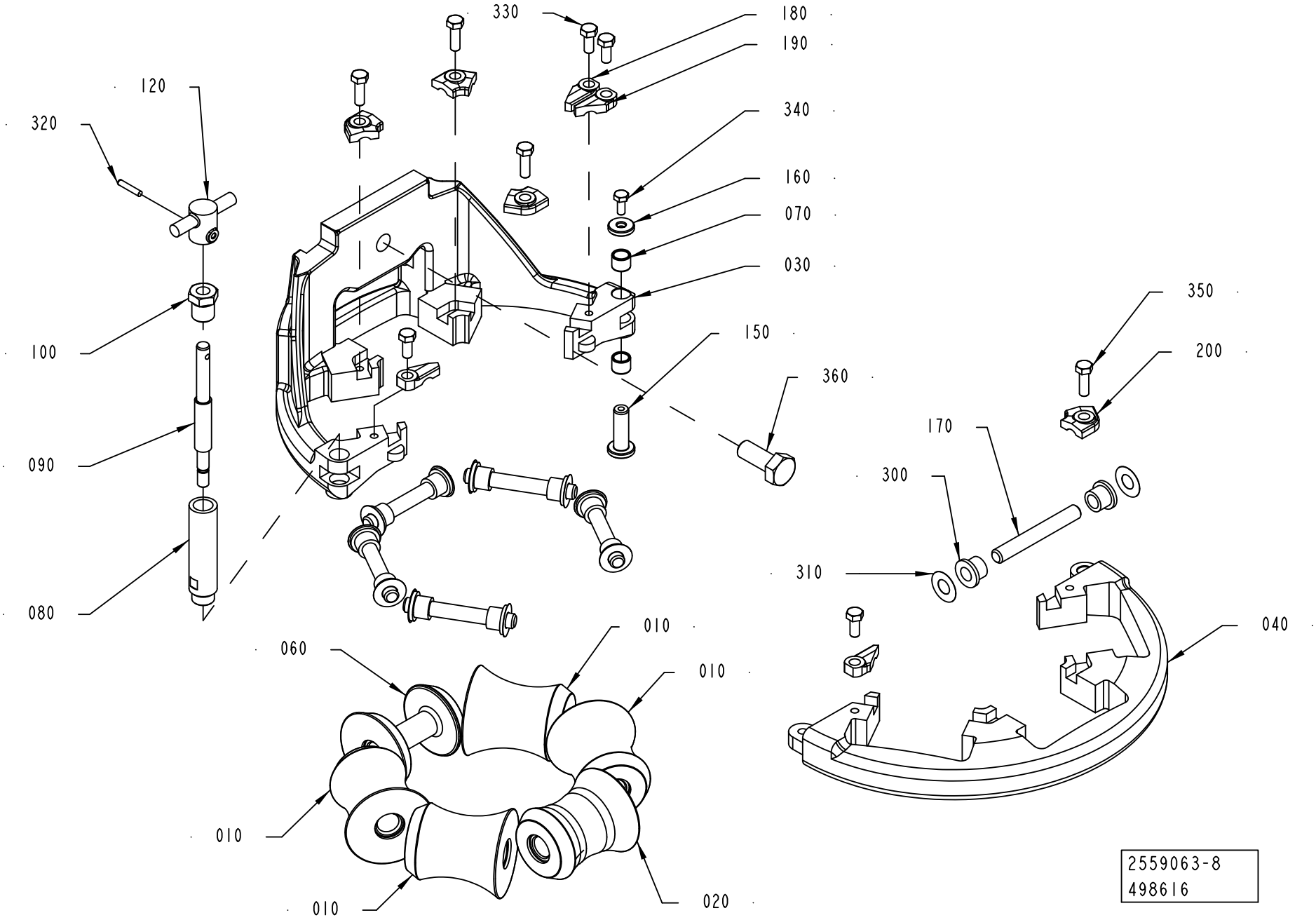

Pos	Part No	UN	Qty	Description	Page No
SEE PREVIOUS LISTS PAGES: 1-347, 1-349.					

Pos	Part No	UN	Qty	Description	Page No

LOWER FORMING RING

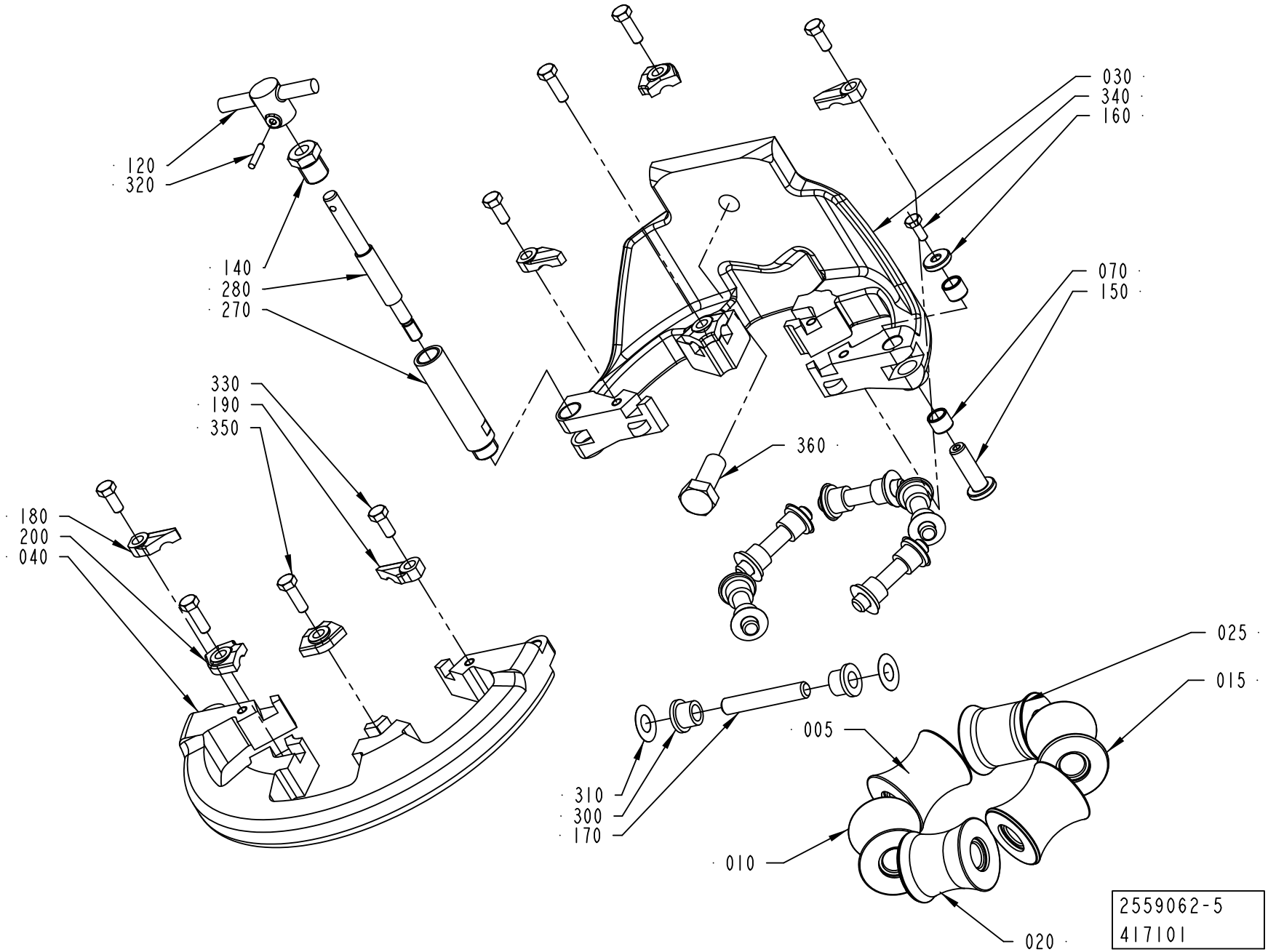

ECM: 607096 - 20131001
Group number: 2559062-0300
Assembly Drawing: 2559062-5_1_AB

This list covers pages from 1-352 to 1-369

Pos	Part No	UN	Qty	Description	Page No
TBA 0500B, TBA 1000B (See drawing on page: 1-368)					
010	1349851-0000		2	ROLL	
015	3079094-0001		1	ROLLER	
020	2876664-0000		1	COUNTER ROLLER	
030	2764026-0000		1	LOWER FORMING RING	
040	2700546-0000		1	FRONT RING	
050	3079095-0001		2	ROLLER	
170	752186-0014		6	SHAFT	
180	2528119-0004		2	LOCK PLATE	
190	2528118-0004		2	LOCK PLATE	
200	2528123-0004		4	LOCK PLATE	
350	312105-0329		4	SCREW, M6S ISO 4017 M5X16 A4 80	
TBA 0500S (See drawing on page: 1-366)					
010	1499636-0000		2	ROLLER	
015	3079096-0001		3	ROLLER	
020	2709785-0000		1	ROLLER	
030	2764025-0000		1	LOWER FORMING RING	
040	2731503-0000		1	LOWER FORMING RING	
170	2522213-0006		6	SHAFT	
180	2528119-0005		2	LOCK PLATE	
190	2528118-0005		2	LOCK PLATE	
200	2528123-0004		4	LOCK PLATE	
350	312105-0329		4	SCREW, M6S ISO 4017 M5X16 A4 80	
TBA 0500SQ, TBA 1000SQ (See drawing on page: 1-356)					
010	2897901-0000		1	ROLLER	
020	2898309-0000		1	ROLLER	
030	2764023-0000		1	LOWER FORMING RING	
040	2736705-0000		1	LOWER FORMING RING	
050	2898310-0000		1	ROLLER	
060	3079097-0001		3	ROLLER	
170	752186-0016		6	SHAFT	
180	2528119-0004		2	LOCK PLATE	
190	2528118-0004		2	LOCK PLATE	
200	2528123-0004		4	LOCK PLATE	
350	312105-0329		4	SCREW, M6S ISO 4017 M5X16 A4 80	
TBA 1000S (See drawing on page: 1-364)					
010	567746-0001		4	ROLLER (STANDARD SIZE)	
015	3099423-0000		1	ROLLER	
020	3099422-0000		1	ROLLER	
030	2764027-0000		1	LOWER FORMING RING	
040	3099424-0000		1	FORMING RING	
165	752186-0019		1	SHAFT	
170	752186-0016		4	SHAFT	
175	752186-0007		1	SHAFT	
180	2528119-0005		2	LOCK PLATE	
190	2528118-0005		2	LOCK PLATE	
200	2528123-0004		3	LOCK PLATE	
210	3099425-0000		1	LOCK PLATE	
350	312105-0329		3	SCREW, M6S ISO 4017 M5X16 A4 80	
370	312105-0331		1	SCREW, M6S ISO 4017 M5X20 A4 80	
TBA 1500S (See drawing on page: 1-358)					
010	1349851-0000		1	ROLL	
015	3079094-0001		1	ROLLER	
020	3301976-0000		1	ROLLER	
030	2764026-0000		1	LOWER FORMING RING	
040	3253326-0000		1	LOWER FORMING RING	
050	3079095-0001		1	ROLLER	
060	3301977-0000		1	ROLLER	
100	3299560-0001		1	ROLLER	
165	752186-0015		1	SHAFT	
170	752186-0014		4	SHAFT	
175	752186-0016		1	SHAFT	
180	2528119-0004		2	LOCK PLATE	
190	2528118-0004		2	LOCK PLATE	
200	2528123-0004		3	LOCK PLATE	
205	3253330-0000		1	PLATE	
350	312105-0329		4	SCREW, M6S ISO 4017 M5X16 A4 80	
TBA 2000S (See drawing on page: 1-354)					
010	2565513-0000		2	ROLLER	
015	3079098-0001		3	ROLLER	
020	2657923-0000		1	COUNTER ROLLER	
030	2764029-0000		1	LOWER FORMING RING	
040	2673023-0000		1	LOWER FORMING RING	
170	752186-0015		6	SHAFT	
180	2528119-0004		2	LOCK PLATE	
190	2528118-0004		2	LOCK PLATE	
200	2528123-0004		4	LOCK PLATE	
350	312105-0329		4	SCREW, M6S ISO 4017 M5X16 A4 80	
TGA 1000SQ, TGA 0750SQ, TGA 0500SQ, TGA 1000CR, TGA 1000LF (See drawing on page: 1-362)					
010	3061501-0001		5	ROLLER	
020	3061502-0000		1	ROLLER	
030	2764025-0000		1	LOWER FORMING RING	
040	2731503-0000		1	LOWER FORMING RING	
170	2522213-0006		6	SHAFT	

Machine Type | Group Description | Used-In | Group Number | Page No

LOWER FORMING RING

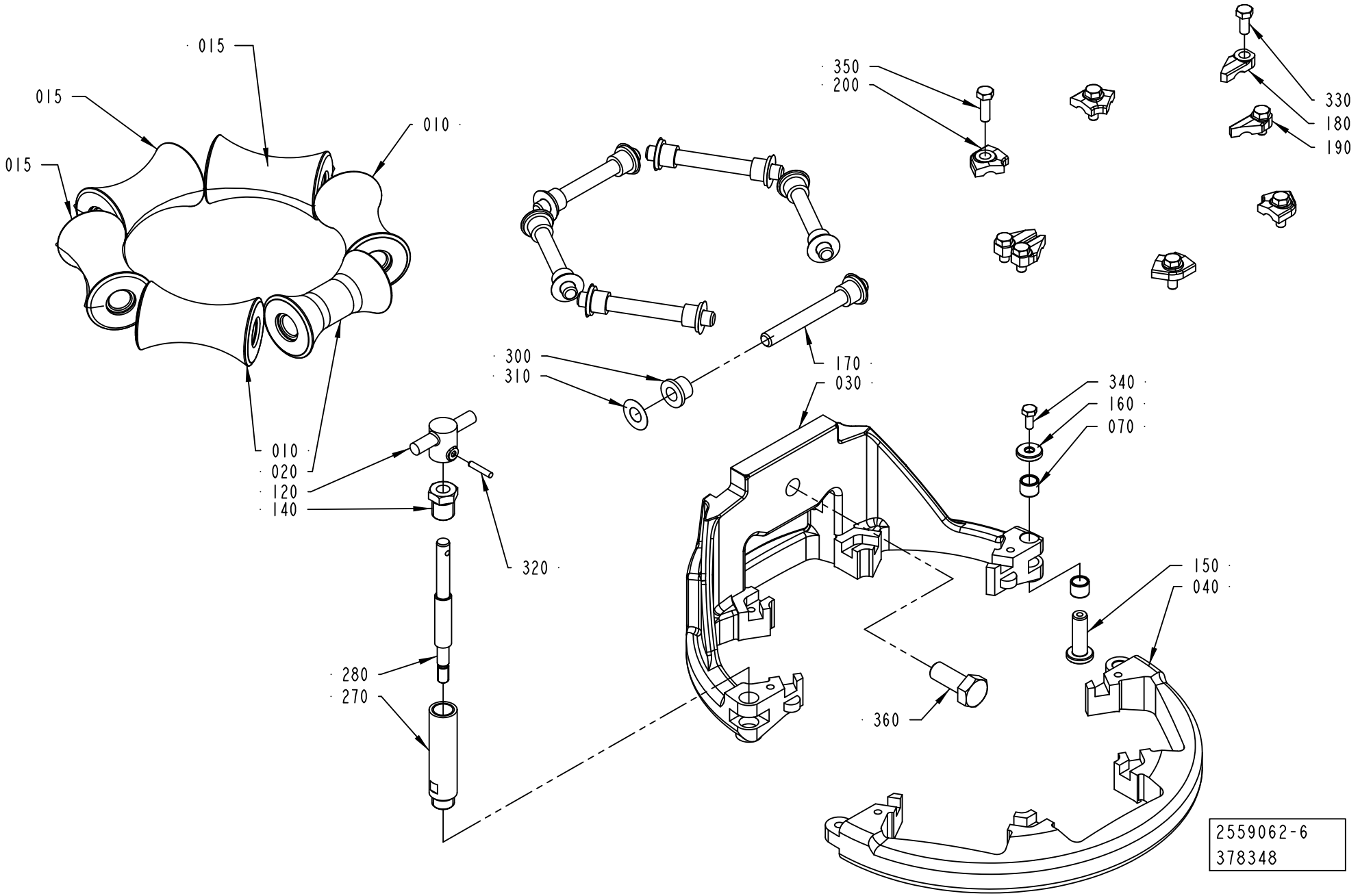

ECM: 607096 - 20131001
Group number: 2559062-0300
Assembly Drawing: 2559062-6_1_AC

This list covers pages from 1-352 to 1-369

Pos	Part No	UN	Qty	Description	Page No
TGA 1000SQ, TGA 0750SQ, TGA 0500SQ, TGA 1000CR, TGA 1000LF (Cont'd) (See drawing on page: 1-362)					
180	2528119-0005		2	LOCK PLATE	
190	2528118-0005		2	LOCK PLATE	
200	2528123-0004		4	LOCK PLATE	
350	312105-0329		4	SCREW, M6S ISO 4017 M5X16 A4 80	
TGA 1500SQ (See drawing on page: 1-366)					
010	1349851-0000		2	ROLL	
020	2876664-0000		1	COUNTER ROLLER	
030	2764026-0000		1	LOWER FORMING RING	
040	2700546-0000		1	FRONT RING	
050	3079095-0001		3	ROLLER	
170	752186-0014		6	SHAFT	
180	2528119-0004		2	LOCK PLATE	
190	2528118-0004		2	LOCK PLATE	
200	2528123-0004		4	LOCK PLATE	
350	312105-0329		4	SCREW, M6S ISO 4017 M5X16 A4 80	
TPA 0500SQ (See drawing on page: 1-352)					
005	3031818-0000		1	ROLLER	
010	2601328-0000		2	ROLLER	
015	3031819-0000		1	ROLLER	
020	2686861-0000		1	ROLLER	
025	3031817-0000		1	ROLLER	
030	2764031-0000		1	LOWER FORMING RING	
040	2731506-0000		1	LOWER FORMING RING	
170	752186-0005		6	SHAFT	
180	2528119-0004		2	LOCK PLATE	
190	2528118-0004		2	LOCK PLATE	
200	2528123-0003		4	LOCK PLATE	
350	312105-0329		4	SCREW, M6S ISO 4017 M5X16 A4 80	
TPA 1000SQ, TPA 0750SQ (See drawing on page: 1-360)					
010	1524156-0000		2	ROLLER	
020	1524547-0000		1	COUNTER ROLLER	
025	2833215-0000		1	ROLLER	
030	2764025-0000		1	LOWER FORMING RING	
040	2731503-0000		1	LOWER FORMING RING	
050	3079119-0001		1	ROLLER	
060	3079118-0001		1	ROLLER	
170	2522213-0006		6	SHAFT	
180	2528119-0005		2	LOCK PLATE	
190	2528118-0005		2	LOCK PLATE	
200	2528123-0004		4	LOCK PLATE	
350	312105-0329		4	SCREW, M6S ISO 4017 M5X16 A4 80	

Pos	Part No	UN	Qty	Description	Page No
Common Parts					
070	2526826-0000		2	BUSHING	
120	2764036-0000		1	KNOB	
140	2731428-0000		1	NUT	
150	2526827-0000		1	SHAFT	
160	2526825-0000		1	WASHER	
270	2764032-0000		1	SHAFT	
280	2764033-0000		1	SHAFT	
300	90240-0172		12	FLANGE BUSHING, 8X12X10 MM	
310	2033-0011		12	WASHER	
320	311103-0236		1	PARALLEL PIN ISO 2338 3M6X16 A1	
330	312105-0327		4	"SCREW, M6S ISO 4017 M5X12 A4 80"	
340	312105-0289		1	SCREW, M6S ISO 4017 M4X10 A4 70	
360	312105-0493		1	SCREW, M6S ISO 4017 M10X25 A4 80	

LOWER FORMING RING

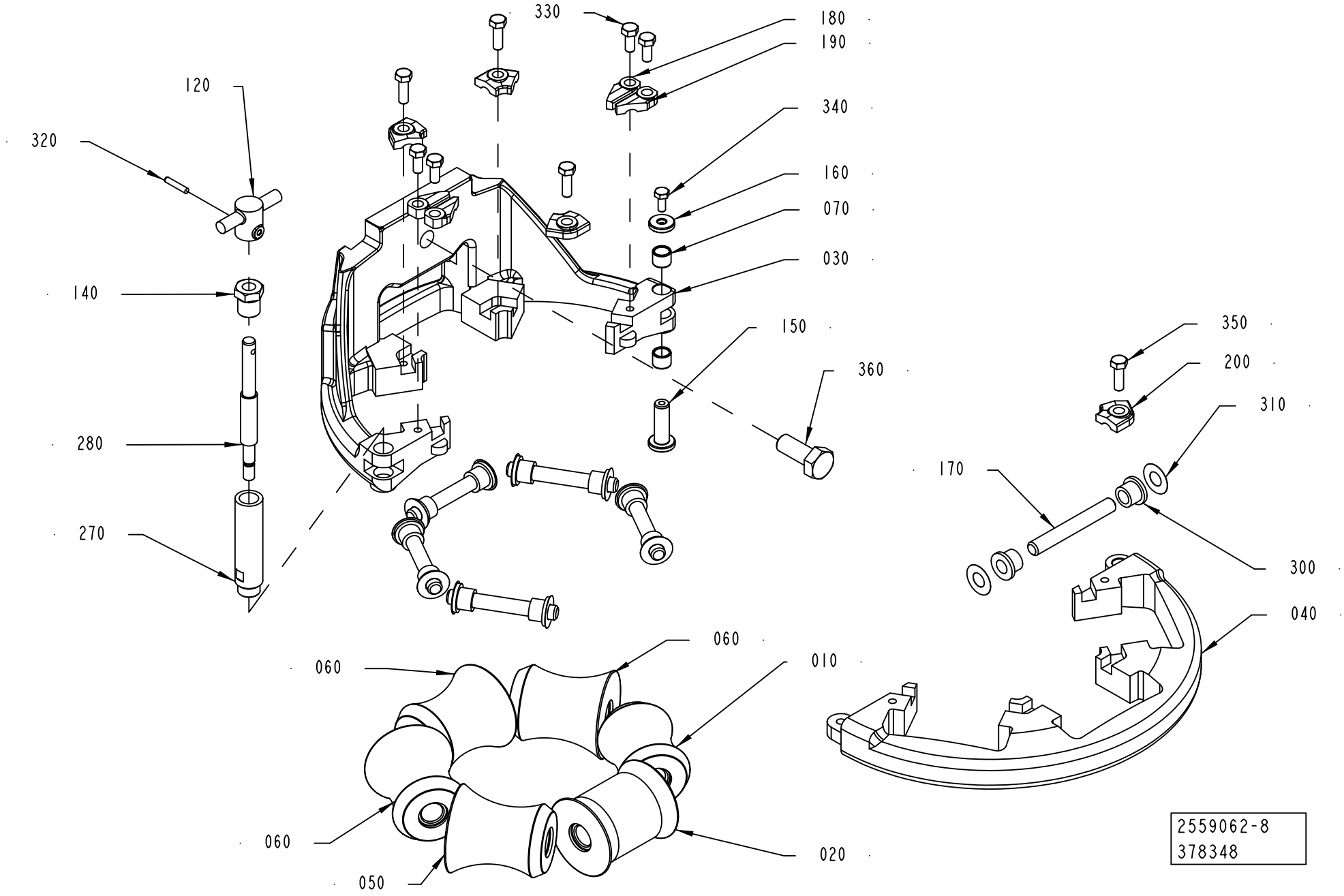

ECM: 607096 - 20131001
Group number: 2559062-0300
Assembly Drawing: 2559062-8_1_AB

This list covers pages from 1-352 to 1-369

Pos	Part No	UN	Qty	Description	Page No
SEE PREVIOUS LISTS PAGES: 1-353, 1-355.					

Pos	Part No	UN	Qty	Description	Page No

Machine Type	Group Description	Used-In	Group Number	Page No

LOWER FORMING RING

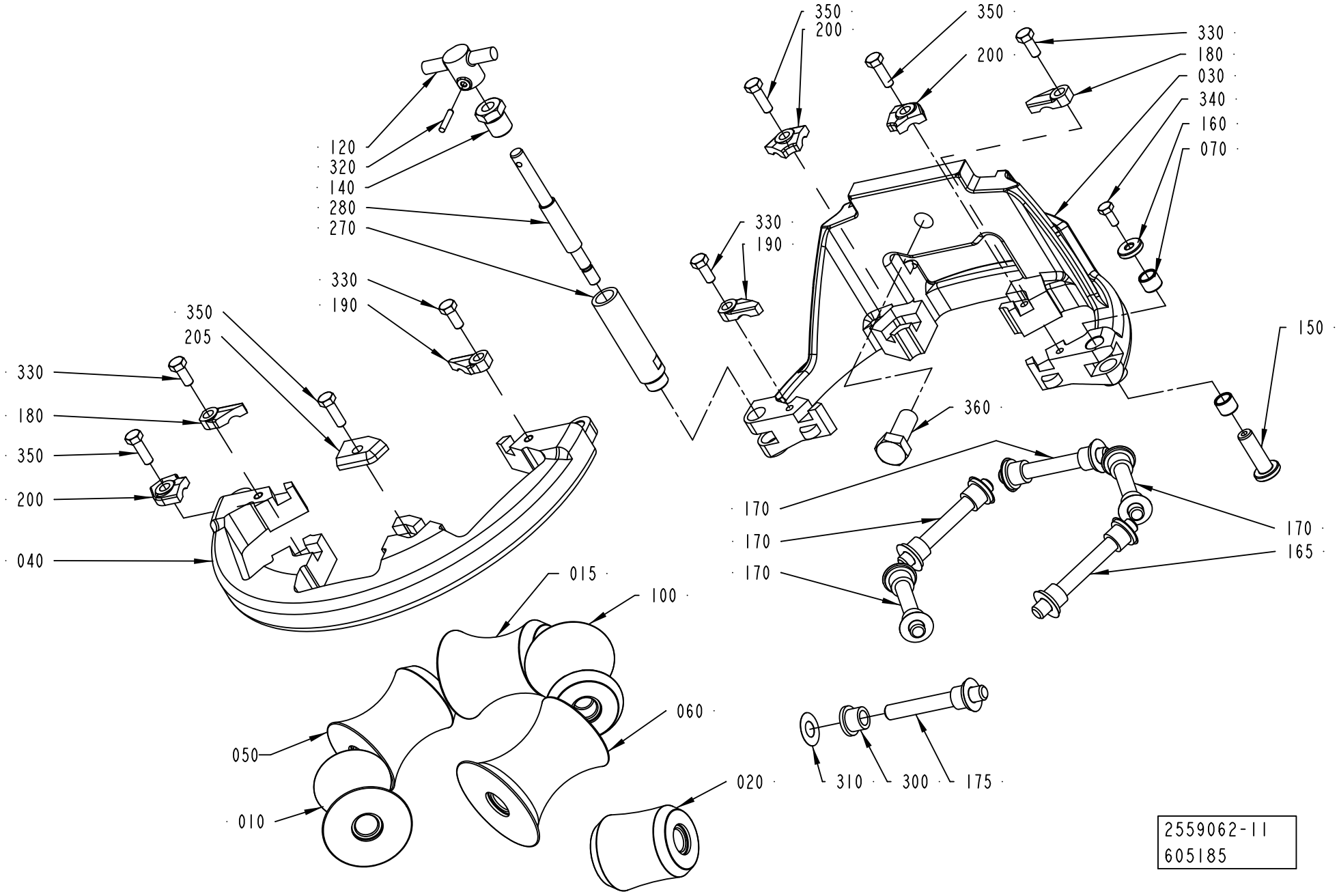

ECM: 607096 - 20131001
Group number: 2559062-0300
Assembly Drawing: 2559062-11_1_AD

This list covers pages from 1-352 to 1-369

Pos	Part No	UN	Qty	Description	Page No
SEE PREVIOUS LISTS PAGES: 1-353, 1-355.					

Pos	Part No	UN	Qty	Description	Page No

Machine Type	Group Description	Used-In	Group Number	Page No

LOWER FORMING RING

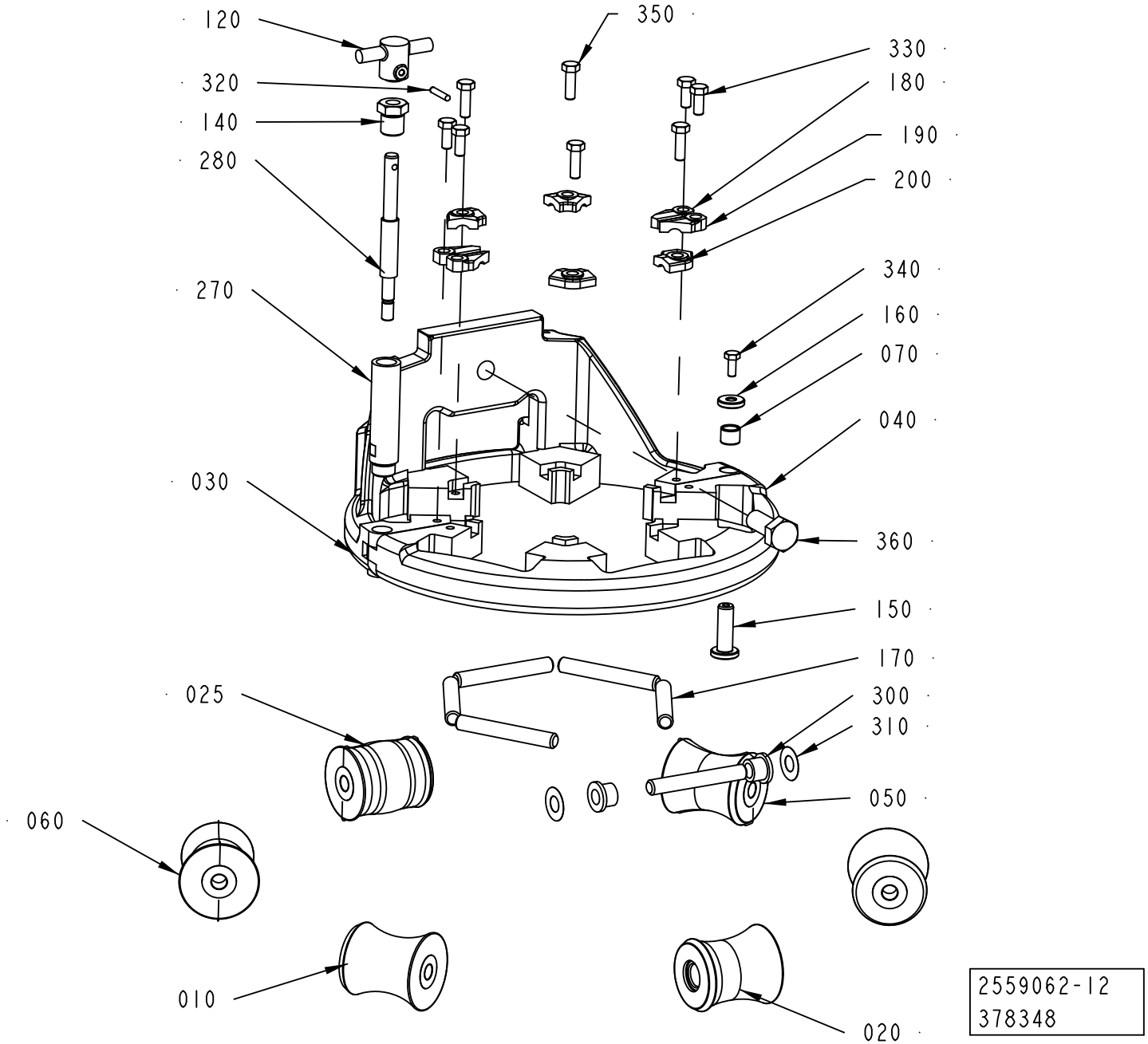

ECM: 607096 - 20131001
Group number: 2559062-0300
Assembly Drawing: 2559062-12_1_AC

This list covers pages from 1-352 to 1-369

Pos	Part No	UN	Qty	Description	Page No
SEE PREVIOUS LISTS PAGES: 1-353, 1-355.					

Pos	Part No	UN	Qty	Description	Page No

LOWER FORMING RING

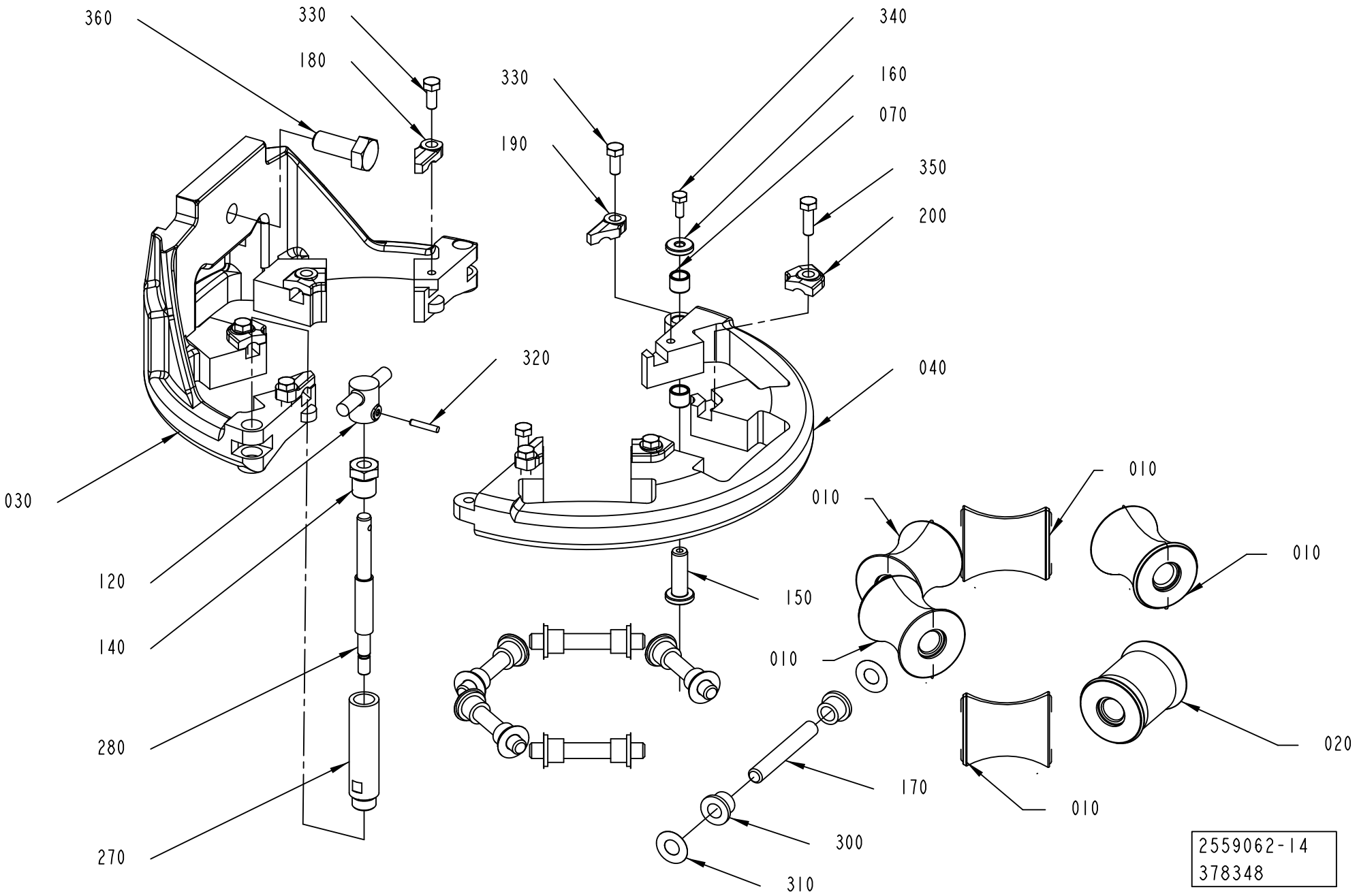

ECM: 607096 - 20131001
Group number: 2559062-0300
Assembly Drawing: 2559062-14_1_AB

This list covers pages from 1-352 to 1-369

Pos	Part No	UN	Qty	Description	Page No
SEE PREVIOUS LISTS PAGES: 1-353, 1-355.					

Pos	Part No	UN	Qty	Description	Page No

LOWER FORMING RING

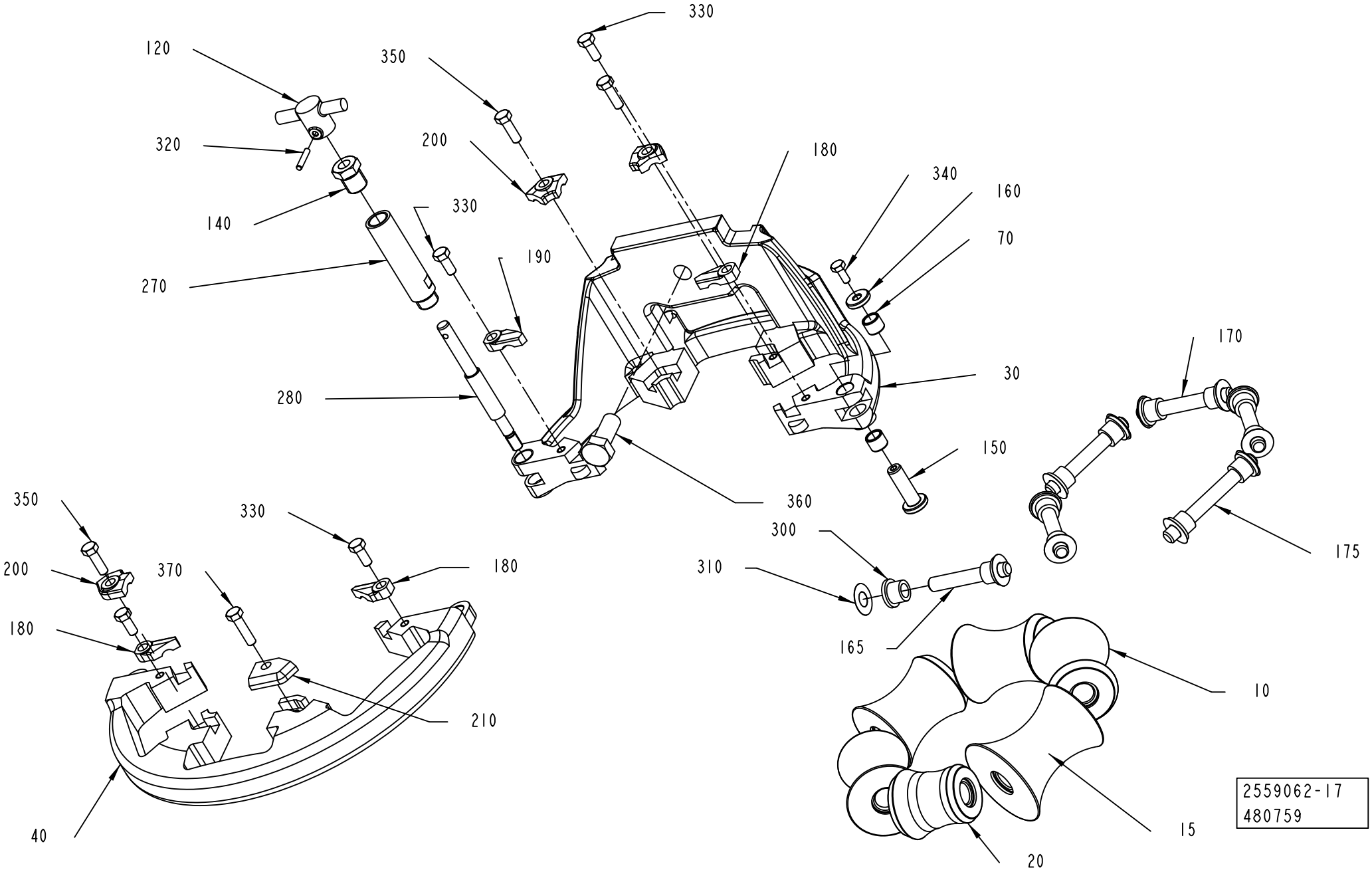

ECM: 607096 - 20131001
Group number: 2559062-0300
Assembly Drawing: 2559062-17_1_AA

This list covers pages from 1-352 to 1-369

Pos	Part No	UN	Qty	Description	Page No
SEE PREVIOUS LISTS PAGES: 1-353, 1-355.					

Pos	Part No	UN	Qty	Description	Page No

Machine Type	Group Description	Used-In	Group Number	Page No

LOWER FORMING RING

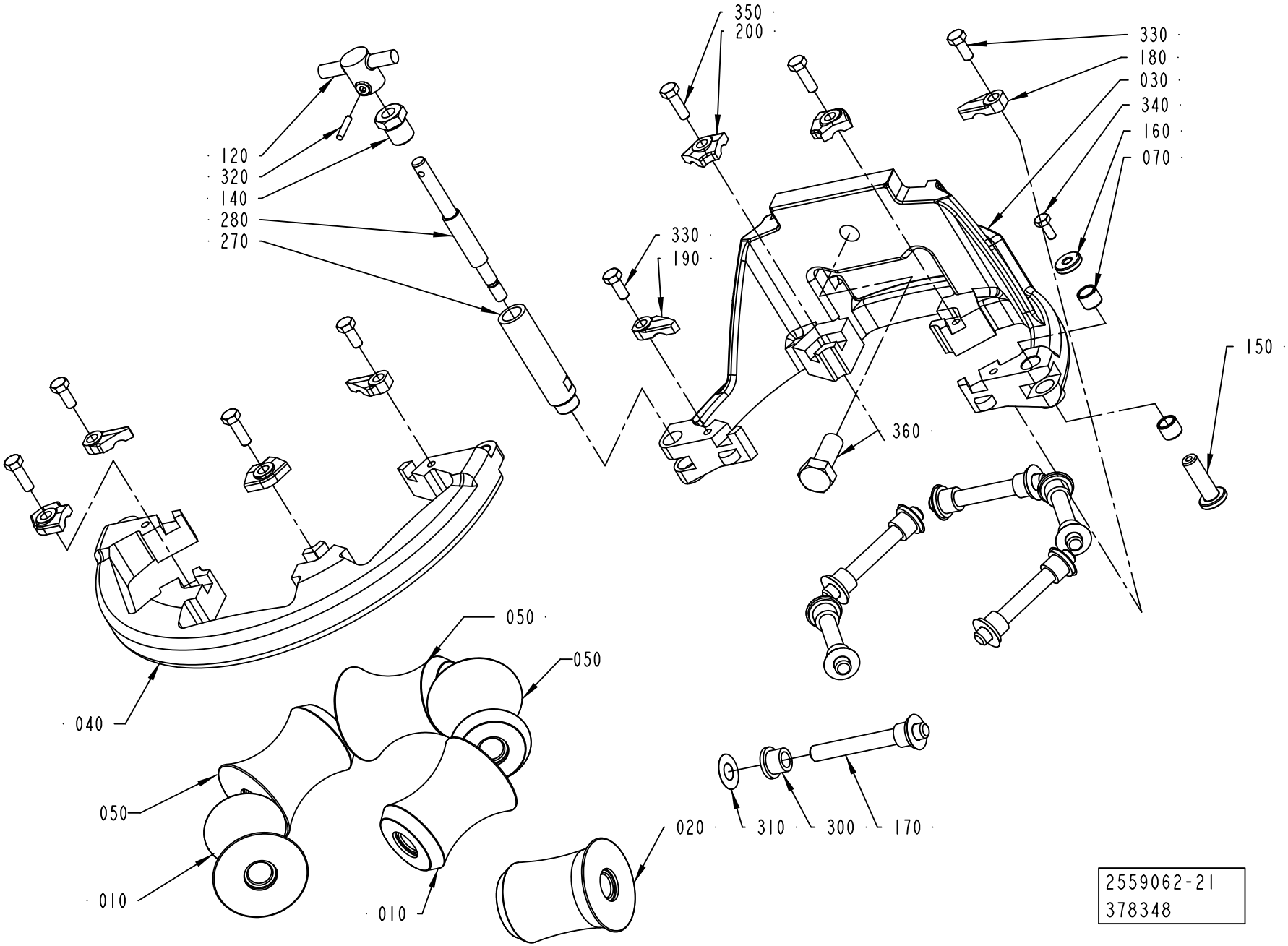

ECM: 607096 - 20131001
Group number: 2559062-0300
Assembly Drawing: 2559062-21_1_AA

This list covers pages from 1-352 to 1-369

Pos	Part No	UN	Qty	Description	Page No
SEE PREVIOUS LISTS PAGES: 1-353, 1-355.					

Pos	Part No	UN	Qty	Description	Page No

LOWER FORMING RING

Drawing file: 2559062-22_1_AA.hpgl

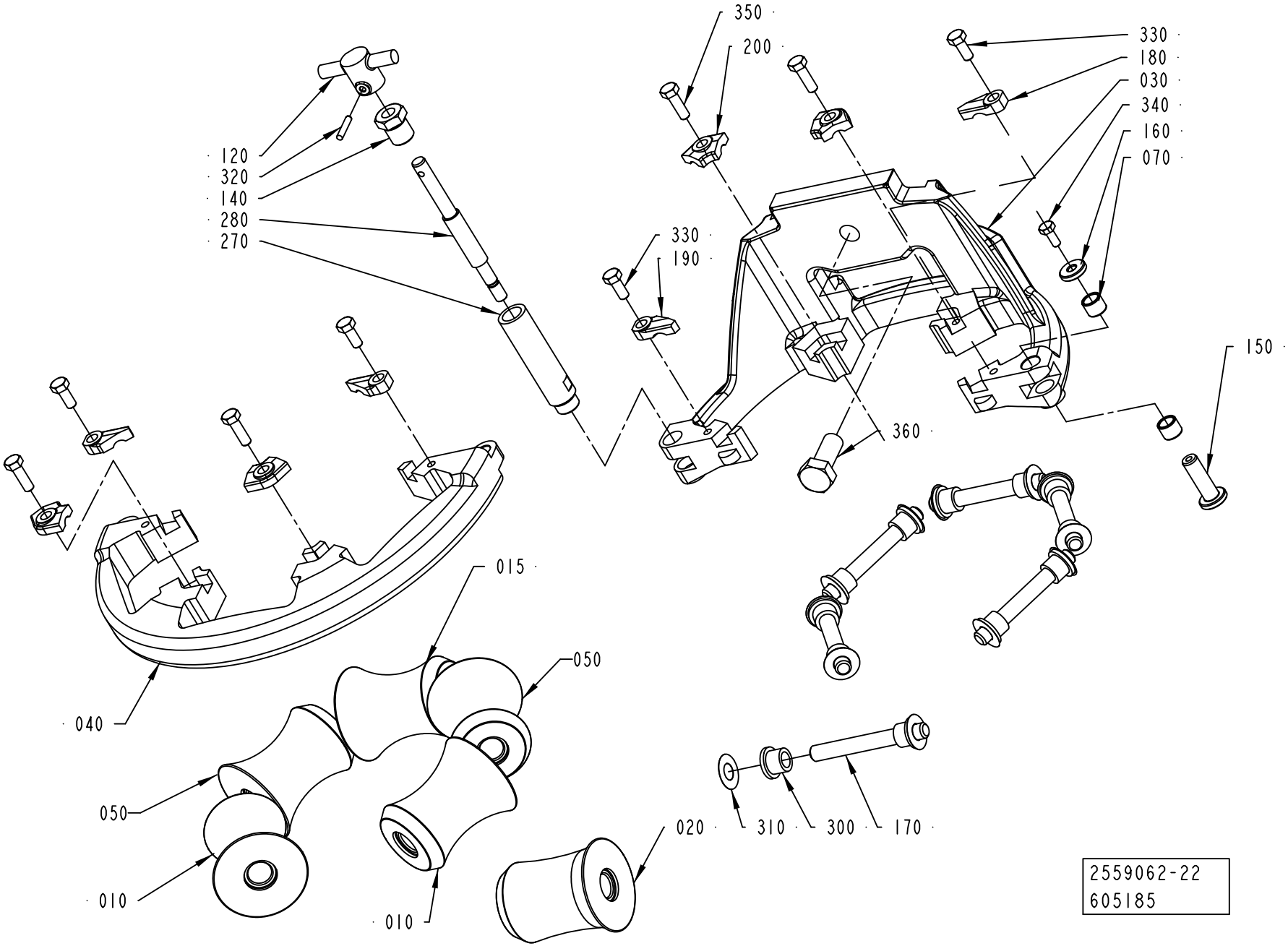

ECM: 607096 - 20131001
Group number: 2559062-0300
Assembly Drawing: 2559062-22_1_AA

This list covers pages from 1-352 to 1-369

Pos	Part No	UN	Qty	Description	Page No
SEE PREVIOUS LISTS PAGES: 1-353, 1-355.					

Pos	Part No	UN	Qty	Description	Page No

PRESSURE ROLLER

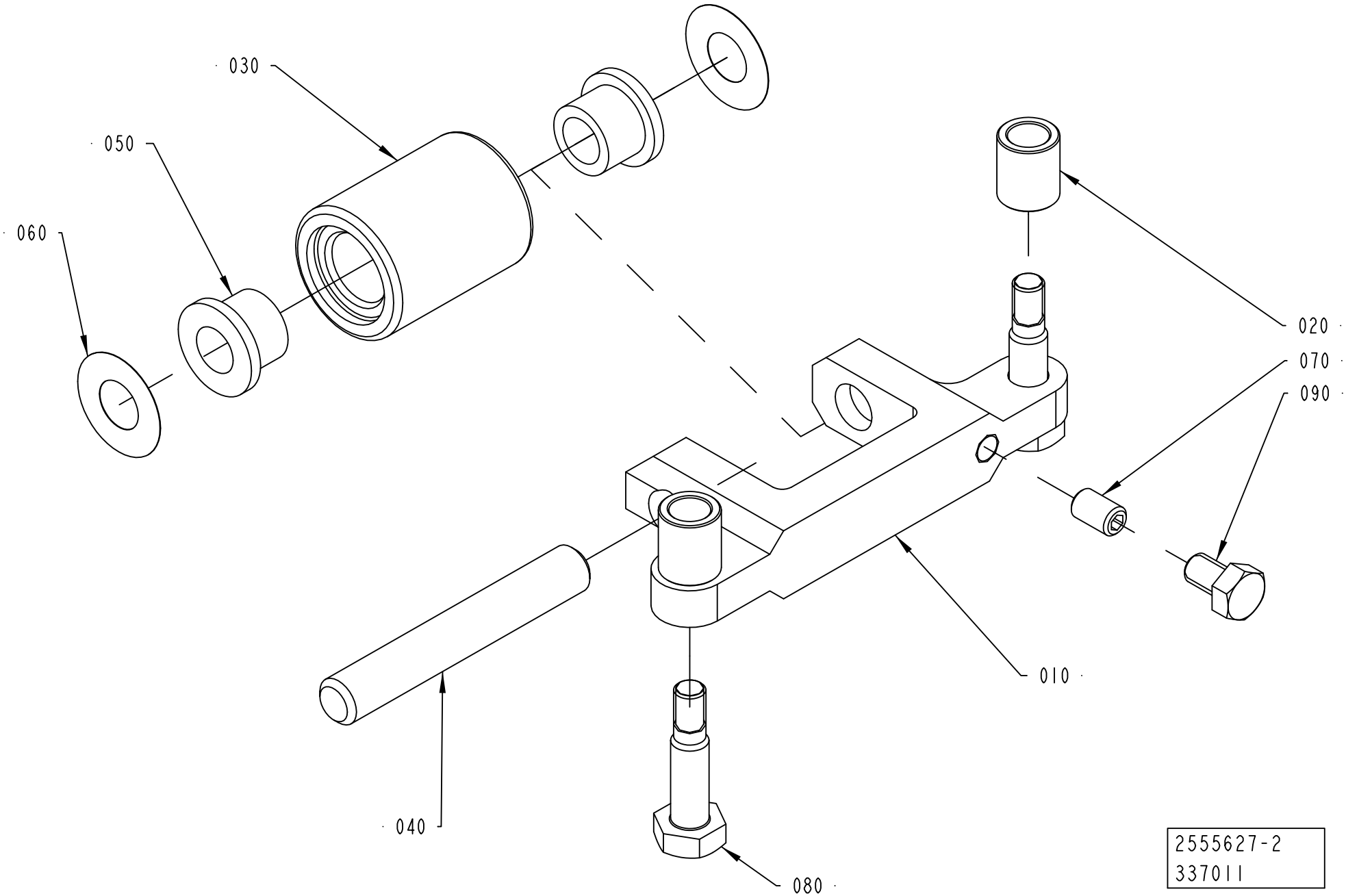

ECM: 644412 - 20140401
Group number: 2555627-0200
Assembly Drawing: 2555627-2_1_AA

Pos	Part No	UN	Qty	Description	Page No
A3/FLEX TBA 0500B, A3/FLEX TBA 1000B, A3/FLEX TBA 1500S, A3/FLEX TGA 1500SQ					
010	2764009-0000		1	BRACKET	
020	2715649-0005		2	SPACER	
030	2826410-0000		1	ROLLER	
040	2522213-0015		1	SHAFT	
050	90240-0172		2	FLANGE BUSHING, 8X12X10 MM	
080	2715650-0003		2	SCREW	
A3/FLEX TBA 0500S					
010	2715567-0000		1	BRACKET	
020	2715649-0008		2	SPACER	
030	2826410-0000		1	ROLLER	
040	3016972-0007		1	SHAFT	
050	90601-2446		2	FLANGE BUSHING, 8X12X10 MM	
080	2715650-0003		2	SCREW	
A3/FLEX TBA 1000S					
010	2611052-0000		1	BRACKET	
020	2715649-0003		2	SPACER	
030	1538950-0000		1	ROLLER	
040	2522213-0015		1	SHAFT	
050	90240-0172		2	FLANGE BUSHING, 8X12X10 MM	
080	2715650-0002		2	SCREW	
A3/FLEX TBA 1000SQ, A3/FLEX TBA 0500SQ, A3/FLEX TBA 1000E, A3/FLEX TBA 0500E					
010	2659361-0000		1	BRACKET	
020	2715649-0005		2	SPACER	
030	2715570-0000		1	ROLLER	
040	2522213-0015		1	SHAFT	
050	90240-0172		2	FLANGE BUSHING, 8X12X10 MM	
080	2715650-0009		2	SCREW	
A3/FLEX TBA 2000S					
010	2594596-0000		1	BRACKET	
020	2715649-0004		2	SPACER	
030	2657925-0000		1	ROLLER	
040	2522213-0015		1	SHAFT	
050	90240-0172		2	FLANGE BUSHING, 8X12X10 MM	
080	2715650-0002		2	SCREW	
A3/FLEX TGA 1000SQ, A3/FLEX TGA 0500SQ, A3/FLEX TGA 0750SQ, A3/FLEX TGA 1000CR, A3/FLEX TGA 1000LF					
010	2715567-0000		1	BRACKET	
020	2715649-0005		2	SPACER	
030	2888118-0000		1	ROLLER	
040	2522213-0015		1	SHAFT	
050	90240-0172		2	FLANGE BUSHING, 8X12X10 MM	
080	2715650-0003		2	SCREW	
A3/FLEX TPA 1000SQ, A3/FLEX TPA 0750SQ					
010	2715567-0000		1	BRACKET	
020	2715649-0005		2	SPACER	
030	2715570-0000		1	ROLLER	
040	2522213-0015		1	SHAFT	
050	90240-0172		2	FLANGE BUSHING, 8X12X10 MM	
080	2715650-0006		2	SCREW	
Common Parts					
060	2033-0011		2	WASHER	
070	312318-0323		1	SET SCREW, CUP END ISO4029 M5X8 A4	
090	312105-0323		1	"FSCR05080-10, SCREW, M6S"	

Machine Type	Group Description	Used-In	Group Number	Page No

LIFTING UNIT

Drawing file: 2575120-1_1_AA.hpgl

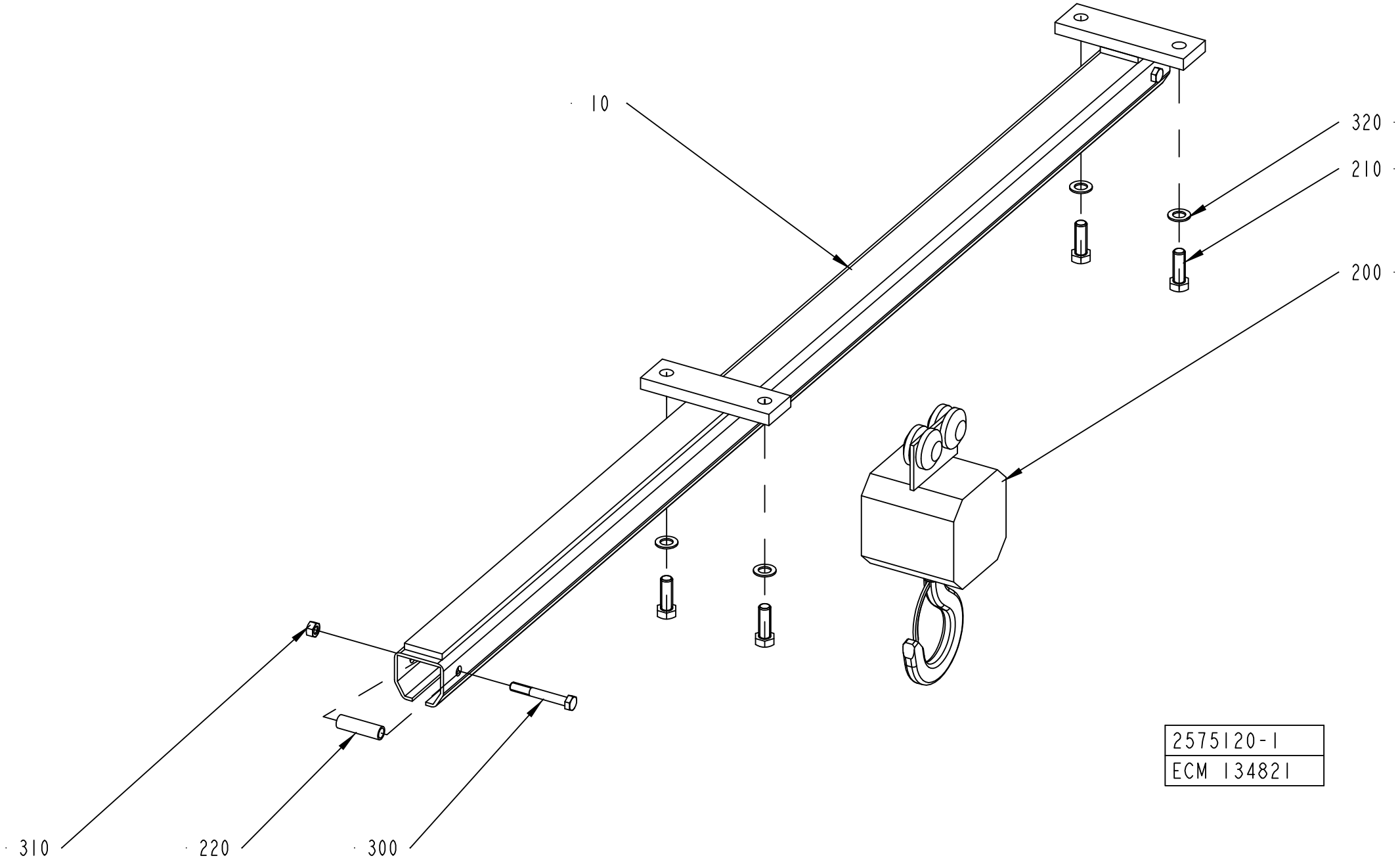

2575120-1
ECM 134821

ECM: 136051 - 20030704
Group number: 2575120-0100
Assembly Drawing: 2575120-1_1_AA

Pos	Part No	UN	Qty	Description	Page No
-					
10	2575119-0000		1	GUIDE	
200	90039-0022		1	TACKLE BLOCK, NO. BV-225/500	
210	90287-0322		4	SCREW M6S M14X40 70	
220	90287-0347		2	BOLT	
300	312105-0506		2	SCREW, M6S ISO 4014 M10X75 A4 80	
310	312605-0320		2	HEXAGON NUT, M6M M10 A280	
320	315101-0182		4	WASHER PLAIN, BRB, 15/26 H=2	

Pos	Part No	UN	Qty	Description	Page No

This page is intentionally left blank.

ECM: 651292 - 20140701
Group number: 2979589-0200
Assembly Drawing:

This list covers pages from 1-374 to 1-377

Pos	Part No	UN	Qty	Description	Page No
TBA 0500B, TBA 1000B NODIMC, TGA 1500SQ					
010	2932252-0000		6	PRESSURE ROLLER QUANT MINIMA 10PCS	
020	24928-0000		12	LOCKING RUBBER	
030	344210-0219		3	O-RING 29,2X3,0 MM FDA, 3-A	
190	3035340-0002		1	TEMPLATE	
200	2930778-0000		1	TOOL	
210	3037777-0100		1	TOOL	**1-379**
TBA 0500S					
010	2909367-0000		3	PRESSURE ROLLER	
030	344210-0219		3	O-RING 29,2X3,0 MM FDA, 3-A	
190	3035340-0005		1	TEMPLATE	
200	2930778-0000		1	TOOL	
210	3037777-0100		1	TOOL	**1-379**
TBA 0500SQ, TBA 1000SQ					
010	2909368-0000		6	PRESSURE ROLLER (PACK 10)	
020	24928-0000		12	LOCKING RUBBER	
030	344210-0219		3	O-RING 29,2X3,0 MM FDA, 3-A	
TBA 1000B STDA7					
010	2932252-0000		3	PRESSURE ROLLER QUANT MINIMA 10PCS	
030	344210-0219		3	O-RING 29,2X3,0 MM FDA, 3-A	
TBA 1000E, TBA 0500E					
010	3157309-0000		6	PRESSURE ROLLER	
020	24928-0000		12	LOCKING RUBBER	
030	344210-0219		3	O-RING 29,2X3,0 MM FDA, 3-A	
040	2957900-0000		1	GASKET	
210	3013043-0000		2	SHIM	
220	3013044-0000		2	SHIM	
TBA 1000M LIGHTCAP24					
040	3123420-0000		1	SEAL	
210	3013043-0000		2	SHIM	
220	3013044-0000		2	SHIM	
TBA 1000M STDA7					
010	2966871-0000		3	PRESSURE ROLLER	
020	24928-0000		12	LOCKING RUBBER	
030	344210-0219		3	O-RING 29,2X3,0 MM FDA, 3-A	
040	3026688-0000		1	SEAL	
210	3013043-0000		2	SHIM	
220	3013044-0000		2	SHIM	
TBA 1000S LIGHTCAP24					
010	2909368-0000		3	PRESSURE ROLLER (PACK 10)	
030	344210-0219		3	O-RING 29,2X3,0 MM FDA, 3-A	
040	2811775-0000		1	SEAL	
TBA 1000S NODIMC					
010	2909368-0000		6	PRESSURE ROLLER (PACK 10)	
020	24928-0000		12	LOCKING RUBBER	
030	344210-0219		3	O-RING 29,2X3,0 MM FDA, 3-A	
190	3035340-0006		1	TEMPLATE	
200	2930778-0000		1	TOOL	
210	3037777-0100		1	TOOL	**1-379**
TBA 1000S STDA7					
010	2909368-0000		3	PRESSURE ROLLER (PACK 10)	
030	344210-0219		3	O-RING 29,2X3,0 MM FDA, 3-A	
210	3037777-0100		1	TOOL	**1-379**
TBA 1500S					
010	2909367-0000		3	PRESSURE ROLLER	
030	344210-0219		3	O-RING 29,2X3,0 MM FDA, 3-A	
190	3035340-0002		1	TEMPLATE	
200	2930778-0000		1	TOOL	
210	3037777-0100		1	TOOL	**1-379**
TBA 2000S					
010	2932252-0000		6	PRESSURE ROLLER QUANT MINIMA 10PCS	
020	24928-0000		12	LOCKING RUBBER	
030	344210-0223		3	O-RING 39,2X3,0 MM FDA, 3-A	
190	3035340-0001		1	TEMPLATE	
200	2930778-0000		1	TOOL	
210	3037777-0100		1	TOOL	**1-379**
TGA 1000SQ, TGA 0750SQ, TGA 0500SQ, TGA 1000CR, TGA 1000LF					
010	2909368-0000		6	PRESSURE ROLLER (PACK 10)	
030	344210-0219		3	O-RING 29,2X3,0 MM FDA, 3-A	
190	3035340-0003		1	TEMPLATE	
200	2930778-0000		1	TOOL	
210	3037777-0100		1	TOOL	**1-379**
TPA 0500SQ					
010	2909367-0000		3	PRESSURE ROLLER	
030	344210-0223		3	O-RING 39,2X3,0 MM FDA, 3-A	
190	3035340-0007		1	TEMPLATE	
200	2930778-0000		1	TOOL	
210	3037777-0100		1	TOOL	**1-379**
TPA 1000SQ, TPA 0750SQ					
010	2909367-0000		6	PRESSURE ROLLER	
020	24928-0000		12	LOCKING RUBBER	
030	344210-0219		3	O-RING 29,2X3,0 MM FDA, 3-A	
190	3035340-0008		1	TEMPLATE	
200	2930778-0000		1	TOOL	

Machine Type | Group Description | Used-In | Group Number | Page No

This page is intentionally left blank.

Pos	Part No	UN	Qty	Description	Page No
TPA 1000SQ, TPA 0750SQ (Cont'd)					
210	3037777-0100		1	TOOL	**1-379**
Common Parts					
050	2725145-0000		2	DIAPHRAGM	
060	3024322-0000		6	GASKET	
070	90459-4179		4	GASKET 30,5X42X4 MM FDA	
100	1296877-0100		1	SEAL KIT	**1-381**
110	1296878-0100		1	SEAL KIT	**1-383**
120	1296879-0100		1	SEAL KIT	**1-385**
130	342850-0304		9	GASKET 35,4X49,1X5,2 1"1/2 FDA, 3-A	
140	342850-0306		4	GASKET 60,3X76,1X5,2 MM 2"1/2 FDA 3-A	
160	90296-0009		1	SILICONE GREASE DOW CORNING 150 GR.	
170	1349914-0200		1	TEMPLATE	**1-387**
180	2793320-0300		1	TEMPLATE	**1-389, 1-391**

Pos	Part No	UN	Qty	Description	Page No

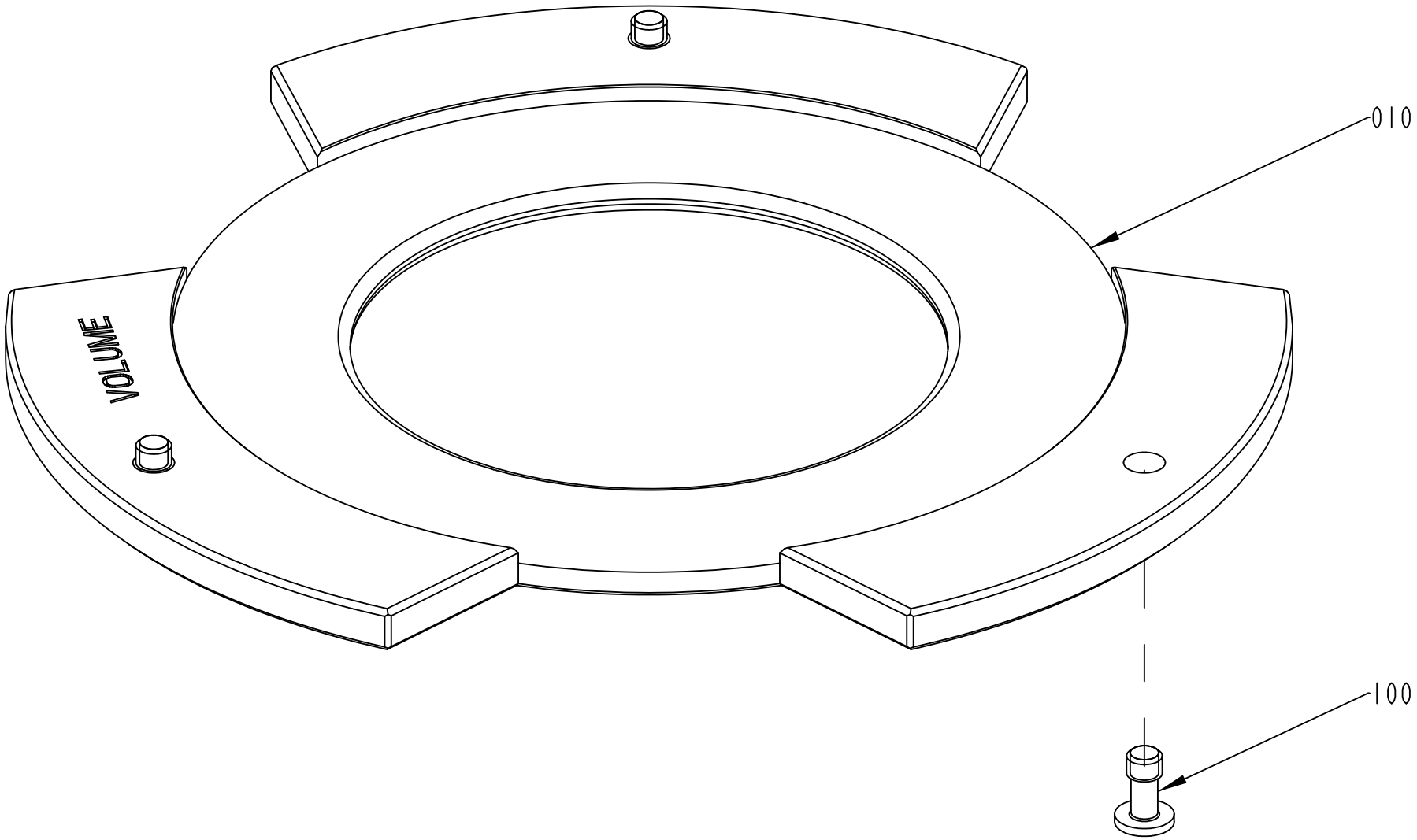

3037777-1
404753

ECM: 583177 - 20130401
Group number: 3037777-0100
Assembly Drawing: 3037777-1_1_AA

Pos	Part No	UN	Qty	Description	Page No
A3/FLEX TBA 0500B, A3/FLEX TBA 1000B, A3/FLEX TBA 1500S, A3/FLEX TGA 1500SQ					
010	3037778-0001		1	TOOL	
A3/FLEX TBA 0500S					
010	3037778-0004		1	TOOL	
A3/FLEX TBA 1000S					
010	3037778-0005		1	TOOL	
A3/FLEX TBA 2000S					
010	3037778-0006		1	TOOL	
A3/FLEX TGA 1000SQ, A3/FLEX TGA 0500SQ, A3/FLEX TGA 0750SQ, A3/FLEX TGA 1000CR, A3/FLEX TGA 1000LF					
010	3037778-0002		1	TOOL	
A3/FLEX TPA 0500SQ					
010	3037778-0007		1	TOOL	
A3/FLEX TPA 1000SQ, A3/FLEX TPA 0750SQ					
010	3037778-0008		1	TOOL	
Common Parts					
100	90601-2046		3	CAPTIVE SCREW M6, GUTBG 6-4-12	

Pos	Part No	UN	Qty	Description	Page No

Machine Type | Group Description | Used-In | Group Number | Page No

This page is intentionally left blank.

ECM: 579554 - 20130102
Group number: 1296877-0100
Assembly Drawing:

Pos	Part No	UN	Qty	Description	Page No
-					
010	2826441-0000		4	SEAL RING	
020	2826440-0000		1	SEAL RING	
030	2826443-0000		1	DIAPHRAGM	
040	539212-0000		1	GASKET	
050	90091-0266		2	SEAL RING 10,4X16,3X2,5 MM	
060	90207-0363		1	GASKET 75X85X1,8 MM 3" FDA 3-A	
070	90207-0365		1	GASKET 53X63X1,8 MM 2,5" FDA 3-A	
100	344210-0215		1	O-RING 19,2X3 MM FDA, 3-A	
110	344210-0301		1	O-RING 49,5X3,0 MM FDA, 3-A	

Pos	Part No	UN	Qty	Description	Page No

This page is intentionally left blank.

ECM: 578481 - 20130102
Group number: 1296878-0100
Assembly Drawing:

Pos	Part No	UN	Qty	Description	Page No
-					
080	90030-0336		2	CONN. STRAIGHT, 316L-12M-BVCO-3	
090	90091-0237		5	ROD SEAL GLYD RING 20X27,5X3 MM	
100	344210-0215		2	O-RING 19,2X3 MM FDA, 3-A	
120	90091-0238		4	WEAR RING 20X22X10 MM	
140	315204-0308		2	O-RING 84,5X3 MM	

Pos	Part No	UN	Qty	Description	Page No

This page is intentionally left blank.

ECM: 578482 - 20130102
Group number: 1296879-0100
Assembly Drawing:

Pos	Part No	UN	Qty	Description	Page No	Pos	Part No	UN	Qty	Description	Page No
-											
090	90091-0237		3	ROD SEAL GLYD RING 20X27,5X3 MM							
100	344210-0215		1	O-RING 19,2X3 MM FDA, 3-A							
120	90091-0238		2	WEAR RING 20X22X10 MM							
130	90091-0335		1	PISTON SEAL GLYD RING 62,5X70X3,2 MM							
150	90091-0304		1	RADIAL SEAL 45X65X8 MM DUST LIP							

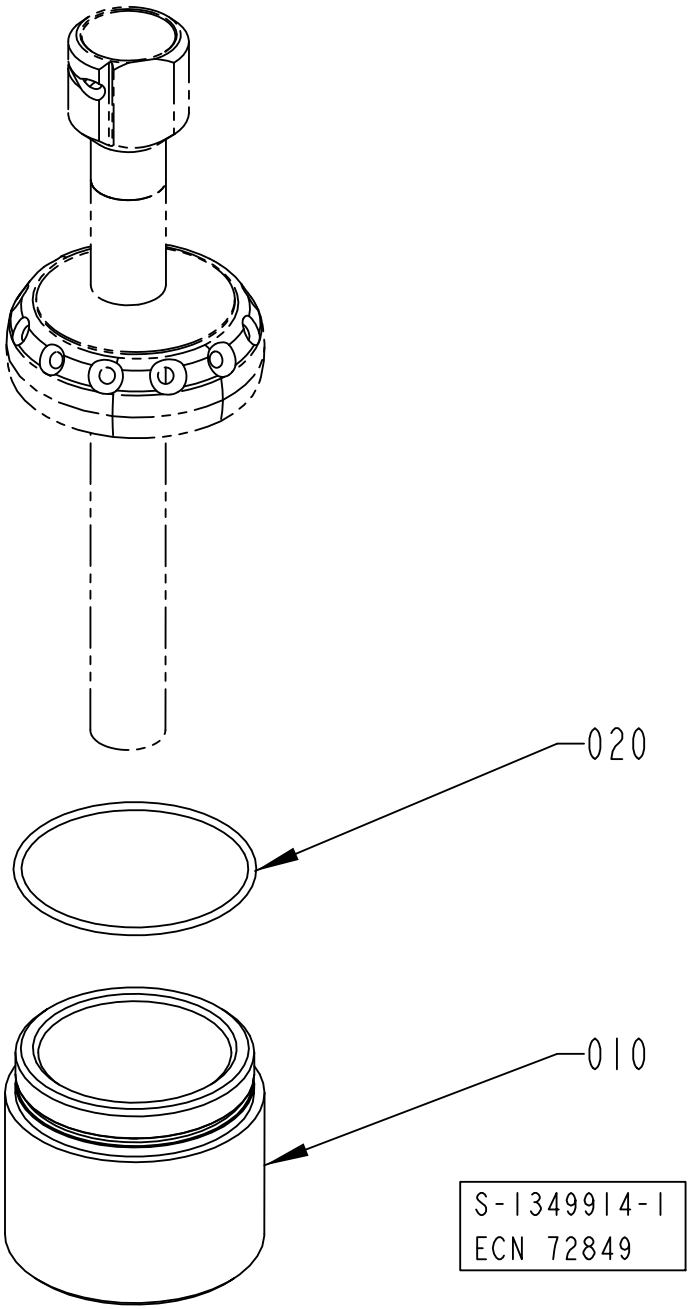
020
010
S-1349914-1
ECN 72849

ECM: 670653 - 20140701
Group number: 1349914-0200
Assembly Drawing: 1349914-1_1_AA

Pos	Part No	UN	Qty	Description	Page No
TBA 0500B, TBA 1000B					
010	2774372-0000		1	TEMPLATE	
020	315202-0233		1	O-RING 79,2X5,7 MM	
TBA 0500S					
010	1524840-0000		1	TEMPLATE	
020	315202-0303		1	O-RING 59,5X3 MM	
TBA 0500SQ, TBA 1000SQ, TBA 1000E, TBA 0500E					
010	3304833-0000		1	TEMPLATE	
020	315202-0305		1	O-RING 69,5X3 MM	
TBA 1000B STDA7					
010	2774374-0000		1	TEMPLATE	
020	315202-0308		1	O-RING 84,5X3 MM	
TBA 1000M					
010	3047963-0000		1	TEMPLATE	
020	315202-0308		1	O-RING 84,5X3 MM	
TBA 1000S					
010	3307993-0000		1	TEMPLATE	
020	315202-0307		1	O-RING 79,5X3 MM	
TBA 1500S, TGA 1500SQ					
010	1498150-0000		1	TEMPLATE	
020	315202-0308		1	O-RING 84,5X3 MM	
TBA 2000S					
010	2660843-0000		1	TEMPLATE	
020	315202-0310		1	O-RING 94,5X3 MM	
TGA 1000SQ, TGA 0750SQ, TGA 0500SQ, TGA 1000CR, TGA 1000LF					
010	2878187-0000		1	TEMPLATE	
020	315202-0304		1	O-RING 64,5X3 MM	
TPA 1000SQ, TPA 0750SQ					
010	1524841-0000		1	TEMPLATE	
020	315202-0303		1	O-RING 59,5X3 MM	
TPA 500SQ NOMOLDEDCAP					
010	3338614-0000		1	TEMPLATE	
020	315202-0302		1	O-RING 54,5X3 MM	

Pos	Part No	UN	Qty	Description	Page No

Machine Type | Group Description | Used-In | Group Number | Page No

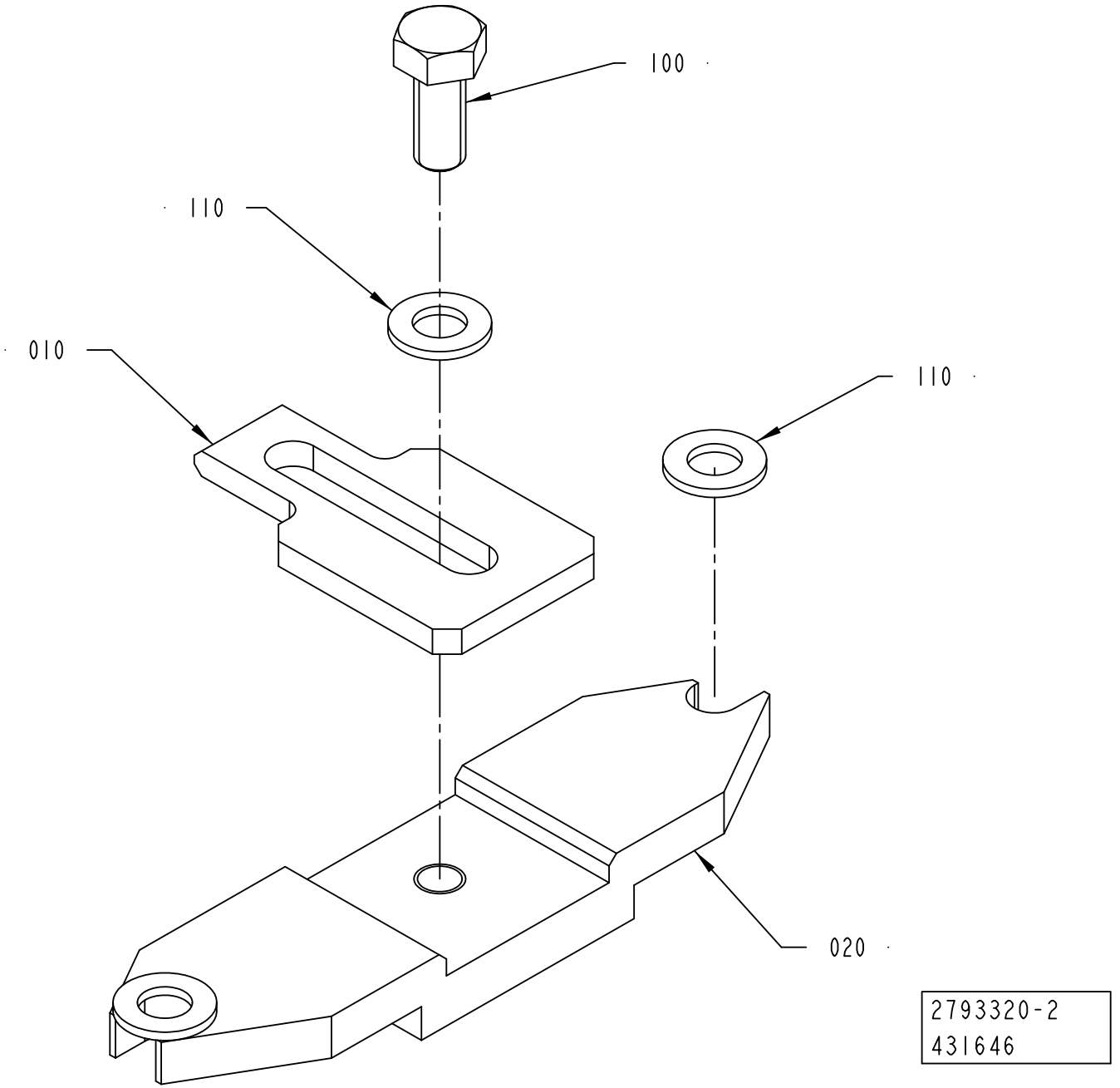
100
110
010
110
020
2793320-2
431646

ECM: 684091 - 20140625
Group number: 2793320-0300
Assembly Drawing: 2793320-2_1_AA

This list covers pages from 1-388 to 1-391

Pos	Part No	UN	Qty	Description	Page No
A3/SPEED TBA 0200E (See drawing on page: 1-390)					
020	3353891-0000		1	TEMPLATE	
110	315105-0146		1	WASHER PLAIN, 5,3X10X1 A4 BRB	
A3/SPEED TBA 0250BL (See drawing on page: 1-390)					
020	3360068-0000		1	TEMPLATE	
110	315105-0146		1	WASHER PLAIN, 5,3X10X1 A4 BRB	
A3/SPEED TBA 0500S (See drawing on page: 1-390)					
020	3365251-0000		1	TEMPLATE	
110	315105-0146		1	WASHER PLAIN, 5,3X10X1 A4 BRB	
A3/FLEX TBA 0500B, A3/FLEX TBA 1000B NOMOLDEDCAP, A3/FLEX TGA 1500SQ (See drawing on page: 1-388)					
020	3060468-0000		1	PLATE	
110	315105-0146		3	WASHER PLAIN, 5,3X10X1 A4 BRB	
A3/FLEX TBA 0500S (See drawing on page: 1-388)					
020	3109139-0000		1	PLATE	
110	315105-0146		3	WASHER PLAIN, 5,3X10X1 A4 BRB	
A3/FLEX TBA 1000B STDA7 (See drawing on page: 1-388)					
020	3060474-0000		1	PLATE	
110	315105-0146		3	WASHER PLAIN, 5,3X10X1 A4 BRB	
A3/FLEX TBA 1000E, A3/FLEX TBA 0500E (See drawing on page: 1-388)					
020	3060471-0000		1	PLATE	
110	315105-0146		3	WASHER PLAIN, 5,3X10X1 A4 BRB	
A3/FLEX TBA 1000M LIGHTCAP24 (See drawing on page: 1-388)					
020	3047951-0000		1	PLATE	
110	315105-0146		3	WASHER PLAIN, 5,3X10X1 A4 BRB	
A3/FLEX TBA 1000M STDA7 (See drawing on page: 1-388)					
020	3060472-0000		1	PLATE	
110	315105-0146		3	WASHER PLAIN, 5,3X10X1 A4 BRB	
A3/FLEX TBA 1000S (See drawing on page: 1-388)					
020	3187185-0000		1	PLATE	
110	315105-0146		3	WASHER PLAIN, 5,3X10X1 A4 BRB	
A3/FLEX TBA 1000SQ, A3/FLEX TBA 0500SQ (See drawing on page: 1-388)					
020	3060470-0000		1	PLATE	
110	315105-0146		3	WASHER PLAIN, 5,3X10X1 A4 BRB	
A3/FLEX TBA 1500S (See drawing on page: 1-388)					
020	3280023-0000		1	PLATE	
110	315105-0146		3	WASHER PLAIN, 5,3X10X1 A4 BRB	
A3/FLEX TBA 2000S (See drawing on page: 1-388)					
020	3079086-0000		1	PLATE	
110	315105-0146		3	WASHER PLAIN, 5,3X10X1 A4 BRB	
A3/FLEX TPA 0500SQ (See drawing on page: 1-388)					
020	3060476-0000		1	PLATE	
110	315105-0146		3	WASHER PLAIN, 5,3X10X1 A4 BRB	
A3/FLEX TPA 1000SQ, A3/FLEX TPA 0750SQ, A3/FLEX TGA 1000SQ, A3/FLEX TGA 0500SQ, A3/FLEX TGA 0750SQ, A3/FLEX TGA 1000CR, A3/FLEX TGA 1000LF (See drawing on page: 1-388)					
020	3060475-0000		1	PLATE	
110	315105-0146		3	WASHER PLAIN, 5,3X10X1 A4 BRB	
Common Parts					
010	2736719-0000		1	PLATE	
100	312105-0327		1	"SCREW, M6S ISO 4017 M5X12 A4 80"	

Machine Type	Group Description	Used-In	Group Number	Page No

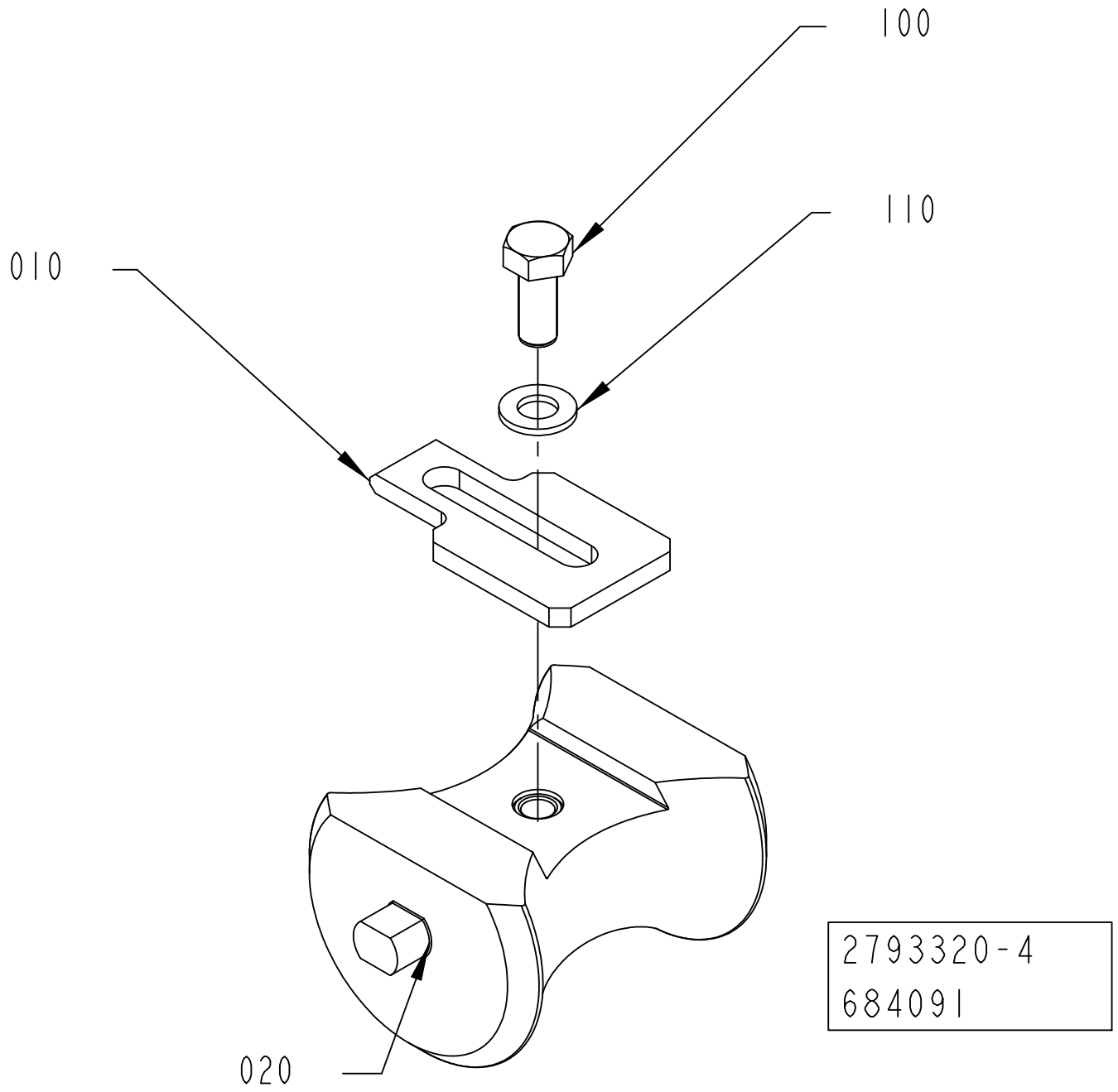
100
110
010
020
2793320-4
684091

ECM: 684091 - 20140625
Group number: 2793320-0300
Assembly Drawing: 2793320-4_1_AA

This list covers pages from 1-388 to 1-391

Pos	Part No	UN	Qty	Description	Page No
A3/SPEED TBA 0200E (See drawing on page: 1-390)					
020	3353891-0000		1	TEMPLATE	
110	315105-0146		1	WASHER PLAIN, 5,3X10X1 A4 BRB	
A3/SPEED TBA 0250BL (See drawing on page: 1-390)					
020	3360068-0000		1	TEMPLATE	
110	315105-0146		1	WASHER PLAIN, 5,3X10X1 A4 BRB	
A3/SPEED TBA 0500S (See drawing on page: 1-390)					
020	3365251-0000		1	TEMPLATE	
110	315105-0146		1	WASHER PLAIN, 5,3X10X1 A4 BRB	
A3/FLEX TBA 0500B, A3/FLEX TBA 1000B NOMOLDEDCAP, A3/FLEX TGA 1500SQ (See drawing on page: 1-388)					
020	3060468-0000		1	PLATE	
110	315105-0146		3	WASHER PLAIN, 5,3X10X1 A4 BRB	
A3/FLEX TBA 0500S (See drawing on page: 1-388)					
020	3109139-0000		1	PLATE	
110	315105-0146		3	WASHER PLAIN, 5,3X10X1 A4 BRB	
A3/FLEX TBA 1000B STDA7 (See drawing on page: 1-388)					
020	3060474-0000		1	PLATE	
110	315105-0146		3	WASHER PLAIN, 5,3X10X1 A4 BRB	
A3/FLEX TBA 1000E, A3/FLEX TBA 0500E (See drawing on page: 1-388)					
020	3060471-0000		1	PLATE	
110	315105-0146		3	WASHER PLAIN, 5,3X10X1 A4 BRB	
A3/FLEX TBA 1000M LIGHTCAP24 (See drawing on page: 1-388)					
020	3047951-0000		1	PLATE	
110	315105-0146		3	WASHER PLAIN, 5,3X10X1 A4 BRB	
A3/FLEX TBA 1000M STDA7 (See drawing on page: 1-388)					
020	3060472-0000		1	PLATE	
110	315105-0146		3	WASHER PLAIN, 5,3X10X1 A4 BRB	
A3/FLEX TBA 1000S (See drawing on page: 1-388)					
020	3187185-0000		1	PLATE	
110	315105-0146		3	WASHER PLAIN, 5,3X10X1 A4 BRB	
A3/FLEX TBA 1000SQ, A3/FLEX TBA 0500SQ (See drawing on page: 1-388)					
020	3060470-0000		1	PLATE	
110	315105-0146		3	WASHER PLAIN, 5,3X10X1 A4 BRB	
A3/FLEX TBA 1500S (See drawing on page: 1-388)					
020	3280023-0000		1	PLATE	
110	315105-0146		3	WASHER PLAIN, 5,3X10X1 A4 BRB	
A3/FLEX TBA 2000S (See drawing on page: 1-388)					
020	3079086-0000		1	PLATE	
110	315105-0146		3	WASHER PLAIN, 5,3X10X1 A4 BRB	
A3/FLEX TPA 0500SQ (See drawing on page: 1-388)					
020	3060476-0000		1	PLATE	
110	315105-0146		3	WASHER PLAIN, 5,3X10X1 A4 BRB	
A3/FLEX TPA 1000SQ, A3/FLEX TPA 0750SQ, A3/FLEX TGA 1000SQ, A3/FLEX TGA 0500SQ, A3/FLEX TGA 0750SQ, A3/FLEX TGA 1000CR, A3/FLEX TGA 1000LF (See drawing on page: 1-388)					
020	3060475-0000		1	PLATE	
110	315105-0146		3	WASHER PLAIN, 5,3X10X1 A4 BRB	
Common Parts					
010	2736719-0000		1	PLATE	
100	312105-0327		1	"SCREW, M6S ISO 4017 M5X12 A4 80"	

Machine Type	Group Description	Used-In	Group Number	Page No

This page is intentionally left blank.

ECM: 535840 - 20120401
Group number: 3035150-0200
Assembly Drawing:

Pos	Part No	UN	Qty	Description	Page No
STREAMCAP1000 NOPT and START FM NOPT NOCAP, STREAMCAP500 NOPT and START FM NOPT NOCAP, HELICAP 23 NOPT and START FM NOPT NOCAP, HELICAP 27 NOPT and START FM NOPT NOCAP					
010	2783088-0400		1	STERILE AIR PIPE	**1-395**
STREAMCAP1000 NOPT and START FM PT/FLEX, STREAMCAP500 NOPT and START FM PT/FLEX, PT/FLEX START FM PT/FLEX, HELICAP 23 NOPT and START FM PT/FLEX, HELICAP 27 NOPT and START FM PT/FLEX					
020	2902379-0100		1	PIPE	**1-397, 1-399**

Pos	Part No	UN	Qty	Description	Page No

Machine Type | Group Description | Used-In | Group Number | Page No

STERILE AIR PIPE

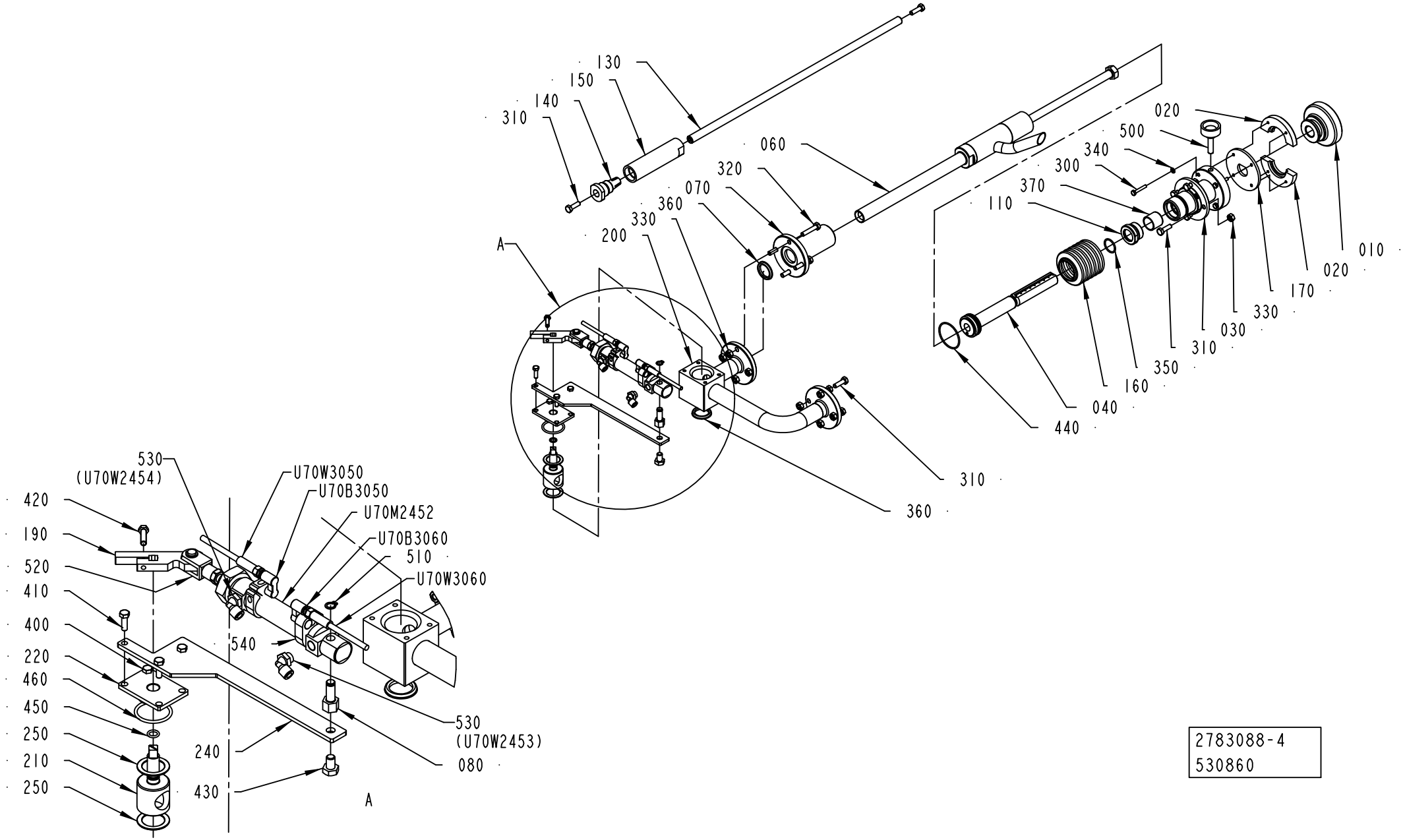

2783088-4
530860

ECM: 578501 - 20130102
Group number: 2783088-0400
Assembly Drawing: 2783088-4_1_AA

Pos	Part No	UN	Qty	Description	Page No
-					
010	2758728-0000		1	HANDLE	
020	2758729-0000		2	CLAMPING LINK	
030	2758730-0000		1	HUB	
040	2758731-0000		1	ADJUSTING SCREW	
060	2902379-0100		1	PIPE	**1-397, 1-399**
070	2758734-0000		1	HUB	
080	1349762-0000		1	SHAFT	
110	2758739-0000		1	PLUG	
130	2763959-0000		1	SHAFT	
140	2793317-0000		1	PLUG	
150	2793318-0000		1	SLIDE	
160	2763963-0000		1	SLEEVE	
170	2764007-0000		1	SPACER	
190	2523665-0000		1	ARM	
200	2946887-0000		1	BODY	
210	2946888-0000		1	SHUTTER	
220	2946889-0000		1	LID	
240	2946914-0000		1	BRACKET	
250	2946915-0000		2	WASHER	
300	312105-0297		4	SCREW, M6S ISO 4017 M4X25 A4 70	
310	312105-0370		10	SCREW, M6S ISO 4017 M6X20 A4 80	
320	312109-0374		4	SCREW, M6S ISO 4017 M6X30 A4 80	
330	312605-0316		12	HEXAGON NUT, M6M M6 A280	
340	315105-0136		4	WASHER PLAIN, 4,3X8X0,8 A4 BRB	
350	344207-1020		1	O-RING 20,35X1,78 MM FDA, 3-A	
360	315229-0203		2	GASKET 22,1X30,1X3,7 MM 1"	
370	321134-0260		1	BUSHING, IGLIDUR W300 20X23X20	
400	312105-0327		1	"SCREW, M6S ISO 4017 M5X12 A4 80"	
410	312105-0329		3	SCREW, M6S ISO 4017 M5X16 A4 80	
420	312105-0331		1	SCREW, M6S ISO 4017 M5X20 A4 80	
430	312105-0447		1	SCREW M6S ISO 4017 M8X12 A480	
440	344207-1041		1	O-RING 41,0X1,78 MM FDA, 3-A	
450	315207-0506		1	O-RING 7,65X1,78 MM	
460	315207-0723		1	O-RING 29,82X2,62 MM	
500	90051-0059		1	KNOB, EXTERNAL THREAD. NO. 8308-1550	
510	90141-0015		1	RETAINING RING FOR SHAFT DIN 471 8 SS	
520	90239-0532		1	ROD END, CLEVIS WITH AXLE M8X1,25	
530	90458-2956		2	ELBOW PIPE JOINT, EXT.THREAD, D=6MM-G1/8	
540	90600-5788		2	SENSOR BRACKET, SMBR-20	
U70B3050	90600-0362		1	PROX. SENSOR, SMTO-4U-PS-S-LED-24	
U70B3060	90600-0362		1	PROX. SENSOR, SMTO-4U-PS-S-LED-24	
U70M2452	90603-5802		1	DOUBLE ACTING, MINI-ISO, CYL. 20-50	
U70W3050	344245-0050		1	SENSOR CABLE, EVT123	
U70W3060	344245-0050		1	SENSOR CABLE, EVT123	

Machine Type	Group Description	Used-In	Group Number	Page No

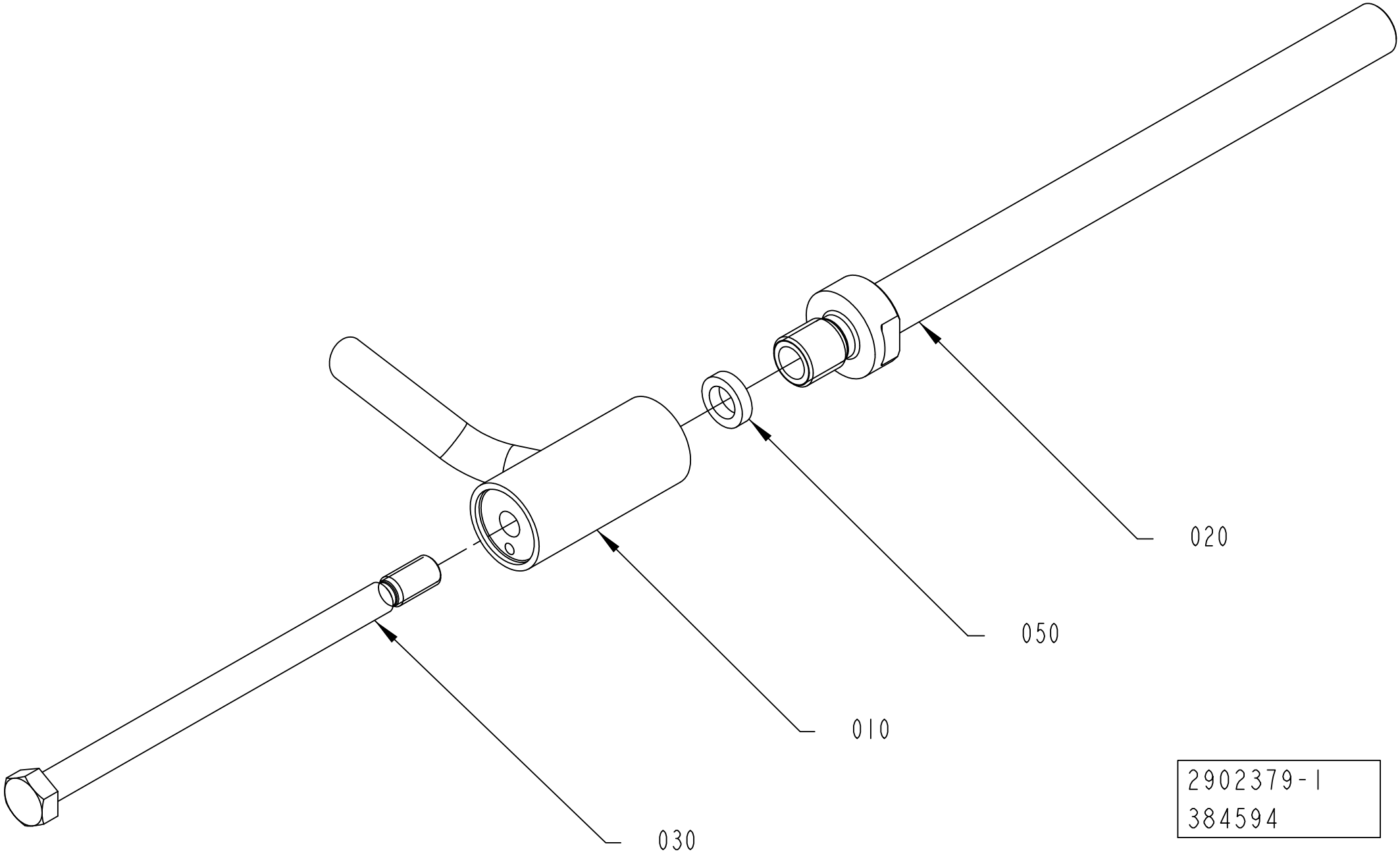

2902379-1
384594

ECM: 530448 - 20120416
Group number: 2902379-0100
Assembly Drawing: 2902379-1_1_AA

This list covers pages from 1-396 to 1-399

Pos	Part No	UN	Qty	Description	Page No
TBA 0500S, TBA 1000B, TBA 1000S (See drawing on page: 1-398)					
020	2758733-0002		1	AIR PIPE	
030	2758738-0002		1	SCREW	
040	2758740-0001		1	SPACER	
TBA 0500SQ, TBA 1000SQ, TPA 1000SQ, TPA 0500SQ, TPA 0750SQ, TGA 1000SQ, TGA 0750SQ, TGA 0500SQ, TGA 1500SQ, TGA 1000CR, TGA 1000LF (See drawing on page: 1-398)					
020	2758733-0003		1	AIR PIPE	
030	2758738-0003		1	SCREW	
040	2758740-0002		1	SPACER	
TBA 1500S, TBA 2000S (See drawing on page: 1-396)					
020	2758733-0001		1	AIR PIPE	
030	2758738-0001		1	SCREW	
Common Parts					
010	2758732-0000		1	AIR NOZZLE	
050	2758737-0000		1	SEAL	

Pos	Part No	UN	Qty	Description	Page No

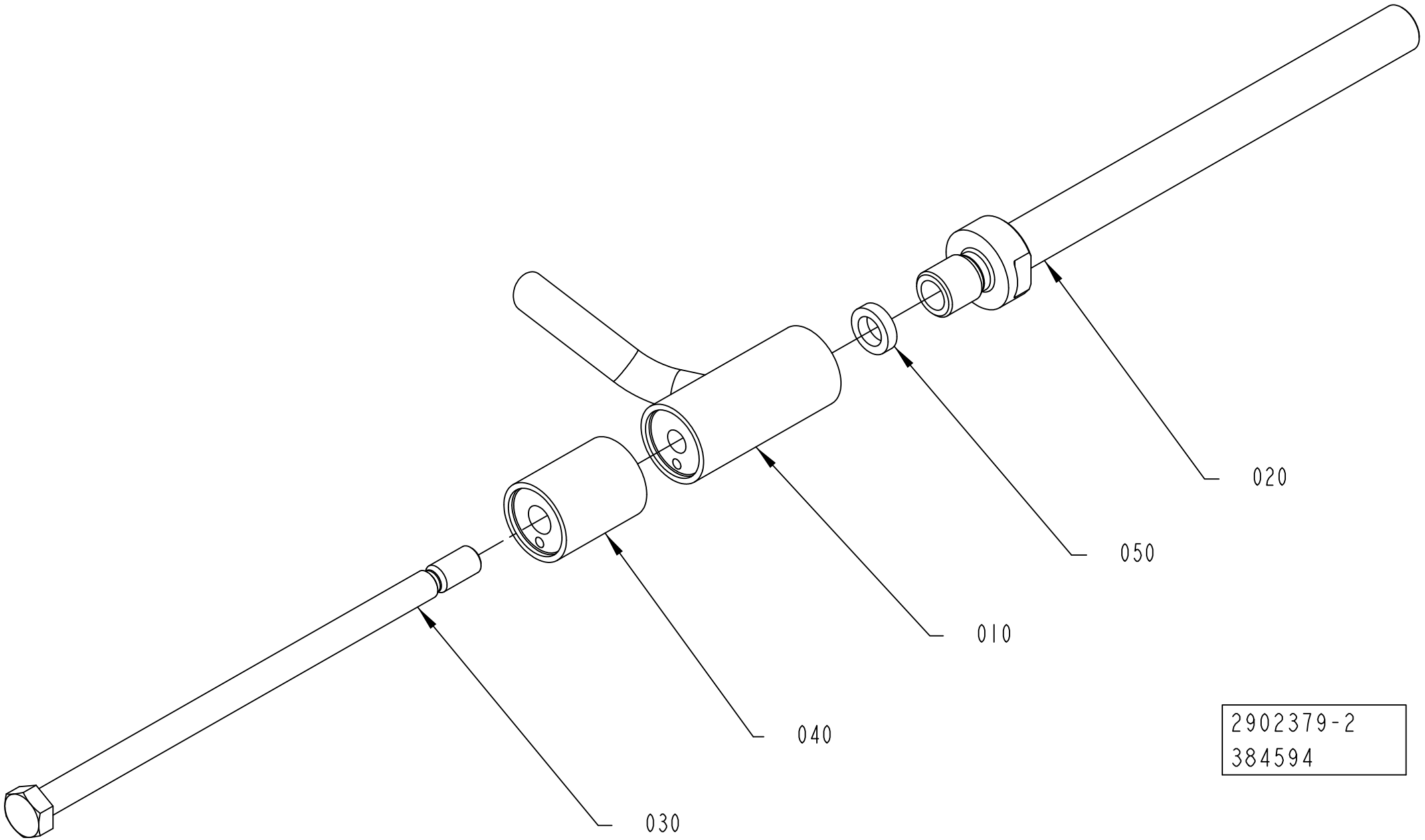
020
050
010
040
030
2902379-2
384594

ECM: 530448 - 20120416
Group number: 2902379-0100
Assembly Drawing: 2902379-2_1_AA

This list covers pages from 1-396 to 1-399

Pos	Part No	UN	Qty	Description	Page No
TBA 0500S, TBA 1000B, TBA 1000S (See drawing on page: 1-398)					
020	2758733-0002		1	AIR PIPE	
030	2758738-0002		1	SCREW	
040	2758740-0001		1	SPACER	
TBA 0500SQ, TBA 1000SQ, TPA 1000SQ, TPA 0500SQ, TPA 0750SQ, TGA 1000SQ, TGA 0750SQ, TGA 0500SQ, TGA 1500SQ, TGA 1000CR, TGA 1000LF (See drawing on page: 1-398)					
020	2758733-0003		1	AIR PIPE	
030	2758738-0003		1	SCREW	
040	2758740-0002		1	SPACER	
TBA 1500S, TBA 2000S (See drawing on page: 1-396)					
020	2758733-0001		1	AIR PIPE	
030	2758738-0001		1	SCREW	
Common Parts					
010	2758732-0000		1	AIR NOZZLE	
050	2758737-0000		1	SEAL	

Pos	Part No	UN	Qty	Description	Page No

PAPER REEL HOLDER

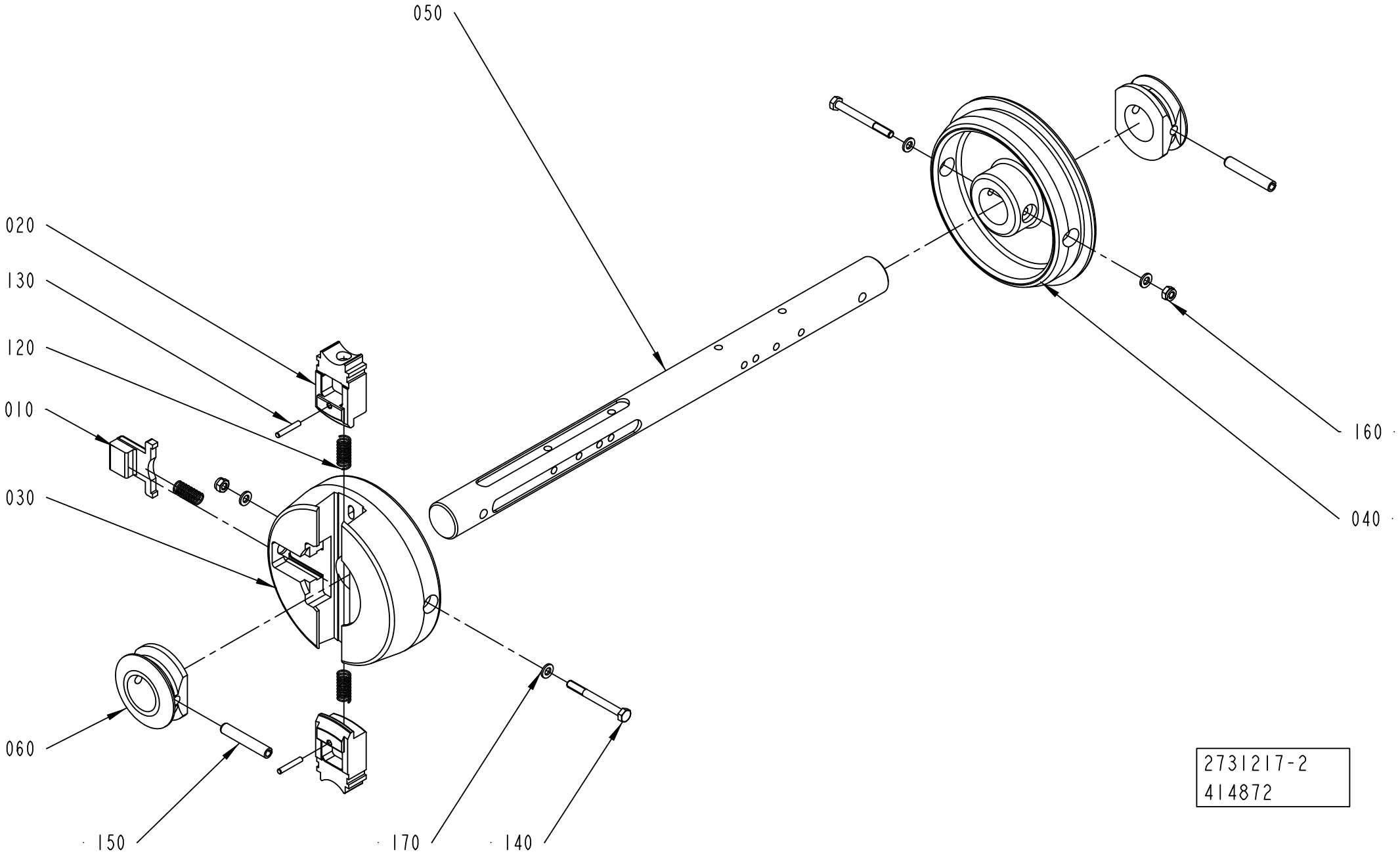

ECM: 668688 - 20140701
Group number: 2731217-0200
Assembly Drawing: 2731217-2_1_AA

Pos	Part No	UN	Qty	Description	Page No
TBA 1000S, TPA 1000SQ, TPA 0750SQ, TBA 1000M, TBA 0200E					
050	3051914-0001		1	SHAFT	
TBA 0500S, TBA 0500SQ, TBA 0500B, TBA 1000B, TBA 1000SQ, TBA 1500S, TPA 0500SQ, TBA 2000S, TGA 1000SQ, TGA 0750SQ, TGA 0500SQ, TGA 1500SQ, TBA 1000E, TGA 1000CR, TGA 1000LF, TBA 0500E					
050	3051914-0002		1	SHAFT	
TBA 0250BL					
050	3051914-0003		1	SHAFT	
Common Parts					
010	272728-0000		1	BARRIER	
020	2851385-0000		2	PLUNGER	
030	2790925-0000		1	SLEEVE	
040	2731210-0000		1	SLEEVE	
060	2731212-0000		2	RING	
120	90335-0025		3	COMP. SPRING, 22010, 1X11X26	
130	311103-1274		2	PARALLEL PIN ISO 2338 4M6X24 A1	
140	312105-0382		2	SCREW, M6S ISO 4014 M6X60 A4 80	
150	311112-0385		2	SPRING PIN, ISO 8752 8X50 A2	
160	312812-0316		2	HEXAGON NUT, NY-LOCK M6 A4 80	
170	315105-0153		4	WASHER PLAIN, 6,4X12X1,5 A4 BRB	

Pos	Part No	UN	Qty	Description	Page No

Machine Type | Group Description | Used-In | Group Number | Page No

This page is intentionally left blank.

ECM: 647296 - 20140401
Group number: 3019537-0100
Assembly Drawing:

Pos	Part No	UN	Qty	Description	Page No
TBA 0500S					
010	2523766-0005		4	BRACKET	
TPA 0500SQ					
010	2523766-0006		4	BRACKET	
TBA 0500B, TBA 1000B, TBA 1500S, TGA 1500SQ					
010	2523766-0001		4	BRACKET	
TBA 0500SQ, TBA 1000SQ, TBA 1000E					
010	2523766-0003		4	BRACKET	
TBA 1000M					
010	2523766-0016		4	BRACKET	
TBA 1000S					
010	2523766-0002		4	BRACKET	
TBA 2000S					
010	2701881-0000		4	BRACKET	
TGA 1000SQ, TGA 0750SQ, TGA 0500SQ, TGA 1000CR, TGA 1000LF					
010	2523766-0013		4	BRACKET	
TPA 1000SQ, TPA 0750SQ					
010	2523766-0012		4	BRACKET	

Pos	Part No	UN	Qty	Description	Page No

This page is intentionally left blank.

ECM: 369142 - 20081001
Group number: 2912700-0100
Assembly Drawing:

Pos	Part No	UN	Qty	Description	Page No
DIMC/FLEX					
010	2559061-0200		1	UPPER FORMING RING	**1-407, 1-409, 1-411, 1-413**
NODIMC					
010	2547422-0300		1	UPPER FORMING RING	**1-415, 1-417, 1-419, 1-421, 1-423, 1-425, 1-427, 1-429, 1-431**

Pos	Part No	UN	Qty	Description	Page No

UPPER FORMING RING

Drawing file: 2559061-4_1_AA.hpgl

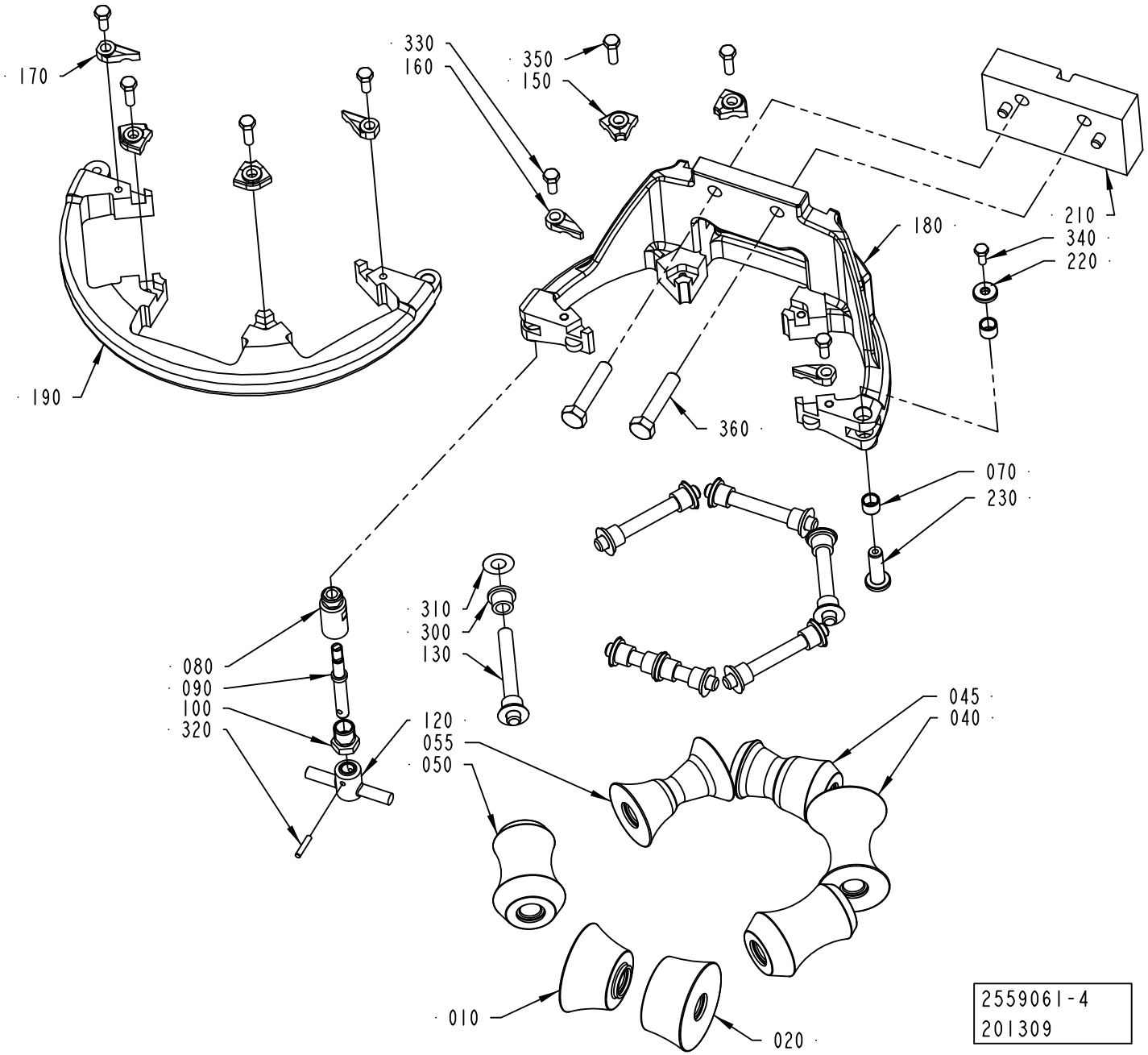

ECM: 644725 - 20140401
Group number: 2559061-0200
Assembly Drawing: 2559061-4_1_AA

This list covers pages from 1-406 to 1-413

Pos	Part No	UN	Qty	Description	Page No
TBA 1000B STDA7 (See drawing on page: 1-408)					
010	2751479-0000		1	ROLLER	
020	2751478-0000		1	ROLLER	
030	2751483-0000		1	ROLLER	
040	2751481-0000		1	ROLLER	
045	2758084-0000		1	ROLLER	
055	2758085-0000		1	ROLLER	
060	2751482-0000		1	ROLLER	
130	752186-0015		3	SHAFT	
135	752186-0007		3	SHAFT	
150	2528123-0004		2	LOCK PLATE	
155	2528123-0008		2	LOCK PLATE	
160	2528118-0005		1	LOCK PLATE	
165	2528118-0001		1	LOCK PLATE	
170	2528119-0005		1	LOCK PLATE	
175	2528119-0001		1	LOCK PLATE	
180	2764022-0000		1	UPPER FORMING RING	
190	2736677-0000		1	UPPER FORMING RING	
210	2532914-0000		1	SPACER	
300	90240-0172		14	FLANGE BUSHING, 8X12X10 MM	
310	2033-0011		14	WASHER	
360	312109-0460		2	SCREW, M6S ISO 4017 M8X45 A4 80	
380	315115-0165		2	WASHER PLAIN, TBRB 8,4/16 H=3	
TBA 1000E LIGHTCAP30, TBA 1000E LIGHTCAP30B, TBA 0500E LIGHTCAP30, TBA 0500E LIGHTCAP30B (See drawing on page: 1-412)					
010	2532965-0000		1	ROLLER	
020	1548541-0000		1	ROLLER	
040	2977909-0000		1	ROLLER	
045	2978351-0000		1	ROLLER	
050	1548531-0000		1	ROLLER	
052	1548540-0000		1	ROLLER	
055	2977907-0000		1	ROLLER	
130	752186-0007		6	SHAFT	
150	2528123-0004		4	LOCK PLATE	
160	2528118-0004		2	LOCK PLATE	
170	2528119-0004		2	LOCK PLATE	
180	2764013-0000		1	UPPER FORMING RING	
190	2736697-0000		1	UPPER FORMING RING	
210	2982646-0000		1	SPACER	
300	90240-0172		14	FLANGE BUSHING, 8X12X10 MM	
310	2033-0011		14	WASHER	
360	312109-0460		2	SCREW, M6S ISO 4017 M8X45 A4 80	
380	315115-0165		2	WASHER PLAIN, TBRB 8,4/16 H=3	
TBA 1000M LIGHTCAP24 (See drawing on page: 1-408)					
010	3019311-0000		1	ROLLER	
020	3019312-0000		1	ROLLER	
030	3019310-0000		1	ROLLER	
040	3019309-0000		1	ROLLER	
045	3298711-0000		1	ROLLER	
055	3298712-0000		1	ROLLER	
060	3019313-0000		1	ROLLER	
130	752186-0015		3	SHAFT	
135	752186-0007		3	SHAFT	
150	2528123-0004		2	LOCK PLATE	
155	2528123-0008		2	LOCK PLATE	
160	2528118-0005		1	LOCK PLATE	
165	2528118-0001		1	LOCK PLATE	
170	2528119-0005		1	LOCK PLATE	
175	2528119-0001		1	LOCK PLATE	
180	2764022-0000		1	UPPER FORMING RING	
190	2736677-0000		1	UPPER FORMING RING	
210	2532914-0000		1	SPACER	
300	90240-0172		14	FLANGE BUSHING, 8X12X10 MM	
310	2033-0011		14	WASHER	
360	312109-0460		2	SCREW, M6S ISO 4017 M8X45 A4 80	
380	315115-0165		2	WASHER PLAIN, TBRB 8,4/16 H=3	
TBA 1000M STDA7 (See drawing on page: 1-408)					
010	3019311-0000		1	ROLLER	
020	3019312-0000		1	ROLLER	
030	3019310-0000		1	ROLLER	
040	3019309-0000		1	ROLLER	
045	3019308-0000		1	ROLLER	
055	3019307-0000		1	ROLLER	
060	3019313-0000		1	ROLLER	
130	752186-0015		3	SHAFT	
135	752186-0007		3	SHAFT	
150	2528123-0004		2	LOCK PLATE	
155	2528123-0008		2	LOCK PLATE	
160	2528118-0005		1	LOCK PLATE	
165	2528118-0001		1	LOCK PLATE	
170	2528119-0005		1	LOCK PLATE	
175	2528119-0001		1	LOCK PLATE	
180	2764022-0000		1	UPPER FORMING RING	
190	2736677-0000		1	UPPER FORMING RING	

Machine Type | Group Description | Used-In | Group Number | Page No

UPPER FORMING RING

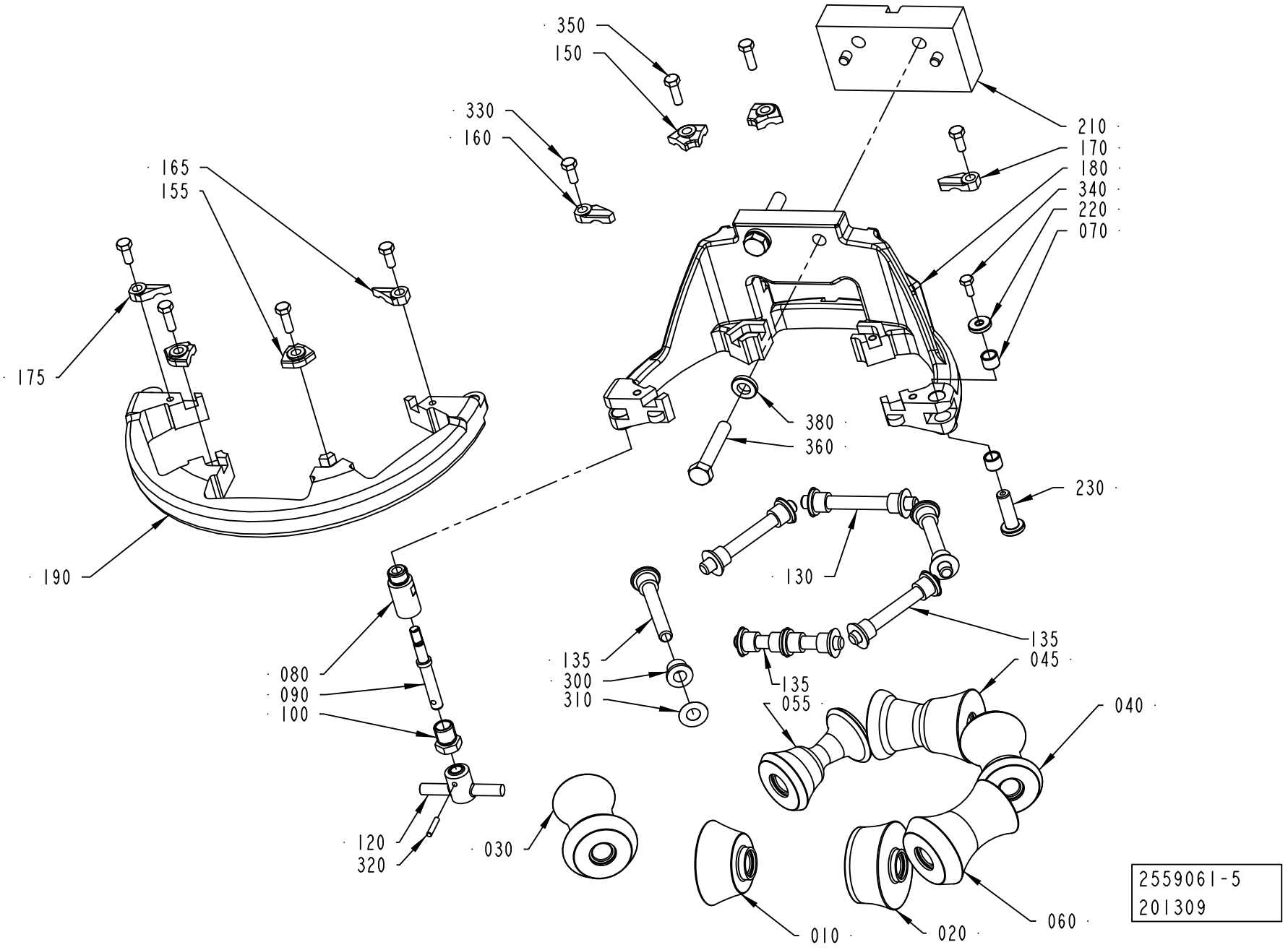

Pos	Part No	UN	Qty	Description	Page No
TBA 1000M STDA7 (Cont'd) (See drawing on page: 1-408)					
210	2532914-0000		1	SPACER	
300	90240-0172		14	FLANGE BUSHING, 8X12X10 MM	
310	2033-0011		14	WASHER	
360	312109-0460		2	SCREW, M6S ISO 4017 M8X45 A4 80	
380	315115-0165		2	WASHER PLAIN, TBRB 8,4/16 H=3	
TBA 1000S LIGHTCAP24 (See drawing on page: 1-410)					
010	2512737-0000		1	ROLLER	
020	2846393-0000		1	ROLLER	
040	2846395-0000		1	ROLLER	
045	2716540-0000		1	ROLLER	
050	2512742-0000		1	ROLLER	
052	2846394-0000		1	ROLLER	
055	2716539-0000		1	ROLLER	
130	752186-0007		6	SHAFT	
150	2528123-0001		2	LOCK PLATE	
155	2528123-0010		2	LOCK PLATE	
160	2528118-0001		2	LOCK PLATE	
170	2528119-0001		2	LOCK PLATE	
180	2764014-0000		1	UPPER FORMING RING	
190	2736676-0000		1	UPPER FORMING RING	
210	2532914-0000		1	SPACER	
300	90240-0172		10	FLANGE BUSHING, 8X12X10 MM	
305	2740795-0000		4	FLANGE BUSHING	
310	2033-0011		12	WASHER	
315	2033-0021		2	WASHER	
360	312109-0459		2	SCREW, M6S ISO 4017 M8X40 A4 80	
TBA 1000S STDA7 (See drawing on page: 1-406)					
010	2512737-0000		1	ROLLER	
020	2512738-0000		1	ROLLER	
040	2512741-0000		1	ROLLER	
045	2555622-0000		1	ROLLER	
050	2512742-0000		2	ROLLER	
055	2555621-0000		1	ROLLER	
130	752186-0007		6	SHAFT	
150	2528123-0001		4	LOCK PLATE	
160	2528118-0001		2	LOCK PLATE	
170	2528119-0001		2	LOCK PLATE	
180	2764014-0000		1	UPPER FORMING RING	
190	2736676-0000		1	UPPER FORMING RING	
210	2532914-0000		1	SPACER	
300	90240-0172		14	FLANGE BUSHING, 8X12X10 MM	
310	2033-0011		14	WASHER	
360	312109-0459		2	SCREW, M6S ISO 4017 M8X40 A4 80	
Common Parts					
070	2526826-0000		2	BUSHING	
080	2764034-0000		1	SHAFT	
090	2764035-0000		1	SHAFT	
100	2731428-0000		1	NUT	
120	2764036-0000		1	KNOB	
220	2526825-0000		1	WASHER	
230	2526827-0000		1	SHAFT	
320	311103-0236		1	PARALLEL PIN ISO 2338 3M6X16 A1	
330	312105-0327		4	"SCREW, M6S ISO 4017 M5X12 A4 80"	
340	312105-0289		1	SCREW, M6S ISO 4017 M4X10 A4 70	
350	312105-0329		4	SCREW, M6S ISO 4017 M5X16 A4 80	

UPPER FORMING RING

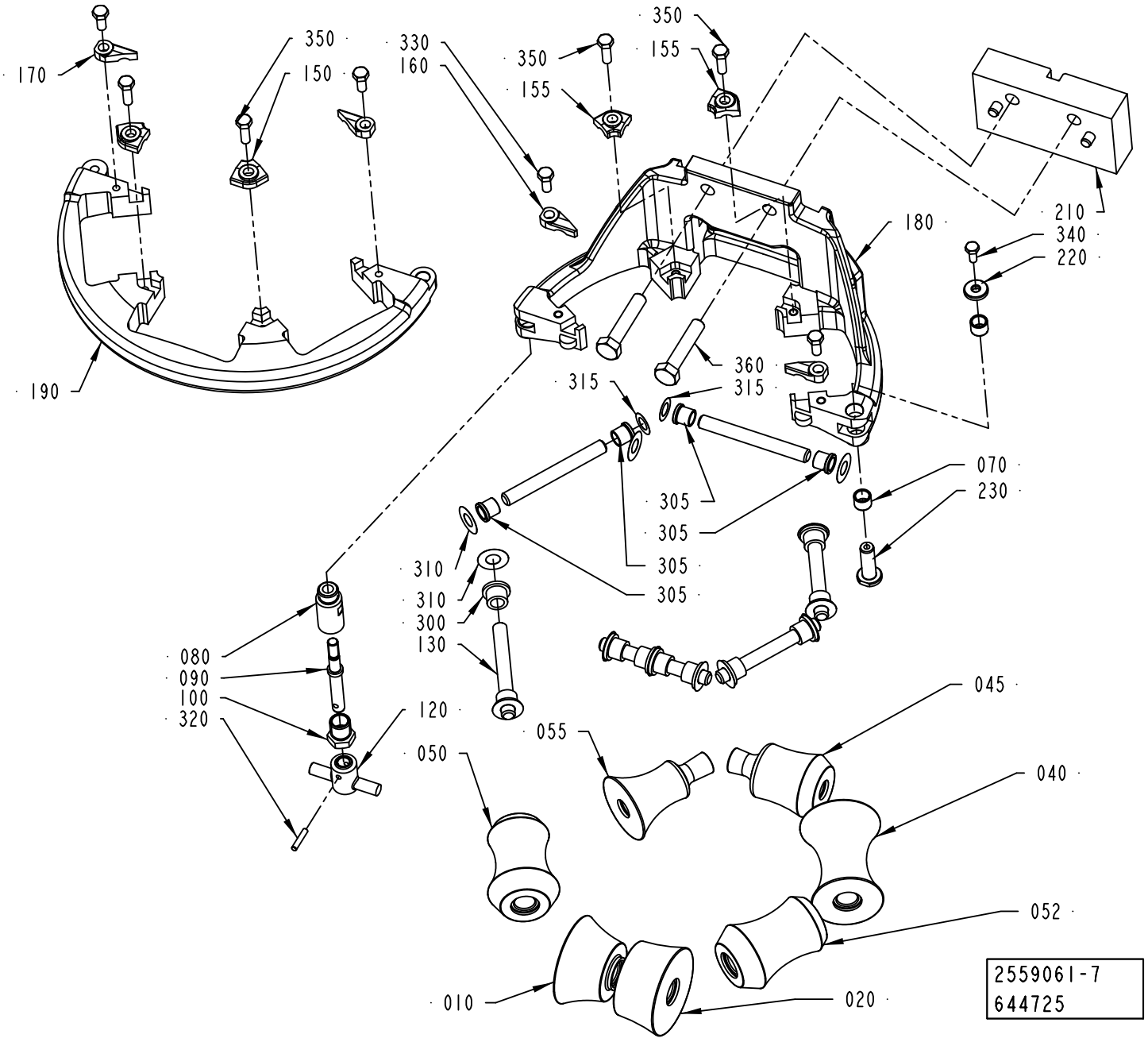

ECM: 644725 - 20140401
Group number: 2559061-0200
Assembly Drawing: 2559061-7_1_AC

This list covers pages from 1-406 to 1-413

Pos	Part No	UN	Qty	Description	Page No
SEE PREVIOUS LISTS PAGES: 1-407, 1-409.					

Pos	Part No	UN	Qty	Description	Page No

UPPER FORMING RING

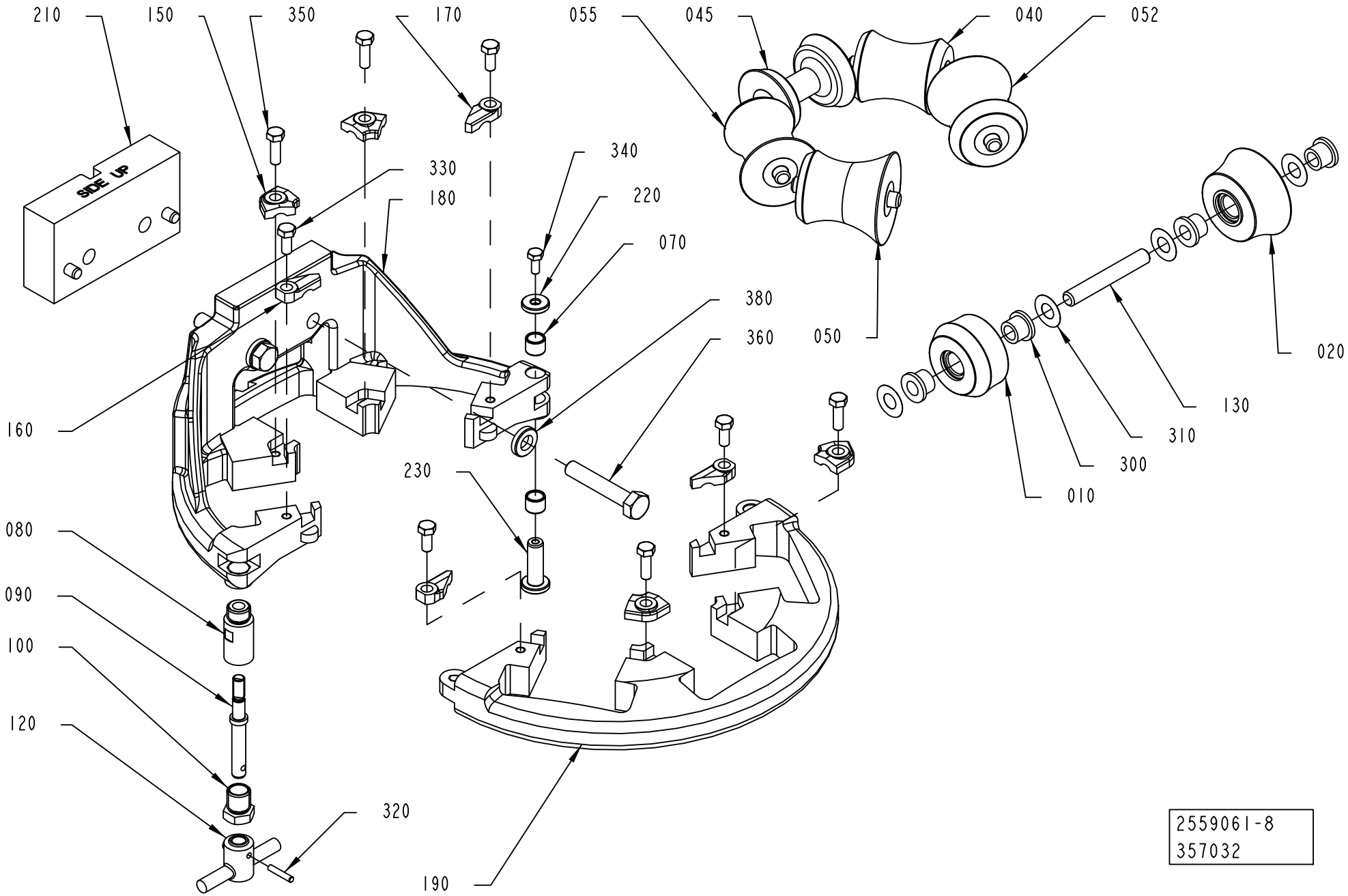

Pos	Part No	UN	Qty	Description	Page No
SEE PREVIOUS LISTS PAGES: 1-407, 1-409.					

Pos	Part No	UN	Qty	Description	Page No

UPPER FORMING RING

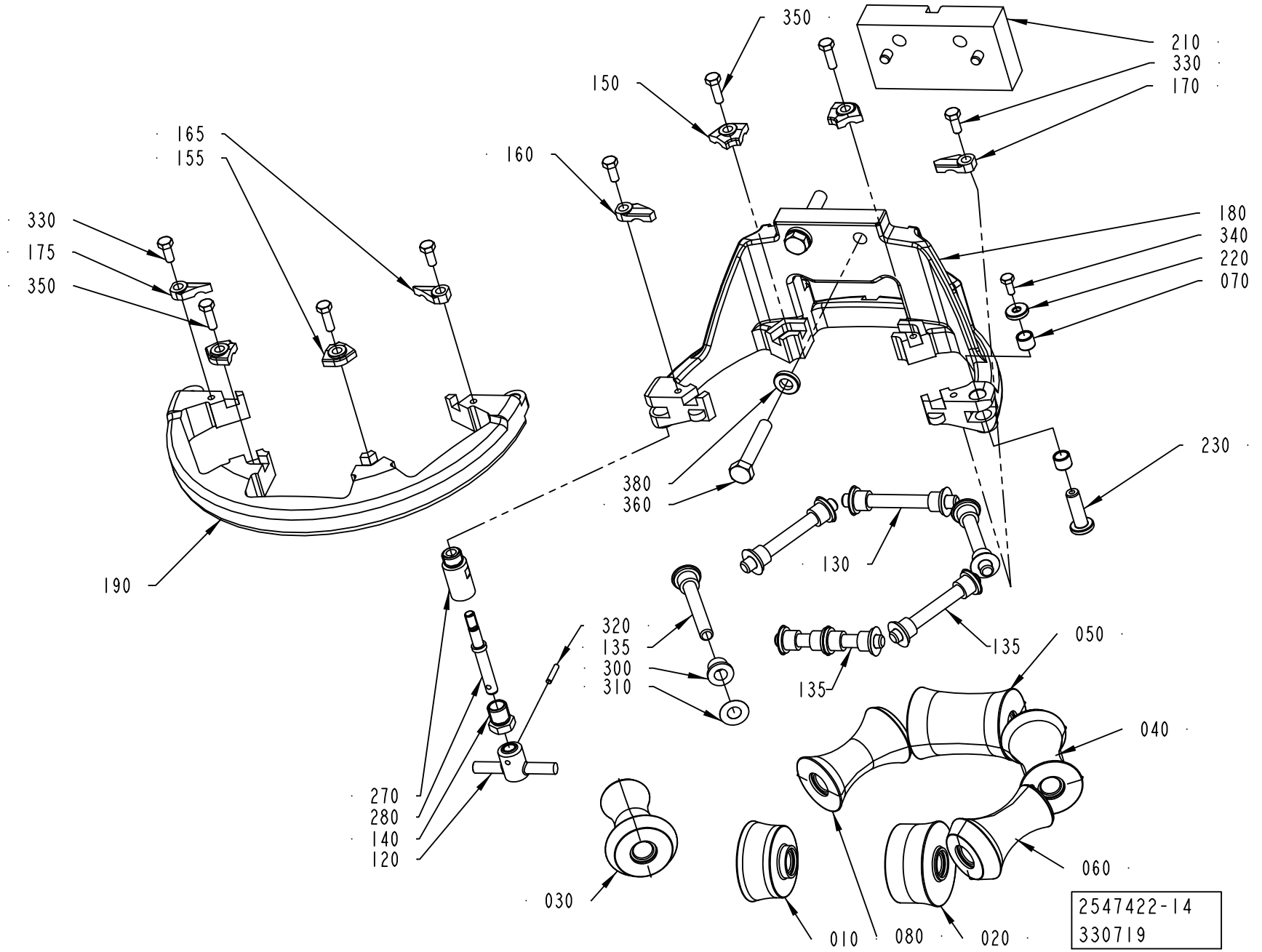

ECM: 566237 - 20121001
Group number: 2547422-0300
Assembly Drawing: 2547422-14_1_AA

This list covers pages from 1-414 to 1-431

Pos	Part No	UN	Qty	Description	Page No
TBA 0500B (See drawing on page: 1-430)					
010	2998412-0000		1	ROLLER	
020	2998413-0000		1	ROLLER	
030	2998411-0000		1	ROLLER	
040	2998507-0000		1	ROLLER	
050	2998506-0000		1	ROLLER	
060	2998414-0000		1	ROLLER	
080	2998505-0000		1	ROLLER	
130	752186-0015		3	SHAFT	
135	752186-0007		3	SHAFT	
150	2528123-0004		2	LOCK PLATE	
155	2528123-0008		2	LOCK PLATE	
160	2528118-0005		1	LOCK PLATE	
165	2528118-0001		1	LOCK PLATE	
170	2528119-0005		1	LOCK PLATE	
175	2528119-0001		1	LOCK PLATE	
180	2764022-0000		1	UPPER FORMING RING	
190	2736677-0000		1	UPPER FORMING RING	
210	3234793-0000		1	SPACER	
300	90240-0172		14	FLANGE BUSHING, 8X12X10 MM	
360	312105-0453		2	SCREW, M6S ISO 4017 M8X25 A4 80	
380	315115-0165		4	WASHER PLAIN, TBRB 8,4/16 H=3	
390	312105-0455		2	SCREW, M6S ISO 4017 M8X30 A4 80	
TBA 0500S (See drawing on page: 1-426)					
010	2611020-0000		1	ROLLER	
020	2720717-0000		1	ROLLER	
030	2672980-0000		1	ROLLER	
040	2672979-0000		2	ROLLER	
050	2672978-0000		1	ROLLER	
060	2672981-0000		1	ROLLER	
130	2522213-0007		6	SHAFT	
150	2528123-0005		4	LOCK PLATE	
160	2528118-0005		2	LOCK PLATE	
170	2528119-0005		2	LOCK PLATE	
180	2764021-0000		1	UPPER FORMING RING	
190	2736631-0000		1	UPPER FORMING RING	
210	2532914-0000		1	SPACER	
300	90240-0172		14	FLANGE BUSHING, 8X12X10 MM	
360	312109-0459		2	SCREW, M6S ISO 4017 M8X40 A4 80	
TBA 0500SQ, TBA 1000SQ (See drawing on page: 1-422)					
010	2532965-0000		1	ROLLER	
020	1548541-0000		1	ROLLER	
030	1548531-0000		4	ROLLER	
060	1548540-0000		1	ROLLER	
130	752186-0007		6	SHAFT	
150	2528123-0004		4	LOCK PLATE	
160	2528118-0004		2	LOCK PLATE	
170	2528119-0004		2	LOCK PLATE	
180	2764013-0000		1	UPPER FORMING RING	
190	2736697-0000		1	UPPER FORMING RING	
210	2532914-0000		1	SPACER	
300	90240-0172		14	FLANGE BUSHING, 8X12X10 MM	
360	312109-0459		2	SCREW, M6S ISO 4017 M8X40 A4 80	
TBA 1000B, TBA 1500S (See drawing on page: 1-428)					
010	2998412-0000		1	ROLLER	
020	2998413-0000		1	ROLLER	
030	2998411-0000		1	ROLLER	
040	2998507-0000		1	ROLLER	
050	2998506-0000		1	ROLLER	
060	2998414-0000		1	ROLLER	
080	2998505-0000		1	ROLLER	
130	752186-0015		3	SHAFT	
135	752186-0007		3	SHAFT	
150	2528123-0004		2	LOCK PLATE	
155	2528123-0008		2	LOCK PLATE	
160	2528118-0005		1	LOCK PLATE	
165	2528118-0001		1	LOCK PLATE	
170	2528119-0005		1	LOCK PLATE	
175	2528119-0001		1	LOCK PLATE	
180	2764022-0000		1	UPPER FORMING RING	
190	2736677-0000		1	UPPER FORMING RING	
210	2696412-0000		1	SPACER	
300	90240-0172		14	FLANGE BUSHING, 8X12X10 MM	
360	312109-0460		2	SCREW, M6S ISO 4017 M8X45 A4 80	
380	315115-0165		2	WASHER PLAIN, TBRB 8,4/16 H=3	
TBA 1000S (See drawing on page: 1-424)					
010	2512737-0000		1	ROLLER	
020	2512738-0000		1	ROLLER	
030	2512740-0000		1	ROLLER	
040	2512741-0000		2	ROLLER	
050	2512742-0000		2	ROLLER	
130	752186-0007		6	SHAFT	
150	2528123-0001		4	LOCK PLATE	
160	2528118-0001		2	LOCK PLATE	

Machine Type | Group Description | Used-In | Group Number | Page No

UPPER FORMING RING

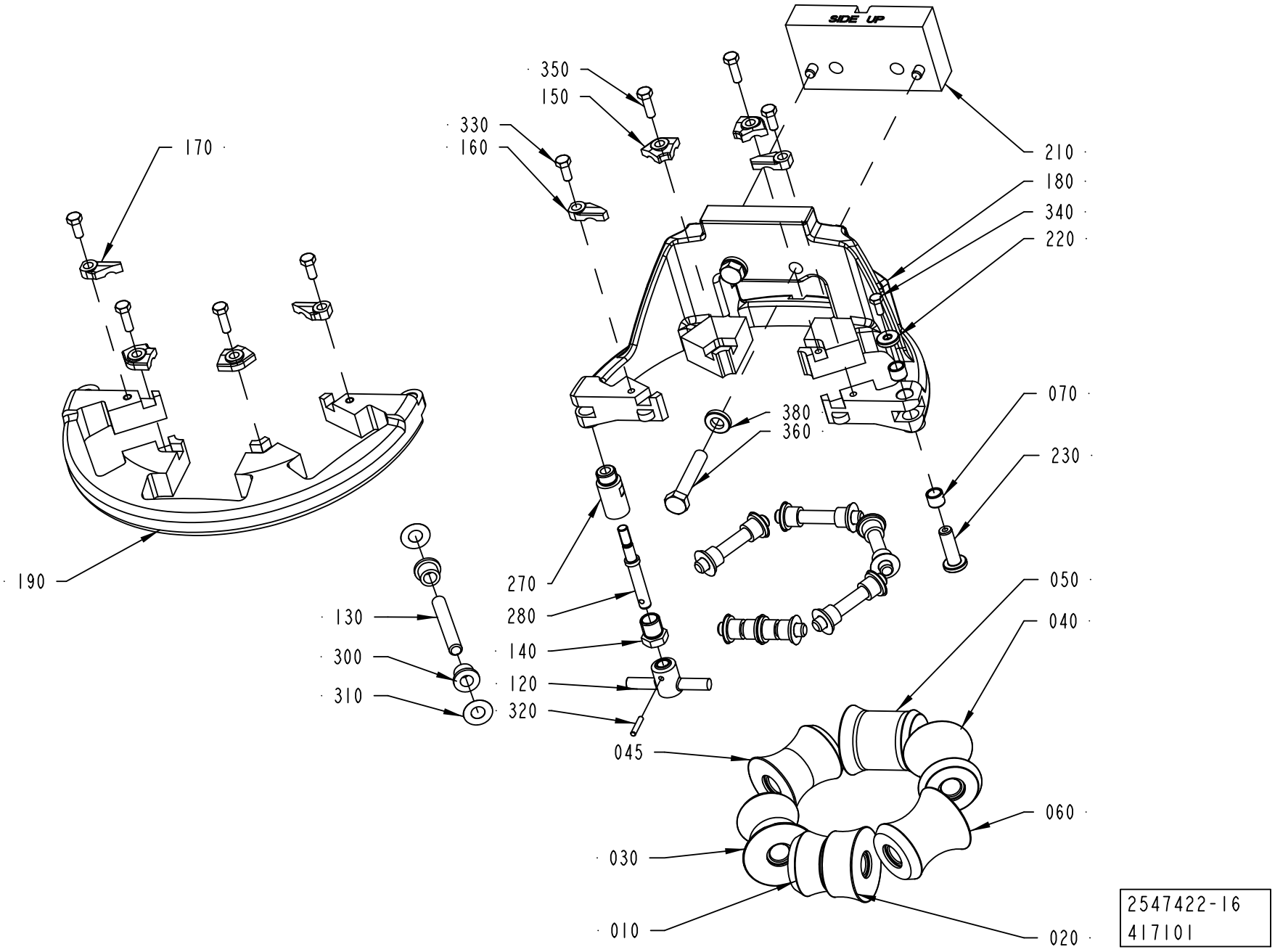

Pos	Part No	UN	Qty	Description	Page No
TBA 1000S (Cont'd) (See drawing on page: 1-424)					
170	2528119-0001		2	LOCK PLATE	
180	2764014-0000		1	UPPER FORMING RING	
190	2736676-0000		1	UPPER FORMING RING	
210	2532914-0000		1	SPACER	
300	90240-0172		14	FLANGE BUSHING, 8X12X10 MM	
360	312109-0459		2	SCREW, M6S ISO 4017 M8X40 A4 80	
TBA 2000S (See drawing on page: 1-420)					
010	2970963-0000		1	ROLLER	
020	2970964-0000		1	ROLLER	
030	2970962-0000		1	ROLLER	
040	2978674-0000		2	ROLLER	
050	2978675-0000		1	ROLLER	
060	2970965-0000		1	ROLLER	
130	752186-0015		6	SHAFT	
150	2528123-0002		4	LOCK PLATE	
160	2528118-0003		2	LOCK PLATE	
170	2528119-0003		2	LOCK PLATE	
180	2764019-0000		1	UPPER FORMING RING	
190	2736633-0000		1	UPPER FORMING RING	
210	3076826-0000		1	SPACER	
300	90240-0172		14	FLANGE BUSHING, 8X12X10 MM	
360	312109-0459		2	SCREW, M6S ISO 4017 M8X40 A4 80	
380	315105-0165		2	FWAS080G0-0S, WASHER PLAIN	
TGA 1000SQ, TGA 0750SQ, TGA 0500SQ, TGA 1000CR, TGA 1000LF (See drawing on page: 1-414)					
010	2905058-0000		1	ROLLER	
020	2905061-0000		1	ROLLER	
030	2909001-0000		1	ROLLER	
040	2908998-0000		2	ROLLER	
050	2905055-0000		1	ROLLER	
060	2908999-0000		2	ROLLER	
080	2909000-0000		1	ROLLER	
130	2522213-0007		6	SHAFT	
150	2528123-0005		4	LOCK PLATE	
160	2528118-0005		2	LOCK PLATE	
170	2528119-0005		2	LOCK PLATE	
180	2793351-0000		1	UPPER FORMING RING	
190	2736631-0000		1	UPPER FORMING RING	
210	2532914-0000		1	SPACER	
300	90240-0172		14	FLANGE BUSHING, 8X12X10 MM	
360	312109-0459		2	SCREW, M6S ISO 4017 M8X40 A4 80	
TGA 1500SQ (See drawing on page: 1-414)					
010	2895460-0000		1	ROLLER	
020	2895463-0000		1	ROLLER	
030	2895459-0000		1	ROLLER	
040	2895461-0000		1	ROLLER	
050	2895457-0000		1	ROLLER	
060	2895462-0000		1	ROLLER	
080	2895458-0000		1	ROLLER	
130	752186-0015		3	SHAFT	
135	752186-0007		3	SHAFT	
150	2528123-0004		2	LOCK PLATE	
155	2528123-0008		2	LOCK PLATE	
160	2528118-0005		1	LOCK PLATE	
165	2528118-0001		1	LOCK PLATE	
170	2528119-0005		1	LOCK PLATE	
175	2528119-0001		1	LOCK PLATE	
180	2764022-0000		1	UPPER FORMING RING	
190	2736677-0000		1	UPPER FORMING RING	
210	2696412-0000		1	SPACER	
300	90240-0172		14	FLANGE BUSHING, 8X12X10 MM	
360	312109-0460		2	SCREW, M6S ISO 4017 M8X45 A4 80	
380	315115-0165		2	WASHER PLAIN, TBRB 8,4/16 H=3	
TPA 0500SQ (See drawing on page: 1-416)					
010	3031824-0000		1	ROLLER	
020	3031825-0000		1	ROLLER	
030	3031823-0000		1	ROLLER	
040	2611016-0000		1	ROLLER	
045	2680196-0000		1	ROLLER	
050	2680195-0000		1	ROLLER	
060	3031826-0000		1	ROLLER	
130	752186-0006		6	SHAFT	
150	2528123-0003		4	LOCK PLATE	
160	2528118-0004		2	LOCK PLATE	
170	2528119-0004		2	LOCK PLATE	
180	2764017-0000		1	UPPER FORMING RING	
190	2736632-0000		1	UPPER FORMING RING	
210	2611024-0000		1	SPACER	
300	90240-0172		14	FLANGE BUSHING, 8X12X10 MM	
360	312109-0460		2	SCREW, M6S ISO 4017 M8X45 A4 80	
380	315115-0165		2	WASHER PLAIN, TBRB 8,4/16 H=3	
TPA 1000SQ, TPA 0750SQ (See drawing on page: 1-418)					
010	2851583-0000		1	ROLLER	
020	2851586-0000		1	ROLLER	

UPPER FORMING RING

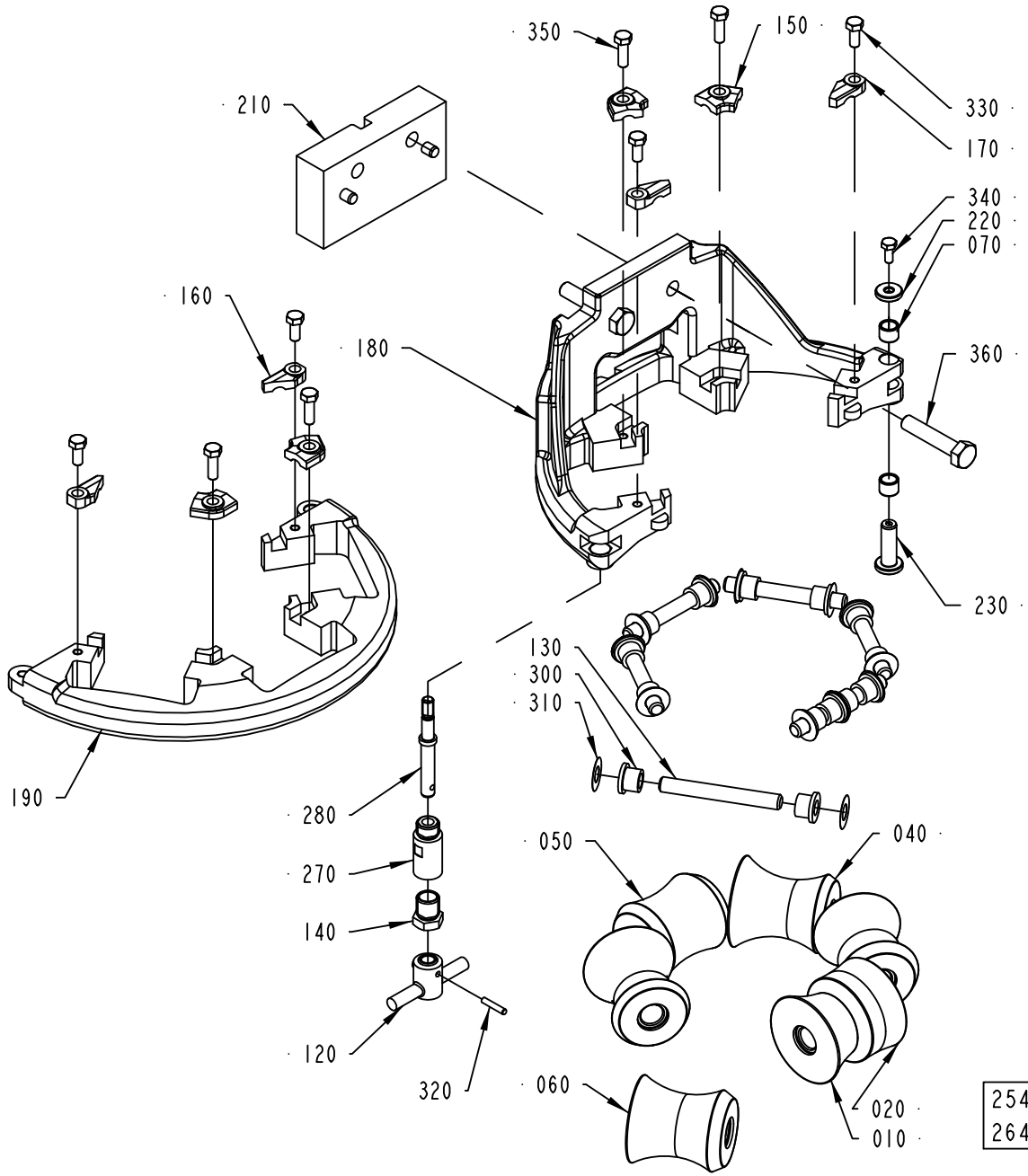

Pos	Part No	UN	Qty	Description	Page No
TPA 1000SQ, TPA 0750SQ (Cont'd) (See drawing on page: 1-418)					
030	1524151-0000		2	ROLLER	
040	2833088-0000		2	ROLLER	
050	2833212-0000		1	ROLLER	
130	2522213-0007		6	SHAFT	
150	2528123-0005		4	LOCK PLATE	
160	2528118-0005		2	LOCK PLATE	
170	2528119-0005		2	LOCK PLATE	
180	2764015-0000		1	UPPER FORMING RING	
190	2736631-0000		1	UPPER FORMING RING	
210	2696411-0000		1	SPACER	
300	90240-0172		14	FLANGE BUSHING, 8X12X10 MM	
360	312109-0459		2	SCREW, M6S ISO 4017 M8X40 A4 80	
Common Parts					
070	2526826-0000		2	BUSHING	
120	2764036-0000		1	KNOB	
140	2731428-0000		1	NUT	
220	2526825-0000		1	WASHER	
230	2526827-0000		1	SHAFT	
270	2764034-0000		1	SHAFT	
280	2764035-0000		1	SHAFT	
310	2033-0011		14	WASHER	
320	311103-0236		1	PARALLEL PIN ISO 2338 3M6X16 A1	
330	312105-0327		4	"SCREW, M6S ISO 4017 M5X12 A4 80"	
340	312105-0289		1	SCREW, M6S ISO 4017 M4X10 A4 70	
350	312105-0329		4	SCREW, M6S ISO 4017 M5X16 A4 80	

Pos	Part No	UN	Qty	Description	Page No

UPPER FORMING RING

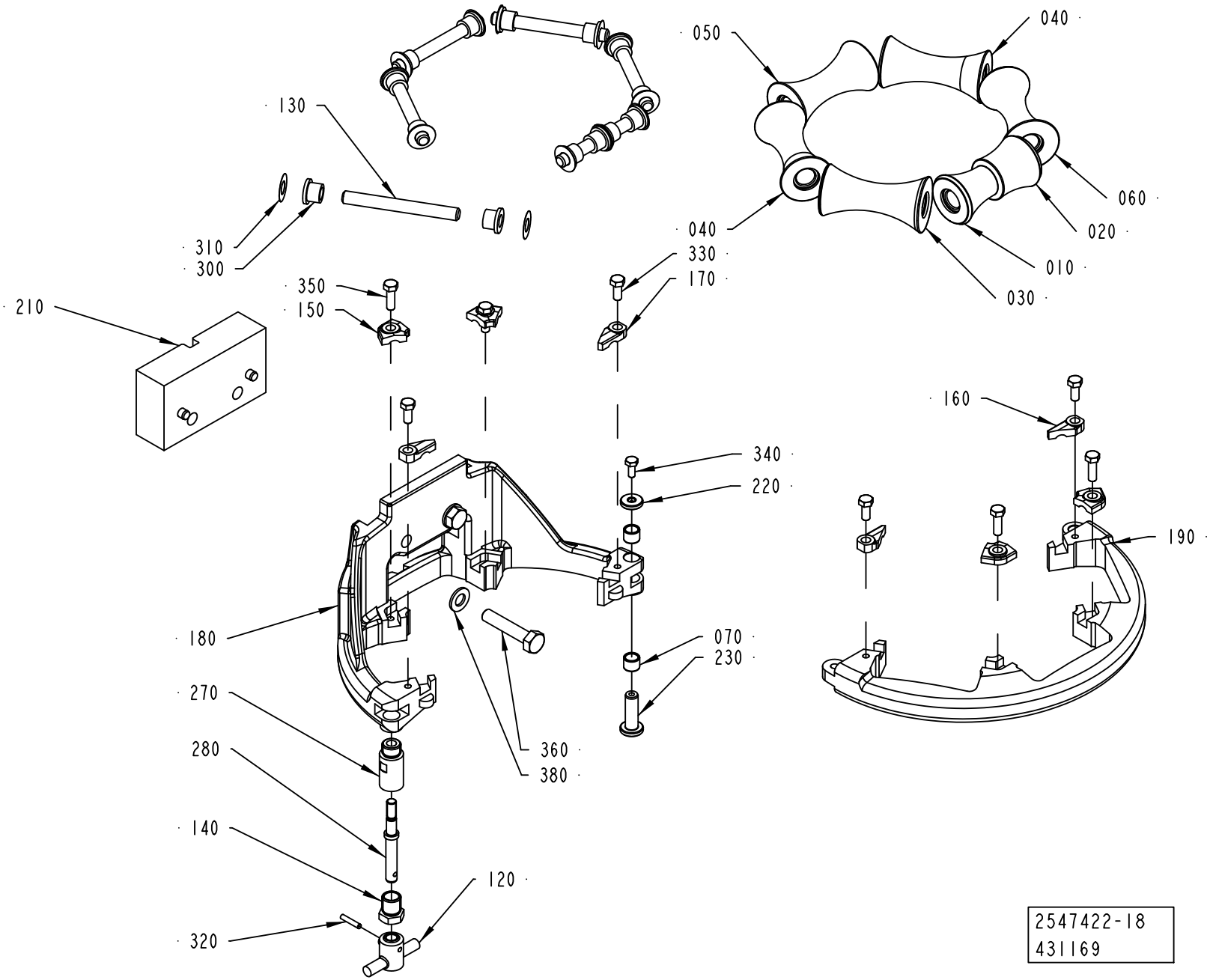

ECM: 566237 - 20121001
Group number: 2547422-0300
Assembly Drawing: 2547422-18_1_AC

This list covers pages from 1-414 to 1-431

Pos	Part No	UN	Qty	Description	Page No
SEE PREVIOUS LISTS PAGES: 1-415, 1-417, 1-419.					

Pos	Part No	UN	Qty	Description	Page No

UPPER FORMING RING

Drawing file: 2547422-19_1_AA.hpgl

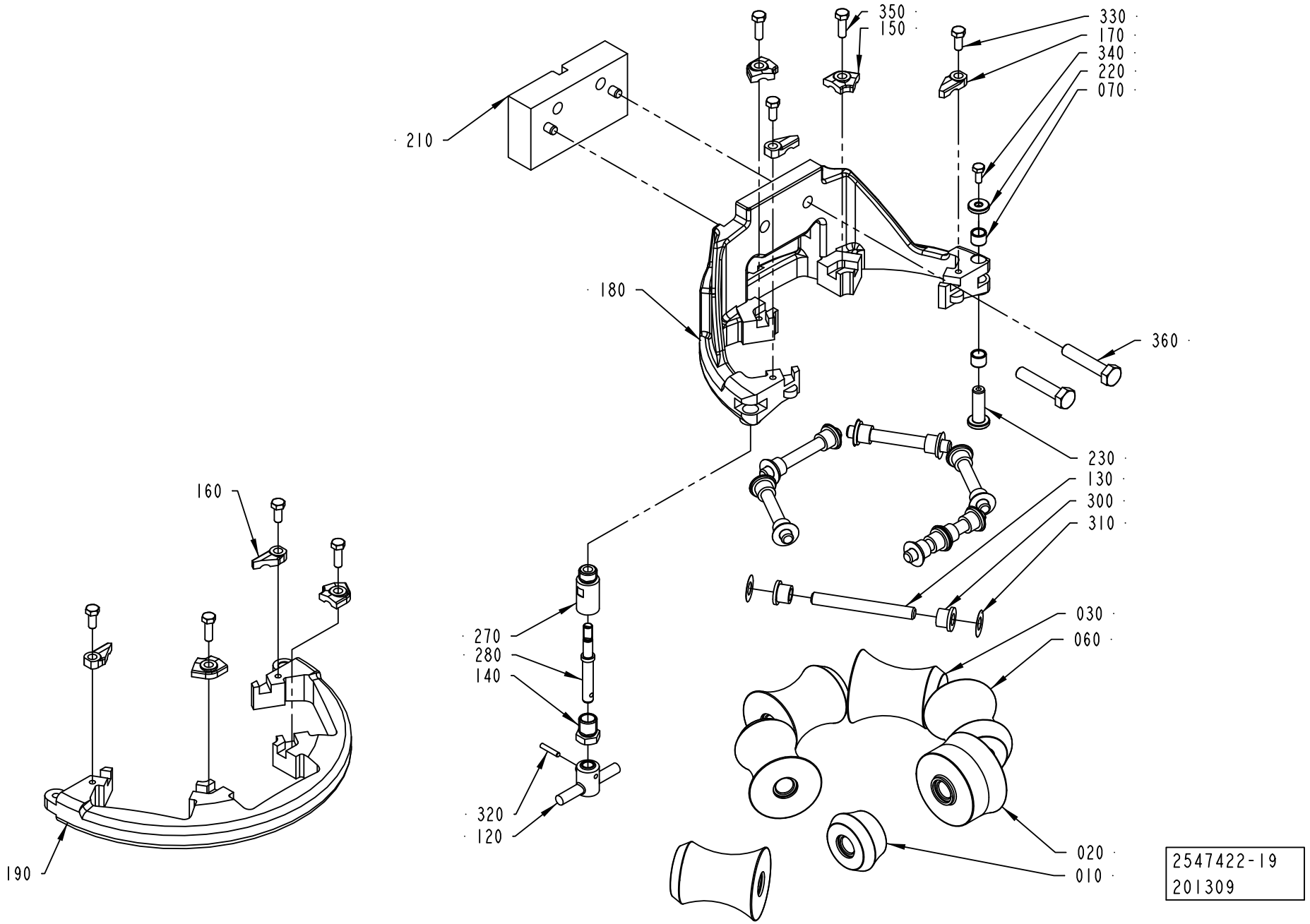

ECM: 566237 - 20121001
Group number: 2547422-0300
Assembly Drawing: 2547422-19_1_AA

This list covers pages from 1-414 to 1-431

Pos	Part No	UN	Qty	Description	Page No
SEE PREVIOUS LISTS PAGES: 1-415, 1-417, 1-419.					

Pos	Part No	UN	Qty	Description	Page No

UPPER FORMING RING

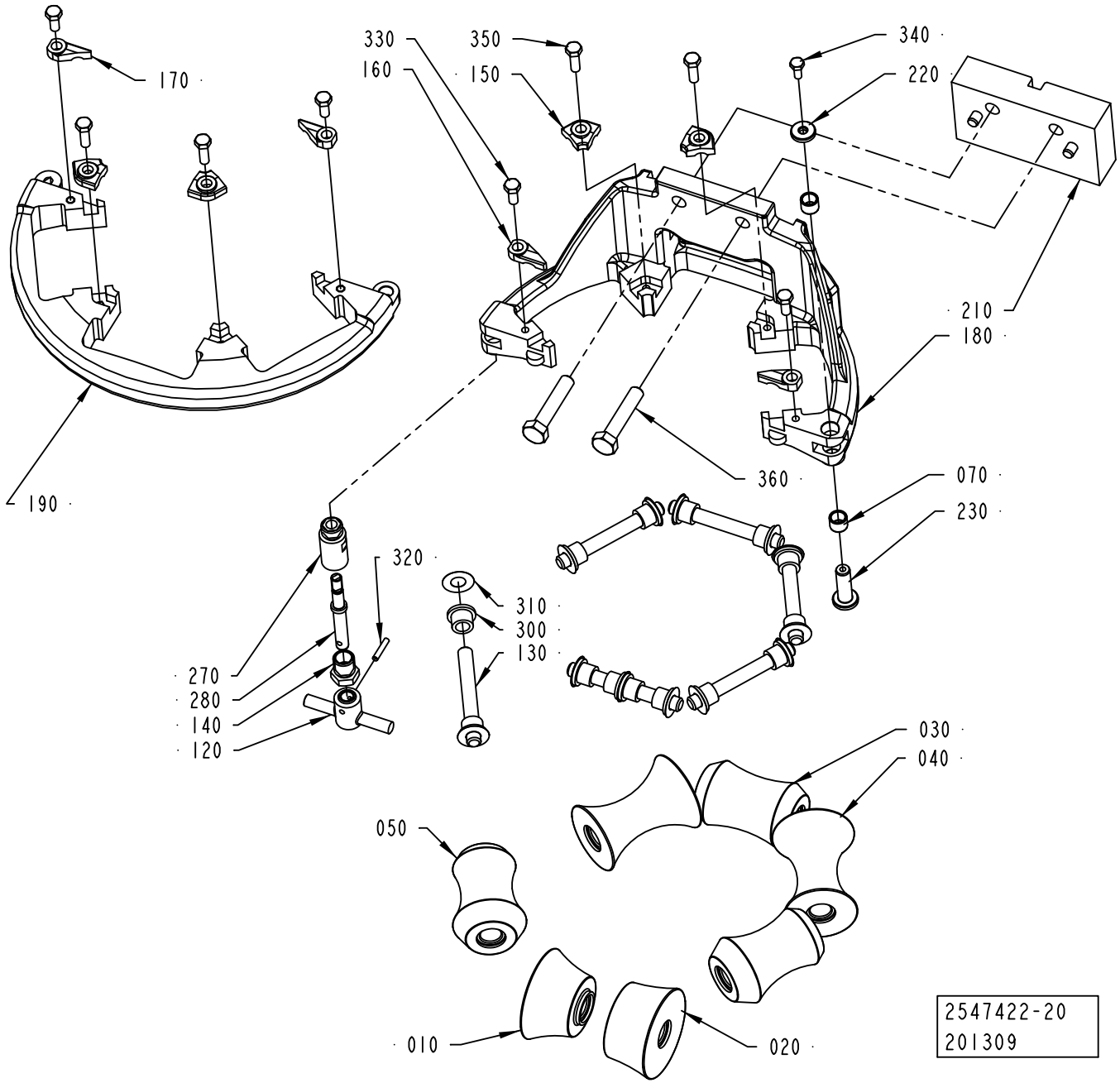

ECM: 566237 - 20121001
Group number: 2547422-0300
Assembly Drawing: 2547422-20_1_AA

This list covers pages from 1-414 to 1-431

Pos	Part No	UN	Qty	Description	Page No
SEE PREVIOUS LISTS PAGES: 1-415, 1-417, 1-419.					

Pos	Part No	UN	Qty	Description	Page No

UPPER FORMING RING

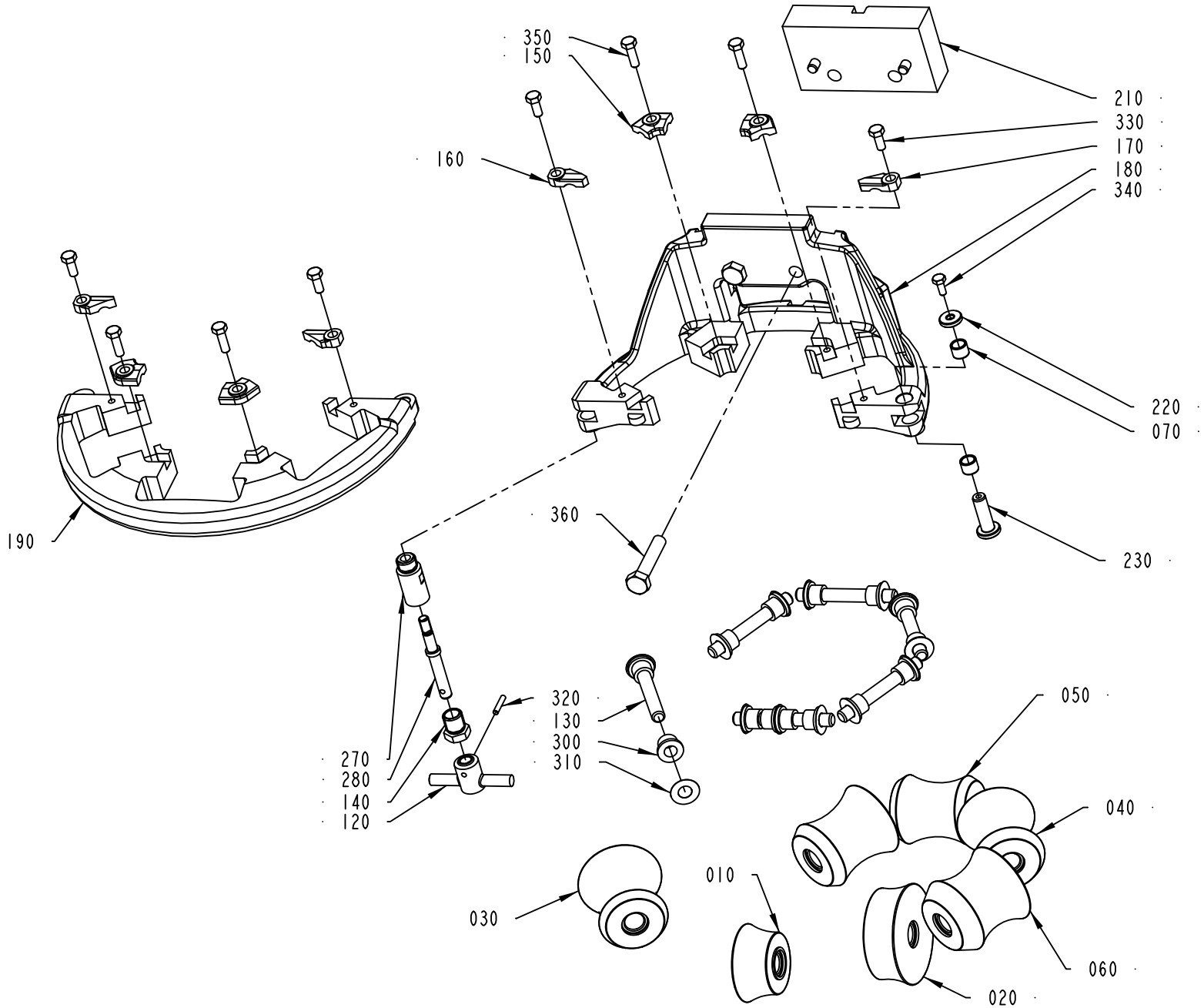

2547422-21
201309

ECM: 566237 - 20121001
Group number: 2547422-0300
Assembly Drawing: 2547422-21_1_AA

This list covers pages from 1-414 to 1-431

Pos	Part No	UN	Qty	Description	Page No
SEE PREVIOUS LISTS PAGES: 1-415, 1-417, 1-419.					

Pos	Part No	UN	Qty	Description	Page No

UPPER FORMING RING

Drawing file: 2547422-26_1_AA.hpgl

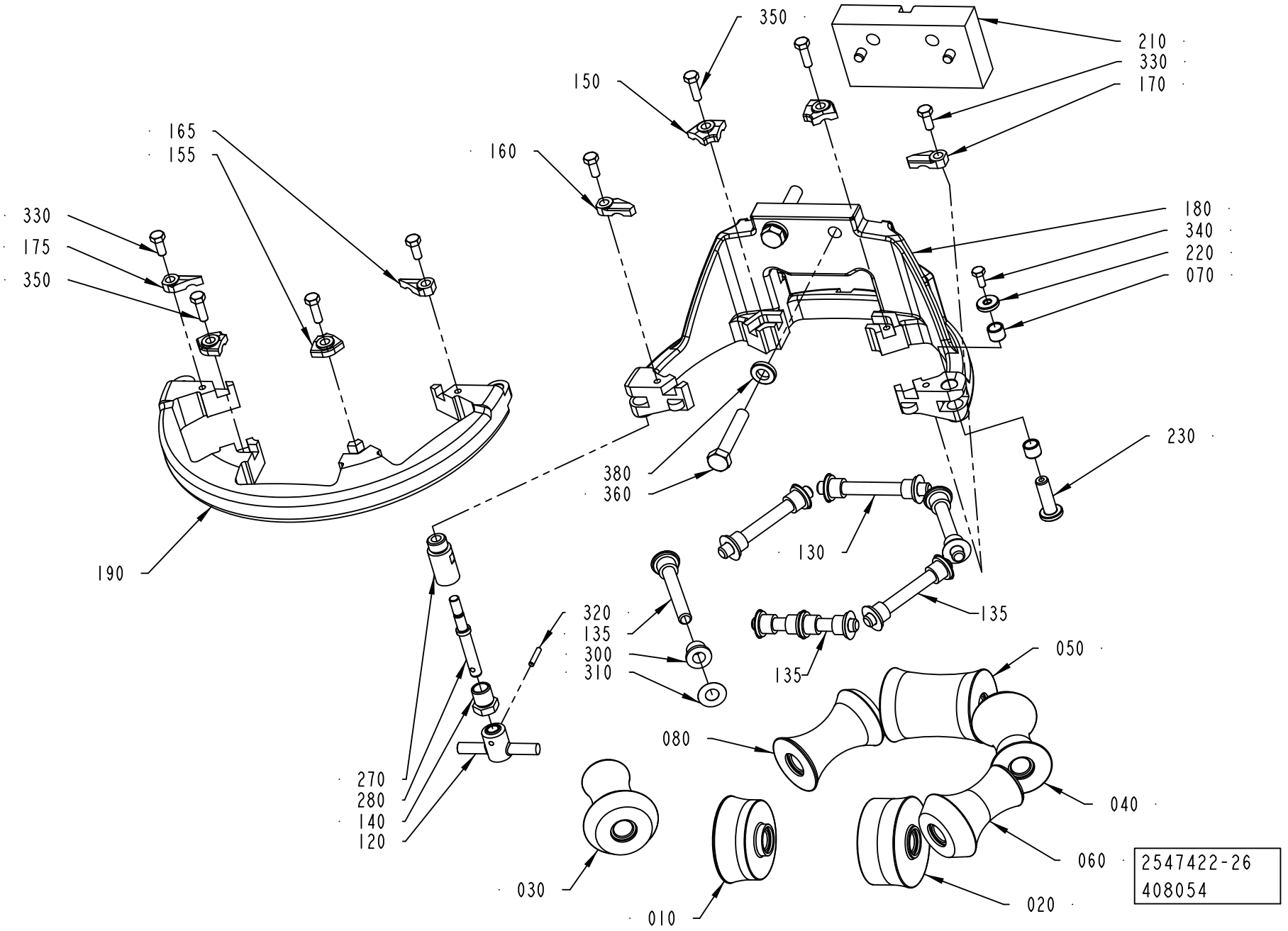

ECM: 566237 - 20121001
Group number: 2547422-0300
Assembly Drawing: 2547422-26_1_AA

This list covers pages from 1-414 to 1-431

Pos	Part No	UN	Qty	Description	Page No
				SEE PREVIOUS LISTS PAGES: 1-415, 1-417, 1-419.	

Pos	Part No	UN	Qty	Description	Page No

UPPER FORMING RING

Drawing file: 2547422-37_1_AA.hpgl

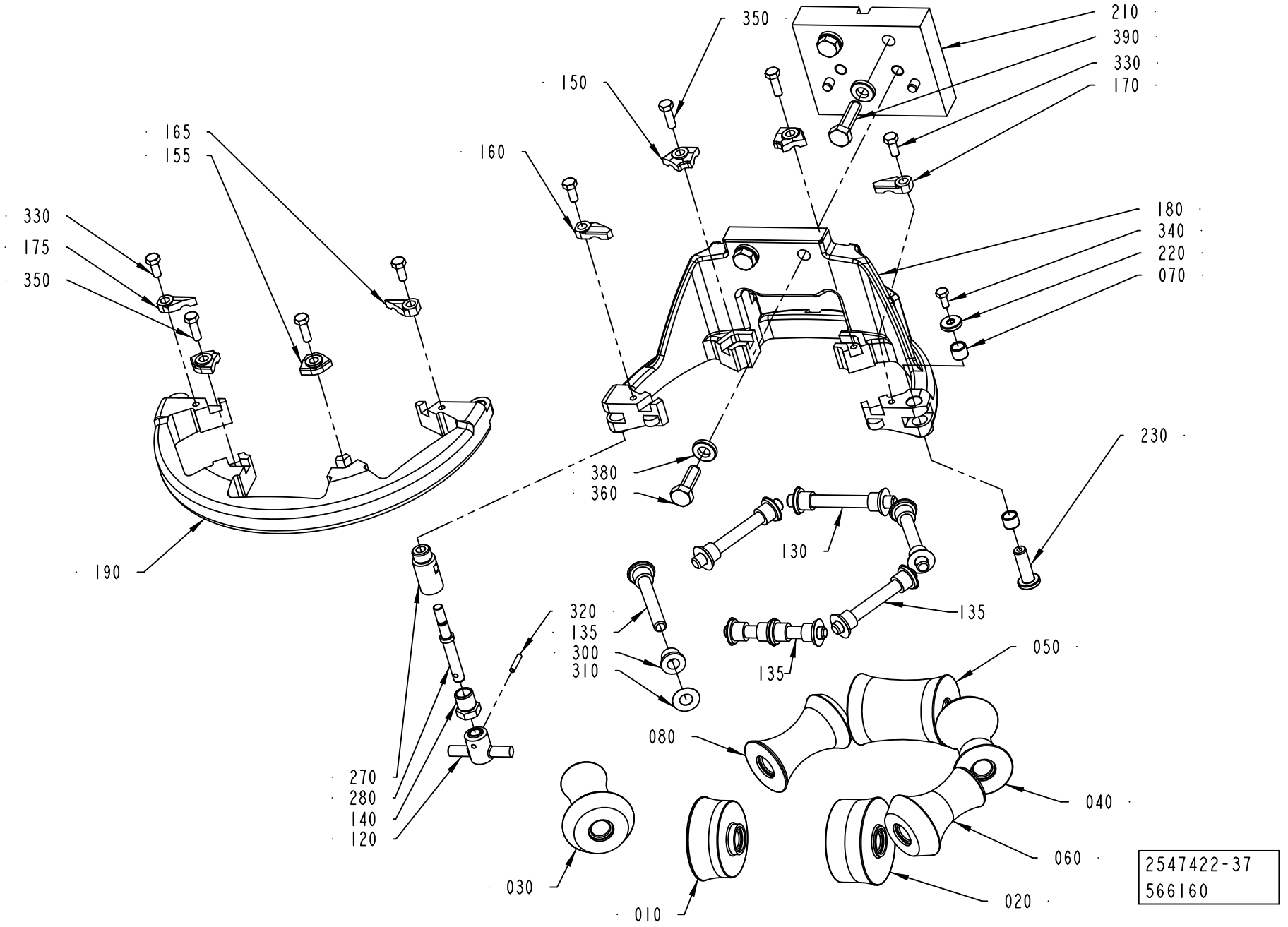

ECM: 566237 - 20121001
Group number: 2547422-0300
Assembly Drawing: 2547422-37_1_AA

This list covers pages from 1-414 to 1-431

Pos	Part No	UN	Qty	Description	Page No
SEE PREVIOUS LISTS PAGES: 1-415, 1-417, 1-419.					

Pos	Part No	UN	Qty	Description	Page No

This page is intentionally left blank.

ECM: 369143 - 20081001
Group number: 2912702-0100
Assembly Drawing:

Pos	Part No	UN	Qty	Description	Page No
DIMC/FLEX					
010	2592550-0100		1	FORMING RING	**1-435, 1-437**
NODIMC					
010	2547421-0200		1	FORMING RING	**1-439, 1-441, 1-443, 1-445, 1-447**

Pos	Part No	UN	Qty	Description	Page No

FORMING RING

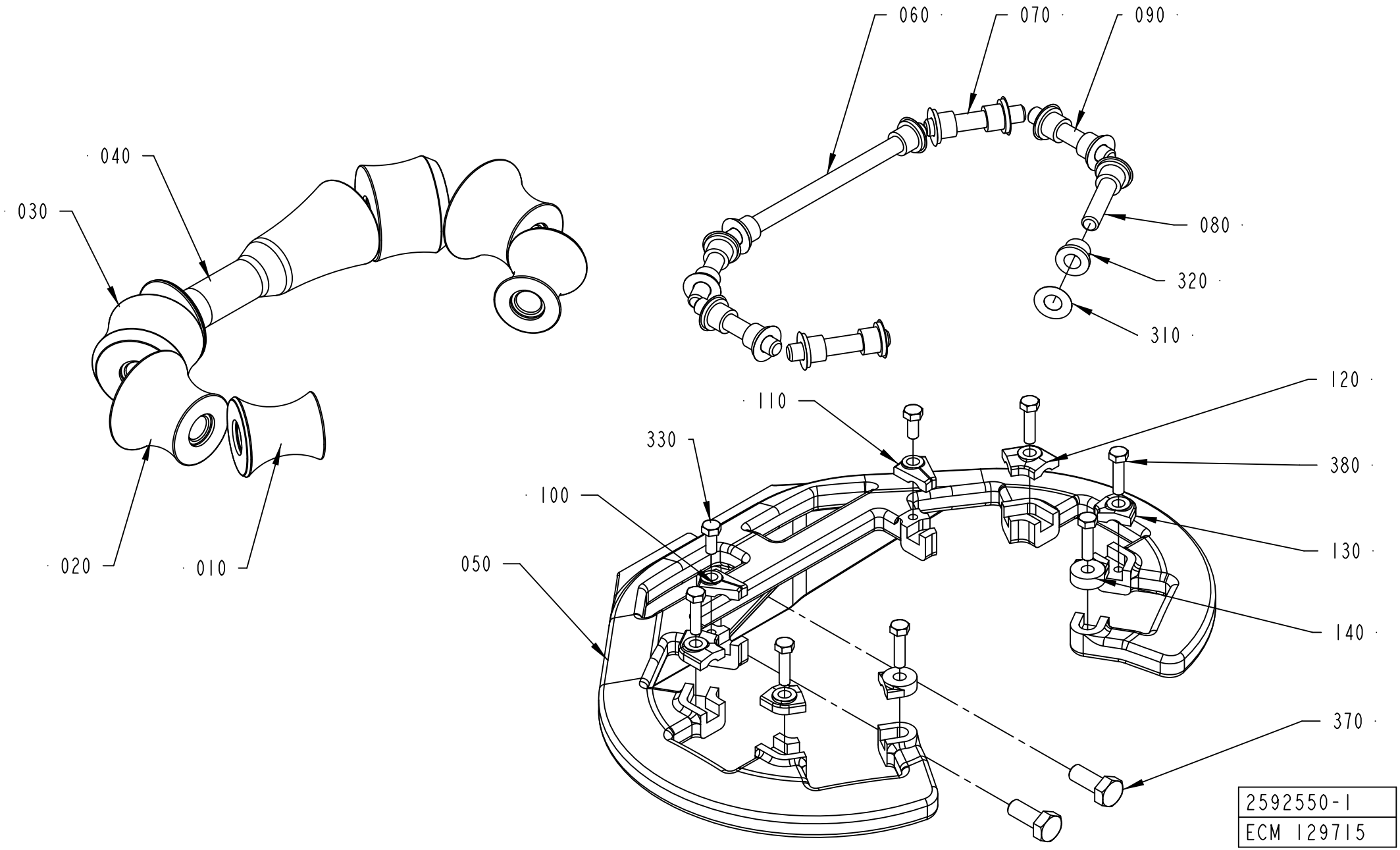

ECM: 644416 - 20140401
Group number: 2592550-0100
Assembly Drawing: 2592550-1_1_AA

This list covers pages from 1-434 to 1-437

Pos	Part No	UN	Qty	Description	Page No
TBA 1000B STDA7, TBA 1000M STDA7 (See drawing on page: 1-434)					
010	2552206-0000		2	ROLLER	
020	2552205-0000		2	ROLLER	
030	2552188-0000		2	ROLLER	
040	2601240-0000		1	ROLLER	
050	2552160-0000		1	SUPPORT RING	
060	2522213-0005		1	SHAFT	
070	752186-0005		2	SHAFT	
080	2522213-0004		2	SHAFT	
090	752186-0019		2	SHAFT	
100	2552176-0001		1	LOCK PLATE	
110	2552177-0001		1	LOCK PLATE	
120	2528123-0002		2	LOCK PLATE	
130	2528123-0008		2	LOCK PLATE	
140	2532895-0004		2	LOCK PLATE	
320	90240-0172		14	FLANGE BUSHING, 8X12X10 MM	
330	312105-0327		2	"SCREW, M6S ISO 4017 M5X12 A4 80"	
370	312105-0451		2	SCREW, M6S ISO 4017 M8X20 A4 80	
380	312105-0331		6	SCREW, M6S ISO 4017 M5X20 A4 80	
TBA 1000E LIGHTCAP30, TBA 1000E LIGHTCAP30B, TBA 0500E LIGHTCAP30, TBA 0500E LIGHTCAP30B (See drawing on page: 1-436)					
010	2982995-0000		2	ROLLER	
020	2982994-0000		2	ROLLER	
030	2982993-0000		2	ROLLER	
040	2982992-0000		1	ROLLER	
050	2982991-0000		1	SUPPORT RING	
060	2522213-0013		1	SHAFT	
070	2522213-0015		2	SHAFT	
090	752186-0019		4	SHAFT	
130	2562667-0008		6	LOCK PLATE	
140	2532895-0002		2	LOCK PLATE	
150	3166673-0000		1	SHIM	
320	90240-0172		14	FLANGE BUSHING, 8X12X10 MM	
330	312105-0329		8	SCREW, M6S ISO 4017 M5X16 A4 80	
370	312105-0453		2	SCREW, M6S ISO 4017 M8X25 A4 80	
390	315105-0165		2	FWAS080G0-0S, WASHER PLAIN	
TBA 1000M LIGHTCAP24 (See drawing on page: 1-436)					
010	2552206-0000		2	ROLLER	
020	2552205-0000		2	ROLLER	
030	2552188-0000		2	ROLLER	
040	3298684-0000		1	ROLLER	
050	2552160-0000		1	SUPPORT RING	
060	2522213-0005		1	SHAFT	
070	752186-0005		2	SHAFT	
080	2522213-0004		2	SHAFT	
090	752186-0019		2	SHAFT	
100	2552176-0001		1	LOCK PLATE	
110	2552177-0001		1	LOCK PLATE	
120	2528123-0002		2	LOCK PLATE	
130	2528123-0008		2	LOCK PLATE	
140	2532895-0004		2	LOCK PLATE	
150	3166673-0000		1	SHIM	
320	90240-0172		14	FLANGE BUSHING, 8X12X10 MM	
330	312105-0327		2	"SCREW, M6S ISO 4017 M5X12 A4 80"	
370	312105-0453		2	SCREW, M6S ISO 4017 M8X25 A4 80	
380	312105-0331		6	SCREW, M6S ISO 4017 M5X20 A4 80	
TBA 1000S LIGHTCAP24 (See drawing on page: 1-434)					
010	2512748-0000		2	ROLLER	
020	2512749-0000		2	ROLLER	
030	2512746-0000		2	ROLLER	
040	2716443-0000		1	ROLLER	
050	2552161-0000		1	SUPPORT RING	
060	2522213-0005		1	SHAFT	
070	752186-0005		2	SHAFT	
080	2522213-0004		2	SHAFT	
090	752186-0019		2	SHAFT	
100	2552176-0003		1	LOCK PLATE	
110	2552177-0003		1	LOCK PLATE	
120	2528123-0007		2	LOCK PLATE	
130	2528123-0001		2	LOCK PLATE	
140	2532895-0003		2	LOCK PLATE	
320	90240-0172		14	FLANGE BUSHING, 8X12X10 MM	
330	312105-0327		2	"SCREW, M6S ISO 4017 M5X12 A4 80"	
370	312105-0451		2	SCREW, M6S ISO 4017 M8X20 A4 80	
380	312105-0331		6	SCREW, M6S ISO 4017 M5X20 A4 80	
TBA 1000S STDA7 (See drawing on page: 1-434)					
010	2512748-0000		2	ROLLER	
020	2512749-0000		2	ROLLER	
030	2512746-0000		2	ROLLER	
040	2592545-0000		1	ROLLER	
050	2552161-0000		1	SUPPORT RING	
060	2522213-0005		1	SHAFT	
070	752186-0005		2	SHAFT	
080	2522213-0004		2	SHAFT	

Machine Type | Group Description | Used-In | Group Number | Page No

FORMING RING

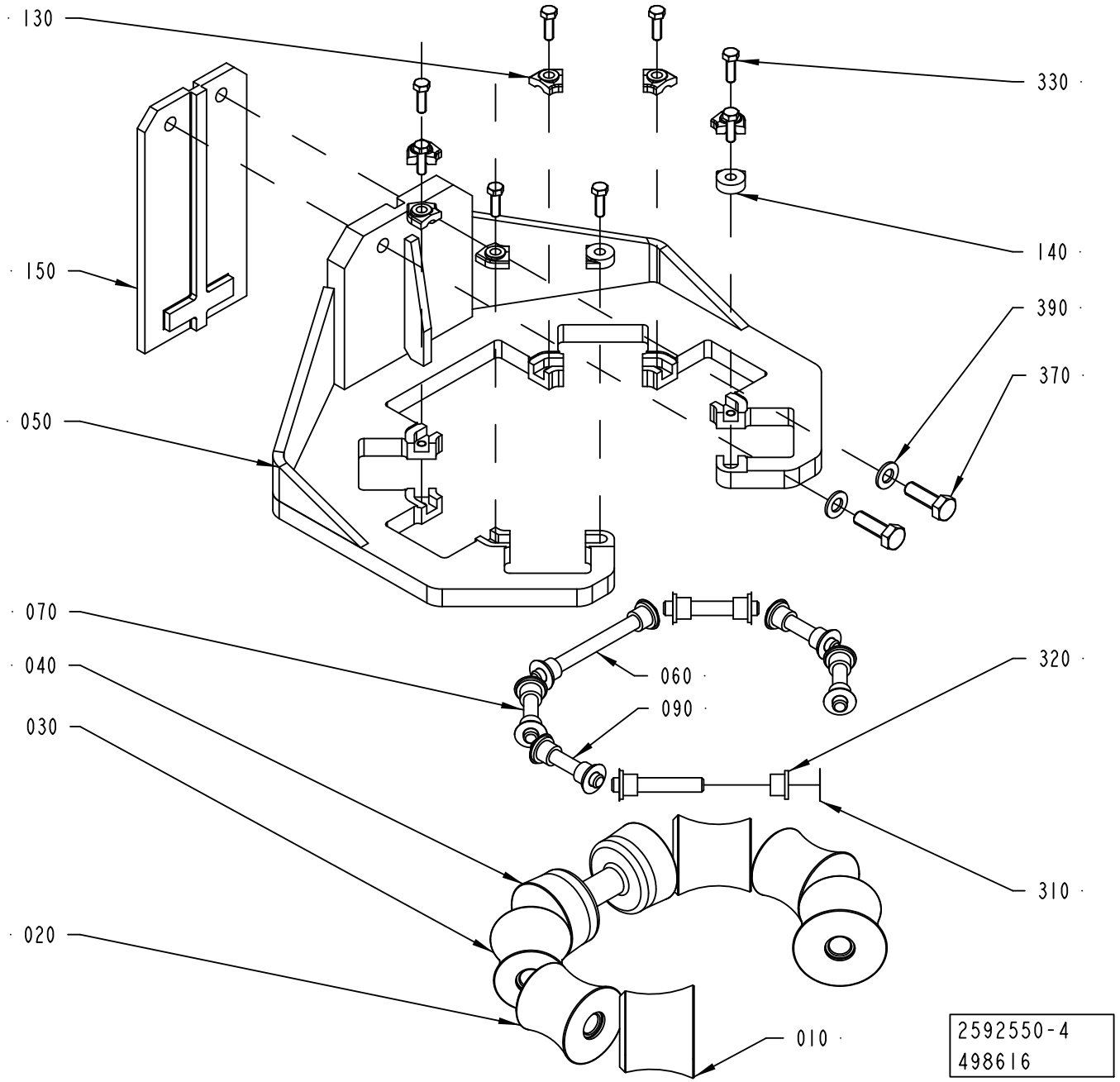

Pos	Part No	UN	Qty	Description	Page No
TBA 1000S STDA7 (Cont'd) (See drawing on page: 1-434)					
090	752186-0019		2	SHAFT	
100	2552176-0003		1	LOCK PLATE	
110	2552177-0003		1	LOCK PLATE	
120	2528123-0007		2	LOCK PLATE	
130	2528123-0001		2	LOCK PLATE	
140	2532895-0003		2	LOCK PLATE	
320	90240-0172		14	FLANGE BUSHING, 8X12X10 MM	
330	312105-0327		2	"SCREW, M6S ISO 4017 M5X12 A4 80"	
370	312105-0451		2	SCREW, M6S ISO 4017 M8X20 A4 80	
380	312105-0331		6	SCREW, M6S ISO 4017 M5X20 A4 80	
Common Parts					
310	2033-0011		14	WASHER	

Pos	Part No	UN	Qty	Description	Page No

FORMING RING

Drawing file: 2547421-1_1_AA.hpgl

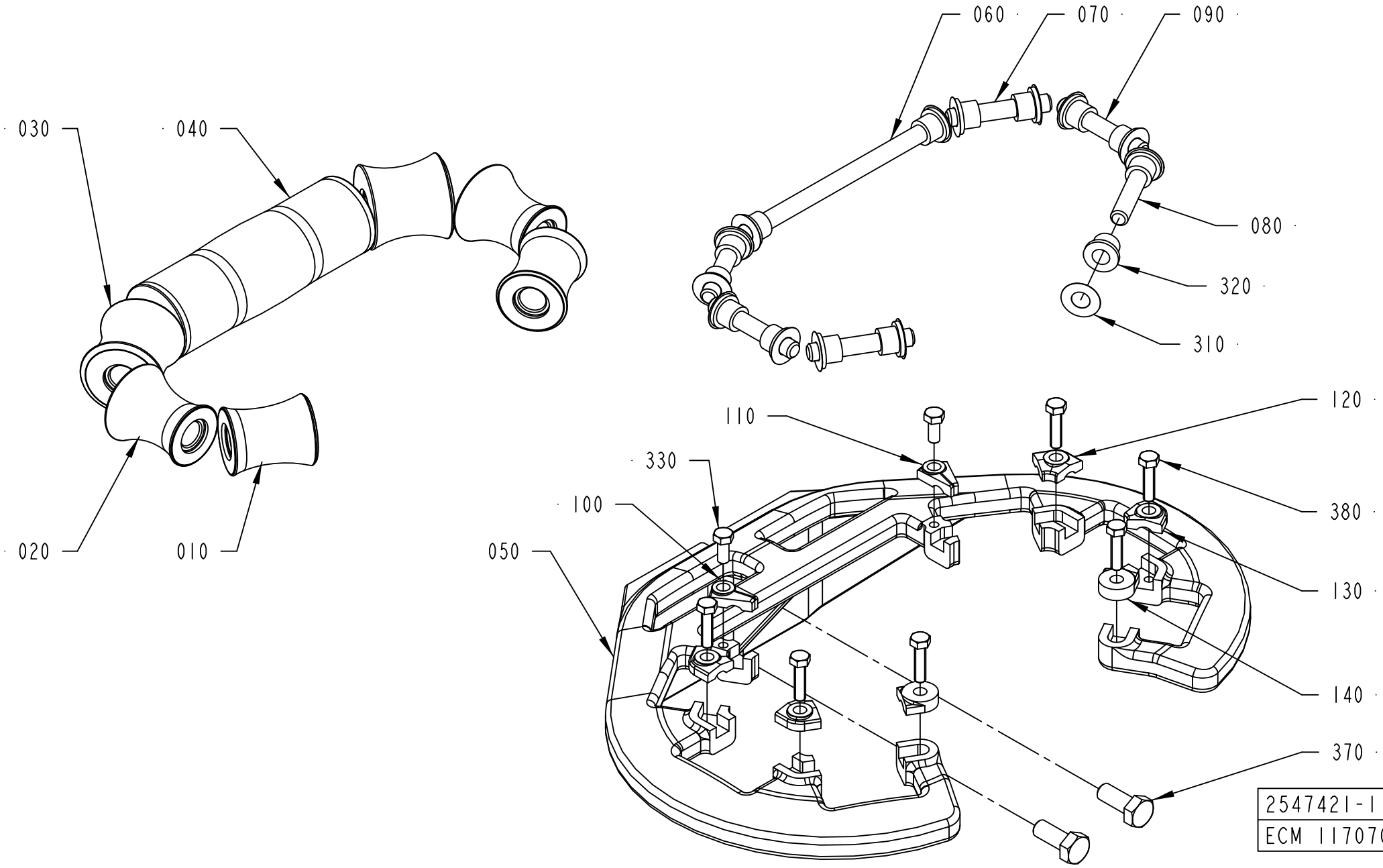

ECM: 530441 - 20120416
Group number: 2547421-0200
Assembly Drawing: 2547421-1_1_AA

This list covers pages from 1-438 to 1-447

Pos	Part No	UN	Qty	Description	Page No
A3/FLEX TBA 1000S (See drawing on page: 1-438)					
010	2512748-0000		2	ROLLER	
020	2512749-0000		2	ROLLER	
030	2512746-0000		2	ROLLER	
040	2514521-0000		2	ROLLER	
050	2552161-0000		1	SUPPORT RING	
060	2522213-0005		1	SHAFT	
070	752186-0005		2	SHAFT	
080	2522213-0004		2	SHAFT	
090	752186-0019		2	SHAFT	
100	2552176-0003		1	LOCK PLATE	
110	2552177-0003		1	LOCK PLATE	
120	2528123-0007		2	LOCK PLATE	
130	2528123-0001		2	LOCK PLATE	
140	2532895-0003		2	LOCK PLATE	
310	2033-0011		16	WASHER	
320	90240-0172		16	FLANGE BUSHING, 8X12X10 MM	
330	312105-0327		2	"SCREW, M6S ISO 4017 M5X12 A4 80"	
370	312105-0451		2	SCREW, M6S ISO 4017 M8X20 A4 80	
380	312105-0331		6	SCREW, M6S ISO 4017 M5X20 A4 80	
TBA 0500B, TBA 1000B, TBA 1500S, TGA 1500SQ (See drawing on page: 1-438)					
010	2552206-0000		2	ROLLER	
020	2552205-0000		2	ROLLER	
030	2552188-0000		2	ROLLER	
040	2552187-0000		1	ROLLER	
050	2552160-0000		1	SUPPORT RING	
060	2522213-0005		1	SHAFT	
070	752186-0005		2	SHAFT	
080	2522213-0004		2	SHAFT	
090	752186-0019		2	SHAFT	
100	2552176-0001		1	LOCK PLATE	
110	2552177-0001		1	LOCK PLATE	
120	2528123-0002		2	LOCK PLATE	
130	2528123-0008		2	LOCK PLATE	
140	2532895-0004		2	LOCK PLATE	
310	2033-0011		14	WASHER	
320	90240-0172		14	FLANGE BUSHING, 8X12X10 MM	
330	312105-0327		2	"SCREW, M6S ISO 4017 M5X12 A4 80"	
370	312105-0451		2	SCREW, M6S ISO 4017 M8X20 A4 80	
380	312105-0331		6	SCREW, M6S ISO 4017 M5X20 A4 80	
TBA 0500S (See drawing on page: 1-438)					
010	2672986-0000		2	ROLLER	
020	2672985-0000		2	ROLLER	
030	2672970-0000		2	ROLLER	
040	2709302-0000		1	ROLLER	
050	2611038-0000		1	SUPPORT RING	
060	752186-0009		1	SHAFT	
070	752186-0012		2	SHAFT	
080	752186-0012		2	SHAFT	
090	752186-0002		2	SHAFT	
120	2562667-0008		6	LOCK PLATE	
140	2532895-0001		2	LOCK PLATE	
310	2033-0011		14	WASHER	
320	90240-0172		14	FLANGE BUSHING, 8X12X10 MM	
370	312105-0451		2	SCREW, M6S ISO 4017 M8X20 A4 80	
380	312105-0331		8	SCREW, M6S ISO 4017 M5X20 A4 80	
TBA 0500SQ, TBA 1000SQ (See drawing on page: 1-442)					
010	2896520-0000		2	ROLLER	
020	2634970-0000		2	ROLLER	
030	2634969-0000		2	ROLLER	
040	2634968-0000		1	ROLLER	
050	2909791-0000		1	SUPPORT	
060	2522213-0008		1	SHAFT	
070	752186-0005		2	SHAFT	
080	2522213-0009		2	SHAFT	
090	752186-0012		2	SHAFT	
120	2532895-0007		2	LOCK PLATE	
130	2562667-0009		6	LOCK PLATE	
160	2916867-0000		1	SUPPORT RING	
310	2033-0011		14	WASHER	
320	90240-0172		14	FLANGE BUSHING, 8X12X10 MM	
370	312105-0451		2	SCREW, M6S ISO 4017 M8X20 A4 80	
380	312105-0329		8	SCREW, M6S ISO 4017 M5X16 A4 80	
400	312109-0374		4	SCREW, M6S ISO 4017 M6X30 A4 80	
TBA 2000S (See drawing on page: 1-440)					
010	2601286-0000		2	ROLLER	
020	2601285-0000		2	ROLLER	
030	2601279-0000		2	ROLLER	
040	2601278-0000		1	ROLLER	
050	2634926-0000		1	SUPPORT ROLLER	
060	2522213-0019		1	SHAFT	
070	752186-0006		2	SHAFT	
080	2522213-0020		2	SHAFT	
090	752186-0019		2	SHAFT	

Machine Type | Group Description | Used-In | Group Number | Page No

FORMING RING

Drawing file: 2547421-3_1_AB.hpgl

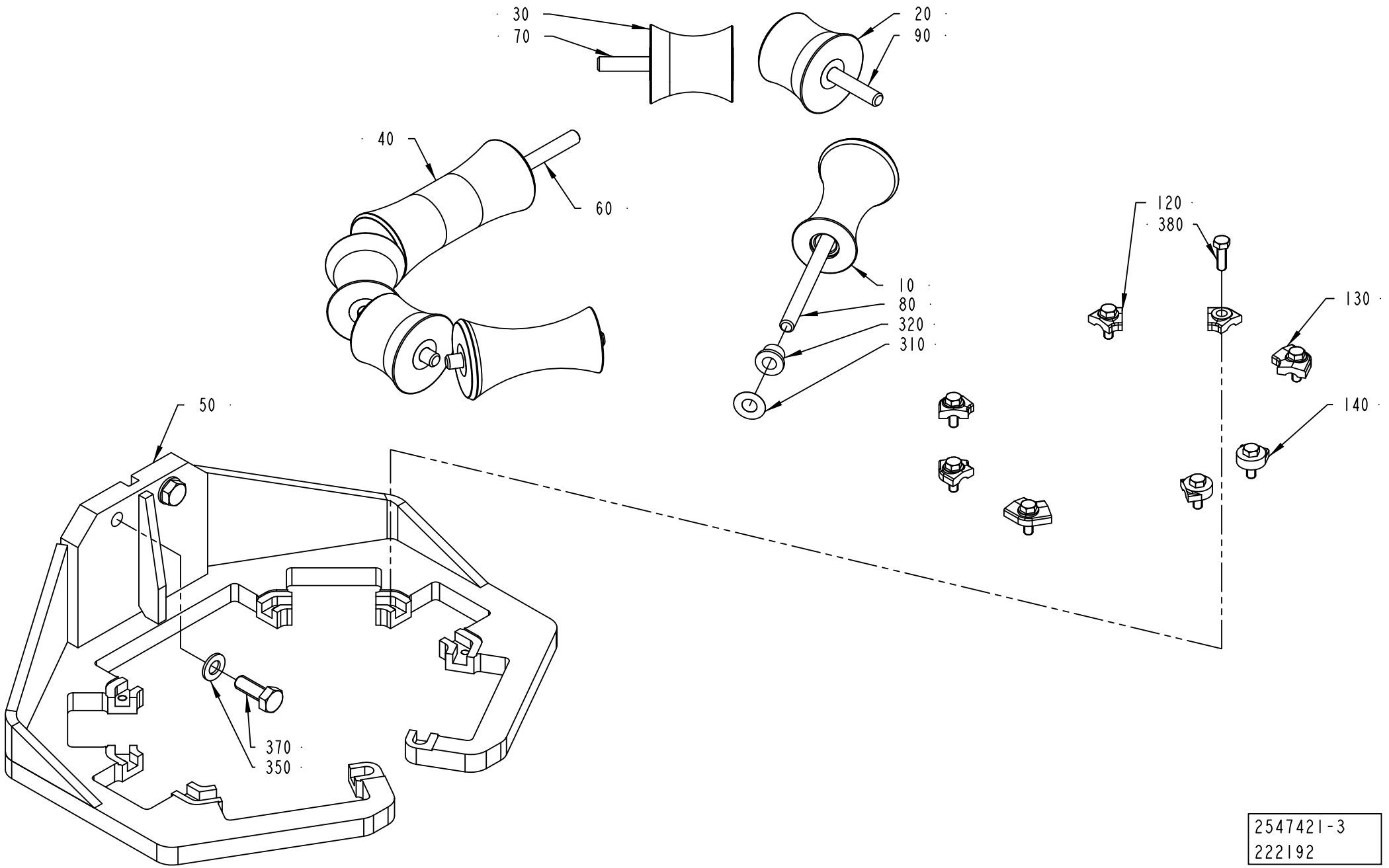

2547421-3
222192

Pos	Part No	UN	Qty	Description	Page No
TBA 2000S (Cont'd) (See drawing on page: 1-440)					
120	2562667-0008		4	LOCK PLATE	
130	2528123-0007		2	LOCK PLATE	
140	2532895-0002		2	LOCK PLATE	
310	2033-0011		14	WASHER	
320	90240-0172		14	FLANGE BUSHING, 8X12X10 MM	
350	315105-0165		2	FWAS080G0-0S, WASHER PLAIN	
370	312105-0453		2	SCREW, M6S ISO 4017 M8X25 A4 80	
380	312105-0329		8	SCREW, M6S ISO 4017 M5X16 A4 80	
TGA 1000SQ, TGA 0750SQ, TGA 0500SQ, TGA 1000CR, TGA 1000LF (See drawing on page: 1-444)					
010	2916129-0000		2	ROLLER	
020	2916128-0000		2	ROLLER	
030	2916127-0000		2	ROLLER	
040	2912169-0000		1	ROLLER	
050	2944619-0000		1	SUPPORT RING	
060	2522213-0008		1	SHAFT	
070	752186-0019		2	SHAFT	
080	752186-0004		2	SHAFT	
090	752186-0012		2	SHAFT	
120	2532895-0001		2	LOCK PLATE	
130	2562667-0008		6	LOCK PLATE	
160	2944618-0000		1	SUPPORT RING	
310	2033-0011		14	WASHER	
320	90240-0172		14	FLANGE BUSHING, 8X12X10 MM	
370	312105-0449		2	SCREW, M6S ISO 4017 M8X16 A4 80	
380	312105-0329		8	SCREW, M6S ISO 4017 M5X16 A4 80	
400	312109-0374		4	SCREW, M6S ISO 4017 M6X30 A4 80	
TPA 0500SQ (See drawing on page: 1-446)					
010	3038244-0000		2	ROLLER	
020	3038245-0000		2	ROLLER	
030	2998859-0000		1	ROLLER	
050	3016809-0000		1	SUPPORT RING	
060	752186-0012		1	SHAFT	
070	752186-0022		2	SHAFT	
080	752186-0014		2	SHAFT	
100	2552176-0003		1	LOCK PLATE	
110	2552177-0003		1	LOCK PLATE	
120	2528123-0005		2	LOCK PLATE	
140	2532895-0002		2	LOCK PLATE	
160	3016808-0000		1	FRAME	
310	2033-0011		10	WASHER	
320	90240-0172		10	FLANGE BUSHING, 8X12X10 MM	
370	312105-0451		2	SCREW, M6S ISO 4017 M8X20 A4 80	
380	312105-0331		8	SCREW, M6S ISO 4017 M5X20 A4 80	
380	312105-0329		6	SCREW, M6S ISO 4017 M5X16 A4 80	
400	312109-0374		4	SCREW, M6S ISO 4017 M6X30 A4 80	
TPA 1000SQ, TPA 0750SQ (See drawing on page: 1-442)					
010	2889461-0000		2	ROLLER	
020	2901229-0000		2	ROLLER	
030	2901228-0000		2	ROLLER	
040	2901291-0000		1	ROLLER	
050	2907975-0000		1	BRACKET	
060	2889464-0000		1	SHAFT	
070	752186-0006		2	SHAFT	
080	752186-0001		2	SHAFT	
090	752186-0004		2	SHAFT	
120	2889463-0000		2	LOCK PLATE	
130	2889462-0000		6	PLATE	
160	2907974-0000		1	FRAME	
310	2033-0011		14	WASHER	
320	90240-0172		14	FLANGE BUSHING, 8X12X10 MM	
370	312105-0449		2	SCREW, M6S ISO 4017 M8X16 A4 80	
380	312105-0325		6	SCREW, M6S ISO 4017 M5X10 A4 80	
400	312109-0374		4	SCREW, M6S ISO 4017 M6X30 A4 80	

FORMING RING

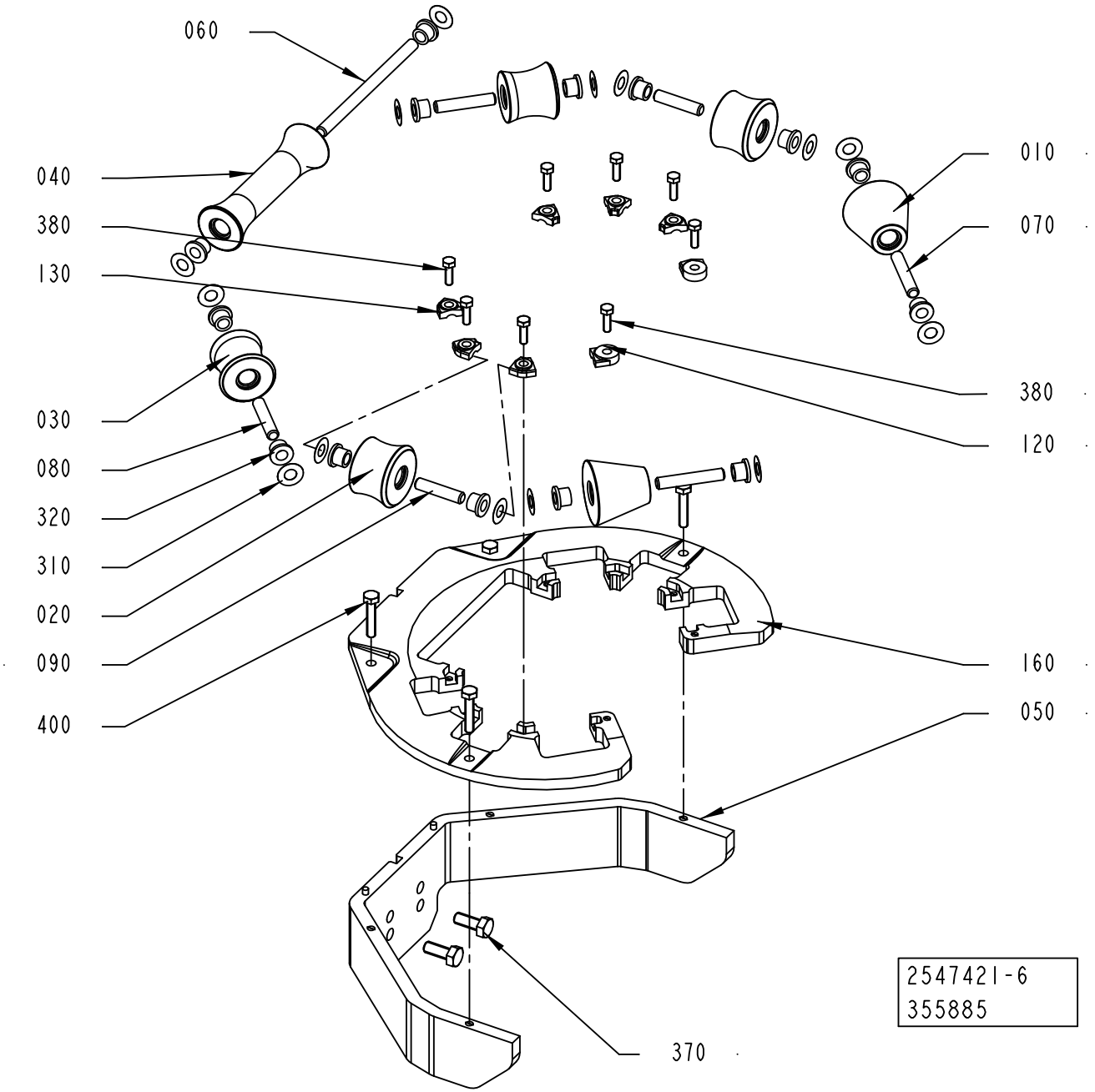

Pos	Part No	UN	Qty	Description	Page No
SEE PREVIOUS LISTS PAGES: 1-439, 1-441.					

Pos	Part No	UN	Qty	Description	Page No

FORMING RING

Drawing file: 2547421-7_1_AA.hpgl

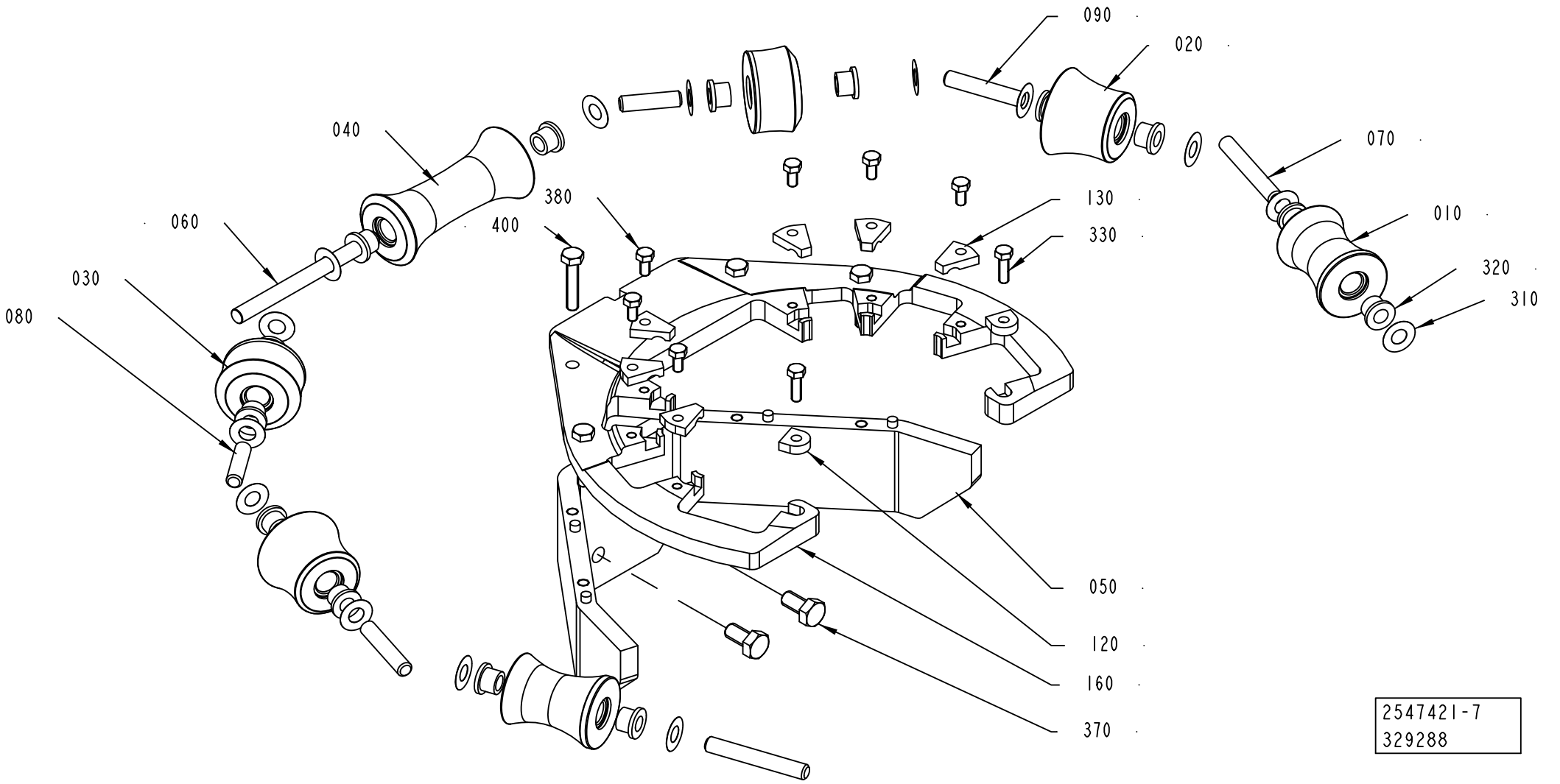

ECM: 530441 - 20120416
Group number: 2547421-0200
Assembly Drawing: 2547421-7_1_AA

This list covers pages from 1-438 to 1-447

Pos	Part No	UN	Qty	Description	Page No
SEE PREVIOUS LISTS PAGES: 1-439, 1-441.					

Pos	Part No	UN	Qty	Description	Page No

FORMING RING

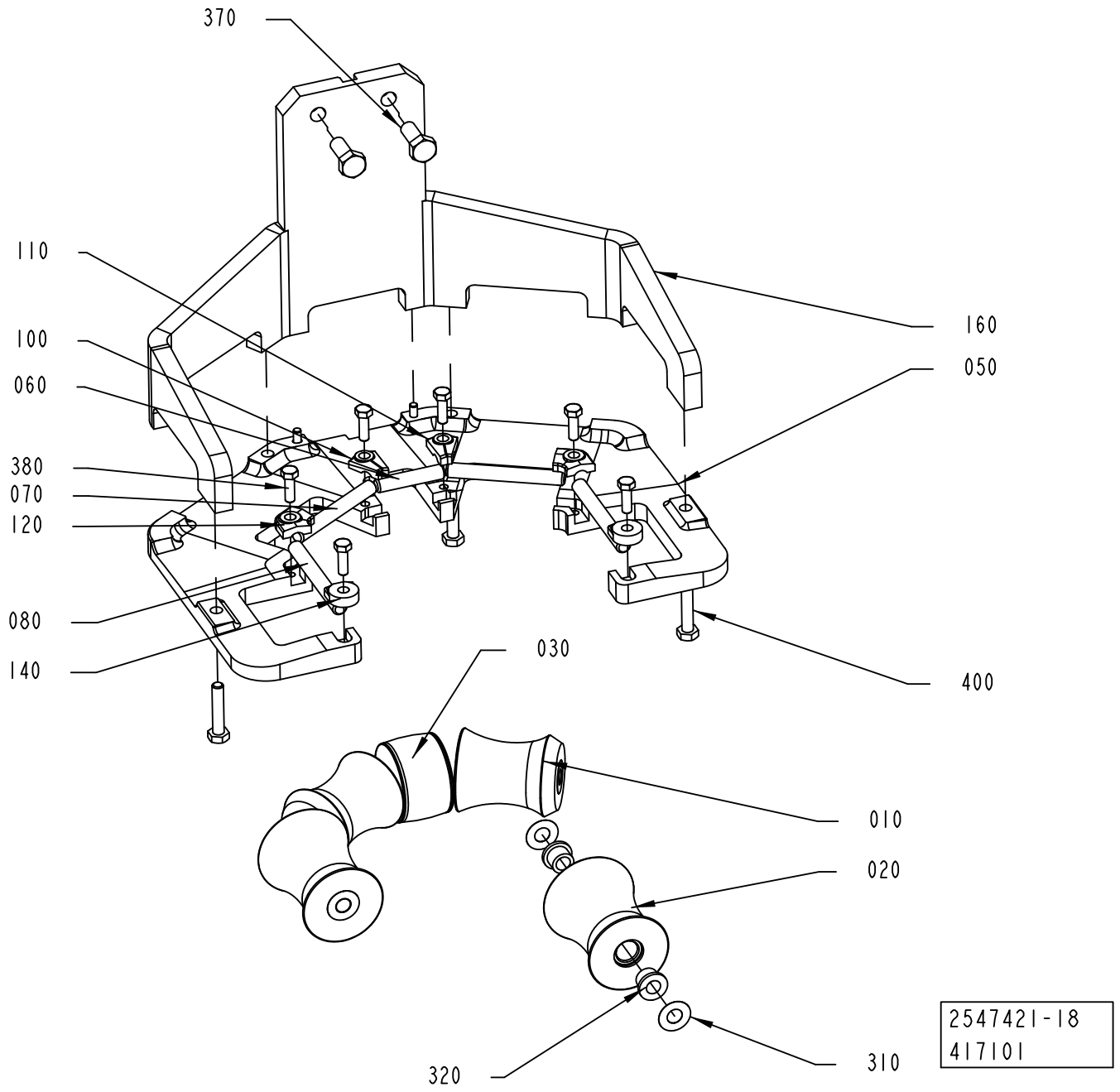

ECM: 530441 - 20120416
Group number: 2547421-0200
Assembly Drawing: 2547421-18_1_AA

This list covers pages from 1-438 to 1-447

Pos	Part No	UN	Qty	Description	Page No
SEE PREVIOUS LISTS PAGES: 1-439, 1-441.					

Pos	Part No	UN	Qty	Description	Page No

This page is intentionally left blank.

ECM: 583214 - 20130102
Group number: 3191259-0100
Assembly Drawing:

Pos	Part No	UN	Qty	Description	Page No
TBA 0500SQ START FM A3/F-0400, TBA 1000SQ START FM A3/F-0400					
020	2512780-0200		1	SEAL	**1-451, 1-453, 1-455**
TBA 1000E START FM A3/F-0400, TBA 1000M START FM A3/F-0400, TBA 1000S DIMC/FLEX START FM A3/F-0400					
020	2559064-0100		1	SEAL	**1-457, 1-459, 1-461, 1-463**
TBA 0500B START FM A3/F-0400, TBA 0500S START FM A3/F-0400, TBA 1000B START FM A3/F-0400, TBA 1500S START FM A3/F-0400, TBA 2000S START FM A3/F-0400, TGA START FM A3/F-0400, TPA 0500SQ START FM A3/F-0400, TPA 0750SQ START FM A3/F-0400, TPA 1000SQ START FM A3/F-0400, TBA 1000S NODIMC START FM A3/F-0400					
020	3035341-0200		1	SEAL	**1-465, 1-467**

Pos	Part No	UN	Qty	Description	Page No

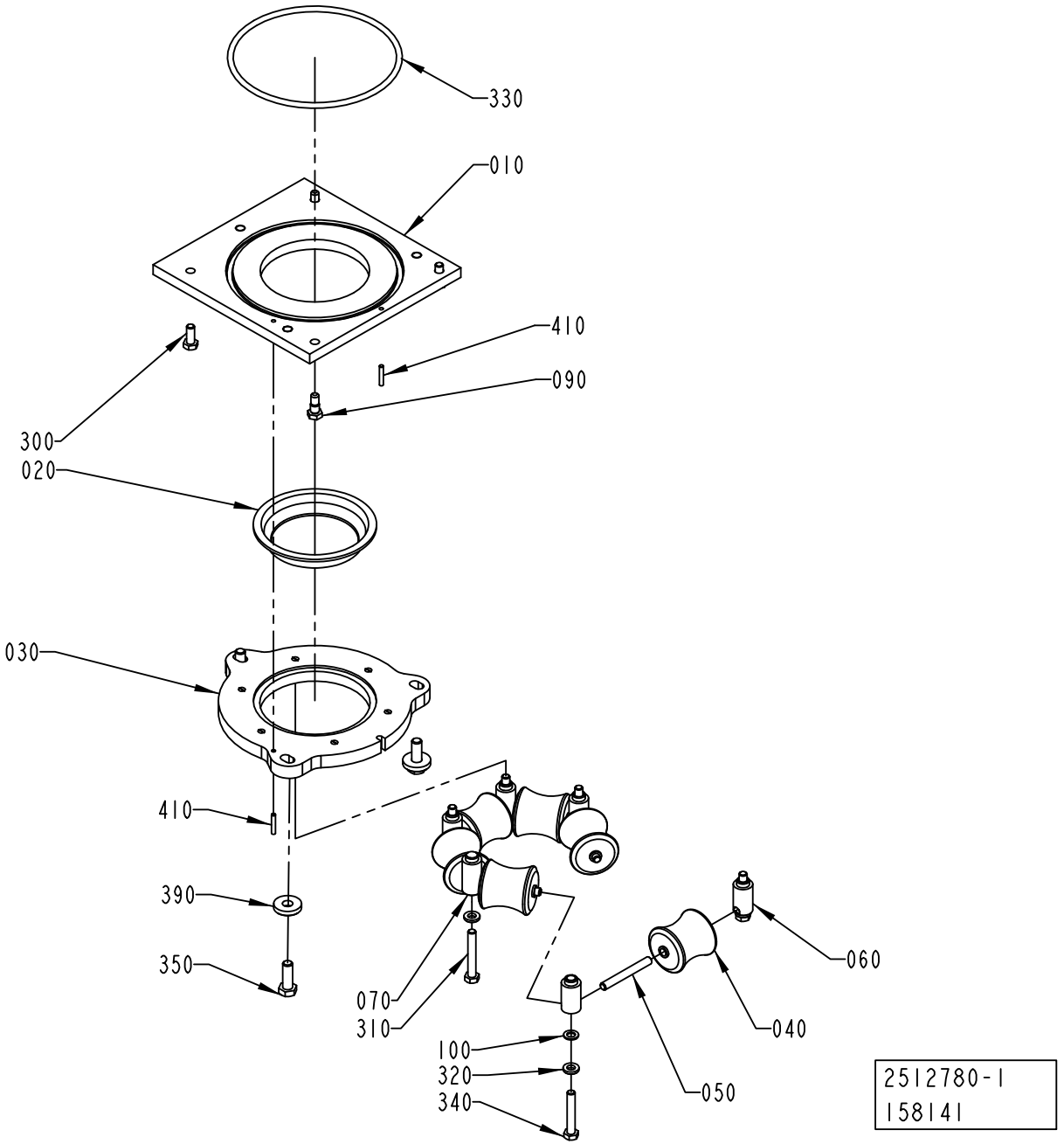
330
010
410
090
300
020
030
410
390
350
070
310
100
320
340
060
040
050
2512780-1
158141

ECM: 578486 - 20130102
Group number: 2512780-0200
Assembly Drawing: 2512780-1_1_AB

This list covers pages from 1-450 to 1-455

Pos	Part No	UN	Qty	Description	Page No
TBA 0500B, TBA 1000B, TBA 1500S (See drawing on page: 1-450)					
010	2559104-0000		1	PLATE	
020	466042-0000		1	SEAL	
030	2512779-0000		1	RING	
040	466046-0000		6	ROLLER	
050	263655-0009		6	SHAFT	
060	1036954-0000		4	AXLE SUPPORT	
070	1036955-0000		2	AXLE SUPPORT	
100	1129431-0000		4	WASHER	
310	312105-0462		2	SCREW, M6S ISO 4014 M8X55 A4 8002	
320	315115-0165		6	WASHER PLAIN, TBRB 8,4/16 H=3	
340	312109-0461		4	SCREW, M6S ISO 4017 M8X50 A4 80	
350	312105-0495		3	SCREW, M6S ISO 4017 M10X30 A4 80	
390	315125-0173		3	WASHER HIGH, TBRSB 10,5X28X6 A4	
410	311103-1274		2	PARALLEL PIN ISO 2338 4M6X24 A1	
TBA 0500S (See drawing on page: 1-450)					
010	2559103-0000		1	PLATE	
020	466089-0000		1	SEAL	
030	2559102-0000		1	RING	
040	466092-0000		6	ROLL	
050	263655-0007		6	SHAFT	
060	1036954-0000		4	AXLE SUPPORT	
070	1036955-0000		2	AXLE SUPPORT	
100	1129431-0000		4	WASHER	
310	312105-0462		2	SCREW, M6S ISO 4014 M8X55 A4 8002	
320	315115-0165		6	WASHER PLAIN, TBRB 8,4/16 H=3	
340	312109-0461		4	SCREW, M6S ISO 4017 M8X50 A4 80	
350	312105-0495		3	SCREW, M6S ISO 4017 M10X30 A4 80	
390	315125-0173		3	WASHER HIGH, TBRSB 10,5X28X6 A4	
410	311103-1274		2	PARALLEL PIN ISO 2338 4M6X24 A1	
TBA 0500SQ, TBA 1000SQ (See drawing on page: 1-450)					
010	2559104-0000		1	PLATE	
020	579318-0000		1	SEAL	
030	2512779-0000		1	RING	
040	1490762-0000		6	ROLLER	
050	263655-0009		6	SHAFT	
060	1036954-0000		4	AXLE SUPPORT	
070	1036955-0000		2	AXLE SUPPORT	
100	1129431-0000		4	WASHER	
310	312105-0462		2	SCREW, M6S ISO 4014 M8X55 A4 8002	
320	315115-0165		6	WASHER PLAIN, TBRB 8,4/16 H=3	
340	312109-0461		4	SCREW, M6S ISO 4017 M8X50 A4 80	
350	312105-0495		3	SCREW, M6S ISO 4017 M10X30 A4 80	
390	315125-0173		3	WASHER HIGH, TBRSB 10,5X28X6 A4	
410	311103-1274		2	PARALLEL PIN ISO 2338 4M6X24 A1	
TBA 1000S (See drawing on page: 1-450)					
010	2559104-0000		1	PLATE	
020	567743-0000		1	SEAL	
030	2512779-0000		1	RING	
040	573504-0000		6	ROLLER	
050	263655-0009		6	SHAFT	
060	1036954-0000		4	AXLE SUPPORT	
070	1036955-0000		2	AXLE SUPPORT	
100	1129431-0000		4	WASHER	
310	312105-0462		2	SCREW, M6S ISO 4014 M8X55 A4 8002	
320	315115-0165		6	WASHER PLAIN, TBRB 8,4/16 H=3	
340	312109-0461		4	SCREW, M6S ISO 4017 M8X50 A4 80	
350	312105-0495		3	SCREW, M6S ISO 4017 M10X30 A4 80	
390	315125-0173		3	WASHER HIGH, TBRSB 10,5X28X6 A4	
410	311103-1274		2	PARALLEL PIN ISO 2338 4M6X24 A1	
TBA 2000S (See drawing on page: 1-450)					
010	2582616-0000		1	PLATE	
020	2582623-0000		1	SEAL	
030	2582629-0000		1	RING	
040	2582630-0000		6	ROLLER	
050	263655-0015		6	SHAFT	
060	1036954-0000		4	AXLE SUPPORT	
070	1036955-0000		2	AXLE SUPPORT	
100	1129431-0000		4	WASHER	
310	312105-0462		2	SCREW, M6S ISO 4014 M8X55 A4 8002	
320	315115-0165		6	WASHER PLAIN, TBRB 8,4/16 H=3	
340	312109-0461		4	SCREW, M6S ISO 4017 M8X50 A4 80	
350	312105-0495		3	SCREW, M6S ISO 4017 M10X30 A4 80	
390	315125-0173		3	WASHER HIGH, TBRSB 10,5X28X6 A4	
410	311103-1274		2	PARALLEL PIN ISO 2338 4M6X24 A1	
TGA 1000SQ, TGA 0750SQ, TGA 0500SQ, TGA 1000CR, TGA 1000LF (See drawing on page: 1-454)					
010	3018414-0000		1	PLATE	
020	2641271-0000		1	SEAL	
410	311103-1274		1	PARALLEL PIN ISO 2338 4M6X24 A1	
TGA 1500SQ (See drawing on page: 1-454)					
010	2968252-0000		1	PLATE	
020	466042-0000		1	SEAL	
410	311103-1274		1	PARALLEL PIN ISO 2338 4M6X24 A1	
TPA 0500SQ (See drawing on page: 1-452)					

Machine Type | Group Description | Used-In | Group Number | Page No

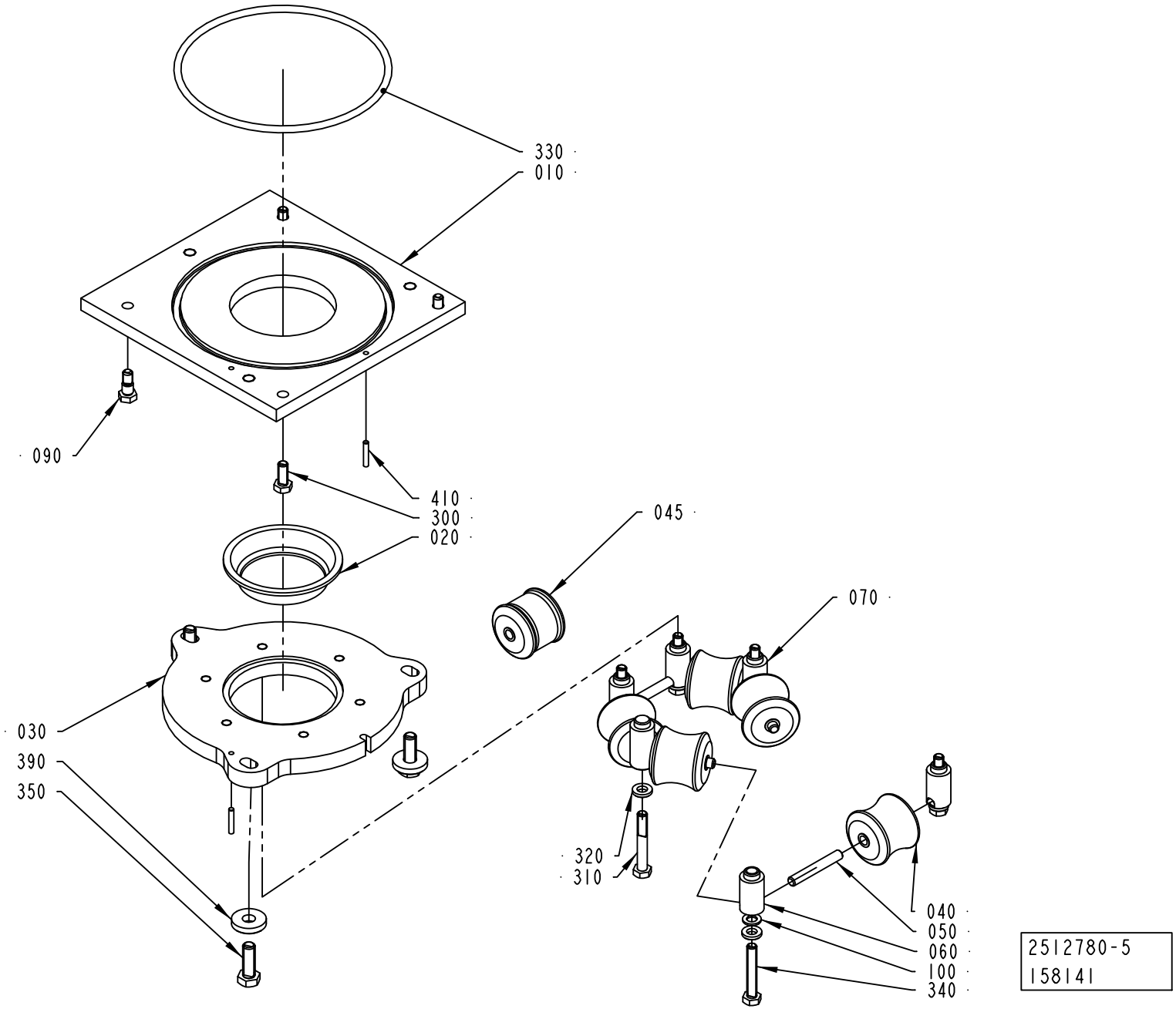
330
010
090
410
300
020
045
070
030
390
350
320
310
040
050
060
100
340
2512780-5
158141

Pos	Part No	UN	Qty	Description	Page No
TPA 0500SQ (Cont'd) (See drawing on page: 1-452)					
010	2611046-0000		1	PLATE	
020	2718901-0000		1	SEAL	
030	2611047-0000		1	RING	
040	2552655-0000		5	ROLLER	
045	2552656-0000		1	ROLLER	
050	263655-0007		6	SHAFT	
060	1036954-0000		4	AXLE SUPPORT	
070	1036955-0000		2	AXLE SUPPORT	
100	1129431-0000		4	WASHER	
310	312105-0462		2	SCREW, M6S ISO 4014 M8X55 A4 8002	
320	315115-0165		6	WASHER PLAIN, TBRB 8,4/16 H=3	
340	312109-0461		4	SCREW, M6S ISO 4017 M8X50 A4 80	
350	312105-0495		3	SCREW, M6S ISO 4017 M10X30 A4 80	
390	315125-0173		3	WASHER HIGH, TBRSB 10,5X28X6 A4	
410	311103-1274		2	PARALLEL PIN ISO 2338 4M6X24 A1	
TPA 1000SQ, TPA 0750SQ (See drawing on page: 1-450)					
010	2559103-0000		1	PLATE	
020	1524414-0000		1	SEAL	
030	2559102-0000		1	RING	
040	1524416-0000		6	ROLLER	
050	263655-0007		6	SHAFT	
060	1036954-0000		4	AXLE SUPPORT	
070	1036955-0000		2	AXLE SUPPORT	
100	1129431-0000		4	WASHER	
310	312105-0462		2	SCREW, M6S ISO 4014 M8X55 A4 8002	
320	315115-0165		6	WASHER PLAIN, TBRB 8,4/16 H=3	
340	312109-0461		4	SCREW, M6S ISO 4017 M8X50 A4 80	
350	312105-0495		3	SCREW, M6S ISO 4017 M10X30 A4 80	
390	315125-0173		3	WASHER HIGH, TBRSB 10,5X28X6 A4	
410	311103-1274		2	PARALLEL PIN ISO 2338 4M6X24 A1	
Common Parts					
090	1037885-0000		2	REAMED BOLT	
300	312105-0451		2	SCREW, M6S ISO 4017 M8X20 A4 80	
330	344210-0324		1	O-RING 164,3X5,7 MM FDA, 3-A	

Pos	Part No	UN	Qty	Description	Page No

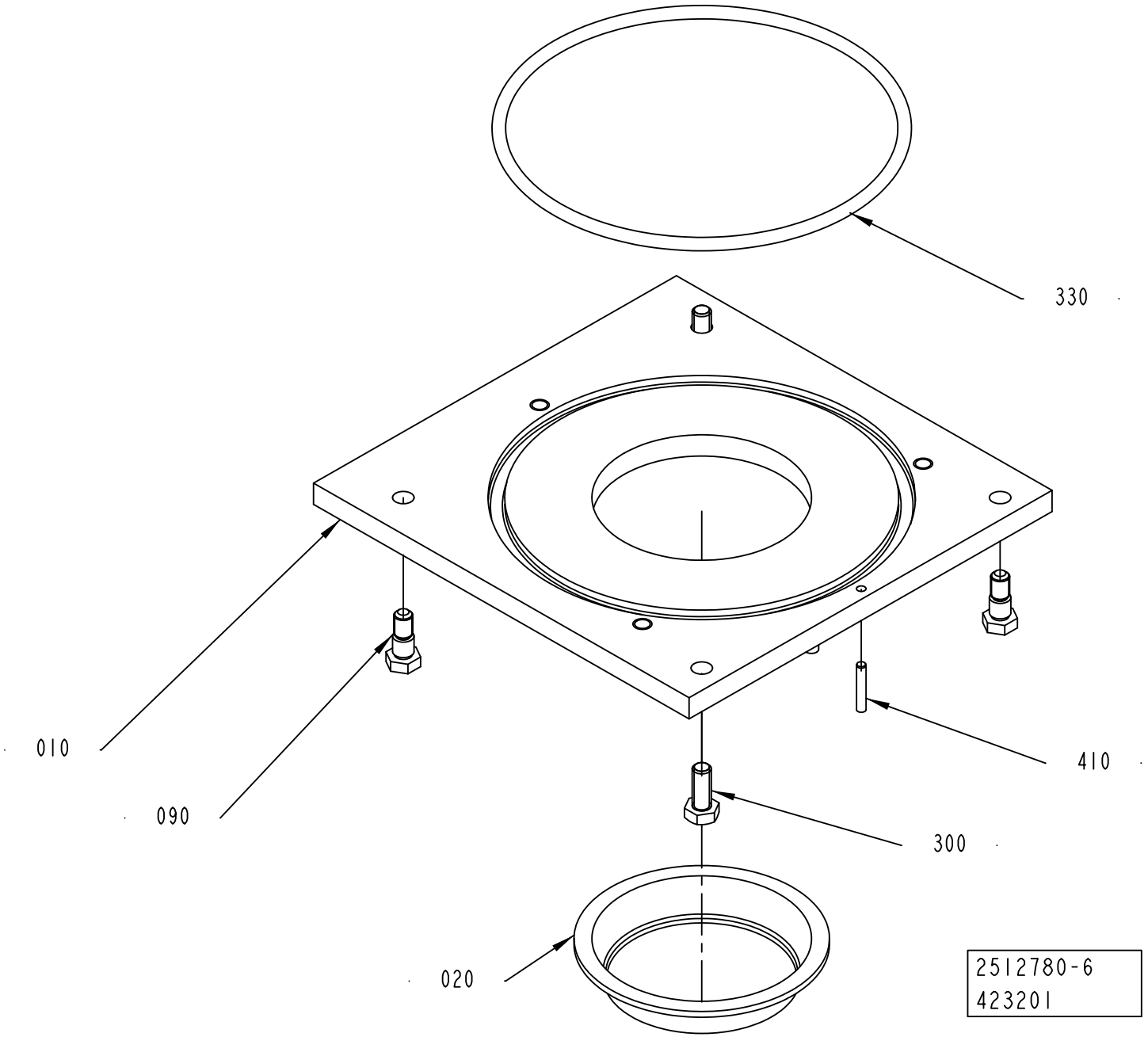
330
010
090
410
300
020
2512780-6
423201

ECM: 578486 - 20130102
Group number: 2512780-0200
Assembly Drawing: 2512780-6_1_AA

This list covers pages from 1-450 to 1-455

Pos	Part No	UN	Qty	Description	Page No
SEE PREVIOUS LISTS PAGES: 1-451, 1-453.					

Pos	Part No	UN	Qty	Description	Page No

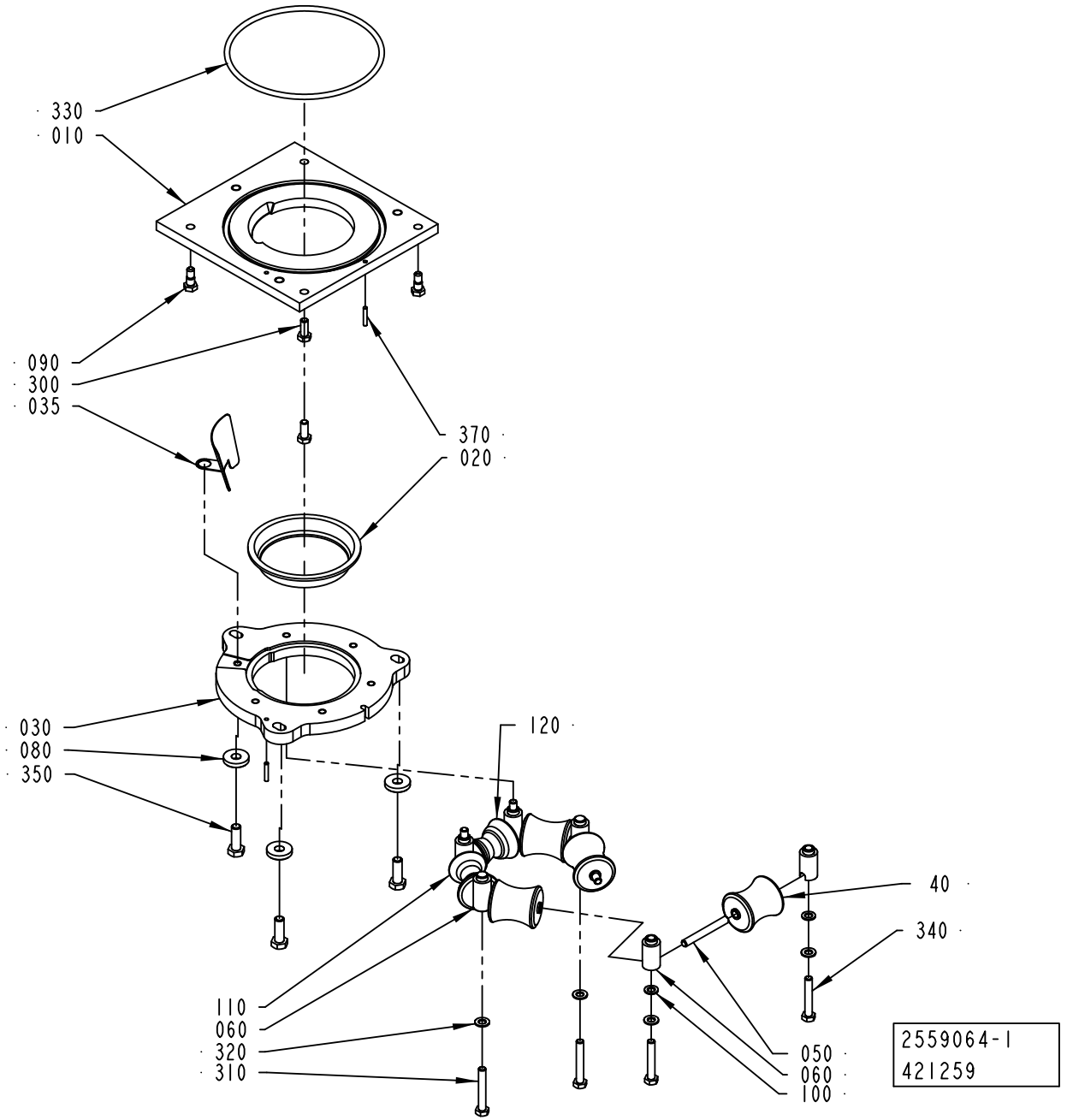
330
010
090
300
035
370
020
030
080
350
120
110
060
320
310
40
340
050
060
100
2559064-1
421259

ECM: 644415 - 20140401
Group number: 2559064-0100
Assembly Drawing: 2559064-1_1_AC

This list covers pages from 1-456 to 1-463

Pos	Part No	UN	Qty	Description	Page No
TBA 1000B STDA7 (See drawing on page: 1-458)					
010	2562687-0000		1	PLATE	
020	466042-0000		1	SEAL	
030	2562688-0000		1	RING	
035	1539454-0000		1	GUIDE	
040	466046-0000		4	ROLLER	
050	263655-0009		6	SHAFT	
060	1036954-0000		4	AXLE SUPPORT	
070	1036955-0000		2	AXLE SUPPORT	
110	2592548-0000		1	ROLLER	
120	2592549-0000		1	ROLLER	
310	312105-0462		2	SCREW, M6S ISO 4014 M8X55 A4 8002	
340	312109-0461		4	SCREW, M6S ISO 4017 M8X50 A4 80	
TBA 1000E LIGHTCAP30, TBA 1000E LIGHTCAP30B, TBA 0500E LIGHTCAP30, TBA 0500E LIGHTCAP30B (See drawing on page: 1-462)					
010	2794725-0000		1	PLATE	
020	2957900-0000		1	GASKET	
030	2794726-0000		1	RING	
040	1490762-0000		5	ROLLER	
050	263655-0009		6	SHAFT	
060	2960214-0000		4	AXLE SUPPORT	
070	2960215-0000		2	AXLE SUPPORT	
110	3008102-0000		1	ROLLER	
310	312105-0465		2	SCREW, M6S ISO 4014 M8X70 A4 80	
340	312105-0463		4	SCREW, M6S ISO 4014 M8X60 A4 80	
TBA 1000M LIGHTCAP24 (See drawing on page: 1-460)					
010	3152479-0000		1	PLATE	
020	3123420-0000		1	SEAL	
030	3152482-0000		1	PLATE	
040	3013416-0000		4	ROLLER	
050	263655-0009		6	SHAFT	
060	1036954-0000		4	AXLE SUPPORT	
070	1036955-0000		2	AXLE SUPPORT	
110	3093804-0000		1	ROLLER	
120	3093803-0000		1	ROLLER	
310	312105-0462		2	SCREW, M6S ISO 4014 M8X55 A4 8002	
340	312109-0461		4	SCREW, M6S ISO 4017 M8X50 A4 80	
TBA 1000M STDA7 (See drawing on page: 1-456)					
010	2562687-0000		1	PLATE	
020	3026688-0000		1	SEAL	
030	2562688-0000		1	RING	
035	1539454-0000		1	GUIDE	
040	3013416-0000		4	ROLLER	
050	263655-0009		6	SHAFT	
060	1036954-0000		4	AXLE SUPPORT	
070	1036955-0000		2	AXLE SUPPORT	
110	3013417-0000		1	ROLLER	
120	3015597-0000		1	ROLLER	
310	312105-0462		2	SCREW, M6S ISO 4014 M8X55 A4 8002	
340	312109-0461		4	SCREW, M6S ISO 4017 M8X50 A4 80	
TBA 1000S LIGHTCAP24 (See drawing on page: 1-460)					
010	2794725-0000		1	PLATE	
020	2811775-0000		1	SEAL	
030	2794726-0000		1	RING	
040	573504-0000		4	ROLLER	
050	263655-0009		6	SHAFT	
060	1036954-0000		4	AXLE SUPPORT	
070	1036955-0000		2	AXLE SUPPORT	
110	2716548-0000		1	ROLLER	
120	2716547-0000		1	ROLLER	
310	312105-0462		2	SCREW, M6S ISO 4014 M8X55 A4 8002	
340	312109-0461		4	SCREW, M6S ISO 4017 M8X50 A4 80	
TBA 1000S STDA7 (See drawing on page: 1-456)					
010	2562687-0000		1	PLATE	
020	567743-0000		1	SEAL	
030	2562688-0000		1	RING	
035	1523696-0000		1	GUIDE	
040	573504-0000		4	ROLLER	
050	263655-0009		6	SHAFT	
060	1036954-0000		4	AXLE SUPPORT	
070	1036955-0000		2	AXLE SUPPORT	
110	2592546-0000		1	ROLLER	
120	2592547-0000		1	ROLLER	
310	312105-0462		2	SCREW, M6S ISO 4014 M8X55 A4 8002	
340	312109-0461		4	SCREW, M6S ISO 4017 M8X50 A4 80	
Common Parts					
080	315125-0173		3	WASHER HIGH, TBRSB 10,5X28X6 A4	
090	1037885-0000		2	REAMED BOLT	
100	1129431-0000		4	WASHER	
300	312105-0451		2	SCREW, M6S ISO 4017 M8X20 A4 80	
320	315115-0165		6	WASHER PLAIN, TBRB 8,4/16 H=3	
330	315204-0324		1	O-RING 164,3X5,7 MM	
350	312105-0495		3	SCREW, M6S ISO 4017 M10X30 A4 80	
370	311103-1274		2	PARALLEL PIN ISO 2338 4M6X24 A1	

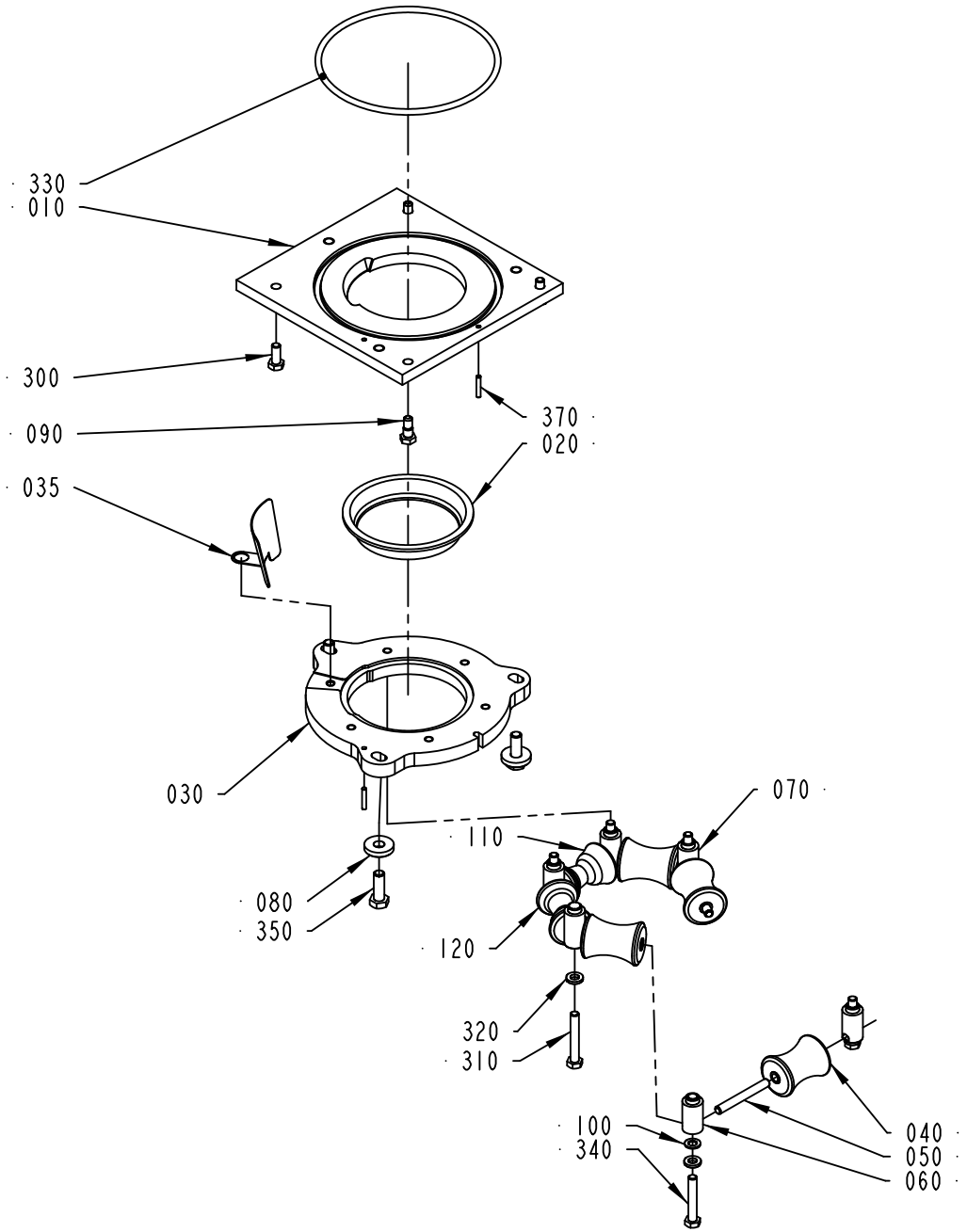

2559064-2
421259

ECM: 644415 - 20140401
Group number: 2559064-0100
Assembly Drawing: 2559064-2_1_AC

This list covers pages from 1-456 to 1-463

Pos	Part No	UN	Qty	Description	Page No
TBA 1000B STDA7 (See drawing on page: 1-458)					
010	2562687-0000		1	PLATE	
020	466042-0000		1	SEAL	
030	2562688-0000		1	RING	
035	1539454-0000		1	GUIDE	
040	466046-0000		4	ROLLER	
050	263655-0009		6	SHAFT	
060	1036954-0000		4	AXLE SUPPORT	
070	1036955-0000		2	AXLE SUPPORT	
110	2592548-0000		1	ROLLER	
120	2592549-0000		1	ROLLER	
310	312105-0462		2	SCREW, M6S ISO 4014 M8X55 A4 8002	
340	312109-0461		4	SCREW, M6S ISO 4017 M8X50 A4 80	
TBA 1000E LIGHTCAP30, TBA 1000E LIGHTCAP30B, TBA 0500E LIGHTCAP30, TBA 0500E LIGHTCAP30B (See drawing on page: 1-462)					
010	2794725-0000		1	PLATE	
020	2957900-0000		1	GASKET	
030	2794726-0000		1	RING	
040	1490762-0000		5	ROLLER	
050	263655-0009		6	SHAFT	
060	2960214-0000		4	AXLE SUPPORT	
070	2960215-0000		2	AXLE SUPPORT	
110	3008102-0000		1	ROLLER	
310	312105-0465		2	SCREW, M6S ISO 4014 M8X70 A4 80	
340	312105-0463		4	SCREW, M6S ISO 4014 M8X60 A4 80	
TBA 1000M LIGHTCAP24 (See drawing on page: 1-460)					
010	3152479-0000		1	PLATE	
020	3123420-0000		1	SEAL	
030	3152482-0000		1	PLATE	
040	3013416-0000		4	ROLLER	
050	263655-0009		6	SHAFT	
060	1036954-0000		4	AXLE SUPPORT	
070	1036955-0000		2	AXLE SUPPORT	
110	3093804-0000		1	ROLLER	
120	3093803-0000		1	ROLLER	
310	312105-0462		2	SCREW, M6S ISO 4014 M8X55 A4 8002	
340	312109-0461		4	SCREW, M6S ISO 4017 M8X50 A4 80	
TBA 1000M STDA7 (See drawing on page: 1-456)					
010	2562687-0000		1	PLATE	
020	3026688-0000		1	SEAL	
030	2562688-0000		1	RING	
035	1539454-0000		1	GUIDE	
040	3013416-0000		4	ROLLER	
050	263655-0009		6	SHAFT	
060	1036954-0000		4	AXLE SUPPORT	
070	1036955-0000		2	AXLE SUPPORT	
110	3013417-0000		1	ROLLER	
120	3015597-0000		1	ROLLER	
310	312105-0462		2	SCREW, M6S ISO 4014 M8X55 A4 8002	
340	312109-0461		4	SCREW, M6S ISO 4017 M8X50 A4 80	
TBA 1000S LIGHTCAP24 (See drawing on page: 1-460)					
010	2794725-0000		1	PLATE	
020	2811775-0000		1	SEAL	
030	2794726-0000		1	RING	
040	573504-0000		4	ROLLER	
050	263655-0009		6	SHAFT	
060	1036954-0000		4	AXLE SUPPORT	
070	1036955-0000		2	AXLE SUPPORT	
110	2716548-0000		1	ROLLER	
120	2716547-0000		1	ROLLER	
310	312105-0462		2	SCREW, M6S ISO 4014 M8X55 A4 8002	
340	312109-0461		4	SCREW, M6S ISO 4017 M8X50 A4 80	
TBA 1000S STDA7 (See drawing on page: 1-456)					
010	2562687-0000		1	PLATE	
020	567743-0000		1	SEAL	
030	2562688-0000		1	RING	
035	1523696-0000		1	GUIDE	
040	573504-0000		4	ROLLER	
050	263655-0009		6	SHAFT	
060	1036954-0000		4	AXLE SUPPORT	
070	1036955-0000		2	AXLE SUPPORT	
110	2592546-0000		1	ROLLER	
120	2592547-0000		1	ROLLER	
310	312105-0462		2	SCREW, M6S ISO 4014 M8X55 A4 8002	
340	312109-0461		4	SCREW, M6S ISO 4017 M8X50 A4 80	
Common Parts					
080	315125-0173		3	WASHER HIGH, TBRSB 10,5X28X6 A4	
090	1037885-0000		2	REAMED BOLT	
100	1129431-0000		4	WASHER	
300	312105-0451		2	SCREW, M6S ISO 4017 M8X20 A4 80	
320	315115-0165		6	WASHER PLAIN, TBRB 8,4/16 H=3	
330	315204-0324		1	O-RING 164,3X5,7 MM	
350	312105-0495		3	SCREW, M6S ISO 4017 M10X30 A4 80	
370	311103-1274		2	PARALLEL PIN ISO 2338 4M6X24 A1	

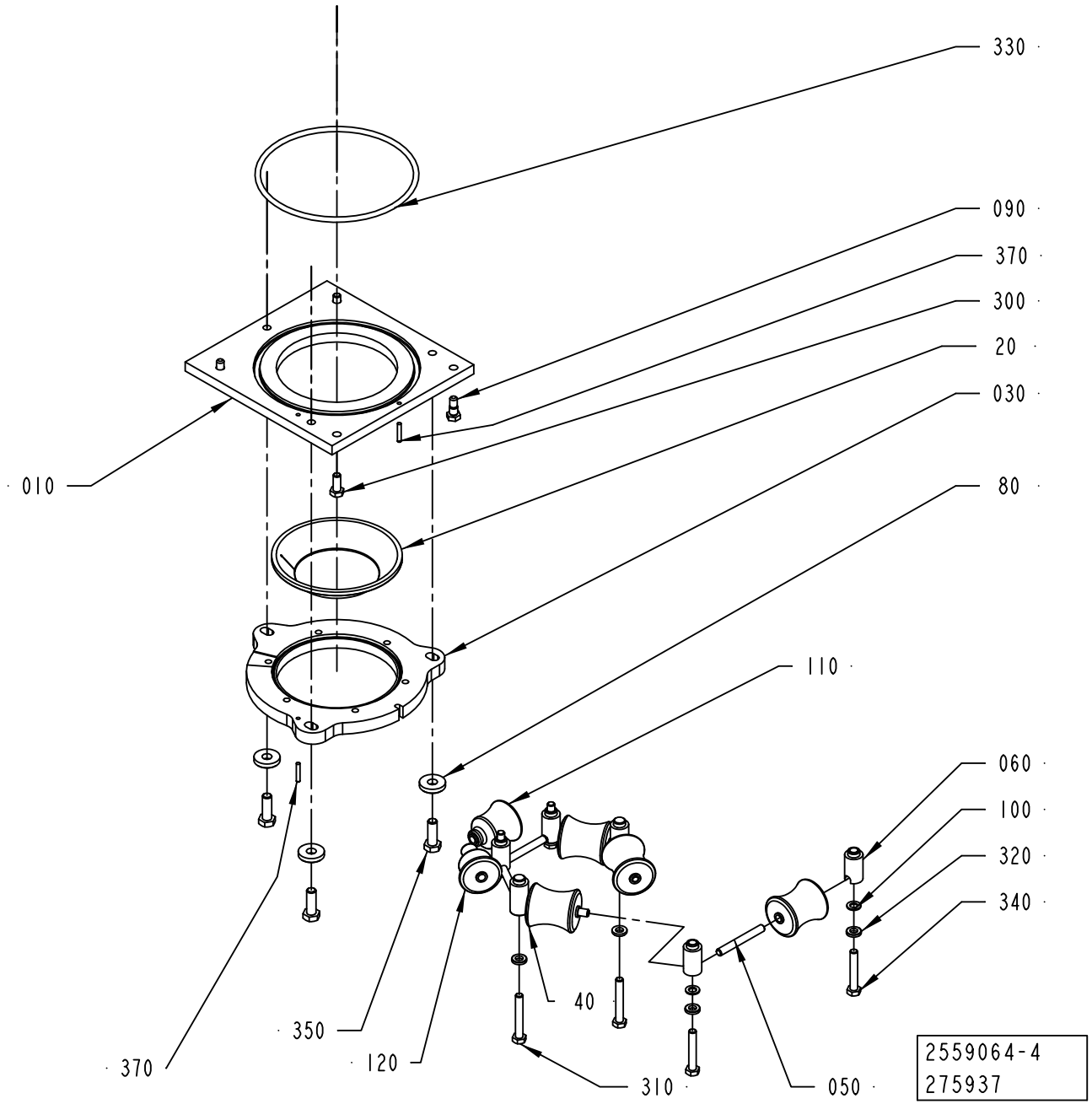
330
090
370
300
20
030
80
010
110
060
100
320
340
40
350
120
370
310
050
2559064-4
275937

ECM: 644415 - 20140401
Group number: 2559064-0100
Assembly Drawing: 2559064-4_1_AB

This list covers pages from 1-456 to 1-463

Pos	Part No	UN	Qty	Description	Page No
TBA 1000B STDA7 (See drawing on page: 1-458)					
010	2562687-0000		1	PLATE	
020	466042-0000		1	SEAL	
030	2562688-0000		1	RING	
035	1539454-0000		1	GUIDE	
040	466046-0000		4	ROLLER	
050	263655-0009		6	SHAFT	
060	1036954-0000		4	AXLE SUPPORT	
070	1036955-0000		2	AXLE SUPPORT	
110	2592548-0000		1	ROLLER	
120	2592549-0000		1	ROLLER	
310	312105-0462		2	SCREW, M6S ISO 4014 M8X55 A4 8002	
340	312109-0461		4	SCREW, M6S ISO 4017 M8X50 A4 80	
TBA 1000E LIGHTCAP30, TBA 1000E LIGHTCAP30B, TBA 0500E LIGHTCAP30, TBA 0500E LIGHTCAP30B (See drawing on page: 1-462)					
010	2794725-0000		1	PLATE	
020	2957900-0000		1	GASKET	
030	2794726-0000		1	RING	
040	1490762-0000		5	ROLLER	
050	263655-0009		6	SHAFT	
060	2960214-0000		4	AXLE SUPPORT	
070	2960215-0000		2	AXLE SUPPORT	
110	3008102-0000		1	ROLLER	
310	312105-0465		2	SCREW, M6S ISO 4014 M8X70 A4 80	
340	312105-0463		4	SCREW, M6S ISO 4014 M8X60 A4 80	
TBA 1000M LIGHTCAP24 (See drawing on page: 1-460)					
010	3152479-0000		1	PLATE	
020	3123420-0000		1	SEAL	
030	3152482-0000		1	PLATE	
040	3013416-0000		4	ROLLER	
050	263655-0009		6	SHAFT	
060	1036954-0000		4	AXLE SUPPORT	
070	1036955-0000		2	AXLE SUPPORT	
110	3093804-0000		1	ROLLER	
120	3093803-0000		1	ROLLER	
310	312105-0462		2	SCREW, M6S ISO 4014 M8X55 A4 8002	
340	312109-0461		4	SCREW, M6S ISO 4017 M8X50 A4 80	
TBA 1000M STDA7 (See drawing on page: 1-456)					
010	2562687-0000		1	PLATE	
020	3026688-0000		1	SEAL	
030	2562688-0000		1	RING	
035	1539454-0000		1	GUIDE	
040	3013416-0000		4	ROLLER	
050	263655-0009		6	SHAFT	
060	1036954-0000		4	AXLE SUPPORT	
070	1036955-0000		2	AXLE SUPPORT	
110	3013417-0000		1	ROLLER	
120	3015597-0000		1	ROLLER	
310	312105-0462		2	SCREW, M6S ISO 4014 M8X55 A4 8002	
340	312109-0461		4	SCREW, M6S ISO 4017 M8X50 A4 80	
TBA 1000S LIGHTCAP24 (See drawing on page: 1-460)					
010	2794725-0000		1	PLATE	
020	2811775-0000		1	SEAL	
030	2794726-0000		1	RING	
040	573504-0000		4	ROLLER	
050	263655-0009		6	SHAFT	
060	1036954-0000		4	AXLE SUPPORT	
070	1036955-0000		2	AXLE SUPPORT	
110	2716548-0000		1	ROLLER	
120	2716547-0000		1	ROLLER	
310	312105-0462		2	SCREW, M6S ISO 4014 M8X55 A4 8002	
340	312109-0461		4	SCREW, M6S ISO 4017 M8X50 A4 80	
TBA 1000S STDA7 (See drawing on page: 1-456)					
010	2562687-0000		1	PLATE	
020	567743-0000		1	SEAL	
030	2562688-0000		1	RING	
035	1523696-0000		1	GUIDE	
040	573504-0000		4	ROLLER	
050	263655-0009		6	SHAFT	
060	1036954-0000		4	AXLE SUPPORT	
070	1036955-0000		2	AXLE SUPPORT	
110	2592546-0000		1	ROLLER	
120	2592547-0000		1	ROLLER	
310	312105-0462		2	SCREW, M6S ISO 4014 M8X55 A4 8002	
340	312109-0461		4	SCREW, M6S ISO 4017 M8X50 A4 80	
Common Parts					
080	315125-0173		3	WASHER HIGH, TBRSB 10,5X28X6 A4	
090	1037885-0000		2	REAMED BOLT	
100	1129431-0000		4	WASHER	
300	312105-0451		2	SCREW, M6S ISO 4017 M8X20 A4 80	
320	315115-0165		6	WASHER PLAIN, TBRB 8,4/16 H=3	
330	315204-0324		1	O-RING 164,3X5,7 MM	
350	312105-0495		3	SCREW, M6S ISO 4017 M10X30 A4 80	
370	311103-1274		2	PARALLEL PIN ISO 2338 4M6X24 A1	

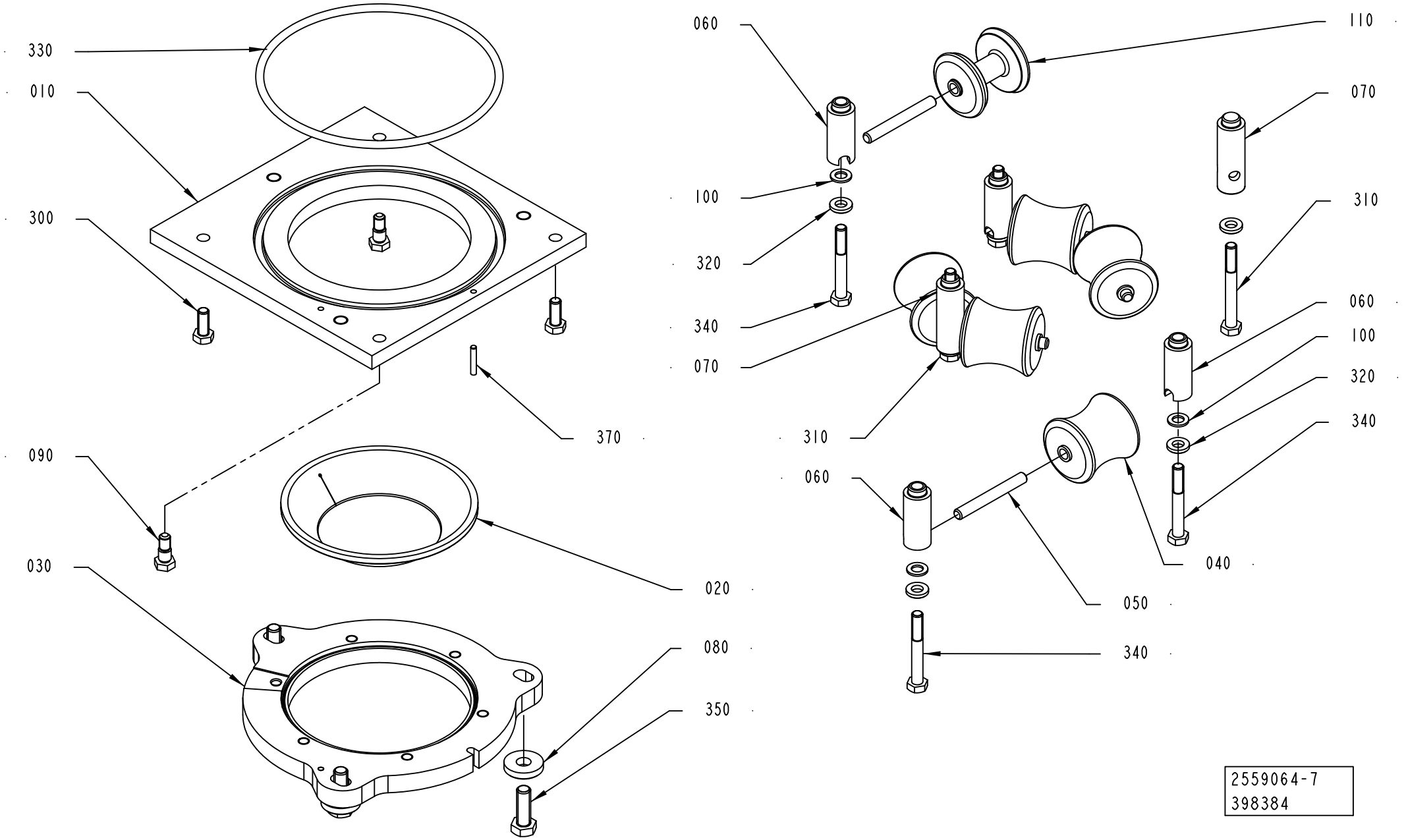
330
010
300
370
090
030
020
080
350
060
110
070
100
320
340
070
310
060
100
320
340
310
060
040
050
340
2559064-7
398384

ECM: 644415 - 20140401
Group number: 2559064-0100
Assembly Drawing: 2559064-7_1_AB

This list covers pages from 1-456 to 1-463

Pos	Part No	UN	Qty	Description	Page No
TBA 1000B STDA7 (See drawing on page: 1-458)					
010	2562687-0000		1	PLATE	
020	466042-0000		1	SEAL	
030	2562688-0000		1	RING	
035	1539454-0000		1	GUIDE	
040	466046-0000		4	ROLLER	
050	263655-0009		6	SHAFT	
060	1036954-0000		4	AXLE SUPPORT	
070	1036955-0000		2	AXLE SUPPORT	
110	2592548-0000		1	ROLLER	
120	2592549-0000		1	ROLLER	
310	312105-0462		2	SCREW, M6S ISO 4014 M8X55 A4 8002	
340	312109-0461		4	SCREW, M6S ISO 4017 M8X50 A4 80	
TBA 1000E LIGHTCAP30, TBA 1000E LIGHTCAP30B, TBA 0500E LIGHTCAP30, TBA 0500E LIGHTCAP30B (See drawing on page: 1-462)					
010	2794725-0000		1	PLATE	
020	2957900-0000		1	GASKET	
030	2794726-0000		1	RING	
040	1490762-0000		5	ROLLER	
050	263655-0009		6	SHAFT	
060	2960214-0000		4	AXLE SUPPORT	
070	2960215-0000		2	AXLE SUPPORT	
110	3008102-0000		1	ROLLER	
310	312105-0465		2	SCREW, M6S ISO 4014 M8X70 A4 80	
340	312105-0463		4	SCREW, M6S ISO 4014 M8X60 A4 80	
TBA 1000M LIGHTCAP24 (See drawing on page: 1-460)					
010	3152479-0000		1	PLATE	
020	3123420-0000		1	SEAL	
030	3152482-0000		1	PLATE	
040	3013416-0000		4	ROLLER	
050	263655-0009		6	SHAFT	
060	1036954-0000		4	AXLE SUPPORT	
070	1036955-0000		2	AXLE SUPPORT	
110	3093804-0000		1	ROLLER	
120	3093803-0000		1	ROLLER	
310	312105-0462		2	SCREW, M6S ISO 4014 M8X55 A4 8002	
340	312109-0461		4	SCREW, M6S ISO 4017 M8X50 A4 80	
TBA 1000M STDA7 (See drawing on page: 1-456)					
010	2562687-0000		1	PLATE	
020	3026688-0000		1	SEAL	
030	2562688-0000		1	RING	
035	1539454-0000		1	GUIDE	
040	3013416-0000		4	ROLLER	
050	263655-0009		6	SHAFT	
060	1036954-0000		4	AXLE SUPPORT	
070	1036955-0000		2	AXLE SUPPORT	
110	3013417-0000		1	ROLLER	
120	3015597-0000		1	ROLLER	
310	312105-0462		2	SCREW, M6S ISO 4014 M8X55 A4 8002	
340	312109-0461		4	SCREW, M6S ISO 4017 M8X50 A4 80	
TBA 1000S LIGHTCAP24 (See drawing on page: 1-460)					
010	2794725-0000		1	PLATE	
020	2811775-0000		1	SEAL	
030	2794726-0000		1	RING	
040	573504-0000		4	ROLLER	
050	263655-0009		6	SHAFT	
060	1036954-0000		4	AXLE SUPPORT	
070	1036955-0000		2	AXLE SUPPORT	
110	2716548-0000		1	ROLLER	
120	2716547-0000		1	ROLLER	
310	312105-0462		2	SCREW, M6S ISO 4014 M8X55 A4 8002	
340	312109-0461		4	SCREW, M6S ISO 4017 M8X50 A4 80	
TBA 1000S STDA7 (See drawing on page: 1-456)					
010	2562687-0000		1	PLATE	
020	567743-0000		1	SEAL	
030	2562688-0000		1	RING	
035	1523696-0000		1	GUIDE	
040	573504-0000		4	ROLLER	
050	263655-0009		6	SHAFT	
060	1036954-0000		4	AXLE SUPPORT	
070	1036955-0000		2	AXLE SUPPORT	
110	2592546-0000		1	ROLLER	
120	2592547-0000		1	ROLLER	
310	312105-0462		2	SCREW, M6S ISO 4014 M8X55 A4 8002	
340	312109-0461		4	SCREW, M6S ISO 4017 M8X50 A4 80	
Common Parts					
080	315125-0173		3	WASHER HIGH, TBRSB 10,5X28X6 A4	
090	1037885-0000		2	REAMED BOLT	
100	1129431-0000		4	WASHER	
300	312105-0451		2	SCREW, M6S ISO 4017 M8X20 A4 80	
320	315115-0165		6	WASHER PLAIN, TBRB 8,4/16 H=3	
330	315204-0324		1	O-RING 164,3X5,7 MM	
350	312105-0495		3	SCREW, M6S ISO 4017 M10X30 A4 80	
370	311103-1274		2	PARALLEL PIN ISO 2338 4M6X24 A1	

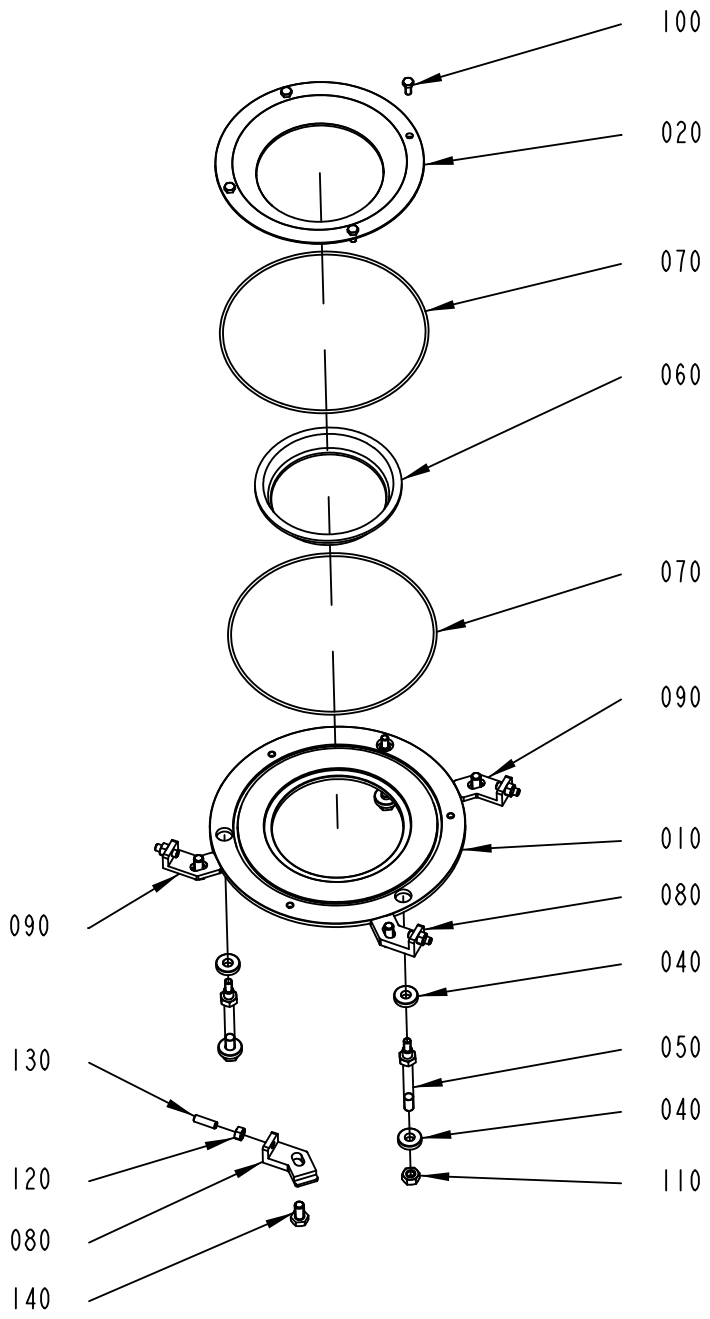

3035341-8
445709

ECM: 530451 - 20120416
Group number: 3035341-0200
Assembly Drawing: 3035341-8_1_AA

This list covers pages from 1-464 to 1-467

Pos	Part No	UN	Qty	Description	Page No
TBA 0500B, TBA 1000B, TBA 1500S (See drawing on page: 1-464)					
010	3093243-0000		1	PLATE	
020	3093227-0000		1	FLANGE	
030	466042-0000		1	SEAL	
050	3035342-0000		3	STUD SCREW	
TBA 0500S (See drawing on page: 1-464)					
010	3093244-0000		1	PLATE	
020	3093228-0000		1	FLANGE	
030	466089-0000		1	SEAL	
050	3035342-0000		3	STUD SCREW	
TBA 1000S (See drawing on page: 1-464)					
010	3093243-0000		1	PLATE	
020	3093227-0000		1	FLANGE	
030	567743-0000		1	SEAL	
050	3035342-0000		3	STUD SCREW	
TBA 2000S (See drawing on page: 1-464)					
010	3093242-0000		1	PLATE	
020	3093226-0000		1	FLANGE	
030	2582623-0000		1	SEAL	
050	3035342-0000		3	STUD SCREW	
TGA 1000SQ, TGA 0750SQ, TGA 0500SQ, TGA 1000CR, TGA 1000LF (See drawing on page: 1-464)					
010	3093244-0000		1	PLATE	
020	3093228-0000		1	FLANGE	
030	2641271-0000		1	SEAL	
050	3035342-0000		3	STUD SCREW	
TGA 1500SQ (See drawing on page: 1-464)					
010	3093243-0000		1	PLATE	
020	3093227-0000		1	FLANGE	
030	466042-0000		1	SEAL	
050	3035342-0000		3	STUD SCREW	
TPA 0500SQ (See drawing on page: 1-466)					
010	3093245-0000		1	PLATE	
020	3093229-0000		1	FLANGE	
030	2718901-0000		1	SEAL	
050	3037779-0000		3	STUD SCREW	
TPA 1000SQ, TPA 0750SQ (See drawing on page: 1-466)					
010	3093244-0000		1	PLATE	
020	3093228-0000		1	FLANGE	
030	1524414-0000		1	SEAL	
050	3037779-0000		3	STUD SCREW	
Common Parts					
040	2821398-0000		6	WASHER	
060	3039010-0000		2	BRACKET	
070	3039011-0000		2	BRACKET	
200	312105-0327		4	"SCREW, M6S ISO 4017 M5X12 A4 80"	
210	312605-0318		3	HEXAGON NUT, M6M M8 A280	
220	312605-0316		4	HEXAGON NUT, M6M M6 A280	
230	312318-0370		4	SET SCREW, CUP END ISO4029 M6X20 A4	
240	312105-0449		4	SCREW, M6S ISO 4017 M8X16 A4 80	
250	90601-4830		2	O-RING 171,12X2,62 MM	

Machine Type | Group Description | Used-In | Group Number | Page No

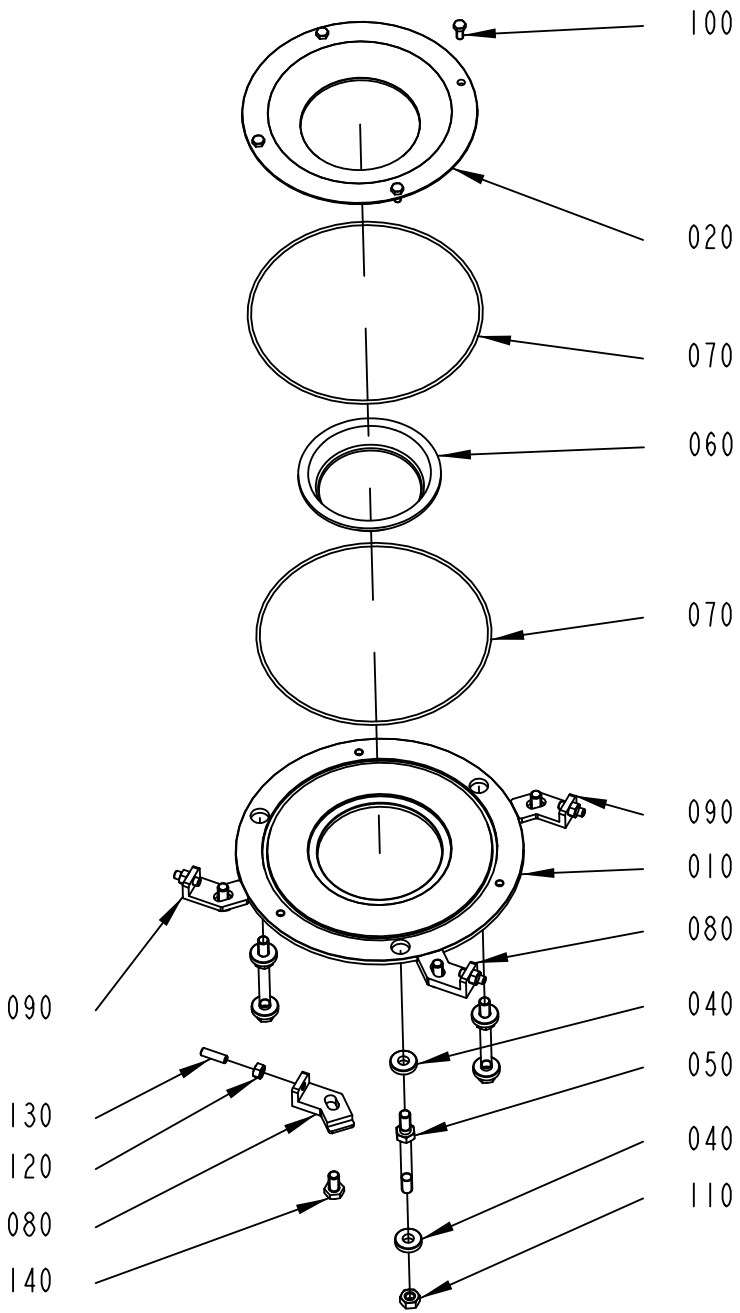

3035341-9
445709

ECM: 530451 - 20120416
Group number: 3035341-0200
Assembly Drawing: 3035341-9_1_AA

This list covers pages from 1-464 to 1-467

Pos	Part No	UN	Qty	Description	Page No
TBA 0500B, TBA 1000B, TBA 1500S (See drawing on page: 1-464)					
010	3093243-0000		1	PLATE	
020	3093227-0000		1	FLANGE	
030	466042-0000		1	SEAL	
050	3035342-0000		3	STUD SCREW	
TBA 0500S (See drawing on page: 1-464)					
010	3093244-0000		1	PLATE	
020	3093228-0000		1	FLANGE	
030	466089-0000		1	SEAL	
050	3035342-0000		3	STUD SCREW	
TBA 1000S (See drawing on page: 1-464)					
010	3093243-0000		1	PLATE	
020	3093227-0000		1	FLANGE	
030	567743-0000		1	SEAL	
050	3035342-0000		3	STUD SCREW	
TBA 2000S (See drawing on page: 1-464)					
010	3093242-0000		1	PLATE	
020	3093226-0000		1	FLANGE	
030	2582623-0000		1	SEAL	
050	3035342-0000		3	STUD SCREW	
TGA 1000SQ, TGA 0750SQ, TGA 0500SQ, TGA 1000CR, TGA 1000LF (See drawing on page: 1-464)					
010	3093244-0000		1	PLATE	
020	3093228-0000		1	FLANGE	
030	2641271-0000		1	SEAL	
050	3035342-0000		3	STUD SCREW	
TGA 1500SQ (See drawing on page: 1-464)					
010	3093243-0000		1	PLATE	
020	3093227-0000		1	FLANGE	
030	466042-0000		1	SEAL	
050	3035342-0000		3	STUD SCREW	
TPA 0500SQ (See drawing on page: 1-466)					
010	3093245-0000		1	PLATE	
020	3093229-0000		1	FLANGE	
030	2718901-0000		1	SEAL	
050	3037779-0000		3	STUD SCREW	
TPA 1000SQ, TPA 0750SQ (See drawing on page: 1-466)					
010	3093244-0000		1	PLATE	
020	3093228-0000		1	FLANGE	
030	1524414-0000		1	SEAL	
050	3037779-0000		3	STUD SCREW	
Common Parts					
040	2821398-0000		6	WASHER	
060	3039010-0000		2	BRACKET	
070	3039011-0000		2	BRACKET	
200	312105-0327		4	"SCREW, M6S ISO 4017 M5X12 A4 80"	
210	312605-0318		3	HEXAGON NUT, M6M M8 A280	
220	312605-0316		4	HEXAGON NUT, M6M M6 A280	
230	312318-0370		4	SET SCREW, CUP END ISO4029 M6X20 A4	
240	312105-0449		4	SCREW, M6S ISO 4017 M8X16 A4 80	
250	90601-4830		2	O-RING 171,12X2,62 MM	

Machine Type | Group Description | Used-In | Group Number | Page No

EDGE ROLLER

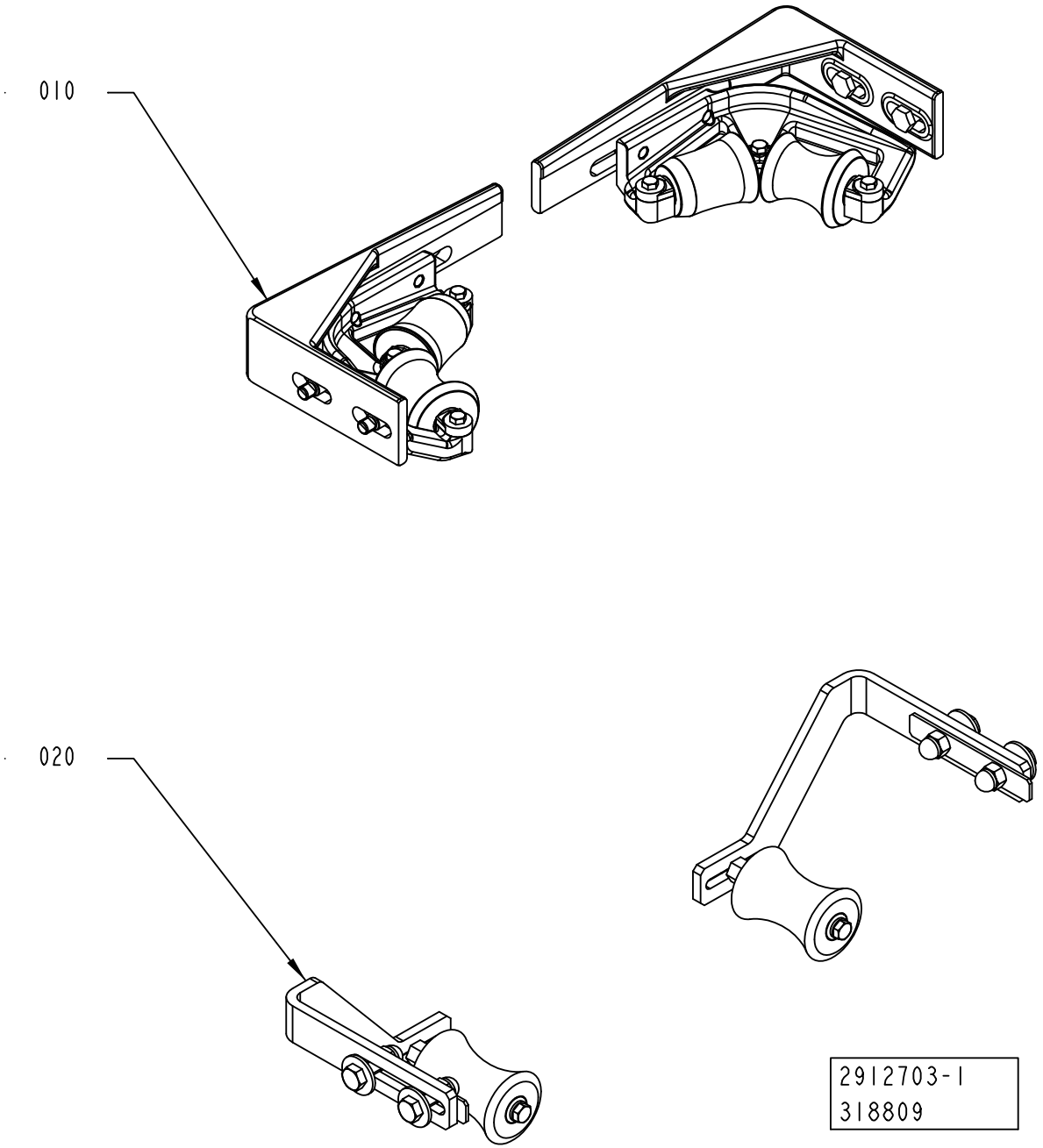

ECM: 644626 - 20140401
Group number: 2912703-0100
Assembly Drawing: 2912703-1_1_AA

Pos	Part No	UN	Qty	Description	Page No
A3/FLEX TBA 0500B, A3/FLEX TBA 1000B, A3/FLEX TBA 1000S, A3/FLEX TBA 1000SQ, A3/FLEX TPA 1000SQ, A3/FLEX TBA 1500S, A3/FLEX TPA 0500SQ, A3/FLEX TBA 0500S, A3/FLEX TPA 0750SQ, A3/FLEX TBA 0500SQ, A3/FLEX TGA 1000SQ, A3/FLEX TGA 0500SQ, A3/FLEX TGA 0750SQ, A3/FLEX TGA 1500SQ, A3/FLEX TBA 1000E, A3/FLEX TBA 1000M, A3/FLEX TGA 1000CR, A3/FLEX TGA 1000LF, A3/FLEX TBA 0500E (See drawing on page: 1-468)					
020	2541634-0200		1	EDGE ROLLER	**1-471, 1-473**
A3/FLEX TBA 2000S (See drawing on page: 1-468)					
010	2547420-0200		1	EDGE ROLLER	**1-475, 1-477**
020	2541634-0200		1	EDGE ROLLER	**1-471, 1-473**

Pos	Part No	UN	Qty	Description	Page No

EDGE ROLLER

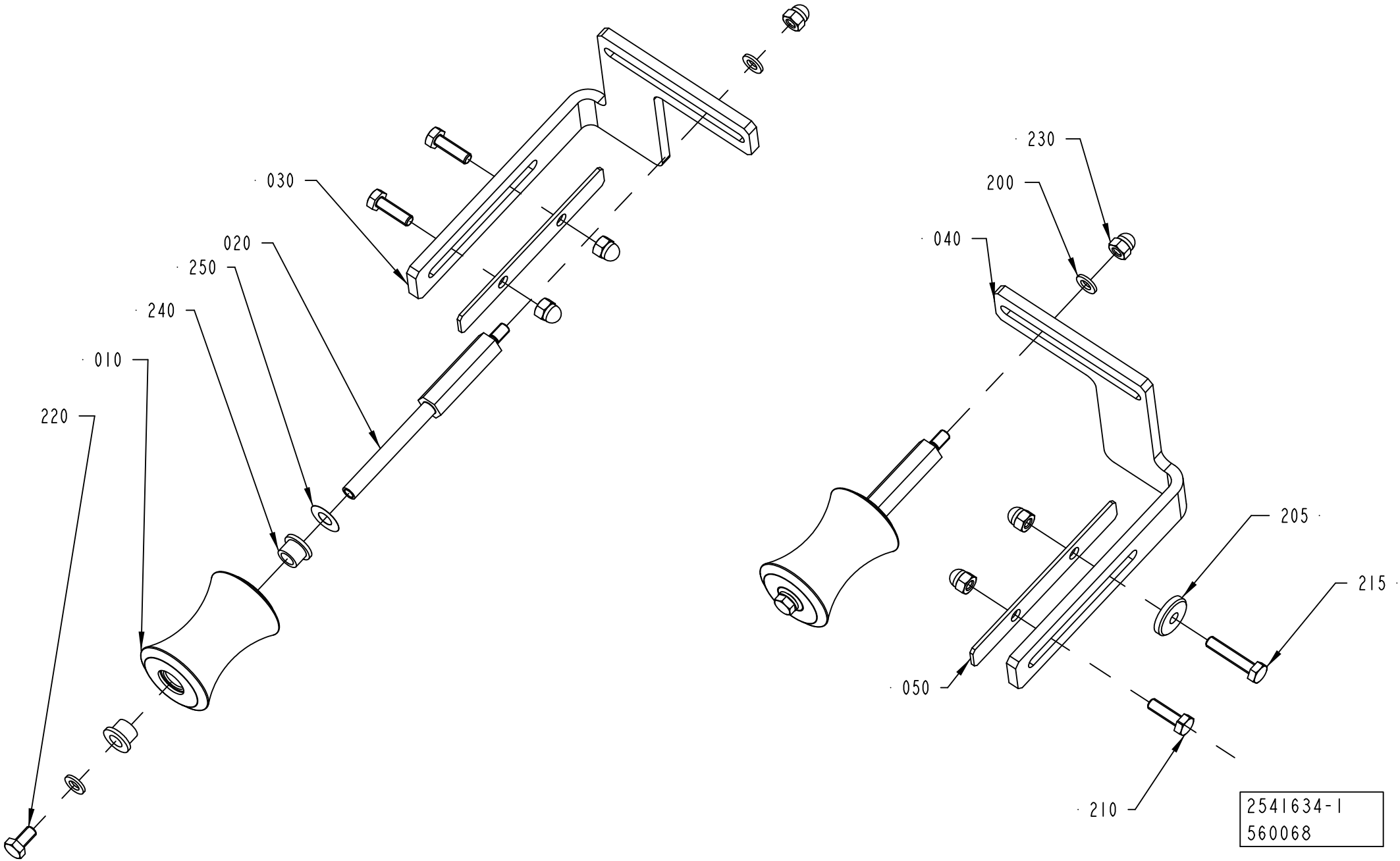
030
020
250
240
010
220
230
200
040
205
215
050
210
2541634-1
560068

Pos	Part No	UN	Qty	Description	Page No
A3/FLEX TBA 0500B, A3/FLEX TBA 1000B, A3/FLEX TBA 1000S, A3/FLEX TBA 1000SQ, A3/FLEX TBA 1500S, A3/FLEX TPA 0500SQ, A3/FLEX TBA 0500S, A3/FLEX TBA 0500SQ, A3/FLEX TGA 1000SQ, A3/FLEX TGA 0500SQ, A3/FLEX TGA 0750SQ, A3/FLEX TGA 1500SQ, A3/FLEX TBA 1000E, A3/FLEX TBA 1000M, A3/FLEX TGA 1000CR, A3/FLEX TGA 1000LF, A3/FLEX TBA 0500E (See drawing on page: 1-470)					
010	1478359-0000		2	ROLLER	
020	1511492-0000		2	SHAFT	
030	2528112-0000		1	BRACKET	
040	2528113-0000		1	BRACKET	
050	2528114-0000		2	COVER PLATE	
200	315105-0153		4	WASHER PLAIN, 6,4X12X1,5 A4 BRB	
205	315125-0153		1	WASHER HIGH, TBRSB 6,4X22X4 A4	
210	312105-0370		3	SCREW, M6S ISO 4017 M6X20 A4 80	
215	312109-0374		1	SCREW, M6S ISO 4017 M6X30 A4 80	
220	312105-0366		2	SCREW, M6S ISO 4017 M6X12 A4 80	
230	312705-0316		6	HEX. DOMED CAP MHM-6 M6 A280	
240	90240-0172		4	FLANGE BUSHING, 8X12X10 MM	
A3/FLEX TBA 2000S (See drawing on page: 1-472)					
010	2601286-0000		2	ROLLER	
020	2634934-0000		2	SHAFT	
030	2634932-0000		1	BRACKET	
040	2634933-0000		1	BRACKET	
050	2651695-0000		2	COVER PLATE	
200	315105-0153		4	WASHER PLAIN, 6,4X12X1,5 A4 BRB	
210	312105-0453		4	SCREW, M6S ISO 4017 M8X25 A4 80	
220	312105-0366		2	SCREW, M6S ISO 4017 M6X12 A4 80	
230	312705-0316		2	HEX. DOMED CAP MHM-6 M6 A280	
240	90240-0172		4	FLANGE BUSHING, 8X12X10 MM	
260	312705-0318		4	NUT HEX. DOMED CAP MHM-6 M8 A280	
A3/FLEX TPA 1000SQ, A3/FLEX TPA 0750SQ (See drawing on page: 1-470)					
010	2885029-0000		2	ROLLER	
020	1511492-0000		2	SHAFT	
030	2528112-0000		1	BRACKET	
040	2528113-0000		1	BRACKET	
050	2528114-0000		2	COVER PLATE	
200	315105-0153		4	WASHER PLAIN, 6,4X12X1,5 A4 BRB	
205	315125-0153		1	WASHER HIGH, TBRSB 6,4X22X4 A4	
210	312105-0370		3	SCREW, M6S ISO 4017 M6X20 A4 80	
215	312109-0374		1	SCREW, M6S ISO 4017 M6X30 A4 80	
220	312105-0366		2	SCREW, M6S ISO 4017 M6X12 A4 80	
230	312705-0316		6	HEX. DOMED CAP MHM-6 M6 A280	
240	90240-0172		4	FLANGE BUSHING, 8X12X10 MM	
Common Parts					

Pos	Part No	UN	Qty	Description	Page No
250	2033-0011		2	WASHER	

Machine Type	Group Description	Used-In	Group Number	Page No

EDGE ROLLER

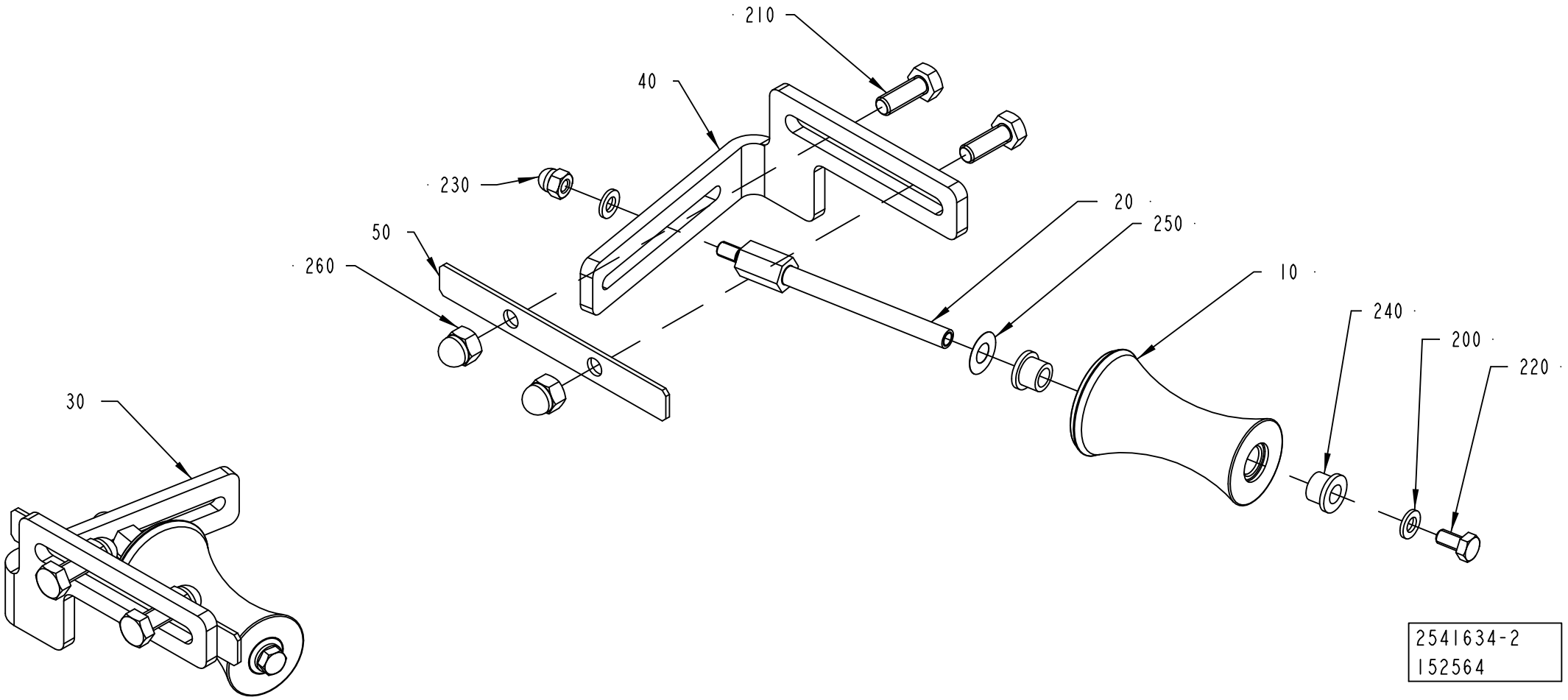

Pos	Part No	UN	Qty	Description	Page No
A3/FLEX TBA 0500B, A3/FLEX TBA 1000B, A3/FLEX TBA 1000S, A3/FLEX TBA 1000SQ, A3/FLEX TBA 1500S, A3/FLEX TPA 0500SQ, A3/FLEX TBA 0500S, A3/FLEX TBA 0500SQ, A3/FLEX TGA 1000SQ, A3/FLEX TGA 0500SQ, A3/FLEX TGA 0750SQ, A3/FLEX TGA 1500SQ, A3/FLEX TBA 1000E, A3/FLEX TBA 1000M, A3/FLEX TGA 1000CR, A3/FLEX TGA 1000LF, A3/FLEX TBA 0500E (See drawing on page: 1-470)					
010	1478359-0000		2	ROLLER	
020	1511492-0000		2	SHAFT	
030	2528112-0000		1	BRACKET	
040	2528113-0000		1	BRACKET	
050	2528114-0000		2	COVER PLATE	
200	315105-0153		4	WASHER PLAIN, 6,4X12X1,5 A4 BRB	
205	315125-0153		1	WASHER HIGH, TBRSB 6,4X22X4 A4	
210	312105-0370		3	SCREW, M6S ISO 4017 M6X20 A4 80	
215	312109-0374		1	SCREW, M6S ISO 4017 M6X30 A4 80	
220	312105-0366		2	SCREW, M6S ISO 4017 M6X12 A4 80	
230	312705-0316		6	HEX. DOMED CAP MHM-6 M6 A280	
240	90240-0172		4	FLANGE BUSHING, 8X12X10 MM	
A3/FLEX TBA 2000S (See drawing on page: 1-472)					
010	2601286-0000		2	ROLLER	
020	2634934-0000		2	SHAFT	
030	2634932-0000		1	BRACKET	
040	2634933-0000		1	BRACKET	
050	2651695-0000		2	COVER PLATE	
200	315105-0153		4	WASHER PLAIN, 6,4X12X1,5 A4 BRB	
210	312105-0453		4	SCREW, M6S ISO 4017 M8X25 A4 80	
220	312105-0366		2	SCREW, M6S ISO 4017 M6X12 A4 80	
230	312705-0316		2	HEX. DOMED CAP MHM-6 M6 A280	
240	90240-0172		4	FLANGE BUSHING, 8X12X10 MM	
260	312705-0318		4	NUT HEX. DOMED CAP MHM-6 M8 A280	
A3/FLEX TPA 1000SQ, A3/FLEX TPA 0750SQ (See drawing on page: 1-470)					
010	2885029-0000		2	ROLLER	
020	1511492-0000		2	SHAFT	
030	2528112-0000		1	BRACKET	
040	2528113-0000		1	BRACKET	
050	2528114-0000		2	COVER PLATE	
200	315105-0153		4	WASHER PLAIN, 6,4X12X1,5 A4 BRB	
205	315125-0153		1	WASHER HIGH, TBRSB 6,4X22X4 A4	
210	312105-0370		3	SCREW, M6S ISO 4017 M6X20 A4 80	
215	312109-0374		1	SCREW, M6S ISO 4017 M6X30 A4 80	
220	312105-0366		2	SCREW, M6S ISO 4017 M6X12 A4 80	
230	312705-0316		6	HEX. DOMED CAP MHM-6 M6 A280	
240	90240-0172		4	FLANGE BUSHING, 8X12X10 MM	
Common Parts					

Pos	Part No	UN	Qty	Description	Page No
250	2033-0011		2	WASHER	

Machine Type	Group Description	Used-In	Group Number	Page No

EDGE ROLLER

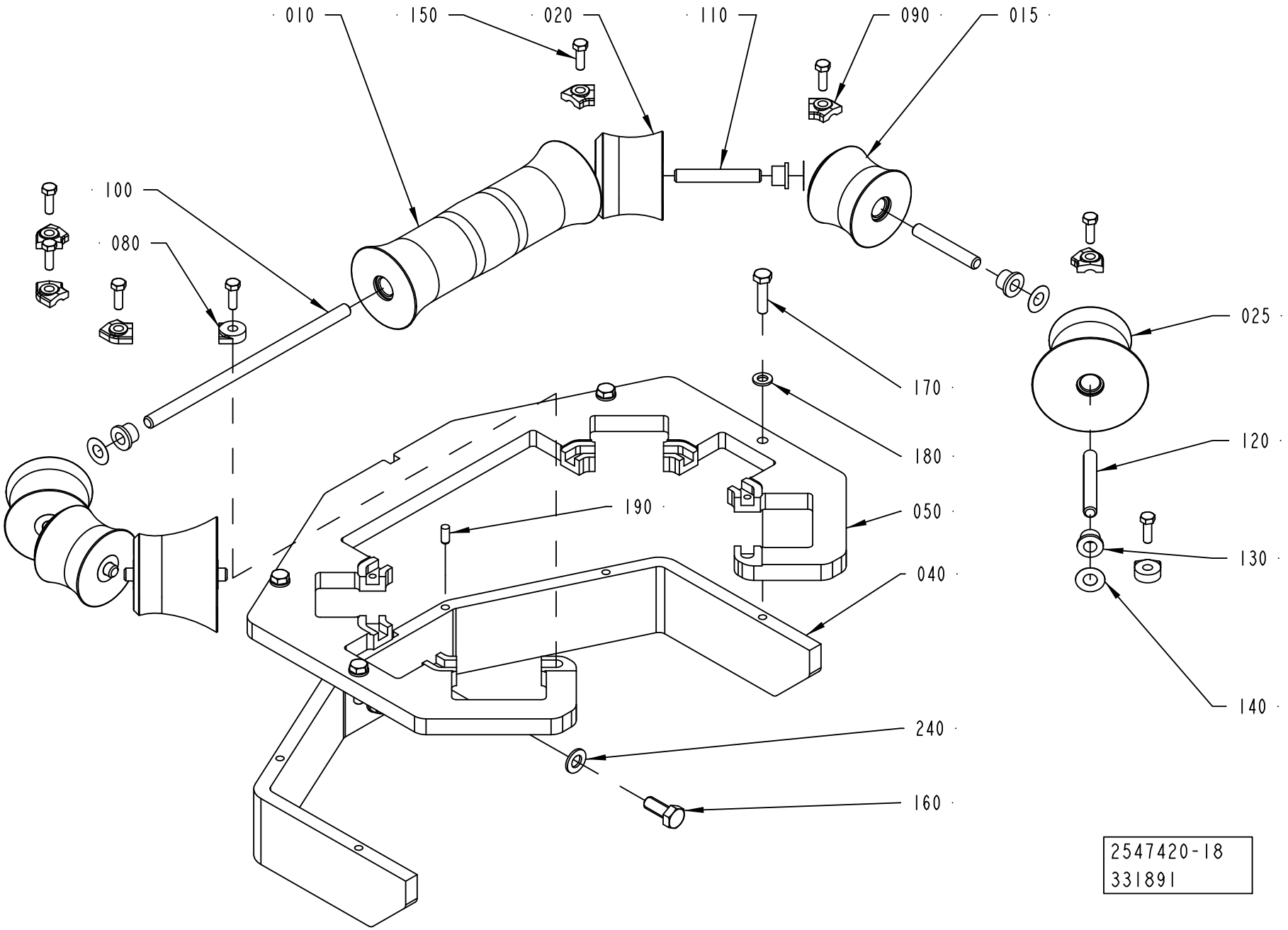
010
150
020
110
090
015
100
080
025
170
180
120
190
050
130
040
140
240
160
2547420-18
331891

ECM: 451980 - 20100702
Group number: 2547420-0200
Assembly Drawing: 2547420-18_1_AA

This list covers pages from 1-474 to 1-477

Pos	Part No	UN	Qty	Description	Page No
TBA 0500B, TBA 1000B (See drawing on page: 1-476)					
010	2651790-0000		2	ROLLER	
020	2651789-0000		2	ROLLER	
030	2552140-0000		1	BRACKET	
040	2552141-0000		1	BRACKET	
050	3079112-0000		1	BRACKET	
060	3079114-0000		1	BRACKET	
080	2532895-0008		4	LOCK PLATE	
090	2528123-0006		2	LOCK PLATE	
110	752186-0016		4	SHAFT	
130	90240-0172		8	FLANGE BUSHING, 8X12X10 MM	
140	2033-0011		8	WASHER	
150	312105-0331		6	SCREW, M6S ISO 4017 M5X20 A4 80	
TBA 1000S, TBA 1500S (See drawing on page: 1-476)					
010	2552144-0000		2	ROLLER	
020	2562664-0000		2	ROLLER	
030	2552140-0000		1	BRACKET	
040	2552141-0000		1	BRACKET	
050	3079112-0000		1	BRACKET	
060	3079114-0000		1	BRACKET	
080	2532895-0008		4	LOCK PLATE	
090	2528123-0006		2	LOCK PLATE	
110	752186-0016		4	SHAFT	
130	90240-0172		8	FLANGE BUSHING, 8X12X10 MM	
140	2033-0011		8	WASHER	
150	312105-0331		6	SCREW, M6S ISO 4017 M5X20 A4 80	
TBA 1000SQ (See drawing on page: 1-476)					
010	2552155-0000		2	ROLLER	
020	2562684-0000		2	ROLLER	
030	2552140-0000		1	BRACKET	
040	2552141-0000		1	BRACKET	
050	3079112-0000		1	BRACKET	
060	3079114-0000		1	BRACKET	
080	2532895-0008		4	LOCK PLATE	
090	2528123-0006		2	LOCK PLATE	
110	752186-0016		4	SHAFT	
130	90240-0172		8	FLANGE BUSHING, 8X12X10 MM	
140	2033-0011		8	WASHER	
150	312105-0331		6	SCREW, M6S ISO 4017 M5X20 A4 80	
TBA 2000S (See drawing on page: 1-474)					
010	2601269-0000		1	ROLLER	
015	2601272-0000		2	ROLLER	
020	2601271-0000		2	ROLLER	
025	2601273-0000		2	ROLLER	
040	2946885-0000		1	BRACKET	
050	2946884-0000		1	SUPPORT ROLLER	
080	2532895-0004		2	LOCK PLATE	
090	2562667-0002		6	LOCK PLATE	
100	2522213-0016		1	SHAFT	
110	2522213-0015		4	SHAFT	
120	2522213-0017		2	SHAFT	
130	90240-0172		14	FLANGE BUSHING, 8X12X10 MM	
140	2033-0011		14	WASHER	
150	312105-0329		8	SCREW, M6S ISO 4017 M5X16 A4 80	
160	312105-0451		2	SCREW, M6S ISO 4017 M8X20 A4 80	
170	312105-0372		4	SCREW, M6S ISO 4017 M6X25 A4 80	
180	315105-0153		4	WASHER PLAIN, 6,4X12X1,5 A4 BRB	
190	311103-0306		2	PARALLEL PIN ISO 2338 5M6X12 A1	
TPA 1000SQ, TPA 0750SQ (See drawing on page: 1-476)					
010	2562694-0000		2	ROLLER	
020	2562695-0000		2	ROLLER	
030	2562696-0000		1	BRACKET	
040	2562697-0000		1	BRACKET	
050	3079113-0000		1	BRACKET	
060	3079115-0000		1	BRACKET	
080	2532895-0008		4	LOCK PLATE	
090	2528123-0009		2	LOCK PLATE	
110	752186-0016		4	SHAFT	
130	90240-0172		8	FLANGE BUSHING, 8X12X10 MM	
140	2033-0011		8	WASHER	
150	312105-0331		6	SCREW, M6S ISO 4017 M5X20 A4 80	
Common Parts					
070	312105-0449		4	SCREW, M6S ISO 4017 M8X16 A4 80	
230	312105-0455		4	SCREW, M6S ISO 4017 M8X30 A4 80	
240	315105-0165		4	FWAS080G0-0S, WASHER PLAIN	
250	312605-0318		4	HEXAGON NUT, M6M M8 A280	

EDGE ROLLER

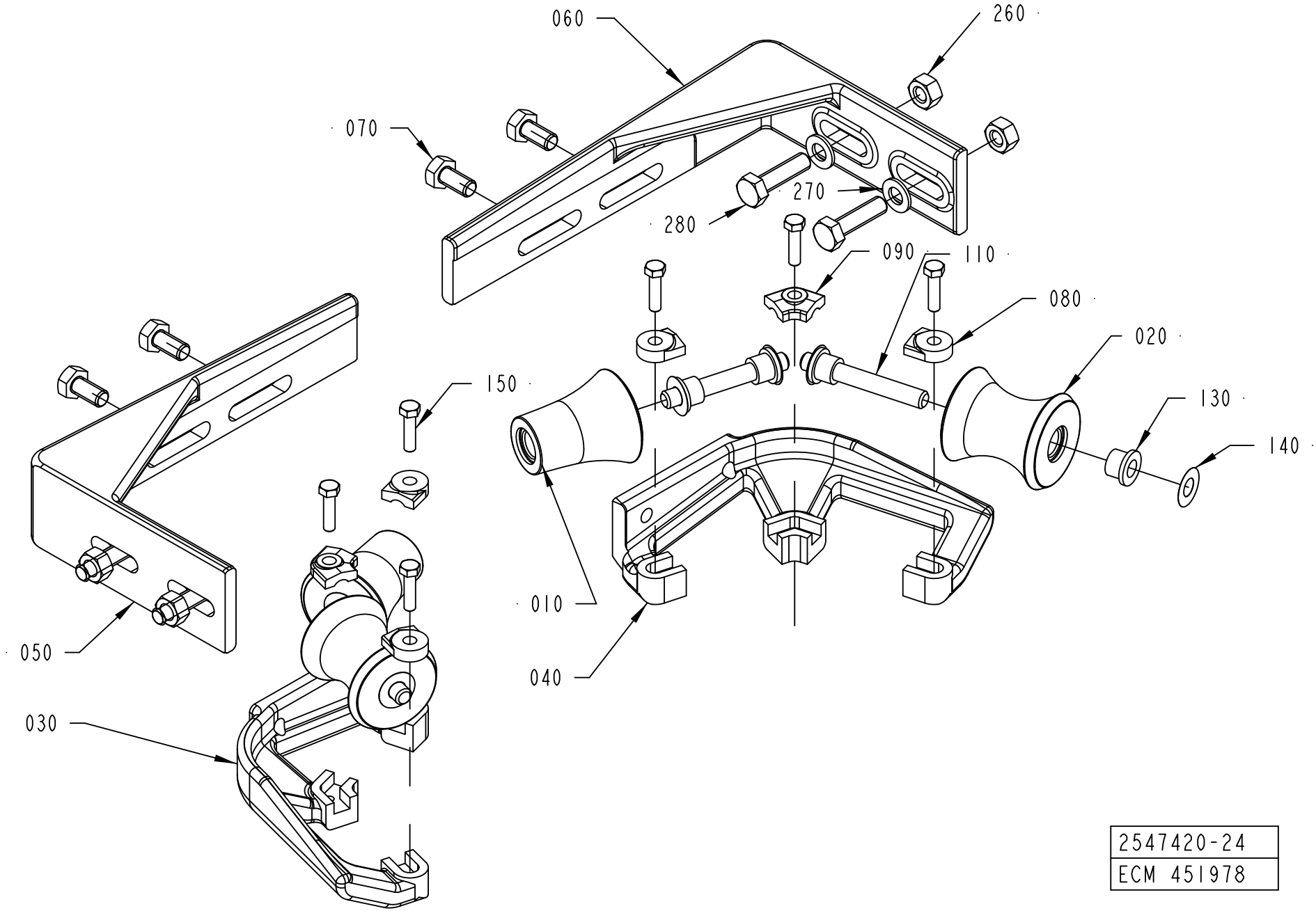

2547420-24
ECM 451978

ECM: 451980 - 20100702
Group number: 2547420-0200
Assembly Drawing: 2547420-24_1_AA

This list covers pages from 1-474 to 1-477

Pos	Part No	UN	Qty	Description	Page No
TBA 0500B, TBA 1000B (See drawing on page: 1-476)					
010	2651790-0000		2	ROLLER	
020	2651789-0000		2	ROLLER	
030	2552140-0000		1	BRACKET	
040	2552141-0000		1	BRACKET	
050	3079112-0000		1	BRACKET	
060	3079114-0000		1	BRACKET	
080	2532895-0008		4	LOCK PLATE	
090	2528123-0006		2	LOCK PLATE	
110	752186-0016		4	SHAFT	
130	90240-0172		8	FLANGE BUSHING, 8X12X10 MM	
140	2033-0011		8	WASHER	
150	312105-0331		6	SCREW, M6S ISO 4017 M5X20 A4 80	
TBA 1000S, TBA 1500S (See drawing on page: 1-476)					
010	2552144-0000		2	ROLLER	
020	2562664-0000		2	ROLLER	
030	2552140-0000		1	BRACKET	
040	2552141-0000		1	BRACKET	
050	3079112-0000		1	BRACKET	
060	3079114-0000		1	BRACKET	
080	2532895-0008		4	LOCK PLATE	
090	2528123-0006		2	LOCK PLATE	
110	752186-0016		4	SHAFT	
130	90240-0172		8	FLANGE BUSHING, 8X12X10 MM	
140	2033-0011		8	WASHER	
150	312105-0331		6	SCREW, M6S ISO 4017 M5X20 A4 80	
TBA 1000SQ (See drawing on page: 1-476)					
010	2552155-0000		2	ROLLER	
020	2562684-0000		2	ROLLER	
030	2552140-0000		1	BRACKET	
040	2552141-0000		1	BRACKET	
050	3079112-0000		1	BRACKET	
060	3079114-0000		1	BRACKET	
080	2532895-0008		4	LOCK PLATE	
090	2528123-0006		2	LOCK PLATE	
110	752186-0016		4	SHAFT	
130	90240-0172		8	FLANGE BUSHING, 8X12X10 MM	
140	2033-0011		8	WASHER	
150	312105-0331		6	SCREW, M6S ISO 4017 M5X20 A4 80	
TBA 2000S (See drawing on page: 1-474)					
010	2601269-0000		1	ROLLER	
015	2601272-0000		2	ROLLER	
020	2601271-0000		2	ROLLER	
025	2601273-0000		2	ROLLER	
040	2946885-0000		1	BRACKET	
050	2946884-0000		1	SUPPORT ROLLER	
080	2532895-0004		2	LOCK PLATE	
090	2562667-0002		6	LOCK PLATE	
100	2522213-0016		1	SHAFT	
110	2522213-0015		4	SHAFT	
120	2522213-0017		2	SHAFT	
130	90240-0172		14	FLANGE BUSHING, 8X12X10 MM	
140	2033-0011		14	WASHER	
150	312105-0329		8	SCREW, M6S ISO 4017 M5X16 A4 80	
160	312105-0451		2	SCREW, M6S ISO 4017 M8X20 A4 80	
170	312105-0372		4	SCREW, M6S ISO 4017 M6X25 A4 80	
180	315105-0153		4	WASHER PLAIN, 6,4X12X1,5 A4 BRB	
190	311103-0306		2	PARALLEL PIN ISO 2338 5M6X12 A1	
TPA 1000SQ, TPA 0750SQ (See drawing on page: 1-476)					
010	2562694-0000		2	ROLLER	
020	2562695-0000		2	ROLLER	
030	2562696-0000		1	BRACKET	
040	2562697-0000		1	BRACKET	
050	3079113-0000		1	BRACKET	
060	3079115-0000		1	BRACKET	
080	2532895-0008		4	LOCK PLATE	
090	2528123-0009		2	LOCK PLATE	
110	752186-0016		4	SHAFT	
130	90240-0172		8	FLANGE BUSHING, 8X12X10 MM	
140	2033-0011		8	WASHER	
150	312105-0331		6	SCREW, M6S ISO 4017 M5X20 A4 80	
Common Parts					
070	312105-0449		4	SCREW, M6S ISO 4017 M8X16 A4 80	
230	312105-0455		4	SCREW, M6S ISO 4017 M8X30 A4 80	
240	315105-0165		4	FWAS080G0-0S, WASHER PLAIN	
250	312605-0318		4	HEXAGON NUT, M6M M8 A280	

LONGITUDINAL SEALING

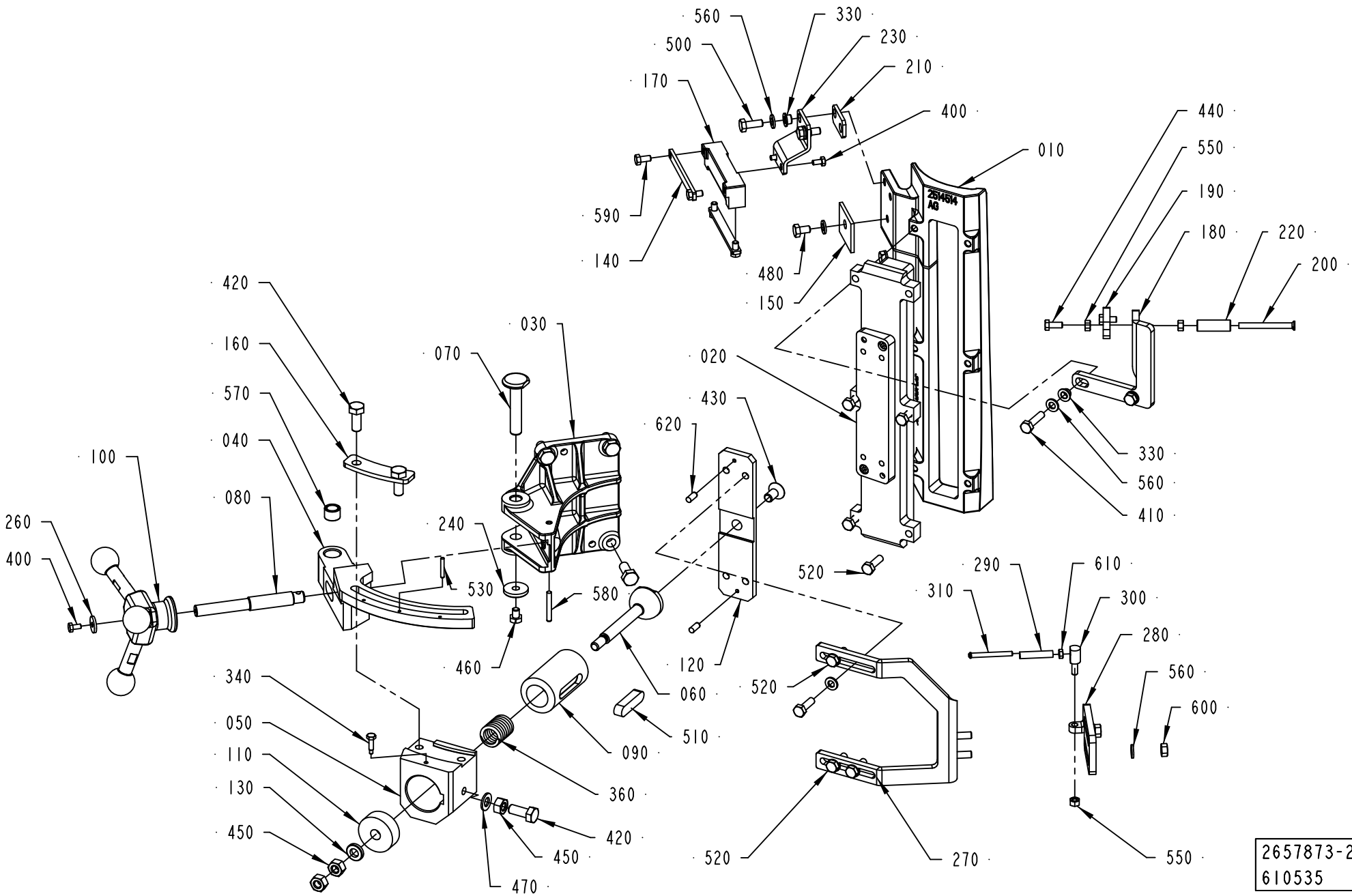

2657873-2
610535

ECM: 682427 - 20140702
Group number: 2657873-0200
Assembly Drawing: 2657873-2_1_AD

This list covers pages from 1-478 to 1-487

Pos	Part No	UN	Qty	Description	Page No
TBA 1000S (See drawing on page: 1-478)					
010	2514522-0000		1	INDUCTOR	
020	2862745-0000		1	INSULATING PLATE	
180	2547404-0000		1	BRACKET	
190	2547405-0000		1	BRACKET	
200	269151-0000		1	SHAFT	
220	2555625-0000		1	ROLL	
240	315125-0153		1	WASHER HIGH, TBRSB 6,4X22X4 A4	
270	2982295-0000		1	BRACKET	
280	3042553-0000		1	BRACKET	
290	2555616-0000		1	ROLLER	
300	2555617-0000		1	PIN	
310	2555618-0000		1	SHAFT	
330	2508292-0000		4	BUSHING	
410	312105-0374		2	SCREW, M6S ISO 4014 M6X30 A4 80	
440	312105-0327		2	"SCREW, M6S ISO 4017 M5X12 A4 80"	
460	312105-0362		1	SCREW, M6S ISO 4017 M6X8 A4 80	
480	312105-0364		2	"SCREW, M6S ISO 4017 M6X10 A4 80"	
500	312105-0368		2	"SCREW, M6S ISO 4017 M6X16 A4 80"	
520	312105-0370		4	SCREW, M6S ISO 4017 M6X20 A4 80	
525	312105-0372		4	SCREW, M6S ISO 4017 M6X25 A4 80	
550	312605-0314		3	HEXAGON NUT, M6M M5 A280	
560	315105-0153		12	WASHER PLAIN, 6,4X12X1,5 A4 BRB	
600	312605-0316		2	HEXAGON NUT, M6M M6 A280	
610	312605-0312		1	HEXAGON NUT, M6M M4 A280	
TBA 2000S (See drawing on page: 1-478)					
010	2601247-0000		1	INDUCTOR	
020	2862746-0000		1	INSULATING PLATE	
180	2601249-0000		1	BRACKET	
190	2547405-0000		1	BRACKET	
200	269151-0000		1	SHAFT	
220	2555625-0000		1	ROLL	
240	315125-0153		1	WASHER HIGH, TBRSB 6,4X22X4 A4	
270	2594636-0000		1	BRACKET	
280	2555615-0000		1	BRACKET	
290	2555616-0000		1	ROLLER	
300	2555617-0000		1	PIN	
310	2555618-0000		1	SHAFT	
330	2508292-0000		4	BUSHING	
410	312105-0372		2	SCREW, M6S ISO 4017 M6X25 A4 80	
440	312105-0327		2	"SCREW, M6S ISO 4017 M5X12 A4 80"	
460	312105-0362		1	SCREW, M6S ISO 4017 M6X8 A4 80	
480	312105-0364		2	"SCREW, M6S ISO 4017 M6X10 A4 80"	
500	312105-0368		2	"SCREW, M6S ISO 4017 M6X16 A4 80"	
520	312105-0370		4	SCREW, M6S ISO 4017 M6X20 A4 80	
550	312605-0314		3	HEXAGON NUT, M6M M5 A280	
560	315105-0153		12	WASHER PLAIN, 6,4X12X1,5 A4 BRB	
600	312605-0316		2	HEXAGON NUT, M6M M6 A280	
610	312605-0312		1	HEXAGON NUT, M6M M4 A280	
TGA 1000SQ, TGA 0750SQ, TGA 0500SQ, TGA 1000CR, TGA 1000LF (See drawing on page: 1-484)					
010	2601289-0000		1	INDUCTOR	
020	2912633-0000		1	PLATE	
180	3067607-0000		1	BRACKET	
190	3067608-0000		1	BRACKET	
200	2887790-0000		1	SHAFT	
240	315125-0153		1	WASHER HIGH, TBRSB 6,4X22X4 A4	
270	2982295-0000		1	BRACKET	
280	3042553-0000		1	BRACKET	
290	2555616-0000		2	ROLLER	
300	2555617-0000		1	PIN	
310	2555618-0000		1	SHAFT	
330	2508292-0000		4	BUSHING	
410	312105-0372		2	SCREW, M6S ISO 4017 M6X25 A4 80	
460	312105-0362		1	SCREW, M6S ISO 4017 M6X8 A4 80	
480	312105-0364		3	"SCREW, M6S ISO 4017 M6X10 A4 80"	
500	312105-0368		2	"SCREW, M6S ISO 4017 M6X16 A4 80"	
520	312105-0370		8	SCREW, M6S ISO 4017 M6X20 A4 80	
550	312605-0314		1	HEXAGON NUT, M6M M5 A280	
560	315105-0153		12	WASHER PLAIN, 6,4X12X1,5 A4 BRB	
600	312605-0316		2	HEXAGON NUT, M6M M6 A280	
610	312605-0312		5	HEXAGON NUT, M6M M4 A280	
640	315105-0136		2	WASHER PLAIN, 4,3X8X0,8 A4 BRB	
TGA 1500SQ (See drawing on page: 1-478)					
010	2514514-0000		1	INDUCTOR	
020	2974365-0000		1	INSULATING PLATE	
180	2547404-0000		1	BRACKET	
190	2547405-0000		1	BRACKET	
200	269151-0000		1	SHAFT	
220	2555625-0000		1	ROLL	
240	315125-0153		1	WASHER HIGH, TBRSB 6,4X22X4 A4	
270	2982295-0000		1	BRACKET	
280	3042553-0000		1	BRACKET	
290	2555616-0000		1	ROLLER	
300	2555617-0000		1	PIN	

Machine Type | Group Description | Used-In | Group Number | Page No

LONGITUDINAL SEALING

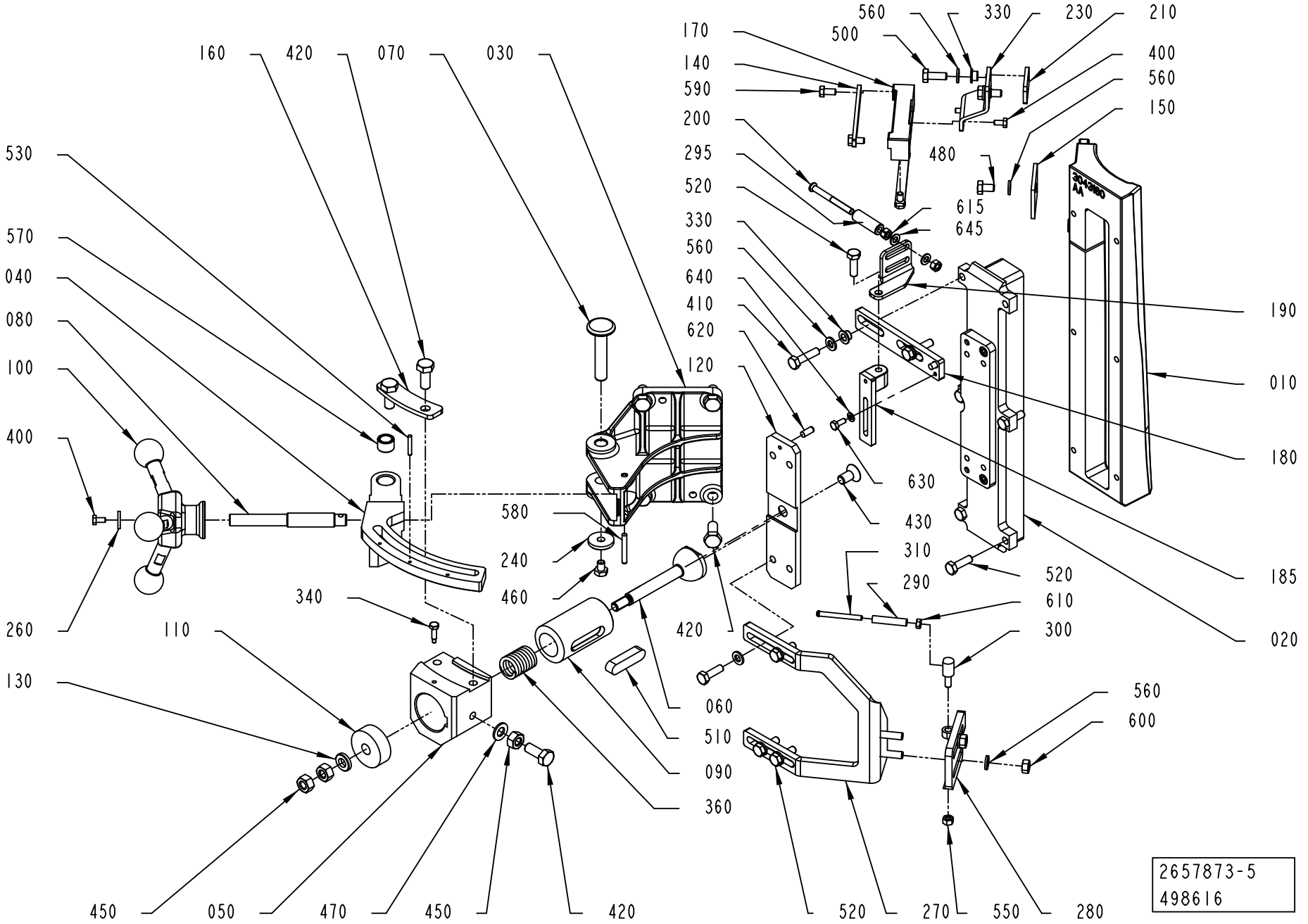

Pos	Part No	UN	Qty	Description	Page No
TGA 1500SQ (Cont'd) (See drawing on page: 1-478)					
310	2555618-0000		1	SHAFT	
330	2508292-0000		4	BUSHING	
410	312105-0372		2	SCREW, M6S ISO 4017 M6X25 A4 80	
440	312105-0327		2	"SCREW, M6S ISO 4017 M5X12 A4 80"	
460	312105-0362		1	SCREW, M6S ISO 4017 M6X8 A4 80	
480	312105-0364		2	"SCREW, M6S ISO 4017 M6X10 A4 80"	
500	312105-0368		2	"SCREW, M6S ISO 4017 M6X16 A4 80"	
520	312105-0370		8	SCREW, M6S ISO 4017 M6X20 A4 80	
550	312605-0314		3	HEXAGON NUT, M6M M5 A280	
560	315105-0153		12	WASHER PLAIN, 6,4X12X1,5 A4 BRB	
600	312605-0316		2	HEXAGON NUT, M6M M6 A280	
610	312605-0312		1	HEXAGON NUT, M6M M4 A280	
TPA 0500SQ (See drawing on page: 1-482)					
010	2897152-0000		1	INDUCTOR	
020	2897150-0000		1	INSULATING PLATE	
180	3079827-0000		1	BRACKET	
200	2887790-0000		1	SHAFT	
240	315125-0153		2	WASHER HIGH, TBRSB 6,4X22X4 A4	
265	3013546-0000		1	BRACKET	
270	3042533-0000		1	BRACKET	
280	3052683-0000		1	BRACKET	
290	2555616-0000		2	ROLLER	
300	2555617-0000		1	PIN	
310	2555618-0000		1	SHAFT	
330	2508292-0000		4	BUSHING	
370	3042534-0000		1	HOLDER	
410	312105-0372		2	SCREW, M6S ISO 4017 M6X25 A4 80	
460	312105-0362		2	SCREW, M6S ISO 4017 M6X8 A4 80	
480	312105-0364		3	"SCREW, M6S ISO 4017 M6X10 A4 80"	
500	312105-0368		4	"SCREW, M6S ISO 4017 M6X16 A4 80"	
520	312105-0370		6	SCREW, M6S ISO 4017 M6X20 A4 80	
550	312605-0314		1	HEXAGON NUT, M6M M5 A280	
560	315105-0153		12	WASHER PLAIN, 6,4X12X1,5 A4 BRB	
600	312605-0316		2	HEXAGON NUT, M6M M6 A280	
610	312605-0312		5	HEXAGON NUT, M6M M4 A280	
640	315105-0136		2	WASHER PLAIN, 4,3X8X0,8 A4 BRB	
TPA 1000SQ, TPA 0750SQ (See drawing on page: 1-478)					
010	2601289-0000		1	INDUCTOR	
020	2862748-0000		1	INSULATING PLATE	
180	2547404-0000		1	BRACKET	
190	2547405-0000		1	BRACKET	
200	269151-0000		1	SHAFT	
220	2555625-0000		1	ROLL	
240	315125-0153		1	WASHER HIGH, TBRSB 6,4X22X4 A4	
270	2982295-0000		1	BRACKET	
280	3042553-0000		1	BRACKET	
290	2555616-0000		1	ROLLER	
300	2555617-0000		1	PIN	
310	2555618-0000		1	SHAFT	
330	2508292-0000		4	BUSHING	
410	312105-0372		2	SCREW, M6S ISO 4017 M6X25 A4 80	
440	312105-0327		2	"SCREW, M6S ISO 4017 M5X12 A4 80"	
460	312105-0362		1	SCREW, M6S ISO 4017 M6X8 A4 80	
480	312105-0364		2	"SCREW, M6S ISO 4017 M6X10 A4 80"	
500	312105-0368		2	"SCREW, M6S ISO 4017 M6X16 A4 80"	
520	312105-0370		8	SCREW, M6S ISO 4017 M6X20 A4 80	
550	312605-0314		3	HEXAGON NUT, M6M M5 A280	
560	315105-0153		12	WASHER PLAIN, 6,4X12X1,5 A4 BRB	
600	312605-0316		2	HEXAGON NUT, M6M M6 A280	
610	312605-0312		1	HEXAGON NUT, M6M M4 A280	
TBA 0200E (See drawing on page: 1-486)					
010	3338055-0000		1	INDUCTOR	
020	3290356-0000		1	INSULATING PLATE	
180	3273747-0000		1	BRACKET	
200	3252874-0000		1	FINGER	
240	315125-0153		1	WASHER HIGH, TBRSB 6,4X22X4 A4	
265	3013546-0000		1	BRACKET	
330	2508292-0000		4	BUSHING	
410	312105-0372		2	SCREW, M6S ISO 4017 M6X25 A4 80	
460	312105-0362		1	SCREW, M6S ISO 4017 M6X8 A4 80	
480	312105-0364		2	"SCREW, M6S ISO 4017 M6X10 A4 80"	
490	312705-0312		1	NUT HEX. DOMED CAP MHM-6 M4 A280	
500	312105-0368		7	"SCREW, M6S ISO 4017 M6X16 A4 80"	
520	312105-0370		8	SCREW, M6S ISO 4017 M6X20 A4 80	
540	315106-0136		2	WASHER PLAIN, M4 ISO7089-4-200 HV A4	
560	315105-0153		11	WASHER PLAIN, 6,4X12X1,5 A4 BRB	
600	312605-0316		1	HEXAGON NUT, M6M M6 A280	
610	312605-0312		1	HEXAGON NUT, M6M M4 A280	
700	3208418-0100		1	GUIDE FINGER	**1-489**
TBA 0250BL (See drawing on page: 1-486)					
010	2917120-0000		1	INDUCTOR	
020	2917121-0000		1	INSULATING PLATE	
240	315125-0153		1	WASHER HIGH, TBRSB 6,4X22X4 A4	

LONGITUDINAL SEALING

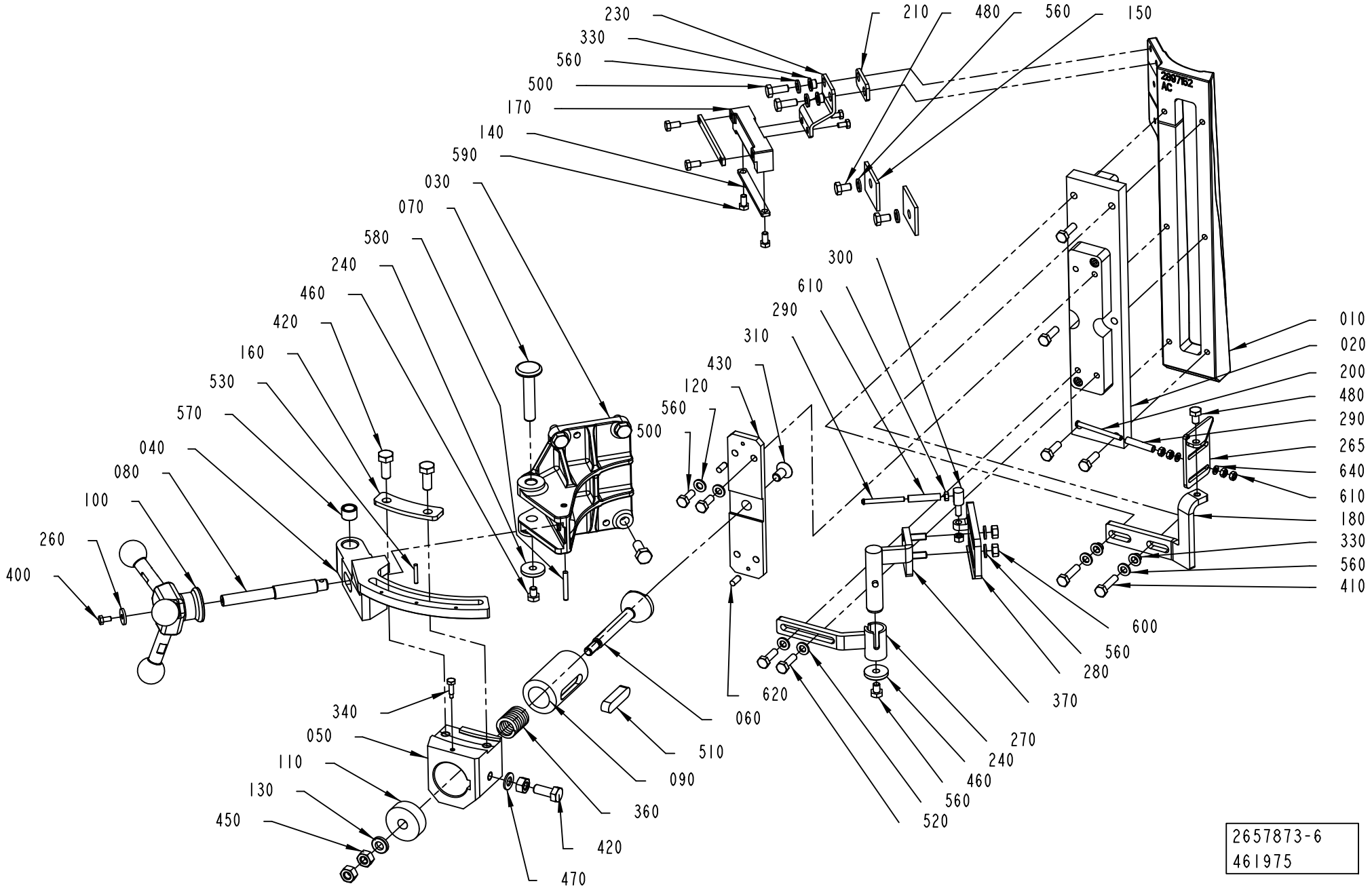

2657873-6
461975

Pos	Part No	UN	Qty	Description	Page No
TBA 0250BL (Cont'd) (See drawing on page: 1-486)					
330	2508292-0000		2	BUSHING	
410	312105-0372		2	SCREW, M6S ISO 4017 M6X25 A4 80	
460	312105-0362		1	SCREW, M6S ISO 4017 M6X8 A4 80	
480	312105-0364		2	"SCREW, M6S ISO 4017 M6X10 A4 80"	
500	312105-0368		2	"SCREW, M6S ISO 4017 M6X16 A4 80"	
520	312105-0370		8	SCREW, M6S ISO 4017 M6X20 A4 80	
560	315105-0153		12	WASHER PLAIN, 6,4X12X1,5 A4 BRB	
700	3208418-0100		1	GUIDE FINGER	**1-489**
TBA 0500B, TBA 1000B, TBA 1500S (See drawing on page: 1-478)					
010	2514514-0000		1	INDUCTOR	
020	2998017-0000		1	INSULATING PLATE	
180	2547404-0000		1	BRACKET	
190	2547405-0000		1	BRACKET	
200	269151-0000		1	SHAFT	
220	2555625-0000		1	ROLL	
240	315125-0153		1	WASHER HIGH, TBRSB 6,4X22X4 A4	
270	2982295-0000		1	BRACKET	
280	3042553-0000		1	BRACKET	
290	2555616-0000		1	ROLLER	
300	2555617-0000		1	PIN	
310	2555618-0000		1	SHAFT	
330	2508292-0000		4	BUSHING	
410	312105-0372		2	SCREW, M6S ISO 4017 M6X25 A4 80	
440	312105-0327		2	"SCREW, M6S ISO 4017 M5X12 A4 80"	
460	312105-0362		1	SCREW, M6S ISO 4017 M6X8 A4 80	
480	312105-0364		2	"SCREW, M6S ISO 4017 M6X10 A4 80"	
500	312105-0368		2	"SCREW, M6S ISO 4017 M6X16 A4 80"	
520	312105-0370		8	SCREW, M6S ISO 4017 M6X20 A4 80	
550	312605-0314		3	HEXAGON NUT, M6M M5 A280	
560	315105-0153		12	WASHER PLAIN, 6,4X12X1,5 A4 BRB	
600	312605-0316		2	HEXAGON NUT, M6M M6 A280	
610	312605-0312		1	HEXAGON NUT, M6M M4 A280	
TBA 0500S (See drawing on page: 1-478)					
010	2672984-0000		1	INDUCTOR	
020	2862743-0000		1	INSULATING PLATE	
180	2547404-0000		1	BRACKET	
190	2547405-0000		1	BRACKET	
200	269151-0000		1	SHAFT	
220	2555625-0000		1	ROLL	
240	315125-0153		1	WASHER HIGH, TBRSB 6,4X22X4 A4	
270	2982295-0000		1	BRACKET	
280	2982296-0000		1	BRACKET	
290	2555616-0000		1	ROLLER	
300	2555617-0000		1	PIN	
310	2555618-0000		1	SHAFT	
330	2508292-0000		4	BUSHING	
410	312105-0372		2	SCREW, M6S ISO 4017 M6X25 A4 80	
440	312105-0327		2	"SCREW, M6S ISO 4017 M5X12 A4 80"	
460	312105-0362		1	SCREW, M6S ISO 4017 M6X8 A4 80	
480	312105-0364		2	"SCREW, M6S ISO 4017 M6X10 A4 80"	
500	312105-0368		2	"SCREW, M6S ISO 4017 M6X16 A4 80"	
520	312105-0370		8	SCREW, M6S ISO 4017 M6X20 A4 80	
550	312605-0314		3	HEXAGON NUT, M6M M5 A280	
560	315105-0153		12	WASHER PLAIN, 6,4X12X1,5 A4 BRB	
600	312605-0316		2	HEXAGON NUT, M6M M6 A280	
610	312605-0312		1	HEXAGON NUT, M6M M4 A280	
TBA 0500SQ, TBA 1000SQ (See drawing on page: 1-478)					
010	2532925-0000		1	INDUCTOR	
020	2862744-0000		1	INSULATING PLATE	
180	2547404-0000		1	BRACKET	
190	2547405-0000		1	BRACKET	
200	269151-0000		1	SHAFT	
220	2555625-0000		1	ROLL	
240	315125-0153		1	WASHER HIGH, TBRSB 6,4X22X4 A4	
270	2982295-0000		1	BRACKET	
280	3042553-0000		1	BRACKET	
290	2555616-0000		1	ROLLER	
300	2555617-0000		1	PIN	
310	2555618-0000		1	SHAFT	
330	2508292-0000		4	BUSHING	
410	312105-0372		2	SCREW, M6S ISO 4017 M6X25 A4 80	
440	312105-0327		2	"SCREW, M6S ISO 4017 M5X12 A4 80"	
460	312105-0362		1	SCREW, M6S ISO 4017 M6X8 A4 80	
480	312105-0364		2	"SCREW, M6S ISO 4017 M6X10 A4 80"	
500	312105-0368		2	"SCREW, M6S ISO 4017 M6X16 A4 80"	
520	312105-0370		8	SCREW, M6S ISO 4017 M6X20 A4 80	
550	312605-0314		3	HEXAGON NUT, M6M M5 A280	
560	315105-0153		12	WASHER PLAIN, 6,4X12X1,5 A4 BRB	
600	312605-0316		2	HEXAGON NUT, M6M M6 A280	
610	312605-0312		1	HEXAGON NUT, M6M M4 A280	
TBA 1000E, TBA 0500E (See drawing on page: 1-480)					
010	3043180-0000		1	INDUCTOR	
020	2983254-0000		1	INSULATING PLATE	

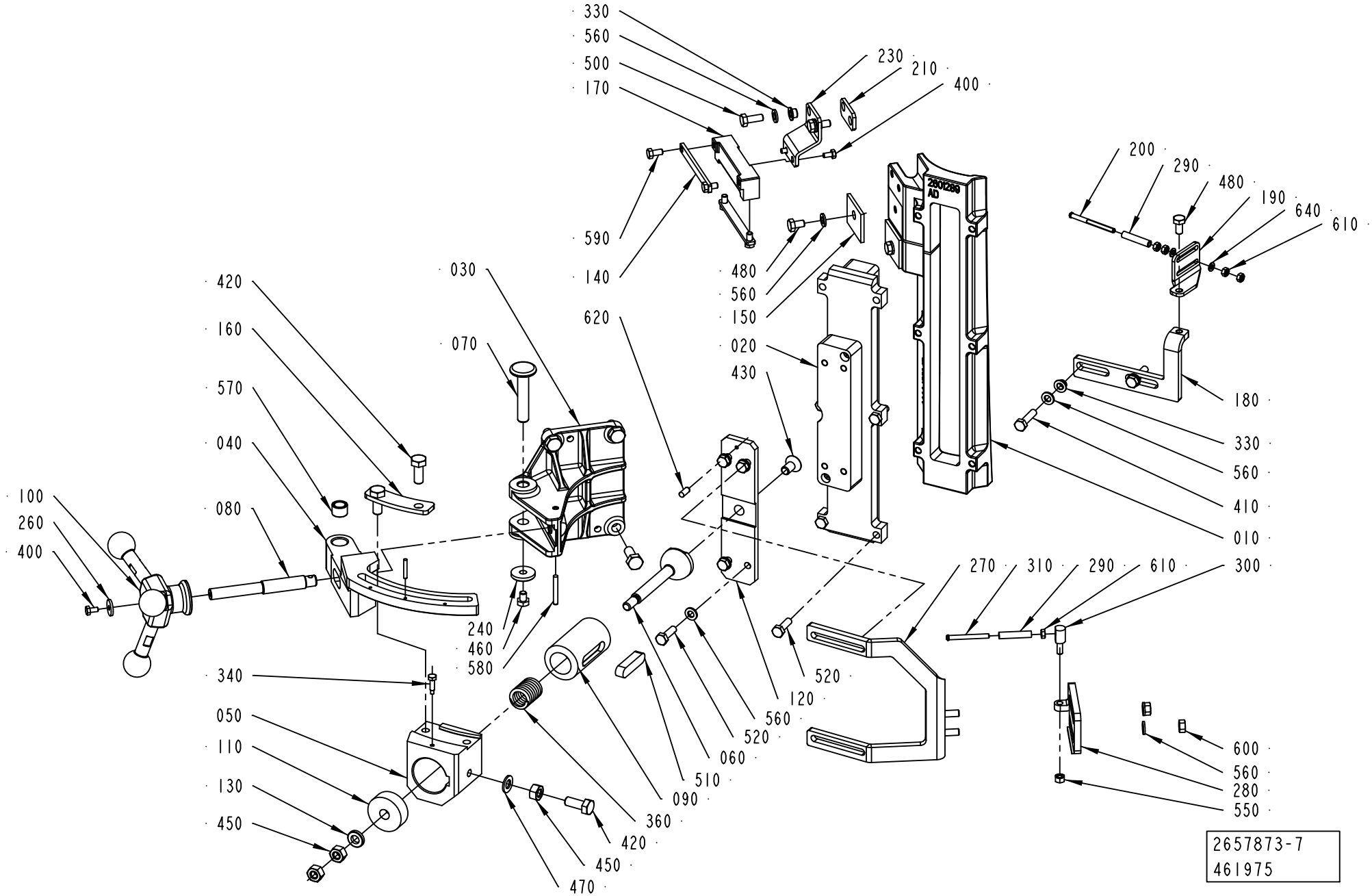
330
560
500
170
230
210
400
590
140
480
560
150
620
030
070
020
430
420
160
570
040
080
100
260
400
240
460
580
340
050
110
130
450
470
420
450
360
090
510
060
520
560
120
520
270
310
290
610
300
200
290
480
190
640
610
180
330
560
410
010
600
560
280
550
260/280 AD
2657873-7
461975

ECM: 682427 - 20140702
Group number: 2657873-0200
Assembly Drawing: 2657873-7_1_AB

This list covers pages from 1-478 to 1-487

Pos	Part No	UN	Qty	Description	Page No
TBA 1000E, TBA 0500E (Cont'd) (See drawing on page: 1-480)					
180	3012911-0000		1	BRACKET	
	311103-0306		*1*	*PARALLEL PIN ISO 2338 5M6X12 A1*	
185	3012912-0000		1	BRACKET	
190	3166669-0000		1	BRACKET	
200	269151-0000		1	SHAFT	
240	315125-0153		1	WASHER HIGH, TBRSB 6,4X22X4 A4	
270	2982295-0000		1	BRACKET	
280	3042553-0000		1	BRACKET	
290	2555616-0000		1	ROLLER	
295	2555625-0000		1	ROLL	
300	2555617-0000		1	PIN	
310	2555618-0000		1	SHAFT	
330	2508292-0000		4	BUSHING	
410	312105-0372		2	SCREW, M6S ISO 4017 M6X25 A4 80	
460	312105-0362		1	SCREW, M6S ISO 4017 M6X8 A4 80	
480	312105-0364		2	"SCREW, M6S ISO 4017 M6X10 A4 80"	
500	312105-0368		2	"SCREW, M6S ISO 4017 M6X16 A4 80"	
520	312105-0370		9	SCREW, M6S ISO 4017 M6X20 A4 80	
550	312605-0314		1	HEXAGON NUT, M6M M5 A280	
560	315105-0153		12	WASHER PLAIN, 6,4X12X1,5 A4 BRB	
600	312605-0316		2	HEXAGON NUT, M6M M6 A280	
610	312605-0312		1	HEXAGON NUT, M6M M4 A280	
615	312605-0314		2	HEXAGON NUT, M6M M5 A280	
630	312105-0289		1	SCREW, M6S ISO 4017 M4X10 A4 70	
640	315105-0136		1	WASHER PLAIN, 4,3X8X0,8 A4 BRB	
645	315105-0146		2	WASHER PLAIN, 5,3X10X1 A4 BRB	
TBA 1000M STDA7, TBA 1000M LIGHTCAP24 (See drawing on page: 1-478)					
010	2514514-0000		1	INDUCTOR	
020	3297545-0000		1	INSULATING PLATE	
180	2547404-0000		1	BRACKET	
190	2547405-0000		1	BRACKET	
200	269151-0000		1	SHAFT	
220	2555625-0000		1	ROLL	
240	315125-0153		1	WASHER HIGH, TBRSB 6,4X22X4 A4	
270	2982295-0000		1	BRACKET	
280	3042553-0000		1	BRACKET	
290	2555616-0000		1	ROLLER	
300	2555617-0000		1	PIN	
310	2555618-0000		1	SHAFT	
330	2508292-0000		4	BUSHING	
410	312105-0372		2	SCREW, M6S ISO 4017 M6X25 A4 80	
440	312105-0327		2	"SCREW, M6S ISO 4017 M5X12 A4 80"	
460	312105-0362		1	SCREW, M6S ISO 4017 M6X8 A4 80	
480	312105-0364		2	"SCREW, M6S ISO 4017 M6X10 A4 80"	
500	312105-0368		2	"SCREW, M6S ISO 4017 M6X16 A4 80"	
520	312105-0370		8	SCREW, M6S ISO 4017 M6X20 A4 80	
550	312605-0314		3	HEXAGON NUT, M6M M5 A280	
560	315105-0153		12	WASHER PLAIN, 6,4X12X1,5 A4 BRB	
600	312605-0316		2	HEXAGON NUT, M6M M6 A280	
610	312605-0312		1	HEXAGON NUT, M6M M4 A280	
Common Parts					
030	2544897-0000		1	BRACKET	
040	2694714-0000		1	GUIDE	
050	3050604-0000		1	SUPPORT	
060	3047472-0000		1	SHAFT	
	312911-0126		*1*	*THREADED INSERT, SCREWLOCK M8X1,5D*	
070	2547388-0000		1	AXLE PIN	
080	2544898-0000		1	SHAFT	
090	3047470-0000		1	SLIDE	
100	2547376-0200		1	KNOB	**1-491**
110	3047471-0000		1	SLIDE	
120	2640993-0000		1	PLATE	
130	315115-0165		1	WASHER PLAIN, TBRB 8,4/16 H=3	
140	2508309-0000		2	PLATE	
150	2508311-0000		2	PLATE	
160	2694716-0000		1	PLATE	
170	2531060-0000		1	BRACKET	
210	2532898-0000		1	BRACKET	
230	2532899-0000		1	BRACKET	
260	2547377-0000		1	WASHER	
340	2725526-0000		1	SCREW	
360	90600-8306		1	COMP. SPRING 3887, 3X20X40,2	
400	312105-0287		3	SCREW, M6S ISO 4017 M4X8 A4 70	
420	312105-0451		7	SCREW, M6S ISO 4017 M8X20 A4 80	
430	312155-0449		1	SCREW DIN 7991 MF6S M8X16 A4 70	
450	312605-0318		3	HEXAGON NUT, M6M M8 A280	
470	315105-0165		1	FWAS080G0-0S, WASHER PLAIN	
510	315705-0301		1	PARALLEL KEY W. ROUND ENDS, 10X8X40 MM	
530	311103-0238		1	PARALLEL PIN ISO 2338 3M6X20 A1	
570	90600-3313		2	BUSHING, 10X14X10 MM	
580	311103-0276		1	PARALLEL PIN ISO 2338 4M6X30 A1	
590	312105-0325		4	SCREW, M6S ISO 4017 M5X10 A4 80	
620	311103-0306		2	PARALLEL PIN ISO 2338 5M6X12 A1	

Machine Type | Group Description | Used-In | Group Number | Page No

LONGITUDINAL SEALING

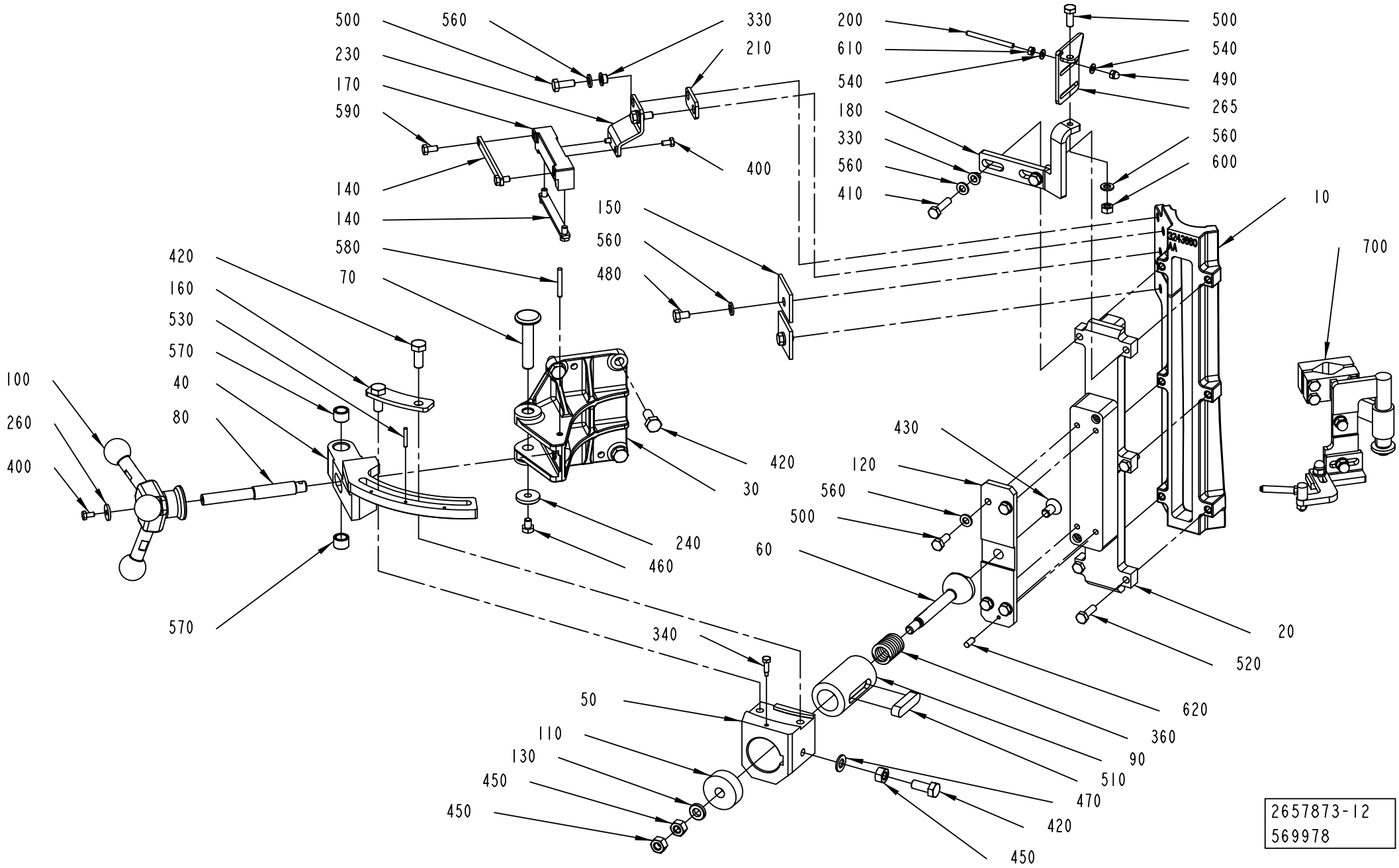

Pos	Part No	UN	Qty	Description	Page No
Common Parts (Cont'd)					
620	311103-0306		2	PARALLEL PIN ISO 2338 5M6X12 A1	

Pos	Part No	UN	Qty	Description	Page No

GUIDE FINGER

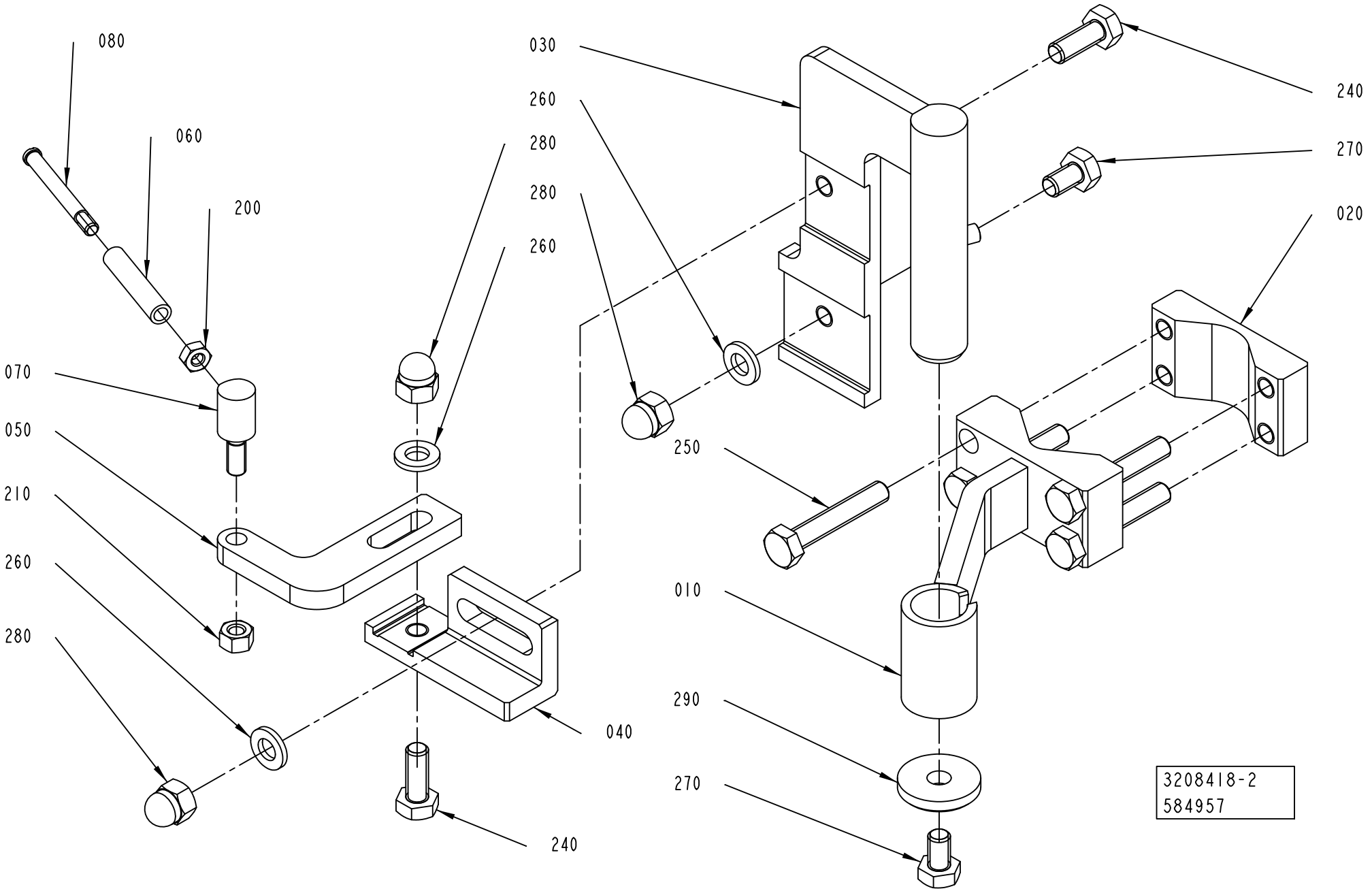

ECM: 682336 - 20140702
Group number: 3208418-0100
Assembly Drawing: 3208418-2_1_AB

Pos	Part No	UN	Qty	Description	Page No
TBA 0200E (See drawing on page: 1-488)					
040	3208416-0000		1	BRACKET	
050	3340571-0000		1	PLATE	
060	2555616-0000		1	ROLLER	
070	2555617-0000		1	PIN	
080	2555618-0000		1	SHAFT	
200	312605-0312		1	HEXAGON NUT, M6M M4 A280	
210	312605-0314		1	HEXAGON NUT, M6M M5 A280	
240	312105-0368		2	"SCREW, M6S ISO 4017 M6X16 A4 80"	
260	315106-0153		3	WASHER PLAIN, M6 ISO7089-6-200 HV A4	
270	312105-0364		2	"SCREW, M6S ISO 4017 M6X10 A4 80"	
280	312705-0316		3	HEX. DOMED CAP MHM-6 M6 A280	
TBA 0250BL (See drawing on page: 1-488)					
040	3208416-0000		1	BRACKET	
050	3208417-0000		1	PLATE	
060	2555616-0000		1	ROLLER	
070	2555617-0000		1	PIN	
080	2555618-0000		1	SHAFT	
200	312605-0312		1	HEXAGON NUT, M6M M4 A280	
210	312605-0314		1	HEXAGON NUT, M6M M5 A280	
240	312105-0368		2	"SCREW, M6S ISO 4017 M6X16 A4 80"	
260	315106-0153		3	WASHER PLAIN, M6 ISO7089-6-200 HV A4	
270	312105-0364		2	"SCREW, M6S ISO 4017 M6X10 A4 80"	
280	312705-0316		3	HEX. DOMED CAP MHM-6 M6 A280	
Common Parts					
010	3208413-0000		1	HOLDER	
020	3208414-0000		1	BLOCKING PIECE	
030	3208415-0000		1	HOLDER	
250	312109-0376		4	SCREW, M6S ISO 4017 M6X35 A4 80	
290	315125-0153		1	WASHER HIGH, TBRSB 6,4X22X4 A4	

Pos	Part No	UN	Qty	Description	Page No

KNOB

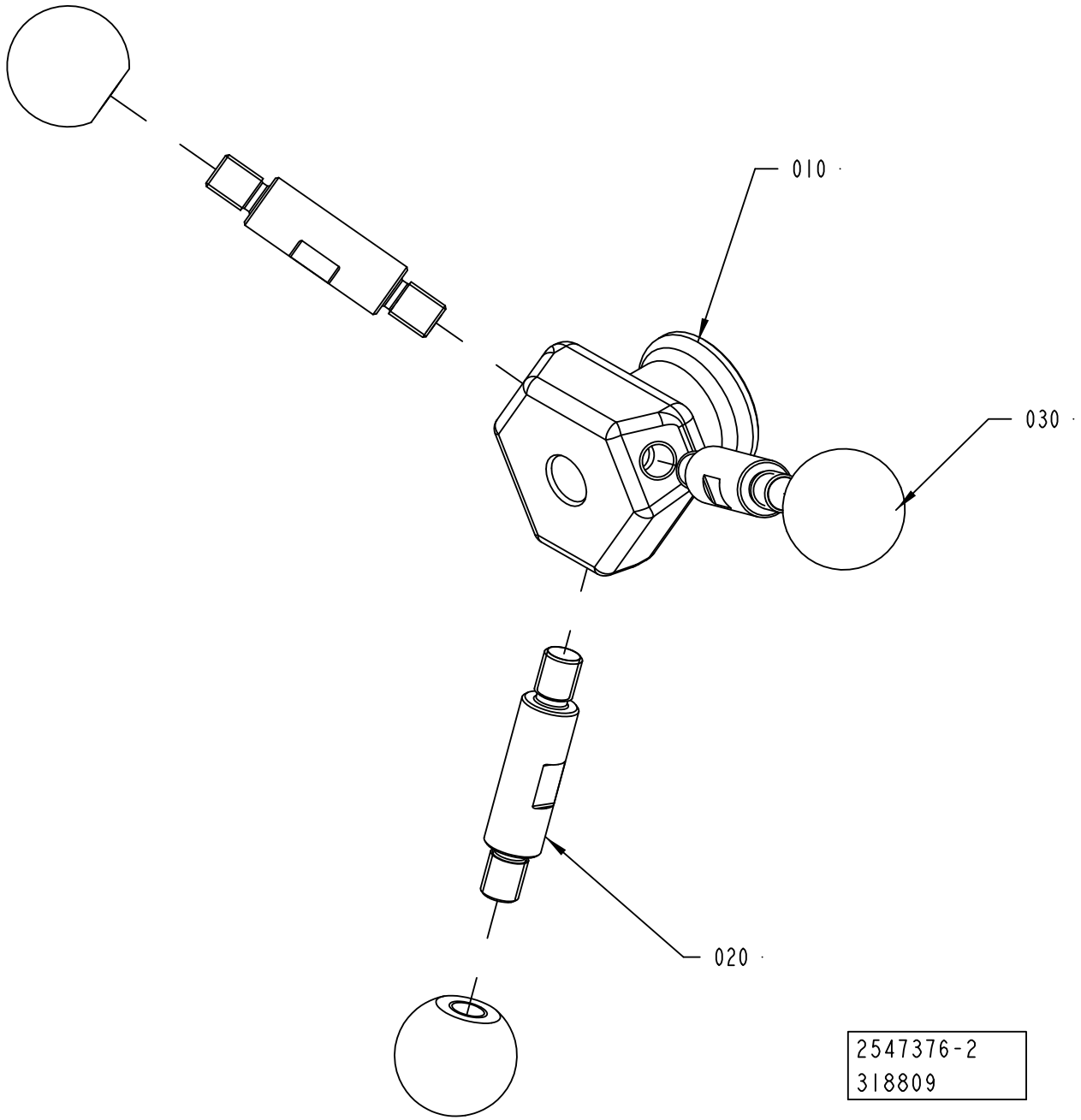

ECM: 318865 - 20070913
Group number: 2547376-0200
Assembly Drawing: 2547376-2_1_AA

Pos	Part No	UN	Qty	Description	Page No
-					
010	2874716-0000		1	BODY	
020	2874715-0000		3	STUD SCREW	
030	2874717-0000		3	KNOB	

Pos	Part No	UN	Qty	Description	Page No

This page is intentionally left blank.

ECM: 644629 - 20140401
Group number: 3093221-0100
Assembly Drawing:

Pos	Part No	UN	Qty	Description	Page No
TBA 0500B, TBA 1000B NODIMC					
010	3079094-0002		1	ROLLER	
015	3079094-0003		1	ROLLER	
020	3079095-0002		2	ROLLER	
025	3079095-0003		2	ROLLER	
TBA 0500S					
010	3079096-0002		3	ROLLER	
015	3079096-0003		3	ROLLER	
TBA 0500SQ, TBA 1000SQ					
010	3079097-0002		3	ROLLER	
015	3079097-0003		3	ROLLER	
TBA 1000E, TBA 0500E					
010	3079097-0002		4	ROLLER	
015	3079097-0003		4	ROLLER	
TBA 1000S LIGHTCAP24					
010	3093183-0002		1	ROLLER	
015	3093183-0003		1	ROLLER	
020	3093184-0002		1	ROLLER	
025	3093184-0003		1	ROLLER	
030	3093182-0002		3	ROLLER	
035	3093182-0003		3	ROLLER	
TBA 1000S NODIMC					
010	567746-0002		3	TRIMMING ROLLER PLUS	
015	567746-0003		3	TRIMMING ROLLER MINUS	
TBA 1000S STDA7, TBA 1000B STDA7					
030	567746-0002		3	TRIMMING ROLLER PLUS	
035	567746-0003		3	TRIMMING ROLLER MINUS	
TBA 1500S					
010	3079094-0002		1	ROLLER	
015	3079094-0003		1	ROLLER	
020	3079095-0002		1	ROLLER	
025	3079095-0003		1	ROLLER	
030	3299560-0002		1	ROLLER	
035	3299560-0003		1	ROLLER	
TBA 2000S					
010	3079098-0002		3	ROLLER	
015	3079098-0003		3	ROLLER	
TGA 1000SQ, TGA 0750SQ, TGA 0500SQ, TGA 1000CR, TGA 1000LF					
010	3061501-0002		3	ROLLER	
015	3061501-0003		3	ROLLER	
TGA 1500SQ					
010	3079095-0002		3	ROLLER	
015	3079095-0003		3	ROLLER	
TPA 1000SQ, TPA 0750SQ					
020	3079118-0002		3	ROLLER	
025	3079118-0003		3	ROLLER	
030	3079119-0002		3	ROLLER	
035	3079119-0003		3	ROLLER	

Machine Type | Group Description | Used-In | Group Number | Page No

SPLICING DEVICE

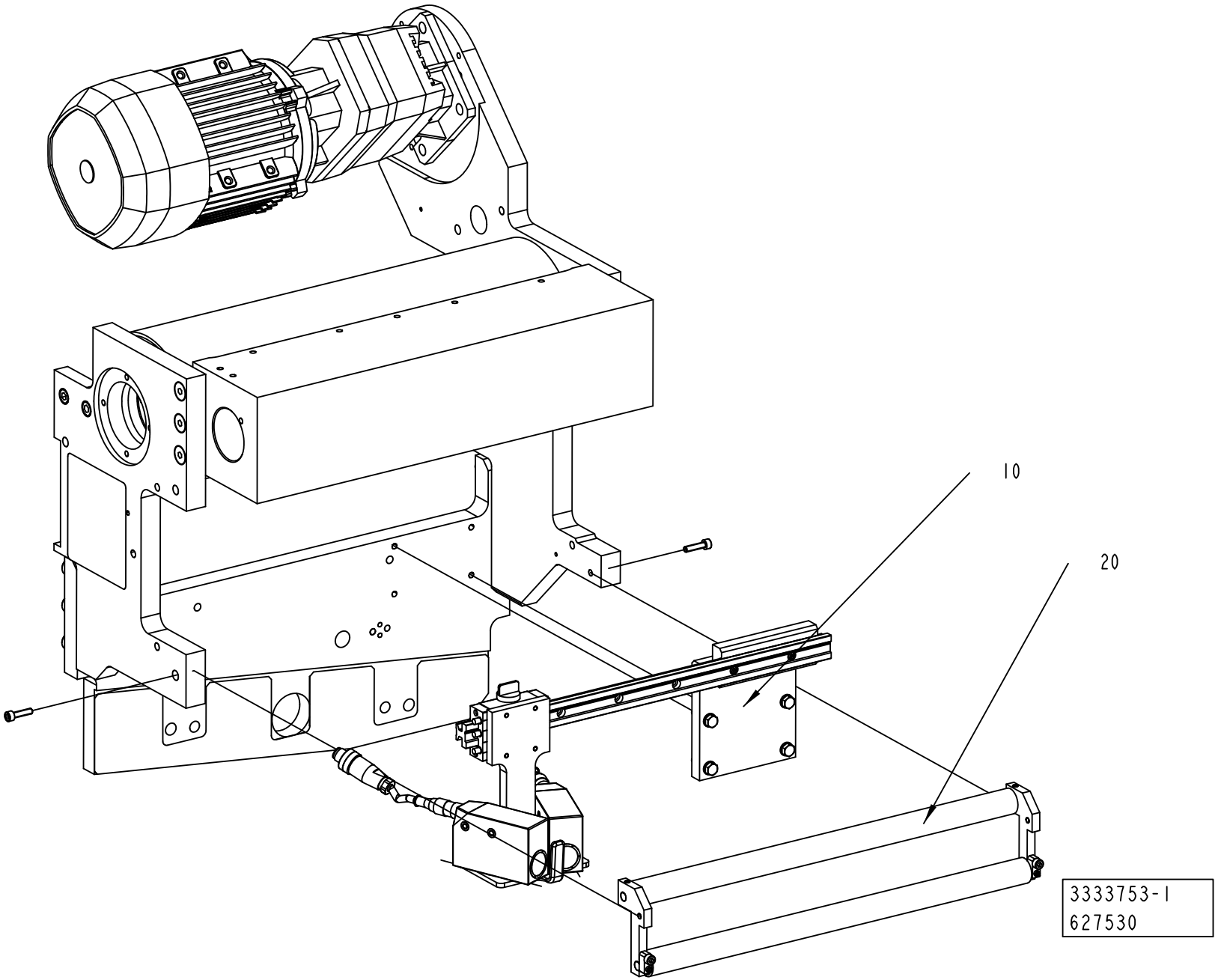

Pos	Part No	UN	Qty	Description	Page No
START FM TBA 1000M (See drawing on page: 1-494)					
010	2737913-0100		1	BAR CODE READER	**1-499**
020	3333754-0100		1	PAPER GUIDE	**1-501**
TBA 1000M STDA7, TBA 1000M LIGHTCAP24 (See drawing on page: 1-496)					
010	3250735-0100		1	MAGNETIC DESIGN READER	**1-505**

SPLICING DEVICE

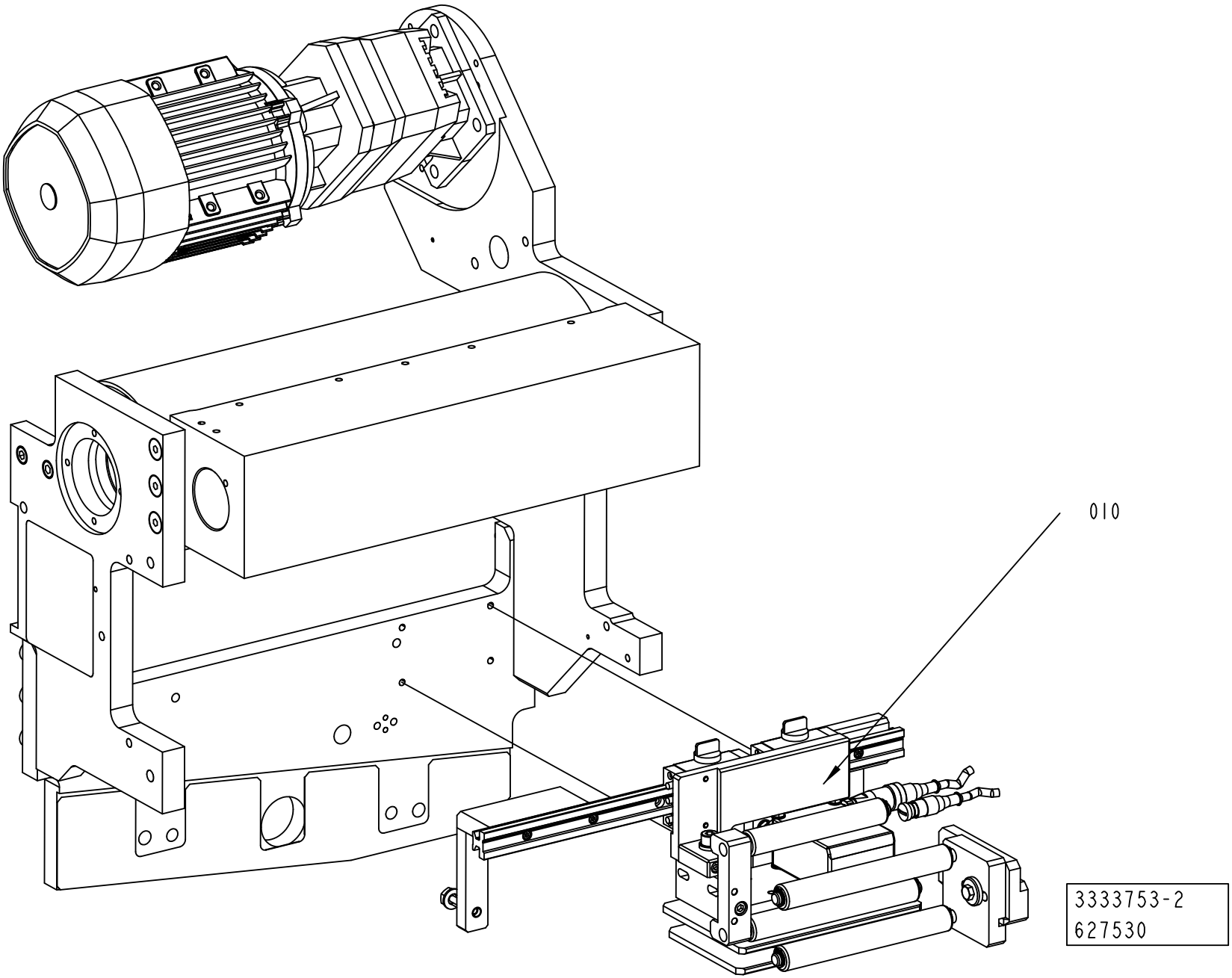

ECM: 648404 - 20140401
Group number: 3333753-0100
Assembly Drawing: 3333753-2_1_AA

This list covers pages from 1-494 to 1-497

Pos	Part No	UN	Qty	Description	Page No
START FM TBA 1000M (See drawing on page: 1-494)					
010	2737913-0100		1	BAR CODE READER	**1-499**
020	3333754-0100		1	PAPER GUIDE	**1-501**
TBA 1000M STDA7, TBA 1000M LIGHTCAP24 (See drawing on page: 1-496)					
010	3250735-0100		1	MAGNETIC DESIGN READER	**1-505**

Pos	Part No	UN	Qty	Description	Page No

BAR CODE READER

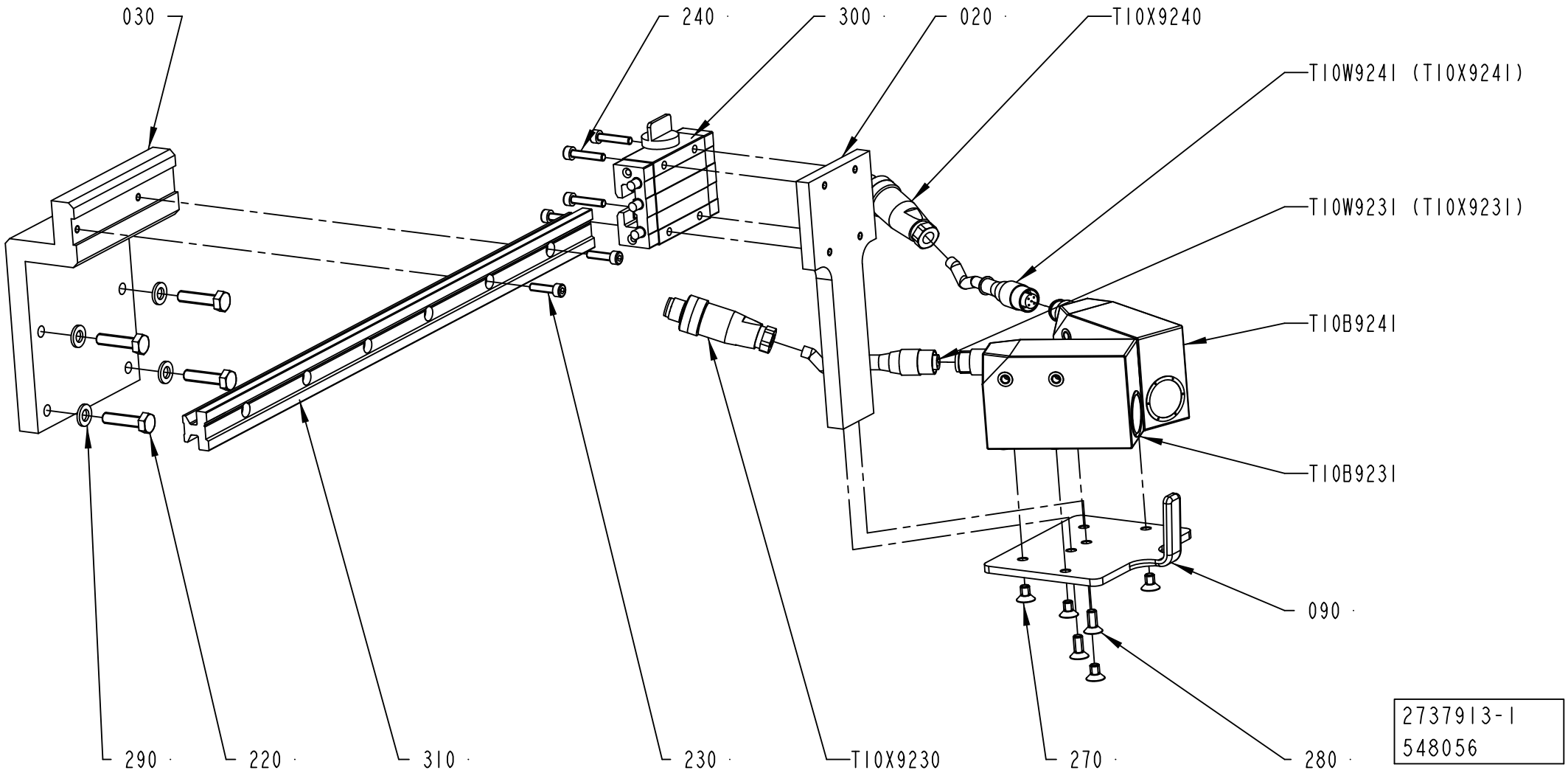

ECM: 601511 - 20130701
Group number: 2737913-0100
Assembly Drawing: 2737913-1_1_AD

Pos	Part No	UN	Qty	Description	Page No
-					
020	2737919-0000		1	PLATE	
030	2737920-0000		1	HOLDER	
090	2737933-0000		1	FASTENING PLATE	
220	312105-0372		4	SCREW, M6S ISO 4017 M6X25 A4 80	
230	312115-0293		2	SCREW ISO4762 M4X16 A4 80	
240	312115-0295		4	SCREW ISO4762 M4X20 A4 80	
270	312155-0323		4	SCREW DIN 7991 MF6S M5X8 A4 70	
280	312155-0327		2	SCREW DIN 7991 MF6S M5X12 A4 70	
290	315105-0153		4	WASHER PLAIN, 6,4X12X1,5 A4 BRB	
300	90600-2667		1	CARRIAGE, TW-01-15-HKA	
310	90600-3051		1	GUIDE RAIL, 15X15,5X380 MM	
T10B9231	90458-0602		1	CONTRAST SCANNER, KT15W-P2213S02	
T10B9241	90458-0602		1	CONTRAST SCANNER, KT15W-P2213S02	
T10W9231	90459-3250		1	SENSOR CABLE, DOP-1205-G15M	
T10W9241	90459-3250		1	SENSOR CABLE, DOP-1205-G15M	
T10X9230	90603-5560		1	CONNECTOR, SACC-M12MS-5CON-PG 7-VA	
T10X9240	90603-5560		1	CONNECTOR, SACC-M12MS-5CON-PG 7-VA	

Pos	Part No	UN	Qty	Description	Page No

PAPER GUIDE

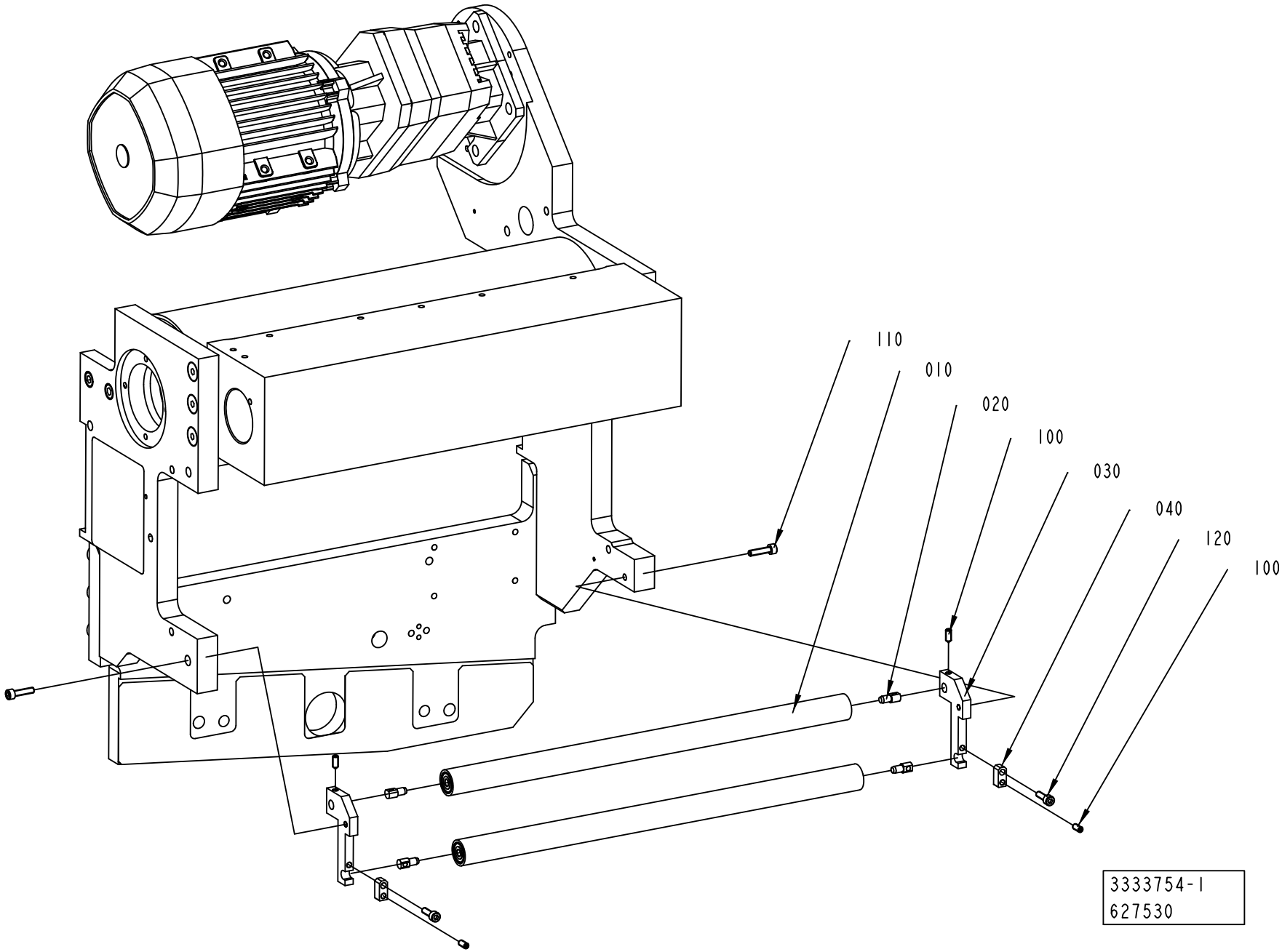

ECM: 648405 - 20140401
Group number: 3333754-0100
Assembly Drawing: 3333754-1_1_AA

Pos	Part No	UN	Qty	Description	Page No
-					
010	2863550-0200		2	ROLLER	**1-503**
020	2863547-0000		4	PIN	
030	2863549-0000		2	BRACKET	
040	2868754-0000		2	BRACKET	
100	90459-7283		4	SCREW HEX.SOCK.SET CONEPT.MS6SS M5X12 A2	
110	312115-0331		2	SCREW ISO4762 M5X20 A4 80	
120	312115-0329		2	SCREW ISO4762 M5X16 A4 80	

Pos	Part No	UN	Qty	Description	Page No

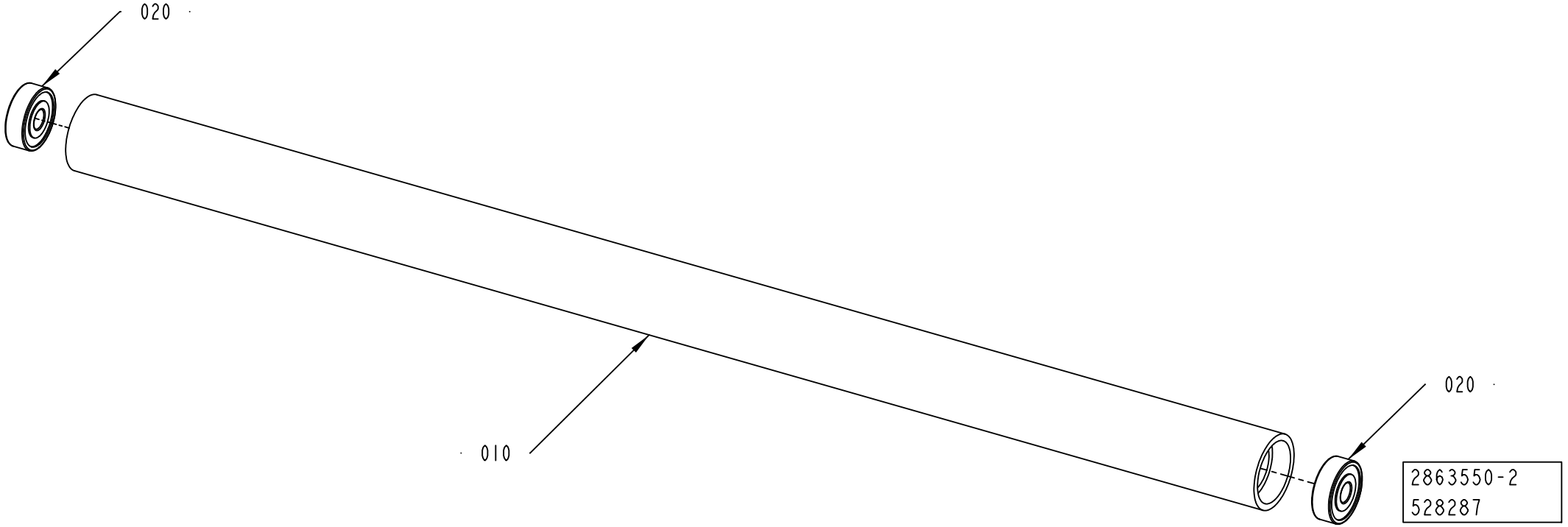
020
010
020
2863550-2
528287

ECM: 528287 - 20120401
Group number: 2863550-0200
Assembly Drawing: 2863550-2_1_AA

Pos	Part No	UN	Qty	Description	Page No
-					
010	2863546-0000		1	ROLLER	
020	90603-2406		2	BALL BEARING 6/19X6	

Pos	Part No	UN	Qty	Description	Page No

MAGNETIC DESIGN READER

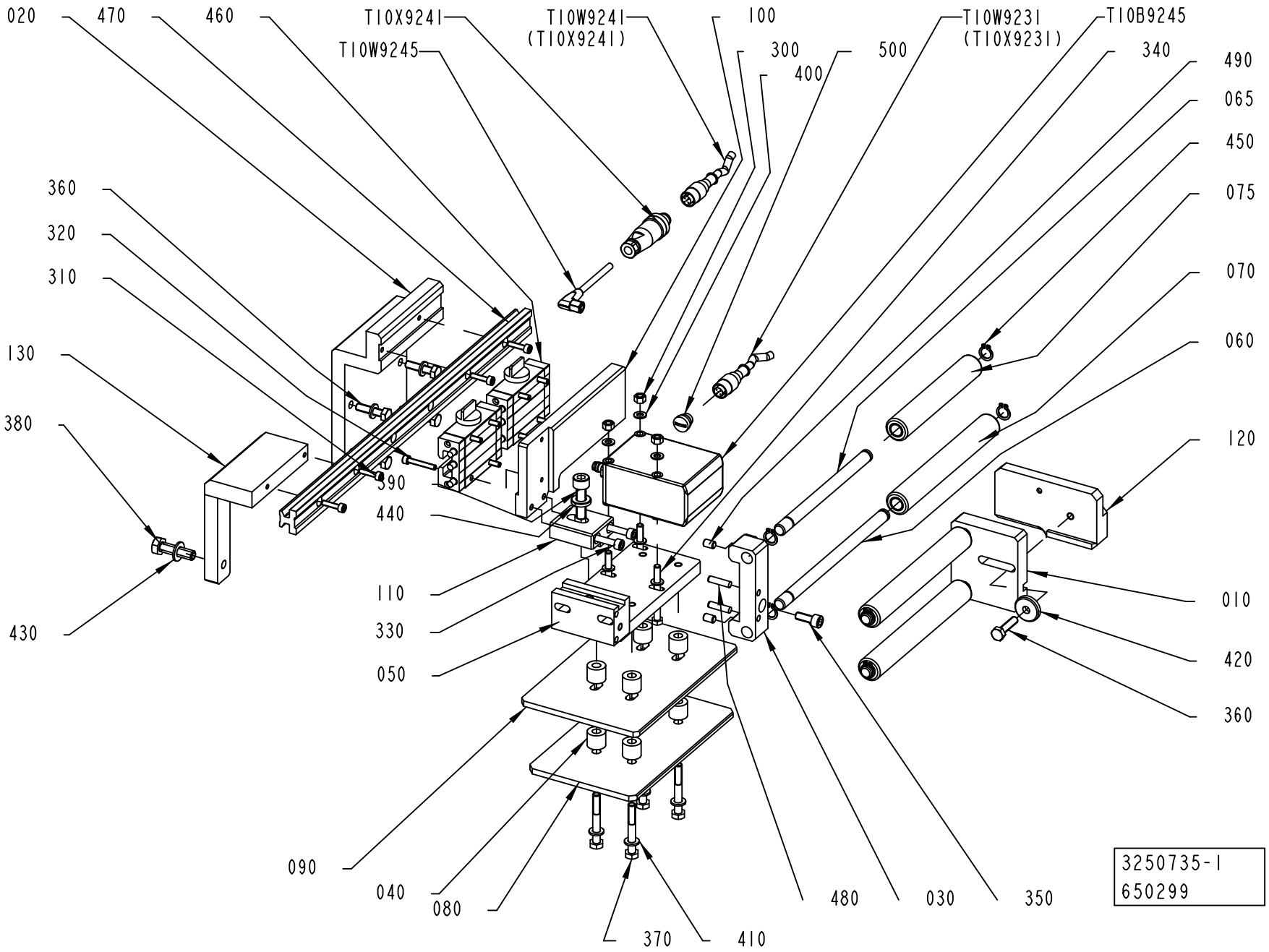

ECM: 654024 - 20140401
Group number: 3250735-0100
Assembly Drawing: 3250735-1_1_AD

Pos	Part No	UN	Qty	Description	Page No
-					
010	3250738-0100		1	ROLLER	1-507
020	2737920-0000		1	HOLDER	
030	3247658-0000		1	BRACKET	
040	3106814-0000		8	SPACER	
050	3247657-0000		1	SUPPORT	
060	3136365-0000		1	SHAFT	
065	3253576-0000		1	SHAFT	
070	3136366-0000		1	ROLLER	
075	3253577-0000		1	ROLLER	
080	3136367-0000		1	PLATE	
090	3136368-0000		1	PLATE	
100	3217189-0000		1	BOTTOM PLATE	
110	3136370-0000		1	BLOCK	
120	3182783-0000		1	BRACKET	
130	3136372-0000		1	HOLDER	
300	312607-0314		3	HEXAGON NUT, EN 24032 M6M M5 A480	
310	312115-0293		4	SCREW ISO4762 M4X16 A4 80	
320	312115-0295		8	SCREW ISO4762 M4X20 A4 80	
330	312115-0340		2	SCREW ISO4762 M5X45 A4 80	
340	312105-0341		3	SCREW, M6S ISO 4014 M5X50 A4 80	
350	312115-0368		1	SCREW ISO4762 M6X16 A4 80	
360	312105-0372		5	SCREW, M6S ISO 4017 M6X25 A4 80	
370	312105-0379		4	SCREW, M6S ISO 4014 M6X45 A4 80	
380	312105-0455		1	SCREW, M6S ISO 4017 M8X30 A4 80	
390	312115-0455		1	SCREW ISO4762 M8X30 A4 80	
400	315106-0146		6	"WASHER PLAIN, M5 ISO7089-5-200 HV A4"	
410	315105-0153		8	WASHER PLAIN, 6,4X12X1,5 A4 BRB	
420	315125-0153		1	WASHER HIGH, TBRSB 6,4X22X4 A4	
430	315105-0165		1	FWAS080G0-0S, WASHER PLAIN	
440	315115-0165		1	WASHER PLAIN, TBRB 8,4/16 H=3	
450	90141-0016		4	RETAINING RING FOR SHAFT DIN 471 10 SS	
460	90600-2667		2	CARRIAGE, TW-01-15-HKA	
470	90600-3051		1	GUIDE RAIL, 15X15,5X380 MM	
480	311103-0310		2	PARALLEL PIN ISO 2338 5M6X20 A1	
490	312309-0362		2	SCREW ISO4026 M6X8 A4	
500	90603-3975		1	PROTECTIVE CAP M12, E70297	
T10B9245	90603-5330		1	MAGNETIC SENSOR, MDR15	
T10W9231	90459-3250		1	SENSOR CABLE, DOP-1205-G15M	
T10W9241	90459-3250		1	SENSOR CABLE, DOP-1205-G15M	
T10W9245	344250-0020		1	SENSOR CABLE, EVT138	
T10X9241	90603-5560		1	CONNECTOR, SACC-M12MS-5CON-PG 7-VA	

Pos	Part No	UN	Qty	Description	Page No

Machine Type	Group Description	Used-In	Group Number	Page No

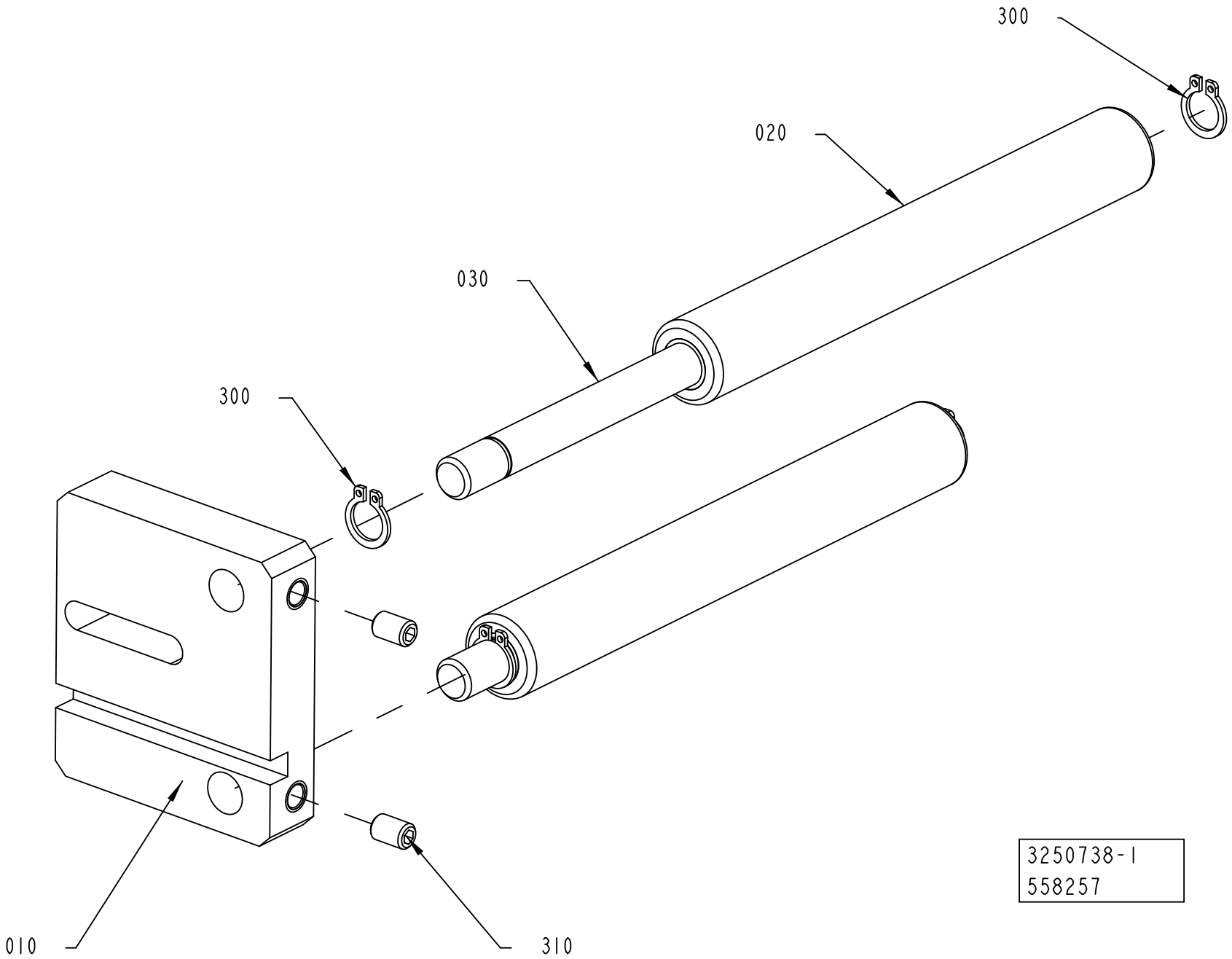
300
020
030
300
010
310
3250738-1
558257

ECM: 564180 - 20120701
Group number: 3250738-0100
Assembly Drawing: 3250738-1_1_AA

Pos	Part No	UN	Qty	Description	Page No
-					
010	3247659-0000		1	BRACKET	
020	3136366-0000		2	ROLLER	
030	3136365-0000		2	SHAFT	
300	90141-0016		4	RETAINING RING FOR SHAFT DIN 471 10 SS	
310	312309-0362		2	SCREW ISO4026 M6X8 A4	

Pos	Part No	UN	Qty	Description	Page No

Machine Type	Group Description	Used-In	Group Number	Page No

BOX3 - JAW SYSTEM

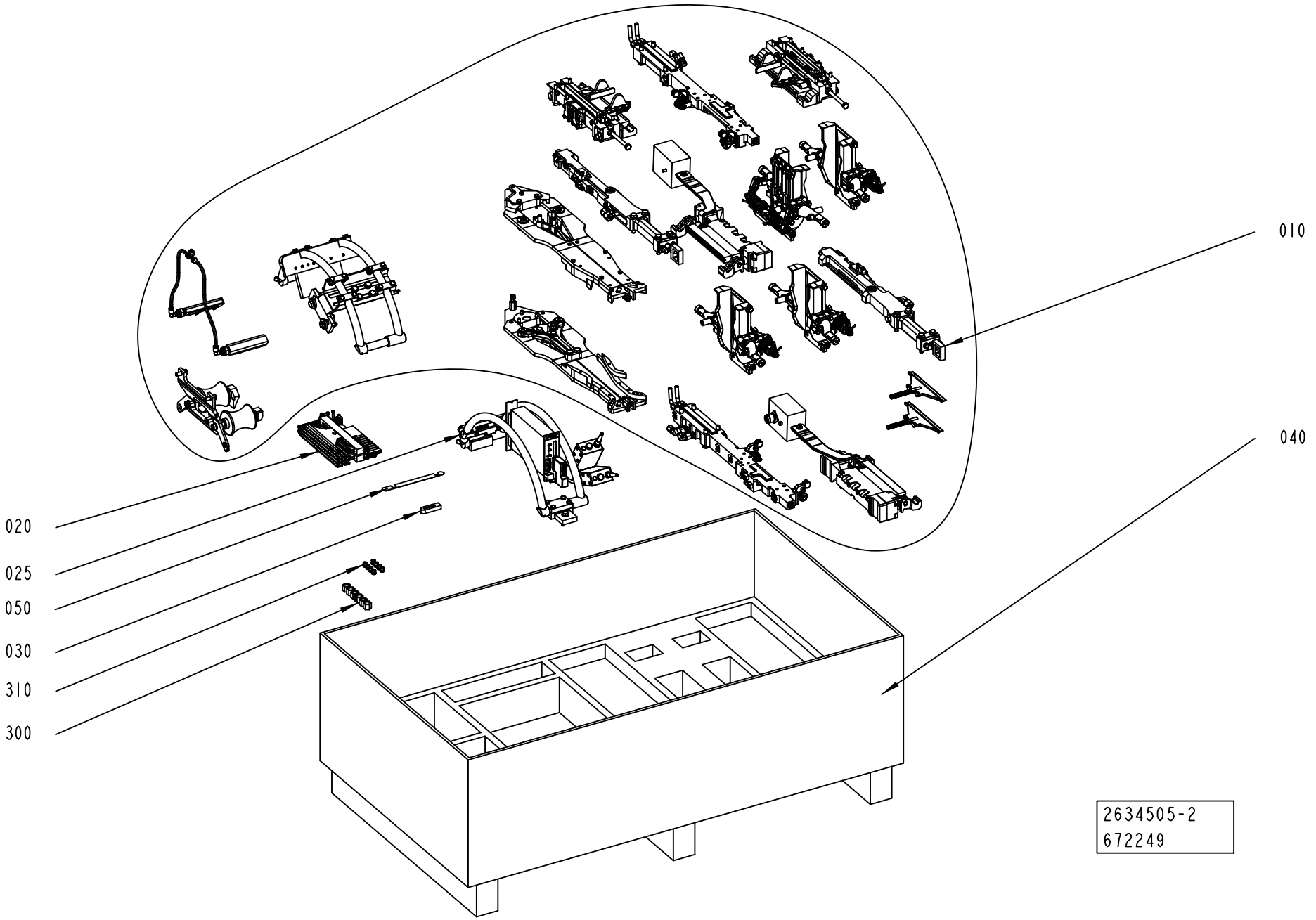

ECM: 675907 - 20140701
Group number: 2634505-0300
Assembly Drawing: 2634505-2_1_AC

Pos	Part No	UN	Qty	Description	Page No
-					
010	2552003-0400		1	FORMING UNIT	**1-511**
020	2979548-0100		1	START-UP KIT JS	**1-743, 1-745, 1-747**
025	3272911-0100		1	MARKING READER	**1-749**
030	1036483-0000		1	SEAL	
040	3056161-0000		1	BOX	
050	1037254-0000		1	SHIM	
300	342703-0208		6	CONE NUT M8, NUT M-8 SS	
310	90030-0098		8	PROGRESSIVE RING 8	

Pos	Part No	UN	Qty	Description	Page No

Machine Type | Group Description | Used-In | Group Number | Page No

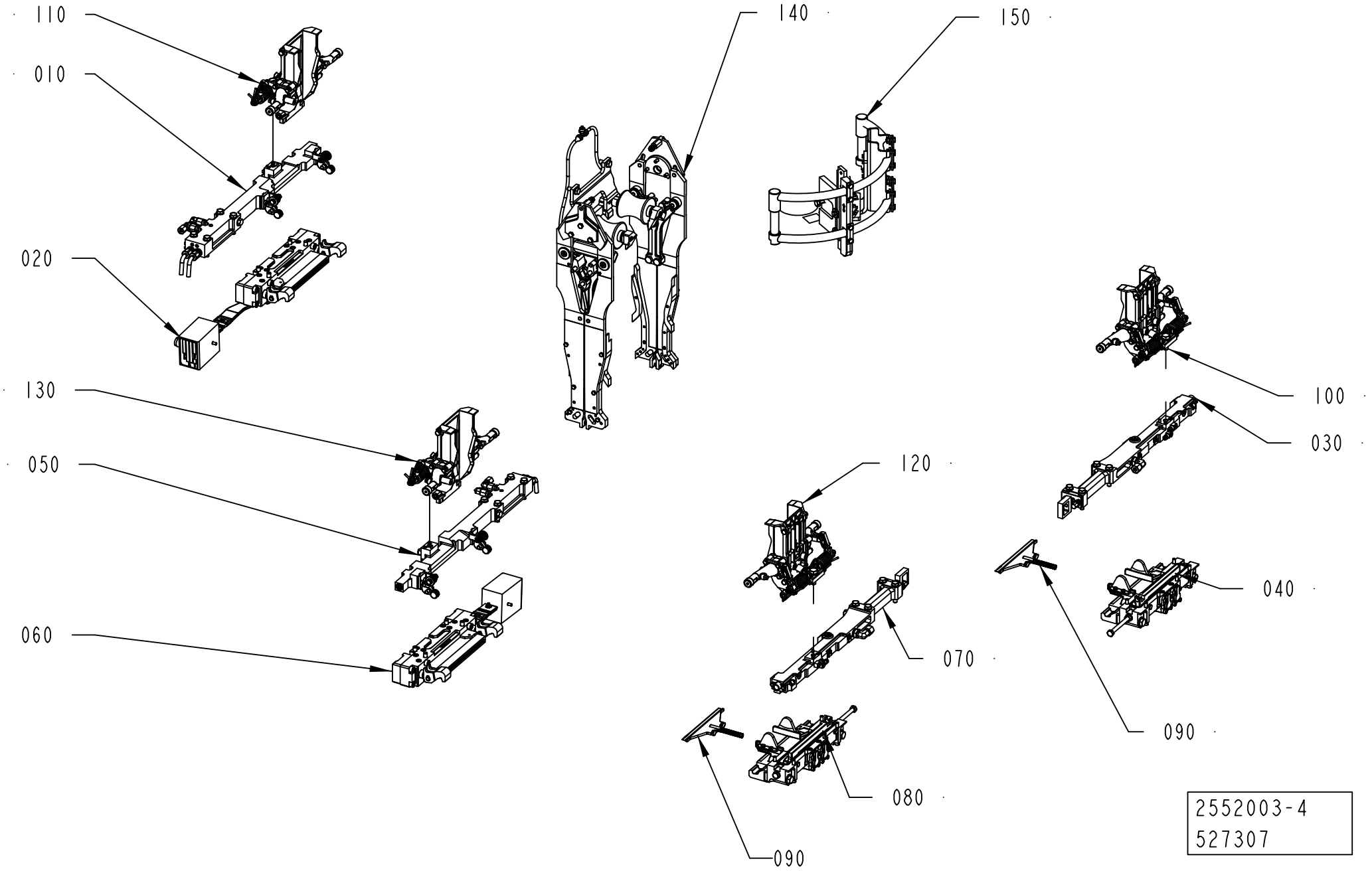

2552003-4
527307

ECM: 647820 - 20140401
Group number: 2552003-0400
Assembly Drawing: 2552003-4_1_AA

Pos	Part No	UN	Qty	Description	Page No
TBA 2000S					
150	2876313-0200		1	PHOTOCELL BRACKET	**1-513, 1-515, 1-517**
TGA 0500SQ					
150	3155711-0100		1	PHOTOCELL BRACKET	**1-525**
TGA 0750SQ					
150	3155711-0100		1	PHOTOCELL BRACKET	**1-525**
TGA 1000CR					
150	3155711-0100		1	PHOTOCELL BRACKET	**1-525**
TGA 1000LF					
150	3155711-0100		1	PHOTOCELL BRACKET	**1-525**
TGA 1000SQ					
150	3155711-0100		1	PHOTOCELL BRACKET	**1-525**
TGA 1500SQ					
150	3155711-0100		1	PHOTOCELL BRACKET	**1-525**
TPA 0500SQ					
150	2876313-0200		1	PHOTOCELL BRACKET	**1-513, 1-515, 1-517**
TPA 0750SQ					
150	2876313-0200		1	PHOTOCELL BRACKET	**1-513, 1-515, 1-517**
TPA 1000SQ					
150	2876313-0200		1	PHOTOCELL BRACKET	**1-513, 1-515, 1-517**
TBA 0500B					
150	2876313-0200		1	PHOTOCELL BRACKET	**1-513, 1-515, 1-517**
TBA 0500E					
150	2876313-0200		1	PHOTOCELL BRACKET	**1-513, 1-515, 1-517**
TBA 0500S					
150	2876313-0200		1	PHOTOCELL BRACKET	**1-513, 1-515, 1-517**
TBA 0500SQ					
150	2876313-0200		1	PHOTOCELL BRACKET	**1-513, 1-515, 1-517**
TBA 1000B NOMOLDEDCAP					
150	2876313-0200		1	PHOTOCELL BRACKET	**1-513, 1-515, 1-517**
TBA 1000B STDA7					
150	2876313-0200		1	PHOTOCELL BRACKET	**1-513, 1-515, 1-517**
TBA 1000E NOQC					
150	2876313-0200		1	PHOTOCELL BRACKET	**1-513, 1-515, 1-517**
TBA 1000E QC					
150	2876313-0200		1	PHOTOCELL BRACKET	**1-513, 1-515, 1-517**
TBA 1000M LIGHTCAP24					
150	3260655-0100		1	BRACKET	**1-527**
TBA 1000M STDA7					
150	3260655-0100		1	BRACKET	**1-527**
TBA 1000S LIGHTCAP24					
150	2876313-0200		1	PHOTOCELL BRACKET	**1-513, 1-515, 1-517**
TBA 1000S NOMOLDEDCAP HELICAP2 23					
150	2876313-0200		1	PHOTOCELL BRACKET	**1-513, 1-515, 1-517**
TBA 1000S NOMOLDEDCAP NOCAP, TBA 1000S NOMOLDEDCAP RECAP3, TBA 1000S NOMOLDEDCAP SLIMCAP 1000					
150	2876313-0200		1	PHOTOCELL BRACKET	**1-513, 1-515, 1-517**
TBA 1000SQ					
150	2876313-0200		1	PHOTOCELL BRACKET	**1-513, 1-515, 1-517**
TBA 1500S HELICAP2 23					
150	2876313-0200		1	PHOTOCELL BRACKET	**1-513, 1-515, 1-517**
TBA 1500S RECAP3, TBA 1500S SLIMCAP 1000					
150	2876313-0200		1	PHOTOCELL BRACKET	**1-513, 1-515, 1-517**
Common Parts					
010	3035771-0100		1	CARRIER PRESSURE LEFT	**1-529, 1-531, 1-533**
020	2832241-0200		1	PRESSURE JAW LEFT	**1-535, 1-537**
030	3035770-0100		1	CARRIER CUTTING LEFT	**1-549, 1-551, 1-553**
040	2832818-0200		1	CUTTING JAW LEFT	**1-557**
050	3035773-0100		1	CARRIER PRESSURE RIGHT	**1-579, 1-581, 1-583**
060	2832242-0200		1	PRESSURE JAW RIGHT	**1-585, 1-587**
070	3035772-0100		1	CARRIER CUTTING RIGHT	**1-597, 1-599, 1-601**
080	2832819-0200		1	CUTTING JAW RIGHT	**1-603**
090	2588317-0100		2	KNIFE	**1-611**
100	2810640-0100		1	SUPPORT FLAP CUTTING	**1-613**
110	2810641-0100		1	SUPPORT FLAP PRESSURE	**1-649**
120	2993980-0100		1	SUPPORT FLAP CUTTING	**1-683**
130	2993981-0100		1	SUPPORT FLAP PRESSURE	**1-697**
140	2855528-0200		1	VOLUME CURVE PIECE	**1-711**

Machine Type | Group Description | Used-In | Group Number | Page No

PHOTOCELL BRACKET

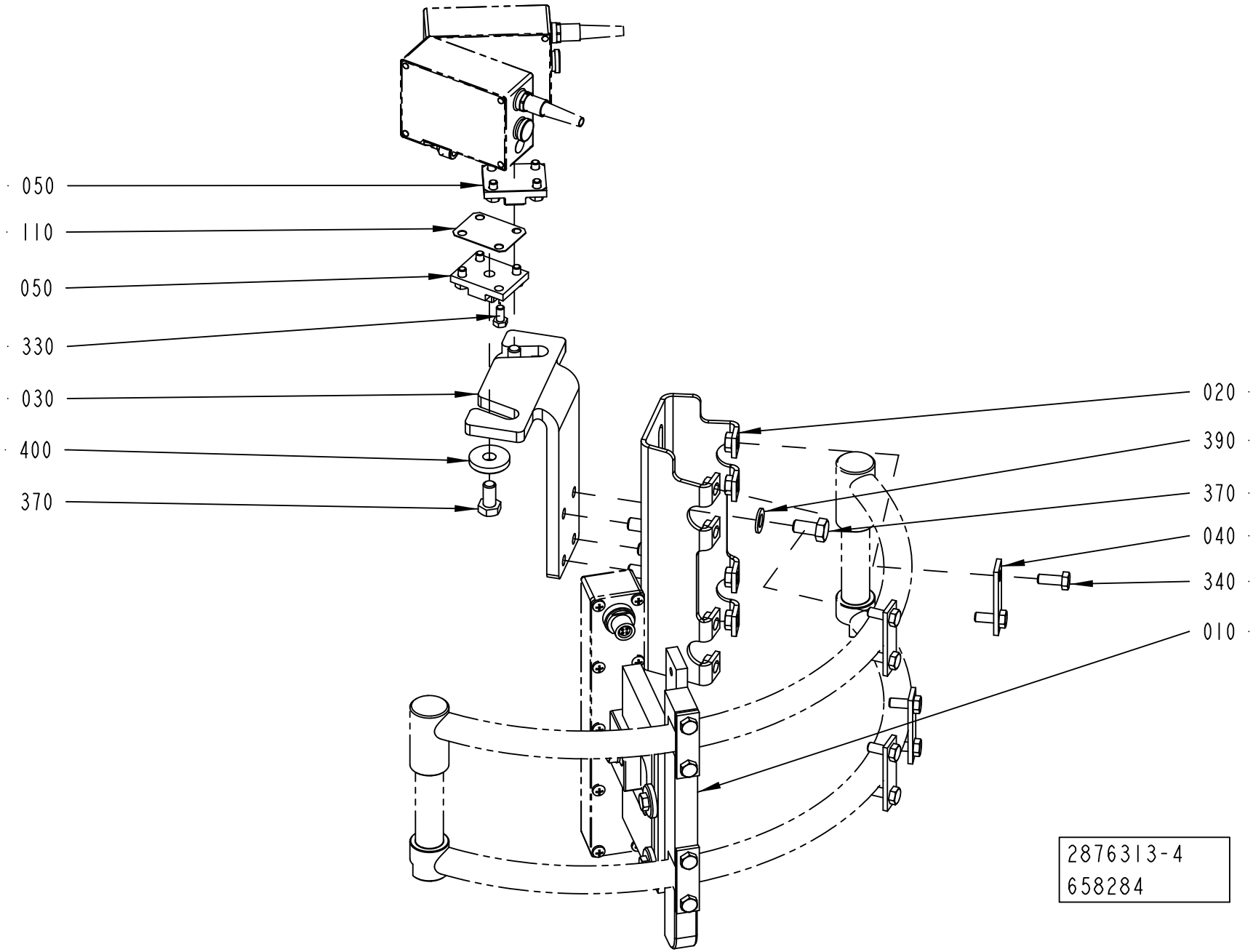

ECM: 664262 - 20140701
Group number: 2876313-0200
Assembly Drawing: 2876313-4_1_AB

This list covers pages from 1-512 to 1-517

Pos	Part No	UN	Qty	Description	Page No
TBA 0500B, TBA 1000B (See drawing on page: 1-512)					
020	2715295-0000		1	BRACKET	
030	1254109-0000		1	BRACKET	
040	1036673-0000		4	WASHER	
340	312105-0368		8	"SCREW, M6S ISO 4017 M6X16 A4 80"	
370	312105-0449		6	SCREW, M6S ISO 4017 M8X16 A4 80	
TBA 0500S (See drawing on page: 1-516)					
020	2715295-0000		1	BRACKET	
030	2719081-0000		1	BRACKET	
040	1036673-0000		4	WASHER	
340	312105-0368		8	"SCREW, M6S ISO 4017 M6X16 A4 80"	
370	312105-0449		6	SCREW, M6S ISO 4017 M8X16 A4 80	
TBA 0500SQ, TBA 1000SQ, TBA 1000E, TBA 0500E (See drawing on page: 1-516)					
020	2715295-0000		1	BRACKET	
030	2694095-0000		1	BRACKET	
040	1036673-0000		4	WASHER	
340	312105-0368		8	"SCREW, M6S ISO 4017 M6X16 A4 80"	
370	312105-0449		6	SCREW, M6S ISO 4017 M8X16 A4 80	
TBA 1000S (See drawing on page: 1-512)					
020	2715295-0000		1	BRACKET	
030	2694095-0000		1	BRACKET	
040	1036673-0000		4	WASHER	
340	312105-0368		8	"SCREW, M6S ISO 4017 M6X16 A4 80"	
370	312105-0449		6	SCREW, M6S ISO 4017 M8X16 A4 80	
TBA 1500S (See drawing on page: 1-516)					
020	2955548-0000		1	BRACKET	
030	1254109-0000		1	BRACKET	
060	2797439-0000		2	FASTENING PLATE	
340	312105-0368		4	"SCREW, M6S ISO 4017 M6X16 A4 80"	
370	312105-0449		6	SCREW, M6S ISO 4017 M8X16 A4 80	
TBA 2000S (See drawing on page: 1-516)					
020	2955548-0000		1	BRACKET	
030	3219182-0000		1	BRACKET	
060	2797439-0000		2	FASTENING PLATE	
340	312105-0368		4	"SCREW, M6S ISO 4017 M6X16 A4 80"	
370	312105-0449		6	SCREW, M6S ISO 4017 M8X16 A4 80	
TPA 0500SQ (See drawing on page: 1-516)					
020	2715295-0000		1	BRACKET	
030	1254111-0000		1	BRACKET	
040	1036673-0000		4	WASHER	
340	312105-0368		8	"SCREW, M6S ISO 4017 M6X16 A4 80"	
370	312105-0449		6	SCREW, M6S ISO 4017 M8X16 A4 80	

Pos	Part No	UN	Qty	Description	Page No
TPA 1000SQ, TPA 0750SQ (See drawing on page: 1-514)					
020	2715295-0000		1	BRACKET	
030	2986655-0000		1	BRACKET	
040	1036673-0000		4	WASHER	
070	2986656-0000		1	SLIDE	
080	2724929-0000		1	KNOB	
090	2993210-0000		1	NUT	
100	2993209-0000		1	SCREW	
300	90335-0024		1	COMP. SPRING, 22250, 1,25X13,75X27	
310	90287-0148		4	SCREW SPRINGLOAD. SLOTTED HEAD M5X12	
320	312318-0321		4	SET SCREW, CUP END ISO4029 M5X6 A4	
340	312105-0368		8	"SCREW, M6S ISO 4017 M6X16 A4 80"	
360	312105-0447		4	SCREW M6S ISO 4017 M8X12 A480	
370	312105-0449		2	SCREW, M6S ISO 4017 M8X16 A4 80	
Common Parts					
010	1487338-0200		1	SUPPORT LEVEL DETECTOR	**1-519, 1-521, 1-523**
050	1036674-0000		2	FASTENING PLATE	
110	3338611-0000		2	SHIM	
330	312105-0325		8	SCREW, M6S ISO 4017 M5X10 A4 80	
390	315105-0165		4	FWAS080G0-0S, WASHER PLAIN	
400	315125-0165		2	WASHER HIGH, TBRSB 8,4X26X5 A4	

Machine Type | Group Description | Used-In | Group Number | Page No

PHOTOCELL BRACKET

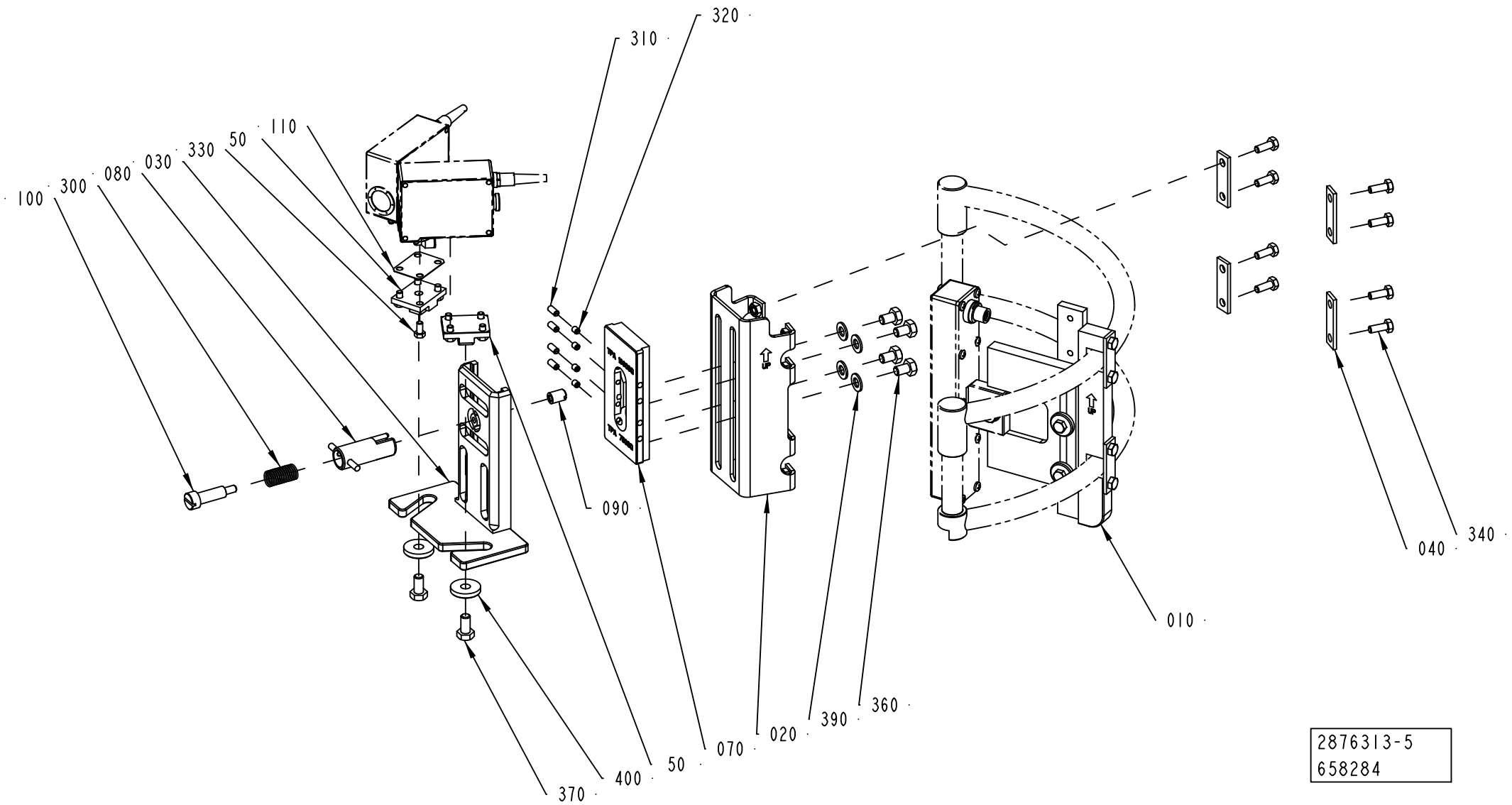

2876313-5
658284

ECM: 664262 - 20140701
Group number: 2876313-0200
Assembly Drawing: 2876313-5_1_AB

This list covers pages from 1-512 to 1-517

Pos	Part No	UN	Qty	Description	Page No
TBA 0500B, TBA 1000B (See drawing on page: 1-512)					
020	2715295-0000		1	BRACKET	
030	1254109-0000		1	BRACKET	
040	1036673-0000		4	WASHER	
340	312105-0368		8	"SCREW, M6S ISO 4017 M6X16 A4 80"	
370	312105-0449		6	SCREW, M6S ISO 4017 M8X16 A4 80	
TBA 0500S (See drawing on page: 1-516)					
020	2715295-0000		1	BRACKET	
030	2719081-0000		1	BRACKET	
040	1036673-0000		4	WASHER	
340	312105-0368		8	"SCREW, M6S ISO 4017 M6X16 A4 80"	
370	312105-0449		6	SCREW, M6S ISO 4017 M8X16 A4 80	
TBA 0500SQ, TBA 1000SQ, TBA 1000E, TBA 0500E (See drawing on page: 1-516)					
020	2715295-0000		1	BRACKET	
030	2694095-0000		1	BRACKET	
040	1036673-0000		4	WASHER	
340	312105-0368		8	"SCREW, M6S ISO 4017 M6X16 A4 80"	
370	312105-0449		6	SCREW, M6S ISO 4017 M8X16 A4 80	
TBA 1000S (See drawing on page: 1-512)					
020	2715295-0000		1	BRACKET	
030	2694095-0000		1	BRACKET	
040	1036673-0000		4	WASHER	
340	312105-0368		8	"SCREW, M6S ISO 4017 M6X16 A4 80"	
370	312105-0449		6	SCREW, M6S ISO 4017 M8X16 A4 80	
TBA 1500S (See drawing on page: 1-516)					
020	2955548-0000		1	BRACKET	
030	1254109-0000		1	BRACKET	
060	2797439-0000		2	FASTENING PLATE	
340	312105-0368		4	"SCREW, M6S ISO 4017 M6X16 A4 80"	
370	312105-0449		6	SCREW, M6S ISO 4017 M8X16 A4 80	
TBA 2000S (See drawing on page: 1-516)					
020	2955548-0000		1	BRACKET	
030	3219182-0000		1	BRACKET	
060	2797439-0000		2	FASTENING PLATE	
340	312105-0368		4	"SCREW, M6S ISO 4017 M6X16 A4 80"	
370	312105-0449		6	SCREW, M6S ISO 4017 M8X16 A4 80	
TPA 0500SQ (See drawing on page: 1-516)					
020	2715295-0000		1	BRACKET	
030	1254111-0000		1	BRACKET	
040	1036673-0000		4	WASHER	
340	312105-0368		8	"SCREW, M6S ISO 4017 M6X16 A4 80"	
370	312105-0449		6	SCREW, M6S ISO 4017 M8X16 A4 80	

Pos	Part No	UN	Qty	Description	Page No
TPA 1000SQ, TPA 0750SQ (See drawing on page: 1-514)					
020	2715295-0000		1	BRACKET	
030	2986655-0000		1	BRACKET	
040	1036673-0000		4	WASHER	
070	2986656-0000		1	SLIDE	
080	2724929-0000		1	KNOB	
090	2993210-0000		1	NUT	
100	2993209-0000		1	SCREW	
300	90335-0024		1	COMP. SPRING, 22250, 1,25X13,75X27	
310	90287-0148		4	SCREW SPRINGLOAD. SLOTTED HEAD M5X12	
320	312318-0321		4	SET SCREW, CUP END ISO4029 M5X6 A4	
340	312105-0368		8	"SCREW, M6S ISO 4017 M6X16 A4 80"	
360	312105-0447		4	SCREW M6S ISO 4017 M8X12 A480	
370	312105-0449		2	SCREW, M6S ISO 4017 M8X16 A4 80	
Common Parts					
010	1487338-0200		1	SUPPORT LEVEL DETECTOR	**1-519, 1-521, 1-523**
050	1036674-0000		2	FASTENING PLATE	
110	3338611-0000		2	SHIM	
330	312105-0325		8	SCREW, M6S ISO 4017 M5X10 A4 80	
390	315105-0165		4	FWAS080G0-0S, WASHER PLAIN	
400	315125-0165		2	WASHER HIGH, TBRSB 8,4X26X5 A4	

Machine Type | Group Description | Used-In | Group Number | Page No

PHOTOCELL BRACKET

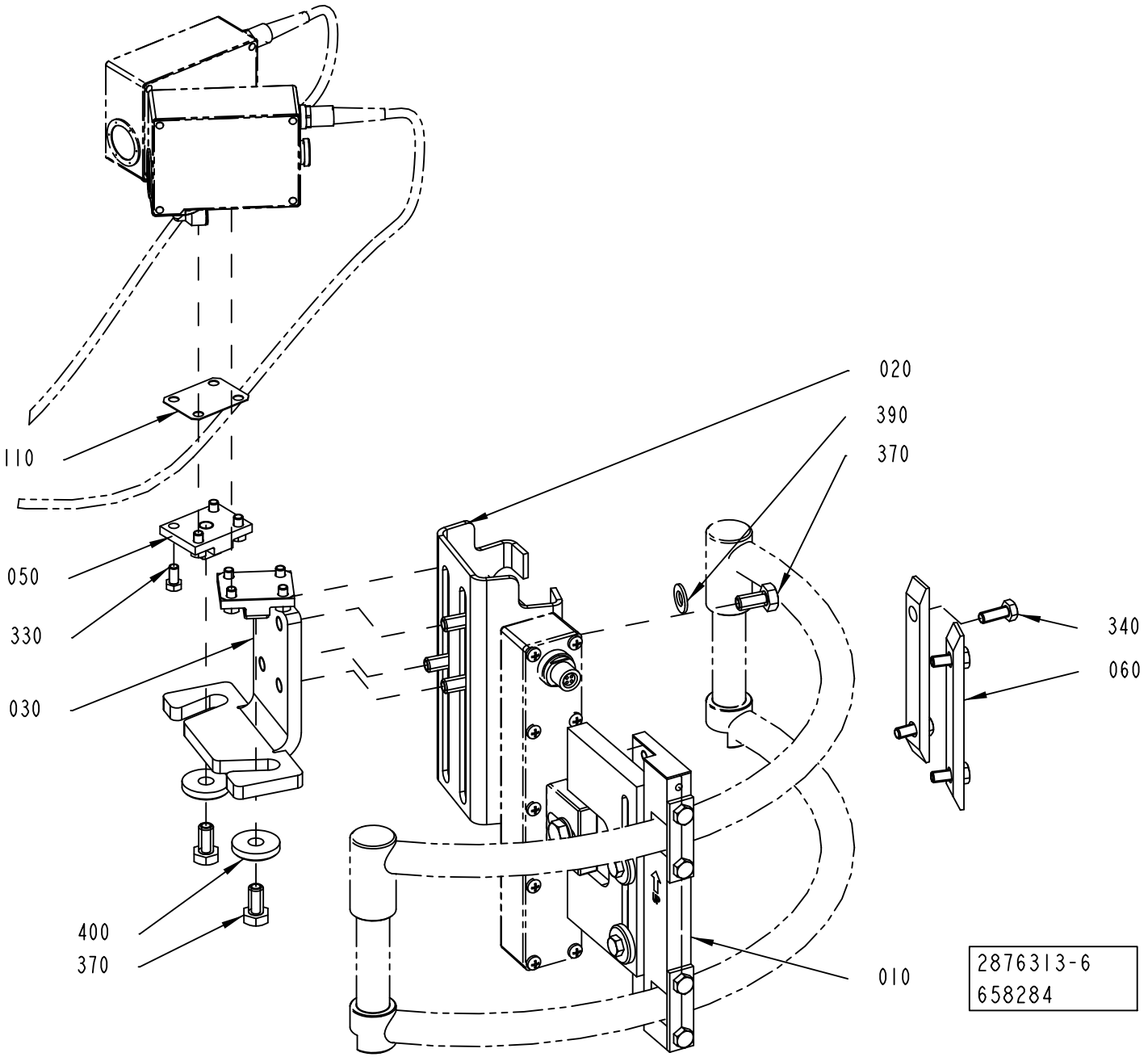

ECM: 664262 - 20140701
Group number: 2876313-0200
Assembly Drawing: 2876313-6_1_AB

This list covers pages from 1-512 to 1-517

Pos	Part No	UN	Qty	Description	Page No
TBA 0500B, TBA 1000B (See drawing on page: 1-512)					
020	2715295-0000		1	BRACKET	
030	1254109-0000		1	BRACKET	
040	1036673-0000		4	WASHER	
340	312105-0368		8	"SCREW, M6S ISO 4017 M6X16 A4 80"	
370	312105-0449		6	SCREW, M6S ISO 4017 M8X16 A4 80	
TBA 0500S (See drawing on page: 1-516)					
020	2715295-0000		1	BRACKET	
030	2719081-0000		1	BRACKET	
040	1036673-0000		4	WASHER	
340	312105-0368		8	"SCREW, M6S ISO 4017 M6X16 A4 80"	
370	312105-0449		6	SCREW, M6S ISO 4017 M8X16 A4 80	
TBA 0500SQ, TBA 1000SQ, TBA 1000E, TBA 0500E (See drawing on page: 1-516)					
020	2715295-0000		1	BRACKET	
030	2694095-0000		1	BRACKET	
040	1036673-0000		4	WASHER	
340	312105-0368		8	"SCREW, M6S ISO 4017 M6X16 A4 80"	
370	312105-0449		6	SCREW, M6S ISO 4017 M8X16 A4 80	
TBA 1000S (See drawing on page: 1-512)					
020	2715295-0000		1	BRACKET	
030	2694095-0000		1	BRACKET	
040	1036673-0000		4	WASHER	
340	312105-0368		8	"SCREW, M6S ISO 4017 M6X16 A4 80"	
370	312105-0449		6	SCREW, M6S ISO 4017 M8X16 A4 80	
TBA 1500S (See drawing on page: 1-516)					
020	2955548-0000		1	BRACKET	
030	1254109-0000		1	BRACKET	
060	2797439-0000		2	FASTENING PLATE	
340	312105-0368		4	"SCREW, M6S ISO 4017 M6X16 A4 80"	
370	312105-0449		6	SCREW, M6S ISO 4017 M8X16 A4 80	
TBA 2000S (See drawing on page: 1-516)					
020	2955548-0000		1	BRACKET	
030	3219182-0000		1	BRACKET	
060	2797439-0000		2	FASTENING PLATE	
340	312105-0368		4	"SCREW, M6S ISO 4017 M6X16 A4 80"	
370	312105-0449		6	SCREW, M6S ISO 4017 M8X16 A4 80	
TPA 0500SQ (See drawing on page: 1-516)					
020	2715295-0000		1	BRACKET	
030	1254111-0000		1	BRACKET	
040	1036673-0000		4	WASHER	
340	312105-0368		8	"SCREW, M6S ISO 4017 M6X16 A4 80"	
370	312105-0449		6	SCREW, M6S ISO 4017 M8X16 A4 80	

Pos	Part No	UN	Qty	Description	Page No
TPA 1000SQ, TPA 0750SQ (See drawing on page: 1-514)					
020	2715295-0000		1	BRACKET	
030	2986655-0000		1	BRACKET	
040	1036673-0000		4	WASHER	
070	2986656-0000		1	SLIDE	
080	2724929-0000		1	KNOB	
090	2993210-0000		1	NUT	
100	2993209-0000		1	SCREW	
300	90335-0024		1	COMP. SPRING, 22250, 1,25X13,75X27	
310	90287-0148		4	SCREW SPRINGLOAD. SLOTTED HEAD M5X12	
320	312318-0321		4	SET SCREW, CUP END ISO4029 M5X6 A4	
340	312105-0368		8	"SCREW, M6S ISO 4017 M6X16 A4 80"	
360	312105-0447		4	SCREW M6S ISO 4017 M8X12 A480	
370	312105-0449		2	SCREW, M6S ISO 4017 M8X16 A4 80	
Common Parts					
010	1487338-0200		1	SUPPORT LEVEL DETECTOR	**1-519, 1-521, 1-523**
050	1036674-0000		2	FASTENING PLATE	
110	3338611-0000		2	SHIM	
330	312105-0325		8	SCREW, M6S ISO 4017 M5X10 A4 80	
390	315105-0165		4	FWAS080G0-0S, WASHER PLAIN	
400	315125-0165		2	WASHER HIGH, TBRSB 8,4X26X5 A4	

Machine Type | Group Description | Used-In | Group Number | Page No

SUPPORT LEVEL DETECTOR

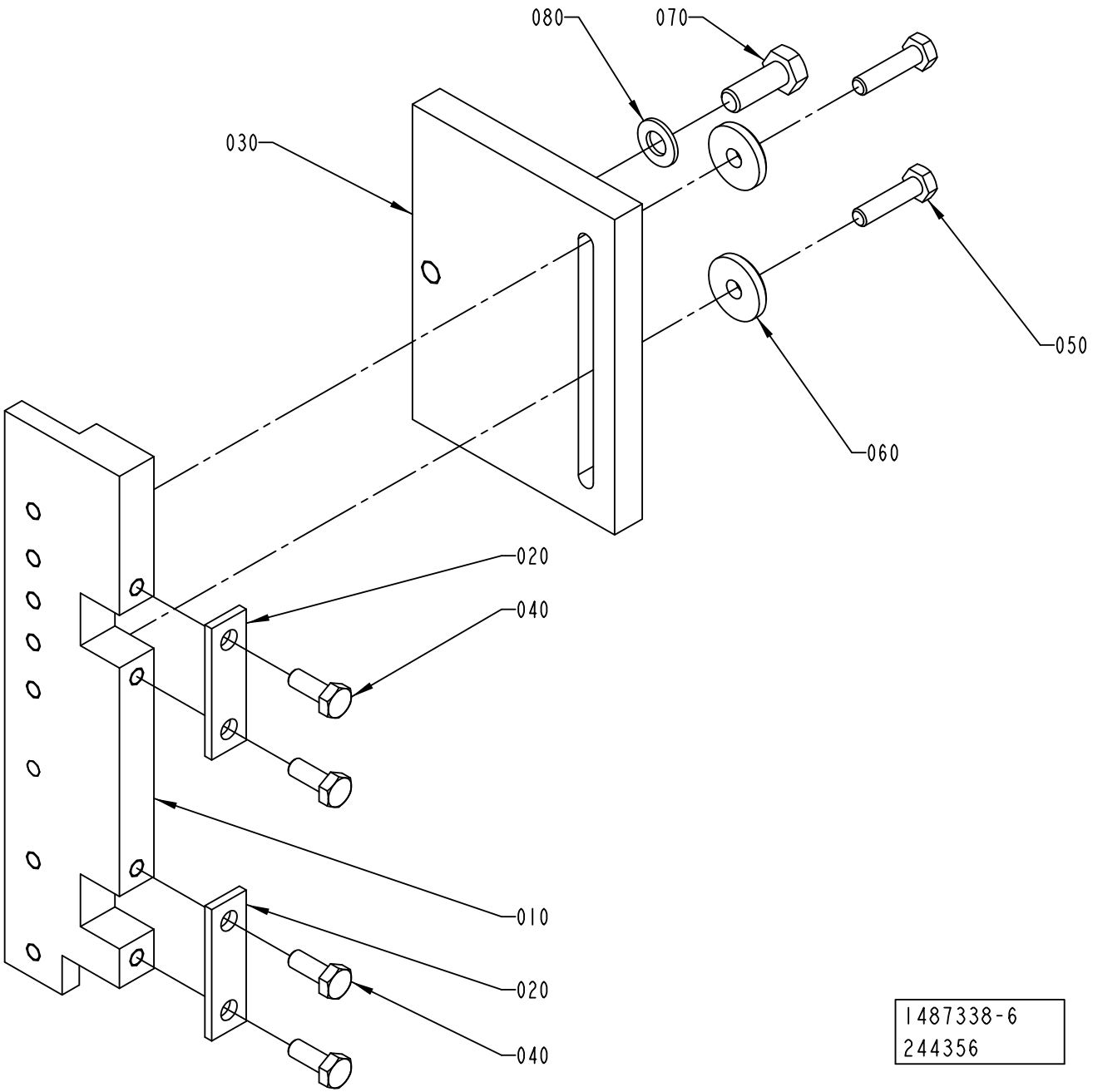

1487338-6
244356

ECM: 647810 - 20140401
Group number: 1487338-0200
Assembly Drawing: 1487338-6_1_AA

This list covers pages from 1-518 to 1-523

Pos	Part No	UN	Qty	Description	Page No
TPA 0500SQ (See drawing on page: 1-520)					
010	2715298-0000		1	BRACKET	
020	1036673-0000		2	WASHER	
030	2874952-0000		1	BRACKET	
040	312105-0368		4	"SCREW, M6S ISO 4017 M6X16 A4 80"	
TBA 0500S, TBA 0500SQ, TBA 0500B, TBA 1000B, TBA 1000SQ, TBA 1000S, TBA 1500S, TPA 1000SQ NOQC, TBA 1000E, TBA 0500E (See drawing on page: 1-518)					
010	2715298-0000		1	BRACKET	
020	1036673-0000		2	WASHER	
030	1317475-0000		1	BRACKET	
040	312105-0368		4	"SCREW, M6S ISO 4017 M6X16 A4 80"	
TBA 2000S (See drawing on page: 1-518)					
010	2715299-0000		1	BRACKET	
020	1036673-0000		2	WASHER	
030	2656899-0000		1	BRACKET	
040	312105-0368		4	"SCREW, M6S ISO 4017 M6X16 A4 80"	
TGA 1000SQ, TGA 0750SQ, TGA 0500SQ (See drawing on page: 1-522)					
010	2888153-0000		1	BRACKET	
020	2797439-0000		1	FASTENING PLATE	
030	1317475-0000		1	BRACKET	
040	312105-0368		2	"SCREW, M6S ISO 4017 M6X16 A4 80"	
TPA 1000SQ QC, TPA 0750SQ QC (See drawing on page: 1-518)					
010	2715299-0000		1	BRACKET	
020	1036673-0000		2	WASHER	
030	1317475-0000		1	BRACKET	
040	312105-0368		4	"SCREW, M6S ISO 4017 M6X16 A4 80"	
Common Parts					
050	312105-0372		2	SCREW, M6S ISO 4017 M6X25 A4 80	
060	315125-0153		2	WASHER HIGH, TBRSB 6,4X22X4 A4	
070	312105-0451		1	SCREW, M6S ISO 4017 M8X20 A4 80	
080	315105-0165		1	FWAS080G0-0S, WASHER PLAIN	

Pos	Part No	UN	Qty	Description	Page No

SUPPORT LEVEL DETECTOR

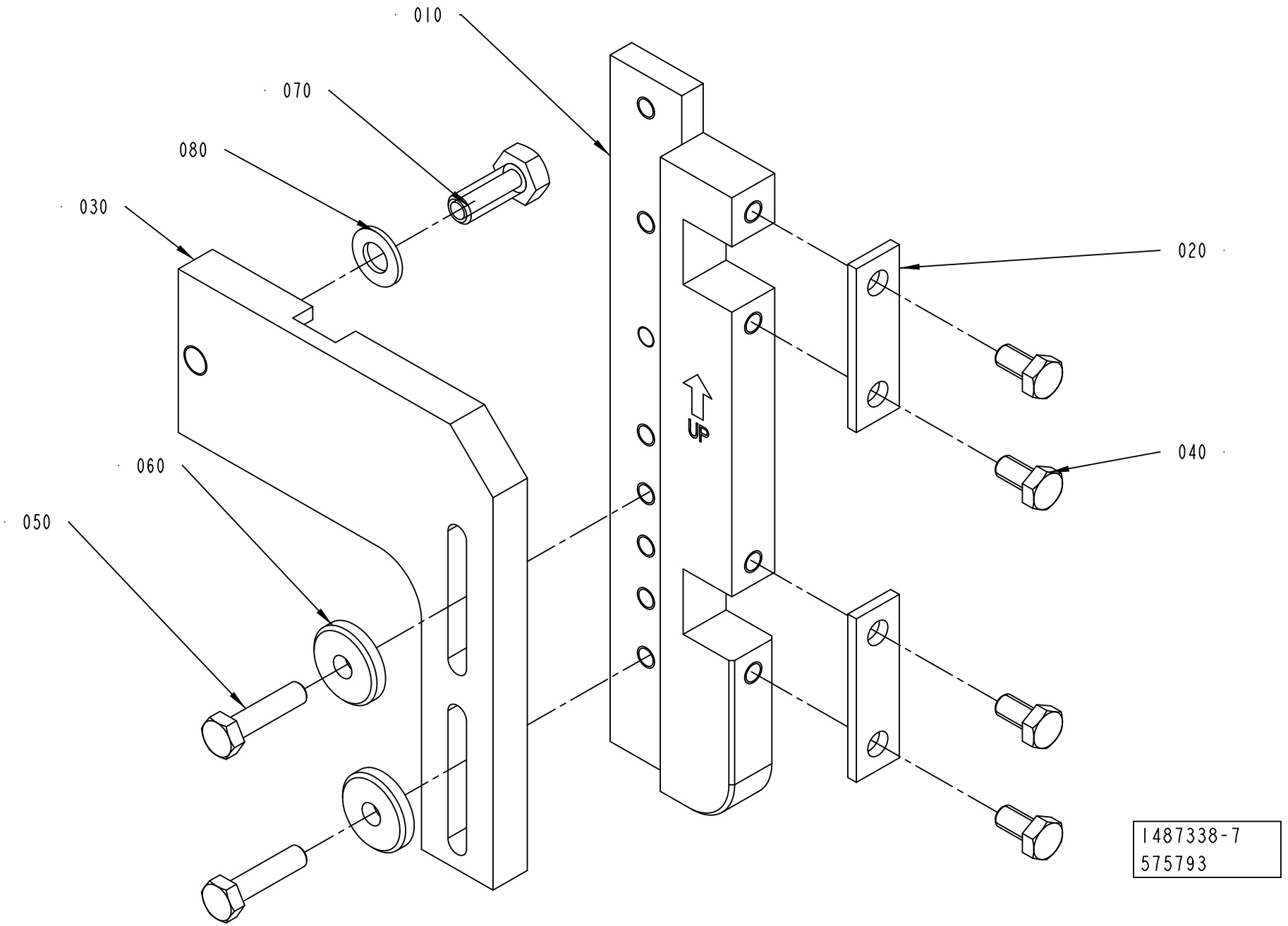

ECM: 647810 - 20140401
Group number: 1487338-0200
Assembly Drawing: 1487338-7_1_AC

This list covers pages from 1-518 to 1-523

Pos	Part No	UN	Qty	Description	Page No
TPA 0500SQ (See drawing on page: 1-520)					
010	2715298-0000		1	BRACKET	
020	1036673-0000		2	WASHER	
030	2874952-0000		1	BRACKET	
040	312105-0368		4	"SCREW, M6S ISO 4017 M6X16 A4 80"	
TBA 0500S, TBA 0500SQ, TBA 0500B, TBA 1000B, TBA 1000SQ, TBA 1000S, TBA 1500S, TPA 1000SQ NOQC, TBA 1000E, TBA 0500E (See drawing on page: 1-518)					
010	2715298-0000		1	BRACKET	
020	1036673-0000		2	WASHER	
030	1317475-0000		1	BRACKET	
040	312105-0368		4	"SCREW, M6S ISO 4017 M6X16 A4 80"	
TBA 2000S (See drawing on page: 1-518)					
010	2715299-0000		1	BRACKET	
020	1036673-0000		2	WASHER	
030	2656899-0000		1	BRACKET	
040	312105-0368		4	"SCREW, M6S ISO 4017 M6X16 A4 80"	
TGA 1000SQ, TGA 0750SQ, TGA 0500SQ (See drawing on page: 1-522)					
010	2888153-0000		1	BRACKET	
020	2797439-0000		1	FASTENING PLATE	
030	1317475-0000		1	BRACKET	
040	312105-0368		2	"SCREW, M6S ISO 4017 M6X16 A4 80"	
TPA 1000SQ QC, TPA 0750SQ QC (See drawing on page: 1-518)					
010	2715299-0000		1	BRACKET	
020	1036673-0000		2	WASHER	
030	1317475-0000		1	BRACKET	
040	312105-0368		4	"SCREW, M6S ISO 4017 M6X16 A4 80"	
Common Parts					
050	312105-0372		2	SCREW, M6S ISO 4017 M6X25 A4 80	
060	315125-0153		2	WASHER HIGH, TBRSB 6,4X22X4 A4	
070	312105-0451		1	SCREW, M6S ISO 4017 M8X20 A4 80	
080	315105-0165		1	FWAS080G0-0S, WASHER PLAIN	

Pos	Part No	UN	Qty	Description	Page No

SUPPORT LEVEL DETECTOR

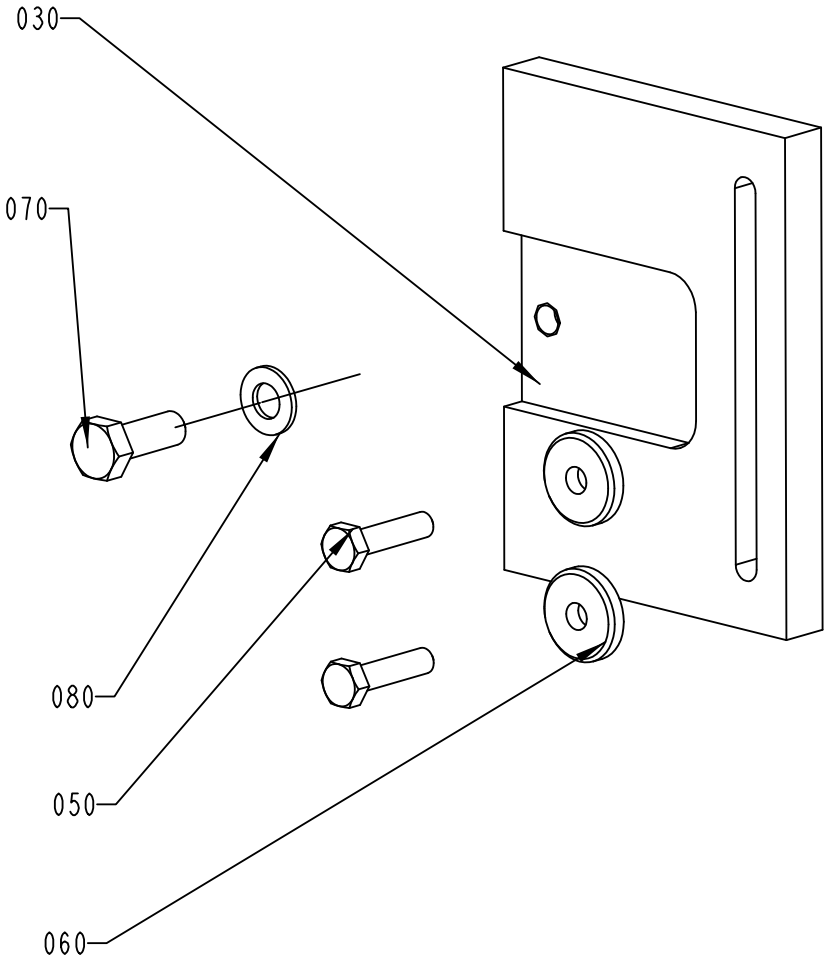

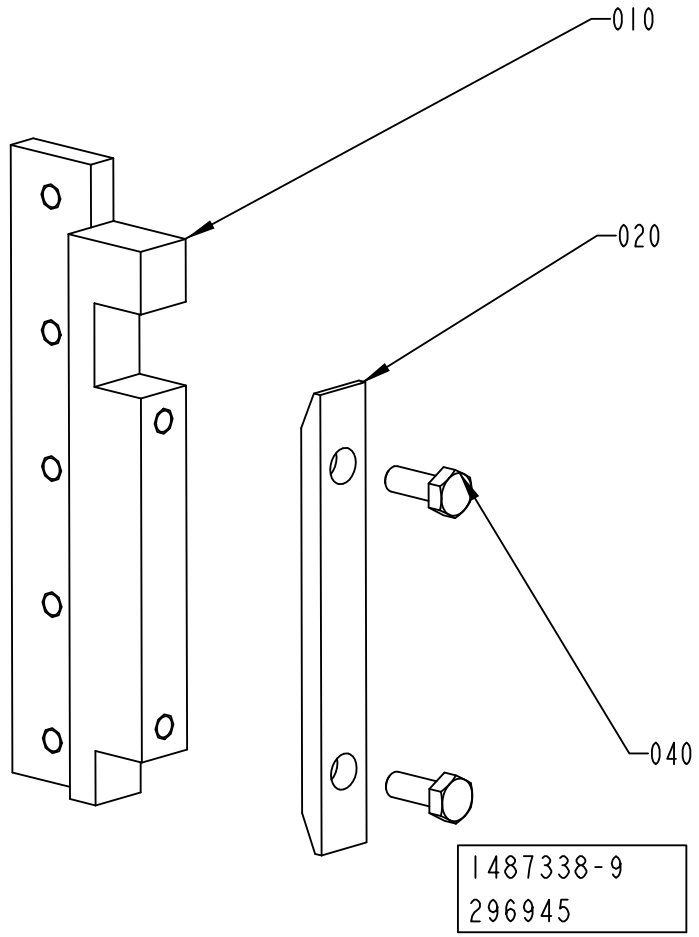

ECM: 647810 - 20140401
Group number: 1487338-0200
Assembly Drawing: 1487338-9_1_AA

This list covers pages from 1-518 to 1-523

Pos	Part No	UN	Qty	Description	Page No
TPA 0500SQ (See drawing on page: 1-520)					
010	2715298-0000		1	BRACKET	
020	1036673-0000		2	WASHER	
030	2874952-0000		1	BRACKET	
040	312105-0368		4	"SCREW, M6S ISO 4017 M6X16 A4 80"	
TBA 0500S, TBA 0500SQ, TBA 0500B, TBA 1000B, TBA 1000SQ, TBA 1000S, TBA 1500S, TPA 1000SQ NOQC, TBA 1000E, TBA 0500E (See drawing on page: 1-518)					
010	2715298-0000		1	BRACKET	
020	1036673-0000		2	WASHER	
030	1317475-0000		1	BRACKET	
040	312105-0368		4	"SCREW, M6S ISO 4017 M6X16 A4 80"	
TBA 2000S (See drawing on page: 1-518)					
010	2715299-0000		1	BRACKET	
020	1036673-0000		2	WASHER	
030	2656899-0000		1	BRACKET	
040	312105-0368		4	"SCREW, M6S ISO 4017 M6X16 A4 80"	
TGA 1000SQ, TGA 0750SQ, TGA 0500SQ (See drawing on page: 1-522)					
010	2888153-0000		1	BRACKET	
020	2797439-0000		1	FASTENING PLATE	
030	1317475-0000		1	BRACKET	
040	312105-0368		2	"SCREW, M6S ISO 4017 M6X16 A4 80"	
TPA 1000SQ QC, TPA 0750SQ QC (See drawing on page: 1-518)					
010	2715299-0000		1	BRACKET	
020	1036673-0000		2	WASHER	
030	1317475-0000		1	BRACKET	
040	312105-0368		4	"SCREW, M6S ISO 4017 M6X16 A4 80"	
Common Parts					
050	312105-0372		2	SCREW, M6S ISO 4017 M6X25 A4 80	
060	315125-0153		2	WASHER HIGH, TBRSB 6,4X22X4 A4	
070	312105-0451		1	SCREW, M6S ISO 4017 M8X20 A4 80	
080	315105-0165		1	FWAS080G0-0S, WASHER PLAIN	

Pos	Part No	UN	Qty	Description	Page No

PHOTOCELL BRACKET

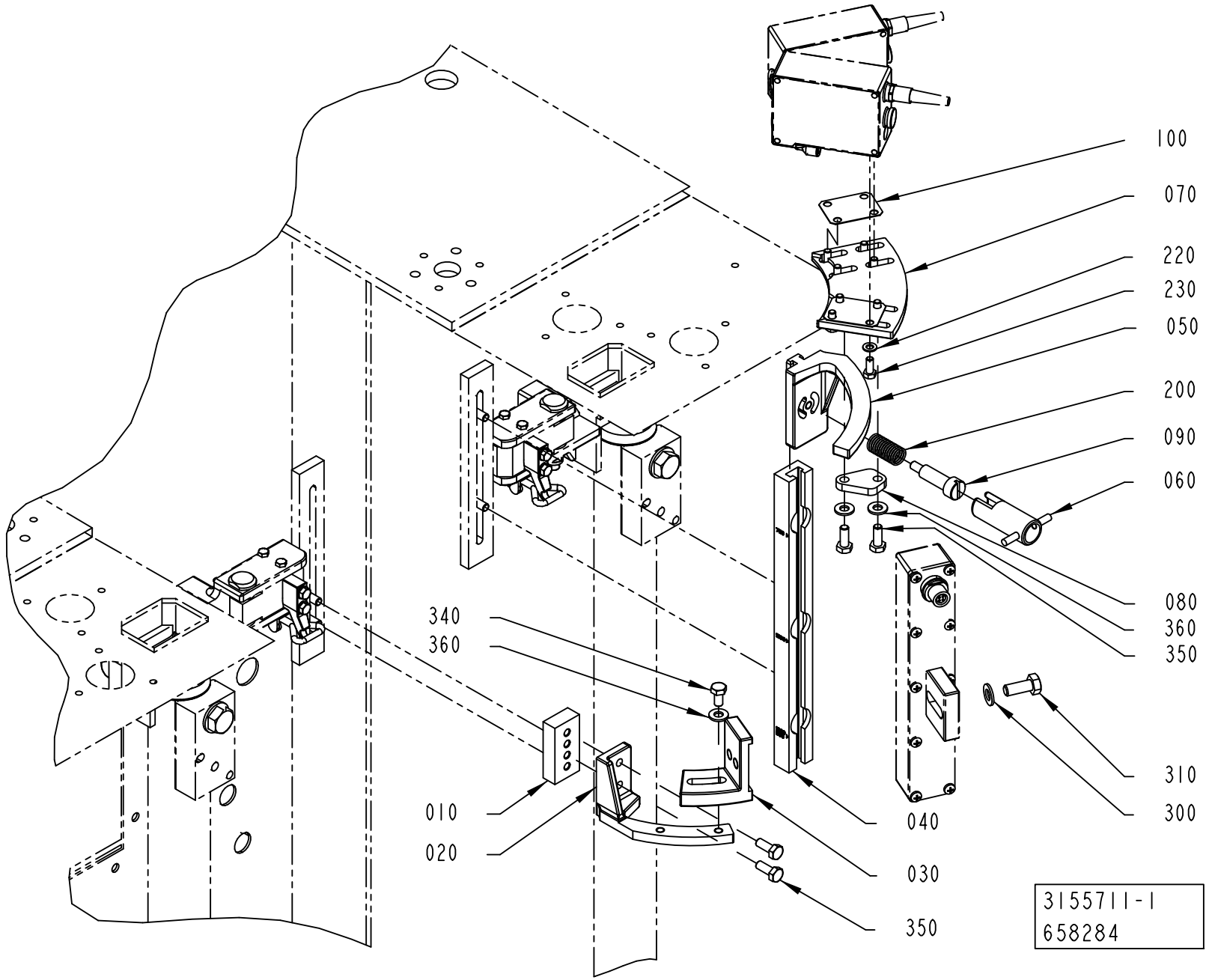

ECM: 664260 - 20140701
Group number: 3155711-0100
Assembly Drawing: 3155711-1_1_AB

Pos	Part No	UN	Qty	Description	Page No
-					
010	3031530-0000		1	SPACER	
020	457361-0000		1	CANTILEVER	
030	2949203-0000		1	SUPPORT	
040	3031528-0000		1	SLIDE	
050	3031527-0000		1	CANTILEVER	
060	2724929-0000		1	KNOB	
070	3073532-0000		1	SUPPORT	
080	3073531-0000		1	PLATE	
090	2993209-0000		1	SCREW	
100	3338611-0000		2	SHIM	
200	90335-0024		1	COMP. SPRING, 22250, 1,25X13,75X27	
220	315105-0146		8	WASHER PLAIN, 5,3X10X1 A4 BRB	
230	312105-0327		8	"SCREW, M6S ISO 4017 M5X12 A4 80"	
300	315105-0165		1	FWAS080G0-0S, WASHER PLAIN	
310	312105-0451		1	SCREW, M6S ISO 4017 M8X20 A4 80	
340	312105-0366		1	SCREW, M6S ISO 4017 M6X12 A4 80	
350	312105-0368		4	"SCREW, M6S ISO 4017 M6X16 A4 80"	
360	315105-0156		3	WASHER PLAIN, 6,7X14X1,5 A4 BRB	

Pos	Part No	UN	Qty	Description	Page No

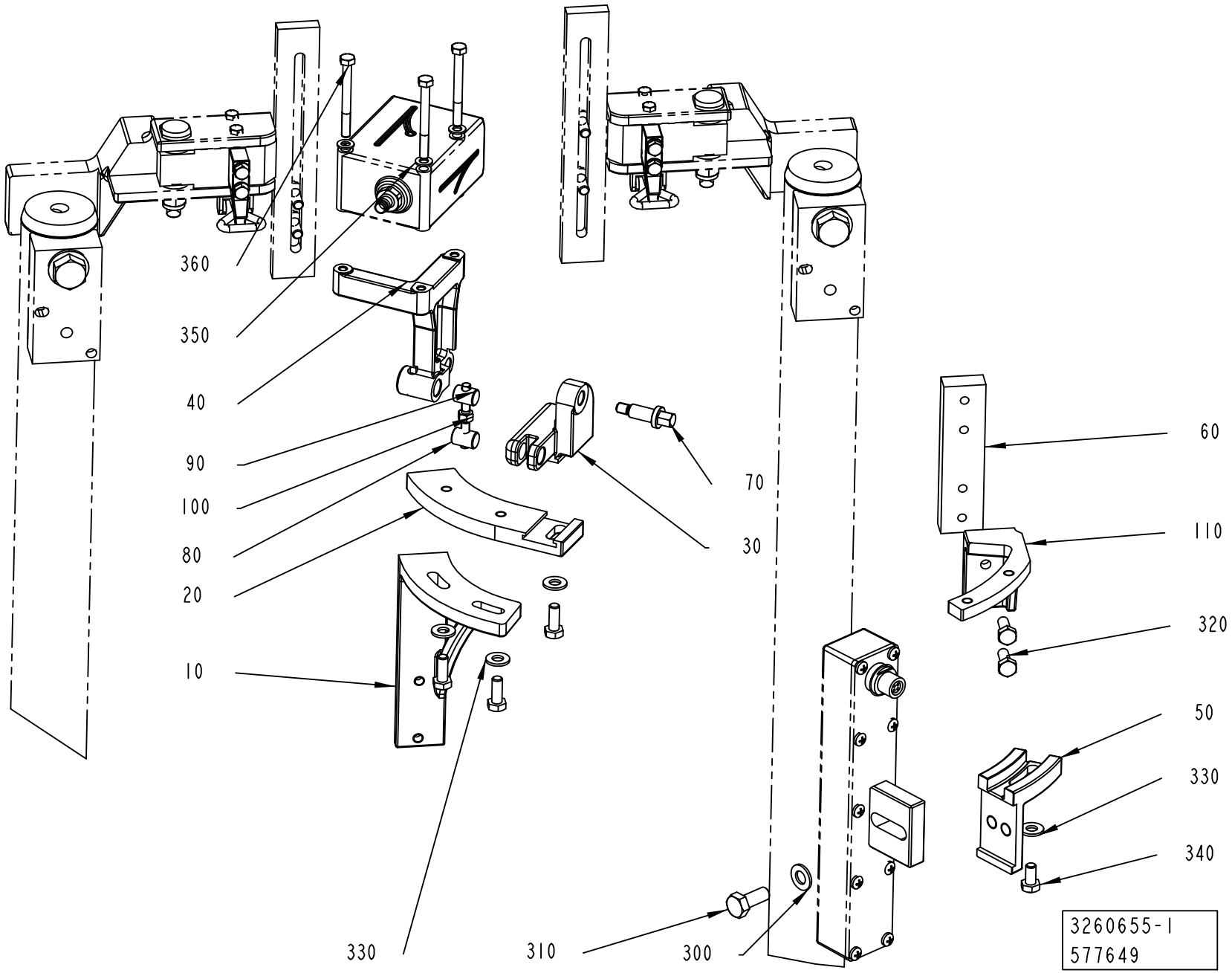
360
350
40
90
100
80
20
10
330
310
300
70
30
60
110
320
50
330
340
3260655-1
577649

ECM: 602562 - 20130701
Group number: 3260655-0100
Assembly Drawing: 3260655-1_1_AA

Pos	Part No	UN	Qty	Description	Page No
-					
010	3224392-0000		1	SUPPORT	
020	3224393-0000		1	PLATE	
030	3224394-0000		1	PLATE	
040	3228834-0000		1	BRACKET	
050	2949203-0000		1	SUPPORT	
060	3234680-0000		1	SPACER	
070	3149341-0000		1	SCREW	
080	3100271-0000		1	NUT	
090	3100270-0000		1	NUT	
100	3119372-0000		1	SCREW	
110	457361-0000		1	CANTILEVER	
300	315105-0165		1	FWAS080G0-0S, WASHER PLAIN	
310	312105-0451		1	SCREW, M6S ISO 4017 M8X20 A4 80	
320	312105-0368		5	"SCREW, M6S ISO 4017 M6X16 A4 80"	
330	315105-0156		4	WASHER PLAIN, 6,7X14X1,5 A4 BRB	
340	312105-0366		1	SCREW, M6S ISO 4017 M6X12 A4 80	
350	315105-0146		3	WASHER PLAIN, 5,3X10X1 A4 BRB	
360	312105-0341		3	SCREW, M6S ISO 4014 M5X50 A4 80	

Pos	Part No	UN	Qty	Description	Page No

CARRIER PRESSURE LEFT

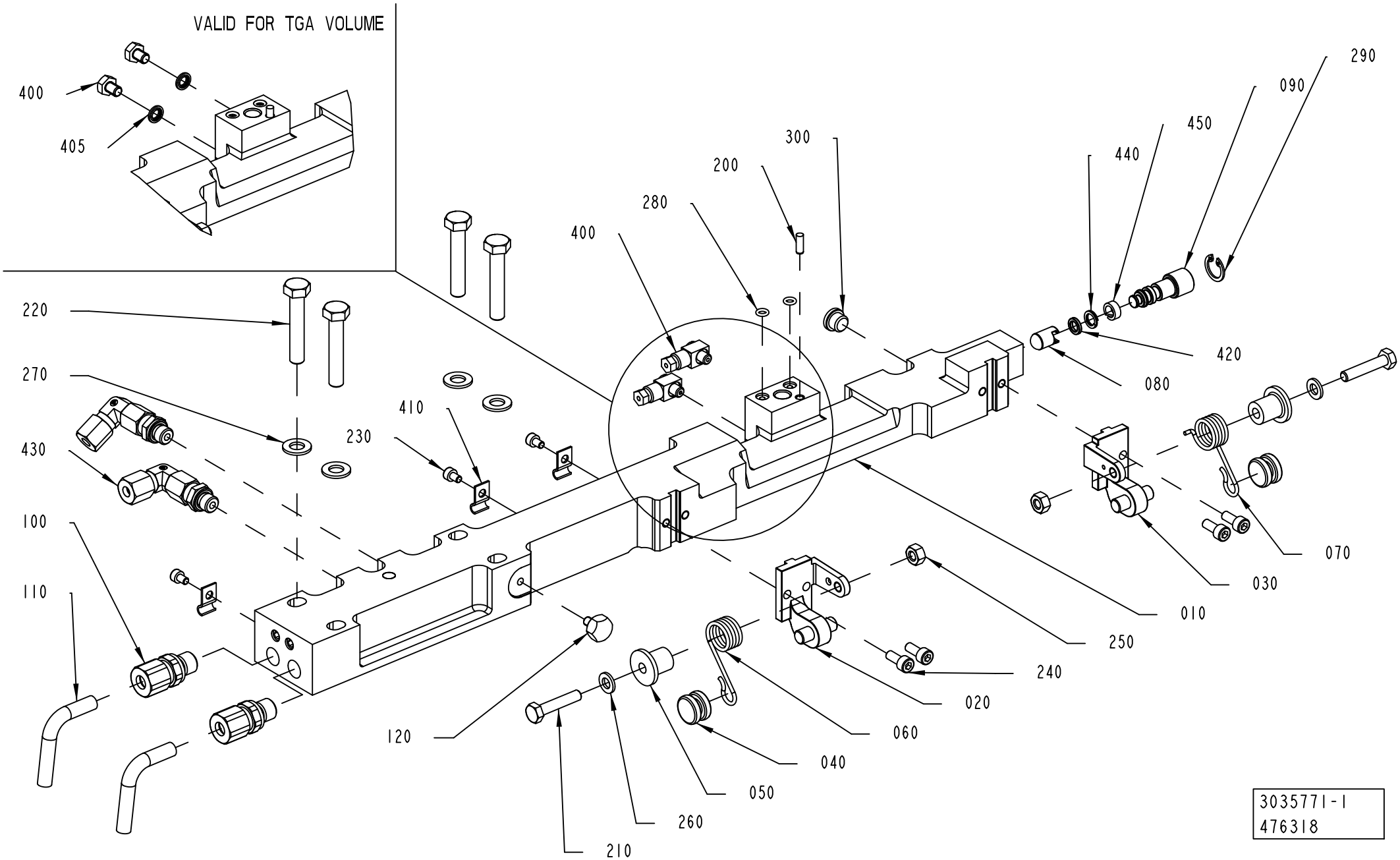

Pos	Part No	UN	Qty	Description	Page No
TBA 0500S, TBA 0500SQ, TBA 0500B, TBA 1000B, TBA 1000SQ, TBA 1000S, TBA 1500S, TPA 1000SQ, TPA 0500SQ, TPA 0750SQ, TBA 1000E, TBA 1000M, TBA 0500E (See drawing on page: 1-528)					
010	3014103-0000		1	CARRIER PRESSURE LEFT	
400	90134-0058		2	CONNECTION	
TBA 2000S (See drawing on page: 1-530)					
010	3038401-0000		1	CARRIER PRESSURE LEFT	
400	90134-0058		2	CONNECTION	
TGA 1000SQ, TGA 0750SQ, TGA 0500SQ, TGA 1500SQ, TGA 1000CR, TGA 1000LF (See drawing on page: 1-532)					
010	3014103-0000		1	CARRIER PRESSURE LEFT	
400	312105-0362		2	SCREW, M6S ISO 4017 M6X8 A4 80	
405	315115-0153		2	WASHER PLAIN, TBRB 6,4/12 H=3	
Common Parts					
020	2530292-0000		1	BRACKET	
030	2530293-0000		1	BRACKET	
040	2530296-0000		2	ROLLER	
050	2532531-0000		2	ROLLER	
060	2547588-0000		1	SPRING	
070	2547589-0000		1	SPRING	
080	2995752-0000		1	HEAD	
090	2995753-0000		1	SHAFT	
100	3039948-0000		2	CONNECTOR	
110	3039949-0000		2	TUBE	
120	3047361-0000		1	SETTING KNOB	
200	311103-0268		1	PARALLEL PIN ISO 2338 4M6X12 A1	
210	312105-0374		2	SCREW, M6S ISO 4014 M6X30 A4 80	
220	312105-0460		4	SCREW, M6S ISO 4014 M8X45 A4 80	
230	312115-0285		3	SCREW ISO4762 M4X6 A4 80	
240	312115-0327		4	SCREW ISO4762 M5X12 A4 80	
250	312605-0316		2	HEXAGON NUT, M6M M6 A280	
260	315105-0153		2	WASHER PLAIN, 6,4X12X1,5 A4 BRB	
270	315105-0165		4	FWAS080G0-0S, WASHER PLAIN	
280	315202-0102		2	O-RING 4,1X1,6 MM	
290	315753-0112		1	RETAINING RING FOR BORE DIN 472 15 SS	
300	342713-0209		1	PLUG, EXT THREAD HEX SOCKET 8638-00-180	
410	90165-0056		3	PIPE CLIP FOR TUBE, 4 MM	
420	90459-1861		1	X-SEAL 6,07X2,62 MM	
430	90600-1991		2	ADJUSTABLE ELBOW CONNECTION 6-G1/8	
440	90601-3689		1	BACK-UP RING 7X1,4 MM	
450	90601-3688		1	WEAR RING 6,9X10X4 MM	
460	90602-4847		1	THREADLOCKER LOCTITE 243, 50ML	

Pos	Part No	UN	Qty	Description	Page No

CARRIER PRESSURE LEFT

Drawing file: 3035771-2_1_AA.hpgl

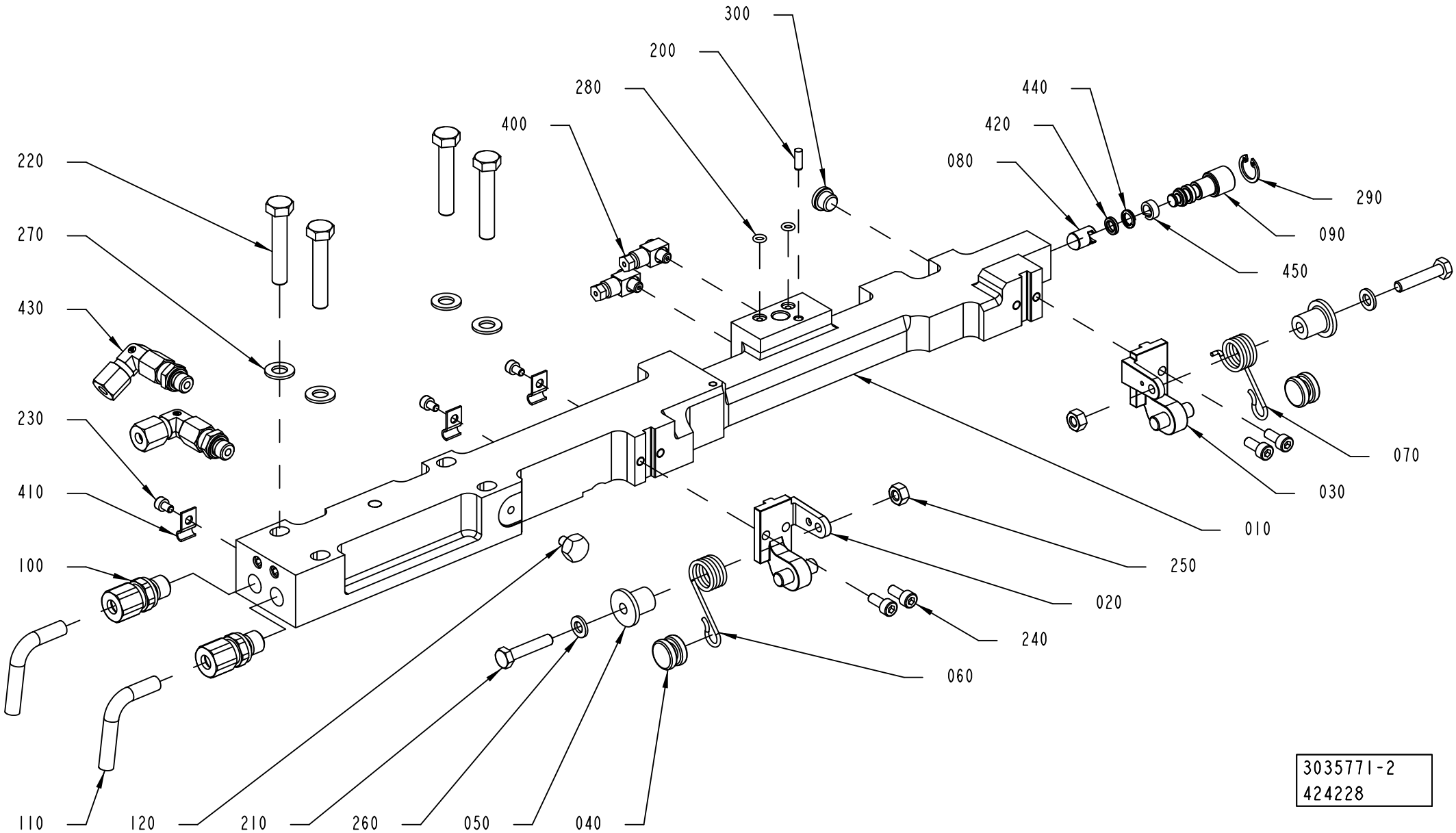

Pos	Part No	UN	Qty	Description	Page No
TBA 0500S, TBA 0500SQ, TBA 0500B, TBA 1000B, TBA 1000SQ, TBA 1000S, TBA 1500S, TPA 1000SQ, TPA 0500SQ, TPA 0750SQ, TBA 1000E, TBA 1000M, TBA 0500E (See drawing on page: 1-528)					
010	3014103-0000		1	CARRIER PRESSURE LEFT	
400	90134-0058		2	CONNECTION	
TBA 2000S (See drawing on page: 1-530)					
010	3038401-0000		1	CARRIER PRESSURE LEFT	
400	90134-0058		2	CONNECTION	
TGA 1000SQ, TGA 0750SQ, TGA 0500SQ, TGA 1500SQ, TGA 1000CR, TGA 1000LF (See drawing on page: 1-532)					
010	3014103-0000		1	CARRIER PRESSURE LEFT	
400	312105-0362		2	SCREW, M6S ISO 4017 M6X8 A4 80	
405	315115-0153		2	WASHER PLAIN, TBRB 6,4/12 H=3	
Common Parts					
020	2530292-0000		1	BRACKET	
030	2530293-0000		1	BRACKET	
040	2530296-0000		2	ROLLER	
050	2532531-0000		2	ROLLER	
060	2547588-0000		1	SPRING	
070	2547589-0000		1	SPRING	
080	2995752-0000		1	HEAD	
090	2995753-0000		1	SHAFT	
100	3039948-0000		2	CONNECTOR	
110	3039949-0000		2	TUBE	
120	3047361-0000		1	SETTING KNOB	
200	311103-0268		1	PARALLEL PIN ISO 2338 4M6X12 A1	
210	312105-0374		2	SCREW, M6S ISO 4014 M6X30 A4 80	
220	312105-0460		4	SCREW, M6S ISO 4014 M8X45 A4 80	
230	312115-0285		3	SCREW ISO4762 M4X6 A4 80	
240	312115-0327		4	SCREW ISO4762 M5X12 A4 80	
250	312605-0316		2	HEXAGON NUT, M6M M6 A280	
260	315105-0153		2	WASHER PLAIN, 6,4X12X1,5 A4 BRB	
270	315105-0165		4	FWAS080G0-0S, WASHER PLAIN	
280	315202-0102		2	O-RING 4,1X1,6 MM	
290	315753-0112		1	RETAINING RING FOR BORE DIN 472 15 SS	
300	342713-0209		1	PLUG, EXT THREAD HEX SOCKET 8638-00-180	
410	90165-0056		3	PIPE CLIP FOR TUBE, 4 MM	
420	90459-1861		1	X-SEAL 6,07X2,62 MM	
430	90600-1991		2	ADJUSTABLE ELBOW CONNECTION 6-G1/8	
440	90601-3689		1	BACK-UP RING 7X1,4 MM	
450	90601-3688		1	WEAR RING 6,9X10X4 MM	
460	90602-4847		1	THREADLOCKER LOCTITE 243, 50ML	

Pos	Part No	UN	Qty	Description	Page No

CARRIER PRESSURE LEFT

Drawing file: 3035771-3_1_AA.hpgl

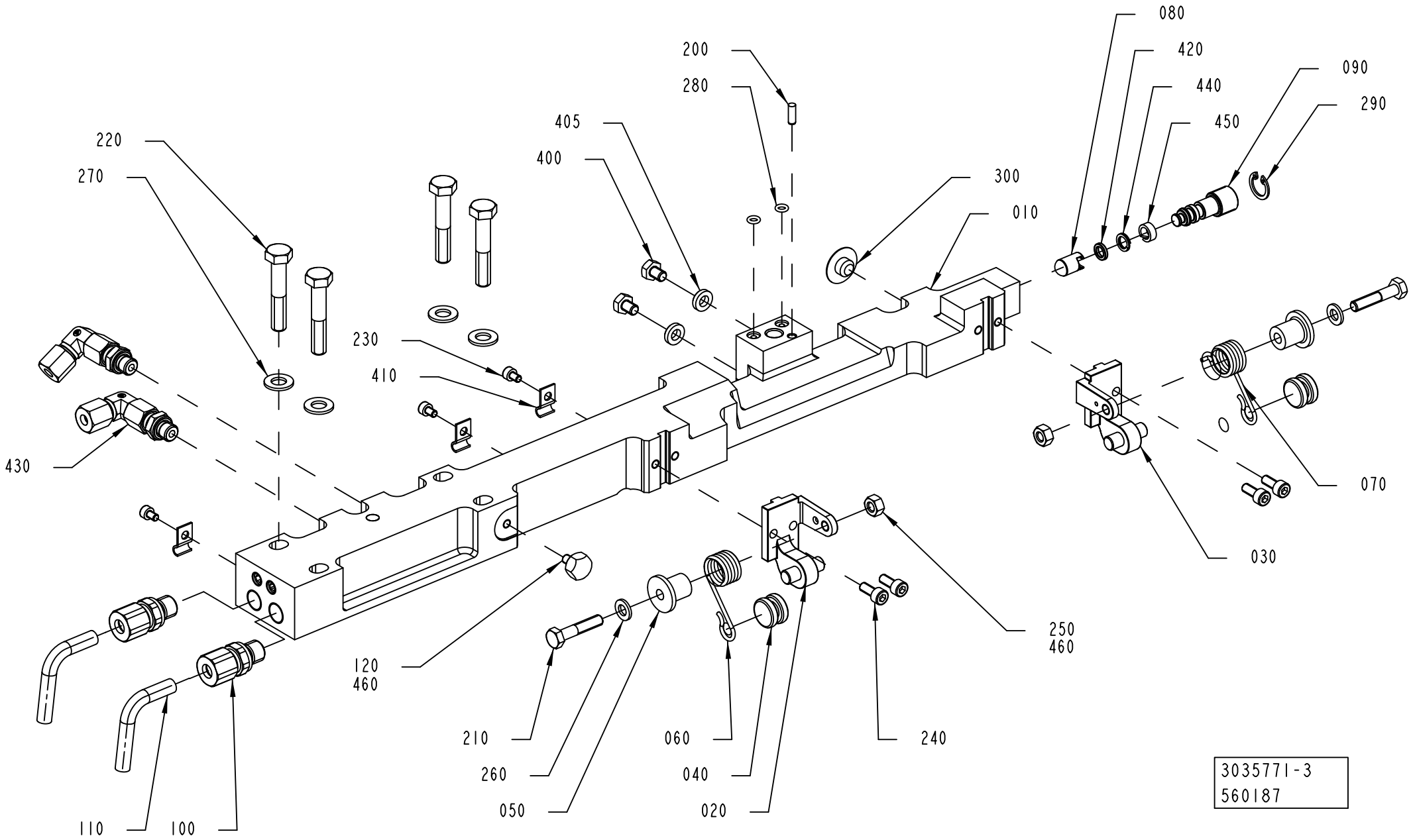

Pos	Part No	UN	Qty	Description	Page No
TBA 0500S, TBA 0500SQ, TBA 0500B, TBA 1000B, TBA 1000SQ, TBA 1000S, TBA 1500S, TPA 1000SQ, TPA 0500SQ, TPA 0750SQ, TBA 1000E, TBA 1000M, TBA 0500E (See drawing on page: 1-528)					
010	3014103-0000		1	CARRIER PRESSURE LEFT	
400	90134-0058		2	CONNECTION	
TBA 2000S (See drawing on page: 1-530)					
010	3038401-0000		1	CARRIER PRESSURE LEFT	
400	90134-0058		2	CONNECTION	
TGA 1000SQ, TGA 0750SQ, TGA 0500SQ, TGA 1500SQ, TGA 1000CR, TGA 1000LF (See drawing on page: 1-532)					
010	3014103-0000		1	CARRIER PRESSURE LEFT	
400	312105-0362		2	SCREW, M6S ISO 4017 M6X8 A4 80	
405	315115-0153		2	WASHER PLAIN, TBRB 6,4/12 H=3	
Common Parts					
020	2530292-0000		1	BRACKET	
030	2530293-0000		1	BRACKET	
040	2530296-0000		2	ROLLER	
050	2532531-0000		2	ROLLER	
060	2547588-0000		1	SPRING	
070	2547589-0000		1	SPRING	
080	2995752-0000		1	HEAD	
090	2995753-0000		1	SHAFT	
100	3039948-0000		2	CONNECTOR	
110	3039949-0000		2	TUBE	
120	3047361-0000		1	SETTING KNOB	
200	311103-0268		1	PARALLEL PIN ISO 2338 4M6X12 A1	
210	312105-0374		2	SCREW, M6S ISO 4014 M6X30 A4 80	
220	312105-0460		4	SCREW, M6S ISO 4014 M8X45 A4 80	
230	312115-0285		3	SCREW ISO4762 M4X6 A4 80	
240	312115-0327		4	SCREW ISO4762 M5X12 A4 80	
250	312605-0316		2	HEXAGON NUT, M6M M6 A280	
260	315105-0153		2	WASHER PLAIN, 6,4X12X1,5 A4 BRB	
270	315105-0165		4	FWAS080G0-0S, WASHER PLAIN	
280	315202-0102		2	O-RING 4,1X1,6 MM	
290	315753-0112		1	RETAINING RING FOR BORE DIN 472 15 SS	
300	342713-0209		1	PLUG, EXT THREAD HEX SOCKET 8638-00-180	
410	90165-0056		3	PIPE CLIP FOR TUBE, 4 MM	
420	90459-1861		1	X-SEAL 6,07X2,62 MM	
430	90600-1991		2	ADJUSTABLE ELBOW CONNECTION 6-G1/8	
440	90601-3689		1	BACK-UP RING 7X1,4 MM	
450	90601-3688		1	WEAR RING 6,9X10X4 MM	
460	90602-4847		1	THREADLOCKER LOCTITE 243, 50ML	

Pos	Part No	UN	Qty	Description	Page No

PRESSURE JAW LEFT

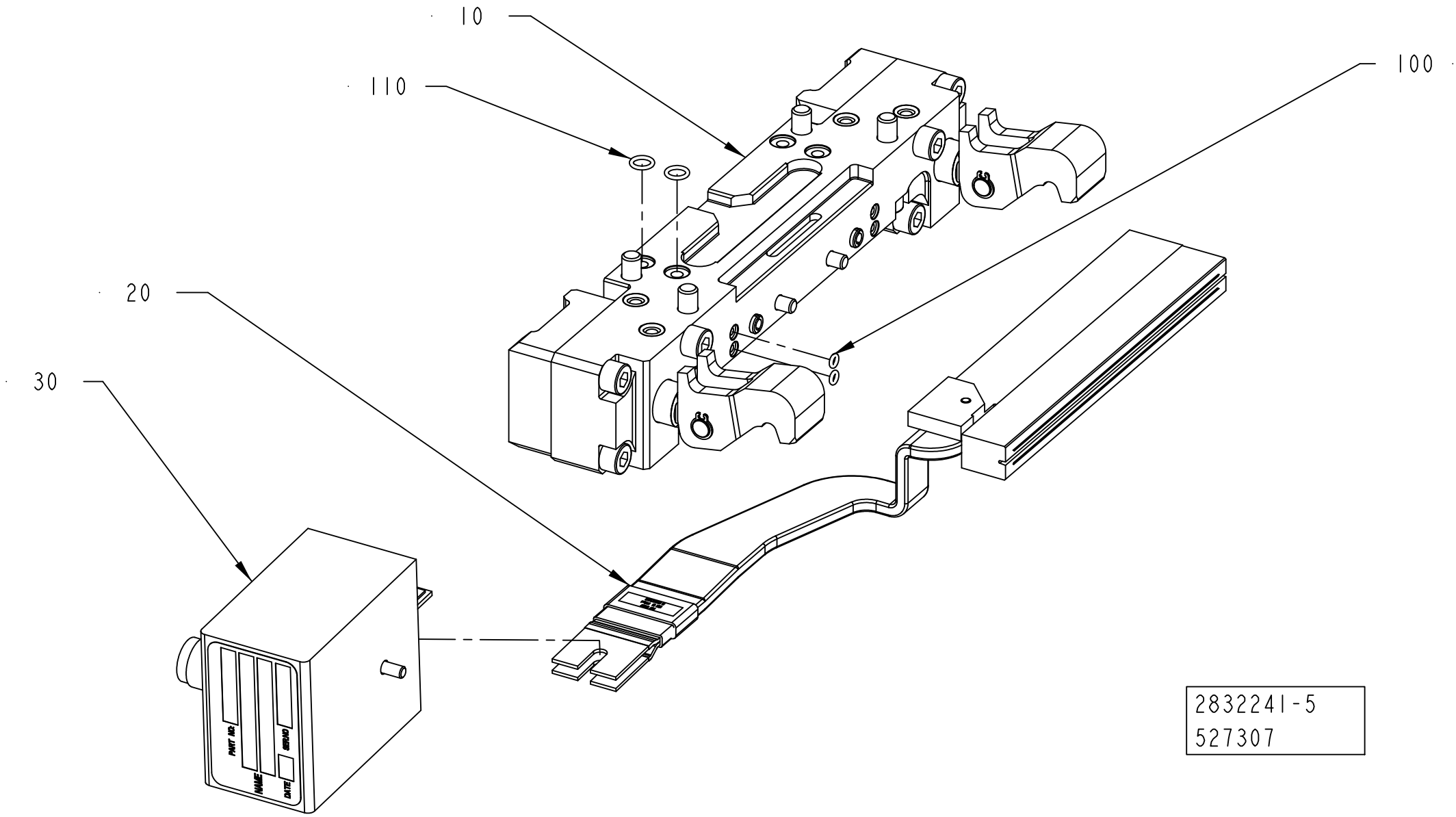

2832241-5
527307

ECM: 647353 - 20140401
Group number: 2832241-0200
Assembly Drawing: 2832241-5_1_AA

This list covers pages from 1-534 to 1-537

Pos	Part No	UN	Qty	Description	Page No
TBA 0500E, TBA 1000E QC (See drawing on pages: 1-534, 1-536)					
050	3322308-0000		1	WEDGE	
200	312155-0331		2	SCREW DIN 7991 MF6S M5X20 A4 70	
TBA 1000E NOQC (See drawing on pages: 1-534, 1-536)					
050	3051286-0000		1	WEDGE	
200	312155-0331		2	SCREW DIN 7991 MF6S M5X20 A4 70	
Common Parts					
010	2832243-0100		1	PRESSURE JAW	**1-539**
020	2832244-0200		1	INDUCTOR LEFT	**1-541, 1-543, 1-545**
030	2875994-0100		1	ADAPTION TRANSFORMER	**1-547**
100	315202-0101		2	O-RING 3,1X1,6 MM	
110	315202-0105		2	O-RING 7,1X1,6 MM	

Pos	Part No	UN	Qty	Description	Page No

PRESSURE JAW LEFT

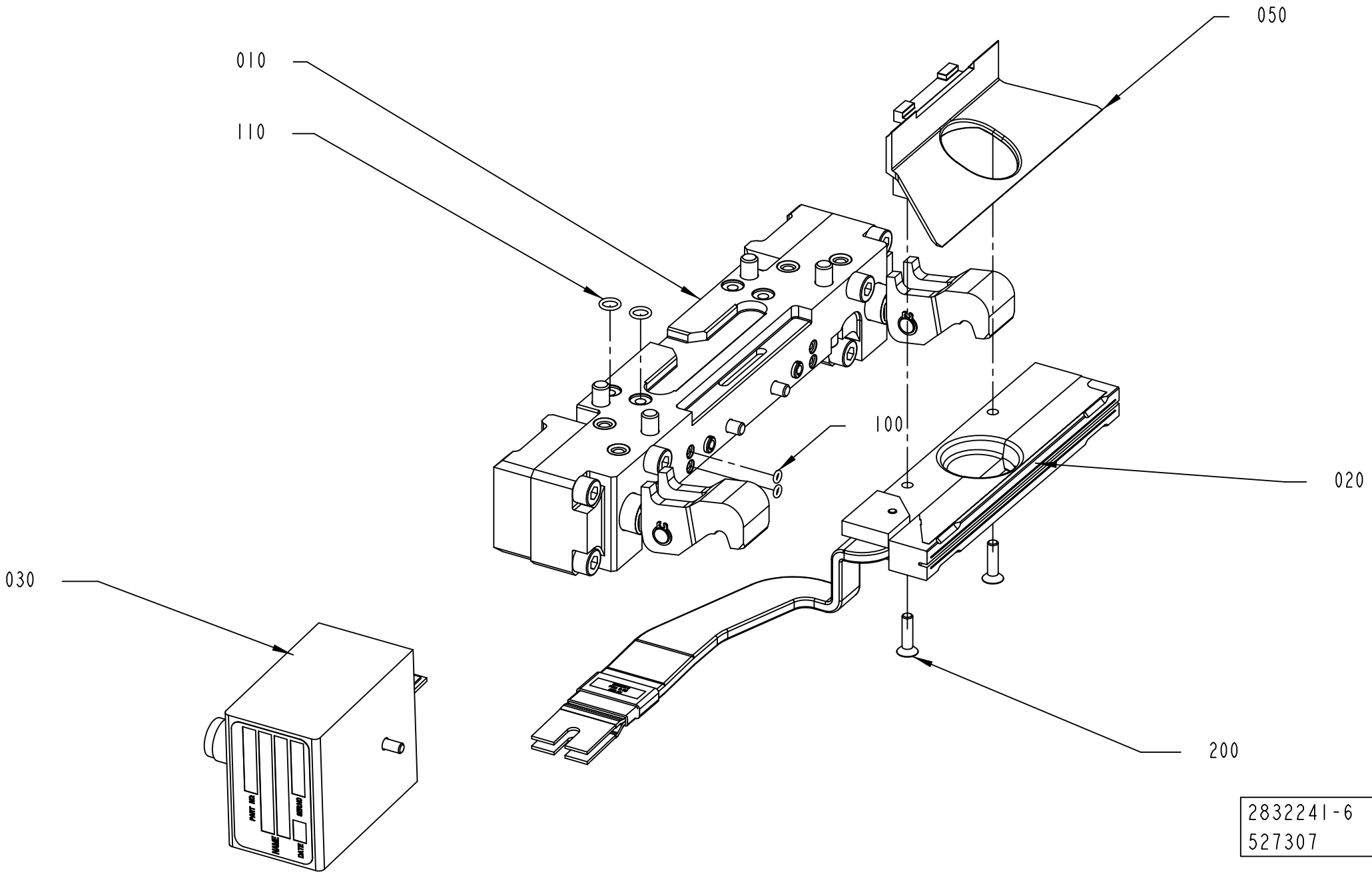

2832241-6
527307

ECM: 647353 - 20140401
Group number: 2832241-0200
Assembly Drawing: 2832241-6_1_AA

This list covers pages from 1-534 to 1-537

Pos	Part No	UN	Qty	Description	Page No
TBA 0500E, TBA 1000E QC (See drawing on pages: 1-534, 1-536)					
050	3322308-0000		1	WEDGE	
200	312155-0331		2	SCREW DIN 7991 MF6S M5X20 A4 70	
TBA 1000E NOQC (See drawing on pages: 1-534, 1-536)					
050	3051286-0000		1	WEDGE	
200	312155-0331		2	SCREW DIN 7991 MF6S M5X20 A4 70	
Common Parts					
010	2832243-0100		1	PRESSURE JAW	**1-539**
020	2832244-0200		1	INDUCTOR LEFT	**1-541, 1-543, 1-545**
030	2875994-0100		1	ADAPTION TRANSFORMER	**1-547**
100	315202-0101		2	O-RING 3,1X1,6 MM	
110	315202-0105		2	O-RING 7,1X1,6 MM	

Pos	Part No	UN	Qty	Description	Page No

PRESSURE JAW

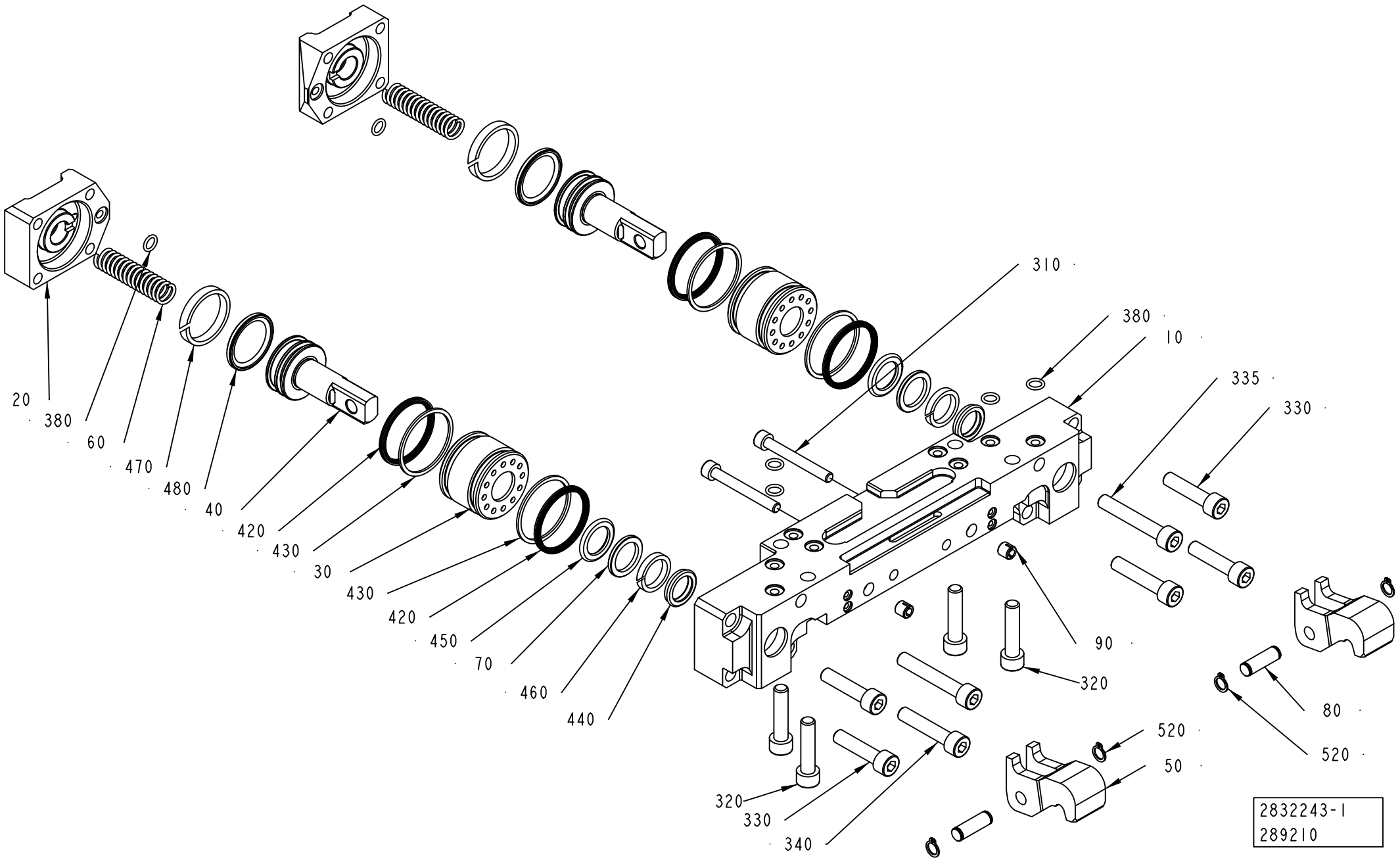

ECM: 647355 - 20140401
Group number: 2832243-0100
Assembly Drawing: 2832243-1_1_AA

Pos	Part No	UN	Qty	Description	Page No
TBA 0500S					
010	2813731-0000		1	BEARING HOUSING	
020	2813730-0000		2	LID	
030	3103391-0000		2	SLEEVE	
040	3103390-0000		2	PISTON	
050	1538349-0000		2	CATCH	
060	1260328-0000		2	SPRING	
080	950351-0000		2	SHAFT	
310	312115-0380		2	SCREW ISO4762 M6X50 A4 80	
320	312115-0457		4	SCREW ISO4762 M8X35 A4 80	
330	312115-0457		4	SCREW ISO4762 M8X35 A4 80	
335	312115-0461		2	SCREW ISO4762 M8X50 A4 80	
340	312115-0459		2	SCREW ISO4762 M8X40 A4 80	
420	90091-0359		4	X-SEAL 36,17X2,62 MM	
430	90091-0360		4	BACK-UP RING 37,5X1,4 MM	
470	90603-4532		2	WEAR RING 25X30X5,6 MM	
480	90603-4541		2	PISTON SEAL GLYD RING 22,5X30X3,2 MM	
TBA 0500SQ, TBA 0500B, TBA 1000B, TBA 1000SQ, TBA 1000S, TBA 1500S, TPA 1000SQ, TPA 0500SQ, TPA 0750SQ, TGA 1500SQ, TBA 1000E, TBA 1000M, TBA 0500E					
010	2813731-0000		1	BEARING HOUSING	
020	2813730-0000		2	LID	
030	1348504-0000		2	SLEEVE	
040	1349612-0000		2	PISTON	
050	1538349-0000		2	CATCH	
060	1260328-0000		2	SPRING	
080	950351-0000		2	SHAFT	
310	312115-0380		2	SCREW ISO4762 M6X50 A4 80	
320	312115-0457		4	SCREW ISO4762 M8X35 A4 80	
330	312115-0457		4	SCREW ISO4762 M8X35 A4 80	
335	312115-0461		2	SCREW ISO4762 M8X50 A4 80	
340	312115-0459		2	SCREW ISO4762 M8X40 A4 80	
420	90091-0359		4	X-SEAL 36,17X2,62 MM	
430	90091-0360		4	BACK-UP RING 37,5X1,4 MM	
470	90091-0368		2	WEAR RING 30X35X5,3 MM	
480	90091-0428		2	PISTON SEAL GLYD RING T 27,5X34,5X3,2 MM	
TBA 2000S					
010	3002560-0000		1	BEARING HOUSING	
020	2907795-0000		2	LID	
030	2588295-0000		2	SLEEVE	
040	2588296-0000		2	PISTON	
050	2566338-0000		2	CATCH	
060	2594892-0000		2	SPRING	
080	2588297-0000		2	SHAFT	
310	312115-0376		3	SCREW ISO4762 M6X35 A4 80	
320	312115-0457		4	SCREW ISO4762 M8X35 A4 80	
330	312115-0457		4	SCREW ISO4762 M8X35 A4 80	
335	312115-0461		2	SCREW ISO4762 M8X50 A4 80	
340	312115-0459		2	SCREW ISO4762 M8X40 A4 80	
420	90459-2146		4	X-SEAL 42,52X2,62 MM	
430	90459-2145		4	BACK-UP RING 43,5X1,4 MM	
470	90091-0074		2	WEAR RING 35X40X5,3 MM	
480	90459-2173		2	PISTON SEAL GLYD RING T 32,5X40X3,2 MM	
TGA 1000SQ, TGA 0750SQ, TGA 0500SQ, TGA 1000CR, TGA 1000LF					
010	2612745-0000		1	BEARING HOUSING	
020	2700151-0000		2	LID	
030	1348504-0000		2	SLEEVE	
040	1349612-0000		2	PISTON	
050	1538349-0000		2	CATCH	
060	1260328-0000		2	SPRING	
080	950351-0000		2	SHAFT	
310	312115-0380		2	SCREW ISO4762 M6X50 A4 80	
320	312115-0457		4	SCREW ISO4762 M8X35 A4 80	
330	312115-0459		4	SCREW ISO4762 M8X40 A4 80	
335	312115-0461		4	SCREW ISO4762 M8X50 A4 80	
420	90091-0359		4	X-SEAL 36,17X2,62 MM	
430	90091-0360		4	BACK-UP RING 37,5X1,4 MM	
470	90091-0368		2	WEAR RING 30X35X5,3 MM	
480	90091-0428		2	PISTON SEAL GLYD RING T 27,5X34,5X3,2 MM	
Common Parts					
070	1038240-0000		2	SPACER	
090	107426-0000		2	GUIDE SLEEVE	
380	315202-0105		6	O-RING 7,1X1,6 MM	
440	90091-0362		2	SCRAPER, EXCLUDER 18X22,8X3,7 MM	
450	90091-0364		2	ROD SEAL, STEPSEAL 18X25,3X3,2 MM	
460	90091-0366		2	WEAR RING 18X23X3,9 MM	
520	90141-0015		4	RETAINING RING FOR SHAFT DIN 471 8 SS	

Machine Type | Group Description | Used-In | Group Number | Page No

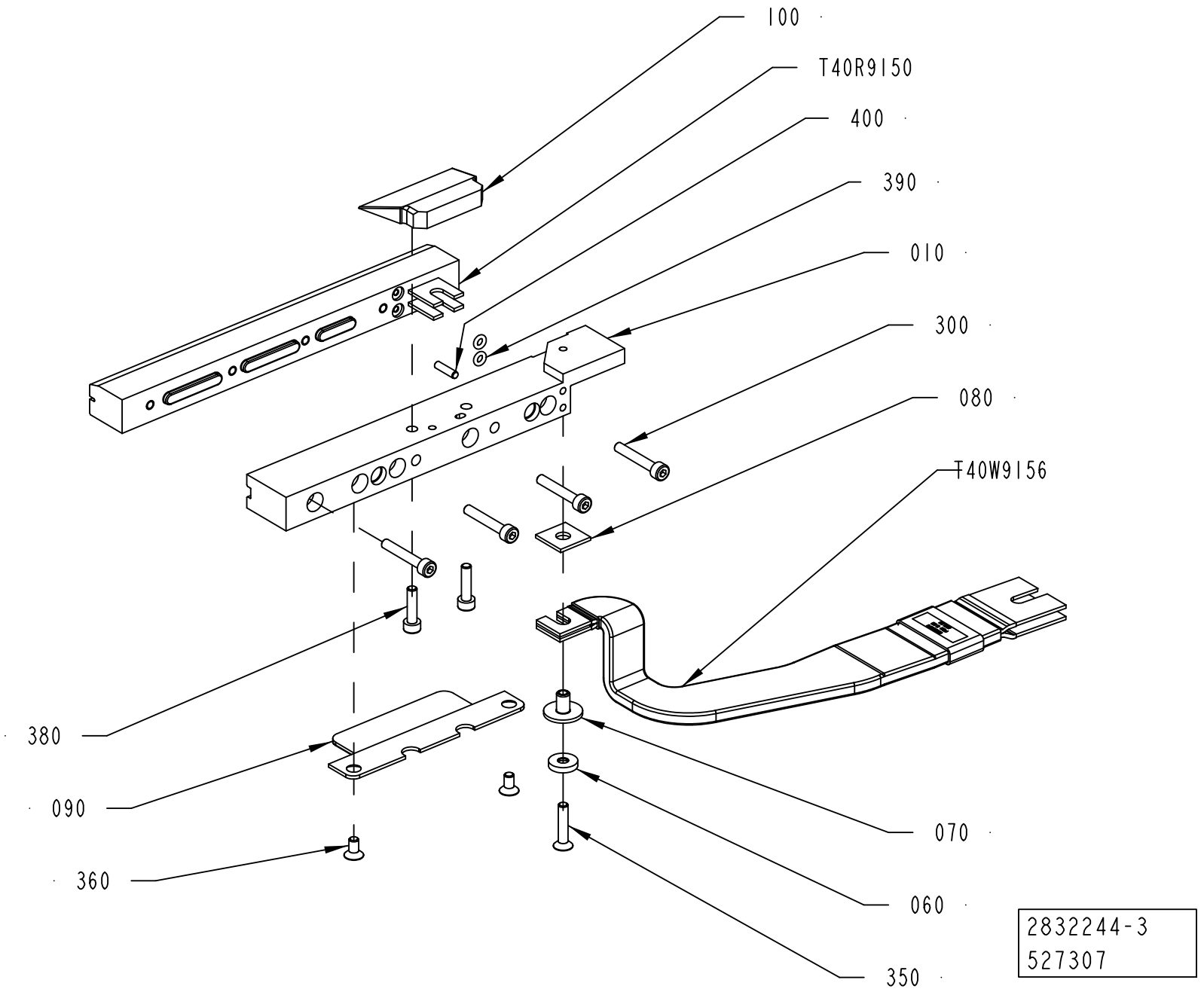
100
T40R9150
400
390
010
300
080
T40W9156
380
090
360
070
060
350
2832244-3
527307

ECM: 647356 - 20140401
Group number: 2832244-0200
Assembly Drawing: 2832244-3_1_AA

This list covers pages from 1-540 to 1-545

Pos	Part No	UN	Qty	Description	Page No
TGA 1500SQ (See drawing on page: 1-542)					
010	2928240-0000		1	RAIL	
060	2836239-0000		1	WASHER	
070	2836238-0000		1	INSULATION NUT	
080	1036584-0000		1	WASHER	
090	2928252-0000		1	VOLUME BULGE	
300	312115-0297		4	SCREW ISO4762 M4X25 A4 80	
350	312155-0295		1	SCREW DIN 7991 MF6S M4X20 A4 70	
370	312105-0368		1	"SCREW, M6S ISO 4017 M6X16 A4 80"	
390	315202-0101		2	O-RING 3,1X1,6 MM	
420	315105-0153		1	WASHER PLAIN, 6,4X12X1,5 A4 BRB	
T40R9150	3187897-0000		1	INDUCTOR	
T40W9156	2830430-0000		1	BUSBAR	
TPA 0500SQ (See drawing on page: 1-540)					
010	2903761-0000		1	RAIL	
060	2836239-0000		1	WASHER	
070	2836238-0000		1	INSULATION NUT	
080	1036584-0000		1	WASHER	
090	2958748-0000		1	VOLUME BULGE	
100	2968248-0000		1	VOLUME BULGE	
300	312115-0297		3	SCREW ISO4762 M4X25 A4 80	
350	312155-0295		1	SCREW DIN 7991 MF6S M4X20 A4 70	
360	312155-0287		2	SCREW DIN 7991 MF6S M4X8 A4 70	
380	312115-0293		2	SCREW ISO4762 M4X16 A4 80	
390	315202-0101		2	O-RING 3,1X1,6 MM	
400	311103-0234		1	PARALLEL PIN ISO 2338 3M6X12 A1	
T40R9150	2587466-0000		1	INDUCTOR	
T40W9156	2830430-0000		1	BUSBAR	
TPA 1000SQ, TPA 0750SQ (See drawing on page: 1-540)					
010	2903761-0000		1	RAIL	
060	2836239-0000		1	WASHER	
070	2836238-0000		1	INSULATION NUT	
080	1036584-0000		1	WASHER	
090	2944194-0000		1	VOLUME BULGE	
100	2944193-0000		1	VOLUME BULGE	
300	312115-0297		4	SCREW ISO4762 M4X25 A4 80	
350	312155-0295		1	SCREW DIN 7991 MF6S M4X20 A4 70	
360	312155-0287		2	SCREW DIN 7991 MF6S M4X8 A4 70	
380	312115-0293		2	SCREW ISO4762 M4X16 A4 80	
390	315202-0101		2	O-RING 3,1X1,6 MM	
400	311103-0234		1	PARALLEL PIN ISO 2338 3M6X12 A1	
T40R9150	2663378-0000		1	INDUCTOR	
T40W9156	2830430-0000		1	BUSBAR	
TBA 0500B, TBA 1000B NOMOLDEDCAP (See drawing on page: 1-540)					
010	2903761-0000		1	RAIL	
060	2836239-0000		1	WASHER	
070	2836238-0000		1	INSULATION NUT	
080	1036584-0000		1	WASHER	
090	1558734-0000		1	VOLUME BULGE	
300	312115-0297		4	SCREW ISO4762 M4X25 A4 80	
350	312155-0295		1	SCREW DIN 7991 MF6S M4X20 A4 70	
360	312155-0287		2	SCREW DIN 7991 MF6S M4X8 A4 70	
390	315202-0101		2	O-RING 3,1X1,6 MM	
T40R9150	3187897-0000		1	INDUCTOR	
T40W9156	2830430-0000		1	BUSBAR	
TBA 0500S (See drawing on page: 1-540)					
010	2815964-0000		1	RAIL	
060	2836239-0000		1	WASHER	
070	2836238-0000		1	INSULATION NUT	
080	1036584-0000		1	WASHER	
300	312115-0297		4	SCREW ISO4762 M4X25 A4 80	
350	312155-0295		1	SCREW DIN 7991 MF6S M4X20 A4 70	
390	315202-0101		2	O-RING 3,1X1,6 MM	
T40R9150	3124822-0000		1	INDUCTOR	
T40W9156	2830430-0000		1	BUSBAR	
TBA 0500SQ, TBA 1000SQ (See drawing on page: 1-540)					
010	2815964-0000		1	RAIL	
060	2836239-0000		1	WASHER	
070	2836238-0000		1	INSULATION NUT	
080	1036584-0000		1	WASHER	
300	312115-0297		4	SCREW ISO4762 M4X25 A4 80	
350	312155-0295		1	SCREW DIN 7991 MF6S M4X20 A4 70	
390	315202-0101		2	O-RING 3,1X1,6 MM	
T40R9150	3187899-0000		1	INDUCTOR	
T40W9156	2830430-0000		1	BUSBAR	
TBA 1000B STDA7 (See drawing on page: 1-540)					
010	2940879-0000		1	RAIL	
060	2836239-0000		1	WASHER	
070	2836238-0000		1	INSULATION NUT	
080	1036584-0000		1	WASHER	
090	1558734-0000		1	VOLUME BULGE	
300	312115-0297		4	SCREW ISO4762 M4X25 A4 80	
350	312155-0295		1	SCREW DIN 7991 MF6S M4X20 A4 70	
360	312155-0287		2	SCREW DIN 7991 MF6S M4X8 A4 70	

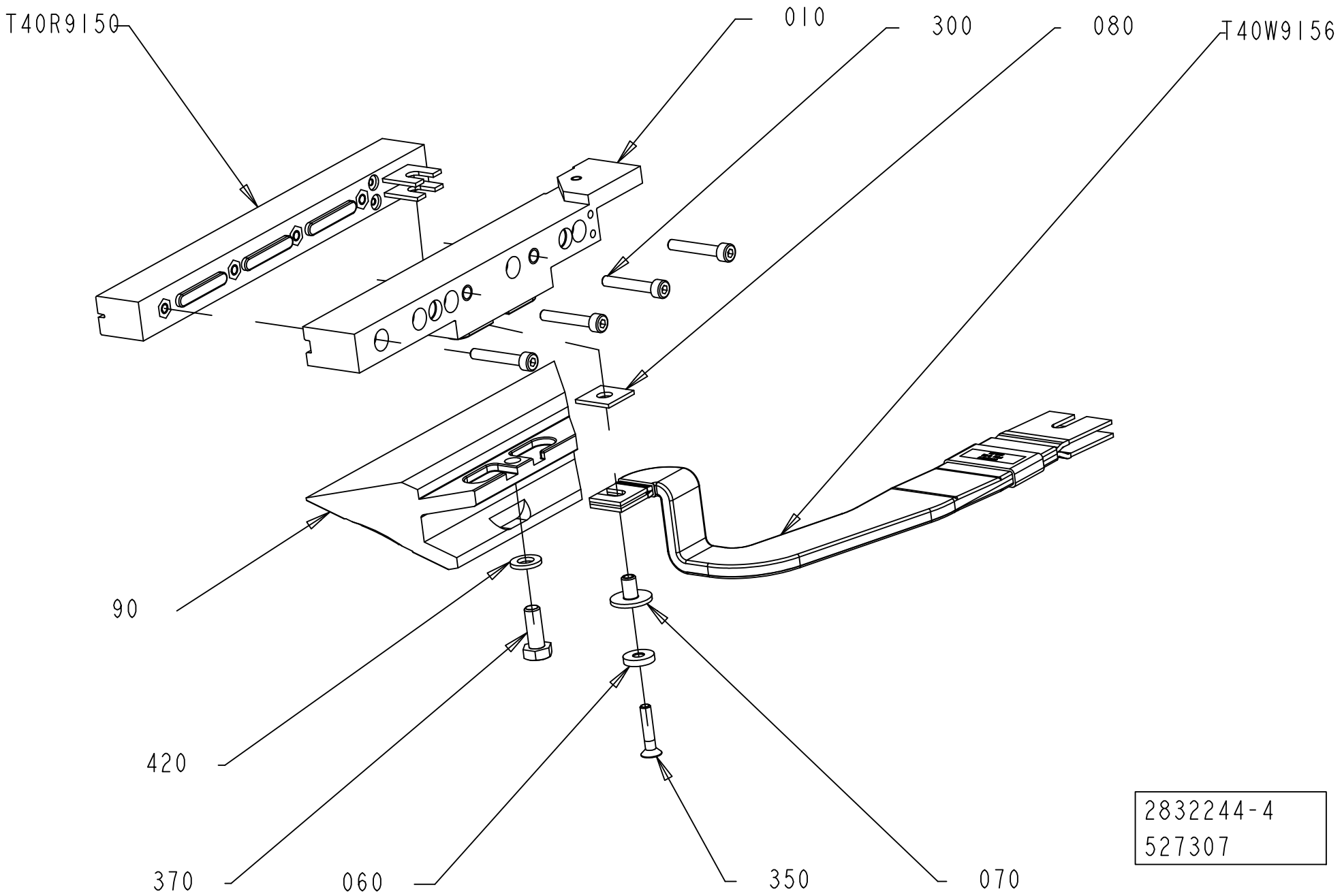
T40R9150
010
300
080
T40W9156
90
420
370
060
350
070
2832244-4
527307

Pos	Part No	UN	Qty	Description	Page No
TBA 1000B STDA7 (Cont'd) (See drawing on page: 1-540)					
390	315202-0101		2	O-RING 3,1X1,6 MM	
T40R9150	2610956-0000		1	INDUCTOR	
T40W9156	2830430-0000		1	BUSBAR	
TBA 1000E, TBA 0500E (See drawing on page: 1-540)					
010	2960621-0000		1	RAIL	
060	3002499-0000		1	WASHER	
070	3002497-0000		1	INSULATION NUT	
080	3002498-0000		1	WASHER	
300	312115-0297		4	SCREW ISO4762 M4X25 A4 80	
350	312155-0295		1	SCREW DIN 7991 MF6S M4X20 A4 70	
390	315202-0101		4	O-RING 3,1X1,6 MM	
400	311103-0307		2	PARALLEL PIN ISO 2338 5M6X14 A1	
T40R9150	3003480-0000		1	INDUCTOR	
T40W9156	2830430-0000		1	BUSBAR	
TBA 1000M LIGHTCAP24 (See drawing on page: 1-540)					
010	3152727-0000		1	RAIL	
060	3002499-0000		1	WASHER	
070	3002497-0000		1	INSULATION NUT	
080	3002498-0000		1	WASHER	
090	3153223-0000		1	VOLUME BULGE	
300	312115-0297		3	SCREW ISO4762 M4X25 A4 80	
350	312155-0295		1	SCREW DIN 7991 MF6S M4X20 A4 70	
360	312155-0285		2	SCREW DIN 7991 MF6S M4X6 A4 70	
390	315202-0101		2	O-RING 3,1X1,6 MM	
T40R9150	3095386-0000		1	INDUCTOR	
T40W9156	2830430-0000		1	BUSBAR	
TBA 1000M STDA7 (See drawing on page: 1-540)					
010	3067549-0000		1	RAIL	
060	3002499-0000		1	WASHER	
070	3002497-0000		1	INSULATION NUT	
080	3002498-0000		1	WASHER	
090	3067384-0000		1	VOLUME BULGE	
300	312115-0297		3	SCREW ISO4762 M4X25 A4 80	
350	312155-0295		1	SCREW DIN 7991 MF6S M4X20 A4 70	
360	312155-0220		2	SCREW DIN 7991 MF6S M3X6 A4 70	
390	315202-0101		2	O-RING 3,1X1,6 MM	
T40R9150	3003481-0000		1	INDUCTOR	
T40W9156	2830430-0000		1	BUSBAR	
TBA 1000S LIGHTCAP24 (See drawing on page: 1-540)					
010	3142221-0000		1	RAIL	
060	2836239-0000		1	WASHER	
070	2836238-0000		1	INSULATION NUT	
080	1036584-0000		1	WASHER	
300	312115-0297		3	SCREW ISO4762 M4X25 A4 80	
350	312155-0295		1	SCREW DIN 7991 MF6S M4X20 A4 70	
390	315202-0101		2	O-RING 3,1X1,6 MM	
T40R9150	3187900-0000		1	INDUCTOR	
T40W9156	2830430-0000		1	BUSBAR	
TBA 1000S NOMOLDEDCAP HELICAP2 23 (See drawing on page: 1-540)					
010	2815964-0000		1	RAIL	
060	2836239-0000		1	WASHER	
070	2836238-0000		1	INSULATION NUT	
080	1036584-0000		1	WASHER	
300	312115-0297		4	SCREW ISO4762 M4X25 A4 80	
350	312155-0295		1	SCREW DIN 7991 MF6S M4X20 A4 70	
390	315202-0101		2	O-RING 3,1X1,6 MM	
T40R9150	3124821-0000		1	INDUCTOR	
T40W9156	2830430-0000		1	BUSBAR	
TBA 1000S NOMOLDEDCAP NOCAP, TBA 1000S NOMOLDEDCAP RECAP3, TBA 1000S NOMOLDEDCAP SLIMCAP 1000 (See drawing on page: 1-540)					
010	2815964-0000		1	RAIL	
060	2836239-0000		1	WASHER	
070	2836238-0000		1	INSULATION NUT	
080	1036584-0000		1	WASHER	
300	312115-0297		4	SCREW ISO4762 M4X25 A4 80	
350	312155-0295		1	SCREW DIN 7991 MF6S M4X20 A4 70	
390	315202-0101		2	O-RING 3,1X1,6 MM	
T40R9150	3187898-0000		1	INDUCTOR	
T40W9156	2830430-0000		1	BUSBAR	
TBA 1000S STDA7 (See drawing on page: 1-540)					
010	2843411-0000		1	RAIL	
060	2836239-0000		1	WASHER	
070	2836238-0000		1	INSULATION NUT	
080	1036584-0000		1	WASHER	
300	312115-0297		4	SCREW ISO4762 M4X25 A4 80	
350	312155-0295		1	SCREW DIN 7991 MF6S M4X20 A4 70	
390	315202-0101		2	O-RING 3,1X1,6 MM	
T40R9150	2546474-0000		1	INDUCTOR	
T40W9156	2830430-0000		1	BUSBAR	
TBA 1500S HELICAP2 23 (See drawing on page: 1-540)					
010	2815964-0000		1	RAIL	
060	2836239-0000		1	WASHER	
070	2836238-0000		1	INSULATION NUT	

Machine Type | Group Description | Used-In | Group Number | Page No

INDUCTOR LEFT

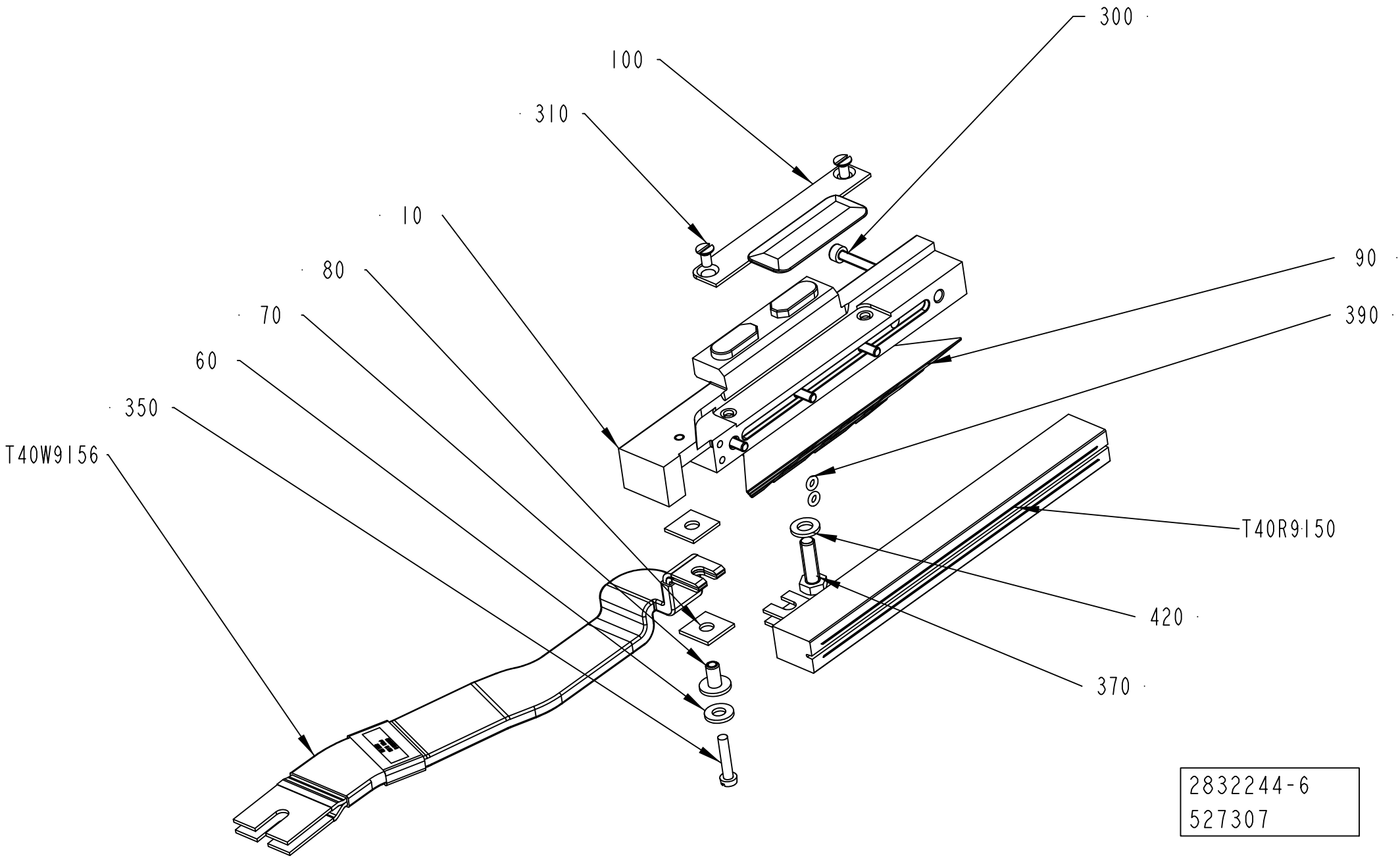

Pos	Part No	UN	Qty	Description	Page No
TBA 1500S HELICAP2 23 (Cont'd) (See drawing on page: 1-540)					
080	1036584-0000		1	WASHER	
300	312115-0297		4	SCREW ISO4762 M4X25 A4 80	
350	312155-0295		1	SCREW DIN 7991 MF6S M4X20 A4 70	
390	315202-0101		2	O-RING 3,1X1,6 MM	
T40R9150	3187897-0000		1	INDUCTOR	
T40W9156	2830430-0000		1	BUSBAR	
TBA 1500S RECAP3, TBA 1500S SLIMCAP 1000 (See drawing on page: 1-540)					
010	2815964-0000		1	RAIL	
060	2836239-0000		1	WASHER	
070	2836238-0000		1	INSULATION NUT	
080	1036584-0000		1	WASHER	
300	312115-0297		4	SCREW ISO4762 M4X25 A4 80	
350	312155-0295		1	SCREW DIN 7991 MF6S M4X20 A4 70	
390	315202-0101		2	O-RING 3,1X1,6 MM	
T40R9150	3187897-0000		1	INDUCTOR	
T40W9156	2830430-0000		1	BUSBAR	
TBA 2000S (See drawing on page: 1-540)					
010	3002559-0000		1	RAIL	
060	3002499-0000		1	WASHER	
070	3002497-0000		1	INSULATION NUT	
080	3002498-0000		1	WASHER	
300	312115-0295		5	SCREW ISO4762 M4X20 A4 80	
350	312155-0295		1	SCREW DIN 7991 MF6S M4X20 A4 70	
390	315202-0101		2	O-RING 3,1X1,6 MM	
400	311103-0267		1	PARALLEL PIN ISO 2338 4M6X10 A1	
T40R9150	2879535-0000		1	INDUCTOR	
T40W9156	2909301-0000		1	BUSBAR	
TGA 1000CR, TGA 1000LF (See drawing on page: 1-544)					
010	3213755-0000		1	RAIL	
060	28509-0000		1	WASHER	
070	32544-0000		1	INSULATION NUT	
080	1036584-0000		2	WASHER	
090	2698631-0000		1	VOLUME BULGE	
100	2503688-0000		1	VOLUME BULGE	
300	312115-0297		4	SCREW ISO4762 M4X25 A4 80	
310	312145-0287		2	SCREW ISO 2009 MFS M4X8 A4	
350	312125-0295		1	SLOTTED HEAD SCREW, ISO1207 M4X20 A4	
370	312105-0370		1	SCREW, M6S ISO 4017 M6X20 A4 80	
420	315105-0153		1	WASHER PLAIN, 6,4X12X1,5 A4 BRB	
T40R9150	1566783-0000		1	INDUCTOR	
T40W9156	1498849-0000		1	BUSBAR	

Pos	Part No	UN	Qty	Description	Page No
TGA 1000SQ, TGA 0750SQ, TGA 0500SQ (See drawing on page: 1-544)					
010	3213755-0000		1	RAIL	
060	28509-0000		1	WASHER	
070	32544-0000		1	INSULATION NUT	
080	1036584-0000		2	WASHER	
090	2698631-0000		1	VOLUME BULGE	
100	3213757-0000		1	PLATE	
300	312115-0297		4	SCREW ISO4762 M4X25 A4 80	
310	312145-0287		2	SCREW ISO 2009 MFS M4X8 A4	
350	312125-0295		1	SLOTTED HEAD SCREW, ISO1207 M4X20 A4	
370	312105-0370		1	SCREW, M6S ISO 4017 M6X20 A4 80	
420	315105-0153		1	WASHER PLAIN, 6,4X12X1,5 A4 BRB	
T40R9150	1566783-0000		1	INDUCTOR	
T40W9156	1498849-0000		1	BUSBAR	

ADAPTION TRANSFORMER

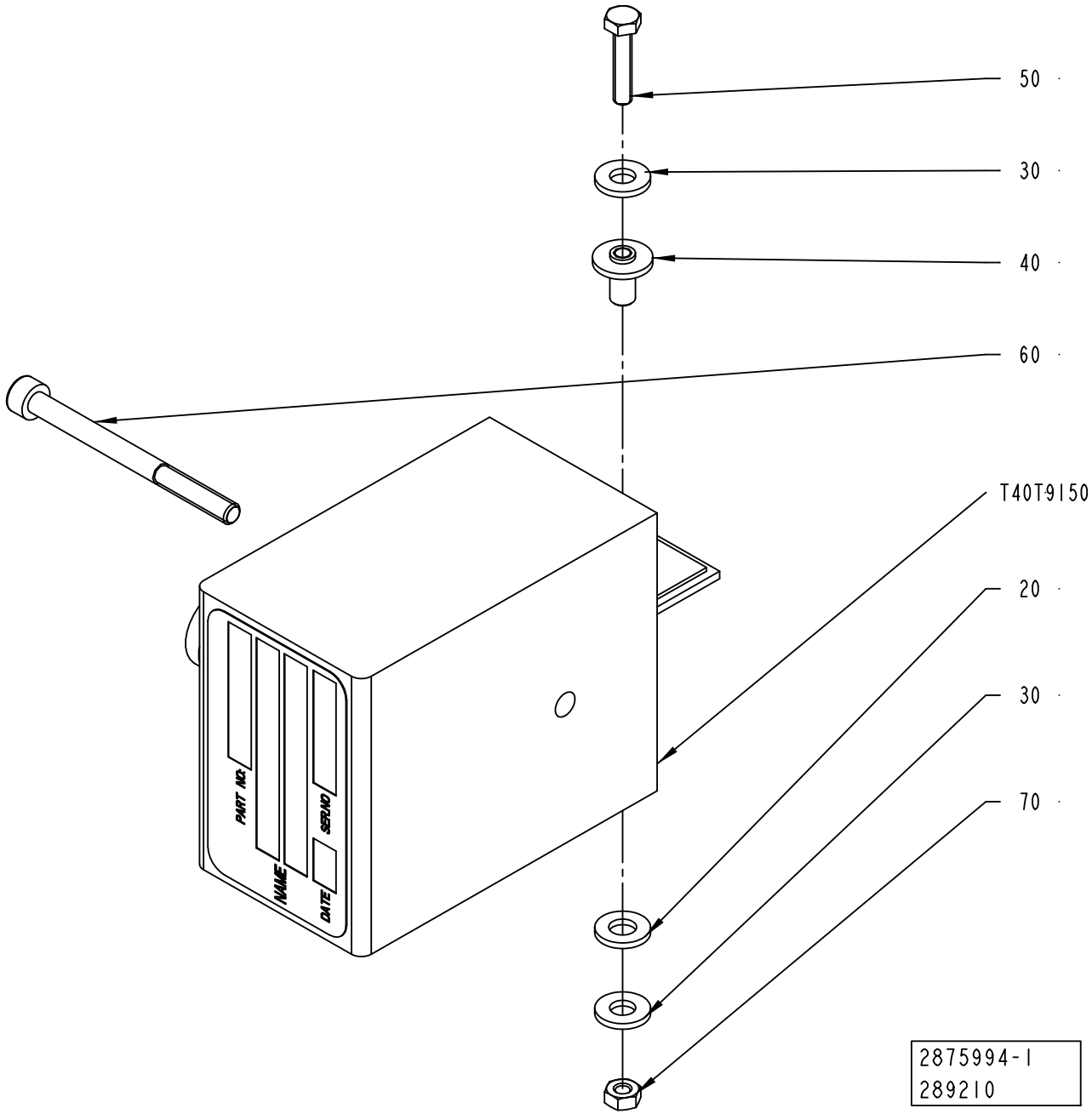

ECM: 647358 - 20140401
Group number: 2875994-0100
Assembly Drawing: 2875994-1_1_AA

Pos	Part No	UN	Qty	Description	Page No
TBA 0500S, TPA 1000SQ, TBA 2000S, TPA 0750SQ					
T40T9150	67379-0106		1	TRANSFORMER	
TBA 0500SQ, TBA 0500B, TBA 1000B, TBA 1000SQ, TBA 1500S RECAP3, TGA 1500SQ, TBA 1500S SLIMCAP 1000, TBA 1000S NOMOLDEDCAP NOCAP, TBA 1000S NOMOLDEDCAP RECAP3, TBA 1000S NOMOLDEDCAP SLIMCAP 1000					
T40T9150	67379-0101		1	TRANSFORMER	
TBA 1000E, TBA 1000M, TBA 0500E					
T40T9150	67379-0262		1	TRANSFORMER	
TBA 1000S LIGHTCAP24					
T40T9150	67379-0115		1	TRANSFORMER	
TBA 1000S NOMOLDEDCAP HELICAP2 23					
T40T9150	2837503-0110		1	TRANSFORMER	
TBA 1500S HELICAP2 23					
T40T9150	2837503-0104		1	TRANSFORMER	
TGA 1000SQ, TGA 0750SQ, TGA 0500SQ, TGA 1000CR, TGA 1000LF					
T40T9150	67379-0249		1	TRANSFORMER	
TPA 0500SQ					
T40T9150	67379-0268		1	TRANSFORMER	
Common Parts					
020	32079-0000		1	WASHER	
030	28509-0000		2	WASHER	
040	32544-0000		1	INSULATION NUT	
050	312105-0295		1	SCREW, M6S ISO 4017 M4X20 A4 70	
060	90458-0058		1	SCREW M5X60 A280	
070	312605-0312		2	HEXAGON NUT, M6M M4 A280	

Pos	Part No	UN	Qty	Description	Page No

Machine Type | Group Description | Used-In | Group Number | Page No

CARRIER CUTTING LEFT

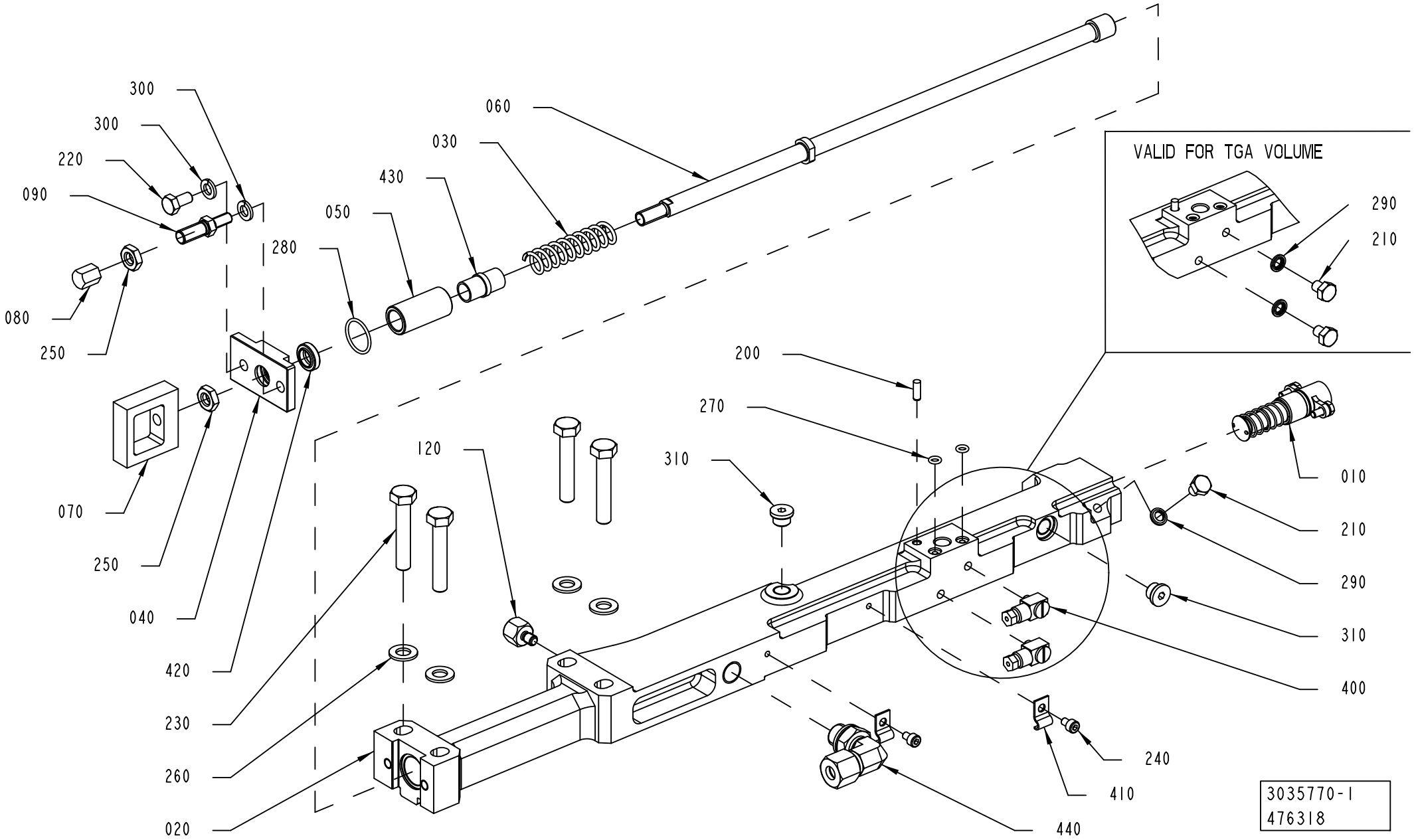

Pos	Part No	UN	Qty	Description	Page No
TBA 0500S, TBA 0500SQ, TBA 0500B, TBA 1000B, TBA 1000SQ, TBA 1000S, TBA 1500S, TPA 1000SQ, TPA 0500SQ, TPA 0750SQ, TBA 1000E, TBA 1000M, TBA 0500E (See drawing on page: 1-548)					
020	3014102-0000		1	CARRIER CUTTING LEFT	
040	2774802-0000		1	COVER	
210	312105-0362		1	SCREW, M6S ISO 4017 M6X8 A4 80	
400	90134-0058		2	CONNECTION	
TBA 2000S (See drawing on page: 1-550)					
020	3038400-0000		1	CARRIER CUTTING LEFT	
040	3048521-0000		1	COVER	
100	2922438-0000		1	PLATE	
110	2922439-0000		1	SHIM	
210	312105-0362		1	SCREW, M6S ISO 4017 M6X8 A4 80	
350	312155-0287		3	SCREW DIN 7991 MF6S M4X8 A4 70	
400	90134-0058		2	CONNECTION	
TGA 1000SQ, TGA 0750SQ, TGA 0500SQ, TGA 1500SQ, TGA 1000CR, TGA 1000LF (See drawing on page: 1-552)					
020	3014102-0000		1	CARRIER CUTTING LEFT	
040	2774802-0000		1	COVER	
210	312105-0362		3	SCREW, M6S ISO 4017 M6X8 A4 80	
450	315115-0153		2	WASHER PLAIN, TBRB 6,4/12 H=3	
Common Parts					
010	2854078-0100		1	PISTON	**1-555**
030	1548940-0000		1	SPRING	
050	2774803-0000		1	SEAT	
060	2803174-0000		1	TIE ROD	
070	2986941-0000		1	EAR	
080	2997337-0000		1	STOP SCREW	
090	2997340-0000		1	SCREW	
120	3047360-0000		1	SETTING KNOB	
200	311103-0268		1	PARALLEL PIN ISO 2338 4M6X12 A1	
220	312105-0366		1	SCREW, M6S ISO 4017 M6X12 A4 80	
230	312105-0460		4	SCREW, M6S ISO 4014 M8X45 A4 80	
240	312115-0285		2	SCREW ISO4762 M4X6 A4 80	
250	312625-0318		2	HEXAGON THIN NUT, EN 24035 ML6M M8 A4	
260	315105-0165		4	FWAS080G0-0S, WASHER PLAIN	
270	315202-0102		2	O-RING 4,1X1,6 MM	
280	315202-0116		1	O-RING 18,1X1,6 MM	
290	315211-0103		1	BONDED SEAL SS/NBR90 M6	
300	315402-0156		2	LOCK WASHER, DIN127B 6,5 A4, 1/4	
310	342713-0209		2	PLUG, EXT THREAD HEX SOCKET 8638-00-180	
360	90602-4847		1	THREADLOCKER LOCTITE 243, 50ML	
410	90165-0056		2	PIPE CLIP FOR TUBE, 4 MM	
420	90459-3388		1	SCRAPER 10X16X4,7 MM	
430	90600-2011		1	3319632, JUM-02-10	
440	90601-3686		1	ELBOW FITTING ADJ., WEE08LR71	

CARRIER CUTTING LEFT

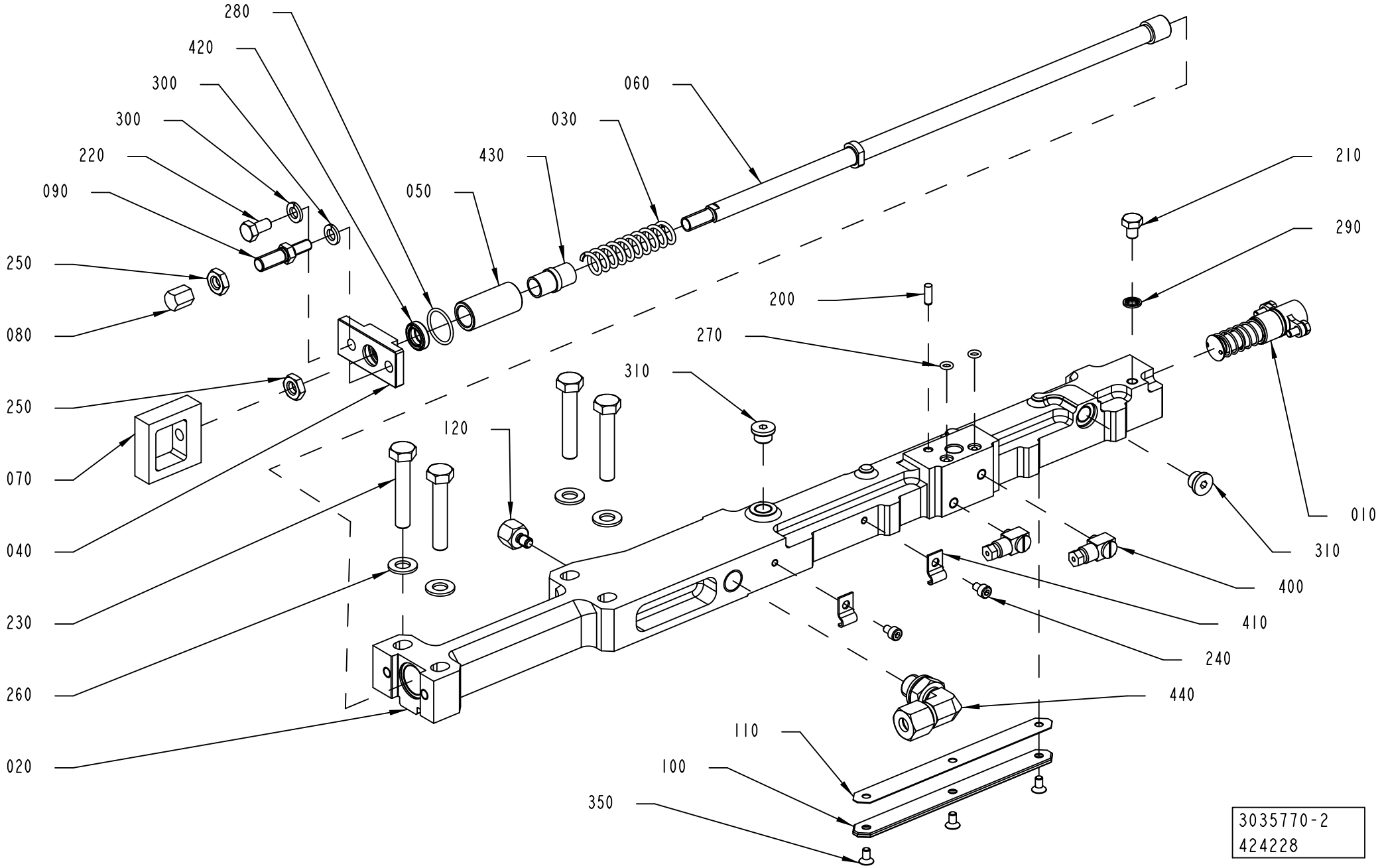

ECM: 647813 - 20140401
Group number: 3035770-0100
Assembly Drawing: 3035770-2_1_AA

This list covers pages from 1-548 to 1-553

Pos	Part No	UN	Qty	Description	Page No
TBA 0500S, TBA 0500SQ, TBA 0500B, TBA 1000B, TBA 1000SQ, TBA 1000S, TBA 1500S, TPA 1000SQ, TPA 0500SQ, TPA 0750SQ, TBA 1000E, TBA 1000M, TBA 0500E (See drawing on page: 1-548)					
020	3014102-0000		1	CARRIER CUTTING LEFT	
040	2774802-0000		1	COVER	
210	312105-0362		1	SCREW, M6S ISO 4017 M6X8 A4 80	
400	90134-0058		2	CONNECTION	
TBA 2000S (See drawing on page: 1-550)					
020	3038400-0000		1	CARRIER CUTTING LEFT	
040	3048521-0000		1	COVER	
100	2922438-0000		1	PLATE	
110	2922439-0000		1	SHIM	
210	312105-0362		1	SCREW, M6S ISO 4017 M6X8 A4 80	
350	312155-0287		3	SCREW DIN 7991 MF6S M4X8 A4 70	
400	90134-0058		2	CONNECTION	
TGA 1000SQ, TGA 0750SQ, TGA 0500SQ, TGA 1500SQ, TGA 1000CR, TGA 1000LF (See drawing on page: 1-552)					
020	3014102-0000		1	CARRIER CUTTING LEFT	
040	2774802-0000		1	COVER	
210	312105-0362		3	SCREW, M6S ISO 4017 M6X8 A4 80	
450	315115-0153		2	WASHER PLAIN, TBRB 6,4/12 H=3	
Common Parts					
010	2854078-0100		1	PISTON	**1-555**
030	1548940-0000		1	SPRING	
050	2774803-0000		1	SEAT	
060	2803174-0000		1	TIE ROD	
070	2986941-0000		1	EAR	
080	2997337-0000		1	STOP SCREW	
090	2997340-0000		1	SCREW	
120	3047360-0000		1	SETTING KNOB	
200	311103-0268		1	PARALLEL PIN ISO 2338 4M6X12 A1	
220	312105-0366		1	SCREW, M6S ISO 4017 M6X12 A4 80	
230	312105-0460		4	SCREW, M6S ISO 4014 M8X45 A4 80	
240	312115-0285		2	SCREW ISO4762 M4X6 A4 80	
250	312625-0318		2	HEXAGON THIN NUT, EN 24035 ML6M M8 A4	
260	315105-0165		4	FWAS080G0-0S, WASHER PLAIN	
270	315202-0102		2	O-RING 4,1X1,6 MM	
280	315202-0116		1	O-RING 18,1X1,6 MM	
290	315211-0103		1	BONDED SEAL SS/NBR90 M6	
300	315402-0156		2	LOCK WASHER, DIN127B 6,5 A4, 1/4	
310	342713-0209		2	PLUG, EXT THREAD HEX SOCKET 8638-00-180	
360	90602-4847		1	THREADLOCKER LOCTITE 243, 50ML	
410	90165-0056		2	PIPE CLIP FOR TUBE, 4 MM	
420	90459-3388		1	SCRAPER 10X16X4,7 MM	
430	90600-2011		1	3319632, JUM-02-10	
440	90601-3686		1	ELBOW FITTING ADJ., WEE08LR71	

Machine Type | Group Description | Used-In | Group Number | Page No

CARRIER CUTTING LEFT

Drawing file: 3035770-3_1_AA.hpgl

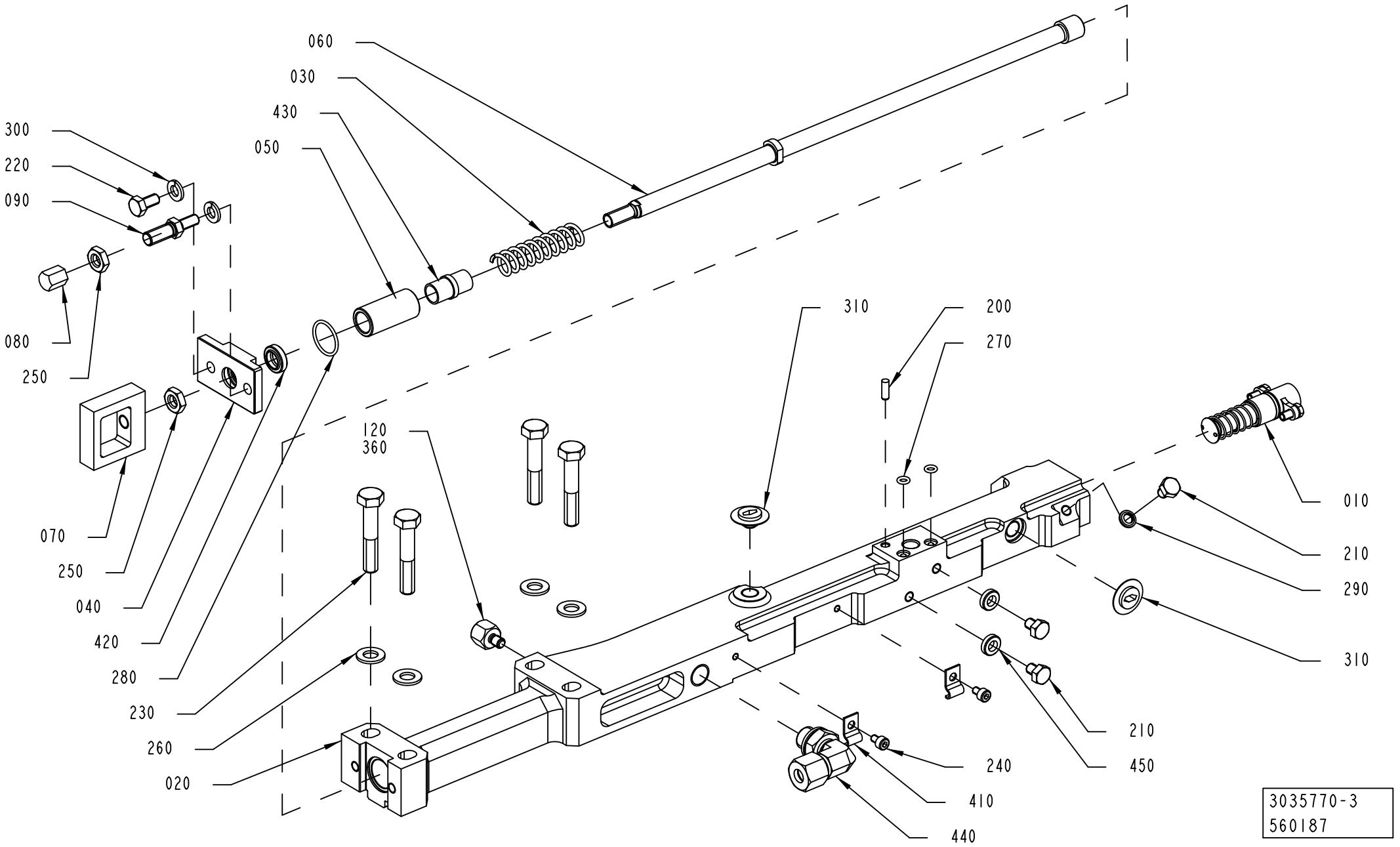

3035770-3
560187

Pos	Part No	UN	Qty	Description	Page No
TBA 0500S, TBA 0500SQ, TBA 0500B, TBA 1000B, TBA 1000SQ, TBA 1000S, TBA 1500S, TPA 1000SQ, TPA 0500SQ, TPA 0750SQ, TBA 1000E, TBA 1000M, TBA 0500E (See drawing on page: 1-548)					
020	3014102-0000		1	CARRIER CUTTING LEFT	
040	2774802-0000		1	COVER	
210	312105-0362		1	SCREW, M6S ISO 4017 M6X8 A4 80	
400	90134-0058		2	CONNECTION	
TBA 2000S (See drawing on page: 1-550)					
020	3038400-0000		1	CARRIER CUTTING LEFT	
040	3048521-0000		1	COVER	
100	2922438-0000		1	PLATE	
110	2922439-0000		1	SHIM	
210	312105-0362		1	SCREW, M6S ISO 4017 M6X8 A4 80	
350	312155-0287		3	SCREW DIN 7991 MF6S M4X8 A4 70	
400	90134-0058		2	CONNECTION	
TGA 1000SQ, TGA 0750SQ, TGA 0500SQ, TGA 1500SQ, TGA 1000CR, TGA 1000LF (See drawing on page: 1-552)					
020	3014102-0000		1	CARRIER CUTTING LEFT	
040	2774802-0000		1	COVER	
210	312105-0362		3	SCREW, M6S ISO 4017 M6X8 A4 80	
450	315115-0153		2	WASHER PLAIN, TBRB 6,4/12 H=3	
Common Parts					
010	2854078-0100		1	PISTON	**1-555**
030	1548940-0000		1	SPRING	
050	2774803-0000		1	SEAT	
060	2803174-0000		1	TIE ROD	
070	2986941-0000		1	EAR	
080	2997337-0000		1	STOP SCREW	
090	2997340-0000		1	SCREW	
120	3047360-0000		1	SETTING KNOB	
200	311103-0268		1	PARALLEL PIN ISO 2338 4M6X12 A1	
220	312105-0366		1	SCREW, M6S ISO 4017 M6X12 A4 80	
230	312105-0460		4	SCREW, M6S ISO 4014 M8X45 A4 80	
240	312115-0285		2	SCREW ISO4762 M4X6 A4 80	
250	312625-0318		2	HEXAGON THIN NUT, EN 24035 ML6M M8 A4	
260	315105-0165		4	FWAS080G0-0S, WASHER PLAIN	
270	315202-0102		2	O-RING 4,1X1,6 MM	
280	315202-0116		1	O-RING 18,1X1,6 MM	
290	315211-0103		1	BONDED SEAL SS/NBR90 M6	
300	315402-0156		2	LOCK WASHER, DIN127B 6,5 A4, 1/4	
310	342713-0209		2	PLUG, EXT THREAD HEX SOCKET 8638-00-180	
360	90602-4847		1	THREADLOCKER LOCTITE 243, 50ML	
410	90165-0056		2	PIPE CLIP FOR TUBE, 4 MM	
420	90459-3388		1	SCRAPER 10X16X4,7 MM	
430	90600-2011		1	3319632, JUM-02-10	
440	90601-3686		1	ELBOW FITTING ADJ., WEE08LR71	

PISTON

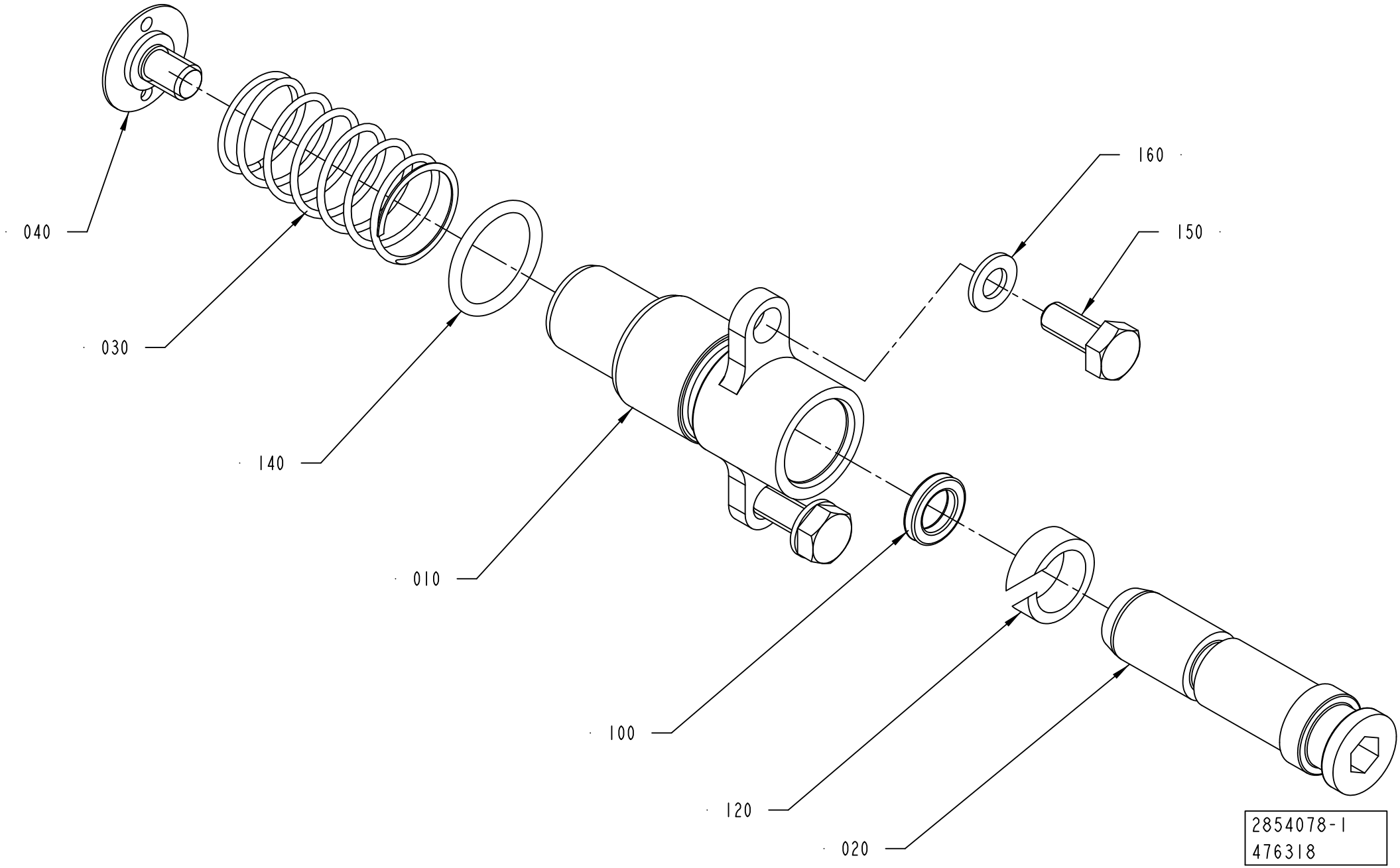

ECM: 483515 - 20101215
Group number: 2854078-0100
Assembly Drawing: 2854078-1_1_AD

Pos	Part No	UN	Qty	Description	Page No
-					
010	2955605-0000		1	SLEEVE	
020	2955606-0000		1	PISTON	
030	2845139-0000		1	COMPRESSION SPRING	
040	2845142-0000		1	STOP	
100	90459-1861		1	X-SEAL 6,07X2,62 MM	
120	90600-2014		1	WEAR RING 8,9X12X4 MM	
130	90602-4847		1	THREADLOCKER LOCTITE 243, 50ML	
140	315202-0111		1	O-RING 13,1X1,6 MM	
150	312105-0289		2	SCREW, M6S ISO 4017 M4X10 A4 70	
160	315105-0136		2	WASHER PLAIN, 4,3X8X0,8 A4 BRB	

Pos	Part No	UN	Qty	Description	Page No

CUTTING JAW LEFT

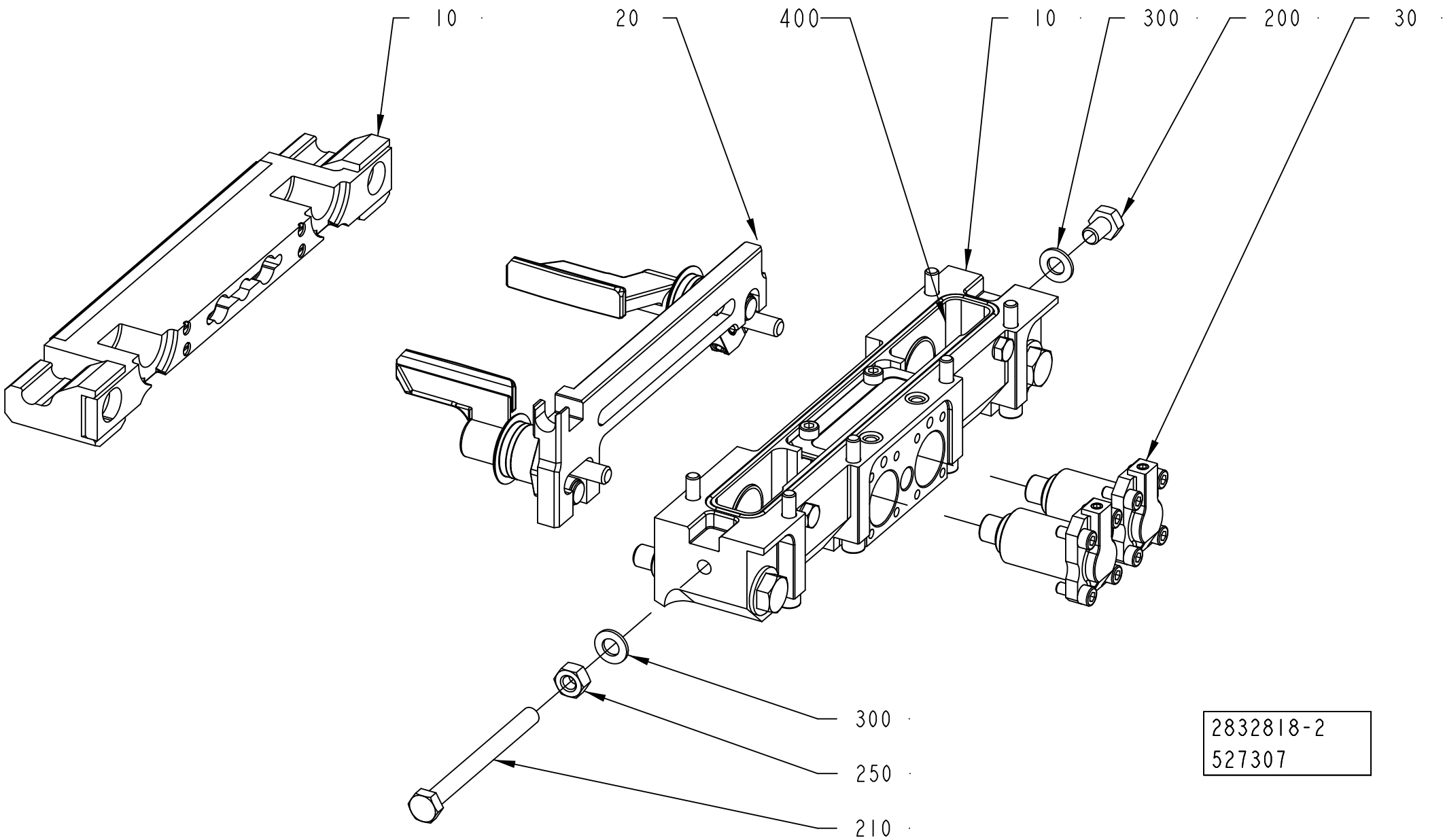

2832818-2
527307

ECM: 646068 - 20140401
Group number: 2832818-0200
Assembly Drawing: 2832818-2_1_AA

Pos	Part No	UN	Qty	Description	Page No
TBA 0500B, TBA 1000B					
030	2772645-0100		2	PISTON	**1-559**
210	312105-0469		1	SCREW, M6S ISO 4014 M8X90 A4 80	
TBA 0500E					
030	2772645-0100		2	PISTON	**1-559**
210	312105-0469		1	SCREW, M6S ISO 4014 M8X90 A4 80	
TBA 0500S					
030	2772645-0100		2	PISTON	**1-559**
210	312105-0469		1	SCREW, M6S ISO 4014 M8X90 A4 80	
TBA 0500SQ, TBA 1000SQ					
030	2772645-0100		2	PISTON	**1-559**
210	312105-0469		1	SCREW, M6S ISO 4014 M8X90 A4 80	
TBA 1000E					
030	2772645-0100		2	PISTON	**1-559**
210	312105-0469		1	SCREW, M6S ISO 4014 M8X90 A4 80	
TBA 1000M					
030	2772645-0100		2	PISTON	**1-559**
210	312105-0469		1	SCREW, M6S ISO 4014 M8X90 A4 80	
TBA 1000S					
030	2772645-0100		2	PISTON	**1-559**
210	312105-0469		1	SCREW, M6S ISO 4014 M8X90 A4 80	
TBA 1500S					
030	2772645-0100		2	PISTON	**1-559**
210	312105-0469		1	SCREW, M6S ISO 4014 M8X90 A4 80	
TBA 2000S					
030	2772645-0100		2	PISTON	**1-559**
210	312105-0466		1	SCREW, M6S ISO 4014 M8X75 A4 80	
TGA 1000SQ, TGA 0750SQ, TGA 0500SQ, TGA 1000CR, TGA 1000LF					
030	2552010-0300		2	PISTON	**1-561**
210	312105-0469		1	SCREW, M6S ISO 4014 M8X90 A4 80	
TGA 1500SQ					
030	2772645-0100		2	PISTON	**1-559**
210	312105-0469		1	SCREW, M6S ISO 4014 M8X90 A4 80	
TPA 0500SQ					
030	2772645-0100		2	PISTON	**1-559**
210	312105-0469		1	SCREW, M6S ISO 4014 M8X90 A4 80	
TPA 1000SQ, TPA 0750SQ					
030	2772645-0100		2	PISTON	**1-559**
210	312105-0469		1	SCREW, M6S ISO 4014 M8X90 A4 80	
Common Parts					
010	2832935-0100		1	CUTTING JAW	**1-563, 1-565, 1-567, 1-569, 1-571**
020	2832936-0100		1	FOLDING FLAP LEFT	**1-573, 1-575, 1-577**
200	312105-0447		1	SCREW M6S ISO 4017 M8X12 A480	
250	312605-0318		1	HEXAGON NUT, M6M M8 A280	
300	315105-0165		2	FWAS080G0-0S, WASHER PLAIN	
400	90603-5339	L	1	KLüBEROIL 4 UH1 320 N, ONLY IN BOM	
	90603-6434		*1*	*KLUBEROIL 4 UH1 320 N, 5 L CANISTER*	
	90603-6454		*1*	*KLüBEROIL 4 UH1 320 N, 20 L CANISTER*	

Machine Type	Group Description	Used-In	Group Number	Page No

PISTON

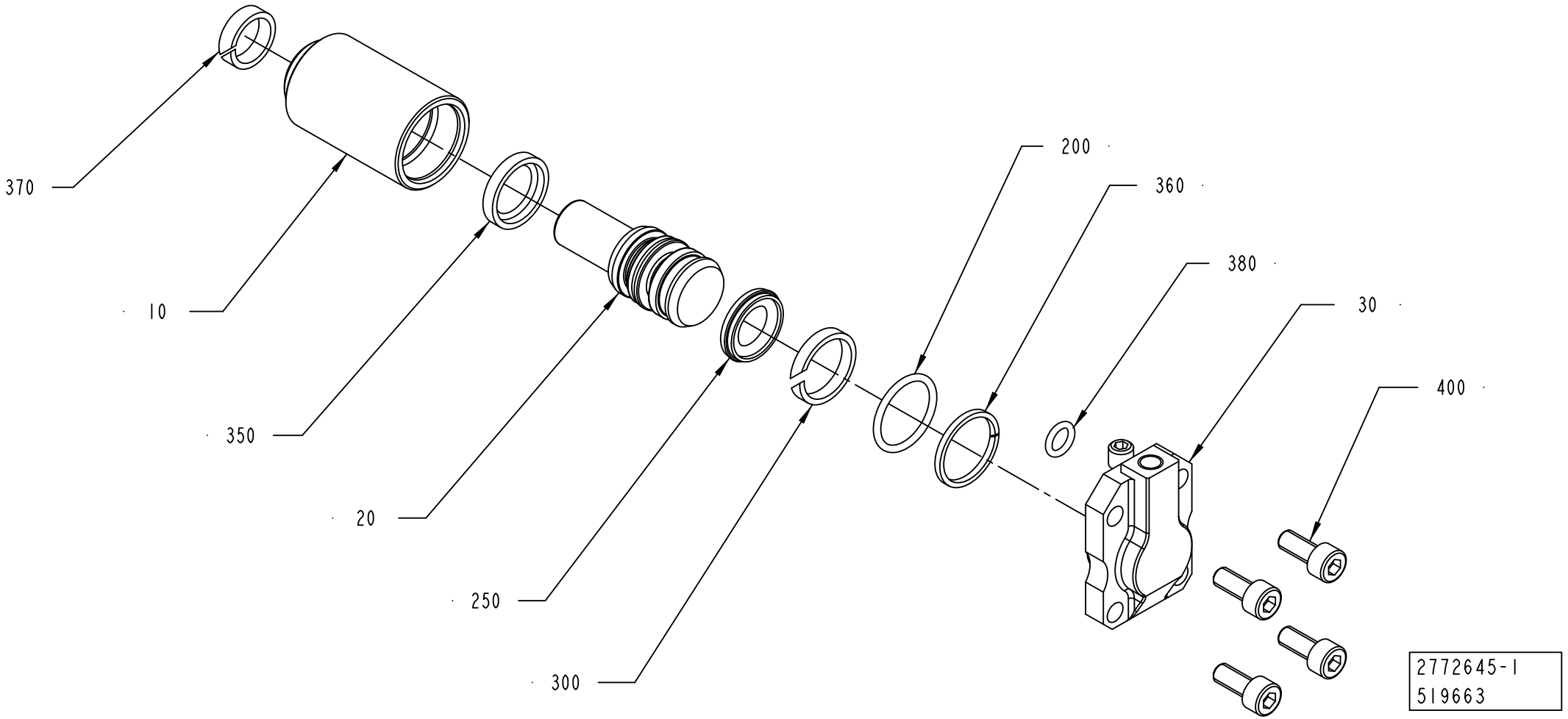

ECM: 646067 - 20140401
Group number: 2772645-0100
Assembly Drawing: 2772645-1_1_AB

Pos	Part No	UN	Qty	Description	Page No
TBA 0500S, TBA 0500SQ, TBA 0500B, TBA 1000B, TBA 1000SQ, TBA 1000S, TBA 1500S, TPA 1000SQ, TPA 0500SQ, TPA 0750SQ, TGA 1500SQ, TBA 1000E, TBA 1000M, TBA 0500E					
010	2772647-0000		1	SLEEVE	
020	2772646-0000		1	PLUNGER	
030	2772648-0000		1	COVER	
200	315202-0705		1	O-RING 17,17X1,78 MM	
250	90459-6019		1	PISTON SEAL STEPSEAL 11,5X19X3,2 MM	
300	90459-6026		1	WEAR RING 16X19X3,2 MM	
350	90459-6023		1	PISTON SEAL 13,5X19X3,2 MM	
360	90600-2016		1	BACK-UP RING 17,4X1,4 MM	
370	90600-2015		1	WEAR RING 12X15,1X4 MM	
380	315202-0104		1	O-RING 6,1X1,6 MM	
TBA 2000S					
010	2909308-0000		1	SLEEVE	
020	2909309-0000		1	PLUNGER	
030	2909310-0000		1	COVER	
200	315202-0706		1	O-RING 18,77X1,78 MM.	
250	90459-6022		1	PISTON SEAL STEPSEAL 14,5X22X3,2 MM	
300	90459-5968		1	WEAR RING 19X22X3,2 MM	
350	90459-6024		1	PISTON SEAL 16X22X3,2 MM	
360	90600-5087		1	BACK-UP RING 19,4X1,4 MM	
370	90600-2018		1	SCRAPER 12X18,6X5,4 MM	
380	315202-0105		1	O-RING 7,1X1,6 MM	
Common Parts					
400	312115-0327		4	SCREW ISO4762 M5X12 A4 80	

Pos	Part No	UN	Qty	Description	Page No

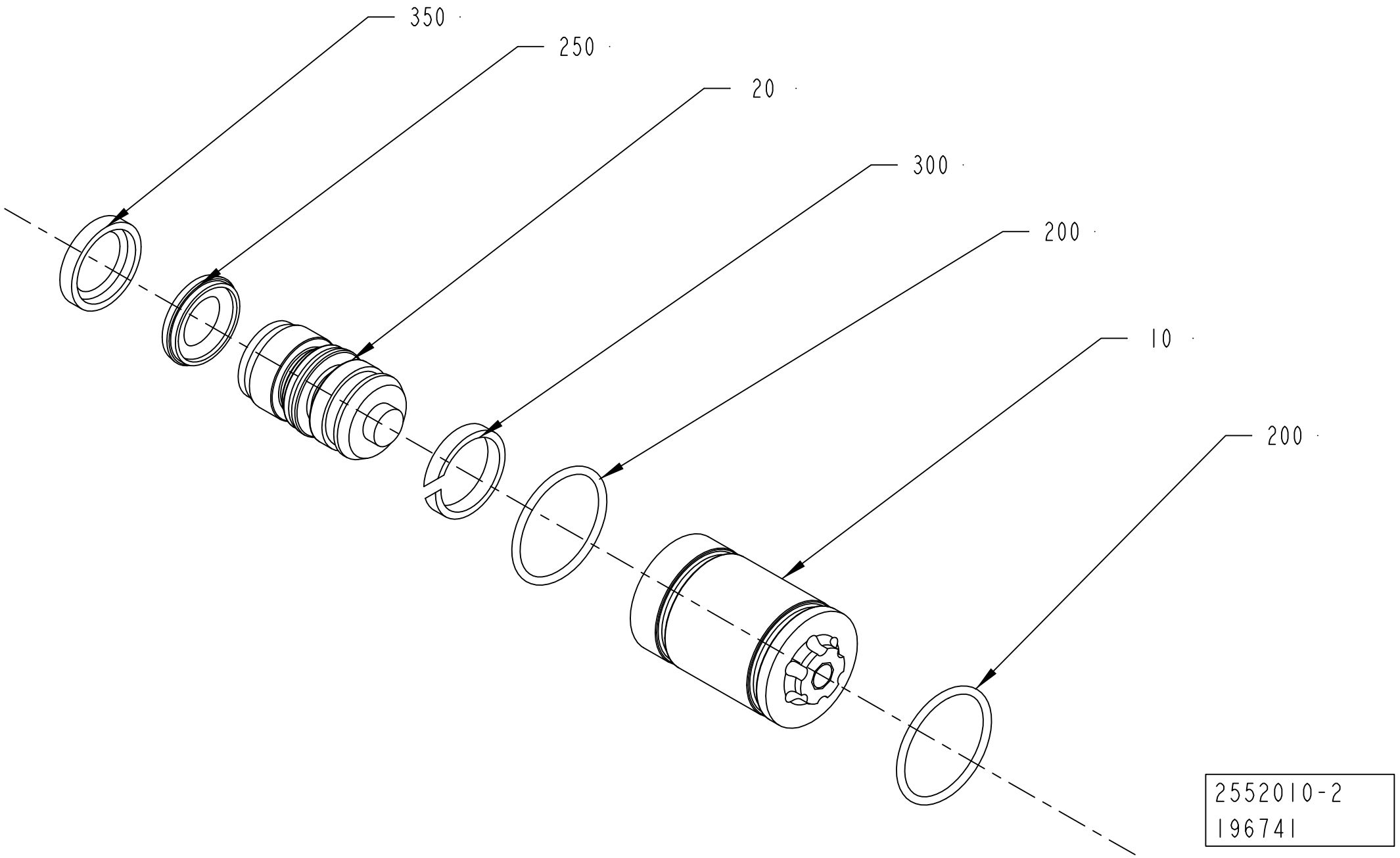
350
250
20
300
200
10
200
2552010-2
196741

ECM: 535039 - 20120102
Group number: 2552010-0300
Assembly Drawing: 2552010-2_1_AA

Pos	Part No	UN	Qty	Description	Page No
-					
010	1036278-0000		1	SLEEVE	
020	2737773-0000		1	PLUNGER	
200	315202-0118		2	O-RING 22,1X1,6 MM	
250	90459-6019		1	PISTON SEAL STEPSEAL 11,5X19X3,2 MM	
300	90459-6026		1	WEAR RING 16X19X3,2 MM	
350	90459-6023		1	PISTON SEAL 13,5X19X3,2 MM	

Pos	Part No	UN	Qty	Description	Page No

CUTTING JAW

Drawing file: 2832935-1_1_AD.hpgl

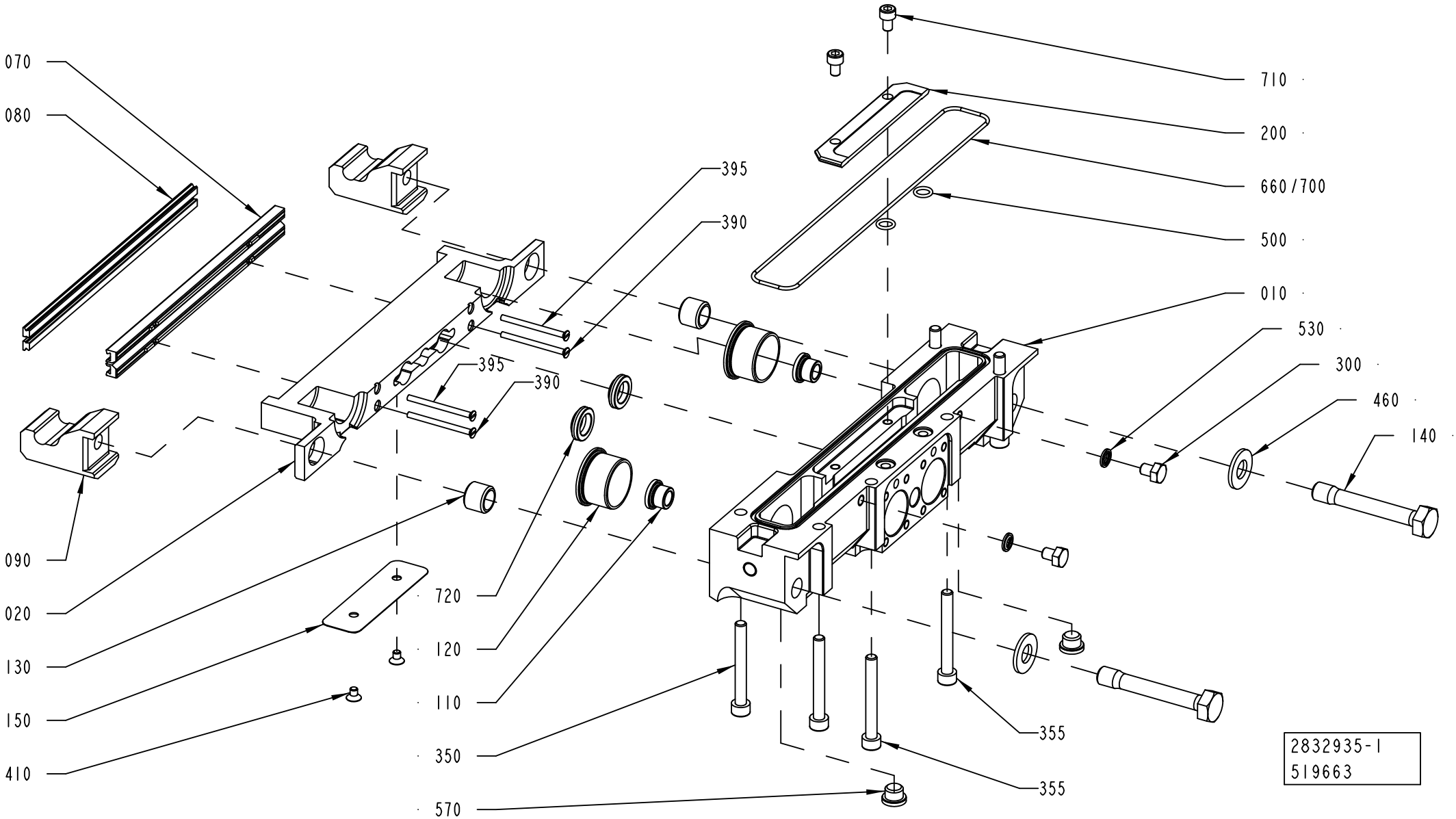

ECM: 676203 - 20140515
Group number: 2832935-0100
Assembly Drawing: 2832935-1_1_AD

This list covers pages from 1-562 to 1-571

Pos	Part No	UN	Qty	Description	Page No
TBA 0500B, TBA 1000B (See drawing on page: 1-562)					
010	2898564-0000		1	BEARING HOUSING	
020	2898565-0000		1	CUTTING JAW	
070	1520455-0000		2	CUTTING RAIL	
080	1110083-0002		2	DOLLY	
090	1538348-0000		2	CATCH	
120	2815967-0000		2	BUSHING	
140	2798473-0000		2	SCREW	
150	1558733-0000		1	VOLUME BULGE	
200	2784290-0000		1	PLATE	
300	312105-0362		2	SCREW, M6S ISO 4017 M6X8 A4 80	
350	312115-0380		4	SCREW ISO4762 M6X50 A4 80	
355	312115-0380		2	SCREW ISO4762 M6X50 A4 80	
390	312145-0238		2	SCREW ISO 2009 MFS M3X40 A4	
395	312145-0238		2	SCREW ISO 2009 MFS M3X40 A4	
410	312155-0285		2	SCREW DIN 7991 MF6S M4X6 A4 70	
500	315202-0105		2	O-RING 7,1X1,6 MM	
530	315211-0103		2	BONDED SEAL SS/NBR90 M6	
710	312115-0323		2	SCREW ISO4762 M5X8 A4 80	
720	90600-2018		2	SCRAPER 12X18,6X5,4 MM	
TBA 0500E, TBA 1000E QC (See drawing on page: 1-562)					
010	2847228-0000		1	BEARING HOUSING	
020	3321780-0000		1	CUTTING JAW	
070	3124990-0000		2	CUTTING RAIL	
080	1110083-0002		2	DOLLY	
090	1538348-0000		2	CATCH	
120	2815967-0000		2	BUSHING	
140	2798473-0000		2	SCREW	
150	3339848-0000		1	VOLUME BULGE	
200	2759019-0000		1	PLATE	
300	312105-0362		2	SCREW, M6S ISO 4017 M6X8 A4 80	
350	312115-0380		4	SCREW ISO4762 M6X50 A4 80	
355	312115-0374		2	SCREW ISO4762 M6X30 A4 80	
390	312145-0238		2	SCREW ISO 2009 MFS M3X40 A4	
395	312145-0238		2	SCREW ISO 2009 MFS M3X40 A4	
410	312155-0285		2	SCREW DIN 7991 MF6S M4X6 A4 70	
500	315202-0105		2	O-RING 7,1X1,6 MM	
530	315211-0103		2	BONDED SEAL SS/NBR90 M6	
710	312115-0323		2	SCREW ISO4762 M5X8 A4 80	
720	90600-2018		2	SCRAPER 12X18,6X5,4 MM	
TBA 0500S (See drawing on page: 1-562)					
010	2996362-0000		1	BEARING HOUSING	
020	2996363-0000		1	CUTTING JAW	
070	3124990-0000		2	CUTTING RAIL	
080	1110083-0002		2	DOLLY	
090	1538348-0000		2	CATCH	
120	2815967-0000		2	BUSHING	
140	2798473-0000		2	SCREW	
200	2996364-0000		1	PLATE	
300	312105-0362		2	SCREW, M6S ISO 4017 M6X8 A4 80	
350	312115-0380		4	SCREW ISO4762 M6X50 A4 80	
355	312115-0374		2	SCREW ISO4762 M6X30 A4 80	
390	312145-0238		2	SCREW ISO 2009 MFS M3X40 A4	
395	312145-0236		2	SCREW ISO 2009 MFS M3X35 A4	
500	315202-0105		2	O-RING 7,1X1,6 MM	
530	315211-0103		2	BONDED SEAL SS/NBR90 M6	
710	312115-0323		2	SCREW ISO4762 M5X8 A4 80	
720	90600-2018		2	SCRAPER 12X18,6X5,4 MM	
TBA 0500SQ, TBA 1000SQ (See drawing on page: 1-562)					
010	2847228-0000		1	BEARING HOUSING	
020	2847229-0000		1	CUTTING JAW	
070	3124990-0000		2	CUTTING RAIL	
080	1520633-0002		2	DOLLY	
090	1538348-0000		2	CATCH	
120	2815967-0000		2	BUSHING	
140	2798473-0000		2	SCREW	
200	2759019-0000		1	PLATE	
300	312105-0362		2	SCREW, M6S ISO 4017 M6X8 A4 80	
350	312115-0380		4	SCREW ISO4762 M6X50 A4 80	
355	312115-0374		2	SCREW ISO4762 M6X30 A4 80	
390	312145-0238		2	SCREW ISO 2009 MFS M3X40 A4	
395	312145-0238		2	SCREW ISO 2009 MFS M3X40 A4	
500	315202-0105		2	O-RING 7,1X1,6 MM	
530	315211-0103		2	BONDED SEAL SS/NBR90 M6	
710	312115-0323		2	SCREW ISO4762 M5X8 A4 80	
720	90600-2018		2	SCRAPER 12X18,6X5,4 MM	
TBA 1000E NOQC (See drawing on page: 1-568)					
010	2847228-0000		1	BEARING HOUSING	
020	2960085-0000		1	CUTTING JAW	
050	2862228-0000		1	FORMING PLATE	
070	3124990-0000		2	CUTTING RAIL	
080	1110083-0002		2	DOLLY	
090	1538348-0000		2	CATCH	
120	2815967-0000		2	BUSHING	

Machine Type | Group Description | Used-In | Group Number | Page No

CUTTING JAW

Drawing file: 2832935-2_1_AB.hpgl

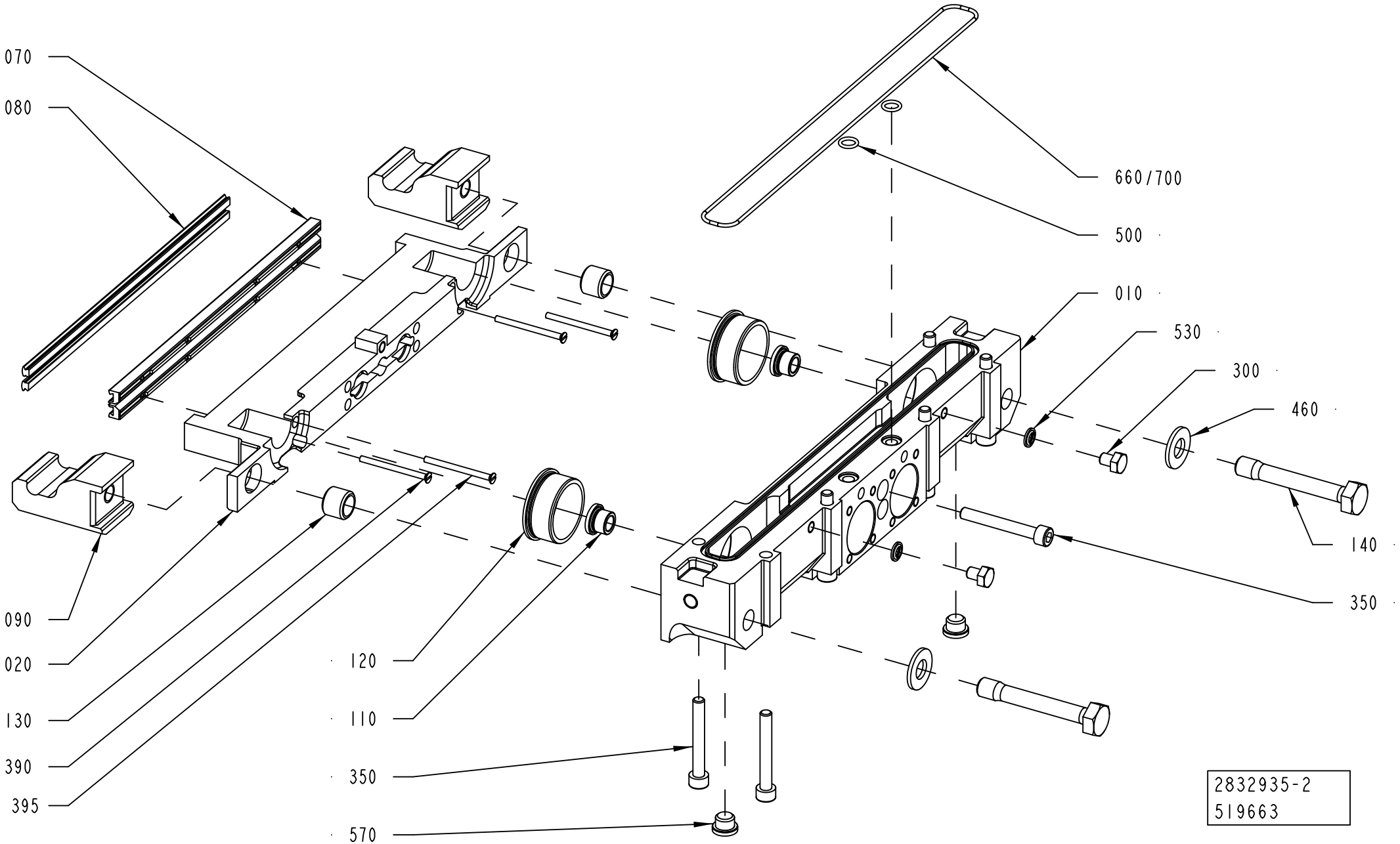

Pos	Part No	UN	Qty	Description	Page No
TBA 1000E NOQC (Cont'd) (See drawing on page: 1-568)					
140	2798473-0000		2	SCREW	
200	2759019-0000		1	PLATE	
300	312105-0362		2	SCREW, M6S ISO 4017 M6X8 A4 80	
350	312115-0380		4	SCREW ISO4762 M6X50 A4 80	
355	312115-0374		2	SCREW ISO4762 M6X30 A4 80	
390	312145-0238		4	SCREW ISO 2009 MFS M3X40 A4	
400	312115-0325		2	SCREW ISO4762 M5X10 A4 80	
500	315202-0105		2	O-RING 7,1X1,6 MM	
530	315211-0103		2	BONDED SEAL SS/NBR90 M6	
710	312115-0323		2	SCREW ISO4762 M5X8 A4 80	
720	90600-2018		2	SCRAPER 12X18,6X5,4 MM	
TBA 1000M (See drawing on page: 1-562)					
010	2998786-0000		1	BEARING HOUSING	
020	2898565-0000		1	CUTTING JAW	
070	1520455-0000		2	CUTTING RAIL	
080	3205112-0002		2	DOLLY	
090	1538348-0000		2	CATCH	
120	2815967-0000		2	BUSHING	
140	2798473-0000		2	SCREW	
150	1558733-0000		1	VOLUME BULGE	
200	2784290-0000		1	PLATE	
350	312115-0380		4	SCREW ISO4762 M6X50 A4 80	
355	312115-0380		2	SCREW ISO4762 M6X50 A4 80	
395	312145-0238		4	SCREW ISO 2009 MFS M3X40 A4	
410	312155-0285		2	SCREW DIN 7991 MF6S M4X6 A4 70	
500	315202-0105		2	O-RING 7,1X1,6 MM	
710	312115-0323		2	SCREW ISO4762 M5X8 A4 80	
720	90600-2018		2	SCRAPER 12X18,6X5,4 MM	
TBA 1000S (See drawing on page: 1-562)					
010	2813723-0000		1	BEARING HOUSING	
020	2813725-0000		1	CUTTING JAW	
070	1520455-0000		2	CUTTING RAIL	
080	1110083-0002		2	DOLLY	
090	1538348-0000		2	CATCH	
120	2815967-0000		2	BUSHING	
140	2798473-0000		2	SCREW	
200	2813724-0000		1	PLATE	
300	312105-0362		2	SCREW, M6S ISO 4017 M6X8 A4 80	
350	312115-0380		4	SCREW ISO4762 M6X50 A4 80	
355	312115-0380		2	SCREW ISO4762 M6X50 A4 80	
390	312145-0238		2	SCREW ISO 2009 MFS M3X40 A4	
395	312145-0238		2	SCREW ISO 2009 MFS M3X40 A4	
500	315202-0105		2	O-RING 7,1X1,6 MM	
530	315211-0103		2	BONDED SEAL SS/NBR90 M6	
710	312115-0323		2	SCREW ISO4762 M5X8 A4 80	
720	90600-2018		2	SCRAPER 12X18,6X5,4 MM	
TBA 1500S (See drawing on page: 1-562)					
010	2898564-0000		1	BEARING HOUSING	
020	2898565-0000		1	CUTTING JAW	
070	1520455-0000		2	CUTTING RAIL	
080	1110083-0002		2	DOLLY	
090	1538348-0000		2	CATCH	
120	2815967-0000		2	BUSHING	
140	2798473-0000		2	SCREW	
200	2784290-0000		1	PLATE	
300	312105-0362		2	SCREW, M6S ISO 4017 M6X8 A4 80	
350	312115-0380		4	SCREW ISO4762 M6X50 A4 80	
355	312115-0380		2	SCREW ISO4762 M6X50 A4 80	
390	312145-0238		2	SCREW ISO 2009 MFS M3X40 A4	
395	312145-0238		2	SCREW ISO 2009 MFS M3X40 A4	
500	315202-0105		2	O-RING 7,1X1,6 MM	
530	315211-0103		2	BONDED SEAL SS/NBR90 M6	
710	312115-0323		2	SCREW ISO4762 M5X8 A4 80	
720	90600-2018		2	SCRAPER 12X18,6X5,4 MM	
TBA 2000S (See drawing on page: 1-564)					
010	2909304-0000		1	BEARING HOUSING	
020	2909305-0000		1	CUTTING JAW	
070	1533051-0000		2	CUTTING RAIL	
080	1520633-0005		2	DOLLY	
090	2566339-0000		2	CATCH	
120	2588299-0000		2	BUSHING	
140	2588303-0000		2	SCREW	
300	312105-0362		2	SCREW, M6S ISO 4017 M6X8 A4 80	
350	312115-0379		1	SCREW ISO4762 M6X45 A4 80	
355	312115-0380		6	SCREW ISO4762 M6X50 A4 80	
390	312145-0238		4	SCREW ISO 2009 MFS M3X40 A4	
395	312145-0238		4	SCREW ISO 2009 MFS M3X40 A4	
500	315202-0105		2	O-RING 7,1X1,6 MM	
530	315211-0103		2	BONDED SEAL SS/NBR90 M6	
TGA 1000CR, TGA 1000LF (See drawing on page: 1-570)					
010	2993289-0000		1	BEARING HOUSING	
020	3213758-0000		1	CUTTING JAW	
040	1349925-0000		1	PLATE	

CUTTING JAW

Drawing file: 2832935-3_1_AB.hpgl

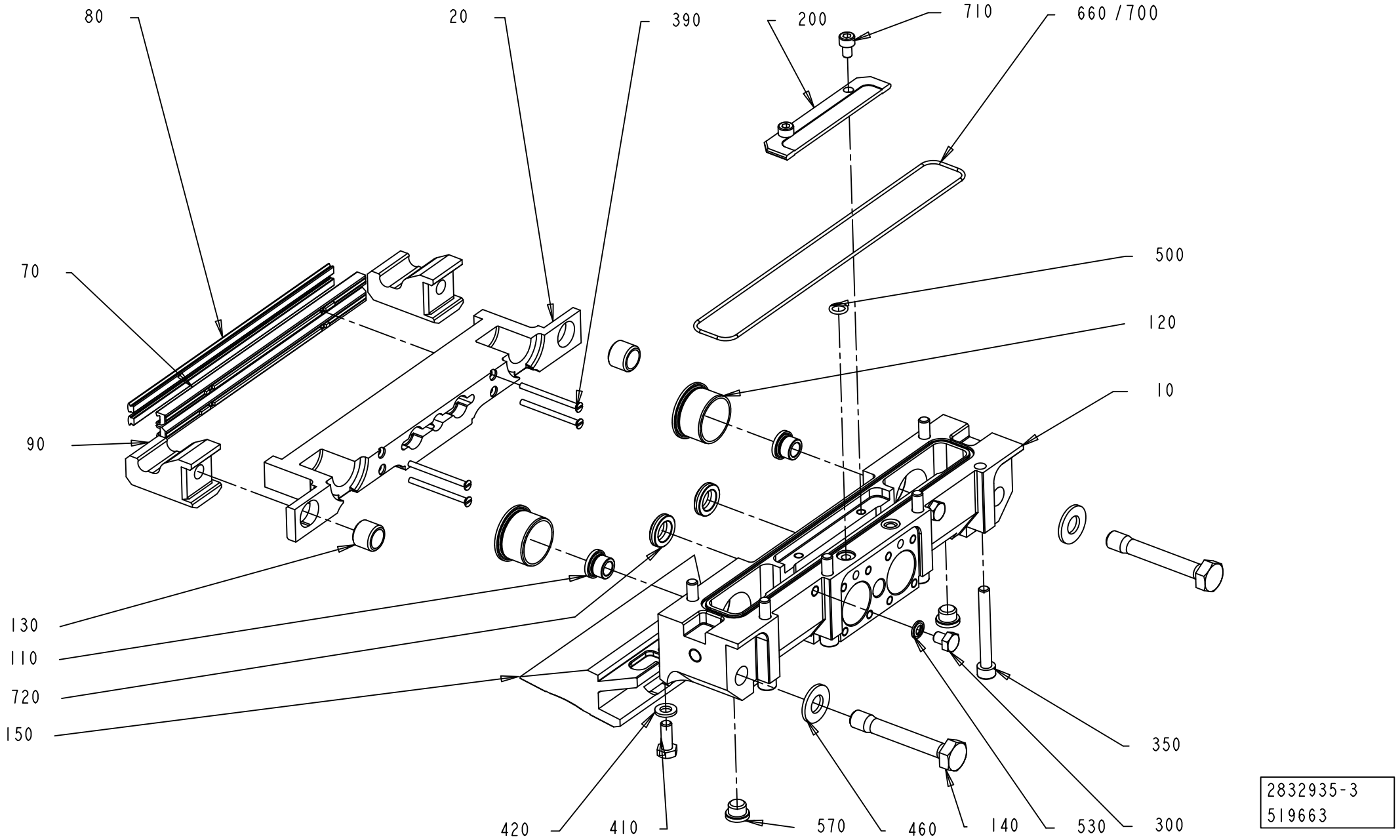

2832935-3
519663

Pos	Part No	UN	Qty	Description	Page No
TGA 1000CR, TGA 1000LF (Cont'd) (See drawing on page: 1-570)					
070	3124990-0000		2	CUTTING RAIL	
080	1520633-0002		2	DOLLY	
090	1538348-0000		2	CATCH	
120	2612738-0000		2	BUSHING	
140	1035871-0000		2	SCREW	
150	2698631-0000		1	VOLUME BULGE	
160	3213759-0000		1	VOLUME BULGE	
200	2993288-0000		1	PLATE	
300	312105-0366		2	SCREW, M6S ISO 4017 M6X12 A4 80	
350	312115-0380		7	SCREW ISO4762 M6X50 A4 80	
390	312145-0236		2	SCREW ISO 2009 MFS M3X35 A4	
395	312145-0224		2	SCREW ISO 2009 MFS M3X10 A4	
410	312105-0368		1	"SCREW, M6S ISO 4017 M6X16 A4 80"	
420	315105-0153		1	WASHER PLAIN, 6,4X12X1,5 A4 BRB	
430	312145-0287		2	SCREW ISO 2009 MFS M4X8 A4	
500	315202-0104		2	O-RING 6,1X1,6 MM	
530	315211-0103		2	BONDED SEAL SS/NBR90 M6	
710	312115-0323		2	SCREW ISO4762 M5X8 A4 80	
TGA 1000SQ, TGA 0750SQ, TGA 0500SQ (See drawing on page: 1-570)					
010	2993289-0000		1	BEARING HOUSING	
020	3213758-0000		1	CUTTING JAW	
040	1349925-0000		1	PLATE	
070	3124990-0000		2	CUTTING RAIL	
080	1520633-0002		2	DOLLY	
090	1538348-0000		2	CATCH	
120	2612738-0000		2	BUSHING	
140	1035871-0000		2	SCREW	
150	2698631-0000		1	VOLUME BULGE	
160	3213760-0000		1	VOLUME BULGE	
200	2993288-0000		1	PLATE	
300	312105-0366		2	SCREW, M6S ISO 4017 M6X12 A4 80	
350	312115-0380		7	SCREW ISO4762 M6X50 A4 80	
390	312145-0236		2	SCREW ISO 2009 MFS M3X35 A4	
395	312145-0224		2	SCREW ISO 2009 MFS M3X10 A4	
410	312105-0368		1	"SCREW, M6S ISO 4017 M6X16 A4 80"	
420	315105-0153		1	WASHER PLAIN, 6,4X12X1,5 A4 BRB	
430	312145-0287		2	SCREW ISO 2009 MFS M4X8 A4	
500	315202-0104		2	O-RING 6,1X1,6 MM	
530	315211-0103		2	BONDED SEAL SS/NBR90 M6	
710	312115-0323		2	SCREW ISO4762 M5X8 A4 80	
TGA 1500SQ (See drawing on page: 1-566)					
010	2898564-0000		1	BEARING HOUSING	
020	2939718-0000		1	CUTTING JAW	
070	1520455-0000		2	CUTTING RAIL	
080	1520633-0002		2	DOLLY	
090	1538348-0000		2	CATCH	
120	2815967-0000		2	BUSHING	
140	2798473-0000		2	SCREW	
150	2928252-0000		1	VOLUME BULGE	
200	2784290-0000		1	PLATE	
300	312105-0362		2	SCREW, M6S ISO 4017 M6X8 A4 80	
350	312115-0380		4	SCREW ISO4762 M6X50 A4 80	
355	312115-0380		2	SCREW ISO4762 M6X50 A4 80	
390	312145-0238		4	SCREW ISO 2009 MFS M3X40 A4	
410	312105-0368		1	"SCREW, M6S ISO 4017 M6X16 A4 80"	
420	315105-0153		1	WASHER PLAIN, 6,4X12X1,5 A4 BRB	
500	315202-0105		2	O-RING 7,1X1,6 MM	
530	315211-0103		2	BONDED SEAL SS/NBR90 M6	
710	312115-0323		2	SCREW ISO4762 M5X8 A4 80	
720	90600-2018		2	SCRAPER 12X18,6X5,4 MM	
TPA 0500SQ (See drawing on page: 1-562)					
010	2958751-0000		1	BEARING HOUSING	
020	2958750-0000		1	CUTTING JAW	
070	1520493-0000		2	CUTTING RAIL	
080	1110083-0002		2	DOLLY	
090	1538348-0000		2	CATCH	
120	2912007-0000		2	BUSHING	
140	2798473-0000		2	SCREW	
200	2958752-0000		1	PLATE	
300	312105-0362		2	SCREW, M6S ISO 4017 M6X8 A4 80	
350	312115-0380		4	SCREW ISO4762 M6X50 A4 80	
355	312115-0380		2	SCREW ISO4762 M6X50 A4 80	
390	312145-0238		2	SCREW ISO 2009 MFS M3X40 A4	
395	312145-0238		2	SCREW ISO 2009 MFS M3X40 A4	
500	315202-0105		2	O-RING 7,1X1,6 MM	
530	315211-0103		2	BONDED SEAL SS/NBR90 M6	
710	312115-0323		2	SCREW ISO4762 M5X8 A4 80	
720	90600-2018		2	SCRAPER 12X18,6X5,4 MM	
TPA 1000SQ, TPA 0750SQ (See drawing on page: 1-562)					
010	2912355-0000		1	BEARING HOUSING	
020	2912356-0000		1	CUTTING JAW	
070	3124990-0000		2	CUTTING RAIL	
080	1520633-0002		2	DOLLY	

CUTTING JAW

Drawing file: 2832935-4_1_AB.hpgl

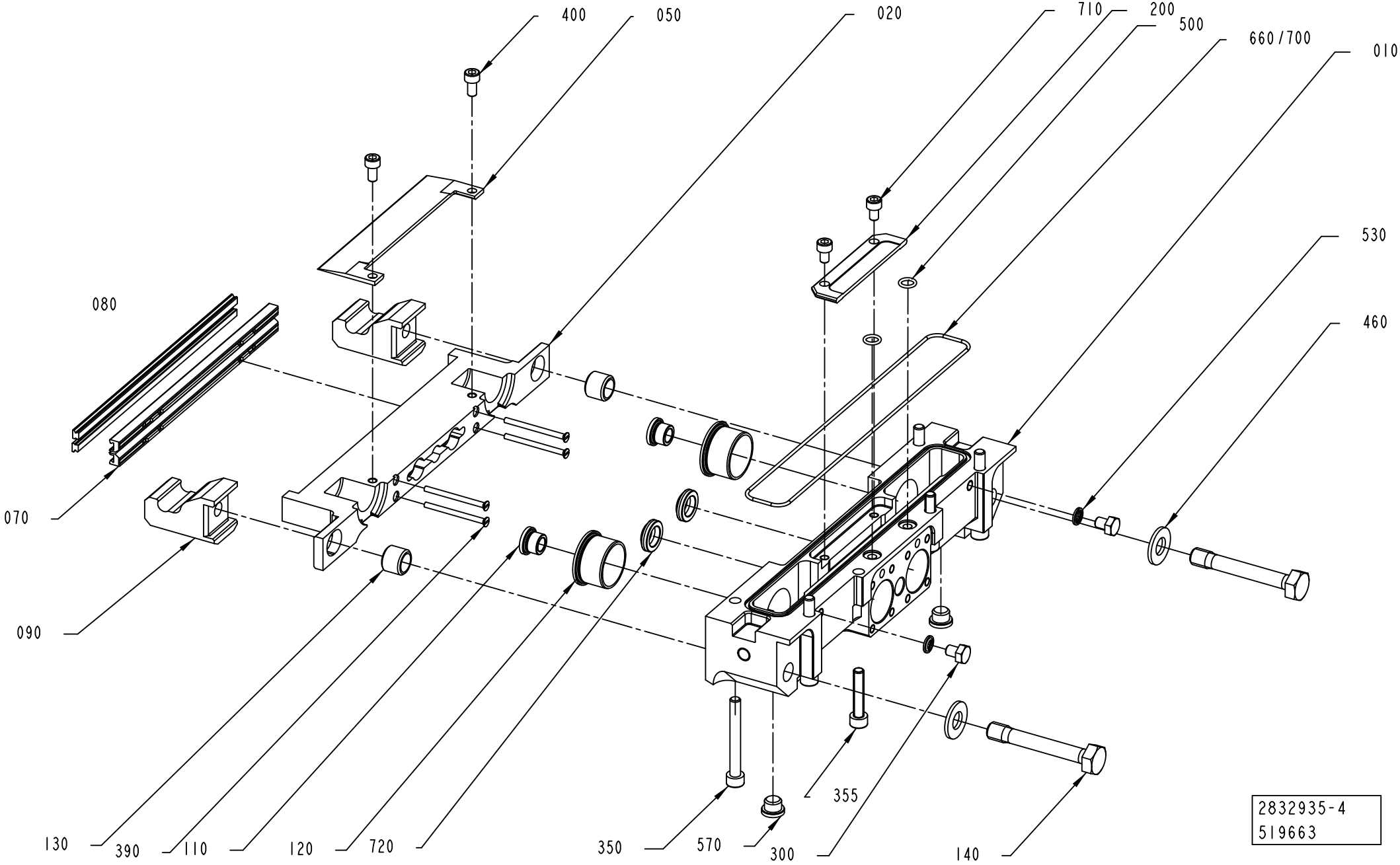

Pos	Part No	UN	Qty	Description	Page No
TPA 1000SQ, TPA 0750SQ (Cont'd) (See drawing on page: 1-562)					
090	1538348-0000		2	CATCH	
120	2912007-0000		2	BUSHING	
140	2798473-0000		2	SCREW	
150	2503699-0000		1	VOLUME BULGE	
200	2912354-0000		1	PLATE	
300	312105-0362		2	SCREW, M6S ISO 4017 M6X8 A4 80	
350	312115-0380		4	SCREW ISO4762 M6X50 A4 80	
355	312115-0380		2	SCREW ISO4762 M6X50 A4 80	
390	312145-0238		2	SCREW ISO 2009 MFS M3X40 A4	
395	312145-0236		2	SCREW ISO 2009 MFS M3X35 A4	
410	312155-0287		2	SCREW DIN 7991 MF6S M4X8 A4 70	
500	315202-0105		2	O-RING 7,1X1,6 MM	
530	315211-0103		2	BONDED SEAL SS/NBR90 M6	
710	312115-0323		2	SCREW ISO4762 M5X8 A4 80	
720	90600-2018		2	SCRAPER 12X18,6X5,4 MM	
Common Parts					
110	1255390-0000		2	BUSHING	
130	1036494-0000		2	GUIDE BUSHING	
460	315105-0173		2	WASHER PLAIN, 10,5X22X2 A4 BRB	
570	342713-0209		2	PLUG, EXT THREAD HEX SOCKET 8638-00-180	
660	90459-2363		1	O-RING MATERIAL 1,78 MM LENGHT 600 MM	
700	90153-0015		1	ADHESIVE LOCTITE IS 496/CYANOLOT 303	

Pos	Part No	UN	Qty	Description	Page No

CUTTING JAW

Drawing file: 2832935-5_1_AC.hpgl

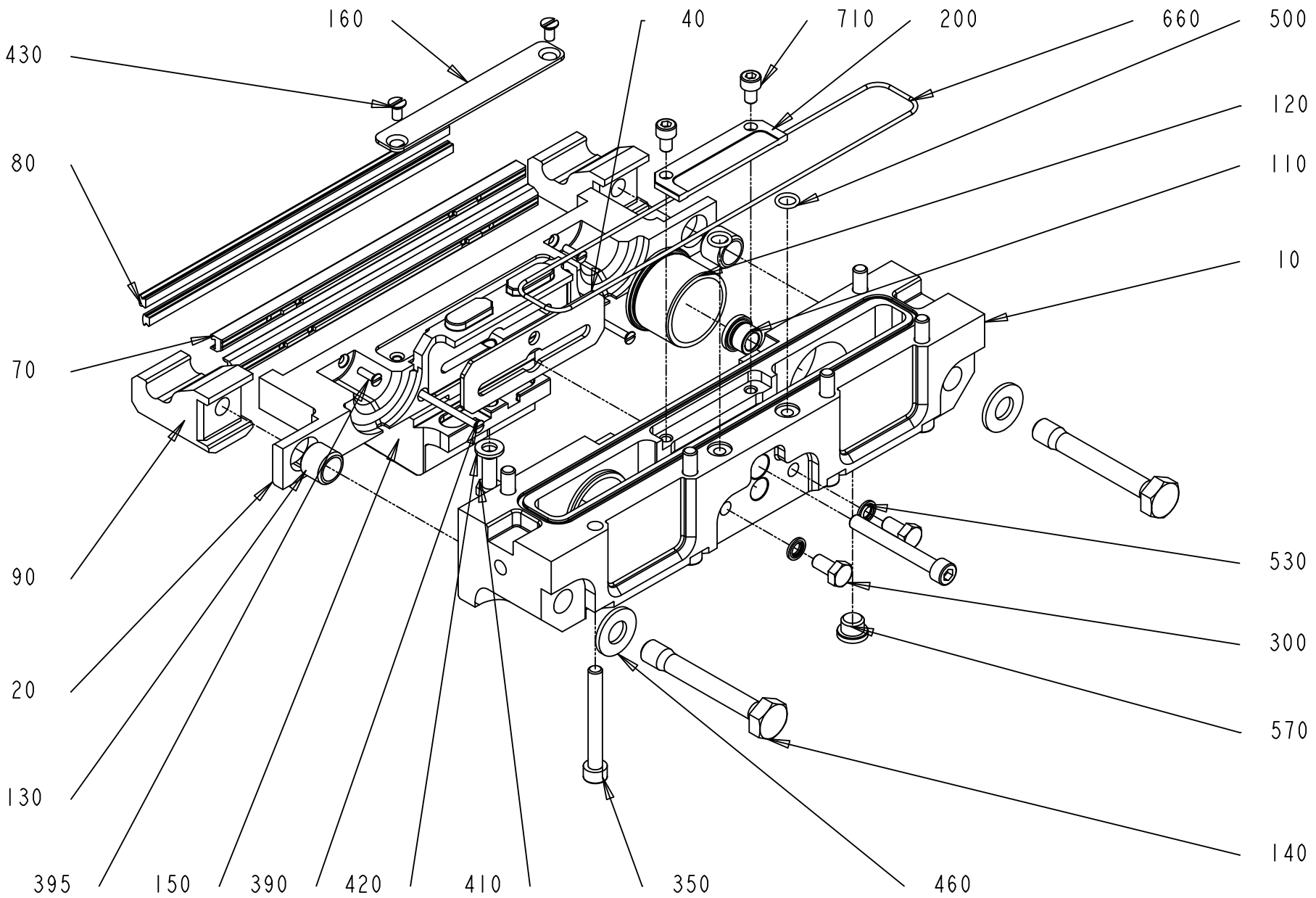

2832935-5
527307

Pos	Part No	UN	Qty	Description	Page No
SEE PREVIOUS LISTS PAGES: 1-563, 1-565, 1-567, 1-569.					

Pos	Part No	UN	Qty	Description	Page No

FOLDING FLAP LEFT

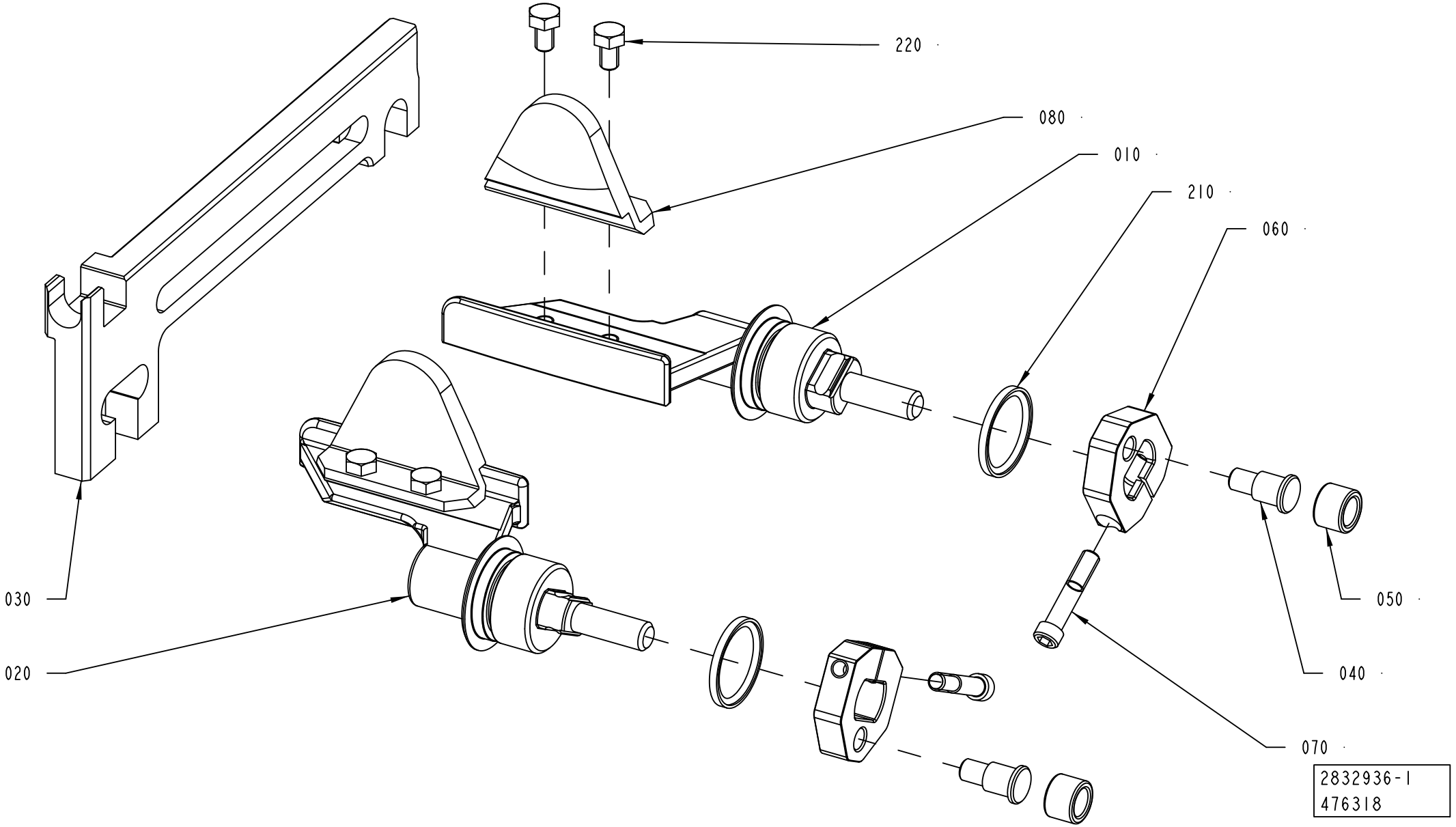

ECM: 646066 - 20140401
Group number: 2832936-0100
Assembly Drawing: 2832936-1_1_AC

This list covers pages from 1-572 to 1-577

Pos	Part No	UN	Qty	Description	Page No
TBA 0500B, TBA 1000B (See drawing on page: 1-572)					
010	2898569-0000		1	FOLDING FLAP	
020	2898568-0000		1	FOLDING FLAP	
030	2948633-0000		1	CARRIER RULER	
040	2948627-0000		2	SHAFT	
050	2948626-0000		2	ROLLER	
060	2948628-0000		2	CARRIER	
070	2833952-0000		2	SCREW	
210	90600-2017		2	PISTON SEAL ROTOGLYD RING 20,1X25X2,2 MM	
TBA 0500E, TBA 1000E QC (See drawing on page: 1-576)					
010	3330228-0000		1	FOLDING FLAP	
020	3330227-0000		1	FOLDING FLAP	
030	2948629-0000		1	CARRIER RULER	
040	2948627-0000		2	SHAFT	
050	2948626-0000		2	ROLLER	
060	2948628-0000		2	CARRIER	
070	2833952-0000		2	SCREW	
100	3212461-0000		1	BEARING	
110	3212462-0000		1	BEARING	
210	90600-2017		2	PISTON SEAL ROTOGLYD RING 20,1X25X2,2 MM	
230	90602-4847		1	THREADLOCKER LOCTITE 243, 50ML	
300	312115-0374		2	SCREW ISO4762 M6X30 A4 80	
TBA 0500S (See drawing on page: 1-572)					
010	2996358-0000		1	FOLDING FLAP	
020	2996359-0000		1	FOLDING FLAP	
030	2996360-0000		1	CARRIER RULER	
040	2948627-0000		2	SHAFT	
050	2948626-0000		2	ROLLER	
060	2948628-0000		2	CARRIER	
070	2833952-0000		2	SCREW	
210	90600-2017		2	PISTON SEAL ROTOGLYD RING 20,1X25X2,2 MM	
TBA 0500SQ, TBA 1000SQ (See drawing on page: 1-572)					
010	2847230-0000		1	FOLDING FLAP	
020	2847231-0000		1	FOLDING FLAP	
030	2948629-0000		1	CARRIER RULER	
040	2948627-0000		2	SHAFT	
050	2948626-0000		2	ROLLER	
060	2948628-0000		2	CARRIER	
070	2833952-0000		2	SCREW	
080	2843780-0000		2	PLATE	
210	90600-2017		2	PISTON SEAL ROTOGLYD RING 20,1X25X2,2 MM	
220	312105-0323		4	"FSCR05080-10, SCREW, M6S"	
230	90602-4847		1	THREADLOCKER LOCTITE 243, 50ML	
TBA 1000E NOQC (See drawing on page: 1-576)					
010	2862211-0000		1	FOLDING FLAP	
020	2862212-0000		1	FOLDING FLAP	
030	2948629-0000		1	CARRIER RULER	
040	2948627-0000		2	SHAFT	
050	2948626-0000		2	ROLLER	
060	2948628-0000		2	CARRIER	
070	2833952-0000		2	SCREW	
100	3212461-0000		1	BEARING	
110	3212462-0000		1	BEARING	
210	90600-2017		2	PISTON SEAL ROTOGLYD RING 20,1X25X2,2 MM	
230	90602-4847		1	THREADLOCKER LOCTITE 243, 50ML	
300	312115-0374		2	SCREW ISO4762 M6X30 A4 80	
TBA 1000M (See drawing on page: 1-572)					
010	3092844-0000		1	FOLDING FLAP	
020	3092843-0000		1	FOLDING FLAP	
030	2998785-0000		1	CARRIER RULER	
040	2948627-0000		2	SHAFT	
050	2948626-0000		2	ROLLER	
060	2948628-0000		2	CARRIER	
070	2833952-0000		2	SCREW	
210	90600-2017		2	PISTON SEAL ROTOGLYD RING 20,1X25X2,2 MM	
TBA 1000S (See drawing on page: 1-572)					
010	2813728-0000		1	FOLDING FLAP	
020	2813729-0000		1	FOLDING FLAP	
030	2948631-0000		1	CARRIER RULER	
040	2948627-0000		2	SHAFT	
050	2948626-0000		2	ROLLER	
060	2948628-0000		2	CARRIER	
070	2833952-0000		2	SCREW	
210	90600-2017		2	PISTON SEAL ROTOGLYD RING 20,1X25X2,2 MM	
TBA 1500S (See drawing on page: 1-572)					
010	2928342-0000		1	FOLDING FLAP	
	3021645-0000		*1*	*FOLDING FLAP*	
020	2928343-0000		1	FOLDING FLAP	
	3021646-0000		*1*	*FOLDING FLAP*	
030	2948633-0000		1	CARRIER RULER	
040	2948627-0000		2	SHAFT	
050	2948626-0000		2	ROLLER	
060	2948628-0000		2	CARRIER	
070	2833952-0000		2	SCREW	

Machine Type | Group Description | Used-In | Group Number | Page No

FOLDING FLAP LEFT

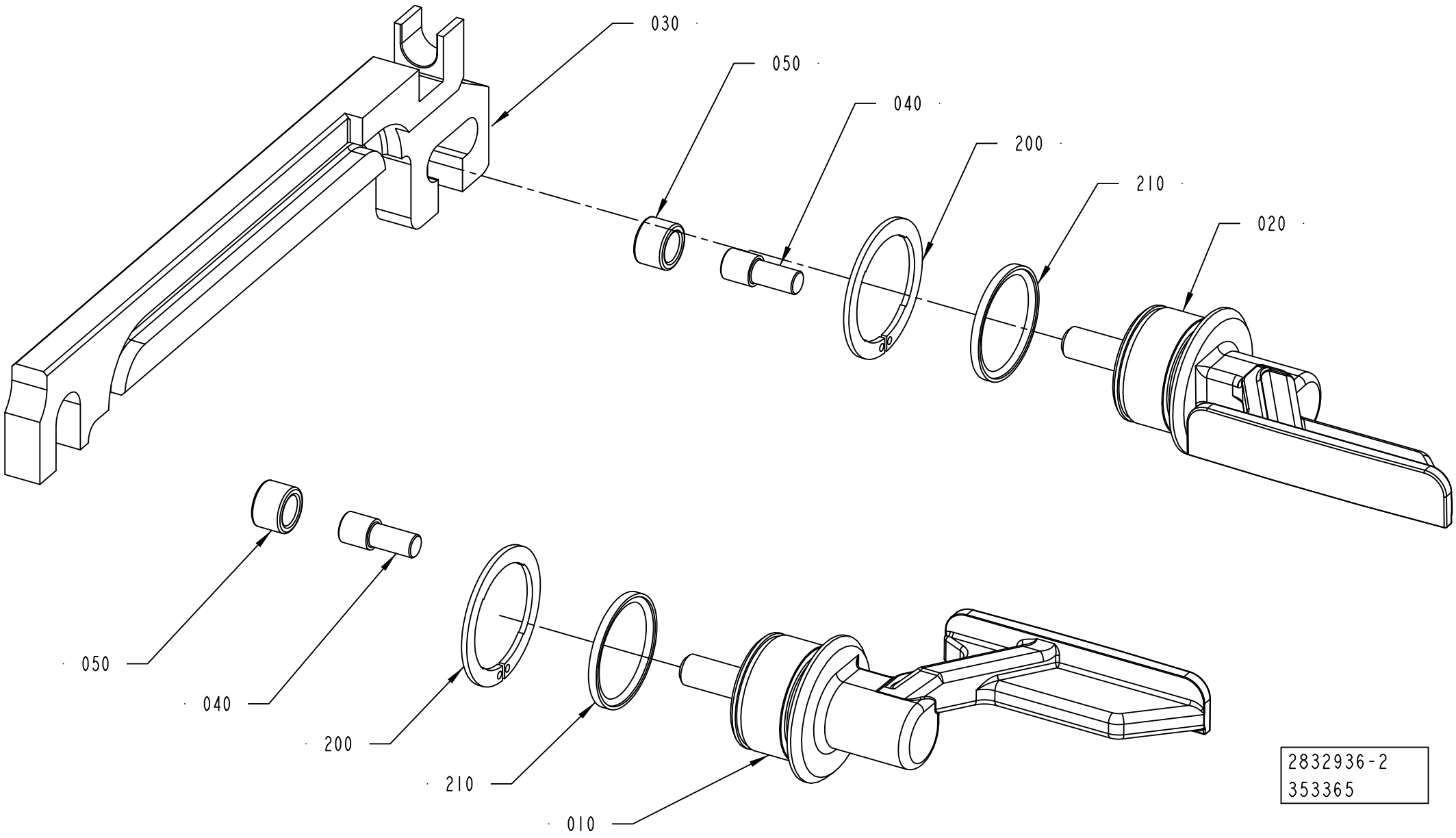

Pos	Part No	UN	Qty	Description	Page No
TBA 1500S (Cont'd) (See drawing on page: 1-572)					
210	90600-2017		2	PISTON SEAL ROTOGLYD RING 20,1X25X2,2 MM	
TBA 2000S (See drawing on page: 1-574)					
010	2566319-0000		1	FOLDING FLAP	
020	2566320-0000		1	FOLDING FLAP	
030	2948637-0000		1	CARRIER RULER	
040	22462-0000		2	SHAFT	
050	22463-0000		2	ROLL	
200	90141-0029		2	CIRCLIP	
210	90459-2258		2	PISTON SEAL ROTOGLYD RING 25,1X30X2,2 MM	
TGA 1000SQ, TGA 0750SQ, TGA 0500SQ, TGA 1000CR, TGA 1000LF (See drawing on page: 1-574)					
010	2660290-0000		1	FOLDING FLAP	
020	2660291-0000		1	FOLDING FLAP	
030	2994205-0000		1	CARRIER RULER	
040	22462-0000		2	SHAFT	
050	22463-0000		2	ROLL	
200	90141-0029		2	CIRCLIP	
210	90459-2258		2	PISTON SEAL ROTOGLYD RING 25,1X30X2,2 MM	
TGA 1500SQ (See drawing on page: 1-572)					
010	2939719-0000		1	FOLDING FLAP	
	3021645-0000		*1*	*FOLDING FLAP*	
020	2939720-0000		1	FOLDING FLAP	
	3021646-0000		*1*	*FOLDING FLAP*	
030	2948633-0000		1	CARRIER RULER	
040	2948627-0000		2	SHAFT	
050	2948626-0000		2	ROLLER	
060	2948628-0000		2	CARRIER	
070	2833952-0000		2	SCREW	
210	90600-2017		2	PISTON SEAL ROTOGLYD RING 20,1X25X2,2 MM	
TPA 0500SQ (See drawing on page: 1-572)					
010	2958754-0000		1	FOLDING FLAP	
020	2958753-0000		1	FOLDING FLAP	
030	2958755-0000		1	CARRIER RULER	
040	2948627-0000		2	SHAFT	
050	2948626-0000		2	ROLLER	
060	2948628-0000		2	CARRIER	
070	2833952-0000		2	SCREW	
210	90600-2017		2	PISTON SEAL ROTOGLYD RING 20,1X25X2,2 MM	
TPA 1000SQ, TPA 0750SQ (See drawing on page: 1-572)					
010	2912359-0000		1	FOLDING FLAP	
020	2912360-0000		1	FOLDING FLAP	
030	2948635-0000		1	CARRIER RULER	
040	2948627-0000		2	SHAFT	
050	2948626-0000		2	ROLLER	
060	2948628-0000		2	CARRIER	
070	2833952-0000		2	SCREW	
210	90600-2017		2	PISTON SEAL ROTOGLYD RING 20,1X25X2,2 MM	

Machine Type | Group Description | Used-In | Group Number | Page No

FOLDING FLAP LEFT

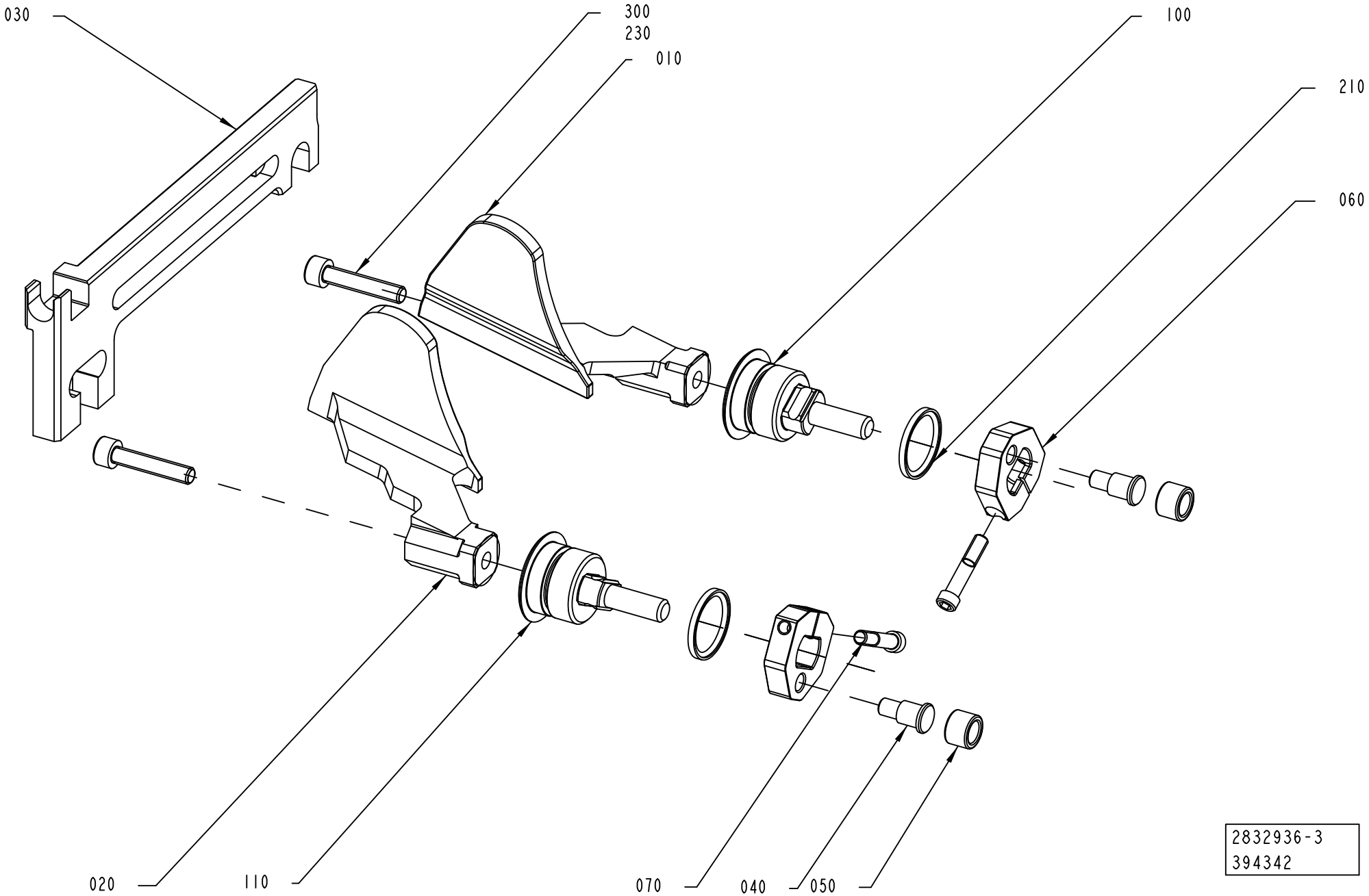

ECM: 646066 - 20140401
Group number: 2832936-0100
Assembly Drawing: 2832936-3_1_AA

This list covers pages from 1-572 to 1-577

Pos	Part No	UN	Qty	Description	Page No
SEE PREVIOUS LISTS PAGES: 1-573, 1-575.					

Pos	Part No	UN	Qty	Description	Page No

CARRIER PRESSURE RIGHT

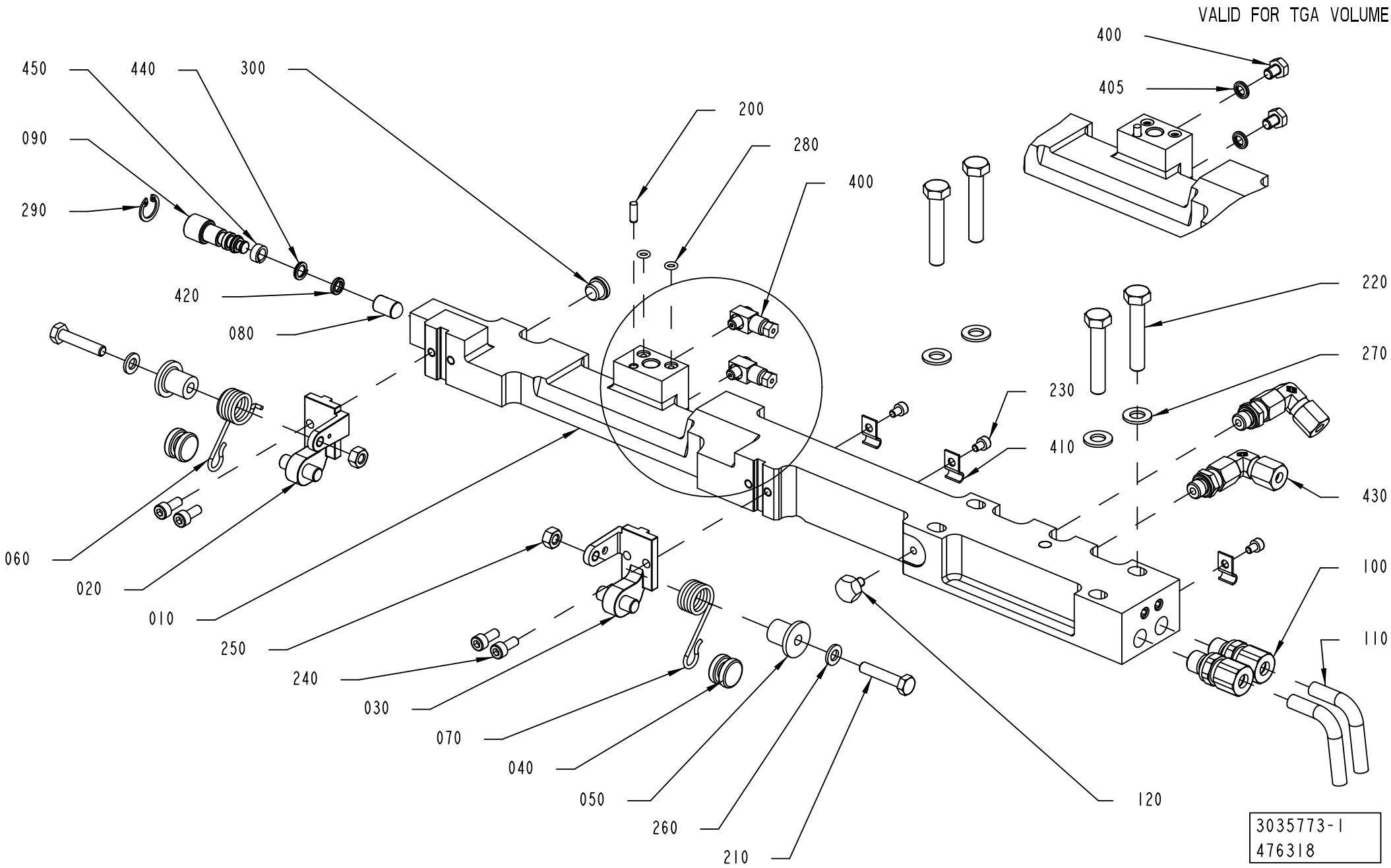

ECM: 647816 - 20140401
Group number: 3035773-0100
Assembly Drawing: 3035773-1_1_AC

This list covers pages from 1-578 to 1-583

Pos	Part No	UN	Qty	Description	Page No
TBA 0500S, TBA 0500SQ, TBA 0500B, TBA 1000B, TBA 1000SQ, TBA 1000S, TBA 1500S, TPA 1000SQ, TPA 0500SQ, TPA 0750SQ, TBA 1000E, TBA 1000M, TBA 0500E (See drawing on page: 1-578)					
010	3014105-0000		1	CARRIER PRESSURE RIGHT	
400	90134-0058		2	CONNECTION	
TBA 2000S (See drawing on page: 1-580)					
010	3038403-0000		1	CARRIER PRESSURE RIGHT	
400	90134-0058		2	CONNECTION	
TGA 1000SQ, TGA 0750SQ, TGA 0500SQ, TGA 1500SQ, TGA 1000CR, TGA 1000LF (See drawing on page: 1-582)					
010	3014105-0000		1	CARRIER PRESSURE RIGHT	
400	312105-0362		2	SCREW, M6S ISO 4017 M6X8 A4 80	
405	315115-0153		2	WASHER PLAIN, TBRB 6,4/12 H=3	
Common Parts					
020	2530292-0000		1	BRACKET	
030	2530293-0000		1	BRACKET	
040	2530296-0000		2	ROLLER	
050	2532531-0000		2	ROLLER	
060	2547588-0000		1	SPRING	
070	2547589-0000		1	SPRING	
080	2995752-0000		1	HEAD	
090	2995753-0000		1	SHAFT	
100	3039948-0000		2	CONNECTOR	
110	3039949-0000		2	TUBE	
120	3047361-0000		1	SETTING KNOB	
200	311103-0268		1	PARALLEL PIN ISO 2338 4M6X12 A1	
210	312105-0374		2	SCREW, M6S ISO 4014 M6X30 A4 80	
220	312105-0460		4	SCREW, M6S ISO 4014 M8X45 A4 80	
230	312115-0285		3	SCREW ISO4762 M4X6 A4 80	
240	312115-0327		4	SCREW ISO4762 M5X12 A4 80	
250	312605-0316		2	HEXAGON NUT, M6M M6 A280	
260	315105-0153		2	WASHER PLAIN, 6,4X12X1,5 A4 BRB	
270	315105-0165		4	FWAS080G0-0S, WASHER PLAIN	
280	315202-0102		2	O-RING 4,1X1,6 MM	
290	315753-0112		1	RETAINING RING FOR BORE DIN 472 15 SS	
300	342713-0209		1	PLUG, EXT THREAD HEX SOCKET 8638-00-180	
410	90165-0056		3	PIPE CLIP FOR TUBE, 4 MM	
420	90459-1861		1	X-SEAL 6,07X2,62 MM	
430	90600-1991		2	ADJUSTABLE ELBOW CONNECTION 6-G1/8	
440	90601-3689		1	BACK-UP RING 7X1,4 MM	
450	90601-3688		1	WEAR RING 6,9X10X4 MM	
460	90602-4847		1	THREADLOCKER LOCTITE 243, 50ML	

Pos	Part No	UN	Qty	Description	Page No

CARRIER PRESSURE RIGHT

Drawing file: 3035773-2_1_AA.hpgl

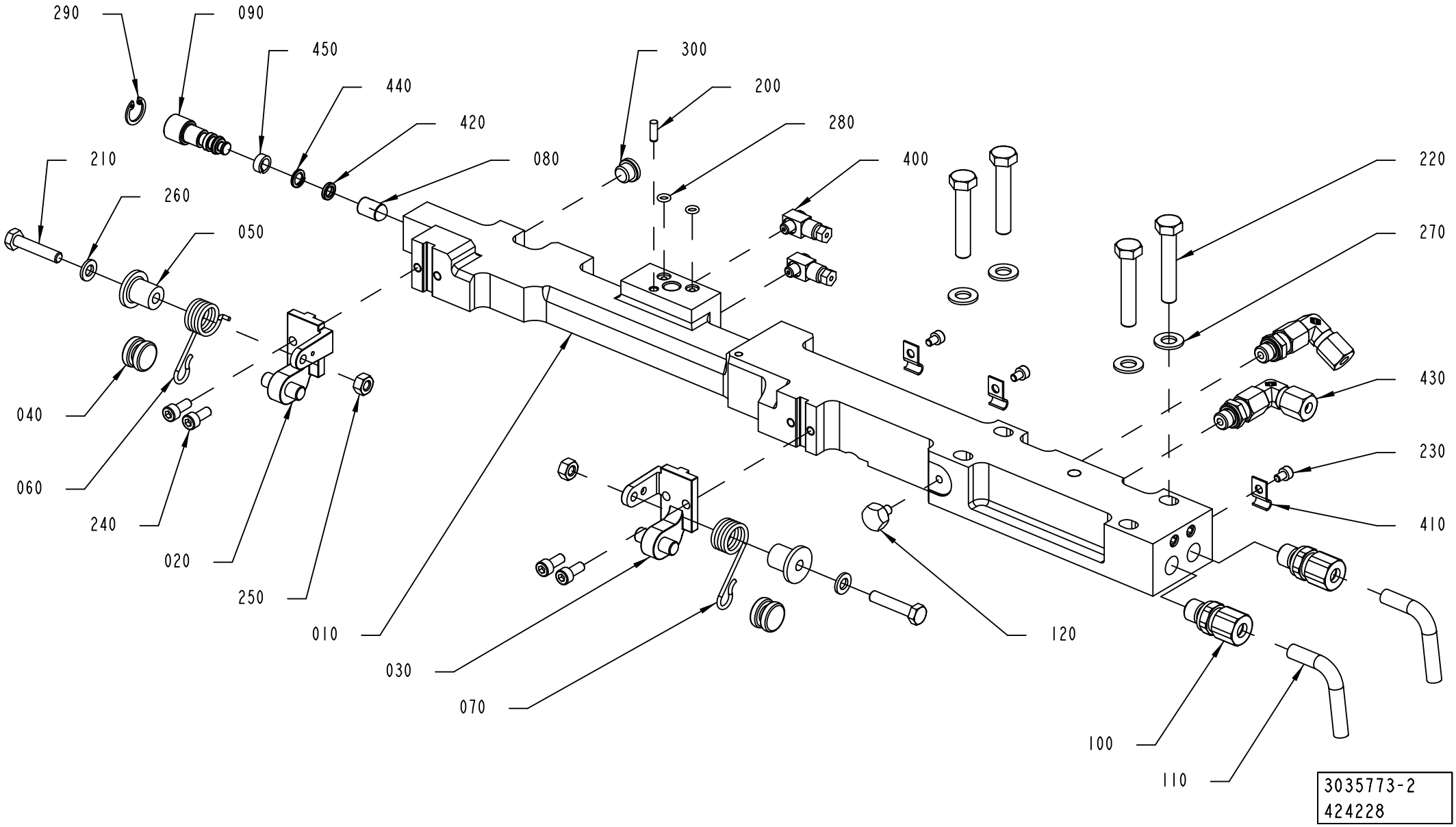

Pos	Part No	UN	Qty	Description	Page No
TBA 0500S, TBA 0500SQ, TBA 0500B, TBA 1000B, TBA 1000SQ, TBA 1000S, TBA 1500S, TPA 1000SQ, TPA 0500SQ, TPA 0750SQ, TBA 1000E, TBA 1000M, TBA 0500E (See drawing on page: 1-578)					
010	3014105-0000		1	CARRIER PRESSURE RIGHT	
400	90134-0058		2	CONNECTION	
TBA 2000S (See drawing on page: 1-580)					
010	3038403-0000		1	CARRIER PRESSURE RIGHT	
400	90134-0058		2	CONNECTION	
TGA 1000SQ, TGA 0750SQ, TGA 0500SQ, TGA 1500SQ, TGA 1000CR, TGA 1000LF (See drawing on page: 1-582)					
010	3014105-0000		1	CARRIER PRESSURE RIGHT	
400	312105-0362		2	SCREW, M6S ISO 4017 M6X8 A4 80	
405	315115-0153		2	WASHER PLAIN, TBRB 6,4/12 H=3	
Common Parts					
020	2530292-0000		1	BRACKET	
030	2530293-0000		1	BRACKET	
040	2530296-0000		2	ROLLER	
050	2532531-0000		2	ROLLER	
060	2547588-0000		1	SPRING	
070	2547589-0000		1	SPRING	
080	2995752-0000		1	HEAD	
090	2995753-0000		1	SHAFT	
100	3039948-0000		2	CONNECTOR	
110	3039949-0000		2	TUBE	
120	3047361-0000		1	SETTING KNOB	
200	311103-0268		1	PARALLEL PIN ISO 2338 4M6X12 A1	
210	312105-0374		2	SCREW, M6S ISO 4014 M6X30 A4 80	
220	312105-0460		4	SCREW, M6S ISO 4014 M8X45 A4 80	
230	312115-0285		3	SCREW ISO4762 M4X6 A4 80	
240	312115-0327		4	SCREW ISO4762 M5X12 A4 80	
250	312605-0316		2	HEXAGON NUT, M6M M6 A280	
260	315105-0153		2	WASHER PLAIN, 6,4X12X1,5 A4 BRB	
270	315105-0165		4	FWAS080G0-0S, WASHER PLAIN	
280	315202-0102		2	O-RING 4,1X1,6 MM	
290	315753-0112		1	RETAINING RING FOR BORE DIN 472 15 SS	
300	342713-0209		1	PLUG, EXT THREAD HEX SOCKET 8638-00-180	
410	90165-0056		3	PIPE CLIP FOR TUBE, 4 MM	
420	90459-1861		1	X-SEAL 6,07X2,62 MM	
430	90600-1991		2	ADJUSTABLE ELBOW CONNECTION 6-G1/8	
440	90601-3689		1	BACK-UP RING 7X1,4 MM	
450	90601-3688		1	WEAR RING 6,9X10X4 MM	
460	90602-4847		1	THREADLOCKER LOCTITE 243, 50ML	

Pos	Part No	UN	Qty	Description	Page No

CARRIER PRESSURE RIGHT

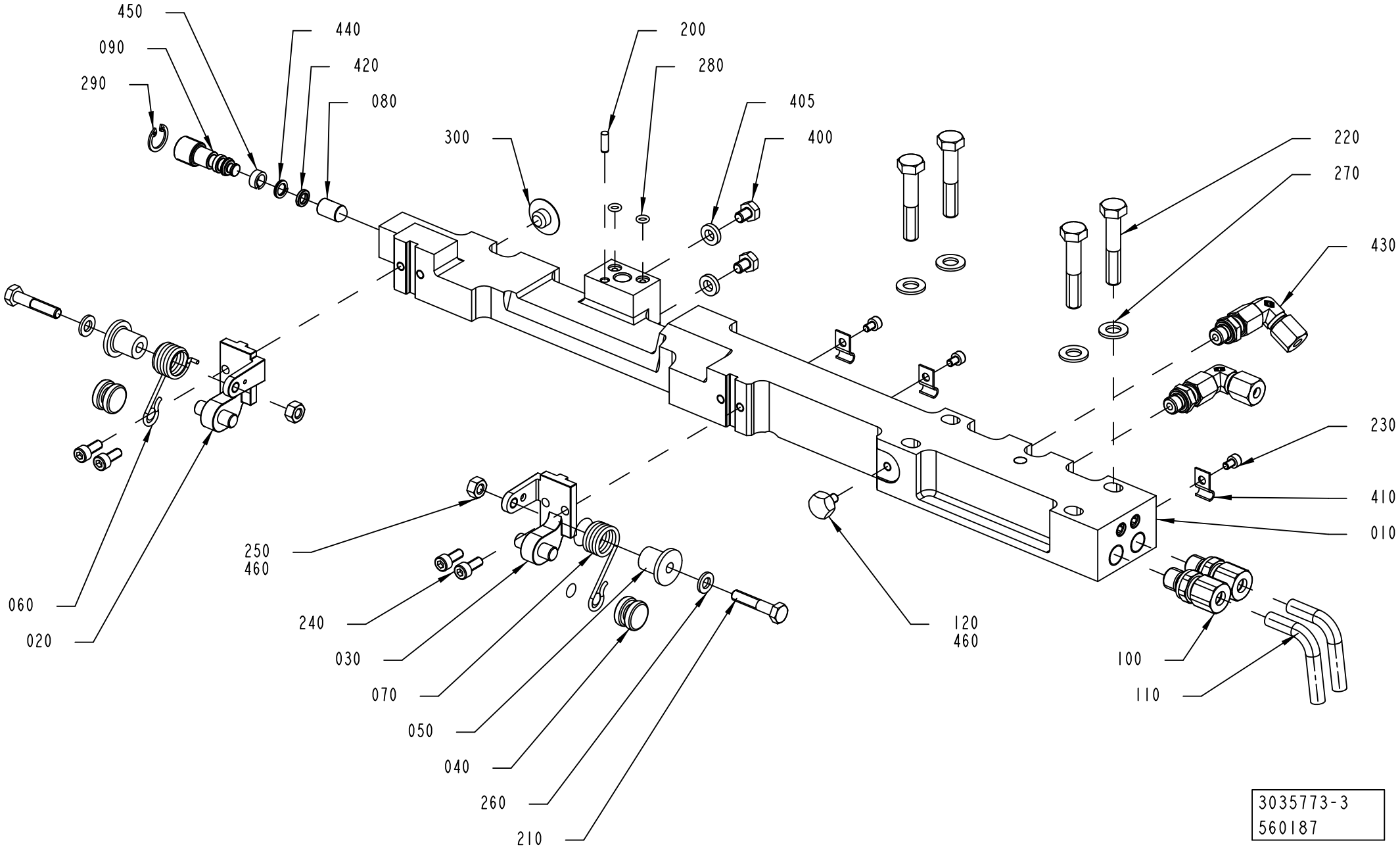

Pos	Part No	UN	Qty	Description	Page No
TBA 0500S, TBA 0500SQ, TBA 0500B, TBA 1000B, TBA 1000SQ, TBA 1000S, TBA 1500S, TPA 1000SQ, TPA 0500SQ, TPA 0750SQ, TBA 1000E, TBA 1000M, TBA 0500E (See drawing on page: 1-578)					
010	3014105-0000		1	CARRIER PRESSURE RIGHT	
400	90134-0058		2	CONNECTION	
TBA 2000S (See drawing on page: 1-580)					
010	3038403-0000		1	CARRIER PRESSURE RIGHT	
400	90134-0058		2	CONNECTION	
TGA 1000SQ, TGA 0750SQ, TGA 0500SQ, TGA 1500SQ, TGA 1000CR, TGA 1000LF (See drawing on page: 1-582)					
010	3014105-0000		1	CARRIER PRESSURE RIGHT	
400	312105-0362		2	SCREW, M6S ISO 4017 M6X8 A4 80	
405	315115-0153		2	WASHER PLAIN, TBRB 6,4/12 H=3	
Common Parts					
020	2530292-0000		1	BRACKET	
030	2530293-0000		1	BRACKET	
040	2530296-0000		2	ROLLER	
050	2532531-0000		2	ROLLER	
060	2547588-0000		1	SPRING	
070	2547589-0000		1	SPRING	
080	2995752-0000		1	HEAD	
090	2995753-0000		1	SHAFT	
100	3039948-0000		2	CONNECTOR	
110	3039949-0000		2	TUBE	
120	3047361-0000		1	SETTING KNOB	
200	311103-0268		1	PARALLEL PIN ISO 2338 4M6X12 A1	
210	312105-0374		2	SCREW, M6S ISO 4014 M6X30 A4 80	
220	312105-0460		4	SCREW, M6S ISO 4014 M8X45 A4 80	
230	312115-0285		3	SCREW ISO4762 M4X6 A4 80	
240	312115-0327		4	SCREW ISO4762 M5X12 A4 80	
250	312605-0316		2	HEXAGON NUT, M6M M6 A280	
260	315105-0153		2	WASHER PLAIN, 6,4X12X1,5 A4 BRB	
270	315105-0165		4	FWAS080G0-0S, WASHER PLAIN	
280	315202-0102		2	O-RING 4,1X1,6 MM	
290	315753-0112		1	RETAINING RING FOR BORE DIN 472 15 SS	
300	342713-0209		1	PLUG, EXT THREAD HEX SOCKET 8638-00-180	
410	90165-0056		3	PIPE CLIP FOR TUBE, 4 MM	
420	90459-1861		1	X-SEAL 6,07X2,62 MM	
430	90600-1991		2	ADJUSTABLE ELBOW CONNECTION 6-G1/8	
440	90601-3689		1	BACK-UP RING 7X1,4 MM	
450	90601-3688		1	WEAR RING 6,9X10X4 MM	
460	90602-4847		1	THREADLOCKER LOCTITE 243, 50ML	

Pos	Part No	UN	Qty	Description	Page No

PRESSURE JAW RIGHT

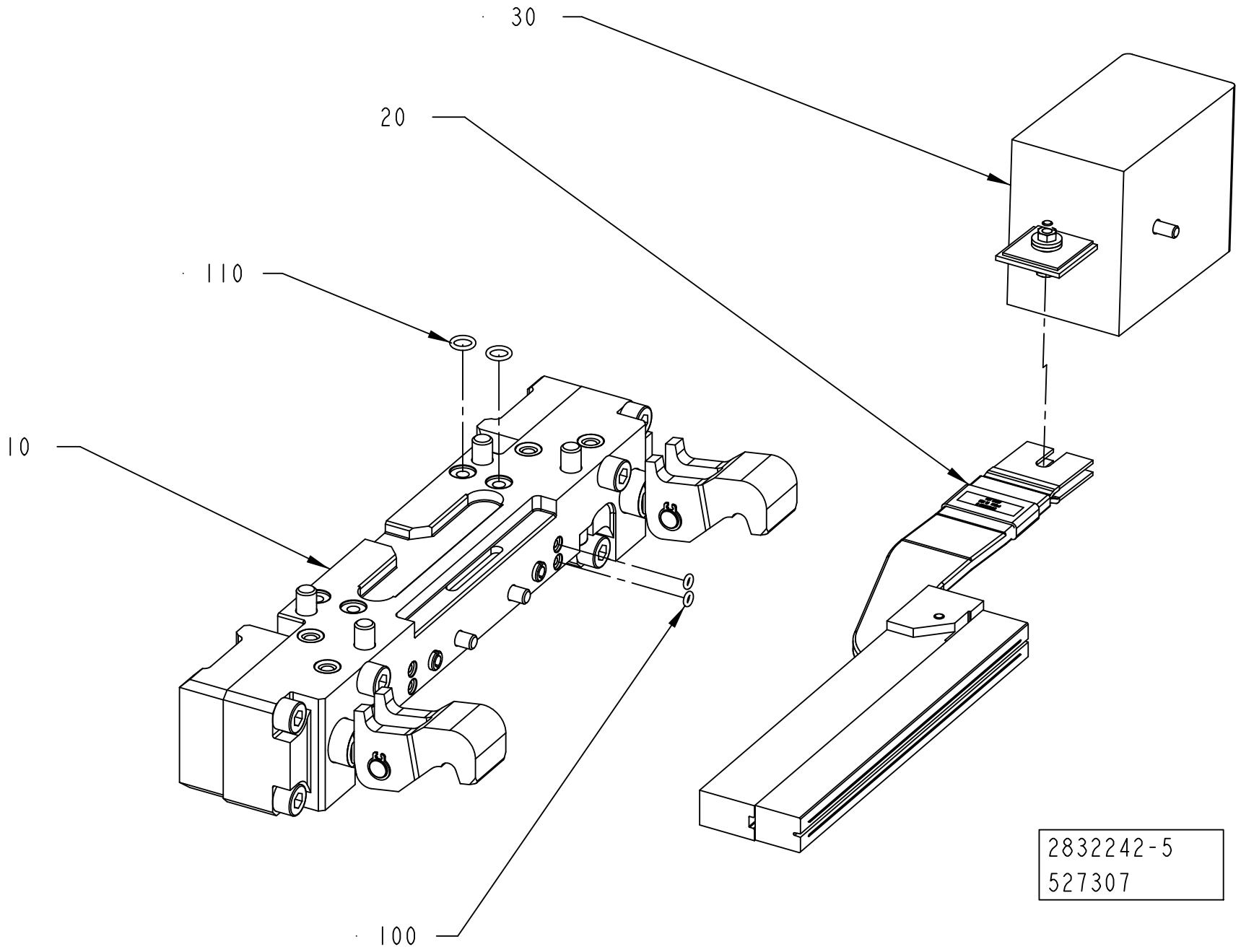

ECM: 647354 - 20140401
Group number: 2832242-0200
Assembly Drawing: 2832242-5_1_AA

This list covers pages from 1-584 to 1-587

Pos	Part No	UN	Qty	Description	Page No
TBA 0500E, TBA 1000E QC (See drawing on pages: 1-584, 1-586)					
050	3322308-0000		1	WEDGE	
200	312155-0331		2	SCREW DIN 7991 MF6S M5X20 A4 70	
TBA 1000E NOQC (See drawing on pages: 1-584, 1-586)					
050	3051286-0000		1	WEDGE	
200	312155-0331		2	SCREW DIN 7991 MF6S M5X20 A4 70	
Common Parts					
010	2832243-0100		1	PRESSURE JAW	**1-539**
020	2832245-0200		1	INDUCTOR RIGHT	**1-589, 1-591, 1-593**
030	2875995-0100		1	ADAPTION TRANSFORMER	**1-595**
100	315202-0101		2	O-RING 3,1X1,6 MM	
110	315202-0105		2	O-RING 7,1X1,6 MM	

Pos	Part No	UN	Qty	Description	Page No

PRESSURE JAW RIGHT

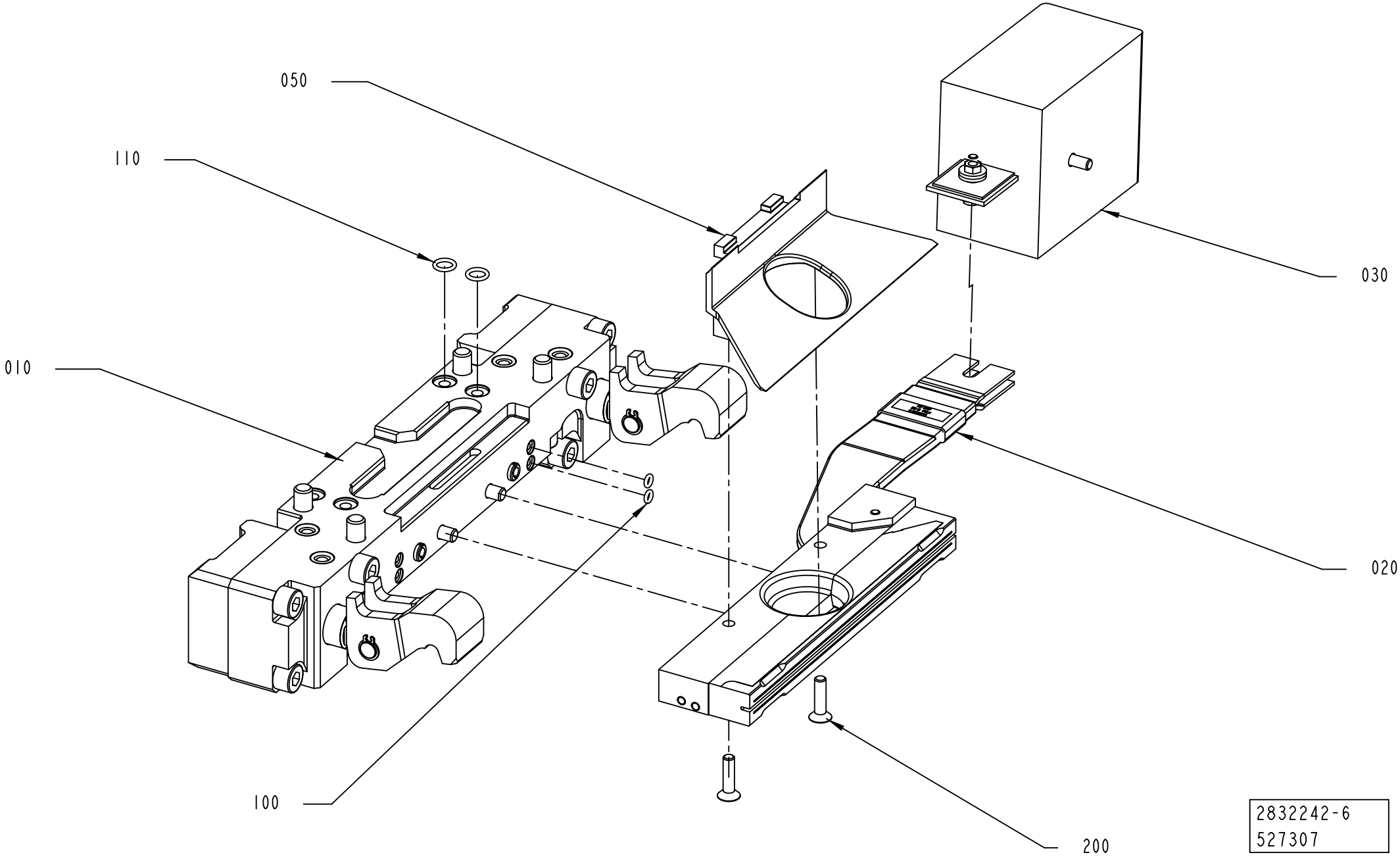

ECM: 647354 - 20140401
Group number: 2832242-0200
Assembly Drawing: 2832242-6_1_AA

This list covers pages from 1-584 to 1-587

Pos	Part No	UN	Qty	Description	Page No
TBA 0500E, TBA 1000E QC (See drawing on pages: 1-584, 1-586)					
050	3322308-0000		1	WEDGE	
200	312155-0331		2	SCREW DIN 7991 MF6S M5X20 A4 70	
TBA 1000E NOQC (See drawing on pages: 1-584, 1-586)					
050	3051286-0000		1	WEDGE	
200	312155-0331		2	SCREW DIN 7991 MF6S M5X20 A4 70	
Common Parts					
010	2832243-0100		1	PRESSURE JAW	**1-539**
020	2832245-0200		1	INDUCTOR RIGHT	**1-589, 1-591, 1-593**
030	2875995-0100		1	ADAPTION TRANSFORMER	**1-595**
100	315202-0101		2	O-RING 3,1X1,6 MM	
110	315202-0105		2	O-RING 7,1X1,6 MM	

Pos	Part No	UN	Qty	Description	Page No

INDUCTOR RIGHT

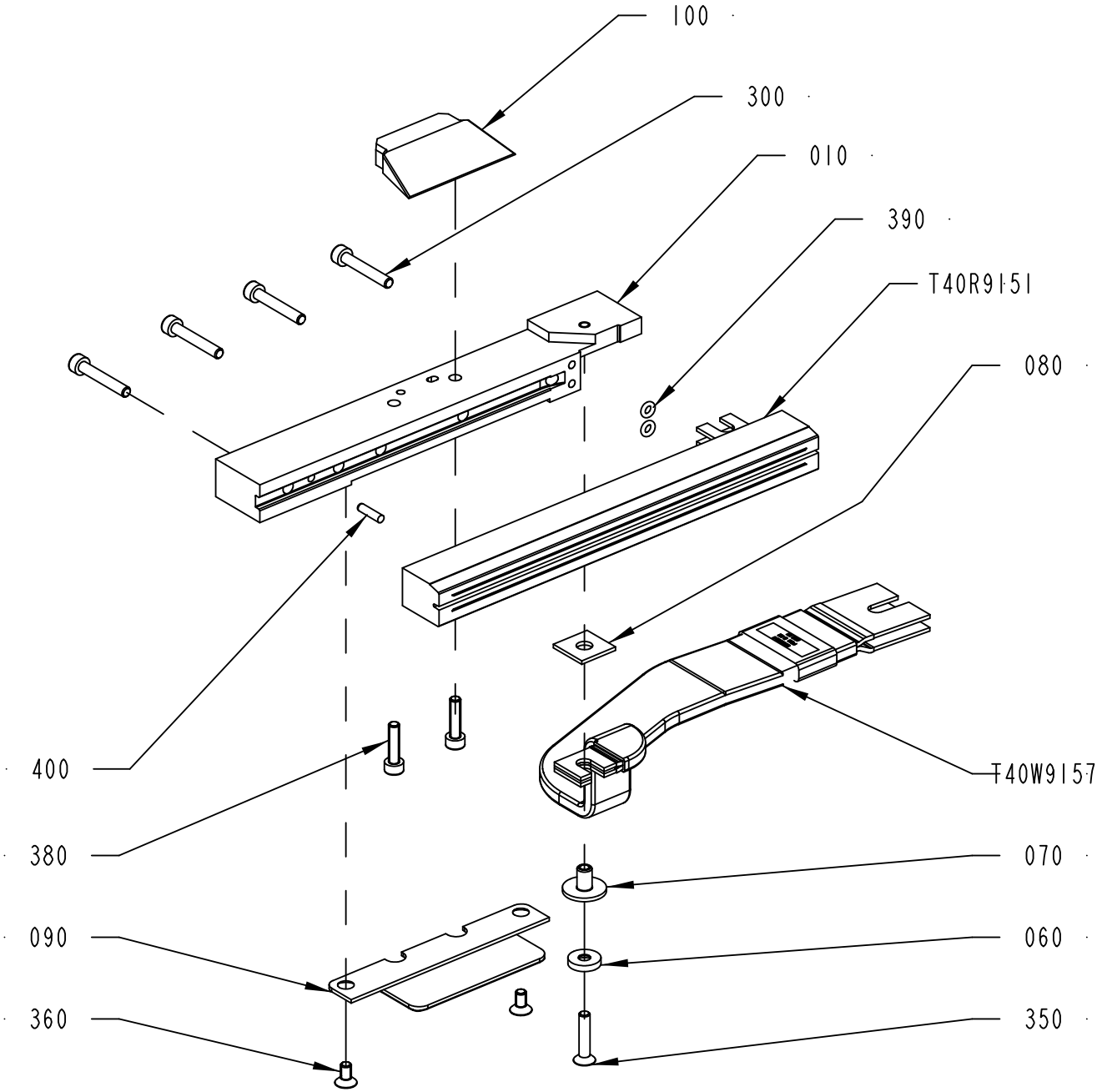

2832245-3
527307

ECM: 647357 - 20140401
Group number: 2832245-0200
Assembly Drawing: 2832245-3_1_AA

This list covers pages from 1-588 to 1-593

Pos	Part No	UN	Qty	Description	Page No
TGA 1500SQ (See drawing on page: 1-590)					
010	2928241-0000		1	RAIL	
060	2836239-0000		1	WASHER	
070	2836238-0000		1	INSULATION NUT	
080	1036584-0000		1	WASHER	
090	2928252-0000		1	VOLUME BULGE	
300	312115-0297		4	SCREW ISO4762 M4X25 A4 80	
350	312155-0295		1	SCREW DIN 7991 MF6S M4X20 A4 70	
370	312105-0368		1	"SCREW, M6S ISO 4017 M6X16 A4 80"	
390	315202-0101		2	O-RING 3,1X1,6 MM	
420	315105-0153		1	WASHER PLAIN, 6,4X12X1,5 A4 BRB	
T40R9151	3187897-0000		1	INDUCTOR	
T40W9157	2831048-0000		1	BUSBAR	
TPA 0500SQ (See drawing on page: 1-588)					
010	2903762-0000		1	RAIL	
060	2836239-0000		1	WASHER	
070	2836238-0000		1	INSULATION NUT	
080	1036584-0000		1	WASHER	
090	2958748-0000		1	VOLUME BULGE	
100	2968248-0000		1	VOLUME BULGE	
300	312115-0297		3	SCREW ISO4762 M4X25 A4 80	
350	312155-0295		1	SCREW DIN 7991 MF6S M4X20 A4 70	
360	312155-0287		2	SCREW DIN 7991 MF6S M4X8 A4 70	
380	312115-0293		2	SCREW ISO4762 M4X16 A4 80	
390	315202-0101		2	O-RING 3,1X1,6 MM	
400	311103-0234		1	PARALLEL PIN ISO 2338 3M6X12 A1	
T40R9151	2587467-0000		1	INDUCTOR	
T40W9157	2831048-0000		1	BUSBAR	
TPA 1000SQ, TPA 0750SQ (See drawing on page: 1-588)					
010	2903762-0000		1	RAIL	
060	2836239-0000		1	WASHER	
070	2836238-0000		1	INSULATION NUT	
080	1036584-0000		1	WASHER	
090	2944194-0000		1	VOLUME BULGE	
100	2944193-0000		1	VOLUME BULGE	
300	312115-0297		4	SCREW ISO4762 M4X25 A4 80	
350	312155-0295		1	SCREW DIN 7991 MF6S M4X20 A4 70	
360	312155-0287		2	SCREW DIN 7991 MF6S M4X8 A4 70	
380	312115-0293		2	SCREW ISO4762 M4X16 A4 80	
390	315202-0101		2	O-RING 3,1X1,6 MM	
400	311103-0234		1	PARALLEL PIN ISO 2338 3M6X12 A1	
T40R9151	2663377-0000		1	INDUCTOR	
T40W9157	2831048-0000		1	BUSBAR	
TBA 0500B, TBA 1000B NOMOLDEDCAP (See drawing on page: 1-588)					
010	2903762-0000		1	RAIL	
060	2836239-0000		1	WASHER	
070	2836238-0000		1	INSULATION NUT	
080	1036584-0000		1	WASHER	
090	1558734-0000		1	VOLUME BULGE	
300	312115-0297		4	SCREW ISO4762 M4X25 A4 80	
350	312155-0295		1	SCREW DIN 7991 MF6S M4X20 A4 70	
360	312155-0287		2	SCREW DIN 7991 MF6S M4X8 A4 70	
390	315202-0101		2	O-RING 3,1X1,6 MM	
T40R9151	3187897-0000		1	INDUCTOR	
T40W9157	2831048-0000		1	BUSBAR	
TBA 0500S (See drawing on page: 1-588)					
010	2832076-0000		1	RAIL	
060	2836239-0000		1	WASHER	
070	2836238-0000		1	INSULATION NUT	
080	1036584-0000		1	WASHER	
300	312115-0297		4	SCREW ISO4762 M4X25 A4 80	
350	312155-0295		1	SCREW DIN 7991 MF6S M4X20 A4 70	
390	315202-0101		2	O-RING 3,1X1,6 MM	
T40R9151	3124822-0000		1	INDUCTOR	
T40W9157	2831048-0000		1	BUSBAR	
TBA 0500SQ, TBA 1000SQ (See drawing on page: 1-588)					
010	2832076-0000		1	RAIL	
060	2836239-0000		1	WASHER	
070	2836238-0000		1	INSULATION NUT	
080	1036584-0000		1	WASHER	
300	312115-0297		4	SCREW ISO4762 M4X25 A4 80	
350	312155-0295		1	SCREW DIN 7991 MF6S M4X20 A4 70	
390	315202-0101		2	O-RING 3,1X1,6 MM	
T40R9151	3187899-0000		1	INDUCTOR	
T40W9157	2831048-0000		1	BUSBAR	
TBA 1000B STDA7 (See drawing on page: 1-588)					
010	2940880-0000		1	RAIL	
060	2836239-0000		1	WASHER	
070	2836238-0000		1	INSULATION NUT	
080	1036584-0000		1	WASHER	
090	1558734-0000		1	VOLUME BULGE	
300	312115-0297		4	SCREW ISO4762 M4X25 A4 80	
350	312155-0295		1	SCREW DIN 7991 MF6S M4X20 A4 70	
360	312155-0287		2	SCREW DIN 7991 MF6S M4X8 A4 70	

INDUCTOR RIGHT

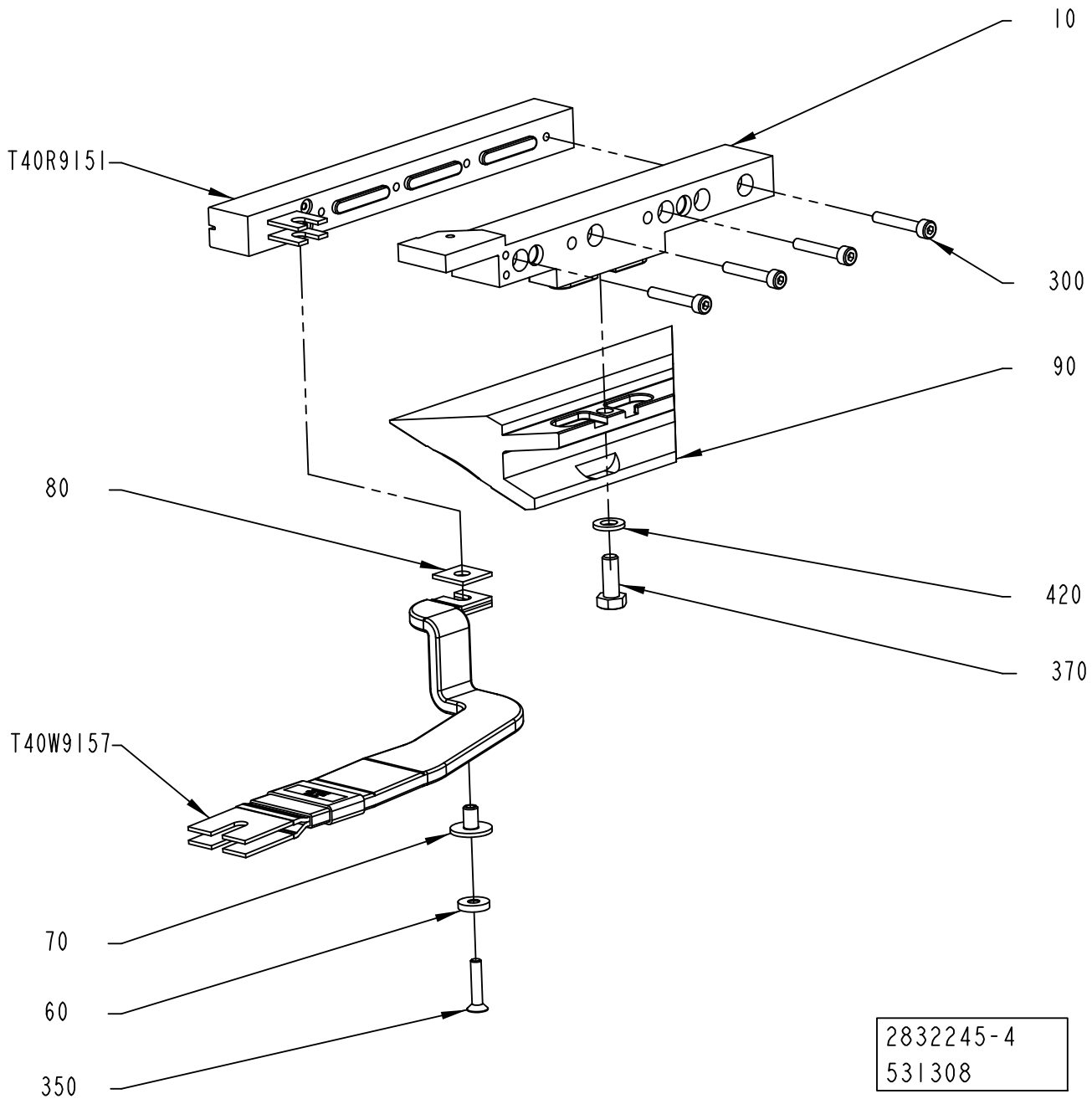

Pos	Part No	UN	Qty	Description	Page No
TBA 1000B STDA7 (Cont'd) (See drawing on page: 1-588)					
390	315202-0101		2	O-RING 3,1X1,6 MM	
T40R9151	2610956-0000		1	INDUCTOR	
T40W9157	2831048-0000		1	BUSBAR	
TBA 1000E, TBA 0500E (See drawing on page: 1-588)					
010	2960620-0000		1	RAIL	
060	3002499-0000		1	WASHER	
070	3002497-0000		1	INSULATION NUT	
080	3002498-0000		1	WASHER	
300	312115-0297		4	SCREW ISO4762 M4X25 A4 80	
350	312155-0295		1	SCREW DIN 7991 MF6S M4X20 A4 70	
390	315202-0101		4	O-RING 3,1X1,6 MM	
400	311103-0307		2	PARALLEL PIN ISO 2338 5M6X14 A1	
T40R9151	3003480-0000		1	INDUCTOR	
T40W9157	2831048-0000		1	BUSBAR	
TBA 1000M LIGHTCAP24 (See drawing on page: 1-588)					
010	3152726-0000		1	RAIL	
060	3002499-0000		1	WASHER	
070	3002497-0000		1	INSULATION NUT	
080	3002498-0000		1	WASHER	
090	3153223-0000		1	VOLUME BULGE	
300	312115-0297		3	SCREW ISO4762 M4X25 A4 80	
350	312155-0295		1	SCREW DIN 7991 MF6S M4X20 A4 70	
360	312155-0285		2	SCREW DIN 7991 MF6S M4X6 A4 70	
390	315202-0101		2	O-RING 3,1X1,6 MM	
T40R9151	3095386-0000		1	INDUCTOR	
T40W9157	2831048-0000		1	BUSBAR	
TBA 1000M STDA7 (See drawing on page: 1-588)					
010	3067548-0000		1	RAIL	
060	3002499-0000		1	WASHER	
070	3002497-0000		1	INSULATION NUT	
080	3002498-0000		1	WASHER	
090	3067384-0000		1	VOLUME BULGE	
300	312115-0297		3	SCREW ISO4762 M4X25 A4 80	
350	312155-0295		1	SCREW DIN 7991 MF6S M4X20 A4 70	
360	312155-0220		2	SCREW DIN 7991 MF6S M3X6 A4 70	
390	315202-0101		2	O-RING 3,1X1,6 MM	
T40R9151	3003481-0000		1	INDUCTOR	
T40W9157	2831048-0000		1	BUSBAR	
TBA 1000S LIGHTCAP24 (See drawing on page: 1-588)					
010	3247663-0000		1	RAIL	
060	2836239-0000		1	WASHER	
070	2836238-0000		1	INSULATION NUT	
080	1036584-0000		1	WASHER	
300	312115-0297		3	SCREW ISO4762 M4X25 A4 80	
350	312155-0295		1	SCREW DIN 7991 MF6S M4X20 A4 70	
390	315202-0101		2	O-RING 3,1X1,6 MM	
T40R9151	3187900-0000		1	INDUCTOR	
T40W9157	2831048-0000		1	BUSBAR	
TBA 1000S NOMOLDEDCAP HELICAP2 23 (See drawing on page: 1-588)					
010	2832076-0000		1	RAIL	
060	2836239-0000		1	WASHER	
070	2836238-0000		1	INSULATION NUT	
080	1036584-0000		1	WASHER	
300	312115-0297		4	SCREW ISO4762 M4X25 A4 80	
350	312155-0295		1	SCREW DIN 7991 MF6S M4X20 A4 70	
390	315202-0101		2	O-RING 3,1X1,6 MM	
T40R9151	3124821-0000		1	INDUCTOR	
T40W9157	2831048-0000		1	BUSBAR	
TBA 1000S NOMOLDEDCAP NOCAP, TBA 1000S NOMOLDEDCAP RECAP3, TBA 1000S NOMOLDEDCAP SLIMCAP 1000 (See drawing on page: 1-588)					
010	2832076-0000		1	RAIL	
060	2836239-0000		1	WASHER	
070	2836238-0000		1	INSULATION NUT	
080	1036584-0000		1	WASHER	
300	312115-0297		4	SCREW ISO4762 M4X25 A4 80	
350	312155-0295		1	SCREW DIN 7991 MF6S M4X20 A4 70	
390	315202-0101		2	O-RING 3,1X1,6 MM	
T40R9151	3187898-0000		1	INDUCTOR	
T40W9157	2831048-0000		1	BUSBAR	
TBA 1000S STDA7 (See drawing on page: 1-588)					
010	2843412-0000		1	RAIL	
060	2836239-0000		1	WASHER	
070	2836238-0000		1	INSULATION NUT	
080	1036584-0000		1	WASHER	
300	312115-0297		4	SCREW ISO4762 M4X25 A4 80	
350	312155-0295		1	SCREW DIN 7991 MF6S M4X20 A4 70	
390	315202-0101		2	O-RING 3,1X1,6 MM	
T40R9151	2546474-0000		1	INDUCTOR	
T40W9157	2831048-0000		1	BUSBAR	
TBA 1500S HELICAP2 23 (See drawing on page: 1-588)					
010	2832076-0000		1	RAIL	
060	2836239-0000		1	WASHER	
070	2836238-0000		1	INSULATION NUT	

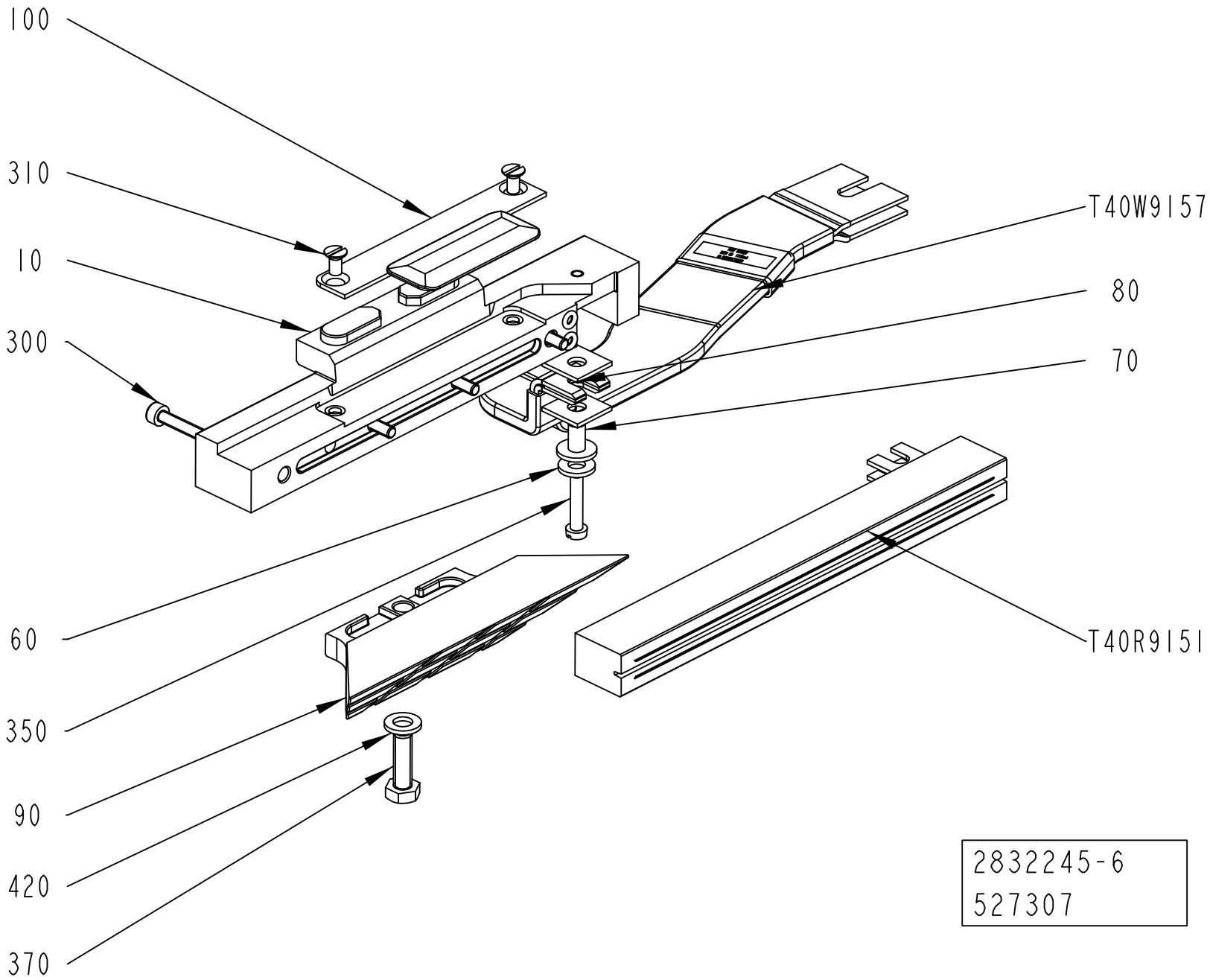
100
310
10
300
T40W9157
80
70
60
T40R9151
350
90
420
370
2832245-6
527307

Pos	Part No	UN	Qty	Description	Page No
TBA 1500S HELICAP2 23 (Cont'd) (See drawing on page: 1-588)					
080	1036584-0000		1	WASHER	
300	312115-0297		4	SCREW ISO4762 M4X25 A4 80	
350	312155-0295		1	SCREW DIN 7991 MF6S M4X20 A4 70	
390	315202-0101		2	O-RING 3,1X1,6 MM	
T40R9151	3187897-0000		1	INDUCTOR	
T40W9157	2831048-0000		1	BUSBAR	
TBA 1500S RECAP3, TBA 1500S SLIMCAP 1000 (See drawing on page: 1-588)					
010	2832076-0000		1	RAIL	
060	2836239-0000		1	WASHER	
070	2836238-0000		1	INSULATION NUT	
080	1036584-0000		1	WASHER	
300	312115-0297		4	SCREW ISO4762 M4X25 A4 80	
350	312155-0295		1	SCREW DIN 7991 MF6S M4X20 A4 70	
390	315202-0101		2	O-RING 3,1X1,6 MM	
T40R9151	3187897-0000		1	INDUCTOR	
T40W9157	2831048-0000		1	BUSBAR	
TBA 2000S (See drawing on page: 1-588)					
010	3002561-0000		1	RAIL	
060	3002499-0000		1	WASHER	
070	3002497-0000		1	INSULATION NUT	
080	3002498-0000		1	WASHER	
300	312115-0295		5	SCREW ISO4762 M4X20 A4 80	
350	312155-0295		1	SCREW DIN 7991 MF6S M4X20 A4 70	
390	315202-0101		2	O-RING 3,1X1,6 MM	
400	311103-0267		1	PARALLEL PIN ISO 2338 4M6X10 A1	
T40R9151	2879535-0000		1	INDUCTOR	
T40W9157	2909302-0000		1	BUSBAR	
TGA 1000CR, TGA 1000LF (See drawing on page: 1-592)					
010	3213756-0000		1	RAIL	
060	28509-0000		1	WASHER	
070	32544-0000		1	INSULATION NUT	
080	1036584-0000		2	WASHER	
090	2698631-0000		1	VOLUME BULGE	
100	2503688-0000		1	VOLUME BULGE	
300	312115-0297		4	SCREW ISO4762 M4X25 A4 80	
310	312145-0287		2	SCREW ISO 2009 MFS M4X8 A4	
350	312125-0295		1	SLOTTED HEAD SCREW, ISO1207 M4X20 A4	
370	312105-0370		1	SCREW, M6S ISO 4017 M6X20 A4 80	
420	315105-0153		1	WASHER PLAIN, 6,4X12X1,5 A4 BRB	
T40R9151	1566783-0000		1	INDUCTOR	
T40W9157	1498850-0000		1	BUSBAR	

Pos	Part No	UN	Qty	Description	Page No
TGA 1000SQ, TGA 0750SQ, TGA 0500SQ (See drawing on page: 1-592)					
010	3213756-0000		1	RAIL	
060	28509-0000		1	WASHER	
070	32544-0000		1	INSULATION NUT	
080	1036584-0000		2	WASHER	
090	2698631-0000		1	VOLUME BULGE	
100	3213757-0000		1	PLATE	
300	312115-0297		4	SCREW ISO4762 M4X25 A4 80	
310	312145-0287		2	SCREW ISO 2009 MFS M4X8 A4	
350	312125-0295		1	SLOTTED HEAD SCREW, ISO1207 M4X20 A4	
370	312105-0370		1	SCREW, M6S ISO 4017 M6X20 A4 80	
420	315105-0153		1	WASHER PLAIN, 6,4X12X1,5 A4 BRB	
T40R9151	1566783-0000		1	INDUCTOR	
T40W9157	1498850-0000		1	BUSBAR	

ADAPTION TRANSFORMER

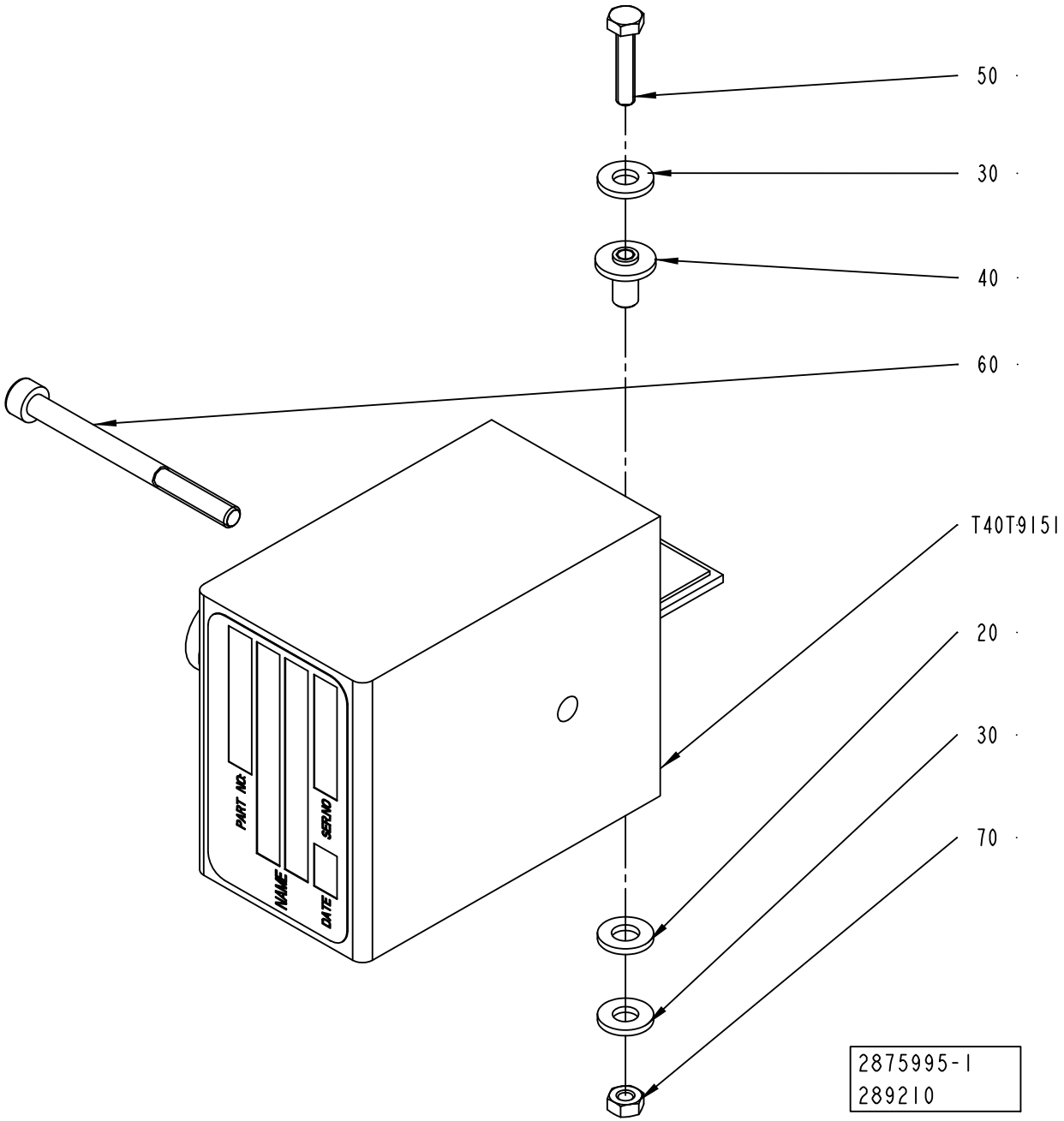

ECM: 647359 - 20140401
Group number: 2875995-0100
Assembly Drawing: 2875995-1_1_AA

Pos	Part No	UN	Qty	Description	Page No
TBA 0500S, TPA 1000SQ, TBA 2000S, TPA 0750SQ					
T40T9151	67379-0106		1	TRANSFORMER	
TBA 0500SQ, TBA 0500B, TBA 1000B, TBA 1000SQ, TBA 1500S RECAP3, TGA 1500SQ, TBA 1500S SLIMCAP 1000, TBA 1000S NOMOLDEDCAP NOCAP, TBA 1000S NOMOLDEDCAP RECAP3, TBA 1000S NOMOLDEDCAP SLIMCAP 1000					
T40T9151	67379-0101		1	TRANSFORMER	
TBA 1000E, TBA 1000M, TBA 0500E					
T40R9151	67379-0262		1	TRANSFORMER	
TBA 1000S					
T40T9151	67379-0101		1	TRANSFORMER	
TBA 1000S LIGHTCAP24					
T40T9151	67379-0115		1	TRANSFORMER	
TBA 1000S NOMOLDEDCAP HELICAP2 23					
T40T9151	2837503-0110		1	TRANSFORMER	
TBA 1500S HELICAP2 23					
T40T9151	2837503-0104		1	TRANSFORMER	
TGA 1000SQ, TGA 0750SQ, TGA 0500SQ, TGA 1000CR, TGA 1000LF					
T40T9151	67379-0249		1	TRANSFORMER	
TPA 0500SQ					
T40R9151	67379-0268		1	TRANSFORMER	
Common Parts					
020	32079-0000		1	WASHER	
030	28509-0000		2	WASHER	
040	32544-0000		1	INSULATION NUT	
050	312105-0295		1	SCREW, M6S ISO 4017 M4X20 A4 70	
060	90458-0058		1	SCREW M5X60 A280	
070	312605-0312		2	HEXAGON NUT, M6M M4 A280	

Pos	Part No	UN	Qty	Description	Page No

Machine Type | Group Description | Used-In | Group Number | Page No

CARRIER CUTTING RIGHT

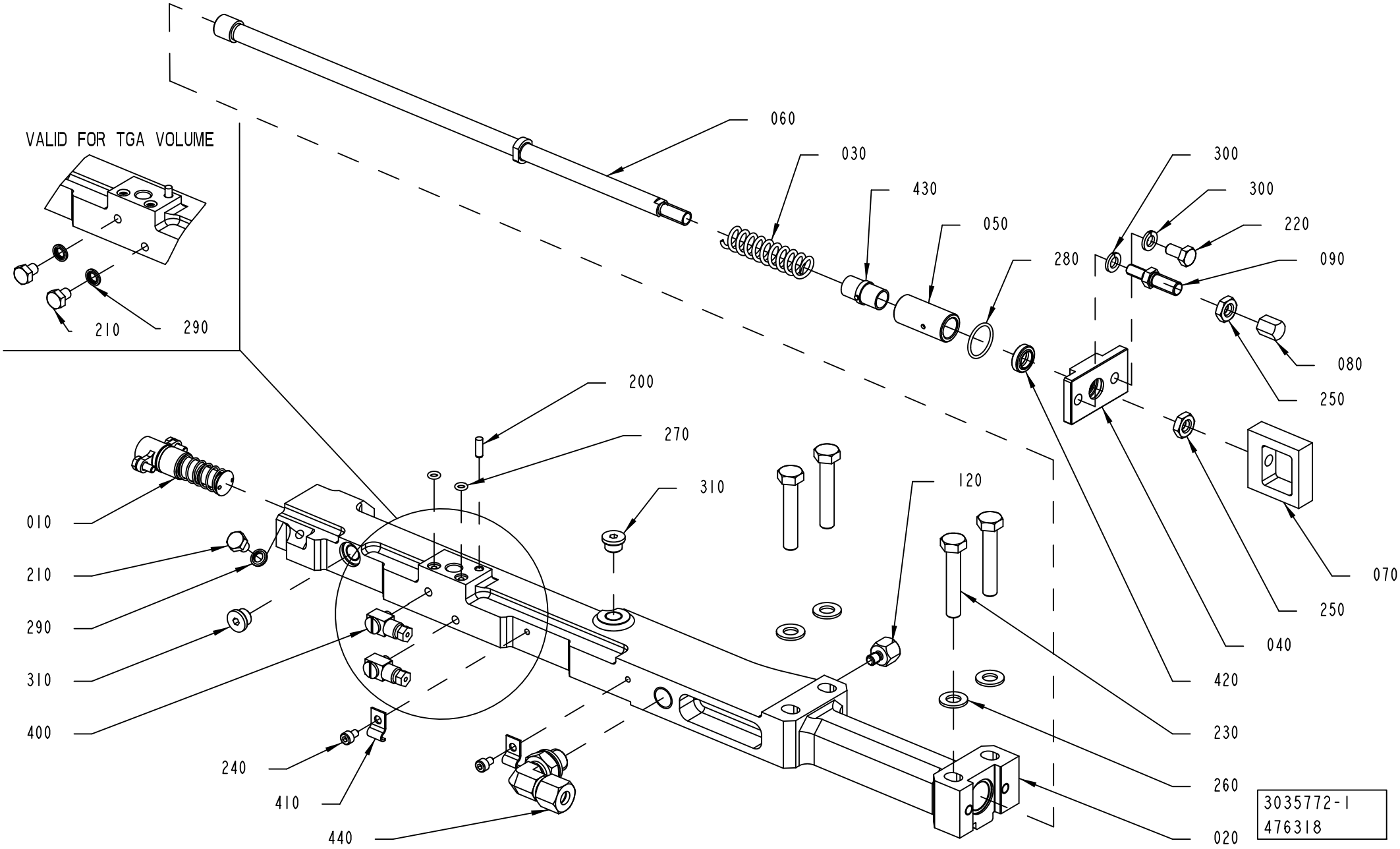

ECM: 647815 - 20140401
Group number: 3035772-0100
Assembly Drawing: 3035772-1_1_AC

This list covers pages from 1-596 to 1-601

Pos	Part No	UN	Qty	Description	Page No
TBA 0500S, TBA 0500SQ, TBA 0500B, TBA 1000B, TBA 1000SQ, TBA 1000S, TBA 1500S, TPA 1000SQ, TPA 0500SQ, TPA 0750SQ, TBA 1000E, TBA 1000M, TBA 0500E (See drawing on page: 1-596)					
020	3014104-0000		1	CARRIER CUTTING RIGHT	
040	2774802-0000		1	COVER	
210	312105-0362		1	SCREW, M6S ISO 4017 M6X8 A4 80	
400	90134-0058		2	CONNECTION	
TBA 2000S (See drawing on page: 1-598)					
020	3038402-0000		1	CARRIER CUTTING RIGHT	
040	3048521-0000		1	COVER	
100	2922438-0000		1	PLATE	
110	2922439-0000		1	SHIM	
210	312105-0362		1	SCREW, M6S ISO 4017 M6X8 A4 80	
350	312155-0287		3	SCREW DIN 7991 MF6S M4X8 A4 70	
400	90134-0058		2	CONNECTION	
TGA 1000SQ, TGA 0750SQ, TGA 0500SQ, TGA 1500SQ, TGA 1000CR, TGA 1000LF (See drawing on page: 1-600)					
020	3014104-0000		1	CARRIER CUTTING RIGHT	
040	2774802-0000		1	COVER	
210	312105-0362		3	SCREW, M6S ISO 4017 M6X8 A4 80	
450	315115-0153		2	WASHER PLAIN, TBRB 6,4/12 H=3	
Common Parts					
010	2854078-0100		1	PISTON	**1-555**
030	1548940-0000		1	SPRING	
050	2774803-0000		1	SEAT	
060	2803174-0000		1	TIE ROD	
070	2986941-0000		1	EAR	
080	2997337-0000		1	STOP SCREW	
090	2997340-0000		1	SCREW	
120	3047360-0000		1	SETTING KNOB	
200	311103-0268		1	PARALLEL PIN ISO 2338 4M6X12 A1	
220	312105-0366		1	SCREW, M6S ISO 4017 M6X12 A4 80	
230	312105-0460		4	SCREW, M6S ISO 4014 M8X45 A4 80	
240	312115-0285		2	SCREW ISO4762 M4X6 A4 80	
250	312625-0318		2	HEXAGON THIN NUT, EN 24035 ML6M M8 A4	
260	315105-0165		4	FWAS080G0-0S, WASHER PLAIN	
270	315202-0102		2	O-RING 4,1X1,6 MM	
280	315202-0116		1	O-RING 18,1X1,6 MM	
290	315211-0103		1	BONDED SEAL SS/NBR90 M6	
300	315402-0156		2	LOCK WASHER, DIN127B 6,5 A4, 1/4	
310	342713-0209		2	PLUG, EXT THREAD HEX SOCKET 8638-00-180	
360	90602-4847		1	THREADLOCKER LOCTITE 243, 50ML	
410	90165-0056		2	PIPE CLIP FOR TUBE, 4 MM	
420	90459-3388		1	SCRAPER 10X16X4,7 MM	
430	90600-2011		1	3319632, JUM-02-10	
440	90601-3686		1	ELBOW FITTING ADJ., WEE08LR71	

Machine Type | Group Description | Used-In | Group Number | Page No

CARRIER CUTTING RIGHT

Drawing file: 3035772-2_1_AA.hpgl

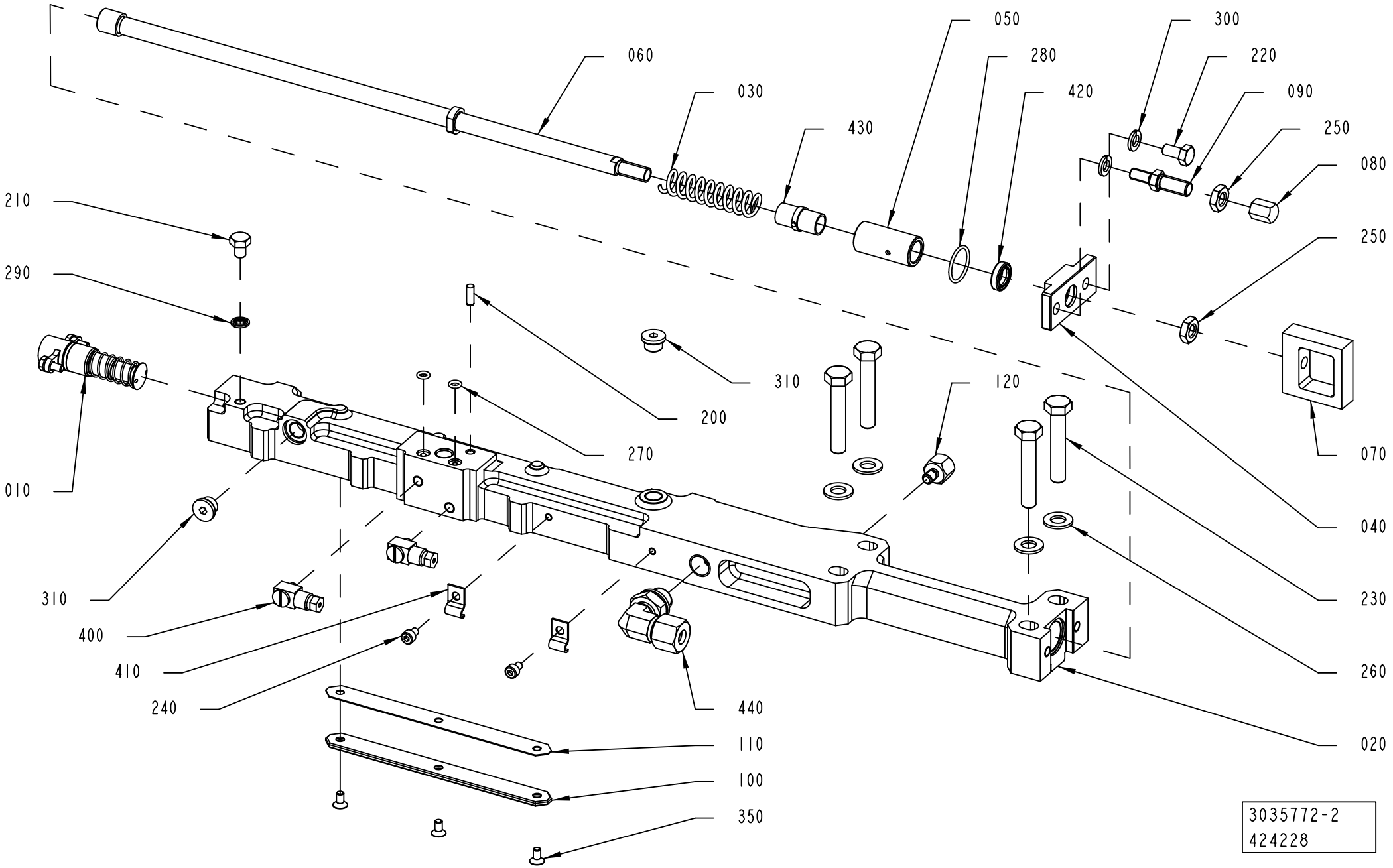

Pos	Part No	UN	Qty	Description	Page No
TBA 0500S, TBA 0500SQ, TBA 0500B, TBA 1000B, TBA 1000SQ, TBA 1000S, TBA 1500S, TPA 1000SQ, TPA 0500SQ, TPA 0750SQ, TBA 1000E, TBA 1000M, TBA 0500E (See drawing on page: 1-596)					
020	3014104-0000		1	CARRIER CUTTING RIGHT	
040	2774802-0000		1	COVER	
210	312105-0362		1	SCREW, M6S ISO 4017 M6X8 A4 80	
400	90134-0058		2	CONNECTION	
TBA 2000S (See drawing on page: 1-598)					
020	3038402-0000		1	CARRIER CUTTING RIGHT	
040	3048521-0000		1	COVER	
100	2922438-0000		1	PLATE	
110	2922439-0000		1	SHIM	
210	312105-0362		1	SCREW, M6S ISO 4017 M6X8 A4 80	
350	312155-0287		3	SCREW DIN 7991 MF6S M4X8 A4 70	
400	90134-0058		2	CONNECTION	
TGA 1000SQ, TGA 0750SQ, TGA 0500SQ, TGA 1500SQ, TGA 1000CR, TGA 1000LF (See drawing on page: 1-600)					
020	3014104-0000		1	CARRIER CUTTING RIGHT	
040	2774802-0000		1	COVER	
210	312105-0362		3	SCREW, M6S ISO 4017 M6X8 A4 80	
450	315115-0153		2	WASHER PLAIN, TBRB 6,4/12 H=3	
Common Parts					
010	2854078-0100		1	PISTON	**1-555**
030	1548940-0000		1	SPRING	
050	2774803-0000		1	SEAT	
060	2803174-0000		1	TIE ROD	
070	2986941-0000		1	EAR	
080	2997337-0000		1	STOP SCREW	
090	2997340-0000		1	SCREW	
120	3047360-0000		1	SETTING KNOB	
200	311103-0268		1	PARALLEL PIN ISO 2338 4M6X12 A1	
220	312105-0366		1	SCREW, M6S ISO 4017 M6X12 A4 80	
230	312105-0460		4	SCREW, M6S ISO 4014 M8X45 A4 80	
240	312115-0285		2	SCREW ISO4762 M4X6 A4 80	
250	312625-0318		2	HEXAGON THIN NUT, EN 24035 ML6M M8 A4	
260	315105-0165		4	FWAS080G0-0S, WASHER PLAIN	
270	315202-0102		2	O-RING 4,1X1,6 MM	
280	315202-0116		1	O-RING 18,1X1,6 MM	
290	315211-0103		1	BONDED SEAL SS/NBR90 M6	
300	315402-0156		2	LOCK WASHER, DIN127B 6,5 A4, 1/4	
310	342713-0209		2	PLUG, EXT THREAD HEX SOCKET 8638-00-180	
360	90602-4847		1	THREADLOCKER LOCTITE 243, 50ML	
410	90165-0056		2	PIPE CLIP FOR TUBE, 4 MM	
420	90459-3388		1	SCRAPER 10X16X4,7 MM	
430	90600-2011		1	3319632, JUM-02-10	
440	90601-3686		1	ELBOW FITTING ADJ., WEE08LR71	

CARRIER CUTTING RIGHT

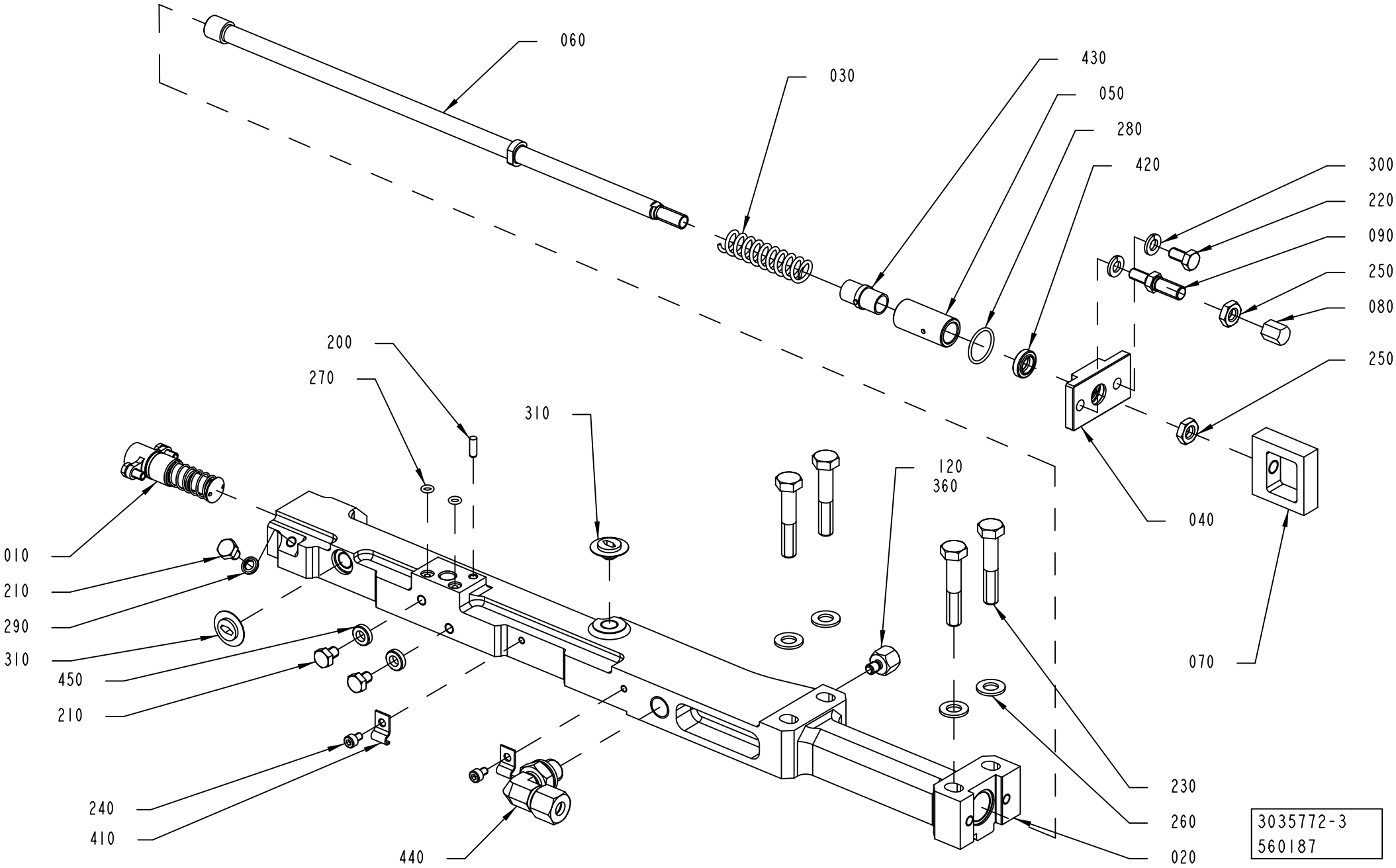

Pos	Part No	UN	Qty	Description	Page No
TBA 0500S, TBA 0500SQ, TBA 0500B, TBA 1000B, TBA 1000SQ, TBA 1000S, TBA 1500S, TPA 1000SQ, TPA 0500SQ, TPA 0750SQ, TBA 1000E, TBA 1000M, TBA 0500E (See drawing on page: 1-596)					
020	3014104-0000		1	CARRIER CUTTING RIGHT	
040	2774802-0000		1	COVER	
210	312105-0362		1	SCREW, M6S ISO 4017 M6X8 A4 80	
400	90134-0058		2	CONNECTION	
TBA 2000S (See drawing on page: 1-598)					
020	3038402-0000		1	CARRIER CUTTING RIGHT	
040	3048521-0000		1	COVER	
100	2922438-0000		1	PLATE	
110	2922439-0000		1	SHIM	
210	312105-0362		1	SCREW, M6S ISO 4017 M6X8 A4 80	
350	312155-0287		3	SCREW DIN 7991 MF6S M4X8 A4 70	
400	90134-0058		2	CONNECTION	
TGA 1000SQ, TGA 0750SQ, TGA 0500SQ, TGA 1500SQ, TGA 1000CR, TGA 1000LF (See drawing on page: 1-600)					
020	3014104-0000		1	CARRIER CUTTING RIGHT	
040	2774802-0000		1	COVER	
210	312105-0362		3	SCREW, M6S ISO 4017 M6X8 A4 80	
450	315115-0153		2	WASHER PLAIN, TBRB 6,4/12 H=3	
Common Parts					
010	2854078-0100		1	PISTON	**1-555**
030	1548940-0000		1	SPRING	
050	2774803-0000		1	SEAT	
060	2803174-0000		1	TIE ROD	
070	2986941-0000		1	EAR	
080	2997337-0000		1	STOP SCREW	
090	2997340-0000		1	SCREW	
120	3047360-0000		1	SETTING KNOB	
200	311103-0268		1	PARALLEL PIN ISO 2338 4M6X12 A1	
220	312105-0366		1	SCREW, M6S ISO 4017 M6X12 A4 80	
230	312105-0460		4	SCREW, M6S ISO 4014 M8X45 A4 80	
240	312115-0285		2	SCREW ISO4762 M4X6 A4 80	
250	312625-0318		2	HEXAGON THIN NUT, EN 24035 ML6M M8 A4	
260	315105-0165		4	FWAS080G0-0S, WASHER PLAIN	
270	315202-0102		2	O-RING 4,1X1,6 MM	
280	315202-0116		1	O-RING 18,1X1,6 MM	
290	315211-0103		1	BONDED SEAL SS/NBR90 M6	
300	315402-0156		2	LOCK WASHER, DIN127B 6,5 A4, 1/4	
310	342713-0209		2	PLUG, EXT THREAD HEX SOCKET 8638-00-180	
360	90602-4847		1	THREADLOCKER LOCTITE 243, 50ML	
410	90165-0056		2	PIPE CLIP FOR TUBE, 4 MM	
420	90459-3388		1	SCRAPER 10X16X4,7 MM	
430	90600-2011		1	3319632, JUM-02-10	
440	90601-3686		1	ELBOW FITTING ADJ., WEE08LR71	

CUTTING JAW RIGHT

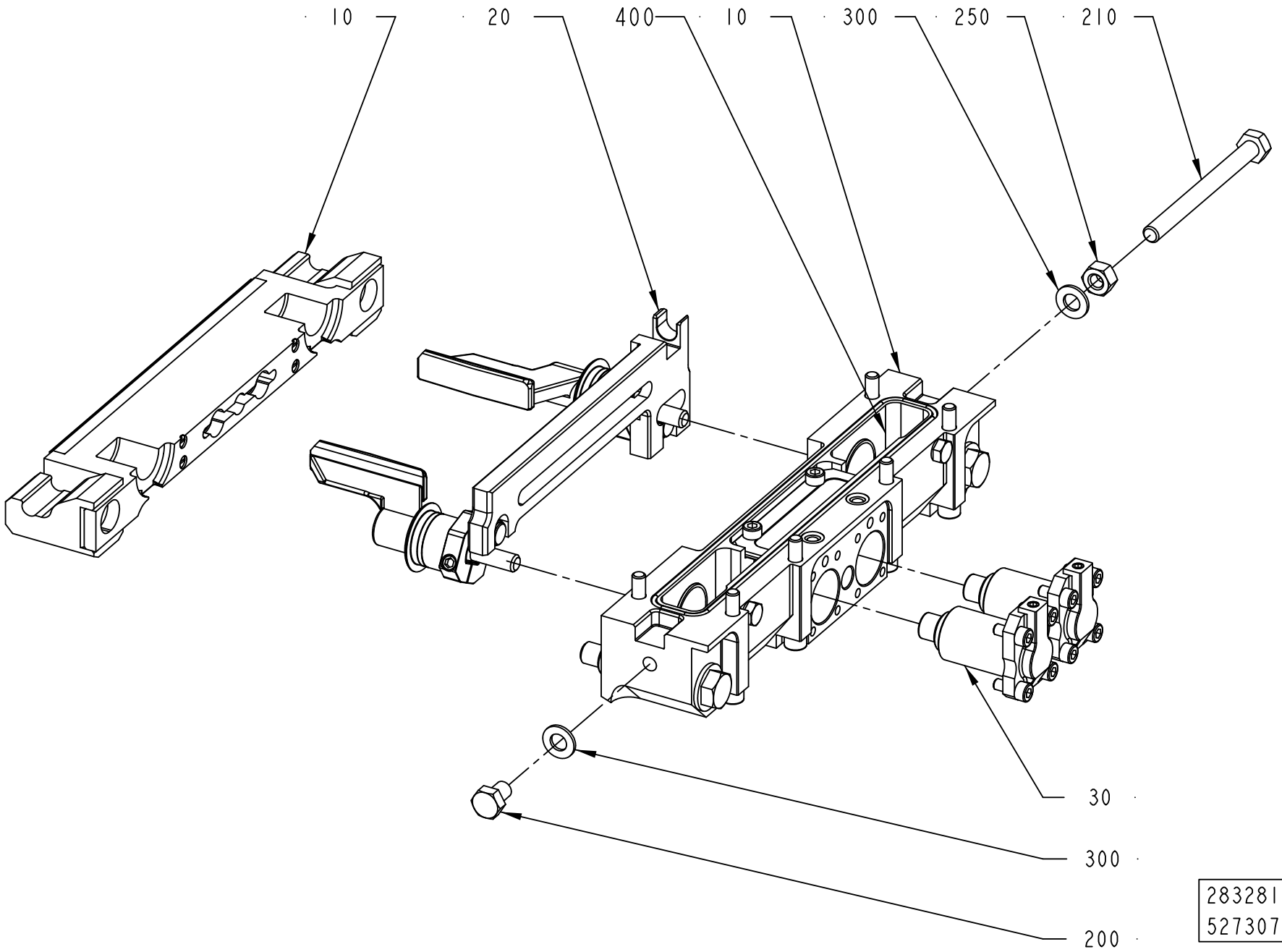

ECM: 646063 - 20140401
Group number: 2832819-0200
Assembly Drawing: 2832819-2_1_AA

Pos	Part No	UN	Qty	Description	Page No
TBA 0500B, TBA 1000B					
030	2772645-0100		2	PISTON	**1-559**
210	312105-0469		1	SCREW, M6S ISO 4014 M8X90 A4 80	
TBA 0500E					
030	2772645-0100		2	PISTON	**1-559**
210	312105-0469		1	SCREW, M6S ISO 4014 M8X90 A4 80	
TBA 0500S					
030	2772645-0100		2	PISTON	**1-559**
210	312105-0469		1	SCREW, M6S ISO 4014 M8X90 A4 80	
TBA 0500SQ, TBA 1000SQ					
030	2772645-0100		2	PISTON	**1-559**
210	312105-0469		1	SCREW, M6S ISO 4014 M8X90 A4 80	
TBA 1000E					
030	2772645-0100		2	PISTON	**1-559**
210	312105-0469		1	SCREW, M6S ISO 4014 M8X90 A4 80	
TBA 1000M					
030	2772645-0100		2	PISTON	**1-559**
210	312105-0469		1	SCREW, M6S ISO 4014 M8X90 A4 80	
TBA 1000S					
030	2772645-0100		2	PISTON	**1-559**
210	312105-0469		1	SCREW, M6S ISO 4014 M8X90 A4 80	
TBA 1500S					
030	2772645-0100		2	PISTON	**1-559**
210	312105-0469		1	SCREW, M6S ISO 4014 M8X90 A4 80	
TBA 2000S					
030	2772645-0100		2	PISTON	**1-559**
210	312105-0466		1	SCREW, M6S ISO 4014 M8X75 A4 80	
TGA 1000SQ, TGA 0750SQ, TGA 0500SQ, TGA 1000CR, TGA 1000LF					
030	2552010-0300		2	PISTON	**1-561**
210	312105-0469		1	SCREW, M6S ISO 4014 M8X90 A4 80	
TGA 1500SQ					
030	2772645-0100		2	PISTON	**1-559**
210	312105-0469		1	SCREW, M6S ISO 4014 M8X90 A4 80	
TPA 0500SQ					
030	2772645-0100		2	PISTON	**1-559**
210	312105-0469		1	SCREW, M6S ISO 4014 M8X90 A4 80	
TPA 1000SQ, TPA 0750SQ					
030	2772645-0100		2	PISTON	**1-559**
210	312105-0469		1	SCREW, M6S ISO 4014 M8X90 A4 80	
Common Parts					
010	2832935-0100		1	CUTTING JAW	**1-563, 1-565, 1-567, 1-569, 1-571**
020	2832937-0100		1	FOLDING FLAP RIGHT	**1-605, 1-607, 1-609**
200	312105-0447		1	SCREW M6S ISO 4017 M8X12 A480	
250	312605-0318		1	HEXAGON NUT, M6M M8 A280	
300	315105-0165		2	FWAS080G0-0S, WASHER PLAIN	
400	90603-5339	L	1	KLüBEROIL 4 UH1 320 N, ONLY IN BOM	
	90603-6434		*1*	*KLUBEROIL 4 UH1 320 N, 5 L CANISTER*	
	90603-6454		*1*	*KLüBEROIL 4 UH1 320 N, 20 L CANISTER*	

Machine Type	Group Description	Used-In	Group Number	Page No

FOLDING FLAP RIGHT

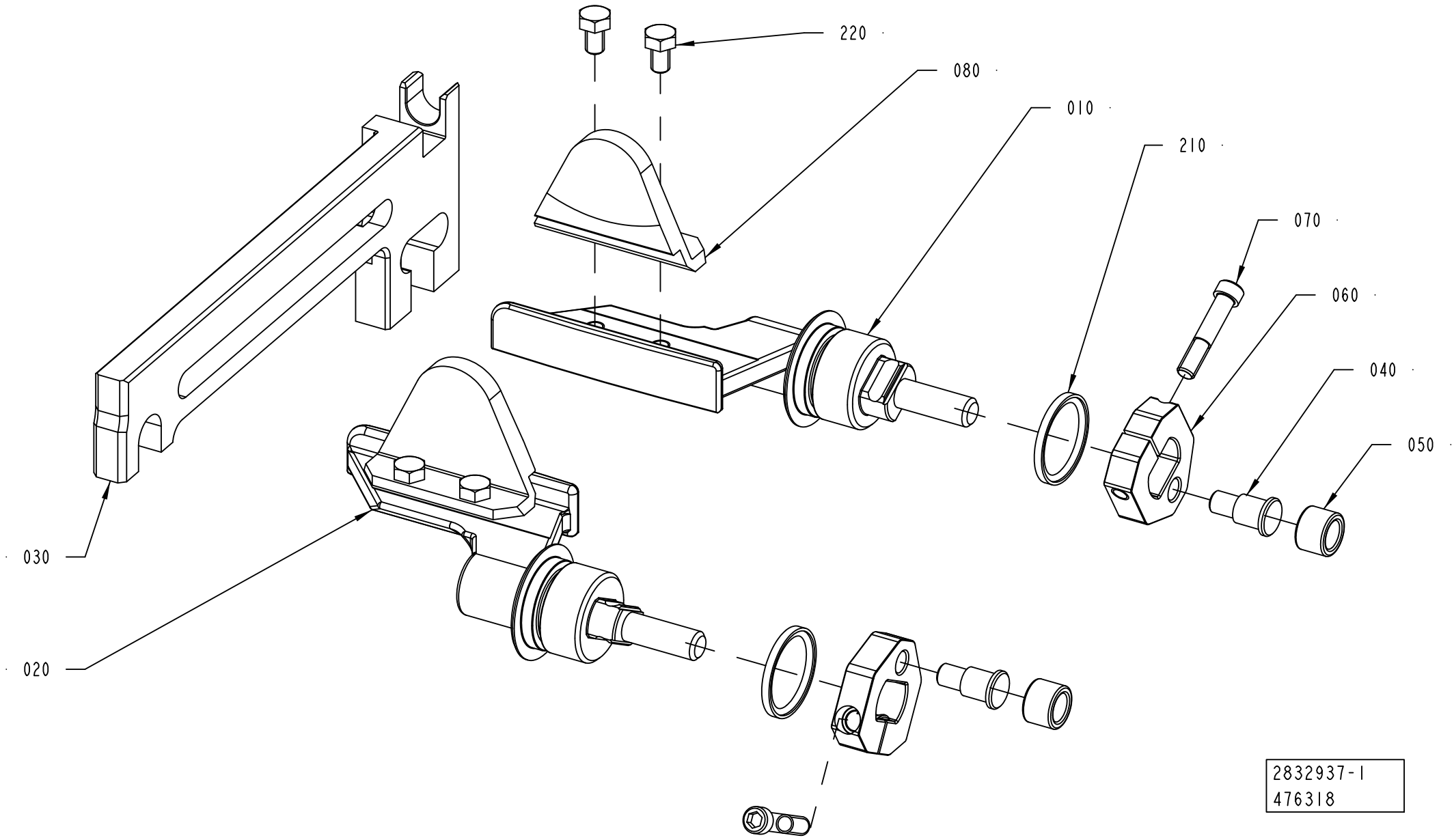

ECM: 646065 - 20140401
Group number: 2832937-0100
Assembly Drawing: 2832937-1_1_AC

This list covers pages from 1-604 to 1-609

Pos	Part No	UN	Qty	Description	Page No
TBA 0500B, TBA 1000B (See drawing on page: 1-604)					
010	2898569-0000		1	FOLDING FLAP	
020	2898568-0000		1	FOLDING FLAP	
030	2948634-0000		1	CARRIER RULER	
040	2948627-0000		2	SHAFT	
050	2948626-0000		2	ROLLER	
060	2948628-0000		2	CARRIER	
070	2833952-0000		2	SCREW	
210	90600-2017		2	PISTON SEAL ROTOGLYD RING 20,1X25X2,2 MM	
TBA 0500E, TBA 1000E QC (See drawing on page: 1-608)					
010	3330228-0000		1	FOLDING FLAP	
020	3330227-0000		1	FOLDING FLAP	
030	2948630-0000		1	CARRIER RULER	
040	2948627-0000		2	SHAFT	
050	2948626-0000		2	ROLLER	
060	2948628-0000		2	CARRIER	
070	2833952-0000		2	SCREW	
100	3212461-0000		1	BEARING	
110	3212462-0000		1	BEARING	
210	90600-2017		2	PISTON SEAL ROTOGLYD RING 20,1X25X2,2 MM	
230	90602-4847		1	THREADLOCKER LOCTITE 243, 50ML	
300	312115-0374		2	SCREW ISO4762 M6X30 A4 80	
TBA 0500S (See drawing on page: 1-604)					
010	2996358-0000		1	FOLDING FLAP	
020	2996359-0000		1	FOLDING FLAP	
030	2996361-0000		1	CARRIER RULER	
040	2948627-0000		2	SHAFT	
050	2948626-0000		2	ROLLER	
060	2948628-0000		2	CARRIER	
070	2833952-0000		2	SCREW	
210	90600-2017		2	PISTON SEAL ROTOGLYD RING 20,1X25X2,2 MM	
TBA 0500SQ, TBA 1000SQ (See drawing on page: 1-604)					
010	2847230-0000		1	FOLDING FLAP	
020	2847231-0000		1	FOLDING FLAP	
030	2948630-0000		1	CARRIER RULER	
040	2948627-0000		2	SHAFT	
050	2948626-0000		2	ROLLER	
060	2948628-0000		2	CARRIER	
070	2833952-0000		2	SCREW	
080	2843780-0000		2	PLATE	
210	90600-2017		2	PISTON SEAL ROTOGLYD RING 20,1X25X2,2 MM	
220	312105-0323		4	"FSCR05080-10, SCREW, M6S"	
230	90602-4847		1	THREADLOCKER LOCTITE 243, 50ML	
TBA 1000E NOQC (See drawing on page: 1-608)					
010	2862211-0000		1	FOLDING FLAP	
020	2862212-0000		1	FOLDING FLAP	
030	2948630-0000		1	CARRIER RULER	
040	2948627-0000		2	SHAFT	
050	2948626-0000		2	ROLLER	
060	2948628-0000		2	CARRIER	
070	2833952-0000		2	SCREW	
100	3212461-0000		1	BEARING	
110	3212462-0000		1	BEARING	
210	90600-2017		2	PISTON SEAL ROTOGLYD RING 20,1X25X2,2 MM	
230	90602-4847		1	THREADLOCKER LOCTITE 243, 50ML	
300	312115-0374		2	SCREW ISO4762 M6X30 A4 80	
TBA 1000M (See drawing on page: 1-604)					
010	3092844-0000		1	FOLDING FLAP	
020	3092843-0000		1	FOLDING FLAP	
030	2998788-0000		1	CARRIER RULER	
040	2948627-0000		2	SHAFT	
050	2948626-0000		2	ROLLER	
060	2948628-0000		2	CARRIER	
070	2833952-0000		2	SCREW	
210	90600-2017		2	PISTON SEAL ROTOGLYD RING 20,1X25X2,2 MM	
TBA 1000S (See drawing on page: 1-604)					
010	2813728-0000		1	FOLDING FLAP	
020	2813729-0000		1	FOLDING FLAP	
030	2948632-0000		1	CARRIER RULER	
040	2948627-0000		2	SHAFT	
050	2948626-0000		2	ROLLER	
060	2948628-0000		2	CARRIER	
070	2833952-0000		2	SCREW	
210	90600-2017		2	PISTON SEAL ROTOGLYD RING 20,1X25X2,2 MM	
TBA 1500S (See drawing on page: 1-604)					
010	2928342-0000		1	FOLDING FLAP	
	3021645-0000		*1*	*FOLDING FLAP*	
020	2928343-0000		1	FOLDING FLAP	
	3021646-0000		*1*	*FOLDING FLAP*	
030	2948634-0000		1	CARRIER RULER	
040	2948627-0000		2	SHAFT	
050	2948626-0000		2	ROLLER	
060	2948628-0000		2	CARRIER	
070	2833952-0000		2	SCREW	

Machine Type | Group Description | Used-In | Group Number | Page No

FOLDING FLAP RIGHT

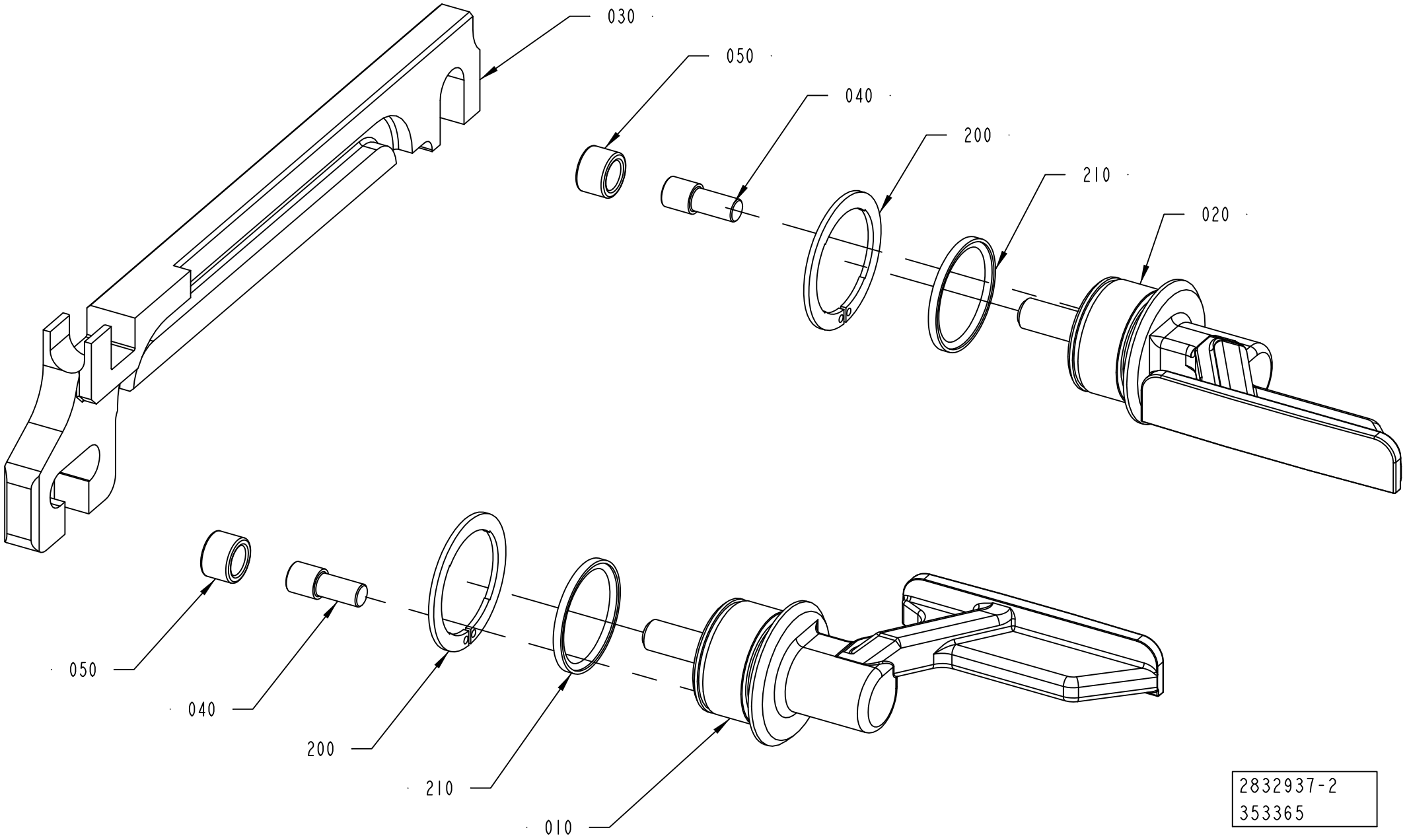

2832937-2
353365

Pos	Part No	UN	Qty	Description	Page No
TBA 1500S (Cont'd) (See drawing on page: 1-604)					
210	90600-2017		2	PISTON SEAL ROTOGLYD RING 20,1X25X2,2 MM	
TBA 2000S (See drawing on page: 1-606)					
010	2566319-0000		1	FOLDING FLAP	
020	2566320-0000		1	FOLDING FLAP	
030	2948638-0000		1	CARRIER RULER	
040	22462-0000		2	SHAFT	
050	22463-0000		2	ROLL	
200	90141-0029		2	CIRCLIP	
210	90459-2258		2	PISTON SEAL ROTOGLYD RING 25,1X30X2,2 MM	
TGA 1000SQ, TGA 0750SQ, TGA 0500SQ, TGA 1000CR, TGA 1000LF (See drawing on page: 1-606)					
010	2660290-0000		1	FOLDING FLAP	
020	2660291-0000		1	FOLDING FLAP	
030	2994206-0000		1	CARRIER RULER	
040	22462-0000		2	SHAFT	
050	22463-0000		2	ROLL	
200	90141-0029		2	CIRCLIP	
210	90459-2258		2	PISTON SEAL ROTOGLYD RING 25,1X30X2,2 MM	
TGA 1500SQ (See drawing on page: 1-604)					
010	2939719-0000		1	FOLDING FLAP	
	3021645-0000		*1*	*FOLDING FLAP*	
020	2939720-0000		1	FOLDING FLAP	
	3021646-0000		*1*	*FOLDING FLAP*	
030	2948634-0000		1	CARRIER RULER	
040	2948627-0000		2	SHAFT	
050	2948626-0000		2	ROLLER	
060	2948628-0000		2	CARRIER	
070	2833952-0000		2	SCREW	
210	90600-2017		2	PISTON SEAL ROTOGLYD RING 20,1X25X2,2 MM	
TPA 0500SQ (See drawing on page: 1-604)					
010	2958754-0000		1	FOLDING FLAP	
020	2958753-0000		1	FOLDING FLAP	
030	2958756-0000		1	CARRIER RULER	
040	2948627-0000		2	SHAFT	
050	2948626-0000		2	ROLLER	
060	2948628-0000		2	CARRIER	
070	2833952-0000		2	SCREW	
210	90600-2017		2	PISTON SEAL ROTOGLYD RING 20,1X25X2,2 MM	
TPA 1000SQ, TPA 0750SQ (See drawing on page: 1-604)					
010	2912359-0000		1	FOLDING FLAP	
020	2912360-0000		1	FOLDING FLAP	
030	2948636-0000		1	CARRIER RULER	
040	2948627-0000		2	SHAFT	
050	2948626-0000		2	ROLLER	
060	2948628-0000		2	CARRIER	
070	2833952-0000		2	SCREW	
210	90600-2017		2	PISTON SEAL ROTOGLYD RING 20,1X25X2,2 MM	

Machine Type | Group Description | Used-In | Group Number | Page No

FOLDING FLAP RIGHT

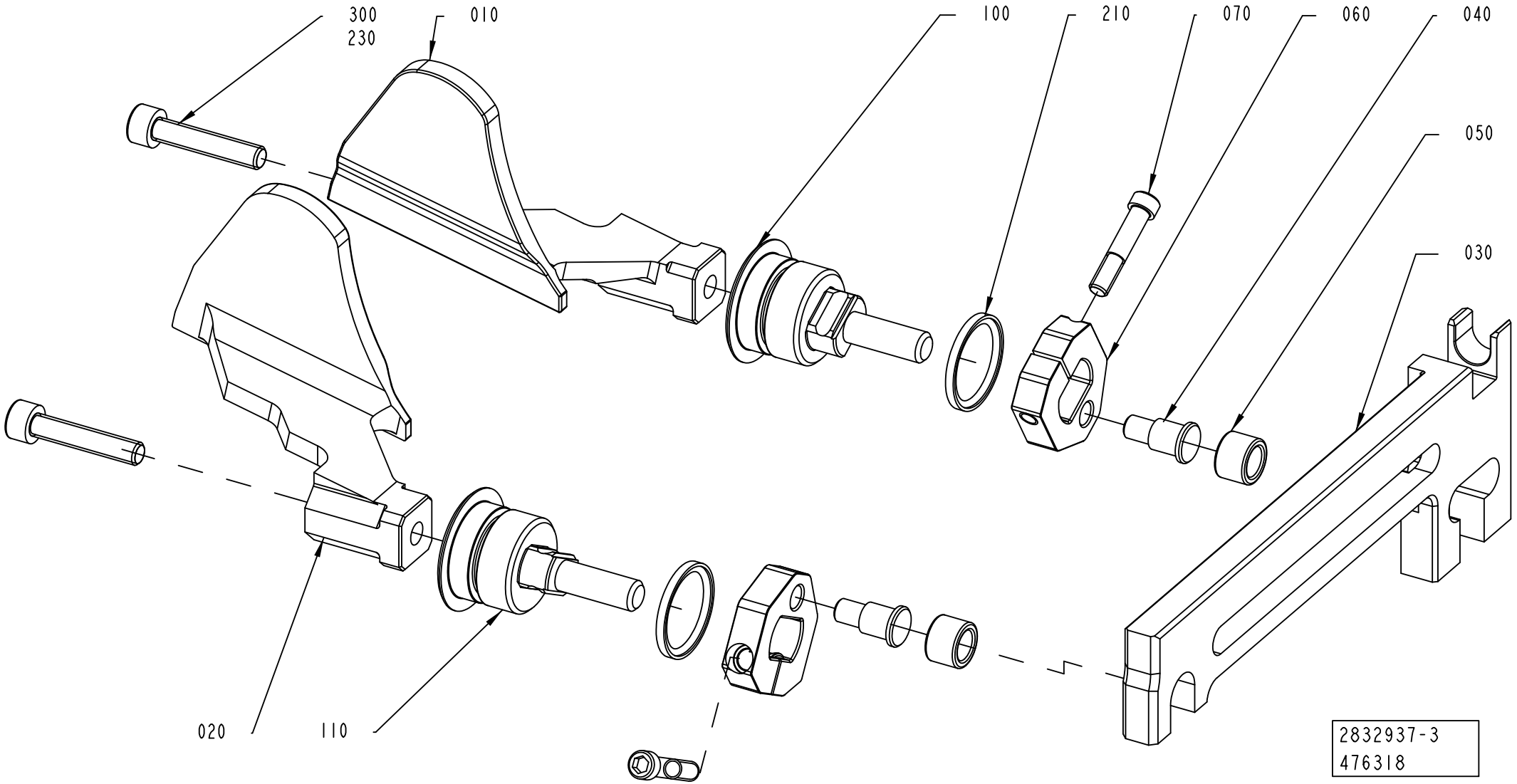

ECM: 646065 - 20140401
Group number: 2832937-0100
Assembly Drawing: 2832937-3_1_AB

This list covers pages from 1-604 to 1-609

Pos	Part No	UN	Qty	Description	Page No
SEE PREVIOUS LISTS PAGES: 1-605, 1-607.					

Pos	Part No	UN	Qty	Description	Page No

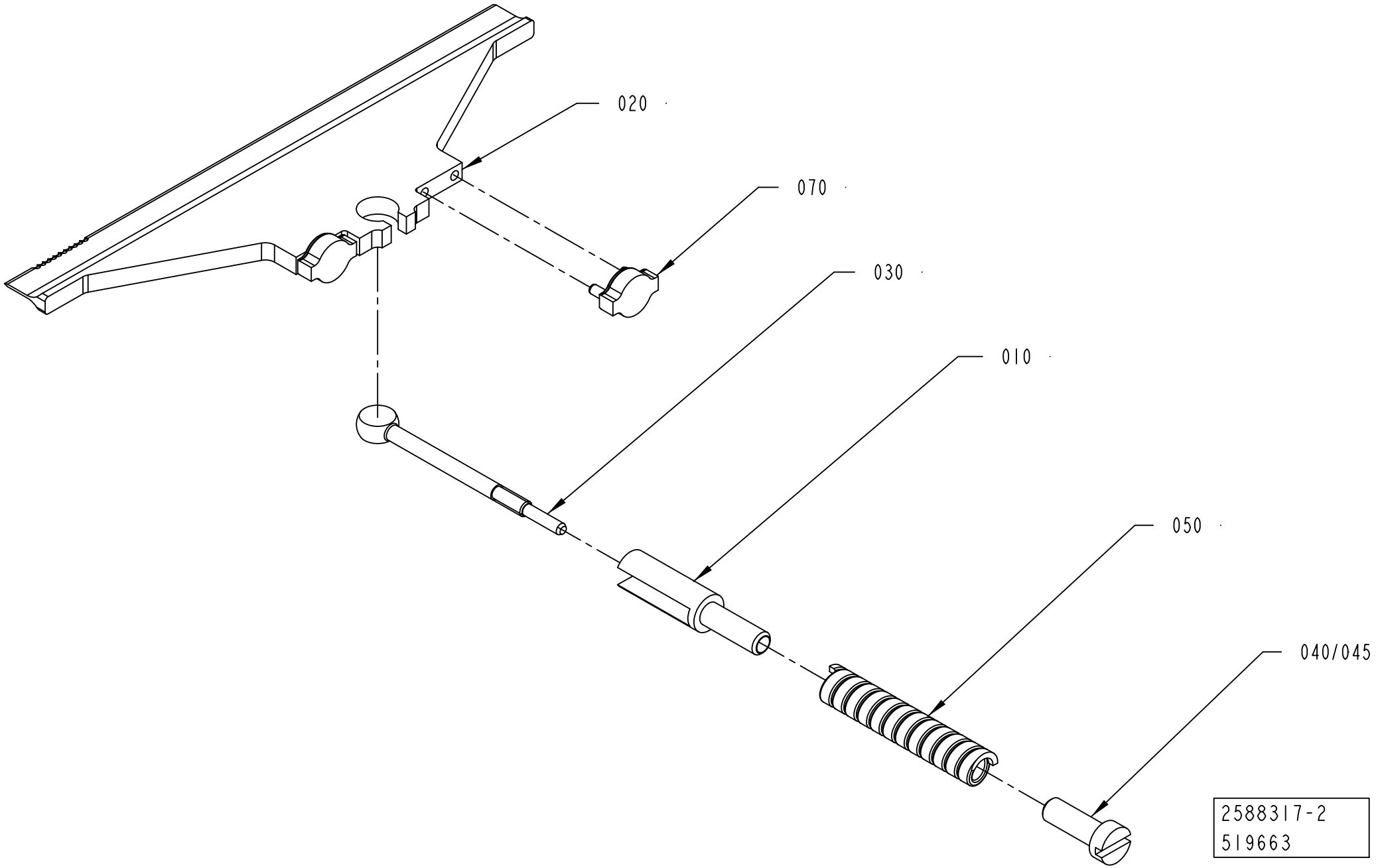
020
070
030
010
050
040/045
2588317-2
519663

ECM: 647812 - 20140401
Group number: 2588317-0100
Assembly Drawing: 2588317-2_1_AB

Pos	Part No	UN	Qty	Description	Page No
TBA 0500S, TPA 1000SQ, TPA 0750SQ					
020	2912006-0000		1	KNIFE	
070	2774799-0000		2	BLOCK	
TBA 0500SQ, TBA 0500B, TBA 1000B, TBA 1000SQ, TBA 1000S, TBA 1500S, TGA 1500SQ, TBA 1000E, TBA 1000M, TBA 0500E					
020	2774798-0000		1	KNIFE	
070	2774799-0000		2	BLOCK	
TBA 2000S					
020	2909311-0000		1	KNIFE	
TGA 1000SQ, TGA 0750SQ, TGA 0500SQ, TGA 1000CR, TGA 1000LF					
020	1348956-0000		1	KNIFE	
TPA 0500SQ					
020	2958757-0000		1	KNIFE	
070	2774799-0000		2	BLOCK	
Common Parts					
010	1285006-0000		1	SPACER	
030	1285003-0000		1	LINK	
040	1285005-0000		1	NUT	
045	90602-4847		1	THREADLOCKER LOCTITE 243, 50ML	
050	1538109-0000		1	COMPRESSION SPRING	

Pos	Part No	UN	Qty	Description	Page No

SUPPORT FLAP CUTTING

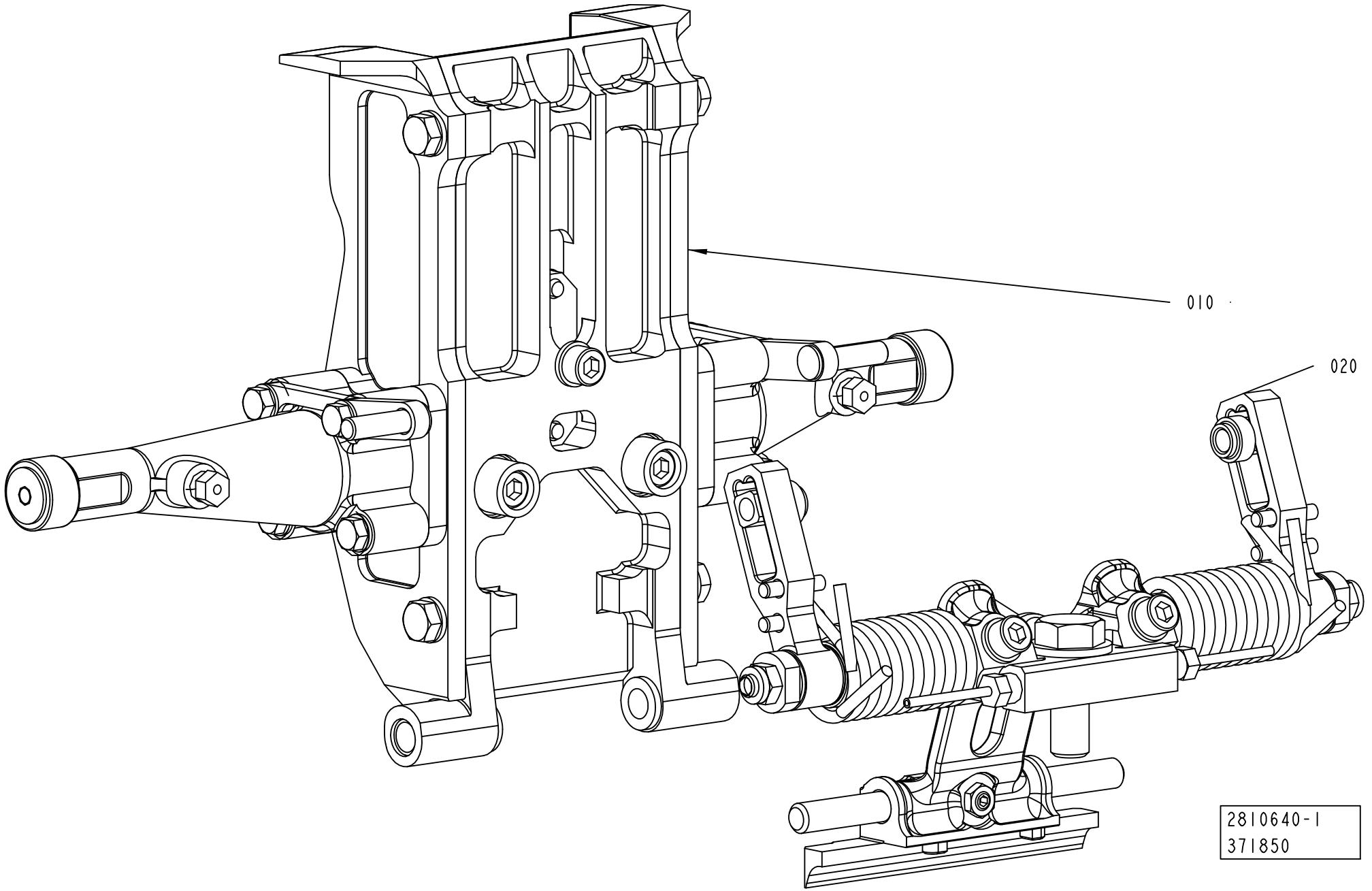

ECM: 644812 - 20140401
Group number: 2810640-0100
Assembly Drawing: 2810640-1_1_AB

Pos	Part No	UN	Qty	Description	Page No
TGA 1500SQ					
010	2698638-0200		1	VOLUME FLAP CUTTING	**1-615**
020	2842772-0100		1	SHOCK ABSORBER CUTTING	**1-617, 1-619, 1-621, 1-623**
TPA 0500SQ					
010	2808800-0100		1	VOLUME FLAP CUTTING	**1-625, 1-627, 1-629, 1-631, 1-633, 1-635, 1-637, 1-639**
020	2842772-0100		1	SHOCK ABSORBER CUTTING	**1-617, 1-619, 1-621, 1-623**
TPA 0750SQ					
010	2808800-0100		1	VOLUME FLAP CUTTING	**1-625, 1-627, 1-629, 1-631, 1-633, 1-635, 1-637, 1-639**
020	2842772-0100		1	SHOCK ABSORBER CUTTING	**1-617, 1-619, 1-621, 1-623**
TPA 1000SQ					
010	2808800-0100		1	VOLUME FLAP CUTTING	**1-625, 1-627, 1-629, 1-631, 1-633, 1-635, 1-637, 1-639**
020	2842772-0100		1	SHOCK ABSORBER CUTTING	**1-617, 1-619, 1-621, 1-623**
TBA 0500B					
010	2808800-0100		1	VOLUME FLAP CUTTING	**1-625, 1-627, 1-629, 1-631, 1-633, 1-635, 1-637, 1-639**
020	2842772-0100		1	SHOCK ABSORBER CUTTING	**1-617, 1-619, 1-621, 1-623**
TBA 0500E					
010	2808800-0100		1	VOLUME FLAP CUTTING	**1-625, 1-627, 1-629, 1-631, 1-633, 1-635, 1-637, 1-639**
020	2842772-0100		1	SHOCK ABSORBER CUTTING	**1-617, 1-619, 1-621, 1-623**
TBA 0500S					
010	2808800-0100		1	VOLUME FLAP CUTTING	**1-625, 1-627, 1-629, 1-631, 1-633, 1-635, 1-637, 1-639**
020	2842772-0100		1	SHOCK ABSORBER CUTTING	**1-617, 1-619, 1-621, 1-623**
TBA 0500SQ					
010	2808800-0100		1	VOLUME FLAP CUTTING	**1-625, 1-627, 1-629, 1-631, 1-633, 1-635, 1-637, 1-639**
020	2842772-0100		1	SHOCK ABSORBER CUTTING	**1-617, 1-619, 1-621, 1-623**
TBA 1000B					
010	2808800-0100		1	VOLUME FLAP CUTTING	**1-625, 1-627, 1-629, 1-631, 1-633, 1-635, 1-637, 1-639**
020	2842772-0100		1	SHOCK ABSORBER CUTTING	**1-617, 1-619, 1-621, 1-623**
TBA 1000E NOQC					
010	2808800-0100		1	VOLUME FLAP CUTTING	**1-625, 1-627, 1-629, 1-631, 1-633, 1-635, 1-637, 1-639**
020	2842772-0100		1	SHOCK ABSORBER CUTTING	**1-617, 1-619, 1-621, 1-623**
TBA 1000E QC					
010	2808800-0100		1	VOLUME FLAP CUTTING	**1-625, 1-627, 1-629, 1-631, 1-633, 1-635, 1-637, 1-639**
020	2842772-0100		1	SHOCK ABSORBER CUTTING	**1-617, 1-619, 1-621, 1-623**
TBA 1000M					
010	2808800-0100		1	VOLUME FLAP CUTTING	**1-625, 1-627, 1-629, 1-631, 1-633, 1-635, 1-637, 1-639**
020	2842772-0100		1	SHOCK ABSORBER CUTTING	**1-617, 1-619, 1-621, 1-623**
TBA 1000S					
010	2808800-0100		1	VOLUME FLAP CUTTING	**1-625, 1-627, 1-629, 1-631, 1-633, 1-635, 1-637, 1-639**
020	2842772-0100		1	SHOCK ABSORBER CUTTING	**1-617, 1-619, 1-621, 1-623**
TBA 1000SQ					
010	2808800-0100		1	VOLUME FLAP CUTTING	**1-625, 1-627, 1-629, 1-631, 1-633, 1-635, 1-637, 1-639**
020	2842772-0100		1	SHOCK ABSORBER CUTTING	**1-617, 1-619, 1-621, 1-623**
TBA 1500S					
010	2808800-0100		1	VOLUME FLAP CUTTING	**1-625, 1-627, 1-629, 1-631, 1-633, 1-635, 1-637, 1-639**
020	2842772-0100		1	SHOCK ABSORBER CUTTING	**1-617, 1-619, 1-621, 1-623**
TBA 2000S					
010	2808800-0100		1	VOLUME FLAP CUTTING	**1-625, 1-627, 1-629, 1-631, 1-633, 1-635, 1-637, 1-639**
020	2842772-0100		1	SHOCK ABSORBER CUTTING	**1-617, 1-619, 1-621, 1-623**
TGA 0500SQ					
010	2928232-0200		1	VOLUME FLAP CUTTING LEFT	**1-643**
TGA 0750SQ					
010	2698638-0200		1	VOLUME FLAP CUTTING	**1-615**
020	2842772-0100		1	SHOCK ABSORBER CUTTING	**1-617, 1-619, 1-621, 1-623**
TGA 1000CR, TGA 1000LF					
010	3183315-0100		1	SUPPORT FLAP CUTTING LEFT	**1-645**
TGA 1000SQ					
010	2698638-0200		1	VOLUME FLAP CUTTING	**1-615**
020	2842772-0100		1	SHOCK ABSORBER CUTTING	**1-617, 1-619, 1-621, 1-623**

Machine Type	Group Description	Used-In	Group Number	Page No

VOLUME FLAP CUTTING

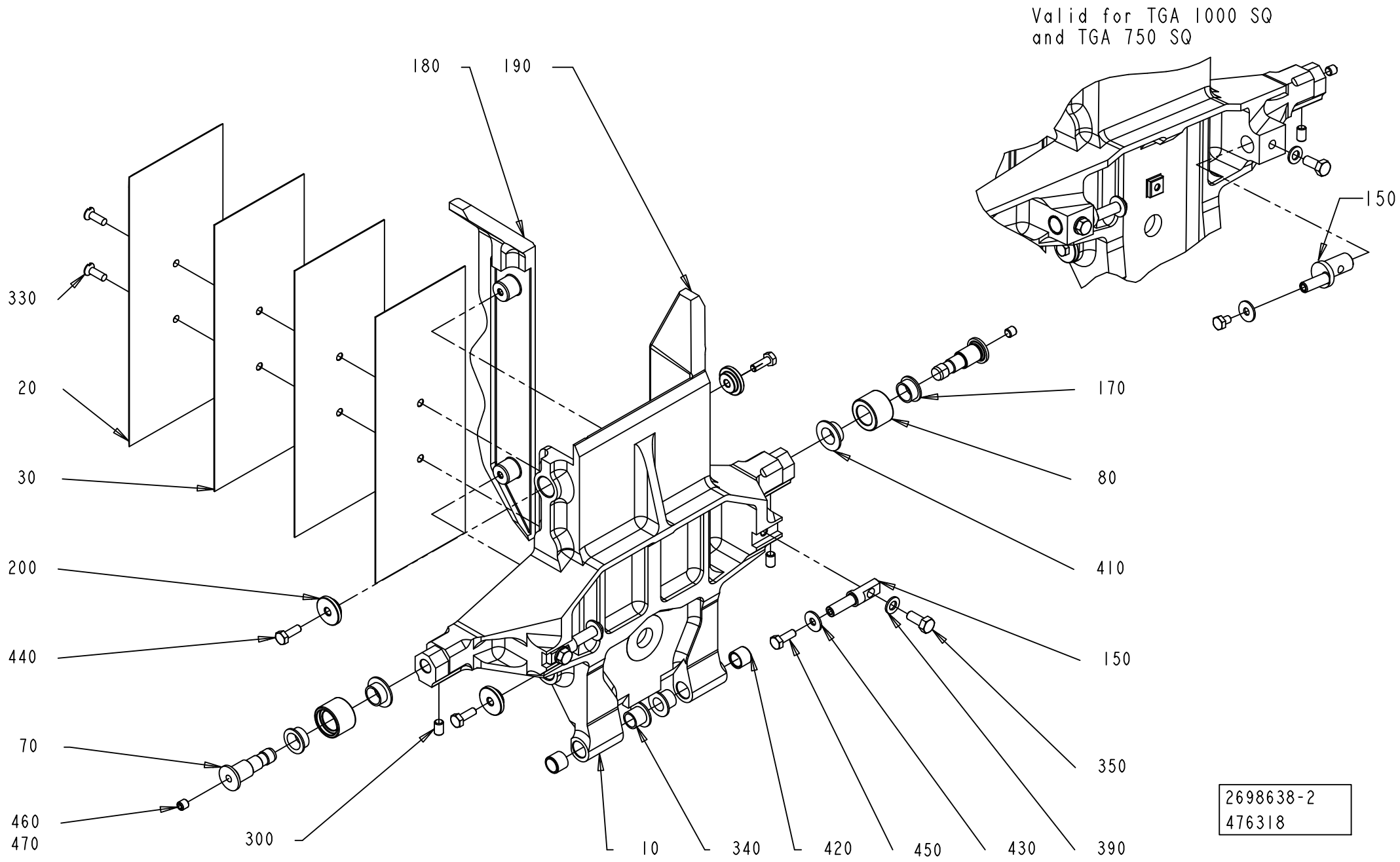

ECM: 483502 - 20101215
Group number: 2698638-0200
Assembly Drawing: 2698638-2_1_AD

Pos	Part No	UN	Qty	Description	Page No
A3/FLEX TGA 0750SQ					
010	2682187-0000		1	VOLUME FLAP	
020	2909851-0000		1	VOLUME BULGE	
030	2909852-0000		3	SHIM	
150	2997338-0000		2	ECCENTRIC SHAFT	
180	2682190-0000		1	FLAP	
190	2682191-0000		1	FLAP	
A3/FLEX TGA 1000SQ					
010	2660289-0000		1	VOLUME FLAP	
020	2660292-0000		1	VOLUME BULGE	
030	2660293-0000		3	VOLUME SHIM	
150	2997338-0000		2	ECCENTRIC SHAFT	
180	2682172-0000		1	FLAP	
190	2682173-0000		1	FLAP	
A3/FLEX TGA 1500SQ					
010	2948019-0000		1	VOLUME FLAP	
020	2660292-0000		1	VOLUME BULGE	
030	2660293-0000		3	VOLUME SHIM	
150	2948024-0000		2	SHAFT	
180	2948020-0000		1	FLAP	
190	2948021-0000		1	FLAP	
Common Parts					
070	2868844-0000		2	AXLE PIN	
080	2660295-0000		2	ROLLER	
170	2660296-0000		2	BUSHING	
200	2682174-0000		4	WASHER	
300	312318-0323		2	SET SCREW, CUP END ISO4029 M5X8 A4	
330	312145-0291		2	SCREW ISO 2009 MFS M4X12 A4	
340	90240-0260		2	FLANGE BUSHING, IGLIDUR X 8X10X9	
350	312105-0327		2	"SCREW, M6S ISO 4017 M5X12 A4 80"	
390	315105-0146		2	WASHER PLAIN, 5,3X10X1 A4 BRB	
410	90240-0289		2	FLANGE BUSHING, IGLIDUR X 10X12X6	
420	90458-0353		2	BUSHING, IGLIDUR X 8X10X8	
430	90005-0082		2	WASHER PLAIN ROUND 4,3(M4)/12,H=1	
440	312105-0291		4	SCREW, M6S ISO 4017 M4X12 A4 70	
450	312105-0285		2	SCREW, M6S ISO 4017 M4X6 A4 70	
460	312318-0320		2	SET SCREW, CUP END ISO4029 M5X5 A4	
470	90602-4847		1	THREADLOCKER LOCTITE 243, 50ML	

Pos	Part No	UN	Qty	Description	Page No

Machine Type | Group Description | Used-In | Group Number | Page No

SHOCK ABSORBER CUTTING

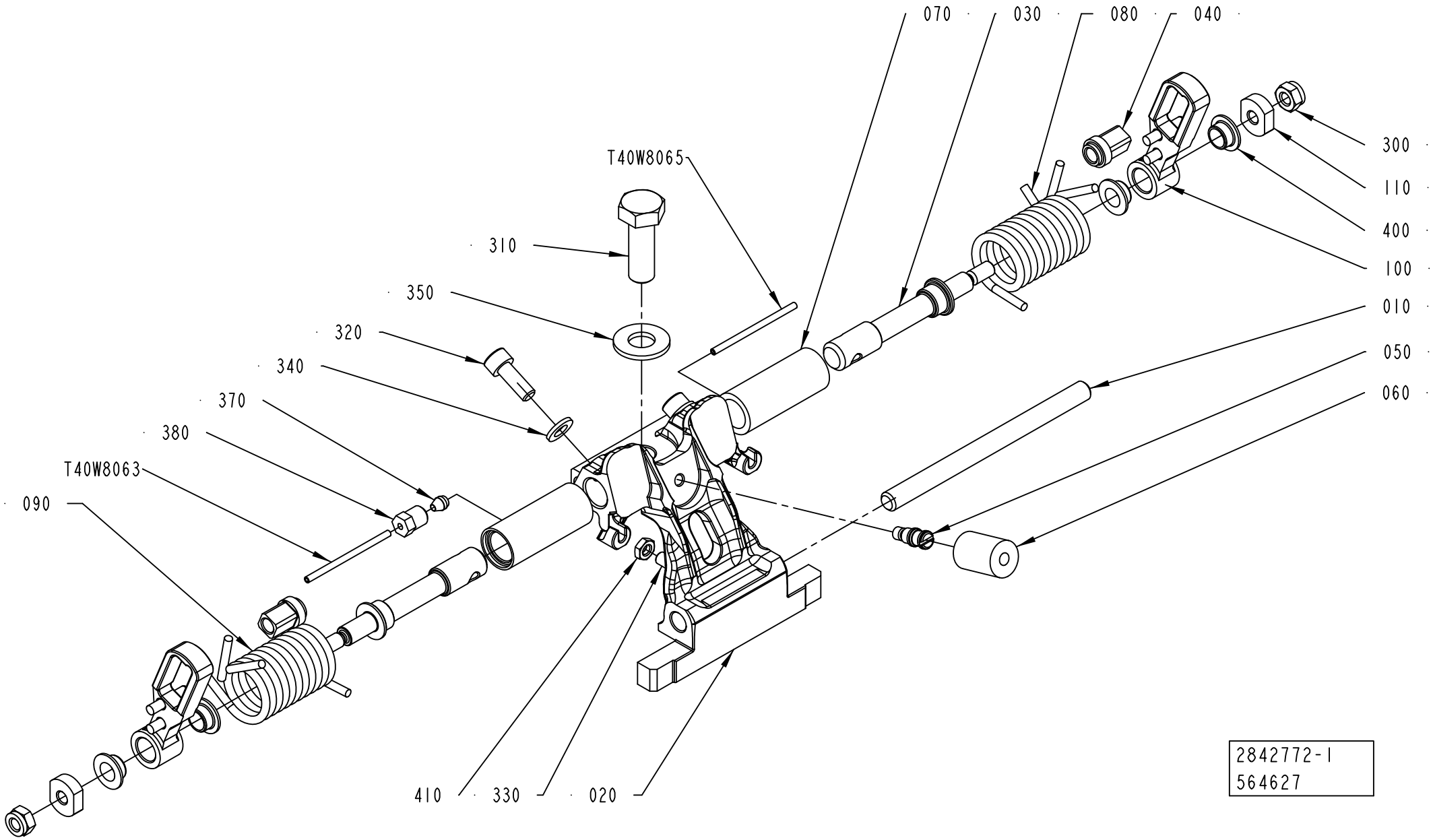

ECM: 676204 - 20140515
Group number: 2842772-0100
Assembly Drawing: 2842772-1_1_AE

This list covers pages from 1-616 to 1-623

Pos	Part No	UN	Qty	Description	Page No
TBA 0500B (See drawing on page: 1-618)					
010	2773510-0000		1	SHAFT	
020	3038000-0001		1	HOLDER	
030	2902006-0000		2	SHAFT	
050	2842776-0000		1	PIN	
060	2842777-0001		1	DAMPER	
080	2961953-0000		2	TENSION SPRING	
120	2905199-0000		2	HOLDER	
300	312105-0285		2	SCREW, M6S ISO 4017 M4X6 A4 70	
310	312105-0495		1	SCREW, M6S ISO 4017 M10X30 A4 80	
320	312115-0368		2	SCREW ISO4762 M6X16 A4 80	
330	312318-0325		1	SET SCREW, CUP END ISO4029 M5X10 A4	
360	315106-0136		2	WASHER PLAIN, M4 ISO7089-4-200 HV A4	
370	90028-0020		2	CONE TUBE 2,5MM	
380	90134-0063		2	BUSHING/NUT M8X1, D=2,5 MM	
410	312625-0314		1	HEXAGON THIN NUT, EN 24035 ML6M M5 A4	
T40W8063	90166-0143	MM	150	TUBE 2,5 MM PA TRANSP.	
T40W8065	90166-0143	MM	150	TUBE 2,5 MM PA TRANSP.	
TBA 0500E (See drawing on page: 1-622)					
010	2773510-0000		1	SHAFT	
020	2862279-0001		1	HOLDER	
030	3051279-0000		2	SHAFT	
080	2959868-0000		2	TENSION SPRING	
120	2905199-0000		2	HOLDER	
130	3051280-0000		2	HOLDER	
140	2959867-0000		2	SPACER SCREW	
300	312105-0285		2	SCREW, M6S ISO 4017 M4X6 A4 70	
310	312105-0495		1	SCREW, M6S ISO 4017 M10X30 A4 80	
320	312115-0368		2	SCREW ISO4762 M6X16 A4 80	
330	312318-0327		1	SET SCREW, CUP END ISO4029 M5X12 A4	
360	315106-0136		2	WASHER PLAIN, M4 ISO7089-4-200 HV A4	
370	90028-0020		2	CONE TUBE 2,5MM	
380	90134-0063		2	BUSHING/NUT M8X1, D=2,5 MM	
390	311111-0252		2	SPRING PIN ISO 8752 4X12-ST	
410	312625-0314		1	HEXAGON THIN NUT, EN 24035 ML6M M5 A4	
T40W8063	90166-0143	MM	150	TUBE 2,5 MM PA TRANSP.	
T40W8065	90166-0143	MM	150	TUBE 2,5 MM PA TRANSP.	
TBA 0500S (See drawing on page: 1-616)					
010	2916971-0000		1	SHAFT	
020	3024712-0001		1	HOLDER	
030	2911622-0000		2	SHAFT	
040	3092829-0000		2	SLIDER	
050	2842776-0000		1	PIN	
060	2842777-0001		1	DAMPER	
070	2842780-0000		2	BUSHING	
080	2842781-0000		1	SPRING	
090	2842782-0000		1	SPRING	
100	3219171-0000		2	LEVER	
110	2911623-0000		2	WASHER	
300	312812-0316		2	HEXAGON NUT, NY-LOCK M6 A4 80	
310	312105-0495		1	SCREW, M6S ISO 4017 M10X30 A4 80	
320	312115-0368		2	SCREW ISO4762 M6X16 A4 80	
330	312318-0325		1	SET SCREW, CUP END ISO4029 M5X10 A4	
370	90028-0020		2	CONE TUBE 2,5MM	
380	90134-0063		2	BUSHING/NUT M8X1, D=2,5 MM	
400	90600-2013		4	FLANGE BUSHING, IGLIDUR X 8X10X5,5	
410	312625-0314		1	HEXAGON THIN NUT, EN 24035 ML6M M5 A4	
T40W8063	90166-0143	MM	155	TUBE 2,5 MM PA TRANSP.	
T40W8065	90166-0143	MM	155	TUBE 2,5 MM PA TRANSP.	
TBA 0500SQ (See drawing on page: 1-618)					
010	2773510-0000		1	SHAFT	
020	3037996-0001		1	HOLDER	
030	2863119-0000		2	SHAFT	
050	2842776-0000		1	PIN	
060	2842777-0001		1	DAMPER	
080	2959868-0000		2	TENSION SPRING	
120	2905199-0000		2	HOLDER	
300	312105-0285		2	SCREW, M6S ISO 4017 M4X6 A4 70	
310	312105-0495		1	SCREW, M6S ISO 4017 M10X30 A4 80	
320	312115-0368		2	SCREW ISO4762 M6X16 A4 80	
330	312318-0323		1	SET SCREW, CUP END ISO4029 M5X8 A4	
360	315106-0136		2	WASHER PLAIN, M4 ISO7089-4-200 HV A4	
370	90028-0020		2	CONE TUBE 2,5MM	
380	90134-0063		2	BUSHING/NUT M8X1, D=2,5 MM	
410	312625-0314		1	HEXAGON THIN NUT, EN 24035 ML6M M5 A4	
T40W8063	90166-0143	MM	135	TUBE 2,5 MM PA TRANSP.	
T40W8065	90166-0143	MM	135	TUBE 2,5 MM PA TRANSP.	
TBA 1000B, TBA 1000M (See drawing on page: 1-616)					
010	2773510-0000		1	SHAFT	
020	3038000-0001		1	HOLDER	
030	2911622-0000		2	SHAFT	
040	3092829-0000		2	SLIDER	
050	2842776-0000		1	PIN	
060	2842777-0001		1	DAMPER	

Machine Type | Group Description | Used-In | Group Number | Page No

SHOCK ABSORBER CUTTING

Drawing file: 2842772-2_1_AC.hpgl

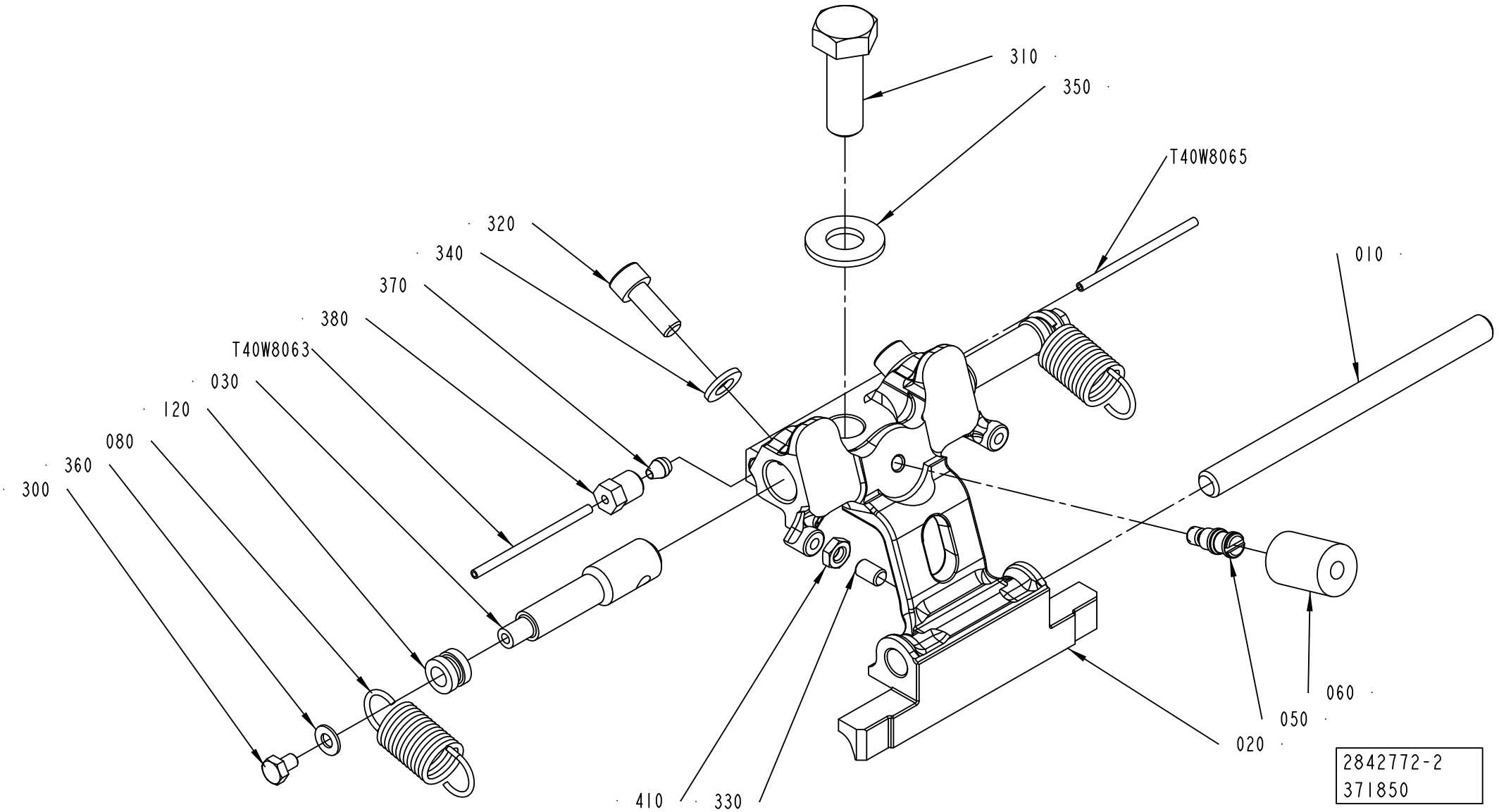

ECM: 676204 - 20140515
Group number: 2842772-0100
Assembly Drawing: 2842772-2_1_AC

This list covers pages from 1-616 to 1-623

Pos	Part No	UN	Qty	Description	Page No
TBA 1000B, TBA 1000M (Cont'd) (See drawing on page: 1-616)					
070	2842780-0000		2	BUSHING	
080	2842781-0000		1	SPRING	
090	2842782-0000		1	SPRING	
100	3219171-0000		2	LEVER	
110	2911623-0000		2	WASHER	
300	312812-0316		2	HEXAGON NUT, NY-LOCK M6 A4 80	
310	312105-0495		1	SCREW, M6S ISO 4017 M10X30 A4 80	
320	312115-0368		2	SCREW ISO4762 M6X16 A4 80	
330	312318-0325		1	SET SCREW, CUP END ISO4029 M5X10 A4	
370	90028-0020		2	CONE TUBE 2,5MM	
380	90134-0063		2	BUSHING/NUT M8X1, D=2,5 MM	
400	90600-2013		4	FLANGE BUSHING, IGLIDUR X 8X10X5,5	
410	312625-0314		1	HEXAGON THIN NUT, EN 24035 ML6M M5 A4	
T40W8063	90166-0143	MM	155	TUBE 2,5 MM PA TRANSP.	
T40W8065	90166-0143	MM	155	TUBE 2,5 MM PA TRANSP.	
TBA 1000E (See drawing on page: 1-616)					
010	2773510-0000		1	SHAFT	
020	2862279-0001		1	HOLDER	
030	2911622-0000		2	SHAFT	
040	3092829-0000		2	SLIDER	
050	2842776-0000		1	PIN	
060	2842777-0001		1	DAMPER	
070	2842780-0000		2	BUSHING	
080	2842781-0000		1	SPRING	
090	2842782-0000		1	SPRING	
100	3219171-0000		2	LEVER	
110	2911623-0000		2	WASHER	
300	312812-0316		2	HEXAGON NUT, NY-LOCK M6 A4 80	
310	312105-0495		1	SCREW, M6S ISO 4017 M10X30 A4 80	
320	312115-0368		2	SCREW ISO4762 M6X16 A4 80	
330	312318-0325		1	SET SCREW, CUP END ISO4029 M5X10 A4	
370	90028-0020		2	CONE TUBE 2,5MM	
380	90134-0063		2	BUSHING/NUT M8X1, D=2,5 MM	
400	90600-2013		4	FLANGE BUSHING, IGLIDUR X 8X10X5,5	
410	312625-0314		1	HEXAGON THIN NUT, EN 24035 ML6M M5 A4	
T40W8063	90166-0143	MM	155	TUBE 2,5 MM PA TRANSP.	
T40W8065	90166-0143	MM	155	TUBE 2,5 MM PA TRANSP.	
TBA 1000S (See drawing on page: 1-616)					
010	2773510-0000		1	SHAFT	
020	3037998-0001		1	HOLDER	
030	2911622-0000		2	SHAFT	
040	3092829-0000		2	SLIDER	
050	2842776-0000		1	PIN	
060	2842777-0001		1	DAMPER	
070	2842780-0000		2	BUSHING	
080	2842781-0000		1	SPRING	
090	2842782-0000		1	SPRING	
100	3219171-0000		2	LEVER	
110	2911623-0000		2	WASHER	
300	312812-0316		2	HEXAGON NUT, NY-LOCK M6 A4 80	
310	312105-0495		1	SCREW, M6S ISO 4017 M10X30 A4 80	
320	312115-0368		2	SCREW ISO4762 M6X16 A4 80	
330	312318-0325		1	SET SCREW, CUP END ISO4029 M5X10 A4	
370	90028-0020		2	CONE TUBE 2,5MM	
380	90134-0063		2	BUSHING/NUT M8X1, D=2,5 MM	
400	90600-2013		4	FLANGE BUSHING, IGLIDUR X 8X10X5,5	
410	312625-0314		1	HEXAGON THIN NUT, EN 24035 ML6M M5 A4	
T40W8063	90166-0143	MM	155	TUBE 2,5 MM PA TRANSP.	
T40W8065	90166-0143	MM	155	TUBE 2,5 MM PA TRANSP.	
TBA 1000SQ (See drawing on page: 1-616)					
010	2773510-0000		1	SHAFT	
020	3037996-0001		1	HOLDER	
030	2911622-0000		2	SHAFT	
040	3092829-0000		2	SLIDER	
050	2842776-0000		1	PIN	
060	2842777-0001		1	DAMPER	
070	2842780-0000		2	BUSHING	
080	2842781-0000		1	SPRING	
090	2842782-0000		1	SPRING	
100	3219171-0000		2	LEVER	
110	2911623-0000		2	WASHER	
300	312812-0316		2	HEXAGON NUT, NY-LOCK M6 A4 80	
310	312105-0495		1	SCREW, M6S ISO 4017 M10X30 A4 80	
320	312115-0368		2	SCREW ISO4762 M6X16 A4 80	
330	312318-0323		1	SET SCREW, CUP END ISO4029 M5X8 A4	
370	90028-0020		2	CONE TUBE 2,5MM	
380	90134-0063		2	BUSHING/NUT M8X1, D=2,5 MM	
400	90600-2013		4	FLANGE BUSHING, IGLIDUR X 8X10X5,5	
410	312625-0314		1	HEXAGON THIN NUT, EN 24035 ML6M M5 A4	
T40W8063	90166-0143	MM	155	TUBE 2,5 MM PA TRANSP.	
T40W8065	90166-0143	MM	155	TUBE 2,5 MM PA TRANSP.	
TBA 1500S (See drawing on page: 1-616)					
010	2773510-0000		1	SHAFT	

Machine Type | Group Description | Used-In | Group Number | Page No

SHOCK ABSORBER CUTTING

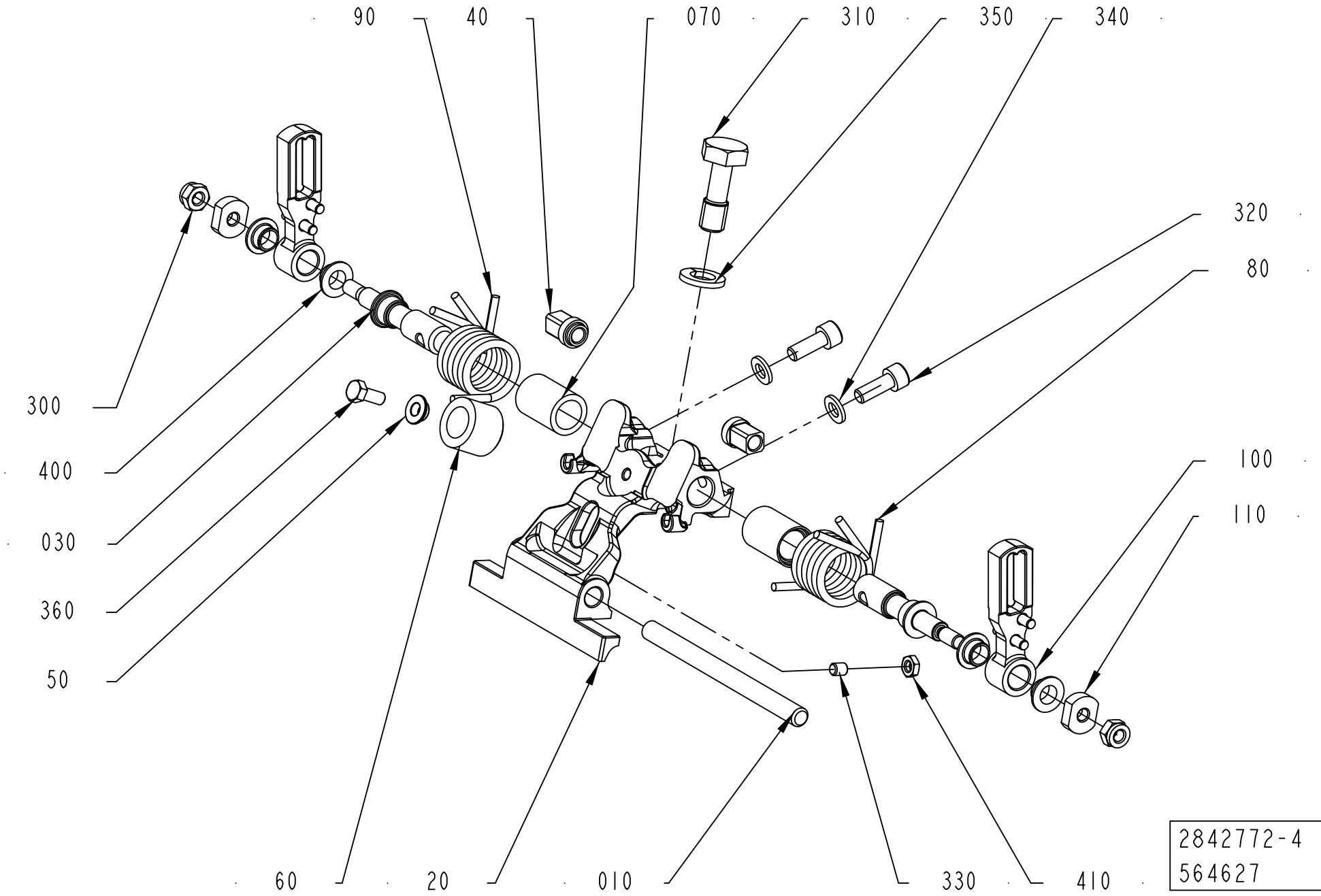

Pos	Part No	UN	Qty	Description	Page No
TBA 1500S (Cont'd) (See drawing on page: 1-616)					
020	3024941-0001		1	HOLDER	
030	2907800-0000		2	SHAFT	
040	3242547-0000		2	SLIDER	
050	2907797-0000		1	PIN	
060	2842777-0005		1	DAMPER	
070	2916984-0000		2	BUSHING	
080	2907805-0000		1	SPRING	
090	2907804-0000		1	SPRING	
100	2907806-0000		2	LEVER	
110	2911623-0000		2	WASHER	
300	312812-0316		2	HEXAGON NUT, NY-LOCK M6 A4 80	
310	312105-0499		1	SCREW, M6S ISO 4014 M10X40 A4 80	
320	312115-0368		2	SCREW ISO4762 M6X16 A4 80	
330	312318-0325		1	SET SCREW, CUP END ISO4029 M5X10 A4	
370	90028-0020		2	CONE TUBE 2,5MM	
380	90134-0063		2	BUSHING/NUT M8X1, D=2,5 MM	
400	90600-2013		4	FLANGE BUSHING, IGLIDUR X 8X10X5,5	
410	312625-0314		1	HEXAGON THIN NUT, EN 24035 ML6M M5 A4	
T40W8063	90166-0143	MM	200	TUBE 2,5 MM PA TRANSP.	
T40W8065	90166-0143	MM	200	TUBE 2,5 MM PA TRANSP.	
TBA 2000S (See drawing on page: 1-616)					
010	2907798-0000		1	SHAFT	
020	3024939-0001		1	HOLDER	
030	2907800-0000		2	SHAFT	
040	3242547-0000		2	SLIDER	
050	2907797-0000		1	PIN	
060	2842777-0005		1	DAMPER	
070	2916984-0000		2	BUSHING	
080	2907805-0000		1	SPRING	
090	2907804-0000		1	SPRING	
100	2907806-0000		2	LEVER	
110	2911623-0000		2	WASHER	
300	312812-0316		2	HEXAGON NUT, NY-LOCK M6 A4 80	
310	312105-0499		1	SCREW, M6S ISO 4014 M10X40 A4 80	
320	312115-0368		2	SCREW ISO4762 M6X16 A4 80	
330	312318-0325		1	SET SCREW, CUP END ISO4029 M5X10 A4	
370	90028-0020		2	CONE TUBE 2,5MM	
380	90134-0063		2	BUSHING/NUT M8X1, D=2,5 MM	
400	90600-2013		4	FLANGE BUSHING, IGLIDUR X 8X10X5,5	
410	312625-0314		1	HEXAGON THIN NUT, EN 24035 ML6M M5 A4	
T40W8063	90166-0143	MM	190	TUBE 2,5 MM PA TRANSP.	
T40W8065	90166-0143	MM	190	TUBE 2,5 MM PA TRANSP.	
TGA 1000SQ, TGA 0750SQ (See drawing on page: 1-620)					
010	2649660-0000		1	SHAFT	
020	2993285-0002		1	HOLDER	
	3021650-0000		*1*	*HOLDER*	
030	2948028-0000		2	SHAFT	
040	3092829-0000		2	SLIDER	
050	2572197-0000		1	SPACER	
060	2649677-0000		1	DAMPER	
070	2948027-0000		2	BUSHING	
080	2949214-0000		1	SPRING	
090	2949215-0000		1	SPRING	
100	3018752-0000		2	LEVER	
110	2911623-0000		2	WASHER	
300	312812-0316		2	HEXAGON NUT, NY-LOCK M6 A4 80	
310	2922524-0000		1	SCREW	
320	312105-0368		2	"SCREW, M6S ISO 4017 M6X16 A4 80"	
330	311103-0268		1	PARALLEL PIN ISO 2338 4M6X12 A1	
360	312105-0327		1	"SCREW, M6S ISO 4017 M5X12 A4 80"	
400	90600-2013		4	FLANGE BUSHING, IGLIDUR X 8X10X5,5	
TGA 1500SQ (See drawing on page: 1-620)					
010	2773510-0000		1	SHAFT	
020	2948025-0001		1	HOLDER	
030	2948028-0000		2	SHAFT	
040	3092829-0000		2	SLIDER	
050	2572197-0000		1	SPACER	
060	3030308-0000		1	DAMPER	
070	2948027-0000		2	BUSHING	
080	2949214-0000		1	SPRING	
090	2949215-0000		1	SPRING	
100	2916131-0000		2	LEVER	
110	2911623-0000		2	WASHER	
300	312812-0316		2	HEXAGON NUT, NY-LOCK M6 A4 80	
310	2922524-0000		1	SCREW	
320	312115-0368		2	SCREW ISO4762 M6X16 A4 80	
330	312318-0321		1	SET SCREW, CUP END ISO4029 M5X6 A4	
360	312105-0327		1	"SCREW, M6S ISO 4017 M5X12 A4 80"	
400	90600-2013		4	FLANGE BUSHING, IGLIDUR X 8X10X5,5	
410	312625-0314		1	HEXAGON THIN NUT, EN 24035 ML6M M5 A4	
TPA 0500SQ (See drawing on page: 1-616)					
010	2962640-0000		1	SHAFT	
020	3024710-0001		1	HOLDER	

SHOCK ABSORBER CUTTING

Drawing file: 2842772-5_1_AA.hpgl

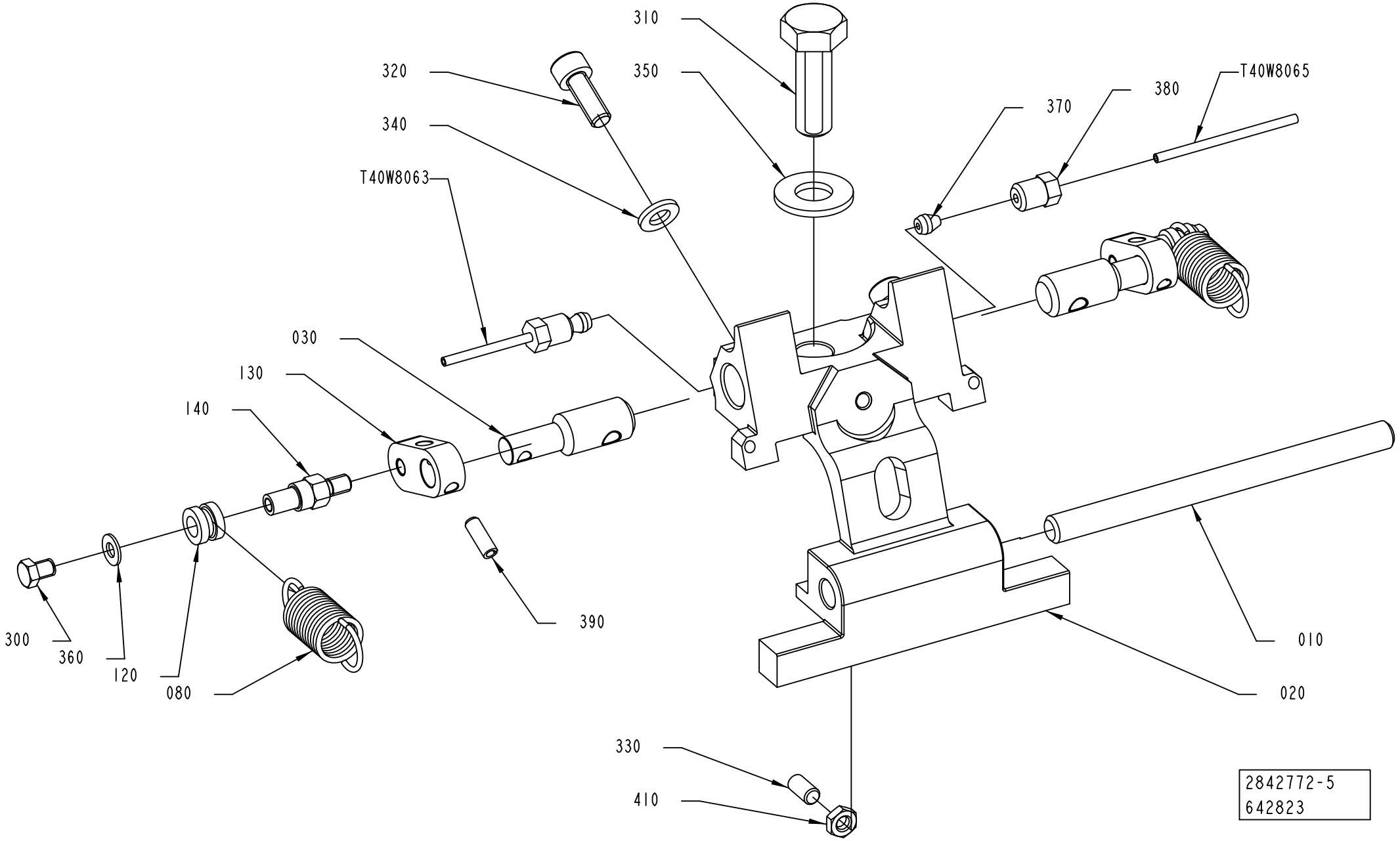

Pos	Part No	UN	Qty	Description	Page No
TPA 0500SQ (Cont'd) (See drawing on page: 1-616)					
030	2911622-0000		2	SHAFT	
040	3092829-0000		2	SLIDER	
050	2842776-0000		1	PIN	
060	2842777-0001		1	DAMPER	
070	2842780-0000		2	BUSHING	
080	2842781-0000		1	SPRING	
090	2842782-0000		1	SPRING	
100	3219171-0000		2	LEVER	
110	2911623-0000		2	WASHER	
300	312812-0316		2	HEXAGON NUT, NY-LOCK M6 A4 80	
310	312105-0495		1	SCREW, M6S ISO 4017 M10X30 A4 80	
320	312115-0368		2	SCREW ISO4762 M6X16 A4 80	
330	312318-0325		1	SET SCREW, CUP END ISO4029 M5X10 A4	
370	90028-0020		2	CONE TUBE 2,5MM	
380	90134-0063		2	BUSHING/NUT M8X1, D=2,5 MM	
400	90600-2013		4	FLANGE BUSHING, IGLIDUR X 8X10X5,5	
410	312625-0314		1	HEXAGON THIN NUT, EN 24035 ML6M M5 A4	
T40W8063	90166-0143	MM	155	TUBE 2,5 MM PA TRANSP.	
T40W8065	90166-0143	MM	155	TUBE 2,5 MM PA TRANSP.	
TPA 1000SQ, TPA 0750SQ (See drawing on page: 1-616)					
010	2916971-0000		1	SHAFT	
020	3024937-0001		1	HOLDER	
030	2907800-0000		2	SHAFT	
040	3242547-0000		2	SLIDER	
050	2907797-0000		1	PIN	
060	2842777-0004		1	DAMPER	
070	2916984-0000		2	BUSHING	
080	2907805-0000		1	SPRING	
090	2907804-0000		1	SPRING	
100	2907806-0000		2	LEVER	
110	2911623-0000		2	WASHER	
300	312812-0316		2	HEXAGON NUT, NY-LOCK M6 A4 80	
310	312105-0499		1	SCREW, M6S ISO 4014 M10X40 A4 80	
320	312115-0368		2	SCREW ISO4762 M6X16 A4 80	
330	312318-0325		1	SET SCREW, CUP END ISO4029 M5X10 A4	
370	90028-0020		2	CONE TUBE 2,5MM	
380	90134-0063		2	BUSHING/NUT M8X1, D=2,5 MM	
400	90600-2013		4	FLANGE BUSHING, IGLIDUR X 8X10X5,5	
410	312625-0314		1	HEXAGON THIN NUT, EN 24035 ML6M M5 A4	
T40W8063	90166-0143	MM	180	TUBE 2,5 MM PA TRANSP.	
T40W8065	90166-0143	MM	180	TUBE 2,5 MM PA TRANSP.	

Pos	Part No	UN	Qty	Description	Page No
Common Parts					
340	315105-0153		2	WASHER PLAIN, 6,4X12X1,5 A4 BRB	
350	315105-0173		1	WASHER PLAIN, 10,5X22X2 A4 BRB	

Machine Type	Group Description	Used-In	Group Number	Page No

VOLUME FLAP CUTTING

VALID FOR TBA 1000B TBA 0500S AND TBA 1000M

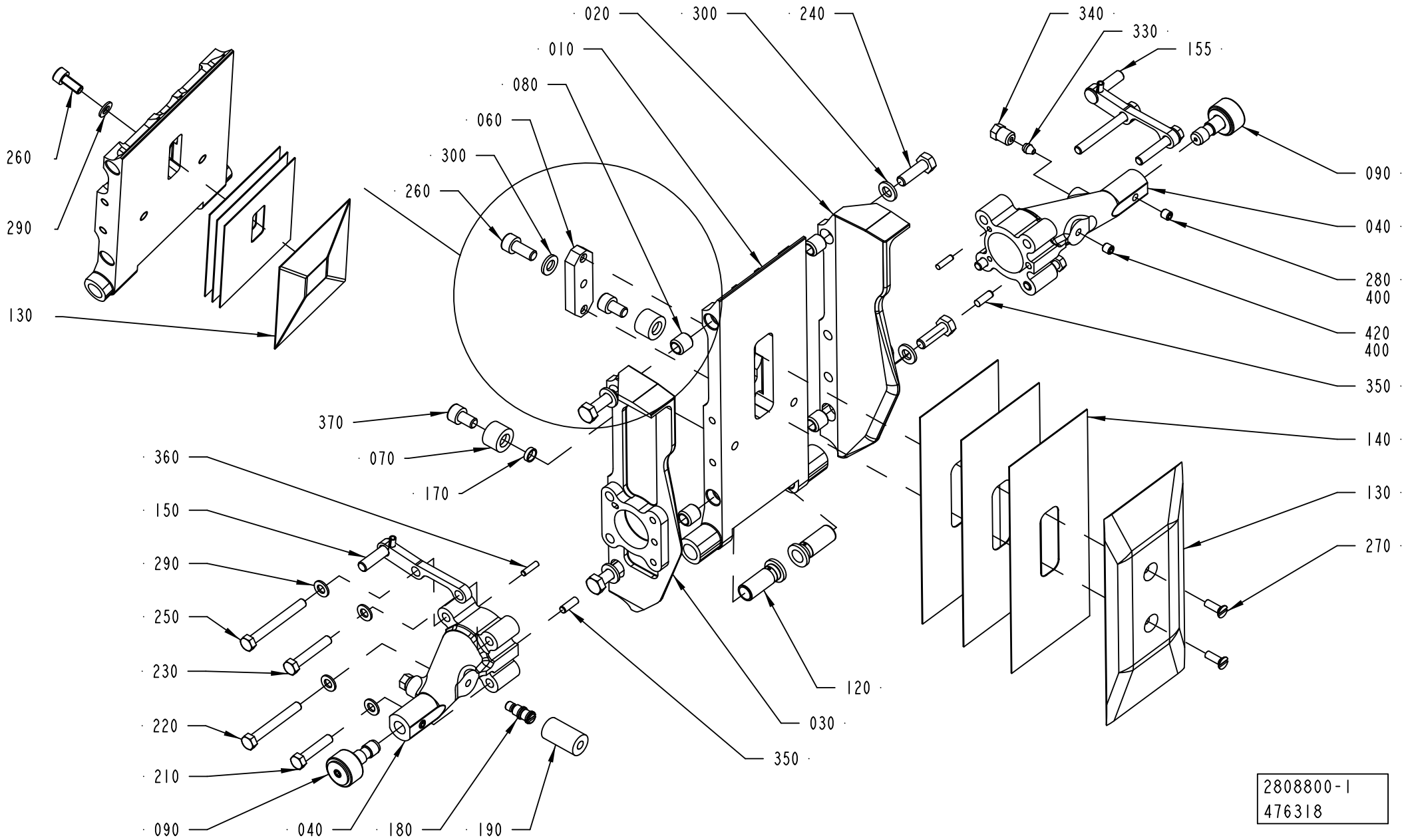

ECM: 676206 - 20140515
Group number: 2808800-0100
Assembly Drawing: 2808800-1_1_AE

This list covers pages from 1-624 to 1-639

Pos	Part No	UN	Qty	Description	Page No
TBA 0500B (See drawing on page: 1-628)					
010	2902007-0000		1	VOLUME FLAP	
040	2905200-0000		1	ARM	
045	2906172-0000		1	ARM	
070	2842778-0000		2	DAMPER	
120	1558701-0000		2	BUSHING	
130	2786059-0000		1	VOLUME BULGE	
140	2790818-0000		3	VOLUME SHIM	
150	2905201-0000		2	SPACER SCREW	
160	2905199-0000		2	HOLDER	
170	2842779-0000		2	SPACER	
180	2872048-0000		1	PIN	
185	2872091-0000		1	PIN	
190	2846667-0000		1	DAMPER	
210	312105-0327		4	"SCREW, M6S ISO 4017 M5X12 A4 80"	
230	312105-0285		2	SCREW, M6S ISO 4017 M4X6 A4 70	
260	312115-0325		1	SCREW ISO4762 M5X10 A4 80	
290	315105-0146		9	WASHER PLAIN, 5,3X10X1 A4 BRB	
300	315106-0136		2	WASHER PLAIN, M4 ISO7089-4-200 HV A4	
360	311103-0234		4	PARALLEL PIN ISO 2338 3M6X12 A1	
370	312115-0364		2	SCREW ISO4762 M6X10 A4 80	
390	312812-0314		2	HEXAGON NUT, NY-LOCK M5 A4 80	
TBA 0500E (See drawing on page: 1-638)					
010	3223119-0000		1	VOLUME FLAP	
040	3051314-0000		2	BRACKET	
070	3051255-0000		1	DAMPER	
120	1558701-0000		2	BUSHING	
130	3339846-0000		1	VOLUME BULGE	
140	3315306-0000		3	VOLUME SHIM	
150	3051293-0000		2	SHAFT	
160	2905199-0000		2	HOLDER	
170	2842779-0000		2	SPACER	
210	312105-0327		4	"SCREW, M6S ISO 4017 M5X12 A4 80"	
230	312105-0285		2	SCREW, M6S ISO 4017 M4X6 A4 70	
260	312115-0327		1	SCREW ISO4762 M5X12 A4 80	
290	315105-0146		7	WASHER PLAIN, 5,3X10X1 A4 BRB	
300	315106-0136		2	WASHER PLAIN, M4 ISO7089-4-200 HV A4	
360	311103-0234		4	PARALLEL PIN ISO 2338 3M6X12 A1	
370	312115-0364		2	SCREW ISO4762 M6X10 A4 80	
TBA 0500S (See drawing on page: 1-624)					
010	2997720-0000		1	VOLUME FLAP	
020	2997721-0000		1	SIDE PLATE	
030	2997722-0000		1	SIDE PLATE	
040	2809061-0010		2	ARM	
070	2842778-0000		2	DAMPER	
080	2778960-0000		4	BUSHING	
120	1511254-0000		2	BUSHING	
130	2997725-0000		1	VOLUME BULGE	
140	2997717-0000		3	SHIM	
150	2997719-0000		1	BRACKET	
155	2997718-0000		1	BRACKET	
170	2842779-0000		2	SPACER	
180	2842776-0000		1	PIN	
190	2846667-0000		1	DAMPER	
210	312105-0333		2	SCREW, M6S ISO 4017 M5X25 A4 80	
220	312105-0339		2	SCREW, M6S ISO 4014 M5X40 A4 80	
230	312105-0335		2	SCREW, M6S ISO 4014 M5X30 A4 80	
240	312105-0370		4	SCREW, M6S ISO 4017 M6X20 A4 80	
250	312105-0340		2	SCREW, M6S ISO 4014 M5X45 A4 80	
260	312115-0328		1	SCREW ISO4762 M5X14 A4 80	
290	315105-0146		9	WASHER PLAIN, 5,3X10X1 A4 BRB	
300	315105-0153		4	WASHER PLAIN, 6,4X12X1,5 A4 BRB	
350	311103-0268		2	PARALLEL PIN ISO 2338 4M6X12 A1	
360	311103-0234		2	PARALLEL PIN ISO 2338 3M6X12 A1	
370	312115-0364		2	SCREW ISO4762 M6X10 A4 80	
420	312318-0320		1	SET SCREW, CUP END ISO4029 M5X5 A4	
TBA 0500SQ (See drawing on page: 1-626)					
010	2860036-0000		1	VOLUME FLAP	
040	2872047-0000		1	ARM	
045	2952710-0000		1	ARM	
070	2842778-0000		2	DAMPER	
120	1558701-0000		2	BUSHING	
130	2860037-0000		1	VOLUME BULGE	
140	2860038-0000		3	VOLUME SHIM	
150	2959867-0000		2	SPACER SCREW	
160	2905199-0000		2	HOLDER	
170	2842779-0000		2	SPACER	
180	2872048-0000		1	PIN	
185	2872091-0000		1	PIN	
190	2846667-0000		1	DAMPER	
210	312105-0327		2	"SCREW, M6S ISO 4017 M5X12 A4 80"	
220	312105-0329		4	SCREW, M6S ISO 4017 M5X16 A4 80	
230	312105-0285		2	SCREW, M6S ISO 4017 M4X6 A4 70	
260	312115-0325		1	SCREW ISO4762 M5X10 A4 80	

Machine Type | Group Description | Used-In | Group Number | Page No

VOLUME FLAP CUTTING

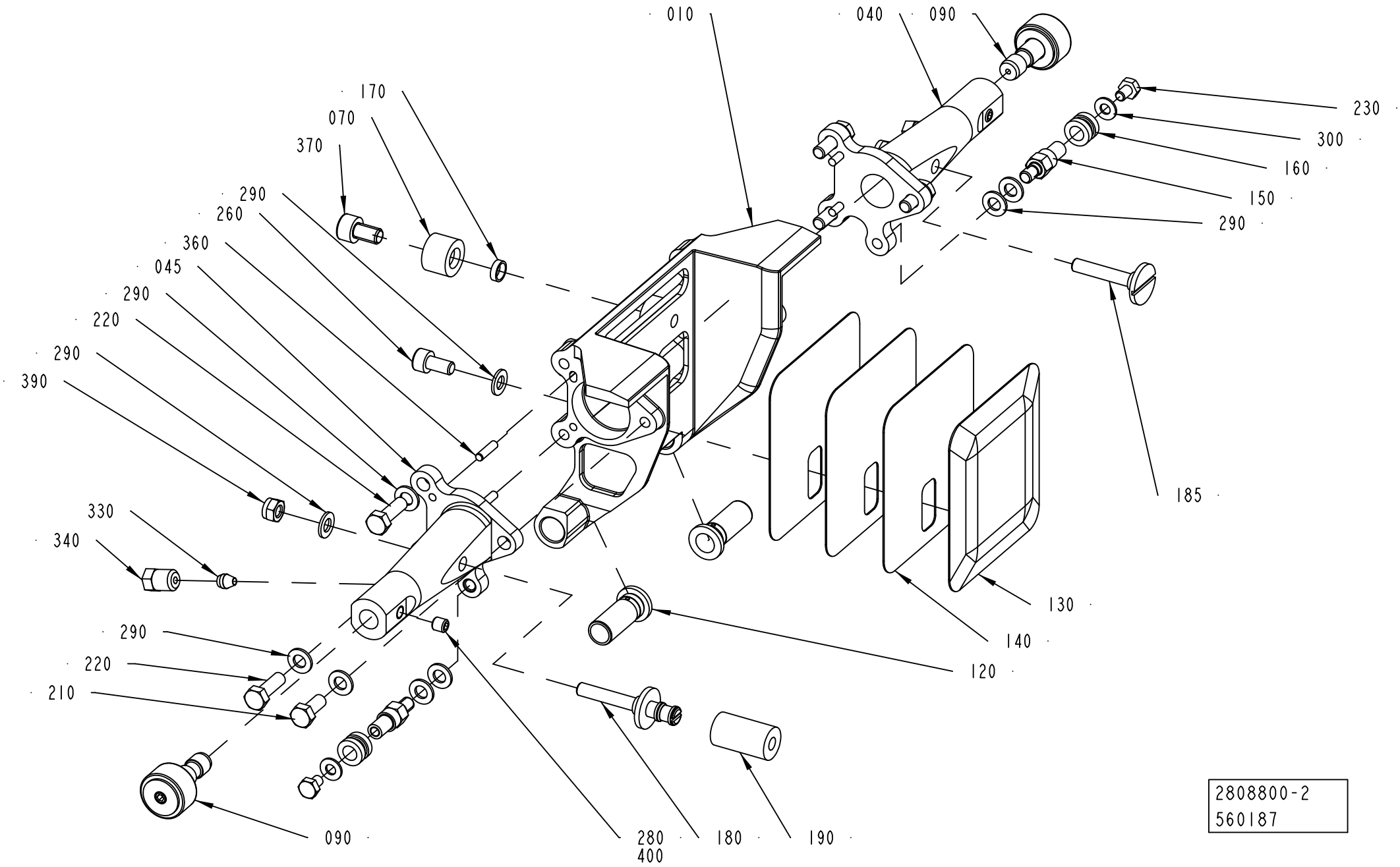

Pos	Part No	UN	Qty	Description	Page No
TBA 0500SQ (Cont'd) (See drawing on page: 1-626)					
290	315105-0146		13	WASHER PLAIN, 5,3X10X1 A4 BRB	
300	315106-0136		2	WASHER PLAIN, M4 ISO7089-4-200 HV A4	
360	311103-0234		4	PARALLEL PIN ISO 2338 3M6X12 A1	
370	312115-0364		2	SCREW ISO4762 M6X10 A4 80	
390	312812-0314		2	HEXAGON NUT, NY-LOCK M5 A4 80	
TBA 1000B (See drawing on page: 1-624)					
010	2902008-0000		1	VOLUME FLAP	
020	2902009-0000		1	SIDE PLATE	
030	2902010-0000		1	SIDE PLATE	
040	2809061-0006		2	ARM	
070	2842778-0000		2	DAMPER	
080	2778960-0000		4	BUSHING	
120	1558701-0000		2	BUSHING	
130	2795078-0000		1	VOLUME BULGE	
140	2795079-0000		3	VOLUME SHIM	
150	2902012-0000		1	BRACKET	
155	2902011-0000		1	BRACKET	
170	2842779-0000		2	SPACER	
180	2842776-0000		1	PIN	
190	2846667-0000		1	DAMPER	
210	312105-0328		2	SCREW M6S ISO 4017 M5X14 A4 80	
220	312105-0335		2	SCREW, M6S ISO 4014 M5X30 A4 80	
230	312105-0331		2	SCREW, M6S ISO 4017 M5X20 A4 80	
240	312105-0370		4	SCREW, M6S ISO 4017 M6X20 A4 80	
250	312105-0337		2	SCREW, M6S ISO 4014 M5X35 A4 80	
260	312115-0327		1	SCREW ISO4762 M5X12 A4 80	
290	315105-0146		9	WASHER PLAIN, 5,3X10X1 A4 BRB	
300	315105-0153		4	WASHER PLAIN, 6,4X12X1,5 A4 BRB	
350	311103-0267		2	PARALLEL PIN ISO 2338 4M6X10 A1	
360	311103-0234		2	PARALLEL PIN ISO 2338 3M6X12 A1	
370	312115-0364		2	SCREW ISO4762 M6X10 A4 80	
420	312318-0320		1	SET SCREW, CUP END ISO4029 M5X5 A4	
TBA 1000E NOQC (See drawing on page: 1-624)					
010	2960124-0000		1	VOLUME FLAP	
020	2960122-0000		1	SIDE PLATE	
030	2960123-0000		1	SIDE PLATE	
040	2809061-0001		2	ARM	
060	1040756-0000		1	WEDGE	
070	3051255-0000		1	DAMPER	
080	2778960-0000		4	BUSHING	
120	2960139-0000		2	BUSHING	
130	3230728-0000		1	VOLUME BULGE	
140	3230729-0000		3	SHIM	
150	2916133-0000		1	BRACKET	
155	2916132-0000		1	BRACKET	
170	2842779-0000		2	SPACER	
180	2842776-0000		1	PIN	
190	3179201-0000		1	DAMPER	
210	312105-0333		2	SCREW, M6S ISO 4017 M5X25 A4 80	
220	312105-0339		2	SCREW, M6S ISO 4014 M5X40 A4 80	
230	312105-0335		2	SCREW, M6S ISO 4014 M5X30 A4 80	
240	312105-0370		4	SCREW, M6S ISO 4017 M6X20 A4 80	
250	312105-0340		2	SCREW, M6S ISO 4014 M5X45 A4 80	
260	312115-0367		1	SCREW ISO4762 M6X14 A4 80	
270	312145-0291		2	SCREW ISO 2009 MFS M4X12 A4	
290	315105-0146		8	WASHER PLAIN, 5,3X10X1 A4 BRB	
300	315105-0153		5	WASHER PLAIN, 6,4X12X1,5 A4 BRB	
350	311103-0268		2	PARALLEL PIN ISO 2338 4M6X12 A1	
360	311103-0234		2	PARALLEL PIN ISO 2338 3M6X12 A1	
370	312115-0364		2	SCREW ISO4762 M6X10 A4 80	
420	312318-0320		1	SET SCREW, CUP END ISO4029 M5X5 A4	
TBA 1000E QC (See drawing on page: 1-624)					
010	3299555-0000		1	VOLUME FLAP	
020	3299554-0000		1	SIDE PLATE	
030	3299556-0000		1	SIDE PLATE	
040	2809061-0001		2	ARM	
060	1040756-0000		1	WEDGE	
070	3051255-0000		1	DAMPER	
080	2778960-0000		4	BUSHING	
120	2960139-0000		2	BUSHING	
130	3315307-0000		1	VOLUME BULGE	
140	3315310-0000		3	VOLUME SHIM	
150	2916133-0000		1	BRACKET	
155	2916132-0000		1	BRACKET	
170	2842779-0000		2	SPACER	
180	2842776-0000		1	PIN	
190	3179201-0000		1	DAMPER	
210	312105-0333		2	SCREW, M6S ISO 4017 M5X25 A4 80	
220	312105-0339		2	SCREW, M6S ISO 4014 M5X40 A4 80	
230	312105-0335		2	SCREW, M6S ISO 4014 M5X30 A4 80	
240	312105-0370		4	SCREW, M6S ISO 4017 M6X20 A4 80	
250	312105-0340		2	SCREW, M6S ISO 4014 M5X45 A4 80	
260	312115-0367		1	SCREW ISO4762 M6X14 A4 80	

VOLUME FLAP CUTTING

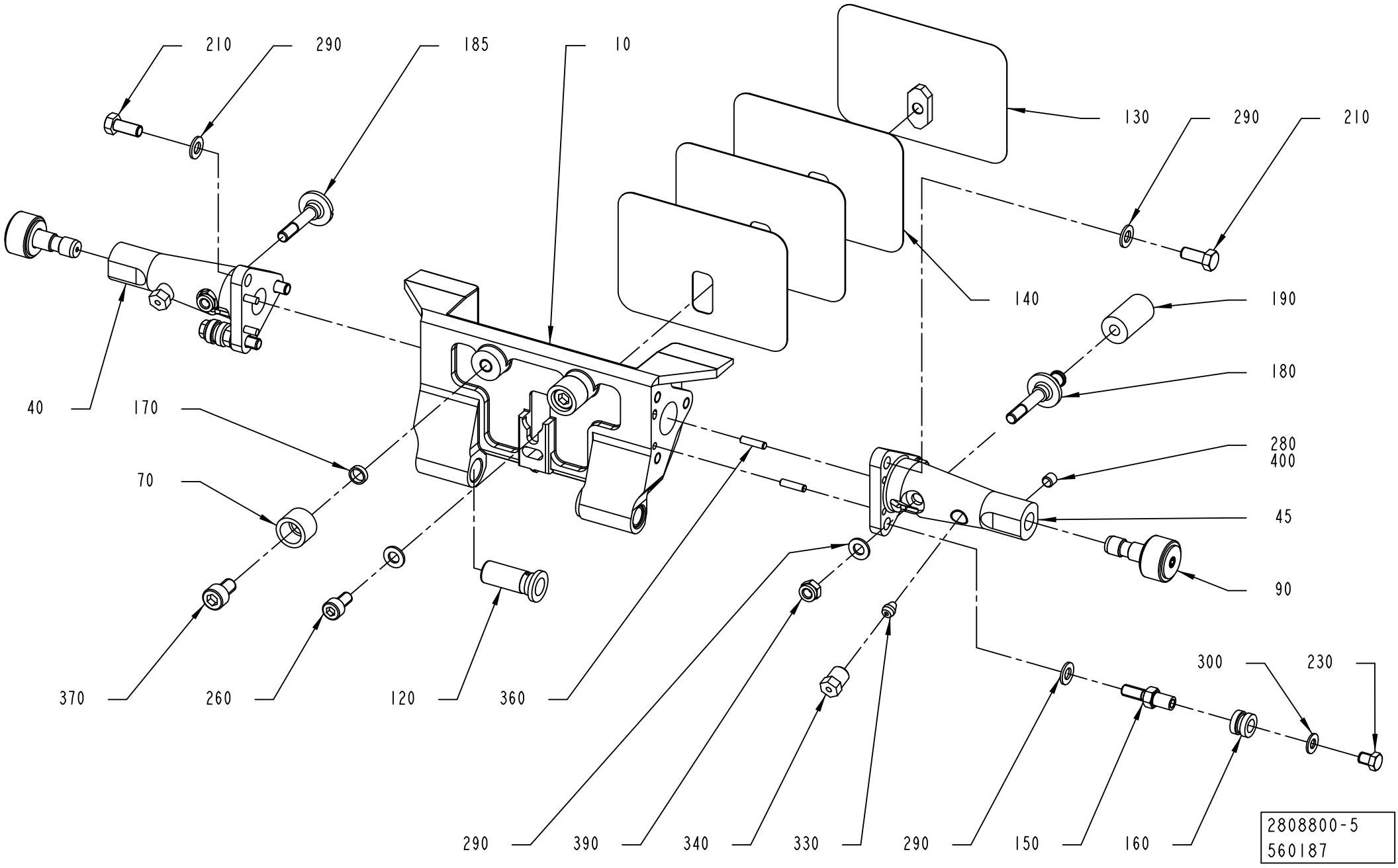

Pos	Part No	UN	Qty	Description	Page No
TBA 1000E QC (Cont'd) (See drawing on page: 1-624)					
270	312145-0291		2	SCREW ISO 2009 MFS M4X12 A4	
290	315105-0146		8	WASHER PLAIN, 5,3X10X1 A4 BRB	
300	315105-0153		5	WASHER PLAIN, 6,4X12X1,5 A4 BRB	
350	311103-0268		2	PARALLEL PIN ISO 2338 4M6X12 A1	
360	311103-0234		2	PARALLEL PIN ISO 2338 3M6X12 A1	
370	312115-0364		2	SCREW ISO4762 M6X10 A4 80	
420	312318-0320		1	SET SCREW, CUP END ISO4029 M5X5 A4	
TBA 1000M (See drawing on page: 1-624)					
010	2998789-0000		1	VOLUME FLAP	
020	2998790-0000		1	SIDE PLATE	
030	2998791-0000		1	SIDE PLATE	
040	2809061-0006		2	ARM	
070	2842778-0000		2	DAMPER	
080	2778960-0000		4	BUSHING	
120	1558701-0000		2	BUSHING	
130	2998792-0000		1	VOLUME BULGE	
140	2998793-0000		3	VOLUME SHIM	
150	2902012-0000		1	BRACKET	
155	2902011-0000		1	BRACKET	
170	2842779-0000		2	SPACER	
180	2842776-0000		1	PIN	
190	2846667-0000		1	DAMPER	
210	312105-0328		2	SCREW M6S ISO 4017 M5X14 A4 80	
220	312105-0335		2	SCREW, M6S ISO 4014 M5X30 A4 80	
230	312105-0331		2	SCREW, M6S ISO 4017 M5X20 A4 80	
240	312105-0370		4	SCREW, M6S ISO 4017 M6X20 A4 80	
250	312105-0337		2	SCREW, M6S ISO 4014 M5X35 A4 80	
260	312115-0327		1	SCREW ISO4762 M5X12 A4 80	
290	315105-0146		9	WASHER PLAIN, 5,3X10X1 A4 BRB	
300	315105-0153		4	WASHER PLAIN, 6,4X12X1,5 A4 BRB	
350	311103-0267		2	PARALLEL PIN ISO 2338 4M6X10 A1	
360	311103-0234		2	PARALLEL PIN ISO 2338 3M6X12 A1	
370	312115-0364		2	SCREW ISO4762 M6X10 A4 80	
420	312318-0320		1	SET SCREW, CUP END ISO4029 M5X5 A4	
TBA 1000S (See drawing on page: 1-624)					
010	2814896-0000		1	VOLUME FLAP	
020	2814897-0000		1	SIDE PLATE	
030	2814898-0000		1	SIDE PLATE	
040	2809061-0002		2	ARM	
060	1040756-0000		1	WEDGE	
070	2842778-0000		2	DAMPER	
080	2778960-0000		4	BUSHING	
120	1558701-0000		2	BUSHING	
130	1040754-0000		1	VOLUME BULGE	
140	1040755-0000		3	VOLUME SHIM	
150	2916135-0000		1	BRACKET	
155	2916134-0000		1	BRACKET	
170	2842779-0000		2	SPACER	
180	2842776-0000		1	PIN	
190	2846667-0000		1	DAMPER	
210	312105-0329		2	SCREW, M6S ISO 4017 M5X16 A4 80	
220	312105-0335		2	SCREW, M6S ISO 4014 M5X30 A4 80	
230	312105-0331		2	SCREW, M6S ISO 4017 M5X20 A4 80	
240	312105-0370		4	SCREW, M6S ISO 4017 M6X20 A4 80	
250	312105-0337		2	SCREW, M6S ISO 4014 M5X35 A4 80	
260	312115-0367		1	SCREW ISO4762 M6X14 A4 80	
270	312145-0291		2	SCREW ISO 2009 MFS M4X12 A4	
290	315105-0146		8	WASHER PLAIN, 5,3X10X1 A4 BRB	
300	315105-0153		5	WASHER PLAIN, 6,4X12X1,5 A4 BRB	
350	311103-0268		2	PARALLEL PIN ISO 2338 4M6X12 A1	
360	311103-0234		2	PARALLEL PIN ISO 2338 3M6X12 A1	
370	312115-0364		2	SCREW ISO4762 M6X10 A4 80	
420	312318-0320		1	SET SCREW, CUP END ISO4029 M5X5 A4	
TBA 1000SQ (See drawing on page: 1-624)					
010	2808802-0000		1	VOLUME FLAP	
020	2808803-0000		1	SIDE PLATE	
030	2808804-0000		1	SIDE PLATE	
040	2809061-0001		2	ARM	
060	1040756-0000		1	WEDGE	
070	2842778-0000		2	DAMPER	
080	2778960-0000		4	BUSHING	
120	1558701-0000		2	BUSHING	
130	1487626-0000		1	VOLUME BULGE	
140	1487627-0000		3	VOLUME SHIM	
150	2916133-0000		1	BRACKET	
155	2916132-0000		1	BRACKET	
170	2842779-0000		2	SPACER	
180	2842776-0000		1	PIN	
190	2846667-0000		1	DAMPER	
210	312105-0333		2	SCREW, M6S ISO 4017 M5X25 A4 80	
220	312105-0339		2	SCREW, M6S ISO 4014 M5X40 A4 80	
230	312105-0335		2	SCREW, M6S ISO 4014 M5X30 A4 80	
240	312105-0370		4	SCREW, M6S ISO 4017 M6X20 A4 80	

VOLUME FLAP CUTTING

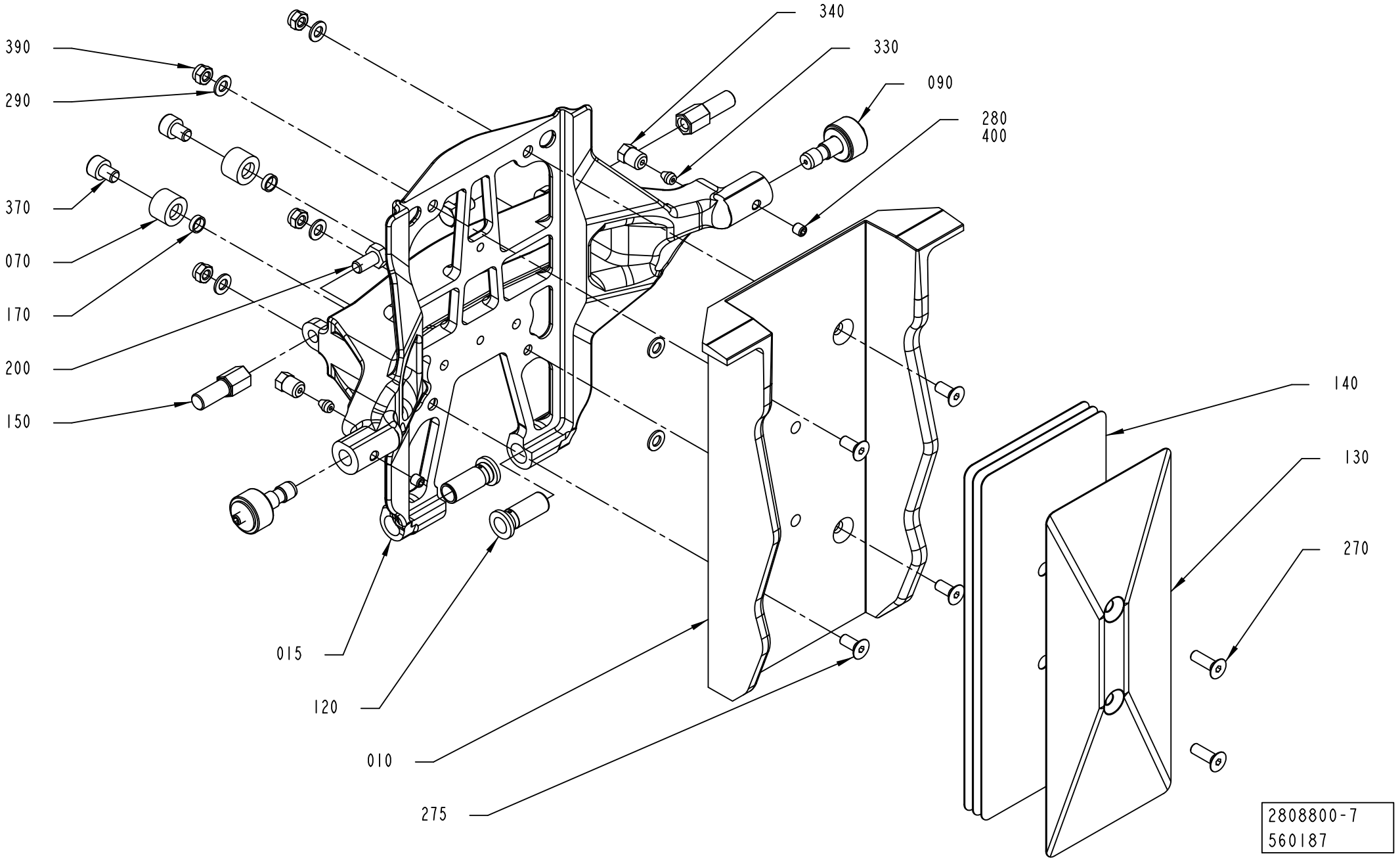

ECM: 676206 - 20140515
Group number: 2808800-0100
Assembly Drawing: 2808800-7_1_AB

This list covers pages from 1-624 to 1-639

Pos	Part No	UN	Qty	Description	Page No
TBA 1000SQ (Cont'd) (See drawing on page: 1-624)					
250	312105-0340		2	SCREW, M6S ISO 4014 M5X45 A4 80	
260	312115-0367		1	SCREW ISO4762 M6X14 A4 80	
270	312145-0291		2	SCREW ISO 2009 MFS M4X12 A4	
290	315105-0146		8	WASHER PLAIN, 5,3X10X1 A4 BRB	
300	315105-0153		5	WASHER PLAIN, 6,4X12X1,5 A4 BRB	
350	311103-0268		2	PARALLEL PIN ISO 2338 4M6X12 A1	
360	311103-0234		2	PARALLEL PIN ISO 2338 3M6X12 A1	
370	312115-0364		2	SCREW ISO4762 M6X10 A4 80	
420	312318-0320		1	SET SCREW, CUP END ISO4029 M5X5 A4	
TBA 1500S (See drawing on page: 1-630)					
010	2969141-0000		1	VOLUME FLAP	
015	2969139-0000		1	VOLUME FLAP	
070	2842778-0000		2	DAMPER	
120	1558701-0000		2	BUSHING	
130	2969142-0000		1	VOLUME BULGE	
140	2987038-0000		3	VOLUME SHIM	
150	2969143-0000		2	BRACKET	
170	2842779-0000		2	SPACER	
200	312105-0366		2	SCREW, M6S ISO 4017 M6X12 A4 80	
270	312155-0329		2	SCREW DIN 7991 MF6S M5X16 A4 70	
275	312155-0327		4	SCREW DIN 7991 MF6S M5X12 A4 70	
290	315105-0146		4	WASHER PLAIN, 5,3X10X1 A4 BRB	
370	312115-0362		2	SCREW ISO4762 M6X8 A4 80	
390	312812-0314		4	HEXAGON NUT, NY-LOCK M5 A4 80	
TBA 2000S (See drawing on page: 1-632)					
010	2978341-0000		1	VOLUME FLAP	
015	2978340-0000		1	VOLUME FLAP	
040	2809061-0011		2	ARM	
070	2842778-0000		2	DAMPER	
120	2917307-0000		2	BUSHING	
130	2978344-0000		1	VOLUME BULGE	
140	2978343-0000		3	VOLUME SHIM	
150	2907809-0000		1	BRACKET	
155	2907808-0000		1	BRACKET	
170	2842779-0000		2	SPACER	
180	2842776-0000		1	PIN	
190	2846667-0000		1	DAMPER	
210	312105-0329		4	SCREW, M6S ISO 4017 M5X16 A4 80	
230	312105-0331		4	SCREW, M6S ISO 4017 M5X20 A4 80	
270	312155-0329		2	SCREW DIN 7991 MF6S M5X16 A4 70	
275	312155-0327		4	SCREW DIN 7991 MF6S M5X12 A4 70	
290	315105-0146		12	WASHER PLAIN, 5,3X10X1 A4 BRB	
350	311103-0267		2	PARALLEL PIN ISO 2338 4M6X10 A1	
360	311103-0233		2	PARALLEL PIN ISO 2338 3M6X10 A1	
370	312115-0362		2	SCREW ISO4762 M6X8 A4 80	
390	312812-0314		4	HEXAGON NUT, NY-LOCK M5 A4 80	
420	312318-0320		1	SET SCREW, CUP END ISO4029 M5X5 A4	
TPA 0500SQ (See drawing on page: 1-636)					
010	3053271-0000		1	VOLUME FLAP	
015	3053273-0001		1	FRAME	
040	3053488-0000		2	ARM	
070	2842778-0000		2	DAMPER	
120	2530313-0000		2	BUSHING	
135	1549829-0000		2	VOLUME BULGE	
145	1549830-0000		4	VOLUME SHIM	
150	2964448-0000		2	SCREW	
180	2842776-0000		1	PIN	
190	2846667-0000		1	DAMPER	
200	312605-0318		2	HEXAGON NUT, M6M M8 A280	
210	312155-0455		2	SCREW DIN 7991 MF6S M8X30 A4 70	
230	312318-0323		2	SET SCREW, CUP END ISO4029 M5X8 A4	
265	312155-0299		4	SCREW DIN 7991 MF6S M4X30 A4 70	
275	312155-0333		2	SCREW DIN 7991 MF6S M5X25 A4 70	
370	312115-0362		2	SCREW ISO4762 M6X8 A4 80	
410	311103-0267		1	PARALLEL PIN ISO 2338 4M6X10 A1	
420	312318-0320		1	SET SCREW, CUP END ISO4029 M5X5 A4	
TPA 0750SQ (See drawing on page: 1-634)					
010	2995602-0000		1	VOLUME FLAP	
015	2995596-0000		1	FRAME	
040	2995608-0000		2	ARM	
070	2842778-0000		2	DAMPER	
120	2530313-0000		2	BUSHING	
130	2995605-0000		1	VOLUME BULGE	
135	2995606-0000		2	VOLUME BULGE	
140	2995603-0000		3	VOLUME SHIM	
145	2995604-0000		6	VOLUME SHIM	
150	2995655-0000		2	SCREW	
170	2842779-0000		2	SPACER	
180	2842776-0000		1	PIN	
190	2846667-0000		1	DAMPER	
200	312605-0320		2	HEXAGON NUT, M6M M10 A280	
210	312115-0329		2	SCREW ISO4762 M5X16 A4 80	
230	90459-1906		2	SHOULDER SCREW, 6X10/M5 SS	

Machine Type | Group Description | Used-In | Group Number | Page No

VOLUME FLAP CUTTING

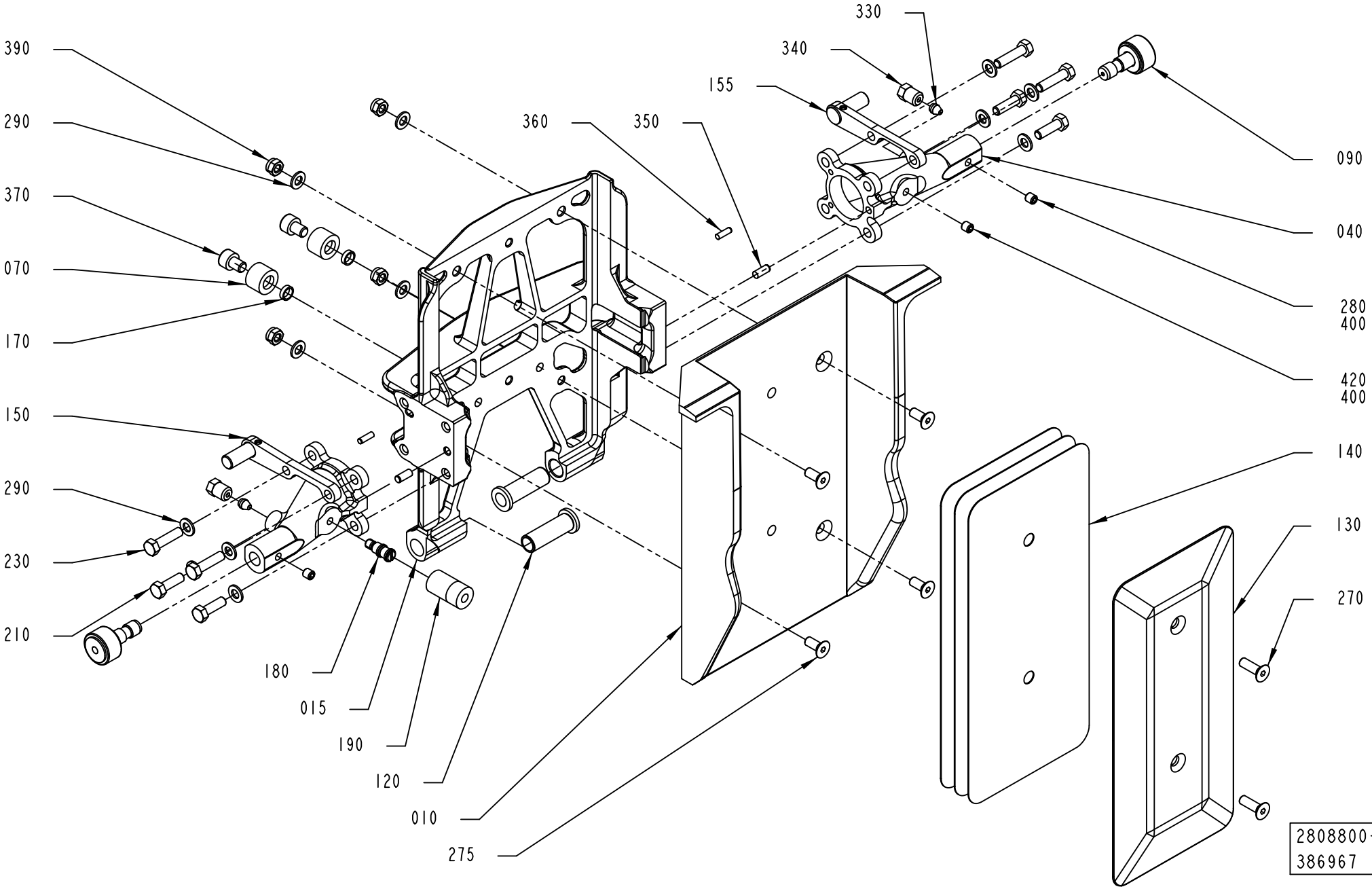

Pos	Part No	UN	Qty	Description	Page No
TPA 0750SQ (Cont'd) (See drawing on page: 1-634)					
265	312155-0299		4	SCREW DIN 7991 MF6S M4X30 A4 70	
270	312145-0293		2	SCREW ISO 2009 MFS M4X16 A4	
275	312115-0331		2	SCREW ISO4762 M5X20 A4 80	
290	315105-0146		4	WASHER PLAIN, 5,3X10X1 A4 BRB	
370	312115-0362		2	SCREW ISO4762 M6X8 A4 80	
410	311103-0267		2	PARALLEL PIN ISO 2338 4M6X10 A1	
420	312318-0320		1	SET SCREW, CUP END ISO4029 M5X5 A4	
TPA 1000SQ (See drawing on page: 1-634)					
010	2995598-0000		1	VOLUME FLAP	
015	2995595-0000		1	FRAME	
040	2995597-0000		2	ARM	
070	2842778-0000		2	DAMPER	
120	2530313-0000		2	BUSHING	
130	2995600-0000		1	VOLUME BULGE	
135	2968854-0000		2	VOLUME BULGE	
140	2995599-0000		3	VOLUME SHIM	
145	2968863-0000		6	VOLUME SHIM	
150	2995655-0000		2	SCREW	
170	2842779-0000		2	SPACER	
180	2842776-0000		1	PIN	
190	2846667-0000		1	DAMPER	
200	312605-0320		2	HEXAGON NUT, M6M M10 A280	
210	312115-0329		2	SCREW ISO4762 M5X16 A4 80	
230	90459-1906		2	SHOULDER SCREW, 6X10/M5 SS	
265	312155-0299		4	SCREW DIN 7991 MF6S M4X30 A4 70	
270	312145-0293		2	SCREW ISO 2009 MFS M4X16 A4	
275	312115-0331		2	SCREW ISO4762 M5X20 A4 80	
290	315105-0146		4	WASHER PLAIN, 5,3X10X1 A4 BRB	
370	312115-0362		2	SCREW ISO4762 M6X8 A4 80	
410	311103-0267		2	PARALLEL PIN ISO 2338 4M6X10 A1	
420	312318-0320		1	SET SCREW, CUP END ISO4029 M5X5 A4	
Common Parts					
090	2952691-0100		2	ROLLER	**1-641**
280	312318-0320		2	SET SCREW, CUP END ISO4029 M5X5 A4	
330	90028-0020		2	CONE TUBE 2,5MM	
340	90134-0063		2	BUSHING/NUT M8X1, D=2,5 MM	
400	90602-4847		1	THREADLOCKER LOCTITE 243, 50ML	

Pos	Part No	UN	Qty	Description	Page No

VOLUME FLAP CUTTING

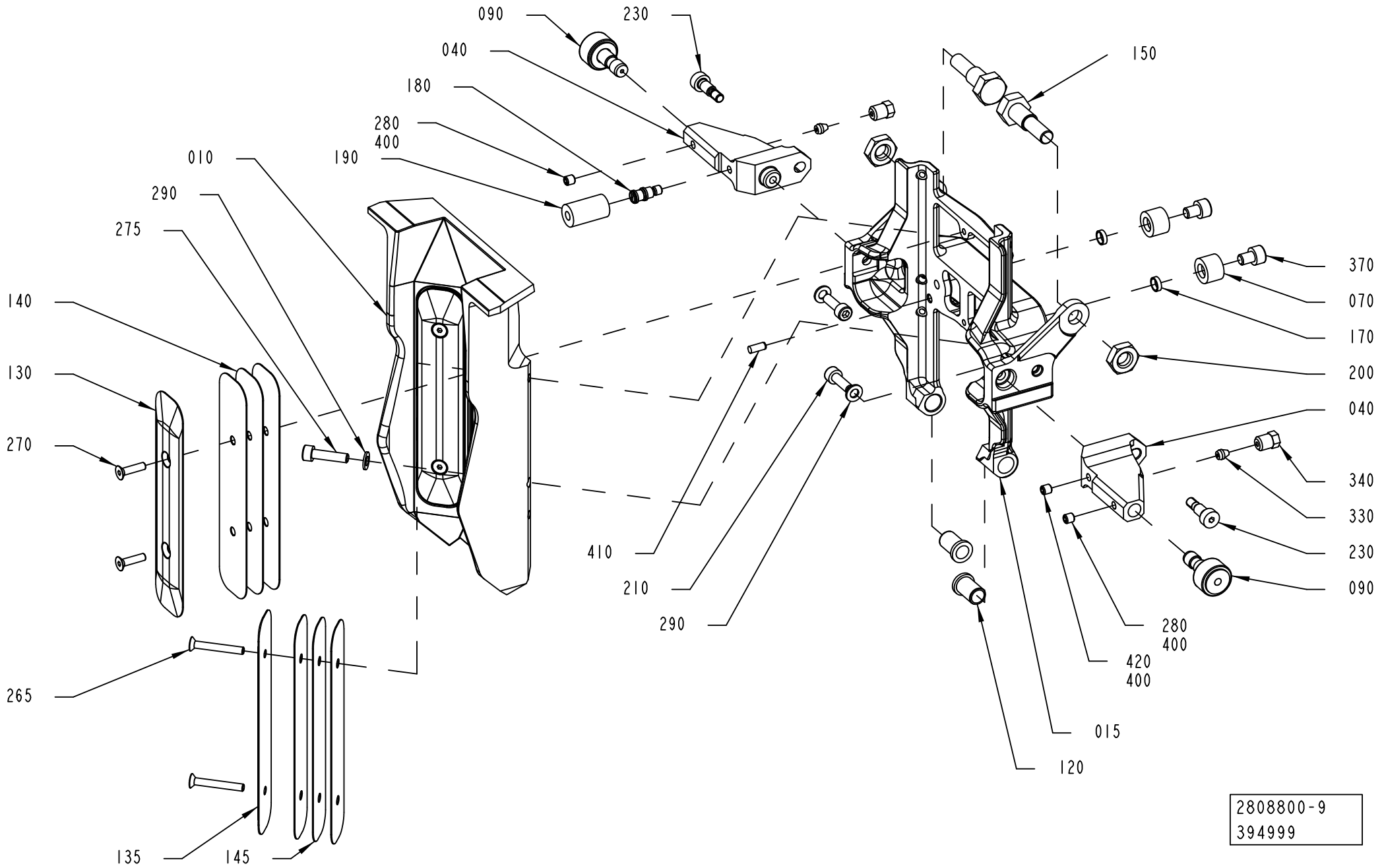

Pos	Part No	UN	Qty	Description	Page No	Pos	Part No	UN	Qty	Description	Page No

SEE PREVIOUS LISTS PAGES: 1-625, 1-627, 1-629, 1-631, 1-633.

VOLUME FLAP CUTTING

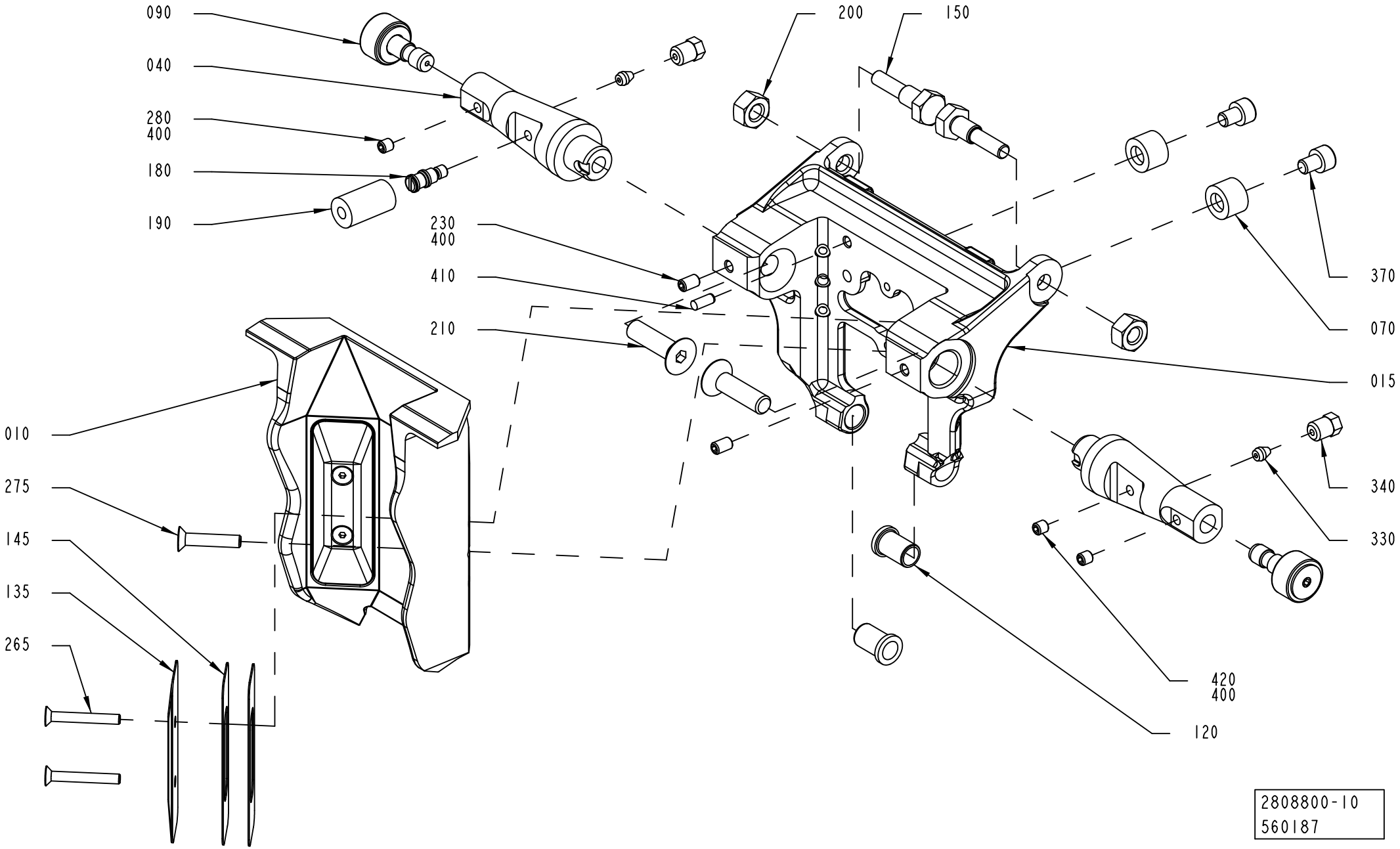

Pos	Part No	UN	Qty	Description	Page No	Pos	Part No	UN	Qty	Description	Page No

SEE PREVIOUS LISTS PAGES: 1-625, 1-627, 1-629, 1-631, 1-633.

VOLUME FLAP CUTTING

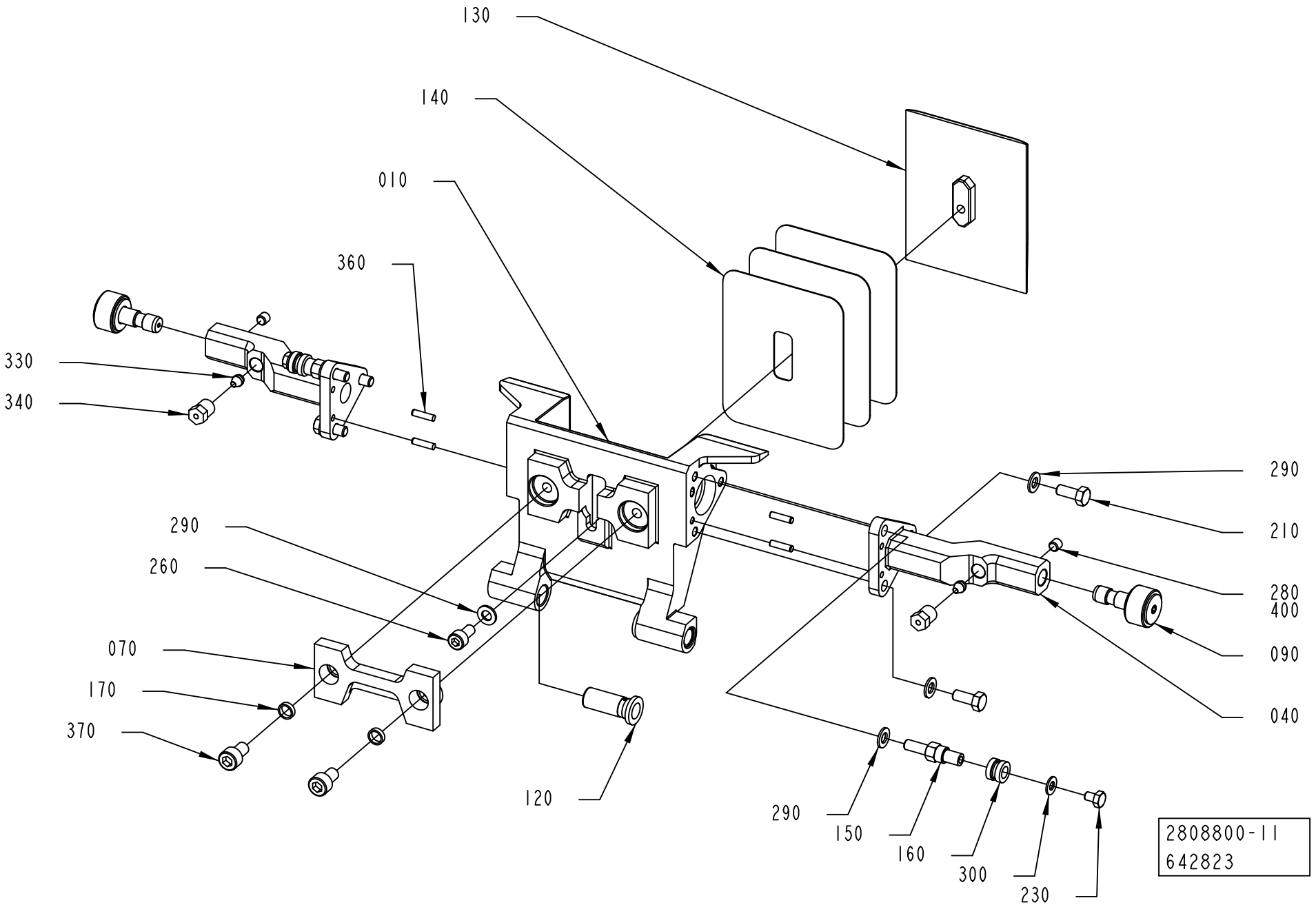

ECM: 676206 - 20140515
Group number: 2808800-0100
Assembly Drawing: 2808800-11_1_AA

This list covers pages from 1-624 to 1-639

Pos	Part No	UN	Qty	Description	Page No
SEE PREVIOUS LISTS PAGES: 1-625, 1-627, 1-629, 1-631, 1-633.					

Pos	Part No	UN	Qty	Description	Page No

Machine Type | Group Description | Used-In | Group Number | Page No

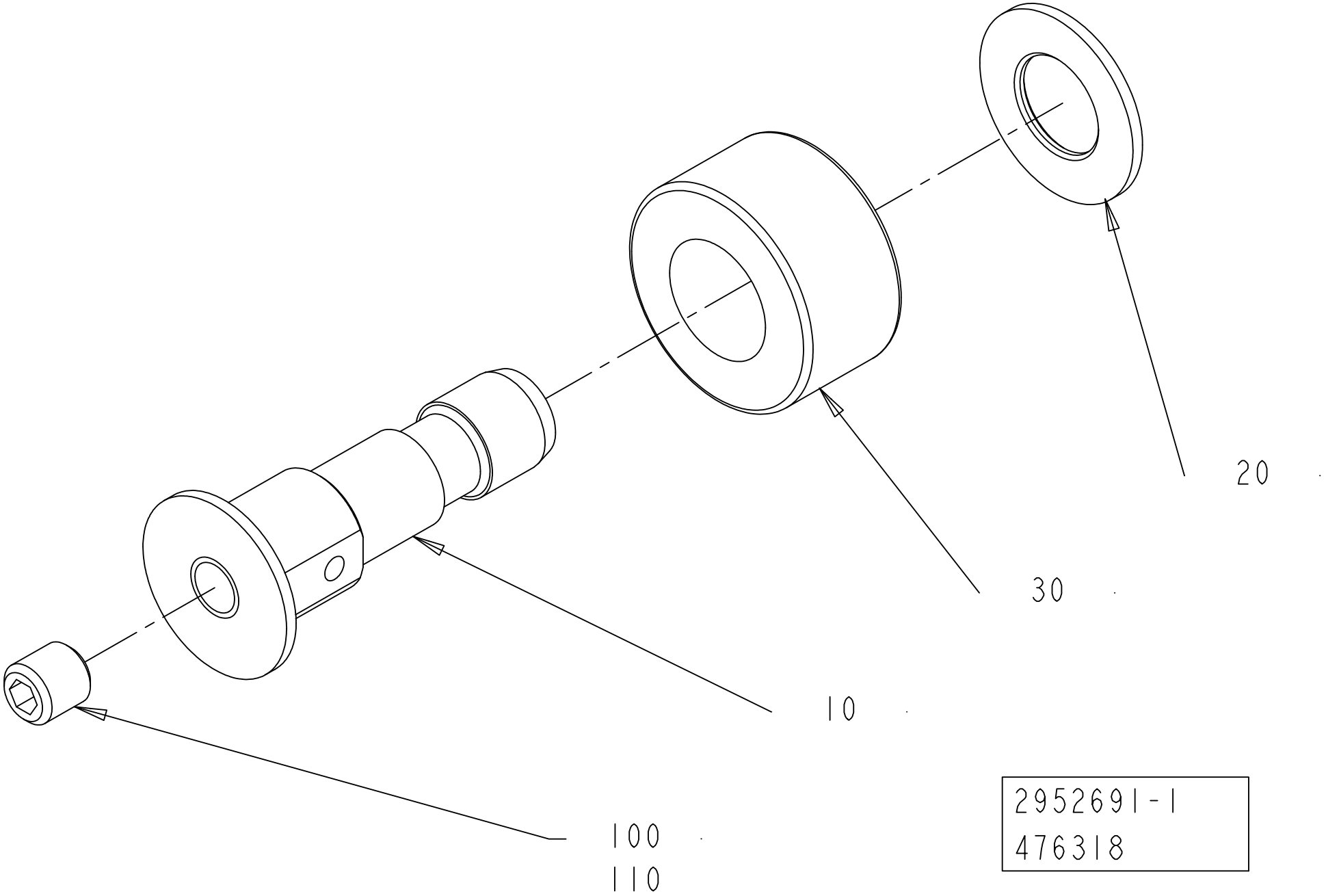
20
30
10
100
110
2952691-1
476318

ECM: 483520 - 20101215
Group number: 2952691-0100
Assembly Drawing: 2952691-1_1_AB

Pos	Part No	UN	Qty	Description	Page No
-					
010	2909137-0000		1	AXLE PIN	
020	19972-0000		1	WASHER	
030	2909138-0000		1	ROLLER	
100	312318-0320		1	SET SCREW, CUP END ISO4029 M5X5 A4	
110	90602-4847		1	THREADLOCKER LOCTITE 243, 50ML	

Pos	Part No	UN	Qty	Description	Page No

VOLUME FLAP CUTTING LEFT

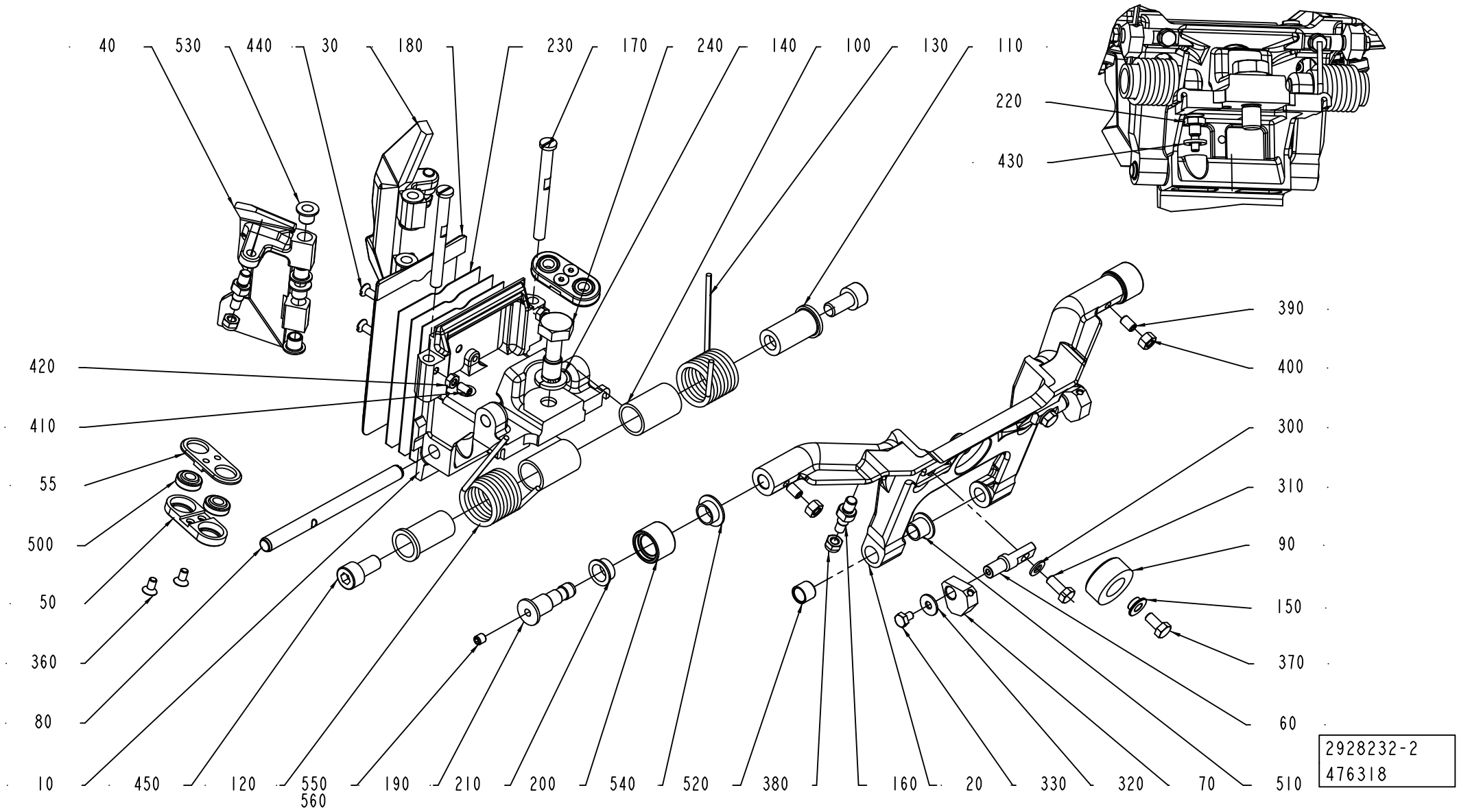

ECM: 483518 - 20101215
Group number: 2928232-0200
Assembly Drawing: 2928232-2_1_AC

Pos	Part No	UN	Qty	Description	Page No
-					
010	2998822-0002		1	FLAP HOLDER	
020	2917413-0000		1	FRAME	
030	3053569-0000		1	FLAP	
040	3053570-0000		1	FLAP	
050	3046743-0000		2	ROD	
055	3046744-0000		2	ROD	
060	2917418-0000		2	PIN	
070	2928239-0000		2	HOLDER	
080	2649660-0000		1	SHAFT	
090	2862308-0000		1	DAMPER	
100	1538521-0000		2	BUSHING	
110	2917419-0000		2	PIN	
120	2922536-0000		1	SPRING	
130	2922537-0000		1	SPRING	
140	315105-0173		1	WASHER PLAIN, 10,5X22X2 A4 BRB	
150	2572197-0000		1	SPACER	
160	2909850-0000		4	SPACER SCREW	
170	2866740-0000		2	SHAFT	
180	3031532-0000		1	VOLUME BULGE	
190	2868844-0000		2	AXLE PIN	
200	2660295-0000		2	ROLLER	
210	2660296-0000		2	BUSHING	
220	2922489-0000		1	PIN	
230	3041582-0000		3	SHIM	
240	2922524-0000		1	SCREW	
300	315105-0146		2	WASHER PLAIN, 5,3X10X1 A4 BRB	
310	312105-0327		2	"SCREW, M6S ISO 4017 M5X12 A4 80"	
320	90005-0082		2	WASHER PLAIN ROUND 4,3(M4)/12,H=1	
330	312105-0285		2	SCREW, M6S ISO 4017 M4X6 A4 70	
360	312155-0287		4	SCREW DIN 7991 MF6S M4X8 A4 70	
370	312105-0325		1	SCREW, M6S ISO 4017 M5X10 A4 80	
380	312812-0314		4	HEXAGON NUT, NY-LOCK M5 A4 80	
390	312318-0323		2	SET SCREW, CUP END ISO4029 M5X8 A4	
400	312605-0314		2	HEXAGON NUT, M6M M5 A280	
410	312318-0287		2	SET SCREW, CUP END ISO4029 M4X8 A4	
420	312605-0312		2	HEXAGON NUT, M6M M4 A280	
430	315105-0153		1	WASHER PLAIN, 6,4X12X1,5 A4 BRB	
440	312145-0291		2	SCREW ISO 2009 MFS M4X12 A4	
450	312115-0449		2	SCREW ISO4762 M8X16 A4 80	
500	90600-3582		4	SPHERICAL BEARING, GE 6 TGR	
510	90240-0260		2	FLANGE BUSHING, IGLIDUR X 8X10X9	
520	90458-0353		2	BUSHING, IGLIDUR X 8X10X8	
530	321155-0062		8	FLANGE BUSHING, IGLIDUR X 6X8X8	
540	90240-0289		2	FLANGE BUSHING, IGLIDUR X 10X12X6	
550	312318-0320		2	SET SCREW, CUP END ISO4029 M5X5 A4	
560	90602-4847		1	THREADLOCKER LOCTITE 243, 50ML	

Machine Type | Group Description | Used-In | Group Number | Page No

SUPPORT FLAP CUTTING LEFT

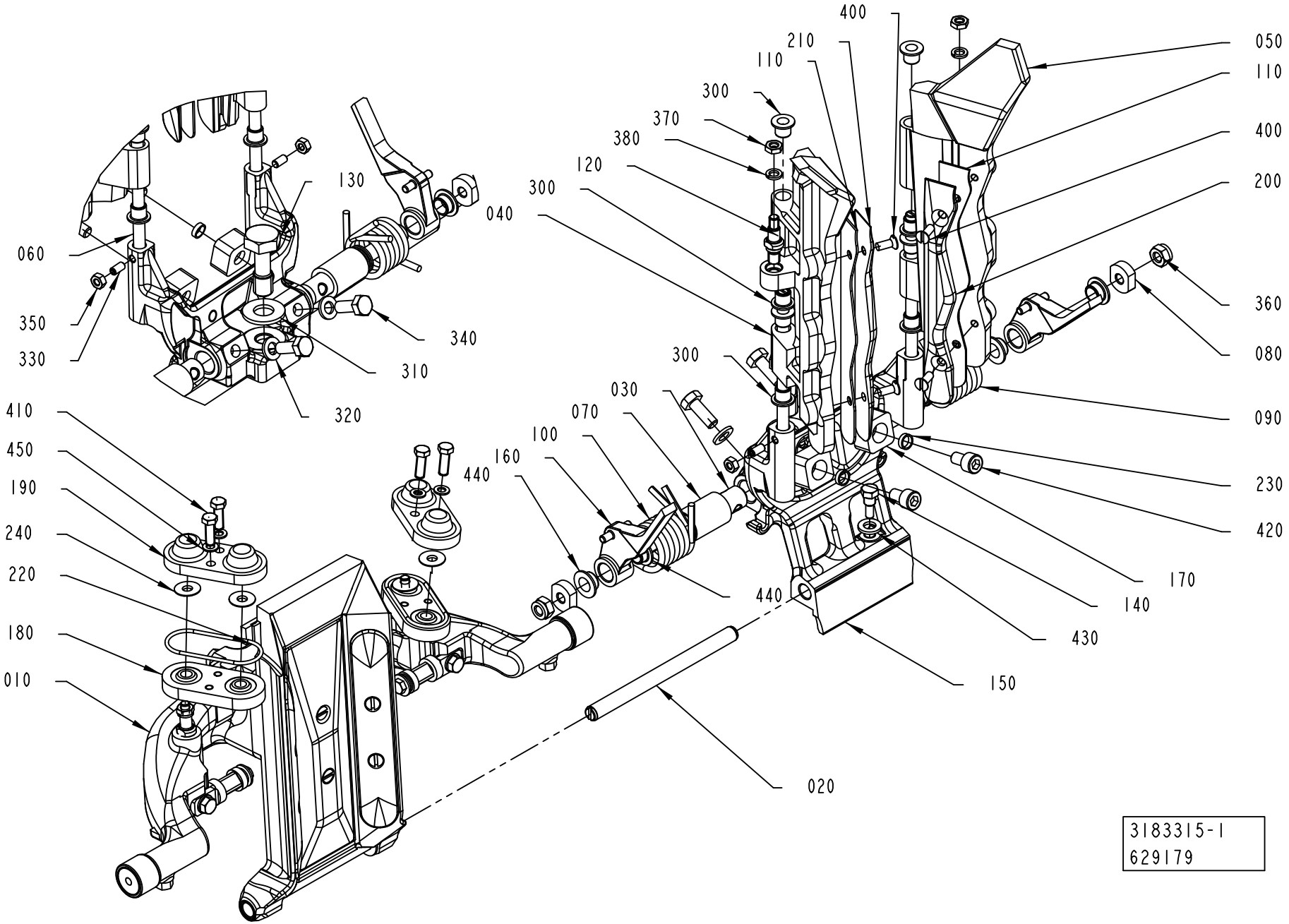

ECM: 634621 - 20140101
Group number: 3183315-0100
Assembly Drawing: 3183315-1_1_AD

Pos	Part No	UN	Qty	Description	Page No
TGA 1000CR					
040	3199626-0000		1	VOLUME FLAP	
050	3199625-0000		1	VOLUME FLAP	
200	3115433-0000		1	VOLUME BULGE	
210	3115435-0000		1	VOLUME BULGE	
TGA 1000LF					
040	3222724-0000		1	VOLUME FLAP	
050	3222723-0000		1	VOLUME FLAP	
200	3235923-0000		1	VOLUME BULGE	
210	3235924-0000		1	VOLUME BULGE	
Common Parts					
010	3183323-0100		1	VOLUME FLAP	**1-647**
020	2649660-0000		1	SHAFT	
030	3179813-0000		2	SHAFT	
060	3199633-0000		2	AXLE PIN	
070	2948027-0000		2	BUSHING	
080	2911623-0000		2	WASHER	
090	2949214-0000		1	SPRING	
100	2949215-0000		1	SPRING	
110	3220080-0000		2	SHIM	
120	3199630-0000		2	SPACER SCREW	
130	2922524-0000		1	SCREW	
140	2922489-0000		1	PIN	
150	3178500-0001		1	HOLDER	
160	3178505-0000		2	LEVER	
170	2982488-0000		2	STOP	
180	3199635-0000		2	ROD	
190	3199634-0000		2	COVER	
220	315202-0801		2	O-RING 37,82X1,78 MM	
230	2842779-0000		2	SPACER	
240	3235929-0000		4	WASHER	
300	321155-0062		8	FLANGE BUSHING, IGLIDUR X 6X8X8	
310	315105-0173		1	WASHER PLAIN, 10,5X22X2 A4 BRB	
320	315105-0153		2	WASHER PLAIN, 6,4X12X1,5 A4 BRB	
330	312318-0287		2	SET SCREW, CUP END ISO4029 M4X8 A4	
340	312105-0368		2	"SCREW, M6S ISO 4017 M6X16 A4 80"	
350	312605-0312		2	HEXAGON NUT, M6M M4 A280	
360	312812-0316		2	HEXAGON NUT, NY-LOCK M6 A4 80	
370	312625-0314		2	HEXAGON THIN NUT, EN 24035 ML6M M5 A4	
380	315402-0146		2	LOCK WASHER, DIN127B 5,1 A4, M5-3/16	
400	312145-0289		4	SCREW ISO 2009 MFS M4X10 A4	
410	312105-0292		4	SCREW, M6S ISO 4017 M4X14 A4 70	
420	312115-0364		2	SCREW ISO4762 M6X10 A4 80	
430	315105-0153		1	WASHER PLAIN, 6,4X12X1,5 A4 BRB	
440	90600-2013		4	FLANGE BUSHING, IGLIDUR X 8X10X5,5	
450	315105-0136		4	WASHER PLAIN, 4,3X8X0,8 A4 BRB	

Machine Type | Group Description | Used-In | Group Number | Page No

VOLUME FLAP

Drawing file: 3183323-1_1_AB.hpgl

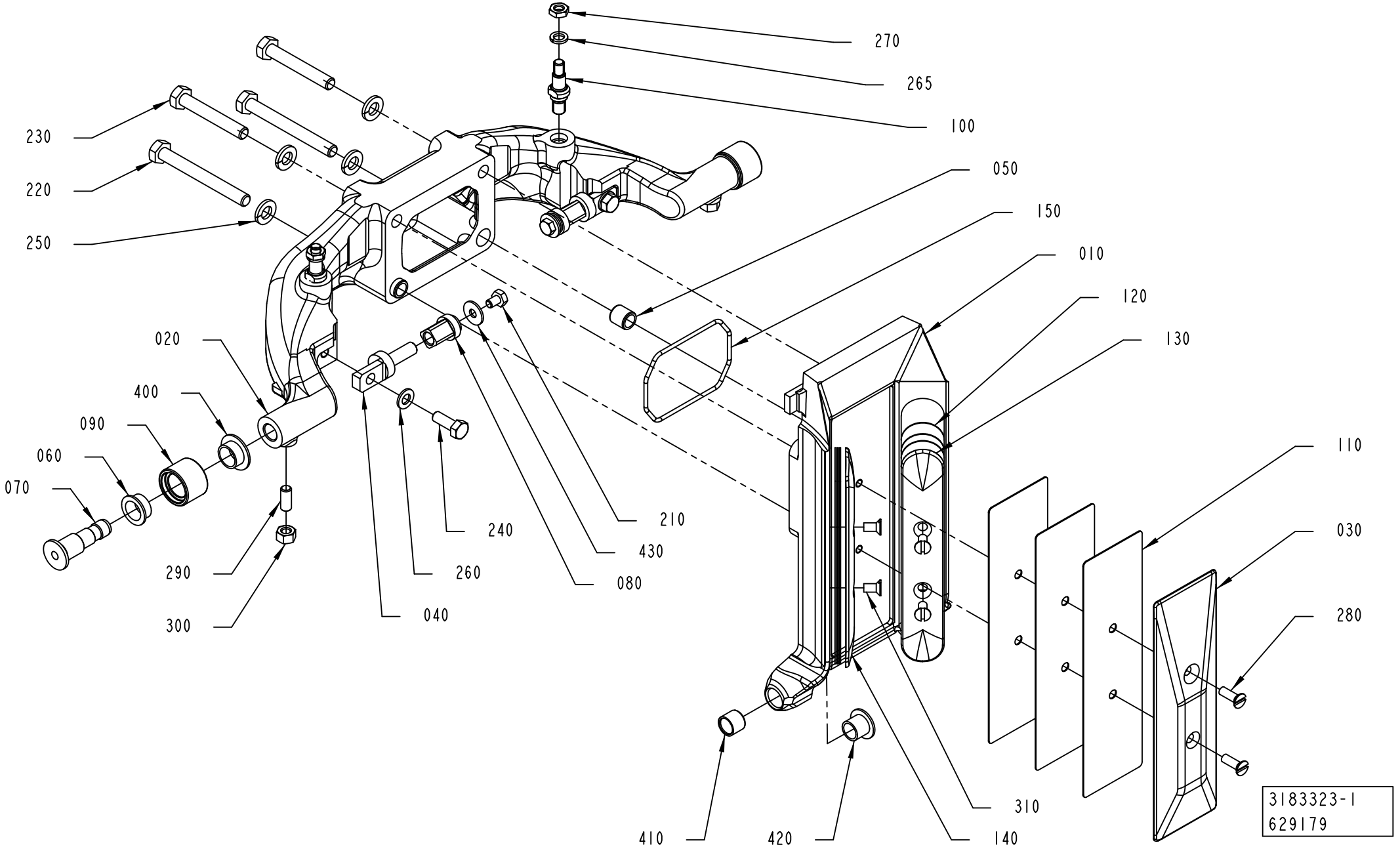

ECM: 634620 - 20140101
Group number: 3183323-0100
Assembly Drawing: 3183323-1_1_AB

Pos	Part No	UN	Qty	Description	Page No
TGA 1000CR					
010	3199619-0000		1	VOLUME FLAP	
030	3199629-0000		1	VOLUME BULGE	
110	3179818-0000		3	VOLUME SHIM	
120	3199637-0000		6	VOLUME SHIM	
130	3199636-0000		1	VOLUME BULGE	
140	3199636-0000		1	VOLUME BULGE	
250	315402-0156		4	LOCK WASHER, DIN127B 6,5 A4, 1/4	
TGA 1000LF					
010	3222722-0000		1	VOLUME FLAP	
030	3123554-0000		1	VOLUME BULGE	
110	3134638-0000		3	VOLUME SHIM	
120	3226131-0000		6	VOLUME SHIM	
130	3312962-0000		1	VOLUME BULGE	
140	3312961-0000		1	VOLUME BULGE	
250	315115-0153		4	WASHER PLAIN, TBRB 6,4/12 H=3	
Common Parts					
020	3199631-0000		1	ARM	
040	3179812-0000		2	SHAFT	
050	3199620-0000		2	BUSHING	
060	2660296-0000		2	BUSHING	
070	2868844-0000		2	AXLE PIN	
080	3092829-0000		2	SLIDER	
090	2660295-0000		2	ROLLER	
100	3199630-0000		2	SPACER SCREW	
150	3220234-0000		1	O-RING	
210	312105-0285		2	SCREW, M6S ISO 4017 M4X6 A4 70	
220	312105-0381		2	SCREW, M6S ISO 4014 M6X55 A4 80	
230	312105-0378		2	SCREW, M6S ISO 4014 M6X40 A4 80	
240	312105-0328		2	SCREW M6S ISO 4017 M5X14 A4 80	
260	315105-0146		2	WASHER PLAIN, 5,3X10X1 A4 BRB	
265	315402-0146		2	LOCK WASHER, DIN127B 5,1 A4, M5-3/16	
270	312625-0314		2	HEXAGON THIN NUT, EN 24035 ML6M M5 A4	
280	312145-0291		2	SCREW ISO 2009 MFS M4X12 A4	
290	312318-0327		2	SET SCREW, CUP END ISO4029 M5X12 A4	
300	312605-0314		2	HEXAGON NUT, M6M M5 A280	
310	312145-0287		4	SCREW ISO 2009 MFS M4X8 A4	
400	90240-0289		2	FLANGE BUSHING, IGLIDUR X 10X12X6	
410	90458-0353		2	BUSHING, IGLIDUR X 8X10X8	
420	90240-0260		2	FLANGE BUSHING, IGLIDUR X 8X10X9	
430	90005-0082		2	WASHER PLAIN ROUND 4,3(M4)/12,H=1	

Pos	Part No	UN	Qty	Description	Page No

SUPPORT FLAP PRESSURE

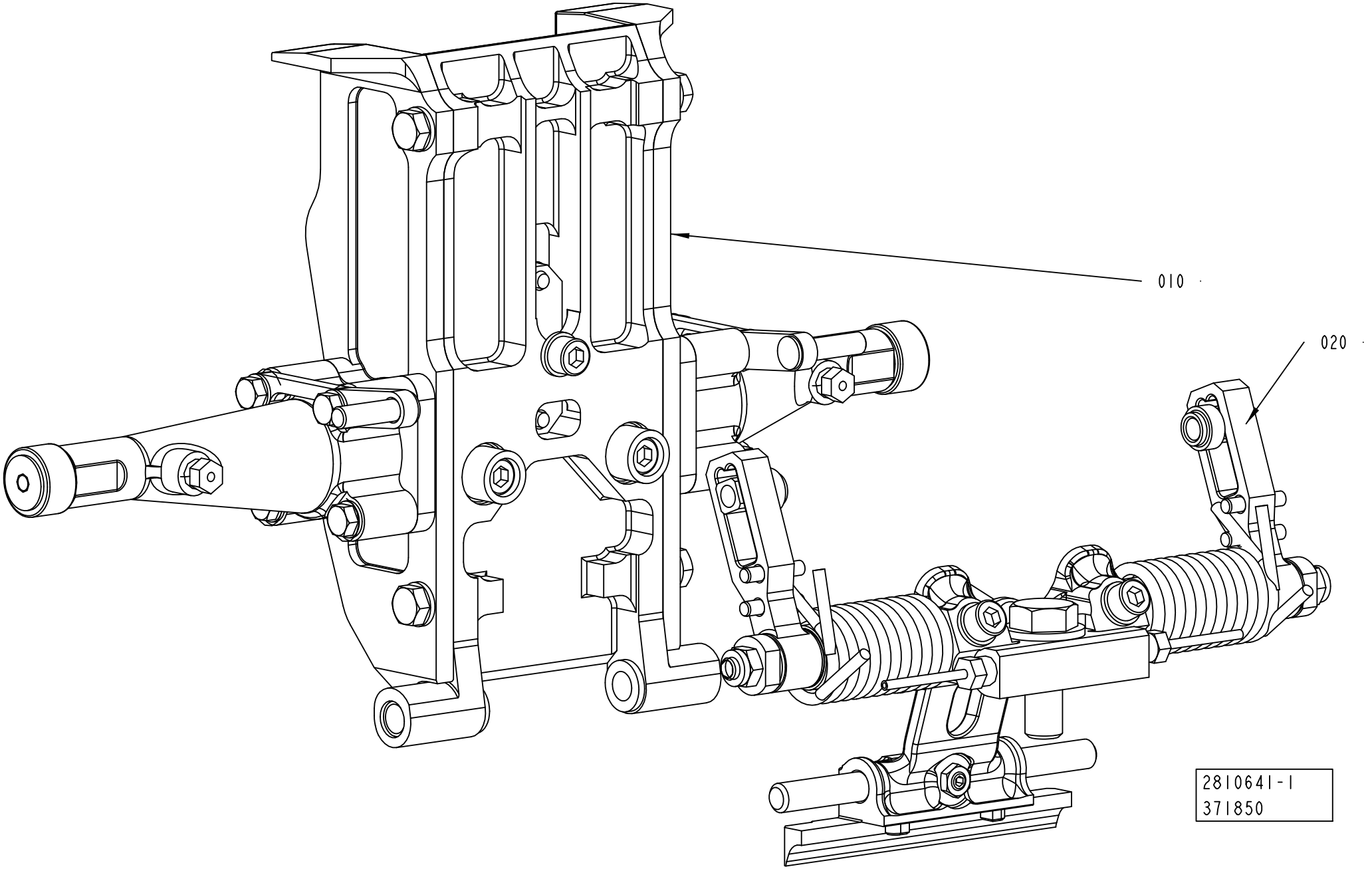

ECM: 644813 - 20140401
Group number: 2810641-0100
Assembly Drawing: 2810641-1_1_AB

Pos	Part No	UN	Qty	Description	Page No
TGA 1500SQ					
010	2698639-0200		1	VOLUME FLAP PRESSURE	**1-651**
020	2842862-0100		1	SHOCK ABSORBER PRESSURE	**1-653, 1-655, 1-657, 1-659**
TPA 0500SQ					
010	2810637-0100		1	VOLUME FLAP PRESSURE	**1-661, 1-663, 1-665, 1-667, 1-669, 1-671, 1-673, 1-675, 1-677**
020	2842862-0100		1	SHOCK ABSORBER PRESSURE	**1-653, 1-655, 1-657, 1-659**
TPA 0750SQ					
010	2810637-0100		1	VOLUME FLAP PRESSURE	**1-661, 1-663, 1-665, 1-667, 1-669, 1-671, 1-673, 1-675, 1-677**
020	2842862-0100		1	SHOCK ABSORBER PRESSURE	**1-653, 1-655, 1-657, 1-659**
TPA 1000SQ					
010	2810637-0100		1	VOLUME FLAP PRESSURE	**1-661, 1-663, 1-665, 1-667, 1-669, 1-671, 1-673, 1-675, 1-677**
020	2842862-0100		1	SHOCK ABSORBER PRESSURE	**1-653, 1-655, 1-657, 1-659**
TBA 0500B					
010	2810637-0100		1	VOLUME FLAP PRESSURE	**1-661, 1-663, 1-665, 1-667, 1-669, 1-671, 1-673, 1-675, 1-677**
020	2842862-0100		1	SHOCK ABSORBER PRESSURE	**1-653, 1-655, 1-657, 1-659**
TBA 0500E					
010	2810637-0100		1	VOLUME FLAP PRESSURE	**1-661, 1-663, 1-665, 1-667, 1-669, 1-671, 1-673, 1-675, 1-677**
020	2842862-0100		1	SHOCK ABSORBER PRESSURE	**1-653, 1-655, 1-657, 1-659**
TBA 0500S					
010	2810637-0100		1	VOLUME FLAP PRESSURE	**1-661, 1-663, 1-665, 1-667, 1-669, 1-671, 1-673, 1-675, 1-677**
020	2842862-0100		1	SHOCK ABSORBER PRESSURE	**1-653, 1-655, 1-657, 1-659**
TBA 0500SQ					
010	2810637-0100		1	VOLUME FLAP PRESSURE	**1-661, 1-663, 1-665, 1-667, 1-669, 1-671, 1-673, 1-675, 1-677**
020	2842862-0100		1	SHOCK ABSORBER PRESSURE	**1-653, 1-655, 1-657, 1-659**
TBA 1000B					
010	2810637-0100		1	VOLUME FLAP PRESSURE	**1-661, 1-663, 1-665, 1-667, 1-669, 1-671, 1-673, 1-675, 1-677**
020	2842862-0100		1	SHOCK ABSORBER PRESSURE	**1-653, 1-655, 1-657, 1-659**
TBA 1000E NOQC					
010	2810637-0100		1	VOLUME FLAP PRESSURE	**1-661, 1-663, 1-665, 1-667, 1-669, 1-671, 1-673, 1-675, 1-677**
020	2842862-0100		1	SHOCK ABSORBER PRESSURE	**1-653, 1-655, 1-657, 1-659**
TBA 1000E QC					
010	2810637-0100		1	VOLUME FLAP PRESSURE	**1-661, 1-663, 1-665, 1-667, 1-669, 1-671, 1-673, 1-675, 1-677**
020	2842862-0100		1	SHOCK ABSORBER PRESSURE	**1-653, 1-655, 1-657, 1-659**
TBA 1000M					
010	2810637-0100		1	VOLUME FLAP PRESSURE	**1-661, 1-663, 1-665, 1-667, 1-669, 1-671, 1-673, 1-675, 1-677**
020	2842862-0100		1	SHOCK ABSORBER PRESSURE	**1-653, 1-655, 1-657, 1-659**
TBA 1000S					
010	2810637-0100		1	VOLUME FLAP PRESSURE	**1-661, 1-663, 1-665, 1-667, 1-669, 1-671, 1-673, 1-675, 1-677**
020	2842862-0100		1	SHOCK ABSORBER PRESSURE	**1-653, 1-655, 1-657, 1-659**
TBA 1000SQ					
010	2810637-0100		1	VOLUME FLAP PRESSURE	**1-661, 1-663, 1-665, 1-667, 1-669, 1-671, 1-673, 1-675, 1-677**
020	2842862-0100		1	SHOCK ABSORBER PRESSURE	**1-653, 1-655, 1-657, 1-659**
TBA 1500S					
010	2810637-0100		1	VOLUME FLAP PRESSURE	**1-661, 1-663, 1-665, 1-667, 1-669, 1-671, 1-673, 1-675, 1-677**
020	2842862-0100		1	SHOCK ABSORBER PRESSURE	**1-653, 1-655, 1-657, 1-659**
TBA 2000S					
010	2810637-0100		1	VOLUME FLAP PRESSURE	**1-661, 1-663, 1-665, 1-667, 1-669, 1-671, 1-673, 1-675, 1-677**
020	2842862-0100		1	SHOCK ABSORBER PRESSURE	**1-653, 1-655, 1-657, 1-659**
TGA 0500SQ					
010	2928233-0200		1	VOLUME FLAP PRESSURE LEFT	**1-679**
TGA 0750SQ					
010	2698639-0200		1	VOLUME FLAP PRESSURE	**1-651**
020	2842862-0100		1	SHOCK ABSORBER PRESSURE	**1-653, 1-655, 1-657, 1-659**
TGA 1000CR, TGA 1000LF					
010	3183317-0100		1	SUPPORT FLAP PRESSURE LEFT	**1-681**
TGA 1000SQ					
010	2698639-0200		1	VOLUME FLAP PRESSURE	**1-651**
020	2842862-0100		1	SHOCK ABSORBER PRESSURE	**1-653, 1-655, 1-657, 1-659**

Machine Type	Group Description	Used-In	Group Number	Page No

VOLUME FLAP PRESSURE

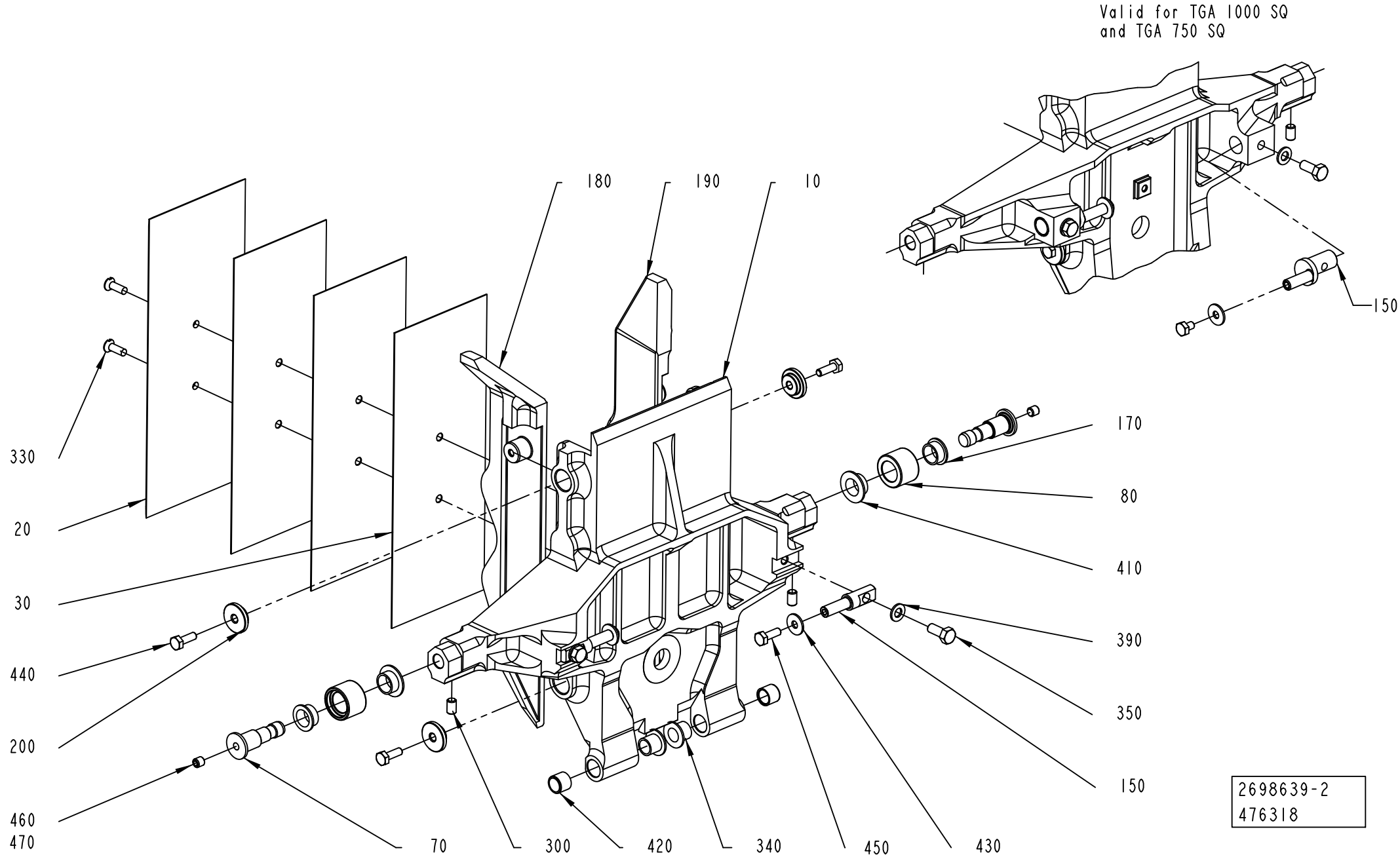

ECM: 483503 - 20101215
Group number: 2698639-0200
Assembly Drawing: 2698639-2_1_AD

Pos	Part No	UN	Qty	Description	Page No
A3/FLEX TGA 0750SQ					
010	2682187-0000		1	VOLUME FLAP	
020	2909851-0000		1	VOLUME BULGE	
030	2909852-0000		3	SHIM	
150	2997338-0000		2	ECCENTRIC SHAFT	
180	2682188-0000		1	FLAP	
190	2682189-0000		1	FLAP	
A3/FLEX TGA 1000SQ					
010	2660289-0000		1	VOLUME FLAP	
020	2660292-0000		1	VOLUME BULGE	
030	2660293-0000		3	VOLUME SHIM	
150	2997338-0000		2	ECCENTRIC SHAFT	
180	2660308-0000		1	FLAP	
190	2660309-0000		1	FLAP	
A3/FLEX TGA 1500SQ					
010	2948019-0000		1	VOLUME FLAP	
020	2660292-0000		1	VOLUME BULGE	
030	2660293-0000		3	VOLUME SHIM	
150	2948024-0000		2	SHAFT	
180	2948022-0000		1	FLAP	
190	2948023-0000		1	FLAP	
Common Parts					
070	2868844-0000		2	AXLE PIN	
080	2660295-0000		2	ROLLER	
170	2660296-0000		2	BUSHING	
200	2682174-0000		4	WASHER	
300	312318-0323		2	SET SCREW, CUP END ISO4029 M5X8 A4	
330	312145-0291		2	SCREW ISO 2009 MFS M4X12 A4	
340	90240-0260		2	FLANGE BUSHING, IGLIDUR X 8X10X9	
350	312105-0327		2	"SCREW, M6S ISO 4017 M5X12 A4 80"	
390	315105-0146		2	WASHER PLAIN, 5,3X10X1 A4 BRB	
410	90240-0289		2	FLANGE BUSHING, IGLIDUR X 10X12X6	
420	90458-0353		2	BUSHING, IGLIDUR X 8X10X8	
430	90005-0082		2	WASHER PLAIN ROUND 4,3(M4)/12,H=1	
440	312105-0291		4	SCREW, M6S ISO 4017 M4X12 A4 70	
450	312105-0285		2	SCREW, M6S ISO 4017 M4X6 A4 70	
460	312318-0320		2	SET SCREW, CUP END ISO4029 M5X5 A4	
470	90602-4847		1	THREADLOCKER LOCTITE 243, 50ML	

Pos	Part No	UN	Qty	Description	Page No

Machine Type | Group Description | Used-In | Group Number | Page No

SHOCK ABSORBER PRESSURE

Drawing file: 2842862-1_1_AF.hpgl

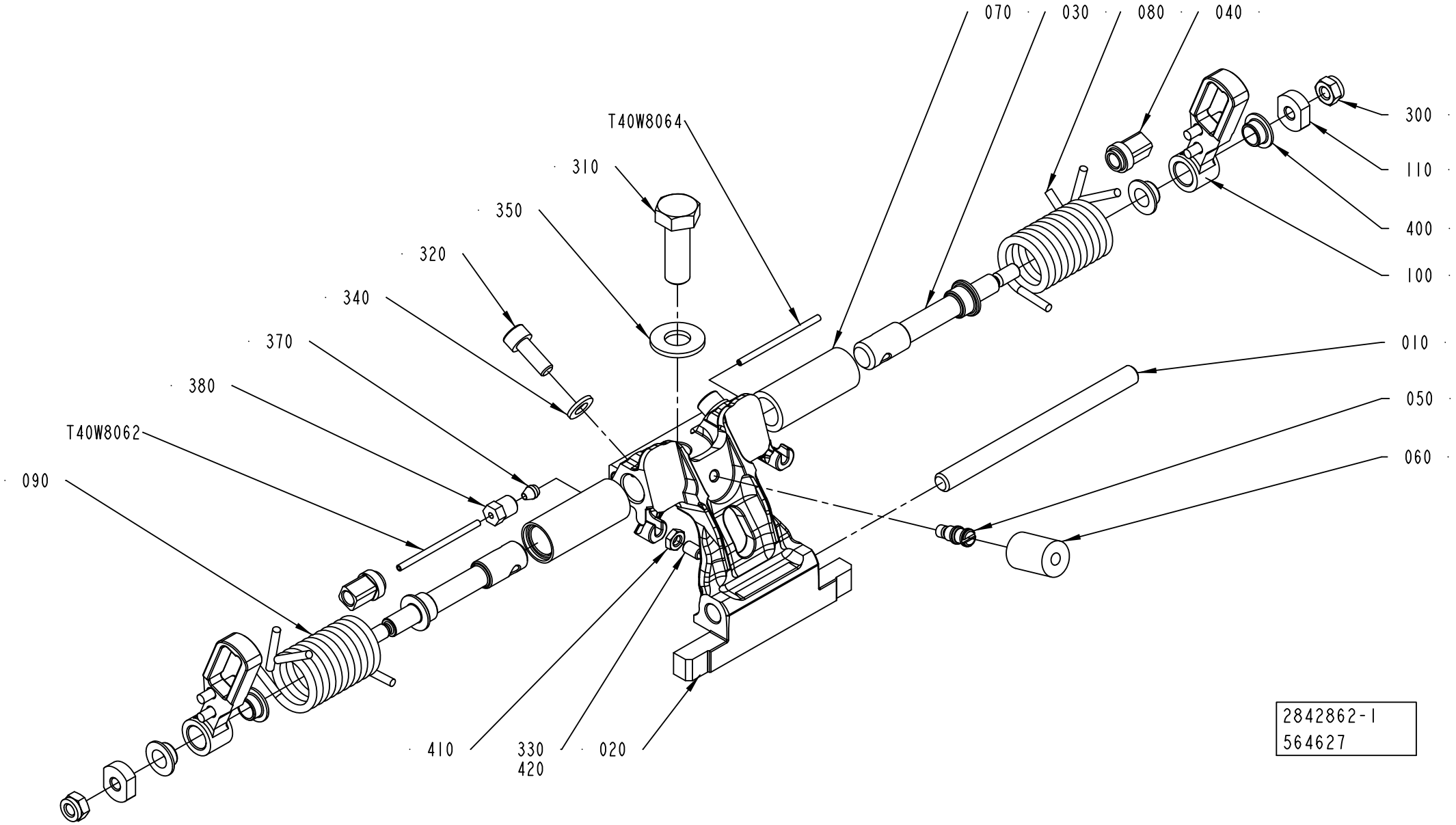

ECM: 676205 - 20140515
Group number: 2842862-0100
Assembly Drawing: 2842862-1_1_AF

This list covers pages from 1-652 to 1-659

Pos	Part No	UN	Qty	Description	Page No
TBA 0500B (See drawing on page: 1-654)					
010	2773510-0000		1	SHAFT	
020	3037999-0001		1	HOLDER	
030	2902006-0000		2	SHAFT	
050	2842776-0000		1	PIN	
060	2842777-0001		1	DAMPER	
080	2961953-0000		2	TENSION SPRING	
120	2905199-0000		2	HOLDER	
300	312105-0285		2	SCREW, M6S ISO 4017 M4X6 A4 70	
310	312105-0495		1	SCREW, M6S ISO 4017 M10X30 A4 80	
320	312115-0368		2	SCREW ISO4762 M6X16 A4 80	
330	312318-0325		1	SET SCREW, CUP END ISO4029 M5X10 A4	
340	315105-0153		2	WASHER PLAIN, 6,4X12X1,5 A4 BRB	
360	315106-0136		2	WASHER PLAIN, M4 ISO7089-4-200 HV A4	
370	90028-0020		2	CONE TUBE 2,5MM	
380	90134-0063		2	BUSHING/NUT M8X1, D=2,5 MM	
410	312625-0314		1	HEXAGON THIN NUT, EN 24035 ML6M M5 A4	
T40W8062	90166-0143	MM	150	TUBE 2,5 MM PA TRANSP.	
T40W8064	90166-0143	MM	150	TUBE 2,5 MM PA TRANSP.	
TBA 0500E (See drawing on page: 1-658)					
010	2773510-0000		1	SHAFT	
020	2862278-0001		1	HOLDER	
030	3051281-0000		2	SHAFT	
080	2959868-0000		2	TENSION SPRING	
120	2905199-0000		2	HOLDER	
130	3051280-0000		2	HOLDER	
140	2959867-0000		2	SPACER SCREW	
300	312105-0285		2	SCREW, M6S ISO 4017 M4X6 A4 70	
310	312105-0495		1	SCREW, M6S ISO 4017 M10X30 A4 80	
320	312115-0368		2	SCREW ISO4762 M6X16 A4 80	
330	312318-0321		1	SET SCREW, CUP END ISO4029 M5X6 A4	
340	315105-0153		2	WASHER PLAIN, 6,4X12X1,5 A4 BRB	
360	315106-0136		2	WASHER PLAIN, M4 ISO7089-4-200 HV A4	
370	90028-0020		2	CONE TUBE 2,5MM	
380	90134-0063		2	BUSHING/NUT M8X1, D=2,5 MM	
390	311111-0252		2	SPRING PIN ISO 8752 4X12-ST	
T40W8062	90166-0143	MM	150	TUBE 2,5 MM PA TRANSP.	
T40W8064	90166-0143	MM	150	TUBE 2,5 MM PA TRANSP.	
TBA 0500S (See drawing on page: 1-652)					
010	2916971-0000		1	SHAFT	
020	3024713-0001		1	HOLDER	
030	2911622-0000		2	SHAFT	
040	3092829-0000		2	SLIDER	
050	2842776-0000		1	PIN	
060	2842777-0001		1	DAMPER	
070	2842780-0000		2	BUSHING	
080	2842781-0000		1	SPRING	
090	2842782-0000		1	SPRING	
100	3219171-0000		2	LEVER	
110	2911623-0000		2	WASHER	
300	312812-0316		2	HEXAGON NUT, NY-LOCK M6 A4 80	
310	312105-0495		1	SCREW, M6S ISO 4017 M10X30 A4 80	
320	312115-0368		2	SCREW ISO4762 M6X16 A4 80	
330	312318-0325		1	SET SCREW, CUP END ISO4029 M5X10 A4	
340	315105-0153		2	WASHER PLAIN, 6,4X12X1,5 A4 BRB	
370	90028-0020		2	CONE TUBE 2,5MM	
380	90134-0063		2	BUSHING/NUT M8X1, D=2,5 MM	
400	90600-2013		4	FLANGE BUSHING, IGLIDUR X 8X10X5,5	
410	312625-0314		1	HEXAGON THIN NUT, EN 24035 ML6M M5 A4	
T40W8062	90166-0143	MM	155	TUBE 2,5 MM PA TRANSP.	
T40W8064	90166-0143	MM	155	TUBE 2,5 MM PA TRANSP.	
TBA 0500SQ (See drawing on page: 1-654)					
010	2773510-0000		1	SHAFT	
020	3037995-0001		1	HOLDER	
030	2863119-0000		2	SHAFT	
050	2842776-0000		1	PIN	
060	2842777-0001		1	DAMPER	
080	2959868-0000		2	TENSION SPRING	
120	2905199-0000		2	HOLDER	
300	312105-0285		2	SCREW, M6S ISO 4017 M4X6 A4 70	
310	312105-0495		1	SCREW, M6S ISO 4017 M10X30 A4 80	
320	312115-0368		2	SCREW ISO4762 M6X16 A4 80	
330	312318-0323		1	SET SCREW, CUP END ISO4029 M5X8 A4	
340	315105-0153		2	WASHER PLAIN, 6,4X12X1,5 A4 BRB	
360	315106-0136		2	WASHER PLAIN, M4 ISO7089-4-200 HV A4	
370	90028-0020		2	CONE TUBE 2,5MM	
380	90134-0063		2	BUSHING/NUT M8X1, D=2,5 MM	
410	312625-0314		1	HEXAGON THIN NUT, EN 24035 ML6M M5 A4	
T40W8062	90166-0143	MM	135	TUBE 2,5 MM PA TRANSP.	
T40W8064	90166-0143	MM	135	TUBE 2,5 MM PA TRANSP.	
TBA 1000B, TBA 1000M (See drawing on page: 1-652)					
010	2773510-0000		1	SHAFT	
020	3037999-0001		1	HOLDER	
030	2911622-0000		2	SHAFT	

Machine Type | Group Description | Used-In | Group Number | Page No

SHOCK ABSORBER PRESSURE

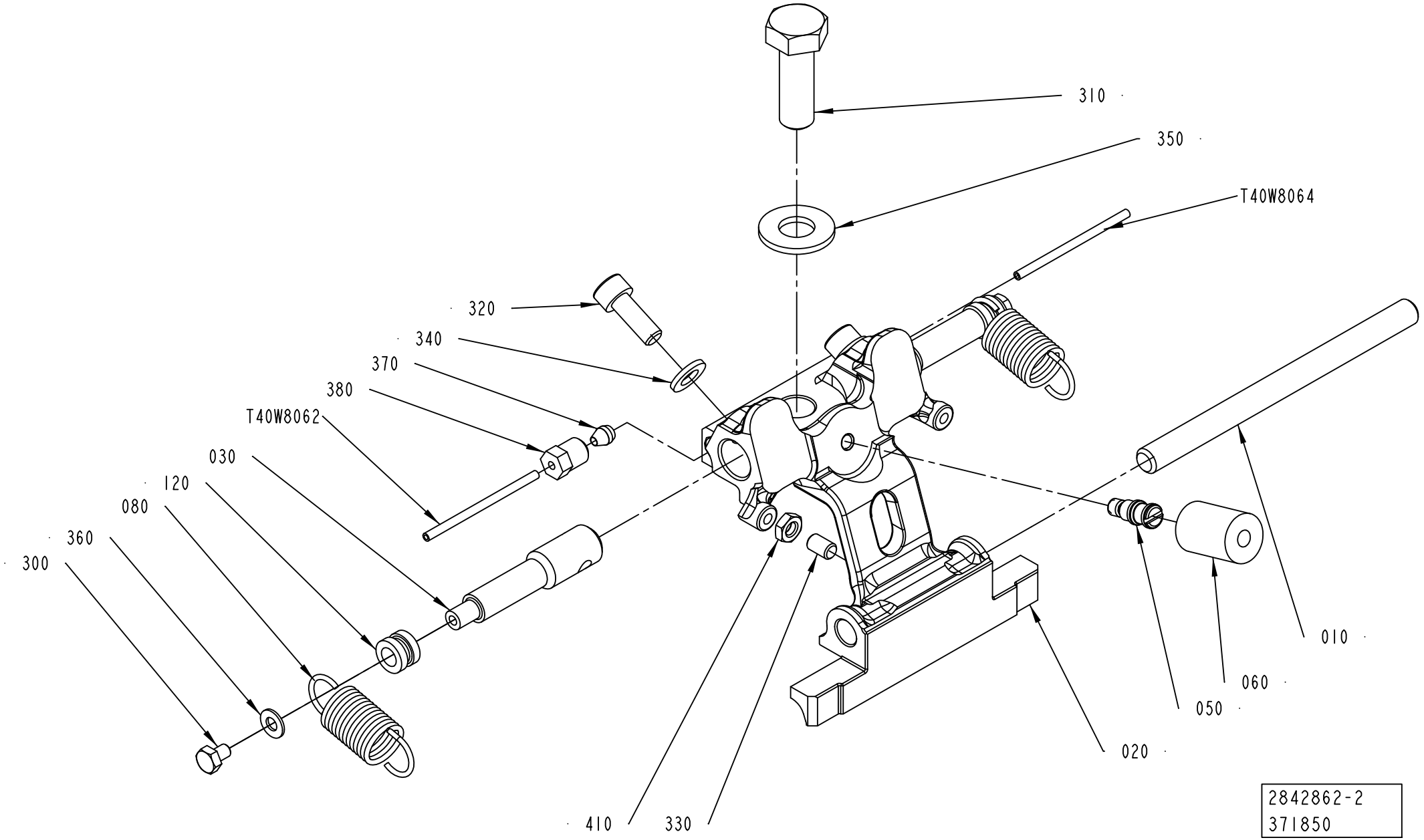

ECM: 676205 - 20140515
Group number: 2842862-0100
Assembly Drawing: 2842862-2_1_AC

This list covers pages from 1-652 to 1-659

Pos	Part No	UN	Qty	Description	Page No
TBA 1000B, TBA 1000M (Cont'd) (See drawing on page: 1-652)					
040	3092829-0000		2	SLIDER	
050	2842776-0000		1	PIN	
060	2842777-0001		1	DAMPER	
070	2842780-0000		2	BUSHING	
080	2842781-0000		1	SPRING	
090	2842782-0000		1	SPRING	
100	3219171-0000		2	LEVER	
110	2911623-0000		2	WASHER	
300	312812-0316		2	HEXAGON NUT, NY-LOCK M6 A4 80	
310	312105-0495		1	SCREW, M6S ISO 4017 M10X30 A4 80	
320	312115-0368		2	SCREW ISO4762 M6X16 A4 80	
330	312318-0325		1	SET SCREW, CUP END ISO4029 M5X10 A4	
340	315105-0153		2	WASHER PLAIN, 6,4X12X1,5 A4 BRB	
370	90028-0020		2	CONE TUBE 2,5MM	
380	90134-0063		2	BUSHING/NUT M8X1, D=2,5 MM	
400	90600-2013		4	FLANGE BUSHING, IGLIDUR X 8X10X5,5	
410	312625-0314		1	HEXAGON THIN NUT, EN 24035 ML6M M5 A4	
T40W8062	90166-0143	MM	155	TUBE 2,5 MM PA TRANSP.	
T40W8064	90166-0143	MM	155	TUBE 2,5 MM PA TRANSP.	
TBA 1000E (See drawing on page: 1-652)					
010	2773510-0000		1	SHAFT	
020	2862278-0001		1	HOLDER	
030	2911622-0000		2	SHAFT	
040	3092829-0000		2	SLIDER	
050	2842776-0000		1	PIN	
060	2842777-0003		1	DAMPER	
070	2842780-0000		2	BUSHING	
080	2842781-0000		1	SPRING	
090	2842782-0000		1	SPRING	
100	3219171-0000		2	LEVER	
110	2911623-0000		2	WASHER	
300	312812-0316		2	HEXAGON NUT, NY-LOCK M6 A4 80	
310	312105-0495		1	SCREW, M6S ISO 4017 M10X30 A4 80	
320	312115-0368		2	SCREW ISO4762 M6X16 A4 80	
330	312318-0320		1	SET SCREW, CUP END ISO4029 M5X5 A4	
370	90028-0020		2	CONE TUBE 2,5MM	
380	90134-0063		2	BUSHING/NUT M8X1, D=2,5 MM	
400	90600-2013		4	FLANGE BUSHING, IGLIDUR X 8X10X5,5	
420	90602-4847		1	THREADLOCKER LOCTITE 243, 50ML	
T40W8062	90166-0143	MM	170	TUBE 2,5 MM PA TRANSP.	
T40W8064	90166-0143	MM	170	TUBE 2,5 MM PA TRANSP.	
TBA 1000S (See drawing on page: 1-652)					
010	2773510-0000		1	SHAFT	
020	3037997-0001		1	HOLDER	
030	2911622-0000		2	SHAFT	
040	3092829-0000		2	SLIDER	
050	2842776-0000		1	PIN	
060	2842777-0001		1	DAMPER	
070	2842780-0000		2	BUSHING	
080	2842781-0000		1	SPRING	
090	2842782-0000		1	SPRING	
100	3219171-0000		2	LEVER	
110	2911623-0000		2	WASHER	
300	312812-0316		2	HEXAGON NUT, NY-LOCK M6 A4 80	
310	312105-0495		1	SCREW, M6S ISO 4017 M10X30 A4 80	
320	312115-0368		2	SCREW ISO4762 M6X16 A4 80	
330	312318-0325		1	SET SCREW, CUP END ISO4029 M5X10 A4	
340	315105-0153		2	WASHER PLAIN, 6,4X12X1,5 A4 BRB	
370	90028-0020		2	CONE TUBE 2,5MM	
380	90134-0063		2	BUSHING/NUT M8X1, D=2,5 MM	
400	90600-2013		4	FLANGE BUSHING, IGLIDUR X 8X10X5,5	
410	312625-0314		1	HEXAGON THIN NUT, EN 24035 ML6M M5 A4	
T40W8062	90166-0143	MM	155	TUBE 2,5 MM PA TRANSP.	
T40W8064	90166-0143	MM	155	TUBE 2,5 MM PA TRANSP.	
TBA 1000SQ (See drawing on page: 1-652)					
010	2773510-0000		1	SHAFT	
020	3037995-0001		1	HOLDER	
030	2911622-0000		2	SHAFT	
040	3092829-0000		2	SLIDER	
050	2842776-0000		1	PIN	
060	2842777-0001		1	DAMPER	
070	2842780-0000		2	BUSHING	
080	2842781-0000		1	SPRING	
090	2842782-0000		1	SPRING	
100	3219171-0000		2	LEVER	
110	2911623-0000		2	WASHER	
300	312812-0316		2	HEXAGON NUT, NY-LOCK M6 A4 80	
310	312105-0495		1	SCREW, M6S ISO 4017 M10X30 A4 80	
320	312115-0368		2	SCREW ISO4762 M6X16 A4 80	
330	312318-0323		1	SET SCREW, CUP END ISO4029 M5X8 A4	
340	315105-0153		2	WASHER PLAIN, 6,4X12X1,5 A4 BRB	
370	90028-0020		2	CONE TUBE 2,5MM	
380	90134-0063		2	BUSHING/NUT M8X1, D=2,5 MM	

SHOCK ABSORBER PRESSURE

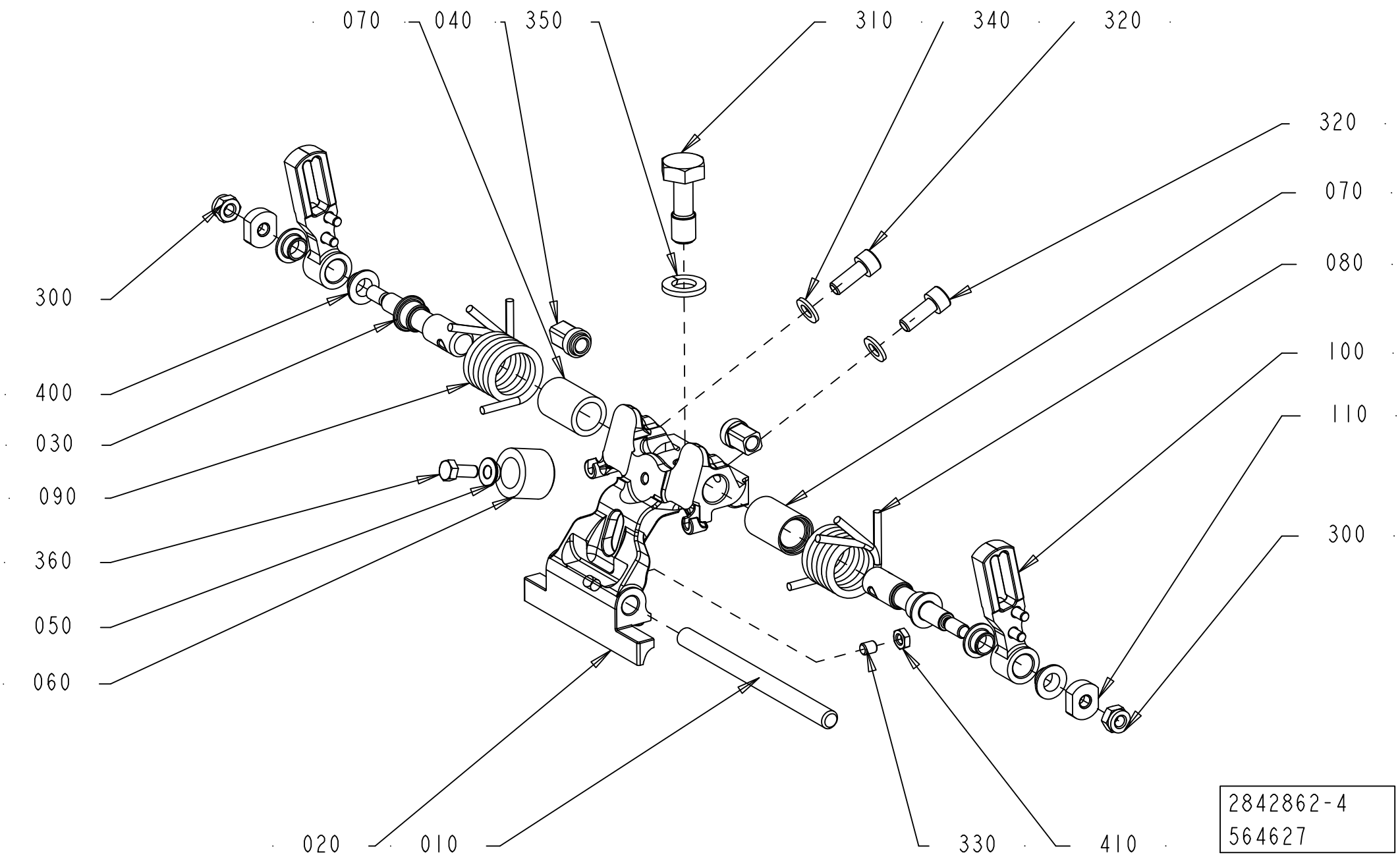

Pos	Part No	UN	Qty	Description	Page No
TBA 1000SQ (Cont'd) (See drawing on page: 1-652)					
400	90600-2013		4	FLANGE BUSHING, IGLIDUR X 8X10X5,5	
410	312625-0314		1	HEXAGON THIN NUT, EN 24035 ML6M M5 A4	
T40W8062	90166-0143	MM	155	TUBE 2,5 MM PA TRANSP.	
T40W8064	90166-0143	MM	155	TUBE 2,5 MM PA TRANSP.	
TBA 1500S (See drawing on page: 1-652)					
010	2773510-0000		1	SHAFT	
020	3024942-0001		1	HOLDER	
030	2907800-0000		2	SHAFT	
040	3242547-0000		2	SLIDER	
050	2907797-0000		1	PIN	
060	2842777-0005		1	DAMPER	
070	2916984-0000		2	BUSHING	
080	2907805-0000		1	SPRING	
090	2907804-0000		1	SPRING	
100	2907806-0000		2	LEVER	
110	2911623-0000		2	WASHER	
300	312812-0316		2	HEXAGON NUT, NY-LOCK M6 A4 80	
310	312105-0499		1	SCREW, M6S ISO 4014 M10X40 A4 80	
320	312115-0368		2	SCREW ISO4762 M6X16 A4 80	
330	312318-0325		1	SET SCREW, CUP END ISO4029 M5X10 A4	
340	315105-0153		2	WASHER PLAIN, 6,4X12X1,5 A4 BRB	
370	90028-0020		2	CONE TUBE 2,5MM	
380	90134-0063		2	BUSHING/NUT M8X1, D=2,5 MM	
400	90600-2013		4	FLANGE BUSHING, IGLIDUR X 8X10X5,5	
410	312625-0314		1	HEXAGON THIN NUT, EN 24035 ML6M M5 A4	
T40W8062	90166-0143	MM	200	TUBE 2,5 MM PA TRANSP.	
T40W8064	90166-0143	MM	200	TUBE 2,5 MM PA TRANSP.	
TBA 2000S (See drawing on page: 1-652)					
010	2907798-0000		1	SHAFT	
020	3024940-0001		1	HOLDER	
030	2907800-0000		2	SHAFT	
040	3242547-0000		2	SLIDER	
050	2907797-0000		1	PIN	
060	2842777-0005		1	DAMPER	
070	2916984-0000		2	BUSHING	
080	2907805-0000		1	SPRING	
090	2907804-0000		1	SPRING	
100	2907806-0000		2	LEVER	
110	2911623-0000		2	WASHER	
300	312812-0316		2	HEXAGON NUT, NY-LOCK M6 A4 80	
310	312105-0499		1	SCREW, M6S ISO 4014 M10X40 A4 80	
320	312115-0368		2	SCREW ISO4762 M6X16 A4 80	
330	312318-0325		1	SET SCREW, CUP END ISO4029 M5X10 A4	
340	315105-0153		2	WASHER PLAIN, 6,4X12X1,5 A4 BRB	
370	90028-0020		2	CONE TUBE 2,5MM	
380	90134-0063		2	BUSHING/NUT M8X1, D=2,5 MM	
400	90600-2013		4	FLANGE BUSHING, IGLIDUR X 8X10X5,5	
410	312625-0314		1	HEXAGON THIN NUT, EN 24035 ML6M M5 A4	
T40W8062	90166-0143	MM	190	TUBE 2,5 MM PA TRANSP.	
T40W8064	90166-0143	MM	190	TUBE 2,5 MM PA TRANSP.	
TGA 1000SQ, TGA 0750SQ (See drawing on page: 1-656)					
010	2649660-0000		1	SHAFT	
020	2993285-0004		1	HOLDER	
	3021650-0000		*1*	*HOLDER*	
030	2948028-0000		2	SHAFT	
040	3092829-0000		2	SLIDER	
050	2572197-0000		1	SPACER	
060	2649677-0000		1	DAMPER	
070	2948027-0000		2	BUSHING	
080	2949214-0000		1	SPRING	
090	2949215-0000		1	SPRING	
100	3018752-0000		2	LEVER	
110	2911623-0000		2	WASHER	
300	312812-0316		2	HEXAGON NUT, NY-LOCK M6 A4 80	
310	2922524-0000		1	SCREW	
320	312105-0368		2	"SCREW, M6S ISO 4017 M6X16 A4 80"	
330	311103-0268		1	PARALLEL PIN ISO 2338 4M6X12 A1	
340	315105-0153		2	WASHER PLAIN, 6,4X12X1,5 A4 BRB	
360	312105-0327		1	"SCREW, M6S ISO 4017 M5X12 A4 80"	
400	90600-2013		4	FLANGE BUSHING, IGLIDUR X 8X10X5,5	
TGA 1500SQ (See drawing on page: 1-656)					
010	2773510-0000		1	SHAFT	
020	2949206-0001		1	HOLDER	
030	2948028-0000		2	SHAFT	
040	3092829-0000		2	SLIDER	
050	2572197-0000		1	SPACER	
060	3030308-0000		1	DAMPER	
070	2948027-0000		2	BUSHING	
080	2949214-0000		1	SPRING	
090	2949215-0000		1	SPRING	
100	2916131-0000		2	LEVER	
110	2911623-0000		2	WASHER	
300	312812-0316		2	HEXAGON NUT, NY-LOCK M6 A4 80	

SHOCK ABSORBER PRESSURE

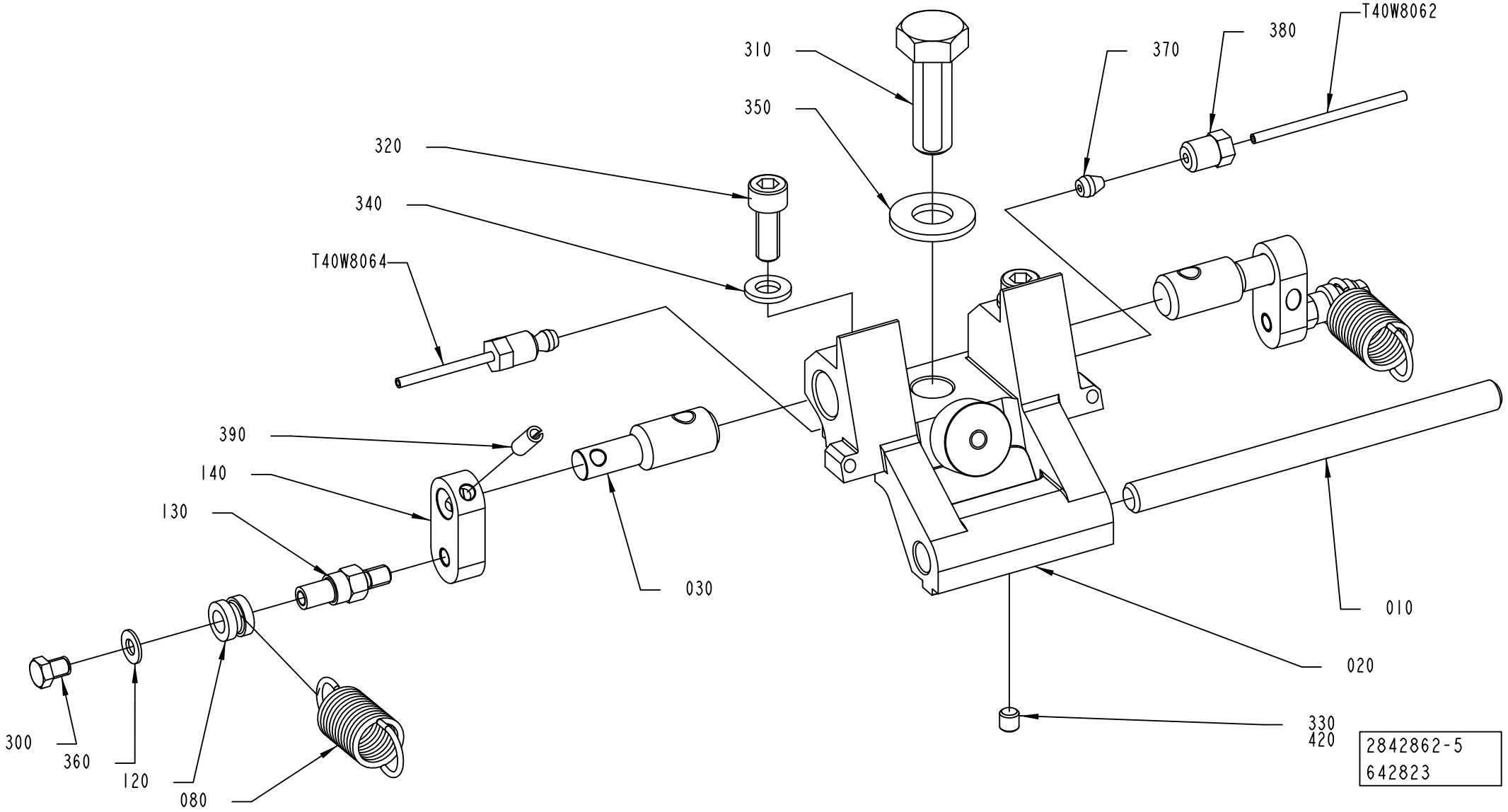

Pos	Part No	UN	Qty	Description	Page No
TGA 1500SQ (Cont'd) (See drawing on page: 1-656)					
310	2922524-0000		1	SCREW	
320	312115-0368		2	SCREW ISO4762 M6X16 A4 80	
330	312318-0321		1	SET SCREW, CUP END ISO4029 M5X6 A4	
340	315105-0153		2	WASHER PLAIN, 6,4X12X1,5 A4 BRB	
360	312105-0327		1	"SCREW, M6S ISO 4017 M5X12 A4 80"	
400	90600-2013		4	FLANGE BUSHING, IGLIDUR X 8X10X5,5	
410	312625-0314		1	HEXAGON THIN NUT, EN 24035 ML6M M5 A4	
TPA 0500SQ (See drawing on page: 1-652)					
010	2962640-0000		1	SHAFT	
020	3024711-0001		1	HOLDER	
030	2911622-0000		2	SHAFT	
040	3092829-0000		2	SLIDER	
050	2842776-0000		1	PIN	
060	2842777-0001		1	DAMPER	
070	2842780-0000		2	BUSHING	
080	2842781-0000		1	SPRING	
090	2842782-0000		1	SPRING	
100	3219171-0000		2	LEVER	
110	2911623-0000		2	WASHER	
300	312812-0316		2	HEXAGON NUT, NY-LOCK M6 A4 80	
310	312105-0495		1	SCREW, M6S ISO 4017 M10X30 A4 80	
320	312115-0368		2	SCREW ISO4762 M6X16 A4 80	
330	312318-0325		1	SET SCREW, CUP END ISO4029 M5X10 A4	
340	315105-0153		2	WASHER PLAIN, 6,4X12X1,5 A4 BRB	
370	90028-0020		2	CONE TUBE 2,5MM	
380	90134-0063		2	BUSHING/NUT M8X1, D=2,5 MM	
400	90600-2013		4	FLANGE BUSHING, IGLIDUR X 8X10X5,5	
410	312625-0314		1	HEXAGON THIN NUT, EN 24035 ML6M M5 A4	
T40W8062	90166-0143	MM	155	TUBE 2,5 MM PA TRANSP.	
T40W8064	90166-0143	MM	155	TUBE 2,5 MM PA TRANSP.	
TPA 1000SQ, TPA 0750SQ (See drawing on page: 1-652)					
010	2916971-0000		1	SHAFT	
020	3024938-0001		1	HOLDER	
030	2907800-0000		2	SHAFT	
040	3242547-0000		2	SLIDER	
050	2907797-0000		1	PIN	
060	2842777-0004		1	DAMPER	
070	2916984-0000		2	BUSHING	
080	2907805-0000		1	SPRING	
090	2907804-0000		1	SPRING	
100	2907806-0000		2	LEVER	
110	2911623-0000		2	WASHER	
300	312812-0316		2	HEXAGON NUT, NY-LOCK M6 A4 80	
310	312105-0499		1	SCREW, M6S ISO 4014 M10X40 A4 80	
320	312115-0368		2	SCREW ISO4762 M6X16 A4 80	
330	312318-0325		1	SET SCREW, CUP END ISO4029 M5X10 A4	
340	315105-0153		2	WASHER PLAIN, 6,4X12X1,5 A4 BRB	
370	90028-0020		2	CONE TUBE 2,5MM	
380	90134-0063		2	BUSHING/NUT M8X1, D=2,5 MM	
400	90600-2013		4	FLANGE BUSHING, IGLIDUR X 8X10X5,5	
410	312625-0314		1	HEXAGON THIN NUT, EN 24035 ML6M M5 A4	
T40W8062	90166-0143	MM	180	TUBE 2,5 MM PA TRANSP.	
T40W8064	90166-0143	MM	180	TUBE 2,5 MM PA TRANSP.	
Common Parts					
350	315105-0173		1	WASHER PLAIN, 10,5X22X2 A4 BRB	

VOLUME FLAP PRESSURE

VALID FOR TBA 1000B TBA 0500S AND TBA 1000M

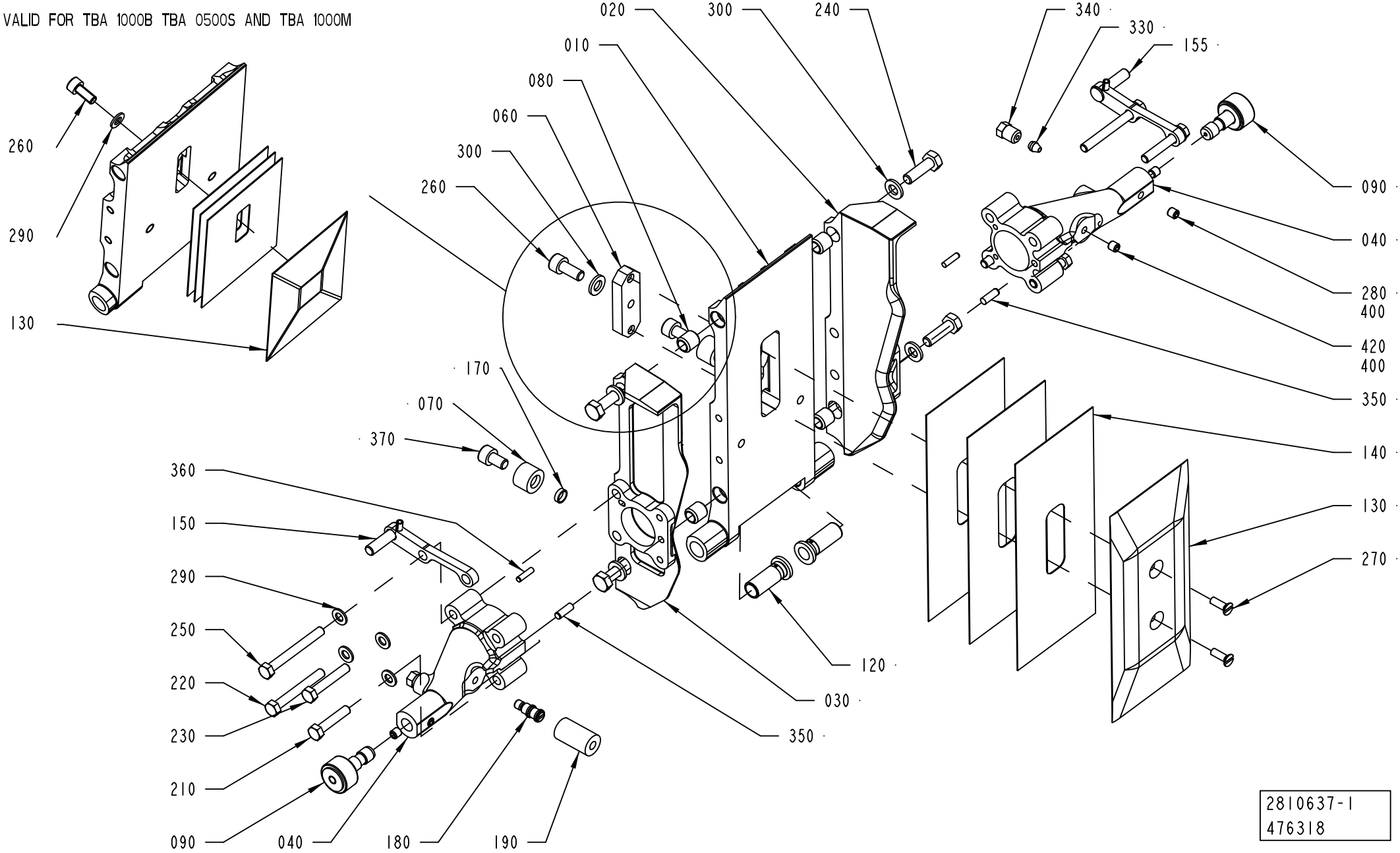

ECM: 676202 - 20140515
Group number: 2810637-0100
Assembly Drawing: 2810637-1_1_AE

This list covers pages from 1-660 to 1-677

Pos	Part No	UN	Qty	Description	Page No
TBA 0500B (See drawing on page: 1-664)					
010	2902007-0000		1	VOLUME FLAP	
040	2905200-0000		1	ARM	
045	2906172-0000		1	ARM	
070	2842778-0000		2	DAMPER	
120	1558701-0000		2	BUSHING	
130	2786059-0000		1	VOLUME BULGE	
140	2790818-0000		3	VOLUME SHIM	
150	2905201-0000		2	SPACER SCREW	
160	2905199-0000		2	HOLDER	
170	2842779-0000		2	SPACER	
180	2872048-0000		1	PIN	
185	2872091-0000		1	PIN	
190	2846667-0000		1	DAMPER	
210	312105-0327		4	"SCREW, M6S ISO 4017 M5X12 A4 80"	
230	312105-0285		2	SCREW, M6S ISO 4017 M4X6 A4 70	
260	312115-0325		1	SCREW ISO4762 M5X10 A4 80	
290	315105-0146		9	WASHER PLAIN, 5,3X10X1 A4 BRB	
300	315106-0136		2	WASHER PLAIN, M4 ISO7089-4-200 HV A4	
360	311103-0234		4	PARALLEL PIN ISO 2338 3M6X12 A1	
370	312115-0364		2	SCREW ISO4762 M6X10 A4 80	
390	312812-0314		2	HEXAGON NUT, NY-LOCK M5 A4 80	
TBA 0500E (See drawing on page: 1-676)					
010	3223118-0000		1	VOLUME FLAP	
040	3051285-0000		2	BRACKET	
070	3051255-0000		1	DAMPER	
120	1558701-0000		2	BUSHING	
130	3339847-0000		1	VOLUME BULGE	
150	3051293-0000		2	SHAFT	
160	2905199-0000		2	HOLDER	
170	2842779-0000		2	SPACER	
210	312105-0327		4	"SCREW, M6S ISO 4017 M5X12 A4 80"	
230	312105-0285		2	SCREW, M6S ISO 4017 M4X6 A4 70	
260	312115-0325		1	SCREW ISO4762 M5X10 A4 80	
290	315105-0146		7	WASHER PLAIN, 5,3X10X1 A4 BRB	
300	315106-0136		2	WASHER PLAIN, M4 ISO7089-4-200 HV A4	
360	311103-0234		4	PARALLEL PIN ISO 2338 3M6X12 A1	
370	312115-0364		2	SCREW ISO4762 M6X10 A4 80	
TBA 0500S (See drawing on page: 1-660)					
010	2997720-0000		1	VOLUME FLAP	
020	2997723-0000		1	SIDE PLATE	
030	2997724-0000		1	SIDE PLATE	
040	2809061-0010		2	ARM	
070	2842778-0000		2	DAMPER	
080	2778960-0000		4	BUSHING	
120	1511254-0000		2	BUSHING	
130	2997725-0000		1	VOLUME BULGE	
140	2997717-0000		3	SHIM	
150	2997719-0000		1	BRACKET	
155	2997718-0000		1	BRACKET	
170	2842779-0000		2	SPACER	
180	2842776-0000		1	PIN	
190	2846667-0000		1	DAMPER	
210	312105-0333		2	SCREW, M6S ISO 4017 M5X25 A4 80	
220	312105-0339		2	SCREW, M6S ISO 4014 M5X40 A4 80	
230	312105-0335		2	SCREW, M6S ISO 4014 M5X30 A4 80	
240	312105-0370		4	SCREW, M6S ISO 4017 M6X20 A4 80	
250	312105-0340		2	SCREW, M6S ISO 4014 M5X45 A4 80	
260	312115-0328		1	SCREW ISO4762 M5X14 A4 80	
290	315105-0146		9	WASHER PLAIN, 5,3X10X1 A4 BRB	
300	315105-0153		4	WASHER PLAIN, 6,4X12X1,5 A4 BRB	
350	311103-0268		2	PARALLEL PIN ISO 2338 4M6X12 A1	
360	311103-0234		2	PARALLEL PIN ISO 2338 3M6X12 A1	
370	312115-0364		2	SCREW ISO4762 M6X10 A4 80	
420	312318-0320		1	SET SCREW, CUP END ISO4029 M5X5 A4	
TBA 0500SQ (See drawing on page: 1-662)					
010	2860036-0000		1	VOLUME FLAP	
040	2872047-0000		1	ARM	
045	2952710-0000		1	ARM	
070	2842778-0000		2	DAMPER	
120	1558701-0000		2	BUSHING	
130	2860037-0000		1	VOLUME BULGE	
140	2860038-0000		3	VOLUME SHIM	
150	2959867-0000		2	SPACER SCREW	
160	2905199-0000		2	HOLDER	
170	2842779-0000		2	SPACER	
180	2872048-0000		1	PIN	
185	2872091-0000		1	PIN	
190	2846667-0000		1	DAMPER	
210	312105-0327		2	"SCREW, M6S ISO 4017 M5X12 A4 80"	
220	312105-0329		4	SCREW, M6S ISO 4017 M5X16 A4 80	
230	312105-0285		2	SCREW, M6S ISO 4017 M4X6 A4 70	
260	312115-0325		1	SCREW ISO4762 M5X10 A4 80	
290	315105-0146		13	WASHER PLAIN, 5,3X10X1 A4 BRB	

Machine Type | Group Description | Used-In | Group Number | Page No

VOLUME FLAP PRESSURE

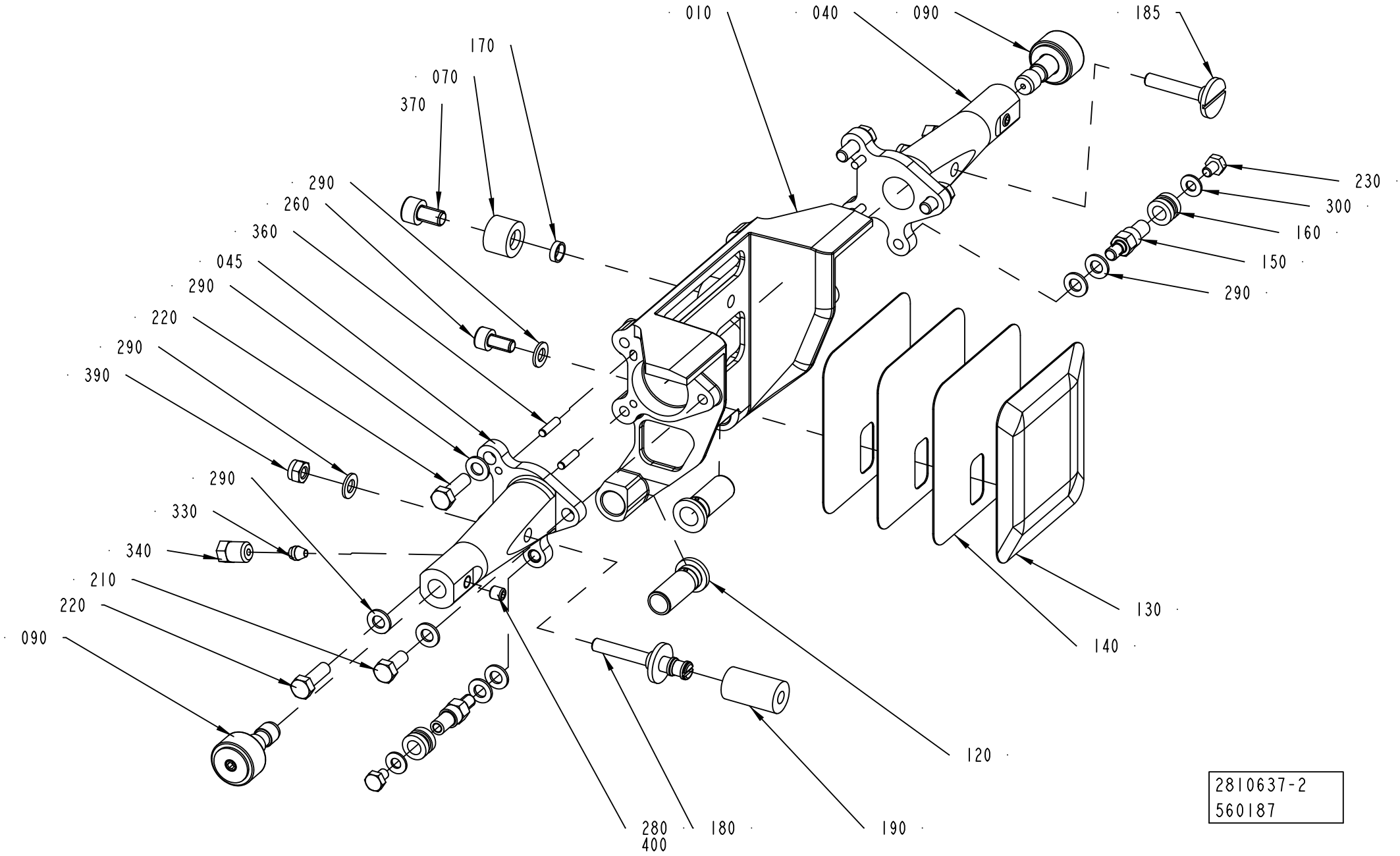

Pos	Part No	UN	Qty	Description	Page No
TBA 0500SQ (Cont'd) (See drawing on page: 1-662)					
300	315106-0136		2	WASHER PLAIN, M4 ISO7089-4-200 HV A4	
360	311103-0234		4	PARALLEL PIN ISO 2338 3M6X12 A1	
370	312115-0364		2	SCREW ISO4762 M6X10 A4 80	
390	312812-0314		2	HEXAGON NUT, NY-LOCK M5 A4 80	
TBA 1000B (See drawing on page: 1-660)					
010	2902008-0000		1	VOLUME FLAP	
020	2902009-0000		1	SIDE PLATE	
030	2902010-0000		1	SIDE PLATE	
040	2809061-0006		2	ARM	
070	2842778-0000		2	DAMPER	
080	2778960-0000		4	BUSHING	
120	1558701-0000		2	BUSHING	
130	2795078-0000		1	VOLUME BULGE	
140	2795079-0000		3	VOLUME SHIM	
150	2902012-0000		1	BRACKET	
155	2902011-0000		1	BRACKET	
170	2842779-0000		2	SPACER	
180	2842776-0000		1	PIN	
190	2846667-0000		1	DAMPER	
210	312105-0328		2	SCREW M6S ISO 4017 M5X14 A4 80	
220	312105-0335		2	SCREW, M6S ISO 4014 M5X30 A4 80	
230	312105-0331		2	SCREW, M6S ISO 4017 M5X20 A4 80	
240	312105-0370		4	SCREW, M6S ISO 4017 M6X20 A4 80	
250	312105-0337		2	SCREW, M6S ISO 4014 M5X35 A4 80	
260	312115-0327		1	SCREW ISO4762 M5X12 A4 80	
290	315105-0146		9	WASHER PLAIN, 5,3X10X1 A4 BRB	
300	315105-0153		4	WASHER PLAIN, 6,4X12X1,5 A4 BRB	
350	311103-0267		2	PARALLEL PIN ISO 2338 4M6X10 A1	
360	311103-0234		2	PARALLEL PIN ISO 2338 3M6X12 A1	
370	312115-0364		2	SCREW ISO4762 M6X10 A4 80	
420	312318-0320		1	SET SCREW, CUP END ISO4029 M5X5 A4	
TBA 1000E NOQC (See drawing on page: 1-672)					
010	2960127-0000		1	VOLUME FLAP	
020	2960125-0000		1	SIDE PLATE	
030	2960126-0000		1	SIDE PLATE	
040	3340091-0000		1	ARM	
045	3340092-0000		1	ARM	
060	1040756-0000		1	WEDGE	
070	3051255-0000		1	DAMPER	
080	2778960-0000		4	BUSHING	
120	2960139-0000		2	BUSHING	
130	1487626-0000		1	VOLUME BULGE	
140	1487627-0000		3	VOLUME SHIM	
150	2916133-0000		1	BRACKET	
155	2916132-0000		1	BRACKET	
170	2842779-0000		2	SPACER	
180	2842776-0000		1	PIN	
190	3179201-0000		1	DAMPER	
220	312105-0378		2	SCREW, M6S ISO 4014 M6X40 A4 80	
230	312105-0335		2	SCREW, M6S ISO 4014 M5X30 A4 80	
240	312105-0370		4	SCREW, M6S ISO 4017 M6X20 A4 80	
250	312105-0379		2	SCREW, M6S ISO 4014 M6X45 A4 80	
260	312115-0367		1	SCREW ISO4762 M6X14 A4 80	
270	312145-0291		2	SCREW ISO 2009 MFS M4X12 A4	
290	315105-0146		2	WASHER PLAIN, 5,3X10X1 A4 BRB	
300	315105-0153		9	WASHER PLAIN, 6,4X12X1,5 A4 BRB	
350	311103-0268		2	PARALLEL PIN ISO 2338 4M6X12 A1	
360	311103-0234		2	PARALLEL PIN ISO 2338 3M6X12 A1	
370	312115-0364		2	SCREW ISO4762 M6X10 A4 80	
420	312318-0320		1	SET SCREW, CUP END ISO4029 M5X5 A4	
TBA 1000E QC (See drawing on page: 1-672)					
010	3299552-0000		1	VOLUME FLAP	
020	3299551-0000		1	SIDE PLATE	
030	3299553-0000		1	SIDE PLATE	
040	3340091-0000		1	ARM	
045	3340092-0000		1	ARM	
060	1040756-0000		1	WEDGE	
070	3051255-0000		1	DAMPER	
080	2778960-0000		4	BUSHING	
120	2960139-0000		2	BUSHING	
130	3315308-0000		1	VOLUME BULGE	
140	3315309-0000		3	VOLUME SHIM	
150	2916133-0000		1	BRACKET	
155	2916132-0000		1	BRACKET	
170	2842779-0000		2	SPACER	
180	2842776-0000		1	PIN	
190	3179201-0000		1	DAMPER	
220	312105-0378		2	SCREW, M6S ISO 4014 M6X40 A4 80	
230	312105-0335		2	SCREW, M6S ISO 4014 M5X30 A4 80	
240	312105-0370		4	SCREW, M6S ISO 4017 M6X20 A4 80	
250	312105-0379		2	SCREW, M6S ISO 4014 M6X45 A4 80	
260	312115-0367		1	SCREW ISO4762 M6X14 A4 80	
270	312145-0291		2	SCREW ISO 2009 MFS M4X12 A4	

VOLUME FLAP PRESSURE

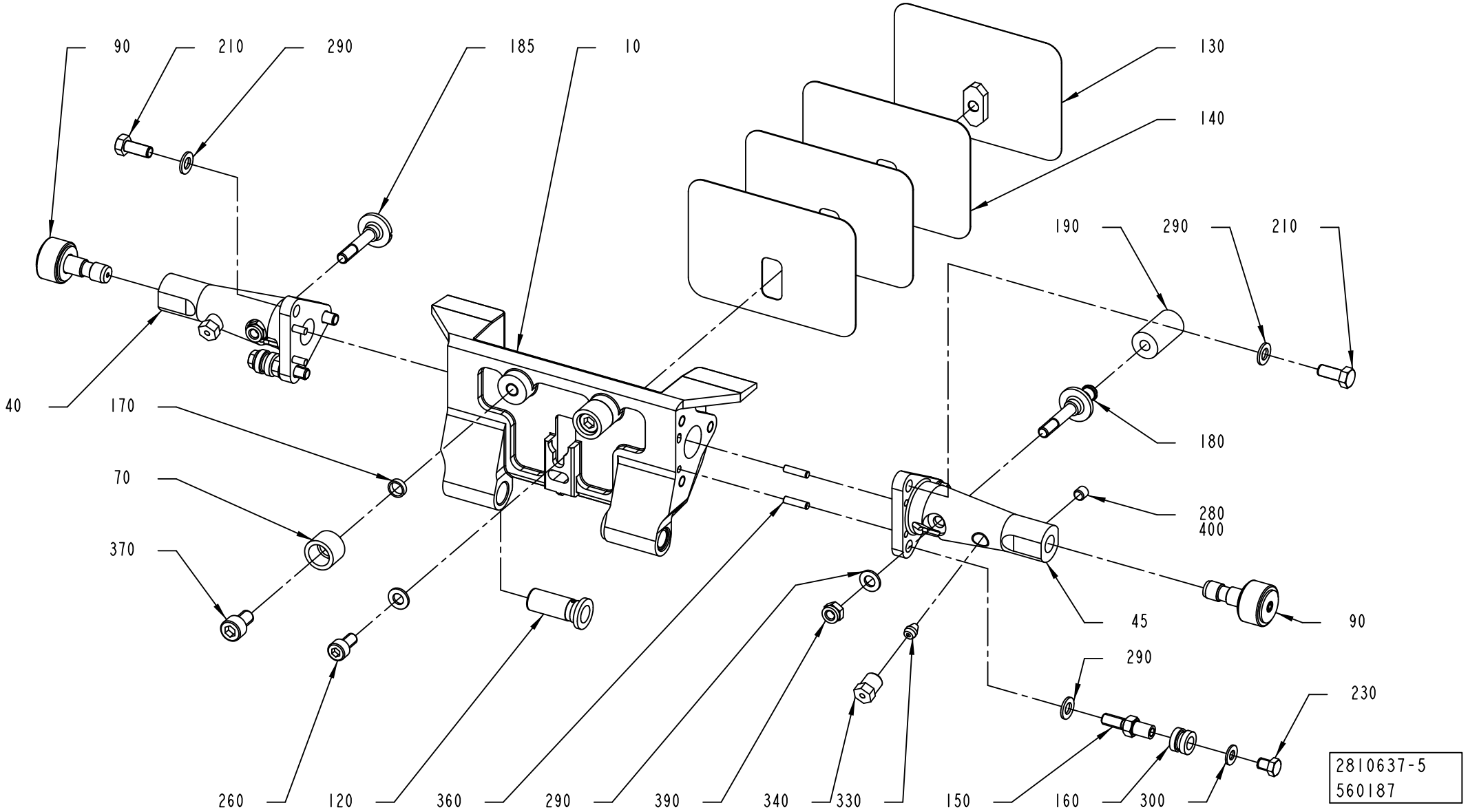

Pos	Part No	UN	Qty	Description	Page No
TBA 1000E QC (Cont'd) (See drawing on page: 1-672)					
290	315105-0146		2	WASHER PLAIN, 5,3X10X1 A4 BRB	
300	315105-0153		9	WASHER PLAIN, 6,4X12X1,5 A4 BRB	
350	311103-0268		2	PARALLEL PIN ISO 2338 4M6X12 A1	
360	311103-0234		2	PARALLEL PIN ISO 2338 3M6X12 A1	
370	312115-0364		2	SCREW ISO4762 M6X10 A4 80	
420	312318-0320		1	SET SCREW, CUP END ISO4029 M5X5 A4	
TBA 1000M (See drawing on page: 1-660)					
010	2998789-0000		1	VOLUME FLAP	
020	2998790-0000		1	SIDE PLATE	
030	2998791-0000		1	SIDE PLATE	
040	2809061-0006		2	ARM	
070	2842778-0000		2	DAMPER	
080	2778960-0000		4	BUSHING	
120	1558701-0000		2	BUSHING	
130	2998792-0000		1	VOLUME BULGE	
140	2998793-0000		3	VOLUME SHIM	
150	2902012-0000		1	BRACKET	
155	2902011-0000		1	BRACKET	
170	2842779-0000		2	SPACER	
180	2842776-0000		1	PIN	
190	2846667-0000		1	DAMPER	
210	312105-0328		2	SCREW M6S ISO 4017 M5X14 A4 80	
220	312105-0335		2	SCREW, M6S ISO 4014 M5X30 A4 80	
230	312105-0331		2	SCREW, M6S ISO 4017 M5X20 A4 80	
240	312105-0370		4	SCREW, M6S ISO 4017 M6X20 A4 80	
250	312105-0337		2	SCREW, M6S ISO 4014 M5X35 A4 80	
260	312115-0327		1	SCREW ISO4762 M5X12 A4 80	
290	315105-0146		9	WASHER PLAIN, 5,3X10X1 A4 BRB	
300	315105-0153		4	WASHER PLAIN, 6,4X12X1,5 A4 BRB	
350	311103-0267		2	PARALLEL PIN ISO 2338 4M6X10 A1	
360	311103-0234		2	PARALLEL PIN ISO 2338 3M6X12 A1	
370	312115-0364		2	SCREW ISO4762 M6X10 A4 80	
420	312318-0320		1	SET SCREW, CUP END ISO4029 M5X5 A4	
TBA 1000S (See drawing on page: 1-660)					
010	2814896-0000		1	VOLUME FLAP	
020	2814899-0000		1	SIDE PLATE	
030	2814900-0000		1	SIDE PLATE	
040	2809061-0002		2	ARM	
060	1040756-0000		1	WEDGE	
070	2842778-0000		2	DAMPER	
080	2778960-0000		4	BUSHING	
120	1558701-0000		2	BUSHING	
130	1040754-0000		1	VOLUME BULGE	
140	1040755-0000		3	VOLUME SHIM	
150	2916135-0000		1	BRACKET	
155	2916134-0000		1	BRACKET	
170	2842779-0000		2	SPACER	
180	2842776-0000		1	PIN	
190	2846667-0000		1	DAMPER	
210	312105-0329		2	SCREW, M6S ISO 4017 M5X16 A4 80	
220	312105-0335		2	SCREW, M6S ISO 4014 M5X30 A4 80	
230	312105-0331		2	SCREW, M6S ISO 4017 M5X20 A4 80	
240	312105-0370		4	SCREW, M6S ISO 4017 M6X20 A4 80	
250	312105-0337		2	SCREW, M6S ISO 4014 M5X35 A4 80	
260	312115-0367		1	SCREW ISO4762 M6X14 A4 80	
270	312145-0291		2	SCREW ISO 2009 MFS M4X12 A4	
290	315105-0146		8	WASHER PLAIN, 5,3X10X1 A4 BRB	
300	315105-0153		5	WASHER PLAIN, 6,4X12X1,5 A4 BRB	
350	311103-0268		2	PARALLEL PIN ISO 2338 4M6X12 A1	
360	311103-0234		2	PARALLEL PIN ISO 2338 3M6X12 A1	
370	312115-0364		2	SCREW ISO4762 M6X10 A4 80	
420	312318-0320		1	SET SCREW, CUP END ISO4029 M5X5 A4	
TBA 1000SQ (See drawing on page: 1-660)					
010	2808802-0000		1	VOLUME FLAP	
020	2810642-0000		1	SIDE PLATE	
030	2810643-0000		1	SIDE PLATE	
040	2809061-0001		2	ARM	
060	1040756-0000		1	WEDGE	
070	2842778-0000		2	DAMPER	
080	2778960-0000		4	BUSHING	
120	1558701-0000		2	BUSHING	
130	1487626-0000		1	VOLUME BULGE	
140	1487627-0000		3	VOLUME SHIM	
150	2916133-0000		1	BRACKET	
155	2916132-0000		1	BRACKET	
170	2842779-0000		2	SPACER	
180	2842776-0000		1	PIN	
190	2846667-0000		1	DAMPER	
210	312105-0333		2	SCREW, M6S ISO 4017 M5X25 A4 80	
220	312105-0339		2	SCREW, M6S ISO 4014 M5X40 A4 80	
230	312105-0335		2	SCREW, M6S ISO 4014 M5X30 A4 80	
240	312105-0370		4	SCREW, M6S ISO 4017 M6X20 A4 80	
250	312105-0340		2	SCREW, M6S ISO 4014 M5X45 A4 80	

VOLUME FLAP PRESSURE

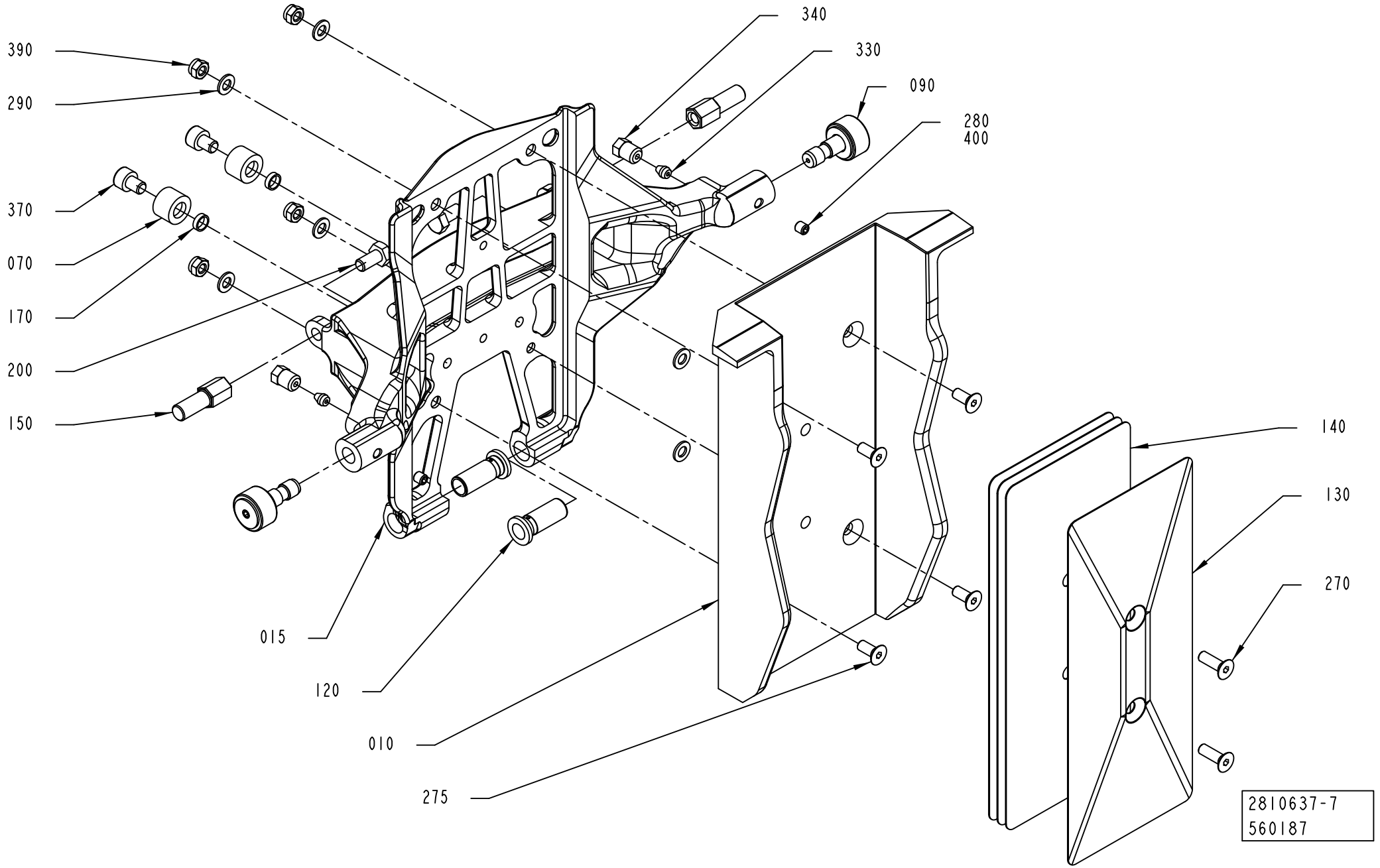

Pos	Part No	UN	Qty	Description	Page No
TBA 1000SQ (Cont'd) (See drawing on page: 1-660)					
260	312115-0367		1	SCREW ISO4762 M6X14 A4 80	
270	312145-0291		2	SCREW ISO 2009 MFS M4X12 A4	
290	315105-0146		8	WASHER PLAIN, 5,3X10X1 A4 BRB	
300	315105-0153		5	WASHER PLAIN, 6,4X12X1,5 A4 BRB	
350	311103-0268		2	PARALLEL PIN ISO 2338 4M6X12 A1	
360	311103-0234		2	PARALLEL PIN ISO 2338 3M6X12 A1	
370	312115-0364		2	SCREW ISO4762 M6X10 A4 80	
420	312318-0320		1	SET SCREW, CUP END ISO4029 M5X5 A4	
TBA 1500S (See drawing on page: 1-666)					
010	2969140-0000		1	VOLUME FLAP	
015	2969139-0000		1	VOLUME FLAP	
070	2842778-0000		2	DAMPER	
120	1558701-0000		2	BUSHING	
130	2969142-0000		1	VOLUME BULGE	
140	2987038-0000		3	VOLUME SHIM	
150	2969143-0000		2	BRACKET	
170	2842779-0000		2	SPACER	
200	312105-0366		2	SCREW, M6S ISO 4017 M6X12 A4 80	
270	312155-0329		2	SCREW DIN 7991 MF6S M5X16 A4 70	
275	312155-0327		4	SCREW DIN 7991 MF6S M5X12 A4 70	
290	315105-0146		4	WASHER PLAIN, 5,3X10X1 A4 BRB	
370	312115-0362		2	SCREW ISO4762 M6X8 A4 80	
390	312812-0314		4	HEXAGON NUT, NY-LOCK M5 A4 80	
TBA 2000S (See drawing on page: 1-668)					
010	2978342-0000		1	VOLUME FLAP	
015	2978340-0000		1	VOLUME FLAP	
040	2809061-0011		2	ARM	
070	2842778-0000		2	DAMPER	
120	2917307-0000		2	BUSHING	
130	2978344-0000		1	VOLUME BULGE	
140	2978343-0000		3	VOLUME SHIM	
150	2907809-0000		1	BRACKET	
155	2907808-0000		1	BRACKET	
170	2842779-0000		2	SPACER	
180	2842776-0000		1	PIN	
190	2846667-0000		1	DAMPER	
210	312105-0329		4	SCREW, M6S ISO 4017 M5X16 A4 80	
230	312105-0331		4	SCREW, M6S ISO 4017 M5X20 A4 80	
270	312155-0329		2	SCREW DIN 7991 MF6S M5X16 A4 70	
275	312155-0327		4	SCREW DIN 7991 MF6S M5X12 A4 70	
290	315105-0146		12	WASHER PLAIN, 5,3X10X1 A4 BRB	
350	311103-0267		2	PARALLEL PIN ISO 2338 4M6X10 A1	
360	311103-0233		2	PARALLEL PIN ISO 2338 3M6X10 A1	
370	312115-0362		2	SCREW ISO4762 M6X8 A4 80	
390	312812-0314		4	HEXAGON NUT, NY-LOCK M5 A4 80	
420	312318-0320		1	SET SCREW, CUP END ISO4029 M5X5 A4	
TPA 0500SQ (See drawing on page: 1-674)					
010	3053272-0000		1	VOLUME FLAP	
015	3053273-0002		1	FRAME	
040	3053488-0000		2	ARM	
070	2842778-0000		2	DAMPER	
120	2530313-0000		2	BUSHING	
130	1549829-0000		1	VOLUME BULGE	
135	1549829-0000		2	VOLUME BULGE	
140	1549830-0000		2	VOLUME SHIM	
145	1549830-0000		4	VOLUME SHIM	
150	2964448-0000		2	SCREW	
180	2842776-0000		1	PIN	
190	2846667-0000		1	DAMPER	
200	312605-0318		2	HEXAGON NUT, M6M M8 A280	
210	312155-0455		2	SCREW DIN 7991 MF6S M8X30 A4 70	
230	312318-0323		2	SET SCREW, CUP END ISO4029 M5X8 A4	
265	312155-0299		4	SCREW DIN 7991 MF6S M4X30 A4 70	
270	312155-0291		2	SCREW DIN 7991 MF6S M4X12 A4 70	
275	312155-0333		2	SCREW DIN 7991 MF6S M5X25 A4 70	
370	312115-0362		2	SCREW ISO4762 M6X8 A4 80	
410	311103-0267		1	PARALLEL PIN ISO 2338 4M6X10 A1	
420	312318-0320		1	SET SCREW, CUP END ISO4029 M5X5 A4	
TPA 0750SQ (See drawing on page: 1-670)					
010	2995607-0000		1	VOLUME FLAP	
015	2995596-0000		1	FRAME	
040	2995608-0000		2	ARM	
070	2842778-0000		2	DAMPER	
120	2530313-0000		2	BUSHING	
130	2995605-0000		1	VOLUME BULGE	
135	2995606-0000		2	VOLUME BULGE	
140	2995603-0000		3	VOLUME SHIM	
145	2995604-0000		6	VOLUME SHIM	
150	2995655-0000		2	SCREW	
170	2842779-0000		2	SPACER	
180	2842776-0000		1	PIN	
190	2846667-0000		1	DAMPER	
200	312605-0320		2	HEXAGON NUT, M6M M10 A280	

VOLUME FLAP PRESSURE

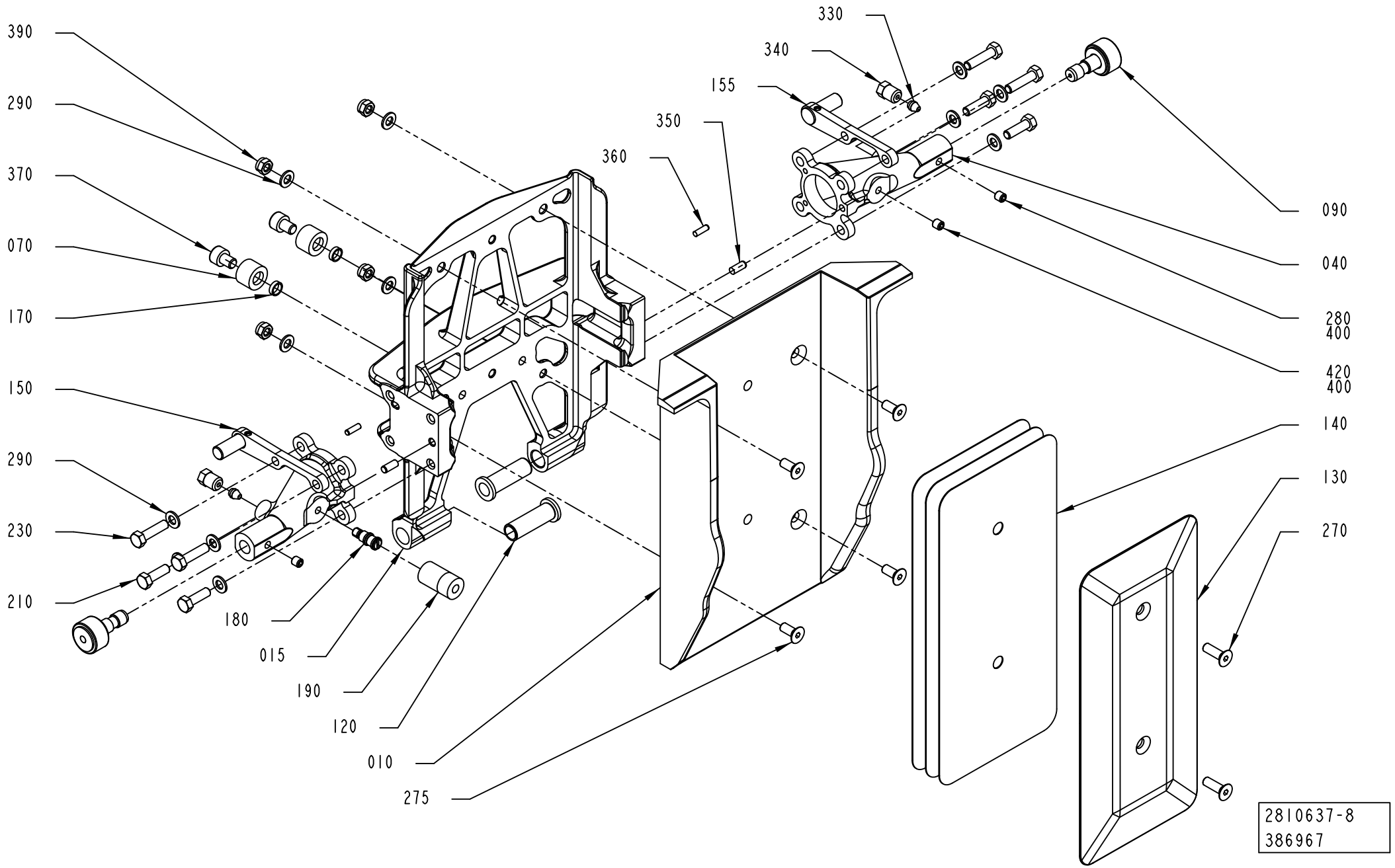

Pos	Part No	UN	Qty	Description	Page No
TPA 0750SQ (Cont'd) (See drawing on page: 1-670)					
210	312115-0329		2	SCREW ISO4762 M5X16 A4 80	
230	90459-1906		2	SHOULDER SCREW, 6X10/M5 SS	
265	312155-0299		4	SCREW DIN 7991 MF6S M4X30 A4 70	
270	312145-0293		2	SCREW ISO 2009 MFS M4X16 A4	
275	312115-0331		2	SCREW ISO4762 M5X20 A4 80	
290	315105-0146		4	WASHER PLAIN, 5,3X10X1 A4 BRB	
370	312115-0362		2	SCREW ISO4762 M6X8 A4 80	
410	311103-0267		2	PARALLEL PIN ISO 2338 4M6X10 A1	
420	312318-0320		1	SET SCREW, CUP END ISO4029 M5X5 A4	
TPA 1000SQ (See drawing on page: 1-670)					
010	2995601-0000		1	VOLUME FLAP	
015	2995595-0000		1	FRAME	
040	2995597-0000		2	ARM	
070	2842778-0000		2	DAMPER	
120	2530313-0000		2	BUSHING	
130	2995600-0000		1	VOLUME BULGE	
135	2968854-0000		2	VOLUME BULGE	
140	2995599-0000		3	VOLUME SHIM	
145	2968863-0000		6	VOLUME SHIM	
150	2995655-0000		2	SCREW	
170	2842779-0000		2	SPACER	
180	2842776-0000		1	PIN	
190	2846667-0000		1	DAMPER	
200	312605-0320		2	HEXAGON NUT, M6M M10 A280	
210	312115-0329		2	SCREW ISO4762 M5X16 A4 80	
230	90459-1906		2	SHOULDER SCREW, 6X10/M5 SS	
265	312155-0299		4	SCREW DIN 7991 MF6S M4X30 A4 70	
270	312145-0293		2	SCREW ISO 2009 MFS M4X16 A4	
275	312115-0331		2	SCREW ISO4762 M5X20 A4 80	
290	315105-0146		4	WASHER PLAIN, 5,3X10X1 A4 BRB	
370	312115-0362		2	SCREW ISO4762 M6X8 A4 80	
410	311103-0267		2	PARALLEL PIN ISO 2338 4M6X10 A1	
420	312318-0320		1	SET SCREW, CUP END ISO4029 M5X5 A4	
Common Parts					
090	2952691-0100		2	ROLLER	**1-641**
280	312318-0320		2	SET SCREW, CUP END ISO4029 M5X5 A4	
330	90028-0020		2	CONE TUBE 2,5MM	
340	90134-0063		2	BUSHING/NUT M8X1, D=2,5 MM	
400	90602-4847		1	THREADLOCKER LOCTITE 243, 50ML	

Pos	Part No	UN	Qty	Description	Page No

VOLUME FLAP PRESSURE

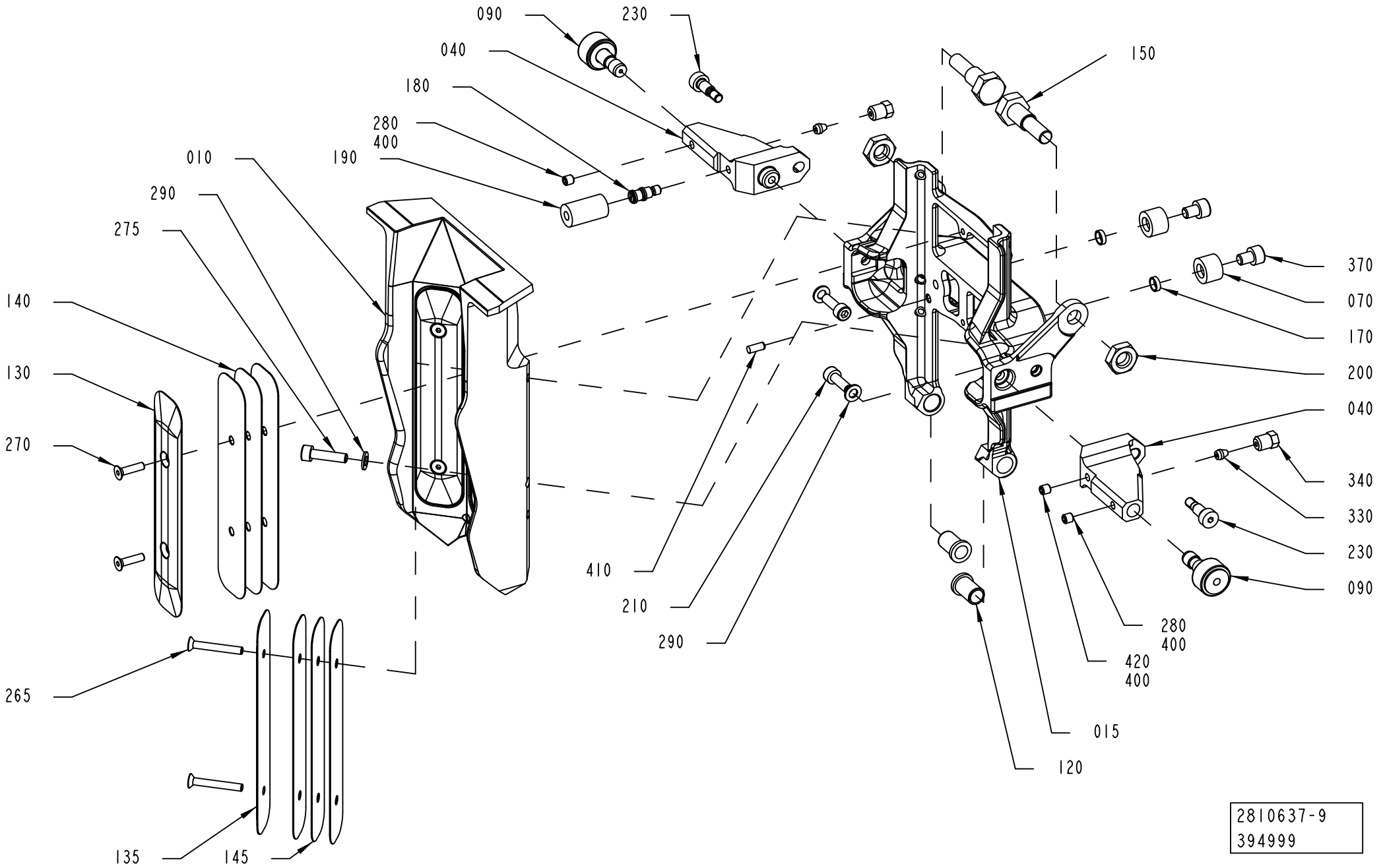

Pos	Part No	UN	Qty	Description	Page No

SEE PREVIOUS LISTS PAGES: 1-661, 1-663, 1-665, 1-667, 1-669.

Pos	Part No	UN	Qty	Description	Page No

VOLUME FLAP PRESSURE

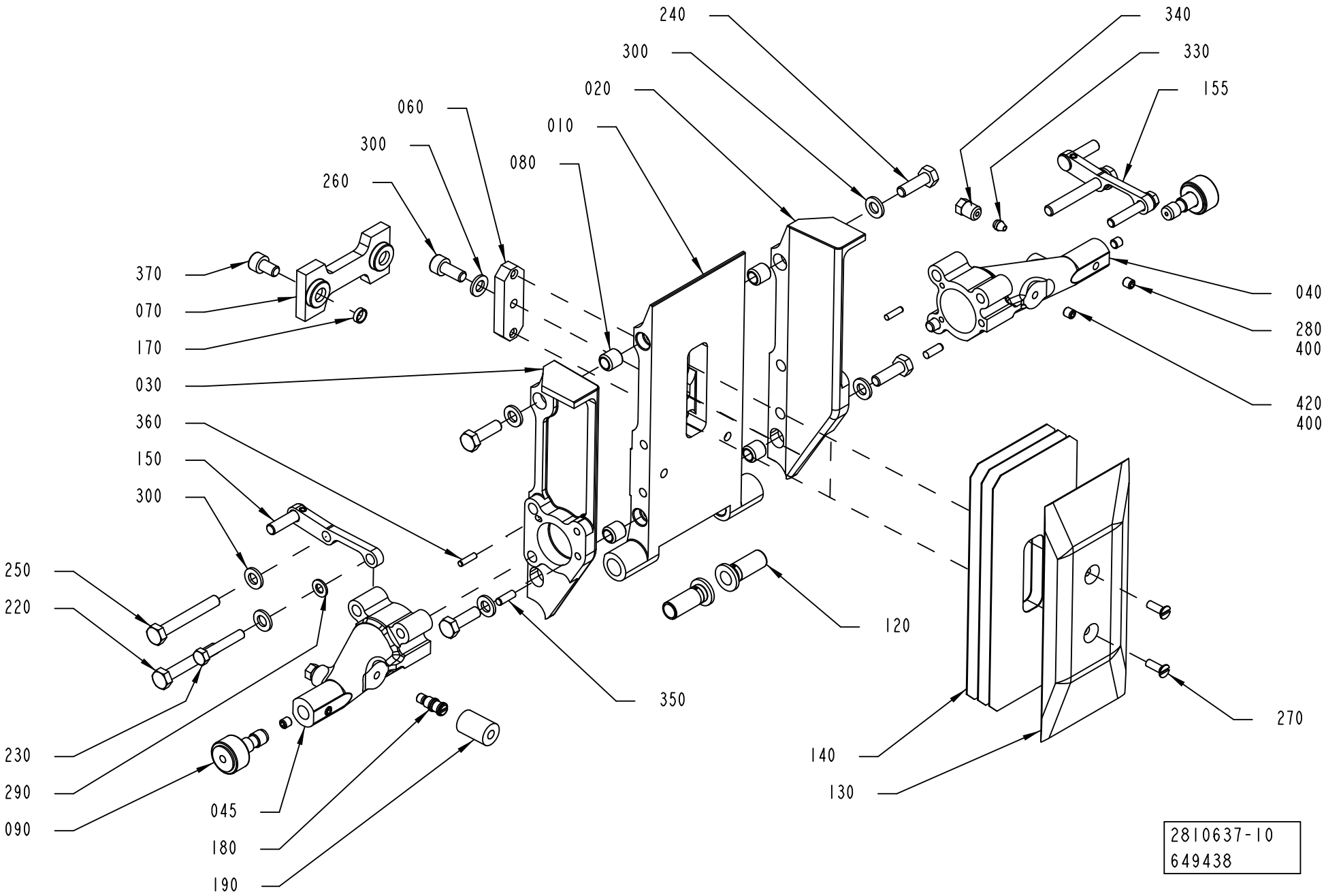

Pos	Part No	UN	Qty	Description	Page No
SEE PREVIOUS LISTS PAGES: 1-661, 1-663, 1-665, 1-667, 1-669.					

Pos	Part No	UN	Qty	Description	Page No

VOLUME FLAP PRESSURE

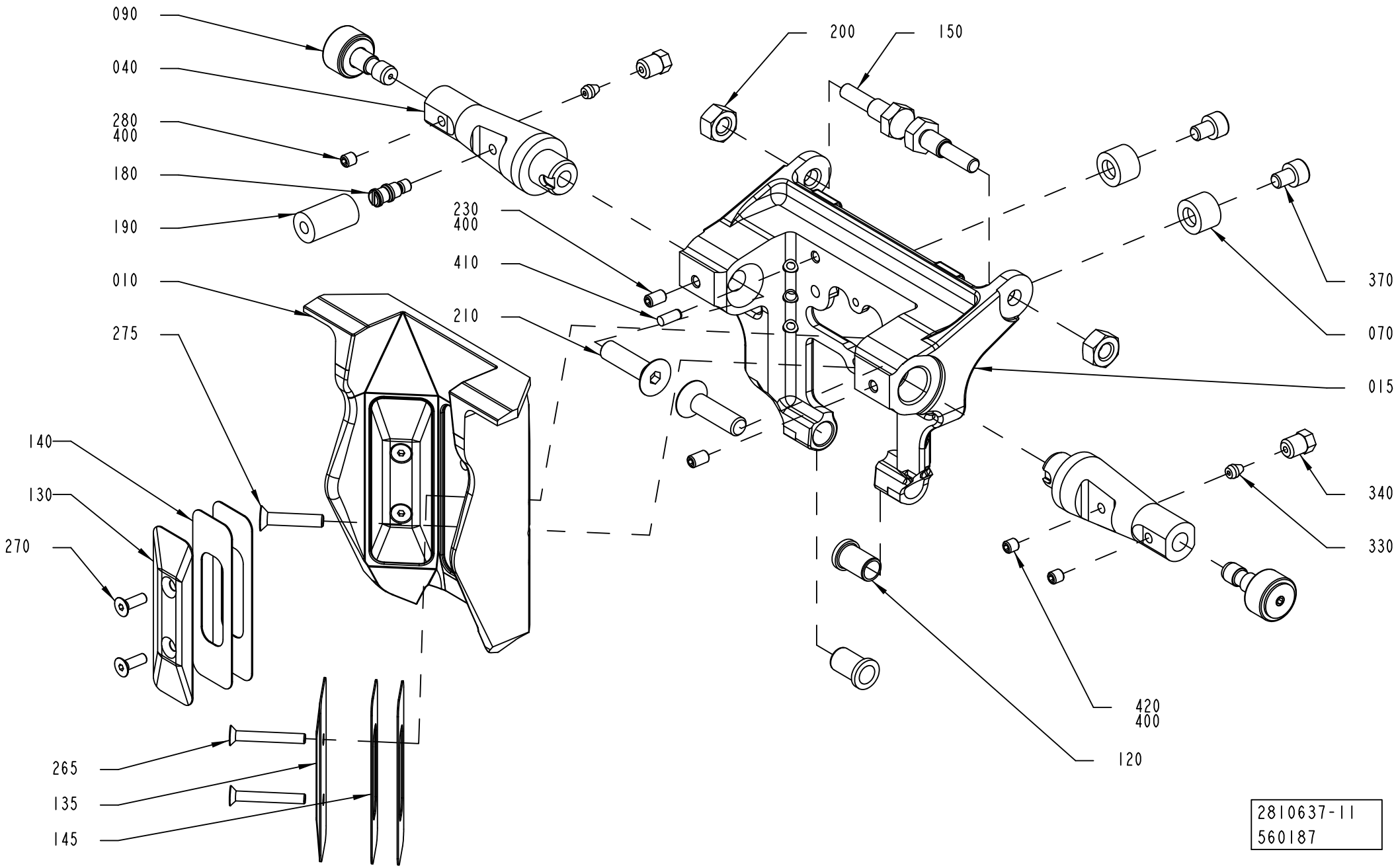

Pos	Part No	UN	Qty	Description	Page No
SEE PREVIOUS LISTS PAGES: 1-661, 1-663, 1-665, 1-667, 1-669.					

Pos	Part No	UN	Qty	Description	Page No

VOLUME FLAP PRESSURE

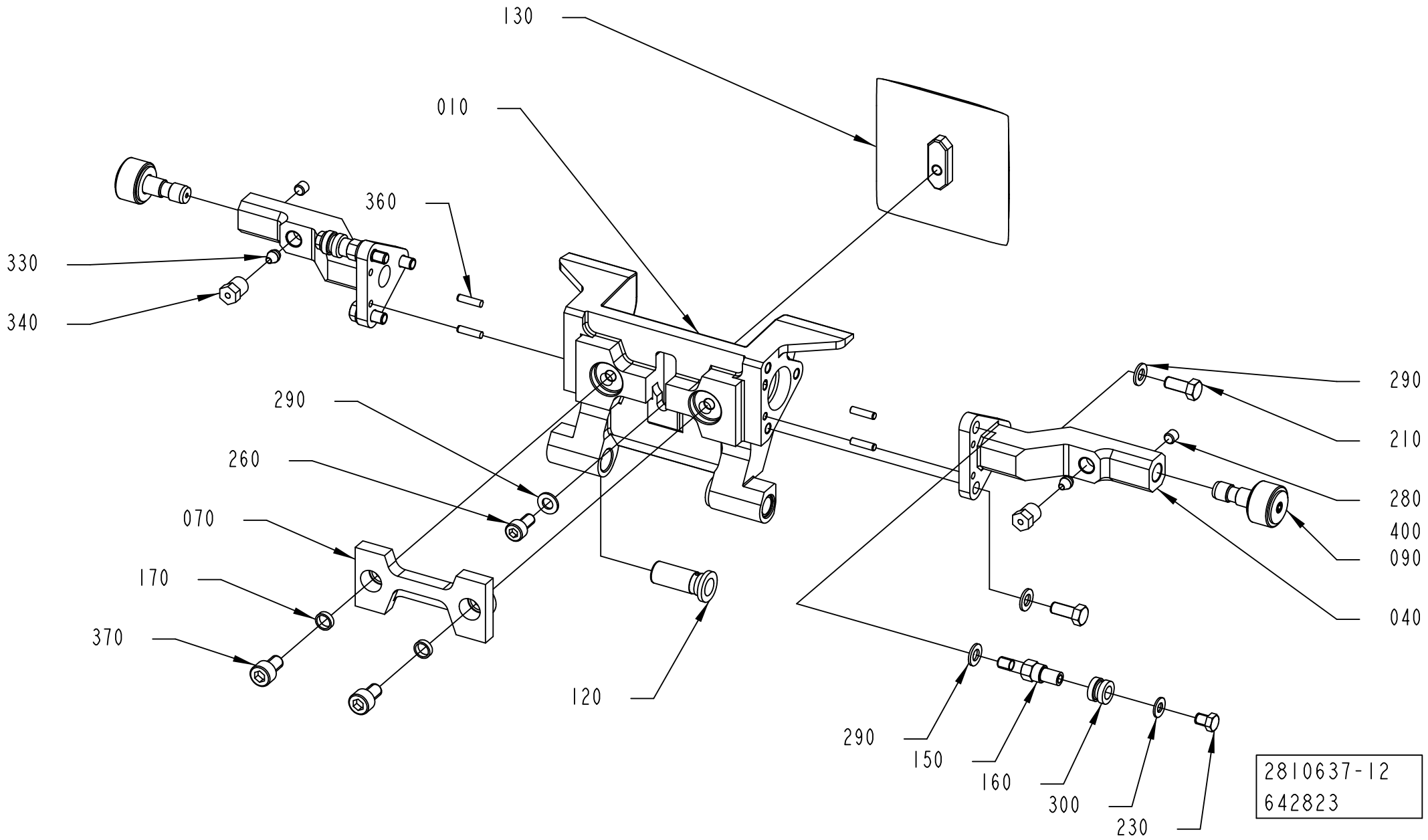

Pos	Part No	UN	Qty	Description	Page No
SEE PREVIOUS LISTS PAGES: 1-661, 1-663, 1-665, 1-667, 1-669.					

Pos	Part No	UN	Qty	Description	Page No

VOLUME FLAP PRESSURE LEFT

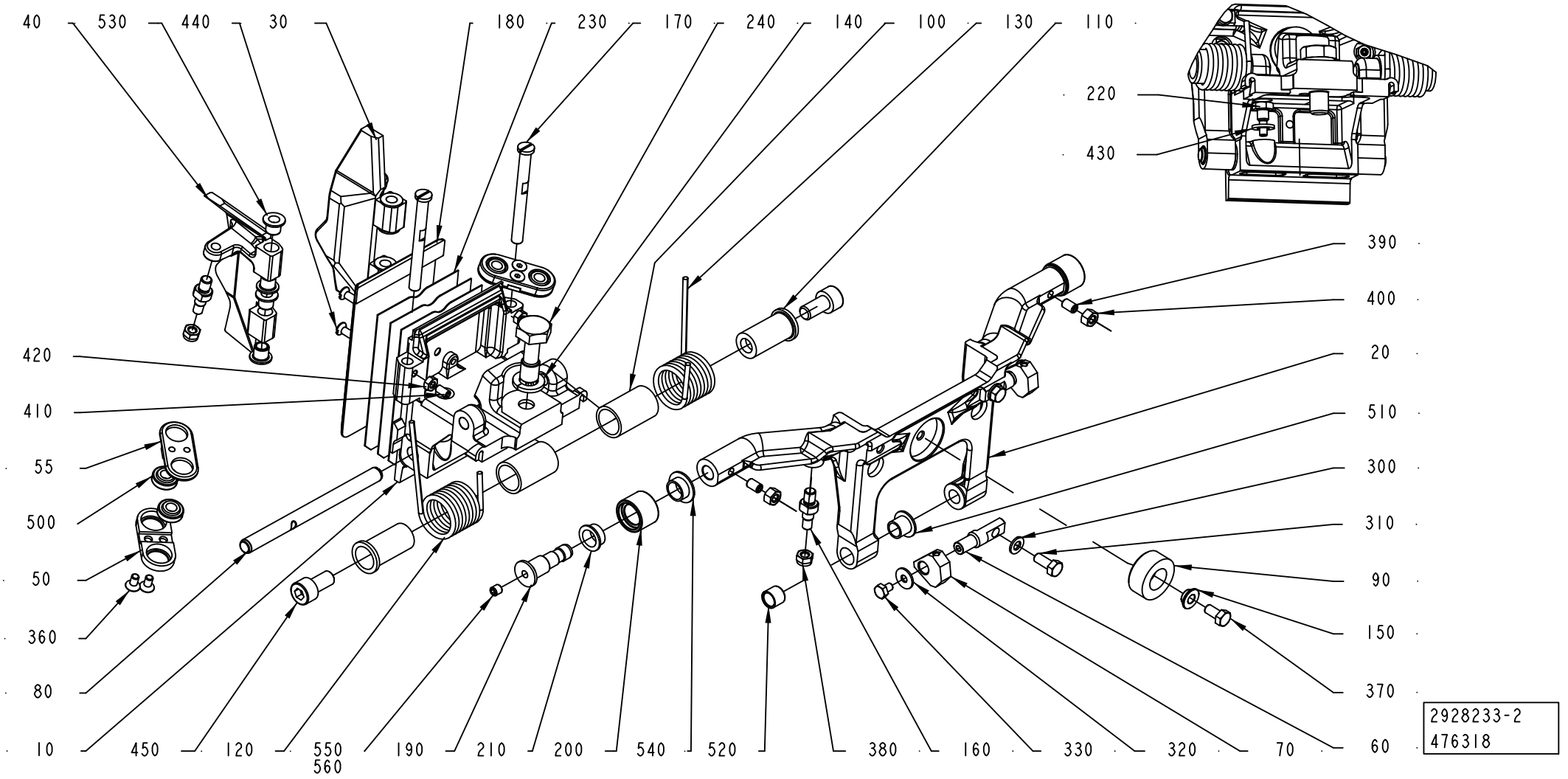

ECM: 483519 - 20101215
Group number: 2928233-0200
Assembly Drawing: 2928233-2_1_AC

Pos	Part No	UN	Qty	Description	Page No
-					
010	2998822-0004		1	FLAP HOLDER	
020	2917413-0000		1	FRAME	
030	3053567-0000		1	FLAP	
040	3053568-0000		1	FLAP	
050	3046743-0000		2	ROD	
055	3046744-0000		2	ROD	
060	2917418-0000		2	PIN	
070	2928239-0000		2	HOLDER	
080	2649660-0000		1	SHAFT	
090	2862308-0000		1	DAMPER	
100	1538521-0000		2	BUSHING	
110	2917419-0000		2	PIN	
120	2922536-0000		1	SPRING	
130	2922537-0000		1	SPRING	
140	315105-0173		1	WASHER PLAIN, 10,5X22X2 A4 BRB	
150	2572197-0000		1	SPACER	
160	2909850-0000		4	SPACER SCREW	
170	2866740-0000		2	SHAFT	
180	3031531-0000		1	VOLUME BULGE	
190	2868844-0000		2	AXLE PIN	
200	2660295-0000		2	ROLLER	
210	2660296-0000		2	BUSHING	
220	2922489-0000		1	PIN	
230	3041582-0000		3	SHIM	
240	2922524-0000		1	SCREW	
300	315105-0146		2	WASHER PLAIN, 5,3X10X1 A4 BRB	
310	312105-0327		2	"SCREW, M6S ISO 4017 M5X12 A4 80"	
320	90005-0082		2	WASHER PLAIN ROUND 4,3(M4)/12,H=1	
330	312105-0285		2	SCREW, M6S ISO 4017 M4X6 A4 70	
360	312155-0287		4	SCREW DIN 7991 MF6S M4X8 A4 70	
370	312105-0325		1	SCREW, M6S ISO 4017 M5X10 A4 80	
380	312812-0314		4	HEXAGON NUT, NY-LOCK M5 A4 80	
390	312318-0323		2	SET SCREW, CUP END ISO4029 M5X8 A4	
400	312605-0314		2	HEXAGON NUT, M6M M5 A280	
410	312318-0287		2	SET SCREW, CUP END ISO4029 M4X8 A4	
420	312605-0312		2	HEXAGON NUT, M6M M4 A280	
430	315105-0153		1	WASHER PLAIN, 6,4X12X1,5 A4 BRB	
440	312145-0291		2	SCREW ISO 2009 MFS M4X12 A4	
450	312115-0449		2	SCREW ISO4762 M8X16 A4 80	
500	90600-3582		4	SPHERICAL BEARING, GE 6 TGR	
510	90240-0260		2	FLANGE BUSHING, IGLIDUR X 8X10X9	
520	90458-0353		2	BUSHING, IGLIDUR X 8X10X8	
530	321155-0062		8	FLANGE BUSHING, IGLIDUR X 6X8X8	
540	90240-0289		2	FLANGE BUSHING, IGLIDUR X 10X12X6	
550	312318-0320		2	SET SCREW, CUP END ISO4029 M5X5 A4	
560	90602-4847		1	THREADLOCKER LOCTITE 243, 50ML	

Machine Type | Group Description | Used-In | Group Number | Page No

SUPPORT FLAP PRESSURE LEFT

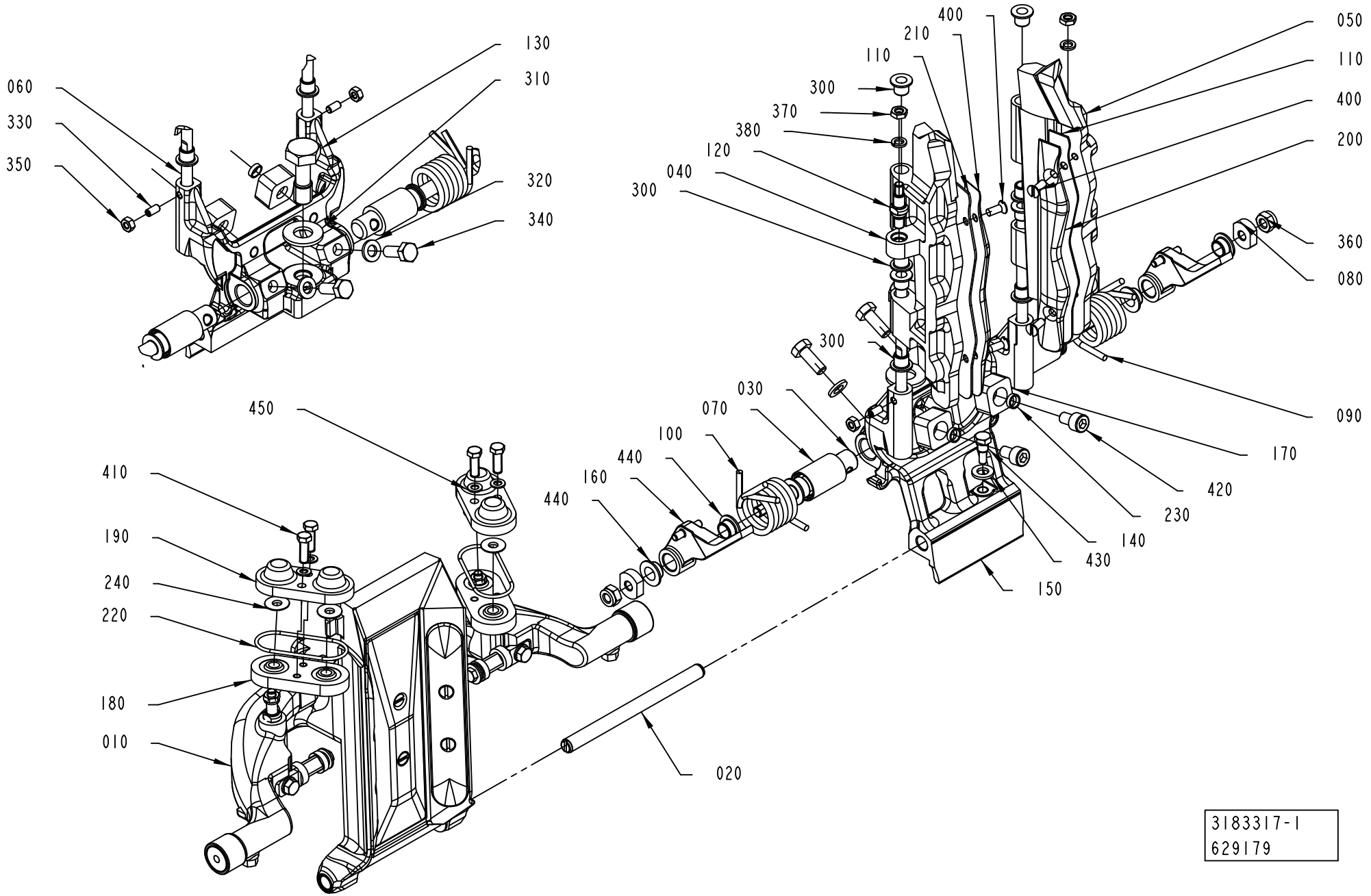

ECM: 634623 - 20140101
Group number: 3183317-0100
Assembly Drawing: 3183317-1_1_AD

Pos	Part No	UN	Qty	Description	Page No
TGA 1000CR					
040	3199628-0000		1	VOLUME FLAP	
050	3199627-0000		1	VOLUME FLAP	
200	3115434-0000		1	VOLUME BULGE	
210	3115436-0000		1	VOLUME BULGE	
TGA 1000LF					
040	3222726-0000		1	VOLUME FLAP	
050	3222725-0000		1	VOLUME FLAP	
200	3235925-0000		1	VOLUME BULGE	
210	3235926-0000		1	VOLUME BULGE	
Common Parts					
010	3183323-0100		1	VOLUME FLAP	**1-647**
020	2649660-0000		1	SHAFT	
030	3179813-0000		2	SHAFT	
060	3199633-0000		2	AXLE PIN	
070	2948027-0000		2	BUSHING	
080	2911623-0000		2	WASHER	
090	2949214-0000		1	SPRING	
100	2949215-0000		1	SPRING	
110	3220079-0000		2	SHIM	
120	3199630-0000		2	SPACER SCREW	
130	2922524-0000		1	SCREW	
140	2922489-0000		1	PIN	
150	3178500-0004		1	HOLDER	
160	3178505-0000		2	LEVER	
170	2982488-0000		2	STOP	
180	3199635-0000		2	ROD	
190	3199634-0000		2	COVER	
220	315202-0801		2	O-RING 37,82X1,78 MM	
230	2842779-0000		2	SPACER	
240	3235929-0000		4	WASHER	
300	321155-0062		8	FLANGE BUSHING, IGLIDUR X 6X8X8	
310	315105-0173		1	WASHER PLAIN, 10,5X22X2 A4 BRB	
320	315105-0153		2	WASHER PLAIN, 6,4X12X1,5 A4 BRB	
330	312318-0287		2	SET SCREW, CUP END ISO4029 M4X8 A4	
340	312105-0368		2	"SCREW, M6S ISO 4017 M6X16 A4 80"	
350	312605-0312		2	HEXAGON NUT, M6M M4 A280	
360	312812-0316		2	HEXAGON NUT, NY-LOCK M6 A4 80	
370	312625-0314		2	HEXAGON THIN NUT, EN 24035 ML6M M5 A4	
380	315402-0146		2	LOCK WASHER, DIN127B 5,1 A4, M5-3/16	
400	312145-0289		4	SCREW ISO 2009 MFS M4X10 A4	
410	312105-0292		4	SCREW, M6S ISO 4017 M4X14 A4 70	
420	312115-0364		2	SCREW ISO4762 M6X10 A4 80	
430	315105-0153		1	WASHER PLAIN, 6,4X12X1,5 A4 BRB	
440	90600-2013		4	FLANGE BUSHING, IGLIDUR X 8X10X5,5	
450	315105-0136		4	WASHER PLAIN, 4,3X8X0,8 A4 BRB	

Machine Type | Group Description | Used-In | Group Number | Page No

SUPPORT FLAP CUTTING

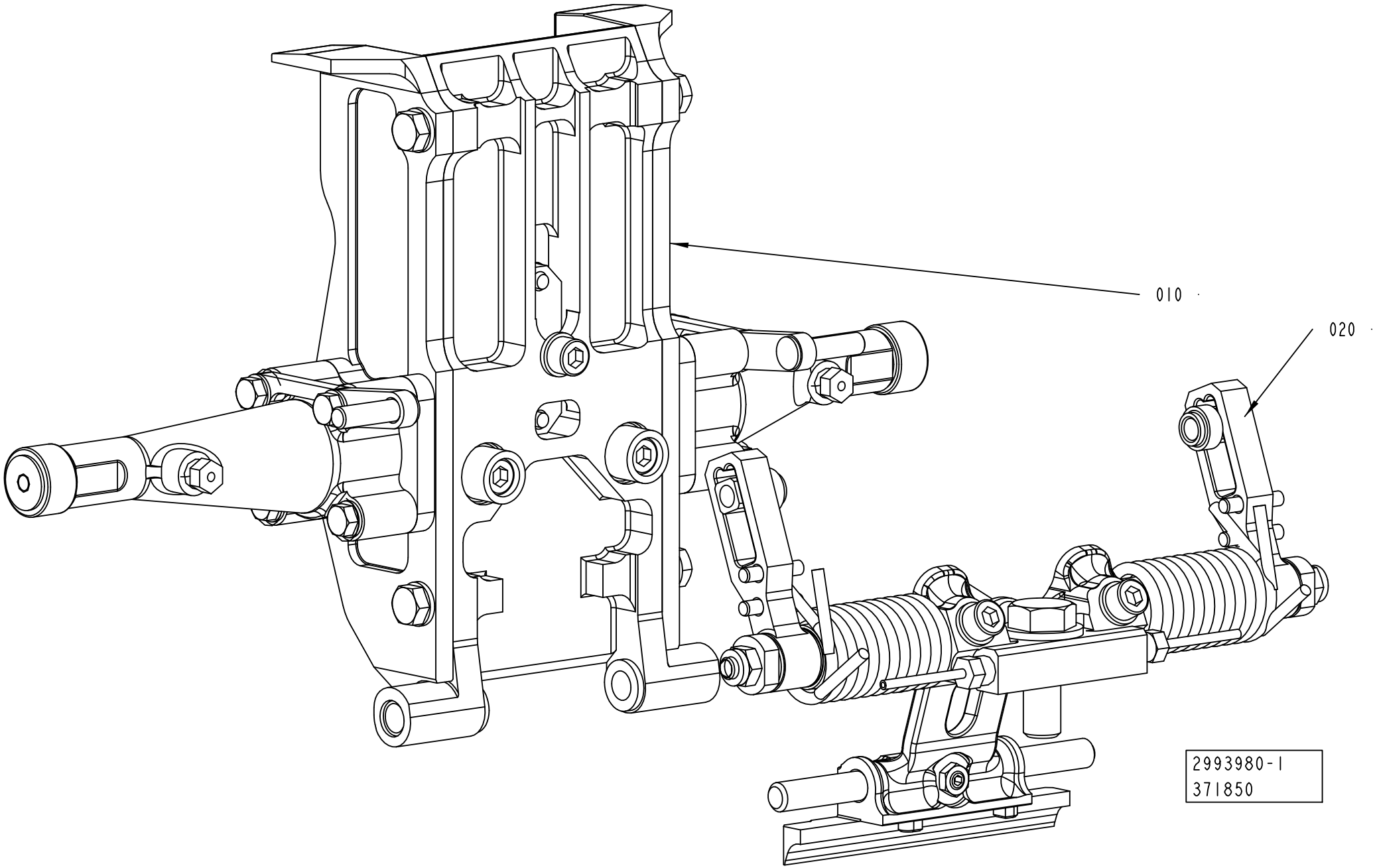

ECM: 644814 - 20140401
Group number: 2993980-0100
Assembly Drawing: 2993980-1_1_AA

Pos	Part No	UN	Qty	Description	Page No
TGA 1500SQ					
010	2698638-0200		1	VOLUME FLAP CUTTING	**1-615**
020	2993979-0100		1	SHOCK ABSORBER CUTTING	**1-685, 1-687, 1-689, 1-691**
TPA 0500SQ					
010	2808800-0100		1	VOLUME FLAP CUTTING	**1-625, 1-627, 1-629, 1-631, 1-633, 1-635, 1-637, 1-639**
020	2993979-0100		1	SHOCK ABSORBER CUTTING	**1-685, 1-687, 1-689, 1-691**
TPA 0750SQ					
010	2808800-0100		1	VOLUME FLAP CUTTING	**1-625, 1-627, 1-629, 1-631, 1-633, 1-635, 1-637, 1-639**
020	2993979-0100		1	SHOCK ABSORBER CUTTING	**1-685, 1-687, 1-689, 1-691**
TPA 1000SQ					
010	2808800-0100		1	VOLUME FLAP CUTTING	**1-625, 1-627, 1-629, 1-631, 1-633, 1-635, 1-637, 1-639**
020	2993979-0100		1	SHOCK ABSORBER CUTTING	**1-685, 1-687, 1-689, 1-691**
TBA 0500B					
010	2808800-0100		1	VOLUME FLAP CUTTING	**1-625, 1-627, 1-629, 1-631, 1-633, 1-635, 1-637, 1-639**
020	2993979-0100		1	SHOCK ABSORBER CUTTING	**1-685, 1-687, 1-689, 1-691**
TBA 0500E					
010	2808800-0100		1	VOLUME FLAP CUTTING	**1-625, 1-627, 1-629, 1-631, 1-633, 1-635, 1-637, 1-639**
020	2993979-0100		1	SHOCK ABSORBER CUTTING	**1-685, 1-687, 1-689, 1-691**
TBA 0500S					
010	2808800-0100		1	VOLUME FLAP CUTTING	**1-625, 1-627, 1-629, 1-631, 1-633, 1-635, 1-637, 1-639**
020	2993979-0100		1	SHOCK ABSORBER CUTTING	**1-685, 1-687, 1-689, 1-691**
TBA 0500SQ					
010	2808800-0100		1	VOLUME FLAP CUTTING	**1-625, 1-627, 1-629, 1-631, 1-633, 1-635, 1-637, 1-639**
020	2993979-0100		1	SHOCK ABSORBER CUTTING	**1-685, 1-687, 1-689, 1-691**
TBA 1000B					
010	2808800-0100		1	VOLUME FLAP CUTTING	**1-625, 1-627, 1-629, 1-631, 1-633, 1-635, 1-637, 1-639**
020	2993979-0100		1	SHOCK ABSORBER CUTTING	**1-685, 1-687, 1-689, 1-691**
TBA 1000E NOQC					
010	2808800-0100		1	VOLUME FLAP CUTTING	**1-625, 1-627, 1-629, 1-631, 1-633, 1-635, 1-637, 1-639**
020	2993979-0100		1	SHOCK ABSORBER CUTTING	**1-685, 1-687, 1-689, 1-691**
TBA 1000E QC					
010	2808800-0100		1	VOLUME FLAP CUTTING	**1-625, 1-627, 1-629, 1-631, 1-633, 1-635, 1-637, 1-639**
020	2993979-0100		1	SHOCK ABSORBER CUTTING	**1-685, 1-687, 1-689, 1-691**
TBA 1000M					
010	2808800-0100		1	VOLUME FLAP CUTTING	**1-625, 1-627, 1-629, 1-631, 1-633, 1-635, 1-637, 1-639**
020	2993979-0100		1	SHOCK ABSORBER CUTTING	**1-685, 1-687, 1-689, 1-691**
TBA 1000S					
010	2808800-0100		1	VOLUME FLAP CUTTING	**1-625, 1-627, 1-629, 1-631, 1-633, 1-635, 1-637, 1-639**
020	2993979-0100		1	SHOCK ABSORBER CUTTING	**1-685, 1-687, 1-689, 1-691**
TBA 1000SQ					
010	2808800-0100		1	VOLUME FLAP CUTTING	**1-625, 1-627, 1-629, 1-631, 1-633, 1-635, 1-637, 1-639**
020	2993979-0100		1	SHOCK ABSORBER CUTTING	**1-685, 1-687, 1-689, 1-691**
TBA 1500S					
010	2808800-0100		1	VOLUME FLAP CUTTING	**1-625, 1-627, 1-629, 1-631, 1-633, 1-635, 1-637, 1-639**
020	2993979-0100		1	SHOCK ABSORBER CUTTING	**1-685, 1-687, 1-689, 1-691**
TBA 2000S					
010	2808800-0100		1	VOLUME FLAP CUTTING	**1-625, 1-627, 1-629, 1-631, 1-633, 1-635, 1-637, 1-639**
020	2993979-0100		1	SHOCK ABSORBER CUTTING	**1-685, 1-687, 1-689, 1-691**
TGA 0500SQ					
010	2922540-0200		1	VOLUME FLAP CUTTING RIGHT	**1-693**
TGA 0750SQ					
010	2698638-0200		1	VOLUME FLAP CUTTING	**1-615**
020	2993979-0100		1	SHOCK ABSORBER CUTTING	**1-685, 1-687, 1-689, 1-691**
TGA 1000CR, TGA 1000LF					
010	3183316-0100		1	SUPPORT FLAP CUTTING RIGHT	**1-695**
TGA 1000SQ					
010	2698638-0200		1	VOLUME FLAP CUTTING	**1-615**
020	2993979-0100		1	SHOCK ABSORBER CUTTING	**1-685, 1-687, 1-689, 1-691**

Machine Type	Group Description	Used-In	Group Number	Page No

SHOCK ABSORBER CUTTING

Drawing file: 2993979-1_1_AB.hpgl

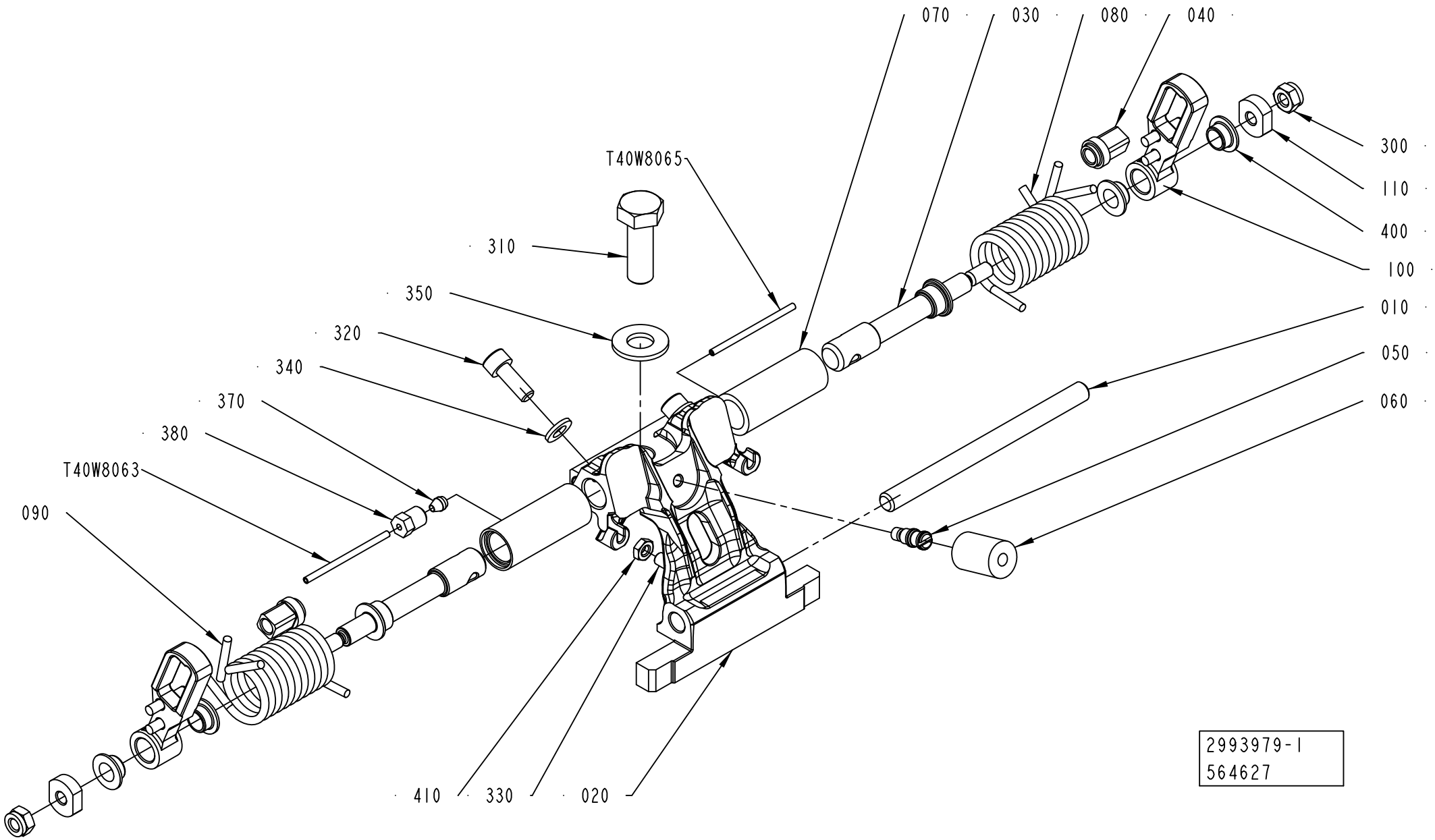

ECM: 676207 - 20140515
Group number: 2993979-0100
Assembly Drawing: 2993979-1_1_AB

This list covers pages from 1-684 to 1-691

Pos	Part No	UN	Qty	Description	Page No
TBA 0500B (See drawing on page: 1-686)					
010	2773510-0000		1	SHAFT	
020	3038000-0002		1	HOLDER	
030	2902006-0000		2	SHAFT	
050	2842776-0000		1	PIN	
060	2842777-0001		1	DAMPER	
080	2961953-0000		2	TENSION SPRING	
120	2905199-0000		2	HOLDER	
300	312105-0285		2	SCREW, M6S ISO 4017 M4X6 A4 70	
310	312105-0495		1	SCREW, M6S ISO 4017 M10X30 A4 80	
320	312115-0368		2	SCREW ISO4762 M6X16 A4 80	
330	312318-0325		1	SET SCREW, CUP END ISO4029 M5X10 A4	
360	315106-0136		2	WASHER PLAIN, M4 ISO7089-4-200 HV A4	
370	90028-0020		2	CONE TUBE 2,5MM	
380	90134-0063		2	BUSHING/NUT M8X1, D=2,5 MM	
410	312625-0314		1	HEXAGON THIN NUT, EN 24035 ML6M M5 A4	
T40W8063	90166-0143	MM	150	TUBE 2,5 MM PA TRANSP.	
T40W8065	90166-0143	MM	150	TUBE 2,5 MM PA TRANSP.	
TBA 0500E (See drawing on page: 1-690)					
010	2773510-0000		1	SHAFT	
020	2862279-0002		1	HOLDER	
030	3051279-0000		2	SHAFT	
080	2959868-0000		2	TENSION SPRING	
120	2905199-0000		2	HOLDER	
130	3051280-0000		2	HOLDER	
140	2959867-0000		2	SPACER SCREW	
300	312105-0285		2	SCREW, M6S ISO 4017 M4X6 A4 70	
310	312105-0495		1	SCREW, M6S ISO 4017 M10X30 A4 80	
320	312115-0368		2	SCREW ISO4762 M6X16 A4 80	
330	312318-0327		1	SET SCREW, CUP END ISO4029 M5X12 A4	
360	315106-0136		2	WASHER PLAIN, M4 ISO7089-4-200 HV A4	
370	90028-0020		2	CONE TUBE 2,5MM	
380	90134-0063		2	BUSHING/NUT M8X1, D=2,5 MM	
390	311111-0252		2	SPRING PIN ISO 8752 4X12-ST	
410	312625-0314		1	HEXAGON THIN NUT, EN 24035 ML6M M5 A4	
T40W8063	90166-0143	MM	150	TUBE 2,5 MM PA TRANSP.	
T40W8065	90166-0143	MM	150	TUBE 2,5 MM PA TRANSP.	
TBA 0500S (See drawing on page: 1-684)					
010	2916971-0000		1	SHAFT	
020	3024712-0002		1	HOLDER	
030	2911622-0000		2	SHAFT	
040	3092829-0000		2	SLIDER	
050	2842776-0000		1	PIN	
060	2842777-0001		1	DAMPER	
070	2842780-0000		2	BUSHING	
080	2842781-0000		1	SPRING	
090	2842782-0000		1	SPRING	
100	3219171-0000		2	LEVER	
110	2911623-0000		2	WASHER	
300	312812-0316		2	HEXAGON NUT, NY-LOCK M6 A4 80	
310	312105-0495		1	SCREW, M6S ISO 4017 M10X30 A4 80	
320	312115-0368		2	SCREW ISO4762 M6X16 A4 80	
330	312318-0325		1	SET SCREW, CUP END ISO4029 M5X10 A4	
370	90028-0020		2	CONE TUBE 2,5MM	
380	90134-0063		2	BUSHING/NUT M8X1, D=2,5 MM	
400	90600-2013		4	FLANGE BUSHING, IGLIDUR X 8X10X5,5	
410	312625-0314		1	HEXAGON THIN NUT, EN 24035 ML6M M5 A4	
T40W8063	90166-0143	MM	155	TUBE 2,5 MM PA TRANSP.	
T40W8065	90166-0143	MM	155	TUBE 2,5 MM PA TRANSP.	
TBA 0500SQ (See drawing on page: 1-686)					
010	2773510-0000		1	SHAFT	
020	3037996-0002		1	HOLDER	
030	2863119-0000		2	SHAFT	
050	2842776-0000		1	PIN	
060	2842777-0001		1	DAMPER	
080	2959868-0000		2	TENSION SPRING	
120	2905199-0000		2	HOLDER	
300	312105-0285		2	SCREW, M6S ISO 4017 M4X6 A4 70	
310	312105-0495		1	SCREW, M6S ISO 4017 M10X30 A4 80	
320	312115-0368		2	SCREW ISO4762 M6X16 A4 80	
330	312318-0323		1	SET SCREW, CUP END ISO4029 M5X8 A4	
360	315106-0136		2	WASHER PLAIN, M4 ISO7089-4-200 HV A4	
370	90028-0020		2	CONE TUBE 2,5MM	
380	90134-0063		2	BUSHING/NUT M8X1, D=2,5 MM	
410	312625-0314		1	HEXAGON THIN NUT, EN 24035 ML6M M5 A4	
T40W8063	90166-0143	MM	135	TUBE 2,5 MM PA TRANSP.	
T40W8065	90166-0143	MM	135	TUBE 2,5 MM PA TRANSP.	
TBA 1000B, TBA 1000M (See drawing on page: 1-684)					
010	2773510-0000		1	SHAFT	
020	3038000-0002		1	HOLDER	
030	2911622-0000		2	SHAFT	
040	3092829-0000		2	SLIDER	
050	2842776-0000		1	PIN	
060	2842777-0001		1	DAMPER	

Machine Type | Group Description | Used-In | Group Number | Page No

SHOCK ABSORBER CUTTING

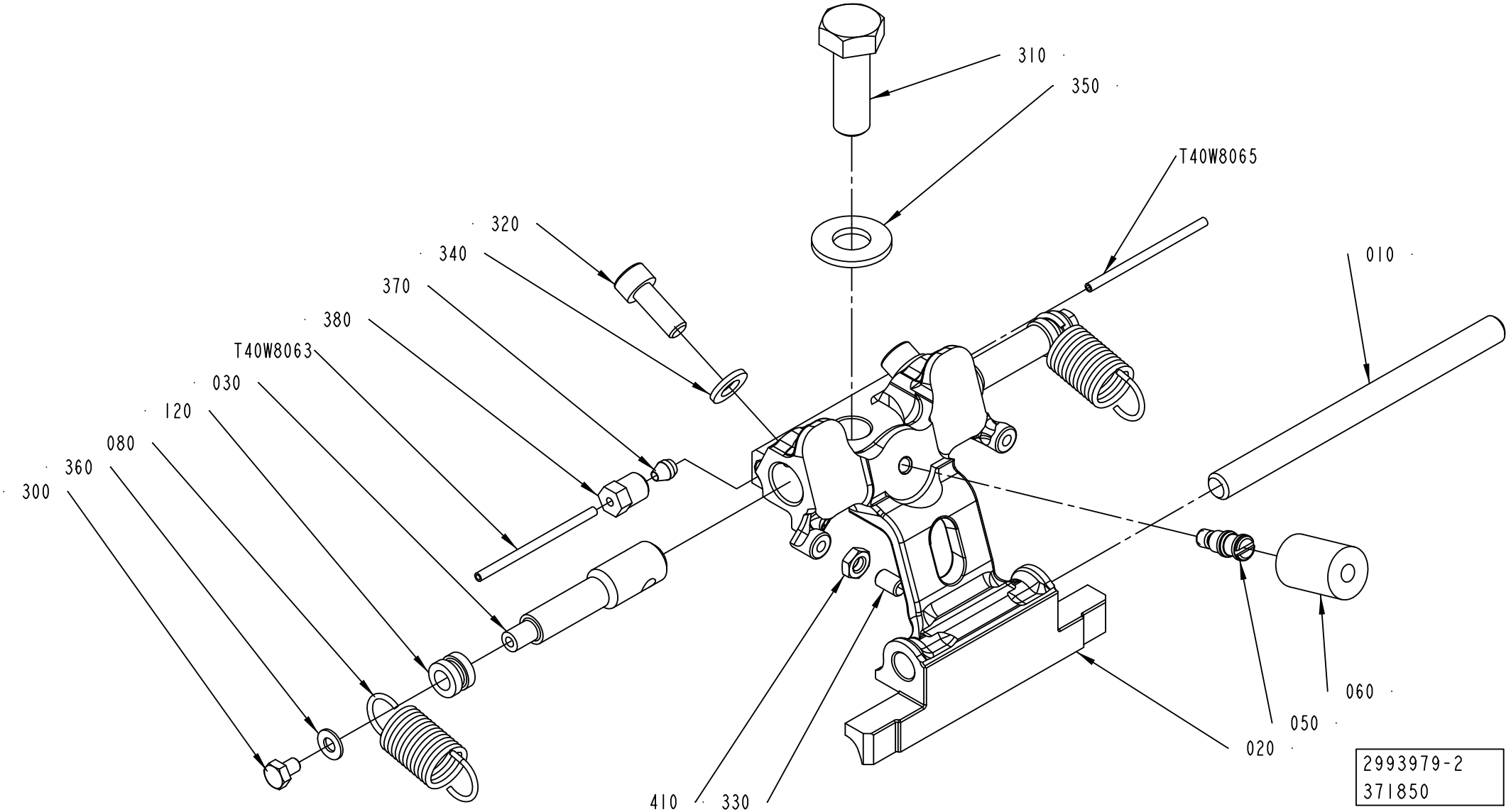

ECM: 676207 - 20140515
Group number: 2993979-0100
Assembly Drawing: 2993979-2_1_AA

This list covers pages from 1-684 to 1-691

Pos	Part No	UN	Qty	Description	Page No
TBA 1000B, TBA 1000M (Cont'd) (See drawing on page: 1-684)					
070	2842780-0000		2	BUSHING	
080	2842781-0000		1	SPRING	
090	2842782-0000		1	SPRING	
100	3219171-0000		2	LEVER	
110	2911623-0000		2	WASHER	
300	312812-0316		2	HEXAGON NUT, NY-LOCK M6 A4 80	
310	312105-0495		1	SCREW, M6S ISO 4017 M10X30 A4 80	
320	312115-0368		2	SCREW ISO4762 M6X16 A4 80	
330	312318-0325		1	SET SCREW, CUP END ISO4029 M5X10 A4	
370	90028-0020		2	CONE TUBE 2,5MM	
380	90134-0063		2	BUSHING/NUT M8X1, D=2,5 MM	
400	90600-2013		4	FLANGE BUSHING, IGLIDUR X 8X10X5,5	
410	312625-0314		1	HEXAGON THIN NUT, EN 24035 ML6M M5 A4	
T40W8063	90166-0143	MM	155	TUBE 2,5 MM PA TRANSP.	
T40W8065	90166-0143	MM	155	TUBE 2,5 MM PA TRANSP.	
TBA 1000E (See drawing on page: 1-684)					
010	2773510-0000		1	SHAFT	
020	2862279-0002		1	HOLDER	
030	2911622-0000		2	SHAFT	
040	3092829-0000		2	SLIDER	
050	2842776-0000		1	PIN	
060	2842777-0001		1	DAMPER	
070	2842780-0000		2	BUSHING	
080	2842781-0000		1	SPRING	
090	2842782-0000		1	SPRING	
100	3219171-0000		2	LEVER	
110	2911623-0000		2	WASHER	
300	312812-0316		2	HEXAGON NUT, NY-LOCK M6 A4 80	
310	312105-0495		1	SCREW, M6S ISO 4017 M10X30 A4 80	
320	312115-0368		2	SCREW ISO4762 M6X16 A4 80	
330	312318-0325		1	SET SCREW, CUP END ISO4029 M5X10 A4	
370	90028-0020		2	CONE TUBE 2,5MM	
380	90134-0063		2	BUSHING/NUT M8X1, D=2,5 MM	
400	90600-2013		4	FLANGE BUSHING, IGLIDUR X 8X10X5,5	
410	312625-0314		1	HEXAGON THIN NUT, EN 24035 ML6M M5 A4	
T40W8063	90166-0143	MM	155	TUBE 2,5 MM PA TRANSP.	
T40W8065	90166-0143	MM	155	TUBE 2,5 MM PA TRANSP.	
TBA 1000S (See drawing on page: 1-684)					
010	2773510-0000		1	SHAFT	
020	3037998-0002		1	HOLDER	
030	2911622-0000		2	SHAFT	
040	3092829-0000		2	SLIDER	
050	2842776-0000		1	PIN	
060	2842777-0001		1	DAMPER	
070	2842780-0000		2	BUSHING	
080	2842781-0000		1	SPRING	
090	2842782-0000		1	SPRING	
100	3219171-0000		2	LEVER	
110	2911623-0000		2	WASHER	
300	312812-0316		2	HEXAGON NUT, NY-LOCK M6 A4 80	
310	312105-0495		1	SCREW, M6S ISO 4017 M10X30 A4 80	
320	312115-0368		2	SCREW ISO4762 M6X16 A4 80	
330	312318-0325		1	SET SCREW, CUP END ISO4029 M5X10 A4	
370	90028-0020		2	CONE TUBE 2,5MM	
380	90134-0063		2	BUSHING/NUT M8X1, D=2,5 MM	
400	90600-2013		4	FLANGE BUSHING, IGLIDUR X 8X10X5,5	
410	312625-0314		1	HEXAGON THIN NUT, EN 24035 ML6M M5 A4	
T40W8063	90166-0143	MM	155	TUBE 2,5 MM PA TRANSP.	
T40W8065	90166-0143	MM	155	TUBE 2,5 MM PA TRANSP.	
TBA 1000SQ (See drawing on page: 1-684)					
010	2773510-0000		1	SHAFT	
020	3037996-0002		1	HOLDER	
030	2911622-0000		2	SHAFT	
040	3092829-0000		2	SLIDER	
050	2842776-0000		1	PIN	
060	2842777-0001		1	DAMPER	
070	2842780-0000		2	BUSHING	
080	2842781-0000		1	SPRING	
090	2842782-0000		1	SPRING	
100	3219171-0000		2	LEVER	
110	2911623-0000		2	WASHER	
300	312812-0316		2	HEXAGON NUT, NY-LOCK M6 A4 80	
310	312105-0495		1	SCREW, M6S ISO 4017 M10X30 A4 80	
320	312115-0368		2	SCREW ISO4762 M6X16 A4 80	
330	312318-0323		1	SET SCREW, CUP END ISO4029 M5X8 A4	
370	90028-0020		2	CONE TUBE 2,5MM	
380	90134-0063		2	BUSHING/NUT M8X1, D=2,5 MM	
400	90600-2013		4	FLANGE BUSHING, IGLIDUR X 8X10X5,5	
410	312625-0314		1	HEXAGON THIN NUT, EN 24035 ML6M M5 A4	
T40W8063	90166-0143	MM	155	TUBE 2,5 MM PA TRANSP.	
T40W8065	90166-0143	MM	155	TUBE 2,5 MM PA TRANSP.	
TBA 1500S (See drawing on page: 1-684)					
010	2773510-0000		1	SHAFT	

Machine Type | Group Description | Used-In | Group Number | Page No

SHOCK ABSORBER CUTTING

Drawing file: 2993979-4_1_AC.hpgl

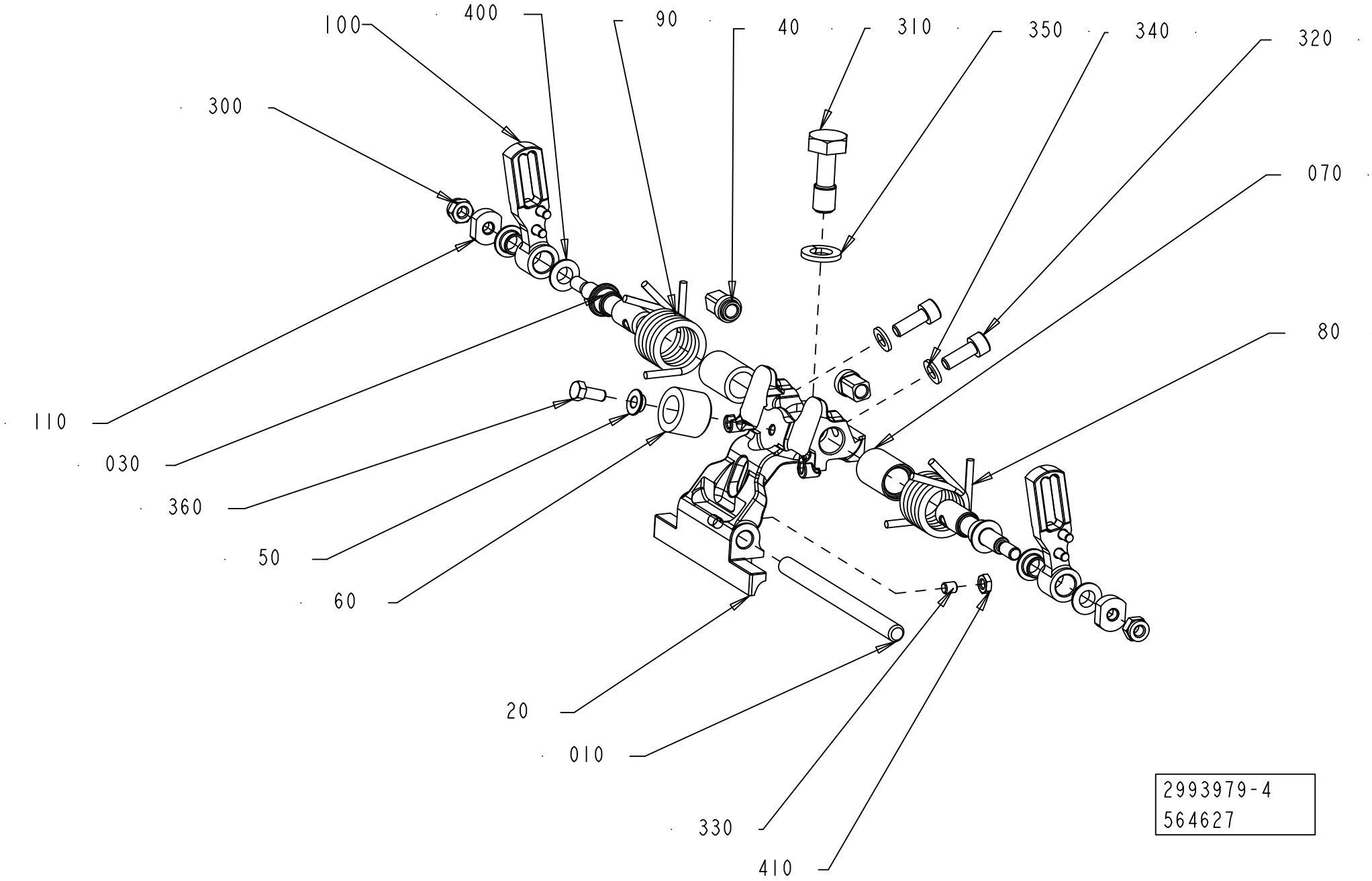

ECM: 676207 - 20140515
Group number: 2993979-0100
Assembly Drawing: 2993979-4_1_AC

This list covers pages from 1-684 to 1-691

Pos	Part No	UN	Qty	Description	Page No
TBA 1500S (Cont'd) (See drawing on page: 1-684)					
020	3024941-0002		1	HOLDER	
030	2907800-0000		2	SHAFT	
040	3242547-0000		2	SLIDER	
050	2907797-0000		1	PIN	
060	2842777-0005		1	DAMPER	
070	2916984-0000		2	BUSHING	
080	2907805-0000		1	SPRING	
090	2907804-0000		1	SPRING	
100	2907806-0000		2	LEVER	
110	2911623-0000		2	WASHER	
300	312812-0316		2	HEXAGON NUT, NY-LOCK M6 A4 80	
310	312105-0499		1	SCREW, M6S ISO 4014 M10X40 A4 80	
320	312115-0368		2	SCREW ISO4762 M6X16 A4 80	
330	312318-0325		1	SET SCREW, CUP END ISO4029 M5X10 A4	
370	90028-0020		2	CONE TUBE 2,5MM	
380	90134-0063		2	BUSHING/NUT M8X1, D=2,5 MM	
400	90600-2013		4	FLANGE BUSHING, IGLIDUR X 8X10X5,5	
410	312625-0314		1	HEXAGON THIN NUT, EN 24035 ML6M M5 A4	
T40W8063	90166-0143	MM	200	TUBE 2,5 MM PA TRANSP.	
T40W8065	90166-0143	MM	200	TUBE 2,5 MM PA TRANSP.	
TBA 2000S (See drawing on page: 1-684)					
010	2907798-0000		1	SHAFT	
020	3024939-0002		1	HOLDER	
030	2907800-0000		2	SHAFT	
040	3242547-0000		2	SLIDER	
050	2907797-0000		1	PIN	
060	2842777-0005		1	DAMPER	
070	2916984-0000		2	BUSHING	
080	2907805-0000		1	SPRING	
090	2907804-0000		1	SPRING	
100	2907806-0000		2	LEVER	
110	2911623-0000		2	WASHER	
300	312812-0316		2	HEXAGON NUT, NY-LOCK M6 A4 80	
310	312105-0499		1	SCREW, M6S ISO 4014 M10X40 A4 80	
320	312115-0368		2	SCREW ISO4762 M6X16 A4 80	
330	312318-0325		1	SET SCREW, CUP END ISO4029 M5X10 A4	
370	90028-0020		2	CONE TUBE 2,5MM	
380	90134-0063		2	BUSHING/NUT M8X1, D=2,5 MM	
400	90600-2013		4	FLANGE BUSHING, IGLIDUR X 8X10X5,5	
410	312625-0314		1	HEXAGON THIN NUT, EN 24035 ML6M M5 A4	
T40W8063	90166-0143	MM	190	TUBE 2,5 MM PA TRANSP.	
T40W8065	90166-0143	MM	190	TUBE 2,5 MM PA TRANSP.	
TGA 1000SQ, TGA 0750SQ (See drawing on page: 1-688)					
010	2649660-0000		1	SHAFT	
020	2993285-0001		1	HOLDER	
	3021650-0000		*1*	*HOLDER*	
030	2948028-0000		2	SHAFT	
040	3092829-0000		2	SLIDER	
050	2572197-0000		1	SPACER	
060	2649677-0000		1	DAMPER	
070	2948027-0000		2	BUSHING	
080	2949214-0000		1	SPRING	
090	2949215-0000		1	SPRING	
100	3018752-0000		2	LEVER	
110	2911623-0000		2	WASHER	
300	312812-0316		2	HEXAGON NUT, NY-LOCK M6 A4 80	
310	2922524-0000		1	SCREW	
320	312105-0368		2	"SCREW, M6S ISO 4017 M6X16 A4 80"	
330	311103-0268		1	PARALLEL PIN ISO 2338 4M6X12 A1	
360	312105-0327		1	"SCREW, M6S ISO 4017 M5X12 A4 80"	
400	90600-2013		4	FLANGE BUSHING, IGLIDUR X 8X10X5,5	
TGA 1500SQ (See drawing on page: 1-688)					
010	2773510-0000		1	SHAFT	
020	2948025-0002		1	HOLDER	
030	2948028-0000		2	SHAFT	
040	3092829-0000		2	SLIDER	
050	2572197-0000		1	SPACER	
060	3030308-0000		1	DAMPER	
070	2948027-0000		2	BUSHING	
080	2949214-0000		1	SPRING	
090	2949215-0000		1	SPRING	
100	2916131-0000		2	LEVER	
110	2911623-0000		2	WASHER	
300	312812-0316		2	HEXAGON NUT, NY-LOCK M6 A4 80	
310	2922524-0000		1	SCREW	
320	312115-0368		2	SCREW ISO4762 M6X16 A4 80	
330	312318-0321		1	SET SCREW, CUP END ISO4029 M5X6 A4	
360	312105-0327		1	"SCREW, M6S ISO 4017 M5X12 A4 80"	
400	90600-2013		4	FLANGE BUSHING, IGLIDUR X 8X10X5,5	
410	312625-0314		1	HEXAGON THIN NUT, EN 24035 ML6M M5 A4	
TPA 0500SQ (See drawing on page: 1-684)					
010	2962640-0000		1	SHAFT	
020	3024710-0002		1	HOLDER	

Machine Type | Group Description | Used-In | Group Number | Page No

SHOCK ABSORBER CUTTING

Drawing file: 2993979-5_1_AA.hpgl

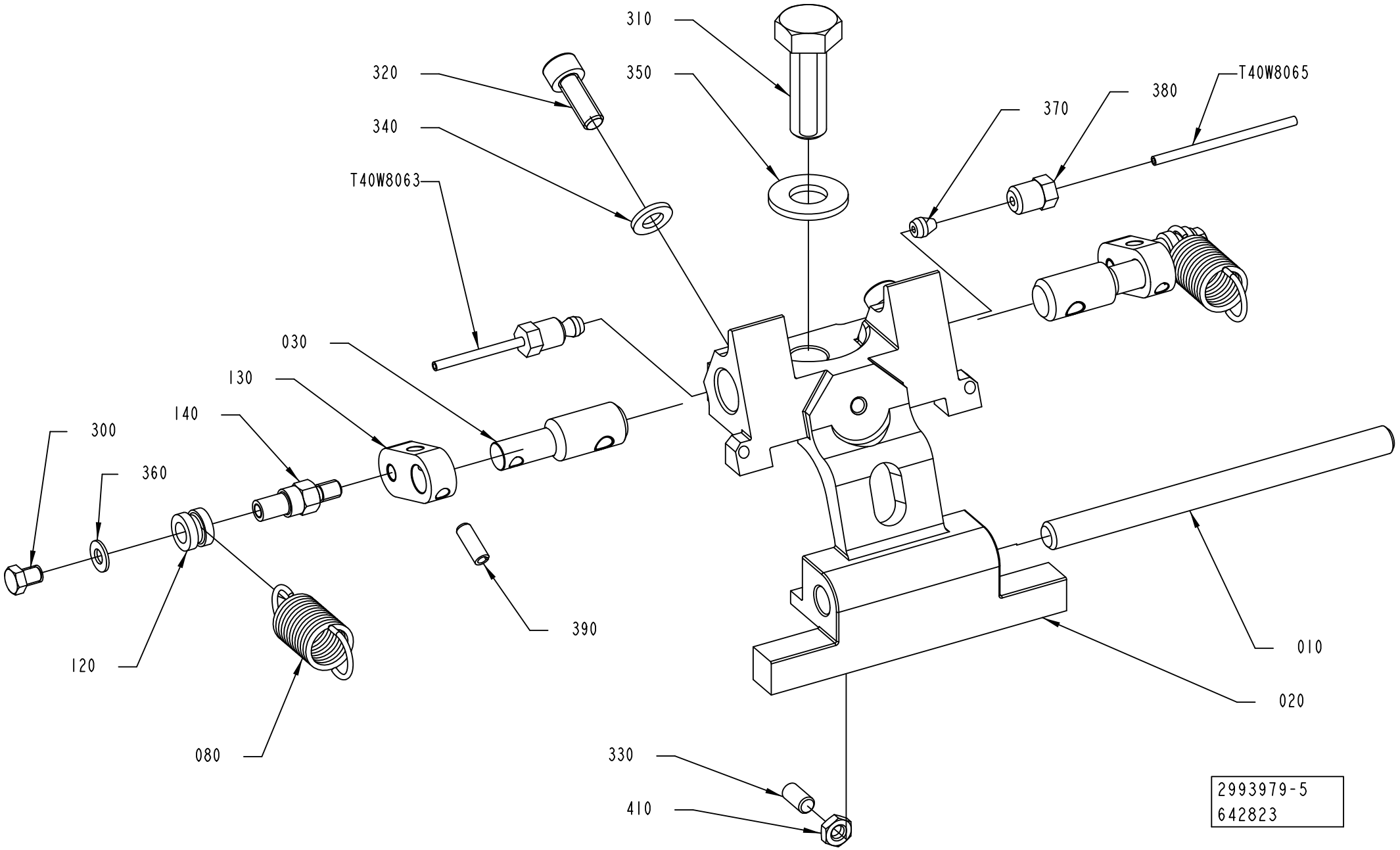

Pos	Part No	UN	Qty	Description	Page No
TPA 0500SQ (Cont'd) (See drawing on page: 1-684)					
030	2911622-0000		2	SHAFT	
040	3092829-0000		2	SLIDER	
050	2842776-0000		1	PIN	
060	2842777-0001		1	DAMPER	
070	2842780-0000		2	BUSHING	
080	2842781-0000		1	SPRING	
090	2842782-0000		1	SPRING	
100	3219171-0000		2	LEVER	
110	2911623-0000		2	WASHER	
300	312812-0316		2	HEXAGON NUT, NY-LOCK M6 A4 80	
310	312105-0495		1	SCREW, M6S ISO 4017 M10X30 A4 80	
320	312115-0368		2	SCREW ISO4762 M6X16 A4 80	
330	312318-0325		1	SET SCREW, CUP END ISO4029 M5X10 A4	
370	90028-0020		2	CONE TUBE 2,5MM	
380	90134-0063		2	BUSHING/NUT M8X1, D=2,5 MM	
400	90600-2013		4	FLANGE BUSHING, IGLIDUR X 8X10X5,5	
410	312625-0314		1	HEXAGON THIN NUT, EN 24035 ML6M M5 A4	
T40W8063	90166-0143	MM	155	TUBE 2,5 MM PA TRANSP.	
T40W8065	90166-0143	MM	155	TUBE 2,5 MM PA TRANSP.	
TPA 1000SQ, TPA 0750SQ (See drawing on page: 1-684)					
010	2916971-0000		1	SHAFT	
020	3024937-0002		1	HOLDER	
030	2907800-0000		2	SHAFT	
040	3242547-0000		2	SLIDER	
050	2907797-0000		1	PIN	
060	2842777-0004		1	DAMPER	
070	2916984-0000		2	BUSHING	
080	2907805-0000		1	SPRING	
090	2907804-0000		1	SPRING	
100	2907806-0000		2	LEVER	
110	2911623-0000		2	WASHER	
300	312812-0316		2	HEXAGON NUT, NY-LOCK M6 A4 80	
310	312105-0499		1	SCREW, M6S ISO 4014 M10X40 A4 80	
320	312115-0368		2	SCREW ISO4762 M6X16 A4 80	
330	312318-0325		1	SET SCREW, CUP END ISO4029 M5X10 A4	
370	90028-0020		2	CONE TUBE 2,5MM	
380	90134-0063		2	BUSHING/NUT M8X1, D=2,5 MM	
400	90600-2013		4	FLANGE BUSHING, IGLIDUR X 8X10X5,5	
410	312625-0314		1	HEXAGON THIN NUT, EN 24035 ML6M M5 A4	
T40W8063	90166-0143	MM	180	TUBE 2,5 MM PA TRANSP.	
T40W8065	90166-0143	MM	180	TUBE 2,5 MM PA TRANSP.	

Pos	Part No	UN	Qty	Description	Page No
Common Parts					
340	315105-0153		2	WASHER PLAIN, 6,4X12X1,5 A4 BRB	
350	315105-0173		1	WASHER PLAIN, 10,5X22X2 A4 BRB	

VOLUME FLAP CUTTING RIGHT

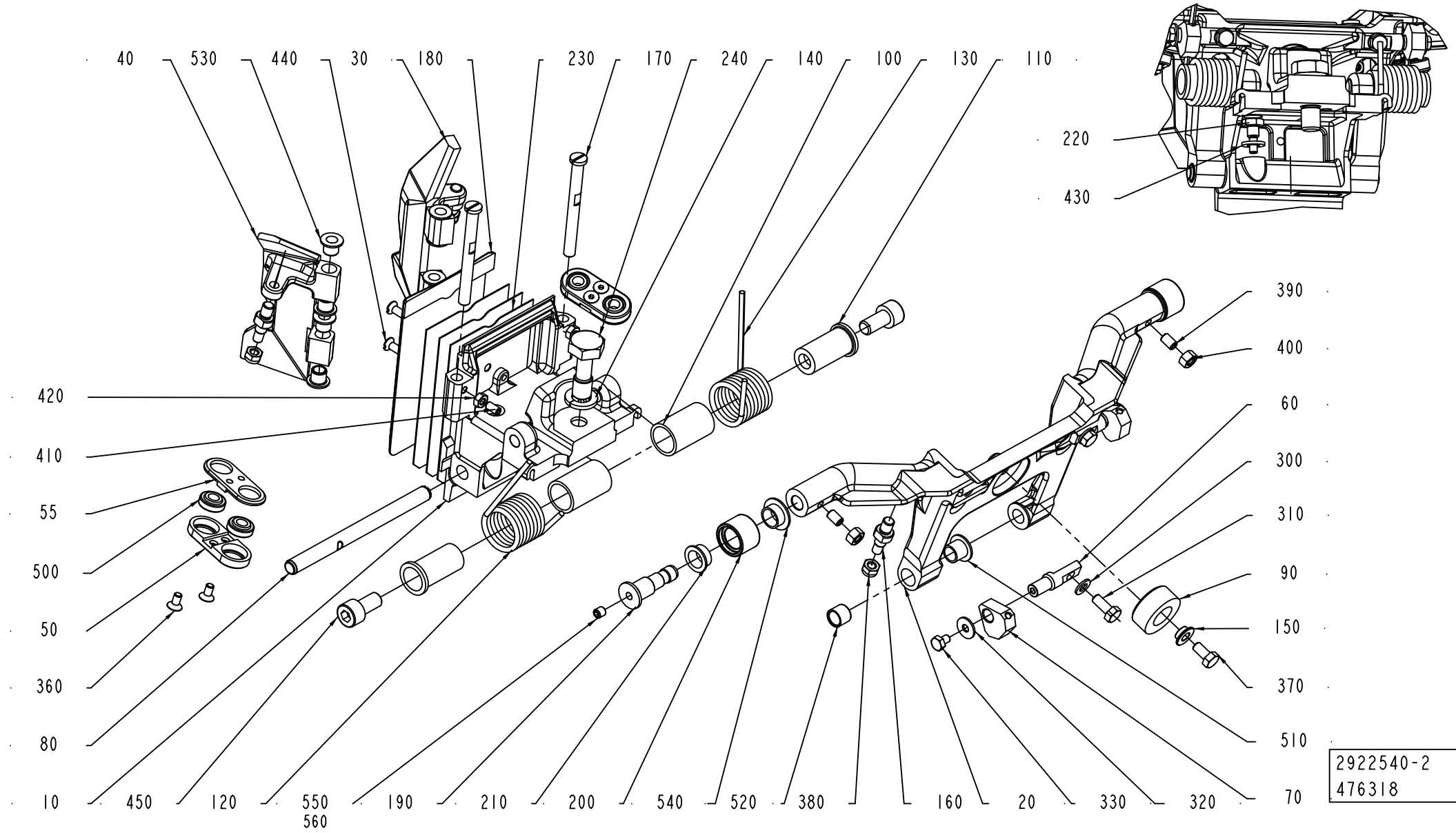

ECM: 483517 - 20101215
Group number: 2922540-0200
Assembly Drawing: 2922540-2_1_AC

Pos	Part No	UN	Qty	Description	Page No
-					
010	2998822-0001		1	FLAP HOLDER	
020	2917413-0000		1	FRAME	
030	3053569-0000		1	FLAP	
040	3053570-0000		1	FLAP	
050	3046743-0000		2	ROD	
055	3046744-0000		2	ROD	
060	2917418-0000		2	PIN	
070	2928239-0000		2	HOLDER	
080	2649660-0000		1	SHAFT	
090	2862308-0000		1	DAMPER	
100	1538521-0000		2	BUSHING	
110	2917419-0000		2	PIN	
120	2922536-0000		1	SPRING	
130	2922537-0000		1	SPRING	
140	315105-0173		1	WASHER PLAIN, 10,5X22X2 A4 BRB	
150	2572197-0000		1	SPACER	
160	2909850-0000		4	SPACER SCREW	
170	2866740-0000		2	SHAFT	
180	3031532-0000		1	VOLUME BULGE	
190	2868844-0000		2	AXLE PIN	
200	2660295-0000		2	ROLLER	
210	2660296-0000		2	BUSHING	
220	2922489-0000		1	PIN	
230	3041582-0000		3	SHIM	
240	2922524-0000		1	SCREW	
300	315105-0146		2	WASHER PLAIN, 5,3X10X1 A4 BRB	
310	312105-0327		2	"SCREW, M6S ISO 4017 M5X12 A4 80"	
320	90005-0082		2	WASHER PLAIN ROUND 4,3(M4)/12,H=1	
330	312105-0285		2	SCREW, M6S ISO 4017 M4X6 A4 70	
360	312155-0287		4	SCREW DIN 7991 MF6S M4X8 A4 70	
370	312105-0325		1	SCREW, M6S ISO 4017 M5X10 A4 80	
380	312812-0314		4	HEXAGON NUT, NY-LOCK M5 A4 80	
390	312318-0323		2	SET SCREW, CUP END ISO4029 M5X8 A4	
400	312605-0314		2	HEXAGON NUT, M6M M5 A280	
410	312318-0287		2	SET SCREW, CUP END ISO4029 M4X8 A4	
420	312605-0312		2	HEXAGON NUT, M6M M4 A280	
430	315105-0153		1	WASHER PLAIN, 6,4X12X1,5 A4 BRB	
440	312145-0291		2	SCREW ISO 2009 MFS M4X12 A4	
450	312115-0449		2	SCREW ISO4762 M8X16 A4 80	
500	90600-3582		4	SPHERICAL BEARING, GE 6 TGR	
510	90240-0260		2	FLANGE BUSHING, IGLIDUR X 8X10X9	
520	90458-0353		2	BUSHING, IGLIDUR X 8X10X8	
530	321155-0062		8	FLANGE BUSHING, IGLIDUR X 6X8X8	
540	90240-0289		2	FLANGE BUSHING, IGLIDUR X 10X12X6	
550	312318-0320		2	SET SCREW, CUP END ISO4029 M5X5 A4	
560	90602-4847		1	THREADLOCKER LOCTITE 243, 50ML	

Machine Type | Group Description | Used-In | Group Number | Page No

SUPPORT FLAP CUTTING RIGHT

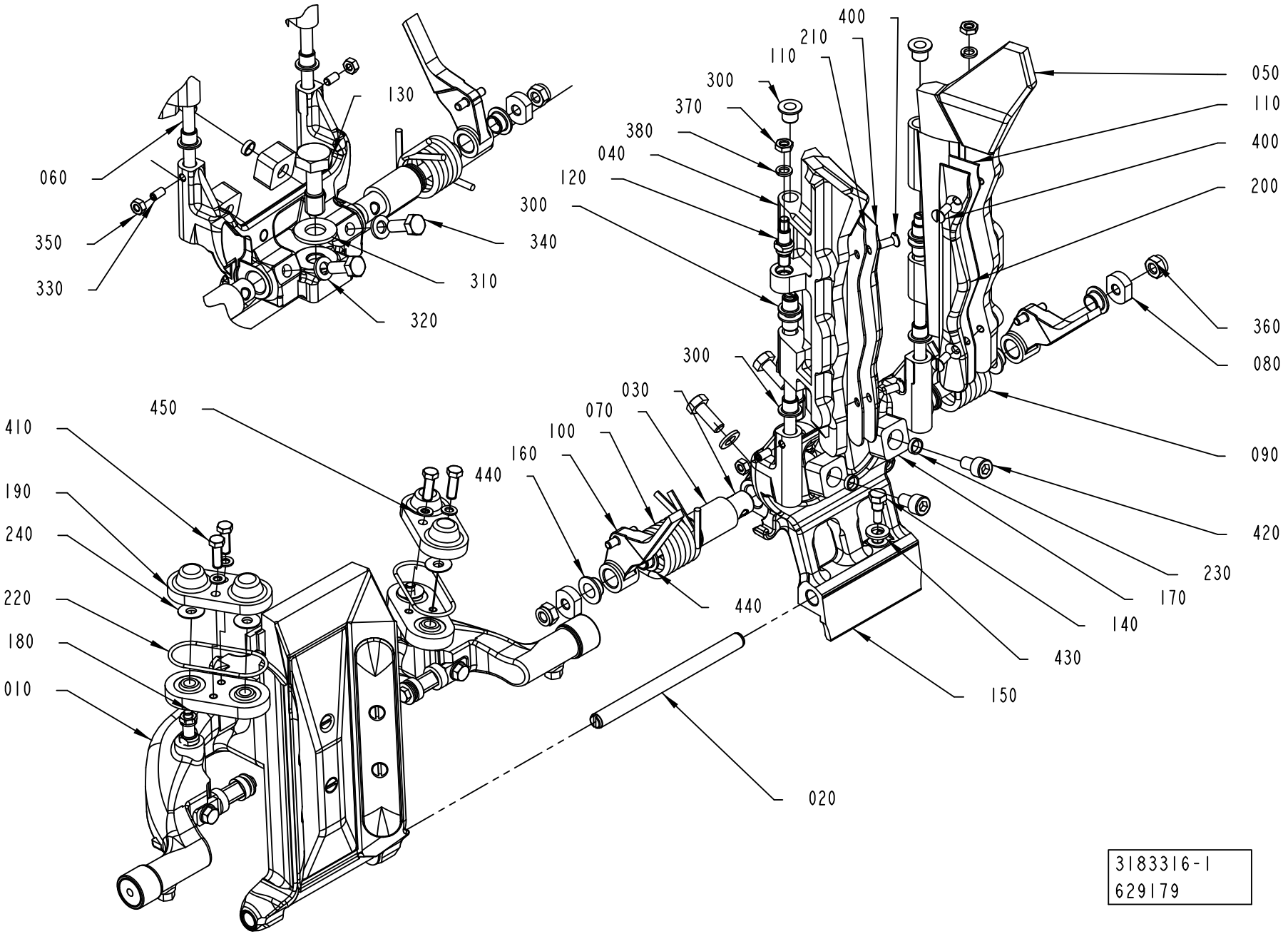

ECM: 634622 - 20140101
Group number: 3183316-0100
Assembly Drawing: 3183316-1_1_AD

Pos	Part No	UN	Qty	Description	Page No
TGA 1000CR					
040	3199626-0000		1	VOLUME FLAP	
050	3199625-0000		1	VOLUME FLAP	
200	3115433-0000		1	VOLUME BULGE	
210	3115435-0000		1	VOLUME BULGE	
TGA 1000LF					
040	3222724-0000		1	VOLUME FLAP	
050	3222723-0000		1	VOLUME FLAP	
200	3235923-0000		1	VOLUME BULGE	
210	3235924-0000		1	VOLUME BULGE	
Common Parts					
010	3183323-0100		1	VOLUME FLAP	**1-647**
020	2649660-0000		1	SHAFT	
030	3179813-0000		2	SHAFT	
060	3199633-0000		2	AXLE PIN	
070	2948027-0000		2	BUSHING	
080	2911623-0000		2	WASHER	
090	2949214-0000		1	SPRING	
100	2949215-0000		1	SPRING	
110	3220080-0000		2	SHIM	
120	3199630-0000		2	SPACER SCREW	
130	2922524-0000		1	SCREW	
140	2922489-0000		1	PIN	
150	3178500-0002		1	HOLDER	
160	3178505-0000		2	LEVER	
170	2982488-0000		2	STOP	
180	3199635-0000		2	ROD	
190	3199634-0000		2	COVER	
220	315202-0801		2	O-RING 37,82X1,78 MM	
230	2842779-0000		2	SPACER	
240	3235929-0000		4	WASHER	
300	321155-0062		8	FLANGE BUSHING, IGLIDUR X 6X8X8	
310	315105-0173		1	WASHER PLAIN, 10,5X22X2 A4 BRB	
320	315105-0153		2	WASHER PLAIN, 6,4X12X1,5 A4 BRB	
330	312318-0287		2	SET SCREW, CUP END ISO4029 M4X8 A4	
340	312105-0368		2	"SCREW, M6S ISO 4017 M6X16 A4 80"	
350	312605-0312		2	HEXAGON NUT, M6M M4 A280	
360	312812-0316		2	HEXAGON NUT, NY-LOCK M6 A4 80	
370	312625-0314		2	HEXAGON THIN NUT, EN 24035 ML6M M5 A4	
380	315402-0146		2	LOCK WASHER, DIN127B 5,1 A4, M5-3/16	
400	312145-0289		4	SCREW ISO 2009 MFS M4X10 A4	
410	312105-0292		4	SCREW, M6S ISO 4017 M4X14 A4 70	
420	312115-0364		2	SCREW ISO4762 M6X10 A4 80	
430	315105-0153		1	WASHER PLAIN, 6,4X12X1,5 A4 BRB	
440	90600-2013		4	FLANGE BUSHING, IGLIDUR X 8X10X5,5	
450	315105-0136		4	WASHER PLAIN, 4,3X8X0,8 A4 BRB	

Machine Type | Group Description | Used-In | Group Number | Page No

SUPPORT FLAP PRESSURE

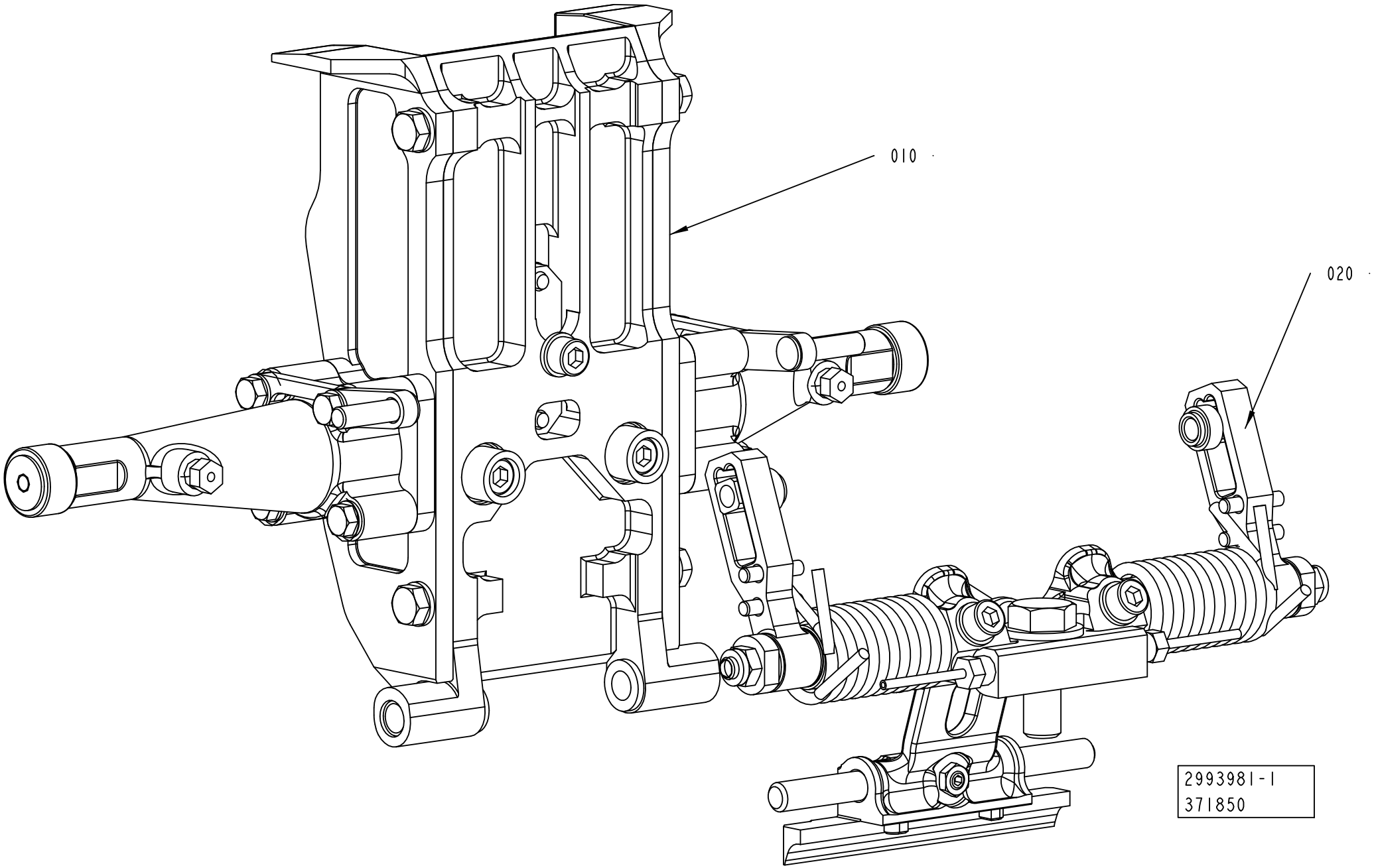

ECM: 644815 - 20140401
Group number: 2993981-0100
Assembly Drawing: 2993981-1_1_AA

Pos	Part No	UN	Qty	Description	Page No
TGA 1500SQ					
010	2698639-0200		1	VOLUME FLAP PRESSURE	**1-651**
020	2993982-0100		1	SHOCK ABSORBER PRESSURE	**1-699, 1-701, 1-703, 1-705**
TPA 0500SQ					
010	2810637-0100		1	VOLUME FLAP PRESSURE	**1-661, 1-663, 1-665, 1-667, 1-669, 1-671, 1-673, 1-675, 1-677**
020	2993982-0100		1	SHOCK ABSORBER PRESSURE	**1-699, 1-701, 1-703, 1-705**
TPA 0750SQ					
010	2810637-0100		1	VOLUME FLAP PRESSURE	**1-661, 1-663, 1-665, 1-667, 1-669, 1-671, 1-673, 1-675, 1-677**
020	2993982-0100		1	SHOCK ABSORBER PRESSURE	**1-699, 1-701, 1-703, 1-705**
TPA 1000SQ					
010	2810637-0100		1	VOLUME FLAP PRESSURE	**1-661, 1-663, 1-665, 1-667, 1-669, 1-671, 1-673, 1-675, 1-677**
020	2993982-0100		1	SHOCK ABSORBER PRESSURE	**1-699, 1-701, 1-703, 1-705**
TBA 0500B					
010	2810637-0100		1	VOLUME FLAP PRESSURE	**1-661, 1-663, 1-665, 1-667, 1-669, 1-671, 1-673, 1-675, 1-677**
020	2993982-0100		1	SHOCK ABSORBER PRESSURE	**1-699, 1-701, 1-703, 1-705**
TBA 0500E					
010	2810637-0100		1	VOLUME FLAP PRESSURE	**1-661, 1-663, 1-665, 1-667, 1-669, 1-671, 1-673, 1-675, 1-677**
020	2993982-0100		1	SHOCK ABSORBER PRESSURE	**1-699, 1-701, 1-703, 1-705**
TBA 0500S					
010	2810637-0100		1	VOLUME FLAP PRESSURE	**1-661, 1-663, 1-665, 1-667, 1-669, 1-671, 1-673, 1-675, 1-677**
020	2993982-0100		1	SHOCK ABSORBER PRESSURE	**1-699, 1-701, 1-703, 1-705**
TBA 0500SQ					
010	2810637-0100		1	VOLUME FLAP PRESSURE	**1-661, 1-663, 1-665, 1-667, 1-669, 1-671, 1-673, 1-675, 1-677**
020	2993982-0100		1	SHOCK ABSORBER PRESSURE	**1-699, 1-701, 1-703, 1-705**
TBA 1000B					
010	2810637-0100		1	VOLUME FLAP PRESSURE	**1-661, 1-663, 1-665, 1-667, 1-669, 1-671, 1-673, 1-675, 1-677**
020	2993982-0100		1	SHOCK ABSORBER PRESSURE	**1-699, 1-701, 1-703, 1-705**
TBA 1000E NOQC					
010	2810637-0100		1	VOLUME FLAP PRESSURE	**1-661, 1-663, 1-665, 1-667, 1-669, 1-671, 1-673, 1-675, 1-677**
020	2993982-0100		1	SHOCK ABSORBER PRESSURE	**1-699, 1-701, 1-703, 1-705**
TBA 1000E QC					
010	2810637-0100		1	VOLUME FLAP PRESSURE	**1-661, 1-663, 1-665, 1-667, 1-669, 1-671, 1-673, 1-675, 1-677**
020	2993982-0100		1	SHOCK ABSORBER PRESSURE	**1-699, 1-701, 1-703, 1-705**
TBA 1000M					
010	2810637-0100		1	VOLUME FLAP PRESSURE	**1-661, 1-663, 1-665, 1-667, 1-669, 1-671, 1-673, 1-675, 1-677**
020	2993982-0100		1	SHOCK ABSORBER PRESSURE	**1-699, 1-701, 1-703, 1-705**
TBA 1000S					
010	2810637-0100		1	VOLUME FLAP PRESSURE	**1-661, 1-663, 1-665, 1-667, 1-669, 1-671, 1-673, 1-675, 1-677**
020	2993982-0100		1	SHOCK ABSORBER PRESSURE	**1-699, 1-701, 1-703, 1-705**
TBA 1000SQ					
010	2810637-0100		1	VOLUME FLAP PRESSURE	**1-661, 1-663, 1-665, 1-667, 1-669, 1-671, 1-673, 1-675, 1-677**
020	2993982-0100		1	SHOCK ABSORBER PRESSURE	**1-699, 1-701, 1-703, 1-705**
TBA 1500S					
010	2810637-0100		1	VOLUME FLAP PRESSURE	**1-661, 1-663, 1-665, 1-667, 1-669, 1-671, 1-673, 1-675, 1-677**
020	2993982-0100		1	SHOCK ABSORBER PRESSURE	**1-699, 1-701, 1-703, 1-705**
TBA 2000S					
010	2810637-0100		1	VOLUME FLAP PRESSURE	**1-661, 1-663, 1-665, 1-667, 1-669, 1-671, 1-673, 1-675, 1-677**
020	2993982-0100		1	SHOCK ABSORBER PRESSURE	**1-699, 1-701, 1-703, 1-705**
TGA 0500SQ					
010	2922539-0200		1	VOLUME FLAP PRESSURE RIGHT	**1-707**
TGA 0750SQ					
010	2698639-0200		1	VOLUME FLAP PRESSURE	**1-651**
020	2993982-0100		1	SHOCK ABSORBER PRESSURE	**1-699, 1-701, 1-703, 1-705**
TGA 1000CR, TGA 1000LF					
010	3183318-0100		1	SUPPORT FLAP PRESSURE RIGHT	**1-709**
TGA 1000SQ					
010	2698639-0200		1	VOLUME FLAP PRESSURE	**1-651**
020	2993982-0100		1	SHOCK ABSORBER PRESSURE	**1-699, 1-701, 1-703, 1-705**

Machine Type | Group Description | Used-In | Group Number | Page No

SHOCK ABSORBER PRESSURE

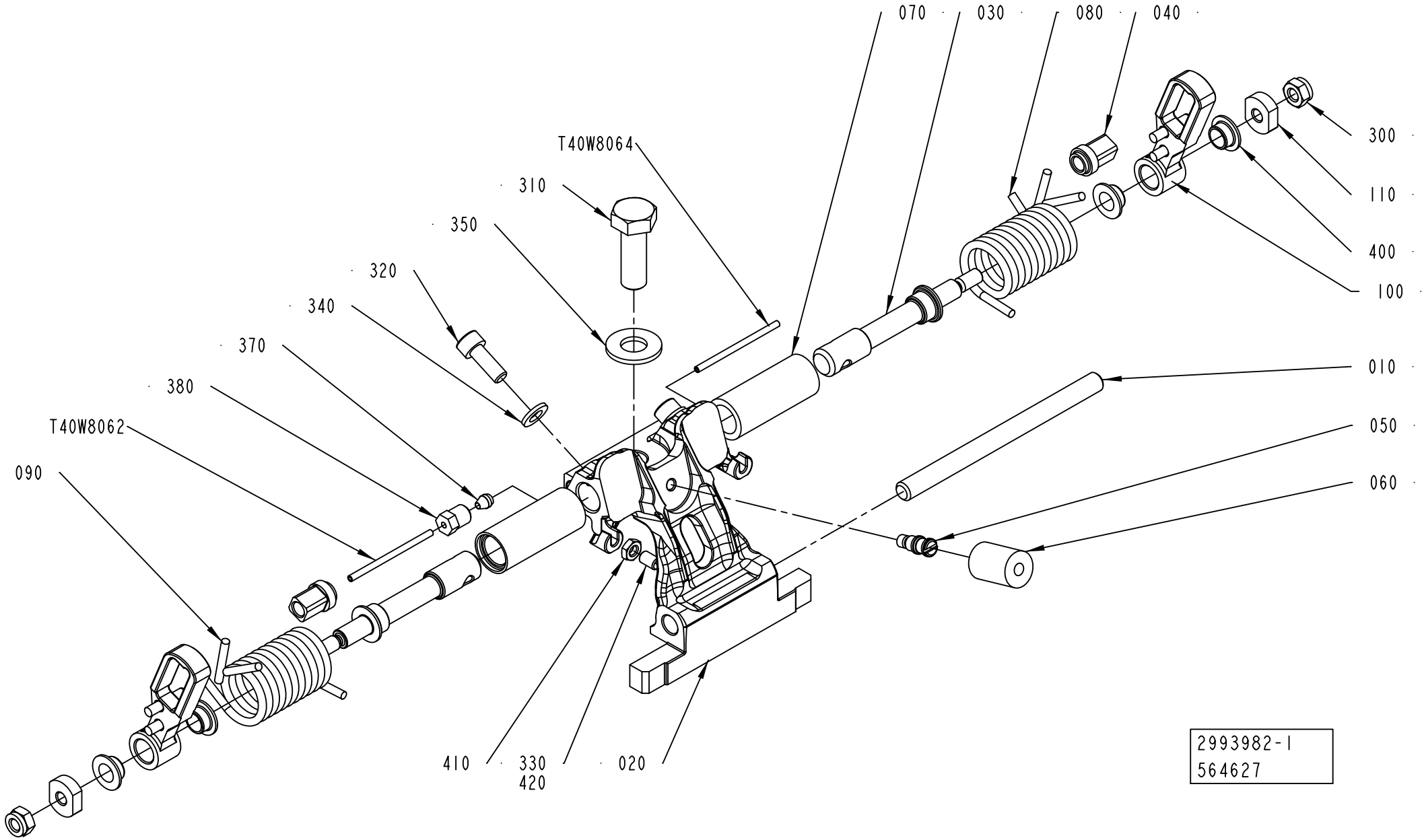

ECM: 676208 - 20140515
Group number: 2993982-0100
Assembly Drawing: 2993982-1_1_AC

This list covers pages from 1-698 to 1-705

Pos	Part No	UN	Qty	Description	Page No
TBA 0500B (See drawing on page: 1-700)					
010	2773510-0000		1	SHAFT	
020	3037999-0002		1	HOLDER	
030	2902006-0000		2	SHAFT	
050	2842776-0000		1	PIN	
060	2842777-0001		1	DAMPER	
080	2961953-0000		2	TENSION SPRING	
120	2905199-0000		2	HOLDER	
300	312105-0285		2	SCREW, M6S ISO 4017 M4X6 A4 70	
310	312105-0495		1	SCREW, M6S ISO 4017 M10X30 A4 80	
320	312115-0368		2	SCREW ISO4762 M6X16 A4 80	
330	312318-0325		1	SET SCREW, CUP END ISO4029 M5X10 A4	
340	315105-0153		2	WASHER PLAIN, 6,4X12X1,5 A4 BRB	
360	315106-0136		2	WASHER PLAIN, M4 ISO7089-4-200 HV A4	
370	90028-0020		2	CONE TUBE 2,5MM	
380	90134-0063		2	BUSHING/NUT M8X1, D=2,5 MM	
410	312625-0314		1	HEXAGON THIN NUT, EN 24035 ML6M M5 A4	
T40W8062	90166-0143	MM	150	TUBE 2,5 MM PA TRANSP.	
T40W8064	90166-0143	MM	150	TUBE 2,5 MM PA TRANSP.	
TBA 0500E (See drawing on page: 1-704)					
010	2773510-0000		1	SHAFT	
020	2862278-0002		1	HOLDER	
030	3051281-0000		2	SHAFT	
080	2959868-0000		2	TENSION SPRING	
120	2905199-0000		2	HOLDER	
130	3051280-0000		2	HOLDER	
140	2959867-0000		2	SPACER SCREW	
300	312105-0285		2	SCREW, M6S ISO 4017 M4X6 A4 70	
310	312105-0495		1	SCREW, M6S ISO 4017 M10X30 A4 80	
320	312115-0368		2	SCREW ISO4762 M6X16 A4 80	
330	312318-0321		1	SET SCREW, CUP END ISO4029 M5X6 A4	
340	315105-0153		2	WASHER PLAIN, 6,4X12X1,5 A4 BRB	
360	315106-0136		2	WASHER PLAIN, M4 ISO7089-4-200 HV A4	
370	90028-0020		2	CONE TUBE 2,5MM	
380	90134-0063		2	BUSHING/NUT M8X1, D=2,5 MM	
390	311111-0252		2	SPRING PIN ISO 8752 4X12-ST	
T40W8062	90166-0143	MM	150	TUBE 2,5 MM PA TRANSP.	
T40W8064	90166-0143	MM	150	TUBE 2,5 MM PA TRANSP.	
TBA 0500S (See drawing on page: 1-698)					
010	2916971-0000		1	SHAFT	
020	3024713-0002		1	HOLDER	
030	2911622-0000		2	SHAFT	
040	3092829-0000		2	SLIDER	
050	2842776-0000		1	PIN	
060	2842777-0001		1	DAMPER	
070	2842780-0000		2	BUSHING	
080	2842781-0000		1	SPRING	
090	2842782-0000		1	SPRING	
100	3219171-0000		2	LEVER	
110	2911623-0000		2	WASHER	
300	312812-0316		2	HEXAGON NUT, NY-LOCK M6 A4 80	
310	312105-0495		1	SCREW, M6S ISO 4017 M10X30 A4 80	
320	312115-0368		2	SCREW ISO4762 M6X16 A4 80	
330	312318-0325		1	SET SCREW, CUP END ISO4029 M5X10 A4	
340	315105-0153		2	WASHER PLAIN, 6,4X12X1,5 A4 BRB	
370	90028-0020		2	CONE TUBE 2,5MM	
380	90134-0063		2	BUSHING/NUT M8X1, D=2,5 MM	
400	90600-2013		4	FLANGE BUSHING, IGLIDUR X 8X10X5,5	
410	312625-0314		1	HEXAGON THIN NUT, EN 24035 ML6M M5 A4	
T40W8062	90166-0143	MM	155	TUBE 2,5 MM PA TRANSP.	
T40W8064	90166-0143	MM	155	TUBE 2,5 MM PA TRANSP.	
TBA 0500SQ (See drawing on page: 1-700)					
010	2773510-0000		1	SHAFT	
020	3037995-0002		1	HOLDER	
030	2863119-0000		2	SHAFT	
050	2842776-0000		1	PIN	
060	2842777-0001		1	DAMPER	
080	2959868-0000		2	TENSION SPRING	
120	2905199-0000		2	HOLDER	
300	312105-0285		2	SCREW, M6S ISO 4017 M4X6 A4 70	
310	312105-0495		1	SCREW, M6S ISO 4017 M10X30 A4 80	
320	312115-0368		2	SCREW ISO4762 M6X16 A4 80	
330	312318-0323		1	SET SCREW, CUP END ISO4029 M5X8 A4	
340	315105-0153		2	WASHER PLAIN, 6,4X12X1,5 A4 BRB	
360	315106-0136		2	WASHER PLAIN, M4 ISO7089-4-200 HV A4	
370	90028-0020		2	CONE TUBE 2,5MM	
380	90134-0063		2	BUSHING/NUT M8X1, D=2,5 MM	
410	312625-0314		1	HEXAGON THIN NUT, EN 24035 ML6M M5 A4	
T40W8062	90166-0143	MM	135	TUBE 2,5 MM PA TRANSP.	
T40W8064	90166-0143	MM	135	TUBE 2,5 MM PA TRANSP.	
TBA 1000B, TBA 1000M (See drawing on page: 1-698)					
010	2773510-0000		1	SHAFT	
020	3037999-0002		1	HOLDER	
030	2911622-0000		2	SHAFT	

Machine Type | Group Description | Used-In | Group Number | Page No

SHOCK ABSORBER PRESSURE

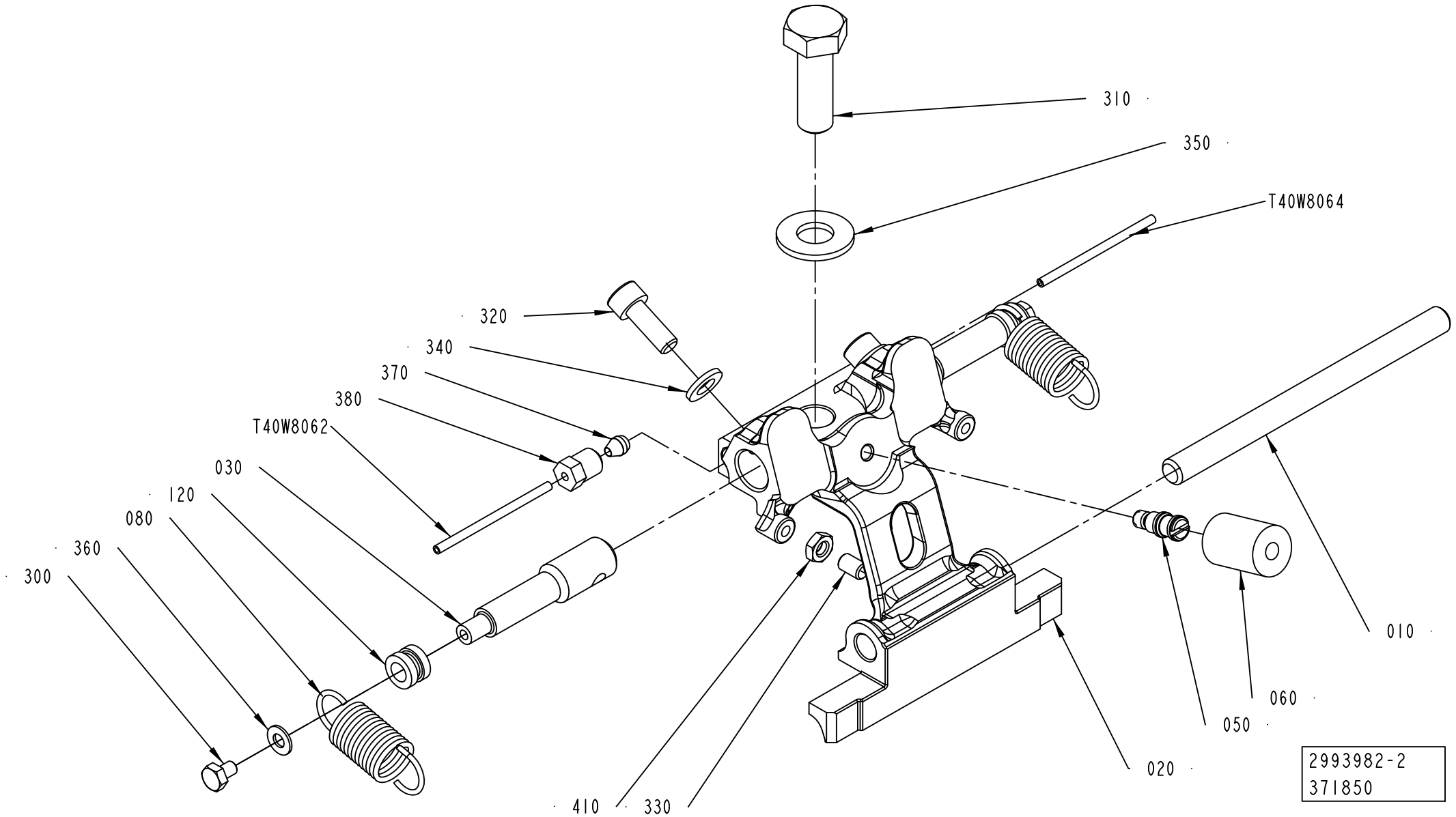

Pos	Part No	UN	Qty	Description	Page No
TBA 1000B, TBA 1000M (Cont'd) (See drawing on page: 1-698)					
040	3092829-0000		2	SLIDER	
050	2842776-0000		1	PIN	
060	2842777-0001		1	DAMPER	
070	2842780-0000		2	BUSHING	
080	2842781-0000		1	SPRING	
090	2842782-0000		1	SPRING	
100	3219171-0000		2	LEVER	
110	2911623-0000		2	WASHER	
300	312812-0316		2	HEXAGON NUT, NY-LOCK M6 A4 80	
310	312105-0495		1	SCREW, M6S ISO 4017 M10X30 A4 80	
320	312115-0368		2	SCREW ISO4762 M6X16 A4 80	
330	312318-0325		1	SET SCREW, CUP END ISO4029 M5X10 A4	
340	315105-0153		2	WASHER PLAIN, 6,4X12X1,5 A4 BRB	
370	90028-0020		2	CONE TUBE 2,5MM	
380	90134-0063		2	BUSHING/NUT M8X1, D=2,5 MM	
400	90600-2013		4	FLANGE BUSHING, IGLIDUR X 8X10X5,5	
410	312625-0314		1	HEXAGON THIN NUT, EN 24035 ML6M M5 A4	
T40W8062	90166-0143	MM	155	TUBE 2,5 MM PA TRANSP.	
T40W8064	90166-0143	MM	155	TUBE 2,5 MM PA TRANSP.	
TBA 1000E (See drawing on page: 1-698)					
010	2773510-0000		1	SHAFT	
020	2862278-0002		1	HOLDER	
030	2911622-0000		2	SHAFT	
040	3092829-0000		2	SLIDER	
050	2842776-0000		1	PIN	
060	2842777-0003		1	DAMPER	
070	2842780-0000		2	BUSHING	
080	2842781-0000		1	SPRING	
090	2842782-0000		1	SPRING	
100	3219171-0000		2	LEVER	
110	2911623-0000		2	WASHER	
300	312812-0316		2	HEXAGON NUT, NY-LOCK M6 A4 80	
310	312105-0495		1	SCREW, M6S ISO 4017 M10X30 A4 80	
320	312115-0368		2	SCREW ISO4762 M6X16 A4 80	
330	312318-0320		1	SET SCREW, CUP END ISO4029 M5X5 A4	
370	90028-0020		2	CONE TUBE 2,5MM	
380	90134-0063		2	BUSHING/NUT M8X1, D=2,5 MM	
400	90600-2013		4	FLANGE BUSHING, IGLIDUR X 8X10X5,5	
420	90602-4847		1	THREADLOCKER LOCTITE 243, 50ML	
T40W8062	90166-0143	MM	170	TUBE 2,5 MM PA TRANSP.	
T40W8064	90166-0143	MM	170	TUBE 2,5 MM PA TRANSP.	
TBA 1000S (See drawing on page: 1-698)					
010	2773510-0000		1	SHAFT	
020	3037997-0002		1	HOLDER	
030	2911622-0000		2	SHAFT	
040	3092829-0000		2	SLIDER	
050	2842776-0000		1	PIN	
060	2842777-0001		1	DAMPER	
070	2842780-0000		2	BUSHING	
080	2842781-0000		1	SPRING	
090	2842782-0000		1	SPRING	
100	3219171-0000		2	LEVER	
110	2911623-0000		2	WASHER	
300	312812-0316		2	HEXAGON NUT, NY-LOCK M6 A4 80	
310	312105-0495		1	SCREW, M6S ISO 4017 M10X30 A4 80	
320	312115-0368		2	SCREW ISO4762 M6X16 A4 80	
330	312318-0325		1	SET SCREW, CUP END ISO4029 M5X10 A4	
340	315105-0153		2	WASHER PLAIN, 6,4X12X1,5 A4 BRB	
370	90028-0020		2	CONE TUBE 2,5MM	
380	90134-0063		2	BUSHING/NUT M8X1, D=2,5 MM	
400	90600-2013		4	FLANGE BUSHING, IGLIDUR X 8X10X5,5	
410	312625-0314		1	HEXAGON THIN NUT, EN 24035 ML6M M5 A4	
T40W8062	90166-0143	MM	155	TUBE 2,5 MM PA TRANSP.	
T40W8064	90166-0143	MM	155	TUBE 2,5 MM PA TRANSP.	
TBA 1000SQ (See drawing on page: 1-698)					
010	2773510-0000		1	SHAFT	
020	3037995-0002		1	HOLDER	
030	2911622-0000		2	SHAFT	
040	3092829-0000		2	SLIDER	
050	2842776-0000		1	PIN	
060	2842777-0001		1	DAMPER	
070	2842780-0000		2	BUSHING	
080	2842781-0000		1	SPRING	
090	2842782-0000		1	SPRING	
100	3219171-0000		2	LEVER	
110	2911623-0000		2	WASHER	
300	312812-0316		2	HEXAGON NUT, NY-LOCK M6 A4 80	
310	312105-0495		1	SCREW, M6S ISO 4017 M10X30 A4 80	
320	312115-0368		2	SCREW ISO4762 M6X16 A4 80	
330	312318-0323		1	SET SCREW, CUP END ISO4029 M5X8 A4	
340	315105-0153		2	WASHER PLAIN, 6,4X12X1,5 A4 BRB	
370	90028-0020		2	CONE TUBE 2,5MM	
380	90134-0063		2	BUSHING/NUT M8X1, D=2,5 MM	

SHOCK ABSORBER PRESSURE

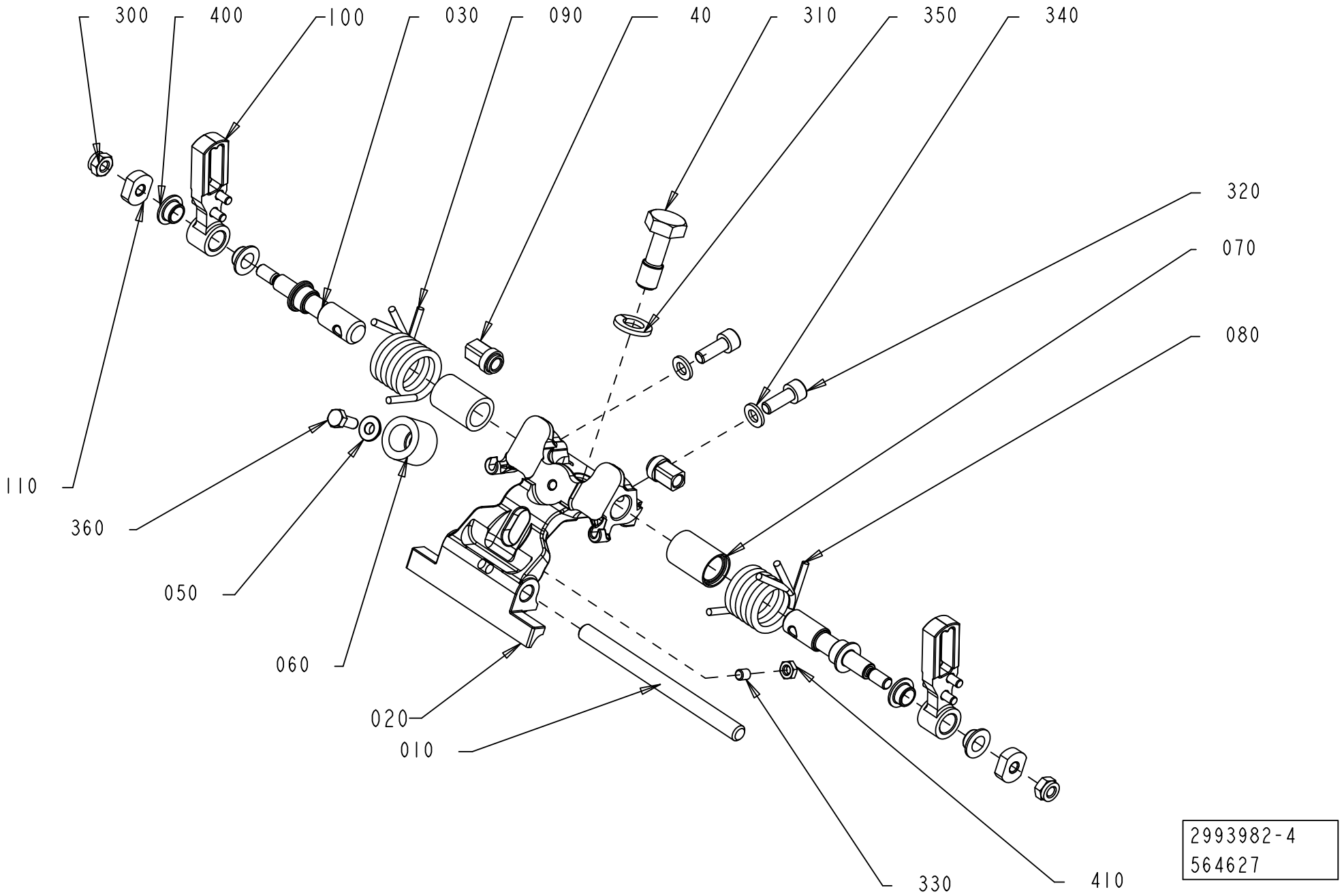

Pos	Part No	UN	Qty	Description	Page No
TBA 1000SQ (Cont'd) (See drawing on page: 1-698)					
400	90600-2013		4	FLANGE BUSHING, IGLIDUR X 8X10X5,5	
410	312625-0314		1	HEXAGON THIN NUT, EN 24035 ML6M M5 A4	
T40W8062	90166-0143	MM	155	TUBE 2,5 MM PA TRANSP.	
T40W8064	90166-0143	MM	155	TUBE 2,5 MM PA TRANSP.	
TBA 1500S (See drawing on page: 1-698)					
010	2773510-0000		1	SHAFT	
020	3024942-0002		1	HOLDER	
030	2907800-0000		2	SHAFT	
040	3242547-0000		2	SLIDER	
050	2907797-0000		1	PIN	
060	2842777-0005		1	DAMPER	
070	2916984-0000		2	BUSHING	
080	2907805-0000		1	SPRING	
090	2907804-0000		1	SPRING	
100	2907806-0000		2	LEVER	
110	2911623-0000		2	WASHER	
300	312812-0316		2	HEXAGON NUT, NY-LOCK M6 A4 80	
310	312105-0499		1	SCREW, M6S ISO 4014 M10X40 A4 80	
320	312115-0368		2	SCREW ISO4762 M6X16 A4 80	
330	312318-0325		1	SET SCREW, CUP END ISO4029 M5X10 A4	
340	315105-0153		2	WASHER PLAIN, 6,4X12X1,5 A4 BRB	
370	90028-0020		2	CONE TUBE 2,5MM	
380	90134-0063		2	BUSHING/NUT M8X1, D=2,5 MM	
400	90600-2013		4	FLANGE BUSHING, IGLIDUR X 8X10X5,5	
410	312625-0314		1	HEXAGON THIN NUT, EN 24035 ML6M M5 A4	
T40W8062	90166-0143	MM	200	TUBE 2,5 MM PA TRANSP.	
T40W8064	90166-0143	MM	200	TUBE 2,5 MM PA TRANSP.	
TBA 2000S (See drawing on page: 1-698)					
010	2907798-0000		1	SHAFT	
020	3024940-0002		1	HOLDER	
030	2907800-0000		2	SHAFT	
040	3242547-0000		2	SLIDER	
050	2907797-0000		1	PIN	
060	2842777-0005		1	DAMPER	
070	2916984-0000		2	BUSHING	
080	2907805-0000		1	SPRING	
090	2907804-0000		1	SPRING	
100	2907806-0000		2	LEVER	
110	2911623-0000		2	WASHER	
300	312812-0316		2	HEXAGON NUT, NY-LOCK M6 A4 80	
310	312105-0499		1	SCREW, M6S ISO 4014 M10X40 A4 80	
320	312115-0368		2	SCREW ISO4762 M6X16 A4 80	
330	312318-0325		1	SET SCREW, CUP END ISO4029 M5X10 A4	
340	315105-0153		2	WASHER PLAIN, 6,4X12X1,5 A4 BRB	
370	90028-0020		2	CONE TUBE 2,5MM	
380	90134-0063		2	BUSHING/NUT M8X1, D=2,5 MM	
400	90600-2013		4	FLANGE BUSHING, IGLIDUR X 8X10X5,5	
410	312625-0314		1	HEXAGON THIN NUT, EN 24035 ML6M M5 A4	
T40W8062	90166-0143	MM	190	TUBE 2,5 MM PA TRANSP.	
T40W8064	90166-0143	MM	190	TUBE 2,5 MM PA TRANSP.	
TGA 1000SQ, TGA 0750SQ (See drawing on page: 1-702)					
010	2649660-0000		1	SHAFT	
020	2993285-0003		1	HOLDER	
	3021650-0000		*1*	*HOLDER*	
030	2948028-0000		2	SHAFT	
040	3092829-0000		2	SLIDER	
050	2572197-0000		1	SPACER	
060	2649677-0000		1	DAMPER	
070	2948027-0000		2	BUSHING	
080	2949214-0000		1	SPRING	
090	2949215-0000		1	SPRING	
100	3018752-0000		2	LEVER	
110	2911623-0000		2	WASHER	
300	312812-0316		2	HEXAGON NUT, NY-LOCK M6 A4 80	
310	2922524-0000		1	SCREW	
320	312105-0368		2	"SCREW, M6S ISO 4017 M6X16 A4 80"	
330	311103-0268		1	PARALLEL PIN ISO 2338 4M6X12 A1	
340	315105-0153		2	WASHER PLAIN, 6,4X12X1,5 A4 BRB	
360	312105-0327		1	"SCREW, M6S ISO 4017 M5X12 A4 80"	
400	90600-2013		4	FLANGE BUSHING, IGLIDUR X 8X10X5,5	
TGA 1500SQ (See drawing on page: 1-702)					
010	2773510-0000		1	SHAFT	
020	2949206-0002		1	HOLDER	
030	2948028-0000		2	SHAFT	
040	3092829-0000		2	SLIDER	
050	2572197-0000		1	SPACER	
060	3030308-0000		1	DAMPER	
070	2948027-0000		2	BUSHING	
080	2949214-0000		1	SPRING	
090	2949215-0000		1	SPRING	
100	2916131-0000		2	LEVER	
110	2911623-0000		2	WASHER	
300	312812-0316		2	HEXAGON NUT, NY-LOCK M6 A4 80	

SHOCK ABSORBER PRESSURE

Drawing file: 2993982-5_1_AA.hpgl

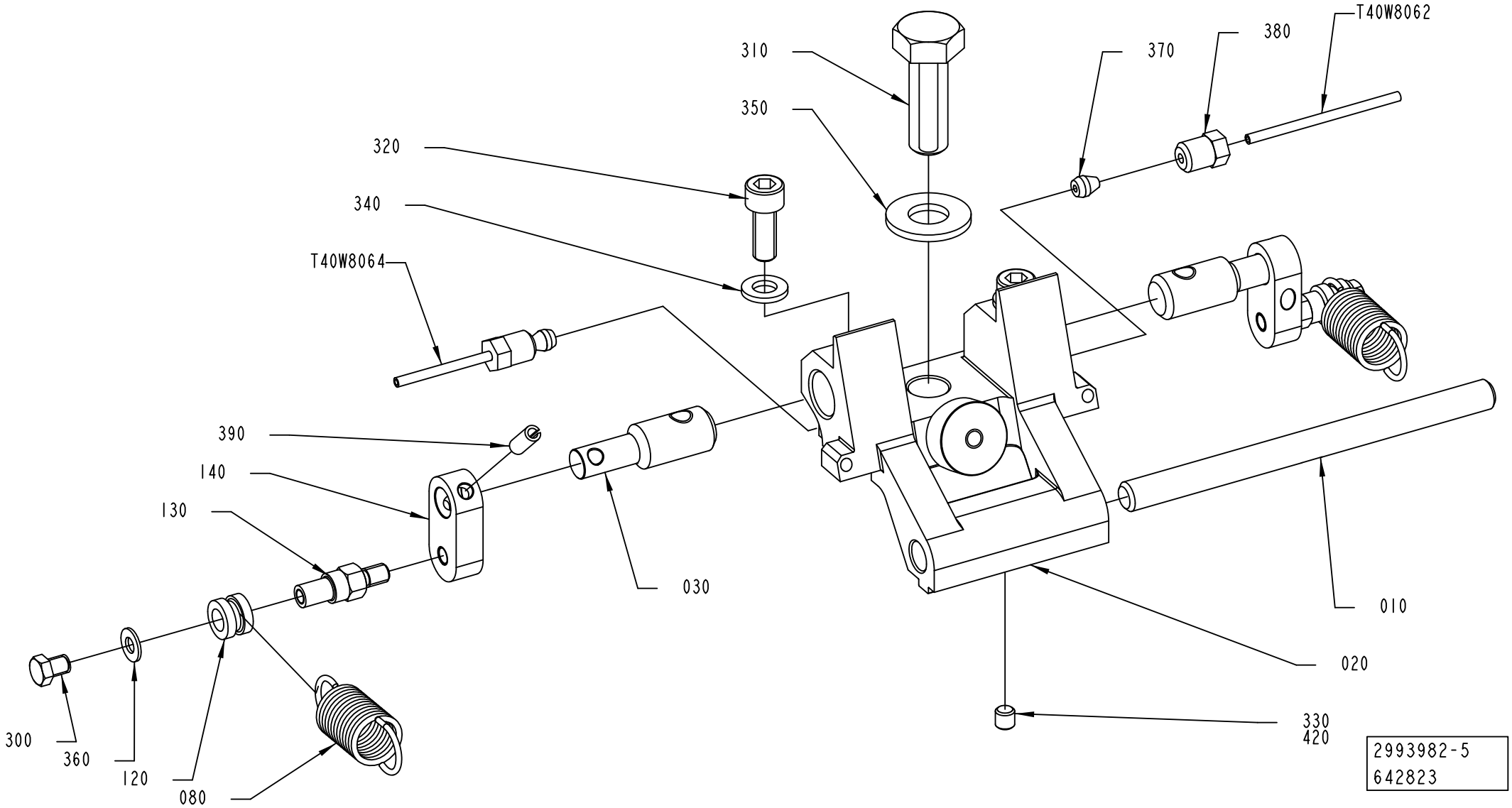

ECM: 676208 - 20140515
Group number: 2993982-0100
Assembly Drawing: 2993982-5_1_AA

This list covers pages from 1-698 to 1-705

Pos	Part No	UN	Qty	Description	Page No
TGA 1500SQ (Cont'd) (See drawing on page: 1-702)					
310	2922524-0000		1	SCREW	
320	312115-0368		2	SCREW ISO4762 M6X16 A4 80	
330	312318-0321		1	SET SCREW, CUP END ISO4029 M5X6 A4	
340	315105-0153		2	WASHER PLAIN, 6,4X12X1,5 A4 BRB	
360	312105-0327		1	"SCREW, M6S ISO 4017 M5X12 A4 80"	
400	90600-2013		4	FLANGE BUSHING, IGLIDUR X 8X10X5,5	
410	312625-0314		1	HEXAGON THIN NUT, EN 24035 ML6M M5 A4	
TPA 0500SQ (See drawing on page: 1-698)					
010	2962640-0000		1	SHAFT	
020	3024711-0002		1	HOLDER	
030	2911622-0000		2	SHAFT	
040	3092829-0000		2	SLIDER	
050	2842776-0000		1	PIN	
060	2842777-0001		1	DAMPER	
070	2842780-0000		2	BUSHING	
080	2842781-0000		1	SPRING	
090	2842782-0000		1	SPRING	
100	3219171-0000		2	LEVER	
110	2911623-0000		2	WASHER	
300	312812-0316		2	HEXAGON NUT, NY-LOCK M6 A4 80	
310	312105-0495		1	SCREW, M6S ISO 4017 M10X30 A4 80	
320	312115-0368		2	SCREW ISO4762 M6X16 A4 80	
330	312318-0325		1	SET SCREW, CUP END ISO4029 M5X10 A4	
340	315105-0153		2	WASHER PLAIN, 6,4X12X1,5 A4 BRB	
370	90028-0020		2	CONE TUBE 2,5MM	
380	90134-0063		2	BUSHING/NUT M8X1, D=2,5 MM	
400	90600-2013		4	FLANGE BUSHING, IGLIDUR X 8X10X5,5	
410	312625-0314		1	HEXAGON THIN NUT, EN 24035 ML6M M5 A4	
T40W8062	90166-0143	MM	155	TUBE 2,5 MM PA TRANSP.	
T40W8064	90166-0143	MM	155	TUBE 2,5 MM PA TRANSP.	
TPA 1000SQ, TPA 0750SQ (See drawing on page: 1-698)					
010	2916971-0000		1	SHAFT	
020	3024938-0002		1	HOLDER	
030	2907800-0000		2	SHAFT	
040	3242547-0000		2	SLIDER	
050	2907797-0000		1	PIN	
060	2842777-0004		1	DAMPER	
070	2916984-0000		2	BUSHING	
080	2907805-0000		1	SPRING	
090	2907804-0000		1	SPRING	
100	2907806-0000		2	LEVER	
110	2911623-0000		2	WASHER	
300	312812-0316		2	HEXAGON NUT, NY-LOCK M6 A4 80	
310	312105-0499		1	SCREW, M6S ISO 4014 M10X40 A4 80	
320	312115-0368		2	SCREW ISO4762 M6X16 A4 80	
330	312318-0325		1	SET SCREW, CUP END ISO4029 M5X10 A4	
340	315105-0153		2	WASHER PLAIN, 6,4X12X1,5 A4 BRB	
370	90028-0020		2	CONE TUBE 2,5MM	
380	90134-0063		2	BUSHING/NUT M8X1, D=2,5 MM	
400	90600-2013		4	FLANGE BUSHING, IGLIDUR X 8X10X5,5	
410	312625-0314		1	HEXAGON THIN NUT, EN 24035 ML6M M5 A4	
T40W8062	90166-0143	MM	180	TUBE 2,5 MM PA TRANSP.	
T40W8064	90166-0143	MM	180	TUBE 2,5 MM PA TRANSP.	
Common Parts					
340	315105-0153		2	WASHER PLAIN, 6,4X12X1,5 A4 BRB	
350	315105-0173		1	WASHER PLAIN, 10,5X22X2 A4 BRB	

Machine Type | Group Description | Used-In | Group Number | Page No

VOLUME FLAP PRESSURE RIGHT

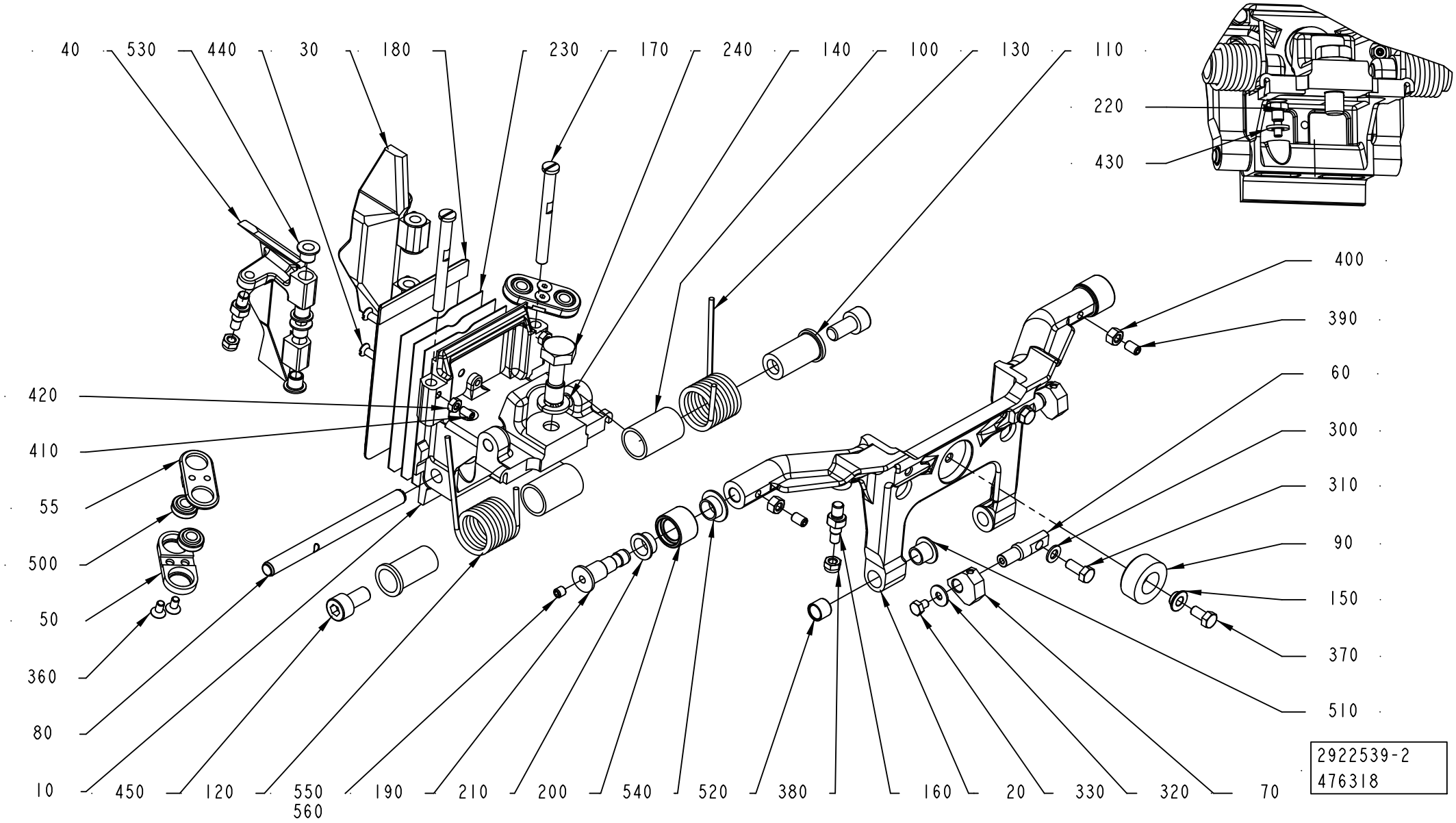

ECM: 483516 - 20101215
Group number: 2922539-0200
Assembly Drawing: 2922539-2_1_AC

Pos	Part No	UN	Qty	Description	Page No
-					
010	2998822-0003		1	FLAP HOLDER	
020	2917413-0000		1	FRAME	
030	3053567-0000		1	FLAP	
040	3053568-0000		1	FLAP	
050	3046743-0000		2	ROD	
055	3046744-0000		2	ROD	
060	2917418-0000		2	PIN	
070	2928239-0000		2	HOLDER	
080	2649660-0000		1	SHAFT	
090	2862308-0000		1	DAMPER	
100	1538521-0000		2	BUSHING	
110	2917419-0000		2	PIN	
120	2922536-0000		1	SPRING	
130	2922537-0000		1	SPRING	
140	315105-0173		1	WASHER PLAIN, 10,5X22X2 A4 BRB	
150	2572197-0000		1	SPACER	
160	2909850-0000		4	SPACER SCREW	
170	2866740-0000		2	SHAFT	
180	3031531-0000		1	VOLUME BULGE	
190	2868844-0000		2	AXLE PIN	
200	2660295-0000		2	ROLLER	
210	2660296-0000		2	BUSHING	
220	2922489-0000		1	PIN	
230	3041582-0000		3	SHIM	
240	2922524-0000		1	SCREW	
300	315105-0146		2	WASHER PLAIN, 5,3X10X1 A4 BRB	
310	312105-0327		2	"SCREW, M6S ISO 4017 M5X12 A4 80"	
320	90005-0082		2	WASHER PLAIN ROUND 4,3(M4)/12,H=1	
330	312105-0285		2	SCREW, M6S ISO 4017 M4X6 A4 70	
360	312155-0287		4	SCREW DIN 7991 MF6S M4X8 A4 70	
370	312105-0325		1	SCREW, M6S ISO 4017 M5X10 A4 80	
380	312812-0314		4	HEXAGON NUT, NY-LOCK M5 A4 80	
390	312318-0323		2	SET SCREW, CUP END ISO4029 M5X8 A4	
400	312605-0314		2	HEXAGON NUT, M6M M5 A280	
410	312318-0287		2	SET SCREW, CUP END ISO4029 M4X8 A4	
420	312605-0312		2	HEXAGON NUT, M6M M4 A280	
430	315105-0153		1	WASHER PLAIN, 6,4X12X1,5 A4 BRB	
440	312145-0291		2	SCREW ISO 2009 MFS M4X12 A4	
450	312115-0449		2	SCREW ISO4762 M8X16 A4 80	
500	90600-3582		4	SPHERICAL BEARING, GE 6 TGR	
510	90240-0260		2	FLANGE BUSHING, IGLIDUR X 8X10X9	
520	90458-0353		2	BUSHING, IGLIDUR X 8X10X8	
530	321155-0062		8	FLANGE BUSHING, IGLIDUR X 6X8X8	
540	90240-0289		2	FLANGE BUSHING, IGLIDUR X 10X12X6	
550	312318-0320		2	SET SCREW, CUP END ISO4029 M5X5 A4	
560	90602-4847		1	THREADLOCKER LOCTITE 243, 50ML	

Machine Type | Group Description | Used-In | Group Number | Page No

SUPPORT FLAP PRESSURE RIGHT

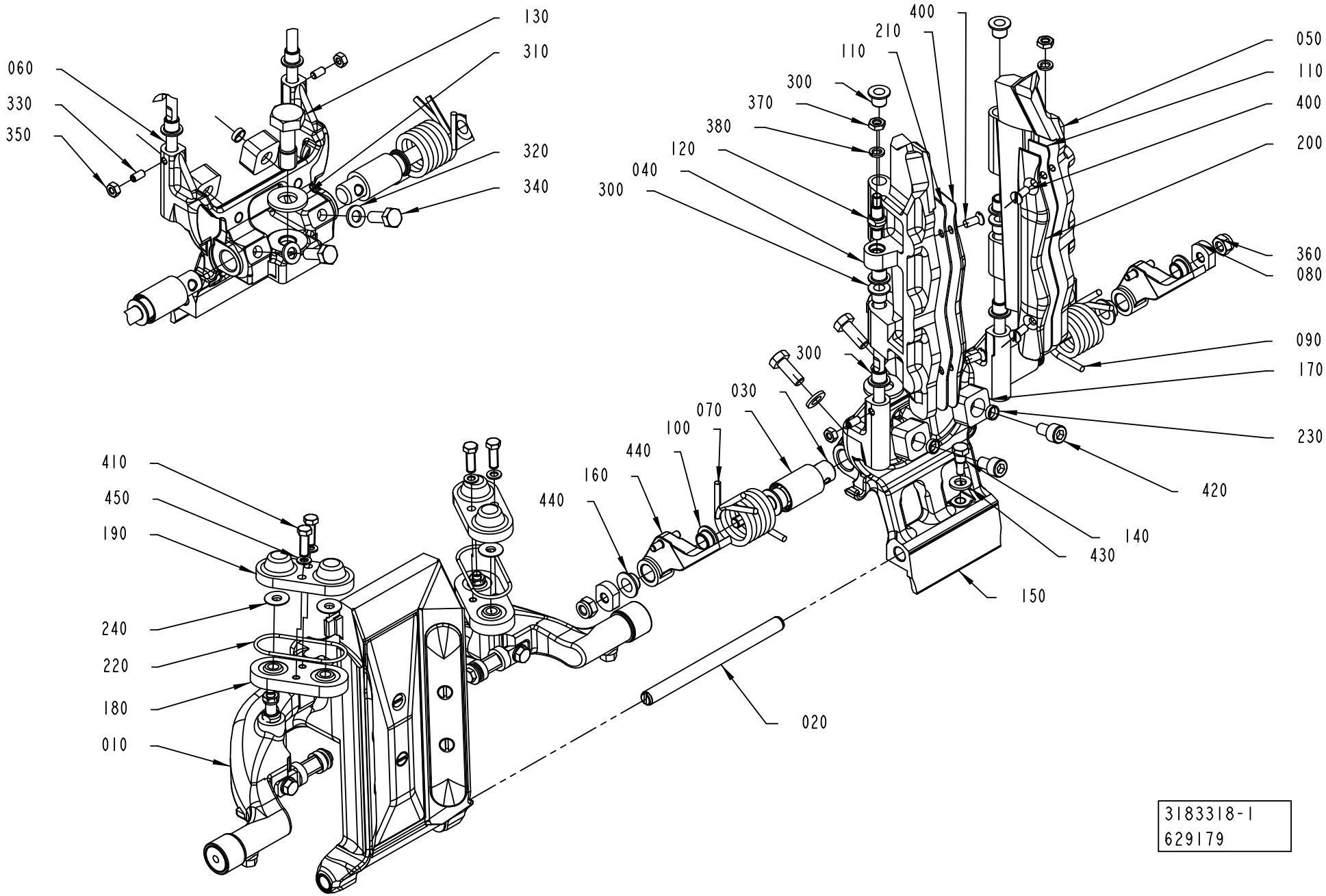

ECM: 634624 - 20140101
Group number: 3183318-0100
Assembly Drawing: 3183318-1_1_AD

Pos	Part No	UN	Qty	Description	Page No
TGA 1000CR					
040	3199628-0000		1	VOLUME FLAP	
050	3199627-0000		1	VOLUME FLAP	
200	3115434-0000		1	VOLUME BULGE	
210	3115436-0000		1	VOLUME BULGE	
TGA 1000LF					
040	3222726-0000		1	VOLUME FLAP	
050	3222725-0000		1	VOLUME FLAP	
200	3235925-0000		1	VOLUME BULGE	
210	3235926-0000		1	VOLUME BULGE	
Common Parts					
010	3183323-0100		1	VOLUME FLAP	**1-647**
020	2649660-0000		1	SHAFT	
030	3179813-0000		2	SHAFT	
060	3199633-0000		2	AXLE PIN	
070	2948027-0000		2	BUSHING	
080	2911623-0000		2	WASHER	
090	2949214-0000		1	SPRING	
100	2949215-0000		1	SPRING	
110	3220079-0000		2	SHIM	
120	3199630-0000		2	SPACER SCREW	
130	2922524-0000		1	SCREW	
140	2922489-0000		1	PIN	
150	3178500-0003		1	HOLDER	
160	3178505-0000		2	LEVER	
170	2982488-0000		2	STOP	
180	3199635-0000		2	ROD	
190	3199634-0000		2	COVER	
220	315202-0801		1	O-RING 37,82X1,78 MM	
230	2842779-0000		2	SPACER	
240	3235929-0000		4	WASHER	
300	321155-0062		8	FLANGE BUSHING, IGLIDUR X 6X8X8	
310	315105-0173		1	WASHER PLAIN, 10,5X22X2 A4 BRB	
320	315105-0153		2	WASHER PLAIN, 6,4X12X1,5 A4 BRB	
330	312318-0287		2	SET SCREW, CUP END ISO4029 M4X8 A4	
340	312105-0368		2	"SCREW, M6S ISO 4017 M6X16 A4 80"	
350	312605-0312		2	HEXAGON NUT, M6M M4 A280	
360	312812-0316		2	HEXAGON NUT, NY-LOCK M6 A4 80	
370	312625-0314		2	HEXAGON THIN NUT, EN 24035 ML6M M5 A4	
380	315402-0146		2	LOCK WASHER, DIN127B 5,1 A4, M5-3/16	
400	312145-0289		4	SCREW ISO 2009 MFS M4X10 A4	
410	312105-0292		4	SCREW, M6S ISO 4017 M4X14 A4 70	
420	312115-0364		2	SCREW ISO4762 M6X10 A4 80	
430	315105-0153		1	WASHER PLAIN, 6,4X12X1,5 A4 BRB	
440	90600-2013		4	FLANGE BUSHING, IGLIDUR X 8X10X5,5	
450	315105-0136		4	WASHER PLAIN, 4,3X8X0,8 A4 BRB	

Machine Type | Group Description | Used-In | Group Number | Page No

VOLUME CURVE PIECE

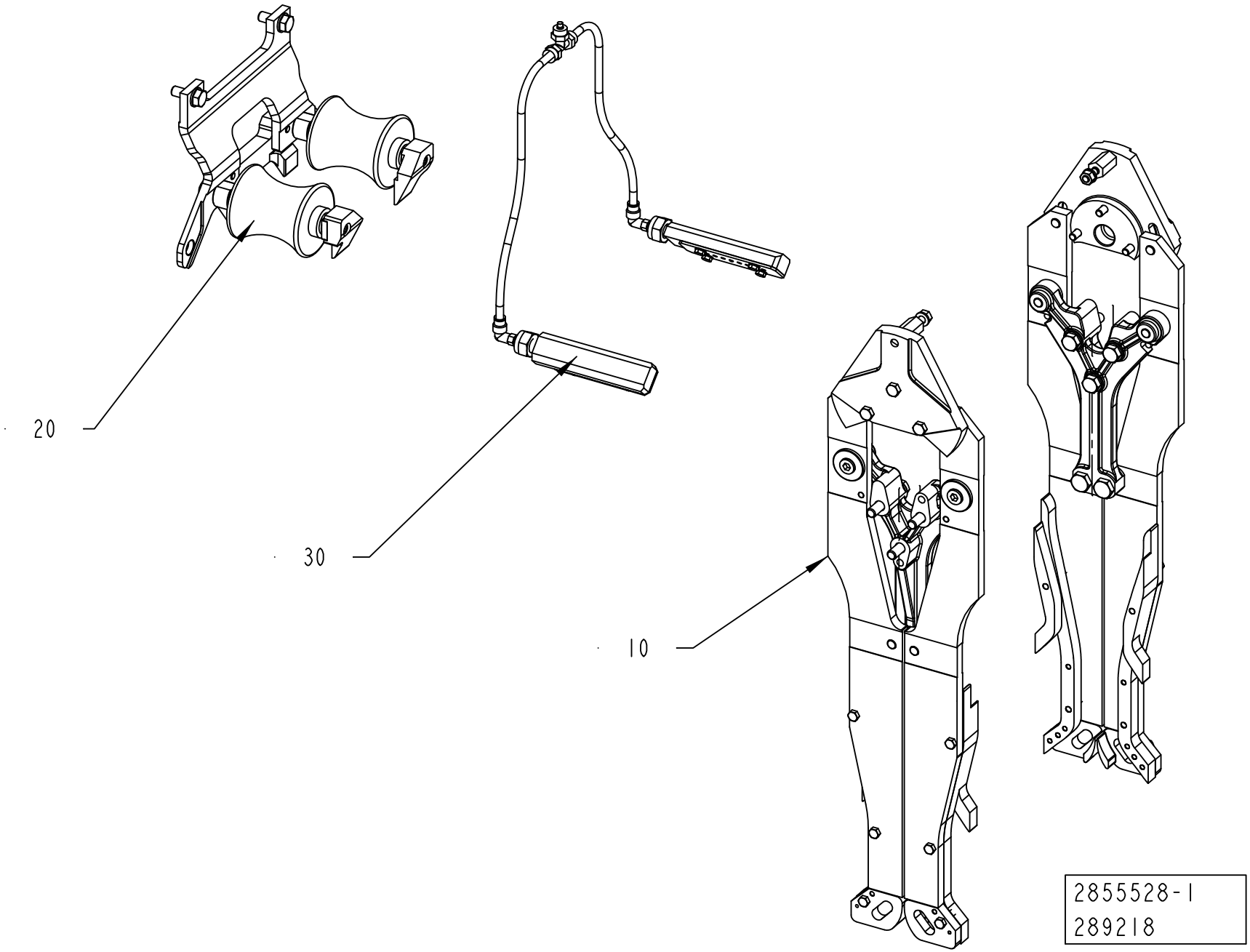

ECM: 647819 - 20140401
Group number: 2855528-0200
Assembly Drawing: 2855528-1_1_AA

Pos	Part No	UN	Qty	Description	Page No
-					
010	2835897-0100		1	CURVE UNIT	**1-713, 1-715, 1-717, 1-719**
020	2812896-0200		1	SUPPORT ROLLER	**1-737, 1-739**
030	2885034-0100		1	TUBE FLUSHING	**1-741**

Pos	Part No	UN	Qty	Description	Page No

CURVE UNIT

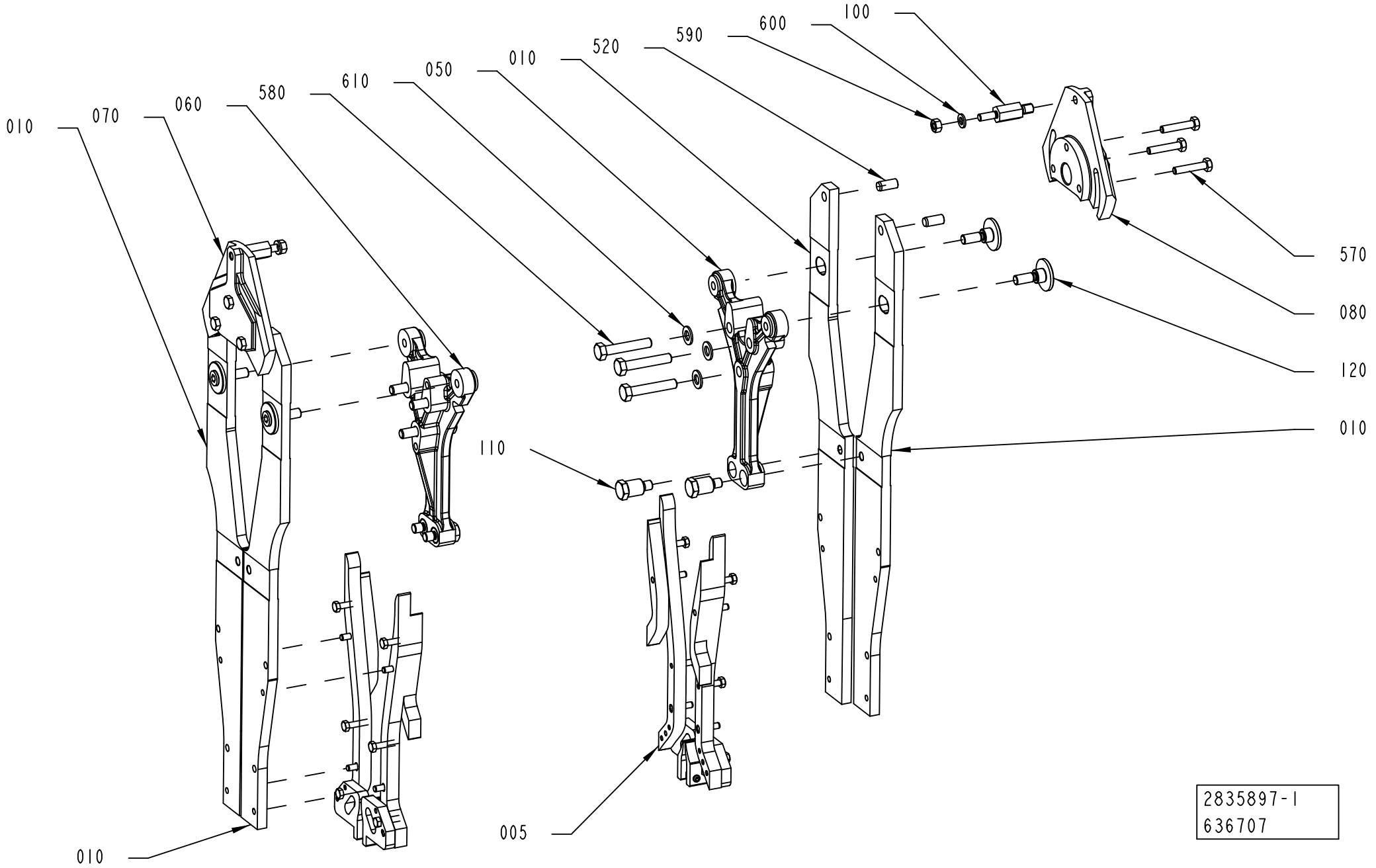
100
600
590
520
010
050
610
580
060
070
010
570
080
120
010
110
005
010
2835897-1
636707

ECM: 658523 - 20140403
Group number: 2835897-0100
Assembly Drawing: 2835897-1_1_AE

This list covers pages from 1-712 to 1-719

Pos	Part No	UN	Qty	Description	Page No
TBA 0500B, TBA 1000B (See drawing on page: 1-712)					
010	2900398-0000		4	RAIL BRACKET	
050	2835895-0001		1	SPACER	
	3030311-0000		*1*	*SPACER*	
060	2835895-0002		1	SPACER	
	3030311-0000		*1*	*SPACER*	
070	2780752-0000		1	ECCENTRIC	
080	2780751-0000		1	ECCENTRIC	
100	2780753-0000		2	PIVOT PIN	
520	311103-0400		4	PARALLEL PIN ISO 2338 8M6X18 A	
570	312109-0374		6	SCREW, M6S ISO 4017 M6X30 A4 80	
580	312105-0460		6	SCREW, M6S ISO 4014 M8X45 A4 80	
590	312605-0316		2	HEXAGON NUT, M6M M6 A280	
600	315105-0153		2	WASHER PLAIN, 6,4X12X1,5 A4 BRB	
TBA 0500E, TBA 1000E QC (See drawing on page: 1-712)					
010	2960086-0000		4	RAIL BRACKET	
050	2835895-0001		1	SPACER	
	3030311-0000		*1*	*SPACER*	
060	2835895-0002		1	SPACER	
	3030311-0000		*1*	*SPACER*	
070	2780752-0000		1	ECCENTRIC	
080	2780751-0000		1	ECCENTRIC	
100	2780753-0000		2	PIVOT PIN	
520	311103-0400		4	PARALLEL PIN ISO 2338 8M6X18 A	
570	312109-0374		6	SCREW, M6S ISO 4017 M6X30 A4 80	
580	312105-0460		6	SCREW, M6S ISO 4014 M8X45 A4 80	
590	312605-0316		2	HEXAGON NUT, M6M M6 A280	
600	315105-0153		2	WASHER PLAIN, 6,4X12X1,5 A4 BRB	
TBA 0500S (See drawing on page: 1-712)					
010	2997728-0000		4	RAIL BRACKET	
050	2835895-0001		1	SPACER	
	3030311-0000		*1*	*SPACER*	
060	2835895-0002		1	SPACER	
	3030311-0000		*1*	*SPACER*	
070	2780752-0000		1	ECCENTRIC	
080	2780751-0000		1	ECCENTRIC	
100	2780753-0000		2	PIVOT PIN	
520	311103-0400		4	PARALLEL PIN ISO 2338 8M6X18 A	
570	312109-0374		6	SCREW, M6S ISO 4017 M6X30 A4 80	
580	312105-0460		6	SCREW, M6S ISO 4014 M8X45 A4 80	
590	312605-0316		2	HEXAGON NUT, M6M M6 A280	
600	315105-0153		2	WASHER PLAIN, 6,4X12X1,5 A4 BRB	

Pos	Part No	UN	Qty	Description	Page No
TBA 0500SQ, TBA 1000SQ (See drawing on page: 1-712)					
010	2835896-0000		4	RAIL BRACKET	
050	2835895-0001		1	SPACER	
	3030311-0000		*1*	*SPACER*	
060	2835895-0002		1	SPACER	
	3030311-0000		*1*	*SPACER*	
070	2780752-0000		1	ECCENTRIC	
080	2780751-0000		1	ECCENTRIC	
100	2780753-0000		2	PIVOT PIN	
520	311103-0400		4	PARALLEL PIN ISO 2338 8M6X18 A	
570	312109-0374		6	SCREW, M6S ISO 4017 M6X30 A4 80	
580	312105-0460		6	SCREW, M6S ISO 4014 M8X45 A4 80	
590	312605-0316		2	HEXAGON NUT, M6M M6 A280	
600	315105-0153		2	WASHER PLAIN, 6,4X12X1,5 A4 BRB	
TBA 1000E NOQC					
010	2960086-0000		4	RAIL BRACKET	
050	2835895-0001		1	SPACER	
	3030311-0000		*1*	*SPACER*	
060	2835895-0002		1	SPACER	
	3030311-0000		*1*	*SPACER*	
070	2780752-0000		1	ECCENTRIC	
080	2780751-0000		1	ECCENTRIC	
100	2780753-0000		2	PIVOT PIN	
520	311103-0400		4	PARALLEL PIN ISO 2338 8M6X18 A	
570	312109-0374		6	SCREW, M6S ISO 4017 M6X30 A4 80	
580	312105-0460		6	SCREW, M6S ISO 4014 M8X45 A4 80	
590	312605-0316		2	HEXAGON NUT, M6M M6 A280	
600	315105-0153		2	WASHER PLAIN, 6,4X12X1,5 A4 BRB	
TBA 1000M (See drawing on page: 1-712)					
010	2998794-0000		4	RAIL BRACKET	
050	2835895-0001		1	SPACER	
	3030311-0000		*1*	*SPACER*	
060	2835895-0002		1	SPACER	
	3030311-0000		*1*	*SPACER*	
070	2780752-0000		1	ECCENTRIC	
080	2780751-0000		1	ECCENTRIC	
100	2780753-0000		2	PIVOT PIN	
520	311103-0400		4	PARALLEL PIN ISO 2338 8M6X18 A	
530	312105-0331		4	SCREW, M6S ISO 4017 M5X20 A4 80	
570	312109-0374		6	SCREW, M6S ISO 4017 M6X30 A4 80	
580	312105-0460		6	SCREW, M6S ISO 4014 M8X45 A4 80	
590	312605-0316		2	HEXAGON NUT, M6M M6 A280	

Machine Type | Group Description | Used-In | Group Number | Page No

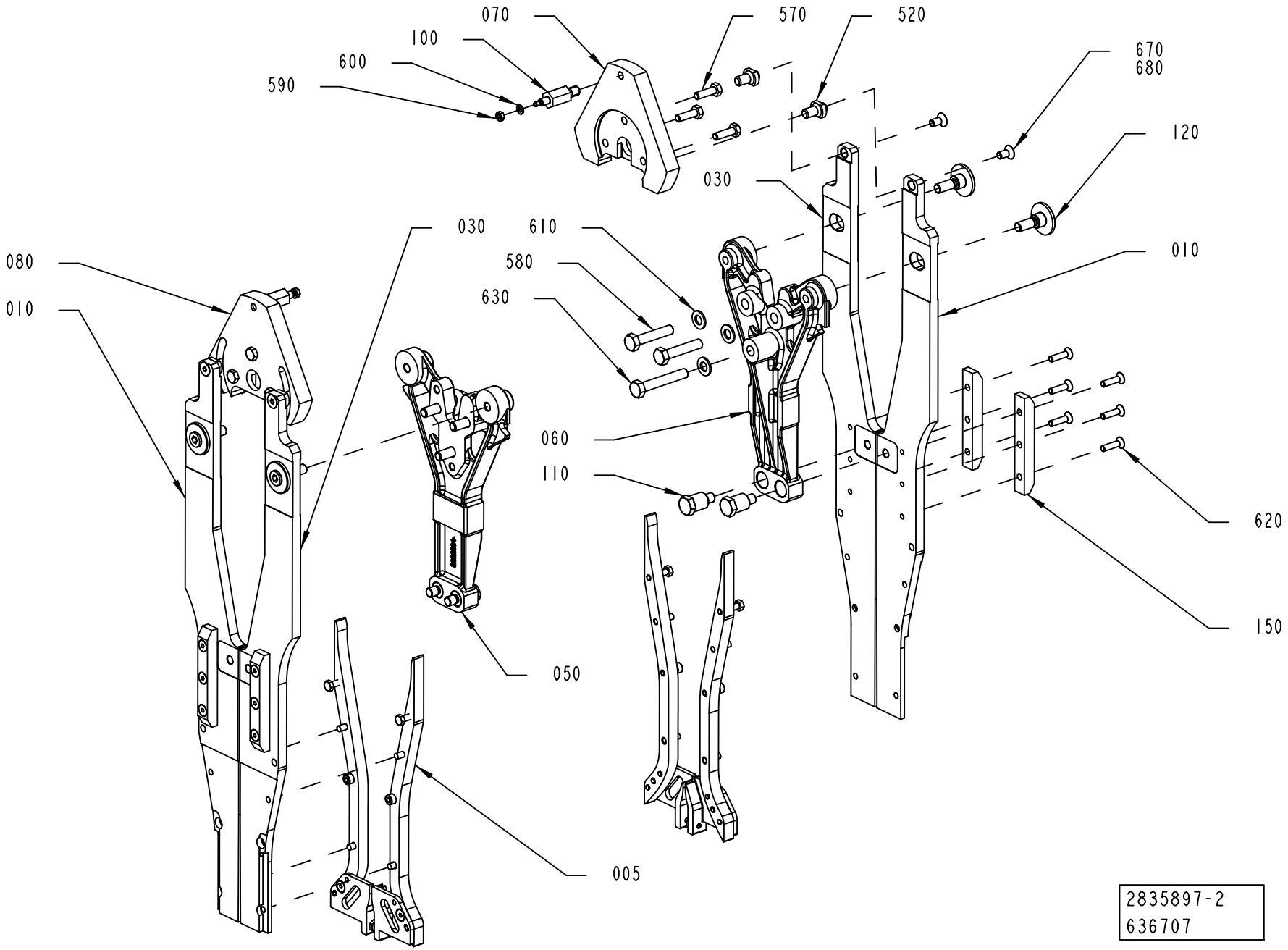
070
100
600
590
570
520
670
680
120
030
610
580
630
080
010
030
060
110
010
620
150
050
005
2835897-2
636707

ECM: 658523 - 20140403
Group number: 2835897-0100
Assembly Drawing: 2835897-2_1_AE

This list covers pages from 1-712 to 1-719

Pos	Part No	UN	Qty	Description	Page No
TBA 1000M (Cont'd) (See drawing on page: 1-712)					
600	315105-0153		2	WASHER PLAIN, 6,4X12X1,5 A4 BRB	
TBA 1000S (See drawing on page: 1-712)					
010	2871884-0000		4	RAIL BRACKET	
050	2835895-0001		1	SPACER	
	3030311-0000		*1*	*SPACER*	
060	2835895-0002		1	SPACER	
	3030311-0000		*1*	*SPACER*	
070	2780752-0000		1	ECCENTRIC	
080	2780751-0000		1	ECCENTRIC	
100	2780753-0000		2	PIVOT PIN	
520	311103-0400		4	PARALLEL PIN ISO 2338 8M6X18 A	
570	312109-0374		6	SCREW, M6S ISO 4017 M6X30 A4 80	
580	312105-0460		6	SCREW, M6S ISO 4014 M8X45 A4 80	
590	312605-0316		2	HEXAGON NUT, M6M M6 A280	
600	315105-0153		2	WASHER PLAIN, 6,4X12X1,5 A4 BRB	
TBA 1500S (See drawing on page: 1-716)					
010	2930279-0000		4	RAIL BRACKET	
050	2835895-0001		1	SPACER	
	3030311-0000		*1*	*SPACER*	
060	2835895-0002		1	SPACER	
	3030311-0000		*1*	*SPACER*	
070	2968867-0000		1	ECCENTRIC	
080	2968868-0000		1	ECCENTRIC	
100	2780753-0000		2	PIVOT PIN	
180	3277188-0000		2	CAM	
190	3277189-0000		6	SPACER	
520	311103-0400		4	PARALLEL PIN ISO 2338 8M6X18 A	
570	312109-0374		6	SCREW, M6S ISO 4017 M6X30 A4 80	
580	312105-0461		6	SCREW, M6S ISO 4014 M8X50 A4 80	
590	312605-0316		2	HEXAGON NUT, M6M M6 A280	
600	315105-0153		2	WASHER PLAIN, 6,4X12X1,5 A4 BRB	
TBA 2000S (See drawing on page: 1-714)					
010	2909315-0000		2	RAIL BRACKET	
030	2936881-0000		2	RAIL BRACKET	
050	2922694-0001		1	SPACER	
060	2922694-0002		1	SPACER	
070	2909317-0000		1	ECCENTRIC	
080	2909318-0000		1	ECCENTRIC	
100	2535443-0000		2	PIVOT PIN	
150	2922698-0000		4	PLATE	
520	3055884-0000		4	PIN	
570	312105-0370		6	SCREW, M6S ISO 4017 M6X20 A4 80	
580	312105-0459		4	SCREW, M6S ISO 4014 M8X40 A4 80	
590	312605-0312		2	HEXAGON NUT, M6M M4 A280	
600	315105-0136		2	WASHER PLAIN, 4,3X8X0,8 A4 BRB	
620	312155-0331		12	SCREW DIN 7991 MF6S M5X20 A4 70	
630	312105-0461		2	SCREW, M6S ISO 4014 M8X50 A4 80	
670	312155-0366		4	SCREW DIN 7991 MF6S M6X12 A4 70	
680	90157-0021		1	LOCKING FLUID LOCTITE 270, 50ML	
TGA 1000CR, TGA 1000LF (See drawing on pages: 1-712, 1-718)					
010	3004138-0000		2	RAIL BRACKET	
030	3004139-0000		2	RAIL BRACKET	
050	3004144-0001		1	SPACER	
	3030311-0000		*1*	*SPACER*	
060	3004144-0002		1	SPACER	
	3030311-0000		*1*	*SPACER*	
070	2618378-0000		1	ECCENTRIC	
080	2618377-0000		1	ECCENTRIC	
100	2624544-0000		2	PIVOT PIN	
160	2867643-0000		2	BRACKET	
170	2854056-0000		2	BRACKET	
520	311103-0399		4	PARALLEL PIN ISO 2338 8M6X16 A1	
570	312105-0368		6	"SCREW, M6S ISO 4017 M6X16 A4 80"	
580	312105-0461		6	SCREW, M6S ISO 4014 M8X50 A4 80	
590	312605-0316		2	HEXAGON NUT, M6M M6 A280	
600	315105-0153		2	WASHER PLAIN, 6,4X12X1,5 A4 BRB	
660	312115-0364		4	SCREW ISO4762 M6X10 A4 80	
TGA 1000SQ, TGA 0750SQ, TGA 0500SQ (See drawing on page: 1-718)					
010	3004138-0000		2	RAIL BRACKET	
030	3004139-0000		2	RAIL BRACKET	
050	3004144-0001		1	SPACER	
	3030311-0000		*1*	*SPACER*	
060	3004144-0002		1	SPACER	
	3030311-0000		*1*	*SPACER*	
070	2618378-0000		1	ECCENTRIC	
080	2618377-0000		1	ECCENTRIC	
100	2624544-0000		2	PIVOT PIN	
160	2867643-0000		2	BRACKET	
170	2854056-0000		2	BRACKET	
520	311103-0399		4	PARALLEL PIN ISO 2338 8M6X16 A1	
570	312105-0368		6	"SCREW, M6S ISO 4017 M6X16 A4 80"	
580	312105-0461		6	SCREW, M6S ISO 4014 M8X50 A4 80	
590	312605-0316		2	HEXAGON NUT, M6M M6 A280	

Machine Type | Group Description | Used-In | Group Number | Page No

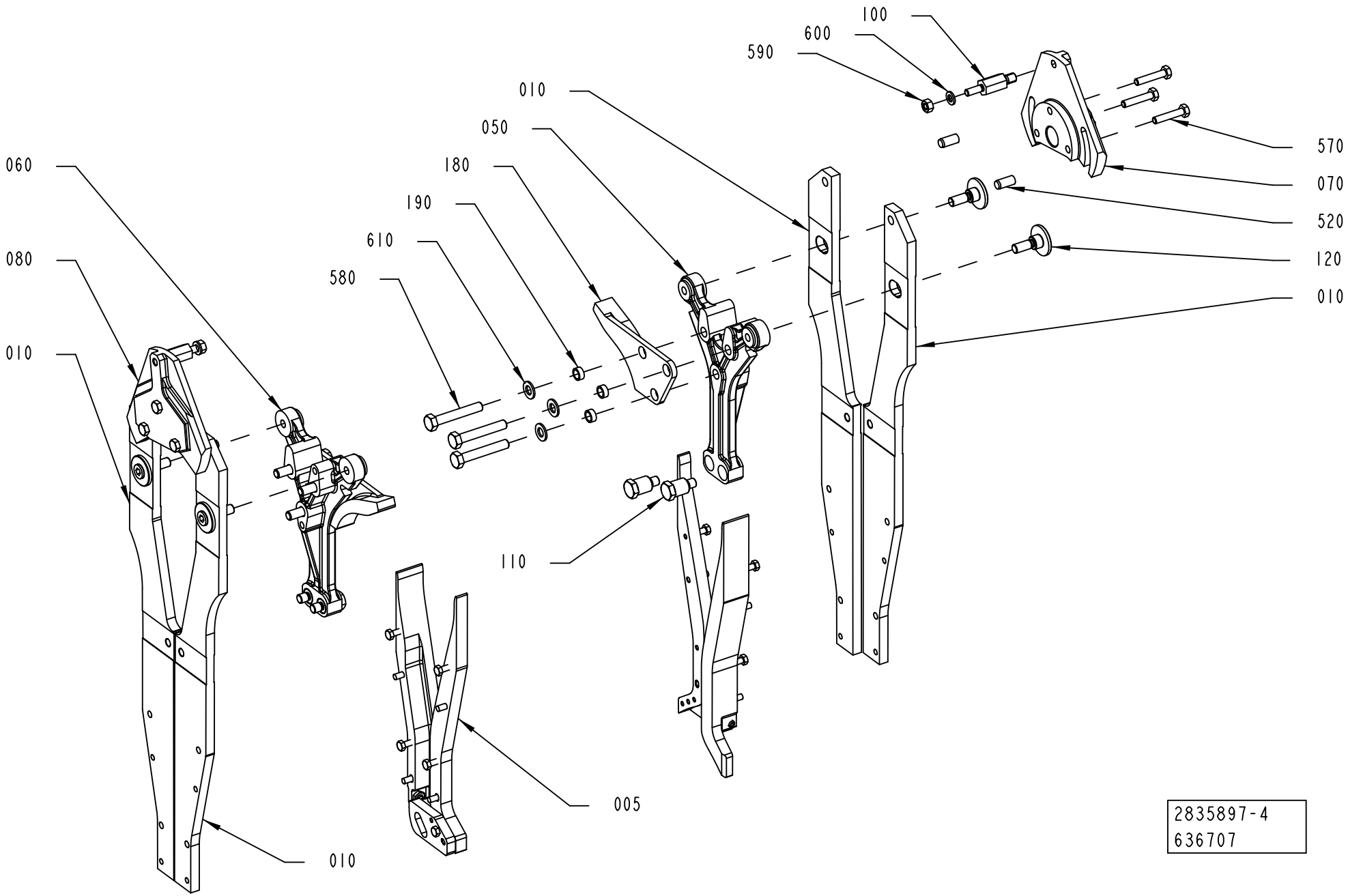
100
600
590
010
050
180
190
610
580
060
080
010
570
070
520
120
010
110
005
010
2835897-4
636707

Pos	Part No	UN	Qty	Description	Page No
TGA 1000SQ, TGA 0750SQ, TGA 0500SQ (Cont'd) (See drawing on page: 1-718)					
600	315105-0153		2	WASHER PLAIN, 6,4X12X1,5 A4 BRB	
660	312115-0364		4	SCREW ISO4762 M6X10 A4 80	
TGA 1500SQ (See drawing on page: 1-712)					
010	2949208-0000		4	RAIL BRACKET	
050	2835895-0001		1	SPACER	
	3030311-0000		*1*	*SPACER*	
060	2835895-0002		1	SPACER	
	3030311-0000		*1*	*SPACER*	
070	2780752-0000		1	ECCENTRIC	
080	2780751-0000		1	ECCENTRIC	
100	2780753-0000		2	PIVOT PIN	
520	311103-0400		4	PARALLEL PIN ISO 2338 8M6X18 A	
530	312105-0331		4	SCREW, M6S ISO 4017 M5X20 A4 80	
570	312109-0374		6	SCREW, M6S ISO 4017 M6X30 A4 80	
580	312105-0460		6	SCREW, M6S ISO 4014 M8X45 A4 80	
590	312605-0316		2	HEXAGON NUT, M6M M6 A280	
600	315105-0153		2	WASHER PLAIN, 6,4X12X1,5 A4 BRB	
TPA 0500SQ (See drawing on page: 1-712)					
010	2962059-0000		4	RAIL BRACKET	
050	2835895-0001		1	SPACER	
	3030311-0000		*1*	*SPACER*	
060	2835895-0002		1	SPACER	
	3030311-0000		*1*	*SPACER*	
070	2780752-0000		1	ECCENTRIC	
080	2780751-0000		1	ECCENTRIC	
100	2780753-0000		2	PIVOT PIN	
520	311103-0400		4	PARALLEL PIN ISO 2338 8M6X18 A	
570	312109-0374		6	SCREW, M6S ISO 4017 M6X30 A4 80	
580	312105-0460		6	SCREW, M6S ISO 4014 M8X45 A4 80	
590	312605-0316		2	HEXAGON NUT, M6M M6 A280	
600	315105-0153		2	WASHER PLAIN, 6,4X12X1,5 A4 BRB	
TPA 1000SQ, TPA 0750SQ (See drawing on page: 1-712)					
010	2916978-0000		4	RAIL BRACKET	
050	2835895-0001		1	SPACER	
	3030311-0000		*1*	*SPACER*	
060	2835895-0002		1	SPACER	
	3030311-0000		*1*	*SPACER*	
070	2780752-0000		1	ECCENTRIC	
080	2780751-0000		1	ECCENTRIC	
100	2780753-0000		2	PIVOT PIN	
520	311103-0400		4	PARALLEL PIN ISO 2338 8M6X18 A	
570	312109-0374		6	SCREW, M6S ISO 4017 M6X30 A4 80	
580	312105-0460		6	SCREW, M6S ISO 4014 M8X45 A4 80	
590	312605-0316		2	HEXAGON NUT, M6M M6 A280	
600	315105-0153		2	WASHER PLAIN, 6,4X12X1,5 A4 BRB	
Common Parts					
005	3321652-0100		1	VOLUME CAM	**1-721, 1-723, 1-725, 1-727, 1-729, 1-731, 1-733 ..... 1-735**
110	2835893-0000		4	PIN	
120	2835894-0000		4	PIN	
610	315105-0165		6	FWAS080G0-0S, WASHER PLAIN	

Machine Type | Group Description | Used-In | Group Number | Page No

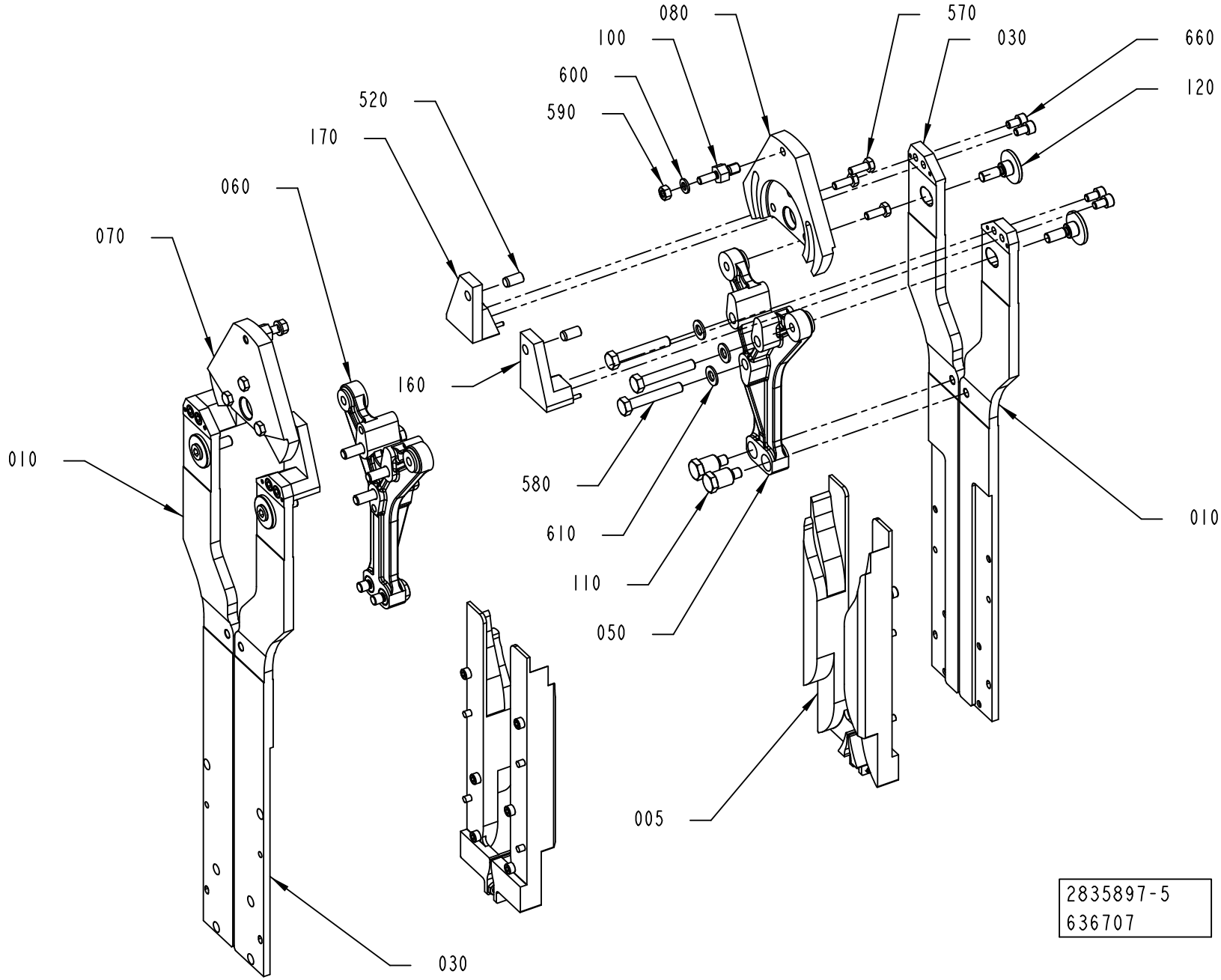
080
570
100
030
660
600
120
590
520
170
060
070
160
010
580
610
110
050
010
005
030
2835897-5
636707

ECM: 658523 - 20140403
Group number: 2835897-0100
Assembly Drawing: 2835897-5_1_AD

This list covers pages from 1-712 to 1-719

Pos	Part No	UN	Qty	Description	Page No
SEE PREVIOUS LISTS PAGES: 1-713, 1-715, 1-717.					

Pos	Part No	UN	Qty	Description	Page No

VOLUME CAM

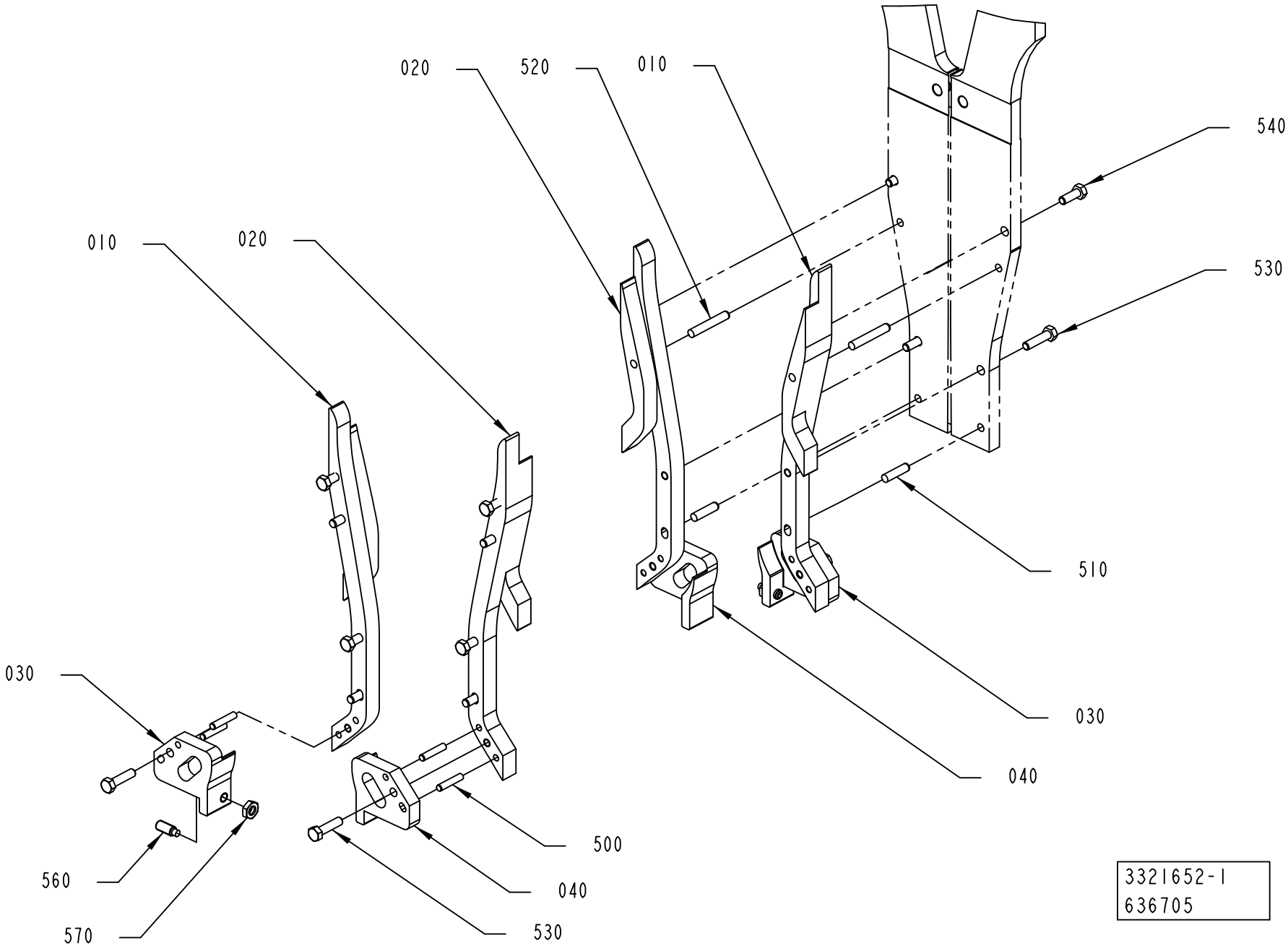
020
520
010
540
010
020
530
030
510
030
040
500
040
560
530
570
3321652-1
636705

ECM: 642515 - 20140403
Group number: 3321652-0100
Assembly Drawing: 3321652-1_1_AA

This list covers pages from 1-720 to 1-735

Pos	Part No	UN	Qty	Description	Page No
TBA 0500B, TBA 1000B (See drawing on page: 1-734)					
010	2900399-0000		2	VOLUME CAM	
020	2900400-0000		2	VOLUME CAM	
030	2900401-0000		2	PULLER CAM	
040	2900402-0000		2	PULLER CAM	
500	311103-0272		8	PARALLEL PIN ISO 2338 4M6X20 A1	
510	311103-0310		8	PARALLEL PIN ISO 2338 5M6X20 A1	
530	312105-0331		12	SCREW, M6S ISO 4017 M5X20 A4 80	
560	90287-0159		2	SET SCREW, DOGPOINT M6X16 A4	
TBA 0500E, TBA 1000E QC (See drawing on page: 1-732)					
010	3331815-0000		1	VOLUME CAM	
015	3331818-0000		1	VOLUME CAM	
020	3331816-0000		1	VOLUME CAM	
025	3331817-0000		1	VOLUME CAM	
030	3312567-0000		1	PULLER CAM	
035	3312566-0000		1	PULLER CAM	
040	3321387-0000		1	PULLER CAM	
045	3321388-0000		1	PULLER CAM	
500	311103-0271		8	PARALLEL PIN ISO 2338 4M6X18 A1	
510	311103-0309		8	PARALLEL PIN ISO 2338 5M6X18 A1	
530	312105-0328		12	SCREW M6S ISO 4017 M5X14 A4 80	
560	90287-0159		2	SET SCREW, DOGPOINT M6X16 A4	
TBA 0500S (See drawing on page: 1-722)					
010	3009336-0000		4	VOLUME CAM	
030	3009338-0000		2	PULLER CAM	
040	3009337-0000		2	PULLER CAM	
500	311103-0277		8	PARALLEL PIN ISO 2338 4M6X32 A1	
510	311103-0310		8	PARALLEL PIN ISO 2338 5M6X20 A1	
530	312105-0331		12	SCREW, M6S ISO 4017 M5X20 A4 80	
560	90287-0159		2	SET SCREW, DOGPOINT M6X16 A4	
TBA 0500SQ, TBA 1000SQ (See drawing on page: 1-720)					
010	2874249-0000		2	VOLUME CAM	
020	2874250-0000		2	VOLUME CAM	
030	2844888-0000		2	PULLER CAM	
040	2844889-0000		2	PULLER CAM	
500	311103-0272		8	PARALLEL PIN ISO 2338 4M6X20 A1	
510	311103-0310		4	PARALLEL PIN ISO 2338 5M6X20 A1	
520	311103-0315		4	PARALLEL PIN ISO 2338 5M6X32 A1	
530	312105-0331		8	SCREW, M6S ISO 4017 M5X20 A4 80	
540	312105-0328		4	SCREW M6S ISO 4017 M5X14 A4 80	
560	90287-0159		2	SET SCREW, DOGPOINT M6X16 A4	
TBA 1000E NOQC (See drawing on page: 1-724)					
010	3312568-0000		2	VOLUME CAM	
020	3312569-0000		2	VOLUME CAM	
030	3312567-0000		1	PULLER CAM	
035	3312566-0000		1	PULLER CAM	
040	3321387-0000		1	PULLER CAM	
045	3321388-0000		1	PULLER CAM	
500	311103-0272		8	PARALLEL PIN ISO 2338 4M6X20 A1	
510	311103-0310		8	PARALLEL PIN ISO 2338 5M6X20 A1	
530	312105-0331		12	SCREW, M6S ISO 4017 M5X20 A4 80	
560	90287-0159		2	SET SCREW, DOGPOINT M6X16 A4	
TBA 1000M (See drawing on page: 1-726)					
010	3030306-0000		2	VOLUME CAM	
020	3030307-0000		2	VOLUME CAM	
530	312105-0331		8	SCREW, M6S ISO 4017 M5X20 A4 80	
560	90287-0159		2	SET SCREW, DOGPOINT M6X16 A4	
TBA 1000S (See drawing on page: 1-722)					
010	2871040-0000		4	VOLUME CAM	
030	2871038-0000		2	PULLER CAM	
040	2871039-0000		2	PULLER CAM	
500	311103-0272		8	PARALLEL PIN ISO 2338 4M6X20 A1	
510	311103-0310		8	PARALLEL PIN ISO 2338 5M6X20 A1	
530	312105-0331		12	SCREW, M6S ISO 4017 M5X20 A4 80	
560	90287-0159		2	SET SCREW, DOGPOINT M6X16 A4	
TBA 1500S (See drawing on page: 1-728)					
010	2955618-0000		2	VOLUME CAM	
020	2955619-0000		2	VOLUME CAM	
040	2930283-0000		2	PULLER CAM	
500	311103-0272		4	PARALLEL PIN ISO 2338 4M6X20 A1	
510	311103-0310		8	PARALLEL PIN ISO 2338 5M6X20 A1	
530	312105-0331		10	SCREW, M6S ISO 4017 M5X20 A4 80	
560	90287-0159		2	SET SCREW, DOGPOINT M6X16 A4	
TBA 2000S (See drawing on page: 1-730)					
010	2909316-0000		4	VOLUME CAM	
030	2922700-0000		2	PULLER CAM	
040	2922701-0000		2	PULLER CAM	
500	311103-0270		8	PARALLEL PIN ISO 2338 4M6X16 A1	
510	311103-0309		4	PARALLEL PIN ISO 2338 5M6X18 A1	
520	311103-0308		4	PARALLEL PIN ISO 2338 5M6X16 A1	
530	312105-0331		4	SCREW, M6S ISO 4017 M5X20 A4 80	
540	312115-0329		4	SCREW ISO4762 M5X16 A4 80	
550	312155-0329		4	SCREW DIN 7991 MF6S M5X16 A4 70	
560	90287-0159		2	SET SCREW, DOGPOINT M6X16 A4	

Machine Type | Group Description | Used-In | Group Number | Page No

VOLUME CAM

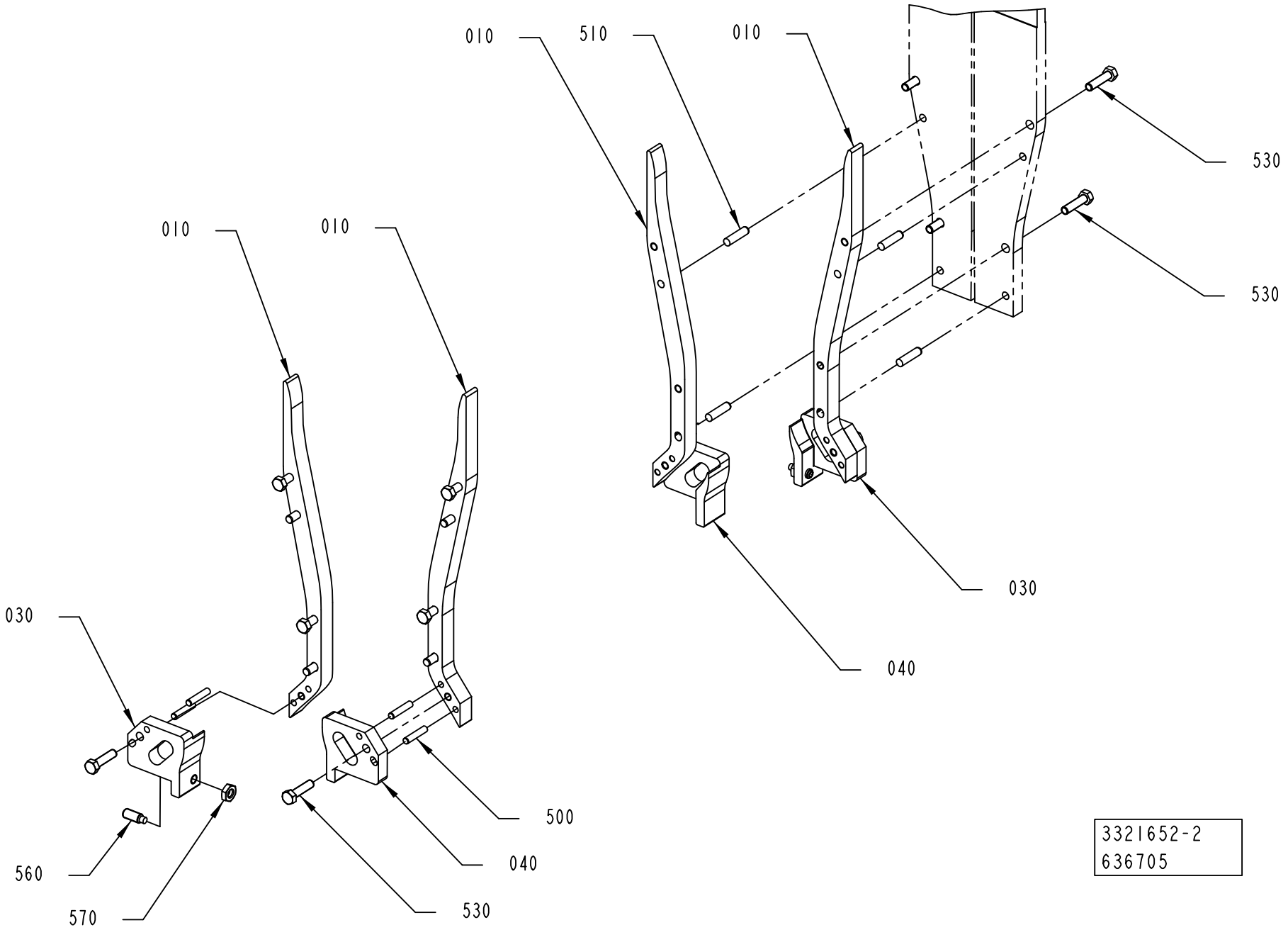

3321652-2
636705

Pos	Part No	UN	Qty	Description	Page No
TGA 1000CR, TGA 1000LF (Cont'd) (See drawing on page: 1-726)					
010	3269647-0000		2	CAM	
020	3269648-0000		2	CAM	
530	312115-0325		12	SCREW ISO4762 M5X10 A4 80	
560	90287-0159		2	SET SCREW, DOGPOINT M6X16 A4	
TGA 1000SQ, TGA 0750SQ, TGA 0500SQ (See drawing on page: 1-726)					
010	3030304-0000		2	VOLUME CAM	
020	3030305-0000		2	VOLUME CAM	
530	312115-0325		12	SCREW ISO4762 M5X10 A4 80	
560	90287-0159		2	SET SCREW, DOGPOINT M6X16 A4	
TGA 1500SQ (See drawing on page: 1-726)					
010	2976259-0000		2	VOLUME CAM	
020	2976260-0000		2	VOLUME CAM	
530	312105-0331		8	SCREW, M6S ISO 4017 M5X20 A4 80	
560	90287-0159		2	SET SCREW, DOGPOINT M6X16 A4	
TPA 0500SQ (See drawing on page: 1-722)					
010	2978784-0000		4	VOLUME CAM	
030	2978786-0000		2	PULLER CAM	
040	2978785-0000		2	PULLER CAM	
500	311103-0277		8	PARALLEL PIN ISO 2338 4M6X32 A1	
510	311103-0310		8	PARALLEL PIN ISO 2338 5M6X20 A1	
530	312105-0331		12	SCREW, M6S ISO 4017 M5X20 A4 80	
560	312318-0370		2	SET SCREW, CUP END ISO4029 M6X20 A4	
TPA 1000SQ, TPA 0750SQ (See drawing on page: 1-734)					
010	2916979-0000		2	VOLUME CAM	
020	2916980-0000		2	VOLUME CAM	
030	2916981-0000		2	PULLER CAM	
040	2916982-0000		2	PULLER CAM	
500	311103-0272		8	PARALLEL PIN ISO 2338 4M6X20 A1	
510	311103-0310		8	PARALLEL PIN ISO 2338 5M6X20 A1	
530	312105-0331		12	SCREW, M6S ISO 4017 M5X20 A4 80	
560	90287-0159		2	SET SCREW, DOGPOINT M6X16 A4	
Common Parts					
570	312625-0316		2	HEXAGON THIN NUT, EN 24035 ML6M M6 A4	

Pos	Part No	UN	Qty	Description	Page No

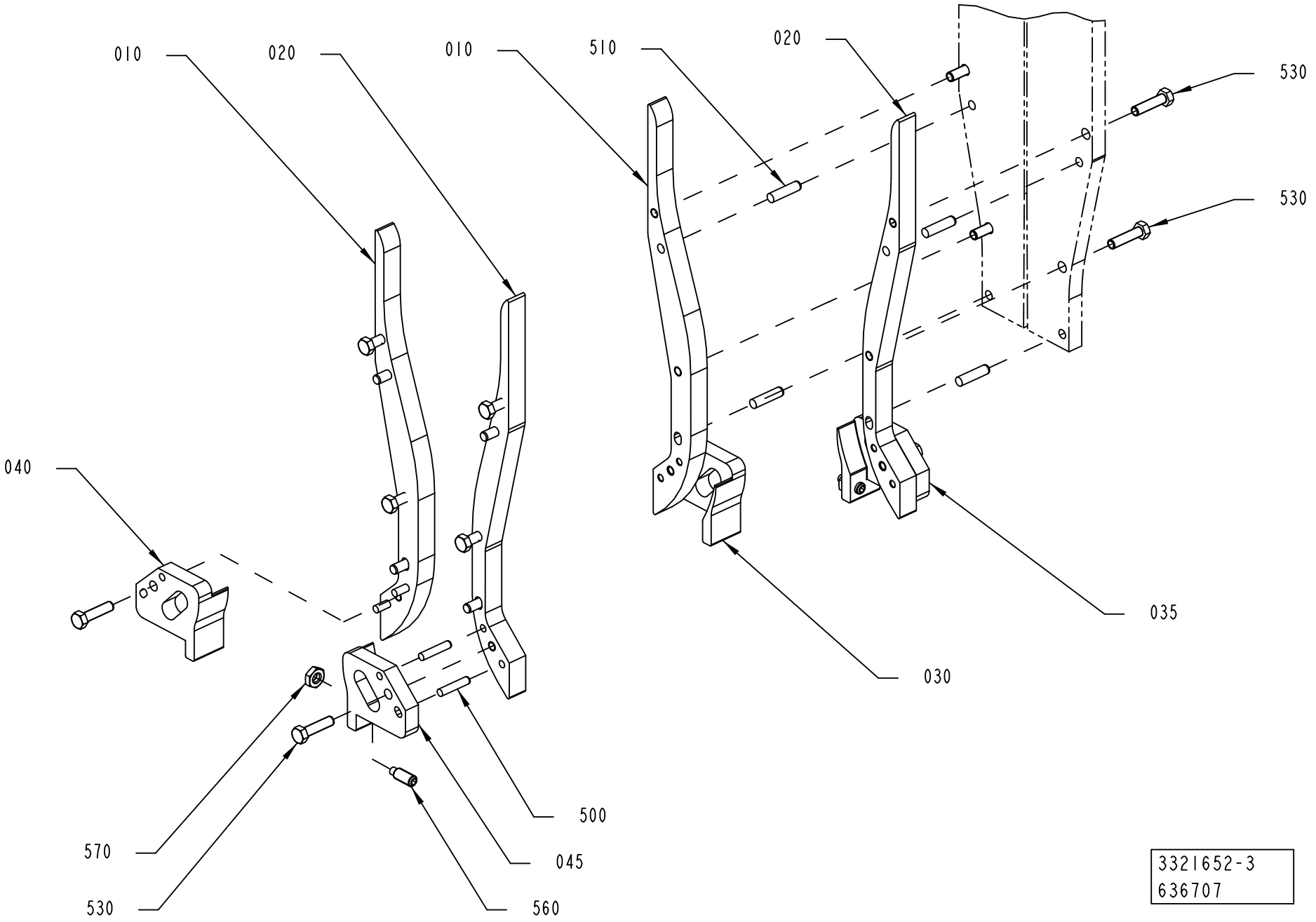
010
020
010
510
020
530
530
040
035
030
500
570
045
530
560
3321652-3
636707

Pos	Part No	UN	Qty	Description	Page No
SEE PREVIOUS LISTS PAGES: 1-721, 1-723.					

Pos	Part No	UN	Qty	Description	Page No

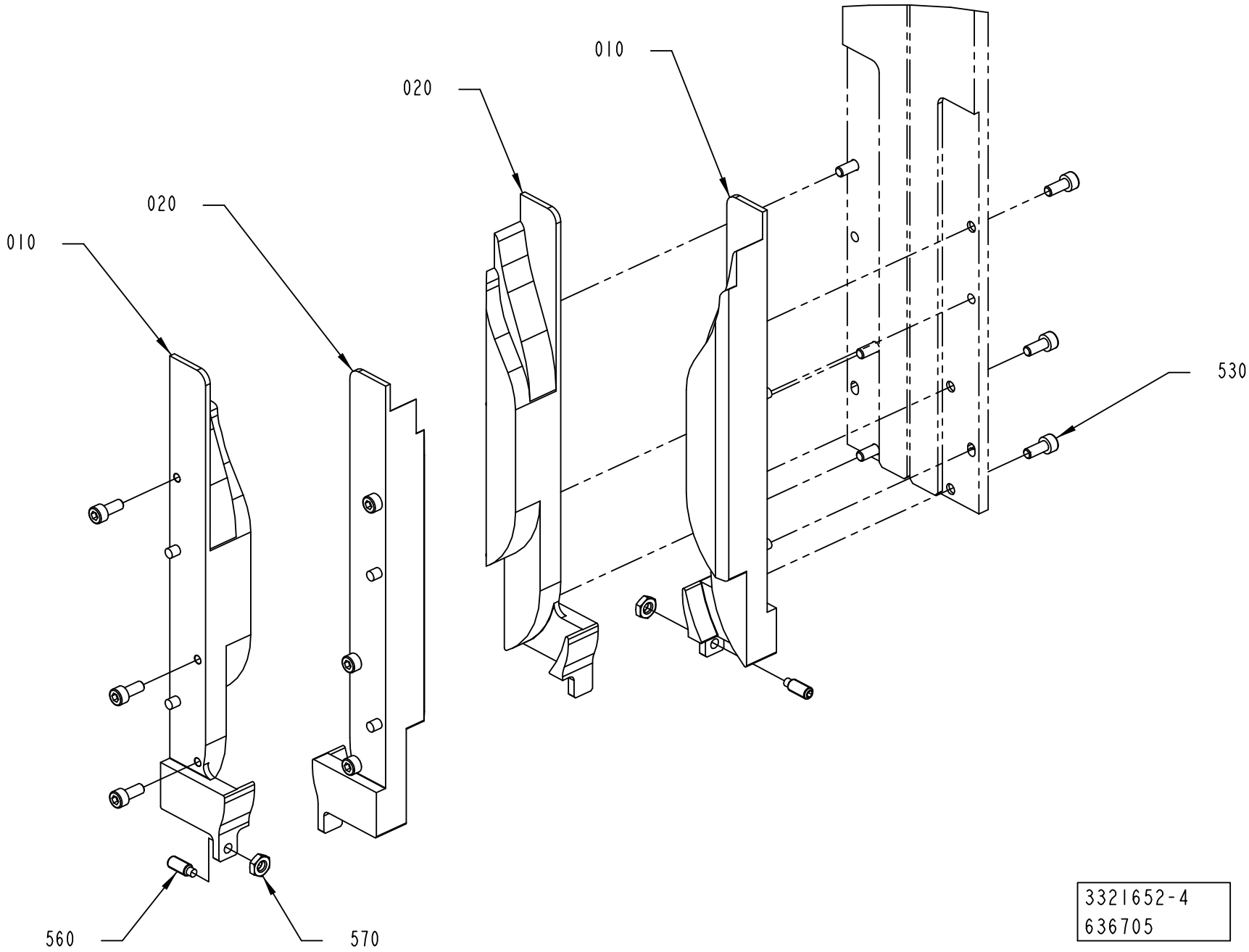
010
020
010
020
530
560
570
3321652-4
636705

Pos	Part No	UN	Qty	Description	Page No
SEE PREVIOUS LISTS PAGES: 1-721, 1-723.					

Pos	Part No	UN	Qty	Description	Page No

VOLUME CAM

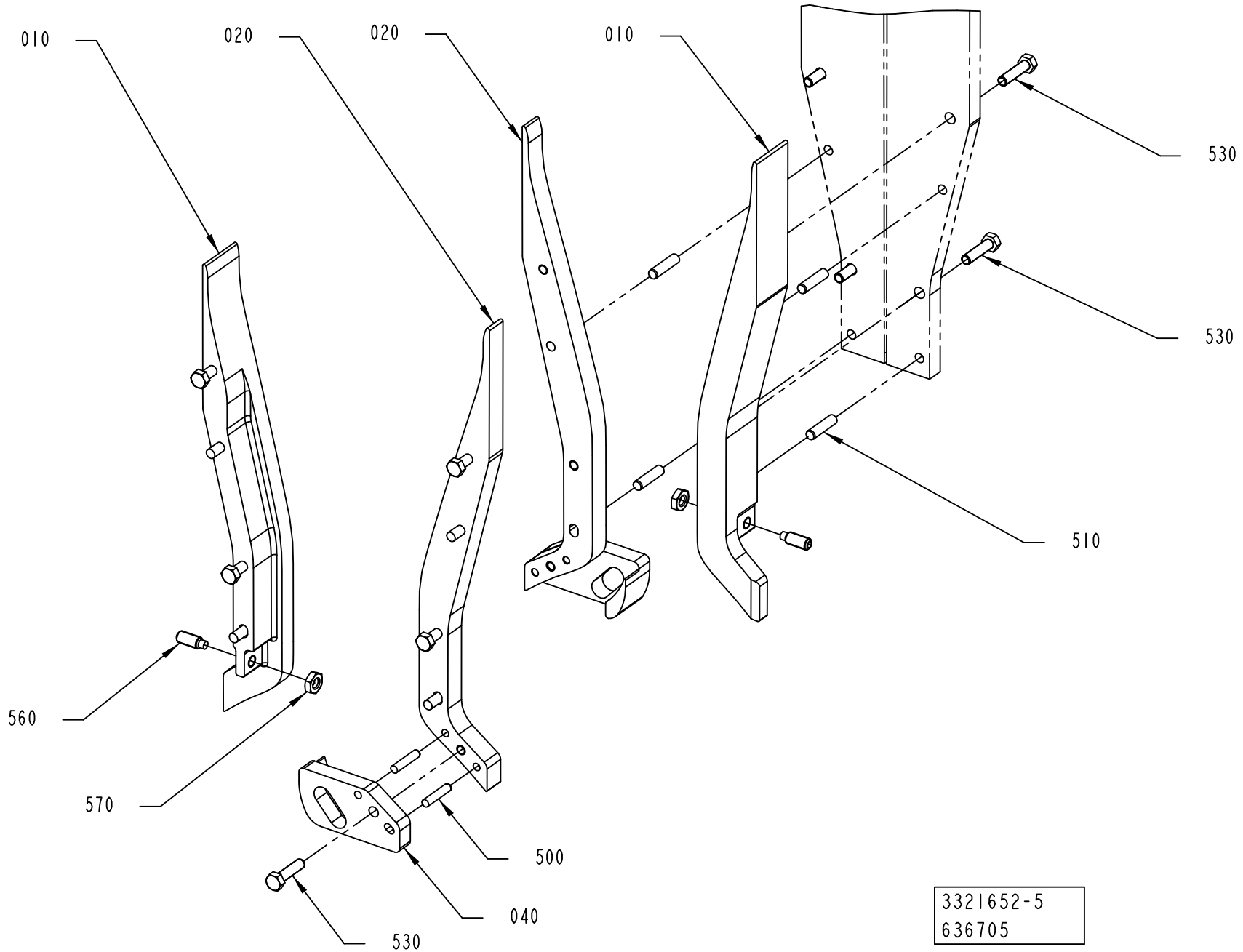
010
020
020
010
530
530
510
560
570
500
040
530
3321652-5
636705

Pos	Part No	UN	Qty	Description	Page No
SEE PREVIOUS LISTS PAGES: 1-721, 1-723.					

Pos	Part No	UN	Qty	Description	Page No

VOLUME CAM

Drawing file: 3321652-6_1_AA.hpgl

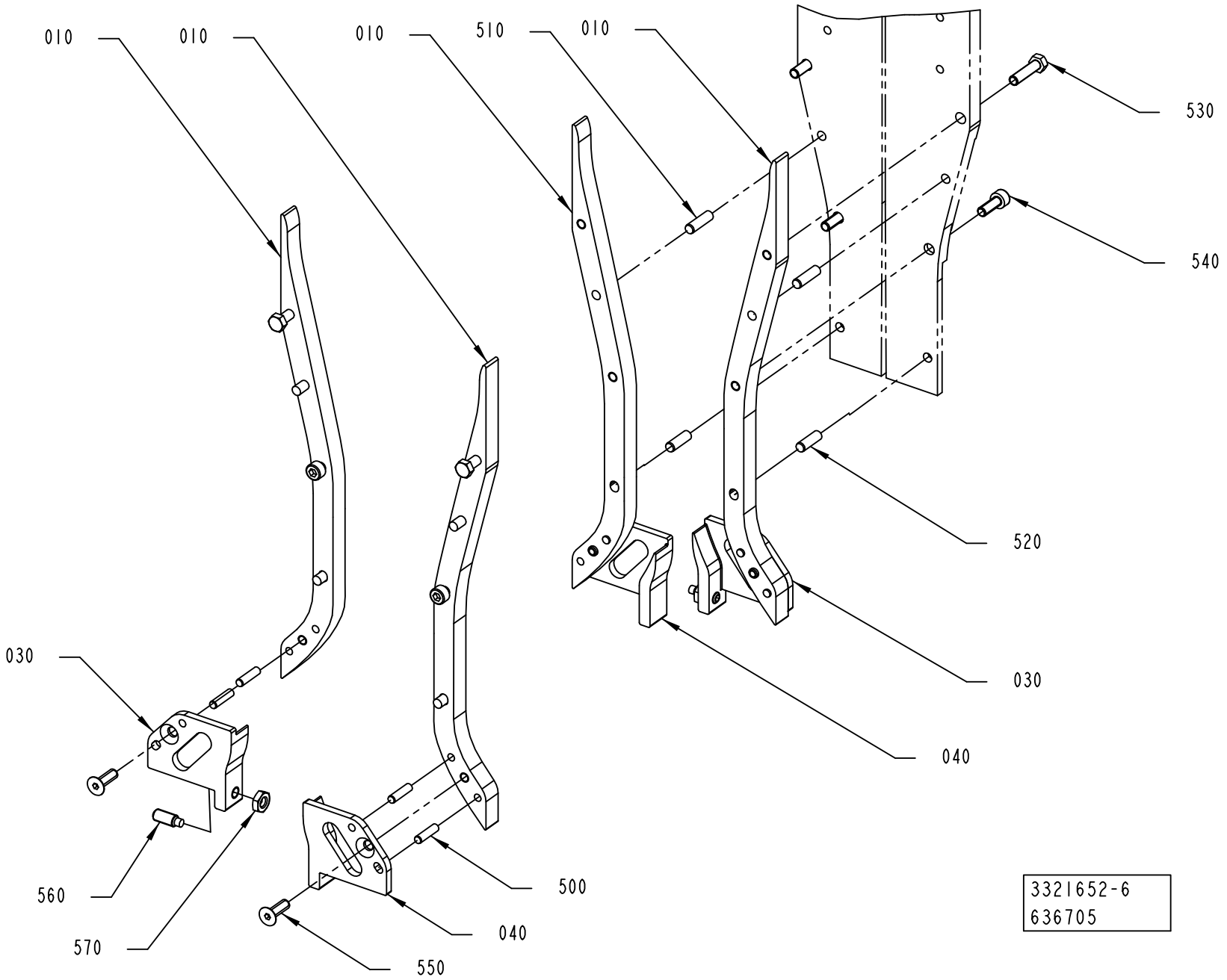

Pos	Part No	UN	Qty	Description	Page No	Pos	Part No	UN	Qty	Description	Page No

SEE PREVIOUS LISTS PAGES: 1-721, 1-723.

VOLUME CAM

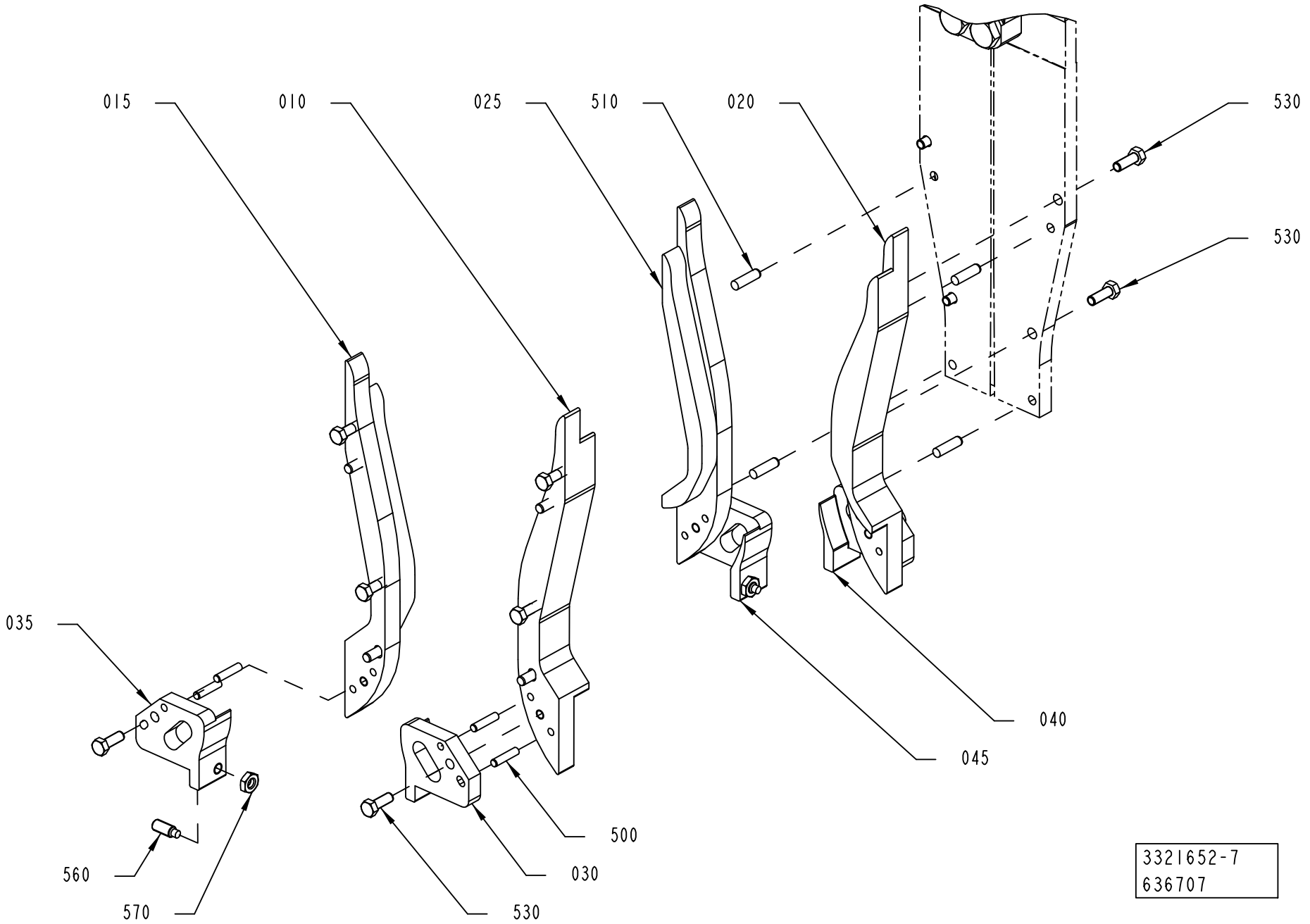
015
010
025
510
020
530
530
035
040
045
500
030
560
570
530
3321652-7
636707

ECM: 642515 - 20140403
Group number: 3321652-0100
Assembly Drawing: 3321652-7_1_AA

This list covers pages from 1-720 to 1-735

Pos	Part No	UN	Qty	Description	Page No
SEE PREVIOUS LISTS PAGES: 1-721, 1-723.					

Pos	Part No	UN	Qty	Description	Page No

Machine Type	Group Description	Used-In	Group Number	Page No

VOLUME CAM

Drawing file: 3321652-8_1_AA.hpgl

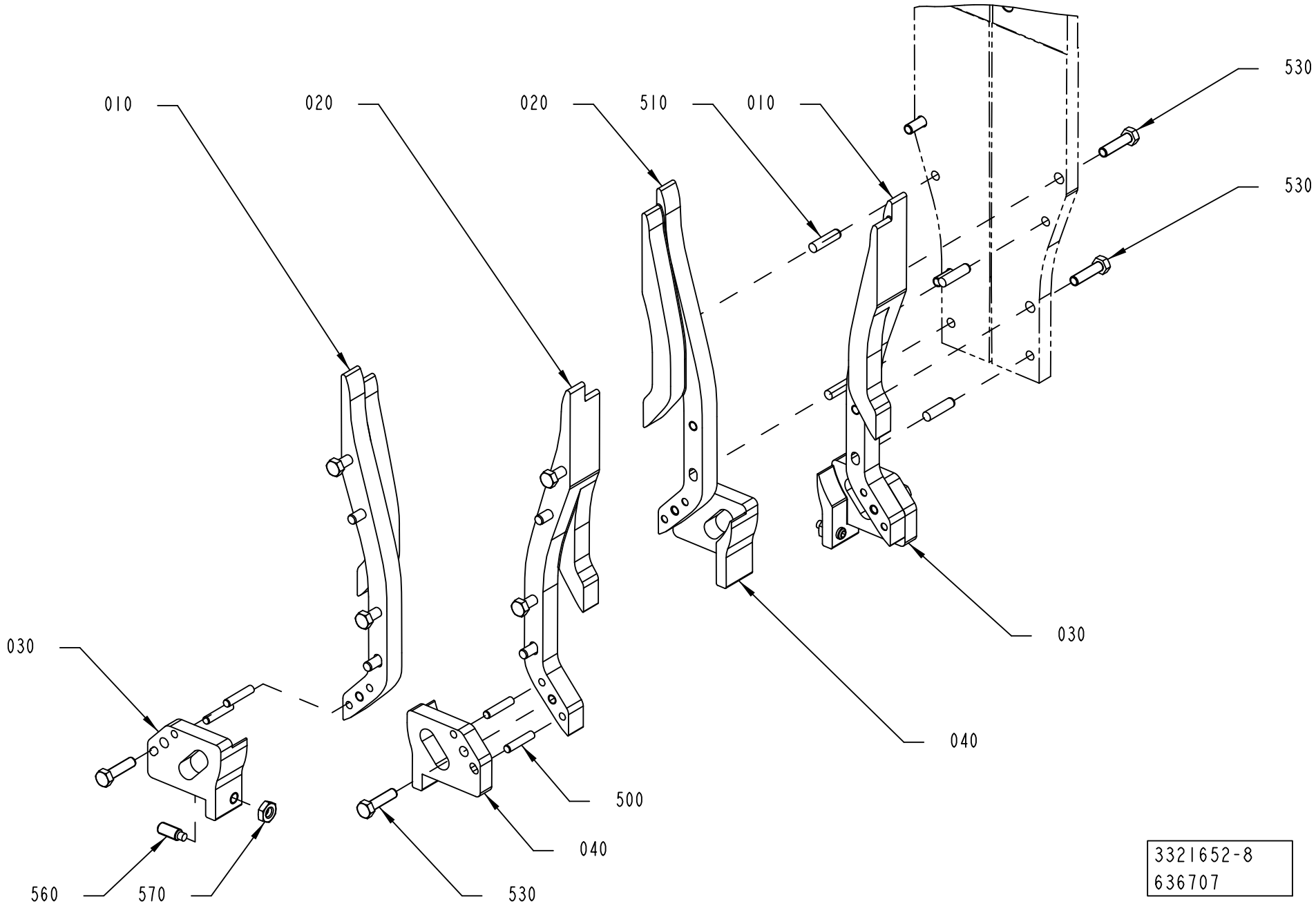

3321652-8
636707

Pos	Part No	UN	Qty	Description	Page No
SEE PREVIOUS LISTS PAGES: 1-721, 1-723.					

Pos	Part No	UN	Qty	Description	Page No

SUPPORT ROLLER

Drawing file: 2812896-3_1_AA.hpgl

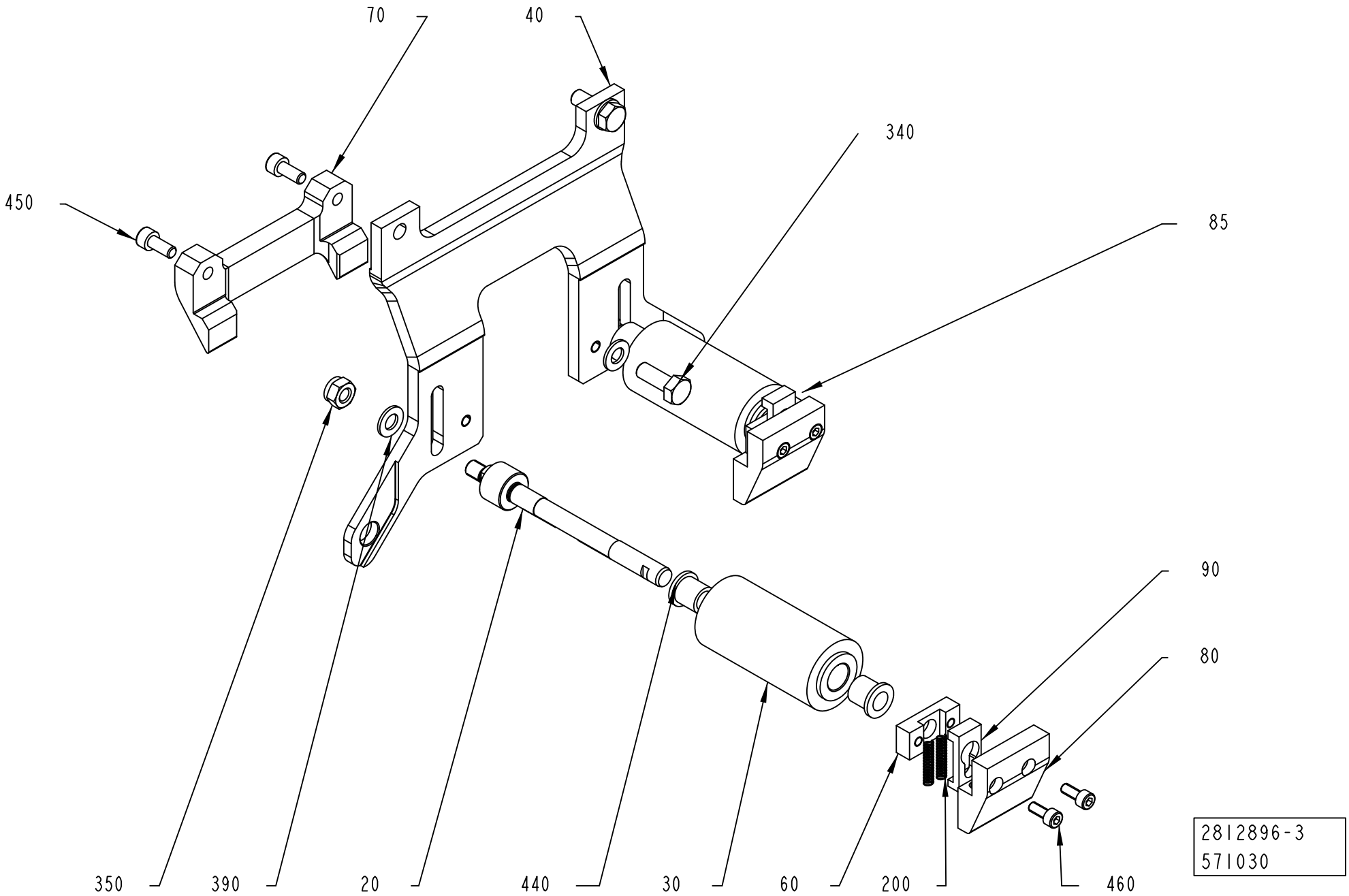

Pos	Part No	UN	Qty	Description	Page No
TBA 0500B, TBA 1000B NOMOLDEDCAP (See drawing on page: 1-738)					
020	2837095-0000		2	SHAFT	
030	2619199-0000		2	ROLLER	
040	2900397-0000		1	PLATE	
060	2837096-0000		2	WASHER	
070	2812899-0000		1	CAM	
080	2837097-0000		1	CAM	
085	2837108-0000		1	CAM	
350	312605-0318		2	HEXAGON NUT, M6M M8 A280	
390	315105-0165		4	FWAS080G0-0S, WASHER PLAIN	
450	312115-0368		2	SCREW ISO4762 M6X16 A4 80	
460	312115-0329		2	SCREW ISO4762 M5X16 A4 80	
470	315105-0146		2	WASHER PLAIN, 5,3X10X1 A4 BRB	
TBA 0500S (See drawing on page: 1-738)					
020	2837095-0000		2	SHAFT	
030	1512484-0000		2	ROLLER	
040	2916977-0000		1	PLATE	
060	2837096-0000		2	WASHER	
350	312605-0318		2	HEXAGON NUT, M6M M8 A280	
390	315105-0165		4	FWAS080G0-0S, WASHER PLAIN	
460	312115-0327		2	SCREW ISO4762 M5X12 A4 80	
470	315105-0146		2	WASHER PLAIN, 5,3X10X1 A4 BRB	
TBA 0500SQ, TBA 1000SQ, TBA 1000E, TBA 0500E (See drawing on page: 1-738)					
020	2837095-0000		2	SHAFT	
030	1499678-0000		2	ROLLER	
040	2812897-0000		1	PLATE	
060	2837096-0000		2	WASHER	
070	2812899-0000		1	CAM	
080	2837097-0000		1	CAM	
085	2837108-0000		1	CAM	
350	312605-0318		2	HEXAGON NUT, M6M M8 A280	
390	315105-0165		4	FWAS080G0-0S, WASHER PLAIN	
450	312115-0368		2	SCREW ISO4762 M6X16 A4 80	
460	312115-0329		2	SCREW ISO4762 M5X16 A4 80	
470	315105-0146		2	WASHER PLAIN, 5,3X10X1 A4 BRB	
TBA 1000B STDA7 (See drawing on page: 1-738)					
020	2837095-0000		2	SHAFT	
030	2767478-0001		2	ROLLER	
040	2900397-0000		1	PLATE	
060	2837096-0000		2	WASHER	
070	2812899-0000		1	CAM	
080	2837097-0000		1	CAM	
085	2837108-0000		1	CAM	
350	312605-0318		2	HEXAGON NUT, M6M M8 A280	
390	315105-0165		4	FWAS080G0-0S, WASHER PLAIN	
450	312115-0368		2	SCREW ISO4762 M6X16 A4 80	
460	312115-0329		2	SCREW ISO4762 M5X16 A4 80	
470	315105-0146		2	WASHER PLAIN, 5,3X10X1 A4 BRB	
TBA 1000M STDA7, TBA 1000M LIGHTCAP24 (See drawing on page: 1-736)					
020	3260650-0000		2	SHAFT	
030	2767478-0001		2	ROLLER	
040	3231300-0000		1	PLATE	
060	3260651-0000		2	BASE PLATE	
070	2812899-0000		1	CAM	
080	3260653-0000		1	CAM	
085	3260654-0000		1	CAM	
090	3260652-0000		2	LOCK PLATE	
200	90601-5711		4	COMP. SPRING, 2315, 0,5X5X25	
350	312812-0318		2	HEXAGON NUT, NY-LOCK M8 A4 80	
390	315105-0165		4	FWAS080G0-0S, WASHER PLAIN	
450	312115-0368		2	SCREW ISO4762 M6X16 A4 80	
460	312115-0327		4	SCREW ISO4762 M5X12 A4 80	
TBA 1000S NOMOLDEDCAP (See drawing on page: 1-738)					
020	2837095-0000		2	SHAFT	
030	569058-0000		2	SUPPORT ROLLER	
040	2812897-0000		1	PLATE	
060	2837096-0000		2	WASHER	
070	2812899-0000		1	CAM	
080	2837097-0000		1	CAM	
085	2837108-0000		1	CAM	
350	312605-0318		2	HEXAGON NUT, M6M M8 A280	
390	315105-0165		4	FWAS080G0-0S, WASHER PLAIN	
450	312115-0368		2	SCREW ISO4762 M6X16 A4 80	
460	312115-0329		2	SCREW ISO4762 M5X16 A4 80	
470	315105-0146		2	WASHER PLAIN, 5,3X10X1 A4 BRB	
TBA 1000S STDA7, TBA 1000S LIGHTCAP24 (See drawing on page: 1-738)					
020	2837095-0000		2	SHAFT	
030	2767478-0002		2	ROLLER	
040	2812897-0000		1	PLATE	
060	2837096-0000		2	WASHER	
070	2812899-0000		1	CAM	
080	2837097-0000		1	CAM	
085	2837108-0000		1	CAM	
350	312605-0318		2	HEXAGON NUT, M6M M8 A280	

SUPPORT ROLLER

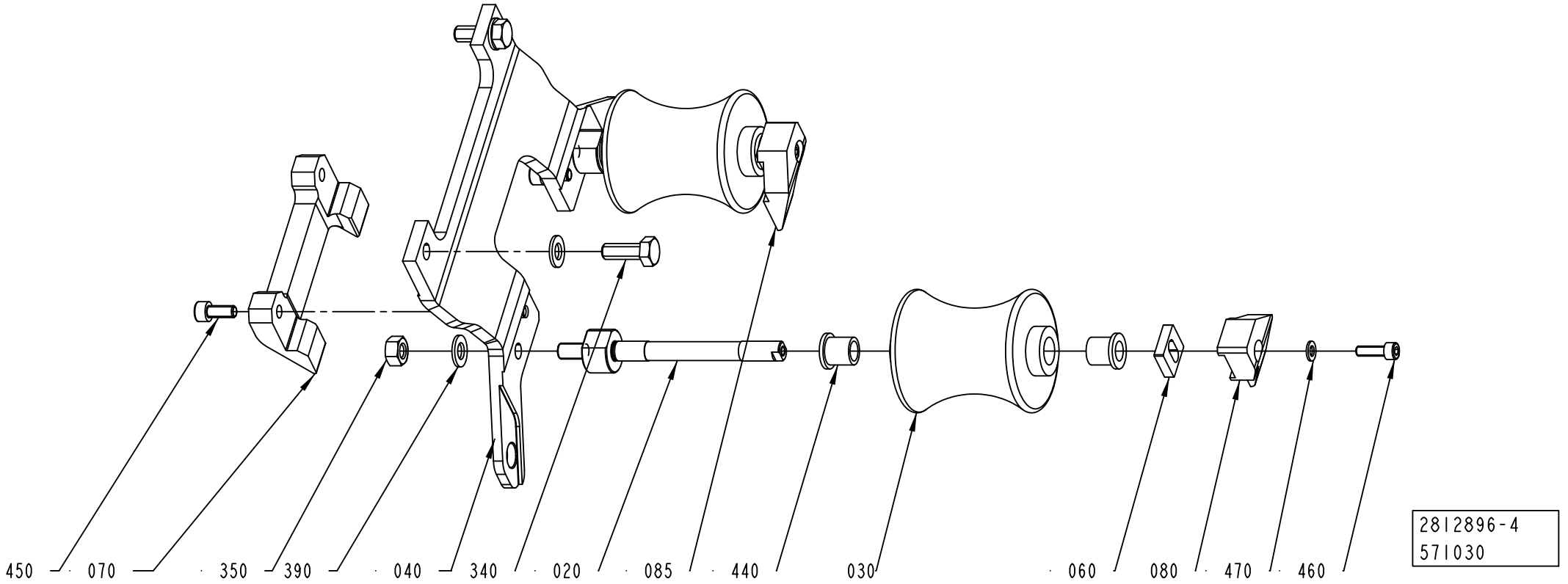

Pos	Part No	UN	Qty	Description	Page No
TBA 1000S STDA7, TBA 1000S LIGHTCAP24 (Cont'd) (See drawing on page: 1-738)					
390	315105-0165		4	FWAS080G0-0S, WASHER PLAIN	
450	312115-0368		2	SCREW ISO4762 M6X16 A4 80	
460	312115-0329		2	SCREW ISO4762 M5X16 A4 80	
470	315105-0146		2	WASHER PLAIN, 5,3X10X1 A4 BRB	
TBA 1500S (See drawing on page: 1-738)					
020	2945841-0000		2	SHAFT	
030	560122-0000		2	SUPPORT ROLLER	
040	2930293-0000		1	PLATE	
060	2837096-0000		2	WASHER	
080	2931344-0000		2	CAM	
350	312605-0318		2	HEXAGON NUT, M6M M8 A280	
390	315105-0165		4	FWAS080G0-0S, WASHER PLAIN	
460	312155-0327		2	SCREW DIN 7991 MF6S M5X12 A4 70	
TBA 2000S (See drawing on page: 1-738)					
020	2922696-0000		2	SHAFT	
030	2602655-0000		2	ROLLER	
040	2922201-0000		1	PLATE	
060	2837096-0000		2	WASHER	
070	2931345-0000		2	CAM	
080	2931344-0000		2	CAM	
350	312605-0318		2	HEXAGON NUT, M6M M8 A280	
390	315105-0165		4	FWAS080G0-0S, WASHER PLAIN	
450	312155-0368		4	SCREW DIN 7991 MF6S M6X16 A4 70	
460	312155-0327		2	SCREW DIN 7991 MF6S M5X12 A4 70	
TGA 1000SQ, TGA 0750SQ, TGA 0500SQ, TGA 1000CR, TGA 1000LF (See drawing on page: 1-738)					
020	2698625-0000		2	SHAFT	
030	2677383-0000		2	ROLLER	
040	2982495-0000		1	PLATE	
060	315125-0153		2	WASHER HIGH, TBRSB 6,4X22X4 A4	
390	315105-0165		2	FWAS080G0-0S, WASHER PLAIN	
460	312705-0316		2	HEX. DOMED CAP MHM-6 M6 A280	
TGA 1500SQ (See drawing on page: 1-738)					
020	2945841-0000		2	SHAFT	
030	560122-0000		2	SUPPORT ROLLER	
040	2949207-0000		1	PLATE	
060	2837096-0000		2	WASHER	
080	2931344-0000		2	CAM	
350	312605-0318		2	HEXAGON NUT, M6M M8 A280	
390	315105-0165		4	FWAS080G0-0S, WASHER PLAIN	
460	312115-0327		2	SCREW ISO4762 M5X12 A4 80	
TPA 0500SQ (See drawing on page: 1-738)					
020	2837095-0000		2	SHAFT	
030	2688917-0000		2	ROLLER	
040	2916977-0000		1	PLATE	
060	2837096-0000		2	WASHER	
350	312605-0318		2	HEXAGON NUT, M6M M8 A280	
390	315105-0165		4	FWAS080G0-0S, WASHER PLAIN	
460	312115-0327		2	SCREW ISO4762 M5X12 A4 80	
470	315105-0146		2	WASHER PLAIN, 5,3X10X1 A4 BRB	
TPA 1000SQ, TPA 0750SQ (See drawing on page: 1-738)					
020	2837095-0000		2	SHAFT	
030	1524421-0000		2	ROLLER	
040	2916977-0000		1	PLATE	
060	2837096-0000		2	WASHER	
070	2916983-0000		1	CAM	
080	2837097-0000		1	CAM	
085	2837108-0000		1	CAM	
350	312605-0318		2	HEXAGON NUT, M6M M8 A280	
390	315105-0165		4	FWAS080G0-0S, WASHER PLAIN	
450	312115-0368		2	SCREW ISO4762 M6X16 A4 80	
460	312115-0329		2	SCREW ISO4762 M5X16 A4 80	
470	315105-0146		2	WASHER PLAIN, 5,3X10X1 A4 BRB	
Common Parts					
340	312105-0452		2	SCREW, M6S ISO 4017 M8X22 A4 80	
440	90240-0180		4	FLANGE BUSHING 10X14X15MM	

TUBE FLUSHING

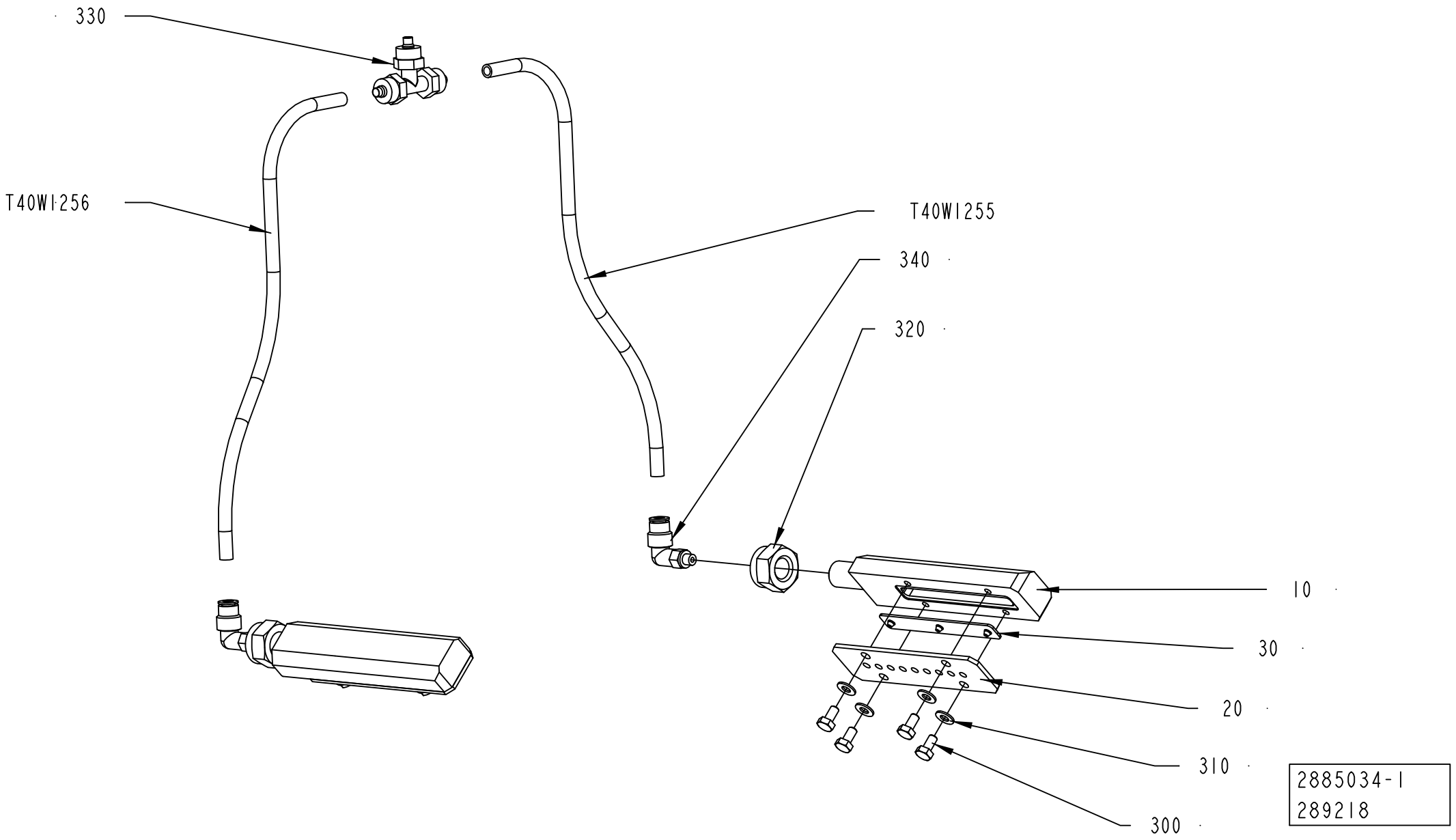

ECM: 647817 - 20140401
Group number: 2885034-0100
Assembly Drawing: 2885034-1_1_AA

Pos	Part No	UN	Qty	Description	Page No
TBA 0500S, TBA 0500SQ, TBA 0500B, TBA 1000B, TBA 1000SQ, TBA 1000S, TPA 1000SQ, TPA 0500SQ, TPA 0750SQ, TGA 1000SQ, TGA 0750SQ, TGA 0500SQ, TBA 1000E, TBA 1000M, TGA 1000CR, TGA 1000LF, TBA 0500E					
010	2886417-0000		2	DISTRIBUTOR	
TBA 1500S, TGA 1500SQ					
010	2922695-0000		2	DISTRIBUTOR	
TBA 2000S					
010	2922695-0000		2	DISTRIBUTOR	
Common Parts					
020	2931944-0000		2	COVER	
030	2931945-0000		2	NOZZLE	
300	312105-0287		8	SCREW, M6S ISO 4017 M4X8 A4 70	
310	315106-0136		8	WASHER PLAIN, M4 ISO7089-4-200 HV A4	
320	312812-0322		2	HEXAGON NUT, NY-LOCK M12 A4 80	
330	342946-0112		1	T-COUPLING,UNION 6/4	
340	350002-0002		2	PUSH-IN L-FITTING QSL-F-M5-6	
T40W1255	315400-0003	MM	500	TUBE PUN-H-6X1-SW	
T40W1256	315400-0003	MM	500	TUBE PUN-H-6X1-SW	

Pos	Part No	UN	Qty	Description	Page No

This page is intentionally left blank.

ECM: 654972 - 20140701
Group number: 2979548-0100
Assembly Drawing:

This list covers pages from 1-742 to 1-747

Pos	Part No	UN	Qty	Description	Page No
TBA 2000S					
010	1520633-0005		12	DOLLY	
020	2879535-0000		2	INDUCTOR	
030	2978343-0000		8	VOLUME SHIM	
040	2909311-0000		2	KNIFE	
TGA 0500SQ					
010	1520633-0002		12	DOLLY	
020	1566783-0000		2	INDUCTOR	
030	3041582-0000		8	SHIM	
040	1348956-0000		2	KNIFE	
TGA 0750SQ					
010	1520633-0002		12	DOLLY	
020	1566783-0000		2	INDUCTOR	
030	2909852-0000		8	SHIM	
040	1348956-0000		2	KNIFE	
TGA 1000CR					
010	1520633-0002		12	DOLLY	
020	1566783-0000		2	INDUCTOR	
030	3179818-0000		8	VOLUME SHIM	
040	1348956-0000		2	KNIFE	
TGA 1000LF					
010	1520633-0002		12	DOLLY	
020	1566783-0000		2	INDUCTOR	
030	3134638-0000		8	VOLUME SHIM	
040	1348956-0000		2	KNIFE	
TGA 1000SQ					
010	1520633-0002		12	DOLLY	
020	1566783-0000		2	INDUCTOR	
030	2660293-0000		8	VOLUME SHIM	
040	1348956-0000		2	KNIFE	
TGA 1500SQ					
010	1520633-0002		12	DOLLY	
020	3187897-0000		2	INDUCTOR	
030	2949205-0000		8	SHIM	
040	2774798-0000		2	KNIFE	
050	2774799-0000		4	BLOCK	
TPA 0500SQ					
010	1110083-0002		12	DOLLY	
020	2587466-0000		1	INDUCTOR	
020	2587467-0000		1	INDUCTOR	
030	1549830-0000		24	VOLUME SHIM	
040	2958757-0000		2	KNIFE	
050	2774799-0000		4	BLOCK	
TPA 0750SQ					
010	1520633-0002		12	DOLLY	
020	2663377-0000		1	INDUCTOR	
020	2663378-0000		1	INDUCTOR	
030	2995603-0000		8	VOLUME SHIM	
030	2995604-0000		16	VOLUME SHIM	
040	2912006-0000		2	KNIFE	
050	2774799-0000		4	BLOCK	
TPA 1000SQ					
010	1520633-0002		12	DOLLY	
020	2663377-0000		1	INDUCTOR	
020	2663378-0000		1	INDUCTOR	
030	2995599-0000		8	VOLUME SHIM	
030	2968863-0000		16	VOLUME SHIM	
040	2912006-0000		2	KNIFE	
050	2774799-0000		4	BLOCK	
TBA 0500B					
010	1110083-0002		12	DOLLY	
020	3187897-0000		2	INDUCTOR	
030	2790818-0000		8	VOLUME SHIM	
040	2774798-0000		2	KNIFE	
050	2774799-0000		4	BLOCK	
TBA 0500E					
010	1110083-0002		12	DOLLY	
020	3003480-0000		2	INDUCTOR	
030	3315306-0000		8	VOLUME SHIM	
040	2774798-0000		2	KNIFE	
050	2774799-0000		4	BLOCK	
TBA 0500S					
010	1110083-0002		12	DOLLY	
020	3124822-0000		2	INDUCTOR	
030	2997717-0000		8	SHIM	
040	2912006-0000		2	KNIFE	
050	2774799-0000		4	BLOCK	
TBA 0500SQ					
010	1520633-0002		12	DOLLY	
020	3187899-0000		2	INDUCTOR	
030	2860038-0000		8	VOLUME SHIM	
040	2774798-0000		2	KNIFE	
050	2774799-0000		4	BLOCK	
TBA 1000B NOMOLDEDCAP					

Machine Type	Group Description	Used-In	Group Number	Page No

This page is intentionally left blank.

ECM: 654972 - 20140701
Group number: 2979548-0100
Assembly Drawing:

This list covers pages from 1-742 to 1-747

Pos	Part No	UN	Qty	Description	Page No
TBA 1000B NOMOLDEDCAP (Cont'd)					
010	1110083-0002		12	DOLLY	
020	3187897-0000		2	INDUCTOR	
030	2795079-0000		8	VOLUME SHIM	
040	2774798-0000		2	KNIFE	
050	2774799-0000		4	BLOCK	
TBA 1000B STDA7					
010	1110083-0002		12	DOLLY	
020	2610956-0000		2	INDUCTOR	
030	2795079-0000		8	VOLUME SHIM	
040	2774798-0000		2	KNIFE	
050	2774799-0000		4	BLOCK	
060	2767478-0003		2	ROLLER	
060	2767478-0002		2	ROLLER	
TBA 1000E NOQC					
010	1110083-0002		12	DOLLY	
020	3003480-0000		2	INDUCTOR	
030	1487627-0000		8	VOLUME SHIM	
040	2774798-0000		2	KNIFE	
050	2774799-0000		4	BLOCK	
TBA 1000E QC					
010	1110083-0002		12	DOLLY	
020	3003480-0000		2	INDUCTOR	
030	3315309-0000		8	VOLUME SHIM	
040	2774798-0000		2	KNIFE	
050	2774799-0000		4	BLOCK	
TBA 1000M LIGHTCAP24					
010	3205112-0002		12	DOLLY	
020	3095386-0000		2	INDUCTOR	
030	2998793-0000		8	VOLUME SHIM	
040	2774798-0000		2	KNIFE	
TBA 1000M STDA7					
010	3205112-0002		12	DOLLY	
020	3003481-0000		2	INDUCTOR	
030	2998793-0000		8	VOLUME SHIM	
040	2774798-0000		2	KNIFE	
050	2774799-0000		4	BLOCK	
TBA 1000S LIGHTCAP24					
010	1110083-0002		12	DOLLY	
020	3187900-0000		2	INDUCTOR	
030	1040755-0000		8	VOLUME SHIM	
040	2774798-0000		2	KNIFE	
050	2774799-0000		4	BLOCK	
060	2767478-0003		2	ROLLER	
060	2767478-0004		2	ROLLER	
060	2767478-0001		2	ROLLER	
TBA 1000S NOMOLDEDCAP HELICAP2 23					
010	1110083-0002		12	DOLLY	
020	3124821-0000		2	INDUCTOR	
030	1040755-0000		8	VOLUME SHIM	
040	2774798-0000		2	KNIFE	
050	2774799-0000		4	BLOCK	
TBA 1000S NOMOLDEDCAP NOCAP, TBA 1000S NOMOLDEDCAP RECAP3, TBA 1000S NOMOLDEDCAP SLIMCAP 1000					
010	1110083-0002		12	DOLLY	
020	3187898-0000		2	INDUCTOR	
030	1040755-0000		8	VOLUME SHIM	
040	2774798-0000		2	KNIFE	
050	2774799-0000		4	BLOCK	
TBA 1000S STDA7					
010	1110083-0002		12	DOLLY	
020	2546474-0000		2	INDUCTOR	
030	1040755-0000		8	VOLUME SHIM	
040	2774798-0000		2	KNIFE	
050	2774799-0000		4	BLOCK	
060	2767478-0004		2	ROLLER	
060	2767478-0003		2	ROLLER	
060	2767478-0001		2	ROLLER	
TBA 1000SQ					
010	1520633-0002		12	DOLLY	
020	3187899-0000		2	INDUCTOR	
030	1487627-0000		8	VOLUME SHIM	
040	2774798-0000		2	KNIFE	
050	2774799-0000		4	BLOCK	
TBA 1500S RECAP3, TBA 1500S SLIMCAP 1000, TBA 1500S HELICAP2 23					
010	1110083-0002		12	DOLLY	
020	3187897-0000		2	INDUCTOR	
030	2987038-0000		8	VOLUME SHIM	
040	2774798-0000		2	KNIFE	
050	2774799-0000		4	BLOCK	
Common Parts					
070	1538109-0000		2	COMPRESSION SPRING	
080	1037254-0000		12	SHIM	
090	28509-0000		2	WASHER	

Machine Type	Group Description	Used-In	Group Number	Page No

This page is intentionally left blank.

ECM: 654972 - 20140701
Group number: 2979548-0100
Assembly Drawing:

This list covers pages from 1-742 to 1-747

Pos	Part No	UN	Qty	Description	Page No
Common Parts (Cont'd)					
100	32544-0000		2	INSULATION NUT	
110	2836239-0000		2	WASHER	
120	107426-0000		4	GUIDE SLEEVE	
130	2836238-0000		2	INSULATION NUT	
140	1036584-0000		4	WASHER	
150	315211-0104		4	BONDED SEAL SS/NBR90 M8	
160	312115-0297		8	SCREW ISO4762 M4X25 A4 80	
170	312125-0295		2	SLOTTED HEAD SCREW, ISO1207 M4X20 A4	
180	315211-0103		4	BONDED SEAL SS/NBR90 M6	
190	315202-0101		8	O-RING 3,1X1,6 MM	
200	315202-0102		8	O-RING 4,1X1,6 MM	

Pos	Part No	UN	Qty	Description	Page No

This page is intentionally left blank.

ECM: 675529 - 20140201
Group number: 3272911-0100
Assembly Drawing:

Pos	Part No	UN	Qty	Description	Page No
START FM TBA 1000M					
010	2958876-0200		1	PHOTOCELL UNIT	**1-751**
TBA 1000M					
010	3119353-0200		1	MAGNETIC DESIGN READER	**1-755**
020	3296779-0100		1	TMCC2 CONTROLLER	**1-759, 1-761**

Pos	Part No	UN	Qty	Description	Page No

PHOTOCELL UNIT

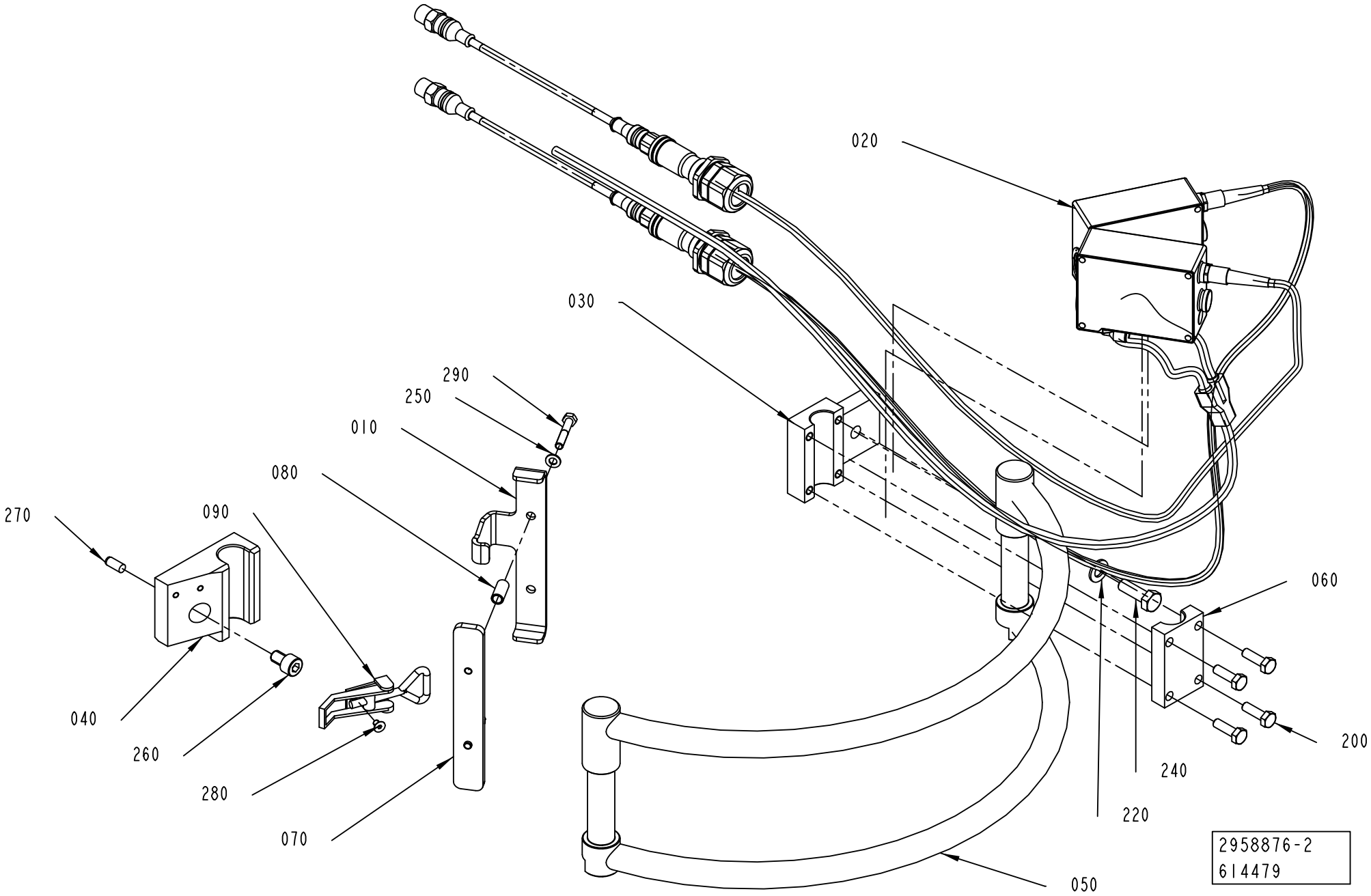

ECM: 615749 - 20131001
Group number: 2958876-0200
Assembly Drawing: 2958876-2_1_AC

Pos	Part No	UN	Qty	Description	Page No
-					
010	3275594-0000		1	CLAMP	
020	3149941-0100		1	DESIGN CONTROL	**1-753**
030	2715300-0000		1	BRACKET	
040	3275592-0000		1	HOLDER	
050	2715297-0000		1	BOW CLAMP	
060	2715301-0000		1	SUPPORT	
070	3275591-0000		1	BAR	
080	3275593-0000		2	TUBE	
090	90600-3824		1	QUICK-LOCK, 701S-C-SS	
200	312105-0370		4	SCREW, M6S ISO 4017 M6X20 A4 80	
220	315105-0165		1	FWAS080G0-0S, WASHER PLAIN	
240	312105-0453		1	SCREW, M6S ISO 4017 M8X25 A4 80	
250	315105-0146		2	WASHER PLAIN, 5,3X10X1 A4 BRB	
260	312115-0447		1	SCREW ISO4762 M8X12 A4 80	
270	311103-0350		2	PARALLEL PIN ISO 2338 6M6X14 A1	
280	312155-0285		2	SCREW DIN 7991 MF6S M4X6 A4 70	
290	312105-0335		2	SCREW, M6S ISO 4014 M5X30 A4 80	

Pos	Part No	UN	Qty	Description	Page No

- Connect the (T40W9210) to T40W9211;
- Connect the (T40W9220) to T40W9221;

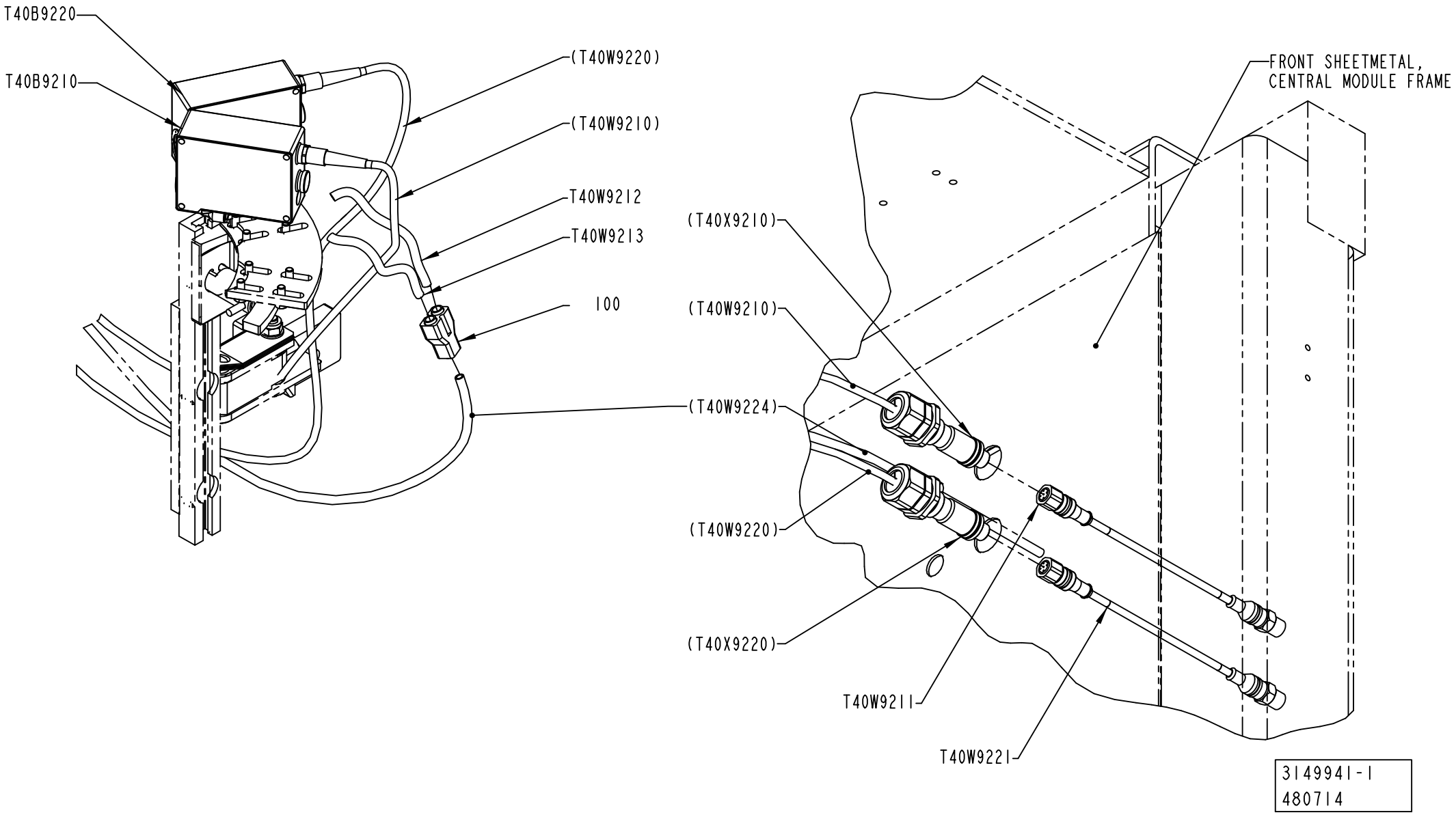

ECM: 485815 - 20110101
Group number: 3149941-0100
Assembly Drawing: 3149941-1_1_AA

Pos	Part No	UN	Qty	Description	Page No
-					
100	90055-0100		1	Y-CONNECTION, 6-6	
T40B9210	3142230-0000		1	CONTRAST SCANNER	
	90458-0407		*1*	*CABLE GLAND, VK 22553Y*	
	90458-0601		*1*	*CONTRAST SCANNER, KT15W-P2110S01*	
	90604-4604		*1*	*PUSH-IN L-FITTING QSL-G1/8-6*	
	90458-2956		*1*	*ELBOW PIPE JOINT, EXT.THREAD, D=6MM-G1/8*	
	90459-1501		*1*	*CABLE SEALING, 12023/I, ELFA. 44-625-79*	
	90459-6387		*1*	*CONNECTOR 5-POL M12, RSCS 5/9*	
	353250-0025		*1*	*GLAND LOCK NUT, M25X1,5*	
	3149940-0000		*1*	*INSERT*	
T40B9220	3142230-0000		1	CONTRAST SCANNER	
	90458-0407		*1*	*CABLE GLAND, VK 22553Y*	
	90458-0601		*1*	*CONTRAST SCANNER, KT15W-P2110S01*	
	90604-4604		*1*	*PUSH-IN L-FITTING QSL-G1/8-6*	
	90458-2956		*1*	*ELBOW PIPE JOINT, EXT.THREAD, D=6MM-G1/8*	
	90459-1501		*1*	*CABLE SEALING, 12023/I, ELFA. 44-625-79*	
	90459-6387		*1*	*CONNECTOR 5-POL M12, RSCS 5/9*	
	353250-0025		*1*	*GLAND LOCK NUT, M25X1,5*	
	3149940-0000		*1*	*INSERT*	
T40W9211	90603-2556		1	ACTU/SENS. CABLE SAC-5P-M12MS/ 4,0-PUR/M	
T40W9212	90166-0081	MM	800	TUBE 6 MM PA BLUE	
T40W9213	90166-0081	MM	800	TUBE 6 MM PA BLUE	
T40W9221	90603-2556		1	ACTU/SENS. CABLE SAC-5P-M12MS/ 4,0-PUR/M	

Pos	Part No	UN	Qty	Description	Page No

MAGNETIC DESIGN READER

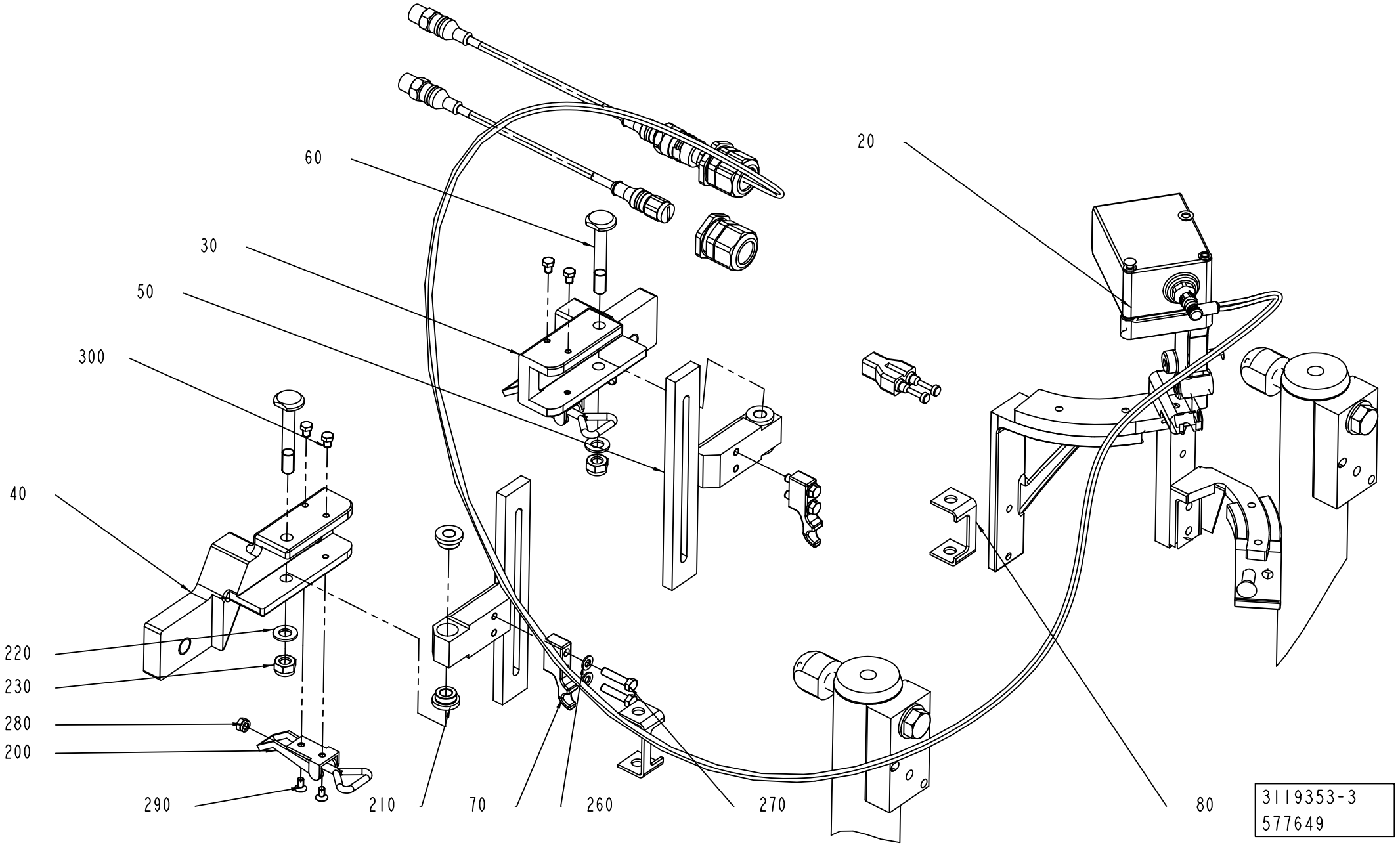

ECM: 588376 - 20130401
Group number: 3119353-0200
Assembly Drawing: 3119353-3_1_AA

Pos	Part No	UN	Qty	Description	Page No
-					
020	3260656-0100		1	DESIGN CONTROL	**1-757**
030	3149495-0000		1	BRACKET	
040	3149496-0000		1	BRACKET	
050	3150926-0000		2	SUPPORT	
060	457367-0000		2	SHAFT	
070	3149497-0000		2	PLATE	
080	3220087-0000		2	END STOP GROUPING	
200	90600-3824		2	QUICK-LOCK, 701S-C-SS	
210	321101-0143		4	FLANGE BUSHING, 8/14X8-18X3 MM	
220	315105-0165		2	FWAS080G0-0S, WASHER PLAIN	
230	312812-0318		2	HEXAGON NUT, NY-LOCK M8 A4 80	
240	312105-0368		4	"SCREW, M6S ISO 4017 M6X16 A4 80"	
250	315105-0156		4	WASHER PLAIN, 6,7X14X1,5 A4 BRB	
260	315105-0146		4	WASHER PLAIN, 5,3X10X1 A4 BRB	
270	312105-0332		4	SCREW, M6S ISO 4017 M5X22 A4 70	
280	312625-0314		2	HEXAGON THIN NUT, EN 24035 ML6M M5 A4	
290	312155-0287		4	SCREW DIN 7991 MF6S M4X8 A4 70	
300	312105-0285		4	SCREW, M6S ISO 4017 M4X6 A4 70	

Pos	Part No	UN	Qty	Description	Page No

Machine Type | Group Description | Used-In | Group Number | Page No

- Connect the Cable pos. T40W9211 to Cable pos. T40W9215;
- Connect the Cable pos. T40W9215 to MDR Sensor T40B9215;
- Plug the Cable pos. T40W9221 with the Cap pos. 140;
- Fix the Caps pos. 150 and 160 on the Y-Hose air connection to close it pos. 100.

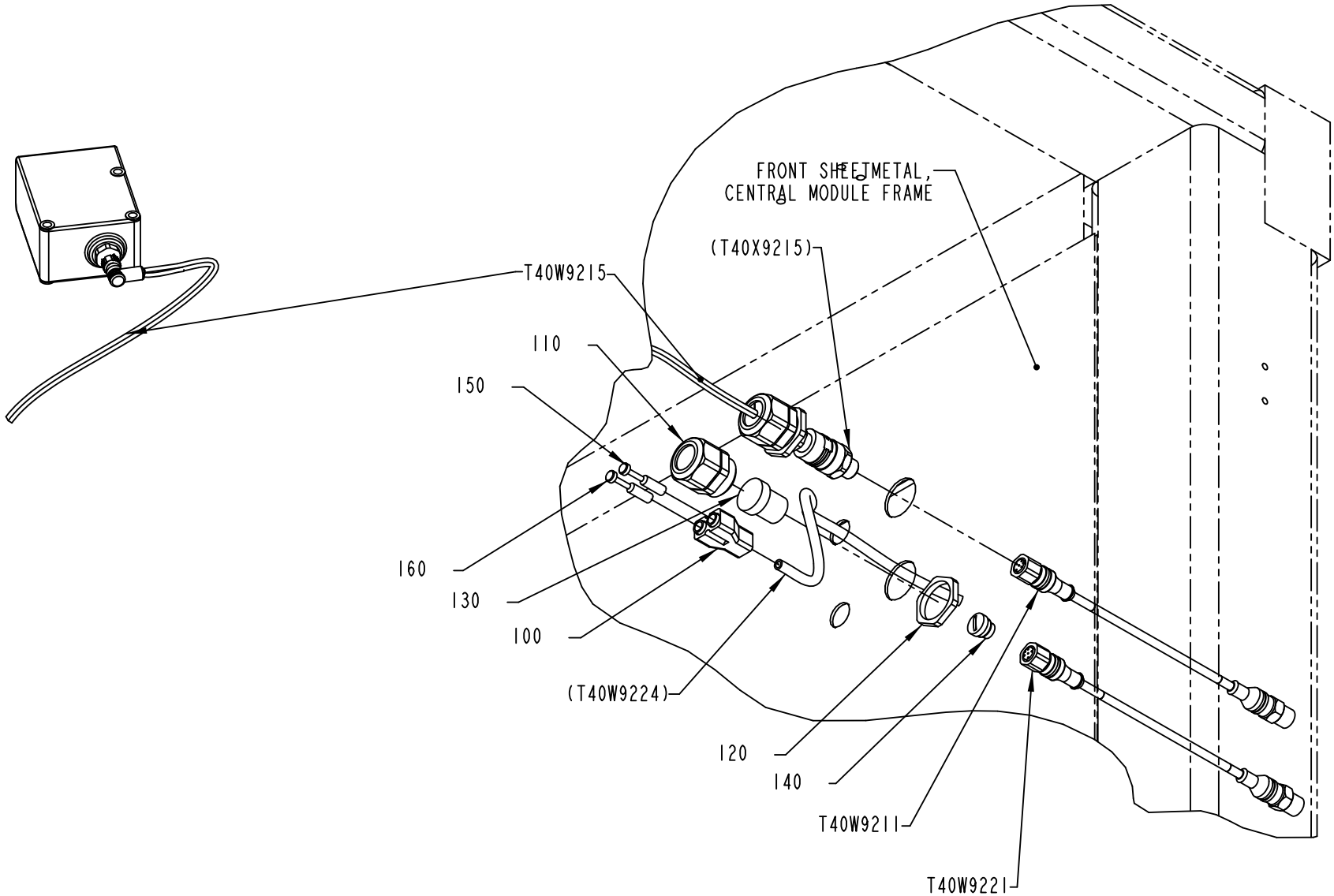

3260656-1
577649

ECM: 577729 - 20130102
Group number: 3260656-0100
Assembly Drawing: 3260656-1_1_AA

Pos	Part No	UN	Qty	Description	Page No
-					
100	90055-0100		1	Y-CONNECTION, 6-6	
110	90458-0407		1	CABLE GLAND, VK 22553Y	
120	353250-0025		1	GLAND LOCK NUT, M25X1,5	
130	353249-0043		1	INSERT, SOLID, E153 G	
140	90603-3975		1	PROTECTIVE CAP M12, E70297	
150	350013-0002		1	PLUG QSC-6H	
160	350013-0002		1	PLUG QSC-6H	
T40B9215	90603-5330		1	MAGNETIC SENSOR, MDR15	
T40W9211	90603-2556		1	ACTU/SENS. CABLE SAC-5P-M12MS/ 4,0-PUR/M	
T40W9215	3260657-0000		1	CABLE WITH CONNECTOR	
	90458-0407		*1*	*CABLE GLAND, VK 22553Y*	
	90459-1501		*1*	*CABLE SEALING, 12023/I, ELFA. 44-625-79*	
	90459-6570		*1*	*CONNECTOR M12 5-POLES MALE, RSCN5/7*	
	344250-0050		*1*	*SENSOR CABLE, EVT139*	
	353250-0025		*1*	*GLAND LOCK NUT, M25X1,5*	
	3149940-0000		*1*	*INSERT*	
T40W9221	90603-2556		1	ACTU/SENS. CABLE SAC-5P-M12MS/ 4,0-PUR/M	

Pos	Part No	UN	Qty	Description	Page No

TMCC2 CONTROLLER

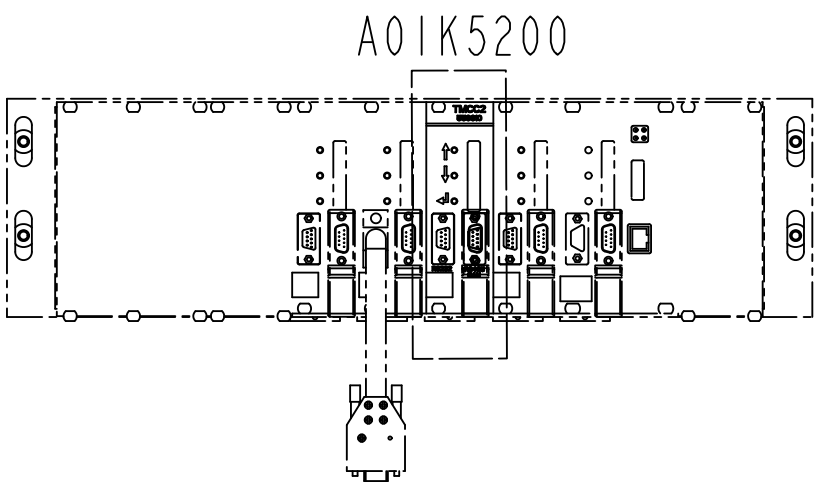

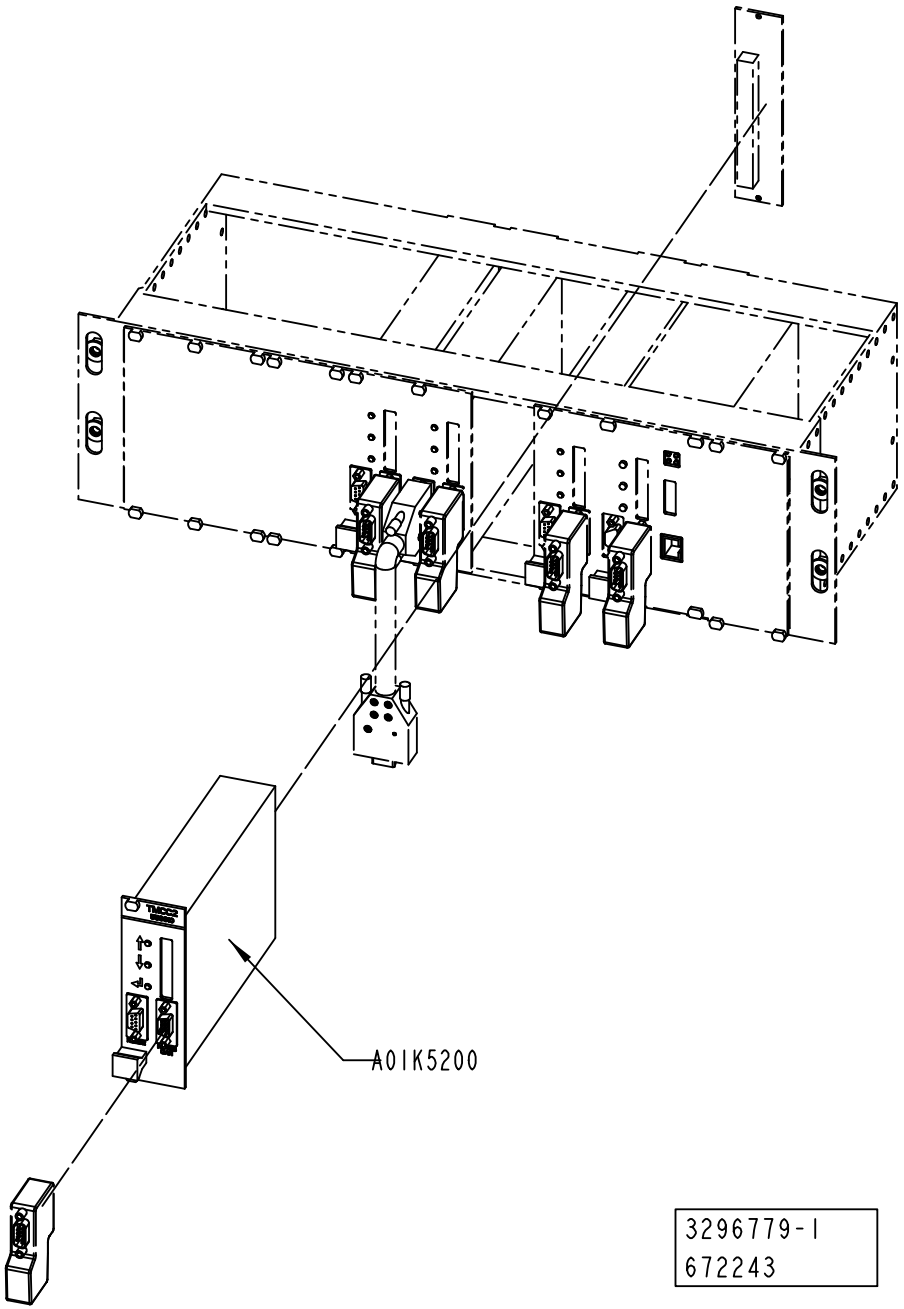

ECM: 680623 - 20140701
Group number: 3296779-0100
Assembly Drawing: 3296779-1_1_AB

This list covers pages from 1-758 to 1-761

Pos	Part No	UN	Qty	Description	Page No
A3/FLEX-0160, A3/FLEX-0150 (See drawing on page: 1-760)					
A400	559810-0201		1	TMCC2 CONTROLLER	
A3/FLEX-0300, A3/FLEX-0200, A3/FLEX-0400 (See drawing on page: 1-758)					
A01K5200	559810-0201		1	TMCC2 CONTROLLER	

Pos	Part No	UN	Qty	Description	Page No

TMCC2 CONTROLLER

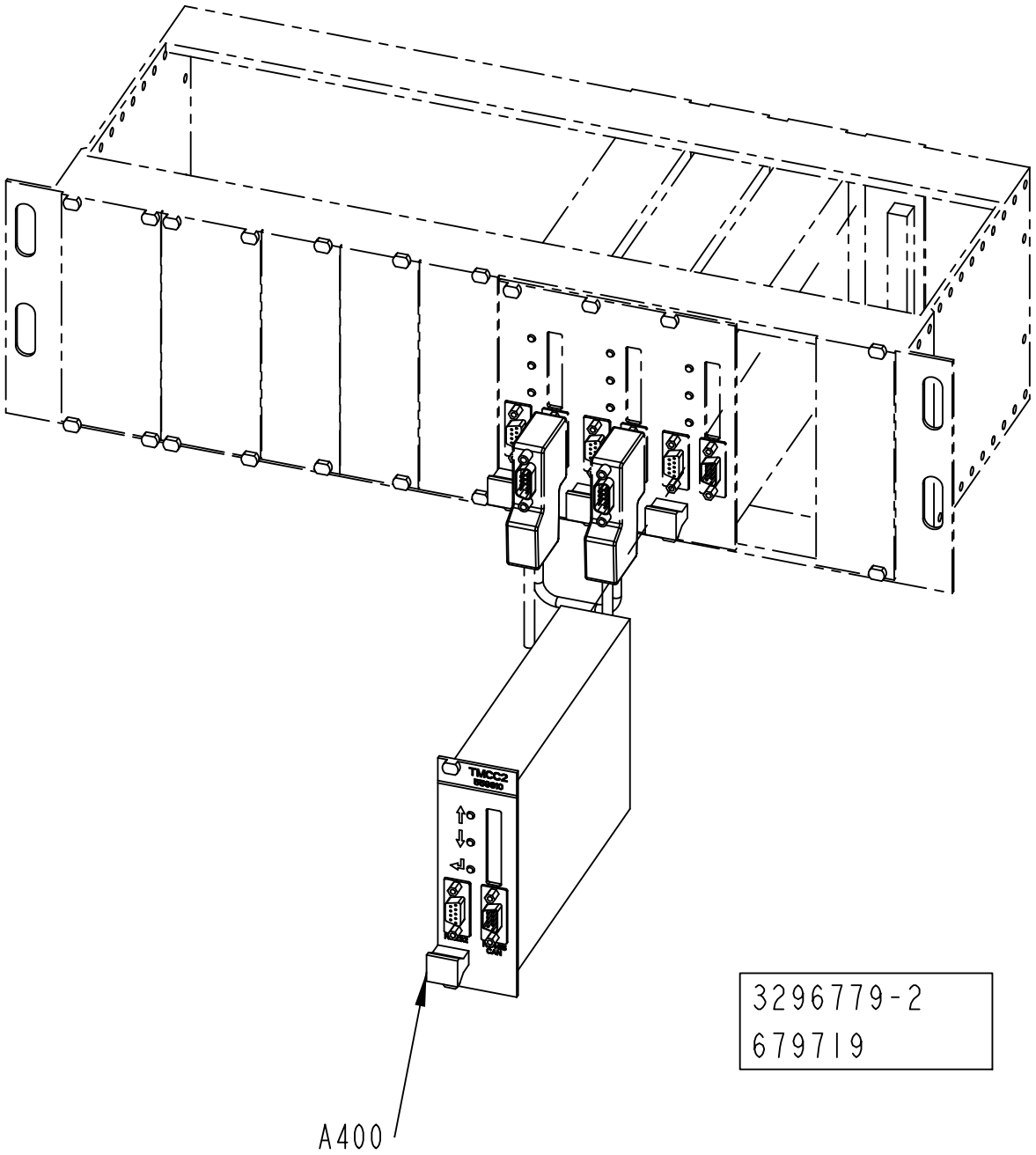

ECM: 680623 - 20140701
Group number: 3296779-0100
Assembly Drawing: 3296779-2_1_AA

This list covers pages from 1-758 to 1-761

Pos	Part No	UN	Qty	Description	Page No
A3/FLEX-0160, A3/FLEX-0150 (See drawing on page: 1-760)					
A400	559810-0201		1	TMCC2 CONTROLLER	
A3/FLEX-0300, A3/FLEX-0200, A3/FLEX-0400 (See drawing on page: 1-758)					
A01K5200	559810-0201		1	TMCC2 CONTROLLER	

Pos	Part No	UN	Qty	Description	Page No

BOX5 - SUPERSTRUCTURE

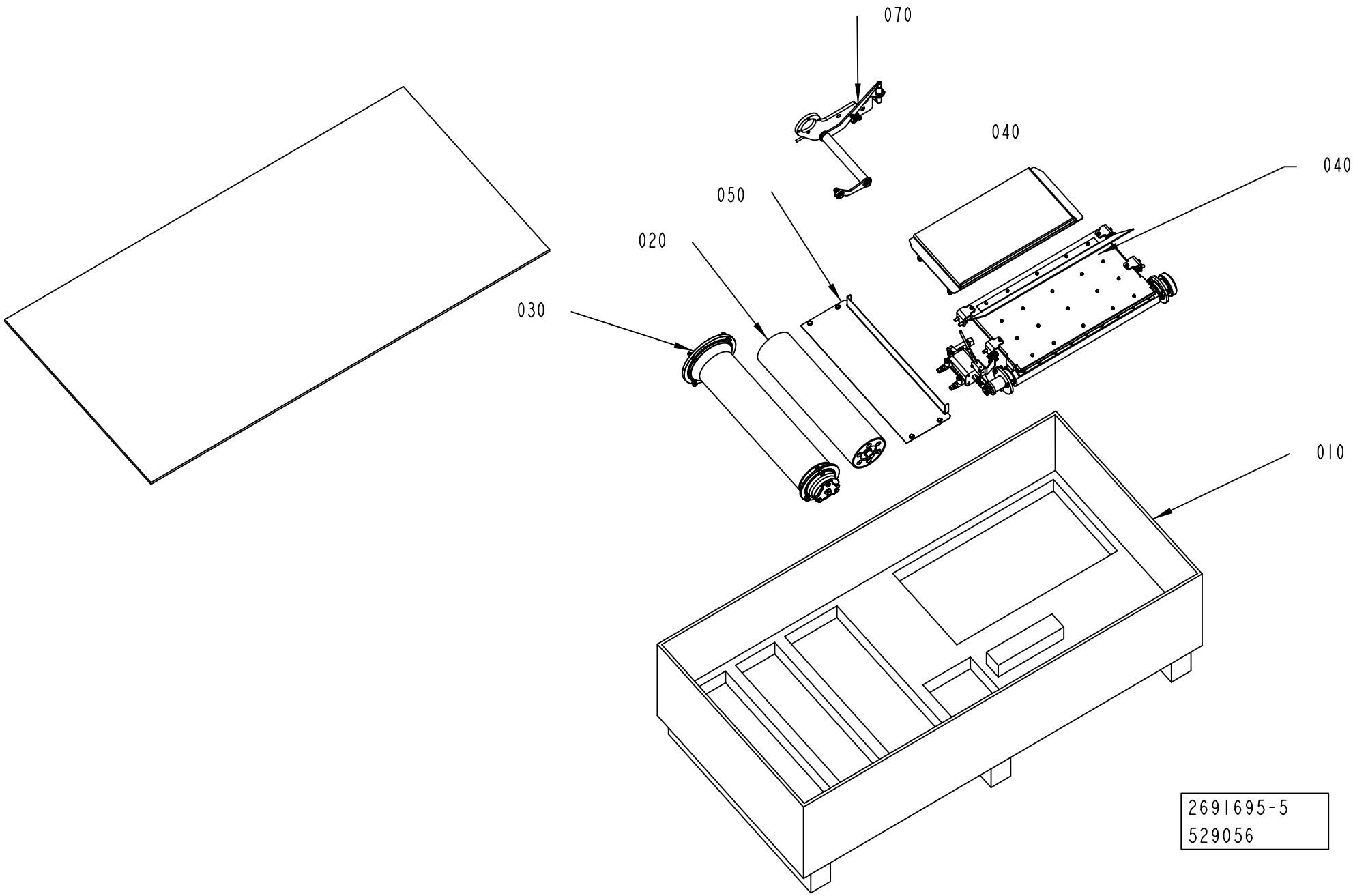

ECM: 648462 - 20140401
Group number: 2691695-0300
Assembly Drawing: 2691695-5_1_AA

This list covers pages from 1-762 to 1-765

Pos	Part No	UN	Qty	Description	Page No
DIMC/FLEX START FM TBA 2000S					
070	1558356-0300		1	SPLICE DETECTOR	**1-767**
NODIMC START FM TBA 2000S (See drawing on page: 1-762)					
010	3010407-0000		1	BOX	
020	2532911-0000		1	ROLLER	
030	2763999-0200		1	BENDING ROLLER	**1-769, 1-771, 1-773**
040	2532934-0300		1	AIR KNIFE	**1-775, 1-777, 1-779, 1-781**
050	2783102-0200		1	PLATE	**1-783, 1-785**
070	1558356-0300		1	SPLICE DETECTOR	**1-767**
TBA 2000S (See drawing on page: 1-764)					
010	3010407-0000		1	BOX	
020	2662639-0000		1	ROLLER	
040	2532934-0300		1	AIR KNIFE	**1-775, 1-777, 1-779, 1-781**
050	2783102-0200		1	PLATE	**1-783, 1-785**
060	3022705-0200		1	BOX	**1-787**
070	3100550-0100		1	SPLICE DETECTOR	**1-801**
080	3100547-0000		1	FLANGE	
090	312105-0378		2	SCREW, M6S ISO 4014 M6X40 A4 80	

Pos	Part No	UN	Qty	Description	Page No

Machine Type | Group Description | Used-In | Group Number | Page No

BOX5 - SUPERSTRUCTURE

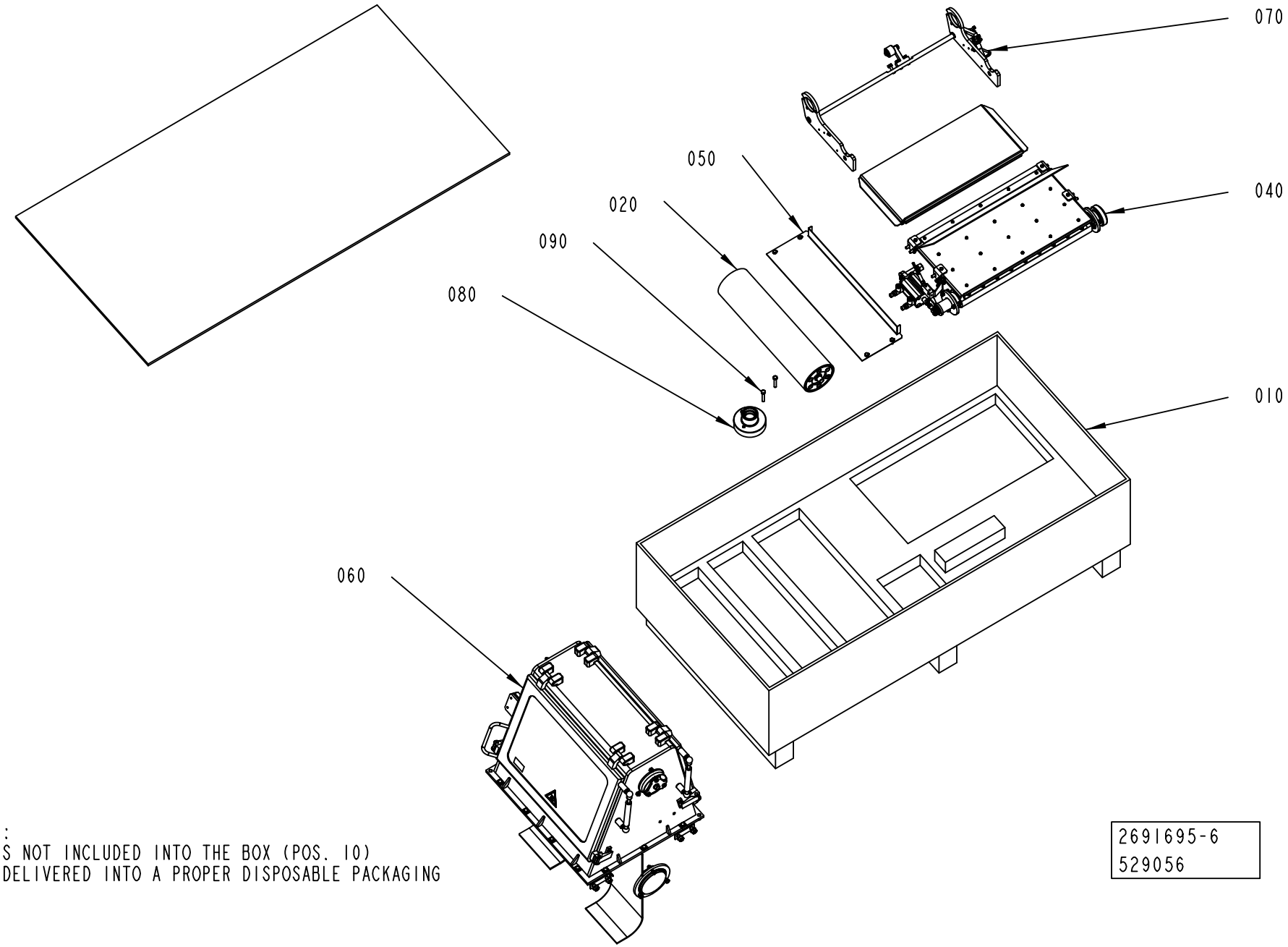

ATTENTION:
POS. 60 IS NOT INCLUDED INTO THE BOX (POS. 10)
BUT IT'S DELIVERED INTO A PROPER DISPOSABLE PACKAGING

2691695-6
529056

Pos	Part No	UN	Qty	Description	Page No
DIMC/FLEX START FM TBA 2000S					
070	1558356-0300		1	SPLICE DETECTOR	**1-767**
NODIMC START FM TBA 2000S (See drawing on page: 1-762)					
010	3010407-0000		1	BOX	
020	2532911-0000		1	ROLLER	
030	2763999-0200		1	BENDING ROLLER	**1-769, 1-771, 1-773**
040	2532934-0300		1	AIR KNIFE	**1-775, 1-777, 1-779, 1-781**
050	2783102-0200		1	PLATE	**1-783, 1-785**
070	1558356-0300		1	SPLICE DETECTOR	**1-767**
TBA 2000S (See drawing on page: 1-764)					
010	3010407-0000		1	BOX	
020	2662639-0000		1	ROLLER	
040	2532934-0300		1	AIR KNIFE	**1-775, 1-777, 1-779, 1-781**
050	2783102-0200		1	PLATE	**1-783, 1-785**
060	3022705-0200		1	BOX	**1-787**
070	3100550-0100		1	SPLICE DETECTOR	**1-801**
080	3100547-0000		1	FLANGE	
090	312105-0378		2	SCREW, M6S ISO 4014 M6X40 A4 80	

Pos	Part No	UN	Qty	Description	Page No

SPLICE DETECTOR

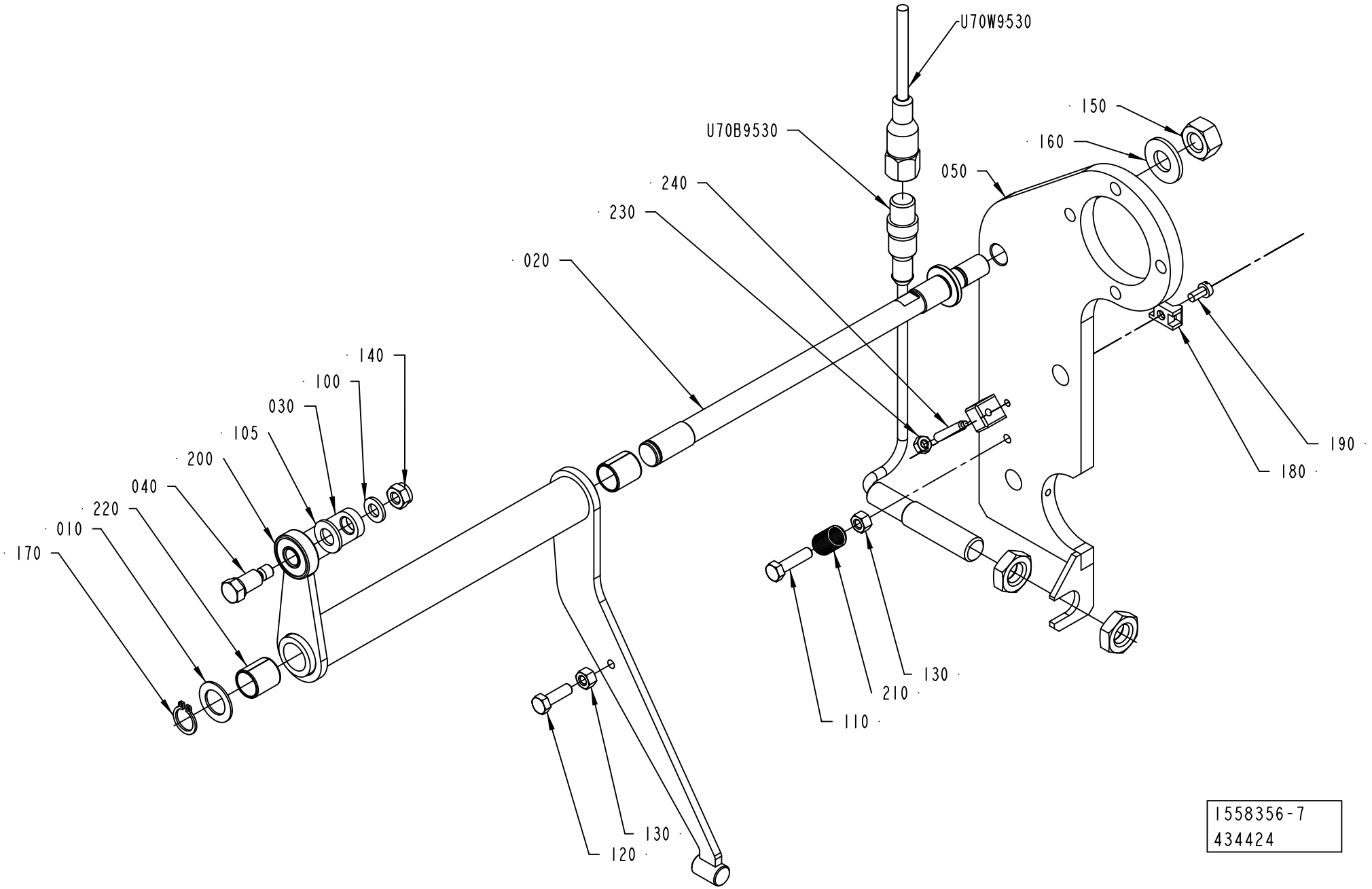

ECM: 565463 - 20130401
Group number: 1558356-0300
Assembly Drawing: 1558356-7_1_AD

Pos	Part No	UN	Qty	Description	Page No
-					
010	266737-0000		1	WASHER	
020	3008114-0000		1	SHAFT	
030	2946876-0000		1	BRACKET	
040	2946878-0000		1	SHAFT	
050	2946880-0000		1	PLATE	
100	315105-0153		1	WASHER PLAIN, 6,4X12X1,5 A4 BRB	
105	315105-0165		1	FWAS080G0-0S, WASHER PLAIN	
110	312105-0331		1	SCREW, M6S ISO 4017 M5X20 A4 80	
120	312105-0329		1	SCREW, M6S ISO 4017 M5X16 A4 80	
130	312605-0314		2	HEXAGON NUT, M6M M5 A280	
140	312812-0316		1	HEXAGON NUT, NY-LOCK M6 A4 80	
150	312605-0320		1	HEXAGON NUT, M6M M10 A280	
160	315105-0173		1	WASHER PLAIN, 10,5X22X2 A4 BRB	
170	315751-0109		1	RETAINING RING FOR SHAFT DIN 471 12 SS	
180	352113-0205		1	ANCHOR PLATES FOR STRIPS, TM2S8-C100	
190	312125-0287		1	SLOTTED HEAD SCREW, ISO1207 M4X8 A4	
200	90459-6335		1	BALL BEARING 8/22X7	
210	90335-0089		1	TENSION SPRING, 41490, 0,9X10X23	
220	321141-0183		2	BEARING BUSHING, 12X14X15 MM	
230	312605-0312		1	HEXAGON NUT, M6M M4 A280	
240	90459-6480		1	SET SCREW, DOGPOINT ISO4028 M4X25 A2	
U70B9530	90600-2233		1	INDUCTIVE SENSOR	
U70W9530	344253-0100		1	SENSOR CABLE, EVT002	

Pos	Part No	UN	Qty	Description	Page No

BENDING ROLLER

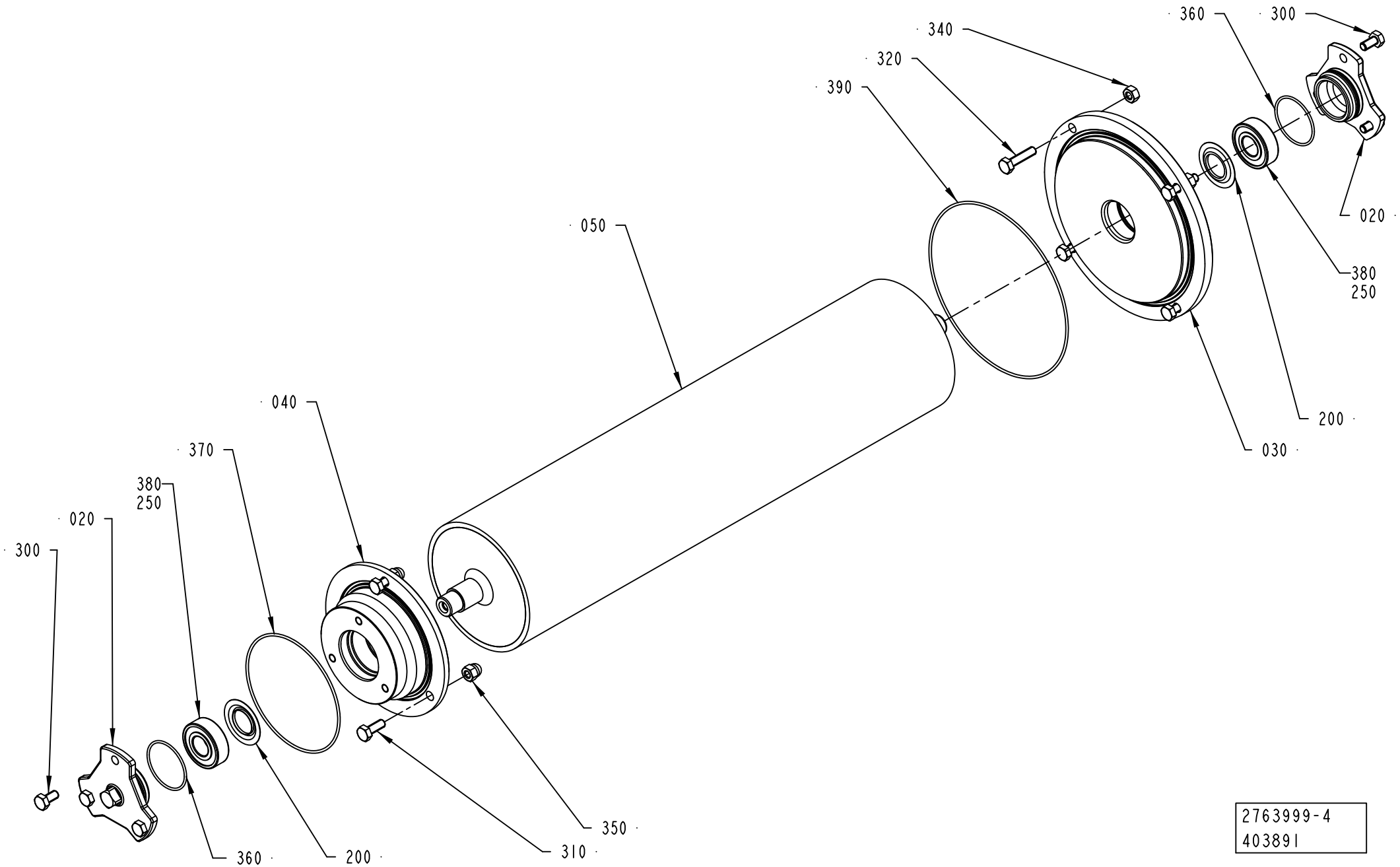

2763999-4
403891

ECM: 644421 - 20140401
Group number: 2763999-0200
Assembly Drawing: 2763999-4_1_AA

This list covers pages from 1-768 to 1-773

Pos	Part No	UN	Qty	Description	Page No
A3/FLEX NODIMC (See drawing on page: 1-768)					
020	2951058-0000		2	LID	
030	3042501-0000		1	FLANGE	
040	3042503-0000		1	FLANGE	
050	3042491-0000		1	BENDING ROLLER	
300	312105-0366		6	SCREW, M6S ISO 4017 M6X12 A4 80	
320	312105-0372		4	SCREW, M6S ISO 4017 M6X25 A4 80	
340	312605-0316		4	HEXAGON NUT, M6M M6 A280	
360	344210-0123		2	O-RING 35,1X1,6 MM FDA, 3-A	
370	344206-1088		1	O-RING 88,62X1,78 MM FDA, 3-A	
390	344207-1133		1	O-RING 133,07X1,78 MM FDA, 3-A	
A3/FLEX TBA 1000E LIGHTCAP30, A3/FLEX TBA 1000E LIGHTCAP30B, A3/FLEX TBA 0500E LIGHTCAP30, A3/FLEX TBA 0500E LIGHTCAP30B (See drawing on page: 1-772)					
020	2951058-0000		1	LID	
025	3166551-0000		1	LID	
030	3166549-0000		1	FLANGE	
040	3166550-0000		1	FLANGE	
050	3042549-0000		1	BENDING ROLLER	
300	312105-0366		3	SCREW, M6S ISO 4017 M6X12 A4 80	
320	312105-0372		4	SCREW, M6S ISO 4017 M6X25 A4 80	
325	312115-0366		3	SCREW ISO4762 M6X12 A4 80	
340	312605-0316		4	HEXAGON NUT, M6M M6 A280	
360	344210-0123		2	O-RING 35,1X1,6 MM FDA, 3-A	
370	344206-1088		1	O-RING 88,62X1,78 MM FDA, 3-A	
390	344207-1133		1	O-RING 133,07X1,78 MM FDA, 3-A	
A3/FLEX TBA 1000M LIGHTCAP24 (See drawing on page: 1-772)					
020	2951058-0000		1	LID	
025	3166551-0000		1	LID	
030	3166549-0000		1	FLANGE	
040	3166550-0000		1	FLANGE	
050	3042548-0000		1	BENDING ROLLER	
300	312105-0366		6	SCREW, M6S ISO 4017 M6X12 A4 80	
320	312105-0372		4	SCREW, M6S ISO 4017 M6X25 A4 80	
325	312115-0366		3	SCREW ISO4762 M6X12 A4 80	
340	312605-0316		4	HEXAGON NUT, M6M M6 A280	
360	344210-0123		2	O-RING 35,1X1,6 MM FDA, 3-A	
370	344206-1088		1	O-RING 88,62X1,78 MM FDA, 3-A	
390	344207-1133		1	O-RING 133,07X1,78 MM FDA, 3-A	
A3/FLEX TBA 1000S STDA7, A3/FLEX TBA 1000B STDA7, A3/FLEX TBA 1000S LIGHTCAP24, A3/FLEX TBA 1000M STDA7 (See drawing on page: 1-770)					
020	2951058-0000		2	LID	
030	3042501-0000		1	FLANGE	
040	3042503-0000		1	FLANGE	
050	3042548-0000		1	BENDING ROLLER	
300	312105-0366		6	SCREW, M6S ISO 4017 M6X12 A4 80	
320	312105-0372		4	SCREW, M6S ISO 4017 M6X25 A4 80	
340	312605-0316		4	HEXAGON NUT, M6M M6 A280	
360	344210-0123		2	O-RING 35,1X1,6 MM FDA, 3-A	
370	344206-1088		1	O-RING 88,62X1,78 MM FDA, 3-A	
390	344207-1133		1	O-RING 133,07X1,78 MM FDA, 3-A	
Common Parts					
200	90214-0303		2	SEALING RING, 18,6X35X2 MM	
250	90296-0091		1	LUBRICATION GREASE, FLUOLUB 210	
310	312105-0368		3	"SCREW, M6S ISO 4017 M6X16 A4 80"	
350	312705-0316		3	HEX. DOMED CAP MHM-6 M6 A280	
380	90458-1704		2	BALL BEARING 15/35X11	

Machine Type | Group Description | Used-In | Group Number | Page No

BENDING ROLLER

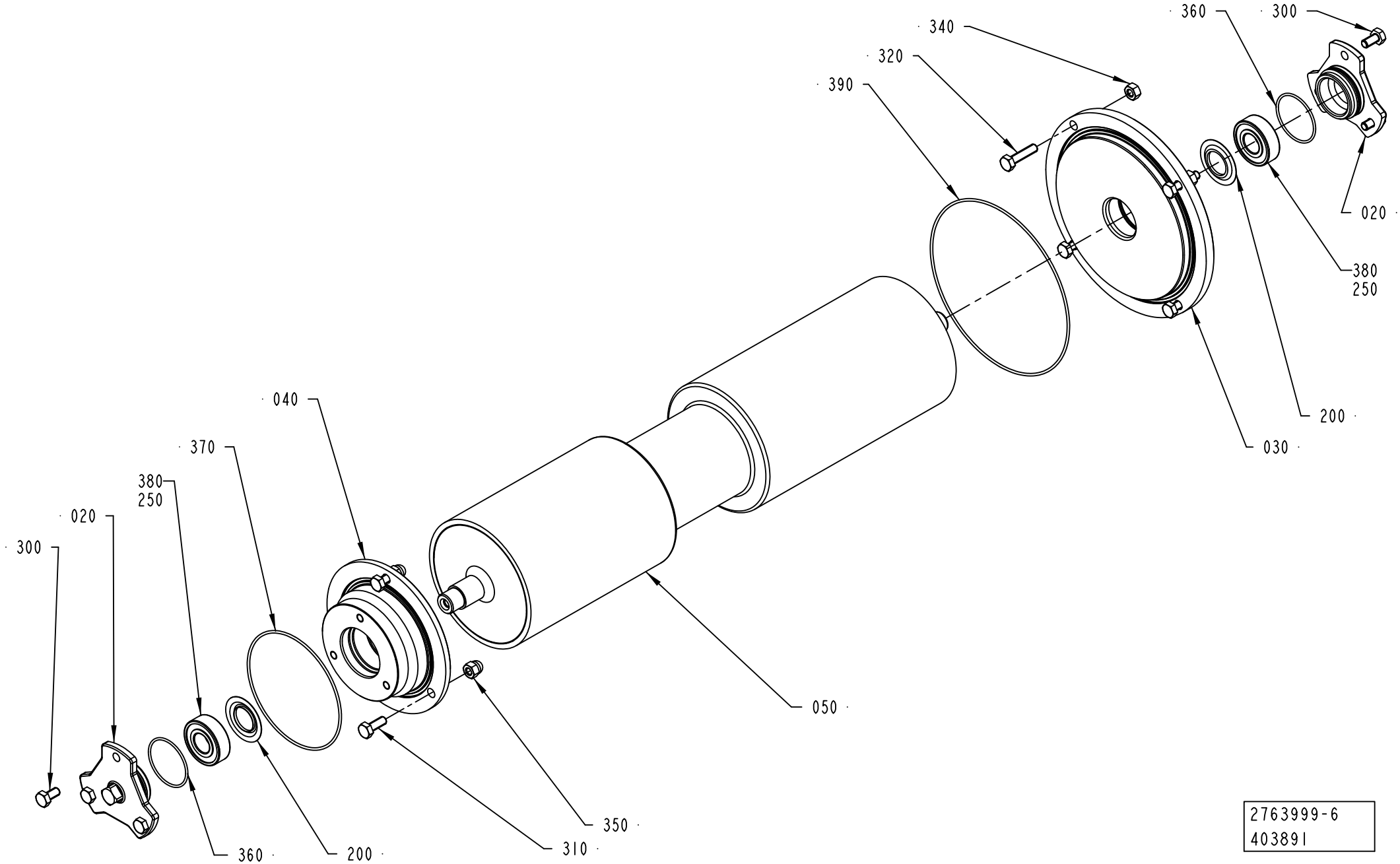

2763999-6
403891

ECM: 644421 - 20140401
Group number: 2763999-0200
Assembly Drawing: 2763999-6_1_AA

This list covers pages from 1-768 to 1-773

Pos	Part No	UN	Qty	Description	Page No
A3/FLEX NODIMC (See drawing on page: 1-768)					
020	2951058-0000		2	LID	
030	3042501-0000		1	FLANGE	
040	3042503-0000		1	FLANGE	
050	3042491-0000		1	BENDING ROLLER	
300	312105-0366		6	SCREW, M6S ISO 4017 M6X12 A4 80	
320	312105-0372		4	SCREW, M6S ISO 4017 M6X25 A4 80	
340	312605-0316		4	HEXAGON NUT, M6M M6 A280	
360	344210-0123		2	O-RING 35,1X1,6 MM FDA, 3-A	
370	344206-1088		1	O-RING 88,62X1,78 MM FDA, 3-A	
390	344207-1133		1	O-RING 133,07X1,78 MM FDA, 3-A	
A3/FLEX TBA 1000E LIGHTCAP30, A3/FLEX TBA 1000E LIGHTCAP30B, A3/FLEX TBA 0500E LIGHTCAP30, A3/FLEX TBA 0500E LIGHTCAP30B (See drawing on page: 1-772)					
020	2951058-0000		1	LID	
025	3166551-0000		1	LID	
030	3166549-0000		1	FLANGE	
040	3166550-0000		1	FLANGE	
050	3042549-0000		1	BENDING ROLLER	
300	312105-0366		3	SCREW, M6S ISO 4017 M6X12 A4 80	
320	312105-0372		4	SCREW, M6S ISO 4017 M6X25 A4 80	
325	312115-0366		3	SCREW ISO4762 M6X12 A4 80	
340	312605-0316		4	HEXAGON NUT, M6M M6 A280	
360	344210-0123		2	O-RING 35,1X1,6 MM FDA, 3-A	
370	344206-1088		1	O-RING 88,62X1,78 MM FDA, 3-A	
390	344207-1133		1	O-RING 133,07X1,78 MM FDA, 3-A	
A3/FLEX TBA 1000M LIGHTCAP24 (See drawing on page: 1-772)					
020	2951058-0000		1	LID	
025	3166551-0000		1	LID	
030	3166549-0000		1	FLANGE	
040	3166550-0000		1	FLANGE	
050	3042548-0000		1	BENDING ROLLER	
300	312105-0366		6	SCREW, M6S ISO 4017 M6X12 A4 80	
320	312105-0372		4	SCREW, M6S ISO 4017 M6X25 A4 80	
325	312115-0366		3	SCREW ISO4762 M6X12 A4 80	
340	312605-0316		4	HEXAGON NUT, M6M M6 A280	
360	344210-0123		2	O-RING 35,1X1,6 MM FDA, 3-A	
370	344206-1088		1	O-RING 88,62X1,78 MM FDA, 3-A	
390	344207-1133		1	O-RING 133,07X1,78 MM FDA, 3-A	
A3/FLEX TBA 1000S STDA7, A3/FLEX TBA 1000B STDA7, A3/FLEX TBA 1000S LIGHTCAP24, A3/FLEX TBA 1000M STDA7 (See drawing on page: 1-770)					
020	2951058-0000		2	LID	
030	3042501-0000		1	FLANGE	
040	3042503-0000		1	FLANGE	
050	3042548-0000		1	BENDING ROLLER	
300	312105-0366		6	SCREW, M6S ISO 4017 M6X12 A4 80	
320	312105-0372		4	SCREW, M6S ISO 4017 M6X25 A4 80	
340	312605-0316		4	HEXAGON NUT, M6M M6 A280	
360	344210-0123		2	O-RING 35,1X1,6 MM FDA, 3-A	
370	344206-1088		1	O-RING 88,62X1,78 MM FDA, 3-A	
390	344207-1133		1	O-RING 133,07X1,78 MM FDA, 3-A	
Common Parts					
200	90214-0303		2	SEALING RING, 18,6X35X2 MM	
250	90296-0091		1	LUBRICATION GREASE, FLUOLUB 210	
310	312105-0368		3	"SCREW, M6S ISO 4017 M6X16 A4 80"	
350	312705-0316		3	HEX. DOMED CAP MHM-6 M6 A280	
380	90458-1704		2	BALL BEARING 15/35X11	

Machine Type | Group Description | Used-In | Group Number | Page No

BENDING ROLLER

Drawing file: 2763999-9_1_AA.hpgl

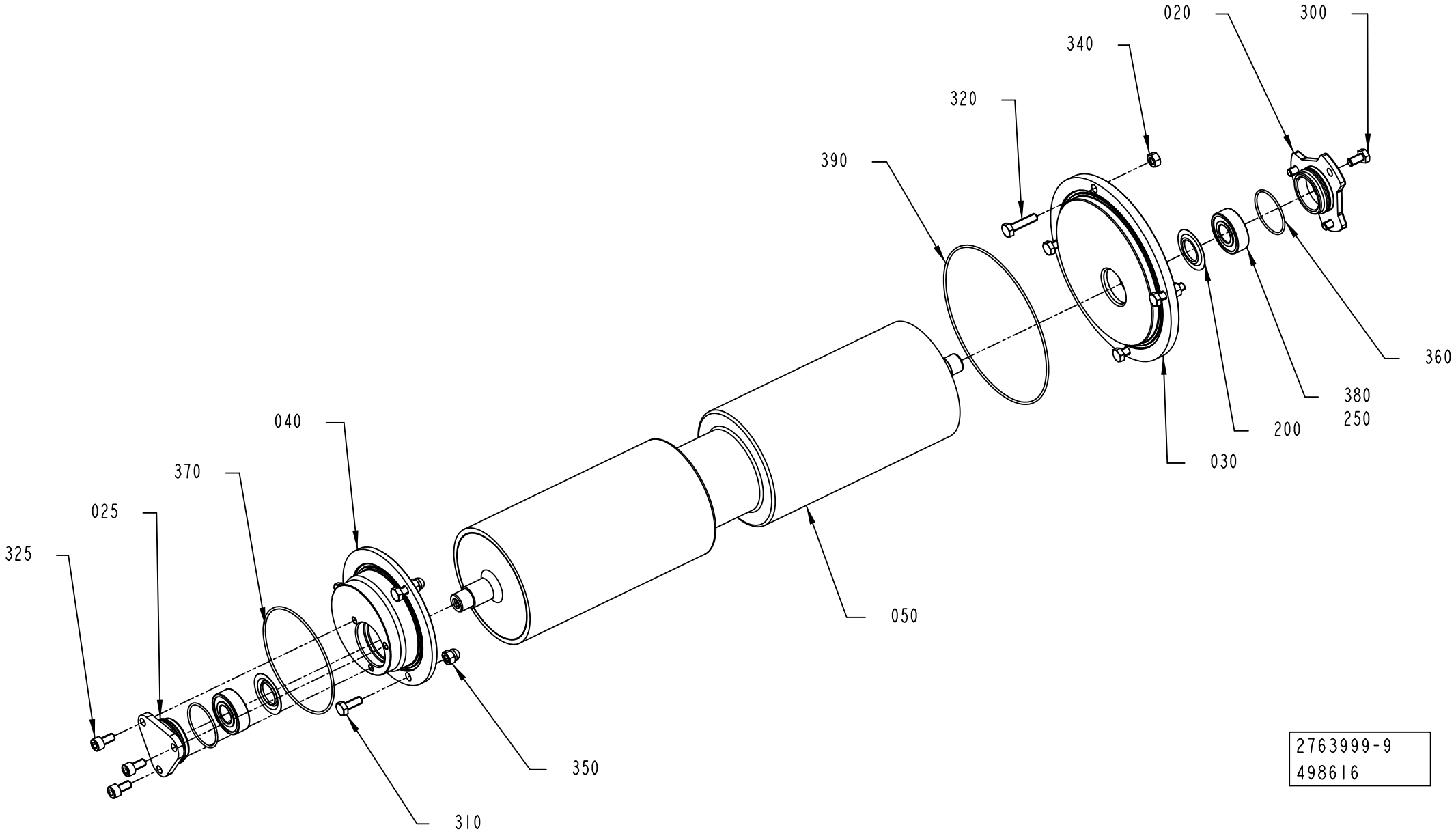

2763999-9
498616

ECM: 644421 - 20140401
Group number: 2763999-0200
Assembly Drawing: 2763999-9_1_AA

This list covers pages from 1-768 to 1-773

Pos	Part No	UN	Qty	Description	Page No
A3/FLEX NODIMC (See drawing on page: 1-768)					
020	2951058-0000		2	LID	
030	3042501-0000		1	FLANGE	
040	3042503-0000		1	FLANGE	
050	3042491-0000		1	BENDING ROLLER	
300	312105-0366		6	SCREW, M6S ISO 4017 M6X12 A4 80	
320	312105-0372		4	SCREW, M6S ISO 4017 M6X25 A4 80	
340	312605-0316		4	HEXAGON NUT, M6M M6 A280	
360	344210-0123		2	O-RING 35,1X1,6 MM FDA, 3-A	
370	344206-1088		1	O-RING 88,62X1,78 MM FDA, 3-A	
390	344207-1133		1	O-RING 133,07X1,78 MM FDA, 3-A	
A3/FLEX TBA 1000E LIGHTCAP30, A3/FLEX TBA 1000E LIGHTCAP30B, A3/FLEX TBA 0500E LIGHTCAP30, A3/FLEX TBA 0500E LIGHTCAP30B (See drawing on page: 1-772)					
020	2951058-0000		1	LID	
025	3166551-0000		1	LID	
030	3166549-0000		1	FLANGE	
040	3166550-0000		1	FLANGE	
050	3042549-0000		1	BENDING ROLLER	
300	312105-0366		3	SCREW, M6S ISO 4017 M6X12 A4 80	
320	312105-0372		4	SCREW, M6S ISO 4017 M6X25 A4 80	
325	312115-0366		3	SCREW ISO4762 M6X12 A4 80	
340	312605-0316		4	HEXAGON NUT, M6M M6 A280	
360	344210-0123		2	O-RING 35,1X1,6 MM FDA, 3-A	
370	344206-1088		1	O-RING 88,62X1,78 MM FDA, 3-A	
390	344207-1133		1	O-RING 133,07X1,78 MM FDA, 3-A	
A3/FLEX TBA 1000M LIGHTCAP24 (See drawing on page: 1-772)					
020	2951058-0000		1	LID	
025	3166551-0000		1	LID	
030	3166549-0000		1	FLANGE	
040	3166550-0000		1	FLANGE	
050	3042548-0000		1	BENDING ROLLER	
300	312105-0366		6	SCREW, M6S ISO 4017 M6X12 A4 80	
320	312105-0372		4	SCREW, M6S ISO 4017 M6X25 A4 80	
325	312115-0366		3	SCREW ISO4762 M6X12 A4 80	
340	312605-0316		4	HEXAGON NUT, M6M M6 A280	
360	344210-0123		2	O-RING 35,1X1,6 MM FDA, 3-A	
370	344206-1088		1	O-RING 88,62X1,78 MM FDA, 3-A	
390	344207-1133		1	O-RING 133,07X1,78 MM FDA, 3-A	
A3/FLEX TBA 1000S STDA7, A3/FLEX TBA 1000B STDA7, A3/FLEX TBA 1000S LIGHTCAP24, A3/FLEX TBA 1000M STDA7 (See drawing on page: 1-770)					
020	2951058-0000		2	LID	
030	3042501-0000		1	FLANGE	
040	3042503-0000		1	FLANGE	
050	3042548-0000		1	BENDING ROLLER	
300	312105-0366		6	SCREW, M6S ISO 4017 M6X12 A4 80	
320	312105-0372		4	SCREW, M6S ISO 4017 M6X25 A4 80	
340	312605-0316		4	HEXAGON NUT, M6M M6 A280	
360	344210-0123		2	O-RING 35,1X1,6 MM FDA, 3-A	
370	344206-1088		1	O-RING 88,62X1,78 MM FDA, 3-A	
390	344207-1133		1	O-RING 133,07X1,78 MM FDA, 3-A	
Common Parts					
200	90214-0303		2	SEALING RING, 18,6X35X2 MM	
250	90296-0091		1	LUBRICATION GREASE, FLUOLUB 210	
310	312105-0368		3	"SCREW, M6S ISO 4017 M6X16 A4 80"	
350	312705-0316		3	HEX. DOMED CAP MHM-6 M6 A280	
380	90458-1704		2	BALL BEARING 15/35X11	

Machine Type | Group Description | Used-In | Group Number | Page No

AIR KNIFE

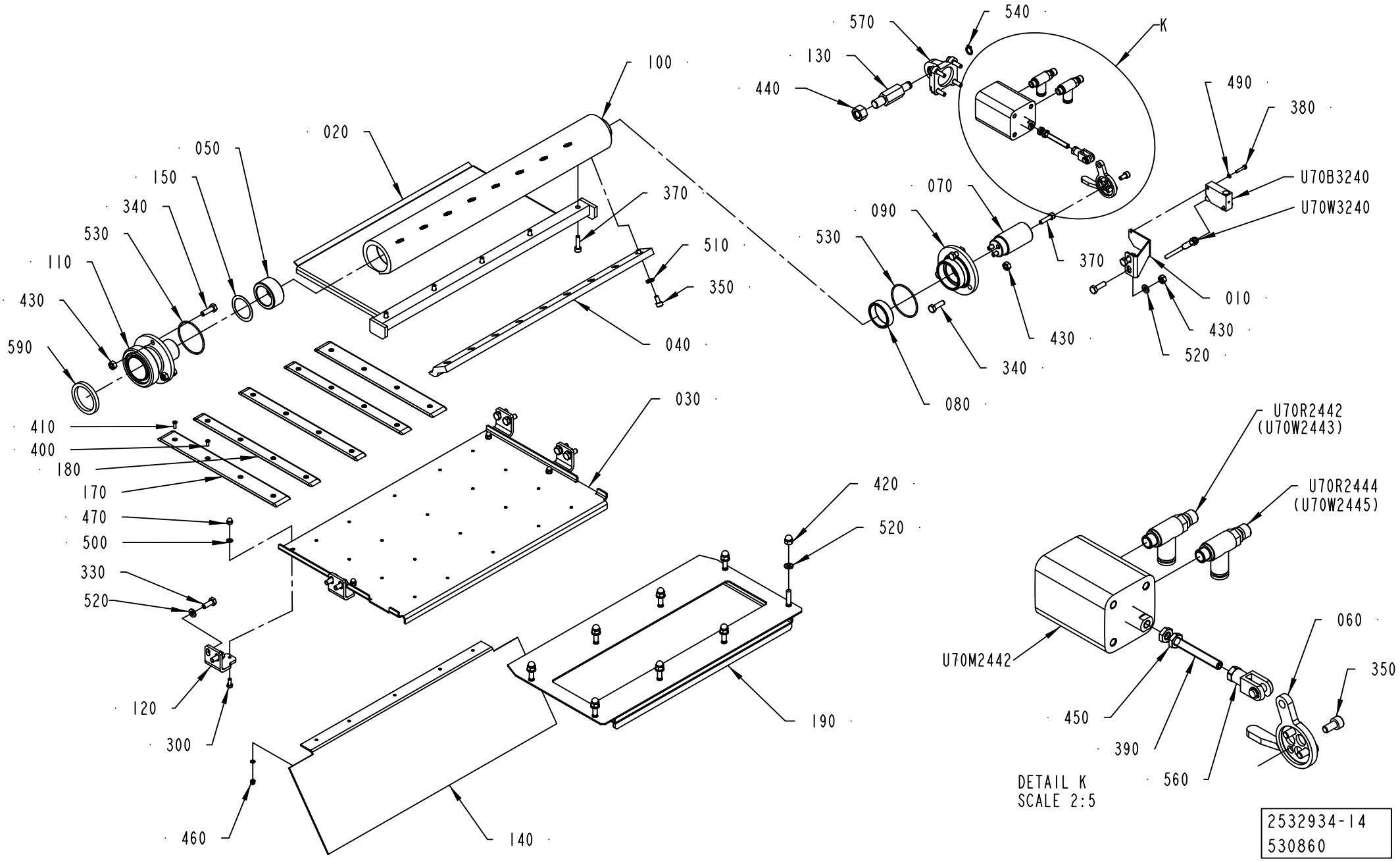

2532934-14
530860

ECM: 644409 - 20140401
Group number: 2532934-0300
Assembly Drawing: 2532934-14_1_AA

This list covers pages from 1-774 to 1-781

Pos	Part No	UN	Qty	Description	Page No
TBA 1000B NODIMC, TBA 1000S NODIMC, TPA 1000SQ NODIMC, TBA 1000SQ NODIMC, TPA 0750SQ NODIMC, TBA 0500B NODIMC, TBA 1500S NODIMC, TBA 0500SQ NODIMC, TGA 0750SQ NODIMC, TGA 0500SQ NODIMC, TGA 1000SQ NODIMC, TGA 1500SQ NODIMC, TPA 0500SQ NODIMC, TBA 0500S NODIMC, TGA 1000CR NODIMC, TGA 1000LF NODIMC (See drawing on page: 1-774)					
020	2867470-0000		1	AIR GUIDE	
030	2874772-0000		1	PLATE	
040	2509681-0000		1	RAIL	
120	2532918-0000		4	HOLDER	
140	2532919-0000		1	PLATE	
180	2894560-0000		3	SLIDE PLATE	
190	2874771-0000		1	PLATE	
300	312105-0289		4	SCREW, M6S ISO 4017 M4X10 A4 70	
400	312145-0222		15	SCREW ISO 2009 MFS M3X8 A4	
410	312145-0224		5	SCREW ISO 2009 MFS M3X10 A4	
420	312705-0316		8	HEX. DOMED CAP MHM-6 M6 A280	
460	312705-0310		20	NUT HEX. DOMED CAP MHM-6 M3 A2	
470	312705-0312		4	NUT HEX. DOMED CAP MHM-6 M4 A280	
490	315105-0124		22	WASHER PLAIN, 3,2X6X0,5 A4 BRB	
500	315105-0136		4	WASHER PLAIN, 4,3X8X0,8 A4 BRB	
520	315105-0153		18	WASHER PLAIN, 6,4X12X1,5 A4 BRB	
TBA 1000E LIGHTCAP30, TPA 0500SQ LIGHTCAP24, TBA 1000E LIGHTCAP30B, TBA 0500E LIGHTCAP30, TBA 0500E LIGHTCAP30B (See drawing on page: 1-780)					
020	3103181-0000		1	AIR GUIDE	
030	3109570-0000		1	BOTTOM PLATE	
040	3037097-0000		1	RAIL	
120	2532918-0000		4	HOLDER	
140	2952932-0000		1	PLATE	
180	2894560-0000		2	SLIDE PLATE	
190	3103180-0000		1	PLATE	
200	3103170-0000		1	PLATE	
300	312105-0289		8	SCREW, M6S ISO 4017 M4X10 A4 70	
400	312145-0222		12	SCREW ISO 2009 MFS M3X8 A4	
410	312145-0224		4	SCREW ISO 2009 MFS M3X10 A4	
420	312705-0316		8	HEX. DOMED CAP MHM-6 M6 A280	
460	312705-0310		16	NUT HEX. DOMED CAP MHM-6 M3 A2	
470	312705-0312		8	NUT HEX. DOMED CAP MHM-6 M4 A280	
490	315105-0124		18	WASHER PLAIN, 3,2X6X0,5 A4 BRB	
500	315105-0136		8	WASHER PLAIN, 4,3X8X0,8 A4 BRB	
520	315105-0153		18	WASHER PLAIN, 6,4X12X1,5 A4 BRB	
TBA 1000S STDA7, TBA 1000B STDA7, TBA 1000S LIGHTCAP24, TBA 1000M STDA7, TBA 1000M LIGHTCAP24 (See drawing on page: 1-776)					
020	2867470-0000		1	AIR GUIDE	
030	2894567-0000		1	PLATE	
040	2884160-0000		1	RAIL	
120	2532918-0000		4	HOLDER	
140	2874687-0000		1	PLATE	
180	2894560-0000		2	SLIDE PLATE	
190	3020116-0000		1	PLATE	
300	312105-0289		4	SCREW, M6S ISO 4017 M4X10 A4 70	
400	312145-0222		12	SCREW ISO 2009 MFS M3X8 A4	
410	312145-0224		4	SCREW ISO 2009 MFS M3X10 A4	
420	312705-0316		6	HEX. DOMED CAP MHM-6 M6 A280	
460	312705-0310		16	NUT HEX. DOMED CAP MHM-6 M3 A2	
470	312705-0312		4	NUT HEX. DOMED CAP MHM-6 M4 A280	
490	315105-0124		18	WASHER PLAIN, 3,2X6X0,5 A4 BRB	
500	315105-0136		4	WASHER PLAIN, 4,3X8X0,8 A4 BRB	
520	315105-0153		16	WASHER PLAIN, 6,4X12X1,5 A4 BRB	
TBA 2000S NODIMC (See drawing on page: 1-778)					
020	2894606-0000		1	AIR GUIDE	
030	2894605-0000		1	BOTTOM PLATE	
040	2594601-0000		1	RAIL	
120	2582655-0000		4	HOLDER	
140	2582654-0000		1	PLATE	
180	2894560-0000		3	SLIDE PLATE	
190	2894604-0000		1	PLATE	
300	312105-0289		4	SCREW, M6S ISO 4017 M4X10 A4 70	
400	312145-0222		15	SCREW ISO 2009 MFS M3X8 A4	
410	312145-0224		5	SCREW ISO 2009 MFS M3X10 A4	
420	312705-0316		8	HEX. DOMED CAP MHM-6 M6 A280	
460	312705-0310		20	NUT HEX. DOMED CAP MHM-6 M3 A2	
470	312705-0312		4	NUT HEX. DOMED CAP MHM-6 M4 A280	
490	315105-0124		22	WASHER PLAIN, 3,2X6X0,5 A4 BRB	
500	315105-0136		4	WASHER PLAIN, 4,3X8X0,8 A4 BRB	
520	315105-0153		18	WASHER PLAIN, 6,4X12X1,5 A4 BRB	
Common Parts					
010	2936344-0000		1	BRACKET	
050	1519166-0000		1	BUSHING	
060	2936343-0000		1	ARM	
070	1519160-0000		1	SHAFT	
080	1519159-0000		1	BUSHING	
090	1519158-0000		1	LID	
100	1519156-0000		1	AIR DISTRIBUTOR	
110	1532231-0000		1	CONNECTION	
130	1498132-0000		1	SHAFT	

Machine Type | Group Description | Used-In | Group Number | Page No

AIR KNIFE

Drawing file: 2532934-15_1_AA.hpgl

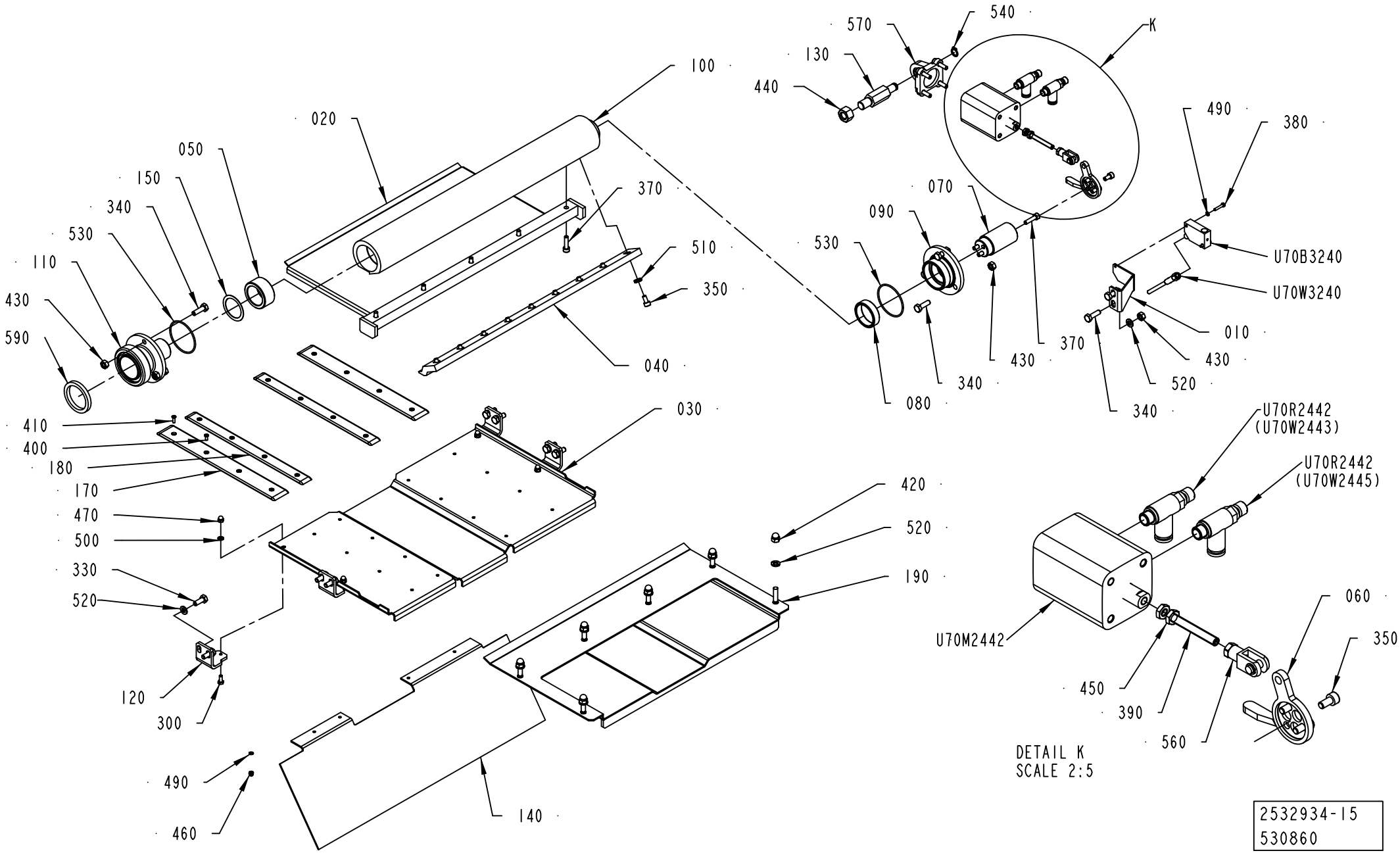

2532934-15
530860

Pos	Part No	UN	Qty	Description	Page No
Common Parts (Cont'd)					
150	2532915-0000		1	WASHER	
170	2894561-0000		2	SLIDE PLATE	
330	312105-0368		8	"SCREW, M6S ISO 4017 M6X16 A4 80"	
340	312105-0370		8	SCREW, M6S ISO 4017 M6X20 A4 80	
350	312115-0325		12	SCREW ISO4762 M5X10 A4 80	
370	312115-0331		12	SCREW ISO4762 M5X20 A4 80	
380	312125-0228		2	SLOTTED HEAD SCREW, ISO1207 M3X16 A4	
390	90459-1728		1	SET SCREW, CUP END ISO4029 M6X45 A4	
430	312605-0316		8	HEXAGON NUT, M6M M6 A280	
440	312605-0322		1	HEXAGON NUT, M6M M12 A280	
450	312625-0316		2	HEXAGON THIN NUT, EN 24035 ML6M M6 A4	
510	90062-0061		9	LOCK WASHER NORD-LOCK,6,5/10,8, T=2,2	
530	344207-1047		2	O-RING 47,35X1,78 MM FDA, 3-A	
540	90141-0016		1	RETAINING RING FOR SHAFT DIN 471 10 SS	
560	90239-0489		1	ROD END, CLEVIS WITH AXLE M6X1,25	
570	90459-2650		1	SWIVEL FLANGE 32	
590	12242-0003		1	GASKET 48X38X5,5	
U70B3240	90459-2409		1	INDUCTIVE SENSOR, IN 5230	
U70M2442	90604-3127		1	DOUBLE ACTING, COMPACT, 32-25	
U70R2442	90459-3528		1	ONE WAY FLOW CONTROL, G1/8, MANUAL	
U70R2444	90459-3528		1	ONE WAY FLOW CONTROL, G1/8, MANUAL	
U70W3240	344245-0050		1	SENSOR CABLE, EVT123	

Pos	Part No	UN	Qty	Description	Page No

AIR KNIFE

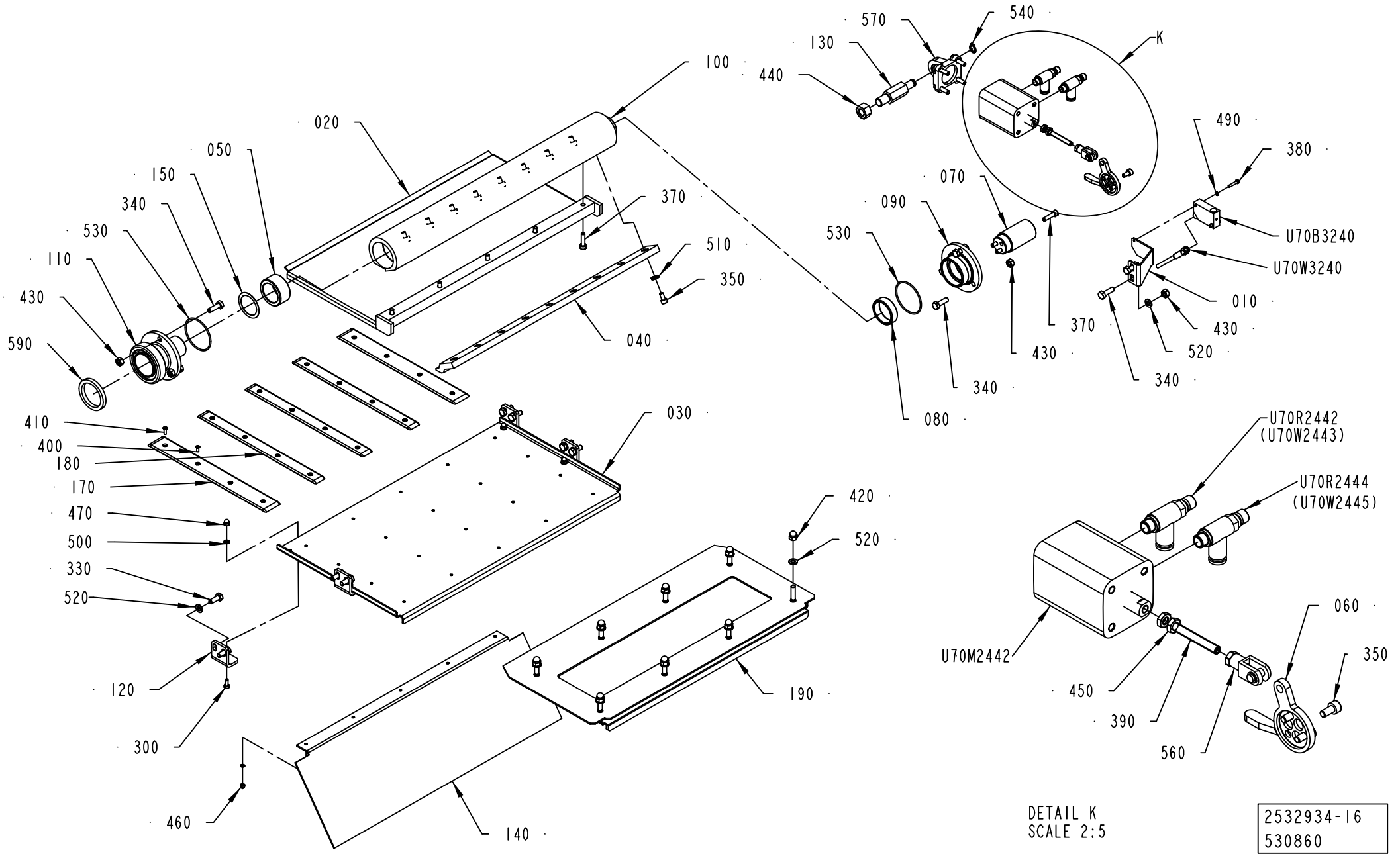

DETAIL K
SCALE 2:5

2532934-16
530860

Pos	Part No	UN	Qty	Description	Page No
SEE PREVIOUS LISTS PAGES: 1-775, 1-777.					

Pos	Part No	UN	Qty	Description	Page No

AIR KNIFE

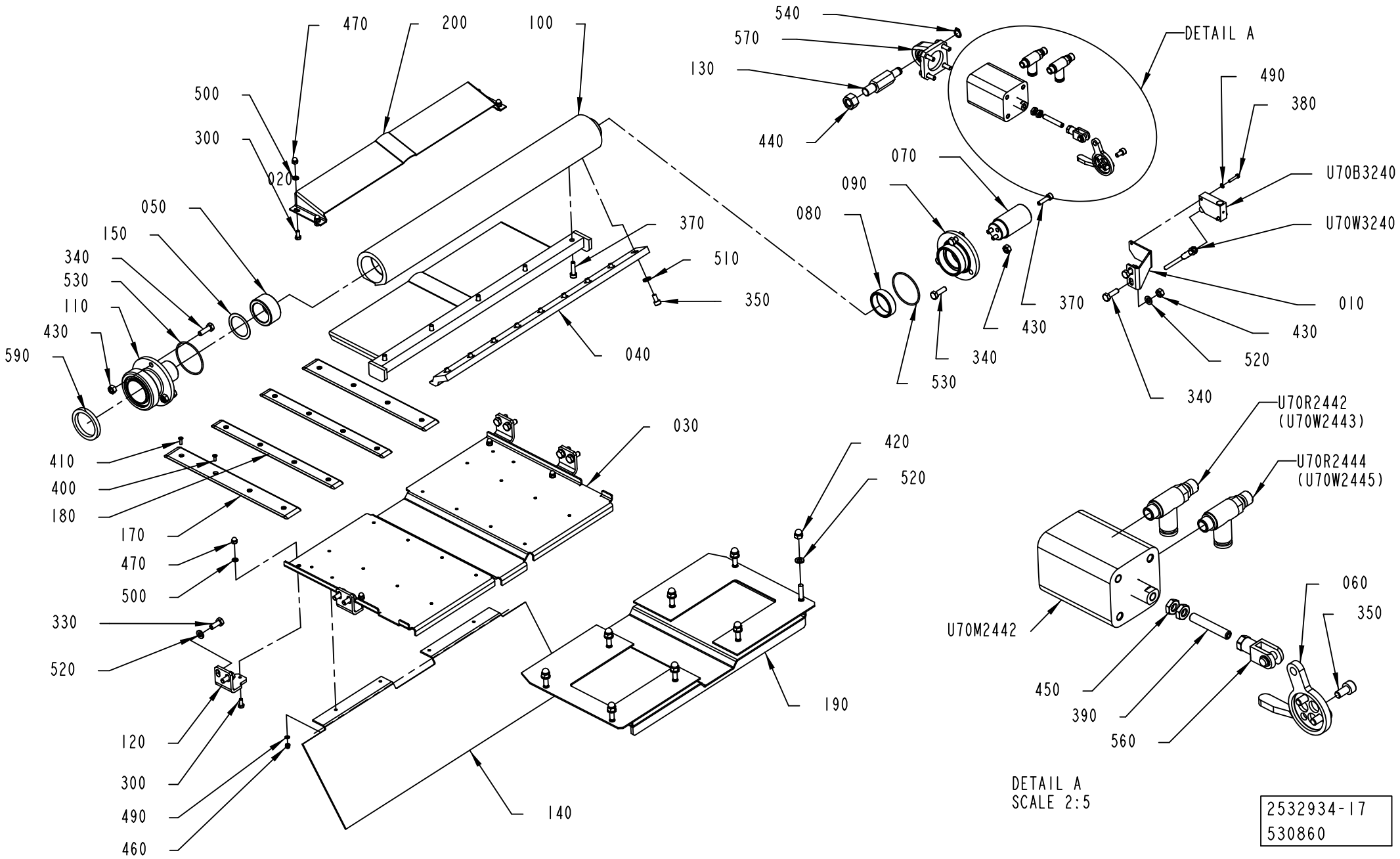

DETAIL A
SCALE 2:5

2532934-17
530860

ECM: 644409 - 20140401
Group number: 2532934-0300
Assembly Drawing: 2532934-17_1_AA

This list covers pages from 1-774 to 1-781

Pos	Part No	UN	Qty	Description	Page No
SEE PREVIOUS LISTS PAGES: 1-775, 1-777.					

Pos	Part No	UN	Qty	Description	Page No

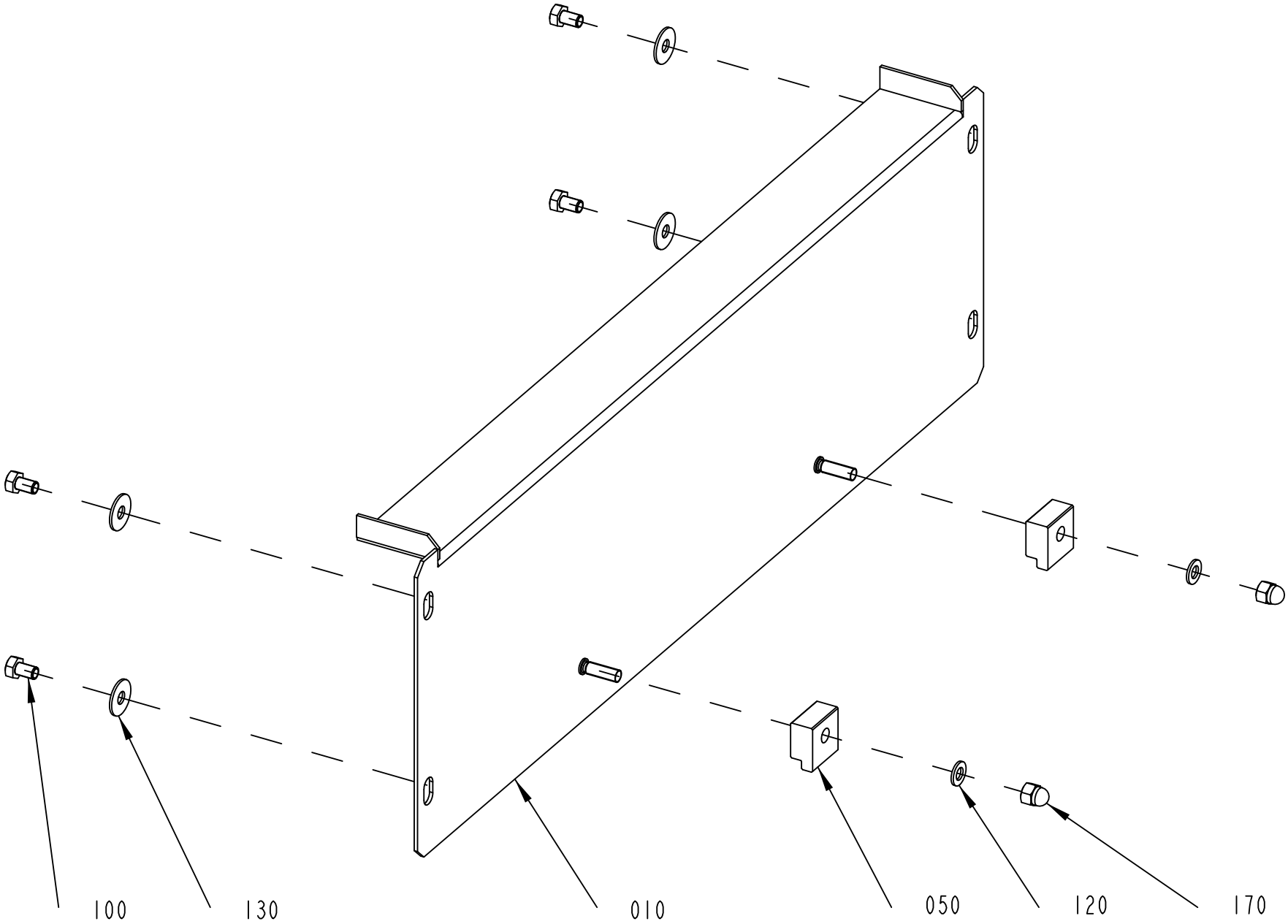

2783102-4
571545

Pos	Part No	UN	Qty	Description	Page No
A3/FLEX TBA 1000E LIGHTCAP30, A3/FLEX TBA 1000E LIGHTCAP30B, A3/FLEX TBA 0500E LIGHTCAP30, A3/FLEX TBA 0500E LIGHTCAP30B (See drawing on page: 1-784)					
010	3260305-0000		1	PLATE	
020	3262233-0000		1	PLATE	
040	3260307-0000		1	PLATE	
120	315106-0146		4	"WASHER PLAIN, M5 ISO7089-5-200 HV A4"	
130	315125-0146		6	WASHER HIGH, TBRSB 5.3X15X1 A4	
160	90287-0199		2	SCREW, M6S ISO 4017 M5X6 A4 80	
170	312705-0314		4	NUT HEX. DOMED CAP MHM-6 M5 A280	
A3/FLEX TBA 1000S LIGHTCAP24, A3/FLEX TBA 1000M LIGHTCAP24 (See drawing on page: 1-784)					
010	3260310-0000		1	PLATE	
020	3262231-0000		1	PLATE	
040	3260307-0000		1	PLATE	
120	315106-0146		4	"WASHER PLAIN, M5 ISO7089-5-200 HV A4"	
130	315125-0146		6	WASHER HIGH, TBRSB 5.3X15X1 A4	
160	90287-0199		2	SCREW, M6S ISO 4017 M5X6 A4 80	
170	312705-0314		4	NUT HEX. DOMED CAP MHM-6 M5 A280	
A3/FLEX TBA 1000S STDA7, A3/FLEX TBA 1000B STDA7, A3/FLEX TBA 1000M STDA7 (See drawing on page: 1-784)					
010	3262249-0000		1	PLATE	
020	3262250-0000		1	PLATE	
040	3260307-0000		1	PLATE	
120	315106-0146		4	"WASHER PLAIN, M5 ISO7089-5-200 HV A4"	
130	315125-0146		6	WASHER HIGH, TBRSB 5.3X15X1 A4	
160	90287-0199		2	SCREW, M6S ISO 4017 M5X6 A4 80	
170	312705-0314		4	NUT HEX. DOMED CAP MHM-6 M5 A280	
A3/FLEX TBA 1000SQ NODIMC, A3/FLEX TBA 1000S NODIMC, A3/FLEX TBA 1000B NODIMC, A3/FLEX TBA 0500B NODIMC, A3/FLEX TPA 1000SQ NODIMC, A3/FLEX TBA 1500S NODIMC, A3/FLEX TPA 0500SQ NODIMC, A3/FLEX TBA 0500S NODIMC, A3/FLEX TPA 0750SQ NODIMC, A3/FLEX TGA 1000SQ NODIMC, A3/FLEX TBA 0500SQ NODIMC, A3/FLEX TGA 0500SQ NODIMC, A3/FLEX TGA 0750SQ NODIMC, A3/FLEX TGA 1500SQ NODIMC, A3/FLEX TGA 1000CR NODIMC, A3/FLEX TGA 1000LF NODIMC (See drawing on page: 1-784)					
010	3262236-0000		1	PLATE	
020	3262237-0000		1	PLATE	
040	3260307-0000		1	PLATE	
120	315106-0146		4	"WASHER PLAIN, M5 ISO7089-5-200 HV A4"	
130	315125-0146		6	WASHER HIGH, TBRSB 5.3X15X1 A4	
160	90287-0199		2	SCREW, M6S ISO 4017 M5X6 A4 80	
170	312705-0314		4	NUT HEX. DOMED CAP MHM-6 M5 A280	
A3/FLEX TBA 2000S NODIMC (See drawing on page: 1-782)					
010	3262238-0000		1	PLATE	
120	315106-0146		2	"WASHER PLAIN, M5 ISO7089-5-200 HV A4"	
130	315125-0146		4	WASHER HIGH, TBRSB 5.3X15X1 A4	
170	312705-0314		2	NUT HEX. DOMED CAP MHM-6 M5 A280	
Common Parts					
050	3260308-0000		2	BLOCK	
100	312105-0323		4	"FSCR05080-10, SCREW, M6S"	

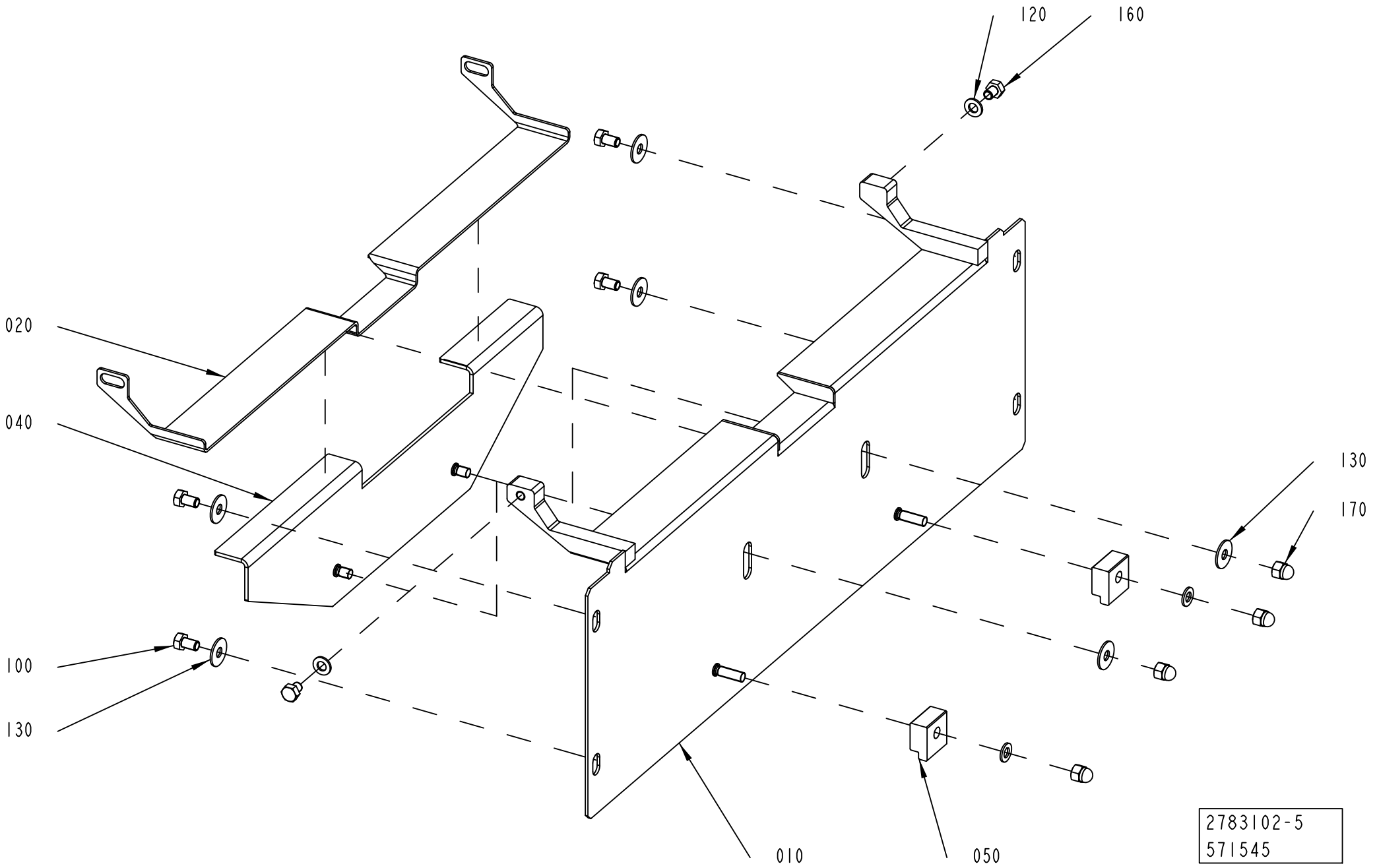
120
160
020
040
130
170
100
130
010
050
2783102-5
571545

Pos	Part No	UN	Qty	Description	Page No
A3/FLEX TBA 1000E LIGHTCAP30, A3/FLEX TBA 1000E LIGHTCAP30B, A3/FLEX TBA 0500E LIGHTCAP30, A3/FLEX TBA 0500E LIGHTCAP30B (See drawing on page: 1-784)					
010	3260305-0000		1	PLATE	
020	3262233-0000		1	PLATE	
040	3260307-0000		1	PLATE	
120	315106-0146		4	"WASHER PLAIN, M5 ISO7089-5-200 HV A4"	
130	315125-0146		6	WASHER HIGH, TBRSB 5.3X15X1 A4	
160	90287-0199		2	SCREW, M6S ISO 4017 M5X6 A4 80	
170	312705-0314		4	NUT HEX. DOMED CAP MHM-6 M5 A280	
A3/FLEX TBA 1000S LIGHTCAP24, A3/FLEX TBA 1000M LIGHTCAP24 (See drawing on page: 1-784)					
010	3260310-0000		1	PLATE	
020	3262231-0000		1	PLATE	
040	3260307-0000		1	PLATE	
120	315106-0146		4	"WASHER PLAIN, M5 ISO7089-5-200 HV A4"	
130	315125-0146		6	WASHER HIGH, TBRSB 5.3X15X1 A4	
160	90287-0199		2	SCREW, M6S ISO 4017 M5X6 A4 80	
170	312705-0314		4	NUT HEX. DOMED CAP MHM-6 M5 A280	
A3/FLEX TBA 1000S STDA7, A3/FLEX TBA 1000B STDA7, A3/FLEX TBA 1000M STDA7 (See drawing on page: 1-784)					
010	3262249-0000		1	PLATE	
020	3262250-0000		1	PLATE	
040	3260307-0000		1	PLATE	
120	315106-0146		4	"WASHER PLAIN, M5 ISO7089-5-200 HV A4"	
130	315125-0146		6	WASHER HIGH, TBRSB 5.3X15X1 A4	
160	90287-0199		2	SCREW, M6S ISO 4017 M5X6 A4 80	
170	312705-0314		4	NUT HEX. DOMED CAP MHM-6 M5 A280	
A3/FLEX TBA 1000SQ NODIMC, A3/FLEX TBA 1000S NODIMC, A3/FLEX TBA 1000B NODIMC, A3/FLEX TBA 0500B NODIMC, A3/FLEX TPA 1000SQ NODIMC, A3/FLEX TBA 1500S NODIMC, A3/FLEX TPA 0500SQ NODIMC, A3/FLEX TBA 0500S NODIMC, A3/FLEX TPA 0750SQ NODIMC, A3/FLEX TGA 1000SQ NODIMC, A3/FLEX TBA 0500SQ NODIMC, A3/FLEX TGA 0500SQ NODIMC, A3/FLEX TGA 0750SQ NODIMC, A3/FLEX TGA 1500SQ NODIMC, A3/FLEX TGA 1000CR NODIMC, A3/FLEX TGA 1000LF NODIMC (See drawing on page: 1-784)					
010	3262236-0000		1	PLATE	
020	3262237-0000		1	PLATE	
040	3260307-0000		1	PLATE	
120	315106-0146		4	"WASHER PLAIN, M5 ISO7089-5-200 HV A4"	
130	315125-0146		6	WASHER HIGH, TBRSB 5.3X15X1 A4	
160	90287-0199		2	SCREW, M6S ISO 4017 M5X6 A4 80	
170	312705-0314		4	NUT HEX. DOMED CAP MHM-6 M5 A280	
A3/FLEX TBA 2000S NODIMC (See drawing on page: 1-782)					
010	3262238-0000		1	PLATE	
120	315106-0146		2	"WASHER PLAIN, M5 ISO7089-5-200 HV A4"	
130	315125-0146		4	WASHER HIGH, TBRSB 5.3X15X1 A4	
170	312705-0314		2	NUT HEX. DOMED CAP MHM-6 M5 A280	
Common Parts					
050	3260308-0000		2	BLOCK	
100	312105-0323		4	"FSCR05080-10, SCREW, M6S"	

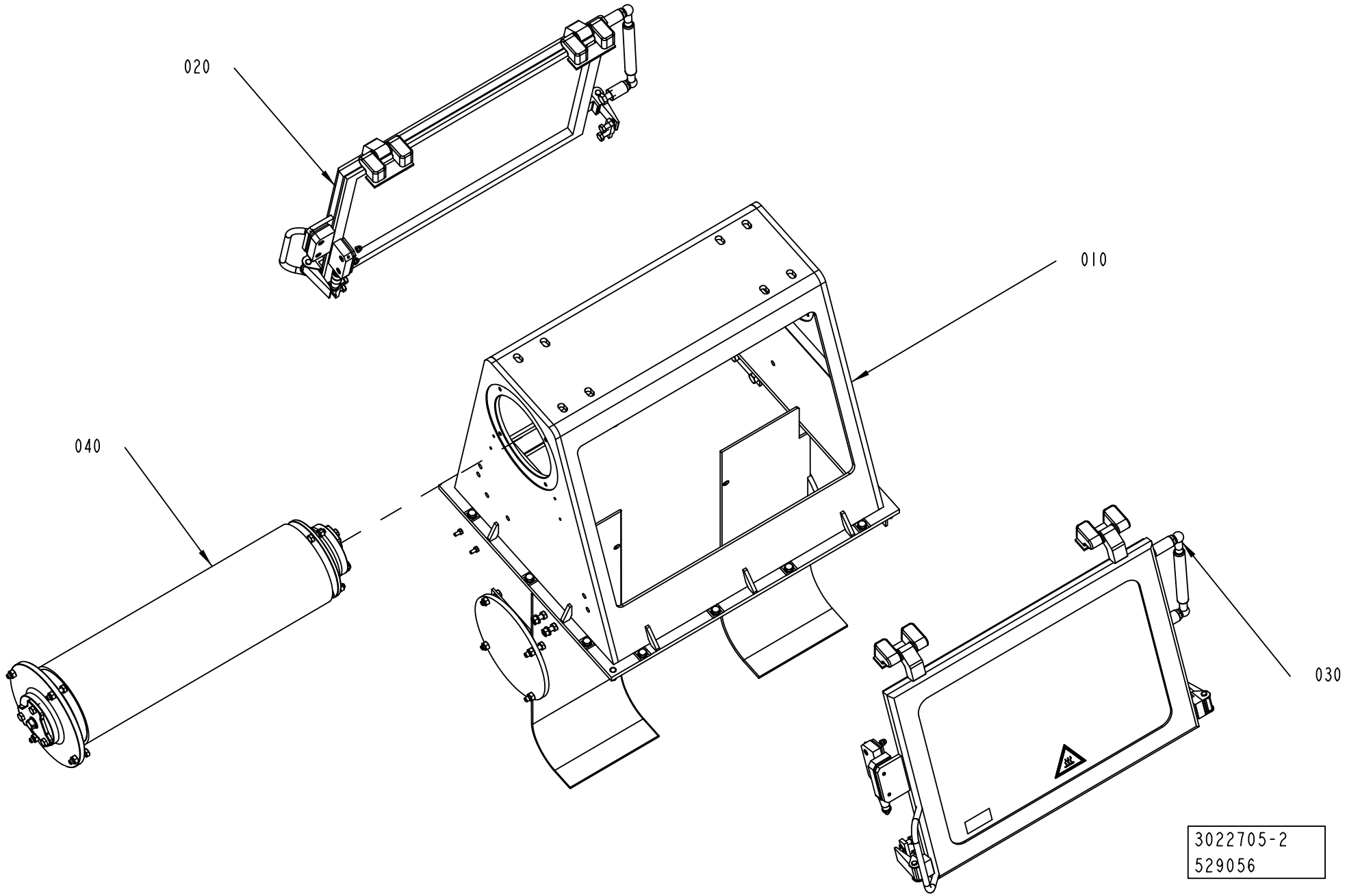
020
010
040
030
3022705-2
529056

ECM: 535856 - 20120401
Group number: 3022705-0200
Assembly Drawing: 3022705-2_1_AA

Pos	Part No	UN	Qty	Description	Page No
-					
010	2531043-0200		1	HOUSING	**1-789**
020	2531039-0300		1	DOOR	**1-791**
030	2528145-0300		1	DOOR	**1-797**
040	2685390-0300		1	BENDING ROLLER	**1-799**

Pos	Part No	UN	Qty	Description	Page No

HOUSING

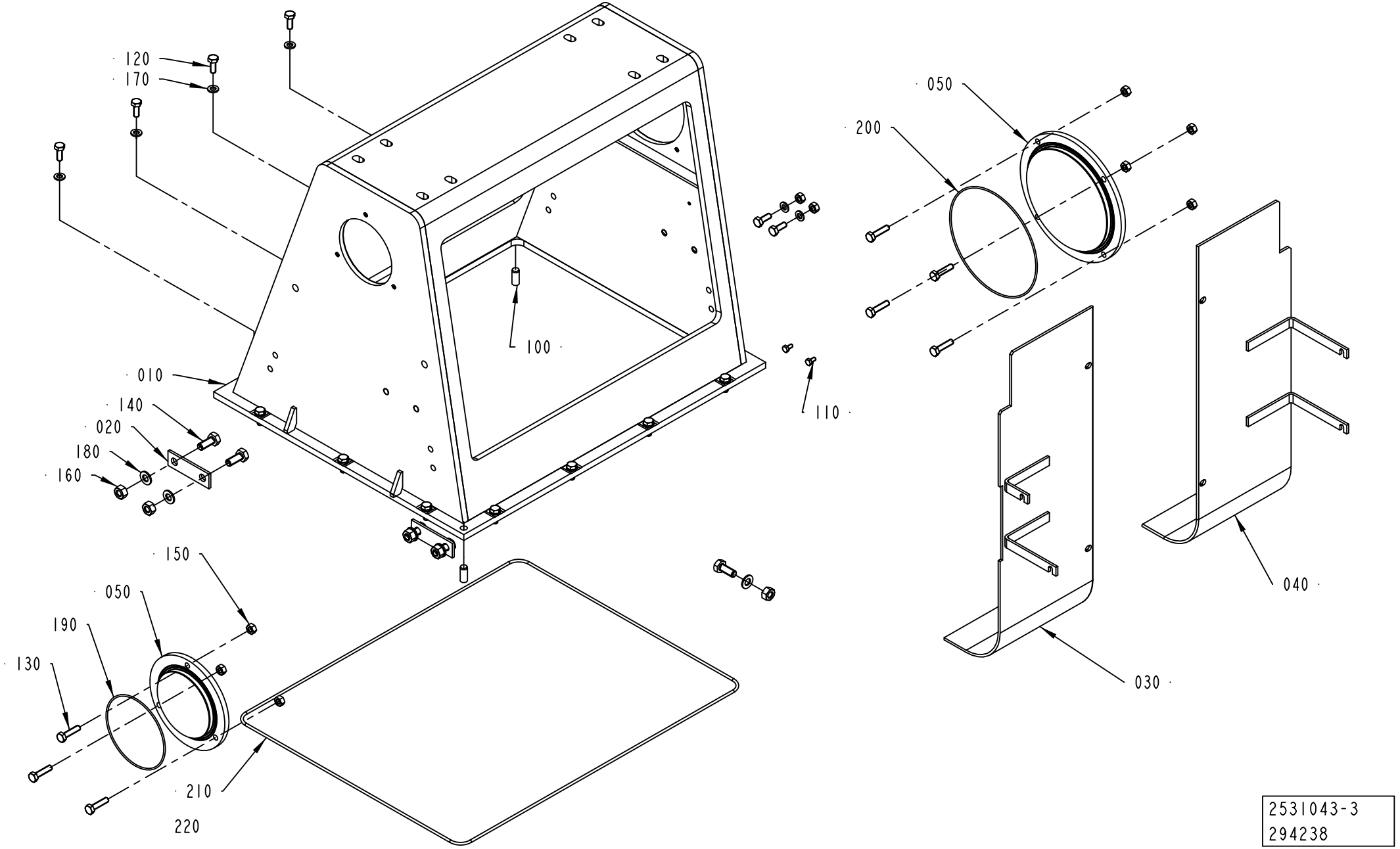

2531043-3
294238

ECM: 578512 - 20130102
Group number: 2531043-0200
Assembly Drawing: 2531043-3_1_AA

Pos	Part No	UN	Qty	Description	Page No
-					
010	2788639-0000		1	BOX FRAME	
020	441737-0000		2	WASHER	
030	2867477-0000		1	DEFLECTOR	
040	2867478-0000		1	DEFLECTOR	
050	2547398-0000		1	LID	
060	2547399-0000		1	LID	
100	311103-0401		2	PARALLEL PIN ISO 2338 8M6X20 A1	
110	312105-0287		2	SCREW, M6S ISO 4017 M4X8 A4 70	
120	312105-0368		16	"SCREW, M6S ISO 4017 M6X16 A4 80"	
130	312105-0372		7	SCREW, M6S ISO 4017 M6X25 A4 80	
140	312105-0451		5	SCREW, M6S ISO 4017 M8X20 A4 80	
150	312605-0316		9	HEXAGON NUT, M6M M6 A280	
160	312605-0318		5	HEXAGON NUT, M6M M8 A280	
170	315105-0153		16	WASHER PLAIN, 6,4X12X1,5 A4 BRB	
180	315105-0165		5	FWAS080G0-0S, WASHER PLAIN	
190	344206-1088		1	O-RING 88,62X1,78 MM FDA, 3-A	
200	344207-1133		1	O-RING 133,07X1,78 MM FDA, 3-A	
210	90459-1314		1	O-RING 491X3 MM	
220	90153-0023		1	ADHESIVE, SILICON 251470 TUB 90CC(UN1993	

Pos	Part No	UN	Qty	Description	Page No

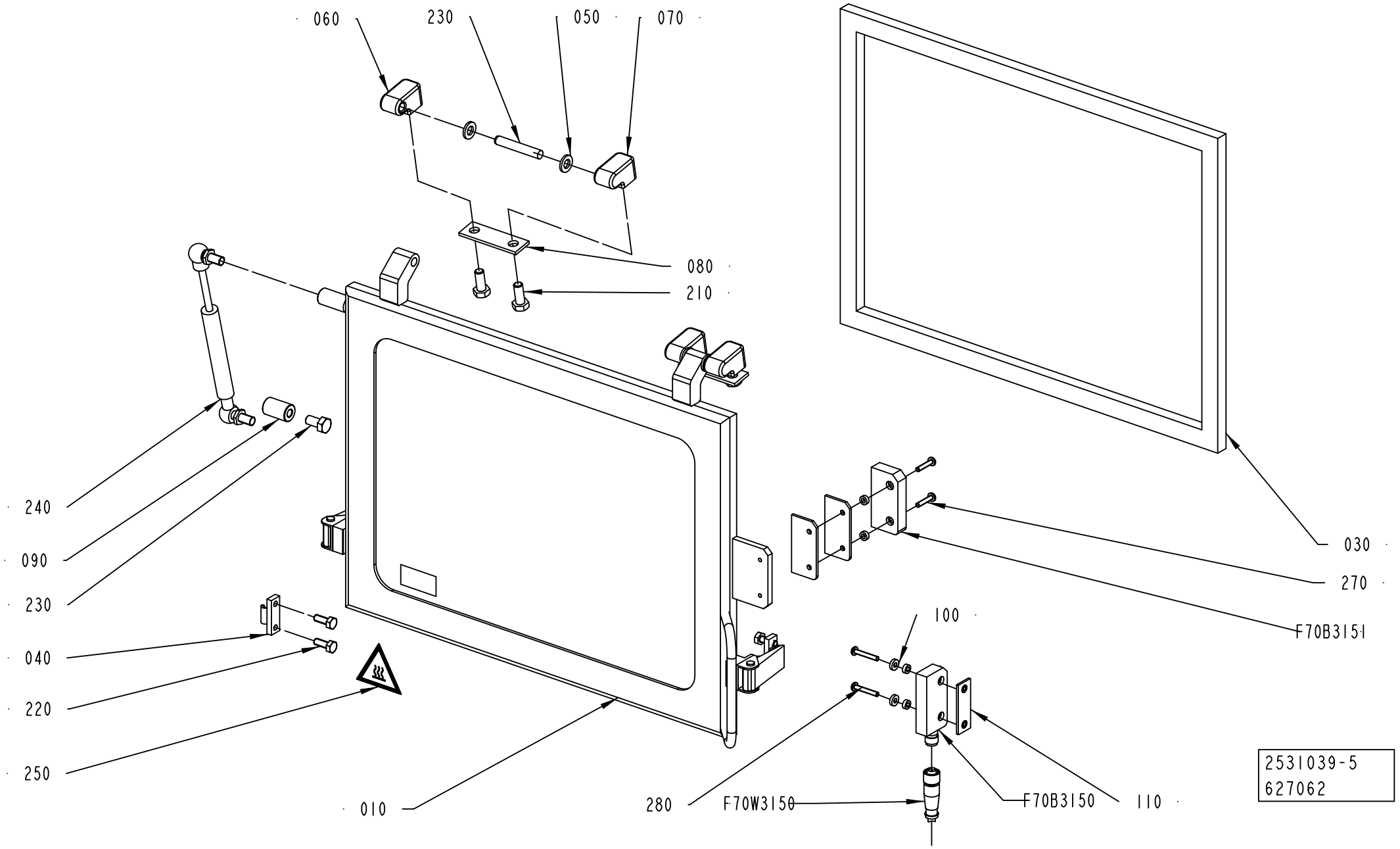
060
230
050
070
080
210
240
090
230
040
220
250
010
030
270
F70B3151
100
280
F70W3150
F70B3150
110
2531039-5
627062

ECM: 668920 - 20140701
Group number: 2531039-0300
Assembly Drawing: 2531039-5_1_AC

Pos	Part No	UN	Qty	Description	Page No
-					
010	3352957-0000		1	DOOR	
030	2833177-0000		1	GASKET	
040	271860-0000		2	CLAMP BLOCK	
050	441739-0000		4	WASHER	
060	1549992-0000		2	HINGE FLANGE	
070	1549993-0000		2	HINGE FLANGE	
080	441737-0000		2	WASHER	
090	1549994-0000		1	SPACER	
100	3203741-0000		2	SPACER	
110	3252303-0000		1	PLATE	
200	311103-0413		2	PARALLEL PIN ISO 2338 8M6X50 A1	
210	312105-0451		4	SCREW, M6S ISO 4017 M8X20 A4 80	
220	312105-0368		4	"SCREW, M6S ISO 4017 M6X16 A4 80"	
230	312105-0449		1	SCREW, M6S ISO 4017 M8X16 A4 80	
240	90604-5164		1	GAS SPRING LIFT-O-MAT 163723	
250	3269047-0100		1	WARNING SIGN HOT SURFACE PLASTIC	**1-793, 1-795**
270	90459-4164		2	SAFETY SCREW, 2TLA020053R4200	
280	90459-4165		2	SAFETY SCREW, SM4X25	
290	90153-0023		1	ADHESIVE, SILICON 251470 TUB 90CC(UN1993	
300	344439-0050		1	RETAINER LOCTITE 603, 50ML	
F70B3150	90459-4142		1	SAFETY SENSOR, ADAM M12, 20-051-00	
F70B3151	90458-2794		1	SAFETY SENSOR, EVA 20-046-00	
F70W3150	90459-4252		1	CABLE M12-C101, 20-056-10	

Pos	Part No	UN	Qty	Description	Page No

WARNING SIGN HOT SURFACE PLASTIC

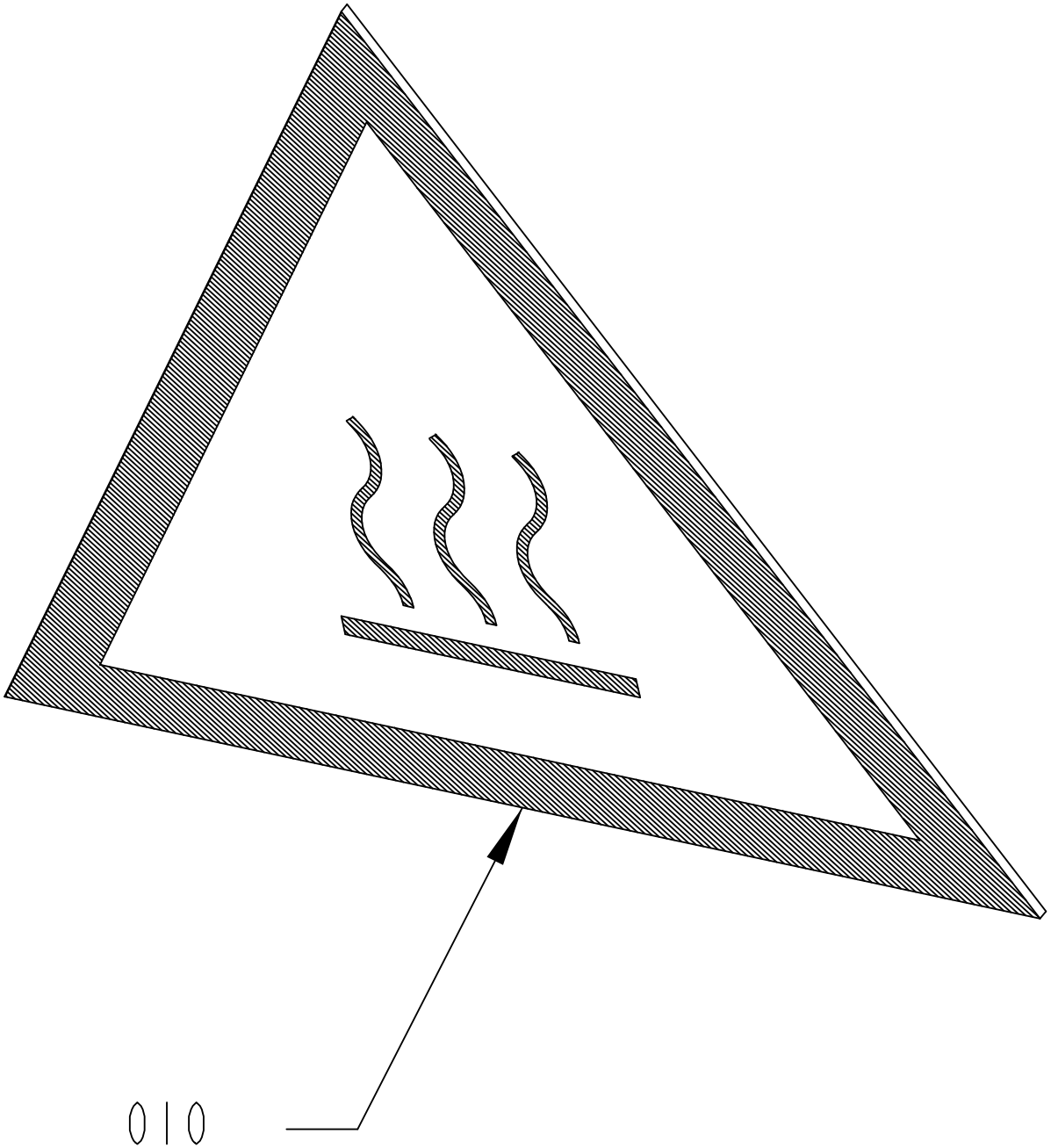

3269047-1
572391

ECM: 579428 - 20130101
Group number: 3269047-0100
Assembly Drawing: 3269047-1_1_AA

This list covers pages from 1-792 to 1-795

Pos	Part No	UN	Qty	Description	Page No
ANSI (See drawing on page: 1-794)					
010	90459-7458		1	WARNING SIGN ANSI (H), HOT SURFACE	
ISO (See drawing on page: 1-792)					
010	359705-0007		1	WARNING SIGN ISO, HOT SURFACE	

Pos	Part No	UN	Qty	Description	Page No

WARNING SIGN HOT SURFACE PLASTIC

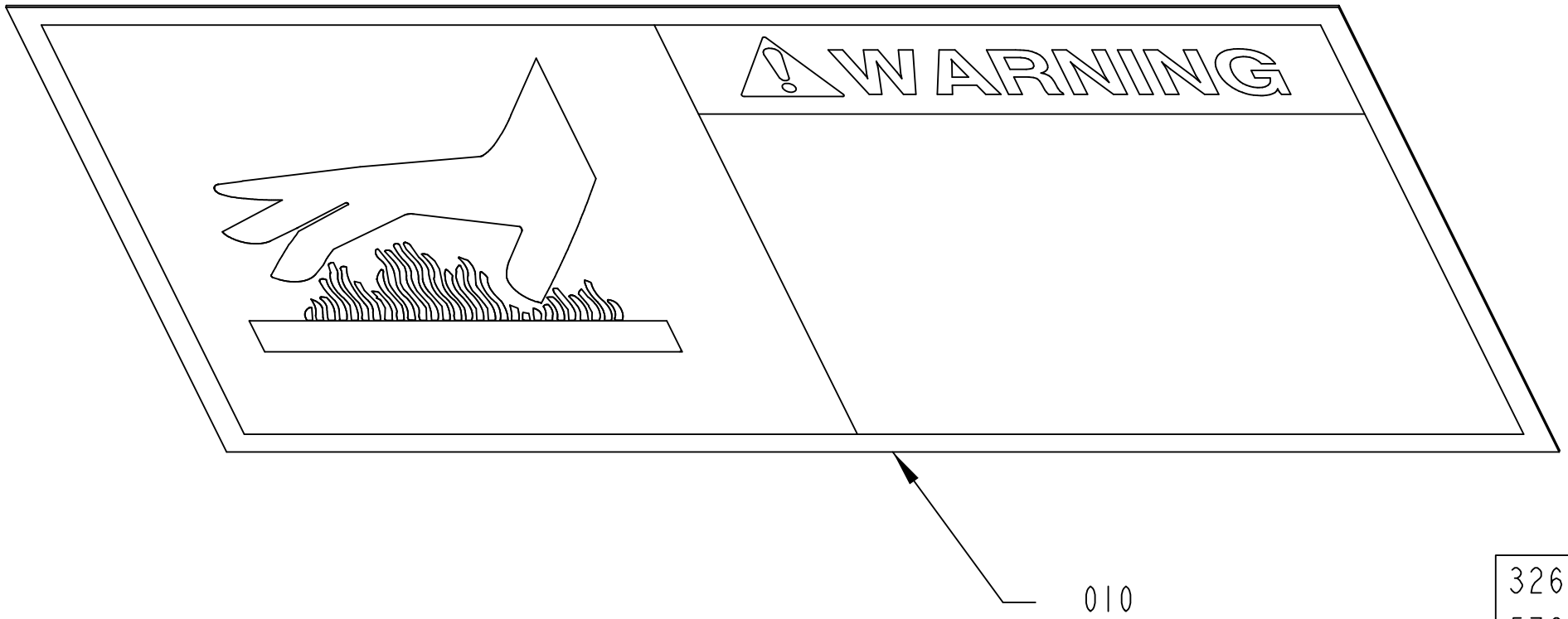

3269047-2
572391

ECM: 579428 - 20130101
Group number: 3269047-0100
Assembly Drawing: 3269047-2_1_AA

This list covers pages from 1-792 to 1-795

Pos	Part No	UN	Qty	Description	Page No
ANSI (See drawing on page: 1-794)					
010	90459-7458		1	WARNING SIGN ANSI (H), HOT SURFACE	
ISO (See drawing on page: 1-792)					
010	359705-0007		1	WARNING SIGN ISO, HOT SURFACE	

Pos	Part No	UN	Qty	Description	Page No

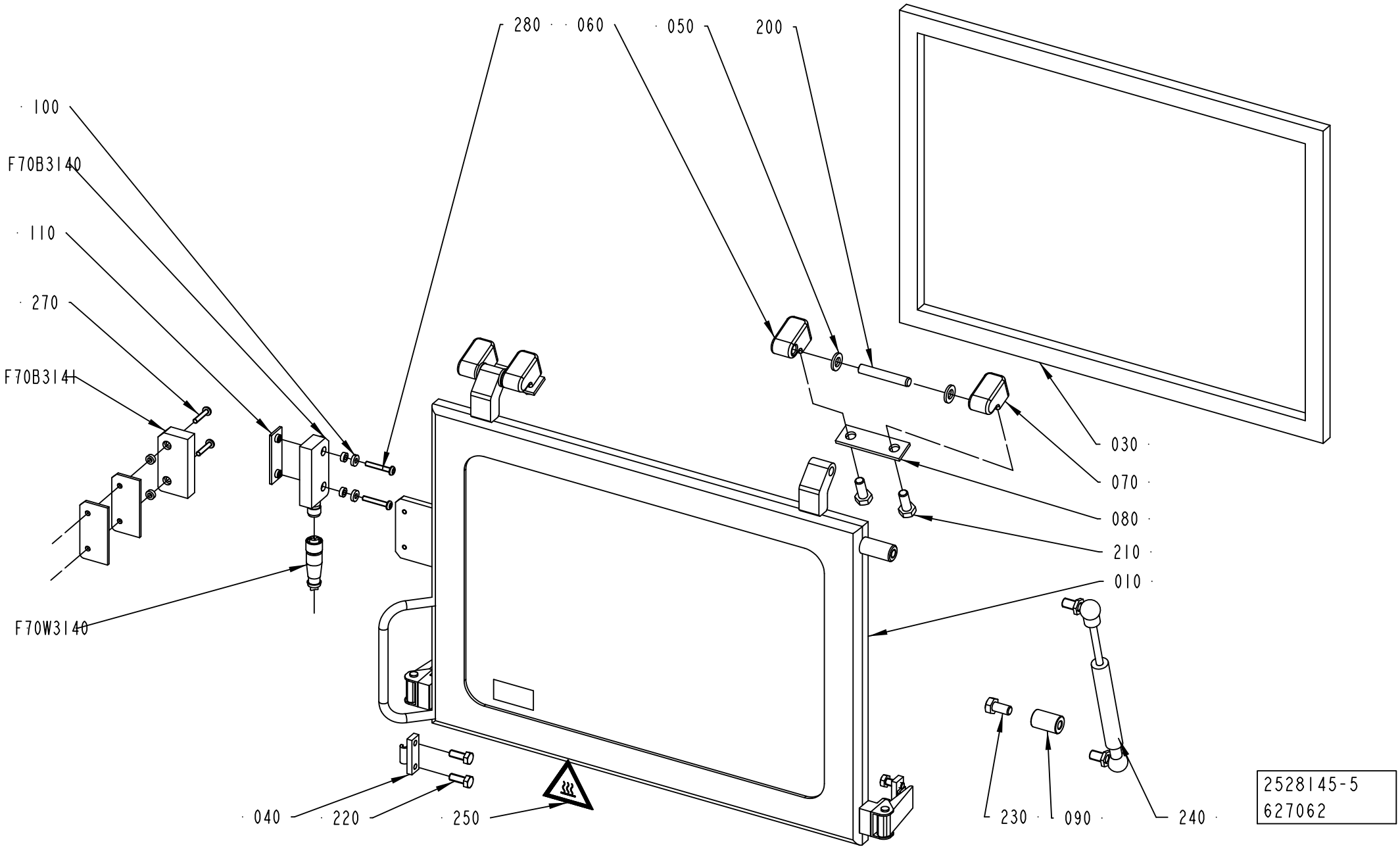
280
060
050
200
100
F70B3140
110
270
F70B3141
030
070
080
210
010
F70W3140
040
220
250
230
090
240
2528145-5
627062

ECM: 668923 - 20140701
Group number: 2528145-0300
Assembly Drawing: 2528145-5_1_AB

Pos	Part No	UN	Qty	Description	Page No
-					
010	3352958-0000		1	DOOR	
030	2833177-0000		1	GASKET	
040	271860-0000		2	CLAMP BLOCK	
050	441739-0000		4	WASHER	
060	1549992-0000		2	HINGE FLANGE	
070	1549993-0000		2	HINGE FLANGE	
080	441737-0000		2	WASHER	
090	1549994-0000		1	SPACER	
100	3203741-0000		2	SPACER	
110	3252303-0000		1	PLATE	
200	311103-0413		2	PARALLEL PIN ISO 2338 8M6X50 A1	
210	312105-0451		4	SCREW, M6S ISO 4017 M8X20 A4 80	
220	312105-0368		2	"SCREW, M6S ISO 4017 M6X16 A4 80"	
230	312105-0449		1	SCREW, M6S ISO 4017 M8X16 A4 80	
240	90604-5164		1	GAS SPRING LIFT-O-MAT 163723	
250	3269047-0100		1	WARNING SIGN HOT SURFACE PLASTIC	**1-793, 1-795**
270	90459-4164		2	SAFETY SCREW, 2TLA020053R4200	
280	90459-4165		2	SAFETY SCREW, SM4X25	
290	90153-0023		1	ADHESIVE, SILICON 251470 TUB 90CC(UN1993	
300	344439-0050		1	RETAINER LOCTITE 603, 50ML	
F70B3140	90459-4142		1	SAFETY SENSOR, ADAM M12, 20-051-00	
F70B3141	90458-2794		1	SAFETY SENSOR, EVA 20-046-00	
F70W3140	90459-4252		1	CABLE M12-C101, 20-056-10	

Pos	Part No	UN	Qty	Description	Page No

Machine Type | Group Description | Used-In | Group Number | Page No

BENDING ROLLER

Drawing file: 2685390-3_1_AA.hpgl

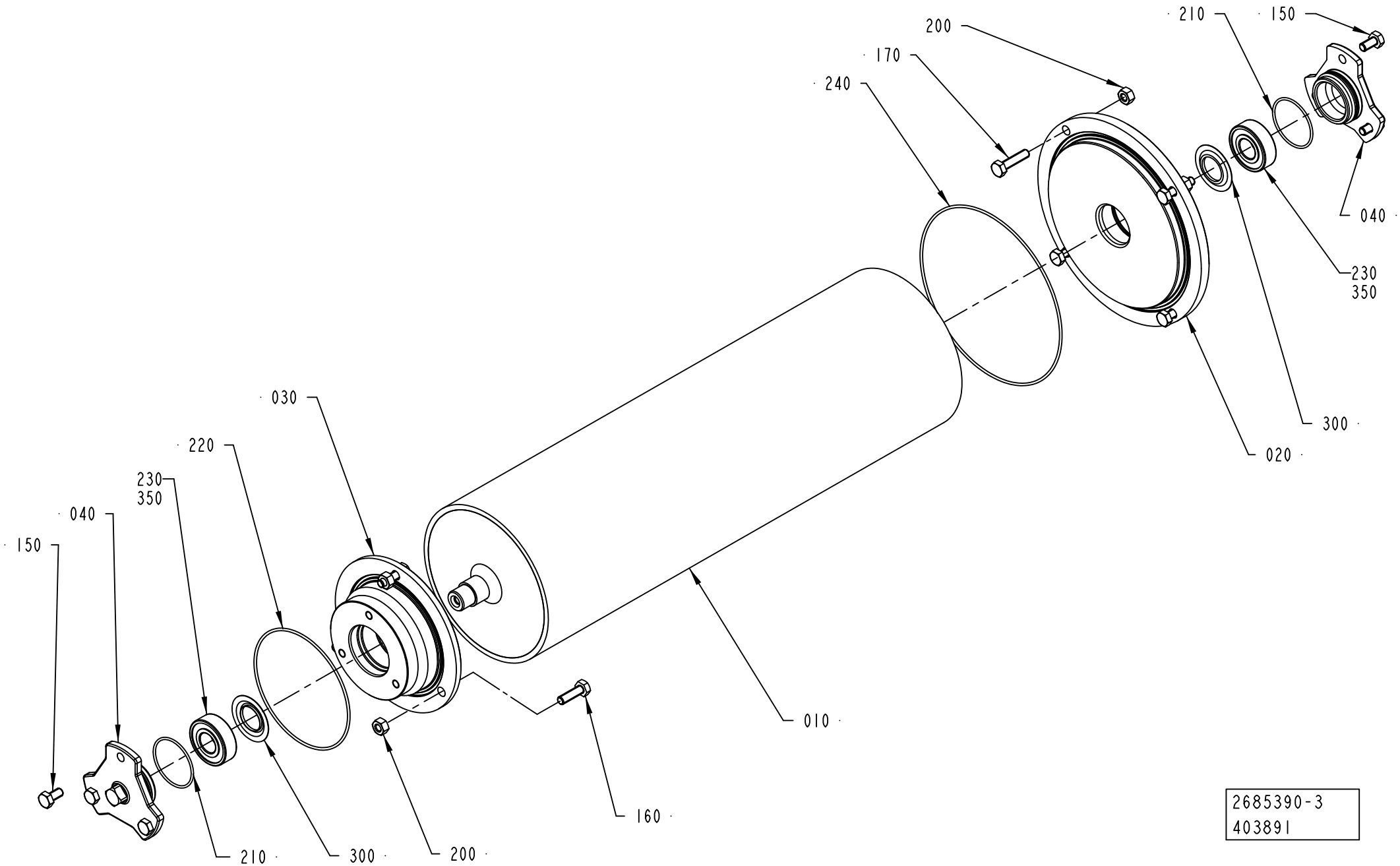

ECM: 592091 - 20131001
Group number: 2685390-0300
Assembly Drawing: 2685390-3_1_AA

Pos	Part No	UN	Qty	Description	Page No
-					
010	3043309-0000		1	BENDING ROLLER	
020	3042501-0000		1	FLANGE	
030	3042503-0000		1	FLANGE	
040	2951058-0000		2	LID	
150	312105-0366		6	SCREW, M6S ISO 4017 M6X12 A4 80	
160	312105-0370		3	SCREW, M6S ISO 4017 M6X20 A4 80	
170	312105-0372		4	SCREW, M6S ISO 4017 M6X25 A4 80	
200	312605-0316		7	HEXAGON NUT, M6M M6 A280	
210	344210-0123		2	O-RING 35,1X1,6 MM FDA, 3-A	
220	344206-1088		1	O-RING 88,62X1,78 MM FDA, 3-A	
230	90458-1704		2	BALL BEARING 15/35X11	
240	344207-1133		1	O-RING 133,07X1,78 MM FDA, 3-A	
300	90214-0303		2	SEALING RING, 18,6X35X2 MM	
350	90296-0091		1	LUBRICATION GREASE, FLUOLUB 210	

Pos	Part No	UN	Qty	Description	Page No

SPLICE DETECTOR

Drawing file: 3100550-1_1_AA.hpgl

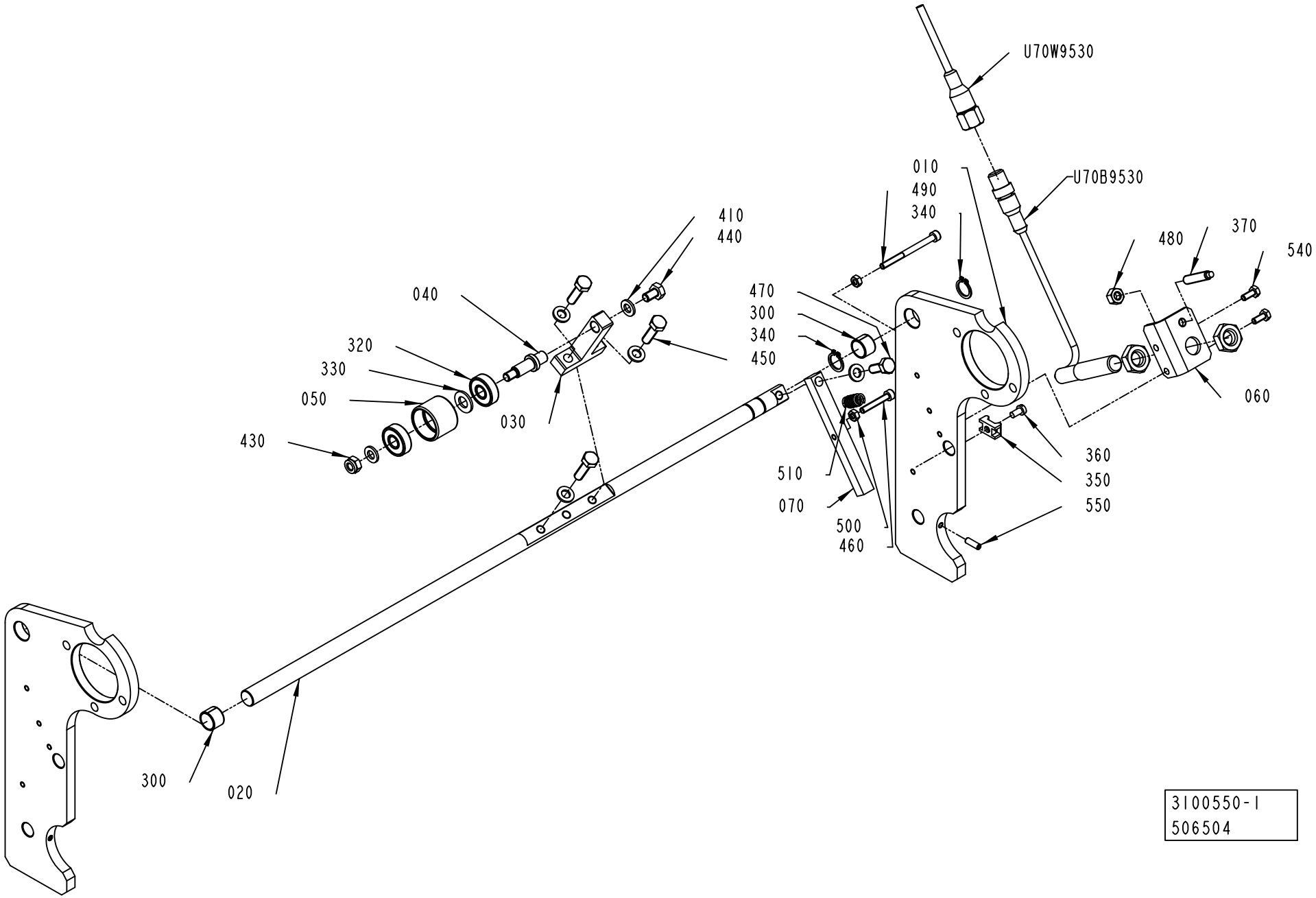

ECM: 565464 - 20130401
Group number: 3100550-0100
Assembly Drawing: 3100550-1_1_AA

Pos	Part No	UN	Qty	Description	Page No
-					
010	3100548-0000		2	PLATE	
020	3100549-0000		1	SHAFT	
030	3100551-0000		1	SUPPORT	
040	3100552-0000		1	SHAFT	
050	3105734-0000		1	ROLLER	
060	3105735-0000		1	PLATE	
070	3105736-0000		1	LEVER	
300	321141-0178		2	BEARING BUSHING, 12X14X10 MM	
320	90459-6335		2	BALL BEARING 8/22X7	
330	315105-0165		1	FWAS080G0-0S, WASHER PLAIN	
340	315751-0109		2	RETAINING RING FOR SHAFT DIN 471 12 SS	
350	352113-0205		1	ANCHOR PLATES FOR STRIPS, TM2S8-C100	
360	312125-0287		1	SLOTTED HEAD SCREW, ISO1207 M4X8 A4	
370	90459-6378		1	SET SCREW, DOGPOINT ISO4028 M6X30 A2 80	
410	315105-0153		6	WASHER PLAIN, 6,4X12X1,5 A4 BRB	
430	312812-0316		1	HEXAGON NUT, NY-LOCK M6 A4 80	
440	312105-0364		1	"SCREW, M6S ISO 4017 M6X10 A4 80"	
450	312105-0370		3	SCREW, M6S ISO 4017 M6X20 A4 80	
460	312115-0297		1	SCREW ISO4762 M4X25 A4 80	
470	312105-0368		1	"SCREW, M6S ISO 4017 M6X16 A4 80"	
480	312605-0316		1	HEXAGON NUT, M6M M6 A280	
490	312115-0305		1	SCREW ISO4762 M4X50 A4 80	
500	312605-0312		2	HEXAGON NUT, M6M M4 A280	
510	90459-5581		1	TENSION SPRING 1,2X23X8,5	
540	312105-0289		2	SCREW, M6S ISO 4017 M4X10 A4 70	
550	312318-0291		1	SET SCREW, CUP END ISO4029 M4X12 A4	
U70B9530	90600-2233		1	INDUCTIVE SENSOR	
U70W9530	344253-0100		1	SENSOR CABLE, EVT002	

Pos	Part No	UN	Qty	Description	Page No

This page is intentionally left blank.

ECM: 648463 - 20140401
Group number: 3272912-0200
Assembly Drawing:

Pos	Part No	UN	Qty	Description	Page No
PLH START FM NOPLH					
030	3272915-0200		1	BOX10 - VCK DIMC PLH	**1-805**
Common Parts					
010	3272913-0200		1	BOX8 - VCK DIMC INFEED	**1-837**
020	3272914-0100		1	BOX9 - VCK DIMC SS	**1-985**
040	3274424-0200		1	BOX11 - VCK DIMC TOOL BOXES	**1-1017**

Pos	Part No	UN	Qty	Description	Page No

BOX10 - VCK DIMC PLH

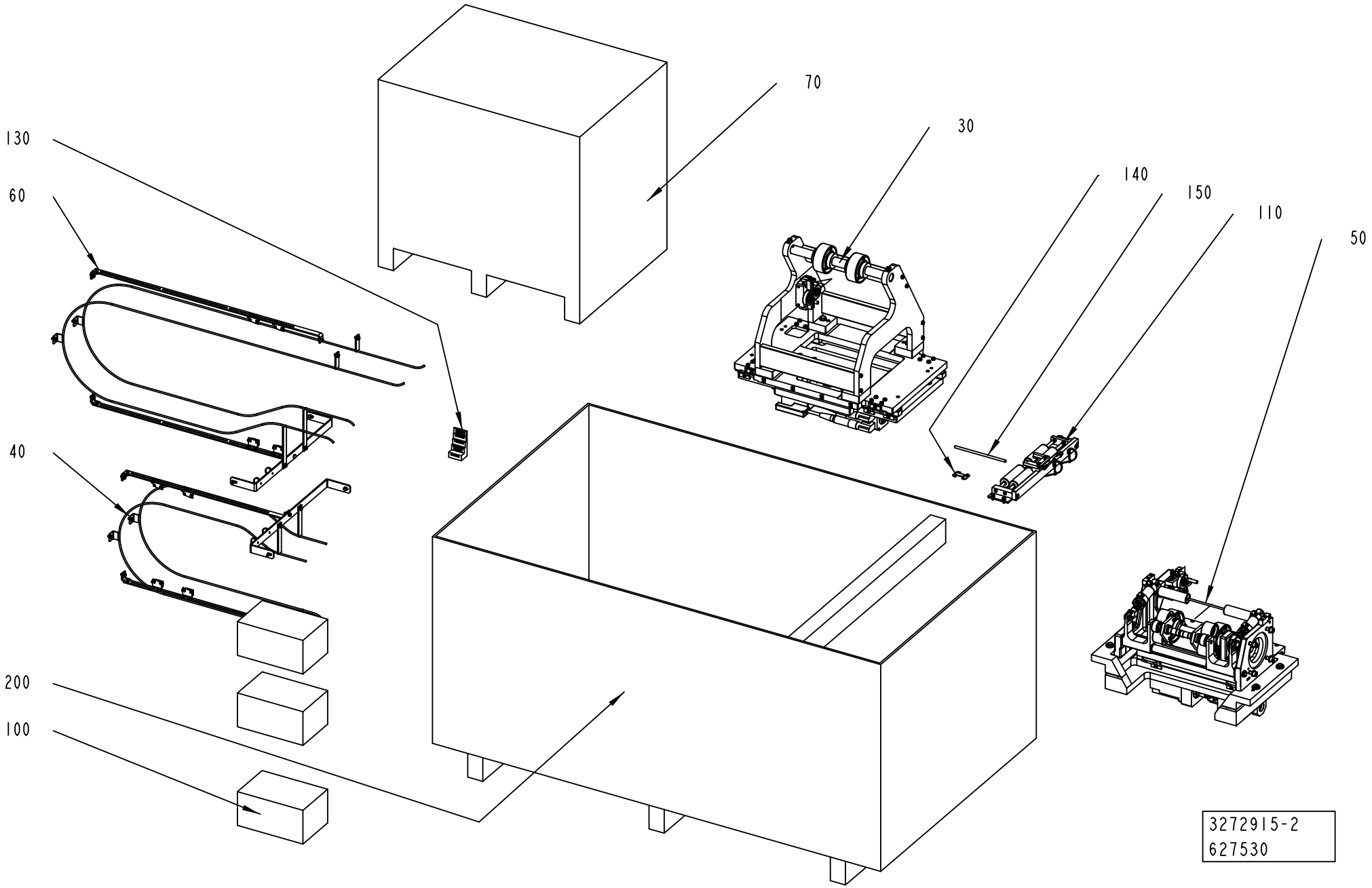

ECM: 675527 - 20140701
Group number: 3272915-0200
Assembly Drawing: 3272915-2_1_AA

Pos	Part No	UN	Qty	Description	Page No
-					
030	3314649-0100		1	INFEED SERVO	**1-807**
040	3054869-0100		1	INFEED LOOP	**1-815**
050	3057779-0200		1	OUTFEED SERVO	**1-817**
060	3069177-0100		1	OUTFEED LOOP	**1-829**
070	3360366-0100		1	ELECTRICAL CABINET	**1-831**
100	3199126-0100		3	CONVERSION KIT	**1-833**
110	3151087-0100		1	CAP DETECTOR	**1-835**
130	2814844-0000		1	SETTING TOOL	
140	3198495-0000		1	BLOCK	
150	3228012-0000		1	PIN	
200	3272971-0000		1	BOX	

Pos	Part No	UN	Qty	Description	Page No

INFEED SERVO

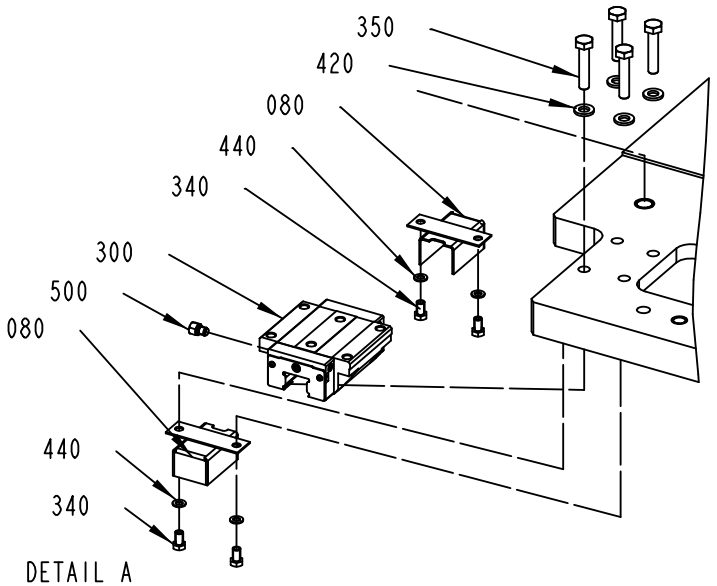

DETAIL A
SCALE 3:10

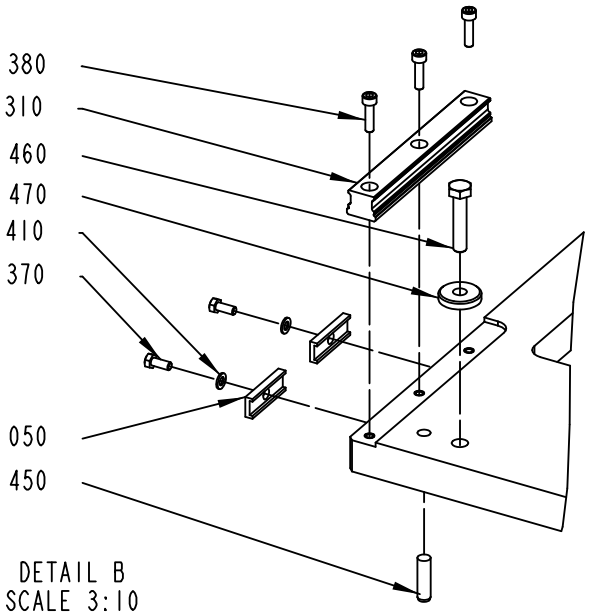

DETAIL B
SCALE 3:10

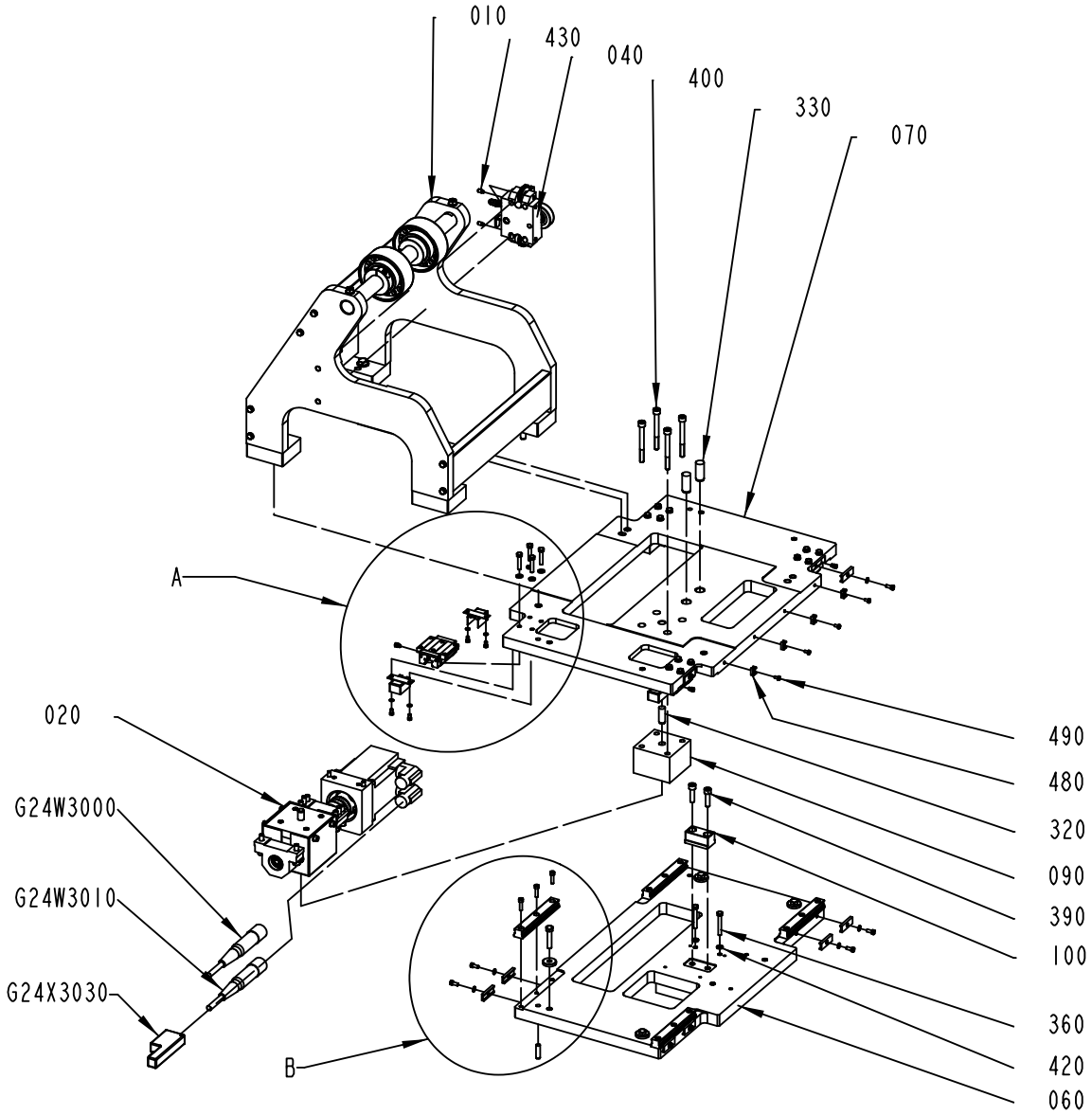

3314649-1
642648

ECM: 665305 - 20140701
Group number: 3314649-0100
Assembly Drawing: 3314649-1_1_AB

Pos	Part No	UN	Qty	Description	Page No
-					
010	3051406-0200		1	BENDING ROLLER	**1-809**
020	3149721-0200		1	GUIDE RAIL	**1-811**
040	2797260-0200		1	PAPER GUIDE	**1-813**
050	3022440-0000		10	BRACKET	
060	3051404-0000		1	PLATE	
070	3051405-0000		1	PLATE	
080	3025007-0000		8	PROTECTION	
090	3054867-0000		1	SPACER	
100	3025011-0000		1	STOP	
300	90605-5782		4	CARRIAGE, F-600852.31.KWVE20-B	
310	90600-9808		4	GUIDE RAIL, TKVD20/140-10-10, KD SURFACE	
320	311102-0514		1	PARALLEL PIN ISO 2338 12M6X35 ST	
330	311102-0619		2	PARALLEL PIN ISO 2338 16M6X40 ST	
340	312105-0287		16	SCREW, M6S ISO 4017 M4X8 A4 70	
350	312105-0374		16	SCREW, M6S ISO 4014 M6X30 A4 80	
360	312105-0379		2	SCREW, M6S ISO 4014 M6X45 A4 80	
370	312105-0327		10	"SCREW, M6S ISO 4017 M5X12 A4 80"	
380	312115-0331		12	SCREW ISO4762 M5X20 A4 80	
390	312115-0455		2	SCREW ISO4762 M8X30 A4 80	
400	312115-0467		4	SCREW ISO4762 M8X80 A4 80	
410	315105-0146		10	WASHER PLAIN, 5,3X10X1 A4 BRB	
420	315105-0153		18	WASHER PLAIN, 6,4X12X1,5 A4 BRB	
430	312311-0366		2	SET SCREW, DOG POINT ISO4028 M6X12 FZB	
440	315105-0136		16	WASHER PLAIN, 4,3X8X0,8 A4 BRB	
450	311103-0405		2	PARALLEL PIN ISO 2338 8M6X30 A1	
460	312109-0459		4	SCREW, M6S ISO 4017 M8X40 A4 80	
470	315125-0165		4	WASHER HIGH, TBRSB 8,4X26X5 A4	
480	352113-0205		4	ANCHOR PLATES FOR STRIPS, TM2S8-C100	
490	312132-0287		4	SLOTTED HEAD, PAN SCREW, MSCS M4X8	
500	90606-2058		4	GREASE NIPPLE M5, SMAD.KWVE20-0021	
G24W3000	351429-1609		1	MOTOR POWER CABLE 2090-CPWM7DF-16AA09	
G24W3010	351428-0009		1	MOTOR FEEDBACK CABLE 2090-CFBM7DF-CEAA09	
G24X3030	90459-2551		1	CONNECTOR, MOTOR FEEDBACK 15 PIN MALE	

Pos	Part No	UN	Qty	Description	Page No

Machine Type	Group Description	Used-In	Group Number	Page No

BENDING ROLLER

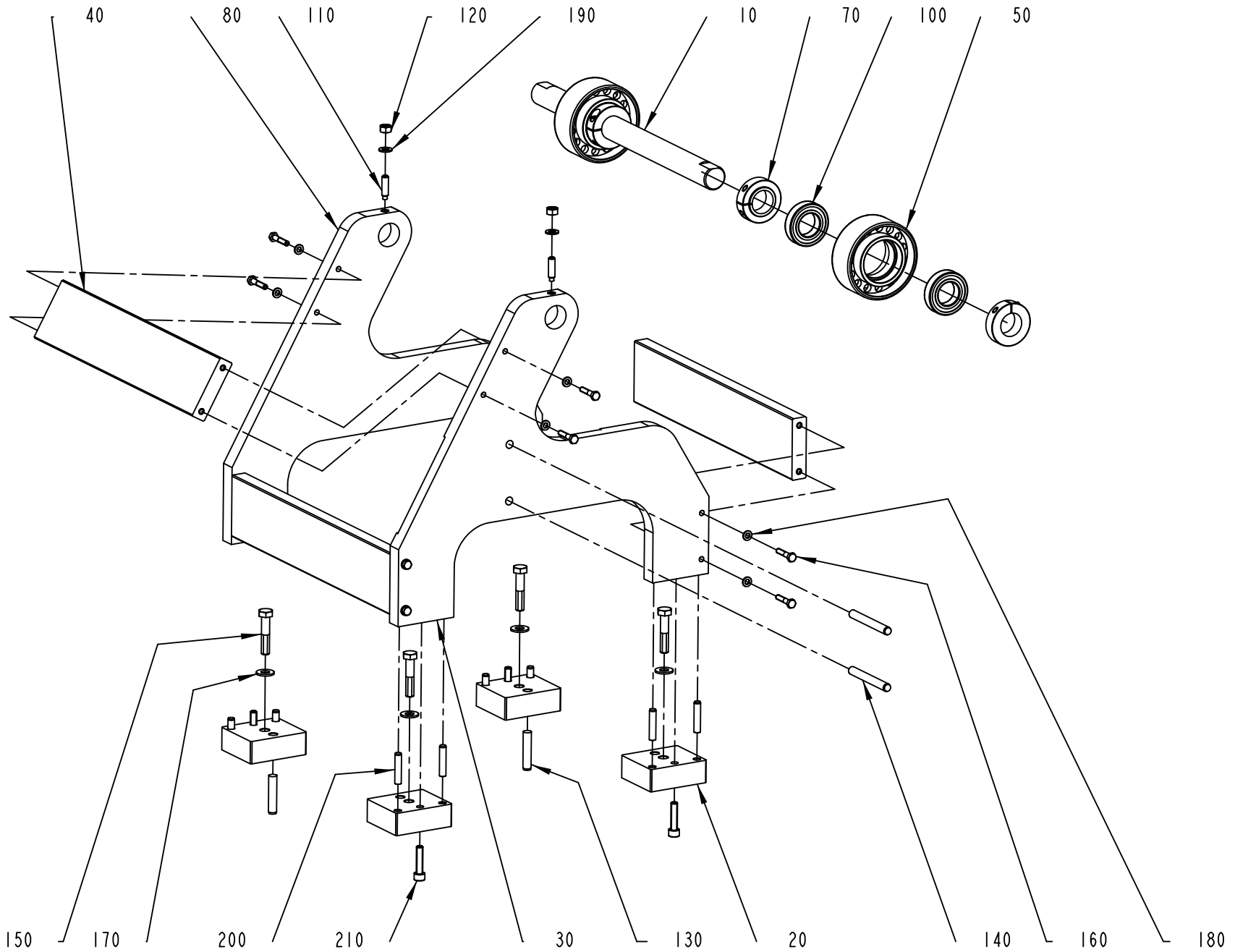

3051406-2
537973

ECM: 567074 - 20120706
Group number: 3051406-0200
Assembly Drawing: 3051406-2_1_AA

Pos	Part No	UN	Qty	Description	Page No
-					
010	3052329-0000		1	SHAFT	
020	3052331-0000		4	BLOCK	
030	3052330-0000		1	PLATE	
040	3052332-0000		3	SPACER	
050	3051407-0000		2	ROLLER	
070	90602-3890		4	SETTING COLLAR, SSCSBN 30-38	
080	3143778-0000		1	PLATE	
100	344224-0206		4	BALL BEARING 30/55X13	
110	312311-0455		2	SET SCREW, DOG POINT ISO4028 M8X30 FZB	
120	312605-0318		2	HEXAGON NUT, M6M M8 A280	
130	311103-0466		2	PARALLEL PIN ISO 2338 10M6X50 A1	
140	311103-0477		2	PARALLEL PIN ISO 2338 10M6X85 A1	
150	312105-0501		4	SCREW, M6S ISO 4014 M10X50 A4 80	
160	312105-0374		12	SCREW, M6S ISO 4014 M6X30 A4 80	
170	315105-0173		4	WASHER PLAIN, 10,5X22X2 A4 BRB	
180	315105-0153		12	WASHER PLAIN, 6,4X12X1,5 A4 BRB	
190	315105-0165		2	FWAS080G0-0S, WASHER PLAIN	
200	311103-0409		8	PARALLEL PIN ISO 2338 8M6X40 A1	
210	312115-0457		4	SCREW ISO4762 M8X35 A4 80	

Pos	Part No	UN	Qty	Description	Page No

GUIDE RAIL

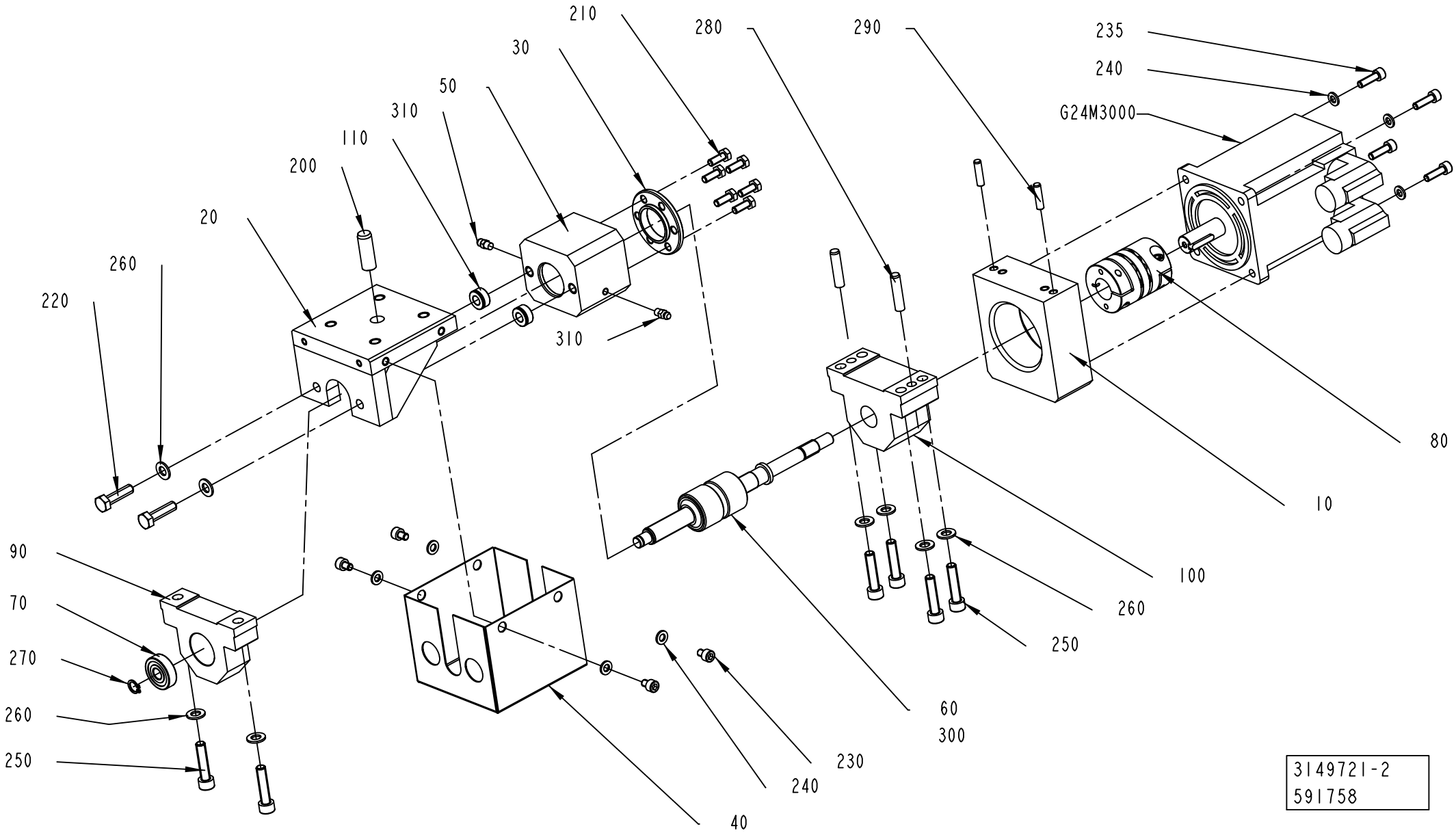

3149721-2
591758

ECM: 665334 - 20140701
Group number: 3149721-0200
Assembly Drawing: 3149721-2_1_AC

Pos	Part No	UN	Qty	Description	Page No
-					
010	3022441-0000		1	BRACKET	
020	3022445-0000		1	CARRIER	
030	3022444-0000		1	COVER	
040	3027823-0000		1	COVER	
050	3022443-0000		1	HOUSING	
060	90600-9266		1	ROLLER SCREW, 12X36,5X137 MM	
070	344226-0100		1	BALL BEARING 10/30X9	
080	90601-0426		1	TORQUE RIGID COUPLING, 10X16 MM	
090	90603-4536		1	BALL BEARING	
100	3269249-0000		1	BEARING BRACKET	
110	90601-6050		2	CLAMPING ELEMENT, 2305.558	
200	311102-0514		1	PARALLEL PIN ISO 2338 12M6X35 ST	
210	312105-0368		6	"SCREW, M6S ISO 4017 M6X16 A4 80"	
220	312105-0455		2	SCREW, M6S ISO 4017 M8X30 A4 80	
230	312115-0362		4	SCREW ISO4762 M6X8 A4 80	
235	312115-0370		4	SCREW ISO4762 M6X20 A4 80	
240	315105-0153		8	WASHER PLAIN, 6,4X12X1,5 A4 BRB	
250	312115-0457		6	SCREW ISO4762 M8X35 A4 80	
260	315105-0165		8	FWAS080G0-0S, WASHER PLAIN	
270	90141-0016		1	RETAINING RING FOR SHAFT DIN 471 10 SS	
280	311103-0407		2	PARALLEL PIN ISO 2338 8M6X35 A1	
290	311103-1355		2	PARALLEL PIN ISO 2338 6M6X24 A1	
300	344407-0000		1	KLüBERSYNTH UH1 14-151, ONLY IN BOM	
	344407-0591		*1*	*KLüBERSYNTH UH1 14-151, 400G CARTRIDGE*	
	344407-0285		*1*	*KLüBERSYNTH UH1 14-151, 45G TUBE*	
	344407-0177		*1*	*KLüBERSYNTH UH1 14-151, 25KG BUCKET*	
	344407-0037		*1*	*KLüBERSYNTH UH1 14-151, 1KG CAN*	
310	344502-0021		2	GREASE NIPPLE STRAIGHT M6	
G24M3000	90601-5090		1	SERVO MOTOR, MPL-B310P-MK72AA SERIES A	

Pos	Part No	UN	Qty	Description	Page No

PAPER GUIDE

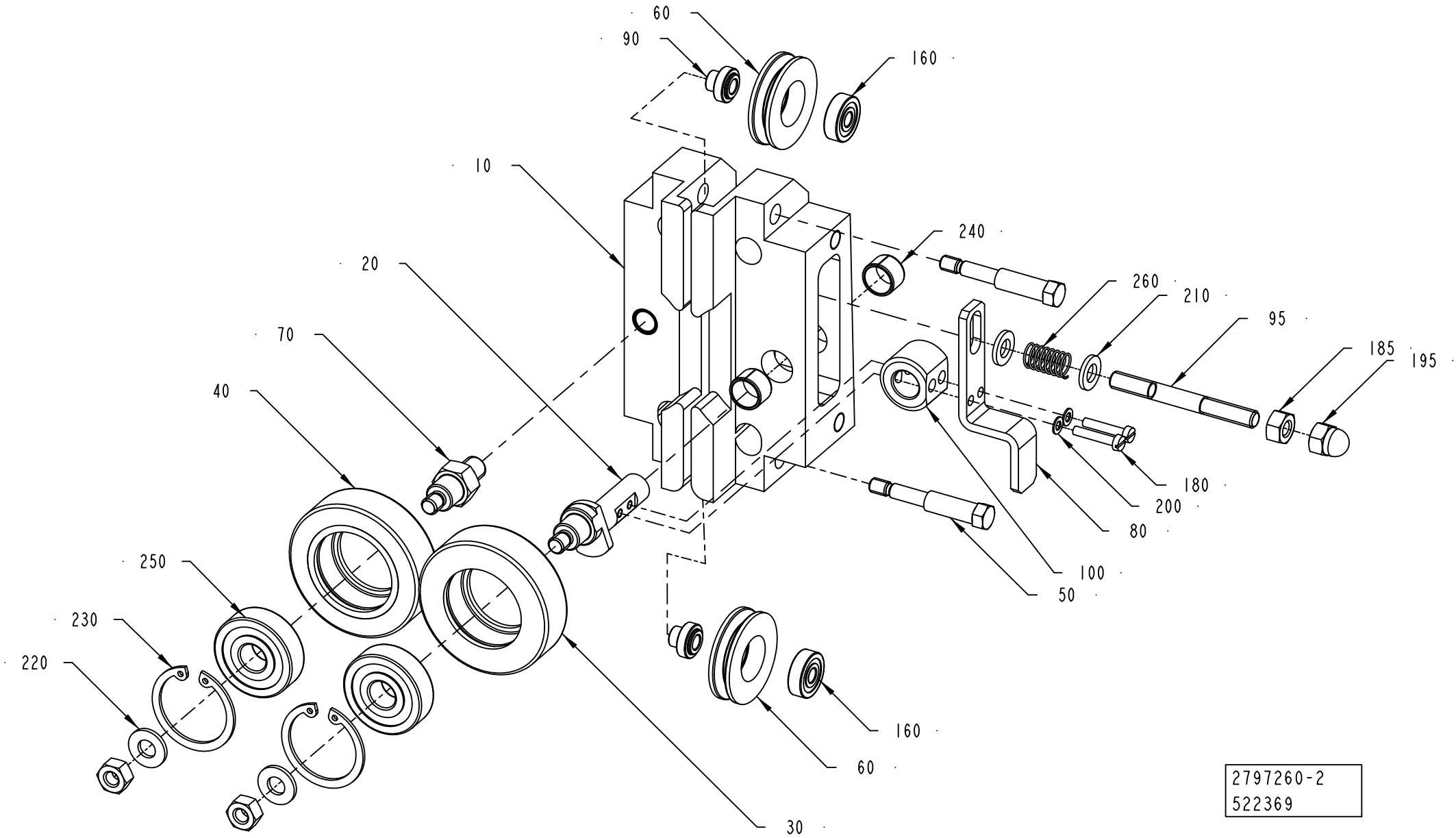
60
90
160
10
240
20
260
210
95
185
195
70
40
180
200
80
100
50
250
230
220
160
60
30
2797260-2
522369

ECM: 567073 - 20120706
Group number: 2797260-0200
Assembly Drawing: 2797260-2_1_AA

Pos	Part No	UN	Qty	Description	Page No
-					
010	2800314-0000		1	SUPPORT	
020	2800315-0000		1	SHAFT	
030	1036622-0000		1	GUIDE ROLLER	
040	1036623-0000		1	GUIDE ROLLER	
050	2533671-0000		2	SCREW	
060	2533673-0000		2	ROLLER	
070	1558254-0000		1	SHAFT	
080	2800316-0000		1	LEVER	
090	2533672-0000		2	SHAFT	
095	2805509-0000		1	SHAFT	
100	2805510-0000		1	SLEEVE	
160	90604-3846		2	BALL BEARING, 5/16X5	
180	312125-0228		2	SLOTTED HEAD SCREW, ISO1207 M3X16 A4	
185	312605-0316		3	HEXAGON NUT, M6M M6 A280	
195	312705-0316		1	HEX. DOMED CAP MHM-6 M6 A280	
200	315105-0124		2	WASHER PLAIN, 3,2X6X0,5 A4 BRB	
210	315105-0153		2	WASHER PLAIN, 6,4X12X1,5 A4 BRB	
220	315105-0156		2	WASHER PLAIN, 6,7X14X1,5 A4 BRB	
230	315753-0122		2	RETAINING RING FOR BORE DIN 472 30 SS	
240	321141-0138		2	BEARING BUSHING, 10X12X8 MM	
250	90604-3845		2	BALL BEARING 10/30X9 SOLID OIL	
260	90600-1092		1	COMP. SPRING D21550, 0,63X8,63X16	

Pos	Part No	UN	Qty	Description	Page No

INFEED LOOP

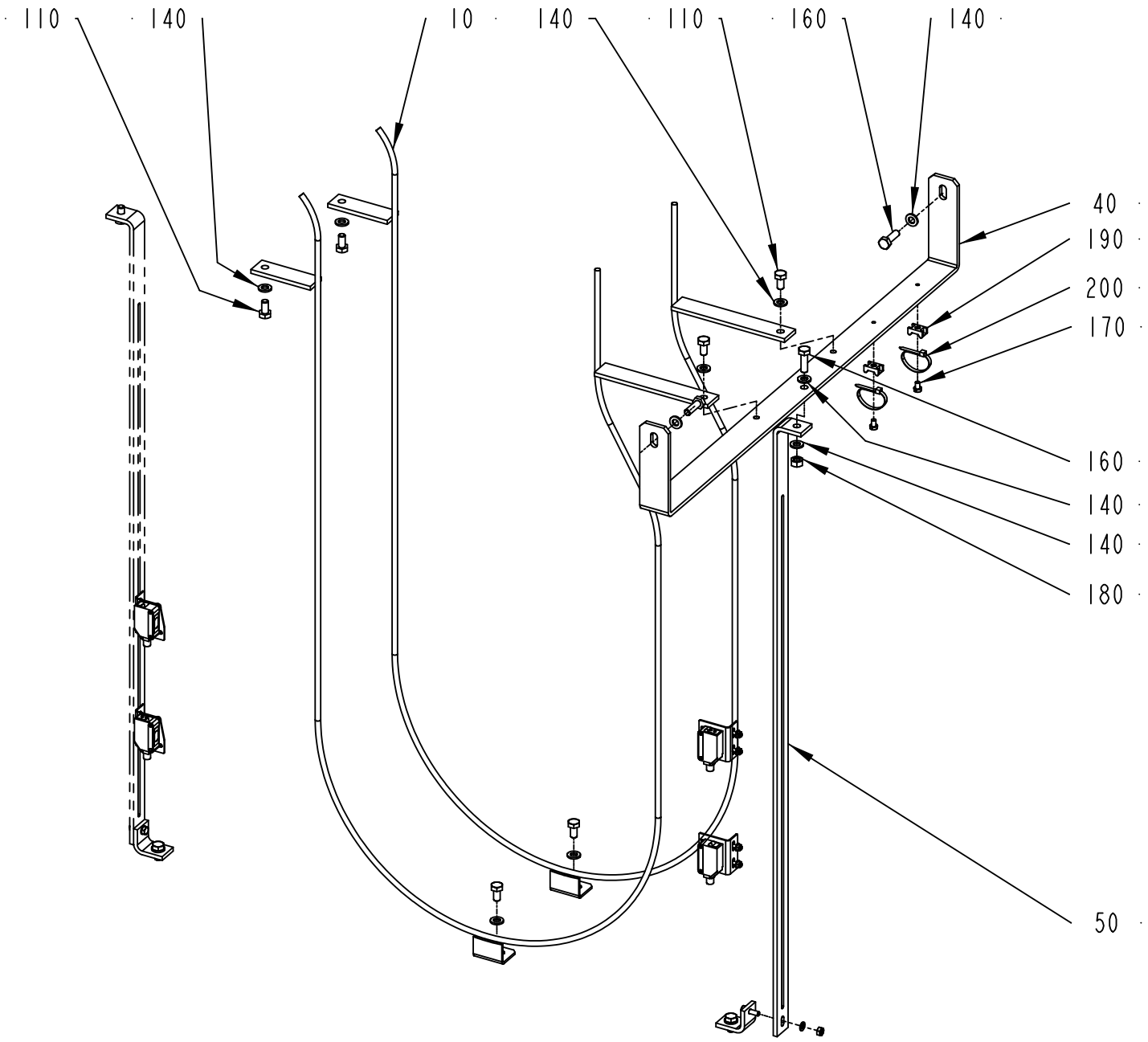

3054869-1
529350

ECM: 532789 - 20111129
Group number: 3054869-0100
Assembly Drawing: 3054869-1_1_AB

Pos	Part No	UN	Qty	Description	Page No
-					
010	3054871-0000		2	GUIDE	
040	3054870-0000		1	BRACKET	
050	3054872-0000		1	BRACKET	
110	312105-0366		6	SCREW, M6S ISO 4017 M6X12 A4 80	
140	315105-0153		10	WASHER PLAIN, 6,4X12X1,5 A4 BRB	
160	312105-0370		3	SCREW, M6S ISO 4017 M6X20 A4 80	
170	312125-0285		2	SLOTTED HEAD SCREW, ISO1207 M4X6 A4	
180	312605-0316		1	HEXAGON NUT, M6M M6 A280	
190	352113-0205		2	ANCHOR PLATES FOR STRIPS, TM2S8-C100	
200	352113-0101		2	CABLE TIE,BLACK 92X	

Pos	Part No	UN	Qty	Description	Page No

OUTFEED SERVO

Drawing file: 3057779-2_1_AA.eps

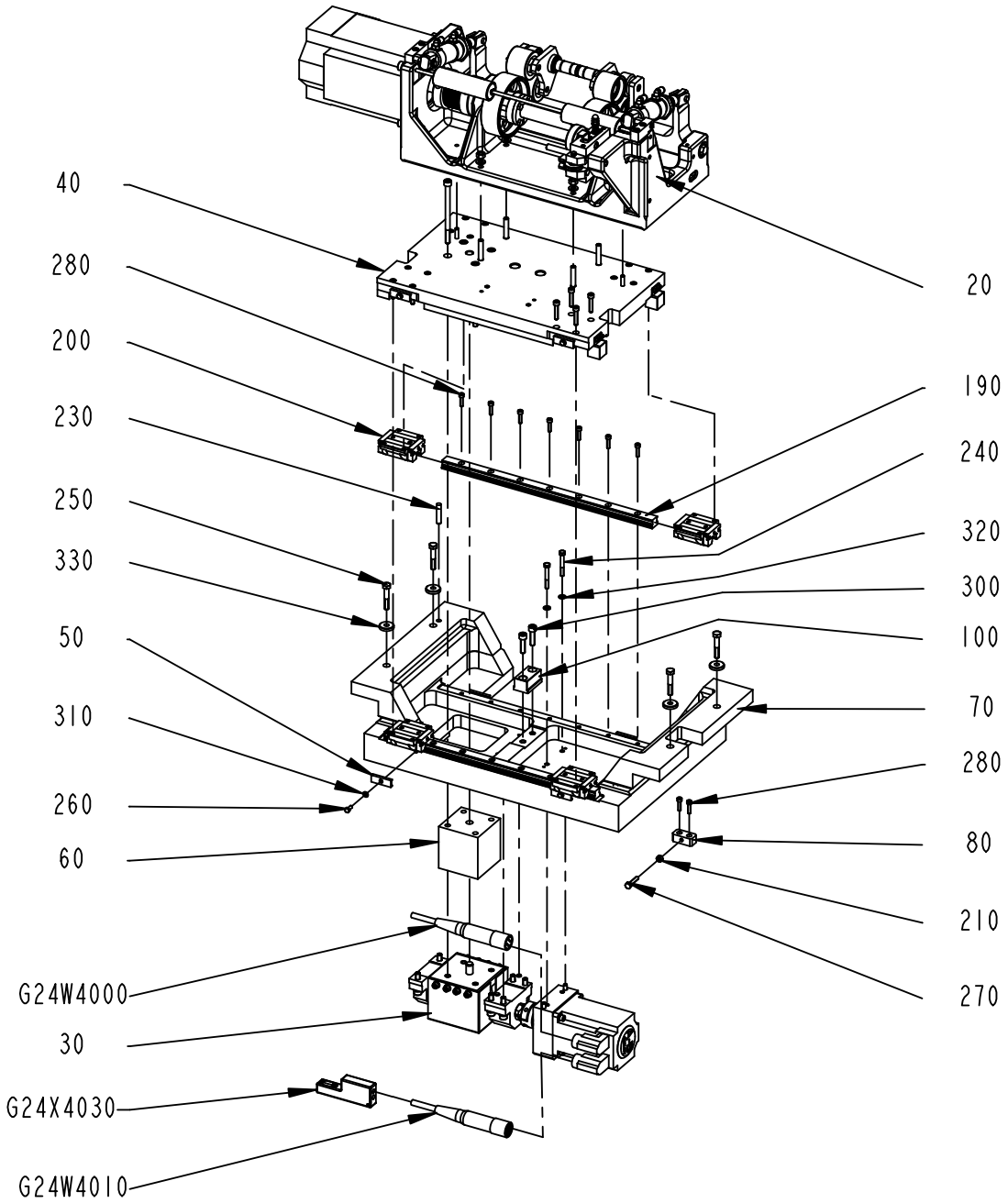

3057779-2
553134

ECM: 555735 - 20120510
Group number: 3057779-0200
Assembly Drawing: 3057779-2_1_AA

Pos	Part No	UN	Qty	Description	Page No
-					
020	3057777-0200		1	OUTFEED SERVO	**1-819**
030	3149722-0200		1	GUIDE RAIL	**1-825**
040	3057778-0100		1	PLATE	**1-827**
050	3022440-0000		4	BRACKET	
060	3057772-0000		1	SPACER	
070	3057773-0000		1	PLATE	
080	2728867-0000		1	PLATE	
100	3025011-0000		1	STOP	
190	90602-3891		2	GUIDE RAIL, TKVD20/430-35-35, KD SURFACE	
200	90600-9806		4	CARRIAGE, KWVE 20 B G3 V1	
210	312605-0316		1	HEXAGON NUT, M6M M6 A280	
230	311103-0409		1	PARALLEL PIN ISO 2338 8M6X40 A1	
240	312105-0379		2	SCREW, M6S ISO 4014 M6X45 A4 80	
250	312105-0460		4	SCREW, M6S ISO 4014 M8X45 A4 80	
260	312105-0327		4	"SCREW, M6S ISO 4017 M5X12 A4 80"	
270	312109-0374		1	SCREW, M6S ISO 4017 M6X30 A4 80	
280	312115-0331		16	SCREW ISO4762 M5X20 A4 80	
300	312115-0455		2	SCREW ISO4762 M8X30 A4 80	
310	315105-0146		4	WASHER PLAIN, 5,3X10X1 A4 BRB	
320	315105-0153		2	WASHER PLAIN, 6,4X12X1,5 A4 BRB	
330	315125-0165		4	WASHER HIGH, TBRSB 8,4X26X5 A4	
G24W4000	351429-1609		1	MOTOR POWER CABLE 2090-CPWM7DF-16AA09	
G24W4010	351428-0009		1	MOTOR FEEDBACK CABLE 2090-CFBM7DF-CEAA09	
G24X4030	90459-2551		1	CONNECTOR, MOTOR FEEDBACK 15 PIN MALE	

Pos	Part No	UN	Qty	Description	Page No

OUTFEED SERVO

Drawing file: 3057777-2_1_AA.eps

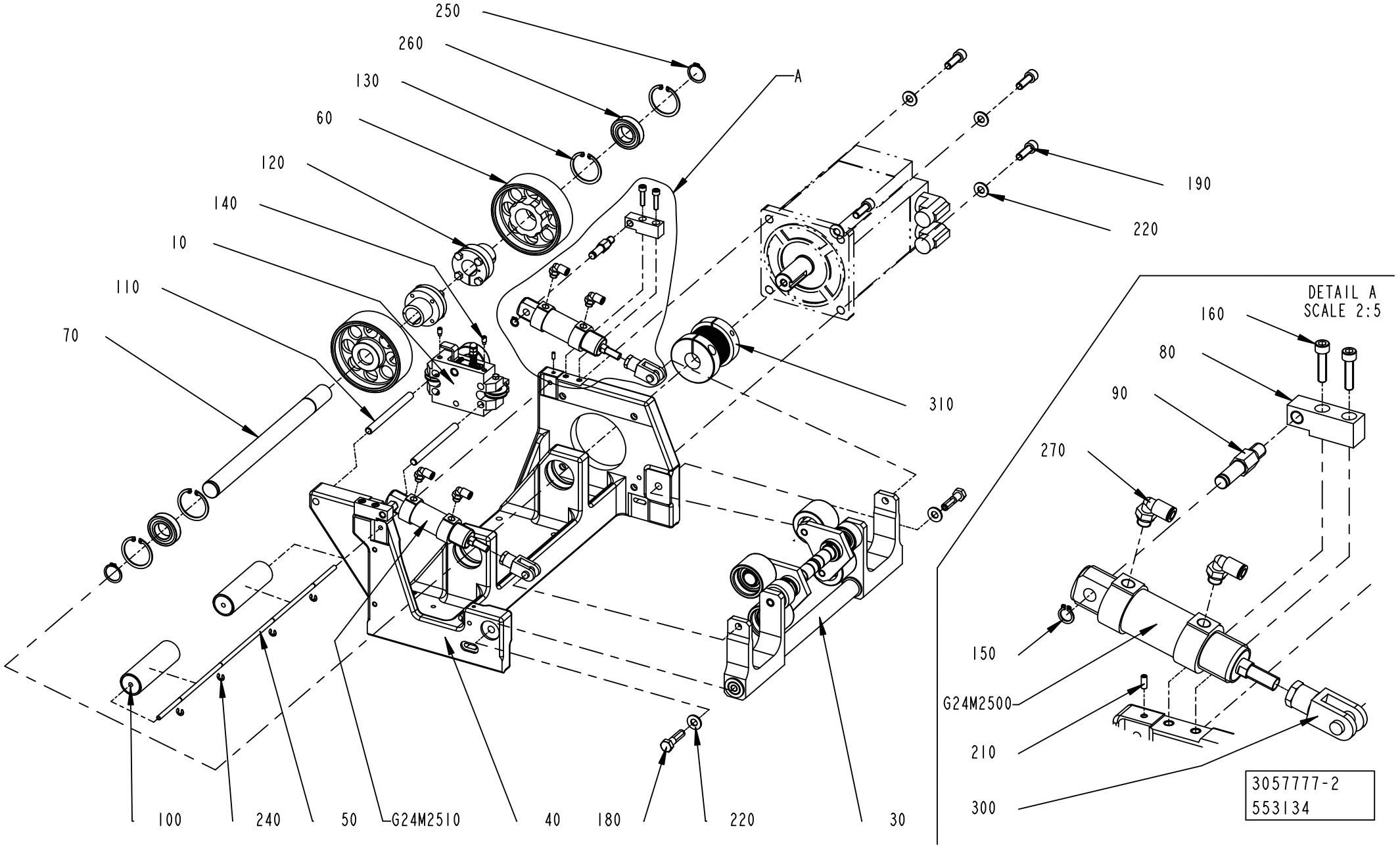

ECM: 567437 - 20120706
Group number: 3057777-0200
Assembly Drawing: 3057777-2_1_AA

Pos	Part No	UN	Qty	Description	Page No
-					
010	2797260-0200		1	PAPER GUIDE	**1-813**
030	3057776-0200		1	COUNTER ROLLER BRACKET	**1-821**
040	3057774-0000		1	BRACKET	
050	2704718-0000		1	SHAFT	
060	2566071-0000		2	ROLLER	
070	2710771-0000		1	SHAFT	
080	3052671-0000		2	SUPPORT	
090	2814856-0000		2	SHAFT	
100	2710816-0000		2	ROLLER	
110	2783538-0000		2	ROD	
120	90208-0080		2	CLAMPING ELEMENT, 25X34 L=25	
130	315753-0130		4	RETAINING RING FOR BORE DIN 472 47 SS	
140	312311-0366		2	SET SCREW, DOG POINT ISO4028 M6X12 FZB	
150	90141-0016		2	RETAINING RING FOR SHAFT DIN 471 10 SS	
160	312115-0372		4	SCREW ISO4762 M6X25 A4 80	
180	312105-0499		2	SCREW, M6S ISO 4014 M10X40 A4 80	
190	312105-0495		4	SCREW, M6S ISO 4017 M10X30 A4 80	
210	312318-0289		2	SET SCREW, CUP END ISO4029 M4X10 A4	
220	315105-0173		6	WASHER PLAIN, 10,5X22X2 A4 BRB	
240	315755-0107		4	RETAINING RING SHAFT DIN 6799 5 SS	
250	315751-0119		2	RETAINING RING FOR SHAFT DIN 471 25 SS	
260	344224-0205		2	BALL BEARING 25/47X12	
270	350002-0006		4	PUSH-IN L-FITTING QSL-F-G1/8-6	
300	90459-1696		2	ROD END, CLEVIS WITH AXLE M10X1,25	
310	90600-3397		1	TORQUE RIGID COUPLING, 25X28 MM	
G24M2500	90604-0669		1	DOUBLE ACTING, MINI-ISO, CYL. 32-12	
G24M2510	90604-0669		1	DOUBLE ACTING, MINI-ISO, CYL. 32-12	

Pos	Part No	UN	Qty	Description	Page No

Machine Type | Group Description | Used-In | Group Number | Page No

COUNTER ROLLER BRACKET

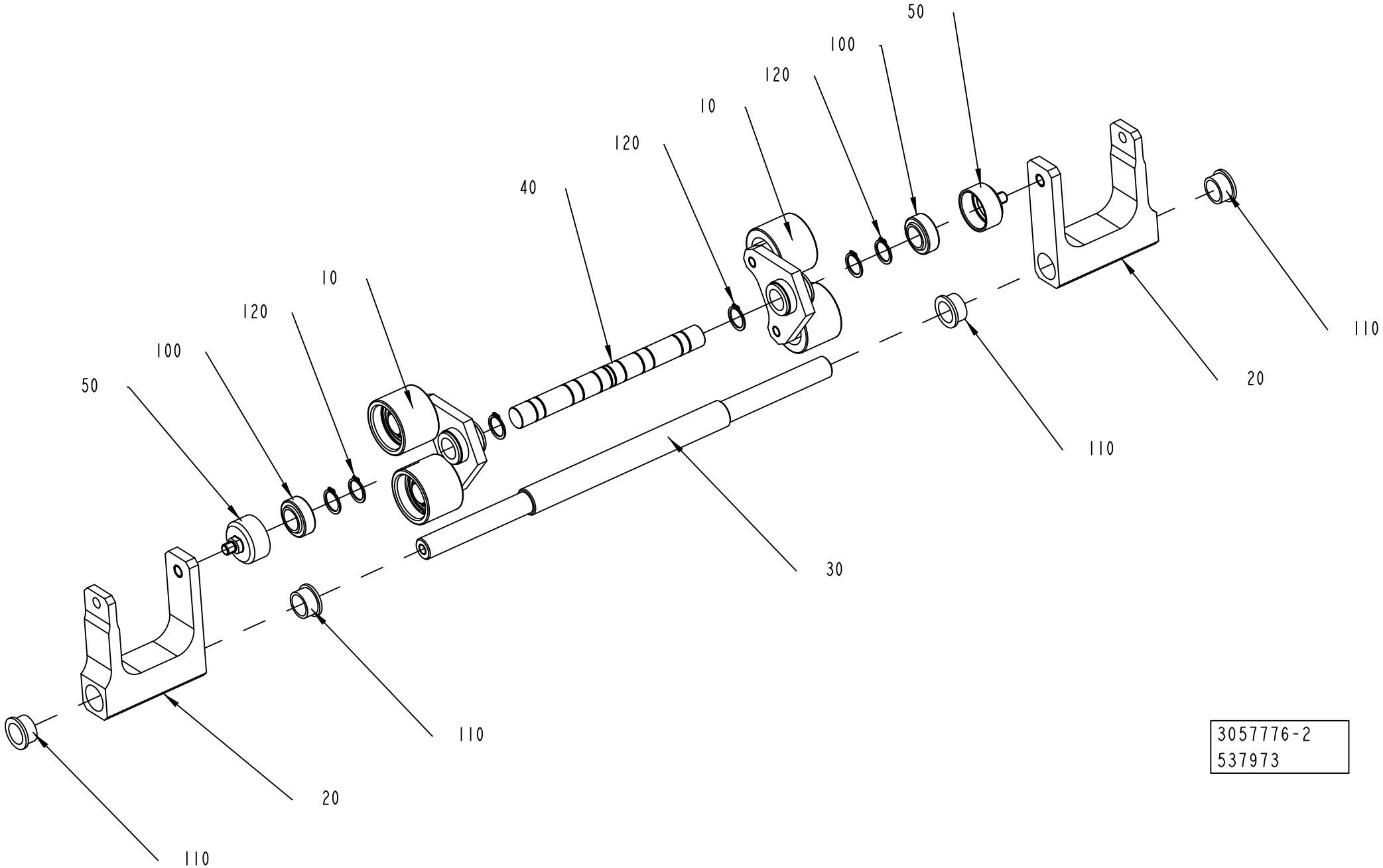

3057776-2
537973

ECM: 539183 - 20120405
Group number: 3057776-0200
Assembly Drawing: 3057776-2_1_AA

Pos	Part No	UN	Qty	Description	Page No
-					
010	2710801-0200		2	COUNTER ROLLER	**1-823**
020	3052669-0000		2	LEVER	
030	2607461-0000		1	SHAFT	
040	2921034-0000		1	AXLE PIN	
050	1517003-0000		2	BEARING HOUSING	
100	90240-0153		2	PLAIN BEAR,SELF ADJ.SPHER.20X35X16 MM	
110	90240-0221		4	FLANGE BUSHING, 20X25X14 MM	
120	315751-0116		6	RETAINING RING FOR SHAFT DIN 471 20 SS	

Pos	Part No	UN	Qty	Description	Page No

COUNTER ROLLER

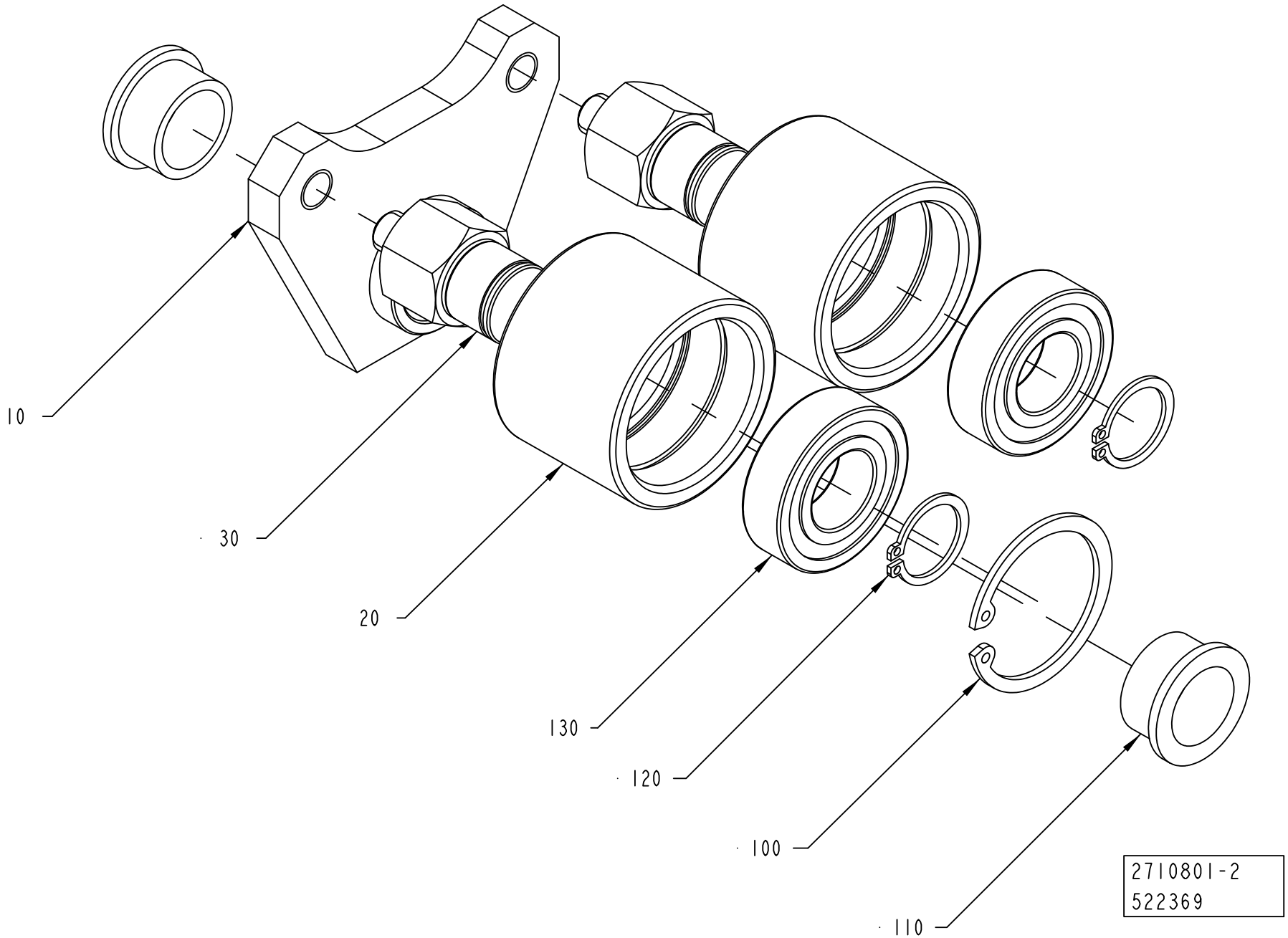

ECM: 523265 - 20120401
Group number: 2710801-0200
Assembly Drawing: 2710801-2_1_AA

Pos	Part No	UN	Qty	Description	Page No
-					
010	2566076-0000		1	HOLDER	
020	2921033-0000		2	ROLLER	
030	2582706-0000		2	AXLE PIN	
100	90141-0020		2	RETAINING RING FOR BORE DIN 472 42 SS	
110	90240-0221		2	FLANGE BUSHING, 20X25X14 MM	
120	315751-0116		2	RETAINING RING FOR SHAFT DIN 471 20 SS	
130	90603-2379		2	BALL BEARING, 20/42X12 SOLID OIL	

Pos	Part No	UN	Qty	Description	Page No

GUIDE RAIL

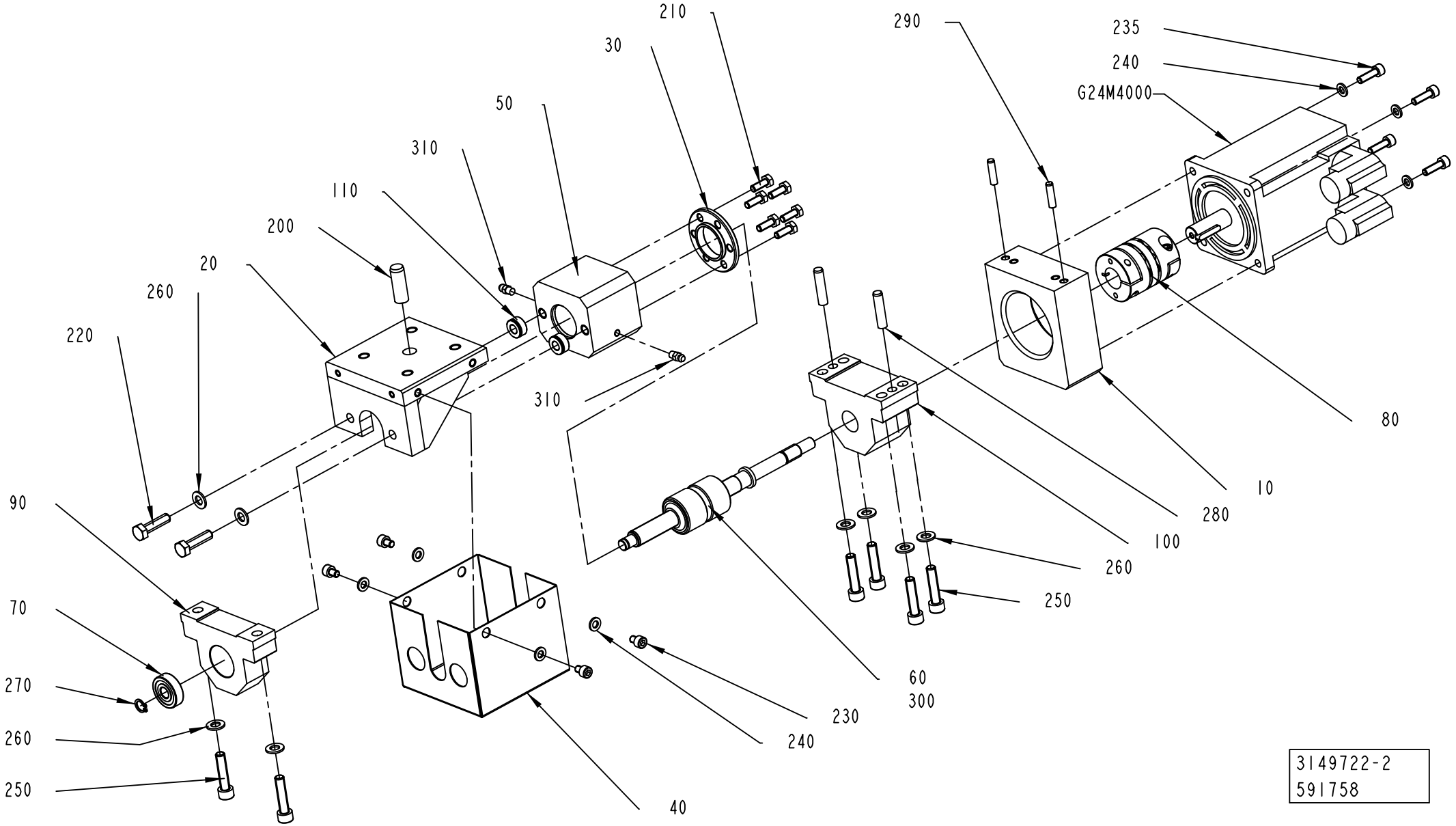

3149722-2
591758

ECM: 665335 - 20140701
Group number: 3149722-0200
Assembly Drawing: 3149722-2_1_AC

Pos	Part No	UN	Qty	Description	Page No
-					
010	3022441-0000		1	BRACKET	
020	3022445-0000		1	CARRIER	
030	3022444-0000		1	COVER	
040	3027823-0000		1	COVER	
050	3022443-0000		1	HOUSING	
060	90600-9266		1	ROLLER SCREW, 12X36,5X137 MM	
070	344226-0100		1	BALL BEARING 10/30X9	
080	90601-0426		1	TORQUE RIGID COUPLING, 10X16 MM	
090	90603-4536		1	BALL BEARING	
100	3269249-0000		1	BEARING BRACKET	
110	90601-6050		2	CLAMPING ELEMENT, 2305.558	
200	311102-0514		1	PARALLEL PIN ISO 2338 12M6X35 ST	
210	312105-0368		6	"SCREW, M6S ISO 4017 M6X16 A4 80"	
220	312105-0455		2	SCREW, M6S ISO 4017 M8X30 A4 80	
230	312115-0362		4	SCREW ISO4762 M6X8 A4 80	
235	312115-0370		4	SCREW ISO4762 M6X20 A4 80	
240	315105-0153		8	WASHER PLAIN, 6,4X12X1,5 A4 BRB	
250	312115-0457		6	SCREW ISO4762 M8X35 A4 80	
260	315105-0165		8	FWAS080G0-0S, WASHER PLAIN	
270	90141-0016		1	RETAINING RING FOR SHAFT DIN 471 10 SS	
280	311103-0407		2	PARALLEL PIN ISO 2338 8M6X35 A1	
290	311103-1355		2	PARALLEL PIN ISO 2338 6M6X24 A1	
300	344407-0000		1	KLüBERSYNTH UH1 14-151, ONLY IN BOM	
	344407-0591		*1*	*KLüBERSYNTH UH1 14-151, 400G CARTRIDGE*	
	344407-0285		*1*	*KLüBERSYNTH UH1 14-151, 45G TUBE*	
	344407-0177		*1*	*KLüBERSYNTH UH1 14-151, 25KG BUCKET*	
	344407-0037		*1*	*KLüBERSYNTH UH1 14-151, 1KG CAN*	
310	344502-0021		2	GREASE NIPPLE STRAIGHT M6	
G24M4000	90601-5090		1	SERVO MOTOR, MPL-B310P-MK72AA SERIES A	

Pos	Part No	UN	Qty	Description	Page No

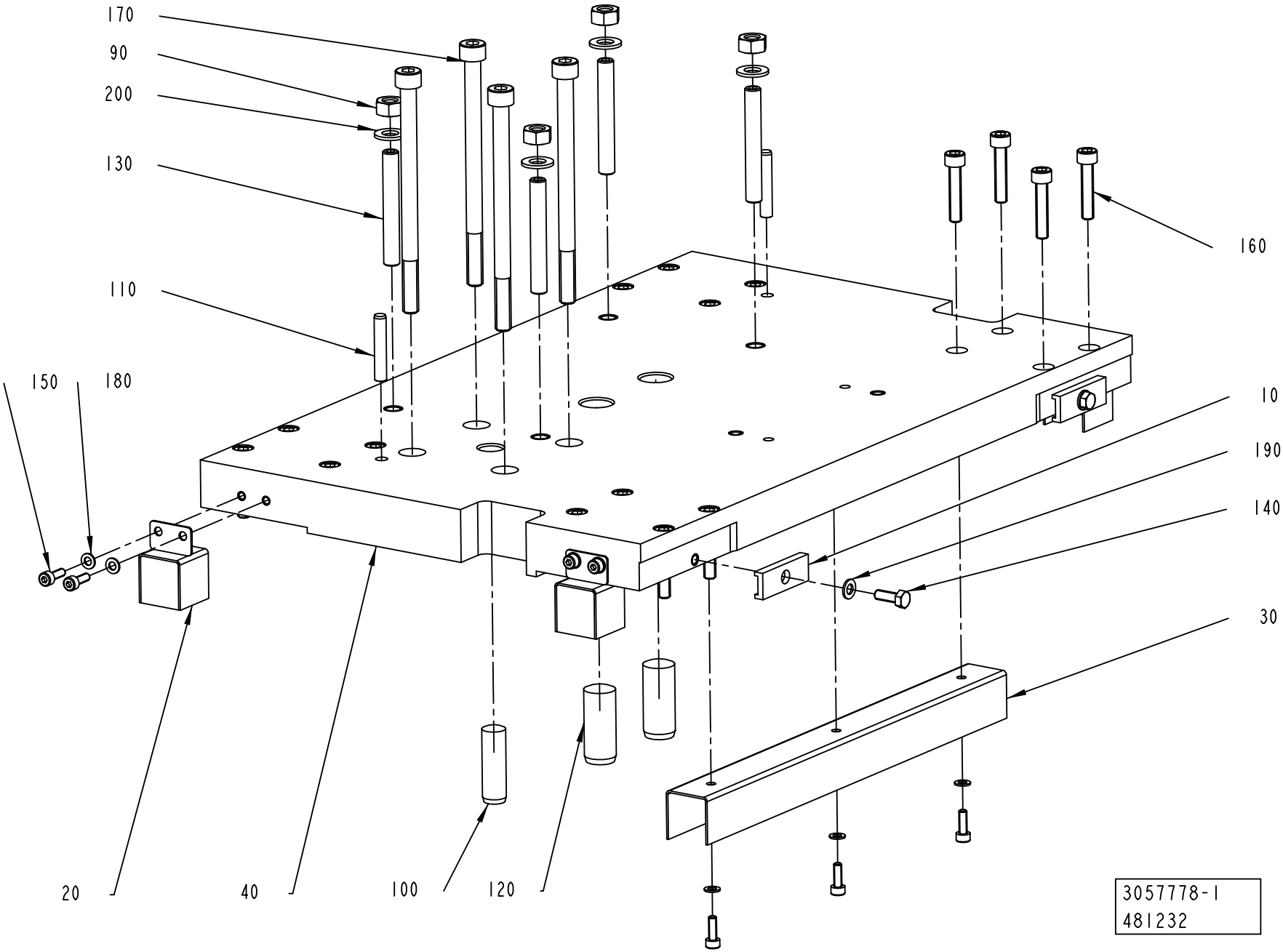
170
90
200
130
110
150
180
160
10
190
140
30
20
40
100
120
3057778-1
481232

ECM: 587931 - 20130201
Group number: 3057778-0100
Assembly Drawing: 3057778-1_1_AA

Pos	Part No	UN	Qty	Description	Page No
-					
010	3022440-0000		2	BRACKET	
020	3057771-0000		4	COVER	
030	3052467-0000		2	COVER	
040	3057770-0000		1	PLATE	
090	312605-0318		4	HEXAGON NUT, M6M M8 A280	
100	311102-0516		1	PARALLEL PIN ISO 2338 12M6X40 ST	
110	311103-0359		2	PARALLEL PIN ISO 2338 6M6X35 A1	
120	311102-0619		2	PARALLEL PIN ISO 2338 16M6X40 ST	
130	312306-0463		4	SCREW ISO4026 M8X60 FZB	
140	312105-0329		2	SCREW, M6S ISO 4017 M5X16 A4 80	
150	312115-0291		14	SCREW ISO4762 M4X12 A4 80	
160	312115-0374		16	SCREW ISO4762 M6X30 A4 80	
170	312111-0475		4	SCREW HEX.SOCK.HD.MC6S 8X120 88 FZB	
180	315105-0136		14	WASHER PLAIN, 4,3X8X0,8 A4 BRB	
190	315105-0146		2	WASHER PLAIN, 5,3X10X1 A4 BRB	
200	315105-0165		4	FWAS080G0-0S, WASHER PLAIN	

Pos	Part No	UN	Qty	Description	Page No

OUTFEED LOOP

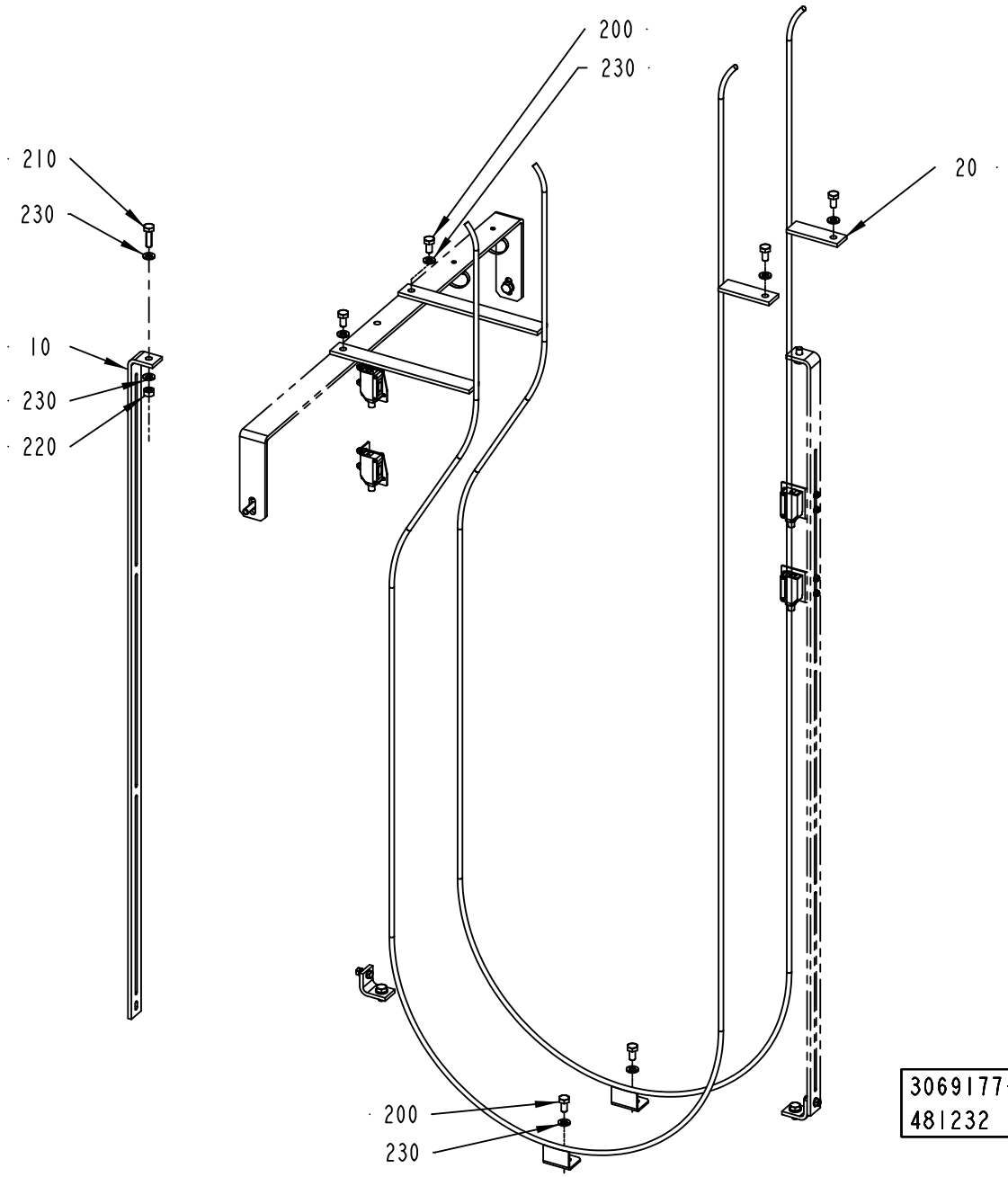

ECM: 485257 - 20101222
Group number: 3069177-0100
Assembly Drawing: 3069177-1_1_AA

Pos	Part No	UN	Qty	Description	Page No
-					
010	3054865-0000		1	BRACKET	
020	3054866-0000		2	GUIDE	
200	312105-0366		6	SCREW, M6S ISO 4017 M6X12 A4 80	
210	312105-0370		1	SCREW, M6S ISO 4017 M6X20 A4 80	
220	312605-0316		1	HEXAGON NUT, M6M M6 A280	
230	315105-0153		8	WASHER PLAIN, 6,4X12X1,5 A4 BRB	

Pos	Part No	UN	Qty	Description	Page No

ELECTRICAL CABINET

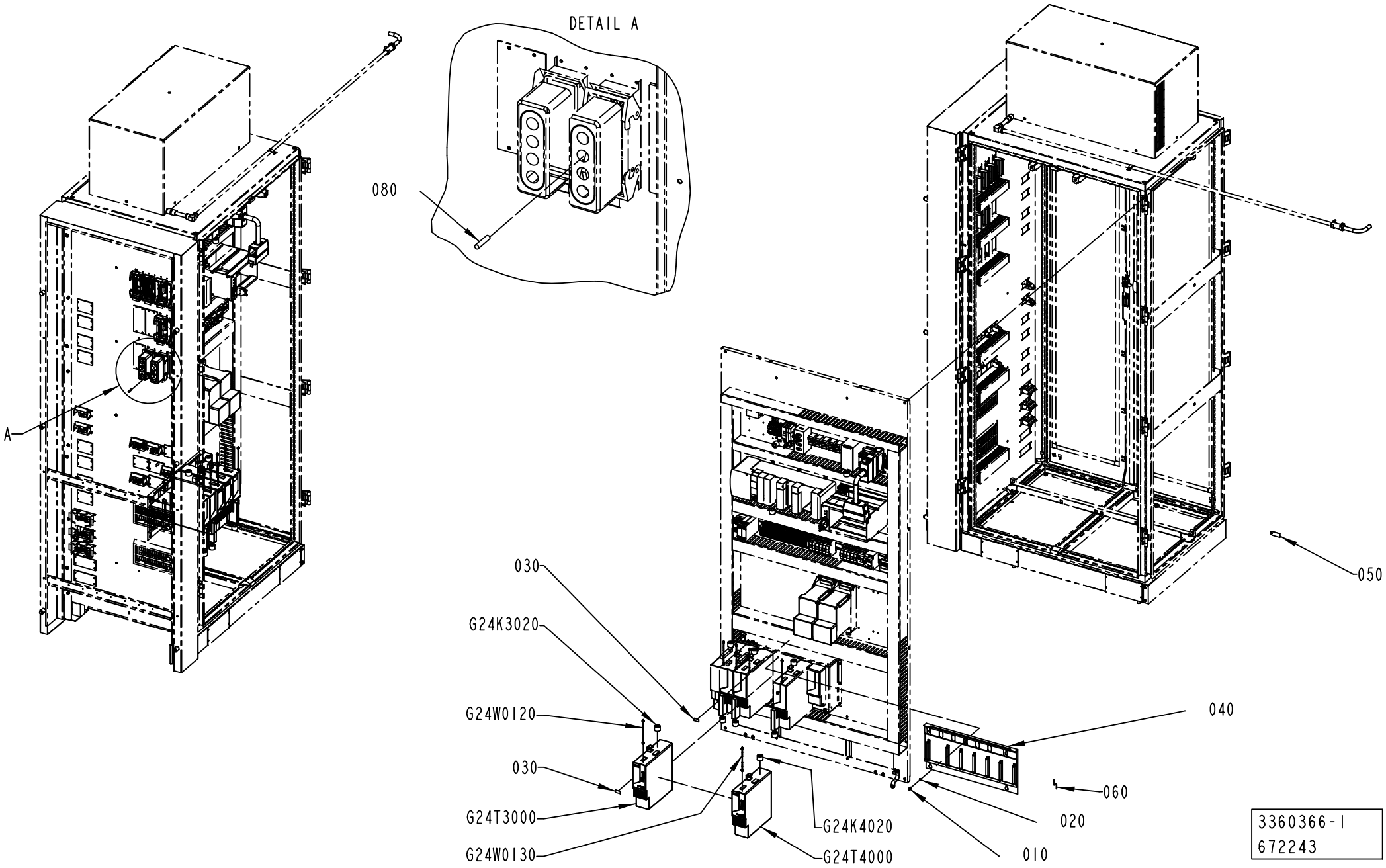

ECM: 678718 - 20140201
Group number: 3360366-0100
Assembly Drawing: 3360366-1_1_AA

Pos	Part No	UN	Qty	Description	Page No
-					
010	312115-0327		2	SCREW ISO4762 M5X12 A4 80	
020	315105-0146		2	WASHER PLAIN, 5,3X10X1 A4 BRB	
030	3324142-0000		2	SET OF SIGNS	
040	90459-5193		1	SLIM POW. RAIL, KINETIX, 6 AX, 2094-PRS6	
050	3292574-0000		1	LABEL	
060	351160-0102	M	20	ECAB01011-6L, WIRE AWM 1X0,75 MM2 DARKBL	
080	353249-0303		1	SEALING PIN, 5,3X25	
G24K3020	90600-5249		1	FERRITE, B64290L616X38	
G24K4020	90600-5249		1	FERRITE, B64290L616X38	
G24T3000	90606-2004		1	AXIS MOD. KINETIX 6000,2094-BM01-S SER.C	
G24T4000	90606-2004		1	AXIS MOD. KINETIX 6000,2094-BM01-S SER.C	
G24W0120	90459-2536		1	SERCOS CABLE 0.1M, 2090-SCEP0-1	
G24W0130	90459-2536		1	SERCOS CABLE 0.1M, 2090-SCEP0-1	

Pos	Part No	UN	Qty	Description	Page No

CONVERSION KIT

Drawing file: 3199126-1_1_AB.hpgl

Cap	Pos.	Model Name	Thcikness
LC-30	20	3179969	5 mm
LC-24	20	3180557	3 mm

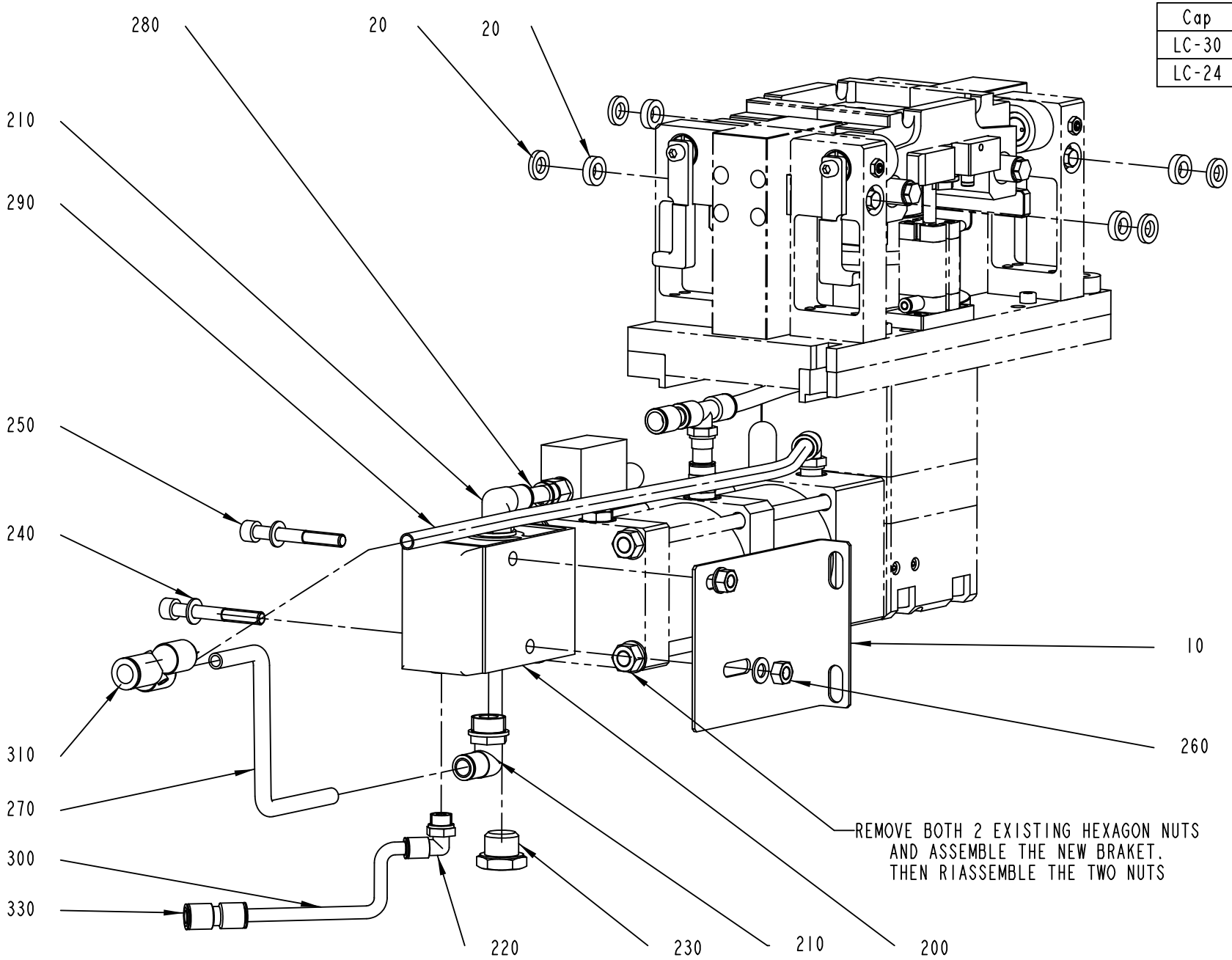

3199126-1
550628

ECM: 553764 - 20130404
Group number: 3199126-0100
Assembly Drawing: 3199126-1_1_AB

Pos	Part No	UN	Qty	Description	Page No
LIGHTCAP24					
020	3180557-0000		4	SPACER	
LIGHTCAP30, LIGHTCAP30B					
020	3179969-0000		4	SPACER	
Common Parts					
010	3198893-0000		1	BRACKET	
200	90235-0297		1	VALVE 3/2, OPEN/CLOSED	
210	350002-0015		2	PUSH-IN L-FITTING QSL-F-G1/2-10	
220	350002-0009		1	PUSH-IN L-FITTING QSL-F-G1/4-8	
230	90330-0037		1	PLUG, G1/2EXT, G1/2	
240	315103-0165		4	WASHER PLAIN, 8,4X15X1,5 BR NI PL	
250	312115-0464		2	SCREW ISO4762 M8X65 A4 80	
260	312607-0318		2	HEXAGON NUT, EN 24032 M6M M8 A480	
270	315300-0007	M	1	TUBE, 10 MM PE BLUE	
280	315300-0007	M	0.5	TUBE, 10 MM PE BLUE	
290	315300-0007	M	2.5	TUBE, 10 MM PE BLUE	
300	315300-0004	M	0.5	TUBE, 8 MM PE BLUE	
310	90459-6064		1	PUSH IN Y-CONNECTOR QSY-12-10	
330	350009-0003		1	PUSH-IN FITTING QS-F-8	

Pos	Part No	UN	Qty	Description	Page No

CAP DETECTOR

Drawing file: 3151087-1_1_AA.hpgl

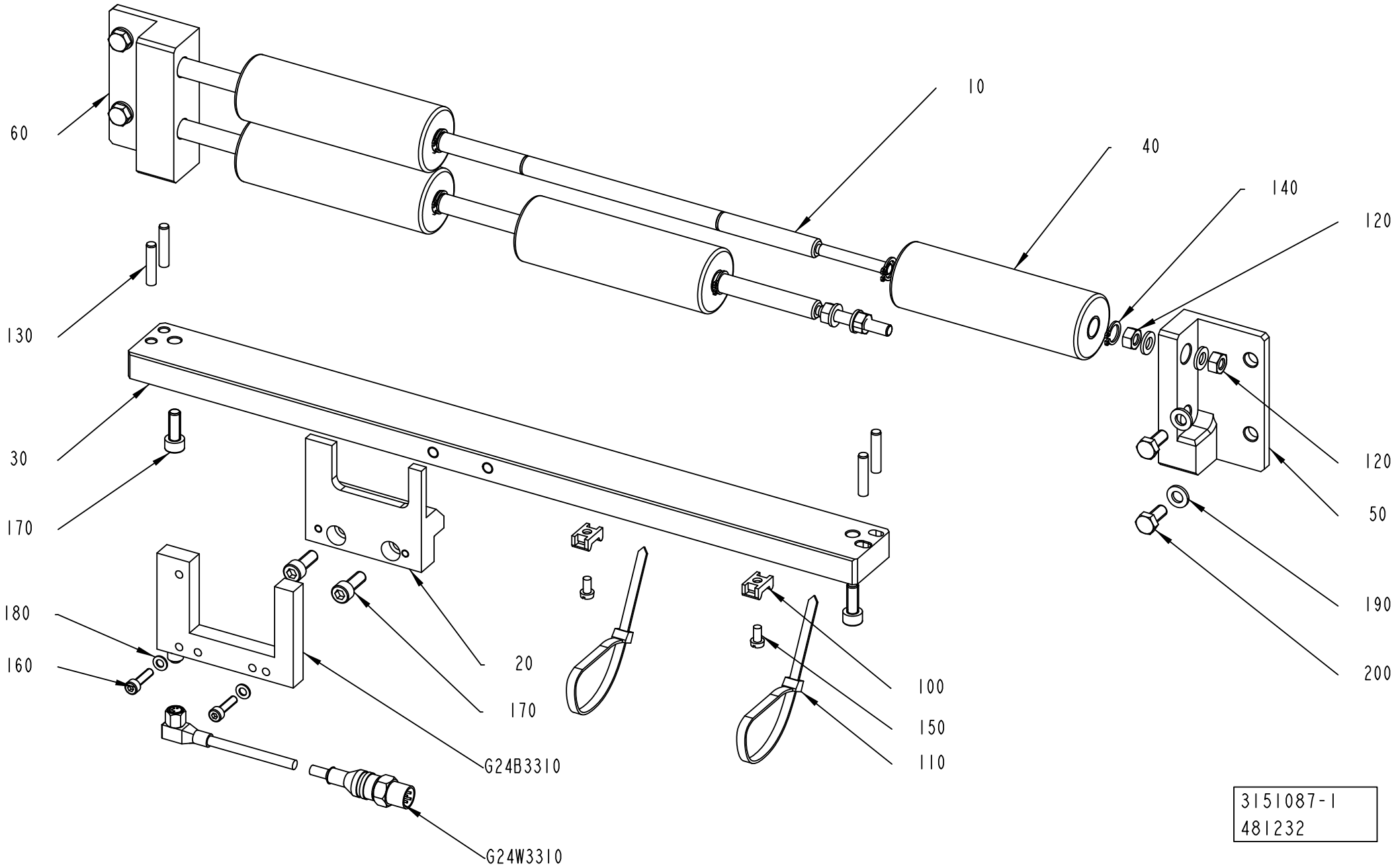

3151087-1
481232

ECM: 587930 - 20130201
Group number: 3151087-0100
Assembly Drawing: 3151087-1_1_AA

Pos	Part No	UN	Qty	Description	Page No
-					
010	3002867-0000		2	AXLE	
020	2998186-0000		1	BRACKET	
030	2998016-0000		1	PLATE	
040	2998010-0000		4	ROLLER	
050	2998009-0000		1	SUPPORT	
060	2998012-0000		1	SUPPORT	
100	352113-0205		2	ANCHOR PLATES FOR STRIPS, TM2S8-C100	
110	352113-0102		2	CABLE TIE, BLACK 188X4,8 MM	
120	312605-0316		4	HEXAGON NUT, M6M M6 A280	
130	311103-1312		4	PARALLEL PIN ISO 2338 5M6X24 A1	
140	90141-0016		8	RETAINING RING FOR SHAFT DIN 471 10 SS	
150	312132-0287		2	SLOTTED HEAD, PAN SCREW, MSCS M4X8	
160	312115-0293		2	SCREW ISO4762 M4X16 A4 80	
170	312115-0368		4	SCREW ISO4762 M6X16 A4 80	
180	315105-0136		2	WASHER PLAIN, 4,3X8X0,8 A4 BRB	
190	315105-0153		8	WASHER PLAIN, 6,4X12X1,5 A4 BRB	
200	312105-0367		4	SCREW, M6S ISO 4017 M6X14 A4 80	
G24B3310	90600-5853		1	PHOTOCELL, WF 50-40 B416	
G24W3310	344266-0020		1	SENSOR CABLE, EVT256	

Pos	Part No	UN	Qty	Description	Page No

BOX8 - VCK DIMC INFEED

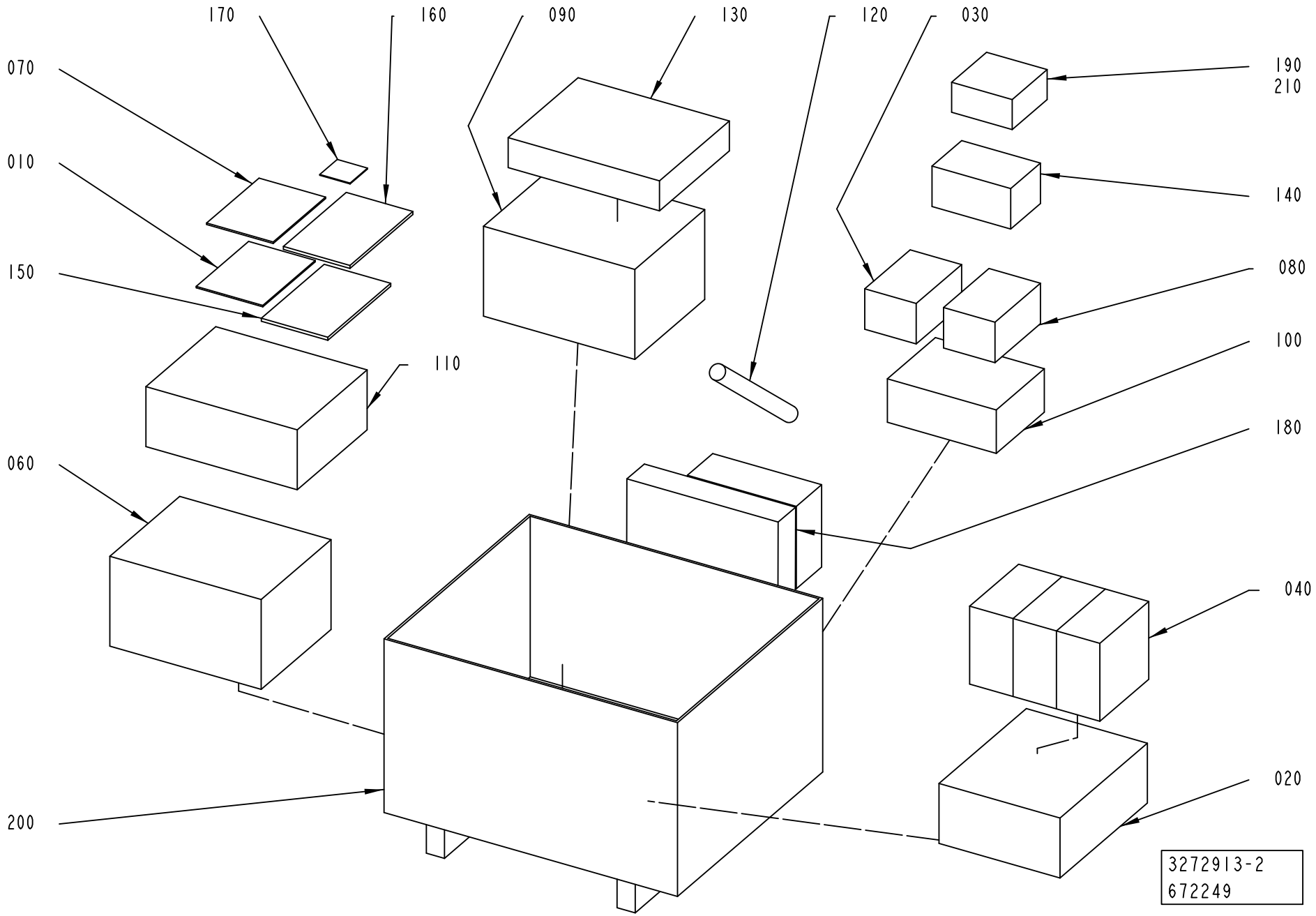

ECM: 675525 - 20140701
Group number: 3272913-0200
Assembly Drawing: 3272913-2_1_AB

Pos	Part No	UN	Qty	Description	Page No
-					
010	2605722-0100		1	CAP SPECIFICATION	**1-839**
020	2763999-0200		1	BENDING ROLLER	**1-769, 1-771, 1-773**
030	3249658-0100		1	CRANK	**1-841**
040	3272967-0100		1	MOULDING TOOL ASSEMBLY	**1-843**
060	3272972-0200		1	FLUSHING DEVICE	**1-881**
070	3272973-0200		1	DIAGRAM	**1-899**
080	3274292-0200		1	INJECTION SYSTEM	**1-903**
090	3275152-0100		1	MARKING READER	**1-917**
100	3275154-0100		1	PUNCH ARRANGEMENT	**1-927**
110	3333814-0100		1	MISCELLANEOUS COMPONENTS	**1-935**
120	3275182-0100		1	BENDING ROLLER	**1-949, 1-951**
130	3275183-0200		1	PAPER GUIDE	**1-955**
140	3309959-0100		1	START-UP KIT	**1-963**
150	3360365-0100		1	ELECTRICAL DOCUMENT	
160	3339876-0100		1	ELECTRICAL DOCUMENT	
170	3339877-0100		1	ELECTRIC MATERIALS	**1-971**
180	3333755-0100		1	OUTFEED TENSION DEVICE	**1-973**
190	3355187-0100		1	ELECTRICAL CABINET	**1-979, 1-981**
200	3272969-0000		1	BOX	
210	90194-0302		1	MARKING LABELS REBUILDING KIT	

Pos	Part No	UN	Qty	Description	Page No

Machine Type | Group Description | Used-In | Group Number | Page No

This page is intentionally left blank.

ECM: 602027 - 20130404
Group number: 2605722-0100
Assembly Drawing:

Pos	Part No	UN	Qty	Description	Page No
TBA 1000B STDA7					
010	2611705-0000		1	CAP SPECIFICATION	
TBA 1000E LIGHTCAP30 NOPLH					
010	3056589-0000		1	CAP SPECIFICATION	
TBA 1000E LIGHTCAP30 PLH, TBA 1000E LIGHTCAP30B PLH					
010	3043707-0000		1	CAP SPECIFICATION	
TBA 1000M LIGHTCAP24 PLH					
010	3043724-0000		1	CAP SPECIFICATION	
TBA 1000M STDA7					
010	3013901-0000		1	CAP SPECIFICATION	
TBA 1000S LIGHTCAP24 NOPLH					
010	2843226-0000		1	CAP SPECIFICATION	
TBA 1000S STDA7					
010	2611706-0000		1	CAP SPECIFICATION	
TPA 0500SQ					
010	2956672-0000		1	CAP SPECIFICATION	

Pos	Part No	UN	Qty	Description	Page No

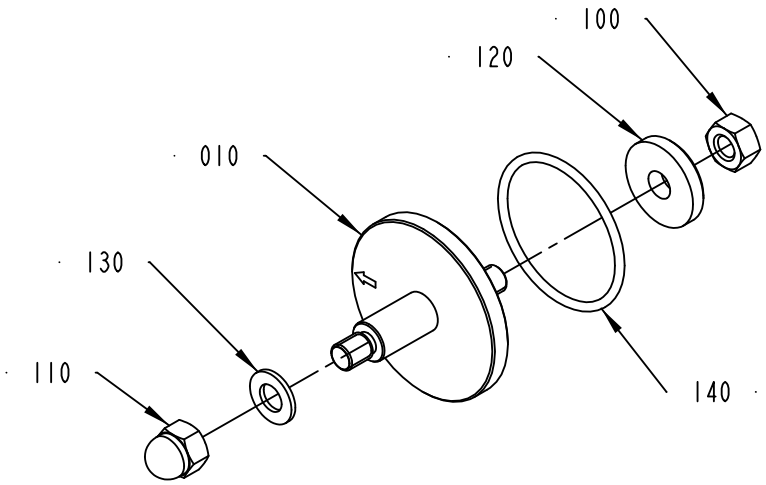

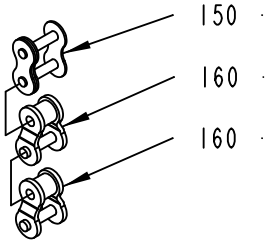

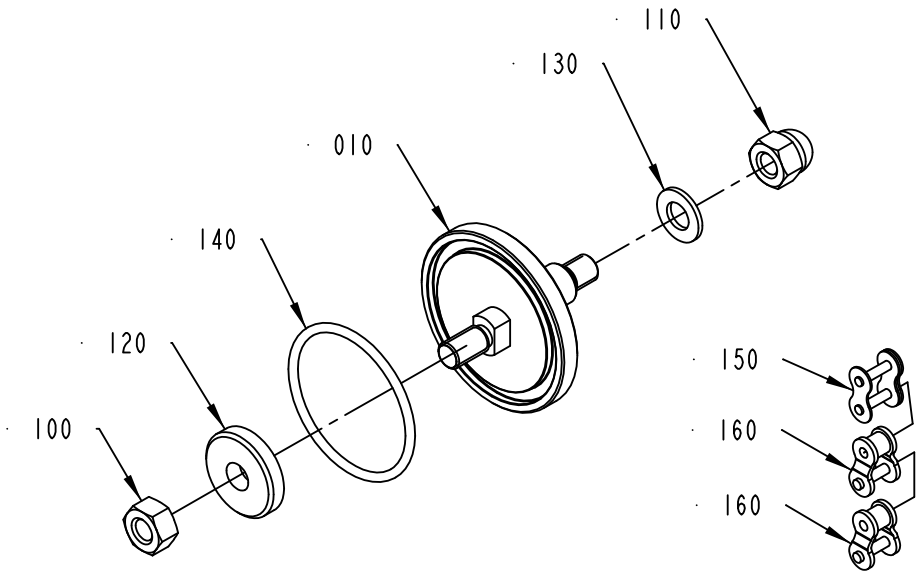

3249658-1
616771

ECM: 617330 - 20131001
Group number: 3249658-0100
Assembly Drawing: 3249658-1_1_AB

Pos	Part No	UN	Qty	Description	Page No
-					
010	2946895-0000		2	SHAFT	
100	312605-0318		2	HEXAGON NUT, M6M M8 A280	
110	312705-0318		2	NUT HEX. DOMED CAP MHM-6 M8 A280	
120	315125-0165		2	WASHER HIGH, TBRSB 8,4X26X5 A4	
130	315105-0165		2	FWAS080G0-0S, WASHER PLAIN	
140	344207-2042		2	O-RING 42,52X2,62 MM FDA, 3-A	
150	90288-0314		2	CONNECTION LINK, SIMPLEX 3/8", SS	
160	90288-0315		4	CONNECTING LINK, SIMPLEX 3/8", SS	

Pos	Part No	UN	Qty	Description	Page No

This page is intentionally left blank.

ECM: 565510 - 20130404
Group number: 3272967-0100
Assembly Drawing:

Pos	Part No	UN	Qty	Description	Page No
LIGHTCAP24 NOPLH					
010	2814023-0100		3	MOULDING TOOL ASSEMBLY	**1-845**
LIGHTCAP24 PLH					
010	3090099-0100		3	MOULDING TOOL ASSEMBLY	**1-853**
LIGHTCAP30 NOPLH					
010	3006590-0100		3	MOULDING TOOL ASSEMBLY	**1-861**
LIGHTCAP30 PLH, LIGHTCAP30B PLH					
010	3151622-0100		3	MOULDING TOOL ASSEMBLY	**1-869**
STDA7 CAP					
010	2632600-0100		3	MOULDING TOOL ASSEMBLY	**1-879**

Pos	Part No	UN	Qty	Description	Page No

MOULDING TOOL ASSEMBLY

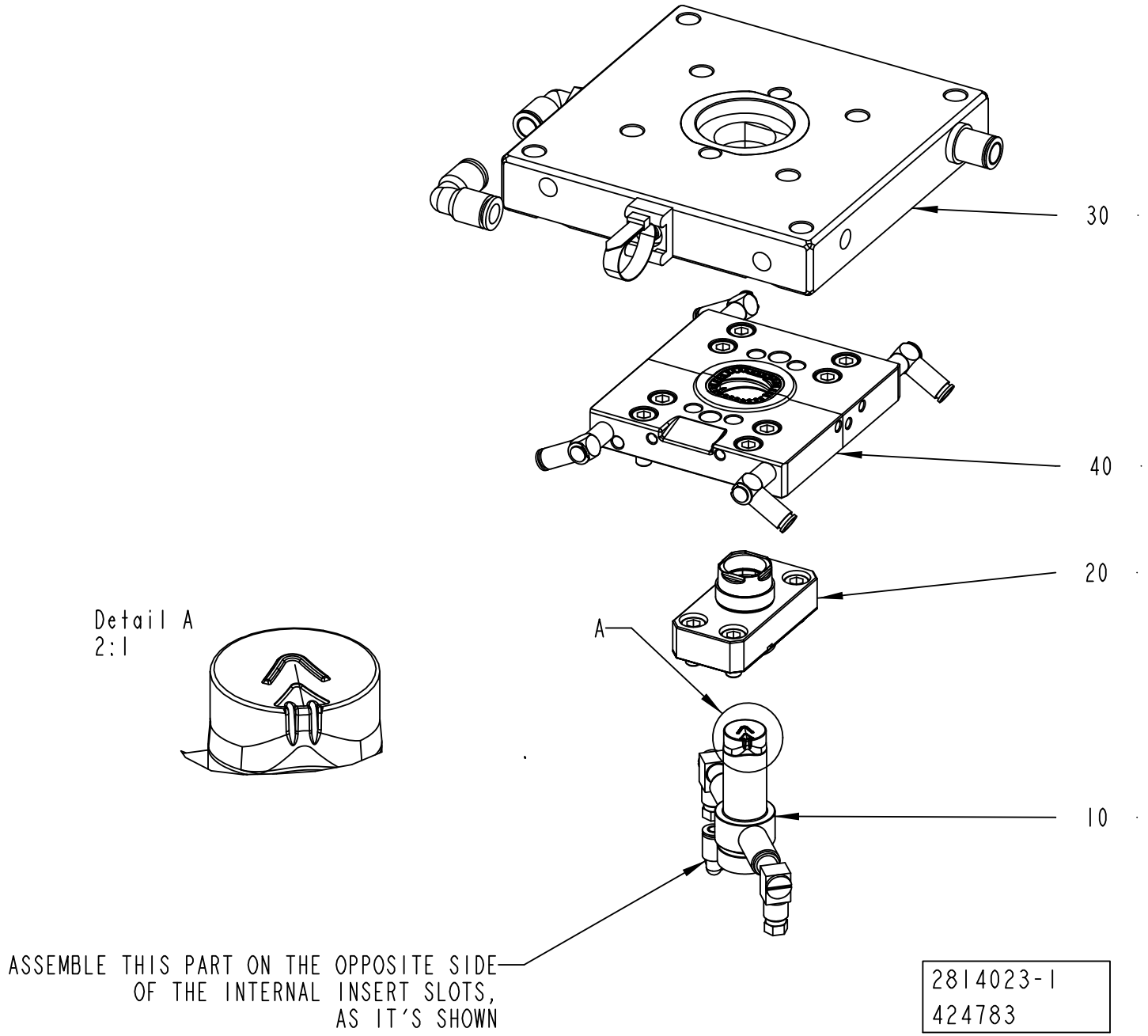

ECM: 567439 - 20120706
Group number: 2814023-0100
Assembly Drawing: 2814023-1_1_AF

Pos	Part No	UN	Qty	Description	Page No
-					
010	2978777-0000		1	INTERNAL INSERT ASSEMBLY	
020	2981825-0100		1	EXTERNAL INSERT ASSEMBLY	**1-847**
030	2859964-0100		1	INTERNAL TOOL ASSEMBLY	**1-849**
040	2859965-0100		1	EXTERNAL TOOL ASSEMBLY	**1-851**

Pos	Part No	UN	Qty	Description	Page No

EXTERNAL INSERT ASSEMBLY

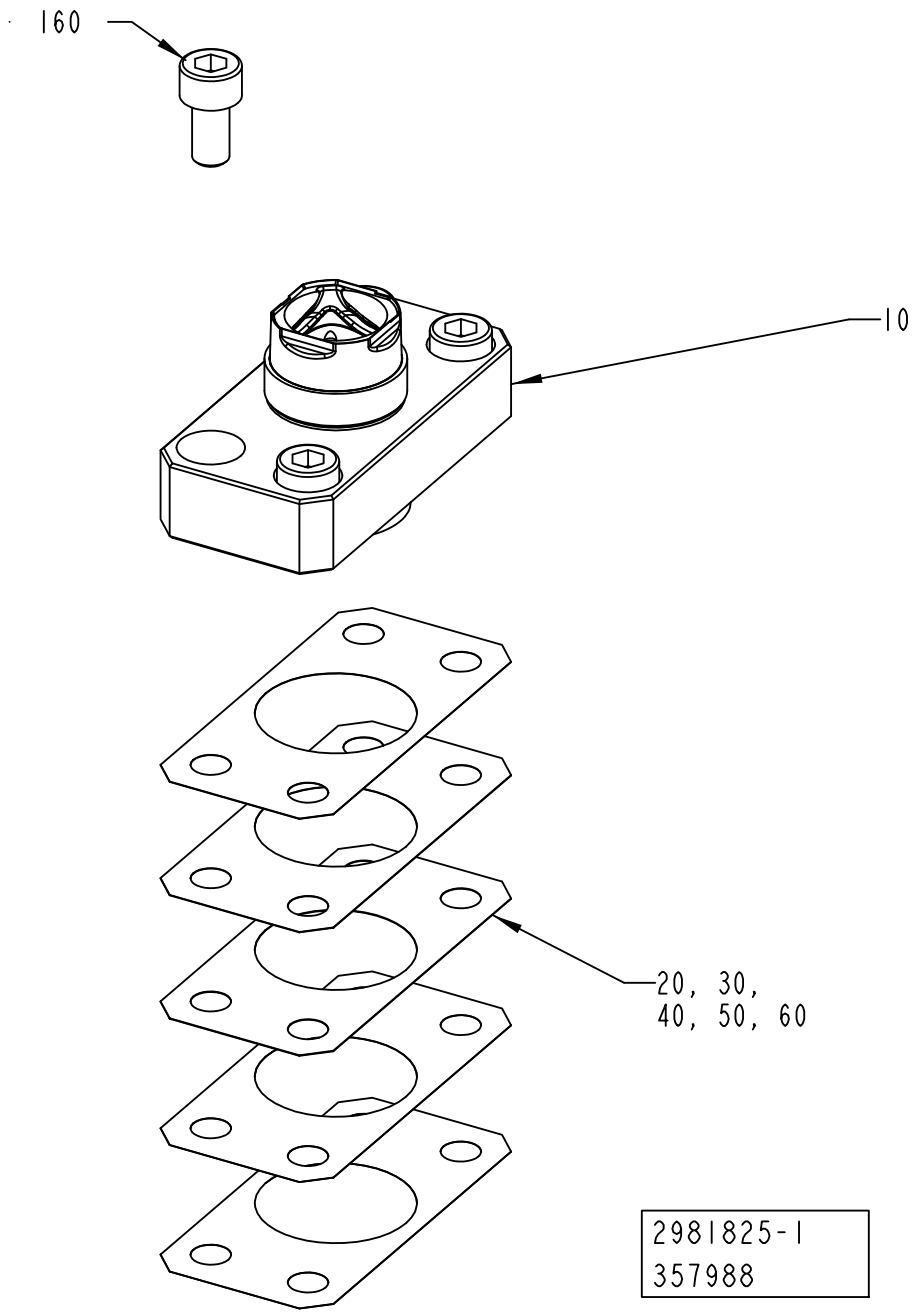

ECM: 359731 - 20081001
Group number: 2981825-0100
Assembly Drawing: 2981825-1_1_AA

Pos	Part No	UN	Qty	Description	Page No
-					
010	2909831-0000		1	EXTERNAL INSERT ASSEMBLY	
020	2771010-0001		1	SHIM	
030	2771010-0002		1	SHIM	
040	2771010-0003		1	SHIM	
050	2771010-0004		1	SHIM	
060	2771010-0005		1	SHIM	
160	312115-0366		4	SCREW ISO4762 M6X12 A4 80	

Pos	Part No	UN	Qty	Description	Page No

INTERNAL TOOL ASSEMBLY

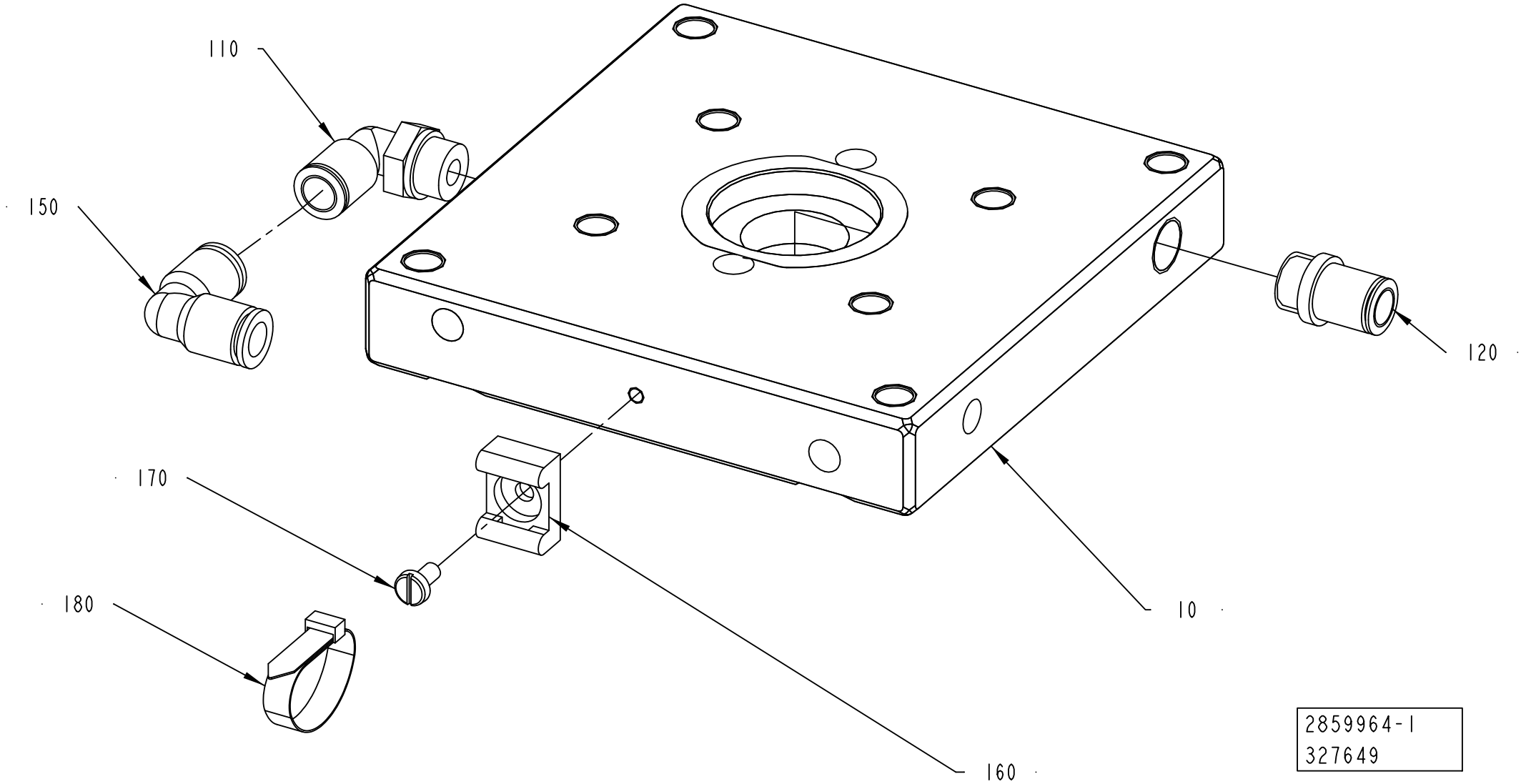

ECM: 331150 - 20080401
Group number: 2859964-0100
Assembly Drawing: 2859964-1_1_AC

Pos	Part No	UN	Qty	Description	Page No
-					
10	2835082-0000		1	INTERNAL TOOL ASSEMBLY	
110	350002-0009		1	PUSH-IN L-FITTING QSL-F-G1/4-8	
120	350003-0007		1	PUSH-IN FITTING QS-F-G1/4-8-I	
150	342735-0103		1	ELBOW PIPE JOINT	
160	352113-0203		1	ANCHOR PLATES FOR STRIPS, TM3S8-M0	
170	312132-0287		1	SLOTTED HEAD, PAN SCREW, MSCS M4X8	
180	352113-0103		1	CABLE TIE, BLACK 290X7,6 MM	

Pos	Part No	UN	Qty	Description	Page No

EXTERNAL TOOL ASSEMBLY

Drawing file: 2859965-1_1_AB.hpgl

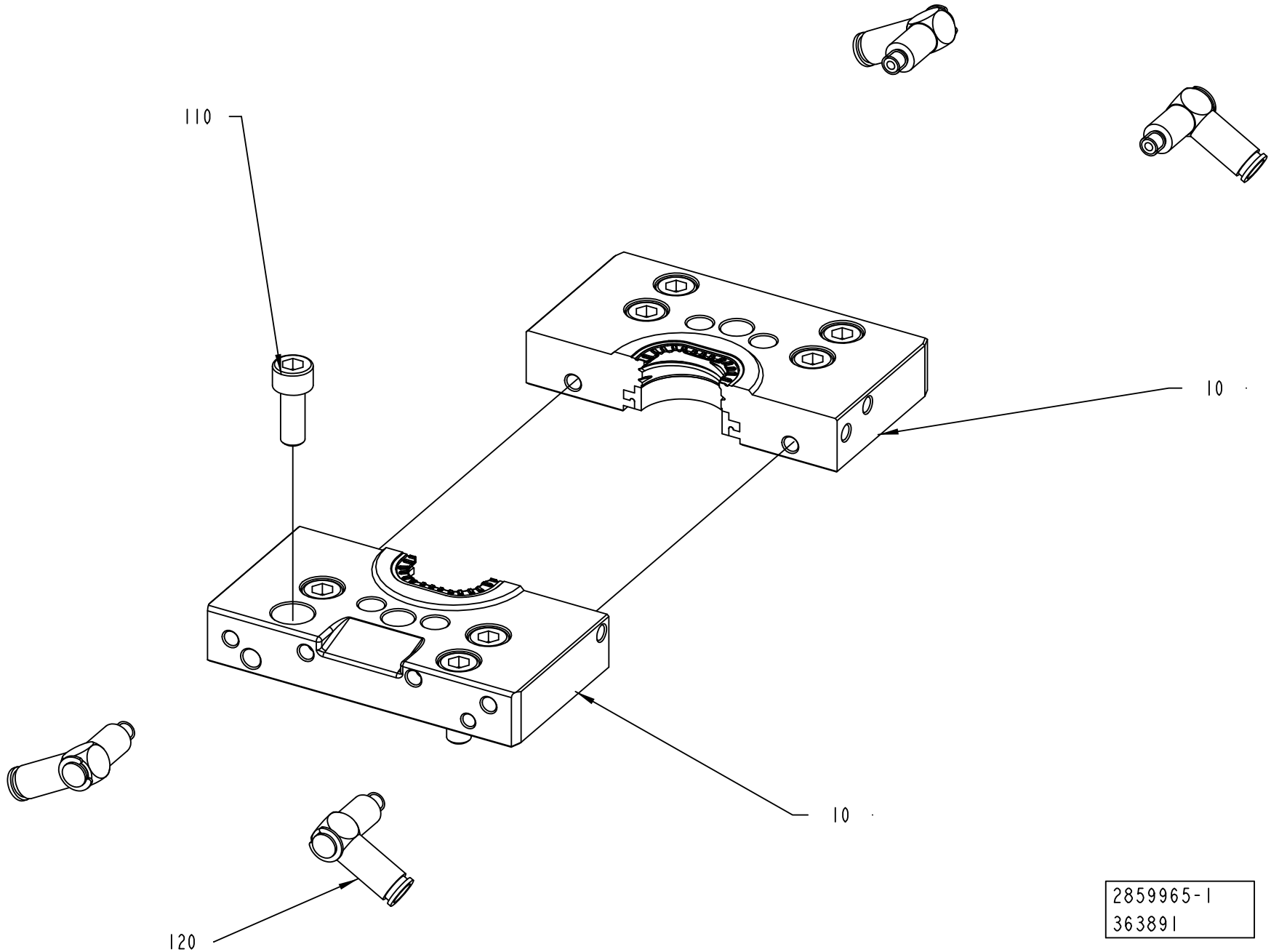

ECM: 368333 - 20090101
Group number: 2859965-0100
Assembly Drawing: 2859965-1_1_AB

Pos	Part No	UN	Qty	Description	Page No
-					
010	2771005-0000		1	TOOL	
110	312115-0368		8	SCREW ISO4762 M6X16 A4 80	
120	2978778-0000		4	BANJO CONNECTION	

Pos	Part No	UN	Qty	Description	Page No

Machine Type | Group Description | Used-In | Group Number | Page No

MOULDING TOOL ASSEMBLY

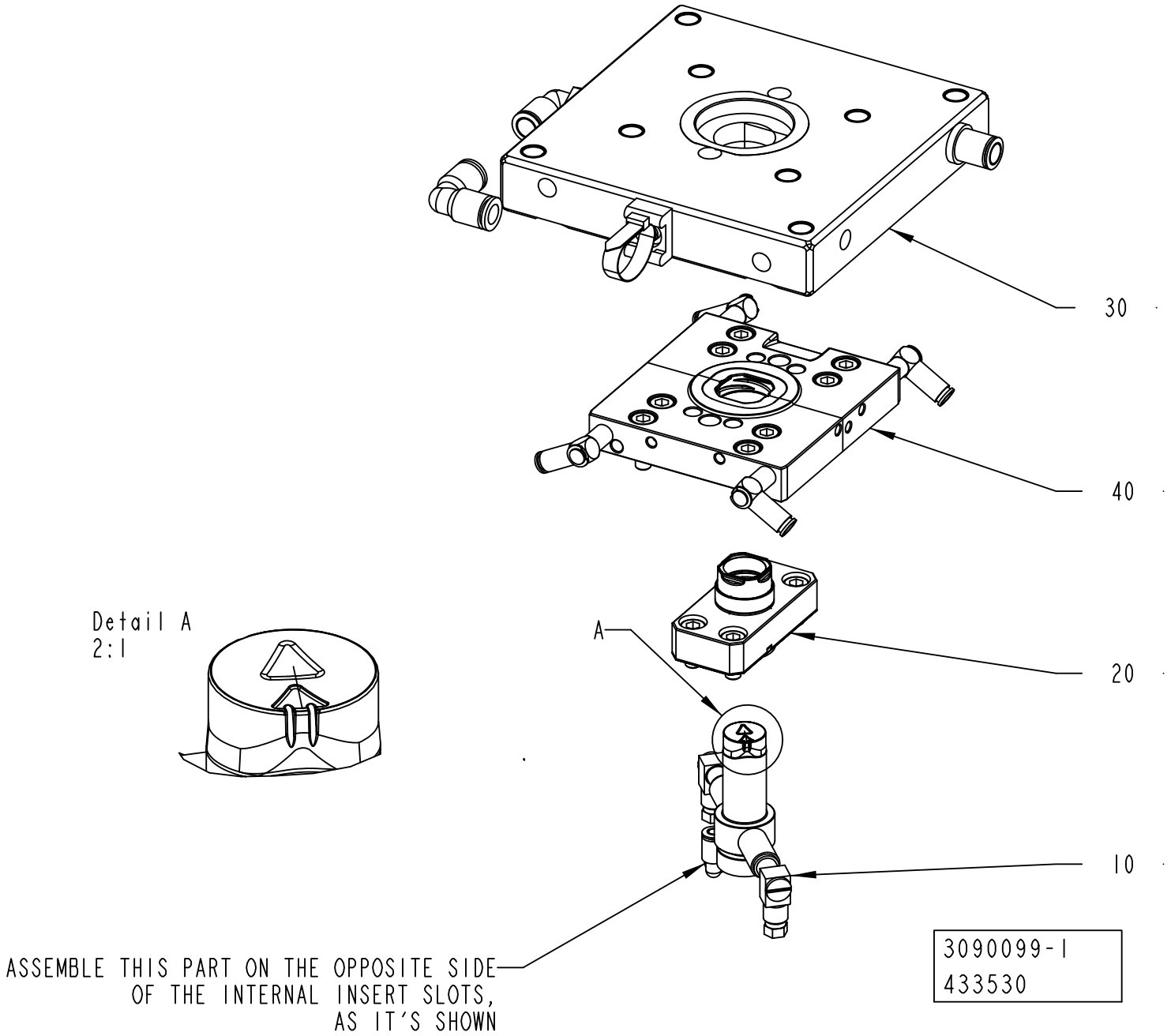

ECM: 567438 - 20120706
Group number: 3090099-0100
Assembly Drawing: 3090099-1_1_AA

Pos	Part No	UN	Qty	Description	Page No
-					
010	3090100-0000		1	INTERNAL INSERT ASSEMBLY	
020	3090101-0100		1	EXTERNAL INSERT ASSEMBLY	**1-855**
030	3090102-0100		1	INTERNAL TOOL ASSEMBLY	**1-857**
040	3090103-0100		1	EXTERNAL TOOL ASSEMBLY	**1-859**

Pos	Part No	UN	Qty	Description	Page No

Machine Type | Group Description | Used-In | Group Number | Page No

EXTERNAL INSERT ASSEMBLY

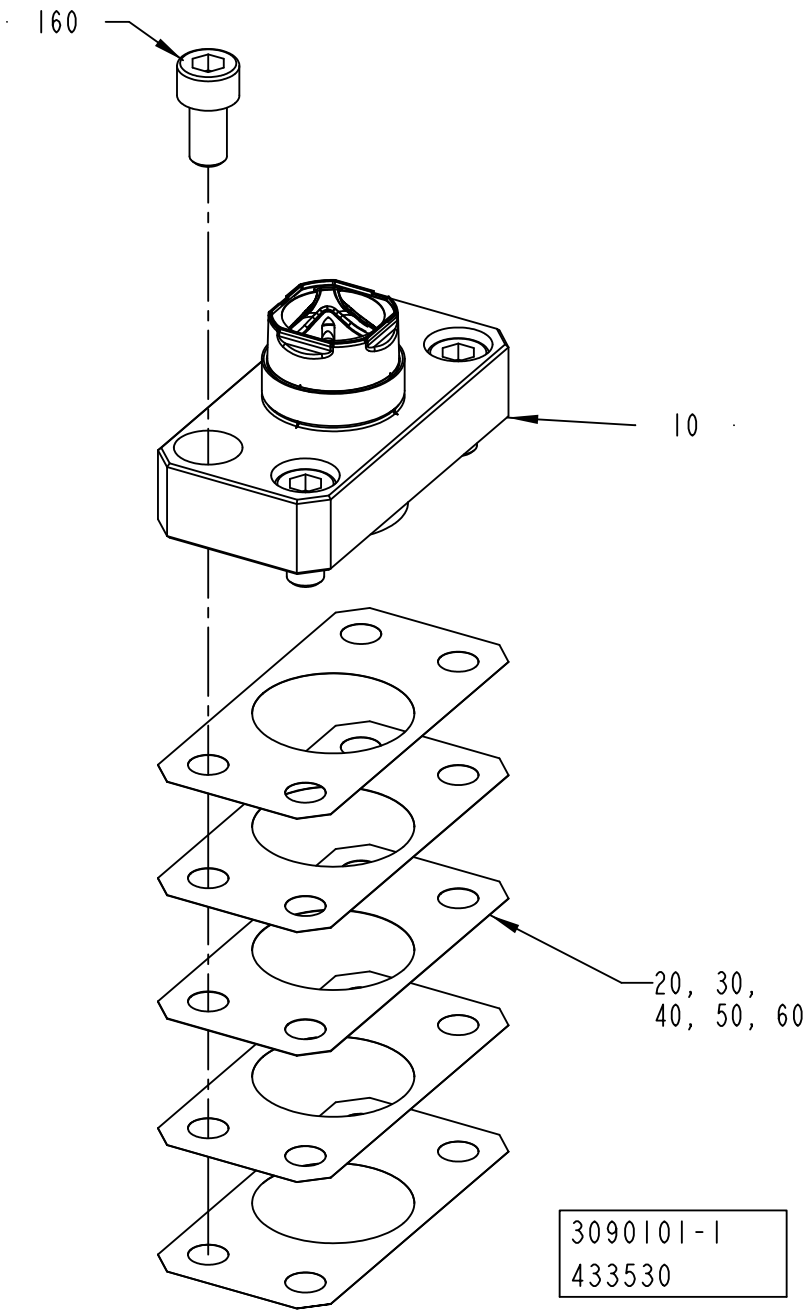

ECM: 436348 - 20100326
Group number: 3090101-0100
Assembly Drawing: 3090101-1_1_AA

Pos	Part No	UN	Qty	Description	Page No
-					
010	3043682-0000		1	EXTERNAL INSERT ASSEMBLY	
020	2771010-0001		1	SHIM	
030	2771010-0002		1	SHIM	
040	2771010-0003		1	SHIM	
050	2771010-0004		1	SHIM	
060	2771010-0005		1	SHIM	
160	312115-0366		4	SCREW ISO4762 M6X12 A4 80	

Pos	Part No	UN	Qty	Description	Page No

INTERNAL TOOL ASSEMBLY

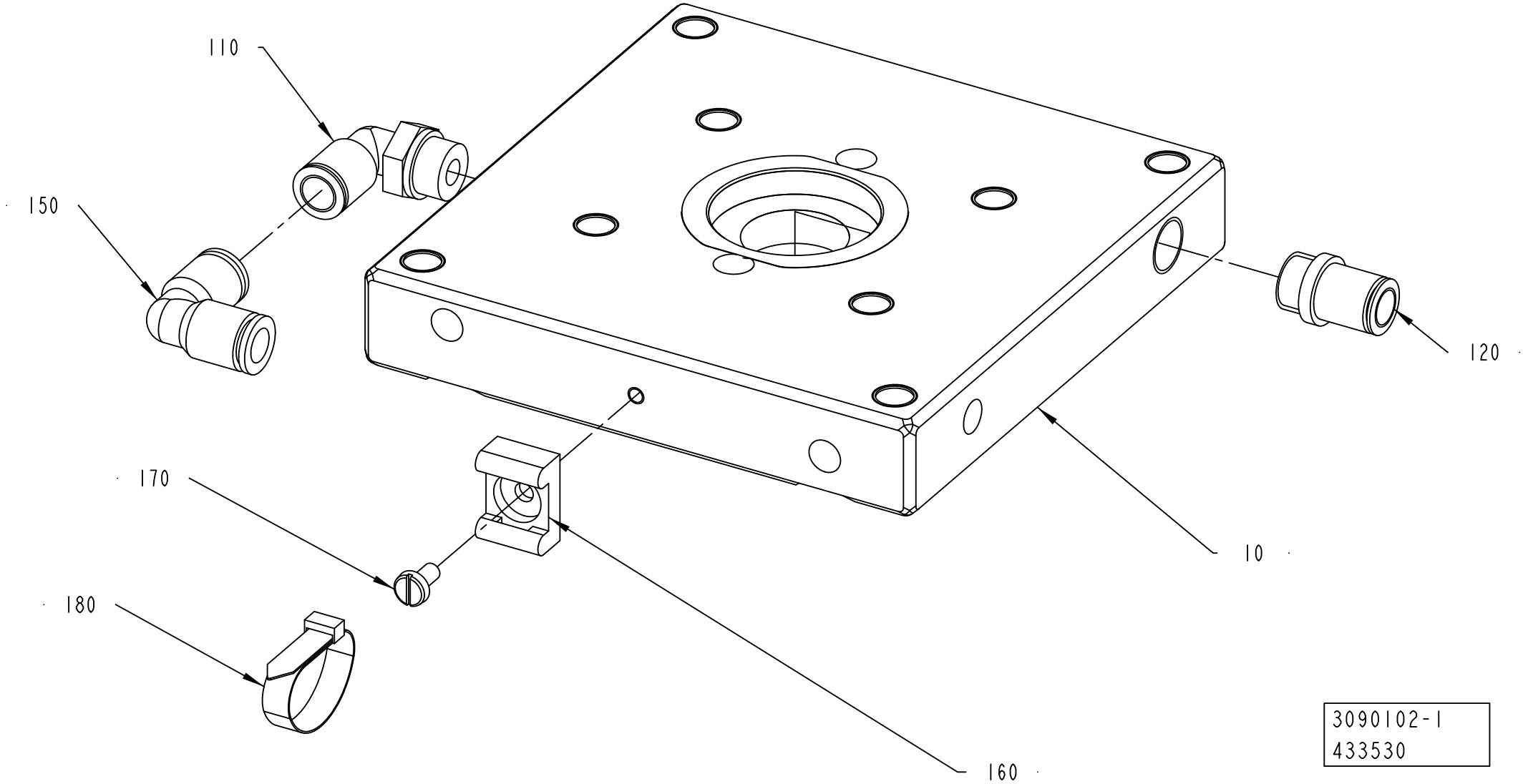

ECM: 436349 - 20100326
Group number: 3090102-0100
Assembly Drawing: 3090102-1_1_AA

Pos	Part No	UN	Qty	Description	Page No
-					
10	2977801-0000		1	INTERNAL TOOL	
110	350002-0009		1	PUSH-IN L-FITTING QSL-F-G1/4-8	
120	350003-0007		1	PUSH-IN FITTING QS-F-G1/4-8-I	
150	342735-0103		1	ELBOW PIPE JOINT	
160	352113-0203		1	ANCHOR PLATES FOR STRIPS, TM3S8-M0	
170	312132-0287		1	SLOTTED HEAD, PAN SCREW, MSCS M4X8	
180	352113-0103		1	CABLE TIE, BLACK 290X7,6 MM	

Pos	Part No	UN	Qty	Description	Page No

EXTERNAL TOOL ASSEMBLY

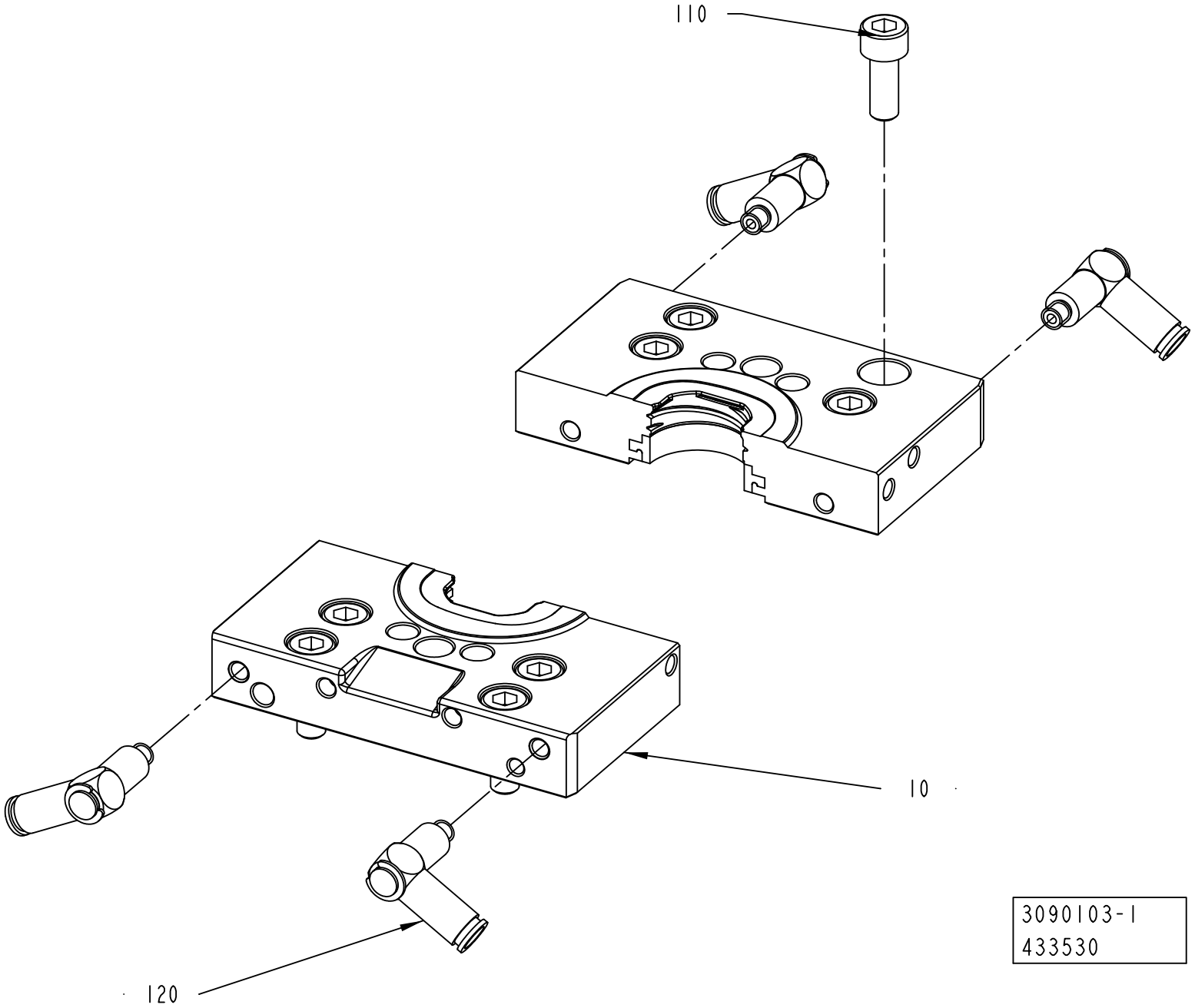

ECM: 436350 - 20100326
Group number: 3090103-0100
Assembly Drawing: 3090103-1_1_AA

Pos	Part No	UN	Qty	Description	Page No
-					
010	2977802-0000		1	EXTERNAL TOOL	
110	312115-0368		8	SCREW ISO4762 M6X16 A4 80	
120	2978778-0000		4	BANJO CONNECTION	

Pos	Part No	UN	Qty	Description	Page No

MOULDING TOOL ASSEMBLY

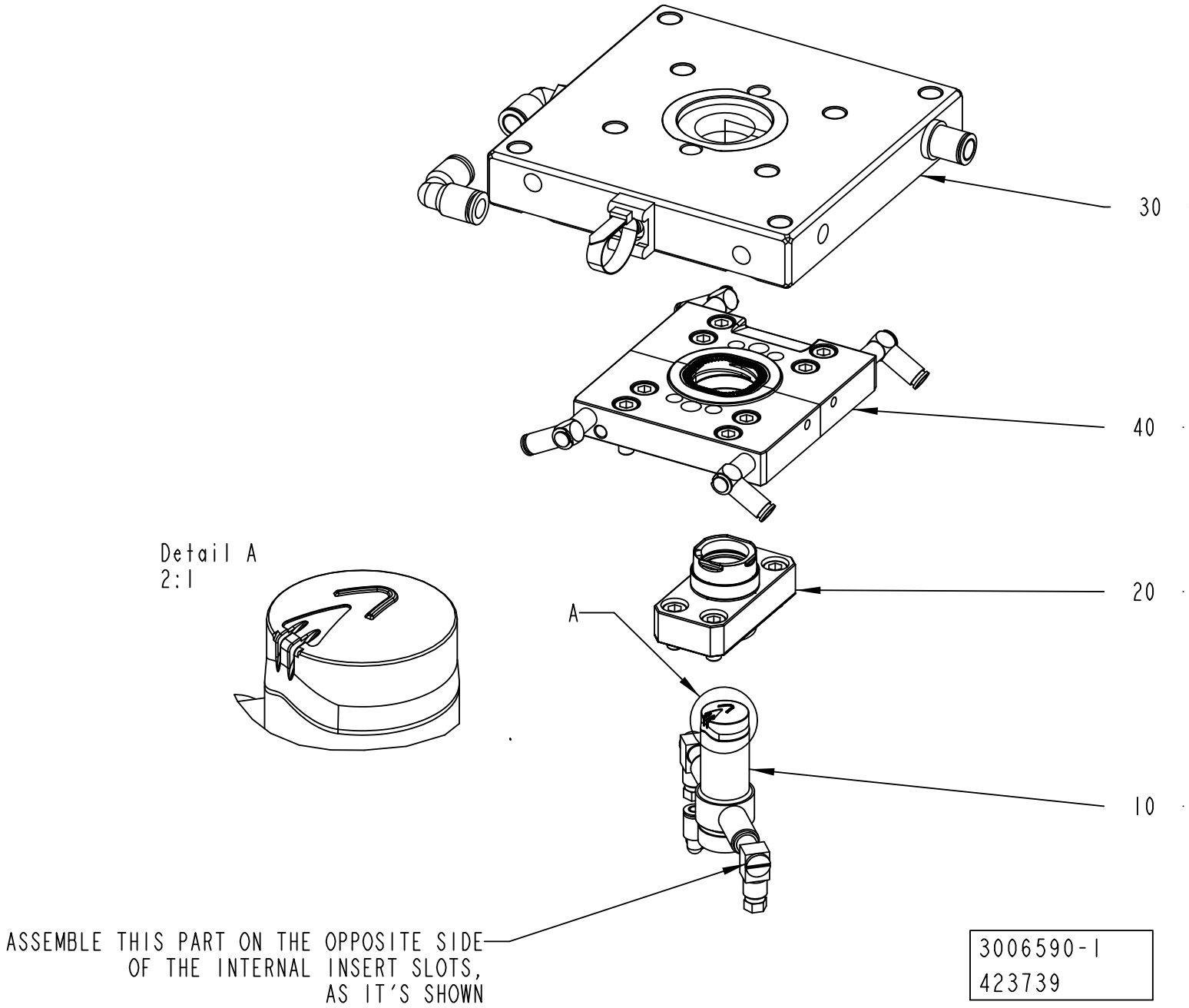

ECM: 427581 - 20100401
Group number: 3006590-0100
Assembly Drawing: 3006590-1_1_AC

Pos	Part No	UN	Qty	Description	Page No
-					
10	3015531-0000		1	INTERNAL INSERT ASSEMBLY	
20	3015530-0100		1	EXTERNAL INSERT ASSEMBLY	**1-863**
30	3015532-0100		1	INTERNAL TOOL ASSEMBLY	**1-865**
40	3015533-0100		1	EXTERNAL TOOL ASSEMBLY	**1-867**

Pos	Part No	UN	Qty	Description	Page No

Machine Type | Group Description | Used-In | Group Number | Page No

EXTERNAL INSERT ASSEMBLY

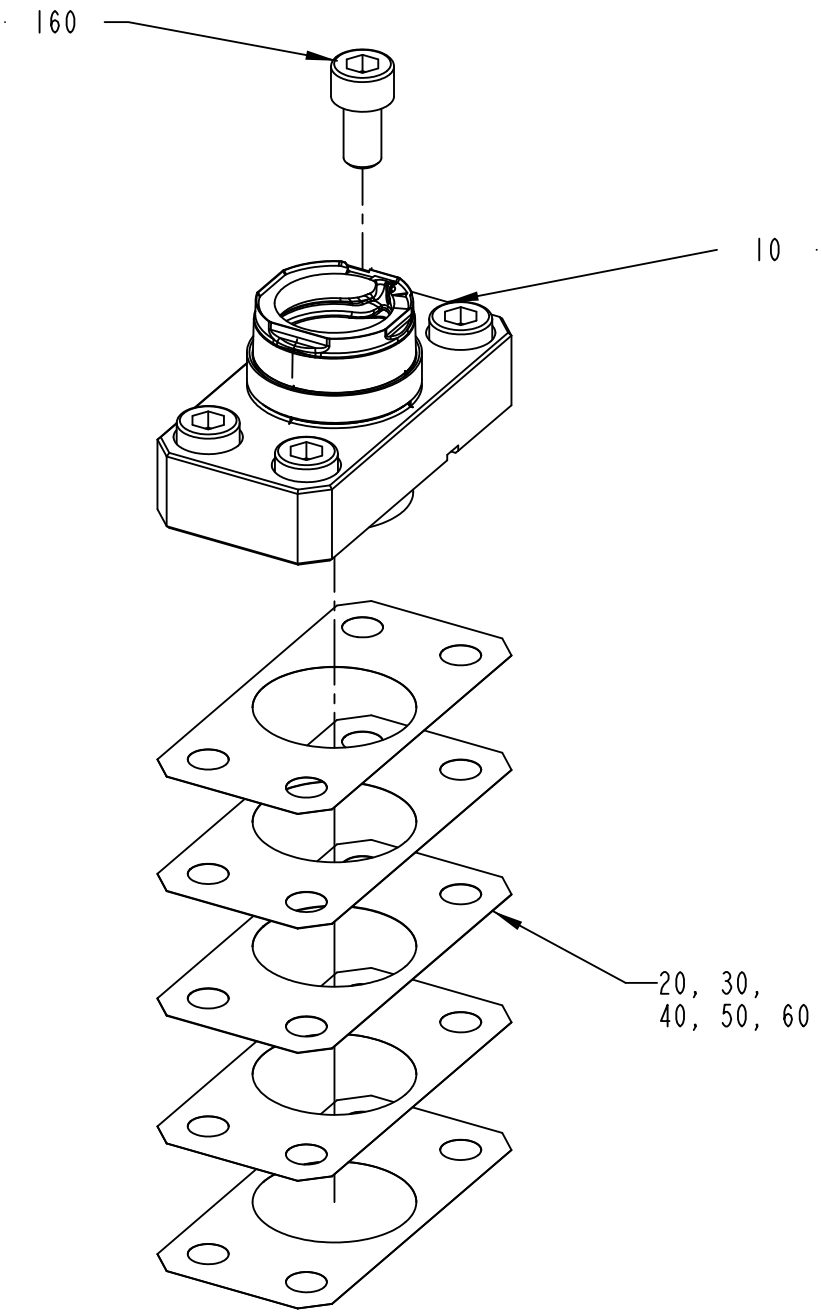

3015530-1
478664

ECM: 479780 - 20110401
Group number: 3015530-0100
Assembly Drawing: 3015530-1_1_AB

Pos	Part No	UN	Qty	Description	Page No
-					
10	3043684-0000		1	INSERT	
20	2771010-0001		1	SHIM	
30	2771010-0002		1	SHIM	
40	2771010-0003		1	SHIM	
50	2771010-0004		1	SHIM	
60	2771010-0005		1	SHIM	
160	312115-0366		4	SCREW ISO4762 M6X12 A4 80	

Pos	Part No	UN	Qty	Description	Page No

Machine Type | Group Description | Used-In | Group Number | Page No

INTERNAL TOOL ASSEMBLY

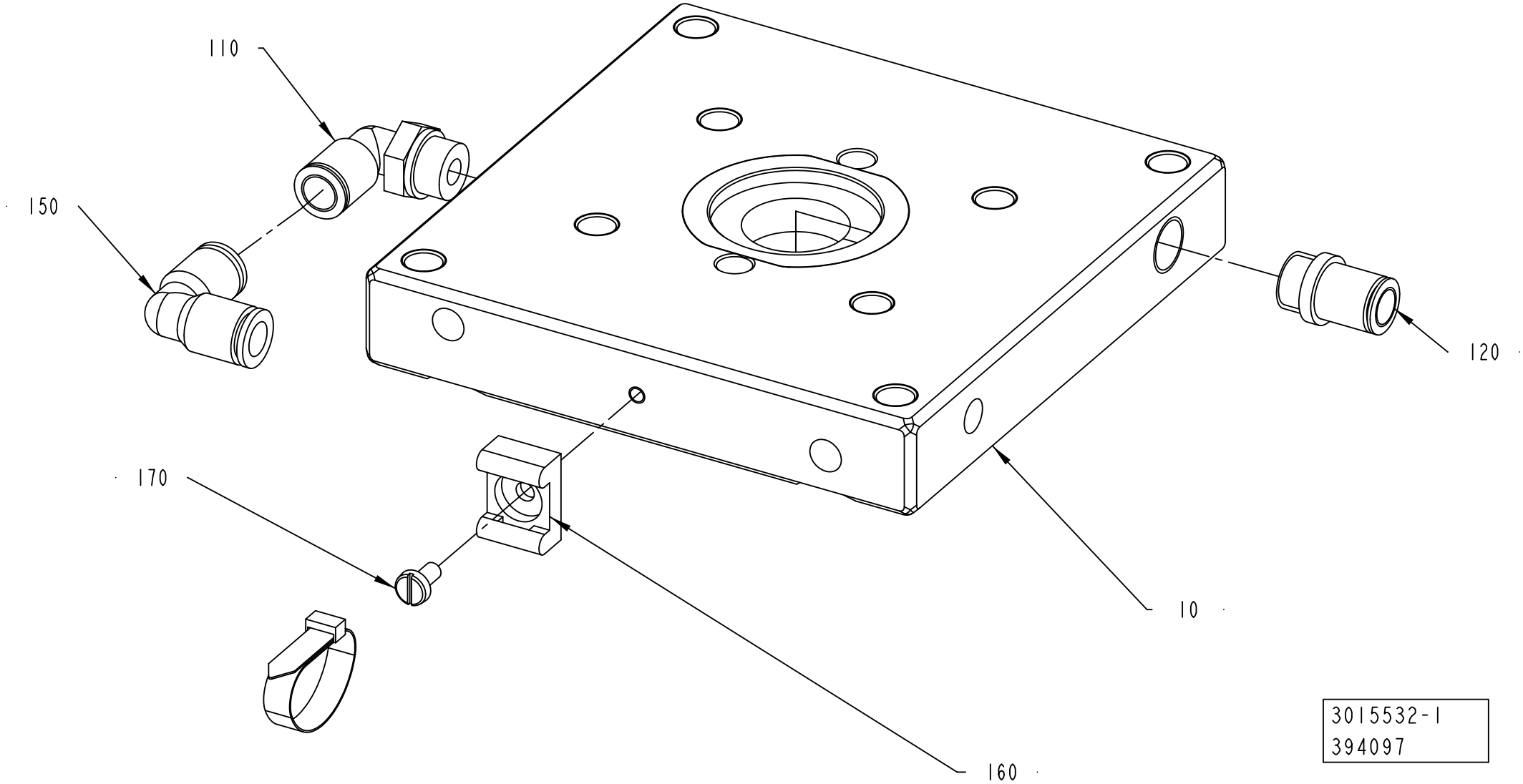

ECM: 394120 - 20090612
Group number: 3015532-0100
Assembly Drawing: 3015532-1_1_AA

Pos	Part No	UN	Qty	Description	Page No
-					
10	2909838-0000		1	INTERNAL TOOL	
110	350002-0009		1	PUSH-IN L-FITTING QSL-F-G1/4-8	
120	350003-0007		1	PUSH-IN FITTING QS-F-G1/4-8-I	
150	342735-0103		1	ELBOW PIPE JOINT	
160	352113-0203		1	ANCHOR PLATES FOR STRIPS, TM3S8-M0	
170	312132-0287		1	SLOTTED HEAD, PAN SCREW, MSCS M4X8	
180	352113-0103		1	CABLE TIE, BLACK 290X7,6 MM	

Pos	Part No	UN	Qty	Description	Page No

EXTERNAL TOOL ASSEMBLY

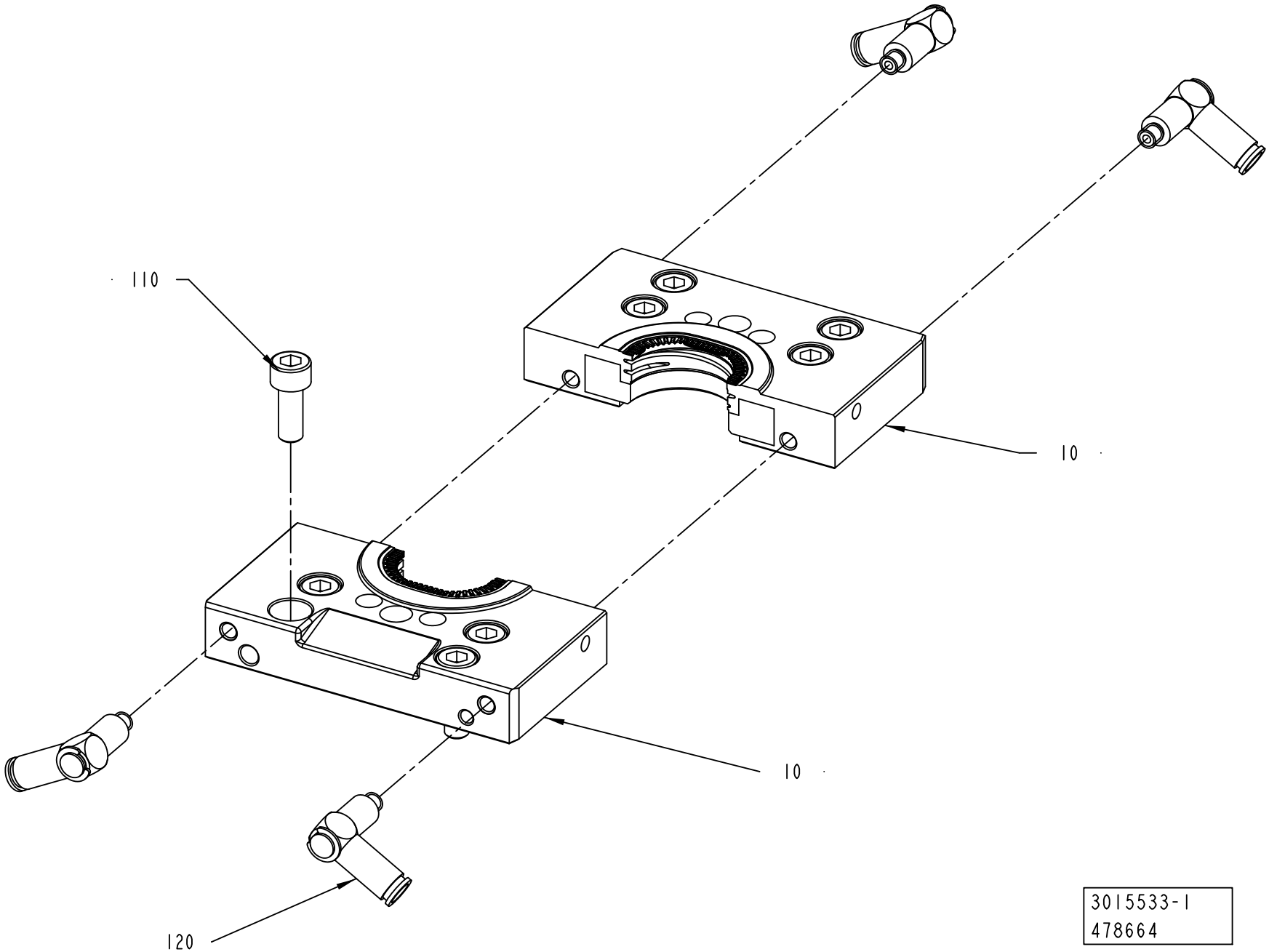

ECM: 479781 - 20110401
Group number: 3015533-0100
Assembly Drawing: 3015533-1_1_AB

Pos	Part No	UN	Qty	Description	Page No
-					
10	3043685-0000		1	EXTERNAL TOOL	
110	312115-0368		8	SCREW ISO4762 M6X16 A4 80	
120	2978778-0000		4	BANJO CONNECTION	

Pos	Part No	UN	Qty	Description	Page No

Machine Type | Group Description | Used-In | Group Number | Page No

MOULDING TOOL ASSEMBLY

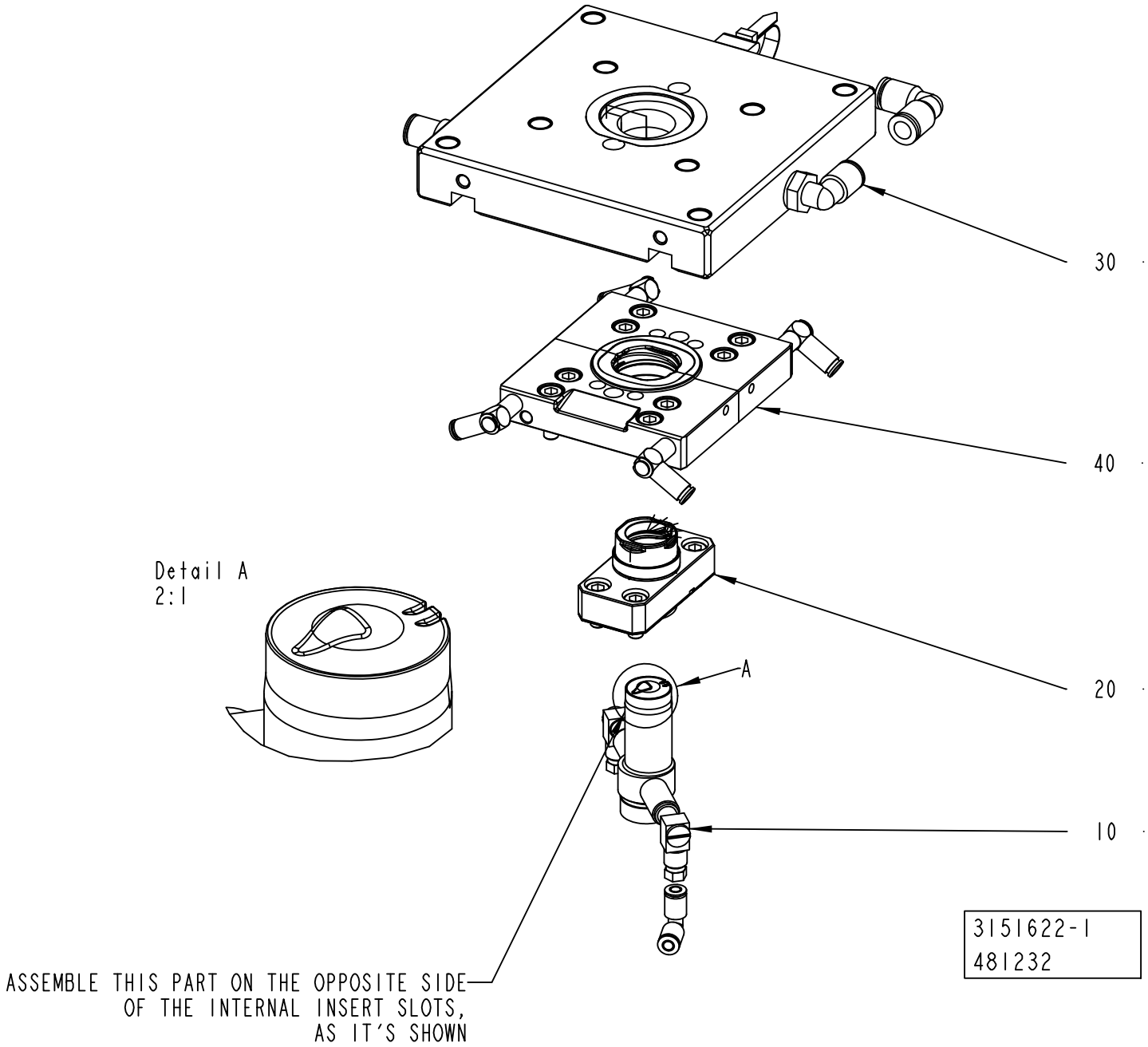

ECM: 485265 - 20101222
Group number: 3151622-0100
Assembly Drawing: 3151622-1_1_AA

Pos	Part No	UN	Qty	Description	Page No
-					
010	3151624-0000		1	INTERNAL INSERT ASSEMBLY	
020	3151623-0100		1	EXTERNAL INSERT ASSEMBLY	**1-871**
030	3151625-0100		1	INTERNAL TOOL ASSEMBLY	**1-873**
040	3151626-0100		1	EXTERNAL TOOL ASSEMBLY	**1-875, 1-877**

Pos	Part No	UN	Qty	Description	Page No

Machine Type | Group Description | Used-In | Group Number | Page No

EXTERNAL INSERT ASSEMBLY

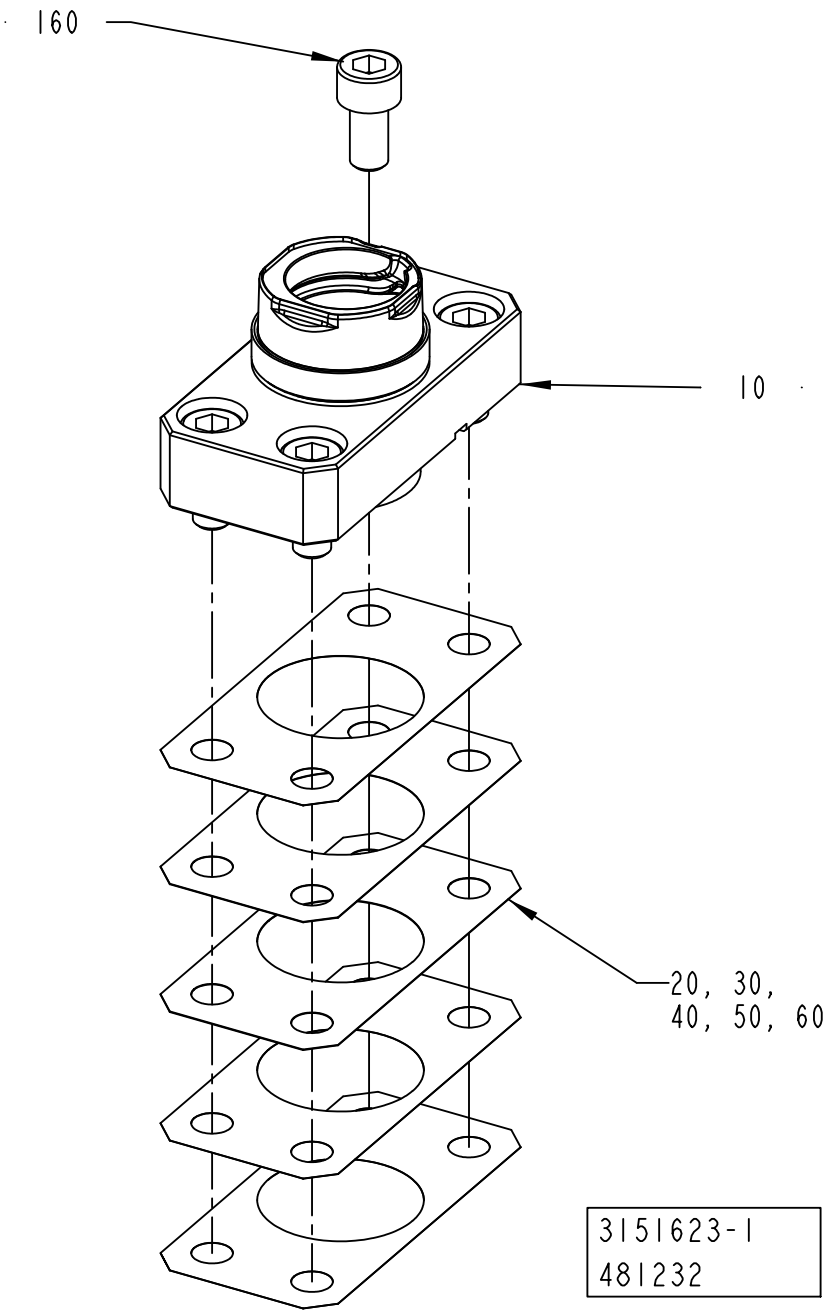

ECM: 485266 - 20101222
Group number: 3151623-0100
Assembly Drawing: 3151623-1_1_AA

Pos	Part No	UN	Qty	Description	Page No
-					
010	3043702-0000		1	INSERT	
020	2771010-0001		1	SHIM	
030	2771010-0002		1	SHIM	
040	2771010-0003		1	SHIM	
050	2771010-0004		1	SHIM	
060	2771010-0005		1	SHIM	
160	312115-0366		4	SCREW ISO4762 M6X12 A4 80	

Pos	Part No	UN	Qty	Description	Page No

INTERNAL TOOL ASSEMBLY

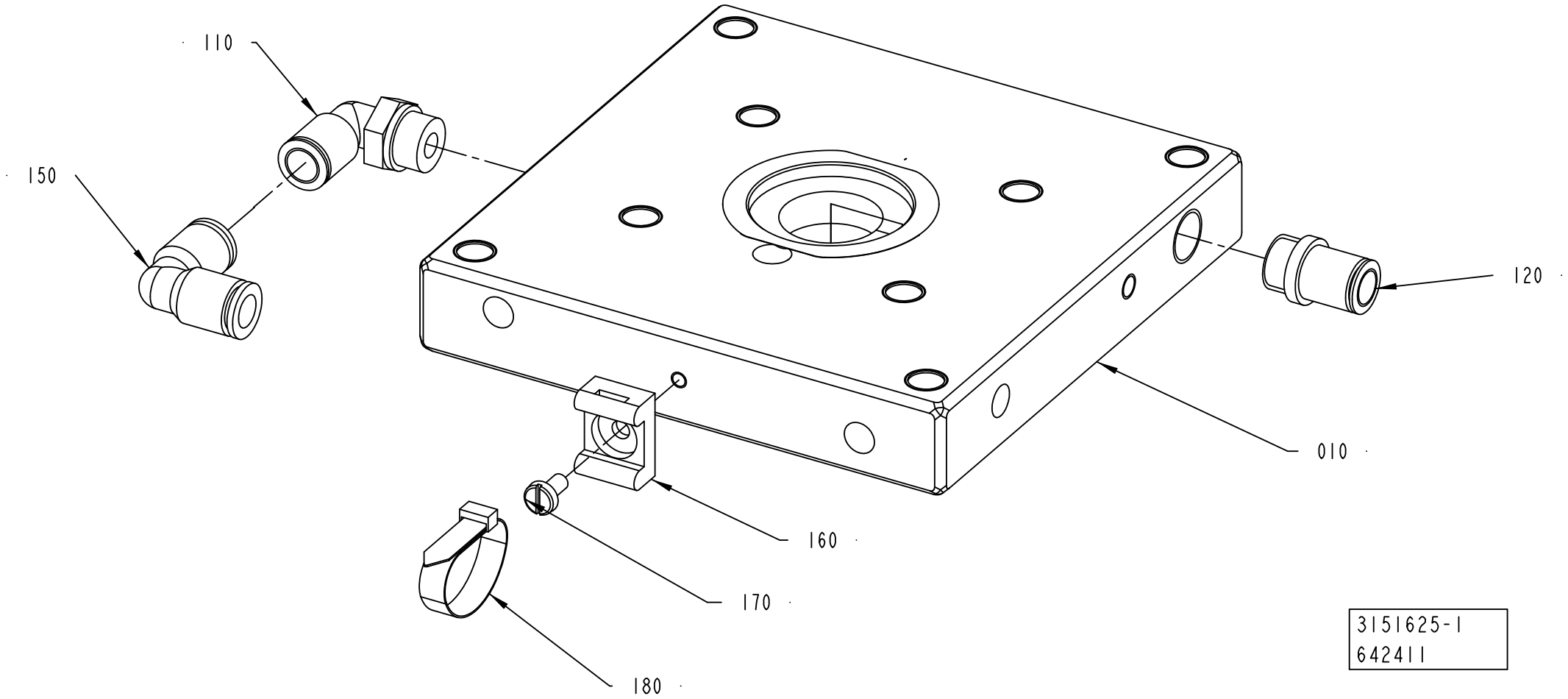

ECM: 642419 - 20140101
Group number: 3151625-0100
Assembly Drawing: 3151625-1_1_AB

Pos	Part No	UN	Qty	Description	Page No
-					
010	3043755-0000		1	INTERNAL TOOL	
110	350002-0009		1	PUSH-IN L-FITTING QSL-F-G1/4-8	
120	350003-0007		1	PUSH-IN FITTING QS-F-G1/4-8-I	
150	342735-0103		1	ELBOW PIPE JOINT	
160	352113-0203		1	ANCHOR PLATES FOR STRIPS, TM3S8-M0	
170	312132-0287		1	SLOTTED HEAD, PAN SCREW, MSCS M4X8	

Pos	Part No	UN	Qty	Description	Page No

EXTERNAL TOOL ASSEMBLY

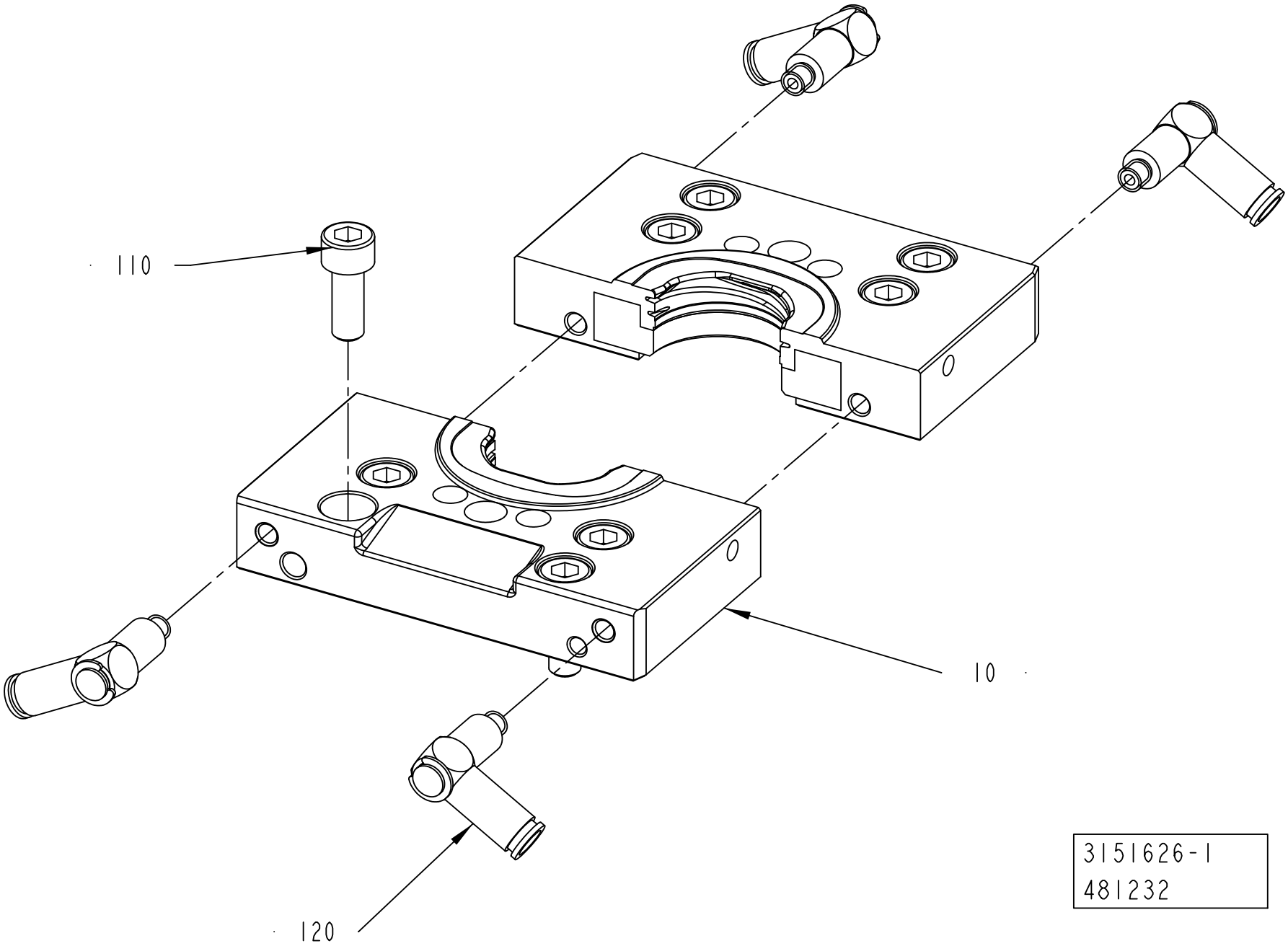

ECM: 598562 - 20130401
Group number: 3151626-0100
Assembly Drawing: 3151626-1_1_AA

This list covers pages from 1-874 to 1-877

Pos	Part No	UN	Qty	Description	Page No
LIGHTCAP30 (See drawing on page: 1-874)					
010	3043708-0000		1	EXTERNAL TOOL	
LIGHTCAP30B (See drawing on page: 1-876)					
010	3043744-0000		1	EXTERNAL TOOL	
Common Parts					
110	312115-0368		8	SCREW ISO4762 M6X16 A4 80	
120	2978778-0000		4	BANJO CONNECTION	

Pos	Part No	UN	Qty	Description	Page No

EXTERNAL TOOL ASSEMBLY

Drawing file: 3151626-2_1_AA.hpgl

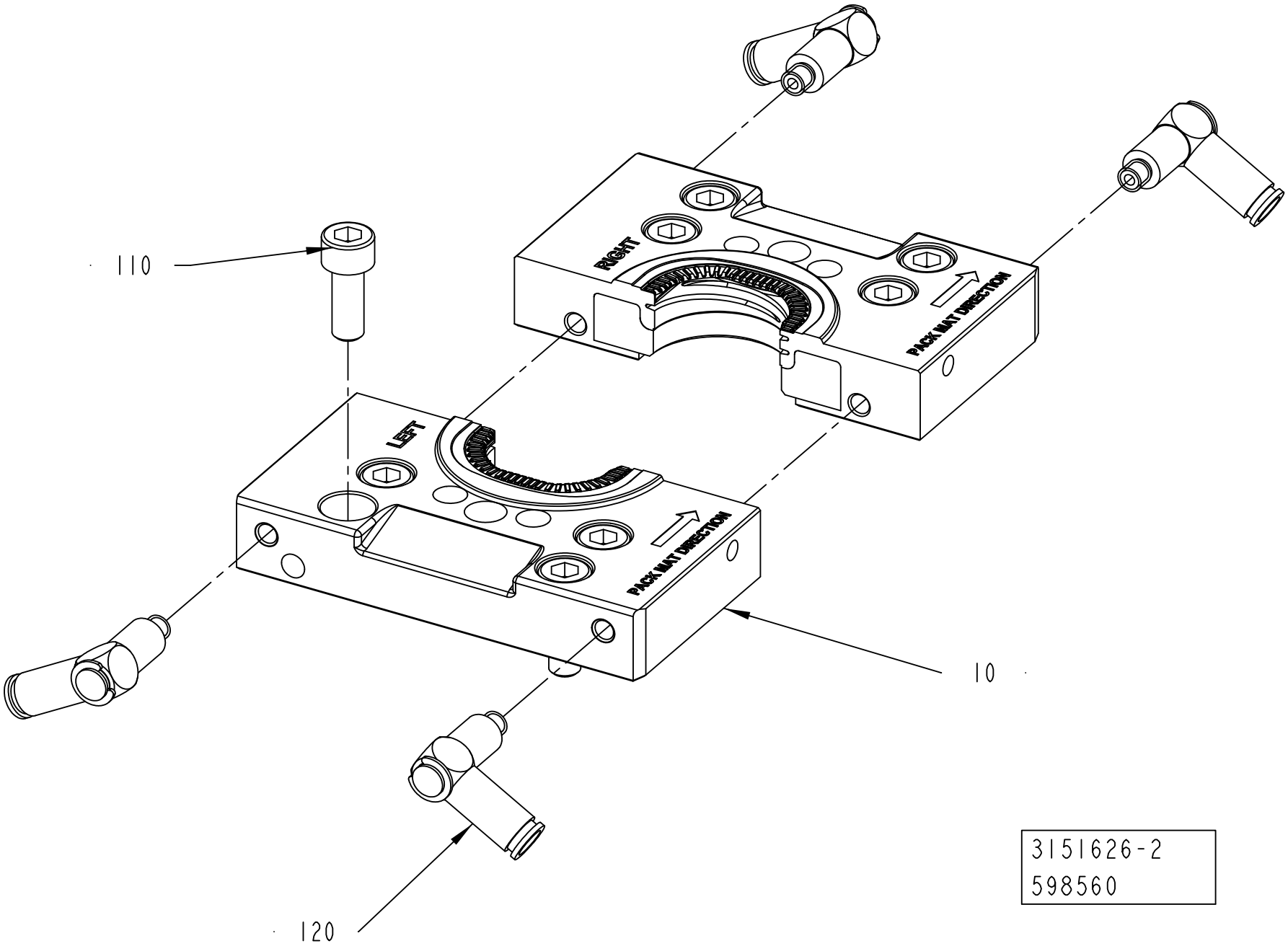

ECM: 598562 - 20130401
Group number: 3151626-0100
Assembly Drawing: 3151626-2_1_AA

This list covers pages from 1-874 to 1-877

Pos	Part No	UN	Qty	Description	Page No
LIGHTCAP30 (See drawing on page: 1-874)					
010	3043708-0000		1	EXTERNAL TOOL	
LIGHTCAP30B (See drawing on page: 1-876)					
010	3043744-0000		1	EXTERNAL TOOL	
Common Parts					
110	312115-0368		8	SCREW ISO4762 M6X16 A4 80	
120	2978778-0000		4	BANJO CONNECTION	

Pos	Part No	UN	Qty	Description	Page No

MOULDING TOOL ASSEMBLY

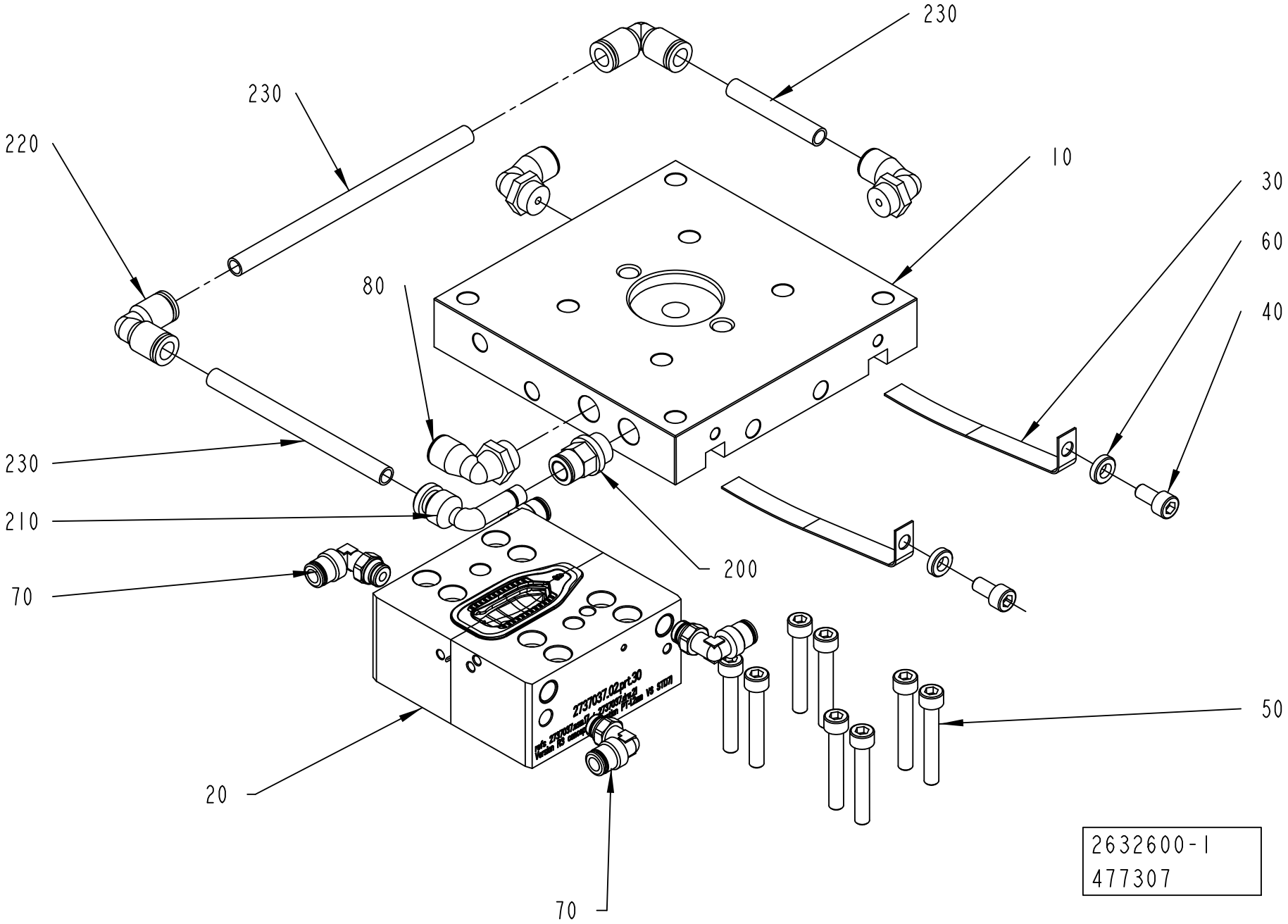

ECM: 477307 - 20110401
Group number: 2632600-0100
Assembly Drawing: 2632600-1_1_AC

Pos	Part No	UN	Qty	Description	Page No
-					
010	2550173-0000		1	INTERNAL TOOL	
020	2737037-0000		1	EXTERNAL TOOL	
030	1282162-0000		2	SPRING PLATE	
040	312115-0366		2	SCREW ISO4762 M6X12 A4 80	
050	312115-0378		8	SCREW ISO4762 M6X40 A4 80	
060	315115-0153		2	WASHER PLAIN, TBRB 6,4/12 H=3	
070	90603-2438		4	PUSH-IN L-FITTING S6520 6-1/8	
080	90458-2958		3	ELBOW PIPE JOINT, EXT.THREAD, D=8MM-G1/4	
200	350001-0009		1	PUSH-IN FITTING QS-F-G1/4-8	
210	90055-0204		1	ELBOW WITH TAILPIECE 8/8 MM LONG	
220	342735-0103		2	ELBOW PIPE JOINT	
230	315400-0006	M	1.5	TUBE PUN-H-8X1,25-SW	

Pos	Part No	UN	Qty	Description	Page No

This page is intentionally left blank.

ECM: 648584 - 20140401
Group number: 3272972-0200
Assembly Drawing:

Pos	Part No	UN	Qty	Description	Page No
TBA 1000E LIGHTCAP30 START FM TBA 1000M STDA7, TBA 1000M LIGHTCAP24 START FM TBA 1000M STDA7, TBA 1000S LIGHTCAP24 START FM TBA 1000M STDA7, TBA 1000E LIGHTCAP30B START FM TBA 1000M STDA7					
010	3030370-0400		1	FLUSHING DEVICE	**1-883, 1-885, 1-887, 1-889**
TBA 1000E LIGHTCAP30 START FM TBA 1000S LIGHTCAP24, TBA 1000E LIGHTCAP30 START FM TBA 1000M LIGHTCAP24, TBA 1000E LIGHTCAP30B START FM TBA 1000S LIGHTCAP24, TBA 1000E LIGHTCAP30B START FM TBA 1000M LIGHTCAP24					
010	3234731-0100		1	CAP NECK FLUSHING	**1-891**
TBA 1000M LIGHTCAP24 START FM TBA 1000S LIGHTCAP24, TBA 1000M LIGHTCAP24 START FM TBA 1000E LIGHTCAP30, TBA 1000M LIGHTCAP24 START FM TBA 1000E LIGHTCAP30B					
010	3212901-0100		1	CAP NECK FLUSHING	**1-895**
TBA 1000M STDA7 START FM TBA 1000E LIGHTCAP30, TBA 1000M STDA7 START FM TBA 1000S LIGHTCAP24, TBA 1000M STDA7 START FM TBA 1000E LIGHTCAP30B					
010	3234889-0100		1	CAP NECK FLUSHING	**1-893**
TBA 1000S LIGHTCAP24 START FM TBA 1000E LIGHTCAP30, TBA 1000S LIGHTCAP24 START FM TBA 1000E LIGHTCAP30B					
010	3234728-0100		1	CAP NECK FLUSHING	**1-897**
Common Parts					
020	350006-0003		1	PUSH-IN FITTING QS-F-8H-6	

Pos	Part No	UN	Qty	Description	Page No

Machine Type	Group Description	Used-In	Group Number	Page No

FLUSHING DEVICE

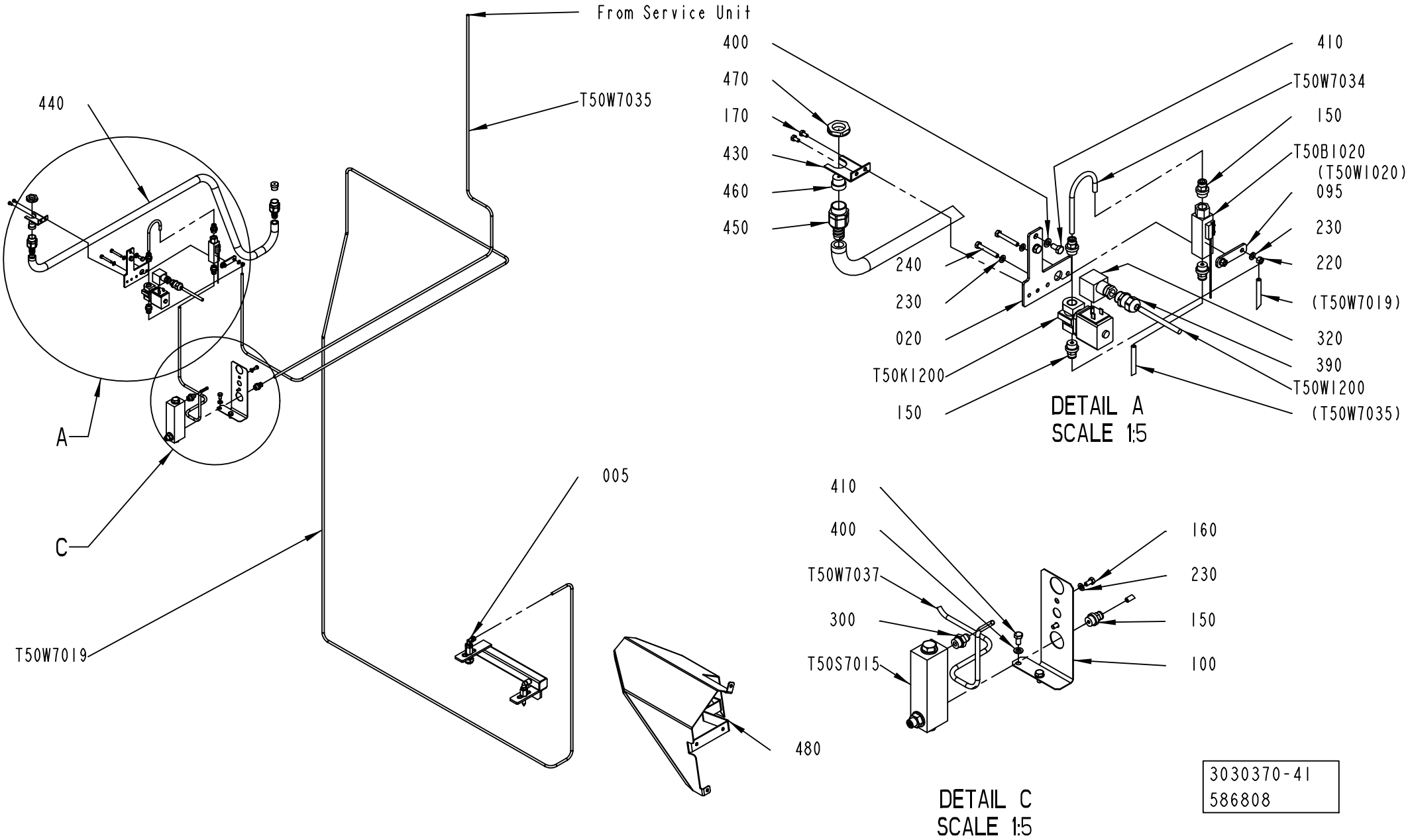

ECM: 648902 - 20140401
Group number: 3030370-0400
Assembly Drawing: 3030370-41_1_AA

This list covers pages from 1-882 to 1-889

Pos	Part No	UN	Qty	Description	Page No
LIGHTCAP30, LIGHTCAP30B (See drawing on page: 1-884)					
005	3234731-0100		1	CAP NECK FLUSHING	**1-891**
095	3043642-0000		1	PLATE	
100	3131564-0000		1	BRACKET	
150	350001-0008		5	PUSH-IN FITTING QS-F-G1/4-6	
160	312105-0325		2	SCREW, M6S ISO 4017 M5X10 A4 80	
220	312605-0314		2	HEXAGON NUT, M6M M5 A280	
230	315106-0146		6	"WASHER PLAIN, M5 ISO7089-5-200 HV A4"	
240	312105-0337		2	SCREW, M6S ISO 4014 M5X35 A4 80	
300	350002-0008		1	PUSH-IN L-FITTING QSL-F-G1/4-6	
400	315105-0153		4	WASHER PLAIN, 6,4X12X1,5 A4 BRB	
410	312105-0366		4	SCREW, M6S ISO 4017 M6X12 A4 80	
430	3147456-0000		1	SUPPORT	
440	90152-0050	MM	1100	HOSE, SPIRAL CONDUIT, 20X13, UL 1313	
450	90458-0413		2	CABLE FITTING, VK 22052YUL11	
460	3175609-0000		2	INSERT	
470	90458-0323		1	NUT, M20X1,5	
T50B1020	90600-1695		1	FLOW SWITCH 0,4 L/MIN, DW-K-A 0.4 L/MIN	
T50S7015	90243-0112		1	FLOW METER	
T50W7037	90459-0221	MM	300	TUBE, 6 MM PE BLACK	
STDA7 CAP (See drawing on page: 1-886)					
005	3234889-0100		1	CAP NECK FLUSHING	**1-893**
120	90224-0329		4	ELBOW 90 COUPL., EXT. THREAD 6/4-G1/4"	
400	315105-0153		2	WASHER PLAIN, 6,4X12X1,5 A4 BRB	
410	312105-0366		2	SCREW, M6S ISO 4017 M6X12 A4 80	
T50S7015	90187-0149		1	THROTTLE VALVE, G1/4, G1/4, MALE	
TBA 1000M LIGHTCAP24 (See drawing on page: 1-888)					
005	3212901-0100		1	CAP NECK FLUSHING	**1-895**
095	3043642-0000		1	PLATE	
100	3131564-0000		1	BRACKET	
150	350001-0008		5	PUSH-IN FITTING QS-F-G1/4-6	
160	312105-0325		2	SCREW, M6S ISO 4017 M5X10 A4 80	
220	312605-0314		2	HEXAGON NUT, M6M M5 A280	
230	315106-0146		6	"WASHER PLAIN, M5 ISO7089-5-200 HV A4"	
240	312105-0337		2	SCREW, M6S ISO 4014 M5X35 A4 80	
300	350002-0008		1	PUSH-IN L-FITTING QSL-F-G1/4-6	
400	315105-0153		4	WASHER PLAIN, 6,4X12X1,5 A4 BRB	
410	312105-0366		4	SCREW, M6S ISO 4017 M6X12 A4 80	
430	3147456-0000		1	SUPPORT	
440	90152-0050	MM	1100	HOSE, SPIRAL CONDUIT, 20X13, UL 1313	
450	90458-0413		2	CABLE FITTING, VK 22052YUL11	
460	3175609-0000		2	INSERT	
470	90458-0323		1	NUT, M20X1,5	
T50B1020	90600-1695		1	FLOW SWITCH 0,4 L/MIN, DW-K-A 0.4 L/MIN	
T50S7015	90243-0112		1	FLOW METER	
T50W7037	90459-0221	MM	300	TUBE, 6 MM PE BLACK	
TBA 1000S LIGHTCAP24 (See drawing on page: 1-882)					
005	3234728-0100		1	CAP NECK FLUSHING	**1-897**
095	3043642-0000		1	PLATE	
100	3131564-0000		1	BRACKET	
150	350001-0008		5	PUSH-IN FITTING QS-F-G1/4-6	
160	312105-0325		2	SCREW, M6S ISO 4017 M5X10 A4 80	
220	312605-0314		2	HEXAGON NUT, M6M M5 A280	
230	315106-0146		6	"WASHER PLAIN, M5 ISO7089-5-200 HV A4"	
240	312105-0337		2	SCREW, M6S ISO 4014 M5X35 A4 80	
300	350002-0008		1	PUSH-IN L-FITTING QSL-F-G1/4-6	
400	315105-0153		4	WASHER PLAIN, 6,4X12X1,5 A4 BRB	
410	312105-0366		4	SCREW, M6S ISO 4017 M6X12 A4 80	
430	3147456-0000		1	SUPPORT	
440	90152-0050	MM	1100	HOSE, SPIRAL CONDUIT, 20X13, UL 1313	
450	90458-0413		2	CABLE FITTING, VK 22052YUL11	
460	3175609-0000		2	INSERT	
470	90458-0323		1	NUT, M20X1,5	
T50B1020	90600-1695		1	FLOW SWITCH 0,4 L/MIN, DW-K-A 0.4 L/MIN	
T50S7015	90243-0112		1	FLOW METER	
T50W7037	90459-0221	MM	300	TUBE, 6 MM PE BLACK	
Common Parts					
020	3136468-0000		1	HOLDER	
170	312105-0287		2	SCREW, M6S ISO 4017 M4X8 A4 70	
320	90110-0095		1	CONNECTOR, PLUG SOCKET, MSSD-C-4P	
390	90458-0306		1	CABLE GLAND, M16X1,5, 5311 1010	
480	3277833-0000		1	COVER	
T50K1200	90042-0248		1	SOLENOID VALVE OFFICIENE DI ENSINO	
T50W1200	351150-0403	M	2.5	CABLE OLFLEX 3X0,75 MM2 LIGHT/GREY 35	
T50W7019	90459-0221	MM	6500	TUBE, 6 MM PE BLACK	
T50W7034	90459-0221	MM	200	TUBE, 6 MM PE BLACK	
T50W7035	90459-0221	MM	1400	TUBE, 6 MM PE BLACK	

Machine Type | Group Description | Used-In | Group Number | Page No

FLUSHING DEVICE

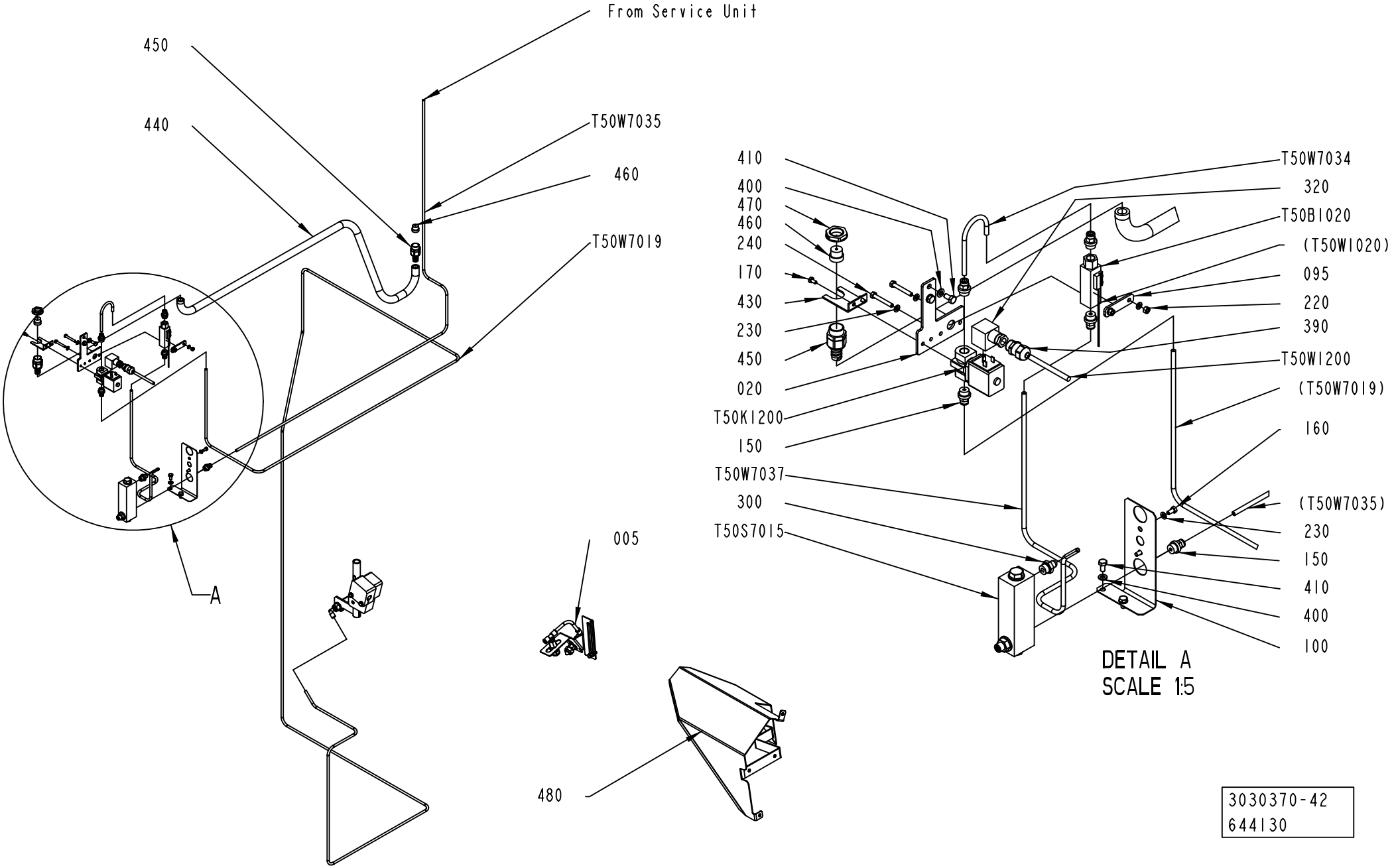

ECM: 648902 - 20140401
Group number: 3030370-0400
Assembly Drawing: 3030370-42_1_AB

This list covers pages from 1-882 to 1-889

Pos	Part No	UN	Qty	Description	Page No
LIGHTCAP30, LIGHTCAP30B (See drawing on page: 1-884)					
005	3234731-0100		1	CAP NECK FLUSHING	**1-891**
095	3043642-0000		1	PLATE	
100	3131564-0000		1	BRACKET	
150	350001-0008		5	PUSH-IN FITTING QS-F-G1/4-6	
160	312105-0325		2	SCREW, M6S ISO 4017 M5X10 A4 80	
220	312605-0314		2	HEXAGON NUT, M6M M5 A280	
230	315106-0146		6	"WASHER PLAIN, M5 ISO7089-5-200 HV A4"	
240	312105-0337		2	SCREW, M6S ISO 4014 M5X35 A4 80	
300	350002-0008		1	PUSH-IN L-FITTING QSL-F-G1/4-6	
400	315105-0153		4	WASHER PLAIN, 6,4X12X1,5 A4 BRB	
410	312105-0366		4	SCREW, M6S ISO 4017 M6X12 A4 80	
430	3147456-0000		1	SUPPORT	
440	90152-0050	MM	1100	HOSE, SPIRAL CONDUIT, 20X13, UL 1313	
450	90458-0413		2	CABLE FITTING, VK 22052YUL11	
460	3175609-0000		2	INSERT	
470	90458-0323		1	NUT, M20X1,5	
T50B1020	90600-1695		1	FLOW SWITCH 0,4 L/MIN, DW-K-A 0.4 L/MIN	
T50S7015	90243-0112		1	FLOW METER	
T50W7037	90459-0221	MM	300	TUBE, 6 MM PE BLACK	
STDA7 CAP (See drawing on page: 1-886)					
005	3234889-0100		1	CAP NECK FLUSHING	**1-893**
120	90224-0329		4	ELBOW 90 COUPL., EXT. THREAD 6/4-G1/4"	
400	315105-0153		2	WASHER PLAIN, 6,4X12X1,5 A4 BRB	
410	312105-0366		2	SCREW, M6S ISO 4017 M6X12 A4 80	
T50S7015	90187-0149		1	THROTTLE VALVE, G1/4, G1/4, MALE	
TBA 1000M LIGHTCAP24 (See drawing on page: 1-888)					
005	3212901-0100		1	CAP NECK FLUSHING	**1-895**
095	3043642-0000		1	PLATE	
100	3131564-0000		1	BRACKET	
150	350001-0008		5	PUSH-IN FITTING QS-F-G1/4-6	
160	312105-0325		2	SCREW, M6S ISO 4017 M5X10 A4 80	
220	312605-0314		2	HEXAGON NUT, M6M M5 A280	
230	315106-0146		6	"WASHER PLAIN, M5 ISO7089-5-200 HV A4"	
240	312105-0337		2	SCREW, M6S ISO 4014 M5X35 A4 80	
300	350002-0008		1	PUSH-IN L-FITTING QSL-F-G1/4-6	
400	315105-0153		4	WASHER PLAIN, 6,4X12X1,5 A4 BRB	
410	312105-0366		4	SCREW, M6S ISO 4017 M6X12 A4 80	
430	3147456-0000		1	SUPPORT	
440	90152-0050	MM	1100	HOSE, SPIRAL CONDUIT, 20X13, UL 1313	
450	90458-0413		2	CABLE FITTING, VK 22052YUL11	
460	3175609-0000		2	INSERT	
470	90458-0323		1	NUT, M20X1,5	
T50B1020	90600-1695		1	FLOW SWITCH 0,4 L/MIN, DW-K-A 0.4 L/MIN	
T50S7015	90243-0112		1	FLOW METER	
T50W7037	90459-0221	MM	300	TUBE, 6 MM PE BLACK	
TBA 1000S LIGHTCAP24 (See drawing on page: 1-882)					
005	3234728-0100		1	CAP NECK FLUSHING	**1-897**
095	3043642-0000		1	PLATE	
100	3131564-0000		1	BRACKET	
150	350001-0008		5	PUSH-IN FITTING QS-F-G1/4-6	
160	312105-0325		2	SCREW, M6S ISO 4017 M5X10 A4 80	
220	312605-0314		2	HEXAGON NUT, M6M M5 A280	
230	315106-0146		6	"WASHER PLAIN, M5 ISO7089-5-200 HV A4"	
240	312105-0337		2	SCREW, M6S ISO 4014 M5X35 A4 80	
300	350002-0008		1	PUSH-IN L-FITTING QSL-F-G1/4-6	
400	315105-0153		4	WASHER PLAIN, 6,4X12X1,5 A4 BRB	
410	312105-0366		4	SCREW, M6S ISO 4017 M6X12 A4 80	
430	3147456-0000		1	SUPPORT	
440	90152-0050	MM	1100	HOSE, SPIRAL CONDUIT, 20X13, UL 1313	
450	90458-0413		2	CABLE FITTING, VK 22052YUL11	
460	3175609-0000		2	INSERT	
470	90458-0323		1	NUT, M20X1,5	
T50B1020	90600-1695		1	FLOW SWITCH 0,4 L/MIN, DW-K-A 0.4 L/MIN	
T50S7015	90243-0112		1	FLOW METER	
T50W7037	90459-0221	MM	300	TUBE, 6 MM PE BLACK	
Common Parts					
020	3136468-0000		1	HOLDER	
170	312105-0287		2	SCREW, M6S ISO 4017 M4X8 A4 70	
320	90110-0095		1	CONNECTOR, PLUG SOCKET, MSSD-C-4P	
390	90458-0306		1	CABLE GLAND, M16X1,5, 5311 1010	
480	3277833-0000		1	COVER	
T50K1200	90042-0248		1	SOLENOID VALVE OFFICIENE DI ENSINO	
T50W1200	351150-0403	M	2.5	CABLE OLFLEX 3X0,75 MM2 LIGHT/GREY 35	
T50W7019	90459-0221	MM	6500	TUBE, 6 MM PE BLACK	
T50W7034	90459-0221	MM	200	TUBE, 6 MM PE BLACK	
T50W7035	90459-0221	MM	1400	TUBE, 6 MM PE BLACK	

Machine Type | Group Description | Used-In | Group Number | Page No

FLUSHING DEVICE

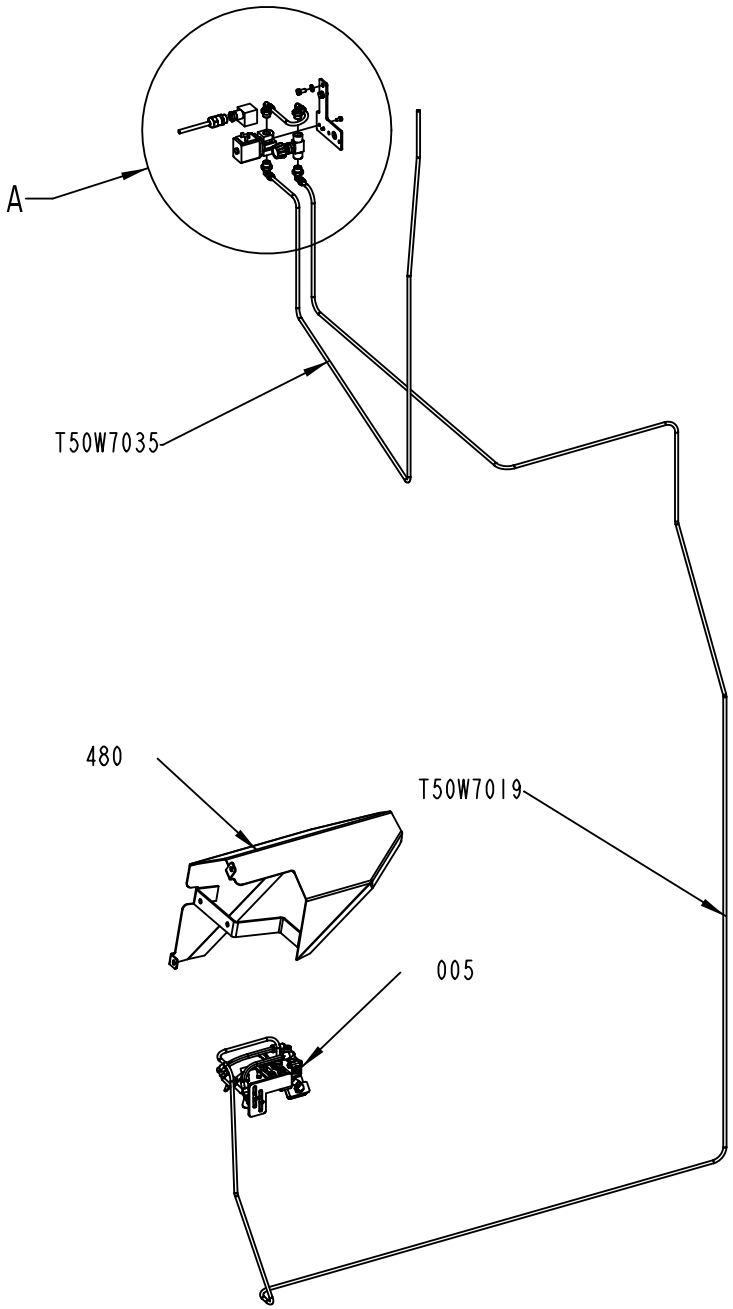

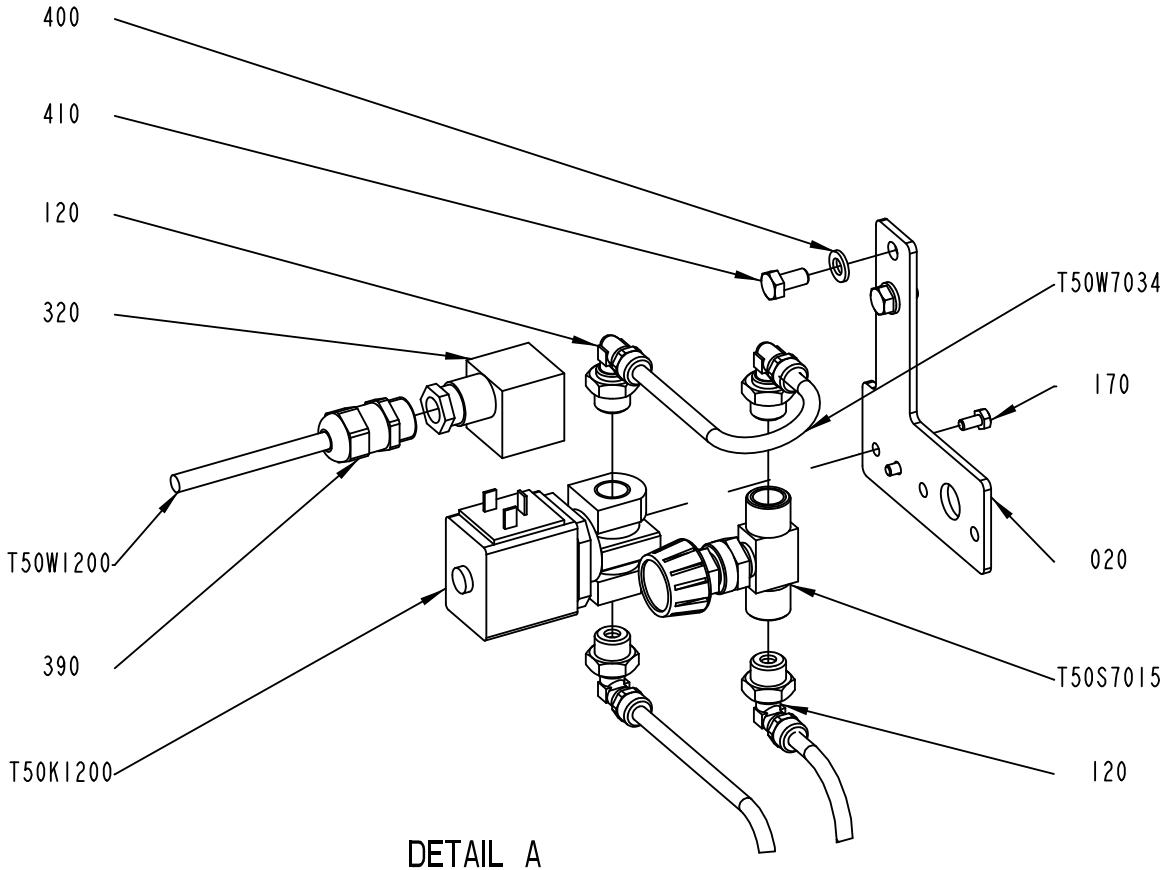

DETAIL A
SCALE 1:2

3030370-43
586808

ECM: 648902 - 20140401
Group number: 3030370-0400
Assembly Drawing: 3030370-43_1_AA

This list covers pages from 1-882 to 1-889

Pos	Part No	UN	Qty	Description	Page No
LIGHTCAP30, LIGHTCAP30B (See drawing on page: 1-884)					
005	3234731-0100		1	CAP NECK FLUSHING	**1-891**
095	3043642-0000		1	PLATE	
100	3131564-0000		1	BRACKET	
150	350001-0008		5	PUSH-IN FITTING QS-F-G1/4-6	
160	312105-0325		2	SCREW, M6S ISO 4017 M5X10 A4 80	
220	312605-0314		2	HEXAGON NUT, M6M M5 A280	
230	315106-0146		6	"WASHER PLAIN, M5 ISO7089-5-200 HV A4"	
240	312105-0337		2	SCREW, M6S ISO 4014 M5X35 A4 80	
300	350002-0008		1	PUSH-IN L-FITTING QSL-F-G1/4-6	
400	315105-0153		4	WASHER PLAIN, 6,4X12X1,5 A4 BRB	
410	312105-0366		4	SCREW, M6S ISO 4017 M6X12 A4 80	
430	3147456-0000		1	SUPPORT	
440	90152-0050	MM	1100	HOSE, SPIRAL CONDUIT, 20X13, UL 1313	
450	90458-0413		2	CABLE FITTING, VK 22052YUL11	
460	3175609-0000		2	INSERT	
470	90458-0323		1	NUT, M20X1,5	
T50B1020	90600-1695		1	FLOW SWITCH 0,4 L/MIN, DW-K-A 0.4 L/MIN	
T50S7015	90243-0112		1	FLOW METER	
T50W7037	90459-0221	MM	300	TUBE, 6 MM PE BLACK	
STDA7 CAP (See drawing on page: 1-886)					
005	3234889-0100		1	CAP NECK FLUSHING	**1-893**
120	90224-0329		4	ELBOW 90 COUPL., EXT. THREAD 6/4-G1/4"	
400	315105-0153		2	WASHER PLAIN, 6,4X12X1,5 A4 BRB	
410	312105-0366		2	SCREW, M6S ISO 4017 M6X12 A4 80	
T50S7015	90187-0149		1	THROTTLE VALVE, G1/4, G1/4, MALE	
TBA 1000M LIGHTCAP24 (See drawing on page: 1-888)					
005	3212901-0100		1	CAP NECK FLUSHING	**1-895**
095	3043642-0000		1	PLATE	
100	3131564-0000		1	BRACKET	
150	350001-0008		5	PUSH-IN FITTING QS-F-G1/4-6	
160	312105-0325		2	SCREW, M6S ISO 4017 M5X10 A4 80	
220	312605-0314		2	HEXAGON NUT, M6M M5 A280	
230	315106-0146		6	"WASHER PLAIN, M5 ISO7089-5-200 HV A4"	
240	312105-0337		2	SCREW, M6S ISO 4014 M5X35 A4 80	
300	350002-0008		1	PUSH-IN L-FITTING QSL-F-G1/4-6	
400	315105-0153		4	WASHER PLAIN, 6,4X12X1,5 A4 BRB	
410	312105-0366		4	SCREW, M6S ISO 4017 M6X12 A4 80	
430	3147456-0000		1	SUPPORT	
440	90152-0050	MM	1100	HOSE, SPIRAL CONDUIT, 20X13, UL 1313	
450	90458-0413		2	CABLE FITTING, VK 22052YUL11	
460	3175609-0000		2	INSERT	
470	90458-0323		1	NUT, M20X1,5	
T50B1020	90600-1695		1	FLOW SWITCH 0,4 L/MIN, DW-K-A 0.4 L/MIN	
T50S7015	90243-0112		1	FLOW METER	
T50W7037	90459-0221	MM	300	TUBE, 6 MM PE BLACK	
TBA 1000S LIGHTCAP24 (See drawing on page: 1-882)					
005	3234728-0100		1	CAP NECK FLUSHING	**1-897**
095	3043642-0000		1	PLATE	
100	3131564-0000		1	BRACKET	
150	350001-0008		5	PUSH-IN FITTING QS-F-G1/4-6	
160	312105-0325		2	SCREW, M6S ISO 4017 M5X10 A4 80	
220	312605-0314		2	HEXAGON NUT, M6M M5 A280	
230	315106-0146		6	"WASHER PLAIN, M5 ISO7089-5-200 HV A4"	
240	312105-0337		2	SCREW, M6S ISO 4014 M5X35 A4 80	
300	350002-0008		1	PUSH-IN L-FITTING QSL-F-G1/4-6	
400	315105-0153		4	WASHER PLAIN, 6,4X12X1,5 A4 BRB	
410	312105-0366		4	SCREW, M6S ISO 4017 M6X12 A4 80	
430	3147456-0000		1	SUPPORT	
440	90152-0050	MM	1100	HOSE, SPIRAL CONDUIT, 20X13, UL 1313	
450	90458-0413		2	CABLE FITTING, VK 22052YUL11	
460	3175609-0000		2	INSERT	
470	90458-0323		1	NUT, M20X1,5	
T50B1020	90600-1695		1	FLOW SWITCH 0,4 L/MIN, DW-K-A 0.4 L/MIN	
T50S7015	90243-0112		1	FLOW METER	
T50W7037	90459-0221	MM	300	TUBE, 6 MM PE BLACK	
Common Parts					
020	3136468-0000		1	HOLDER	
170	312105-0287		2	SCREW, M6S ISO 4017 M4X8 A4 70	
320	90110-0095		1	CONNECTOR, PLUG SOCKET, MSSD-C-4P	
390	90458-0306		1	CABLE GLAND, M16X1,5, 5311 1010	
480	3277833-0000		1	COVER	
T50K1200	90042-0248		1	SOLENOID VALVE OFFICIENE DI ENSINO	
T50W1200	351150-0403	M	2.5	CABLE OLFLEX 3X0,75 MM2 LIGHT/GREY 35	
T50W7019	90459-0221	MM	6500	TUBE, 6 MM PE BLACK	
T50W7034	90459-0221	MM	200	TUBE, 6 MM PE BLACK	
T50W7035	90459-0221	MM	1400	TUBE, 6 MM PE BLACK	

Machine Type | Group Description | Used-In | Group Number | Page No

FLUSHING DEVICE

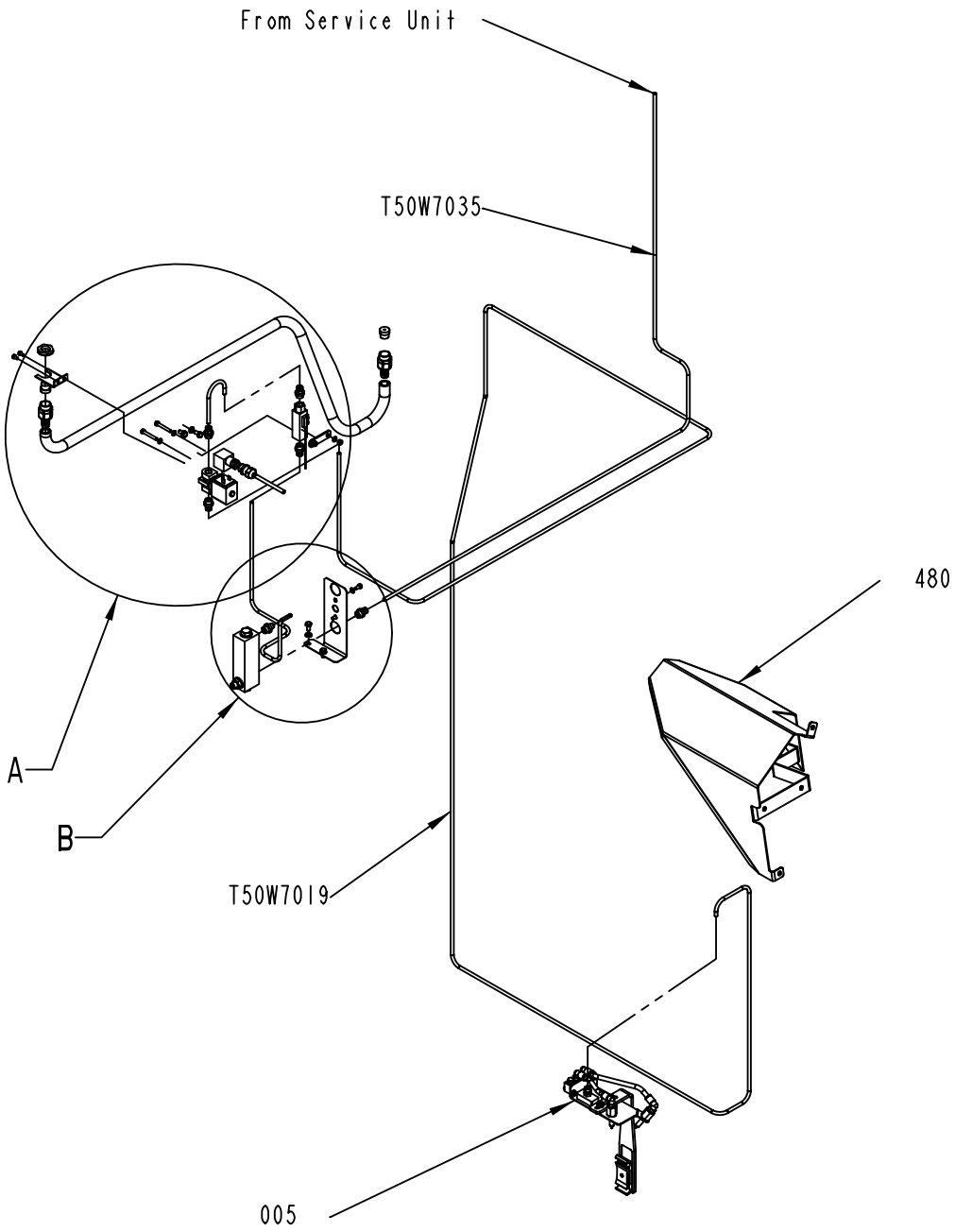

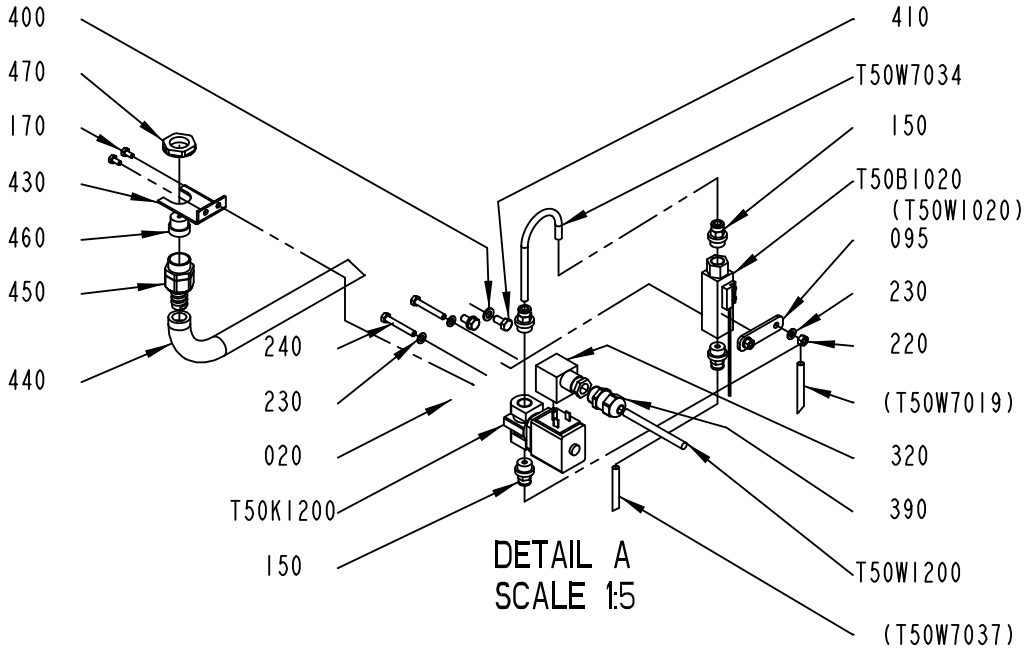

DETAIL A
SCALE 1:5

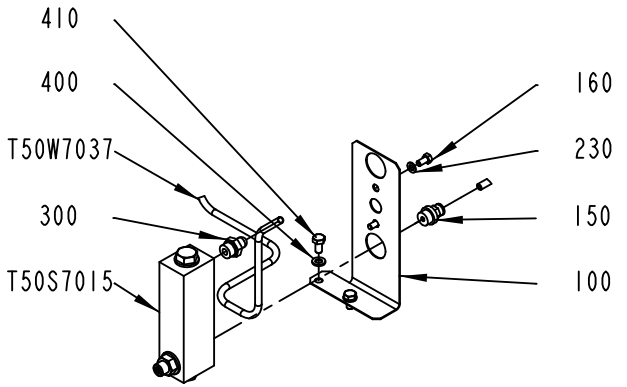

DETAIL B
SCALE 1:5

3030370-44
586808

ECM: 648902 - 20140401
Group number: 3030370-0400
Assembly Drawing: 3030370-44_1_AA

This list covers pages from 1-882 to 1-889

Pos	Part No	UN	Qty	Description	Page No
LIGHTCAP30, LIGHTCAP30B (See drawing on page: 1-884)					
005	3234731-0100		1	CAP NECK FLUSHING	**1-891**
095	3043642-0000		1	PLATE	
100	3131564-0000		1	BRACKET	
150	350001-0008		5	PUSH-IN FITTING QS-F-G1/4-6	
160	312105-0325		2	SCREW, M6S ISO 4017 M5X10 A4 80	
220	312605-0314		2	HEXAGON NUT, M6M M5 A280	
230	315106-0146		6	"WASHER PLAIN, M5 ISO7089-5-200 HV A4"	
240	312105-0337		2	SCREW, M6S ISO 4014 M5X35 A4 80	
300	350002-0008		1	PUSH-IN L-FITTING QSL-F-G1/4-6	
400	315105-0153		4	WASHER PLAIN, 6,4X12X1,5 A4 BRB	
410	312105-0366		4	SCREW, M6S ISO 4017 M6X12 A4 80	
430	3147456-0000		1	SUPPORT	
440	90152-0050	MM	1100	HOSE, SPIRAL CONDUIT, 20X13, UL 1313	
450	90458-0413		2	CABLE FITTING, VK 22052YUL11	
460	3175609-0000		2	INSERT	
470	90458-0323		1	NUT, M20X1,5	
T50B1020	90600-1695		1	FLOW SWITCH 0,4 L/MIN, DW-K-A 0.4 L/MIN	
T50S7015	90243-0112		1	FLOW METER	
T50W7037	90459-0221	MM	300	TUBE, 6 MM PE BLACK	
STDA7 CAP (See drawing on page: 1-886)					
005	3234889-0100		1	CAP NECK FLUSHING	**1-893**
120	90224-0329		4	ELBOW 90 COUPL., EXT. THREAD 6/4-G1/4"	
400	315105-0153		2	WASHER PLAIN, 6,4X12X1,5 A4 BRB	
410	312105-0366		2	SCREW, M6S ISO 4017 M6X12 A4 80	
T50S7015	90187-0149		1	THROTTLE VALVE, G1/4, G1/4, MALE	
TBA 1000M LIGHTCAP24 (See drawing on page: 1-888)					
005	3212901-0100		1	CAP NECK FLUSHING	**1-895**
095	3043642-0000		1	PLATE	
100	3131564-0000		1	BRACKET	
150	350001-0008		5	PUSH-IN FITTING QS-F-G1/4-6	
160	312105-0325		2	SCREW, M6S ISO 4017 M5X10 A4 80	
220	312605-0314		2	HEXAGON NUT, M6M M5 A280	
230	315106-0146		6	"WASHER PLAIN, M5 ISO7089-5-200 HV A4"	
240	312105-0337		2	SCREW, M6S ISO 4014 M5X35 A4 80	
300	350002-0008		1	PUSH-IN L-FITTING QSL-F-G1/4-6	
400	315105-0153		4	WASHER PLAIN, 6,4X12X1,5 A4 BRB	
410	312105-0366		4	SCREW, M6S ISO 4017 M6X12 A4 80	
430	3147456-0000		1	SUPPORT	
440	90152-0050	MM	1100	HOSE, SPIRAL CONDUIT, 20X13, UL 1313	
450	90458-0413		2	CABLE FITTING, VK 22052YUL11	
460	3175609-0000		2	INSERT	
470	90458-0323		1	NUT, M20X1,5	
T50B1020	90600-1695		1	FLOW SWITCH 0,4 L/MIN, DW-K-A 0.4 L/MIN	
T50S7015	90243-0112		1	FLOW METER	
T50W7037	90459-0221	MM	300	TUBE, 6 MM PE BLACK	
TBA 1000S LIGHTCAP24 (See drawing on page: 1-882)					
005	3234728-0100		1	CAP NECK FLUSHING	**1-897**
095	3043642-0000		1	PLATE	
100	3131564-0000		1	BRACKET	
150	350001-0008		5	PUSH-IN FITTING QS-F-G1/4-6	
160	312105-0325		2	SCREW, M6S ISO 4017 M5X10 A4 80	
220	312605-0314		2	HEXAGON NUT, M6M M5 A280	
230	315106-0146		6	"WASHER PLAIN, M5 ISO7089-5-200 HV A4"	
240	312105-0337		2	SCREW, M6S ISO 4014 M5X35 A4 80	
300	350002-0008		1	PUSH-IN L-FITTING QSL-F-G1/4-6	
400	315105-0153		4	WASHER PLAIN, 6,4X12X1,5 A4 BRB	
410	312105-0366		4	SCREW, M6S ISO 4017 M6X12 A4 80	
430	3147456-0000		1	SUPPORT	
440	90152-0050	MM	1100	HOSE, SPIRAL CONDUIT, 20X13, UL 1313	
450	90458-0413		2	CABLE FITTING, VK 22052YUL11	
460	3175609-0000		2	INSERT	
470	90458-0323		1	NUT, M20X1,5	
T50B1020	90600-1695		1	FLOW SWITCH 0,4 L/MIN, DW-K-A 0.4 L/MIN	
T50S7015	90243-0112		1	FLOW METER	
T50W7037	90459-0221	MM	300	TUBE, 6 MM PE BLACK	
Common Parts					
020	3136468-0000		1	HOLDER	
170	312105-0287		2	SCREW, M6S ISO 4017 M4X8 A4 70	
320	90110-0095		1	CONNECTOR, PLUG SOCKET, MSSD-C-4P	
390	90458-0306		1	CABLE GLAND, M16X1,5, 5311 1010	
480	3277833-0000		1	COVER	
T50K1200	90042-0248		1	SOLENOID VALVE OFFICIENE DI ENSINO	
T50W1200	351150-0403	M	2.5	CABLE OLFLEX 3X0,75 MM2 LIGHT/GREY 35	
T50W7019	90459-0221	MM	6500	TUBE, 6 MM PE BLACK	
T50W7034	90459-0221	MM	200	TUBE, 6 MM PE BLACK	
T50W7035	90459-0221	MM	1400	TUBE, 6 MM PE BLACK	

Machine Type | Group Description | Used-In | Group Number | Page No

CAP NECK FLUSHING

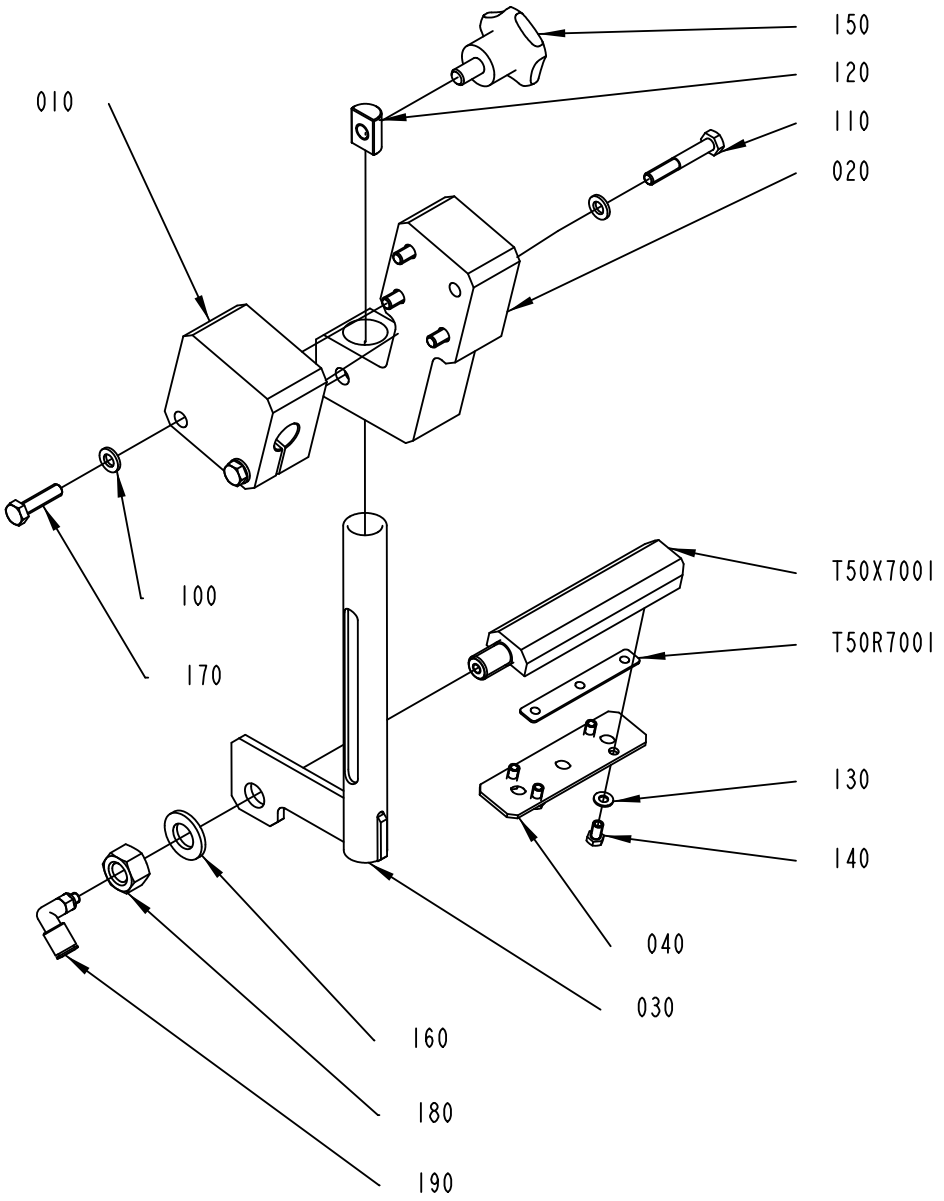

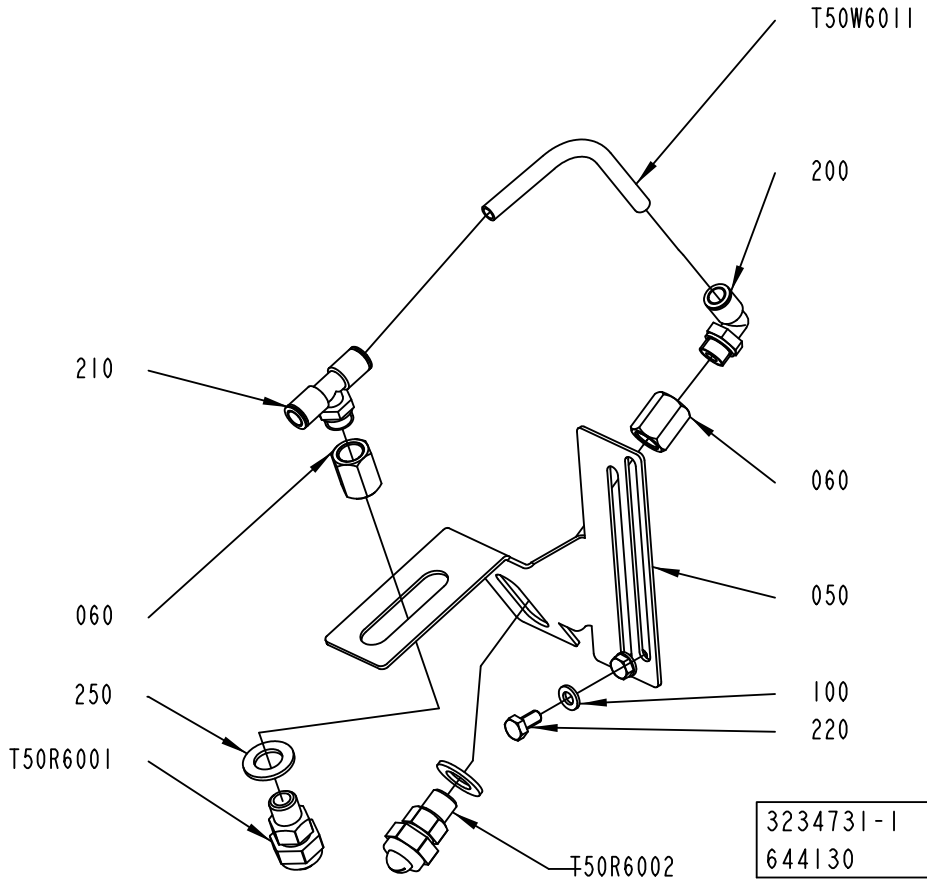

ECM: 648904 - 20140401
Group number: 3234731-0100
Assembly Drawing: 3234731-1_1_AC

Pos	Part No	UN	Qty	Description	Page No
-					
010	3103113-0000		1	BLOCK	
020	3103114-0000		1	HOLDER	
030	3103115-0000		1	HOLDER	
040	2931944-0000		1	COVER	
050	3268377-0000		1	HOLDER	
060	1523641-0000		2	SPACER	
100	315105-0153		8	WASHER PLAIN, 6,4X12X1,5 A4 BRB	
110	312105-0378		4	SCREW, M6S ISO 4014 M6X40 A4 80	
120	3103116-0000		1	LOCKING BLOCK	
130	315106-0136		4	WASHER PLAIN, M4 ISO7089-4-200 HV A4	
140	312105-0287		4	SCREW, M6S ISO 4017 M4X8 A4 70	
150	90051-0025		1	KNOB, EXTERNAL THREAD. NO. 8306-0200	
160	315106-0178		1	"WASHER PLAIN, M12 ISO7089-12-200 HV A4"	
170	312105-0372		2	SCREW, M6S ISO 4017 M6X25 A4 80	
180	312605-0322		1	HEXAGON NUT, M6M M12 A280	
190	350002-0002		1	PUSH-IN L-FITTING QSL-F-M5-6	
200	350002-0009		1	PUSH-IN L-FITTING QSL-F-G1/4-8	
210	350007-0009		1	PUSH-IN T-FITTING QST-F-G1/4-8	
220	312105-0366		2	SCREW, M6S ISO 4017 M6X12 A4 80	
250	315105-0179		2	WASHER PLAIN, 13,5X242 A4 BRB	
T50R6001	1523645-0000		1	AIR NOZZLE	
T50R6002	1523645-0000		1	AIR NOZZLE	
T50R7001	2931945-0000		1	NOZZLE	
T50W6011	315300-0004	MM	200	TUBE, 8 MM PE BLUE	
T50X7001	2886417-0000		1	DISTRIBUTOR	

Pos	Part No	UN	Qty	Description	Page No

CAP NECK FLUSHING

Drawing file: 3234889-2_1_AC.hpgl

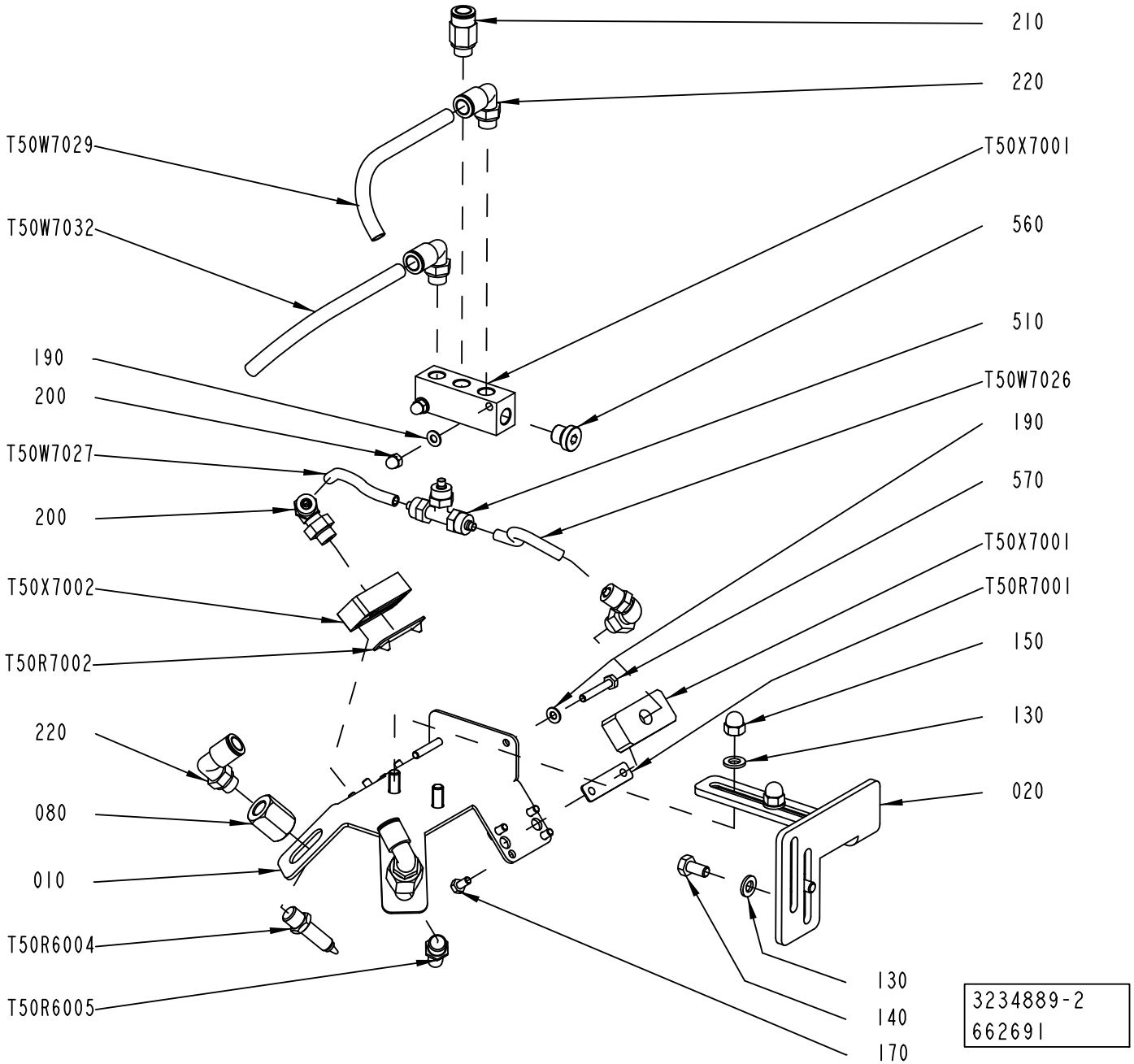

ECM: 669032 - 20140701
Group number: 3234889-0100
Assembly Drawing: 3234889-2_1_AC

Pos	Part No	UN	Qty	Description	Page No
-					
010	3140381-0000		1	BRACKET	
020	3141702-0000		1	ANGLE	
030	2764404-0000		2	SPACER	
100	312105-0287		8	SCREW, M6S ISO 4017 M4X8 A4 70	
110	315106-0136		4	WASHER PLAIN, M4 ISO7089-4-200 HV A4	
120	342931-0113		2	ELBOW 90 COUPL., EXT. THREAD 6/4-G1/8"	
130	315105-0153		4	WASHER PLAIN, 6,4X12X1,5 A4 BRB	
140	312105-0366		2	SCREW, M6S ISO 4017 M6X12 A4 80	
150	312705-0316		2	HEX. DOMED CAP MHM-6 M6 A280	
160	342946-0112		1	T-COUPLING,UNION 6/4	
170	90201-0450		1	PLUG, EXT THREAD HEX SOCKET VSCH-R 1/8"/	
180	312105-0297		2	SCREW, M6S ISO 4017 M4X25 A4 70	
200	312705-0312		2	NUT HEX. DOMED CAP MHM-6 M4 A280	
210	350001-0007		1	PUSH-IN FITTING QS-F-G1/8-8	
220	350002-0007		4	PUSH-IN L-FITTING QSL-F-G1/8-8	
T50R6001	90459-7280		1	AIR NOZZLE, 011	
T50R6002	90459-7280		1	AIR NOZZLE, 011	
T50R7001	3141043-0000		1	NOZZLE	
T50R7002	3141043-0000		1	NOZZLE	
T50W6011	315300-0004	MM	200	TUBE, 8 MM PE BLUE	
T50W6012	315300-0004	MM	200	TUBE, 8 MM PE BLUE	
T50W7026	90459-0221	MM	100	TUBE, 6 MM PE BLACK	
T50W7027	90459-0221	MM	100	TUBE, 6 MM PE BLACK	
T50X6001	90224-0314		1	DISTRIBUTOR BLOCK, FR-4-1/8-B	
T50X7001	3155771-0000		1	SUPPORT	
T50X7002	3155771-0000		1	SUPPORT	

Pos	Part No	UN	Qty	Description	Page No

CAP NECK FLUSHING

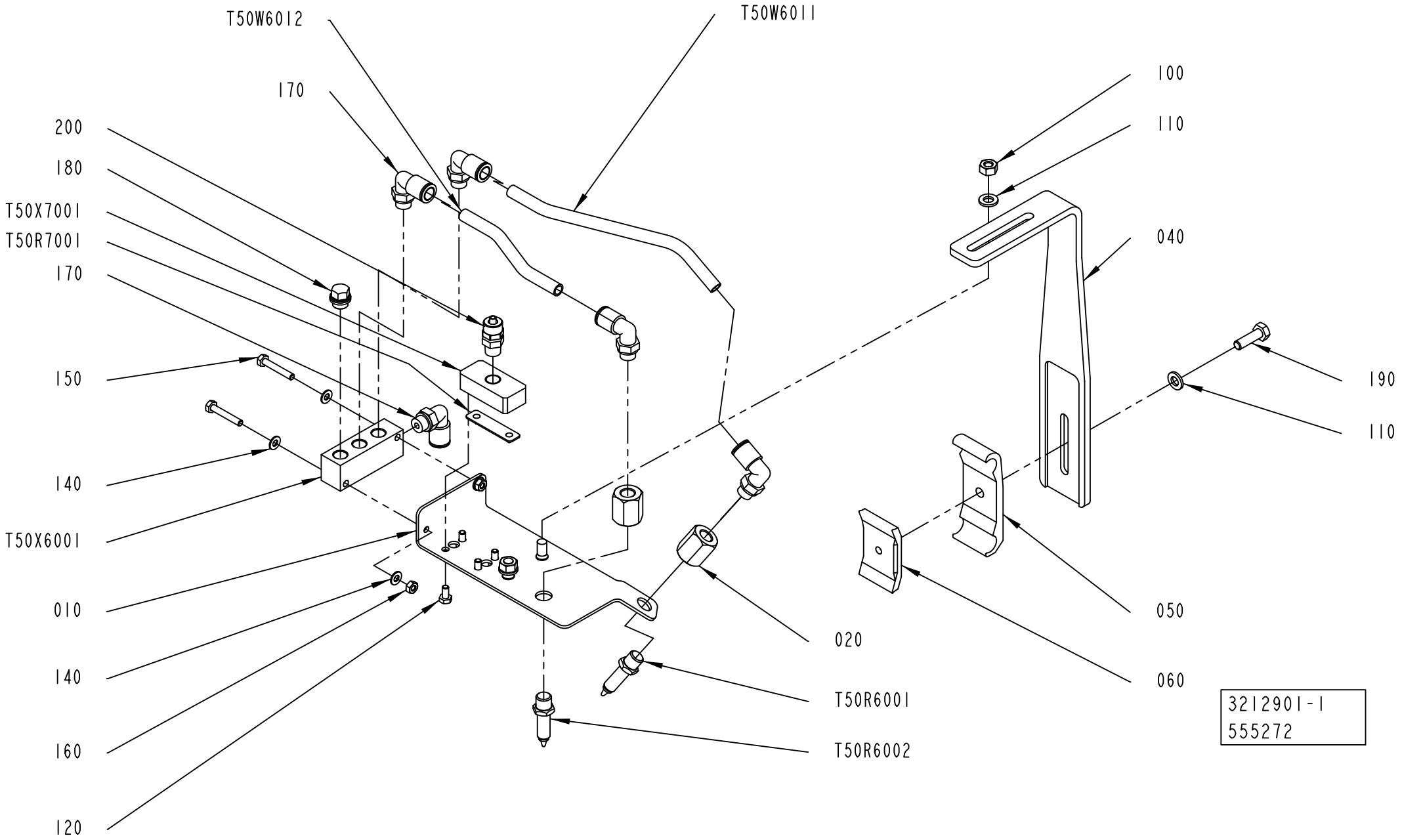

ECM: 603764 - 20130701
Group number: 3212901-0100
Assembly Drawing: 3212901-1_1_AB

Pos	Part No	UN	Qty	Description	Page No
-					
010	3212880-0000		1	BRACKET	
020	2764404-0000		2	SPACER	
040	3236596-0000		1	SUPPORT	
050	1366750-0000		1	HOLDER	
060	1366727-0000		1	CLAMP	
100	312605-0316		2	HEXAGON NUT, M6M M6 A280	
110	315105-0153		3	WASHER PLAIN, 6,4X12X1,5 A4 BRB	
120	312105-0287		4	SCREW, M6S ISO 4017 M4X8 A4 70	
140	315106-0136		4	WASHER PLAIN, M4 ISO7089-4-200 HV A4	
150	312105-0297		2	SCREW, M6S ISO 4017 M4X25 A4 70	
160	312605-0312		2	HEXAGON NUT, M6M M4 A280	
170	350002-0007		5	PUSH-IN L-FITTING QSL-F-G1/8-8	
180	90459-0698		1	PLUG G1/8 EXT., CDVI5.0-B-G1/8	
190	312105-0370		1	SCREW, M6S ISO 4017 M6X20 A4 80	
200	342920-0113		1	STRAIGHT COUPLING,EXT.THREAD 6/4-R1/8	
T50R6001	90459-7280		1	AIR NOZZLE, 011	
T50R6002	90459-7280		1	AIR NOZZLE, 011	
T50R7001	3141043-0000		1	NOZZLE	
T50W6011	315300-0004	MM	200	TUBE, 8 MM PE BLUE	
T50W6012	315300-0004	MM	100	TUBE, 8 MM PE BLUE	
T50X6001	90224-0314		1	DISTRIBUTOR BLOCK, FR-4-1/8-B	
T50X7001	3155771-0000		1	SUPPORT	

Pos	Part No	UN	Qty	Description	Page No

CAP NECK FLUSHING

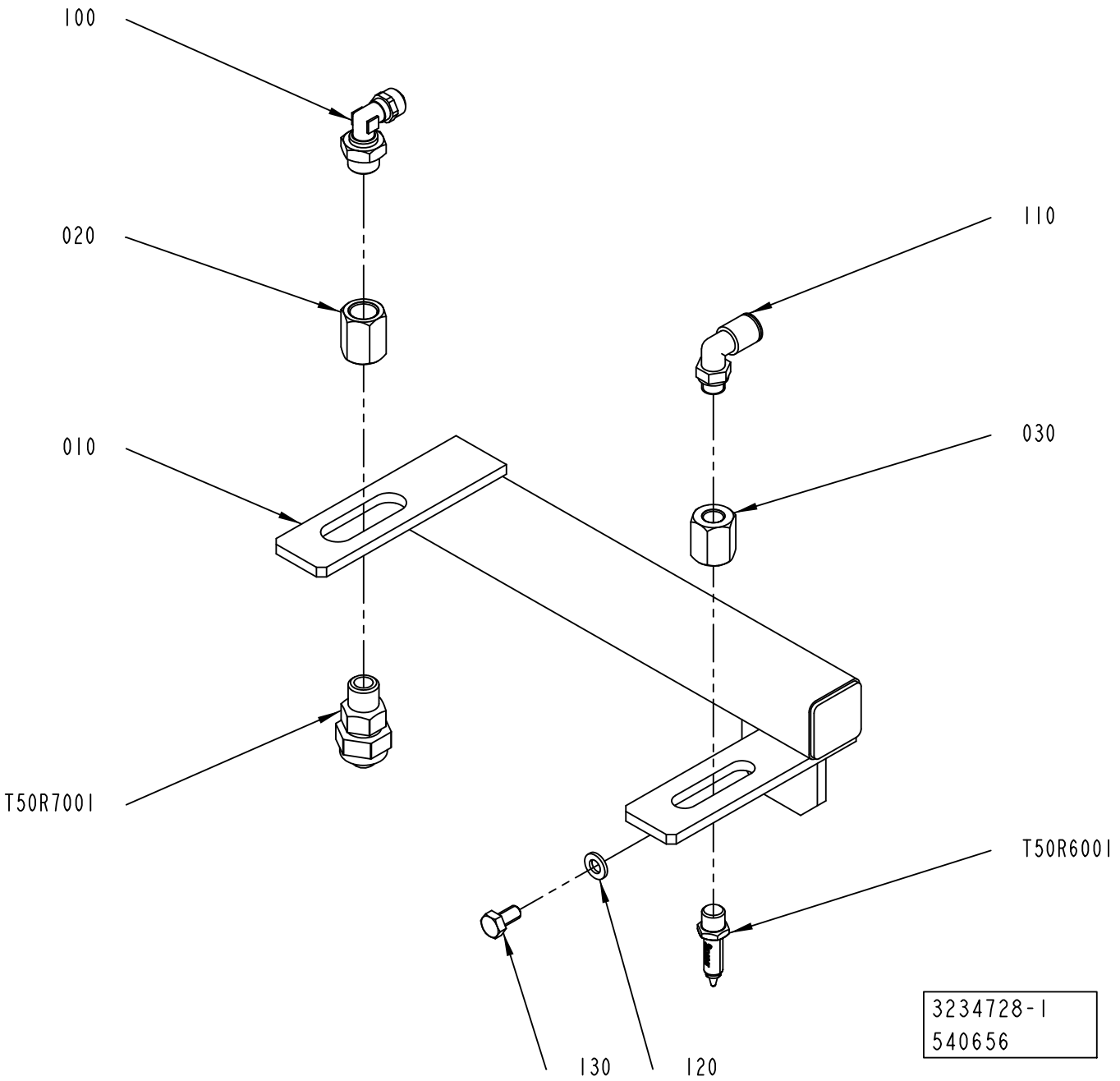

ECM: 546662 - 20120402
Group number: 3234728-0100
Assembly Drawing: 3234728-1_1_AA

Pos	Part No	UN	Qty	Description	Page No
-					
010	3010238-0000		1	HOLDER	
020	1523641-0000		1	SPACER	
030	2764404-0000		1	SPACER	
100	90224-0329		1	ELBOW 90 COUPL., EXT. THREAD 6/4-G1/4"	
110	350002-0007		1	PUSH-IN L-FITTING QSL-F-G1/8-8	
120	315105-0153		2	WASHER PLAIN, 6,4X12X1,5 A4 BRB	
130	312105-0366		2	SCREW, M6S ISO 4017 M6X12 A4 80	
T50R6001	90459-7280		1	AIR NOZZLE, 011	
T50R7001	1523645-0000		1	AIR NOZZLE	

Pos	Part No	UN	Qty	Description	Page No

This page is intentionally left blank.

ECM: 648465 - 20140401
Group number: 3272973-0200
Assembly Drawing:

Pos	Part No	UN	Qty	Description	Page No
-					
DC010	2905234-0200		1	DIAGRAM	**1-901**
MB010	3193719-0000		1	PNEUMATIC DIAGRAM	
SU010	3205270-0000		1	WATER DIAGRAM	
SU010	3205271-0000		1	WATER DIAGRAM	

Pos	Part No	UN	Qty	Description	Page No

This page is intentionally left blank.

ECM: 659027 - 20140701
Group number: 2905234-0200
Assembly Drawing:

Pos	Part No	UN	Qty	Description	Page No
TBA 1000M LIGHTCAP24 PLH, TBA 1000E LIGHTCAP30 PLH, TBA 1000E LIGHTCAP30B PLH, TBA 0500E QC LIGHTCAP30 PLH, TBA 0500E QC LIGHTCAP30B PLH					
030	3198490-0000		1	WATER DIAGRAM	
050	3223238-0000		1	PNEUMATIC DIAGRAM	
TBA 1000S LIGHTCAP24 NOPLH, TBA 1000E LIGHTCAP30 NOPLH					
030	3198490-0000		1	WATER DIAGRAM	
040	3198500-0000		1	PNEUMATIC DIAGRAM	
TBA 1000S STDA7, TBA 1000B STDA7, TBA 1000M STDA7					
010	3198493-0000		1	WATER DIAGRAM	
020	3198494-0000		1	PNEUMATIC DIAGRAM	

Pos	Part No	UN	Qty	Description	Page No

This page is intentionally left blank.

ECM: 648466 - 20140401
Group number: 3274292-0200
Assembly Drawing:

Pos	Part No	UN	Qty	Description	Page No
STDA7 CAP, START FM STDA7					
010	3274293-0200		1	NOZZLE	**1-905, 1-907**
Common Parts					
020	3273652-0100		3	COLUMN	**1-915**

Pos	Part No	UN	Qty	Description	Page No

Machine Type | Group Description | Used-In | Group Number | Page No

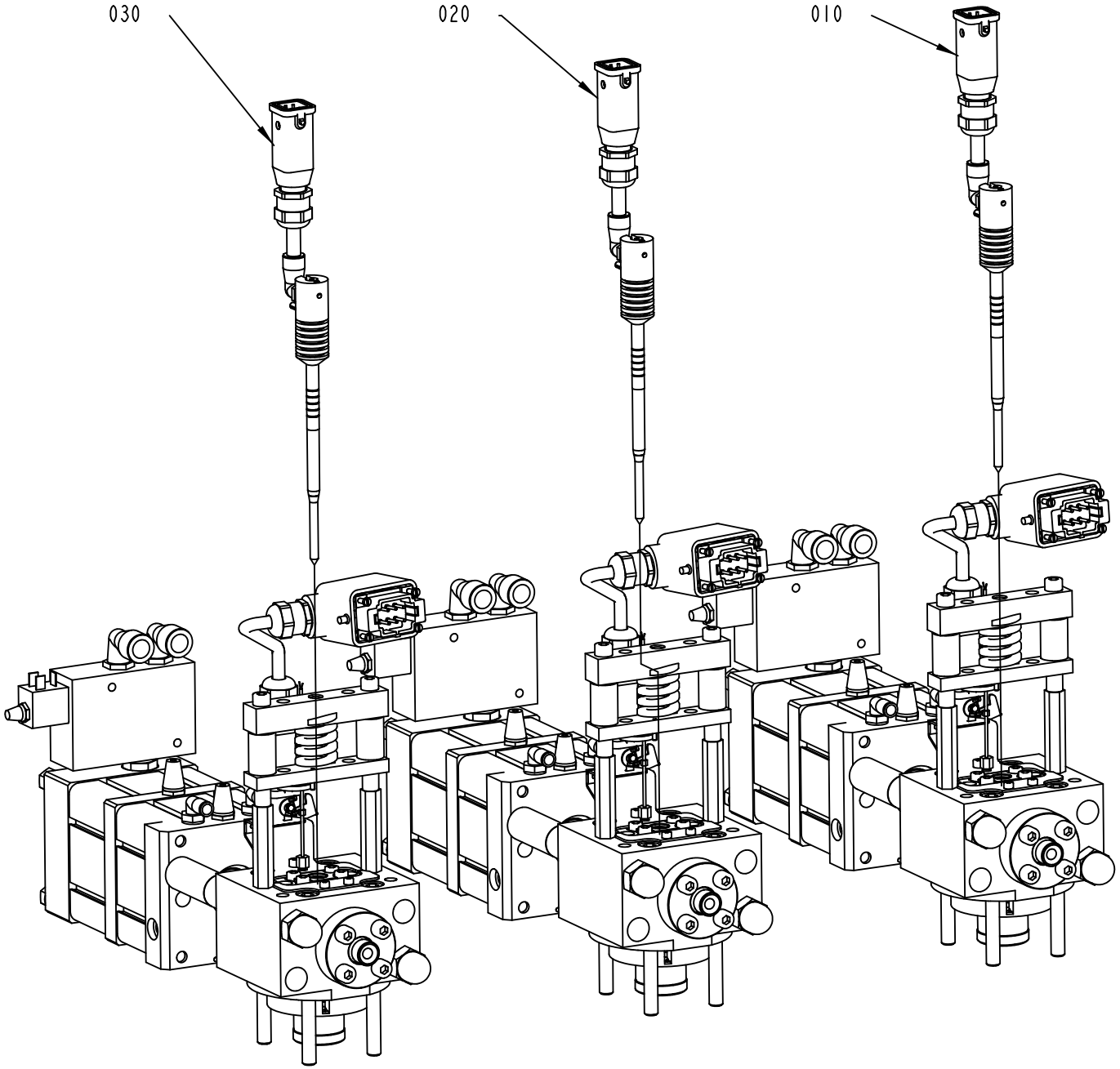
030
020
010
3274293-2
627530

ECM: 652803 - 20140401
Group number: 3274293-0200
Assembly Drawing: 3274293-2_1_AA

This list covers pages from 1-904 to 1-907

Pos	Part No	UN	Qty	Description	Page No
LIGHTCAP24, LIGHTCAP30, LIGHTCAP30B (See drawing on page: 1-906)					
G23B3350	90600-0659		1	FILLING NOZZLE, SS041837/100 TYPE: K	
G25B1350	90600-0659		1	FILLING NOZZLE, SS041837/100 TYPE: K	
G25B2350	90600-0659		1	FILLING NOZZLE, SS041837/100 TYPE: K	
G25R1310	2719697-0000		1	SHUTTER	
G25R2310	2719697-0000		1	SHUTTER	
G25R3310	2719697-0000		1	SHUTTER	
STDA7 CAP (See drawing on page: 1-904)					
010	2686751-0200		1	NEEDLE	**1-909**
020	3204003-0100		1	NEEDLE	**1-911**
030	3204002-0100		1	NEEDLE	**1-913**

Pos	Part No	UN	Qty	Description	Page No

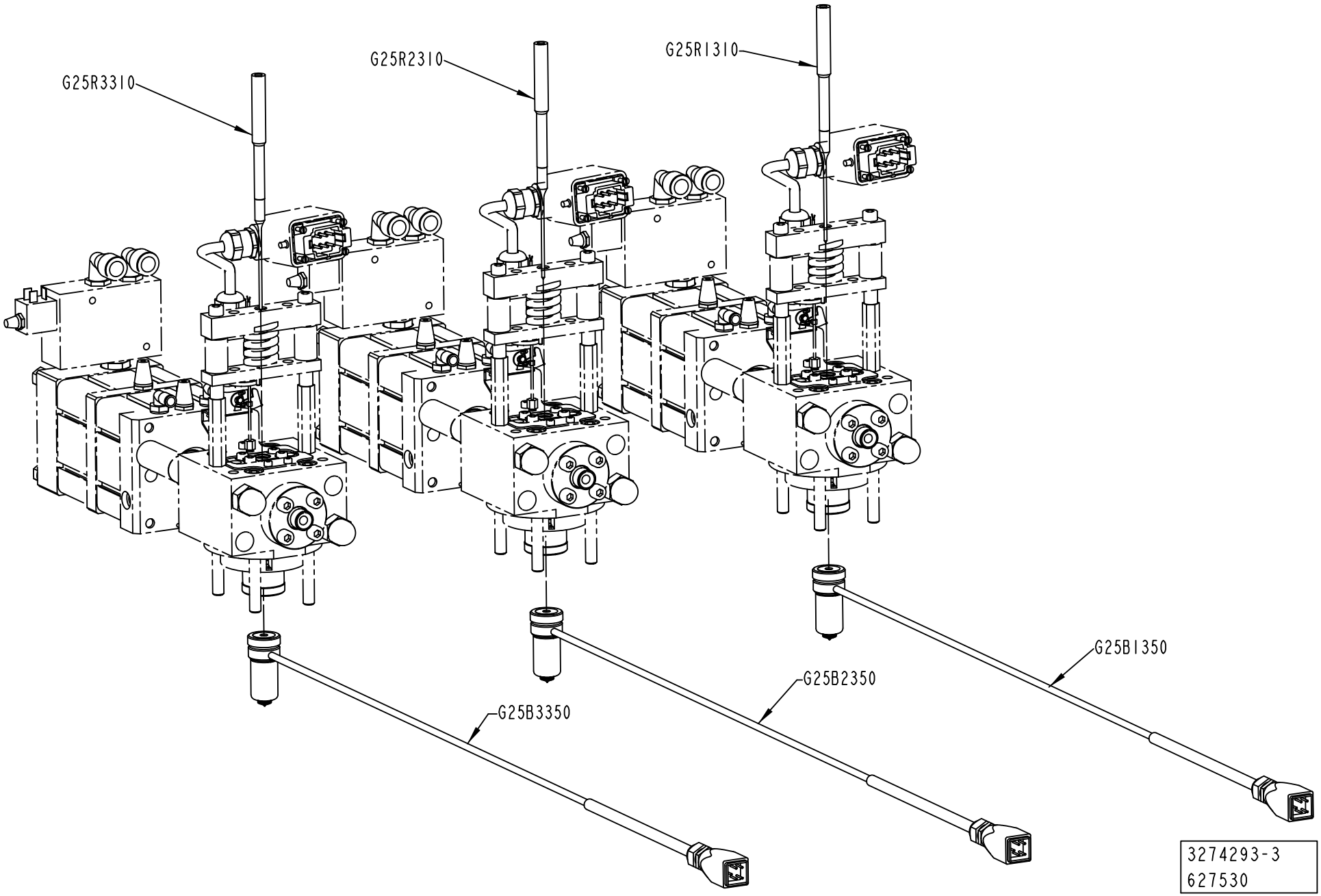
G25R3310
G25R2310
G25R1310
G25B1350
G25B2350
G25B3350
3274293-3
627530

Pos	Part No	UN	Qty	Description	Page No
LIGHTCAP24, LIGHTCAP30, LIGHTCAP30B (See drawing on page: 1-906)					
G23B3350	90600-0659		1	FILLING NOZZLE, SS041837/100 TYPE: K	
G25B1350	90600-0659		1	FILLING NOZZLE, SS041837/100 TYPE: K	
G25B2350	90600-0659		1	FILLING NOZZLE, SS041837/100 TYPE: K	
G25R1310	2719697-0000		1	SHUTTER	
G25R2310	2719697-0000		1	SHUTTER	
G25R3310	2719697-0000		1	SHUTTER	
STDA7 CAP (See drawing on page: 1-904)					
010	2686751-0200		1	NEEDLE	**1-909**
020	3204003-0100		1	NEEDLE	**1-911**
030	3204002-0100		1	NEEDLE	**1-913**

Pos	Part No	UN	Qty	Description	Page No

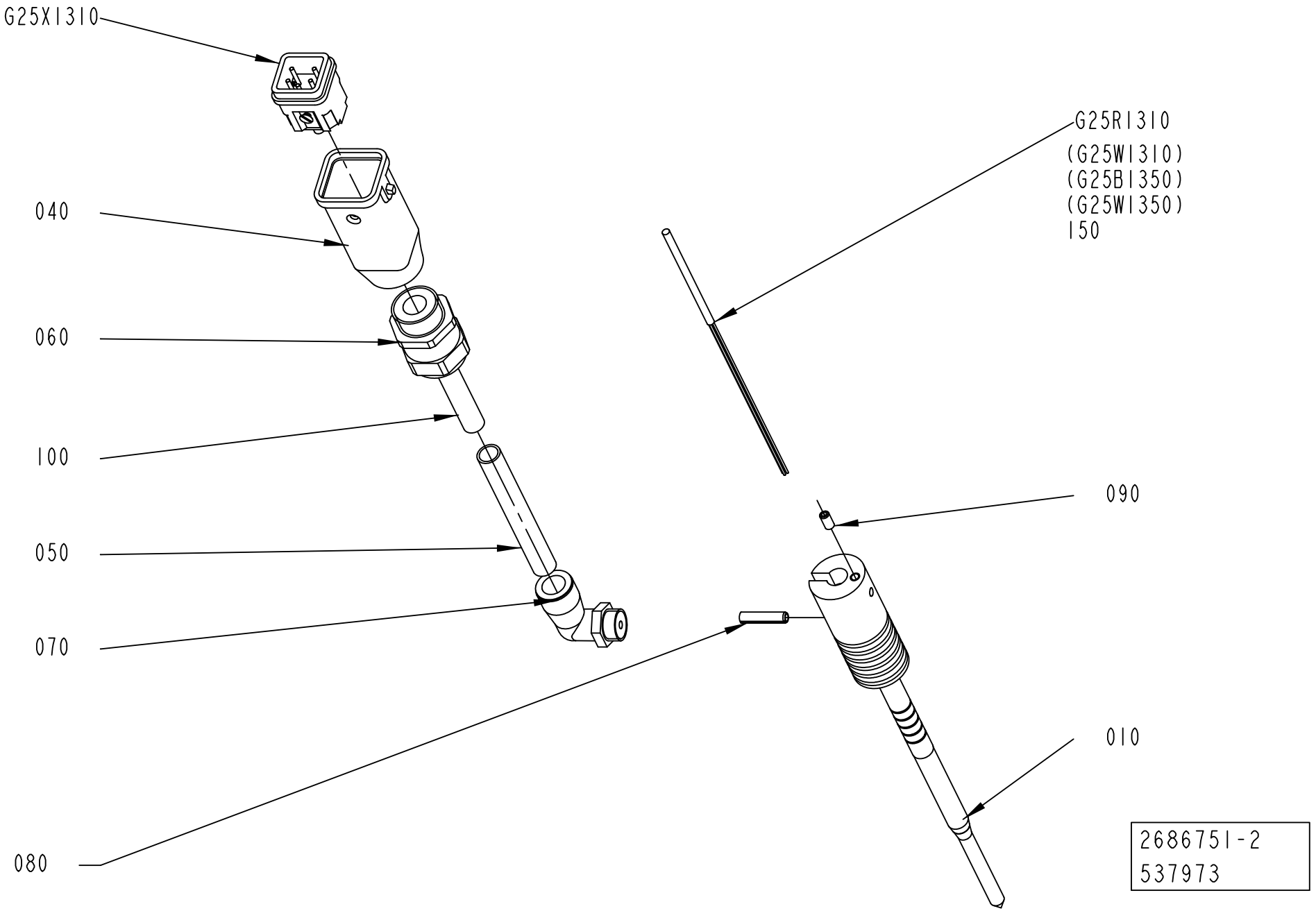
G25X1310
040
060
100
050
070
080
G25R1310
(G25W1310)
(G25B1350)
(G25W1350)
150
090
010
2686751-2
537973

ECM: 545779 - 20120405
Group number: 2686751-0200
Assembly Drawing: 2686751-2_1_AB

Pos	Part No	UN	Qty	Description	Page No
-					
010	2682490-0000		1	NEEDLE	
040	90459-3080		1	HOOD, HAN-BRID3A, 19 20 003 1443	
050	90166-0141	MM	50	TUBE 10 MM PA TRANSP.	
060	90458-0315		1	CABLE GLAND, M20X1,5, 5311 1120	
070	90458-2961		1	ELBOW PIPE JOINT, EXT.THREAD,D=10MM-G1/4	
080	311112-0256		1	SPRING PIN, ISO 8752 4X20 A2	
090	312318-0287		1	SET SCREW, CUP END ISO4029 M4X8 A4	
100	90142-0005	MM	425	HOSE	
150	90296-0051	KG	1	HEAT SINK COMPOUND 340	
G25R1310	90326-0092		1	CARTRIDGE HEATER 150W 230V, C2G-1057	
G25X1310	90459-6821		1	MALE INSERT HAN 4A, 0920 0042 611	

Pos	Part No	UN	Qty	Description	Page No

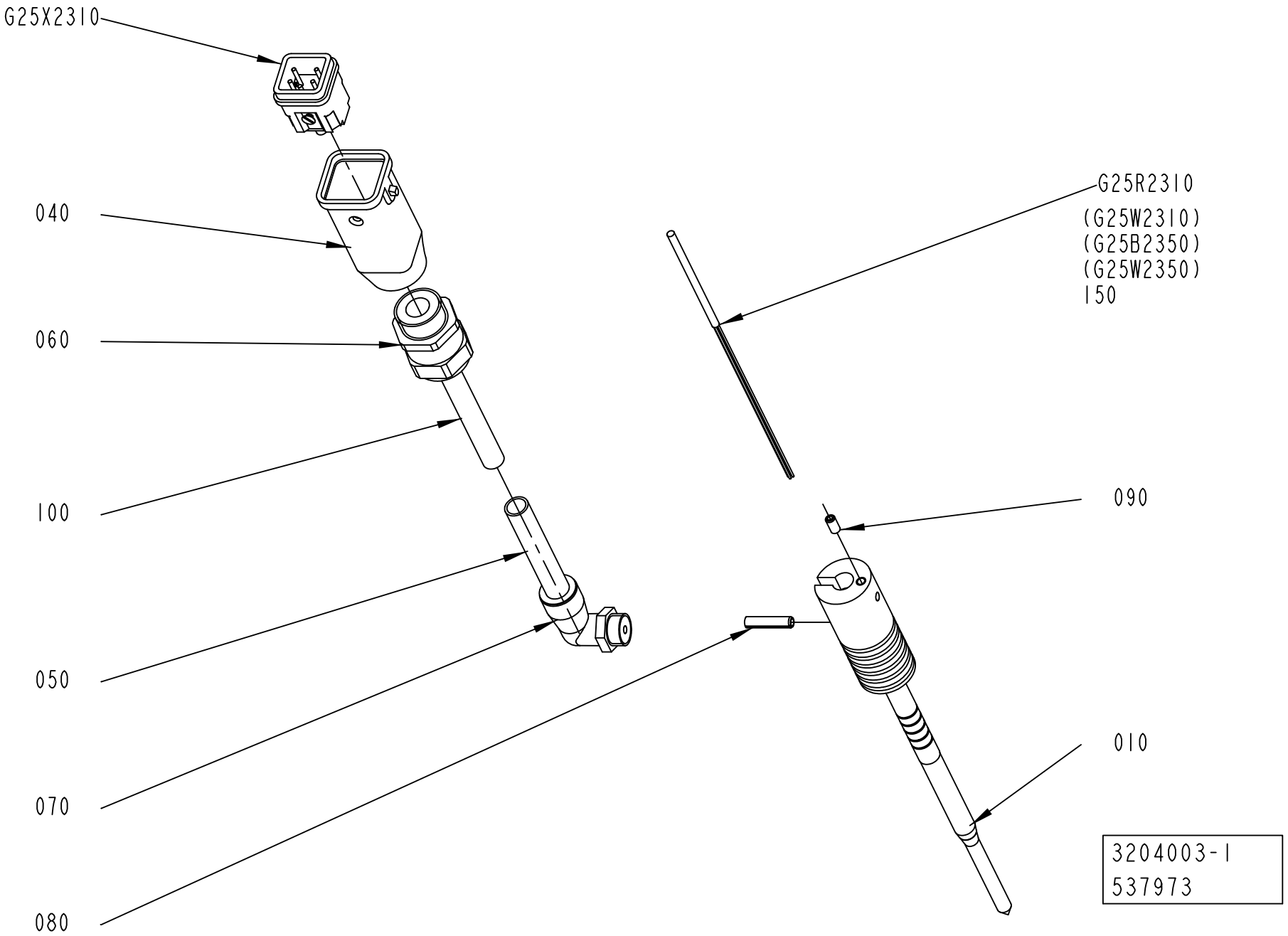
G25X2310
040
060
100
050
070
080
G25R2310
(G25W2310)
(G25B2350)
(G25W2350)
150
090
010
3204003-1
537973

ECM: 545957 - 20120405
Group number: 3204003-0100
Assembly Drawing: 3204003-1_1_AB

Pos	Part No	UN	Qty	Description	Page No
-					
010	2682490-0000		1	NEEDLE	
040	90459-3080		1	HOOD, HAN-BRID3A, 19 20 003 1443	
050	90166-0141	MM	50	TUBE 10 MM PA TRANSP.	
060	90458-0315		1	CABLE GLAND, M20X1,5, 5311 1120	
070	90458-2961		1	ELBOW PIPE JOINT, EXT.THREAD,D=10MM-G1/4	
080	311112-0256		1	SPRING PIN, ISO 8752 4X20 A2	
090	312318-0287		1	SET SCREW, CUP END ISO4029 M4X8 A4	
100	90142-0005	MM	425	HOSE	
150	90296-0051	KG	1	HEAT SINK COMPOUND 340	
G25R2310	90326-0092		1	CARTRIDGE HEATER 150W 230V, C2G-1057	
G25X2310	90459-6821		1	MALE INSERT HAN 4A, 0920 0042 611	

Pos	Part No	UN	Qty	Description	Page No

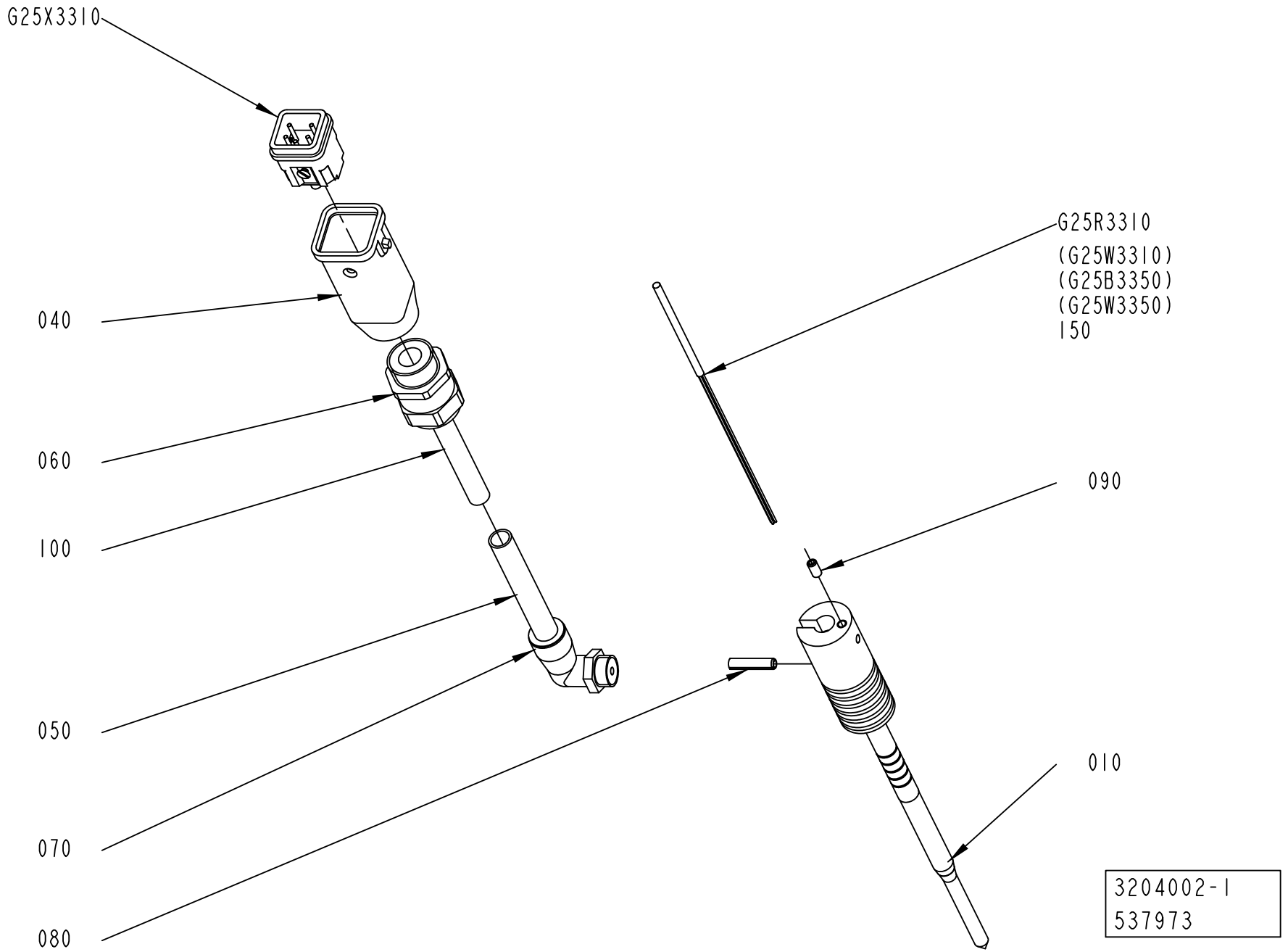
G25X3310
040
060
100
050
070
080
G25R3310
(G25W3310)
(G25B3350)
(G25W3350)
150
090
010
3204002-1
537973

ECM: 545958 - 20120405
Group number: 3204002-0100
Assembly Drawing: 3204002-1_1_AB

Pos	Part No	UN	Qty	Description	Page No
-					
010	2682490-0000		1	NEEDLE	
040	90459-3080		1	HOOD, HAN-BRID3A, 19 20 003 1443	
050	90166-0141	MM	50	TUBE 10 MM PA TRANSP.	
060	90458-0315		1	CABLE GLAND, M20X1,5, 5311 1120	
070	90458-2961		1	ELBOW PIPE JOINT, EXT.THREAD,D=10MM-G1/4	
080	311112-0256		1	SPRING PIN, ISO 8752 4X20 A2	
090	312318-0287		1	SET SCREW, CUP END ISO4029 M4X8 A4	
100	90142-0005	MM	425	HOSE	
150	90296-0051	KG	1	HEAT SINK COMPOUND 340	
G25R3310	90326-0092		1	CARTRIDGE HEATER 150W 230V, C2G-1057	
G25X3310	90459-6821		1	MALE INSERT HAN 4A, 0920 0042 611	

Pos	Part No	UN	Qty	Description	Page No

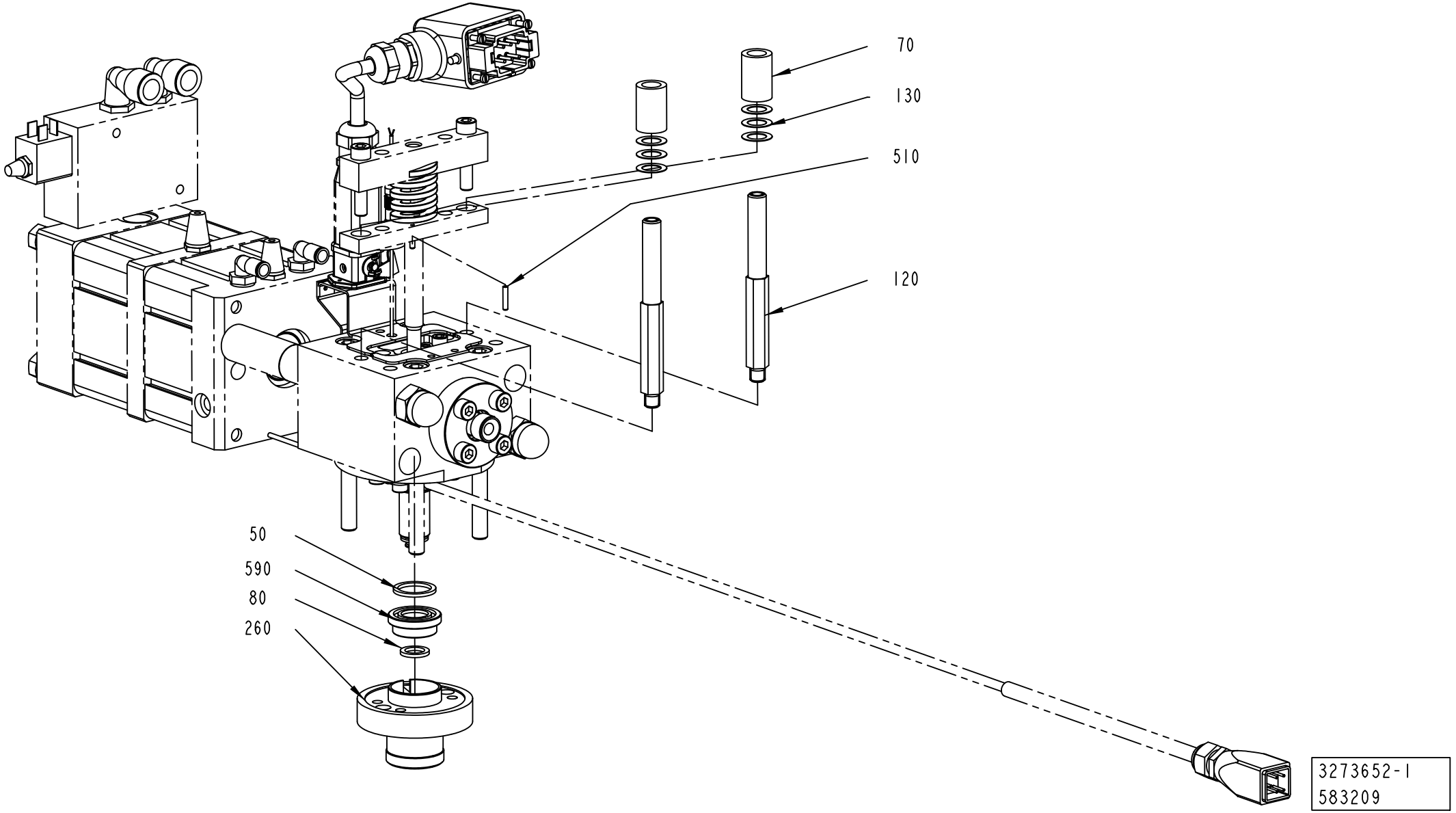
70
130
510
120
50
590
80
260
3273652-1
583209

ECM: 583209 - 20130404
Group number: 3273652-0100
Assembly Drawing: 3273652-1_1_AA

Pos	Part No	UN	Qty	Description	Page No
LIGHTCAP24					
070	2833263-0000		2	SPACER	
080	2725337-0000		1	SEAL	
120	2814866-0000		2	GUIDE	
260	2799582-0000		1	BUSHING	
590	2826594-0000		1	SHIM	
LIGHTCAP30, LIGHTCAP30B					
070	2863720-0000		2	SPACER	
080	2725337-0000		1	SEAL	
120	2998534-0000		2	GUIDE	
260	2998533-0000		1	BUSHING	
590	2909839-0000		1	SHIM	
STDA7 CAP					
070	2863720-0000		2	SPACER	
080	1350383-0000		1	SEAL	
120	2814867-0000		2	GUIDE	
260	2799576-0000		1	BUSHING	
510	311111-0208		1	SPRING PIN ISO 8752 3X16-ST	
Common Parts					
050	1296451-0000		1	SEAL	
130	2033-0016		6	WASHER	

Pos	Part No	UN	Qty	Description	Page No

This page is intentionally left blank.

ECM: 605309 - 20130701
Group number: 3275152-0100
Assembly Drawing:

Pos	Part No	UN	Qty	Description	Page No
PLH START FM NOPLH					
010	3244032-0200		1	MAGNETIC DESIGN READER	**1-919**
TBA 1000M STDA7 NOPLH					
010	3208071-0100		1	MAGNETIC DESIGN READER	**1-923**
TBA 1000S LIGHTCAP24 NOPLH START FM TBA 1000M STDA7 NOPLH					
010	2704689-0100		1	BAR CODE READER	**1-925**

Pos	Part No	UN	Qty	Description	Page No

MAGNETIC DESIGN READER

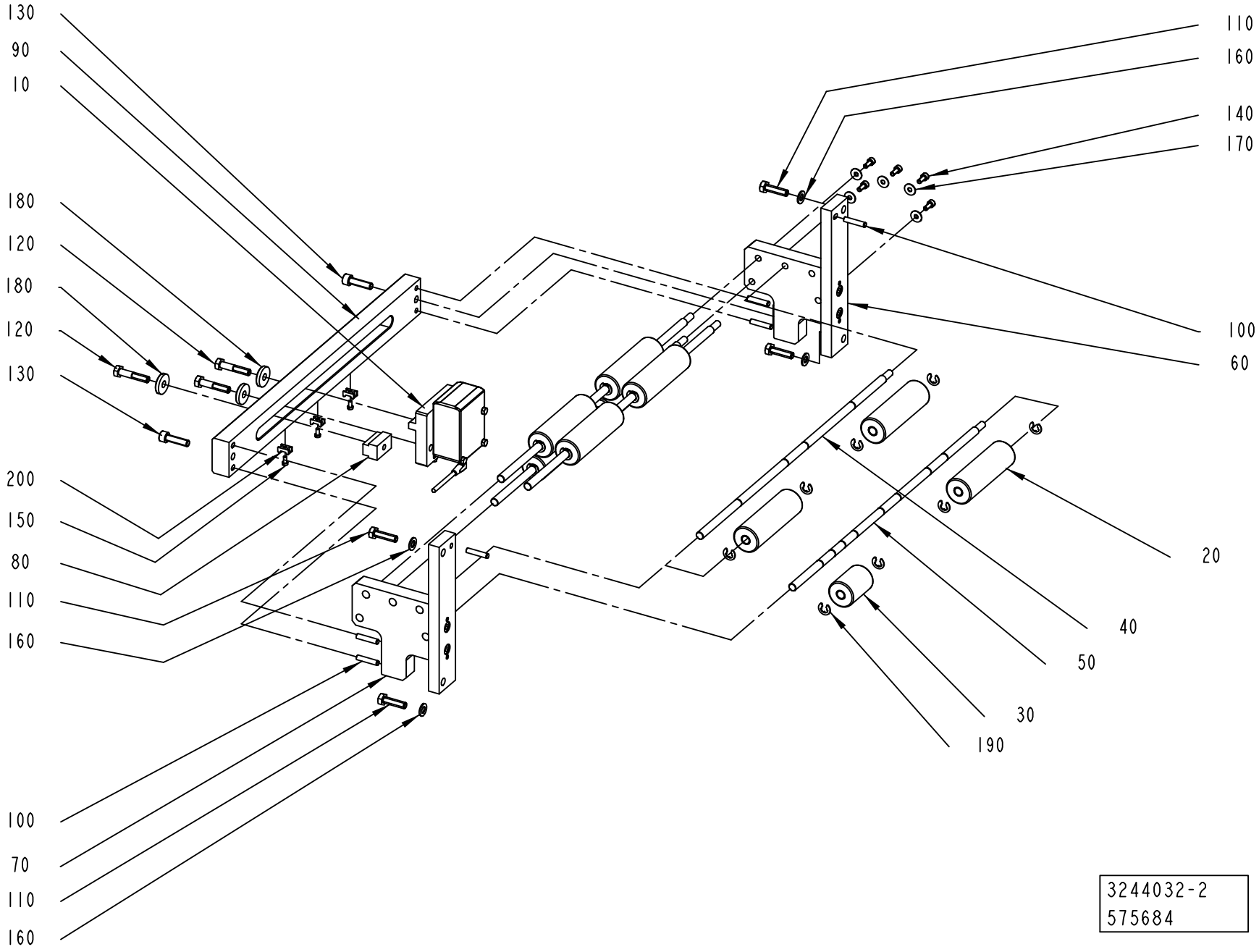

ECM: 576529 - 20130101
Group number: 3244032-0200
Assembly Drawing: 3244032-2_1_AA

Pos	Part No	UN	Qty	Description	Page No
-					
010	3244031-0200		1	SENSOR BRACKET	**1-921**
020	2998010-0000		9	ROLLER	
030	3244043-0000		1	ROLLER	
040	3168015-0000		4	SHAFT	
050	3244044-0000		1	SHAFT	
060	3265967-0000		1	BRACKET	
070	3265968-0000		1	BRACKET	
080	3123075-0000		1	STOP	
090	3053820-0000		1	PLATE	
100	311103-0357		6	PARALLEL PIN ISO 2338 6M6X30 A1	
110	312105-0455		4	SCREW, M6S ISO 4017 M8X30 A4 80	
120	312105-0459		3	SCREW, M6S ISO 4014 M8X40 A4 80	
130	312115-0455		2	SCREW ISO4762 M8X30 A4 80	
140	312115-0327		5	SCREW ISO4762 M5X12 A4 80	
150	312125-0287		3	SLOTTED HEAD SCREW, ISO1207 M4X8 A4	
160	315105-0165		4	FWAS080G0-0S, WASHER PLAIN	
170	315125-0146		5	WASHER HIGH, TBRSB 5.3X15X1 A4	
180	315125-0165		3	WASHER HIGH, TBRSB 8,4X26X5 A4	
190	315755-0801		20	RETAINING RING SHAFT DIN 6799 8 SS	
200	352113-0205		3	ANCHOR PLATES FOR STRIPS, TM2S8-C100	

Pos	Part No	UN	Qty	Description	Page No

Machine Type | Group Description | Used-In | Group Number | Page No

Used in group:
3244032-0200 Pos. 010

SENSOR BRACKET

Drawing file: 3244031-2_1_AA.hpgl

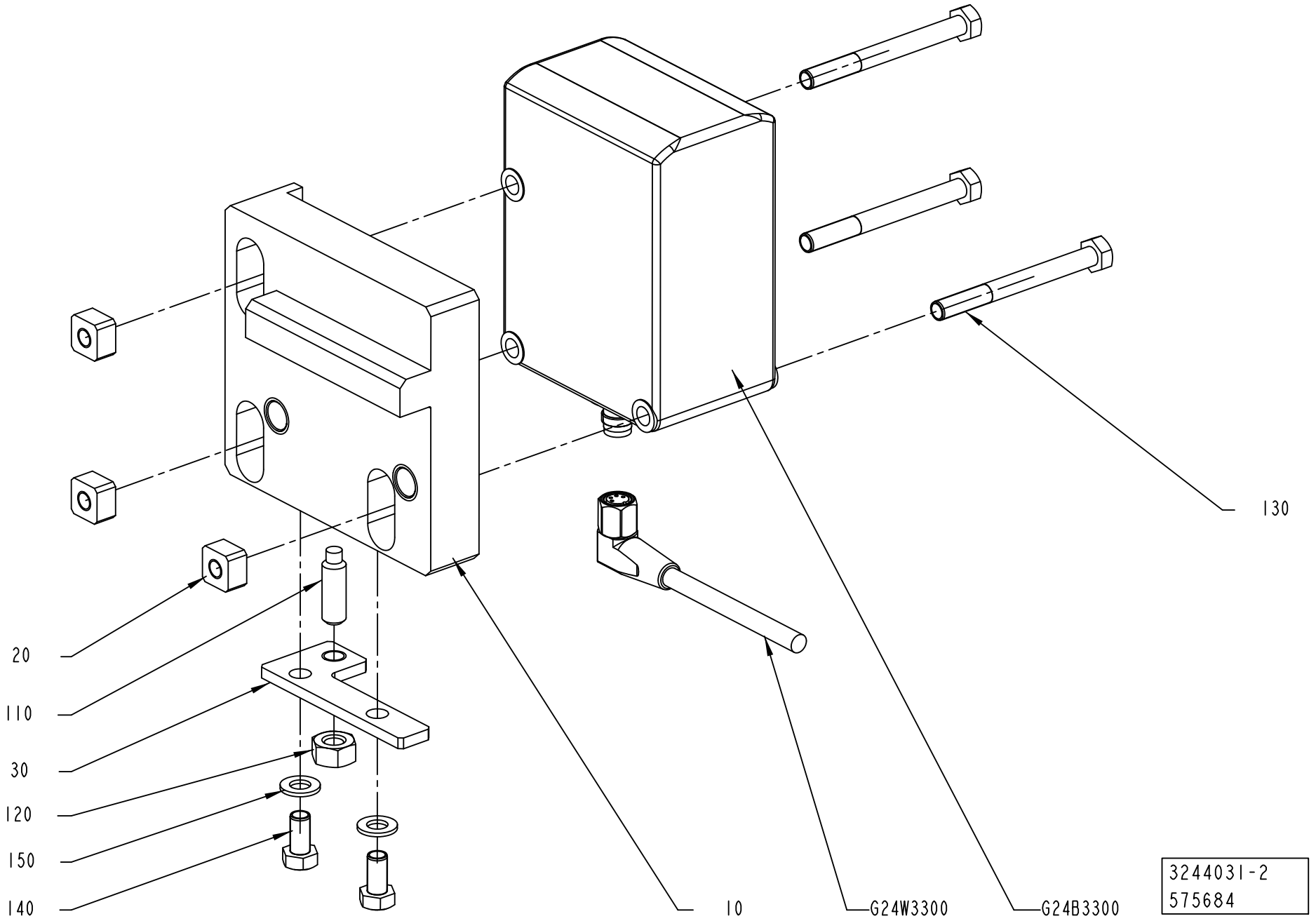

ECM: 589037 - 20130201
Group number: 3244031-0200
Assembly Drawing: 3244031-2_1_AA

Pos	Part No	UN	Qty	Description	Page No
-					
010	3244027-0000		1	BRACKET	
020	3244028-0000		3	PLATE	
030	3244029-0000		1	PLATE	
110	312311-0370		1	SET SCREW, DOG PONT ISO4028 M6X20 FZB	
120	312605-0316		1	HEXAGON NUT, M6M M6 A280	
130	312105-0341		3	SCREW, M6S ISO 4014 M5X50 A4 80	
140	312105-0325		2	SCREW, M6S ISO 4017 M5X10 A4 80	
150	315105-0146		2	WASHER PLAIN, 5,3X10X1 A4 BRB	
G24B3300	90603-5330		1	MAGNETIC SENSOR, MDR15	
G24W3300	344250-0020		1	SENSOR CABLE, EVT138	

Pos	Part No	UN	Qty	Description	Page No

MAGNETIC DESIGN READER

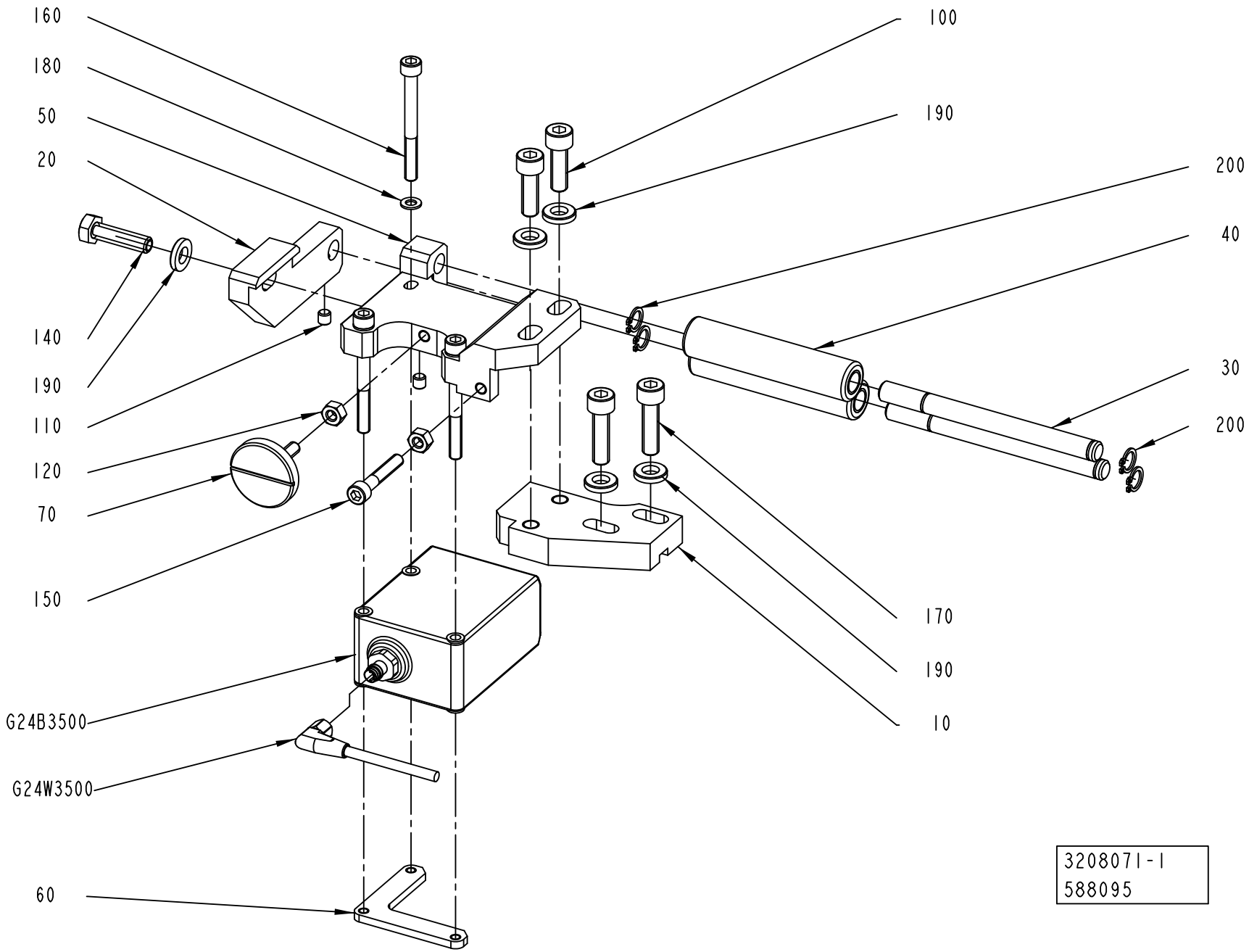

ECM: 590071 - 20130401
Group number: 3208071-0100
Assembly Drawing: 3208071-1_1_AA

Pos	Part No	UN	Qty	Description	Page No
-					
010	3227996-0000		1	BLOCK	
020	3228000-0000		1	BRACKET	
030	3227995-0000		2	SHAFT	
040	3089249-0000		2	ROLLER	
050	3227999-0000		1	PLATE	
060	3208083-0000		1	PLATE	
070	3089262-0000		1	SHAFT	
100	312115-0453		2	SCREW ISO4762 M8X25 A4 80	
110	312318-0360		2	SET SCREW, CUP END ISO4029 M6X6 A4	
120	312605-0316		2	HEXAGON NUT, M6M M6 A280	
140	312105-0455		1	SCREW, M6S ISO 4017 M8X30 A4 80	
150	312115-0376		1	SCREW ISO4762 M6X35 A4 80	
160	312115-0382		3	SCREW ISO4762 M6X60 A4 80	
170	312115-0455		2	SCREW ISO4762 M8X30 A4 80	
180	315105-0146		3	WASHER PLAIN, 5,3X10X1 A4 BRB	
190	315115-0165		5	WASHER PLAIN, TBRB 8,4/16 H=3	
200	90141-0016		4	RETAINING RING FOR SHAFT DIN 471 10 SS	
G24B3500	90603-5330		1	MAGNETIC SENSOR, MDR15	
G24W3500	344250-0100		1	SENSOR CABLE, EVT140	

Pos	Part No	UN	Qty	Description	Page No

BAR CODE READER

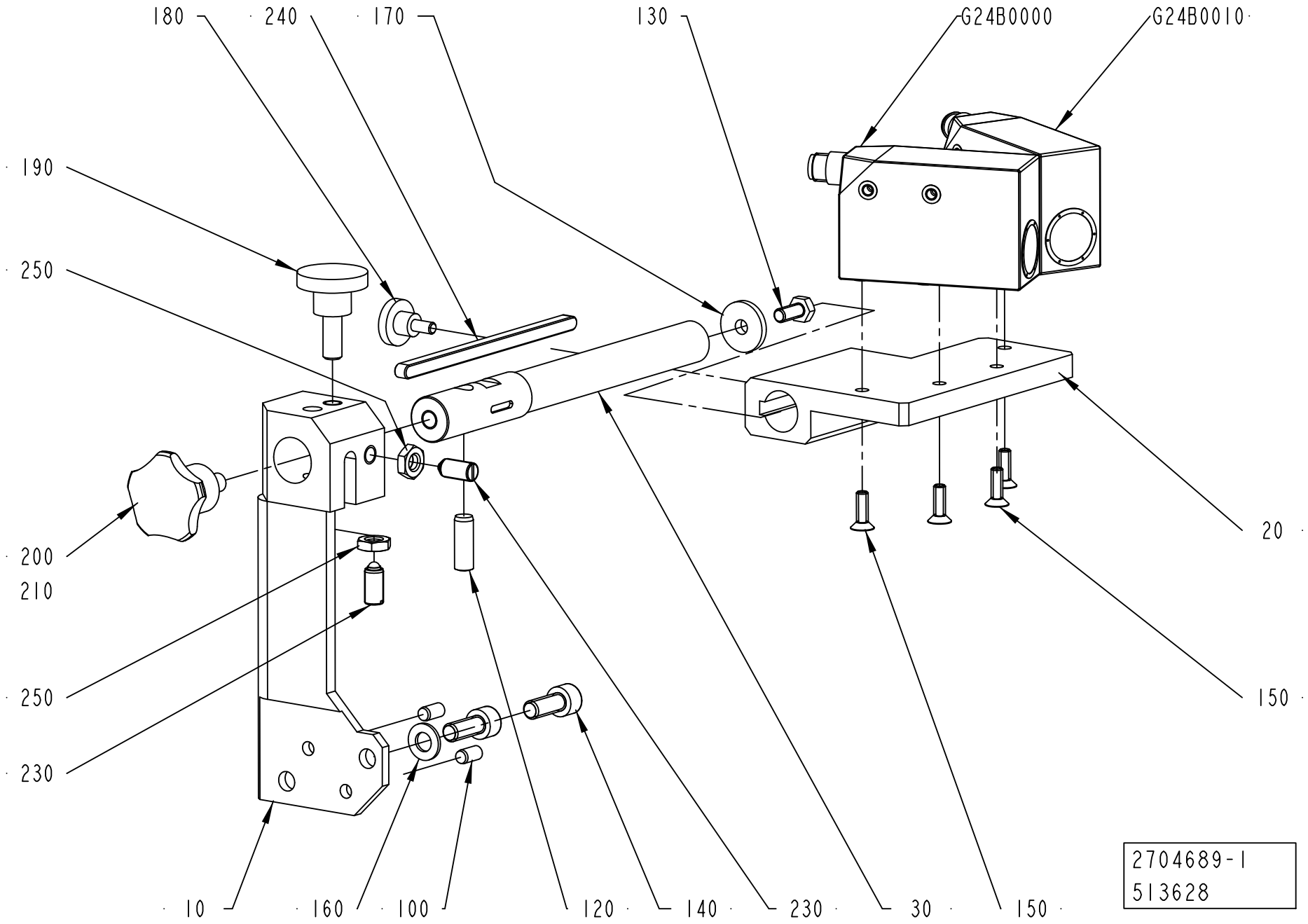

ECM: 513628 - 20120101
Group number: 2704689-0100
Assembly Drawing: 2704689-1_1_AC

Pos	Part No	UN	Qty	Description	Page No
-					
010	2796027-0000		1	SUPPORT	
020	2704697-0000		1	SUPPORT	
030	2704698-0000		1	BAR	
100	311103-0349		2	PARALLEL PIN ISO 2338 6M6X12 A1	
120	311103-1403		1	PARALLEL PIN ISO 2338 8M6X24 A1	
130	312105-0367		1	SCREW, M6S ISO 4017 M6X14 A4 80	
140	312115-0451		2	SCREW ISO4762 M8X20 A4 80	
150	312155-0329		4	SCREW DIN 7991 MF6S M5X16 A4 70	
160	315105-0165		2	FWAS080G0-0S, WASHER PLAIN	
170	315125-0153		1	WASHER HIGH, TBRSB 6,4X22X4 A4	
180	318860-0104		1	KNOB, ADJUST.HI.EXT.THREAD, NO 8324-3623	
190	318860-0110		1	KNOB, ADJUST.HI.EXT.THREAD, NO 8324-3844	
200	90051-0025		1	KNOB, EXTERNAL THREAD. NO. 8306-0200	
210	90600-0685		1	THREADLOCKER LOCTITE 2701, 50ML	
230	90287-0112		2	SCREW SPRINGLOAD. SLOTTED HEAD M8X16	
240	90458-2401		1	PARALLEL KEY W. ROUND ENDS 6X6X120 MM	
250	312625-0318		2	HEXAGON THIN NUT, EN 24035 ML6M M8 A4	
G24B0000	90458-0602		1	CONTRAST SCANNER, KT15W-P2213S02	
G24B0010	90458-0602		1	CONTRAST SCANNER, KT15W-P2213S02	

Pos	Part No	UN	Qty	Description	Page No

Machine Type	Group Description	Used-In	Group Number	Page No

PUNCH ARRANGEMENT

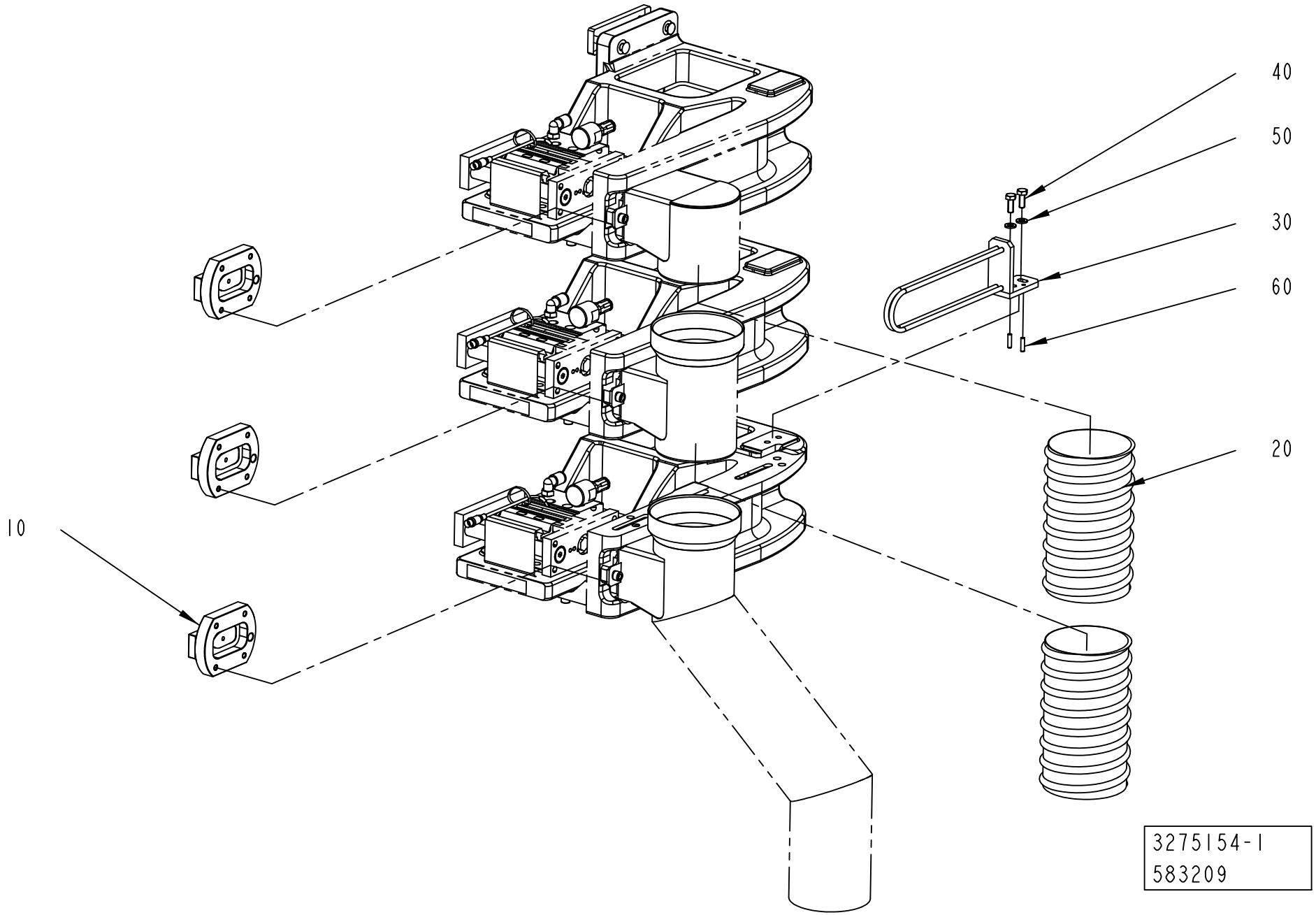

ECM: 584784 - 20130102
Group number: 3275154-0100
Assembly Drawing: 3275154-1_1_AA

Pos	Part No	UN	Qty	Description	Page No
LIGHTCAP24 NOPLH START FM LIGHTCAP30 NOPLH (See drawing on page: 1-926)					
010	2566038-0100		3	PUNCH UNIT	**1-929, 1-931, 1-933**
020	2704695-0006		2	TUBE	
LIGHTCAP24 NOPLH START FM STDA7 NOPLH (See drawing on page: 1-926)					
010	2566038-0100		3	PUNCH UNIT	**1-929, 1-931, 1-933**
020	2704695-0006		2	TUBE	
030	2704688-0000		1	BRACKET	
040	312105-0368		2	"SCREW, M6S ISO 4017 M6X16 A4 80"	
050	315105-0153		2	WASHER PLAIN, 6,4X12X1,5 A4 BRB	
060	311103-0270		2	PARALLEL PIN ISO 2338 4M6X16 A1	
STDA7 START FM NOPLH (See drawing on page: 1-926)					
010	2566038-0100		3	PUNCH UNIT	**1-929, 1-931, 1-933**
020	2704695-0008		2	TUBE	

Pos	Part No	UN	Qty	Description	Page No

PUNCH UNIT

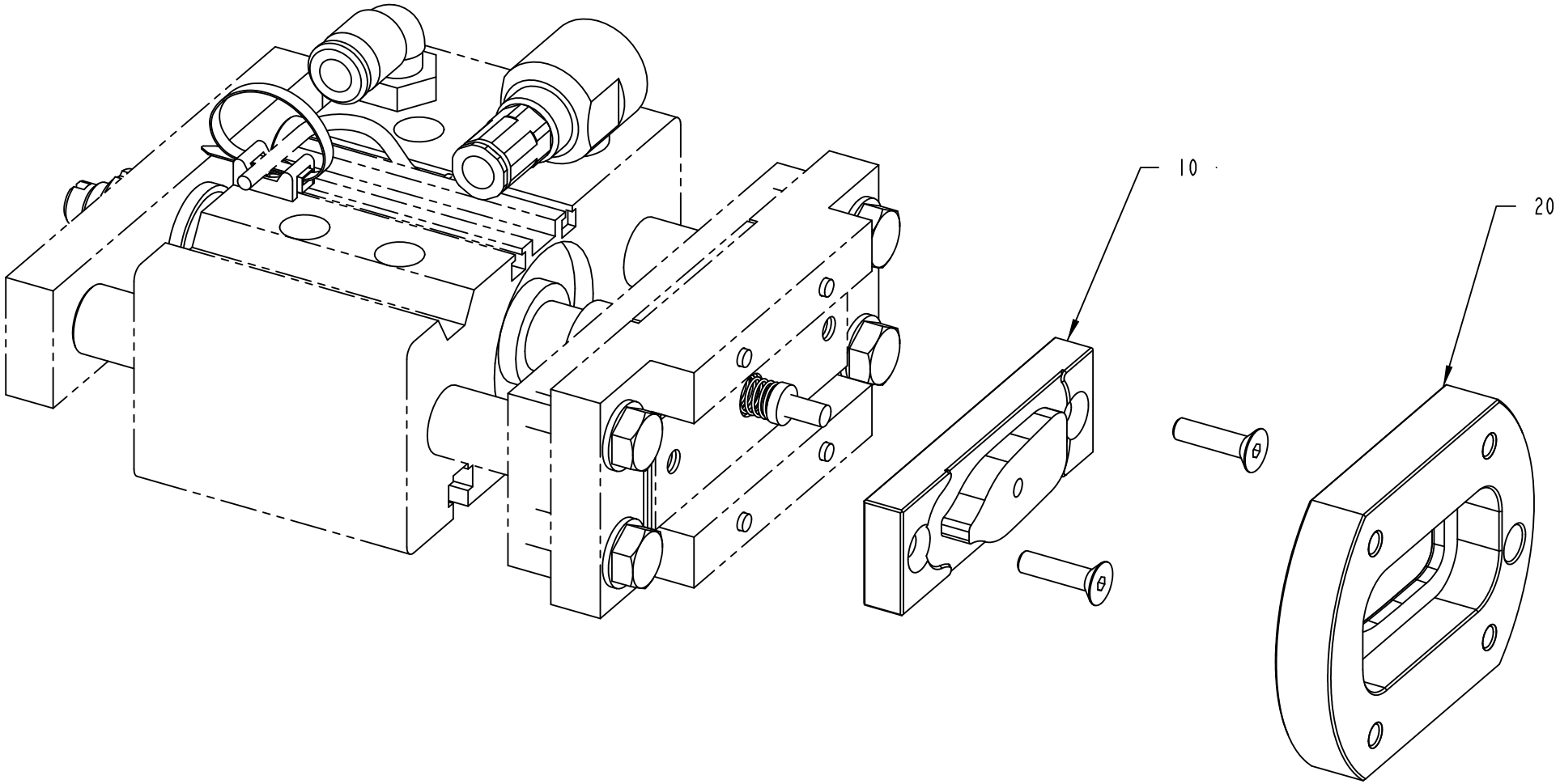

2566038-1
ECM 139169

ECM: 602008 - 20130404
Group number: 2566038-0100
Assembly Drawing: 2566038-1_1_AB

This list covers pages from 1-928 to 1-933

Pos	Part No	UN	Qty	Description	Page No
LIGHTCAP24 (See drawing on page: 1-930)					
010	2758778-0000		1	PUNCH	
020	2758779-0000		1	DIE	
LIGHTCAP30, LIGHTCAP30B (See drawing on page: 1-932)					
010	2909841-0000		1	PUNCH	
020	2909842-0000		1	DIE	
STDA7 CAP (See drawing on page: 1-928)					
010	2564488-0000		1	PUNCH	
020	2564489-0000		1	DIE	

Pos	Part No	UN	Qty	Description	Page No

PUNCH UNIT

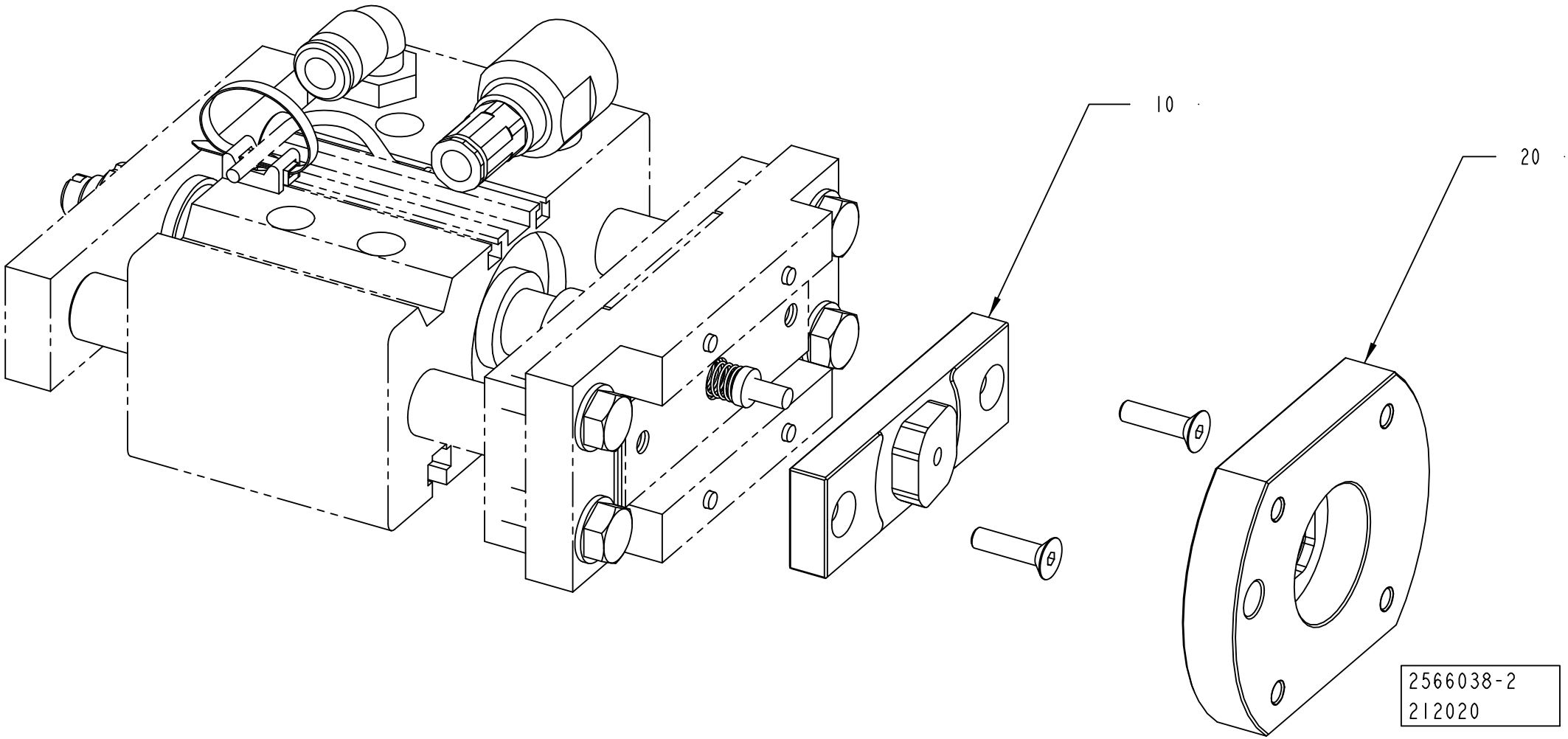

ECM: 602008 - 20130404
Group number: 2566038-0100
Assembly Drawing: 2566038-2_1_AA

This list covers pages from 1-928 to 1-933

Pos	Part No	UN	Qty	Description	Page No
LIGHTCAP24 (See drawing on page: 1-930)					
010	2758778-0000		1	PUNCH	
020	2758779-0000		1	DIE	
LIGHTCAP30, LIGHTCAP30B (See drawing on page: 1-932)					
010	2909841-0000		1	PUNCH	
020	2909842-0000		1	DIE	
STDA7 CAP (See drawing on page: 1-928)					
010	2564488-0000		1	PUNCH	
020	2564489-0000		1	DIE	

Pos	Part No	UN	Qty	Description	Page No

PUNCH UNIT

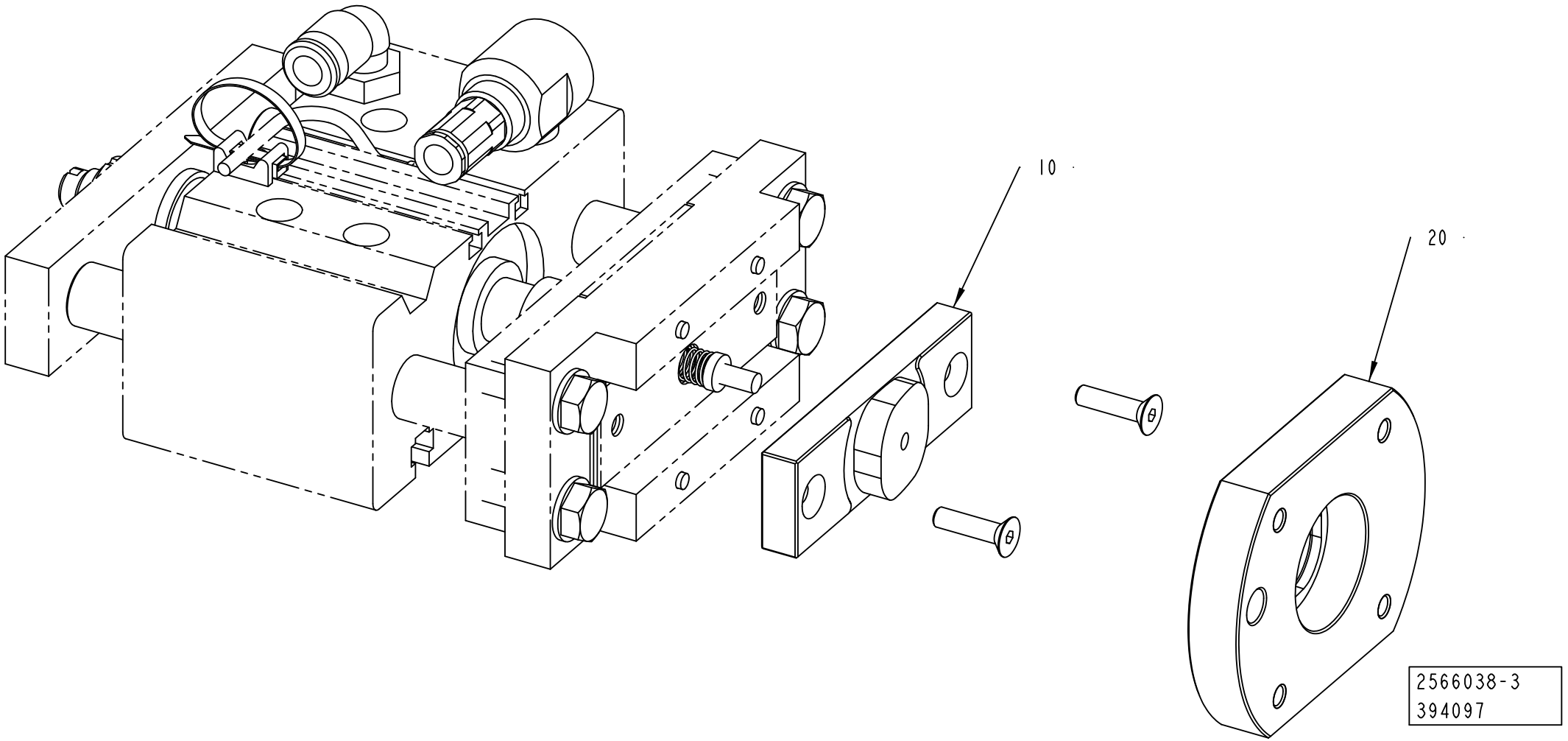

ECM: 602008 - 20130404
Group number: 2566038-0100
Assembly Drawing: 2566038-3_1_AA

This list covers pages from 1-928 to 1-933

Pos	Part No	UN	Qty	Description	Page No
LIGHTCAP24 (See drawing on page: 1-930)					
010	2758778-0000		1	PUNCH	
020	2758779-0000		1	DIE	
LIGHTCAP30, LIGHTCAP30B (See drawing on page: 1-932)					
010	2909841-0000		1	PUNCH	
020	2909842-0000		1	DIE	
STDA7 CAP (See drawing on page: 1-928)					
010	2564488-0000		1	PUNCH	
020	2564489-0000		1	DIE	

Pos	Part No	UN	Qty	Description	Page No

This page is intentionally left blank.

ECM: 648577 - 20140401
Group number: 3333814-0100
Assembly Drawing:

Pos	Part No	UN	Qty	Description	Page No
-					
010	3292069-0200		1	MISCELLANEOUS COMPONENTS	**1-937**
060	3228017-0000		1	PROTECTION	
070	311103-0422		1	PARALLEL PIN ISO 2338 8M6X80 A1	
075	3228012-0000		1	PIN	
080	90459-0577	MM	100	TUBE 15MM PA BLACK	
090	90459-0579		5	ELBOW PIPE JOINT 15 MM	
G25W1556	315400-0004	MM	250	TUBE PUN-H-8X1,25-BL	

Pos	Part No	UN	Qty	Description	Page No

This page is intentionally left blank.

ECM: 597932 - 20130214
Group number: 3292069-0200
Assembly Drawing:

Pos	Part No	UN	Qty	Description	Page No
-					
010	3292070-0200		1	PIPE WORK-WATER	**1-939**
020	3292071-0200		1	VALVE GROUP	**1-941, 1-943, 1-945**
030	3292072-0200		1	MOULDING ARRANGEMENT	**1-947**

Pos	Part No	UN	Qty	Description	Page No

PIPE WORK-WATER

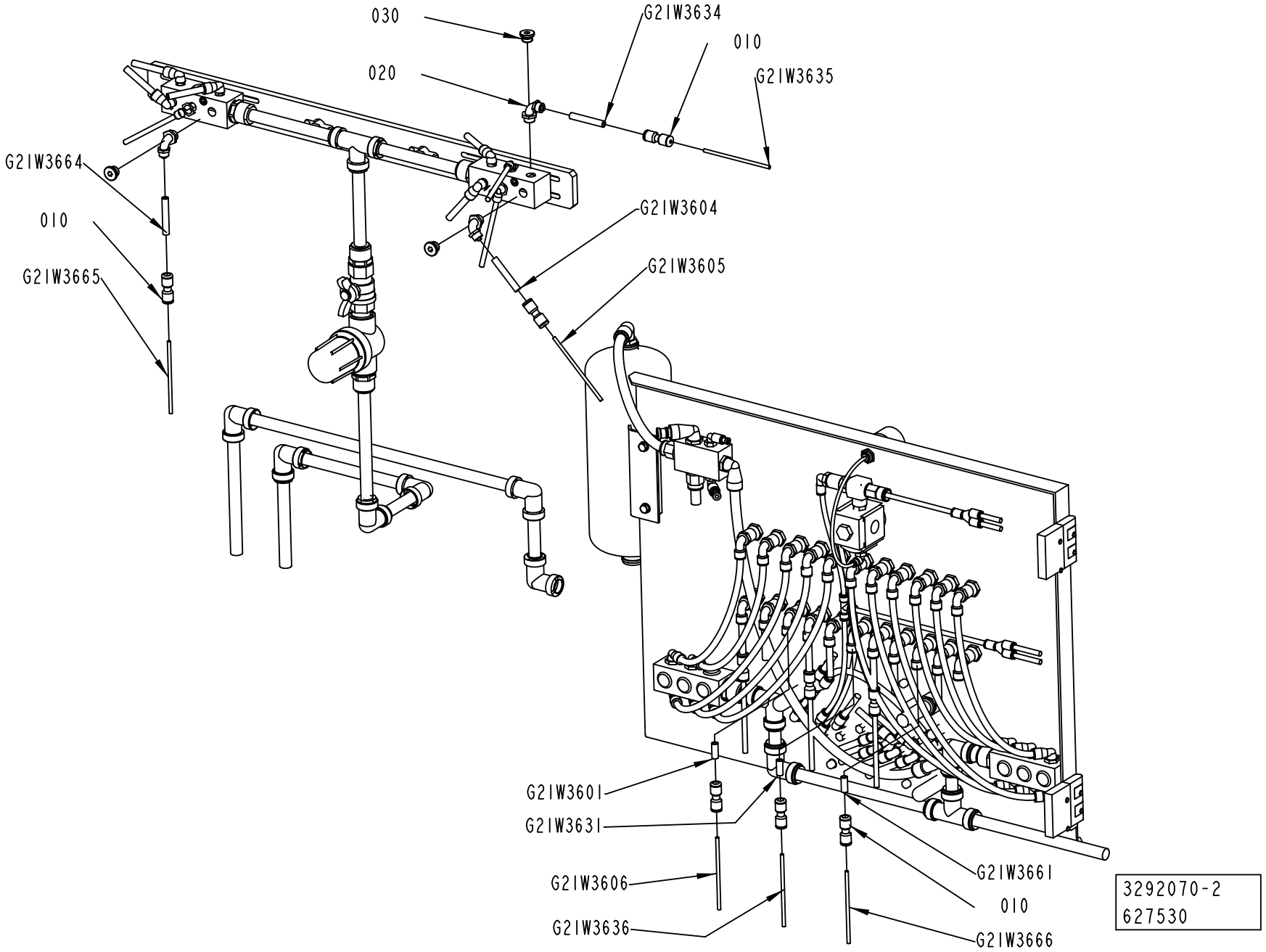

ECM: 648549 - 20140401
Group number: 3292070-0200
Assembly Drawing: 3292070-2_1_AB

Pos	Part No	UN	Qty	Description	Page No
LIGHTCAP24, LIGHTCAP30, LIGHTCAP30B (See drawing on page: 1-938)					
010	90055-0238		6	HOSE,NIPPLE,REDUCER,TUBE, 4/8MM	
020	342931-0122		3	ELBOW 90 COUPL., EXT. THREAD 8/6-G1/4"	
G21W3601	344342-0081	M	3	TUBE 8 MM APA BLACK	
G21W3604	344342-0081	M	1	TUBE 8 MM APA BLACK	
G21W3605	344342-0041	M	1	TUBE 4 MM APA BLACK	
G21W3606	344342-0041	M	1	TUBE 4 MM APA BLACK	
G21W3631	344342-0081	M	3	TUBE 8 MM APA BLACK	
G21W3634	344342-0081	M	1	TUBE 8 MM APA BLACK	
G21W3635	344342-0041	M	1	TUBE 4 MM APA BLACK	
G21W3636	344342-0041	M	1	TUBE 4 MM APA BLACK	
G21W3661	344342-0081	M	3	TUBE 8 MM APA BLACK	
G21W3664	344342-0081	M	1	TUBE 8 MM APA BLACK	
G21W3665	344342-0041	M	1	TUBE 4 MM APA BLACK	
G21W3666	344342-0041	M	1	TUBE 4 MM APA BLACK	
STDA7 CAP (See drawing on page: 1-938)					
030	90604-6027		3	PLUG, EXT. THREAD HEX. SOCKET. G1/4	

Pos	Part No	UN	Qty	Description	Page No

Machine Type | Group Description | Used-In | Group Number | Page No

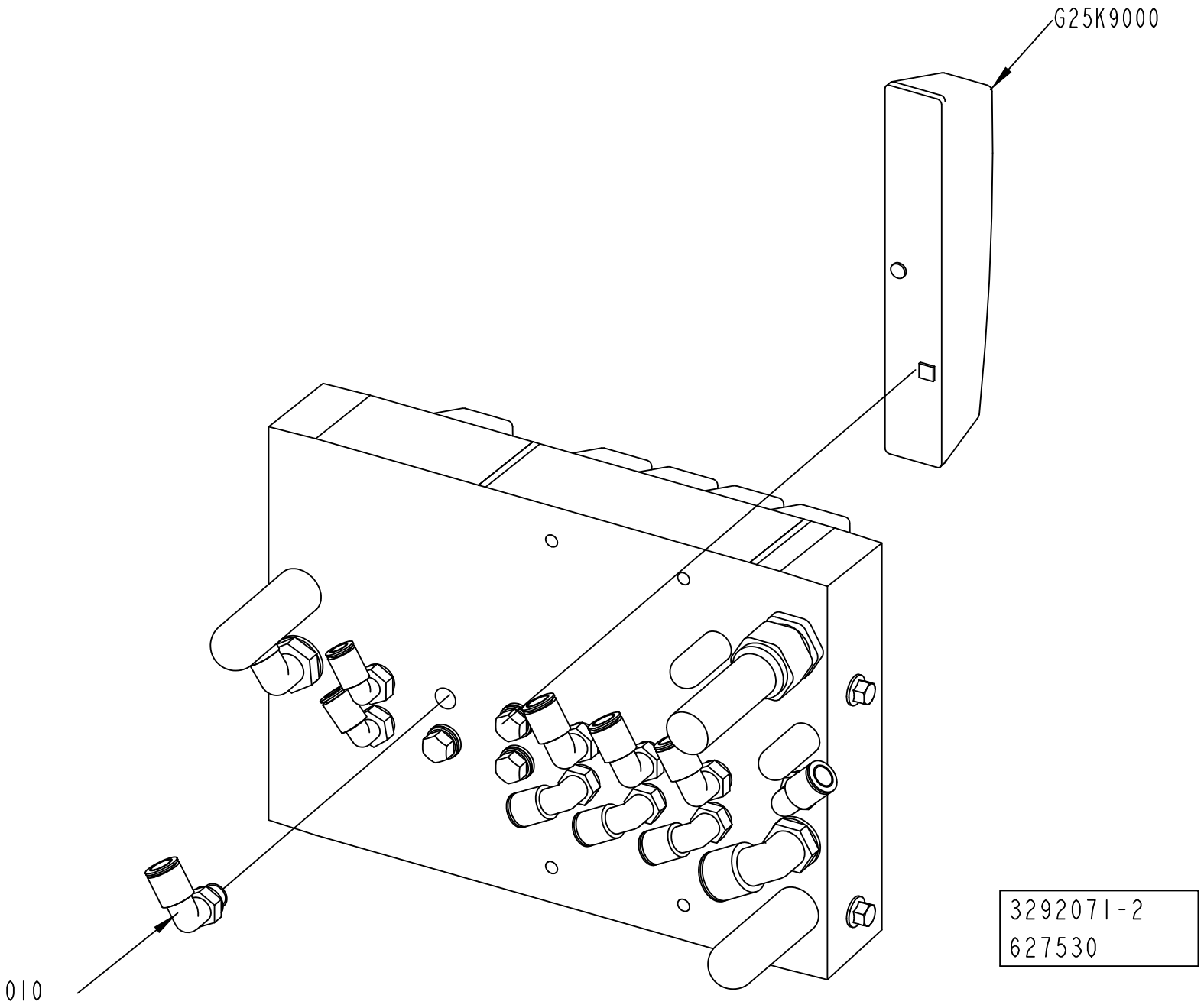
G25K9000
010
3292071-2
627530

ECM: 648550 - 20140401
Group number: 3292071-0200
Assembly Drawing: 3292071-2_1_AB

This list covers pages from 1-940 to 1-945

Pos	Part No	UN	Qty	Description	Page No
LIGHTCAP30 NOPLH, LIGHTCAP24 NOPLH (See drawing on page: 1-940)					
010	350002-0007		1	PUSH-IN L-FITTING QSL-F-G1/8-8	
G25K9000	90458-1194		1	VALVE, 5/2 MONOSTABLE	
LIGHTCAP30 PLH, LIGHTCAP24 PLH, LIGHTCAP30B PLH (See drawing on page: 1-942)					
020	90459-0698		3	PLUG G1/8 EXT., CDVI5.0-B-G1/8	
G25K9000	90458-1194		1	VALVE, 5/2 MONOSTABLE	
STDA7 CAP (See drawing on page: 1-944)					
020	90459-0698		1	PLUG G1/8 EXT., CDVI5.0-B-G1/8	
030	90458-1215		1	COVER PLATE, EMPTY VALVE POSITION	

Pos	Part No	UN	Qty	Description	Page No

VALVE GROUP

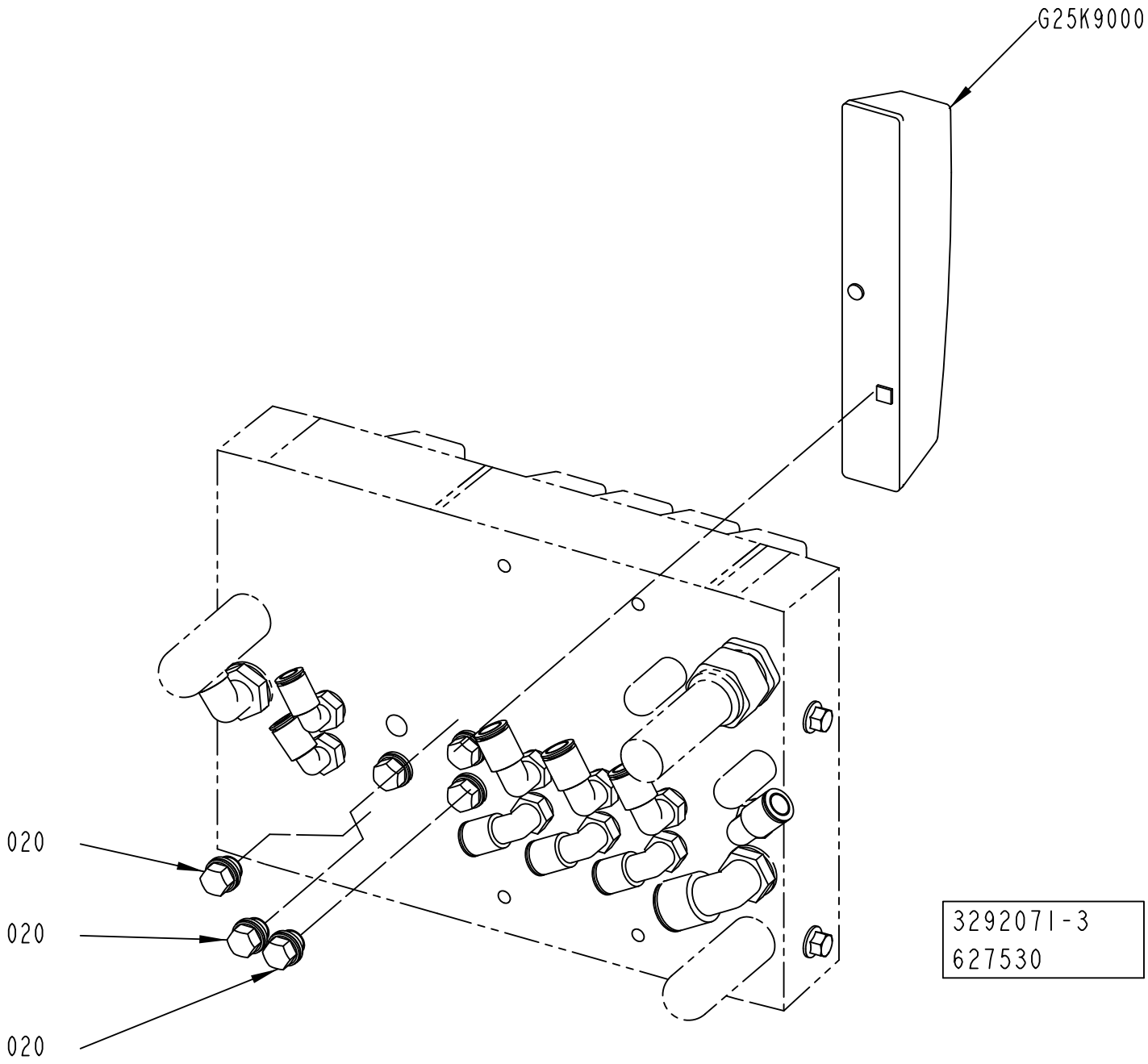

ECM: 648550 - 20140401
Group number: 3292071-0200
Assembly Drawing: 3292071-3_1_AA

This list covers pages from 1-940 to 1-945

Pos	Part No	UN	Qty	Description	Page No
LIGHTCAP30 NOPLH, LIGHTCAP24 NOPLH (See drawing on page: 1-940)					
010	350002-0007		1	PUSH-IN L-FITTING QSL-F-G1/8-8	
G25K9000	90458-1194		1	VALVE, 5/2 MONOSTABLE	
LIGHTCAP30 PLH, LIGHTCAP24 PLH, LIGHTCAP30B PLH (See drawing on page: 1-942)					
020	90459-0698		3	PLUG G1/8 EXT., CDVI5.0-B-G1/8	
G25K9000	90458-1194		1	VALVE, 5/2 MONOSTABLE	
STDA7 CAP (See drawing on page: 1-944)					
020	90459-0698		1	PLUG G1/8 EXT., CDVI5.0-B-G1/8	
030	90458-1215		1	COVER PLATE, EMPTY VALVE POSITION	

Pos	Part No	UN	Qty	Description	Page No

Machine Type | Group Description | Used-In | Group Number | Page No

VALVE GROUP

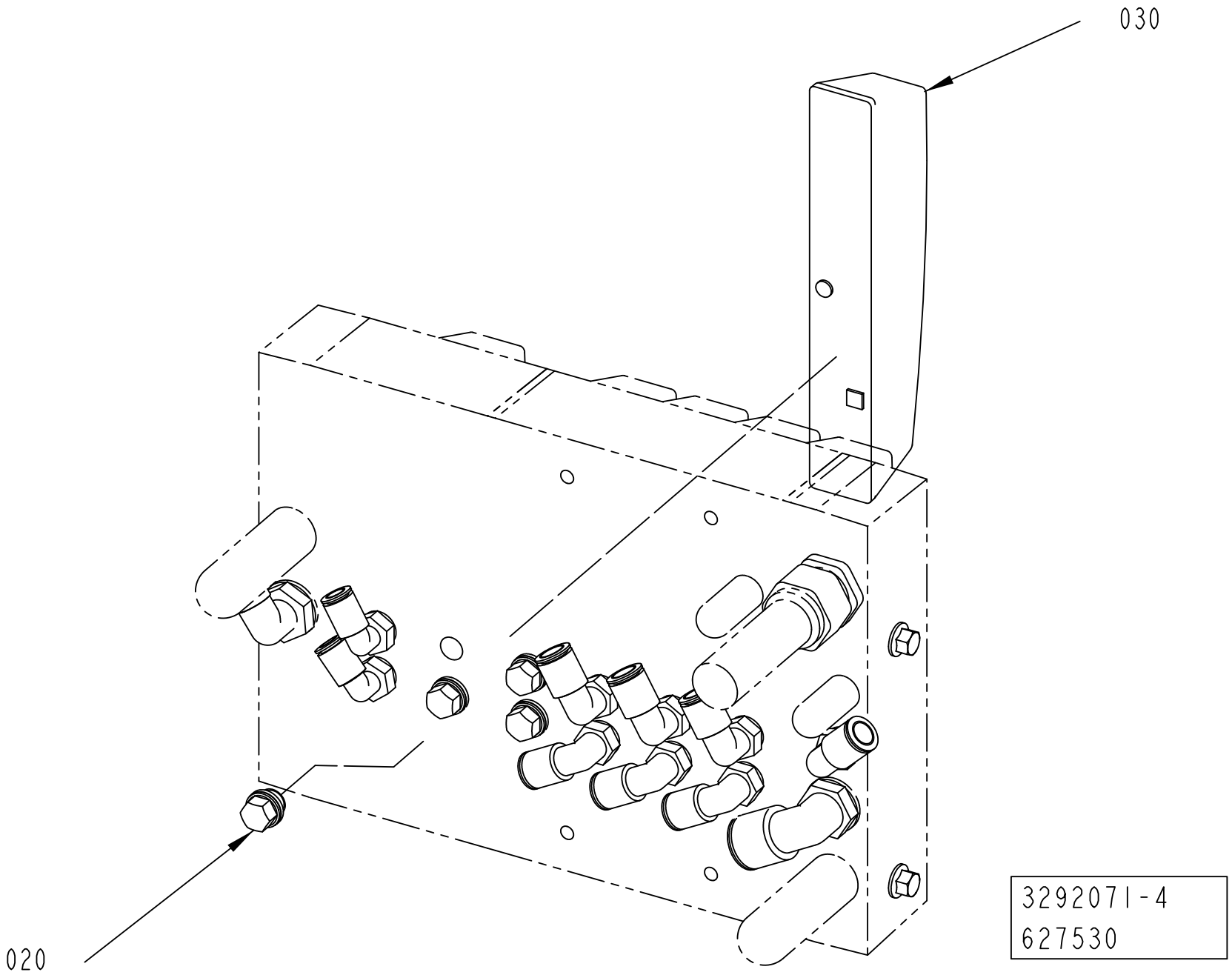

ECM: 648550 - 20140401
Group number: 3292071-0200
Assembly Drawing: 3292071-4_1_AA

This list covers pages from 1-940 to 1-945

Pos	Part No	UN	Qty	Description	Page No
LIGHTCAP30 NOPLH, LIGHTCAP24 NOPLH (See drawing on page: 1-940)					
010	350002-0007		1	PUSH-IN L-FITTING QSL-F-G1/8-8	
G25K9000	90458-1194		1	VALVE, 5/2 MONOSTABLE	
LIGHTCAP30 PLH, LIGHTCAP24 PLH, LIGHTCAP30B PLH (See drawing on page: 1-942)					
020	90459-0698		3	PLUG G1/8 EXT., CDVI5.0-B-G1/8	
G25K9000	90458-1194		1	VALVE, 5/2 MONOSTABLE	
STDA7 CAP (See drawing on page: 1-944)					
020	90459-0698		1	PLUG G1/8 EXT., CDVI5.0-B-G1/8	
030	90458-1215		1	COVER PLATE, EMPTY VALVE POSITION	

Pos	Part No	UN	Qty	Description	Page No

MOULDING ARRANGEMENT

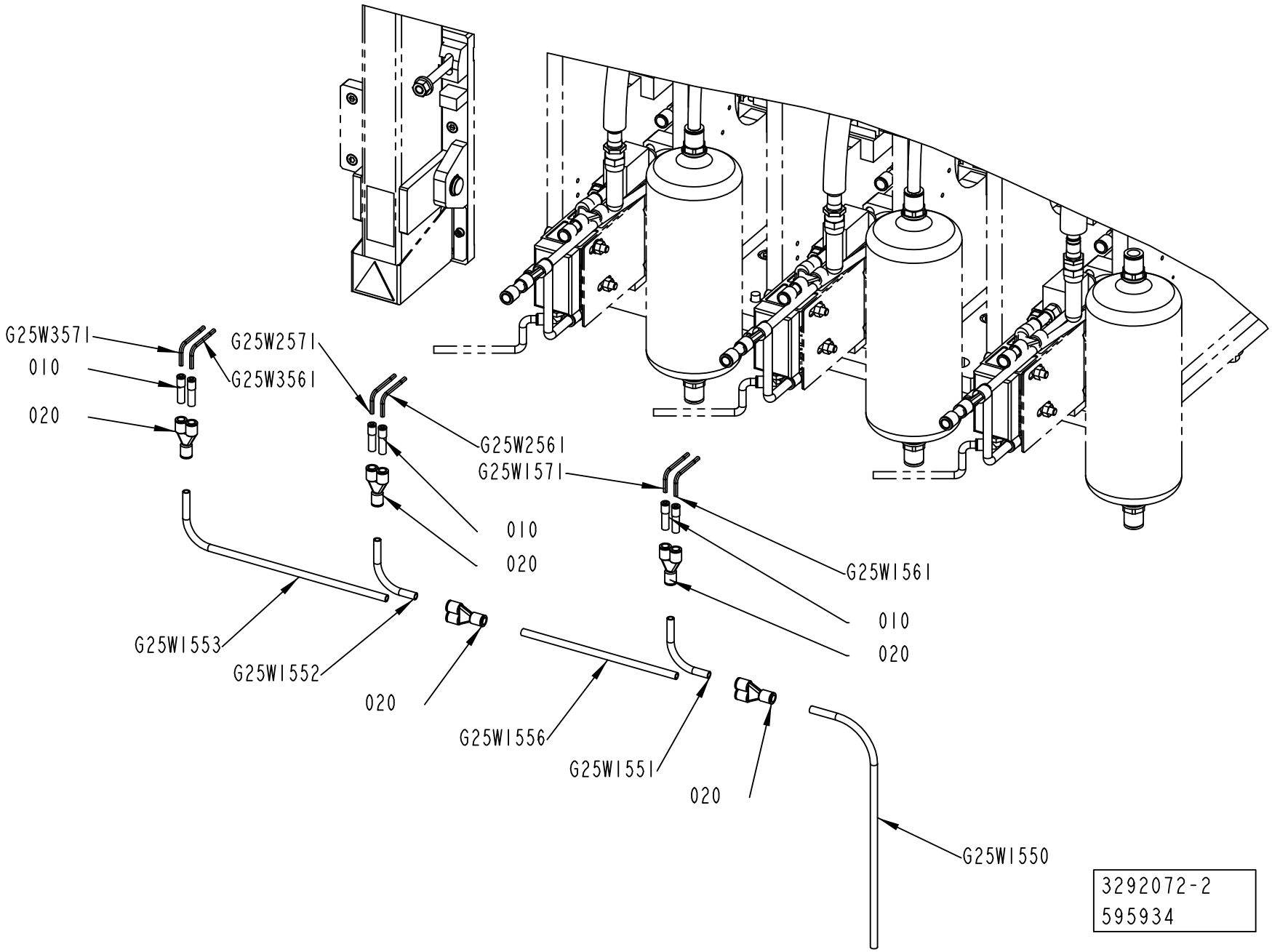

ECM: 597938 - 20130214
Group number: 3292072-0200
Assembly Drawing: 3292072-2_1_AA

Pos	Part No	UN	Qty	Description	Page No
-					
010	350006-0002		6	PUSH-IN FITTING QS-F-8H-4	
020	350015-0003		5	PUSH-IN Y-CONNECTOR QSY-F-8	
G25W1550	315400-0004	M	3	TUBE PUN-H-8X1,25-BL	
G25W1551	315400-0004	M	0.75	TUBE PUN-H-8X1,25-BL	
G25W1552	315400-0004	M	0.75	TUBE PUN-H-8X1,25-BL	
G25W1553	315400-0004	M	0.87	TUBE PUN-H-8X1,25-BL	
G25W1556	315400-0004	M	0.365	TUBE PUN-H-8X1,25-BL	
G25W1561	315400-0016	M	0.5	TUBE PUN-H-4X0,75-BL	
G25W1571	315400-0016	M	0.5	TUBE PUN-H-4X0,75-BL	
G25W2561	315400-0016	M	0.5	TUBE PUN-H-4X0,75-BL	
G25W2571	315400-0016	M	0.5	TUBE PUN-H-4X0,75-BL	
G25W3561	315400-0016	M	0.5	TUBE PUN-H-4X0,75-BL	
G25W3571	315400-0016	M	0.5	TUBE PUN-H-4X0,75-BL	

Pos	Part No	UN	Qty	Description	Page No

BENDING ROLLER

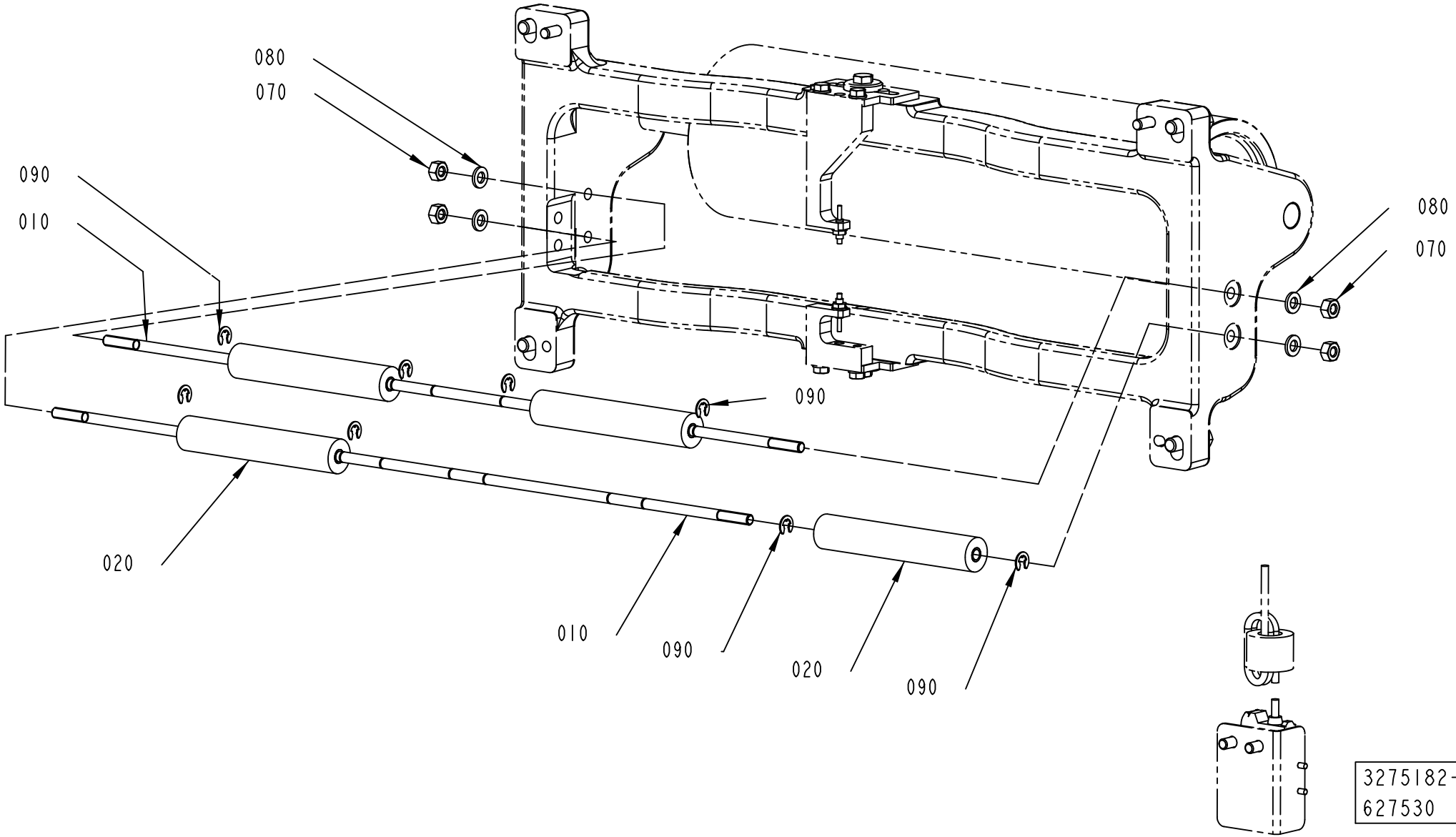

3275182-1
627530

ECM: 648547 - 20140401
Group number: 3275182-0100
Assembly Drawing: 3275182-1_1_AB

This list covers pages from 1-948 to 1-951

Pos	Part No	UN	Qty	Description	Page No
TBA 1000M STDA7 START FM TBA 1000S LIGHTCAP24 (See drawing on page: 1-948)					
010	2704722-0000		2	SHAFT	
020	2831688-0000		4	ROLLER	
010	*321138-0060*		*2*	*BUSHING, IGLIDUR J 6X8X6*	
070	312605-0316		4	HEXAGON NUT, M6M M6 A280	
080	315105-0153		4	WASHER PLAIN, 6,4X12X1,5 A4 BRB	
090	315755-0107		8	RETAINING RING SHAFT DIN 6799 5 SS	
TBA 1000S LIGHTCAP24 START FM TBA 1000M STDA7 (See drawing on page: 1-950)					
030	2890921-0000		1	BRACKET	
040	311103-0422		1	PARALLEL PIN ISO 2338 8M6X80 A1	
050	312115-0370		2	SCREW ISO4762 M6X20 A4 80	
060	312318-0289		1	SET SCREW, CUP END ISO4029 M4X10 A4	
100	3175065-0100		1	GUIDE ROLLER	**1-953**

Pos	Part No	UN	Qty	Description	Page No

BENDING ROLLER

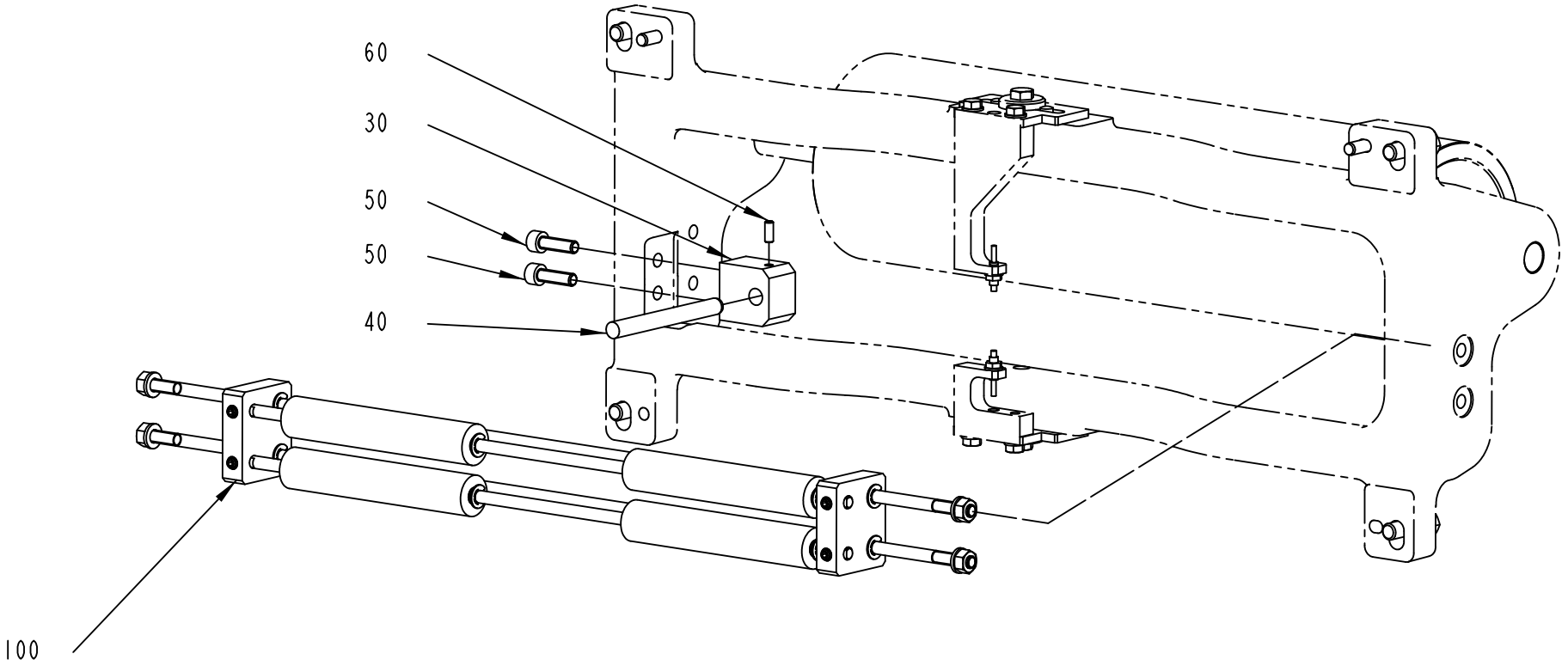

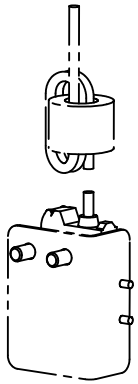

3275182-2
627530

ECM: 648547 - 20140401
Group number: 3275182-0100
Assembly Drawing: 3275182-2_1_AA

This list covers pages from 1-948 to 1-951

Pos	Part No	UN	Qty	Description	Page No
TBA 1000M STDA7 START FM TBA 1000S LIGHTCAP24 (See drawing on page: 1-948)					
010	2704722-0000		2	SHAFT	
020	2831688-0000		4	ROLLER	
010	*321138-0060*		*2*	*BUSHING, IGLIDUR J 6X8X6*	
070	312605-0316		4	HEXAGON NUT, M6M M6 A280	
080	315105-0153		4	WASHER PLAIN, 6,4X12X1,5 A4 BRB	
090	315755-0107		8	RETAINING RING SHAFT DIN 6799 5 SS	
TBA 1000S LIGHTCAP24 START FM TBA 1000M STDA7 (See drawing on page: 1-950)					
030	2890921-0000		1	BRACKET	
040	311103-0422		1	PARALLEL PIN ISO 2338 8M6X80 A1	
050	312115-0370		2	SCREW ISO4762 M6X20 A4 80	
060	312318-0289		1	SET SCREW, CUP END ISO4029 M4X10 A4	
100	3175065-0100		1	GUIDE ROLLER	**1-953**

Pos	Part No	UN	Qty	Description	Page No

GUIDE ROLLER

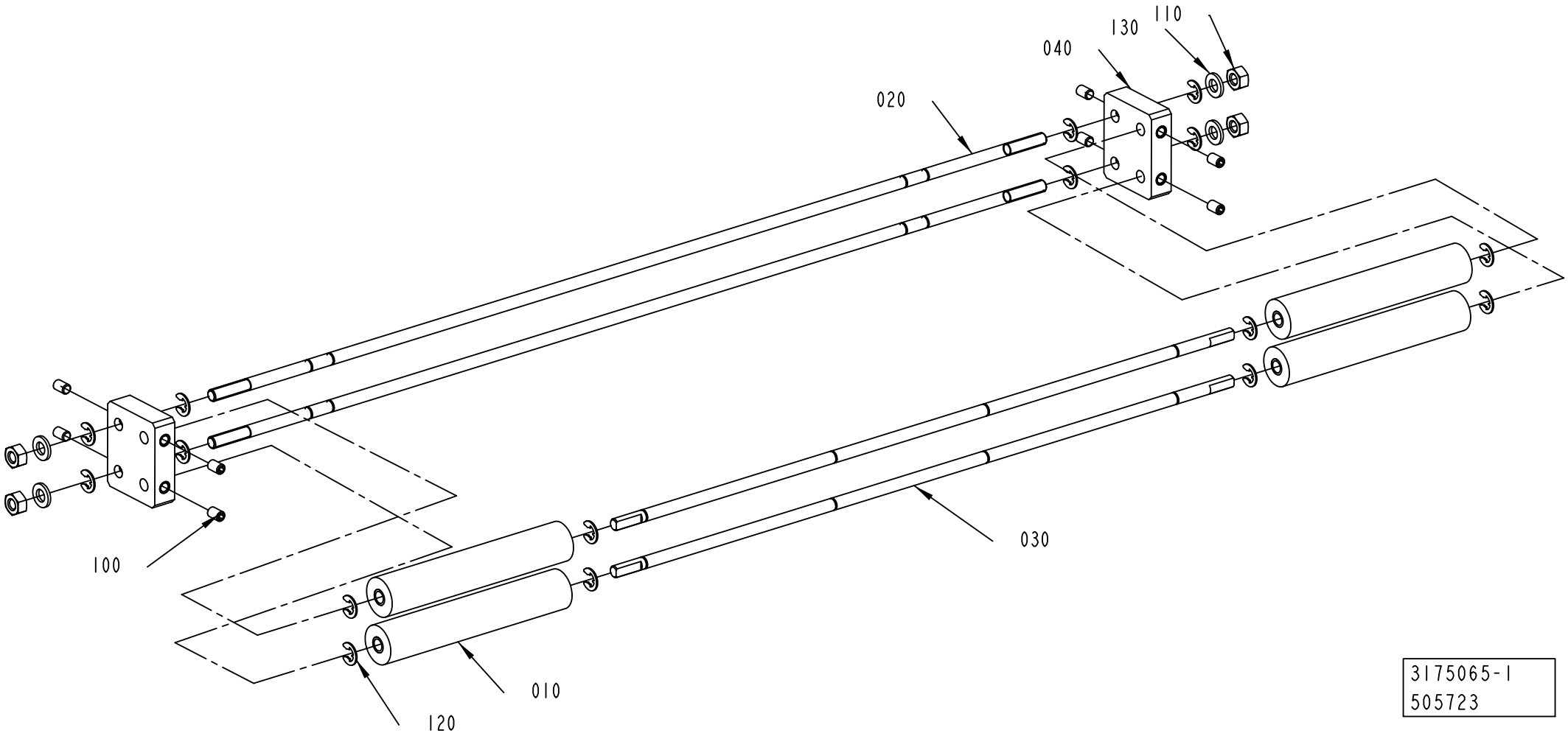

3175065-1
505723

ECM: 506605 - 20110401
Group number: 3175065-0100
Assembly Drawing: 3175065-1_1_AA

Pos	Part No	UN	Qty	Description	Page No
-					
010	2831688-0000		4	ROLLER	
010	*321138-0060*		*2*	*BUSHING, IGLIDUR J 6X8X6*	
020	3175066-0000		2	SHAFT	
030	3175067-0000		2	SHAFT	
040	3175068-0000		2	SUPPORT	
100	312318-0323		8	SET SCREW, CUP END ISO4029 M5X8 A4	
110	312605-0316		4	HEXAGON NUT, M6M M6 A280	
120	315755-0107		16	RETAINING RING SHAFT DIN 6799 5 SS	
130	315105-0153		4	WASHER PLAIN, 6,4X12X1,5 A4 BRB	

Pos	Part No	UN	Qty	Description	Page No

This page is intentionally left blank.

ECM: 648548 - 20140401
Group number: 3275183-0200
Assembly Drawing:

Pos	Part No	UN	Qty	Description	Page No
LIGHTCAP24 START FM STDA7					
010	2760262-0200		2	PAPER GUIDE	**1-957**
020	2828726-0100		3	PAPER GUIDE	**1-959**
LIGHTCAP30 START FM STDA7, LIGHTCAP30B START FM STDA7					
010	2760262-0200		2	PAPER GUIDE	**1-957**
020	2828726-0100		2	PAPER GUIDE	**1-959**
STDA7 START FM LIGHTCAP30, STDA7 START FM LIGHTCAP24, STDA7 START FM LIGHTCAP30B					
010	2797518-0100		3	PAPER GUIDE	**1-961**

Pos	Part No	UN	Qty	Description	Page No

PAPER GUIDE

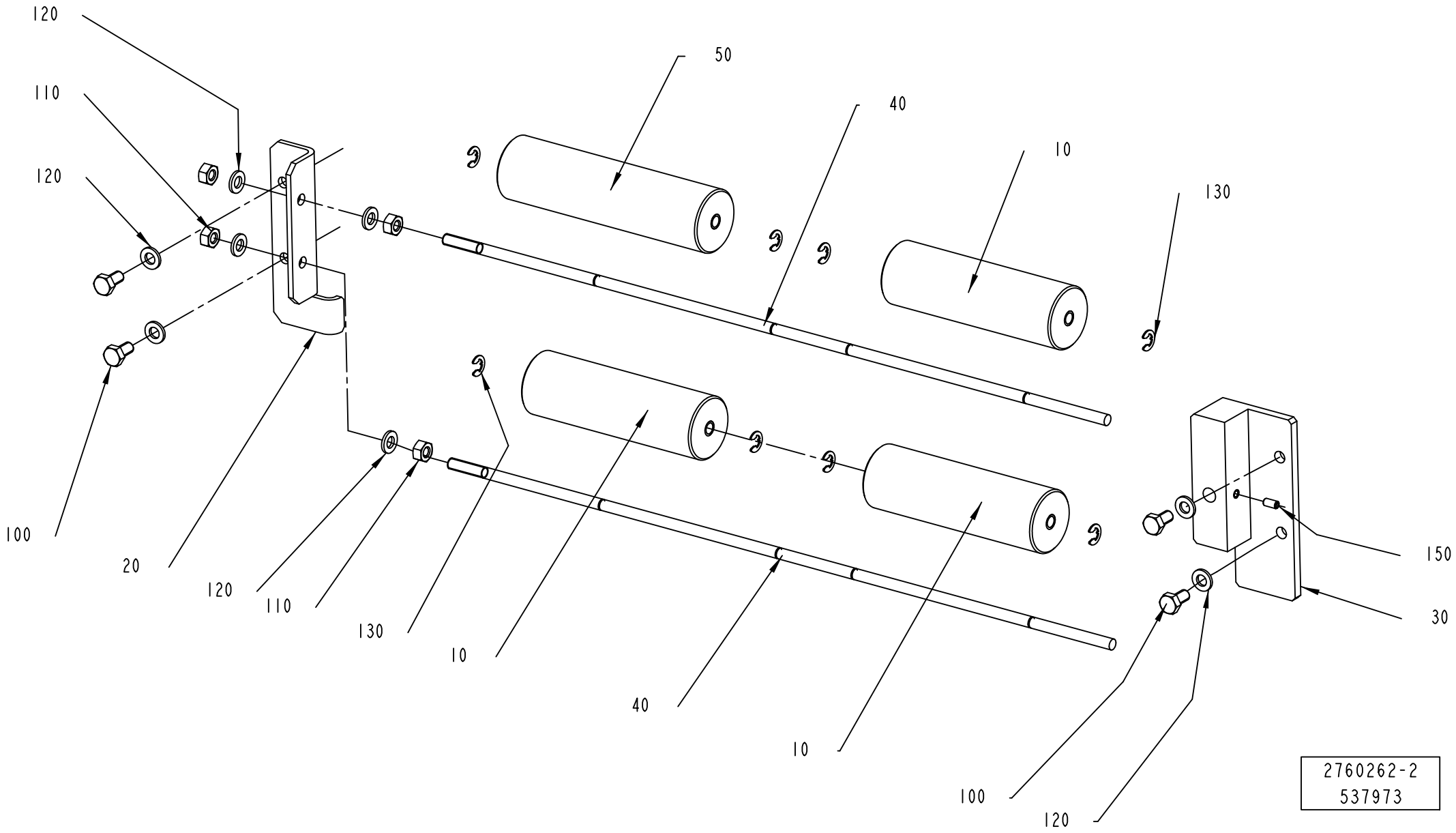
120
110
120
50
40
10
130
100
20
120
110
130
10
40
10
150
30
100
120
2760262-2
537973

ECM: 546109 - 20120405
Group number: 2760262-0200
Assembly Drawing: 2760262-2_1_AA

Pos	Part No	UN	Qty	Description	Page No
-					
010	2759110-0000		3	ROLLER	
020	2716552-0000		1	BRACKET	
030	2828724-0000		1	SUPPORT	
040	2828723-0000		2	SHAFT	
050	3156422-0000		1	ROLLER	
100	312105-0366		4	SCREW, M6S ISO 4017 M6X12 A4 80	
110	312605-0316		4	HEXAGON NUT, M6M M6 A280	
120	315105-0153		8	WASHER PLAIN, 6,4X12X1,5 A4 BRB	
130	315755-0107		8	RETAINING RING SHAFT DIN 6799 5 SS	
150	312318-0287		1	SET SCREW, CUP END ISO4029 M4X8 A4	

Pos	Part No	UN	Qty	Description	Page No

PAPER GUIDE

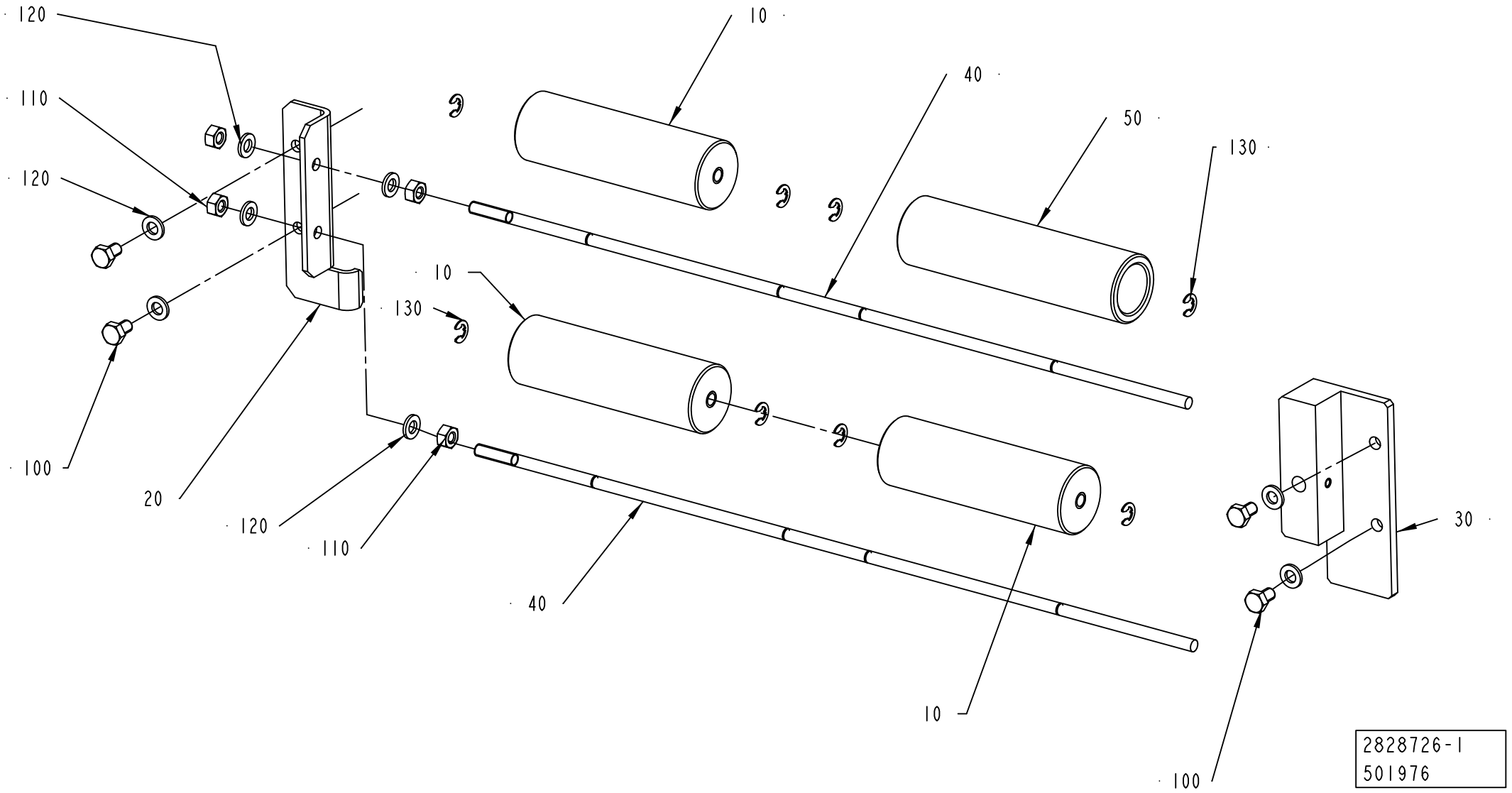
120
110
120
100
20
120
110
10
130
40
10
40
50
130
10
30
100
2828726-1
501976

ECM: 503718 - 20111001
Group number: 2828726-0100
Assembly Drawing: 2828726-1_1_AB

Pos	Part No	UN	Qty	Description	Page No
-					
010	2759110-0000		3	ROLLER	
020	2716552-0000		1	BRACKET	
030	2828724-0000		1	SUPPORT	
040	2828725-0000		2	SHAFT	
050	3156422-0000		1	ROLLER	
100	312105-0364		4	"SCREW, M6S ISO 4017 M6X10 A4 80"	
110	312605-0316		8	HEXAGON NUT, M6M M6 A280	
120	315105-0153		12	WASHER PLAIN, 6,4X12X1,5 A4 BRB	
130	315755-0107		8	RETAINING RING SHAFT DIN 6799 5 SS	

Pos	Part No	UN	Qty	Description	Page No

PAPER GUIDE

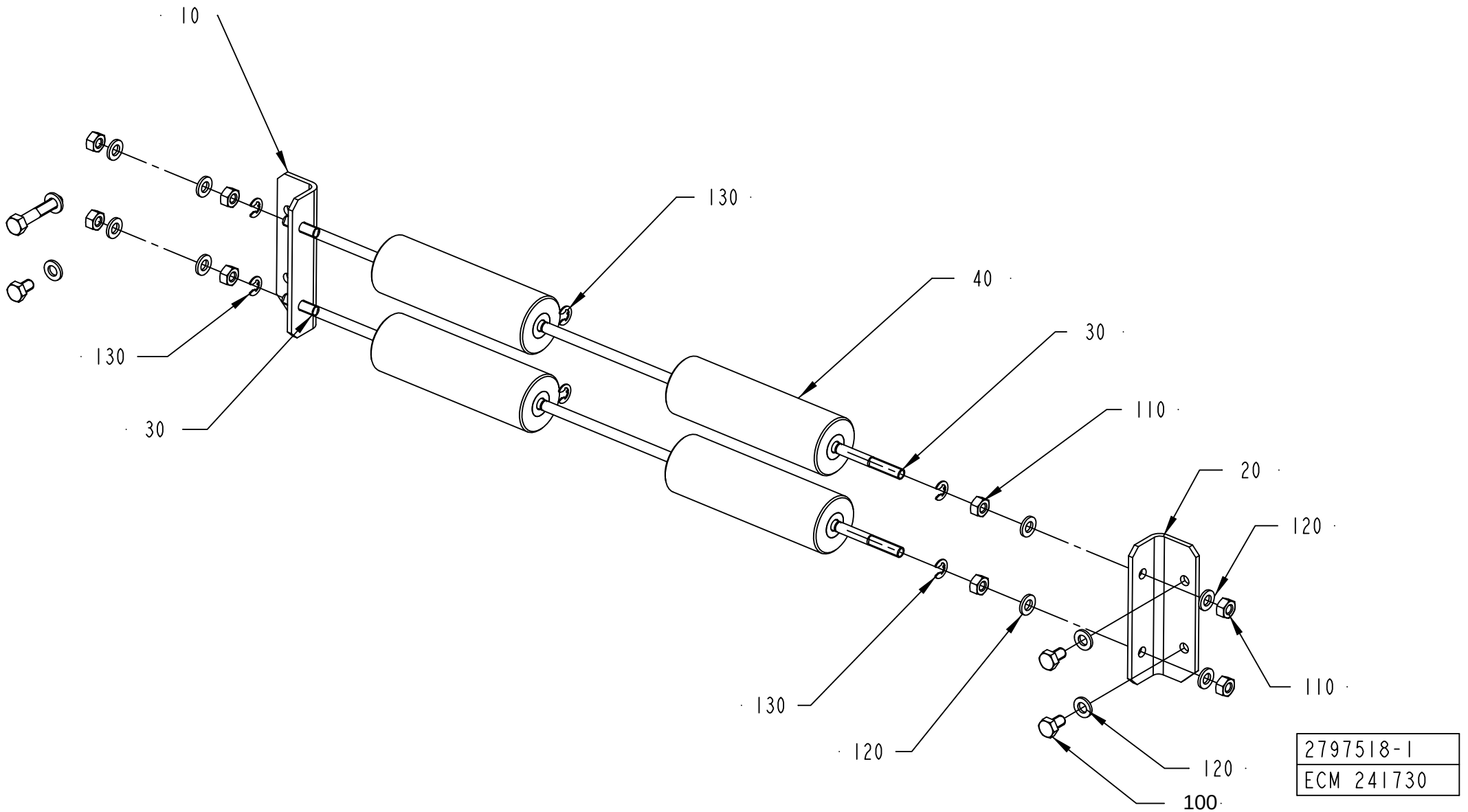
10
130
40
30
110
20
120
130
30
130
120
120
110
100
2797518-1
ECM 241730

ECM: 241734 - 20060116
Group number: 2797518-0100
Assembly Drawing: 2797518-1_1_AA

Pos	Part No	UN	Qty	Description	Page No
-					
010	2797525-0000		1	BRACKET	
020	2797519-0000		1	BRACKET	
030	1338352-0000		2	SHAFT	
040	2759110-0000		4	ROLLER	
100	312105-0364		4	"SCREW, M6S ISO 4017 M6X10 A4 80"	
110	312605-0316		8	HEXAGON NUT, M6M M6 A280	
120	315105-0153		12	WASHER PLAIN, 6,4X12X1,5 A4 BRB	
130	315755-0107		8	RETAINING RING SHAFT DIN 6799 5 SS	

Pos	Part No	UN	Qty	Description	Page No

This page is intentionally left blank.

ECM: 648551 - 20140401
Group number: 3309959-0100
Assembly Drawing:

Pos	Part No	UN	Qty	Description	Page No
LIGHTCAP24 START FM LIGHTCAP30, LIGHTCAP30 START FM LIGHTCAP24, LIGHTCAP30B START FM LIGHTCAP24, LIGHTCAP24 START FM LIGHTCAP30B					
040	3245535-0100		1	TEMPLATE	**1-965**
080	2771013-0001		6	SHIM	
090	2771013-0002		6	SHIM	
100	2771013-0003		6	SHIM	
110	2771013-0004		6	SHIM	
120	2771013-0005		6	SHIM	
LIGHTCAP24 START FM STDA7, LIGHTCAP30 START FM STDA7, LIGHTCAP30B START FM STDA7					
005	3053463-0100		1	SEAL KIT	**1-967**
010	3244930-0100		1	TEMPLATE	**1-969**
020	2719697-0000		1	SHUTTER	
040	3245535-0100		1	TEMPLATE	**1-965**
080	2771013-0001		6	SHIM	
090	2771013-0002		6	SHIM	
100	2771013-0003		6	SHIM	
110	2771013-0004		6	SHIM	
120	2771013-0005		6	SHIM	
130	2760291-0001		6	SHIM	
140	90600-3845		2	THERMOCOUPLE, C102002A	
150	90600-0659		1	FILLING NOZZLE, SS041837/100 TYPE: K	
210	2760291-0002		6	SHIM	
220	2760291-0003		6	SHIM	
230	2760291-0004		6	SHIM	
240	2760291-0005		6	SHIM	
260	2760291-0006		6	SHIM	
STDA7 START FM LIGHTCAP30, STDA7 START FM LIGHTCAP24, STDA7 START FM LIGHTCAP30B					
080	1338165-0000		6	SHIM	
090	1338166-0000		6	SHIM	
100	1338167-0000		6	SHIM	
110	1338168-0000		6	SHIM	
120	1338169-0000		6	SHIM	
130	1338170-0000		6	SHIM	
200	1279875-0000		6	SHIM	
210	1296532-0000		6	SHIM	
220	1296533-0000		6	SHIM	
230	1296534-0000		6	SHIM	
240	1296535-0000		6	SHIM	
250	1296536-0000		6	SHIM	

Pos	Part No	UN	Qty	Description	Page No

This page is intentionally left blank.

ECM: 659025 - 20140701
Group number: 3245535-0100
Assembly Drawing:

Pos	Part No	UN	Qty	Description	Page No
TBA 1000E LIGHTCAP30, TBA 1000E LIGHTCAP30B, TBA 0500E QC LIGHTCAP30 PLH, TBA 0500E QC LIGHTCAP30B PLH					
010	3043723-0000		1	TEMPLATE	
TBA 1000M LIGHTCAP24 PLH					
010	3043738-0000		1	TEMPLATE	
TBA 1000S LIGHTCAP24 NOPLH					
010	2818315-0000		1	TEMPLATE	

Pos	Part No	UN	Qty	Description	Page No

This page is intentionally left blank.

ECM: 415955 - 20091003
Group number: 3053463-0100
Assembly Drawing:

Pos	Part No	UN	Qty	Description	Page No
-					
10	2725337-0000		6	SEAL	
20	1296451-0000		6	SEAL	
30	2799570-0000		6	SEAL	
40	2799571-0000		6	SEAL	
50	2841981-0003		6	SEAL	

Pos	Part No	UN	Qty	Description	Page No

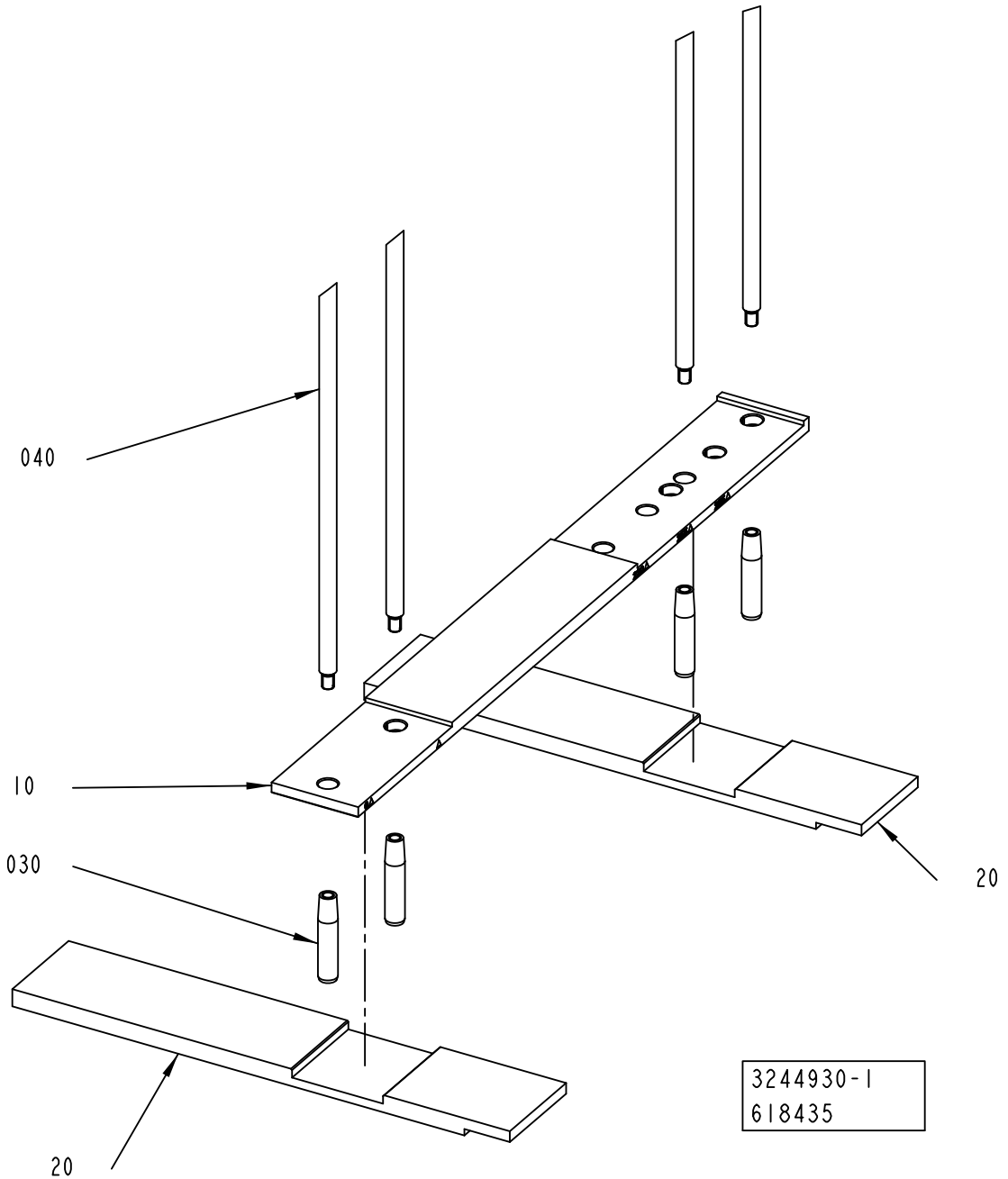
040
10
030
20
20
3244930-1
618435

ECM: 622120 - 20131001
Group number: 3244930-0100
Assembly Drawing: 3244930-1_1_AB

Pos	Part No	UN	Qty	Description	Page No
-					
010	3244928-0000		1	BRACKET	
020	3244929-0000		2	SUPPORT	
030	1338100-0000		4	PIN	
040	2859572-0000		4	ROD	

Pos	Part No	UN	Qty	Description	Page No

This page is intentionally left blank.

ECM: 654361 - 20140401
Group number: 3339877-0100
Assembly Drawing:

Pos	Part No	UN	Qty	Description	Page No
-					
0010	90600-1762		4	CABLE MARKING, YELLOW, PK-20Q*25	
0020	3116736-0000		4	LABEL	

Pos	Part No	UN	Qty	Description	Page No

Machine Type | Group Description | Used-In | Group Number | Page No

This page is intentionally left blank.

ECM: 648576 - 20140401
Group number: 3333755-0100
Assembly Drawing:

Pos	Part No	UN	Qty	Description	Page No
TBA 1000E LIGHTCAP30 START FM TBA 1000M LIGHTCAP24, TBA 1000E LIGHTCAP30B START FM TBA 1000M LIGHTCAP24					
010	344351-0312		2	PROTECTIVE PLUG PE, GPN 300/F312	
TBA 1000M LIGHTCAP24 START FM TBA 1000S LIGHTCAP24, TBA 1000M LIGHTCAP24 START FM TBA 1000E LIGHTCAP30, TBA 1000M LIGHTCAP24 START FM TBA 1000E LIGHTCAP30B					
020	3286001-0200		1	TENSIONER	**1-975**

Pos	Part No	UN	Qty	Description	Page No

Machine Type | Group Description | Used-In | Group Number | Page No

TENSIONER

Drawing file: 3286001-2_1_AA.hpgl

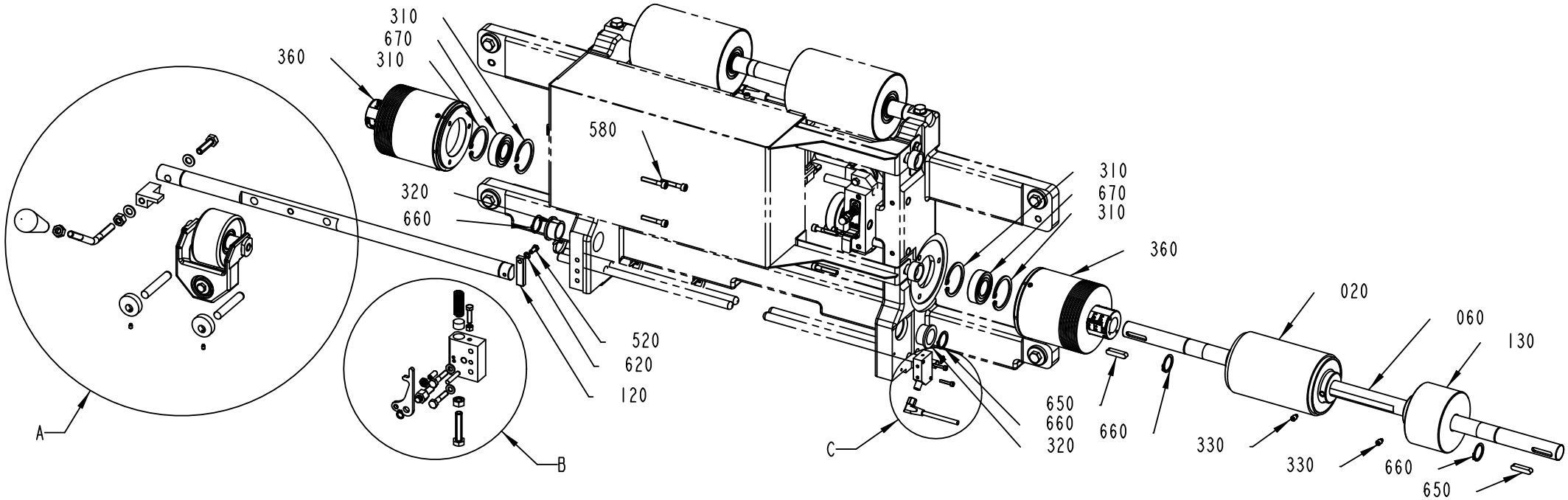

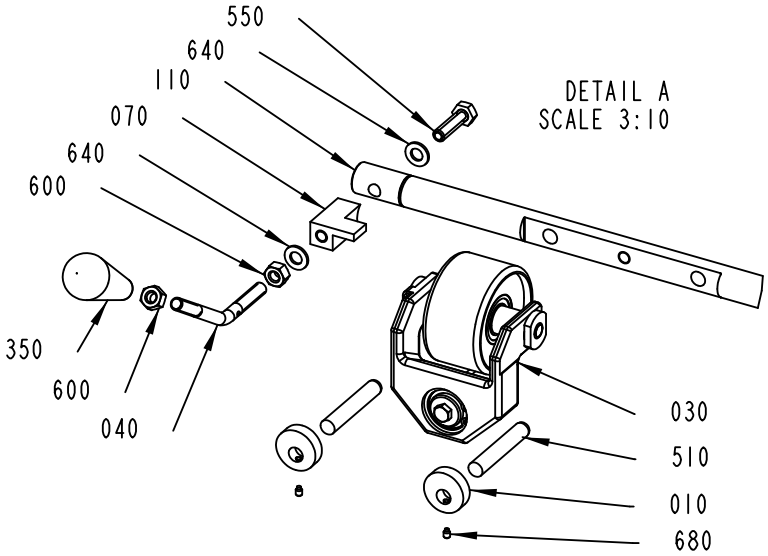

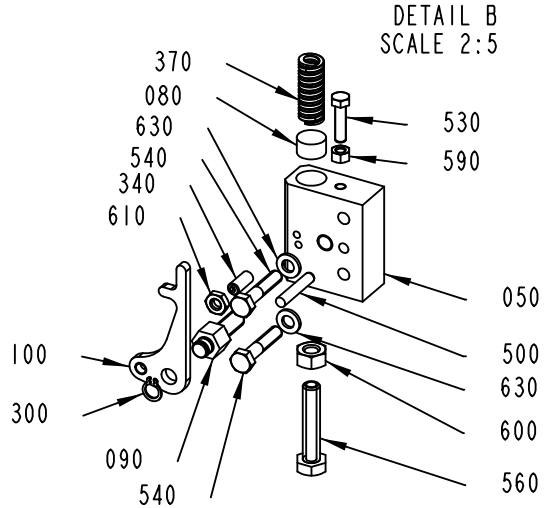

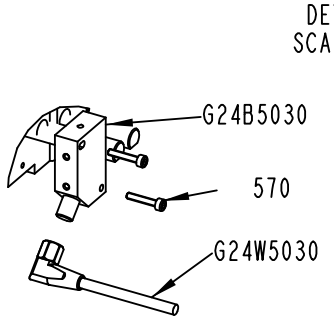

3286001-2
601325

ECM: 605046 - 20130701
Group number: 3286001-0200
Assembly Drawing: 3286001-2_1_AA

Pos	Part No	UN	Qty	Description	Page No
-					
010	2655456-0000		2	CAM	
020	2791248-0000		1	ROLLER	
030	3114781-0200		1	COUNTER ROLLER	**1-977**
040	3198491-0000		1	LEVER	
050	3228001-0000		1	SUPPORT	
060	3228009-0000		1	SHAFT	
070	3228014-0000		1	PIN	
080	3228015-0000		1	PIN	
090	3253699-0000		1	PIN	
100	3256335-0000		1	CLIP	
110	3260484-0000		1	AXLE	
120	3261981-0000		1	PLATE	
130	3262009-0000		1	ROLLER	
300	90141-0015		1	RETAINING RING FOR SHAFT DIN 471 8 SS	
310	90141-0020		4	RETAINING RING FOR BORE DIN 472 42 SS	
320	90240-0221		2	FLANGE BUSHING, 20X25X14 MM	
330	90287-0154		2	SET SCREW, DOGPOINT M6X10 A4	
340	90287-0163		1	SCREW SPRINGLOAD. SLOTTED HEAD M6X14	
350	90458-2163		1	HANDLE, OVAL, THREADED BUSH, M8 29X69 MM	
360	90605-3562		2	BRAKE, 3/150.100-S/20/6885-1	
370	90605-2902		1	COMP. SPRING, 5390, 2,3X17,1X32	
500	311103-0313		1	PARALLEL PIN ISO 2338 5M6X28 A1	
510	311103-0470		2	PARALLEL PIN ISO 2338 10M6X60 A1	
520	312105-0289		1	SCREW, M6S ISO 4017 M4X10 A4 70	
530	312105-0331		1	SCREW, M6S ISO 4017 M5X20 A4 80	
540	312105-0374		2	SCREW, M6S ISO 4014 M6X30 A4 80	
550	312105-0455		1	SCREW, M6S ISO 4017 M8X30 A4 80	
560	312109-0459		1	SCREW, M6S ISO 4017 M8X40 A4 80	
570	312115-0228		2	SCREW ISO4762 M3X16 A4 80	
580	312115-0335		6	SCREW ISO4762 M5X30 A4 80	
590	312605-0314		1	HEXAGON NUT, M6M M5 A280	
600	312605-0318		3	HEXAGON NUT, M6M M8 A280	
610	312625-0316		1	HEXAGON THIN NUT, EN 24035 ML6M M6 A4	
620	315105-0136		1	WASHER PLAIN, 4,3X8X0,8 A4 BRB	
630	315105-0153		2	WASHER PLAIN, 6,4X12X1,5 A4 BRB	
640	315105-0165		2	FWAS080G0-0S, WASHER PLAIN	
650	315705-0235		2	PARALLEL KEY W. ROUND ENDS, 6X6X28 MM	
660	315751-0116		4	RETAINING RING FOR SHAFT DIN 471 20 SS	
670	344224-0204		2	BALL BEARING 20/42X12	
680	344324-0285		2	SET SCREW, DOG POINT ISO4028 M4X6 A2	
G24B5030	90459-2409		1	INDUCTIVE SENSOR, IN 5230	
G24W5030	344246-0050		1	SENSOR CABLE, EVT127	

Machine Type	Group Description	Used-In	Group Number	Page No

COUNTER ROLLER

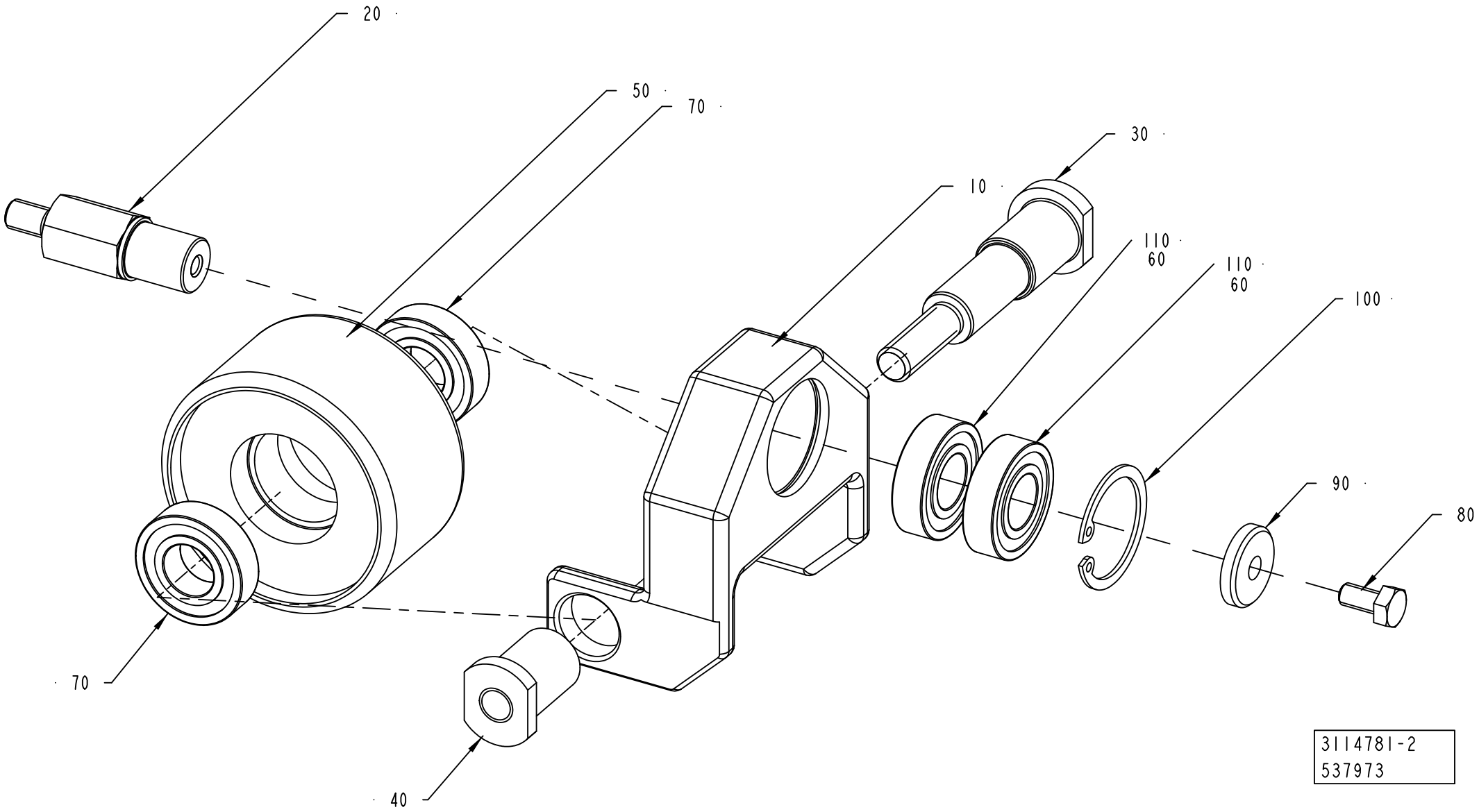

3114781-2
537973

ECM: 539219 - 20120405
Group number: 3114781-0200
Assembly Drawing: 3114781-2_1_AA

Pos	Part No	UN	Qty	Description	Page No
-					
010	3183337-0000		1	BRACKET	
020	2733499-0000		1	PIN	
030	263152-0000		1	SHAFT	
040	263153-0000		1	NUT	
050	1145079-0000		1	WHEEL	
060	90157-0035		1	LOCKING FLUID LOCTITE TYPE 641, 50ML	
070	90604-3847		2	BALL BEARING 15/32X9 SOLID OIL	
080	312105-0366		1	SCREW, M6S ISO 4017 M6X12 A4 80	
090	315125-0153		1	WASHER HIGH, TBRSB 6,4X22X4 A4	
100	315753-0123		1	RETAINING RING FOR BORE DIN 472 32 SS	
110	344224-0202		2	BALL BEARING 15/32X9	

Pos	Part No	UN	Qty	Description	Page No

DIMC Flex 648553-0400 in Filling Machine A3/Flex 648575-0300

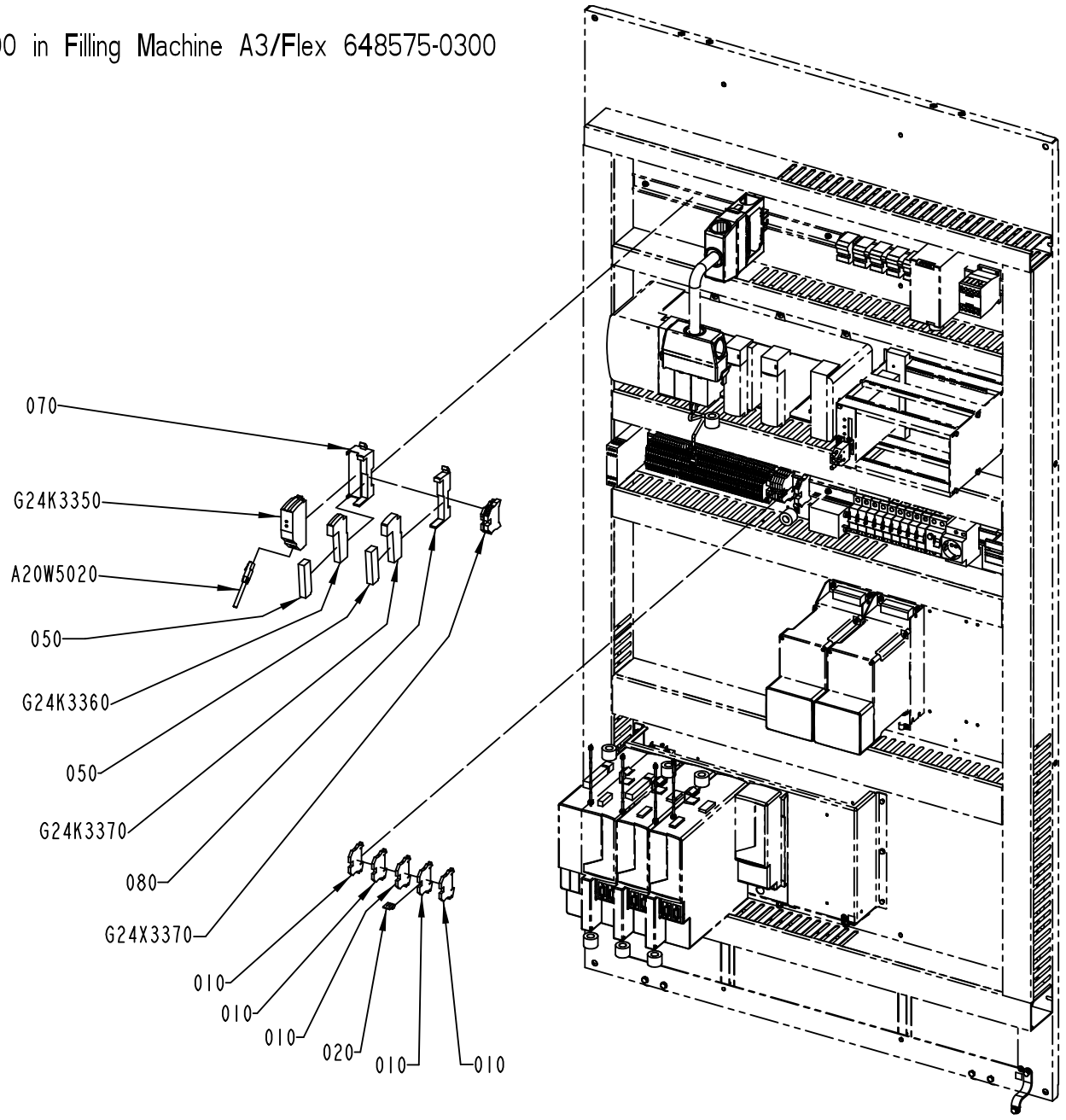

3355187-1
672243

Pos	Part No	UN	Qty	Description	Page No
TBA 1000M STDA7 NOPLH, PLH START FM TBA 1000E NOPLH, PLH START FM TBA 1000S NOPLH (See drawing on pages: 1-978, 1-980)					
	3290894-0000		2	SET OF SIGNS	
	352150-0070	MM	50	SHRINKABLE HOSE 4,0-7,0, HOTY 4	
	351160-0102	M	20	ECAB01011-6L, WIRE AWM 1X0,75 MM2 DARKBL	
010	353021-0212		5	FEED THROUGH TERMINAL, WDU 2,5	
020	353034-0042		1	BRIDGE CONNECTOR WQV 2,5/3	
050	90605-3155		2	TERMINAL BLOCK, X20TB12	
070	90605-3153		1	BUS BASE, X20BB8	
080	90605-3154		1	BUS MODULE, X20BM11	
A20W5020	351501-0015		1	ETHERNET PATCH CABLE, FL CAT5 PATCH 1,5	
G24K3350	90605-3149		1	ETHERNET/IP BUS CONTROLLER, X20BC0088	
G24K3360	90605-3151		1	SUPPLY MODULE X20, X20PS9400	
G24K3370	90605-3152		1	DIGITAL SIGNAL MODULE, X20DS4387	
G24X3370	3289870-0100		1	PLINTH	**1-983**

Pos	Part No	UN	Qty	Description	Page No

DIMC Flex 648553-0500 in Filling Machine A3/Flex 648575-0400

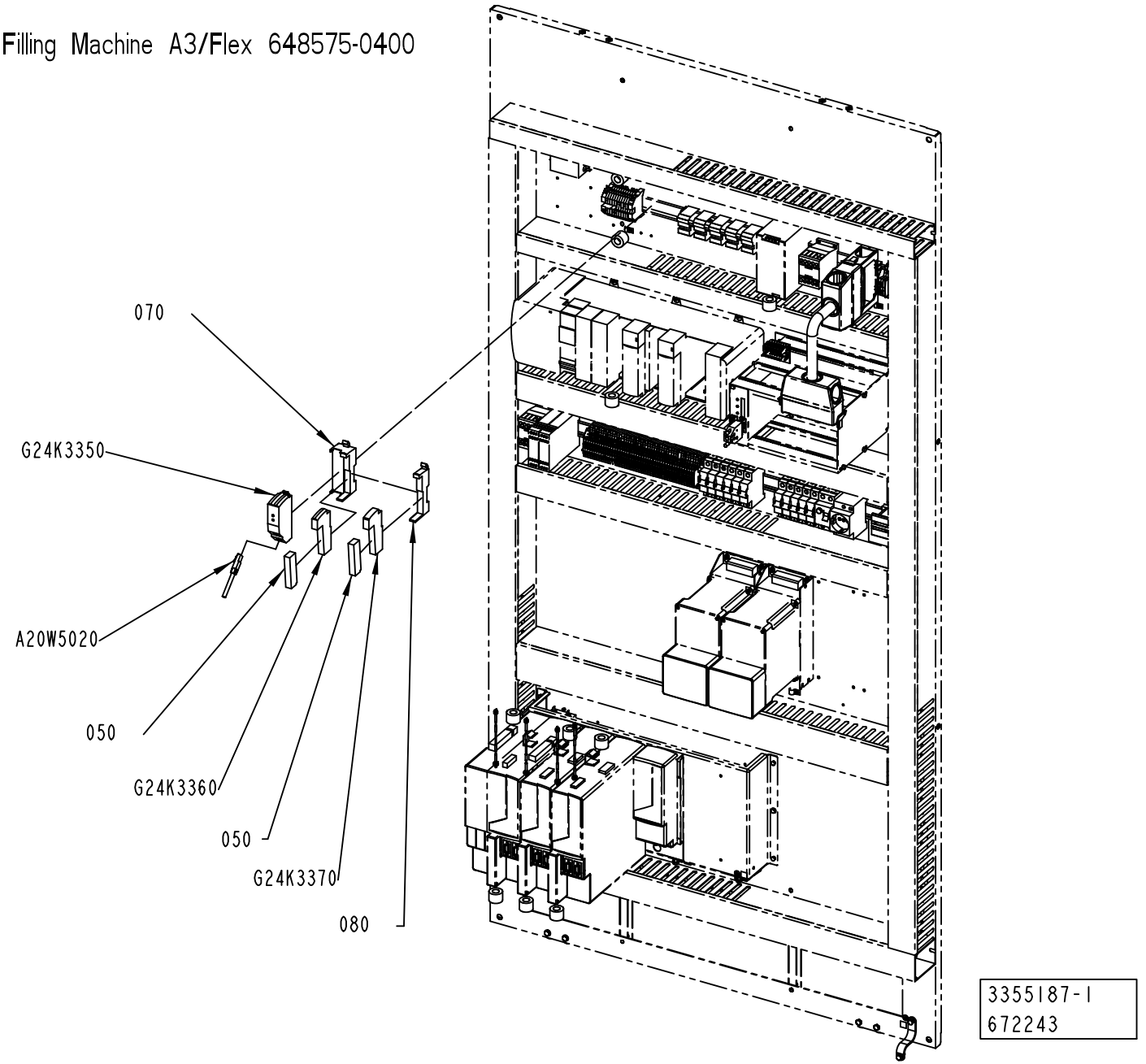

3355187-1
672243

Pos	Part No	UN	Qty	Description	Page No
TBA 1000M STDA7 NOPLH, PLH START FM TBA 1000E NOPLH, PLH START FM TBA 1000S NOPLH (See drawing on pages: 1-978, 1-980)					
	3290894-0000		2	SET OF SIGNS	
	352150-0070	MM	50	SHRINKABLE HOSE 4,0-7,0, HOTY 4	
	351160-0102	M	20	ECAB01011-6L, WIRE AWM 1X0,75 MM2 DARKBL	
010	353021-0212		5	FEED THROUGH TERMINAL, WDU 2,5	
020	353034-0042		1	BRIDGE CONNECTOR WQV 2,5/3	
050	90605-3155		2	TERMINAL BLOCK, X20TB12	
070	90605-3153		1	BUS BASE, X20BB8	
080	90605-3154		1	BUS MODULE, X20BM11	
A20W5020	351501-0015		1	ETHERNET PATCH CABLE, FL CAT5 PATCH 1,5	
G24K3350	90605-3149		1	ETHERNET/IP BUS CONTROLLER, X20BC0088	
G24K3360	90605-3151		1	SUPPLY MODULE X20, X20PS9400	
G24K3370	90605-3152		1	DIGITAL SIGNAL MODULE, X20DS4387	
G24X3370	3289870-0100		1	PLINTH	**1-983**

Pos	Part No	UN	Qty	Description	Page No

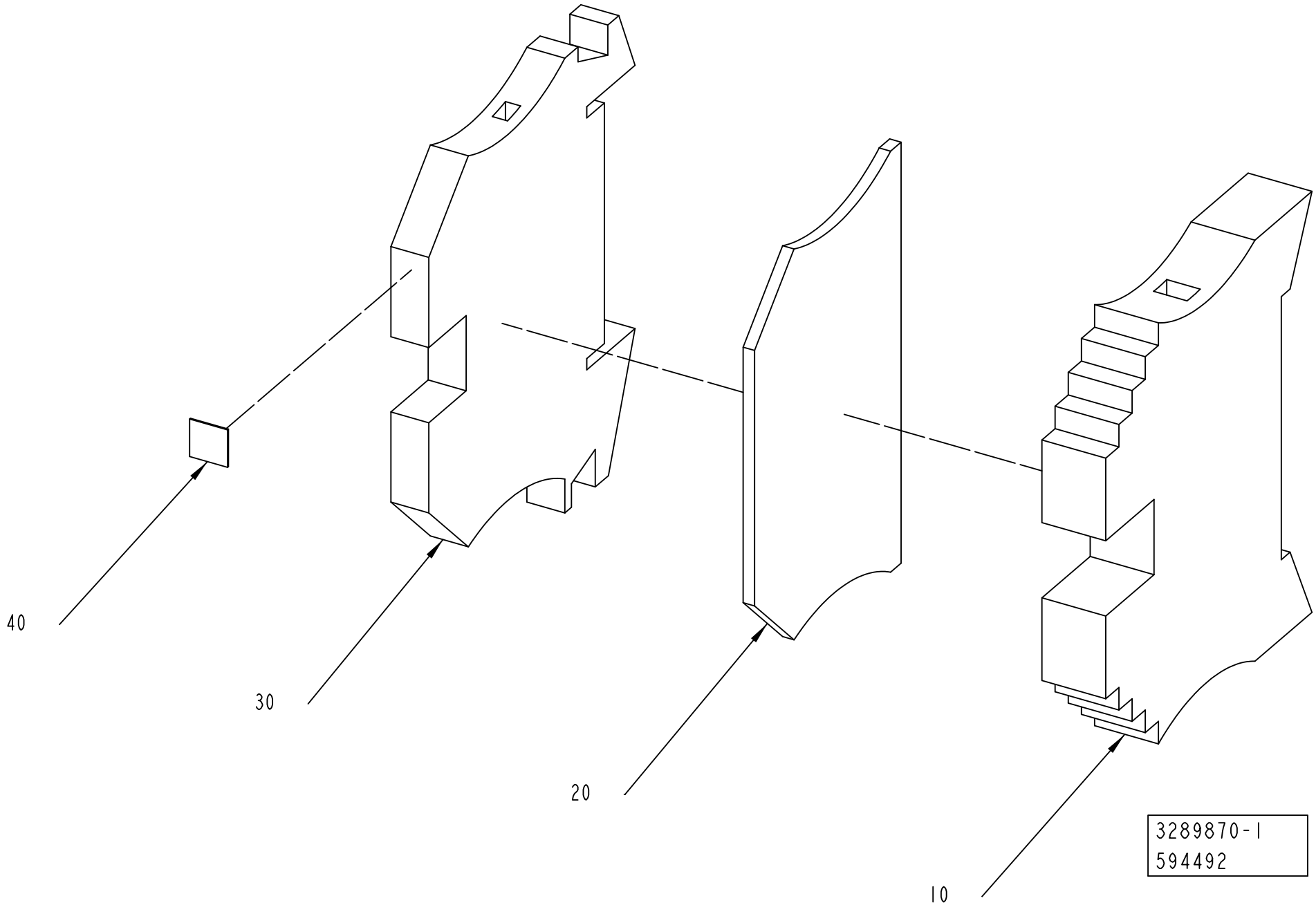
40
30
20
10
3289870-1
594492

ECM: 594979 - 20130205
Group number: 3289870-0100
Assembly Drawing: 3289870-1_1_AA

Pos	Part No	UN	Qty	Description	Page No
-					
010	353031-0203		1	END BRACKET, WEW 35/2	
020	353032-0004		1	END PLATE, WAP 2,5-10, BEIGE	
030	353021-0212		1	FEED THROUGH TERMINAL, WDU 2,5	
040	359011-0807		1	MARKING, DEK 5 FW 1-50	

Pos	Part No	UN	Qty	Description	Page No

BOX9 - VCK DIMC SS

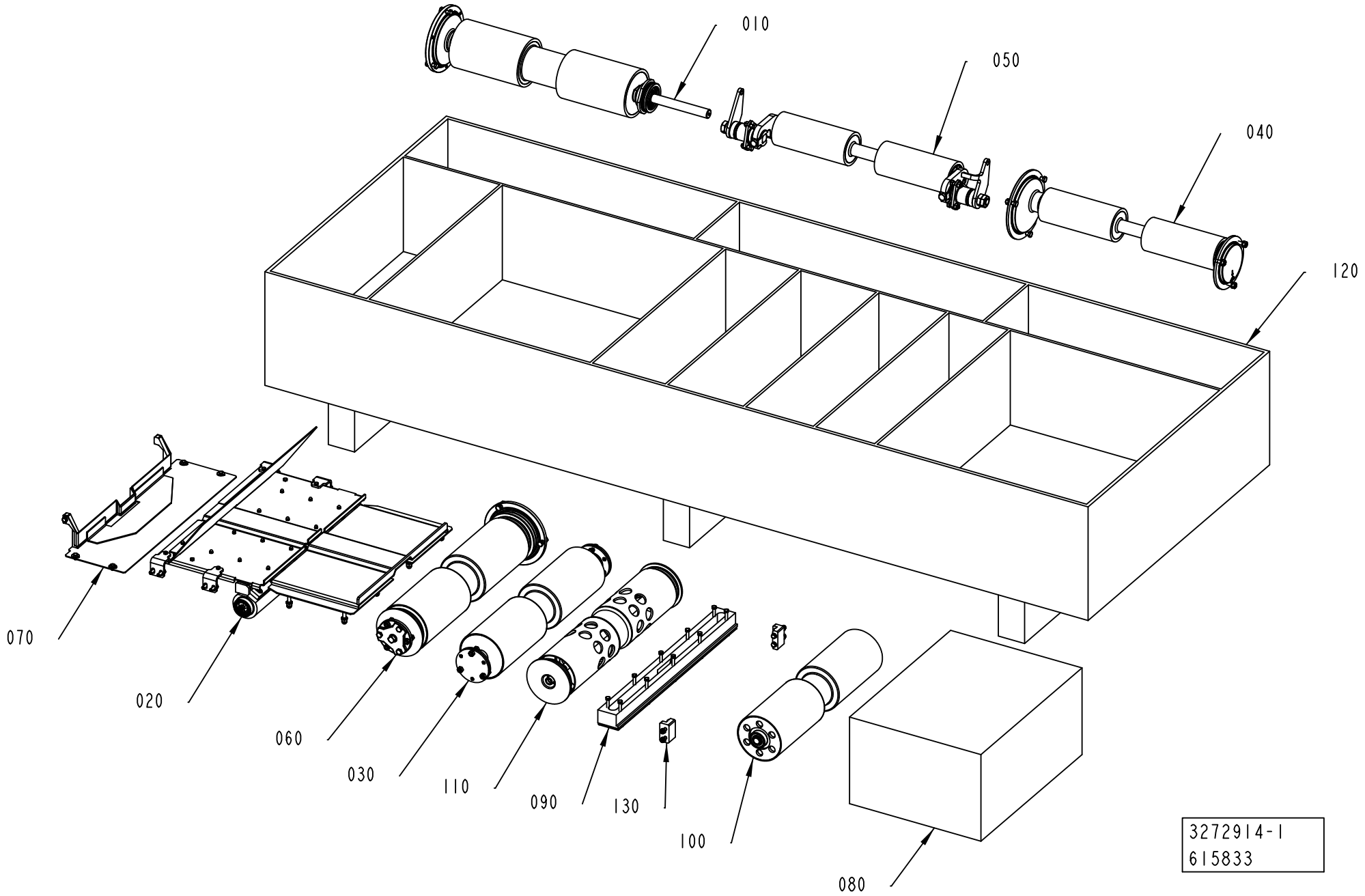

ECM: 651657 - 20140401
Group number: 3272914-0100
Assembly Drawing: 3272914-1_1_AB

Pos	Part No	UN	Qty	Description	Page No
TBA 1000E LIGHTCAP30, START FM TBA 1000E LIGHTCAP30, TBA 1000E LIGHTCAP30B, START FM TBA 1000E LIGHTCAP30B					
010	3249661-0100		1	DRIVE ROLLER	**1-987**
020	3249659-0100		1	AIR KNIFE	**1-989, 1-991**
030	1548736-0200		1	BENDING ROLLER	**1-993, 1-995, 1-997**
040	2758064-0200		1	SQUEE-GEE ROLLER	**1-999**
050	3249660-0100		1	CALENDER ROLLER	**1-1001**
060	2745337-0200		1	BENDING ROLLER	**1-1003, 1-1005**
070	2783102-0200		1	PLATE	**1-783, 1-785**
080	3047359-0200		1	BLOWING DEVICE	**1-1007**
090	3272975-0100		1	FRAME HOUSING	**1-1009**
100	3270001-0100		1	BENDING ROLLER	**1-1011**
110	3203580-0100		1	BENDING ROLLER	**1-1013**
120	3272970-0000		1	BOX	
130	3297846-0100		1	GUIDE	**1-1015**
TBA 1000M LIGHTCAP24 START FM TBA 1000M STDA7, TBA 1000S LIGHTCAP24 START FM TBA 1000M STDA7, TBA 1000M STDA7 START FM TBA 1000S LIGHTCAP24					
030	1548736-0200		1	BENDING ROLLER	**1-993, 1-995, 1-997**
040	2758064-0200		1	SQUEE-GEE ROLLER	**1-999**
060	2745337-0200		1	BENDING ROLLER	**1-1003, 1-1005**
070	2783102-0200		1	PLATE	**1-783, 1-785**
080	3047359-0200		1	BLOWING DEVICE	**1-1007**
090	3272975-0100		1	FRAME HOUSING	**1-1009**
110	3203580-0100		1	BENDING ROLLER	**1-1013**
120	3272970-0000		1	BOX	
130	3297846-0100		1	GUIDE	**1-1015**

Pos	Part No	UN	Qty	Description	Page No

DRIVE ROLLER

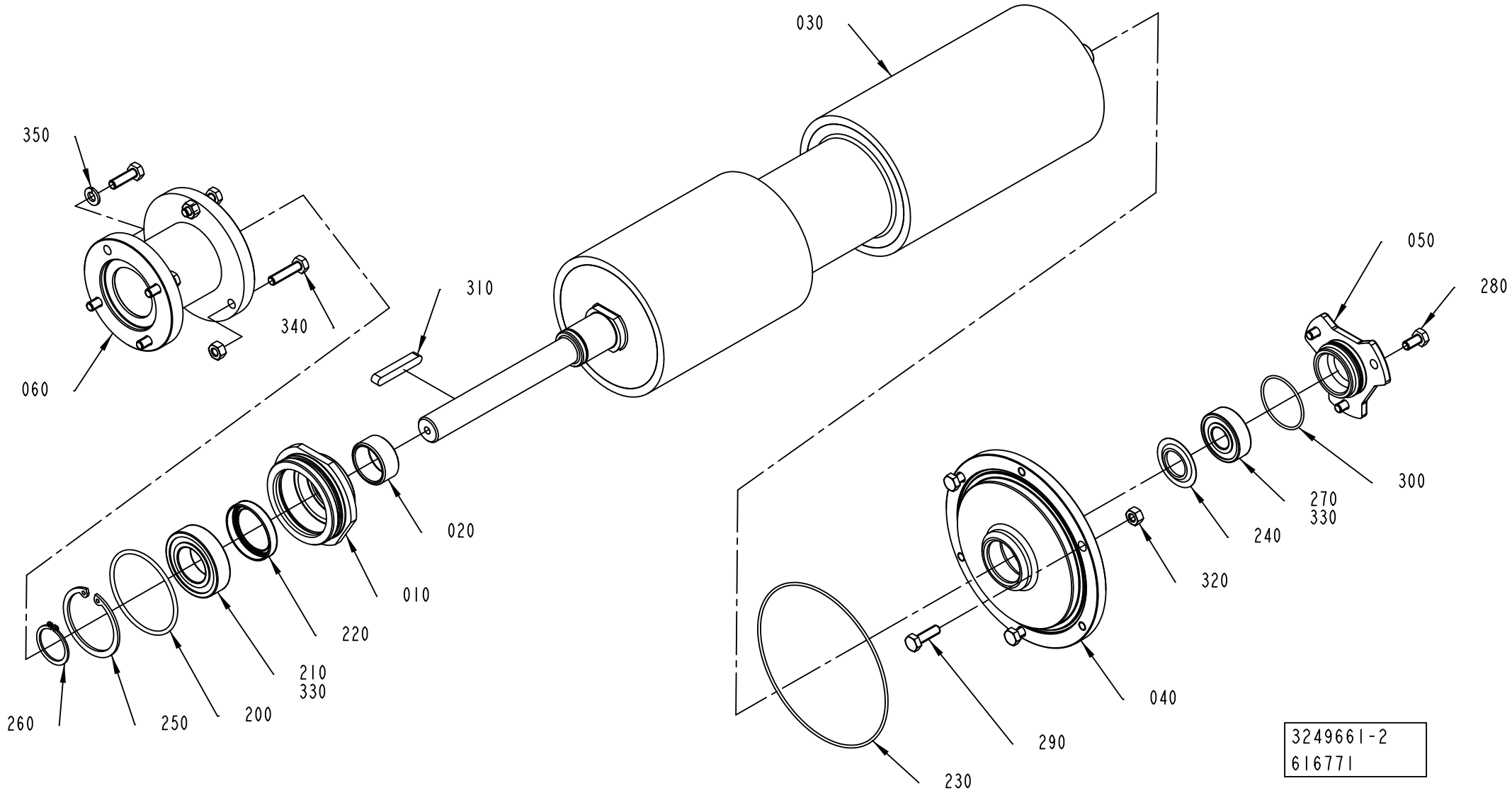

ECM: 617332 - 20131001
Group number: 3249661-0100
Assembly Drawing: 3249661-2_1_AA

Pos	Part No	UN	Qty	Description	Page No
A3/FLEX-0400 TBA 1000E LIGHTCAP30, A3/FLEX-0400 TBA 1000E LIGHTCAP30B (See drawing on page: 1-986)					
030	3006272-0000		1	DRIVE ROLLER	
290	312105-0370		3	SCREW, M6S ISO 4017 M6X20 A4 80	
320	312605-0316		3	HEXAGON NUT, M6M M6 A280	
A3/FLEX-0400 TBA 1000M LIGHTCAP24, A3/FLEX-0400 TBA 1000S LIGHTCAP24, A3/FLEX-0400 TBA 1000M STDA7 (See drawing on page: 1-986)					
030	2951059-0000		1	RUBBER ROLLER	
290	312105-0370		3	SCREW, M6S ISO 4017 M6X20 A4 80	
320	312605-0316		3	HEXAGON NUT, M6M M6 A280	
Common Parts					
010	2931917-0000		1	BEARING SEAT	
020	1548751-0000		1	BUSHING	
040	2951057-0000		1	FLANGE	
050	2951058-0000		1	LID	
200	344207-2055		1	O-RING 55,25X2,62 MM FDA, 3-A	
210	90603-2356		1	BALL BEARING, 25X47X12 MM	
220	90459-1650		1	SEALING RING, VARILIP 30X40X7 MM	
230	344207-1114		1	O-RING 114,02X1,78 MM FDA, 3-A	
240	90214-0303		1	SEALING RING, 18,6X35X2 MM	
250	315753-0130		1	RETAINING RING FOR BORE DIN 472 47 SS	
260	315751-0119		1	RETAINING RING FOR SHAFT DIN 471 25 SS	
270	90458-1704		1	BALL BEARING 15/35X11	
280	312105-0366		3	SCREW, M6S ISO 4017 M6X12 A4 80	
300	344210-0123		1	O-RING 35,1X1,6 MM FDA, 3-A	
310	315705-0239		1	PARALLEL KEY W. ROUND ENDS, 6X6X40 MM	
330	90296-0091		1	LUBRICATION GREASE, FLUOLUB 210	

Pos	Part No	UN	Qty	Description	Page No

Machine Type | Group Description | Used-In | Group Number | Page No

AIR KNIFE

Drawing file: 3249659-1_1_AA.hpgl

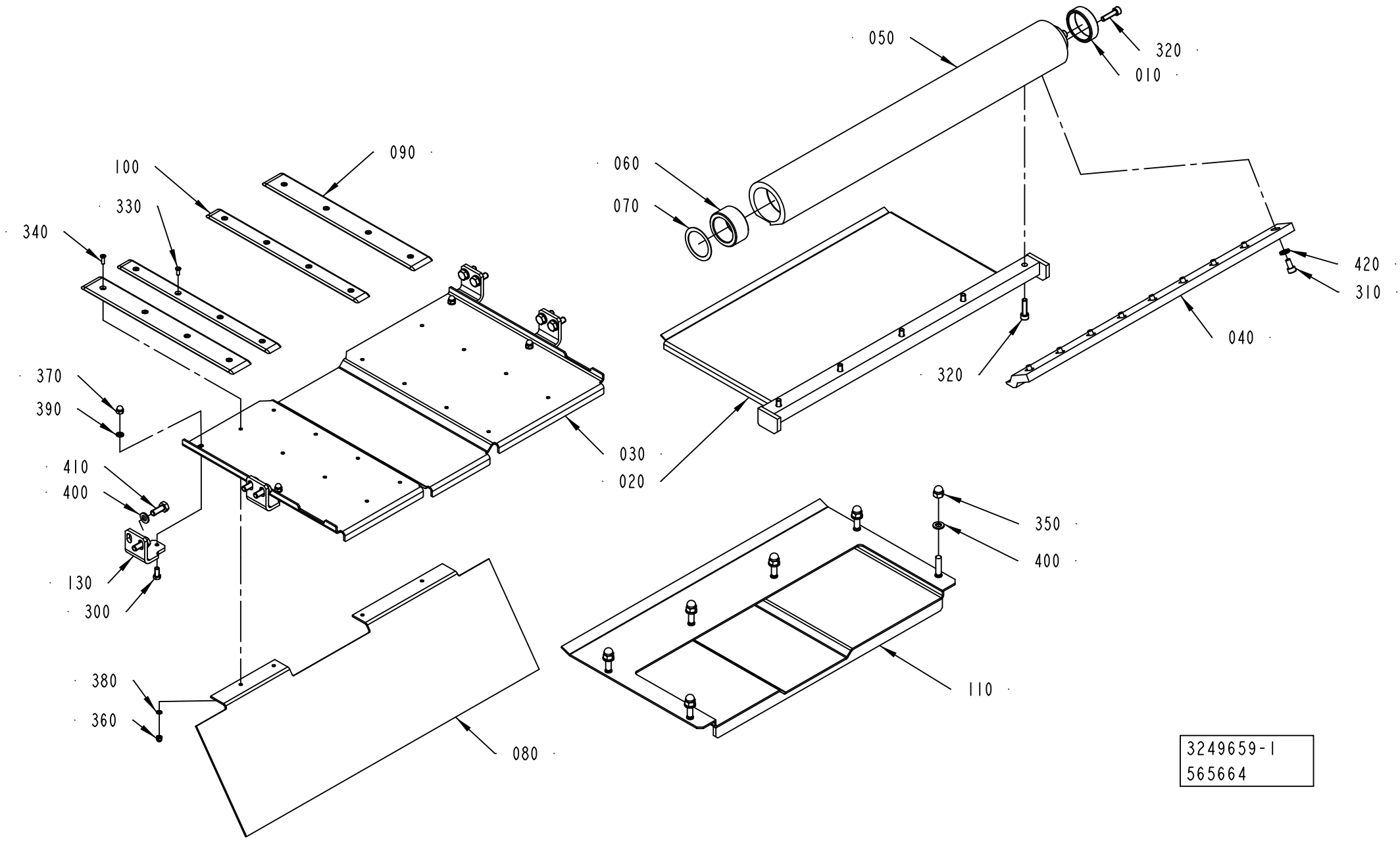

Pos	Part No	UN	Qty	Description	Page No
TBA 1000E LIGHTCAP30, TBA 1000E LIGHTCAP30B (See drawing on page: 1-990)					
020	3103181-0000		1	AIR GUIDE	
030	3109570-0000		1	BOTTOM PLATE	
040	3037097-0000		1	RAIL	
080	2952932-0000		1	PLATE	
110	3103180-0000		1	PLATE	
120	3103170-0000		1	PLATE	
300	312105-0289		8	SCREW, M6S ISO 4017 M4X10 A4 70	
350	312705-0316		8	HEX. DOMED CAP MHM-6 M6 A280	
370	312705-0312		8	NUT HEX. DOMED CAP MHM-6 M4 A280	
390	315105-0136		8	WASHER PLAIN, 4,3X8X0,8 A4 BRB	
400	315105-0153		16	WASHER PLAIN, 6,4X12X1,5 A4 BRB	
TBA 1000S LIGHTCAP24, TBA 1000M STDA7, TBA 1000M LIGHTCAP24 (See drawing on page: 1-988)					
020	2867470-0000		1	AIR GUIDE	
030	2894567-0000		1	PLATE	
040	2884160-0000		1	RAIL	
080	2874687-0000		1	PLATE	
110	3020116-0000		1	PLATE	
300	312105-0289		4	SCREW, M6S ISO 4017 M4X10 A4 70	
350	312705-0316		6	HEX. DOMED CAP MHM-6 M6 A280	
370	312705-0312		4	NUT HEX. DOMED CAP MHM-6 M4 A280	
390	315105-0136		4	WASHER PLAIN, 4,3X8X0,8 A4 BRB	
400	315105-0153		14	WASHER PLAIN, 6,4X12X1,5 A4 BRB	
Common Parts					
010	1519159-0000		1	BUSHING	
050	1519156-0000		1	AIR DISTRIBUTOR	
060	1519166-0000		1	BUSHING	
070	2532915-0000		1	WASHER	
090	2894561-0000		2	SLIDE PLATE	
100	2894560-0000		2	SLIDE PLATE	
130	2532918-0000		4	HOLDER	
310	312115-0325		9	SCREW ISO4762 M5X10 A4 80	
320	312115-0331		8	SCREW ISO4762 M5X20 A4 80	
330	312145-0222		12	SCREW ISO 2009 MFS M3X8 A4	
340	312145-0224		4	SCREW ISO 2009 MFS M3X10 A4	
360	312705-0310		16	NUT HEX. DOMED CAP MHM-6 M3 A2	
380	315105-0124		16	WASHER PLAIN, 3,2X6X0,5 A4 BRB	
410	312105-0368		8	"SCREW, M6S ISO 4017 M6X16 A4 80"	
420	90062-0061		9	LOCK WASHER NORD-LOCK,6,5/10,8, T=2,2	

Pos	Part No	UN	Qty	Description	Page No

AIR KNIFE

Drawing file: 3249659-2_1_AA.hpgl

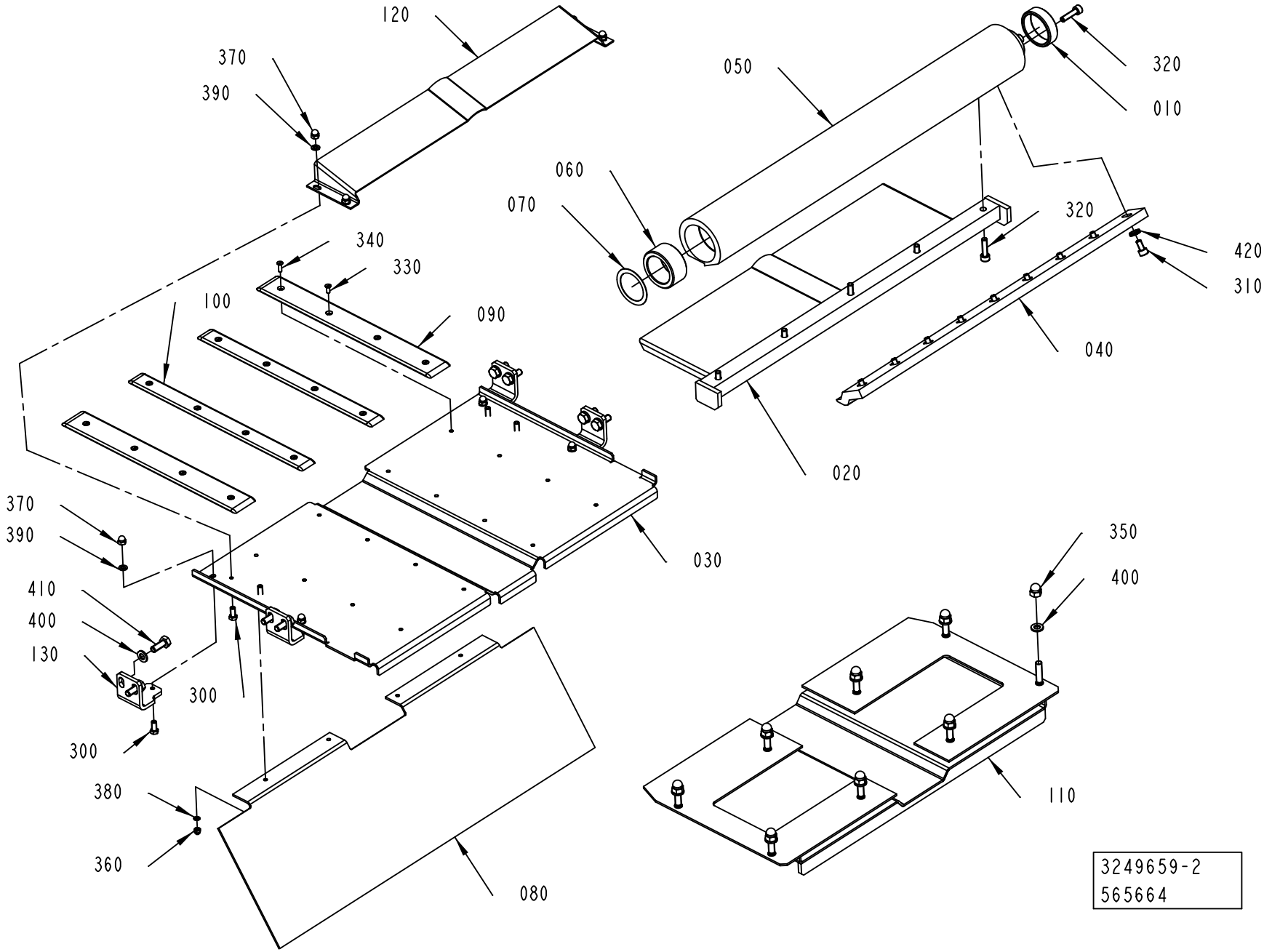

Pos	Part No	UN	Qty	Description	Page No
TBA 1000E LIGHTCAP30, TBA 1000E LIGHTCAP30B (See drawing on page: 1-990)					
020	3103181-0000		1	AIR GUIDE	
030	3109570-0000		1	BOTTOM PLATE	
040	3037097-0000		1	RAIL	
080	2952932-0000		1	PLATE	
110	3103180-0000		1	PLATE	
120	3103170-0000		1	PLATE	
300	312105-0289		8	SCREW, M6S ISO 4017 M4X10 A4 70	
350	312705-0316		8	HEX. DOMED CAP MHM-6 M6 A280	
370	312705-0312		8	NUT HEX. DOMED CAP MHM-6 M4 A280	
390	315105-0136		8	WASHER PLAIN, 4,3X8X0,8 A4 BRB	
400	315105-0153		16	WASHER PLAIN, 6,4X12X1,5 A4 BRB	
TBA 1000S LIGHTCAP24, TBA 1000M STDA7, TBA 1000M LIGHTCAP24 (See drawing on page: 1-988)					
020	2867470-0000		1	AIR GUIDE	
030	2894567-0000		1	PLATE	
040	2884160-0000		1	RAIL	
080	2874687-0000		1	PLATE	
110	3020116-0000		1	PLATE	
300	312105-0289		4	SCREW, M6S ISO 4017 M4X10 A4 70	
350	312705-0316		6	HEX. DOMED CAP MHM-6 M6 A280	
370	312705-0312		4	NUT HEX. DOMED CAP MHM-6 M4 A280	
390	315105-0136		4	WASHER PLAIN, 4,3X8X0,8 A4 BRB	
400	315105-0153		14	WASHER PLAIN, 6,4X12X1,5 A4 BRB	
Common Parts					
010	1519159-0000		1	BUSHING	
050	1519156-0000		1	AIR DISTRIBUTOR	
060	1519166-0000		1	BUSHING	
070	2532915-0000		1	WASHER	
090	2894561-0000		2	SLIDE PLATE	
100	2894560-0000		2	SLIDE PLATE	
130	2532918-0000		4	HOLDER	
310	312115-0325		9	SCREW ISO4762 M5X10 A4 80	
320	312115-0331		8	SCREW ISO4762 M5X20 A4 80	
330	312145-0222		12	SCREW ISO 2009 MFS M3X8 A4	
340	312145-0224		4	SCREW ISO 2009 MFS M3X10 A4	
360	312705-0310		16	NUT HEX. DOMED CAP MHM-6 M3 A2	
380	315105-0124		16	WASHER PLAIN, 3,2X6X0,5 A4 BRB	
410	312105-0368		8	"SCREW, M6S ISO 4017 M6X16 A4 80"	
420	90062-0061		9	LOCK WASHER NORD-LOCK,6,5/10,8, T=2,2	

Pos	Part No	UN	Qty	Description	Page No

BENDING ROLLER

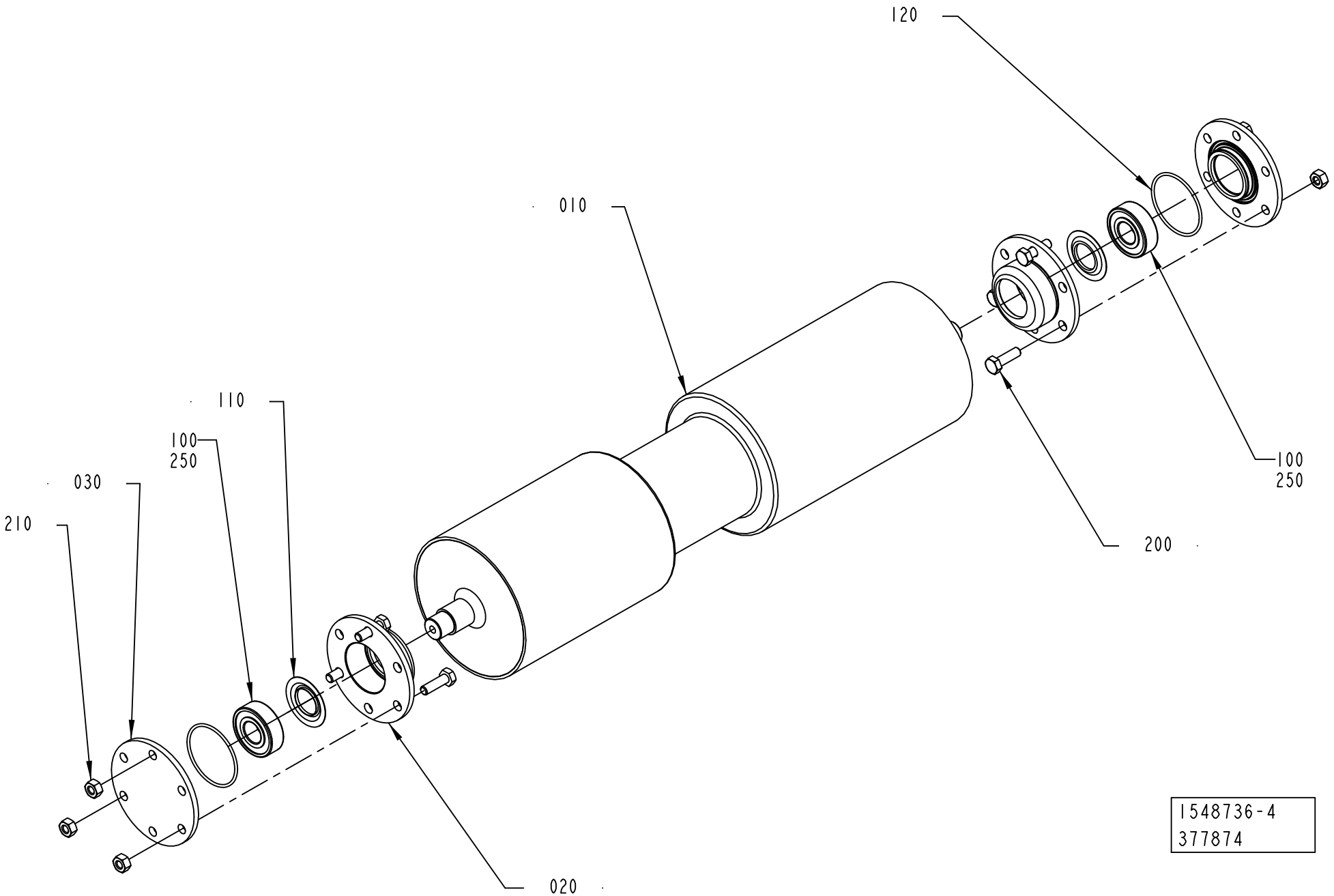

ECM: 644405 - 20140401
Group number: 1548736-0200
Assembly Drawing: 1548736-4_1_AA

This list covers pages from 1-992 to 1-997

Pos	Part No	UN	Qty	Description	Page No
NOMOLDEDCAP (See drawing on page: 1-994)					
010	3008105-0000		1	BENDING ROLLER	
020	3008106-0000		2	BEARING SEAT	
030	3008107-0000		2	LID	
TBA 1000S LIGHTCAP24, TBA 1000M LIGHTCAP24 (See drawing on page: 1-992)					
010	2931913-0000		1	BENDING ROLLER	
020	2931912-0000		2	BEARING SEAT	
030	2931914-0000		2	BEARING COVER	
TBA 1000S STDA7, TBA 1000B STDA7, TBA 1000M STDA7 (See drawing on page: 1-996)					
010	2931913-0000		1	BENDING ROLLER	
020	3008106-0000		2	BEARING SEAT	
030	3008107-0000		2	LID	
TBA 1000E LIGHTCAP30, TBA 1000E LIGHTCAP30B, TBA 0500E LIGHTCAP30, TBA 0500E LIGHTCAP30B (See drawing on page: 1-992)					
010	3008108-0000		1	BENDING ROLLER	
020	2931912-0000		2	BEARING SEAT	
030	2931914-0000		2	BEARING COVER	
Common Parts					
100	90458-1704		2	BALL BEARING 15/35X11	
110	90214-0303		2	SEALING RING, 18,6X35X2 MM	
120	344207-1041		2	O-RING 41,0X1,78 MM FDA, 3-A	
200	312105-0370		6	SCREW, M6S ISO 4017 M6X20 A4 80	
210	312605-0316		6	HEXAGON NUT, M6M M6 A280	
250	90296-0091		1	LUBRICATION GREASE, FLUOLUB 210	

Pos	Part No	UN	Qty	Description	Page No

BENDING ROLLER

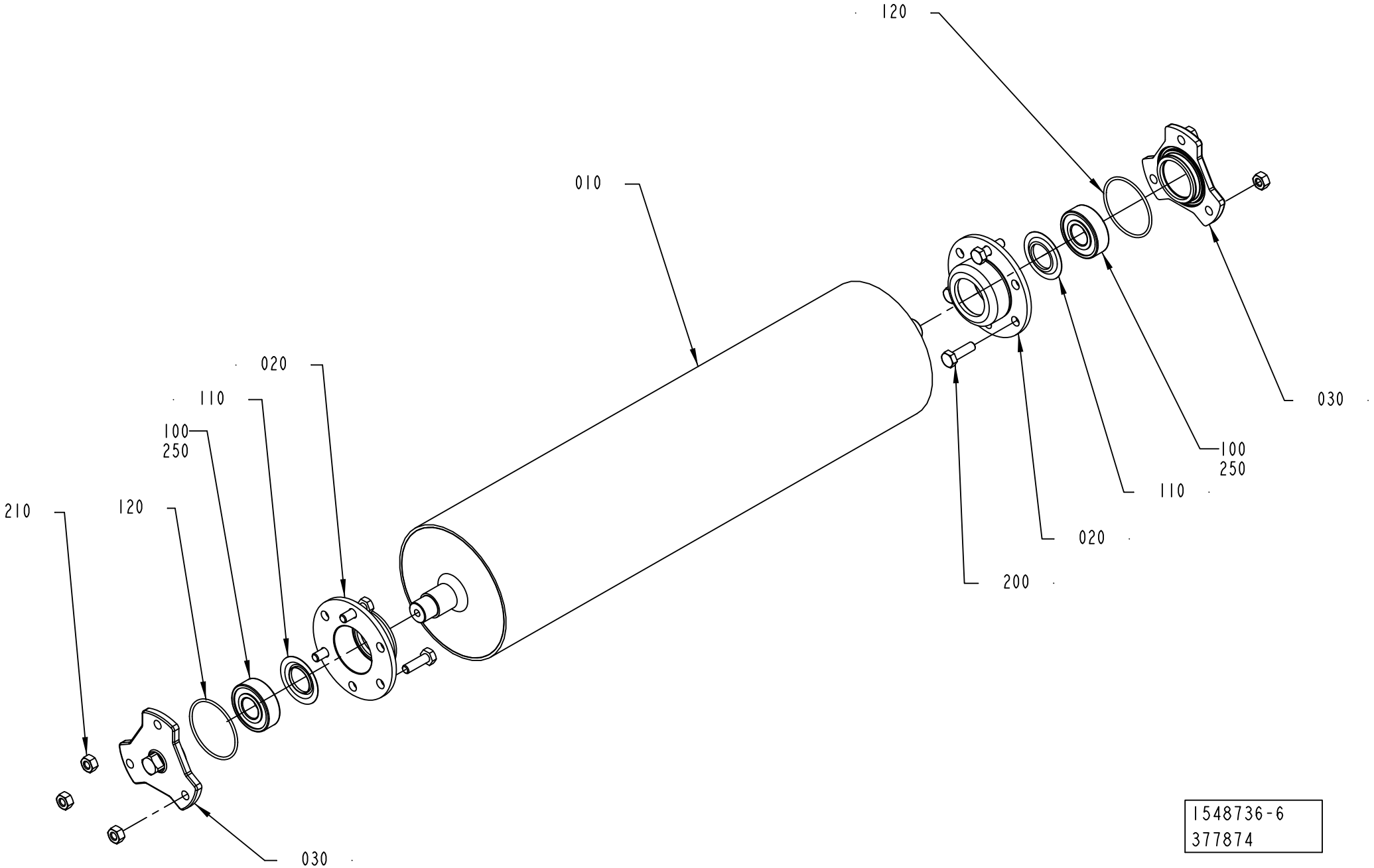

Pos	Part No	UN	Qty	Description	Page No
NOMOLDEDCAP (See drawing on page: 1-994)					
010	3008105-0000		1	BENDING ROLLER	
020	3008106-0000		2	BEARING SEAT	
030	3008107-0000		2	LID	
TBA 1000S LIGHTCAP24, TBA 1000M LIGHTCAP24 (See drawing on page: 1-992)					
010	2931913-0000		1	BENDING ROLLER	
020	2931912-0000		2	BEARING SEAT	
030	2931914-0000		2	BEARING COVER	
TBA 1000S STDA7, TBA 1000B STDA7, TBA 1000M STDA7 (See drawing on page: 1-996)					
010	2931913-0000		1	BENDING ROLLER	
020	3008106-0000		2	BEARING SEAT	
030	3008107-0000		2	LID	
TBA 1000E LIGHTCAP30, TBA 1000E LIGHTCAP30B, TBA 0500E LIGHTCAP30, TBA 0500E LIGHTCAP30B (See drawing on page: 1-992)					
010	3008108-0000		1	BENDING ROLLER	
020	2931912-0000		2	BEARING SEAT	
030	2931914-0000		2	BEARING COVER	
Common Parts					
100	90458-1704		2	BALL BEARING 15/35X11	
110	90214-0303		2	SEALING RING, 18,6X35X2 MM	
120	344207-1041		2	O-RING 41,0X1,78 MM FDA, 3-A	
200	312105-0370		6	SCREW, M6S ISO 4017 M6X20 A4 80	
210	312605-0316		6	HEXAGON NUT, M6M M6 A280	
250	90296-0091		1	LUBRICATION GREASE, FLUOLUB 210	

Pos	Part No	UN	Qty	Description	Page No

BENDING ROLLER

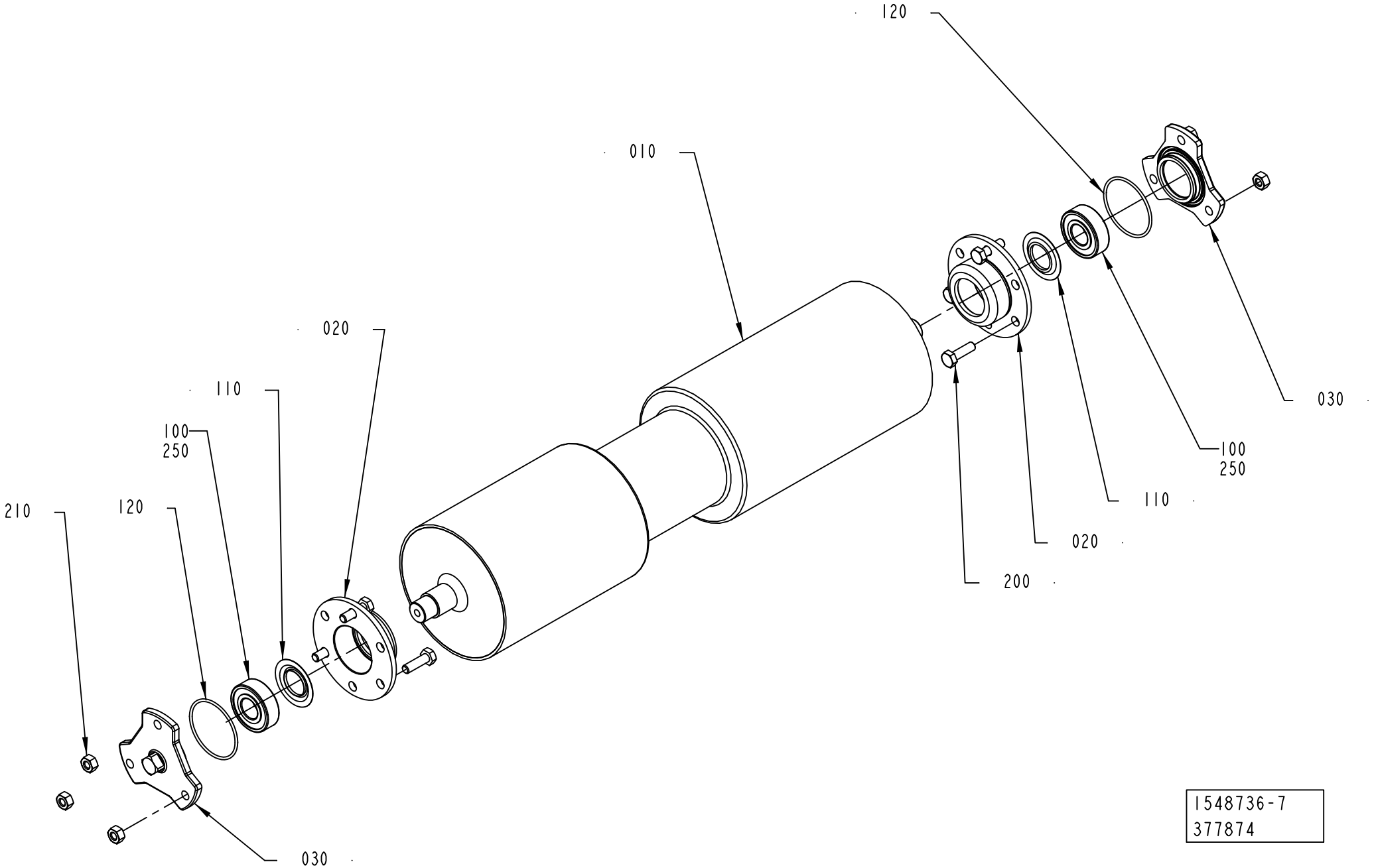

ECM: 644405 - 20140401
Group number: 1548736-0200
Assembly Drawing: 1548736-7_1_AA

This list covers pages from 1-992 to 1-997

Pos	Part No	UN	Qty	Description	Page No
NOMOLDEDCAP (See drawing on page: 1-994)					
010	3008105-0000		1	BENDING ROLLER	
020	3008106-0000		2	BEARING SEAT	
030	3008107-0000		2	LID	
TBA 1000S LIGHTCAP24, TBA 1000M LIGHTCAP24 (See drawing on page: 1-992)					
010	2931913-0000		1	BENDING ROLLER	
020	2931912-0000		2	BEARING SEAT	
030	2931914-0000		2	BEARING COVER	
TBA 1000S STDA7, TBA 1000B STDA7, TBA 1000M STDA7 (See drawing on page: 1-996)					
010	2931913-0000		1	BENDING ROLLER	
020	3008106-0000		2	BEARING SEAT	
030	3008107-0000		2	LID	
TBA 1000E LIGHTCAP30, TBA 1000E LIGHTCAP30B, TBA 0500E LIGHTCAP30, TBA 0500E LIGHTCAP30B (See drawing on page: 1-992)					
010	3008108-0000		1	BENDING ROLLER	
020	2931912-0000		2	BEARING SEAT	
030	2931914-0000		2	BEARING COVER	
Common Parts					
100	90458-1704		2	BALL BEARING 15/35X11	
110	90214-0303		2	SEALING RING, 18,6X35X2 MM	
120	344207-1041		2	O-RING 41,0X1,78 MM FDA, 3-A	
200	312105-0370		6	SCREW, M6S ISO 4017 M6X20 A4 80	
210	312605-0316		6	HEXAGON NUT, M6M M6 A280	
250	90296-0091		1	LUBRICATION GREASE, FLUOLUB 210	

Pos	Part No	UN	Qty	Description	Page No

SQUEE-GEE ROLLER

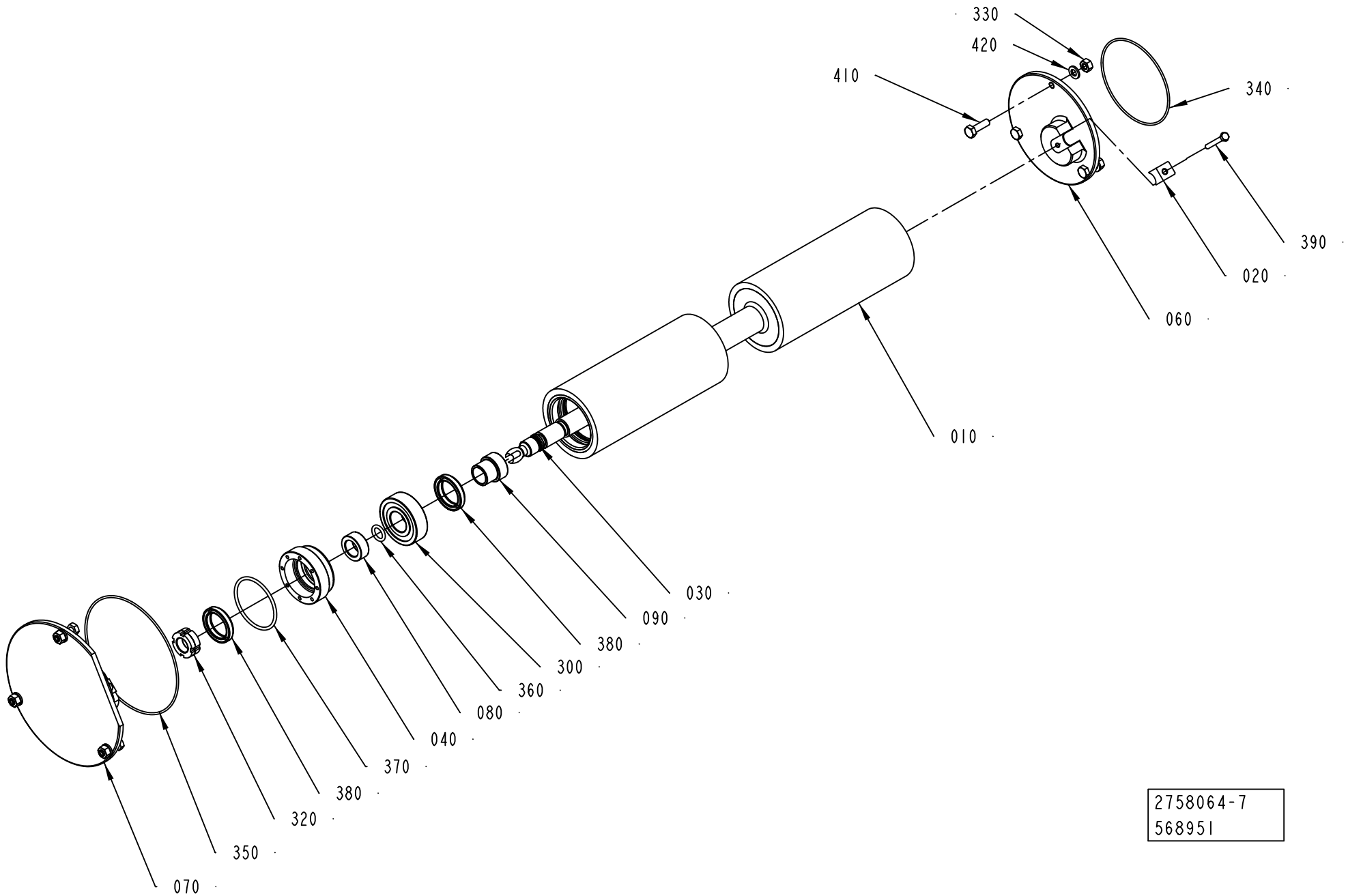

ECM: 644420 - 20140401
Group number: 2758064-0200
Assembly Drawing: 2758064-7_1_AB

Pos	Part No	UN	Qty	Description	Page No
A3/FLEX TBA 1000B STDA7, A3/FLEX TBA 1000M STDA7 (See drawing on page: 1-998)					
010	3047455-0000		1	ROLLER	
020	3050622-0000		2	CLAMPING PIECE	
030	3047454-0000		1	SHAFT	
040	3047456-0000		2	BEARING HOUSING	
060	3050618-0000		1	FLANGE	
070	3050619-0000		1	FLANGE	
080	3047458-0000		2	BUSHING	
090	3047457-0000		2	BUSHING	
320	90601-9633		2	LOCK NUT MISUMI, HLBS15	
350	344207-1075		1	O-RING 75,92X1,78 MM FDA, 3-A	
360	344207-2010		2	O-RING 10,77X2,62 MM FDA, 3-A	
370	344207-2047		2	O-RING 47,29X2,62 MM FDA, 3-A	
380	90602-0271		4	RADIAL SEAL 24,8X34X6 MM DUST LIP	
390	312105-0299		2	SCREW, M6S ISO 4017 M4X30 A4 70	
A3/FLEX TBA 1000S LIGHTCAP24, A3/FLEX TBA 1000M LIGHTCAP24 (See drawing on page: 1-998)					
010	3047455-0000		1	ROLLER	
020	3050622-0000		2	CLAMPING PIECE	
030	3047454-0000		1	SHAFT	
040	3047456-0000		2	BEARING HOUSING	
060	3155773-0000		1	FLANGE	
070	3155772-0000		1	FLANGE	
080	3047458-0000		2	BUSHING	
090	3047457-0000		2	BUSHING	
320	90601-9633		2	LOCK NUT MISUMI, HLBS15	
350	344207-1075		1	O-RING 75,92X1,78 MM FDA, 3-A	
360	344207-2010		2	O-RING 10,77X2,62 MM FDA, 3-A	
370	344207-2047		2	O-RING 47,29X2,62 MM FDA, 3-A	
380	90602-0271		4	RADIAL SEAL 24,8X34X6 MM DUST LIP	
390	312105-0299		2	SCREW, M6S ISO 4017 M4X30 A4 70	
A3/FLEX TPA 0500SQ LIGHTCAP24, A3/FLEX TBA 1000E LIGHTCAP30, A3/FLEX TBA 1000E LIGHTCAP30B, A3/FLEX TBA 0500E LIGHTCAP30, A3/FLEX TBA 0500E LIGHTCAP30B (See drawing on page: 1-998)					
010	3155451-0000		1	SQUEE-GEE ROLLER	
020	3050622-0000		2	CLAMPING PIECE	
030	3047454-0000		1	SHAFT	
040	3047456-0000		2	BEARING HOUSING	
060	3155773-0000		1	FLANGE	
070	3155772-0000		1	FLANGE	
080	3047458-0000		2	BUSHING	
090	3047457-0000		2	BUSHING	
320	90601-9633		2	LOCK NUT MISUMI, HLBS15	
350	344207-1114		1	O-RING 114,02X1,78 MM FDA, 3-A	
360	344207-2010		2	O-RING 10,77X2,62 MM FDA, 3-A	
370	344207-2047		2	O-RING 47,29X2,62 MM FDA, 3-A	
380	90602-0271		4	RADIAL SEAL 24,8X34X6 MM DUST LIP	
390	312105-0299		2	SCREW, M6S ISO 4017 M4X30 A4 70	
Common Parts					
300	90600-3852		2	BALL BEARING, 20X47X14 MM	
330	312605-0316		6	HEXAGON NUT, M6M M6 A280	
340	344207-1082		1	O-RING 82,27X1,78 MM FDA, 3-A	
410	312105-0370		6	SCREW, M6S ISO 4017 M6X20 A4 80	
420	315105-0153		6	WASHER PLAIN, 6,4X12X1,5 A4 BRB	
430	90601-3167		1	GREASE, BARRIERTA L55/2, 100G	

Machine Type	Group Description	Used-In	Group Number	Page No

CALENDER ROLLER

Drawing file: 3249660-1_1_AB.hpgl

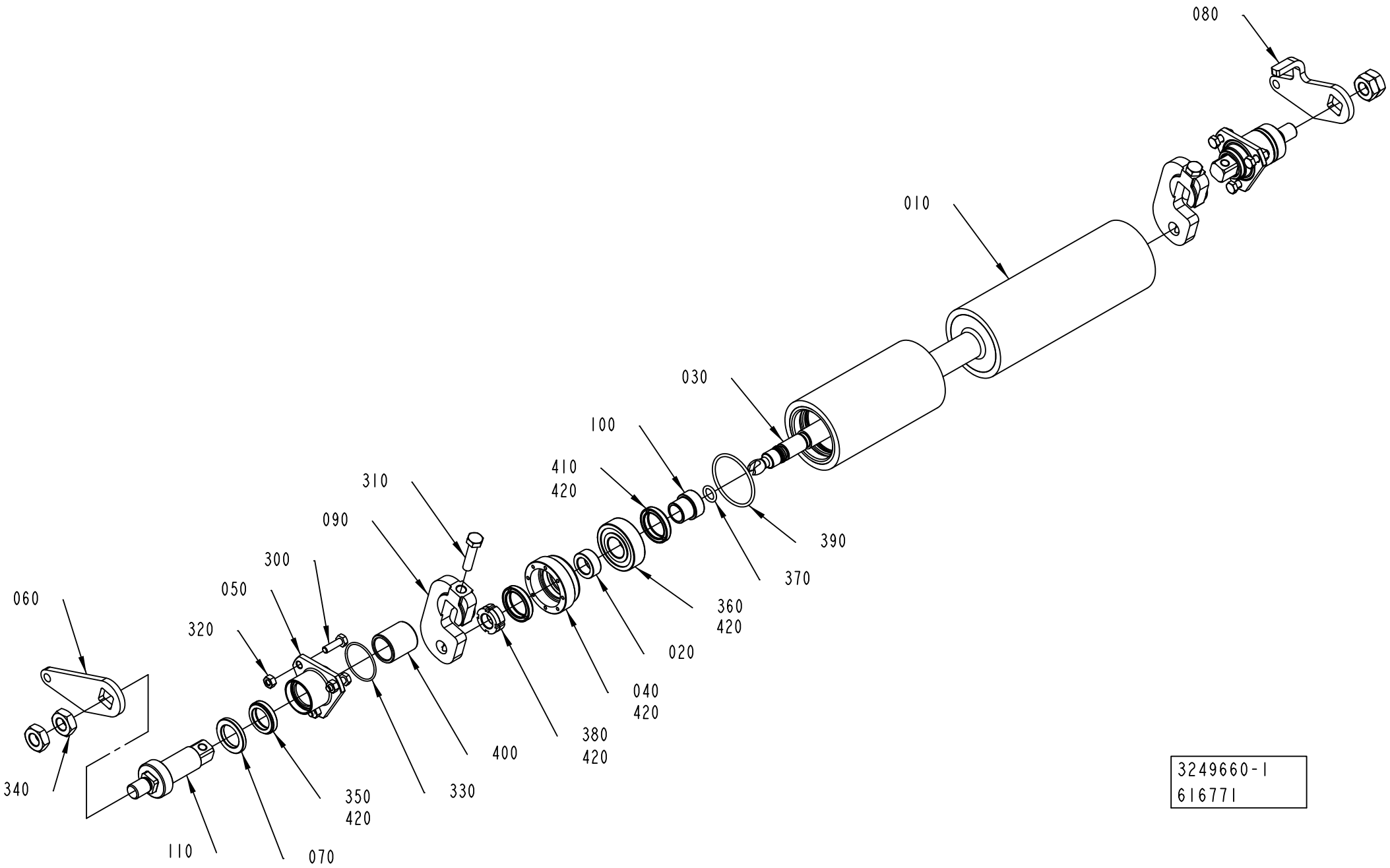

3249660-1
616771

ECM: 640370 - 20140102
Group number: 3249660-0100
Assembly Drawing: 3249660-1_1_AB

Pos	Part No	UN	Qty	Description	Page No
A3/FLEX-0400 TBA 1000E LIGHTCAP30, A3/FLEX-0400 TBA 1000E LIGHTCAP30B					
010	3155451-0000		1	SQUEE-GEE ROLLER	
060	3178574-0000		1	PLATE	
080	3178575-0000		1	PLATE	
A3/FLEX-0400 TBA 1000M LIGHTCAP24, A3/FLEX-0400 TBA 1000S LIGHTCAP24, A3/FLEX-0400 TBA 1000M STDA7					
010	3047455-0000		1	ROLLER	
060	3178574-0000		1	PLATE	
080	3178575-0000		1	PLATE	
Common Parts					
020	3047458-0000		2	BUSHING	
030	3047454-0000		1	SHAFT	
040	3047456-0000		2	BEARING HOUSING	
050	3004050-0000		2	FLANGE	
070	3004051-0000		2	WASHER	
090	3047460-0000		2	ARM	
100	3047457-0000		2	BUSHING	
110	3004049-0000		2	SHAFT	
300	312105-0370		6	SCREW, M6S ISO 4017 M6X20 A4 80	
310	312109-0457		2	SCREW, M6S ISO 4017 M8X35 A4 80	
320	312605-0316		6	HEXAGON NUT, M6M M6 A280	
330	344207-1034		2	O-RING 34,65X1,78 MM FDA, 3-A	
340	90099-0027		4	HEXAGON NUT, M14, DIN936	
350	90600-6017		2	RADIAL SEAL 21,8X30X6 MM DUST LIP	
360	90600-3852		2	BALL BEARING, 20X47X14 MM	
370	344207-2010		2	O-RING 10,77X2,62 MM FDA, 3-A	
380	90601-9633		2	LOCK NUT MISUMI, HLBS15	
390	315205-0734		2	O-RING 47,29X2,62 MM	
400	90601-2426		2	BUSHING, 22X281X31 MM	
410	90602-0271		4	RADIAL SEAL 24,8X34X6 MM DUST LIP	
420	90601-3167		1	GREASE, BARRIERTA L55/2, 100G	

Pos	Part No	UN	Qty	Description	Page No

BENDING ROLLER

Drawing file: 2745337-3_1_AB.hpgl

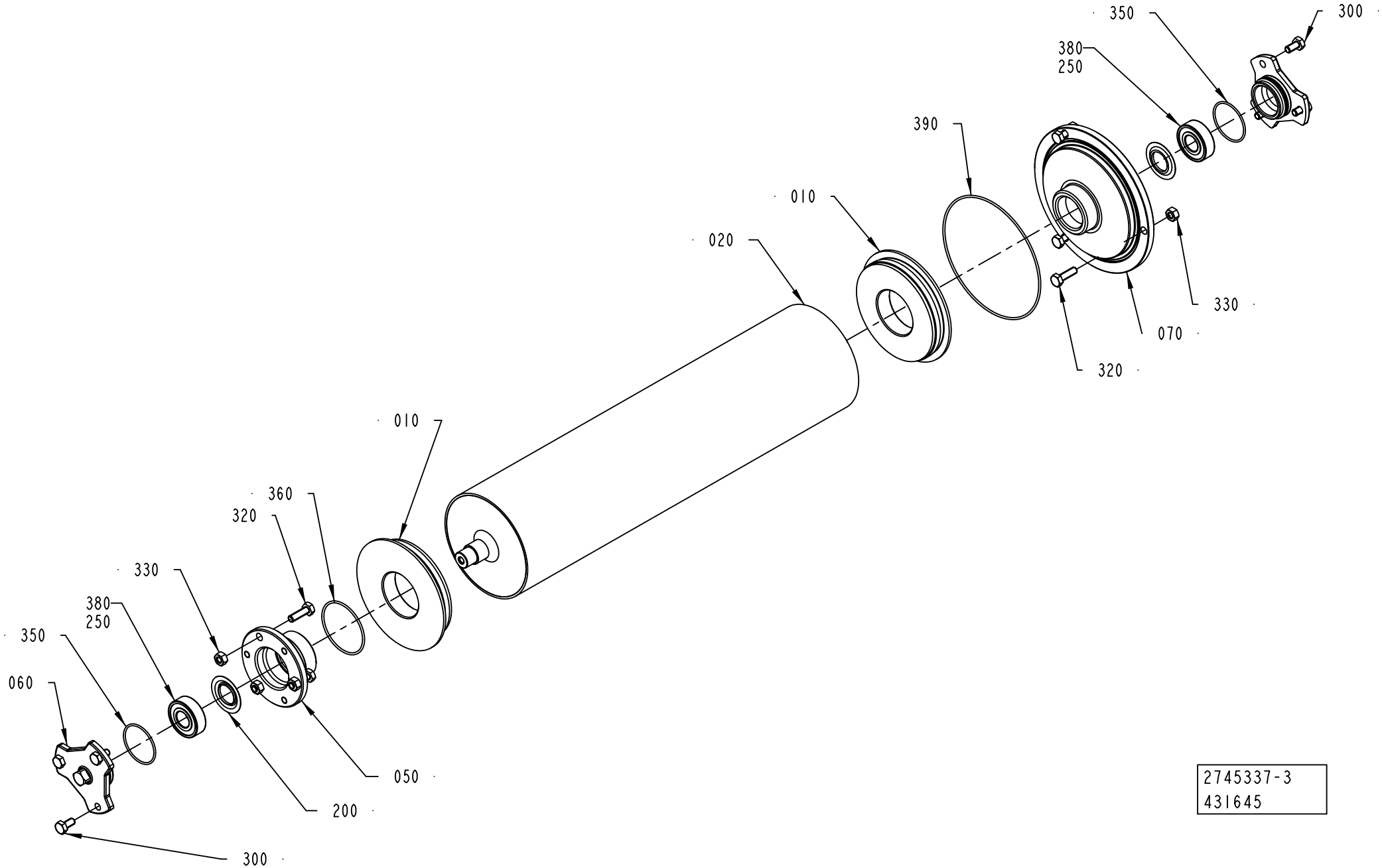

2745337-3
431645

Pos	Part No	UN	Qty	Description	Page No
TBA 0500S, TBA 0500SQ, TBA 0500B, TBA 1000SQ, TBA 1500S, TPA 1000SQ, TPA 0750SQ, TGA 1000SQ, TGA 0750SQ, TGA 0500SQ, TBA 1000B NODIMC, TGA 1500SQ, TBA 1000S NODIMC, TPA 0500SQ NODIMC, TBA 0200E, TGA 1000CR, TGA 1000LF, TBA 0250BL (See drawing on page: 1-1002)					
010	1498783-0000		2	WHEEL	
020	3042661-0000		1	BENDING ROLLER	
TBA 1000E LIGHTCAP30, TPA 0500SQ LIGHTCAP24, TBA 1000E LIGHTCAP30B, TBA 0500E LIGHTCAP30, TBA 0500E LIGHTCAP30B (See drawing on page: 1-1004)					
010	2725564-0000		2	WHEEL	
020	3043262-0000		1	BENDING ROLLER	
TBA 1000S LIGHTCAP24, TBA 1000M LIGHTCAP24 (See drawing on page: 1-1004)					
010	2725564-0000		2	WHEEL	
020	3043232-0000		1	BENDING ROLLER	
TBA 1000S STDA7, TBA 1000B STDA7, A3/FLEX TBA 1000M STDA7 (See drawing on page: 1-1004)					
010	1498783-0000		2	WHEEL	
020	3043255-0000		1	BENDING ROLLER	
TBA 2000S (See drawing on page: 1-1004)					
010	2725564-0000		2	WHEEL	
020	3190209-0000		1	BENDING ROLLER	
Common Parts					
050	3042672-0000		1	FLANGE	
060	2951058-0000		2	LID	
070	3042662-0000		1	FLANGE	
200	90214-0303		2	SEALING RING, 18,6X35X2 MM	
250	90296-0091		1	LUBRICATION GREASE, FLUOLUB 210	
300	312105-0366		6	SCREW, M6S ISO 4017 M6X12 A4 80	
320	312105-0370		6	SCREW, M6S ISO 4017 M6X20 A4 80	
330	312605-0316		6	HEXAGON NUT, M6M M6 A280	
350	344210-0123		2	O-RING 35,1X1,6 MM FDA, 3-A	
360	344207-1047		1	O-RING 47,35X1,78 MM FDA, 3-A	
380	90458-1704		2	BALL BEARING 15/35X11	
390	344207-1114		1	O-RING 114,02X1,78 MM FDA, 3-A	

Pos	Part No	UN	Qty	Description	Page No

BENDING ROLLER

Drawing file: 2745337-4_1_AA.hpgl

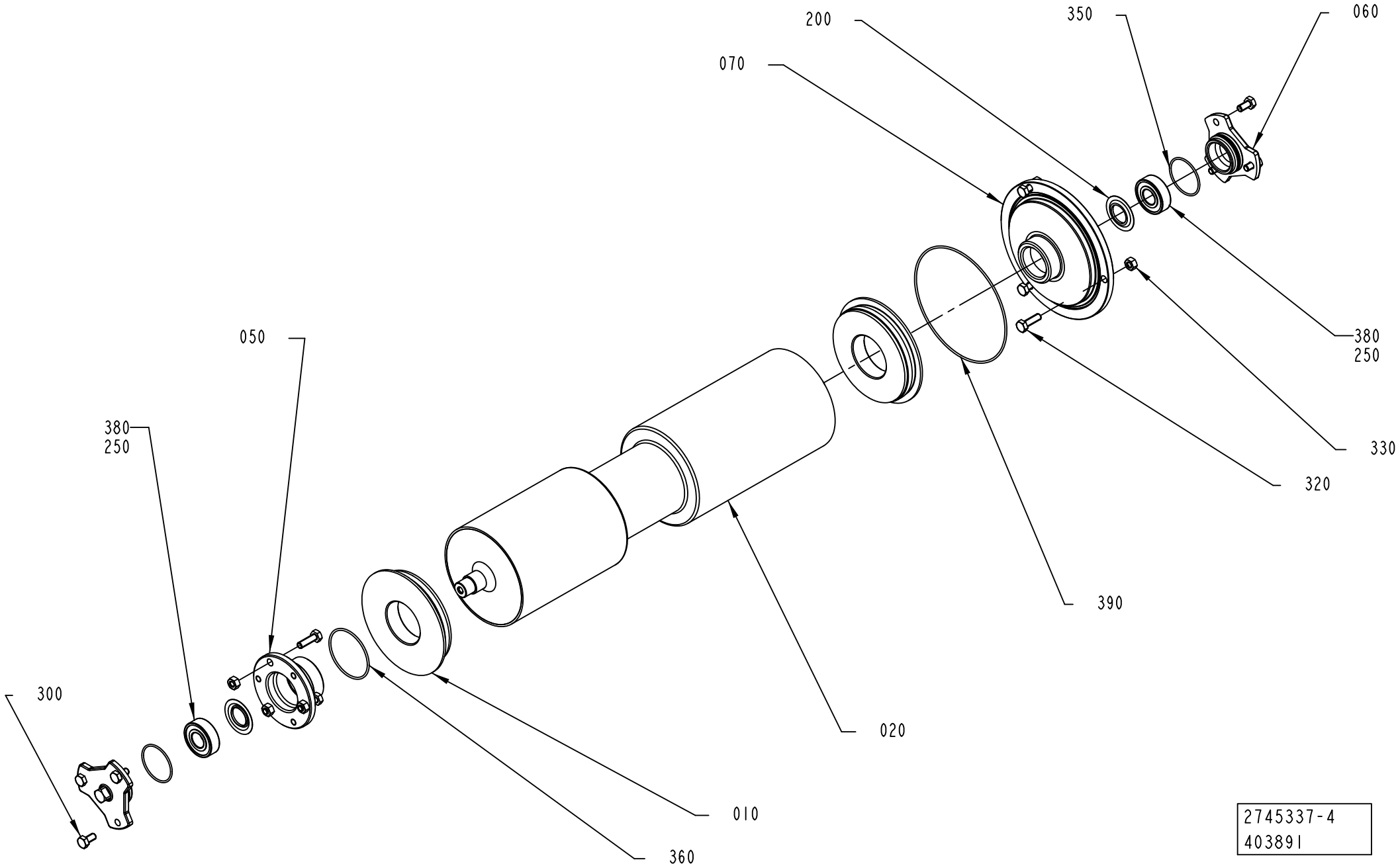

2745337-4
403891

Pos	Part No	UN	Qty	Description	Page No
TBA 0500S, TBA 0500SQ, TBA 0500B, TBA 1000SQ, TBA 1500S, TPA 1000SQ, TPA 0750SQ, TGA 1000SQ, TGA 0750SQ, TGA 0500SQ, TBA 1000B NODIMC, TGA 1500SQ, TBA 1000S NODIMC, TPA 0500SQ NODIMC, TBA 0200E, TGA 1000CR, TGA 1000LF, TBA 0250BL (See drawing on page: 1-1002)					
010	1498783-0000		2	WHEEL	
020	3042661-0000		1	BENDING ROLLER	
TBA 1000E LIGHTCAP30, TPA 0500SQ LIGHTCAP24, TBA 1000E LIGHTCAP30B, TBA 0500E LIGHTCAP30, TBA 0500E LIGHTCAP30B (See drawing on page: 1-1004)					
010	2725564-0000		2	WHEEL	
020	3043262-0000		1	BENDING ROLLER	
TBA 1000S LIGHTCAP24, TBA 1000M LIGHTCAP24 (See drawing on page: 1-1004)					
010	2725564-0000		2	WHEEL	
020	3043232-0000		1	BENDING ROLLER	
TBA 1000S STDA7, TBA 1000B STDA7, A3/FLEX TBA 1000M STDA7 (See drawing on page: 1-1004)					
010	1498783-0000		2	WHEEL	
020	3043255-0000		1	BENDING ROLLER	
TBA 2000S (See drawing on page: 1-1004)					
010	2725564-0000		2	WHEEL	
020	3190209-0000		1	BENDING ROLLER	
Common Parts					
050	3042672-0000		1	FLANGE	
060	2951058-0000		2	LID	
070	3042662-0000		1	FLANGE	
200	90214-0303		2	SEALING RING, 18,6X35X2 MM	
250	90296-0091		1	LUBRICATION GREASE, FLUOLUB 210	
300	312105-0366		6	SCREW, M6S ISO 4017 M6X12 A4 80	
320	312105-0370		6	SCREW, M6S ISO 4017 M6X20 A4 80	
330	312605-0316		6	HEXAGON NUT, M6M M6 A280	
350	344210-0123		2	O-RING 35,1X1,6 MM FDA, 3-A	
360	344207-1047		1	O-RING 47,35X1,78 MM FDA, 3-A	
380	90458-1704		2	BALL BEARING 15/35X11	
390	344207-1114		1	O-RING 114,02X1,78 MM FDA, 3-A	

Pos	Part No	UN	Qty	Description	Page No

BLOWING DEVICE

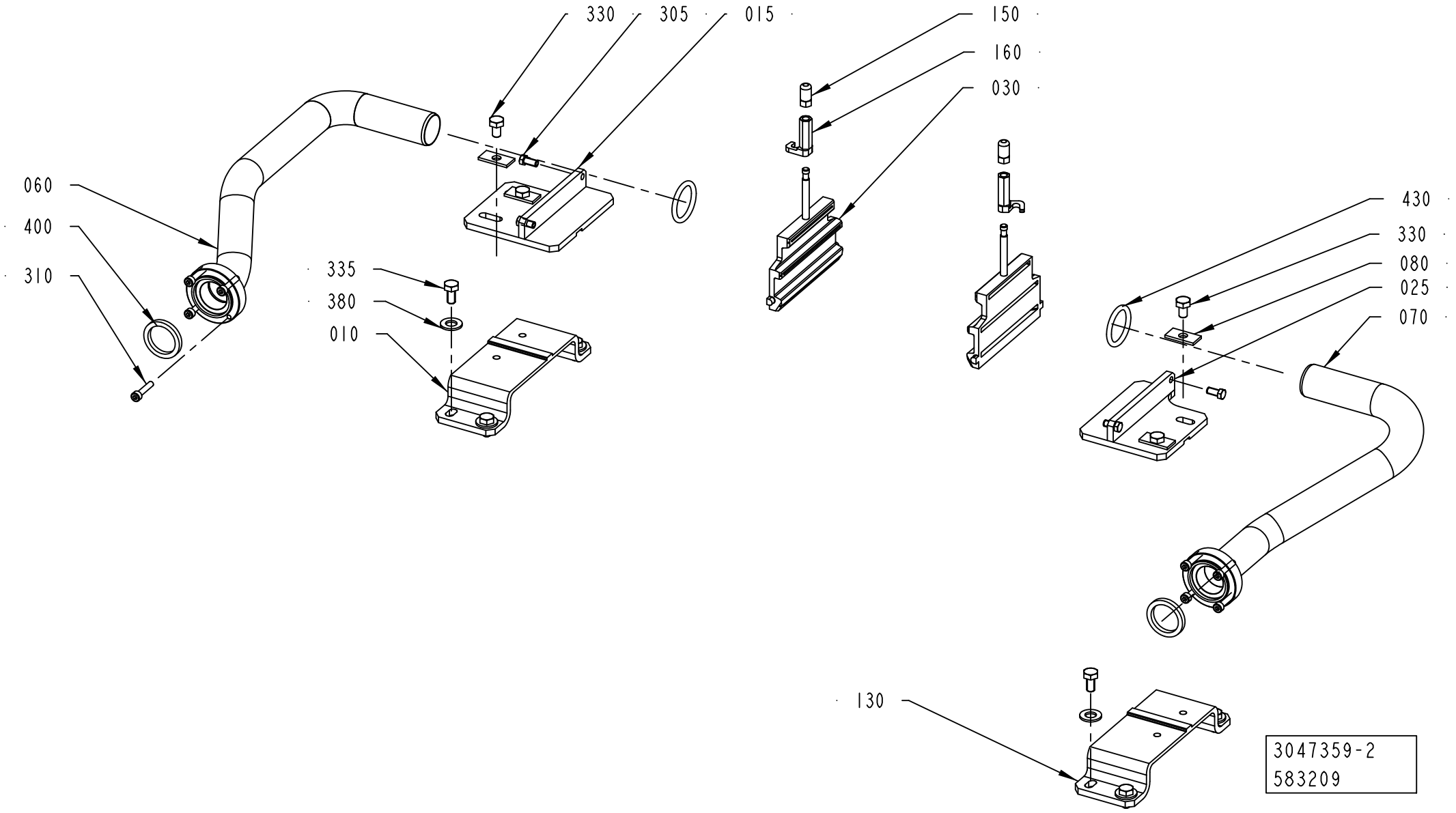

ECM: 583209 - 20130404
Group number: 3047359-0200
Assembly Drawing: 3047359-2_1_AA

Pos	Part No	UN	Qty	Description	Page No
TBA 1000E LIGHTCAP30, TBA 1000E LIGHTCAP30B					
010	2955989-0000		1	PLATE	
015	2955991-0000		1	HOLDER	
025	2956878-0000		1	HOLDER	
030	2921577-0000		2	AIR NOZZLE	
060	2960147-0000		1	PIPE	
070	2955987-0000		1	PIPE	
130	2955990-0000		1	PLATE	
330	312105-0364		4	"SCREW, M6S ISO 4017 M6X10 A4 80"	
335	312105-0366		8	SCREW, M6S ISO 4017 M6X12 A4 80	
TBA 1000S LIGHTCAP24, TBA 1000M LIGHTCAP24					
010	2805966-0000		1	PLATE	
015	2815344-0000		2	HOLDER	
030	2921577-0000		2	AIR NOZZLE	
060	3025711-0000		1	PIPE	
070	3025709-0000		1	PIPE	
130	2805965-0000		1	PLATE	
330	312105-0368		4	"SCREW, M6S ISO 4017 M6X16 A4 80"	
335	312105-0376		8	SCREW, M6S ISO 4014 M6X35 A4 80	
TBA 1000S STDA7, TBA 1000B STDA7, TBA 1000M STDA7					
010	2805966-0000		1	PLATE	
015	2815344-0000		2	HOLDER	
030	2986689-0000		2	AIR NOZZLE	
060	3025711-0000		1	PIPE	
070	3025709-0000		1	PIPE	
130	2805965-0000		1	PLATE	
330	312105-0368		4	"SCREW, M6S ISO 4017 M6X16 A4 80"	
335	312105-0376		8	SCREW, M6S ISO 4014 M6X35 A4 80	
Common Parts					
080	2616236-0000		4	WASHER	
150	2921581-0000		2	CAP NUT	
160	2921579-0000		2	HOOK	
305	312105-0289		4	SCREW, M6S ISO 4017 M4X10 A4 70	
310	312115-0295		8	SCREW ISO4762 M4X20 A4 80	
380	315105-0165		8	FWAS080G0-0S, WASHER PLAIN	
400	315229-0103		2	SQUARE RING, 23,1X30,1X3,7 MM 1" FDA	
430	315207-0519		2	O-RING 24,99X3,53 MM	

Pos	Part No	UN	Qty	Description	Page No

FRAME HOUSING

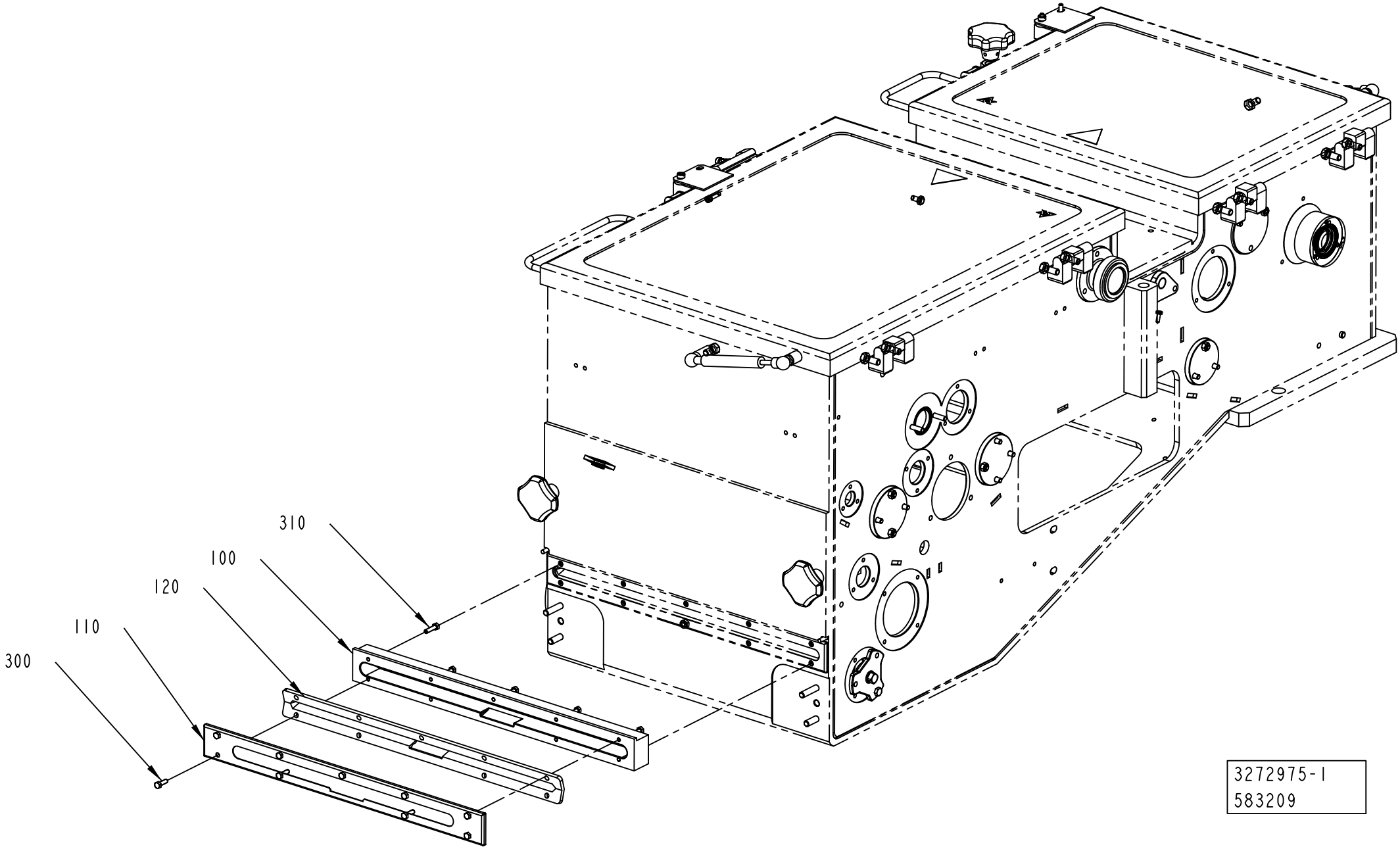

ECM: 651738 - 20140401
Group number: 3272975-0100
Assembly Drawing: 3272975-1_1_AA

Pos	Part No	UN	Qty	Description	Page No
TBA 1000E LIGHTCAP30, TBA 1000E LIGHTCAP30B					
100	3117688-0000		1	HOUSING	
110	3117686-0000		1	LID	
120	3171665-0000		1	GASKET	
300	312105-0329		9	SCREW, M6S ISO 4017 M5X16 A4 80	
310	312105-0331		10	SCREW, M6S ISO 4017 M5X20 A4 80	
TBA 1000S LIGHTCAP24, TBA 1000M LIGHTCAP24					
100	3325779-0000		1	HOUSING	
110	3325778-0000		1	LID	
120	3325777-0000		1	GASKET	
300	312105-0329		9	SCREW, M6S ISO 4017 M5X16 A4 80	
310	312105-0331		10	SCREW, M6S ISO 4017 M5X20 A4 80	
TBA 1000S STDA7, TBA 1000B STDA7, TBA 1000M STDA7					
110	1499171-0000		1	LID	
120	1499170-0000		1	GASKET	
340	312105-0370		10	SCREW, M6S ISO 4017 M6X20 A4 80	
430	312812-0316		10	HEXAGON NUT, NY-LOCK M6 A4 80	

Pos	Part No	UN	Qty	Description	Page No

BENDING ROLLER

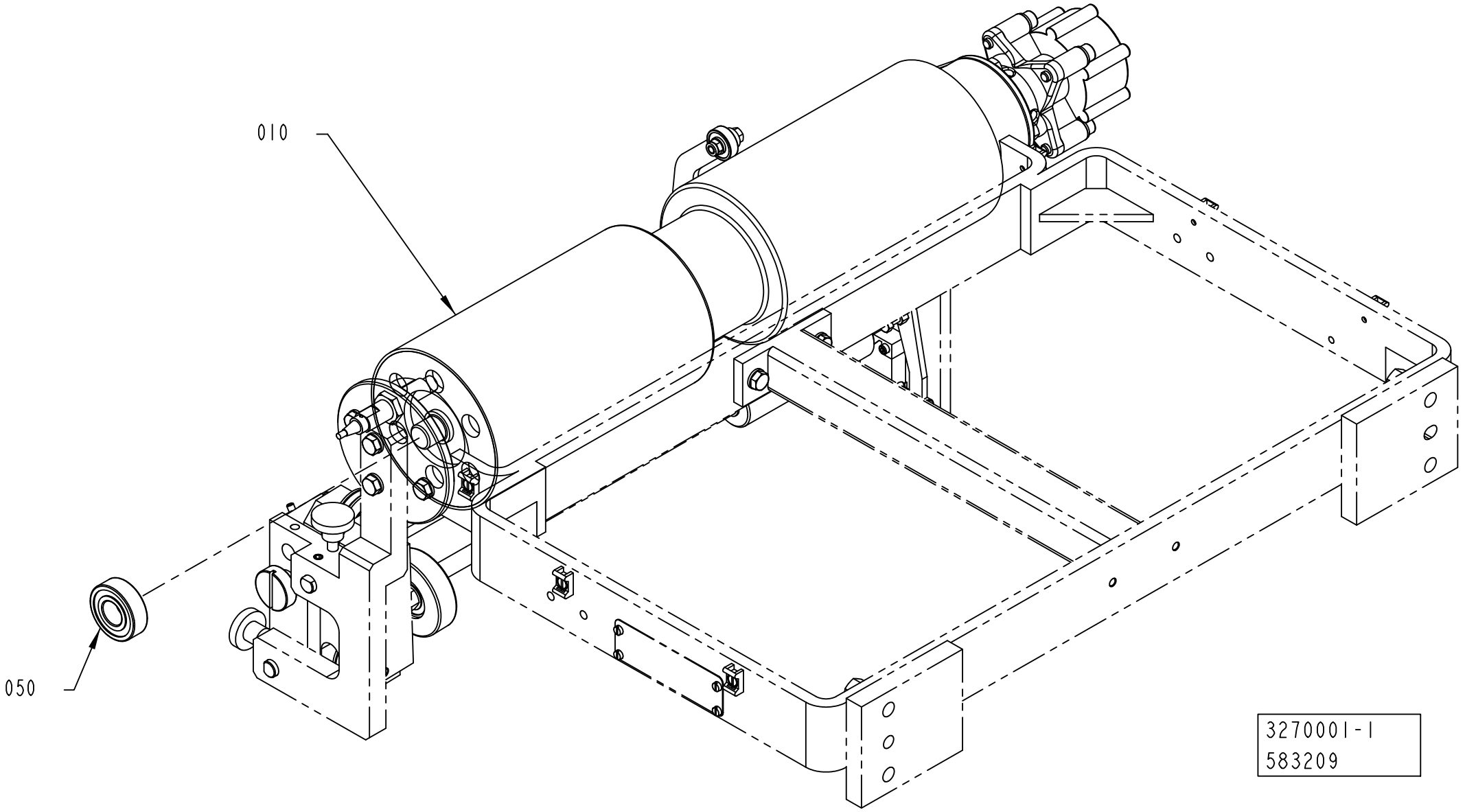

ECM: 583209 - 20130404
Group number: 3270001-0100
Assembly Drawing: 3270001-1_1_AA

Pos	Part No	UN	Qty	Description	Page No
TBA 1000E LIGHTCAP30, TBA 1000E LIGHTCAP30B					
010	2951501-0000		1	ROLLER	
TBA 1000S STDA7, TBA 1000B STDA7, TBA 1000S LIGHTCAP24, TBA 1000M STDA7, TBA 1000M LIGHTCAP24					
010	2532908-0000		1	ROLLER	
Common Parts					
050	344226-0102		2	BALL BEARING 15/35X11	

Pos	Part No	UN	Qty	Description	Page No

BENDING ROLLER

Drawing file: 3203580-1_1_AA.hpgl

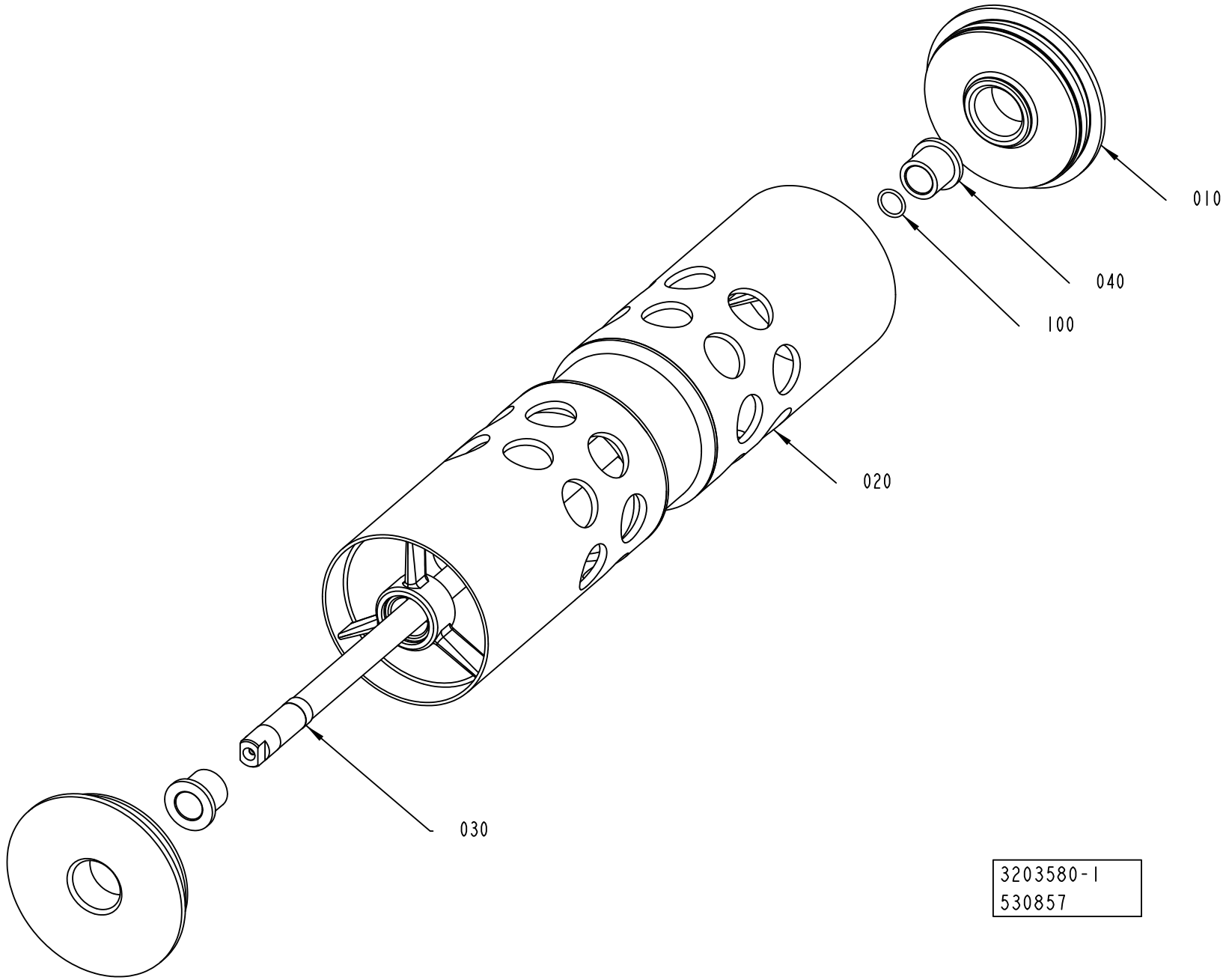

ECM: 678737 - 20140702
Group number: 3203580-0100
Assembly Drawing: 3203580-1_1_AA

Pos	Part No	UN	Qty	Description	Page No
TBA 0500S, TBA 0500SQ, TBA 0500B, TBA 1000SQ, TBA 1500S, TPA 1000SQ, A3/FLEX TBA 1000S STDA7, A3/FLEX TBA 1000B STDA7, TPA 0750SQ, TGA 1000SQ, TGA 0750SQ, TGA 0500SQ, TBA 1000B NODIMC, TGA 1500SQ, TBA 1000S NODIMC, A3/FLEX TBA 1000M STDA7, TPA 0500SQ NODIMC, TBA 0200E, TGA 1000CR, TGA 1000LF, TBA 0250BL					
010	1539727-0000		2	WHEEL	
020	2788624-0000		1	BENDING ROLLER	
TBA 1000E, TPA 0500SQ LIGHTCAP24, TBA 0500E					
010	2709224-0000		2	WHEEL	
020	3103193-0000		1	BENDING ROLLER	
TBA 2000S, TBA 1000S LIGHTCAP24, TBA 1000M LIGHTCAP24					
010	2709224-0000		2	WHEEL	
020	2946894-0000		1	BENDING ROLLER	
Common Parts					
030	2940246-0000		1	SHAFT	
040	3123940-0000		2	BUSHING	
100	344210-0110		1	O-RING 12,1X1,6 MM FDA, 3-A	

Pos	Part No	UN	Qty	Description	Page No

Machine Type	Group Description	Used-In	Group Number	Page No

GUIDE

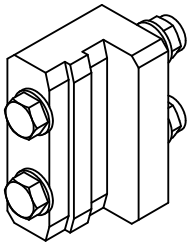

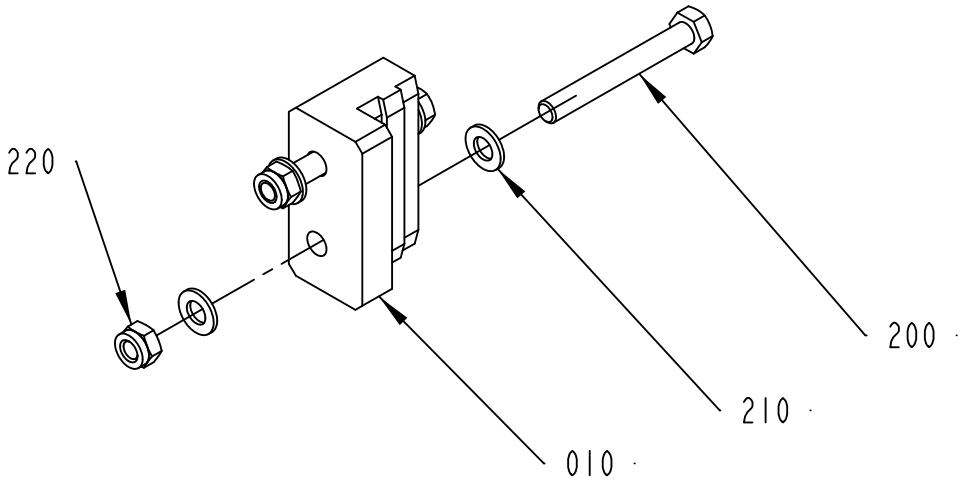

3297846-1
615833

ECM: 648579 - 20140401
Group number: 3297846-0100
Assembly Drawing: 3297846-1_1_AA

Pos	Part No	UN	Qty	Description	Page No
LIGHTCAP24 START FM STDA7, LIGHTCAP30 START FM STDA7, LIGHTCAP30B START FM STDA7					
010	2946898-0000		2	CHAIN GUIDE	
200	312105-0339		4	SCREW, M6S ISO 4014 M5X40 A4 80	
210	315105-0146		8	WASHER PLAIN, 5,3X10X1 A4 BRB	
220	312812-0314		4	HEXAGON NUT, NY-LOCK M5 A4 80	
STDA7 START FM LIGHTCAP30, STDA7 START FM LIGHTCAP24, STDA7 START FM LIGHTCAP30B					
010	2894568-0000		2	CHAIN GUIDE	
200	312105-0339		4	SCREW, M6S ISO 4014 M5X40 A4 80	
210	315105-0146		8	WASHER PLAIN, 5,3X10X1 A4 BRB	
220	312812-0314		4	HEXAGON NUT, NY-LOCK M5 A4 80	

Pos	Part No	UN	Qty	Description	Page No

BOX11 - VCK DIMC TOOL BOXES

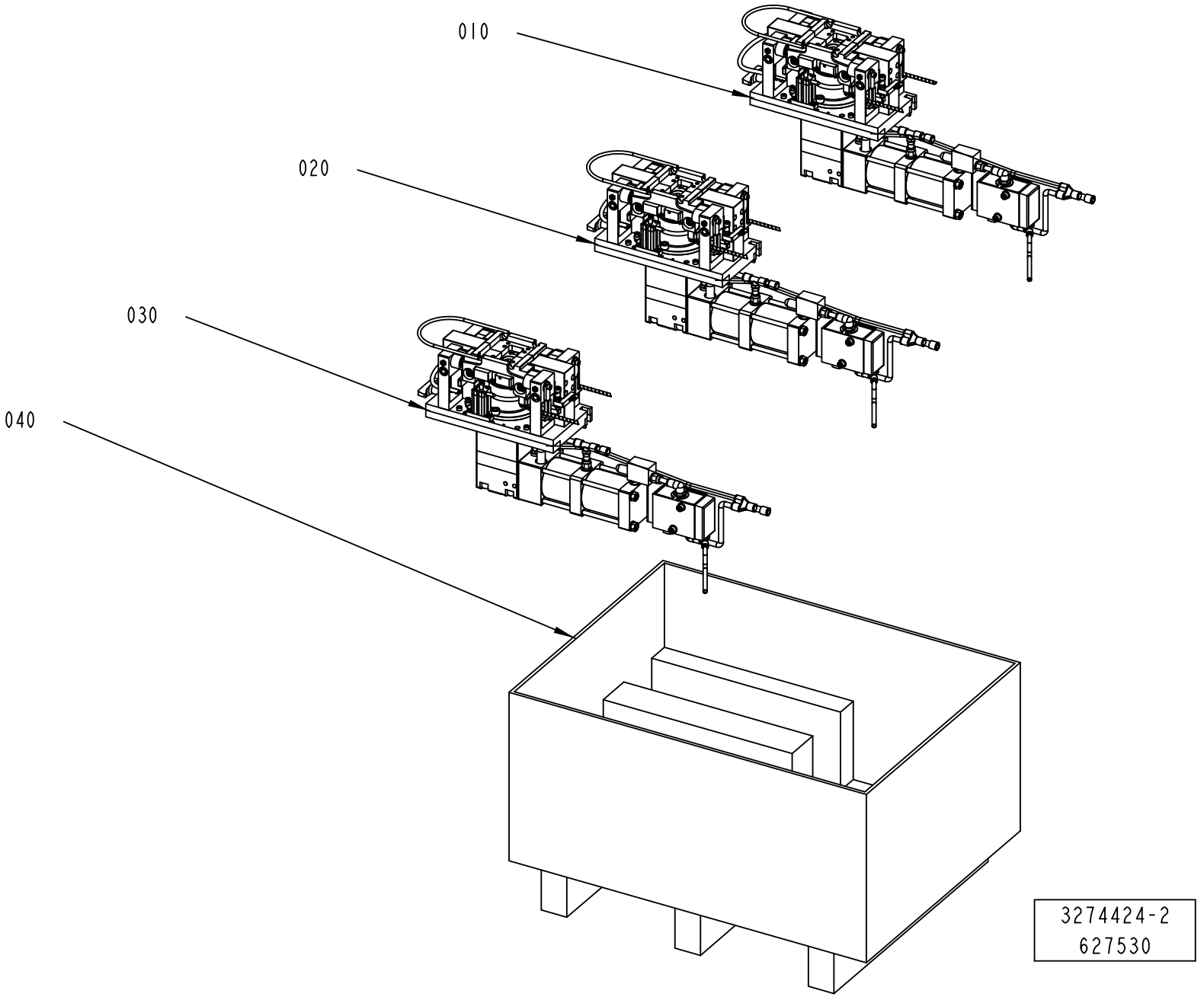

ECM: 648583 - 20140401
Group number: 3274424-0200
Assembly Drawing: 3274424-2_1_AA

Pos	Part No	UN	Qty	Description	Page No
START FM STDA7 (See drawing on page: 1-1016)					
010	2814022-0200		1	TOOL BOX	**1-1019, 1-1021**
020	3202032-0100		1	TOOL BOX	**1-1025, 1-1027**
030	3202327-0100		1	TOOL BOX	**1-1029, 1-1031**
040	3275143-0000		1	BOX	
STDA7 CAP (See drawing on page: 1-1016)					
010	2842771-0200		1	TOOL BOX	**1-1033**
020	3202033-0100		1	TOOL BOX	**1-1035**
030	3202035-0100		1	TOOL BOX	**1-1037**
040	3275143-0000		1	BOX	

Pos	Part No	UN	Qty	Description	Page No

TOOL BOX

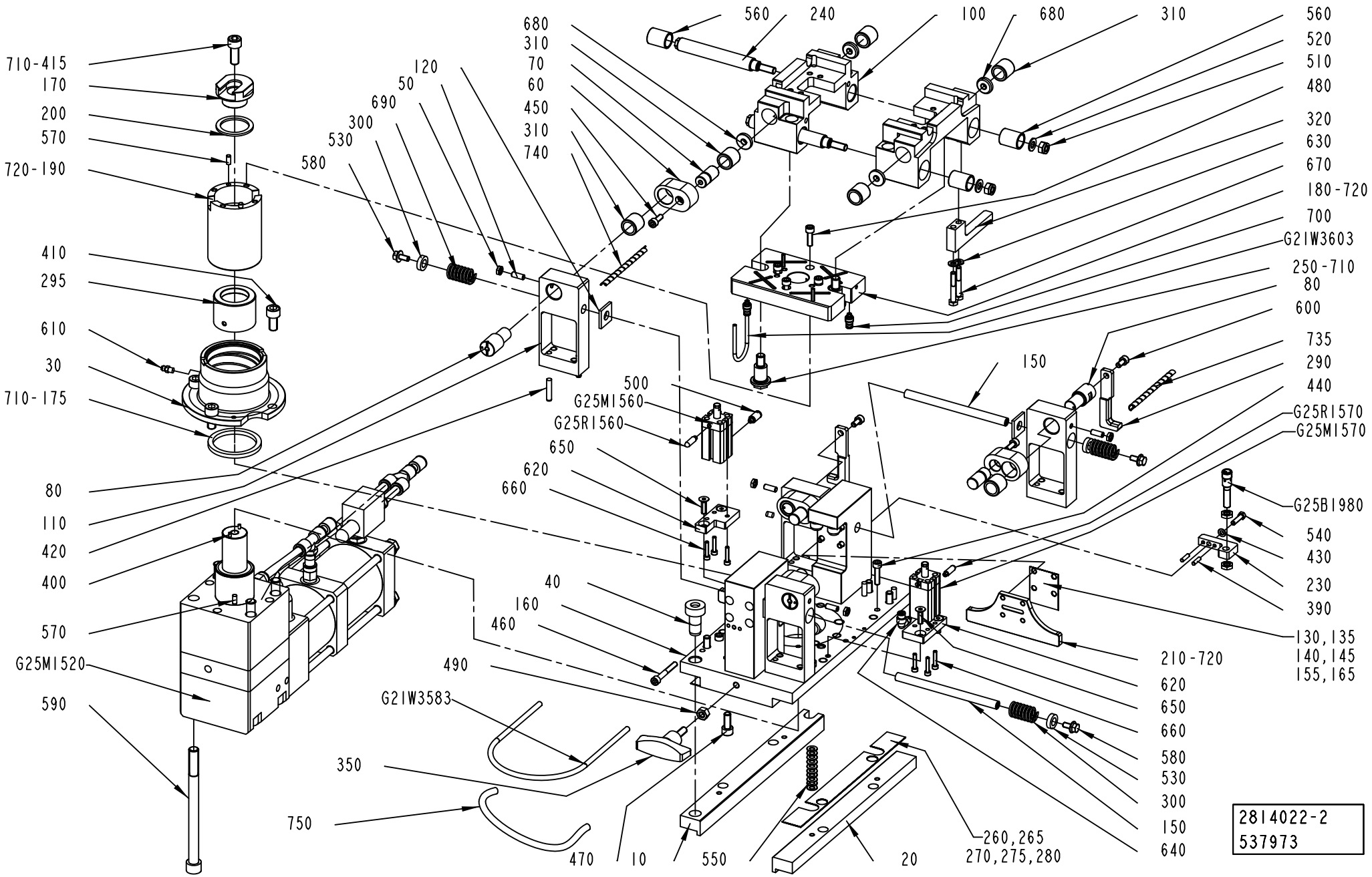
710-415
170
200
570
720-190
410
295
610
30
710-175
80
110
420
400
570
G25M1520
590
680
310
70
60
450
310
740
120
50
690
300
530
580
560
240
100
680
310
560
520
510
480
320
630
670
180-720
700
G21W3603
250-710
80
600
735
290
440
G25R1570
G25M1570
150
500
G25M1560
G25R1560
650
620
660
40
160
460
490
G21W3583
350
750
470
10
550
20
260,265
270,275,280
G25B1980
540
430
230
390
130,135
140,145
155,165
210-720
620
650
660
580
530
300
150
640
2814022-2
537973

ECM: 665306 - 20140701
Group number: 2814022-0200
Assembly Drawing: 2814022-2_1_AB

This list covers pages from 1-1018 to 1-1021

Pos	Part No	UN	Qty	Description	Page No
LIGHTCAP24 NOPLH (See drawing on page: 1-1018)					
520	315105-0165		2	FWAS080G0-0S, WASHER PLAIN	
530	3180557-0000		4	SPACER	
LIGHTCAP24 PLH (See drawing on page: 1-1020)					
090	3198893-0000		1	BRACKET	
330	90330-0037		1	PLUG, G1/2EXT, G1/2	
475	312115-0465		2	SCREW ISO4762 M8X70 A4 80	
520	315105-0165		6	FWAS080G0-0S, WASHER PLAIN	
530	3180557-0000		4	SPACER	
730	312607-0318		2	HEXAGON NUT, EN 24032 M6M M8 A480	
800	350002-0009		1	PUSH-IN L-FITTING QSL-F-G1/4-8	
810	350002-0015		2	PUSH-IN L-FITTING QSL-F-G1/2-10	
820	350006-0009		1	PUSH-IN FITTING QS-F-12H-10	
840	350015-0005		1	PUSH-IN Y-CONNECTOR QSY-F-10	
G25Q1500	90235-0297		1	VALVE 3/2, OPEN/CLOSED	
G25W1503	315300-0004	M	0.3	TUBE, 8 MM PE BLUE	
G25W1961	315300-0007	M	0.05	TUBE, 10 MM PE BLUE	
G25W1962	315300-0007	M	0.43	TUBE, 10 MM PE BLUE	
LIGHTCAP30 NOPLH (See drawing on page: 1-1018)					
520	315105-0165		2	FWAS080G0-0S, WASHER PLAIN	
530	3179969-0000		4	SPACER	
LIGHTCAP30 PLH, LIGHTCAP30B PLH (See drawing on page: 1-1020)					
090	3198893-0000		1	BRACKET	
330	90330-0037		1	PLUG, G1/2EXT, G1/2	
475	312115-0465		2	SCREW ISO4762 M8X70 A4 80	
520	315105-0165		6	FWAS080G0-0S, WASHER PLAIN	
530	3179969-0000		4	SPACER	
730	312607-0318		2	HEXAGON NUT, EN 24032 M6M M8 A480	
800	350002-0009		1	PUSH-IN L-FITTING QSL-F-G1/4-8	
810	350002-0015		2	PUSH-IN L-FITTING QSL-F-G1/2-10	
820	350006-0009		1	PUSH-IN FITTING QS-F-12H-10	
840	350015-0005		1	PUSH-IN Y-CONNECTOR QSY-F-10	
G25Q1500	90235-0297		1	VALVE 3/2, OPEN/CLOSED	
G25W1503	315300-0004	M	0.3	TUBE, 8 MM PE BLUE	
G25W1961	315300-0007	M	0.05	TUBE, 10 MM PE BLUE	
G25W1962	315300-0007	M	0.43	TUBE, 10 MM PE BLUE	
Common Parts					
010	2760293-0000		1	GUIDE	
020	2760288-0000		1	GUIDE	
030	2814030-0000		1	FLANGE	
040	1282191-0000		1	BUSHING	
050	312318-0368		4	SET SCREW, CUP END ISO4029 M6X16 A4	
060	2771015-0000		4	LEVER	
070	2771008-0000		4	PIN	
080	2771009-0000		4	PIN	
100	2729837-0000		1	HOLDER	
110	2771016-0000		4	BLOCK	
120	1338224-0000		4	SHIM	
130	2760291-0001		2	SHIM	
135	2760291-0002		2	SHIM	
140	2760291-0003		2	SHIM	
145	2760291-0004		2	SHIM	
150	2771018-0000		2	PIN	
155	2760291-0005		2	SHIM	
160	2833244-0000		1	BOX	
165	2760291-0006		2	SHIM	
170	2814035-0000		1	PISTON	
175	2760283-0001		1	STOP	
180	2814038-0000		1	HOLDER	
190	2814029-0000		1	CYLINDER HOLDER	
200	2771006-0003		1	STOP	
210	2729835-0000		2	GUIDE	
230	3208041-0000		1	BRACKET	
240	2719075-0000		2	GUIDE PIN	
250	2729842-0000		2	SCREW	
260	2771013-0001		4	SHIM	
265	2771013-0002		4	SHIM	
270	2771013-0003		4	SHIM	
275	2771013-0004		4	SHIM	
280	2771013-0005		4	SHIM	
290	2833245-0000		2	PLATE	
295	2833248-0000		1	SPACER	
300	90459-6275		4	TOOL SPRING, 51440, 9.5/19.5X31,8	
310	90603-4578		8	NEEDLE ROLLER BEARING, 15X21X20 MM	
320	3208042-0000		1	BRACKET	
350	90458-0850		1	HANDLE, THREADED TAP. NO.WN562-70-M8X24	
390	311101-0270		2	PARALLEL PIN ISO 2338 4H6X16 ST	
400	311103-0233		2	PARALLEL PIN ISO 2338 3M6X10 A1	
410	312115-0491		4	SCREW ISO4762 M10X20 A4 80	
415	312403-0493		1	SCREW ISO4762 M10X25 12.9	
420	311103-0357		8	PARALLEL PIN ISO 2338 6M6X30 A1	
430	315105-0146		1	WASHER PLAIN, 5,3X10X1 A4 BRB	
440	312115-0372		4	SCREW ISO4762 M6X25 A4 80	
450	312115-0368		4	SCREW ISO4762 M6X16 A4 80	

Machine Type	Group Description	Used-In	Group Number	Page No

TOOL BOX

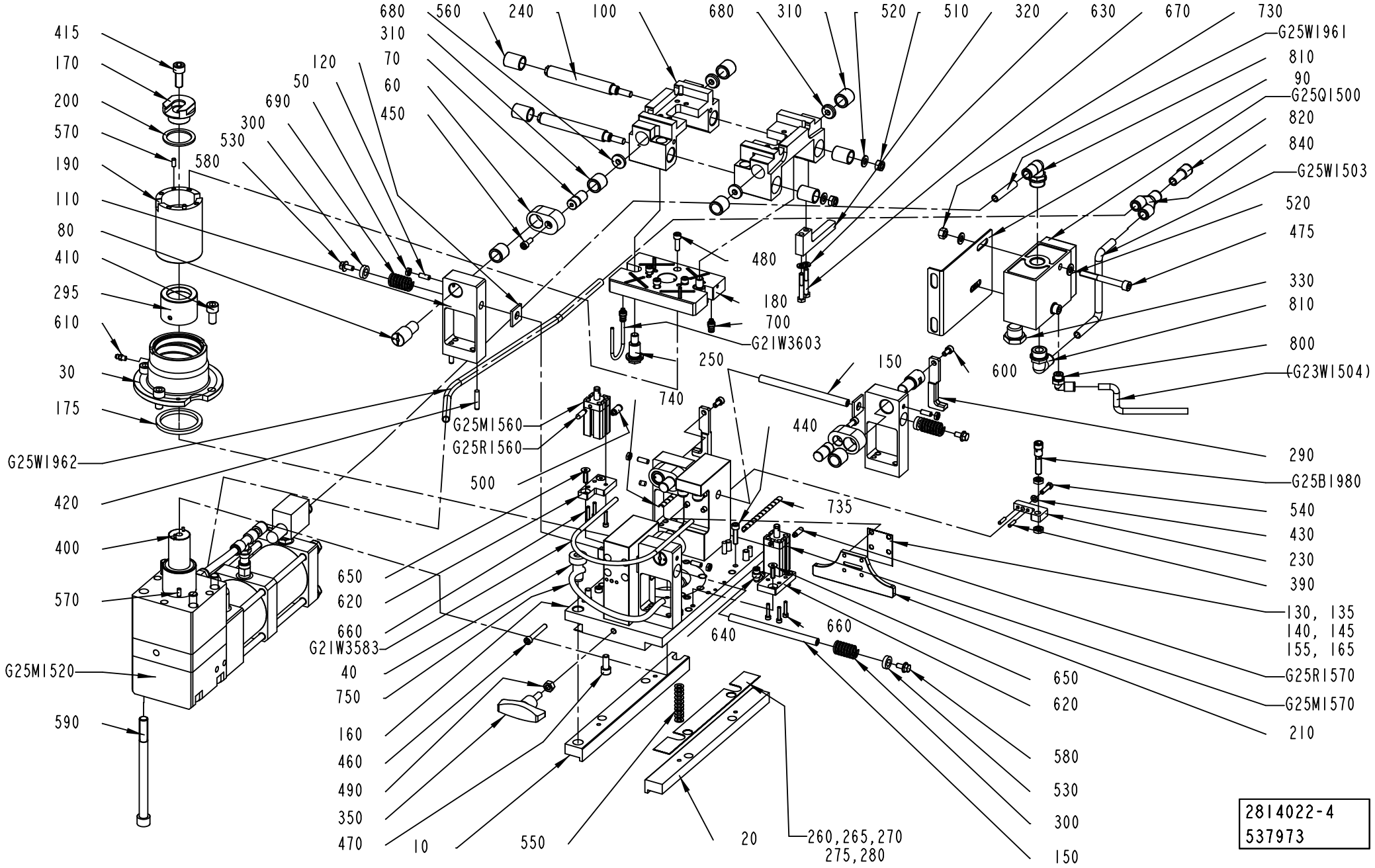

2814022-4
537973

Pos	Part No	UN	Qty	Description	Page No
Common Parts (Cont'd)					
460	312115-0379		8	SCREW ISO4762 M6X45 A4 80	
470	312115-0451		8	SCREW ISO4762 M8X20 A4 80	
480	312115-0370		4	SCREW ISO4762 M6X20 A4 80	
490	312605-0318		1	HEXAGON NUT, M6M M8 A280	
500	350003-0001		1	PUSH-IN FITTING QS-F-M5-4-I	
510	312812-0318		2	HEXAGON NUT, NY-LOCK M8 A4 80	
540	312105-0331		1	SCREW, M6S ISO 4017 M5X20 A4 80	
550	319030-0126		44	DISC SPRING, CONICAL 12,5X6,2X0,7 MM	
560	344271-0238		4	BUSHING W/O FLANGE 16/20X25 MM	
570	311103-0306		4	PARALLEL PIN ISO 2338 5M6X12 A1	
580	312108-0366		4	SCREW EN 1665 TYPE F M6X12 A270	
590	2721109-0000		4	SCREW	
600	312111-0366		2	SCREW HEX.SOCK.HD.MC6S 6X12 88 FZB	
610	344502-0021		1	GREASE NIPPLE STRAIGHT M6	
620	2833254-0000		2	SUPPORT	
630	315105-0153		2	WASHER PLAIN, 6,4X12X1,5 A4 BRB	
640	350002-0001		1	PUSH-IN L-FITTING QSL-F-M5-4	
650	312155-0370		4	SCREW DIN 7991 MF6S M6X20 A4 70	
660	312115-0295		6	SCREW ISO4762 M4X20 A4 80	
670	312101-0378		2	SCREW M6S M6X40 FZB	
680	2875883-0000		4	WASHER	
690	312625-0316		4	HEXAGON THIN NUT, EN 24035 ML6M M6 A4	
700	90600-3006		2	PUSH-IN FITTING 3681 04 19	
710	90602-4847		1	THREADLOCKER LOCTITE 243, 50ML	
720	344460-0000		1	ROCOL SAPPHIRE ENDURE, ONLY IN BOM	
	344460-0101		*1*	*ROCOL SAPPHIRE ENDURE, 100G TUBE*	
	344460-0702		*1*	*ROCOL SAPPHIRE ENDURE, 700G CARTRIDGE*	
	344460-1003		*1*	*ROCOL SAPPHIRE ENDURE, 1KG CAN*	
735	90602-3981		1	PLASTIC SPIRAL KW 5, 61600040	
740	90602-3981		1	PLASTIC SPIRAL KW 5, 61600040	
750	90602-3981		1	PLASTIC SPIRAL KW 5, 61600040	
G25B1980	90600-7886		1	INDUCTIVE SENSOR, IE 5379	
G25M1520	90459-6253		1	CYL VERT.63-23/HOR. 80-38, NC20093026S	
010	*90600-1069*		*1*	*VERTICAL CYLINDER, SP-01-93026*	
020	*90600-3981*		*1*	*END BLOCK, G2005812-01*	
030	*315202-0908*		*2*	*O-RING 17,86X2,62 MM*	
040	*90606-1383*		*1*	*SILENCER SINTERED BRONZE G1/2", S/2*	
050	*90606-1380*		*1*	*PLUG M10, TD908XA201001*	
060	*90600-2523*		*1*	*SEAL KIT, HSG - 01 - 23026*	
070	*90606-1382*		*1*	*SILENCER SINTERED BRONZE G3/8", S/3*	
G25M1560	2863709-0200		1	CYLINDER	**1-1023**
G25M1570	2863709-0200		1	CYLINDER	**1-1023**
G25R1560	90328-0029		1	SILENCER, M5	
G25R1570	90328-0029		1	SILENCER, M5	
G21W3583	315400-0003	M	0.4	TUBE PUN-H-6X1-SW	
G21W3603	315400-0018	M	0.2	TUBE PUN-H-4X0,75-SW	

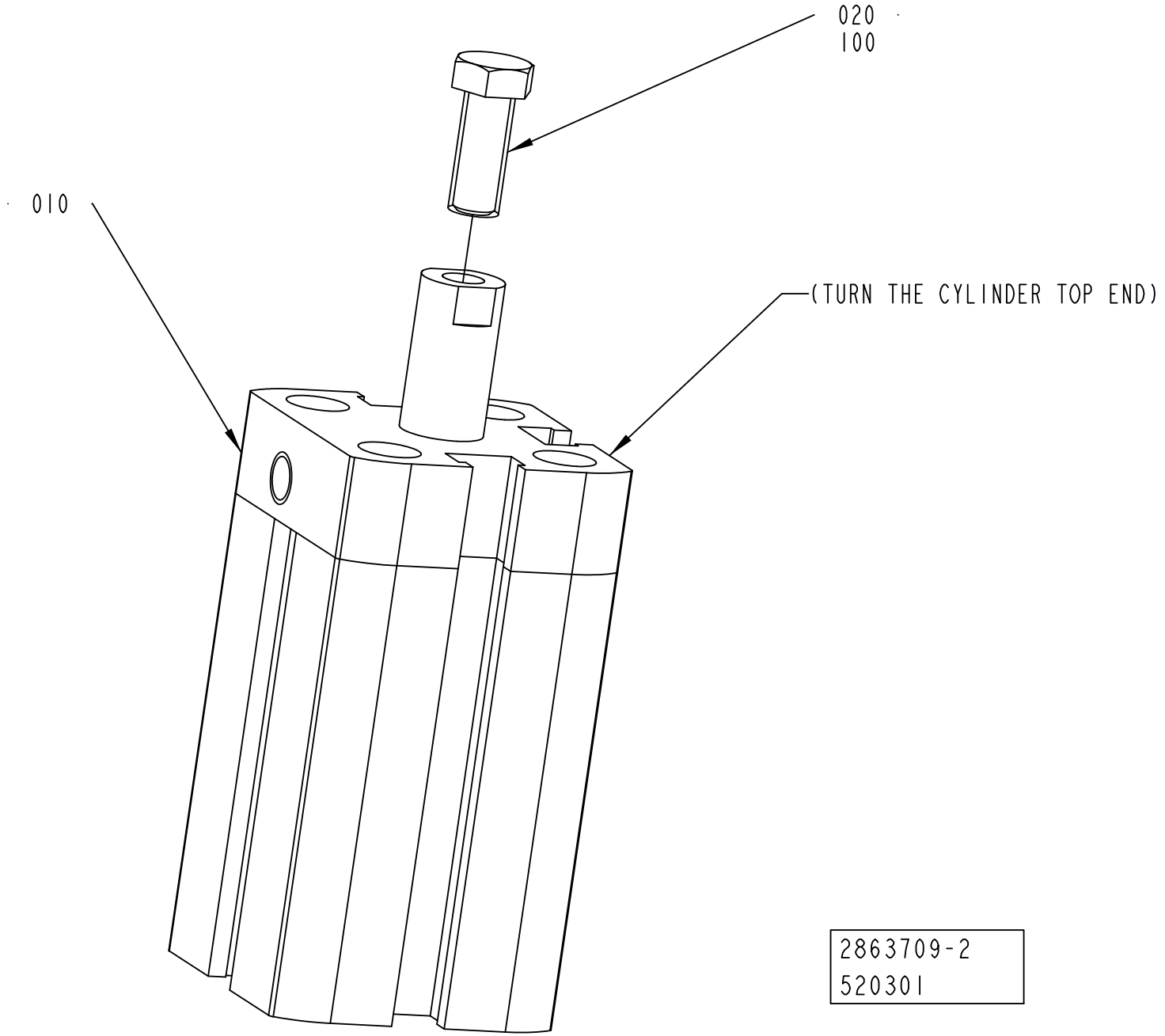
020
100
010
(TURN THE CYLINDER TOP END)
2863709-2
520301

ECM: 520958 - 20120401
Group number: 2863709-0200
Assembly Drawing: 2863709-2_1_AA

Pos	Part No	UN	Qty	Description	Page No
-					
010	90604-0664		1	DOUBLE ACTING, COMPACT, 16-20	
020	312105-0291		1	SCREW, M6S ISO 4017 M4X12 A4 70	
100	90602-4847		1	THREADLOCKER LOCTITE 243, 50ML	

Pos	Part No	UN	Qty	Description	Page No

TOOL BOX

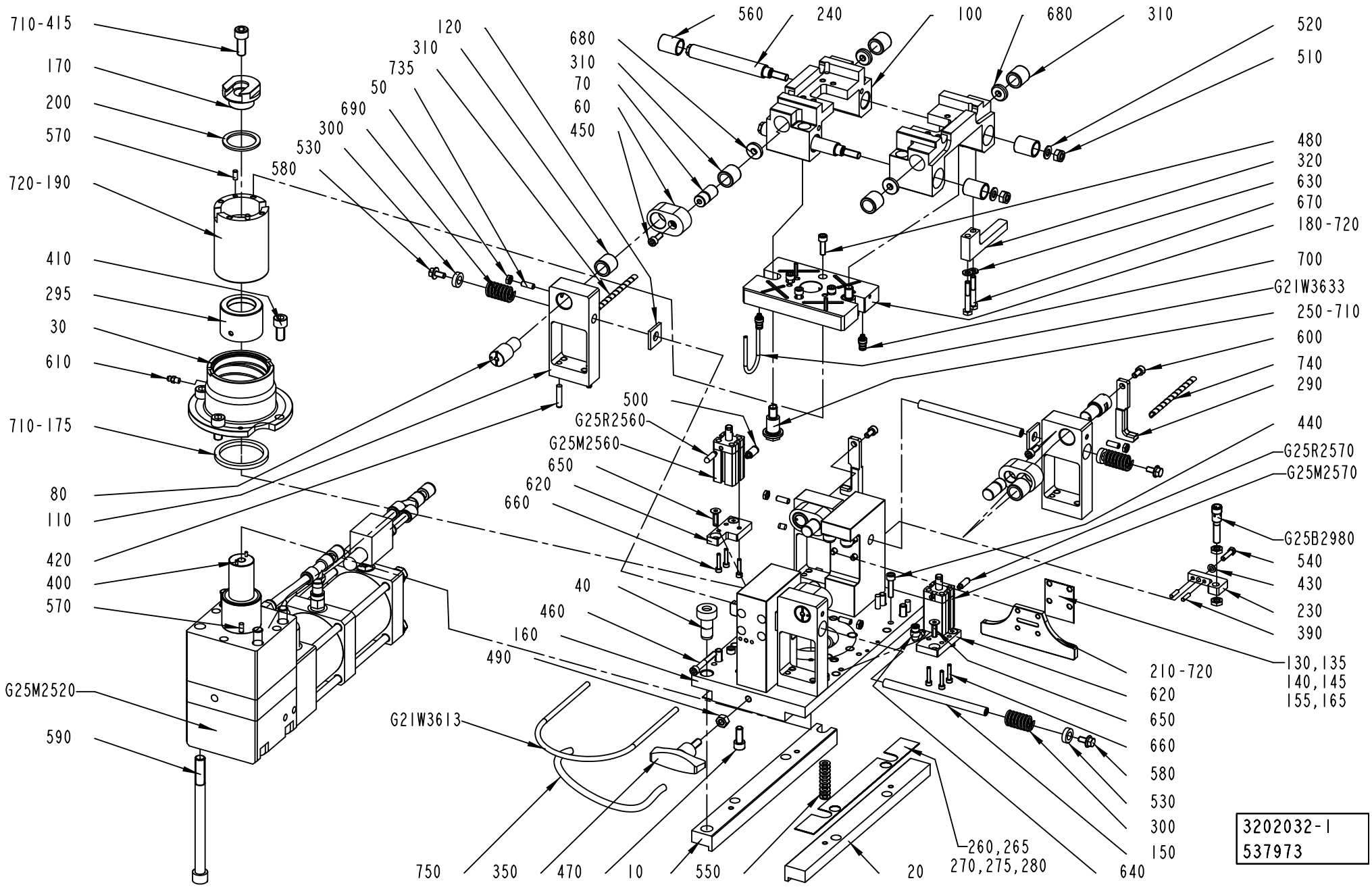
710-415
170
200
570
720-190
410
295
30
610
710-175
80
110
420
400
570
G25M2520
590
120
310
735
50
690
300
530
580
680
310
70
60
450
560
240
100
680
310
520
510
480
320
630
670
180-720
700
G21W3633
250-710
600
740
290
440
G25R2570
G25M2570
500
G25R2560
G25M2560
650
620
660
40
460
160
490
G21W3613
750
350
470
10
550
20
260,265
270,275,280
640
210-720
620
650
660
580
530
300
150
G25B2980
540
430
230
390
130,135
140,145
155,165
3202032-1
537973

ECM: 665307 - 20140701
Group number: 3202032-0100
Assembly Drawing: 3202032-1_1_AB

This list covers pages from 1-1024 to 1-1027

Pos	Part No	UN	Qty	Description	Page No
LIGHTCAP24 NOPLH (See drawing on page: 1-1024)					
520	315105-0165		2	FWAS080G0-0S, WASHER PLAIN	
530	3180557-0000		4	SPACER	
LIGHTCAP24 PLH (See drawing on page: 1-1026)					
090	3198893-0000		1	BRACKET	
330	90330-0037		1	PLUG, G1/2EXT, G1/2	
475	312115-0465		2	SCREW ISO4762 M8X70 A4 80	
520	315105-0165		6	FWAS080G0-0S, WASHER PLAIN	
530	3180557-0000		4	SPACER	
730	312607-0318		2	HEXAGON NUT, EN 24032 M6M M8 A480	
800	350002-0009		1	PUSH-IN L-FITTING QSL-F-G1/4-8	
810	350002-0015		2	PUSH-IN L-FITTING QSL-F-G1/2-10	
820	350006-0009		1	PUSH-IN FITTING QS-F-12H-10	
840	350015-0005		1	PUSH-IN Y-CONNECTOR QSY-F-10	
G25Q2500	90235-0297		1	VALVE 3/2, OPEN/CLOSED	
G25W2503	315300-0007	M	0.3	TUBE, 10 MM PE BLUE	
G25W2961	315300-0007	M	0.05	TUBE, 10 MM PE BLUE	
G25W2962	315300-0007	M	0.43	TUBE, 10 MM PE BLUE	
LIGHTCAP30 NOPLH (See drawing on page: 1-1024)					
520	315105-0165		2	FWAS080G0-0S, WASHER PLAIN	
530	3179969-0000		4	SPACER	
LIGHTCAP30 PLH, LIGHTCAP30B PLH (See drawing on page: 1-1026)					
090	3198893-0000		1	BRACKET	
330	90330-0037		1	PLUG, G1/2EXT, G1/2	
475	312115-0465		2	SCREW ISO4762 M8X70 A4 80	
520	315105-0165		6	FWAS080G0-0S, WASHER PLAIN	
530	3179969-0000		4	SPACER	
730	312607-0318		2	HEXAGON NUT, EN 24032 M6M M8 A480	
800	350002-0009		1	PUSH-IN L-FITTING QSL-F-G1/4-8	
810	350002-0015		2	PUSH-IN L-FITTING QSL-F-G1/2-10	
820	350006-0009		1	PUSH-IN FITTING QS-F-12H-10	
840	350015-0005		1	PUSH-IN Y-CONNECTOR QSY-F-10	
G25Q2500	90235-0297		1	VALVE 3/2, OPEN/CLOSED	
G25W2503	315300-0007	M	0.3	TUBE, 10 MM PE BLUE	
G25W2961	315300-0007	M	0.05	TUBE, 10 MM PE BLUE	
G25W2962	315300-0007	M	0.43	TUBE, 10 MM PE BLUE	
Common Parts					
010	2760293-0000		1	GUIDE	
020	2760288-0000		1	GUIDE	
030	2814030-0000		1	FLANGE	
040	1282191-0000		1	BUSHING	
050	312318-0368		4	SET SCREW, CUP END ISO4029 M6X16 A4	
060	2771015-0000		4	LEVER	
070	2771008-0000		4	PIN	
080	2771009-0000		4	PIN	
100	2729837-0000		1	HOLDER	
110	2771016-0000		4	BLOCK	
120	1338224-0000		4	SHIM	
130	2760291-0001		2	SHIM	
135	2760291-0002		2	SHIM	
140	2760291-0003		2	SHIM	
145	2760291-0004		2	SHIM	
150	2771018-0000		2	PIN	
155	2760291-0005		2	SHIM	
160	2833244-0000		1	BOX	
165	2760291-0006		2	SHIM	
170	2814035-0000		1	PISTON	
175	2760283-0001		1	STOP	
180	2814038-0000		1	HOLDER	
190	2814029-0000		1	CYLINDER HOLDER	
200	2771006-0003		1	STOP	
210	2729835-0000		2	GUIDE	
230	3208041-0000		1	BRACKET	
240	2719075-0000		2	GUIDE PIN	
250	2729842-0000		2	SCREW	
260	2771013-0001		4	SHIM	
265	2771013-0002		4	SHIM	
270	2771013-0003		4	SHIM	
275	2771013-0004		4	SHIM	
280	2771013-0005		4	SHIM	
290	2833245-0000		2	PLATE	
295	2833248-0000		1	SPACER	
300	90459-6275		4	TOOL SPRING, 51440, 9.5/19.5X31,8	
310	90603-4578		8	NEEDLE ROLLER BEARING, 15X21X20 MM	
320	3208042-0000		1	BRACKET	
350	90458-0850		1	HANDLE, THREADED TAP. NO.WN562-70-M8X24	
390	311101-0270		2	PARALLEL PIN ISO 2338 4H6X16 ST	
400	311103-0233		2	PARALLEL PIN ISO 2338 3M6X10 A1	
410	312115-0491		4	SCREW ISO4762 M10X20 A4 80	
415	312403-0493		1	SCREW ISO4762 M10X25 12.9	
420	311103-0357		8	PARALLEL PIN ISO 2338 6M6X30 A1	
430	315105-0146		1	WASHER PLAIN, 5,3X10X1 A4 BRB	
440	312115-0372		4	SCREW ISO4762 M6X25 A4 80	
450	312115-0368		4	SCREW ISO4762 M6X16 A4 80	

Machine Type	Group Description	Used-In	Group Number	Page No

TOOL BOX

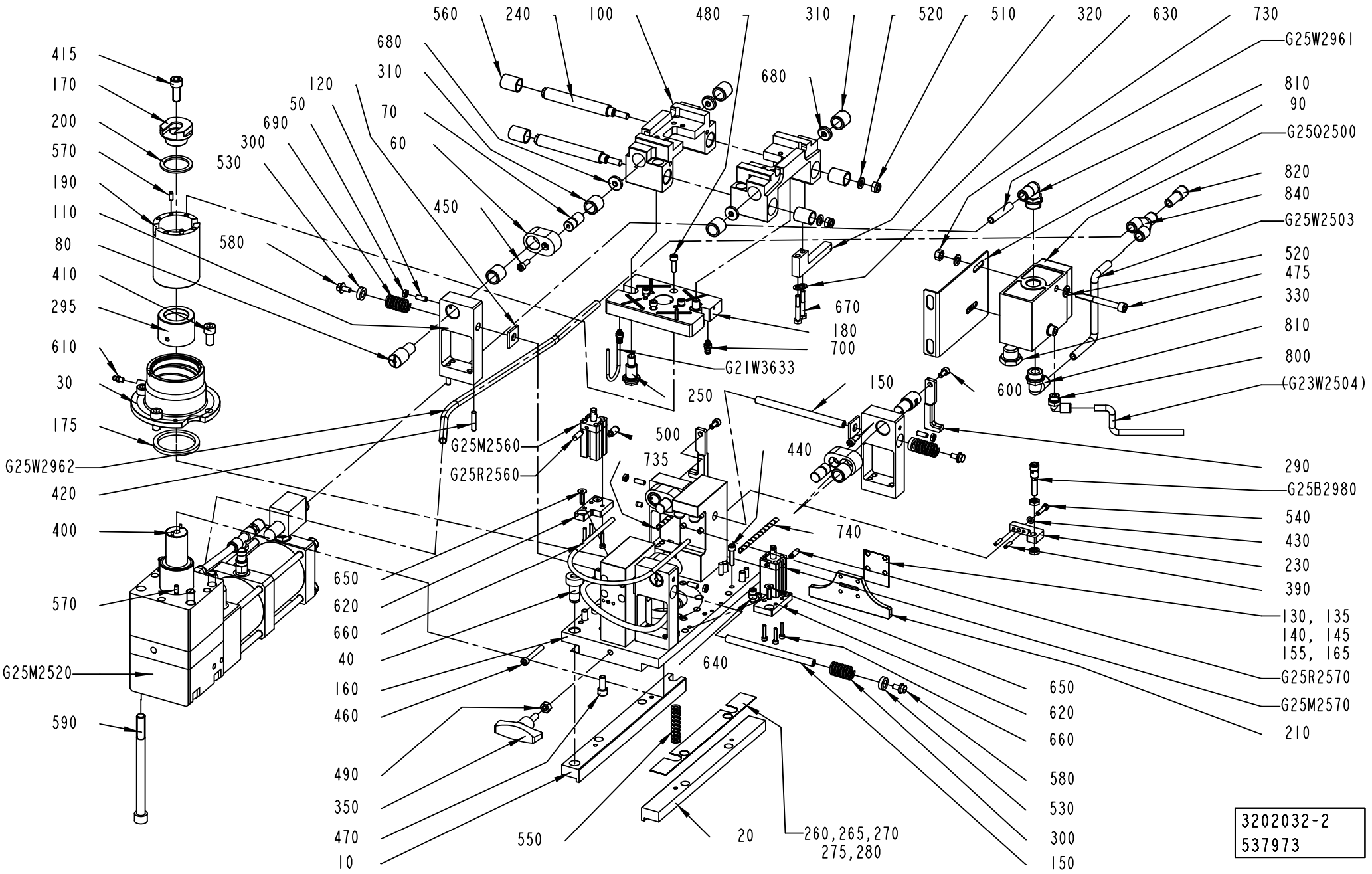

3202032-2
537973

Pos	Part No	UN	Qty	Description	Page No
Common Parts (Cont'd)					
460	312115-0379		8	SCREW ISO4762 M6X45 A4 80	
470	312115-0451		8	SCREW ISO4762 M8X20 A4 80	
480	312115-0370		4	SCREW ISO4762 M6X20 A4 80	
490	312605-0318		1	HEXAGON NUT, M6M M8 A280	
500	350003-0001		1	PUSH-IN FITTING QS-F-M5-4-I	
510	312812-0318		2	HEXAGON NUT, NY-LOCK M8 A4 80	
540	312105-0331		1	SCREW, M6S ISO 4017 M5X20 A4 80	
550	319030-0126		40	DISC SPRING, CONICAL 12,5X6,2X0,7 MM	
560	344271-0238		4	BUSHING W/O FLANGE 16/20X25 MM	
570	311103-0306		4	PARALLEL PIN ISO 2338 5M6X12 A1	
580	312108-0366		4	SCREW EN 1665 TYPE F M6X12 A270	
590	2721109-0000		4	SCREW	
600	312111-0366		2	SCREW HEX.SOCK.HD.MC6S 6X12 88 FZB	
610	344502-0021		1	GREASE NIPPLE STRAIGHT M6	
620	2833254-0000		2	SUPPORT	
630	315105-0153		2	WASHER PLAIN, 6,4X12X1,5 A4 BRB	
640	350002-0001		1	PUSH-IN L-FITTING QSL-F-M5-4	
650	312155-0370		4	SCREW DIN 7991 MF6S M6X20 A4 70	
660	312115-0295		6	SCREW ISO4762 M4X20 A4 80	
670	312101-0378		2	SCREW M6S M6X40 FZB	
680	2875883-0000		4	WASHER	
690	312625-0316		4	HEXAGON THIN NUT, EN 24035 ML6M M6 A4	
700	90600-3006		2	PUSH-IN FITTING 3681 04 19	
710	90602-4847		1	THREADLOCKER LOCTITE 243, 50ML	
720	344460-0000		1	ROCOL SAPPHIRE ENDURE, ONLY IN BOM	
	344460-0101		*1*	*ROCOL SAPPHIRE ENDURE, 100G TUBE*	
	344460-0702		*1*	*ROCOL SAPPHIRE ENDURE, 700G CARTRIDGE*	
	344460-1003		*1*	*ROCOL SAPPHIRE ENDURE, 1KG CAN*	
735	90602-3981		1	PLASTIC SPIRAL KW 5, 61600040	
740	90602-3981		1	PLASTIC SPIRAL KW 5, 61600040	
750	90602-3981		1	PLASTIC SPIRAL KW 5, 61600040	
G25B2980	90600-7886		1	INDUCTIVE SENSOR, IE 5379	
G25M2520	90459-6253		1	CYL VERT.63-23/HOR. 80-38, NC20093026S	
010	*90600-1069*		*1*	*VERTICAL CYLINDER, SP-01-93026*	
020	*90600-3981*		*1*	*END BLOCK, G2005812-01*	
030	*315202-0908*		*2*	*O-RING 17,86X2,62 MM*	
040	*90606-1383*		*1*	*SILENCER SINTERED BRONZE G1/2", S/2*	
050	*90606-1380*		*1*	*PLUG M10, TD908XA201001*	
060	*90600-2523*		*1*	*SEAL KIT, HSG - 01 - 23026*	
070	*90606-1382*		*1*	*SILENCER SINTERED BRONZE G3/8", S/3*	
G25M2560	2863709-0200		1	CYLINDER	**1-1023**
G25M2570	2863709-0200		1	CYLINDER	**1-1023**
G25R2560	90328-0029		1	SILENCER, M5	
G25R2570	90328-0029		1	SILENCER, M5	
G21W3613	315400-0003	M	0.4	TUBE PUN-H-6X1-SW	
G21W3633	315400-0018	M	0.2	TUBE PUN-H-4X0,75-SW	

TOOL BOX

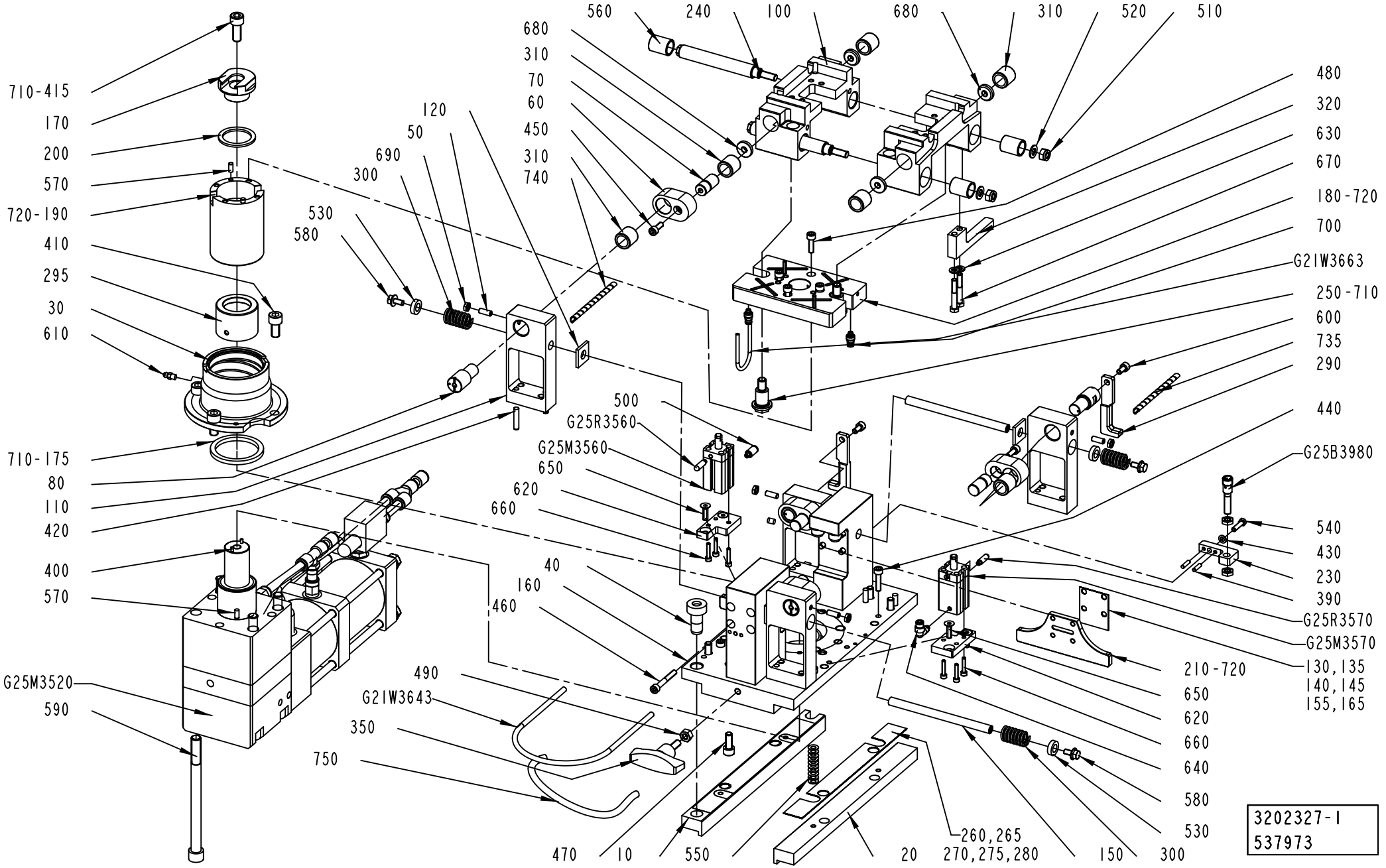
710-415
170
200
570
720-190
410
295
30
610
710-175
80
110
420
400
570
G25M3520
590
560
240
100
680
310
520
510
680
310
70
60
450
310
740
120
50
690
300
530
580
480
320
630
670
180-720
700
G21W3663
250-710
600
735
290
440
G25B3980
500
G25R3560
G25M3560
650
620
660
40
160
460
490
G21W3643
350
750
470
10
550
20
260,265
270,275,280
150
300
540
430
230
390
G25R3570
G25M3570
130,135
140,145
155,165
210-720
650
620
660
640
580
530
3202327-1
537973

ECM: 665308 - 20140701
Group number: 3202327-0100
Assembly Drawing: 3202327-1_1_AB

This list covers pages from 1-1028 to 1-1031

Pos	Part No	UN	Qty	Description	Page No
LIGHTCAP24 NOPLH (See drawing on page: 1-1028)					
520	315105-0165		2	FWAS080G0-0S, WASHER PLAIN	
530	3180557-0000		4	SPACER	
LIGHTCAP24 PLH (See drawing on page: 1-1030)					
090	3198893-0000		1	BRACKET	
330	90330-0037		1	PLUG, G1/2EXT, G1/2	
475	312115-0465		2	SCREW ISO4762 M8X70 A4 80	
520	315105-0165		6	FWAS080G0-0S, WASHER PLAIN	
530	3180557-0000		4	SPACER	
730	312607-0318		2	HEXAGON NUT, EN 24032 M6M M8 A480	
800	350002-0009		1	PUSH-IN L-FITTING QSL-F-G1/4-8	
810	350002-0015		2	PUSH-IN L-FITTING QSL-F-G1/2-10	
820	350006-0009		1	PUSH-IN FITTING QS-F-12H-10	
840	350015-0005		1	PUSH-IN Y-CONNECTOR QSY-F-10	
G25Q3500	90235-0297		1	VALVE 3/2, OPEN/CLOSED	
G25W3503	315300-0007	M	0.3	TUBE, 10 MM PE BLUE	
G25W3961	315300-0007	M	0.05	TUBE, 10 MM PE BLUE	
G25W3962	315300-0007	M	0.43	TUBE, 10 MM PE BLUE	
LIGHTCAP30 NOPLH (See drawing on page: 1-1028)					
520	315105-0165		2	FWAS080G0-0S, WASHER PLAIN	
530	3179969-0000		4	SPACER	
LIGHTCAP30 PLH, LIGHTCAP30B PLH (See drawing on page: 1-1030)					
090	3198893-0000		1	BRACKET	
330	90330-0037		1	PLUG, G1/2EXT, G1/2	
475	312115-0465		2	SCREW ISO4762 M8X70 A4 80	
520	315105-0165		6	FWAS080G0-0S, WASHER PLAIN	
530	3179969-0000		4	SPACER	
730	312607-0318		2	HEXAGON NUT, EN 24032 M6M M8 A480	
800	350002-0009		1	PUSH-IN L-FITTING QSL-F-G1/4-8	
810	350002-0015		2	PUSH-IN L-FITTING QSL-F-G1/2-10	
820	350006-0009		1	PUSH-IN FITTING QS-F-12H-10	
840	350015-0005		1	PUSH-IN Y-CONNECTOR QSY-F-10	
G25Q3500	90235-0297		1	VALVE 3/2, OPEN/CLOSED	
G25W3503	315300-0007	M	0.3	TUBE, 10 MM PE BLUE	
G25W3961	315300-0007	M	0.05	TUBE, 10 MM PE BLUE	
G25W3962	315300-0007	M	0.43	TUBE, 10 MM PE BLUE	
Common Parts					
010	2760293-0000		1	GUIDE	
020	2760288-0000		1	GUIDE	
030	2814030-0000		1	FLANGE	
040	1282191-0000		1	BUSHING	
050	312318-0368		4	SET SCREW, CUP END ISO4029 M6X16 A4	
060	2771015-0000		4	LEVER	
070	2771008-0000		4	PIN	
080	2771009-0000		4	PIN	
100	2729837-0000		1	HOLDER	
110	2771016-0000		4	BLOCK	
120	1338224-0000		4	SHIM	
130	2760291-0001		2	SHIM	
135	2760291-0002		2	SHIM	
140	2760291-0003		2	SHIM	
145	2760291-0004		2	SHIM	
150	2771018-0000		2	PIN	
155	2760291-0005		2	SHIM	
160	2833244-0000		1	BOX	
165	2760291-0006		2	SHIM	
170	2814035-0000		1	PISTON	
175	2760283-0001		1	STOP	
180	2814038-0000		1	HOLDER	
190	2814029-0000		1	CYLINDER HOLDER	
200	2771006-0003		1	STOP	
210	2729835-0000		2	GUIDE	
230	3208041-0000		1	BRACKET	
240	2719075-0000		2	GUIDE PIN	
250	2729842-0000		2	SCREW	
260	2771013-0001		4	SHIM	
265	2771013-0002		4	SHIM	
270	2771013-0003		4	SHIM	
275	2771013-0004		4	SHIM	
280	2771013-0005		4	SHIM	
290	2833245-0000		2	PLATE	
295	2833248-0000		1	SPACER	
300	90459-6275		4	TOOL SPRING, 51440, 9.5/19.5X31,8	
310	90603-4578		8	NEEDLE ROLLER BEARING, 15X21X20 MM	
320	3208042-0000		1	BRACKET	
350	90458-0850		1	HANDLE, THREADED TAP. NO.WN562-70-M8X24	
390	311101-0270		2	PARALLEL PIN ISO 2338 4H6X16 ST	
400	311103-0233		2	PARALLEL PIN ISO 2338 3M6X10 A1	
410	312115-0491		4	SCREW ISO4762 M10X20 A4 80	
415	312403-0493		1	SCREW ISO4762 M10X25 12.9	
420	311103-0357		8	PARALLEL PIN ISO 2338 6M6X30 A1	
430	315105-0146		1	WASHER PLAIN, 5,3X10X1 A4 BRB	
440	312115-0372		4	SCREW ISO4762 M6X25 A4 80	
450	312115-0368		4	SCREW ISO4762 M6X16 A4 80	

Machine Type	Group Description	Used-In	Group Number	Page No

TOOL BOX

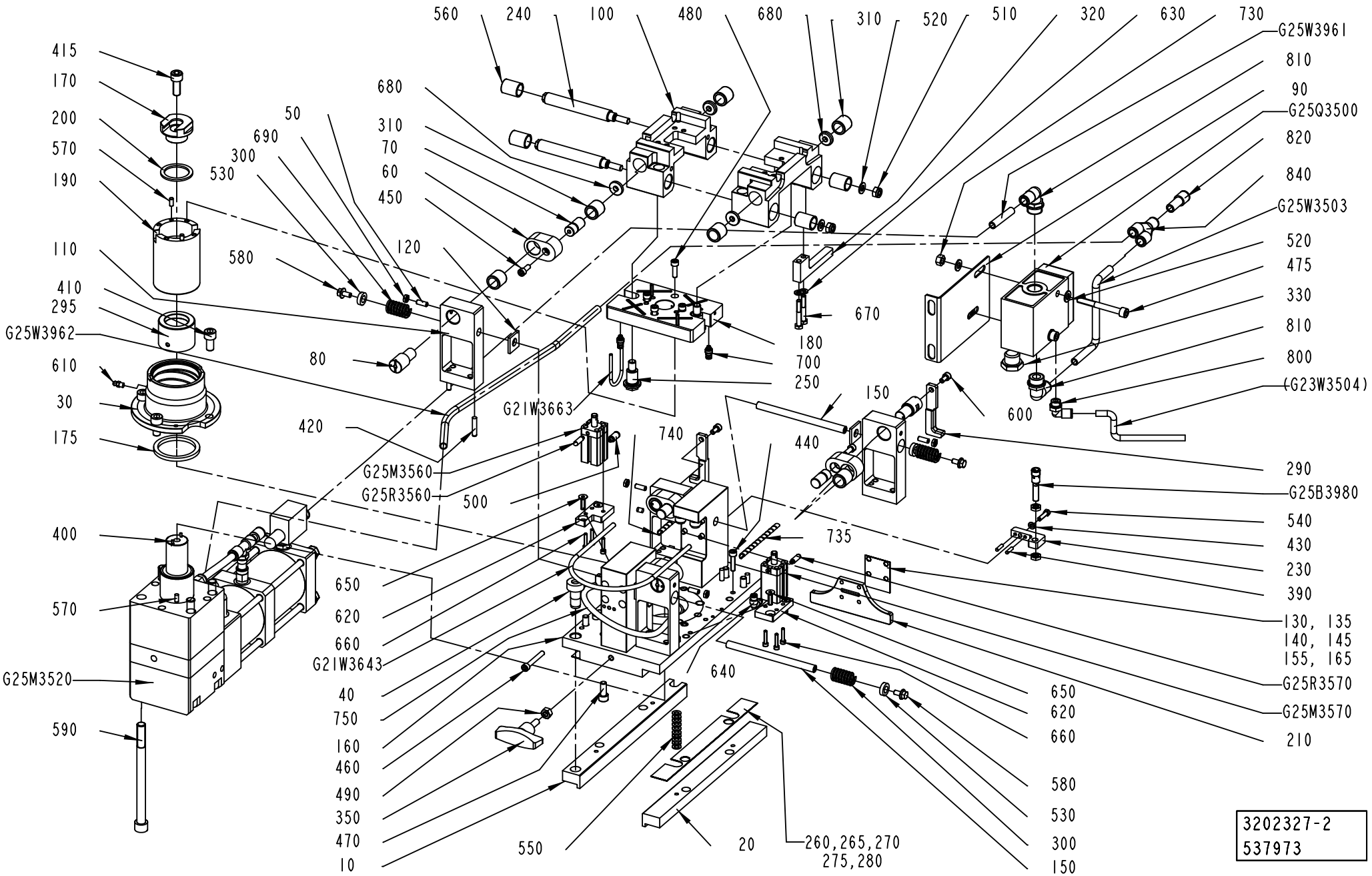

3202327-2
537973

Pos	Part No	UN	Qty	Description	Page No
Common Parts (Cont'd)					
460	312115-0379		8	SCREW ISO4762 M6X45 A4 80	
470	312115-0451		8	SCREW ISO4762 M8X20 A4 80	
480	312115-0370		4	SCREW ISO4762 M6X20 A4 80	
490	312605-0318		1	HEXAGON NUT, M6M M8 A280	
500	350003-0001		1	PUSH-IN FITTING QS-F-M5-4-I	
510	312812-0318		2	HEXAGON NUT, NY-LOCK M8 A4 80	
540	312105-0331		1	SCREW, M6S ISO 4017 M5X20 A4 80	
550	319030-0126		44	DISC SPRING, CONICAL 12,5X6,2X0,7 MM	
560	344271-0238		4	BUSHING W/O FLANGE 16/20X25 MM	
570	311103-0306		4	PARALLEL PIN ISO 2338 5M6X12 A1	
580	312108-0366		4	SCREW EN 1665 TYPE F M6X12 A270	
590	2721109-0000		4	SCREW	
600	312111-0366		2	SCREW HEX.SOCK.HD.MC6S 6X12 88 FZB	
610	344502-0021		1	GREASE NIPPLE STRAIGHT M6	
620	2833254-0000		2	SUPPORT	
630	315105-0153		2	WASHER PLAIN, 6,4X12X1,5 A4 BRB	
640	350002-0001		1	PUSH-IN L-FITTING QSL-F-M5-4	
650	312155-0370		4	SCREW DIN 7991 MF6S M6X20 A4 70	
660	312115-0295		6	SCREW ISO4762 M4X20 A4 80	
670	312101-0378		2	SCREW M6S M6X40 FZB	
680	2875883-0000		4	WASHER	
690	312625-0316		4	HEXAGON THIN NUT, EN 24035 ML6M M6 A4	
700	90600-3006		2	PUSH-IN FITTING 3681 04 19	
710	90602-4847		1	THREADLOCKER LOCTITE 243, 50ML	
720	344460-0000		1	ROCOL SAPPHIRE ENDURE, ONLY IN BOM	
	344460-0101		*1*	*ROCOL SAPPHIRE ENDURE, 100G TUBE*	
	344460-0702		*1*	*ROCOL SAPPHIRE ENDURE, 700G CARTRIDGE*	
	344460-1003		*1*	*ROCOL SAPPHIRE ENDURE, 1KG CAN*	
735	90602-3981		1	PLASTIC SPIRAL KW 5, 61600040	
740	90602-3981		1	PLASTIC SPIRAL KW 5, 61600040	
750	90602-3981		1	PLASTIC SPIRAL KW 5, 61600040	
G25B3980	90600-7886		1	INDUCTIVE SENSOR, IE 5379	
G25M3520	90459-6253		1	CYL VERT.63-23/HOR. 80-38, NC20093026S	
010	*90600-1069*		*1*	*VERTICAL CYLINDER, SP-01-93026*	
020	*90600-3981*		*1*	*END BLOCK, G2005812-01*	
030	*315202-0908*		*2*	*O-RING 17,86X2,62 MM*	
040	*90606-1383*		*1*	*SILENCER SINTERED BRONZE G1/2", S/2*	
050	*90606-1380*		*1*	*PLUG M10, TD908XA201001*	
060	*90600-2523*		*1*	*SEAL KIT, HSG - 01 - 23026*	
070	*90606-1382*		*1*	*SILENCER SINTERED BRONZE G3/8", S/3*	
G25M3560	2863709-0200		1	CYLINDER	**1-1023**
G25M3570	2863709-0200		1	CYLINDER	**1-1023**
G25R3560	90328-0029		1	SILENCER, M5	
G25R3570	90328-0029		1	SILENCER, M5	
G21W3643	315400-0003	M	0.4	TUBE PUN-H-6X1-SW	
G21W3663	315400-0018	M	0.2	TUBE PUN-H-4X0,75-SW	

TOOL BOX

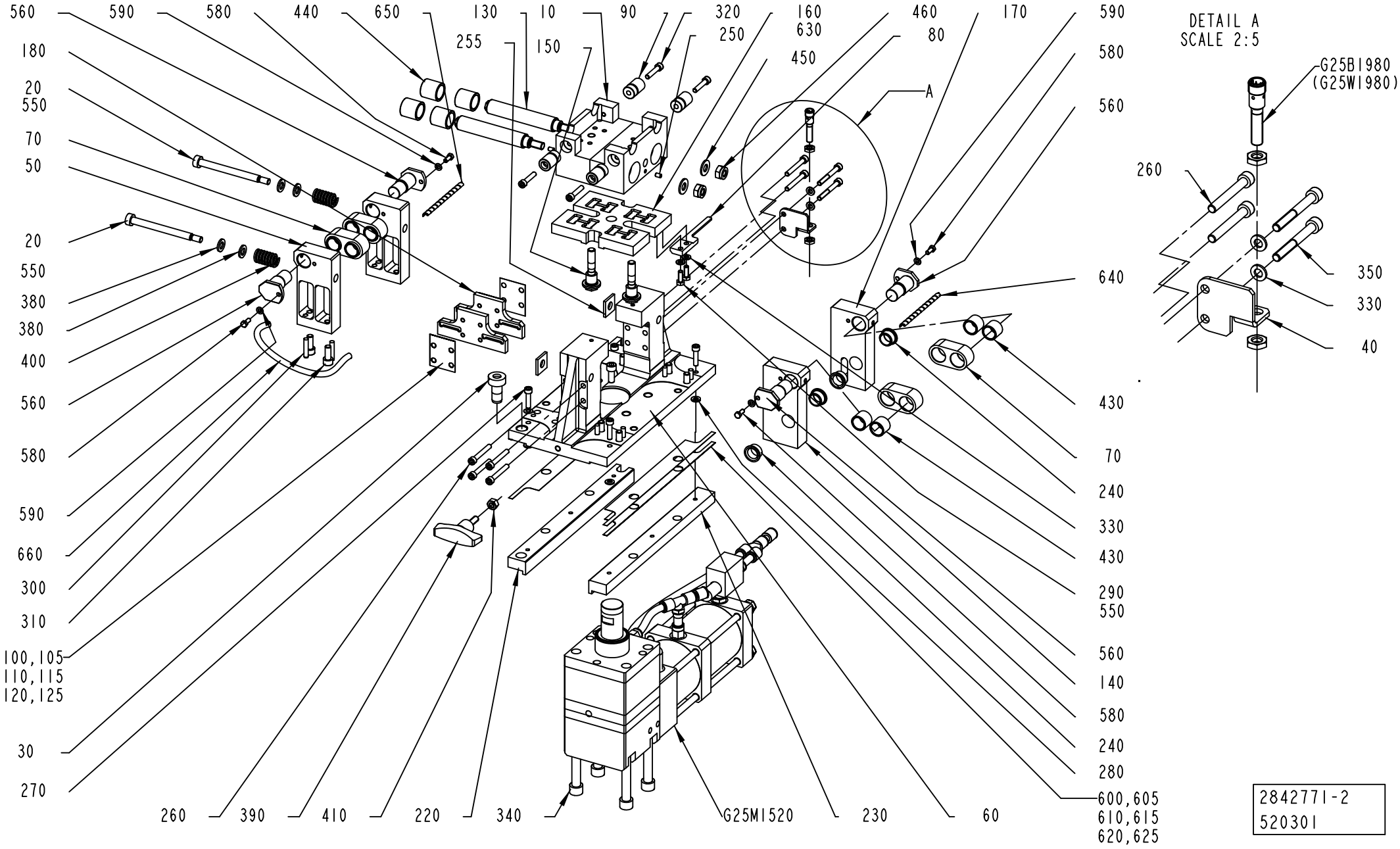

2842771-2
520301

ECM: 669413 - 20140701
Group number: 2842771-0200
Assembly Drawing: 2842771-2_1_AA

Pos	Part No	UN	Qty	Description	Page No
DIMC/FLEX					
G25M1520	90600-1145		1	TANDEM CYLINDER, NC20058023S	
010	*90600-1144*		*1*	*VERTICAL CYLINDER, SP-01-58023*	
020	*90600-3981*		*1*	*END BLOCK, G2005812-01*	
030	*315202-0908*		*2*	*O-RING 17,86X2,62 MM*	
040	*90606-1383*		*1*	*SILENCER SINTERED BRONZE G1/2", S/2*	
050	*90606-1380*		*1*	*PLUG M10, TD908XA201001*	
060	*90600-2523*		*1*	*SEAL KIT, HSG - 01 - 23026*	
070	*90606-1382*		*1*	*SILENCER SINTERED BRONZE G3/8", S/3*	
Common Parts					
010	2509592-0000		1	HOLDER	
020	1338149-0000		2	BOLT	
030	1282191-0000		1	BUSHING	
040	3208043-0000		1	BRACKET	
050	1528623-0000		2	BLOCK	
060	2809471-0000		1	BOX	
070	1528800-0000		4	LEVER	
080	3208044-0000		1	LEVER	
090	1528801-0000		4	PIN	
100	1279875-0000		2	SHIM	
105	1296532-0000		2	SHIM	
110	1296533-0000		2	SHIM	
115	1296534-0000		2	SHIM	
120	1296535-0000		2	SHIM	
125	1296536-0000		2	SHIM	
130	2528450-0000		2	ROD	
140	3072135-0000		1	BLOCK	
150	1528542-0000		2	BOLT	
160	2529774-0000		1	PLATE	
170	3198498-0000		1	BLOCK	
180	2529775-0000		2	LACE	
220	1260574-0000		1	PLATE	
230	1260576-0000		1	PLATE	
240	3071724-0000		4	FLANGE BUSHING	
250	312318-0323		2	SET SCREW, CUP END ISO4029 M5X8 A4	
255	1338224-0000		2	SHIM	
260	312115-0379		6	SCREW ISO4762 M6X45 A4 80	
270	312115-0372		4	SCREW ISO4762 M6X25 A4 80	
280	319030-0126		44	DISC SPRING, CONICAL 12,5X6,2X0,7 MM	
290	312105-0368		2	"SCREW, M6S ISO 4017 M6X16 A4 80"	
300	311103-0357		8	PARALLEL PIN ISO 2338 6M6X30 A1	
310	312115-0451		9	SCREW ISO4762 M8X20 A4 80	
320	312115-0374		4	SCREW ISO4762 M6X30 A4 80	
330	315105-0153		4	WASHER PLAIN, 6,4X12X1,5 A4 BRB	
340	2721109-0000		4	SCREW	
350	312115-0380		2	SCREW ISO4762 M6X50 A4 80	
380	315105-0171		4	WASHER PLAIN, 10X18X2 A4 BRB	
390	90458-0850		1	HANDLE, THREADED TAP. NO.WN562-70-M8X24	
400	90335-0248		2	TOOL SPRING, 51420, 9,5/19X31,8	
410	312605-0318		1	HEXAGON NUT, M6M M8 A280	
430	344271-0270		8	BUSHING W/O FLANGE 18/22X18 MM	
440	344271-0306		4	BUSHING W/O FLANGE 20/26X25 MM	
450	315105-0173		2	WASHER PLAIN, 10,5X22X2 A4 BRB	
460	312812-0320		2	HEXAGON NUT, NY-LOCK M10 A4 80	
540	90296-0091		1	LUBRICATION GREASE, FLUOLUB 210	
550	90602-4847		1	THREADLOCKER LOCTITE 243, 50ML	
560	2936356-0000		4	PIN	
580	312105-0327		4	"SCREW, M6S ISO 4017 M5X12 A4 80"	
590	315105-0146		4	WASHER PLAIN, 5,3X10X1 A4 BRB	
600	1338165-0000		4	SHIM	
605	1338166-0000		4	SHIM	
610	1338167-0000		4	SHIM	
615	1338168-0000		4	SHIM	
620	1338169-0000		4	SHIM	
625	1338170-0000		4	SHIM	
640	90602-3981		1	PLASTIC SPIRAL KW 5, 61600040	
650	90602-3981		1	PLASTIC SPIRAL KW 5, 61600040	
660	90602-3981		1	PLASTIC SPIRAL KW 5, 61600040	
670	344460-0000		1	ROCOL SAPPHIRE ENDURE, ONLY IN BOM	
	344460-0101		*1*	*ROCOL SAPPHIRE ENDURE, 100G TUBE*	
	344460-0702		*1*	*ROCOL SAPPHIRE ENDURE, 700G CARTRIDGE*	
	344460-1003		*1*	*ROCOL SAPPHIRE ENDURE, 1KG CAN*	
G25B1980	90600-7886		1	INDUCTIVE SENSOR, IE 5379	

Machine Type	Group Description	Used-In	Group Number	Page No

TOOL BOX

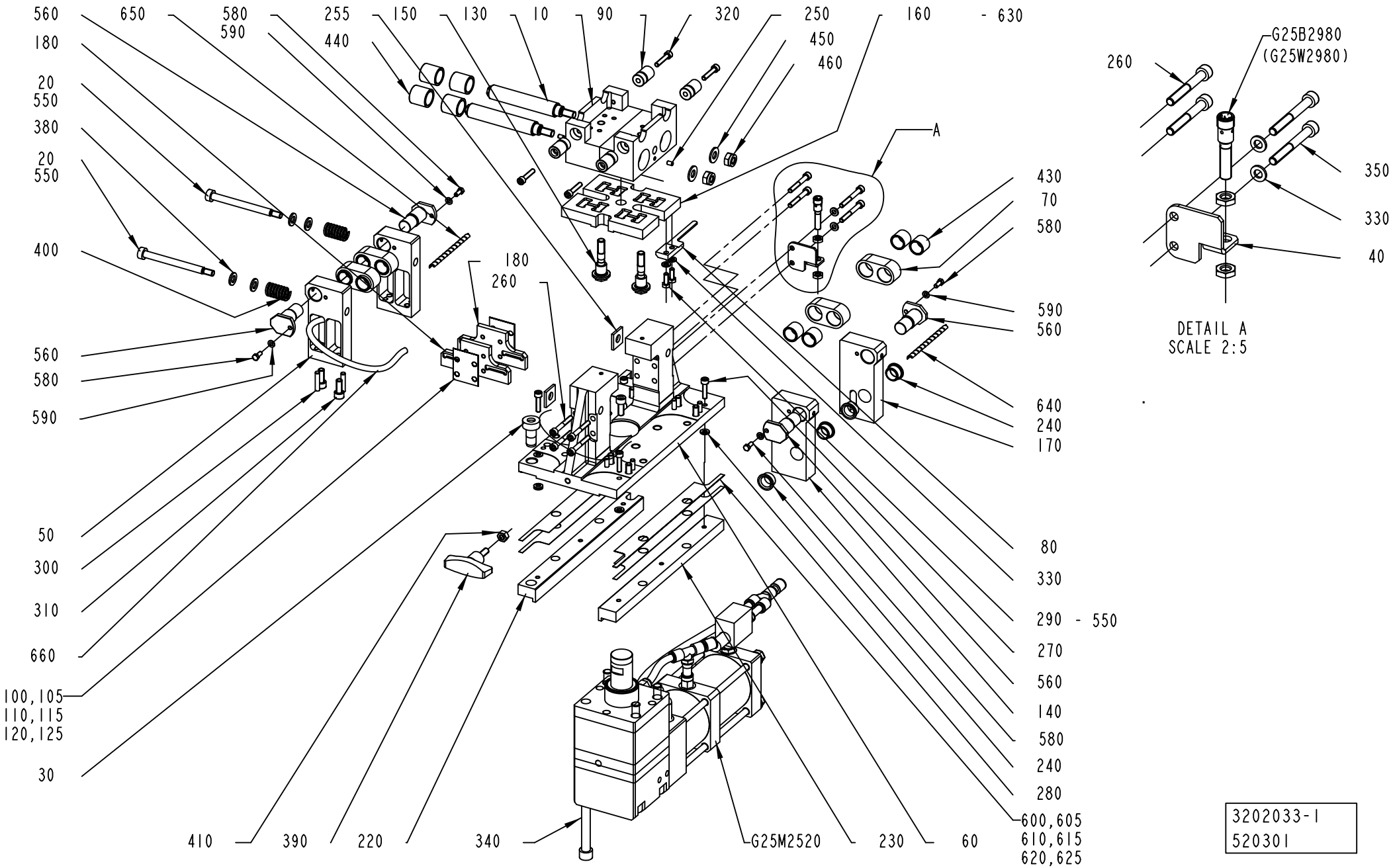
560
180
20
550
380
20
550
400
560
580
590
50
300
310
660
100,105
110,115
120,125
30
650
580
590
255
440
150
130
10
90
320
250
450
460
160
- 630
A
180
260
410
390
220
340
G25M2520
230
60
430
70
580
590
560
640
240
170
80
330
290 - 550
270
560
140
580
240
280
600,605
610,615
620,625
260
G25B2980
(G25W2980)
350
330
40
DETAIL A
SCALE 2:5
3202033-1
520301

ECM: 669414 - 20140701
Group number: 3202033-0100
Assembly Drawing: 3202033-1_1_AA

Pos	Part No	UN	Qty	Description	Page No
DIMC/FLEX					
G25M2520	90600-1145		1	TANDEM CYLINDER, NC20058023S	
010	*90600-1144*		*1*	*VERTICAL CYLINDER, SP-01-58023*	
020	*90600-3981*		*1*	*END BLOCK, G2005812-01*	
030	*315202-0908*		*2*	*O-RING 17,86X2,62 MM*	
040	*90606-1383*		*1*	*SILENCER SINTERED BRONZE G1/2", S/2*	
050	*90606-1380*		*1*	*PLUG M10, TD908XA201001*	
060	*90600-2523*		*1*	*SEAL KIT, HSG - 01 - 23026*	
070	*90606-1382*		*1*	*SILENCER SINTERED BRONZE G3/8", S/3*	
Common Parts					
010	2509592-0000		1	HOLDER	
020	1338149-0000		2	BOLT	
030	1282191-0000		1	BUSHING	
040	3208043-0000		1	BRACKET	
050	1528623-0000		2	BLOCK	
060	2809471-0000		1	BOX	
070	1528800-0000		4	LEVER	
080	3208044-0000		1	LEVER	
090	1528801-0000		4	PIN	
100	1279875-0000		2	SHIM	
105	1296532-0000		2	SHIM	
110	1296533-0000		2	SHIM	
115	1296534-0000		2	SHIM	
120	1296535-0000		2	SHIM	
125	1296536-0000		2	SHIM	
130	2528450-0000		2	ROD	
140	3072135-0000		1	BLOCK	
150	1528542-0000		2	BOLT	
160	2529774-0000		1	PLATE	
170	3198498-0000		1	BLOCK	
180	2529775-0000		2	LACE	
220	1260574-0000		1	PLATE	
230	1260576-0000		1	PLATE	
240	3071724-0000		4	FLANGE BUSHING	
250	312318-0323		2	SET SCREW, CUP END ISO4029 M5X8 A4	
255	1338224-0000		2	SHIM	
260	312115-0379		6	SCREW ISO4762 M6X45 A4 80	
270	312115-0372		4	SCREW ISO4762 M6X25 A4 80	
280	319030-0126		44	DISC SPRING, CONICAL 12,5X6,2X0,7 MM	
290	312105-0368		2	"SCREW, M6S ISO 4017 M6X16 A4 80"	
300	311103-0357		8	PARALLEL PIN ISO 2338 6M6X30 A1	
310	312115-0451		9	SCREW ISO4762 M8X20 A4 80	
320	312115-0374		4	SCREW ISO4762 M6X30 A4 80	
330	315105-0153		4	WASHER PLAIN, 6,4X12X1,5 A4 BRB	
340	2721109-0000		4	SCREW	
350	312115-0380		2	SCREW ISO4762 M6X50 A4 80	
380	315105-0171		4	WASHER PLAIN, 10X18X2 A4 BRB	
390	90458-0850		1	HANDLE, THREADED TAP. NO.WN562-70-M8X24	
400	90335-0248		2	TOOL SPRING, 51420, 9,5/19X31,8	
410	312605-0318		1	HEXAGON NUT, M6M M8 A280	
430	344271-0270		8	BUSHING W/O FLANGE 18/22X18 MM	
440	344271-0306		4	BUSHING W/O FLANGE 20/26X25 MM	
450	315105-0173		2	WASHER PLAIN, 10,5X22X2 A4 BRB	
460	312812-0320		2	HEXAGON NUT, NY-LOCK M10 A4 80	
540	90296-0091		1	LUBRICATION GREASE, FLUOLUB 210	
550	90602-4847		1	THREADLOCKER LOCTITE 243, 50ML	
560	2936356-0000		4	PIN	
580	312105-0327		4	"SCREW, M6S ISO 4017 M5X12 A4 80"	
590	315105-0146		4	WASHER PLAIN, 5,3X10X1 A4 BRB	
600	1338165-0000		4	SHIM	
605	1338166-0000		4	SHIM	
610	1338167-0000		4	SHIM	
615	1338168-0000		4	SHIM	
620	1338169-0000		4	SHIM	
625	1338170-0000		4	SHIM	
640	90602-3981		1	PLASTIC SPIRAL KW 5, 61600040	
650	90602-3981		1	PLASTIC SPIRAL KW 5, 61600040	
660	90602-3981		1	PLASTIC SPIRAL KW 5, 61600040	
670	344460-0000		1	ROCOL SAPPHIRE ENDURE, ONLY IN BOM	
	344460-0101		*1*	*ROCOL SAPPHIRE ENDURE, 100G TUBE*	
	344460-0702		*1*	*ROCOL SAPPHIRE ENDURE, 700G CARTRIDGE*	
	344460-1003		*1*	*ROCOL SAPPHIRE ENDURE, 1KG CAN*	
G25B2980	90600-7886		1	INDUCTIVE SENSOR, IE 5379	

Machine Type	Group Description	Used-In	Group Number	Page No

TOOL BOX

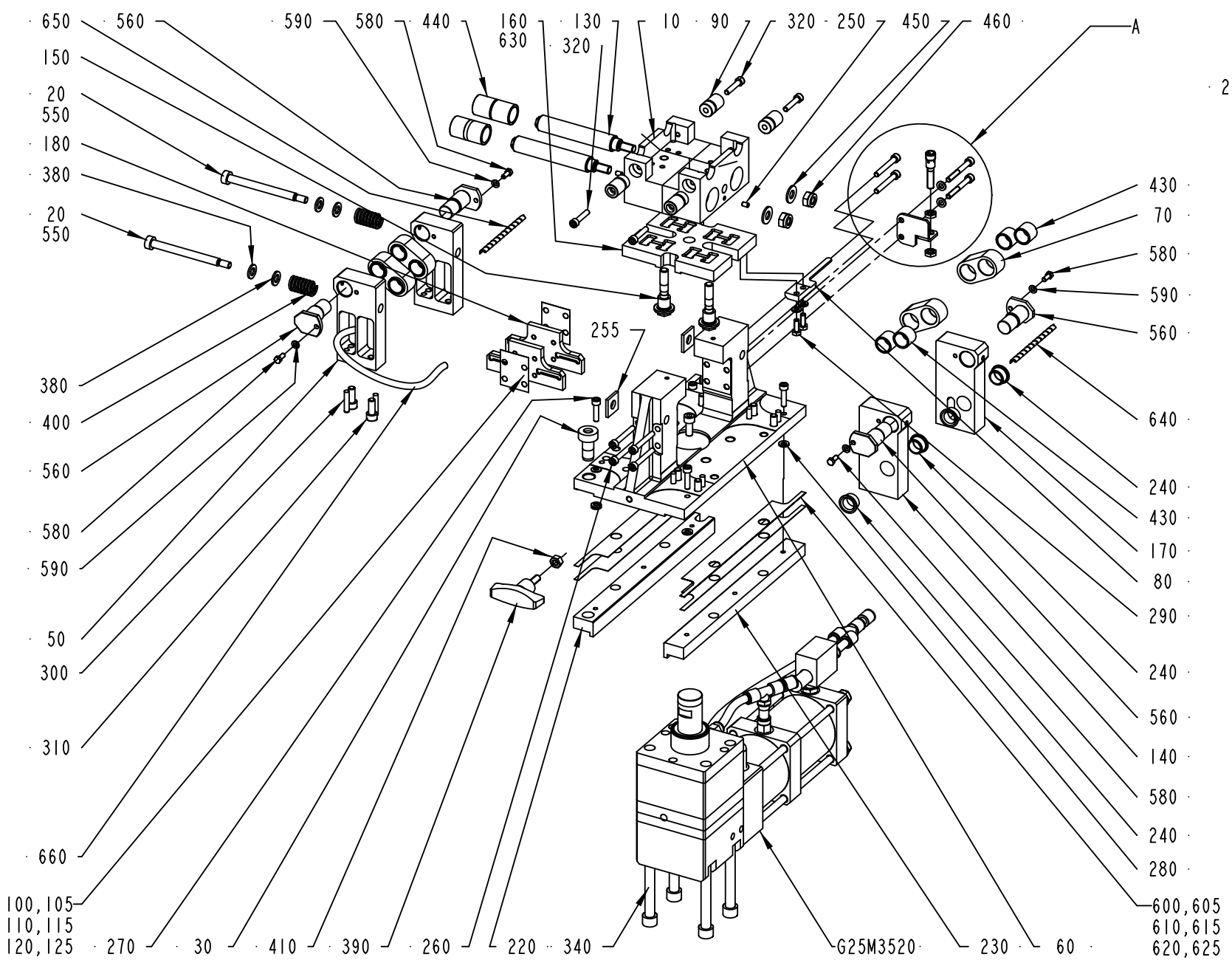

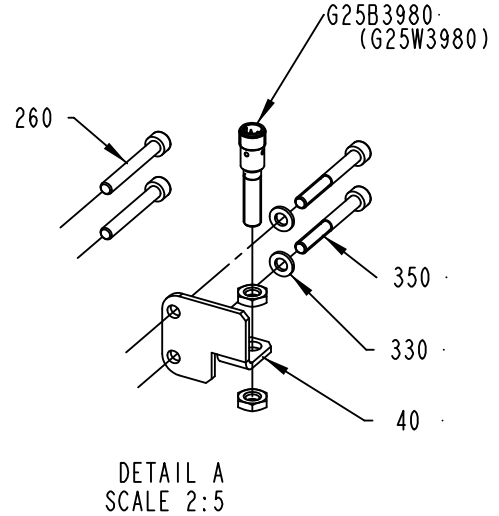

DETAIL A
SCALE 2:5

3202035-1
520301

ECM: 669415 - 20140701
Group number: 3202035-0100
Assembly Drawing: 3202035-1_1_AA

Pos	Part No	UN	Qty	Description	Page No
DIMC/FLEX					
G25M3520	90600-1145		1	TANDEM CYLINDER, NC20058023S	
010	*90600-1144*		*1*	*VERTICAL CYLINDER, SP-01-58023*	
020	*90600-3981*		*1*	*END BLOCK, G2005812-01*	
030	*315202-0908*		*2*	*O-RING 17,86X2,62 MM*	
040	*90606-1383*		*1*	*SILENCER SINTERED BRONZE G1/2", S/2*	
050	*90606-1380*		*1*	*PLUG M10, TD908XA201001*	
060	*90600-2523*		*1*	*SEAL KIT, HSG - 01 - 23026*	
070	*90606-1382*		*1*	*SILENCER SINTERED BRONZE G3/8", S/3*	
Common Parts					
010	2509592-0000		1	HOLDER	
020	1338149-0000		2	BOLT	
030	1282191-0000		1	BUSHING	
040	3208043-0000		1	BRACKET	
050	1528623-0000		2	BLOCK	
060	2809471-0000		1	BOX	
070	1528800-0000		4	LEVER	
080	3208044-0000		1	LEVER	
090	1528801-0000		4	PIN	
100	1279875-0000		2	SHIM	
105	1296532-0000		2	SHIM	
110	1296533-0000		2	SHIM	
115	1296534-0000		2	SHIM	
120	1296535-0000		2	SHIM	
125	1296536-0000		2	SHIM	
130	2528450-0000		2	ROD	
140	3072135-0000		1	BLOCK	
150	1528542-0000		2	BOLT	
160	2529774-0000		1	PLATE	
170	3198498-0000		1	BLOCK	
180	2529775-0000		2	LACE	
220	1260574-0000		1	PLATE	
230	1260576-0000		1	PLATE	
240	3071724-0000		4	FLANGE BUSHING	
250	312318-0323		2	SET SCREW, CUP END ISO4029 M5X8 A4	
255	1338224-0000		2	SHIM	
260	312115-0379		6	SCREW ISO4762 M6X45 A4 80	
270	312115-0372		4	SCREW ISO4762 M6X25 A4 80	
280	319030-0126		44	DISC SPRING, CONICAL 12,5X6,2X0,7 MM	
290	312105-0368		2	"SCREW, M6S ISO 4017 M6X16 A4 80"	
300	311103-0357		8	PARALLEL PIN ISO 2338 6M6X30 A1	
310	312115-0451		9	SCREW ISO4762 M8X20 A4 80	
320	312115-0374		4	SCREW ISO4762 M6X30 A4 80	
330	315105-0153		4	WASHER PLAIN, 6,4X12X1,5 A4 BRB	
340	2721109-0000		4	SCREW	
350	312115-0380		2	SCREW ISO4762 M6X50 A4 80	
380	315105-0171		4	WASHER PLAIN, 10X18X2 A4 BRB	
390	90458-0850		1	HANDLE, THREADED TAP. NO.WN562-70-M8X24	
400	90335-0248		2	TOOL SPRING, 51420, 9,5/19X31,8	
410	312605-0318		1	HEXAGON NUT, M6M M8 A280	
430	344271-0270		8	BUSHING W/O FLANGE 18/22X18 MM	
440	344271-0306		4	BUSHING W/O FLANGE 20/26X25 MM	
450	315105-0173		2	WASHER PLAIN, 10,5X22X2 A4 BRB	
460	312812-0320		2	HEXAGON NUT, NY-LOCK M10 A4 80	
540	90296-0091		1	LUBRICATION GREASE, FLUOLUB 210	
550	90602-4847		1	THREADLOCKER LOCTITE 243, 50ML	
560	2936356-0000		4	PIN	
580	312105-0327		4	"SCREW, M6S ISO 4017 M5X12 A4 80"	
590	315105-0146		4	WASHER PLAIN, 5,3X10X1 A4 BRB	
600	1338165-0000		4	SHIM	
605	1338166-0000		4	SHIM	
610	1338167-0000		4	SHIM	
615	1338168-0000		4	SHIM	
620	1338169-0000		4	SHIM	
625	1338170-0000		4	SHIM	
640	90602-3981		1	PLASTIC SPIRAL KW 5, 61600040	
650	90602-3981		1	PLASTIC SPIRAL KW 5, 61600040	
660	90602-3981		1	PLASTIC SPIRAL KW 5, 61600040	
670	344460-0000		1	ROCOL SAPPHIRE ENDURE, ONLY IN BOM	
	344460-0101		*1*	*ROCOL SAPPHIRE ENDURE, 100G TUBE*	
	344460-0702		*1*	*ROCOL SAPPHIRE ENDURE, 700G CARTRIDGE*	
	344460-1003		*1*	*ROCOL SAPPHIRE ENDURE, 1KG CAN*	
G25B3980	90600-7886		1	INDUCTIVE SENSOR, IE 5379	

Machine Type	Group Description	Used-In	Group Number	Page No

BOX6 - VOLUME KIT

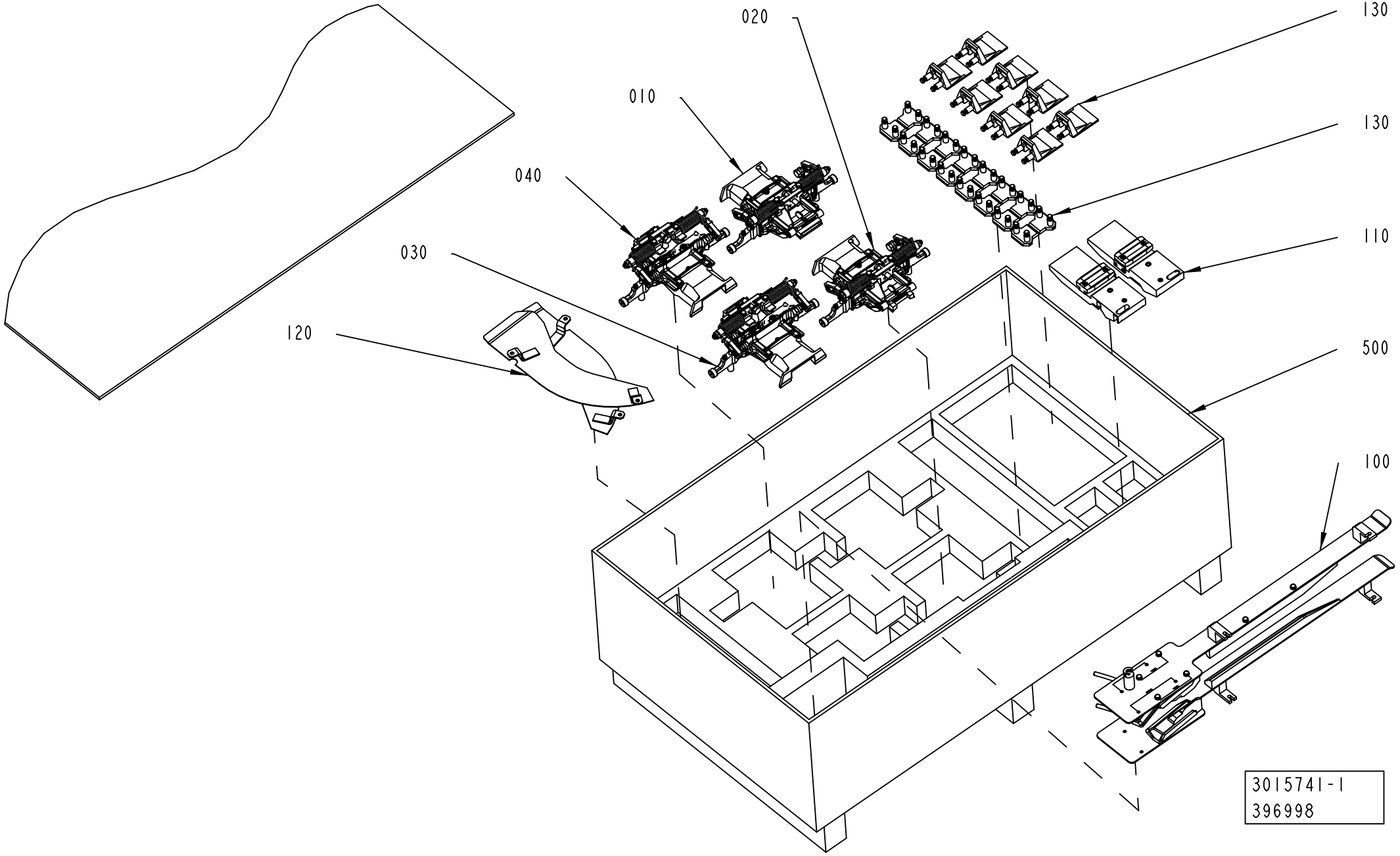

ECM: 397003 - 20100104
Group number: 3015741-0100
Assembly Drawing: 3015741-1_1_AA

This list covers pages from 1-1038 to 1-1041

Pos	Part No	UN	Qty	Description	Page No
TBA (See drawing on page: 1-1038)					
100	2985180-0100		1	BELT INFEED GUIDE	**1-165, 1-167, 1-169**
120	2984516-0100		1	SIDE PLATE	**1-11**
130	2925965-0100		1	BOTTOM	**1-95, 1-97, 1-99, 1-101, 1-103**
TGA (See drawing on page: 1-1040)					
200	2902419-0200		4	BOTTOM	**1-267**
210	2902422-0200		4	BOTTOM	**1-273**
220	2902423-0200		4	BOTTOM	**1-275**
230	2826710-0200		1	FORMING PLATE	**1-279, 1-281**
240	2838217-0200		1	FORMING PLATE	**1-283, 1-285**
250	2902424-0200		1	GUIDE	**1-295, 1-297**
260	2826720-0300		1	FORMING PLATE	**1-305, 1-307**
270	2838218-0300		1	FORMING PLATE	**1-309, 1-311**
TPA (See drawing on page: 1-1038)					
100	2985180-0100		1	BELT INFEED GUIDE	**1-165, 1-167, 1-169**
110	2971903-0100		1	PUSHER	**1-1043**
120	2984516-0100		1	SIDE PLATE	**1-11**
130	2925965-0100		1	BOTTOM	**1-95, 1-97, 1-99, 1-101, 1-103**
Common Parts					
010	2810640-0100		1	SUPPORT FLAP CUTTING	**1-613**
020	2810641-0100		1	SUPPORT FLAP PRESSURE	**1-649**
030	2993980-0100		1	SUPPORT FLAP CUTTING	**1-683**
040	2993981-0100		1	SUPPORT FLAP PRESSURE	**1-697**
500	3016563-0000		1	BOX	

Pos	Part No	UN	Qty	Description	Page No

BOX6 - VOLUME KIT

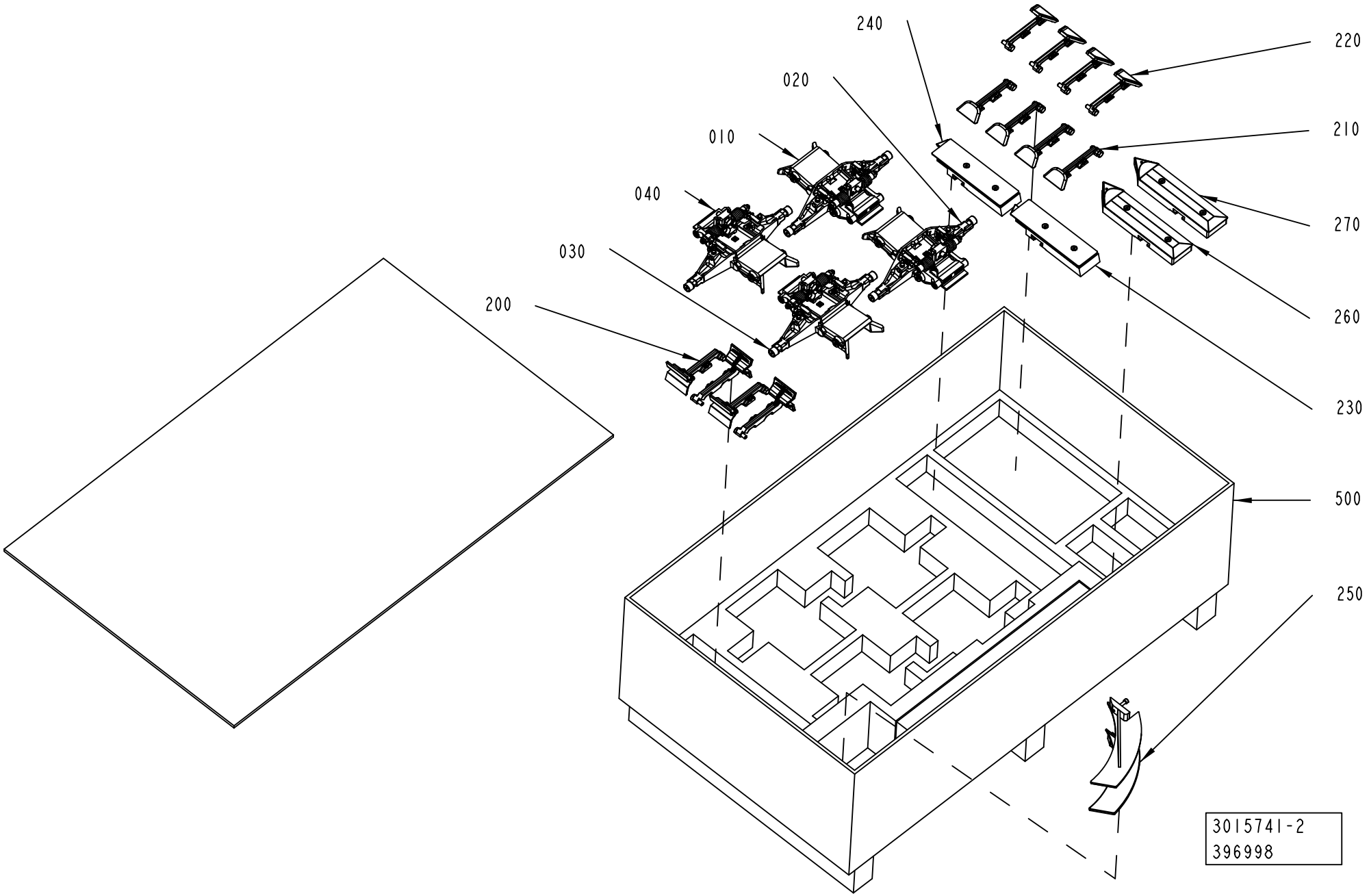

ECM: 397003 - 20100104
Group number: 3015741-0100
Assembly Drawing: 3015741-2_1_AA

This list covers pages from 1-1038 to 1-1041

Pos	Part No	UN	Qty	Description	Page No
TBA (See drawing on page: 1-1038)					
100	2985180-0100		1	BELT INFEED GUIDE	**1-165, 1-167, 1-169**
120	2984516-0100		1	SIDE PLATE	**1-11**
130	2925965-0100		1	BOTTOM	**1-95, 1-97, 1-99, 1-101, 1-103**
TGA (See drawing on page: 1-1040)					
200	2902419-0200		4	BOTTOM	**1-267**
210	2902422-0200		4	BOTTOM	**1-273**
220	2902423-0200		4	BOTTOM	**1-275**
230	2826710-0200		1	FORMING PLATE	**1-279, 1-281**
240	2838217-0200		1	FORMING PLATE	**1-283, 1-285**
250	2902424-0200		1	GUIDE	**1-295, 1-297**
260	2826720-0300		1	FORMING PLATE	**1-305, 1-307**
270	2838218-0300		1	FORMING PLATE	**1-309, 1-311**
TPA (See drawing on page: 1-1038)					
100	2985180-0100		1	BELT INFEED GUIDE	**1-165, 1-167, 1-169**
110	2971903-0100		1	PUSHER	**1-1043**
120	2984516-0100		1	SIDE PLATE	**1-11**
130	2925965-0100		1	BOTTOM	**1-95, 1-97, 1-99, 1-101, 1-103**
Common Parts					
010	2810640-0100		1	SUPPORT FLAP CUTTING	**1-613**
020	2810641-0100		1	SUPPORT FLAP PRESSURE	**1-649**
030	2993980-0100		1	SUPPORT FLAP CUTTING	**1-683**
040	2993981-0100		1	SUPPORT FLAP PRESSURE	**1-697**
500	3016563-0000		1	BOX	

Pos	Part No	UN	Qty	Description	Page No

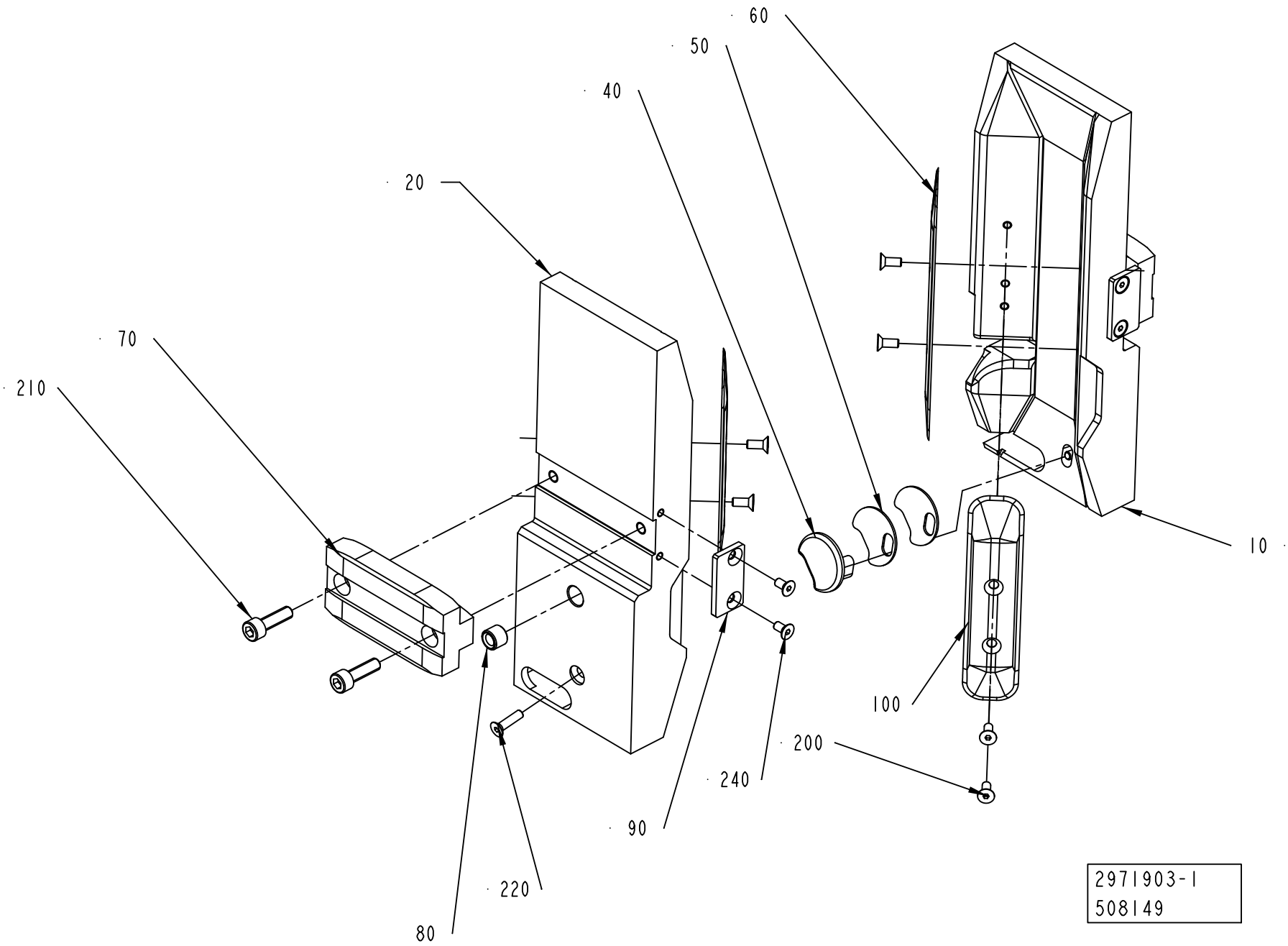
60
50
40
20
70
210
10
100
200
240
90
220
80
2971903-1
508149

ECM: 515995 - 20120101
Group number: 2971903-0100
Assembly Drawing: 2971903-1_1_AC

Pos	Part No	UN	Qty	Description	Page No
TPA 0750SQ (See drawing on page: 1-1042)					
010	2647094-0000		1	PUSHER	
020	2647093-0000		1	PUSHER	
060	3096280-0000		4	VOLUME BULGE	
TPA 1000SQ (See drawing on page: 1-1042)					
010	2647096-0000		1	PUSHER	
020	2647095-0000		1	PUSHER	
060	2996054-0000		2	VOLUME BULGE	
100	2996053-0000		2	VOLUME BULGE	
Common Parts					
040	2647097-0000		2	NAIL	
050	2658247-0000		6	WASHER	
070	2647098-0000		2	BLOCK	
080	2647113-0000		2	BUSHING	
090	2698319-0000		2	BLOCK	
200	312155-0289		8	SCREW DIN 7991 MF6S M4X10 A4 70	
210	312115-0370		4	SCREW ISO4762 M6X20 A4 80	
220	312155-0293		2	SCREW DIN 7991 MF6S M4X16 A4 70	
240	312155-0287		4	SCREW DIN 7991 MF6S M4X8 A4 70	

Pos	Part No	UN	Qty	Description	Page No

NO QUICKCHANGE INTERMEDIATE

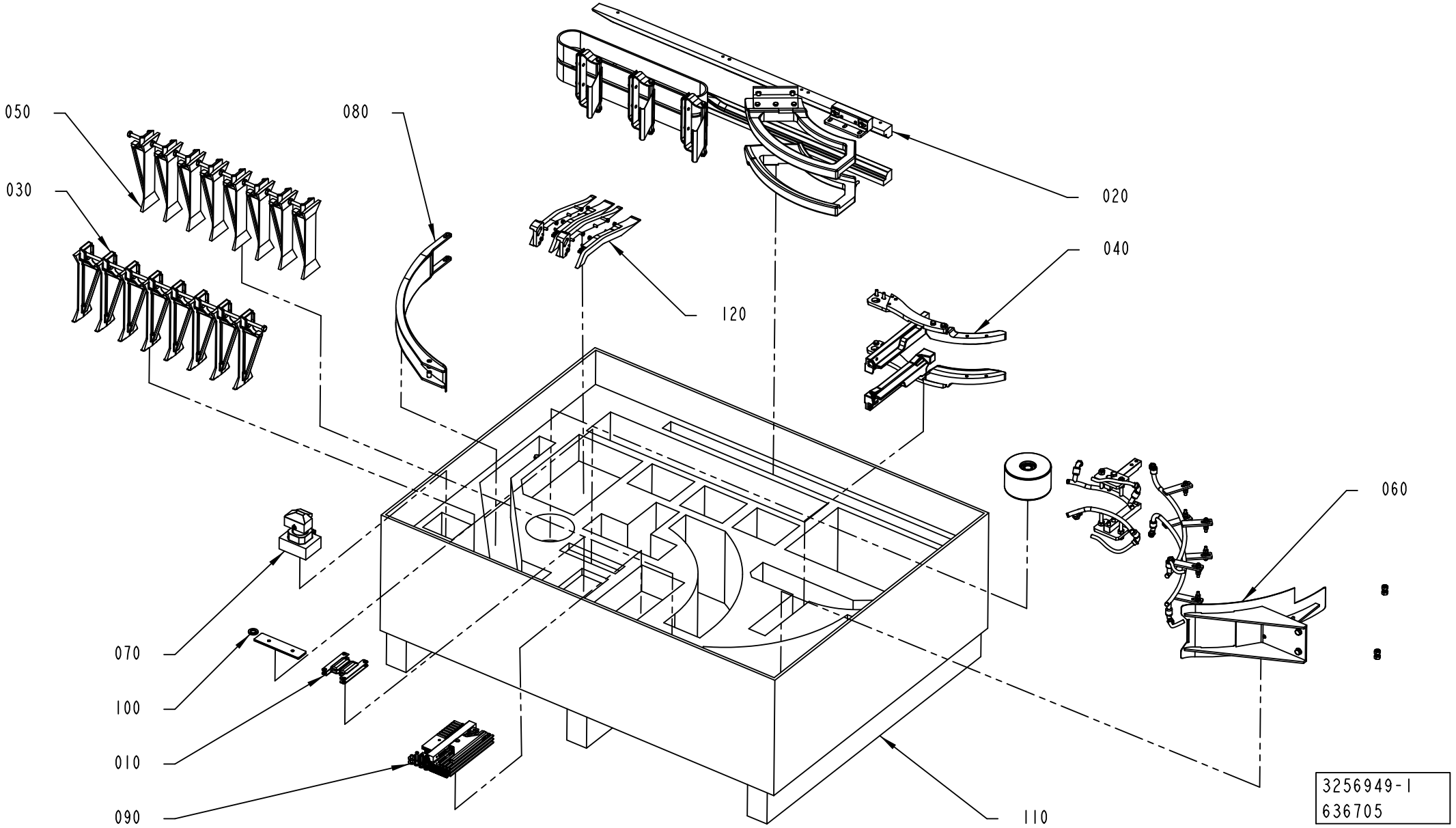

ECM: 637219 - 20140101
Group number: 3256949-0100
Assembly Drawing: 3256949-1_1_AB

Pos	Part No	UN	Qty	Description	Page No
-					
010	3222953-0100		2	VOLUME BULGE	**1-1047**
020	3211686-0100		1	VOLUME CHANGE	**1-259, 1-261**
030	2902418-0200		8	FLAP	**1-269**
040	2963316-0200		1	VOLUME CHANGE	**1-291, 1-293**
050	2902421-0200		8	FLAP	**1-277**
060	3218554-0100		1	VOLUME CHANGE	**1-301, 1-303**
070	2963317-0100		1	PRESSURE UNIT	**1-313**
080	3264360-0100		1	CHUTE	**1-1049**
090	2979548-0100		1	START-UP KIT JS	**1-743, 1-745, 1-747**
100	2980903-0100		1	START-UP KIT FF	**1-245**
110	3256950-0000		1	BOX	
120	3321652-0100		1	VOLUME CAM **1-721, 1-723, 1-725, 1-727, 1-729, 1-731, 1-733**	**1-735**

Pos	Part No	UN	Qty	Description	Page No

VOLUME BULGE

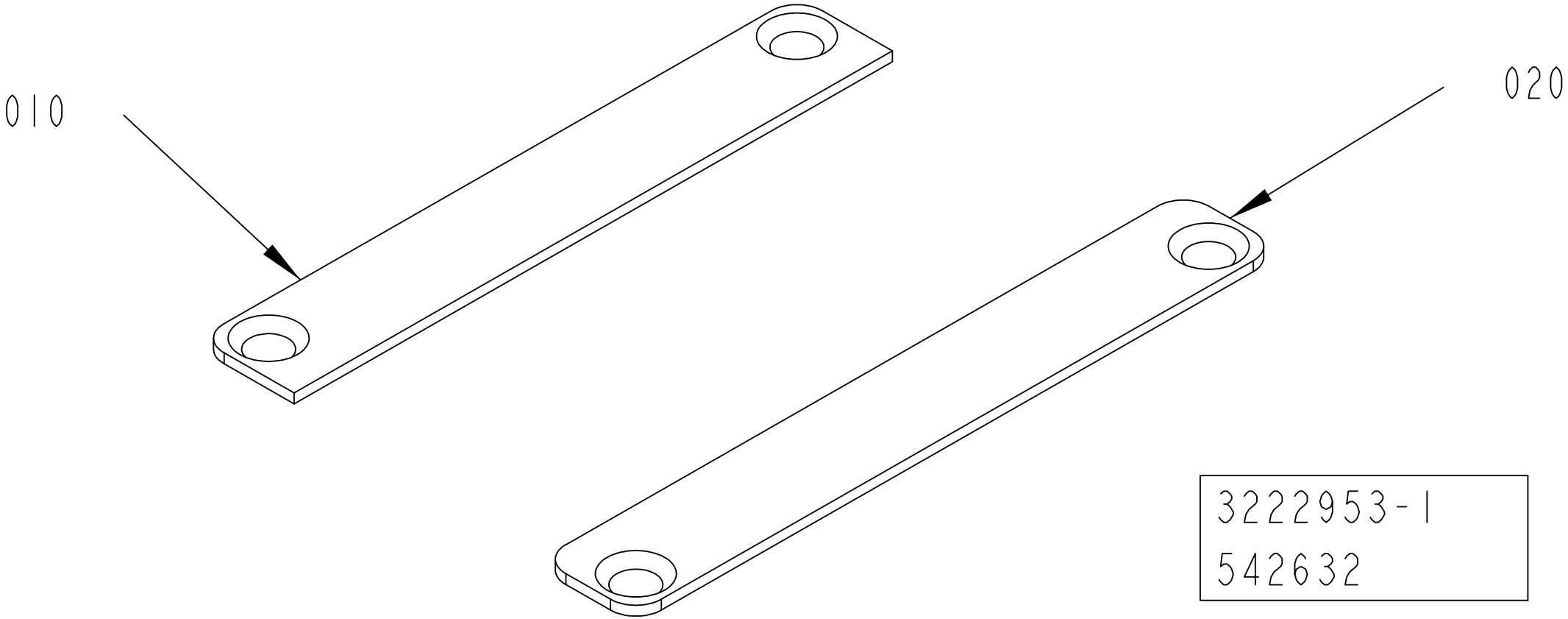

ECM: 542632 - 20121002
Group number: 3222953-0100
Assembly Drawing: 3222953-1_1_AA

Pos	Part No	UN	Qty	Description	Page No
TGA 1000CR, TGA 1000LF					
010	2503688-0000		1	VOLUME BULGE	
020	3213759-0000		1	VOLUME BULGE	
TGA 1000SQ, TGA 0750SQ, TGA 0500SQ					
010	3213757-0000		1	PLATE	
020	3213760-0000		1	VOLUME BULGE	

Pos	Part No	UN	Qty	Description	Page No

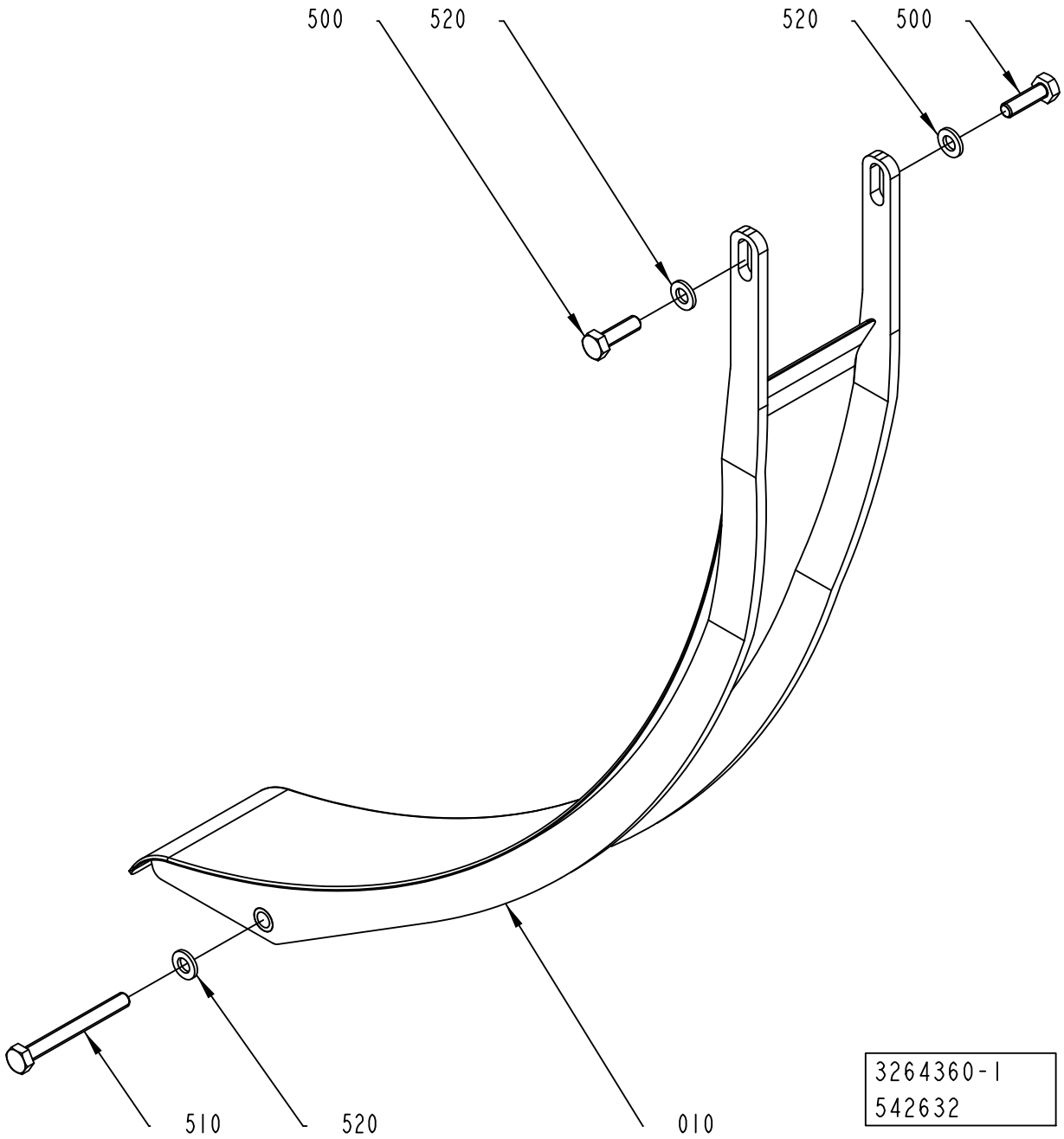
500
520
520
500
510
520
010
3264360-1
542632

ECM: 576163 - 20121002
Group number: 3264360-0100
Assembly Drawing: 3264360-1_1_AA

Pos	Part No	UN	Qty	Description	Page No
TGA 1000CR, TGA 1000LF					
010	3246439-0000		1	GUIDE	
TGA 1000SQ, TGA 0750SQ, TGA 0500SQ					
010	3160995-0000		1	GUIDE	
TGA 1500SQ					
010	3218963-0000		1	GUIDE	
Common Parts					
500	312105-0370		2	SCREW, M6S ISO 4017 M6X20 A4 80	
510	312109-0381		1	SCREW, M6S ISO 4017 M6X55 A4 80	
520	315105-0153		3	WASHER PLAIN, 6,4X12X1,5 A4 BRB	

Pos	Part No	UN	Qty	Description	Page No

Tetra Pak®

SPC
Spare Parts Catalogue

Part No	Description	Page No
List - 648597-0400		1-3
2033-0011	WASHER	1-347, 1-349, 1-353, 1-355, 1-371, 1-407, 1-409, 1-415, 1-417, 1-419, 1-435, 1-437, 1-439, 1-441, 1-471, 1-473, 1-475, 1-477
2033-0016	WASHER	1-915
2033-0021	WASHER	1-407, 1-409
12242-0003	GASKET 48X38X5,5	1-775, 1-777
14600-0000	HOOD	1-333, 1-335, 1-337, 1-339
19972-0000	WASHER	1-641
22462-0000	SHAFT	1-573, 1-575, 1-605, 1-607
22463-0000	ROLL	1-573, 1-575, 1-605, 1-607
24928-0000	LOCKING RUBBER	1-333, 1-335, 1-337, 1-339, 1-375, 1-377
28509-0000	WASHER	1-215, 1-541, 1-543, 1-545, 1-547, 1-589, 1-591, 1-593, 1-595, 1-743, 1-745, 1-747
32079-0000	WASHER	1-547, 1-595
32544-0000	INSULATION NUT	1-215, 1-541, 1-543, 1-545, 1-547, 1-589, 1-591, 1-593, 1-595, 1-743, 1-745, 1-747
32644-0000	WASHER	1-215
67379-0101	TRANSFORMER	1-547, 1-595
67379-0106	TRANSFORMER	1-547, 1-595
67379-0115	TRANSFORMER	1-547, 1-595
67379-0216	TRANSFORMER	1-215
67379-0224	TRANSFORMER	1-215
67379-0249	TRANSFORMER	1-547, 1-595
67379-0262	TRANSFORMER	1-547, 1-595
67379-0268	TRANSFORMER	1-547, 1-595
90005-0082	WASHER PLAIN ROUND 4,3(M4)/12,H=1	1-615, 1-643, 1-647, 1-651, 1-679, 1-693, 1-707
90005-0094	GASKET C 19438-EPR	1-179, 1-181
90028-0020	CONE TUBE 2,5MM	1-141, 1-143, 1-145, 1-147, 1-149, 1-151, 1-617, 1-619, 1-621, 1-623, 1-625, 1-627, 1-629, 1-631, 1-633, 1-653, 1-655, 1-657, 1-659, 1-661, 1-663, 1-665, 1-667, 1-669, 1-685, 1-687, 1-689, 1-691, 1-699, 1-701, 1-703, 1-705
90028-0021	CONE TUBE 4 MM	1-141, 1-143, 1-145, 1-147, 1-149, 1-151
90028-0022	CONE TUBE 6 MM	1-141, 1-143, 1-145, 1-147, 1-149, 1-151
90030-0098	PROGRESSIVE RING 8	1-509
90030-0336	CONN. STRAIGHT, 316L-12M-BVCO-3	1-383
90039-0022	TACKLE BLOCK, NO. BV-225/500	1-373
90042-0248	SOLENOID VALVE OFFICIENE DI ENSINO	1-883, 1-885, 1-887, 1-889
90044-0194	INDUCTIVE SENSOR, IN 5329	1-121, 1-123, 1-125, 1-127, 1-179, 1-181
90051-0025	KNOB, EXTERNAL THREAD. NO. 8306-0200	1-891, 1-925
90051-0059	KNOB, EXTERNAL THREAD. NO. 8308-1550	1-395
90051-0090	KNOB, EXTERNAL THREAD. NO. WN 450GS	1-201
90055-0100	Y-CONNECTION, 6-6	1-753, 1-757
90055-0189	HOSE,NIPPLE,REDUCER,TUBE, 6/8M	1-203
90055-0204	ELBOW WITH TAILPIECE 8/8 MM LONG	1-879
90055-0238	HOSE,NIPPLE,REDUCER,TUBE, 4/8MM	1-939
90062-0061	LOCK WASHER NORD-LOCK,6,5/10,8, T=2,2	1-13, 1-15, 1-17, 1-19, 1-21, 1-183, 1-185, 1-263, 1-775, 1-777, 1-989, 1-991
90087-0019	PLUG M10X1 STAINLESS	1-141, 1-143, 1-145, 1-147, 1-149, 1-151
90091-0074	WEAR RING 35X40X5,3 MM	1-539
90091-0237	ROD SEAL GLYD RING 20X27,5X3 MM	1-383, 1-385
90091-0238	WEAR RING 20X22X10 MM	1-383, 1-385
90091-0266	SEAL RING 10,4X16,3X2,5 MM	1-381
90091-0297	RADIAL SEAL 35X47X7 MM DUST LIP	1-23, 1-25, 1-27, 1-121, 1-123, 1-125, 1-127, 1-179, 1-181
90091-0298	RADIAL SEAL 45X65X8 MM DUST LIP	1-121, 1-123, 1-125, 1-127
90091-0299	RADIAL SEAL 30X52X7 MM DUST LIP	1-25, 1-27
90091-0304	RADIAL SEAL 45X65X8 MM DUST LIP	1-385
90091-0335	PISTON SEAL GLYD RING 62,5X70X3,2 MM	1-385
90091-0359	X-SEAL 36,17X2,62 MM	1-539
90091-0360	BACK-UP RING 37,5X1,4 MM	1-539
90091-0362	SCRAPER, EXCLUDER 18X22,8X3,7 MM	1-539
90091-0364	ROD SEAL, STEPSEAL 18X25,3X3,2 MM	1-539
90091-0366	WEAR RING 18X23X3,9 MM	1-539
90091-0368	WEAR RING 30X35X5,3 MM	1-539
90091-0380	SCRAPER, EXCLUDER 20X24,8X3,7 MM	1-157
90091-0408	BEARING SEAL 70X78X5 MM	1-159
90091-0428	PISTON SEAL GLYD RING T 27,5X34,5X3,2 MM	1-539
90091-0440	RADIAL SEAL 22X40X7 MM DUST LIP	1-179, 1-181
90092-0052	METERING VALVE 10 MM3	1-141, 1-143, 1-145, 1-147, 1-149, 1-151
90092-0054	METERING VALVE 50 MM3	1-141, 1-143, 1-145, 1-147, 1-149, 1-151
90099-0027	HEXAGON NUT, M14, DIN936	1-1001
90099-0205	NUT PREV.TORQ.HEX.FULL METAL M6 A2	1-165, 1-167, 1-169
90110-0095	CONNECTOR, PLUG SOCKET, MSSD-C-4P	1-883, 1-885, 1-887, 1-889
90115-0020	ROD END, ID=8 MM, M8X1,25	1-37, 1-39
90115-0021	ROD END, ID=8 MM, M8X1,25 LH	1-37, 1-39
90115-0137	ROD END, ID=6 MM, M6X1	1-67, 1-69, 1-71, 1-73
90115-0139	ROD END, ID=8 MM, M8X1,25	1-29, 1-31, 1-33
90115-0180	ROD END, ID=8 MM, M8X1,25 LH	1-29, 1-31, 1-33
90115-0181	ROD END, ID=10 MM M10X1,5	1-25, 1-27, 1-45
90115-0182	ROD END, ID=10 MM M10X1,5LH	1-25, 1-27, 1-45
90134-0030	SLEEVE FOR PLASTIC TUBE	1-141, 1-143, 1-145, 1-147, 1-149, 1-151
90134-0031	SLEEVE FOR PLASTIC TUBE	1-141, 1-143, 1-145, 1-147, 1-149, 1-151
90134-0039	BUSHING VALVE CONNECTION 2,5 MM	1-141, 1-143, 1-145, 1-147, 1-149, 1-151
90134-0040	BUSHING VALVE CONNECTION 4 MM	1-141, 1-143, 1-145, 1-147, 1-149, 1-151
90134-0052	PLUG DOSING BLOCK	1-141, 1-143, 1-145, 1-147, 1-149, 1-151
90134-0054	BLOCK CONNECTION M10X1	1-141, 1-143, 1-145, 1-147, 1-149, 1-151
90134-0055	BUSHING/NUT INLET/OUTLET 6 MM	1-141, 1-143, 1-145, 1-147, 1-149, 1-151
90134-0058	CONNECTION	1-29, 1-41, 1-43, 1-153, 1-155, 1-157, 1-159, 1-161, 1-287, 1-289, 1-313, 1-529

Part No	Description	Page No
		1-531, 1-533, 1-549, 1-551, 1-553, 1-579, 1-581, 1-583, 1-597, 1-599, 1-601
90134-0063	BUSHING/NUT M8X1, D=2,5 MM	1-617, 1-619, 1-621, 1-623, 1-625, 1-627, 1-629, 1-631, 1-633 1-653, 1-655, 1-657, 1-659, 1-661, 1-663, 1-665, 1-667, 1-669, 1-685, 1-687, 1-689, 1-691, 1-699 1-701, 1-703, 1-705
90134-0065	CONNECTION M6 TUBE 2,5 MM	1-41, 1-43
90134-0068	CONNECTION	1-31, 1-33, 1-159
90141-0015	RETAINING RING FOR SHAFT DIN 471 8 SS	1-37, 1-39, 1-395, 1-539, 1-975
90141-0016	RETAINING RING FOR SHAFT DIN 471 10 SS	1-37, 1-39, 1-505, 1-507, 1-775, 1-777, 1-811 1-819, 1-825, 1-835, 1-923
90141-0019	RETAINING RING FOR BORE DIN 472 50 SS	1-23, 1-179, 1-181
90141-0020	RETAINING RING FOR BORE DIN 472 42 SS	1-823, 1-975
90141-0029	CIRCLIP	1-573, 1-575, 1-605, 1-607
90142-0005	HOSE	1-909, 1-911, 1-913
90152-0050	HOSE, SPIRAL CONDUIT, 20X13, UL 1313	1-883, 1-885, 1-887, 1-889
90153-0015	ADHESIVE LOCTITE IS 496/CYANOLOT 303	1-563, 1-565, 1-567, 1-569
90153-0023	ADHESIVE, SILICON 251470 TUB 90CC(UN1993	1-789, 1-791, 1-797
90157-0021	LOCKING FLUID LOCTITE 270, 50ML	1-713, 1-715, 1-717
90157-0035	LOCKING FLUID LOCTITE TYPE 641, 50ML	1-201, 1-977
90165-0056	PIPE CLIP FOR TUBE, 4 MM	1-121, 1-123, 1-125, 1-127, 1-529, 1-531, 1-533, 1-549, 1-551 1-553, 1-579, 1-581, 1-583, 1-597, 1-599, 1-601
90165-0057	PIPE CLIP FOR TUBE D=6 MM	1-179, 1-181
90166-0081	TUBE 6 MM PA BLUE	1-753
90166-0108	TUBE 6 MM PA TRANSP.	1-141, 1-143, 1-145, 1-147, 1-149, 1-151
90166-0109	TUBE 4 MM PA TRANSP.	1-141, 1-143, 1-145, 1-147, 1-149, 1-151, 1-159
90166-0118	TUBE 8 MM PA BLACK	1-57, 1-59, 1-61, 1-63, 1-75, 1-77, 1-301, 1-303, 1-325
90166-0141	TUBE 10 MM PA TRANSP.	1-909, 1-911, 1-913
90166-0143	TUBE 2,5 MM PA TRANSP.	1-141, 1-143, 1-145, 1-147, 1-149, 1-151, 1-617, 1-619, 1-621 1-623, 1-653, 1-655, 1-657, 1-659, 1-685, 1-687, 1-689, 1-691, 1-699, 1-701, 1-703, 1-705
90187-0149	THROTTLE VALVE, G1/4, G1/4, MALE	1-883, 1-885, 1-887, 1-889
90194-0302	MARKING LABELS REBUILDING KIT	1-837
90201-0450	PLUG, EXT THREAD HEX SOCKET VSCH-R 1/8"/	1-893
90207-0363	GASKET 75X85X1,8 MM 3" FDA 3-A	1-381
90207-0365	GASKET 53X63X1,8 MM 2,5" FDA 3-A	1-381
90208-0080	CLAMPING ELEMENT, 25X34 L=25	1-819
90214-0219	CYL.ROLLER BEARING, 17X40X12 MM	1-179, 1-181
90214-0229	BALL BEARING 65/85X10	1-159
90214-0303	SEALING RING, 18,6X35X2 MM	1-769, 1-771, 1-773, 1-799, 1-987, 1-993, 1-995, 1-997, 1-1003, 1-1005
90224-0314	DISTRIBUTOR BLOCK, FR-4-1/8-B	1-893, 1-895
90224-0329	ELBOW 90 COUPL., EXT. THREAD 6/4-G1/4"	1-883, 1-885, 1-887, 1-889, 1-897
90230-0027	NON-RETURN VALVE QJ 8355-1/4"	1-179, 1-181
90232-0325	FIBRE, E32-DC200	1-201
90235-0297	VALVE 3/2, OPEN/CLOSED	1-833, 1-1019, 1-1021, 1-1025, 1-1027, 1-1029, 1-1031
90235-0846	THROTTLE CHECK VALVE G1/8", MANUAL, 6	1-243
90239-0489	ROD END, CLEVIS WITH AXLE M6X1,25	1-775, 1-777
90239-0532	ROD END, CLEVIS WITH AXLE M8X1,25	1-395
90240-0153	PLAIN BEAR,SELF ADJ.SPHER.20X35X16 MM	1-821
90240-0172	FLANGE BUSHING, 8X12X10 MM	1-347, 1-349, 1-353, 1-355, 1-371, 1-407, 1-409, 1-415 1-417, 1-419, 1-435, 1-437, 1-439, 1-441, 1-471, 1-473, 1-475, 1-477
90240-0180	FLANGE BUSHING 10X14X15MM	1-737, 1-739
90240-0221	FLANGE BUSHING, 20X25X14 MM	1-821, 1-823, 1-975
90240-0260	FLANGE BUSHING, IGLIDUR X 8X10X9	1-615, 1-643, 1-647, 1-651, 1-679, 1-693, 1-707
90240-0289	FLANGE BUSHING, IGLIDUR X 10X12X6	1-615, 1-643, 1-647, 1-651, 1-679, 1-693, 1-707
90242-0270	O-RING 82,27X1,78 MM	1-159
90242-0271	O-RING 63,22X1,78 MM	1-121, 1-123, 1-125, 1-127
90243-0112	FLOW METER	1-883, 1-885, 1-887, 1-889
90258-0060	COTTER	1-251
90286-0013	GREASE NIPPLE STRAIGHT, H1 M6X1 2346	1-23, 1-179, 1-181, 1-243, 1-265, 1-271
90287-0112	SCREW SPRINGLOAD. SLOTTED HEAD M8X16	1-925
90287-0148	SCREW SPRINGLOAD. SLOTTED HEAD M5X12	1-513, 1-515, 1-517
90287-0154	SET SCREW, DOGPOINT M6X10 A4	1-287, 1-289, 1-975
90287-0159	SET SCREW, DOGPOINT M6X16 A4	1-721, 1-723
90287-0163	SCREW SPRINGLOAD. SLOTTED HEAD M6X14	1-975
90287-0196	THREADED ROD MHGS M8 SS	1-61, 1-63
90287-0199	SCREW, M6S ISO 4017 M5X6 A4 80	1-783, 1-785
90287-0322	SCREW M6S M14X40 70	1-373
90287-0347	BOLT	1-373
90288-0314	CONNECTION LINK, SIMPLEX 3/8", SS	1-841
90288-0315	CONNECTING LINK, SIMPLEX 3/8", SS	1-841
90296-0009	SILICONE GREASE DOW CORNING 150 GR.	1-375, 1-377
90296-0051	HEAT SINK COMPOUND 340	1-909, 1-911, 1-913
90296-0091	LUBRICATION GREASE, FLUOLUB 210	1-769, 1-771, 1-773, 1-799, 1-987, 1-993, 1-995 1-997, 1-1003, 1-1005, 1-1033, 1-1035, 1-1037
90326-0092	CARTRIDGE HEATER 150W 230V, C2G-1057	1-909, 1-911, 1-913
90328-0029	SILENCER, M5	1-1019, 1-1021, 1-1025, 1-1027, 1-1029, 1-1031
90330-0037	PLUG, G1/2EXT, G1/2	1-833, 1-1019, 1-1021, 1-1025, 1-1027, 1-1029, 1-1031
90335-0024	COMP. SPRING, 22250, 1,25X13,75X27	1-513, 1-515, 1-517, 1-525
90335-0025	COMP. SPRING, 22010, 1X11X26	1-401
90335-0036	COMP. SPRING, 22450, 1,6X14,1X24	1-67, 1-69, 1-71, 1-73
90335-0089	TENSION SPRING, 41490, 0,9X10X23	1-767
90335-0248	TOOL SPRING, 51420, 9,5/19X31,8	1-1033, 1-1035, 1-1037
90457-0860	SET SCREW, CUP END ISO4029 M4X16 A4	1-201
90457-0922	ELBOW PIPE JOINT, EXT.THREAD, D=6MM M5	1-25, 1-27, 1-189, 1-191, 1-203
90458-0058	SCREW M5X60 A280	1-547, 1-595
90458-0073	WASHER 6,4/30, H=1,5	1-179, 1-181

Part No	Description	Page No
90458-0305	CABLE GLAND, M12X1,5, 5311 1000	1-287, 1-289
90458-0306	CABLE GLAND, M16X1,5, 5311 1010	1-883, 1-885, 1-887, 1-889
90458-0314	CABLE GLAND, M16X1,5, 5311 1110	1-201
90458-0315	CABLE GLAND, M20X1,5, 5311 1120	1-909, 1-911, 1-913
90458-0323	NUT, M20X1,5	1-883, 1-885, 1-887, 1-889
90458-0353	BUSHING, IGLIDUR X 8X10X8	1-615, 1-643, 1-647, 1-651, 1-679, 1-693, 1-707
90458-0407	CABLE GLAND, VK 22553Y	1-757
90458-0413	CABLE FITTING, VK 22052YUL11	1-883, 1-885, 1-887, 1-889
90458-0602	CONTRAST SCANNER, KT15W-P2213S02	1-499, 1-925
90458-0850	HANDLE, THREADED TAP. NO.WN562-70-M8X24	1-1019, 1-1021, 1-1025, 1-1027, 1-1029, 1-1031, 1-1033, 1-1035, 1-1037
90458-1194	VALVE, 5/2 MONOSTABLE	1-941, 1-943, 1-945
90458-1215	COVER PLATE, EMPTY VALVE POSITION	1-941, 1-943, 1-945
90458-1404	FLANGE BUSHING, 12X16X16 MM	1-121, 1-123, 1-125, 1-127, 1-129, 1-131, 1-135, 1-137, 1-139
90458-1704	BALL BEARING 15/35X11	1-769, 1-771, 1-773, 1-799, 1-987, 1-993, 1-995, 1-997, 1-1003, 1-1005
90458-2163	HANDLE, OVAL, THREADED BUSH, M8 29X69 MM	1-975
90458-2401	PARALLEL KEY W. ROUND ENDS 6X6X120 MM	1-925
90458-2794	SAFETY SENSOR, EVA 20-046-00	1-791, 1-797
90458-2920	BUSHING INSERT, JUM-01-16	1-243
90458-2956	ELBOW PIPE JOINT, EXT.THREAD, D=6MM-G1/8	1-395
90458-2958	ELBOW PIPE JOINT, EXT.THREAD, D=8MM-G1/4	1-879
90458-2961	ELBOW PIPE JOINT, EXT.THREAD,D=10MM-G1/4	1-909, 1-911, 1-913
90459-0221	TUBE, 6 MM PE BLACK	1-883, 1-885, 1-887, 1-889, 1-893
90459-0577	TUBE 15MM PA BLACK	1-935
90459-0579	ELBOW PIPE JOINT 15 MM	1-935
90459-0698	PLUG G1/8 EXT., CDVI5.0-B-G1/8	1-895, 1-941, 1-943, 1-945
90459-0729	HEXAGONAL PROTECTIVE CAP GPN 1000	1-333, 1-335, 1-337, 1-339
90459-0969	COMP. SPRING, 22430, 1,6X11,6X58,5	1-91, 1-93, 1-115
90459-1314	O-RING 491X3 MM	1-789
90459-1650	SEALING RING, VARILIP 30X40X7 MM	1-987
90459-1696	ROD END, CLEVIS WITH AXLE M10X1,25	1-819
90459-1728	SET SCREW, CUP END ISO4029 M6X45 A4	1-775, 1-777
90459-1861	X-SEAL 6,07X2,62 MM	1-529, 1-531, 1-533, 1-555, 1-579, 1-581, 1-583
90459-1906	SHOULDER SCREW, 6X10/M5 SS	1-625, 1-627, 1-629, 1-631, 1-633, 1-661, 1-663, 1-665, 1-667, 1-669
90459-2130	TAPE, ADHESIVE SI TAPE MON3154535033CL	1-215
90459-2145	BACK-UP RING 43,5X1,4 MM	1-539
90459-2146	X-SEAL 42,52X2,62 MM	1-539
90459-2173	PISTON SEAL GLYD RING T 32,5X40X3,2 MM	1-539
90459-2258	PISTON SEAL ROTOGLYD RING 25,1X30X2,2 MM	1-573, 1-575, 1-605, 1-607
90459-2363	O-RING MATERIAL 1,78 MM LENGHT 600 MM	1-563, 1-565, 1-567, 1-569
90459-2409	INDUCTIVE SENSOR, IN 5230	1-775, 1-777, 1-975
90459-2536	SERCOS CABLE 0.1M, 2090-SCEP0-1	1-831
90459-2551	CONNECTOR, MOTOR FEEDBACK 15 PIN MALE	1-807, 1-817
90459-2650	SWIVEL FLANGE 32	1-775, 1-777
90459-3080	HOOD, HAN-BRID3A, 19 20 003 1443	1-909, 1-911, 1-913
90459-3250	SENSOR CABLE, DOP-1205-G15M	1-499, 1-505
90459-3388	SCRAPER 10X16X4,7 MM	1-549, 1-551, 1-553, 1-597, 1-599, 1-601
90459-3528	ONE WAY FLOW CONTROL, G1/8, MANUAL	1-775, 1-777
90459-3670	HOOD, HAN3A, 19 20 003 1440	1-201
90459-3940	LEVER, GN 612-6-M16X1.5-A-NI	1-129, 1-131, 1-135, 1-137, 1-139
90459-4142	SAFETY SENSOR, ADAM M12, 20-051-00	1-791, 1-797
90459-4164	SAFETY SCREW, 2TLA020053R4200	1-791, 1-797
90459-4165	SAFETY SCREW, SM4X25	1-791, 1-797
90459-4179	GASKET 30,5X42X4 MM FDA	1-375, 1-377
90459-4252	CABLE M12-C101, 20-056-10	1-791, 1-797
90459-4735	SCREW, M6S ISO 4017 M8X10 A4 80	1-315, 1-317
90459-5193	SLIM POW. RAIL, KINETIX, 6 AX, 2094-PRS6	1-831
90459-5268	DOUBLE ACTING, MINI-ISO, CYL. 25-130	1-243
90459-5581	TENSION SPRING 1,2X23X8,5	1-801
90459-5652	LUBRICATION BLOCK, HFS4666	1-141, 1-143, 1-145, 1-147, 1-149, 1-151
90459-5828	CLAMPING ELEMENT WITH SLEEVE, 45X54 MM	1-81
90459-5968	WEAR RING 19X22X3,2 MM	1-559
90459-6019	PISTON SEAL STEPSEAL 11,5X19X3,2 MM	1-559, 1-561
90459-6022	PISTON SEAL STEPSEAL 14,5X22X3,2 MM	1-559
90459-6023	PISTON SEAL 13,5X19X3,2 MM	1-559, 1-561
90459-6024	PISTON SEAL 16X22X3,2 MM	1-559
90459-6026	WEAR RING 16X19X3,2 MM	1-559, 1-561
90459-6064	PUSH IN Y-CONNECTOR QSY-12-10	1-833
90459-6253	CYL VERT.63-23/HOR. 80-38, NC20093026S	1-1019, 1-1021, 1-1025, 1-1027, 1-1029, 1-1031
90459-6275	TOOL SPRING, 51440, 9.5/19.5X31,8	1-1019, 1-1021, 1-1025, 1-1027, 1-1029, 1-1031
90459-6335	BALL BEARING 8/22X7	1-767, 1-801
90459-6378	SET SCREW, DOGPOINT ISO4028 M6X30 A2 80	1-801
90459-6480	SET SCREW, DOGPOINT ISO4028 M4X25 A2	1-767
90459-6821	MALE INSERT HAN 4A, 0920 0042 611	1-201, 1-909, 1-911, 1-913
90459-7223	REDUCER, M20/M16	1-201
90459-7280	AIR NOZZLE, 011	1-893, 1-895, 1-897
90459-7283	SCREW HEX.SOCK.SET CONEPT.MS6SS M5X12 A2	1-501
90459-7361	FIBRE OPTIC UNIT, WLL170-2P460	1-201
90459-7458	WARNING SIGN ANSI (H), HOT SURFACE	1-793, 1-795
90600-0362	PROX. SENSOR, SMTO-4U-PS-S-LED-24	1-395
90600-0464	INDUCTIVE SWITCH,E2A-M12LS02-WP-B1-TP 5M	1-243
90600-0659	FILLING NOZZLE, SS041837/100 TYPE: K	1-905, 1-907, 1-963
90600-0685	THREADLOCKER LOCTITE 2701, 50ML	1-925

Part No	Description	Page No
90600-0808	CAM ROLLER 12X30X40 MM, CFT 12 M UU N	1-265, 1-271
90600-0847	SPHERICAL BEARING, S8-DNIRO BMF C1	1-287, 1-289
90600-1092	COMP. SPRING D21550, 0,63X8,63X16	1-813
90600-1145	TANDEM CYLINDER, NC20058023S	1-1033, 1-1035, 1-1037
90600-1695	FLOW SWITCH 0,4 L/MIN, DW-K-A 0.4 L/MIN	1-883, 1-885, 1-887, 1-889
90600-1762	CABLE MARKING, YELLOW, PK-20Q*25	1-971
90600-1991	ADJUSTABLE ELBOW CONNECTION 6-G1/8	1-529, 1-531, 1-533, 1-579, 1-581, 1-583
90600-2011	3319632, JUM-02-10	1-549, 1-551, 1-553, 1-597, 1-599, 1-601
90600-2013	FLANGE BUSHING, IGLIDUR X 8X10X5,5	1-617, 1-619, 1-621, 1-623, 1-645, 1-653, 1-655, 1-657, 1-659, 1-681, 1-685, 1-687, 1-689, 1-691, 1-695, 1-699, 1-701, 1-703, 1-705, 1-709
90600-2014	WEAR RING 8,9X12X4 MM	1-555
90600-2015	WEAR RING 12X15,1X4 MM	1-559
90600-2016	BACK-UP RING 17,4X1,4 MM	1-559
90600-2017	PISTON SEAL ROTOGLYD RING 20,1X25X2,2 MM	1-573, 1-575, 1-605, 1-607
90600-2018	SCRAPER 12X18,6X5,4 MM	1-559, 1-563, 1-565, 1-567, 1-569
90600-2233	INDUCTIVE SENSOR	1-767, 1-801
90600-2609	SCOTCH-BRITE WHITE 690	1-233
90600-2667	CARRIAGE, TW-01-15-HKA	1-499, 1-505
90600-3006	PUSH-IN FITTING 3681 04 19	1-1019, 1-1021, 1-1025, 1-1027, 1-1029, 1-1031
90600-3051	GUIDE RAIL, 15X15,5X380 MM	1-499, 1-505
90600-3222	PILOTED FUNCTION VALVE G1/8, 7880 06 10	1-243
90600-3313	BUSHING, 10X14X10 MM	1-479, 1-481, 1-483, 1-485, 1-487
90600-3397	TORQUE RIGID COUPLING, 25X28 MM	1-819
90600-3582	SPHERICAL BEARING, GE 6 TGR	1-643, 1-679, 1-693, 1-707
90600-3824	QUICK-LOCK, 701S-C-SS	1-751, 1-755
90600-3845	THERMOCOUPLE, C102002A	1-963
90600-3852	BALL BEARING, 20X47X14 MM	1-999, 1-1001
90600-5087	BACK-UP RING 19,4X1,4 MM	1-559
90600-5249	FERRITE, B64290L616X38	1-831
90600-5788	SENSOR BRACKET, SMBR-20	1-395
90600-5853	PHOTOCELL, WF 50-40 B416	1-835
90600-6017	RADIAL SEAL 21,8X30X6 MM DUST LIP	1-1001
90600-7886	INDUCTIVE SENSOR, IE 5379	1-1019, 1-1021, 1-1025, 1-1027, 1-1029, 1-1031, 1-1033, 1-1035, 1-1037
90600-8306	COMP. SPRING 3887, 3X20X40,2	1-479, 1-481, 1-483, 1-485, 1-487
90600-9266	ROLLER SCREW, 12X36,5X137 MM	1-811, 1-825
90600-9806	CARRIAGE, KWVE 20 B G3 V1	1-817
90600-9808	GUIDE RAIL, TKVD20/140-10-10, KD SURFACE	1-807
90601-0426	TORQUE RIGID COUPLING, 10X16 MM	1-811, 1-825
90601-2046	CAPTIVE SCREW M6, GUTBG 6-4-12	1-379
90601-2426	BUSHING, 22X281X31 MM	1-1001
90601-2446	FLANGE BUSHING, 8X12X10 MM	1-371
90601-3167	GREASE, BARRIERTA L55/2, 100G	1-999, 1-1001
90601-3686	ELBOW FITTING ADJ., WEE08LR71	1-549, 1-551, 1-553, 1-597, 1-599, 1-601
90601-3688	WEAR RING 6,9X10X4 MM	1-529, 1-531, 1-533, 1-579, 1-581, 1-583
90601-3689	BACK-UP RING 7X1,4 MM	1-529, 1-531, 1-533, 1-579, 1-581, 1-583
90601-4830	O-RING 171,12X2,62 MM	1-465, 1-467
90601-5090	SERVO MOTOR, MPL-B310P-MK72AA SERIES A	1-811, 1-825
90601-5711	COMP. SPRING, 2315, 0,5X5X25	1-737, 1-739
90601-6050	CLAMPING ELEMENT, 2305.558	1-811, 1-825
90601-9633	LOCK NUT MISUMI, HLBS15	1-999, 1-1001
90602-0271	RADIAL SEAL 24,8X34X6 MM DUST LIP	1-999, 1-1001
90602-3890	SETTING COLLAR, SSCSBN 30-38	1-809
90602-3891	GUIDE RAIL, TKVD20/430-35-35, KD SURFACE	1-817
90602-3981	PLASTIC SPIRAL KW 5, 61600040	1-1019, 1-1021, 1-1025, 1-1027, 1-1029, 1-1031, 1-1033, 1-1035, 1-1037
90602-4847	THREADLOCKER LOCTITE 243, 50ML	1-529, 1-531, 1-533, 1-549, 1-551, 1-553, 1-555, 1-573, 1-575, 1-579, 1-581, 1-583, 1-597, 1-599, 1-601, 1-605, 1-607, 1-611, 1-615, 1-625, 1-627, 1-629, 1-631, 1-633, 1-641, 1-643, 1-651, 1-653, 1-655, 1-657, 1-659, 1-661, 1-663, 1-665, 1-667, 1-669, 1-679, 1-693, 1-699, 1-701, 1-703, 1-705, 1-707, 1-1019, 1-1021, 1-1023, 1-1025, 1-1027, 1-1029, 1-1031, 1-1033, 1-1035, 1-1037
90602-9550	ADH. TAPE LABELS AL/PET,BS SPLICE 90N 30	1-233
90602-9590	ADH. TAPE LABELS AL/PE,BS FOIL 100 35X16	1-233
90603-2356	BALL BEARING, 25X47X12 MM	1-987
90603-2379	BALL BEARING, 20/42X12 SOLID OIL	1-823
90603-2398	BALL BEARING, 17X40X12	1-257, 1-301, 1-303
90603-2406	BALL BEARING 6/19X6	1-503
90603-2438	PUSH-IN L-FITTING S6520 6-1/8	1-879
90603-2556	ACTU/SENS. CABLE SAC-5P-M12MS/ 4,0-PUR/M	1-753, 1-757
90603-3975	PROTECTIVE CAP M12, E70297	1-505, 1-757
90603-4532	WEAR RING 25X30X5,6 MM	1-539
90603-4536	BALL BEARING	1-811, 1-825
90603-4541	PISTON SEAL GLYD RING 22,5X30X3,2 MM	1-539
90603-4578	NEEDLE ROLLER BEARING, 15X21X20 MM	1-1019, 1-1021, 1-1025, 1-1027, 1-1029, 1-1031
90603-5330	MAGNETIC SENSOR, MDR15	1-505, 1-757, 1-921, 1-923
90603-5339	KLüBEROIL 4 UH1 320 N, ONLY IN BOM	1-557, 1-603
90603-5560	CONNECTOR, SACC-M12MS-5CON-PG 7-VA	1-499, 1-505
90603-5802	DOUBLE ACTING, MINI-ISO, CYL. 20-50	1-395
90603-6022	KLüBERSYNTH UH1 64-62, ONLY IN BOM	1-23, 1-179, 1-181
90604-0664	DOUBLE ACTING, COMPACT, 16-20	1-1023
90604-0669	DOUBLE ACTING, MINI-ISO, CYL. 32-12	1-819
90604-3127	DOUBLE ACTING, COMPACT, 32-25	1-775, 1-777
90604-3845	BALL BEARING 10/30X9 SOLID OIL	1-813
90604-3846	BALL BEARING, 5/16X5	1-813
90604-3847	BALL BEARING 15/32X9 SOLID OIL	1-977

Machine Type Group Description Page No

Part No	Description	Page No
90604-4370	BALL BEARING 12/28X8	1-287, 1-289
90604-5164	GAS SPRING LIFT-O-MAT 163723	1-791, 1-797
90604-6027	PLUG, EXT. THREAD HEX. SOCKET. G1/4	1-939
90604-8446	CARRIAGE, SSR15XV1QZSSHHFMS(B) BLOCK	1-287, 1-289
90605-2902	COMP. SPRING, 5390, 2,3X17,1X32	1-975
90605-3149	ETHERNET/IP BUS CONTROLLER, X20BC0088	1-979, 1-981
90605-3151	SUPPLY MODULE X20, X20PS9400	1-979, 1-981
90605-3152	DIGITAL SIGNAL MODULE, X20DS4387	1-979, 1-981
90605-3153	BUS BASE, X20BB8	1-979, 1-981
90605-3154	BUS MODULE, X20BM11	1-979, 1-981
90605-3155	TERMINAL BLOCK, X20TB12	1-979, 1-981
90605-3562	BRAKE, 3/150.100-S/20/6885-1	1-975
90605-5782	CARRIAGE, F-600852.31.KWVE20-B	1-807
90606-2004	AXIS MOD. KINETIX 6000,2094-BM01-S SER.C	1-831
90606-2058	GREASE NIPPLE M5, SMAD.KWVE20-0021	1-807
107426-0000	GUIDE SLEEVE	1-539, 1-743, 1-745, 1-747
263152-0000	SHAFT	1-977
263153-0000	NUT	1-977
263655-0007	SHAFT	1-451, 1-453
263655-0009	SHAFT	1-451, 1-453, 1-457, 1-459, 1-461, 1-463
263655-0015	SHAFT	1-451, 1-453
266737-0000	WASHER	1-767
269151-0000	SHAFT	1-479, 1-481, 1-483, 1-485, 1-487
271860-0000	CLAMP BLOCK	1-791, 1-797
272728-0000	BARRIER	1-401
311101-0270	PARALLEL PIN ISO 2338 4H6X16 ST	1-1019, 1-1021, 1-1025, 1-1027, 1-1029, 1-1031
311102-0237	PARALLEL PIN ISO 2338 3M6X18 ST	1-243
311102-0514	PARALLEL PIN ISO 2338 12M6X35 ST	1-807, 1-811, 1-825
311102-0516	PARALLEL PIN ISO 2338 12M6X40 ST	1-827
311102-0619	PARALLEL PIN ISO 2338 16M6X40 ST	1-807, 1-827
311103-0233	PARALLEL PIN ISO 2338 3M6X10 A1	1-299, 1-625, 1-627, 1-629, 1-631, 1-633, 1-661, 1-663, 1-665, 1-667, 1-669, 1-1019, 1-1021, 1-1025, 1-1027, 1-1029, 1-1031
311103-0234	PARALLEL PIN ISO 2338 3M6X12 A1	1-173, 1-541, 1-543, 1-545, 1-589, 1-591, 1-593, 1-625, 1-627, 1-629, 1-631, 1-633, 1-661, 1-663, 1-665, 1-667, 1-669
311103-0236	PARALLEL PIN ISO 2338 3M6X16 A1	1-347, 1-349, 1-353, 1-355, 1-407, 1-409, 1-415, 1-417, 1-419
311103-0238	PARALLEL PIN ISO 2338 3M6X20 A1	1-479, 1-481, 1-483, 1-485, 1-487
311103-0267	PARALLEL PIN ISO 2338 4M6X10 A1	1-541, 1-543, 1-545, 1-589, 1-591, 1-593, 1-625, 1-627, 1-629, 1-631, 1-633, 1-661, 1-663, 1-665, 1-667, 1-669
311103-0268	PARALLEL PIN ISO 2338 4M6X12 A1	1-529, 1-531, 1-533, 1-549, 1-551, 1-553, 1-579, 1-581, 1-583, 1-597, 1-599, 1-601, 1-617, 1-619, 1-621, 1-623, 1-625, 1-627, 1-629, 1-631, 1-633, 1-653, 1-655, 1-657, 1-659, 1-661, 1-663, 1-665, 1-667, 1-669, 1-685, 1-687, 1-689, 1-691, 1-699, 1-701, 1-703, 1-705
311103-0269	PARALLEL PIN ISO 2338 4M6X14 A1	1-305, 1-307, 1-309, 1-311
311103-0270	PARALLEL PIN ISO 2338 4M6X16 A1	1-721, 1-723, 1-927
311103-0271	PARALLEL PIN ISO 2338 4M6X18 A1	1-721, 1-723
311103-0272	PARALLEL PIN ISO 2338 4M6X20 A1	1-721, 1-723
311103-0276	PARALLEL PIN ISO 2338 4M6X30 A1	1-479, 1-481, 1-483, 1-485, 1-487
311103-0277	PARALLEL PIN ISO 2338 4M6X32 A1	1-721, 1-723
311103-0306	PARALLEL PIN ISO 2338 5M6X12 A1	1-475, 1-477, 1-479, 1-481, 1-483, 1-485, 1-487, 1-1019, 1-1021, 1-1025, 1-1027, 1-1029, 1-1031
311103-0307	PARALLEL PIN ISO 2338 5M6X14 A1	1-541, 1-543, 1-545, 1-589, 1-591, 1-593
311103-0308	PARALLEL PIN ISO 2338 5M6X16 A1	1-721, 1-723
311103-0309	PARALLEL PIN ISO 2338 5M6X18 A1	1-721, 1-723
311103-0310	PARALLEL PIN ISO 2338 5M6X20 A1	1-505, 1-721, 1-723
311103-0313	PARALLEL PIN ISO 2338 5M6X28 A1	1-975
311103-0315	PARALLEL PIN ISO 2338 5M6X32 A1	1-721, 1-723
311103-0322	PARALLEL PIN ISO 2338 5M6X50 A1	1-173
311103-0348	PARALLEL PIN ISO 2338 6M6X10 A1	1-279, 1-281, 1-283, 1-285, 1-305, 1-307, 1-309, 1-311
311103-0349	PARALLEL PIN ISO 2338 6M6X12 A1	1-925
311103-0350	PARALLEL PIN ISO 2338 6M6X14 A1	1-751
311103-0357	PARALLEL PIN ISO 2338 6M6X30 A1	1-919, 1-1019, 1-1021, 1-1025, 1-1027, 1-1029, 1-1031, 1-1033, 1-1035, 1-1037
311103-0359	PARALLEL PIN ISO 2338 6M6X35 A1	1-827
311103-0361	PARALLEL PIN ISO 2338 6M6X40 A1	1-257
311103-0365	PARALLEL PIN ISO 2338 6M6X50 A1	1-257
311103-0399	PARALLEL PIN ISO 2338 8M6X16 A1	1-713, 1-715, 1-717
311103-0400	PARALLEL PIN ISO 2338 8M6X18 A	1-713, 1-715, 1-717
311103-0401	PARALLEL PIN ISO 2338 8M6X20 A1	1-789
311103-0405	PARALLEL PIN ISO 2338 8M6X30 A1	1-807
311103-0407	PARALLEL PIN ISO 2338 8M6X35 A1	1-179, 1-811, 1-825
311103-0409	PARALLEL PIN ISO 2338 8M6X40 A1	1-809, 1-817
311103-0413	PARALLEL PIN ISO 2338 8M6X50 A1	1-791, 1-797
311103-0422	PARALLEL PIN ISO 2338 8M6X80 A1	1-935, 1-949, 1-951
311103-0466	PARALLEL PIN ISO 2338 10M6X50 A1	1-809
311103-0470	PARALLEL PIN ISO 2338 10M6X60 A1	1-975
311103-0477	PARALLEL PIN ISO 2338 10M6X85 A1	1-809
311103-1274	PARALLEL PIN ISO 2338 4M6X24 A1	1-401, 1-451, 1-453, 1-457, 1-459, 1-461, 1-463
311103-1312	PARALLEL PIN ISO 2338 5M6X24 A1	1-835
311103-1355	PARALLEL PIN ISO 2338 6M6X24 A1	1-811, 1-825
311103-1403	PARALLEL PIN ISO 2338 8M6X24 A1	1-299, 1-925
311111-0208	SPRING PIN ISO 8752 3X16-ST	1-915
311111-0252	SPRING PIN ISO 8752 4X12-ST	1-617, 1-619, 1-621, 1-623, 1-653, 1-655, 1-657, 1-659, 1-685, 1-687, 1-689, 1-691, 1-699, 1-701, 1-703, 1-705
311112-0256	SPRING PIN, ISO 8752 4X20 A2	1-909, 1-911, 1-913

Part No	Description	Page No
311112-0385 ..	SPRING PIN, ISO 8752 8X50 A2	1-401
312101-0378 ..	SCREW M6S M6X40 FZB	1-1019, 1-1021, 1-1025, 1-1027, 1-1029, 1-1031
312101-0515 ..	SCREW M6S M10X120 FZB	1-247
312105-0285 ..	SCREW, M6S ISO 4017 M4X6 A4 70	1-243, 1-615, 1-617, 1-619, 1-621, 1-623, 1-625, 1-627, 1-629, 1-631, 1-633, 1-643, 1-647, 1-651, 1-653, 1-655, 1-657, 1-659, 1-661, 1-663, 1-665, 1-667, 1-669, 1-679, 1-685, 1-687, 1-689, 1-691, 1-693, 1-699, 1-701, 1-703, 1-705, 1-707, 1-755
312105-0287 ..	SCREW, M6S ISO 4017 M4X8 A4 70	1-23, 1-129, 1-131, 1-135, 1-137, 1-139, 1-479, 1-481, 1-483, 1-485, 1-487, 1-741, 1-789, 1-807, 1-883, 1-885, 1-887, 1-889, 1-891, 1-893, 1-895
312105-0289 ..	SCREW, M6S ISO 4017 M4X10 A4 70	1-83, 1-85, 1-87, 1-89, 1-105, 1-107, 1-109, 1-111, 1-113, 1-201, 1-243, 1-347, 1-349, 1-353, 1-355, 1-407, 1-409, 1-415, 1-417, 1-419, 1-479, 1-481, 1-483, 1-485, 1-487, 1-555, 1-775, 1-777, 1-801, 1-975, 1-989, 1-991, 1-1007
312105-0291 ..	SCREW, M6S ISO 4017 M4X12 A4 70	1-201, 1-615, 1-651, 1-1023
312105-0292 ..	SCREW, M6S ISO 4017 M4X14 A4 70	1-645, 1-681, 1-695, 1-709
312105-0293 ..	SCREW, M6S ISO 4017 M4X16 A4 70	1-287, 1-289
312105-0295 ..	SCREW, M6S ISO 4017 M4X20 A4 70	1-215, 1-547, 1-595
312105-0297 ..	SCREW, M6S ISO 4017 M4X25 A4 70	1-395, 1-893, 1-895
312105-0299 ..	SCREW, M6S ISO 4017 M4X30 A4 70	1-999
312105-0323 ..	"FSCR05080-10, SCREW, M6S"	1-371, 1-573, 1-575, 1-605, 1-607, 1-783, 1-785
312105-0325 ..	SCREW, M6S ISO 4017 M5X10 A4 80	1-35, 1-171, 1-439, 1-441, 1-479, 1-481, 1-483, 1-485, 1-487, 1-513, 1-515, 1-517, 1-643, 1-679, 1-693, 1-707, 1-883, 1-885, 1-887, 1-889, 1-921
312105-0327 ..	"SCREW, M6S ISO 4017 M5X12 A4 80"	1-347, 1-349, 1-353, 1-355, 1-389, 1-391, 1-395, 1-407, 1-409, 1-415, 1-417, 1-419, 1-435, 1-437, 1-439, 1-441, 1-465, 1-467, 1-479, 1-481, 1-483, 1-485, 1-487, 1-525, 1-615, 1-617, 1-619, 1-621, 1-623, 1-625, 1-627, 1-629, 1-631, 1-633, 1-643, 1-651, 1-653, 1-655, 1-657, 1-659, 1-661, 1-663, 1-665, 1-667, 1-669, 1-679, 1-685, 1-687, 1-689, 1-691, 1-693, 1-699, 1-701, 1-703, 1-705, 1-707, 1-807, 1-817, 1-1033, 1-1035, 1-1037
312105-0328 ..	SCREW M6S ISO 4017 M5X14 A4 80	1-625, 1-627, 1-629, 1-631, 1-633, 1-647, 1-661, 1-663, 1-665, 1-667, 1-669, 1-721, 1-723
312105-0329 ..	SCREW, M6S ISO 4017 M5X16 A4 80	1-179, 1-181, 1-347, 1-349, 1-353, 1-355, 1-395, 1-407, 1-409, 1-415, 1-417, 1-419, 1-435, 1-437, 1-439, 1-441, 1-475, 1-477, 1-625, 1-627, 1-629, 1-631, 1-633, 1-661, 1-663, 1-665, 1-667, 1-669, 1-767, 1-827, 1-1009
312105-0331 ..	SCREW, M6S ISO 4017 M5X20 A4 80	1-305, 1-307, 1-309, 1-311, 1-353, 1-355, 1-395, 1-435, 1-437, 1-439, 1-441, 1-475, 1-477, 1-625, 1-627, 1-629, 1-631, 1-633, 1-661, 1-663, 1-665, 1-667, 1-669, 1-713, 1-715, 1-717, 1-721, 1-723, 1-767, 1-975, 1-1009, 1-1019, 1-1021, 1-1025, 1-1027, 1-1029, 1-1031
312105-0332 ..	SCREW, M6S ISO 4017 M5X22 A4 70	1-755
312105-0333 ..	SCREW, M6S ISO 4017 M5X25 A4 80	1-625, 1-627, 1-629, 1-631, 1-633, 1-661, 1-663, 1-665, 1-667, 1-669
312105-0335 ..	SCREW, M6S ISO 4014 M5X30 A4 80	1-201, 1-625, 1-627, 1-629, 1-631, 1-633, 1-661, 1-663, 1-665, 1-667, 1-669, 1-751
312105-0337 ..	SCREW, M6S ISO 4014 M5X35 A4 80	1-625, 1-627, 1-629, 1-631, 1-633, 1-661, 1-663, 1-665, 1-667, 1-669, 1-883, 1-885, 1-887, 1-889
312105-0339 ..	SCREW, M6S ISO 4014 M5X40 A4 80	1-625, 1-627, 1-629, 1-631, 1-633, 1-661, 1-663, 1-665, 1-667, 1-669, 1-1015
312105-0340 ..	SCREW, M6S ISO 4014 M5X45 A4 80	1-625, 1-627, 1-629, 1-631, 1-633, 1-661, 1-663, 1-665, 1-667, 1-669
312105-0341 ..	SCREW, M6S ISO 4014 M5X50 A4 80	1-505, 1-527, 1-921
312105-0362 ..	SCREW, M6S ISO 4017 M6X8 A4 80	1-179, 1-181, 1-259, 1-261, 1-479, 1-481, 1-483, 1-485, 1-487, 1-529, 1-531, 1-533, 1-549, 1-551, 1-553, 1-563, 1-565, 1-567, 1-569, 1-579, 1-581, 1-583, 1-597, 1-599, 1-601
312105-0364 ..	"SCREW, M6S ISO 4017 M6X10 A4 80"	1-13, 1-15, 1-57, 1-59, 1-165, 1-167, 1-169, 1-479, 1-481, 1-483, 1-485, 1-487, 1-489, 1-801, 1-959, 1-961, 1-1007
312105-0366 ..	SCREW, M6S ISO 4017 M6X12 A4 80	1-13, 1-15, 1-35, 1-75, 1-77, 1-121, 1-123, 1-125, 1-127, 1-155, 1-161, 1-165, 1-167, 1-169, 1-179, 1-181, 1-315, 1-317, 1-319, 1-471, 1-473, 1-525, 1-527, 1-549, 1-551, 1-553, 1-563, 1-565, 1-567, 1-569, 1-597, 1-599, 1-601, 1-625, 1-627, 1-629, 1-631, 1-633, 1-661, 1-663, 1-665, 1-667, 1-669, 1-769, 1-771, 1-773, 1-799, 1-815, 1-829, 1-883, 1-885, 1-887, 1-889, 1-891, 1-893, 1-897, 1-957, 1-977, 1-987, 1-1003, 1-1005, 1-1007
312105-0367 ..	SCREW, M6S ISO 4017 M6X14 A4 80	1-835, 1-925
312105-0368 ..	"SCREW, M6S ISO 4017 M6X16 A4 80"	1-13, 1-15, 1-17, 1-19, 1-21, 1-25, 1-27, 1-49, 1-51, 1-53, 1-55, 1-67, 1-69, 1-71, 1-73, 1-75, 1-77, 1-95, 1-97, 1-99, 1-101, 1-103, 1-121, 1-123, 1-125, 1-127, 1-129, 1-131, 1-135, 1-137, 1-139, 1-165, 1-167, 1-169, 1-179, 1-181, 1-183, 1-185, 1-201, 1-243, 1-257, 1-259, 1-261, 1-263, 1-269, 1-299, 1-315, 1-317, 1-321, 1-479, 1-481, 1-483, 1-485, 1-487, 1-489, 1-513, 1-515, 1-517, 1-519, 1-521, 1-523, 1-525, 1-527, 1-541, 1-543, 1-545, 1-563, 1-565, 1-567, 1-569, 1-589, 1-591, 1-593, 1-617, 1-619, 1-621, 1-623, 1-645, 1-653, 1-655, 1-657, 1-659, 1-681, 1-685, 1-687, 1-689, 1-691, 1-695, 1-699, 1-701, 1-703, 1-705, 1-709, 1-713, 1-715, 1-717, 1-755, 1-769, 1-771, 1-773, 1-775, 1-777, 1-789, 1-791, 1-797, 1-801, 1-811, 1-825, 1-927, 1-989, 1-991, 1-1007, 1-1033, 1-1035, 1-1037
312105-0370 ..	SCREW, M6S ISO 4017 M6X20 A4 80	1-17, 1-19, 1-21, 1-23, 1-49, 1-51, 1-53, 1-55, 1-81, 1-129, 1-131, 1-135, 1-137, 1-139, 1-157, 1-163, 1-165, 1-167, 1-169, 1-171, 1-201, 1-291, 1-293, 1-315, 1-317, 1-319, 1-395, 1-471, 1-473, 1-479, 1-481, 1-483, 1-485, 1-487, 1-541, 1-543, 1-545, 1-589, 1-591, 1-593, 1-625, 1-627, 1-629, 1-631, 1-633, 1-661, 1-663, 1-665, 1-667, 1-669, 1-713, 1-715, 1-717, 1-751, 1-775, 1-777, 1-799, 1-801, 1-815, 1-829, 1-895, 1-987, 1-993, 1-995, 1-997, 1-999, 1-1001, 1-1003, 1-1005, 1-1009, 1-1049
312105-0372 ..	SCREW, M6S ISO 4017 M6X25 A4 80	1-13, 1-15, 1-17, 1-19, 1-21, 1-37, 1-39, 1-129, 1-131, 1-135, 1-137, 1-139, 1-179, 1-181, 1-189, 1-191, 1-291, 1-293, 1-475, 1-477, 1-479, 1-481, 1-483, 1-485, 1-487, 1-499, 1-505, 1-519, 1-521, 1-523, 1-769, 1-771, 1-773, 1-789, 1-799, 1-891
312105-0374 ..	SCREW, M6S ISO 4014 M6X30 A4 80	1-13, 1-15, 1-165, 1-167, 1-169, 1-183, 1-185, 1-243, 1-259, 1-261, 1-479, 1-481, 1-483, 1-485, 1-487, 1-529, 1-531, 1-533, 1-579, 1-581, 1-583, 1-807, 1-809, 1-975
312105-0376 ..	SCREW, M6S ISO 4014 M6X35 A4 80	1-17, 1-19, 1-21, 1-57, 1-59, 1-81, 1-179, 1-1007
312105-0378 ..	SCREW, M6S ISO 4014 M6X40 A4 80	1-13, 1-15, 1-81, 1-647, 1-661, 1-663, 1-665, 1-667, 1-669, 1-763, 1-765, 1-891
312105-0379 ..	SCREW, M6S ISO 4014 M6X45 A4 80	1-183, 1-185, 1-505, 1-661, 1-663, 1-665, 1-667, 1-669, 1-807, 1-817
312105-0380 ..	SCREW, M6S ISO 4014 M6X50 A4 80	1-259, 1-261

Part No	Description	Page No
312105-0381 ..	SCREW, M6S ISO 4014 M6X55 A4 80	1-13, 1-15, 1-179, 1-647
312105-0382 ..	SCREW, M6S ISO 4014 M6X60 A4 80	1-327, 1-329, 1-401
312105-0447 ..	SCREW M6S ISO 4017 M8X12 A480	1-29, 1-31, 1-33, 1-41, 1-43, 1-265, 1-271, 1-395, 1-513, 1-515, 1-517, 1-557, 1-603
312105-0449 ..	SCREW, M6S ISO 4017 M8X16 A4 80	1-49, 1-51, 1-53, 1-55, 1-67, 1-69, 1-71, 1-73, 1-187, 1-439, 1-441, 1-465, 1-467, 1-475, 1-477, 1-513, 1-515, 1-517, 1-791, 1-797
312105-0451 ..	SCREW, M6S ISO 4017 M8X20 A4 80	1-29, 1-31, 1-33, 1-41, 1-61, 1-63, 1-67, 1-69, 1-71, 1-73, 1-163, 1-179, 1-181, 1-187, 1-301, 1-303, 1-315, 1-317, 1-435, 1-437, 1-439, 1-441, 1-451, 1-453, 1-457, 1-459, 1-461, 1-463, 1-475, 1-477, 1-479, 1-481, 1-483, 1-485, 1-487, 1-519, 1-521, 1-523, 1-525, 1-527, 1-789, 1-791, 1-797
312105-0452 ..	SCREW, M6S ISO 4017 M8X22 A4 80	1-243, 1-737, 1-739
312105-0453 ..	SCREW, M6S ISO 4017 M8X25 A4 80	1-49, 1-51, 1-53, 1-55, 1-61, 1-63, 1-67, 1-69, 1-71, 1-73, 1-75, 1-77, 1-81, 1-239, 1-267, 1-273, 1-275, 1-415, 1-417, 1-419, 1-435, 1-437, 1-439, 1-441, 1-471, 1-473, 1-751
312105-0455 ..	SCREW, M6S ISO 4017 M8X30 A4 80	1-23, 1-25, 1-27, 1-29, 1-35, 1-49, 1-51, 1-53, 1-55, 1-75, 1-77, 1-117, 1-119, 1-121, 1-123, 1-125, 1-127, 1-201, 1-239, 1-333, 1-335, 1-337, 1-339, 1-415, 1-417, 1-419, 1-475, 1-477, 1-505, 1-811, 1-825, 1-919, 1-923, 1-975
312105-0457 ..	SCREW, M6S ISO 4014 M8X35 A4 80	1-49, 1-51, 1-53, 1-55, 1-67, 1-69, 1-71, 1-73, 1-75, 1-77, 1-121, 1-123, 1-125, 1-127, 1-301, 1-303
312105-0459 ..	SCREW, M6S ISO 4014 M8X40 A4 80	1-299, 1-713, 1-715, 1-717, 1-919
312105-0460 ..	SCREW, M6S ISO 4014 M8X45 A4 80	1-61, 1-63, 1-265, 1-271, 1-529, 1-531, 1-533, 1-549, 1-551, 1-553, 1-579, 1-581, 1-583, 1-597, 1-599, 1-601, 1-713, 1-715, 1-717, 1-817
312105-0461 ..	SCREW, M6S ISO 4014 M8X50 A4 80	1-713, 1-715, 1-717
312105-0462 ..	SCREW, M6S ISO 4014 M8X55 A4 8002	1-49, 1-51, 1-53, 1-55, 1-61, 1-63, 1-269, 1-277, 1-451, 1-453, 1-457, 1-459, 1-461, 1-463
312105-0463 ..	SCREW, M6S ISO 4014 M8X60 A4 80	1-75, 1-77, 1-457, 1-459, 1-461, 1-463
312105-0464 ..	SCREW, M6S ISO 4014 M8X65 A4 80	1-61, 1-63, 1-75, 1-77
312105-0465 ..	SCREW, M6S ISO 4014 M8X70 A4 80	1-61, 1-63, 1-75, 1-77, 1-457, 1-459, 1-461, 1-463
312105-0466 ..	SCREW, M6S ISO 4014 M8X75 A4 80	1-75, 1-77, 1-557, 1-603
312105-0467 ..	SCREW, M6S ISO 4014 M8X80 A4 80	1-61, 1-63, 1-75, 1-77
312105-0469 ..	SCREW, M6S ISO 4014 M8X90 A4 80	1-557, 1-603
312105-0489 ..	SCREW, M6S ISO 4017 M10X16 A4 80	1-25, 1-27
312105-0493 ..	SCREW, M6S ISO 4017 M10X25 A4 80	1-23, 1-117, 1-119, 1-247, 1-347, 1-349, 1-353, 1-355
312105-0495 ..	SCREW, M6S ISO 4017 M10X30 A4 80	1-25, 1-27, 1-35, 1-117, 1-119, 1-179, 1-181, 1-247, 1-333, 1-335, 1-337, 1-339, 1-451, 1-453, 1-457, 1-459, 1-461, 1-463, 1-617, 1-619, 1-621, 1-623, 1-653, 1-655, 1-657, 1-659, 1-685, 1-687, 1-689, 1-691, 1-699, 1-701, 1-703, 1-705, 1-819
312105-0497 ..	SCREW, M6S ISO 4017 M10X35 A4 80	1-117, 1-119
312105-0499 ..	SCREW, M6S ISO 4014 M10X40 A4 80	1-617, 1-619, 1-621, 1-623, 1-653, 1-655, 1-657, 1-659, 1-685, 1-687, 1-689, 1-691, 1-699, 1-701, 1-703, 1-705, 1-819
312105-0501 ..	SCREW, M6S ISO 4014 M10X50 A4 80	1-117, 1-119, 1-809
312105-0503 ..	SCREW, M6S ISO 4014 M10X60 A4 80	1-117, 1-119
312105-0506 ..	SCREW, M6S ISO 4014 M10X75 A4 80	1-373
312105-0540 ..	SCREW, M6S ISO 4017 M12X40 A4 80	1-247
312108-0366 ..	SCREW EN 1665 TYPE F M6X12 A270	1-1019, 1-1021, 1-1025, 1-1027, 1-1029, 1-1031
312108-0449 ..	SCREW EN 1665 TYPE F M8X16 A270	1-319
312109-0335 ..	SCREW, M6S ISO 4017 M5X30 A4 80	1-305, 1-307, 1-309, 1-311
312109-0374 ..	SCREW, M6S ISO 4017 M6X30 A4 80	1-17, 1-19, 1-21, 1-179, 1-395, 1-439, 1-441, 1-471, 1-473, 1-713, 1-715, 1-717, 1-817
312109-0376 ..	SCREW, M6S ISO 4017 M6X35 A4 80	1-17, 1-19, 1-21, 1-23, 1-257, 1-489
312109-0378 ..	SCREW, M6S ISO 4017 M6X40 A4 80	1-299
312109-0381 ..	SCREW, M6S ISO 4017 M6X55 A4 80	1-315, 1-317, 1-1049
312109-0457 ..	SCREW, M6S ISO 4017 M8X35 A4 80	1-61, 1-63, 1-1001
312109-0459 ..	SCREW, M6S ISO 4017 M8X40 A4 80	1-29, 1-75, 1-77, 1-407, 1-409, 1-415, 1-417, 1-419, 1-807, 1-975
312109-0460 ..	SCREW, M6S ISO 4017 M8X45 A4 80	1-25, 1-27, 1-61, 1-63, 1-75, 1-77, 1-121, 1-123, 1-125, 1-127, 1-407, 1-409, 1-415, 1-417, 1-419
312109-0461 ..	SCREW, M6S ISO 4017 M8X50 A4 80	1-35, 1-61, 1-63, 1-75, 1-77, 1-269, 1-277, 1-451, 1-453, 1-457, 1-459, 1-461, 1-463
312109-0463 ..	SCREW, M6S ISO 4017 M8X60 A4 80	1-23, 1-75, 1-77, 1-179, 1-181
312109-0499 ..	SCREW, M6S ISO 4017 M10X40 A4 80	1-179, 1-181
312109-0500 ..	SCREW, M6S ISO 4017 M10X45 A4 80	1-181, 1-249, 1-253
312111-0366 ..	SCREW HEX.SOCK.HD.MC6S 6X12 88 FZB	1-1019, 1-1021, 1-1025, 1-1027, 1-1029, 1-1031
312111-0475 ..	SCREW HEX.SOCK.HD.MC6S 8X120 88 FZB	1-827
312115-0228 ..	SCREW ISO4762 M3X16 A4 80	1-975
312115-0230 ..	SCREW ISO4762 M3X20 A4 80	1-121, 1-123, 1-125, 1-127, 1-179, 1-181
312115-0232 ..	SCREW ISO4762 M3X25 A4 80	1-25, 1-27
312115-0285 ..	SCREW ISO4762 M4X6 A4 80	1-529, 1-531, 1-533, 1-549, 1-551, 1-553, 1-579, 1-581, 1-583, 1-597, 1-599, 1-601
312115-0287 ..	SCREW ISO4762 M4X8 A4 80	1-287, 1-289
312115-0291 ..	SCREW ISO4762 M4X12 A4 80	1-91, 1-93, 1-115, 1-827
312115-0293 ..	SCREW ISO4762 M4X16 A4 80	1-499, 1-505, 1-541, 1-543, 1-545, 1-589, 1-591, 1-593, 1-835
312115-0295 ..	SCREW ISO4762 M4X20 A4 80	1-279, 1-281, 1-283, 1-285, 1-499, 1-505, 1-541, 1-543, 1-545, 1-589, 1-591, 1-593, 1-1007, 1-1019, 1-1021, 1-1025, 1-1027, 1-1029, 1-1031
312115-0297 ..	SCREW ISO4762 M4X25 A4 80	1-541, 1-543, 1-545, 1-589, 1-591, 1-593, 1-743, 1-745, 1-747, 1-801
312115-0305 ..	SCREW ISO4762 M4X50 A4 80	1-801
312115-0323 ..	SCREW ISO4762 M5X8 A4 80	1-189, 1-191, 1-287, 1-289, 1-563, 1-565, 1-567, 1-569
312115-0325 ..	SCREW ISO4762 M5X10 A4 80	1-563, 1-565, 1-567, 1-569, 1-625, 1-627, 1-629, 1-631, 1-633, 1-661, 1-663, 1-665, 1-667, 1-669, 1-721, 1-723, 1-775, 1-777, 1-989, 1-991
312115-0327 ..	SCREW ISO4762 M5X12 A4 80	1-287, 1-289, 1-529, 1-531, 1-533, 1-559, 1-579, 1-581, 1-583, 1-625, 1-627, 1-629, 1-631, 1-633, 1-661, 1-663, 1-665, 1-667, 1-669, 1-737, 1-739, 1-831, 1-919
312115-0328 ..	SCREW ISO4762 M5X14 A4 80	1-625, 1-627, 1-629, 1-631, 1-633, 1-661, 1-663, 1-665, 1-667, 1-669
312115-0329 ..	SCREW ISO4762 M5X16 A4 80	1-171, 1-287, 1-289, 1-501, 1-625, 1-627, 1-629, 1-631, 1-633, 1-661, 1-663, 1-665, 1-667, 1-669, 1-721, 1-723, 1-737, 1-739
312115-0331 ..	SCREW ISO4762 M5X20 A4 80	1-501, 1-625, 1-627, 1-629, 1-631, 1-633, 1-661, 1-663, 1-665

Part No	Description	Page No
		1-667, 1-669, 1-775, 1-777, 1-807, 1-817, 1-989, 1-991
312115-0335 ..	SCREW ISO4762 M5X30 A4 80	1-975
312115-0340 ..	SCREW ISO4762 M5X45 A4 80	1-505
312115-0362 ..	SCREW ISO4762 M6X8 A4 80	1-625, 1-627, 1-629, 1-631, 1-633, 1-661, 1-663, 1-665, 1-667 1-669, 1-811, 1-825
312115-0364 ..	SCREW ISO4762 M6X10 A4 80	1-203, 1-625, 1-627, 1-629, 1-631, 1-633, 1-645, 1-661, 1-663 1-665, 1-667, 1-669, 1-681, 1-695, 1-709, 1-713, 1-715, 1-717
312115-0366 ..	SCREW ISO4762 M6X12 A4 80	1-29, 1-31, 1-33, 1-41, 1-43, 1-243, 1-769, 1-771, 1-773, 1-847 1-855, 1-863, 1-871, 1-879
312115-0367 ..	SCREW ISO4762 M6X14 A4 80	1-625, 1-627, 1-629, 1-631, 1-633, 1-661, 1-663, 1-665, 1-667 1-669
312115-0368 ..	SCREW ISO4762 M6X16 A4 80	1-313, 1-505, 1-617, 1-619, 1-621, 1-623, 1-653, 1-655, 1-657 1-659, 1-685, 1-687, 1-689, 1-691, 1-699, 1-701, 1-703, 1-705, 1-737, 1-739, 1-835, 1-851, 1-859 1-867, 1-875, 1-877, 1-1019, 1-1021, 1-1025, 1-1027, 1-1029, 1-1031
312115-0370 ..	SCREW ISO4762 M6X20 A4 80	1-129, 1-131, 1-135, 1-137, 1-139, 1-157, 1-811, 1-825, 1-949 1-951, 1-1019, 1-1021, 1-1025, 1-1027, 1-1029, 1-1031, 1-1043
312115-0372 ..	SCREW ISO4762 M6X25 A4 80	1-257, 1-819, 1-1019, 1-1021, 1-1025, 1-1027, 1-1029, 1-1031 1-1033, 1-1035, 1-1037
312115-0374 ..	SCREW ISO4762 M6X30 A4 80	1-295, 1-297, 1-563, 1-565, 1-567, 1-569, 1-573, 1-575, 1-605 1-607, 1-827, 1-1033, 1-1035, 1-1037
312115-0376 ..	SCREW ISO4762 M6X35 A4 80	1-257, 1-539, 1-923
312115-0378 ..	SCREW ISO4762 M6X40 A4 80	1-879
312115-0379 ..	SCREW ISO4762 M6X45 A4 80	1-257, 1-563, 1-565, 1-567, 1-569, 1-1019, 1-1021, 1-1025 1-1027, 1-1029, 1-1031, 1-1033, 1-1035, 1-1037
312115-0380 ..	SCREW ISO4762 M6X50 A4 80	1-539, 1-563, 1-565, 1-567, 1-569, 1-1033, 1-1035, 1-1037
312115-0382 ..	SCREW ISO4762 M6X60 A4 80	1-327, 1-329, 1-923
312115-0447 ..	SCREW ISO4762 M8X12 A4 80	1-751
312115-0449 ..	SCREW ISO4762 M8X16 A4 80	1-67, 1-69, 1-71, 1-73, 1-643, 1-679, 1-693, 1-707
312115-0451 ..	SCREW ISO4762 M8X20 A4 80	1-43, 1-287, 1-289, 1-925, 1-1019, 1-1021, 1-1025, 1-1027 1-1029, 1-1031, 1-1033, 1-1035, 1-1037
312115-0453 ..	SCREW ISO4762 M8X25 A4 80	1-923
312115-0455 ..	SCREW ISO4762 M8X30 A4 80	1-287, 1-289, 1-505, 1-807, 1-817, 1-919, 1-923
312115-0457 ..	SCREW ISO4762 M8X35 A4 80	1-539, 1-809, 1-811, 1-825
312115-0459 ..	SCREW ISO4762 M8X40 A4 80	1-539
312115-0461 ..	SCREW ISO4762 M8X50 A4 80	1-539
312115-0464 ..	SCREW ISO4762 M8X65 A4 80	1-833
312115-0465 ..	SCREW ISO4762 M8X70 A4 80	1-1019, 1-1021, 1-1025, 1-1027, 1-1029, 1-1031
312115-0467 ..	SCREW ISO4762 M8X80 A4 80	1-807
312115-0491 ..	SCREW ISO4762 M10X20 A4 80	1-1019, 1-1021, 1-1025, 1-1027, 1-1029, 1-1031
312125-0228 ..	SLOTTED HEAD SCREW, ISO1207 M3X16 A4	1-775, 1-777, 1-813
312125-0230 ..	SLOTTED HEAD SCREW, ISO1207 M3X20 A4	1-25, 1-27, 1-201
312125-0234 ..	SLOTTED HEAD SCREW, ISO1207 M3X30 A4	1-25, 1-27
312125-0285 ..	SLOTTED HEAD SCREW, ISO1207 M4X6 A4	1-815
312125-0287 ..	SLOTTED HEAD SCREW, ISO1207 M4X8 A4	1-121, 1-123, 1-125, 1-127, 1-179, 1-181, 1-201 1-767, 1-801, 1-919
312125-0295 ..	SLOTTED HEAD SCREW, ISO1207 M4X20 A4	1-541, 1-543, 1-545, 1-589, 1-591, 1-593, 1-743 1-745, 1-747
312125-0327 ..	SLOTTED HEAD SCREW, ISO1207 M5X12 A4	1-179, 1-181
312132-0287 ..	SLOTTED HEAD, PAN SCREW, MSCS M4X8	1-807, 1-835, 1-849, 1-857, 1-865, 1-873
312145-0222 ..	SCREW ISO 2009 MFS M3X8 A4	1-775, 1-777, 1-989, 1-991
312145-0224 ..	SCREW ISO 2009 MFS M3X10 A4	1-563, 1-565, 1-567, 1-569, 1-775, 1-777, 1-989, 1-991
312145-0236 ..	SCREW ISO 2009 MFS M3X35 A4	1-563, 1-565, 1-567, 1-569
312145-0238 ..	SCREW ISO 2009 MFS M3X40 A4	1-563, 1-565, 1-567, 1-569
312145-0287 ..	SCREW ISO 2009 MFS M4X8 A4	1-541, 1-543, 1-545, 1-563, 1-565, 1-567, 1-569, 1-589, 1-591 1-593, 1-647
312145-0289 ..	SCREW ISO 2009 MFS M4X10 A4	1-129, 1-131, 1-135, 1-137, 1-139, 1-645, 1-681, 1-695, 1-709
312145-0291 ..	SCREW ISO 2009 MFS M4X12 A4	1-615, 1-625, 1-627, 1-629, 1-631, 1-633, 1-643, 1-647 1-651, 1-661, 1-663, 1-665, 1-667, 1-669, 1-679, 1-693, 1-707
312145-0293 ..	SCREW ISO 2009 MFS M4X16 A4	1-625, 1-627, 1-629, 1-631, 1-633, 1-661, 1-663, 1-665 1-667, 1-669
312155-0220 ..	SCREW DIN 7991 MF6S M3X6 A4 70	1-541, 1-543, 1-545, 1-589, 1-591, 1-593
312155-0285 ..	SCREW DIN 7991 MF6S M4X6 A4 70	1-541, 1-543, 1-545, 1-563, 1-565, 1-567, 1-569, 1-589 1-591, 1-593, 1-751
312155-0287 ..	SCREW DIN 7991 MF6S M4X8 A4 70	1-83, 1-85, 1-87, 1-89, 1-105, 1-107, 1-109, 1-111, 1-113 1-115, 1-129, 1-131, 1-135, 1-137, 1-139, 1-279, 1-281, 1-283, 1-285, 1-541, 1-543, 1-545, 1-549 1-551, 1-553, 1-563, 1-565, 1-567, 1-569, 1-589, 1-591, 1-593, 1-597, 1-599, 1-601, 1-643, 1-679 1-693, 1-707, 1-755, 1-1043
312155-0289 ..	SCREW DIN 7991 MF6S M4X10 A4 70	1-105, 1-107, 1-109, 1-111, 1-113, 1-129, 1-131, 1-135 1-137, 1-139, 1-201, 1-1043
312155-0291 ..	SCREW DIN 7991 MF6S M4X12 A4 70	1-661, 1-663, 1-665, 1-667, 1-669
312155-0293 ..	SCREW DIN 7991 MF6S M4X16 A4 70	1-129, 1-131, 1-135, 1-137, 1-139, 1-1043
312155-0295 ..	SCREW DIN 7991 MF6S M4X20 A4 70	1-541, 1-543, 1-545, 1-589, 1-591, 1-593
312155-0297 ..	SCREW DIN 7991 MF6S M4X25 A4 70	1-203
312155-0299 ..	SCREW DIN 7991 MF6S M4X30 A4 70	1-141, 1-143, 1-145, 1-147, 1-149, 1-151, 1-625, 1-627 1-629, 1-631, 1-633, 1-661, 1-663, 1-665, 1-667, 1-669
312155-0323 ..	SCREW DIN 7991 MF6S M5X8 A4 70	1-17, 1-19, 1-21, 1-183, 1-185, 1-263, 1-499
312155-0327 ..	SCREW DIN 7991 MF6S M5X12 A4 70	1-91, 1-93, 1-115, 1-121, 1-123, 1-125, 1-127, 1-159 1-287, 1-289, 1-499, 1-625, 1-627, 1-629, 1-631, 1-633, 1-661, 1-663, 1-665, 1-667, 1-669, 1-737 1-739
312155-0329 ..	SCREW DIN 7991 MF6S M5X16 A4 70	1-287, 1-289, 1-625, 1-627, 1-629, 1-631, 1-633, 1-661 1-663, 1-665, 1-667, 1-669, 1-721, 1-723, 1-925
312155-0331 ..	SCREW DIN 7991 MF6S M5X20 A4 70	1-535, 1-537, 1-585, 1-587, 1-713, 1-715, 1-717
312155-0333 ..	SCREW DIN 7991 MF6S M5X25 A4 70	1-625, 1-627, 1-629, 1-631, 1-633, 1-661, 1-663, 1-665 1-667, 1-669

Part No	Description	Page No
312155-0366 ..	SCREW DIN 7991 MF6S M6X12 A4 70	1-49, 1-51, 1-53, 1-55, 1-279, 1-281, 1-283, 1-285, 1-305, 1-307, 1-309, 1-311, 1-713, 1-715, 1-717
312155-0368 ..	SCREW DIN 7991 MF6S M6X16 A4 70	1-179, 1-181, 1-279, 1-281, 1-283, 1-285, 1-305, 1-307, 1-309, 1-311, 1-737, 1-739
312155-0370 ..	SCREW DIN 7991 MF6S M6X20 A4 70	1-95, 1-97, 1-99, 1-101, 1-103, 1-1019, 1-1021, 1-1025, 1-1027, 1-1029, 1-1031
312155-0376 ..	SCREW DIN 7991 MF6S M6X35 A4 70	1-95, 1-97, 1-99, 1-101, 1-103
312155-0379 ..	SCREW DIN 7991 MF6S M6X45 A4 70	1-95, 1-97, 1-99, 1-101, 1-103
312155-0380 ..	SCREW DIN 7991 MF6S M6X50 A4 70	1-95, 1-97, 1-99, 1-101, 1-103
312155-0447 ..	SCREW DIN 7991 MF6S M8X12 A4 70	1-29
312155-0449 ..	SCREW DIN 7991 MF6S M8X16 A4 70	1-479, 1-481, 1-483, 1-485, 1-487
312155-0453 ..	SCREW DIN 7991 MF6S M8X25 A4 70	1-121, 1-123, 1-125, 1-127
312155-0455 ..	SCREW DIN 7991 MF6S M8X30 A4 70	1-625, 1-627, 1-629, 1-631, 1-633, 1-661, 1-663, 1-665, 1-667, 1-669
312155-0459 ..	SCREW DIN 7991 MF6S M8X40 A4 70	1-61, 1-63
312155-0495 ..	SCREW DIN 7991 MF6S M10X30 A4 70	1-23, 1-179, 1-181
312155-0499 ..	SCREW DIN 7991 MF6S M10X40 A4 70	1-81
312306-0463 ..	SCREW ISO4026 M8X60 FZB	1-827
312309-0362 ..	SCREW ISO4026 M6X8 A4	1-505, 1-507
312311-0366 ..	SET SCREW, DOG POINT ISO4028 M6X12 FZB	1-807, 1-819
312311-0370 ..	SET SCREW, DOG PONT ISO4028 M6X20 FZB	1-921
312311-0455 ..	SET SCREW, DOG POINT ISO4028 M8X30 FZB	1-809
312318-0218 ..	SET SCREW, CUP END ISO4029 M3X4 A4	1-201
312318-0287 ..	SET SCREW, CUP END ISO4029 M4X8 A4	1-643, 1-645, 1-679, 1-681, 1-693, 1-695, 1-707, 1-709, 1-909, 1-911, 1-913, 1-957
312318-0289 ..	SET SCREW, CUP END ISO4029 M4X10 A4	1-819, 1-949, 1-951
312318-0291 ..	SET SCREW, CUP END ISO4029 M4X12 A4	1-801
312318-0320 ..	SET SCREW, CUP END ISO4029 M5X5 A4	1-615, 1-625, 1-627, 1-629, 1-631, 1-633, 1-641, 1-643, 1-651, 1-653, 1-655, 1-657, 1-659, 1-661, 1-663, 1-665, 1-667, 1-669, 1-679, 1-693, 1-699, 1-701, 1-703, 1-705, 1-707
312318-0321 ..	SET SCREW, CUP END ISO4029 M5X6 A4	1-513, 1-515, 1-517, 1-617, 1-619, 1-621, 1-623, 1-653, 1-655, 1-657, 1-659, 1-685, 1-687, 1-689, 1-691, 1-699, 1-701, 1-703, 1-705
312318-0323 ..	SET SCREW, CUP END ISO4029 M5X8 A4	1-371, 1-615, 1-617, 1-619, 1-621, 1-623, 1-625, 1-627, 1-629, 1-631, 1-633, 1-643, 1-651, 1-653, 1-655, 1-657, 1-659, 1-661, 1-663, 1-665, 1-667, 1-669, 1-679, 1-685, 1-687, 1-689, 1-691, 1-693, 1-699, 1-701, 1-703, 1-705, 1-707, 1-953, 1-1033, 1-1035, 1-1037
312318-0325 ..	SET SCREW, CUP END ISO4029 M5X10 A4	1-617, 1-619, 1-621, 1-623, 1-653, 1-655, 1-657, 1-659, 1-685, 1-687, 1-689, 1-691, 1-699, 1-701, 1-703, 1-705
312318-0327 ..	SET SCREW, CUP END ISO4029 M5X12 A4	1-617, 1-619, 1-621, 1-623, 1-647, 1-685, 1-687, 1-689, 1-691
312318-0329 ..	SET SCREW, CUP END ISO4029 M5X16 A4	1-91, 1-93, 1-115, 1-201
312318-0360 ..	SET SCREW, CUP END ISO4029 M6X6 A4	1-923
312318-0362 ..	SET SCREW, CUP END ISO4029 M6X8 A4	1-23, 1-25, 1-27, 1-35, 1-179, 1-181
312318-0366 ..	SET SCREW, CUP END ISO4029 M6X12 A4	1-201
312318-0368 ..	SET SCREW, CUP END ISO4029 M6X16 A4	1-153, 1-155, 1-161, 1-1019, 1-1021, 1-1025, 1-1027, 1-1029, 1-1031
312318-0370 ..	SET SCREW, CUP END ISO4029 M6X20 A4	1-157, 1-465, 1-467, 1-721, 1-723
312403-0493 ..	SCREW ISO4762 M10X25 12.9	1-1019, 1-1021, 1-1025, 1-1027, 1-1029, 1-1031
312601-0320 ..	HEXAGON NUT, DIN 934 M10 8 FZB	1-247
312602-0312 ..	HEXAGON NUT, EN 24032 M6M M4 NIPLBR	1-141, 1-143, 1-145, 1-147, 1-149, 1-151
312605-0312 ..	HEXAGON NUT, M6M M4 A280	1-201, 1-203, 1-479, 1-481, 1-483, 1-485, 1-487, 1-489, 1-547, 1-595, 1-643, 1-645, 1-679, 1-681, 1-693, 1-695, 1-707, 1-709, 1-713, 1-715, 1-717, 1-767, 1-801, 1-895
312605-0314 ..	HEXAGON NUT, M6M M5 A280	1-91, 1-93, 1-115, 1-201, 1-479, 1-481, 1-483, 1-485, 1-487, 1-489, 1-643, 1-647, 1-679, 1-693, 1-707, 1-767, 1-883, 1-885, 1-887, 1-889, 1-975
312605-0316 ..	HEXAGON NUT, M6M M6 A280	1-37, 1-39, 1-67, 1-69, 1-71, 1-73, 1-129, 1-131, 1-135, 1-137, 1-139, 1-153, 1-155, 1-157, 1-161, 1-287, 1-289, 1-301, 1-303, 1-395, 1-465, 1-467, 1-479, 1-481, 1-483, 1-485, 1-487, 1-529, 1-531, 1-533, 1-579, 1-581, 1-583, 1-713, 1-715, 1-717, 1-769, 1-771, 1-773, 1-775, 1-777, 1-789, 1-799, 1-801, 1-813, 1-815, 1-817, 1-829, 1-835, 1-895, 1-921, 1-923, 1-949, 1-951, 1-953, 1-957, 1-959, 1-961, 1-987, 1-993, 1-995, 1-997, 1-999, 1-1001, 1-1003, 1-1005
312605-0318 ..	HEXAGON NUT, M6M M8 A280	1-29, 1-31, 1-33, 1-35, 1-37, 1-39, 1-61, 1-63, 1-153, 1-179, 1-181, 1-187, 1-287, 1-289, 1-301, 1-303, 1-333, 1-335, 1-337, 1-339, 1-465, 1-467, 1-475, 1-477, 1-479, 1-481, 1-483, 1-485, 1-487, 1-557, 1-603, 1-625, 1-627, 1-629, 1-631, 1-633, 1-661, 1-663, 1-665, 1-667, 1-669, 1-737, 1-739, 1-789, 1-809, 1-827, 1-841, 1-975, 1-1019, 1-1021, 1-1025, 1-1027, 1-1029, 1-1031, 1-1033, 1-1035, 1-1037
312605-0320 ..	HEXAGON NUT, M6M M10 A280	1-23, 1-25, 1-27, 1-45, 1-249, 1-333, 1-335, 1-337, 1-339, 1-373, 1-625, 1-627, 1-629, 1-631, 1-633, 1-661, 1-663, 1-665, 1-667, 1-669, 1-767
312605-0322 ..	HEXAGON NUT, M6M M12 A280	1-23, 1-35, 1-67, 1-69, 1-71, 1-73, 1-251, 1-775, 1-777, 1-891
312607-0314 ..	HEXAGON NUT, EN 24032 M6M M5 A480	1-505
312607-0318 ..	HEXAGON NUT, EN 24032 M6M M8 A480	1-239, 1-833, 1-1019, 1-1021, 1-1025, 1-1027, 1-1029, 1-1031
312625-0314 ..	HEXAGON THIN NUT, EN 24035 ML6M M5 A4	1-617, 1-619, 1-621, 1-623, 1-645, 1-647, 1-653, 1-655, 1-657, 1-659, 1-681, 1-685, 1-687, 1-689, 1-691, 1-695, 1-699, 1-701, 1-703, 1-705, 1-709, 1-755
312625-0316 ..	HEXAGON THIN NUT, EN 24035 ML6M M6 A4	1-721, 1-723, 1-775, 1-777, 1-975, 1-1019, 1-1021, 1-1025, 1-1027, 1-1029, 1-1031
312625-0318 ..	HEXAGON THIN NUT, EN 24035 ML6M M8 A4	1-549, 1-551, 1-553, 1-597, 1-599, 1-601, 1-925
312705-0310 ..	NUT HEX. DOMED CAP MHM-6 M3 A2	1-775, 1-777, 1-989, 1-991
312705-0312 ..	NUT HEX. DOMED CAP MHM-6 M4 A280	1-479, 1-481, 1-483, 1-485, 1-487, 1-775, 1-777, 1-893, 1-989, 1-991
312705-0314 ..	NUT HEX. DOMED CAP MHM-6 M5 A280	1-783, 1-785
312705-0316 ..	HEX. DOMED CAP MHM-6 M6 A280	1-471, 1-473, 1-489, 1-737, 1-739, 1-769, 1-771, 1-773, 1-775, 1-777, 1-813, 1-893, 1-989, 1-991
312705-0318 ..	NUT HEX. DOMED CAP MHM-6 M8 A280	1-471, 1-473, 1-841
312812-0312 ..	HEXAGON NUT, NY-LOCK M4 A4 80	1-17, 1-19, 1-21, 1-215
312812-0314 ..	HEXAGON NUT, NY-LOCK M5 A4 80	1-625, 1-627, 1-629, 1-631, 1-633, 1-643, 1-661, 1-663

Part No	Description	Page No
		1-665, 1-667, 1-669, 1-679, 1-693, 1-707, 1-1015
312812-0316 ..	HEXAGON NUT, NY-LOCK M6 A4 80	1-183, 1-185, 1-331, 1-401, 1-617, 1-619, 1-621, 1-623, 1-645, 1-653, 1-655, 1-657, 1-659, 1-681, 1-685, 1-687, 1-689, 1-691, 1-695, 1-699, 1-701, 1-703
		1-705, 1-709, 1-767, 1-801, 1-1009
312812-0318 ..	HEXAGON NUT, NY-LOCK M8 A4 80	1-29, 1-31, 1-33, 1-201, 1-737, 1-739, 1-755, 1-1019
		1-1021, 1-1025, 1-1027, 1-1029, 1-1031
312812-0320 ..	HEXAGON NUT, NY-LOCK M10 A4 80	1-1033, 1-1035, 1-1037
312812-0322 ..	HEXAGON NUT, NY-LOCK M12 A4 80	1-741
312902-0318 ..	NUT HEX. LEFT THREAD, M8 A280	1-29, 1-31, 1-33, 1-37, 1-39, 1-153
312902-0320 ..	NUT HEX. LEFT THREAD, M10 A280	1-25, 1-27, 1-45
315101-0136 ..	WASHER BRB, 4,3/8 H=0,8	1-243
315101-0153 ..	WASHER PLAIN, BRB, 6,4/12 H=1,5	1-41, 1-43
315101-0182 ..	WASHER PLAIN, BRB, 15/26 H=2	1-373
315103-0153 ..	WASHER PLAIN, 6,4X12X1,5 BR NI PL	1-129, 1-131, 1-135, 1-137, 1-139
315103-0165 ..	WASHER PLAIN, 8,4X15X1,5 BR NI PL	1-833
315105-0124 ..	WASHER PLAIN, 3,2X6X0,5 A4 BRB	1-25, 1-27, 1-121, 1-123, 1-125, 1-127, 1-179, 1-181
		1-201, 1-775, 1-777, 1-813, 1-989, 1-991
315105-0136 ..	WASHER PLAIN, 4,3X8X0,8 A4 BRB	1-17, 1-19, 1-21, 1-23, 1-83, 1-85, 1-87, 1-89, 1-105, 1-107
		1-109, 1-111, 1-113, 1-129, 1-131, 1-135, 1-137, 1-139, 1-141, 1-143, 1-145, 1-147, 1-149, 1-151
		1-201, 1-203, 1-279, 1-281, 1-283, 1-285, 1-287, 1-289, 1-395, 1-479, 1-481, 1-483, 1-485, 1-487
		1-555, 1-645, 1-681, 1-695, 1-709, 1-713, 1-715, 1-717, 1-775, 1-777, 1-807, 1-827, 1-835, 1-975
		1-989, 1-991
315105-0146 ..	WASHER PLAIN, 5,3X10X1 A4 BRB	1-179, 1-181, 1-389, 1-391, 1-479, 1-481, 1-483, 1-485
		1-487, 1-525, 1-527, 1-615, 1-625, 1-627, 1-629, 1-631, 1-633, 1-643, 1-647, 1-651, 1-661, 1-663
		1-665, 1-667, 1-669, 1-679, 1-693, 1-707, 1-737, 1-739, 1-751, 1-755, 1-807, 1-817, 1-827, 1-831
		1-921, 1-923, 1-1015, 1-1019, 1-1021, 1-1025, 1-1027, 1-1029, 1-1031, 1-1033, 1-1035, 1-1037
315105-0153 ..	WASHER PLAIN, 6,4X12X1,5 A4 BRB	1-17, 1-19, 1-21, 1-23, 1-25, 1-27, 1-35, 1-49, 1-51, 1-53
		1-55, 1-57, 1-59, 1-75, 1-77, 1-81, 1-95, 1-97, 1-99, 1-101, 1-103, 1-121, 1-123, 1-125, 1-127
		1-129, 1-131, 1-135, 1-137, 1-139, 1-157, 1-163, 1-165, 1-167, 1-169, 1-179, 1-181, 1-183, 1-185
		1-201, 1-243, 1-257, 1-259, 1-261, 1-263, 1-287, 1-289, 1-291, 1-293, 1-299, 1-301, 1-303, 1-315
		1-317, 1-401, 1-471, 1-473, 1-475, 1-477, 1-479, 1-481, 1-483, 1-485, 1-487, 1-499, 1-505, 1-529
		1-531, 1-533, 1-541, 1-543, 1-545, 1-563, 1-565, 1-567, 1-569, 1-579, 1-581, 1-583, 1-589, 1-591
		1-593, 1-617, 1-619, 1-621, 1-623, 1-625, 1-627, 1-629, 1-631, 1-633, 1-643, 1-645, 1-653, 1-655
		1-657, 1-659, 1-661, 1-663, 1-665, 1-667, 1-669, 1-679, 1-681, 1-685, 1-687, 1-689, 1-691, 1-693
		1-695, 1-699, 1-701, 1-703, 1-705, 1-707, 1-709, 1-713, 1-715, 1-717, 1-767, 1-775, 1-777, 1-789
		1-801, 1-807, 1-809, 1-811, 1-813, 1-815, 1-817, 1-825, 1-829, 1-835, 1-883, 1-885, 1-887, 1-889
		1-891, 1-893, 1-895, 1-897, 1-927, 1-949, 1-951, 1-953, 1-957, 1-959, 1-961, 1-975, 1-989, 1-991
		1-999, 1-1019, 1-1021, 1-1025, 1-1027, 1-1029, 1-1031, 1-1033, 1-1035, 1-1037, 1-1049
315105-0156 ..	WASHER PLAIN, 6,7X14X1,5 A4 BRB	1-57, 1-59, 1-525, 1-527, 1-755, 1-813
315105-0165 ..	FWAS080G0-0S, WASHER PLAIN	1-23, 1-25, 1-27, 1-29, 1-31, 1-33, 1-35, 1-41, 1-43, 1-49
		1-51, 1-53, 1-55, 1-61, 1-63, 1-67, 1-69, 1-71, 1-73, 1-75, 1-77, 1-81, 1-91, 1-93, 1-115, 1-117
		1-119, 1-121, 1-123, 1-125, 1-127, 1-163, 1-179, 1-181, 1-187, 1-201, 1-239, 1-243, 1-287, 1-289
		1-299, 1-301, 1-303, 1-315, 1-317, 1-415, 1-417, 1-419, 1-435, 1-437, 1-439, 1-441, 1-475, 1-477
		1-479, 1-481, 1-483, 1-485, 1-487, 1-505, 1-513, 1-515, 1-517, 1-519, 1-521, 1-523, 1-525, 1-527
		1-529, 1-531, 1-533, 1-549, 1-551, 1-553, 1-557, 1-579, 1-581, 1-583, 1-597, 1-599, 1-601, 1-603
		1-713, 1-715, 1-717, 1-737, 1-739, 1-751, 1-755, 1-767, 1-789, 1-801, 1-809, 1-811, 1-825, 1-827
		1-841, 1-919, 1-925, 1-975, 1-1007, 1-1019, 1-1021, 1-1025, 1-1027, 1-1029, 1-1031
315105-0171 ..	WASHER PLAIN, 10X18X2 A4 BRB	1-25, 1-27, 1-1033, 1-1035, 1-1037
315105-0173 ..	WASHER PLAIN, 10,5X22X2 A4 BRB	1-25, 1-27, 1-35, 1-117, 1-119, 1-179, 1-181, 1-333
		1-335, 1-337, 1-339, 1-563, 1-565, 1-567, 1-569, 1-617, 1-619, 1-621, 1-623, 1-643, 1-645, 1-653
		1-655, 1-657, 1-659, 1-679, 1-681, 1-685, 1-687, 1-689, 1-691, 1-693, 1-695, 1-699, 1-701, 1-703
		1-705, 1-707, 1-709, 1-767, 1-809, 1-819, 1-1033, 1-1035, 1-1037
315105-0178 ..	WASHER PLAIN, 13X24X2,5 A4 BRB	1-23, 1-67, 1-69, 1-71, 1-73, 1-247
315105-0179 ..	WASHER PLAIN, 13,5X242 A4 BRB	1-891
315106-0136 ..	WASHER PLAIN, M4 ISO7089-4-200 HV A4	1-479, 1-481, 1-483, 1-485, 1-487, 1-617, 1-619
		1-621, 1-623, 1-625, 1-627, 1-629, 1-631, 1-633, 1-653, 1-655, 1-657, 1-659, 1-661, 1-663, 1-665
		1-667, 1-669, 1-685, 1-687, 1-689, 1-691, 1-699, 1-701, 1-703, 1-705, 1-741, 1-891, 1-893, 1-895
315106-0146 ..	"WASHER PLAIN, M5 ISO7089-5-200 HV A4"	1-305, 1-307, 1-309, 1-311, 1-505, 1-783, 1-785
		1-883, 1-885, 1-887, 1-889
315106-0153 ..	WASHER PLAIN, M6 ISO7089-6-200 HV A4	1-171, 1-489
315106-0178 ..	"WASHER PLAIN, M12 ISO7089-12-200 HV A4"	1-891
315115-0153 ..	WASHER PLAIN, TBRB 6,4/12 H=3	1-81, 1-529, 1-531, 1-533, 1-549, 1-551, 1-553, 1-579
		1-581, 1-583, 1-597, 1-599, 1-601, 1-647, 1-879
315115-0165 ..	WASHER PLAIN, TBRB 8,4/16 H=3	1-407, 1-409, 1-415, 1-417, 1-419, 1-451, 1-453, 1-457
		1-459, 1-461, 1-463, 1-479, 1-481, 1-483, 1-485, 1-487, 1-505, 1-923
315121-0173 ..	WASHER PLAIN, TBRSB 10,5/28 H=6	1-247
315125-0146 ..	WASHER HIGH, TBRSB 5.3X15X1 A4	1-201, 1-783, 1-785, 1-919
315125-0153 ..	WASHER HIGH, TBRSB 6,4X22X4 A4	1-35, 1-179, 1-181, 1-257, 1-471, 1-473, 1-479, 1-481
		1-483, 1-485, 1-487, 1-489, 1-505, 1-519, 1-521, 1-523, 1-737, 1-739, 1-925, 1-977
315125-0165 ..	WASHER HIGH, TBRSB 8,4X26X5 A4	1-201, 1-513, 1-515, 1-517, 1-807, 1-817, 1-841, 1-919
315125-0173 ..	WASHER HIGH, TBRSB 10,5X28X6 A4	1-179, 1-181, 1-451, 1-453, 1-457, 1-459, 1-461, 1-463
315202-0101 ..	O-RING 3,1X1,6 MM	1-535, 1-537, 1-541, 1-543, 1-545, 1-585, 1-587, 1-589, 1-591, 1-593
		1-743, 1-745, 1-747
315202-0102 ..	O-RING 4,1X1,6 MM	1-529, 1-531, 1-533, 1-549, 1-551, 1-553, 1-579, 1-581, 1-583, 1-597
		1-599, 1-601, 1-743, 1-745, 1-747
315202-0104 ..	O-RING 6,1X1,6 MM	1-559, 1-563, 1-565, 1-567, 1-569
315202-0105 ..	O-RING 7,1X1,6 MM	1-535, 1-537, 1-539, 1-559, 1-563, 1-565, 1-567, 1-569, 1-585, 1-587
315202-0107 ..	O-RING 9,1X1,6 MM	1-29, 1-31, 1-33, 1-41, 1-43
315202-0111 ..	O-RING 13,1X1,6 MM	1-555
315202-0116 ..	O-RING 18,1X1,6 MM	1-549, 1-551, 1-553, 1-597, 1-599, 1-601
315202-0118 ..	O-RING 22,1X1,6 MM	1-561
315202-0217 ..	O-RING 24,2X3 MM	1-25, 1-27, 1-121, 1-123, 1-125, 1-127
315202-0221 ..	O-RING 34,2X3 MM	1-179, 1-181
315202-0225 ..	O-RING 44,2X3 MM	1-81

Part No	Description	Page No
315202-0233 ..	O-RING 79,2X5,7 MM	1-387
315202-0302 ..	O-RING 54,5X3 MM	1-387
315202-0303 ..	O-RING 59,5X3 MM	1-121, 1-123, 1-125, 1-127, 1-387
315202-0304 ..	O-RING 64,5X3 MM	1-387
315202-0305 ..	O-RING 69,5X3 MM	1-23, 1-121, 1-123, 1-125, 1-127, 1-387
315202-0307 ..	O-RING 79,5X3 MM	1-387
315202-0308 ..	O-RING 84,5X3 MM	1-387
315202-0310 ..	O-RING 94,5X3 MM	1-387
315202-0311 ..	O-RING 99,5X3 MM	1-81
315202-0705 ..	O-RING 17,17X1,78 MM	1-559
315202-0706 ..	O-RING 18,77X1,78 MM.	1-559
315202-0801 ..	O-RING 37,82X1,78 MM	1-645, 1-681, 1-695, 1-709
315204-0308 ..	O-RING 84,5X3 MM	1-383
315204-0324 ..	O-RING 164,3X5,7 MM	1-457, 1-459, 1-461, 1-463
315205-0734 ..	O-RING 47,29X2,62 MM	1-1001
315207-0506 ..	O-RING 7,65X1,78 MM	1-395
315207-0519 ..	O-RING 24,99X3,53 MM	1-1007
315207-0723 ..	O-RING 29,82X2,62 MM	1-395
315211-0103 ..	BONDED SEAL SS/NBR90 M6	1-549, 1-551, 1-553, 1-563, 1-565, 1-567, 1-569, 1-597, 1-599, 1-601, 1-743, 1-745, 1-747
315211-0104 ..	BONDED SEAL SS/NBR90 M8	1-743, 1-745, 1-747
315229-0103 ..	SQUARE RING, 23,1X30,1X3,7 MM 1" FDA	1-1007
315229-0203 ..	GASKET 22,1X30,1X3,7 MM 1"	1-395
315300-0004 ..	TUBE, 8 MM PE BLUE	1-833, 1-891, 1-893, 1-895, 1-1019, 1-1021
315300-0007 ..	TUBE, 10 MM PE BLUE	1-833, 1-1019, 1-1021, 1-1025, 1-1027, 1-1029, 1-1031
315400-0001 ..	6-4E PUN-H-6X1-BL	1-243
315400-0003 ..	TUBE PUN-H-6X1-SW	1-741, 1-1019, 1-1021, 1-1025, 1-1027, 1-1029, 1-1031
315400-0004 ..	TUBE PUN-H-8X1,25-BL	1-121, 1-123, 1-125, 1-127, 1-935, 1-947
315400-0006 ..	TUBE PUN-H-8X1,25-SW	1-879
315400-0016 ..	TUBE PUN-H-4X0,75-BL	1-243, 1-947
315400-0018 ..	TUBE PUN-H-4X0,75-SW	1-1019, 1-1021, 1-1025, 1-1027, 1-1029, 1-1031
315402-0146 ..	LOCK WASHER, DIN127B 5,1 A4, M5-3/16	1-645, 1-647, 1-681, 1-695, 1-709
315402-0156 ..	LOCK WASHER, DIN127B 6,5 A4, 1/4	1-549, 1-551, 1-553, 1-597, 1-599, 1-601, 1-647
315402-0165 ..	LOCK WASHER, DIN127B 8,1 A4, M8-5/16	1-269, 1-277
315402-0178 ..	LOCK WASHER, DIN127B 12,2 A4, M12	1-265, 1-271
315705-0202 ..	PARALLEL KEY W. ROUND ENDS, 5X5X25MM	1-179, 1-181
315705-0234 ..	PARALLEL KEY W. ROUND ENDS, 6X6X25 MM	1-201
315705-0235 ..	PARALLEL KEY W. ROUND ENDS, 6X6X28 MM	1-975
315705-0239 ..	PARALLEL KEY W. ROUND ENDS, 6X6X40 MM	1-987
315705-0267 ..	PARALLEL KEY W. ROUND ENDS, 8X7X30 MM	1-25, 1-27, 1-121, 1-123, 1-125, 1-127
315705-0270 ..	PARALLEL KEY W. ROUND ENDS, 8X7X40 MM	1-25, 1-27
315705-0301 ..	PARALLEL KEY W. ROUND ENDS, 10X8X40 MM	1-479, 1-481, 1-483, 1-485, 1-487
315741-0216 ..	RETAINING RING, DIN 705 A4 20	1-35
315750-0102 ..	RETAINING RING FOR SHAFT DIN 471 5	1-201
315751-0109 ..	RETAINING RING FOR SHAFT DIN 471 12 SS	1-767, 1-801
315751-0116 ..	RETAINING RING FOR SHAFT DIN 471 20 SS	1-821, 1-823, 1-975
315751-0119 ..	RETAINING RING FOR SHAFT DIN 471 25 SS	1-23, 1-179, 1-181, 1-819, 1-987
315753-0112 ..	RETAINING RING FOR BORE DIN 472 15 SS	1-529, 1-531, 1-533, 1-579, 1-581, 1-583
315753-0117 ..	RETAINING RING FOR BORE DIN 472 22 SS	1-287, 1-289
315753-0121 ..	RETAINING RING FOR BORE DIN 472 28 SS	1-287, 1-289
315753-0122 ..	RETAINING RING FOR BORE DIN 472 30 SS	1-157, 1-813
315753-0123 ..	RETAINING RING FOR BORE DIN 472 32 SS	1-977
315753-0127 ..	RETAINING RING FOR BORE DIN 472 40X1.75C	1-257
315753-0130 ..	RETAINING RING FOR BORE DIN 472 47 SS	1-819, 1-987
315753-0132 ..	RETAINING RING FOR BORE DIN 472 52 SS	1-25, 1-27
315755-0106 ..	RETAINING RING SHAFT DIN 6799 4 SS	1-183, 1-185
315755-0107 ..	RETAINING RING SHAFT DIN 6799 5 SS	1-819, 1-949, 1-951, 1-953, 1-957, 1-959, 1-961
315755-0108 ..	RETAINING RING SHAFT DIN 6799 6 SS	1-243
315755-0801 ..	RETAINING RING SHAFT DIN 6799 8 SS	1-919
316810-0106 ..	PIPE CLIP FOR TUBE D=8 MM	1-23
318856-0115 ..	KNOB, EXTERNAL THREAD. NO. 8306-0278	1-35
318860-0104 ..	KNOB, ADJUST.HI.EXT.THREAD, NO 8324-3623	1-925
318860-0110 ..	KNOB, ADJUST.HI.EXT.THREAD, NO 8324-3844	1-925
318871-0105 ..	KNOB CIRCULAR, EXT THREAD, NO. 8302-6150	1-35
319030-0126 ..	DISC SPRING, CONICAL 12,5X6,2X0,7 MM	1-1019, 1-1021, 1-1025, 1-1027, 1-1029, 1-1031, 1-1033, 1-1035, 1-1037
321101-0143 ..	FLANGE BUSHING, 8/14X8-18X3 MM	1-755
321101-0172 ..	FLANGE BUSHING, 12X18X10 MM	1-287, 1-289
321101-0173 ..	FLANGE BUSHING, 12X18X12 MM	1-41, 1-43
321105-0204 ..	BUSHING W/O FLANGE, 16/22X20 MM	1-201
321111-0302 ..	FLANGE BUSHING, 20/26X15-32X3 MM	1-35
321130-0200 ..	THRUST WASHER, 14X26X1,5 MM	1-155, 1-161
321133-0375 ..	BUSHING IGLIDUR G 35X39X30	1-157
321134-0260 ..	BUSHING, IGLIDUR W300 20X23X20	1-395
321141-0104 ..	BEARING BUSHING, 8X10X12 MM	1-37, 1-39
321141-0138 ..	BEARING BUSHING, 10X12X8 MM	1-813
321141-0178 ..	BEARING BUSHING, 12X14X10 MM	1-801
321141-0183 ..	BEARING BUSHING, 12X14X15 MM	1-767
321155-0062 ..	FLANGE BUSHING, IGLIDUR X 6X8X8	1-643, 1-645, 1-679, 1-681, 1-693, 1-695, 1-707, 1-709
321306-0105 ..	BALL BEARING 25/47X12	1-23, 1-179, 1-181
321309-0103 ..	BALL BEARING 17/40X12	1-179, 1-181
342703-0208 ..	CONE NUT M8, NUT M-8 SS	1-509
342713-0209 ..	PLUG, EXT THREAD HEX SOCKET 8638-00-180	1-529, 1-531, 1-533, 1-549, 1-551, 1-553, 1-563, 1-565, 1-567, 1-569, 1-579, 1-581, 1-583, 1-597, 1-599, 1-601

Part No	Description	Page No
342722-0206 ..	STRAIGHT COUPLING D=8-G3/8"	1-121, 1-123, 1-125, 1-127
342735-0103 ..	ELBOW PIPE JOINT	1-849, 1-857, 1-865, 1-873, 1-879
342840-0103 ..	CLAMPING PIECE DN 1-11/2, GH13LAH112304N	1-341
342850-0304 ..	GASKET 35,4X49,1X5,2 1"1/2 FDA, 3-A	1-341, 1-375, 1-377
342850-0305 ..	GASKET 47,8X62,6X5,2 MM 2" FDA 3-A	1-341
342850-0306 ..	GASKET 60,3X76,1X5,2 MM 2"1/2 FDA 3-A	1-341, 1-375, 1-377
342920-0113 ..	STRAIGHT COUPLING,EXT.THREAD 6/4-R1/8	1-895
342920-0121 ..	STRAIGHT COUPLING, EXT.THREAD 8/6-R1/8	1-61, 1-63, 1-75, 1-77
342930-0113 ..	ELBOW 90COUPL., EXT. THREAD 6/4-R1/8"	1-179, 1-181
342931-0113 ..	ELBOW 90 COUPL., EXT. THREAD 6/4-G1/8"	1-893
342931-0121 ..	ELBOW 90 COUPL., EXT. THREAD 8/6-G1/8"	1-57, 1-59, 1-61, 1-63, 1-75, 1-77, 1-301, 1-303, 1-325
342931-0122 ..	ELBOW 90 COUPL., EXT. THREAD 8/6-G1/4"	1-939
342946-0112 ..	T-COUPLING,UNION 6/4	1-741, 1-893
344206-1088 ..	O-RING 88,62X1,78 MM FDA, 3-A	1-769, 1-771, 1-773, 1-789, 1-799
344207-1020 ..	O-RING 20,35X1,78 MM FDA, 3-A	1-395
344207-1034 ..	O-RING 34,65X1,78 MM FDA, 3-A	1-1001
344207-1041 ..	O-RING 41,0X1,78 MM FDA, 3-A	1-395, 1-993, 1-995, 1-997
344207-1047 ..	O-RING 47,35X1,78 MM FDA, 3-A	1-775, 1-777, 1-1003, 1-1005
344207-1075 ..	O-RING 75,92X1,78 MM FDA, 3-A	1-999
344207-1082 ..	O-RING 82,27X1,78 MM FDA, 3-A	1-999
344207-1114 ..	O-RING 114,02X1,78 MM FDA, 3-A	1-987, 1-999, 1-1003, 1-1005
344207-1133 ..	O-RING 133,07X1,78 MM FDA, 3-A	1-769, 1-771, 1-773, 1-789, 1-799
344207-2010 ..	O-RING 10,77X2,62 MM FDA, 3-A	1-999, 1-1001
344207-2042 ..	O-RING 42,52X2,62 MM FDA, 3-A	1-841
344207-2047 ..	O-RING 47,29X2,62 MM FDA, 3-A	1-999
344207-2055 ..	O-RING 55,25X2,62 MM FDA, 3-A	1-987
344210-0110 ..	O-RING 12,1X1,6 MM FDA, 3-A	1-1013
344210-0123 ..	O-RING 35,1X1,6 MM FDA, 3-A	1-769, 1-771, 1-773, 1-799, 1-987, 1-1003, 1-1005
344210-0215 ..	O-RING 19,2X3 MM FDA, 3-A	1-381, 1-383, 1-385
344210-0219 ..	O-RING 29,2X3,0 MM FDA, 3-A	1-333, 1-335, 1-337, 1-339, 1-375, 1-377
344210-0223 ..	O-RING 39,2X3,0 MM FDA, 3-A	1-333, 1-335, 1-337, 1-339, 1-375, 1-377
344210-0301 ..	O-RING 49,5X3,0 MM FDA, 3-A	1-381
344210-0324 ..	O-RING 164,3X5,7 MM FDA, 3-A	1-451, 1-453
344224-0202 ..	BALL BEARING 15/32X9	1-977
344224-0204 ..	BALL BEARING 20/42X12	1-975
344224-0205 ..	BALL BEARING 25/47X12	1-25, 1-27, 1-819
344224-0206 ..	BALL BEARING 30/55X13	1-809
344226-0100 ..	BALL BEARING 10/30X9	1-811, 1-825
344226-0102 ..	BALL BEARING 15/35X11	1-1011
344226-0105 ..	BALL BEARING 25/52X15	1-25, 1-27, 1-121, 1-123, 1-125, 1-127
344226-0107 ..	BALL BEARING 35/72X17	1-121, 1-123, 1-125, 1-127
344227-0206 ..	BALL BEARING 30/72X19	1-23
344245-0050 ..	SENSOR CABLE, EVT123	1-395, 1-775, 1-777
344246-0050 ..	SENSOR CABLE, EVT127	1-975
344250-0020 ..	SENSOR CABLE, EVT138	1-505, 1-921
344250-0100 ..	SENSOR CABLE, EVT140	1-923
344253-0100 ..	SENSOR CABLE, EVT002	1-767, 1-801
344266-0020 ..	SENSOR CABLE, EVT256	1-835
344271-0238 ..	BUSHING W/O FLANGE 16/20X25 MM	1-1019, 1-1021, 1-1025, 1-1027, 1-1029, 1-1031
344271-0270 ..	BUSHING W/O FLANGE 18/22X18 MM	1-1033, 1-1035, 1-1037
344271-0306 ..	BUSHING W/O FLANGE 20/26X25 MM	1-1033, 1-1035, 1-1037
344324-0285 ..	SET SCREW, DOG POINT ISO4028 M4X6 A2	1-975
344324-0449 ..	SET SCREW, DOG POINT ISO4028 M8X16 A2	1-265, 1-271
344342-0041 ..	TUBE 4 MM APA BLACK	1-939
344342-0081 ..	TUBE 8 MM APA BLACK	1-939
344351-0312 ..	PROTECTIVE PLUG PE, GPN 300/F312	1-973
344407-0000 ..	KLüBERSYNTH UH1 14-151, ONLY IN BOM	1-811, 1-825
344439-0050 ..	RETAINER LOCTITE 603, 50ML	1-791, 1-797
344460-0000 ..	ROCOL SAPPHIRE ENDURE, ONLY IN BOM	1-1019, 1-1021, 1-1025, 1-1027, 1-1029, 1-1031, 1-1033, 1-1035, 1-1037
344502-0021 ..	GREASE NIPPLE STRAIGHT M6	1-811, 1-825, 1-1019, 1-1021, 1-1025, 1-1027, 1-1029, 1-1031
350001-0006 ..	PUSH-IN FITTING QS-F-G1/8-6	1-243
350001-0007 ..	PUSH-IN FITTING QS-F-G1/8-8	1-893
350001-0008 ..	PUSH-IN FITTING QS-F-G1/4-6	1-883, 1-885, 1-887, 1-889
350001-0009 ..	PUSH-IN FITTING QS-F-G1/4-8	1-879
350002-0001 ..	PUSH-IN L-FITTING QSL-F-M5-4	1-1019, 1-1021, 1-1025, 1-1027, 1-1029, 1-1031
350002-0002 ..	PUSH-IN L-FITTING QSL-F-M5-6	1-741, 1-891
350002-0006 ..	PUSH-IN L-FITTING QSL-F-G1/8-6	1-243, 1-819
350002-0007 ..	PUSH-IN L-FITTING QSL-F-G1/8-8	1-893, 1-895, 1-897, 1-941, 1-943, 1-945
350002-0008 ..	PUSH-IN L-FITTING QSL-F-G1/4-6	1-883, 1-885, 1-887, 1-889
350002-0009 ..	PUSH-IN L-FITTING QSL-F-G1/4-8	1-833, 1-849, 1-857, 1-865, 1-873, 1-891, 1-1019, 1-1021, 1-1025, 1-1027, 1-1029, 1-1031
350002-0015 ..	PUSH-IN L-FITTING QSL-F-G1/2-10	1-833, 1-1019, 1-1021, 1-1025, 1-1027, 1-1029, 1-1031
350003-0001 ..	PUSH-IN FITTING QS-F-M5-4-I	1-1019, 1-1021, 1-1025, 1-1027, 1-1029, 1-1031
350003-0007 ..	PUSH-IN FITTING QS-F-G1/4-8-I	1-849, 1-857, 1-865, 1-873
350005-0001 ..	PUSH-IN T-FITTING QST-F-4	1-243
350006-0002 ..	PUSH-IN FITTING QS-F-8H-4	1-947
350006-0003 ..	PUSH-IN FITTING QS-F-8H-6	1-881
350006-0009 ..	PUSH-IN FITTING QS-F-12H-10	1-1019, 1-1021, 1-1025, 1-1027, 1-1029, 1-1031
350007-0009 ..	PUSH-IN T-FITTING QST-F-G1/4-8	1-891
350009-0003 ..	PUSH-IN FITTING QS-F-8	1-203, 1-833
350012-0002 ..	SLEEVE QSH-F-6	1-203
350013-0002 ..	PLUG QSC-6H	1-757
350015-0003 ..	PUSH-IN Y-CONNECTOR QSY-F-8	1-947

Part No	Description	Page No
350015-0005 ..	PUSH-IN Y-CONNECTOR QSY-F-10	1-1019, 1-1021, 1-1025, 1-1027, 1-1029, 1-1031
351150-0403 ..	CABLE OLFLEX 3X0,75 MM2 LIGHT/GREY 35	1-883, 1-885, 1-887, 1-889
351160-0102 ..	ECAB01011-6L, WIRE AWM 1X0,75 MM2 DARKBL	1-831, 1-979, 1-981
351428-0009 ..	MOTOR FEEDBACK CABLE 2090-CFBM7DF-CEAA09	1-807, 1-817
351429-1609 ..	MOTOR POWER CABLE 2090-CPWM7DF-16AA09	1-807, 1-817
351501-0015 ..	ETHERNET PATCH CABLE, FL CAT5 PATCH 1,5	1-979, 1-981
352113-0101 ..	CABLE TIE,BLACK 92X	1-23, 1-121, 1-123, 1-125, 1-127, 1-201, 1-815
352113-0102 ..	CABLE TIE, BLACK 188X4,8 MM	1-23, 1-121, 1-123, 1-125, 1-127, 1-835
352113-0103 ..	CABLE TIE, BLACK 290X7,6 MM	1-849, 1-857, 1-865
352113-0203 ..	ANCHOR PLATES FOR STRIPS, TM3S8-M0	1-849, 1-857, 1-865, 1-873
352113-0205 ..	ANCHOR PLATES FOR STRIPS, TM2S8-C100	1-201, 1-767, 1-801, 1-807, 1-815, 1-835, 1-919
352150-0070 ..	SHRINKABLE HOSE 4,0-7,0, HOTY 4	1-979, 1-981
353021-0212 ..	FEED THROUGH TERMINAL, WDU 2,5	1-979, 1-981, 1-983
353031-0203 ..	END BRACKET, WEW 35/2	1-983
353032-0004 ..	END PLATE, WAP 2,5-10, BEIGE	1-983
353034-0042 ..	BRIDGE CONNECTOR WQV 2,5/3	1-979, 1-981
353249-0043 ..	INSERT, SOLID, E153 G	1-757
353249-0303 ..	SEALING PIN, 5,3X25	1-831
353250-0025 ..	GLAND LOCK NUT, M25X1,5	1-757
359011-0807 ..	MARKING, DEK 5 FW 1-50	1-983
359705-0007 ..	WARNING SIGN ISO, HOT SURFACE	1-793, 1-795
434665-0000 ..	HOOD	1-333, 1-335, 1-337, 1-339
441737-0000 ..	WASHER	1-789, 1-791, 1-797
441739-0000 ..	WASHER	1-791, 1-797
457361-0000 ..	CANTILEVER	1-525, 1-527
457367-0000 ..	SHAFT	1-755
466042-0000 ..	SEAL	1-451, 1-453, 1-457, 1-459, 1-461, 1-463, 1-465, 1-467
466046-0000 ..	ROLLER	1-451, 1-453, 1-457, 1-459, 1-461, 1-463
466089-0000 ..	SEAL	1-451, 1-453, 1-465, 1-467
466092-0000 ..	ROLL	1-451, 1-453
499011-0000 ..	SHAFT	1-333, 1-335, 1-337, 1-339
532413-0000 ..	REDUCING NIPPLE	1-179, 1-181
534310-0003 ..	NOZZLE	1-179, 1-181
539212-0000 ..	GASKET	1-381
541165-0000 ..	WASHER	1-287, 1-289
559810-0201 ..	TMCC2 CONTROLLER	1-759, 1-761
560122-0000 ..	SUPPORT ROLLER	1-737, 1-739
567743-0000 ..	SEAL	1-451, 1-453, 1-457, 1-459, 1-461, 1-463, 1-465, 1-467
567746-0001 ..	ROLLER (STANDARD SIZE)	1-347, 1-349, 1-353, 1-355
567746-0002 ..	TRIMMING ROLLER PLUS	1-493
567746-0003 ..	TRIMMING ROLLER MINUS	1-493
569058-0000 ..	SUPPORT ROLLER	1-737, 1-739
573504-0000 ..	ROLLER	1-451, 1-453, 1-457, 1-459, 1-461, 1-463
579318-0000 ..	SEAL	1-451, 1-453
598095-0000 ..	SCREW	1-251
598096-0000 ..	WASHER	1-251
599815-0100 ..	HOLDING FIXTURE	1-7
752186-0001 ..	SHAFT	1-439, 1-441
752186-0002 ..	SHAFT	1-439, 1-441
752186-0004 ..	SHAFT	1-439, 1-441
752186-0005 ..	SHAFT	1-353, 1-355, 1-435, 1-437, 1-439, 1-441
752186-0006 ..	SHAFT	1-415, 1-417, 1-419, 1-439, 1-441
752186-0007 ..	SHAFT	1-353, 1-355, 1-407, 1-409, 1-415, 1-417, 1-419
752186-0009 ..	SHAFT	1-439, 1-441
752186-0012 ..	SHAFT	1-439, 1-441
752186-0014 ..	SHAFT	1-347, 1-349, 1-353, 1-355, 1-439, 1-441
752186-0015 ..	SHAFT	1-353, 1-355, 1-407, 1-409, 1-415, 1-417, 1-419
752186-0016 ..	SHAFT	1-347, 1-349, 1-353, 1-355, 1-475, 1-477
752186-0019 ..	SHAFT	1-353, 1-355, 1-435, 1-437, 1-439, 1-441
752186-0022 ..	SHAFT	1-439, 1-441
929823-0000 ..	PAPER GUIDE	1-203
950351-0000 ..	SHAFT	1-539
1035871-0000 .	SCREW	1-563, 1-565, 1-567, 1-569
1036278-0000 .	SLEEVE	1-561
1036483-0000 .	SEAL	1-509
1036494-0000 .	GUIDE BUSHING	1-563, 1-565, 1-567, 1-569
1036584-0000 .	WASHER	1-541, 1-543, 1-545, 1-589, 1-591, 1-593, 1-743, 1-745, 1-747
1036622-0000 .	GUIDE ROLLER	1-813
1036623-0000 .	GUIDE ROLLER	1-813
1036673-0000 .	WASHER	1-513, 1-515, 1-517, 1-519, 1-521, 1-523
1036674-0000 .	FASTENING PLATE	1-513, 1-515, 1-517
1036954-0000 .	AXLE SUPPORT	1-451, 1-453, 1-457, 1-459, 1-461, 1-463
1036955-0000 .	AXLE SUPPORT	1-451, 1-453, 1-457, 1-459, 1-461, 1-463
1037254-0000 .	SHIM	1-509, 1-743, 1-745, 1-747
1037885-0000 .	REAMED BOLT	1-451, 1-453, 1-457, 1-459, 1-461, 1-463
1038240-0000 .	SPACER	1-539
1040754-0000 .	VOLUME BULGE	1-625, 1-627, 1-629, 1-631, 1-633, 1-661, 1-663, 1-665, 1-667, 1-669
1040755-0000 .	VOLUME SHIM	1-625, 1-627, 1-629, 1-631, 1-633, 1-661, 1-663, 1-665, 1-667, 1-669, 1-743, 1-745, 1-747
1040756-0000 .	WEDGE	1-625, 1-627, 1-629, 1-631, 1-633, 1-661, 1-663, 1-665, 1-667, 1-669
1110083-0002 .	DOLLY	1-563, 1-565, 1-567, 1-569, 1-743, 1-745, 1-747
1129431-0000 .	WASHER	1-451, 1-453, 1-457, 1-459, 1-461, 1-463
1140889-0000 .	BUSBAR	1-215
1143530-0000 .	SPRING	1-163

Part No	Description	Page No
1144312-0000	.AXLE PIN	1-81
1144335-0000	.ROLLER	1-81
1144354-0000	.WASHER	1-81
1144356-0000	.COVER	1-81
1144417-0000	.BUSHING	1-81
1144472-0000	.LEVER	1-25, 1-27
1144473-0000	.LEVER	1-25, 1-27
1144475-0000	.BRACKET	1-25, 1-27
1144476-0000	.BRACKET	1-25, 1-27
1144482-0000	.SUPPORT	1-129, 1-131, 1-135, 1-137, 1-139
1144485-0000	.SUPPORT	1-157
1144486-0000	.CAM	1-163
1144488-0000	.COLUMN	1-121, 1-123, 1-125, 1-127
1144489-0000	.FLANGE	1-157
1144492-0000	.SPRING	1-163, 1-313
1144493-0000	.WASHER	1-157
1144494-0000	.AXLE PIN	1-157
1144495-0000	.ECCENTRIC	1-121, 1-123, 1-125, 1-127
1144496-0000	.ECCENTRIC	1-121, 1-123, 1-125, 1-127
1144498-0000	.FLANGE	1-159
1144500-0000	.SUPPORT	1-121, 1-123, 1-125, 1-127
1144501-0000	.SPACER	1-121, 1-123, 1-125, 1-127
1144502-0000	.WASHER	1-121, 1-123, 1-125, 1-127
1144503-0000	.FLANGE	1-121, 1-123, 1-125, 1-127
1144505-0000	.COLUMN	1-121, 1-123, 1-125, 1-127
1144506-0000	.LEVER	1-155, 1-161
1144508-0000	.AXLE PIN	1-155, 1-161
1144511-0000	.SHIM	1-129, 1-131, 1-135, 1-137, 1-139, 1-245
1144514-0000	.BUSHING	1-159
1144515-0000	.INSERT	1-157
1144517-0000	.BUSHING	1-157
1144521-0000	.CLAMP	1-155, 1-161
1144551-0000	.SPACER	1-187
1144552-0000	.PLATE	1-187
1144566-0000	.FLANGE	1-25, 1-27
1144593-0000	.PLATE	1-179
1144597-0000	.SPACER	1-179, 1-181
1144598-0000	.SHAFT	1-179
1144620-0000	.WASHER	1-23, 1-247
1144621-0000	.PLATE	1-165, 1-167, 1-169
1144665-0000	.SEAL RING	1-23
1144667-0000	.HINGE	1-183, 1-185
1144668-0000	.HINGE	1-183, 1-185
1144669-0000	.PIN	1-183, 1-185
1144678-0000	.SHAFT	1-25, 1-27
1144681-0000	.WASHER	1-25, 1-27, 1-247
1144683-0000	.AXLE PIN	1-25, 1-27
1144684-0000	.SPACER	1-25, 1-27
1144685-0000	.SCREW	1-25, 1-27
1144686-0000	.TIE ROD	1-45
1144687-0000	.TIE ROD	1-25, 1-27
1144688-0000	.SCREW	1-25, 1-27
1144719-0000	.RAIL	1-61, 1-63
1144783-0000	.TIMING BELT	1-17, 1-19, 1-21
1144794-0000	.SUPPORT	1-179, 1-181
1144797-0000	.SUPPORT	1-23
1144839-0000	.BLOCK	1-23
1144841-0000	.TIMING BELT	1-179, 1-181
1144899-0000	.SUPPORT	1-187
1144901-0000	.GUIDE	1-67, 1-69, 1-71, 1-73
1144902-0000	.SUPPORT	1-67, 1-69, 1-71, 1-73
1144914-0000	.LEVER	1-153
1144915-0000	.LEVER	1-153
1144916-0000	.ADJUSTING SCREW	1-153
1144918-0000	.PLATE	1-17, 1-19, 1-21
1144919-0000	.CARRIER	1-17, 1-19, 1-21
1144926-0000	.FLAP	1-105, 1-107, 1-109, 1-111, 1-113
1144927-0000	.FLAP	1-83, 1-85, 1-87, 1-89
1144928-0000	.PUSHER	1-129, 1-131
1144932-0000	.PLATE	1-163
1144941-0000	.COVERING PLATE	1-67, 1-69, 1-71, 1-73
1144976-0000	.STOP SCREW	1-67, 1-69, 1-71, 1-73
1144978-0000	.CAM	1-163
1144979-0000	.WASHER	1-67, 1-69, 1-71, 1-73
1145079-0000	.WHEEL	1-977
1145416-0000	.PUNCH HOLE 55	1-205
1145417-0000	.DIE HOLE 55	1-205
1254109-0000	.BRACKET	1-513, 1-515, 1-517
1254111-0000	.BRACKET	1-513, 1-515, 1-517
1255390-0000	.BUSHING	1-563, 1-565, 1-567, 1-569
1260328-0000	.SPRING	1-539
1260574-0000	.PLATE	1-1033, 1-1035, 1-1037
1260576-0000	.PLATE	1-1033, 1-1035, 1-1037
1260702-0000	.PLATE	1-163

Part No	Description	Page No
1260704-0000	.FLAP	1-105, 1-107, 1-109, 1-111, 1-113
1260705-0000	.FLAP	1-83, 1-85, 1-87, 1-89
1260709-0000	.GUIDE UPPER R	1-75, 1-77
1260710-0000	.GUIDE UPPER L	1-75, 1-77
1260824-0000	.SPACER RING	1-25, 1-27
1260895-0000	.SPRING	1-313
1260931-0000	.SCREW	1-23
1260941-0000	.SLIDE	1-181
1260944-0000	.BUSHING	1-25, 1-27
1279409-0000	.PLATE	1-165, 1-167, 1-169
1279559-0000	.ARM	1-81
1279670-0000	.SPACER	1-13, 1-15
1279875-0000	.SHIM	1-963, 1-1033, 1-1035, 1-1037
1282162-0000	.SPRING PLATE	1-879
1282191-0000	.BUSHING	1-1019, 1-1021, 1-1025, 1-1027, 1-1029, 1-1031, 1-1033, 1-1035, 1-1037
1282287-0000	.CARRIER	1-17, 1-19, 1-21
1282705-0000	.SUPPORT	1-75, 1-77
1282708-0000	.BUSHING	1-29, 1-31, 1-33, 1-41, 1-43, 1-81
1282848-0000	.CARRIER	1-17, 1-19, 1-21
1285003-0000	.LINK	1-611
1285005-0000	.NUT	1-611
1285006-0000	.SPACER	1-611
1285022-0000	.SIDE PLATE	1-11
1285023-0000	.SIDE PLATE	1-11
1285955-0000	.PLATE	1-179
1285956-0000	.BLOCK	1-179
1296451-0000	.SEAL	1-915, 1-967
1296532-0000	.SHIM	1-963, 1-1033, 1-1035, 1-1037
1296533-0000	.SHIM	1-963, 1-1033, 1-1035, 1-1037
1296534-0000	.SHIM	1-963, 1-1033, 1-1035, 1-1037
1296535-0000	.SHIM	1-963, 1-1033, 1-1035, 1-1037
1296536-0000	.SHIM	1-963, 1-1033, 1-1035, 1-1037
1296877-0100	.SEAL KIT	1-375, 1-377
1296878-0100	.SEAL KIT	1-375, 1-377
1296879-0100	.SEAL KIT	1-375, 1-377
1317042-0000	.RAIL	1-61, 1-63
1317043-0000	.SUPPORT	1-61, 1-63
1317047-0000	.RAIL	1-61, 1-63
1317362-0000	.SHAFT	1-153, 1-155, 1-161
1317363-0000	.SHAFT	1-155, 1-161
1317475-0000	.BRACKET	1-519, 1-521, 1-523
1317554-0000	.FLAP	1-105, 1-107, 1-109, 1-111, 1-113
1317555-0000	.FLAP	1-83, 1-85, 1-87, 1-89
1317650-0000	.GUIDE	1-17, 1-19, 1-21
1317651-0000	.GUIDE	1-17, 1-19, 1-21
1317654-0000	.PUSHER	1-129, 1-131
1317655-0000	.PLATE	1-163
1317656-0000	.INSERT	1-83, 1-85, 1-87, 1-89, 1-105, 1-107, 1-109, 1-111, 1-113
1317787-0000	.CATCH	1-129, 1-131
1317805-0000	.BAR	1-165, 1-167, 1-169
1334018-0000	.SHIM	1-25, 1-27
1334271-0000	.BAR	1-165, 1-167, 1-169
1334328-0000	.SPACER	1-25, 1-27
1334447-0000	.SPACER	1-75, 1-77
1334561-0000	.SLIDE	1-165, 1-167, 1-169
1334562-0000	.SLIDE	1-165, 1-167, 1-169
1334718-0000	.SPACER	1-61, 1-63
1334856-0000	.COUNTER ROLLER	1-347, 1-349
1338100-0000	.PIN	1-969
1338149-0000	.BOLT	1-1033, 1-1035, 1-1037
1338165-0000	.SHIM	1-963, 1-1033, 1-1035, 1-1037
1338166-0000	.SHIM	1-963, 1-1033, 1-1035, 1-1037
1338167-0000	.SHIM	1-963, 1-1033, 1-1035, 1-1037
1338168-0000	.SHIM	1-963, 1-1033, 1-1035, 1-1037
1338169-0000	.SHIM	1-963, 1-1033, 1-1035, 1-1037
1338170-0000	.SHIM	1-963, 1-1033, 1-1035, 1-1037
1338224-0000	.SHIM	1-1019, 1-1021, 1-1025, 1-1027, 1-1029, 1-1031, 1-1033, 1-1035, 1-1037
1338352-0000	.SHAFT	1-961
1346471-0000	.WEDGE	1-17, 1-19, 1-21
1346539-0000	.CONNECTING ROD	1-159
1346736-0000	.WEDGE	1-17, 1-19, 1-21
1347018-0000	.PLUG	1-121, 1-123, 1-125, 1-127
1347057-0000	.GUIDE	1-67, 1-69, 1-71, 1-73
1347495-0000	.AXLE PIN	1-29, 1-31, 1-33
1347496-0000	.SCREW	1-29, 1-31, 1-33, 1-41, 1-43
1347600-0000	.SUPPORT	1-31, 1-33
1347952-0003	.SPACER	1-221
1347952-0004	.SPACER	1-221
1347952-0006	.SPACER	1-221, 1-225
1347952-0008	.SPACER	1-225
1347952-0010	.SPACER	1-225
1347952-0011	.SPACER	1-225
1348047-0000	.FORK	1-333, 1-335, 1-337, 1-339
1348048-0000	.FORK	1-333, 1-335, 1-337, 1-339

Part No	Description	Page No
1348132-0000	.SLIDE	1-165, 1-167, 1-169
1348133-0000	.SLIDE	1-165, 1-167, 1-169
1348138-0000	.SLIDE	1-165, 1-167, 1-169
1348139-0000	.SLIDE	1-165, 1-167, 1-169
1348144-0000	.BAR	1-165, 1-167, 1-169
1348145-0000	.BAR	1-165, 1-167, 1-169
1348150-0000	.BAR	1-165, 1-167, 1-169
1348151-0000	.BAR	1-165, 1-167, 1-169
1348504-0000	.SLEEVE	1-539
1348537-0000	.TIMING BELT	1-121, 1-123, 1-125, 1-127
1348956-0000	.KNIFE	1-611, 1-743, 1-745, 1-747
1349516-0000	.SHAFT	1-121, 1-123, 1-125, 1-127
1349517-0000	.TOOTHED PULLEY	1-121, 1-123, 1-125, 1-127
1349612-0000	.PISTON	1-539
1349762-0000	.SHAFT	1-395
1349851-0000	.ROLL	1-353, 1-355
1349914-0200	.TEMPLATE	1-375, 1-377
1349925-0000	.PLATE	1-563, 1-565, 1-567, 1-569
1350383-0000	.SEAL	1-915
1350440-0000	.LEVER	1-29, 1-31, 1-33, 1-41, 1-43
1350441-0000	.SUPPORT	1-31, 1-33
1359565-0000	.NUT	1-319
1360149-0000	.SPACER	1-183, 1-185
1361547-0000	.PULLER	1-253
1361558-0100	.LIFTING KIT-WHEEL	1-7
1361559-0100	.PULLER	1-7
1361934-0000	.FRAME	1-247
1361935-0100	.FRAME	1-7
1363768-0000	.BOX	1-7
1363780-0000	.CARRIER	1-247
1363791-0000	.BRACKET	1-249
1366727-0000	.CLAMP	1-315, 1-317, 1-319, 1-321, 1-895
1366750-0000	.HOLDER	1-315, 1-317, 1-321, 1-895
1478189-0000	.SUPPORT	1-157
1478359-0000	.ROLLER	1-471, 1-473
1484620-0000	.SHAFT	1-181
1487338-0200	.SUPPORT LEVEL DETECTOR	1-513, 1-515, 1-517
1487626-0000	.VOLUME BULGE	1-625, 1-627, 1-629, 1-631, 1-633, 1-661, 1-663, 1-665, 1-667, 1-669
1487627-0000	.VOLUME SHIM	1-625, 1-627, 1-629, 1-631, 1-633, 1-661, 1-663, 1-665, 1-667, 1-669, 1-743, 1-745, 1-747
1487739-0000	.FLAP	1-105, 1-107, 1-109, 1-111, 1-113
1487922-0000	.FOLDING DEVICE	1-29, 1-31, 1-33, 1-41
1487923-0000	.FOLDING DEVICE	1-29, 1-31, 1-33, 1-43
1490033-0000	.SLIDE	1-165, 1-167, 1-169
1490034-0000	.SLIDE	1-165, 1-167, 1-169
1490035-0000	.BAR	1-165, 1-167, 1-169
1490036-0000	.BAR	1-165, 1-167, 1-169
1490129-0000	.TEMPLATE	1-235
1490762-0000	.ROLLER	1-451, 1-453, 1-457, 1-459, 1-461, 1-463
1498029-0000	.PIN	1-157, 1-313
1498068-0000	.SEAL RING	1-179, 1-181
1498132-0000	.SHAFT	1-775, 1-777
1498150-0000	.TEMPLATE	1-387
1498783-0000	.WHEEL	1-1003, 1-1005
1498849-0000	.BUSBAR	1-541, 1-543, 1-545
1498850-0000	.BUSBAR	1-589, 1-591, 1-593
1499071-0000	.SPACER	1-75, 1-77
1499072-0000	.SPACER	1-61, 1-63
1499103-0000	.TIE ROD	1-31, 1-33
1499140-0000	.SPACER	1-13, 1-15
1499142-0000	.FLAP	1-105, 1-107, 1-109, 1-111, 1-113
1499143-0000	.PLATE	1-163
1499144-0000	.PUSHER	1-129, 1-131
1499150-0000	.RAIL	1-61, 1-63
1499151-0000	.RAIL	1-61, 1-63
1499170-0000	.GASKET	1-1009
1499171-0000	.LID	1-1009
1499216-0000	.PLATE	1-201
1499227-0000	.SHIM	1-203
1499228-0000	.SHIM	1-203
1499296-0002	.GUIDE	1-219
1499296-0003	.GUIDE	1-219
1499296-0004	.GUIDE	1-219, 1-227
1499296-0007	.GUIDE	1-227
1499296-0008	.GUIDE	1-227
1499296-0015	.GUIDE	1-227
1499400-0000	.GUIDE	1-165, 1-167, 1-169
1499401-0000	.GUIDE	1-165, 1-167, 1-169
1499417-0000	.BAR	1-165, 1-167, 1-169
1499418-0000	.SLIDE	1-165, 1-167, 1-169
1499422-0000	.SLIDE	1-165, 1-167, 1-169
1499423-0000	.BAR	1-165, 1-167, 1-169
1499476-0000	.HOLDER	1-17, 1-19, 1-21, 1-183, 1-185, 1-263
1499635-0000	.LEVER	1-25, 1-27

Part No	Description	Page No
1499636-0000	.ROLLER	1-353, 1-355
1499678-0000	.ROLLER	1-737, 1-739
1499765-0000	.AXLE LINK	1-31, 1-33
1511254-0000	.BUSHING	1-625, 1-627, 1-629, 1-631, 1-633, 1-661, 1-663, 1-665, 1-667, 1-669
1511492-0000	.SHAFT	1-471, 1-473
1512484-0000	.ROLLER	1-737, 1-739
1517003-0000	.BEARING HOUSING	1-821
1517242-0000	.GUIDE	1-165, 1-167, 1-169
1517243-0000	.GUIDE	1-165, 1-167, 1-169
1517299-0600	.INFEED CONVEYOR LONG	1-177
1519156-0000	.AIR DISTRIBUTOR	1-775, 1-777, 1-989, 1-991
1519158-0000	.LID	1-775, 1-777
1519159-0000	.BUSHING	1-775, 1-777, 1-989, 1-991
1519160-0000	.SHAFT	1-775, 1-777
1519166-0000	.BUSHING	1-775, 1-777, 1-989, 1-991
1519355-0000	.SPACER	1-49, 1-51, 1-53, 1-55
1520455-0000	.CUTTING RAIL	1-563, 1-565, 1-567, 1-569
1520493-0000	.CUTTING RAIL	1-563, 1-565, 1-567, 1-569
1520633-0002	.DOLLY	1-563, 1-565, 1-567, 1-569, 1-743, 1-745, 1-747
1520633-0005	.DOLLY	1-563, 1-565, 1-567, 1-569, 1-743, 1-745, 1-747
1523641-0000	.SPACER	1-891, 1-897
1523645-0000	.AIR NOZZLE	1-891, 1-897
1523664-0001	.ROLLER (STANDARD SIZE)	1-347, 1-349
1523665-0001	.ROLLER (STANDARD SIZE)	1-347, 1-349
1523696-0000	.GUIDE	1-457, 1-459, 1-461, 1-463
1524035-0000	.VOLUME BULGE	1-105, 1-107, 1-109, 1-111, 1-113
1524151-0000	.ROLLER	1-415, 1-417, 1-419
1524156-0000	.ROLLER	1-353, 1-355
1524414-0000	.SEAL	1-451, 1-453, 1-465, 1-467
1524416-0000	.ROLLER	1-451, 1-453
1524421-0000	.ROLLER	1-737, 1-739
1524547-0000	.COUNTER ROLLER	1-353, 1-355
1524840-0000	.TEMPLATE	1-387
1524841-0000	.TEMPLATE	1-387
1528542-0000	.BOLT	1-1033, 1-1035, 1-1037
1528623-0000	.BLOCK	1-1033, 1-1035, 1-1037
1528800-0000	.LEVER	1-1033, 1-1035, 1-1037
1528801-0000	.PIN	1-1033, 1-1035, 1-1037
1532231-0000	.CONNECTION	1-775, 1-777
1532256-0000	.CARRIER	1-17, 1-19, 1-21
1532268-0000	.AXLE LINK	1-31, 1-33
1532447-0000	.HANDLE	1-201
1533051-0000	.CUTTING RAIL	1-563, 1-565, 1-567, 1-569
1533360-0000	.INDUCTOR	1-215
1533361-0000	.INDUCTOR	1-215
1533362-0000	.INDUCTOR	1-215
1533364-0000	.INDUCTOR	1-215
1538109-0000	.COMPRESSION SPRING	1-611, 1-743, 1-745, 1-747
1538247-0000	.AXLE PIN	1-201
1538348-0000	.CATCH	1-563, 1-565, 1-567, 1-569
1538349-0000	.CATCH	1-539
1538521-0000	.BUSHING	1-643, 1-679, 1-693, 1-707
1538668-0000	.GUIDE ROD	1-201
1538950-0000	.ROLLER	1-371
1538953-0000	.SHAFT	1-333, 1-335, 1-337, 1-339
1539454-0000	.GUIDE	1-457, 1-459, 1-461, 1-463
1539727-0000	.WHEEL	1-1013
1539877-0000	.BAR	1-165, 1-167, 1-169
1539878-0000	.BAR	1-165, 1-167, 1-169
1539900-0000	.RIGHT UPPER GUIDE	1-75, 1-77
1539983-0000	.GUIDE	1-165, 1-167, 1-169
1539984-0000	.GUIDE	1-165, 1-167, 1-169
1548531-0000	.ROLLER	1-407, 1-409, 1-415, 1-417, 1-419
1548540-0000	.ROLLER	1-407, 1-409, 1-415, 1-417, 1-419
1548541-0000	.ROLLER	1-407, 1-409, 1-415, 1-417, 1-419
1548736-0200	.BENDING ROLLER	1-985
1548751-0000	.BUSHING	1-987
1548940-0000	.SPRING	1-549, 1-551, 1-553, 1-597, 1-599, 1-601
1549406-0000	.PACKAGE GUIDE	1-75, 1-77
1549411-0000	.PACKAGE GUIDE	1-75, 1-77
1549506-0000	.SPACER	1-75, 1-77
1549508-0000	.SPACER SCREW	1-61, 1-63
1549512-0000	.SPACER	1-13, 1-15
1549513-0000	.SLIDE	1-165, 1-167, 1-169
1549514-0000	.SLIDE	1-165, 1-167, 1-169
1549515-0000	.BAR	1-165, 1-167, 1-169
1549516-0000	.BAR	1-165, 1-167, 1-169
1549517-0000	.GUIDE	1-165, 1-167, 1-169
1549518-0000	.GUIDE	1-165, 1-167, 1-169
1549522-0000	.GUIDE	1-17, 1-19, 1-21
1549523-0000	.GUIDE	1-17, 1-19, 1-21
1549614-0000	.LEFT UPPER GUIDE	1-75, 1-77
1549829-0000	.VOLUME BULGE	1-625, 1-627, 1-629, 1-631, 1-633, 1-661, 1-663, 1-665, 1-667, 1-669
1549830-0000	.VOLUME SHIM	1-625, 1-627, 1-629, 1-631, 1-633, 1-661, 1-663, 1-665, 1-667, 1-669, 1-743

Part No	Description	Page No
		1-745, 1-747
1549844-0000	.FLAP	1-105, 1-107, 1-109, 1-111, 1-113
1549940-0000	.PUSHER	1-163
1549992-0000	.HINGE FLANGE	1-791, 1-797
1549993-0000	.HINGE FLANGE	1-791, 1-797
1549994-0000	.SPACER	1-791, 1-797
1550664-0000	.DOWEL	1-315, 1-317
1550666-0000	.HOLDER	1-315, 1-317
1550743-0200	.RAIL HOLDER	1-315, 1-317
1550772-0000	.HOLDER	1-319
1558047-0000	.PUSHER	1-129, 1-131
1558178-0000	.PUSHER	1-135, 1-137, 1-139
1558184-0000	.PLATE	1-163
1558254-0000	.SHAFT	1-813
1558356-0300	.SPLICE DETECTOR	1-763, 1-765
1558701-0000	.BUSHING	1-625, 1-627, 1-629, 1-631, 1-633, 1-661, 1-663, 1-665, 1-667, 1-669
1558733-0000	.VOLUME BULGE	1-563, 1-565, 1-567, 1-569
1558734-0000	.VOLUME BULGE	1-541, 1-543, 1-545, 1-589, 1-591, 1-593
1558910-0000	.SPACER	1-75, 1-77
1566783-0000	.INDUCTOR	1-541, 1-543, 1-545, 1-589, 1-591, 1-593, 1-743, 1-745, 1-747
2500071-0000	.O-RING	1-333, 1-335, 1-337, 1-339
2500082-0000	.MOUNTING PLATE	1-333, 1-335, 1-337, 1-339
2501310-0300	.FILLING PIPE	1-323
2503688-0000	.VOLUME BULGE	1-541, 1-543, 1-545, 1-589, 1-591, 1-593, 1-1047
2503699-0000	.VOLUME BULGE	1-563, 1-565, 1-567, 1-569
2507048-0000	.GASKET	1-333, 1-335, 1-337, 1-339
2508292-0000	.BUSHING	1-479, 1-481, 1-483, 1-485, 1-487
2508309-0000	.PLATE	1-479, 1-481, 1-483, 1-485, 1-487
2508311-0000	.PLATE	1-479, 1-481, 1-483, 1-485, 1-487
2509592-0000	.HOLDER	1-1033, 1-1035, 1-1037
2509681-0000	.RAIL	1-775, 1-777
2509936-0000	.SPACER SCREW	1-61, 1-63
2509937-0000	.SPACER	1-61, 1-63
2512737-0000	.ROLLER	1-407, 1-409, 1-415, 1-417, 1-419
2512738-0000	.ROLLER	1-407, 1-409, 1-415, 1-417, 1-419
2512740-0000	.ROLLER	1-415, 1-417, 1-419
2512741-0000	.ROLLER	1-407, 1-409, 1-415, 1-417, 1-419
2512742-0000	.ROLLER	1-407, 1-409, 1-415, 1-417, 1-419
2512746-0000	.ROLLER	1-435, 1-437, 1-439, 1-441
2512748-0000	.ROLLER	1-435, 1-437, 1-439, 1-441
2512749-0000	.ROLLER	1-435, 1-437, 1-439, 1-441
2512779-0000	.RING	1-451, 1-453
2512780-0200	.SEAL	1-449
2512936-0200	.CLEANING CUP	1-323
2514029-0000	.OPENING SPECIFICATION	1-237
2514032-0000	.OPENING SPECIFICATION	1-237
2514514-0000	.INDUCTOR	1-479, 1-481, 1-483, 1-485, 1-487
2514521-0000	.ROLLER	1-439, 1-441
2514522-0000	.INDUCTOR	1-479, 1-481, 1-483, 1-485, 1-487
2518098-0000	.COUNTER ROLLER	1-347, 1-349
2520160-0000	.CLAMP	1-17, 1-19, 1-21
2520168-0000	.SLIDE	1-91, 1-93
2520170-0000	.FLAP	1-91, 1-93
2522213-0004	.SHAFT	1-435, 1-437, 1-439, 1-441
2522213-0005	.SHAFT	1-435, 1-437, 1-439, 1-441
2522213-0006	.SHAFT	1-353, 1-355
2522213-0007	.SHAFT	1-415, 1-417, 1-419
2522213-0008	.SHAFT	1-439, 1-441
2522213-0009	.SHAFT	1-439, 1-441
2522213-0013	.SHAFT	1-435, 1-437
2522213-0015	.SHAFT	1-371, 1-435, 1-437, 1-475, 1-477
2522213-0016	.SHAFT	1-475, 1-477
2522213-0017	.SHAFT	1-475, 1-477
2522213-0019	.SHAFT	1-439, 1-441
2522213-0020	.SHAFT	1-439, 1-441
2523268-0000	.SHAFT	1-333, 1-335, 1-337, 1-339
2523665-0000	.ARM	1-395
2523766-0001	.BRACKET	1-403
2523766-0002	.BRACKET	1-403
2523766-0003	.BRACKET	1-403
2523766-0005	.BRACKET	1-403
2523766-0006	.BRACKET	1-403
2523766-0012	.BRACKET	1-403
2523766-0013	.BRACKET	1-403
2523766-0016	.BRACKET	1-403
2524512-0000	.PUSHER	1-129, 1-131
2526249-0000	.ROLLER	1-155, 1-161
2526551-0000	.PLATE	1-211
2526563-0000	.HANDLE	1-91, 1-93, 1-115
2526567-0000	.CYLINDER	1-91, 1-93, 1-115
2526825-0000	.WASHER	1-347, 1-349, 1-353, 1-355, 1-407, 1-409, 1-415, 1-417, 1-419
2526826-0000	.BUSHING	1-347, 1-349, 1-353, 1-355, 1-407, 1-409, 1-415, 1-417, 1-419
2526827-0000	.SHAFT	1-347, 1-349, 1-353, 1-355, 1-407, 1-409, 1-415, 1-417, 1-419
2527529-0000	.GUIDE UPPER L	1-75, 1-77

Part No	Description	Page No
2527530-0000	.GUIDE UPPER R	1-75, 1-77
2527531-0000	.TIE ROD	1-31, 1-33
2527792-0000	.SUPPORT	1-17, 1-19, 1-21, 1-183, 1-185
2527793-0000	.SHAFT	1-17, 1-19, 1-21, 1-183, 1-185, 1-263
2528112-0000	.BRACKET	1-471, 1-473
2528113-0000	.BRACKET	1-471, 1-473
2528114-0000	.COVER PLATE	1-471, 1-473
2528118-0001	.LOCK PLATE	1-407, 1-409, 1-415, 1-417, 1-419
2528118-0003	.LOCK PLATE	1-415, 1-417, 1-419
2528118-0004	.LOCK PLATE	1-347, 1-349, 1-353, 1-355, 1-407, 1-409, 1-415, 1-417, 1-419
2528118-0005	.LOCK PLATE	1-347, 1-349, 1-353, 1-355, 1-407, 1-409, 1-415, 1-417, 1-419
2528119-0001	.LOCK PLATE	1-407, 1-409, 1-415, 1-417, 1-419
2528119-0003	.LOCK PLATE	1-415, 1-417, 1-419
2528119-0004	.LOCK PLATE	1-347, 1-349, 1-353, 1-355, 1-407, 1-409, 1-415, 1-417, 1-419
2528119-0005	.LOCK PLATE	1-347, 1-349, 1-353, 1-355, 1-407, 1-409, 1-415, 1-417, 1-419
2528123-0001	.LOCK PLATE	1-407, 1-409, 1-415, 1-417, 1-419, 1-435, 1-437, 1-439, 1-441
2528123-0002	.LOCK PLATE	1-415, 1-417, 1-419, 1-435, 1-437, 1-439, 1-441
2528123-0003	.LOCK PLATE	1-353, 1-355, 1-415, 1-417, 1-419
2528123-0004	.LOCK PLATE	1-347, 1-349, 1-353, 1-355, 1-407, 1-409, 1-415, 1-417, 1-419
2528123-0005	.LOCK PLATE	1-415, 1-417, 1-419, 1-439, 1-441
2528123-0006	.LOCK PLATE	1-475, 1-477
2528123-0007	.LOCK PLATE	1-435, 1-437, 1-439, 1-441
2528123-0008	.LOCK PLATE	1-407, 1-409, 1-415, 1-417, 1-419, 1-435, 1-437, 1-439, 1-441
2528123-0009	.LOCK PLATE	1-475, 1-477
2528123-0010	.LOCK PLATE	1-407, 1-409
2528145-0300	.DOOR	1-787
2528450-0000	.ROD	1-1033, 1-1035, 1-1037
2529277-0000	.BAR	1-165, 1-167, 1-169
2529278-0000	.BAR	1-165, 1-167, 1-169
2529279-0000	.PLATE	1-165, 1-167, 1-169
2529289-0000	.PUSHER	1-135, 1-137, 1-139
2529419-0000	.SHAFT	1-333, 1-335, 1-337, 1-339
2529671-0000	.FOLDING DEVICE	1-41
2529672-0000	.FOLDING DEVICE	1-43
2529673-0000	.SUPPORT	1-31, 1-33
2529674-0000	.SUPPORT	1-31, 1-33
2529675-0000	.LEVER	1-31, 1-33
2529676-0000	.LEVER	1-31, 1-33
2529774-0000	.PLATE	1-1033, 1-1035, 1-1037
2529775-0000	.LACE	1-1033, 1-1035, 1-1037
2529785-0000	.KNOB	1-17, 1-19, 1-21
2529786-0000	.KNOB	1-17, 1-19, 1-21
2530292-0000	.BRACKET	1-529, 1-531, 1-533, 1-579, 1-581, 1-583
2530293-0000	.BRACKET	1-529, 1-531, 1-533, 1-579, 1-581, 1-583
2530296-0000	.ROLLER	1-529, 1-531, 1-533, 1-579, 1-581, 1-583
2530313-0000	.BUSHING	1-625, 1-627, 1-629, 1-631, 1-633, 1-661, 1-663, 1-665, 1-667, 1-669
2530418-0000	.SPRING	1-17, 1-19, 1-21, 1-183, 1-185, 1-263
2531039-0300	.DOOR	1-787
2531043-0200	.HOUSING	1-787
2531060-0000	.BRACKET	1-479, 1-481, 1-483, 1-485, 1-487
2532531-0000	.ROLLER	1-529, 1-531, 1-533, 1-579, 1-581, 1-583
2532895-0001	.LOCK PLATE	1-439, 1-441
2532895-0002	.LOCK PLATE	1-435, 1-437, 1-439, 1-441
2532895-0003	.LOCK PLATE	1-435, 1-437, 1-439, 1-441
2532895-0004	.LOCK PLATE	1-435, 1-437, 1-439, 1-441, 1-475, 1-477
2532895-0007	.LOCK PLATE	1-439, 1-441
2532895-0008	.LOCK PLATE	1-475, 1-477
2532898-0000	.BRACKET	1-479, 1-481, 1-483, 1-485, 1-487
2532899-0000	.BRACKET	1-479, 1-481, 1-483, 1-485, 1-487
2532908-0000	.ROLLER	1-1011
2532911-0000	.ROLLER	1-763, 1-765
2532914-0000	.SPACER	1-407, 1-409, 1-415, 1-417, 1-419
2532915-0000	.WASHER	1-775, 1-777, 1-989, 1-991
2532918-0000	.HOLDER	1-775, 1-777, 1-989, 1-991
2532919-0000	.PLATE	1-775, 1-777
2532925-0000	.INDUCTOR	1-479, 1-481, 1-483, 1-485, 1-487
2532934-0300	.AIR KNIFE	1-763, 1-765
2532965-0000	.ROLLER	1-407, 1-409, 1-415, 1-417, 1-419
2533671-0000	.SCREW	1-813
2533672-0000	.SHAFT	1-813
2533673-0000	.ROLLER	1-813
2533681-0100	.BOBBIN HOLDER	1-195, 1-197, 1-199
2533682-0100	.BOBBIN HOLDER	1-195, 1-197, 1-199
2533684-0100	.SPLICING TABLE	1-195, 1-197, 1-199
2533685-0100	.SPLICING TABLE	1-195, 1-197, 1-199
2535443-0000	.PIVOT PIN	1-713, 1-715, 1-717
2537129-0000	.SPACER	1-13, 1-15
2540609-0000	.KNOB	1-13, 1-15
2540612-0000	.PLATE	1-17, 1-19, 1-21, 1-183, 1-185, 1-263
2541634-0200	.EDGE ROLLER	1-469
2541877-0000	.NAIL	1-129, 1-131, 1-135, 1-137, 1-139
2541878-0000	.WASHER	1-129, 1-131, 1-135, 1-137, 1-139
2543242-0000	.ANGLE BLOCK	1-165, 1-167, 1-169
2544342-0000	.BRACKET	1-49, 1-51, 1-53, 1-55

Part No	Description	Page No
2544897-0000	.BRACKET	1-479, 1-481, 1-483, 1-485, 1-487
2544898-0000	.SHAFT	1-479, 1-481, 1-483, 1-485, 1-487
2545545-0000	.INSERT	1-165, 1-167, 1-169
2546271-0100	.TAB C'JAW	1-195, 1-197, 1-199
2546275-0100	.TAB FEEDER	1-195, 1-197, 1-199
2546278-0100	.PUNCH UNIT	1-195, 1-197, 1-199
2546474-0000	.INDUCTOR	1-541, 1-543, 1-545, 1-589, 1-591, 1-593, 1-743, 1-745, 1-747
2547376-0200	.KNOB	1-479, 1-481, 1-483, 1-485, 1-487
2547377-0000	.WASHER	1-479, 1-481, 1-483, 1-485, 1-487
2547388-0000	.AXLE PIN	1-479, 1-481, 1-483, 1-485, 1-487
2547398-0000	.LID	1-789
2547399-0000	.LID	1-789
2547404-0000	.BRACKET	1-479, 1-481, 1-483, 1-485, 1-487
2547405-0000	.BRACKET	1-479, 1-481, 1-483, 1-485, 1-487
2547420-0200	.EDGE ROLLER	1-469
2547421-0200	.FORMING RING	1-433
2547422-0300	.UPPER FORMING RING	1-405
2547588-0000	.SPRING	1-529, 1-531, 1-533, 1-579, 1-581, 1-583
2547589-0000	.SPRING	1-529, 1-531, 1-533, 1-579, 1-581, 1-583
2550173-0000	.INTERNAL TOOL	1-879
2550211-0000	.VOLUME BULGE	1-83, 1-85, 1-87, 1-89
2552003-0400	.FORMING UNIT	1-509
2552010-0300	.PISTON	1-557, 1-603
2552022-0000	.GUIDE	1-67, 1-69, 1-71, 1-73
2552140-0000	.BRACKET	1-475, 1-477
2552141-0000	.BRACKET	1-475, 1-477
2552144-0000	.ROLLER	1-475, 1-477
2552155-0000	.ROLLER	1-475, 1-477
2552160-0000	.SUPPORT RING	1-435, 1-437, 1-439, 1-441
2552161-0000	.SUPPORT RING	1-435, 1-437, 1-439, 1-441
2552176-0001	.LOCK PLATE	1-435, 1-437, 1-439, 1-441
2552176-0003	.LOCK PLATE	1-435, 1-437, 1-439, 1-441
2552177-0001	.LOCK PLATE	1-435, 1-437, 1-439, 1-441
2552177-0003	.LOCK PLATE	1-435, 1-437, 1-439, 1-441
2552187-0000	.ROLLER	1-439, 1-441
2552188-0000	.ROLLER	1-435, 1-437, 1-439, 1-441
2552205-0000	.ROLLER	1-435, 1-437, 1-439, 1-441
2552206-0000	.ROLLER	1-435, 1-437, 1-439, 1-441
2552445-0000	.SUPPORT	1-181
2552655-0000	.ROLLER	1-451, 1-453
2552656-0000	.ROLLER	1-451, 1-453
2553284-0000	.BLOCK	1-67, 1-69, 1-71, 1-73
2555615-0000	.BRACKET	1-479, 1-481, 1-483, 1-485, 1-487
2555616-0000	.ROLLER	1-479, 1-481, 1-483, 1-485, 1-487, 1-489
2555617-0000	.PIN	1-479, 1-481, 1-483, 1-485, 1-487, 1-489
2555618-0000	.SHAFT	1-479, 1-481, 1-483, 1-485, 1-487, 1-489
2555621-0000	.ROLLER	1-407, 1-409
2555622-0000	.ROLLER	1-407, 1-409
2555625-0000	.ROLL	1-479, 1-481, 1-483, 1-485, 1-487
2555627-0200	.PRESSURE ROLLER	1-343, 1-345
2559008-0000	.VOLUME BULGE	1-129, 1-131, 1-135, 1-137, 1-139
2559061-0200	.UPPER FORMING RING	1-405
2559062-0300	.LOWER FORMING RING	1-343, 1-345
2559063-0200	.LOWER FORMING RING	1-343, 1-345
2559064-0100	.SEAL	1-449
2559102-0000	.RING	1-451, 1-453
2559103-0000	.PLATE	1-451, 1-453
2559104-0000	.PLATE	1-451, 1-453
2561596-0000	.RAIL HOLDER KIT	1-321
2561602-0100	.RAIL HOLDER KIT	1-315, 1-317
2562664-0000	.ROLLER	1-475, 1-477
2562667-0002	.LOCK PLATE	1-475, 1-477
2562667-0008	.LOCK PLATE	1-435, 1-437, 1-439, 1-441
2562667-0009	.LOCK PLATE	1-439, 1-441
2562684-0000	.ROLLER	1-475, 1-477
2562687-0000	.PLATE	1-457, 1-459, 1-461, 1-463
2562688-0000	.RING	1-457, 1-459, 1-461, 1-463
2562694-0000	.ROLLER	1-475, 1-477
2562695-0000	.ROLLER	1-475, 1-477
2562696-0000	.BRACKET	1-475, 1-477
2562697-0000	.BRACKET	1-475, 1-477
2563974-0000	.SEALING PLATE	1-213
2564043-0003	.ROLLER	1-207
2564043-0004	.ROLLER	1-207
2564043-0005	.ROLLER	1-207, 1-229
2564043-0006	.ROLLER	1-229
2564043-0008	.ROLLER	1-229
2564043-0009	.ROLLER	1-229
2564044-0004	.ROLLER	1-207, 1-217, 1-231
2564044-0005	.ROLLER	1-207, 1-217, 1-231
2564044-0006	.ROLLER	1-207, 1-209, 1-217, 1-223, 1-231
2564044-0008	.ROLLER	1-209, 1-223
2564044-0011	.ROLLER	1-209, 1-223
2564044-0012	.ROLLER	1-209, 1-223

Part No	Description	Page No
2564057-0100	.TAB MAGAZINE	1-195, 1-197, 1-199
2564058-0100	.TURNING DEVICE	1-195, 1-197, 1-199
2564059-0100	.TAB FEEDER	1-195, 1-197, 1-199
2564060-0100	.PATCH FEEDER	1-195, 1-197, 1-199
2564075-0100	.OPENING SPECIFICATION	1-193
2564076-0100	.START-UP KIT	1-193
2564347-0000	.FLAP	1-83, 1-85, 1-87, 1-89
2564488-0000	.PUNCH	1-929, 1-931, 1-933
2564489-0000	.DIE	1-929, 1-931, 1-933
2565513-0000	.ROLLER	1-353, 1-355
2566038-0100	.PUNCH UNIT	1-927
2566071-0000	.ROLLER	1-819
2566076-0000	.HOLDER	1-823
2566319-0000	.FOLDING FLAP	1-573, 1-575, 1-605, 1-607
2566320-0000	.FOLDING FLAP	1-573, 1-575, 1-605, 1-607
2566321-0000	.FLAP	1-83, 1-85, 1-87, 1-89
2566323-0000	.FLAP	1-105, 1-107, 1-109, 1-111, 1-113
2566338-0000	.CATCH	1-539
2566339-0000	.CATCH	1-563, 1-565, 1-567, 1-569
2572071-0000	.HOOD	1-333, 1-335, 1-337, 1-339
2572197-0000	.SPACER	1-617, 1-619, 1-621, 1-623, 1-643, 1-653, 1-655, 1-657, 1-659, 1-679, 1-685, 1-687, 1-689, 1-691, 1-693, 1-699, 1-701, 1-703, 1-705, 1-707
2575119-0000	.GUIDE	1-373
2575120-0100	.LIFTING UNIT	1-323
2579883-0000	.SEALING PLATE	1-213
2579886-0000	.SEALING PLATE	1-213
2579887-0000	.OPENING SPECIFICATION	1-237
2582616-0000	.PLATE	1-451, 1-453
2582623-0000	.SEAL	1-451, 1-453, 1-465, 1-467
2582629-0000	.RING	1-451, 1-453
2582630-0000	.ROLLER	1-451, 1-453
2582654-0000	.PLATE	1-775, 1-777
2582655-0000	.HOLDER	1-775, 1-777
2582706-0000	.AXLE PIN	1-823
2587337-0100	.SETTING TEMPLATE	1-193
2587466-0000	.INDUCTOR	1-541, 1-543, 1-545, 1-743, 1-745, 1-747
2587467-0000	.INDUCTOR	1-589, 1-591, 1-593, 1-743, 1-745, 1-747
2588127-0000	.AXLE PIN	1-35
2588134-0000	.YOKE	1-35
2588218-0000	.STRUT	1-49, 1-51, 1-53, 1-55
2588295-0000	.SLEEVE	1-539
2588296-0000	.PISTON	1-539
2588297-0000	.SHAFT	1-539
2588299-0000	.BUSHING	1-563, 1-565, 1-567, 1-569
2588303-0000	.SCREW	1-563, 1-565, 1-567, 1-569
2588317-0100	.KNIFE	1-511
2588327-0000	.INSERT	1-83, 1-85, 1-87, 1-89
2592539-0000	.ROLLER	1-347, 1-349
2592540-0000	.ROLLER	1-347, 1-349
2592545-0000	.ROLLER	1-435, 1-437
2592546-0000	.ROLLER	1-457, 1-459, 1-461, 1-463
2592547-0000	.ROLLER	1-457, 1-459, 1-461, 1-463
2592548-0000	.ROLLER	1-457, 1-459, 1-461, 1-463
2592549-0000	.ROLLER	1-457, 1-459, 1-461, 1-463
2592550-0100	.FORMING RING	1-433
2594596-0000	.BRACKET	1-371
2594601-0000	.RAIL	1-775, 1-777
2594636-0000	.BRACKET	1-479, 1-481, 1-483, 1-485, 1-487
2594892-0000	.SPRING	1-539
2594902-0000	.CATCH	1-129, 1-131
2597531-0000	.FLOAT	1-333, 1-335, 1-337, 1-339
2598487-0000	.SLIDE	1-165, 1-167, 1-169
2598488-0000	.SLIDE	1-165, 1-167, 1-169
2598706-0000	.BAR	1-25, 1-27
2598820-0000	.SPACER	1-13, 1-15
2598880-0000	.SETTING SCREW	1-37, 1-39
2598890-0000	.AXLE PIN	1-41, 1-43
2601240-0000	.ROLLER	1-435, 1-437
2601247-0000	.INDUCTOR	1-479, 1-481, 1-483, 1-485, 1-487
2601249-0000	.BRACKET	1-479, 1-481, 1-483, 1-485, 1-487
2601269-0000	.ROLLER	1-475, 1-477
2601271-0000	.ROLLER	1-475, 1-477
2601272-0000	.ROLLER	1-475, 1-477
2601273-0000	.ROLLER	1-475, 1-477
2601278-0000	.ROLLER	1-439, 1-441
2601279-0000	.ROLLER	1-439, 1-441
2601285-0000	.ROLLER	1-439, 1-441
2601286-0000	.ROLLER	1-439, 1-441, 1-471, 1-473
2601289-0000	.INDUCTOR	1-479, 1-481, 1-483, 1-485, 1-487
2601328-0000	.ROLLER	1-353, 1-355
2601468-0000	.PRESSURE FLANGE	1-333, 1-335, 1-337, 1-339
2602613-0000	.VOLUME BULGE	1-129, 1-131, 1-135, 1-137, 1-139
2602614-0000	.BOTTOM	1-95, 1-97, 1-99, 1-101, 1-103
2602655-0000	.ROLLER	1-737, 1-739

Part No	Description	Page No
2603547-0000	.FOLDING PART	1-49, 1-51, 1-53, 1-55
2603548-0000	.FOLDING PART	1-49, 1-51, 1-53, 1-55
2603661-0000	.BRACKET	1-49, 1-51, 1-53, 1-55
2603662-0000	.BRACKET	1-49, 1-51, 1-53, 1-55
2603663-0000	.SPACER	1-75, 1-77
2603682-0000	.DIE	1-205
2603683-0000	.PUNCH	1-205
2604551-0000	.SEALING PLATE	1-211
2604554-0000	.PUNCH	1-205
2604555-0000	.DIE	1-205
2604557-0000	.OPENING SPECIFICATION	1-237
2605722-0100	.CAP SPECIFICATION	1-837
2605993-0000	.SIDE PLATE	1-11
2605994-0000	.SIDE PLATE	1-11
2606277-0000	.FOLDING DEVICE	1-31, 1-33
2606278-0000	.FOLDING DEVICE	1-31, 1-33
2607461-0000	.SHAFT	1-821
2608234-0000	.SEALING PLATE	1-211
2608239-0000	.OPENING SPECIFICATION	1-237
2609368-0000	.TIE ROD	1-31, 1-33
2609371-0000	.SPACER	1-61, 1-63
2609372-0000	.GUIDE	1-67, 1-69, 1-71, 1-73
2610042-0000	.FLOAT	1-333, 1-335, 1-337, 1-339
2610956-0000	.INDUCTOR	1-541, 1-543, 1-545, 1-589, 1-591, 1-593, 1-743, 1-745, 1-747
2611016-0000	.ROLLER	1-415, 1-417, 1-419
2611020-0000	.ROLLER	1-415, 1-417, 1-419
2611024-0000	.SPACER	1-415, 1-417, 1-419
2611038-0000	.SUPPORT RING	1-439, 1-441
2611046-0000	.PLATE	1-451, 1-453
2611047-0000	.RING	1-451, 1-453
2611052-0000	.BRACKET	1-371
2611705-0000	.CAP SPECIFICATION	1-839
2611706-0000	.CAP SPECIFICATION	1-839
2611875-0000	.SHIM	1-129, 1-131, 1-135, 1-137, 1-139
2612738-0000	.BUSHING	1-563, 1-565, 1-567, 1-569
2612745-0000	.BEARING HOUSING	1-539
2616236-0000	.WASHER	1-1007
2618377-0000	.ECCENTRIC	1-713, 1-715, 1-717
2618378-0000	.ECCENTRIC	1-713, 1-715, 1-717
2619199-0000	.ROLLER	1-737, 1-739
2619528-0000	.LOCKING CIRCLIP	1-37, 1-39
2619529-0000	.SLEEVE	1-37, 1-39
2619530-0000	.SLEEVE	1-37, 1-39
2619531-0000	.SHAFT	1-37, 1-39
2619574-0000	.SPACER	1-13, 1-15
2619584-0100	.STRUT	1-35
2619591-0000	.SLIDER	1-41, 1-43
2619596-0000	.HANDLE	1-37, 1-39
2619597-0100	.FLAP GUIDE	1-35
2619598-0100	.FLAP GUIDE	1-35
2619727-0000	.GUIDE	1-165, 1-167, 1-169
2619728-0000	.GUIDE	1-165, 1-167, 1-169
2624544-0000	.PIVOT PIN	1-713, 1-715, 1-717
2629344-0000	.SPACER	1-61, 1-63
2632600-0100	.MOULDING TOOL ASSEMBLY	1-843
2634504-0300	.BOX2 - SUPERSTRUCTURE	1-5
2634505-0300	.BOX3 - JAW SYSTEM	1-5
2634506-0300	.BOX4 - FINAL FOLDER	1-5
2634509-0300	.VOLUME KIT	1-7
2634511-0300	.MECHANICAL DIFFERENCES	1-9
2634926-0000	.SUPPORT ROLLER	1-439, 1-441
2634932-0000	.BRACKET	1-471, 1-473
2634933-0000	.BRACKET	1-471, 1-473
2634934-0000	.SHAFT	1-471, 1-473
2634968-0000	.ROLLER	1-439, 1-441
2634969-0000	.ROLLER	1-439, 1-441
2634970-0000	.ROLLER	1-439, 1-441
2634972-0000	.SHAFT	1-333, 1-335, 1-337, 1-339
2635167-0000	.VOLUME BULGE	1-129, 1-131, 1-135, 1-137, 1-139
2635555-0000	.OPENING SPECIFICATION	1-237
2638077-0000	.SHAFT	1-333, 1-335, 1-337, 1-339
2638180-0000	.INSERT	1-105, 1-107, 1-109, 1-111, 1-113
2640075-0000	.VOLUME BULGE	1-129, 1-131, 1-135, 1-137, 1-139
2640993-0000	.PLATE	1-479, 1-481, 1-483, 1-485, 1-487
2641271-0000	.SEAL	1-451, 1-453, 1-465, 1-467
2644368-0000	.BRACKET	1-49, 1-51, 1-53, 1-55
2647088-0000	.BAR	1-165, 1-167, 1-169
2647089-0000	.BAR	1-165, 1-167, 1-169
2647090-0000	.SLIDE	1-165, 1-167, 1-169
2647091-0000	.SLIDE	1-165, 1-167, 1-169
2647092-0000	.ANGLE BLOCK	1-165, 1-167, 1-169
2647093-0000	.PUSHER	1-129, 1-131, 1-1043
2647094-0000	.PUSHER	1-135, 1-137, 1-139, 1-1043
2647095-0000	.PUSHER	1-129, 1-131, 1-1043

Part No	Description	Page No
2647096-0000	.PUSHER	1-135, 1-137, 1-139, 1-1043
2647097-0000	.NAIL	1-129, 1-131, 1-135, 1-137, 1-139, 1-1043
2647098-0000	.BLOCK	1-129, 1-131, 1-135, 1-137, 1-139, 1-1043
2647099-0000	.GUIDE	1-129, 1-131, 1-135, 1-137, 1-139
2647101-0000	.SUPPORT	1-129, 1-131, 1-135, 1-137, 1-139
2647103-0000	.SHAFT	1-35
2647104-0000	.LEVER	1-41, 1-43
2647105-0000	.AXLE PIN	1-41, 1-43
2647106-0000	.SLIDER	1-43
2647107-0000	.SLIDER	1-41
2647108-0000	.STRUT	1-37, 1-39
2647109-0000	.SHAFT	1-37, 1-39
2647111-0000	.SUPPORT	1-67, 1-69, 1-71, 1-73
2647112-0000	.GUIDE	1-67, 1-69, 1-71, 1-73
2647113-0000	.BUSHING	1-129, 1-131, 1-135, 1-137, 1-139, 1-1043
2647126-0000	.BRACKET	1-49, 1-51, 1-53, 1-55
2647127-0000	.FOLDING PART	1-49, 1-51, 1-53, 1-55
2647128-0000	.FOLDING PART	1-49, 1-51, 1-53, 1-55
2647129-0000	.FOLDING PART	1-49, 1-51, 1-53, 1-55
2647130-0000	.FOLDING PART	1-49, 1-51, 1-53, 1-55
2647131-0000	.GUIDE	1-57, 1-59
2648819-0000	.SEALING PLATE	1-213
2649660-0000	.SHAFT	1-617, 1-619, 1-621, 1-623, 1-643, 1-645, 1-653, 1-655, 1-657, 1-659, 1-679, 1-681, 1-685, 1-687, 1-689, 1-691, 1-693, 1-695, 1-699, 1-701, 1-703, 1-705, 1-707, 1-709
2649677-0000	.DAMPER	1-617, 1-619, 1-621, 1-623, 1-653, 1-655, 1-657, 1-659, 1-685, 1-687, 1-689, 1-691, 1-699, 1-701, 1-703, 1-705
2651295-0000	.TEMPLATE	1-235
2651573-0000	.TEMPLATE	1-235
2651695-0000	.COVER PLATE	1-471, 1-473
2651789-0000	.ROLLER	1-475, 1-477
2651790-0000	.ROLLER	1-475, 1-477
2655456-0000	.CAM	1-975
2656899-0000	.BRACKET	1-519, 1-521, 1-523
2657828-0000	.PUNCH	1-205
2657829-0000	.DIE	1-205
2657873-0200	.LONGITUDINAL SEALING	1-323
2657923-0000	.COUNTER ROLLER	1-353, 1-355
2657925-0000	.ROLLER	1-371
2658045-0000	.OPENING SPECIFICATION	1-237
2658046-0000	.OPENING SPECIFICATION	1-237
2658047-0000	.OPENING SPECIFICATION	1-237
2658048-0000	.OPENING SPECIFICATION	1-237
2658078-0000	.SEALING PLATE	1-211
2658238-0000	.FLAP	1-115
2658239-0000	.BOTTOM	1-95, 1-97, 1-99, 1-101, 1-103
2658240-0000	.BOTTOM	1-95, 1-97, 1-99, 1-101, 1-103
2658241-0000	.SLIDE	1-91, 1-93, 1-115
2658242-0000	.FLAP	1-91, 1-93
2658247-0000	.WASHER	1-129, 1-131, 1-135, 1-137, 1-139, 1-1043
2658249-0000	.SHIM	1-129, 1-131, 1-135, 1-137, 1-139, 1-245
2659361-0000	.BRACKET	1-371
2659364-0000	.FORK	1-333, 1-335, 1-337, 1-339
2660289-0000	.VOLUME FLAP	1-615, 1-651
2660290-0000	.FOLDING FLAP	1-573, 1-575, 1-605, 1-607
2660291-0000	.FOLDING FLAP	1-573, 1-575, 1-605, 1-607
2660292-0000	.VOLUME BULGE	1-615, 1-651
2660293-0000	.VOLUME SHIM	1-615, 1-651, 1-743, 1-745, 1-747
2660295-0000	.ROLLER	1-615, 1-643, 1-647, 1-651, 1-679, 1-693, 1-707
2660296-0000	.BUSHING	1-615, 1-643, 1-647, 1-651, 1-679, 1-693, 1-707
2660308-0000	.FLAP	1-651
2660309-0000	.FLAP	1-651
2660841-0000	.PUSHER	1-163
2660843-0000	.TEMPLATE	1-387
2661153-0000	.SPACER	1-13, 1-15
2661429-0000	.PUSHER	1-129, 1-131
2662142-0000	.SPRING	1-163
2662639-0000	.ROLLER	1-763, 1-765
2663370-0000	.SUPPORT	1-35
2663373-0000	.BOTTOM	1-95, 1-97, 1-99, 1-101, 1-103
2663377-0000	.INDUCTOR	1-589, 1-591, 1-593, 1-743, 1-745, 1-747
2663378-0000	.INDUCTOR	1-541, 1-543, 1-545, 1-743, 1-745, 1-747
2664765-0000	.TEMPLATE	1-235
2664766-0000	.TEMPLATE	1-235
2665197-0000	.BRACKET	1-179
2665199-0000	.SLIDE	1-179
2665200-0000	.GUIDE	1-17, 1-19, 1-21
2665201-0000	.GUIDE	1-17, 1-19, 1-21
2665204-0000	.CRADLE	1-189, 1-191
2665205-0000	.PLATE	1-11
2665206-0000	.PLATE	1-11
2672797-0000	.TEMPLATE	1-235
2672798-0000	.TEMPLATE	1-235
2672799-0000	.TEMPLATE	1-235
2672800-0000	.TEMPLATE	1-235

Part No	Description	Page No
2672970-0000	.ROLLER	1-439, 1-441
2672978-0000	.ROLLER	1-415, 1-417, 1-419
2672979-0000	.ROLLER	1-415, 1-417, 1-419
2672980-0000	.ROLLER	1-415, 1-417, 1-419
2672981-0000	.ROLLER	1-415, 1-417, 1-419
2672984-0000	.INDUCTOR	1-479, 1-481, 1-483, 1-485, 1-487
2672985-0000	.ROLLER	1-439, 1-441
2672986-0000	.ROLLER	1-439, 1-441
2672994-0000	.HOOD	1-333, 1-335, 1-337, 1-339
2672995-0000	.BRACKET	1-333, 1-335, 1-337, 1-339
2673015-0000	.FORK	1-333, 1-335, 1-337, 1-339
2673021-0000	.SHAFT	1-333, 1-335, 1-337, 1-339
2673023-0000	.LOWER FORMING RING	1-353, 1-355
2675322-0000	.SLIDE	1-165, 1-167, 1-169
2675323-0000	.SLIDE	1-165, 1-167, 1-169
2677383-0000	.ROLLER	1-737, 1-739
2678708-0000	.SUPPORT	1-179
2680195-0000	.ROLLER	1-415, 1-417, 1-419
2680196-0000	.ROLLER	1-415, 1-417, 1-419
2682172-0000	.FLAP	1-615
2682173-0000	.FLAP	1-615
2682174-0000	.WASHER	1-615, 1-651
2682187-0000	.VOLUME FLAP	1-615, 1-651
2682188-0000	.FLAP	1-651
2682189-0000	.FLAP	1-651
2682190-0000	.FLAP	1-615
2682191-0000	.FLAP	1-615
2682490-0000	.NEEDLE	1-909, 1-911, 1-913
2685390-0300	.BENDING ROLLER	1-787
2686751-0200	.NEEDLE	1-905, 1-907
2686861-0000	.ROLLER	1-353, 1-355
2688917-0000	.ROLLER	1-737, 1-739
2691317-0000	.PLATE	1-201
2691318-0000	.PLATE	1-201
2691320-0000	.HOUSING	1-201
2691321-0000	.SUPPORT	1-201
2691322-0000	.PLATE	1-201
2691323-0000	.PLATE	1-201
2691695-0300	.BOX5 - SUPERSTRUCTURE	1-5
2693197-0000	.INSERT	1-83, 1-85, 1-87, 1-89, 1-105, 1-107, 1-109, 1-111, 1-113
2693200-0000	.SCREW	1-81
2694025-0000	.SEALING PLATE	1-211
2694095-0000	.BRACKET	1-513, 1-515, 1-517
2694714-0000	.GUIDE	1-479, 1-481, 1-483, 1-485, 1-487
2694716-0000	.PLATE	1-479, 1-481, 1-483, 1-485, 1-487
2696411-0000	.SPACER	1-415, 1-417, 1-419
2696412-0000	.SPACER	1-415, 1-417, 1-419
2698300-0000	.PLATE	1-163
2698319-0000	.BLOCK	1-129, 1-131, 1-135, 1-137, 1-139, 1-1043
2698625-0000	.SHAFT	1-737, 1-739
2698631-0000	.VOLUME BULGE	1-541, 1-543, 1-545, 1-563, 1-565, 1-567, 1-569, 1-589, 1-591, 1-593
2698638-0200	.VOLUME FLAP CUTTING	1-613, 1-683
2698639-0200	.VOLUME FLAP PRESSURE	1-649, 1-697
2699436-0000	.SPACER	1-319
2699437-0000	.RAIL HOLDER	1-319
2700151-0000	.LID	1-539
2700546-0000	.FRONT RING	1-347, 1-349, 1-353, 1-355
2701881-0000	.BRACKET	1-403
2704688-0000	.BRACKET	1-927
2704689-0100	.BAR CODE READER	1-917
2704695-0006	.TUBE	1-927
2704695-0008	.TUBE	1-927
2704697-0000	.SUPPORT	1-925
2704698-0000	.BAR	1-925
2704718-0000	.SHAFT	1-819
2704722-0000	.SHAFT	1-949, 1-951
2709224-0000	.WHEEL	1-1013
2709302-0000	.ROLLER	1-439, 1-441
2709785-0000	.ROLLER	1-353, 1-355
2710771-0000	.SHAFT	1-819
2710800-0100	.PATCH MAGAZINE	1-195, 1-197, 1-199
2710801-0200	.COUNTER ROLLER	1-821
2710816-0000	.ROLLER	1-819
2715295-0000	.BRACKET	1-513, 1-515, 1-517
2715297-0000	.BOW CLAMP	1-751
2715298-0000	.BRACKET	1-519, 1-521, 1-523
2715299-0000	.BRACKET	1-519, 1-521, 1-523
2715300-0000	.BRACKET	1-751
2715301-0000	.SUPPORT	1-751
2715567-0000	.BRACKET	1-371
2715569-0000	.BRACKET	1-333, 1-335, 1-337, 1-339
2715570-0000	.ROLLER	1-371
2715649-0003	.SPACER	1-371
2715649-0004	.SPACER	1-371

Part No	Description	Page No
2715649-0005	.SPACER	1-371
2715649-0008	.SPACER	1-371
2715650-0002	.SCREW	1-371
2715650-0003	.SCREW	1-371
2715650-0006	.SCREW	1-371
2715650-0009	.SCREW	1-371
2715652-0000	.FORK	1-333, 1-335, 1-337, 1-339
2716443-0000	.ROLLER	1-435, 1-437
2716534-0000	.PUSHER	1-129, 1-131
2716539-0000	.ROLLER	1-407, 1-409
2716540-0000	.ROLLER	1-407, 1-409
2716547-0000	.ROLLER	1-457, 1-459, 1-461, 1-463
2716548-0000	.ROLLER	1-457, 1-459, 1-461, 1-463
2716552-0000	.BRACKET	1-957, 1-959
2718901-0000	.SEAL	1-451, 1-453, 1-465, 1-467
2719075-0000	.GUIDE PIN	1-1019, 1-1021, 1-1025, 1-1027, 1-1029, 1-1031
2719081-0000	.BRACKET	1-513, 1-515, 1-517
2719697-0000	.SHUTTER	1-905, 1-907, 1-963
2720717-0000	.ROLLER	1-415, 1-417, 1-419
2721109-0000	.SCREW	1-1019, 1-1021, 1-1025, 1-1027, 1-1029, 1-1031, 1-1033, 1-1035, 1-1037
2721423-0000	.FORMING RING	1-347, 1-349
2724929-0000	.KNOB	1-513, 1-515, 1-517, 1-525
2725145-0000	.DIAPHRAGM	1-375, 1-377
2725337-0000	.SEAL	1-915, 1-967
2725526-0000	.SCREW	1-479, 1-481, 1-483, 1-485, 1-487
2725564-0000	.WHEEL	1-1003, 1-1005
2728867-0000	.PLATE	1-817
2729835-0000	.GUIDE	1-1019, 1-1021, 1-1025, 1-1027, 1-1029, 1-1031
2729837-0000	.HOLDER	1-1019, 1-1021, 1-1025, 1-1027, 1-1029, 1-1031
2729842-0000	.SCREW	1-1019, 1-1021, 1-1025, 1-1027, 1-1029, 1-1031
2731210-0000	.SLEEVE	1-401
2731212-0000	.RING	1-401
2731217-0200	.PAPER REEL HOLDER	1-323
2731428-0000	.NUT	1-347, 1-349, 1-353, 1-355, 1-407, 1-409, 1-415, 1-417, 1-419
2731503-0000	.LOWER FORMING RING	1-353, 1-355
2731506-0000	.LOWER FORMING RING	1-353, 1-355
2733499-0000	.PIN	1-977
2733999-0000	.HUB	1-81
2736631-0000	.UPPER FORMING RING	1-415, 1-417, 1-419
2736632-0000	.UPPER FORMING RING	1-415, 1-417, 1-419
2736633-0000	.UPPER FORMING RING	1-415, 1-417, 1-419
2736676-0000	.UPPER FORMING RING	1-407, 1-409, 1-415, 1-417, 1-419
2736677-0000	.UPPER FORMING RING	1-407, 1-409, 1-415, 1-417, 1-419
2736697-0000	.UPPER FORMING RING	1-407, 1-409, 1-415, 1-417, 1-419
2736705-0000	.LOWER FORMING RING	1-347, 1-349, 1-353, 1-355
2736719-0000	.PLATE	1-389, 1-391
2737037-0000	.EXTERNAL TOOL	1-879
2737773-0000	.PLUNGER	1-561
2737913-0100	.BAR CODE READER	1-495, 1-497
2737919-0000	.PLATE	1-499
2737920-0000	.HOLDER	1-499, 1-505
2737933-0000	.FASTENING PLATE	1-499
2740795-0000	.FLANGE BUSHING	1-407, 1-409
2745337-0200	.BENDING ROLLER	1-985
2746756-0200	.WHEEL	1-255
2746765-0200	.WHEEL	1-255
2748115-0000	.CRADLE	1-189, 1-191
2751478-0000	.ROLLER	1-407, 1-409
2751479-0000	.ROLLER	1-407, 1-409
2751481-0000	.ROLLER	1-407, 1-409
2751482-0000	.ROLLER	1-407, 1-409
2751483-0000	.ROLLER	1-407, 1-409
2751788-0000	.CRADLE	1-189, 1-191
2758064-0200	.SQUEE-GEE ROLLER	1-985
2758084-0000	.ROLLER	1-407, 1-409
2758085-0000	.ROLLER	1-407, 1-409
2758728-0000	.HANDLE	1-395
2758729-0000	.CLAMPING LINK	1-395
2758730-0000	.HUB	1-395
2758731-0000	.ADJUSTING SCREW	1-395
2758732-0000	.AIR NOZZLE	1-397, 1-399
2758733-0001	.AIR PIPE	1-397, 1-399
2758733-0002	.AIR PIPE	1-397, 1-399
2758733-0003	.AIR PIPE	1-397, 1-399
2758734-0000	.HUB	1-395
2758737-0000	.SEAL	1-397, 1-399
2758738-0001	.SCREW	1-397, 1-399
2758738-0002	.SCREW	1-397, 1-399
2758738-0003	.SCREW	1-397, 1-399
2758739-0000	.PLUG	1-395
2758740-0001	.SPACER	1-397, 1-399
2758740-0002	.SPACER	1-397, 1-399
2758778-0000	.PUNCH	1-929, 1-931, 1-933
2758779-0000	.DIE	1-929, 1-931, 1-933

Part No	Description	Page No
2759019-0000	.PLATE	1-563, 1-565, 1-567, 1-569
2759110-0000	.ROLLER	1-957, 1-959, 1-961
2760089-0000	.STOP	1-243
2760120-0000	.PLATE	1-243
2760121-0000	.BAR	1-243
2760126-0000	.SPACER	1-243
2760262-0200	.PAPER GUIDE	1-955
2760283-0001	.STOP	1-1019, 1-1021, 1-1025, 1-1027, 1-1029, 1-1031
2760288-0000	.GUIDE	1-1019, 1-1021, 1-1025, 1-1027, 1-1029, 1-1031
2760291-0001	.SHIM	1-963, 1-1019, 1-1021, 1-1025, 1-1027, 1-1029, 1-1031
2760291-0002	.SHIM	1-963, 1-1019, 1-1021, 1-1025, 1-1027, 1-1029, 1-1031
2760291-0003	.SHIM	1-963, 1-1019, 1-1021, 1-1025, 1-1027, 1-1029, 1-1031
2760291-0004	.SHIM	1-963, 1-1019, 1-1021, 1-1025, 1-1027, 1-1029, 1-1031
2760291-0005	.SHIM	1-963, 1-1019, 1-1021, 1-1025, 1-1027, 1-1029, 1-1031
2760291-0006	.SHIM	1-963, 1-1019, 1-1021, 1-1025, 1-1027, 1-1029, 1-1031
2760293-0000	.GUIDE	1-1019, 1-1021, 1-1025, 1-1027, 1-1029, 1-1031
2761950-0000	.CRADLE	1-291, 1-293
2761951-0000	.CRADLE	1-291, 1-293
2763959-0000	.SHAFT	1-395
2763963-0000	.SLEEVE	1-395
2763999-0200	.BENDING ROLLER	1-763, 1-765, 1-837
2764007-0000	.SPACER	1-395
2764009-0000	.BRACKET	1-371
2764013-0000	.UPPER FORMING RING	1-407, 1-409, 1-415, 1-417, 1-419
2764014-0000	.UPPER FORMING RING	1-407, 1-409, 1-415, 1-417, 1-419
2764015-0000	.UPPER FORMING RING	1-415, 1-417, 1-419
2764017-0000	.UPPER FORMING RING	1-415, 1-417, 1-419
2764019-0000	.UPPER FORMING RING	1-415, 1-417, 1-419
2764021-0000	.UPPER FORMING RING	1-415, 1-417, 1-419
2764022-0000	.UPPER FORMING RING	1-407, 1-409, 1-415, 1-417, 1-419
2764023-0000	.LOWER FORMING RING	1-347, 1-349, 1-353, 1-355
2764025-0000	.LOWER FORMING RING	1-353, 1-355
2764026-0000	.LOWER FORMING RING	1-347, 1-349, 1-353, 1-355
2764027-0000	.LOWER FORMING RING	1-347, 1-349, 1-353, 1-355
2764029-0000	.LOWER FORMING RING	1-353, 1-355
2764031-0000	.LOWER FORMING RING	1-353, 1-355
2764032-0000	.SHAFT	1-347, 1-349, 1-353, 1-355
2764033-0000	.SHAFT	1-347, 1-349, 1-353, 1-355
2764034-0000	.SHAFT	1-407, 1-409, 1-415, 1-417, 1-419
2764035-0000	.SHAFT	1-407, 1-409, 1-415, 1-417, 1-419
2764036-0000	.KNOB	1-347, 1-349, 1-353, 1-355, 1-407, 1-409, 1-415, 1-417, 1-419
2764324-0000	.HOLD-DOWN	1-269
2764404-0000	.SPACER	1-893, 1-895, 1-897
2767295-0000	.BLOCK	1-35
2767296-0000	.SPACER SCREW	1-35
2767478-0001	.ROLLER	1-737, 1-739, 1-743, 1-745, 1-747
2767478-0002	.ROLLER	1-737, 1-739, 1-743, 1-745, 1-747
2767478-0003	.ROLLER	1-743, 1-745, 1-747
2767478-0004	.ROLLER	1-743, 1-745, 1-747
2769842-0200	.PULL-DOWN DEVICE	1-9
2769843-0000	.BLOCK	1-25, 1-27
2769844-0000	.GRUB SCREW	1-25, 1-27
2771005-0000	.TOOL	1-851
2771006-0003	.STOP	1-1019, 1-1021, 1-1025, 1-1027, 1-1029, 1-1031
2771008-0000	.PIN	1-1019, 1-1021, 1-1025, 1-1027, 1-1029, 1-1031
2771009-0000	.PIN	1-1019, 1-1021, 1-1025, 1-1027, 1-1029, 1-1031
2771010-0001	.SHIM	1-847, 1-855, 1-863, 1-871
2771010-0002	.SHIM	1-847, 1-855, 1-863, 1-871
2771010-0003	.SHIM	1-847, 1-855, 1-863, 1-871
2771010-0004	.SHIM	1-847, 1-855, 1-863, 1-871
2771010-0005	.SHIM	1-847, 1-855, 1-863, 1-871
2771013-0001	.SHIM	1-963, 1-1019, 1-1021, 1-1025, 1-1027, 1-1029, 1-1031
2771013-0002	.SHIM	1-963, 1-1019, 1-1021, 1-1025, 1-1027, 1-1029, 1-1031
2771013-0003	.SHIM	1-963, 1-1019, 1-1021, 1-1025, 1-1027, 1-1029, 1-1031
2771013-0004	.SHIM	1-963, 1-1019, 1-1021, 1-1025, 1-1027, 1-1029, 1-1031
2771013-0005	.SHIM	1-963, 1-1019, 1-1021, 1-1025, 1-1027, 1-1029, 1-1031
2771015-0000	.LEVER	1-1019, 1-1021, 1-1025, 1-1027, 1-1029, 1-1031
2771016-0000	.BLOCK	1-1019, 1-1021, 1-1025, 1-1027, 1-1029, 1-1031
2771018-0000	.PIN	1-1019, 1-1021, 1-1025, 1-1027, 1-1029, 1-1031
2772645-0100	.PISTON	1-557, 1-603
2772646-0000	.PLUNGER	1-559
2772647-0000	.SLEEVE	1-559
2772648-0000	.COVER	1-559
2773510-0000	.SHAFT	1-617, 1-619, 1-621, 1-623, 1-653, 1-655, 1-657, 1-659, 1-685, 1-687, 1-689, 1-691, 1-699, 1-701, 1-703, 1-705
2773832-0000	.GASKET	1-245
2774372-0000	.TEMPLATE	1-387
2774374-0000	.TEMPLATE	1-387
2774465-0000	.SCREW BUSHING	1-81
2774466-0000	.SCREW HOLDER	1-81
2774798-0000	.KNIFE	1-611, 1-743, 1-745, 1-747
2774799-0000	.BLOCK	1-611, 1-743, 1-745, 1-747
2774802-0000	.COVER	1-549, 1-551, 1-553, 1-597, 1-599, 1-601
2774803-0000	.SEAT	1-549, 1-551, 1-553, 1-597, 1-599, 1-601

Part No	Description	Page No
2774936-0000	.PUSHER	1-171
2774938-0000	.GUIDE	1-315, 1-317
2778960-0000	.BUSHING	1-625, 1-627, 1-629, 1-631, 1-633, 1-661, 1-663, 1-665, 1-667, 1-669
2779738-0000	.GUIDE	1-17, 1-19, 1-21
2779739-0000	.GUIDE	1-17, 1-19, 1-21
2780314-0000	.PAPER GUIDE	1-203
2780751-0000	.ECCENTRIC	1-713, 1-715, 1-717
2780752-0000	.ECCENTRIC	1-713, 1-715, 1-717
2780753-0000	.PIVOT PIN	1-713, 1-715, 1-717
2783088-0400	.STERILE AIR PIPE	1-393
2783102-0200	.PLATE	1-763, 1-765, 1-985
2783538-0000	.ROD	1-819
2784290-0000	.PLATE	1-563, 1-565, 1-567, 1-569
2786059-0000	.VOLUME BULGE	1-625, 1-627, 1-629, 1-631, 1-633, 1-661, 1-663, 1-665, 1-667, 1-669
2787568-0000	.HOOD	1-333, 1-335, 1-337, 1-339
2788624-0000	.BENDING ROLLER	1-1013
2788639-0000	.BOX FRAME	1-789
2789231-0000	.GUIDE	1-287, 1-289
2790818-0000	.VOLUME SHIM	1-625, 1-627, 1-629, 1-631, 1-633, 1-661, 1-663, 1-665, 1-667, 1-669, 1-743, 1-745, 1-747
2790925-0000	.SLEEVE	1-401
2791248-0000	.ROLLER	1-975
2793317-0000	.PLUG	1-395
2793318-0000	.SLIDE	1-395
2793320-0300	.TEMPLATE	1-375, 1-377
2793351-0000	.UPPER FORMING RING	1-415, 1-417, 1-419
2794725-0000	.PLATE	1-457, 1-459, 1-461, 1-463
2794726-0000	.RING	1-457, 1-459, 1-461, 1-463
2795078-0000	.VOLUME BULGE	1-625, 1-627, 1-629, 1-631, 1-633, 1-661, 1-663, 1-665, 1-667, 1-669
2795079-0000	.VOLUME SHIM	1-625, 1-627, 1-629, 1-631, 1-633, 1-661, 1-663, 1-665, 1-667, 1-669, 1-743, 1-745, 1-747
2795264-0000	.BOTTOM	1-95, 1-97, 1-99, 1-101, 1-103
2796027-0000	.SUPPORT	1-925
2796908-0000	.FOLDING DEVICE	1-29
2796909-0000	.FOLDING DEVICE	1-29
2797260-0200	.PAPER GUIDE	1-807, 1-819
2797439-0000	.FASTENING PLATE	1-513, 1-515, 1-517, 1-519, 1-521, 1-523
2797518-0100	.PAPER GUIDE	1-955
2797519-0000	.BRACKET	1-961
2797525-0000	.BRACKET	1-961
2798288-0000	.VOLUME BULGE	1-309, 1-311
2798289-0000	.VOLUME BULGE	1-305, 1-307
2798294-0000	.WHEEL	1-265, 1-271
2798295-0000	.ARM	1-265, 1-271
2798296-0000	.FLAP	1-269, 1-277
2798298-0000	.BOTTOM	1-275
2798299-0000	.BOTTOM	1-273
2798304-0000	.BOTTOM	1-267
2798473-0000	.SCREW	1-563, 1-565, 1-567, 1-569
2799570-0000	.SEAL	1-967
2799571-0000	.SEAL	1-967
2799576-0000	.BUSHING	1-915
2799582-0000	.BUSHING	1-915
2800314-0000	.SUPPORT	1-813
2800315-0000	.SHAFT	1-813
2800316-0000	.LEVER	1-813
2802612-0000	.BOTTOM	1-95, 1-97, 1-99, 1-101, 1-103
2803174-0000	.TIE ROD	1-549, 1-551, 1-553, 1-597, 1-599, 1-601
2803986-0000	.STOP PIN	1-333, 1-335, 1-337, 1-339
2803987-0000	.STOP PIN	1-333, 1-335, 1-337, 1-339
2805164-0000	.SHAFT	1-287, 1-289
2805167-0000	.WASHER	1-287, 1-289
2805169-0000	.SHAFT	1-287, 1-289
2805170-0000	.PLATE	1-287
2805171-0000	.VOLUME BULGE	1-287
2805172-0000	.VOLUME BULGE	1-287
2805188-0000	.LEVER	1-287, 1-289
2805193-0000	.BUSHING	1-265, 1-271
2805210-0000	.SHAFT	1-287, 1-289
2805509-0000	.SHAFT	1-813
2805510-0000	.SLEEVE	1-813
2805965-0000	.PLATE	1-1007
2805966-0000	.PLATE	1-1007
2806345-0000	.GUIDE	1-75, 1-77
2806346-0000	.GUIDE	1-75, 1-77
2807149-0000	.SPACER	1-287, 1-289
2807152-0000	.SPACER	1-279, 1-281, 1-283, 1-285
2807185-0000	.SPRING	1-287, 1-289
2808800-0100	.VOLUME FLAP CUTTING	1-613, 1-683
2808802-0000	.VOLUME FLAP	1-625, 1-627, 1-629, 1-631, 1-633, 1-661, 1-663, 1-665, 1-667, 1-669
2808803-0000	.SIDE PLATE	1-625, 1-627, 1-629, 1-631, 1-633
2808804-0000	.SIDE PLATE	1-625, 1-627, 1-629, 1-631, 1-633
2809061-0001	.ARM	1-625, 1-627, 1-629, 1-631, 1-633, 1-661, 1-663, 1-665, 1-667, 1-669
2809061-0002	.ARM	1-625, 1-627, 1-629, 1-631, 1-633, 1-661, 1-663, 1-665, 1-667, 1-669

Part No	Description	Page No
2809061-0006	.ARM	1-625, 1-627, 1-629, 1-631, 1-633, 1-661, 1-663, 1-665, 1-667, 1-669
2809061-0010	.ARM	1-625, 1-627, 1-629, 1-631, 1-633, 1-661, 1-663, 1-665, 1-667, 1-669
2809061-0011	.ARM	1-625, 1-627, 1-629, 1-631, 1-633, 1-661, 1-663, 1-665, 1-667, 1-669
2809471-0000	.BOX	1-1033, 1-1035, 1-1037
2809846-0000	.STOP PIN	1-333, 1-335, 1-337, 1-339
2809847-0000	.STOP PIN	1-333, 1-335, 1-337, 1-339
2809849-0000	.STOP PIN	1-333, 1-335, 1-337, 1-339
2810637-0100	.VOLUME FLAP PRESSURE	1-649, 1-697
2810640-0100	.SUPPORT FLAP CUTTING	1-511, 1-1039, 1-1041
2810641-0100	.SUPPORT FLAP PRESSURE	1-511, 1-1039, 1-1041
2810642-0000	.SIDE PLATE	1-661, 1-663, 1-665, 1-667, 1-669
2810643-0000	.SIDE PLATE	1-661, 1-663, 1-665, 1-667, 1-669
2811775-0000	.SEAL	1-375, 1-377, 1-457, 1-459, 1-461, 1-463
2812896-0200	.SUPPORT ROLLER	1-711
2812897-0000	.PLATE	1-737, 1-739
2812899-0000	.CAM	1-737, 1-739
2813723-0000	.BEARING HOUSING	1-563, 1-565, 1-567, 1-569
2813724-0000	.PLATE	1-563, 1-565, 1-567, 1-569
2813725-0000	.CUTTING JAW	1-563, 1-565, 1-567, 1-569
2813728-0000	.FOLDING FLAP	1-573, 1-575, 1-605, 1-607
2813729-0000	.FOLDING FLAP	1-573, 1-575, 1-605, 1-607
2813730-0000	.LID	1-539
2813731-0000	.BEARING HOUSING	1-539
2814022-0200	.TOOL BOX	1-1017
2814023-0100	.MOULDING TOOL ASSEMBLY	1-843
2814029-0000	.CYLINDER HOLDER	1-1019, 1-1021, 1-1025, 1-1027, 1-1029, 1-1031
2814030-0000	.FLANGE	1-1019, 1-1021, 1-1025, 1-1027, 1-1029, 1-1031
2814035-0000	.PISTON	1-1019, 1-1021, 1-1025, 1-1027, 1-1029, 1-1031
2814038-0000	.HOLDER	1-1019, 1-1021, 1-1025, 1-1027, 1-1029, 1-1031
2814844-0000	.SETTING TOOL	1-805
2814856-0000	.SHAFT	1-819
2814866-0000	.GUIDE	1-915
2814867-0000	.GUIDE	1-915
2814896-0000	.VOLUME FLAP	1-625, 1-627, 1-629, 1-631, 1-633, 1-661, 1-663, 1-665, 1-667, 1-669
2814897-0000	.SIDE PLATE	1-625, 1-627, 1-629, 1-631, 1-633
2814898-0000	.SIDE PLATE	1-625, 1-627, 1-629, 1-631, 1-633
2814899-0000	.SIDE PLATE	1-661, 1-663, 1-665, 1-667, 1-669
2814900-0000	.SIDE PLATE	1-661, 1-663, 1-665, 1-667, 1-669
2815344-0000	.HOLDER	1-1007
2815964-0000	.RAIL	1-541, 1-543, 1-545
2815967-0000	.BUSHING	1-563, 1-565, 1-567, 1-569
2816115-0100	.TOP RAIL	1-47
2818315-0000	.TEMPLATE	1-965
2818326-0000	.RAIL	1-203
2818554-0000	.BOTTOM	1-95, 1-97, 1-99, 1-101, 1-103
2818555-0000	.BOTTOM	1-95, 1-97, 1-99, 1-101, 1-103
2818556-0000	.BLOCK	1-25, 1-27
2821398-0000	.WASHER	1-465, 1-467
2826390-0000	.SPRING	1-333, 1-335, 1-337, 1-339
2826393-0000	.SPRING	1-333, 1-335, 1-337, 1-339
2826395-0000	.SPRING	1-333, 1-335, 1-337, 1-339
2826398-0000	.SPRING	1-333, 1-335, 1-337, 1-339
2826399-0000	.SPRING	1-333, 1-335, 1-337, 1-339
2826410-0000	.ROLLER	1-371
2826440-0000	.SEAL RING	1-381
2826441-0000	.SEAL RING	1-381
2826443-0000	.DIAPHRAGM	1-381
2826478-0000	.UPPER FILLING PIPE	1-333, 1-335, 1-337, 1-339
2826594-0000	.SHIM	1-915
2826678-0000	.SUPPORT	1-287, 1-289
2826710-0200	.FORMING PLATE	1-255, 1-1039, 1-1041
2826713-0000	.SUPPORT	1-287
2826714-0000	.SUPPORT	1-287
2826717-0000	.LEVER	1-287, 1-289
2826718-0000	.LEVER	1-287, 1-289
2826720-0300	.FORMING PLATE	1-255, 1-1039, 1-1041
2827042-0000	.FLAP	1-105, 1-107, 1-109, 1-111, 1-113
2828723-0000	.SHAFT	1-957
2828724-0000	.SUPPORT	1-957, 1-959
2828725-0000	.SHAFT	1-959
2828726-0100	.PAPER GUIDE	1-955
2829385-0000	.PLATE	1-243
2830430-0000	.BUSBAR	1-541, 1-543, 1-545
2831048-0000	.BUSBAR	1-589, 1-591, 1-593
2831688-0000	.ROLLER	1-949, 1-951, 1-953
2832076-0000	.RAIL	1-589, 1-591, 1-593
2832241-0200	.PRESSURE JAW LEFT	1-511
2832242-0200	.PRESSURE JAW RIGHT	1-511
2832243-0100	.PRESSURE JAW	1-535, 1-537, 1-585, 1-587
2832244-0200	.INDUCTOR LEFT	1-535, 1-537
2832245-0200	.INDUCTOR RIGHT	1-585, 1-587
2832553-0000	.UPPER FILLING PIPE	1-333, 1-335, 1-337, 1-339
2832555-0000	.FILLING PIPE	1-333, 1-335, 1-337, 1-339
2832818-0200	.CUTTING JAW LEFT	1-511

Part No	Description	Page No
2832819-0200	.CUTTING JAW RIGHT	1-511
2832867-0000	.ROLLER	1-331
2832935-0100	.CUTTING JAW	1-557, 1-603
2832936-0100	.FOLDING FLAP LEFT	1-557
2832937-0100	.FOLDING FLAP RIGHT	1-603
2833088-0000	.ROLLER	1-415, 1-417, 1-419
2833177-0000	.GASKET	1-791, 1-797
2833212-0000	.ROLLER	1-415, 1-417, 1-419
2833215-0000	.ROLLER	1-353, 1-355
2833244-0000	.BOX	1-1019, 1-1021, 1-1025, 1-1027, 1-1029, 1-1031
2833245-0000	.PLATE	1-1019, 1-1021, 1-1025, 1-1027, 1-1029, 1-1031
2833248-0000	.SPACER	1-1019, 1-1021, 1-1025, 1-1027, 1-1029, 1-1031
2833254-0000	.SUPPORT	1-1019, 1-1021, 1-1025, 1-1027, 1-1029, 1-1031
2833263-0000	.SPACER	1-915
2833952-0000	.SCREW	1-573, 1-575, 1-605, 1-607
2835082-0000	.INTERNAL TOOL ASSEMBLY	1-849
2835893-0000	.PIN	1-713, 1-715, 1-717
2835894-0000	.PIN	1-713, 1-715, 1-717
2835895-0001	.SPACER	1-713, 1-715, 1-717
2835895-0002	.SPACER	1-713, 1-715, 1-717
2835896-0000	.RAIL BRACKET	1-713, 1-715, 1-717
2835897-0100	.CURVE UNIT	1-711
2836238-0000	.INSULATION NUT	1-541, 1-543, 1-545, 1-589, 1-591, 1-593, 1-743, 1-745, 1-747
2836239-0000	.WASHER	1-541, 1-543, 1-545, 1-589, 1-591, 1-593, 1-743, 1-745, 1-747
2836242-0000	.SUPPORT	1-289
2836243-0000	.SUPPORT	1-289
2836244-0000	.PLATE	1-289
2836247-0000	.TOOL	1-289
2836248-0000	.TOOL	1-289
2836249-0000	.TOOL	1-279, 1-281
2836250-0000	.TOOL	1-283, 1-285
2837095-0000	.SHAFT	1-737, 1-739
2837096-0000	.WASHER	1-737, 1-739
2837097-0000	.CAM	1-737, 1-739
2837108-0000	.CAM	1-737, 1-739
2837503-0104	.TRANSFORMER	1-547, 1-595
2837503-0110	.TRANSFORMER	1-547, 1-595
2837533-0100	.PATCH C'JAW	1-195, 1-197, 1-199
2838217-0200	.FORMING PLATE	1-255, 1-1039, 1-1041
2838218-0300	.FORMING PLATE	1-255, 1-1039, 1-1041
2841981-0003	.SEAL	1-967
2842771-0200	.TOOL BOX	1-1017
2842772-0100	.SHOCK ABSORBER CUTTING	1-613
2842776-0000	.PIN	1-617, 1-619, 1-621, 1-623, 1-625, 1-627, 1-629, 1-631, 1-633, 1-653, 1-655, 1-657, 1-659, 1-661, 1-663, 1-665, 1-667, 1-669, 1-685, 1-687, 1-689, 1-691, 1-699, 1-701, 1-703, 1-705
2842777-0001	.DAMPER	1-617, 1-619, 1-621, 1-623, 1-653, 1-655, 1-657, 1-659, 1-685, 1-687, 1-689, 1-691, 1-699, 1-701, 1-703, 1-705
2842777-0003	.DAMPER	1-653, 1-655, 1-657, 1-659, 1-699, 1-701, 1-703, 1-705
2842777-0004	.DAMPER	1-617, 1-619, 1-621, 1-623, 1-653, 1-655, 1-657, 1-659, 1-685, 1-687, 1-689, 1-691, 1-699, 1-701, 1-703, 1-705
2842777-0005	.DAMPER	1-617, 1-619, 1-621, 1-623, 1-653, 1-655, 1-657, 1-659, 1-685, 1-687, 1-689, 1-691, 1-699, 1-701, 1-703, 1-705
2842778-0000	.DAMPER	1-625, 1-627, 1-629, 1-631, 1-633, 1-661, 1-663, 1-665, 1-667, 1-669
2842779-0000	.SPACER	1-625, 1-627, 1-629, 1-631, 1-633, 1-645, 1-661, 1-663, 1-665, 1-667, 1-669, 1-681, 1-695, 1-709
2842780-0000	.BUSHING	1-617, 1-619, 1-621, 1-623, 1-653, 1-655, 1-657, 1-659, 1-685, 1-687, 1-689, 1-691, 1-699, 1-701, 1-703, 1-705
2842781-0000	.SPRING	1-617, 1-619, 1-621, 1-623, 1-653, 1-655, 1-657, 1-659, 1-685, 1-687, 1-689, 1-691, 1-699, 1-701, 1-703, 1-705
2842782-0000	.SPRING	1-617, 1-619, 1-621, 1-623, 1-653, 1-655, 1-657, 1-659, 1-685, 1-687, 1-689, 1-691, 1-699, 1-701, 1-703, 1-705
2842862-0100	.SHOCK ABSORBER PRESSURE	1-649
2842877-0000	.REGISTER	1-201
2843226-0000	.CAP SPECIFICATION	1-839
2843411-0000	.RAIL	1-541, 1-543, 1-545
2843412-0000	.RAIL	1-589, 1-591, 1-593
2843780-0000	.PLATE	1-573, 1-575, 1-605, 1-607
2844575-0000	.BAR	1-25, 1-27
2844888-0000	.PULLER CAM	1-721, 1-723
2844889-0000	.PULLER CAM	1-721, 1-723
2845139-0000	.COMPRESSION SPRING	1-555
2845142-0000	.STOP	1-555
2846308-0000	.FORK	1-333, 1-335, 1-337, 1-339
2846309-0000	.BRACKET	1-333, 1-335, 1-337, 1-339
2846311-0000	.FORK	1-333, 1-335, 1-337, 1-339
2846393-0000	.ROLLER	1-407, 1-409
2846394-0000	.ROLLER	1-407, 1-409
2846395-0000	.ROLLER	1-407, 1-409
2846667-0000	.DAMPER	1-625, 1-627, 1-629, 1-631, 1-633, 1-661, 1-663, 1-665, 1-667, 1-669
2847228-0000	.BEARING HOUSING	1-563, 1-565, 1-567, 1-569
2847229-0000	.CUTTING JAW	1-563, 1-565, 1-567, 1-569
2847230-0000	.FOLDING FLAP	1-573, 1-575, 1-605, 1-607
2847231-0000	.FOLDING FLAP	1-573, 1-575, 1-605, 1-607
2848492-0000	.GUIDE	1-165, 1-167, 1-169

Part No	Description	Page No
2848493-0000	.GUIDE	1-165, 1-167, 1-169
2850481-0000	.SPACER	1-179, 1-181
2851346-0000	.PLATE	1-121, 1-123, 1-125, 1-127
2851347-0000	.HOLDER	1-187
2851385-0000	.PLUNGER	1-401
2851583-0000	.ROLLER	1-415, 1-417, 1-419
2851586-0000	.ROLLER	1-415, 1-417, 1-419
2851929-0000	.STRUT	1-37, 1-39
2852228-0000	.ECCENTRIC SHAFT	1-179, 1-181
2852461-0000	.SPACER	1-243
2852462-0000	.SPACER	1-117, 1-119
2852463-0000	.SPACER	1-75, 1-77
2852465-0000	.BRACKET	1-243
2852472-0000	.SPACER	1-61, 1-63
2852473-0000	.SPACER	1-75, 1-77
2854056-0000	.BRACKET	1-713, 1-715, 1-717
2854078-0100	.PISTON	1-549, 1-551, 1-553, 1-597, 1-599, 1-601
2855528-0200	.VOLUME CURVE PIECE	1-511
2855843-0000	.NOZZLE	1-117, 1-119
2855844-0000	.NOZZLE	1-117, 1-119
2855845-0000	.NOZZLE	1-117, 1-119
2855846-0000	.NOZZLE	1-117, 1-119
2857893-0200	.PRESSURE DEVICE	1-9
2858421-0000	.BAR	1-25, 1-27
2859572-0000	.ROD	1-969
2859964-0100	.INTERNAL TOOL ASSEMBLY	1-845
2859965-0100	.EXTERNAL TOOL ASSEMBLY	1-845
2860036-0000	.VOLUME FLAP	1-625, 1-627, 1-629, 1-631, 1-633, 1-661, 1-663, 1-665, 1-667, 1-669
2860037-0000	.VOLUME BULGE	1-625, 1-627, 1-629, 1-631, 1-633, 1-661, 1-663, 1-665, 1-667, 1-669
2860038-0000	.VOLUME SHIM	1-625, 1-627, 1-629, 1-631, 1-633, 1-661, 1-663, 1-665, 1-667, 1-669, 1-743, 1-745, 1-747
2860106-0000	.SLIDE	1-165, 1-167, 1-169
2860107-0000	.SLIDE	1-165, 1-167, 1-169
2861123-0200	.DISTRIBUTOR	1-121, 1-123, 1-125, 1-127
2861926-0100	.TOP SECTION	1-47
2861978-0000	.ADJUSTING PLATE	1-67, 1-69, 1-71, 1-73
2861981-0000	.ATTACHMENT PLATE	1-67, 1-69, 1-71, 1-73
2861995-0000	.PUSHER	1-135, 1-137, 1-139
2861996-0000	.PUSHER	1-129, 1-131
2862117-0000	.FOLDING BAR	1-49, 1-51, 1-53, 1-55
2862118-0000	.FOLDING BAR	1-49, 1-51, 1-53, 1-55
2862155-0000	.GUIDE	1-57, 1-59
2862156-0000	.GUIDE	1-57, 1-59
2862211-0000	.FOLDING FLAP	1-573, 1-575, 1-605, 1-607
2862212-0000	.FOLDING FLAP	1-573, 1-575, 1-605, 1-607
2862227-0000	.HUB	1-81
2862228-0000	.FORMING PLATE	1-563, 1-565, 1-567, 1-569
2862266-0000	.BRACKET	1-57, 1-59
2862267-0000	.BRACKET	1-57, 1-59
2862268-0000	.AIR NOZZLE	1-117, 1-119
2862269-0000	.AIR NOZZLE	1-117, 1-119
2862278-0001	.HOLDER	1-653, 1-655, 1-657, 1-659
2862278-0002	.HOLDER	1-699, 1-701, 1-703, 1-705
2862279-0001	.HOLDER	1-617, 1-619, 1-621, 1-623
2862279-0002	.HOLDER	1-685, 1-687, 1-689, 1-691
2862308-0000	.DAMPER	1-643, 1-679, 1-693, 1-707
2862626-0000	.FLANGE	1-23
2862627-0000	.BEARING HOUSING	1-23
2862743-0000	.INSULATING PLATE	1-479, 1-481, 1-483, 1-485, 1-487
2862744-0000	.INSULATING PLATE	1-479, 1-481, 1-483, 1-485, 1-487
2862745-0000	.INSULATING PLATE	1-479, 1-481, 1-483, 1-485, 1-487
2862746-0000	.INSULATING PLATE	1-479, 1-481, 1-483, 1-485, 1-487
2862748-0000	.INSULATING PLATE	1-479, 1-481, 1-483, 1-485, 1-487
2862761-0000	.NOZZLE	1-117, 1-119
2862762-0000	.NOZZLE	1-117, 1-119
2863119-0000	.SHAFT	1-617, 1-619, 1-621, 1-623, 1-653, 1-655, 1-657, 1-659, 1-685, 1-687, 1-689, 1-691, 1-699, 1-701, 1-703, 1-705
2863123-0100	.FOLDING PART	1-25, 1-27
2863138-0000	.PLATE	1-23
2863546-0000	.ROLLER	1-503
2863547-0000	.PIN	1-501
2863549-0000	.BRACKET	1-501
2863550-0200	.ROLLER	1-501
2863709-0200	.CYLINDER	1-1019, 1-1021, 1-1025, 1-1027, 1-1029, 1-1031
2863720-0000	.SPACER	1-915
2863955-0000	.PLATE	1-203
2864758-0000	.NOZZLE	1-189, 1-191
2866604-0100	.FOLDING PART	1-9
2866605-0100	.FLAP GUIDE	1-47
2866700-0000	.BOTTOM	1-267
2866701-0000	.BOTTOM	1-267
2866703-0000	.BOTTOM	1-273
2866704-0000	.BOTTOM	1-273
2866706-0000	.BOTTOM	1-275

Part No	Description	Page No
2866707-0000	.BOTTOM	1-275
2866740-0000	.SHAFT	1-643, 1-679, 1-693, 1-707
2866755-0000	.LOWER FILLING PIPE	1-333, 1-335, 1-337, 1-339
2866896-0000	.SUPPORT	1-75, 1-77
2867470-0000	.AIR GUIDE	1-775, 1-777, 1-989, 1-991
2867477-0000	.DEFLECTOR	1-789
2867478-0000	.DEFLECTOR	1-789
2867643-0000	.BRACKET	1-713, 1-715, 1-717
2868038-0100	.STRIP MAGAZINE	1-195, 1-197, 1-199
2868213-0000	.AXLE LINK	1-29
2868214-0000	.TIE ROD	1-29
2868215-0000	.TIE ROD	1-29
2868216-0000	.BRACKET	1-29
2868754-0000	.BRACKET	1-501
2868844-0000	.AXLE PIN	1-615, 1-643, 1-647, 1-651, 1-679, 1-693, 1-707
2869148-0000	.TUBE	1-141, 1-143, 1-145, 1-147, 1-149, 1-151
2869149-0000	.TUBE	1-141, 1-143, 1-145, 1-147, 1-149, 1-151
2869538-0000	.FLAP	1-91, 1-93
2871038-0000	.PULLER CAM	1-721, 1-723
2871039-0000	.PULLER CAM	1-721, 1-723
2871040-0000	.VOLUME CAM	1-721, 1-723
2871043-0000	.BOTTOM	1-95, 1-97, 1-99, 1-101, 1-103
2871044-0000	.SLIDE	1-91, 1-93
2871884-0000	.RAIL BRACKET	1-713, 1-715, 1-717
2872047-0000	.ARM	1-625, 1-627, 1-629, 1-631, 1-633, 1-661, 1-663, 1-665, 1-667, 1-669
2872048-0000	.PIN	1-625, 1-627, 1-629, 1-631, 1-633, 1-661, 1-663, 1-665, 1-667, 1-669
2872065-0000	.PIN	1-331
2872091-0000	.PIN	1-625, 1-627, 1-629, 1-631, 1-633, 1-661, 1-663, 1-665, 1-667, 1-669
2874249-0000	.VOLUME CAM	1-721, 1-723
2874250-0000	.VOLUME CAM	1-721, 1-723
2874687-0000	.PLATE	1-775, 1-777, 1-989, 1-991
2874715-0000	.STUD SCREW	1-491
2874716-0000	.BODY	1-491
2874717-0000	.KNOB	1-491
2874771-0000	.PLATE	1-775, 1-777
2874772-0000	.PLATE	1-775, 1-777
2874952-0000	.BRACKET	1-519, 1-521, 1-523
2875883-0000	.WASHER	1-1019, 1-1021, 1-1025, 1-1027, 1-1029, 1-1031
2875994-0100	.ADAPTION TRANSFORMER	1-535, 1-537
2875995-0100	.ADAPTION TRANSFORMER	1-585, 1-587
2876313-0200	.PHOTOCELL BRACKET	1-511
2876334-0000	.HOLDER	1-49, 1-51, 1-53, 1-55
2876458-0000	.SPACER	1-187
2876459-0000	.SUPPORT	1-187
2876469-0000	.SPACER	1-117, 1-119
2876473-0000	.PLATE	1-241
2876664-0000	.COUNTER ROLLER	1-353, 1-355
2878080-0000	.GUIDE	1-295, 1-297
2878100-0000	.SHAFT	1-265, 1-271
2878104-0000	.SHAFT	1-287, 1-289
2878187-0000	.TEMPLATE	1-387
2878205-0000	.SPACER	1-117, 1-119
2878625-0000	.BRACKET	1-331
2878634-0000	.BRACKET	1-331
2879069-0000	.FOLDING BAR	1-75, 1-77
2879238-0000	.PRESSURE FLANGE	1-333, 1-335, 1-337, 1-339
2879239-0000	.FILLING PIPE	1-333, 1-335, 1-337, 1-339
2879535-0000	.INDUCTOR	1-541, 1-543, 1-545, 1-589, 1-591, 1-593, 1-743, 1-745, 1-747
2881044-0000	.DAMPER	1-243
2881047-0000	.BUSHING	1-243
2881048-0000	.WASHER	1-243
2881463-0000	.LOCKING DEVICE	1-333, 1-335, 1-337, 1-339
2883280-0000	.COVER	1-189, 1-191
2884160-0000	.RAIL	1-775, 1-777, 1-989, 1-991
2884994-0000	.SPACER	1-117, 1-119
2885029-0000	.ROLLER	1-471, 1-473
2885034-0100	.TUBE FLUSHING	1-711
2886173-0000	.LOCKING RING	1-333, 1-335, 1-337, 1-339
2886417-0000	.DISTRIBUTOR	1-741, 1-891
2887081-0100	.FLAP GUIDE	1-47
2887735-0000	.FORK	1-333, 1-335, 1-337, 1-339
2887736-0000	.BRACKET	1-333, 1-335, 1-337, 1-339
2887770-0000	.CLAMP	1-57, 1-59
2887771-0000	.CLAMP	1-57, 1-59
2887772-0000	.BRACKET	1-57, 1-59
2887773-0000	.BRACKET	1-57, 1-59
2887790-0000	.SHAFT	1-479, 1-481, 1-483, 1-485, 1-487
2887887-0100	.FOLDING PART	1-47
2888118-0000	.ROLLER	1-371
2888153-0000	.BRACKET	1-519, 1-521, 1-523
2888970-0438	.TRANSFORMER VMN	1-325
2888970-0524	.TRANSFORMER VMN	1-325
2888970-0619	.TRANSFORMER VMN	1-325
2889461-0000	.ROLLER	1-439, 1-441

Part No	Description	Page No
2889462-0000	.PLATE	1-439, 1-441
2889463-0000	.LOCK PLATE	1-439, 1-441
2889464-0000	.SHAFT	1-439, 1-441
2889590-0100	.PROTECTIVE COVER	1-175
2890921-0000	.BRACKET	1-949, 1-951
2894560-0000	.SLIDE PLATE	1-775, 1-777, 1-989, 1-991
2894561-0000	.SLIDE PLATE	1-775, 1-777, 1-989, 1-991
2894567-0000	.PLATE	1-775, 1-777, 1-989, 1-991
2894568-0000	.CHAIN GUIDE	1-1015
2894604-0000	.PLATE	1-775, 1-777
2894605-0000	.BOTTOM PLATE	1-775, 1-777
2894606-0000	.AIR GUIDE	1-775, 1-777
2895457-0000	.ROLLER	1-415, 1-417, 1-419
2895458-0000	.ROLLER	1-415, 1-417, 1-419
2895459-0000	.ROLLER	1-415, 1-417, 1-419
2895460-0000	.ROLLER	1-415, 1-417, 1-419
2895461-0000	.ROLLER	1-415, 1-417, 1-419
2895462-0000	.ROLLER	1-415, 1-417, 1-419
2895463-0000	.ROLLER	1-415, 1-417, 1-419
2895566-0000	.BLOCK	1-25, 1-27
2895567-0000	.BAR	1-25, 1-27
2895568-0200	.FRAMEWORK	1-9
2895569-0000	.BOTTOM PLATE	1-95, 1-97, 1-99, 1-101, 1-103
2895570-0000	.PLATE	1-23
2896520-0000	.ROLLER	1-439, 1-441
2897150-0000	.INSULATING PLATE	1-479, 1-481, 1-483, 1-485, 1-487
2897152-0000	.INDUCTOR	1-479, 1-481, 1-483, 1-485, 1-487
2897901-0000	.ROLLER	1-353, 1-355
2898028-0000	.SPACER	1-117, 1-119
2898029-0000	.NOZZLE	1-117, 1-119
2898030-0000	.NOZZLE	1-117, 1-119
2898033-0000	.AIR NOZZLE	1-117, 1-119
2898034-0000	.AIR NOZZLE	1-117, 1-119
2898035-0000	.SPACER	1-117, 1-119
2898309-0000	.ROLLER	1-353, 1-355
2898310-0000	.ROLLER	1-353, 1-355
2898564-0000	.BEARING HOUSING	1-563, 1-565, 1-567, 1-569
2898565-0000	.CUTTING JAW	1-563, 1-565, 1-567, 1-569
2898568-0000	.FOLDING FLAP	1-573, 1-575, 1-605, 1-607
2898569-0000	.FOLDING FLAP	1-573, 1-575, 1-605, 1-607
2900397-0000	.PLATE	1-737, 1-739
2900398-0000	.RAIL BRACKET	1-713, 1-715, 1-717
2900399-0000	.VOLUME CAM	1-721, 1-723
2900400-0000	.VOLUME CAM	1-721, 1-723
2900401-0000	.PULLER CAM	1-721, 1-723
2900402-0000	.PULLER CAM	1-721, 1-723
2901065-0000	.BRACKET	1-57, 1-59
2901066-0000	.GUIDE	1-49, 1-51, 1-53, 1-55
2901067-0000	.GUIDE	1-49, 1-51, 1-53, 1-55
2901068-0000	.GUIDE	1-49, 1-51, 1-53, 1-55
2901069-0000	.GUIDE	1-49, 1-51, 1-53, 1-55
2901228-0000	.ROLLER	1-439, 1-441
2901229-0000	.ROLLER	1-439, 1-441
2901291-0000	.ROLLER	1-439, 1-441
2902006-0000	.SHAFT	1-617, 1-619, 1-621, 1-623, 1-653, 1-655, 1-657, 1-659, 1-685, 1-687, 1-689, 1-691, 1-699, 1-701, 1-703, 1-705
2902007-0000	.VOLUME FLAP	1-625, 1-627, 1-629, 1-631, 1-633, 1-661, 1-663, 1-665, 1-667, 1-669
2902008-0000	.VOLUME FLAP	1-625, 1-627, 1-629, 1-631, 1-633, 1-661, 1-663, 1-665, 1-667, 1-669
2902009-0000	.SIDE PLATE	1-625, 1-627, 1-629, 1-631, 1-633, 1-661, 1-663, 1-665, 1-667, 1-669
2902010-0000	.SIDE PLATE	1-625, 1-627, 1-629, 1-631, 1-633, 1-661, 1-663, 1-665, 1-667, 1-669
2902011-0000	.BRACKET	1-625, 1-627, 1-629, 1-631, 1-633, 1-661, 1-663, 1-665, 1-667, 1-669
2902012-0000	.BRACKET	1-625, 1-627, 1-629, 1-631, 1-633, 1-661, 1-663, 1-665, 1-667, 1-669
2902082-0000	.AIR NOZZLE	1-117, 1-119
2902083-0000	.AIR NOZZLE	1-117, 1-119
2902378-0100	.TRANSFORMER	1-323
2902379-0100	.PIPE	1-393, 1-395
2902418-0200	.FLAP	1-265, 1-1045
2902419-0200	.BOTTOM	1-265, 1-1039, 1-1041
2902421-0200	.FLAP	1-271, 1-1045
2902422-0200	.BOTTOM	1-271, 1-1039, 1-1041
2902423-0200	.BOTTOM	1-271, 1-1039, 1-1041
2902424-0200	.GUIDE	1-255, 1-1039, 1-1041
2902438-0000	.GUIDE	1-295, 1-297
2902439-0000	.GUIDE	1-295, 1-297
2902440-0000	.GUIDE	1-295, 1-297
2902441-0000	.GUIDE	1-295, 1-297
2902494-0000	.GUIDE	1-295, 1-297
2903581-0000	.GUIDE	1-57, 1-59
2903582-0000	.GUIDE	1-49, 1-51, 1-53, 1-55
2903583-0000	.GUIDE	1-49, 1-51, 1-53, 1-55
2903584-0000	.GUIDE	1-49, 1-51, 1-53, 1-55
2903585-0000	.GUIDE	1-49, 1-51, 1-53, 1-55
2903761-0000	.RAIL	1-541, 1-543, 1-545
2903762-0000	.RAIL	1-589, 1-591, 1-593

Part No	Description	Page No
2905055-0000	.ROLLER	1-415, 1-417, 1-419
2905058-0000	.ROLLER	1-415, 1-417, 1-419
2905061-0000	.ROLLER	1-415, 1-417, 1-419
2905199-0000	.HOLDER	1-617, 1-619, 1-621, 1-623, 1-625, 1-627, 1-629, 1-631, 1-633, 1-653, 1-655, 1-657, 1-659, 1-661, 1-663, 1-665, 1-667, 1-669, 1-685, 1-687, 1-689, 1-691, 1-699, 1-701, 1-703, 1-705
2905200-0000	.ARM	1-625, 1-627, 1-629, 1-631, 1-633, 1-661, 1-663, 1-665, 1-667, 1-669
2905201-0000	.SPACER SCREW	1-625, 1-627, 1-629, 1-631, 1-633, 1-661, 1-663, 1-665, 1-667, 1-669
2905234-0200	.DIAGRAM	1-899
2906004-0000	.GUIDE	1-57, 1-59
2906006-0000	.RAIL	1-49, 1-51, 1-53, 1-55
2906007-0000	.RAIL	1-49, 1-51, 1-53, 1-55
2906008-0000	.GUIDE	1-49, 1-51, 1-53, 1-55
2906009-0000	.GUIDE	1-49, 1-51, 1-53, 1-55
2906011-0000	.HOLDER	1-49, 1-51, 1-53, 1-55
2906166-0000	.NOZZLE	1-117, 1-119
2906167-0000	.NOZZLE	1-117, 1-119
2906172-0000	.ARM	1-625, 1-627, 1-629, 1-631, 1-633, 1-661, 1-663, 1-665, 1-667, 1-669
2907795-0000	.LID	1-539
2907797-0000	.PIN	1-617, 1-619, 1-621, 1-623, 1-653, 1-655, 1-657, 1-659, 1-685, 1-687, 1-689, 1-691, 1-699, 1-701, 1-703, 1-705
2907798-0000	.SHAFT	1-617, 1-619, 1-621, 1-623, 1-653, 1-655, 1-657, 1-659, 1-685, 1-687, 1-689, 1-691, 1-699, 1-701, 1-703, 1-705
2907800-0000	.SHAFT	1-617, 1-619, 1-621, 1-623, 1-653, 1-655, 1-657, 1-659, 1-685, 1-687, 1-689, 1-691, 1-699, 1-701, 1-703, 1-705
2907804-0000	.SPRING	1-617, 1-619, 1-621, 1-623, 1-653, 1-655, 1-657, 1-659, 1-685, 1-687, 1-689, 1-691, 1-699, 1-701, 1-703, 1-705
2907805-0000	.SPRING	1-617, 1-619, 1-621, 1-623, 1-653, 1-655, 1-657, 1-659, 1-685, 1-687, 1-689, 1-691, 1-699, 1-701, 1-703, 1-705
2907806-0000	.LEVER	1-617, 1-619, 1-621, 1-623, 1-653, 1-655, 1-657, 1-659, 1-685, 1-687, 1-689, 1-691, 1-699, 1-701, 1-703, 1-705
2907808-0000	.BRACKET	1-625, 1-627, 1-629, 1-631, 1-633, 1-661, 1-663, 1-665, 1-667, 1-669
2907809-0000	.BRACKET	1-625, 1-627, 1-629, 1-631, 1-633, 1-661, 1-663, 1-665, 1-667, 1-669
2907974-0000	.FRAME	1-439, 1-441
2907975-0000	.BRACKET	1-439, 1-441
2908998-0000	.ROLLER	1-415, 1-417, 1-419
2908999-0000	.ROLLER	1-415, 1-417, 1-419
2909000-0000	.ROLLER	1-415, 1-417, 1-419
2909001-0000	.ROLLER	1-415, 1-417, 1-419
2909028-0000	.GUIDE PIN	1-49, 1-51, 1-53, 1-55
2909029-0000	.GUIDE PIN	1-49, 1-51, 1-53, 1-55
2909030-0000	.FOLDING BAR	1-49, 1-51, 1-53, 1-55
2909137-0000	.AXLE PIN	1-641
2909138-0000	.ROLLER	1-641
2909301-0000	.BUSBAR	1-541, 1-543, 1-545
2909302-0000	.BUSBAR	1-589, 1-591, 1-593
2909304-0000	.BEARING HOUSING	1-563, 1-565, 1-567, 1-569
2909305-0000	.CUTTING JAW	1-563, 1-565, 1-567, 1-569
2909308-0000	.SLEEVE	1-559
2909309-0000	.PLUNGER	1-559
2909310-0000	.COVER	1-559
2909311-0000	.KNIFE	1-611, 1-743, 1-745, 1-747
2909315-0000	.RAIL BRACKET	1-713, 1-715, 1-717
2909316-0000	.VOLUME CAM	1-721, 1-723
2909317-0000	.ECCENTRIC	1-713, 1-715, 1-717
2909318-0000	.ECCENTRIC	1-713, 1-715, 1-717
2909367-0000	.PRESSURE ROLLER	1-333, 1-335, 1-337, 1-339, 1-375, 1-377
2909368-0000	.PRESSURE ROLLER (PACK 10)	1-333, 1-335, 1-337, 1-339, 1-375, 1-377
2909506-0000	.FOLDING BAR	1-49, 1-51, 1-53, 1-55
2909791-0000	.SUPPORT	1-439, 1-441
2909831-0000	.EXTERNAL INSERT ASSEMBLY	1-847
2909838-0000	.INTERNAL TOOL	1-865
2909839-0000	.SHIM	1-915
2909841-0000	.PUNCH	1-929, 1-931, 1-933
2909842-0000	.DIE	1-929, 1-931, 1-933
2909850-0000	.SPACER SCREW	1-643, 1-679, 1-693, 1-707
2909851-0000	.VOLUME BULGE	1-615, 1-651
2909852-0000	.SHIM	1-615, 1-651, 1-743, 1-745, 1-747
2911509-0000	.BAR	1-25, 1-27
2911510-0000	.BLOCK	1-25, 1-27
2911622-0000	.SHAFT	1-617, 1-619, 1-621, 1-623, 1-653, 1-655, 1-657, 1-659, 1-685, 1-687, 1-689, 1-691, 1-699, 1-701, 1-703, 1-705
2911623-0000	.WASHER	1-617, 1-619, 1-621, 1-623, 1-645, 1-653, 1-655, 1-657, 1-659, 1-681, 1-685, 1-687, 1-689, 1-691, 1-695, 1-699, 1-701, 1-703, 1-705, 1-709
2912006-0000	.KNIFE	1-611, 1-743, 1-745, 1-747
2912007-0000	.BUSHING	1-563, 1-565, 1-567, 1-569
2912153-0000	.SPACER	1-117, 1-119
2912154-0000	.SPACER	1-117, 1-119
2912157-0000	.AIR NOZZLE	1-117, 1-119
2912158-0000	.AIR NOZZLE	1-117, 1-119
2912163-0000	.AIR NOZZLE	1-117, 1-119
2912164-0000	.AIR NOZZLE	1-117, 1-119
2912169-0000	.ROLLER	1-439, 1-441
2912354-0000	.PLATE	1-563, 1-565, 1-567, 1-569
2912355-0000	.BEARING HOUSING	1-563, 1-565, 1-567, 1-569

Part No	Description	Page No
2912356-0000	.CUTTING JAW	1-563, 1-565, 1-567, 1-569
2912359-0000	.FOLDING FLAP	1-573, 1-575, 1-605, 1-607
2912360-0000	.FOLDING FLAP	1-573, 1-575, 1-605, 1-607
2912505-0000	.GUIDE	1-17, 1-19, 1-21
2912506-0000	.GUIDE	1-17, 1-19, 1-21
2912511-0000	.BLOCKING PIECE	1-35
2912633-0000	.PLATE	1-479, 1-481, 1-483, 1-485, 1-487
2912699-0100	.LOWER FORMING RING	1-323
2912700-0100	.UPPER FORMING RING	1-323
2912702-0100	.FORMING RING	1-323
2912703-0100	.EDGE ROLLER	1-323
2913594-0000	.CRADLE	1-189, 1-191
2913595-0000	.ATTACHMENT PLATE	1-67, 1-69, 1-71, 1-73
2913596-0000	.GUIDE	1-75, 1-77
2913597-0000	.GUIDE	1-75, 1-77
2913598-0000	.GUIDE	1-75, 1-77
2913599-0000	.GUIDE	1-75, 1-77
2913600-0000	.FOLDING PART	1-49, 1-51, 1-53, 1-55
2913601-0000	.FOLDING PART	1-49, 1-51, 1-53, 1-55
2914987-0000	.SPACER	1-239
2916127-0000	.ROLLER	1-439, 1-441
2916128-0000	.ROLLER	1-439, 1-441
2916129-0000	.ROLLER	1-439, 1-441
2916131-0000	.LEVER	1-617, 1-619, 1-621, 1-623, 1-653, 1-655, 1-657, 1-659, 1-685, 1-687, 1-689, 1-691, 1-699, 1-701, 1-703, 1-705
2916132-0000	.BRACKET	1-625, 1-627, 1-629, 1-631, 1-633, 1-661, 1-663, 1-665, 1-667, 1-669
2916133-0000	.BRACKET	1-625, 1-627, 1-629, 1-631, 1-633, 1-661, 1-663, 1-665, 1-667, 1-669
2916134-0000	.BRACKET	1-625, 1-627, 1-629, 1-631, 1-633, 1-661, 1-663, 1-665, 1-667, 1-669
2916135-0000	.BRACKET	1-625, 1-627, 1-629, 1-631, 1-633, 1-661, 1-663, 1-665, 1-667, 1-669
2916867-0000	.SUPPORT RING	1-439, 1-441
2916971-0000	.SHAFT	1-617, 1-619, 1-621, 1-623, 1-653, 1-655, 1-657, 1-659, 1-685, 1-687, 1-689, 1-691, 1-699, 1-701, 1-703, 1-705
2916977-0000	.PLATE	1-737, 1-739
2916978-0000	.RAIL BRACKET	1-713, 1-715, 1-717
2916979-0000	.VOLUME CAM	1-721, 1-723
2916980-0000	.VOLUME CAM	1-721, 1-723
2916981-0000	.PULLER CAM	1-721, 1-723
2916982-0000	.PULLER CAM	1-721, 1-723
2916983-0000	.CAM	1-737, 1-739
2916984-0000	.BUSHING	1-617, 1-619, 1-621, 1-623, 1-653, 1-655, 1-657, 1-659, 1-685, 1-687, 1-689, 1-691, 1-699, 1-701, 1-703, 1-705
2917120-0000	.INDUCTOR	1-479, 1-481, 1-483, 1-485, 1-487
2917121-0000	.INSULATING PLATE	1-479, 1-481, 1-483, 1-485, 1-487
2917307-0000	.BUSHING	1-625, 1-627, 1-629, 1-631, 1-633, 1-661, 1-663, 1-665, 1-667, 1-669
2917413-0000	.FRAME	1-643, 1-679, 1-693, 1-707
2917418-0000	.PIN	1-643, 1-679, 1-693, 1-707
2917419-0000	.PIN	1-643, 1-679, 1-693, 1-707
2918659-0000	.PIPE	1-35
2918660-0000	.PIPE	1-35
2919381-0000	.AIR NOZZLE	1-117, 1-119
2919382-0000	.AIR NOZZLE	1-117, 1-119
2919384-0000	.SPACER	1-117, 1-119
2921016-0000	.PLATE	1-201
2921018-0000	.BRACKET	1-201
2921033-0000	.ROLLER	1-823
2921034-0000	.AXLE PIN	1-821
2921394-0000	.BRACKET	1-331
2921577-0000	.AIR NOZZLE	1-1007
2921579-0000	.HOOK	1-1007
2921581-0000	.CAP NUT	1-1007
2921646-0100	.FOLDING PART	1-175
2922201-0000	.PLATE	1-737, 1-739
2922438-0000	.PLATE	1-549, 1-551, 1-553, 1-597, 1-599, 1-601
2922439-0000	.SHIM	1-549, 1-551, 1-553, 1-597, 1-599, 1-601
2922489-0000	.PIN	1-643, 1-645, 1-679, 1-681, 1-693, 1-695, 1-707, 1-709
2922524-0000	.SCREW	1-617, 1-619, 1-621, 1-623, 1-643, 1-645, 1-653, 1-655, 1-657, 1-659, 1-679, 1-681, 1-685, 1-687, 1-689, 1-691, 1-693, 1-695, 1-699, 1-701, 1-703, 1-705, 1-707, 1-709
2922536-0000	.SPRING	1-643, 1-679, 1-693, 1-707
2922537-0000	.SPRING	1-643, 1-679, 1-693, 1-707
2922539-0200	.VOLUME FLAP PRESSURE RIGHT	1-697
2922540-0200	.VOLUME FLAP CUTTING RIGHT	1-683
2922694-0001	.SPACER	1-713, 1-715, 1-717
2922694-0002	.SPACER	1-713, 1-715, 1-717
2922695-0000	.DISTRIBUTOR	1-741
2922696-0000	.SHAFT	1-737, 1-739
2922698-0000	.PLATE	1-713, 1-715, 1-717
2922700-0000	.PULLER CAM	1-721, 1-723
2922701-0000	.PULLER CAM	1-721, 1-723
2922911-0000	.BLOCK	1-25, 1-27
2922976-0000	.FINGER	1-171
2925961-0100	.HUB	1-79
2925962-0000	.GUIDE	1-165, 1-167, 1-169
2925963-0000	.GUIDE	1-165, 1-167, 1-169
2925964-0100	.FLAP	1-79

Part No	Description	Page No
2925965-0100	.BOTTOM	1-79, 1-1039, 1-1041
2926125-0000	.BRACKET	1-117, 1-119
2926126-0000	.AIR NOZZLE	1-117, 1-119
2926868-0000	.SCREW	1-287, 1-289
2926881-0000	.TOOTHED PULLEY	1-257
2926892-0000	.COLUMN	1-257
2926896-0000	.SPACER	1-257
2926897-0000	.SPACER	1-257
2927548-0100	.FLAP	1-83, 1-85, 1-87, 1-89
2927549-0100	.FLAP	1-105, 1-107, 1-109, 1-111, 1-113
2927613-0100	.WHEEL	1-9
2927638-0000	.TIMING BELT	1-17, 1-19, 1-21
2927639-0000	.TIMING BELT	1-17, 1-19, 1-21
2927640-0200	.INFEED CONVEYOR SHORT	1-177
2927641-0000	.PLATE	1-179
2928232-0200	.VOLUME FLAP CUTTING LEFT	1-613
2928233-0200	.VOLUME FLAP PRESSURE LEFT	1-649
2928239-0000	.HOLDER	1-643, 1-679, 1-693, 1-707
2928240-0000	.RAIL	1-541, 1-543, 1-545
2928241-0000	.RAIL	1-589, 1-591, 1-593
2928252-0000	.VOLUME BULGE	1-541, 1-543, 1-545, 1-563, 1-565, 1-567, 1-569, 1-589, 1-591, 1-593
2928342-0000	.FOLDING FLAP	1-573, 1-575, 1-605, 1-607
2928343-0000	.FOLDING FLAP	1-573, 1-575, 1-605, 1-607
2929028-0000	.BLOCK	1-25, 1-27
2929029-0000	.BAR	1-25, 1-27
2929030-0000	.BOTTOM	1-95, 1-97, 1-99, 1-101, 1-103
2929031-0000	.SPACER	1-75, 1-77
2929032-0000	.SPACER	1-75, 1-77
2929033-0000	.SPACER	1-75, 1-77
2929034-0000	.GUIDE	1-75, 1-77
2929035-0000	.GUIDE	1-75, 1-77
2929036-0000	.SPACER	1-75, 1-77
2930279-0000	.RAIL BRACKET	1-713, 1-715, 1-717
2930283-0000	.PULLER CAM	1-721, 1-723
2930293-0000	.PLATE	1-737, 1-739
2930778-0000	.TOOL	1-375, 1-377
2931193-0000	.AIR NOZZLE	1-117, 1-119
2931194-0000	.AIR NOZZLE	1-117, 1-119
2931344-0000	.CAM	1-737, 1-739
2931345-0000	.CAM	1-737, 1-739
2931346-0000	.SPACER	1-117, 1-119
2931347-0000	.SPACER	1-117, 1-119
2931380-0200	.FRAME	1-241
2931384-0000	.GUIDE	1-75, 1-77
2931386-0000	.SPACER	1-117, 1-119
2931388-0100	.FOLDING DEVICE	1-25, 1-27
2931912-0000	.BEARING SEAT	1-993, 1-995, 1-997
2931913-0000	.BENDING ROLLER	1-993, 1-995, 1-997
2931914-0000	.BEARING COVER	1-993, 1-995, 1-997
2931917-0000	.BEARING SEAT	1-987
2931944-0000	.COVER	1-741, 1-891
2931945-0000	.NOZZLE	1-741, 1-891
2932052-0000	.JOINT	1-327, 1-329
2932252-0000	.PRESSURE ROLLER QUANT MINIMA 10PCS	1-333, 1-335, 1-337, 1-339, 1-375, 1-377
2932827-0000	.BOTTOM	1-95, 1-97, 1-99, 1-101, 1-103
2933180-0000	.FOLDING BAR	1-61, 1-63
2933181-0000	.FOLDING BAR	1-61, 1-63
2936209-0000	.PLATE	1-243
2936210-0000	.PLATE	1-243
2936211-0000	.PLATE	1-243
2936212-0000	.PLATE	1-243
2936213-0000	.BRACKET	1-243
2936343-0000	.ARM	1-775, 1-777
2936344-0000	.BRACKET	1-775, 1-777
2936356-0000	.PIN	1-1033, 1-1035, 1-1037
2936881-0000	.RAIL BRACKET	1-713, 1-715, 1-717
2937242-0000	.GUIDE	1-165, 1-167, 1-169
2937243-0000	.GUIDE	1-165, 1-167, 1-169
2937351-0000	.FOLDING BAR	1-61, 1-63
2937352-0000	.FOLDING BAR	1-61, 1-63
2938199-0000	.FOLDING BAR	1-61, 1-63
2938200-0000	.FOLDING BAR	1-61, 1-63
2939718-0000	.CUTTING JAW	1-563, 1-565, 1-567, 1-569
2939719-0000	.FOLDING FLAP	1-573, 1-575, 1-605, 1-607
2939720-0000	.FOLDING FLAP	1-573, 1-575, 1-605, 1-607
2940246-0000	.SHAFT	1-1013
2940879-0000	.RAIL	1-541, 1-543, 1-545
2940880-0000	.RAIL	1-589, 1-591, 1-593
2940964-0000	.BELT	1-259, 1-261
2940965-0000	.BELT	1-259, 1-261
2940972-0000	.CRADLE	1-189, 1-191
2940977-0000	.MAIN BODY	1-287, 1-289
2940978-0000	.PLATE	1-287
2940979-0000	.VOLUME BULGE	1-287

Part No	Description	Page No
2940980-0000	.VOLUME BULGE	1-287
2940981-0000	.PLATE	1-289
2940982-0000	.TOOL	1-289
2940983-0000	.TOOL	1-289
2940984-0000	.LEVER	1-287, 1-289
2940985-0000	.LEVER	1-287, 1-289
2940989-0000	.NOZZLE	1-299
2940990-0000	.GUIDE	1-295, 1-297
2940991-0000	.NOZZLE	1-299
2940992-0000	.NOZZLE	1-299
2940994-0000	.BOWL	1-301, 1-303
2940999-0000	.NOZZLE	1-299
2941010-0000	.CRADLE	1-291, 1-293
2941011-0000	.CRADLE	1-291, 1-293
2941015-0000	.GUIDE	1-315, 1-317
2941022-0000	.SHAFT	1-257
2941023-0000	.COLUMN	1-257
2941025-0000	.SPACER	1-257
2941026-0000	.WHEEL	1-265, 1-271
2941027-0000	.ARM	1-265, 1-271
2941028-0000	.FLAP	1-269, 1-277
2941033-0000	.GUIDE	1-315, 1-317
2941041-0000	.PLATE	1-301, 1-303
2944193-0000	.VOLUME BULGE	1-541, 1-543, 1-545, 1-589, 1-591, 1-593
2944194-0000	.VOLUME BULGE	1-541, 1-543, 1-545, 1-589, 1-591, 1-593
2944618-0000	.SUPPORT RING	1-439, 1-441
2944619-0000	.SUPPORT RING	1-439, 1-441
2944644-0000	.FILLING PIPE	1-333, 1-335, 1-337, 1-339
2944647-0000	.BRACKET	1-331
2944780-0000	.SUPPORT	1-67, 1-69, 1-71, 1-73
2945841-0000	.SHAFT	1-737, 1-739
2946844-0000	.TOOL	1-283, 1-285
2946845-0000	.TOOL	1-279, 1-281
2946876-0000	.BRACKET	1-767
2946878-0000	.SHAFT	1-767
2946880-0000	.PLATE	1-767
2946884-0000	.SUPPORT ROLLER	1-475, 1-477
2946885-0000	.BRACKET	1-475, 1-477
2946887-0000	.BODY	1-395
2946888-0000	.SHUTTER	1-395
2946889-0000	.LID	1-395
2946894-0000	.BENDING ROLLER	1-1013
2946895-0000	.SHAFT	1-841
2946898-0000	.CHAIN GUIDE	1-1015
2946914-0000	.BRACKET	1-395
2946915-0000	.WASHER	1-395
2946917-0000	.SPRING	1-333, 1-335, 1-337, 1-339
2947624-0100	.PUSHER	1-171
2947625-0000	.PUSHER	1-173
2947626-0000	.PUSHER	1-173
2947971-0000	.PUSHER	1-171
2948019-0000	.VOLUME FLAP	1-615, 1-651
2948020-0000	.FLAP	1-615
2948021-0000	.FLAP	1-615
2948022-0000	.FLAP	1-651
2948023-0000	.FLAP	1-651
2948024-0000	.SHAFT	1-615, 1-651
2948025-0001	.HOLDER	1-617, 1-619, 1-621, 1-623
2948025-0002	.HOLDER	1-685, 1-687, 1-689, 1-691
2948027-0000	.BUSHING	1-617, 1-619, 1-621, 1-623, 1-645, 1-653, 1-655, 1-657, 1-659, 1-681, 1-685, 1-687, 1-689, 1-691, 1-695, 1-699, 1-701, 1-703, 1-705, 1-709
2948028-0000	.SHAFT	1-617, 1-619, 1-621, 1-623, 1-653, 1-655, 1-657, 1-659, 1-685, 1-687, 1-689, 1-691, 1-699, 1-701, 1-703, 1-705
2948538-0000	.FINGER	1-171
2948626-0000	.ROLLER	1-573, 1-575, 1-605, 1-607
2948627-0000	.SHAFT	1-573, 1-575, 1-605, 1-607
2948628-0000	.CARRIER	1-573, 1-575, 1-605, 1-607
2948629-0000	.CARRIER RULER	1-573, 1-575
2948630-0000	.CARRIER RULER	1-605, 1-607
2948631-0000	.CARRIER RULER	1-573, 1-575
2948632-0000	.CARRIER RULER	1-605, 1-607
2948633-0000	.CARRIER RULER	1-573, 1-575
2948634-0000	.CARRIER RULER	1-605, 1-607
2948635-0000	.CARRIER RULER	1-573, 1-575
2948636-0000	.CARRIER RULER	1-605, 1-607
2948637-0000	.CARRIER RULER	1-573, 1-575
2948638-0000	.CARRIER RULER	1-605, 1-607
2949203-0000	.SUPPORT	1-525, 1-527
2949205-0000	.SHIM	1-743, 1-745, 1-747
2949206-0001	.HOLDER	1-653, 1-655, 1-657, 1-659
2949206-0002	.HOLDER	1-699, 1-701, 1-703, 1-705
2949207-0000	.PLATE	1-737, 1-739
2949208-0000	.RAIL BRACKET	1-713, 1-715, 1-717
2949214-0000	.SPRING	1-617, 1-619, 1-621, 1-623, 1-645, 1-653, 1-655, 1-657, 1-659, 1-681, 1-685, 1-687

Part No	Description	Page No
		1-689, 1-691, 1-695, 1-699, 1-701, 1-703, 1-705, 1-709
2949215-0000	.SPRING	1-617, 1-619, 1-621, 1-623, 1-645, 1-653, 1-655, 1-657, 1-659, 1-681, 1-685, 1-687
		1-689, 1-691, 1-695, 1-699, 1-701, 1-703, 1-705, 1-709
2951057-0000	.FLANGE	1-987
2951058-0000	.LID	1-769, 1-771, 1-773, 1-799, 1-987, 1-1003, 1-1005
2951059-0000	.RUBBER ROLLER	1-987
2951198-0000	.BUSHING	1-243
2951501-0000	.ROLLER	1-1011
2951588-0000	.SHIM	1-203
2952684-0000	.TOOTHED PULLEY	1-181
2952685-0000	.TOOTHED PULLEY	1-181
2952687-0000	.TOOTHED PULLEY	1-179
2952688-0000	.TOOTHED PULLEY	1-179
2952691-0100	.ROLLER	1-625, 1-627, 1-629, 1-631, 1-633, 1-661, 1-663, 1-665, 1-667, 1-669
2952710-0000	.ARM	1-625, 1-627, 1-629, 1-631, 1-633, 1-661, 1-663, 1-665, 1-667, 1-669
2952932-0000	.PLATE	1-775, 1-777, 1-989, 1-991
2953135-0000	.BLOCK	1-25, 1-27
2953136-0000	.FOLDING BAR	1-61, 1-63
2953137-0000	.FOLDING BAR	1-61, 1-63
2955104-0000	.PLUG	1-179, 1-181
2955148-0000	.AIR NOZZLE	1-117, 1-119
2955149-0000	.AIR NOZZLE	1-117, 1-119
2955150-0000	.AIR NOZZLE	1-117, 1-119
2955151-0000	.AIR NOZZLE	1-117, 1-119
2955152-0000	.SPACER	1-117, 1-119
2955548-0000	.BRACKET	1-513, 1-515, 1-517
2955605-0000	.SLEEVE	1-555
2955606-0000	.PISTON	1-555
2955618-0000	.VOLUME CAM	1-721, 1-723
2955619-0000	.VOLUME CAM	1-721, 1-723
2955763-0000	.BEARING HOUSING	1-179
2955987-0000	.PIPE	1-1007
2955989-0000	.PLATE	1-1007
2955990-0000	.PLATE	1-1007
2955991-0000	.HOLDER	1-1007
2956672-0000	.CAP SPECIFICATION	1-839
2956878-0000	.HOLDER	1-1007
2957900-0000	.GASKET	1-375, 1-377, 1-457, 1-459, 1-461, 1-463
2958089-0000	.BUSHING	1-313
2958240-0000	.ROLLER	1-179, 1-181
2958241-0000	.SHAFT	1-179, 1-181
2958419-0000	.SPACER	1-117, 1-119
2958748-0000	.VOLUME BULGE	1-541, 1-543, 1-545, 1-589, 1-591, 1-593
2958750-0000	.CUTTING JAW	1-563, 1-565, 1-567, 1-569
2958751-0000	.BEARING HOUSING	1-563, 1-565, 1-567, 1-569
2958752-0000	.PLATE	1-563, 1-565, 1-567, 1-569
2958753-0000	.FOLDING FLAP	1-573, 1-575, 1-605, 1-607
2958754-0000	.FOLDING FLAP	1-573, 1-575, 1-605, 1-607
2958755-0000	.CARRIER RULER	1-573, 1-575
2958756-0000	.CARRIER RULER	1-605, 1-607
2958757-0000	.KNIFE	1-611, 1-743, 1-745, 1-747
2958758-0100	.PUSHER	1-9
2958876-0200	.PHOTOCELL UNIT	1-749
2959681-0000	.SPRING	1-333, 1-335, 1-337, 1-339
2959682-0000	.HOOD	1-333, 1-335, 1-337, 1-339
2959867-0000	.SPACER SCREW	1-617, 1-619, 1-621, 1-623, 1-625, 1-627, 1-629, 1-631, 1-633, 1-653, 1-655
		1-657, 1-659, 1-661, 1-663, 1-665, 1-667, 1-669, 1-685, 1-687, 1-689, 1-691, 1-699, 1-701, 1-703, 1-705
2959868-0000	.TENSION SPRING	1-617, 1-619, 1-621, 1-623, 1-653, 1-655, 1-657, 1-659, 1-685, 1-687, 1-689
		1-691, 1-699, 1-701, 1-703, 1-705
2960085-0000	.CUTTING JAW	1-563, 1-565, 1-567, 1-569
2960086-0000	.RAIL BRACKET	1-713, 1-715, 1-717
2960114-0000	.SPACER	1-117, 1-119
2960122-0000	.SIDE PLATE	1-625, 1-627, 1-629, 1-631, 1-633
2960123-0000	.SIDE PLATE	1-625, 1-627, 1-629, 1-631, 1-633
2960124-0000	.VOLUME FLAP	1-625, 1-627, 1-629, 1-631, 1-633
2960125-0000	.SIDE PLATE	1-661, 1-663, 1-665, 1-667, 1-669
2960126-0000	.SIDE PLATE	1-661, 1-663, 1-665, 1-667, 1-669
2960127-0000	.VOLUME FLAP	1-661, 1-663, 1-665, 1-667, 1-669
2960139-0000	.BUSHING	1-625, 1-627, 1-629, 1-631, 1-633, 1-661, 1-663, 1-665, 1-667, 1-669
2960147-0000	.PIPE	1-1007
2960166-0000	.PUSHER	1-163
2960186-0000	.BAR	1-25, 1-27
2960214-0000	.AXLE SUPPORT	1-457, 1-459, 1-461, 1-463
2960215-0000	.AXLE SUPPORT	1-457, 1-459, 1-461, 1-463
2960405-0000	.SHIM	1-115
2960430-0000	.BOTTOM	1-95, 1-97, 1-99, 1-101, 1-103
2960431-0000	.FOLDING BAR	1-61, 1-63
2960432-0000	.FOLDING BAR	1-61, 1-63
2960579-0000	.UPPER FILLING PIPE	1-333, 1-335, 1-337, 1-339
2960620-0000	.RAIL	1-589, 1-591, 1-593
2960621-0000	.RAIL	1-541, 1-543, 1-545
2961246-0000	.UPPER FILLING PIPE	1-333, 1-335, 1-337, 1-339
2961953-0000	.TENSION SPRING	1-617, 1-619, 1-621, 1-623, 1-653, 1-655, 1-657, 1-659, 1-685, 1-687, 1-689
		1-691, 1-699, 1-701, 1-703, 1-705

Part No	Description	Page No
2962059-0000	.RAIL BRACKET	1-713, 1-715, 1-717
2962640-0000	.SHAFT	1-617, 1-619, 1-621, 1-623, 1-653, 1-655, 1-657, 1-659, 1-685, 1-687, 1-689, 1-691, 1-699, 1-701, 1-703, 1-705
2963251-0000	.GUIDE	1-259, 1-261
2963252-0000	.GUIDE	1-259, 1-261
2963268-0000	.PLATE	1-257
2963269-0000	.PLATE	1-257
2963270-0000	.SUPPORT	1-287, 1-289
2963271-0000	.PUSHER	1-279, 1-281, 1-283, 1-285
2963272-0000	.SHIM	1-245, 1-279, 1-281, 1-283, 1-285
2963273-0000	.VOLUME BULGE	1-279, 1-281, 1-283, 1-285
2963277-0000	.SPACER	1-301, 1-303
2963278-0000	.SHAFT	1-299
2963280-0000	.BRACKET	1-299
2963286-0000	.NOZZLE	1-299
2963287-0000	.NOZZLE	1-299
2963288-0000	.NOZZLE	1-299
2963289-0000	.NOZZLE	1-299
2963290-0000	.PLATE	1-301, 1-303
2963293-0000	.FLANGE	1-313
2963294-0000	.SHIM	1-245, 1-305, 1-307, 1-309, 1-311
2963295-0000	.VOLUME BULGE	1-305, 1-307, 1-309, 1-311
2963296-0000	.PUSHER	1-305, 1-307, 1-309, 1-311
2963300-0200	.FOLDING UNIT	1-255
2963307-0000	.BOTTOM	1-267
2963308-0000	.BOTTOM	1-273
2963309-0000	.BOTTOM	1-275
2963310-0200	.FOLDING UNIT	1-255
2963316-0200	.VOLUME CHANGE	1-255, 1-1045
2963317-0100	.PRESSURE UNIT	1-255, 1-1045
2963338-0000	.GUIDE	1-257
2963339-0000	.GUIDE	1-257
2963340-0000	.SHAFT	1-257
2963360-0000	.ROLLER	1-23
2963361-0000	.SHAFT	1-23
2964448-0000	.SCREW	1-625, 1-627, 1-629, 1-631, 1-633, 1-661, 1-663, 1-665, 1-667, 1-669
2966871-0000	.PRESSURE ROLLER	1-333, 1-335, 1-337, 1-339, 1-375, 1-377
2966896-0000	.COVERING PLATE	1-67, 1-69, 1-71, 1-73
2966900-0100	.SPACER	1-175
2966902-0000	.NUT	1-243
2966905-0100	.CRADLE	1-175, 1-255
2968248-0000	.VOLUME BULGE	1-541, 1-543, 1-545, 1-589, 1-591, 1-593
2968252-0000	.PLATE	1-451, 1-453
2968257-0000	.ROLLER	1-347, 1-349
2968854-0000	.VOLUME BULGE	1-625, 1-627, 1-629, 1-631, 1-633, 1-661, 1-663, 1-665, 1-667, 1-669
2968863-0000	.VOLUME SHIM	1-625, 1-627, 1-629, 1-631, 1-633, 1-661, 1-663, 1-665, 1-667, 1-669, 1-743, 1-745, 1-747
2968867-0000	.ECCENTRIC	1-713, 1-715, 1-717
2968868-0000	.ECCENTRIC	1-713, 1-715, 1-717
2969139-0000	.VOLUME FLAP	1-625, 1-627, 1-629, 1-631, 1-633, 1-661, 1-663, 1-665, 1-667, 1-669
2969140-0000	.VOLUME FLAP	1-661, 1-663, 1-665, 1-667, 1-669
2969141-0000	.VOLUME FLAP	1-625, 1-627, 1-629, 1-631, 1-633
2969142-0000	.VOLUME BULGE	1-625, 1-627, 1-629, 1-631, 1-633, 1-661, 1-663, 1-665, 1-667, 1-669
2969143-0000	.BRACKET	1-625, 1-627, 1-629, 1-631, 1-633, 1-661, 1-663, 1-665, 1-667, 1-669
2970962-0000	.ROLLER	1-415, 1-417, 1-419
2970963-0000	.ROLLER	1-415, 1-417, 1-419
2970964-0000	.ROLLER	1-415, 1-417, 1-419
2970965-0000	.ROLLER	1-415, 1-417, 1-419
2971484-0000	.BLOCK	1-25, 1-27
2971485-0000	.BAR	1-25, 1-27
2971486-0000	.BRACKET	1-333, 1-335, 1-337, 1-339
2971773-0000	.GUIDE	1-165, 1-167, 1-169
2971774-0000	.GUIDE	1-165, 1-167, 1-169
2971903-0100	.PUSHER	1-1039, 1-1041
2974365-0000	.INSULATING PLATE	1-479, 1-481, 1-483, 1-485, 1-487
2976051-0000	.SPACER	1-117, 1-119
2976052-0000	.SPACER	1-117, 1-119
2976053-0000	.AIR NOZZLE	1-117, 1-119
2976054-0000	.AIR NOZZLE	1-117, 1-119
2976055-0000	.AIR NOZZLE	1-117, 1-119
2976056-0000	.AIR NOZZLE	1-117, 1-119
2976089-0000	.LOCKING DEVICE	1-333, 1-335, 1-337, 1-339
2976259-0000	.VOLUME CAM	1-721, 1-723
2976260-0000	.VOLUME CAM	1-721, 1-723
2976577-0000	.SPACER	1-117, 1-119
2977415-0000	.PRESSURE FLANGE	1-333, 1-335, 1-337, 1-339
2977546-0000	.LOWER FILLING TUBE	1-333, 1-335, 1-337, 1-339
2977654-0000	.SUPPORT	1-299
2977801-0000	.INTERNAL TOOL	1-857
2977802-0000	.EXTERNAL TOOL	1-859
2977907-0000	.ROLLER	1-407, 1-409
2977909-0000	.ROLLER	1-407, 1-409
2978028-0000	.SHAFT	1-299
2978340-0000	.VOLUME FLAP	1-625, 1-627, 1-629, 1-631, 1-633, 1-661, 1-663, 1-665, 1-667, 1-669

Part No	Description	Page No
2978341-0000	.VOLUME FLAP	1-625, 1-627, 1-629, 1-631, 1-633
2978342-0000	.VOLUME FLAP	1-661, 1-663, 1-665, 1-667, 1-669
2978343-0000	.VOLUME SHIM	1-625, 1-627, 1-629, 1-631, 1-633, 1-661, 1-663, 1-665, 1-667, 1-669, 1-743, 1-745, 1-747
2978344-0000	.VOLUME BULGE	1-625, 1-627, 1-629, 1-631, 1-633, 1-661, 1-663, 1-665, 1-667, 1-669
2978351-0000	.ROLLER	1-407, 1-409
2978606-0000	.BRACKET	1-299
2978673-0000	.SPRING	1-333, 1-335, 1-337, 1-339
2978674-0000	.ROLLER	1-415, 1-417, 1-419
2978675-0000	.ROLLER	1-415, 1-417, 1-419
2978777-0000	.INTERNAL INSERT ASSEMBLY	1-845
2978778-0000	.BANJO CONNECTION	1-851, 1-859, 1-867, 1-875, 1-877
2978782-0000	.SUPPORT	1-299
2978783-0000	.SPACER	1-301, 1-303
2978784-0000	.VOLUME CAM	1-721, 1-723
2978785-0000	.PULLER CAM	1-721, 1-723
2978786-0000	.PULLER CAM	1-721, 1-723
2979548-0100	.START-UP KIT JS	1-509, 1-1045
2979589-0200	.START-UP KIT SS	1-323
2980829-0200	.FLAP HEATER	1-255
2980903-0100	.START-UP KIT FF	1-9, 1-255, 1-1045
2981825-0100	.EXTERNAL INSERT ASSEMBLY	1-845
2982295-0000	.BRACKET	1-479, 1-481, 1-483, 1-485, 1-487
2982296-0000	.BRACKET	1-479, 1-481, 1-483, 1-485, 1-487
2982488-0000	.STOP	1-645, 1-681, 1-695, 1-709
2982495-0000	.PLATE	1-737, 1-739
2982646-0000	.SPACER	1-407, 1-409
2982991-0000	.SUPPORT RING	1-435, 1-437
2982992-0000	.ROLLER	1-435, 1-437
2982993-0000	.ROLLER	1-435, 1-437
2982994-0000	.ROLLER	1-435, 1-437
2982995-0000	.ROLLER	1-435, 1-437
2983109-0000	.VOLUME BULGE	1-305, 1-307, 1-309, 1-311
2983110-0000	.VOLUME BULGE	1-305, 1-307, 1-309, 1-311
2983111-0000	.VOLUME BULGE	1-305, 1-307, 1-309, 1-311
2983112-0000	.SHIM	1-245, 1-305, 1-307, 1-309, 1-311
2983113-0000	.SHIM	1-245, 1-305, 1-307, 1-309, 1-311
2983114-0000	.SHIM	1-245, 1-305, 1-307, 1-309, 1-311
2983115-0000	.PUSHER	1-305, 1-307, 1-309, 1-311
2983116-0000	.PUSHER	1-305, 1-307, 1-309, 1-311
2983117-0000	.PUSHER	1-305, 1-307, 1-309, 1-311
2983118-0000	.VOLUME BULGE	1-279, 1-281, 1-283, 1-285
2983119-0000	.VOLUME BULGE	1-279, 1-281, 1-283, 1-285
2983121-0000	.SHIM	1-245, 1-279, 1-281, 1-283, 1-285
2983122-0000	.SHIM	1-245, 1-279, 1-281, 1-283, 1-285
2983123-0000	.SHIM	1-245, 1-279, 1-281, 1-283, 1-285
2983124-0000	.PUSHER	1-279, 1-281, 1-283, 1-285
2983125-0000	.PUSHER	1-279, 1-281, 1-283, 1-285
2983126-0000	.PUSHER	1-279, 1-281, 1-283, 1-285
2983134-0000	.DAMPER	1-287, 1-289
2983142-0000	.SHIM	1-245
2983150-0200	.VOLUME CHANGE	1-255
2983254-0000	.INSULATING PLATE	1-479, 1-481, 1-483, 1-485, 1-487
2983786-0000	.SUPPORT	1-187
2983789-0000	.FOLDING BAR	1-61, 1-63
2983790-0000	.FOLDING BAR	1-61, 1-63
2984513-0000	.BOTTOM	1-95, 1-97, 1-99, 1-101, 1-103
2984514-0000	.FLAP	1-83, 1-85, 1-87, 1-89
2984516-0100	.SIDE PLATE	1-9, 1-1039, 1-1041
2984518-0100	.SPACER	1-9
2984554-0000	.PLATE	1-201
2985173-0100	.NOZZLE	1-9
2985175-0100	.INFEED CONVEYOR VARIANT	1-9
2985180-0100	.BELT INFEED GUIDE	1-9, 1-1039, 1-1041
2986655-0000	.BRACKET	1-513, 1-515, 1-517
2986656-0000	.SLIDE	1-513, 1-515, 1-517
2986689-0000	.AIR NOZZLE	1-1007
2986941-0000	.EAR	1-549, 1-551, 1-553, 1-597, 1-599, 1-601
2987003-0000	.SHAFT	1-179, 1-181
2987004-0000	.SPACER	1-179, 1-181
2987005-0000	.TOOTHED PULLEY	1-181
2987006-0000	.TOOTHED PULLEY	1-181
2987008-0000	.TOOTHED PULLEY	1-179
2987009-0000	.TOOTHED PULLEY	1-179
2987038-0000	.VOLUME SHIM	1-625, 1-627, 1-629, 1-631, 1-633, 1-661, 1-663, 1-665, 1-667, 1-669, 1-743, 1-745, 1-747
2991531-0000	.MAIN BODY	1-287, 1-289
2991546-0000	.GUIDE	1-257
2993152-0000	.TIE ROD	1-31, 1-33
2993153-0000	.SUPPORT	1-31, 1-33
2993154-0000	.SUPPORT	1-31, 1-33
2993209-0000	.SCREW	1-513, 1-515, 1-517, 1-525
2993210-0000	.NUT	1-513, 1-515, 1-517
2993285-0001	.HOLDER	1-685, 1-687, 1-689, 1-691

Part No	Description	Page No
2993285-0002	.HOLDER	1-617, 1-619, 1-621, 1-623
2993285-0003	.HOLDER	1-699, 1-701, 1-703, 1-705
2993285-0004	.HOLDER	1-653, 1-655, 1-657, 1-659
2993288-0000	.PLATE	1-563, 1-565, 1-567, 1-569
2993289-0000	.BEARING HOUSING	1-563, 1-565, 1-567, 1-569
2993979-0100	.SHOCK ABSORBER CUTTING	1-683
2993980-0100	.SUPPORT FLAP CUTTING	1-511, 1-1039, 1-1041
2993981-0100	.SUPPORT FLAP PRESSURE	1-511, 1-1039, 1-1041
2993982-0100	.SHOCK ABSORBER PRESSURE	1-697
2994205-0000	.CARRIER RULER	1-573, 1-575
2994206-0000	.CARRIER RULER	1-605, 1-607
2994447-0000	.SUPPORT	1-179, 1-181
2995595-0000	.FRAME	1-625, 1-627, 1-629, 1-631, 1-633, 1-661, 1-663, 1-665, 1-667, 1-669
2995596-0000	.FRAME	1-625, 1-627, 1-629, 1-631, 1-633, 1-661, 1-663, 1-665, 1-667, 1-669
2995597-0000	.ARM	1-625, 1-627, 1-629, 1-631, 1-633, 1-661, 1-663, 1-665, 1-667, 1-669
2995598-0000	.VOLUME FLAP	1-625, 1-627, 1-629, 1-631, 1-633
2995599-0000	.VOLUME SHIM	1-625, 1-627, 1-629, 1-631, 1-633, 1-661, 1-663, 1-665, 1-667, 1-669, 1-743, 1-745, 1-747
2995600-0000	.VOLUME BULGE	1-625, 1-627, 1-629, 1-631, 1-633, 1-661, 1-663, 1-665, 1-667, 1-669
2995601-0000	.VOLUME FLAP	1-661, 1-663, 1-665, 1-667, 1-669
2995602-0000	.VOLUME FLAP	1-625, 1-627, 1-629, 1-631, 1-633
2995603-0000	.VOLUME SHIM	1-625, 1-627, 1-629, 1-631, 1-633, 1-661, 1-663, 1-665, 1-667, 1-669, 1-743, 1-745, 1-747
2995604-0000	.VOLUME SHIM	1-625, 1-627, 1-629, 1-631, 1-633, 1-661, 1-663, 1-665, 1-667, 1-669, 1-743, 1-745, 1-747
2995605-0000	.VOLUME BULGE	1-625, 1-627, 1-629, 1-631, 1-633, 1-661, 1-663, 1-665, 1-667, 1-669
2995606-0000	.VOLUME BULGE	1-625, 1-627, 1-629, 1-631, 1-633, 1-661, 1-663, 1-665, 1-667, 1-669
2995607-0000	.VOLUME FLAP	1-661, 1-663, 1-665, 1-667, 1-669
2995608-0000	.ARM	1-625, 1-627, 1-629, 1-631, 1-633, 1-661, 1-663, 1-665, 1-667, 1-669
2995655-0000	.SCREW	1-625, 1-627, 1-629, 1-631, 1-633, 1-661, 1-663, 1-665, 1-667, 1-669
2995752-0000	.HEAD	1-529, 1-531, 1-533, 1-579, 1-581, 1-583
2995753-0000	.SHAFT	1-529, 1-531, 1-533, 1-579, 1-581, 1-583
2996045-0000	.SPACER	1-183, 1-185
2996053-0000	.VOLUME BULGE	1-129, 1-131, 1-135, 1-137, 1-139, 1-1043
2996054-0000	.VOLUME BULGE	1-129, 1-131, 1-135, 1-137, 1-139, 1-1043
2996358-0000	.FOLDING FLAP	1-573, 1-575, 1-605, 1-607
2996359-0000	.FOLDING FLAP	1-573, 1-575, 1-605, 1-607
2996360-0000	.CARRIER RULER	1-573, 1-575
2996361-0000	.CARRIER RULER	1-605, 1-607
2996362-0000	.BEARING HOUSING	1-563, 1-565, 1-567, 1-569
2996363-0000	.CUTTING JAW	1-563, 1-565, 1-567, 1-569
2996364-0000	.PLATE	1-563, 1-565, 1-567, 1-569
2997337-0000	.STOP SCREW	1-549, 1-551, 1-553, 1-597, 1-599, 1-601
2997338-0000	.ECCENTRIC SHAFT	1-615, 1-651
2997340-0000	.SCREW	1-549, 1-551, 1-553, 1-597, 1-599, 1-601
2997607-0000	.PUSHER	1-313
2997640-0000	.SUPPORT	1-313
2997717-0000	.SHIM	1-625, 1-627, 1-629, 1-631, 1-633, 1-661, 1-663, 1-665, 1-667, 1-669, 1-743, 1-745, 1-747
2997718-0000	.BRACKET	1-625, 1-627, 1-629, 1-631, 1-633, 1-661, 1-663, 1-665, 1-667, 1-669
2997719-0000	.BRACKET	1-625, 1-627, 1-629, 1-631, 1-633, 1-661, 1-663, 1-665, 1-667, 1-669
2997720-0000	.VOLUME FLAP	1-625, 1-627, 1-629, 1-631, 1-633, 1-661, 1-663, 1-665, 1-667, 1-669
2997721-0000	.SIDE PLATE	1-625, 1-627, 1-629, 1-631, 1-633
2997722-0000	.SIDE PLATE	1-625, 1-627, 1-629, 1-631, 1-633
2997723-0000	.SIDE PLATE	1-661, 1-663, 1-665, 1-667, 1-669
2997724-0000	.SIDE PLATE	1-661, 1-663, 1-665, 1-667, 1-669
2997725-0000	.VOLUME BULGE	1-625, 1-627, 1-629, 1-631, 1-633, 1-661, 1-663, 1-665, 1-667, 1-669
2997728-0000	.RAIL BRACKET	1-713, 1-715, 1-717
2998009-0000	.SUPPORT	1-835
2998010-0000	.ROLLER	1-835, 1-919
2998012-0000	.SUPPORT	1-835
2998016-0000	.PLATE	1-835
2998017-0000	.INSULATING PLATE	1-479, 1-481, 1-483, 1-485, 1-487
2998186-0000	.BRACKET	1-835
2998411-0000	.ROLLER	1-415, 1-417, 1-419
2998412-0000	.ROLLER	1-415, 1-417, 1-419
2998413-0000	.ROLLER	1-415, 1-417, 1-419
2998414-0000	.ROLLER	1-415, 1-417, 1-419
2998505-0000	.ROLLER	1-415, 1-417, 1-419
2998506-0000	.ROLLER	1-415, 1-417, 1-419
2998507-0000	.ROLLER	1-415, 1-417, 1-419
2998533-0000	.BUSHING	1-915
2998534-0000	.GUIDE	1-915
2998785-0000	.CARRIER RULER	1-573, 1-575
2998786-0000	.BEARING HOUSING	1-563, 1-565, 1-567, 1-569
2998788-0000	.CARRIER RULER	1-605, 1-607
2998789-0000	.VOLUME FLAP	1-625, 1-627, 1-629, 1-631, 1-633, 1-661, 1-663, 1-665, 1-667, 1-669
2998790-0000	.SIDE PLATE	1-625, 1-627, 1-629, 1-631, 1-633, 1-661, 1-663, 1-665, 1-667, 1-669
2998791-0000	.SIDE PLATE	1-625, 1-627, 1-629, 1-631, 1-633, 1-661, 1-663, 1-665, 1-667, 1-669
2998792-0000	.VOLUME BULGE	1-625, 1-627, 1-629, 1-631, 1-633, 1-661, 1-663, 1-665, 1-667, 1-669
2998793-0000	.VOLUME SHIM	1-625, 1-627, 1-629, 1-631, 1-633, 1-661, 1-663, 1-665, 1-667, 1-669, 1-743, 1-745, 1-747
2998794-0000	.RAIL BRACKET	1-713, 1-715, 1-717
2998799-0000	.GUIDE	1-165, 1-167, 1-169
2998800-0000	.GUIDE	1-165, 1-167, 1-169

Part No	Description	Page No
2998801-0000	.BOTTOM	1-95, 1-97, 1-99, 1-101, 1-103
2998802-0000	.FLAP	1-105, 1-107, 1-109, 1-111, 1-113
2998803-0000	.FLAP	1-83, 1-85, 1-87, 1-89
2998806-0000	.GUIDE	1-165, 1-167, 1-169
2998807-0000	.GUIDE	1-165, 1-167, 1-169
2998812-0000	.SPACER	1-13, 1-15
2998813-0000	.SPACER	1-61, 1-63
2998814-0000	.FOLDING BAR	1-61, 1-63
2998815-0000	.FOLDING BAR	1-61, 1-63
2998816-0000	.SPACER	1-75, 1-77
2998817-0000	.SPACER	1-75, 1-77
2998818-0000	.SPACER	1-117, 1-119
2998819-0000	.BLOCK	1-25, 1-27
2998820-0000	.PLATE	1-163
2998821-0000	.PUSHER	1-129, 1-131
2998822-0001	.FLAP HOLDER	1-693
2998822-0002	.FLAP HOLDER	1-643
2998822-0003	.FLAP HOLDER	1-707
2998822-0004	.FLAP HOLDER	1-679
2998859-0000	.ROLLER	1-439, 1-441
3002385-0000	.CRADLE	1-189, 1-191
3002497-0000	.INSULATION NUT	1-541, 1-543, 1-545, 1-589, 1-591, 1-593
3002498-0000	.WASHER	1-541, 1-543, 1-545, 1-589, 1-591, 1-593
3002499-0000	.WASHER	1-541, 1-543, 1-545, 1-589, 1-591, 1-593
3002559-0000	.RAIL	1-541, 1-543, 1-545
3002560-0000	.BEARING HOUSING	1-539
3002561-0000	.RAIL	1-589, 1-591, 1-593
3002867-0000	.AXLE	1-835
3003480-0000	.INDUCTOR	1-541, 1-543, 1-545, 1-589, 1-591, 1-593, 1-743, 1-745, 1-747
3003481-0000	.INDUCTOR	1-541, 1-543, 1-545, 1-589, 1-591, 1-593, 1-743, 1-745, 1-747
3004049-0000	.SHAFT	1-1001
3004050-0000	.FLANGE	1-1001
3004051-0000	.WASHER	1-1001
3004138-0000	.RAIL BRACKET	1-713, 1-715, 1-717
3004139-0000	.RAIL BRACKET	1-713, 1-715, 1-717
3004144-0001	.SPACER	1-713, 1-715, 1-717
3004144-0002	.SPACER	1-713, 1-715, 1-717
3006272-0000	.DRIVE ROLLER	1-987
3006590-0100	.MOULDING TOOL ASSEMBLY	1-843
3007550-0000	.CLEANING CUP	1-341
3007551-0000	.CLEANING CUP	1-341
3007552-0000	.CLEANING CUP	1-341
3007553-0000	.CLEANING CUP	1-341
3008102-0000	.ROLLER	1-457, 1-459, 1-461, 1-463
3008105-0000	.BENDING ROLLER	1-993, 1-995, 1-997
3008106-0000	.BEARING SEAT	1-993, 1-995, 1-997
3008107-0000	.LID	1-993, 1-995, 1-997
3008108-0000	.BENDING ROLLER	1-993, 1-995, 1-997
3008114-0000	.SHAFT	1-767
3009336-0000	.VOLUME CAM	1-721, 1-723
3009337-0000	.PULLER CAM	1-721, 1-723
3009338-0000	.PULLER CAM	1-721, 1-723
3010238-0000	.HOLDER	1-897
3010407-0000	.BOX	1-763, 1-765
3010408-0000	.BOX	1-323
3012046-0000	.LOWER FILLING TUBE	1-333, 1-335, 1-337, 1-339
3012056-0000	.PRESSURE FLANGE	1-333, 1-335, 1-337, 1-339
3012771-0000	.LOCKING DEVICE	1-333, 1-335, 1-337, 1-339
3012904-0000	.BRACKET	1-333, 1-335, 1-337, 1-339
3012911-0000	.BRACKET	1-479, 1-481, 1-483, 1-485, 1-487
3012912-0000	.BRACKET	1-479, 1-481, 1-483, 1-485, 1-487
3013043-0000	.SHIM	1-375, 1-377
3013044-0000	.SHIM	1-375, 1-377
3013416-0000	.ROLLER	1-457, 1-459, 1-461, 1-463
3013417-0000	.ROLLER	1-457, 1-459, 1-461, 1-463
3013546-0000	.BRACKET	1-479, 1-481, 1-483, 1-485, 1-487
3013901-0000	.CAP SPECIFICATION	1-839
3014102-0000	.CARRIER CUTTING LEFT	1-549, 1-551, 1-553
3014103-0000	.CARRIER PRESSURE LEFT	1-529, 1-531, 1-533
3014104-0000	.CARRIER CUTTING RIGHT	1-597, 1-599, 1-601
3014105-0000	.CARRIER PRESSURE RIGHT	1-579, 1-581, 1-583
3015530-0100	.EXTERNAL INSERT ASSEMBLY	1-861
3015531-0000	.INTERNAL INSERT ASSEMBLY	1-861
3015532-0100	.INTERNAL TOOL ASSEMBLY	1-861
3015533-0100	.EXTERNAL TOOL ASSEMBLY	1-861
3015597-0000	.ROLLER	1-457, 1-459, 1-461, 1-463
3015740-0200	.VOLUME CONVERSION KIT	1-3
3015741-0100	.BOX6 - VOLUME KIT	1-3
3016193-0200	.FLAP HEATER	1-9
3016237-0200	.BOX4 - FINAL FOLDER	1-5
3016563-0000	.BOX	1-1039, 1-1041
3016566-0000	.ROLLER	1-347, 1-349
3016707-0000	.ROLLER	1-347, 1-349
3016808-0000	.FRAME	1-439, 1-441

Part No	Description	Page No
3016809-0000	.SUPPORT RING	1-439, 1-441
3016908-0000	.ROLLER	1-347, 1-349
3016910-0000	.COUNTER ROLLER	1-347, 1-349
3016972-0007	.SHAFT	1-371
3018395-0000	.BRACKET	1-331
3018414-0000	.PLATE	1-451, 1-453
3018752-0000	.LEVER	1-617, 1-619, 1-621, 1-623, 1-653, 1-655, 1-657, 1-659, 1-685, 1-687, 1-689, 1-691, 1-699, 1-701, 1-703, 1-705
3019102-0200	.INFEED FRAME	1-175
3019307-0000	.ROLLER	1-407, 1-409
3019308-0000	.ROLLER	1-407, 1-409
3019309-0000	.ROLLER	1-407, 1-409
3019310-0000	.ROLLER	1-407, 1-409
3019311-0000	.ROLLER	1-407, 1-409
3019312-0000	.ROLLER	1-407, 1-409
3019313-0000	.ROLLER	1-407, 1-409
3019537-0100	.BENDING ROLLER	1-323
3020116-0000	.PLATE	1-775, 1-777, 1-989, 1-991
3021528-0100	.SPRING	1-259, 1-261
3022440-0000	.BRACKET	1-807, 1-817, 1-827
3022441-0000	.BRACKET	1-811, 1-825
3022443-0000	.HOUSING	1-811, 1-825
3022444-0000	.COVER	1-811, 1-825
3022445-0000	.CARRIER	1-811, 1-825
3022705-0200	.BOX	1-763, 1-765
3022804-0000	.WASHER	1-163
3024322-0000	.GASKET	1-375, 1-377
3024710-0001	.HOLDER	1-617, 1-619, 1-621, 1-623
3024710-0002	.HOLDER	1-685, 1-687, 1-689, 1-691
3024711-0001	.HOLDER	1-653, 1-655, 1-657, 1-659
3024711-0002	.HOLDER	1-699, 1-701, 1-703, 1-705
3024712-0001	.HOLDER	1-617, 1-619, 1-621, 1-623
3024712-0002	.HOLDER	1-685, 1-687, 1-689, 1-691
3024713-0001	.HOLDER	1-653, 1-655, 1-657, 1-659
3024713-0002	.HOLDER	1-699, 1-701, 1-703, 1-705
3024937-0001	.HOLDER	1-617, 1-619, 1-621, 1-623
3024937-0002	.HOLDER	1-685, 1-687, 1-689, 1-691
3024938-0001	.HOLDER	1-653, 1-655, 1-657, 1-659
3024938-0002	.HOLDER	1-699, 1-701, 1-703, 1-705
3024939-0001	.HOLDER	1-617, 1-619, 1-621, 1-623
3024939-0002	.HOLDER	1-685, 1-687, 1-689, 1-691
3024940-0001	.HOLDER	1-653, 1-655, 1-657, 1-659
3024940-0002	.HOLDER	1-699, 1-701, 1-703, 1-705
3024941-0001	.HOLDER	1-617, 1-619, 1-621, 1-623
3024941-0002	.HOLDER	1-685, 1-687, 1-689, 1-691
3024942-0001	.HOLDER	1-653, 1-655, 1-657, 1-659
3024942-0002	.HOLDER	1-699, 1-701, 1-703, 1-705
3025006-0000	.SUPPORT	1-263
3025007-0000	.PROTECTION	1-807
3025011-0000	.STOP	1-807, 1-817
3025636-0100	.FLAP	1-79
3025699-0000	.LOWER FILLING TUBE	1-333, 1-335, 1-337, 1-339
3025700-0000	.PRESSURE FLANGE	1-333, 1-335, 1-337, 1-339
3025701-0000	.PRESSURE FLANGE	1-333, 1-335, 1-337, 1-339
3025702-0000	.LOWER FILLING TUBE	1-333, 1-335, 1-337, 1-339
3025705-0000	.PRESSURE FLANGE	1-333, 1-335, 1-337, 1-339
3025709-0000	.PIPE	1-1007
3025711-0000	.PIPE	1-1007
3026440-0200	.STEERING RING	1-323
3026688-0000	.SEAL	1-375, 1-377, 1-457, 1-459, 1-461, 1-463
3026932-0000	.BRACKET	1-331
3027823-0000	.COVER	1-811, 1-825
3030304-0000	.VOLUME CAM	1-721, 1-723
3030305-0000	.VOLUME CAM	1-721, 1-723
3030306-0000	.VOLUME CAM	1-721, 1-723
3030307-0000	.VOLUME CAM	1-721, 1-723
3030308-0000	.DAMPER	1-617, 1-619, 1-621, 1-623, 1-653, 1-655, 1-657, 1-659, 1-685, 1-687, 1-689, 1-691, 1-699, 1-701, 1-703, 1-705
3030370-0400	.FLUSHING DEVICE	1-881
3031186-0000	.BRACKET	1-121, 1-123, 1-125, 1-127
3031187-0000	.ACTIVATOR	1-121, 1-123, 1-125, 1-127
3031188-0000	.ACTIVATOR	1-179, 1-181
3031512-0000	.LOWER FILLING TUBE	1-333, 1-335, 1-337, 1-339
3031513-0000	.LOWER FILLING TUBE	1-333, 1-335, 1-337, 1-339
3031527-0000	.CANTILEVER	1-525
3031528-0000	.SLIDE	1-525
3031530-0000	.SPACER	1-525
3031531-0000	.VOLUME BULGE	1-679, 1-707
3031532-0000	.VOLUME BULGE	1-643, 1-693
3031817-0000	.ROLLER	1-353, 1-355
3031818-0000	.ROLLER	1-353, 1-355
3031819-0000	.ROLLER	1-353, 1-355
3031823-0000	.ROLLER	1-415, 1-417, 1-419
3031824-0000	.ROLLER	1-415, 1-417, 1-419

Part No	Description	Page No
3031825-0000	.ROLLER	1-415, 1-417, 1-419
3031826-0000	.ROLLER	1-415, 1-417, 1-419
3035150-0200	.STERILE AIR BLOWER	1-323
3035340-0001	.TEMPLATE	1-375, 1-377
3035340-0002	.TEMPLATE	1-375, 1-377
3035340-0003	.TEMPLATE	1-375, 1-377
3035340-0005	.TEMPLATE	1-375, 1-377
3035340-0006	.TEMPLATE	1-375, 1-377
3035340-0007	.TEMPLATE	1-375, 1-377
3035340-0008	.TEMPLATE	1-375, 1-377
3035341-0200	.SEAL	1-449
3035342-0000	.STUD SCREW	1-465, 1-467
3035770-0100	.CARRIER CUTTING LEFT	1-511
3035771-0100	.CARRIER PRESSURE LEFT	1-511
3035772-0100	.CARRIER CUTTING RIGHT	1-511
3035773-0100	.CARRIER PRESSURE RIGHT	1-511
3037097-0000	.RAIL	1-775, 1-777, 1-989, 1-991
3037777-0100	.TOOL	1-375, 1-377
3037778-0001	.TOOL	1-379
3037778-0002	.TOOL	1-379
3037778-0004	.TOOL	1-379
3037778-0005	.TOOL	1-379
3037778-0006	.TOOL	1-379
3037778-0007	.TOOL	1-379
3037778-0008	.TOOL	1-379
3037779-0000	.STUD SCREW	1-465, 1-467
3037995-0001	.HOLDER	1-653, 1-655, 1-657, 1-659
3037995-0002	.HOLDER	1-699, 1-701, 1-703, 1-705
3037996-0001	.HOLDER	1-617, 1-619, 1-621, 1-623
3037996-0002	.HOLDER	1-685, 1-687, 1-689, 1-691
3037997-0001	.HOLDER	1-653, 1-655, 1-657, 1-659
3037997-0002	.HOLDER	1-699, 1-701, 1-703, 1-705
3037998-0001	.HOLDER	1-617, 1-619, 1-621, 1-623
3037998-0002	.HOLDER	1-685, 1-687, 1-689, 1-691
3037999-0001	.HOLDER	1-653, 1-655, 1-657, 1-659
3037999-0002	.HOLDER	1-699, 1-701, 1-703, 1-705
3038000-0001	.HOLDER	1-617, 1-619, 1-621, 1-623
3038000-0002	.HOLDER	1-685, 1-687, 1-689, 1-691
3038244-0000	.ROLLER	1-439, 1-441
3038245-0000	.ROLLER	1-439, 1-441
3038278-0200	.FOLDING DEVICE	1-195, 1-197, 1-199
3038400-0000	.CARRIER CUTTING LEFT	1-549, 1-551, 1-553
3038401-0000	.CARRIER PRESSURE LEFT	1-529, 1-531, 1-533
3038402-0000	.CARRIER CUTTING RIGHT	1-597, 1-599, 1-601
3038403-0000	.CARRIER PRESSURE RIGHT	1-579, 1-581, 1-583
3039010-0000	.BRACKET	1-465, 1-467
3039011-0000	.BRACKET	1-465, 1-467
3039948-0000	.CONNECTOR	1-529, 1-531, 1-533, 1-579, 1-581, 1-583
3039949-0000	.TUBE	1-529, 1-531, 1-533, 1-579, 1-581, 1-583
3040941-0000	.BRACKET	1-179
3040942-0000	.PLATE	1-179, 1-181
3041582-0000	.SHIM	1-643, 1-679, 1-693, 1-707, 1-743, 1-745, 1-747
3042491-0000	.BENDING ROLLER	1-769, 1-771, 1-773
3042501-0000	.FLANGE	1-769, 1-771, 1-773, 1-799
3042503-0000	.FLANGE	1-769, 1-771, 1-773, 1-799
3042533-0000	.BRACKET	1-479, 1-481, 1-483, 1-485, 1-487
3042534-0000	.HOLDER	1-479, 1-481, 1-483, 1-485, 1-487
3042548-0000	.BENDING ROLLER	1-769, 1-771, 1-773
3042549-0000	.BENDING ROLLER	1-769, 1-771, 1-773
3042553-0000	.BRACKET	1-479, 1-481, 1-483, 1-485, 1-487
3042661-0000	.BENDING ROLLER	1-1003, 1-1005
3042662-0000	.FLANGE	1-1003, 1-1005
3042672-0000	.FLANGE	1-1003, 1-1005
3043180-0000	.INDUCTOR	1-479, 1-481, 1-483, 1-485, 1-487
3043232-0000	.BENDING ROLLER	1-1003, 1-1005
3043255-0000	.BENDING ROLLER	1-1003, 1-1005
3043262-0000	.BENDING ROLLER	1-1003, 1-1005
3043309-0000	.BENDING ROLLER	1-799
3043642-0000	.PLATE	1-883, 1-885, 1-887, 1-889
3043682-0000	.EXTERNAL INSERT ASSEMBLY	1-855
3043684-0000	.INSERT	1-863
3043685-0000	.EXTERNAL TOOL	1-867
3043702-0000	.INSERT	1-871
3043707-0000	.CAP SPECIFICATION	1-839
3043708-0000	.EXTERNAL TOOL	1-875, 1-877
3043723-0000	.TEMPLATE	1-965
3043724-0000	.CAP SPECIFICATION	1-839
3043738-0000	.TEMPLATE	1-965
3043744-0000	.EXTERNAL TOOL	1-875, 1-877
3043755-0000	.INTERNAL TOOL	1-873
3044267-0100	.ROLLER BRACKET	1-323, 1-327, 1-329
3044462-0000	.ARCH	1-315, 1-317
3044463-0000	.ARCH	1-315, 1-317
3046743-0000	.ROD	1-643, 1-679, 1-693, 1-707

Part No	Description	Page No
3046744-0000	.ROD	1-643, 1-679, 1-693, 1-707
3047359-0200	.BLOWING DEVICE	1-985
3047360-0000	.SETTING KNOB	1-549, 1-551, 1-553, 1-597, 1-599, 1-601
3047361-0000	.SETTING KNOB	1-529, 1-531, 1-533, 1-579, 1-581, 1-583
3047454-0000	.SHAFT	1-999, 1-1001
3047455-0000	.ROLLER	1-999, 1-1001
3047456-0000	.BEARING HOUSING	1-999, 1-1001
3047457-0000	.BUSHING	1-999, 1-1001
3047458-0000	.BUSHING	1-999, 1-1001
3047460-0000	.ARM	1-1001
3047470-0000	.SLIDE	1-479, 1-481, 1-483, 1-485, 1-487
3047471-0000	.SLIDE	1-479, 1-481, 1-483, 1-485, 1-487
3047472-0000	.SHAFT	1-479, 1-481, 1-483, 1-485, 1-487
3047951-0000	.PLATE	1-389, 1-391
3047954-0000	.PRESSURE FLANGE	1-333, 1-335, 1-337, 1-339
3047955-0000	.LOWER FILLING TUBE	1-333, 1-335, 1-337, 1-339
3047963-0000	.TEMPLATE	1-387
3048516-0000	.PUSHER	1-171
3048521-0000	.COVER	1-549, 1-551, 1-553, 1-597, 1-599, 1-601
3048557-0000	.SHIM	1-265, 1-271
3050520-0000	.BOX	1-255
3050604-0000	.SUPPORT	1-479, 1-481, 1-483, 1-485, 1-487
3050618-0000	.FLANGE	1-999
3050619-0000	.FLANGE	1-999
3050622-0000	.CLAMPING PIECE	1-999
3051255-0000	.DAMPER	1-625, 1-627, 1-629, 1-631, 1-633, 1-661, 1-663, 1-665, 1-667, 1-669
3051275-0000	.CRADLE	1-189, 1-191
3051279-0000	.SHAFT	1-617, 1-619, 1-621, 1-623, 1-685, 1-687, 1-689, 1-691
3051280-0000	.HOLDER	1-617, 1-619, 1-621, 1-623, 1-653, 1-655, 1-657, 1-659, 1-685, 1-687, 1-689, 1-691, 1-699, 1-701, 1-703, 1-705
3051281-0000	.SHAFT	1-653, 1-655, 1-657, 1-659, 1-699, 1-701, 1-703, 1-705
3051285-0000	.BRACKET	1-661, 1-663, 1-665, 1-667, 1-669
3051286-0000	.WEDGE	1-535, 1-537, 1-585, 1-587
3051293-0000	.SHAFT	1-625, 1-627, 1-629, 1-631, 1-633, 1-661, 1-663, 1-665, 1-667, 1-669
3051314-0000	.BRACKET	1-625, 1-627, 1-629, 1-631, 1-633
3051404-0000	.PLATE	1-807
3051405-0000	.PLATE	1-807
3051406-0200	.BENDING ROLLER	1-807
3051407-0000	.ROLLER	1-809
3051914-0001	.SHAFT	1-401
3051914-0002	.SHAFT	1-401
3051914-0003	.SHAFT	1-401
3052329-0000	.SHAFT	1-809
3052330-0000	.PLATE	1-809
3052331-0000	.BLOCK	1-809
3052332-0000	.SPACER	1-809
3052467-0000	.COVER	1-827
3052669-0000	.LEVER	1-821
3052671-0000	.SUPPORT	1-819
3052683-0000	.BRACKET	1-479, 1-481, 1-483, 1-485, 1-487
3053271-0000	.VOLUME FLAP	1-625, 1-627, 1-629, 1-631, 1-633
3053272-0000	.VOLUME FLAP	1-661, 1-663, 1-665, 1-667, 1-669
3053273-0001	.FRAME	1-625, 1-627, 1-629, 1-631, 1-633
3053273-0002	.FRAME	1-661, 1-663, 1-665, 1-667, 1-669
3053463-0100	.SEAL KIT	1-963
3053488-0000	.ARM	1-625, 1-627, 1-629, 1-631, 1-633, 1-661, 1-663, 1-665, 1-667, 1-669
3053567-0000	.FLAP	1-679, 1-707
3053568-0000	.FLAP	1-679, 1-707
3053569-0000	.FLAP	1-643, 1-693
3053570-0000	.FLAP	1-643, 1-693
3053820-0000	.PLATE	1-919
3054865-0000	.BRACKET	1-829
3054866-0000	.GUIDE	1-829
3054867-0000	.SPACER	1-807
3054869-0100	.INFEED LOOP	1-805
3054870-0000	.BRACKET	1-815
3054871-0000	.GUIDE	1-815
3054872-0000	.BRACKET	1-815
3055029-0000	.VOLUME BULGE	1-279, 1-281, 1-283, 1-285
3055884-0000	.PIN	1-713, 1-715, 1-717
3056161-0000	.BOX	1-509
3056589-0000	.CAP SPECIFICATION	1-839
3057770-0000	.PLATE	1-827
3057771-0000	.COVER	1-827
3057772-0000	.SPACER	1-817
3057773-0000	.PLATE	1-817
3057774-0000	.BRACKET	1-819
3057776-0200	.COUNTER ROLLER BRACKET	1-819
3057777-0200	.OUTFEED SERVO	1-817
3057778-0100	.PLATE	1-817
3057779-0200	.OUTFEED SERVO	1-805
3060468-0000	.PLATE	1-389, 1-391
3060470-0000	.PLATE	1-389, 1-391
3060471-0000	.PLATE	1-389, 1-391

Part No	Description	Page No
3060472-0000	.PLATE	1-389, 1-391
3060474-0000	.PLATE	1-389, 1-391
3060475-0000	.PLATE	1-389, 1-391
3060476-0000	.PLATE	1-389, 1-391
3060490-0100	.FOLDING PART	1-25, 1-27
3060493-0000	.BRACKET	1-181
3061501-0001	.ROLLER	1-353, 1-355
3061501-0002	.ROLLER	1-493
3061501-0003	.ROLLER	1-493
3061502-0000	.ROLLER	1-353, 1-355
3066565-0100	.MECHANICAL REBUILDING	1-193
3066566-0102	.REBUILDING MANUAL	1-193
3066567-0100	.PT FLEX HOLES	1-175
3067049-0000	.BOX	1-195, 1-197, 1-199
3067384-0000	.VOLUME BULGE	1-541, 1-543, 1-545, 1-589, 1-591, 1-593
3067548-0000	.RAIL	1-589, 1-591, 1-593
3067549-0000	.RAIL	1-541, 1-543, 1-545
3067607-0000	.BRACKET	1-479, 1-481, 1-483, 1-485, 1-487
3067608-0000	.BRACKET	1-479, 1-481, 1-483, 1-485, 1-487
3069177-0100	.OUTFEED LOOP	1-805
3071724-0000	.FLANGE BUSHING	1-1033, 1-1035, 1-1037
3072135-0000	.BLOCK	1-1033, 1-1035, 1-1037
3073531-0000	.PLATE	1-525
3073532-0000	.SUPPORT	1-525
3076826-0000	.SPACER	1-415, 1-417, 1-419
3079086-0000	.PLATE	1-389, 1-391
3079094-0001	.ROLLER	1-347, 1-349, 1-353, 1-355
3079094-0002	.ROLLER	1-493
3079094-0003	.ROLLER	1-493
3079095-0001	.ROLLER	1-353, 1-355
3079095-0002	.ROLLER	1-493
3079095-0003	.ROLLER	1-493
3079096-0001	.ROLLER	1-353, 1-355
3079096-0002	.ROLLER	1-493
3079096-0003	.ROLLER	1-493
3079097-0001	.ROLLER	1-347, 1-349, 1-353, 1-355
3079097-0002	.ROLLER	1-493
3079097-0003	.ROLLER	1-493
3079098-0001	.ROLLER	1-353, 1-355
3079098-0002	.ROLLER	1-493
3079098-0003	.ROLLER	1-493
3079112-0000	.BRACKET	1-475, 1-477
3079113-0000	.BRACKET	1-475, 1-477
3079114-0000	.BRACKET	1-475, 1-477
3079115-0000	.BRACKET	1-475, 1-477
3079118-0001	.ROLLER	1-353, 1-355
3079118-0002	.ROLLER	1-493
3079118-0003	.ROLLER	1-493
3079119-0001	.ROLLER	1-353, 1-355
3079119-0002	.ROLLER	1-493
3079119-0003	.ROLLER	1-493
3079827-0000	.BRACKET	1-479, 1-481, 1-483, 1-485, 1-487
3089249-0000	.ROLLER	1-923
3089262-0000	.SHAFT	1-923
3090099-0100	.MOULDING TOOL ASSEMBLY	1-843
3090100-0000	.INTERNAL INSERT ASSEMBLY	1-853
3090101-0100	.EXTERNAL INSERT ASSEMBLY	1-853
3090102-0100	.INTERNAL TOOL ASSEMBLY	1-853
3090103-0100	.EXTERNAL TOOL ASSEMBLY	1-853
3091602-0000	.AIR NOZZLE	1-203
3092829-0000	.SLIDER	1-617, 1-619, 1-621, 1-623, 1-647, 1-653, 1-655, 1-657, 1-659, 1-685, 1-687, 1-689, 1-691, 1-699, 1-701, 1-703, 1-705
3092843-0000	.FOLDING FLAP	1-573, 1-575, 1-605, 1-607
3092844-0000	.FOLDING FLAP	1-573, 1-575, 1-605, 1-607
3093182-0001	.ROLLER	1-347, 1-349
3093182-0002	.ROLLER	1-493
3093182-0003	.ROLLER	1-493
3093183-0001	.ROLLER	1-347, 1-349
3093183-0002	.ROLLER	1-493
3093183-0003	.ROLLER	1-493
3093184-0001	.ROLLER	1-347, 1-349
3093184-0002	.ROLLER	1-493
3093184-0003	.ROLLER	1-493
3093221-0100	.TRIMMING ROLLER	1-323
3093226-0000	.FLANGE	1-465, 1-467
3093227-0000	.FLANGE	1-465, 1-467
3093228-0000	.FLANGE	1-465, 1-467
3093229-0000	.FLANGE	1-465, 1-467
3093242-0000	.PLATE	1-465, 1-467
3093243-0000	.PLATE	1-465, 1-467
3093244-0000	.PLATE	1-465, 1-467
3093245-0000	.PLATE	1-465, 1-467
3093546-0000	.PLATE	1-265, 1-271
3093803-0000	.ROLLER	1-457, 1-459, 1-461, 1-463

Part No	Description	Page No
3093804-0000	.ROLLER	1-457, 1-459, 1-461, 1-463
3094049-0000	.GUIDE	1-165, 1-167, 1-169
3094050-0000	.GUIDE	1-165, 1-167, 1-169
3094051-0000	.SLIDE	1-165, 1-167, 1-169
3094052-0000	.SLIDE	1-165, 1-167, 1-169
3094053-0000	.PLATE	1-165, 1-167, 1-169
3094296-0000	.BOTTOM	1-95, 1-97, 1-99, 1-101, 1-103
3095351-0000	.FLOAT	1-333, 1-335, 1-337, 1-339
3095377-0000	.FLOAT	1-333, 1-335, 1-337, 1-339
3095386-0000	.INDUCTOR	1-541, 1-543, 1-545, 1-589, 1-591, 1-593, 1-743, 1-745, 1-747
3096280-0000	.VOLUME BULGE	1-129, 1-131, 1-135, 1-137, 1-139, 1-1043
3099422-0000	.ROLLER	1-353, 1-355
3099423-0000	.ROLLER	1-353, 1-355
3099424-0000	.FORMING RING	1-353, 1-355
3099425-0000	.LOCK PLATE	1-353, 1-355
3100270-0000	.NUT	1-527
3100271-0000	.NUT	1-527
3100547-0000	.FLANGE	1-763, 1-765
3100548-0000	.PLATE	1-801
3100549-0000	.SHAFT	1-801
3100550-0100	.SPLICE DETECTOR	1-763, 1-765
3100551-0000	.SUPPORT	1-801
3100552-0000	.SHAFT	1-801
3103113-0000	.BLOCK	1-891
3103114-0000	.HOLDER	1-891
3103115-0000	.HOLDER	1-891
3103116-0000	.LOCKING BLOCK	1-891
3103170-0000	.PLATE	1-775, 1-777, 1-989, 1-991
3103180-0000	.PLATE	1-775, 1-777, 1-989, 1-991
3103181-0000	.AIR GUIDE	1-775, 1-777, 1-989, 1-991
3103193-0000	.BENDING ROLLER	1-1013
3103390-0000	.PISTON	1-539
3103391-0000	.SLEEVE	1-539
3105734-0000	.ROLLER	1-801
3105735-0000	.PLATE	1-801
3105736-0000	.LEVER	1-801
3106814-0000	.SPACER	1-505
3106884-0000	.FLOAT	1-333, 1-335, 1-337, 1-339
3106887-0000	.FLOAT	1-333, 1-335, 1-337, 1-339
3106890-0000	.FLOAT	1-333, 1-335, 1-337, 1-339
3106892-0000	.FLOAT	1-333, 1-335, 1-337, 1-339
3109139-0000	.PLATE	1-389, 1-391
3109510-0000	.WASHER	1-67, 1-69, 1-71, 1-73
3109570-0000	.BOTTOM PLATE	1-775, 1-777, 1-989, 1-991
3110481-0000	.BOTTOM	1-273
3113981-0000	.TOP SECTION	1-301, 1-303
3114781-0200	.COUNTER ROLLER	1-975
3115223-0000	.CRADLE	1-291, 1-293
3115395-0000	.CRADLE	1-291, 1-293
3115433-0000	.VOLUME BULGE	1-645, 1-695
3115434-0000	.VOLUME BULGE	1-681, 1-709
3115435-0000	.VOLUME BULGE	1-645, 1-695
3115436-0000	.VOLUME BULGE	1-681, 1-709
3116736-0000	.LABEL	1-971
3117686-0000	.LID	1-1009
3117688-0000	.HOUSING	1-1009
3119353-0200	.MAGNETIC DESIGN READER	1-749
3119372-0000	.SCREW	1-527
3121516-0000	.SHIM	1-245, 1-279, 1-281, 1-283, 1-285, 1-305, 1-307, 1-309, 1-311
3123075-0000	.STOP	1-919
3123420-0000	.SEAL	1-375, 1-377, 1-457, 1-459, 1-461, 1-463
3123554-0000	.VOLUME BULGE	1-647
3123898-0000	.BOTTOM	1-267
3123940-0000	.BUSHING	1-1013
3124026-0000	.SPACER	1-61, 1-63
3124760-0000	.SHIM	1-245, 1-279, 1-281, 1-283, 1-285, 1-305, 1-307, 1-309, 1-311
3124821-0000	.INDUCTOR	1-541, 1-543, 1-545, 1-589, 1-591, 1-593, 1-743, 1-745, 1-747
3124822-0000	.INDUCTOR	1-541, 1-543, 1-545, 1-589, 1-591, 1-593, 1-743, 1-745, 1-747
3124990-0000	.CUTTING RAIL	1-563, 1-565, 1-567, 1-569
3128967-0000	.BOTTOM	1-95, 1-97, 1-99, 1-101, 1-103
3128968-0000	.FOLDING BAR	1-61, 1-63
3128969-0000	.FOLDING BAR	1-61, 1-63
3130265-0000	.GUIDE	1-259, 1-261, 1-291, 1-293
3130266-0000	.GUIDE	1-259, 1-261, 1-291, 1-293
3130267-0000	.RAIL	1-259, 1-261
3130845-0000	.SUPPORT	1-291, 1-293
3130846-0000	.SUPPORT	1-291, 1-293
3131564-0000	.BRACKET	1-883, 1-885, 1-887, 1-889
3133493-0000	.BOWL	1-301, 1-303
3133652-0000	.TOP SECTION	1-301, 1-303
3134638-0000	.VOLUME SHIM	1-647, 1-743, 1-745, 1-747
3135275-0000	.GUIDE	1-165, 1-167, 1-169
3135276-0000	.GUIDE	1-165, 1-167, 1-169
3135277-0000	.GUIDE	1-165, 1-167, 1-169

Part No	Description	Page No
3135278-0000	.GUIDE	1-165, 1-167, 1-169
3136365-0000	.SHAFT	1-505, 1-507
3136366-0000	.ROLLER	1-505, 1-507
3136367-0000	.PLATE	1-505
3136368-0000	.PLATE	1-505
3136370-0000	.BLOCK	1-505
3136372-0000	.HOLDER	1-505
3136468-0000	.HOLDER	1-883, 1-885, 1-887, 1-889
3140381-0000	.BRACKET	1-893
3141043-0000	.NOZZLE	1-893, 1-895
3141702-0000	.ANGLE	1-893
3142195-0000	.VOLUME BULGE	1-115
3142221-0000	.RAIL	1-541, 1-543, 1-545
3142230-0000	.CONTRAST SCANNER	1-753
3143778-0000	.PLATE	1-809
3146837-0000	.TOOL	1-279, 1-281
3146838-0000	.TOOL	1-283, 1-285
3147456-0000	.SUPPORT	1-883, 1-885, 1-887, 1-889
3149341-0000	.SCREW	1-527
3149495-0000	.BRACKET	1-755
3149496-0000	.BRACKET	1-755
3149497-0000	.PLATE	1-755
3149721-0200	.GUIDE RAIL	1-807
3149722-0200	.GUIDE RAIL	1-817
3149941-0100	.DESIGN CONTROL	1-751
3149942-0000	.FLAP	1-277
3149943-0000	.FLAP	1-269
3150926-0000	.SUPPORT	1-755
3151087-0100	.CAP DETECTOR	1-805
3151622-0100	.MOULDING TOOL ASSEMBLY	1-843
3151623-0100	.EXTERNAL INSERT ASSEMBLY	1-869
3151624-0000	.INTERNAL INSERT ASSEMBLY	1-869
3151625-0100	.INTERNAL TOOL ASSEMBLY	1-869
3151626-0100	.EXTERNAL TOOL ASSEMBLY	1-869
3152479-0000	.PLATE	1-457, 1-459, 1-461, 1-463
3152482-0000	.PLATE	1-457, 1-459, 1-461, 1-463
3152726-0000	.RAIL	1-589, 1-591, 1-593
3152727-0000	.RAIL	1-541, 1-543, 1-545
3153223-0000	.VOLUME BULGE	1-541, 1-543, 1-545, 1-589, 1-591, 1-593
3155451-0000	.SQUEE-GEE ROLLER	1-999, 1-1001
3155711-0100	.PHOTOCELL BRACKET	1-511
3155712-0000	.BOTTOM	1-275
3155771-0000	.SUPPORT	1-893, 1-895
3155772-0000	.FLANGE	1-999
3155773-0000	.FLANGE	1-999
3156422-0000	.ROLLER	1-957, 1-959
3157309-0000	.PRESSURE ROLLER	1-333, 1-335, 1-337, 1-339, 1-375, 1-377
3159856-0000	.GUIDE	1-259, 1-261
3159857-0000	.GUIDE	1-259, 1-261
3159858-0000	.BELT	1-259, 1-261
3159859-0000	.BELT	1-259, 1-261
3160995-0000	.GUIDE	1-315, 1-317, 1-1049
3166549-0000	.FLANGE	1-769, 1-771, 1-773
3166550-0000	.FLANGE	1-769, 1-771, 1-773
3166551-0000	.LID	1-769, 1-771, 1-773
3166669-0000	.BRACKET	1-479, 1-481, 1-483, 1-485, 1-487
3166673-0000	.SHIM	1-435, 1-437
3168015-0000	.SHAFT	1-919
3171665-0000	.GASKET	1-1009
3175065-0100	.GUIDE ROLLER	1-949, 1-951
3175066-0000	.SHAFT	1-953
3175067-0000	.SHAFT	1-953
3175068-0000	.SUPPORT	1-953
3175609-0000	.INSERT	1-883, 1-885, 1-887, 1-889
3178500-0001	.HOLDER	1-645
3178500-0002	.HOLDER	1-695
3178500-0003	.HOLDER	1-709
3178500-0004	.HOLDER	1-681
3178505-0000	.LEVER	1-645, 1-681, 1-695, 1-709
3178571-0000	.STEERING DEVICE	1-327, 1-329
3178574-0000	.PLATE	1-1001
3178575-0000	.PLATE	1-1001
3179201-0000	.DAMPER	1-625, 1-627, 1-629, 1-631, 1-633, 1-661, 1-663, 1-665, 1-667, 1-669
3179812-0000	.SHAFT	1-647
3179813-0000	.SHAFT	1-645, 1-681, 1-695, 1-709
3179818-0000	.VOLUME SHIM	1-647, 1-743, 1-745, 1-747
3179969-0000	.SPACER	1-833, 1-1019, 1-1021, 1-1025, 1-1027, 1-1029, 1-1031
3180557-0000	.SPACER	1-833, 1-1019, 1-1021, 1-1025, 1-1027, 1-1029, 1-1031
3182783-0000	.BRACKET	1-505
3183315-0100	.SUPPORT FLAP CUTTING LEFT	1-613
3183316-0100	.SUPPORT FLAP CUTTING RIGHT	1-683
3183317-0100	.SUPPORT FLAP PRESSURE LEFT	1-649
3183318-0100	.SUPPORT FLAP PRESSURE RIGHT	1-697
3183323-0100	.VOLUME FLAP	1-645, 1-681, 1-695, 1-709

Part No	Description	Page No
3183337-0000	.BRACKET	1-977
3183626-0000	.PUSHER	1-313
3184873-0000	.COUNTER ROLLER	1-347, 1-349
3187185-0000	.PLATE	1-389, 1-391
3187897-0000	.INDUCTOR	1-541, 1-543, 1-545, 1-589, 1-591, 1-593, 1-743, 1-745, 1-747
3187898-0000	.INDUCTOR	1-541, 1-543, 1-545, 1-589, 1-591, 1-593, 1-743, 1-745, 1-747
3187899-0000	.INDUCTOR	1-541, 1-543, 1-545, 1-589, 1-591, 1-593, 1-743, 1-745, 1-747
3187900-0000	.INDUCTOR	1-541, 1-543, 1-545, 1-589, 1-591, 1-593, 1-743, 1-745, 1-747
3189234-0000	.SHAFT	1-333, 1-335, 1-337, 1-339
3189332-0000	.FORK	1-333, 1-335, 1-337, 1-339
3190209-0000	.BENDING ROLLER	1-1003, 1-1005
3191259-0100	.SEAL	1-323
3192386-0100	.RAIL	1-255
3192413-0000	.BRACKET	1-315, 1-317
3193719-0000	.PNEUMATIC DIAGRAM	1-899
3193975-0000	.RAIL HOLDER	1-315, 1-317
3193976-0000	.SHIM	1-315, 1-317
3198490-0000	.WATER DIAGRAM	1-901
3198491-0000	.LEVER	1-975
3198493-0000	.WATER DIAGRAM	1-901
3198494-0000	.PNEUMATIC DIAGRAM	1-901
3198495-0000	.BLOCK	1-805
3198498-0000	.BLOCK	1-1033, 1-1035, 1-1037
3198500-0000	.PNEUMATIC DIAGRAM	1-901
3198893-0000	.BRACKET	1-833, 1-1019, 1-1021, 1-1025, 1-1027, 1-1029, 1-1031
3199126-0100	.CONVERSION KIT	1-805
3199619-0000	.VOLUME FLAP	1-647
3199620-0000	.BUSHING	1-647
3199625-0000	.VOLUME FLAP	1-645, 1-695
3199626-0000	.VOLUME FLAP	1-645, 1-695
3199627-0000	.VOLUME FLAP	1-681, 1-709
3199628-0000	.VOLUME FLAP	1-681, 1-709
3199629-0000	.VOLUME BULGE	1-647
3199630-0000	.SPACER SCREW	1-645, 1-647, 1-681, 1-695, 1-709
3199631-0000	.ARM	1-647
3199633-0000	.AXLE PIN	1-645, 1-681, 1-695, 1-709
3199634-0000	.COVER	1-645, 1-681, 1-695, 1-709
3199635-0000	.ROD	1-645, 1-681, 1-695, 1-709
3199636-0000	.VOLUME BULGE	1-647
3199637-0000	.VOLUME SHIM	1-647
3202032-0100	.TOOL BOX	1-1017
3202033-0100	.TOOL BOX	1-1017
3202035-0100	.TOOL BOX	1-1017
3202327-0100	.TOOL BOX	1-1017
3202899-0000	.PUSHER	1-279, 1-281, 1-283, 1-285
3202901-0000	.PUSHER	1-305, 1-307, 1-309, 1-311
3203580-0100	.BENDING ROLLER	1-985
3203741-0000	.SPACER	1-791, 1-797
3204002-0100	.NEEDLE	1-905, 1-907
3204003-0100	.NEEDLE	1-905, 1-907
3204305-0000	.VOLUME BULGE	1-279, 1-281, 1-283, 1-285, 1-305, 1-307, 1-309, 1-311
3204601-0000	.SLIDER	1-165, 1-167, 1-169
3204602-0000	.SLIDER	1-165, 1-167, 1-169
3205112-0002	.DOLLY	1-563, 1-565, 1-567, 1-569, 1-743, 1-745, 1-747
3205270-0000	.WATER DIAGRAM	1-899
3205271-0000	.WATER DIAGRAM	1-899
3208041-0000	.BRACKET	1-1019, 1-1021, 1-1025, 1-1027, 1-1029, 1-1031
3208042-0000	.BRACKET	1-1019, 1-1021, 1-1025, 1-1027, 1-1029, 1-1031
3208043-0000	.BRACKET	1-1033, 1-1035, 1-1037
3208044-0000	.LEVER	1-1033, 1-1035, 1-1037
3208071-0100	.MAGNETIC DESIGN READER	1-917
3208083-0000	.PLATE	1-923
3208413-0000	.HOLDER	1-489
3208414-0000	.BLOCKING PIECE	1-489
3208415-0000	.HOLDER	1-489
3208416-0000	.BRACKET	1-489
3208417-0000	.PLATE	1-489
3208418-0100	.GUIDE FINGER	1-479, 1-481, 1-483, 1-485, 1-487
3210808-0000	.GUIDE	1-165, 1-167, 1-169
3210809-0000	.GUIDE	1-165, 1-167, 1-169
3211679-0000	.GUIDE	1-259, 1-261
3211682-0000	.GUIDE	1-259, 1-261
3211685-0000	.BRACKET	1-315, 1-317
3211686-0100	.VOLUME CHANGE	1-257, 1-1045
3212461-0000	.BEARING	1-573, 1-575, 1-605, 1-607
3212462-0000	.BEARING	1-573, 1-575, 1-605, 1-607
3212880-0000	.BRACKET	1-895
3212901-0100	.CAP NECK FLUSHING	1-881, 1-883, 1-885, 1-887, 1-889
3213755-0000	.RAIL	1-541, 1-543, 1-545
3213756-0000	.RAIL	1-589, 1-591, 1-593
3213757-0000	.PLATE	1-541, 1-543, 1-545, 1-589, 1-591, 1-593, 1-1047
3213758-0000	.CUTTING JAW	1-563, 1-565, 1-567, 1-569
3213759-0000	.VOLUME BULGE	1-563, 1-565, 1-567, 1-569, 1-1047
3213760-0000	.VOLUME BULGE	1-563, 1-565, 1-567, 1-569, 1-1047

Part No	Description	Page No
3217189-0000	.BOTTOM PLATE	1-505
3218554-0100	.VOLUME CHANGE	1-299, 1-1045
3218963-0000	.GUIDE	1-315, 1-317, 1-1049
3219171-0000	.LEVER	1-617, 1-619, 1-621, 1-623, 1-653, 1-655, 1-657, 1-659, 1-685, 1-687, 1-689, 1-691, 1-699, 1-701, 1-703, 1-705
3219182-0000	.BRACKET	1-513, 1-515, 1-517
3220007-0101	.UPDATE PAGES	1-193
3220065-0000	.VOLUME BULGE	1-279, 1-281, 1-283, 1-285
3220079-0000	.SHIM	1-681, 1-709
3220080-0000	.SHIM	1-645, 1-695
3220087-0000	.END STOP GROUPING	1-755
3220234-0000	.O-RING	1-647
3222722-0000	.VOLUME FLAP	1-647
3222723-0000	.VOLUME FLAP	1-645, 1-695
3222724-0000	.VOLUME FLAP	1-645, 1-695
3222725-0000	.VOLUME FLAP	1-681, 1-709
3222726-0000	.VOLUME FLAP	1-681, 1-709
3222953-0100	.VOLUME BULGE	1-1045
3223118-0000	.VOLUME FLAP	1-661, 1-663, 1-665, 1-667, 1-669
3223119-0000	.VOLUME FLAP	1-625, 1-627, 1-629, 1-631, 1-633
3223122-0000	.GUIDE	1-17, 1-19, 1-21
3223123-0000	.GUIDE	1-17, 1-19, 1-21
3223238-0000	.PNEUMATIC DIAGRAM	1-901
3223254-0000	.CARRIER	1-17, 1-19, 1-21
3224392-0000	.SUPPORT	1-527
3224393-0000	.PLATE	1-527
3224394-0000	.PLATE	1-527
3226131-0000	.VOLUME SHIM	1-647
3227995-0000	.SHAFT	1-923
3227996-0000	.BLOCK	1-923
3227999-0000	.PLATE	1-923
3228000-0000	.BRACKET	1-923
3228001-0000	.SUPPORT	1-975
3228009-0000	.SHAFT	1-975
3228012-0000	.PIN	1-805, 1-935
3228014-0000	.PIN	1-975
3228015-0000	.PIN	1-975
3228017-0000	.PROTECTION	1-935
3228266-0000	.SUPPORT	1-291, 1-293
3228268-0000	.GUIDE	1-291, 1-293
3228269-0000	.GUIDE	1-291, 1-293
3228834-0000	.BRACKET	1-527
3230137-0000	.SPACER	1-13, 1-15
3230728-0000	.VOLUME BULGE	1-625, 1-627, 1-629, 1-631, 1-633
3230729-0000	.SHIM	1-625, 1-627, 1-629, 1-631, 1-633
3231300-0000	.PLATE	1-737, 1-739
3234680-0000	.SPACER	1-527
3234728-0100	.CAP NECK FLUSHING	1-881, 1-883, 1-885, 1-887, 1-889
3234731-0100	.CAP NECK FLUSHING	1-881, 1-883, 1-885, 1-887, 1-889
3234793-0000	.SPACER	1-415, 1-417, 1-419
3234889-0100	.CAP NECK FLUSHING	1-881, 1-883, 1-885, 1-887, 1-889
3234934-0000	.FLAP	1-269
3234935-0000	.FLAP	1-277
3235923-0000	.VOLUME BULGE	1-645, 1-695
3235924-0000	.VOLUME BULGE	1-645, 1-695
3235925-0000	.VOLUME BULGE	1-681, 1-709
3235926-0000	.VOLUME BULGE	1-681, 1-709
3235929-0000	.WASHER	1-645, 1-681, 1-695, 1-709
3235930-0000	.STUD SCREW	1-301, 1-303
3235931-0000	.GUIDE	1-301, 1-303
3235932-0000	.GUIDE	1-301, 1-303
3236596-0000	.SUPPORT	1-895
3236771-0000	.PUSHER	1-305, 1-307, 1-309, 1-311
3237844-0000	.VOLUME BULGE	1-279, 1-281, 1-283, 1-285, 1-305, 1-307, 1-309, 1-311
3238190-0000	.PLATE	1-301, 1-303
3239081-0000	.PUSHER	1-279, 1-281, 1-283, 1-285
3242547-0000	.SLIDER	1-617, 1-619, 1-621, 1-623, 1-653, 1-655, 1-657, 1-659, 1-685, 1-687, 1-689, 1-691, 1-699, 1-701, 1-703, 1-705
3243102-0000	.BOTTOM	1-95, 1-97, 1-99, 1-101, 1-103
3244027-0000	.BRACKET	1-921
3244028-0000	.PLATE	1-921
3244029-0000	.PLATE	1-921
3244031-0200	.SENSOR BRACKET	1-919
3244032-0200	.MAGNETIC DESIGN READER	1-917
3244043-0000	.ROLLER	1-919
3244044-0000	.SHAFT	1-919
3244928-0000	.BRACKET	1-969
3244929-0000	.SUPPORT	1-969
3244930-0100	.TEMPLATE	1-963
3245535-0100	.TEMPLATE	1-963
3246439-0000	.GUIDE	1-315, 1-317, 1-1049
3247072-0000	.TOP SECTION	1-301, 1-303
3247657-0000	.SUPPORT	1-505
3247658-0000	.BRACKET	1-505

Part No	Description	Page No
3247659-0000	.BRACKET	1-507
3247663-0000	.RAIL	1-589, 1-591, 1-593
3249658-0100	.CRANK	1-837
3249659-0100	.AIR KNIFE	1-985
3249660-0100	.CALENDER ROLLER	1-985
3249661-0100	.DRIVE ROLLER	1-985
3250735-0100	.MAGNETIC DESIGN READER	1-495, 1-497
3250738-0100	.ROLLER	1-505
3252303-0000	.PLATE	1-791, 1-797
3252309-0000	.BOTTOM	1-95, 1-97, 1-99, 1-101, 1-103
3252874-0000	.FINGER	1-479, 1-481, 1-483, 1-485, 1-487
3253326-0000	.LOWER FORMING RING	1-353, 1-355
3253330-0000	.PLATE	1-353, 1-355
3253576-0000	.SHAFT	1-505
3253577-0000	.ROLLER	1-505
3253699-0000	.PIN	1-975
3256335-0000	.CLIP	1-975
3256949-0100	.NO QUICKCHANGE INTERMEDIATE	1-3
3256950-0000	.BOX	1-1045
3257395-0000	.GUIDE	1-301, 1-303
3257396-0000	.GUIDE	1-301, 1-303
3258444-0000	.PLATE	1-301, 1-303
3259793-0000	.BRACKET	1-29
3260305-0000	.PLATE	1-783, 1-785
3260307-0000	.PLATE	1-783, 1-785
3260308-0000	.BLOCK	1-783, 1-785
3260310-0000	.PLATE	1-783, 1-785
3260484-0000	.AXLE	1-975
3260575-0000	.CARRIER	1-17, 1-19, 1-21
3260650-0000	.SHAFT	1-737, 1-739
3260651-0000	.BASE PLATE	1-737, 1-739
3260652-0000	.LOCK PLATE	1-737, 1-739
3260653-0000	.CAM	1-737, 1-739
3260654-0000	.CAM	1-737, 1-739
3260655-0100	.BRACKET	1-511
3260656-0100	.DESIGN CONTROL	1-755
3260657-0000	.CABLE WITH CONNECTOR	1-757
3261981-0000	.PLATE	1-975
3262009-0000	.ROLLER	1-975
3262231-0000	.PLATE	1-783, 1-785
3262233-0000	.PLATE	1-783, 1-785
3262236-0000	.PLATE	1-783, 1-785
3262237-0000	.PLATE	1-783, 1-785
3262238-0000	.PLATE	1-783, 1-785
3262249-0000	.PLATE	1-783, 1-785
3262250-0000	.PLATE	1-783, 1-785
3264360-0100	.CHUTE	1-1045
3265967-0000	.BRACKET	1-919
3265968-0000	.BRACKET	1-919
3266045-0000	.PRESSURE FLANGE	1-333, 1-335, 1-337, 1-339
3267943-0100	.TIE ROD	1-25, 1-27
3267944-0100	.TIE ROD	1-121, 1-123, 1-125, 1-127
3267945-0100	.PUSHER	1-121, 1-123, 1-125, 1-127
3268377-0000	.HOLDER	1-891
3269047-0100	.WARNING SIGN HOT SURFACE PLASTIC	1-791, 1-797
3269249-0000	.BEARING BRACKET	1-811, 1-825
3269647-0000	.CAM	1-721, 1-723
3269648-0000	.CAM	1-721, 1-723
3269824-0100	.LEVER	1-121, 1-123, 1-125, 1-127
3269825-0100	.CONNECTING ROD	1-121, 1-123, 1-125, 1-127
3269826-0100	.PUSHER	1-121, 1-123, 1-125, 1-127
3269827-0100	.PUSHER	1-121, 1-123, 1-125, 1-127
3269828-0100	.LEVER	1-121, 1-123, 1-125, 1-127
3269829-0100	.PUSHER	1-121, 1-123, 1-125, 1-127
3269836-0000	.WEDGE	1-17, 1-19, 1-21
3270001-0100	.BENDING ROLLER	1-985
3270463-0000	.VOLUME BULGE	1-305, 1-307
3270464-0000	.VOLUME BULGE	1-309, 1-311
3271429-0000	.FORK	1-333, 1-335, 1-337, 1-339
3272911-0100	.MARKING READER	1-509
3272912-0200	.VOLUME CONVERSION KIT WITH DIMC	1-3
3272913-0200	.BOX8 - VCK DIMC INFEED	1-803
3272914-0100	.BOX9 - VCK DIMC SS	1-803
3272915-0200	.BOX10 - VCK DIMC PLH	1-803
3272967-0100	.MOULDING TOOL ASSEMBLY	1-837
3272969-0000	.BOX	1-837
3272970-0000	.BOX	1-985
3272971-0000	.BOX	1-805
3272972-0200	.FLUSHING DEVICE	1-837
3272973-0200	.DIAGRAM	1-837
3272975-0100	.FRAME HOUSING	1-985
3273652-0100	.COLUMN	1-903
3273747-0000	.BRACKET	1-479, 1-481, 1-483, 1-485, 1-487
3273748-0000	.PRESSURE FLANGE	1-333, 1-335, 1-337, 1-339

Part No	Description	Page No
3274292-0200	.INJECTION SYSTEM	1-837
3274293-0200	.NOZZLE	1-903
3274424-0200	.BOX11 - VCK DIMC TOOL BOXES	1-803
3274681-0000	.GUIDE	1-165, 1-167, 1-169
3274682-0000	.GUIDE	1-165, 1-167, 1-169
3275143-0000	.BOX	1-1017
3275152-0100	.MARKING READER	1-837
3275154-0100	.PUNCH ARRANGEMENT	1-837
3275182-0100	.BENDING ROLLER	1-837
3275183-0200	.PAPER GUIDE	1-837
3275591-0000	.BAR	1-751
3275592-0000	.HOLDER	1-751
3275593-0000	.TUBE	1-751
3275594-0000	.CLAMP	1-751
3276469-0000	.SHIM	1-305, 1-307, 1-309, 1-311
3277188-0000	.CAM	1-713, 1-715, 1-717
3277189-0000	.SPACER	1-713, 1-715, 1-717
3277833-0000	.COVER	1-883, 1-885, 1-887, 1-889
3280023-0000	.PLATE	1-389, 1-391
3285103-0000	.GUIDE	1-49, 1-51, 1-53, 1-55
3285104-0000	.GUIDE	1-49, 1-51, 1-53, 1-55
3285105-0000	.HOLDER	1-49, 1-51, 1-53, 1-55
3285106-0000	.GUIDE	1-49, 1-51, 1-53, 1-55
3285107-0000	.GUIDE	1-49, 1-51, 1-53, 1-55
3285654-0100	.FOLDING UNIT	1-201
3286001-0200	.TENSIONER	1-973
3289870-0100	.PLINTH	1-979, 1-981
3290356-0000	.INSULATING PLATE	1-479, 1-481, 1-483, 1-485, 1-487
3290427-0000	.PLATE	1-181
3290894-0000	.SET OF SIGNS	1-979, 1-981
3292069-0200	.MISCELLANEOUS COMPONENTS	1-935
3292070-0200	.PIPE WORK-WATER	1-937
3292071-0200	.VALVE GROUP	1-937
3292072-0200	.MOULDING ARRANGEMENT	1-937
3292574-0000	.LABEL	1-831
3296779-0100	.TMCC2 CONTROLLER	1-749
3297545-0000	.INSULATING PLATE	1-479, 1-481, 1-483, 1-485, 1-487
3297846-0100	.GUIDE	1-985
3298684-0000	.ROLLER	1-435, 1-437
3298711-0000	.ROLLER	1-407, 1-409
3298712-0000	.ROLLER	1-407, 1-409
3298713-0000	.ROLLER	1-347, 1-349
3298714-0000	.ROLLER	1-347, 1-349
3299551-0000	.SIDE PLATE	1-661, 1-663, 1-665, 1-667, 1-669
3299552-0000	.VOLUME FLAP	1-661, 1-663, 1-665, 1-667, 1-669
3299553-0000	.SIDE PLATE	1-661, 1-663, 1-665, 1-667, 1-669
3299554-0000	.SIDE PLATE	1-625, 1-627, 1-629, 1-631, 1-633
3299555-0000	.VOLUME FLAP	1-625, 1-627, 1-629, 1-631, 1-633
3299556-0000	.SIDE PLATE	1-625, 1-627, 1-629, 1-631, 1-633
3299560-0001	.ROLLER	1-353, 1-355
3299560-0002	.ROLLER	1-493
3299560-0003	.ROLLER	1-493
3299621-0000	.GUIDE	1-291, 1-293
3299622-0000	.BRACKET	1-259, 1-261
3299623-0000	.BRACKET	1-259, 1-261
3301268-0000	.BRACKET	1-291, 1-293
3301976-0000	.ROLLER	1-353, 1-355
3301977-0000	.ROLLER	1-353, 1-355
3302702-0000	.TIE ROD	1-29
3304527-0000	.LOWER FILLING PIPE	1-333, 1-335, 1-337, 1-339
3304833-0000	.TEMPLATE	1-387
3307993-0000	.TEMPLATE	1-387
3309959-0100	.START-UP KIT	1-837
3312566-0000	.PULLER CAM	1-721, 1-723
3312567-0000	.PULLER CAM	1-721, 1-723
3312568-0000	.VOLUME CAM	1-721, 1-723
3312569-0000	.VOLUME CAM	1-721, 1-723
3312961-0000	.VOLUME BULGE	1-647
3312962-0000	.VOLUME BULGE	1-647
3314649-0100	.INFEED SERVO	1-805
3315306-0000	.VOLUME SHIM	1-625, 1-627, 1-629, 1-631, 1-633, 1-743, 1-745, 1-747
3315307-0000	.VOLUME BULGE	1-625, 1-627, 1-629, 1-631, 1-633
3315308-0000	.VOLUME BULGE	1-661, 1-663, 1-665, 1-667, 1-669
3315309-0000	.VOLUME SHIM	1-661, 1-663, 1-665, 1-667, 1-669, 1-743, 1-745, 1-747
3315310-0000	.VOLUME SHIM	1-625, 1-627, 1-629, 1-631, 1-633
3317946-0000	.PRESSURE FLANGE	1-333, 1-335, 1-337, 1-339
3317949-0000	.LOWER FILLING PIPE	1-333, 1-335, 1-337, 1-339
3321387-0000	.PULLER CAM	1-721, 1-723
3321388-0000	.PULLER CAM	1-721, 1-723
3321652-0100	.VOLUME CAM	1-713, 1-715, 1-717, 1-1045
3321780-0000	.CUTTING JAW	1-563, 1-565, 1-567, 1-569
3322308-0000	.WEDGE	1-535, 1-537, 1-585, 1-587
3324142-0000	.SET OF SIGNS	1-831
3325777-0000	.GASKET	1-1009

Part No	Description	Page No	Part No	Description	Page No

Tetra Pak®

SPC
Spare Parts Catalogue

Pos	Part No	Description	Page No
A			
A400	559810-0201	TMCC2 CONTROLLER	1-759, 1-761
B			
F70B3140	90459-4142	SAFETY SENSOR, ADAM M12, 20-051-00	1-797
F70B3141	90458-2794	SAFETY SENSOR, EVA 20-046-00	1-797
F70B3150	90459-4142	SAFETY SENSOR, ADAM M12, 20-051-00	1-791
F70B3151	90458-2794	SAFETY SENSOR, EVA 20-046-00	1-791
G23B3350	90600-0659	FILLING NOZZLE, SS041837/100 TYPE: K	1-905, 1-907
G24B0000	90458-0602	CONTRAST SCANNER, KT15W-P2213S02	1-925
G24B0010	90458-0602	CONTRAST SCANNER, KT15W-P2213S02	1-925
G24B3300	90603-5330	MAGNETIC SENSOR, MDR15	1-921
G24B3310	90600-5853	PHOTOCELL, WF 50-40 B416	1-835
G24B3500	90603-5330	MAGNETIC SENSOR, MDR15	1-923
G24B5030	90459-2409	INDUCTIVE SENSOR, IN 5230	1-975
G25B1350	90600-0659	FILLING NOZZLE, SS041837/100 TYPE: K	1-905, 1-907
G25B1980	90600-7886	INDUCTIVE SENSOR, IE 5379	1-1019, 1-1021, 1-1033
G25B2350	90600-0659	FILLING NOZZLE, SS041837/100 TYPE: K	1-905, 1-907
G25B2610	90459-7361	FIBRE OPTIC UNIT, WLL170-2P460	1-201
G25B2980	90600-7886	INDUCTIVE SENSOR, IE 5379	1-1025, 1-1027, 1-1035
G25B3980	90600-7886	INDUCTIVE SENSOR, IE 5379	1-1029, 1-1031, 1-1037
T10B9231	90458-0602	CONTRAST SCANNER, KT15W-P2213S02	1-499
T10B9241	90458-0602	CONTRAST SCANNER, KT15W-P2213S02	1-499
T10B9245	90603-5330	MAGNETIC SENSOR, MDR15	1-505
T40B9210	3142230-0000	CONTRAST SCANNER	1-753
T40B9215	90603-5330	MAGNETIC SENSOR, MDR15	1-757
T40B9220	3142230-0000	CONTRAST SCANNER	1-753
T50B1020	90600-1695	FLOW SWITCH 0,4 L/MIN, DW-K-A 0.4 L/MIN	1-883, 1-885, 1-887, 1-889
T50B1070	90600-0464	INDUCTIVE SWITCH,E2A-M12LS02-WP-B1-TP 5M	1-243
T50B1080	90600-0464	INDUCTIVE SWITCH,E2A-M12LS02-WP-B1-TP 5M	1-243
T50B1110	90600-0464	INDUCTIVE SWITCH,E2A-M12LS02-WP-B1-TP 5M	1-243
T50B1120	90600-0464	INDUCTIVE SWITCH,E2A-M12LS02-WP-B1-TP 5M	1-243
T50B6001	90459-5652	LUBRICATION BLOCK, HFS4666	1-141, 1-143, 1-145, 1-147, 1-149, 1-151
T50B6002	90459-5652	LUBRICATION BLOCK, HFS4666	1-141, 1-143, 1-145, 1-147, 1-149, 1-151
T50B6003	90459-5652	LUBRICATION BLOCK, HFS4666	1-141, 1-143, 1-145, 1-147, 1-149, 1-151
T50B9510	90044-0194	INDUCTIVE SENSOR, IN 5329	1-179, 1-181
T50B9520	90044-0194	INDUCTIVE SENSOR, IN 5329	1-121, 1-123, 1-125, 1-127
U70B3050	90600-0362	PROX. SENSOR, SMTO-4U-PS-S-LED-24	1-395
U70B3060	90600-0362	PROX. SENSOR, SMTO-4U-PS-S-LED-24	1-395
U70B3240	90459-2409	INDUCTIVE SENSOR, IN 5230	1-775, 1-777
U70B9530	90600-2233	INDUCTIVE SENSOR	1-767, 1-801
D			
DC010	2905234-0200	DIAGRAM	1-899
E			
T50E7011	2647131-0000	GUIDE	1-57, 1-59
T50E7011	2862155-0000	GUIDE	1-57, 1-59
T50E7011	2903581-0000	GUIDE	1-57, 1-59
T50E7011	2906004-0000	GUIDE	1-57, 1-59
T50E7011	2933181-0000	FOLDING BAR	1-61, 1-63
T50E7011	2937351-0000	FOLDING BAR	1-61, 1-63
T50E7011	2938200-0000	FOLDING BAR	1-61, 1-63
T50E7011	2953137-0000	FOLDING BAR	1-61, 1-63
T50E7011	2960431-0000	FOLDING BAR	1-61, 1-63
T50E7011	2983790-0000	FOLDING BAR	1-61, 1-63
T50E7011	2998815-0000	FOLDING BAR	1-61, 1-63
T50E7011	3128968-0000	FOLDING BAR	1-61, 1-63
T50E7012	2879069-0000	FOLDING BAR	1-75, 1-77
T50E7013	2879069-0000	FOLDING BAR	1-75, 1-77
T50E7014	2647131-0000	GUIDE	1-57, 1-59
T50E7014	2862156-0000	GUIDE	1-59
T50E7014	2903581-0000	GUIDE	1-59
T50E7014	2906004-0000	GUIDE	1-59
T50E7014	2933180-0000	FOLDING BAR	1-61, 1-63
T50E7014	2937352-0000	FOLDING BAR	1-61, 1-63
T50E7014	2938199-0000	FOLDING BAR	1-61, 1-63
T50E7014	2953136-0000	FOLDING BAR	1-61, 1-63
T50E7014	2960432-0000	FOLDING BAR	1-61, 1-63
T50E7014	2983789-0000	FOLDING BAR	1-61, 1-63
T50E7014	2998814-0000	FOLDING BAR	1-61, 1-63
T50E7014	3128969-0000	FOLDING BAR	1-61, 1-63
T50E7015	3257396-0000	GUIDE	1-301, 1-303
T50E7016	3257395-0000	GUIDE	1-301, 1-303
T50E7034	3235931-0000	GUIDE	1-301, 1-303
T50E7035	3235932-0000	GUIDE	1-301, 1-303
K			
A01K5200	559810-0201	TMCC2 CONTROLLER	1-759, 1-761
G24K3020	90600-5249	FERRITE, B64290L616X38	1-831
G24K3350	90605-3149	ETHERNET/IP BUS CONTROLLER, X20BC0088	1-979, 1-981
G24K3360	90605-3151	SUPPLY MODULE X20, X20PS9400	1-979, 1-981
G24K3370	90605-3152	DIGITAL SIGNAL MODULE, X20DS4387	1-979, 1-981
G24K4020	90600-5249	FERRITE, B64290L616X38	1-831
G25K9000	90458-1194	VALVE, 5/2 MONOSTABLE	1-941, 1-943, 1-945
T50K1200	90042-0248	SOLENOID VALVE OFFICIENE DI ENSINO	1-883, 1-885, 1-887, 1-889
T50K9602	90600-3222	PILOTED FUNCTION VALVE G1/8, 7880 06 10	1-243
T50K9604	90600-3222	PILOTED FUNCTION VALVE G1/8, 7880 06 10	1-243

Pos	Part No	Description	Page No
M			
MB010	3193719-0000	PNEUMATIC DIAGRAM	1-899
G24M2500	90604-0669	DOUBLE ACTING, MINI-ISO, CYL. 32-12	1-819
G24M2510	90604-0669	DOUBLE ACTING, MINI-ISO, CYL. 32-12	1-819
G24M3000	90601-5090	SERVO MOTOR, MPL-B310P-MK72AA SERIES A	1-811
G24M4000	90601-5090	SERVO MOTOR, MPL-B310P-MK72AA SERIES A	1-825
G25M1520	90459-6253	CYL VERT.63-23/HOR. 80-38, NC20093026S	1-1019, 1-1021
G25M1520	90600-1145	TANDEM CYLINDER, NC20058023S	1-1033
G25M1560	2863709-0200	CYLINDER	1-1019, 1-1021
G25M1570	2863709-0200	CYLINDER	1-1019, 1-1021
G25M2520	90459-6253	CYL VERT.63-23/HOR. 80-38, NC20093026S	1-1025, 1-1027
G25M2520	90600-1145	TANDEM CYLINDER, NC20058023S	1-1035
G25M2560	2863709-0200	CYLINDER	1-1025, 1-1027
G25M2570	2863709-0200	CYLINDER	1-1025, 1-1027
G25M3520	90459-6253	CYL VERT.63-23/HOR. 80-38, NC20093026S	1-1029, 1-1031
G25M3520	90600-1145	TANDEM CYLINDER, NC20058023S	1-1037
G25M3560	2863709-0200	CYLINDER	1-1029, 1-1031
G25M3570	2863709-0200	CYLINDER	1-1029, 1-1031
T50M9602	90459-5268	DOUBLE ACTING, MINI-ISO, CYL. 25-130	1-243
T50M9604	90459-5268	DOUBLE ACTING, MINI-ISO, CYL. 25-130	1-243
U70M2442	90604-3127	DOUBLE ACTING, COMPACT, 32-25	1-775, 1-777
U70M2452	90603-5802	DOUBLE ACTING, MINI-ISO, CYL. 20-50	1-395
Q			
G25Q1500	90235-0297	VALVE 3/2, OPEN/CLOSED	1-1019, 1-1021
G25Q2500	90235-0297	VALVE 3/2, OPEN/CLOSED	1-1025, 1-1027
G25Q3500	90235-0297	VALVE 3/2, OPEN/CLOSED	1-1029, 1-1031
T50Q6001	90092-0052	METERING VALVE 10 MM3	1-141, 1-143, 1-145, 1-147, 1-149, 1-151
T50Q6002	90092-0052	METERING VALVE 10 MM3	1-141, 1-143, 1-145, 1-147, 1-149, 1-151
T50Q6003	90092-0052	METERING VALVE 10 MM3	1-141, 1-143, 1-145, 1-147, 1-149, 1-151
T50Q6004	90092-0054	METERING VALVE 50 MM3	1-141, 1-143, 1-145, 1-147, 1-149, 1-151
T50Q6006	90230-0027	NON-RETURN VALVE QJ 8355-1/4"	1-179, 1-181
T50Q6010	90092-0052	METERING VALVE 10 MM3	1-141, 1-143, 1-145, 1-147, 1-149, 1-151
T50Q6011	90092-0052	METERING VALVE 10 MM3	1-141, 1-143, 1-145, 1-147, 1-149, 1-151
T50Q6012	90092-0052	METERING VALVE 10 MM3	1-141, 1-143, 1-145, 1-147, 1-149, 1-151
T50Q6013	90092-0052	METERING VALVE 10 MM3	1-141, 1-143, 1-145, 1-147, 1-149, 1-151
T50Q6014	90092-0052	METERING VALVE 10 MM3	1-141, 1-143, 1-145, 1-147, 1-149, 1-151
T50Q6015	90092-0052	METERING VALVE 10 MM3	1-141, 1-143, 1-145, 1-147, 1-149, 1-151
T50Q6016	90092-0052	METERING VALVE 10 MM3	1-141, 1-143, 1-145, 1-147, 1-149, 1-151
T50Q6017	90092-0052	METERING VALVE 10 MM3	1-141, 1-143, 1-145, 1-147, 1-149, 1-151
T50Q6018	90092-0052	METERING VALVE 10 MM3	1-141, 1-143, 1-145, 1-147, 1-149, 1-151
T50Q6019	90092-0052	METERING VALVE 10 MM3	1-141, 1-143, 1-145, 1-147, 1-149, 1-151
T50Q6020	90092-0052	METERING VALVE 10 MM3	1-141, 1-143, 1-145, 1-147, 1-149, 1-151
T50Q6021	90092-0052	METERING VALVE 10 MM3	1-141, 1-143, 1-145, 1-147, 1-149, 1-151
T50Q6022	90092-0052	METERING VALVE 10 MM3	1-141, 1-143, 1-145, 1-147, 1-149, 1-151
T50Q6023	90092-0052	METERING VALVE 10 MM3	1-141, 1-143, 1-145, 1-147, 1-149, 1-151
R			
G25R1100	1533360-0000	INDUCTOR	1-215
G25R1100	1533361-0000	INDUCTOR	1-215
G25R1100	1533362-0000	INDUCTOR	1-215
G25R1100	1533364-0000	INDUCTOR	1-215
G25R1310	90326-0092	CARTRIDGE HEATER 150W 230V, C2G-1057	1-909
G25R1310	2719697-0000	SHUTTER	1-905, 1-907
G25R1560	90328-0029	SILENCER, M5	1-1019, 1-1021
G25R1570	90328-0029	SILENCER, M5	1-1019, 1-1021
G25R2310	90326-0092	CARTRIDGE HEATER 150W 230V, C2G-1057	1-911
G25R2310	2719697-0000	SHUTTER	1-905, 1-907
G25R2560	90328-0029	SILENCER, M5	1-1025, 1-1027
G25R2570	90328-0029	SILENCER, M5	1-1025, 1-1027
G25R2600	2863955-0000	PLATE	1-203
G25R2600	3091602-0000	AIR NOZZLE	1-203
G25R3310	90326-0092	CARTRIDGE HEATER 150W 230V, C2G-1057	1-913
G25R3310	2719697-0000	SHUTTER	1-905, 1-907
G25R3560	90328-0029	SILENCER, M5	1-1029, 1-1031
G25R3570	90328-0029	SILENCER, M5	1-1029, 1-1031
T40R9150	1566783-0000	INDUCTOR	1-541, 1-543, 1-545
T40R9150	2546474-0000	INDUCTOR	1-541, 1-543, 1-545
T40R9150	2587466-0000	INDUCTOR	1-541, 1-543, 1-545
T40R9150	2610956-0000	INDUCTOR	1-541, 1-543, 1-545
T40R9150	2663378-0000	INDUCTOR	1-541, 1-543, 1-545
T40R9150	2879535-0000	INDUCTOR	1-541, 1-543, 1-545
T40R9150	3003480-0000	INDUCTOR	1-541, 1-543, 1-545
T40R9150	3003481-0000	INDUCTOR	1-541, 1-543, 1-545
T40R9150	3095386-0000	INDUCTOR	1-541, 1-543, 1-545
T40R9150	3124821-0000	INDUCTOR	1-541, 1-543, 1-545
T40R9150	3124822-0000	INDUCTOR	1-541, 1-543, 1-545
T40R9150	3187897-0000	INDUCTOR	1-541, 1-543, 1-545
T40R9150	3187898-0000	INDUCTOR	1-541, 1-543, 1-545
T40R9150	3187899-0000	INDUCTOR	1-541, 1-543, 1-545
T40R9150	3187900-0000	INDUCTOR	1-541, 1-543, 1-545
T40R9151	67379-0262	TRANSFORMER	1-595
T40R9151	67379-0268	TRANSFORMER	1-595
T40R9151	1566783-0000	INDUCTOR	1-589, 1-591, 1-593
T40R9151	2546474-0000	INDUCTOR	1-589, 1-591, 1-593

Pos	Part No	Description	Page No
R			
T40R9151	2587467-0000	INDUCTOR	1-589, 1-591, 1-593
T40R9151	2610956-0000	INDUCTOR	1-589, 1-591, 1-593
T40R9151	2663377-0000	INDUCTOR	1-589, 1-591, 1-593
T40R9151	2879535-0000	INDUCTOR	1-589, 1-591, 1-593
T40R9151	3003480-0000	INDUCTOR	1-589, 1-591, 1-593
T40R9151	3003481-0000	INDUCTOR	1-589, 1-591, 1-593
T40R9151	3095386-0000	INDUCTOR	1-589, 1-591, 1-593
T40R9151	3124821-0000	INDUCTOR	1-589, 1-591, 1-593
T40R9151	3124822-0000	INDUCTOR	1-589, 1-591, 1-593
T40R9151	3187897-0000	INDUCTOR	1-589, 1-591, 1-593
T40R9151	3187898-0000	INDUCTOR	1-589, 1-591, 1-593
T40R9151	3187899-0000	INDUCTOR	1-589, 1-591, 1-593
T40R9151	3187900-0000	INDUCTOR	1-589, 1-591, 1-593
T50R6001	90459-7280	AIR NOZZLE, 011	1-893, 1-895, 1-897
T50R6001	1523645-0000	AIR NOZZLE	1-891
T50R6002	90459-7280	AIR NOZZLE, 011	1-893, 1-895
T50R6002	1523645-0000	AIR NOZZLE	1-891
T50R7001	1523645-0000	AIR NOZZLE	1-897
T50R7001	2931945-0000	NOZZLE	1-891
T50R7001	3141043-0000	NOZZLE	1-893, 1-895
T50R7002	3141043-0000	NOZZLE	1-893
T50R9612	90235-0846	THROTTLE CHECK VALVE G1/8", MANUAL, 6	1-243
T50R9614	90235-0846	THROTTLE CHECK VALVE G1/8", MANUAL, 6	1-243
U70R2442	90459-3528	ONE WAY FLOW CONTROL, G1/8, MANUAL	1-775, 1-777
U70R2444	90459-3528	ONE WAY FLOW CONTROL, G1/8, MANUAL	1-775, 1-777
S			
SU010	3205270-0000	WATER DIAGRAM	1-899
SU010	3205271-0000	WATER DIAGRAM	1-899
T50S7015	90187-0149	THROTTLE VALVE, G1/4, G1/4, MALE	1-883, 1-885, 1-887, 1-889
T50S7015	90243-0112	FLOW METER	1-883, 1-885, 1-887, 1-889
T			
G24T3000	90606-2004	AXIS MOD. KINETIX 6000,2094-BM01-S SER.C	1-831
G24T4000	90606-2004	AXIS MOD. KINETIX 6000,2094-BM01-S SER.C	1-831
G25T1100	67379-0216	TRANSFORMER	1-215
G25T1100	67379-0224	TRANSFORMER	1-215
T40T9150	67379-0101	TRANSFORMER	1-547
T40T9150	67379-0106	TRANSFORMER	1-547
T40T9150	67379-0115	TRANSFORMER	1-547
T40T9150	67379-0249	TRANSFORMER	1-547
T40T9150	67379-0262	TRANSFORMER	1-547
T40T9150	67379-0268	TRANSFORMER	1-547
T40T9150	2837503-0104	TRANSFORMER	1-547
T40T9150	2837503-0110	TRANSFORMER	1-547
T40T9151	67379-0101	TRANSFORMER	1-595
T40T9151	67379-0106	TRANSFORMER	1-595
T40T9151	67379-0115	TRANSFORMER	1-595
T40T9151	67379-0249	TRANSFORMER	1-595
T40T9151	2837503-0104	TRANSFORMER	1-595
T40T9151	2837503-0110	TRANSFORMER	1-595
U70T9160	2888970-0438	TRANSFORMER VMN	1-325
U70T9160	2888970-0524	TRANSFORMER VMN	1-325
U70T9160	2888970-0619	TRANSFORMER VMN	1-325
W			
A20W5020	351501-0015	ETHERNET PATCH CABLE, FL CAT5 PATCH 1,5	1-979, 1-981
F70W3140	90459-4252	CABLE M12-C101, 20-056-10	1-797
F70W3150	90459-4252	CABLE M12-C101, 20-056-10	1-791
G21W3583	315400-0003	TUBE PUN-H-6X1-SW	1-1019, 1-1021
G21W3601	344342-0081	TUBE 8 MM APA BLACK	1-939
G21W3603	315400-0018	TUBE PUN-H-4X0,75-SW	1-1019, 1-1021
G21W3604	344342-0081	TUBE 8 MM APA BLACK	1-939
G21W3605	344342-0041	TUBE 4 MM APA BLACK	1-939
G21W3606	344342-0041	TUBE 4 MM APA BLACK	1-939
G21W3613	315400-0003	TUBE PUN-H-6X1-SW	1-1025, 1-1027
G21W3631	344342-0081	TUBE 8 MM APA BLACK	1-939
G21W3633	315400-0018	TUBE PUN-H-4X0,75-SW	1-1025, 1-1027
G21W3634	344342-0081	TUBE 8 MM APA BLACK	1-939
G21W3635	344342-0041	TUBE 4 MM APA BLACK	1-939
G21W3636	344342-0041	TUBE 4 MM APA BLACK	1-939
G21W3643	315400-0003	TUBE PUN-H-6X1-SW	1-1029, 1-1031
G21W3661	344342-0081	TUBE 8 MM APA BLACK	1-939
G21W3663	315400-0018	TUBE PUN-H-4X0,75-SW	1-1029, 1-1031
G21W3664	344342-0081	TUBE 8 MM APA BLACK	1-939
G21W3665	344342-0041	TUBE 4 MM APA BLACK	1-939
G21W3666	344342-0041	TUBE 4 MM APA BLACK	1-939
G24W0120	90459-2536	SERCOS CABLE 0.1M, 2090-SCEP0-1	1-831
G24W0130	90459-2536	SERCOS CABLE 0.1M, 2090-SCEP0-1	1-831
G24W3000	351429-1609	MOTOR POWER CABLE 2090-CPWM7DF-16AA09	1-807
G24W3010	351428-0009	MOTOR FEEDBACK CABLE 2090-CFBM7DF-CEAA09	1-807
G24W3300	344250-0020	SENSOR CABLE, EVT138	1-921
G24W3310	344266-0020	SENSOR CABLE, EVT256	1-835
G24W3500	344250-0100	SENSOR CABLE, EVT140	1-923
G24W4000	351429-1609	MOTOR POWER CABLE 2090-CPWM7DF-16AA09	1-817

Pos	Part No	Description	Page No
W			
G24W4010	351428-0009	MOTOR FEEDBACK CABLE 2090-CFBM7DF-CEAA09	1-817
G24W5030	344246-0050	SENSOR CABLE, EVT127	1-975
G25W1503	315300-0004	TUBE, 8 MM PE BLUE	1-1019, 1-1021
G25W1550	315400-0004	TUBE PUN-H-8X1,25-BL	1-947
G25W1551	315400-0004	TUBE PUN-H-8X1,25-BL	1-947
G25W1552	315400-0004	TUBE PUN-H-8X1,25-BL	1-947
G25W1553	315400-0004	TUBE PUN-H-8X1,25-BL	1-947
G25W1556	315400-0004	TUBE PUN-H-8X1,25-BL	1-935, 1-947
G25W1561	315400-0016	TUBE PUN-H-4X0,75-BL	1-947
G25W1571	315400-0016	TUBE PUN-H-4X0,75-BL	1-947
G25W1961	315300-0007	TUBE, 10 MM PE BLUE	1-1019, 1-1021
G25W1962	315300-0007	TUBE, 10 MM PE BLUE	1-1019, 1-1021
G25W2503	315300-0007	TUBE, 10 MM PE BLUE	1-1025, 1-1027
G25W2561	315400-0016	TUBE PUN-H-4X0,75-BL	1-947
G25W2571	315400-0016	TUBE PUN-H-4X0,75-BL	1-947
G25W2611	90232-0325	FIBRE, E32-DC200	1-201
G25W2961	315300-0007	TUBE, 10 MM PE BLUE	1-1025, 1-1027
G25W2962	315300-0007	TUBE, 10 MM PE BLUE	1-1025, 1-1027
G25W3503	315300-0007	TUBE, 10 MM PE BLUE	1-1029, 1-1031
G25W3561	315400-0016	TUBE PUN-H-4X0,75-BL	1-947
G25W3571	315400-0016	TUBE PUN-H-4X0,75-BL	1-947
G25W3961	315300-0007	TUBE, 10 MM PE BLUE	1-1029, 1-1031
G25W3962	315300-0007	TUBE, 10 MM PE BLUE	1-1029, 1-1031
T10W9231	90459-3250	SENSOR CABLE, DOP-1205-G15M	1-499, 1-505
T10W9241	90459-3250	SENSOR CABLE, DOP-1205-G15M	1-499, 1-505
T10W9245	344250-0020	SENSOR CABLE, EVT138	1-505
T40W1255	315400-0003	TUBE PUN-H-6X1-SW	1-741
T40W1256	315400-0003	TUBE PUN-H-6X1-SW	1-741
T40W8062	90166-0143	TUBE 2,5 MM PA TRANSP.	1-653, 1-655, 1-657, 1-659, 1-699, 1-701, 1-703, 1-705
T40W8063	90166-0143	TUBE 2,5 MM PA TRANSP.	1-617, 1-619, 1-621, 1-623, 1-685, 1-687, 1-689, 1-691
T40W8064	90166-0143	TUBE 2,5 MM PA TRANSP.	1-653, 1-655, 1-657, 1-659, 1-699, 1-701, 1-703, 1-705
T40W8065	90166-0143	TUBE 2,5 MM PA TRANSP.	1-617, 1-619, 1-621, 1-623, 1-685, 1-687, 1-689, 1-691
T40W9156	1498849-0000	BUSBAR	1-541, 1-543, 1-545
T40W9156	2830430-0000	BUSBAR	1-541, 1-543, 1-545
T40W9156	2909301-0000	BUSBAR	1-541, 1-543, 1-545
T40W9157	1498850-0000	BUSBAR	1-589, 1-591, 1-593
T40W9157	2831048-0000	BUSBAR	1-589, 1-591, 1-593
T40W9157	2909302-0000	BUSBAR	1-589, 1-591, 1-593
T40W9211	90603-2556	ACTU/SENS. CABLE SAC-5P-M12MS/ 4,0-PUR/M	1-753, 1-757
T40W9212	90166-0081	TUBE 6 MM PA BLUE	1-753
T40W9213	90166-0081	TUBE 6 MM PA BLUE	1-753
T40W9215	3260657-0000	CABLE WITH CONNECTOR	1-757
T40W9221	90603-2556	ACTU/SENS. CABLE SAC-5P-M12MS/ 4,0-PUR/M	1-753, 1-757
T50W1200	351150-0403	CABLE OLFLEX 3X0,75 MM2 LIGHT/GREY 35	1-883, 1-885, 1-887, 1-889
T50W1344	90166-0108	TUBE 6 MM PA TRANSP.	1-141, 1-143, 1-145, 1-147, 1-149, 1-151
T50W6001	315400-0001	6-4E PUN-H-6X1-BL	1-243
T50W6002	315400-0001	6-4E PUN-H-6X1-BL	1-243
T50W6011	315300-0004	TUBE, 8 MM PE BLUE	1-891, 1-893, 1-895
T50W6012	315300-0004	TUBE, 8 MM PE BLUE	1-893, 1-895
T50W7011	90166-0118	TUBE 8 MM PA BLACK	1-75, 1-77
T50W7012	90166-0118	TUBE 8 MM PA BLACK	1-57, 1-59, 1-61, 1-63, 1-75, 1-77
T50W7013	90166-0118	TUBE 8 MM PA BLACK	1-57, 1-59, 1-61, 1-63, 1-75, 1-77
T50W7014	90166-0118	TUBE 8 MM PA BLACK	1-57, 1-59, 1-61, 1-63, 1-75, 1-77
T50W7015	90166-0118	TUBE 8 MM PA BLACK	1-57, 1-59, 1-61, 1-63
T50W7019	90459-0221	TUBE, 6 MM PE BLACK	1-883, 1-885, 1-887, 1-889
T50W7025	90166-0118	TUBE 8 MM PA BLACK	1-301, 1-303
T50W7026	90166-0118	TUBE 8 MM PA BLACK	1-301, 1-303
T50W7026	90459-0221	TUBE, 6 MM PE BLACK	1-893
T50W7027	90459-0221	TUBE, 6 MM PE BLACK	1-893
T50W7032	90166-0118	TUBE 8 MM PA BLACK	1-301, 1-303
T50W7033	90166-0118	TUBE 8 MM PA BLACK	1-301, 1-303
T50W7034	90459-0221	TUBE, 6 MM PE BLACK	1-883, 1-885, 1-887, 1-889
T50W7035	90459-0221	TUBE, 6 MM PE BLACK	1-883, 1-885, 1-887, 1-889
T50W7037	90459-0221	TUBE, 6 MM PE BLACK	1-883, 1-885, 1-887, 1-889
T50W8001	90166-0109	TUBE 4 MM PA TRANSP.	1-159
T50W8060	90166-0143	TUBE 2,5 MM PA TRANSP.	1-141, 1-143, 1-145, 1-147, 1-149, 1-151
T50W8061	90166-0109	TUBE 4 MM PA TRANSP.	1-141, 1-143, 1-145, 1-147, 1-149, 1-151
T50W8061	90166-0143	TUBE 2,5 MM PA TRANSP.	1-141, 1-143, 1-145, 1-147, 1-149, 1-151
T50W8061	2869148-0000	TUBE	1-141, 1-143, 1-145, 1-147, 1-149, 1-151
T50W8062	90166-0143	TUBE 2,5 MM PA TRANSP.	1-141, 1-143, 1-145, 1-147, 1-149, 1-151
T50W8063	90166-0143	TUBE 2,5 MM PA TRANSP.	1-141, 1-143, 1-145, 1-147, 1-149, 1-151
T50W8064	90166-0143	TUBE 2,5 MM PA TRANSP.	1-141, 1-143, 1-145, 1-147, 1-149, 1-151
T50W8065	90166-0143	TUBE 2,5 MM PA TRANSP.	1-141, 1-143, 1-145, 1-147, 1-149, 1-151
T50W8066	90166-0143	TUBE 2,5 MM PA TRANSP.	1-141, 1-143, 1-145, 1-147, 1-149, 1-151
T50W8067	90166-0143	TUBE 2,5 MM PA TRANSP.	1-141, 1-143, 1-145, 1-147, 1-149, 1-151
T50W8068	90166-0143	TUBE 2,5 MM PA TRANSP.	1-141, 1-143, 1-145, 1-147, 1-149, 1-151
T50W8069	90166-0143	TUBE 2,5 MM PA TRANSP.	1-141, 1-143, 1-145, 1-147, 1-149, 1-151
T50W8070	90166-0143	TUBE 2,5 MM PA TRANSP.	1-141, 1-143, 1-145, 1-147, 1-149, 1-151

Machine Type Group Description Page No

Pos	Part No	Description	Page No
W			
T50W8071	90166-0143	TUBE 2,5 MM PA TRANSP.	1-141, 1-143, 1-145, 1-147, 1-149, 1-151
T50W8072	90166-0143	TUBE 2,5 MM PA TRANSP.	1-141, 1-143, 1-145, 1-147, 1-149, 1-151
T50W8073	90166-0143	TUBE 2,5 MM PA TRANSP.	1-141, 1-143, 1-145, 1-147, 1-149, 1-151
T50W8074	90166-0143	TUBE 2,5 MM PA TRANSP.	1-141, 1-143, 1-145, 1-147, 1-149, 1-151
T50W8075	90166-0143	TUBE 2,5 MM PA TRANSP.	1-141, 1-143, 1-145, 1-147, 1-149, 1-151
T50W8076	90166-0143	TUBE 2,5 MM PA TRANSP.	1-141, 1-143, 1-145, 1-147, 1-149, 1-151
T50W8077	90166-0109	TUBE 4 MM PA TRANSP.	1-141, 1-143, 1-145, 1-147, 1-149, 1-151
T50W8077	90166-0143	TUBE 2,5 MM PA TRANSP.	1-141, 1-143, 1-145, 1-147, 1-149, 1-151
T50W8077	2869149-0000	TUBE	1-141, 1-143, 1-145, 1-147, 1-149, 1-151
T50W9613	315400-0001	6-4E PUN-H-6X1-BL	1-243
T50W9615	315400-0001	6-4E PUN-H-6X1-BL	1-243
T50W9616	315400-0001	6-4E PUN-H-6X1-BL	1-243
T50W9617	315400-0001	6-4E PUN-H-6X1-BL	1-243
T50W9618	315400-0016	TUBE PUN-H-4X0,75-BL	1-243
T50W9619	315400-0016	TUBE PUN-H-4X0,75-BL	1-243
T50W9623	315400-0004	TUBE PUN-H-8X1,25-BL	1-121, 1-123, 1-125, 1-127
T50W9624	315400-0016	TUBE PUN-H-4X0,75-BL	1-243
U70W3050	344245-0050	SENSOR CABLE, EVT123	1-395
U70W3060	344245-0050	SENSOR CABLE, EVT123	1-395
U70W3240	344245-0050	SENSOR CABLE, EVT123	1-775, 1-777
U70W7003	90166-0118	TUBE 8 MM PA BLACK	1-325
U70W9530	344253-0100	SENSOR CABLE, EVT002	1-767, 1-801
X			
G24X3030	90459-2551	CONNECTOR, MOTOR FEEDBACK 15 PIN MALE	1-807
G24X3370	3289870-0100	PLINTH	1-979, 1-981
G24X4030	90459-2551	CONNECTOR, MOTOR FEEDBACK 15 PIN MALE	1-817
G25X1310	90459-6821	MALE INSERT HAN 4A, 0920 0042 611	1-909
G25X2310	90459-6821	MALE INSERT HAN 4A, 0920 0042 611	1-911
G25X2620	90459-6821	MALE INSERT HAN 4A, 0920 0042 611	1-201
G25X3310	90459-6821	MALE INSERT HAN 4A, 0920 0042 611	1-913
T10X9230	90603-5560	CONNECTOR, SACC-M12MS-5CON-PG 7-VA	1-499
T10X9240	90603-5560	CONNECTOR, SACC-M12MS-5CON-PG 7-VA	1-499
T10X9241	90603-5560	CONNECTOR, SACC-M12MS-5CON-PG 7-VA	1-505
T50X6001	90224-0314	DISTRIBUTOR BLOCK, FR-4-1/8-B	1-893, 1-895
T50X7001	2886417-0000	DISTRIBUTOR	1-891
T50X7001	3155771-0000	SUPPORT	1-893, 1-895
T50X7002	3155771-0000	SUPPORT	1-893

Pos	Part No	Description	Page No

Pos	Part No	Description	Page No	Pos	Part No	Description	Page No

Tetra Pak®

Label for 80 mm binder **Note!** *This page is generated* **automatically.**

VCK A3/Flex 040V
648597-0400 Issue 2014-09
Doc No. SPC-3212463-0110

VCK A3/Flex 040V
648597-0400 Issue 2014-09
Doc No. SPC-3212463-0110

VCK A3/Flex 040V
648597-0400 Issue 2014-09
Doc No. SPC-3212463-0110

VCK A3/Flex 040V 1(3)
648597-0400 Issue 2014-09
Doc No. SPC-3212463-0110

VCK A3/Flex 040V 1(2)
648597-0400 Issue 2014-09
Doc No. SPC-3212463-0110

VCK A3/Flex 040V 2(3)
648597-0400 Issue 2014-09
Doc No. SPC-3212463-0110

VCK A3/Flex 040V 2(2)
648597-0400 Issue 2014-09
Doc No. SPC-3212463-0110

VCK A3/Flex 040V 3(3)
648597-0400 Issue 2014-09
Doc No. SPC-3212463-0110

Label for 55 mm binder **Note!** *This page is generated* **automatically.**

VCK A3/Flex 040V
648597-0400 Issue 2014-09
Doc No. SPC-3212463-0110

VCK A3/Flex 040V 1(2)
648597-0400 Issue 2014-09
Doc No. SPC-3212463-0110

VCK A3/Flex 040V
648597-0400 Issue 2014-09
Doc No. SPC-3212463-0110

VCK A3/Flex 040V 2(2)
648597-0400 Issue 2014-09
Doc No. SPC-3212463-0110

VCK A3/Flex 040V
648597-0400 Issue 2014-09
Doc No. SPC-3212463-0110

VCK A3/Flex 040V 1(3)
648597-0400 Issue 2014-09
Doc No. SPC-3212463-0110

VCK A3/Flex 040V
648597-0400 Issue 2014-09
Doc No. SPC-3212463-0110

VCK A3/Flex 040V 2(3)
648597-0400 Issue 2014-09
Doc No. SPC-3212463-0110

VCK A3/Flex 040V
648597-0400 Issue 2014-09
Doc No. SPC-3212463-0110

VCK A3/Flex 040V 3(3)
648597-0400 Issue 2014-09
Doc No. SPC-3212463-0110

VCK A3/Flex 040V
648597-0400 Issue 2014-09
Doc No. SPC-3212463-0110

VCK A3/Flex 040V 3(3)
648597-0400 Issue 2014-09
Doc No. SPC-3212463-0110

Label for 40 mm binder **Note!** *This page is generated* **automatically.**

VCK A3/Flex 040V
648597-0400 Issue 2014-09
Doc No. SPC-3212463-0110

VCK A3/Flex 040V 1(2)
648597-0400 Issue 2014-09
Doc No. SPC-3212463-0110

VCK A3/Flex 040V
648597-0400 Issue 2014-09
Doc No. SPC-3212463-0110

VCK A3/Flex 040V 2(2)
648597-0400 Issue 2014-09
Doc No. SPC-3212463-0110

VCK A3/Flex 040V
648597-0400 Issue 2014-09
Doc No. SPC-3212463-0110

VCK A3/Flex 040V 1(2)
648597-0400 Issue 2014-09
Doc No. SPC-3212463-0110

VCK A3/Flex 040V
648597-0400 Issue 2014-09
Doc No. SPC-3212463-0110

VCK A3/Flex 040V 2(2)
648597-0400 Issue 2014-09
Doc No. SPC-3212463-0110

VCK A3/Flex 040V
648597-0400 Issue 2014-09
Doc No. SPC-3212463-0110

VCK A3/Flex 040V 1(3)
648597-0400 Issue 2014-09
Doc No. SPC-3212463-0110

VCK A3/Flex 040V
648597-0400 Issue 2014-09
Doc No. SPC-3212463-0110

VCK A3/Flex 040V 2(3)
648597-0400 Issue 2014-09
Doc No. SPC-3212463-0110

VCK A3/Flex 040V
648597-0400 Issue 2014-09
Doc No. SPC-3212463-0110

VCK A3/Flex 040V 3(3)
648597-0400 Issue 2014-09
Doc No. SPC-3212463-0110

VCK A3/Flex 040V
648597-0400 Issue 2014-09
Doc No. SPC-3212463-0110

VCK A3/Flex 040V 3(3)
648597-0400 Issue 2014-09
Doc No. SPC-3212463-0110