5.2 Final Folder

SPC Reference	1346815-0500

5.2.1 Station Chain

5.2.1-1 Station Chain - Change

Machine Status	Mains Power OFF Air OFF Steam ON Water OFF
Consumables	Locking fluid TP No. 90602-4847
SPC Reference	2531774-0200

CAUTION

Risk of personal injury and/or damage to the equipment.

Put a beam on to the frame to avoid that the chain falls suddenly in the waste conveyor when it is opened.

a) Remove the conveyor chute, see 5.1-1 Conveyor - Change Belt, steps a) to b).

(Cont'd)

TechPub_2614345_0107 - 0503_3048165_01.fm

(Cont'd)

b) Lift the swing frame and put a beam (1) as shown to block the station chain.

c) On both sides, remove the screws (2) and the guide (3).

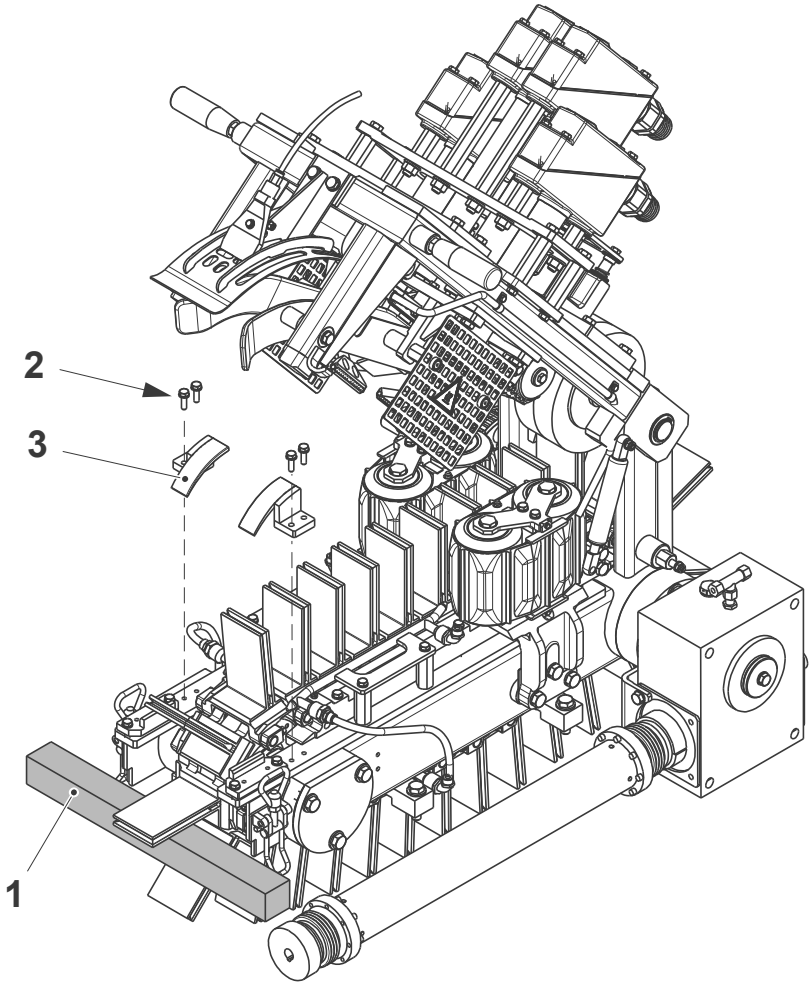

1 Beam
2 Screw
3 Guide

(Cont'd)

TechPub_2614345_0107 - 0503_3048165_01.fm

(Cont'd)

Note! Valid for Family Packages only.

d) Remove the tension to the station chain by tightening the nut (4). When assembling, loosen the nut (4) to add tension to the station chain.

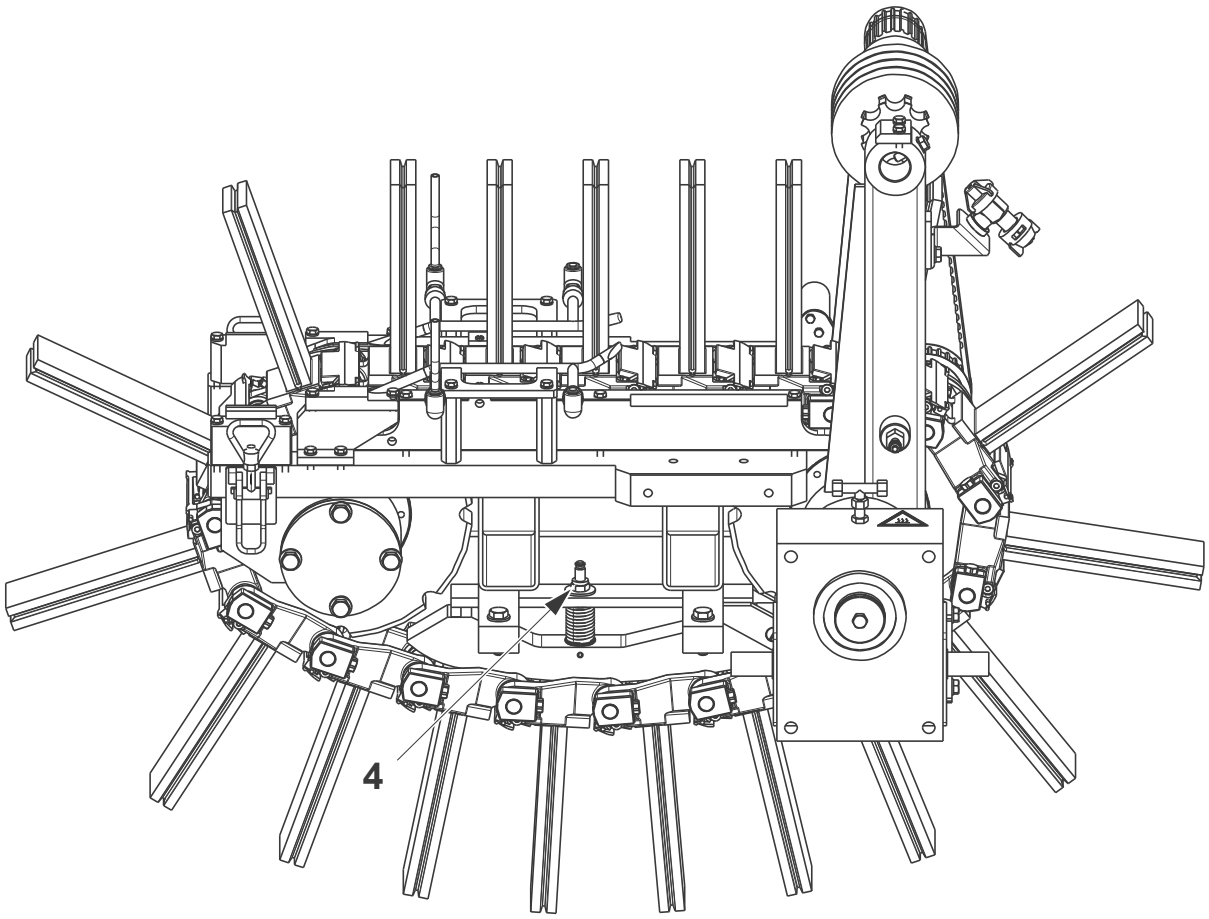

4 Nut

(Cont'd)

TechPub_2614345_0107 - 0503_3048165_01.fm

(Cont'd)

e) Rotate the shaft (5) until a link in the station chain can be accessed at the infeed of the folder.

f) At the link, remove the screws (6) and (7) and the sliders (8).

g) Push out the shaft (9).

h) Rotate the shaft (4) to remove the station chain.

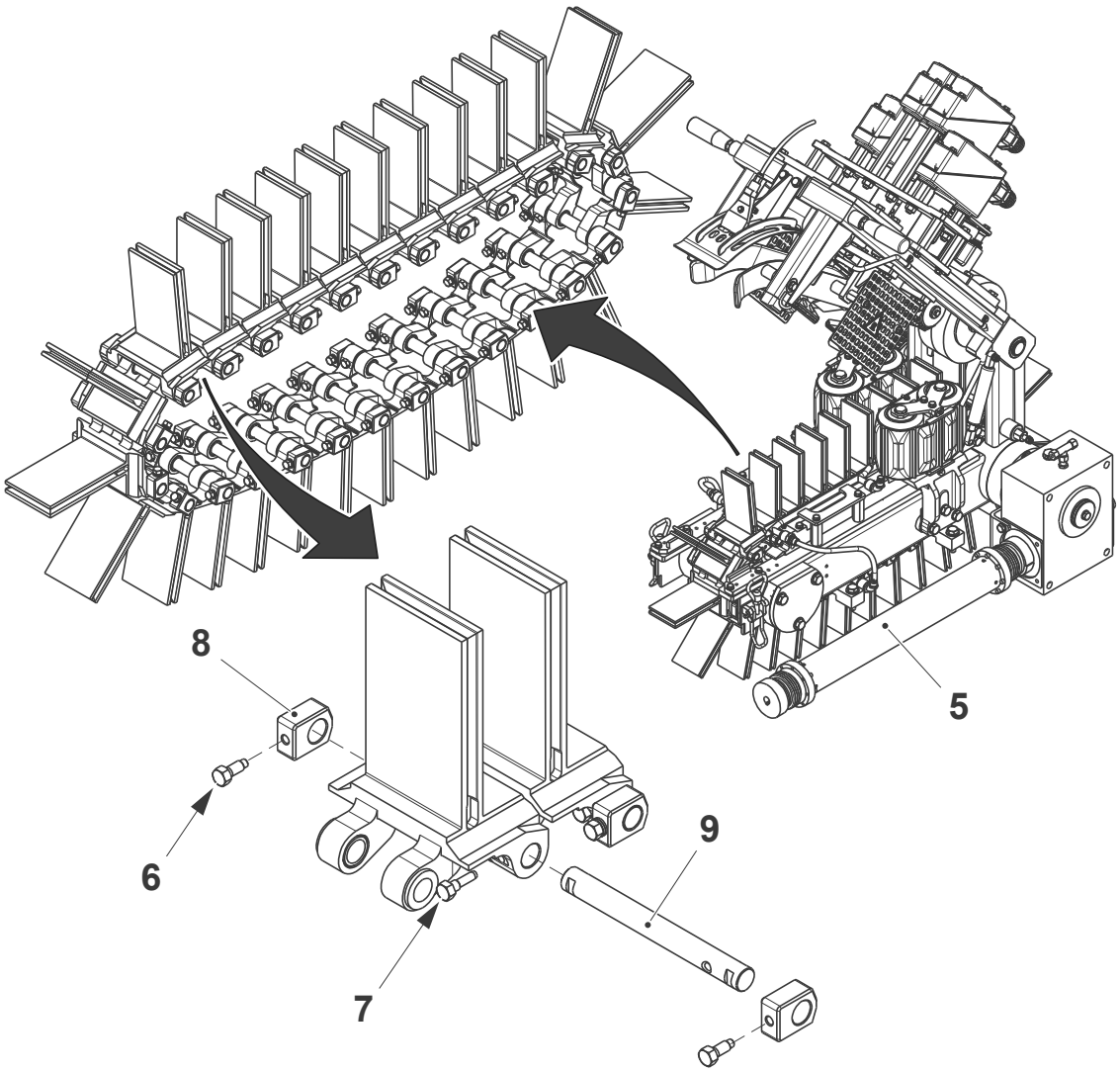

5 Shaft
6 Screw
7 Slider
8 Screw
9 Shaft

(Cont'd)

TechPub_2614345_0107 - 0503_3048165_01.fm

(Cont'd)

i) Insert a smooth plate (10) of wood under the station chain in order to avoid that the carton stations get stuck in the waste conveyor when rotating the shaft (4).

j) Remove the beam (1) supporting the opened station chain and lay the station chain on the plate (10).

k) Rotate the shaft (4) to remove the station chain.

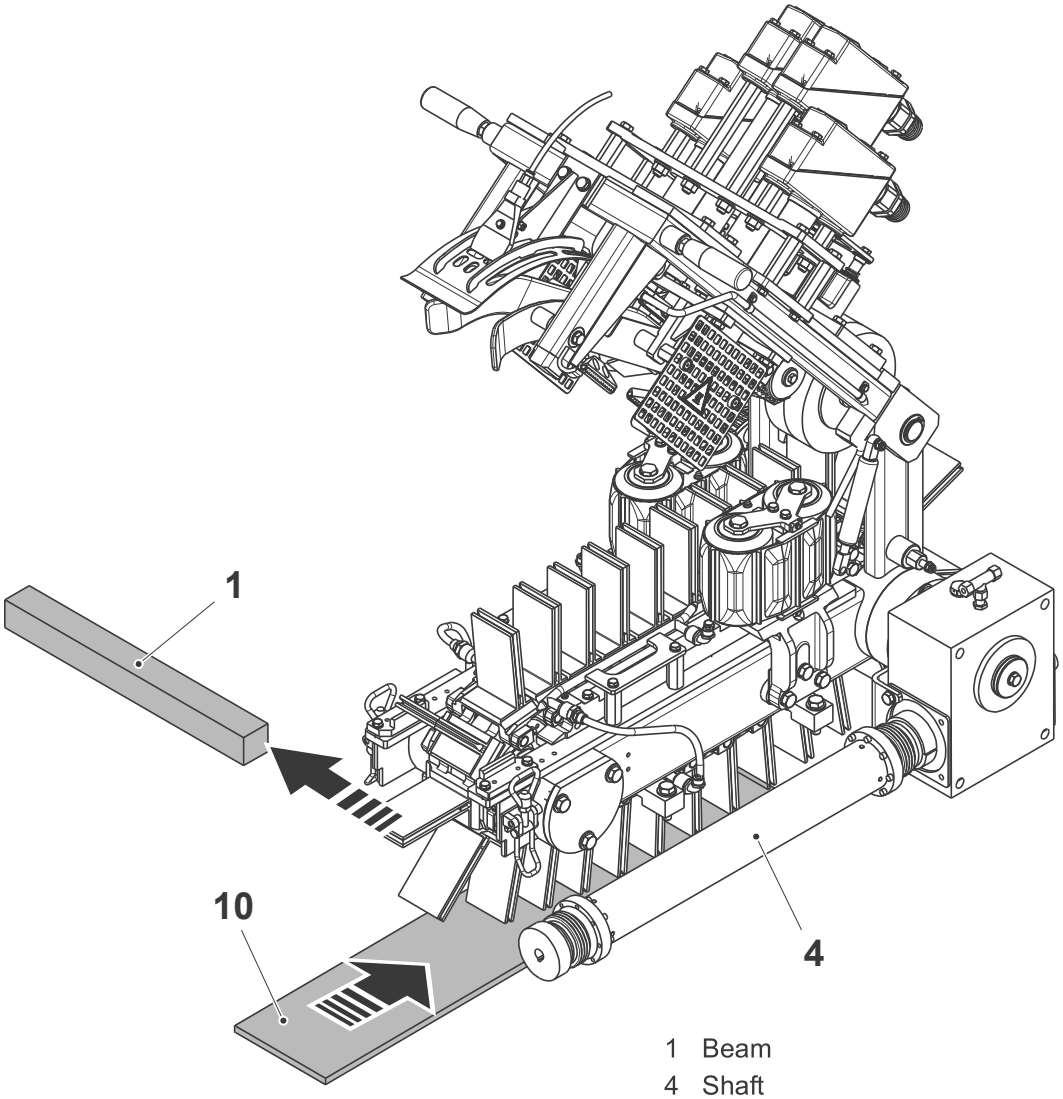

1 Beam
4 Shaft
10 Plate

(Cont'd)

TechPub_2614345_0107 - 0503_3048165_01.fm

(Cont'd)

WARNING
Risk of cutting.
Be careful not to trap your fingers when removing the chain.

CAUTION
Risk of damage to the equipment.
Pay attention that the station chain slides smoothly on the plate (10) while turning the shaft.

Note! Two people are recommended for the station chain removal.

l) Separate the station chain in three or four parts (according to the volume) to make easier the removal, repeating the steps e) and f).

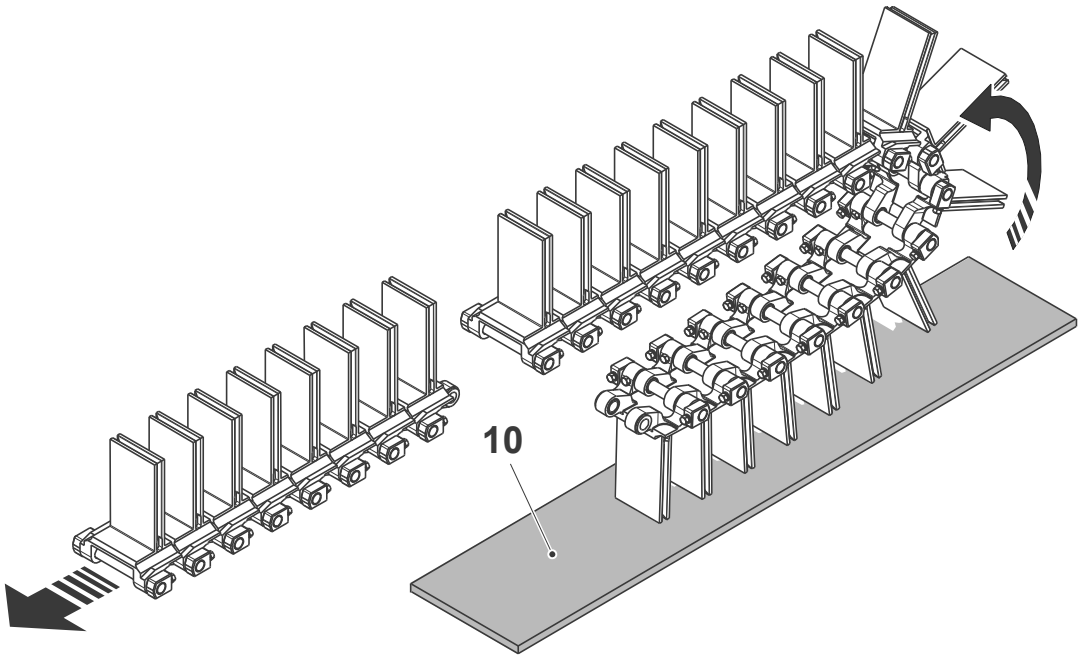

10 Plate

TechPub_2614345_0107 - 0503_3048165_01.fm

(Cont'd)

(Cont'd)

CAUTION
Risk of damage to the equipment.
Pay attention inserting the shaft (9) in to the chain link: do not force it with a hammer: it could damage the bushings.

Note! Apply Loctite TP No. 90602-4847, to screws (6) and (7) before assembly.

m) Assemble in the reverse order.

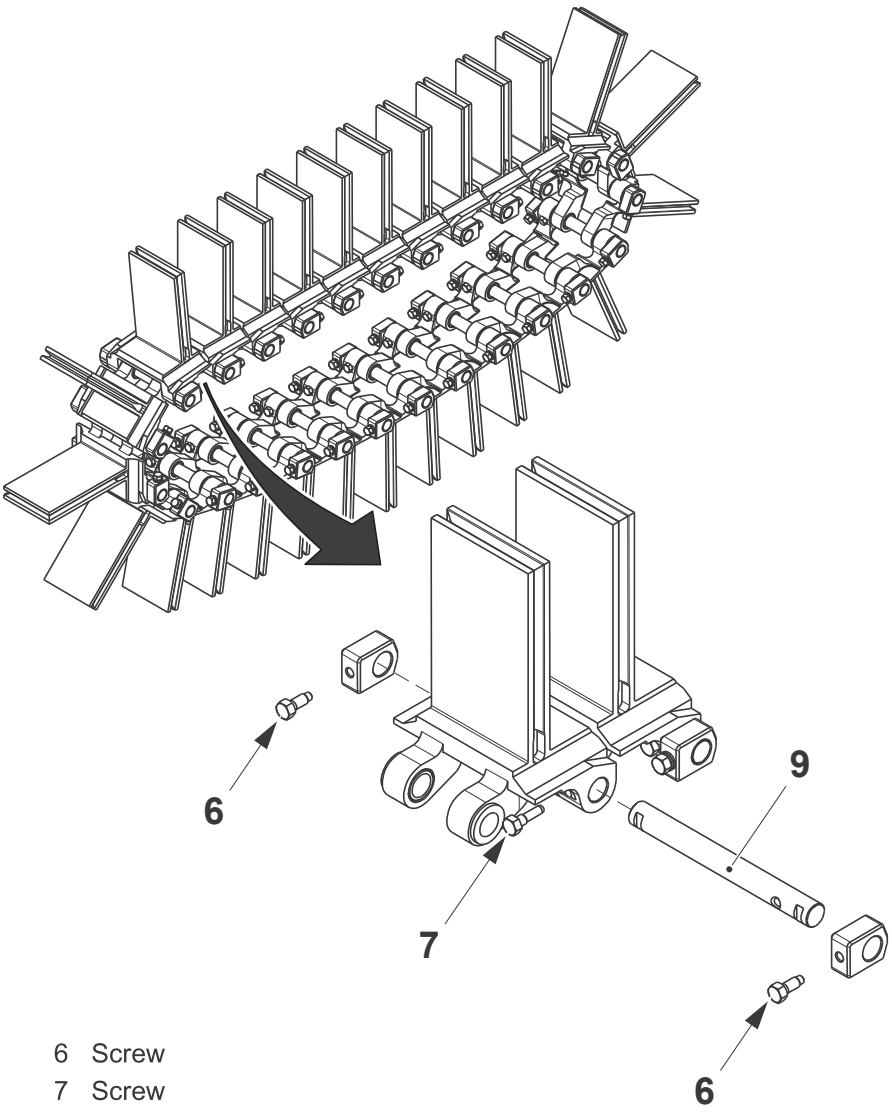

6 Screw
7 Screw
9 Shaft

TechPub_2614345_0107 - 0503_3048165_01.fm

5.2.1-2 Station Chain - Overhaul

Machine Status	Mains Power OFF Air OFF Steam ON Water OFF
Consumables	Locking fluid TP No. 90602-4847
SPC Reference	2531774-0200

Remove the station chain, see 5.2.1-1 Station Chain - Change and move it on the work bench.

a) Remove the screws (1) and (2).

b) Push out the shaft (3) and change the shaft (3) and the sliders (4).

c) Pull out and change the bushings (5).

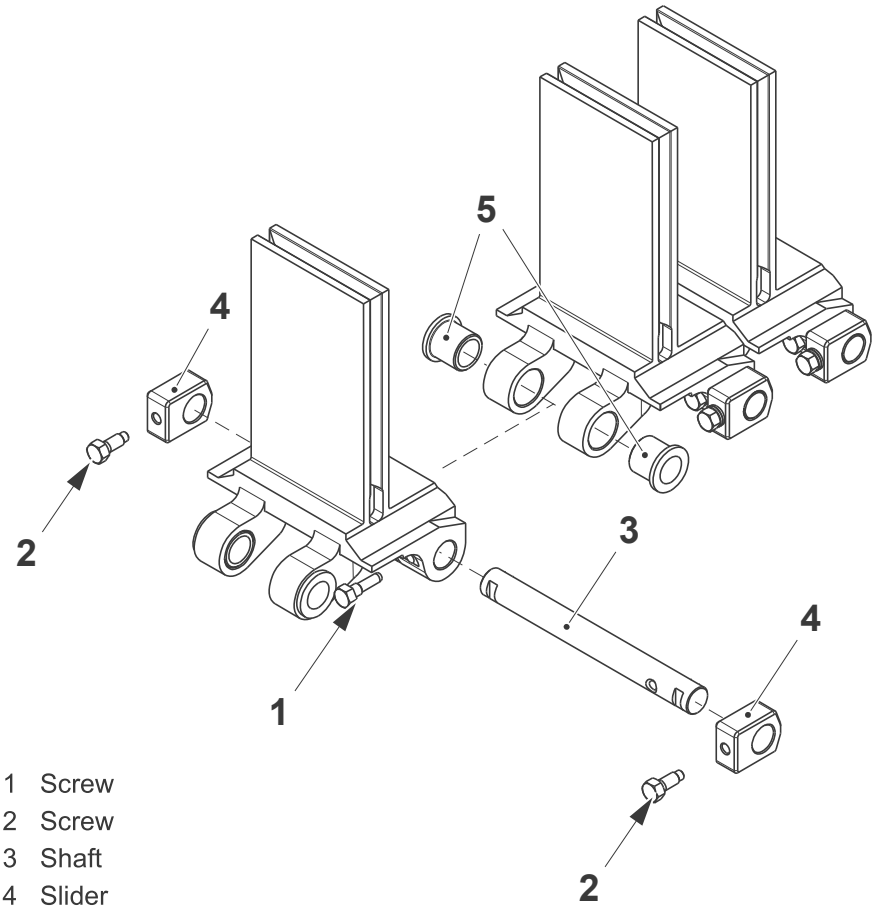

1 Screw
2 Screw
3 Shaft
4 Slider
5 Bushing

(Cont'd)

TechPub_2614345_0107 - 0503_3048165_01.fm

(Cont'd)

CAUTION
Risk of damage to the equipment.
Pay attention inserting the shaft (3) into the chain link: do not force it with a hammer: it could damage the bushings.

Note! Lubricate the shaft (3) and apply a thin layer of grease on the sliders (4) before assembling.

Note! Apply locking fluid TP No. 90602-4847 on the thread of the screws (1) and (2) before assembly.

d) Assemble in the reverse order.

e) Repeat on the other links.

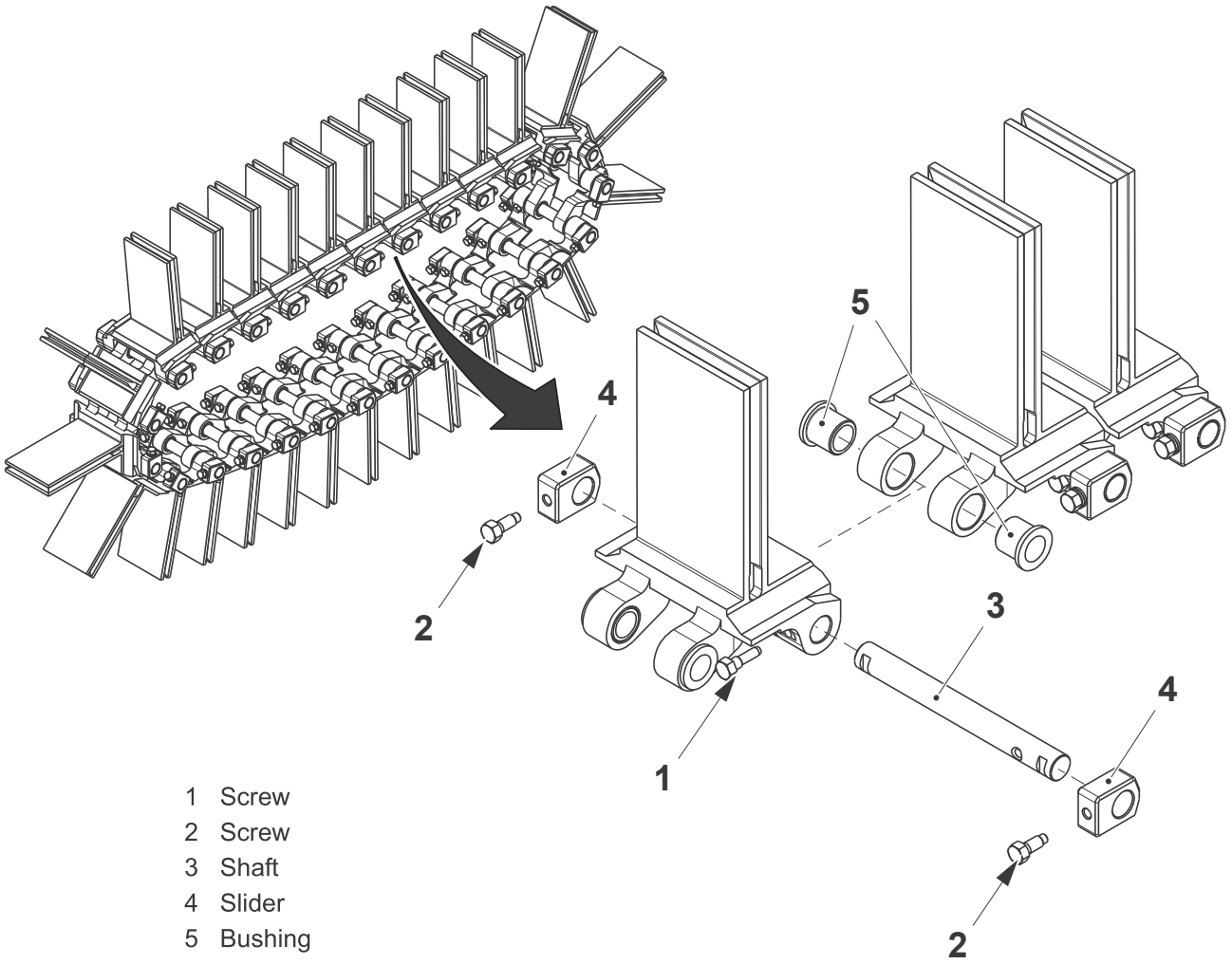

1 Screw
2 Screw
3 Shaft
4 Slider
5 Bushing

TechPub_2614345_0107 - 0503_3048165_01.fm

5.2.1-3 Station Chain - Turn Shafts

Machine Status	Mains Power OFF Air OFF Steam ON Water OFF
SPC Reference	2531774-0200

a) Lift the swing frame and remove the guides to access the station chain, see 5.2.1-1 Station Chain - Change.

(Cont'd)

TechPub_2614345_0107 - 0503_3048165_01.fm

(Cont'd)

b) Remove the screw (1).

c) On both sides of the chain, loosen the screws (2) and pull off the sliders (3).

d) Turn the shaft (4) through a **180°**.

e) Fit the sliders (3), tighten the screws (2) and insert and tighten the screw (1).

f) Repeat for the other shafts.

Note! When assembling apply Loctite type 243 locking fluid (TP No. 90602-4847) on the thread of the screws (2).

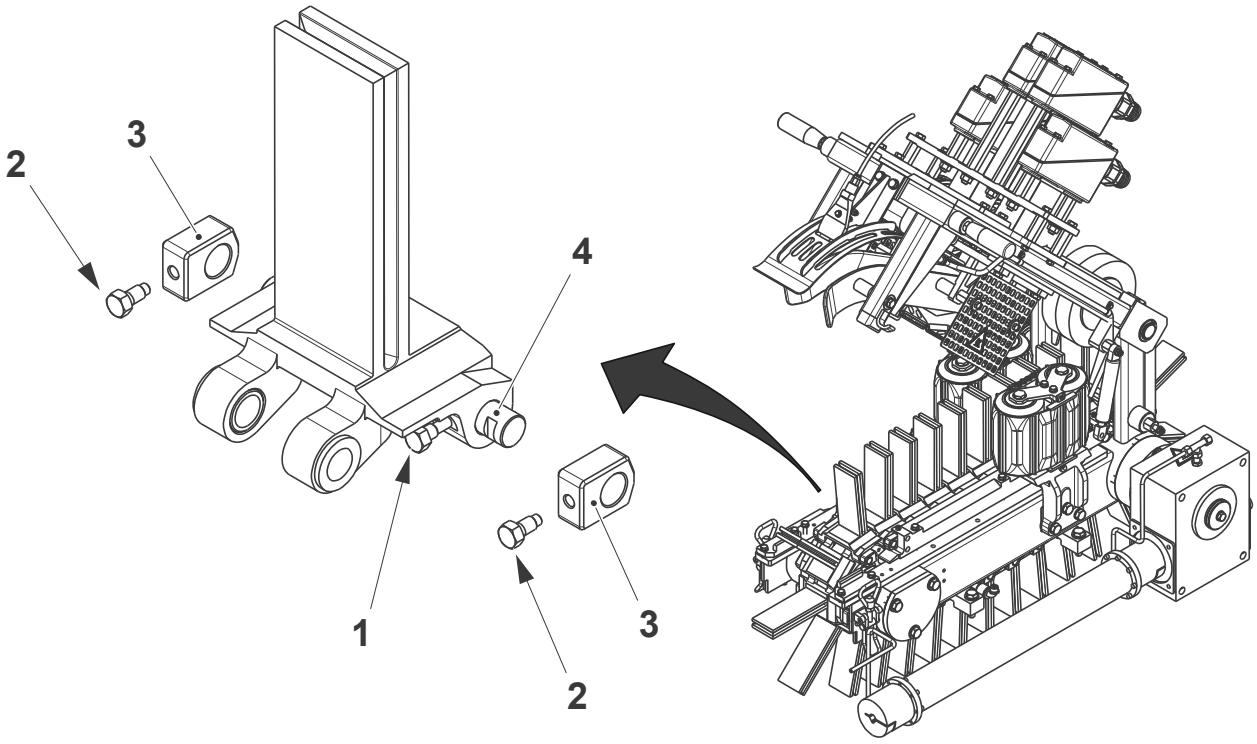

1 Screw
2 Screw
3 Slider
4 Shaft

TechPub_2614345_0107 - 0503_3048165_01.fm

5.2.1-4 Station Chain - Check Sliders

Machine Status	Mains Power OFF Air OFF Steam ON Water OFF
SPC Reference	2531774-0200

Check the surface (1) of the sliders (2) for wear. If required change the sliders as follow:

Remove the screws (3) and change the sliders (2).

Note! Apply a thin layer of grease on the sliders (2) before assembling.

Note! When assembling apply Loctite type 243 locking fluid (TP No. 90602-4847) on the thread of the screws (3).

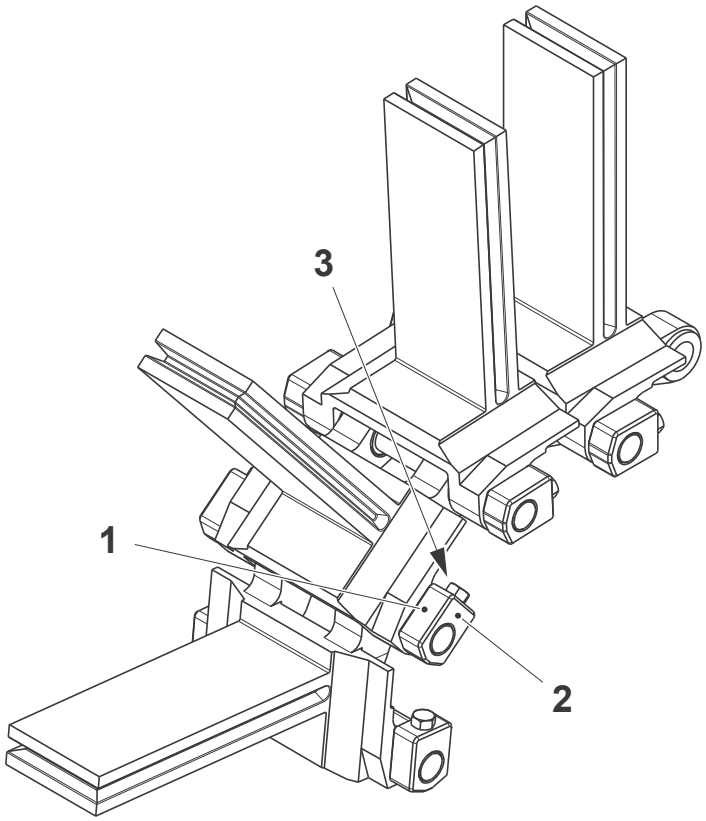

1 Surface
2 Slider
3 Screw

TechPub_2614345_0107 - 0503_3048165_01.fm

5.2.1-5 Station Chain - Check Plates

Machine Status	Mains Power OFF Air OFF Steam ON Water OFF
SPC Reference	2531774-0200

Note! Valid for TBA 1000 Sq only.

Make sure that the plates (1) have a play. If not, change the plate (1) as follows:

a) Loosen the screw (2) and remove the support (3) using the screw (2) as extractor.

b) Remove and change the plate (1).

c) Assemble in the reverse order.

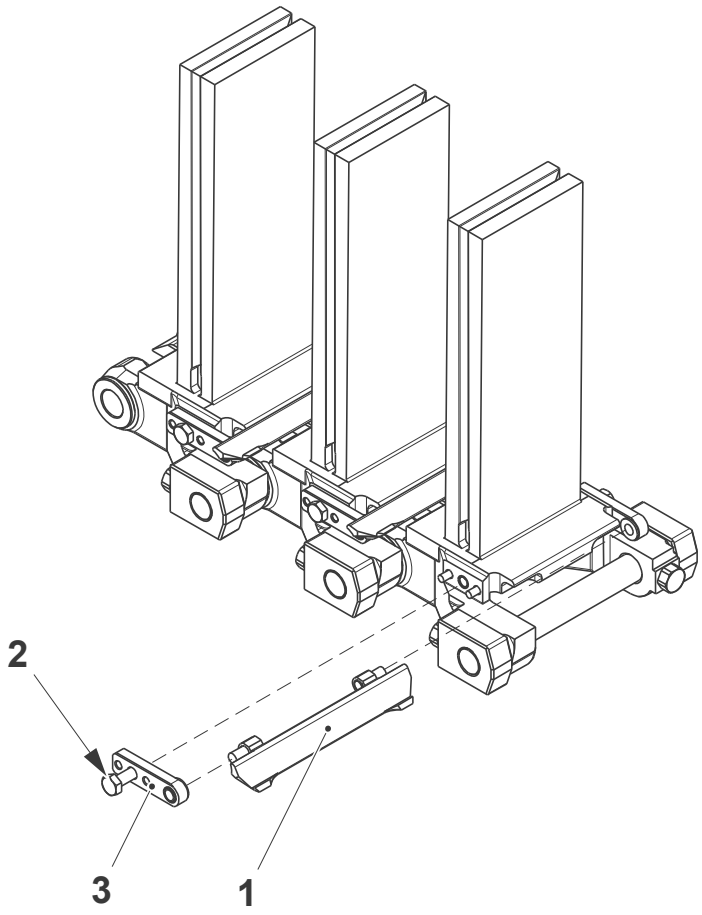

1 Plate
2 Screw
3 Support

TechPub_2614345_0107 - 0503_3048165_01.fm

5.2.1-6 Station Chain - Change Pins and Bushings

Machine Status	Mains Power OFF Air OFF Steam ON Water OFF
SPC Reference	2531774-0200

Note! Valid for TBA 1000 Sq only.

a) Remove the plate (1), see 5.2.1-5 Station Chain - Check Plates.

b) Remove the pins (2) and the bushings (3). Change if necessary.

c) Assemble in the reverse order.

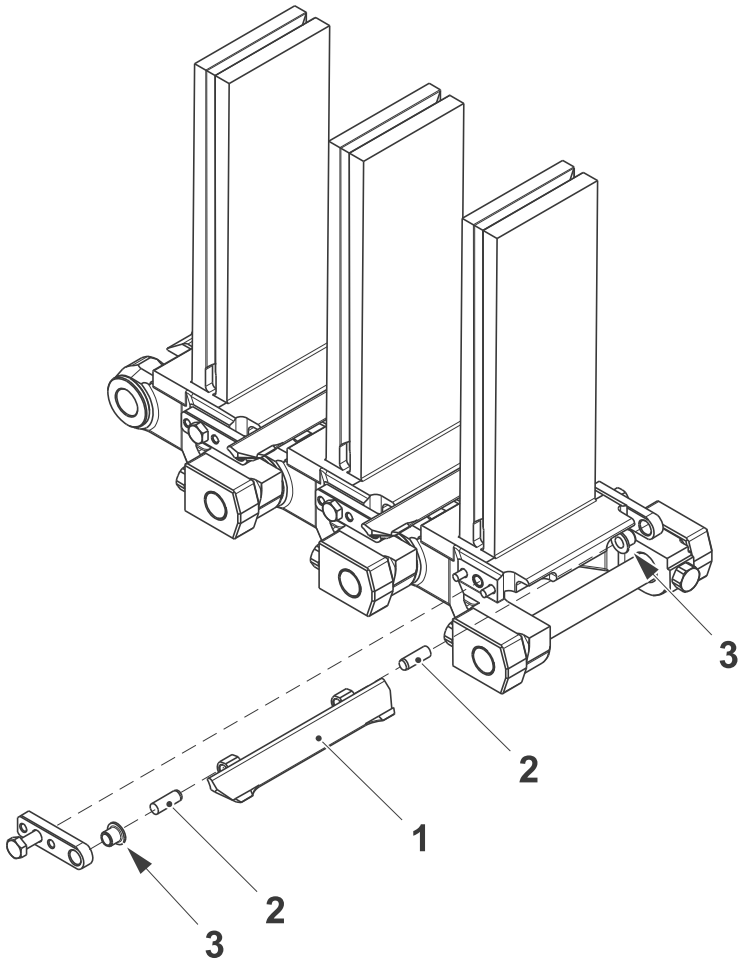

1 Plate
2 Pin
3 Bushing

TechPub_2614345_0107 - 0503_3048165_01.fm

5.2.1-7 Station Chain - Change Cam

Machine Status	Mains Power OFF Air OFF Steam ON Water OFF
SPC Reference	2531774-0200

Note! Valid for TBA 1000 Sq.

When the carton station is the position shown below, check the cam (1) for wear or damage; if necessary, remove and change the cam (1) by the screw (2).

Repeat the same procedure for the other carton stations.

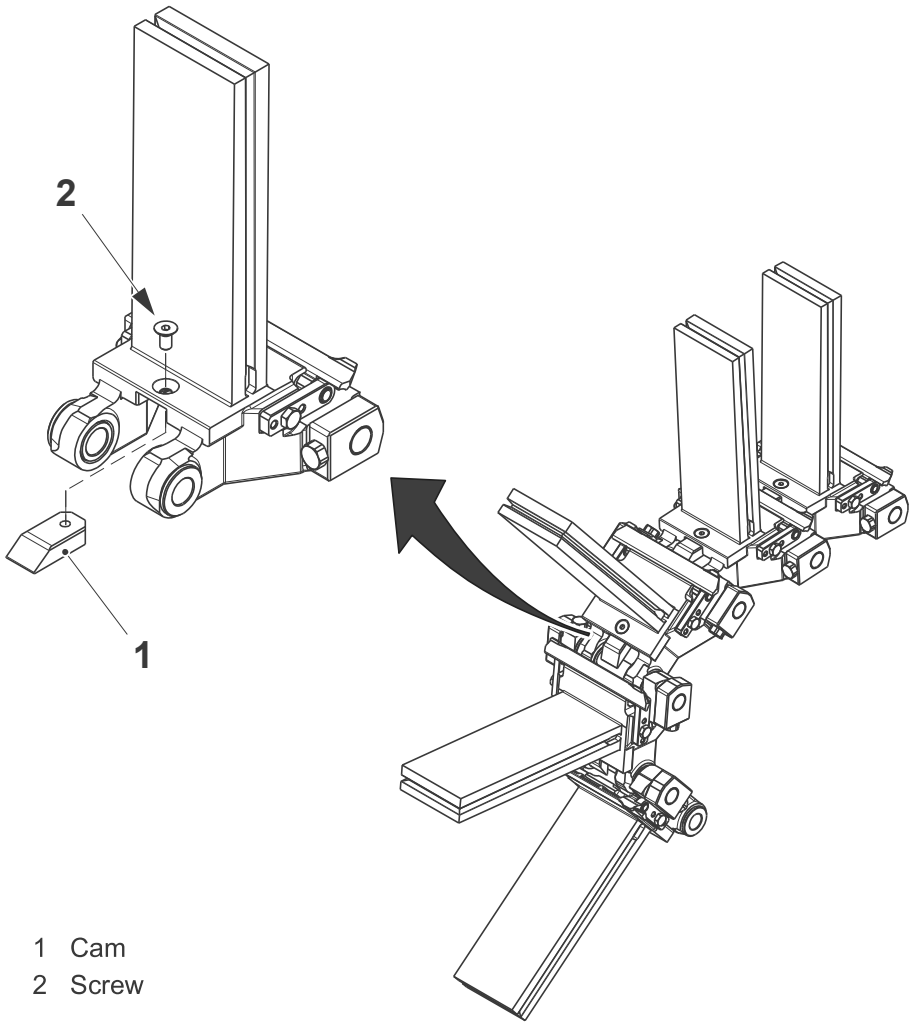

1 Cam
2 Screw

TechPub_2614345_0107 - 0503_3048165_01.fm

5.2.2 Swing Frame

5.2.2-1 Swing Frame - Check Pulley

Machine Status	Mains Power OFF Air OFF Steam ON Water OFF
SPC Reference	1349500-0500

Note! Valid for all volumes except TBA 1000 Sq.

Check that the pulley (1) rotates freely, if not:

a) Remove the screws (2) and lift out the pulley bracket (3).

b) Remove the screw (4) and pull out the pin (5).

c) Change the bushings (6) and if necessary the pulley (1).

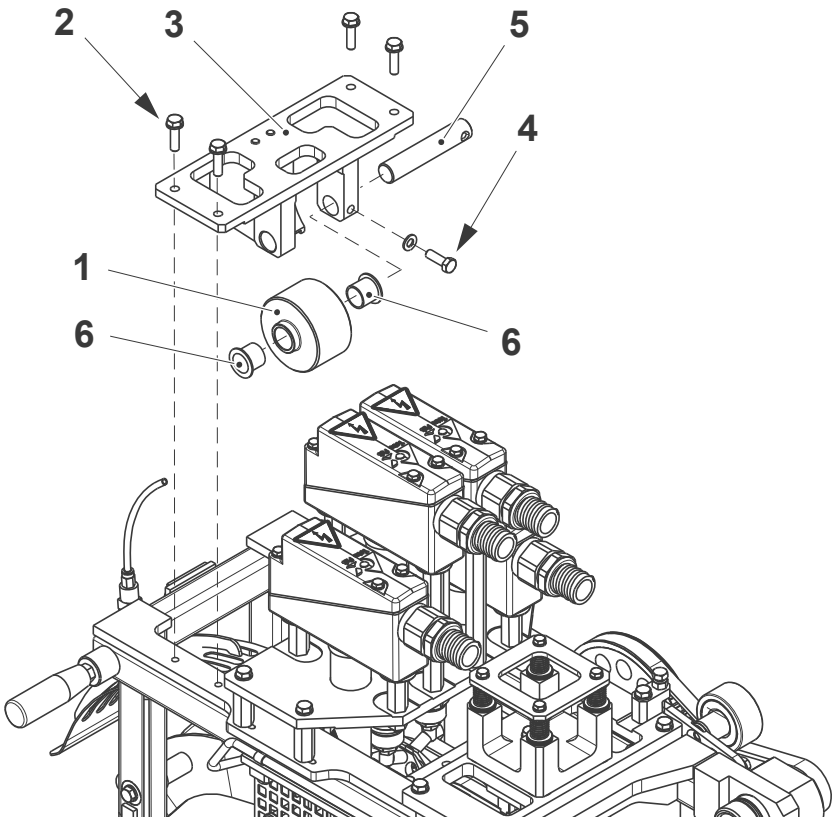

1 Pulley
2 Screw
3 Bracket
4 Screw
5 Pin
6 Bushing

TechPub_2614345_0107 - 0502_3048166_01.fm

5.2.2-2 Swing Frame - Change Belt

Machine Status	Mains Power OFF Air OFF Steam ON Water OFF
SPC Reference	1349500-0500

Check the belt (1) for wear or damage.

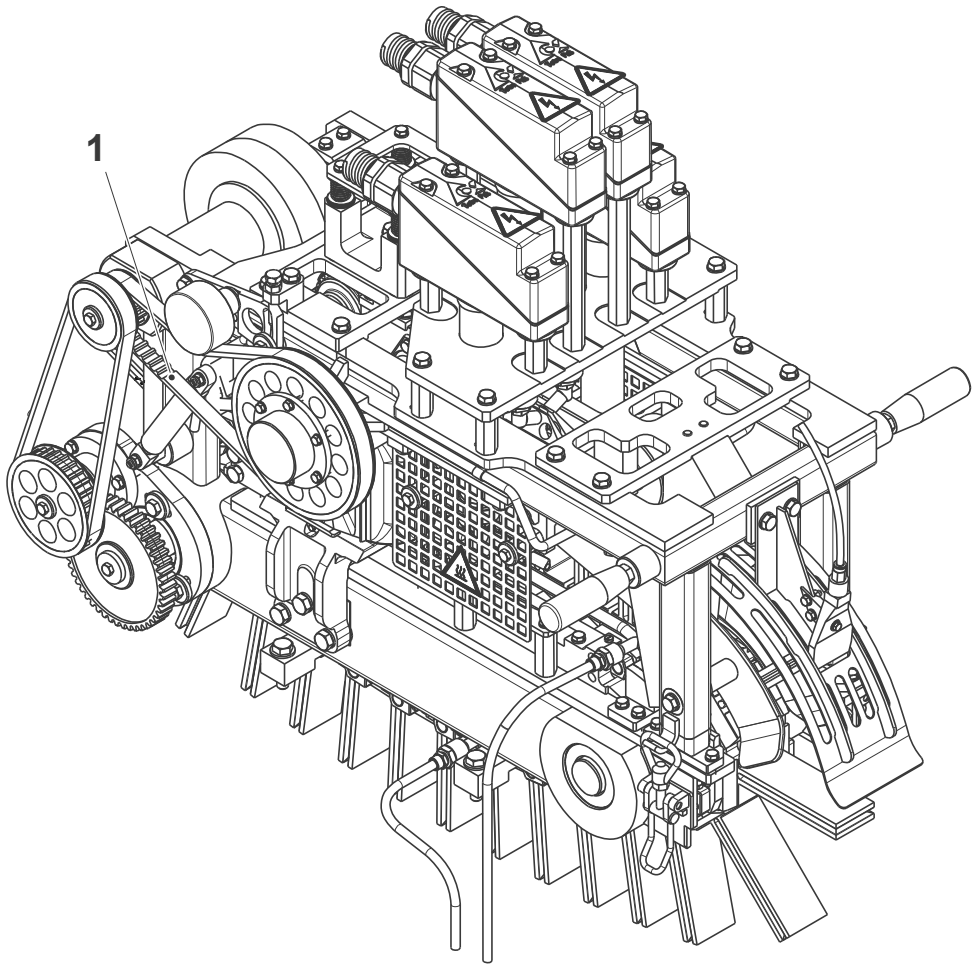

1 Belt

(Cont'd)

TechPub_2614345_0107 - 0502_3048166_01.fm

(Cont'd)

If required change the belt as follows:

a) Loosen the screw (2) and turn the flange (3) clockwise to reduce the tension of the belt (4).

b) Remove the belt (4).

c) Loosen the screw (5) to reduce the tension of the belt (1).

d) Remove and change the belt (1).

e) Assemble in the reverse order.

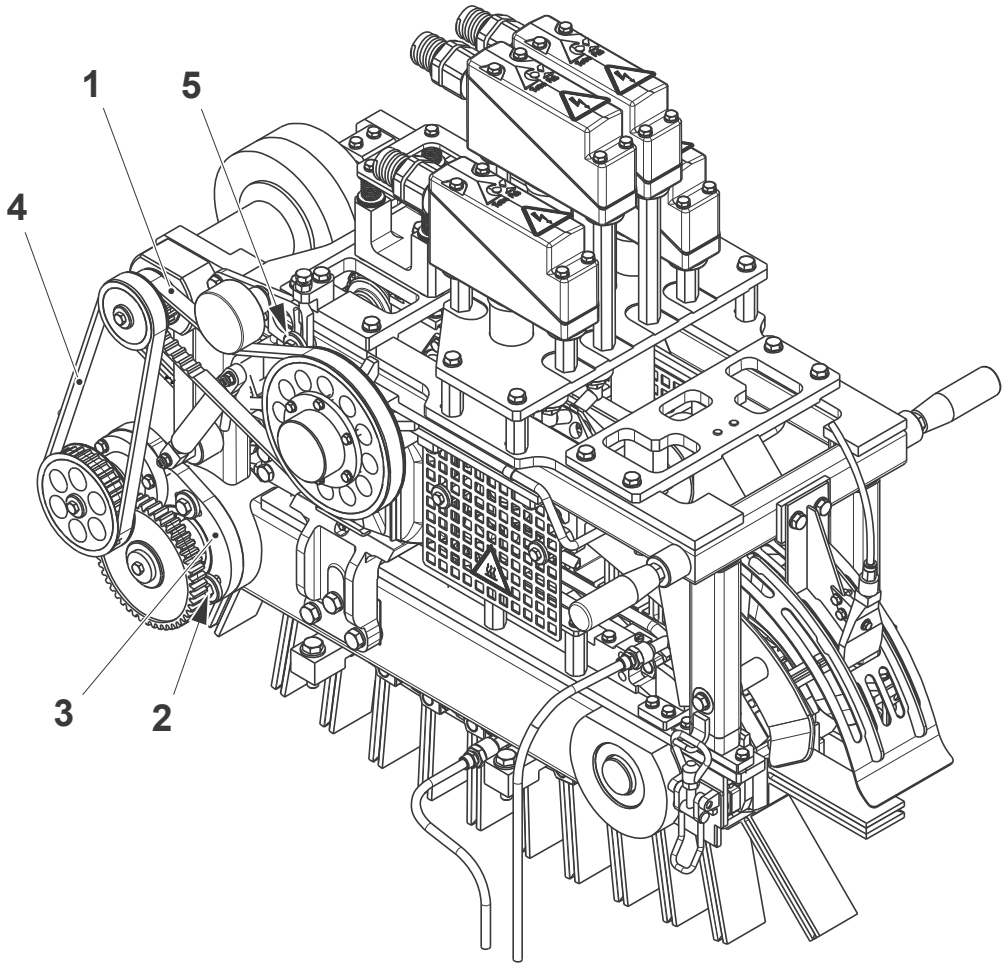

1 Belt
2 Screw
3 Flange
4 Belt
5 Screw

TechPub_2614345_0107 - 0502_3048166_01.fm

(Cont'd)

(Cont'd)

f) Set the tension of the belt (1), see 5.2.2-3 Swing Frame - Set Belt.
g) Set the tension of the belt (4), see 5.2.3-6 Chain Support - Set Belt.
h) Set the top squeezer belt, see 5.2.4-1 Squeezer - Set Position.

TechPub_2614345_0107 - 0502_3048166_01.fm

5.2.2-3 Swing Frame - Set Belt

Machine Status	Mains Power OFF Air OFF Steam ON Water OFF
Special Equipment	Force Gauge TP No. 90459-1467 Tensiometer TP No. 90600-3415
SPC Reference	1349500-0500

This setting can be done using a force gauge or a tensiometer, see following pages.

(Cont'd)

TechPub_2614345_0107 - 0502_3048166_01.fm

(Cont'd)

Belt Setting using the Force Gauge

a) Loosen the screws (1).

b) Check with the force gauge that the deflection at the mid-point of the belt (2) is **A** when a force of **B** is applied.

Package	A (mm)	B (N)
Portion Packages	4.5	25
Family Packages	5.0	15

c) If necessary, add or release tension by the screw (3).

d) Tighten the screws (1).

e) Set the top squeezer belt, see 5.2.4-1 Squeezer - Set Position.

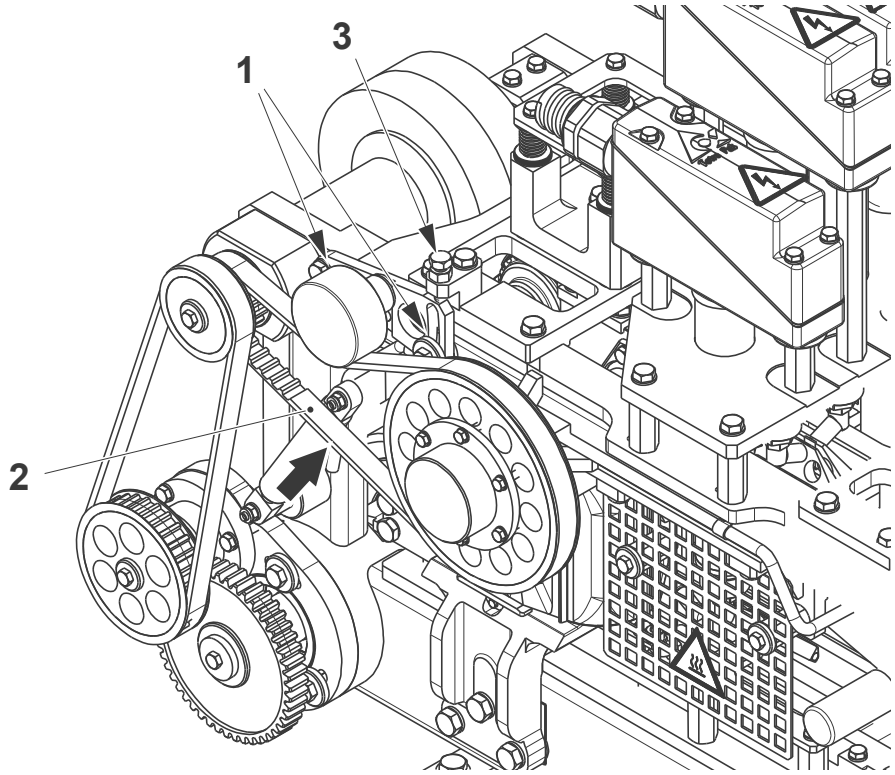

1 Screw
2 Belt
3 Screw

(Cont'd)

TechPub_2614345_0107 - 0502_3048166_01.fm

(Cont'd)

Belt Setting using the Tensiometer

a) Loosen the screws (1).

b) Position the tensiometer sensor at the distance of 10 mm from the mid-point of the belt (2).

c) Press the reset icon on the tensiometer.

d) Tap the belt (2) with a screwdriver or similar tool.

e) Check that the frequency recorded is **A**, see table.

Package	A (Hz)
Portion Packages	95
Family Packages	67

f) If necessary, add or release tension by the screw (3).

g) Tighten the screws (1).

h) Set the top squeezer belt, see 5.2.4-1 Squeezer - Set Position.

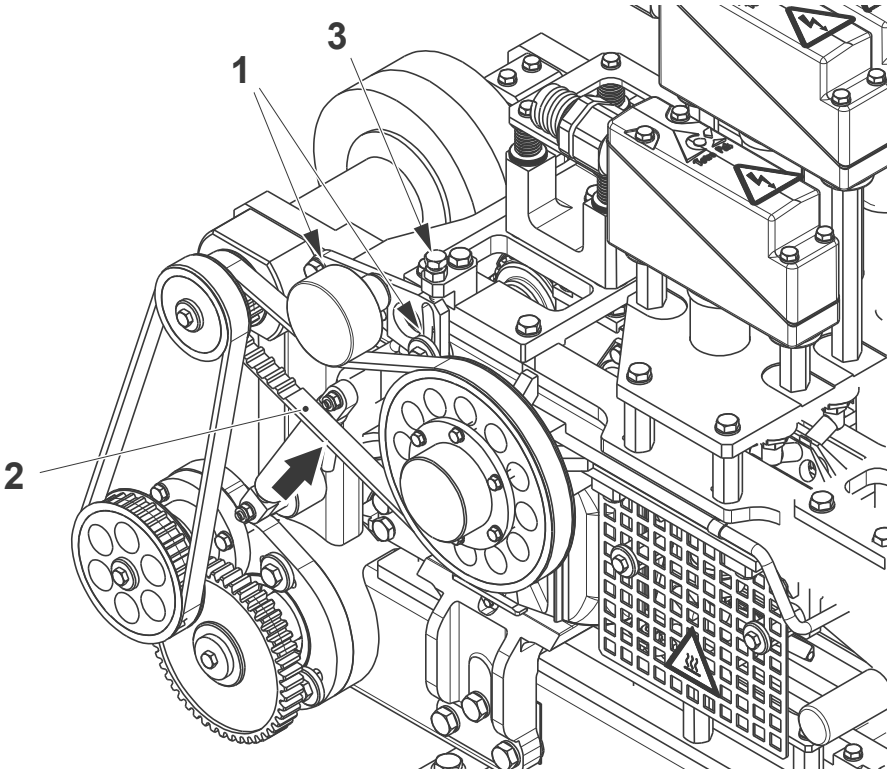

1 Screw
2 Belt
3 Screw

TechPub_2614345_0107 - 0502_3048166_01.fm

5.2.2-4 Swing Frame - Overhaul

Machine Status	Mains Power OFF Air OFF Steam ON Water OFF
Special Equipment	Torque Wrench
SPC Reference	1349500-0500

Remove the belt (1), see 5.2.2-2 Swing Frame - Change Belt.

Top Squeezer Drive

a) Remove the screws (2) and the cover (3).

b) Remove and change the O-ring (4).

c) Remove the screws (5) and the plate (6).

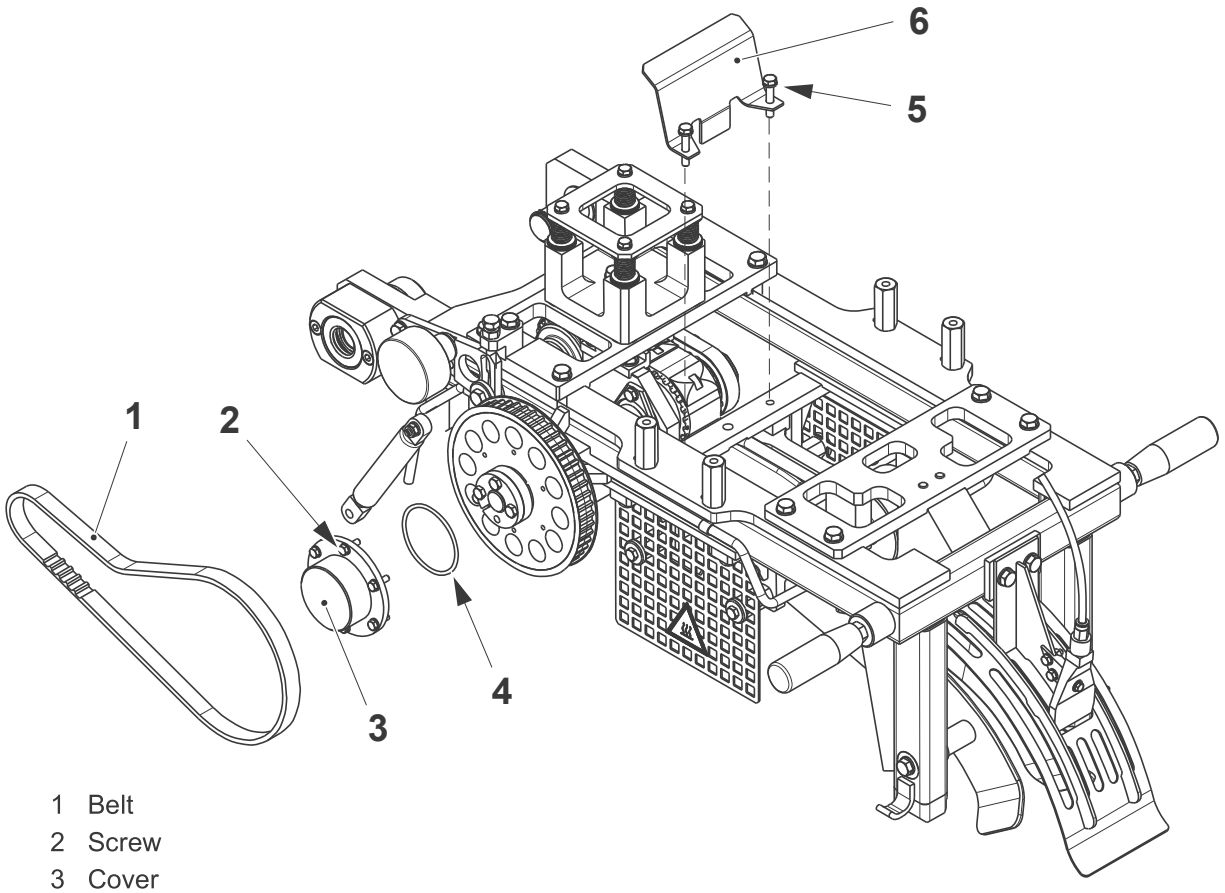

1 Belt
2 Screw
3 Cover
4 O-ring
5 Screw
6 Plate

(Cont'd)

TechPub_2614345_0107 - 0502_3048166_01.fm

(Cont'd)

Note! When opening the coupling (8) pay attention to hold the central body (9) and the plates (10).

d) Disconnect the cooling water tubes (7).

e) Open the coupling (8) of the top squeezer drive.

f) Remove the screws (11) and lift the top squeezer (12).

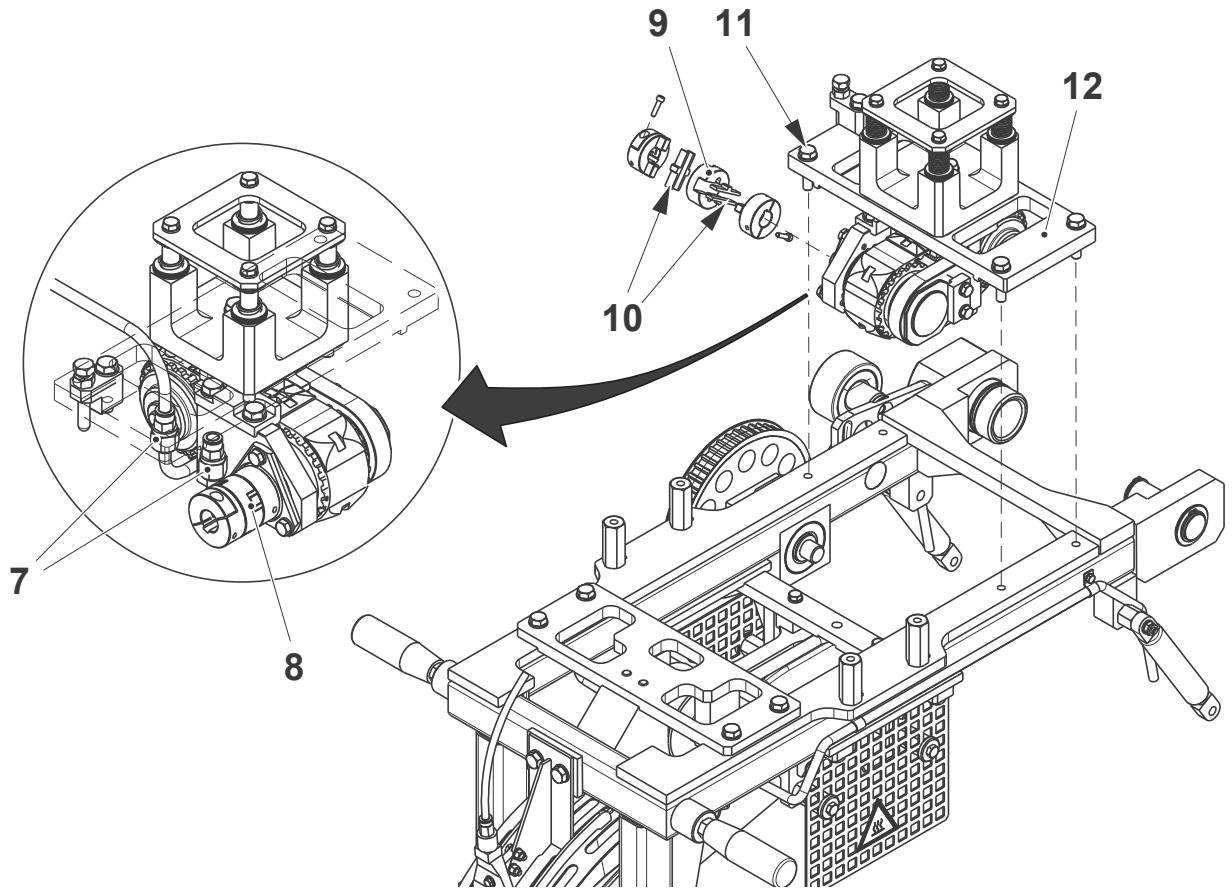

7 Tube
8 Coupling
9 Central body
10 Plate
11 Screw
12 Top Squeezer

(Cont'd)

TechPub_2614345_0107 - 0502_3048166_01.fm

(Cont'd)

Note! When assembling tighten the screws (20) of the clamping element (13) using a torque wrench set to 11.5 Nm.

g) Remove the clamping element (13).

h) Remove the pulley (14) and change the O-ring (15).

i) Remove the seal rings (16). Change if necessary.

j) Remove the retaining rings (17), the shaft (18) and the ball bearings (19). Change the ball bearings (19) if necessary.

k) Assemble in the reverse order.

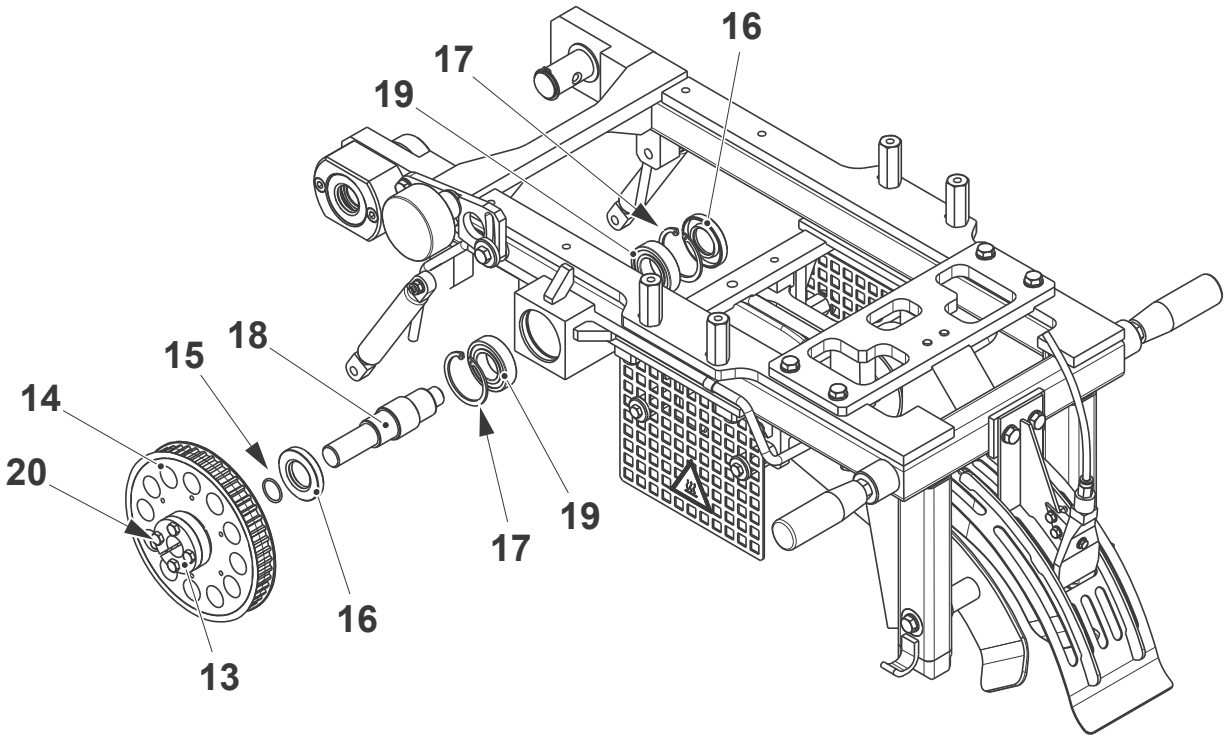

13 Clamping element
14 Pulley
15 O-ring
16 Seal ring
17 Retaining ring
18 Shaft
19 Ball bearing
20 Screw

(Cont'd)

TechPub_2614345_0107 - 0502_3048166_01.fm

(Cont'd)

Belt Tensioner

a) Loosen the screws (1) and (2).

b) Remove the support (3).

c) Loosen the screw (4) and separate the roller assembly.

d) Remove the seal ring (5). Change if necessary.

e) Remove the retaining ring (6) and the roller (7).

f) Remove the retaining rings (8) and pull out the ball bearing (9) from the shaft (10). Change the ball bearing (9) if necessary.

g) Assemble in the reverse order.

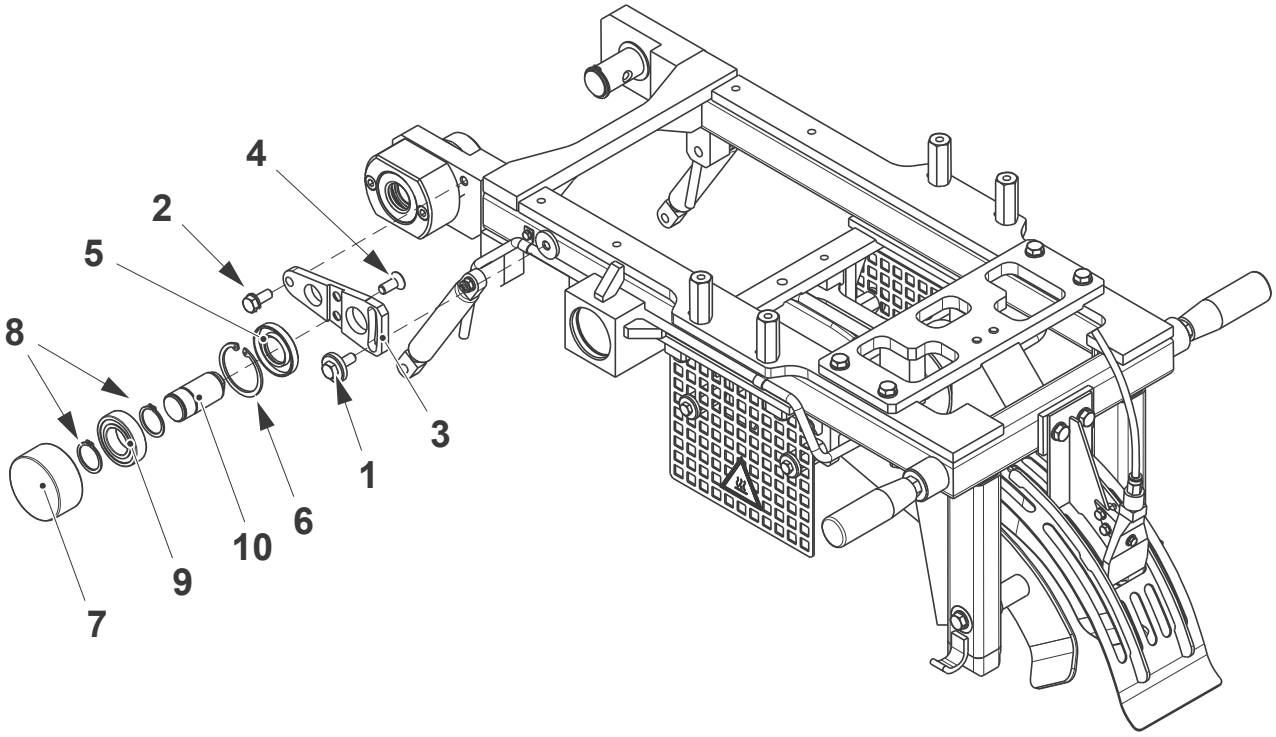

1 Screw
2 Screw
3 Support
4 Screw
5 Seal ring
6 Retaining ring
7 Roller
8 Retaining ring
9 Ball bearing
10 Shaft

(Cont'd)

TechPub_2614345_0107 - 0502_3048166_01.fm

(Cont'd)

Swing Frame Pivot

a) Loosen the screw (1).

b) Remove the retaining rings (2) and pull out the pin (3)

c) Remove and change the bushing (4).

d) Assemble in the reverse order.

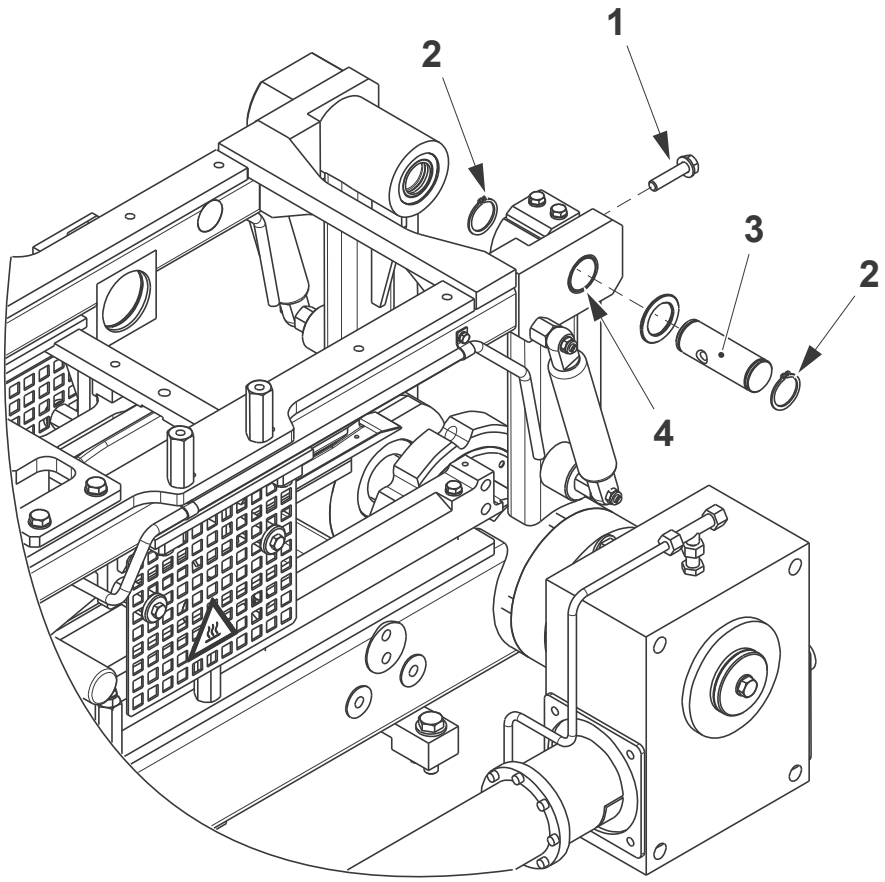

1 Screw
2 Retaining ring
3 Pin
4 Bushing

TechPub_2614345_0107 - 0502_3048166_01.fm

5.2.2-5 Swing Frame - Set Air Nozzle Pressure

Machine Status	PRODUCTION
SPC Reference	1349500-0500

Set the pressure for the air nozzle (1) to 4 bar by the pressure regulator (2) located in the pneumatic panel (3).

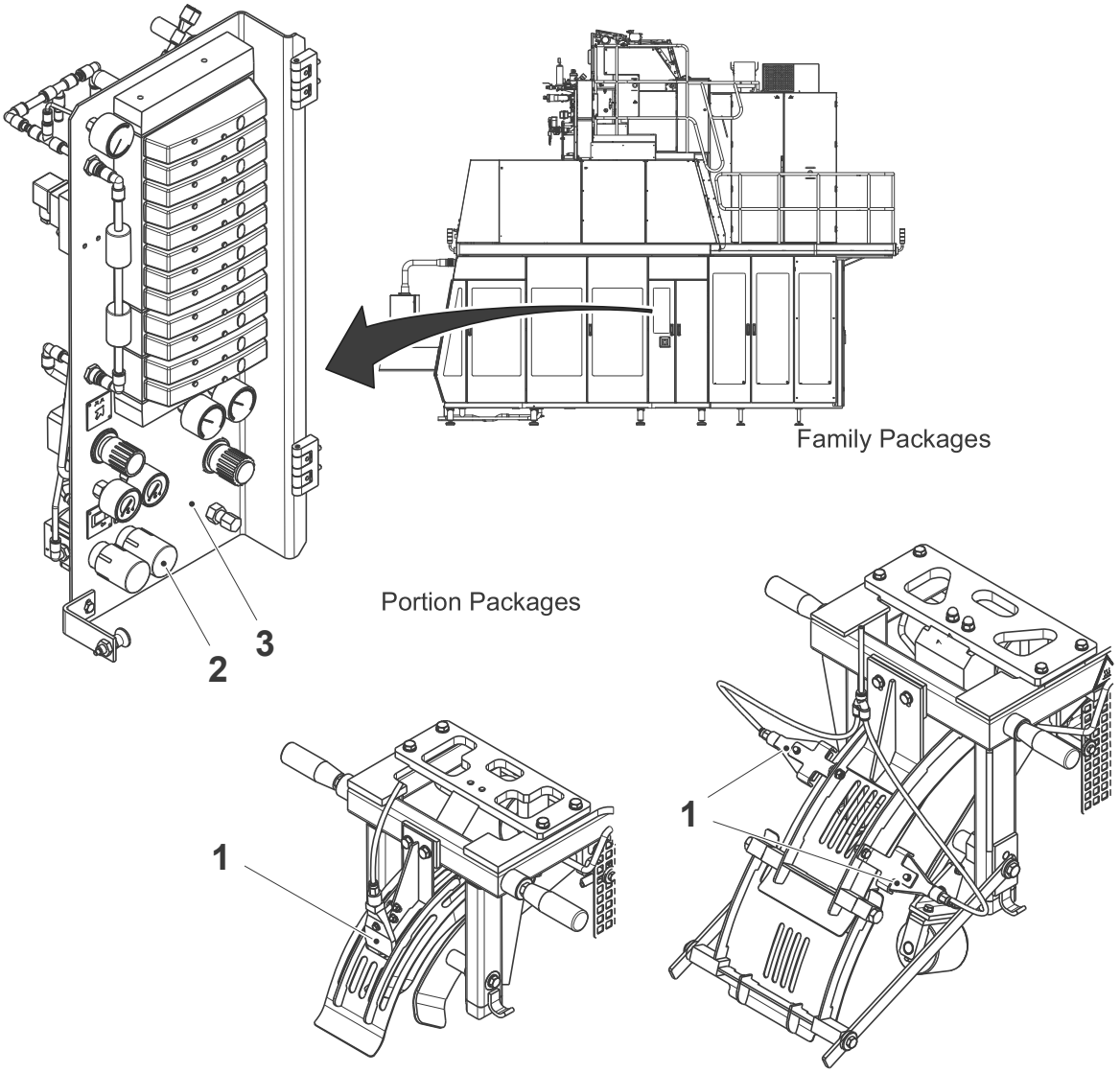

1 Air nozzle
2 Pressure regulator
3 Pneumatic panel

TechPub_2614345_0107 - 0502_3048166_01.fm

5.2.2-6 Swing Frame - Change Rollers

Machine Status	Mains Power OFF Air OFF Steam ON Water OFF
SPC Reference	1349500-0500

Note! Valid for TBA 1000 Sq only.

Check the rollers (1) for wear. If necessary remove the screws (2), the shaft (3) and change the rollers (1) and the bushings (4).

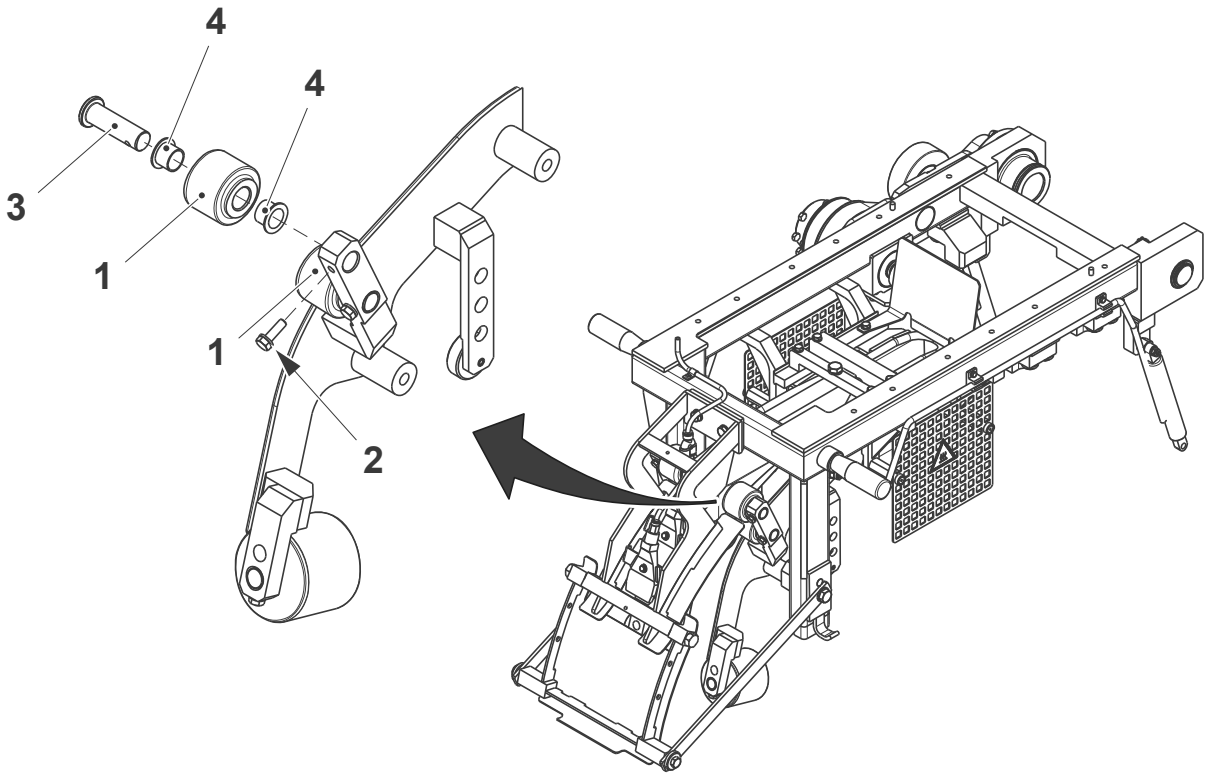

1 Roller
2 Screw
3 Shaft
4 Bushing

TechPub_2614345_0107 - 0502_3048166_01.fm

5.2.3 Chain Support

5.2.3-1 Chain Support - Check Chain Guide

Machine Status	Mains Power OFF Air OFF Steam ON Water OFF
SPC Reference	1349498-0400

Check the internal surfaces of the chain guide (1) at both sides of the folder for wear or damage. Change if required, see 5.2.3-2 Chain Support - Change Chain Guide.

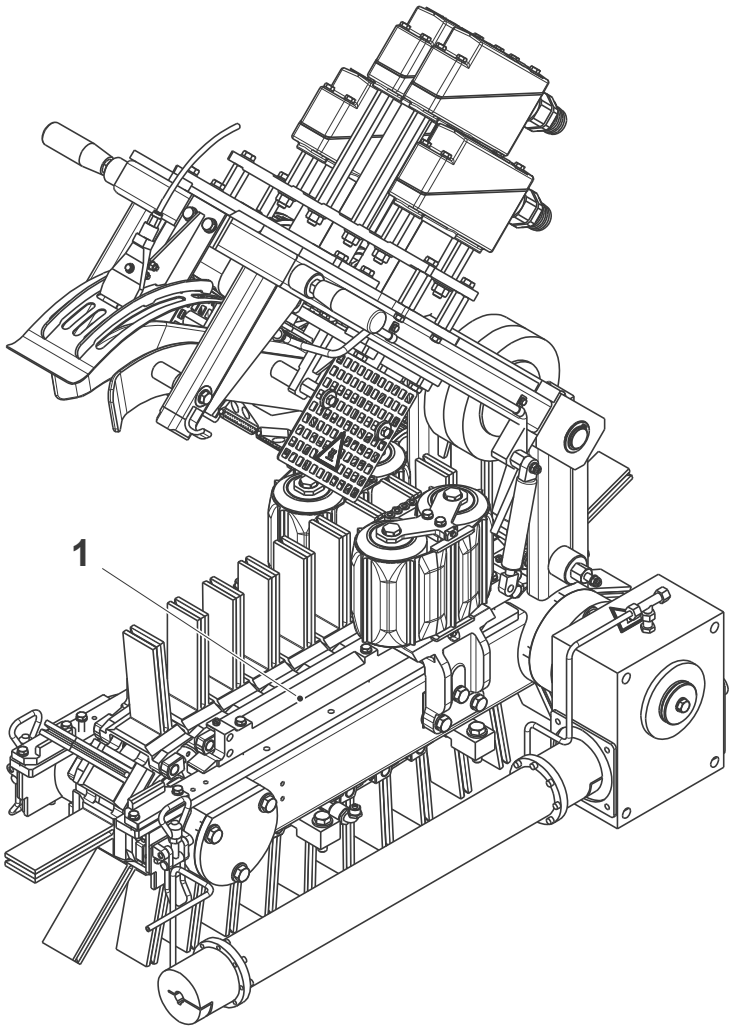

1 Chain guide

TechPub_2614345_0107 - 0501_3048167_01.fm

5.2.3-2 Chain Support - Change Chain Guide

Machine Status	Mains Power OFF Air OFF Steam ON Water OFF
Consumables	Synthetic Grease TP No. 90459-7413
SPC Reference	1349498-0400

a) Remove the station chain (1), see 5.2.1-1 Station Chain - Change.

b) On both sides, remove the side squeezers (2) by the screws (3), see 5.2.4-4 Squeezer - Side Squeezer Overhaul.

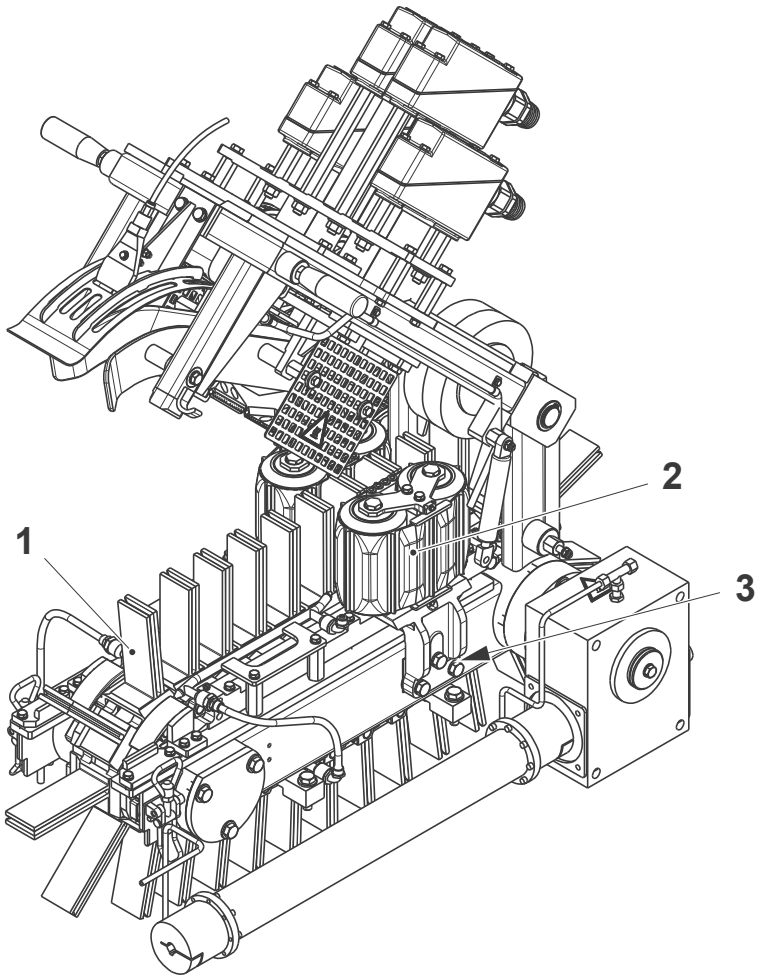

1 Station chain
2 Side squeezer
3 Screw

(Cont'd)

TechPub_2614345_0107 - 0501_3048167_01.fm

(Cont'd)

c) On both sides, disconnect the grease pipes (4).
d) Remove the couplings (5).
e) Remove the screws (6) and the chain guides (7).
f) Change the chain guides (7).
g) Assemble in the reverse order.
h) Grease the chain guides (7).

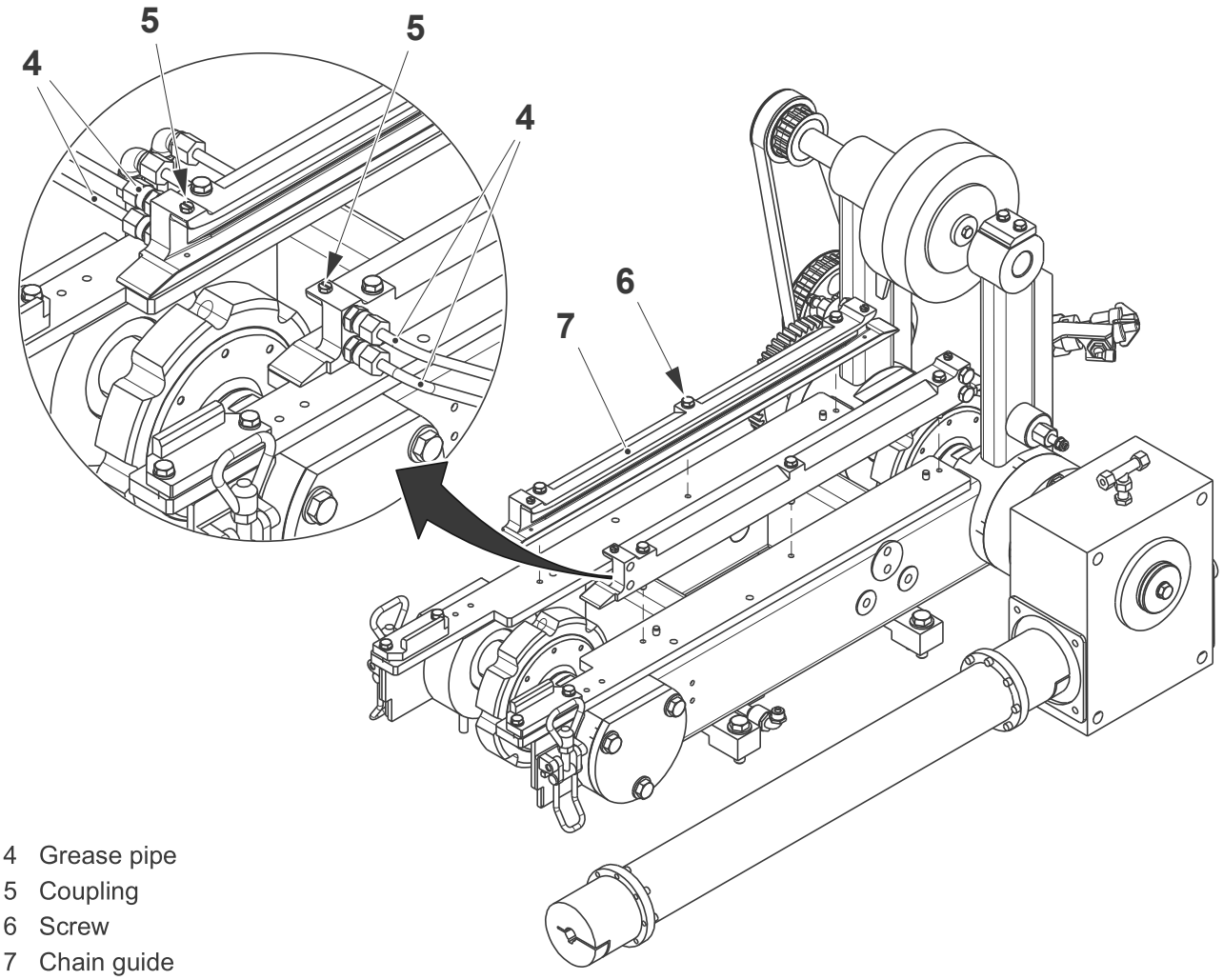

4 Grease pipe
5 Coupling
6 Screw
7 Chain guide

TechPub_2614345_0107 - 0501_3048167_01.fm

5.2.3-3 Chain Support - Overhaul

Machine Status	Mains Power OFF Air OFF Steam ON Water OFF
Consumables	Synthetic Grease TP No. 90459-7413
SPC Reference	1349498-0400

Note! In the pictures some parts have been removed for clarity.

Remove the chain guides, see 5.2.3-2 Chain Support - Change Chain Guide.

(Cont'd)

TechPub_2614345_0107 - 0501_3048167_01.fm

(Cont'd)

Brush Drive

a) Remove the belts (1) and (2), see 5.2.2-2 Swing Frame - Change Belt.

b) Loosen the screw (3) and remove the pulley (4).

c) Loosen the screw (5) and remove the pulleys (6) and (7)

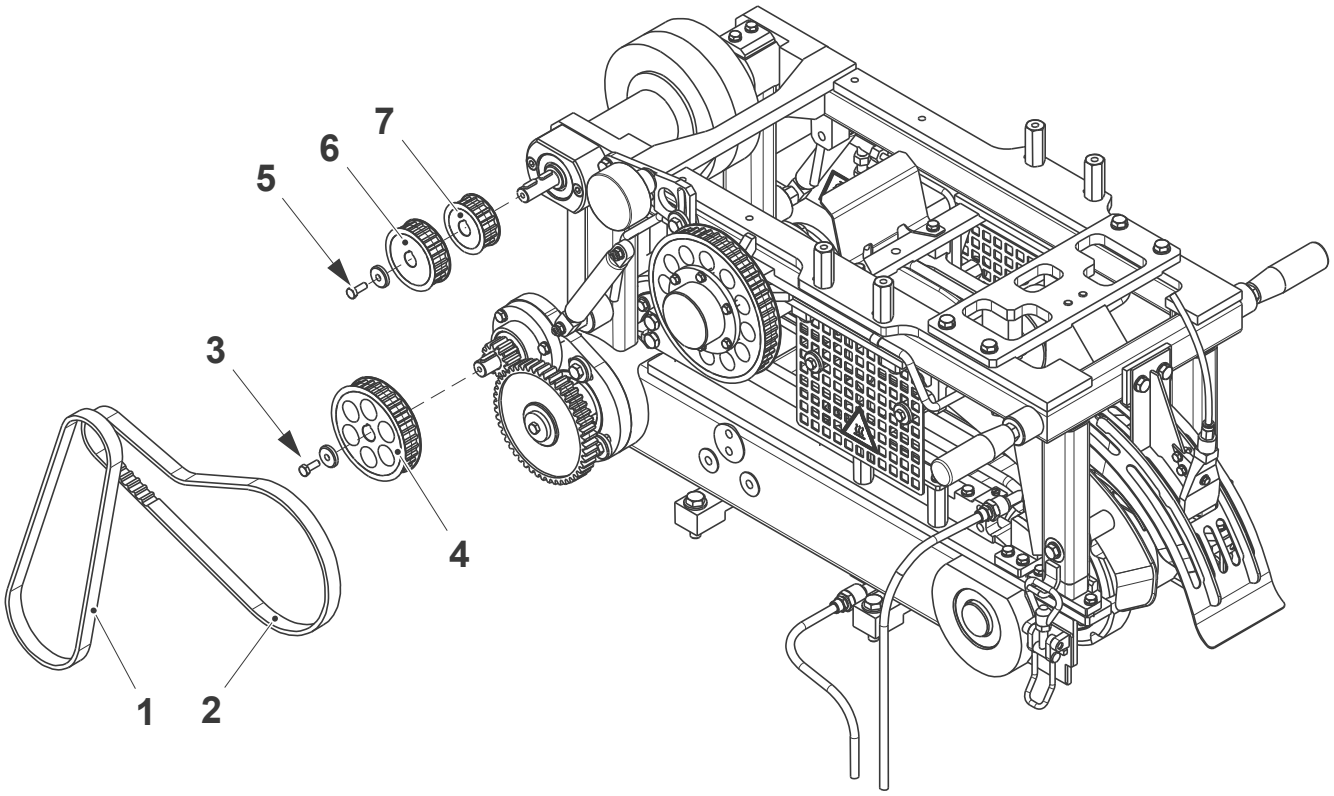

1 Belt
2 Belt
3 Screw
4 Pulley
5 Screw
6 Pulley
7 Pulley

(Cont'd)

TechPub_2614345_0107 - 0501_3048167_01.fm

(Cont'd)

d) Remove the screw (8) and the brushes (9).

e) Remove the radial seal (10) and the retaining ring (11).

f) Remove the screws (12) and the flange (13). Change the O-ring (14) if necessary.

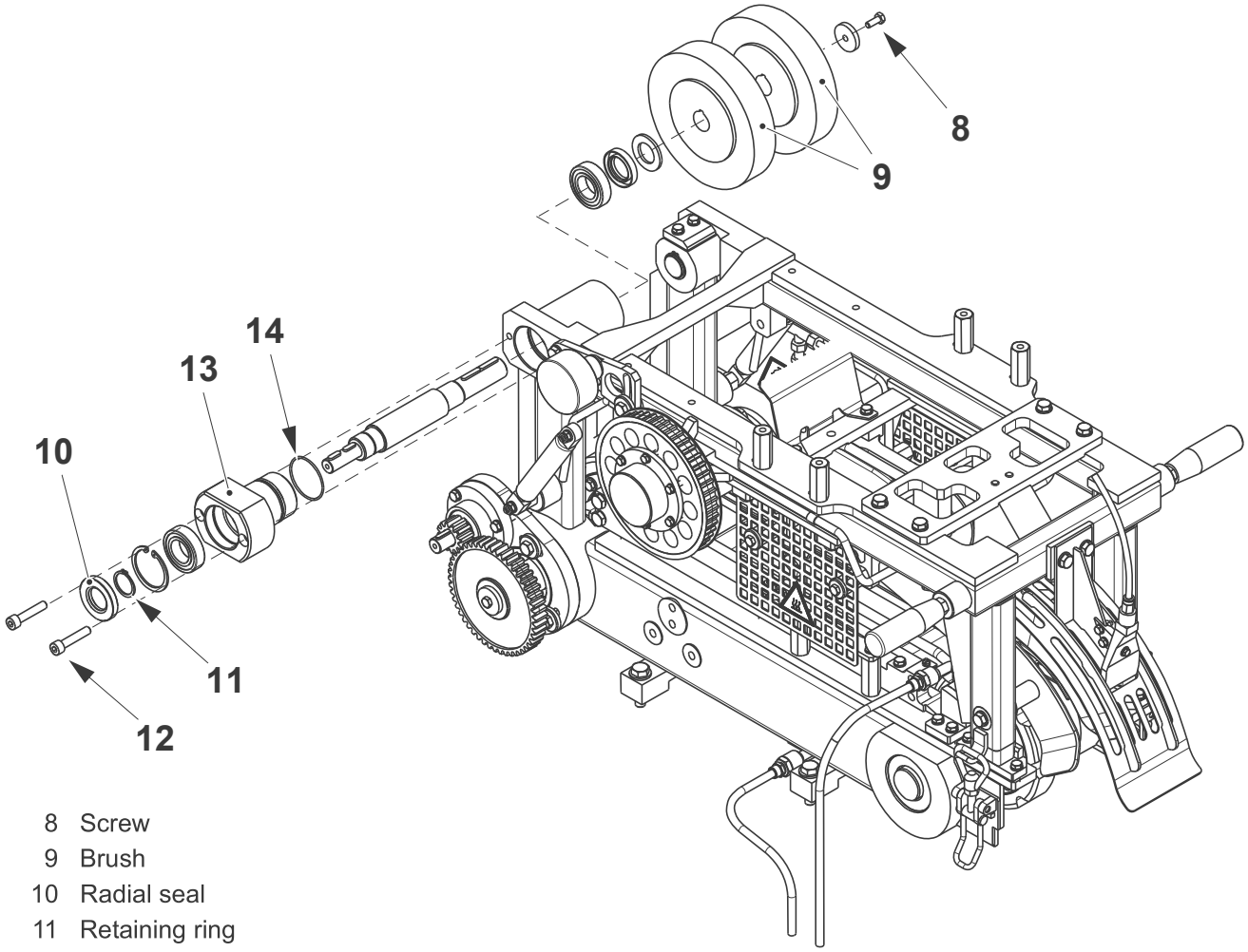

8 Screw
9 Brush
10 Radial seal
11 Retaining ring
12 Screw
13 Flange
14 O-ring

(Cont'd)

TechPub_2614345_0107 - 0501_3048167_01.fm

(Cont'd)

g) Remove the retaining ring (15) and the ball bearing (16). Change the ball bearing (16) if necessary.

h) Extract the shaft (17).

i) Remove the spacer (18), the seal (19) and the ball bearing (20). Change the ball bearing (20) if necessary.

j) Assemble in the reverse order.

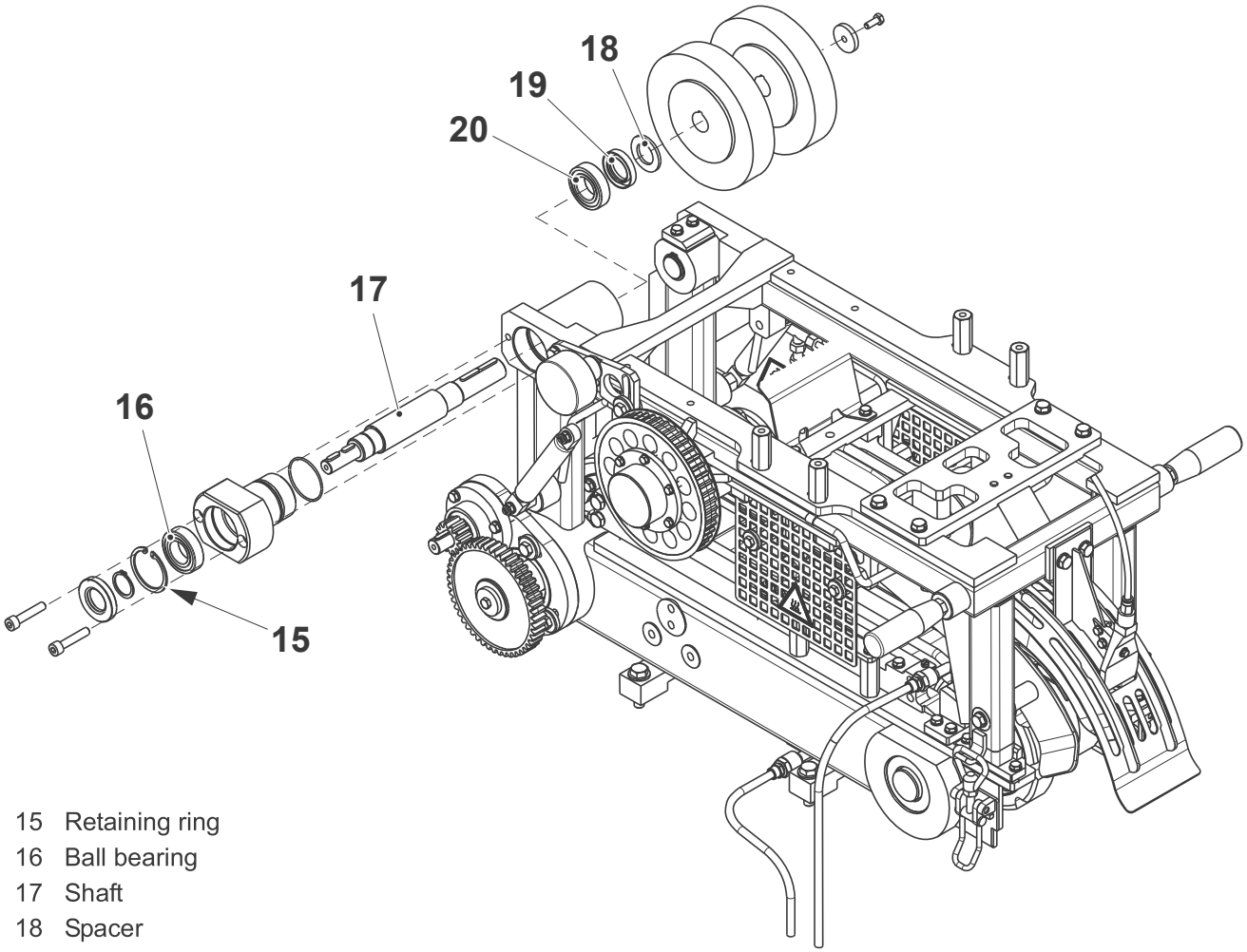

15 Retaining ring
16 Ball bearing
17 Shaft
18 Spacer
19 Seal
20 Shaft

TechPub_2614345_0107 - 0501_3048167_01.fm

(Cont'd)

(Cont'd)

Note! Before removing the couplings take of the distance between the end of the gearbox and the end of the couplings. This will ensure the intermediate shaft is centralized between the two gearboxes when assembling.

Chain Drive Outfeed End

a) Disconnect the grease pipe (1).

b) Remove the screws (2) and remove the intermediate shaft (3).

c) Loosen the screw (4) and remove the coupling (5).

Note! When assembling, tighten the screw (4) with a torque of 28.7 Nm.

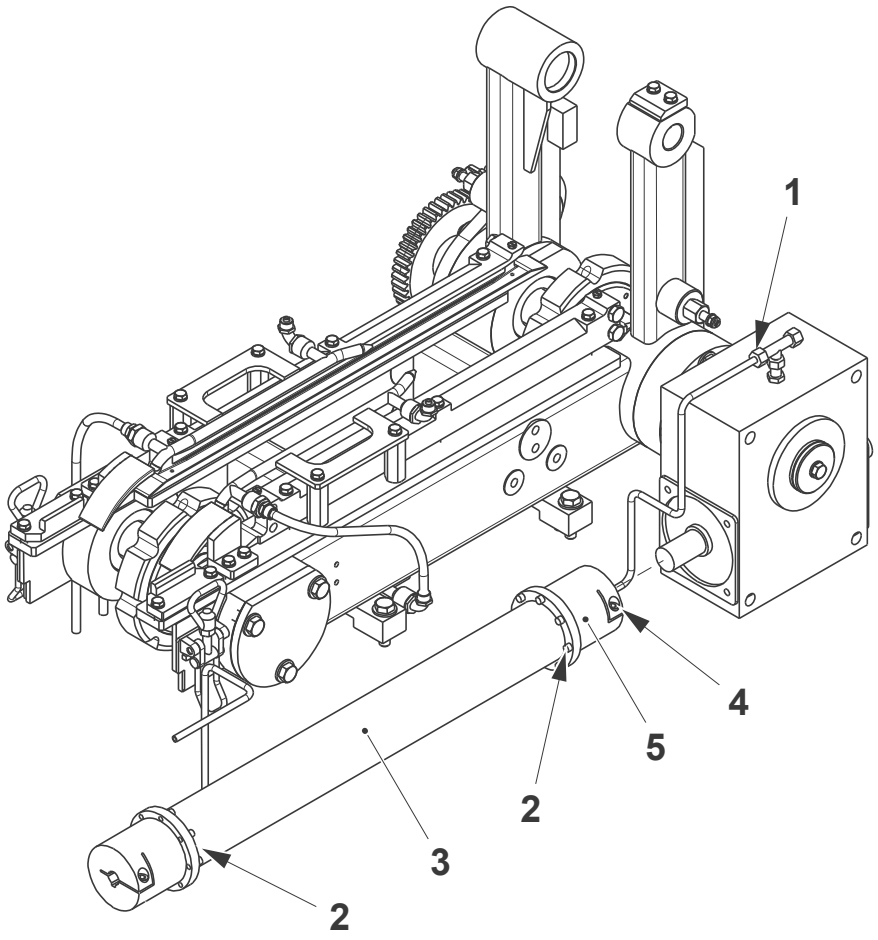

1 Pipe
2 Screw
3 Shaft
4 Screw
5 Coupling

(Cont'd)

TechPub_2614345_0107 - 0501_3048167_01.fm

(Cont'd)

d) Remove the screw (6).
e) Remove the screws (7) and pull out the gearbox (8).
f) Remove the spacer (9).
g) Remove the screws (10) and the support (11).
h) Remove and change the O-ring (12).
i) Remove and change the seal ring (13).

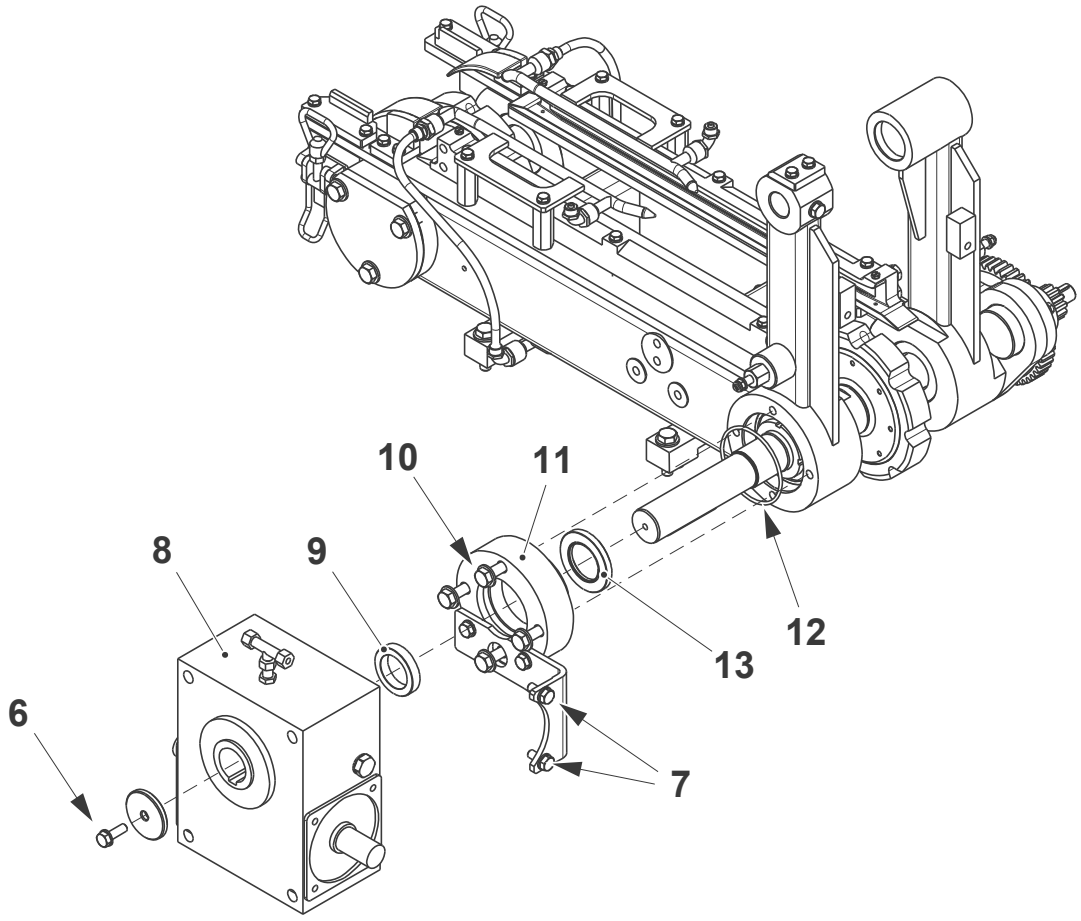

6 Screw
7 Screw
8 Gearbox
9 Spacer
10 Screw
11 Support
12 O-ring
13 Seal ring

(Cont'd)

TechPub_2614345_0107 - 0501_3048167_01.fm

(Cont'd)

j) Remove the gear (14).
k) Remove the screw (15) and the gear (16).
l) Remove the screws (17) and the plate (18).
m) Remove the seal ring (19). Change if necessary.
n) Remove the retaining ring (20) and pull out the shaft (21).
o) Remove the retaining ring (22) and change the ball bearing (22).

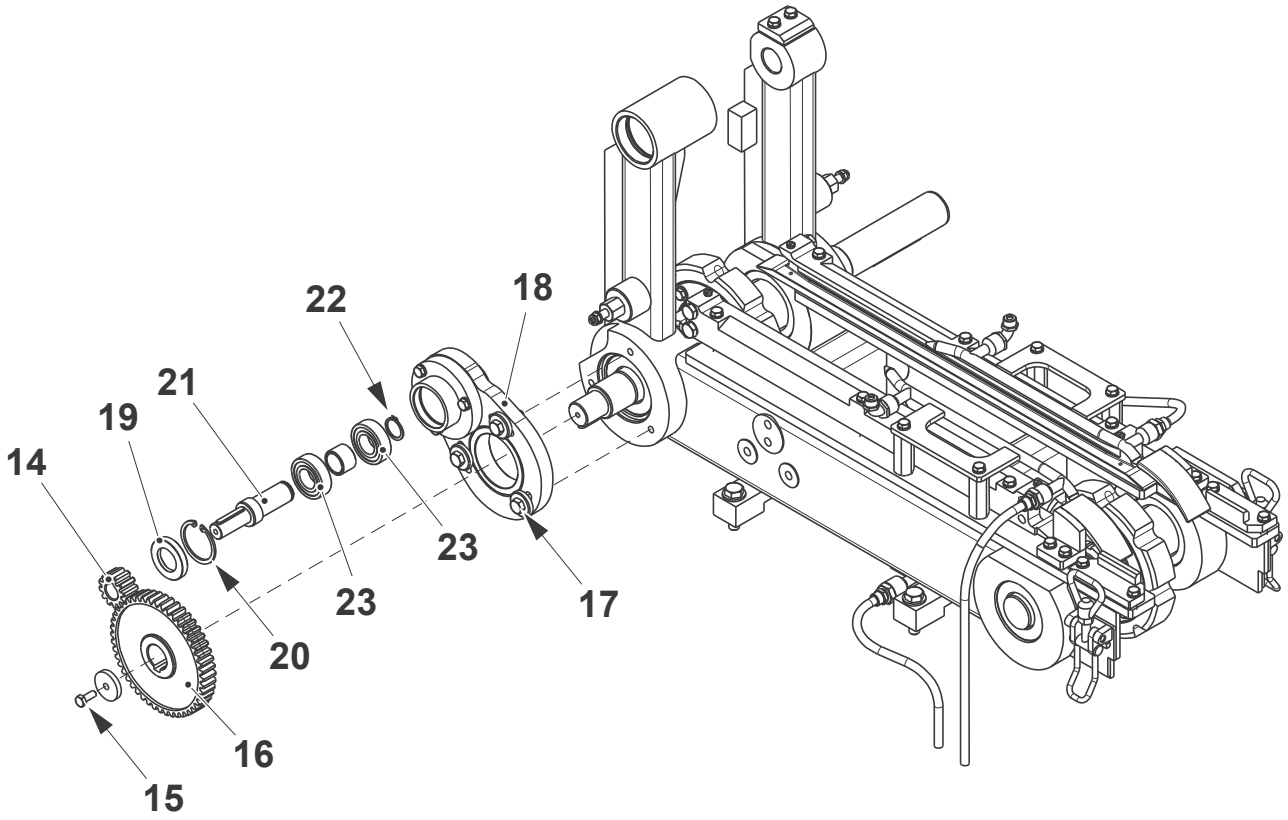

14 Gear
15 Screw
16 Gear
17 Screw
18 Plate
19 Seal ring
20 Retaining ring
21 Shaft
22 Retaining ring
23 Ball bearing

(Cont'd)

TechPub_2614345_0107 - 0501_3048167_01.fm

(Cont'd)

p) Remove the screws (24) and move aside the sprocket (25).
q) Remove the stop screws (26).
r) Loosen the nuts (27) and (28).

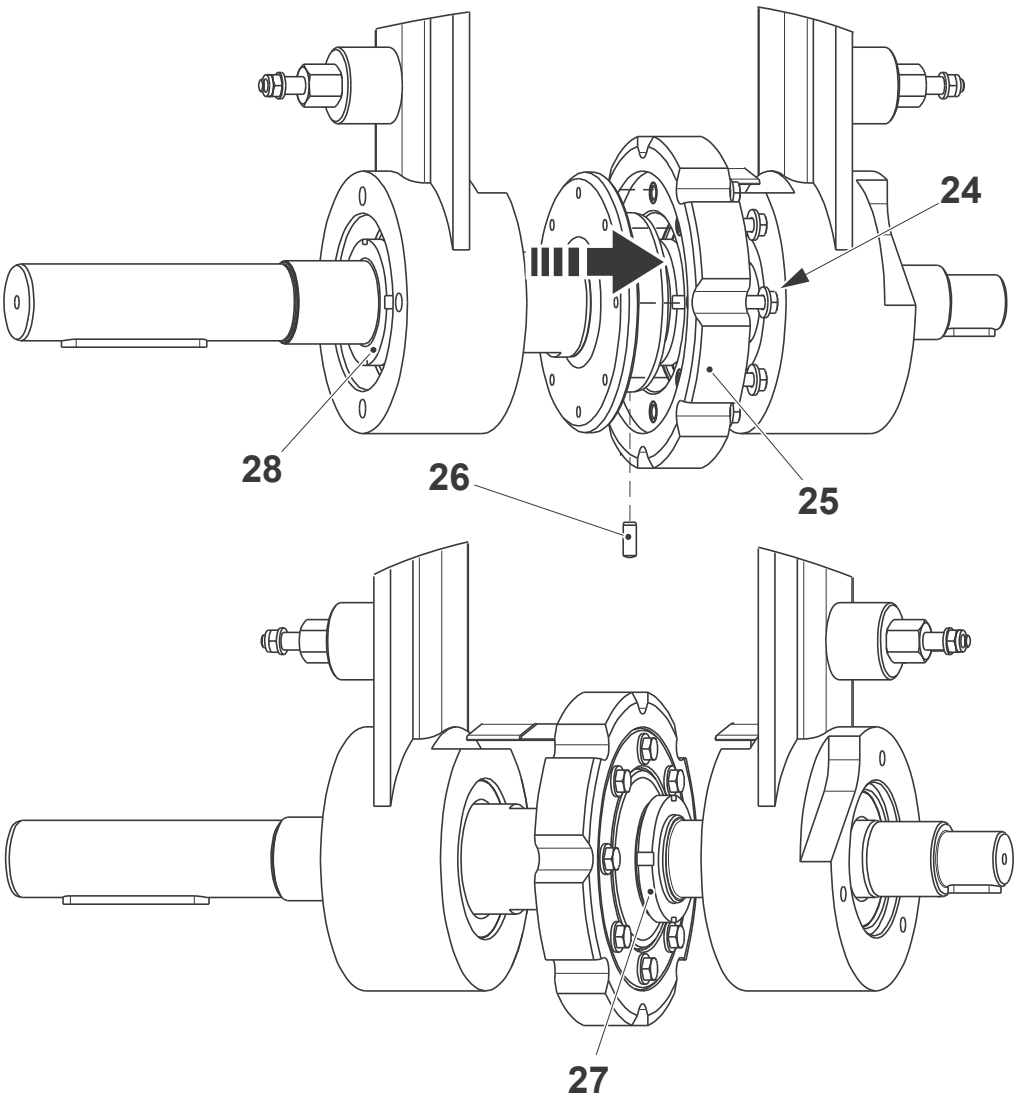

24 Screw
25 Sprocket
26 Stop screw
27 Nut
28 Nut

(Cont'd)

TechPub_2614345_0107 - 0501_3048167_01.fm

(Cont'd)

s) Remove the nut (27) and extract the shaft (29) slipping off the flange (30), the sprocket (25) and the nut (28).

t) Remove and change the ball bearing (31).

u) Remove the seal (32). Change if necessary.

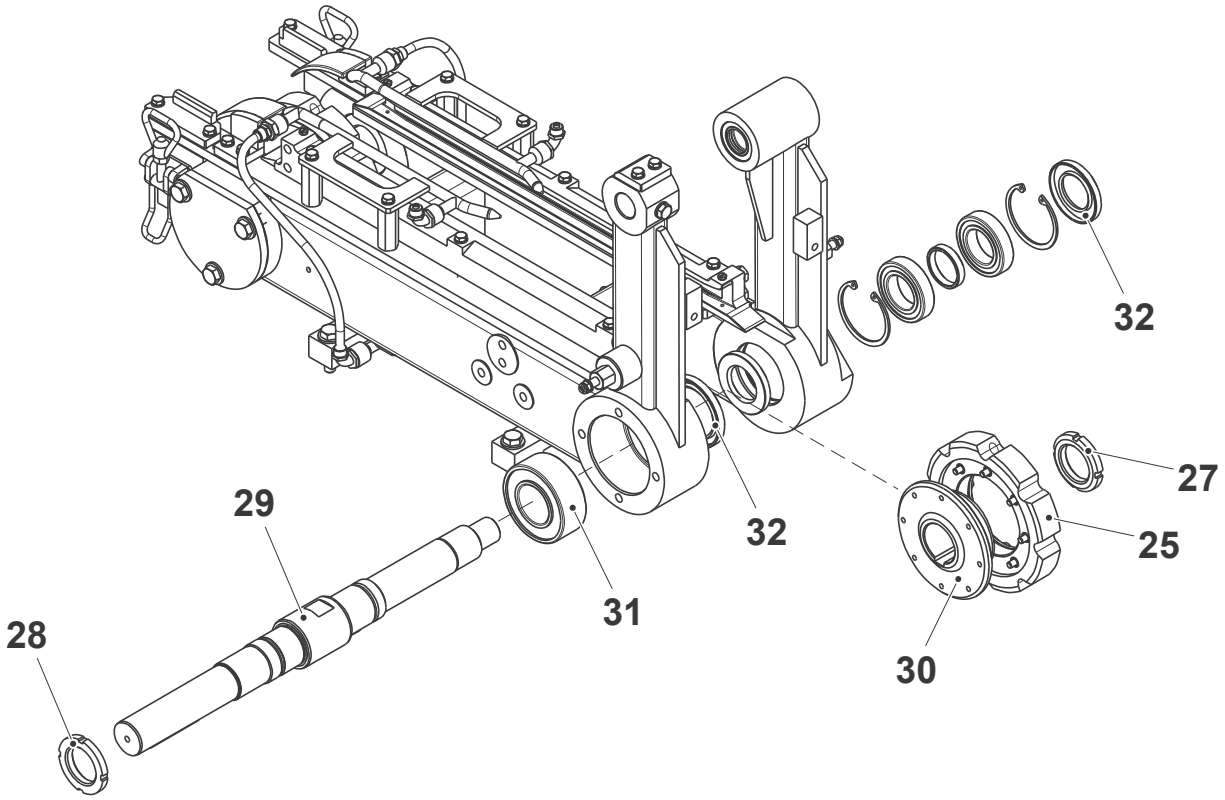

25 Sprocket
27 Nut
28 Nut
29 Shaft
30 Flange
31 Ball bearing
32 Seal

(Cont'd)

TechPub_2614345_0107 - 0501_3048167_01.fm

(Cont'd)

Note! Before assembling, apply Synthetic Grease TP No. 90459-7413 on the ball bearing (31) and on the surfaces of the shaft (29) in contact with the seal rings.

v) Overhaul the other flange by removing the seals (33), the retaining rings (34), the ball bearings (35) and the spacer (36). Change the ball bearings (35) if necessary.

w) Assemble in the reverse order.

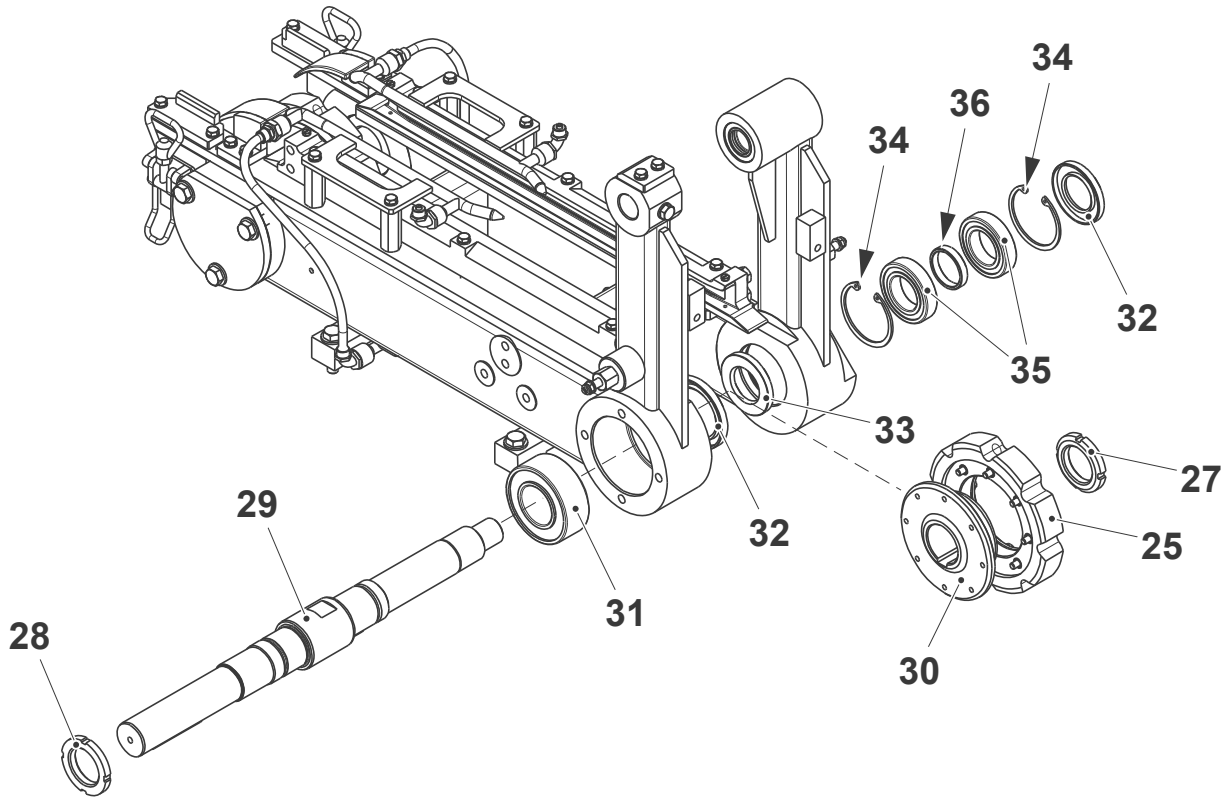

29 Shaft
31 Ball bearing
33 Seal
34 Retaining ring
35 Ball bearing
36 Spacer

(Cont'd)

TechPub_2614345_0107 - 0501_3048167_01.fm

(Cont'd)

Chain Drive Infeed End

a) Remove the screws (1) and move aside the sprocket (2).

b) Remove the stop screw (3).

c) Remove the screws (4) and the cover (5).

d) Remove and change the O-ring (6).

e) Loosen the nuts (7) and (8).

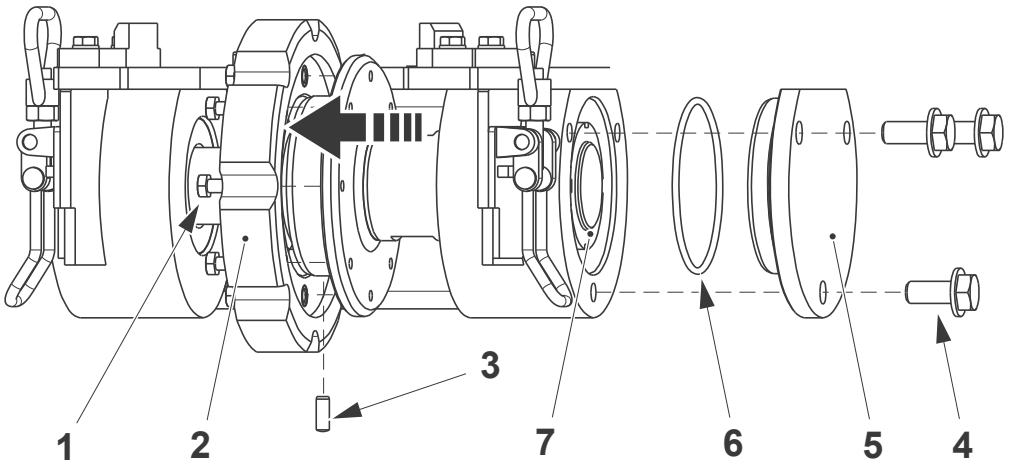

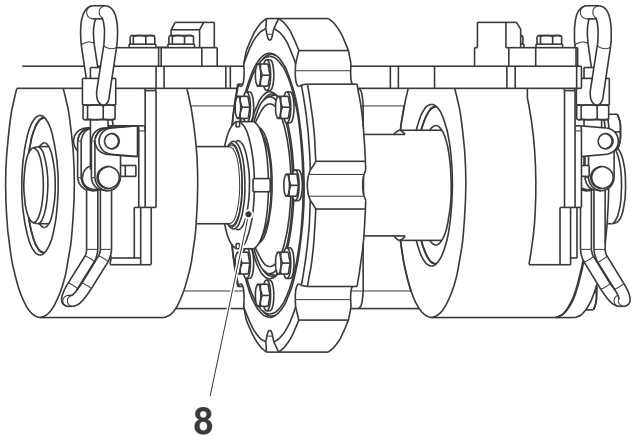

1 Screw
2 Sprocket
3 Stop screw
4 Screw
5 Cover
6 O-ring
7 Nut
8 Nut

(Cont'd)

TechPub_2614345_0107 - 0501_3048167_01.fm

(Cont'd)

Note! Before assembling, apply grease code **R** on the ball bearing (9) and on the surfaces of the shaft (11) in contact with the seal rings.

f) Remove the nut (7) and change the ball bearing (9).

g) Remove the seal (10) and extract the shaft (11) slipping off the flange (12), the sprocket (2) and the nut (8).

h) Overhaul the other flange by removing the seals (13), the retaining rings (14), the ball bearings (15) and the spacer (16). Change the ball bearings (15) if necessary.

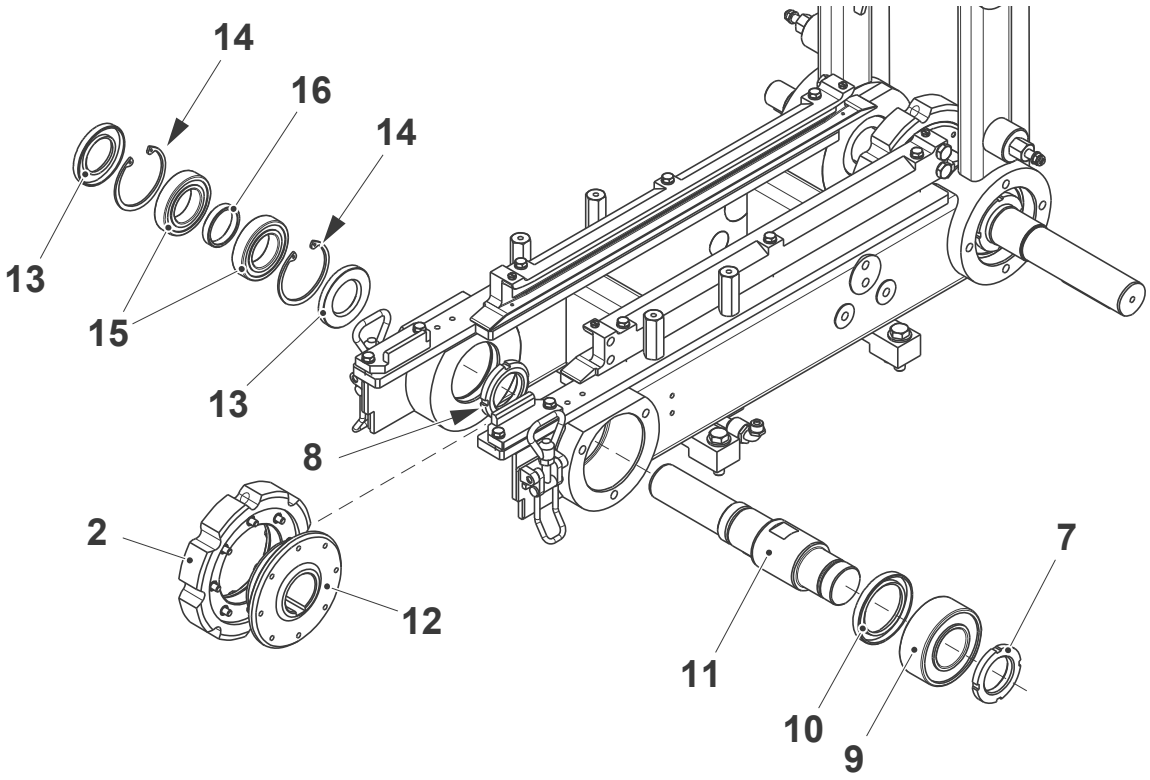

2 Sprocket
7 Nut
8 Nut
9 Ball bearing
10 Seal
11 Shaft
12 Flange
13 Seal
14 Retaining ring
15 Ball bearing
16 Spacer

(Cont'd)

TechPub_2614345_0107 - 0501_3048167_01.fm

(Cont'd)

i) Assemble in the reverse order.
j) Set the squeezer position, see 5.2.4-1 Squeezer - Set Position.
k) Synchronise the final folder, see 5-1 Final Folder Unit - Synchronise.

TechPub_2614345_0107 - 0501_3048167_01.fm

5.2.3-4 Chain Support - Change Brushes

Machine Status	Mains Power OFF Air OFF Steam ON Water OFF
SPC Reference	1349498-0400

Valid for Portion Packages

Remove the screw (1) and slip off the brushes (2). Change the brushes (2) and assemble in the reverse order.

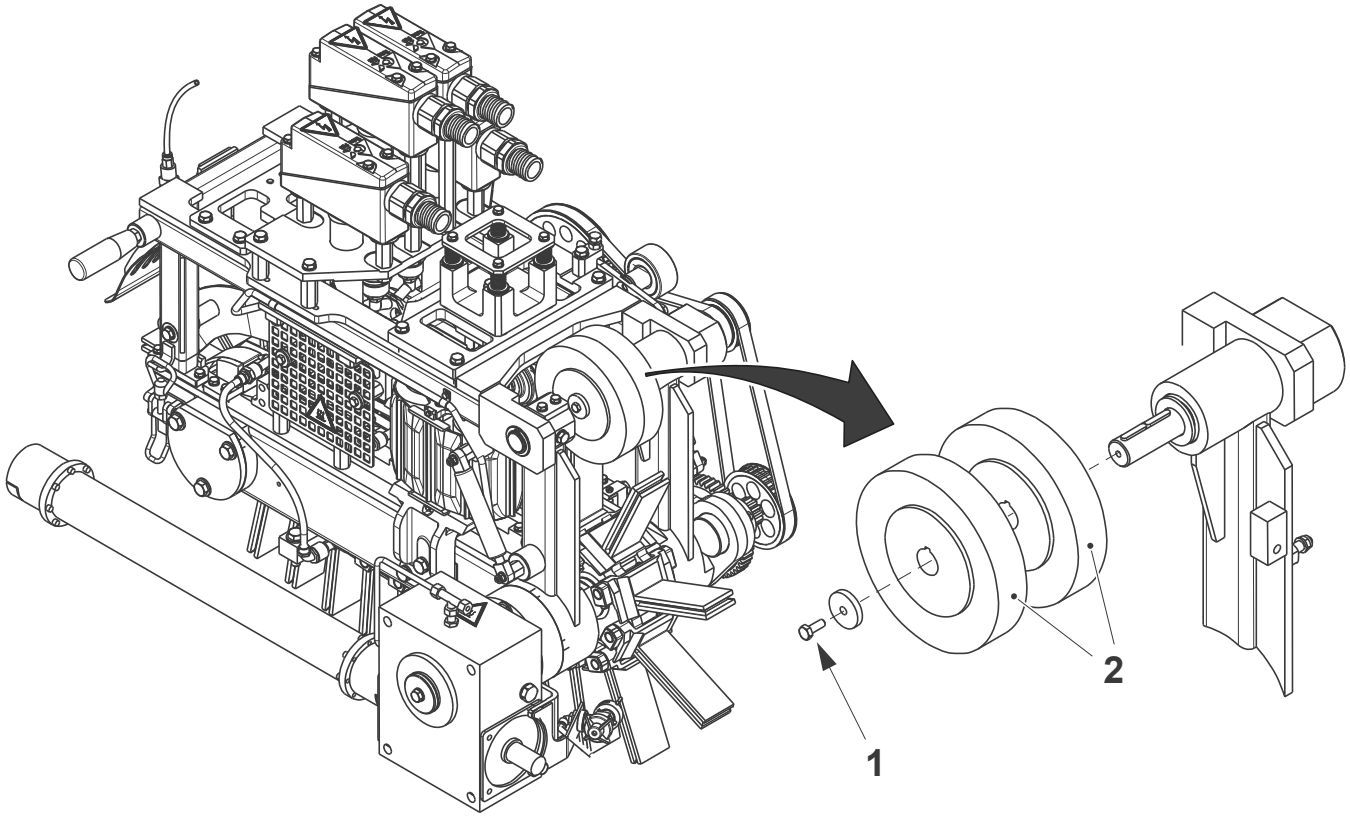

1 Screw
2 Brush

TechPub_2614345_0107 - 0501_3048167_01.fm

(Cont'd)

(Cont'd)

Valid for Family Packages

a) Remove the brushes (1) from the hubs (2).

b) Remove the screw (3) and the hubs (2).

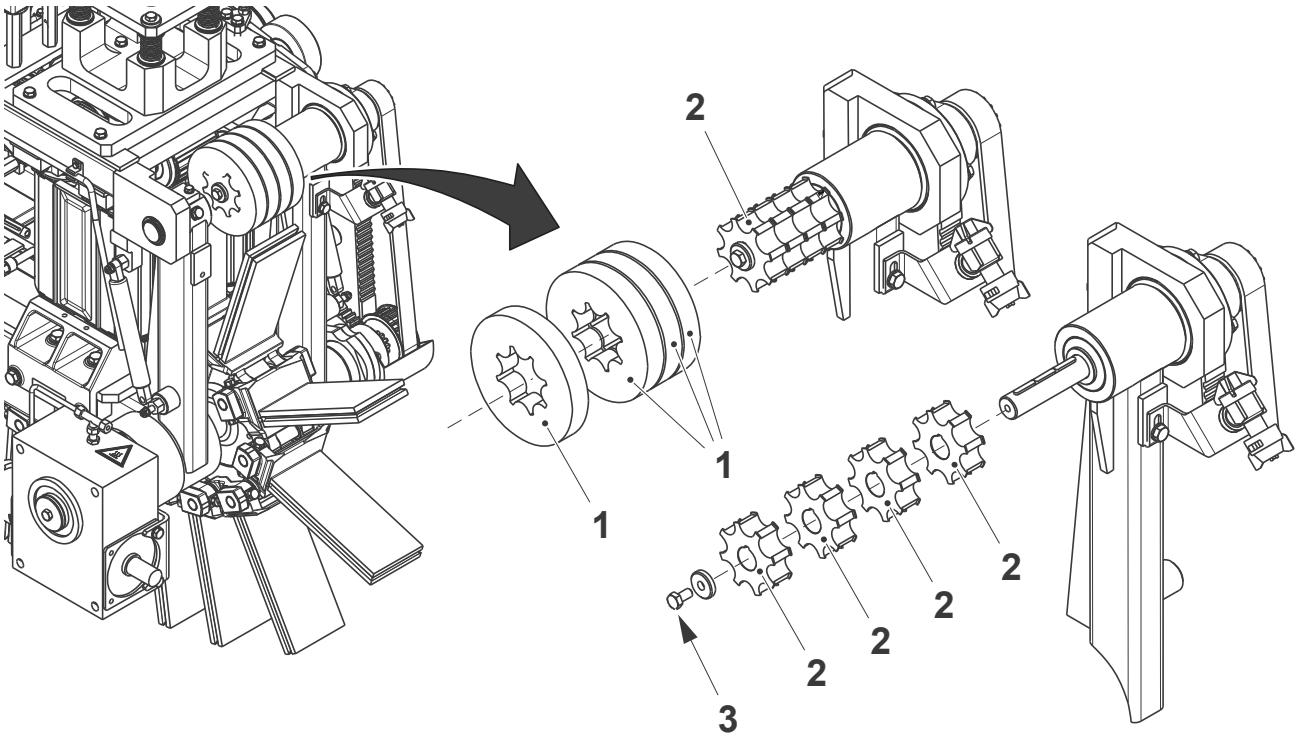

1 Brush
2 Hub
3 Screw

(Cont'd)

TechPub_2614345_0107 - 0501_3048167_01.fm

(Cont'd)

Note! Insert the new brushes on the shaft (5) holding the hubs (2) and not the sponge brushes (4).

c) Fit the new brush (4) on each hub (2).

d) Insert the hubs (2) with the brushes (4) on the shaft (5).

e) Tighten the screw (3).

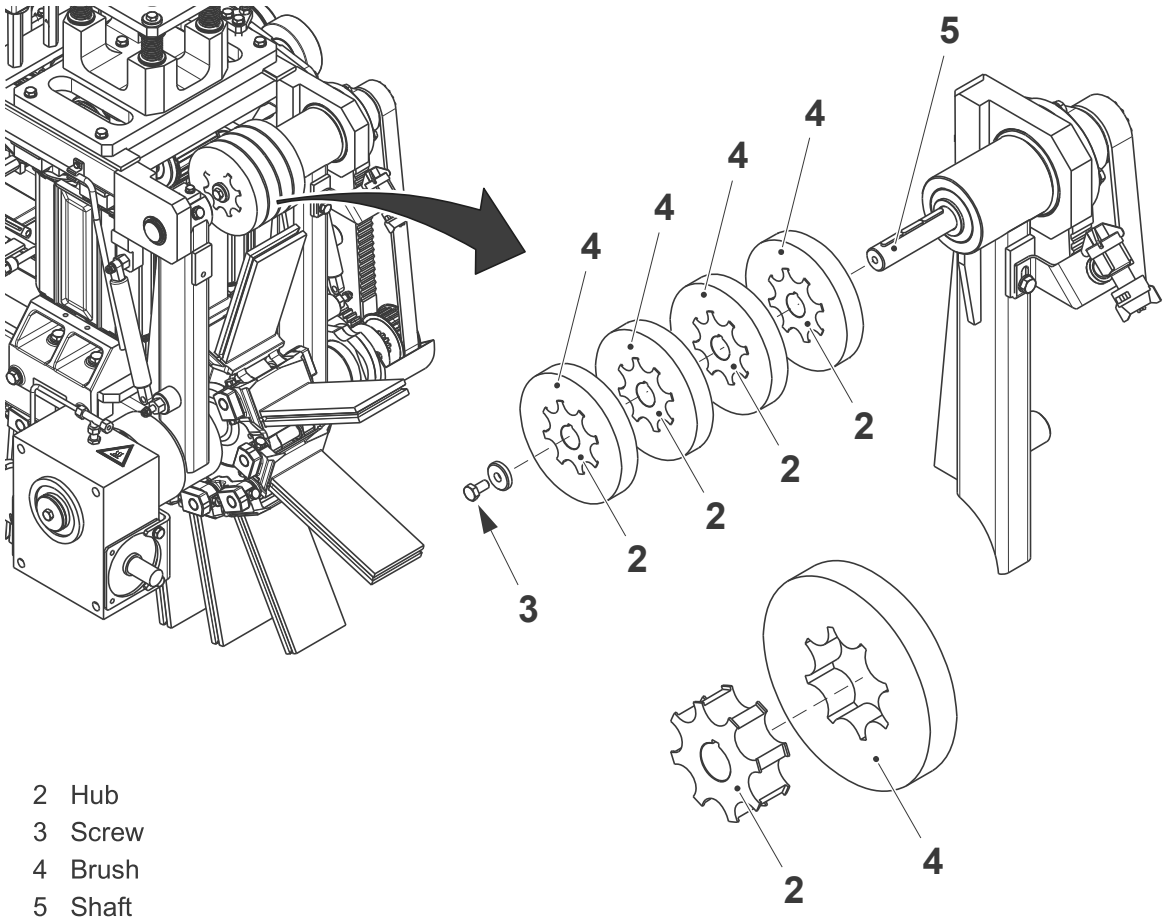

2 Hub
3 Screw
4 Brush
5 Shaft

TechPub_2614345_0107 - 0501_3048167_01.fm

5.2.3-5 Chain Support - Change Belt

Machine Status	Mains Power OFF Air OFF Steam ON Water OFF
SPC Reference	1349498-0400

Check the belt (1) for wear or damage. If necessary change the belt as follows:

a) Loosen the screws (2).
b) Turn the flange (3) clockwise to reduce the belt tension.
c) Change the belt (1).
d) Assemble in the reverse order.
e) Set the belt tension, see 5.2.3-6 Chain Support - Set Belt.
f) Set the top squeezer belt, see 5.2.4-1 Squeezer - Set Position.

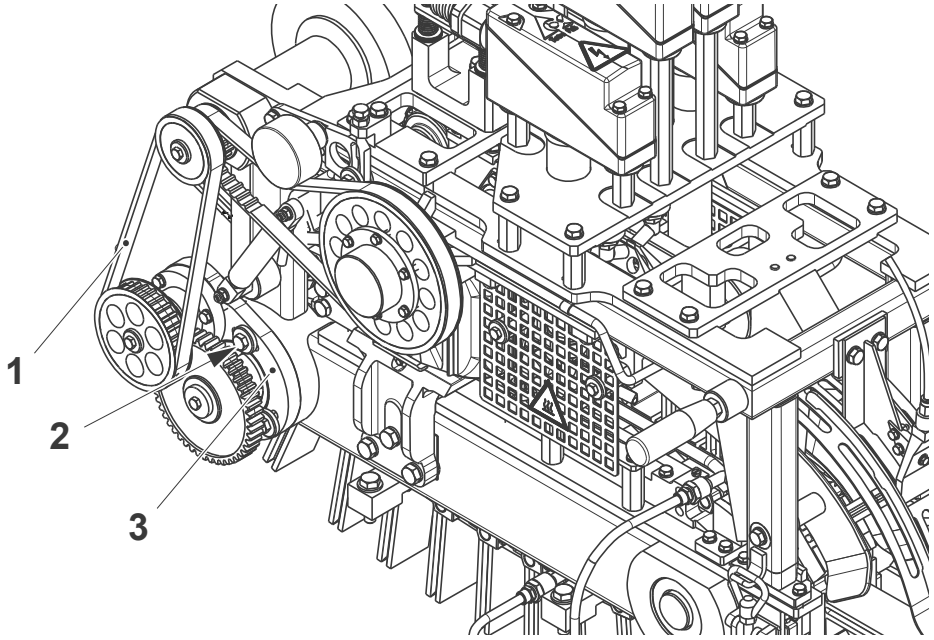

1 Belt
2 Screw
3 Flange

TechPub_2614345_0107 - 0501_3048167_01.fm

5.2.3-6 Chain Support - Set Belt

Machine Status	Mains Power OFF Air OFF Steam ON Water OFF
Special Equipment	Force Gauge TP No. 90459-1467 Tensiometer TP No. 90600-3415
SPC Reference	1349498-0400

This setting can be done using a force gauge or a tensiometer, see following pages.

(Cont'd)

TechPub_2614345_0107 - 0501_3048167_01.fm

(Cont'd)

Belt Setting using the Force Gauge

a) Check that the deflection at the mid-point of the belt (1) is **A** when a force **B** is applied, see table.

Package	A (mm)	B (N)
TBA 200 S - TBA 250 B - TBA 250 S	5.5	36
TBA 125 S - TBA 200 B - TBA 200 M	5.0	40
TBA 1000 S - TBA 1000 Sq - TBA 1000 B	5.0	15

b) If necessary, loosen the screws (2) and turn the flange (3) to add or release tension.

c) Tighten the screw (2).

d) Set the top squeezer belt, see 5.2.4-1 Squeezer - Set Position.

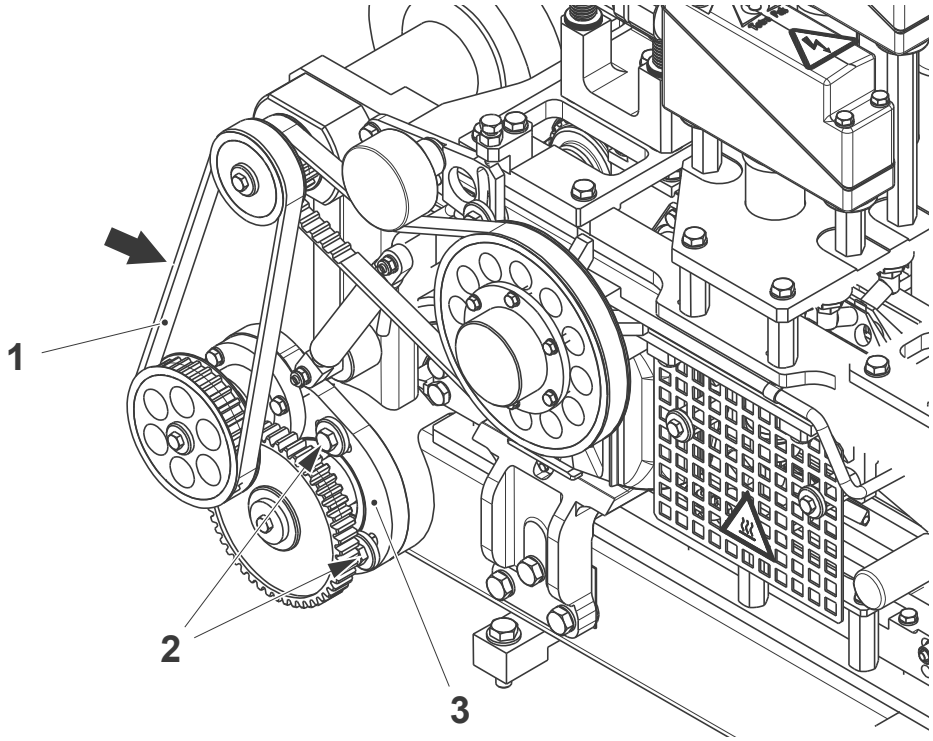

1 Belt
2 Screw
3 Flange

(Cont'd)

TechPub_2614345_0107 - 0501_3048167_01.fm

(Cont'd)

Belt Setting using the Tensiometer

a) Position the tensiometer sensor at the distance of 10 mm from the mid-point of the belt (1).

b) Press the reset icon on the tensiometer.

c) Tap the belt (1) with a screwdriver or similar tool.

d) Check that the frequency recorded is **A**, see table.

Package	A (Hz)
TBA 200 S - TBA 250 B - TBA 250 S	86.5
TBA 125 S - TBA 200 B - TBA 200 M	81
TBA 1000 S - TBA 1000 Sq - TBA 1000 B	67

e) If necessary, loosen the screws (2) and turn the flange (3) to add or release tension.

f) Tighten the screws (2).

g) Set the top squeezer belt, see 5.2.4-1 Squeezer - Set Position.

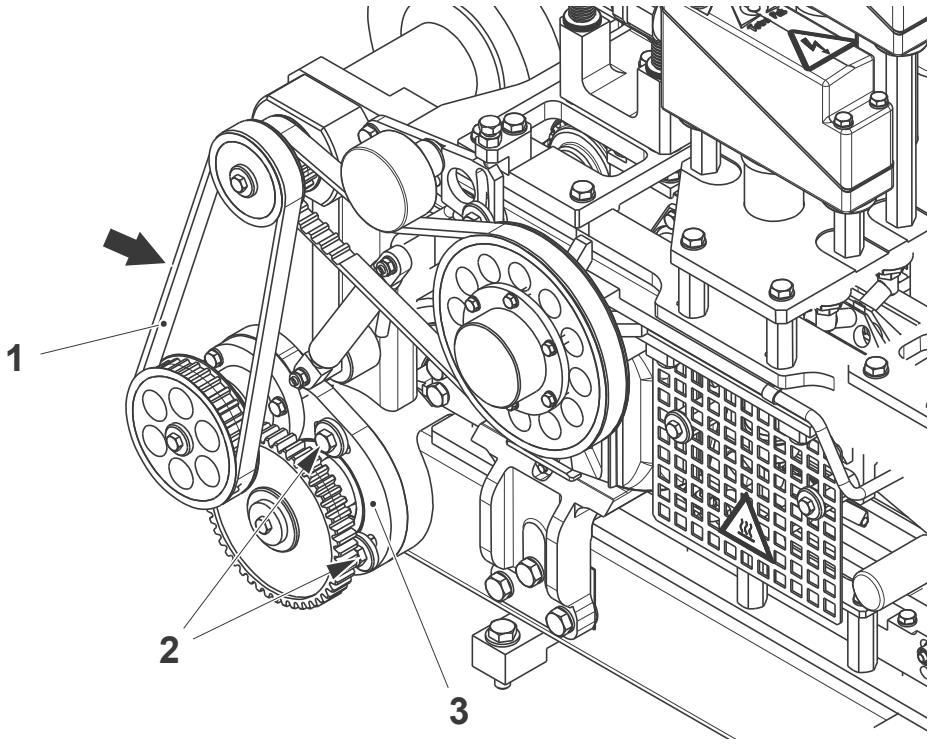

1 Belt
2 Screw
3 Flange

TechPub_2614345_0107 - 0501_3048167_01.fm

5.2.3-7 Chain Support - Change Oil Brush

Machine Status	Mains Power OFF Air OFF Steam ON Water OFF
SPC Reference	1349498-0400

Loosen the nipple (1) and disconnect the oil brush (2) from the spacer (3). Change the oil brush (2) and assemble in the reverse order.

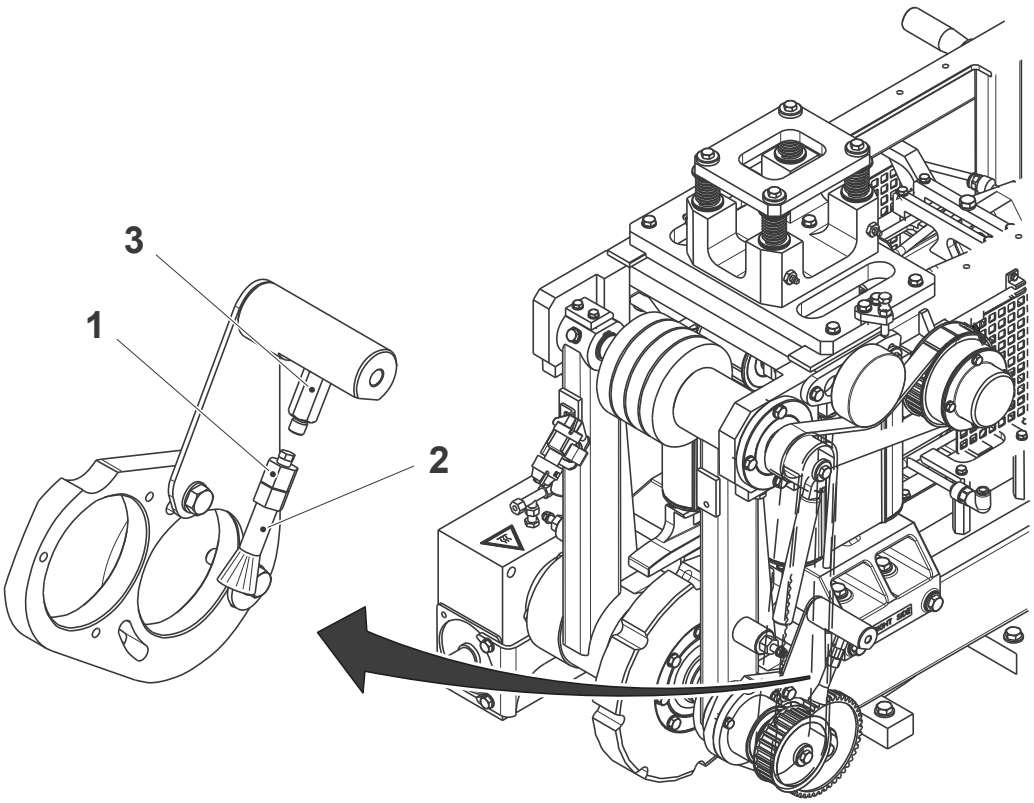

1 Nipple
2 Oil brush
3 Spacer

TechPub_2614345_0107 - 0501_3048167_01.fm

5.2.3-8 Chain Support - Change Fin Guide

Machine Status	Mains Power OFF Air OFF Steam ON Water OFF
SPC Reference	1349498-0400

Note! Valid for TBA 1000 Sq.

a) Lift the swing frame.

b) Remove the screws (1) and the guide (2).

c) Remove the screws (3) and the fin guide (4). Change the fin guide (4) and assemble in the reverse order.

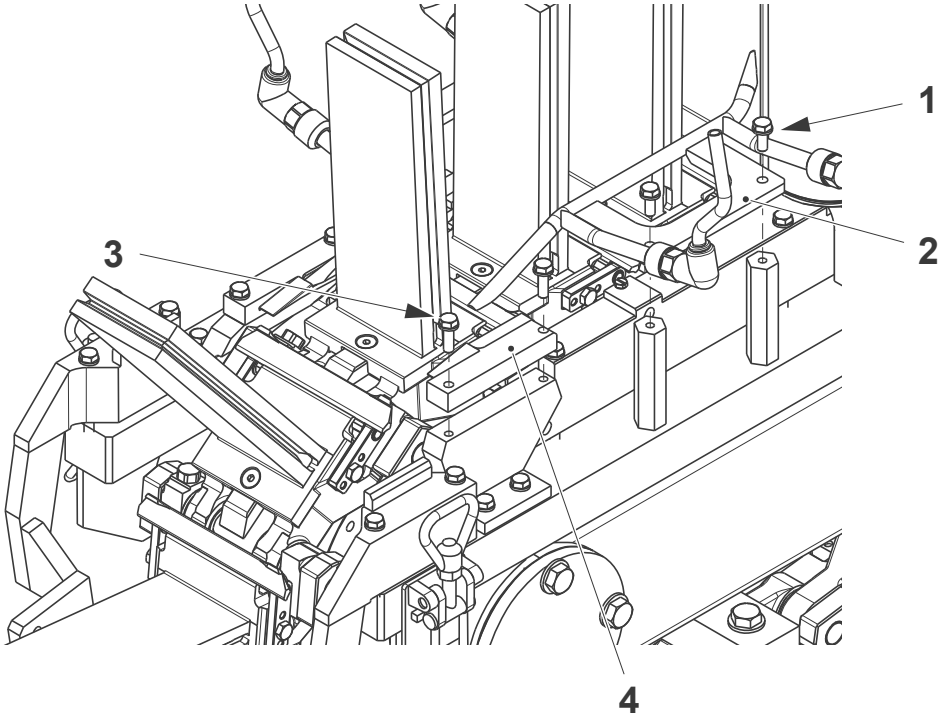

1 Screw
2 Guide
3 Screw
4 Fin guide

TechPub_2614345_0107 - 0501_3048167_01.fm

5.2.4 Squeezer

5.2.4-1 Squeezer - Set Position

Machine Status	Mains Power OFF Air OFF Steam ON Water OFF
Special Equipment	Needle Pressure Gauge TP No. 1478583-0100
SPC Reference	1549868-0300

Top Squeezer Belt Gap

Note! It is recommended to check the distance **A** at least on two carton stations (1).

Check the distance **A** between the top edge of the carton stations (1) and the top belt (2).

Package	A (mm)
TBA 1000 B	2.5
All other volumes	0.3

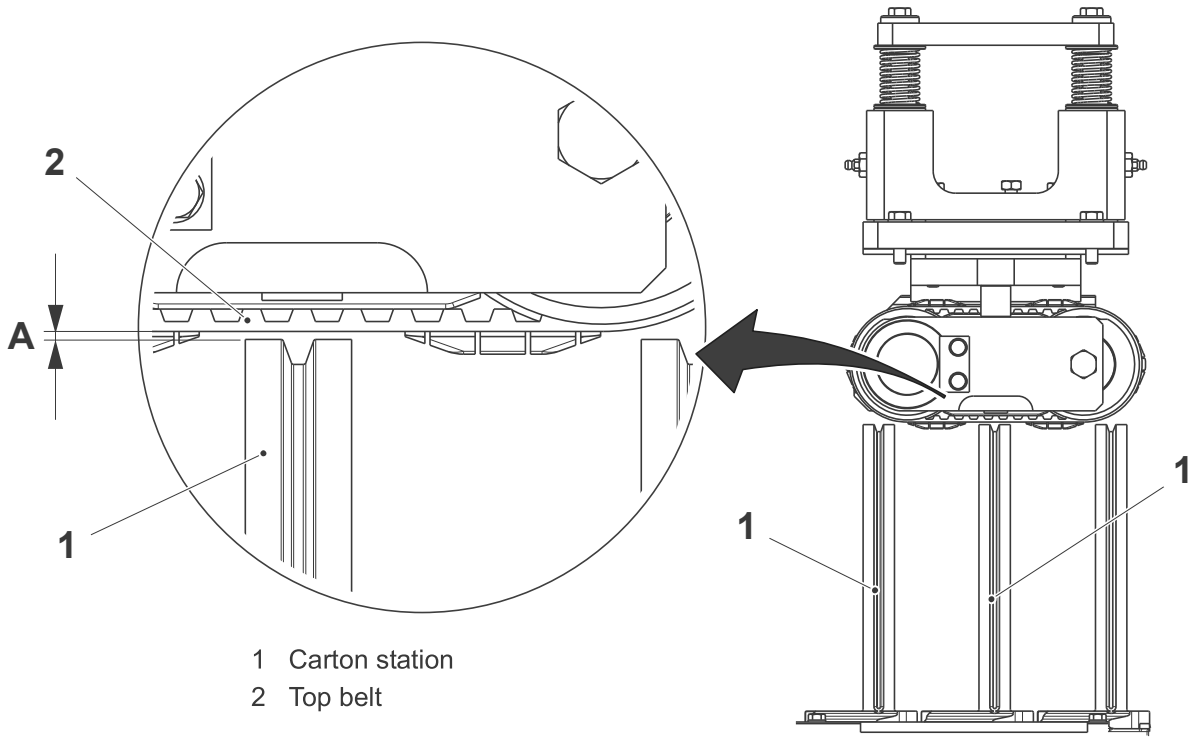

1 Carton station
2 Top belt

(Cont'd)

TechPub_2614345_0107 - 0504_3048168_01.fm

(Cont'd)

If necessary, set the distance **A** as follows:

a) Open the swing frame and remove the screws (3)

b) Separate the belt assembly (4) from the top squeezer frame (5).

c) Remove the screw (6) and the spacer (7).

d) Add or remove shims (8) to set the distance **A**.

Package	A (mm)
TBA 1000 B	2.5
All other volumes	0.3

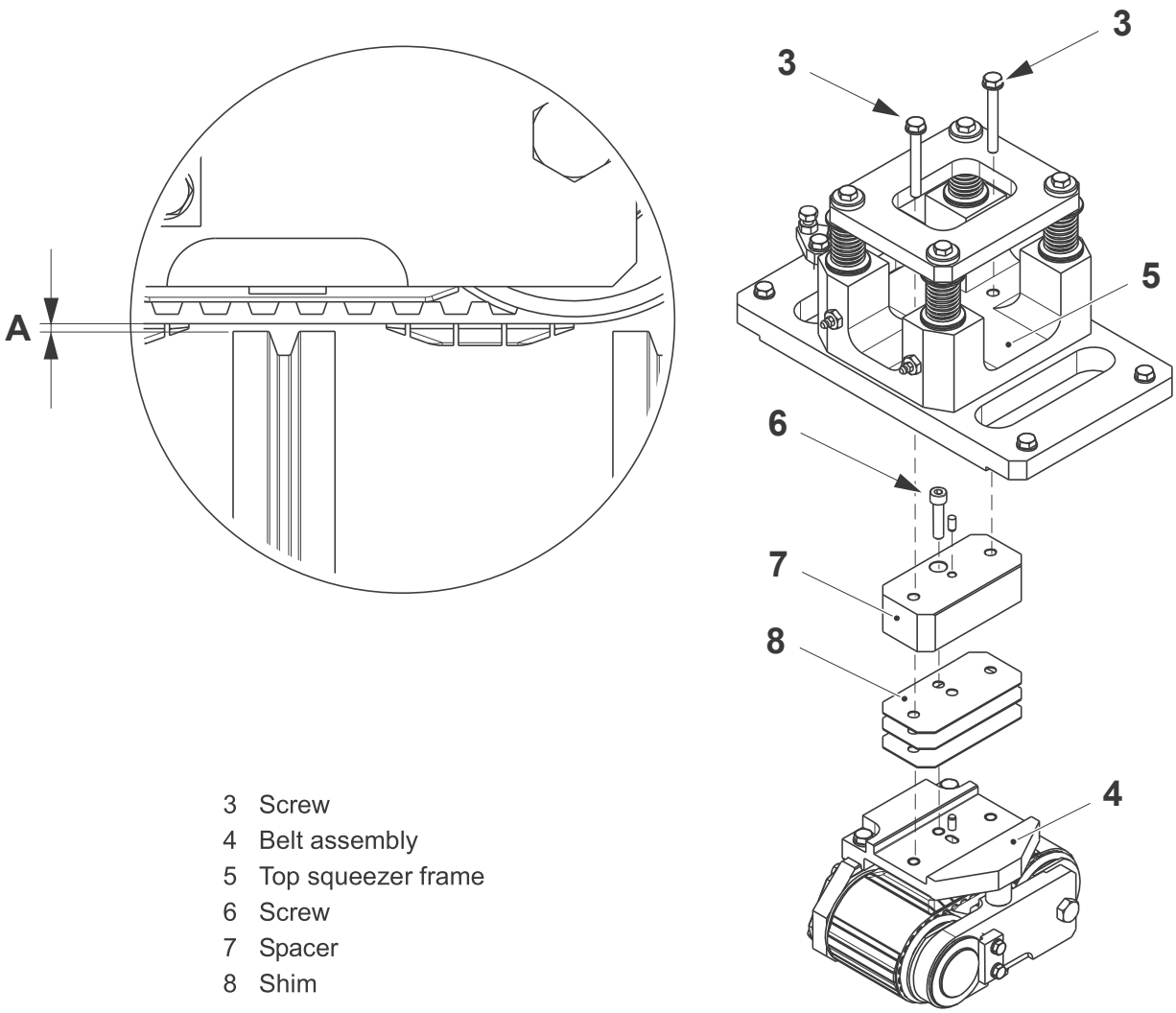

3 Screw
4 Belt assembly
5 Top squeezer frame
6 Screw
7 Spacer
8 Shim

(Cont'd)

TechPub_2614345_0107 - 0504_3048168_01.fm

(Cont'd)

e) Assemble in the reverse order.

Note! Before assembling the belt assembly (4) on the top squeezer frame (5), secure the shims (8) and the spacer (7) on the belt assembly (4) by the screw (6).

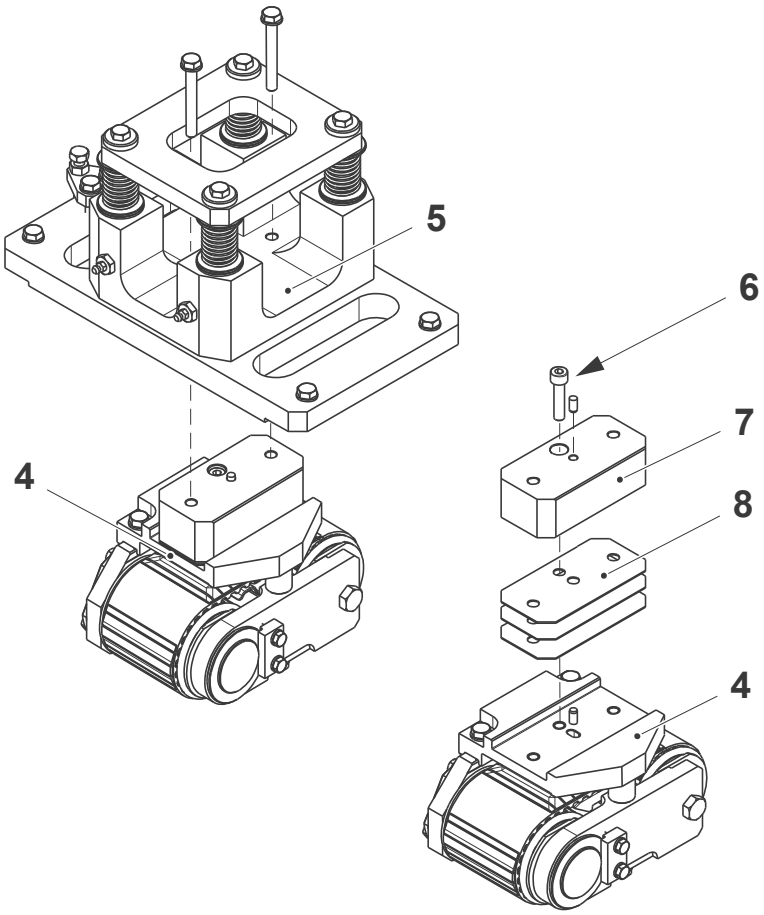

4 Belt assembly
5 Top squeezer frame
6 Screw
7 Spacer
8 Shim

(Cont'd)

TechPub_2614345_0107 - 0504_3048168_01.fm

(Cont'd)

f) Perform a complete rotation of the station chain by turning the shaft (9) and check that there are no contact between the carton stations (1) and the top squeezer belt (2).

g) Assemble in the reverse order.

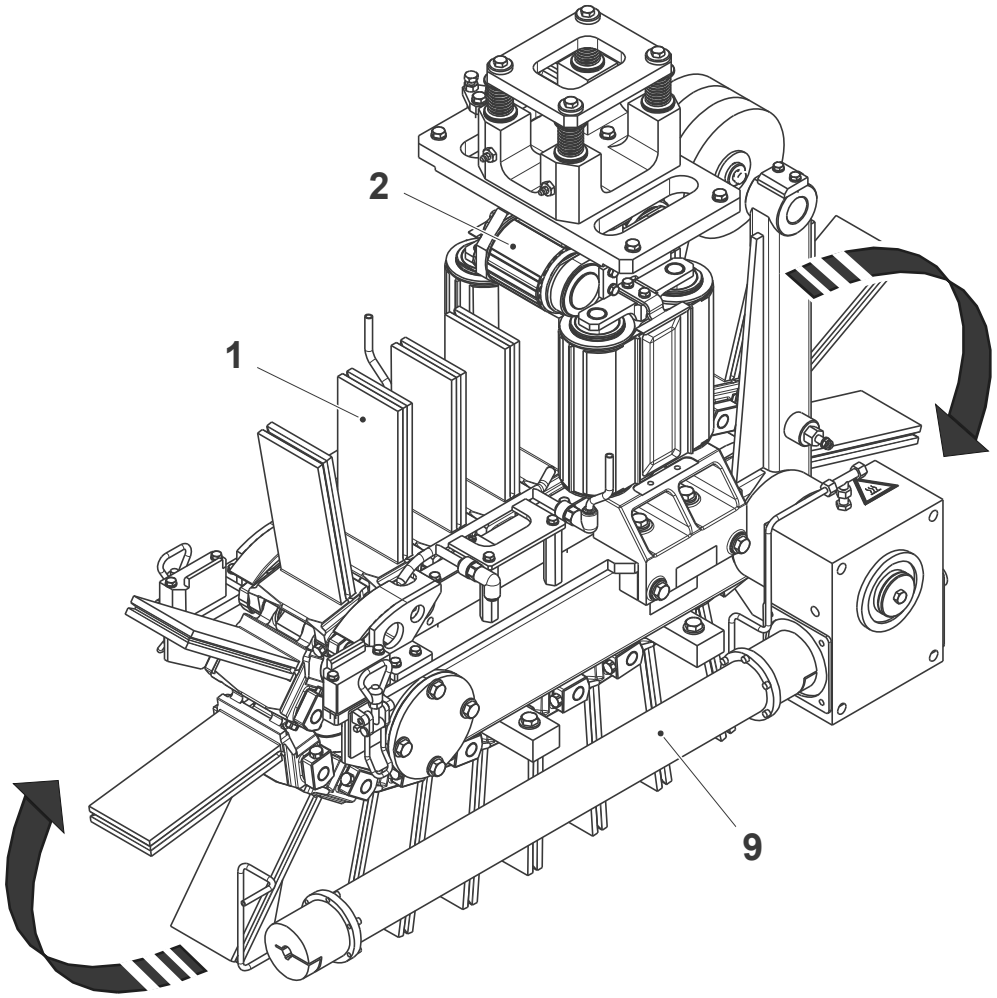

1 Carton station
2 Top belt
9 Shaft

(Cont'd)

TechPub_2614345_0107 - 0504_3048168_01.fm

(Cont'd)

Top Squeezer Belt Position

Note! Valid for Portion Packages only.

a) Check that the teeth (1) in the side belts (2) fit the slots (3) at the side of the carton stations (4).

b) If not, loosen the screws (5) to move backwards the side squeezers and turn the side belts (2) until the teeth (1) are aligned with the slots (3) at the side of the carton stations (4); then tighten the screws (5).

Note! Make sure the side squeezer clearance is according to 5.2.4-6 Squeezer - Check Side Squeezer Clearances.

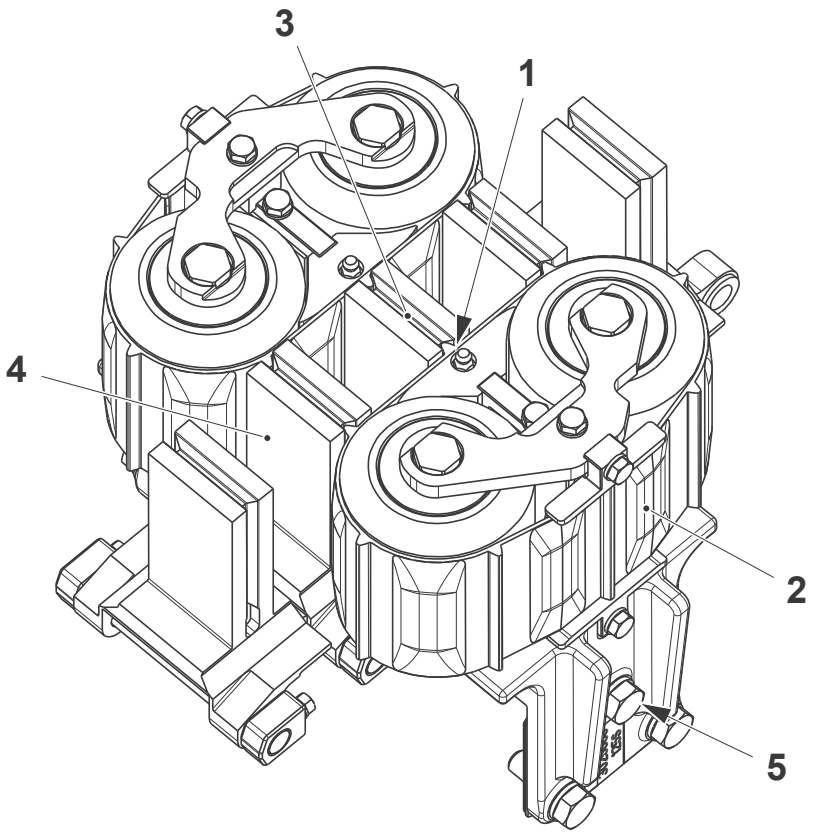

1 Tooth
2 Side belt
3 Slot
4 Carton station
5 Screw

(Cont'd)

TechPub_2614345_0107 - 0504_3048168_01.fm

(Cont'd)

c) Close the swing frame and perform a complete rotation of the station chain to recover the plays.

d) Check that the bulge (6) on the top belt (7) is at the distance **A** from the carton station (4) behind (LH side in the picture below). If not, proceed as follows:

- remove the cover (8) by the screws (9)
- loosen the clamping element (10)
- rotate manually the coupling (11) until the bulge (6) is exactly between the carton stations (4).
- tighten the clamping element (10) using a torque wrench set to 11.5 Nm and fit back the cover (8).

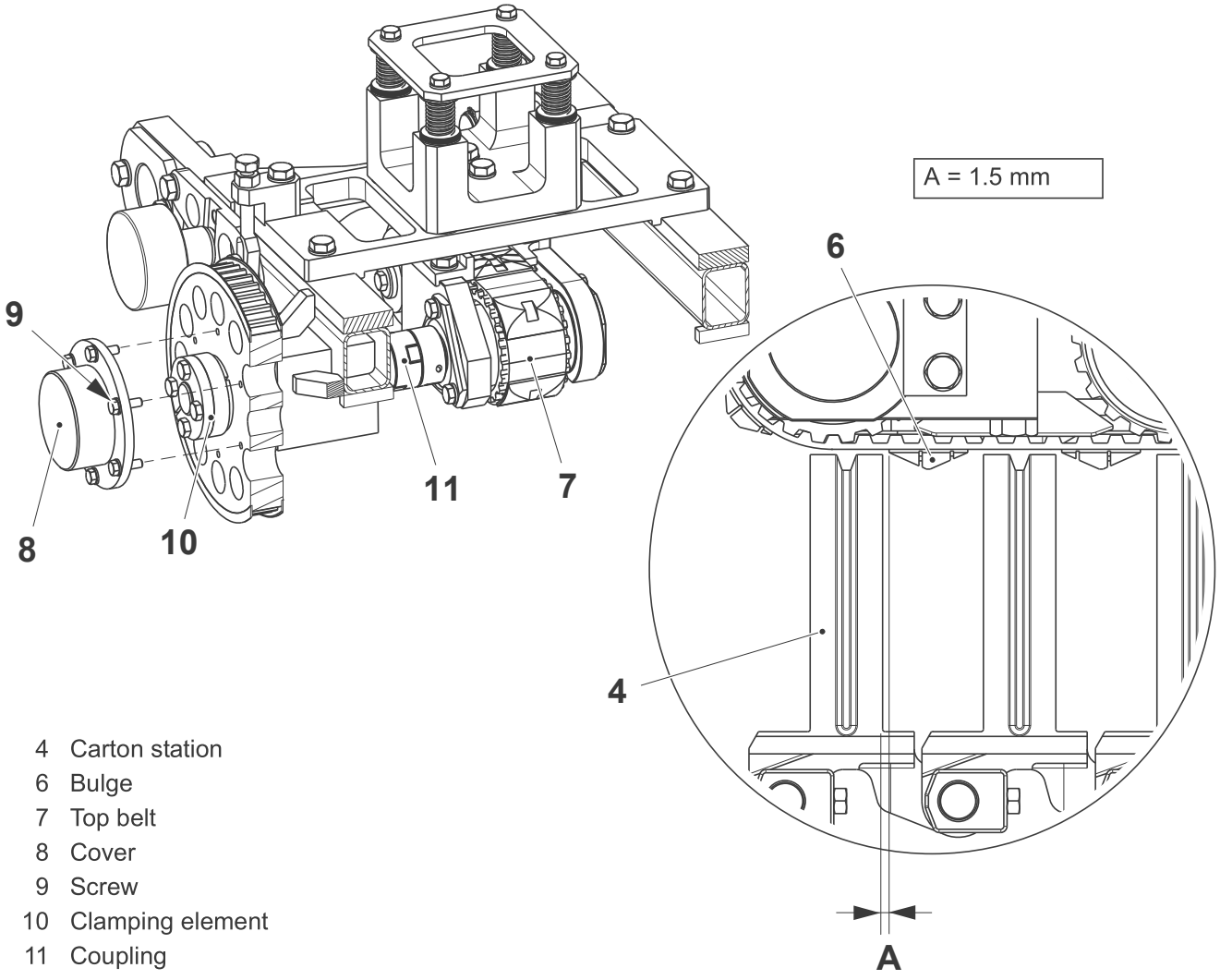

4 Carton station
6 Bulge
7 Top belt
8 Cover
9 Screw
10 Clamping element
11 Coupling

(Cont'd)

TechPub_2614345_0107 - 0504_3048168_01.fm

(Cont'd)

Note! Valid for Family Packages only.

a) Check that the teeth (1) in the side belts fit the slots (2) at the side of the carton stations.

b) If not, proceed as follows:
   - remove the screws (3) and loosen the screws (4)
   - turn the side belt until the teeth are aligned with the slots in the side of the carton stations
   - tighten the screws (3) and (4).

Note! Make sure the side squeezer clearance is according to 5.2.4-6 Squeezer - Check Side Squeezer Clearances.

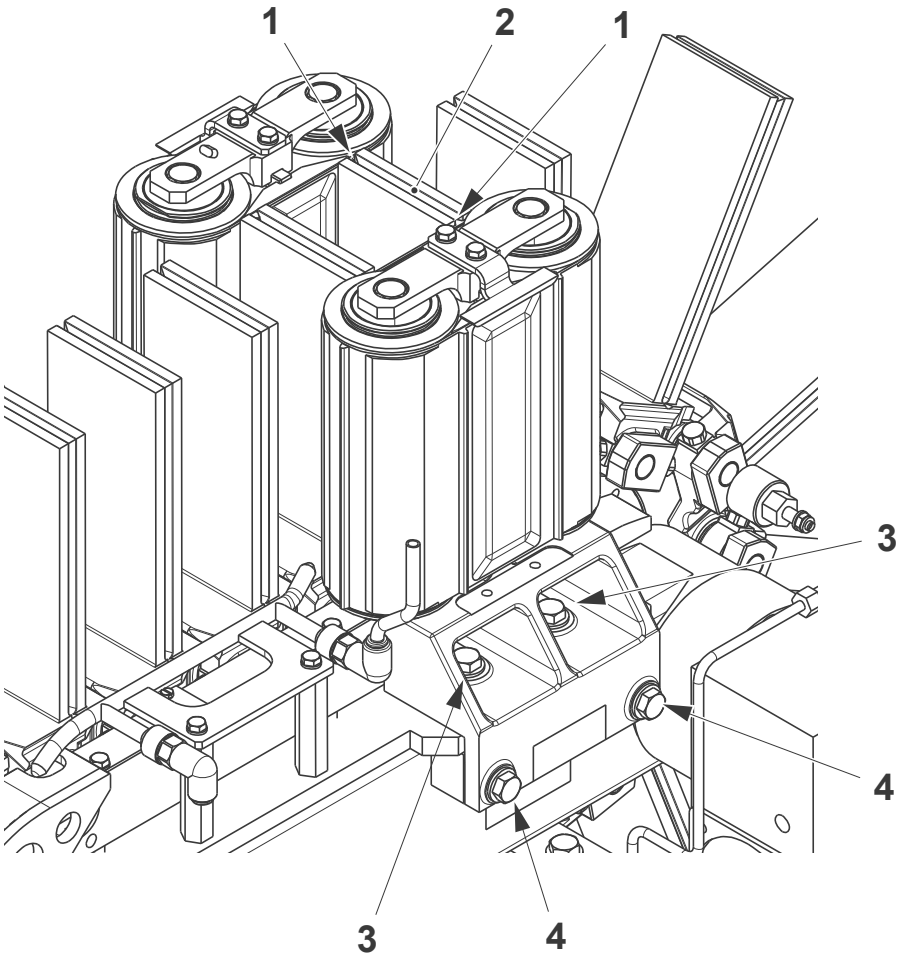

1 Tooth
2 Slot
3 Screw
4 Screw

(Cont'd)

TechPub_2614345_0107 - 0504_3048168_01.fm

(Cont'd)

c) Close the swing frame and perform a complete rotation of the station chain to recover the plays.

d) Check that the bulge (5) on the top belt is in the centre of the space between the carton stations (6). If not, proceed as follows:
   - loosen the screws (7) and remove the cover (8)
   - loosen the clamping element (9)
   - rotate manually the coupling (10) until the bulge (5) is exactly between the carton stations
   - tighten the clamping element (9) using a torque of 11.5 Nm and fit back the cover (8).

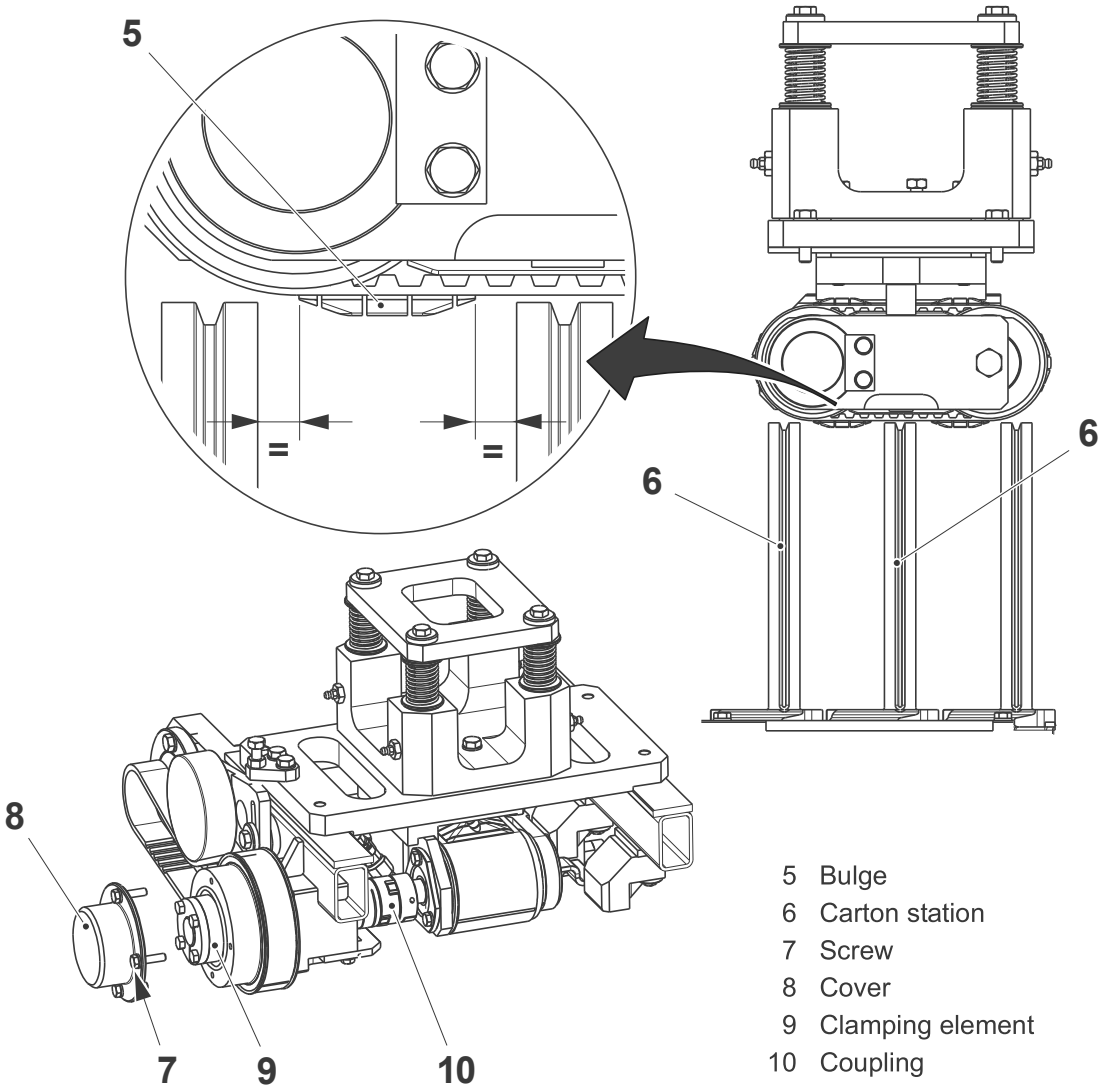

5 Bulge
6 Carton station
7 Screw
8 Cover
9 Clamping element
10 Coupling

(Cont'd)

TechPub_2614345_0107 - 0504_3048168_01.fm

(Cont'd)

Package Pressure Checks

Note! The swing frame must be closed when performing the package pressure check.

a) Insert at least 3 packages between the squeezers.

b) Close and fasten the swing frame.

c) Use a needle pressure gauge (1) to check the pressure inside the package (2). The pressure should be between **0.4** and **0.5 bar**. If not:

– add or remove side squeezer shims to obtain correct pressure, see 5.2.4-6 Squeezer - Check Side Squeezer Clearances.

Note! Make sure that the package (2) to be checked has the correct nominal weight.

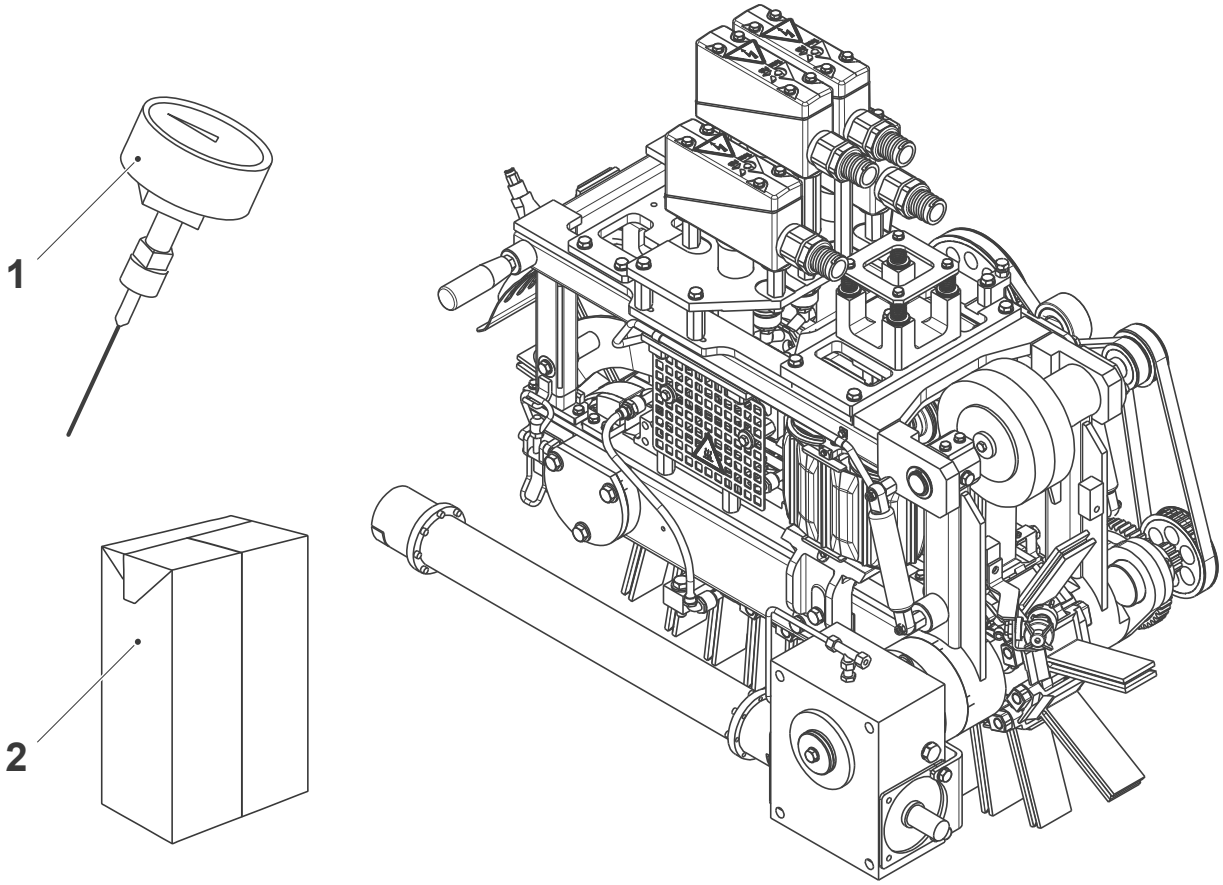

1 Needle pressure gauge
2 Package

TechPub_2614345_0107 - 0504_3048168_01.fm

5.2.4-2 Squeezer - Change Side Belt

Machine Status	Mains Power OFF Air OFF Steam ON Water OFF
SPC Reference	1549868-0300

Check the side pressure belts (1) for damage. If damaged, change them:

a) Lift the swing frame.

b) Remove the screws (2).

c) Remove the side squeezer (3) and the shims (4) and (5).

Note! The shims (5) are present only for Portion Packages and they have different thickness depending on the fact that the machine is running with or without the Headspace Unit (OE). The mark “HI” or “NO HI” on the shim identifies which shim has to be used.

Portion packages shown

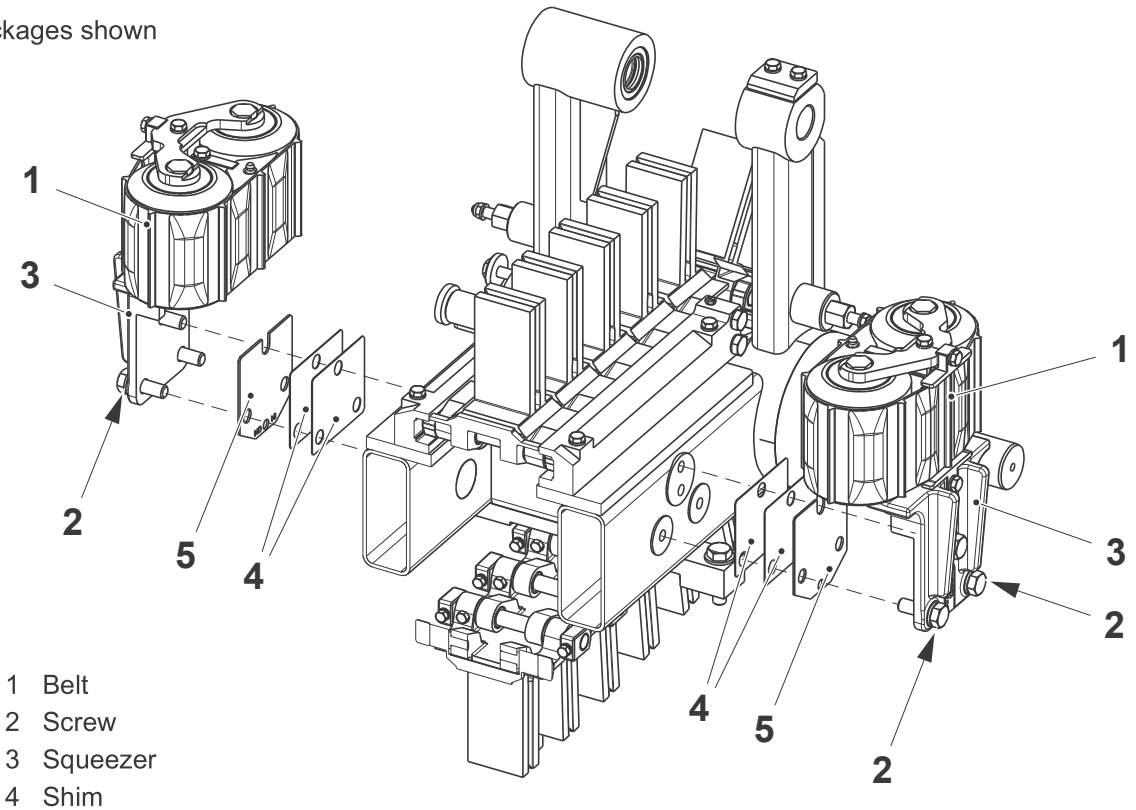

1 Belt
2 Screw
3 Squeezer
4 Shim
5 Shim

(Cont'd)

TechPub_2614345_0107 - 0504_3048168_01.fm

(Cont'd)

d) Remove the screws (6) and the bracket (6).

e) Remove and change the belt (1).

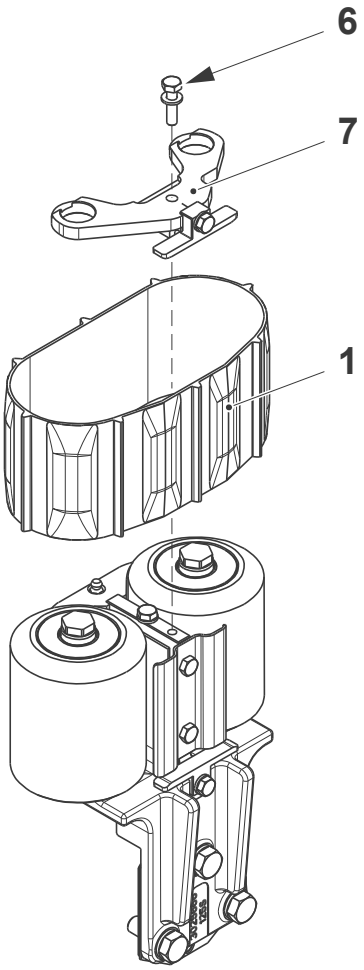

1 Belt
6 Screw
7 Bracket

(Cont'd)

TechPub_2614345_0107 - 0504_3048168_01.fm

(Cont'd)

Note! For Portion packages with T-order: 21215/00001 to 21215/000189, when assembling make sure that the parallel pins (7) lean on the frame (8). For Portion Packages with T-order: 21215/000190 and above the side squeezer supports mate the frame (8) without parallel pins.

f) Assemble in the reverse order and set the squeezer position, see 5.2.4-1 Squeezer - Set Position.

Portion packages with T-order: 21215/00001 to 21215/000189 is shown

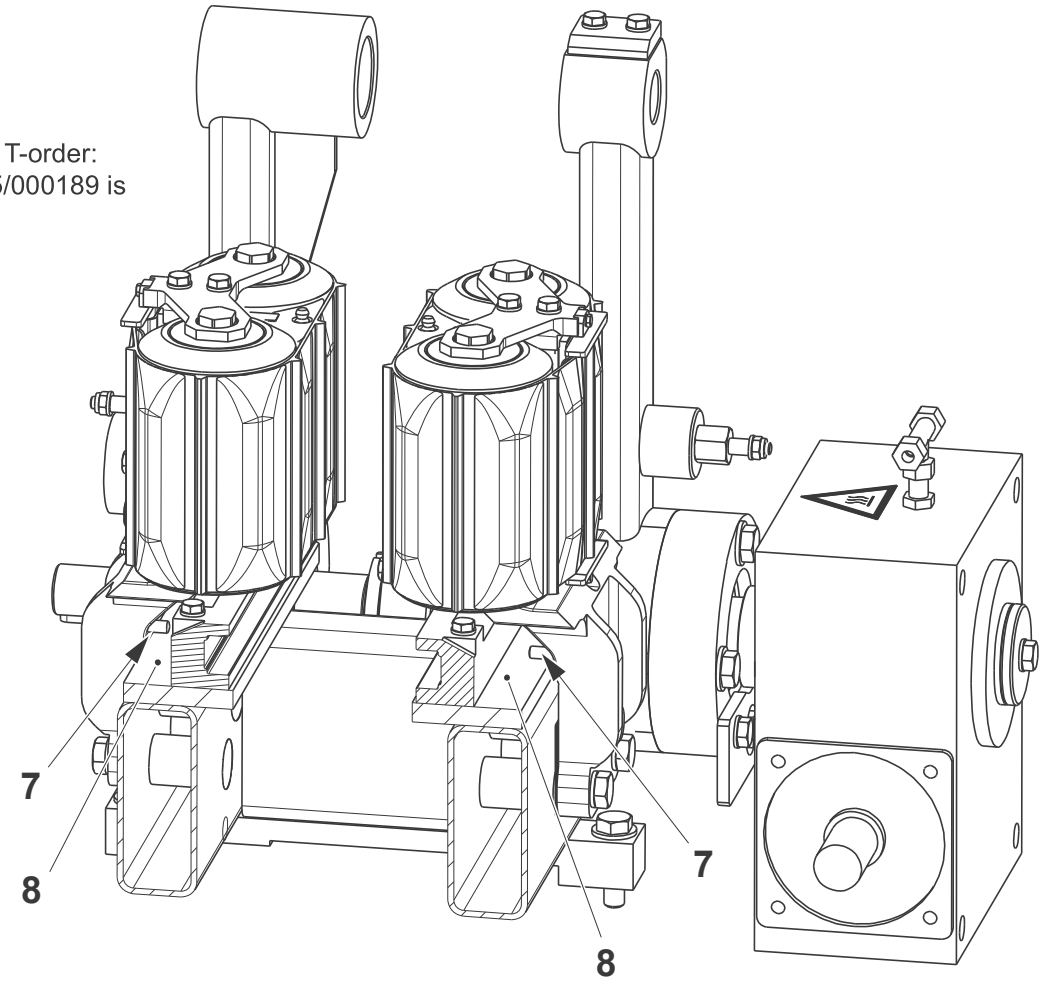

8 Parallel pin
9 Frame

TechPub_2614345_0107 - 0504_3048168_01.fm

5.2.4-3 Squeezer - Change Top Belt

Machine Status	Mains Power OFF Air OFF Steam ON Water OFF
SPC Reference	1549868-0300

Check the top pressure belt (1) for damage. If damaged, change it:

a) Remove the screw (2) and extract the guide (3).

b) Remove and change the belt (1).

c) Assemble in the reverse order and set the squeezer position, see 5.2.4-1 Squeezer - Set Position.

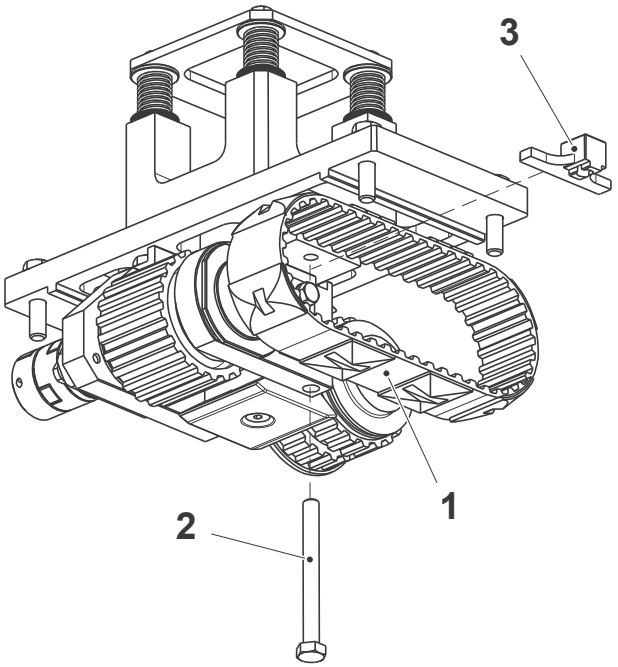

1 Belt
2 Screw
3 Guide

TechPub_2614345_0107 - 0504_3048168_01.fm

5.2.4-4 Squeezer - Side Squeezer Overhaul

Machine Status	Mains Power OFF Air OFF Steam ON Water OFF
SPC Reference	1549868-0300

CAUTION
Risk of damage to the equipment.
Wrong unscrewing can cause damage to the threading. The shafts (2) must be loosened **counter-clockwise**.

a) Remove the side belt (1), see 5.2.4-2 Squeezer - Change Side Belt.

b) Unscrew the shaft (2) and remove the roller assembly (3) from the support (4).

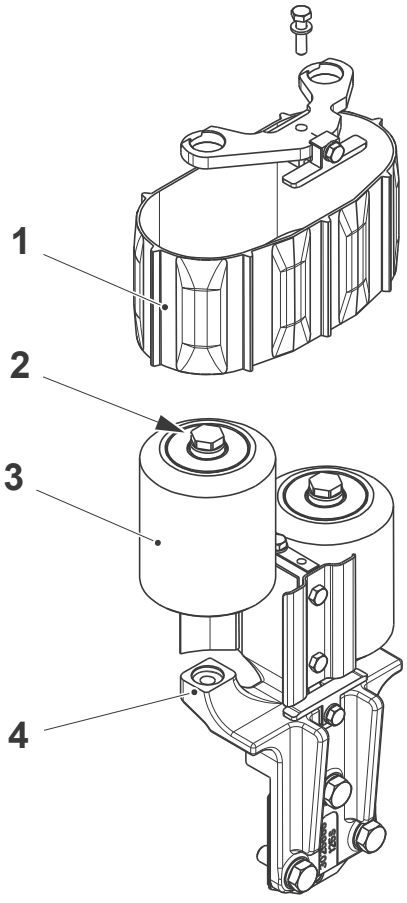

1 Belt
2 Shaft
3 Roller assembly
4 Bracket

(Cont'd)

TechPub_2614345_0107 - 0504_3048168_01.fm

(Cont'd)

c) Remove the seal (5) and the retaining ring (6).
d) Remove and change the ball bearing (7).
e) Remove the seal (8) and the retaining ring (9).
f) Push the shaft (2) out of the roller (10).
g) Remove the spacer (11) and change the ball bearing (12).
h) Apply grease on the shaft (2) and on the ball bearings (7) and (12).
i) Repeat on the other roller.

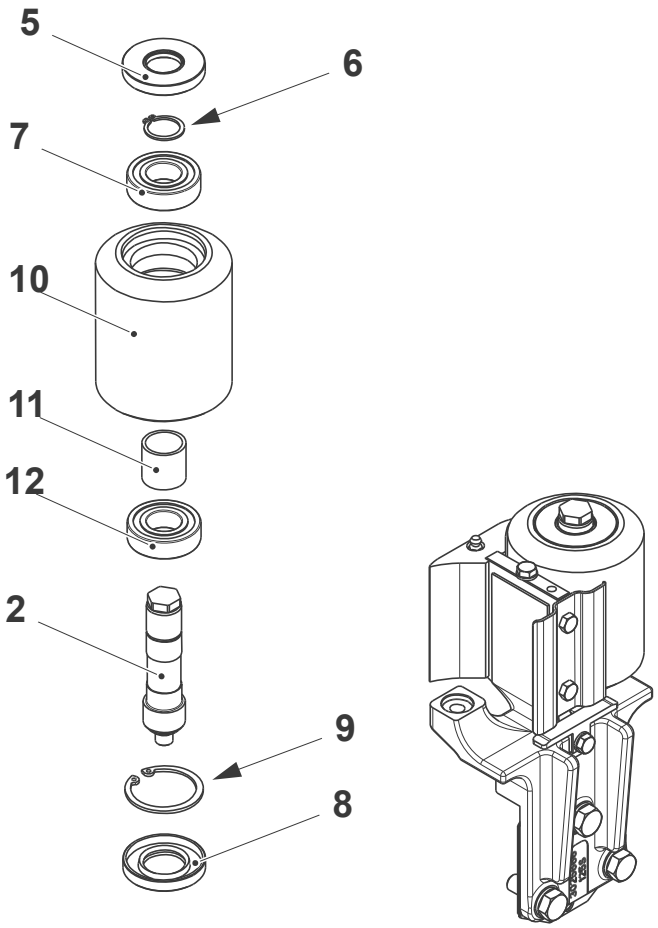

2 Shaft
5 Seal
6 Retaining ring
7 Ball bearing
8 Seal
9 Retaining ring
10 Roller
11 Spacer
12 Ball bearing

(Cont'd)

TechPub_2614345_0107 - 0504_3048168_01.fm

(Cont'd)

j) Remove the screws (13) and the sliders (14) and (15).

k) Change the sliders (14) and (15).

Note! Only for Portion Packages, remove the grease nipple (16).

l) Assemble in the reverse order.

m) Set the squeezer position, see 5.2.4-1 Squeezer - Set Position.

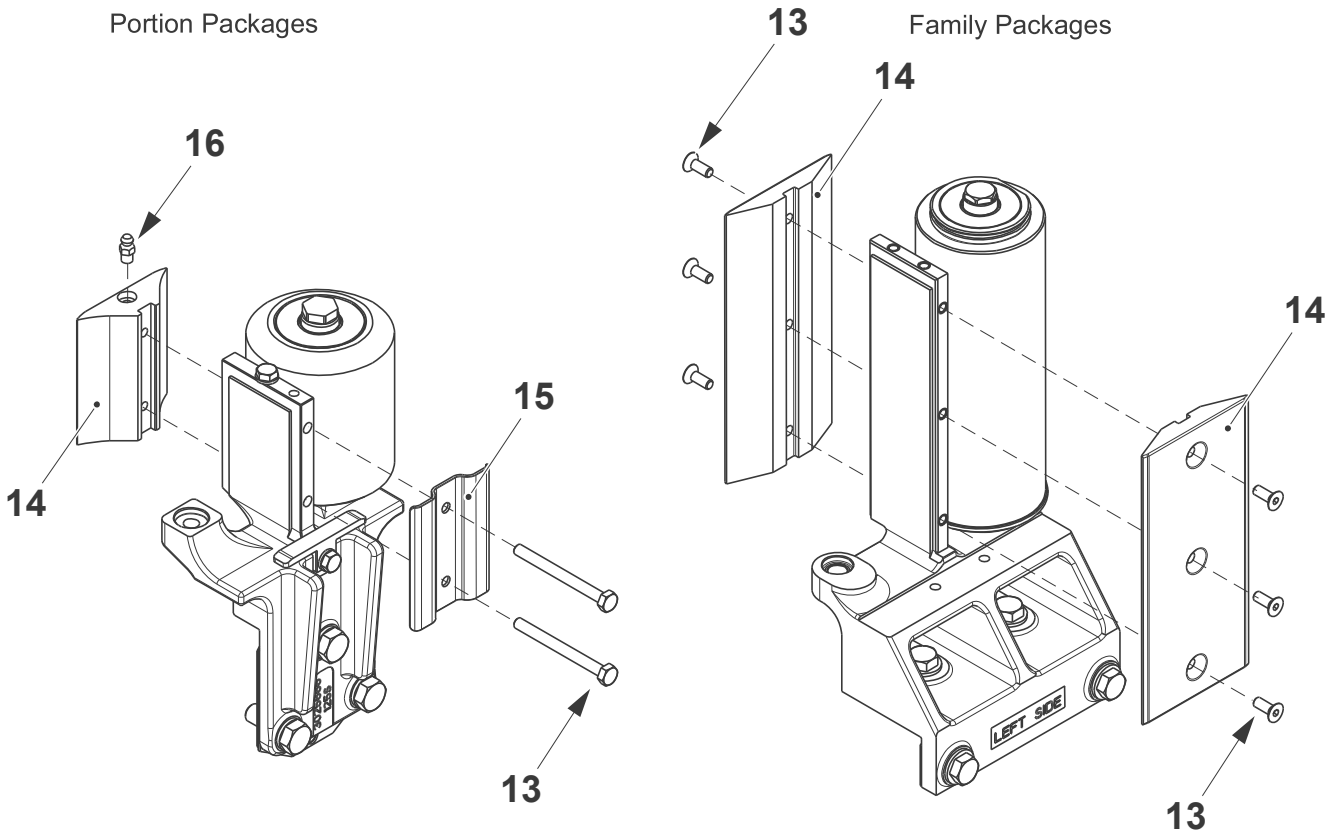

13 Screw
14 Slider
15 Slider
16 Grease nipple

TechPub_2614345_0107 - 0504_3048168_01.fm

5.2.4-5 Squeezer - Top Squeezer Overhaul

Machine Status	Mains Power OFF Air OFF Steam ON Water OFF
SPC Reference	1549868-0300

Note! When opening the coupling (1) pay attention to hold the central body (2) and the plates (3).

a) Close the water supply valves in the service unit.

b) Disconnect the cooling water tubes (4).

c) Lift the swing frame and open the coupling (1).

d) Remove the screws (5) and the top squeezer assembly (6).

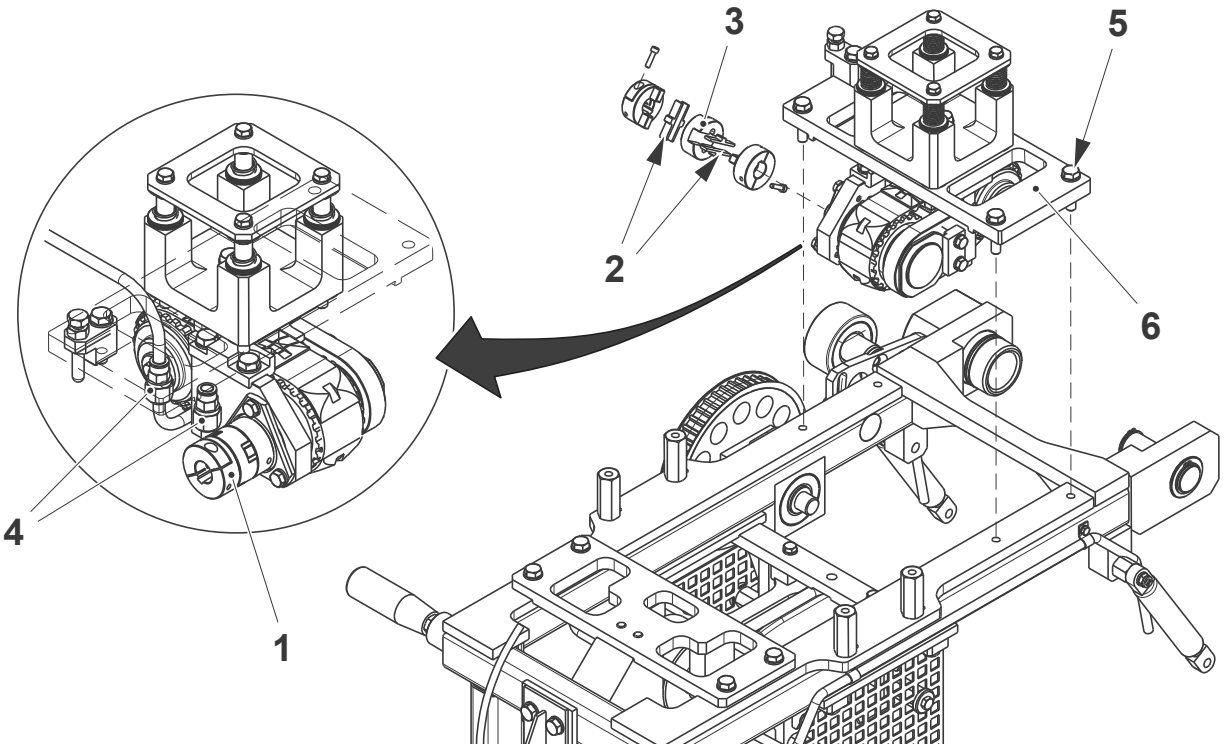

1 Coupling
2 Central body
3 Plate
4 Tube
5 Screw
6 Top squeezer

(Cont'd)

TechPub_2614345_0107 - 0504_3048168_01.fm

(Cont'd)

Note! When assembling, pay attention to fit back the same shims (12) that had been removed.

e) Remove the belt (7), see 5.2.4-3 Squeezer - Change Top Belt.

f) Remove the screws (8) to separate the belt assembly (9) from the top squeezer frame.

g) Remove the screw (10).

h) Remove the spacer block (11) and the shims (12).

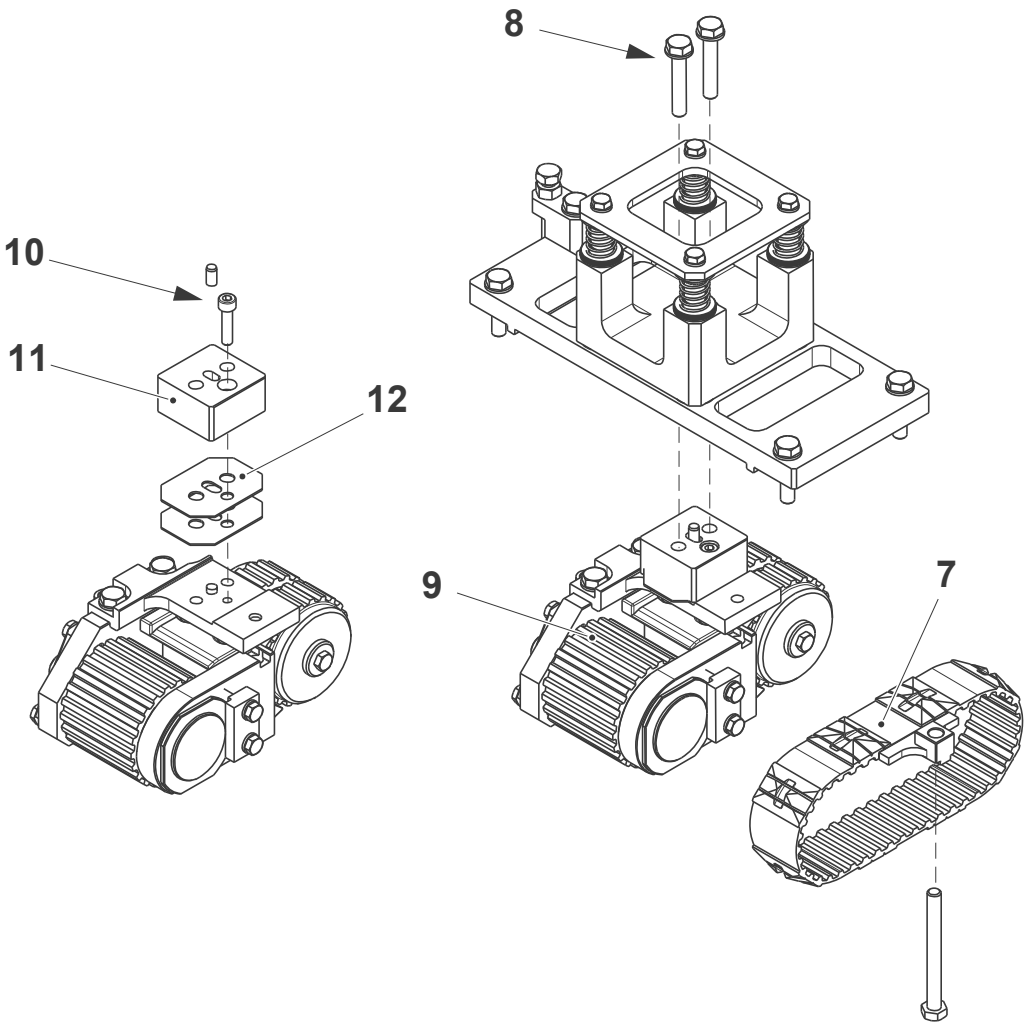

7 Belt
8 Screw
9 Belt assembly
10 Screw
11 Spacer block
12 Shims

TechPub_2614345_0107 - 0504_3048168_01.fm

(Cont'd)

(Cont'd)

Note! The upper slider (16) has to be changed only in Portion Packages machines.

i) Remove the screws (13) and the support (14).

j) Remove the screws (15) and change the slider (16).

k) Remove the screws (17) and change the cooled slider (18).

Portion packages

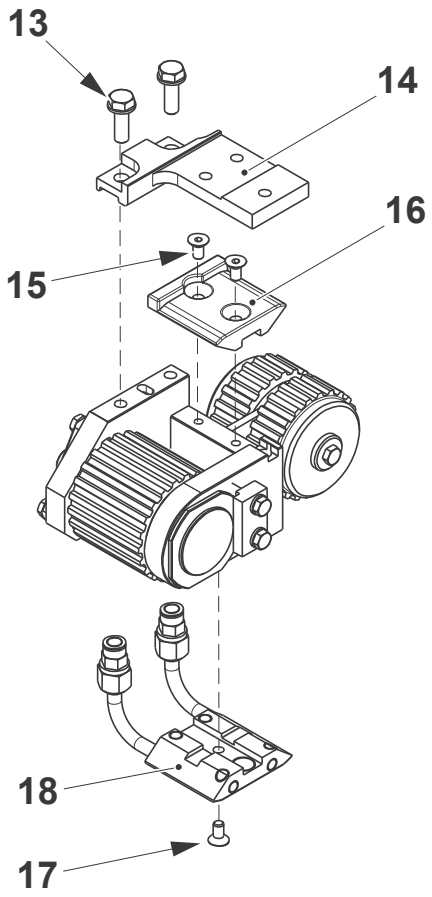

Family packages

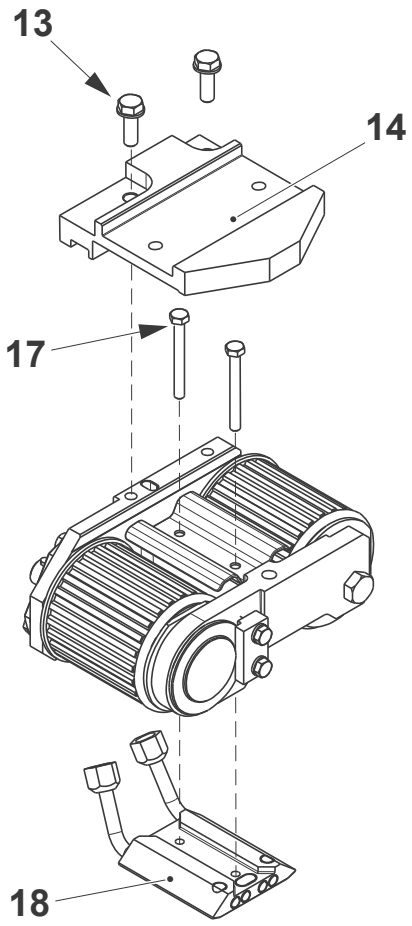

13 Screw
14 Support
15 Screw
16 Slider
17 Screw
18 Cooled slider

(Cont'd)

TechPub_2614345_0107 - 0504_3048168_01.fm

(Cont'd)

l) Loosen the screws (19) and remove the plate (20).

m) Loosen the screws (21) and move aside the shaft assembly (22).

n) Remove the retaining ring (23).

o) Remove the screws (21) and extract the shaft assembly (22) removing the pulley (24).

p) Remove the flange (25).

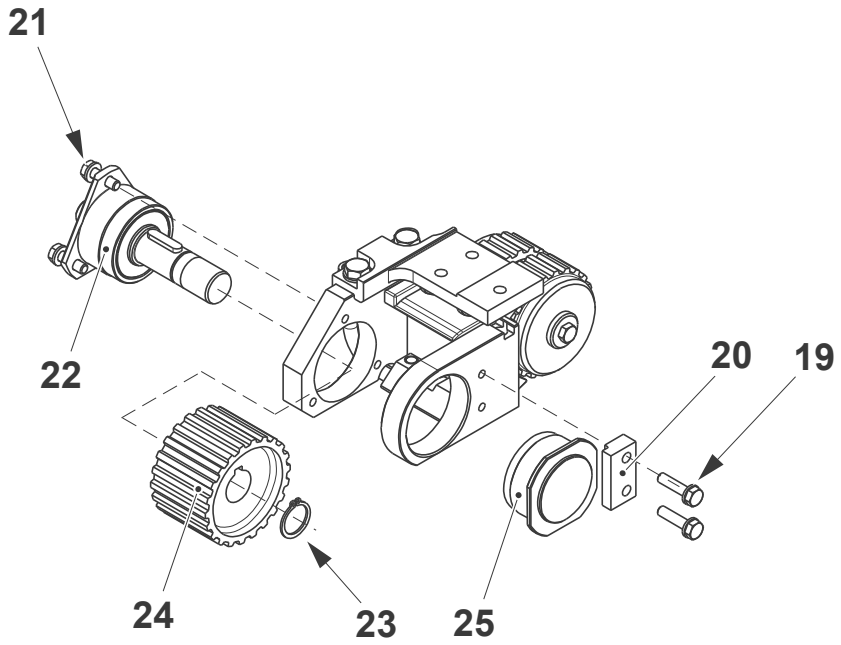

19 Screw
20 Plate
21 Screw
22 Shaft assembly
23 Retaining ring
24 Pulley
25 Flange

(Cont'd)

TechPub_2614345_0107 - 0504_3048168_01.fm

(Cont'd)

q) On the shaft assembly (22), remove the seal rings (26).

r) Remove the retaining ring (27) and slip off the shaft (28).

s) Remove the retaining ring (29) from the flange (30) and change the ball bearing (31).

t) On the flange (25), remove the seal ring (32) and the retaining ring (33).

u) Remove and change the ball bearing (34).

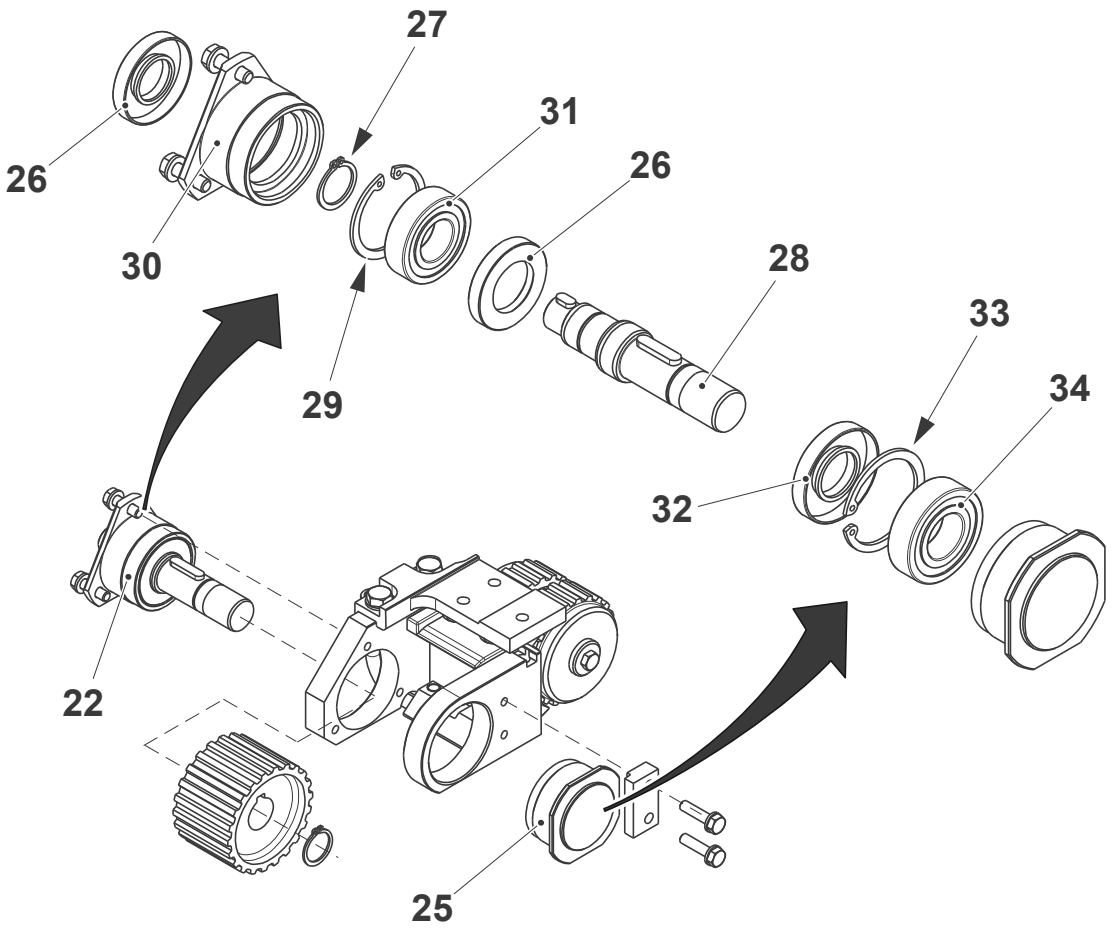

22 Shaft assembly
14 Flange
26 Seal ring
27 Retaining ring
28 Shaft
29 Retaining ring
30 Flange
31 Ball bearing
32 Seal ring
33 Retaining ring
34 Ball bearing

(Cont'd)

TechPub_2614345_0107 - 0504_3048168_01.fm

(Cont'd)

v) On both sides, remove the screw (35) and the pulley (36).
w) Remove the seal rings (37) and the retaining rings (38).
x) Remove the shaft (39) and change the ball bearings (40).
y) Assemble in the reverse order.
z) Set the top squeezer position, see 5.2.4-1 Squeezer - Set Position.

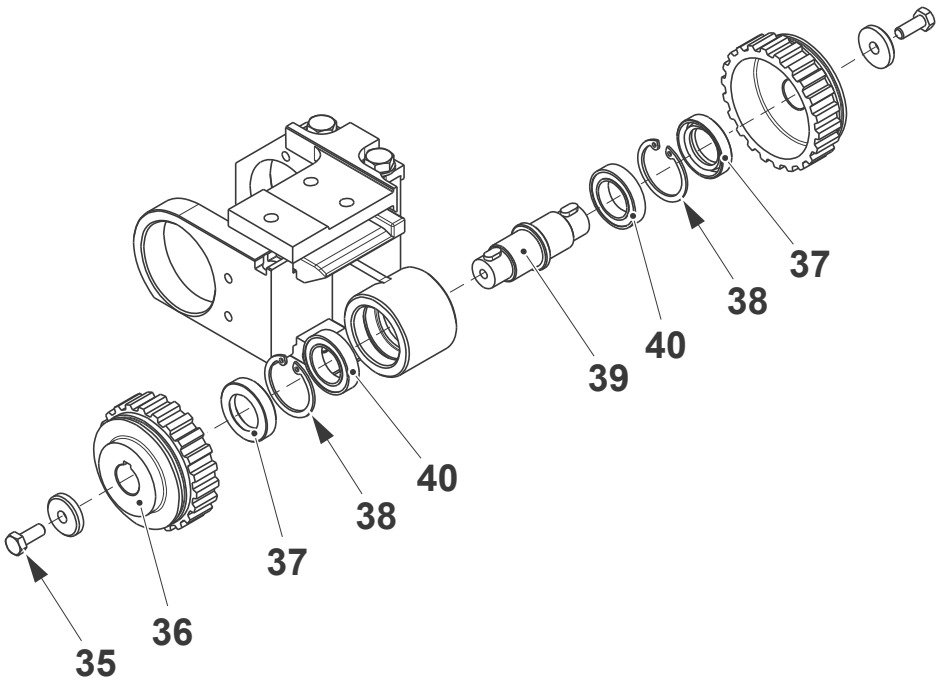

35 Screw
36 Pulley
37 Seal ring
38 Retaining ring
39 Shaft
40 Ball bearing

TechPub_2614345_0107 - 0504_3048168_01.fm

5.2.4-6 Squeezer - Check Side Squeezer Clearances

Machine Status	Mains Power OFF Air OFF Steam ON Water OFF
SPC Reference	1549868-0300

Note! Verify the clearance by fitting the feeler gauges where indicated by the arrows, see pictures on the next pages.

(Cont'd)

TechPub_2614345_0107 - 0504_3048168_01.fm

(Cont'd)

Valid for Portion Packages (except TBA 125 S) with T-order: 21215/00001 to 21215/00189

a) Rotate the final folder drive shaft by hand until the carton station (1) is in line with the centre of the side squeezers.

b) With a feeler gauge, check that the clearance between the side of the carton station (1) and the belts (2) on both sides squeezers is 0.5 mm.

c) Adjust the clearance by inserting or removing shims (3) behind the supports (4).

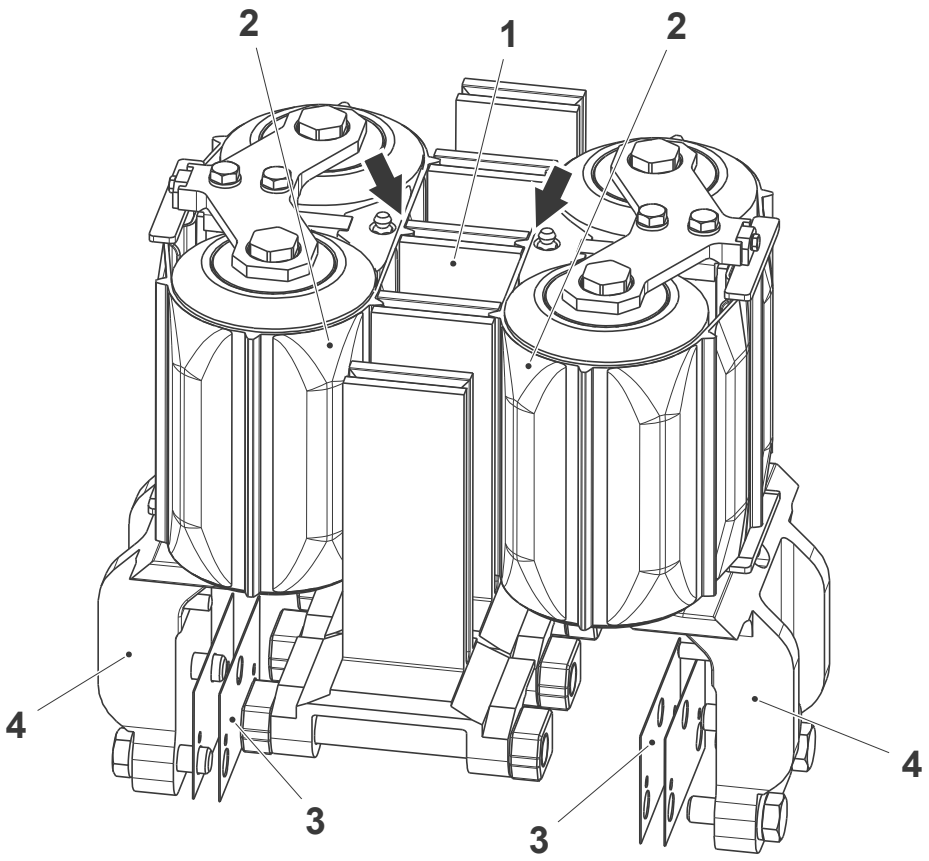

1 Carton station
2 Belt
3 Shim
4 Support

(Cont'd)

TechPub_2614345_0107 - 0504_3048168_01.fm

(Cont'd)

Valid for TBA 125 S and for Portion Packages with T-order: 21215/00190 and above

Note! Two pair of special shims (shown below as grey) with different thickness marked “HI” or “NO HI” are supplied. Fit the shims marked “HI” if the Headspace Unit (OE) is running on the machine, or the shims “NO HI” if it is not running.

a) Rotate the final folder drive shaft by hand until the carton station (1) is in line with the centre of the side squeezers.

b) With a feeler gauge, check that the clearance between the side of the carton station (1) and the belts (2) is 0.6 mm on both sides squeezers, see arrows.

Note! If the HI is installed, the distance to be checked is 0.3 mm.

c) Adjust the clearance by inserting or removing shims (3).

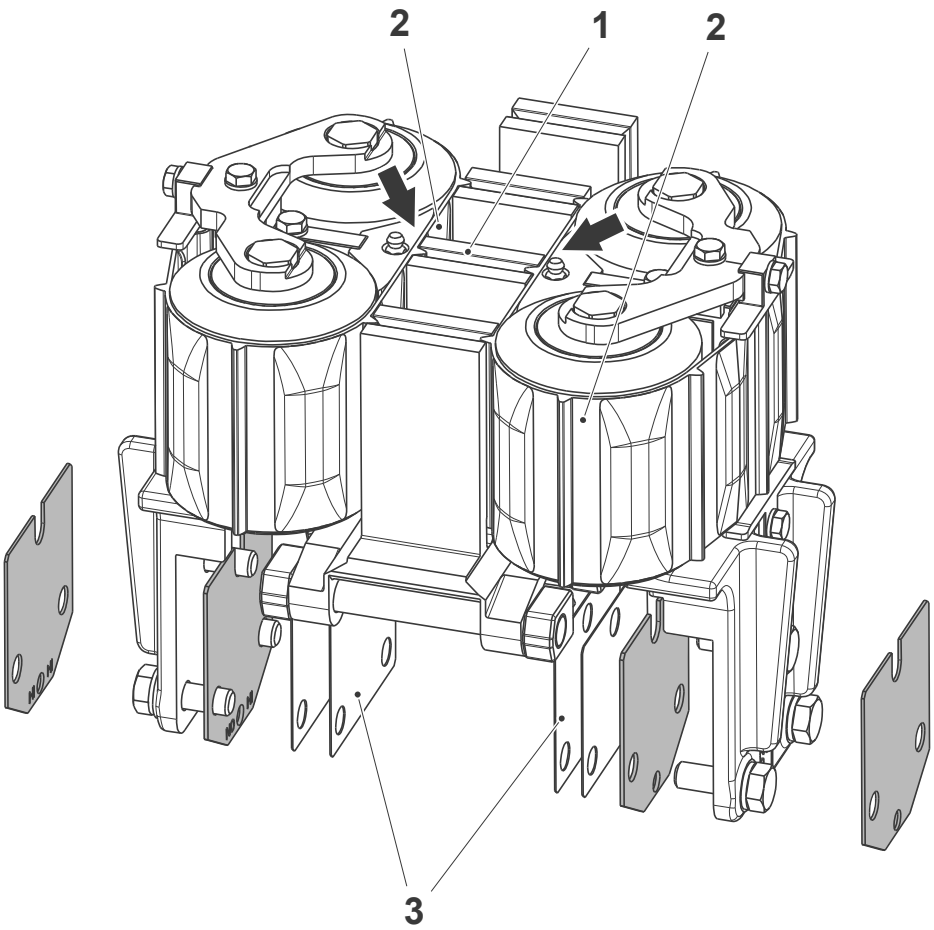

1 Carton station
2 Belt
3 Shim

(Cont'd)

TechPub_2614345_0107 - 0504_3048168_01.fm

(Cont'd)

Valid for Family Packages

a) Rotate the final folder drive shaft by hand until the carton station (1) is in line with the centre of the side squeezers.

b) With a feeler gauge, check that the clearance between the side of the carton station (1) and the belts (2) on both sides squeezers is according the table below.

Package	Clearance (mm)
TBA 1000 S - TBA 1000 Sq	1.3
TBA 1000 B	1.5

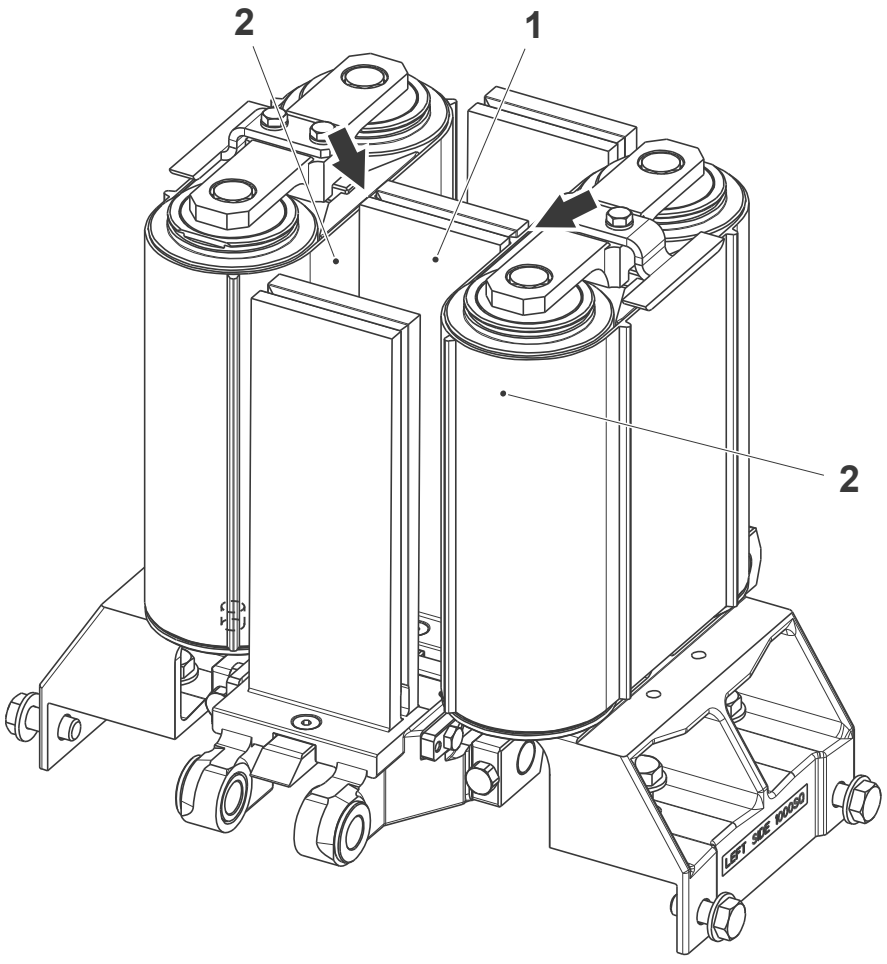

1 Carton station
2 Belt

(Cont'd)

TechPub_2614345_0107 - 0504_3048168_01.fm

(Cont'd)

c) Adjust the clearance by inserting or removing shims (3) behind the supports (4).

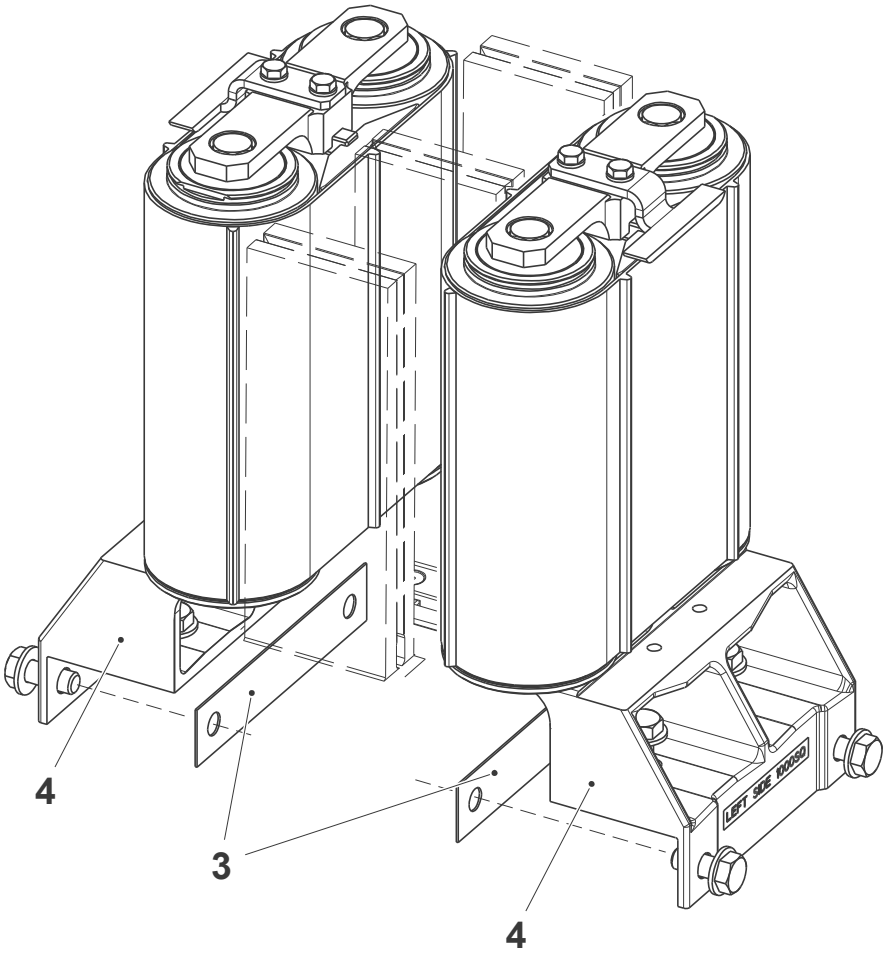

3 Shim
4 Support

TechPub_2614345_0107 - 0504_3048168_01.fm

5.2.4-7 Squeezer - Check Top Squeezer Bushings

Machine Status	Mains Power OFF Air OFF Steam ON Water OFF
SPC Reference	1549868-0300

a) Remove the screws (1) and the plate (2).

b) Remove the springs (3) with the washers (4) and (5). Change the springs (3) if necessary.

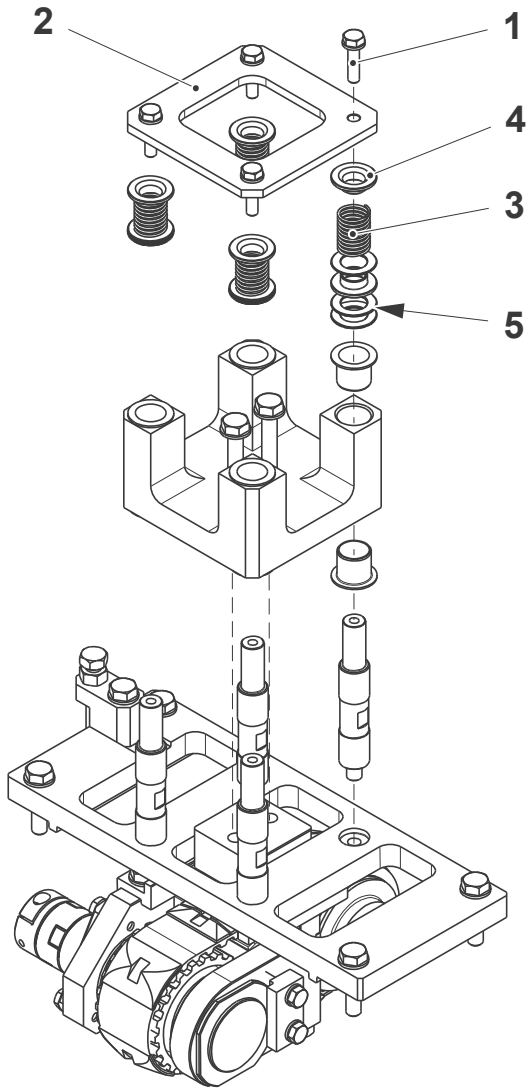

1 Screw
2 Plate
3 Spring
4 Washer
5 Washer

(Cont'd)

TechPub_2614345_0107 - 0504_3048168_01.fm

(Cont'd)

c) Remove the screws (6) and slip off the guide bracket (7).

d) Remove the bushings (8) and check for wear or damage. Change if necessary.

e) Assemble in the reverse order.

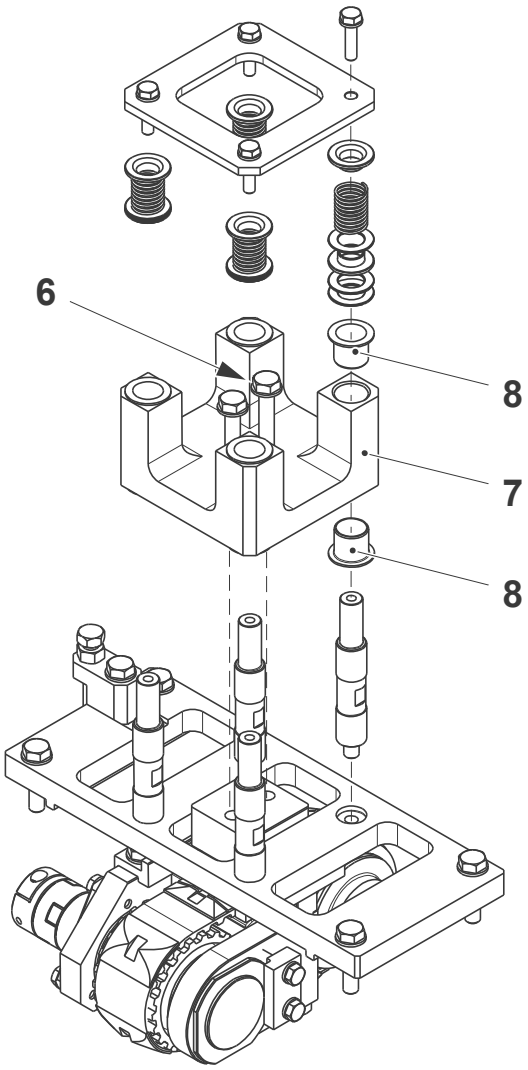

6 Screw
7 Guide bracket
8 Bushing

TechPub_2614345_0107 - 0504_3048168_01.fm

5.2.4-8 Squeezer - Set Top Squeezer Coupling

Machine Status	Mains Power OFF Air OFF Steam ON Water OFF
SPC Reference	1549868-0300

a) Loosen the screw (1) and move the hub (2) against the shoulder of the top squeezer shaft.

b) Tighten the screw (1).

c) Loosen the screw (3) to release the hub (4).

d) With the aid of a feeler gauge, set the distance **A** between the coupling (5) and the hubs (2) and (4).

e) Tighten the screw (3).

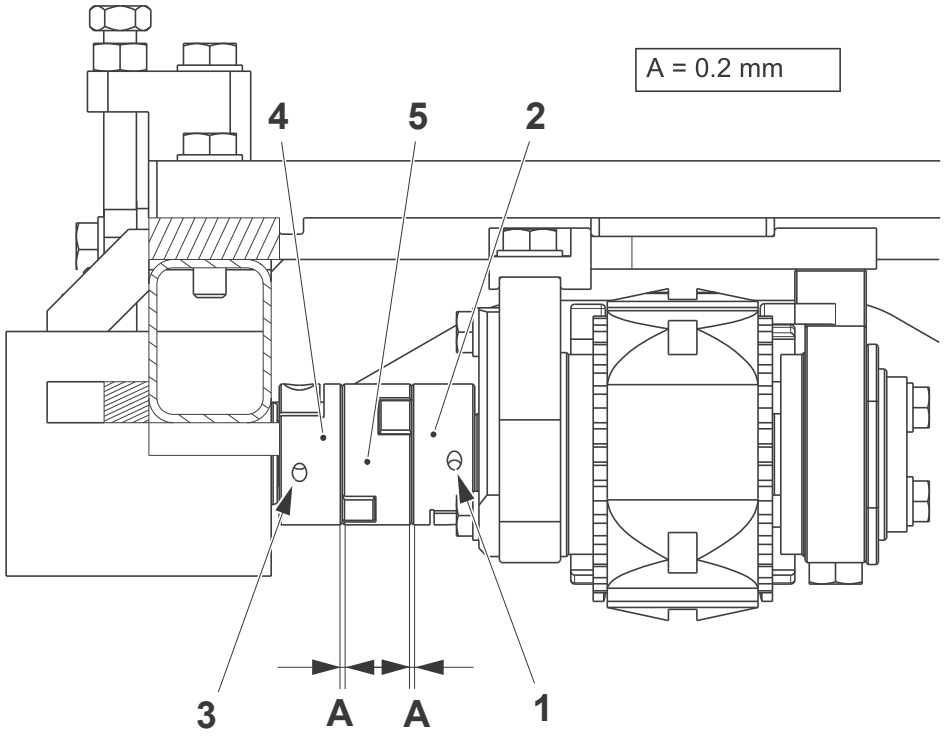

1 Screw
2 Hub
3 Screw
4 Hub
5 Coupling

TechPub_2614345_0107 - 0504_3048168_01.fm

5.2.4-9 Squeezer - Change Coupling Plates

Machine Status	Mains Power OFF Air OFF Steam ON Water OFF
SPC Reference	1549868-0300

Note! When opening the coupling pay attention to hold the central body (3) and the plates (2).

Separate the coupling by loosening the screws (1) and change the plates (2) on the central body (3) of the coupling.

After the assembly, set the top squeezer belt, see 5.2.4-1 Squeezer - Set Position.

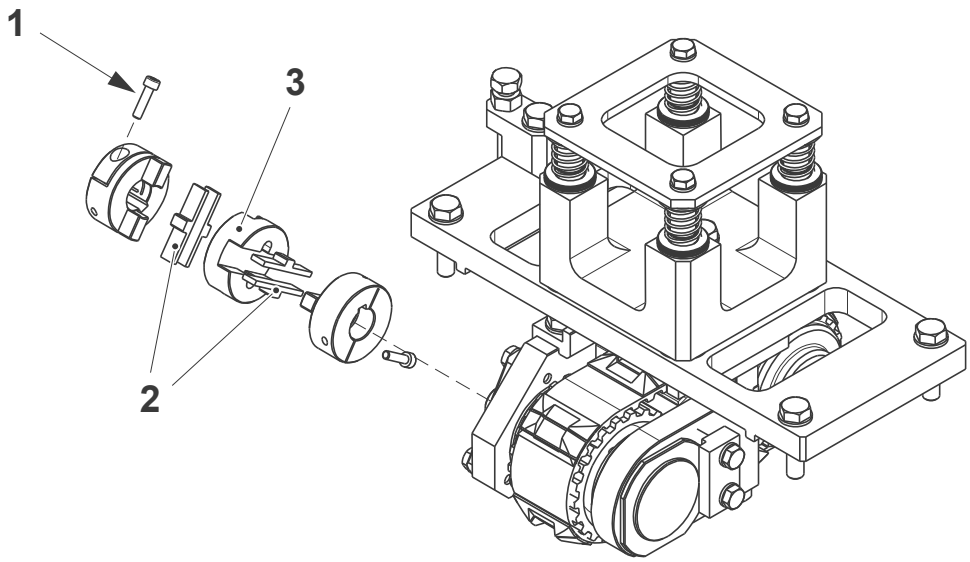

1 Screw
2 Plate
3 Central body

TechPub_2614345_0107 - 0504_3048168_01.fm

5.2.5 Heating Chamber

5.2.5-1 Heating Chamber - Set Flap Sealing Nozzles

Machine Status	Mains Power OFF Air OFF Steam ON Water OFF
Special Equipment	Template, see 10.2 Templates and Tools
SPC Reference	2867510-0100

WARNING

Burn hazard.

Nozzles might be hot.

a) Lift the swing frame (1).

b) Remove the pulley assembly (2) by the screws (3).

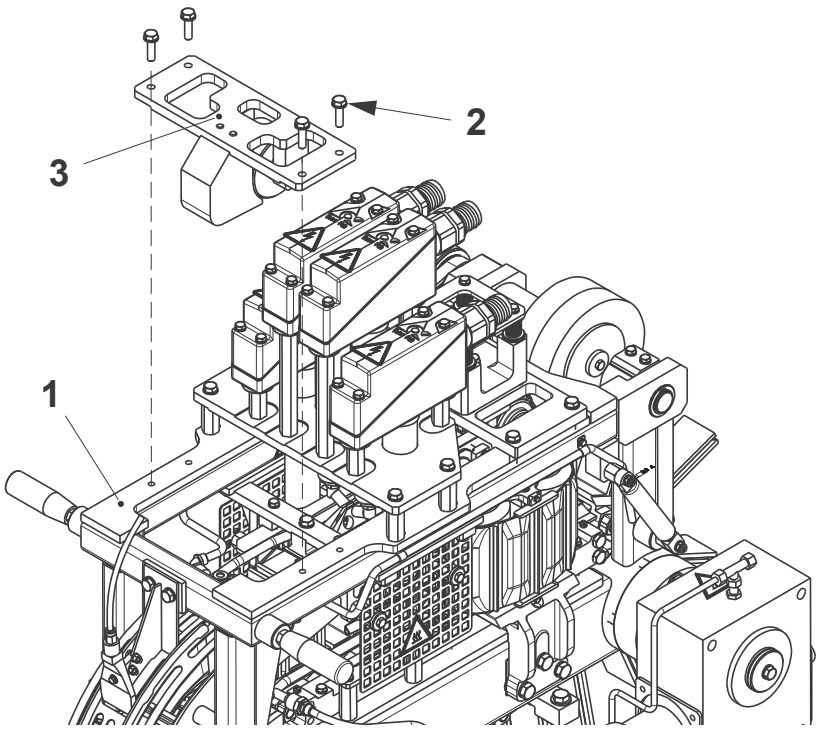

1 Swing frame
2 Pulley assembly
3 Screw

(Cont'd)

TechPub_2614345_0107 - 0502_3048169_01.fm

(Cont'd)

c) Loosen the nozzles (4) and (5).

d) Fit the template (6) in to the station chain, positioning the template below the heating chamber.

e) Carefully lower the swing frame and turn the shaft (7) until the template (6) is below the nozzles (4).

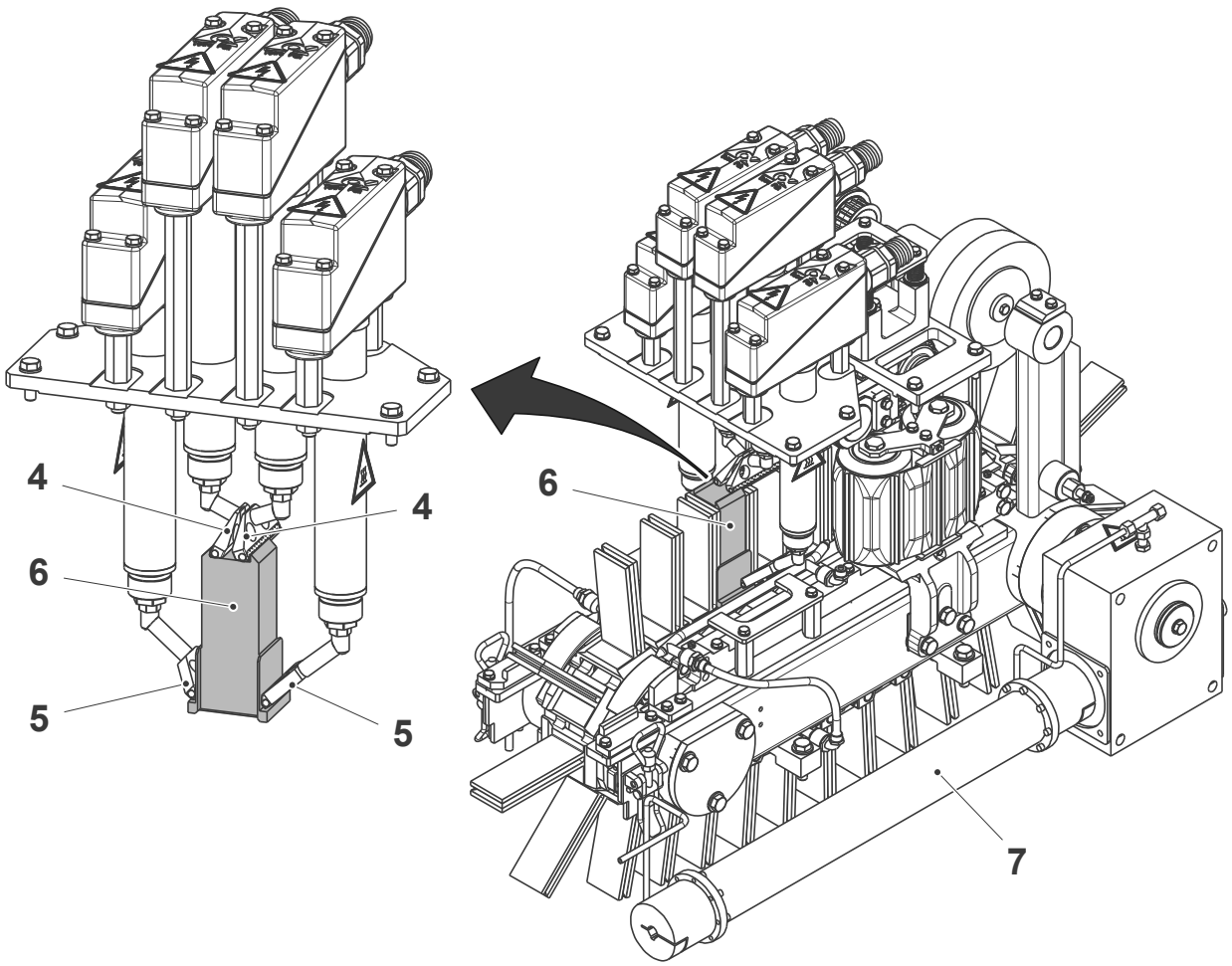

4 Nozzle
5 Nozzle
6 Template
7 Shaft

(Cont'd)

TechPub_2614345_0107 - 0502_3048169_01.fm

(Cont'd)

Note! At least one shim (8) must be left on each nozzle.

f) Add or remove shims (8) until the nozzles (4) are as close as possible to the top of the template (6).

g) Set the nozzles (5) sideways so that they lightly touch the template (6).

h) Tighten the nozzles (4) and (5) by hand and remove the template (6).

i) Remove the heating chamber and tighten the nozzles with a torque of 110 Nm; only for Portion Packages see the procedure Final Tightening in the following pages.

Note! The final tightening is necessary to prevent the loosening and the consequent falling of the nozzles into the station chain when the machine is running.

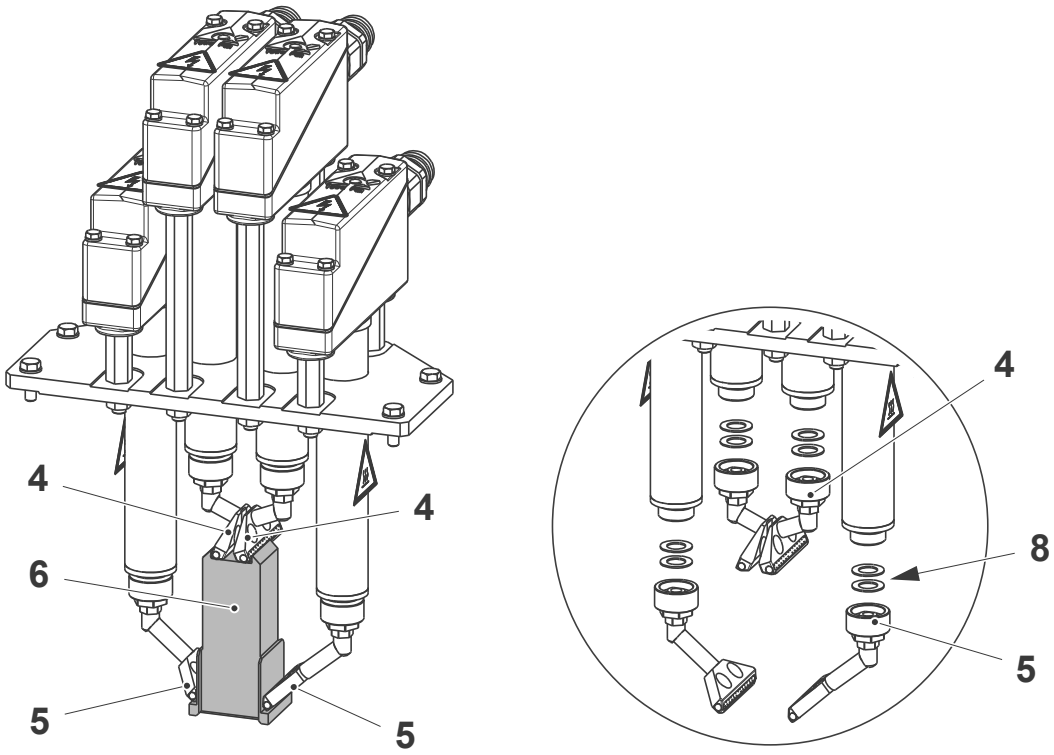

4 Nozzle
5 Nozzle
6 Template
8 Shim

(Cont'd)

TechPub_2614345_0107 - 0502_3048169_01.fm

(Cont'd)

Final Tightening

Note! Valid for Portion Packages only.

a) Remove the touch guards (1) by the screws (2).

b) Remove the screw (3).

c) Unscrew the spacers (4) and remove the guide (5).

d) Repeat the same for the other guide (6).

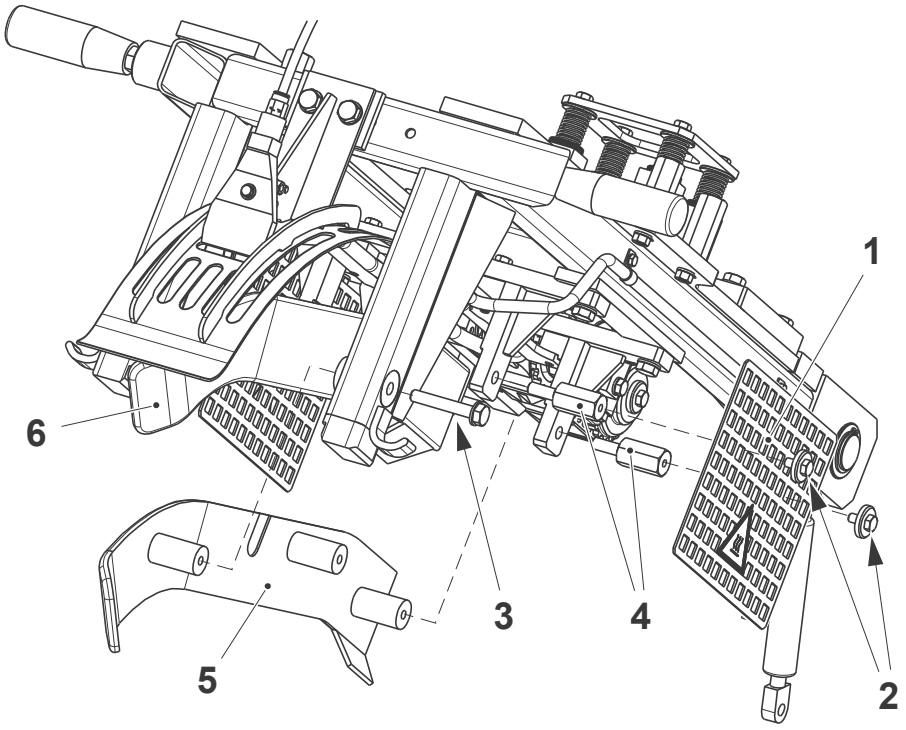

1 Touch guard
2 Screw
3 Screw
4 Spacer
5 Guide
6 Guide

(Cont'd)

TechPub_2614345_0107 - 0502_3048169_01.fm

(Cont'd)

e) Disconnect the water hoses (7) of the guide (8).

f) Remove the guide (8) by the four screws (9).

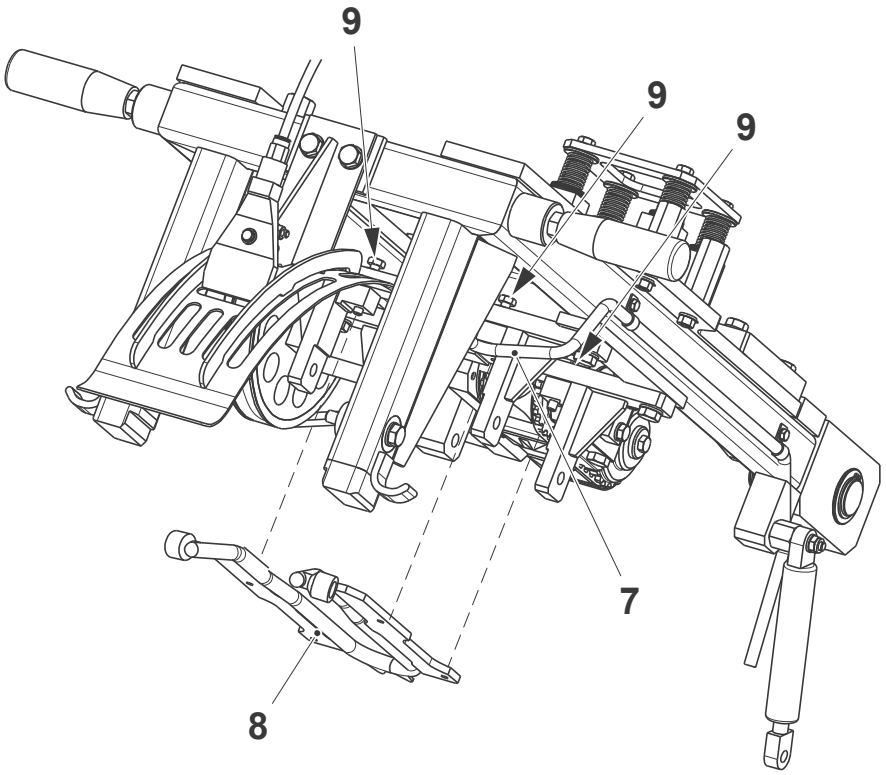

7 Water hose
8 Guide
9 Screw

(Cont'd)

TechPub_2614345_0107 - 0502_3048169_01.fm

(Cont'd)

CAUTION
Risk of damage to the equipment.
If the nozzles (12) and (13) are not tightened with the recommended tightening torque, they might loosen and fall into the station chain.

g) Remove the screws (10).

h) Extract the heating chamber assembly (11) and place it on the swing frame as shown below.

i) Tighten the nozzles (12) and (13) with a torque of 110 Nm.

j) Assemble in the reverse order.

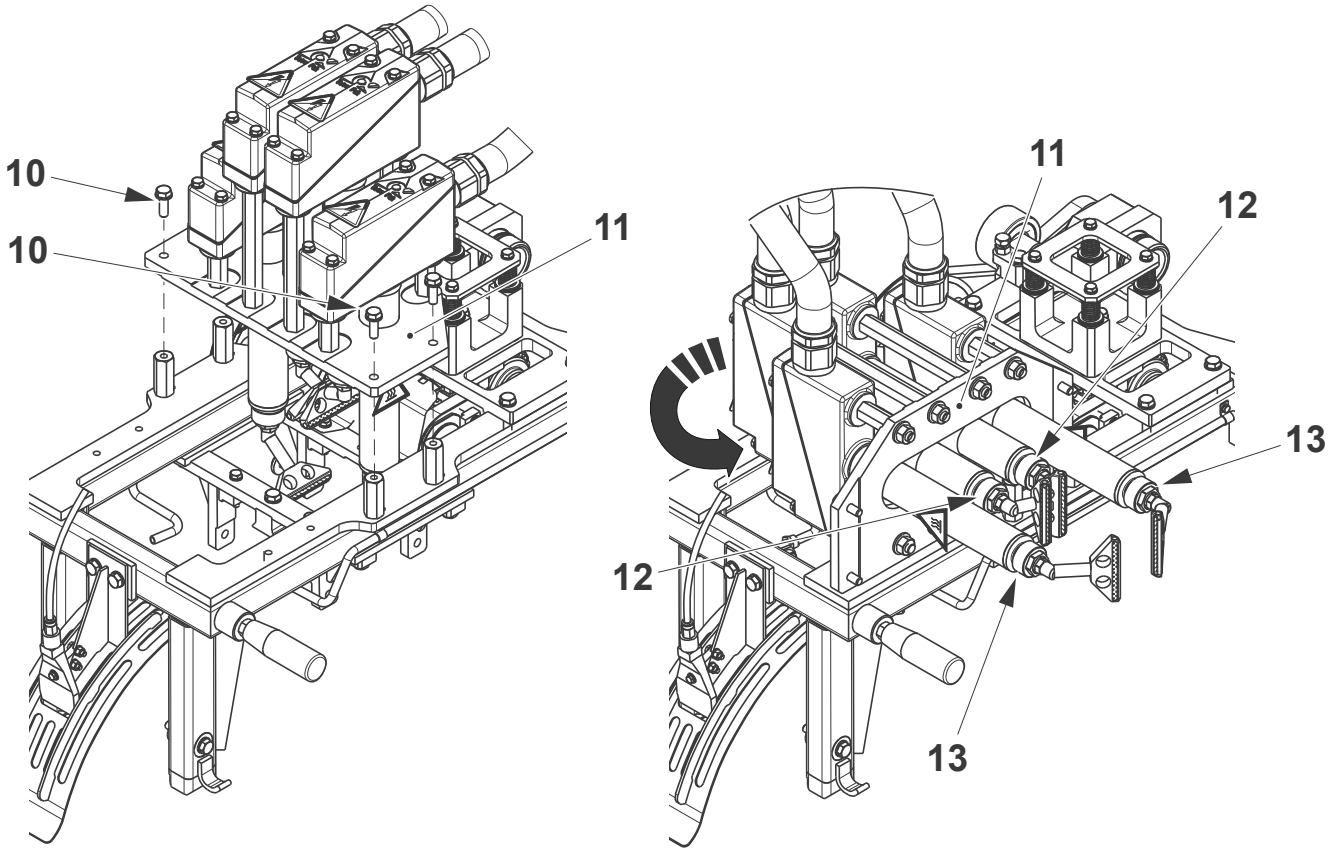

10 Screw
11 Heating chamber assembly
12 Nozzle
13 Nozzle

TechPub_2614345_0107 - 0502_3048169_01.fm

5.2.5-2 Heating Chamber - Set Flap Sealing Temperature

Machine Status	PRODUCTION
SPC Reference	2867510-0100

a) Touch the PRODUCTION CONTROL button (1) on the TPOP.

b) Touch the FINAL FOLDER button (2).

c) In the FINAL FOLDER window, touch the TEMPERATURE icon (3).

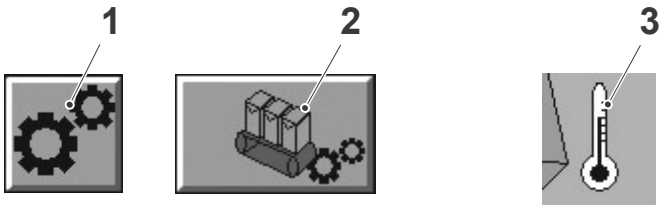

1 Production control button
2 Final folder button
3 Temperature icon

(Cont'd)

TechPub_2614345_0107 - 0502_3048169_01.fm

(Cont'd)

d) Touch one of the four regulator panels:
   - the lower LH nozzle icon (4)
   - the lower RH nozzle icon (5)
   - the upper LH nozzle icon (6)
   - the upper LH nozzle icon (7).

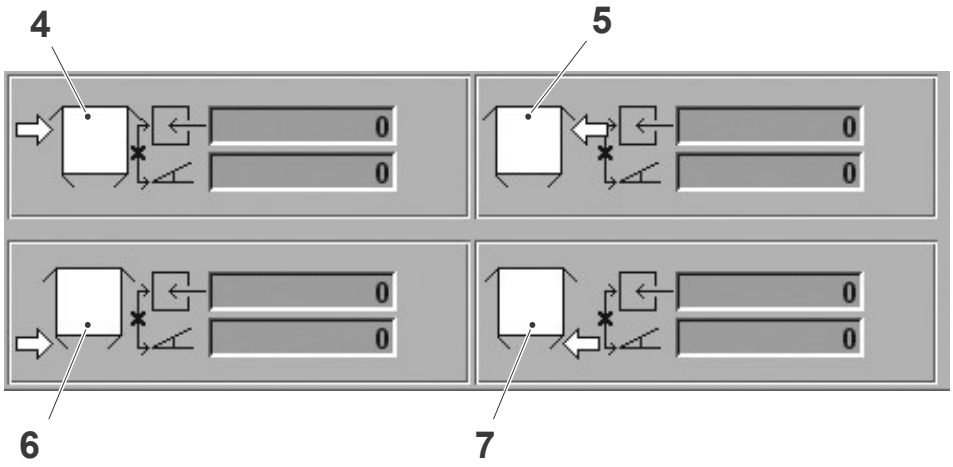

4 Lower LH nozzle icon
5 Lower RH nozzle icon
6 Upper LH nozzle icon
7 Upper RH nozzle icon

(Cont'd)

TechPub_2614345_0107 - 0502_3048169_01.fm

(Cont'd)

e) Use the ARROW buttons (8) to adjust the temperature setting.

f) Press the EXIT button (9).

Note! The flap heater temperature is a parameter set in the recipe and depends on the product and the packaging material being produced. The values in the table are provided as a reference only.

Flap Heating	Temperature (ºC)
Top (left and right)	450 ±70
Bottom (left and right)	500 ±70

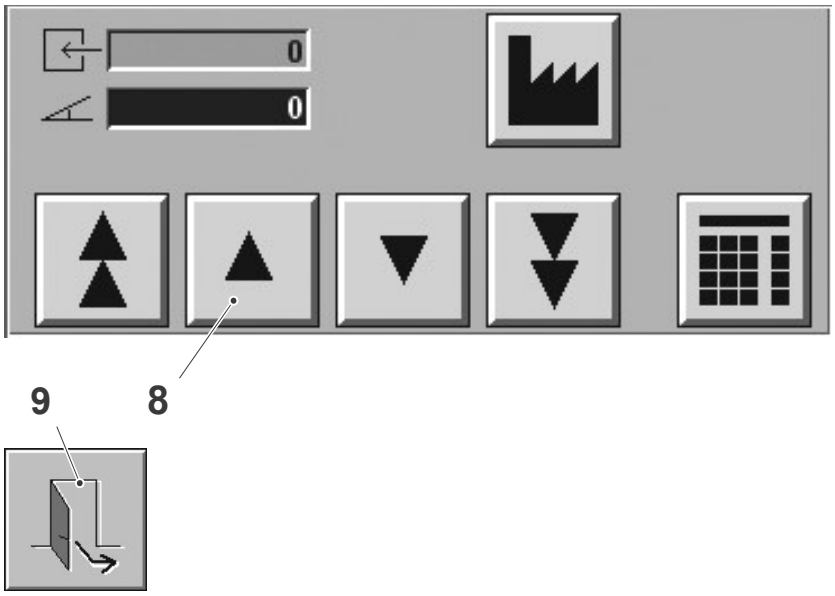

8 Arrow button
9 Exit button

TechPub_2614345_0107 - 0502_3048169_01.fm

5.2.5-3 Heating Chamber - Set Flap Heater Pressure

Machine Status	PREPARATION
SPC Reference	2867510-0100

The pressure of the flap heaters is controlled by the I/P transducers, see 2.3.1-2 Pneumatic System - Set I/P Transducer.

TechPub_2614345_0107 - 0502_3048169_01.fm

5.2.5-4 Heating Chamber - Overhaul

Machine Status	Mains Power OFF Air OFF Steam ON Water OFF
SPC Reference	2867510-0100

DANGER

Hazardous voltage.

Follow the Safety precautions.

WARNING

Burn hazard.

Nozzles might be hot.

(Cont'd)

TechPub_2614345_0107 - 0502_3048169_01.fm

(Cont'd)

Change Nozzles (Valid for Portion Packages)

a) Unscrew and remove the nozzles (1).

b) Remove the nuts (2) and extract upwards the heating elements (3) with the nozzles (4), then unscrew and remove the nozzles (4).

c) Check that the air holes in the nozzles (1) and (4) are not clogged. Clean with a brass wire brush if necessary.

d) Inspect the nozzles for damage and change them if necessary.

Note! When assembling, tighten the nozzles (1) and (4) with a torque of 110 Nm. The nozzles (4) must be tightened on the heating elements (3) before fitting them back in the heating chamber.

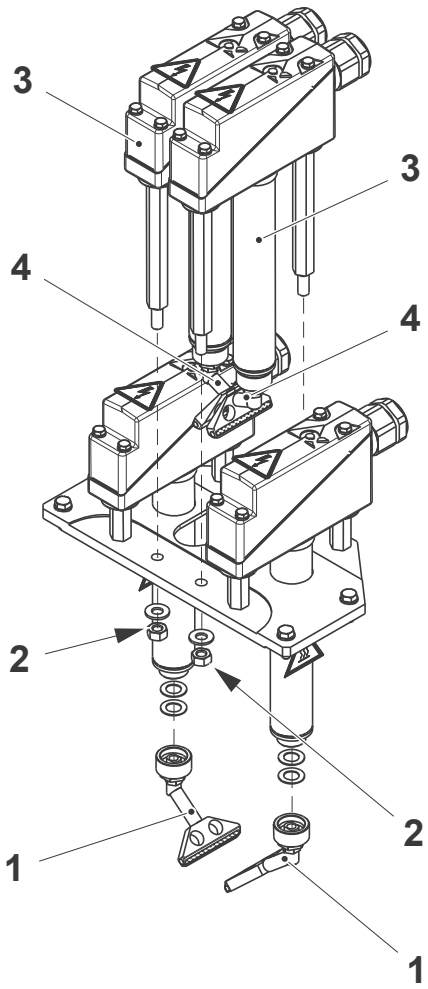

1 Nozzle
2 Nut
3 Heating element
4 Nozzle

(Cont'd)

TechPub_2614345_0107 - 0502_3048169_01.fm

(Cont'd)

Change Nozzles (Valid for Family Packages)

a) Unscrew and remove the nozzles (1).

b) Remove the screws (2) and extract upwards the heating elements (3) with the nozzles (4), then unscrew and remove the nozzles (4).

c) Check that the air holes in the nozzles (1) and (4) are not clogged. Clean with a brass wire brush if necessary.

d) Inspect the nozzles for damage and change them if necessary.

Note! When assembling, tighten the nozzles (1) and (4) with a torque of 110 Nm. The nozzles (4) must be tightened on the heating elements (3) before fitting them back in the heating chamber.

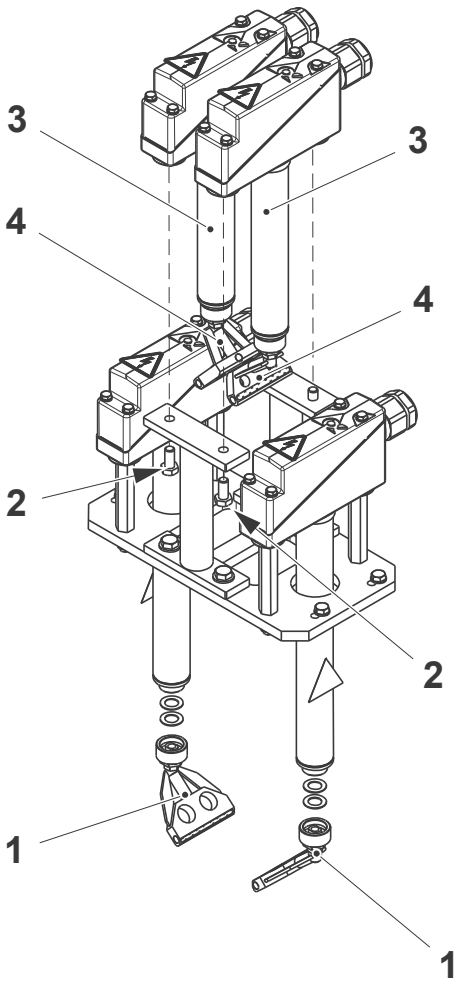

1 Nozzle
2 Screw
3 Heating element
4 Nozzle

(Cont'd)

TechPub_2614345_0107 - 0502_3048169_01.fm

(Cont'd)

Change Heating Elements

a) Remove the screws (1) and lift off the top covers (2).
b) Remove the seals (3).
c) Disconnect the male plug (4)
d) Disconnect the wires from the terminal block (5).
e) Disconnect the air tube (6).

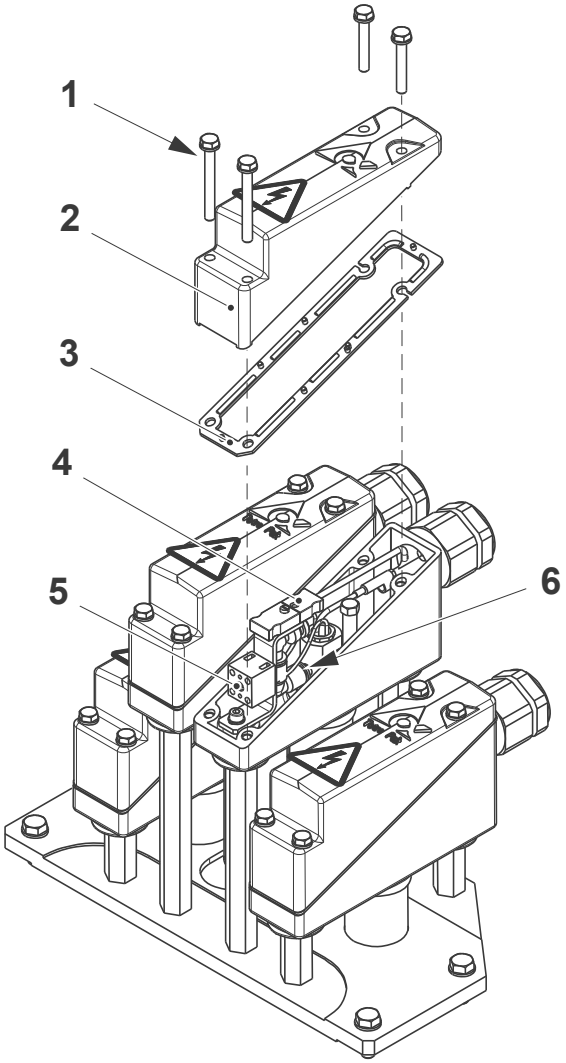

1 Screw
2 Top cover
3 Seal
4 Male plug
5 Terminal block
6 Air tube

(Cont'd)

TechPub_2614345_0107 - 0502_3048169_01.fm

(Cont'd)

f) Remove the screw (7) and the bracket (8).
g) Loosen the screw (9).
h) Extract the heating element (10). Change if necessary.
i) Remove and change the O-ring (11), if necessary.

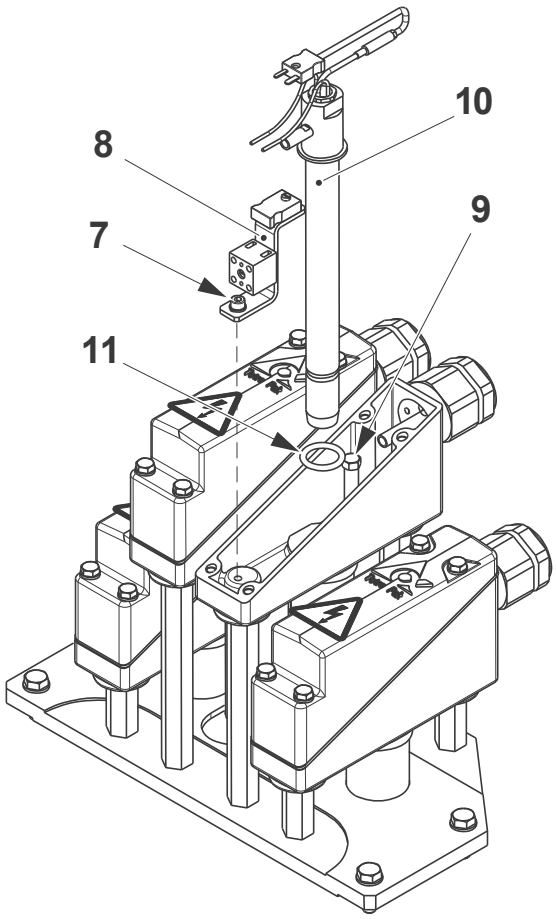

7 Screw
8 Bracket
9 Screw
10 Heating element
11 O-ring

(Cont'd)

TechPub_2614345_0107 - 0502_3048169_01.fm

(Cont'd)

CAUTION
Risk of damage to the equipment.
When assembling, pay attention to fit the seal (4): if wrongly fitted or crushed, water can seep into the heating unit.

j) Assemble in the reverse order paying attention to not damage the seal (3).

k) Tighten the screws (1) until the mechanical stops (12) on the top cover (2) touch the base (13) of the heating element. Apply a torque of 9.3 Nm.

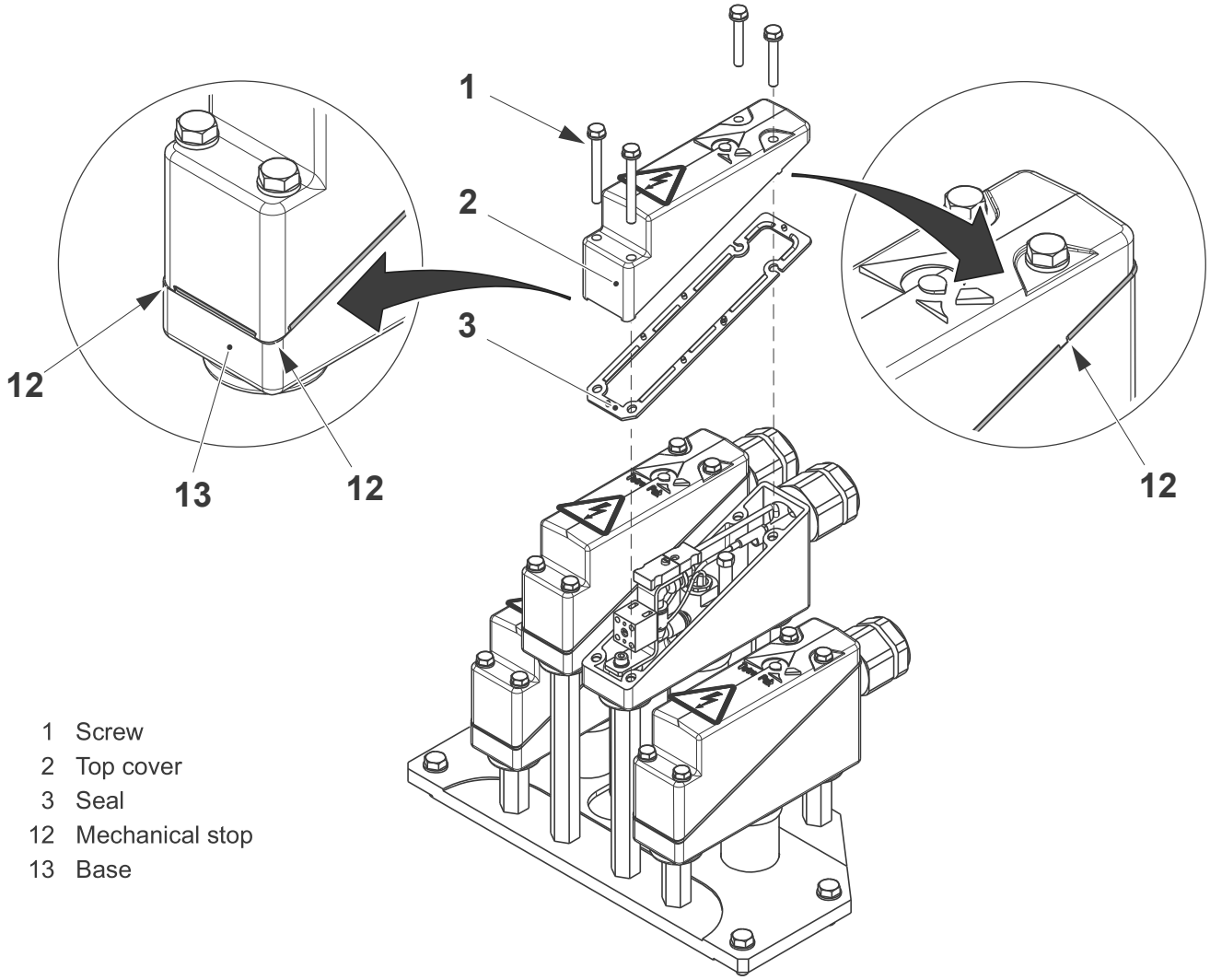

1 Screw
2 Top cover
3 Seal
12 Mechanical stop
13 Base

TechPub_2614345_0107 - 0502_3048169_01.fm

5.3 Discharge Device

SPC Reference	1346816-0400 2914617-0100

5.3.1 Outfeed Unit

5.3.1-1 Outfeed Unit - Check Carriers

Machine Status	Mains Power OFF Air OFF Steam ON Water OFF
SPC Reference	2914620-0100 1349502-0400

Three types of maintenance are possible on the carriers: on the single carrier, on the carrier fingers or the complete overhaul (see the following pages).

Note! In Portion Packages machines the outfeed unit is supplied in two different configurations, “normal” outfeed or “lower” outfeed, according to the volume performed, see the table below.

Outfeed Type	**Package**
Normal outfeed	TBA 200 B - TBA 250 B
Normal outfeed	TBA 125 S - TBA 200 S (T-order 21215/00001 to 21215/00069)
Lower outfeed	TBA 125 S - TBA 200 S (T-order 21215/00070 and above)
Lower outfeed	TBA 250 S - TBA 200 M

(Cont'd)

TechPub_2614345_0107 - 0503_3048170_01.fm