MM

Maintenance Manual

Tetra Pak A3/Speed

648576-0300

TechPub_2614345_0108 - MM_3022042_0106_fro.fm

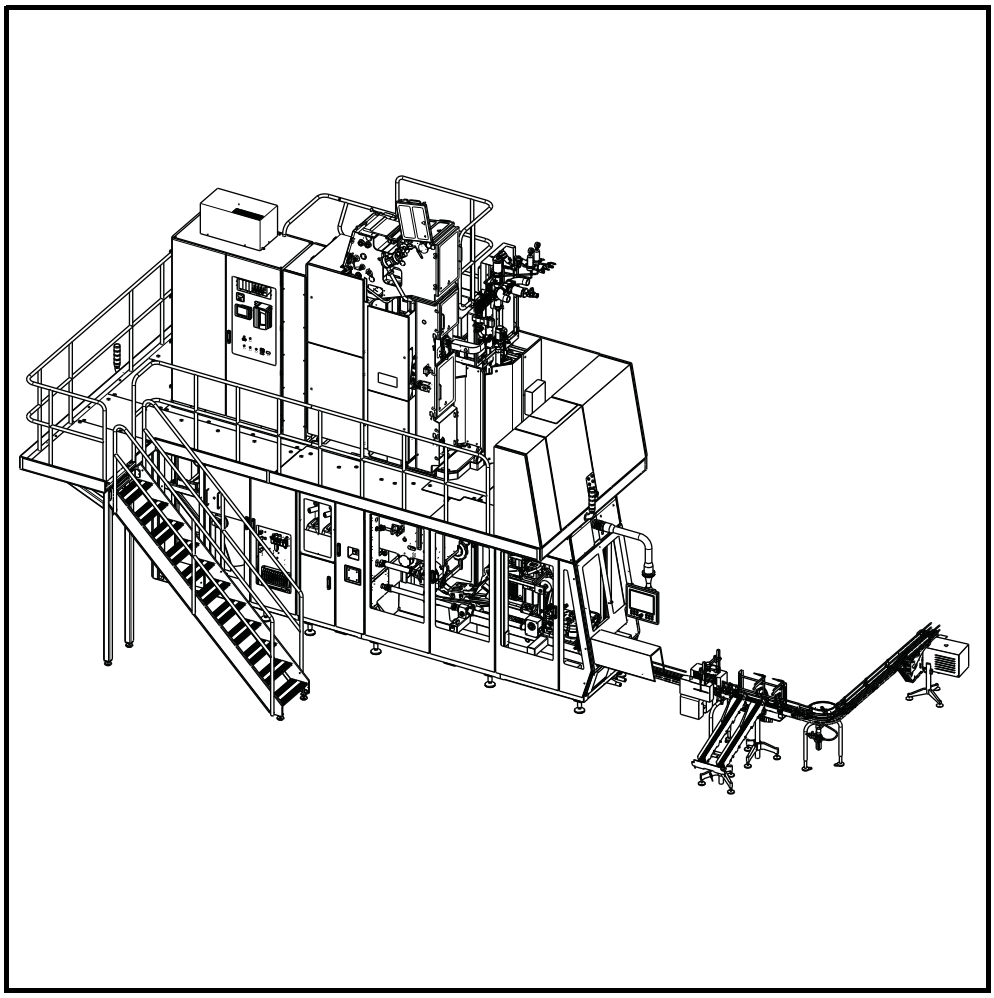

WARNING

Read and follow all safety precaution instructions throughout this manual and on safety signs attached to this equipment.

Failure to follow all safety precaution instructions could result in death or serious injury.

Tetra Pak

Doc. No. MM-3022042-0106

Copyright © 2011 Tetra Pak Group

All rights reserved. No part of this document may be reproduced or copied in any form or by any means without written permission from Tetra Pak Packaging Solutions.

Tetra Pak and all Tetra Pak products are trademarks belonging to the Tetra Pak Group.

The content of this manual is in accordance with the design and construction of the machine or equipment at the time of publishing. Tetra Pak reserves the right to introduce design modifications without prior notice.

The English language version of this document contains the original instructions. All other language versions are translations of the original instructions.

This document was produced by:

Tetra Pak Packaging Solutions
Via Delfini
41123 Modena
Italy

Additional copies can be ordered from Tetra Pak. When ordering additional copies, always provide the document number.

Doc. No. MM-3022042-0106

Issue 2011-01

TechPub_2614345_0108 - MM_3022042_0106_fro.fm

This manual is valid for:

Series No./ Machine No. Sign.

MM

Maintenance Manual

Tetra Pak A3/Speed
648576-0300

i Introduction

ii Safety Precautions

1 Superstructure

2 Machine Body

3 Drive Unit

4 Jaw System

5 Final Folder

6 Conveyor Section

7 Service Unit

8 Automatic Splicing Unit

9 Electrical System

10 General

iii Index

Machine or equipment configurations that this manual is valid for are described on the next page.

Doc. No. MM-3022042-0106

Issue 2011-01

Tetra Pak

Tetra Pak Packaging Solutions

TechPub_2614345_0108 - MM_3022042_0106_fro.fm

Valid for:

Name	Drawing Specification and Development Step	Additional Information
Tetra Pak A3/Speed	648576-0300	Optional Equipment: Tetra Pak PT Speed HI - Headspace by Injection Stair on RH Side

TechPub_2614345_0108 - MM_3022042_0106_fro.fm

Update Log for Doc. No. MM-3022042-0106

This table shows all changes made to this manual, including installed rebuilding kits, added or removed pages. Page numbering on added pages begins with UP.

Date	Installed Kit	Added Pages (Doc. No.)	Removed Pages	Signature

TechPub_2614345_0108 - MM_3022042_0106_fro.fm

Date	Installed Kit	Added Pages (Doc. No.)	Removed Pages	Signature

TechPub_2614345_0108 - MM_3022042_0106_fro.fm

i Introduction

TechPub_2614345_0108 - in01_3048261_01.fm

About the Introduction Chapter

This chapter contains basic information about this manual and the related Tetra Pak equipment.

TechPub_2614345_0108 - in01_3048261_01.fm

Abbreviations and Terminology . . . . . i - 5

Manual Information . . . . . i - 7

Delivered Manuals . . . . . i - 7

Page Layout . . . . . i - 8

Page Numbering. . . . . i - 9

Typographical Conventions . . . . . i - 9

Symbols . . . . . i - 9

Machine Introduction . . . . . i - 10

Intended Use of the Equipment . . . . . i - 10

Manufacturer . . . . . i - 10

Support and Feedback . . . . . i - 10

Declaration of Conformity . . . . . i - 10

Identification . . . . . i - 11

CE Classification . . . . . i - 11

3-A Compliance . . . . . i - 11

Machine Plate . . . . . i - 11

Orientation . . . . . i - 12

Hygiene. . . . . i - 13

Packaging Material. . . . . i - 13

Steam Barrier in the Product Valve . . . . . i - 13

How to Use This MM . . . . . i - 14

Procedures . . . . . i - 14

Procedure Start Table . . . . . i - 14

TPMS . . . . . i - 15

Planned Maintenance Program . . . . . i - 15

Checklists and Spare Parts Recommendations . . i - 15

TechPub_2614345_0108 - in01_3048261_01.fm

This page intentionally left blank

TechPub_2614345_0108 - in01_3048261_01.fm

Abbreviations and Terminology

Abbreviation/ Terminology	Meaning	Translation
ASU	Automatic Splicing Unit	
B	Base (package shape)	
CIP	Cleaning In Place	
DE	Distribution Equipment	
DIMC	Direct Injection Moulded Concept	
ECM	Engineering Change Management	
EM	Electrical Manual	
Family Packages	Packages having the volumes: TBA 1000 B, TBA 1000 S, TBA 1000 Sq	
HI	Headspace by gas Injection	
HMI	Human Machine Interface	
ICU	Integrated Cleaning Unit	
IPC	Industrial Personal Computer	
IPT	Inductive Power Transfer	
IH	Induction Heating	
JEID	Jaw and Event Identification	
LED	Light Emitting Diode	
LC30	Line Controller 30	
LH	Left Hand	
LS	Longitudinal Seal(ing)	
M	Mid (package shape)	
MB	Master Batch	
min	Minimum	
max	Maximum	
MKC	Mandatory Kit Corrective	
MKS	Mandatory Kit Human and Product Safety	
MM	Maintenance Manual	
N.A.	Not Available	
OK	Optional Kit	
OE	Optional Equipment	
OM	Operation Manual	
M	Mid (package shape)	
PE	Polyethylene	
PM	Packaging Material	
Portion Packages	Packages having the volumes: TBA 200 S, TBA 250 B, TBA 200 B, TBA 125 S, TBA 250 S, TBA 200 M	
PT	PullTab	
RH	Right Hand	
RK	Rebuilding Kit	
RM	Rebuilding Manual	

TechPub_2614345_0108 - in01_3048261_01.fm

S	Slim (package shape)	
SA	Strip Applicator	
SPC	Spare Parts Catalogue	
Sq	Square (package shape)	
TBA	Tetra Brik Aseptic	
TGA	Tetra Gemina Aseptic	
TPA	Tetra Prisma Aseptic	
TMCC	Tetra Pak Multi-purpose Compact Controller	
TPOP	Tetra Pak Operator Panel	
TS	Transversal Sealing	
UK	Upgrade Kit	
VMN	Variable Matching Network	

TechPub_2614345_0108 - in01_3048261_01.fm

Manual Information

Tetra Pak recommends reading all delivered manuals carefully. Make sure that the delivered manuals are available to personnel who operate or maintain the equipment.

It is important to keep this manual for the lifetime of the equipment and to pass the manual on to any subsequent holder or user.

Tetra Pak will not be held responsible for any damage to the equipment caused by not following the instructions given in this manual.

Delivered Manuals

Manuals delivered with this equipment:

- CM
  The Conversion Manual provides technicians with information on converting the equipment between different production modes.
- EM
  The Electrical Manual provides technicians with information about the equipment’s electrical system.
- IM
  The Installation Manual provides technicians with information required to safely install the equipment.
- MM
  The Maintenance Manual provides technicians with information on maintaining the equipment.
- OM
  The Operation Manual manual provides the operator with information on handling and operating the equipment before, during, and after production.
- SPC
  The Spare Parts Catalogue provides the information necessary to order spare parts from Tetra Pak
- TeM
  The Technical Manual provides technicians with information which can be:
  - information required to safely install the equipment
  - information required to maintaining the equipment
  - information about the machine’s/equipment’s electrical system
  - information necessary to order spare parts from Tetra Pak
  - other technical information.

TechPub_2614345_0108 - in01_3048261_01.fm

Page Layout

Every main page in a manual contains a header and a footer. The page header contains the chapter name (1) and the section name (2). The page footer contains the page number (3), and the document number (4). See also the Page Numbering section.

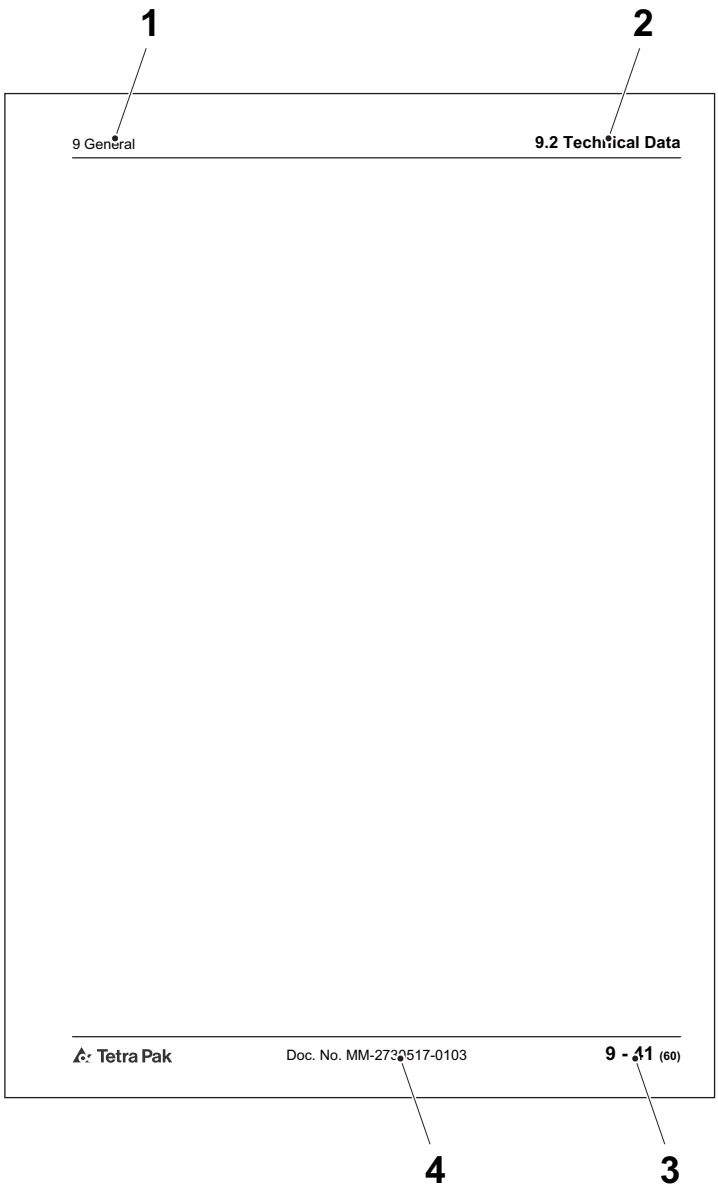

1 Chapter name
2 Section name
3 Page number
4 Document number

TechPub_2614345_0108 - in01_3048261_01.fm

Page Numbering

A page number has three parts:

- chapter number (1)
- consecutive page number (2) within the chapter
- total number of pages (3) in the chapter.

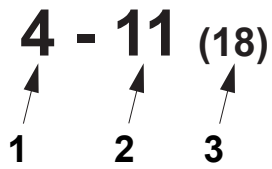

1 Chapter number
2 Consecutive page number
3 Total number of pages

Typographical Conventions

Controls on the operator panel, emergency stop devices, and program steps are printed in CAPITAL LETTERS.

Menu names, button names and other text displayed in software are printed in `courier`.

Cross-references are underlined.

Symbols

Symbols used in illustrations.

	A pointer arrow indicates the position of an object.
	A zoom arrow indicates that an object view is enlarged. The arrow points towards the enlarged view of the object.
	A rotation movement arrow indicates rotational movement of an object. The arrow points in the direction of rotation.
	A straight movement arrow indicates movement of an object. The arrow points in the direction of movement.

TechPub_2614345_0108 - in01_3048261_01.fm

Machine Introduction

Intended Use of the Equipment

The intended use of this Tetra Pak equipment is to pack liquid food products.

All other use is prohibited. Tetra Pak will not be held responsible for injury or damage if the equipment is used for any other purpose than the intended use described above.

Manufacturer

This Tetra Pak equipment has been manufactured by

Tetra Pak Packaging Solutions
Via Delfini
41123 Modena
Italy

Support and Feedback

If you encounter problems when operating this equipment or have other inquiries, comments, or suggestions for improvement, contact Tetra Pak.

Declaration of Conformity

A copy of the Declaration of Conformity can be found in the Installation Manual. The signed Declaration of Conformity is delivered separately with the equipment.

TechPub_2614345_0108 - in01_3048261_01.fm

Identification

CE Classification

This equipment complies with the basic health and safety regulations of the European Economic Area (EEA).

3-A Compliance

This equipment complies with the 3-A Sanitary Standards for Formers, Fillers, and Sealers of Containers for Fluid Milk and Fluid Milk Products, Number 17-10.

Machine Plate

The illustration below shows an example of the machine plate and its location on the equipment. The machine plate carries data needed when contacting Tetra Pak concerning this specific equipment.

Make sure that the equipment data in the front pages of this manual corresponds to the machine plate data and the machine specification.

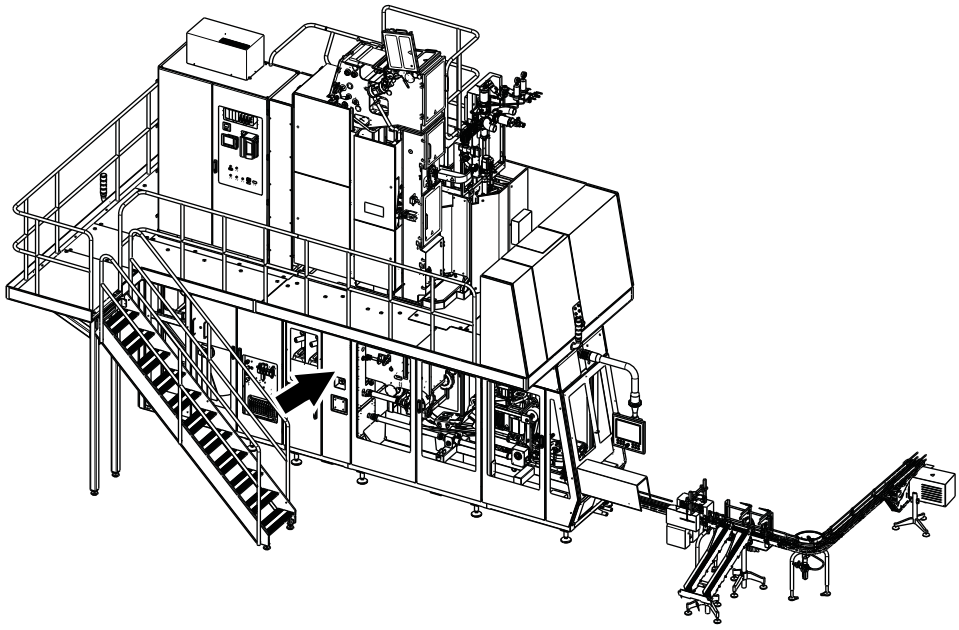

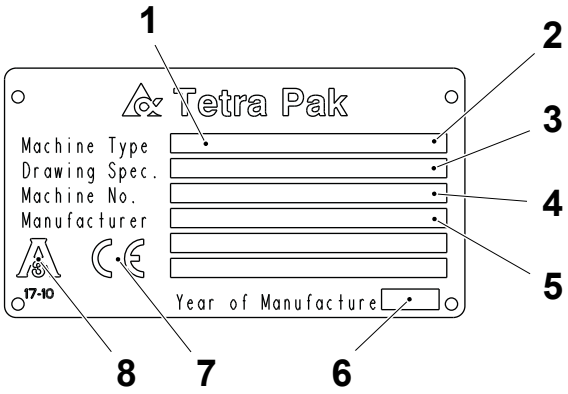

1 Machine type
2 Volume
3 Drawing specifications
4 Machine serial number
5 Manufactured by
6 Year of manufacture
7 CE mark
8 3-A mark

TechPub_2614345_0108 - in01_3048261_01.fm

Orientation

The illustration below shows the orientation of the equipment. This orientation information will be used throughout this manual. The arrows indicate the flow of material.

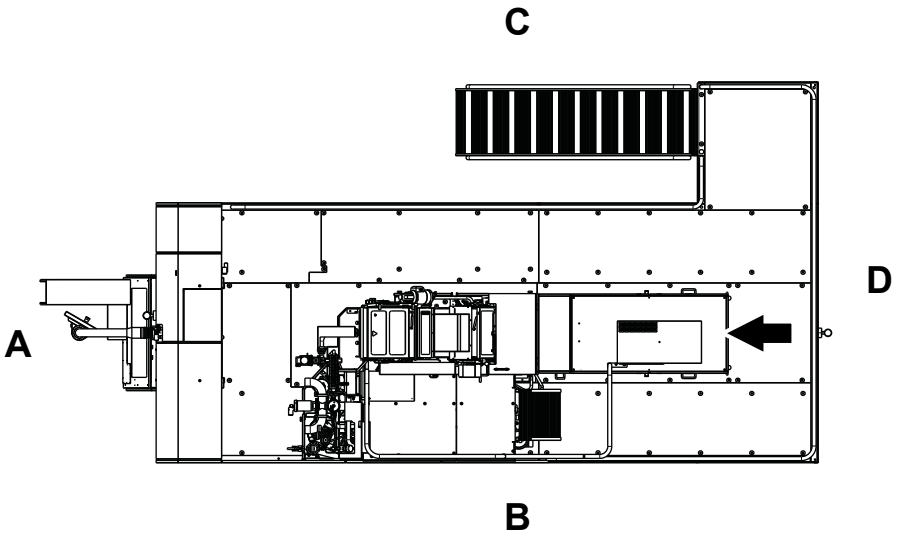

A Front
B Right-hand side
C Left-hand side
D Back

TechPub_2614345_0108 - in01_3048261_01.fm

Hygiene

Packaging Material

Avoid microbiological contamination of the packaging material:

- Always protect your packaging material against contamination.
- Always keep the doors to the filling room (area) closed. To prevent contamination via air streams, never open a window when the machine is in production.
- Never clean the floors or the machine in the filling room (area) when the machine is in production.
- Compressed air used for cleaning purposes is to be used only for cleaning filters and should only be used outside of the filling room (area) or in the final folder compartment of the filling machine.
- Prepare the splicing of the packaging material as late as possible.
- Disinfect your hands before touching anything that may come into contact with the product. Use code H disinfectant. See the Technical Data chapter of the Maintenance Manual.
- Keep your hands clean.
- Always wear some type of hair protection (cap or hairnet) and clean clothes (preferably white).
- Do not wear a watch, ring, necklace, earrings, or any other exposed jewellery.

Steam Barrier in the Product Valve

The filling machine’s product valve employs a steam barrier to separate the product supply line from the filling machine. The steam barrier allows the machine and the product supply line to be independently sterilised to commercial sterility conditions.

- Never disengage the steam barrier, and never interrupt the steam supply when the filling machine or the product supply line is being brought to the pre-sterilization phase, or when the machine is already in the production phase.
- If any maintenance activity requires disengagement of the steam barrier or the interruption of the steam supply to the machine, make sure that the product supply line is idle and empty of product.

TechPub_2614345_0108 - in01_3048261_01.fm

How to Use This MM

Procedures

The name of the chapters and sections in the MM correspond to the groups in the structure of the equipment. Procedures correspond to a chapter or a section:

- The dashes indicate that it is a procedure heading. The example below shows a heading for Procedure number 3 in Section 1.5.
- The text after the second dash tells what type of procedure it is. Check, Change and Set are common procedure types.

1.5-3 Outfeed Servo - Change Bearings

Maintenance procedures in this manual are connected to the Tetra Pak Maintenance System, TPMS. See the TPMS section.

Procedure Start Table

Procedures in this manual begin with a table providing information needed to begin the procedure.

- Machine Status (1) shows actuator status, program step, and any other machine status necessary to begin the procedure.
- Special Equipment (2) shows a list of personal protective equipment and special tools that are not normally carried by a service technician, but are needed in the procedure.
- Consumables (3) shows items, such as lubricants, that are required to perform the procedure. Consumables do not include replacement parts.
- SPC Reference (4) shows the assembly number, found in the index of the SPC.

1	Machine Status	Power supply disconnector OFF Air valve OFF Water valve OFF
2	Special Equipment	Hook spanner TP No. 777170-0105 Dial indicator
3	Consumables	Grease code F
4	SPC Reference	2501234-0100

1 Machine Status
2 Special Equipment
3 Consumables
4 SPC Reference

TechPub_2614345_0108 - in01_3048261_01.fm

TPMS

To ensure uninterrupted production, all machines and equipment must be maintained on a regular basis.

Tetra Pak has developed a planned maintenance system to keep pace with the ongoing development of new and existing machines and equipment from Tetra Pak, and to meet the demands set by customers for higher efficiency and better economy.

Planned Maintenance Program

The Tetra Pak planned maintenance system reduces unplanned downtime and maintenance time for complete production lines, as well as for individual machines and equipment.

With the Tetra Pak planned maintenance system, preventive maintenance can be performed before production is affected. The system is continually updated based on experience with Tetra Pak machines and equipment worldwide.

The Tetra Pak planned maintenance system maintains records of when maintenance is performed, when parts are changed, whether alterations are made, and so on. These records, combined with usage statistics, enable reliable predictions of the service life of all machine and equipment parts.

Checklists and Spare Parts Recommendations

Customers using the Tetra Pak planned maintenance system receive checklists from their local Tetra Pak office whenever planned maintenance is due. These checklists are individualised for each customer, according to the type of machine, equipment usage, and maintenance occasion. In addition, the system recommends spare parts, rotation units, tools, and templates according to the statistics collected.

Note! Contact the local Tetra Pak office for additional information about the Tetra Pak Maintenance System and its planned maintenance program.

TechPub_2614345_0108 - in01_3048261_01.fm

This page intentionally left blank

TechPub_2614345_0108 - in01_3048261_01.fm

ii Safety Precautions

TechPub_2614345_0108 - sp04_3048262_01.fm

Description

Safety Precaution Instructions

WARNING

Read and understand this manual before using the machine.
Failure to follow safety precautions and instructions can result in death or serious injury.

Definition of Lockout Procedure

A lockout procedure is a procedure to put each necessary energy isolating device in its safe position to prevent the energisation of the equipment, such as when a maintenance procedure should be carried out.

A lockout is the use of a device, for example, a padlock, to make sure that an energy isolating device cannot be operated.

An energy isolating device is a mechanical device that physically prevents transmission or release of energy, such as a power supply disconnector.

TechPub_2614345_0108 - sp04_3048262_01.fm

Safety Messages Description . . . . . ii - 5

Personnel Requirements . . . . . ii - 6

Skilled Person . . . . . ii - 6

Instructed Person. . . . . ii - 6

Safety Signs . . . . . ii - 7

Locations of Safety Signs. . . . . ii - 10

HI Equipment (OE) . . . . . ii - 20

Protective Devices. . . . . ii - 21

Emergency Stop. . . . . ii - 21

Emergency Stop Push-Buttons . . . . . ii - 22

Safeguards . . . . . ii - 23

Warning Lamp . . . . . ii - 25

Audible Alarm. . . . . ii - 25

Safe Manual Handling . . . . . ii - 26

Personal Protection. . . . . ii - 27

Noise . . . . . ii - 27

Entanglement . . . . . ii - 27

Hazardous Substances . . . . . ii - 28

Disposal of Chemical Substances . . . . . ii - 29

Hydrogen Peroxide (H_2O_2) . . . . . ii - 30

Emergency Procedures. . . . . ii - 30

Personal Protective Equipment . . . . . ii - 31

Handling of Hydrogen Peroxide. . . . . ii - 32

Storage of Hydrogen Peroxide. . . . . ii - 33

Disposal of Hydrogen Peroxide . . . . . ii - 34

Caustic Soda/Sodium Hydroxide (NaOH) . . . . . ii - 35

Emergency Procedures. . . . . ii - 35

Personal Protective Equipment . . . . . ii - 36

TechPub_2614345_0108 - sp04_3048262_01.fm

Handling and Storage of Caustic Soda/Sodium Hydroxide . . . . . ii - 37
Disposal of Caustic Soda/Sodium Hydroxide . . . ii - 37
Nitric Acid (HNO3) . . . . . ii - 38
Emergency Procedures . . . . . ii - 38
Personal Protective Equipment . . . . . ii - 40
Handling and Storage of Nitric Acid . . . . . ii - 41
Disposal of Nitric Acid . . . . . ii - 42
Ultraviolet Light . . . . . ii - 43
Supply Systems . . . . . ii - 44
Power Supply . . . . . ii - 44
Residual Voltage . . . . . ii - 45
Electrical Cabinet . . . . . ii - 45
Socket Outlet . . . . . ii - 47
Air Supply . . . . . ii - 48
Steam Supply . . . . . ii - 50
Water Supply . . . . . ii - 51
Equipment for Lifting and Moving Loads . . . . ii - 52

TechPub_2614345_0108 - sp04_3048262_01.fm

Safety Messages Description

A safety message is always accompanied by a safety alert symbol and a signal word.

The safety alert symbol is used to alert about potential personal injury hazards. To avoid hazards, obey all safety messages that follow this symbol.

The following safety alert symbols and signal words are used in this manual to inform the user of hazards.

DANGER	Danger indicates an imminently hazardous situation which, if not avoided, will result in death or serious injury.
WARNING	Warning indicates a potentially hazardous situation which, if not avoided, **could** result in **death or serious injury**.
CAUTION	Caution indicates a potentially hazardous situation which, if not avoided, **may** result in **minor or moderate injury.** It may also be used to alert against unsafe practices.
CAUTION	Caution without the safety alert symbol indicates a potentially hazardous situation which, if not avoided, **may** result in **property damage**.

TechPub_2614345_0108 - sp04_3048262_01.fm

Personnel Requirements

Note! Personnel includes all persons working on or near this equipment.

Only skilled or instructed persons are allowed to work with this equipment.

Skilled Person

A skilled person must have relevant education and experience to enable him or her to identify hazards, analyse risks, and avoid hazards which electricity, machinery, chemicals, other energies, and supply systems on this equipment can create.

Skilled persons must meet local regulations, such as certifications and qualifications for working with these energies and systems.

Instructed Person

An instructed person must be adequately advised or supervised by a skilled person. The skilled person enables the instructed person to identify hazards, analyse risks, and avoid hazards which electricity, machinery, chemicals, other energies, and supply systems on this equipment can create.

TechPub_2614345_0108 - sp04_3048262_01.fm

Safety Signs

WARNING

Damaged or missing safety signs.
Safety signs are used to indicate safety hazards.
If the signs are missing or damaged, they can not fulfil this function. Replace all missing or damaged safety signs immediately.

Safety signs are attached to the equipment. The table below lists all the signs that are used, and illustrations show their locations on the equipment. Each position number refers to two standards of a safety sign in the table, but only one is used on the equipment.

- Make sure that each safety sign is legible and in its correct position after installation and maintenance.
- Replace all missing or damaged safety signs immediately.

Pos.	ISO sign	ANSI sign
1		
	Hot surface. Do not touch. Follow lockout procedure before maintenance.	
2		
	Chemical burn hazard. Wear personal protective equipment.	
3	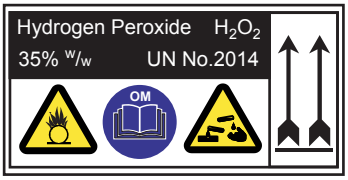	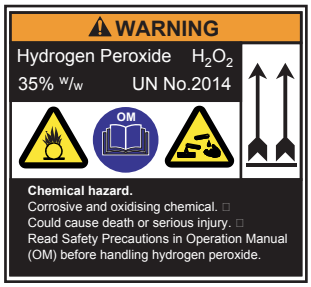
	Chemical hazard. Corrosive and oxidising chemical. Could cause death or serious injury. Read Safety Precautions in Operation Manual (OM) before handling hydrogen peroxide.	

TechPub_2614345_0108 - sp04_3048262_01.fm

Pos.	ISO sign	ANSI sign
4		
	Risk of eye injury. Wear eye protection.	
5		
	Hazardous voltage. Will shock, burn, or cause death. Follow lockout procedure before maintenance.	
6		
	Hazardous voltage 6 kV. Will shock, burn, or cause death. Follow lockout procedure before maintenance.	
7		
	Hazardous residual voltage on capacitors. Will shock, burn or cause death. Do not touch until safe. Follow instructions for safe work practices.	
8		
	Hazardous voltage. Can shock, burn, or cause death. Read Maintenance Manual (MM) before using this socket outlet.	

TechPub_2614345_0108 - sp04_3048262_01.fm

Pos.	ISO sign	ANSI sign
9		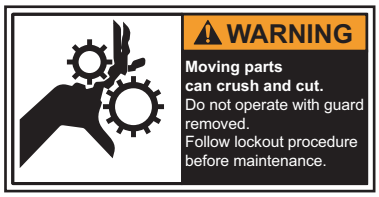
	Moving parts can crush and cut. Do not operate with guard removed. Follow lockout procedure before maintenance.	
10		
	Moving part can crush and cut. Do not operate with guard removed. Follow lockout procedure before maintenance.	
11		
	Do not reach in. Moving parts may cause injury Follow instructions for safe work practice.	

TechPub_2614345_0108 - sp04_3048262_01.fm

Locations of Safety Signs

The illustration shows where the safety signs are located. The position numbers refer to the table in the Safety Signs section.

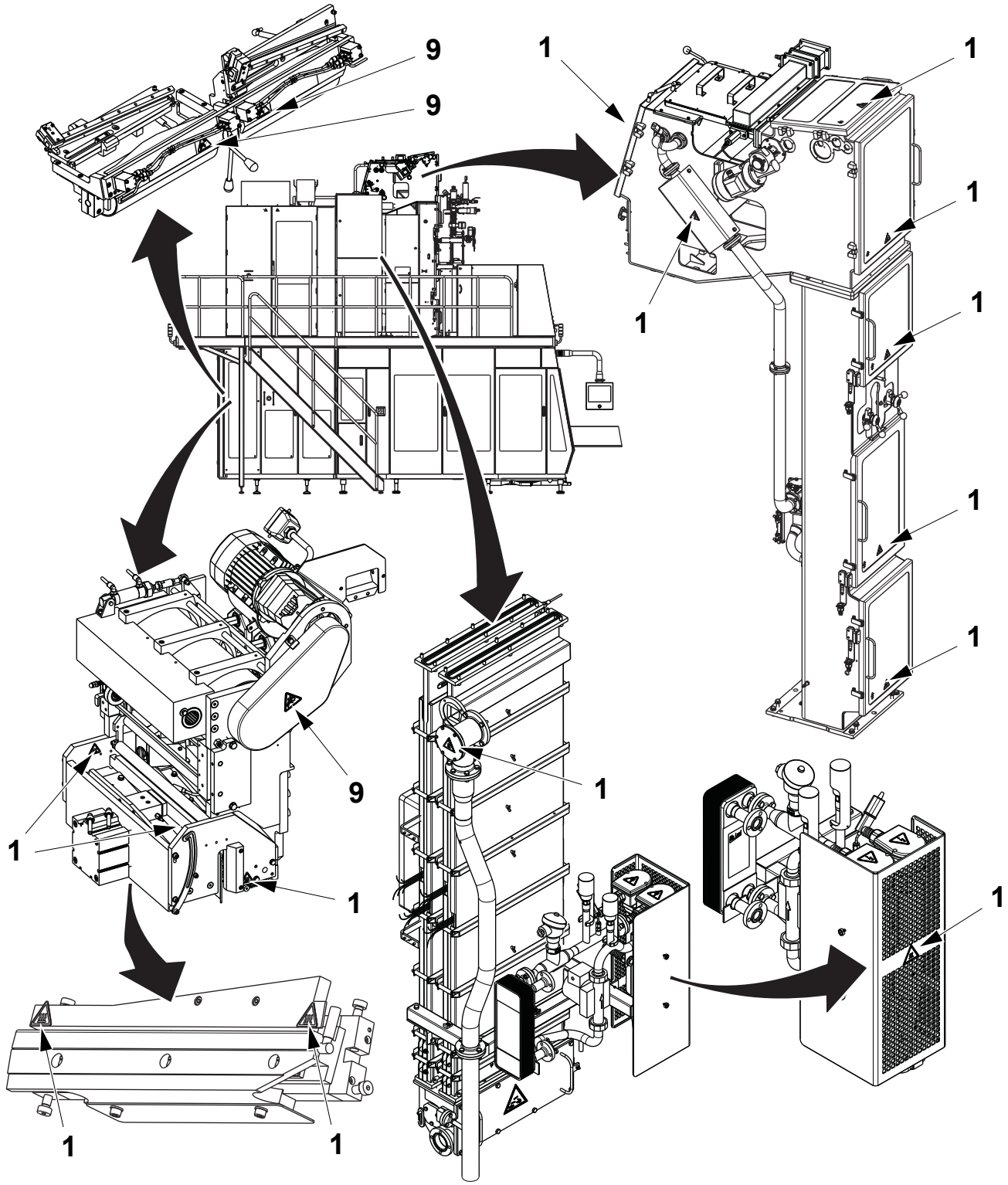

(Cont'd)

TechPub_2614345_0108 - sp04_3048262_01.fm

(Cont'd)

The illustration shows where the safety signs are located. The position numbers refer to the table in the Safety Signs section.

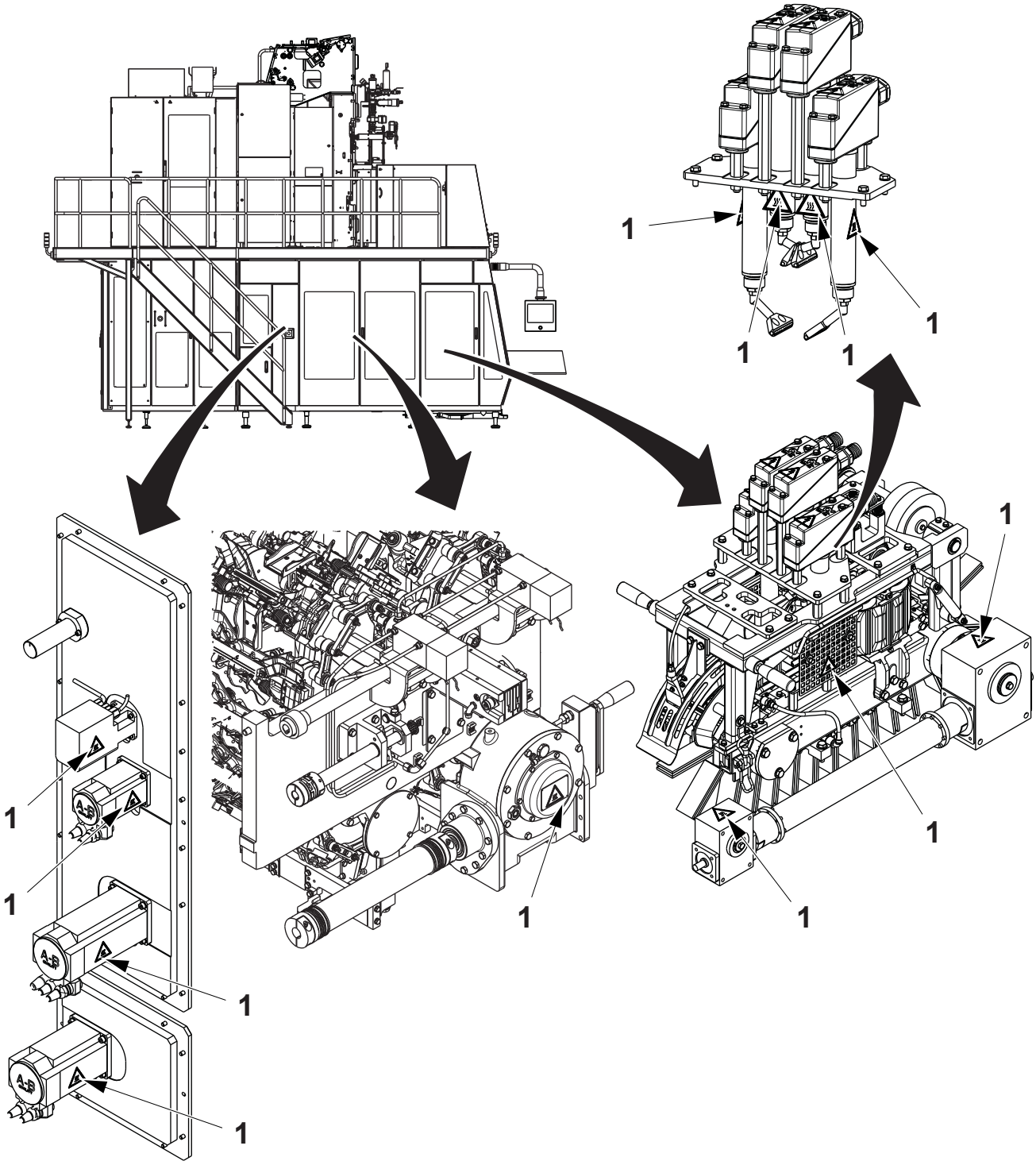

(Cont'd)

TechPub_2614345_0108 - sp04_3048262_01.fm

(Cont'd)

The illustration shows where the safety signs are located. The position numbers refer to the table in the Safety Signs section.

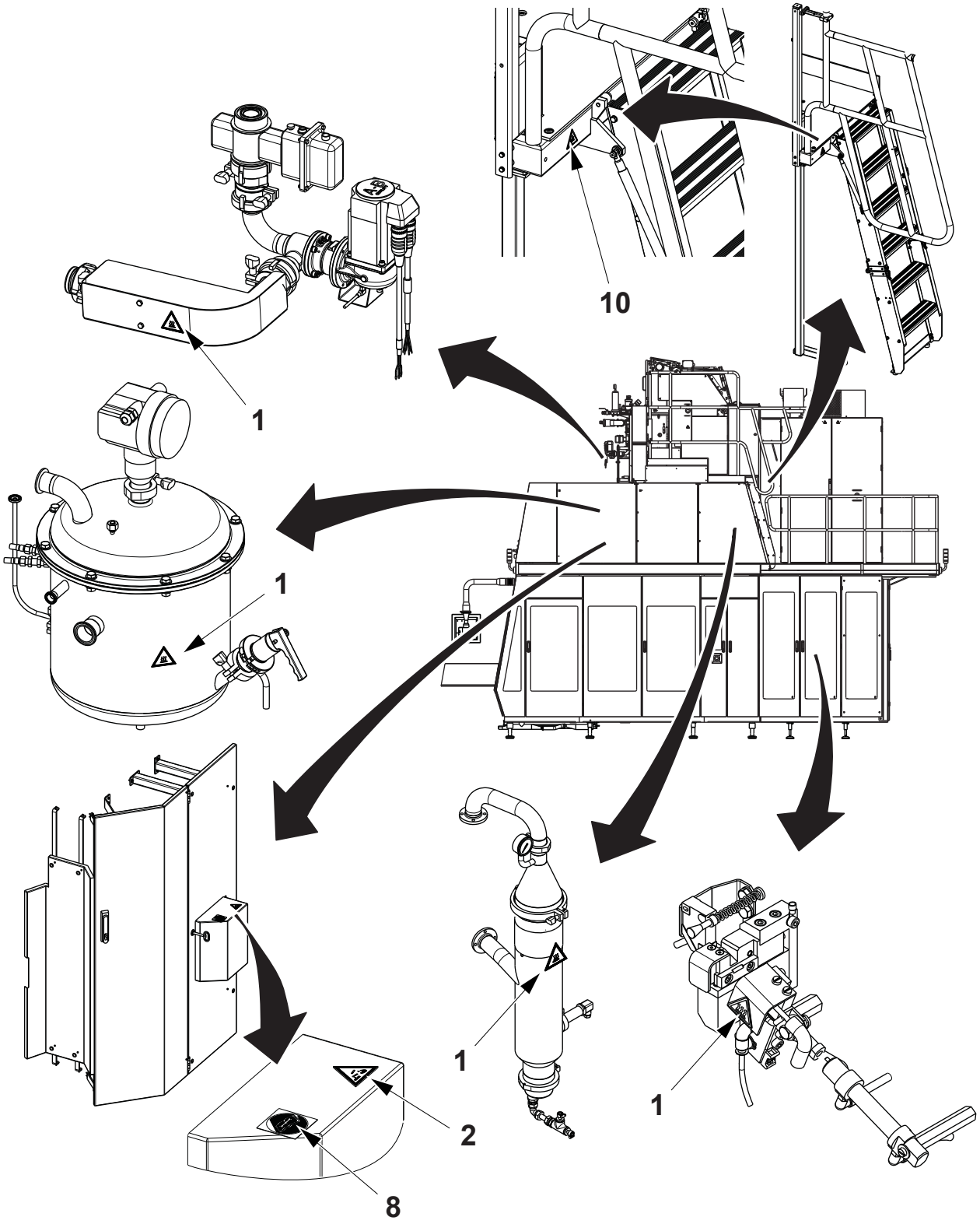

TechPub_2614345_0108 - sp04_3048262_01.fm

(Cont'd)

(Cont'd)

The illustration shows where the safety signs are located. The position numbers refer to the table in the Safety Signs section.

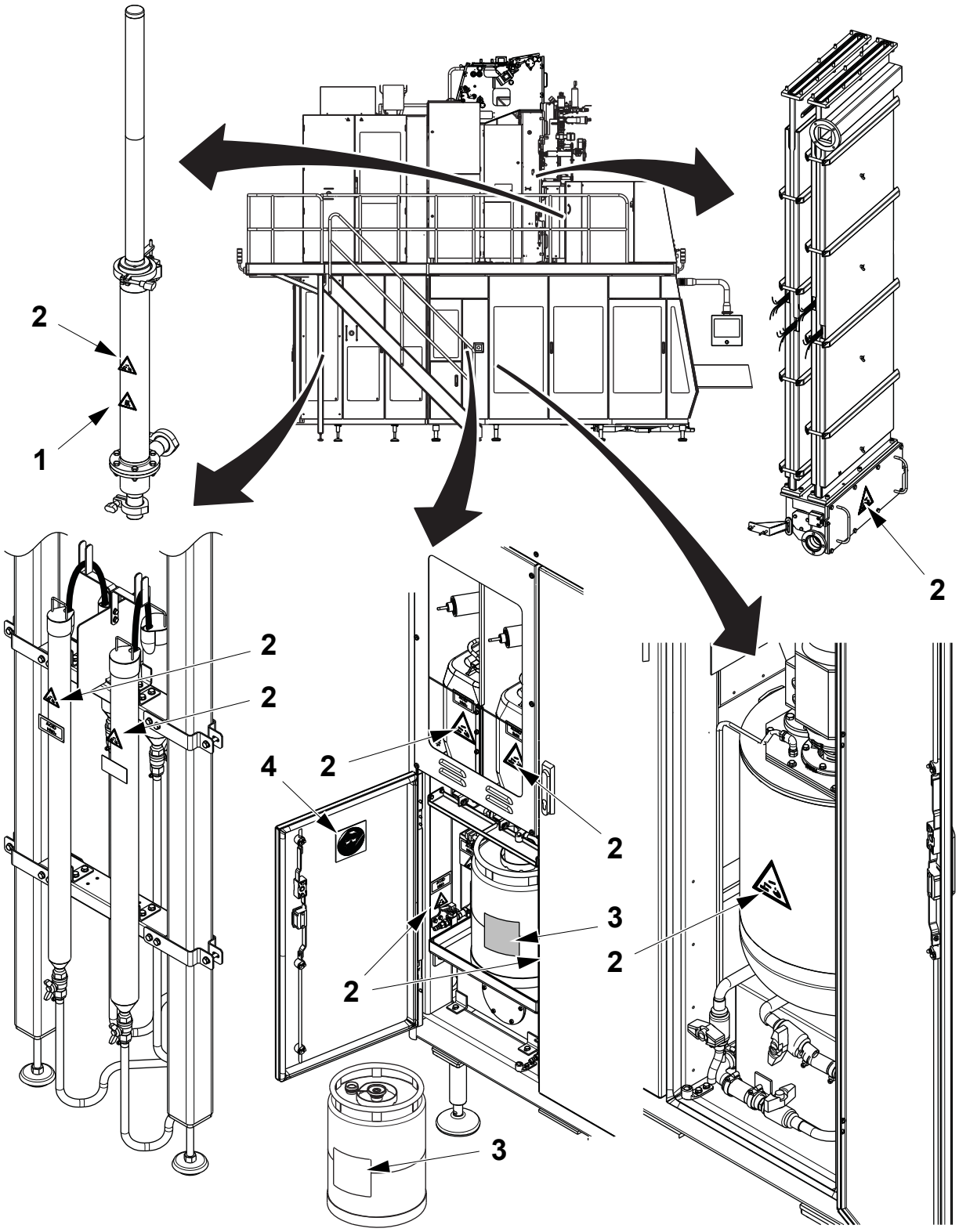

(Cont'd)

TechPub_2614345_0108 - sp04_3048262_01.fm

(Cont'd)

The illustration shows where the safety signs are located. The position numbers refer to the table in the Safety Signs section.

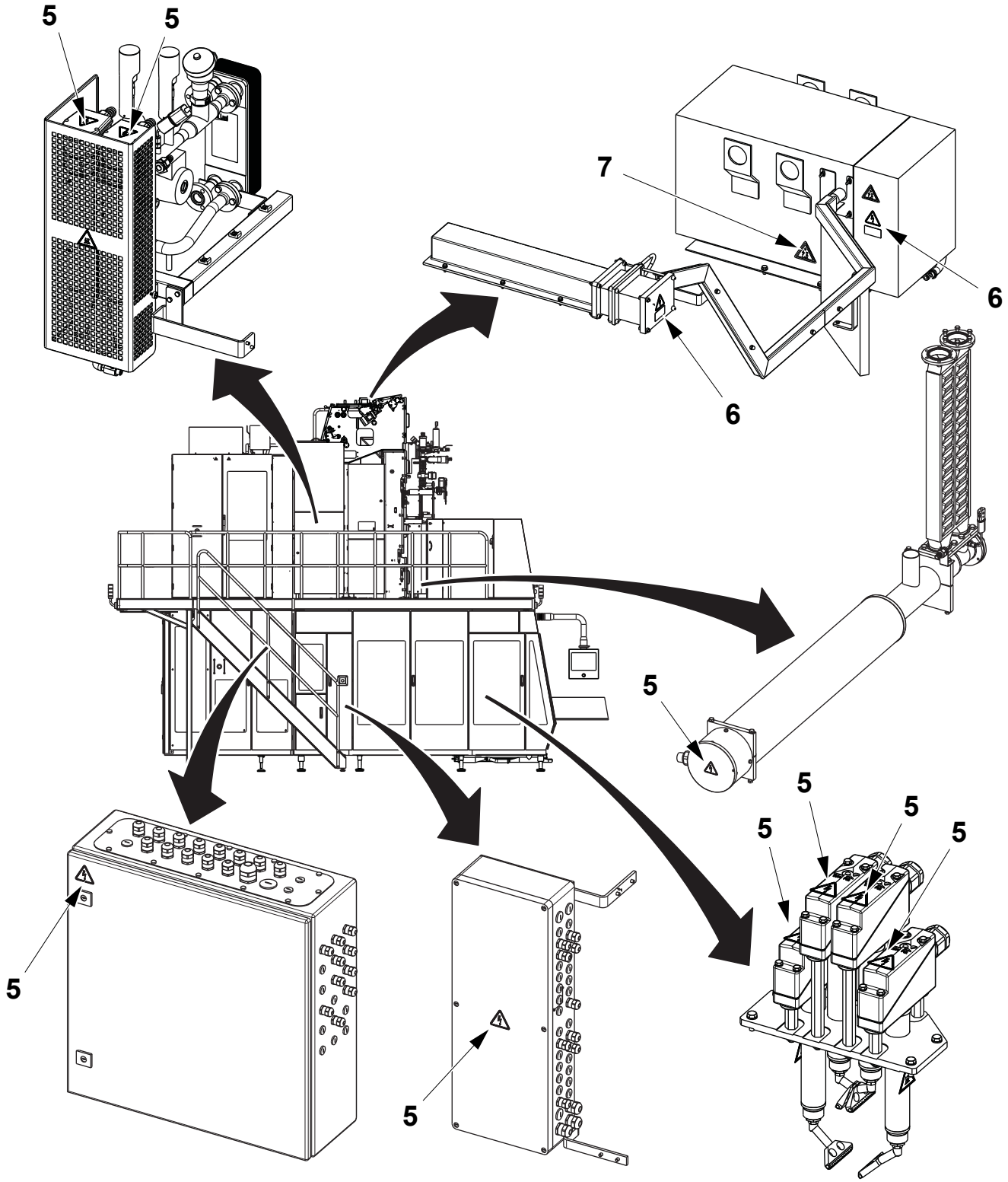

TechPub_2614345_0108 - sp04_3048262_01.fm

(Cont'd)

(Cont'd)

The illustration shows where the safety signs are located. The position numbers refer to the table in the Safety Signs section.

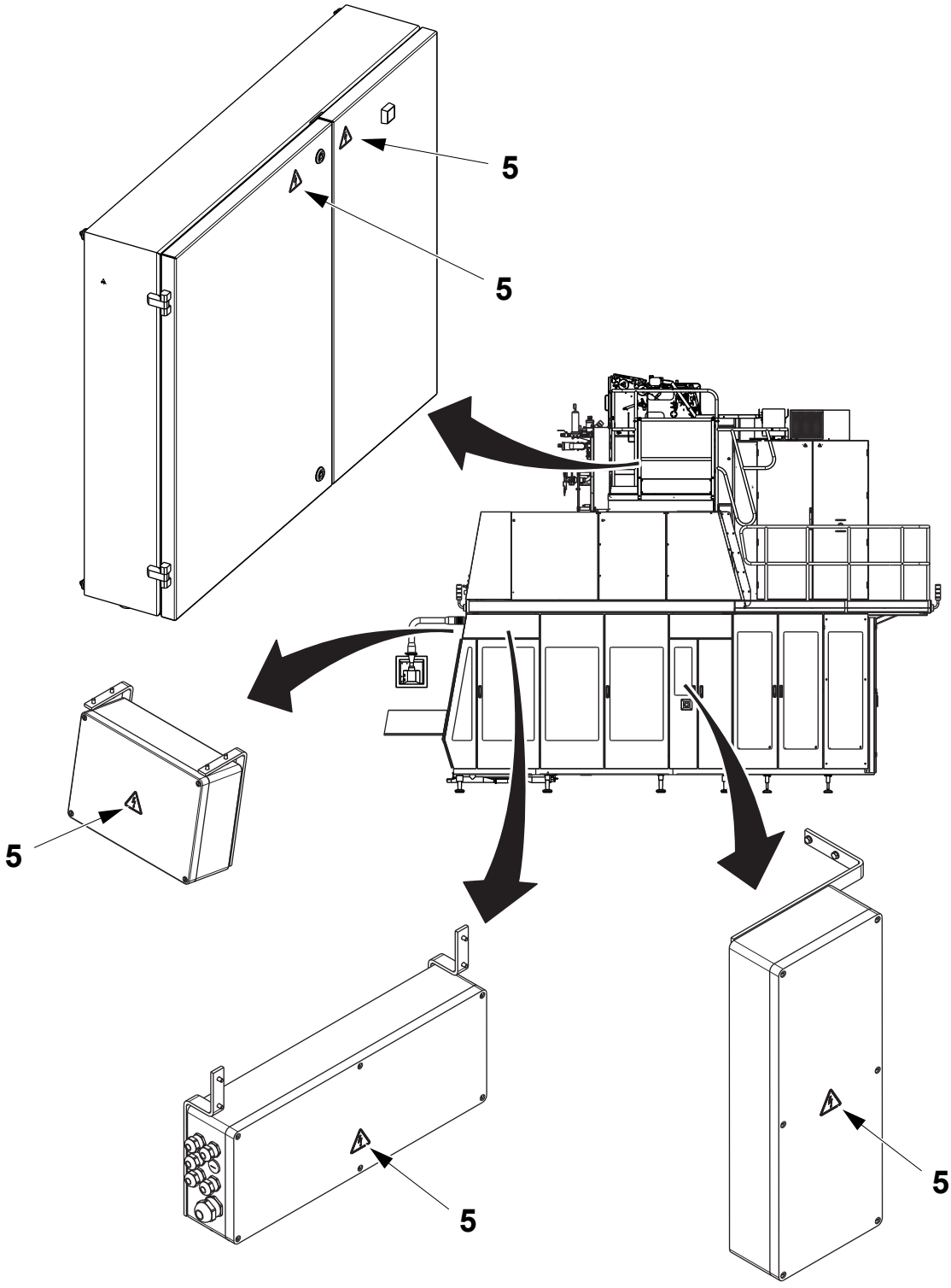

(Cont'd)

TechPub_2614345_0108 - sp04_3048262_01.fm

(Cont'd)

The illustration shows where the safety signs are located. The position numbers refer to the table in the Safety Signs section.

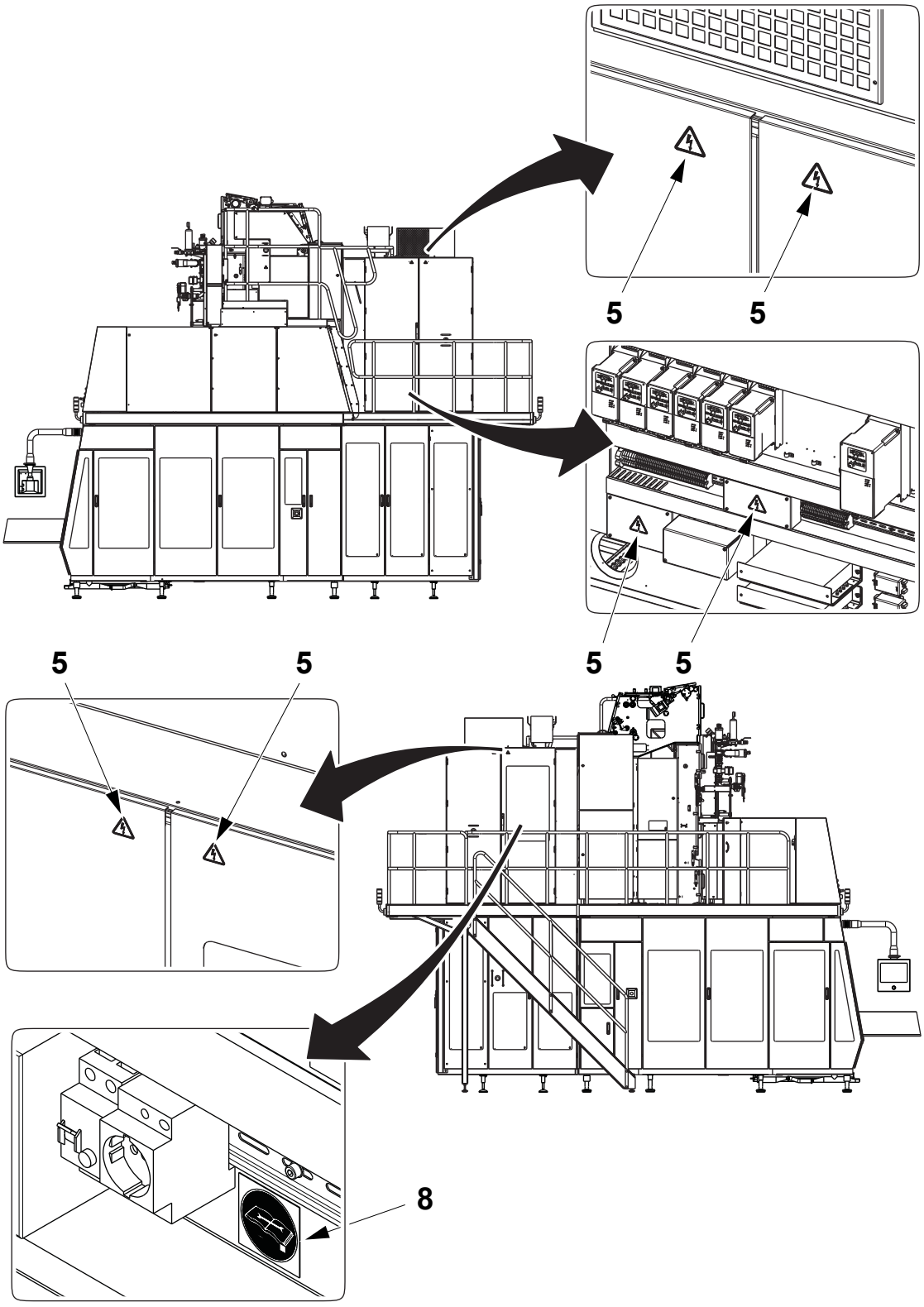

TechPub_2614345_0108 - sp04_3048262_01.fm

(Cont'd)

(Cont'd)

The illustration shows where the safety signs are located. The position numbers refer to the table in the Safety Signs section.

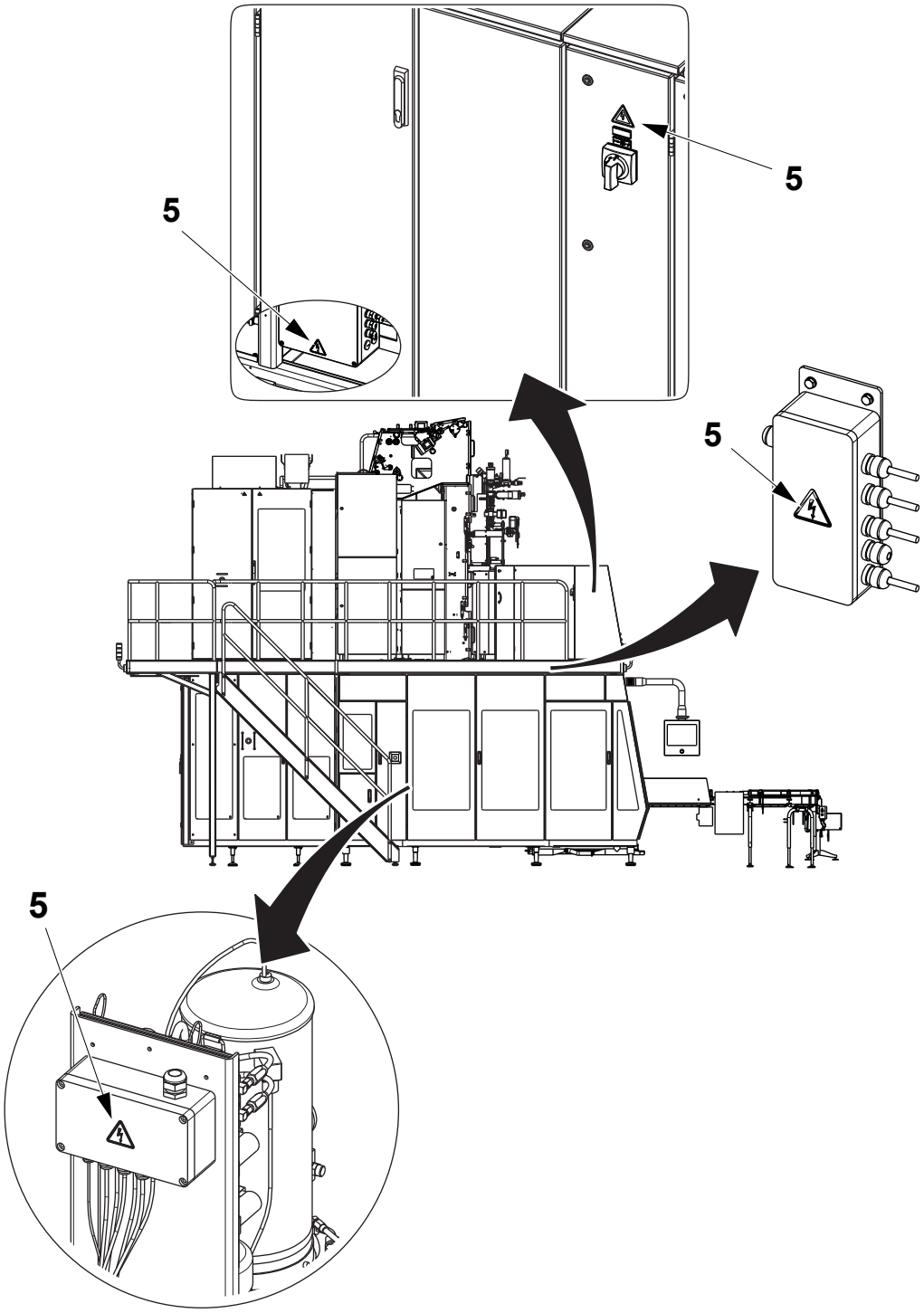

(Cont'd)

TechPub_2614345_0108 - sp04_3048262_01.fm

(Cont'd)

The illustration shows where the safety signs are located. The position numbers refer to the table in the Safety Signs section.

Note! These two signs are introduced for Tetra Pak A3/Speed from T-order 21215/00070.

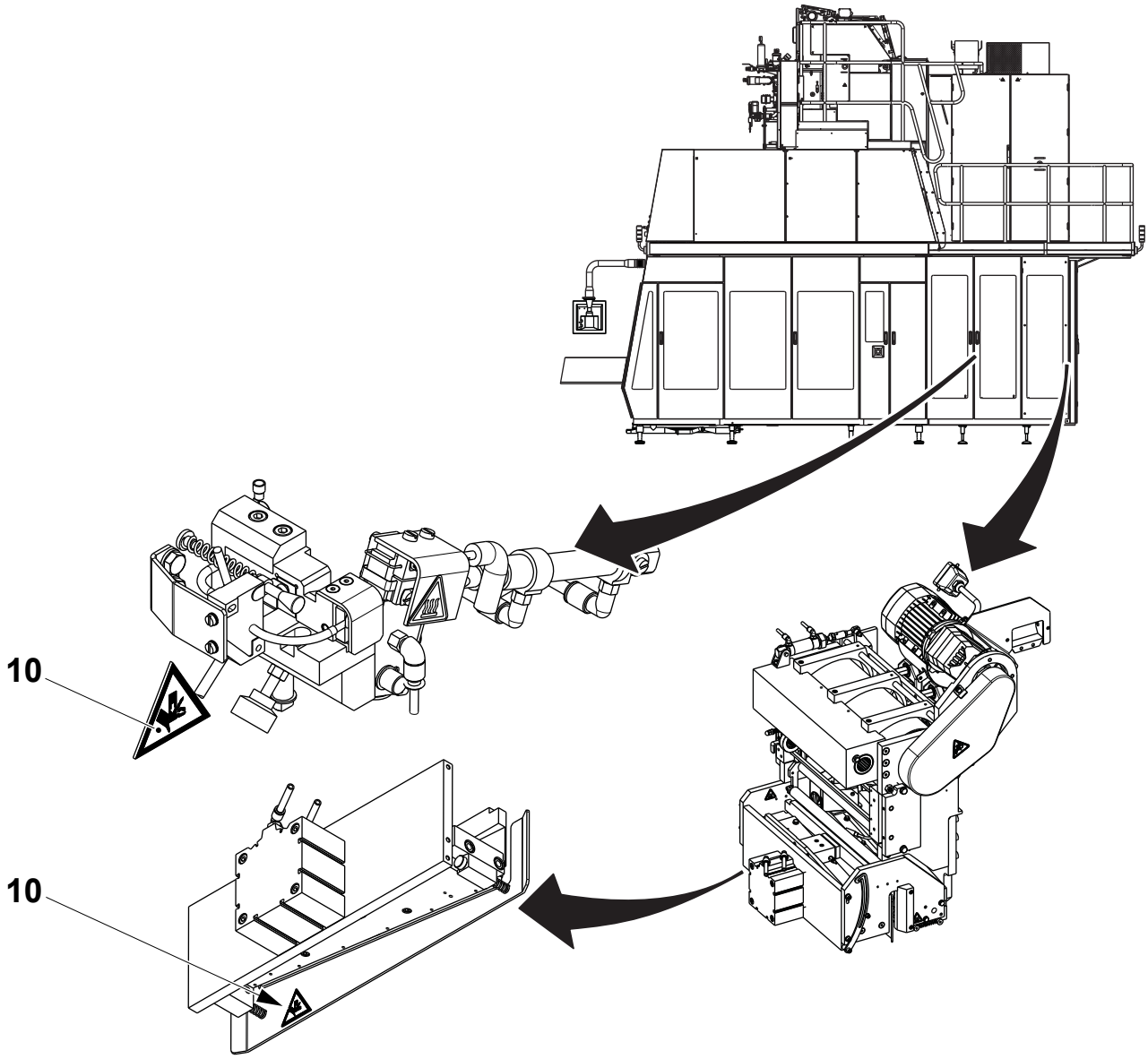

TechPub_2614345_0108 - sp04_3048262_01.fm

(Cont'd)

(Cont'd)

The illustration shows where the safety signs are located. The position numbers refer to the table in the Safety Signs section.

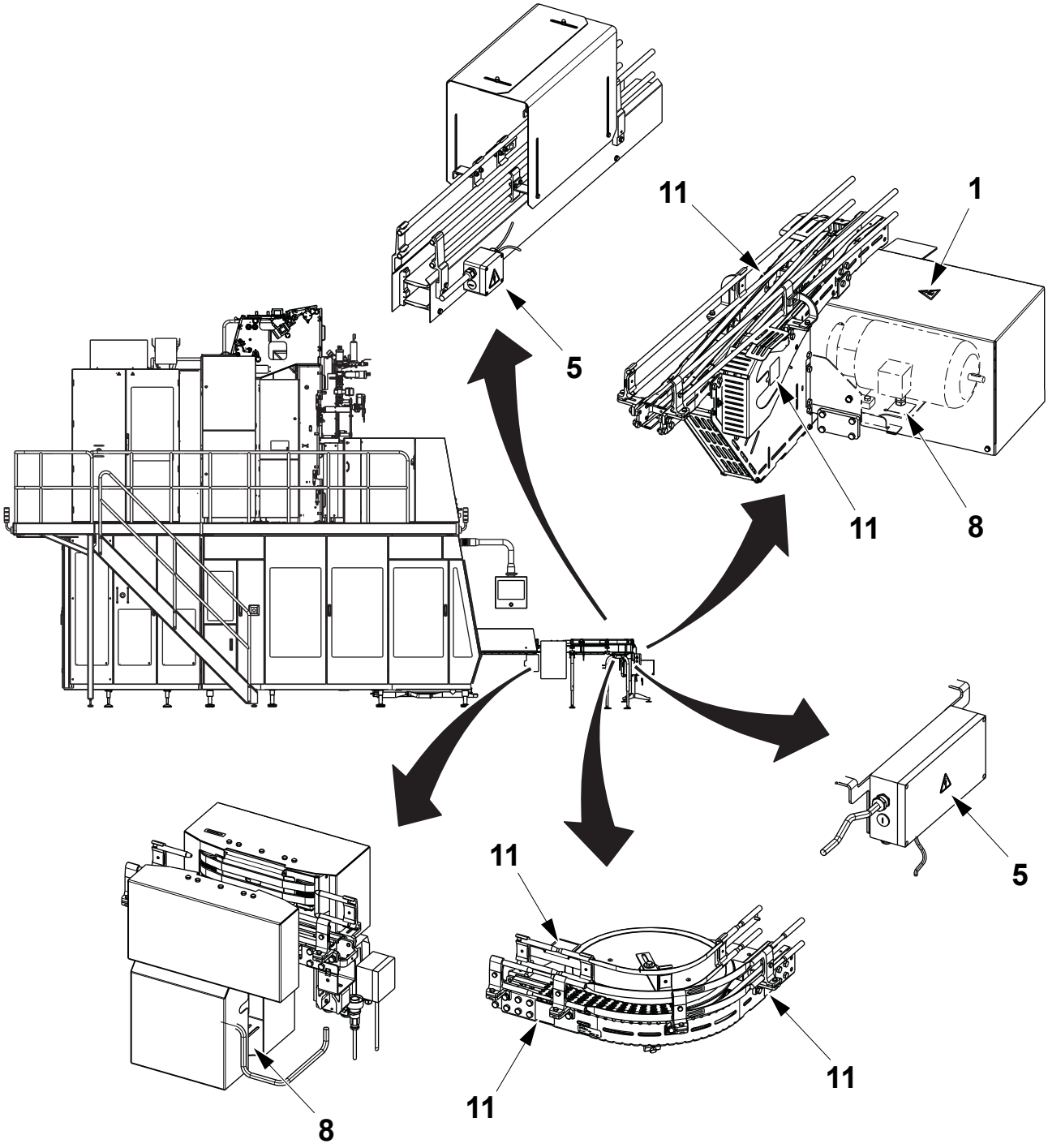

(Cont'd)

TechPub_2614345_0108 - sp04_3048262_01.fm

(Cont'd)

HI Equipment (OE)

The illustration shows where the safety signs are located. The position numbers refer to the table in the Safety Signs section.

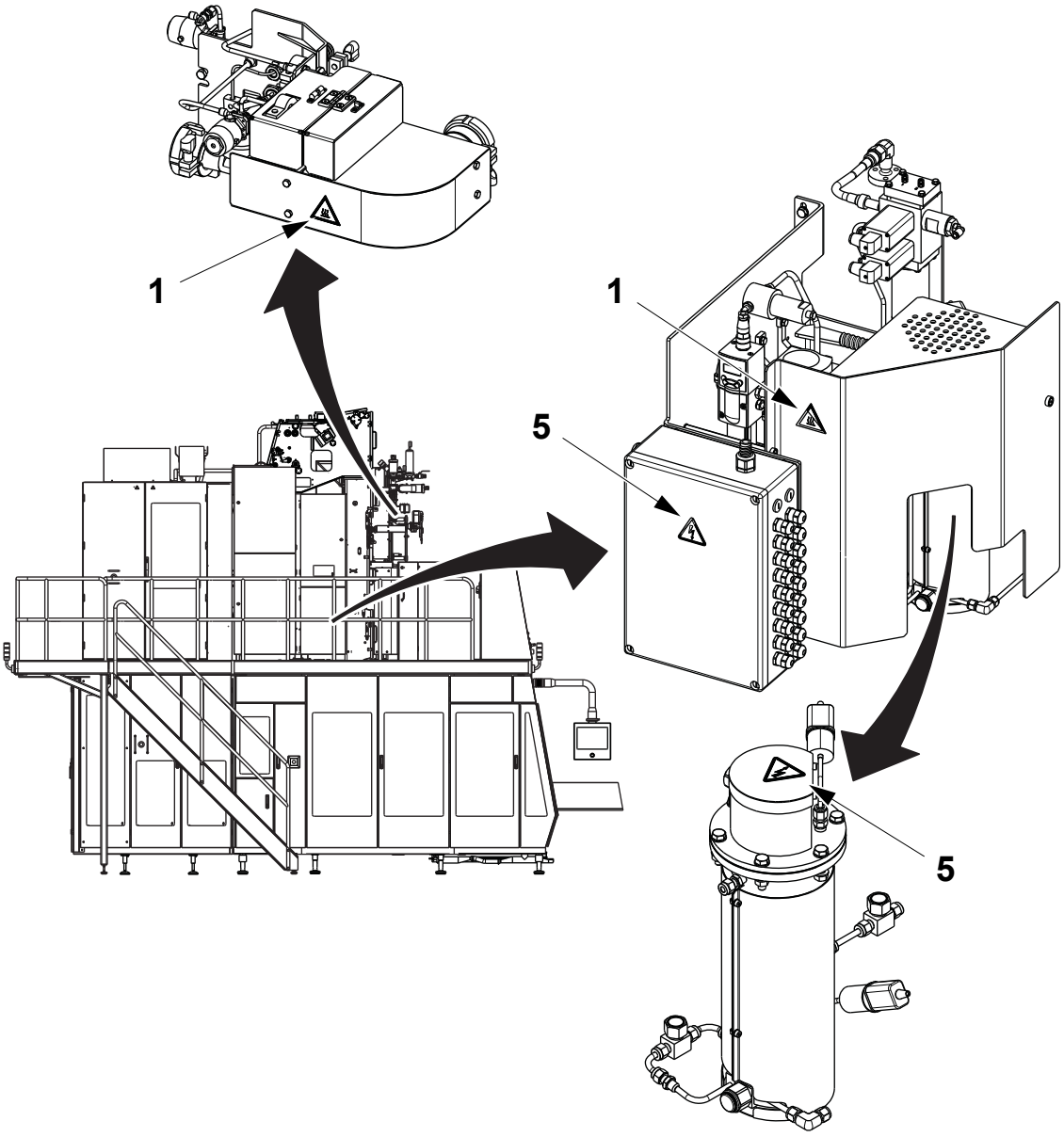

TechPub_2614345_0108 - sp04_3048262_01.fm

Protective Devices

There are different kinds of protective device designed to ensure safe use of the equipment. See the sections below.

WARNING

Hazardous zones.

Hazardous zones are safeguarded and provided with protective devices. Do not inch or run this equipment if any protective device is inoperative.

Change inoperative components of the safety system immediately.

For the locations of safeguards and/or other protective devices not mentioned in this section, see the Maintenance Manual.

DANGER

Hazardous voltage.

Will shock, burn, or cause death.

Hazardous voltage remains ON after activating an EMERGENCY STOP.

Emergency Stop

Emergency stop devices are used to stop this equipment immediately in an hazardous situation. Learn the positions of all emergency stop devices and how to use them.

Instructions for a normal production stop are included in the Stop chapter of the Operation Manual.

TechPub_2614345_0108 - sp04_3048262_01.fm

Emergency Stop Push-Buttons

Push one of the EMERGENCY STOP push-buttons to stop this equipment immediately.

The location of each EMERGENCY STOP push-button is shown by an arrow.

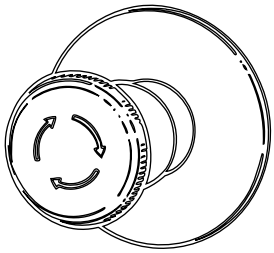

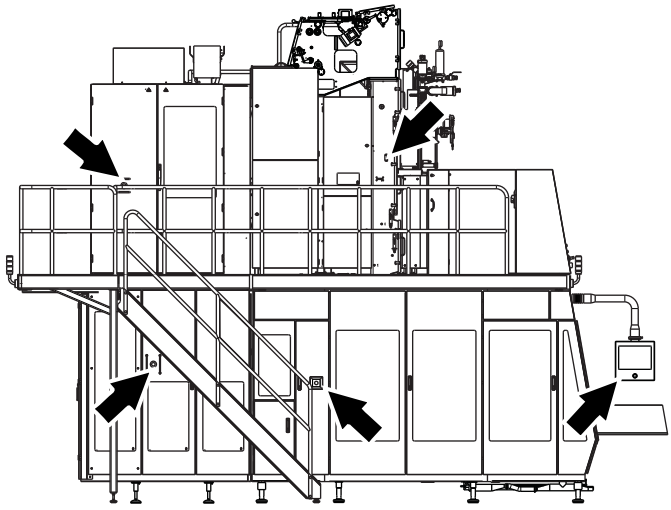

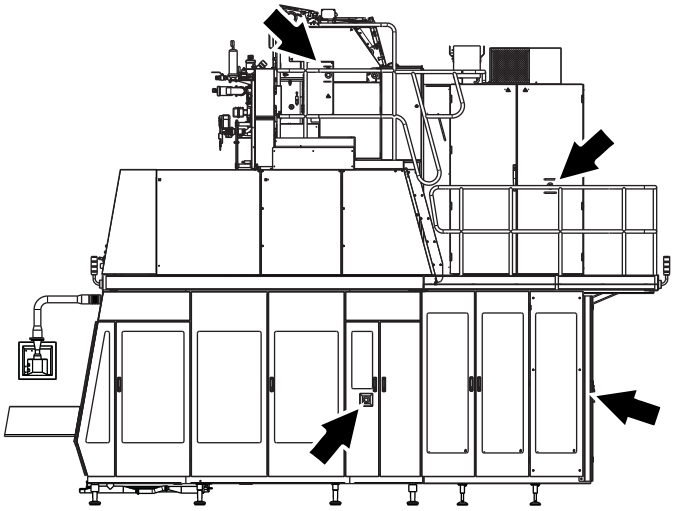

(behind door)

TechPub_2614345_0108 - sp04_3048262_01.fm

Safeguards

WARNING

Moving machinery parts.

Never defeat or bypass the interlocking devices.

Movable guards, for example, doors and covers leading to hazardous zones, are fitted with interlocking devices where required. These devices are usually electric safety switches that are parts of the safety system and must never be defeated, bypassed, or otherwise made inoperative.

CAUTION

Corners and edges.

Close the doors, guards, or parts of the equipment unless they must be open during work.

CAUTION

Burn hazard.

Parts of the equipment protected by guards may be hot after operation. Allow components to cool down or use personal protective equipment.

After installation and maintenance, and before this equipment is inched or run, check that all safeguards are in place and that they operate correctly.

(Cont'd)

TechPub_2614345_0108 - sp04_3048262_01.fm

(Cont'd)

CAUTION
Equipment damage.
The equipment can be damaged if it is not stopped in the correct way. Never stop this equipment by opening a movable guard, for example, a door or cover, equipped with an interlocking device.

The location of each interlocking device is shown by an arrow.

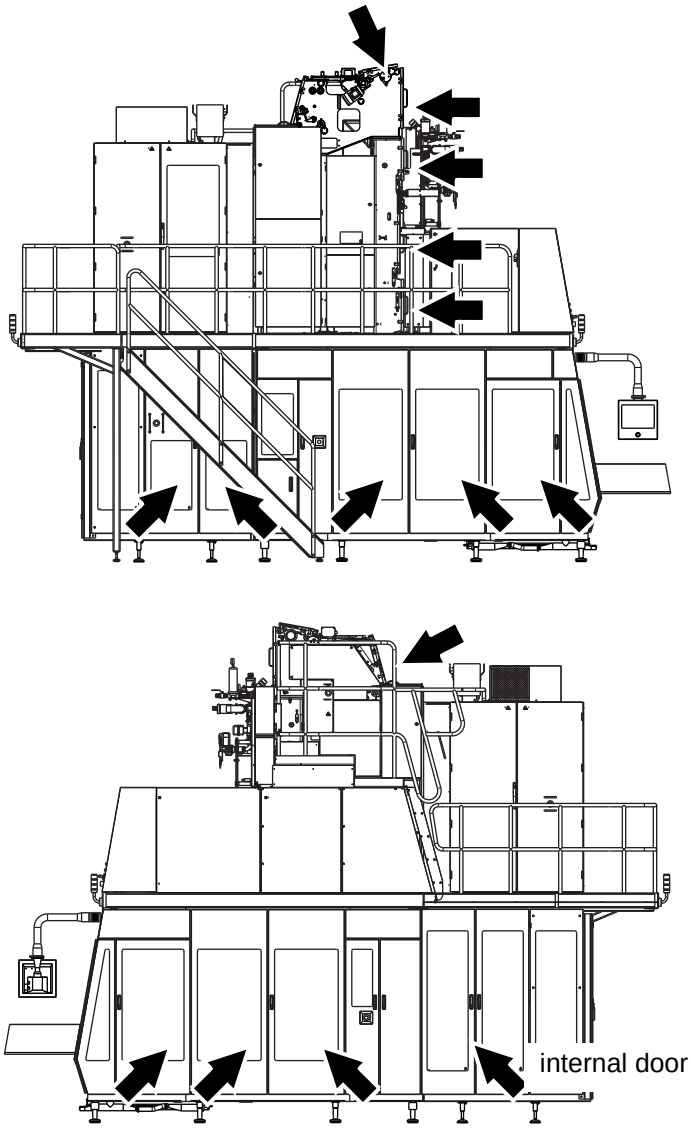

TechPub_2614345_0108 - sp04_3048262_01.fm

Warning Lamp

A warning lamp is a column of warning lights:

- A red light (2) indicates a hazardous condition. This is a situation that requires immediate action.
- A yellow light (3) indicates an abnormal or impending critical condition. This is a condition calling for action by the operator.
- A blue light (4) indicates that operator action is required.
- A green light (5) indicates a normal condition.

Audible Alarm

The audible alarm (1) produces a warning signal every time this equipment is about to start. The warning signal sounds for approximately three seconds prior to starting to alert personnel.

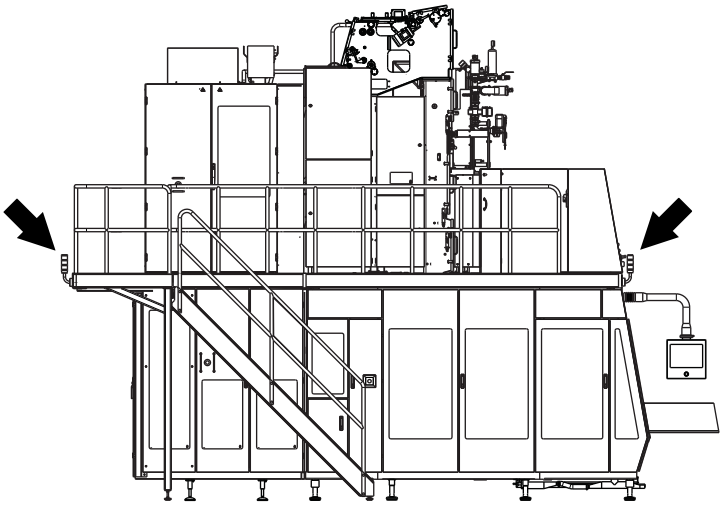

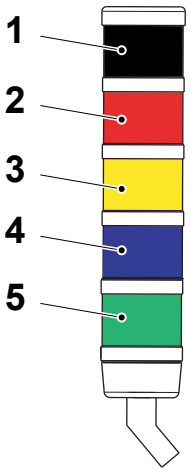

1 Audible alarm
2 Red light
3 Yellow light
4 Blue light
5 Green light

TechPub_2614345_0108 - sp04_3048262_01.fm

Safe Manual Handling

Use mechanical lifting aids whenever possible. If mechanical lifting aids are not available, do not attempt to lift loads over 23 kg without the assistance of a colleague. Avoid lifting below knee height and above shoulder height. If it is necessary to lift from the floor, follow the instructions below to reduce the risk of back and disc injuries.

- Use safety shoes and be sure that the surface of the floor is not slippery.
- Get close to the load.
- Take a wide stance and find the best positions for your feet.
- Bend your hips and knees, and use your leg muscles.
- Keep the load close to your body.
- Do not twist your body while moving the load.
- Take small steps when turning.

In order to reduce the risk of injury to discs and back muscles, be careful to not bend or twist your back when lifting. Keep the load close to your body to reduce the strain on your back.

To reduce the ergonomic risks to each individual operator, job rotation is recommended, so that recovery and variety are provided.

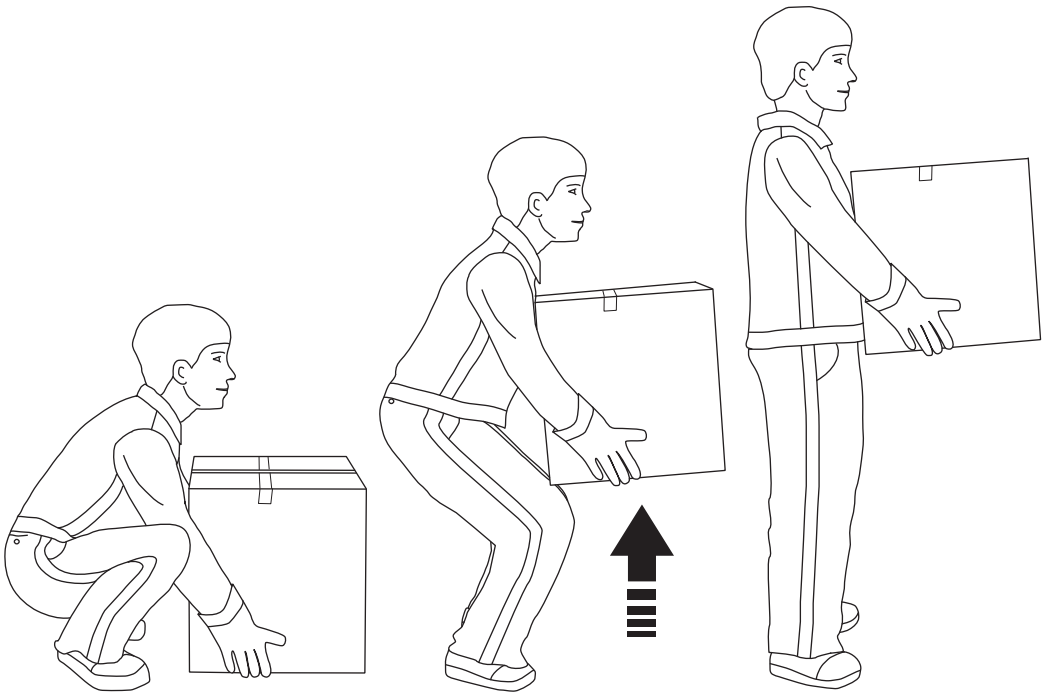

TechPub_2614345_0108 - sp04_3048262_01.fm

Personal Protection

This section applies to all personnel at all times when this equipment is in operation. For special personal protective equipment required when handling hazardous substances, see the Hazardous Substances section.

Noise

WARNING

Hazardous noise.

Can cause impaired hearing.

Wear hearing protection whenever this equipment is in operation.

CAUTION

Hazardous noise.

May cause impaired hearing.

Hearing protection is recommended whenever this equipment is in operation.

Entanglement

WARNING

Risk of entanglement.

Do not wear jewellery or loose clothing when working on or near this equipment. Restrain long hair with, for example, clips or rubber bands.

TechPub_2614345_0108 - sp04_3048262_01.fm

Hazardous Substances

WARNING

Contact with chemicals can cause death, serious injury, or illness.
Always read and follow the instructions in the safety data sheet supplied by the manufacturer or local supplier, when handling chemicals.

Make sure that

- the safety data sheet is available
- the showers work
- an eyewash device, movable or wall-mounted, is available and operational
- additional washing facilities are nearby

Note! Learn the locations of all washing facilities in order to act immediately in case of an accident



TechPub_2614345_0108 - sp04_3048262_01.fm

Disposal of Chemical Substances

Always read and follow the disposal instructions in the safety data sheet supplied by the manufacturer or local supplier.

It is strongly recommended that used chemical containers are

- disposed of according to the instructions immediately after use
- not used as disposal containers for other chemicals in order to avoid uncontrolled chemical reactions within the container

TechPub_2614345_0108 - sp04_3048262_01.fm

Hydrogen Peroxide (H_2O_2)

WARNING
Corrosive chemical.
Wear personal protective equipment.

In both liquid and gas states, hydrogen peroxide may cause irritation or damage if it comes into contact with skin, mucous membranes, eyes, or clothes. Call for medical attention immediately if there is an accident.

Liquid hydrogen peroxide in concentrations of less than 1% is generally considered harmless to humans.

Consult the instructions on the label of the tank or container.

Emergency Procedures

If there is an accident involving hydrogen peroxide, rinse the affected area as soon as possible with large amounts of water.

Eyes

If splashes or vapour from hydrogen peroxide come in contact with the eyes

- wash the eyes thoroughly with lukewarm water for 15 minutes (keep eyelids wide apart)
- call for medical attention immediately

Skin

If hydrogen peroxide comes into contact with skin or clothes

- rinse immediately with plenty of water
- call for medical attention immediately if skin burns appear
- thoroughly wash the clothes before wearing them again

Inhalation

If irritation or pain is experienced due to having **inhaled** hydrogen peroxide vapour

- leave the affected area and get some fresh air
- call for medical attention if the symptoms get worse

Ingestion

If hydrogen peroxide is swallowed

- do not attempt to cause vomiting
- drink large amounts of lukewarm water to dilute the peroxide
- call for medical attention immediately

TechPub_2614345_0108 - sp04_3048262_01.fm

Personal Protective Equipment

The personal protective equipment for hydrogen peroxide is

- protective goggles (for instance, TP No. 90303-11), tight fitting
  If there is a risk of splashes, a visor is a suitable complement
- protective gloves made of neoprene (for instance, TP No. 90303-12), nitrile, or butyl rubber
- protective apron (for instance, TP No. 90303-13), or protective suit when handling larger amounts
- protective shoes or boots made of PVC, PE plastic, or rubber
- proper respiratory equipment, if ventilation is insufficient

TechPub_2614345_0108 - sp04_3048262_01.fm

Handling of Hydrogen Peroxide

WARNING

Sudden and violent chemical reaction.

Avoid any contamination of hydrogen peroxide.

Hydrogen peroxide can react very suddenly and violently in combination with many compounds, or if it is contaminated. Never pour surplus hydrogen peroxide back into the original container. There is a risk of a violent decomposition liberating oxygen and heat, with a big increase in volume due to the oxygen generated by the peroxide decomposition. This will cause a large overpressure if the contaminated hydrogen peroxide is in a closed container. If the integrity of the container fails, this could result in a dangerous hazard.

Ensure that equipment used for handling and diluting hydrogen peroxide is clean before it comes in contact with hydrogen peroxide. Pumps or other equipment used for handling hydrogen peroxide must be **used for this purpose only** and must be manufactured from appropriate materials, such as stainless steel 316 L, glass, polyethylene, or teflon. After use, make sure that all peroxide residue is rinsed away.

If hydrogen peroxide is spilled, dilute it with large amounts of water. Dispose of the diluted hydrogen peroxide according to local regulations.



WARNING

Self-ignition.

Never wipe up hydrogen peroxide with materials such as rags or paper as these may self-ignite several hours after contact. If there is a fire, spray with large quantities of water.

TechPub_2614345_0108 - sp04_3048262_01.fm

Storage of Hydrogen Peroxide

WARNING

Containers may become overpressurised if they are not properly ventilated. If the integrity of a container fails, this could result in a dangerous hazard.

Keep the container upright and fitted with its proper ventilation cap. If there is a fire, cool all containers by spraying them with large quantities of water.

Hydrogen peroxide decomposes much faster with increasing temperature. There is a risk of a container becoming overpressurised at high temperatures, since the ventilation cap cannot release the gases produced quickly enough. If the integrity of the container fails, this could result in a dangerous hazard.

Hydrogen peroxide **must** be stored in the **original container** delivered by the supplier. Keep the container upright and fitted with its proper ventilation cap, which allows oxygen to escape. Otherwise there is a risk of overpressurisation of the container due to violent decomposition of the peroxide. If the integrity of the container fails, this could result in a dangerous hazard.

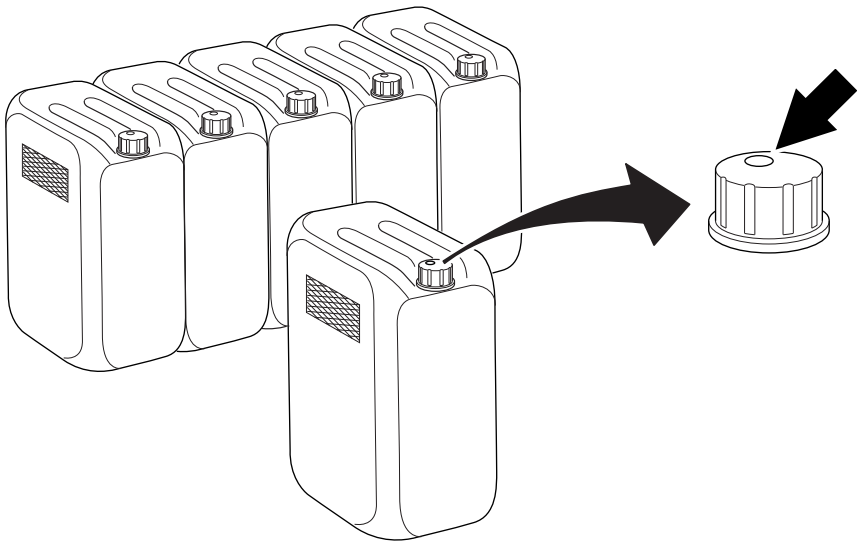

Make sure that the container is always properly closed.

(Cont'd)

TechPub_2614345_0108 - sp04_3048262_01.fm

(Cont'd)

Commercial food-grade hydrogen peroxide has been stabilized to inhibit the catalytic decomposition effects of metals and other impurities, but it can decompose into oxygen and water if it is exposed to heat or contaminated.

Make sure that the area used for storage of hydrogen peroxide is

- cool, clean, and well ventilated
- shielded from direct sunlight
- kept free from combustible materials

Disposal of Hydrogen Peroxide

Always read and follow the disposal instructions in the safety data sheet supplied by the manufacturer or local supplier.

TechPub_2614345_0108 - sp04_3048262_01.fm

Caustic Soda/Sodium Hydroxide (NaOH)

WARNING
Corrosive chemical.
Wear personal protective equipment.

Caustic soda/sodium hydroxide is highly corrosive in all forms and can cause serious burns on contact with skin and eyes.

Always wear personal protective equipment (as specified on the next page).

Emergency Procedures

First Aid Measures

Inhalation

Remove victim immediately from source of exposure, provide rest, warmth and fresh air, get medical attention if any discomfort continues.

Ingestion

Do not induce vomiting, immediately rinse mouth and drink plenty of water (200 - 300 ml) and get medical attention immediately!

Skin Contact

Immediately remove contaminated clothing, rinse the skin with lots of water and get medical attention.

Eye Contact

May cause permanent damage if eye is not immediately irrigated. Make sure to remove any contact lenses from eyes before rinsing. Promptly wash eyes with plenty of water while lifting the eyelids, get immediately medical attention and continue to rinse.

WARNING
Corrosive chemical.
Wear personal protective equipment.

Accidental Release, Spillage or Splashing

In case of accidental release, spillage or splashing

- wash contaminated area with water. Alternatively, absorb in vermiculite, dry sand or earth, place into containers and wash the affected area
- in case of contact with eyes or skin wash with plenty of water
- remove any contaminated clothing immediately

TechPub_2614345_0108 - sp04_3048262_01.fm

Personal Protective Equipment

The personal protective equipment for hydrogen peroxide is

- protective goggles (for instance, TP No. 90303-11), tight fitting
  If there is a risk of splashes, a visor is a suitable complement
- protective gloves made of neoprene (for instance, TP No. 90303-12), nitrile, or butyl rubber
- protective apron (for instance, TP No. 90303-13), or protective suit when handling larger amounts
- protective shoes or boots made of PVC, PE plastic, or rubber
- proper respiratory equipment, if ventilation is insufficient

TechPub_2614345_0108 - sp04_3048262_01.fm

Handling and Storage of Caustic Soda/Sodium Hydroxide

WARNING

Sudden and violent chemical reaction.

Avoid any contamination of caustic soda/sodium hydroxide. Never store or mix caustic soda together with hydrogen peroxide.

Ensure that

- containers are kept tightly closed
- containers are stored in a cool dry place away from direct sunlight or sources of heat
- designated storage and handling areas are adequately ventilated and that emergency shower and eye wash facilities are available nearby
- handle containers carefully during transport
- avoid spilling, skin and eye contact
- use dedicated equipment when sampling, pouring or decanting
- never store or mix caustic soda together with hydrogen peroxide

Disposal of Caustic Soda/Sodium Hydroxide

Dispose of waste and residues in accordance with local authority requirements. Used caustic soda should be sent to an approved facility for destruction. Never allow caustic soda to be disposed into the drain.

CAUTION

Fire-Fighting Measures

Always apply the following measures.

Extinguishing Media

The product is non-combustible, use fire extinguishing media appropriate for surrounding materials.

Specific Hazards

Corrosive liquid.

Protective Measures in Fire

Self-contained breathing apparatus and full-protective clothing must be worn in case of fire.

Note! Always refer to your supplier’s Material Safety Data Sheet (MSDS) for caustic soda.

TechPub_2614345_0108 - sp04_3048262_01.fm

Nitric Acid (HNO_3)

WARNING
Corrosive chemical.
Wear personal protective equipment.

Nitric acid is extremely hazardous; it is corrosive, reactive, a strong oxidizer and a poison. Liquid and mist can cause serious burns on contact with skin and eyes; contact with other material may cause fire; liquid and mist cause severe burns to skin and eyes; inhalation may cause lung and tooth damage.

Always wear personal protective equipment (as specified on the next page).

Emergency Procedures

Inhalation
Remove victim immediately from source of exposure, provide rest, warmth and fresh air. If not breathing, give artificial respiration; if breathing is difficult give oxygen. Get medical attention immediately.

Ingestion
Do not induce vomiting, immediately rinse mouth and drink plenty of water or milk if available. Never give anything by mouth to an unconscious person. Get medical attention immediately.

Skin Contact
Immediately remove contaminated clothing, rinse the skin with lots of water and get medical attention.

Eye Contact
May cause permanent damage if eye is not immediately irrigated. Make sure to remove any contact lenses from eyes before rinsing. Promptly wash eyes with plenty of water while lifting the eyelids, get immediately medical attention and continue to rinse. Get medical attention if any discomfort continues.

(Cont'd)

TechPub_2614345_0108 - sp04_3048262_01.fm

(Cont'd)

WARNING
Corrosive chemical.
Wear personal protective equipment.

Accidental Release, Spillage or Splashing

In case of accidental release, spillage or splashing

- ventilate area of leak or spill, isolate hazard area, keep unnecessary and unprotected personnel from entering, contain and recover liquid when possible, neutralise with alkaline material (soda ash, lime) then absorb with an inert material (e.g.,vermiculite, dry sand or earth), place in a chemical waste container; do not use combustible materials, such as saw dust, rags, paper, wood
- in case of contact with eyes or skin wash with plenty of water
- remove any contaminated clothing immediately; see the Fire-fighting (fire) measures section on page ii-42

TechPub_2614345_0108 - sp04_3048262_01.fm

Personal Protective Equipment

The personal protective equipment for hydrogen peroxide is

- protective goggles (for instance, TP No. 90303-11), tight fitting
  If there is a risk of splashes, a visor is a suitable complement
- protective gloves made of neoprene (for instance, TP No. 90303-12), nitrile, or butyl rubber
- protective apron (for instance, TP No. 90303-13), or protective suit when handling larger amounts
- protective shoes or boots made of PVC, PE plastic, or rubber
- proper respiratory equipment, if ventilation is insufficient

TechPub_2614345_0108 - sp04_3048262_01.fm

Handling and Storage of Nitric Acid

WARNING

Sudden and violent chemical reaction.

Avoid any contamination of nitric acid.

Ensure that

- containers are kept tightly closed
- containers are stored in a cool dry place away from direct sunlight or sources of heat, water and incompatible materials and that emergency shower and eye wash facilities are available nearby
- designated storage and handling areas are adequately ventilated and have acid-resistant floors
- handle containers carefully during transport
- avoid spilling, skin and eye contact
- use dedicated equipment when sampling, pouring or decanting
- do not wash out container and use it for other purposes. Containers of this material may be hazardous when empty since they retain product residues (vapours, liquid)

TechPub_2614345_0108 - sp04_3048262_01.fm

Disposal of Nitric Acid

Dispose of waste and residues in accordance with local authority requirements. Used nitric acid should be sent to an approved facility for destruction. Never allow nitric acid to be disposed into the drain.

CAUTION

Fire-fighting measures.

Always apply the following measures.

Fire

The product is non-combustible, but it is a strong oxidiser and its heat of reaction with reducing agents or combustibles may cause ignition. Can react with metals to release flammable hydrogen gas.

Explosion

Reacts explosively with combustible organic or readily oxidizable materials such as alcohols, turpentine, charcoal, organic refuse, metal powder, hydrogen sulphide, etc. Reacts with most metals to release hydrogen gas which can form explosive mixtures with air.

Extinguishing Media

Water spray may be used to keep containers exposed to the fire cool. Do not get water inside containers. Use fire extinguishing media appropriate for surrounding materials.

Special Information

Increases the flammability of combustible, organic and readily oxidizable materials.

Protective Measures In Fire

Self-contained breathing apparatus and full-protective clothing must be worn in case of fire.

Note! Always refer to your supplier’s Material Safety Data Sheet (MSDS) for nitric acid.

TechPub_2614345_0108 - sp04_3048262_01.fm

Ultraviolet Light

WARNING

Ultraviolet light.

Can cause eye or skin burns.

The ultraviolet lamp must only be operated when it is in its normal operating position and protected by its safeguard.

An ultraviolet lamp is protected by an interlocking guard, such as a door or cover.

Ultraviolet light damage is cumulative. Extended exposure may cause illness. Exposure to ultraviolet light should be avoided.

CAUTION

Hot surfaces.

May cause burns.

The assembly housing and components around the ultraviolet light assembly are hot. Allow components to cool down before maintenance.

The location of each ultraviolet light is shown by an arrow.

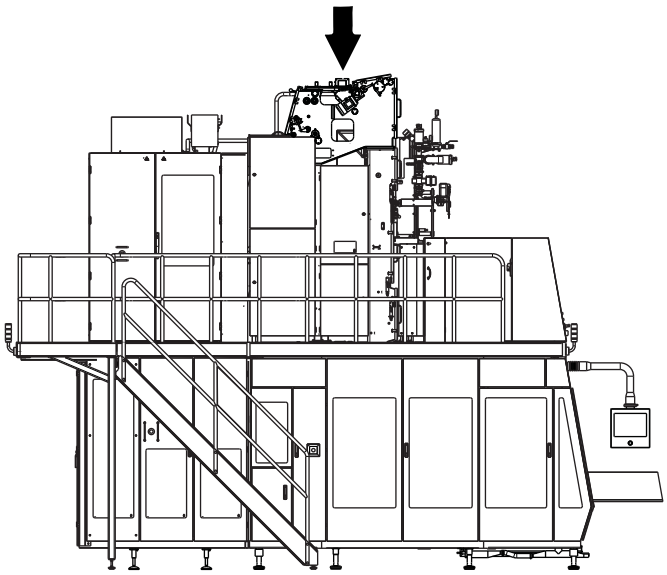

TechPub_2614345_0108 - sp04_3048262_01.fm

Supply Systems

Power Supply

DANGER

Hazardous voltage and moving machinery.
The power supply disconnector must be turned off and secured with a lock before any maintenance.

Note! The key to the lock must be removed by the technician and retained in his/her possession until all work is completed.

DANGER

Hazardous voltage can be present with the power supply switched off.
Circuits identified by orange-coloured conductors are not disconnected by the main power supply disconnector. The location of the power supply disconnector of these circuits is described in the Maintenance Manual procedures that include work on these types of circuit.

Certain maintenance procedures may require power supply systems to be on. These exceptions are clearly stated in the Maintenance Manual.

The illustrations show the power supply disconnector and its location.

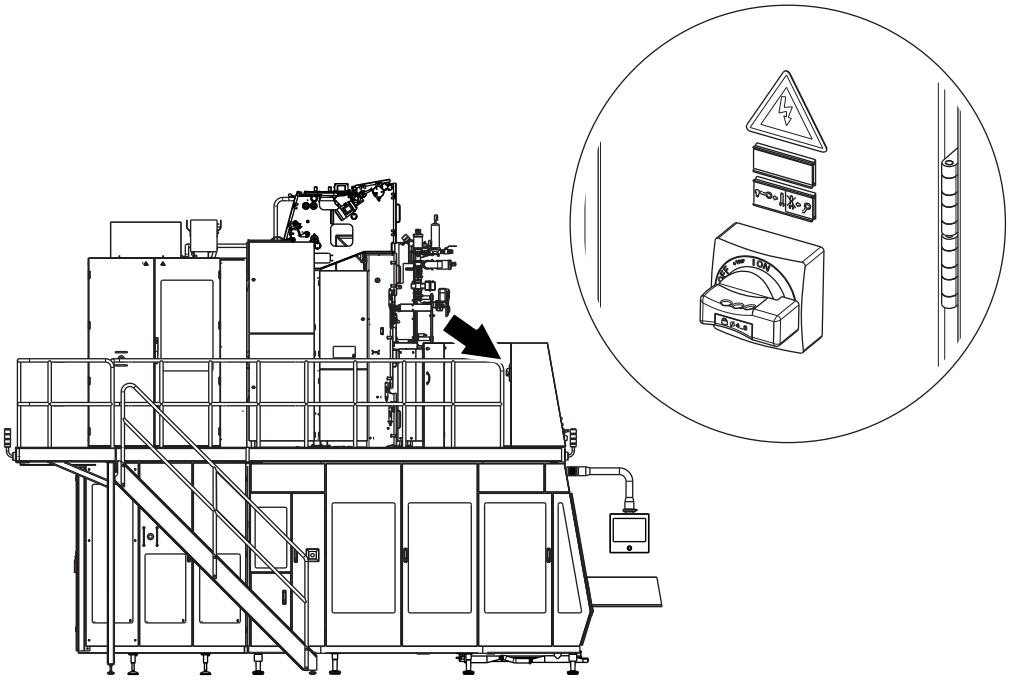

TechPub_2614345_0108 - sp04_3048262_01.fm

Residual Voltage

DANGER

Hazardous voltage.
Will shock, burn, or cause death.
After the power supply disconnector is turned off, residual voltage remains in the capacitor circuits.
Wait five minutes before opening the enclosure containing these circuits.
Ensure that no residual voltage remains on the capacitors before touching them.

Electrical Cabinet

DANGER

Hazardous voltage.
Will shock, burn, or cause death.
Parts behind doors to electrical enclosures may be live. The power supply disconnector must be turned off and secured with a lock before performing maintenance inside the electrical cabinet.

Note! The key to the lock must be removed by the technician and retained in his/her possession until all work is completed.

(Cont'd)

TechPub_2614345_0108 - sp04_3048262_01.fm

(Cont'd)

Make sure that the electrical cabinet doors are closed after working inside the electrical cabinet. Doors with lock must be locked.

The location of each electrical cabinet is shown by an arrow.

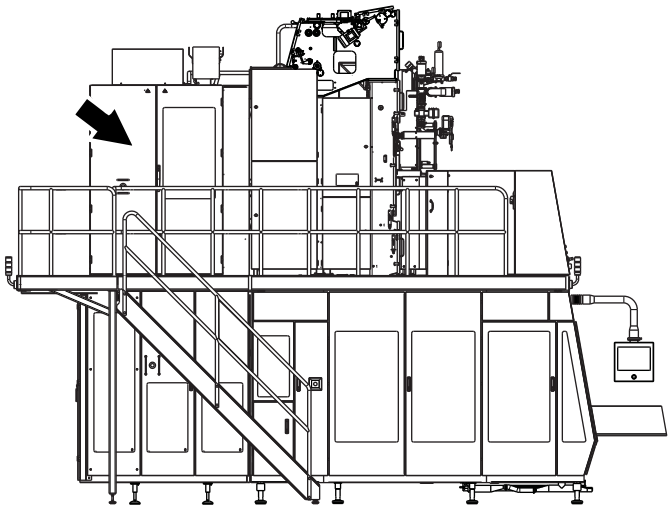

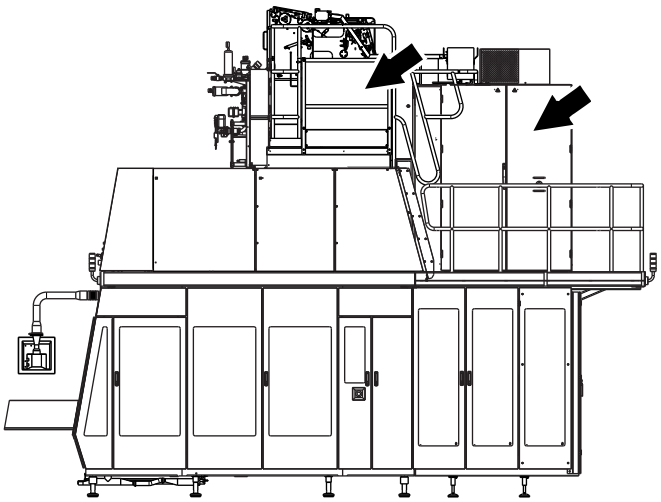

TechPub_2614345_0108 - sp04_3048262_01.fm

Socket Outlet

WARNING

Hazardous voltage.

Can shock, burn, or cause death. Read the Maintenance Manual before using this socket outlet.

The socket outlet (1) is connected to a residual current device (2) to protect users against electrical shock if there is an earth fault in the connected equipment. The residual current device must be tested each time before the socket outlet is being used. See the MM for test procedure.

The illustrations show the socket outlet, the residual current device, and their locations.

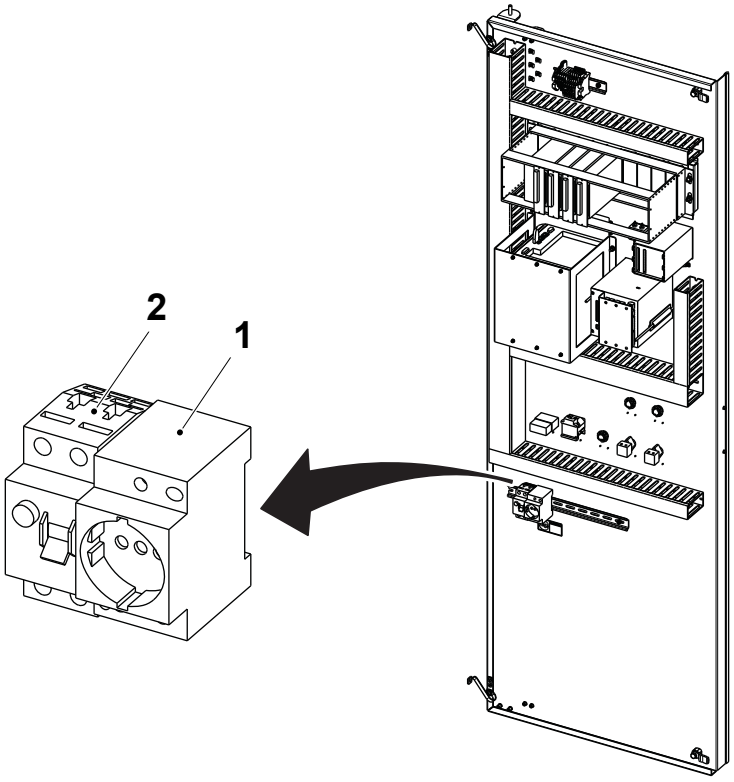

1 Socket outlet
2 Residual current device

TechPub_2614345_0108 - sp04_3048262_01.fm

Air Supply

WARNING

Compressed air and moving machinery.

Close the main air valve and lock it, and safely release compressed air from the air system before any maintenance.

Certain maintenance procedures may require air supply systems to be on. These exceptions are clearly stated in the Maintenance Manual.

The illustrations show the main air switch (1), the main air regulator (2) and their location in the filling machine.

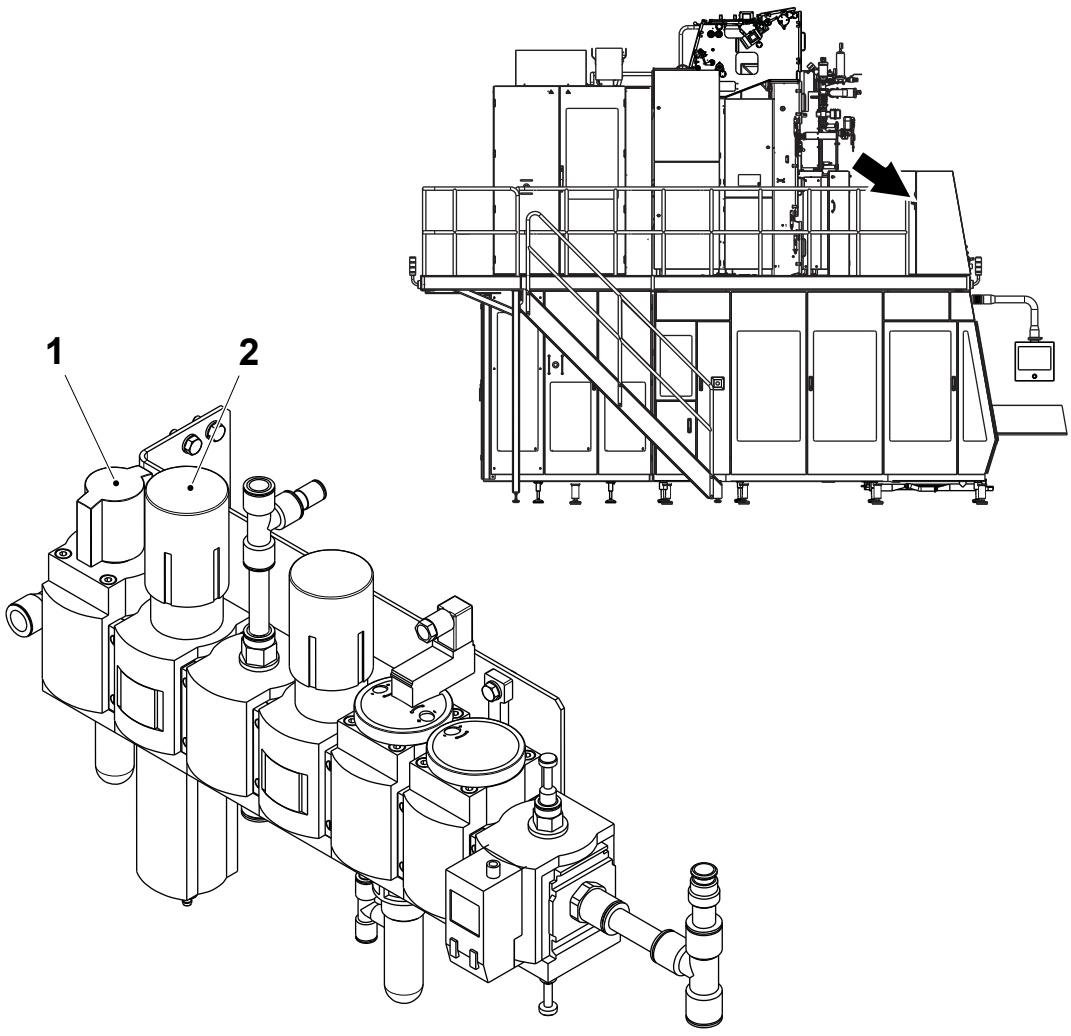

1 Main air switch
2 Main air regulator

(Cont'd)

TechPub_2614345_0108 - sp04_3048262_01.fm

(Cont'd)

Note! The air for the ASU pneumatic panel and the pre-applicator pneumatic panel are taken before the main air valve (1).

The illustrations show the air valve (3) for the ASU, the air valve (4) for the pre-applicator, the main air valve (5) on the ASU pneumatic panel and their location in the filling machine.

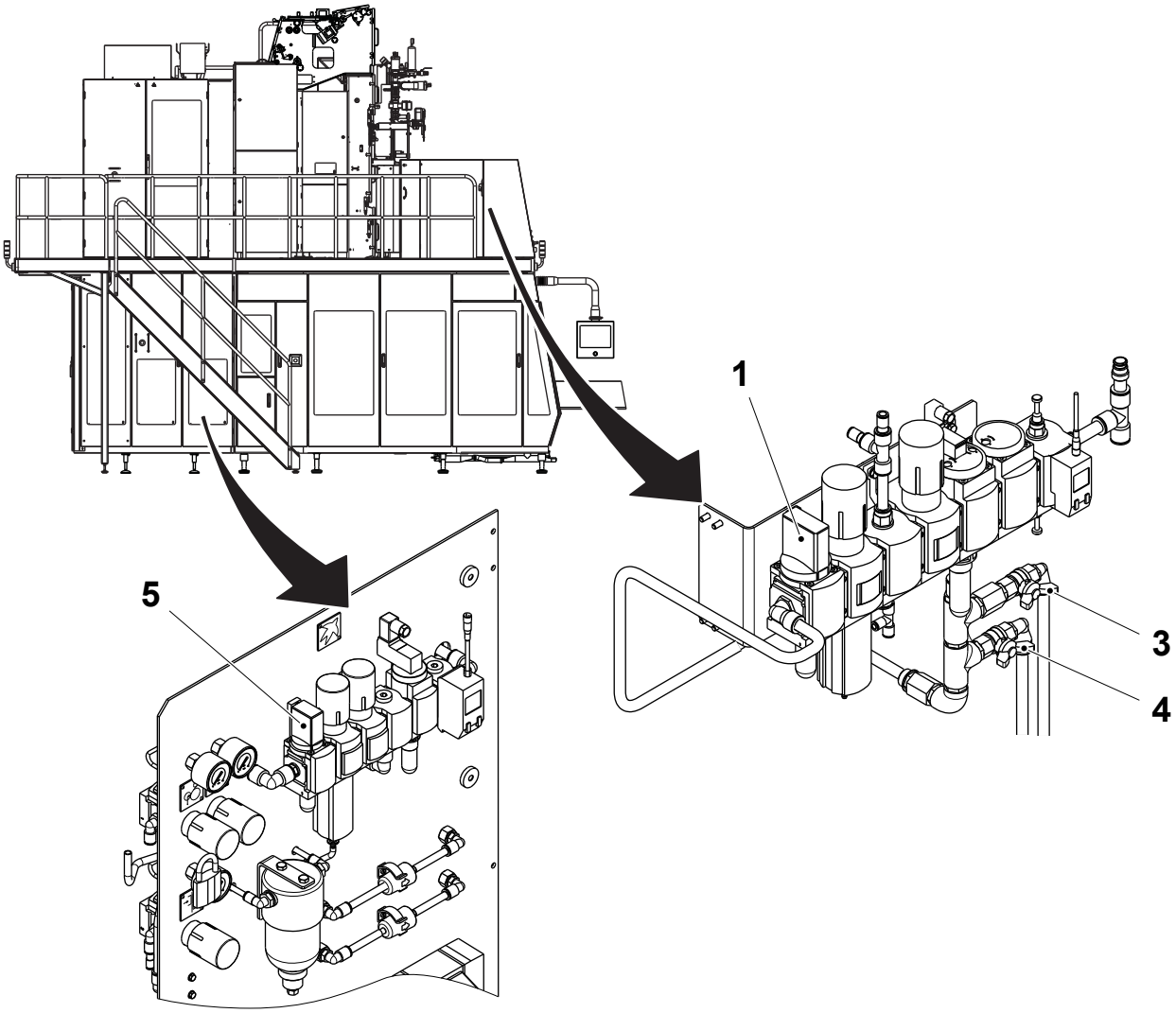

1 Main air valve
3 Valve
4 Valve
5 Main air valve

TechPub_2614345_0108 - sp04_3048262_01.fm

Steam Supply

WARNING

Hot steam can cause scalds.

Pressurised steam can be discharged unexpectedly.
Close the steam supply valve and lock it, and safely vent all steam pressure from the steam system before any maintenance on parts with steam, such as pipes and valves.

a) The key to the lock must be removed by the technician and retained in his/her possession until all work is completed.

Certain maintenance procedures may require steam supply systems to be on. These exceptions are clearly stated in the Maintenance Manual.

The steam supply system is separated in two different supply: the valve (1) is for the steam barrier in the product valve, the valve (2) is for the cleaning system only.

The illustrations show the steam supply valves (1) and (2) with the padlocks (3) and their location.

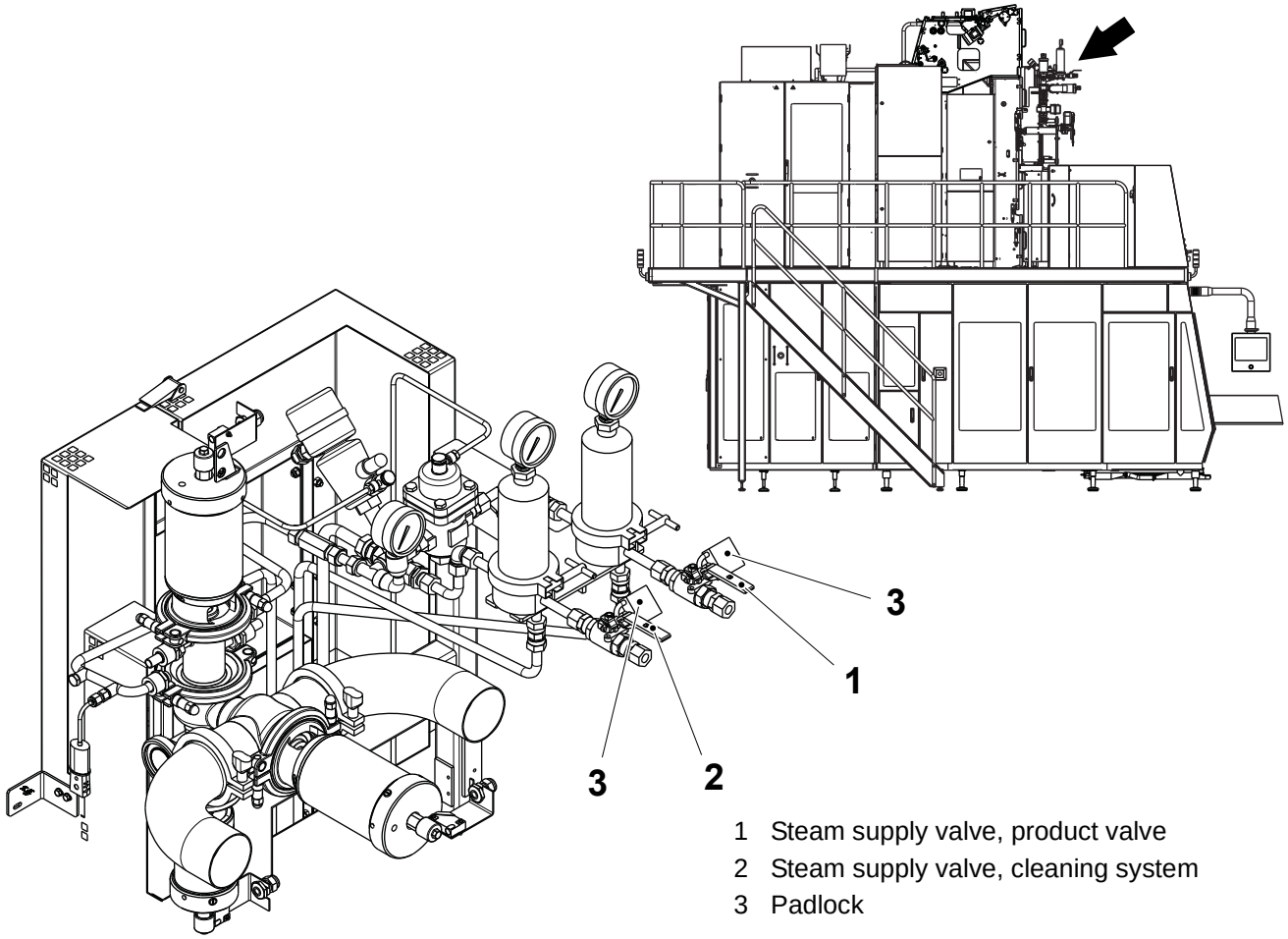

1 Steam supply valve, product valve
2 Steam supply valve, cleaning system
3 Padlock

TechPub_2614345_0108 - sp04_3048262_01.fm

Water Supply

CAUTION

Water under pressure.

Close the water supply valves before any maintenance.

Certain maintenance procedures may require water supply systems to be on. These exceptions are clearly stated in the Maintenance Manual.

The illustrations show the water supply valves (1) and (2), and their location.

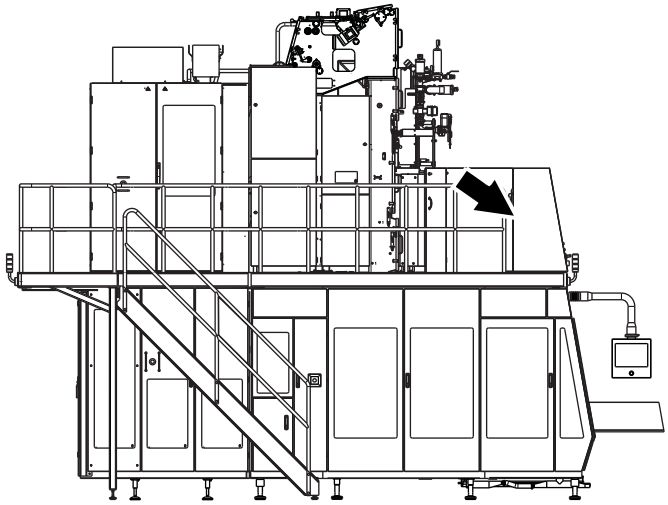

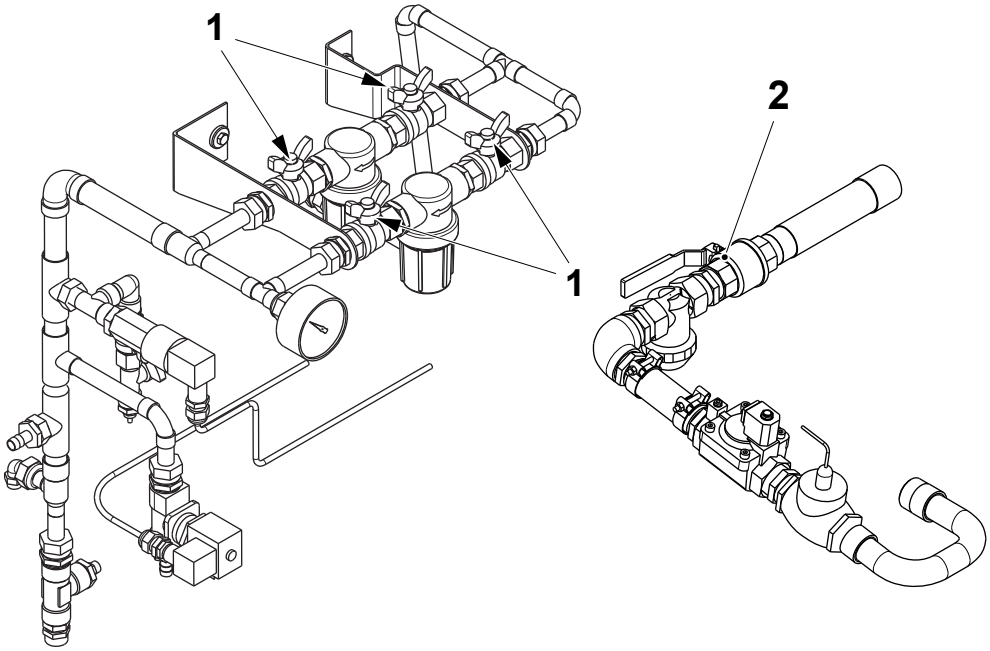

1 Water supply valve
2 Hot water supply valve

TechPub_2614345_0108 - sp04_3048262_01.fm

Equipment for Lifting and Moving Loads

WARNING

Risk of crushing injury.

Make sure that the capacity of the lifting equipment is adequate and that the equipment itself is in proper working order.

If lifting tackle must be joined to make up the necessary lengths, make sure that the joints are secure and have the same lifting capacity as the rest of the lifting tackle.

Always engage safety clips fitted to lifting hooks to prevent the lifting tackle from slipping off.

Use ropes or poles to steady and manoeuvre suspended loads. Do **not** use hands or feet.

Make sure that the route and destination are free from obstacles before moving a suspended load. It must always be possible to quickly and safely lower the load to the floor in an emergency.

When depositing loads, keep lifting tackle in place until the stability of the load has been substantiated.

TechPub_2614345_0108 - sp04_3048262_01.fm

1 Superstructure

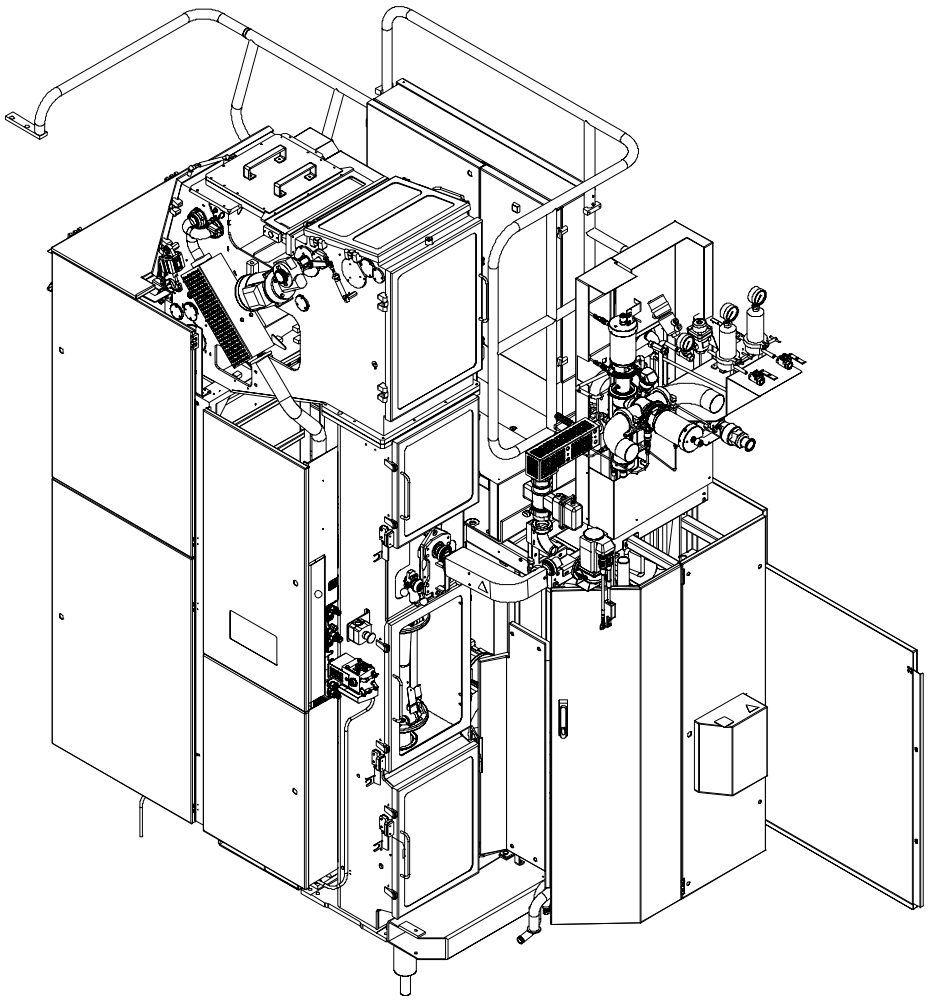

TechPub_2614345_0108 - 0101_3048051_01.fm

Superstructure - Description

SPC Reference	648555-0300

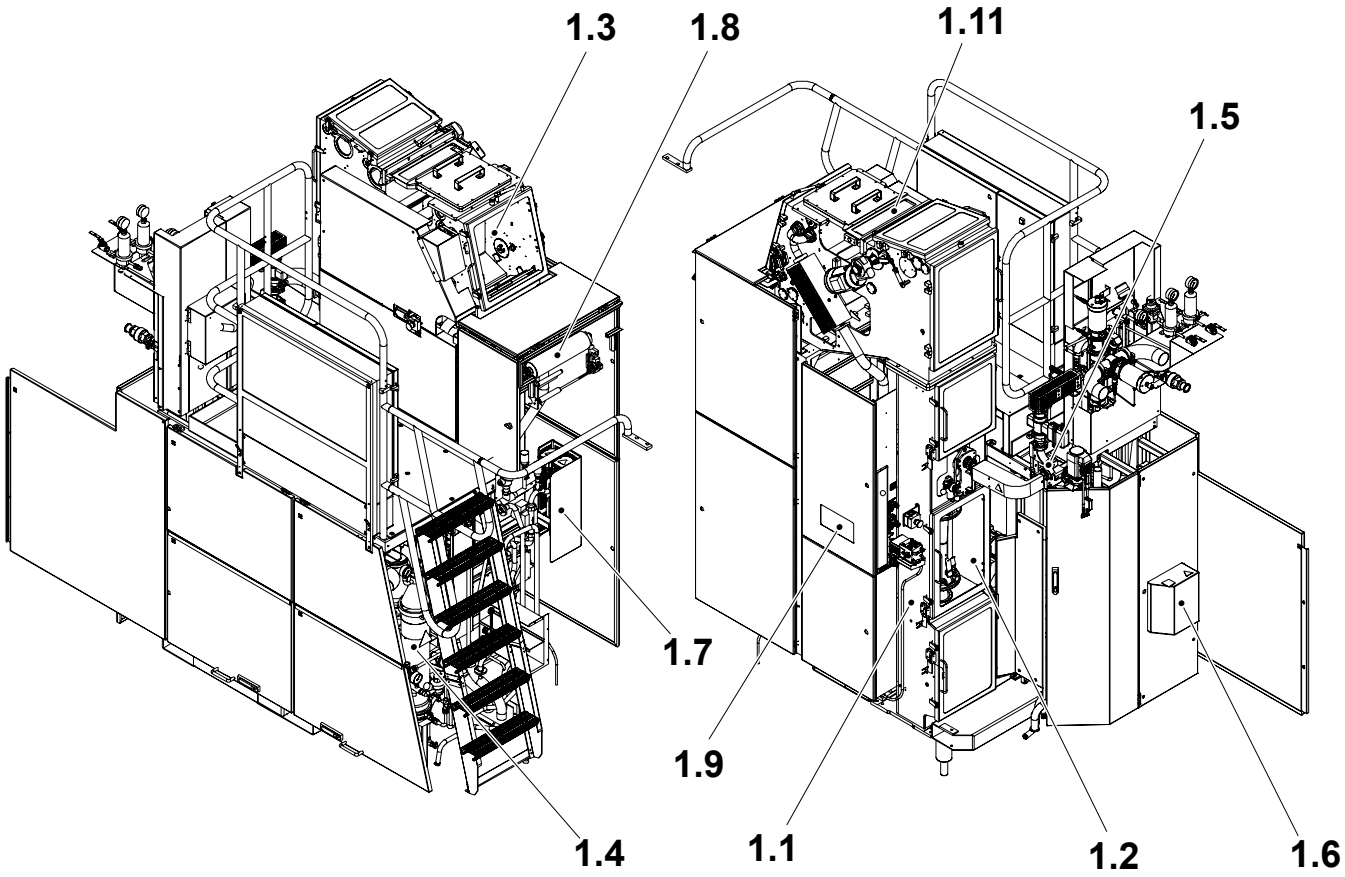

1 Superstructure
1.1 Aseptic Chamber
1.2 Forming Section
1.3 Drying Chamber
1.4 Sterile Air System
1.5 Filling System
1.6 Cleaning System
1.7 Hydrogen Peroxide
1.8 Frame Section, Upper
1.9 Pneumatic System
1.11 UV Lamp

TechPub_2614345_0108 - 0101_3048051_01.fm

1 Superstructure . . . . . 1 - 11

1-1 Superstructure - Setting Sequence, Type I . . . . . 1 - 11

1-2 Superstructure - Setting Sequence, Type II . . . . 1 - 12

1-3 Superstructure - Settings, Type III . . . . . 1 - 12

1.1 Aseptic Chamber . . . . . 1 - 13

1.1.1 Support Rail . . . . . 1 - 13

1.1.1-1 Support Rail - Check . . . . . 1 - 13

1.1.2 Lid . . . . . 1 - 15

1.1.2-1 Lid - Set Sensor . . . . . 1 - 15

1.2 Forming Section . . . . . 1 - 16

1.2-1 Forming Section - Check Forming Rings . . . . . 1 - 16

1.2-2 Forming Section - Change Forming Ring Bushings . . . . . 1 - 20

1.2-3 Forming Section - Set Forming Ring Position . . 1 - 23

1.2.1 Lower Forming Ring . . . . . 1 - 25

1.2.1-1 Lower Forming Ring - Set Clearance . . . . . 1 - 25

1.2.1-2 Lower Forming Ring - Set Position . . . . . 1 - 27

1.2.1-3 Lower Forming Ring - Set Overlap . . . . . 1 - 32

1.2.1-4 Lower Forming Ring - Set Cylinder . . . . . 1 - 37

1.2.1-5 Lower Forming Ring - Check Pressure Roller . . 1 - 39

1.2.1-6 Lower Forming Ring - Change Knob . . . . . 1 - 41

1.2.2 Upper Forming Ring . . . . . 1 - 42

1.2.2-1 Upper Forming Ring - Set Clearance . . . . . 1 - 42

1.2.2-2 Upper Forming Ring - Change Knob . . . . . 1 - 44

1.2.3 Forming Ring . . . . . 1 - 45

1.2.3-1 Forming Ring - Set Clearance . . . . . 1 - 45

1.2.4 Edge Roller . . . . . 1 - 47

1.2.4-1 Edge Roller - Set . . . . . 1 - 47

1.2.4-2 Edge Roller - Set Lower Edge Roller Clearance 1 - 53

1.2.5 Longitudinal Sealing . . . . . 1 - 54

1.2.5-1 Longitudinal Sealing - Check . . . . . 1 - 54

TechPub_2614345_0108 - 0101_3048051_01.fm

1.2.5-2 Longitudinal Sealing - Change Rollers . . . . . 1 - 55
1.2.5-3 Longitudinal Sealing - Set . . . . . 1 - 56
1.2.5-4 Longitudinal Sealing - Set VMN Mode . . . . . 1 - 73

1.2.6 Seal . . . . . 1 - 76

1.2.6-1 Seal - Check . . . . . 1 - 76
1.2.6-2 Seal - Change . . . . . 1 - 77
1.2.6-3 Seal - Set Position . . . . . 1 - 79

1.2.7 Steering Ring . . . . . 1 - 84

1.2.7-1 Steering Ring - Overhaul . . . . . 1 - 84
1.2.7-2 Steering Ring - Set Rollers . . . . . 1 - 87
1.2.7-3 Steering Ring - Change Motor . . . . . 1 - 89
1.2.7-4 Steering Ring - Reference Motor . . . . . 1 - 90
1.2.7-5 Steering Ring - Manual Control . . . . . 1 - 91
1.2.7-6 Steering Ring - Correct Tube Position . . . . . 1 - 93

1.3 Drying Chamber . . . . . 1 - 95

1.3-1 Drying Chamber - Check Rollers . . . . . 1 - 95
1.3-2 Drying Chamber - Leakage Detection . . . . . 1 - 98
1.3-3 Drying Chamber - Check Aseptic Chamber Overpressure . . . . . 1 - 106
1.3-4 Drying Chamber - Set Overpressure . . . . . 1 - 108

1.3.1 Frame Housing . . . . . 1 - 110

1.3.1-1 Frame Housing - Check Seal and Gasket . . . . 1 - 110
1.3.1-2 Frame Housing - Change Seal and Gasket . . . 1 - 112
1.3.1-3 Frame Housing - Clean Tunnel . . . . . 1 - 113
1.3.1-4 Frame Housing - Tunnel Overhaul . . . . . 1 - 115

1.3.2 Bending Roller . . . . . 1 - 119

1.3.2-1 Bending Roller - Change . . . . . 1 - 119

1.3.3 Drive Roller . . . . . 1 - 120

1.3.3-1 Drive Roller - Check . . . . . 1 - 120
1.3.3-2 Drive Roller - Change . . . . . 1 - 122

1.3.4 Calender Roller . . . . . 1 - 125

1.3.4-1 Calender Roller - Check . . . . . 1 - 125
1.3.4-2 Calender Roller - Change . . . . . 1 - 127

TechPub_2614345_0108 - 0101_3048051_01.fm

1.3.4-3 Calender Roller - Set Distance . . . . . 1 - 131
1.3.4-4 Calender Roller - Set Proximity Switch . . . . . 1 - 133
1.3.4-5 Calender Roller - Change Seals . . . . . 1 - 135

1.3.5 Crank . . . . . 1 - 137

1.3.5-1 Crank - Check Chain . . . . . 1 - 137

1.3.6 Bending Roller . . . . . 1 - 140

1.3.6-1 Bending Roller - Change . . . . . 1 - 140

1.3.7 Air Knife . . . . . 1 - 143

1.3.7-1 Air Knife - Check and Clean . . . . . 1 - 143
1.3.7-2 Air Knife - Change Rails . . . . . 1 - 145
1.3.7-3 Air Knife - Set Proximity Sensor . . . . . 1 - 147

1.3.8 Pendulum Roller. . . . . 1 - 148

1.3.8-1 Pendulum Roller - Check . . . . . 1 - 148
1.3.8-3 Pendulum Roller - Set I/P Transducer . . . . . 1 - 150
1.3.8-4 Pendulum Roller - Set Position . . . . . 1 - 154
1.3.8-5 Pendulum Roller - Set Cylinder . . . . . 1 - 158
1.3.8-6 Pendulum Roller - Change Bushings . . . . . 1 - 159

1.3.9 Valve . . . . . 1 - 161

1.3.9-1 Valve - Check . . . . . 1 - 161

1.3.10 Squee-gee Roller . . . . . 1 - 163

1.3.10-1 Squee-gee Roller - Change . . . . . 1 - 163

1.3.11 Bending Roller . . . . . 1 - 167

1.3.11-1 Bending - Change Roller . . . . . 1 - 167

1.3.12 Pendulum Counter Roller . . . . . 1 - 169

1.3.12-1 Pendulum Counter Roller - Set Pressure . . . . . 1 - 169
1.3.12-2 Pendulum Counter Roller - Set Distance . . . . . 1 - 170
1.3.12-3 Pendulum Counter Roller - Change Rollers . . . 1 - 171
1.3.12-4 Pendulum Counter Roller - Set Roller Position 1 - 173

1.3.13 Cap Guide . . . . . 1 - 174

1.3.13-1 Cap Guide - Set Position . . . . . 1 - 174

1.4 Sterile Air System . . . . . 1 - 176

1.4-1 Sterile Air System - Check for Leaks . . . . . 1 - 176

TechPub_2614345_0108 - 0101_3048051_01.fm

1.4.1 Pipe Work Air . . . . . 1 - 178

1.4.1-1 Pipe Work Air - Check Spray Nozzle . . . . . 1 - 178

1.4.1-2 Pipe Work Air - Clean Spray Nozzle and Balls 1 - 182

1.4.1-3 Pipe Work Air - Check Change Over Valve . . 1 - 186

1.4.1-4 Pipe Work Air - Overhaul Change Over Valve 1 - 188

1.4.2 Compressor Unit . . . . . 1 - 191

1.4.2-1 Compressor Unit - Check Pressure . . . . . 1 - 191

1.4.2-2 Compressor Unit - Change Gaskets . . . . . 1 - 193

1.4.2-3 Compressor Unit - Clean Impeller . . . . . 1 - 195

1.4.3 Separator . . . . . 1 - 199

1.4.3-1 Separator - Clean Filter and Floater . . . . . 1 - 199

1.4.3-2 Separator - Change Valve and Valve Seat . . . . 1 - 203

1.4.3-3 Separator - Set Float Unit . . . . . 1 - 205

1.4.3-4 Separator - Check Pressure Gauge . . . . . 1 - 207

1.4.4 Heat Exchanger Valve . . . . . 1 - 208

1.4.4-1 Heat Exchanger Valve - Overhaul . . . . . 1 - 208

1.4.4-2 Heat Exchanger Valve - Set . . . . . 1 - 212

1.4.5 Air Super Heater . . . . . 1 - 215

1.4.5-1 Air Super Heater - Check . . . . . 1 - 215

1.4.5-2 Air Super Heater - Check Heat Exchanger . . . 1 - 217

1.4.6 Air Valve . . . . . 1 - 223

1.4.6-1 Air Valve - Set . . . . . 1 - 223

1.4.6-2 Air Valve - Overhaul . . . . . 1 - 227

1.4.6-3 Air Valve - Set Proximity Switch . . . . . 1 - 231

1.4.7 Scrubber. . . . . 1 - 233

1.4.7-1 Scrubber - Set Pressure Regulator . . . . . 1 - 233

1.4.7-2 Scrubber - Clean Filters . . . . . 1 - 234

1.4.8 Sterile Air Pipe . . . . . 1 - 237

1.4.8-1 Sterile Air Pipe - Set Nozzle . . . . . 1 - 237

1.4.8-2 Sterile Air Pipe - Overhaul . . . . . 1 - 240

1.5 Filling System. . . . . 1 - 244

Filling System Description . . . . . 1 - 244

TechPub_2614345_0108 - 0101_3048051_01.fm

1.5.1 Filling Pipe . . . . . 1 - 248

1.5.1-1 Filling Pipe - Check . . . . . 1 - 248

1.5.1-2 Filling Pipe - Remove . . . . . 1 - 249

1.5.1-3 Filling Pipe - Fit . . . . . 1 - 255

1.5.1-4 Filling Pipe - Set Position . . . . . 1 - 263

1.5.1-5 Filling Pipe - Set Pressure Roller . . . . . 1 - 273

1.5.1-6 Filling Pipe - Set Level Detector Position . . . . 1 - 275

1.5.1-7 Filling Pipe - Check Level Detector Function . 1 - 284

1.5.1-8 Filling Pipe - Change Locking Pins . . . . . 1 - 286

1.5.1-9 Filling Pipe - Remove Bucket . . . . . 1 - 289

1.5.1-10 Filling Pipe - Change Gasket . . . . . 1 - 293

1.5.2 Product Valve . . . . . 1 - 294

1.5.2-1 Product Valve - Remove Cylinders . . . . . 1 - 294

1.5.2-2 Product Valve - Change Seals and Membranes 1 - 297

1.5.2-3 Product Valve - Change O-Rings . . . . . 1 - 302

1.5.2-4 Product Valve - Set Proximity Switches . . . . . 1 - 309

1.5.2-5 Product Valve - Empty Tube . . . . . 1 - 310

1.5.3 Product Lines . . . . . 1 - 311

1.5.3-1 Product Lines - Overhaul Regulating Valve . . . 1 - 311

1.5.3-2 Product Lines - Set Regulating Valve Proximity Switch . . . . . 1 - 317

1.5.3-3 Product Lines - Change Flow Meter Gaskets . 1 - 318

1.5.3-4 Product Lines - Change Flow Meter . . . . . 1 - 319

1.5.3-5 Product Lines - Move Regulating Valve . . . . . 1 - 321

1.5.3-6 Product Lines - Product Pipes Assembly . . . . . 1 - 324

1.5.4 Steam System. . . . . 1 - 330

1.5.4-1 Steam System - Clean Steam Trap . . . . . 1 - 330

1.5.4-2 Steam System - Clean Filter . . . . . 1 - 332

1.5.4-3 Steam System - Check Membrane . . . . . 1 - 337

1.5.4-4 Steam System - Change Pressure Regulator . . 1 - 339

1.5.4-5 Steam System - Set Pressure Regulator . . . . . 1 - 341

1.5.4-6 Steam System - Set Steam Regulator . . . . . 1 - 343

1.6 Cleaning System . . . . . 1 - 344

TechPub_2614345_0108 - 0101_3048051_01.fm

1.6.1 Flow Switch . . . . . 1 - 344

1.6.1-1 Flow Switch - Check Gaskets . . . . . 1 - 344

1.6.1-2 Flow Switch - Set . . . . . 1 - 345

1.6.1-3 Flow Switch - Change Sensor Gasket . . . . . 1 - 346

1.6.2 Cleaning Cup . . . . . 1 - 347

1.6.2-1 Cleaning Cup - Check Gaskets . . . . . 1 - 347

1.6.2-2 Cleaning Cup - Set Sensor . . . . . 1 - 348

1.6.3 ICU . . . . . 1 - 349

1.6.3-1 ICU - Check Leakages . . . . . 1 - 349

1.6.3-2 ICU - Check Pump . . . . . 1 - 351

1.6.3-3 ICU - Change Pump Seals . . . . . 1 - 353

1.6.3-4 ICU - Set Pump Shaft . . . . . 1 - 361

1.6.3-5 ICU - Sample Cleaning Liquid . . . . . 1 - 364

1.6.4 Pipe Work . . . . . 1 - 366

1.6.4-1 Pipe Work - Check . . . . . 1 - 366

1.6.4-2 Pipe Work - Check Conductivity Sensor . . . . . 1 - 368

1.6.5 Draining . . . . . 1 - 370

1.6.5-1 Draining - Check . . . . . 1 - 370

1.6.5-2 Draining - Change 3-Way Valve Diaphragm . . 1 - 371

1.6.5-3 Draining - Set 3-Way Valve Sensor . . . . . 1 - 373

1.6.6 Cleaning Section . . . . . 1 - 374

1.6.6-1 Cleaning Section- Change Gaskets . . . . . 1 - 374

1.6.6-2 Cleaning Section - Set . . . . . 1 - 378

1.7 Hydrogen Peroxide . . . . . 1 - 381

1.7-1 Hydrogen Peroxide - Check Leaks . . . . . 1 - 381

1.7.1 Heating Unit . . . . . 1 - 383

1.7.1-1 Heating Unit - Change Heating Elements . . . . 1 - 383

1.7.1-2 Heating Unit - Change Heat Exchanger . . . . . 1 - 385

1.7.1-3 Heating Unit - Drain U-bend . . . . . 1 - 387

1.7.1-4 Heating Unit - Check Pump . . . . . 1 - 389

1.7.1-5 Heating Unit - Change Venting Valve . . . . . 1 - 390

1.7.1-6 Heating Unit - Check Venting Valve Floater . . 1 - 394

TechPub_2614345_0108 - 0101_3048051_01.fm

1.7.2 Pressure Unit . . . . . 1 - 398

1.7.2-1 Pressure Unit - Check Leaks . . . . . 1 - 398

1.7.2-2 Pressure Unit - Fill . . . . . 1 - 400

1.7.2-3 Pressure Unit - Set Pressure . . . . . 1 - 403

1.7.3 Bath . . . . . 1 - 405

1.7.3-1 Bath - Check Roller . . . . . 1 - 405

1.7.3-2 Bath - Change Roller Bushings . . . . . 1 - 408

1.7.3-3 Bath - Change Heating Elements . . . . . 1 - 412

1.7.3-4 Bath - Set Bottom Cover Sensor . . . . . 1 - 422

1.7.4 Spray System . . . . . 1 - 423

1.7.4-1 Spray System - Check . . . . . 1 - 423

1.7.4-2 Spray System - Clean Peroxide Filter . . . . . 1 - 424

1.7.4-3 Spray System - Set Pressure . . . . . 1 - 426

1.7.4-4 Spray System - Clean Filter . . . . . 1 - 427

1.8 Frame Section, Upper . . . . . 1 - 429

1.8.1 Bending Roller . . . . . 1 - 429

1.8.1-1 Bending Roller - Overhaul . . . . . 1 - 429

1.8.1-2 Bending Roller - Check Splice Detector . . . . . 1 - 431

1.8.1-3 Bending Roller - Set Splice Detector . . . . . 1 - 433

1.8.1-4 Bending Roller - Set Paper Guide Position . . . 1 - 435

1.8.1-5 Bending Roller - Check Paper Guide . . . . . 1 - 437

1.8.1-6 Bending Roller - Set Web Width . . . . . 1 - 443

1.8.1-7 Bending Roller - Set Paper Guide Pressure . . . 1 - 445

1.8.1-8 Bending Roller - Check Proximity Switch . . . . 1 - 446

1.8.1-9 Bending Roller - Set Proximity Switch . . . . . 1 - 447

1.8.2 Electrical Equipment . . . . . 1 - 448

1.8.2-1 Electrical Equipment - Check Pressure Sensor 1 - 448

1.8.3 Tab Folding . . . . . 1 - 451

1.8.3-1 Tab Folding - Set Pressure Wheel . . . . . 1 - 451

1.8.3-2 Tab Folding - Overhaul . . . . . 1 - 452

1.9 Pneumatic System. . . . . 1 - 455

1.9-1 Pneumatic System - Check . . . . . 1 - 455

TechPub_2614345_0108 - 0101_3048051_01.fm

1.11 UV Lamp . . . . . 1 - 456

1.11-1 UV Lamp- Check Functionality . . . . . 1 - 456

1.11.1 Irradiation Kit . . . . . 1 - 460

1.11.1-1 Irradiation Kit - Check . . . . . 1 - 460

1.11.1-2 Irradiation Kit - Overhaul . . . . . 1 - 461

1.11.1-3 Irradiation Kit - Change Film . . . . . 1 - 470

1.11.2 Power Supply Unit. . . . . 1 - 474

1.11.2-1 Power Supply Unit - Change . . . . . 1 - 474

1.11.2-2 Power Supply Unit - Troubleshoot . . . . . 1 - 481

1.11.2-3 Power Supply Unit - Check Fuses . . . . . 1 - 484

1.11.2-4 Power Supply Unit - Change UV Cable . . . . . 1 - 490

TechPub_2614345_0108 - 0101_3048051_01.fm

1 Superstructure

SPC Reference	648555-0300

1-1 Superstructure - Setting Sequence, Type I

Type I settings must be performed in sequence and according to the flowchart below. These settings are performed before the first start-up or commissioning of the filling machine.

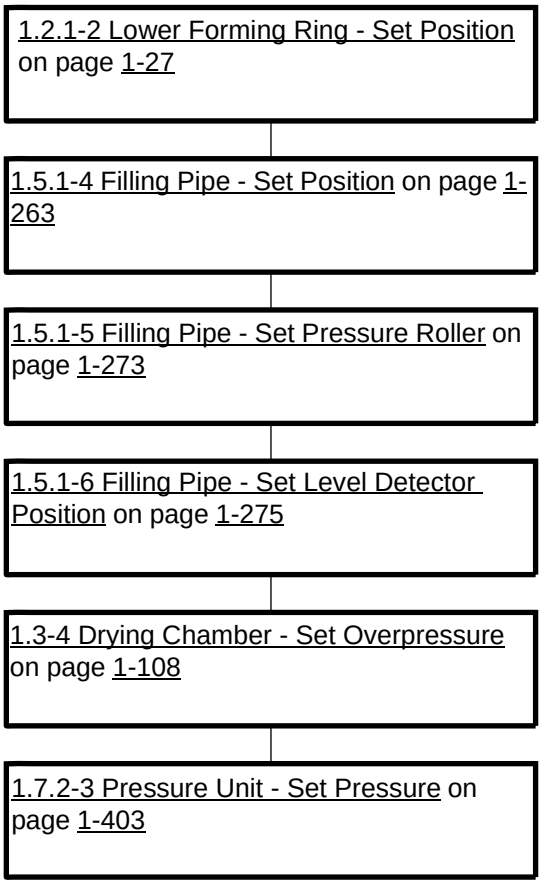

TechPub_2614345_0108 - 0101_3048051_01.fm

1-2 Superstructure - Setting Sequence, Type II

Type II settings must be performed in sequence and according to the flowchart below. These settings are specifically related to the setting and correction of the packaging material tracking and to the fine tuning of the longitudinal sealing.

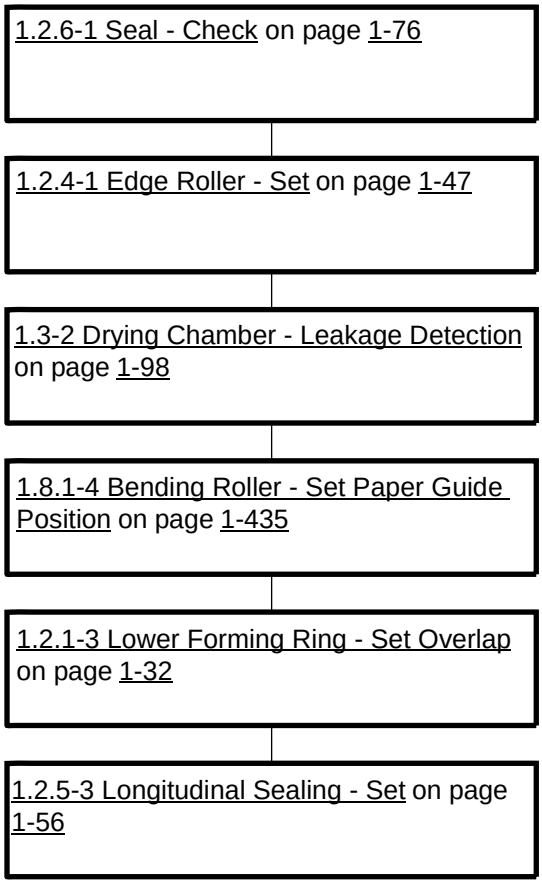

1-3 Superstructure - Settings, Type III

Type III settings include all of the remaining superstructure setting procedures. These settings can be performed independently and have no affect on any of the other superstructure settings.

TechPub_2614345_0108 - 0101_3048051_01.fm

1.1 Aseptic Chamber

SPC Reference	2539440-0400

1.1.1 Support Rail

1.1.1-1 Support Rail - Check

Machine Status	Mains Power OFF Air OFF Steam ON Water OFF
SPC Reference	2512930-0300

CAUTION
Risk of damage to the equipment.
Do not remove any part of this assembly, doing so will lead to serious machine misalignment. Contact the nearest Tetra Pak service station for further information.

(Cont'd)

TechPub_2614345_0108 - 0101_3048051_01.fm

(Cont'd)

Check the lower forming ring rail for wear or damage. Check that:

- the rails (1) and rollers (2) are not worn
- the rollers (2) turn easily
- there is no play between the rollers (2) and the rail (1)
- the springs (3) are easily compressed.

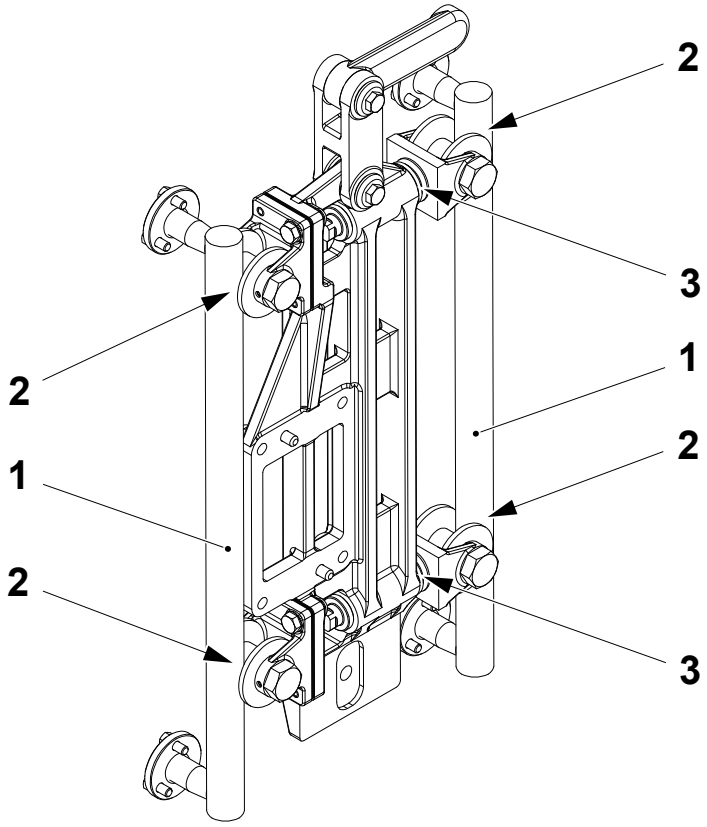

1 Rail
2 Roller
3 Spring

TechPub_2614345_0108 - 0101_3048051_01.fm

1.1.2 Lid

1.1.2-1 Lid - Set Sensor

Machine Status	Mains Power OFF Air OFF Steam ON Water OFF
SPC Reference	2532962-0100

a) Fit the lid (1) at the bottom of the aseptic chamber by the knobs (2).

b) Loosen the nuts (3) and set the distance **A** between the sensor (4) and the plate (5).

c) Tighten the nuts (3).

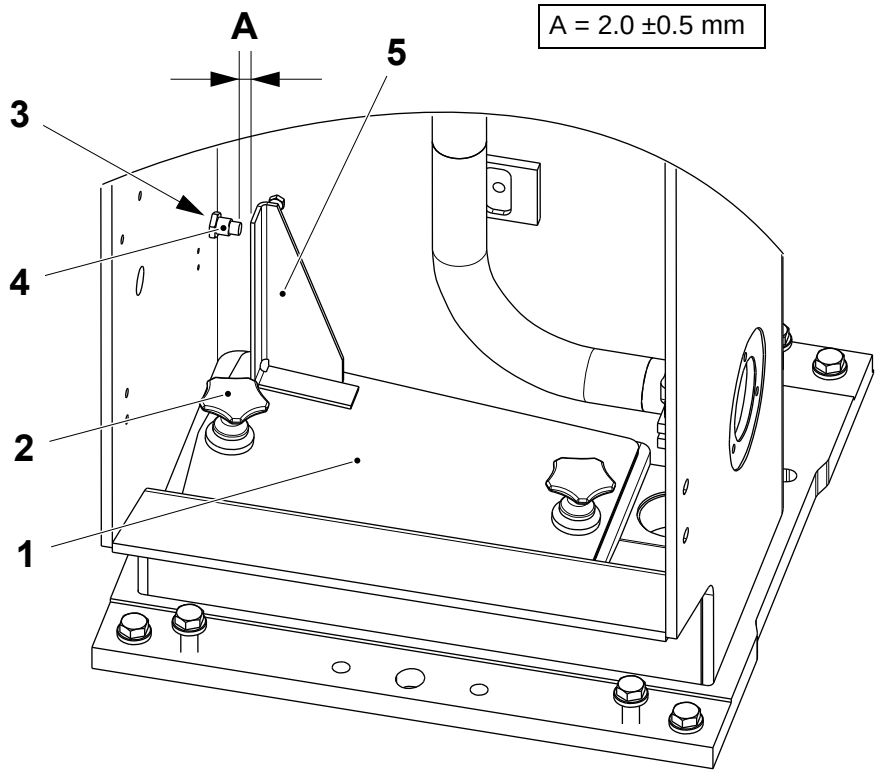

1 Lid
2 Knob
3 Nut
4 Sensor
5 Plate

TechPub_2614345_0108 - 0101_3048051_01.fm

1.2 Forming Section

SPC Reference	2544850-0300

1.2-1 Forming Section - Check Forming Rings

Machine Status	Mains Power OFF Air OFF Steam ON Water OFF
SPC Reference	2544850-0300

Check that the surface of the rollers (1) are not damaged and that the rollers (1) rotate freely in the forming section, see the next page.

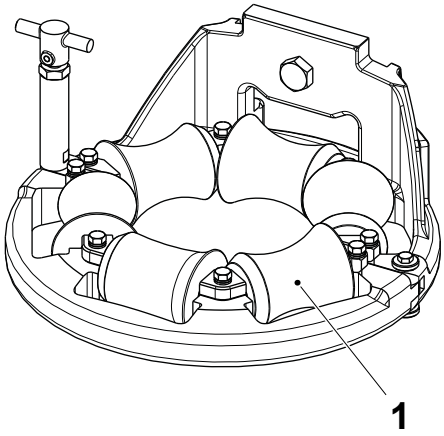

Lower forming ring is shown as an example

1 Roller

(Cont'd)

TechPub_2614345_0108 - 0104_3048052_01.fm

(Cont'd)

The forming section consists of:

- edge roller assembly (2)
- edge roller assembly (3)
- forming ring assembly (4)
- upper forming ring assembly (5)
- lower forming ring assembly (6)

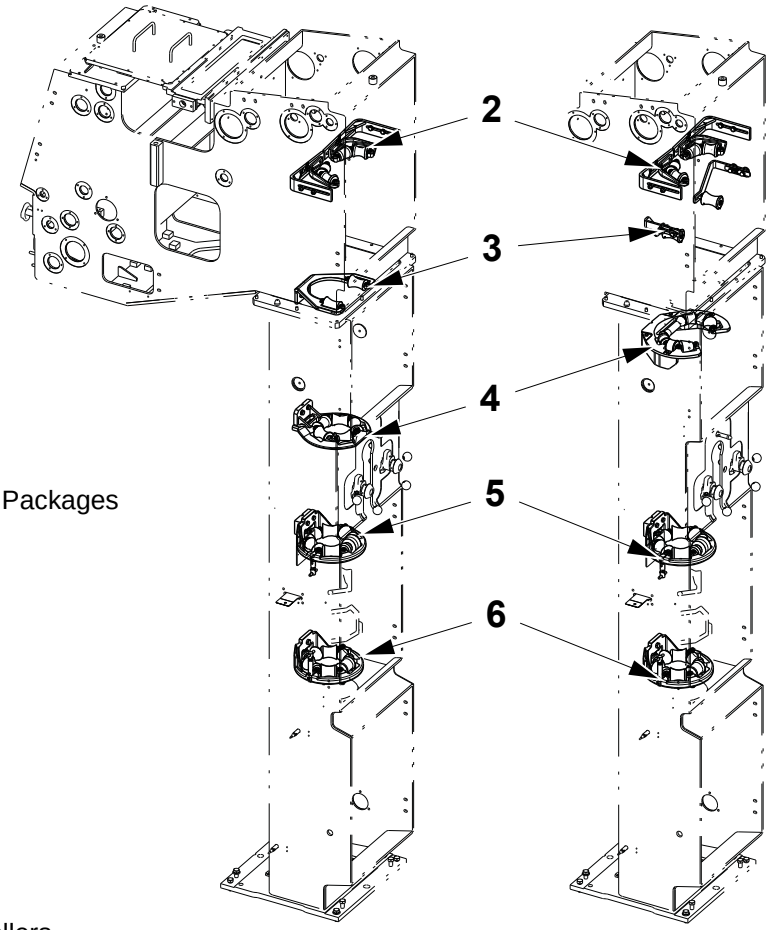

Portion Packages

Family Packages

2 Edge rollers
3 Edge rollers
4 Forming ring
5 Upper forming ring
6 Lower forming ring

(Cont'd)

TechPub_2614345_0108 - 0104_3048052_01.fm

(Cont'd)

If necessary, clean the rollers (1) or change them, see 1.2-2 Forming Section - Change Forming Ring Bushings.

Check on the upper and lower forming rings that the screw (7) securing the knob (8) is tight. If necessary, tighten the screw.

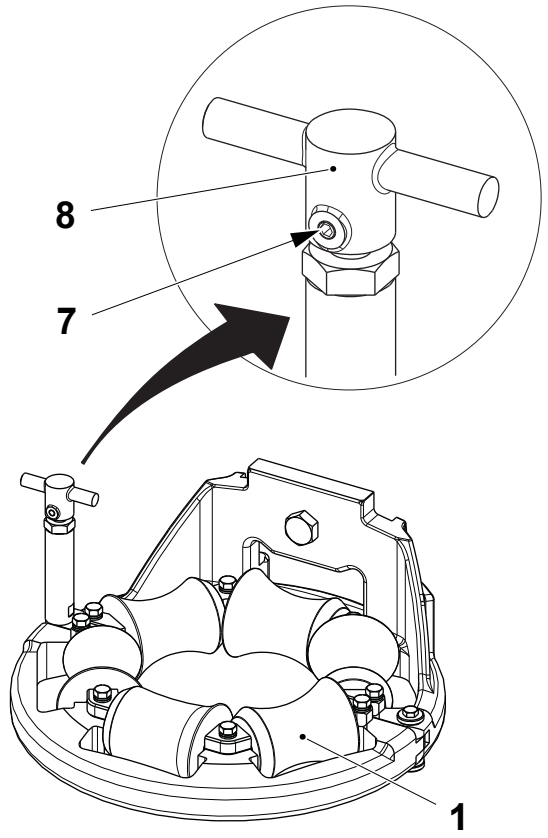

1 Roller
7 Screw
8 Knob

(Cont'd)

TechPub_2614345_0108 - 0104_3048052_01.fm

(Cont'd)

CAUTION
Risk of damage to the equipment.
In machines TBA 125 S, TBA 200 S, TBA 250 S and TBA 200 M do not tighten the nut (9) with a spanner to avoid damaging the thread. If necessary, use the spanner only to loosen the knob (9).

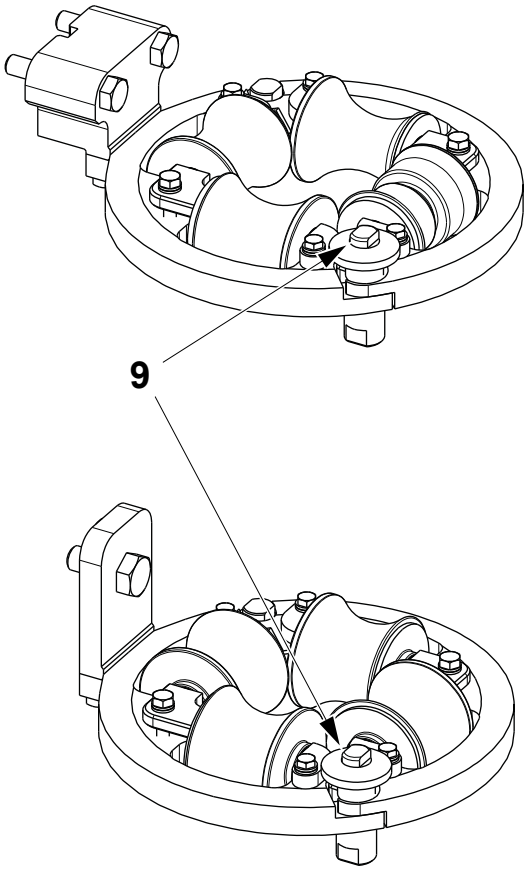

Upper Forming Ring TBA 125 S and TBA 200 S

Lower Forming Ring TBA 125 S, TBA 200 S, TBA 250 S and TBA 200 M

9 Nut

TechPub_2614345_0108 - 0104_3048052_01.fm

1.2-2 Forming Section - Change Forming Ring Bushings

Machine Status	Mains Power OFF Air OFF Steam ON Water OFF
Consumables	Food Grade Grease OKS 1110 NSF H1, TP No. 90600-8108
SPC Reference	2544850-0300

Note! Make sure that the lock plates (3) and the washers (5) are fitted into their original positions.

a) Remove the screws (1), the lock washers (2) and the lock plates (3).

b) Discard the lock washers (2).

c) Remove the roller (4) and the washers (5).

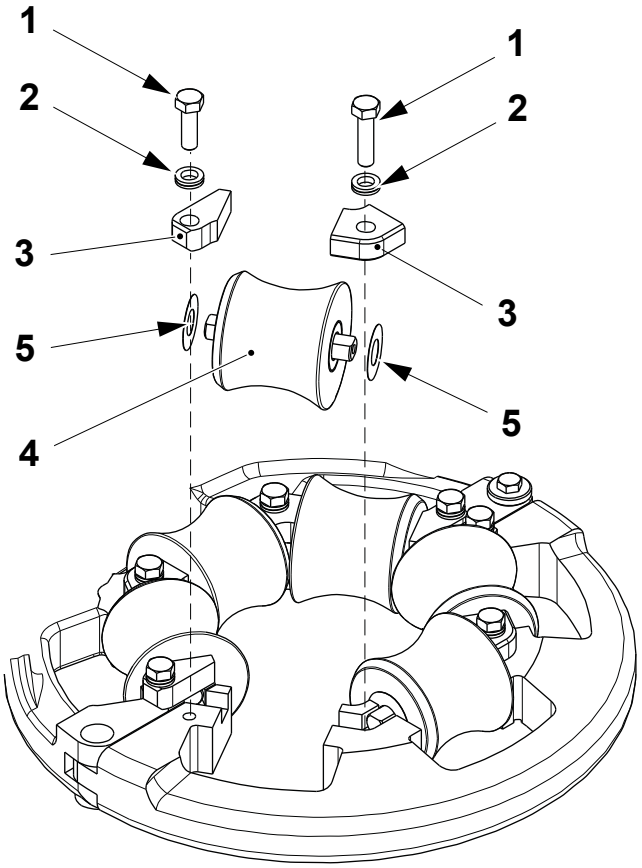

Lower forming ring shown

1 Screw
2 Lock washer
3 Lock plate
4 Roller
5 Washer

(Cont'd)

TechPub_2614345_0108 - 0104_3048052_01.fm

(Cont'd)

d) Change the shaft (6) and the bushings (7) if necessary.

e) Using a toothpick apply the food grade grease TP No. 90600-8108 into the two grooves (8) of the bushings (7).

f) Insert the shaft (6) through the bushings (7) to check the sliding.

g) Remove the shaft (6) and clean it with alcohol.

h) Assemble the bushing (7), the shaft (6) and the washers (5) on the roller (4).

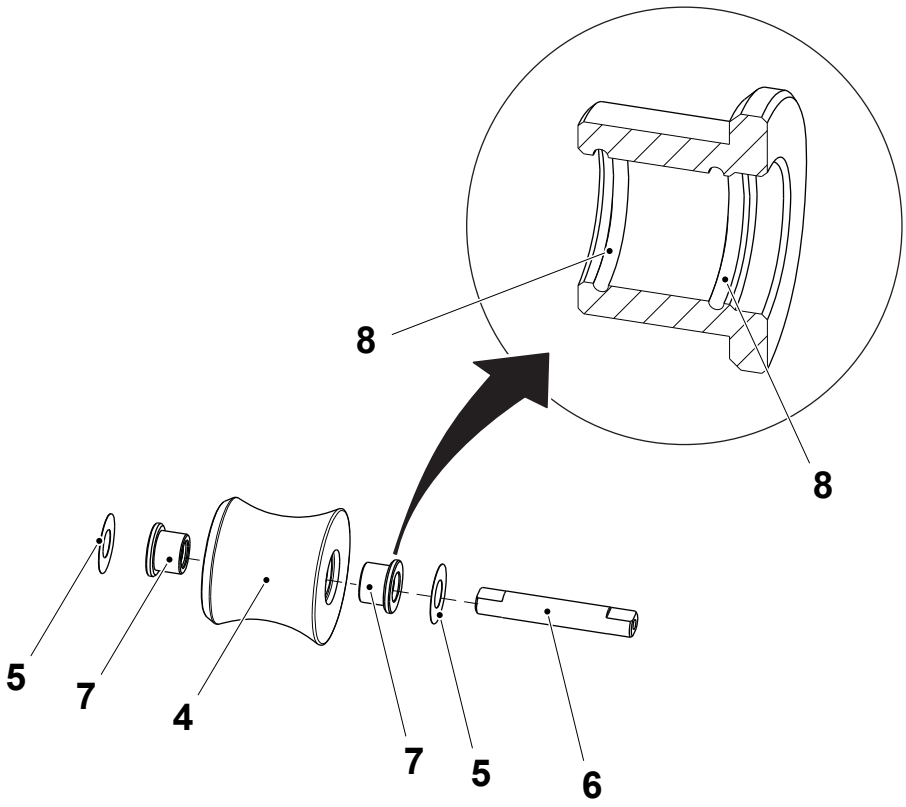

4 Roller
5 Washer
6 Shaft
7 Bushing
8 Groove

(Cont'd)

TechPub_2614345_0108 - 0104_3048052_01.fm

(Cont'd)

i) Fit the roller (4) on the forming ring.

j) Fit the lock plates (3), the new lock washers (2) and the screws (1) without tightening them.

k) Insert a feeler gauge between the roller (4) and the lock plates (3) so that there is a clearance of **A**.

l) Holding the lock plates (3) tighten the screws (1).

Check the play between the rollers (4). If necessary, see 1.2.1-1 Lower Forming Ring - Set Clearance. If the edge roller bushings have been changed, see 1.2.4-1 Edge Roller - Set.

A = 0.3 mm

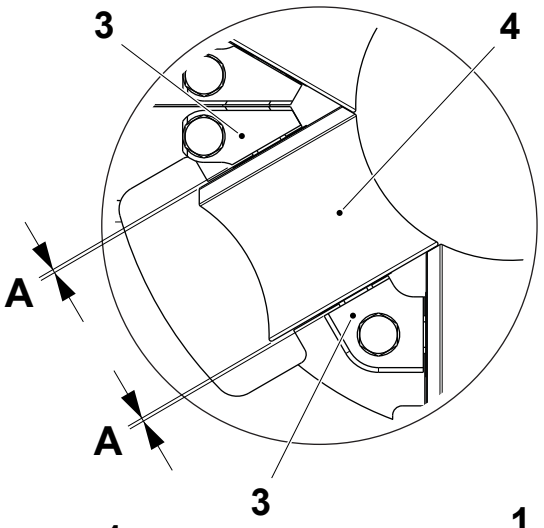

Lower forming ring shown

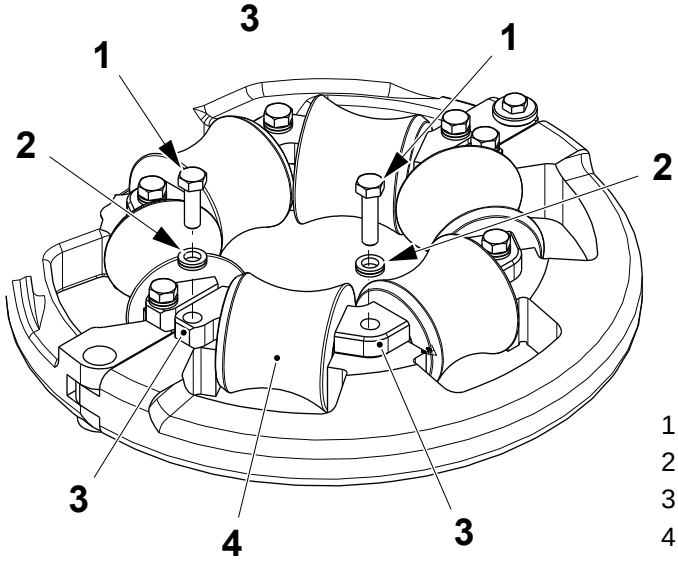

1 Screw
2 Lock washer
3 Lock plate
4 Roller

TechPub_2614345_0108 - 0104_3048052_01.fm

1.2-3 Forming Section - Set Forming Ring Position

Machine Status	Mains Power OFF Air OFF Steam ON Water OFF
SPC Reference	2544850-0300

Use the table to set the forming rings in the correct position. The distances are measured from the centre of the roller axles on each forming ring and based on the lower forming ring being in its upper position.

(Cont'd)

TechPub_2614345_0108 - 0104_3048052_01.fm

(Cont'd)

Note! Distances between the centre of the roller axis

	Dimension ±5.0 (mm)			
Package	A	B	C	D
TBA 200 S	480	400	520	495
TBA 250 B - TBA 200 B	475	405	520	495
TBA 125 S	470	405	495	525
TBA 200 M - TBA 250 S	485	465	447	332
TBA 1000 S	522	850	325	215
TBA 1000 Sq	560	732	403	215
TBA 1000 B	535	885	285	215

Portion Packages Forming Section

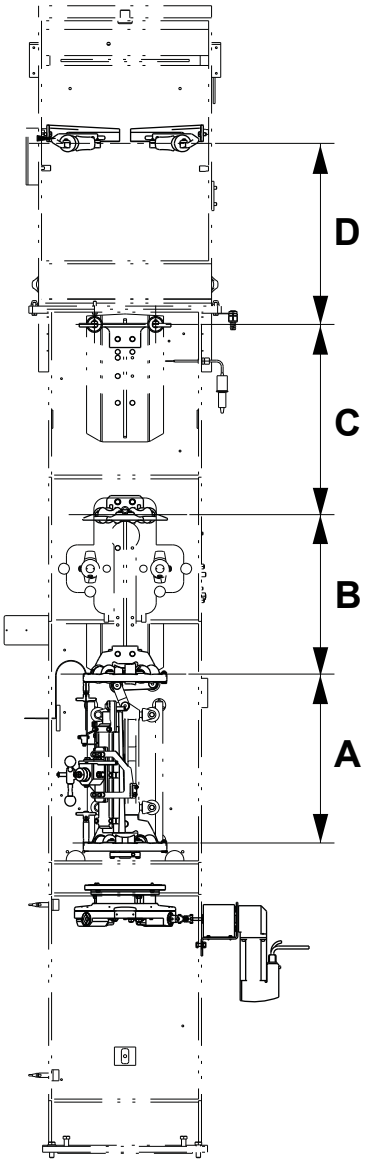

Family Packages Forming Section

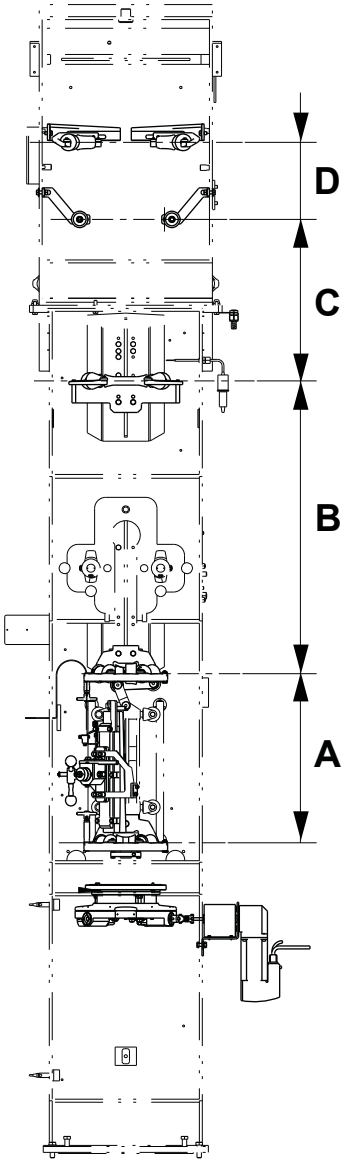

TechPub_2614345_0108 - 0104_3048052_01.fm

1.2.1 Lower Forming Ring

1.2.1-1 Lower Forming Ring - Set Clearance

Machine Status	Mains Power OFF Air OFF Steam ON Water OFF
SPC Reference	2895150-0250

Valid for: TBA 200 B, TBA 250 B, TBA 1000 B, TBA 1000 S and TBA 1000 Sq

Note! Always follow the setting order: 1-2, 2-3, 3-4, 1-2, 2-3, 3-4, as indicated in the illustration.

Make sure that the filling pipe is removed from the machine. Set the distance **A** between the rollers by adding or removing the shimming washers (1).

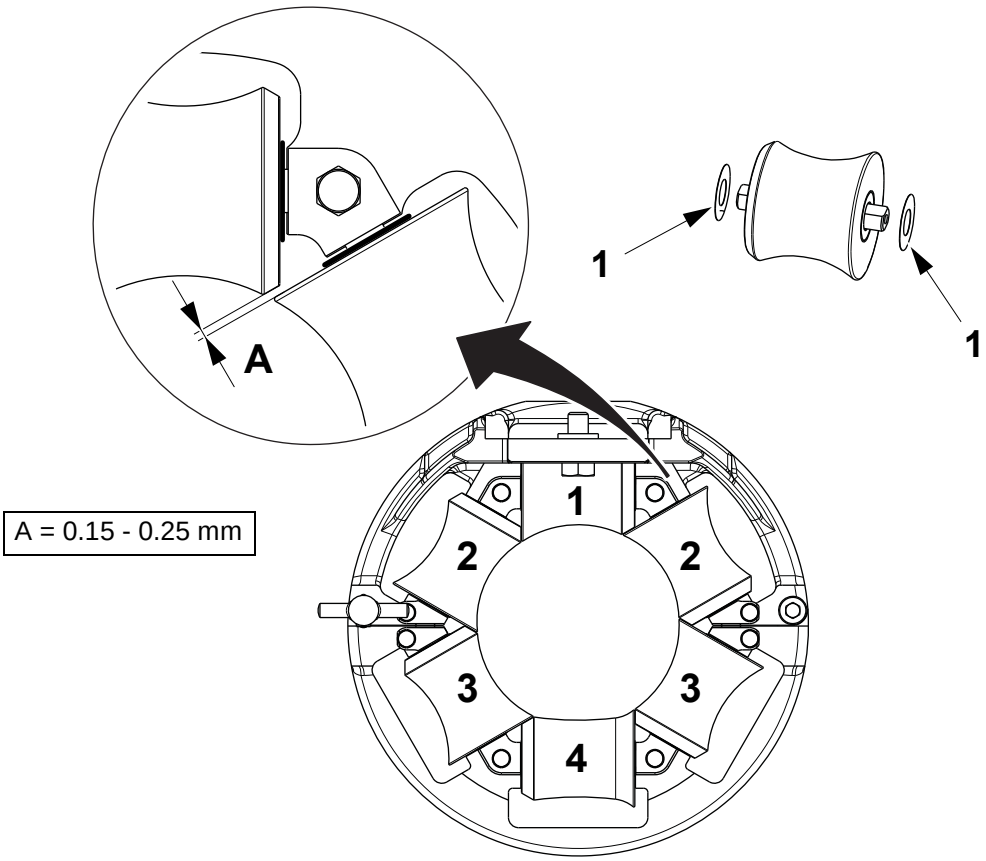

1 Shimming washer

(Cont'd)

TechPub_2614345_0108 - 0105_3048053_01.fm

(Cont'd)

Valid for: TBA 125 S, TBA 200 S, TBA 250 S and TBA 200 M

Note! Always follow the setting order: 1-2, 2-3,1-2, 2-3 as indicated in the illustration.

Make sure that the filling pipe is removed from the machine. Set the distance **A** between the rollers by adding or removing the shimming washers (1).

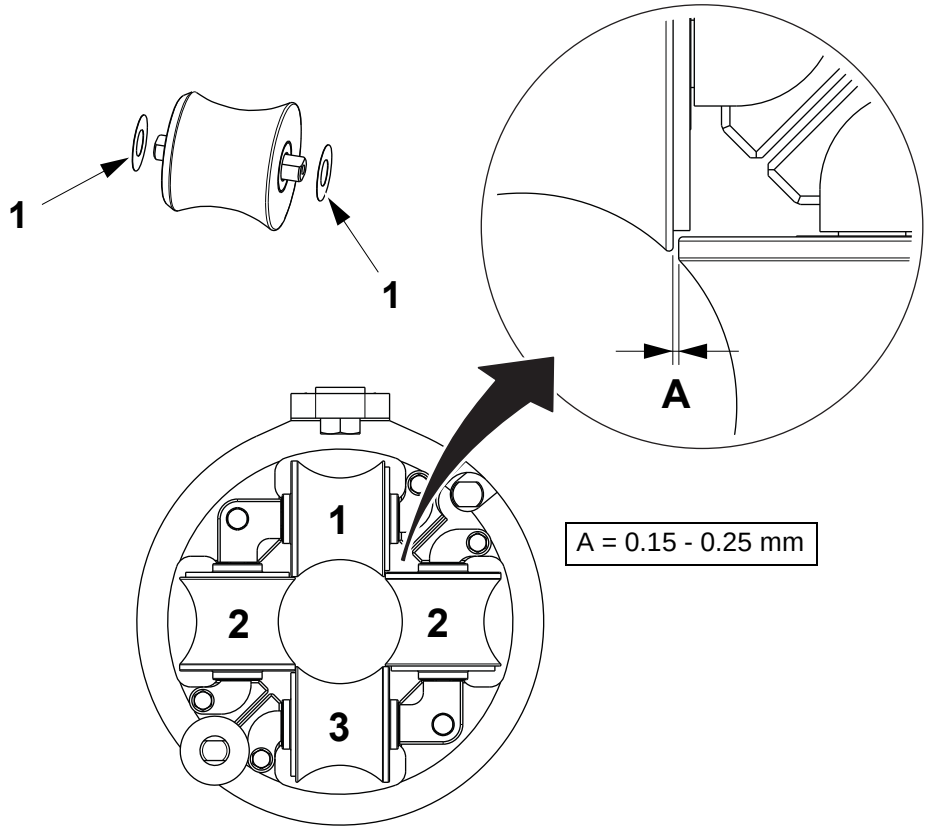

1 Shimming washer

TechPub_2614345_0108 - 0105_3048053_01.fm

1.2.1-2 Lower Forming Ring - Set Position

Machine Status	Mains Power ON Air ON Steam ON Water ON
Special Equipment	Setting Template (6) See 10.2 Templates and Tools
SPC Reference	2895150-0250

Setting with Template

This setting procedure must performed in accordance with the instructions described in 1 Superstructure. The filling pipe should be installed on the machine.

a) Step up the machine to PREPARATION.

(Cont'd)

TechPub_2614345_0108 - 0105_3048053_01.fm

(Cont'd)

b) Remove the screws (1).

c) Remove the lock plates (2) and the roller (3).

d) If present, remove the pressure roller (4) by the screws (5).

e) Fit the template (6) and secure it into position with the screws (1).

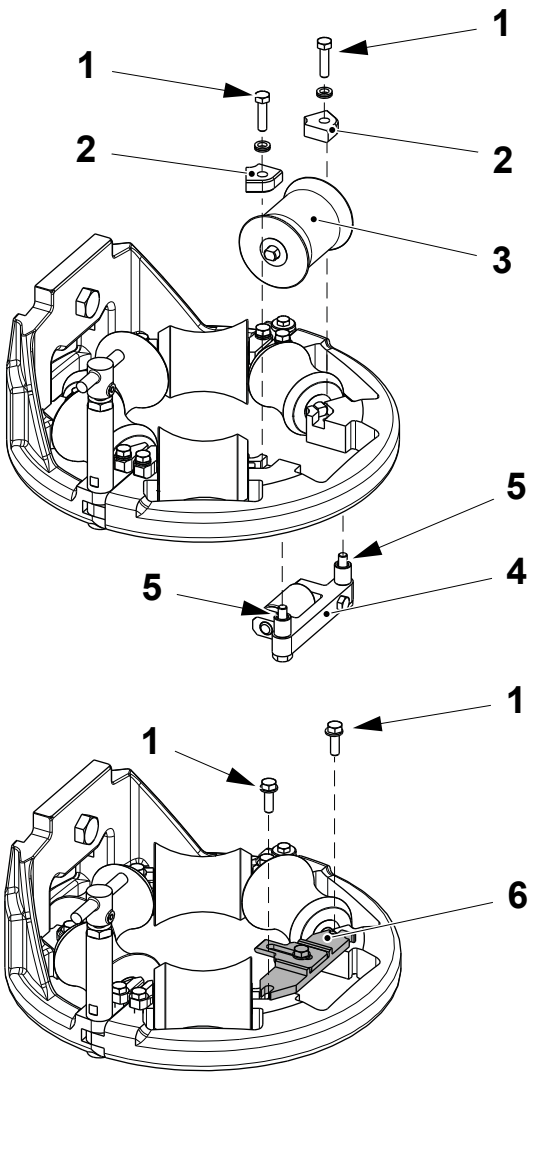

1 Screw
2 Lock plate
3 Roller
4 Pressure roller
5 Screw
6 Template

(Cont'd)

TechPub_2614345_0108 - 0105_3048053_01.fm

(Cont'd)

f) Loosen the screw (7) and move the plate (8) between the roller (9) and the fork (10).

Note! Keep the holder of the double pressure roller in vertical position.

g) Loosen the nut (11).

h) Turn the piston rod (12) until the roller (9) touches the plate (8).

i) Tighten the nut (11).

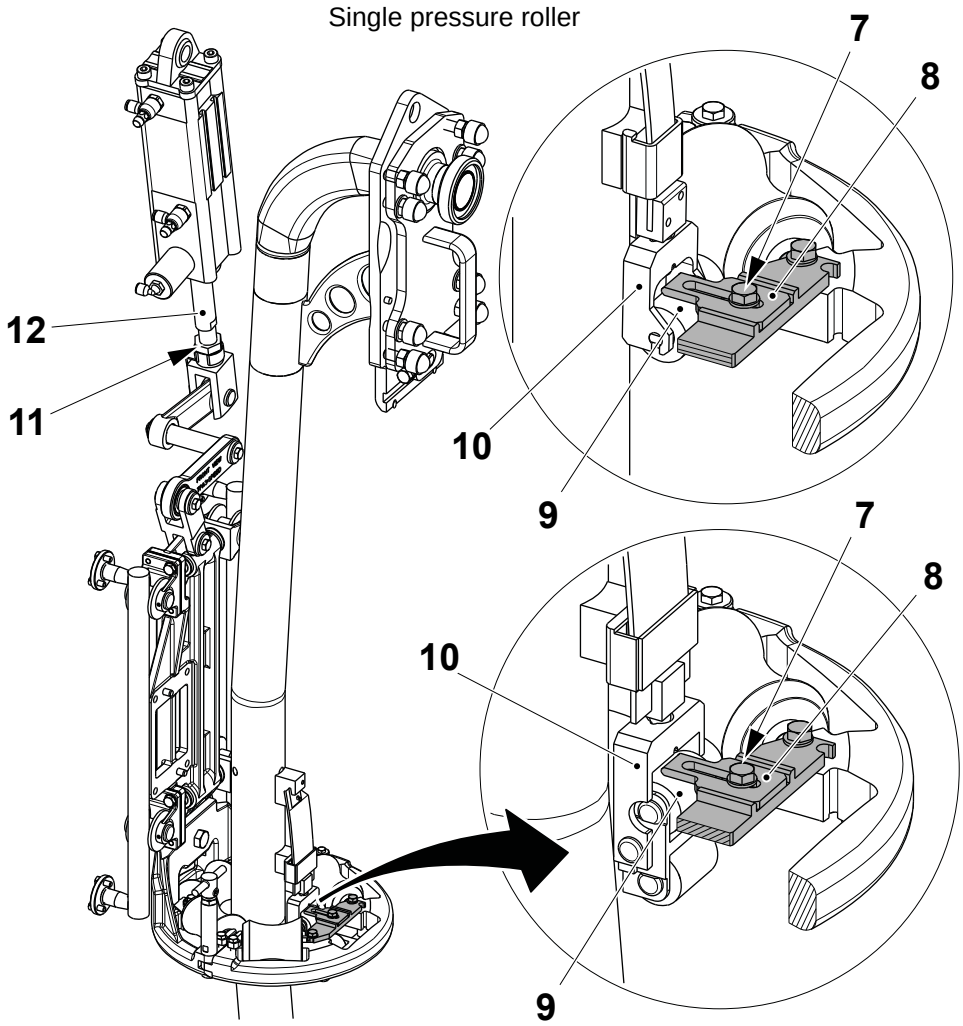

7 Screw
8 Plate
9 Roller
10 Fork
11 Nut
12 Piston rod

(Cont'd)

TechPub_2614345_0108 - 0105_3048053_01.fm

(Cont'd)

j) Remove the template and fit the roller (3).

k) Set the lower forming ring movement, see 1.2.1-4 Lower Forming Ring - Set Cylinder.

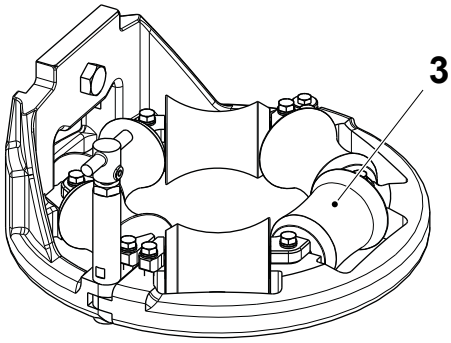

3 Roller

(Cont'd)

TechPub_2614345_0108 - 0105_3048053_01.fm

(Cont'd)

Setting without Template

a) Step up the machine to PREPARATION.

b) Loosen the nut (1).

c) Turn the piston rod (2) to set the distance **A** between the pressure roller (3) and the counter roller (4).

d) Tighten the nut (1).

Package	A ±0.5 (mm)
TBA 250 B - TBA 200 B - TBA 125 S - TBA 1000 S	2.0
TBA 250 S - TBA 200 M	3.0
TBA 200 S	4.0
TBA 1000 Sq	5.0
TBA 1000 B	6.0

Single roller

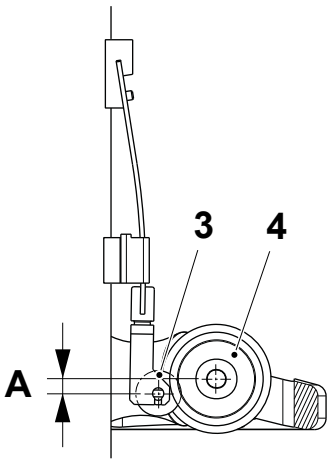

Double roller

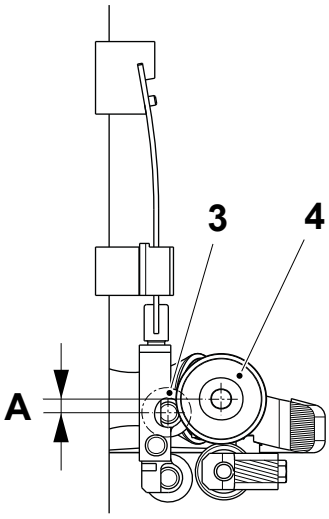

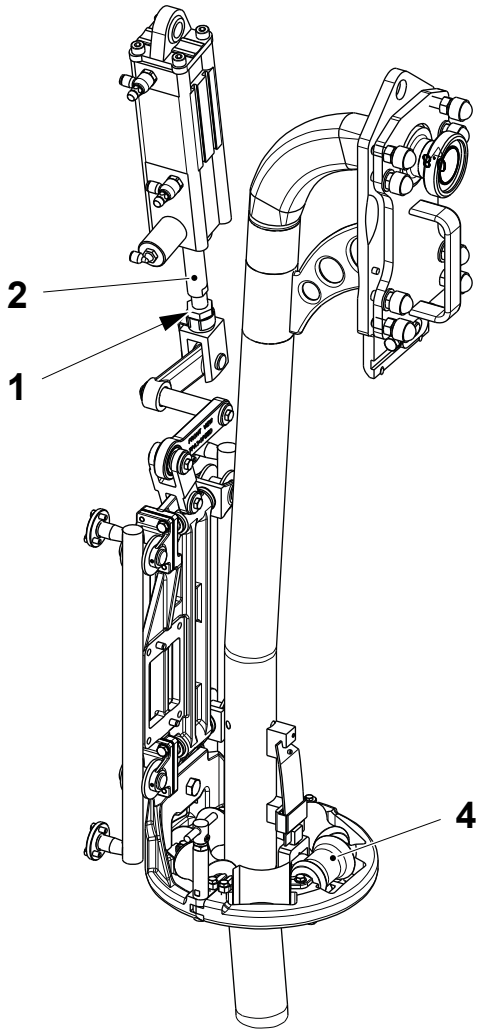

1 Nut
2 Piston rod
3 Pressure roller
4 Counter roller

TechPub_2614345_0108 - 0105_3048053_01.fm

1.2.1-3 Lower Forming Ring - Set Overlap

Machine Status	Mains Power OFF Air OFF Steam ON Water OFF
SPC Reference	2895150-0250

Pick out two packages and measure the LS overlap **A**, see the table below.

Note! The table below shows the **nominal** overlap value. If the width of the packaging material used differs from the nominal value, the overlap must be increased or decreased to produce the correct tube diameter. The width of the packaging material web can vary from the nominal width by ±1.0 mm.

Package	**Nominal packaging material width (mm)**	**Nominal overlap A (mm)**
TBA 200 S	174.0	4.0 ±0.5
TBA 250 B	214.0	8.0 ±1
TBA 200 B	214.0	8.0 ±1
TBA 125 S	162.0	4.0 ±0.5
TBA 250 S	188.0	6.0 ±0.5
TBA 200 M	188.0	6.0 ±0.5
TBA 1000 B	322.0	8.0 ±1
TBA 1000 Sq	292.0	6.0
TBA 1000 S	305.0	8.0

(Cont'd)

TechPub_2614345_0108 - 0105_3048053_01.fm

(Cont'd)

Lower Forming Ring Standard Roller Configuration

Package	Roller (1) TP No.	Roller (2) TP No.	Roller (3) TP No.
TBA 200 S	3106246-1	3106246-1	3106246-1
TBA 250 B	3093190-1	3093190-1	3093190-1
TBA 200 B	3093190-1	3093190-1	3093190-1
TBA 125 S	3093266-1	3093266-1	3093266-1
TBA 250 S	3110856-1	3110856-1	3110856-1
TBA 200 M	3110856-1	3110856-1	3110856-1
TBA 1000 S	567746-1	567746-1	567746-1
TBA 1000 Sq	3093194-1	3093194-1	3093194-1
TBA 1000 B	3079094-1	3079095-1	3079095-1

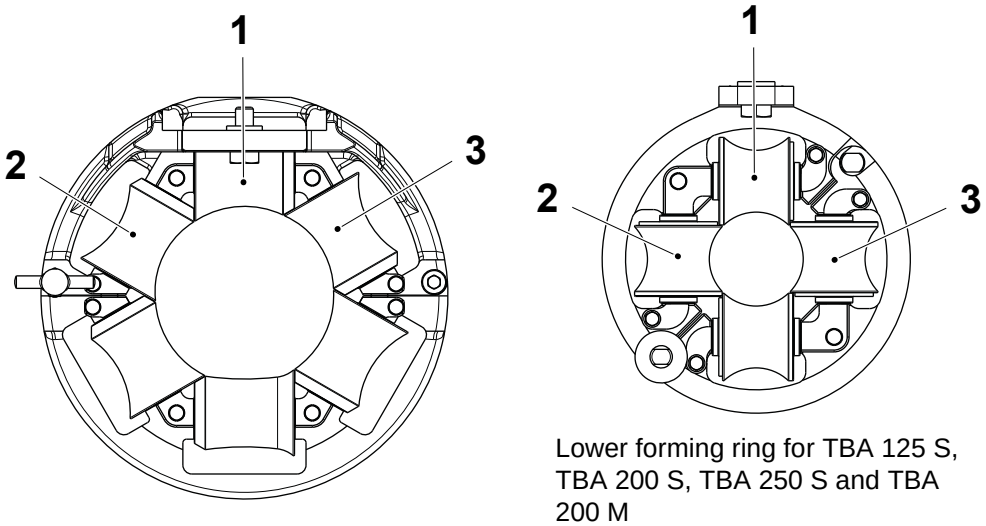

Lower forming ring for TBA 125 S, TBA 200 S, TBA 250 S and TBA 200 M

1 Roller
2 Roller
3 Roller

(Cont'd)

TechPub_2614345_0108 - 0105_3048053_01.fm

(Cont'd)

Lower Forming Ring Plus Roller Configuration

Package	Roller (1) TP No.	Roller (2) TP No.	Roller (3) TP No.
TBA 200 S	3106246-3	3106246-3	3106246-3
TBA 250 B	3093190-3	3093190-3	3093190-3
TBA 200 B	3093190-3	3093190-3	3093190-3
TBA 125 S	3093266-3	3093266-3	3093266-3
TBA 250 S	3110856-3	3110856-3	3110856-3
TBA 200 M	3110856-3	3110856-3	3110856-3
TBA 1000 S	567746-2	567746-2	567746-2
TBA 1000 Sq	3093194-3	3093194-3	3093194-3
TBA 1000 B	3079094-3	3079095-3	3079095-3

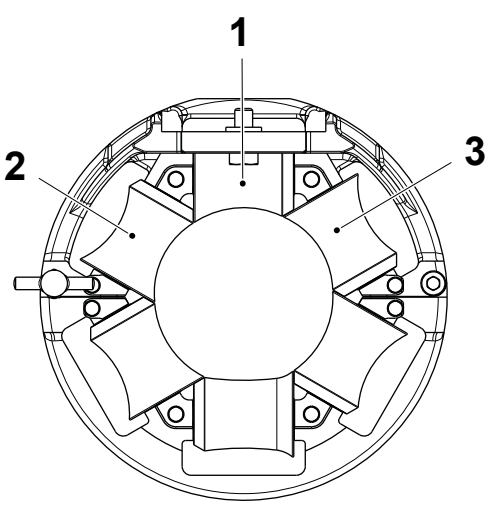

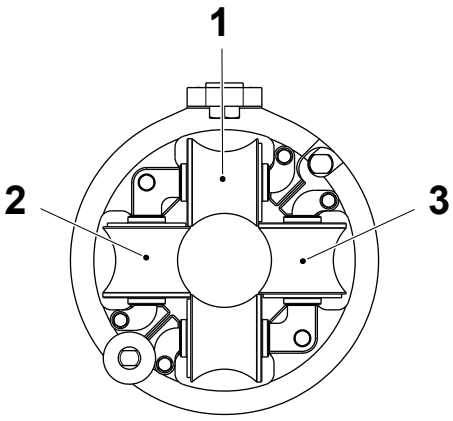

Lower forming ring for TBA 125 S, TBA 200 S, TBA 250 S and TBA 200 M

1 Roller
2 Roller
3 Roller

(Cont'd)

TechPub_2614345_0108 - 0105_3048053_01.fm

(Cont'd)

Lower Forming Ring Minus Roller Configuration

Package	Roller (1) TP No.	Roller (2) TP No.	Roller (3) TP No.
TBA 200 S	3106246-2	3106246-2	3106246-2
TBA 250 B	3093190-2	3093190-2	3093190-2
TBA 200 B	3093190-2	3093190-2	3093190-2
TBA 125 S	3093266-2	3093266-2	3093266-2
TBA 250 S	3110856-2	3110856-2	3110856-2
TBA 200 M	3110856-2	3110856-2	3110856-2
TBA 1000 S	567746-3	567746-3	567746-3
TBA 1000 Sq	3093194-2	3093194-2	3093194-2
TBA 1000 B	3079094-2	3079095-2	3079095-2

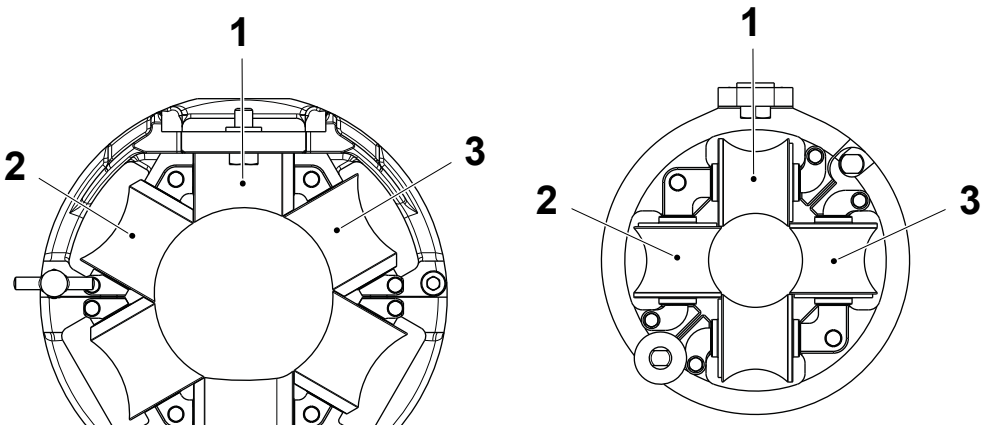

Lower forming ring for TBA 125 S, TBA 200 S, TBA 250 S and TBA 200 M

1 Roller
2 Roller
3 Roller

(Cont'd)

TechPub_2614345_0108 - 0105_3048053_01.fm

(Cont'd)

Set the overlap by changing rollers in the lower forming ring. See the table on the previous page for a guide to the plus, minus and standard rollers. Always fit rollers symmetrically in respect to the pressure roller (4). Never fit plus and minus rollers together.

Set the overlap **A** by changing the rollers in the lower forming ring.

- to INCREASE the overlap **A**, change the standard rollers for minus rollers
- to DECREASE the overlap **A**, change the standard rollers for plus rollers.

After the forming ring has been set it will function correctly with all packaging material widths within the given limits.

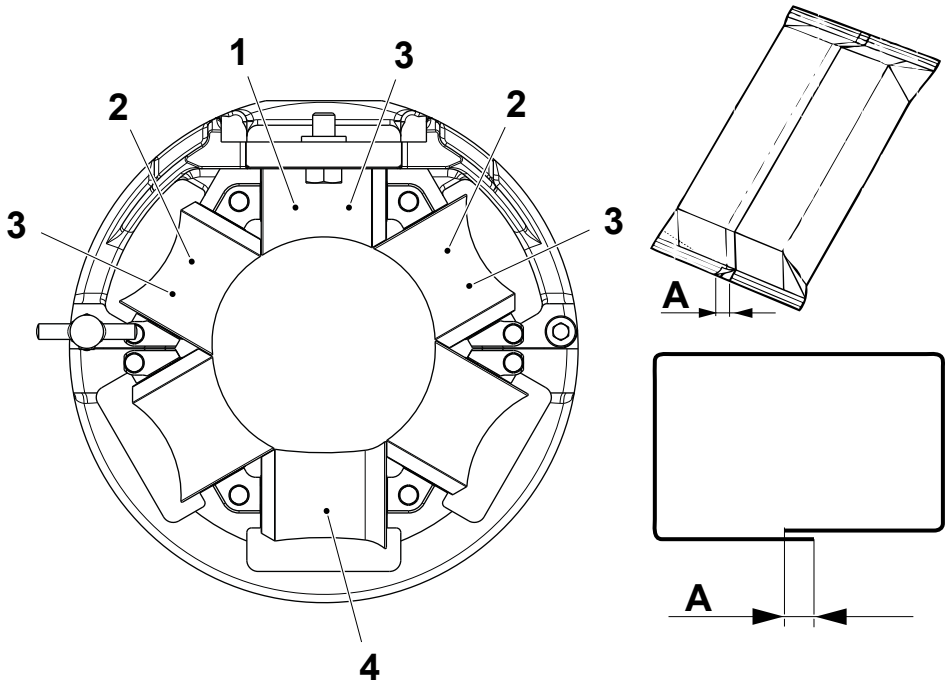

1 Where to put one trimming roller
2 Where to put two trimming rollers
3 Where to put three trimming rollers
4 Pressure roller

TechPub_2614345_0108 - 0105_3048053_01.fm

1.2.1-4 Lower Forming Ring - Set Cylinder

Machine Status	Mains Power OFF Air OFF Steam ON Water OFF
SPC Reference	2895150-0250 2512930-0300

Set Restrictor Valves

Adjust the cylinder restrictor valves (1) as described below to set the correct speed of movement for the lower forming ring.

a) Close the restrictor valves (1) on both the plus (+) and minus (-) sides.

b) On the minus (-) side, open the restrictor valve (1) **6** turns.

c) On the plus (+) side, open the restrictor valve (1) **5** turns.

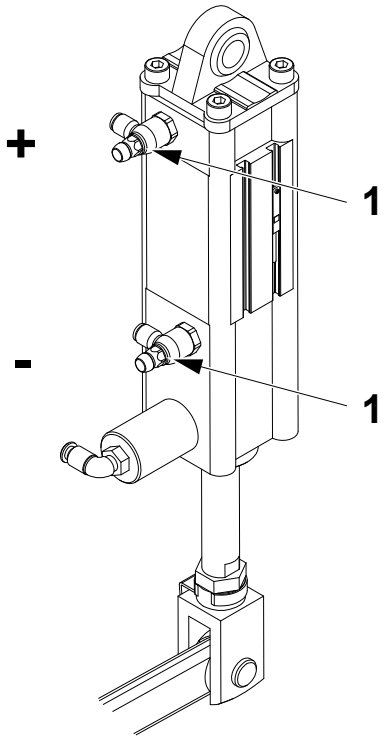

1 Restrictor valve

(Cont'd)

TechPub_2614345_0108 - 0105_3048053_01.fm

(Cont'd)

Set Proximity Sensors

a) Step up the machine to PREPARATION.

b) When the cylinder is fully retracted, loosen the screw (1) and move the proximity sensor U70B3090 (2) until the LED switches on.

c) Tighten the screw (1)

d) Activate the valve U70K2250.

e) When the cylinder is fully extended, loosen the screw (3) and move the proximity sensor U70B3100 (4) until the LED switches on.

f) Tighten the screw (3).

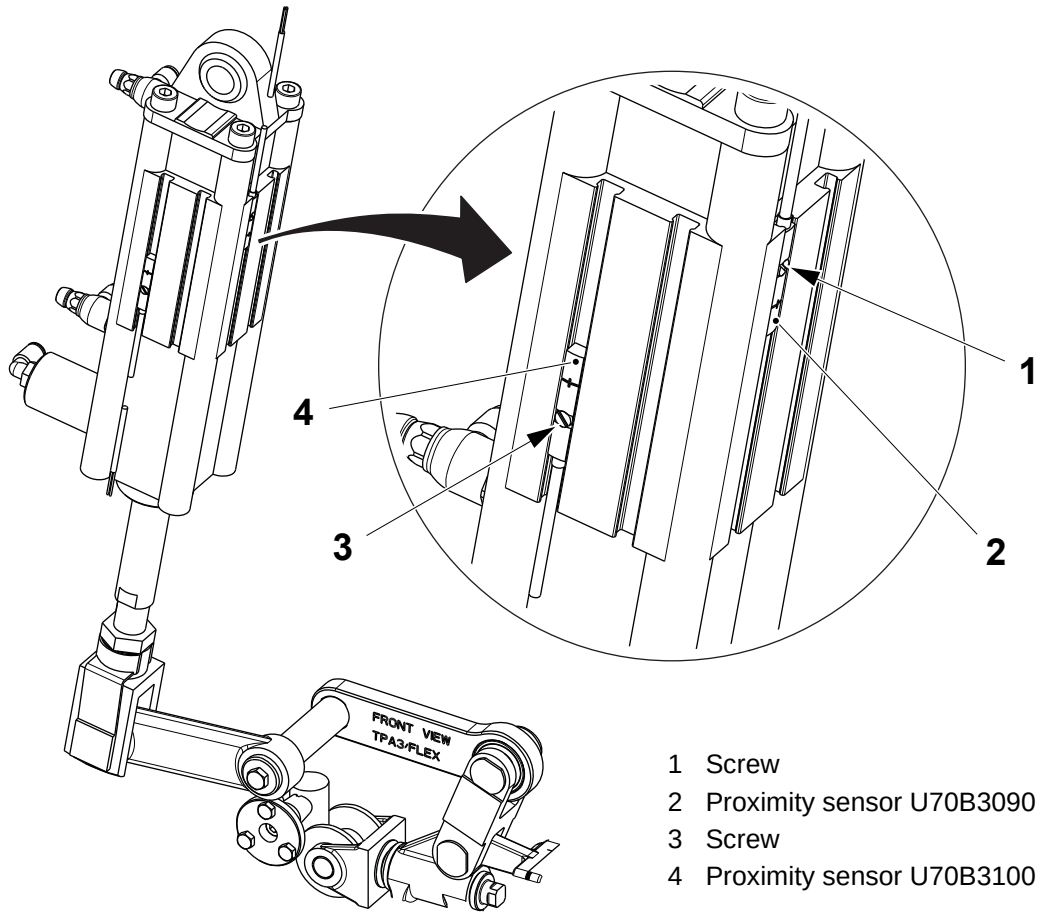

1 Screw
2 Proximity sensor U70B3090
3 Screw
4 Proximity sensor U70B3100

TechPub_2614345_0108 - 0105_3048053_01.fm

1.2.1-5 Lower Forming Ring - Check Pressure Roller

Machine Status	Mains Power OFF Air OFF Steam ON Water OFF
Consumables	Grease TP No. 90600-8108
SPC Reference	2895150-0250

Note! Valid for Family Packages only.

Check the roller (1) and the flange bushings (2) for wear and damage. Proceed as follows:

a) Remove the screws (3) and separate the bracket (4) from the lower forming ring (5).

b) Loosen the screw (6).

c) Pull out the shaft (7).

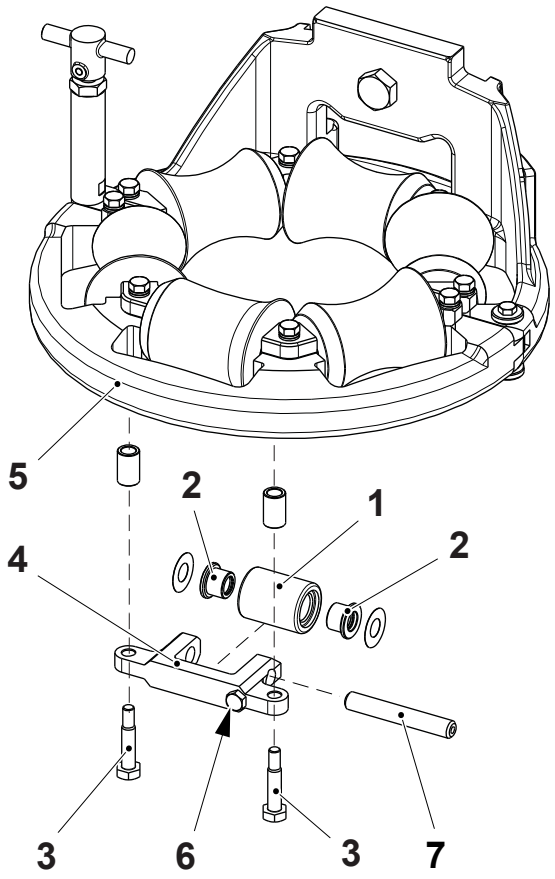

1 Roller
2 Flange bushing
3 Screw
4 Bracket
5 Lower forming ring
6 Screw
7 Shaft

(Cont'd)

TechPub_2614345_0108 - 0105_3048053_01.fm

(Cont'd)

d) Remove the roller (1) and the flange bushings (2). Change if necessary.

Note! Apply a thin layer of grease TP No. 90600-8108 inside the bushings (2).

e) Assemble in the reverse order.

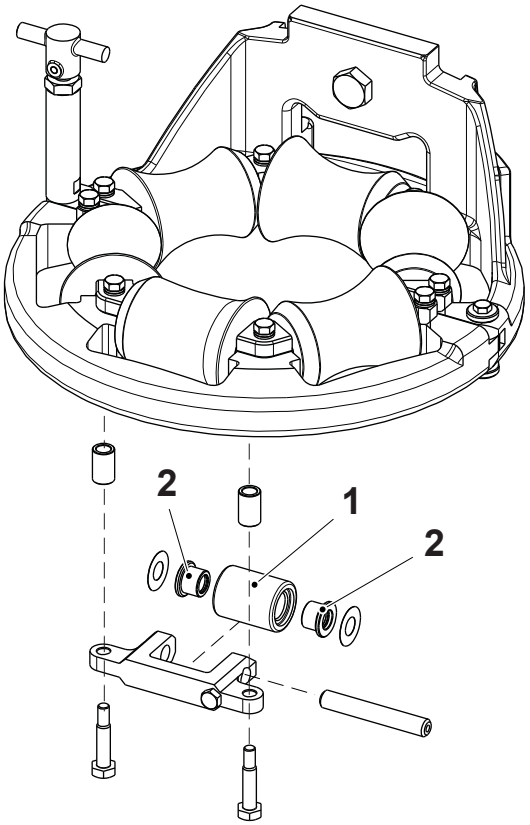

1 Roller
2 Flange bushing

TechPub_2614345_0108 - 0105_3048053_01.fm

1.2.1-6 Lower Forming Ring - Change Knob

Machine Status	Mains Power OFF Air OFF Steam ON Water OFF
SPC Reference	2895150-0250

Note! Valid only for TBA 125 S, TBA 200 S, TBA250 S and TBA 200 M.

CAUTION
Risk of damage to the equipment.
Do not tighten the knob (1) by the spanner to avoid damaging the thread. If necessary, use the spanner only to loosen the knob (1).

Note! Pay attention to the plug (2): it has a left-handed thread.

a) Loosen and remove the knob (1) and the plug (2) from the forming ring (3).

b) Assemble in the reverse order.

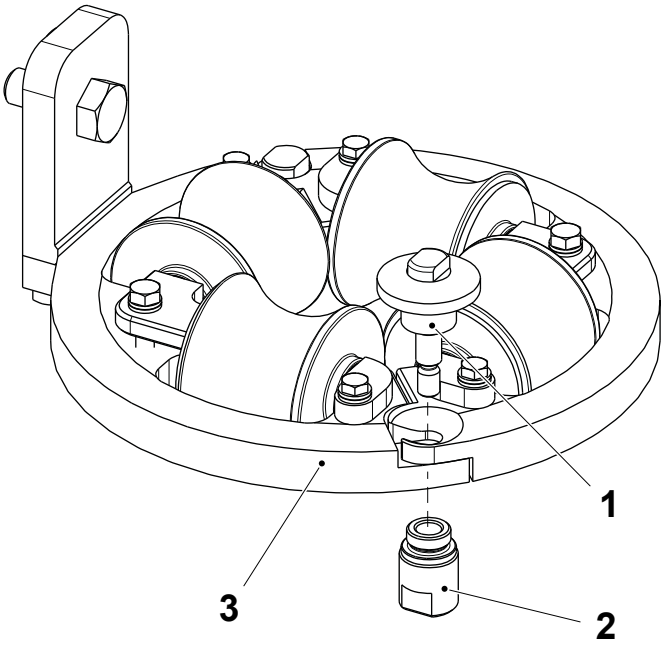

1 Knob
2 Plug
3 Forming ring

TechPub_2614345_0108 - 0105_3048053_01.fm

1.2.2 Upper Forming Ring

1.2.2-1 Upper Forming Ring - Set Clearance

Machine Status	Mains Power OFF Air OFF Steam ON Water OFF
SPC Reference	2912701-0250

Valid for All Volumes except TBA 125 S and TBA 200 S
Note! Always follow the setting order: 1-2, 2-3, 3-4, 1-5, 5-6, 6-7, 4-7 as indicated in the illustration.

Make sure that the filling pipe is removed from the filling machine. Set the distance **A** between the rollers by adding or removing the shimming washers (1).

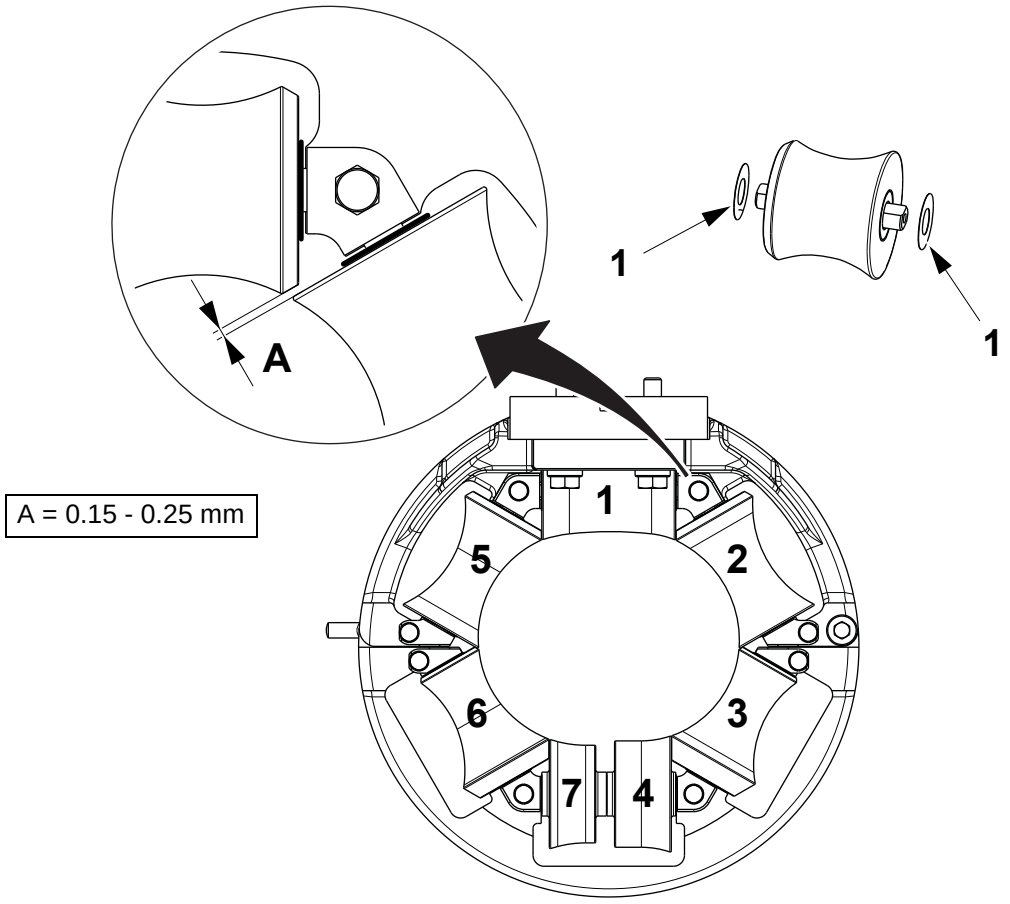

1 Shimming washer

(Cont'd)

TechPub_2614345_0108 - 0103_3048054_01.fm

(Cont'd)

Valid for TBA 125 S and TBA 200 S only

Note! Always follow the setting order: 1-2, 2-3, 1-4, 4-5, as indicated in the illustration.

Make sure that the filling pipe is removed from the filling machine. Set the distance **A** between the rollers by adding or removing the shimming washers (1).

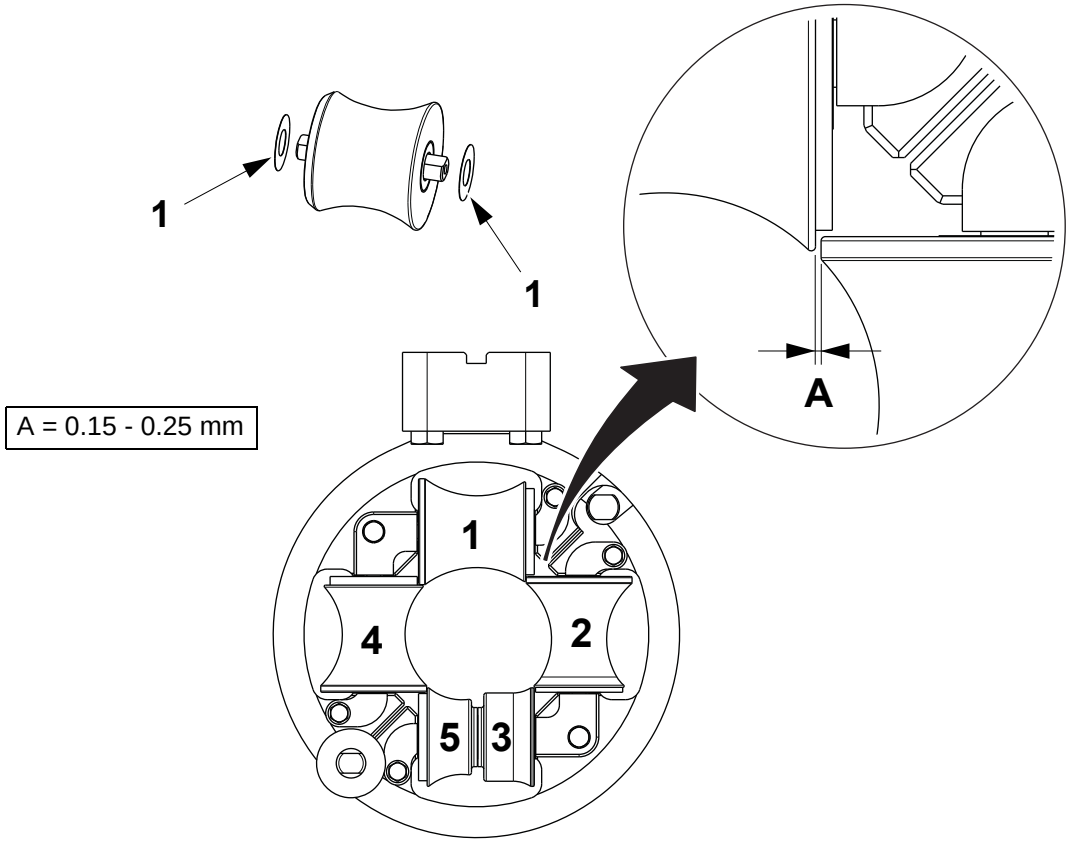

1 Shimming washer

TechPub_2614345_0108 - 0103_3048054_01.fm

1.2.2-2 Upper Forming Ring - Change Knob

Machine Status	Mains Power OFF Air OFF Steam ON Water OFF
SPC Reference	2912701-0250

Note! Valid for TBA 125 S and TBA 200 S only.

CAUTION
Risk of damage to the equipment.
Do not tighten the knob (1) by the spanner to avoid damaging the thread. If necessary, use the spanner only to loosen the knob (1).

Note! Pay attention to the plug (2): it has a left-handed thread.

a) Loosen and remove the knob (1) and the plug (2) from the forming ring (3).

b) Assemble in the reverse order.

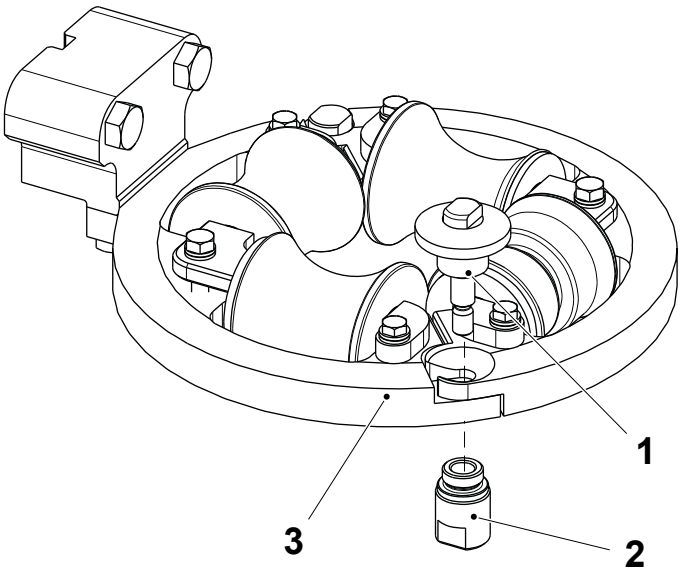

1 Knob
2 Plug
3 Forming ring

TechPub_2614345_0108 - 0103_3048054_01.fm

1.2.3 Forming Ring

1.2.3-1 Forming Ring - Set Clearance

Machine Status	Mains Power OFF Air OFF Steam ON Water OFF
SPC Reference	2911823-0100

Valid for Portion Packages

Note! Always set the rollers in the following order: 1-2-3-4, as indicated in the illustration.

Make sure that the filling pipe is removed from the filling machine. Set the distance **A** between the rollers by adding or removing the shimming washers (5).

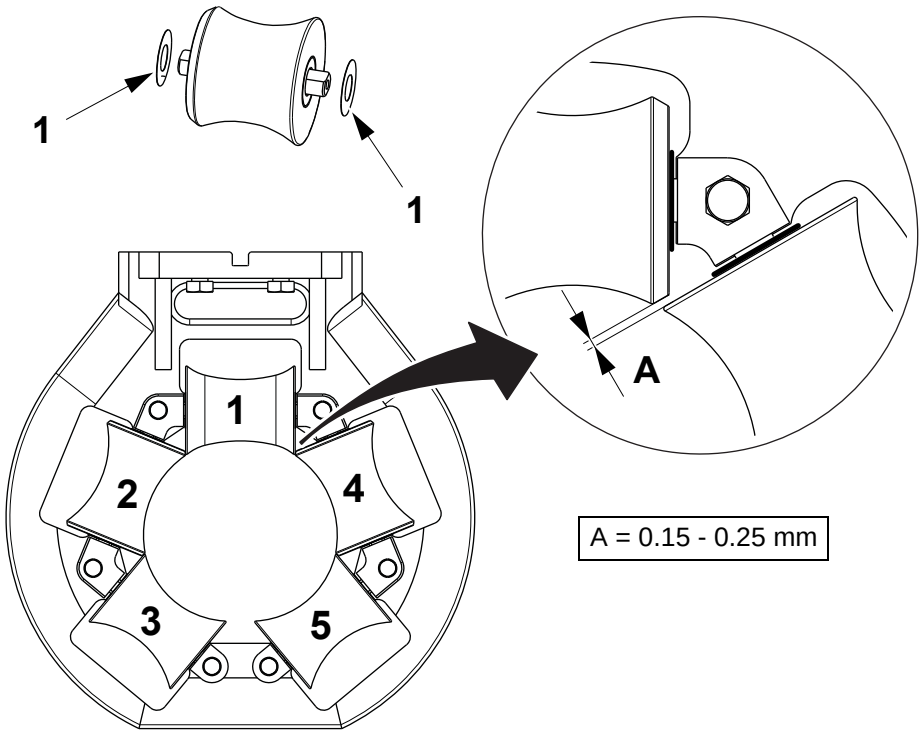

TBA 250 B shown

1 Position n.1
2 Position n.2
3 Position n.3
4 Position n.4
5 Shimming washer

(Cont'd)

TechPub_2614345_0108 - 0102_3048055_01.fm

(Cont'd)

Valid for Family Packages

Note! Always set the rollers in the following order: 1-2, 2-3, 3-4, 1-2, 2-3, 3-4 as indicated in the illustration.

Make sure that the filling pipe is removed from the filling machine. Set the distance **A** between the rollers by adding or removing the shimming washers (1).

A = 0.15 to 0.25 mm

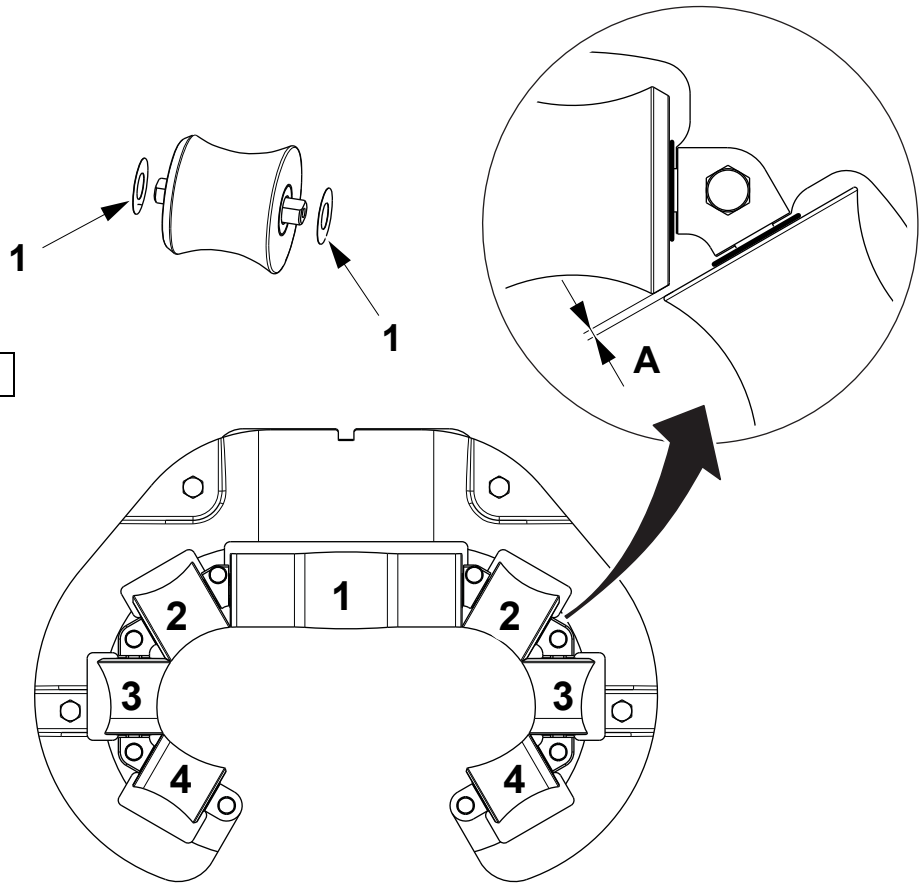

1 Shimming washer

TechPub_2614345_0108 - 0102_3048055_01.fm

1.2.4 Edge Roller

1.2.4-1 Edge Roller - Set

Machine Status	Mains Power OFF Air OFF Steam ON Water OFF
SPC Reference	2912703-0200

Note! Portion packages machines are supplied with the upper edge rollers (1) only while Family Packages have both upper and lower edge rollers (2).

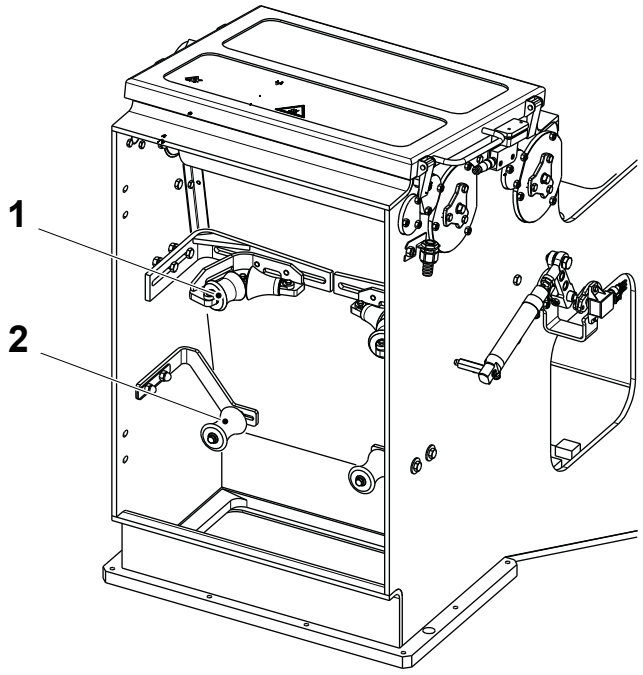

1 Upper edge rollers
2 Lower edge rollers

(Cont'd)

TechPub_2614345_0108 - 0103_3048056_01.fm

(Cont'd)

Upper Edge Rollers

a) On both the edge rollers, loosen the screws (1) and move the bracket (2) to set the distance **A** between the end of the bracket (2) and the end of the bracket (3).

b) Without moving the bracket (2), tighten the screws (1).

Package	A ±1.0 (mm)
TBA 200 S	20
TBA 250 B - TBA 200 B	25
TBA 250 S - TBA 200 M	22
TBA 125 S	6
TBA 1000 S	62
TBA 1000 Sq	55
TBA 1000 B	75

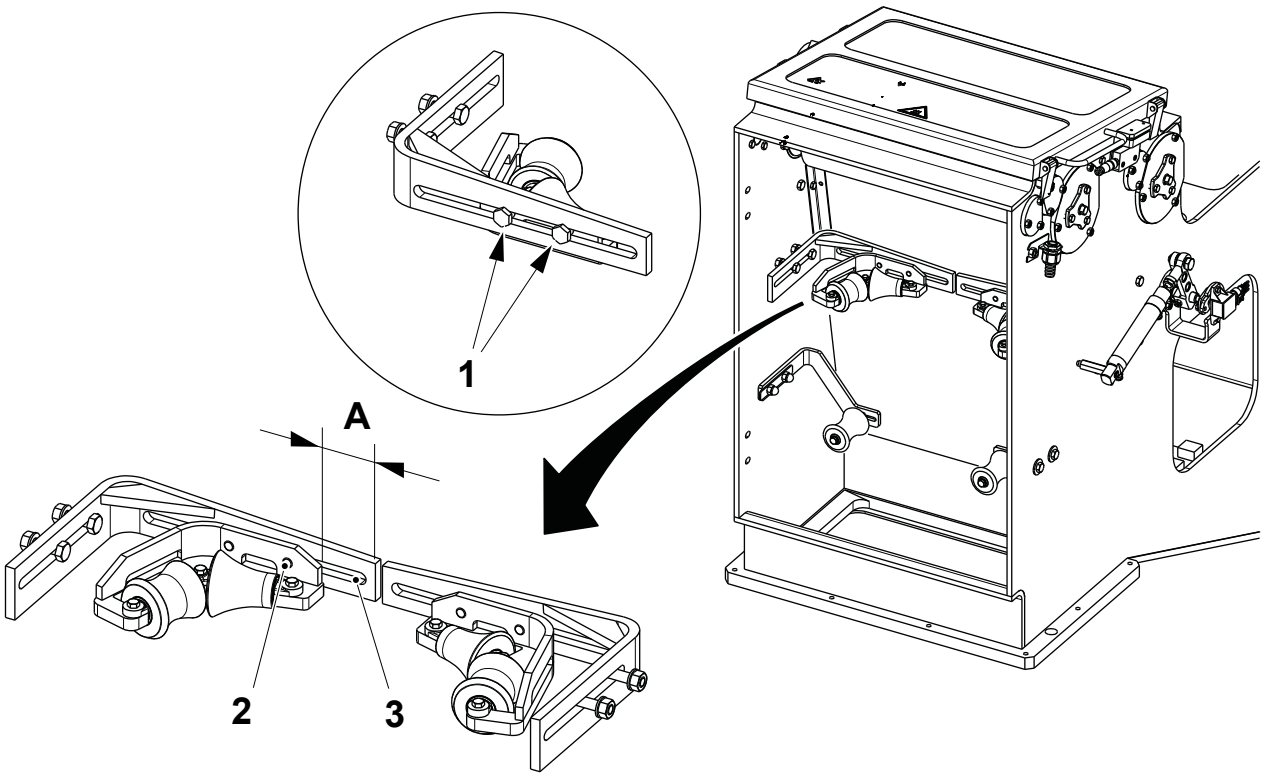

1 Screw
2 Bracket
3 Bracket

(Cont'd)

TechPub_2614345_0108 - 0103_3048056_01.fm

(Cont'd)

c) On both the edge rollers, loosen the screws (4) and move the bracket (3) until the front edge of the bracket (3) is at distance **B** from the front edge of the drying chamber frame (5).

d) Without moving the bracket (3), tighten the screws (4).

Package	**B ±1.0 (mm)**
TBA 200 S	197
TBA 250 B - TBA 200 B	202
TBA 250 S - TBA 200 M	211
TBA 125 S	194
TBA 1000 S	209
TBA 1000 Sq	193
TBA 1000 B	215

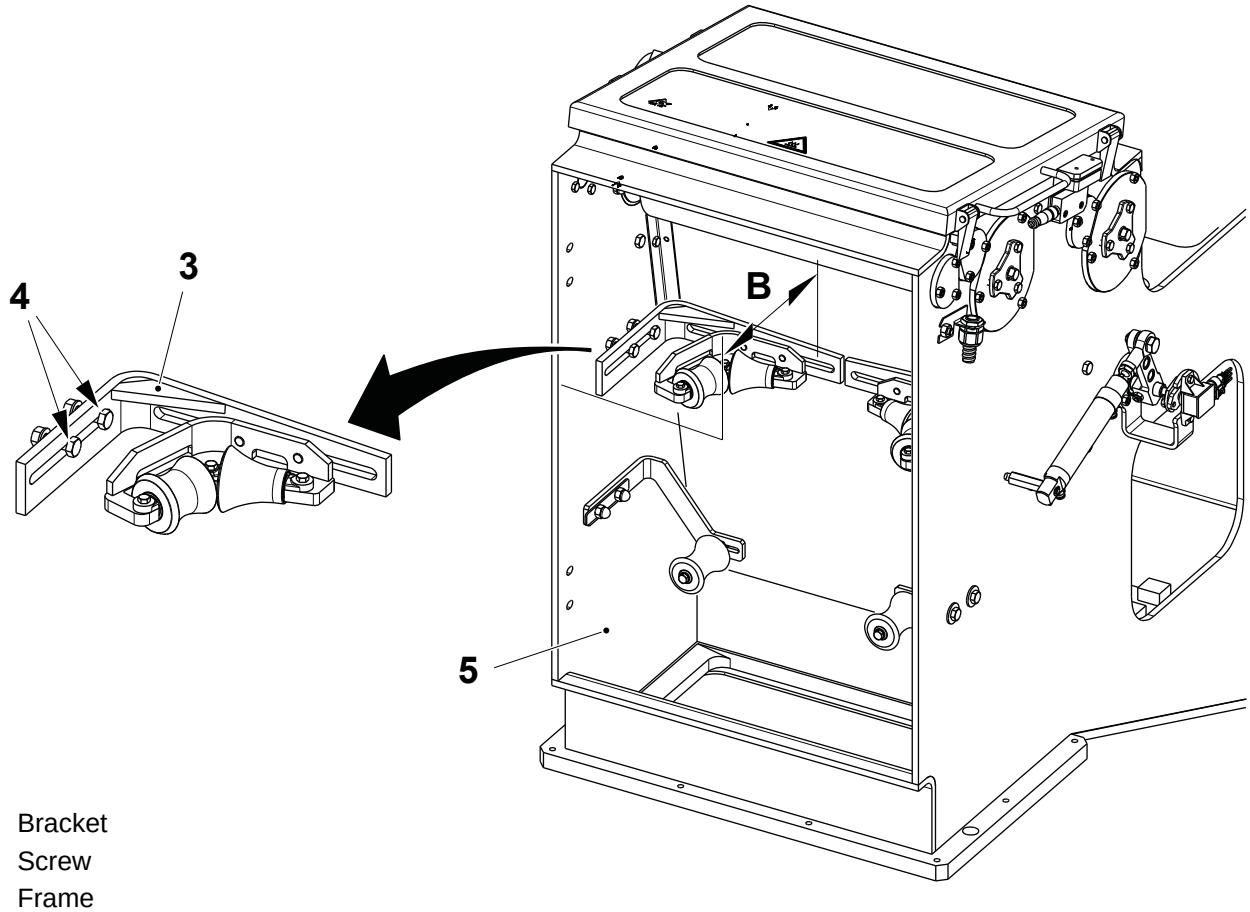

3 Bracket
4 Screw
5 Frame

(Cont'd)

TechPub_2614345_0108 - 0103_3048056_01.fm

(Cont'd)

Lower Edge Rollers

Note! Valid for Family Packages only.

a) Loosen the screw (1) and move the roller (2) to set the distance A between the edge of the roller (3) and the drying chamber surface (4).

b) Tighten the screw (1).

c) Repeat the same setting for the other roller.

Package	A ±1.0 (mm)
TBA 1000 S	77
TBA 1000 Sq	80
TBA 1000 B	74

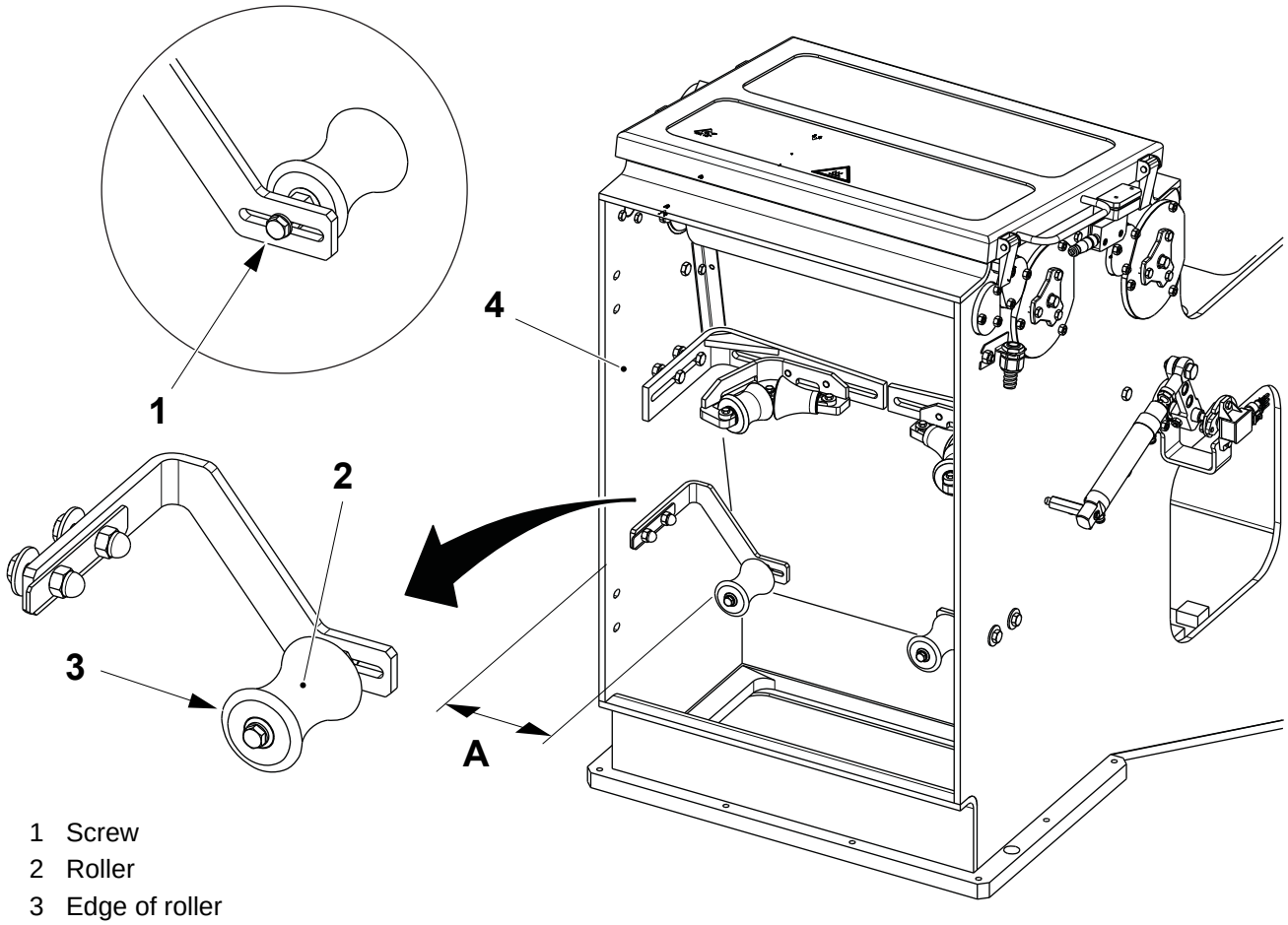

1 Screw
2 Roller
3 Edge of roller
4 Drying chamber surface

TechPub_2614345_0108 - 0103_3048056_01.fm

(Cont'd)

(Cont'd)

d) Loosen the screws (5) and move the bracket (6) to set the distance **B** between the edge of the bracket (6) and the edge of the drying chamber window (7).

e) Tighten the screws (5).

f) Repeat the setting for the other roller.

Package	**B ±1.0 (mm)**
TBA 1000 S	47
TBA 1000 Sq	47
TBA 1000 B	47

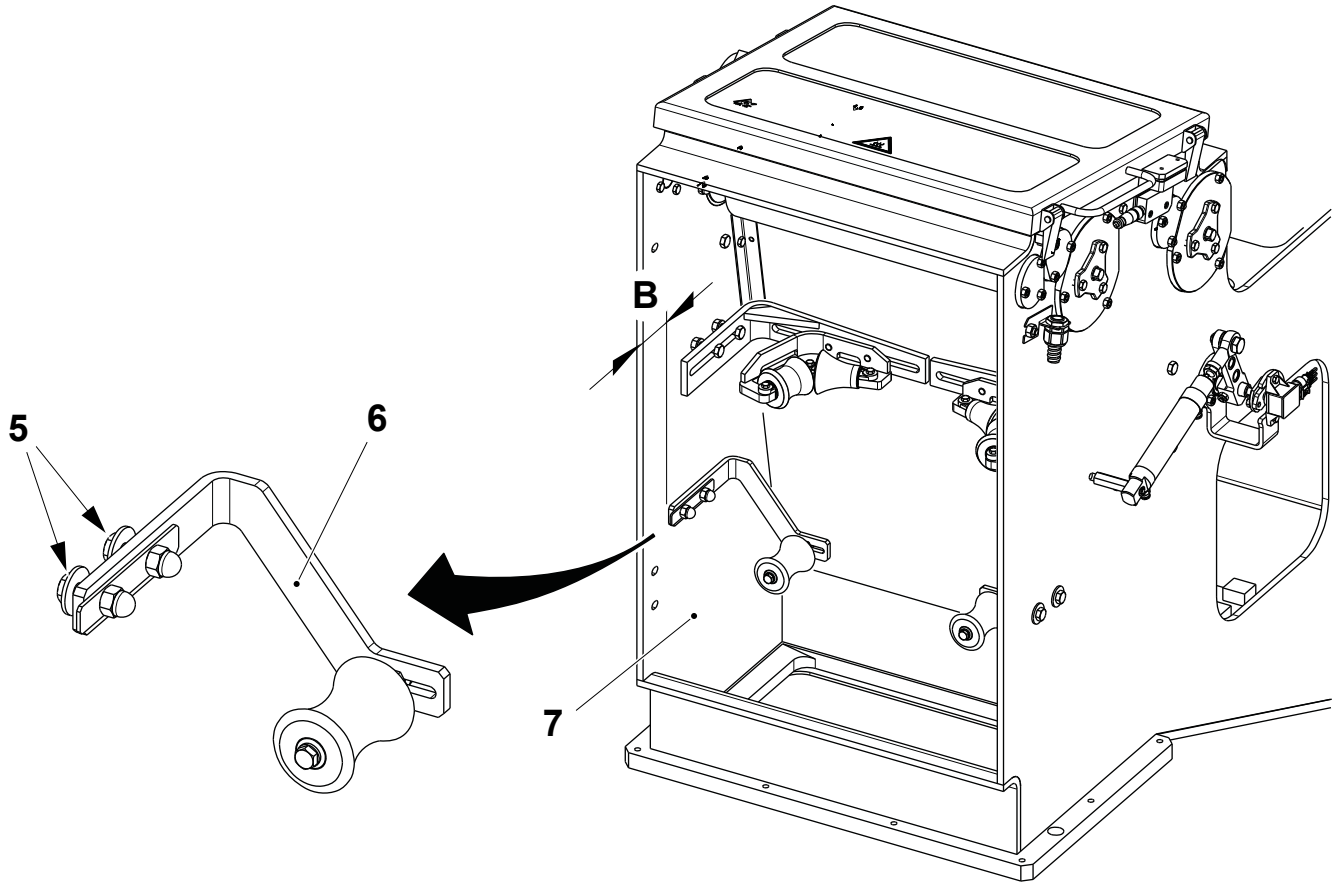

5 Screw
6 Bracket
7 Drying chamber window edge

(Cont'd)

TechPub_2614345_0108 - 0103_3048056_01.fm

(Cont'd)

g) To fine set the edge rollers, proceed as follows:

- perform the jaw system inching, see 4-2 Jaw System - Inch and Go to Position.
- check that the lower edge rollers (8) lean on the packaging material (9) without adding or removing tension so that the packaging material path between the upper edge rollers (10) and the forming ring (11) is straight as shown below
- if necessary, set the roller position by adjusting the screws (1) or (5).

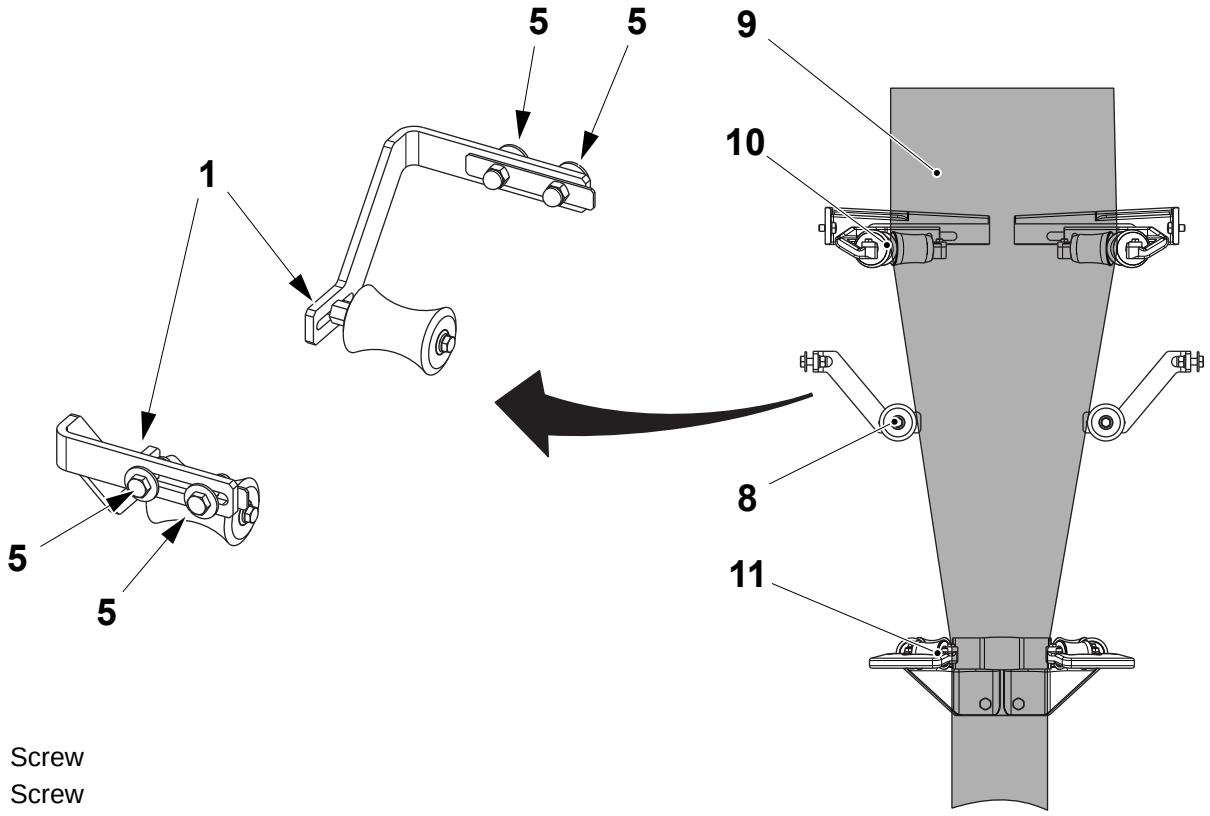

1 Screw
5 Screw
8 Edge rollers
9 Packaging material
10 Edge rollers
11 Forming ring

TechPub_2614345_0108 - 0103_3048056_01.fm

1.2.4-2 Edge Roller - Set Lower Edge Roller Clearance

Machine Status	Mains Power OFF Air OFF Steam ON Water OFF
SPC Reference	2891806-0200

Note! Valid for TBA 125 S only.

Note! Always set the rollers in the following order: 1-2-3-4, as indicated in the illustration.

Make sure that the filling pipe is removed from the filling machine. Set the distance **A** between the rollers by adding or removing the shimming washers (5).

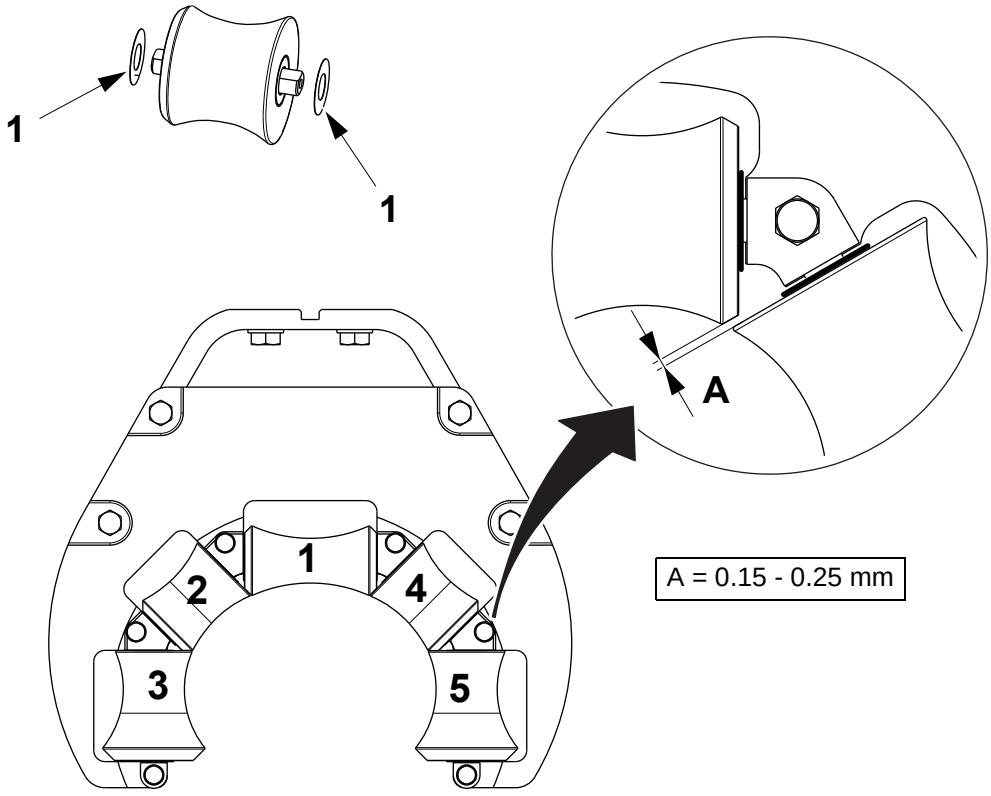

1 Position n.1
2 Position n.2
3 Position n.3
4 Position n.4
5 Shimming washer

TechPub_2614345_0108 - 0103_3048056_01.fm

1.2.5 Longitudinal Sealing

1.2.5-1 Longitudinal Sealing - Check

Machine Status	Mains Power OFF Air OFF Steam ON Water OFF
SPC Reference	2657873-0200

Check that:

- the rollers (1) are not worn or damaged. Change if necessary, see 1.2.5-2 Longitudinal Sealing - Change Rollers
- the bushings (2) are not damaged. Change if necessary
- the induction plate (3) is clean. If necessary, remove all residues and clean the induction plate (3)
- the busbar (4) is not damaged.

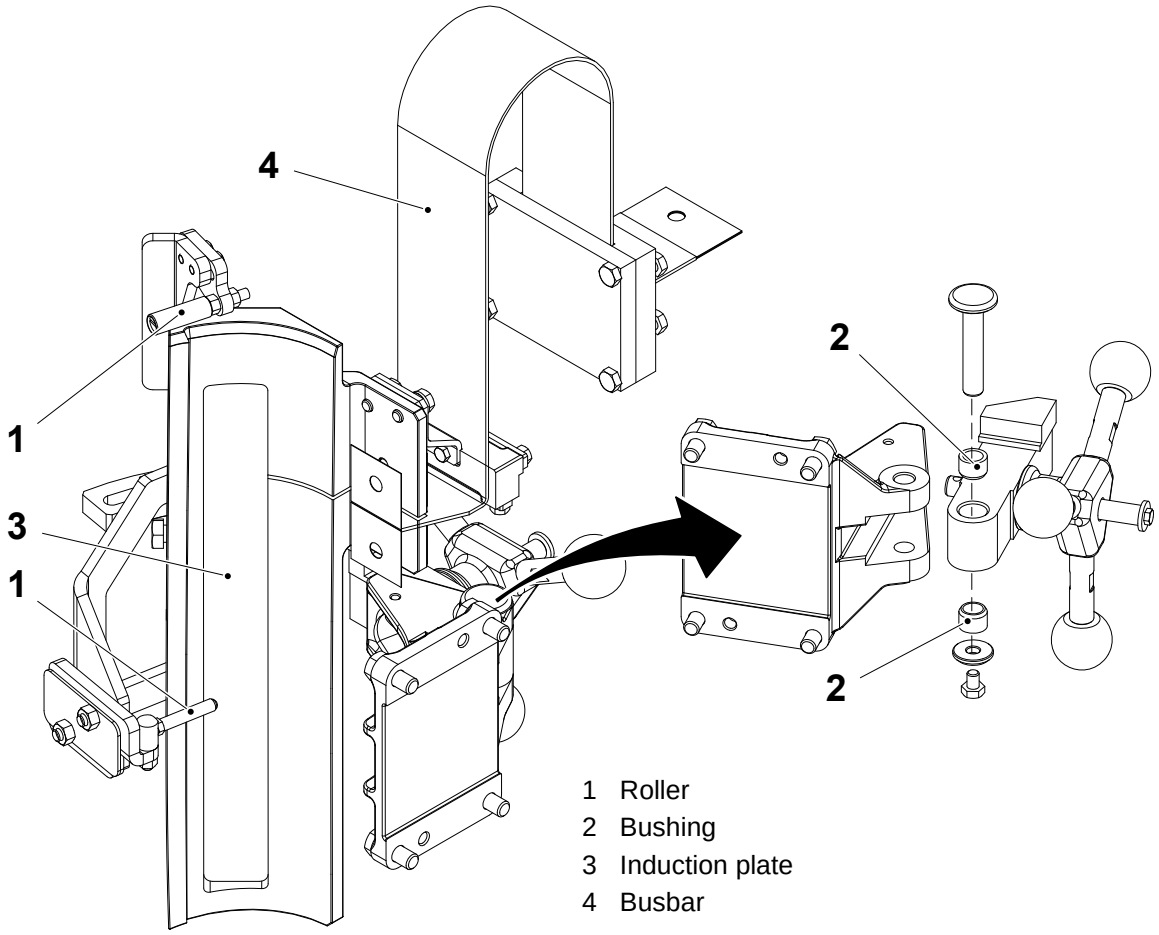

1 Roller
2 Bushing
3 Induction plate
4 Busbar

1.2.5-2 Longitudinal Sealing - Change Rollers

Machine Status	Mains Power OFF Air OFF Steam ON Water OFF
SPC Reference	2657873-0200

a) Remove the nuts (1) and the shafts (2).

b) Remove and change the rollers (3).

c) Assemble in the reverse order.

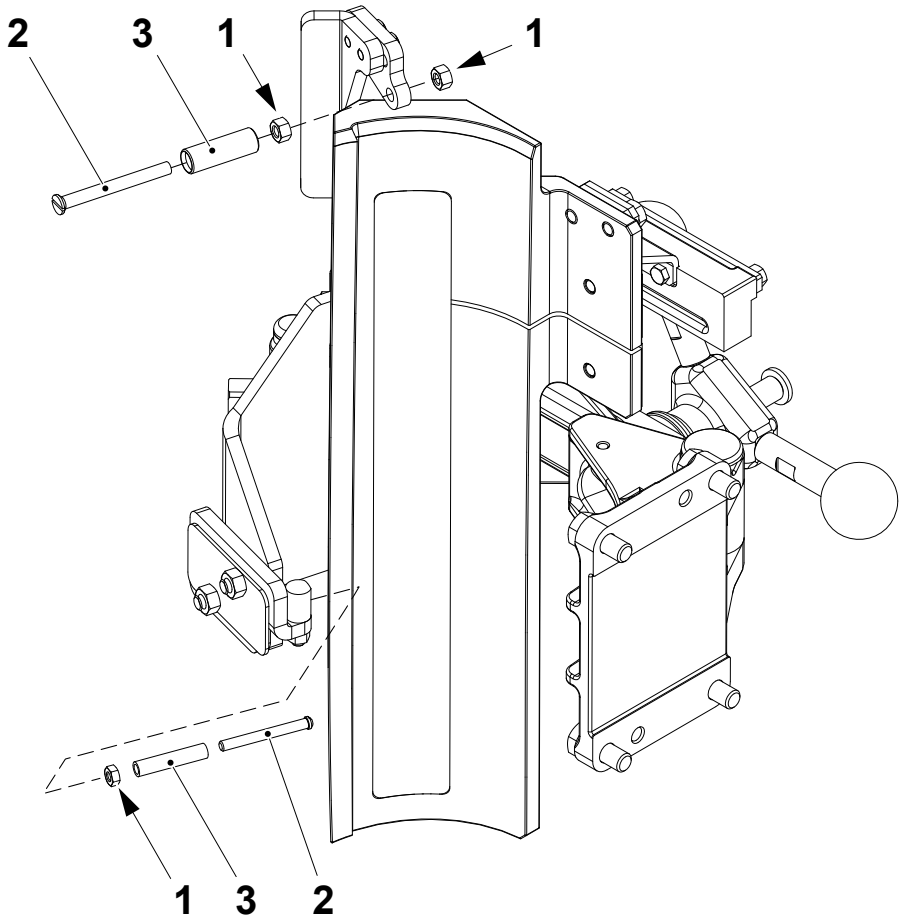

1 Nut
2 Shaft
3 Roller

1.2.5-3 Longitudinal Sealing - Set

Machine Status	Mains Power OFF Air OFF Steam ON Water OFF
Special Equipment	Tool (6) TP No. 3090823-0100 See 10.2 Templates and Tools
SPC Reference	2657873-0200

Inductor Alignment - Basic Setting

a) Loosen the screws (1).

b) Align the inductor (2) to the edge of the paper web (3) and move the support (4) along the guide (5) to set distance **A**.

c) Tighten the screws (1).

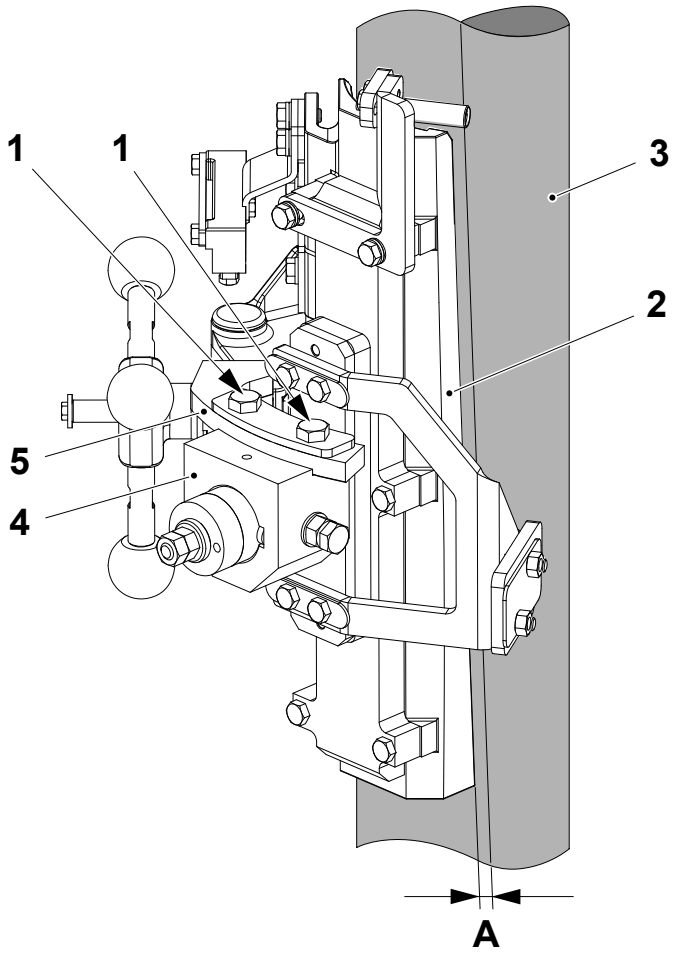

1 Screw
2 Inductor
3 Packaging material web
4 Support
5 Guide

A = 1.5 ±0.5 mm

(Cont'd)

(Cont'd)

d) Check distances **B** and **C** are correct. If not, continue below.

e) Loosen the nut (6) and move the inductor (7) until it is in a parallel position in relation to the tube; the same distance **B** is required at the top as at the bottom of the inductor (7), see arrows.

f) Tighten the nut (6).

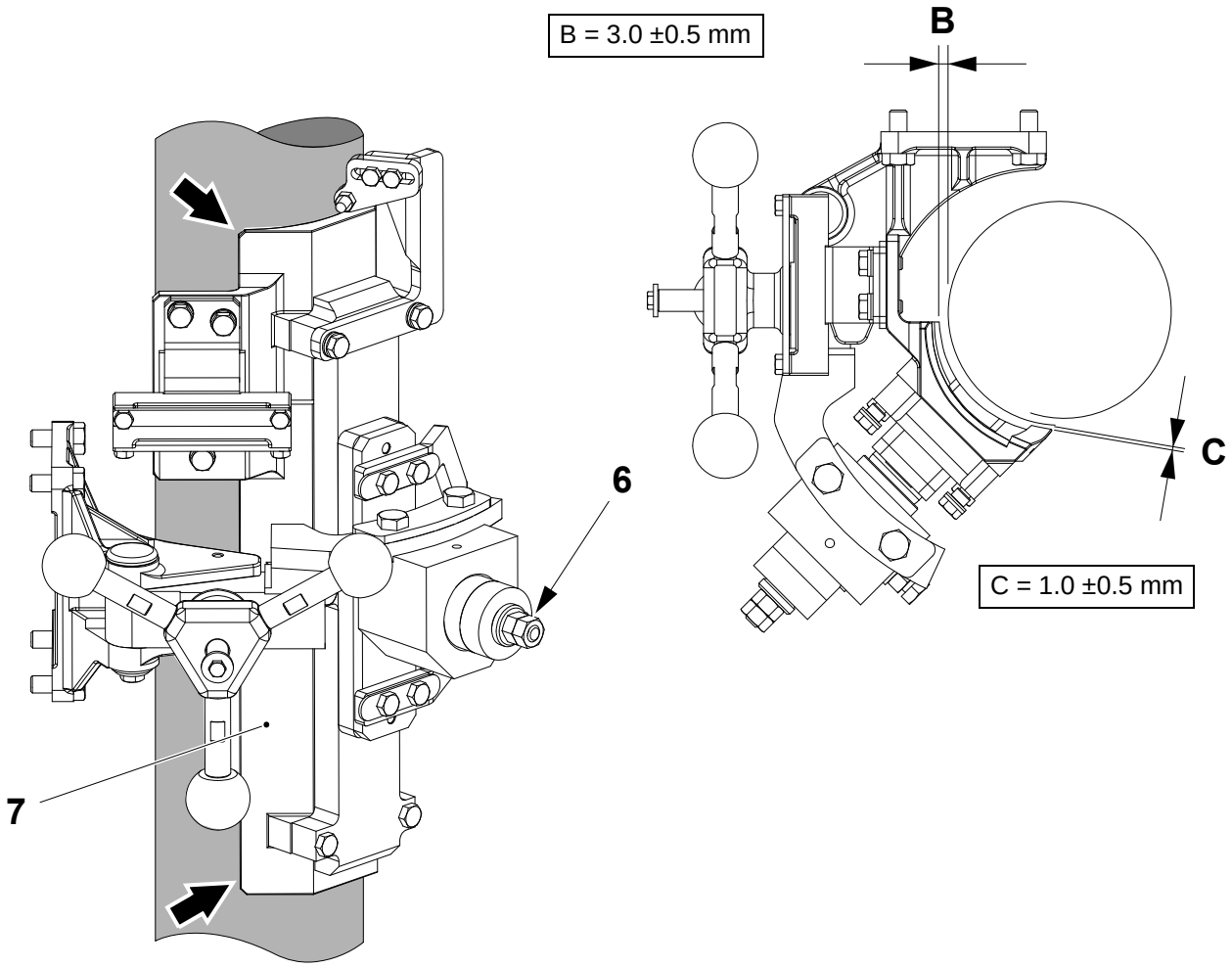

6 Nut
7 Inductor

(Cont'd)

(Cont'd)

g) Loosen the nut (8).

h) Move the slide (9) forward or backwards to set the distance **C**.

i) Tighten the nut (8).

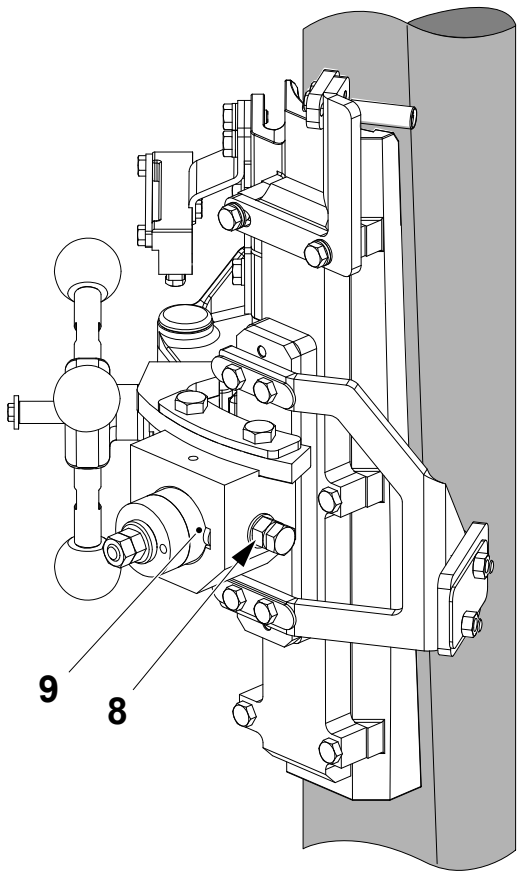

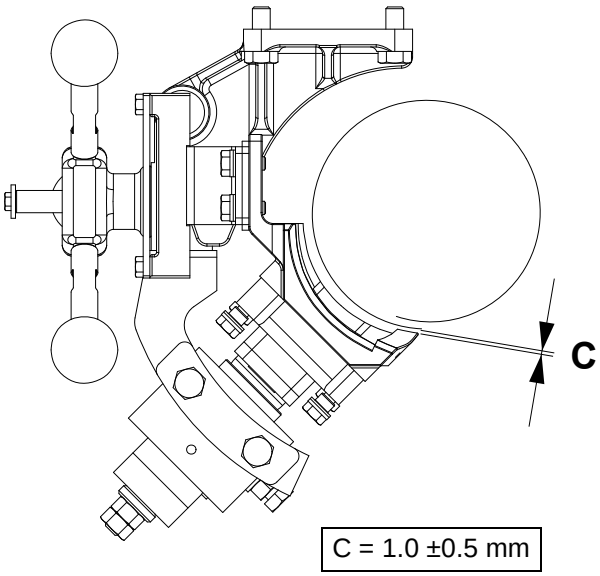

C = 1.0 ±0.5 mm

8 Nut
9 Slide

(Cont'd)

(Cont'd)

j) Adjust the finger (10) to set the distance **D** between inside surface of the packaging material web (11) and the side of the finger (10). The finger should be approximately parallel to the end of the inductor.

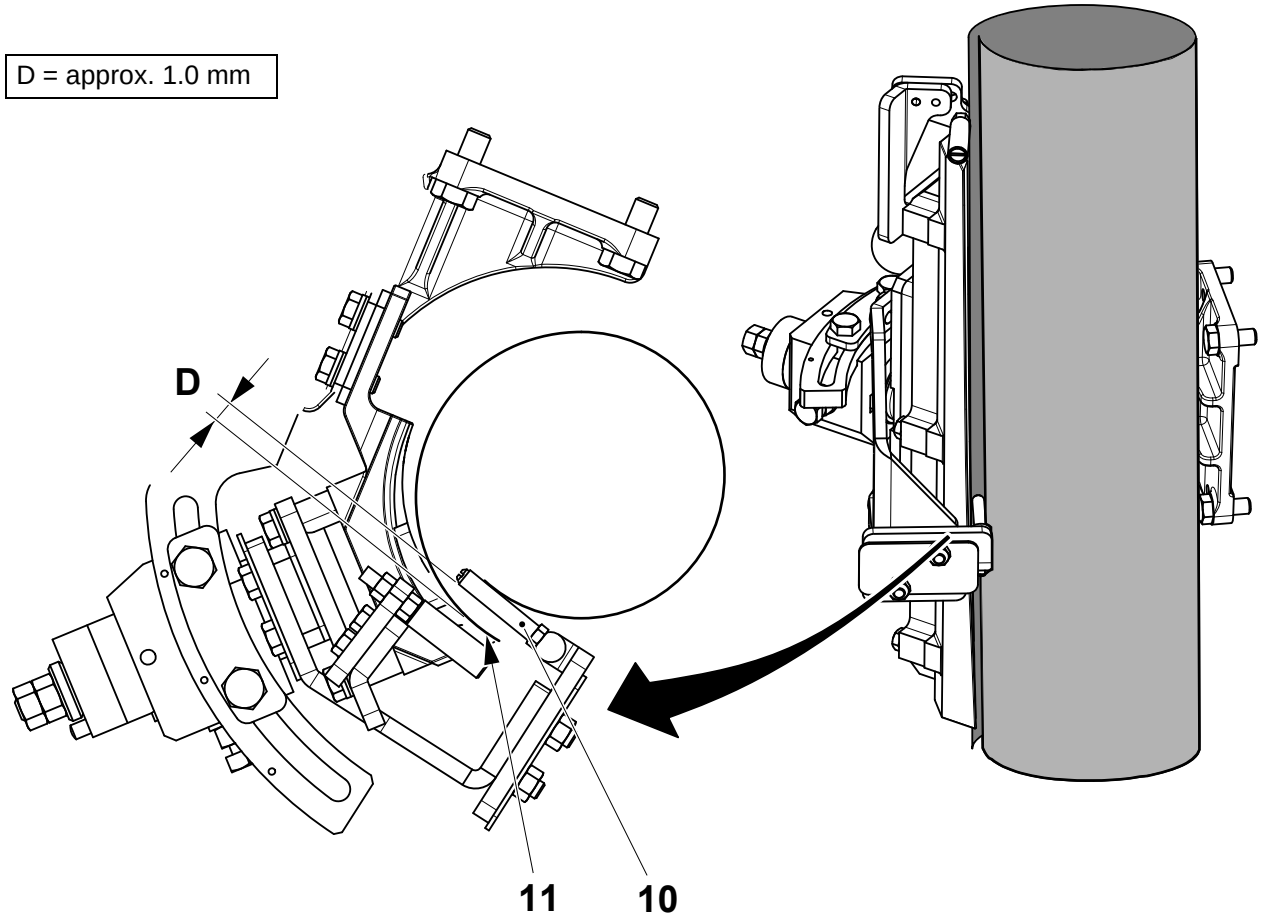

10 Finger
11 Packaging material web

(Cont'd)

(Cont'd)

Note! It is important that the LS strip is applied correctly to the packaging and the packaging material is aligned correctly before adjustments are made to the LS inductor.

Inductor Alignment - Fine Setting

To fine set the inductor alignment proceed as follows.

a) Adjust the finger (1) so that it does not touch the packaging material web (2).

b) Disable the VMN automatic mode, see 1.2.5-4 Longitudinal Sealing - Set VMN Mode.

c) Step up the machine to TUBE SEALING.Take the last 10 sealed packages wasted during TUBE SEALING and check that the LS sealing is correct as described in the OM sections, Crease Lines, LS Overlap and LS Strip Application. If not, check the basic position of the LS inductor again, see Inductor Alignment - Basic Setting.

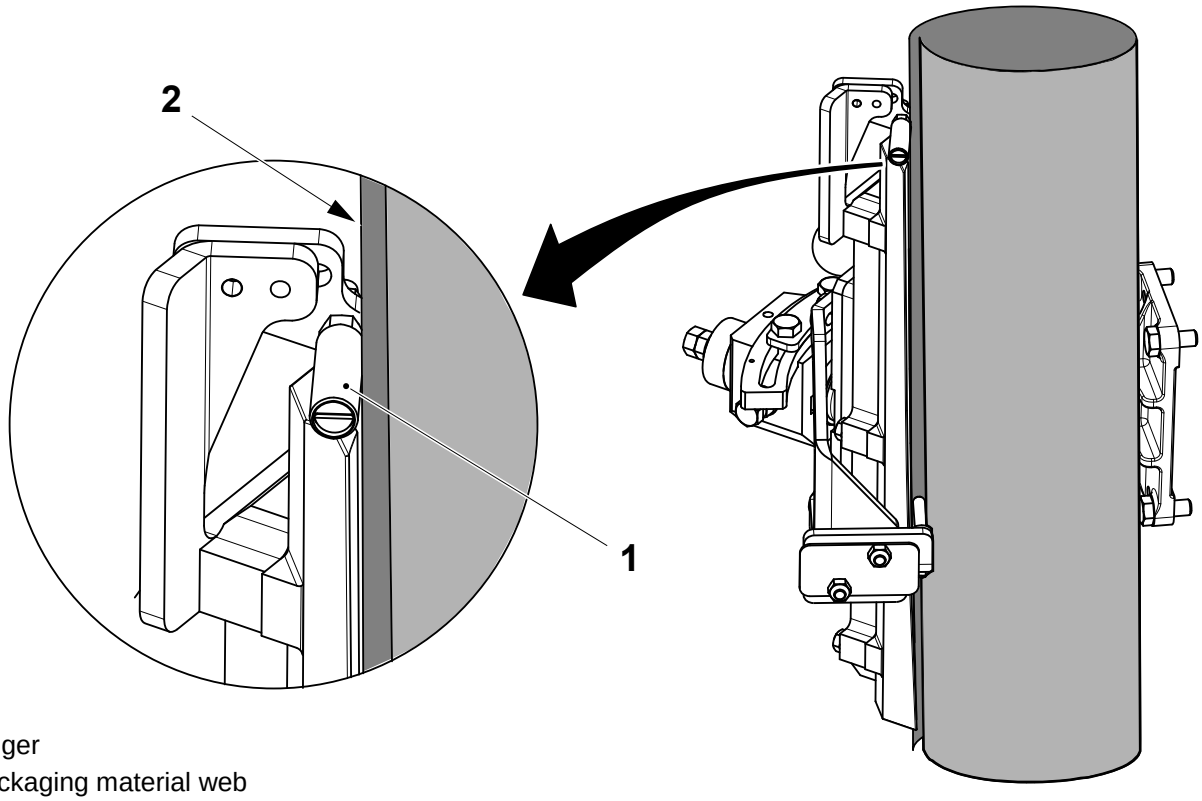

1 Finger
2 Packaging material web

(Cont'd)

(Cont'd)

Note! The performance of the inductor is different when the machine is hot than when it is cold. There is also a difference when the machine is running with a product and when no product is being used. The inductor should be set when the best position for PRODUCTION with product has been found.

This must be done as follows:

d) Step the machine up to HEAT STERILISATION.

e) At the electrical cabinet, connect a PC to the RS 232 connection of TMCC2 A01K5220 (Sealing Monitoring).

f) Set up the PC to set up RS232 communications, see 9.8-2 TMCC2 Controller - Set Communication.

g) Follow the instructions in 9.8 TMCC2 Controller, TMCC2 card A01K5220 (Sealing Monitoring) to read the LS sealing data.

(Cont'd)

(Cont'd)

Note! Running the machine in STERILISED INCHING produces and wastes packages at production speed but without product. This allows the electrical parameters of the LS to be checked.

h) When the machine has stepped up to SIGNAL TO STERILIZER and the TPOP icon is flashing, the JAW INCHING button starts to flash.

i) Press and hold the JAW INCHING button to run the machine in STERILISED INCHING. While this is being done a second person should check and record the electrical parameters. The limits for the parameters are given in the following table.

Phase angle (Degrees) (Ph)	**Impedance (Ohms) (Z)**
0 ±20	50 ±10

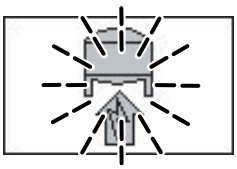

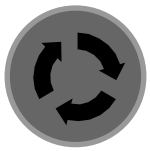

(Cont'd)

(Cont'd)

j) Release the JAW INCHING button.

k) Adjust the finger (1) so that it contacts the packaging material web (2) but does not visibly move the packaging material web (2) out of its path.

l) Press and hold the JAW INCHING button and check the electrical parameters.

- if the parameters are **different** from those recorded in step i) and also **incorrect**, remove the finger (1) and continue with item m)
- if the parameters are **different** from those recorded in step i), but **correct**, remove the finger (1) and continue with item t)
- if the parameters are the **same** as those recorded in step i) and also **incorrect** continue with item m)
- if the parameters are the **same** as those recorded in step i) but **correct**, continue with item t).

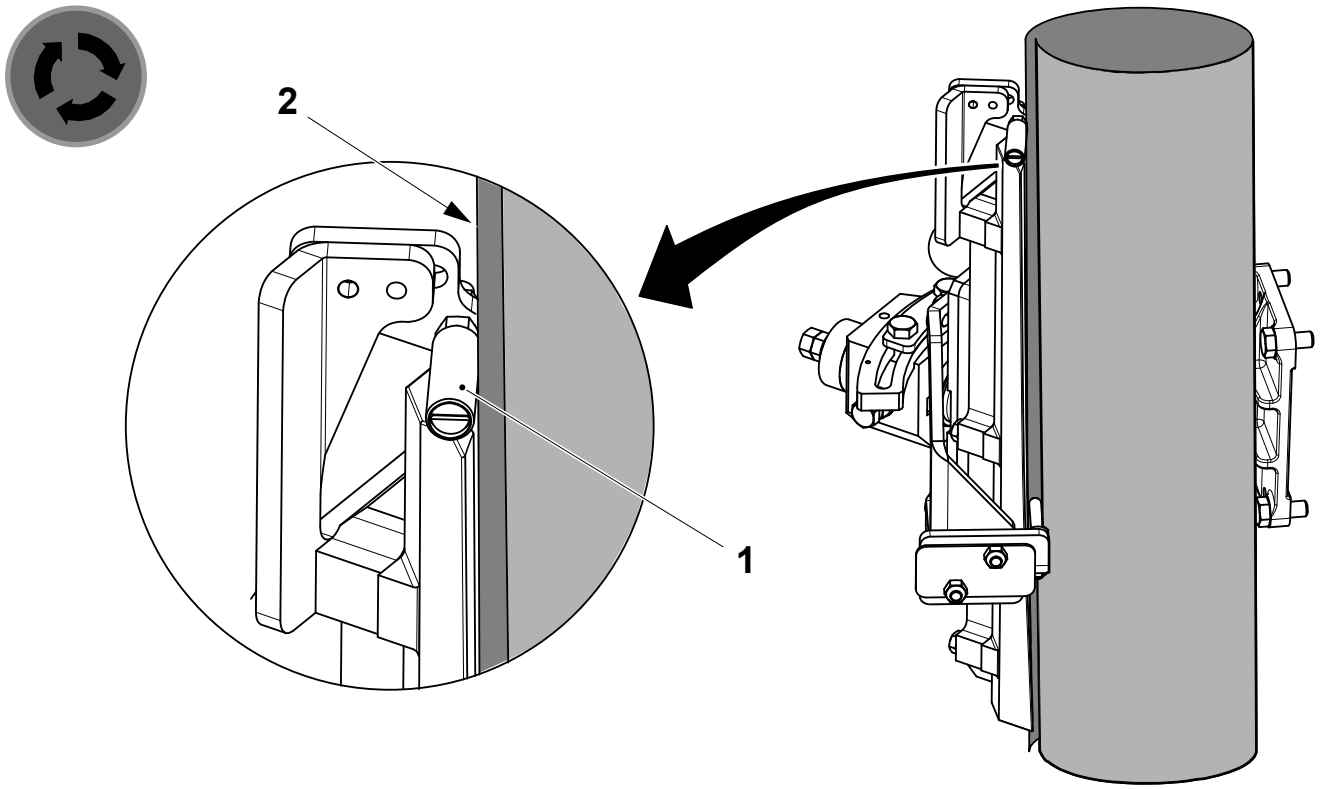

1 Finger
2 Packaging material web

(Cont'd)

(Cont'd)

m) Step the machine down to STEP ZERO.

n) Loosen the nut (3) and move the inductor (4) nearer toward or further away from the packaging material web (2) making sure that it remains parallel to the packaging material web (2).

o) Tighten the nut (3).

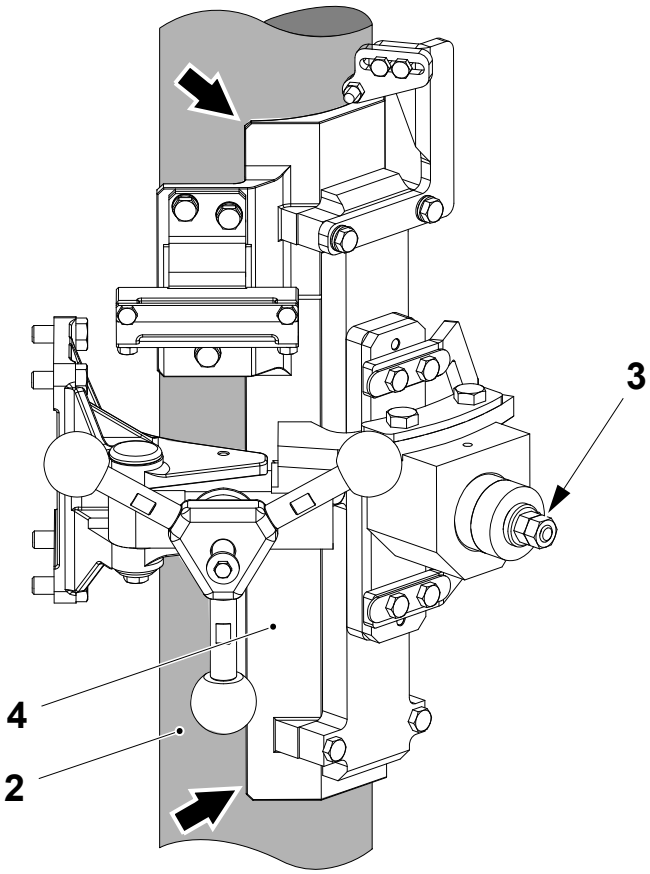

2 Packaging material web
3 Nut
4 Inductor

(Cont'd)

(Cont'd)

p) Loosen the nut (5).

q) Move the slide (6) nearer toward or further away from the packaging material web (2). This changes the distance **C**, see page 1-57.

r) Tighten the nut (5).

s) Step up the machine to HEAT STERILISATION and repeat step l).

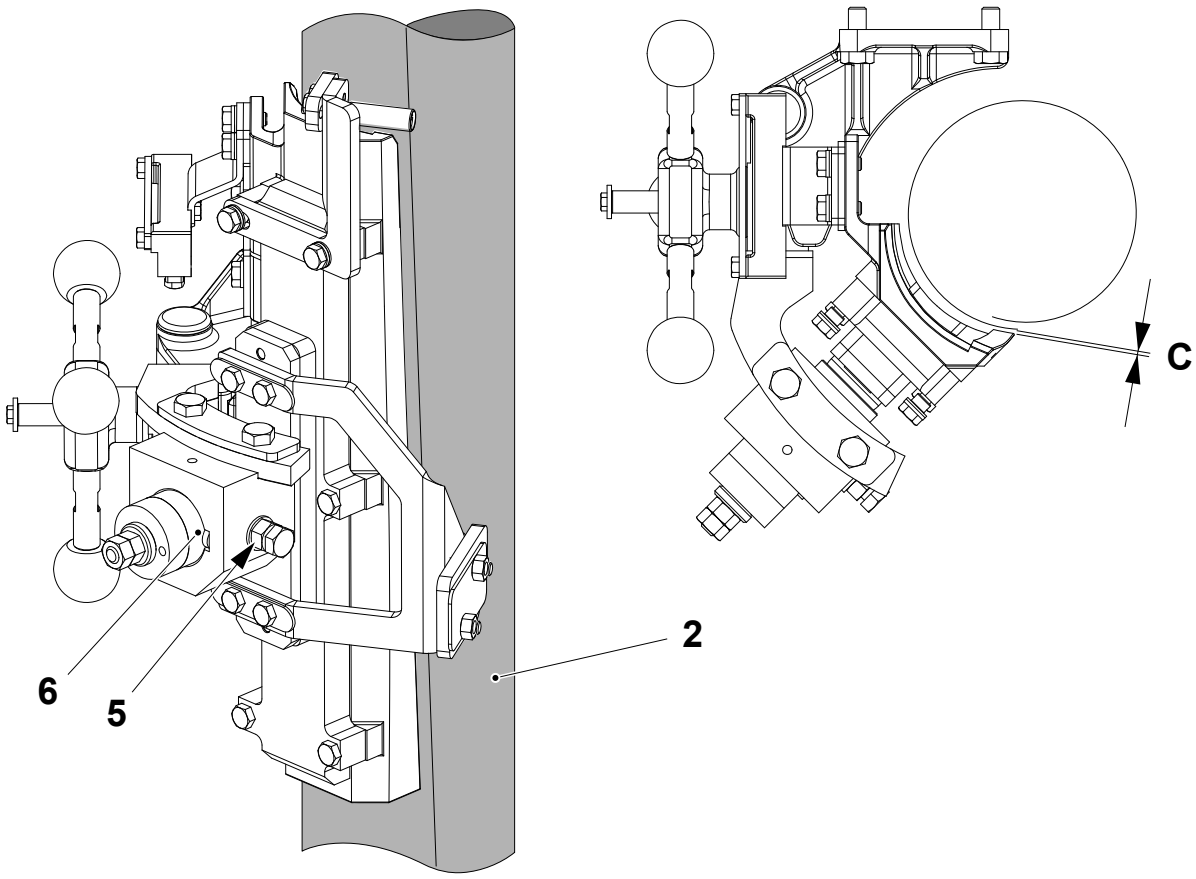

2 Packaging material web
5 Nut
6 Slide

(Cont'd)

(Cont'd)

Note! Using water as a product will allow the machine to be stepped up again without having to perform CIP.

t) Step the machine up to PRODUCTION and run the machine with water as a product.

u) Check the electrical parameters.

- if the result is **incorrect**, step the machine down to STEP ZERO and repeat steps n) to r), t) and u)
- if the parameters are **correct**, continue with step v).

v) Run the machine in PRODUCTION with a normal product.

w) Check the electrical parameters.

- if the parameters are **correct**, fix the inductor in position, see Inductor Fixing.
- If the results are **incorrect**, step the machine down to STEP ZERO and perform CIP. Repeat steps n) to r), v) and w) until the parameters are **correct** and then fix the inductor in position, see Inductor Fixing.

x) Enable the VMN automatic mode, see 1.2.5-4 Longitudinal Sealing - Set VMN Mode.

(Cont'd)

(Cont'd)

LS Inductor Setting Sequence

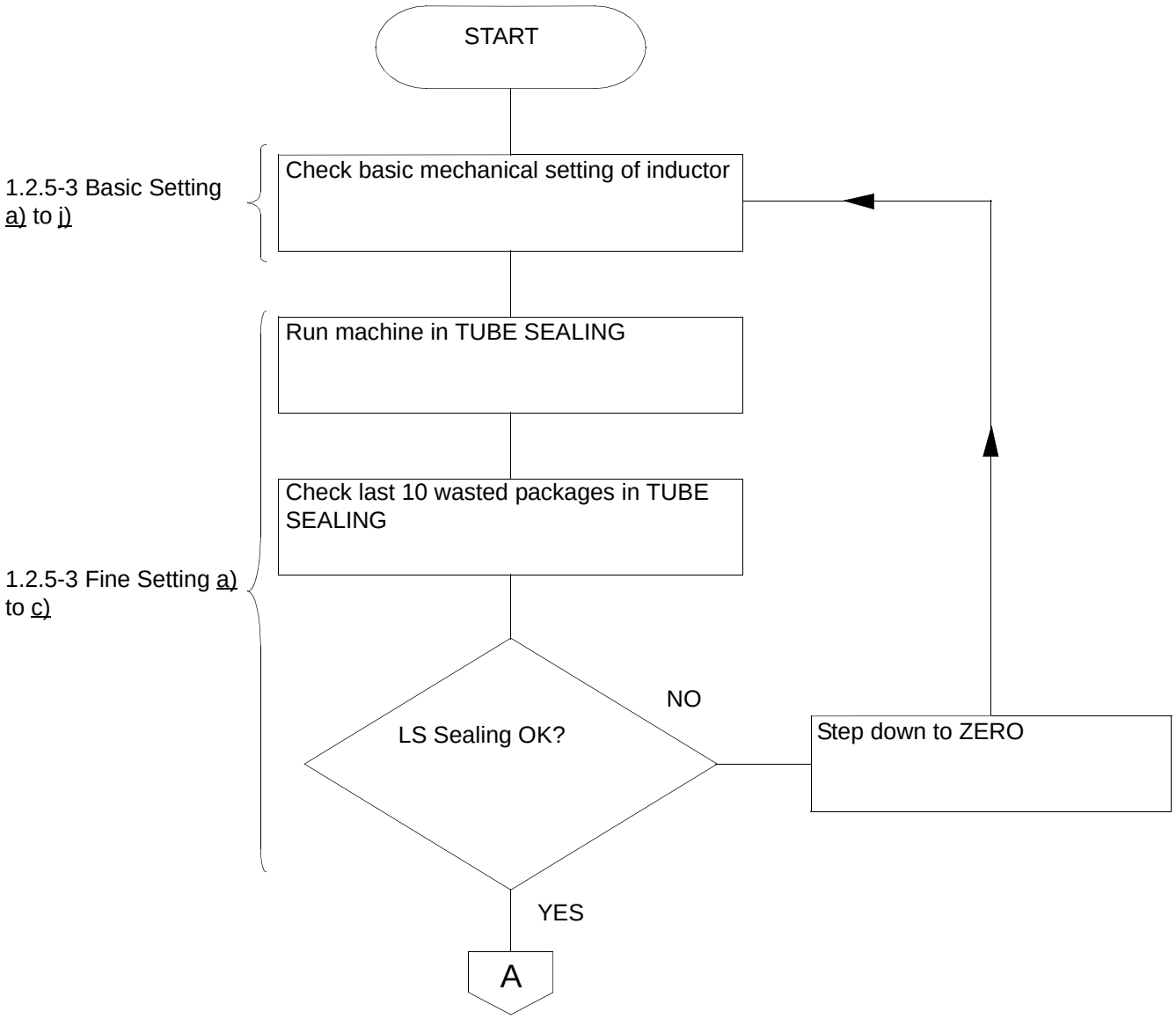

(Cont'd)

(Cont'd)

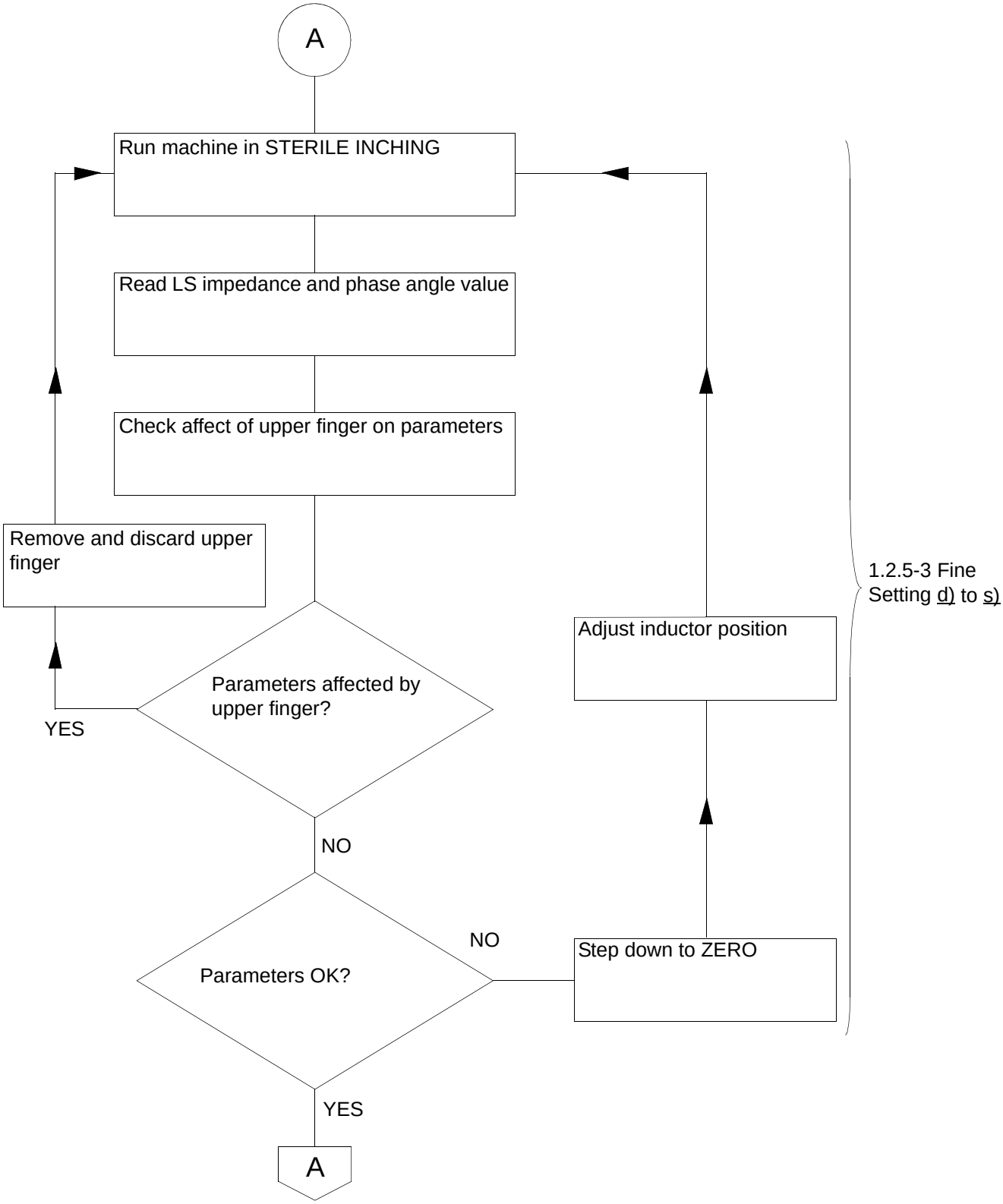
A
Run machine in STERILE INCHING
Read LS impedance and phase angle value
Check affect of upper finger on parameters
Remove and discard upper finger
Parameters affected by upper finger?
YES
NO
Parameters OK?
NO
Step down to ZERO
Adjust inductor position
1.2.5-3 Fine Setting d) to s)
YES
A

(Cont'd)

(Cont'd)

1.2.5-3 Fine Setting t) and u)

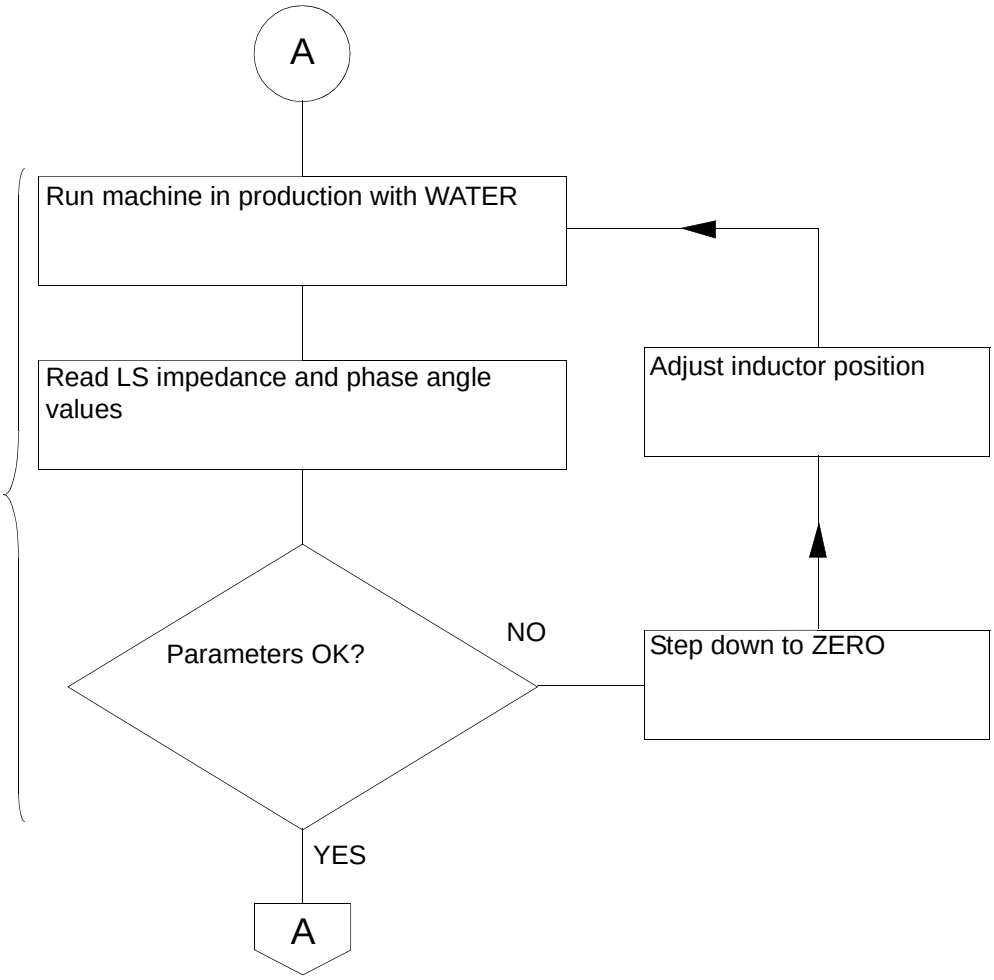

(Cont'd)

(Cont'd)

1.2.5-3 Fine Setting v) and w)

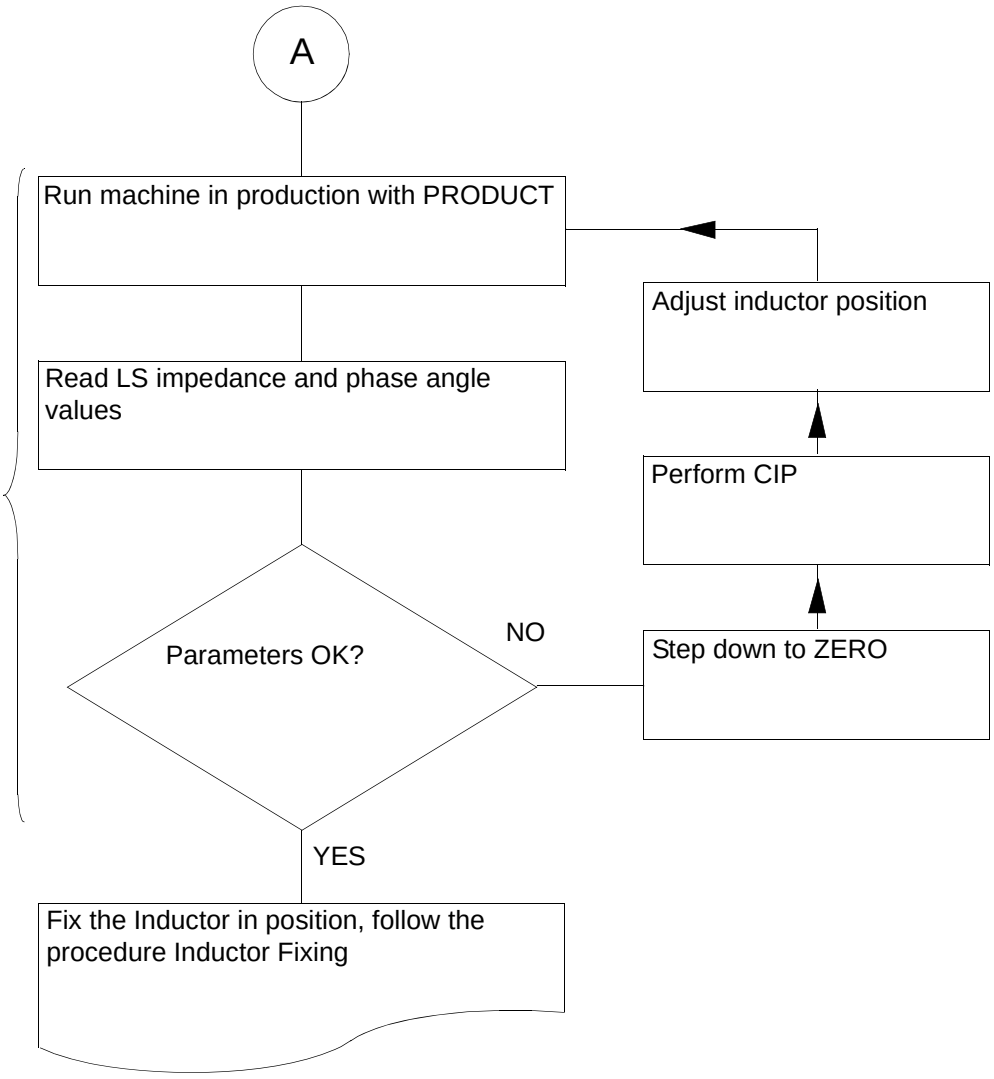

(Cont'd)

(Cont'd)

Inductor Fixing

a) Drill the plates (1) and (2) and pin with the parallel pins (3).

b) Drill the guide (4) and the support (5) and pin with the parallel pin (6).

c) Drill the slides (7) and (8) and pin with the parallel pin (9).

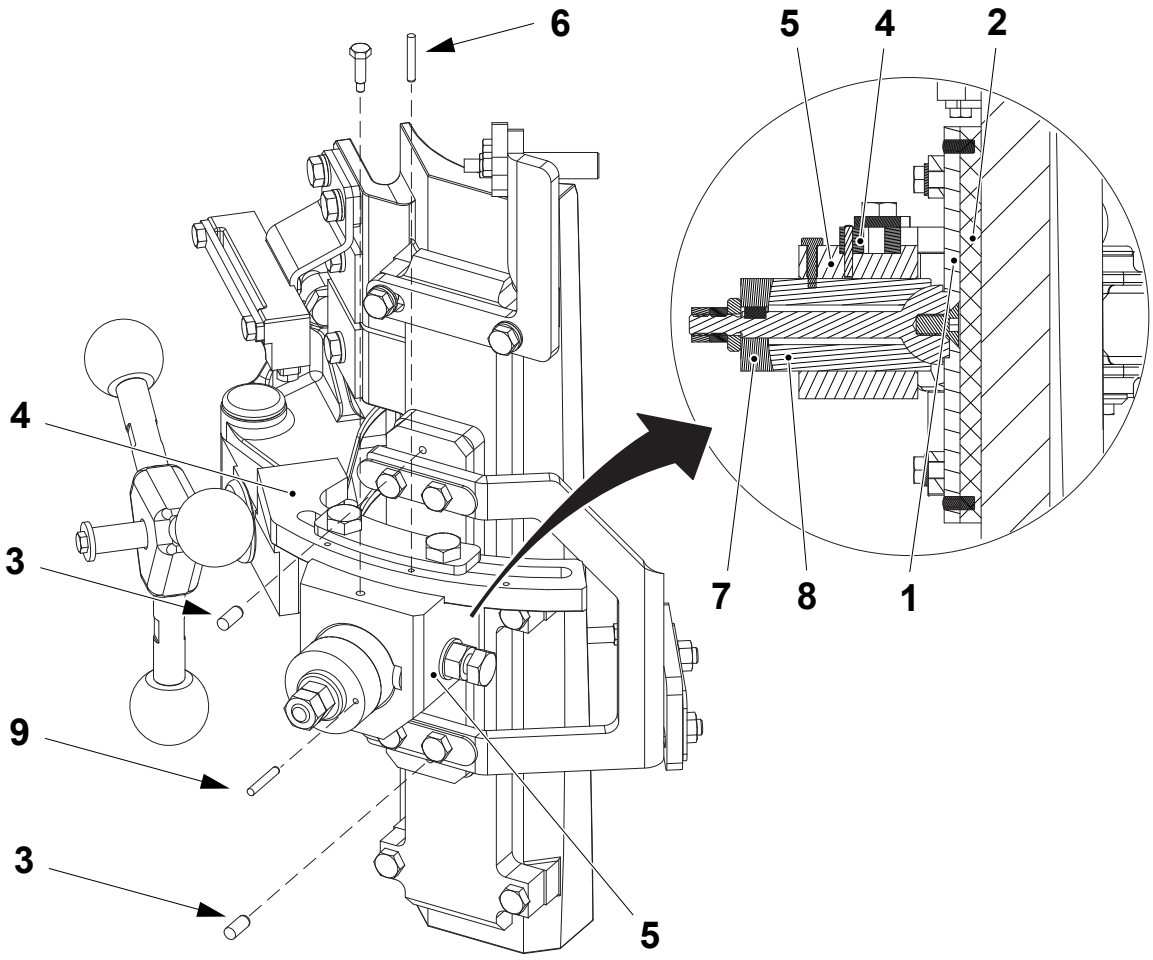

1 Plate
2 Plate
3 Parallel pin
4 Guide
5 Support
6 Parallel pin
7 Slide
8 Slide
9 Parallel pin

(Cont'd)

(Cont'd)

CAUTION

Risk of damage to the equipment.

Be careful to not damage the thread when drilling through the threaded hole (10). The depth of the drilled hole must not exceed 4.0 mm.

d) Drill the slide (8) through the threaded hole (10) with a drill bit Ø3 mm and fit the screw (11).

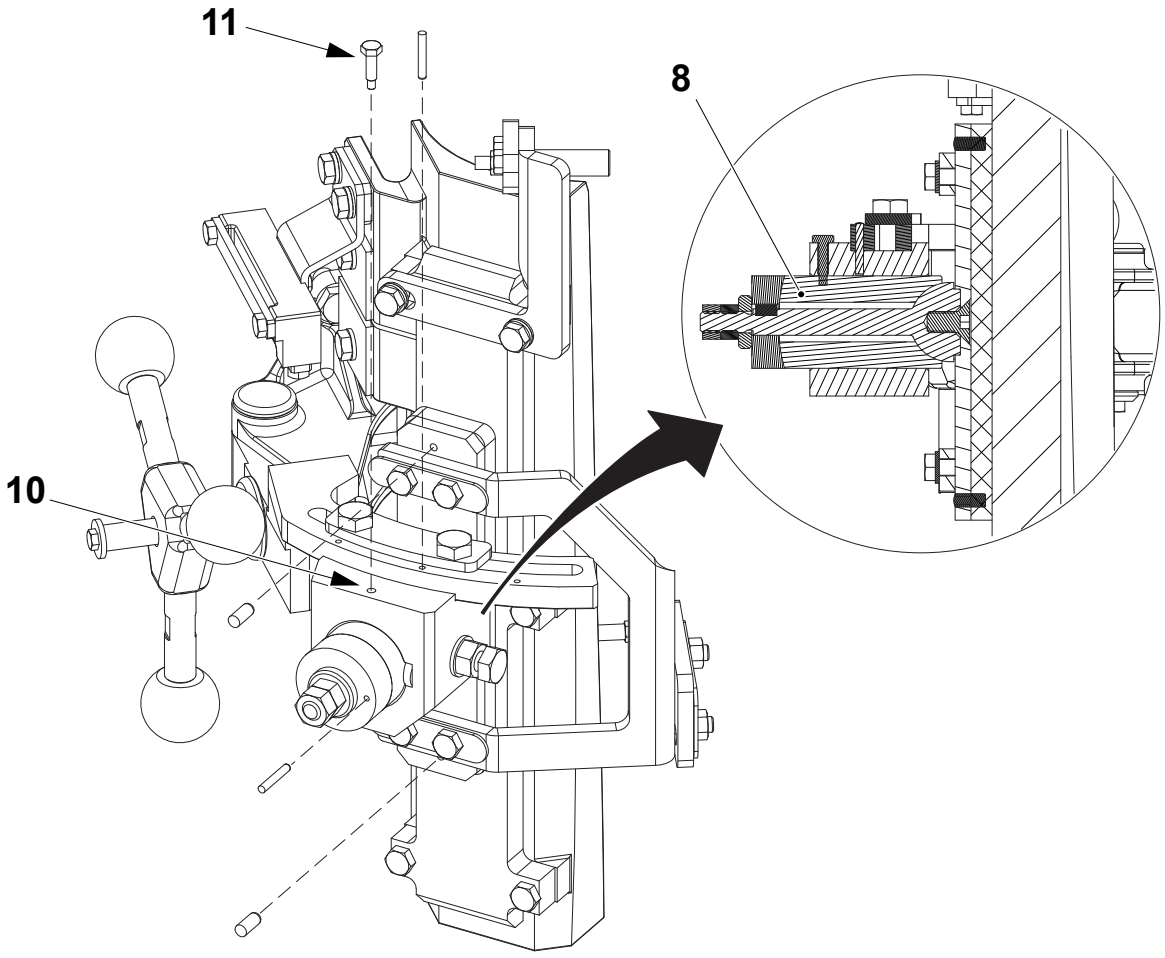

8 Slide
10 Threaded hole
11 Screw

1.2.5-4 Longitudinal Sealing - Set VMN Mode

Machine Status	STEP ZERO
SPC Reference	2657873-0200

The VMN (Variable Matching Network) has two working modes:

- Automatic mode: the LS generator is allowed to self-adjust the capacitance configuration within a limited range from the default configuration
- Fixed (or manual) mode: the generator keeps the default configuration and the system works as a standard transformer.

Before performing manual basic settings on the LS inductor the VMN has to be set to fixed (or manual) mode; when the LS quality is good and the electrical parameters (phase and impedance) are within the acceptable limits the VMN can be set to automatic mode.

(Cont'd)

(Cont'd)

Disable VMN Automatic Mode

a) Touch the MAINTENANCE CONTROL button (1) and enter the password required, see 9.6.3-2 HMI - User Management Log On.

b) Touch the TUBE FORMING UNIT button (2).

c) Touch the DISABLE VMN button (3). The ON/OFF button are displayed.

d) Touch the ON button (4) and the OK button (5) to switch to the fixed mode. A green dot appears close to the disable VMN button (3).

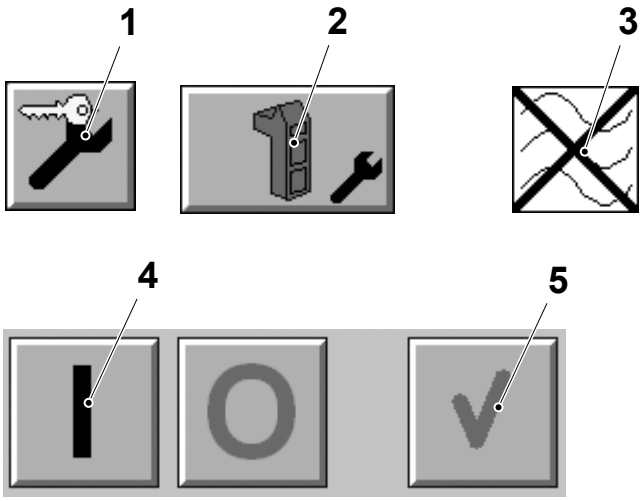

1 Maintenance control button
2 Tube forming unit button
3 Disable VMN button
4 ON button
5 OK button

(Cont'd)

(Cont'd)

Enable VMN Automatic Mode

Note! When the VMN automatic mode is disabled a green dot appears next to the DISABLE VMN button (3).

a) Touch the MAINTENANCE CONTROL button (1) and enter the password required, see 9.6.3-2 HMI - User Management Log On.

b) Touch the TUBE FORMING UNIT button (2).

c) Touch the DISABLE VMN button (3). The ON/OFF button are displayed.

d) Touch the OFF button (4) and the OK button (5) to restore to the automatic mode.

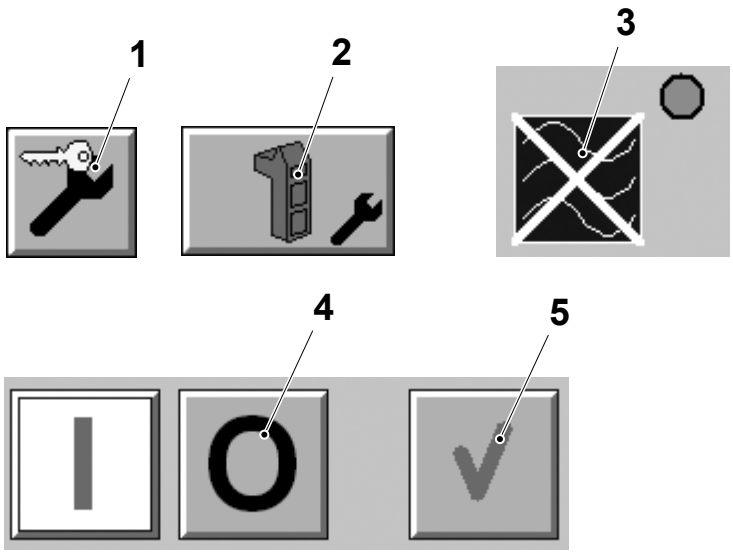

1 Maintenance control button
2 Tube forming unit button
3 Disable VMN button
4 OFF button
5 OK button

1.2.6 Seal

1.2.6-1 Seal - Check

Machine Status	Mains Power OFF Air OFF Steam ON Water OFF
SPC Reference	3020129-0100

Check that:

- the seal (1) is not worn or damaged. Change the seal (1) if the thickness is less than distance **A**.
- the O-ring (2) is not damaged, change if necessary.

Overhaul the seal unit if necessary, see 1.2.6-2 Seal - Change.

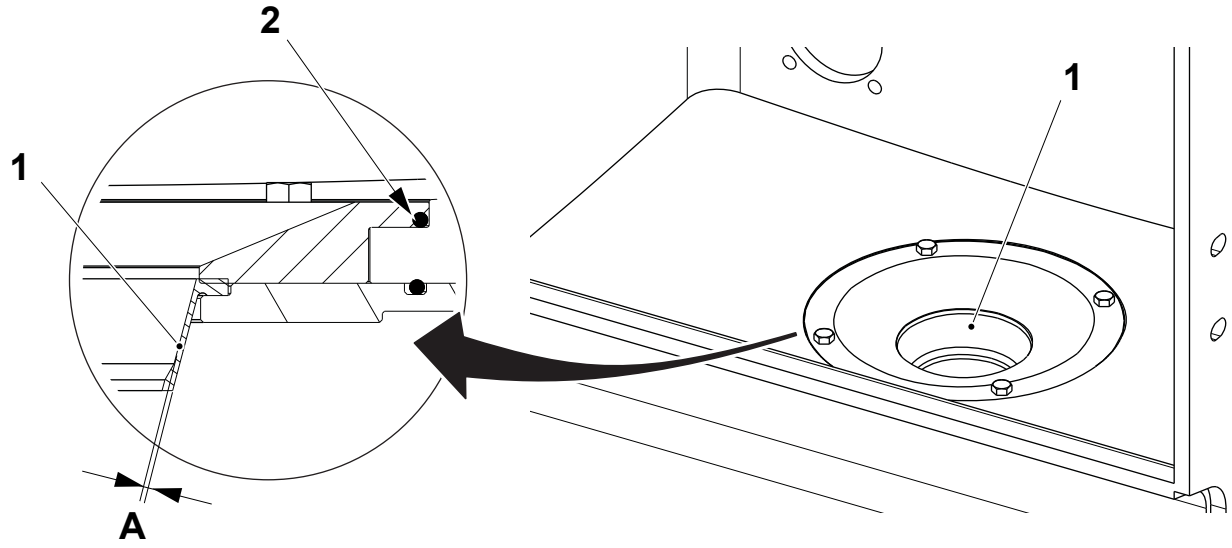

A = min. 1.0 mm

1 Seal
2 O-ring

TechPub_2614345_0108 - 0101_3048058_01.fm

1.2.6-2 Seal - Change

Machine Status	Mains Power OFF Air OFF Steam ON Water OFF
SPC Reference	3020129-0100

a) Remove the lower filling pipe from the filling machine.

b) Remove the screws (1) and the flange (2).

c) Remove the O-ring (3).

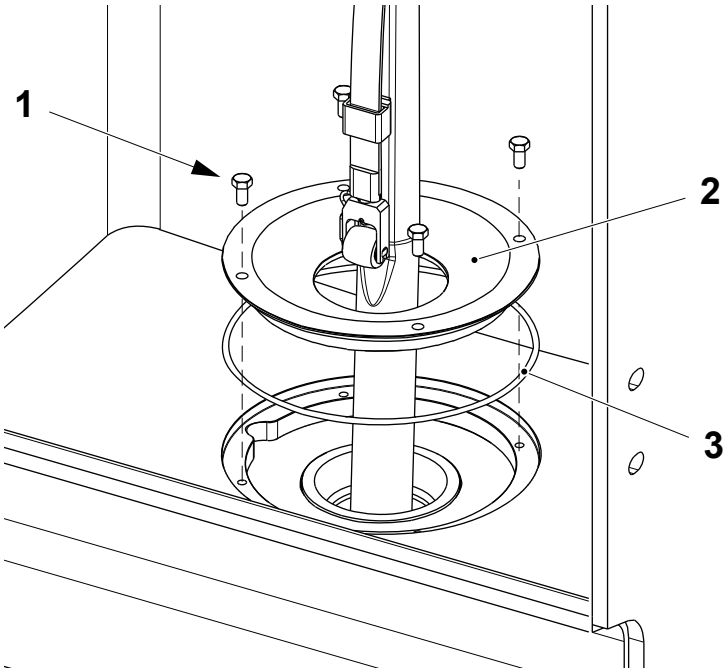

1 Screw
2 Flange
3 O-Ring

(Cont'd)

TechPub_2614345_0108 - 0101_3048058_01.fm

(Cont'd)

d) Remove the seal (4) pulling it downwards.

e) Change the O-ring (3) and the seal (4) if necessary.

f) Assemble in the reverse order inserting the seal (4) from the bottom.

Note! Make sure that the O-ring (3) and seal (4) are correctly fitted.

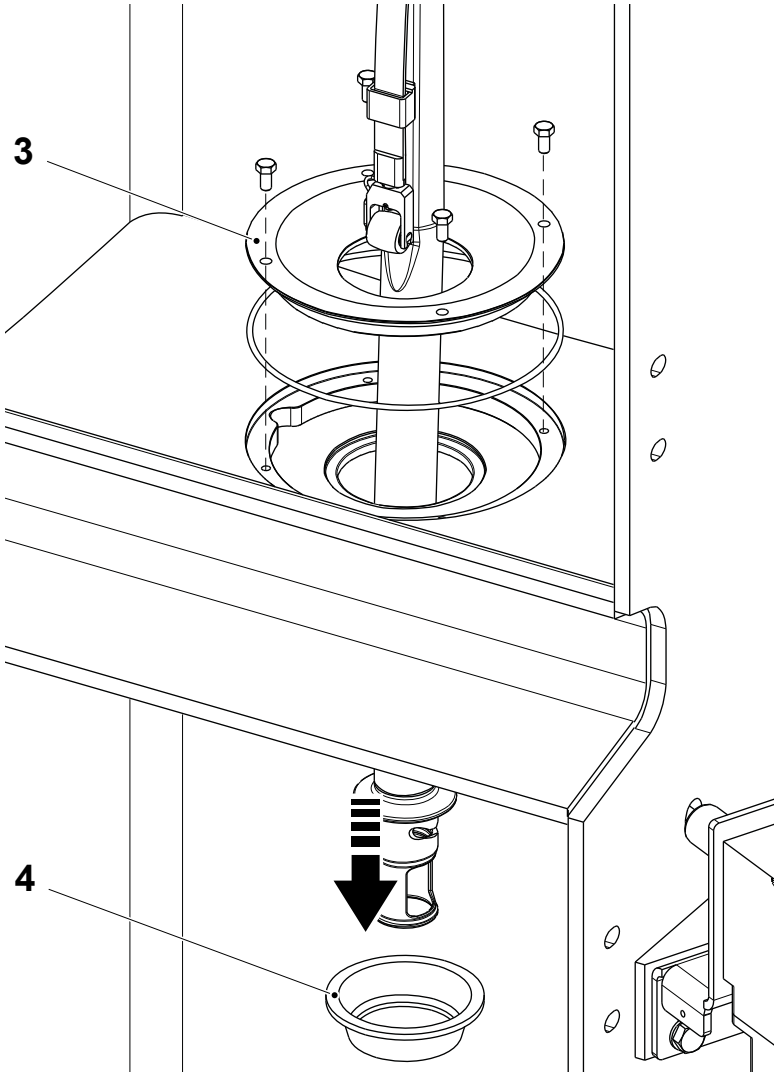

3 O-Ring
4 Seal

TechPub_2614345_0108 - 0101_3048058_01.fm

1.2.6-3 Seal - Set Position

Machine Status	PRODUCTION
Special Equipment	Template TP No. 3038998-0100, see 10.2 Templates and Tools
SPC Reference	3020129-0100

a) Remove the steering ring, see 1.2.7-1 Steering Ring - Overhaul, steps a) to c).

b) Remove the screws (1), the flange (2) and the O-ring (3).

c) Remove the seal (4) pulling it downwards.

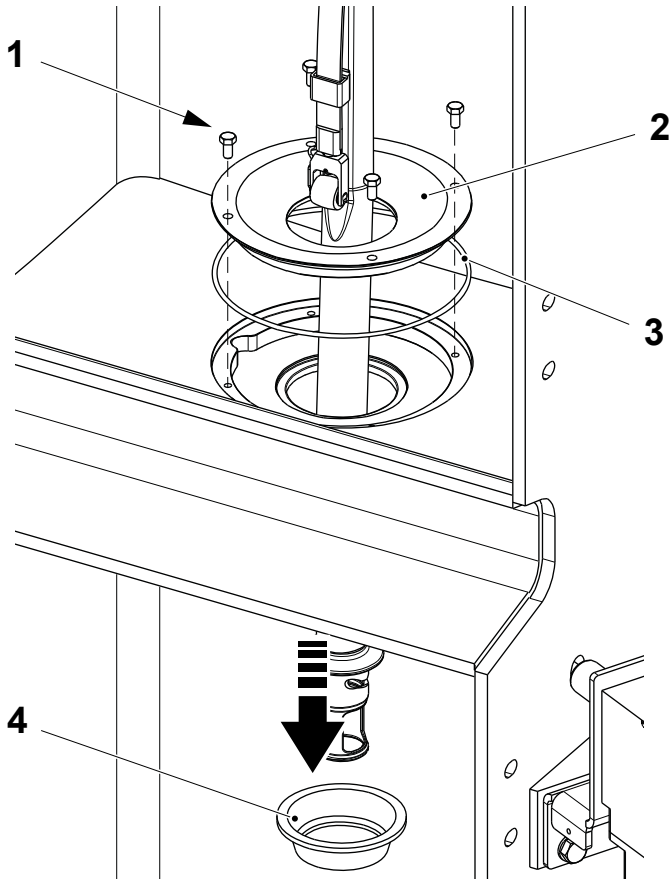

1 Screw
2 Flange
3 O-Ring
4 Seal

(Cont'd)

TechPub_2614345_0108 - 0101_3048058_01.fm

(Cont'd)

d) Fit back the flange (2) the O-ring (3) and tighten the screws (1).

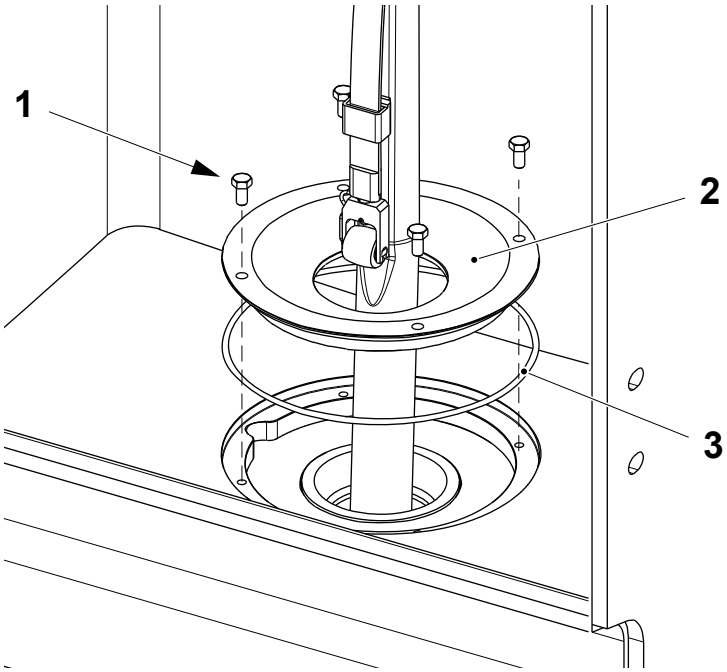

1 Screw
2 Flange
3 O-Ring

(Cont'd)

TechPub_2614345_0108 - 0101_3048058_01.fm

(Cont'd)

e) Loosen the three stud screws (5).

f) Fit the template (6) on the flange (7) with the captive screws (8).

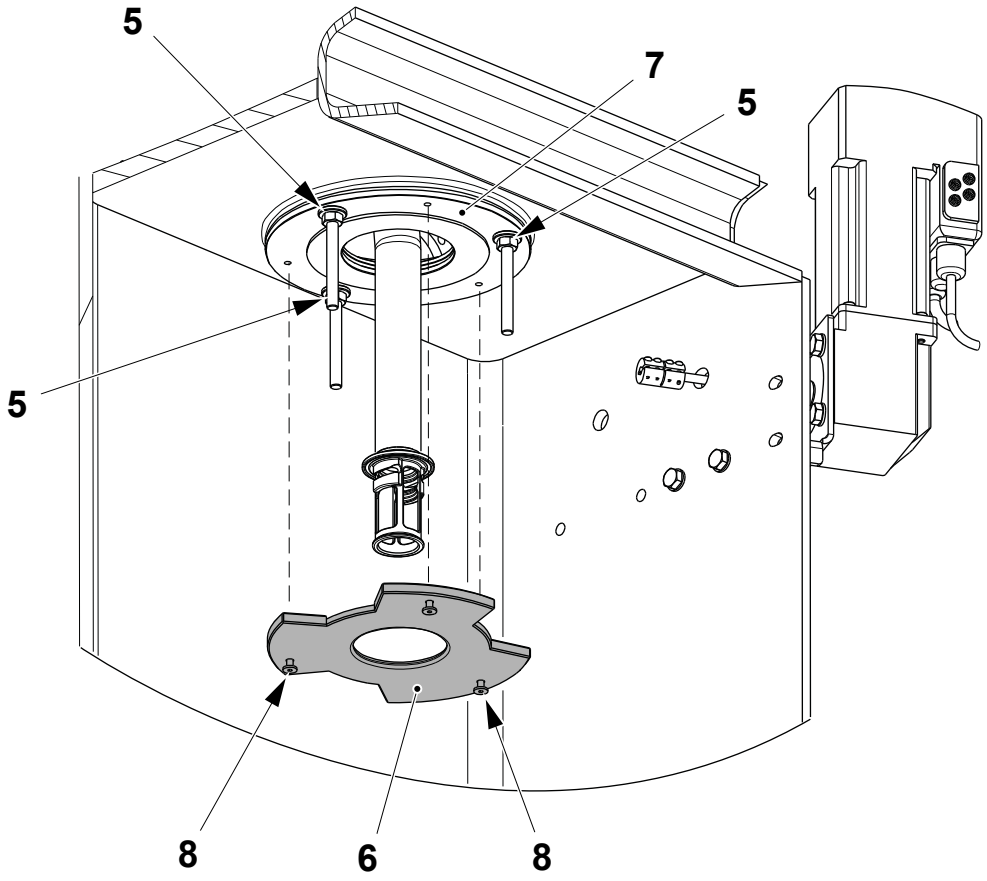

5 Stud screw
6 Template
7 Flange
8 Captive screw

(Cont'd)

TechPub_2614345_0108 - 0101_3048058_01.fm

(Cont'd)

g) Thread the packaging material tube and step up the machine to PRODUCTION.

h) While the machine is running, let the flange (7) self-adjust with the position of the packaging material tube.

i) Stop the machine and tighten the three stud screws (5).

j) Cut the packaging material tube and remove the template (6).

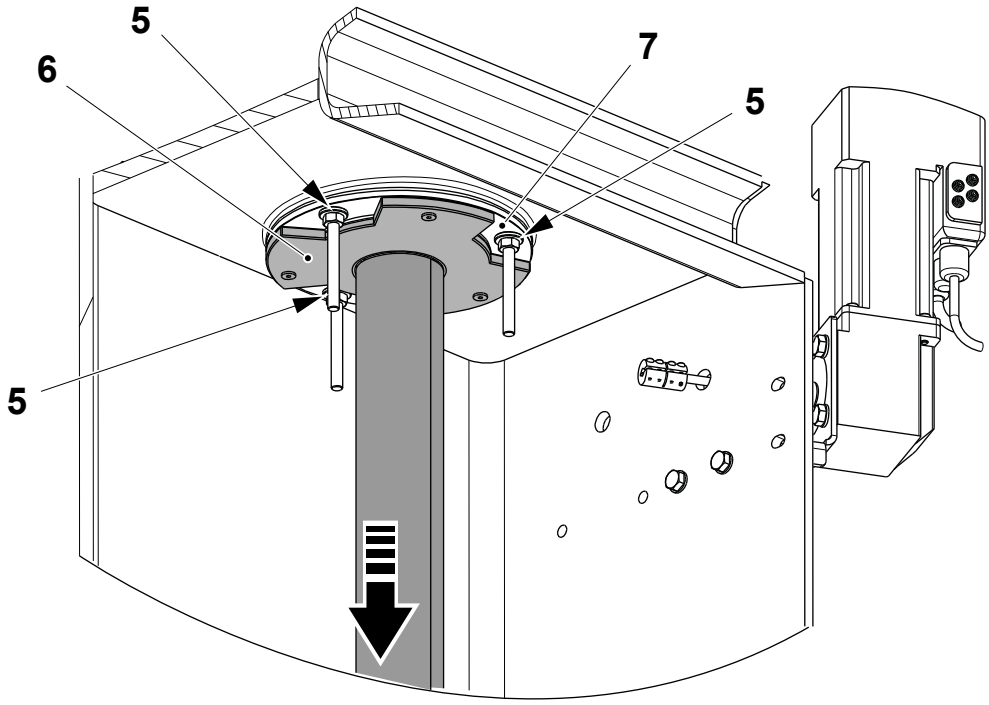

5 Stud screw
6 Template
7 Flange

(Cont'd)

TechPub_2614345_0108 - 0101_3048058_01.fm

(Cont'd)

k) Remove the screws (1), the flange (2) and the O-ring (3).

l) Fit back the seal (4) inserting it from the bottom.

m) Fit back the flange (2) the O-ring (3) and tighten the screws (1).

n) Fit back the steering ring, see 1.2.7-1 Steering Ring - Overhaul.

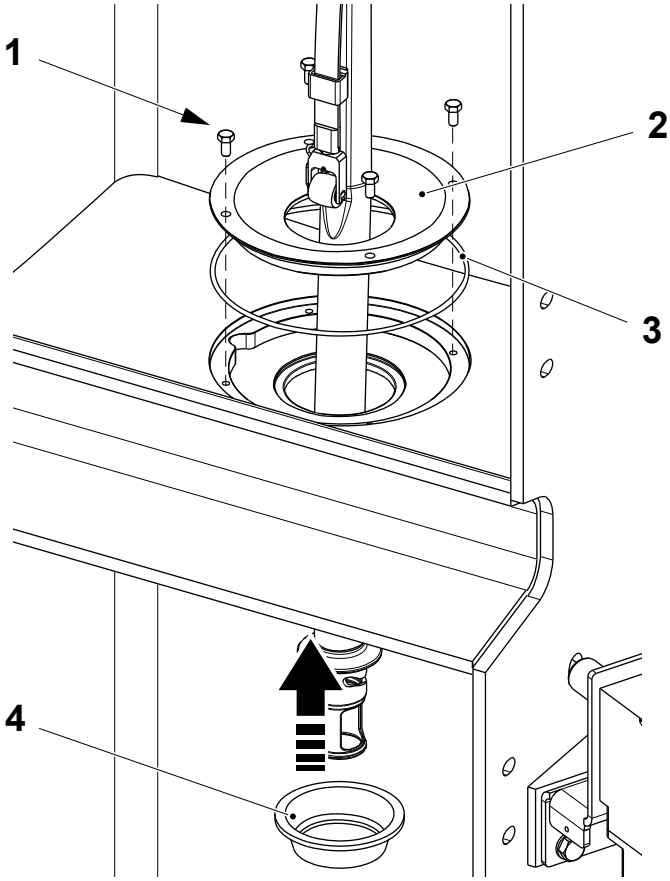

1 Screw
2 Flange
3 O-Ring
4 Seal

TechPub_2614345_0108 - 0101_3048058_01.fm

1.2.7 Steering Ring

SPC Reference	2876047-0100

1.2.7-1 Steering Ring - Overhaul

Machine Status	Mains Power OFF Air OFF Steam ON Water OFF
SPC Reference	2876047-0100

a) Remove the lower filling pipe from the filling machine, see 1.5.1-2 Filling Pipe - Remove.

b) Loosen the screws (1) and slide the coupling (2) along the shaft (3) to release the steering ring (4).

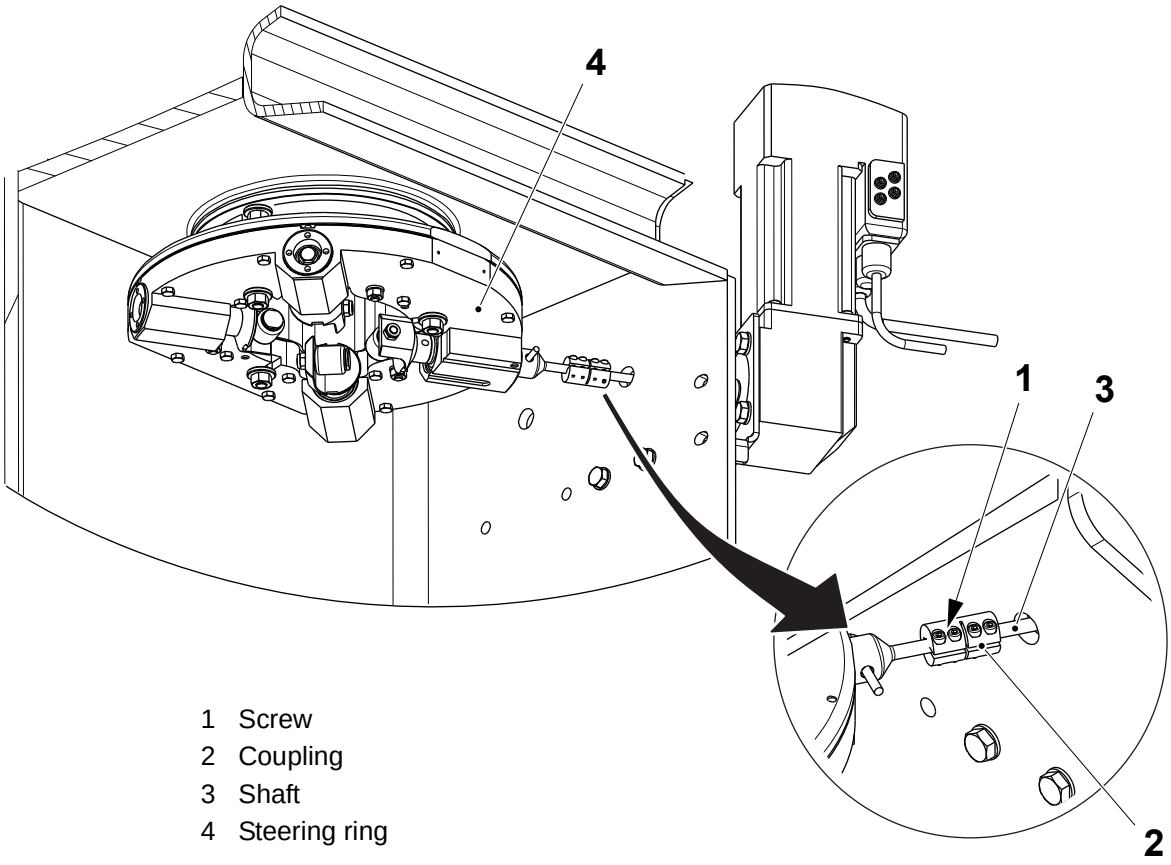

1 Screw
2 Coupling
3 Shaft
4 Steering ring

(Cont'd)

TechPub_2614345_0108 - 0102_3048059_01.fm

(Cont'd)

c) Remove the steering ring (4) by the three nuts (5) and move it on the work bench.

Note! Do not loosen the stud screws (6) to not lose the position setting of the seal ring (7).

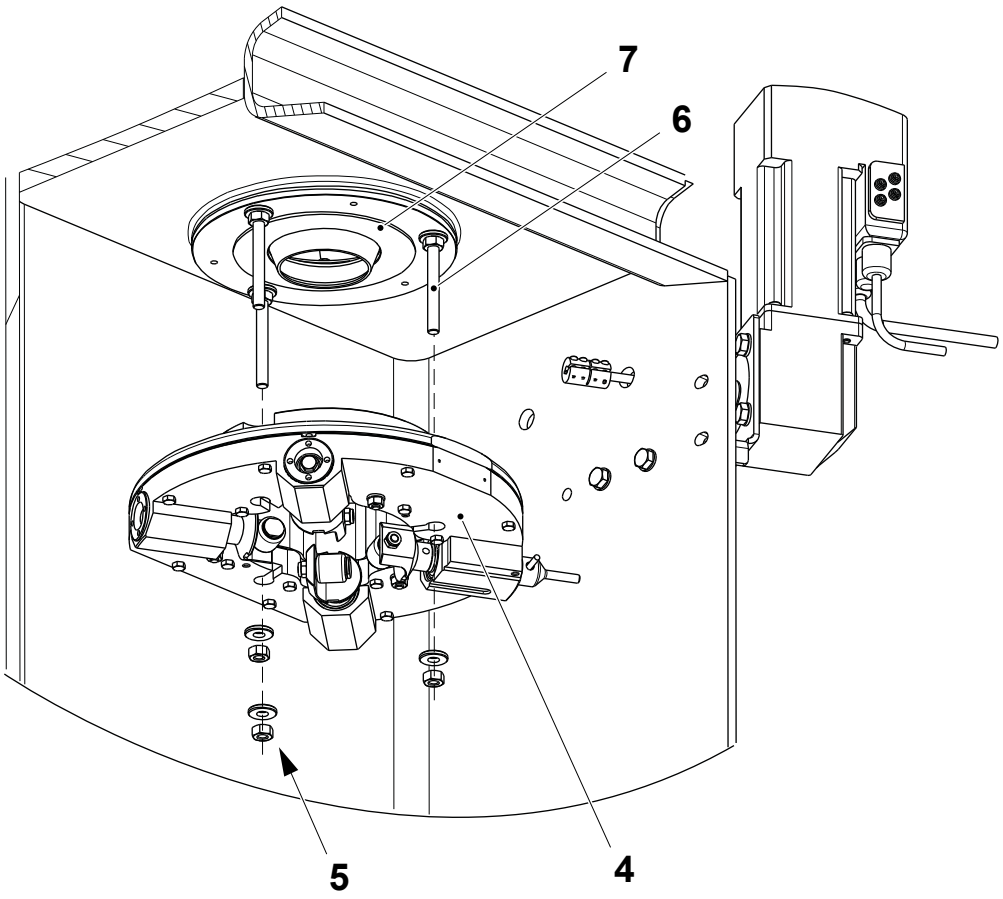

4 Steering ring
5 Nut
6 Stud screw
7 Seal ring

(Cont'd)

TechPub_2614345_0108 - 0102_3048059_01.fm

(Cont'd)

d) On each of the roller assemblies of the steering ring (4), remove the nut (8).

e) Remove the shaft (9) and the bushings (10).

f) Remove the roller (11).

g) Change the rollers (11) and the bushings (10)

h) Assemble in the reverse order.

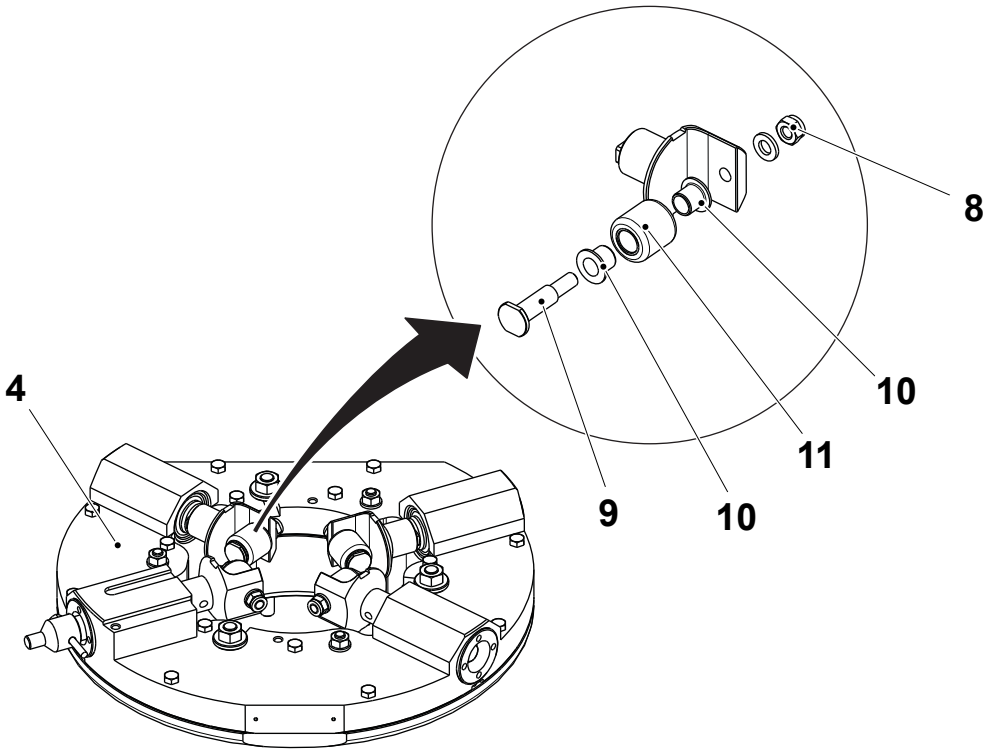

4 Steering ring
8 Nut
9 Shaft
10 Bushing
11 Roller

TechPub_2614345_0108 - 0102_3048059_01.fm

1.2.7-2 Steering Ring - Set Rollers

Machine Status	Mains Power OFF Air OFF Steam ON Water OFF
Special Equipment	Pin Spanner Setting Template, see 10.2 Templates and Tools
SPC Reference	2876047-0100

a) Remove the steering ring, see 1.2.7-1 Steering Ring - Overhaul, steps a) to c) and move it on the work bench.

(Cont'd)

TechPub_2614345_0108 - 0102_3048059_01.fm

(Cont'd)

b) Loosen the stop screws (1).

c) Fit the template (2) to the steering ring (3).

d) To set the position of the rollers (4) proceed as follows:

– turn the flanges (5) by means of the pin spanner (6) until all the rollers (4) are slightly touching the template (2).

e) Tighten the stop screws (1).

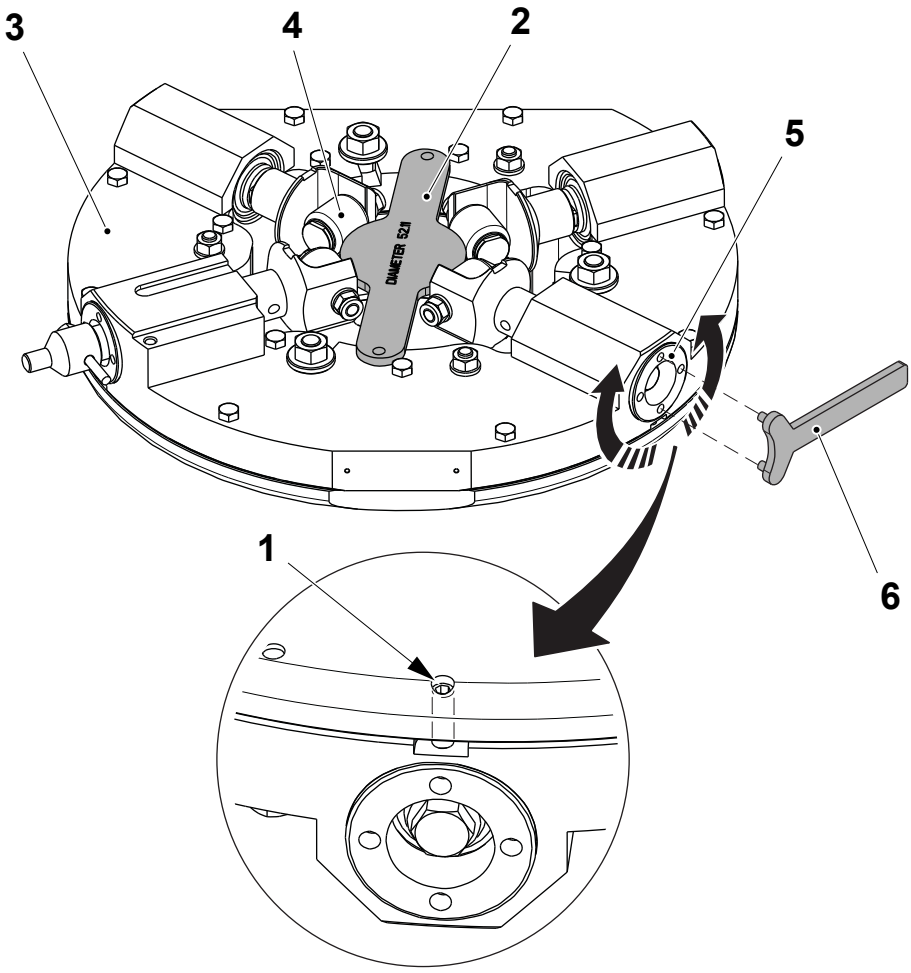

1 Stop screw
2 Template
3 Steering ring
4 Roller
5 Flange
6 Pin spanner

TechPub_2614345_0108 - 0102_3048059_01.fm

1.2.7-3 Steering Ring - Change Motor

Machine Status	Mains Power OFF Air OFF Steam ON Water OFF
SPC Reference	2876047-0100

a) Disconnect the power supply cable and the DeviceNet cable on the motor (1) according to the EM.

b) Loosen the screws (2) to release the coupling (3).

c) Remove the screws (4) and extract the motor (1).

d) Remove the shaft (5) and change the motor (1).

e) Assemble in the reverse order.

f) Reference the motor, see 1.2.7-4 Steering Ring - Reference Motor.

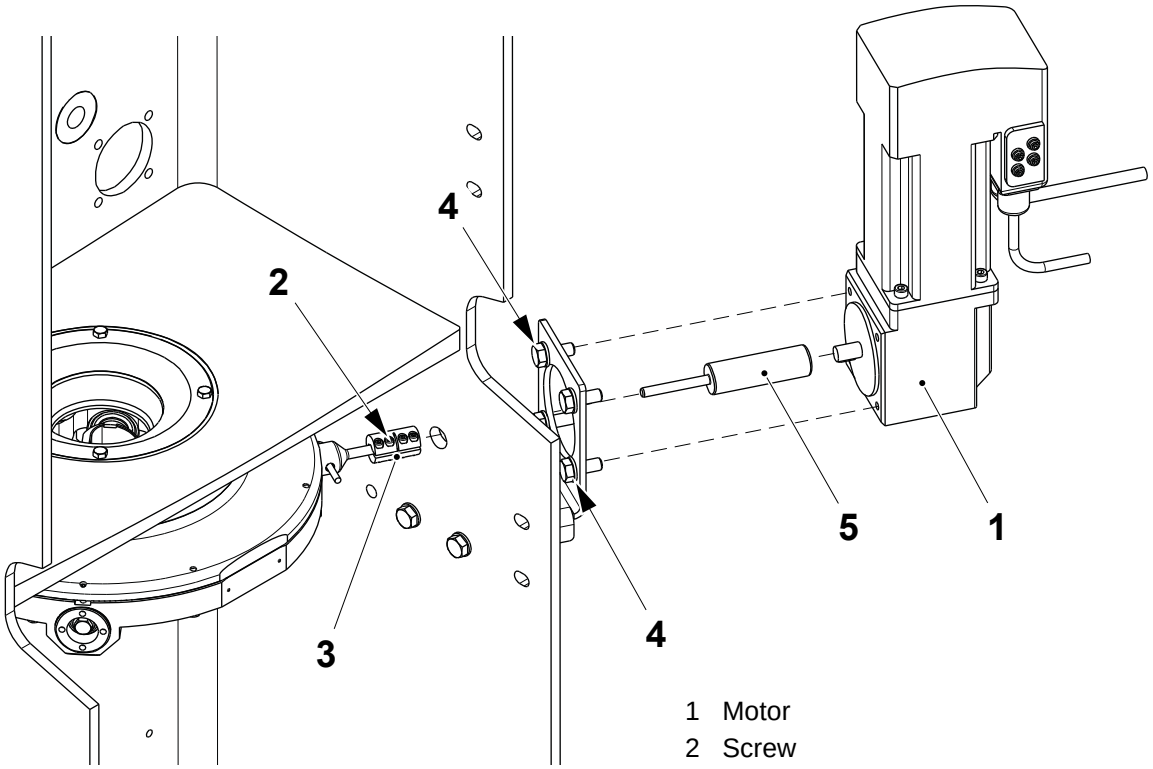

1 Motor
2 Screw
3 Coupling
4 Screw
5 Shaft

TechPub_2614345_0108 - 0102_3048059_01.fm

1.2.7-4 Steering Ring - Reference Motor

Machine Status	PREPARATION
SPC Reference	2876047-0100

In the event of a new PLC program download or the steering ring motor has been changed or if the steering ring has been overhauled the steering ring motor must be referenced, follow the procedure below:

a) On the TPOP display touch the PRODUCTION CONTROL button (1).

b) Touch the TUBE FORMING UNIT button (2) to display the TUBE FORMING UNIT window.

c) Touch the HOME TUBE STEERING icon (3). The ON/OFF buttons are displayed.

d) Touch the ON button (4) to move the steering ring in home position.

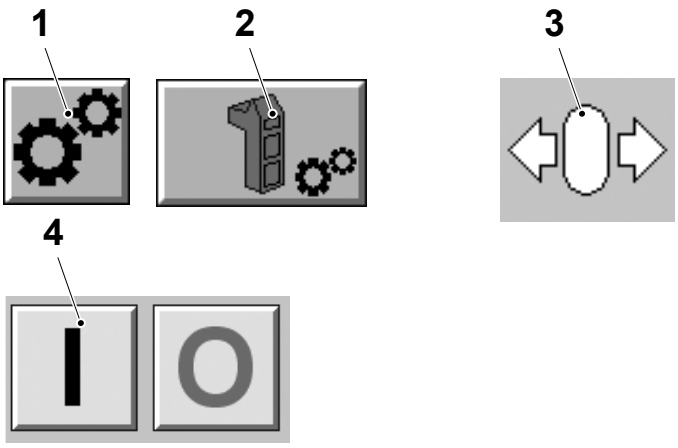

1 Production control button
2 Tube forming unit button
3 Home tube steering icon
4 ON button

TechPub_2614345_0108 - 0102_3048059_01.fm

1.2.7-5 Steering Ring - Manual Control

Machine Status	PRODUCTION
SPC Reference	2876047-0100

Note! In case of servo motor malfunction it is possible to move manually the the steering ring.

a) On the TPOP, touch the MAINTENANCE CONTROL button (1) and enter the password required, see 9.6.1-2 HMI User Management - Log On as a User.

b) Touch the TUBE FORMING UNIT button (2).

c) Touch the DISABLE TUBE STEERING DEVICE icon (3). The ON/OFF buttons are displayed.

d) Touch the OFF button (4) and the OK button (5) to disable the control via TPOP.

Note! The tube steering can be re-enabled when the jaw system is not running.

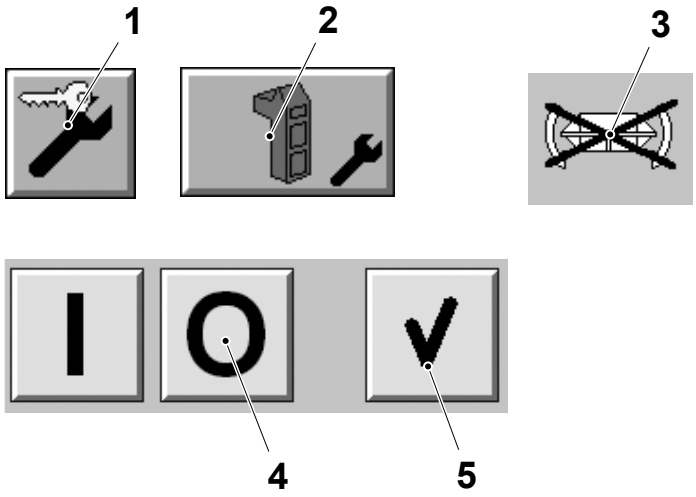

1 Maintenance control button
2 Tube forming unit button
3 Disable tube steering device icon
4 OFF button
5 OK button

(Cont'd)

TechPub_2614345_0108 - 0102_3048059_01.fm

(Cont'd)

e) Using a screwdriver rotate the jog plus and minus switches (6) attached to the cover plate at the back of the motor (7) to move the rollers (8) of the steering ring.

f) When the pin (9) is in horizontal position, the rollers (8) are in horizontal position and there is no torsion on the packaging material tube.

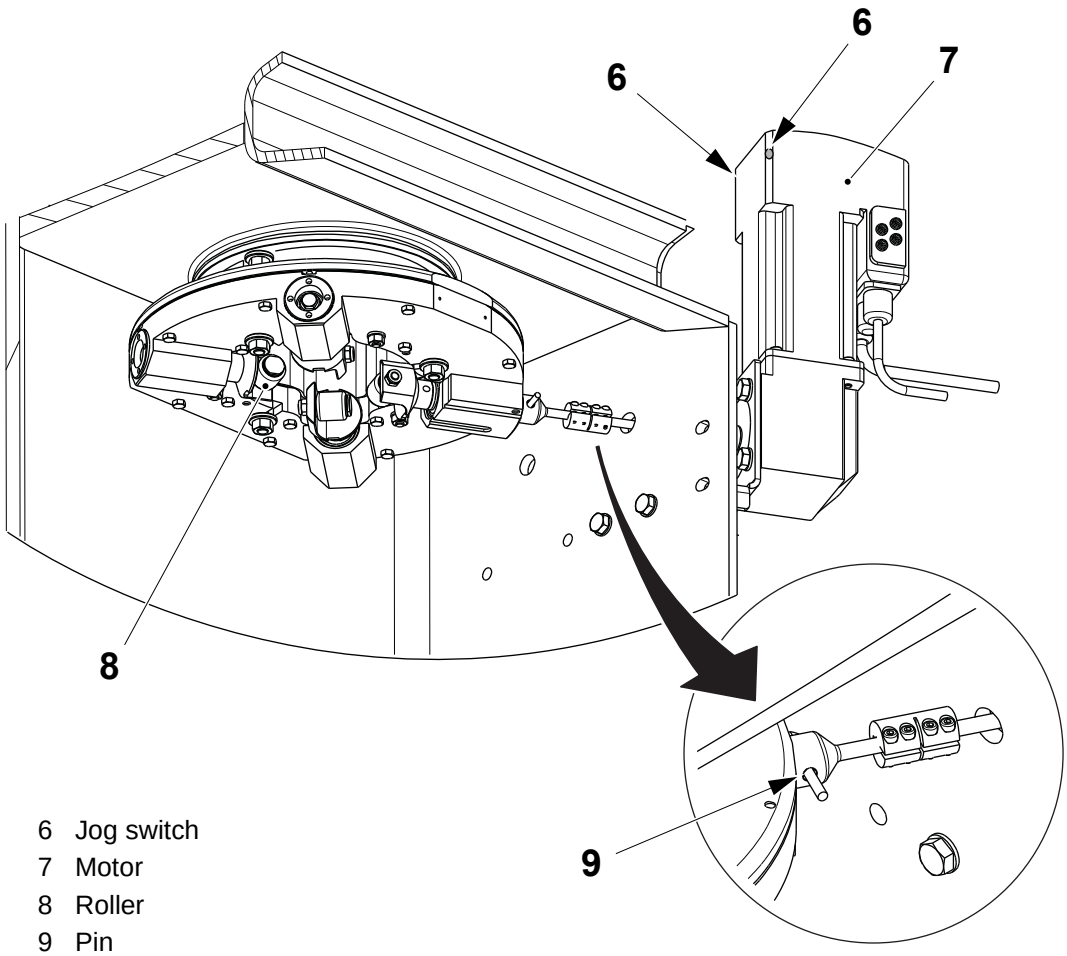

6 Jog switch
7 Motor
8 Roller
9 Pin

TechPub_2614345_0108 - 0102_3048059_01.fm

1.2.7-6 Steering Ring - Correct Tube Position

Machine Status	PRODUCTION
SPC Reference	2876047-0100

Pick out a formed package and check that the creases are opposite one another, see Package Checks in the OM. If not, adjust the position of the sealed tube as follows:

a) Touch the PRODUCTION CONTROL button (1).

b) Touch the TUBE FORMING UNIT button (2).

c) Touch the TUBE STEERING OFFSET icon (3). The TUBE STEERING OFFSET key pad is displayed.

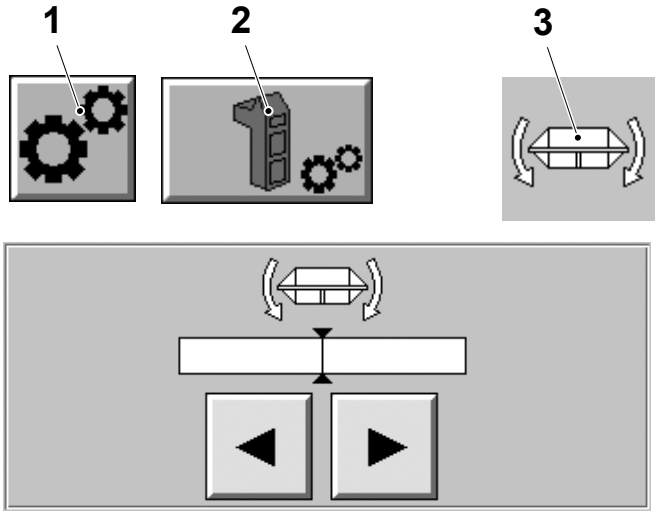

1 Production control button
2 Tube forming unit button
3 Tube steering offset icon

(Cont'd)

TechPub_2614345_0108 - 0102_3048059_01.fm

(Cont'd)

d) Check the top of the package:
   - if the creases are misaligned as in the example **A**, the tube must be rotated **clockwise**: use the RH side ARROW button (4) to change step by step the tube rotation
   - if the creases are misaligned as in the example **B**, the tube must be rotated **counterclockwise**: use the LH side ARROW button (5) to change step by step the tube rotation.

Note! The working range goes from -8 to +8 steps.

e) Pick out a package and repeat the procedure until the best alignment is obtained.

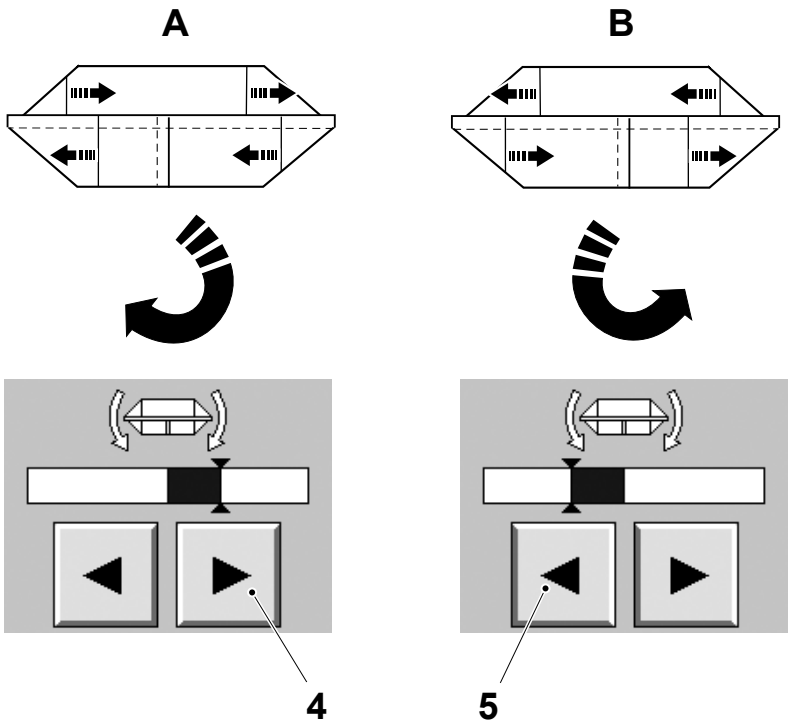

4 RH side arrow button
5 LH side arrow button

TechPub_2614345_0108 - 0102_3048059_01.fm

1.3 Drying Chamber

SPC Reference	2788634-0200

1.3-1 Drying Chamber - Check Rollers

Machine Status	Mains Power OFF Air OFF Steam ON Water OFF
SPC Reference	2788634-0200

WARNING
Hydrogen Peroxide.
Follow the Safety Precautions.

(Cont'd)

TechPub_2614345_0108 - 0101_3048060_01.fm

(Cont'd)

Check the following rollers for wear or damage:

- the bending roller (1). Change if necessary, see 1.3.11-1 Bending - Change Roller
- the calender roller (2). Change if necessary, see 1.3.4-2 Calender Roller - Change
- the squee-gee roller (3). Change if necessary, see 1.3.10-1 Squee-gee Roller - Change

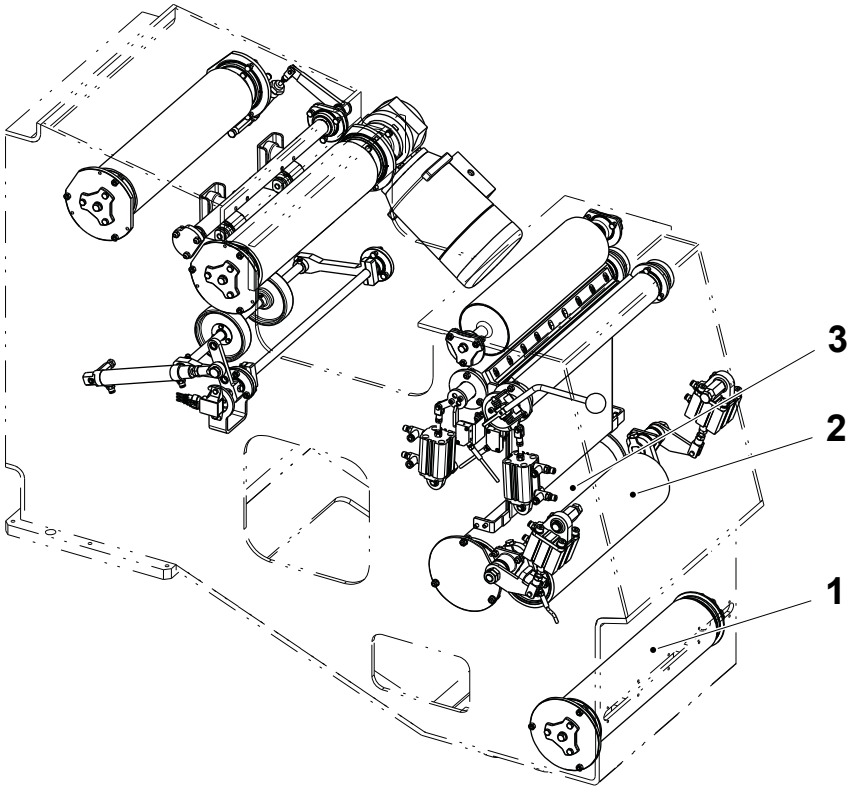

1 Bending roller
2 Calender roller
3 Squee-gee roller

(Cont'd)

TechPub_2614345_0108 - 0101_3048060_01.fm

(Cont'd)

- the bending roller (4). Change if necessary, see 1.3.2-1 Bending Roller - Change
- the drive roller (5). Change if necessary, see 1.3.3-2 Drive Roller - Change
- the pendulum roller (6). See 1.3.8-1 Pendulum Roller - Check.
- the bending roller (7). Change if necessary, see 1.3.6-1 Bending Roller - Change

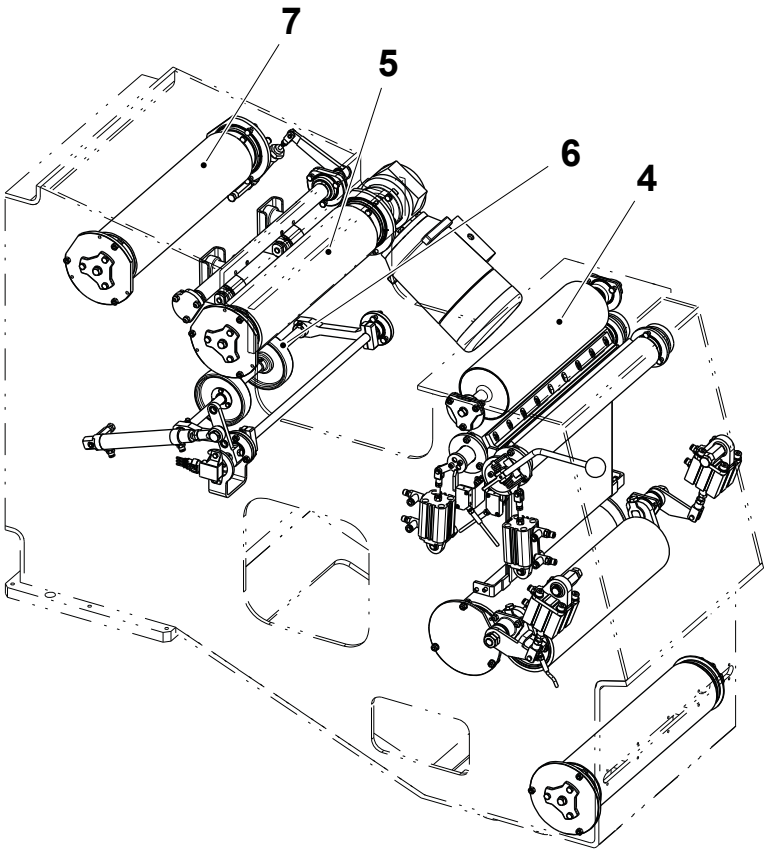

4 Bending roller
5 Drive roller
6 Pendulum roller
7 Bending roller

TechPub_2614345_0108 - 0101_3048060_01.fm

1.3-2 Drying Chamber - Leakage Detection

Machine Status	PRODUCTION
Special Equipment	Leak Finding Equipment TP No. 533014-0100
SPC Reference	2788634-0200

WARNING
Hydrogen Peroxide.
Follow the Safety Precautions.

a) Operate the machine in PRODUCTION and perform a SHORT STOP.

b) Step down the machine to ZERO with the packaging material tube filled with product. If possible let the machine cool down.

c) Check the overlap, see 1.2.1-3 Lower Forming Ring - Set Overlap.

(Cont'd)

TechPub_2614345_0108 - 0101_3048060_01.fm

(Cont'd)

d) Remove the plug from the threaded hole (1) and insert the pressure gauge hose (2) into the threaded hole (1).

e) Remove the plug from the threaded hole (3) and insert the flow meter hose (4) to into the threaded hole (3) on the column (5).

f) Connect the hose (6) from the equipment for finding leakages to a compressed air line.

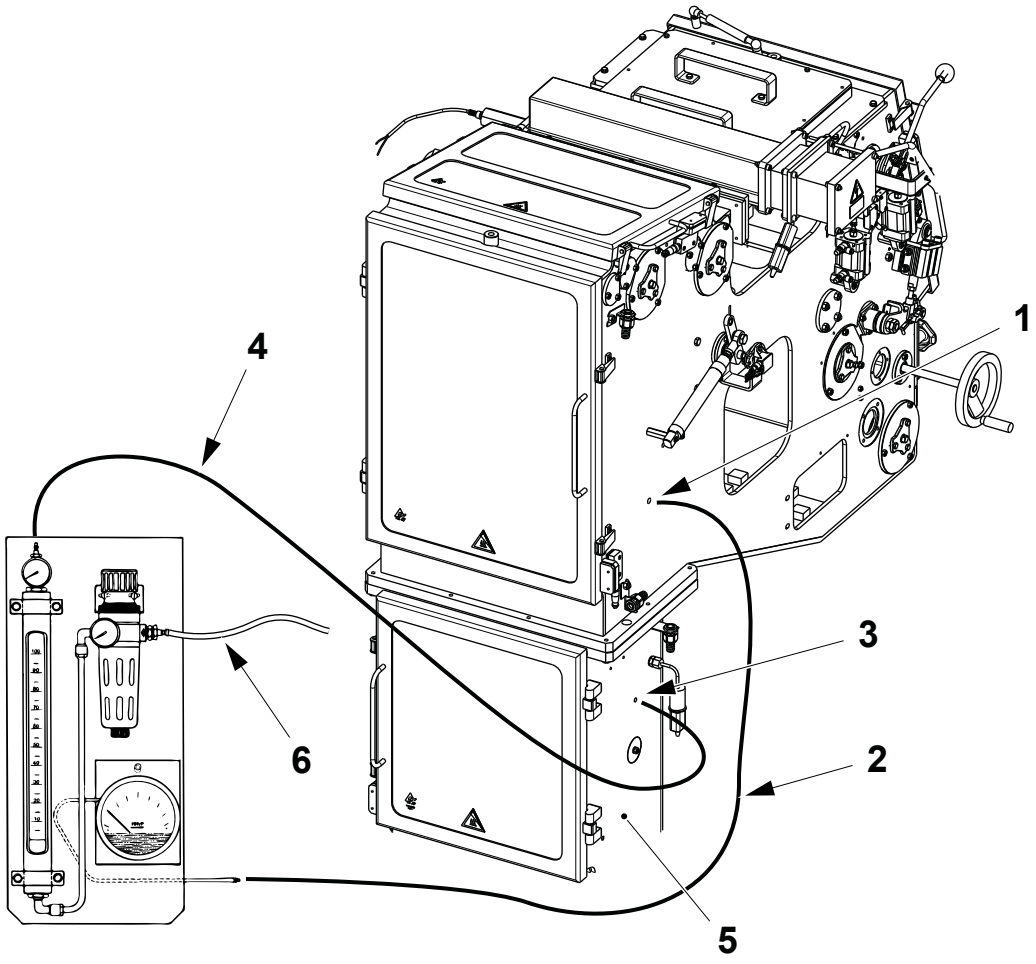

1 Threaded hole
2 Hose
3 Threaded hole
4 Hose
5 Column
6 Hose

(Cont'd)

TechPub_2614345_0108 - 0101_3048060_01.fm

(Cont'd)

CAUTION
Risk of damage to the equipment.
High pressure in the aseptic chamber may damage the pressure sensor (8). Disconnect the hose (7) before operating the leak finding equipment.

g) Disconnect the hose (7) marked with the plus sign from the pressure sensor (8) on the plate (9).

h) Bend the end of the hose (7) and clench it by a strip.

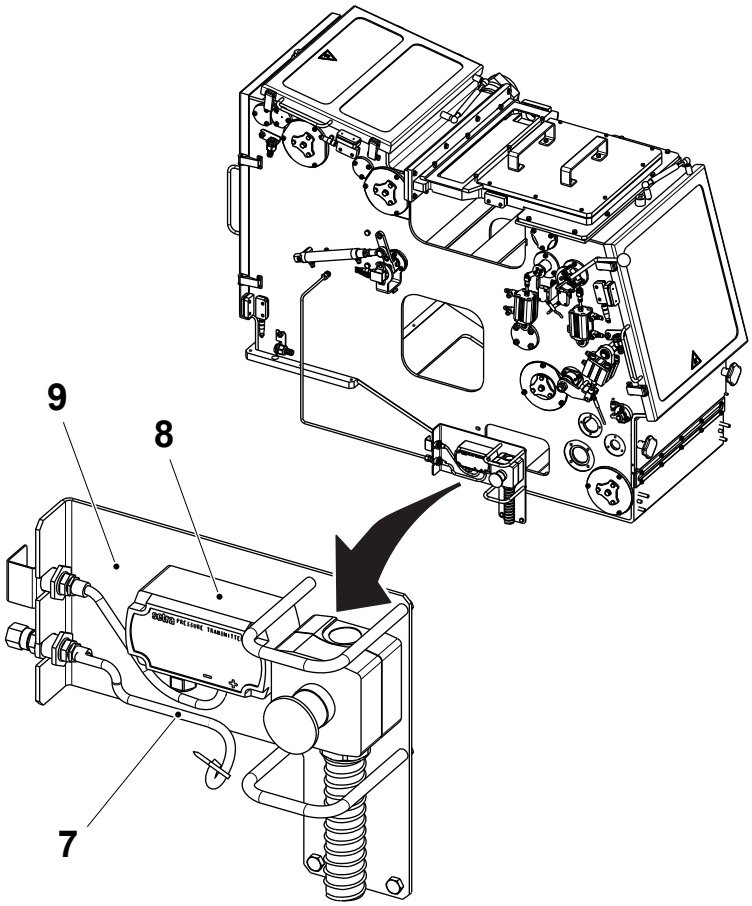

7 Hose
8 Pressure sensor
9 Plate

(Cont'd)

TechPub_2614345_0108 - 0101_3048060_01.fm

(Cont'd)

Note! Clamp the drainage hose from the electrical cabinet cooler(s).

i) Check that all connections and screws in the drying chamber are tight.

j) Check the door locks, the door hinges and the micro switch, so that the sealing is properly tight and no leaks occur.

k) Check the drying chamber seals. See also 1.2.6-1 Seal - Check and 1.3.1-1 Frame Housing - Check Seal and Gasket.

(Cont'd)

TechPub_2614345_0108 - 0101_3048060_01.fm

(Cont'd)

l) Close the valves (10), (11) and (12) in the dilution tank.

m) Slowly open the pressure regulator (14) until 200 Pa (20 mm WC) is reached on the pressure gauge (13).

n) Read the flow F% on the flow meter (15) and the pressure P2 on the pressure gauge (16).

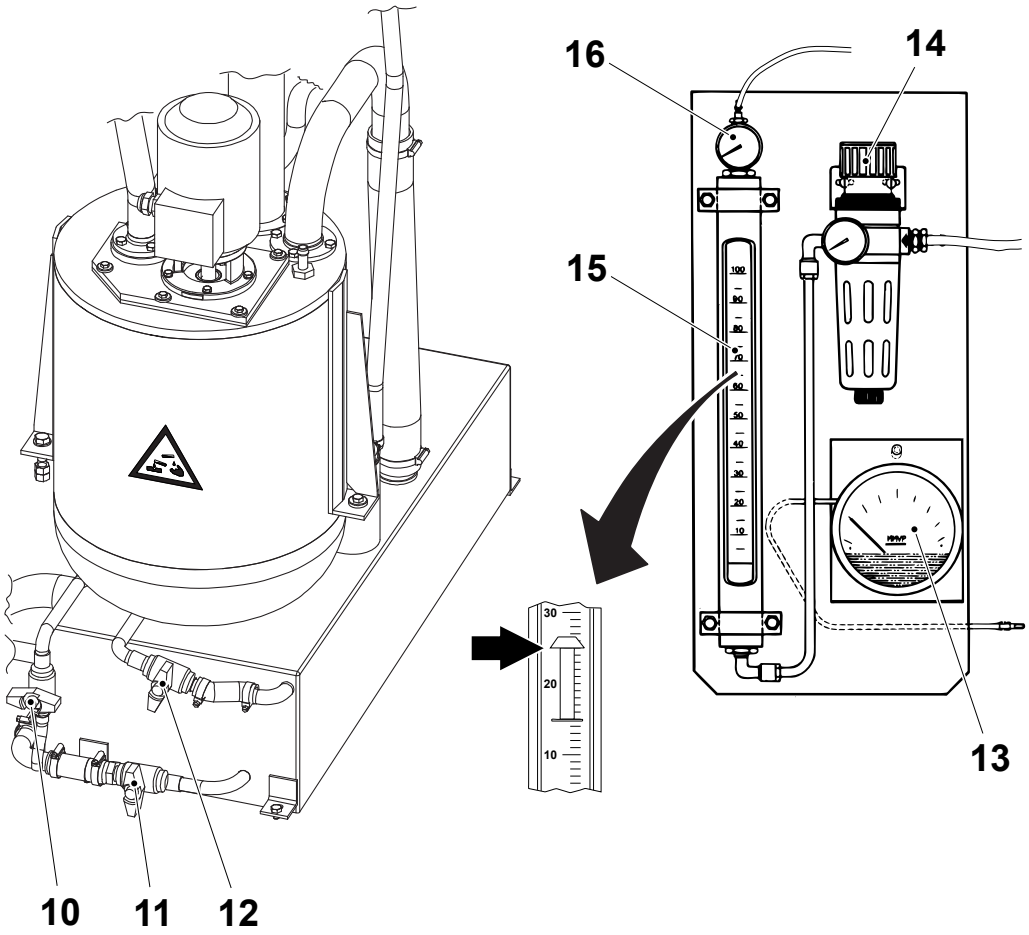

10 Valve
11 Valve
12 Valve
13 Pressure gauge
14 Pressure regulator
15 Flow meter
16 Pressure gauge

(Cont'd)

TechPub_2614345_0108 - 0101_3048060_01.fm

(Cont'd)

o) Enter the values on the diagram and read the leakage Q. The maximum leakage allowed is 3m3/h.

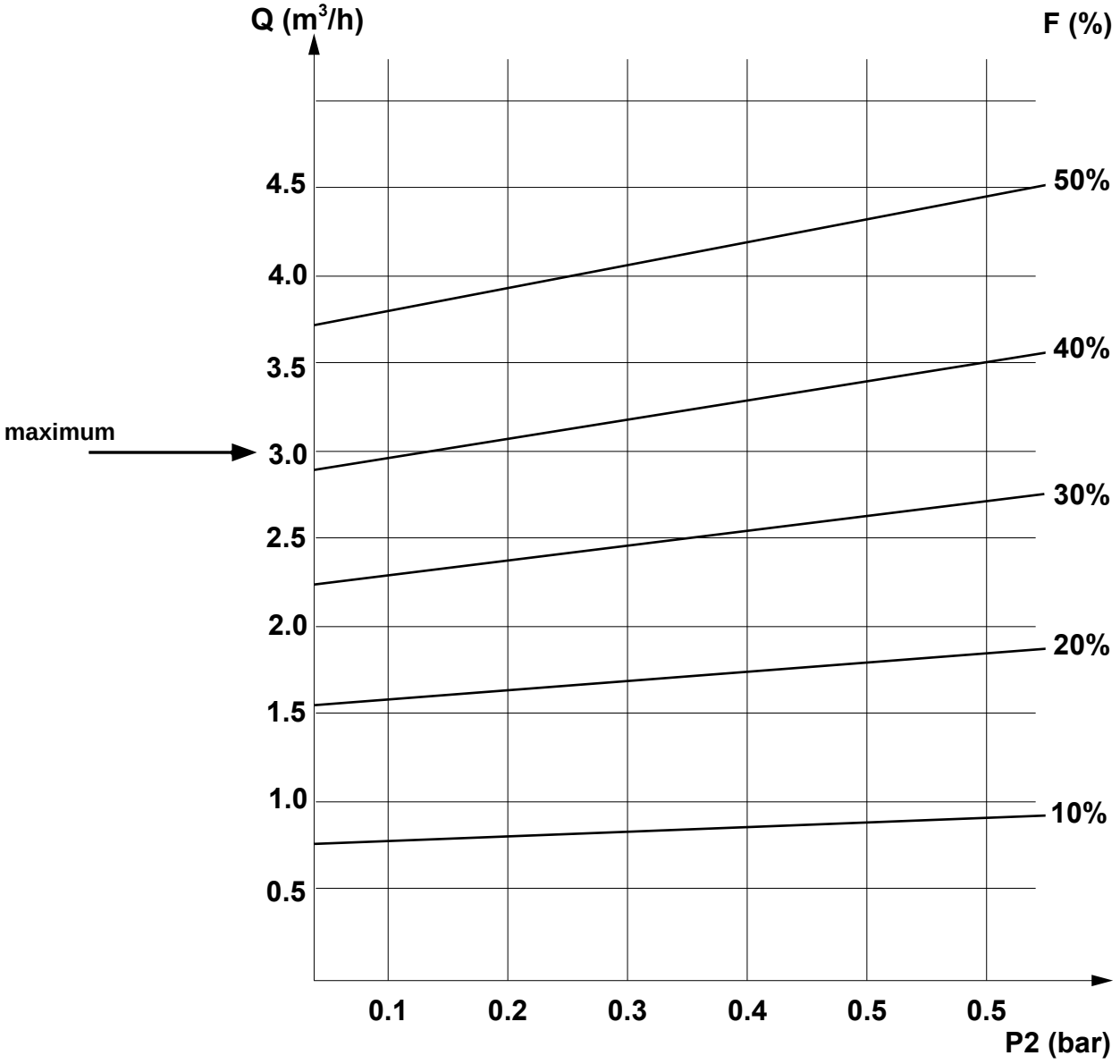

(Cont'd)

TechPub_2614345_0108 - 0101_3048060_01.fm

(Cont'd)

p) If the maximum allowed leakage is exceeded, check tightness at the following points:
   - the safety lids in the hydrogen peroxide tank
   - the door seals of the drying chamber
   - the plug holes in the drying chamber
   - the chain seals in the drier
   - the bath entry seal; change if necessary; see 1.3.1-2 Frame Housing - Change Seal and Gasket
   - the seal in the pillar; see 1.2.6-1 Seal - Check.

q) If not, disconnect the equipment for finding leaks.

(Cont'd)

TechPub_2614345_0108 - 0101_3048060_01.fm

(Cont'd)

r) Connect the hose (7) marked with the plus sign to the pressure sensor (8).

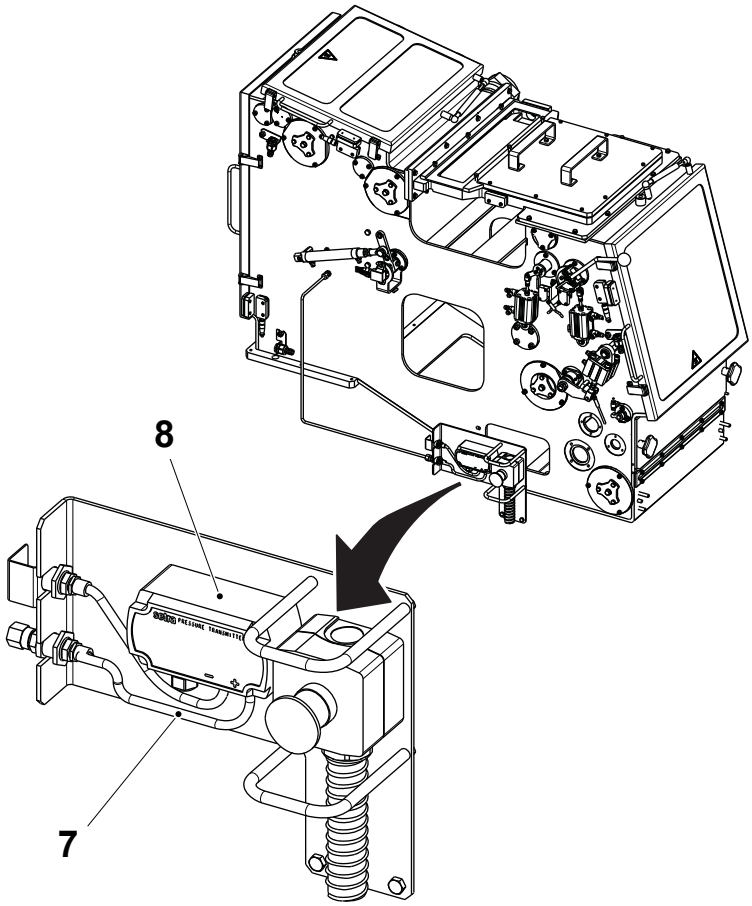

7 Hose
8 Pressure sensor

TechPub_2614345_0108 - 0101_3048060_01.fm

1.3-3 Drying Chamber - Check Aseptic Chamber Overpressure

Machine Status	PRODUCTION
SPC Reference	2788634-0200

WARNING
Hydrogen Peroxide.
Follow the Safety Precautions.

a) Check the environmental seal, see 1.2.6-1 Seal - Check.

b) Touch the PRODUCTION CONTROL button (1) on the filling machine TPOP screen.

c) Touch the STERILE AIR SYSTEM button (2).

d) Touch the ASEPTIC CHAMBER AIR PRESSURE icon (3) to display the ASEPTIC CHAMBER AIR PRESSURE monitor (4).

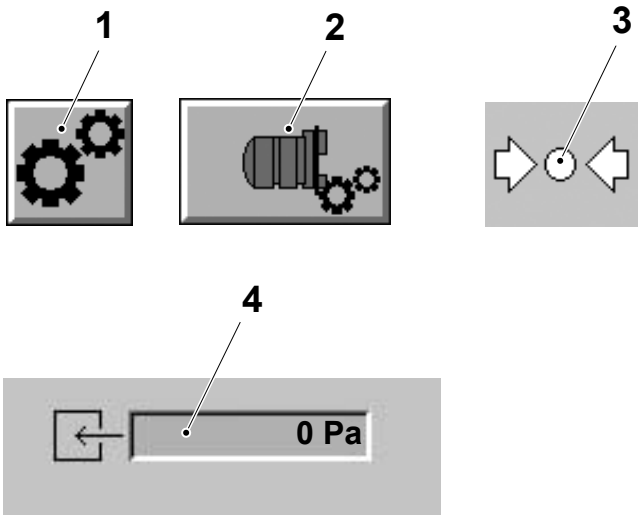

1 Production control button
2 Sterile air system button
3 Aseptic chamber air pressure icon
4 Aseptic chamber air pressure monitor

(Cont'd)

TechPub_2614345_0108 - 0101_3048060_01.fm

(Cont'd)

Note! If the correct overpressure in the aseptic chamber (5) cannot be obtained, check with the equipment for tracing leakage, see 1.3-2 Drying Chamber - Leakage Detection.

e) Check that the pressure on the TPOP for the aseptic chamber (5) is as follows:
   - When the machine is in SHORT STOP the overpressure should be within the range of 350 - 800 Pa.
   - When the machine is in PRODUCTION the overpressure should be within the range of 250 - 650 Pa.

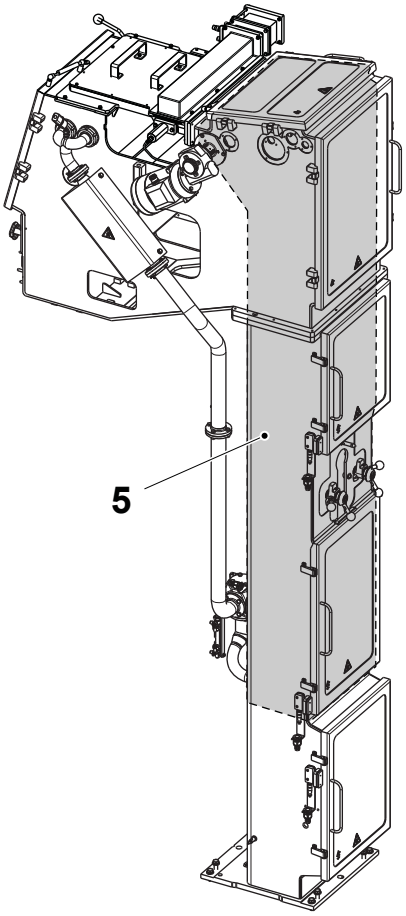

5 Aseptic chamber

TechPub_2614345_0108 - 0101_3048060_01.fm

1.3-4 Drying Chamber - Set Overpressure

Machine Status	PRODUCTION
Special Equipment	Pressure gauge
SPC Reference	2788634-0200

WARNING
Hydrogen Peroxide.
Follow the Safety Precautions.

Remove the screw (1) supporting the holder (2) and connect the pressure gauge (3) to the threaded hole by an hose connection.

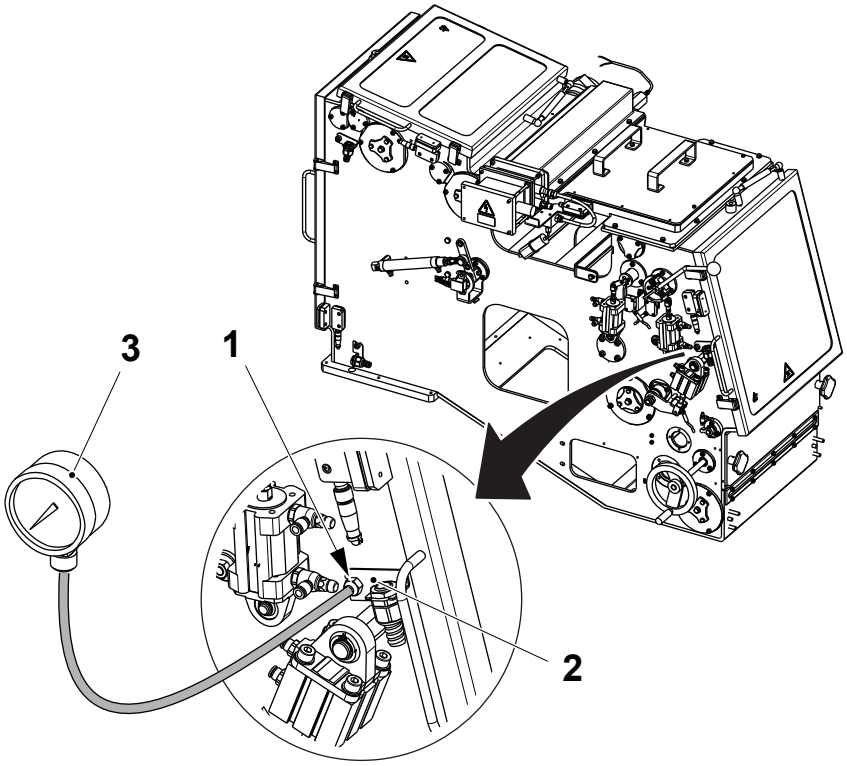

1 Screw
2 Holder
3 Pressure gauge

(Cont'd)

TechPub_2614345_0108 - 0101_3048060_01.fm

(Cont'd)

Check that the pressure of the drying compartment (4) is 100 ±50 Pa. If not, set the overpressure as follows:

a) Loosen the screw (5).

b) Adjust the angle of the shaft (6) with the stop screw (7).
   - If the pressure is too high, the valve (8) should be open more.
   - If the pressure is too low, the valve (8) should be closed more.

c) Tighten the screw (5).

d) Check that the cylinder (9) can still close the valve (8) completely.

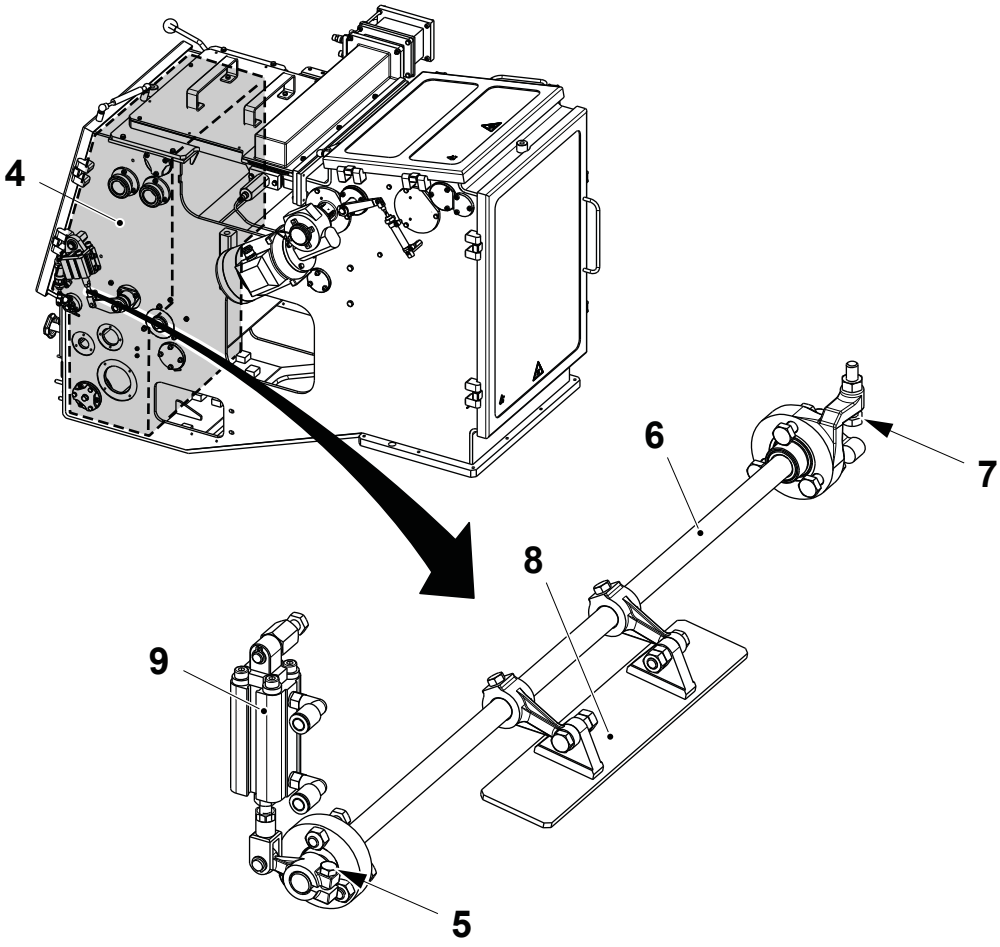

4 Drying compartment
5 Screw
6 Shaft
7 Stop screw
8 Valve
9 Cylinder

TechPub_2614345_0108 - 0101_3048060_01.fm

1.3.1 Frame Housing

1.3.1-1 Frame Housing - Check Seal and Gasket

Machine Status	Mains Power OFF Air OFF Steam ON Water OFF
SPC Reference	2783101-0200

WARNING
Hydrogen Peroxide.
Follow the Safety Precautions.

(Cont'd)

TechPub_2614345_0108 - 0101_3048061_01.fm

(Cont'd)

Check the following parts for wear or damage:

- the seal (1). Change it if necessary, see 1.3.1-2 Frame Housing - Change Seal and Gasket
- the gasket (2). Change it if necessary, see 1.3.1-2 Frame Housing - Change Seal and Gasket
- the lid (3). Make sure that the lid (3) is securely fitted against the pillar by the two handles (4). Make sure that there is no packaging material residue. Clean if necessary.

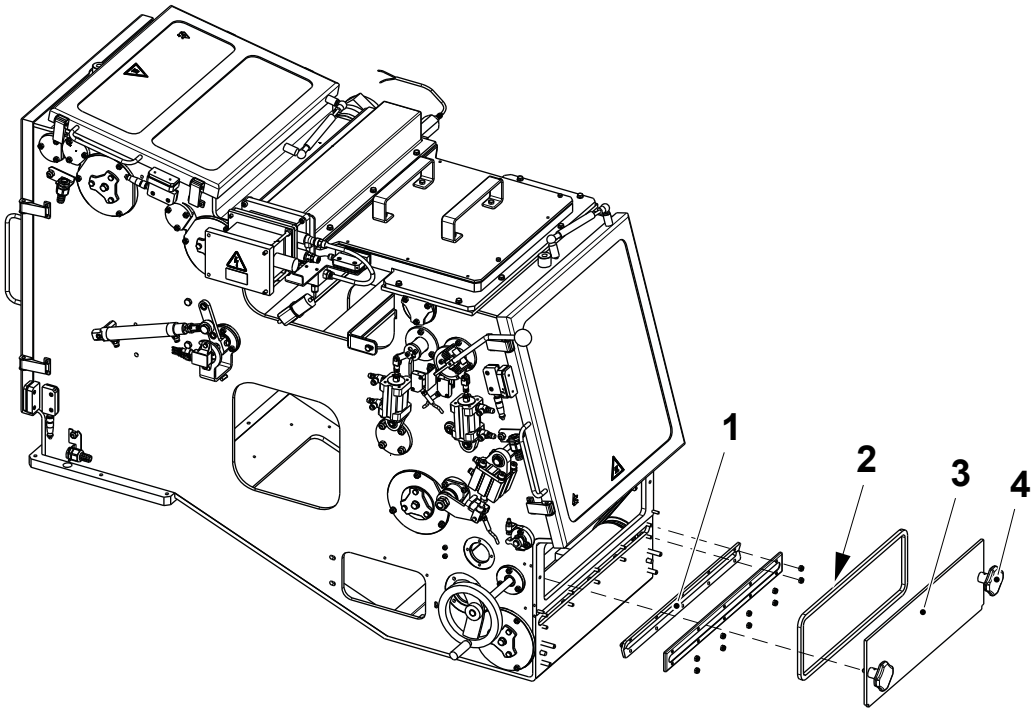

1 Seal
2 Gasket
3 Lid
4 Handle

TechPub_2614345_0108 - 0101_3048061_01.fm

1.3.1-2 Frame Housing - Change Seal and Gasket

Machine Status	Mains Power OFF Air OFF Steam ON Water OFF
SPC Reference	2783101-0200

WARNING

Hydrogen Peroxide.
Follow the Safety Precautions.

a) Remove the lid (1) by the handles (2).

b) Change the gasket (3).

c) Remove the cover (4).

d) Change the seal (5).

e) Assemble in the reverse order.

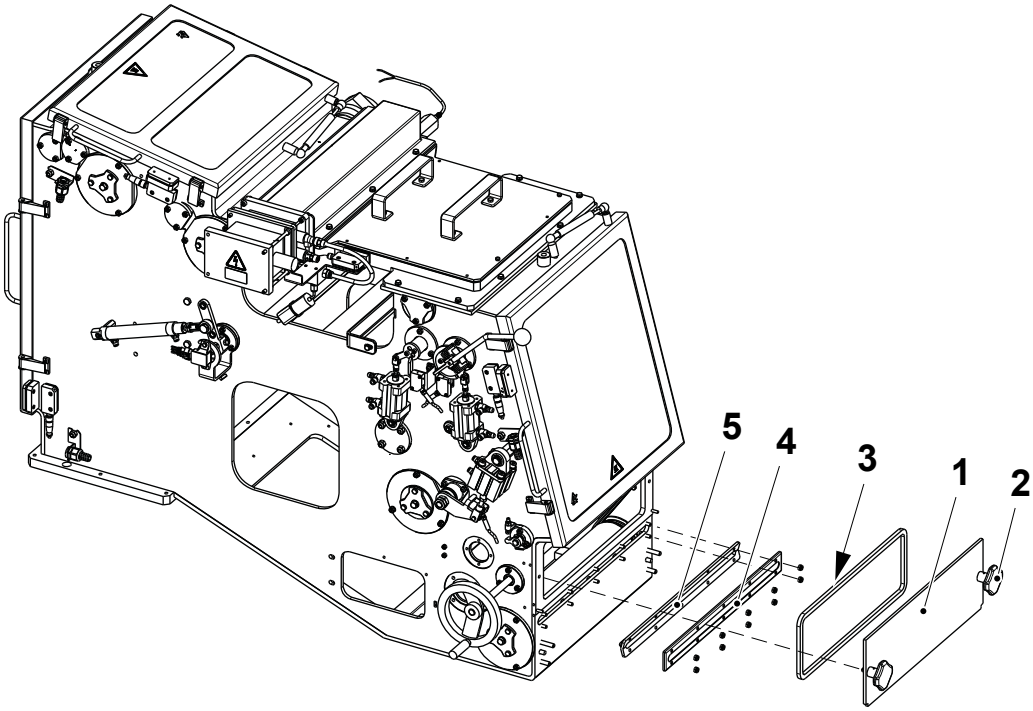

1 Lid
2 Handle
3 Gasket
4 Cover
5 Seal

TechPub_2614345_0108 - 0101_3048061_01.fm

1.3.1-3 Frame Housing - Clean Tunnel

Machine Status	Mains Power OFF Air OFF Steam ON Water OFF
SPC Reference	2783101-0200

DANGER

Hazardous voltage.
Make sure the main switch is OFF.

WARNING

Hydrogen Peroxide.
Follow the Safety Precautions.

a) Remove the irradiation kit (1), see 1.11.1-2 Irradiation Kit - Overhaul, steps a) to e).

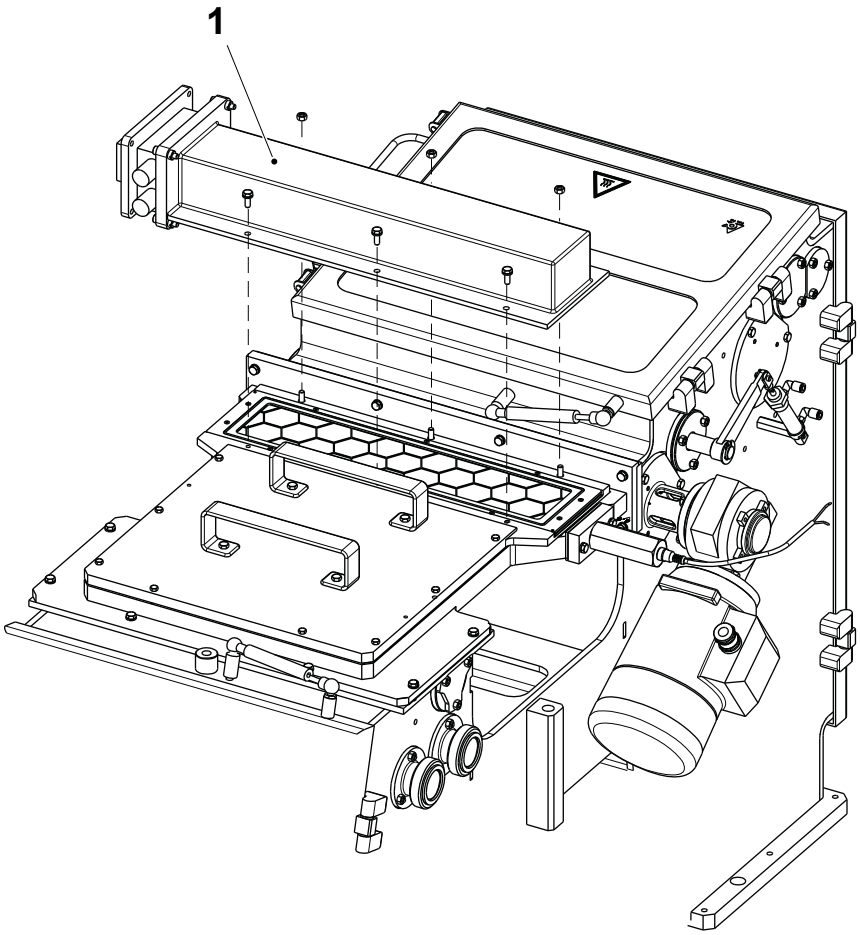

1 Irradiation kit

(Cont'd)

TechPub_2614345_0108 - 0101_3048061_01.fm

(Cont'd)

b) Remove the grid assembly (2) and move it on the work bench for maintenance.

c) Remove the lid (3) by the screws (4).

d) Clean the tunnel (5) and the area around the bending roller (6) from the residues of polyethylene, if present.

e) Check the gasket (7). Change if necessary.

f) Assemble in the reverse order.

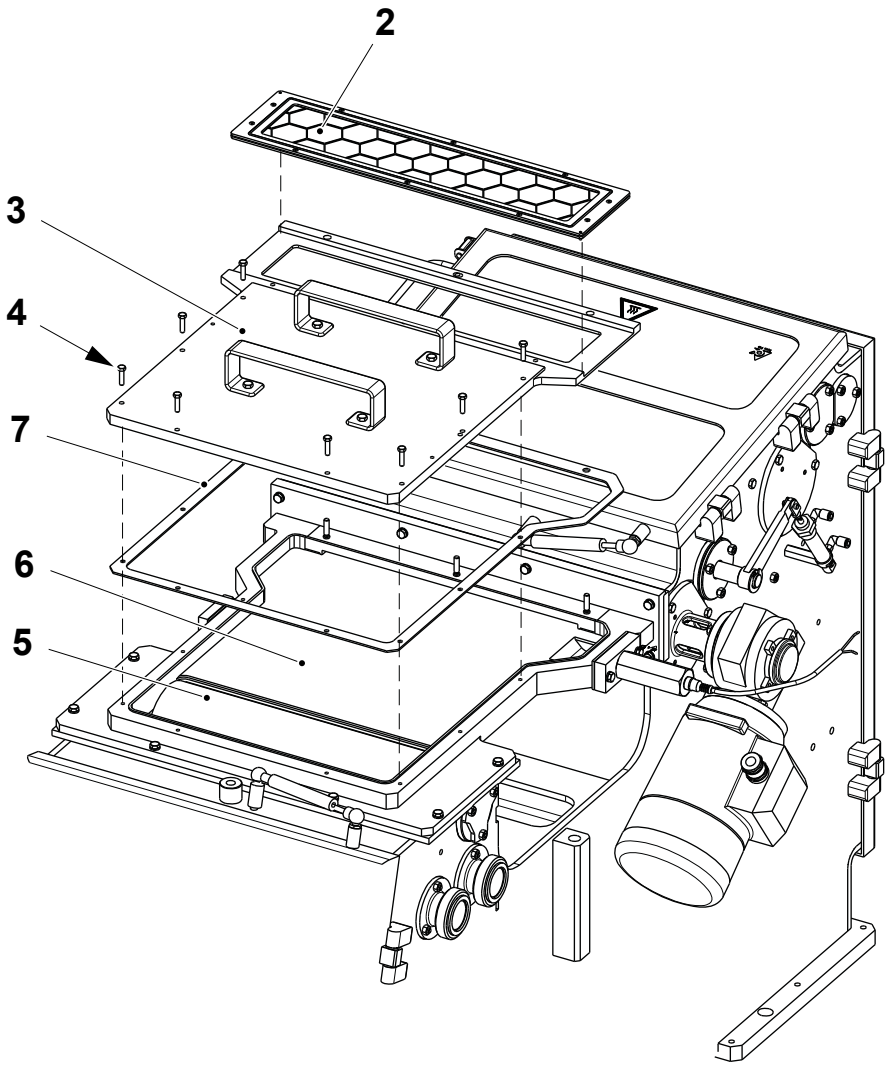

2 Grid assembly
3 Lid
4 Screw
5 Tunnel
6 Bending roller
7 Gasket

TechPub_2614345_0108 - 0101_3048061_01.fm

1.3.1-4 Frame Housing - Tunnel Overhaul

Machine Status	Mains Power OFF Air OFF Steam ON Water OFF
SPC Reference	2783101-0200

DANGER

Hazardous voltage.
Make sure the main switch is OFF.

WARNING

Hydrogen Peroxide.
Follow the Safety Precautions.

(Cont'd)

TechPub_2614345_0108 - 0101_3048061_01.fm

(Cont'd)

a) Remove the irradiation kit (1) and the lid (2), see 1.3.1-3 Frame Housing - Clean Tunnel.

b) Disconnect the radiometer (3).

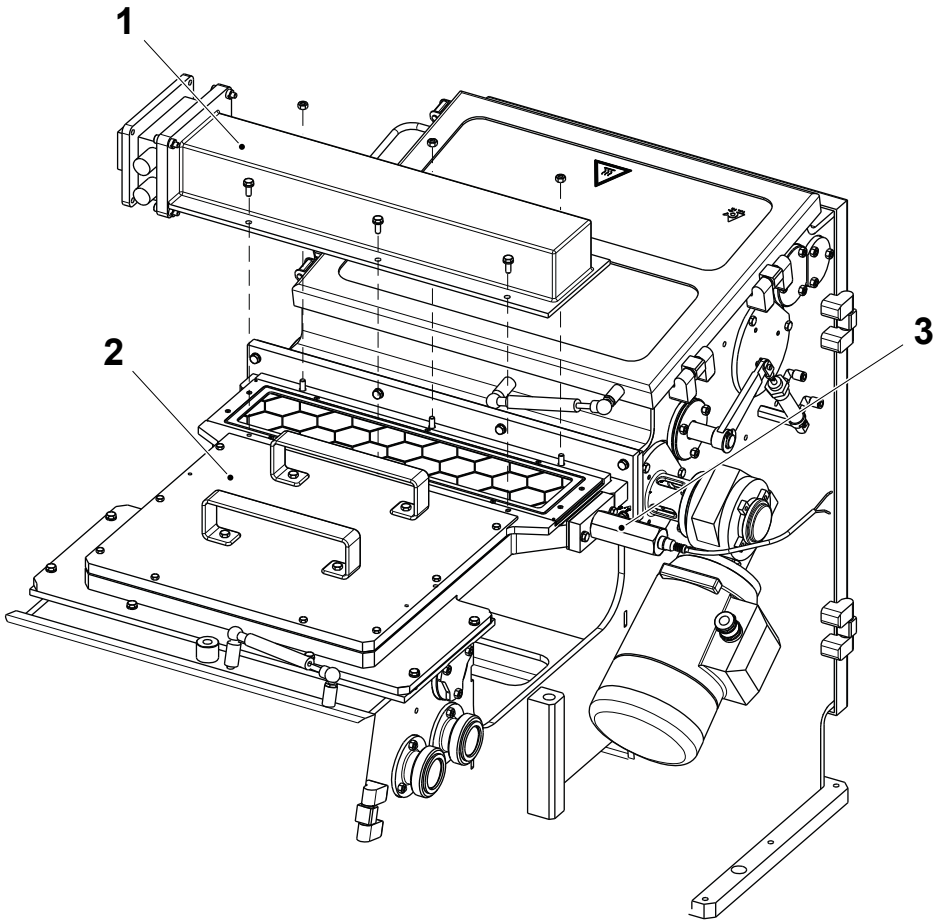

1 Irradiation kit
2 Lid
3 Radiometer

(Cont'd)

TechPub_2614345_0108 - 0101_3048061_01.fm

(Cont'd)

CAUTION
Risk of personal injury and/or damage to the equipment.
The tunnel assembly (7) weights 10 Kg about, move it carefully.

c) Remove the two screws (4) and the six screws (5).

d) Remove the eight screws (6) and remove the tunnel assembly (7).

e) Change the O-rings (8) and (9) if necessary.

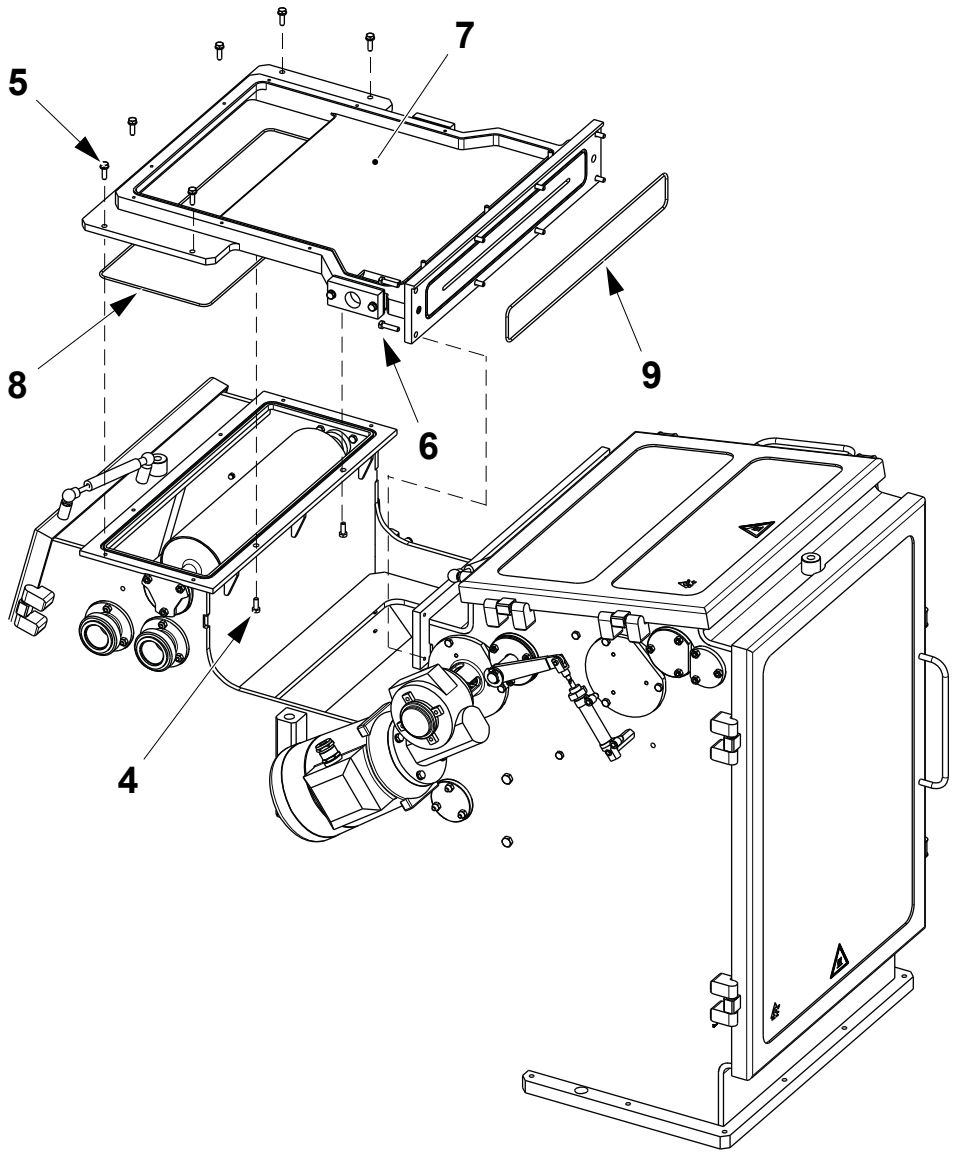

4 Screw
5 Screw
6 Screw
7 Tunnel assembly
8 O-ring
9 O-ring

(Cont'd)

TechPub_2614345_0108 - 0101_3048061_01.fm

(Cont'd)

f) Remove the screws (10) and the plate (11).
g) Change the gasket (12) if necessary.
h) Remove the screws (13) and the extract the plate (14).
i) Change the gaskets (15) if necessary.
j) Assemble in the reverse order.

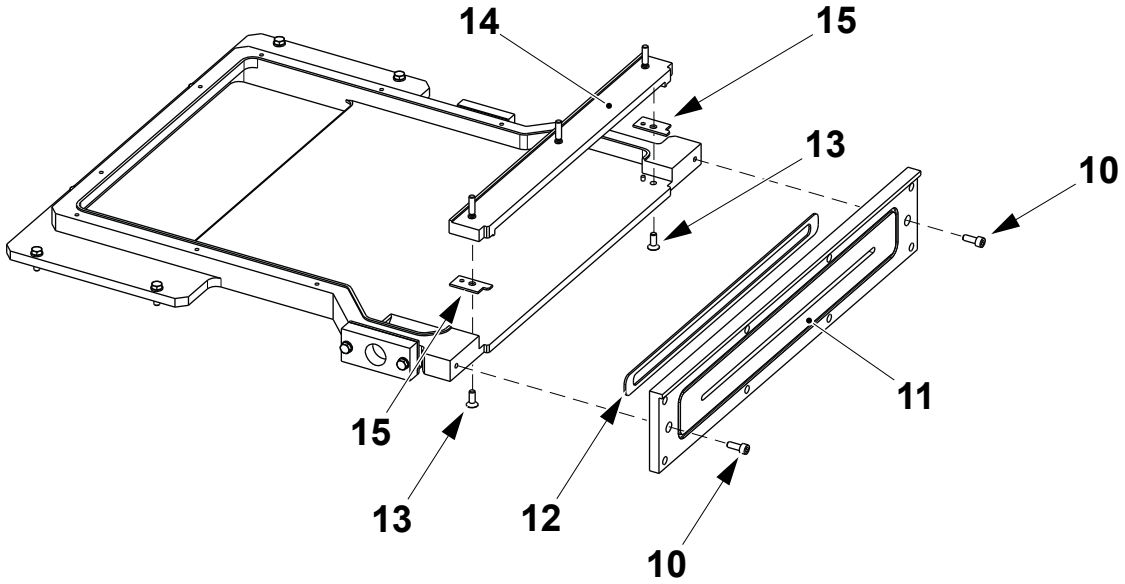

10 Screw
11 Plate
12 Gasket
13 Screw
14 Plate
15 Gasket

TechPub_2614345_0108 - 0101_3048061_01.fm

1.3.2 Bending Roller

1.3.2-1 Bending Roller - Change

Machine Status	Mains Power OFF Air OFF Steam ON Water OFF
Consumables	PTFE Grease TP No. 90296-0091
SPC Reference	2751510-0200

Note! Apply PTFE grease TP No. 90296-0091 on the ball bearing (4).

a) Remove the three nuts (1) and the lid (2).

b) Change the O-ring (3) if necessary.

c) Remove the ball bearing (4) and the sealing ring (5).

d) Remove the screws (6) and the flange (7).

e) Change the O-ring (8) if necessary.

f) Repeat the procedure at the opposite side and change the bending roller (9).

g) Assemble in the reverse order.

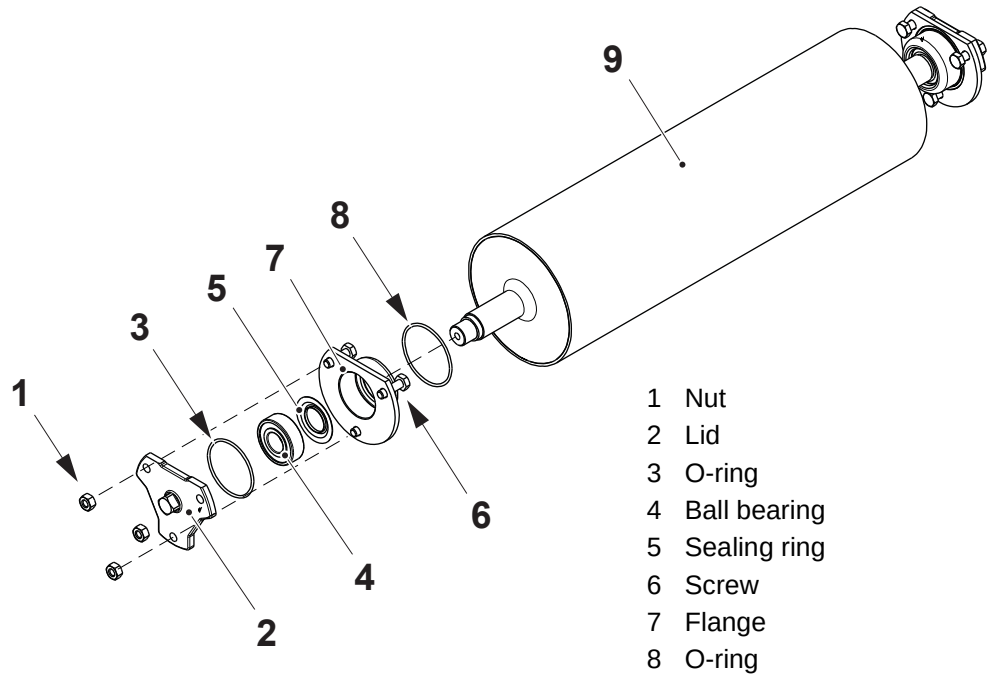

1 Nut
2 Lid
3 O-ring
4 Ball bearing
5 Sealing ring
6 Screw
7 Flange
8 O-ring
9 Roller

TechPub_2614345_0108 - 0101_3048062_01.fm

1.3.3 Drive Roller

1.3.3-1 Drive Roller - Check

Machine Status	Mains Power OFF Air OFF Steam ON Water OFF
SPC Reference	3006270-0200

Check the following parts for visual wear or damage:

- the drive motor (1) and gear (2) for abnormal noises
- the bending roller (3), check the rubber surface of the bending roller (3) for any marks. Also check for excessive play in the ball bearings by turning the bending roller (3) back and forwards.

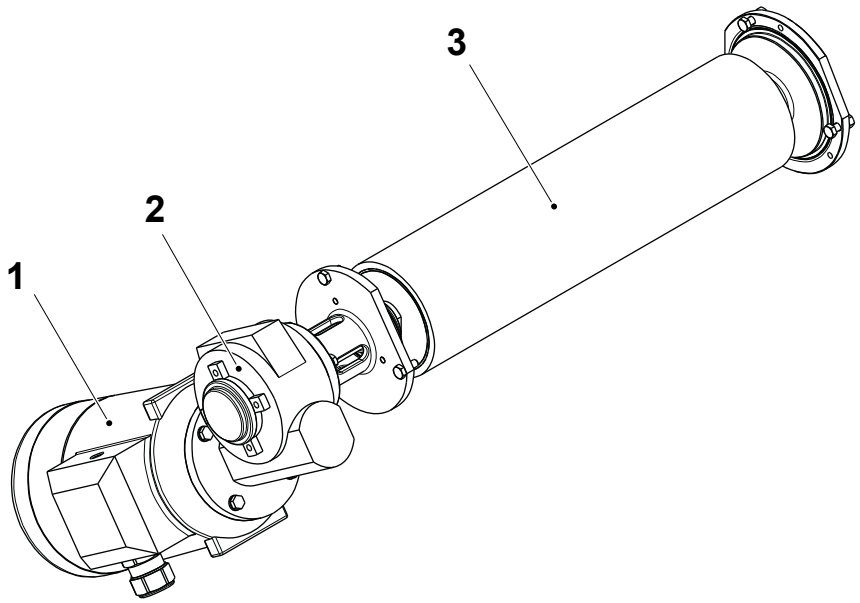

1 Drive motor
2 Gear
3 Bending roller

(Cont'd)

TechPub_2614345_0108 - 0101_3048063_01.fm

(Cont'd)

If the packaging material is slipping on the roller surface, remove the roller see 1.3.3-2 Drive Roller - Change and remove any layers of peroxide residue with a fine sand paper. Change damaged or worn parts if necessary.

Checking During PRODUCTION

Check that there are no drops of hydrogen peroxide on the packaging material after it has passed the calender rollers. If necessary see 1.3.4-3 Calender Roller - Set Distance or 1.3.4-2 Calender Roller - Change.

TechPub_2614345_0108 - 0101_3048063_01.fm

1.3.3-2 Drive Roller - Change

Machine Status	Mains Power OFF Air OFF Steam ON Water OFF
Consumables	PTFE Grease TP No. 90296-0091
SPC Reference	3006270-0200

Note! Apply PTFE grease TP No. 90296-0091 on the ball bearing (7).

a) Remove the screws (1) and the lid (2). Change the O-ring (3) if necessary.

b) Remove the screws and nuts (4) and remove the flange (5). Change the O-ring (6) if necessary.

c) Remove the ball bearings (7) and the sealing ring (8). Change if necessary

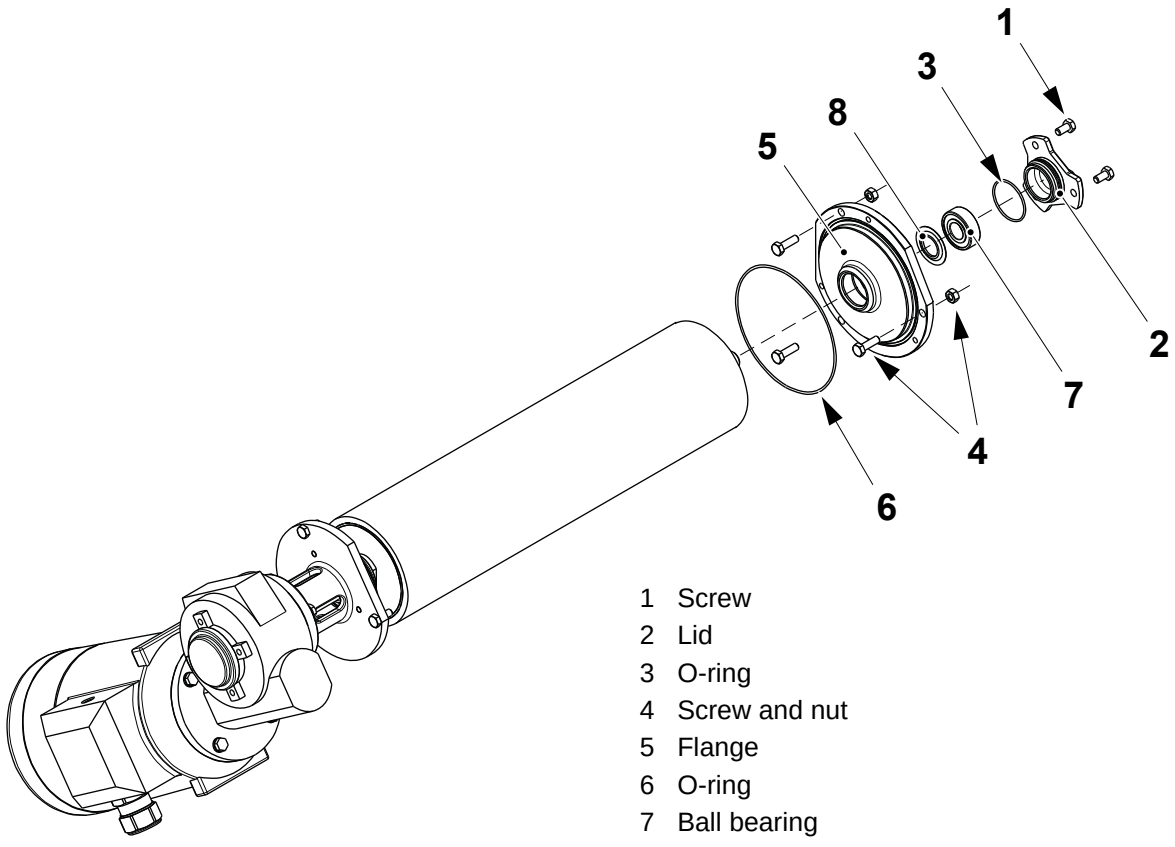

1 Screw
2 Lid
3 O-ring
4 Screw and nut
5 Flange
6 O-ring
7 Ball bearing
8 Sealing ring

(Cont'd)

TechPub_2614345_0108 - 0101_3048063_01.fm

(Cont'd)

WARNING
Risk of crushing.
The motor (11) is heavy. Use caution when removing the motor (11).

d) Disconnect the motor connector (9).
e) Remove the screws (10) and the motor (11).
f) Remove the retaining ring (12).

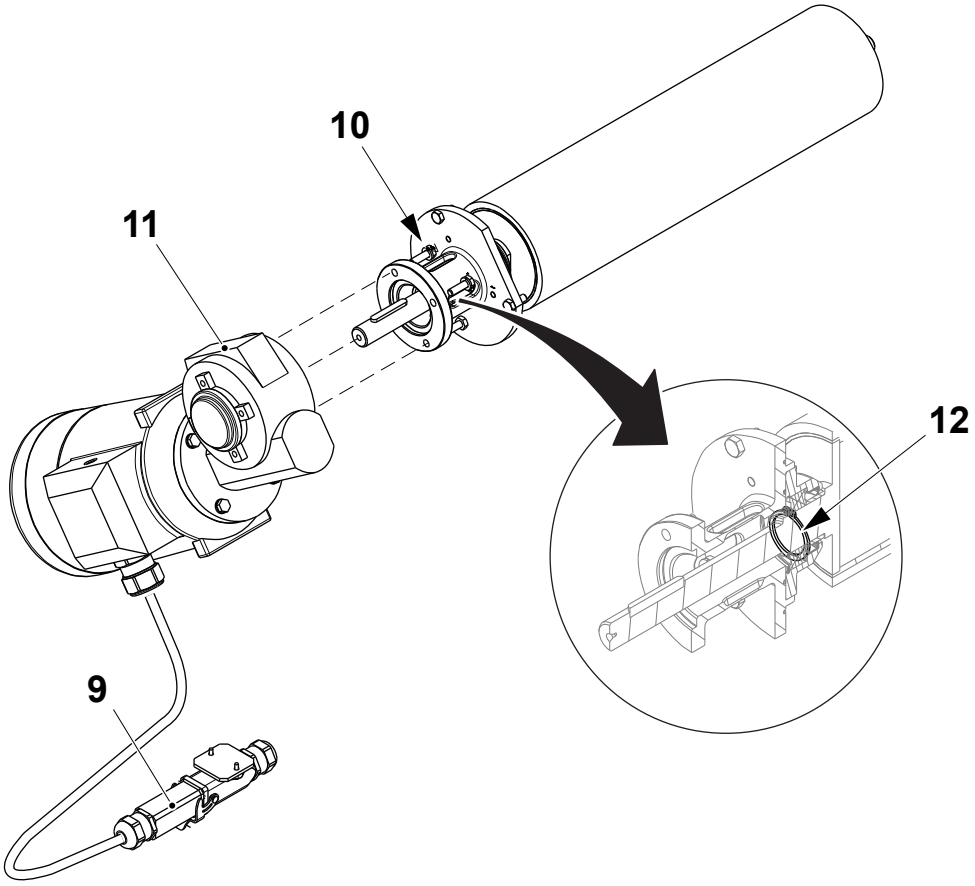

9 Connector
10 Screw
11 Motor
12 Retaining ring

(Cont'd)

TechPub_2614345_0108 - 0101_3048063_01.fm

(Cont'd)

Note! Apply PTFE grease TP No. 90296-0091 on the ball bearing (19).

g) Slip off the roller (13). Change if necessary.

h) Remove the spacer (14).

i) Remove the screws (15) and the flange (16). Change the O-ring (17) if necessary.

j) Remove the retaining ring (18), the ball bearing (19) and the varilip (20). Change if necessary.

k) Assemble in the reverse order.

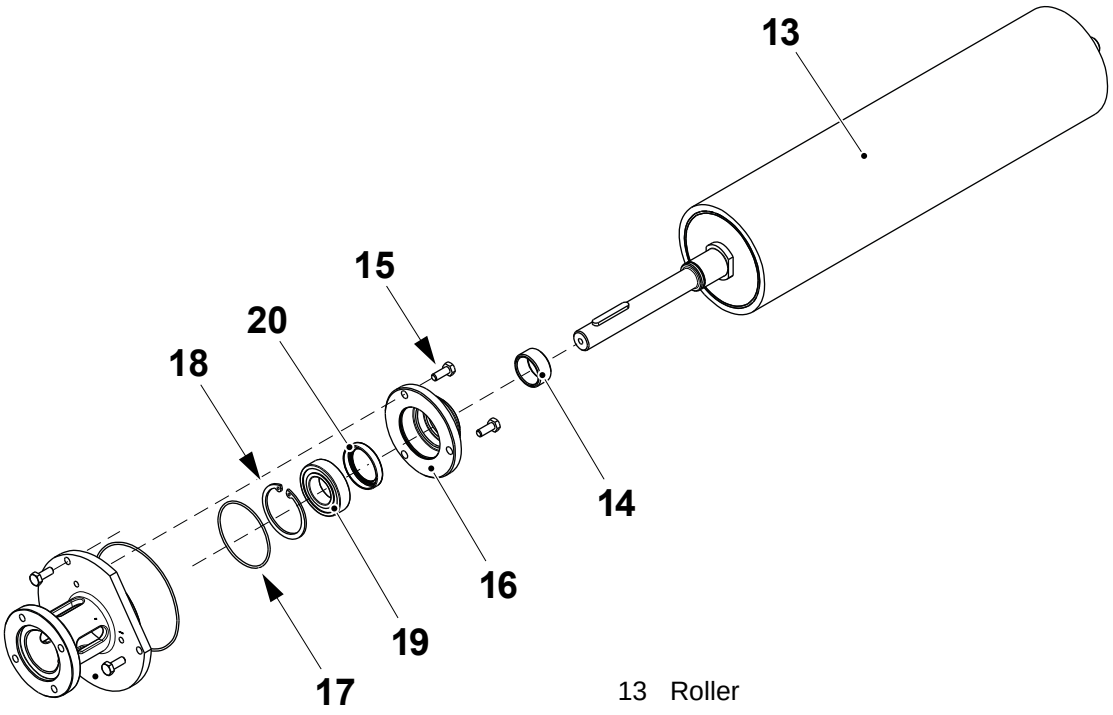

13 Roller
14 Spacer
15 Screw
16 Flange
17 O-ring
18 Retaining ring
19 Ball bearing
20 Varilip

TechPub_2614345_0108 - 0101_3048063_01.fm

1.3.4 Calender Roller

1.3.4-1 Calender Roller - Check

Machine Status	Mains Power ON Air OFF Steam ON Water OFF
SPC Reference	1548892-0300

WARNING
Hydrogen Peroxide.
Follow the Safety Precautions.

(Cont'd)

TechPub_2614345_0108 - 0101_3048064_01.fm

(Cont'd)

Check that:

- the calender roller (1) is not worn or damaged. Make sure that the roller rotates freely and that the surface is undamaged, change if necessary
- the radial play of the ball bearings (2) is not excessive. If excessive, change them, see 1.3.4-2 Calender Roller - Change
- the ball bearings (2) are correctly greased
- the two pneumatic cylinders (3) move easily
- the proximity switch (4) functions correctly. Adjust if necessary, see 1.3.4-4 Calender Roller - Set Proximity Switch.

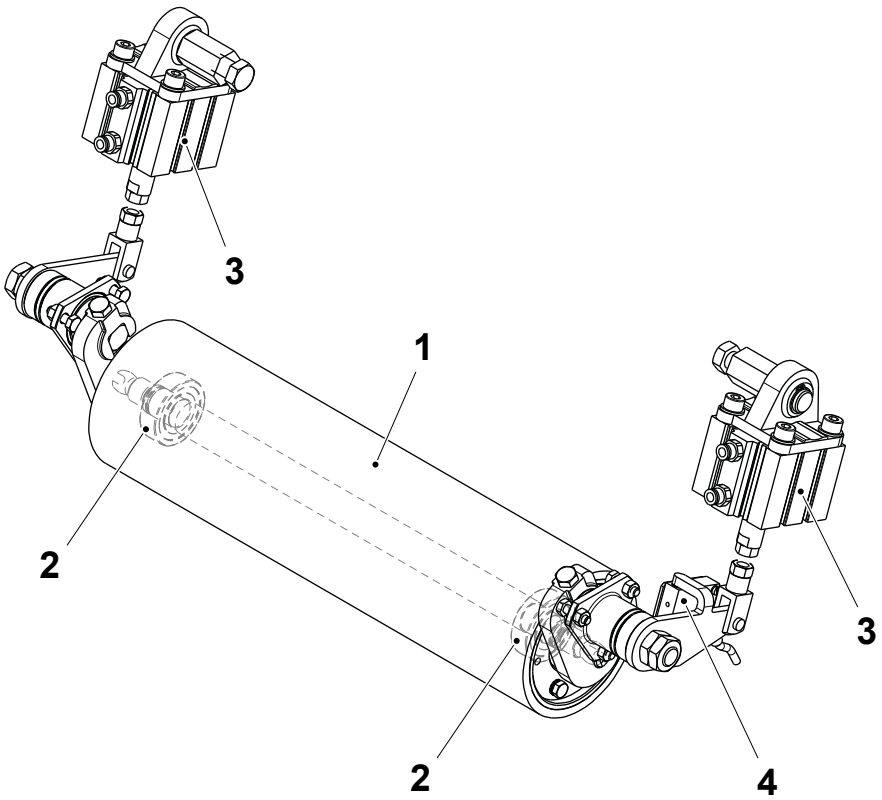

1 Roller
2 Ball bearing
3 Pneumatic cylinder
4 Proximity switch

TechPub_2614345_0108 - 0101_3048064_01.fm

1.3.4-2 Calender Roller - Change

Machine Status	Mains Power OFF Air OFF Steam ON Water OFF
Consumables	Grease TP No. 90601-3167
SPC Reference	1548892-0300

WARNING
Hydrogen Peroxide.
Follow the Safety Precautions.

(Cont'd)

TechPub_2614345_0108 - 0101_3048064_01.fm

(Cont'd)

a) Remove the screws (1).
b) Lift and release the arms (2) and remove the roller assembly (3).
c) Remove the arms (2).

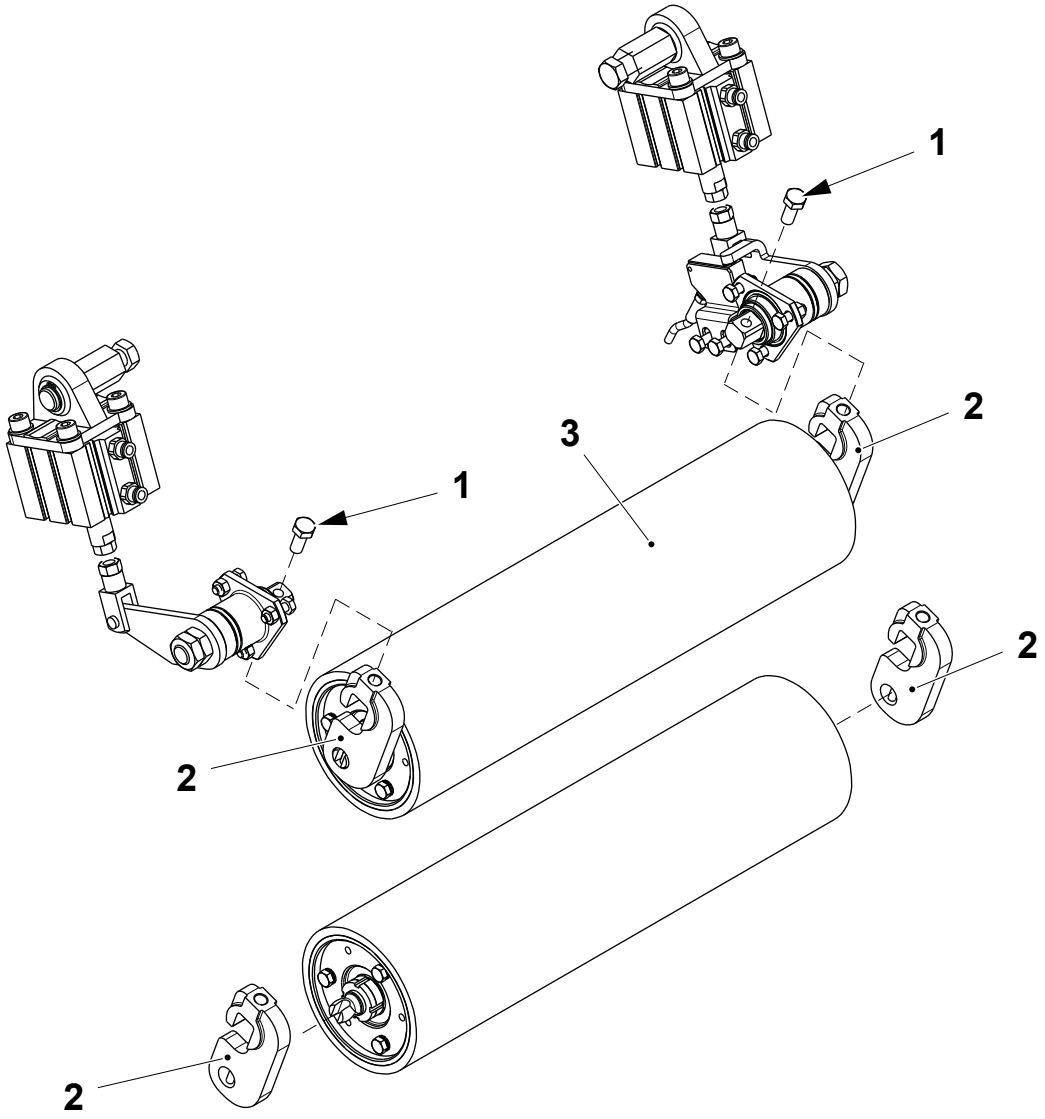

1 Screw
2 Arm
3 Roller assembly

(Cont'd)

TechPub_2614345_0108 - 0101_3048064_01.fm

(Cont'd)

d) Loosen and remove the lock nut (4).

e) Remove the radial seal (5). Change if necessary.

f) Remove the screws (6) and extract the bearing housing (7).

g) Remove the lid (8) from the bearing housing (7) and change the O-ring (9).

h) Remove the ball bearing (10) and the radial seal (11). Change if necessary.

Note! Lubricate the radial seals (5) and (11) with grease TP No. 90601-3167.

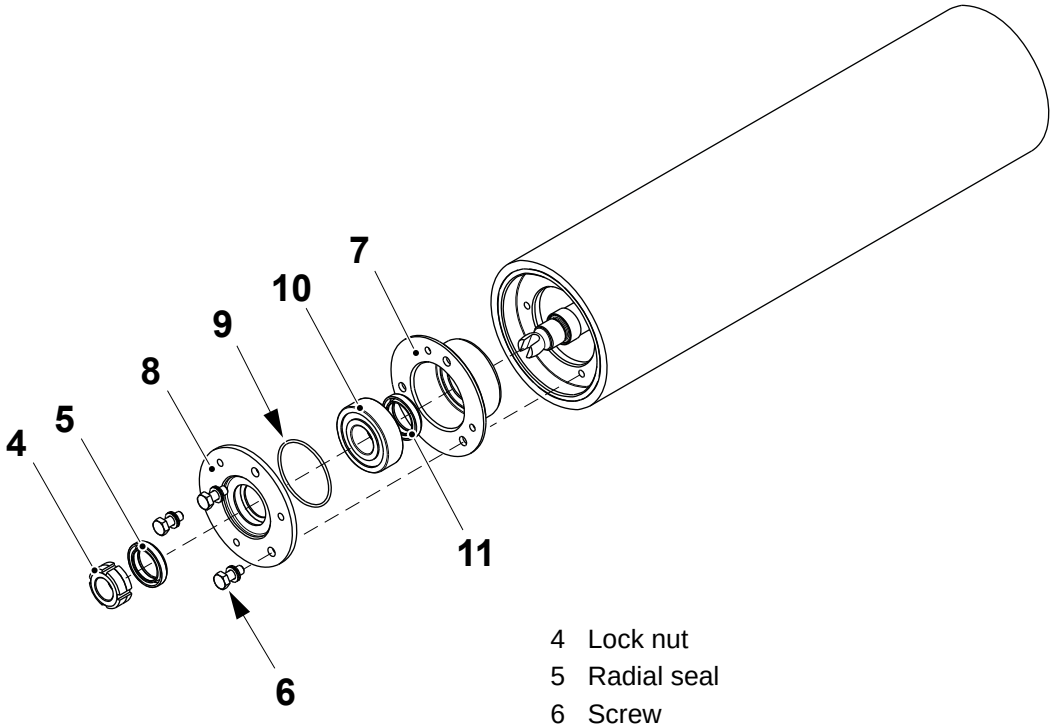

4 Lock nut
5 Radial seal
6 Screw
7 Bearing housing
8 Lid
9 O-ring
10 Ball bearing
11 Radial seal

(Cont'd)

TechPub_2614345_0108 - 0101_3048064_01.fm

(Cont'd)

i) Remove the O-ring (12) and the bushings (13). Change if necessary.

j) Repeat the same steps on the other end of the roller.

k) Remove the shaft (14) and change the roller (15).

l) Assemble in the reverse order.

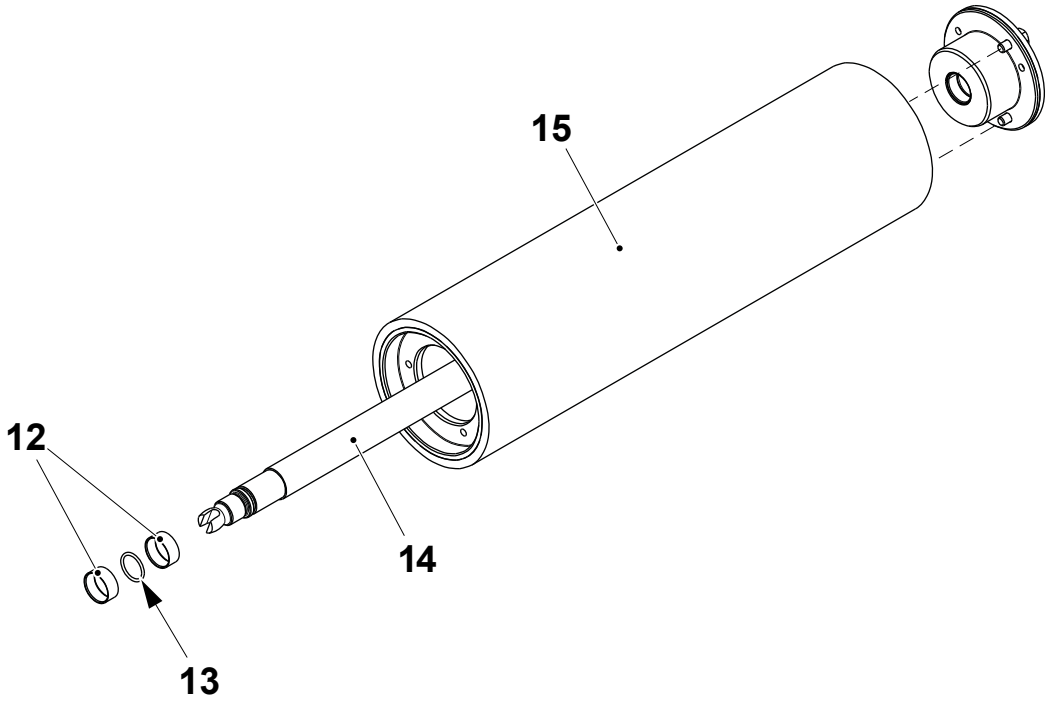

12 O-ring
13 Bushing
14 Shaft
15 Roller

TechPub_2614345_0108 - 0101_3048064_01.fm

1.3.4-3 Calender Roller - Set Distance

Machine Status	PREPARATION
SPC Reference	1548892-0300

WARNING
Hydrogen Peroxide.
Follow the Safety Precautions.

(Cont'd)

TechPub_2614345_0108 - 0101_3048064_01.fm

(Cont'd)

CAUTION
Risk of damage to the equipment.
The squee-gee roller (3) is made of rubber and can be easily damaged.

Check that the piston rods (1) of the pneumatic cylinders (2) are fully retracted.

Adjust the piston rods (1) on both cylinders until the distance **A**, between the squee-gee roller (3) and the calender roller (4) is obtained.

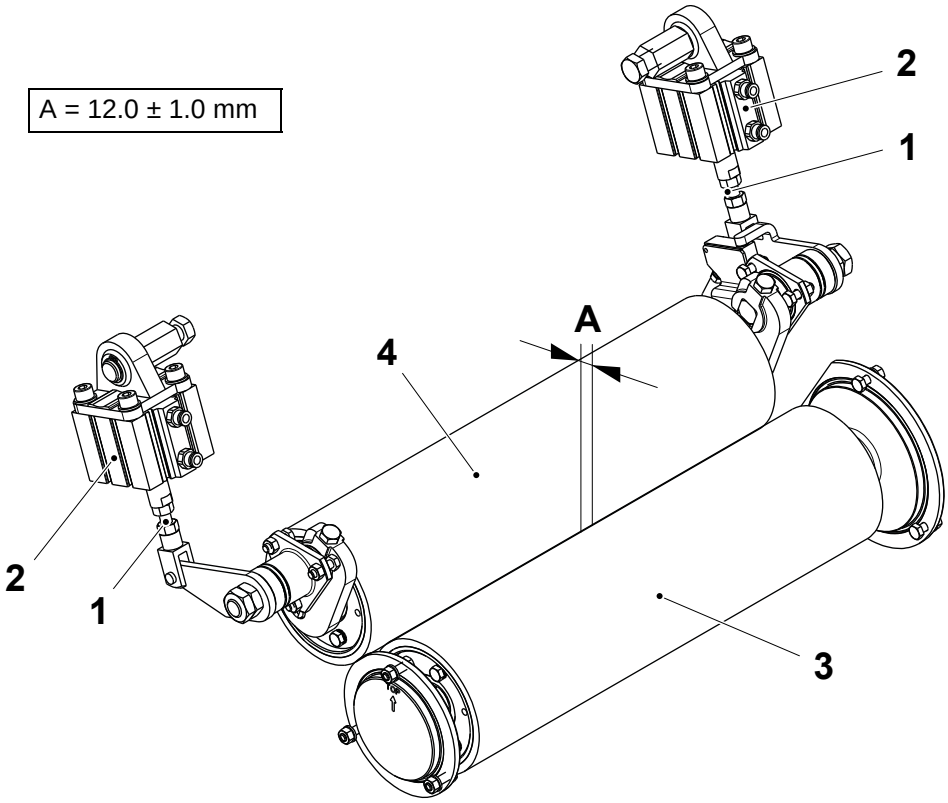

1 Piston rod
2 Cylinder
3 Squee-gee roller
4 Calender roller

TechPub_2614345_0108 - 0101_3048064_01.fm

1.3.4-4 Calender Roller - Set Proximity Switch

Machine Status	PREPARATION
SPC Reference	1548892-0300

WARNING
Hydrogen Peroxide.
Follow the Safety Precautions.

a) Set the distance between the calender roller and the squee-gee roller, see 1.3.4-3 Calender Roller - Set Distance.

(Cont'd)

TechPub_2614345_0108 - 0101_3048064_01.fm

(Cont'd)

b) Activate the valve U70K2430.

c) Check the distance **A** between the proximity sensor (1) and the plate (2) when the piston rod (3) is fully extended.

d) If necessary, set the distance **A** by loosening the screws (4) and adjusting the position of the bracket (5).

e) Deactivate the valve U70K2430.

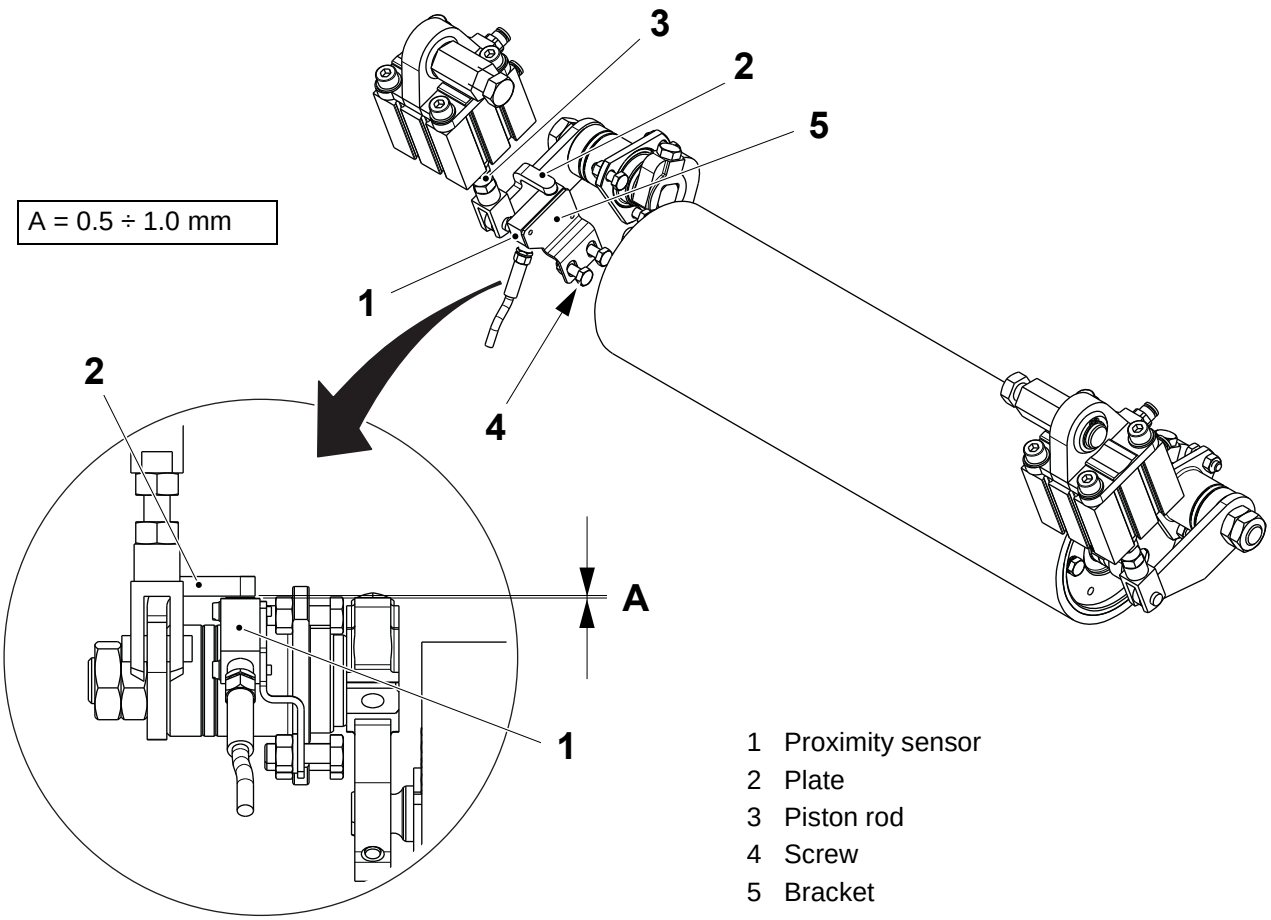

1 Proximity sensor
2 Plate
3 Piston rod
4 Screw
5 Bracket

TechPub_2614345_0108 - 0101_3048064_01.fm

1.3.4-5 Calender Roller - Change Seals

Machine Status	Mains Power OFF Air OFF Steam ON Water OFF
Consumables	Grease TP No. 90601-3167
SPC Reference	1548892-0300

WARNING
Hydrogen Peroxide.
Follow the Safety Precautions.

a) Remove the roller assembly (1), see 1.3.4-2 Calender Roller - Change, steps a) to b).

b) Disconnect the cylinder fork (2) from the plate (3).

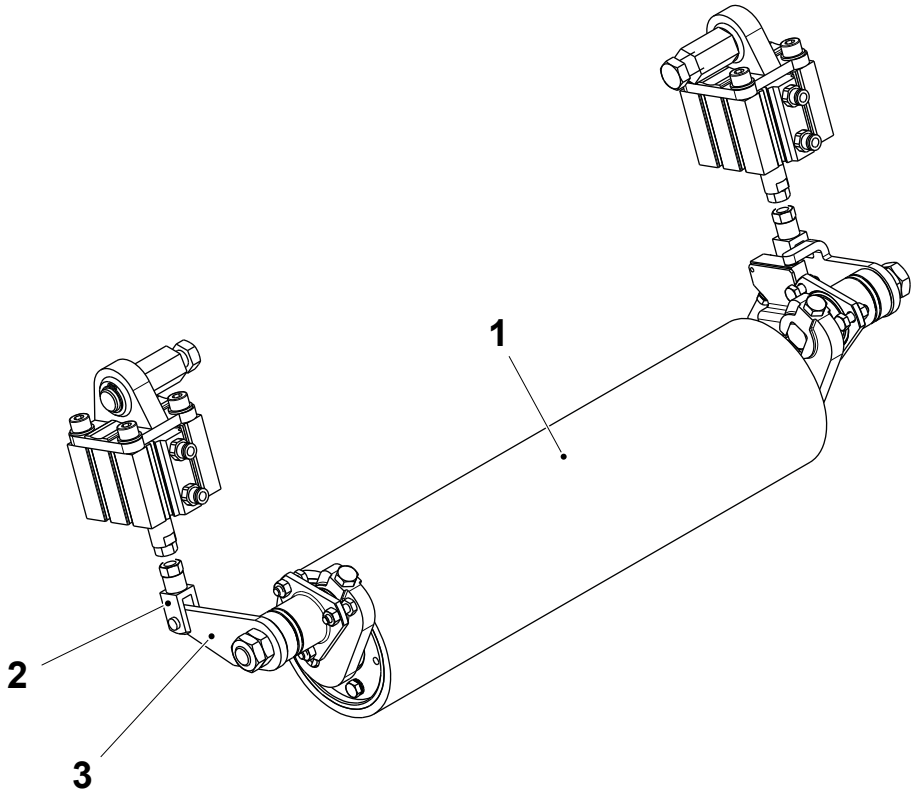

1 Roller assembly
2 Cylinder fork
3 Plate

(Cont'd)

TechPub_2614345_0108 - 0101_3048064_01.fm

(Cont'd)

Note! The plates (3) are not symmetrical, mark the position of the plates (3) to facilitate the re-assembly of the components.

c) Remove the screws (4) and the flanges (5).

d) Remove the nuts (6), the plate (3) and the shaft (7).

e) Check the bushing (8), the radial seal (9) and the O-ring (10) for wear or damage. Change if necessary.

f) Repeat the same procedure on the other side.

g) Assemble in the reverse order.

Note! Lubricate the radial seals (9) with grease TP No. 90601-3167.

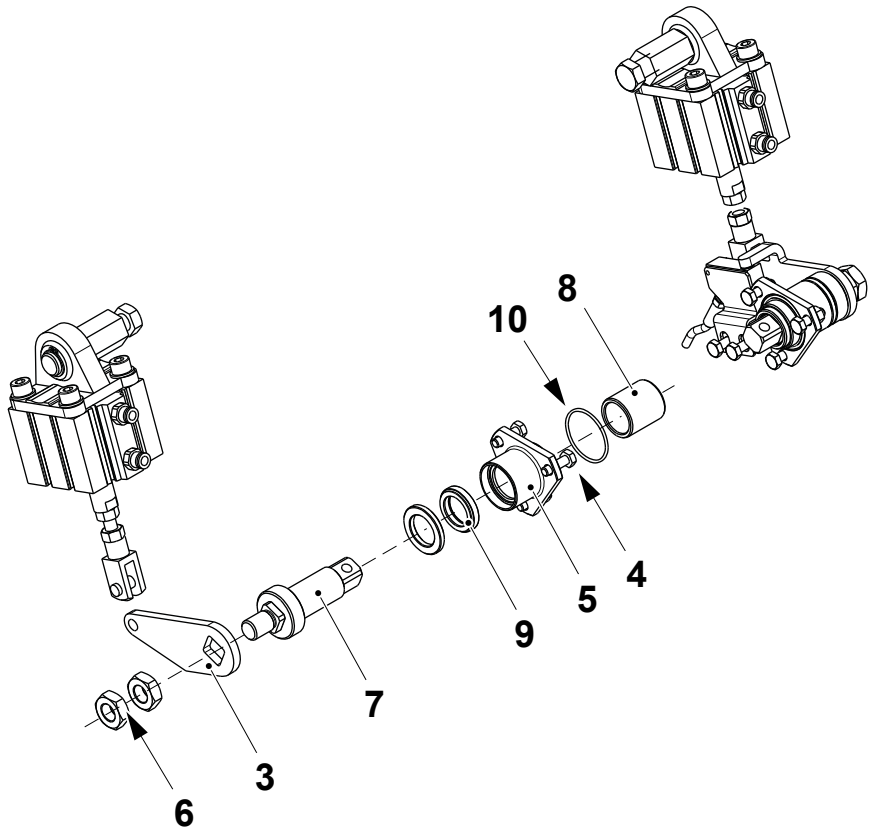

3 Plate
4 Screw
5 Flange
6 Nut
7 Shaft
8 Bushing
9 Radial seal
10 O-ring

TechPub_2614345_0108 - 0101_3048064_01.fm

1.3.5 Crank

1.3.5-1 Crank - Check Chain

Machine Status	Mains Power OFF Air OFF Steam ON Water OFF
SPC Reference	1549573-0200

WARNING

Risk of pinching or crushing injury.

Take care when cranking the packaging material carrier (1) with the handle (2).

Crank the packaging material carrier (1) with the handle (2) until it reaches the highest position. Check the following parts for visual wear or damage:

- the packaging material carrier (1). Check that the teeth in the packaging material carrier (1) are not damaged and that the packaging material carrier is not bent. Change if necessary

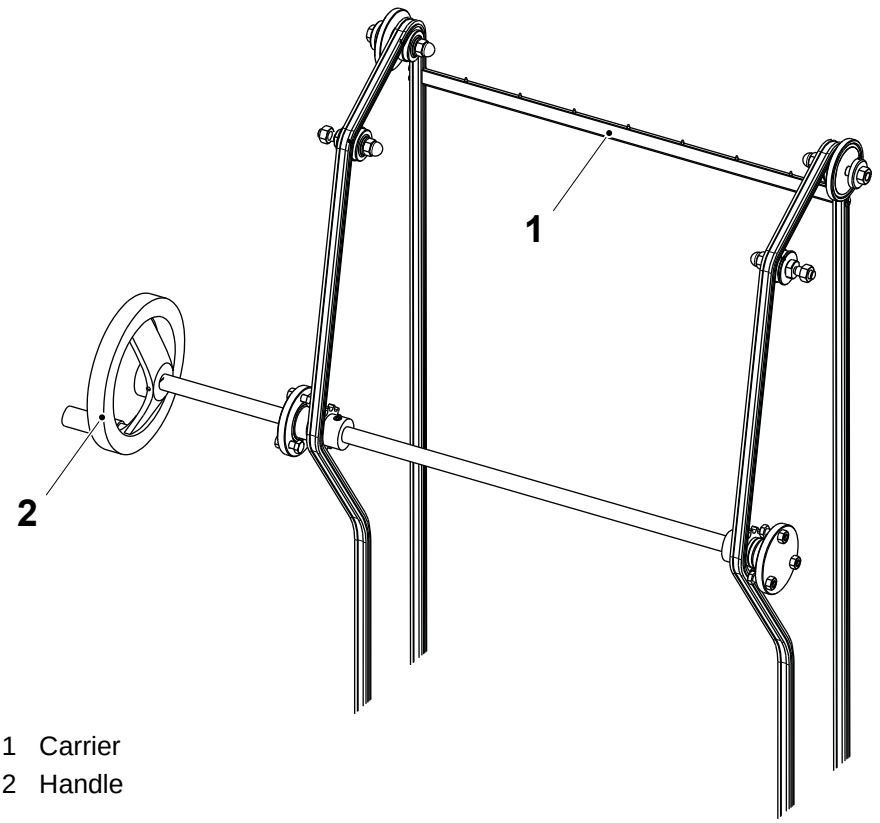

1 Carrier
2 Handle

(Cont'd)

TechPub_2614345_0108 - 0101_3048065_01.fm

(Cont'd)

- the chains (3). Crank the chains (3) and make sure that they move freely. If the chains are too loose, tighten them by loosening the nuts (4) and raising the wheels (5)

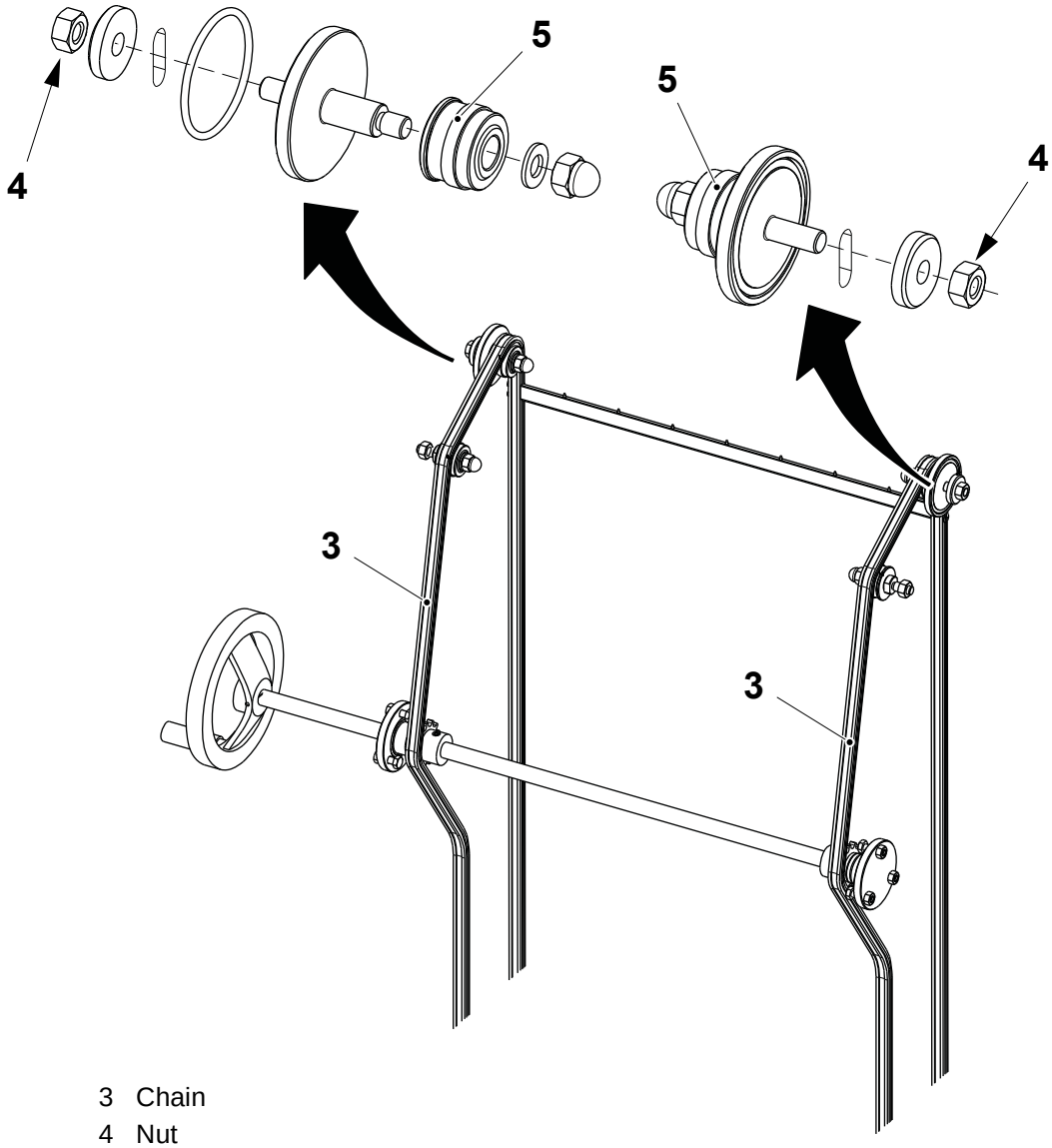

3 Chain
4 Nut
5 Wheel

(Cont'd)

TechPub_2614345_0108 - 0101_3048065_01.fm

(Cont'd)

- the wheels (5) and the bushings (6). Make sure that the radial play is not excessive
- the shaft (7)
- the O-rings (8) and (9). Change if necessary
- the sprocket (10).

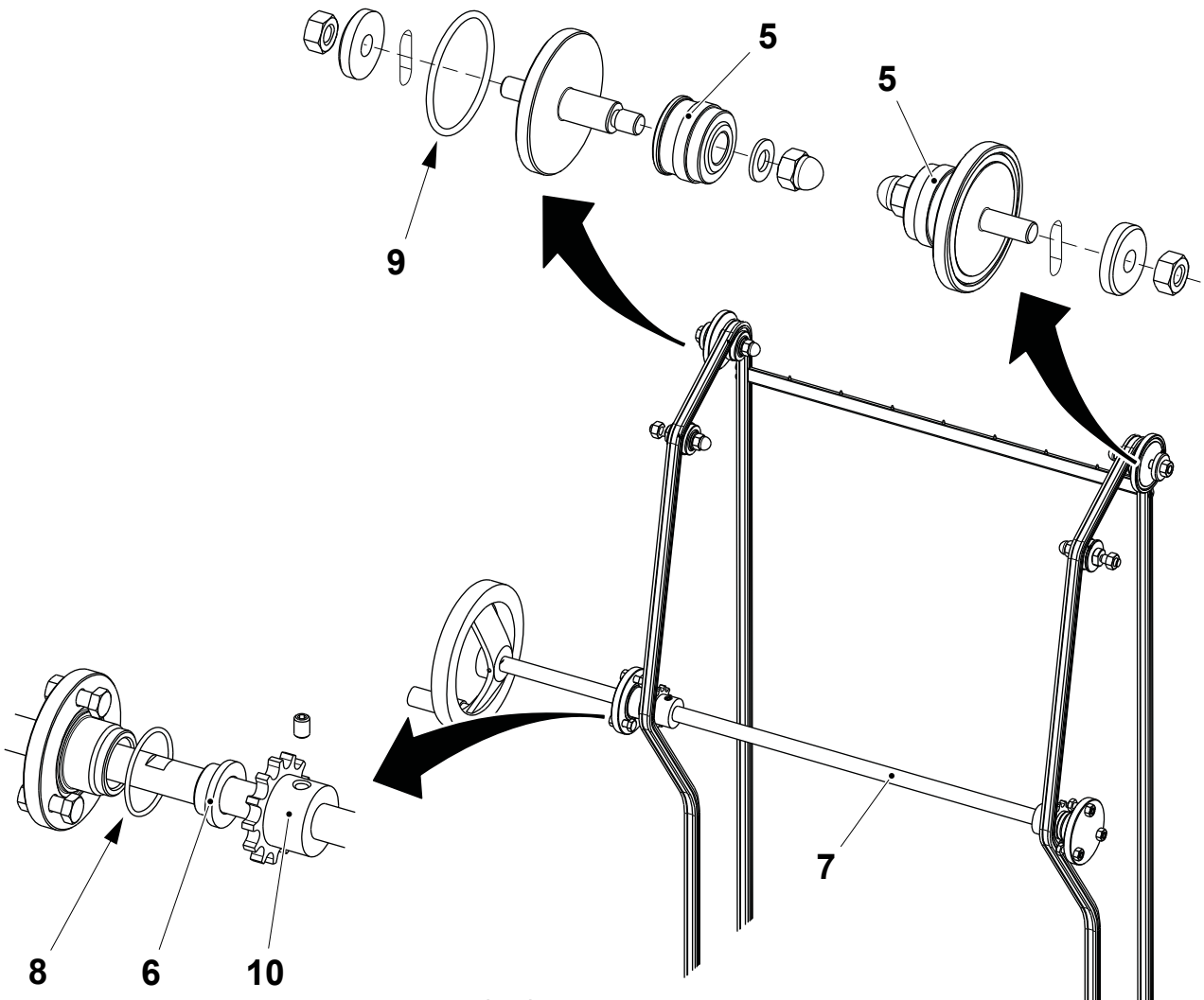

5 Wheel
6 Bushing
7 Shaft
8 O-ring
9 O-ring
10 Sprocket

TechPub_2614345_0108 - 0101_3048065_01.fm

1.3.6 Bending Roller

1.3.6-1 Bending Roller - Change

Machine Status	Mains Power OFF Air OFF Steam ON Water OFF
Consumables	PTFE Grease TP No. 90296-0091
SPC Reference	2763999-0200

WARNING
Hydrogen peroxide.
Follow the Safety Precautions.

(Cont'd)

TechPub_2614345_0108 - 0101_3048066_01.fm

(Cont'd)

a) Loosen the nuts (1) and remove the screw (2).
b) Remove the flange (3).
c) Change the O-ring (4) if necessary.
d) Remove the screw (5) and the nuts (6).
e) Slip off the bending roller assembly (7) from drying chamber.
f) Change the O-ring (8) if necessary.

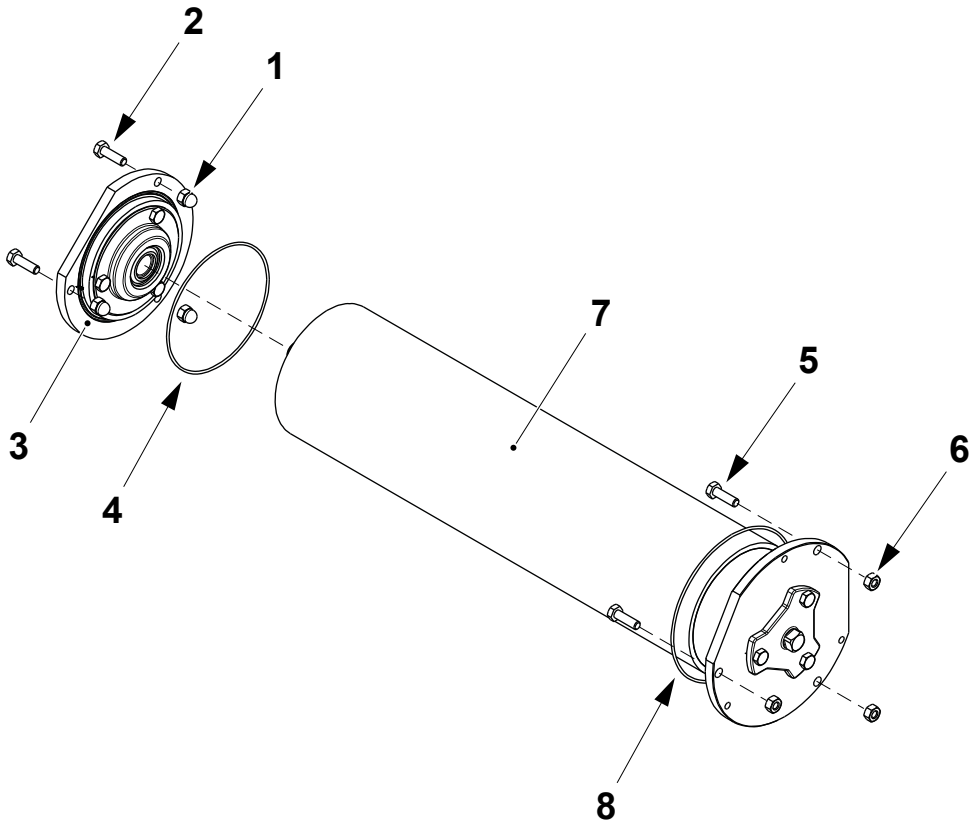

1 Nut
2 Screw
3 Flange
4 O-ring
5 Screw
6 Nut
7 Bending roller assembly
8 O-ring

(Cont'd)

TechPub_2614345_0108 - 0101_3048066_01.fm

(Cont'd)

Note! Apply PTFE grease TP No. 90296-0091 on the ball bearings (13) and (21).

g) Remove the screw (9), the lid (10) and change the O-ring (11).

h) Remove the sealing ring (12) and the ball bearing (13) from the flange (14). Change if necessary.

i) Remove and change the roller (15).

j) Remove the screws (16) and separate the flanges (17) and (18).

k) Change the O-ring (19).

l) Remove the retaining ring (20), the ball bearing (21) and the sealing ring (22). Change if necessary.

m) Assemble in the reverse order.

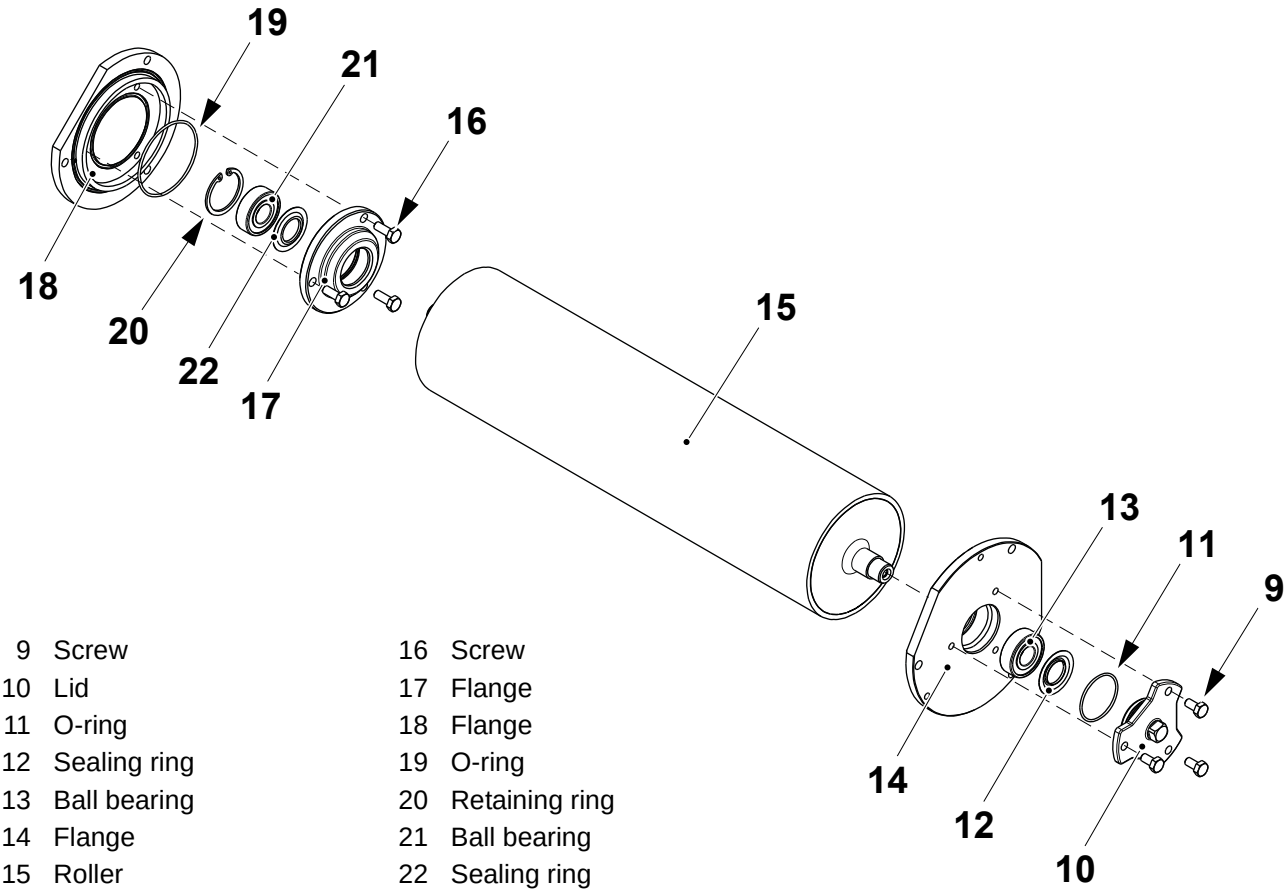

9	Screw	16	Screw
10	Lid	17	Flange
11	O-ring	18	Flange
12	Sealing ring	19	O-ring
13	Ball bearing	20	Retaining ring
14	Flange	21	Ball bearing
15	Roller	22	Sealing ring

TechPub_2614345_0108 - 0101_3048066_01.fm

1.3.7 Air Knife

1.3.7-1 Air Knife - Check and Clean

Machine Status	Mains Power OFF Air OFF Steam ON Water OFF
Consumables	Soapy Water Sandpaper
SPC Reference	2783069-0100

WARNING
Hydrogen Peroxide.
Follow the Safety Precautions.

WARNING
Burn hazard.
The air guides and other adjacent parts may be hot. Wear heat-resistant protective gloves.

(Cont'd)

TechPub_2614345_0108 - 0101_3048067_01.fm

(Cont'd)

a) On both air distributors (1), check that the bushings (2) and (3) are intact.

b) Check that the steering rails (4) for wear or damage. Change them if necessary, see 1.3.7-2 Air Knife - Change Rails.

c) Clean the air guides (5) with soapy water and the steering rails (4) with sandpaper.

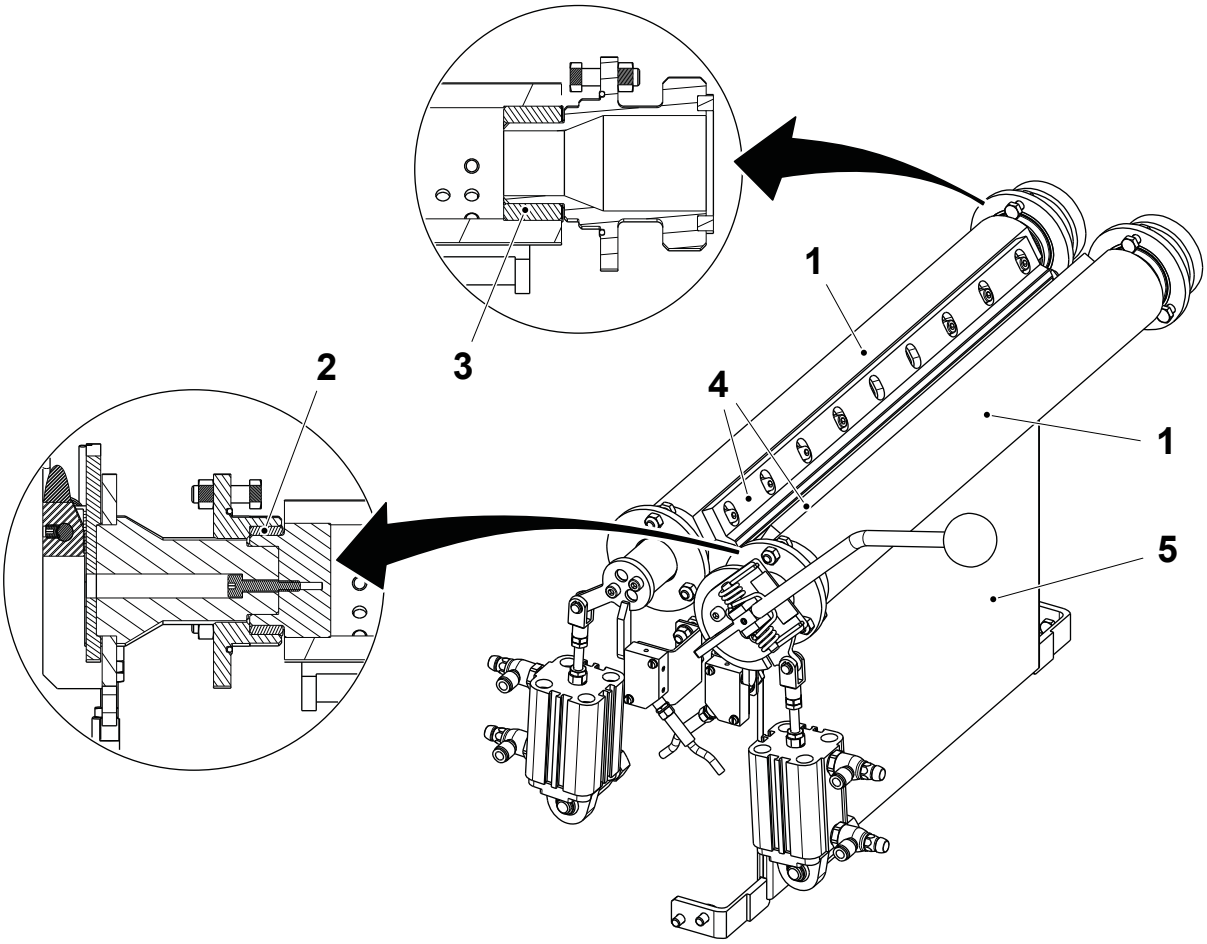

1 Air distributor
2 Bushing
3 Bushing
4 Steering rail
5 Air guide

TechPub_2614345_0108 - 0101_3048067_01.fm

1.3.7-2 Air Knife - Change Rails

Machine Status	Mains Power OFF Air OFF Steam ON Water OFF
SPC Reference	2783069-0100

a) Remove the lid (1) above the drying chamber, see 1.3.1-3 Frame Housing - Clean Tunnel and open the door (2) to access the air knife.

b) Remove the screws (3) and change the steering rail (4).

c) Remove the screws (5) and change the steering rail (6).

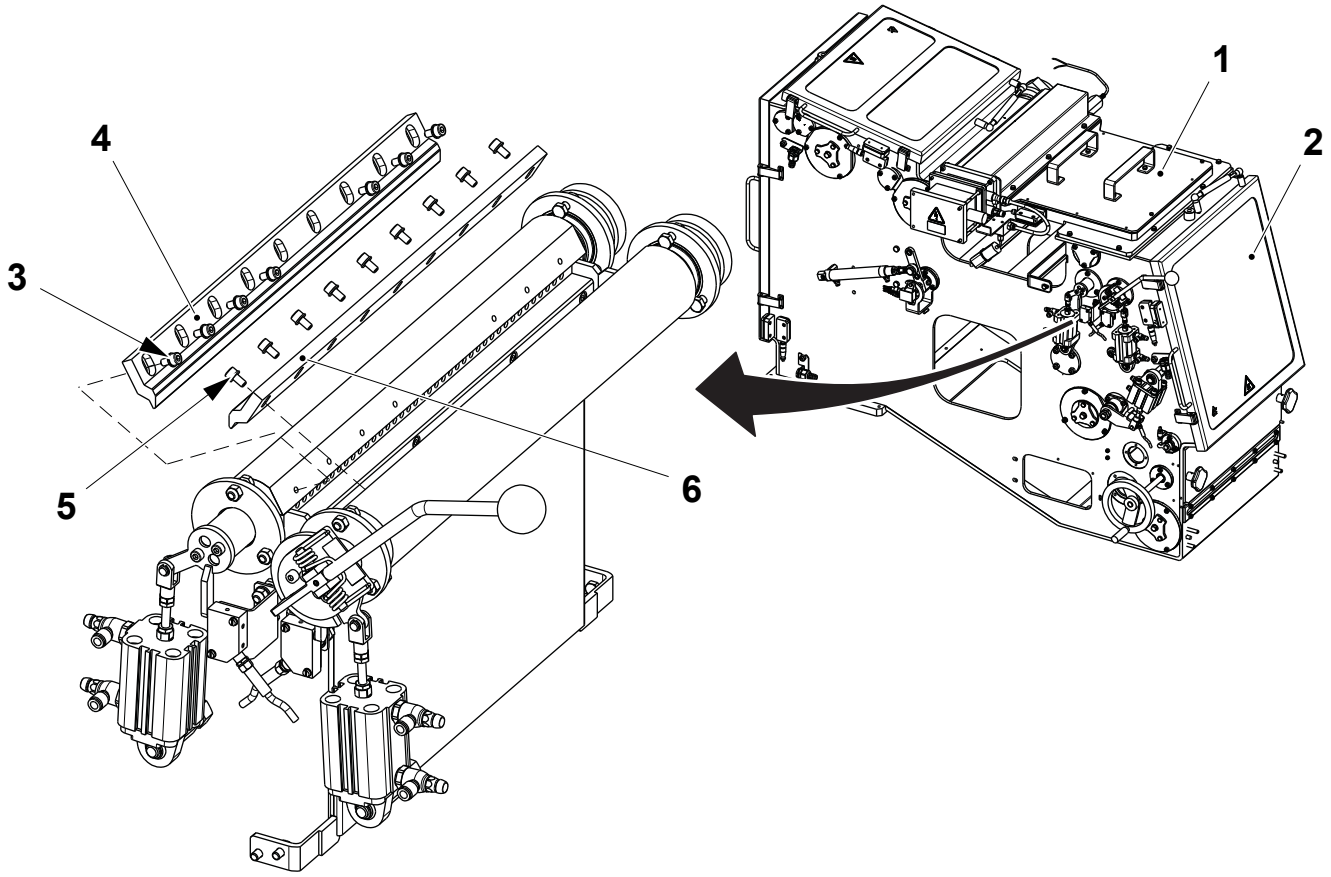

1 Lid
2 Door
3 Screw
4 Steering rail
5 Screw
6 Steering rail

(Cont'd)

TechPub_2614345_0108 - 0101_3048067_01.fm

(Cont'd)

d) Tense a plumb-line (7) from the bending roller (8) to simulate the packaging material path.

e) Set the distance **A** between the steering rails (4) and (6) by the screws (3) and (5) making sure that the plumb-line (7) is in the middle.

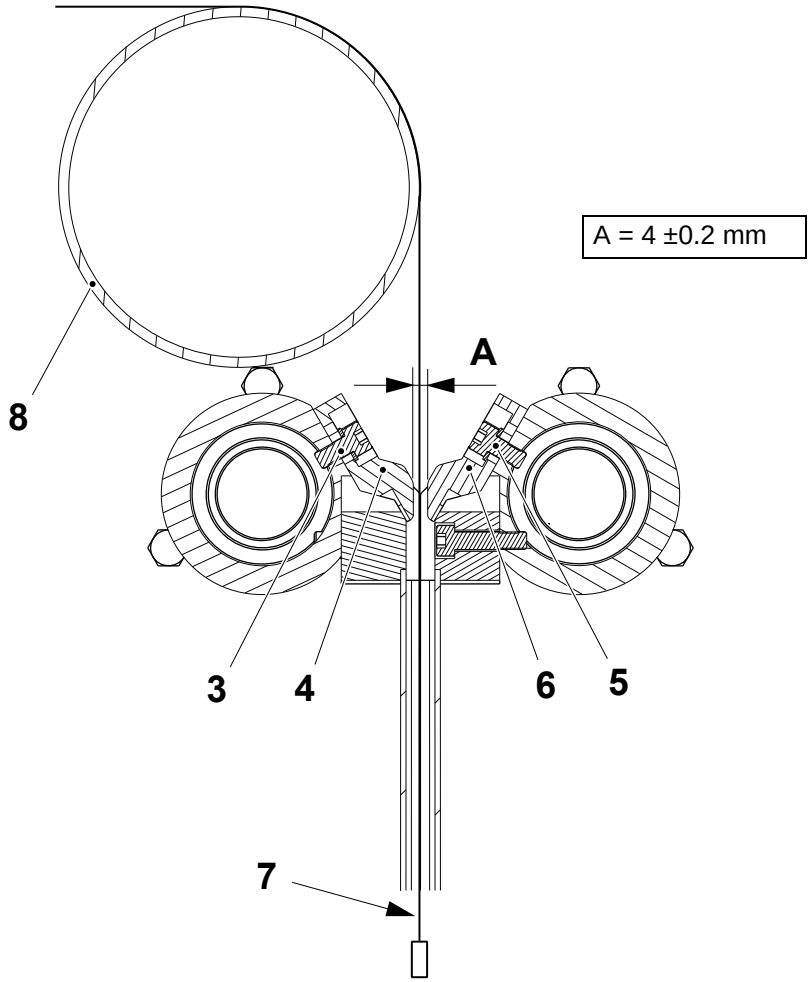

3 Screw
4 Steering rail
5 Screw
6 Steering rail
7 Plumb-line
8 Bending roller

TechPub_2614345_0108 - 0101_3048067_01.fm

1.3.7-3 Air Knife - Set Proximity Sensor

Machine Status	Mains Power OFF Air OFF Steam ON Water OFF
SPC Reference	2532934-0200

Check the distance **A** between the proximity sensor (1) and the plate (2) when the piston rod (3) is fully retracted. If necessary, set the distance **A** by the screws (4).

Note! Make sure that the extra stroke of the piston rod (3) when it is fully retracted is max. 2 mm.

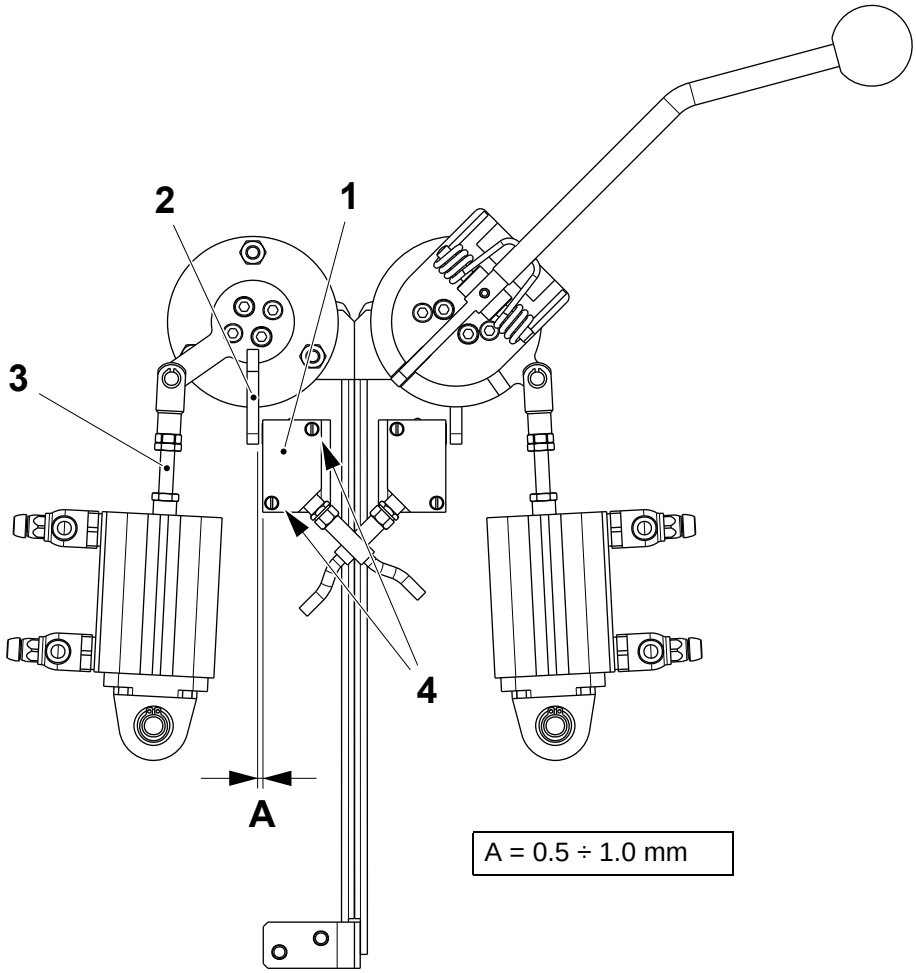

1 Proximity sensor
2 Plate
3 Piston rod
4 Screw

TechPub_2614345_0108 - 0101_3048067_01.fm

1.3.8 Pendulum Roller

1.3.8-1 Pendulum Roller - Check

Machine Status	Mains Power ON Air OFF Steam ON Water OFF
SPC Reference	2539445-0400

CAUTION

Risk of personal injury.

Moving parts can crush or cut.

(Cont'd)

TechPub_2614345_0108 - 0101_3048068_01.fm

(Cont'd)

Check that:

- the surface of the two wheels (1) are not worn or damaged
- the radial play in the bushings (2) are not excessive. Change them if necessary, see 1.3.8-6 Pendulum Roller - Change Bushings.
- the shaft (3) rotates easily.

Check during PRODUCTION

Turn ON the main air supply and make sure that the pneumatic cylinder (4) moves easily. Check for air leaks.

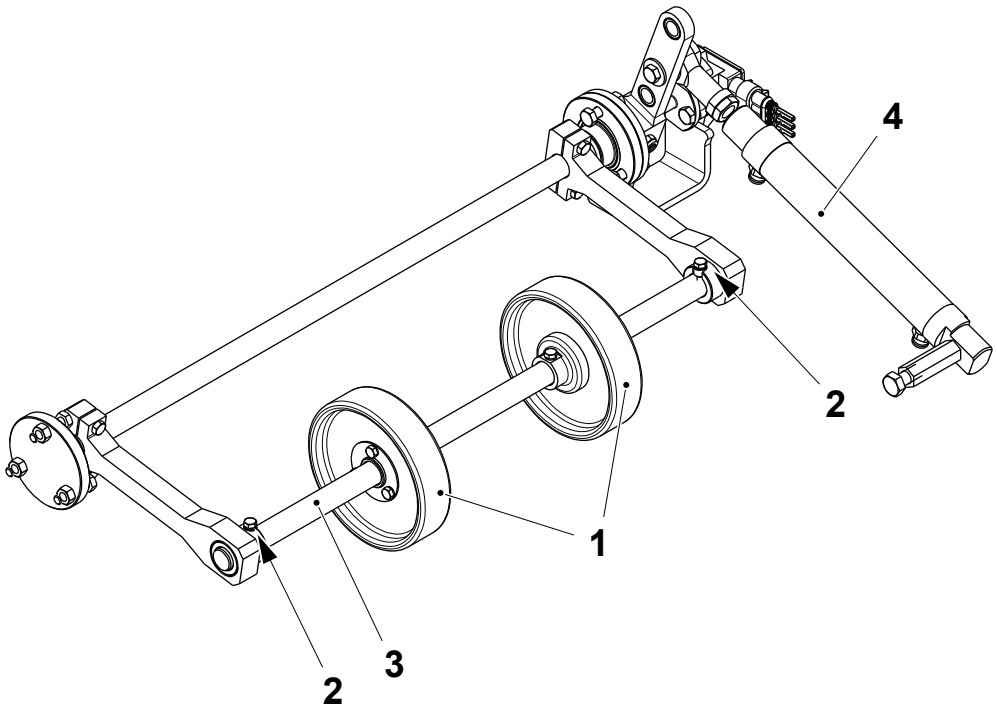

1 Wheel
2 Bushing
3 Shaft
4 Pneumatic cylinder

TechPub_2614345_0108 - 0101_3048068_01.fm

1.3.8-3 Pendulum Roller - Set I/P Transducer

Machine Status	PREPARATION
SPC Reference	2539445-0400 2914523-0100

CAUTION
Risk of damage to the equipment.
Be careful not to damage the trimmers with the screw driver.

a) Remove the rubber cover (1) to display the three trimmers Z, S and G.

b) Turn the gain trimmer G (2) fully anti-clockwise.

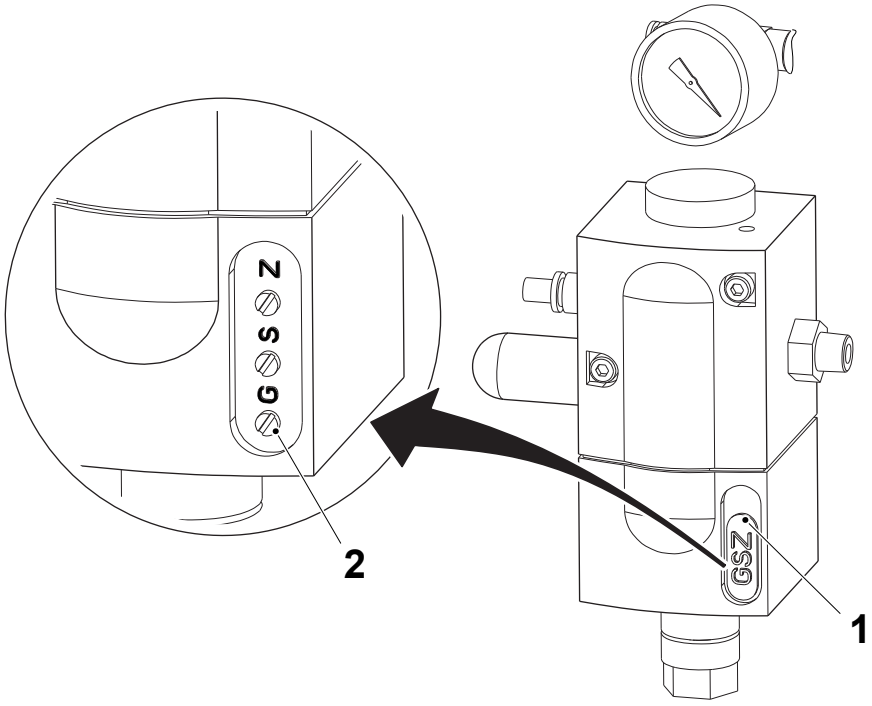

1 Rubber cover
2 Gain trimmer G

(Cont'd)

TechPub_2614345_0108 - 0101_3048068_01.fm

(Cont'd)

c) On the TPOP, touch the PRODUCTION CONTROL button (3).

d) Touch the TUBE FORMING UNIT button (4).

e) Touch the PENDULUM ROLLER icon (5).

f) Set the value to 0 bar by the arrows buttons (6) or the keyboard button (7).

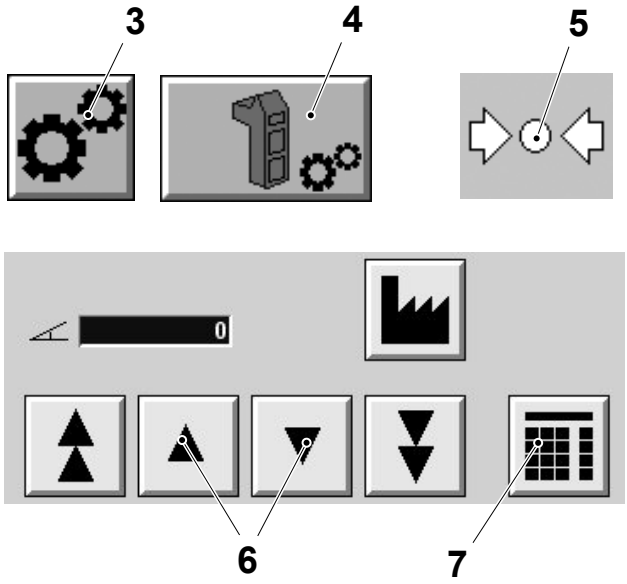

3 Production control button
4 Tube forming unit button
5 Pendulum roller icon
6 Arrow button
7 Keyboard button

(Cont'd)

TechPub_2614345_0108 - 0101_3048068_01.fm

(Cont'd)

g) Set the pressure for the pendulum roller on the pressure gauge (8) to 0.1 bar with the trimmer Z (9).

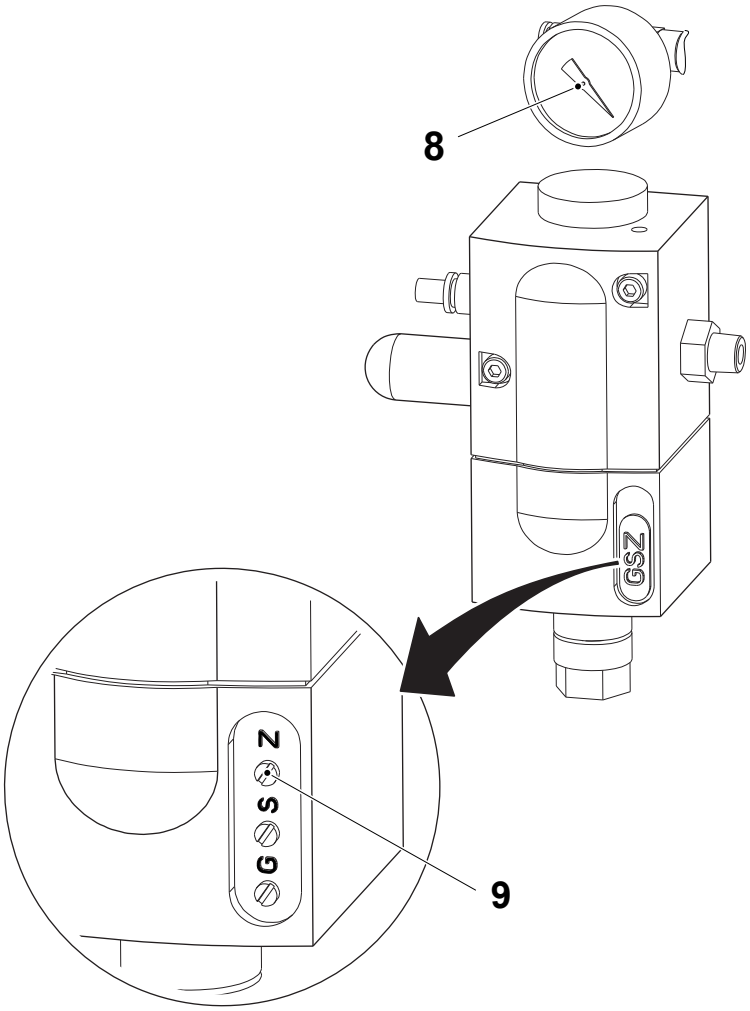

8 Pressure gauge
9 Trimmer Z

(Cont'd)

TechPub_2614345_0108 - 0101_3048068_01.fm

(Cont'd)

h) Set the value to 6 bar by the arrows buttons (6) or the keyboard button (7).

i) Make sure that the pressure on the pressure gauge (8) is 6 bar. If necessary, adjust by using the trimmer S (10).

j) Touch the EXIT button (11).

k) Fit back the rubber cover (1).

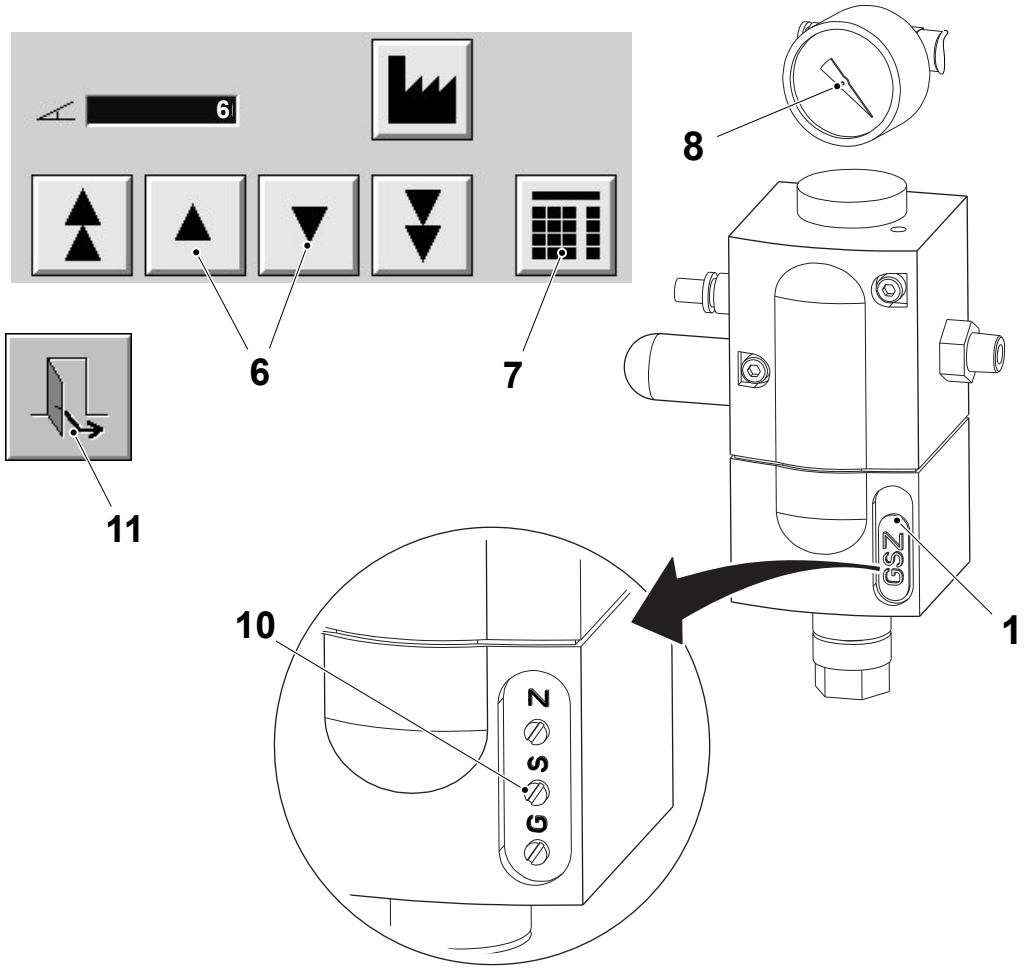

1 Rubber cover
6 Arrow button
7 Keyboard button
8 Pressure gauge
10 Trimmer S
11 Exit button

TechPub_2614345_0108 - 0101_3048068_01.fm

1.3.8-4 Pendulum Roller - Set Position

Machine Status	Mains Power OFF Air OFF Steam ON Water OFF
SPC Reference	2539445-0400

Set Lever Position

Note! The position of the ball joint (1) on the lever (2) changes according to the volume to be produced.

a) Loosen the screw (3) and remove the shaft (4).

b) With the piston rod (5) fully retracted, connect the ball joint (1) to the lever (2) by inserting the shaft (4) in the position required by the volume, see the table in the next page.

c) Tighten the screw (3).

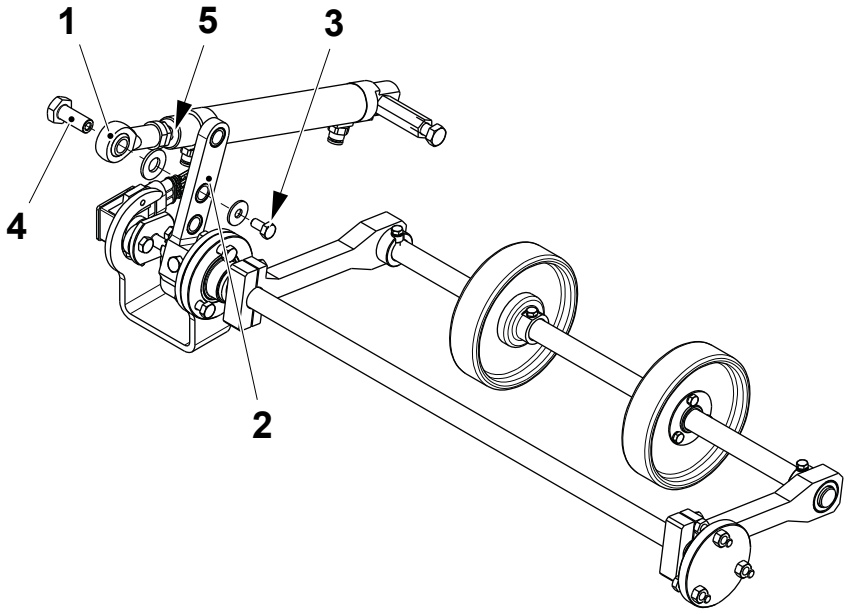

1 Ball joint
2 Lever
3 Screw
4 Shaft
5 Piston rod

(Cont'd)

TechPub_2614345_0108 - 0101_3048068_01.fm

(Cont'd)

Package	Position
TBA 1000 S - TBA 1000 Sq - TBA 1000 B	B
TBA 200 S - TBA 250 B - TBA 200 B - TBA 250 S - TBA 200 M - TBA 125 S	C

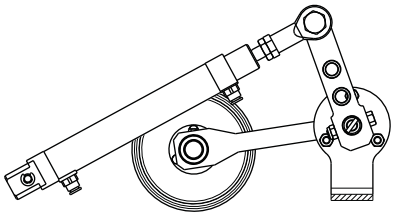

Pos. A

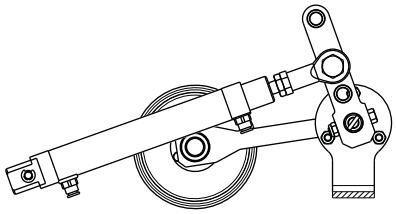

Pos. B

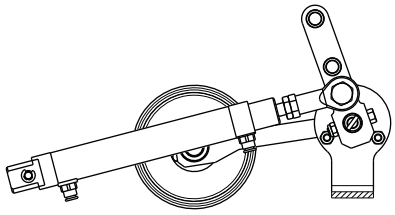

Pos. C

(Cont'd)

TechPub_2614345_0108 - 0101_3048068_01.fm

(Cont'd)

Set Wheels Position

a) On both levers (1), remove the screws (2) and bring the shaft (3) with the wheels (4) on the work bench.

b) Separate the shaft (3) from the levers (1).

c) Remove the screws (5) and slip off the wheels (4).

Note! When assembling pay attention that the screw (6) on the shaft is fitted into the slot of the bushing (7).

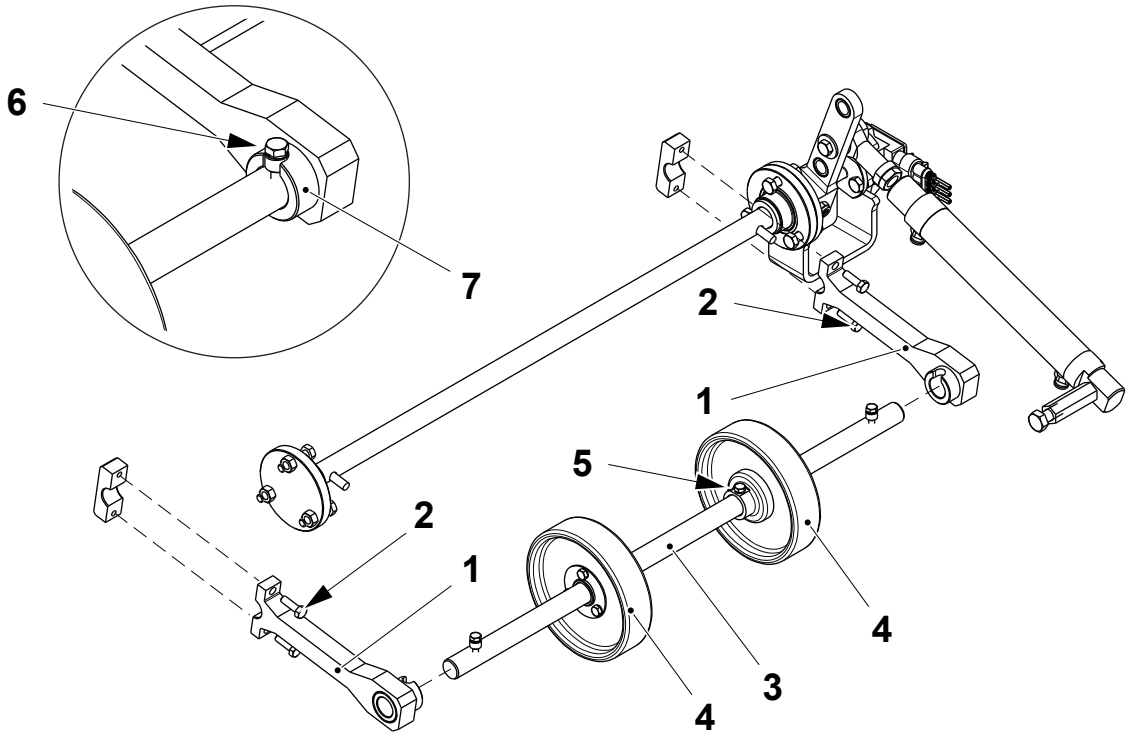

1 Lever
2 Screw
3 Shaft
4 Wheel
5 Screw
6 Screw
7 Bushing

(Cont'd)

TechPub_2614345_0108 - 0101_3048068_01.fm

(Cont'd)

d) Position the wheels (4) according to illustration and the table below, then tighten the screws (5).

e) Assemble in the reverse order.

Package	Position
TBA 1000 S - TBA 1000 Sq - TBA 1000 B	A
TBA 125 S - TBA 200 S - TBA 250 B - TBA 200 B - TBA 250 S - TBA 200 M	B

Pos. A

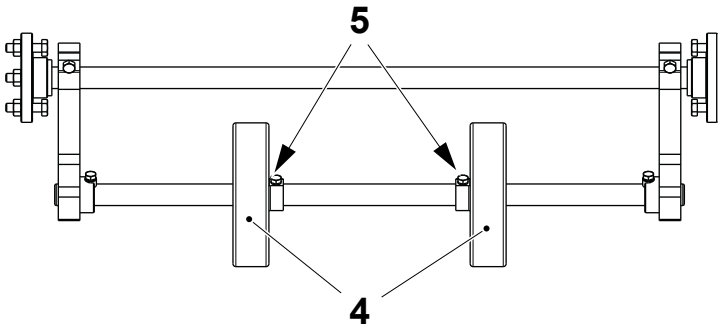

Pos. B

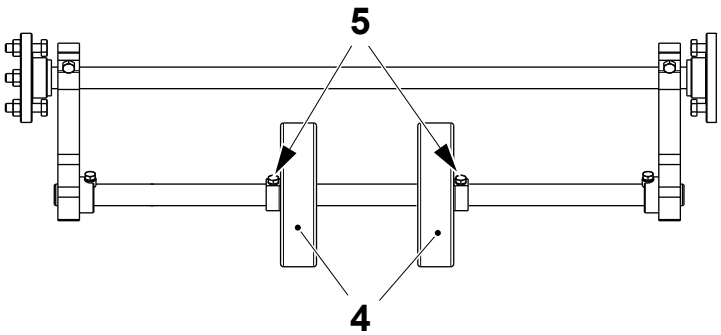

4 Wheel
5 Screw

TechPub_2614345_0108 - 0101_3048068_01.fm

1.3.8-5 Pendulum Roller - Set Cylinder

Machine Status	Mains Power OFF Air OFF Steam ON Water OFF
SPC Reference	2539445-0400

a) Loosen the screw (1) and remove the shaft (2).

b) Move the cylinder (3) from the lever (4).

c) Pull out completely the piston rod (5).

d) Set the distance **A** between the ball joint (6) and the cylinder by adjusting the nut (7).

e) Connect the cylinder (3) to the lever (4) by inserting the shaft (2) and the screw (1).

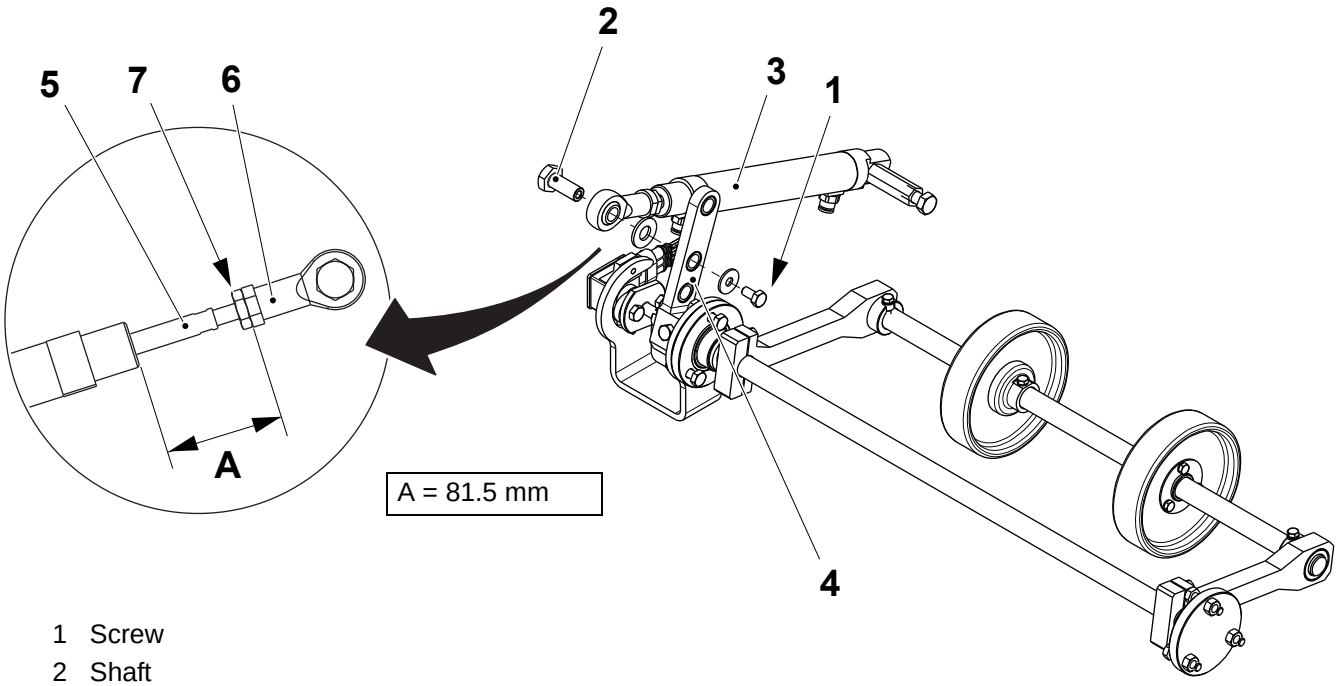

1 Screw
2 Shaft
3 Cylinder
4 Lever
5 Piston rod
6 Ball joint
7 Nut

TechPub_2614345_0108 - 0101_3048068_01.fm

1.3.8-6 Pendulum Roller - Change Bushings

Machine Status	Mains Power ON Air OFF Steam ON Water OFF
Consumables	PTFE Grease TP No. 90296-00091
SPC Reference	2539445-0400

a) On both levers (1), remove the screws (2) and bring the shaft and wheels assembly (3) on the work bench.

b) On both sides remove and change the bushing (4).

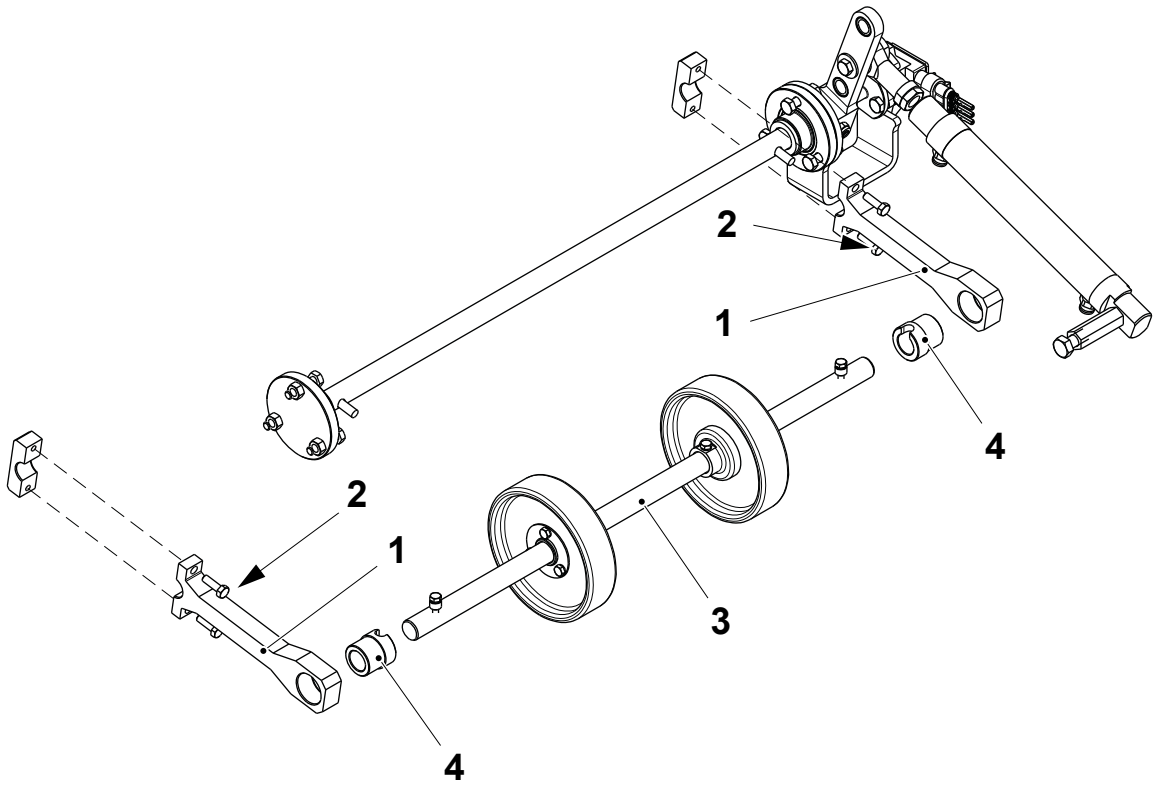

1 Lever
2 Screw
3 Shaft and wheels assembly
4 Bushing

(Cont'd)

TechPub_2614345_0108 - 0101_3048068_01.fm

(Cont'd)

Note! Apply a thin layer of food-grade lubricating grease TP No. 90296-00091 to the bushings (4).

c) Assemble in the reverse order paying attention that the screw (5) on the shaft is fitted into the slot of the bushing (4).

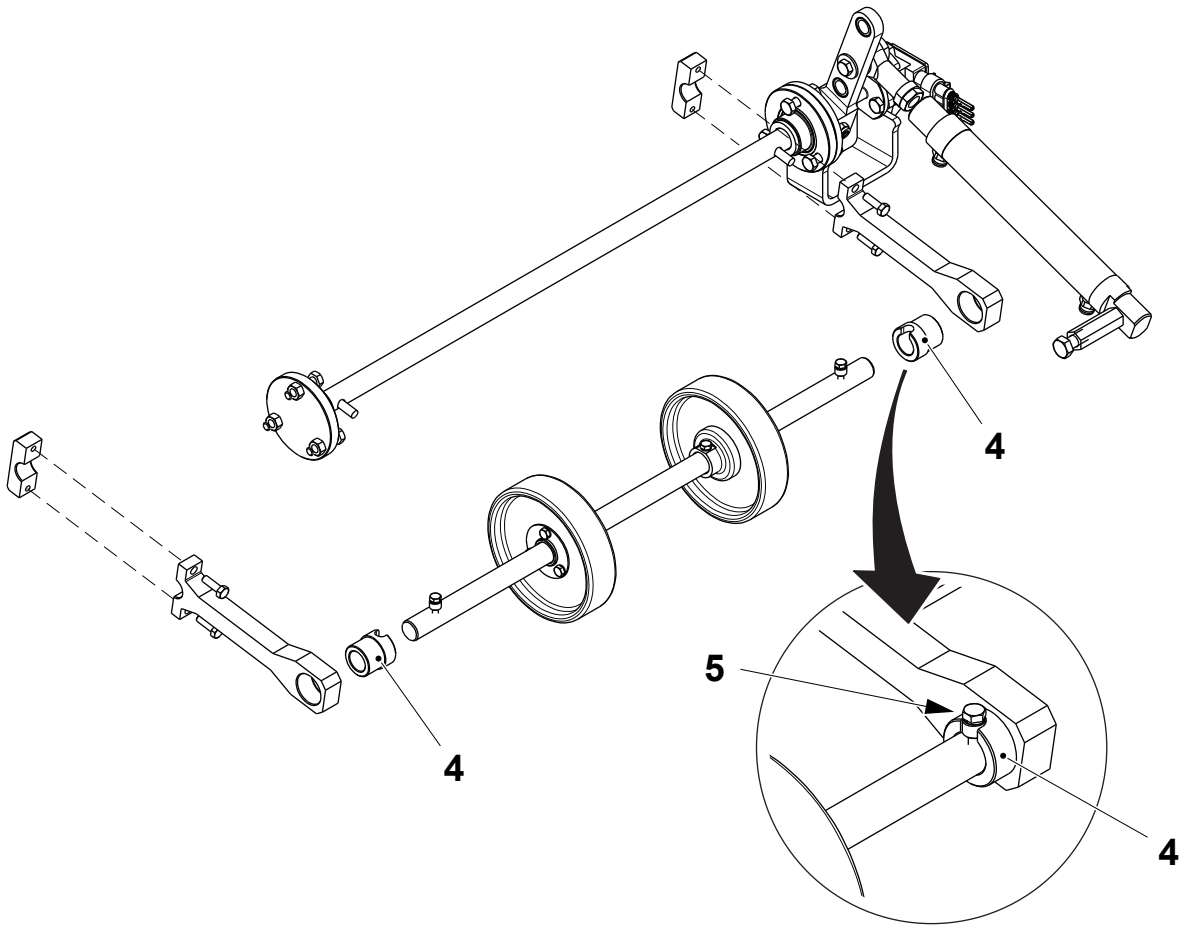

4 Bushing
5 Screw

TechPub_2614345_0108 - 0101_3048068_01.fm

1.3.9 Valve

1.3.9-1 Valve - Check

Machine Status	Mains Power OFF Air OFF Steam OFF Water OFF
SPC Reference	2550890-0100

WARNING
Hydrogen peroxide.
Follow the Safety Precautions.

(Cont'd)

TechPub_2614345_0108 - 0101_3048069_01.fm

(Cont'd)

a) Remove the cover (1).
b) Check that the valve (2) moves freely.
c) Check that the valve (2) seals correctly when closed.
d) Fit the cover (1).

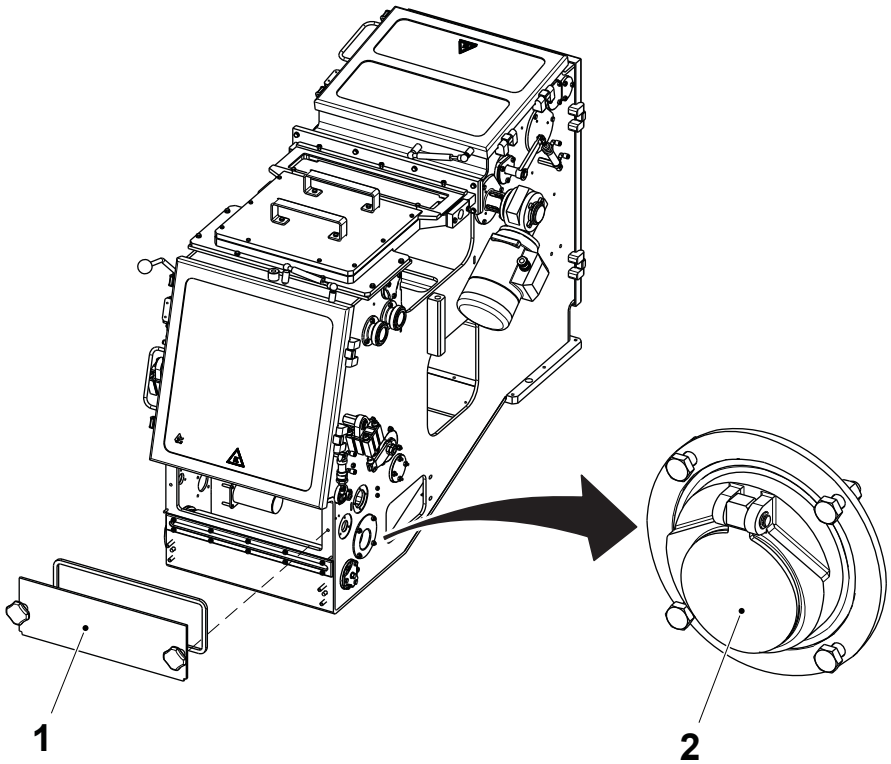

1 Cover
2 Valve

TechPub_2614345_0108 - 0101_3048069_01.fm

1.3.10 Squee-gee Roller

1.3.10-1 Squee-gee Roller - Change

Machine Status	Mains Power OFF Air OFF Steam ON Water OFF
SPC Reference	2758064-0200

WARNING
Hydrogen Peroxide.
Follow the Safety Precautions.

a) Remove the calender roller, see 1.3.4-2 Calender Roller - Change, steps a) to b).

(Cont'd)

TechPub_2614345_0108 - 0101_3048070_01.fm

(Cont'd)

b) Remove the screws (1) and the clamping piece (2).

c) Lift and remove the roller assembly (3).

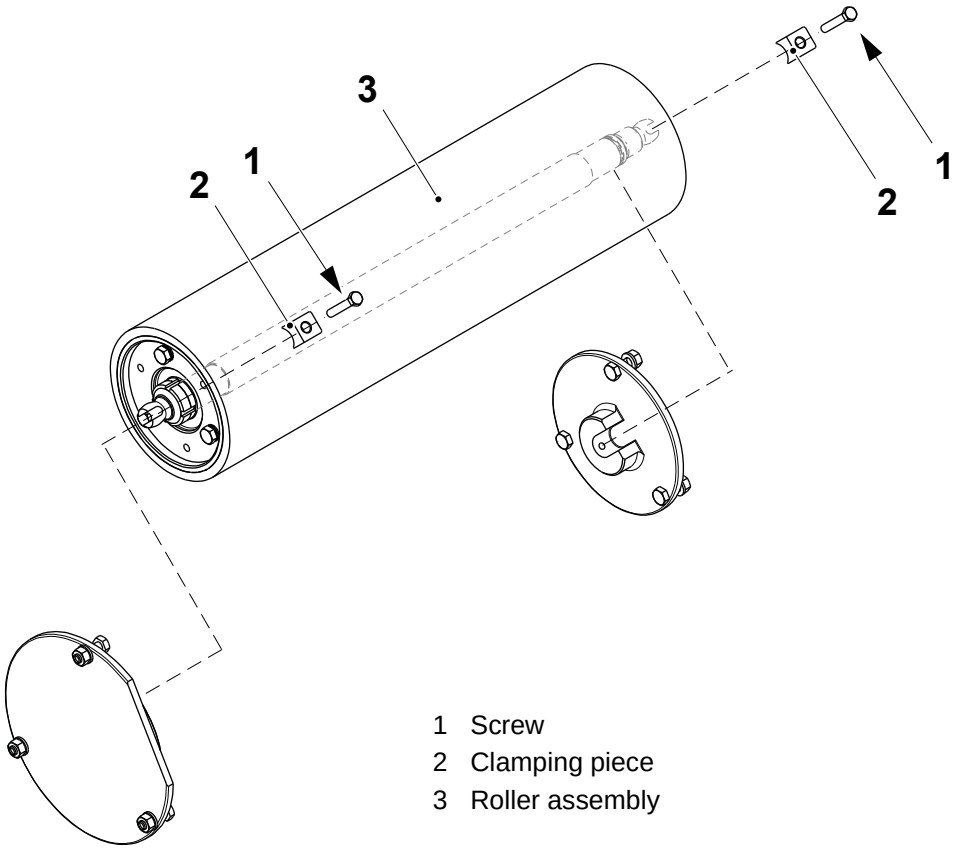

1 Screw
2 Clamping piece
3 Roller assembly

(Cont'd)

TechPub_2614345_0108 - 0101_3048070_01.fm

(Cont'd)

d) Loosen and remove the lock nut (4).

e) Remove the radial seal (5). Change if necessary.

f) Remove the screws (6) and extract the bearing housing (7).

g) Remove the lid (8) from the bearing housing (7) and change the O-ring (9).

h) Remove the ball bearing (10) and the radial seal (11). Change if necessary.

Note! Lubricate the radial seals (5) and (11) with grease TP No. 90601-3167.

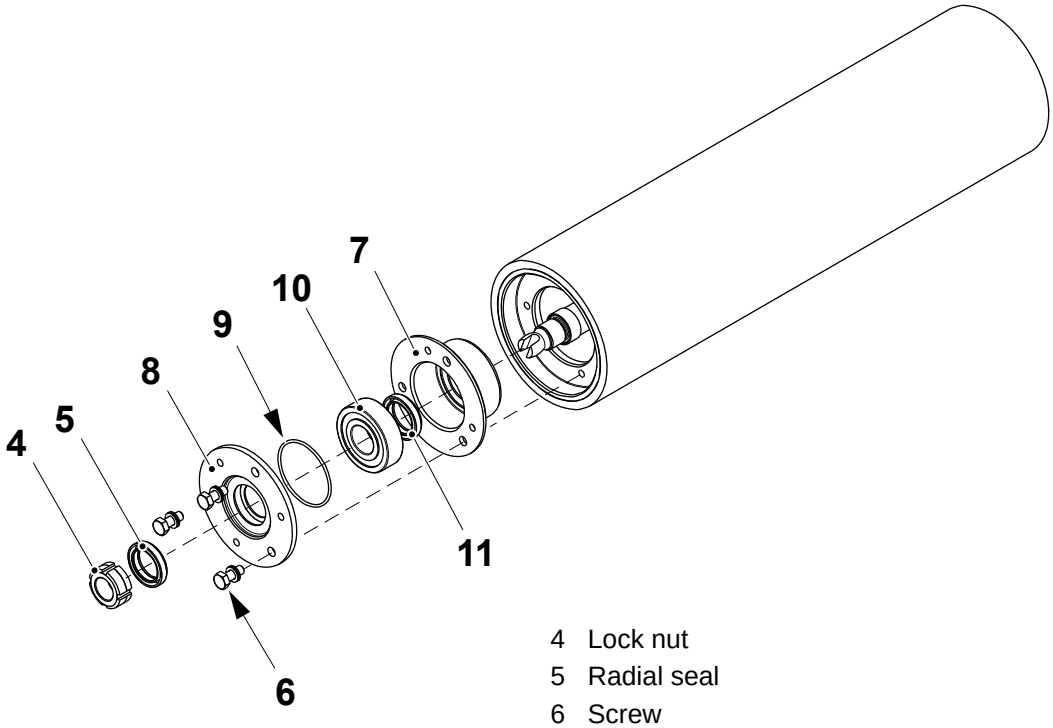

4 Lock nut
5 Radial seal
6 Screw
7 Bearing housing
8 Lid
9 O-ring
10 Ball bearing
11 Radial seal

(Cont'd)

TechPub_2614345_0108 - 0101_3048070_01.fm

(Cont'd)

i) Remove the O-ring (12) and the bushings (13). Change if necessary.
j) Repeat the same steps on the other end of the roller.
k) Remove the shaft (14) and change the roller (15).
l) Assemble in the reverse order.

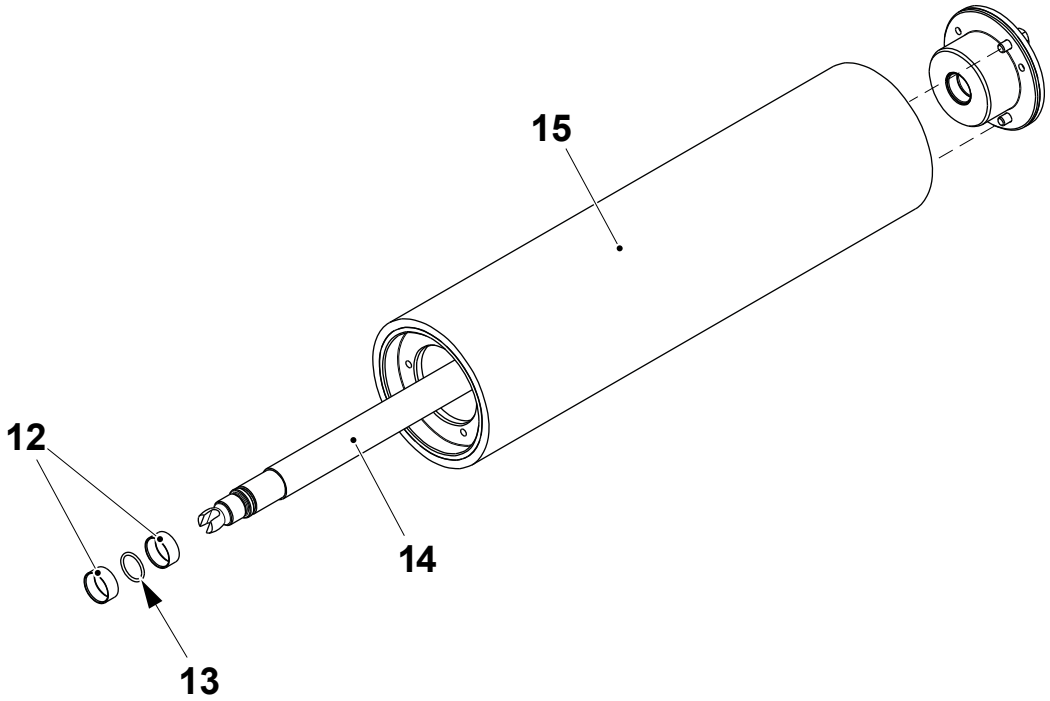

12 O-ring
13 Bushing
14 Shaft
15 Roller

TechPub_2614345_0108 - 0101_3048070_01.fm

1.3.11 Bending Roller

1.3.11-1 Bending - Change Roller

Machine Status	Mains Power OFF Air OFF Steam ON Water OFF
Consumables	PTFE Grease TP No. 90296-0091
SPC Reference	2745337-0200

Note! Apply PTFE grease TP No. 90296-0091 on the ball bearing (4).

a) Remove the screws (1), the cover (2) and change the O-ring (3).

b) Remove the ball bearing (4) and the sealing ring (5). Change if necessary.

c) Remove the screws and nuts (6) and the flange (7).

d) Remove and change the O-ring (8).

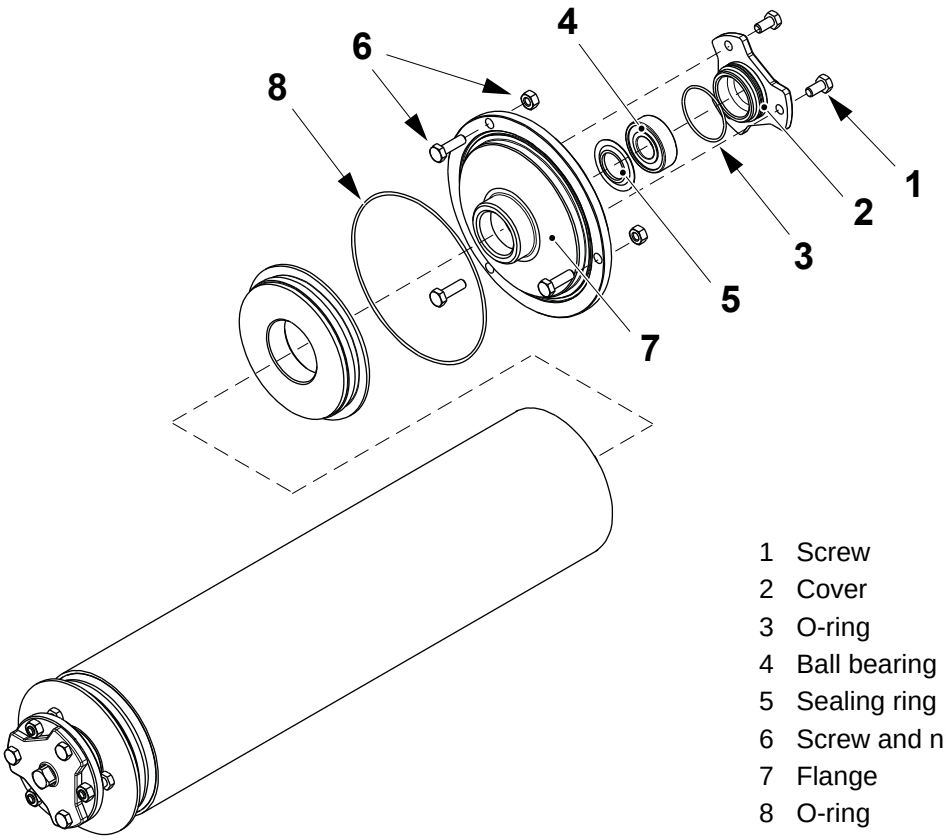

1 Screw
2 Cover
3 O-ring
4 Ball bearing
5 Sealing ring
6 Screw and nut
7 Flange
8 O-ring

(Cont'd)

TechPub_2614345_0108 - 0101_3048071_01.fm

(Cont'd)

Note! Apply PTFE grease TP No. 90296-0091 on the ball bearings (17).

e) Remove the roller (9) and wheels (10).

f) Remove the screws (11), the lid (12) and change the O-ring (13).

g) Remove the screws and nuts (14) and the flange (15).

h) Change the O-ring (16).

i) Remove the ball bearing (17) and the sealing ring (18). Change if necessary.

j) Assemble in the reverse order.

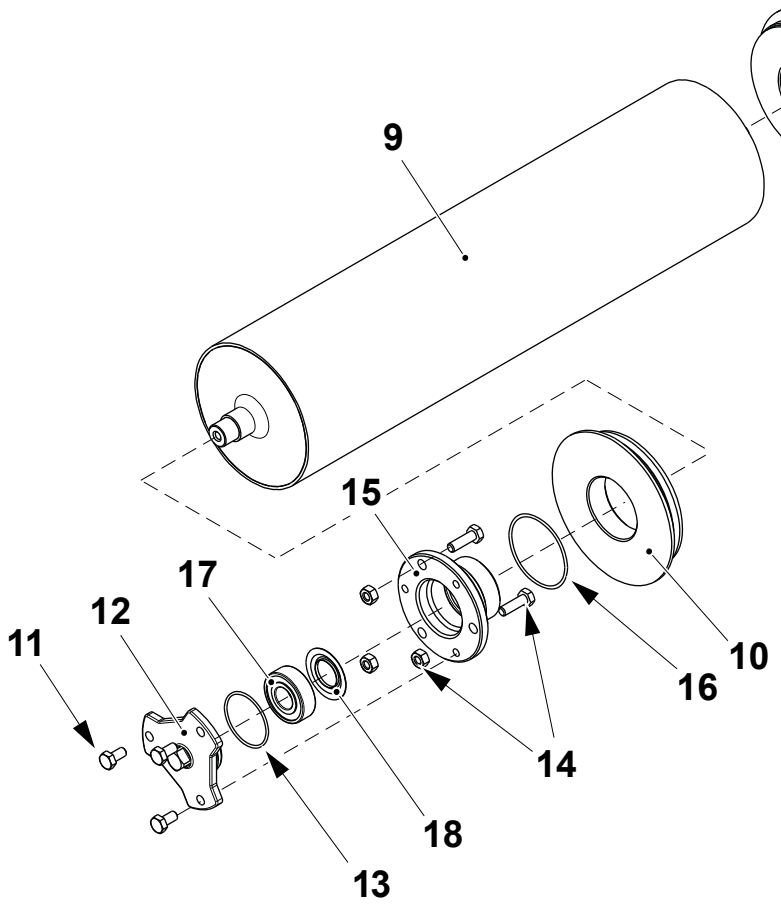

9 Roller
10 Wheels
11 Screw
12 Lid
13 O-ring
14 Screw and nut
15 Flange
16 O-ring
17 Ball bearing
18 Sealing ring

TechPub_2614345_0108 - 0101_3048071_01.fm

1.3.12 Pendulum Counter Roller

1.3.12-1 Pendulum Counter Roller - Set Pressure

Machine Status	Mains Power OFF Air OFF Steam ON Water OFF
SPC Reference	2826414-0400

Set the pressure for the pressure roller cylinder (1) between 2.0 and 2.5 bar by the pressure regulator (2) located on the superstructure air panel.

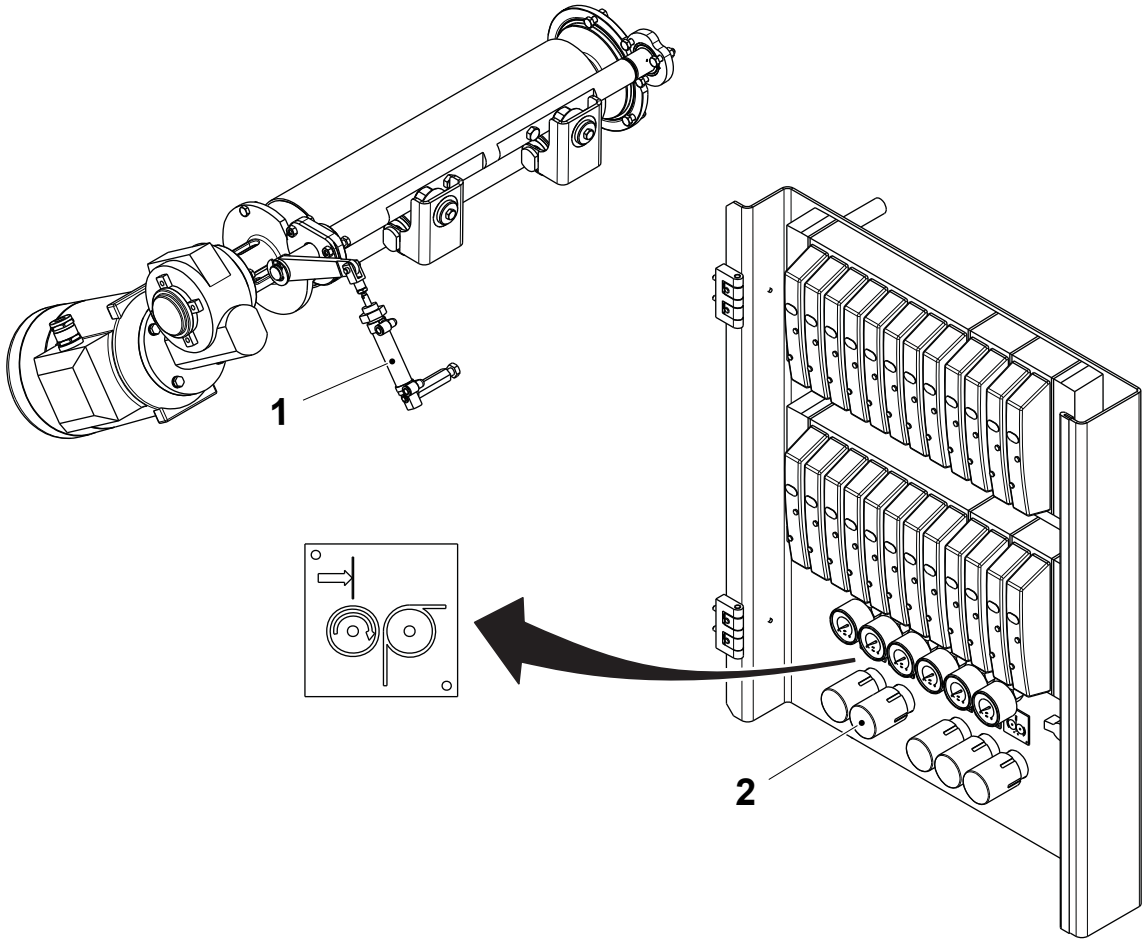

1 Cylinder
2 Pressure regulator

TechPub_2614345_0108 - 0101_3048072_01.fm

1.3.12-2 Pendulum Counter Roller - Set Distance

Machine Status	Mains Power OFF Air OFF Steam ON Water OFF
SPC Reference	2826414-0400

Check that both the counter rollers (1) are in contact with the drive roller (2). If the counter rollers (1) are misaligned, add or remove shims (3) until they touch simultaneously the drive roller (2).

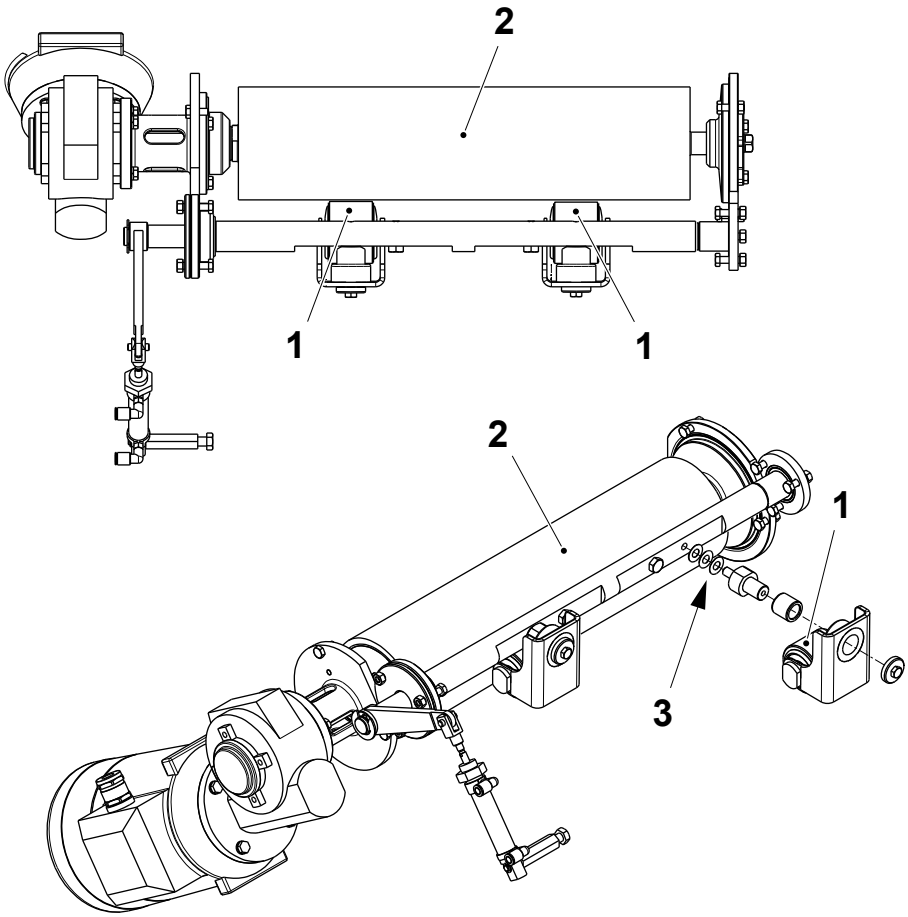

1 Counter roller
2 Drive roller
3 Shim

TechPub_2614345_0108 - 0101_3048072_01.fm

1.3.12-3 Pendulum Counter Roller - Change Rollers

Machine Status	Mains Power OFF Air OFF Steam ON Water OFF
Consumables	PTFE Grease TP No. 90296-0091
SPC Reference	2826414-0400

CAUTION
Risk of damage to the equipment.
Remove and insert gently the shaft (4) through the roller (5) without forcing.

a) Remove the roller assembly by the screw (1).

b) Change the bushing (2) if necessary.

c) Remove the nut (3), the shaft (4) and change the roller (5).

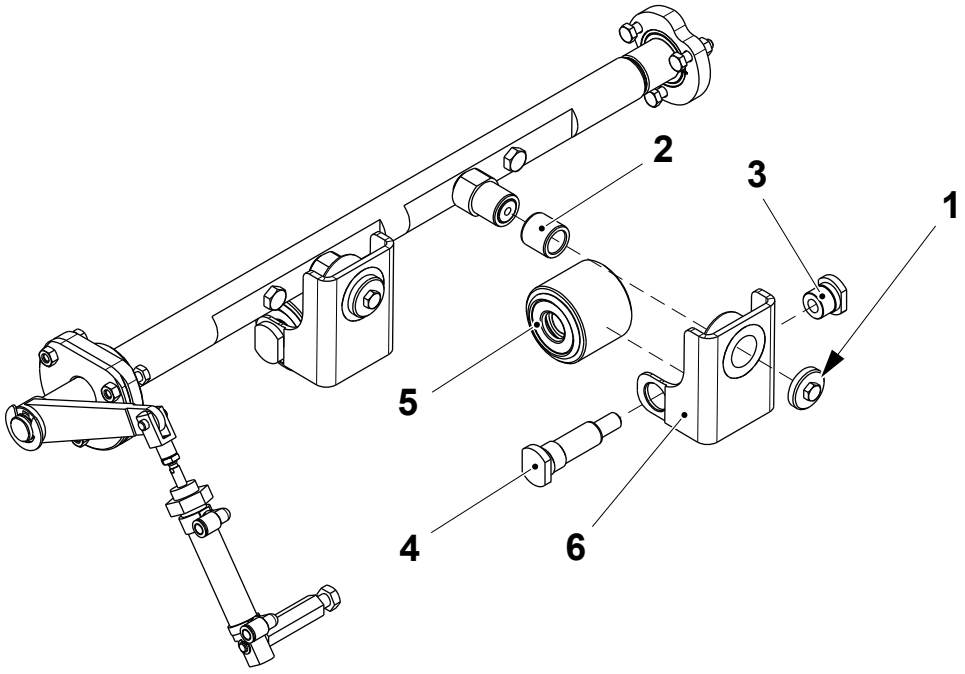

1 Screw
2 Bushing
3 Nut
4 Shaft
5 Roller

(Cont'd)

TechPub_2614345_0108 - 0101_3048072_01.fm

(Cont'd)

d) Remove the sealing rings (6). Change the sealing rings (6) and the roller (5) if necessary.

e) Remove and change the bushings (7).

Note! Apply a thin layer of grease TP No. 90296-0091 on the bushing (7).

f) Assemble in the reverse order.

Note! When assembling, push the shaft (4) against the worked surface of the bracket (8) so that the milling of the shaft (4) mates the milling (9) on the bracket (8), see picture below.

g) Repeat on the other counter roller.

4 Shaft
5 Roller
6 Sealing ring
7 Bushing
8 Bracket
9 Milling

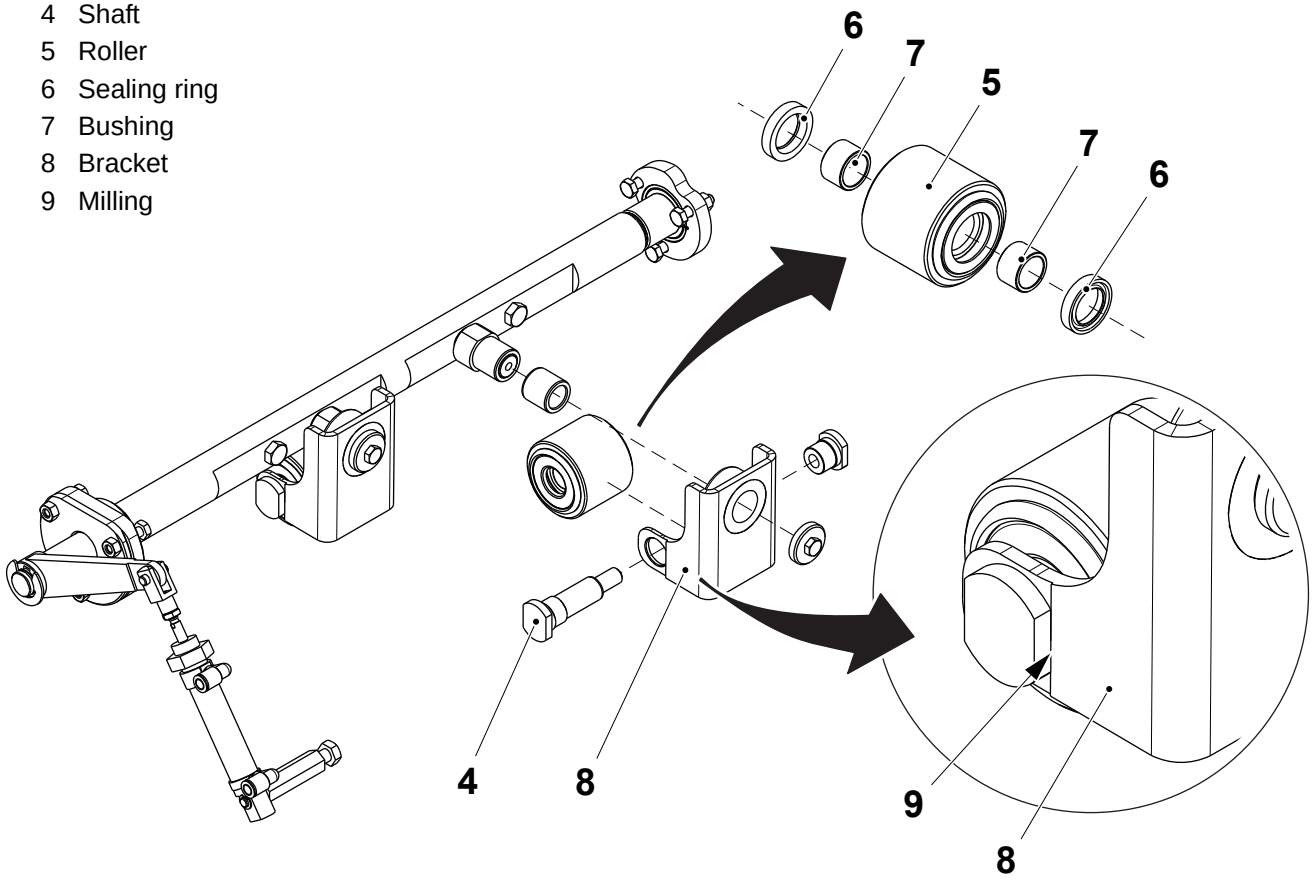

TechPub_2614345_0108 - 0101_3048072_01.fm

1.3.12-4 Pendulum Counter Roller - Set Roller Position

Machine Status	Mains Power OFF Air OFF Steam ON Water OFF
SPC Reference	2826414-0400

a) On both counter rollers (1), remove the screws (2) and the counter rollers (1).

b) Remove the screws (3) and fit the counter rollers (1) in the position required by the volume, see the table below.

c) Assemble in the reverse order.

Package	Position
TBA 1000 S - TBA 1000 Sq - TBA 1000 B	A
TBA 125 S - TBA 200 S - TBA 250 B - TBA 200 B - TBA 250 S - TBA 200 M	B

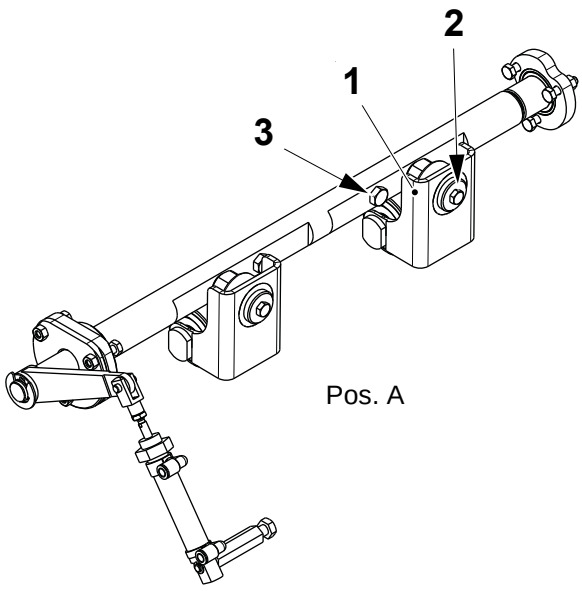

Pos. A

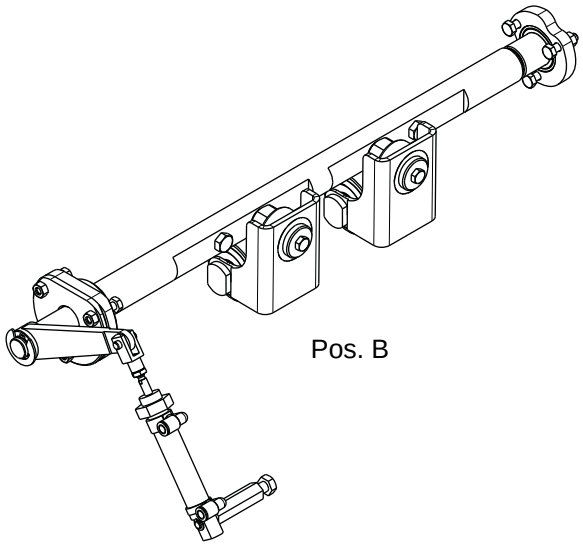

Pos. B

1 Counter roller
2 Screw
3 Screw

TechPub_2614345_0108 - 0101_3048072_01.fm

1.3.13 Cap Guide

1.3.13-1 Cap Guide - Set Position

Machine Status	Mains Power OFF Air OFF Steam ON Water OFF
SPC Reference	1528746-0100

Note! Valid for machines equipped with PT Speed.

Package	**A ±0.5 (mm)**
TBA 1000 S	350
TBA 1000 Sq Recap3	220

(Cont'd)

TechPub_2614345_0108 - 0101_3048073_01.fm

(Cont'd)

a) Remove the lid (1).

b) Loosen the screw (2) and set the distance **A** between the internal surface of the drying chamber and the centre of the cap guide (3), see the table on the previous page.

c) Tighten the screw (2) and fit back the lid (1).

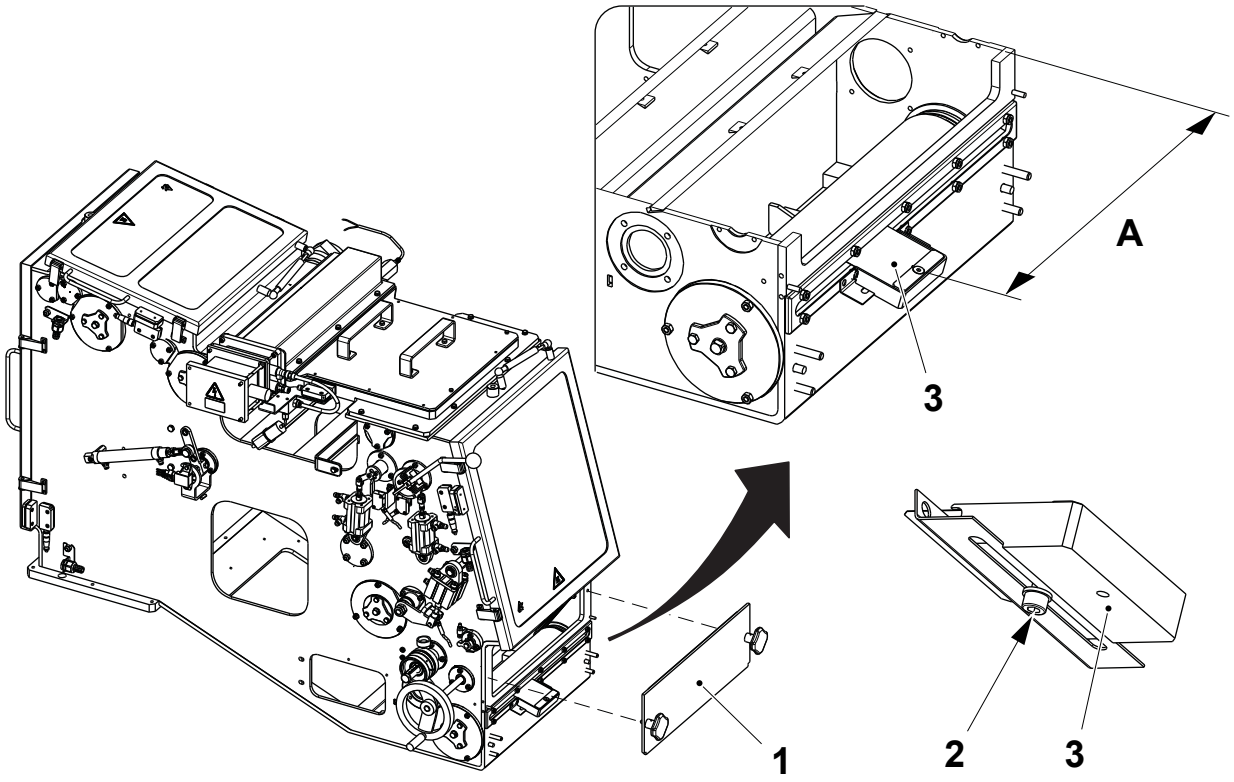

1 Lid
2 Screw
3 Cap guide

TechPub_2614345_0108 - 0101_3048073_01.fm

1.4 Sterile Air System

SPC Reference	2528076-0300

1.4-1 Sterile Air System - Check for Leaks

Machine Status	HEAT STERILIZATION
SPC Reference	2528076-0300

WARNING
Burn hazard.
Follow the Safety Precautions.

WARNING
Hydrogen Peroxide.
Follow the Safety Precautions.

Check the connections for air leaks at the following points:

- the spray generator (1)
- the compressor unit (2)
- the air superheater (3)
- the heat exchanger (4)

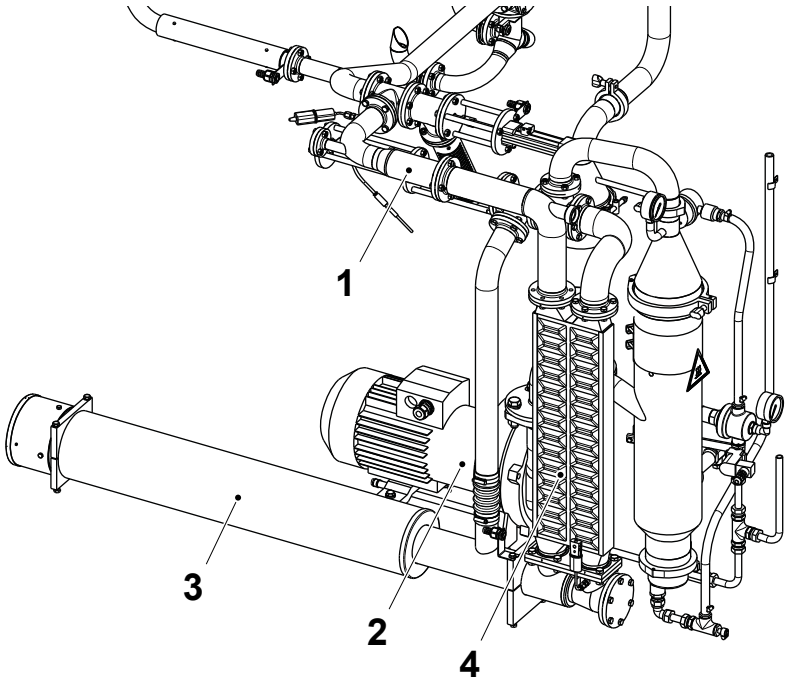

1 Spray generator
2 Compressor unit
3 Air superheater
4 Heat exchanger

(Cont'd)

TechPub_2614345_0108 - 0102_3048075_01.fm

(Cont'd)

- the separator (5)
- the scrubber (6)
- the heat exchanger valve (7)
- the air preheating valve (8)
- the change over valve (9)
- the air knife heater (10).

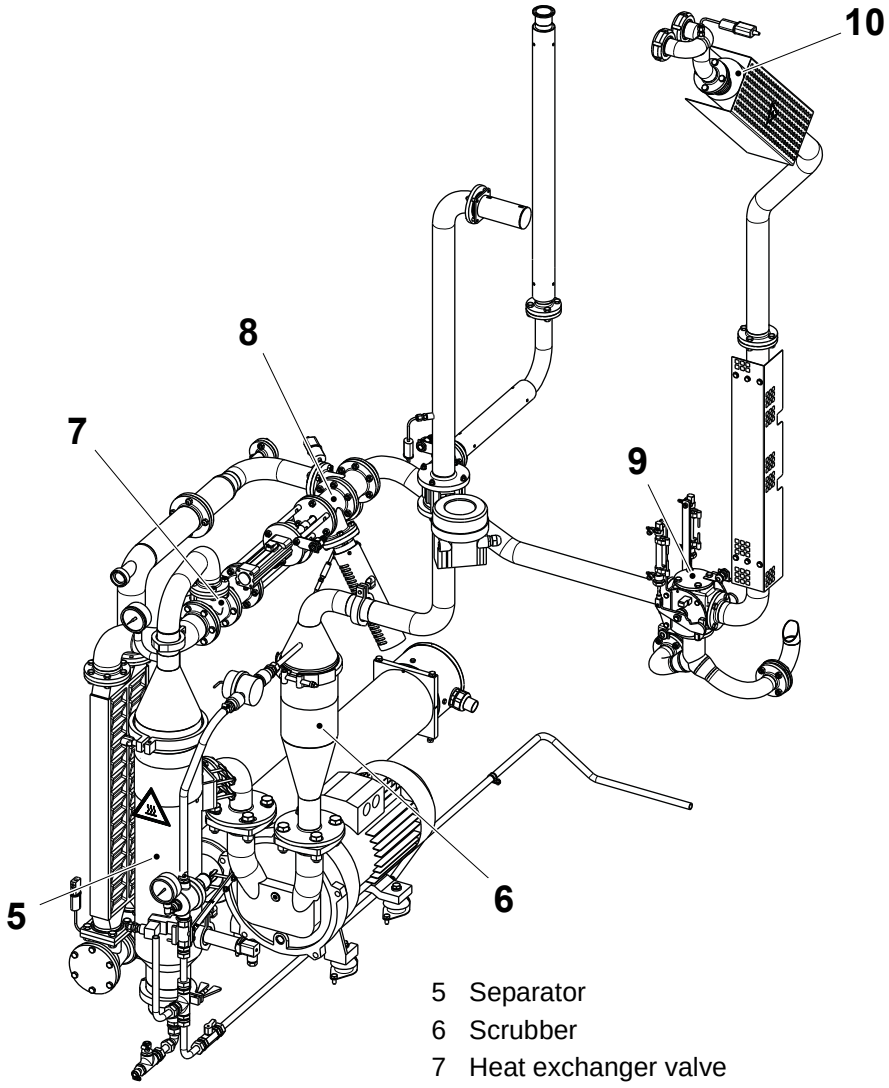

5 Separator
6 Scrubber
7 Heat exchanger valve
8 Air preheating valve
9 Change over valve
10 Air knife heater

TechPub_2614345_0108 - 0102_3048075_01.fm

1.4.1 Pipe Work Air

1.4.1-1 Pipe Work Air - Check Spray Nozzle

Machine Status	Mains Power OFF Air OFF Steam OFF Water OFF
SPC Reference	1558511-0400

WARNING
Burn hazard.
Follow the Safety Precautions.

WARNING
Hydrogen Peroxide.
Follow the Safety Precautions.

CAUTION
Risk of serious production fault.
Never close the steam valve when the dairy product line is still in use by other machines. The steam in the product valve forms an aseptic barrier between the machine and the remaining dairy product line. Closing the steam valve will remove this barrier.

(Cont'd)

TechPub_2614345_0108 - 0102_3048075_01.fm

(Cont'd)

a) Remove the pipes from the connections (1).
b) Remove the spray nozzle group (2) with the nut (3).

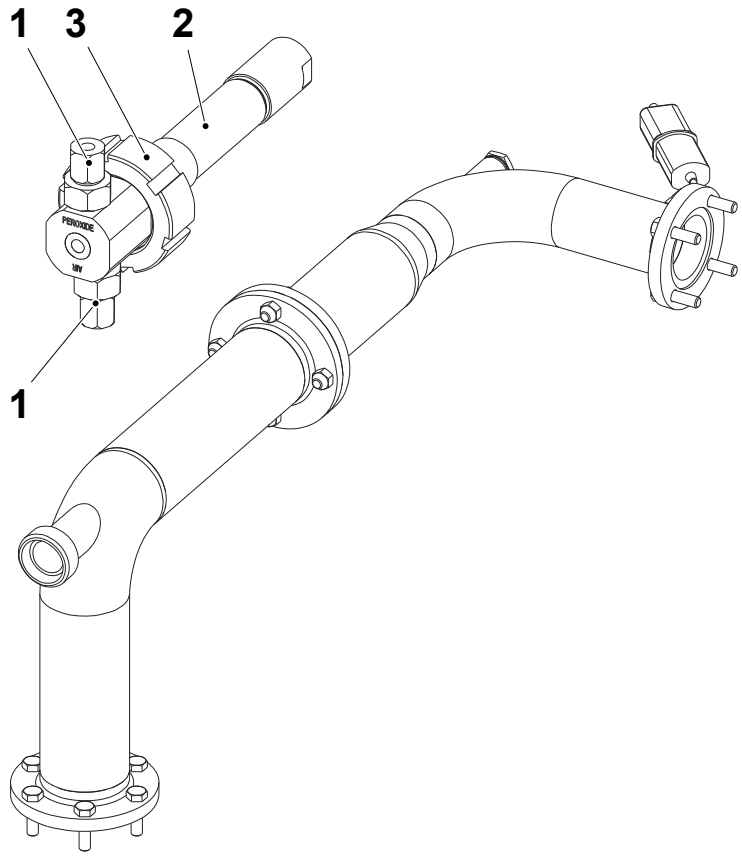

1 Connection
2 Nozzle group
3 Nut

(Cont'd)

TechPub_2614345_0108 - 0102_3048075_01.fm

(Cont'd)

c) Remove the nut (4).

d) Disassemble the nozzle (5) from the dome (6), the spacer (7) and the nut (4).

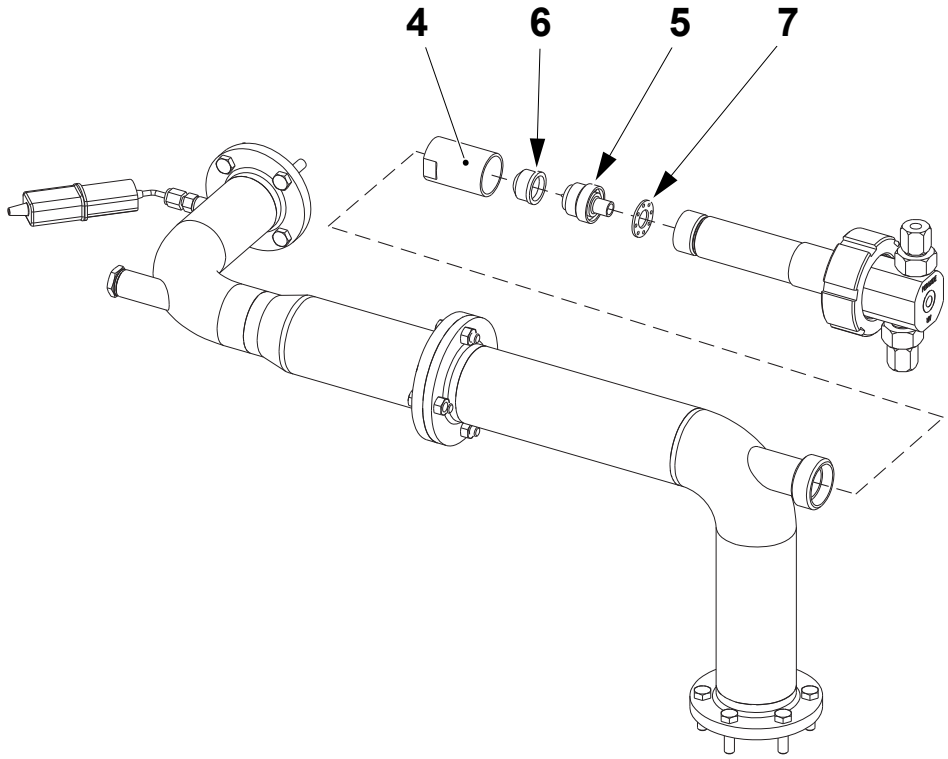

4 Nut
5 Nozzle
6 Dome
7 Spacer

(Cont'd)

TechPub_2614345_0108 - 0102_3048075_01.fm

(Cont'd)

Note! If the connections (1) have been removed from the spray nozzle body (9), use Teflon tape on the joints when assembling to avoid leakage.

e) Remove the external pipe (8) and the nut (3).

f) Check all the parts for wear or damage and clean them if necessary with compressed air, see 1.4.1-2 Pipe Work Air - Clean Spray Nozzle and Balls.

g) Assemble in the reverse order.

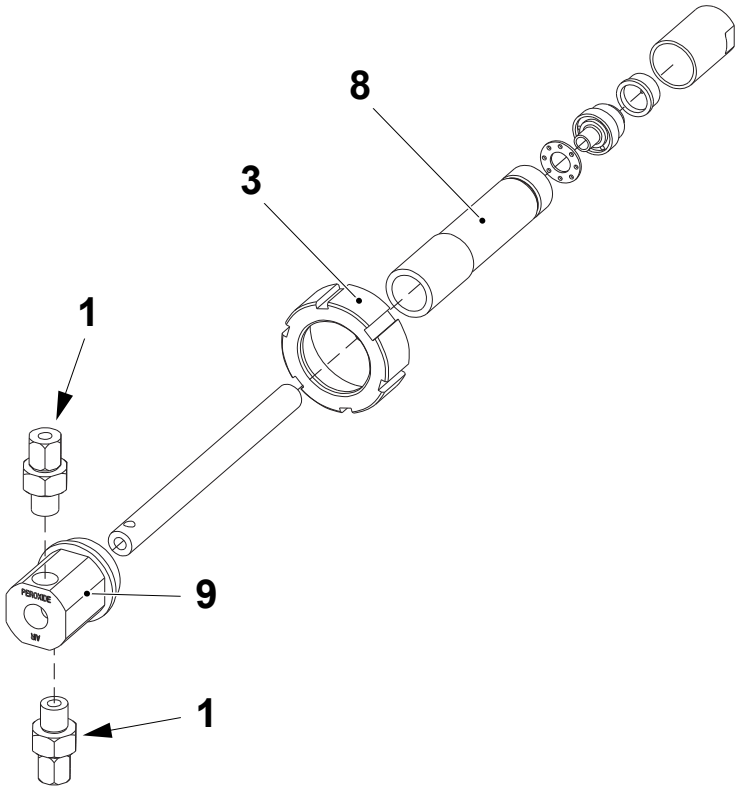

1 Connection
3 Nut
8 External pipe
9 Spray nozzle body

TechPub_2614345_0108 - 0102_3048075_01.fm

1.4.1-2 Pipe Work Air - Clean Spray Nozzle and Balls

Machine Status	Mains Power OFF Air OFF Steam OFF Water OFF
Consumables	De-liming Acid, See List
SPC Reference	1558511-0400

WARNING
Burn hazard.
Follow the Safety Precautions.

WARNING
Hydrogen Peroxide.
Follow the Safety Precautions.

CAUTION
Risk of serious production fault.
Never close the steam valve when the dairy product line is still in use by other machines. The steam in the product valve forms an aseptic barrier between the machine and the remaining dairy product line. Closing the steam valve will remove this barrier.

(Cont'd)

TechPub_2614345_0108 - 0102_3048075_01.fm

(Cont'd)

a) Disconnect the electrical connection from the thermocouple (1).

b) Remove the H_2O_2 pipe and the compressed air pipe from the connections (2) and (3).

c) Remove the ten screws (4) and remove the spray generator (5).

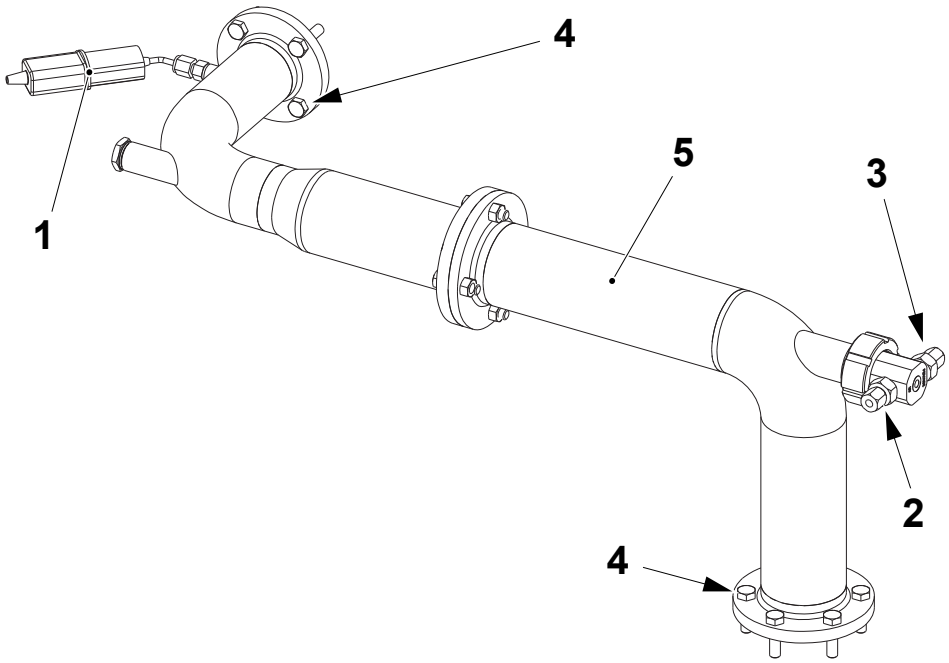

1 Thermocouple
2 Connection
3 Connection
4 Screw
5 Spray generator

(Cont'd)

TechPub_2614345_0108 - 0102_3048075_01.fm

(Cont'd)

d) Remove the spray nozzle group (6) with the nut (7).

e) Remove the nut (8).

f) Disassemble the nozzle (9) from the dome (10), the spacer (11) and the nut (8).

g) Clean all the parts with compressed air. If necessary, use a needle to clean the spacer (11), the nozzle (9) and the dome (10).

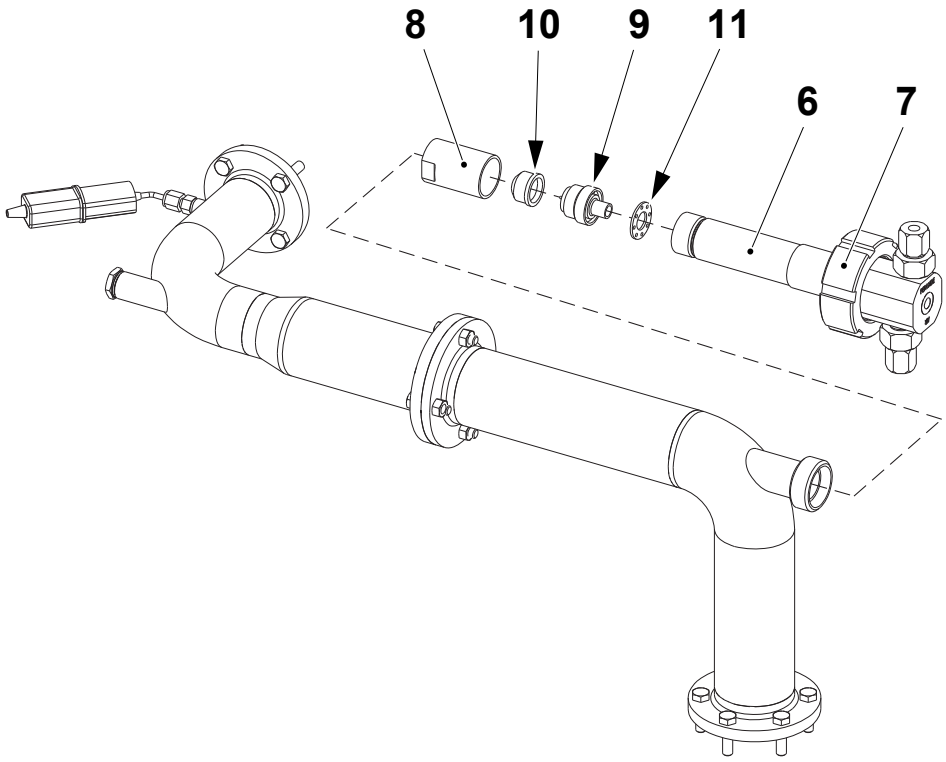

6 Nozzle group
7 Nut
8 Nut
9 Nozzle
10 Dome
11 Spacer

TechPub_2614345_0108 - 0102_3048075_01.fm

(Cont'd)

(Cont'd)

WARNING
Acids.
Follow the Safety Precautions.

h) Disconnect the pipe (12) from the pipe (13) with the nuts (14) and the screws (15).

i) Remove the container (16).

j) Clean the container (16) containing the balls with nitric acid (HNO_3) at 5-10%. The solution must have a temperature of 50°- 60°C during peroxide residue removal.

k) After cleaning flush the container (16) with water and then rinse with softened or distilled water.

l) Assemble in the reverse order.

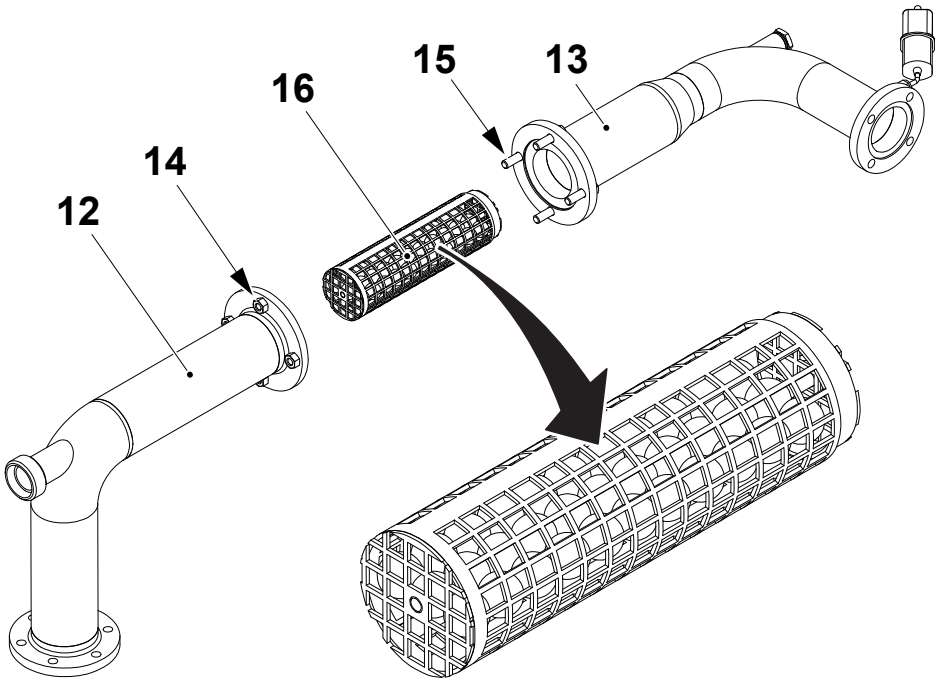

12 Pipe
13 Pipe
14 Nut
15 Screw
16 Container

TechPub_2614345_0108 - 0102_3048075_01.fm

1.4.1-3 Pipe Work Air - Check Change Over Valve

Machine Status	Mains Power OFF Air OFF Steam OFF Water OFF
SPC Reference	1558511-0400 2550895-0200

WARNING
Burn hazard.
Follow the Safety Precautions.

CAUTION
Risk of serious production fault.
Never close the steam valve when the dairy product line is still in use by other machines. The steam in the product valve forms an aseptic barrier between the machine and the remaining dairy product line. Closing the steam valve will remove this barrier.

(Cont'd)

TechPub_2614345_0108 - 0102_3048075_01.fm

(Cont'd)

Check the valve functions correctly and that the shafts (1) move freely. If not change the bushings, see 1.4.1-4 Pipe Work Air - Overhaul Change Over Valve.

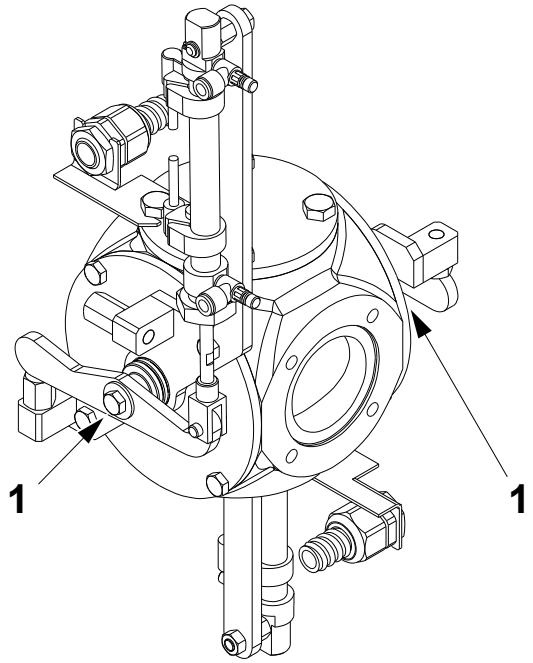

1 Shaft

TechPub_2614345_0108 - 0102_3048075_01.fm

1.4.1-4 Pipe Work Air - Overhaul Change Over Valve

Machine Status	Mains Power OFF Air OFF Steam OFF Water OFF
SPC Reference	1558511-0400 2550895-0200

WARNING

Burn hazard.

Follow the Safety Precautions.

CAUTION

Risk of serious production fault.

Never close the steam valve when the dairy product line is still in use by other machines. The steam in the product valve forms an aseptic barrier between the machine and the remaining dairy product line. Closing the steam valve will remove this barrier.

(Cont'd)

TechPub_2614345_0108 - 0102_3048075_01.fm

(Cont'd)

a) Remove the screw (1), the washer (2) and the arm (3).
b) Remove the screws (4) and the assembly (5).
c) Remove the shaft (6).
d) Remove and change the O-ring (7) and the bushing (8).
e) Remove the screws (9) and the lid (10).
f) Change the O-ring (11).

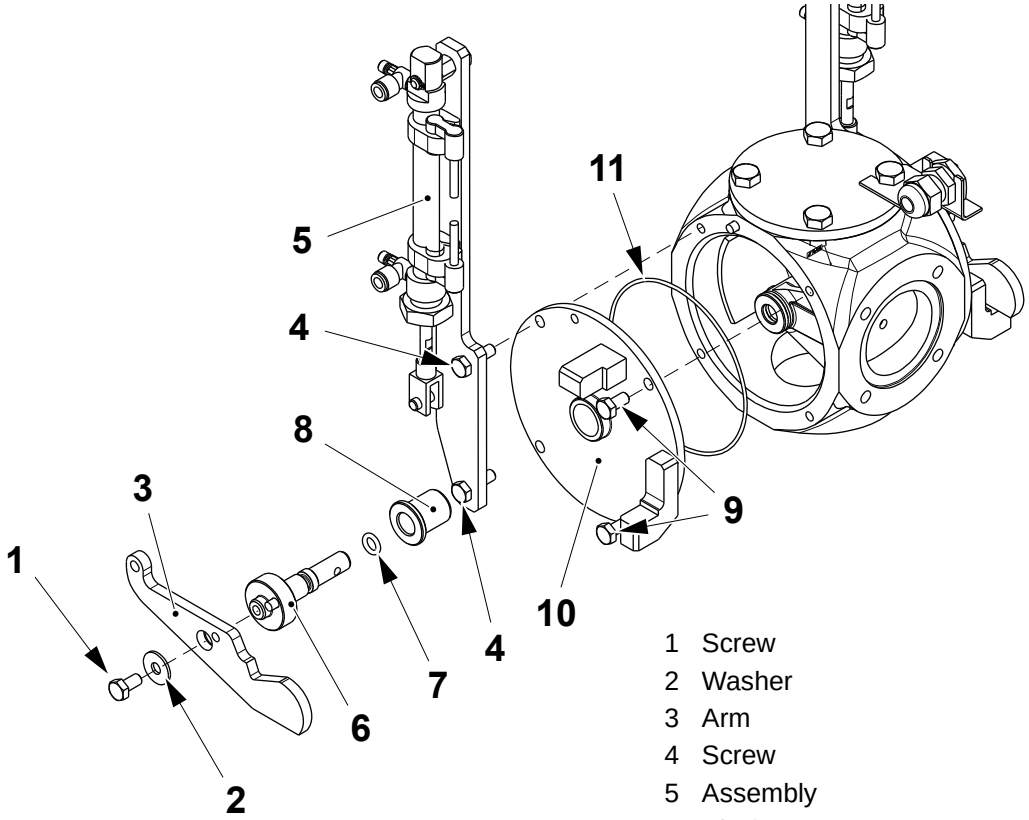

1 Screw
2 Washer
3 Arm
4 Screw
5 Assembly
6 Shaft
7 O-ring
8 Bushing
9 Screw
10 Lid
11 O-ring

(Cont'd)

TechPub_2614345_0108 - 0102_3048075_01.fm

(Cont'd)

Note! When assembling centre the lid (10) by the pin (12) and the arm (3) by the pin (13).

g) Assemble in the reverse order. Repeat the procedure for the other side of the change over valve.

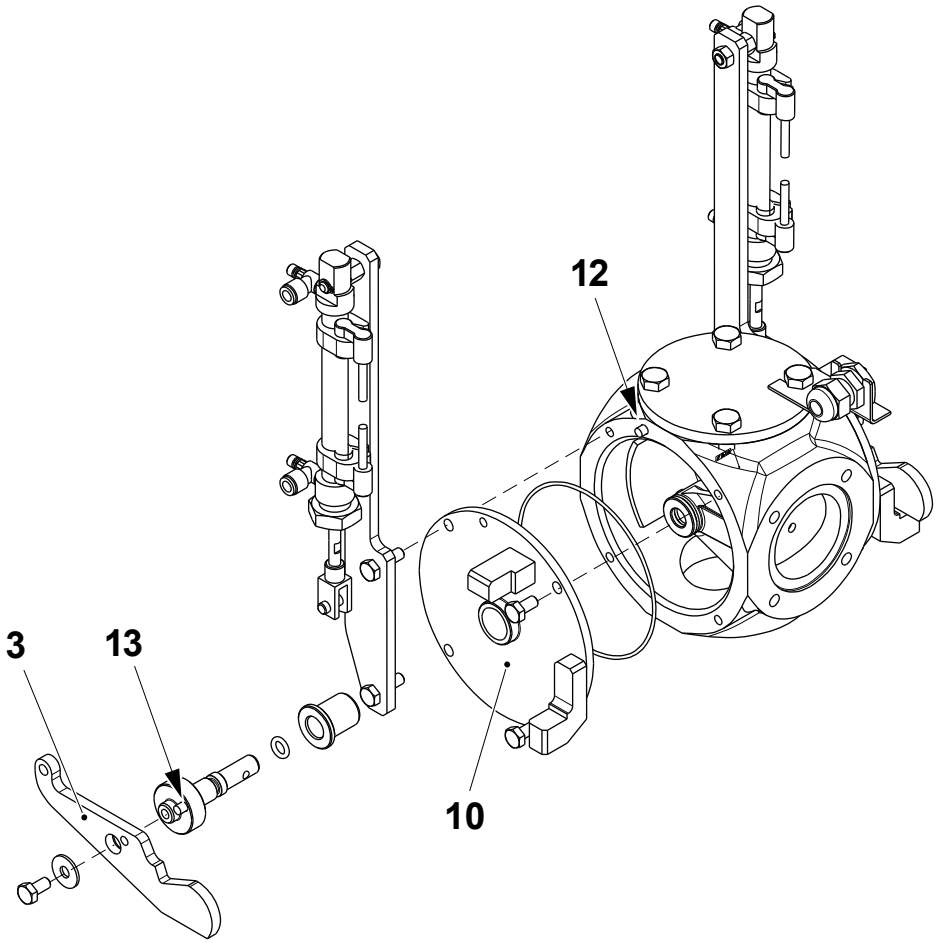

3 Arm
10 Lid
12 Pin
13 Pin

TechPub_2614345_0108 - 0102_3048075_01.fm

1.4.2 Compressor Unit

1.4.2-1 Compressor Unit - Check Pressure

Machine Status	PRODUCTION
SPC Reference	2700059-0300

WARNING
Burn hazard.
Follow the Safety Precautions.

Check that the pressure gauge (1) on the water separator (2) indicates the nominal sterile air pressure of 0.3 bar.

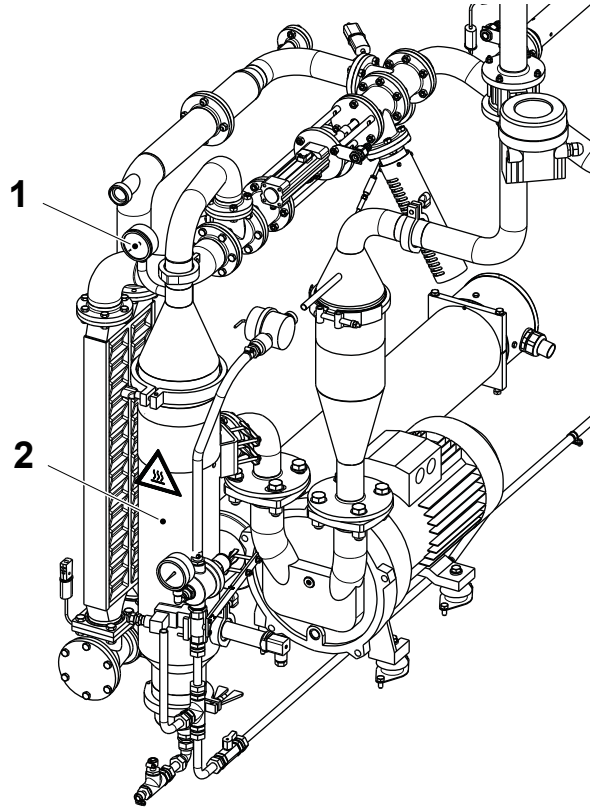

1 Pressure gauge
2 Water separator

(Cont'd)

TechPub_2614345_0108 - 0101_3048076_01.fm

(Cont'd)

If the correct sterile air pressure cannot be achieved, check the following:

- that the cause of too high sterile air pressure may be due to a blockage somewhere in the sterile air system pipe work
- that the cause of too low air pressure in the sterile air system may be due to a leakage in the sterile air system pipe work, a blocked filter in the suction system or insufficient compressor capacity.

TechPub_2614345_0108 - 0101_3048076_01.fm

1.4.2-2 Compressor Unit - Change Gaskets

Machine Status	Mains Power OFF Air OFF Steam OFF Water OFF
SPC Reference	2700059-0300

WARNING

Burn hazard.

Follow the Safety Precautions.

(Cont'd)

TechPub_2614345_0108 - 0101_3048076_01.fm

(Cont'd)

WARNING
Burn hazard.
Follow the Safety Precautions.

Check the flanges (1) of the compressor (2) for leaks. Remove the screws (3) and (4) and change the expansion joints (5) if necessary.

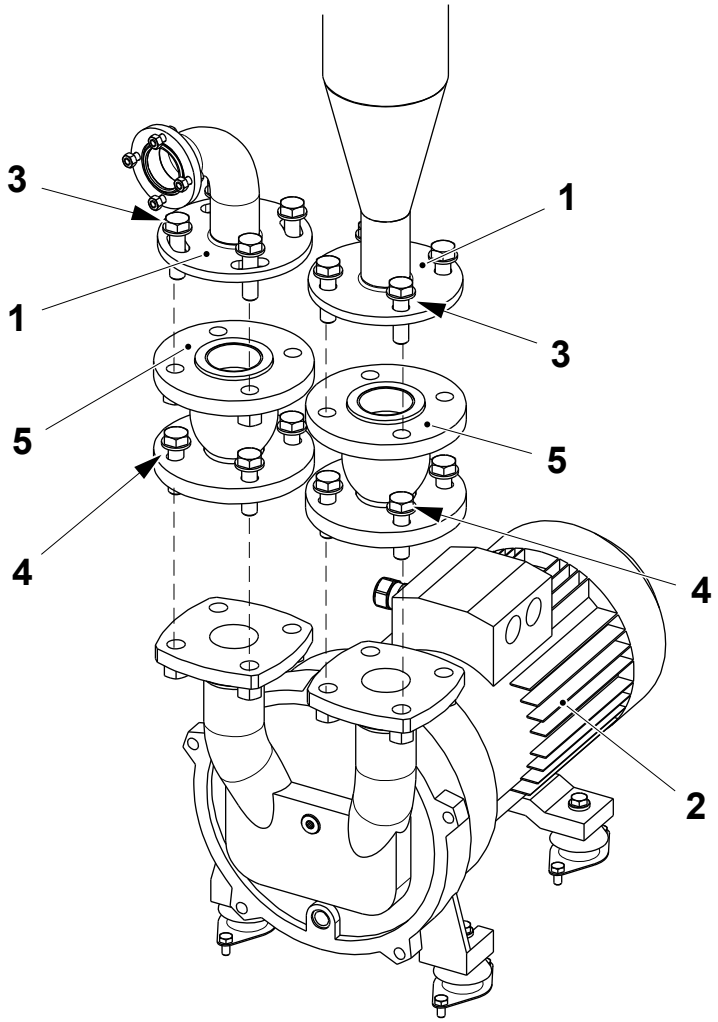

1 Flange
2 Compressor
3 Screw
4 Screw
5 Expansion joint

TechPub_2614345_0108 - 0101_3048076_01.fm

1.4.2-3 Compressor Unit - Clean Impeller

Machine Status	Mains Power OFF Air OFF Steam OFF Water OFF
Special Equipment	Container
SPC Reference	2700059-0300

WARNING

Burn hazard.

Follow the Safety Precautions.

(Cont'd)

TechPub_2614345_0108 - 0101_3048076_01.fm

(Cont'd)

a) Place a container (1) under the drain plug (2) of the compressor.

b) Remove the drain plug (2) and drain the water in the container (1).

c) Rotate occasionally the motor until no more water runs out, proceeding as follows:
   – remove the fan cowl (3)
   – rotate the motor fan (4) by hand in the running direction.

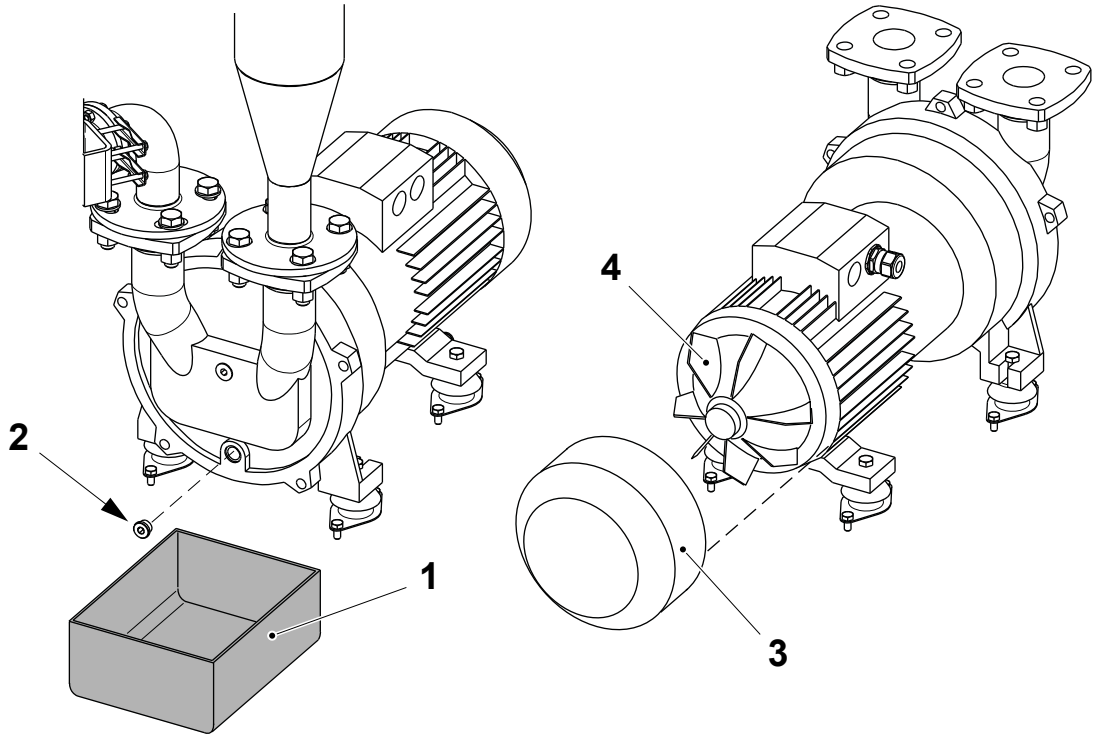

1 Container
2 Drain plug
3 Fan cowl
4 Motor fan

TechPub_2614345_0108 - 0101_3048076_01.fm

(Cont'd)

(Cont'd)

d) Remove the flanges (5) and (6) by the screws (7) and (8).
e) Remove the expansion joints (9) by the screws (10).
f) Fit back the drain plug (2).

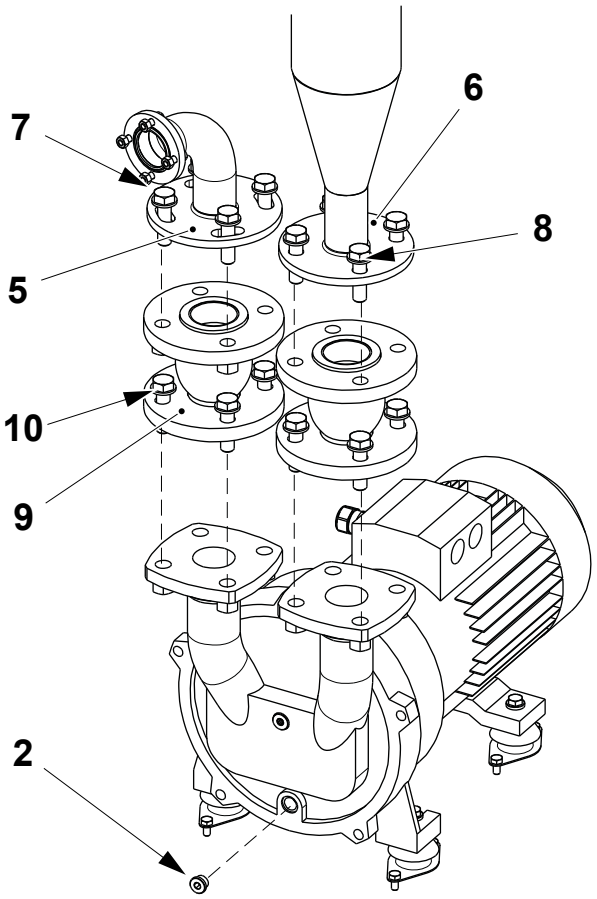

2 Drain plug
5 Flange
6 Flange
7 Screw
8 Screw
9 Expansion joint
10 Screw

(Cont'd)

TechPub_2614345_0108 - 0101_3048076_01.fm

(Cont'd)

g) Fill the impeller chamber (11) through one of the pipes (12) with 5 litres about of acetic acid (CH_3COOH) 10% or other commercial available decalcifying agent.

h) Plug the pipes (12).

i) Let the decalcifying liquid operating for approx. 30 minutes, rotating occasionally the motor fan (4) in the running direction.

j) After 30 minutes, remove the drain plug (2) and drain the decalcifying liquid in a container, rotating the motor fan (4) in the running direction until no more liquid runs out.

k) Fit back the drain plug (2) and assemble in the reverse order.

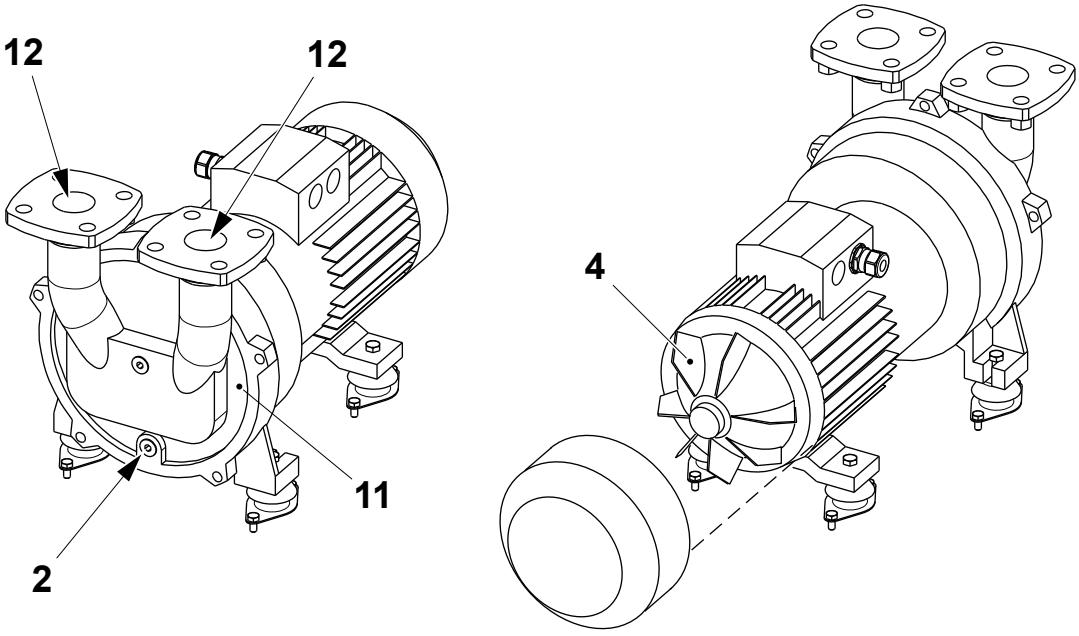

2 Drain plug
4 Motor fan
11 Impeller chamber
12 Pipe

TechPub_2614345_0108 - 0101_3048076_01.fm

1.4.3 Separator

1.4.3-1 Separator - Clean Filter and Floater

Machine Status	Mains Power OFF Air OFF Steam OFF Water OFF
Consumables	Lime Scale Removal Acid, See List
SPC Reference	1558769-0400

WARNING
Chemical products.
Follow the Safety Precautions.

CAUTION
Risk of serious production fault.
Never close the steam valve when the dairy product line is still in use by other machines. The steam in the product valve forms an aseptic barrier between the machine and the remaining dairy product line. Closing the steam valve will remove this barrier.

(Cont'd)

TechPub_2614345_0108 - 0101_3048077_01.fm

(Cont'd)

a) Remove the pipe connection (1).

b) Loosen the clamp (2) and remove the float unit (3), the seal (4) and the draining (5).

c) Remove the float (3) and clean it.

d) Shake the float (3) to make sure that no liquid has leaked into it. Change the float (3) if necessary.

e) If the valve (7) or the valve seat (6) is defective, change them, see 1.4.3-2 Separator - Change Valve and Valve Seat.

f) Dip the draining (5) into a container with deliming agent to remove the limescale residues.

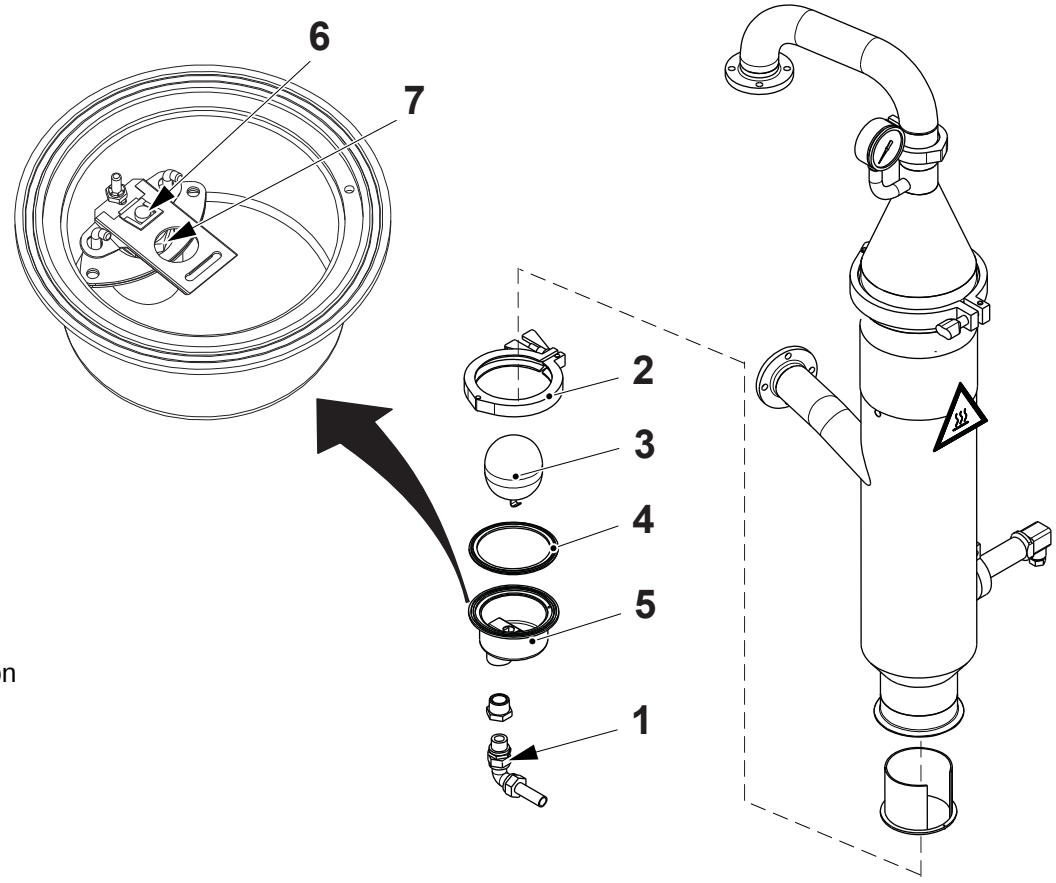

1 Pipe connection
2 Clamp
3 Float unit
4 Seal
5 Draining
6 Valve seat
7 Valve

TechPub_2614345_0108 - 0101_3048077_01.fm

(Cont'd)

(Cont'd)

g) Clean the inside of the separator with a sponge and water. Blow dry with compressed air.

h) Release the clamps (8) and (9).

i) Remove the upper section cover (10) and the gasket (11).

j) Remove the retaining ring (12).

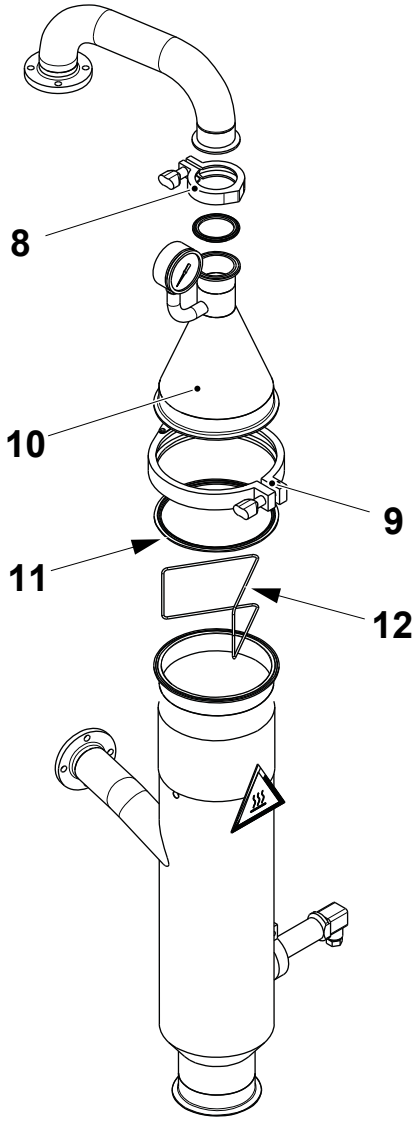

8 Clamp
9 Clamp
10 Upper section cover
11 Gasket
12 Retaining ring

(Cont'd)

TechPub_2614345_0108 - 0101_3048077_01.fm

(Cont'd)

WARNING

Acids.

Follow the Safety Precautions. Only use the acids listed below, do not use detergents.

k) Remove limescale from the filter (13) with one of the four acid solutions listed below. All the solutions must have an ambient temperature during lime scale removal.
   - acetic acid (CH_3COOH), 20%
   - nitric acid (HNO_3), 5-10%
   - citric acid ($C_6H_8O_7$), 20%
   - phosphoric acid (H_3PO_4), 5-10%

l) After limescale removal rinse with water.

m) Assemble in the reverse order and set the float unit, see 1.4.3-3 Separator - Set Float Unit.

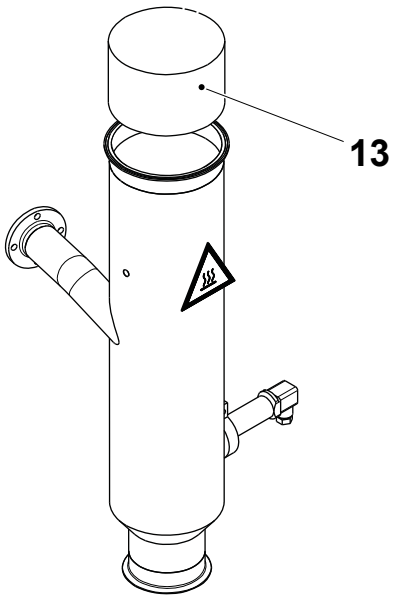

13 Filter

TechPub_2614345_0108 - 0101_3048077_01.fm

1.4.3-2 Separator - Change Valve and Valve Seat

Machine Status	Mains Power OFF Air OFF Steam OFF Water OFF
SPC Reference	1558769-0400

CAUTION

Risk of serious production fault.

Never close the steam valve when the dairy product line is still in use by other machines. The steam in the product valve forms an aseptic barrier between the machine and the remaining dairy product line. Closing the steam valve will remove this barrier.

(Cont'd)

TechPub_2614345_0108 - 0101_3048077_01.fm

(Cont'd)

a) Remove the float unit, see 1.4.3-1 Separator - Clean Filter and Floater.
b) On the draining (1), remove the nut (2) and lift off the valve lever (3).
c) Remove the clip (4), the valve (5) and the valve seat (6).
d) Change the valve (5) and the valve seat (6).
e) Install the valve lever (3) and the nut (2).
f) Set the float unit, see 1.4.3-3 Separator - Set Float Unit.
g) Assemble the float unit in the reverse order, see 1.4.3-1 Separator - Clean Filter and Floater.

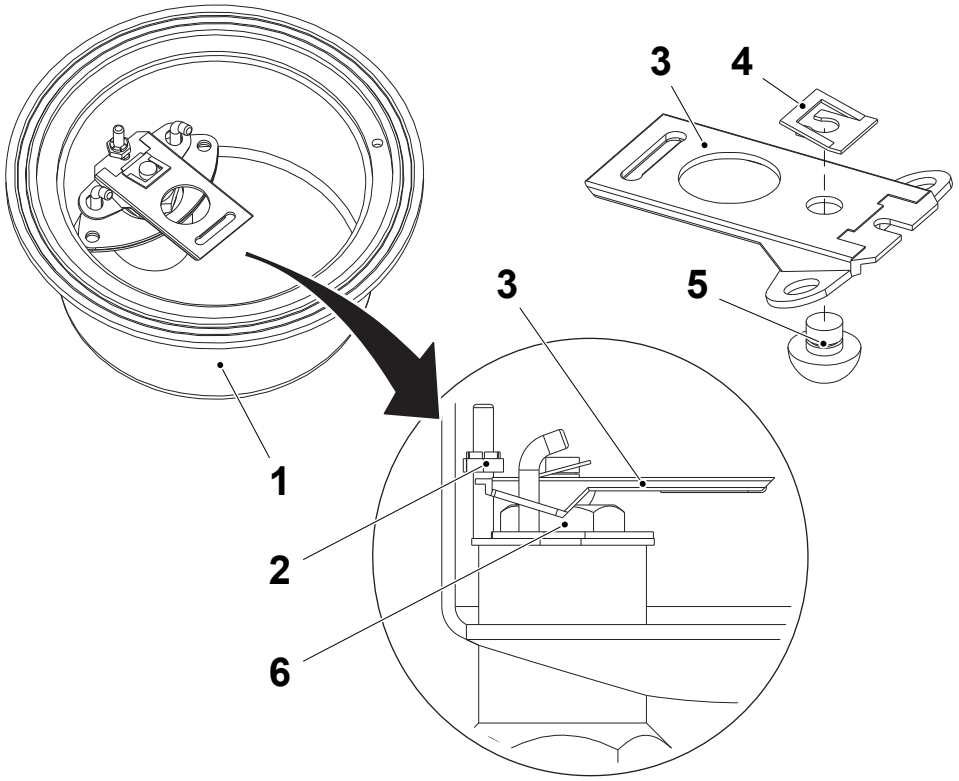

1 Draining
2 Nut
3 Valve lever
4 Clip
5 Valve
6 Valve seat

TechPub_2614345_0108 - 0101_3048077_01.fm

1.4.3-3 Separator - Set Float Unit

Machine Status	Mains Power OFF Air OFF Steam OFF Water OFF
SPC Reference	1558769-0400

CAUTION

Risk of serious production fault.

Never close the steam valve when the dairy product line is still in use by other machines. The steam in the product valve forms an aseptic barrier between the machine and the remaining dairy product line. Closing the steam valve will remove this barrier.

(Cont'd)

TechPub_2614345_0108 - 0101_3048077_01.fm

(Cont'd)

Press down on the valve lever (1) on each side of the valve (2) as indicated by the arrows in the illustration, to make the fulcrum points (3) horizontal on the valve seat (4).

In this position, set the distance **A** between the nut (5) and the valve lever (1).

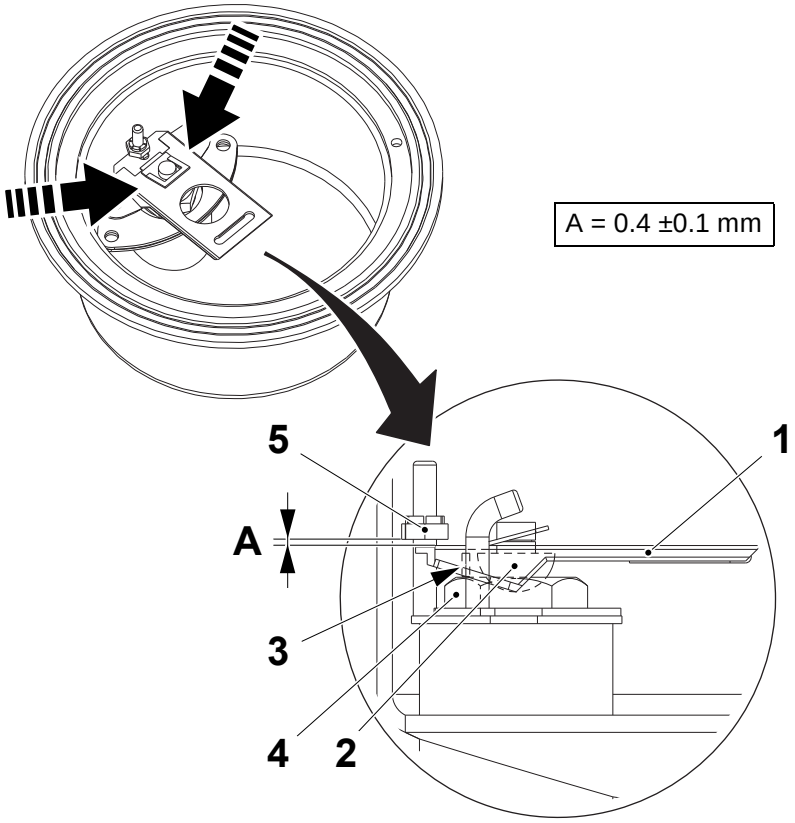

1 Valve lever
2 Valve
3 Fulcrum point
4 Valve seat
5 Nut

TechPub_2614345_0108 - 0101_3048077_01.fm

1.4.3-4 Separator - Check Pressure Gauge

Machine Status	Mains Power OFF Air OFF Steam OFF Water OFF
SPC Reference	1558769-0400

Check the level of the glycerine into the pressure gauge (1): the glycerine may leak out into the air flow. If necessary, change the pressure gauge (1).

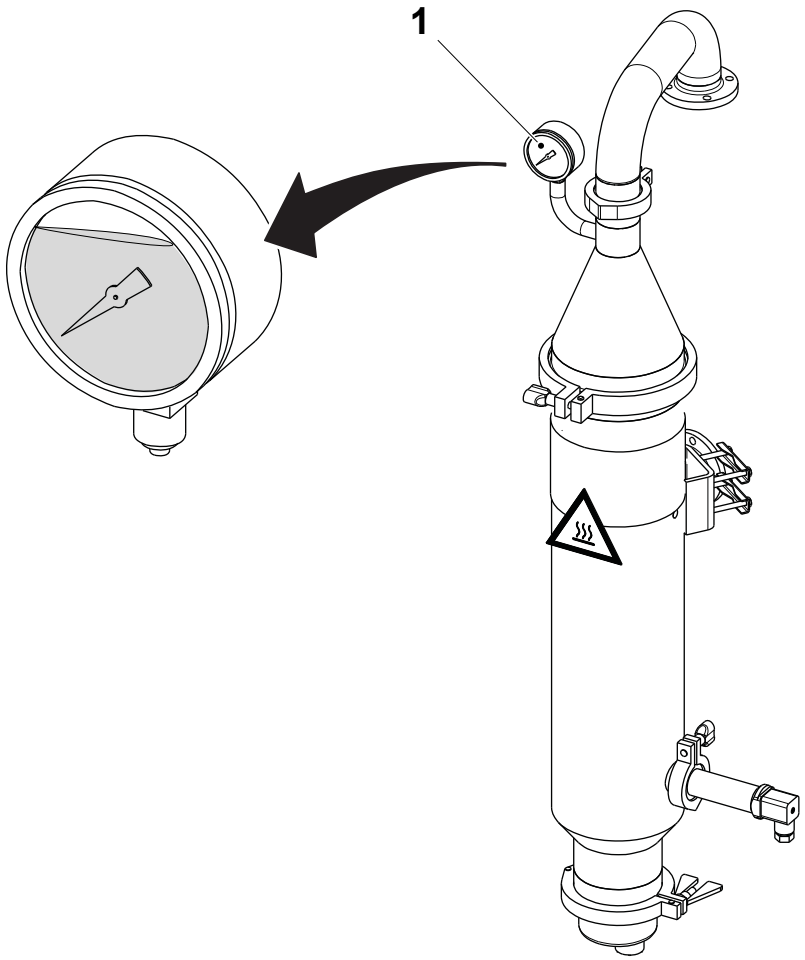

1 Pressure gauge

TechPub_2614345_0108 - 0101_3048077_01.fm

1.4.4 Heat Exchanger Valve

1.4.4-1 Heat Exchanger Valve - Overhaul

Machine Status	Mains Power OFF Air OFF Steam OFF Water OFF
SPC Reference	1532250-0200

WARNING
Burn hazard.
Follow the Safety Precautions.

CAUTION
Risk of serious production fault.
Never close the steam valve when the dairy product line is still in use by other machines. The steam in the product valve forms an aseptic barrier between the machine and the remaining dairy product line. Closing the steam valve will remove this barrier.

(Cont'd)

TechPub_2614345_0108 - 0102_3048078_01.fm

(Cont'd)

a) Disconnect the cable of the linear actuator (1).

b) Remove the screws (2), (3) and (4) from the flanges and remove the heat exchanger valve assembly.

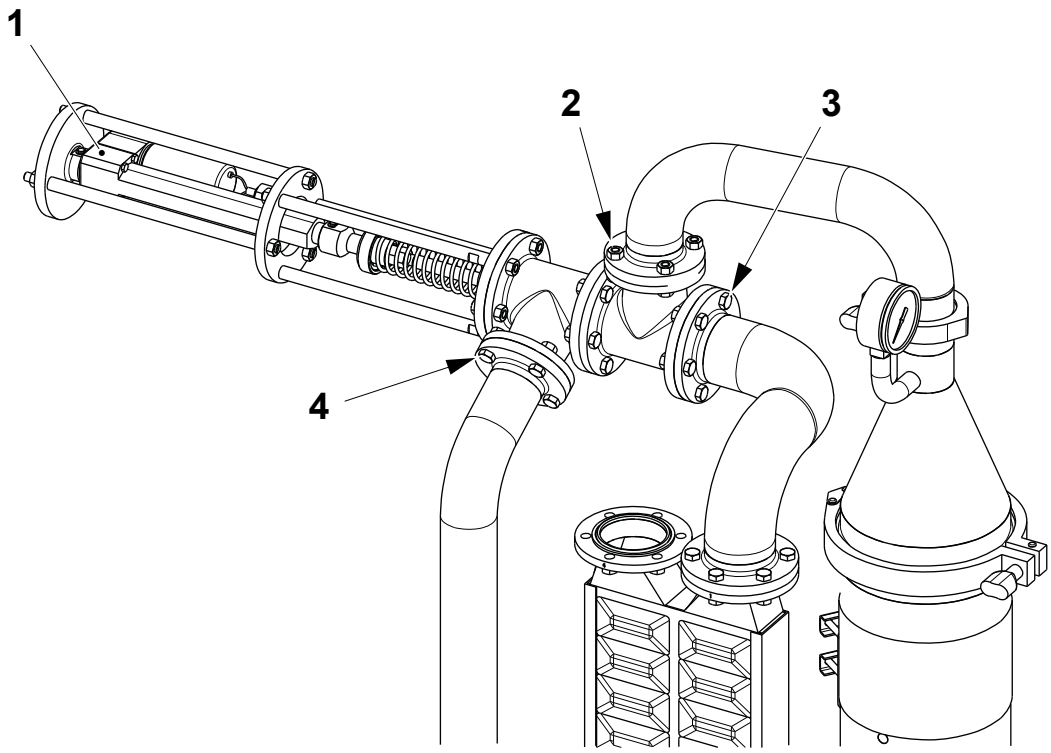

1 Linear actuator
2 Screw
3 Screw
4 Screw

(Cont'd)

TechPub_2614345_0108 - 0102_3048078_01.fm

(Cont'd)

c) Change the gaskets (5), (6) and (7).
d) Remove the screws (8) and the T-pipe (9); change the gasket (10).
e) Remove the retaining ring (11) to separate the joint (12).
f) Loosen the nut (13) and slip off the shaft (14).

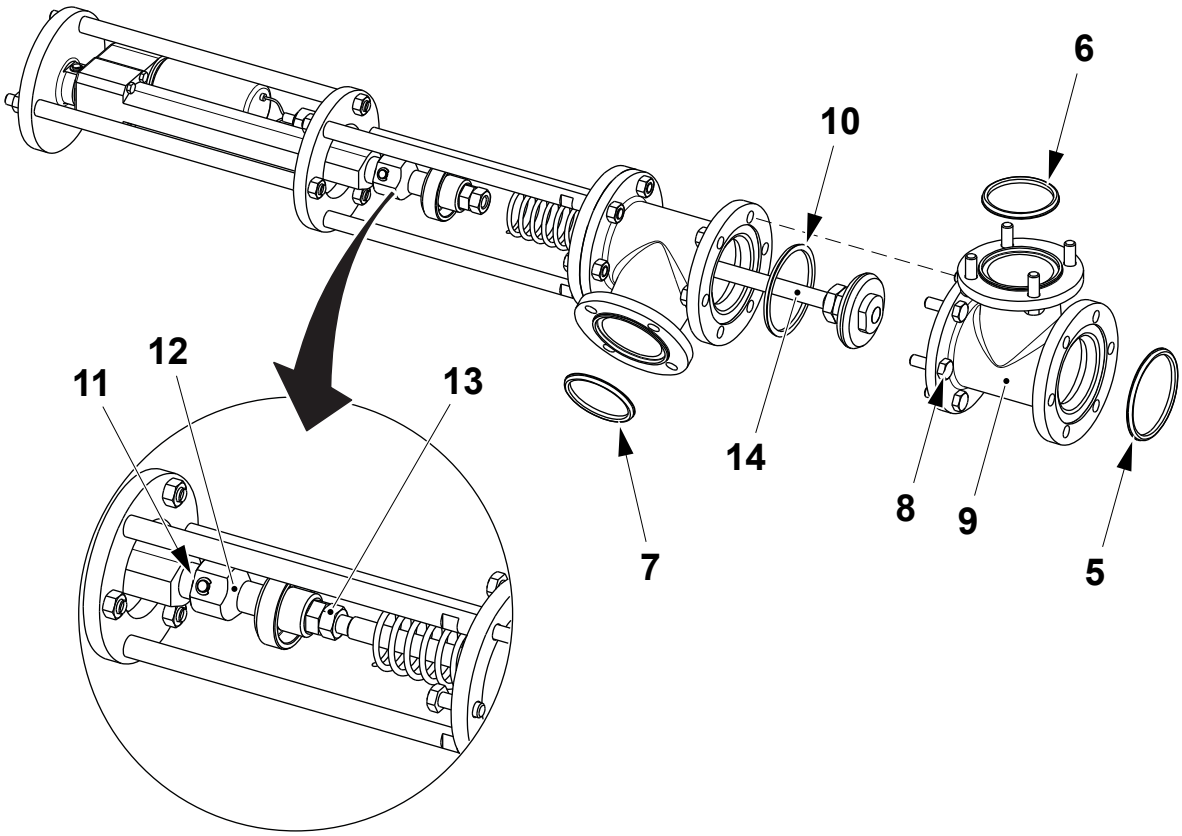

5 Gasket
6 Gasket
7 Gasket
8 Screw
9 T-pipe
10 Gasket
11 Retaining ring
12 Joint
13 Nut
14 Shaft

(Cont'd)

TechPub_2614345_0108 - 0102_3048078_01.fm

(Cont'd)

g) On the shaft (14), remove the nuts (15) and slip off the shutter (16). Change the shutter (16) if necessary.

h) Make sure that the shaft (14) is not damaged or bent. Change the shaft (14) if necessary.

i) Remove the T-pipe (17) by the screws (18) and the nuts (19); change the gasket (20).

j) Change the bearings (21) and the O-rings (22).

k) Assemble in the reverse order.

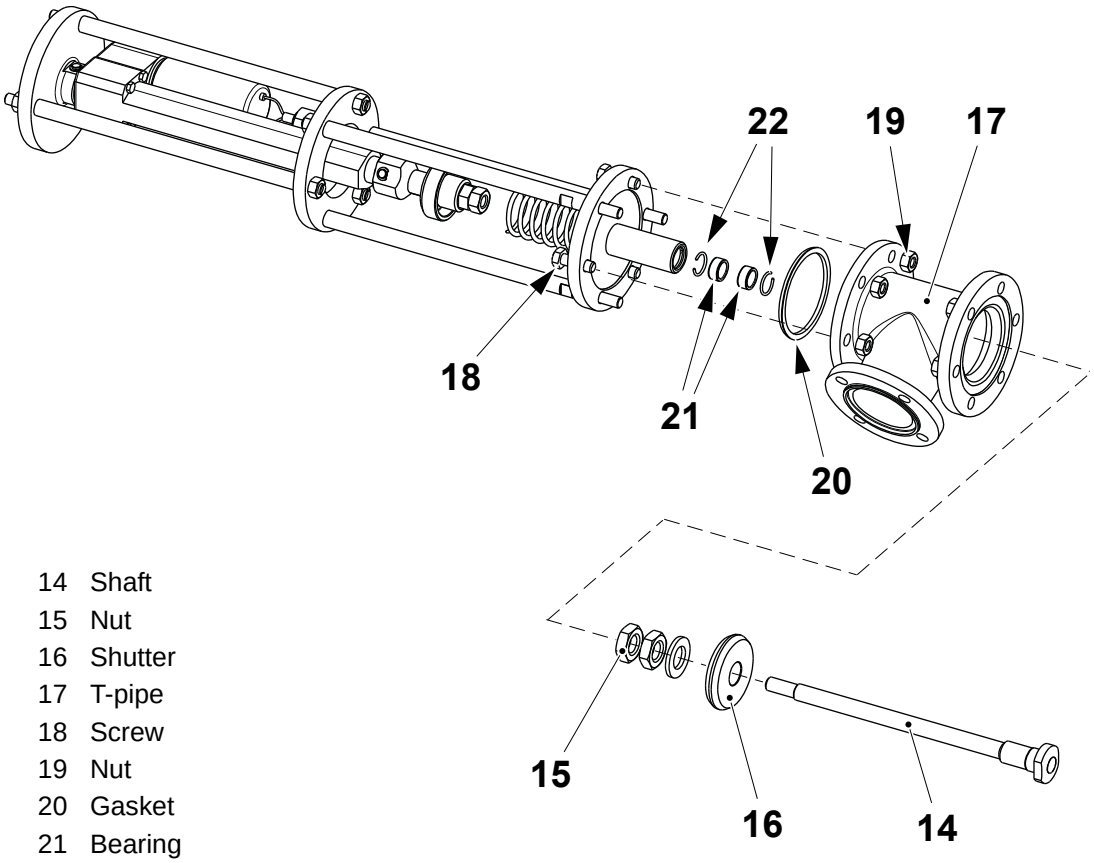

14 Shaft
15 Nut
16 Shutter
17 T-pipe
18 Screw
19 Nut
20 Gasket
21 Bearing
22 O-ring

TechPub_2614345_0108 - 0102_3048078_01.fm

1.4.4-2 Heat Exchanger Valve - Set

Machine Status	PREPARATION
SPC Reference	1532250-0200

Home Position

If necessary, set manually the heat exchanger valve home position. Proceed as follows:

a) In step PREPARATION, touch the MAINTENANCE CONTROL button (1) and enter the password required, see 9.6.3-2 HMI - User Management Log On.

b) Touch the STERILE SYSTEM button (2).

c) Touch the HOME HEAT EXCHANGER VALVE icon (3).

d) Touch the ON button (4) to start the home position function. The maximum cooling position and the by pass position are set.

e) Touch the EXIT button (5).

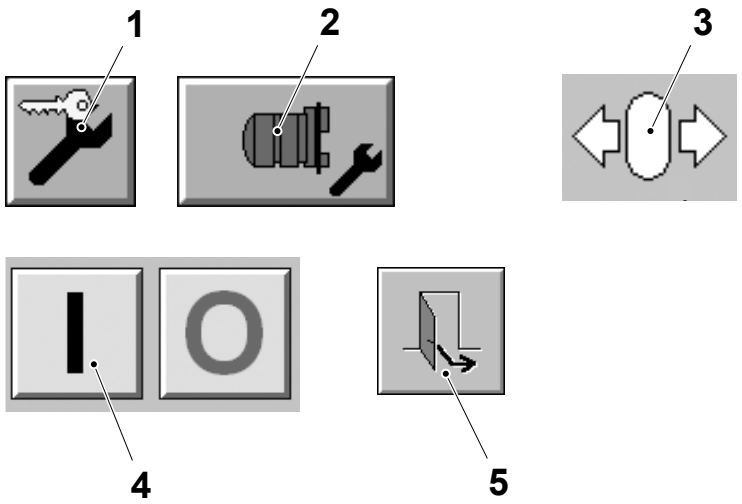

1 Maintenance control button
2 Sterile system button
3 Home heat exchanger valve icon
4 ON button
5 Exit button

(Cont'd)

TechPub_2614345_0108 - 0102_3048078_01.fm

(Cont'd)

Minimum Cooling Position

To set intermediate positions of the seal (1), proceed as follows:

a) In step PREPARATION, touch the MAINTENANCE CONTROL button (2) and enter the password required, see 9.6.3-2 HMI - User Management Log On.

b) Touch the STERILE SYSTEM button (3).

c) Touch the HEAT EXCHANGER VALVE SET POSITION icon (4).

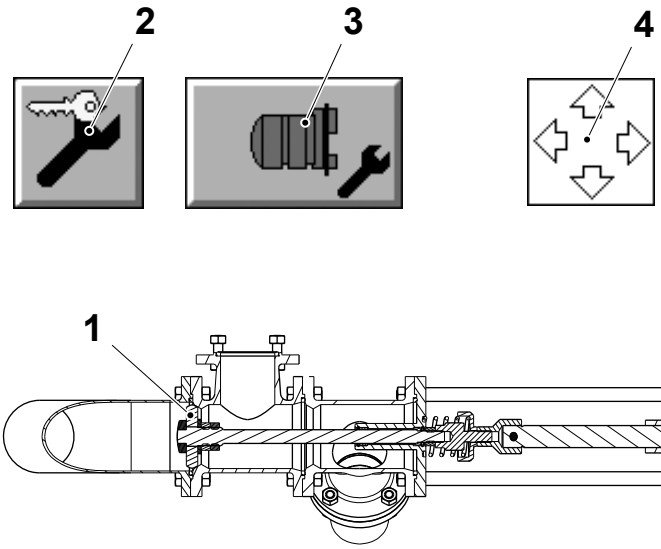

1 Seal
2 Maintenance control button
3 Sterile system button
4 Heat exchanger valve set position icon

(Cont'd)

TechPub_2614345_0108 - 0102_3048078_01.fm

(Cont'd)

Note! The maximum cooling position corresponds to 0% and the by-pass position is 100%.

d) Set the value by the ARROW buttons or the KEYBOARD button (5).

e) Touch the ON button (6) to start the function.

f) Touch the EXIT button (7).

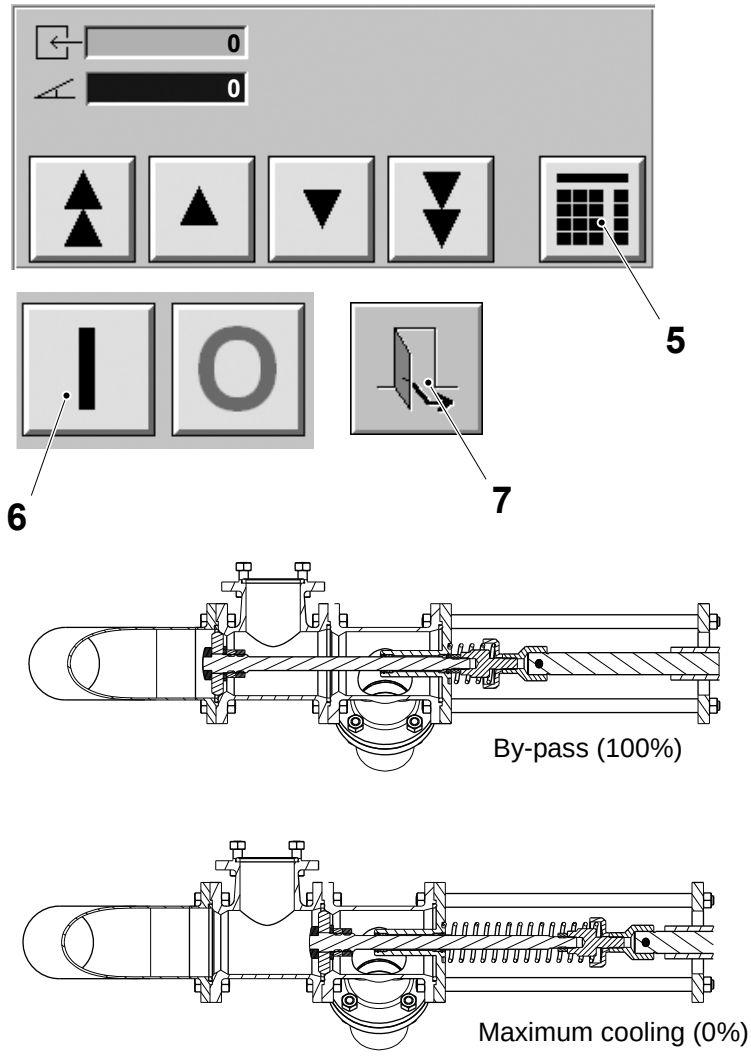

5 Keyboard button
6 ON button
7 Exit button

TechPub_2614345_0108 - 0102_3048078_01.fm

1.4.5 Air Super Heater

1.4.5-1 Air Super Heater - Check

Machine Status	Mains Power ON Air ON Steam ON Water ON
SPC Reference	1499158-0200

WARNING

Burn hazard.

Follow the Safety Precautions.

(Cont'd)

TechPub_2614345_0108 - 0101_3048079_01.fm

(Cont'd)

Make sure that the air superheater (1) temperature reaches 360°C.

a) Touch the PRODUCTION CONTROL button (2) on the TPOP display.
b) Touch the STERILE SYSTEM button (3).
c) Touch the SUPERHEATER TEMPERATURE icon (4).
d) Check the indication on the temperature display (5).
e) Press the EXIT button (6) to close the window.

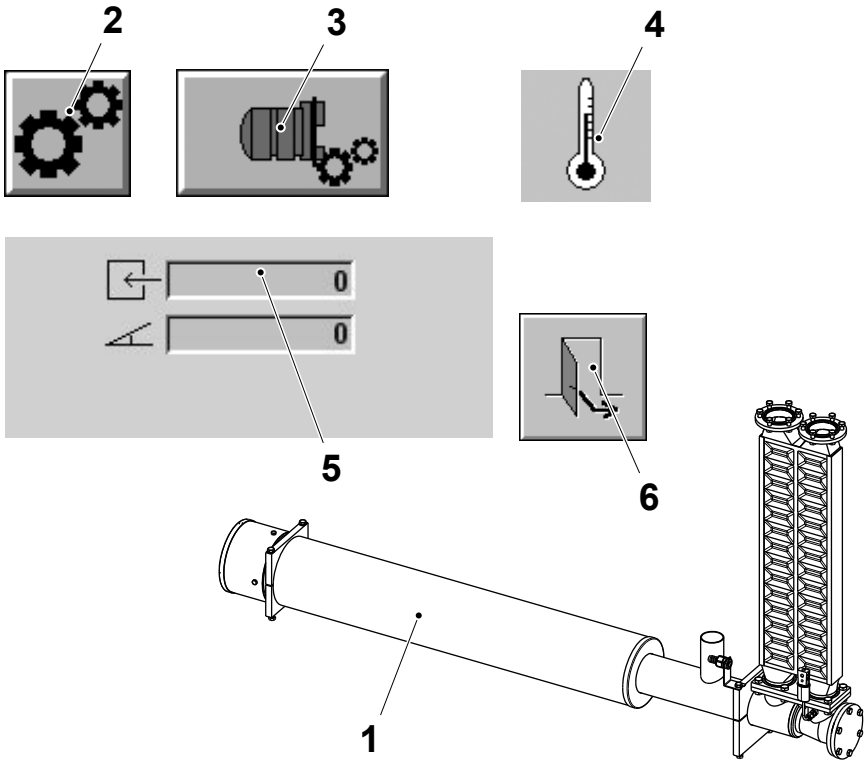

1 Air super heater
2 Production control button
3 Sterile system button
4 Superheater temperature icon
5 Temperature display
6 Exit button

TechPub_2614345_0108 - 0101_3048079_01.fm

1.4.5-2 Air Super Heater - Check Heat Exchanger

Machine Status	Mains Power ON Air ON Steam ON Water ON
Special Equipment	Pressure Test Equipment TP No. 1349738-0100
SPC Reference	1499158-0200

WARNING
Burn hazard.
Follow the Safety Precautions.

(Cont'd)

TechPub_2614345_0108 - 0101_3048079_01.fm

(Cont'd)

Remove lime scale from the heat exchanger with one of the four acid solutions listed in the next page. Proceed as follows:

a) Remove the screws (1) from the upper flanges and the screws (2) from the lower flanges.

b) Remove the heat exchanger (3) from the filling machine.

Note! All solutions must have an ambient temperature during lime scale removal.

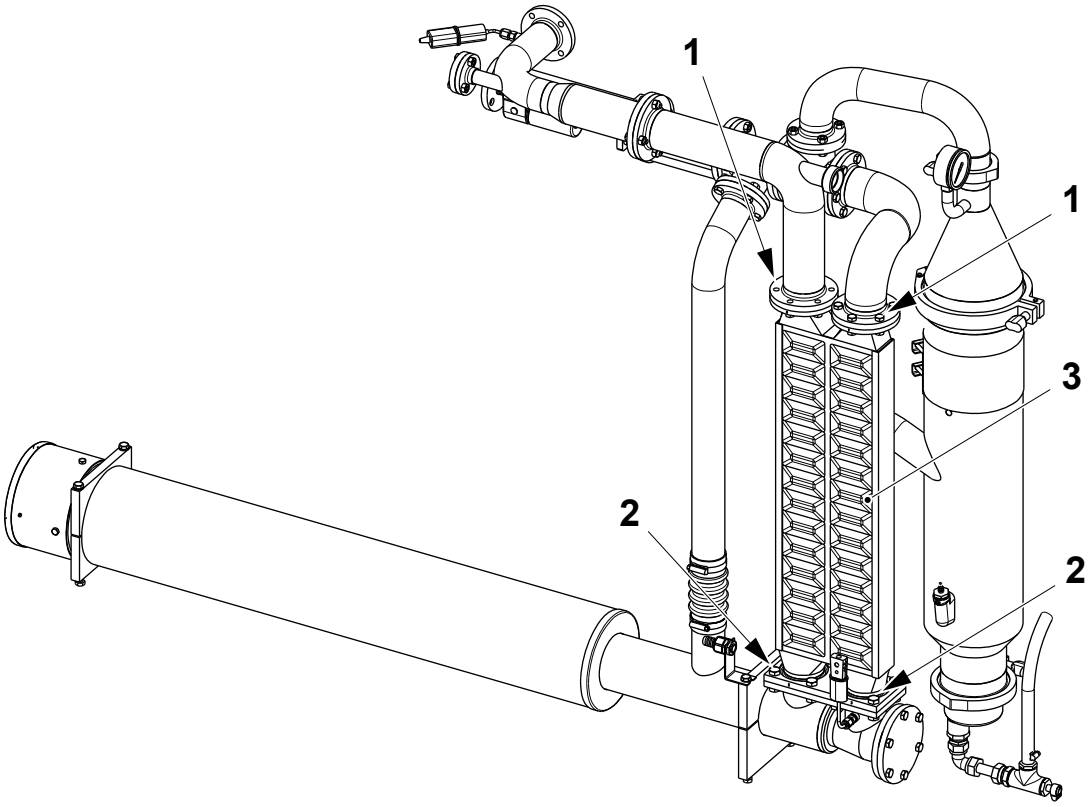

1 Screw
2 Screw
3 Heat exchanger

TechPub_2614345_0108 - 0101_3048079_01.fm

(Cont'd)

(Cont'd)

WARNING

Acids.

Follow the Safety Precautions.

c) Only use the Acids listed below.
   - acetic acid (CH_3COOH), 20%
   - nitric acid (HNO_3), 5-10%
   - citric acid ($C_6H_8O_7$), 20%
   - phosphoric acid (H_3PO_4), 5-10%.

d) After limescale removal flush with water and then perform a final rinse with softened or distilled water.

(Cont'd)

TechPub_2614345_0108 - 0101_3048079_01.fm

(Cont'd)

e) Check the heat exchanger (3) for leaks as described below.

f) Seal the heat exchanger bottom connections using the blank-off flange (4).

g) Connect the pressure test equipment (5) with the flange (6), to one of the heat exchanger top connections.

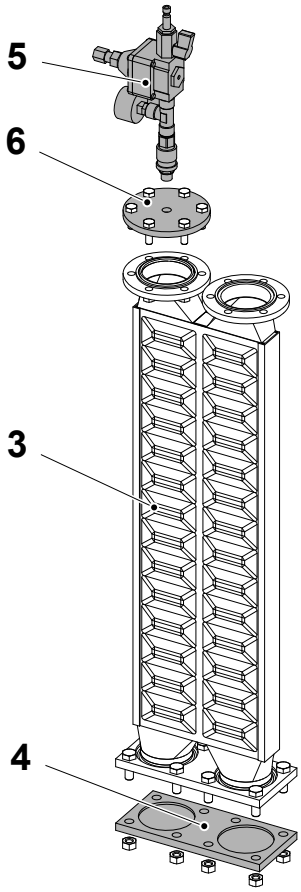

3 Heat exchanger
4 Blank-off flange
5 Pressure test equipment
6 Flange

(Cont'd)

TechPub_2614345_0108 - 0101_3048079_01.fm

(Cont'd)

CAUTION
Risk of damage to the equipment.
Before turning on the compressed air, turn the adjustment screw (7) anti-clockwise until the spring load is released and close the valve (8).

Note! Make sure that the equipment is connected in the correct direction. The flow must run from the valve (8) **towards** the pressure gauge (9) in the direction shown by arrow.

h) Connect the compressed air connection (10).

i) Submerge the heat exchanger in water. Take care **not** to drench the pressure controller (11). Let the air bubbles disappear.

j) Open the valve (8). Adjust the pressure to 0.5 bar on the pressure gauge (9), using the adjustment screw (7). Air bubbles will immediately show any leaking points in the heat exchanger.

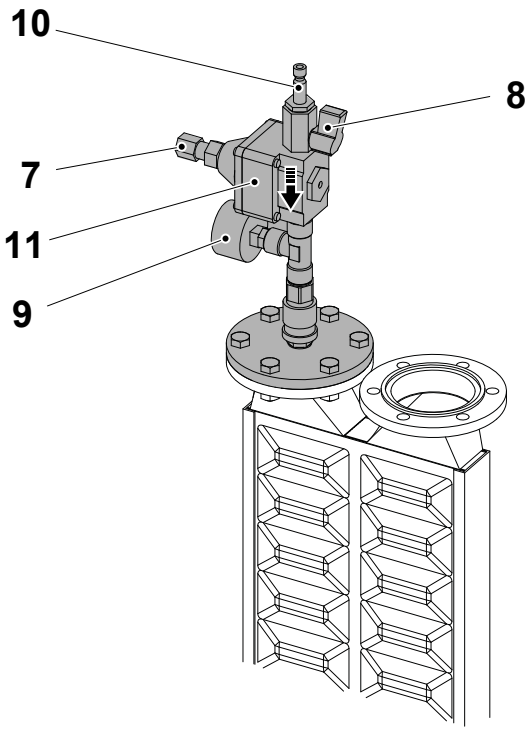

7 Adjustment screw
8 Valve
9 Pressure gauge
10 Compressed air connection
11 Pressure controller

(Cont'd)

TechPub_2614345_0108 - 0101_3048079_01.fm

(Cont'd)

k) Repeat the procedure with the other cooling coil (other connections).

l) If any leaks are detected or suspected, change the heat exchanger.

m) Change the four joint gaskets.

n) Install the heat exchanger on to the machine.

Note! Make sure that the numbers on the heat exchanger flanges correspond with the numbers on the pipes.

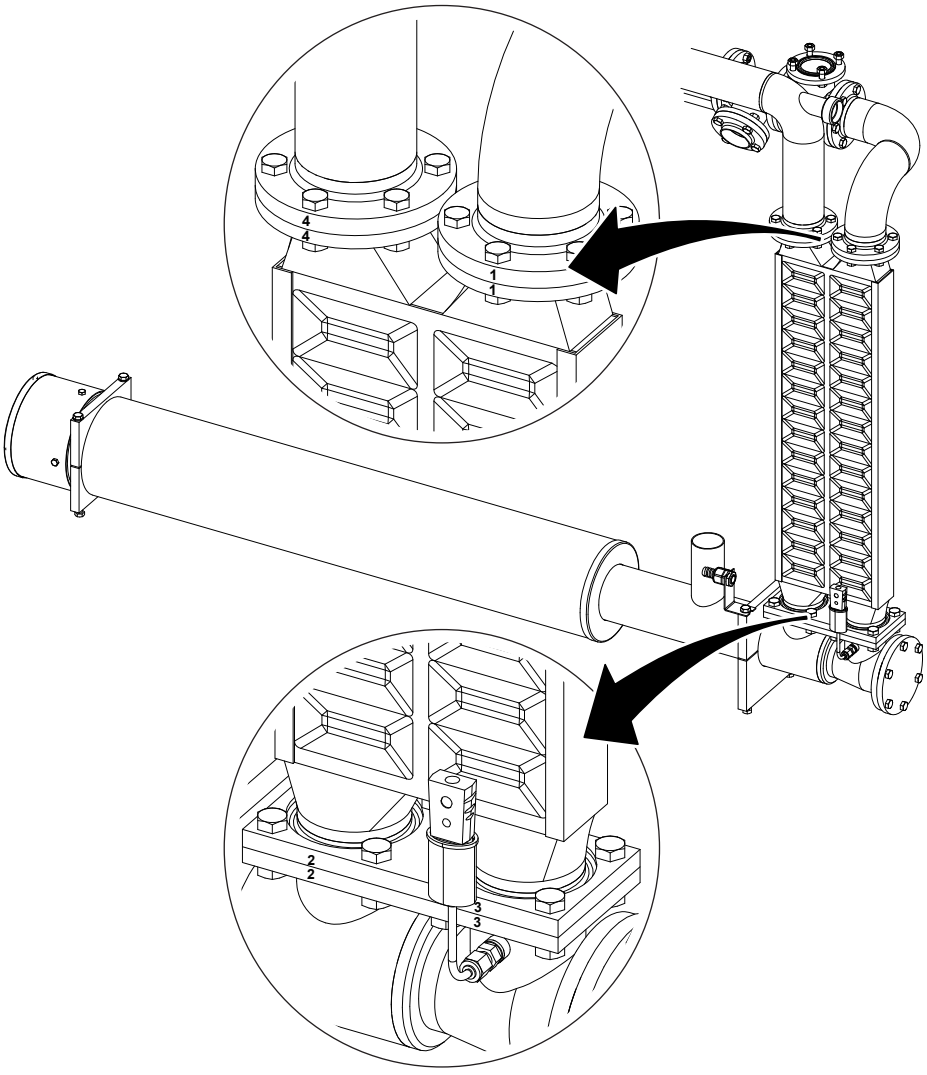

TechPub_2614345_0108 - 0101_3048079_01.fm

1.4.6 Air Valve

1.4.6-1 Air Valve - Set

Machine Status	Mains Power OFF Air OFF Steam OFF Water OFF
SPC Reference	1538166-0200

CAUTION
Risk of serious production fault.
Never close the steam valve when the dairy product line is still in use by other machines. The steam in the product valve forms an aseptic barrier between the machine and the remaining dairy product line. Closing the steam valve will remove this barrier.

(Cont'd)

TechPub_2614345_0108 - 0102_3048080_01.fm

(Cont'd)

a) Close the main air at the service unit.

b) Remove the air valve (1) and place it on a work bench, see 1.4.6-2 Air Valve - Overhaul.

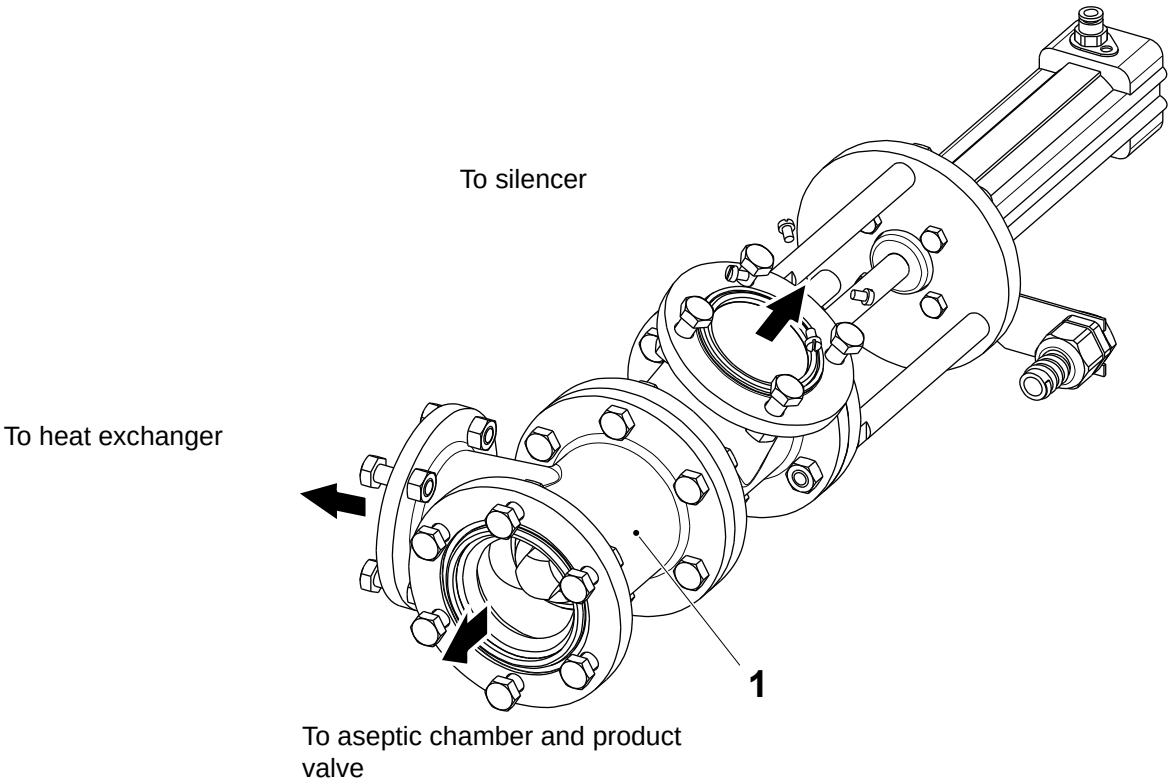

1 Air valve

TechPub_2614345_0108 - 0102_3048080_01.fm

(Cont'd)

(Cont'd)

c) Loosen the nut (2).

d) Unscrew and disconnect the piston rod (3) from the pendulum suspension (4).

e) Push the piston rod (3) all the way into the cylinder.

f) Move the shaft (5) so that the valve (6) is in position **A** as indicated in the in the illustration.

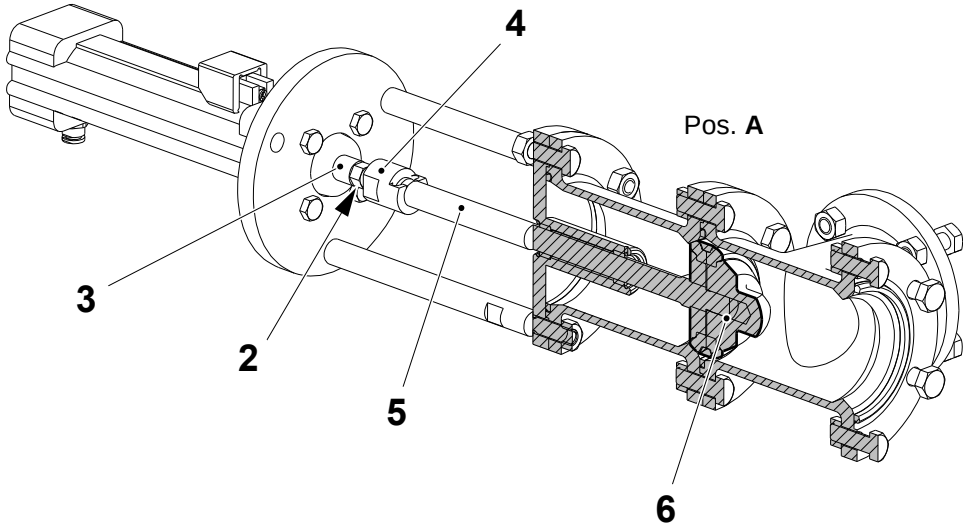

2 Nut
3 Piston rod
4 Pendulum suspension
5 Shaft
6 Valve

(Cont'd)

TechPub_2614345_0108 - 0102_3048080_01.fm

(Cont'd)

g) Holding the piston rod (3) in its position, screw the pendulum suspension (4) into the piston rod (3) until it starts to move, then screw in a half turn more. Tighten the nut (2).

h) Move the shaft (5) by hand and check that the valve closes completely in both positions: **A** and **B**. If not repeat from item c).

i) Assemble in the reverse order.

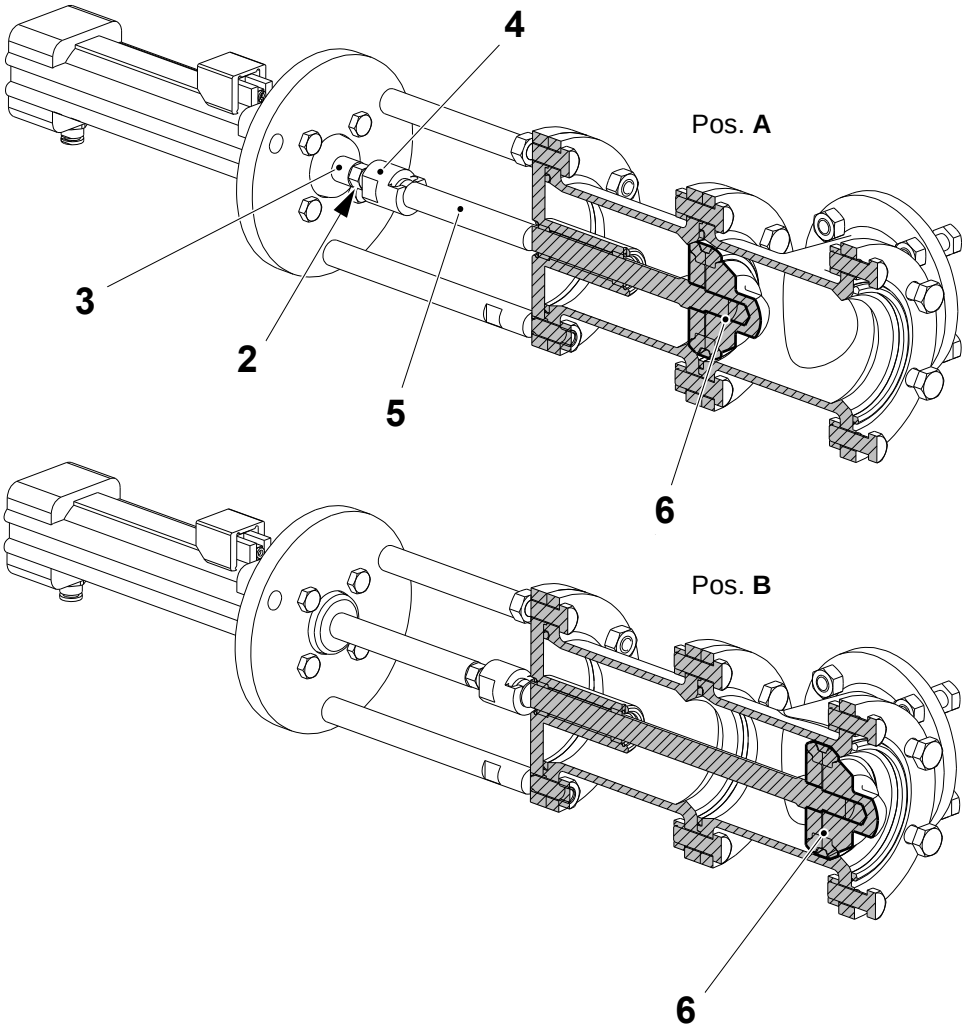

2 Nut
3 Piston rod
4 Pendulum suspension
5 Shaft
6 Valve

TechPub_2614345_0108 - 0102_3048080_01.fm

1.4.6-2 Air Valve - Overhaul

Machine Status	Mains Power OFF Air OFF Steam OFF Water OFF
SPC Reference	1538166-0200

WARNING
Burn hazard.
Follow the Safety Precautions.

CAUTION
Risk of serious production fault.
Never close the steam valve when the dairy product line is still in use by other machines. The steam in the product valve forms an aseptic barrier between the machine and the remaining dairy product line. Closing the steam valve will remove this barrier.

a) Disconnect the air hoses and the sensor (1) from the cylinder.

b) Remove the screws (2) and (3) and remove the air valve assembly.

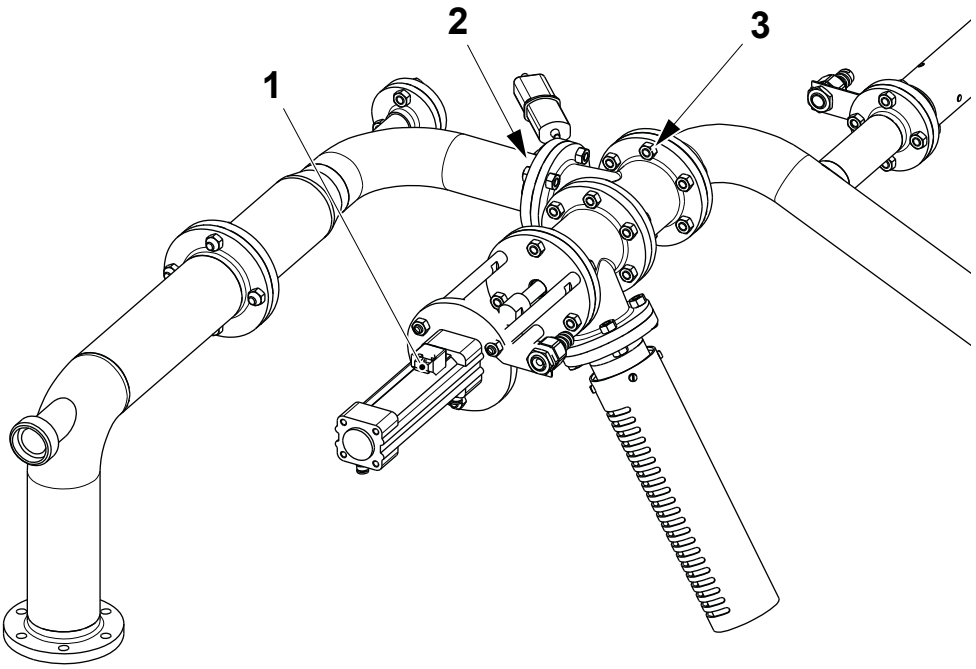

1 Sensor
2 Screw
3 Screw

(Cont'd)

TechPub_2614345_0108 - 0102_3048080_01.fm

(Cont'd)

c) Change the gaskets (4) and (5).
d) Remove the screws (6) and change the gasket (7).
e) Remove the screws (8) and change the gasket (9).
f) Remove the valve cone (10) and change the seal rings (11).

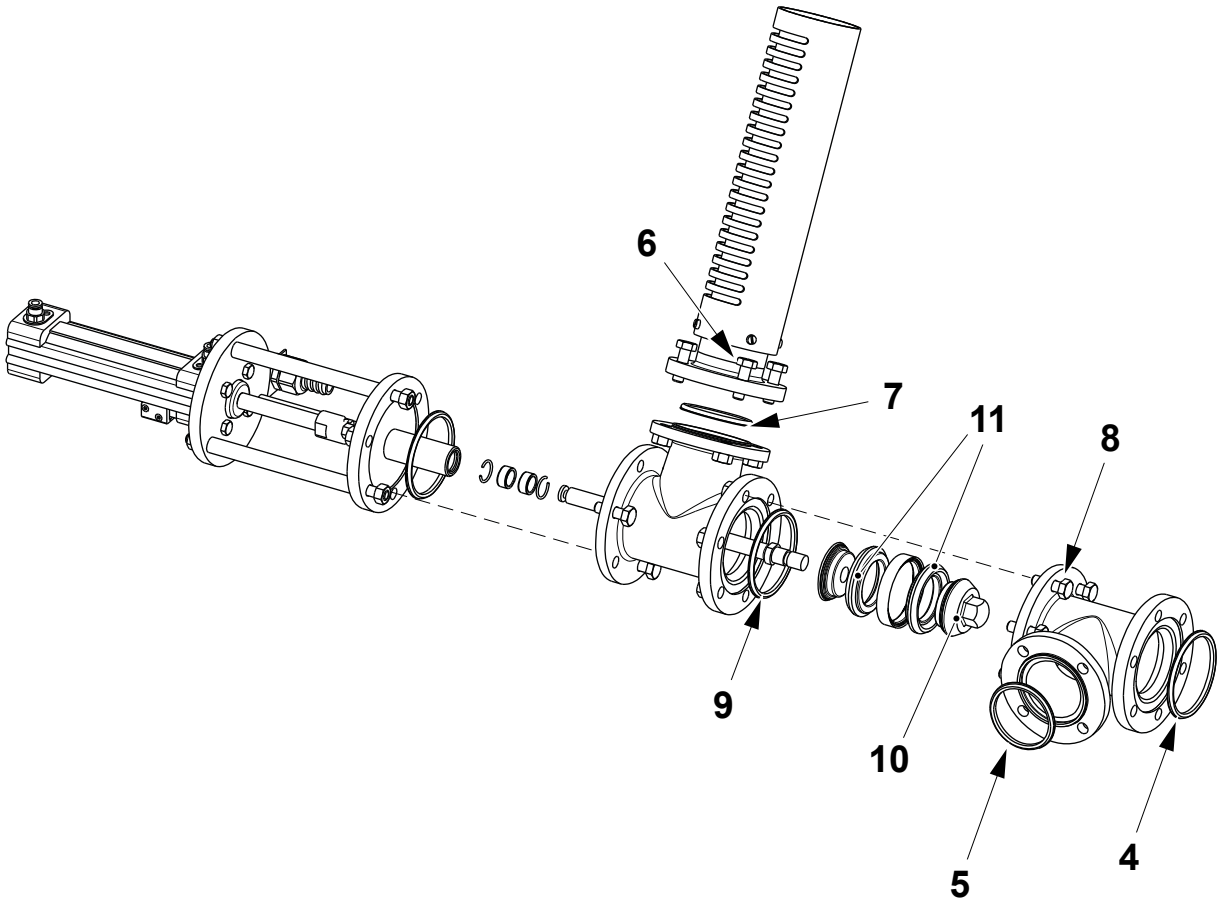

4 Gasket
5 Gasket
6 Screw
7 Gasket
8 Screw
9 Gasket
10 Valve cone
11 Seal ring

(Cont'd)

TechPub_2614345_0108 - 0102_3048080_01.fm

(Cont'd)

g) Remove the screws (12) and the nuts and change the gasket (13).

h) Disconnect the joint (14) and make sure that the shaft (15) is not damaged or bent. Change the shaft (15) if necessary.

i) Change the bearings (16) and the O-rings (17).

j) Make sure that the cylinder (18) moves freely. Change if necessary.

Note! When assembling tighten the valve cone (10) to 50 Nm using a torque wrench.

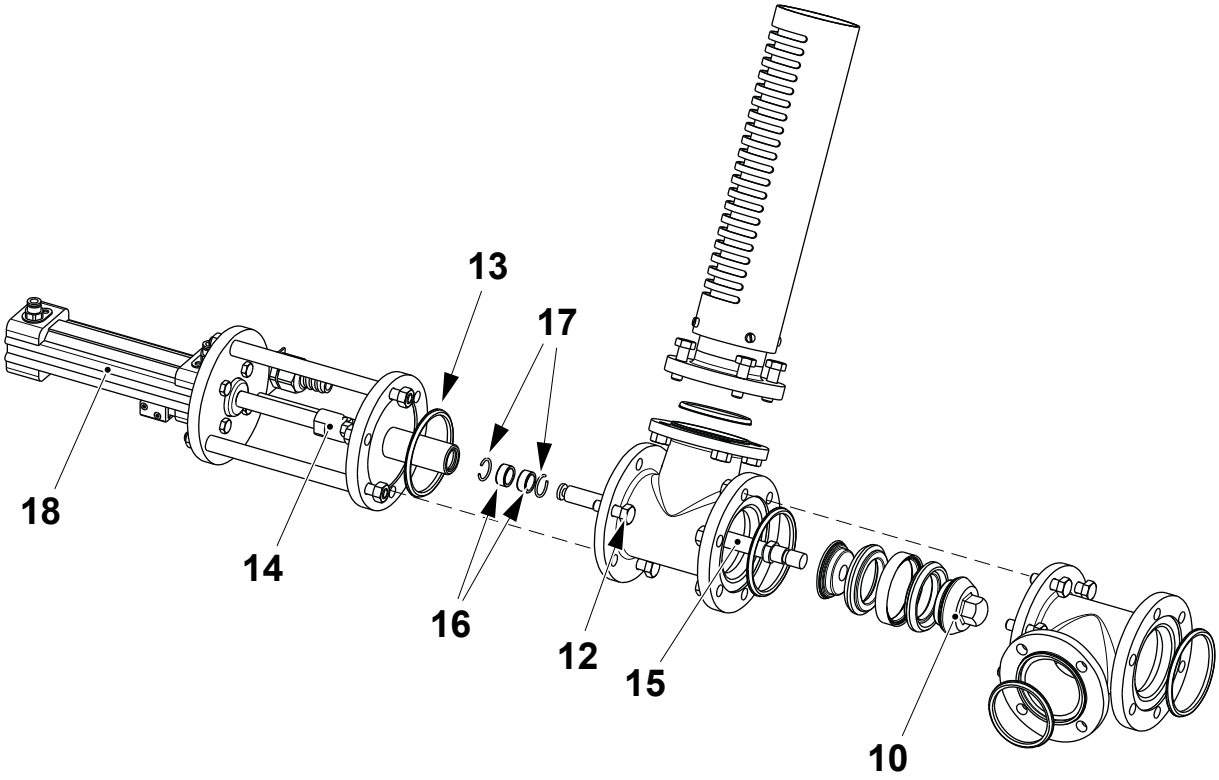

10 Valve cone
12 Screw
13 Gasket
14 Joint
15 Shaft
16 Bearing
17 O-ring
18 Cylinder

(Cont'd)

TechPub_2614345_0108 - 0102_3048080_01.fm

(Cont'd)

Note! When assembling, make sure that the T-pipe (19) with the silencer (20) is oriented as shown below.

k) Assemble in the reverse order.

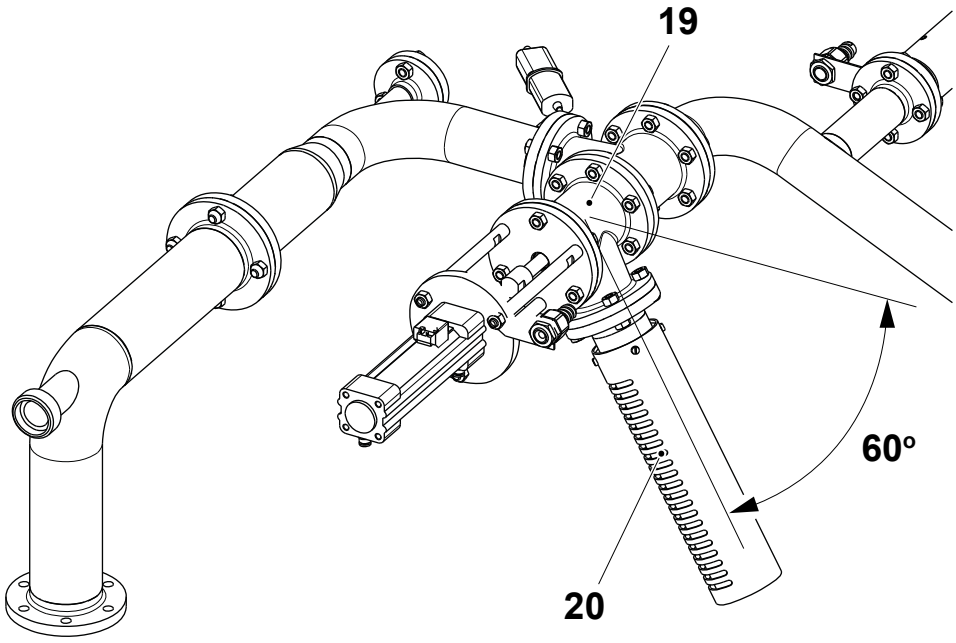

19 T-pipe
20 Silencer

TechPub_2614345_0108 - 0102_3048080_01.fm

1.4.6-3 Air Valve - Set Proximity Switch

Machine Status	Mains Power ON Air ON Steam OFF Water OFF
SPC Reference	1538166-0200

WARNING

Burn hazard.

Follow the Safety Precautions.

CAUTION

Risk of serious production fault.

Never close the steam valve when the dairy product line is still in use by other machines. The steam in the product valve forms an aseptic barrier between the machine and the remaining dairy product line. Closing the steam valve will remove this barrier.

(Cont'd)

TechPub_2614345_0108 - 0102_3048080_01.fm

(Cont'd)

a) Activate the valve U70K2300 on the superstructure pneumatic panel.

b) Set the proximity switch (1) position so that it is activated when the cylinder shaft (2) is in the lowest back position.

c) Deactivate the valve U70K2300 and make sure that the proximity switch is deactivated.

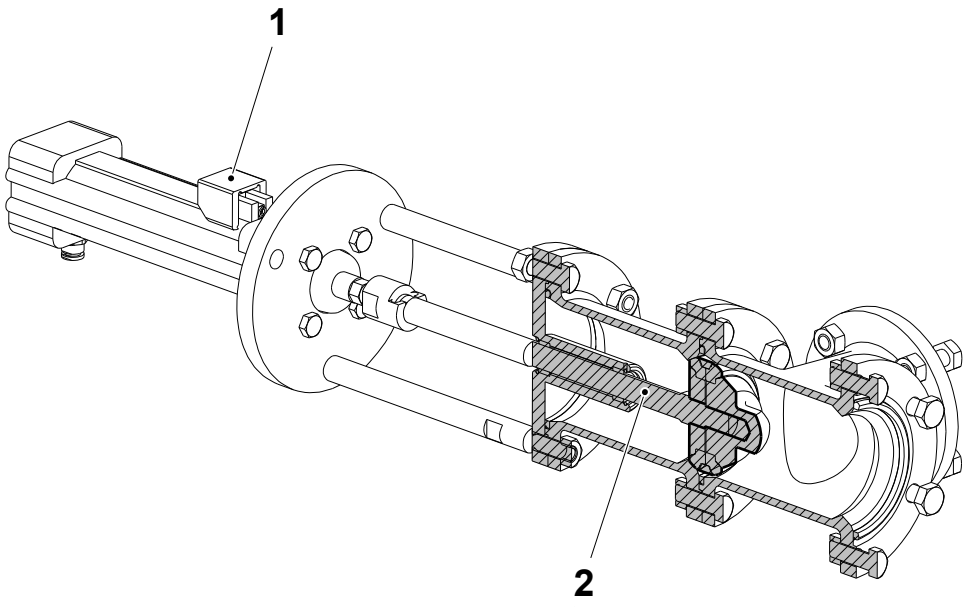

1 Proximity switch
2 Shaft

TechPub_2614345_0108 - 0102_3048080_01.fm

1.4.7 Scrubber

1.4.7-1 Scrubber - Set Pressure Regulator

Machine Status	HEAT STERILIZATION
SPC Reference	1499160-0500

Note! The setting must be performed when the compressor (1) is running.

Remove the cap (2) and set the pressure regulator (3) to 1.4 bar. This pressure value corresponds to a delivery capacity of 6.5 l/min.

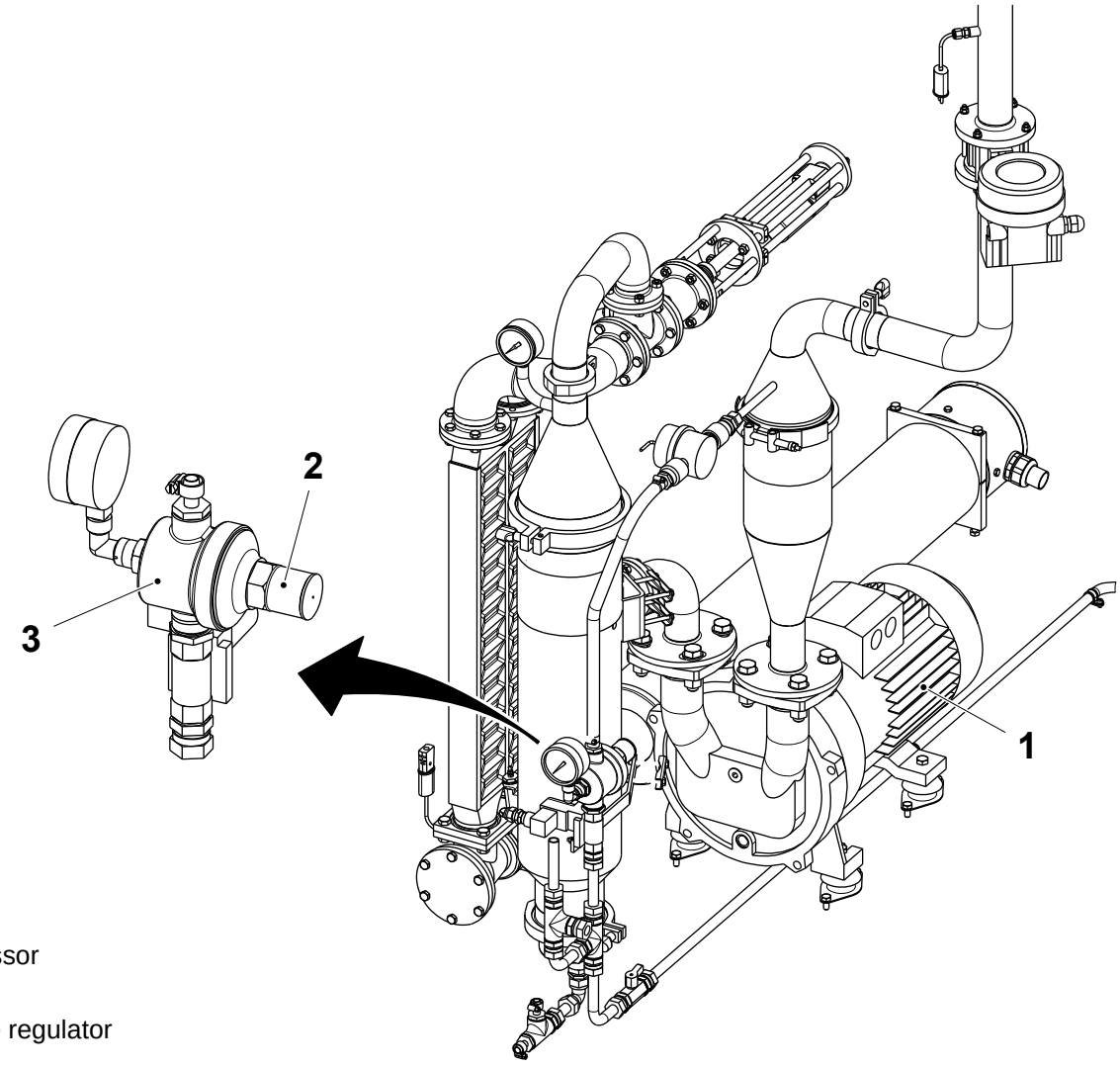

1 Compressor
2 Cap
3 Pressure regulator

TechPub_2614345_0108 - 0101_3048081_01.fm

1.4.7-2 Scrubber - Clean Filters

Machine Status	Mains Power OFF Air OFF Steam OFF Water OFF
Consumables	Lime Scale Removal Acid, See list
SPC Reference	1499160-0500

WARNING
Acids.
Follow the Safety Precautions.

CAUTION
Risk of serious production fault.
Never close the steam valve when the dairy product line is still in use by other machines. The steam in the product valve forms an aseptic barrier between the machine and the remaining dairy product line. Closing the steam valve will remove this barrier.

(Cont'd)

TechPub_2614345_0108 - 0101_3048081_01.fm

(Cont'd)

a) Loosen the clamp (1) and the holder (2) and remove the upper section cover (3).

b) Remove and clean the nozzle (4) with compressed air. If necessary, carefully use a needle to clean it.

c) Remove the O-ring (5) and check for damage. Change if necessary.

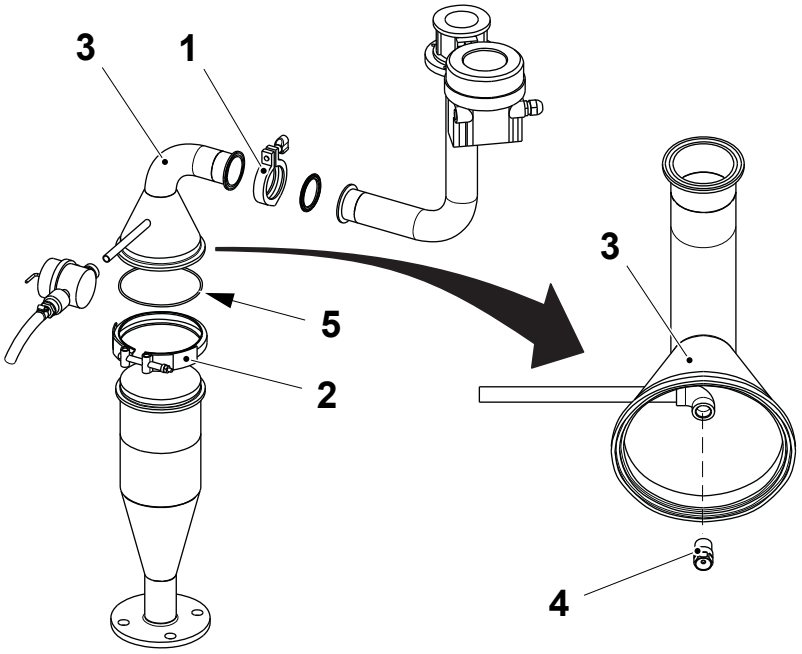

1 Clamp
2 Holder
3 Upper section cover
4 Nozzle
5 O-ring

(Cont'd)

TechPub_2614345_0108 - 0101_3048081_01.fm

(Cont'd)

CAUTION
Risk of damage to the equipment.
Only use the acids listed below.

d) Pull out the filters (6) and remove lime scale with one of the four acid solutions listed below. All solutions must have an ambient temperature during lime scale removal.
   - acetic acid (CH_3COOH), 20%
   - nitric acid (HNO_3), 5-10%
   - citric acid ($C_6H_8O_7$), 20%
   - phosphoric acid (H_3PO_4), 5-10%.

e) After lime scale removal, flush with water and then perform a final rinse with softened or distilled water.

f) Assemble in the reverse order and make sure that the upper filter (6) is in close contact with the upper section cover (3).

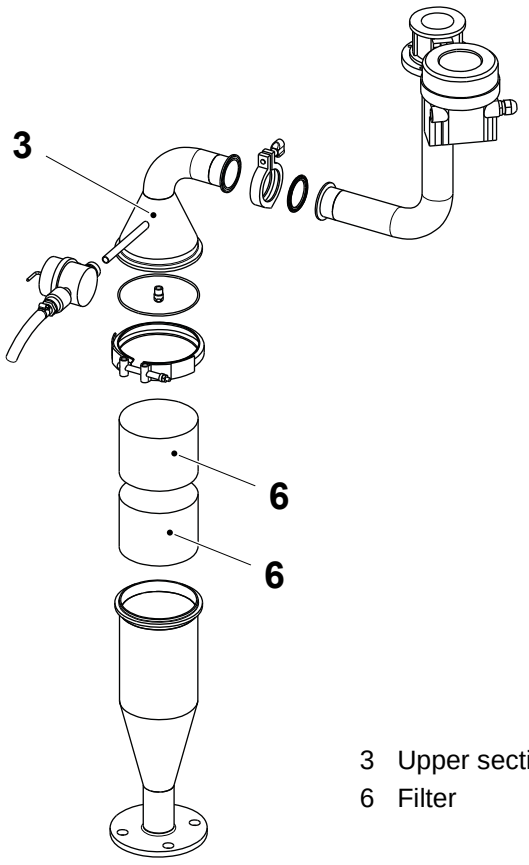

3 Upper section cover
6 Filter

TechPub_2614345_0108 - 0101_3048081_01.fm

1.4.8 Sterile Air Pipe

1.4.8-1 Sterile Air Pipe - Set Nozzle

Machine Status	Mains Power OFF Air OFF Steam OFF Water OFF
SPC Reference	2783088-0300

Note! Valid for machines equipped with PT Speed.

CAUTION
Risk of serious production fault.
Never close the steam valve when the dairy product line is still in use by other machines. The steam in the product valve forms an aseptic barrier between the machine and the remaining dairy product line. Closing the steam valve will remove this barrier.

(Cont'd)

TechPub_2614345_0108 - 0101_3048082_01.fm

(Cont'd)

a) Loosen the knob (1).

b) Rotate the handle (2) until the distance **A** is set in the ruler (3) marked on the adjusting screw (4). The nozzle (5) moves sideways.

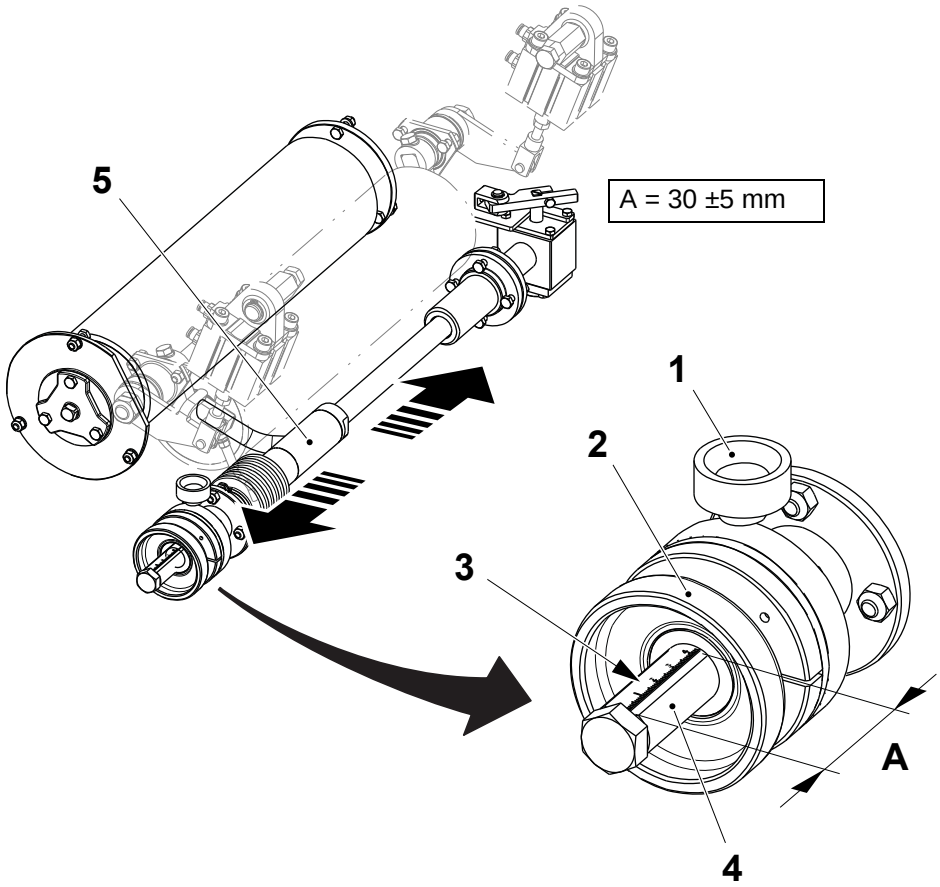

1 Knob
2 Handle
3 Ruler
4 Adjusting screw
5 Nozzle

(Cont'd)

TechPub_2614345_0108 - 0101_3048082_01.fm

(Cont'd)

c) Tighten the knob (1).

d) Check the distance **B** between the nozzle (5) and the packaging material (6). If not, loosen the knob (1) and turn gently by a key the adjusting screw (4) until the distance **B** is set, then tighten the knob (1).

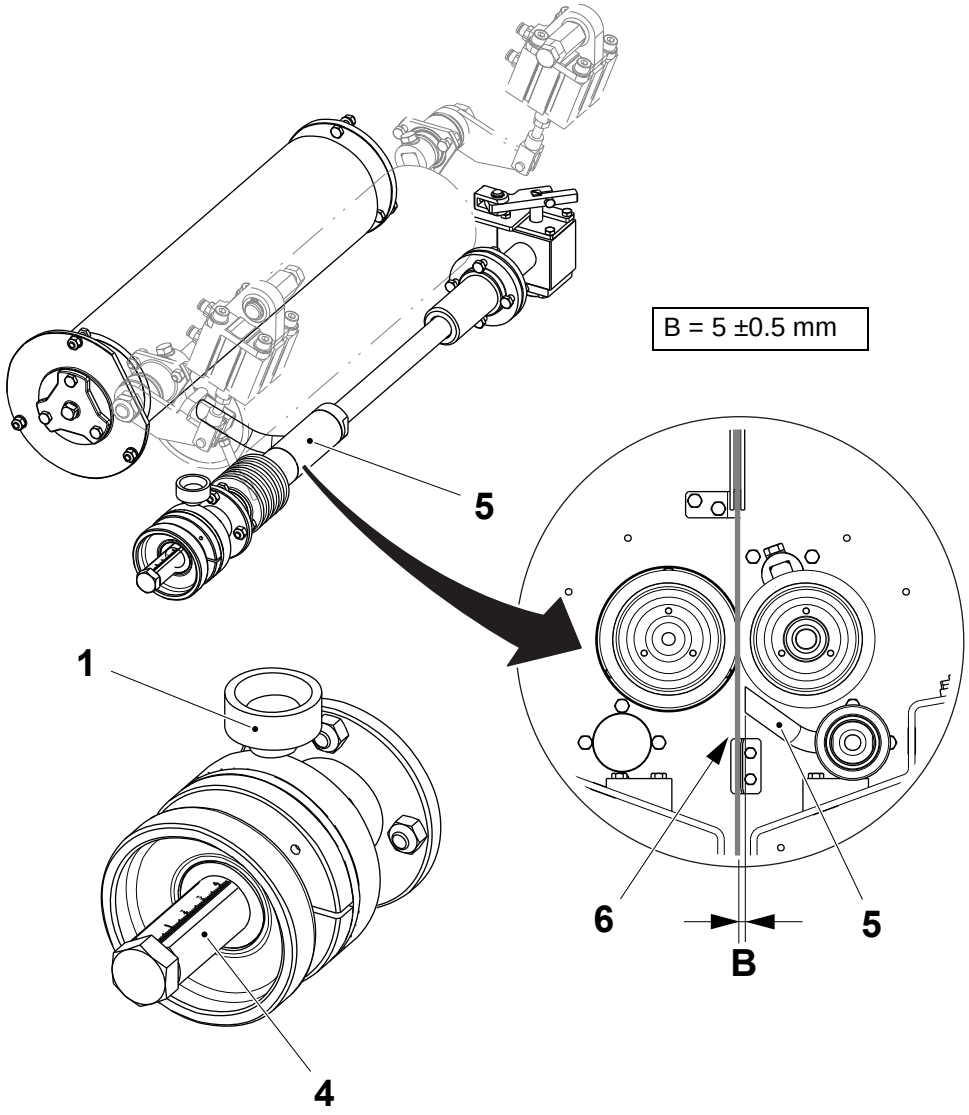

1 Knob
4 Adjusting screw
5 Nozzle
6 Packaging material

TechPub_2614345_0108 - 0101_3048082_01.fm

1.4.8-2 Sterile Air Pipe - Overhaul

Machine Status	Mains Power OFF Air OFF Steam OFF Water OFF
SPC Reference	2783088-0300

Note! Valid for machines equipped with PT Speed.

CAUTION
Risk of serious production fault.
Never close the steam valve when the dairy product line is still in use by other machines. The steam in the product valve forms an aseptic barrier between the machine and the remaining dairy product line. Closing the steam valve will remove this barrier.

(Cont'd)

TechPub_2614345_0108 - 0101_3048082_01.fm

(Cont'd)

Note! Use a step ladder to access the sterile air pipe on the LH side.

a) Remove the connectors U70W3050 (1) and U70W3060 (2) and the air hoses U70W2454 (3) and U70W2453 (4) from the cylinder (5).

b) Loosen the screw (6) to release the arm (7)

c) Remove the screws (8) and the bracket (9) with the cylinder (5).

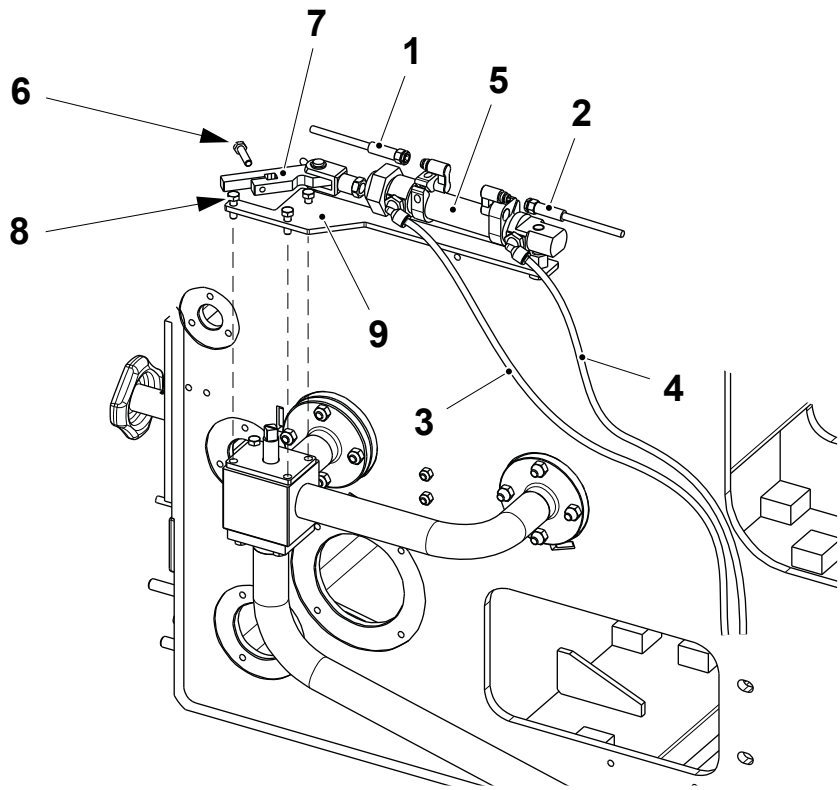

1 Connector U70W3050
2 Connector U70W3060
3 Hose U70W2454
4 Hose U70W2453
5 Cylinder
6 Screw
7 Arm
8 Screw
9 Bracket

(Cont'd)

TechPub_2614345_0108 - 0101_3048082_01.fm

(Cont'd)

d) Remove the screw (10) and the lid (11).

e) Extract the shutter (12) and change the O-rings (13) and (14).

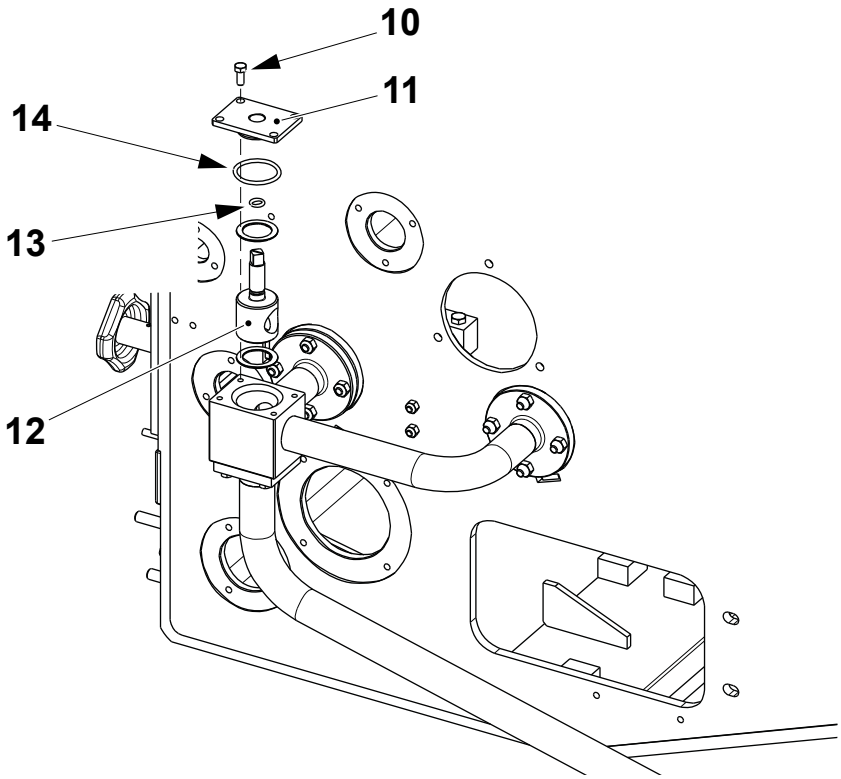

10 Screw
11 Lid
12 Shutter
13 O-ring
14 O-ring

(Cont'd)

TechPub_2614345_0108 - 0101_3048082_01.fm

(Cont'd)

f) Assemble in the reverse order.

Note! When assembling, make sure that the shutter (12) is fit with the big hole (15) oriented in the direction of the pipe (16) when the cylinder (5) is fully retracted, as indicated by the notch (17) on the shutter tip.

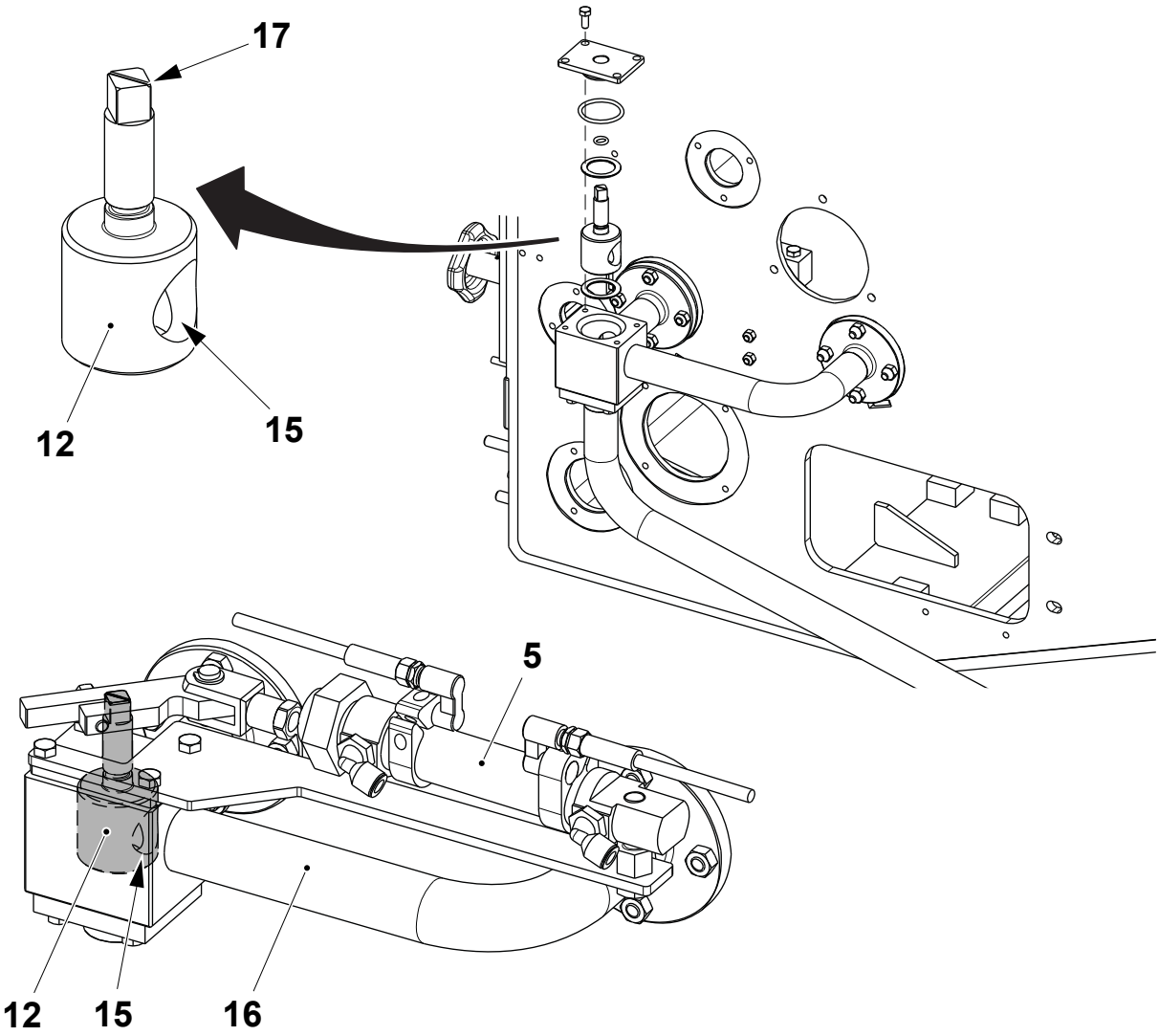

5 Cylinder
12 Shutter
15 Hole
16 Pipe
17 Notch

TechPub_2614345_0108 - 0101_3048082_01.fm

1.5 Filling System

SPC Reference	2501290-0500

Filling System Description

The magnetic level detector (1) uses the position of the floater (2) to determine the level of the product inside the packaging material tube. A flow meter (3) placed before the servo dosing valve (4) reads the amount of product flow.

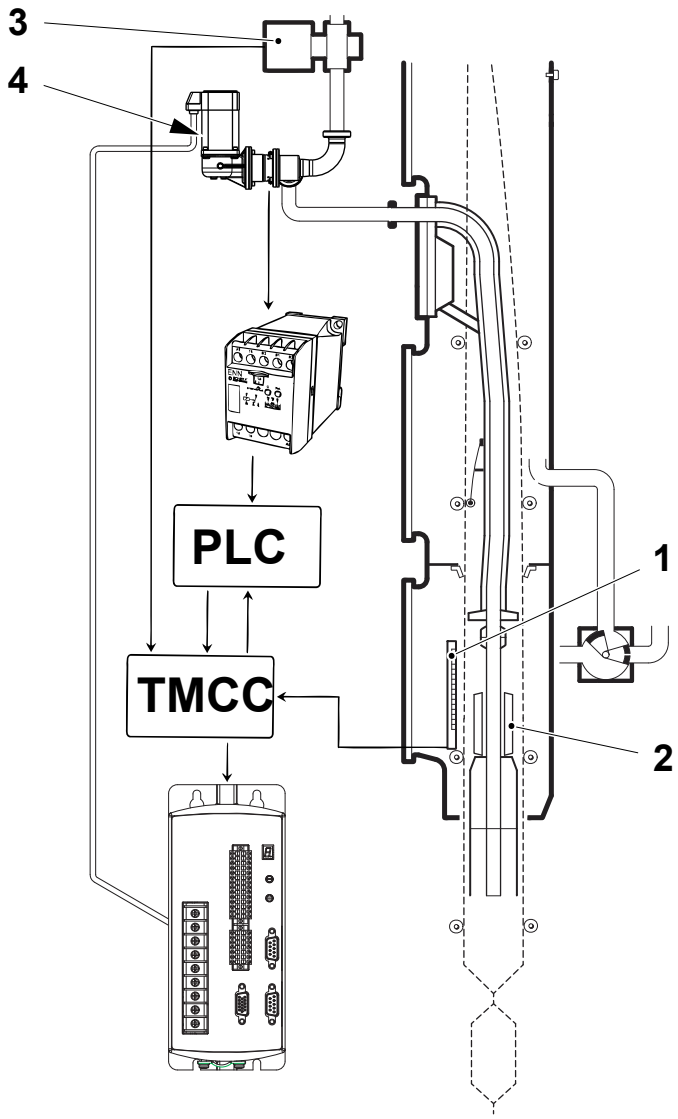

1 Level detector
2 Floater
3 Flow meter
4 Servo dosing valve

(Cont'd)

TechPub_2614345_0108 - 0103_3048083_01.fm

(Cont'd)

These two signals are sent to the TMCC card that calculates the correct position of the servo dosing valve (4) in order to keep a constant flow and a constant level of product in the filling system.

The control signal is converted by the servo drive card (5) to a mechanical position for the motor, that drives the valve shutter.

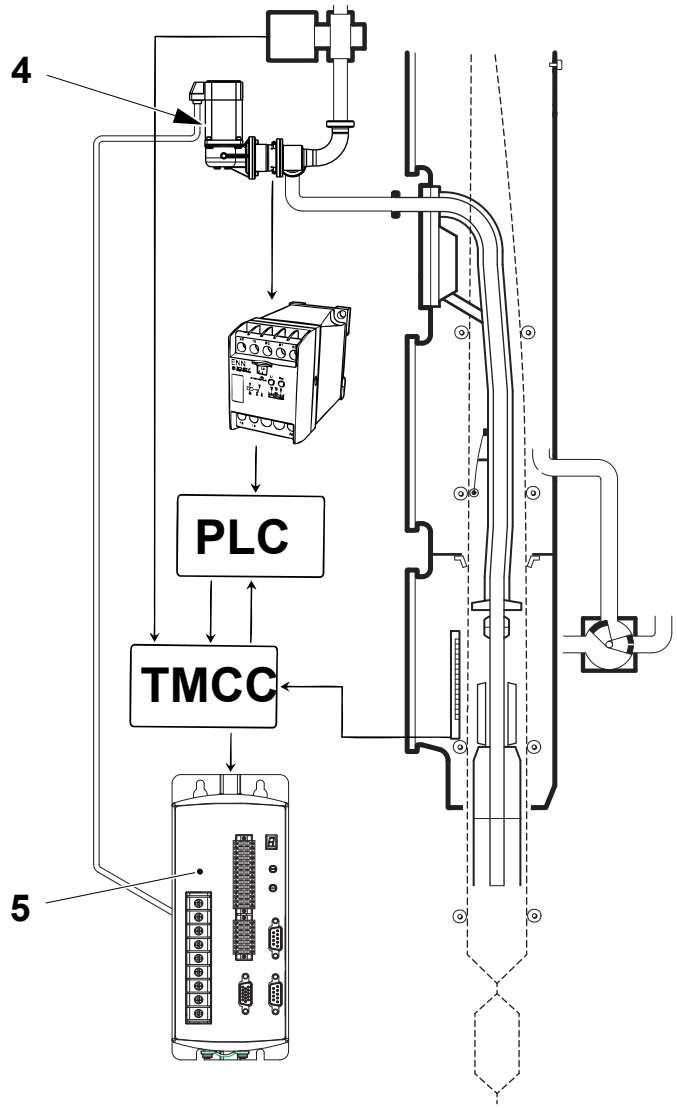

4 Servo dosing valve
5 Servo drive card

(Cont'd)

TechPub_2614345_0108 - 0103_3048083_01.fm

(Cont'd)

A leakage detector (6) detects leaks in the membranes of the servo dosing valve (4). Change the membranes if an alarm is activated on the TPOP, see also 1.5.3-1 Product Lines - Overhaul Regulating Valve.

The filling pipe (7) consists of two parts; the outlet is below the product level to prevent foaming, and is a counter pressure bucket to increase the pressure in the bottom of the packaging material tube when the jaw system forms the package.

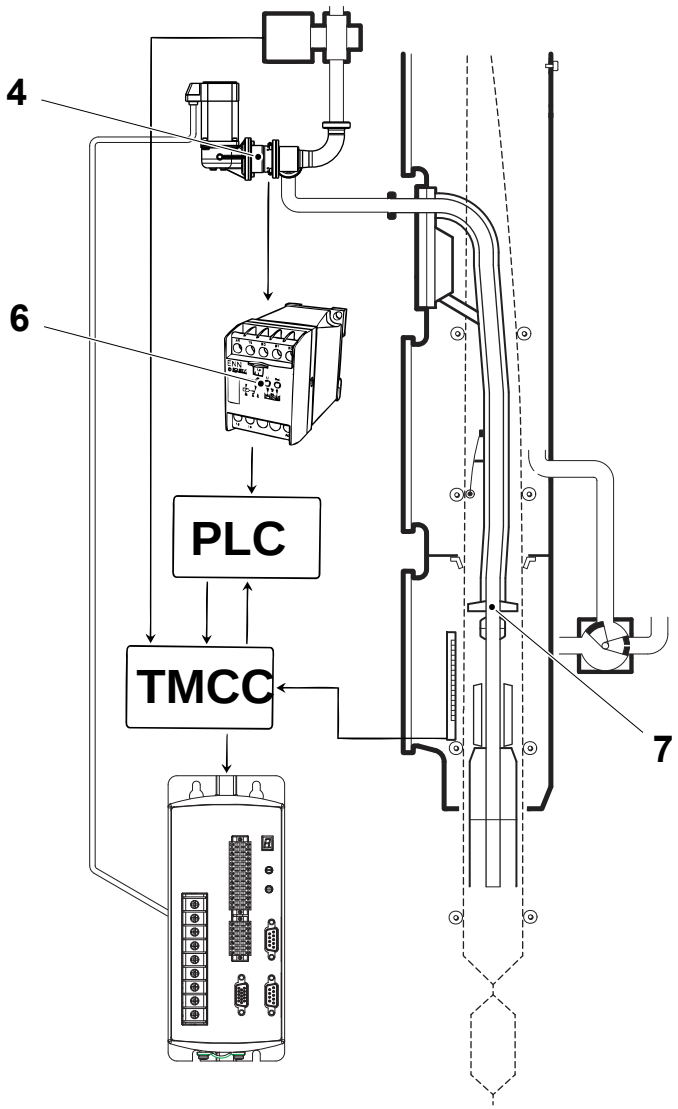

4 Servo dosing valve
6 Leakage detector
7 Filling pipe

(Cont'd)

TechPub_2614345_0108 - 0103_3048083_01.fm

(Cont'd)

On standard machines a swing pipe can be moved manually to switch between the production and CIP modes of the filling system.

TechPub_2614345_0108 - 0103_3048083_01.fm

1.5.1 Filling Pipe

1.5.1-1 Filling Pipe - Check

Machine Status	Mains Power OFF Air OFF Steam ON Water OFF
SPC Reference	1549160-0300

Check that:

- the pressure roller (1) is intact and rotates freely. Change if necessary
- the float (2) is intact and slides freely. Change if necessary
- the filling pipe (3) is centred to the lower forming ring (4). Set if necessary, see 1.5.1-4 Filling Pipe - Set Position.

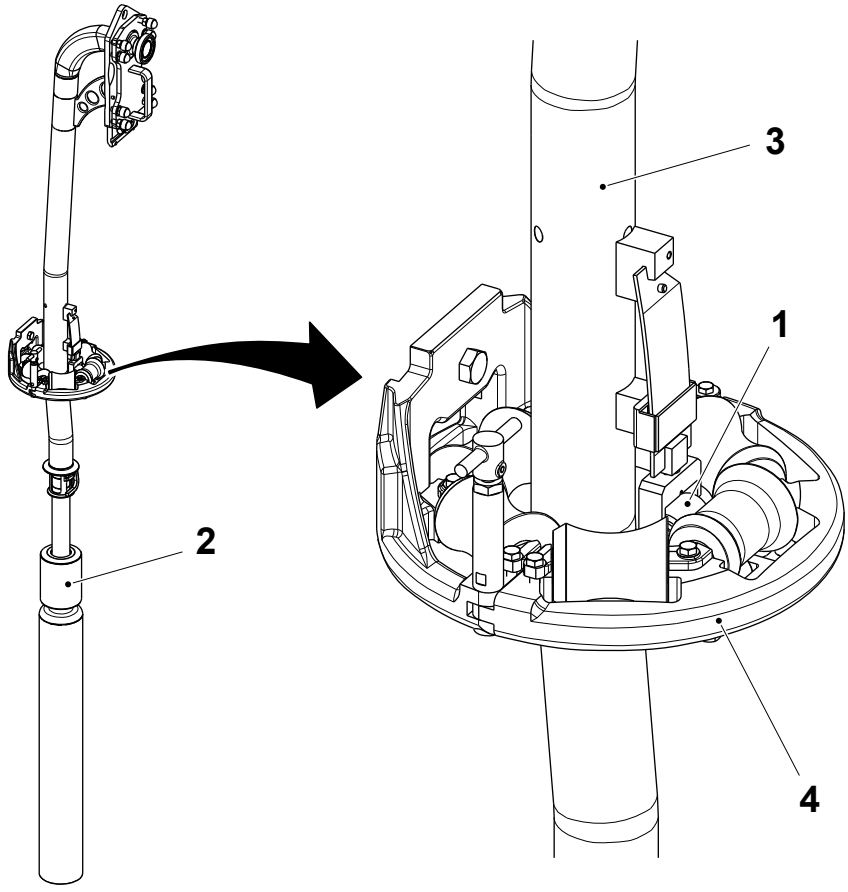

1 Pressure roller
2 Float
3 Filling pipe
4 Lower forming ring

TechPub_2614345_0108 - 0103_3048083_01.fm

1.5.1-2 Filling Pipe - Remove

Machine Status	Mains Power OFF Air OFF Steam ON Water OFF
SPC Reference	1549160-0300

a) Open the aseptic chamber doors (1).

b) Open the level control device (2).

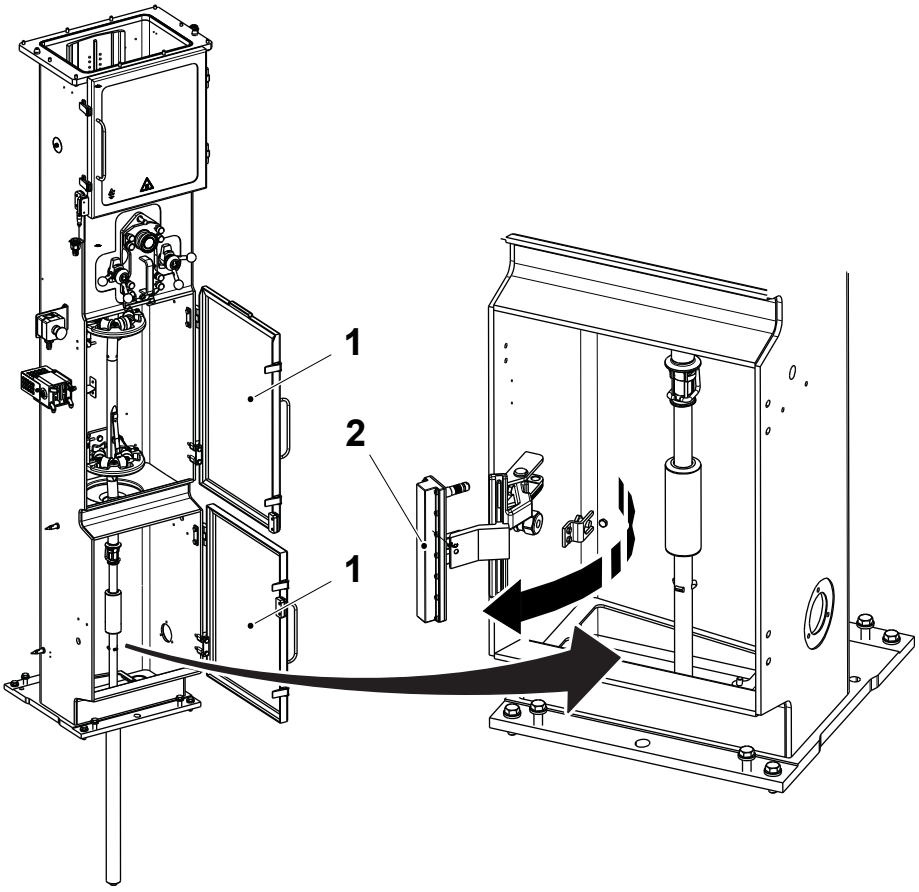

1 Door
2 Level control device

(Cont'd)

TechPub_2614345_0108 - 0103_3048083_01.fm

(Cont'd)

CAUTION
Risk of damage to the equipment.
Extract the lower part of the filling pipe very carefully and holding the pipe as straight as possible in order to prevent any damage to the photocells below the pillar. For Family Packages, follow the instruction 1.5.1-9 Filling Pipe - Remove Bucket.

c) Remove the locking pins (3) and the lower part of the filling pipe (4).

Note! The link (5) is for Family Packages only.

d) Remove the O-ring (6) from the lower part of the filling pipe (4).

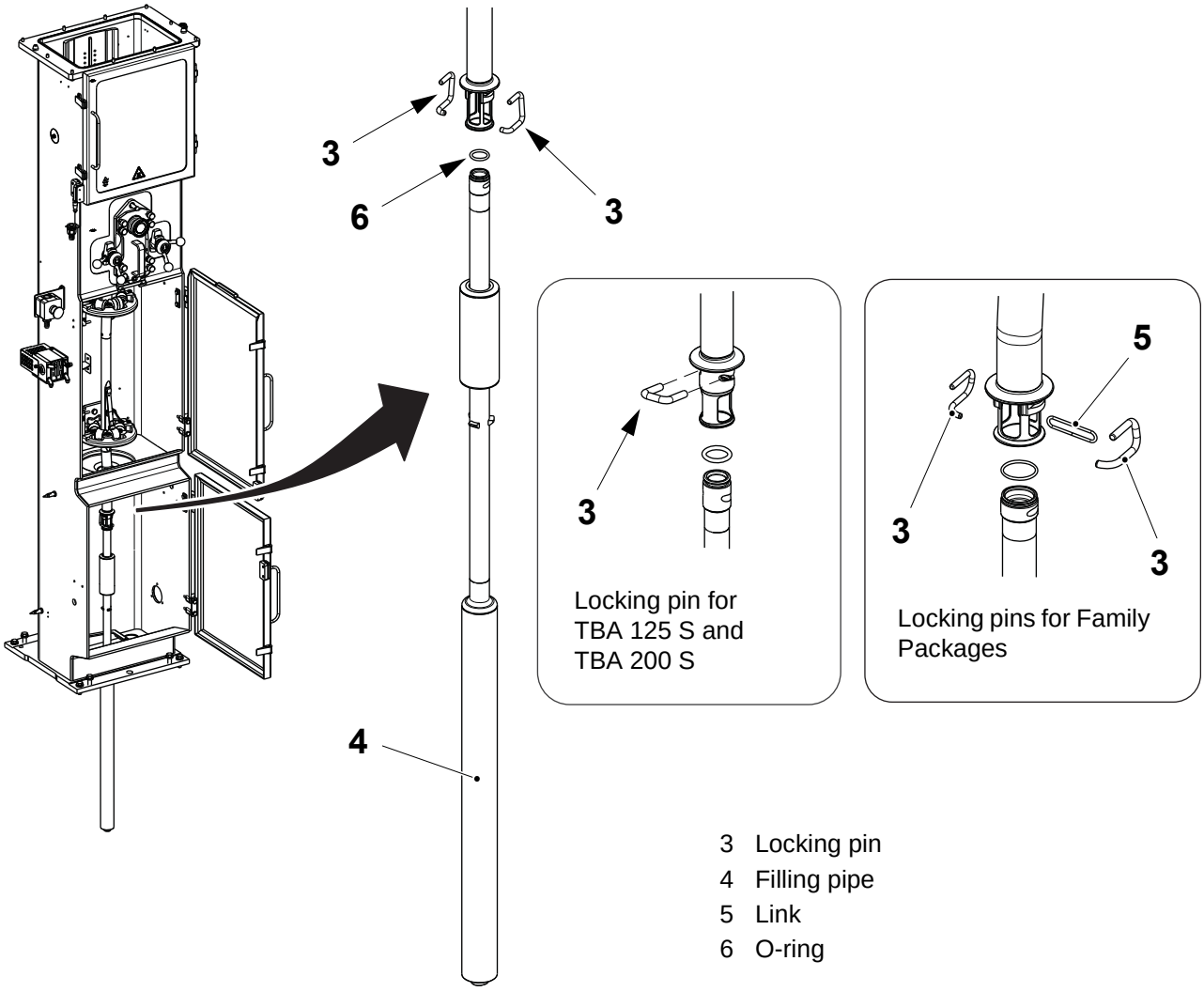

3 Locking pin
4 Filling pipe
5 Link
6 O-ring

(Cont'd)

TechPub_2614345_0108 - 0103_3048083_01.fm

(Cont'd)

e) Open the LS inductor (7) by turning the knob (8).

Note! For TBA 125 S and TBA 200 S, swing the LS finger (9) open.

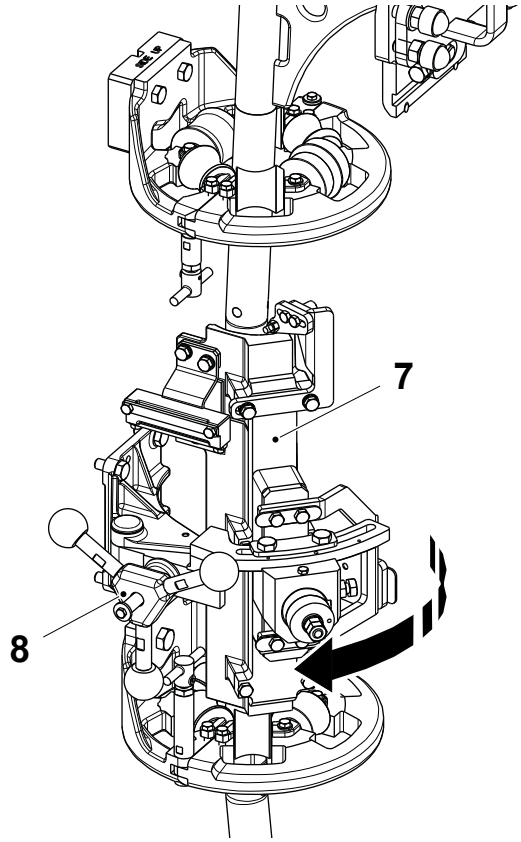

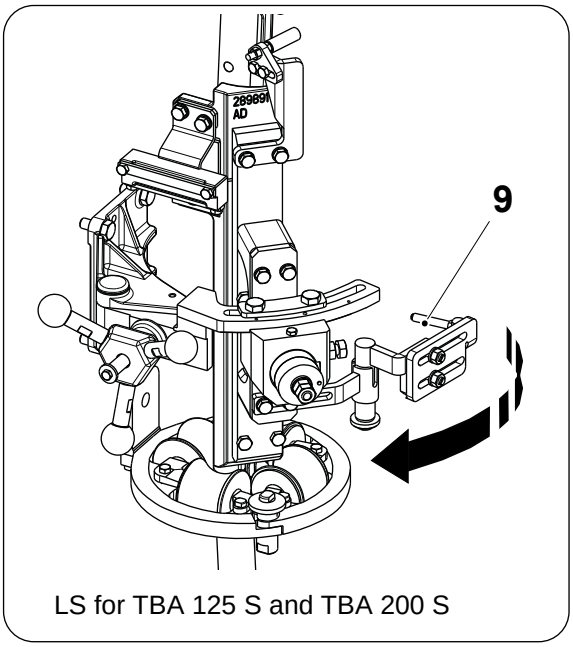

LS for TBA 125 S and TBA 200 S

7 LS inductor
8 Knob
9 LS finger

(Cont'd)

TechPub_2614345_0108 - 0103_3048083_01.fm

(Cont'd)

CAUTION
Risk of damage to the equipment.
Press the front half of the lower forming ring (11) backwards while turning the knob (10) to avoid damaging the threaded screw on the end of the knob (10).

f) Unscrew the knob (10) and open the lower forming ring (11).

g) Remove the pressure rollers assembly (12) from the filling pipe.

h) Unscrew the knob (13) and open the upper forming ring (14).

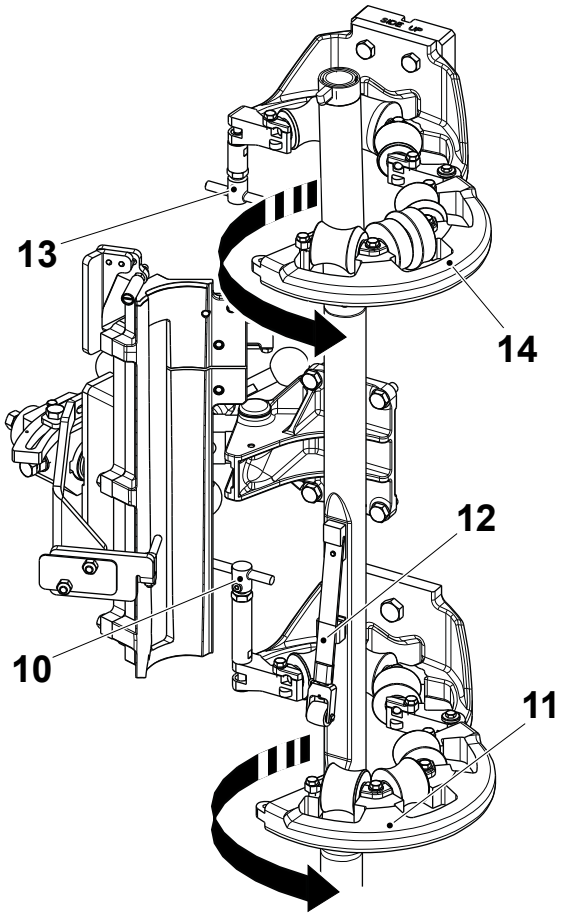

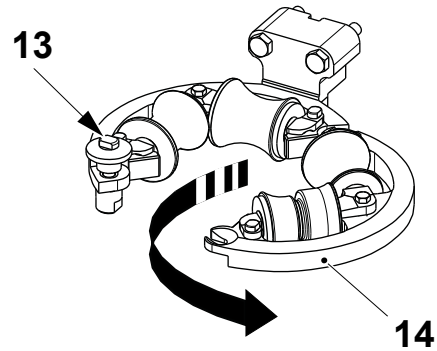

Upper forming ring for TBA 125 S and TBA 200 S

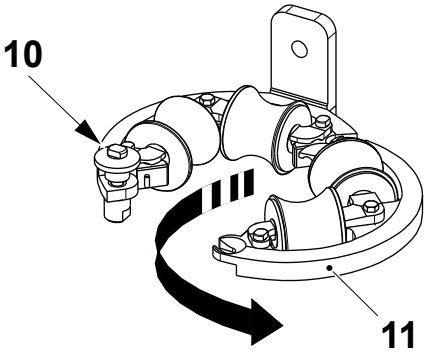

Lower forming ring for TBA 125 S, TBA 200 S, TBA 250 S and TBA 200 M

10 Knob
11 Lower forming ring
12 Pressure roller assembly
13 Knob
14 Upper forming ring

(Cont'd)

TechPub_2614345_0108 - 0103_3048083_01.fm

(Cont'd)

WARNING

Burn hazard.

The product pipe and adjacent components may be hot. If necessary wear personal protective equipment.

i) Loosen the screws (15), remove the clamp (16) and the covering panel (17).

j) Loosen the clamps (18) and the nuts (19) at either end the product pipe (20) and remove the pipe (20) and the gaskets (21).

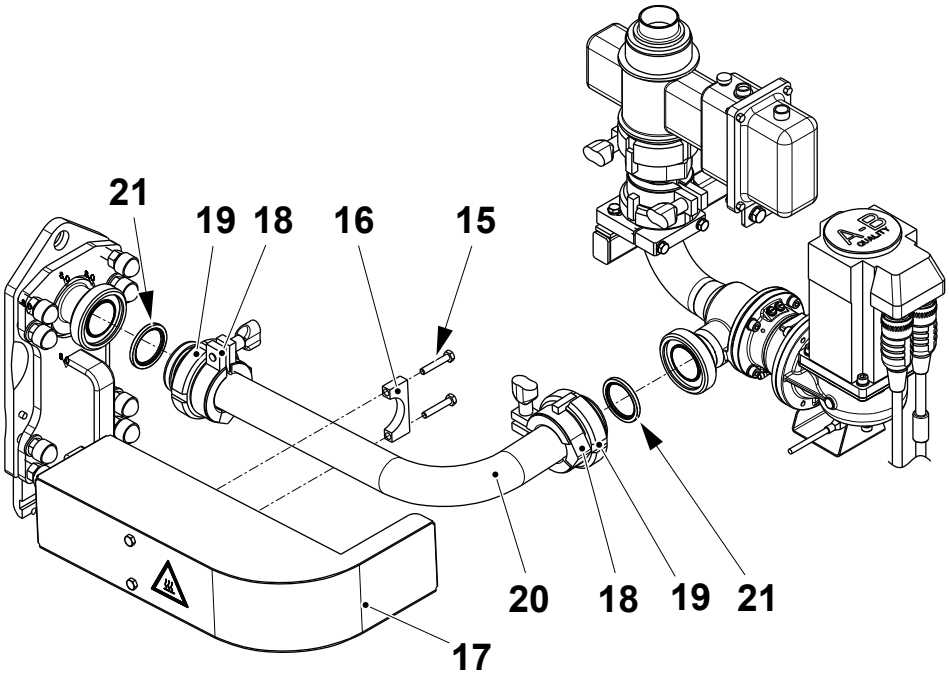

15 Screw
16 Clamp
17 Covering panel
18 Clamp
19 Nut
20 Pipe
21 Gasket

(Cont'd)

TechPub_2614345_0108 - 0103_3048083_01.fm

(Cont'd)

k) With one hand firmly holding the filling pipe (22), undo the locking handles (23).

l) Remove the filling pipe (22) and store it in a safe place.

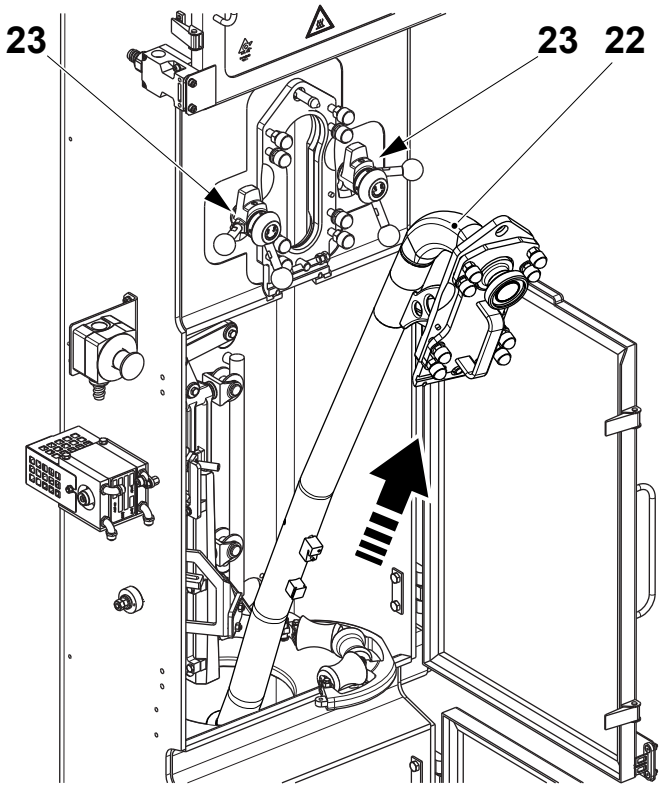

22 Filling pipe
23 Locking handle

TechPub_2614345_0108 - 0103_3048083_01.fm

1.5.1-3 Filling Pipe - Fit

Machine Status	Mains Power OFF Water OFF Air OFF Steam ON
SPC Reference	1549160-0300

a) Open the LS inductor (1) by turning the knob (2).

Note! For TBA 125 S and TBA 200 S, swing the LS finger (3) open.

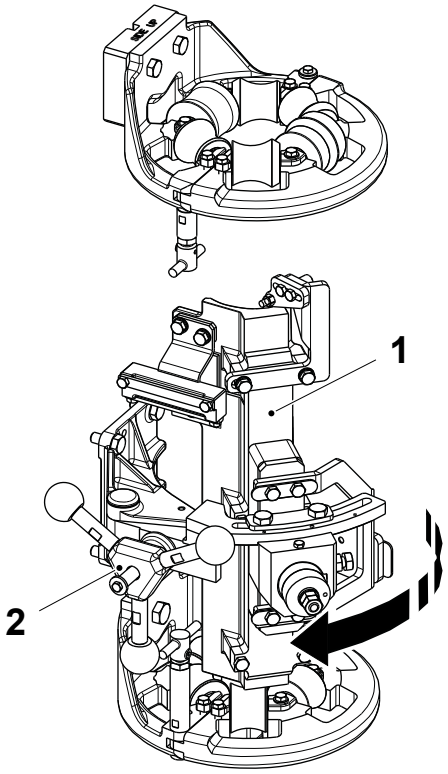

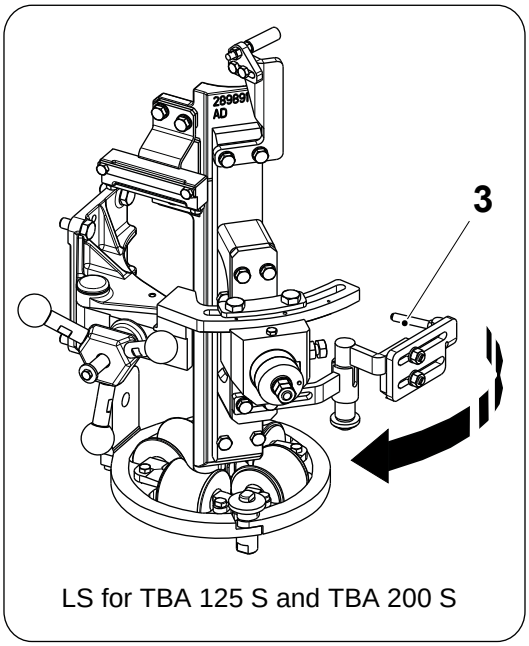

LS for TBA 125 S and TBA 200 S

1 LS inductor
2 Knob
3 LS finger

(Cont'd)

TechPub_2614345_0108 - 0103_3048083_01.fm

(Cont'd)

Note! Press the front half of the lower forming ring (7) backwards while turning the knob (6) to avoid damaging the threaded screw on the end of the knob (6).

a) Unscrew the knob (4) and open the upper forming ring (5).

b) Unscrew the knob (6) and open the lower forming ring (7).

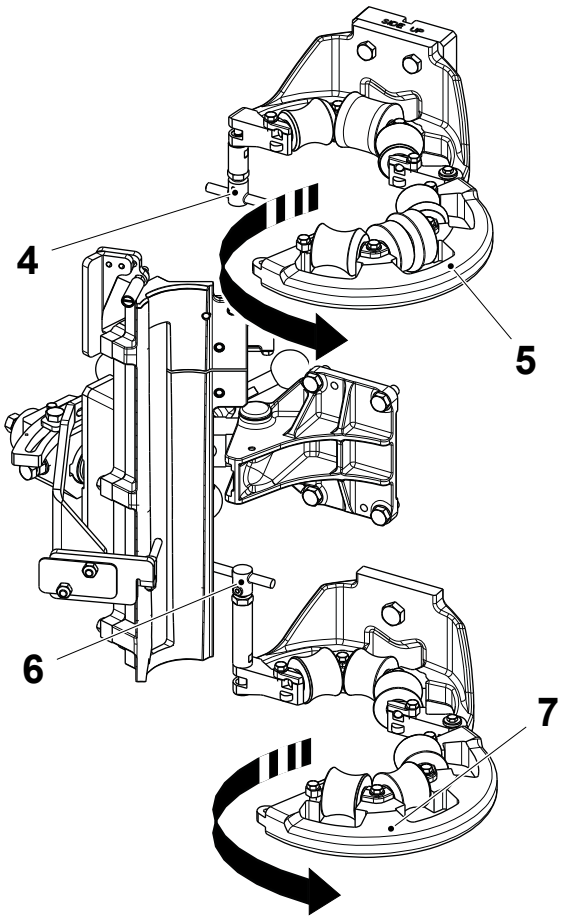

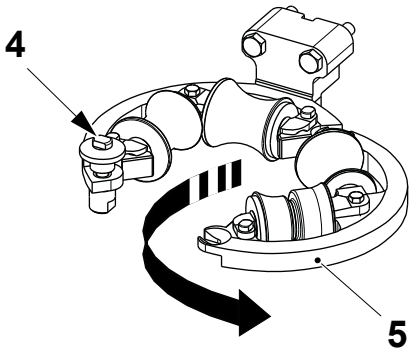

Upper forming ring for TBA 125 S and TBA 200 S

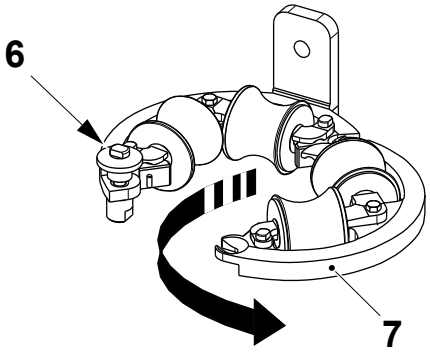

Lower forming ring for TBA 125 S, TBA 200 S, TBA 250 S and TBA 200 M

4 Knob
5 Lower forming ring
6 Knob
7 Upper forming ring

(Cont'd)

TechPub_2614345_0108 - 0103_3048083_01.fm

(Cont'd)

c) Fit the filling pipe (8) and secure it in to position with the locking handles (9).

d) Mount the pressure roller assembly (10) on to the filling pipe.

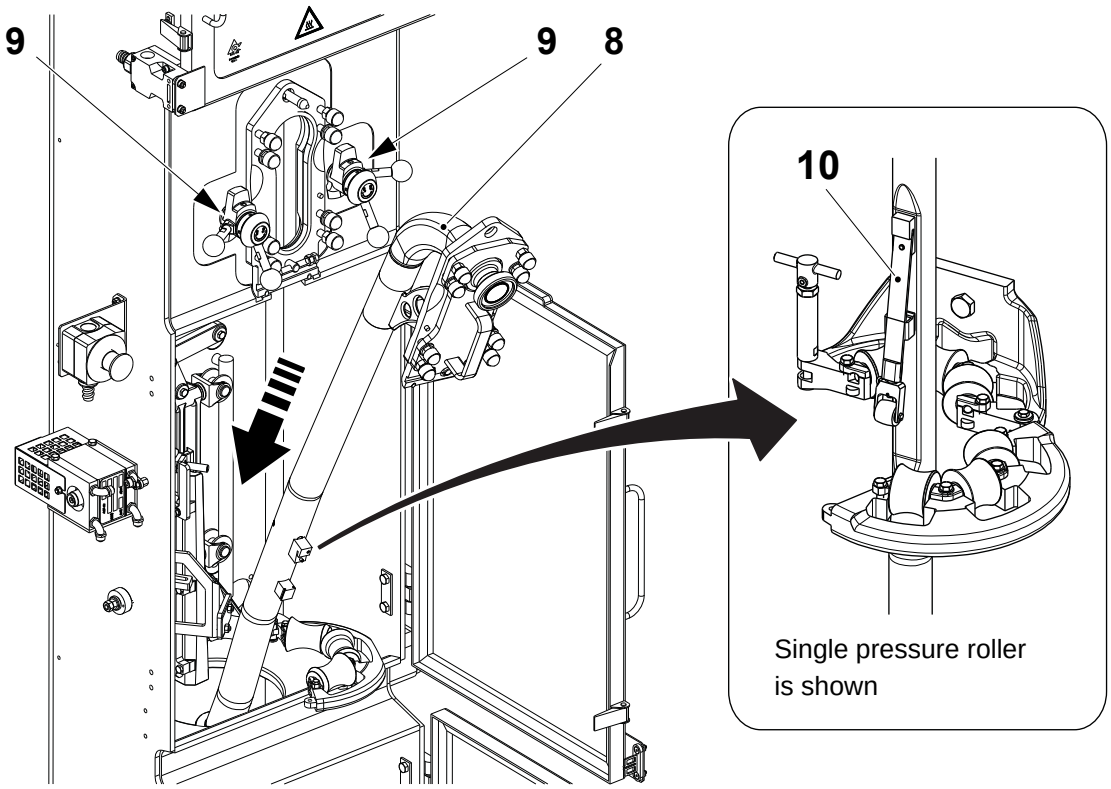

8 Filling pipe
9 Locking handle
10 Pressure roller assembly

(Cont'd)

TechPub_2614345_0108 - 0103_3048083_01.fm

(Cont'd)

CAUTION
Risk of damage to the equipment.
Press the front half of the lower forming ring (7) backwards while tightening the knob (6) to avoid damaging the threaded screw on the end of the knob (6).

CAUTION
Risk of damage to the equipment.
In machines TBA 125 S, TBA 200 S, TBA 250 S and TBA 200 M do not tighten the knobs (4) and (6) by the spanner to avoid damaging the thread.

e) Close the upper forming ring (4) and tighten the knob (3).

f) Close the lower forming ring (7) and tighten the knob (6).

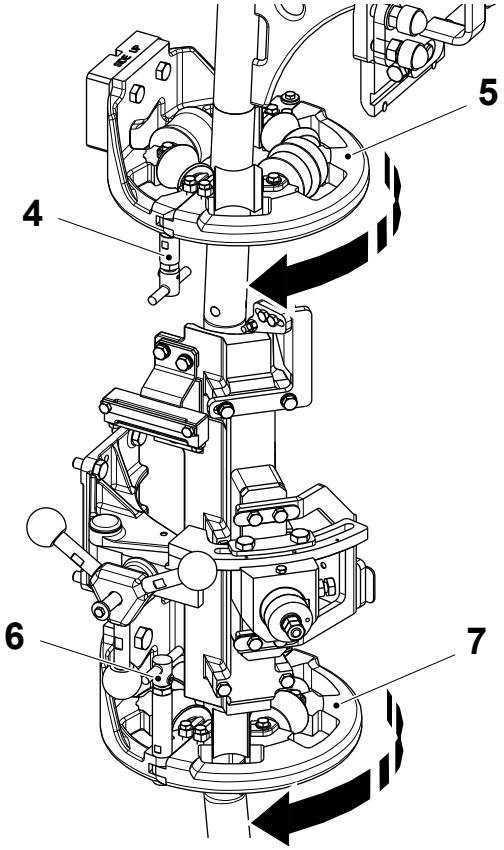

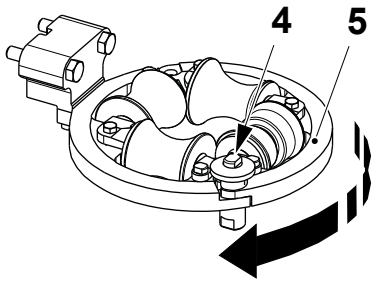

Upper forming ring for TBA 125 S and TBA 200 S

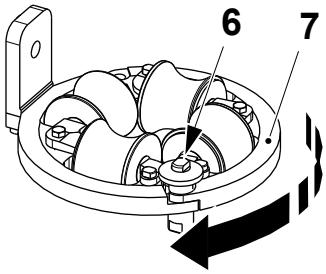

Lower forming ring for TBA 125 S, TBA 200 S, TBA 250 S and TBA 200 M

4 Knob
5 Lower forming ring
6 Knob
7 Upper forming ring

(Cont'd)

TechPub_2614345_0108 - 0103_3048083_01.fm

(Cont'd)

g) Close the LS inductor (1) by turning the knob (2).

Note! For TBA 125 S and TBA 200 S, swing the LS finger (3) close.

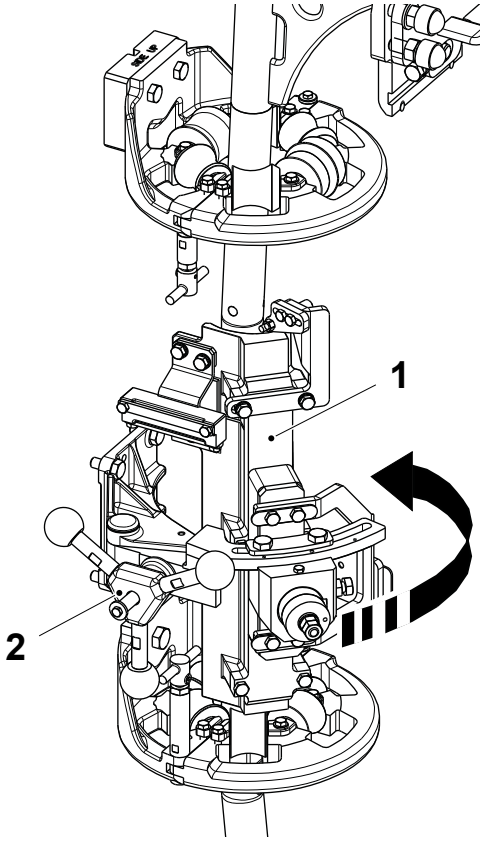

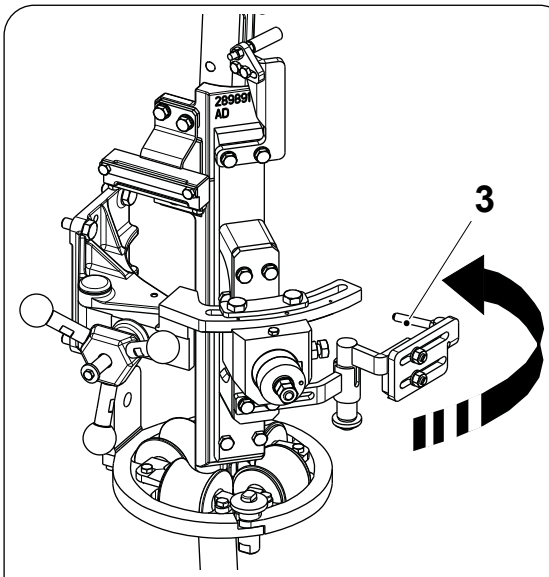

LS for TBA 125 S and TBA 200 S

1 LS inductor
2 Knob
3 LS finger

(Cont'd)

TechPub_2614345_0108 - 0103_3048083_01.fm

(Cont'd)

WARNING

Burn hazard.

The product pipe and adjacent components may be hot. If necessary wear personal protective equipment.

h) Fit the product pipe (11) and gaskets (12) by tightening the nuts (13) and locking them with the clamps (14).

i) Fit the clamps (15) and the covering panel (16) on the product pipe (11) by tightening the screws (17).

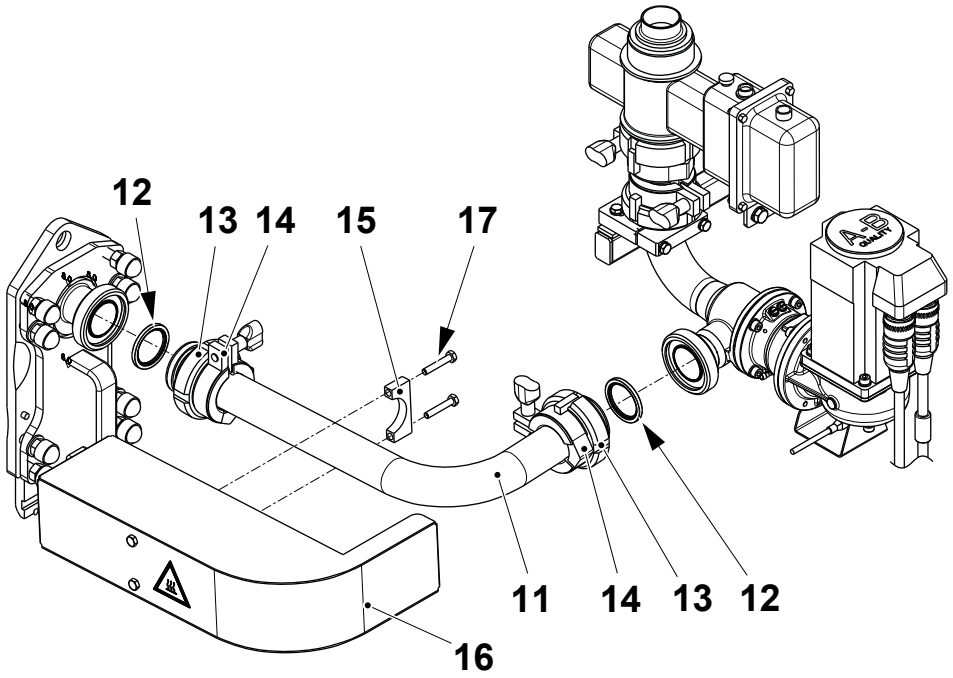

11 Product pipe
12 Gasket
13 Nut
14 Clamp
15 Clamp
16 Covering panel
17 Screw

(Cont'd)

TechPub_2614345_0108 - 0103_3048083_01.fm

(Cont'd)

CAUTION
Risk of damage to the equipment.
Insert the lower part of the filling pipe very carefully and holding the pipe as straight as possible in order to prevent any damage to the photocells below the pillar. For Family Packages, follow the instruction 1.5.1-9 Filling Pipe - Remove Bucket.

j) Fit the O-ring (18) in its seat on the lower part of the filling pipe (19).

k) Fit the lower part of the filling pipe (19) and secure it in to position with the locking pins (20).

Note! The link (21) is for Family Packages only.

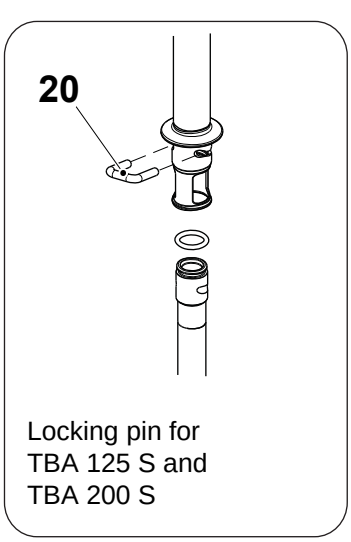

Locking pin for
TBA 125 S and
TBA 200 S

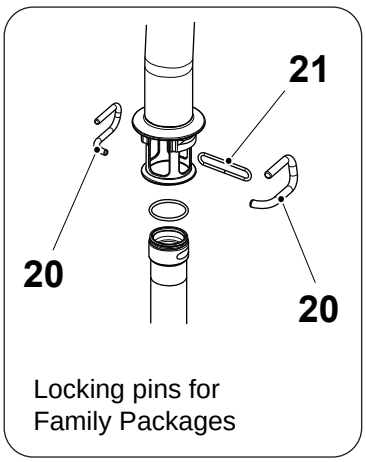

Locking pins for
Family Packages

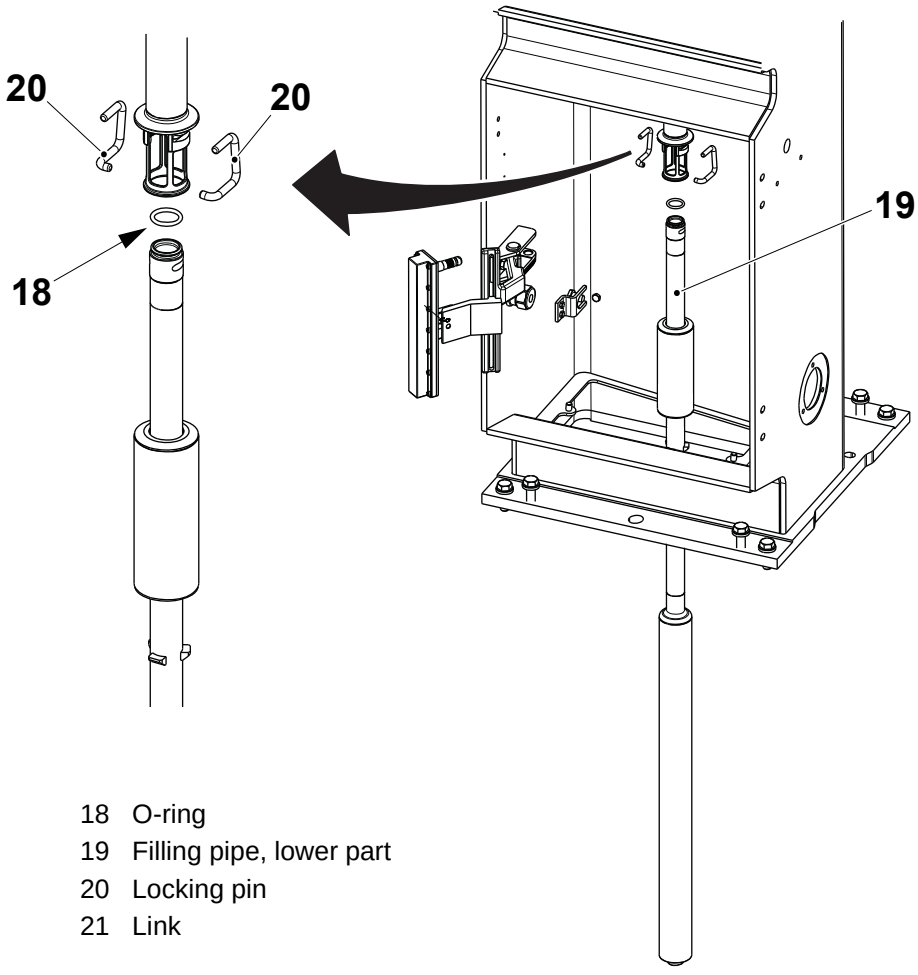

18 O-ring
19 Filling pipe, lower part
20 Locking pin
21 Link

(Cont'd)

TechPub_2614345_0108 - 0103_3048083_01.fm

(Cont'd)

l) Close the level control device (22).

Note! Make sure that the locking pin is fitted in the groove (23) and not in the O-ring seat (24).

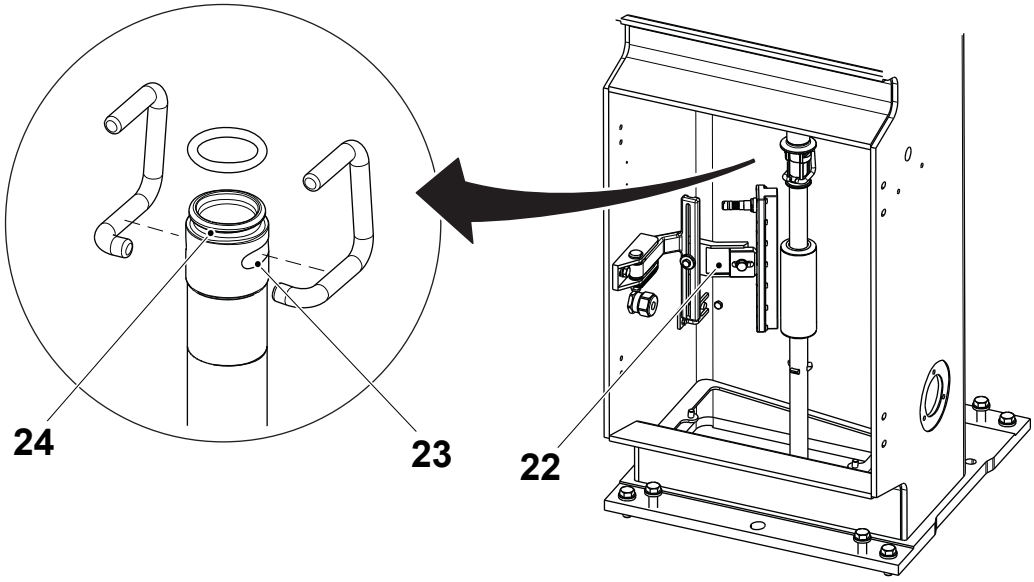

22 Level control device
23 Groove
24 O-ring seat

TechPub_2614345_0108 - 0103_3048083_01.fm

1.5.1-4 Filling Pipe - Set Position

Machine Status	Mains Power OFF Air OFF Steam ON Water OFF
Special Equipment	Template TP No. 3038999-0100
SPC Reference	1549160-0300

a) Remove the lower part of the filling pipe (1), see 1.5.1-2 Filling Pipe - Remove, steps a) to d).

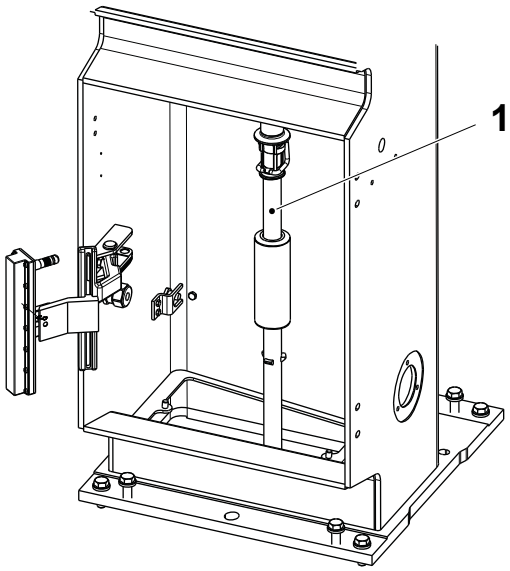

1 Filling pipe, upper part

TechPub_2614345_0108 - 0103_3048083_01.fm

(Cont'd)

WARNING

Burn hazard.

The product pipe and adjacent components may be hot. If necessary wear personal protective equipment.

b) Remove the covering panel (2) and the clamp (3).

c) Remove the clamps (4) and loosen the nuts (5) at either end the product pipe (6)and then remove the pipe and gaskets (7).

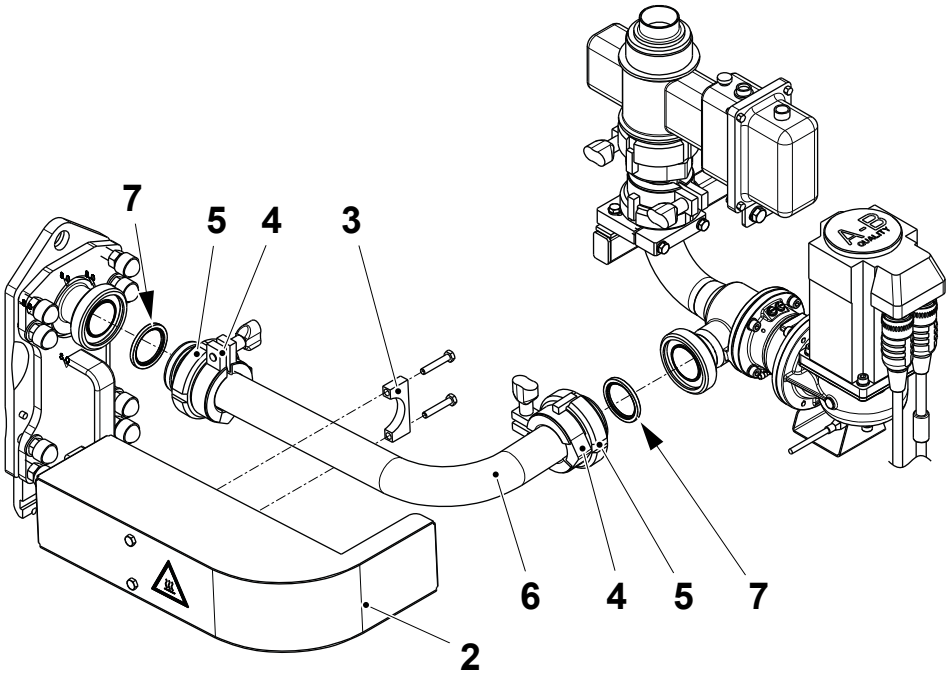

2 Covering panel
3 Clamp
4 Clamp
5 Nut
6 Pipe
7 Gasket

(Cont'd)

TechPub_2614345_0108 - 0103_3048083_01.fm

(Cont'd)

Note! The lower forming ring (11) must be in its closed position. Put a double piece of packaging material between the pressure roller and the counter roller, see 1.5.1-5 Filling Pipe - Set Pressure Roller.

d) Check that the seal (8) between the mounting plate (9) and the fastening plate (10) is compressed to dimension **A**.

Note! It is important to set the distance **A** correctly.

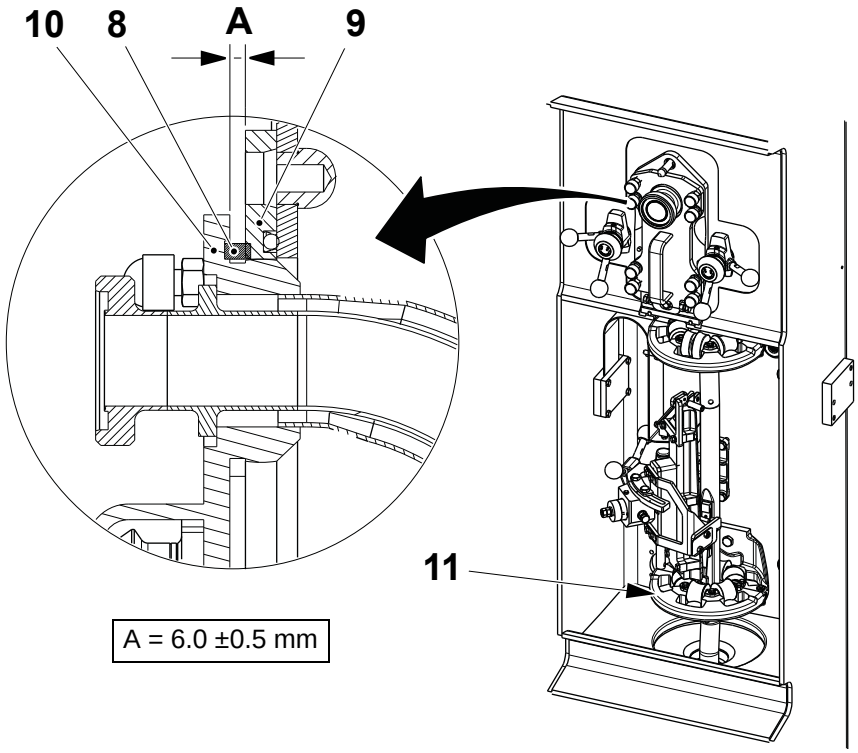

8 Seal
9 Mounting plate
10 Fastening plate
11 Lower forming ring

(Cont'd)

TechPub_2614345_0108 - 0103_3048083_01.fm

(Cont'd)

e) Remove the steering ring (12), see 1.2.7-1 Steering Ring - Overhaul, steps b) to c).

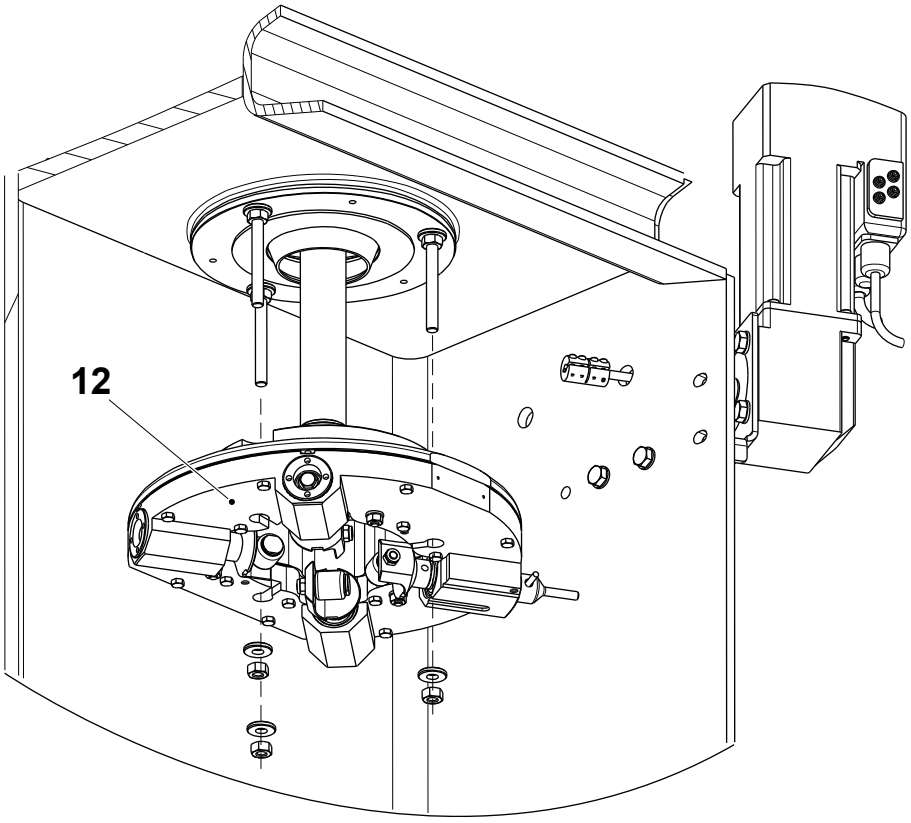

12 Steering ring

(Cont'd)

TechPub_2614345_0108 - 0103_3048083_01.fm

(Cont'd)

f) Fit the template (13) on the stud screws (14) by the nuts (15).

g) Tighten the nuts (15).

Note! Do not loosen the stud screws (14) to not lose the position setting of the seal ring.

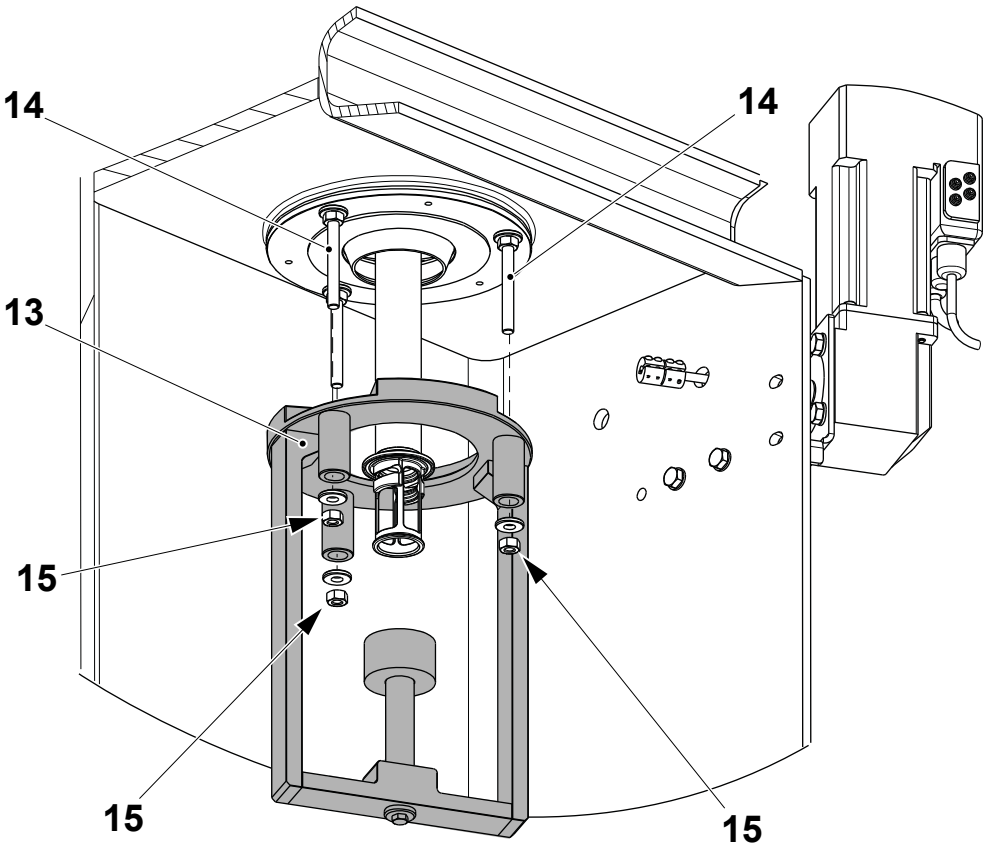

13 Template
14 Stud screw
15 Nut

(Cont'd)

TechPub_2614345_0108 - 0103_3048083_01.fm

(Cont'd)

h) Check the alignment of the filling pipe by raising the movable part of the template (16). It should slide easily over the end of the filling pipe. If this is the case, proceed from point m). If the pipe is not aligned correctly, continue below.

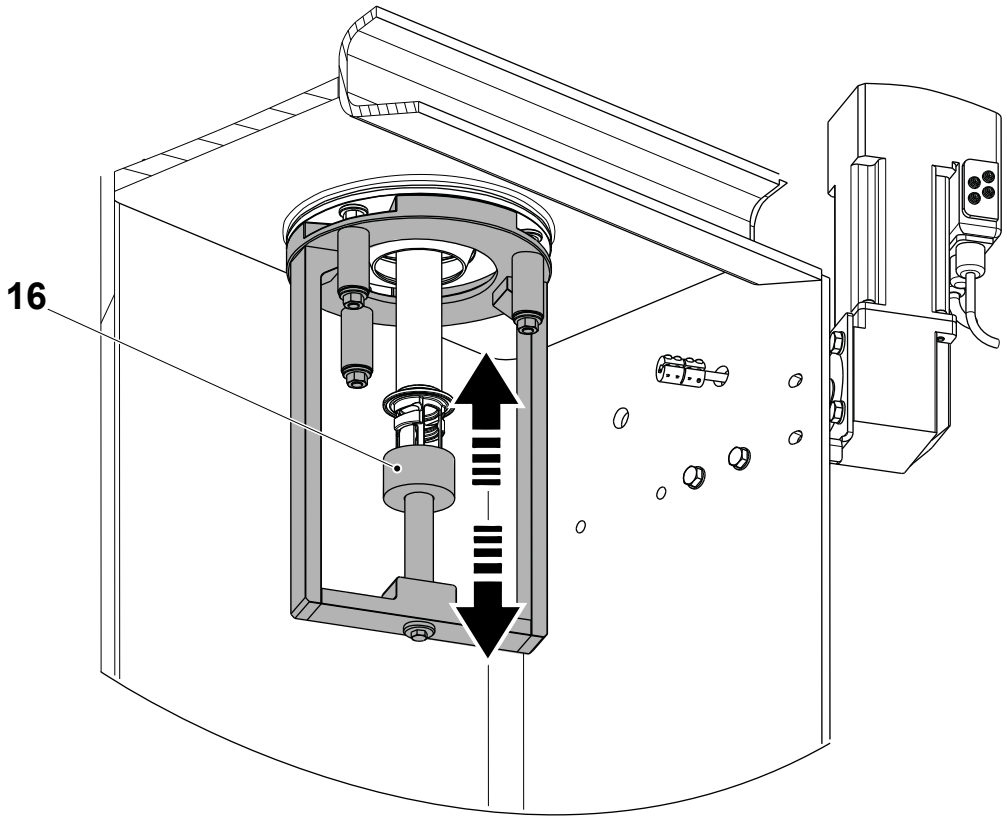

16 Movable part of template

(Cont'd)

TechPub_2614345_0108 - 0103_3048083_01.fm

(Cont'd)

i) On the fastening plate (10), loosen the lock nuts on the screws (17) and (18). Loosen the screws (17) a few turns.

j) Align and centre the filling pipe to the template using the screws (18) and (19). Do not over tighten the screws (18). Lock in position with the lock nuts on screws (18) and (19).

k) Tighten the screws (17) on the fastening plate (10) until they just touch the mounting plate. Do not over tighten. Lock the screws (18) with the lock nuts.

l) Check that:

- the gasket compression is according to item d). If it is not correct, reset it and proceed from item i).
- the spring load is correct, see 1.5.1-5 Filling Pipe - Set Pressure Roller. Adjust if necessary
- the filling pipe alignment is according to step j).

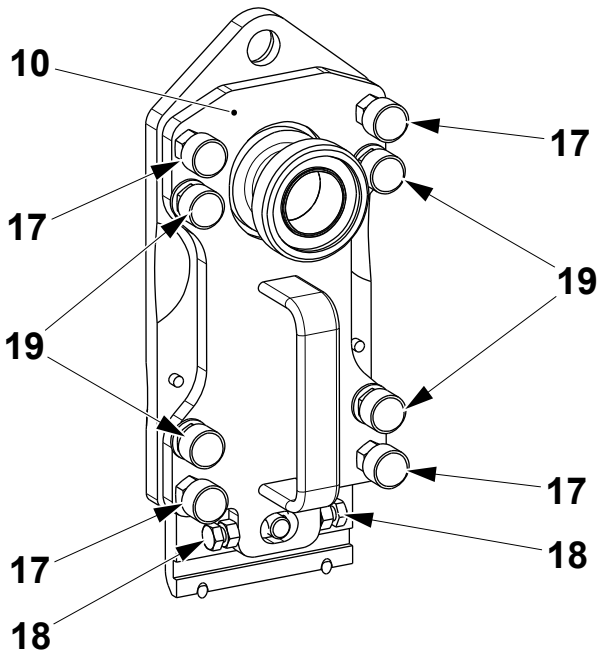

10 Fastening plate
17 Screw
18 Screw
19 Screw

(Cont'd)

TechPub_2614345_0108 - 0103_3048083_01.fm

(Cont'd)

m) Remove the template (13) by the nuts (15).

Note! Do not loosen the stud screws (14) to not lose the position setting of the seal ring.

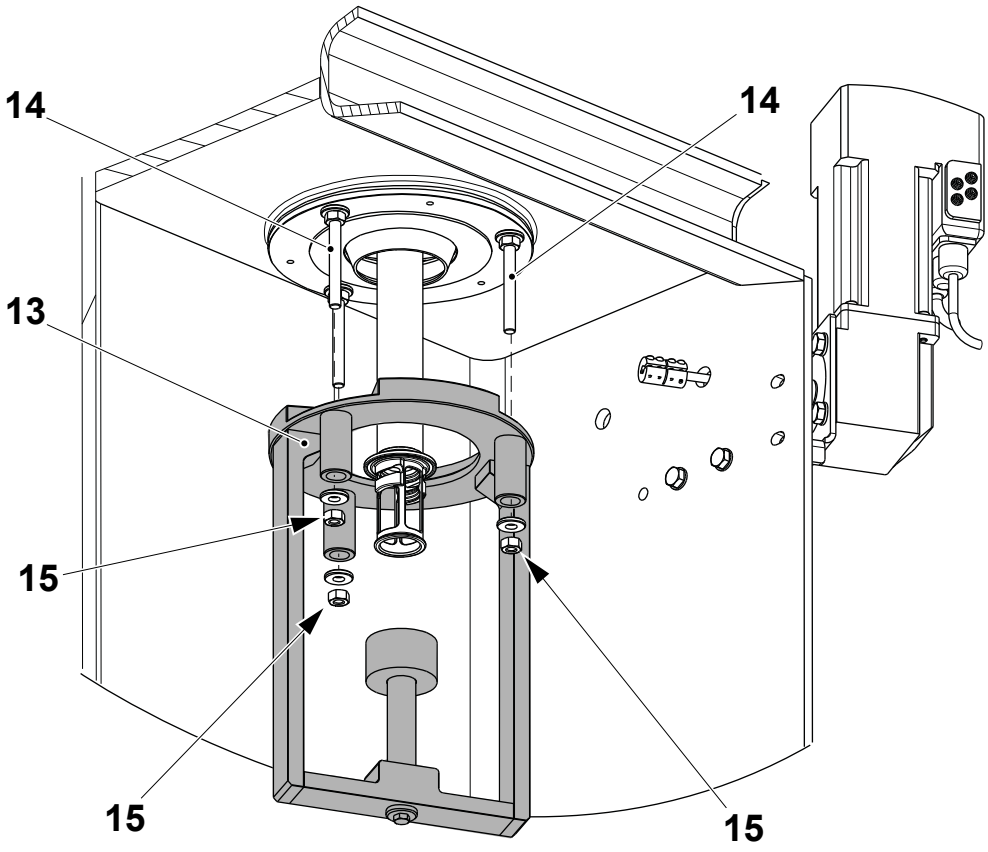

13 Template
14 Stud screw
15 Nut

(Cont'd)

TechPub_2614345_0108 - 0103_3048083_01.fm

(Cont'd)

n) Fit back the steering ring (12), see 1.2.7-1 Steering Ring - Overhaul, steps b) to c) in the reverse order.

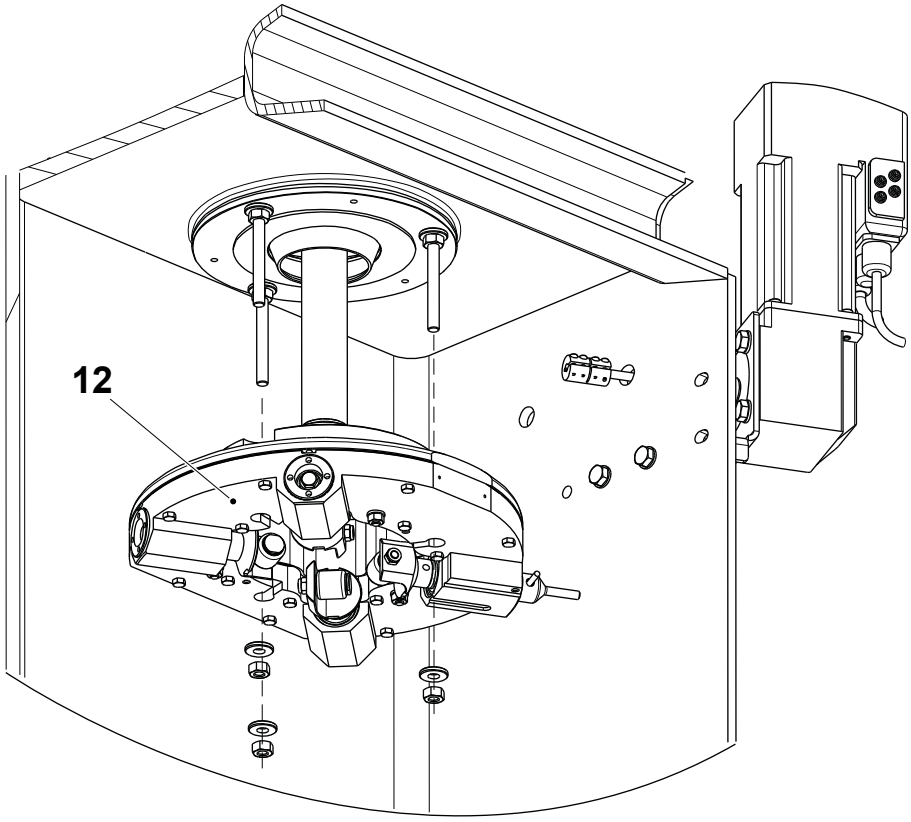

14 Steering ring

(Cont'd)

TechPub_2614345_0108 - 0103_3048083_01.fm

(Cont'd)

WARNING

Burn hazard.

The product pipe and adjacent components may be hot. If necessary wear personal protective equipment.

o) Fit the product pipe (6) and gaskets (7) by tightening the nut (5) and locking them with the clamps (4).

p) Fit the clamps (3) and the covering panel (2).

q) Fit back the lower part of the filling pipe, see 1.5.1-3 Filling Pipe - Fit, steps j) to l).

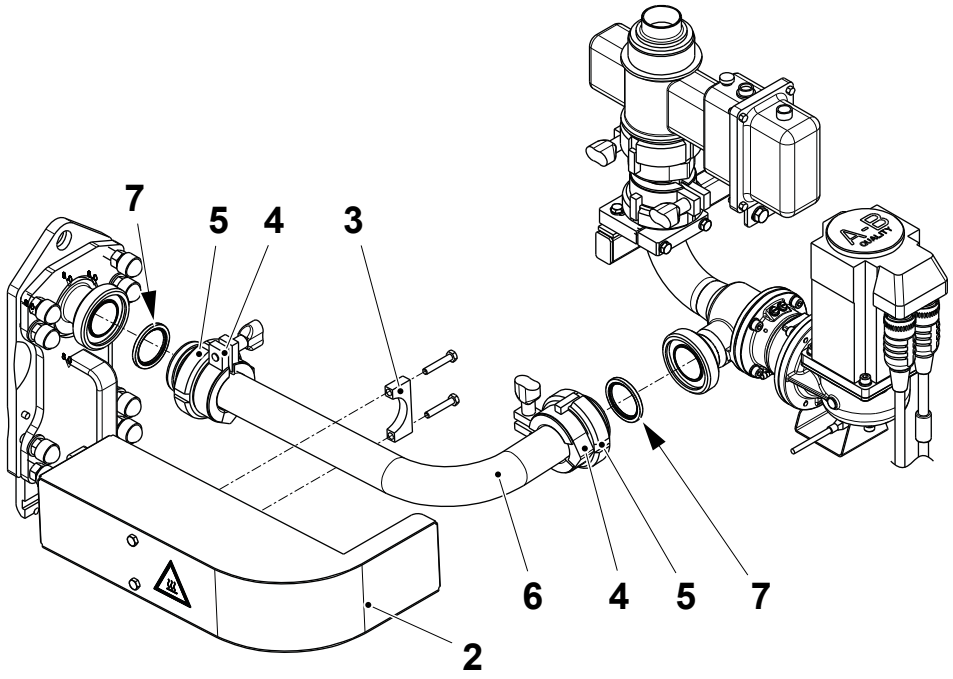

2 Covering panel
3 Clamp
4 Clamp
5 Nut
6 Pipe
7 Gasket

TechPub_2614345_0108 - 0103_3048083_01.fm

1.5.1-5 Filling Pipe - Set Pressure Roller

Machine Status	Mains Power OFF Air OFF Steam ON Water OFF
Special Equipment	Force Gauge TP No. 90459-1467
SPC Reference	1549160-0300

Note! This setting procedure must be performed in accordance with the instructions described in 1-1 Superstructure - Setting Sequence, Type I.

(Cont'd)

TechPub_2614345_0108 - 0103_3048083_01.fm

(Cont'd)

a) Fold a double piece of packaging material (5) and put it between the pressure roller (1) and the counter rollers (2).

b) Press the force gauge tool (4) against the spring (3). Take an accurate reading when the packaging material slips down, see table below.

c) Adjust by bending or changing the spring (3) until the correct force is obtained.

d) Check the filling pipe position, see 1.5.1-4 Filling Pipe - Set Position.

Package	**Force (N)**
Portion Packages	40 ±5
Family Packages	140 ±10

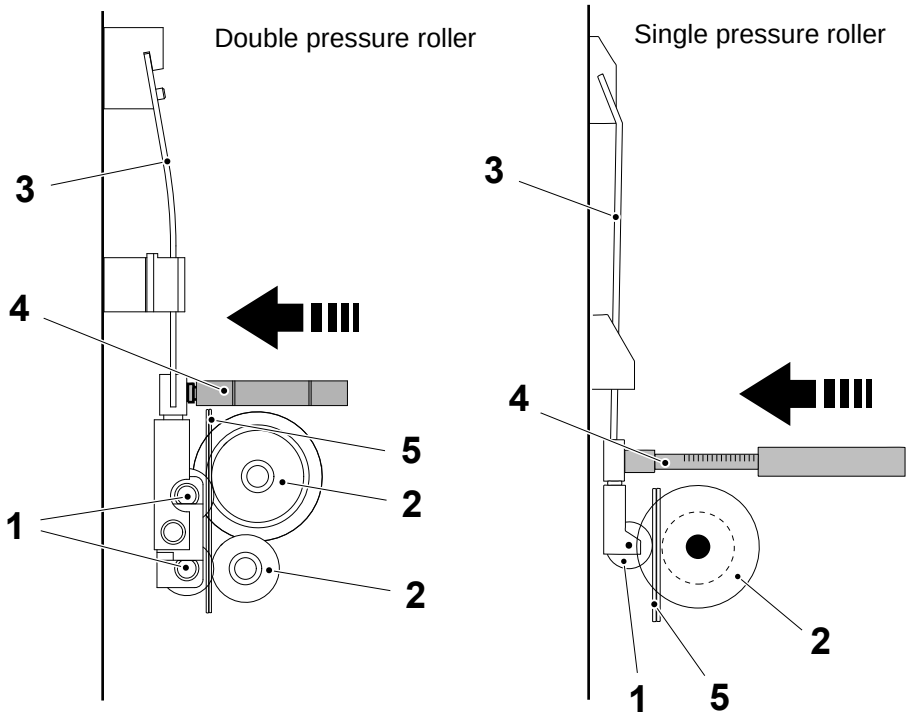

1 Pressure roller
2 Counter roller
3 Spring
4 Force gauge tool
5 Packaging material

TechPub_2614345_0108 - 0103_3048083_01.fm

1.5.1-6 Filling Pipe - Set Level Detector Position

Machine Status	Mains Power ON Air OFF Steam ON Water OFF
SPC Reference	1549160-0300

TechPub_2614345_0108 - 0103_3048083_01.fm

(Cont'd)

Basic Setting

a) Loosen the screw (1) and move the sensor (2) to set the distance **A** between the top of the sensor (2) and the bottom of the filling pipe (3). Tighten the screw (1) on completion.

Package	A (mm)
TBA 200 S	65
TBA 250 B	54
TBA 200 B - TBA 125 S	55
TBA 250 S - TBA 200 M	56
TBA 1000 S	25
TBA 1000 Sq	34
TBA 1000 B	38

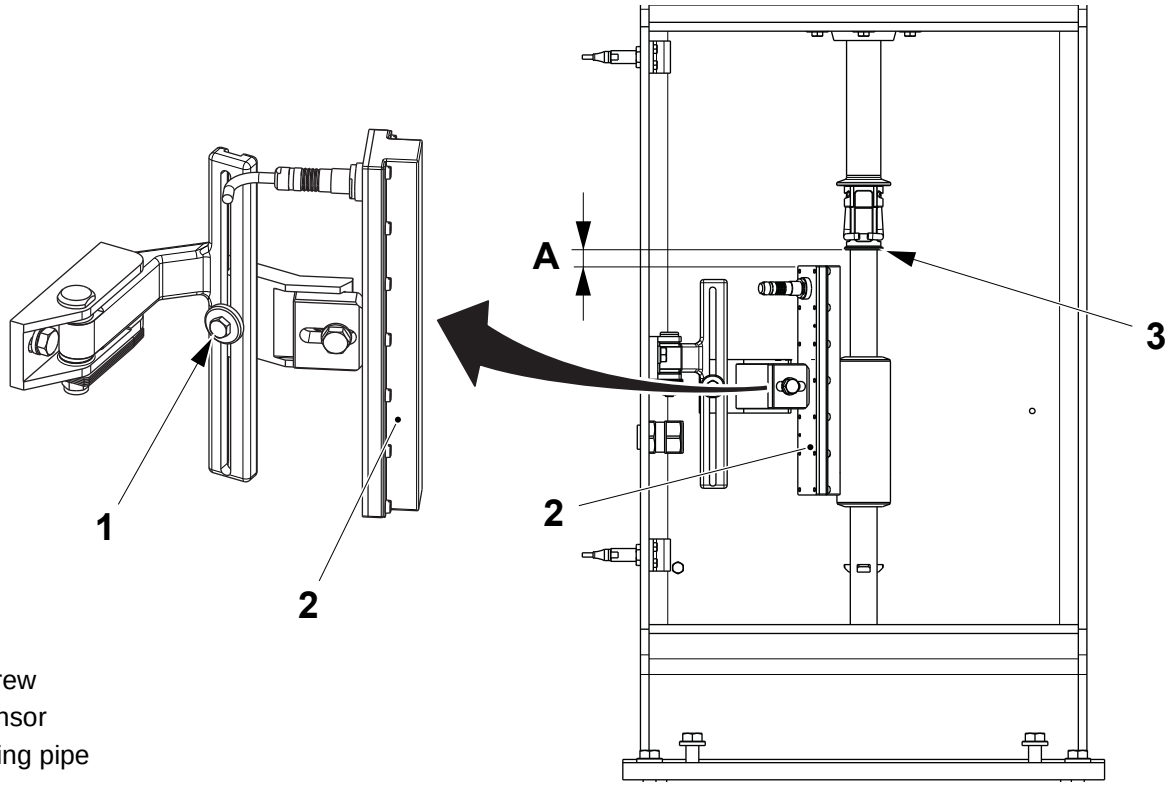

1 Screw
2 Sensor
3 Filling pipe

(Cont'd)

TechPub_2614345_0108 - 0103_3048083_01.fm

(Cont'd)

b) Loosen the screw (4) and move the sensor (2) to set the distance **B** between the sensor (2) and the float (5). Tighten the screw (4).

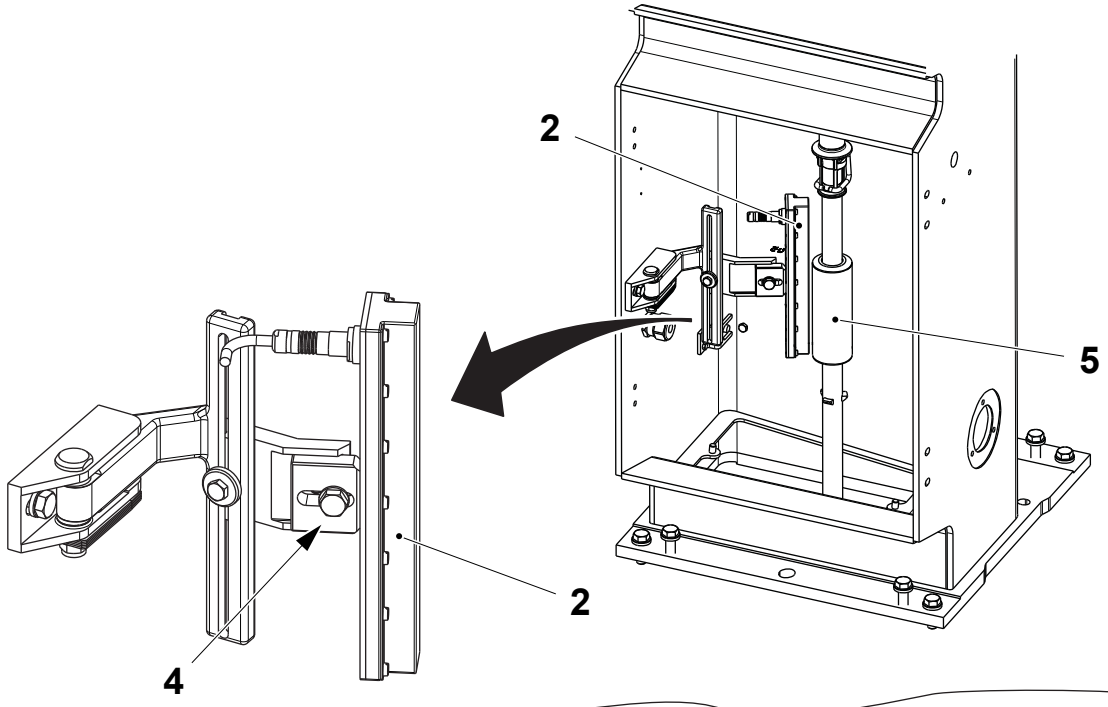

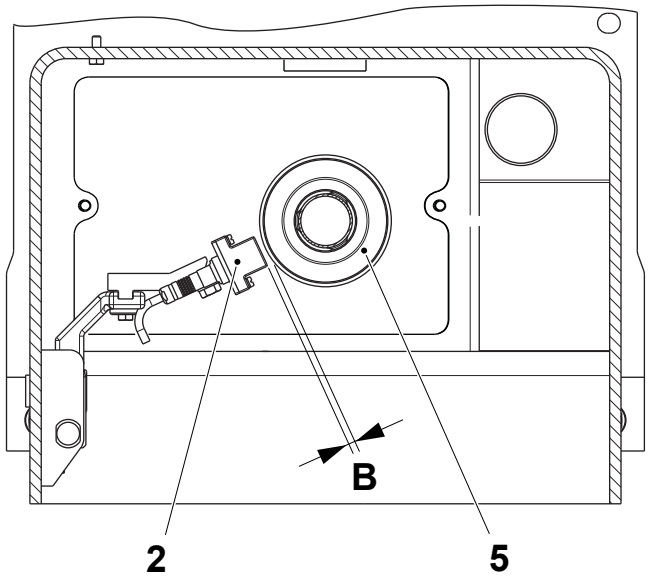

B = 15 mm

2 Sensor
4 Screw
5 Float

(Cont'd)

TechPub_2614345_0108 - 0103_3048083_01.fm

(Cont'd)

Check Function

a) Make sure the float (1) is in its lowest position. Check that the green LED on the base of the sensor (2) is lit.

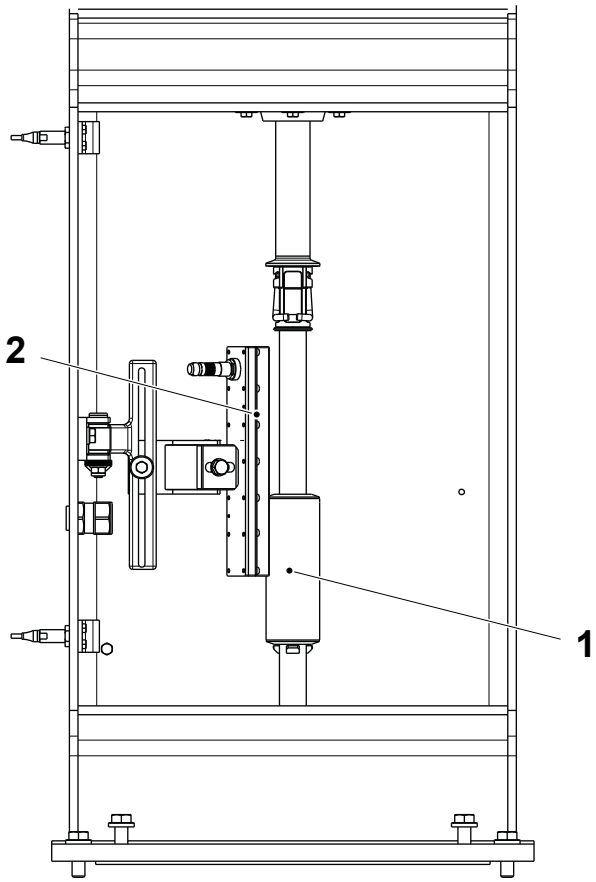

1 Float
2 Sensor

(Cont'd)

TechPub_2614345_0108 - 0103_3048083_01.fm

(Cont'd)

b) Touch the PRODUCTION CONTROL button (3).

c) Touch the FILLING SYSTEM button (4).

d) Touch the LEVEL INDICATOR icon (5) and check the level indicator is working. If not, loosen the screw (6) and move the sensor (2) nearer the float (1) until it does. Tighten the screw (6) when the sensor is working properly.

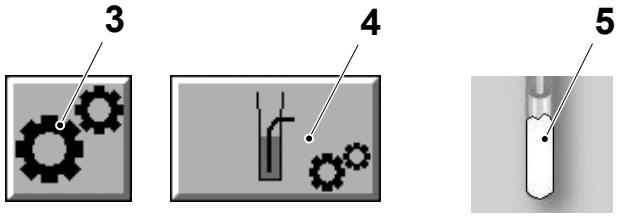

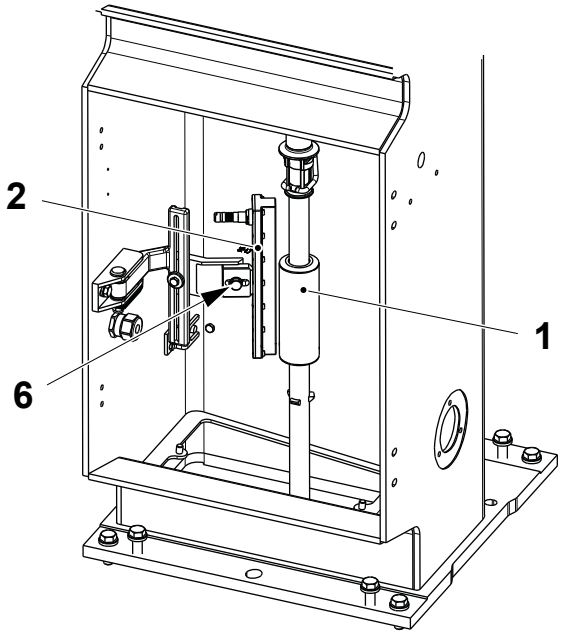

1 Float
2 Sensor
3 Production control button
4 Filling system button
5 Level indicator icon
6 Screw

(Cont'd)

TechPub_2614345_0108 - 0103_3048083_01.fm

(Cont'd)

e) Move the float (1) up and check that all the yellow LEDs along the sensor (2) light progressively.

f) Raise the float (1) to its highest position and support it in that position. Only the red LED on the upper part of the sensor (2) must be lit.

g) Check in the level indicator window (7) that the level indicator is at 100% of the range. If 0% is indicated, contact your local Tetra Pak service station.

h) Bring back the float (1) is in its lowest position.

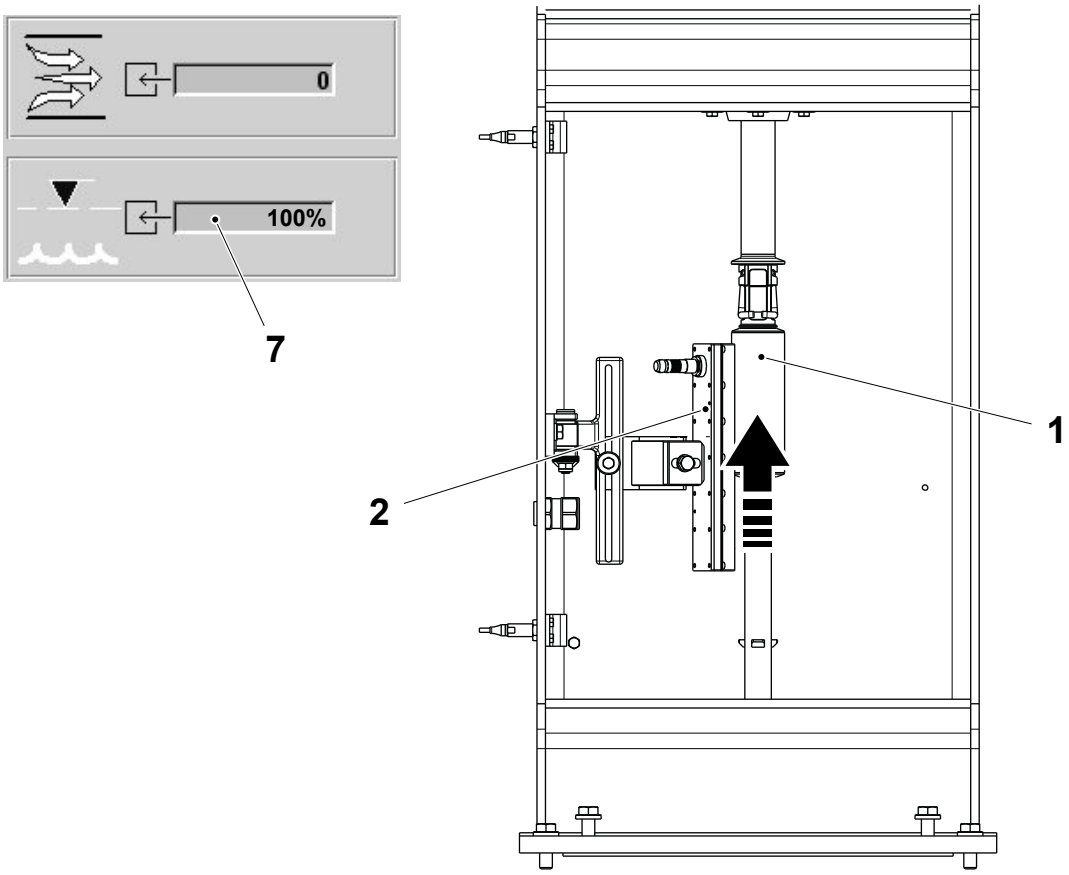

1 Float
2 Sensor
7 Level indicator window

(Cont'd)

TechPub_2614345_0108 - 0103_3048083_01.fm

(Cont'd)

Fine Setting

a) Step the machine up to TUBE SEALING.

b) Loosen the screw (1) and move the sensor (2) to set the distance **B** between the sensor (2) and the tube (3). Tighten the screw (1).

Package	B (±0.5 mm)
TBA 125 S	4
Other volumes	7

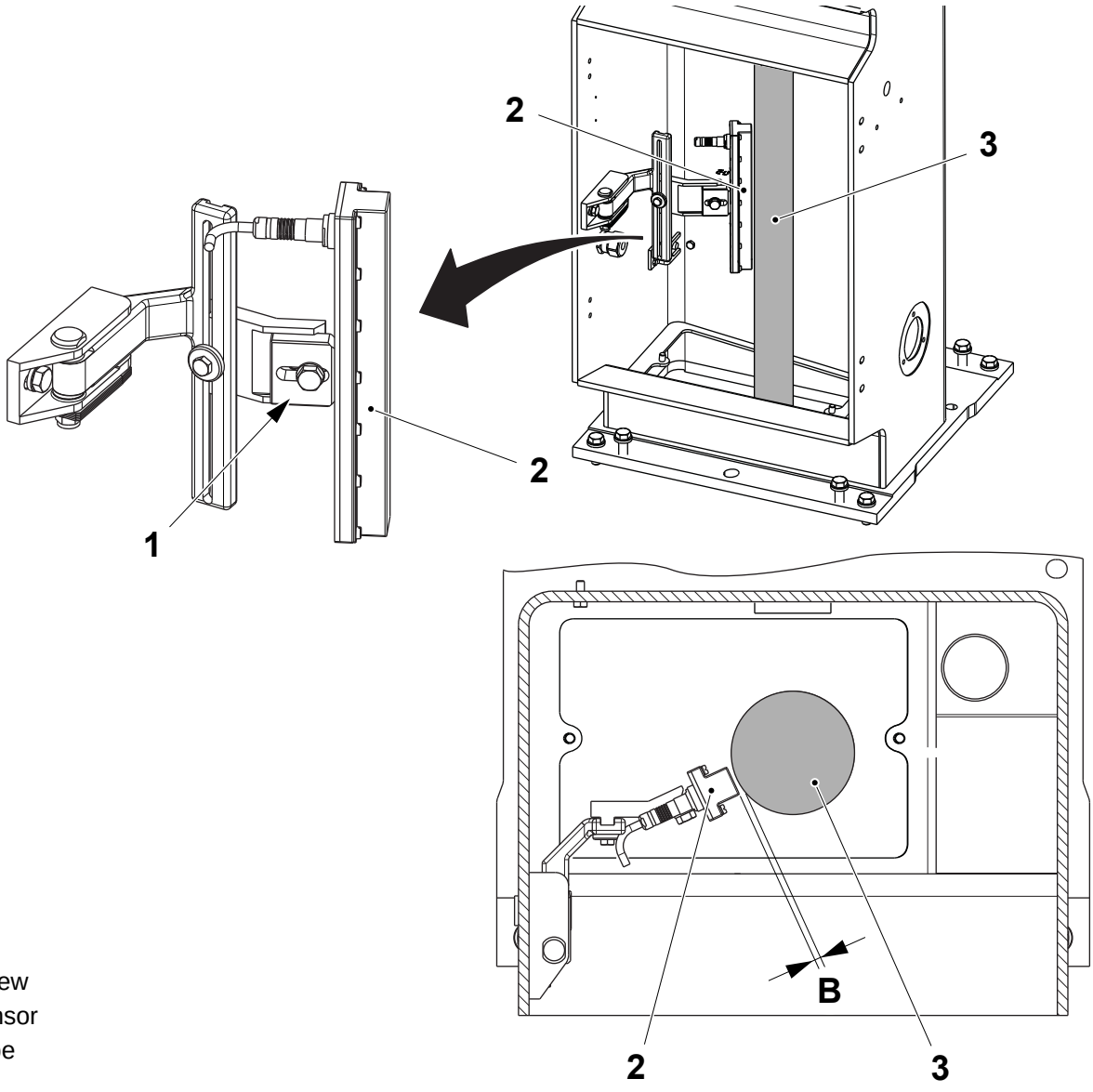

1 Screw
2 Sensor
3 Tube

(Cont'd)

TechPub_2614345_0108 - 0103_3048083_01.fm

(Cont'd)

Note! The level may be monitored also through the TMCC card A01K5210 display, see the description in 9.8 TMCC2 Controller.

c) Touch the PRODUCTION CONTROL button (4).

d) Touch the FILLING SYSTEM button (5).

e) Touch the LEVEL INDICATOR icon (6) and check that the level indicator is at 7% of the range. If not, loosen the screw (7) and adjust the sensor (2) until the level is at 7%. Tighten the screw (7) when the level is set.

f) Touch the EXIT button (8).

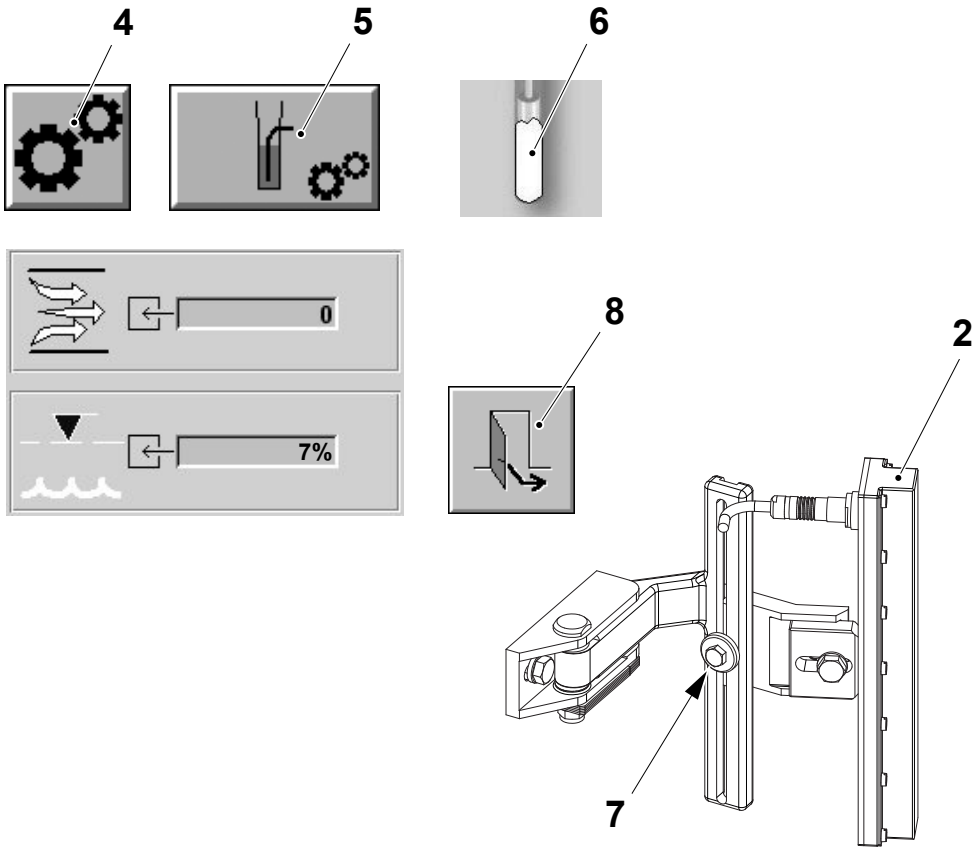

2 Sensor
4 Production control button
5 Filling system button
6 Level indicator icon
7 Screw
8 Exit button

(Cont'd)

TechPub_2614345_0108 - 0103_3048083_01.fm

(Cont'd)

CAUTION
Risk of damage to the equipment.
The level sensor must not touch the tube.

g) Step the machine up to PRODUCTION.

h) Touch the `PRODUCTION CONTROL` button (4).

i) Touch the `FILLING SYSTEM` button (5).

j) Touch the `LEVEL INDICATOR` icon (6) and check that the level indicator is operating.

k) Touch the `EXIT` button (8).

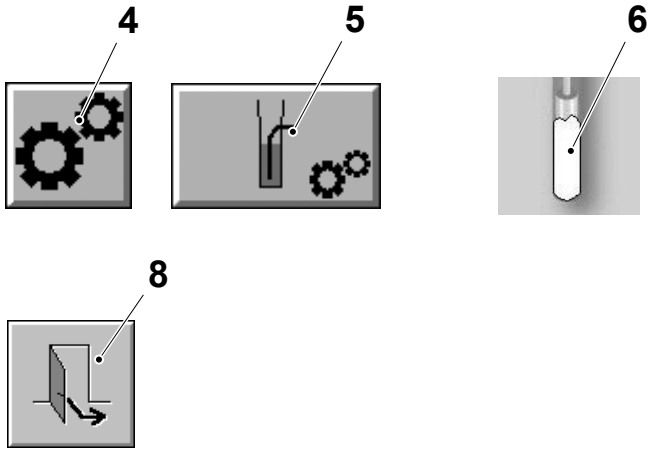

4 Production control button
5 Filling system button
6 Level indicator icon
8 Exit button

TechPub_2614345_0108 - 0103_3048083_01.fm

1.5.1-7 Filling Pipe - Check Level Detector Function

Machine Status	Mains Power ON Air OFF Steam ON Water OFF
SPC Reference	1549160-0300

a) Cut a small slot (1) in the packaging material tube (2) above the pressure flange, so that is possible to reach the float (3).

b) Make sure that the float (3) is in the lowest position by lifting it up and releasing it.

c) Check the level sensor shows the lowest LED turned ON (with the floater in the bottom position) and verify that, by moving the floater (3) up and down, the LEDs on the level sensor turns on (two or three at the same time) corresponding to the floater position.

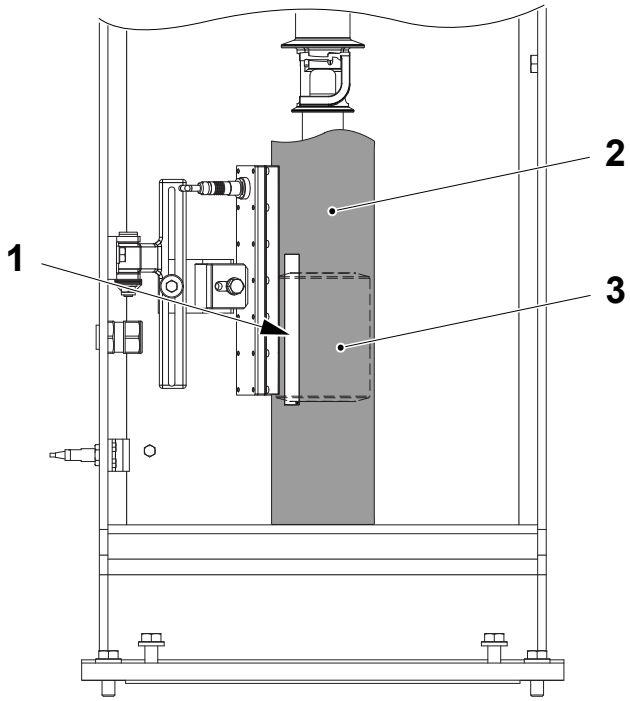

1 Slot
2 Packaging material tube
3 Float

(Cont'd)

TechPub_2614345_0108 - 0103_3048083_01.fm

(Cont'd)

d) Verify that not more than three LEDs turn on in every floater position: in this case increase the distance between the paper tube and the level sensor and repeat the test procedure again.

e) Check the level detector setting, see 1.5.1-6 Filling Pipe - Set Level Detector Position.

Change the level detector if necessary.

TechPub_2614345_0108 - 0103_3048083_01.fm

1.5.1-8 Filling Pipe - Change Locking Pins

Machine Status	Mains Power OFF Air OFF Steam ON Water OFF
SPC Reference	1549160-0300

CAUTION
Risk of damage to the equipment.
Move the lower part of the filling pipe very carefully and holding the pipe as straight as possible in order to prevent any damage to the photocells below the pillar. For Family Packages, follow the instruction 1.5.1-9 Filling Pipe - Remove Bucket.

a) Open the level control device (1).

b) Open the locking pins (2) and remove the lower filling pipe (3).

Note! The link (4) is for Family Packages only.

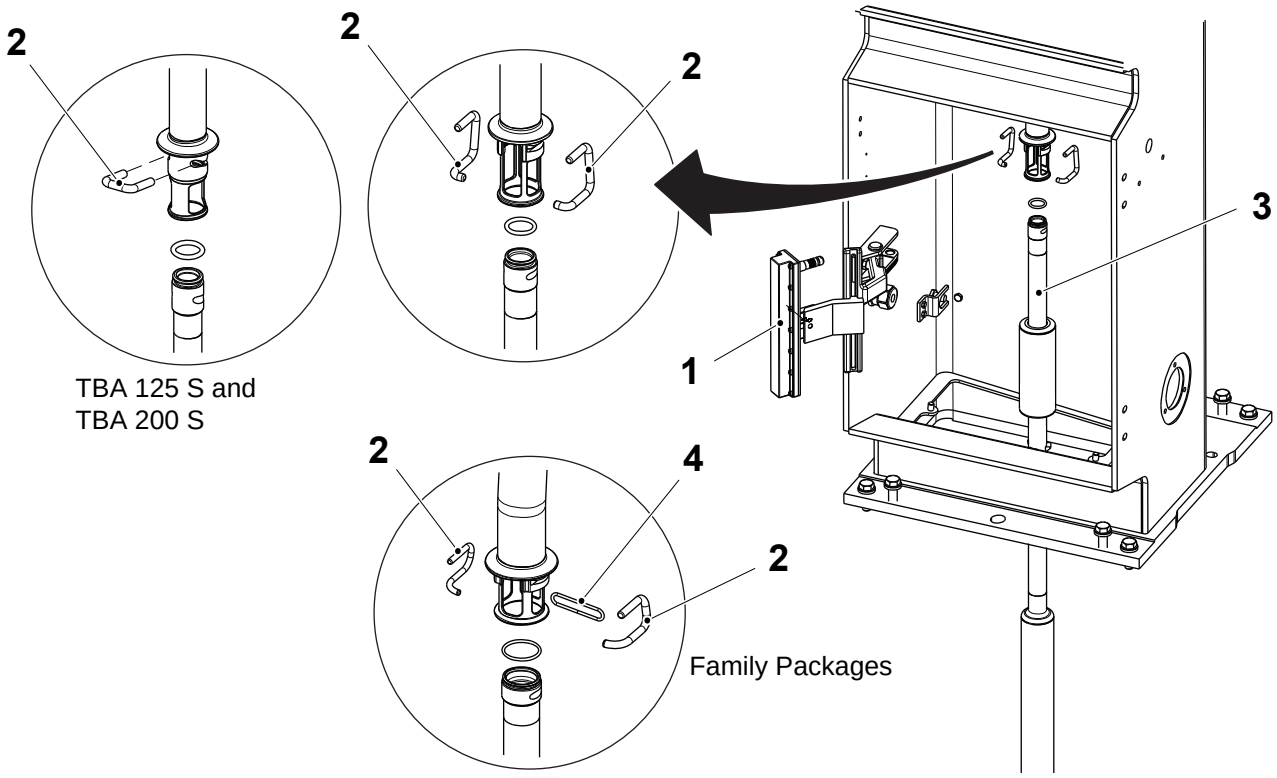

1 Level control device
2 Locking pin
3 Lower filling pipe
4 Link

(Cont'd)

TechPub_2614345_0108 - 0103_3048083_01.fm

(Cont'd)

c) Check the grooved seat (5) of the locking pins (2) for wear or damage: if necessary, change the worn or damaged parts, see 1.5.1-2 Filling Pipe - Remove.

d) Change the locking pins (2) and the link (4).

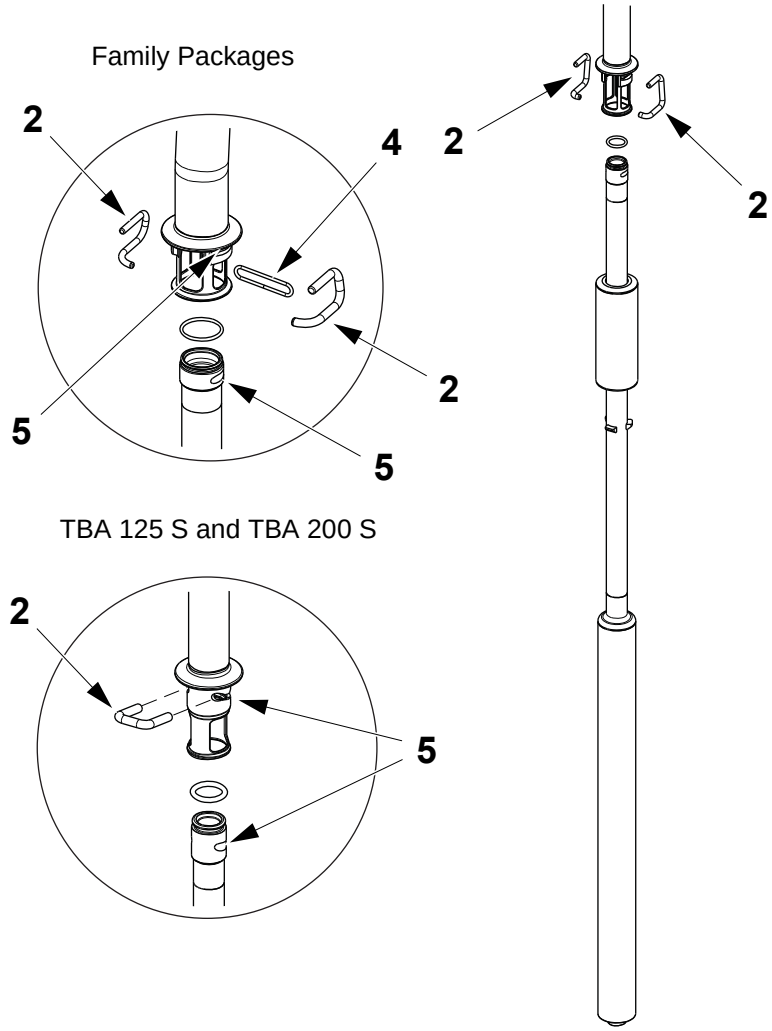

2 Locking pin
4 Link
5 Grooved seat

(Cont'd)

TechPub_2614345_0108 - 0103_3048083_01.fm

(Cont'd)

Note! The link (4) is for Family Packages only.

e) Fit the lower filling pipe (3) and lock it in position with the new locking pins (2) and the new link (4).

Portion Packages

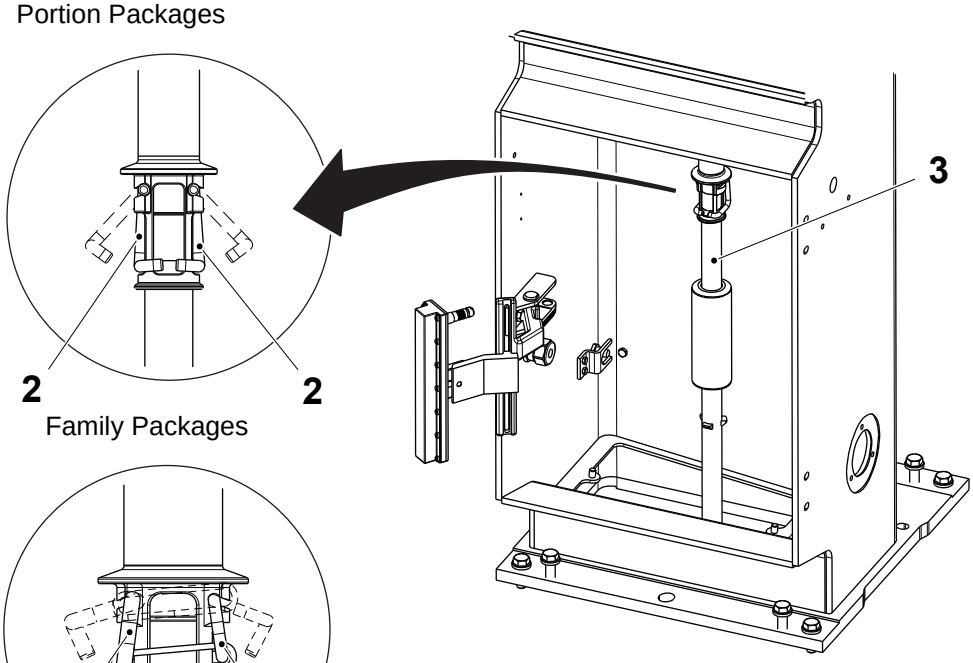

Family Packages

TBA 125 S and TBA 200 S

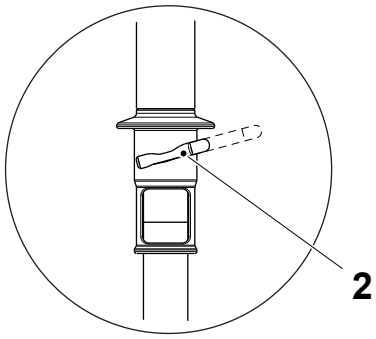

2 Locking pin
3 Lower filling pipe
4 Link

TechPub_2614345_0108 - 0103_3048083_01.fm

1.5.1-9 Filling Pipe - Remove Bucket

Machine Status	PREPARATION
SPC Reference	1549160-0300

Note! Valid for Family Packages

CAUTION
Risk of damage to the equipment.
Remove the lower part of the filling pipe very carefully: parts in the jaw system and photocell unit may be damaged. Pay attention to the locking pins (3): they may drop into the jaw system.

a) Crank the jaw system so that the links are in the top position as shown below.

b) Swing the photocell unit (1) open.

c) Disconnect the bucket (2) from the upper part of the filling pipe by removing the locking pins (3) and the link (4).

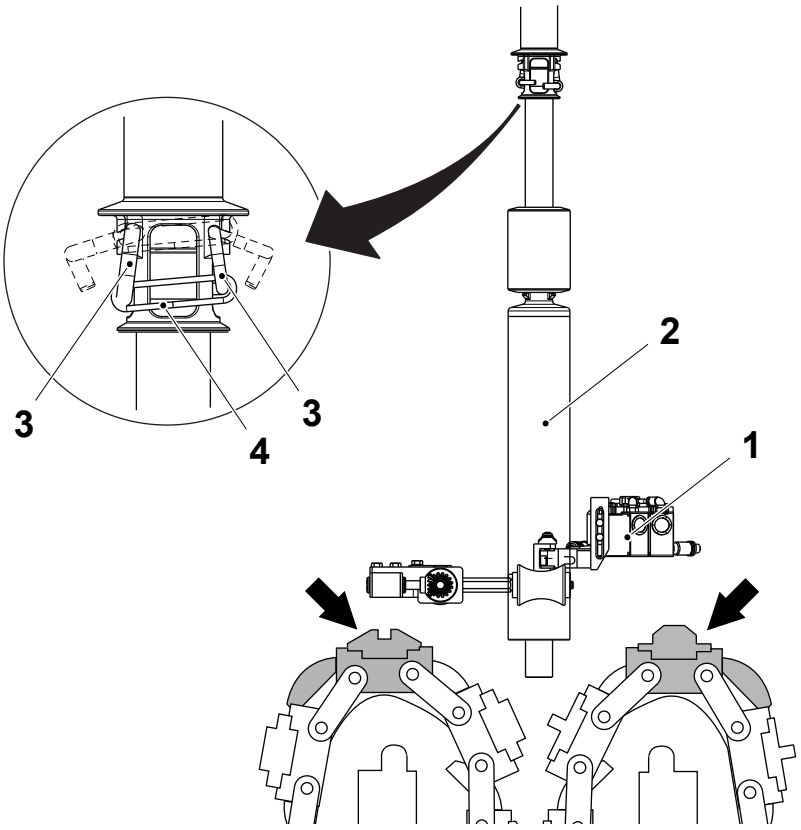

1 Photocell unit
2 Bucket
3 Locking pin
4 Link

(Cont'd)

TechPub_2614345_0108 - 0103_3048083_01.fm

(Cont'd)

CAUTION
Risk of damage to the equipment.
Pay attention to not bump the bucket (2) against the photocell unit gears (5) and against the jaw links.

Note! The top view shows the turn of the bucket (2) around the roller (6).

d) Tilt the bucket (2) backwards and raise it up so that can exit from the rollers (6).

e) Tilt the bucket (2) frontwards and pull it out of the aseptic chamber.

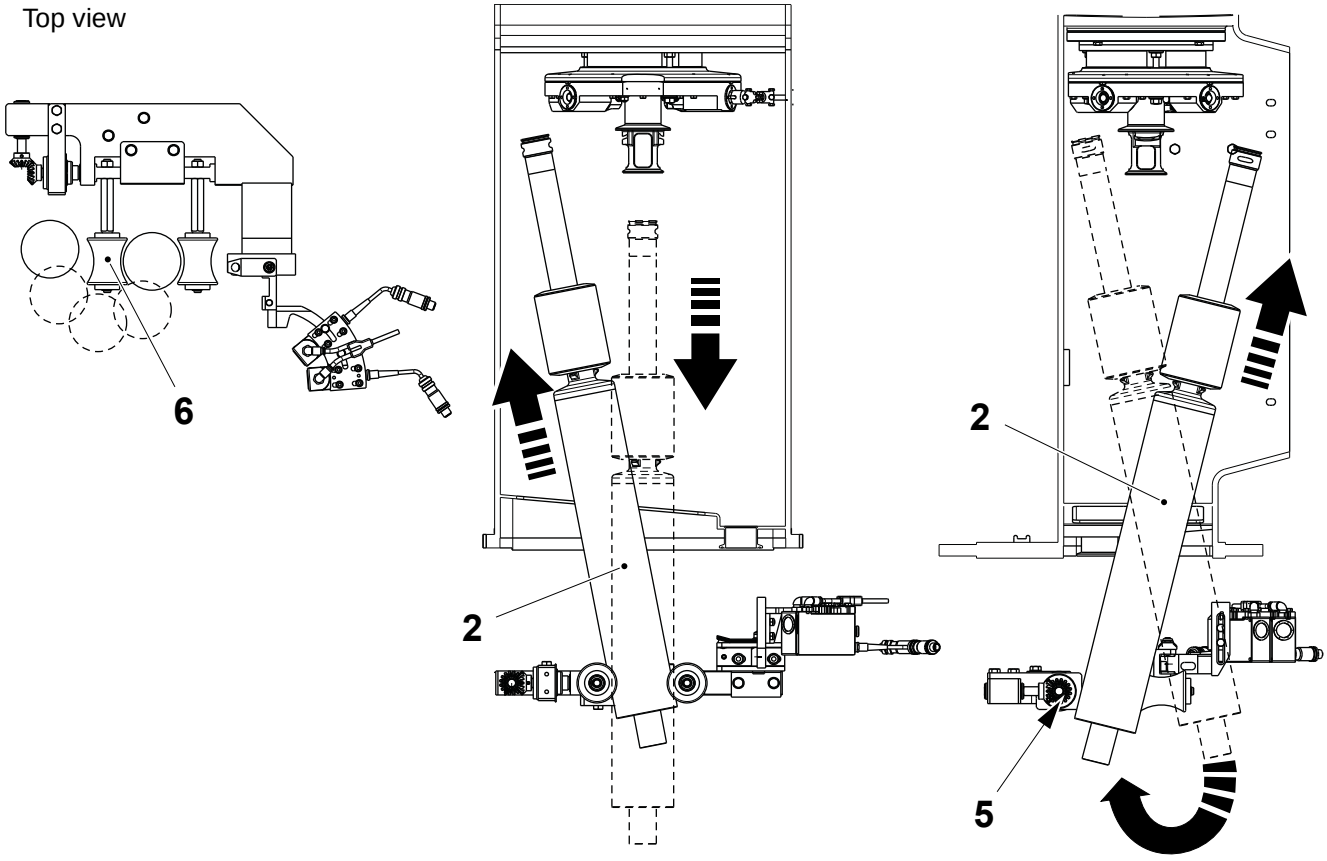

2 Bucket
5 Gear
6 Roller

TechPub_2614345_0108 - 0103_3048083_01.fm

(Cont'd)

Insert Bucket

CAUTION

Risk of damage to the equipment.

Pay attention to not bump the bucket (2) against the photocell unit gears (4) and against the jaw links.

Note! Make sure that the photocell unit (1) is open.

a) Insert and tilt the bucket (2) so that it goes out of the roller (3).

b) Rotate the bucket (2) around the roller (3), then raise the bucket (2) in order to insert it between the rollers.

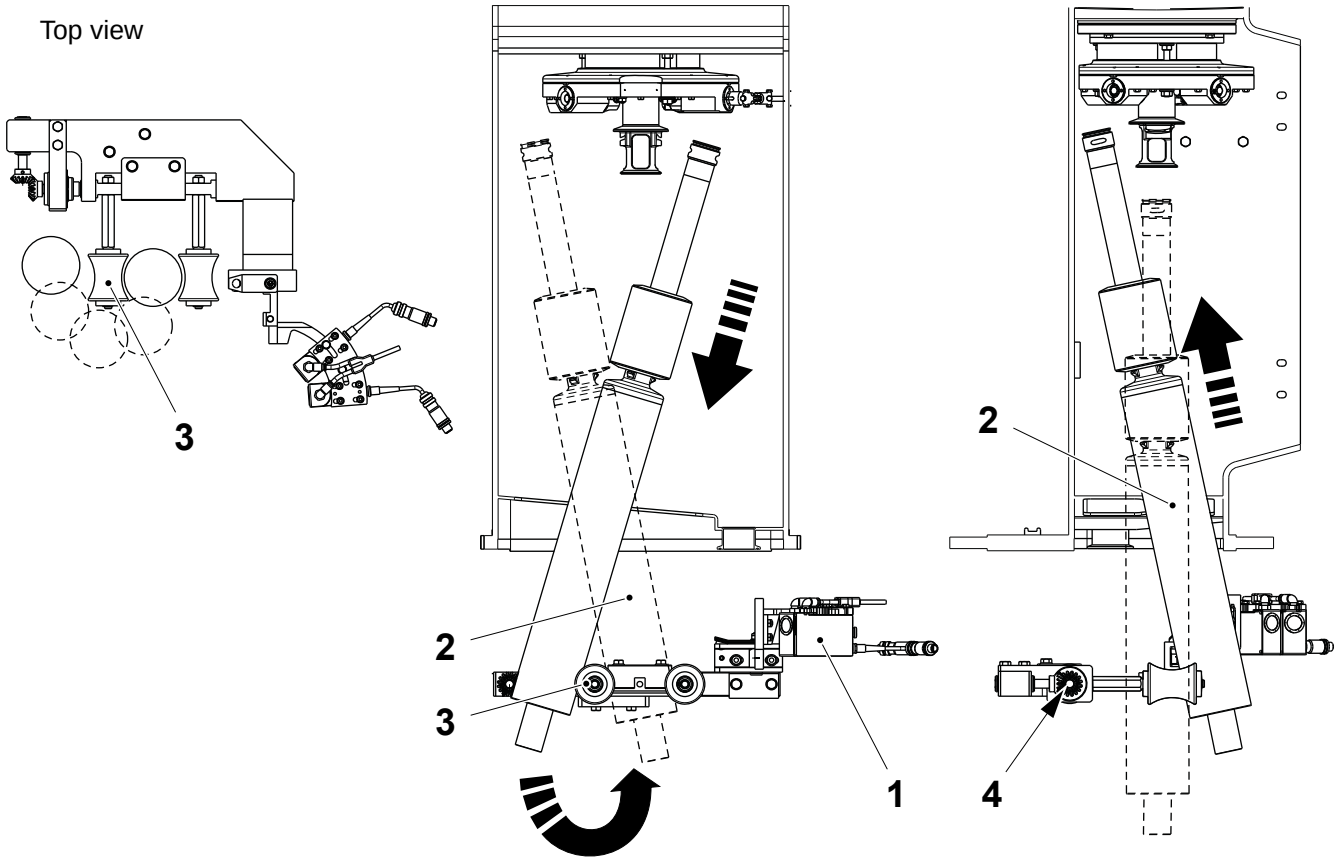

1 Photocell unit
2 Bucket
3 Roller
4 Gear

(Cont'd)

TechPub_2614345_0108 - 0103_3048083_01.fm

(Cont'd)

c) Lock the bucket (2) to the upper part of the filling pipe by the locking pins (5) and the link (6).

d) Swing the photocell unit (1) in production position.

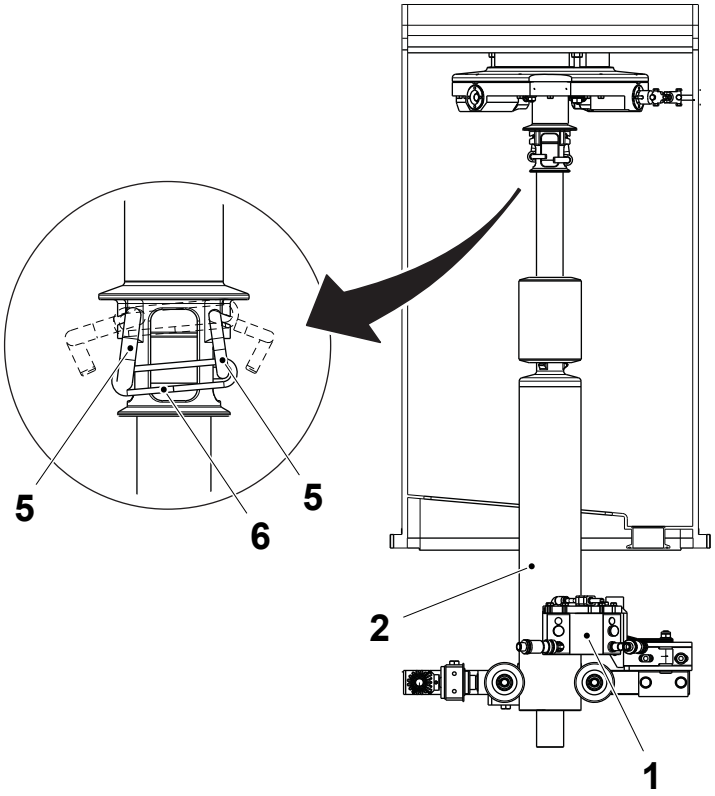

1 Photocell unit
2 Bucket
5 Locking pin
6 Link

TechPub_2614345_0108 - 0103_3048083_01.fm

1.5.1-10 Filling Pipe - Change Gasket

Machine Status	Mains Power OFF Water OFF Air OFF Steam ON
SPC Reference	1549160-0300

If necessary, remove and change the gasket (1) as follows:

a) Remove the filling pipe, see 1.5.1-2 Filling Pipe - Remove.

b) Remove and change the gasket (1).

c) Fit the filling pipe, see 1.5.1-3 Filling Pipe - Fit.

d) Cut the excess parts (2) of the gasket (1) with a cutter so that the ends of the gasket are aligned with the surface of the mounting plate (3).

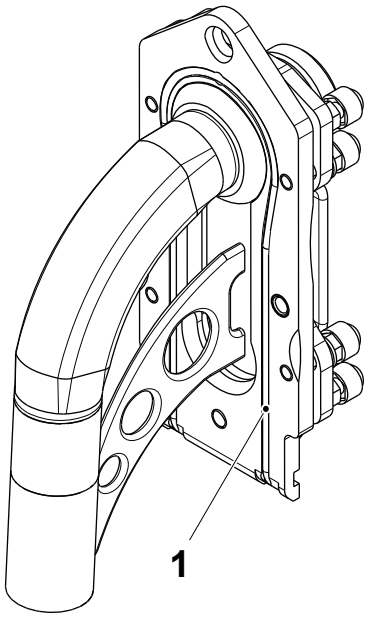

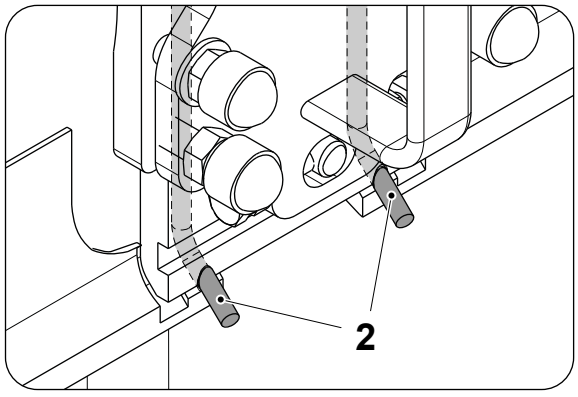

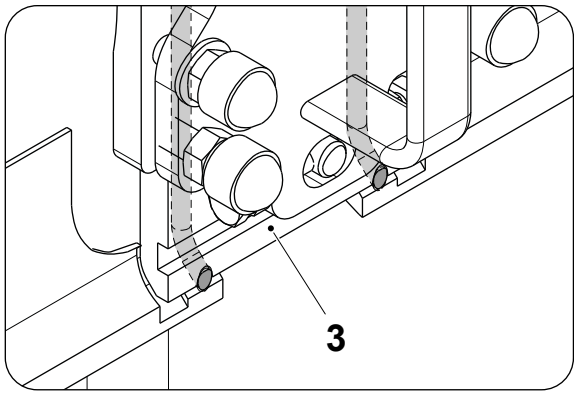

1 Gasket
2 Excess part
3 Mounting plate

TechPub_2614345_0108 - 0103_3048083_01.fm

1.5.2 Product Valve

CAUTION
Risk of serious production fault.
No maintenance activity is authorised on the Product Valve unless the product supply line is idle and empty from product. Any operation requiring the interruption of the steam supply and disruption of the steam barrier between the machine and the product supply line can only be carried out when the product supply line is idle and empty from product.

1.5.2-1 Product Valve - Remove Cylinders

Machine Status	Mains Power OFF Air OFF Steam OFF Water OFF
Special Equipment	Tool Dismounting TP No.449969-0100
SPC Reference	1558494-0400

WARNING
Risk of personal injury.
Make sure that the steam and the compressed air have been turned off. Make sure that there is no product, steam or cleaning liquid in the line. In case of accident call for medical attention.

CAUTION
Risk of serious production fault.
Never close the steam supply valve to the machine until the product line is idle and empty from product. The steam in the product valve forms an aseptic barrier between the machine and the product supply line. Closing the steam valve will disrupt this barrier.

(Cont'd)

TechPub_2614345_0108 - 0101_3048084_01.fm

(Cont'd)

a) Remove the air connections (1) and, when required, the steam valve connections (2) from the cylinder.

b) Remove the two screws (3), collect the washers and remove the proximity switch brackets (4).

c) Turn the sleeves (5) until it is free from the cylinder.

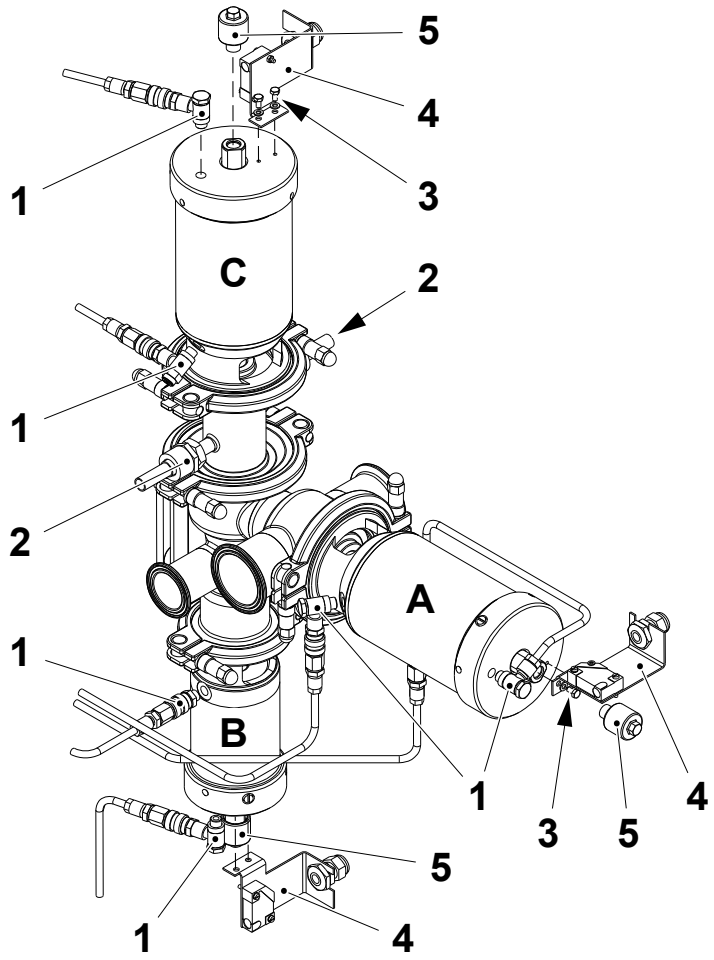

1 Air connection
2 Steam valve connection
3 Screw
4 Bracket
5 Sleeve

(Cont'd)

TechPub_2614345_0108 - 0101_3048084_01.fm

(Cont'd)

d) Fit the tool dismounting (6) and turn the handle clockwise (approx.5 turns) to release the piston pressure from the valve site.

e) Remove the clamp ring (7) and the valve **A**.

f) Check the gasket (8) and change it if necessary.

g) Change the O-rings if necessary, see 1.5.2-3 Product Valve - Change O-Rings.

h) Repeat the same procedure for the valves **B** and **C**.

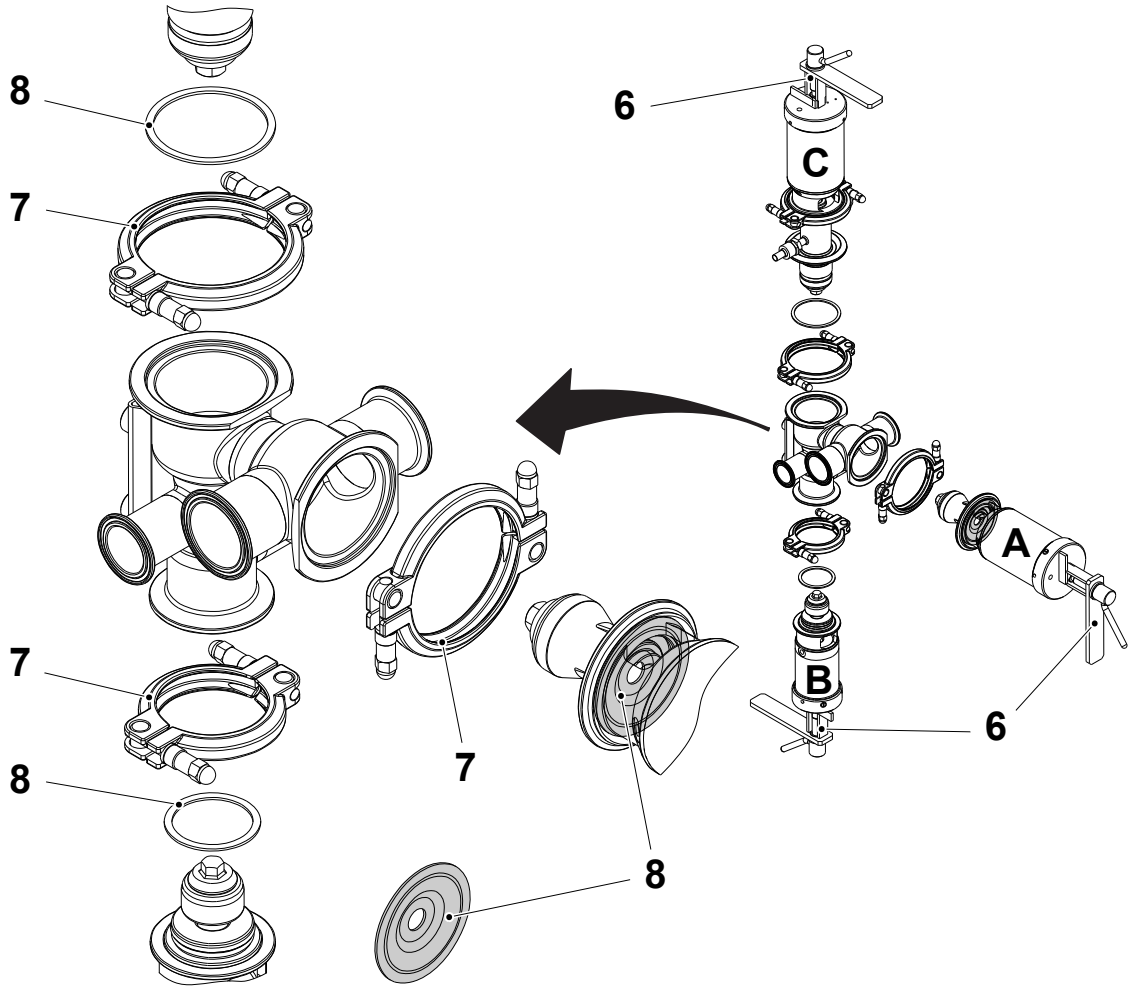

6 Tool dismounting
7 Clamp ring
8 Gasket

TechPub_2614345_0108 - 0101_3048084_01.fm

1.5.2-2 Product Valve - Change Seals and Membranes

Machine Status	Mains Power OFF Air OFF Steam OFF Water OFF
Special Equipment	Torque Wrench min. 50 Nm Tool Dismounting TP No.449969-0100
Consumables	Silicone Grease TP No. 90296-0009
SPC Reference	1558494-0400

WARNING

Risk of personal injury.

Make sure that the steam and the compressed air have been turned off. Make sure that there is no product, steam or cleaning liquid in the line. In case of accident call for medical attention.

CAUTION

Risk of serious production fault.

Never close the steam supply valve to the machine until the product line is idle and empty from product. The steam in the product valve forms an aseptic barrier between the machine and the product supply line. Closing the steam valve will disrupt this barrier.

(Cont'd)

TechPub_2614345_0108 - 0101_3048084_01.fm

(Cont'd)

Product Valve (A)

a) Remove the valve, see 1.5.2-1 Product Valve - Remove Cylinders.

b) Release the cylinder spring completely using the tool dismounting (7).

c) Remove the valve cone (1). Check the seal ring (2) and change it if necessary.

d) Remove the seal ring holder (3), the diaphragm (4), the ring (5) and the washer (6). Check the diaphragm (4) for damage and change if necessary.

e) Fit back the ring (5) and the washer (6) in to the cylinder housing with the grooves facing up.

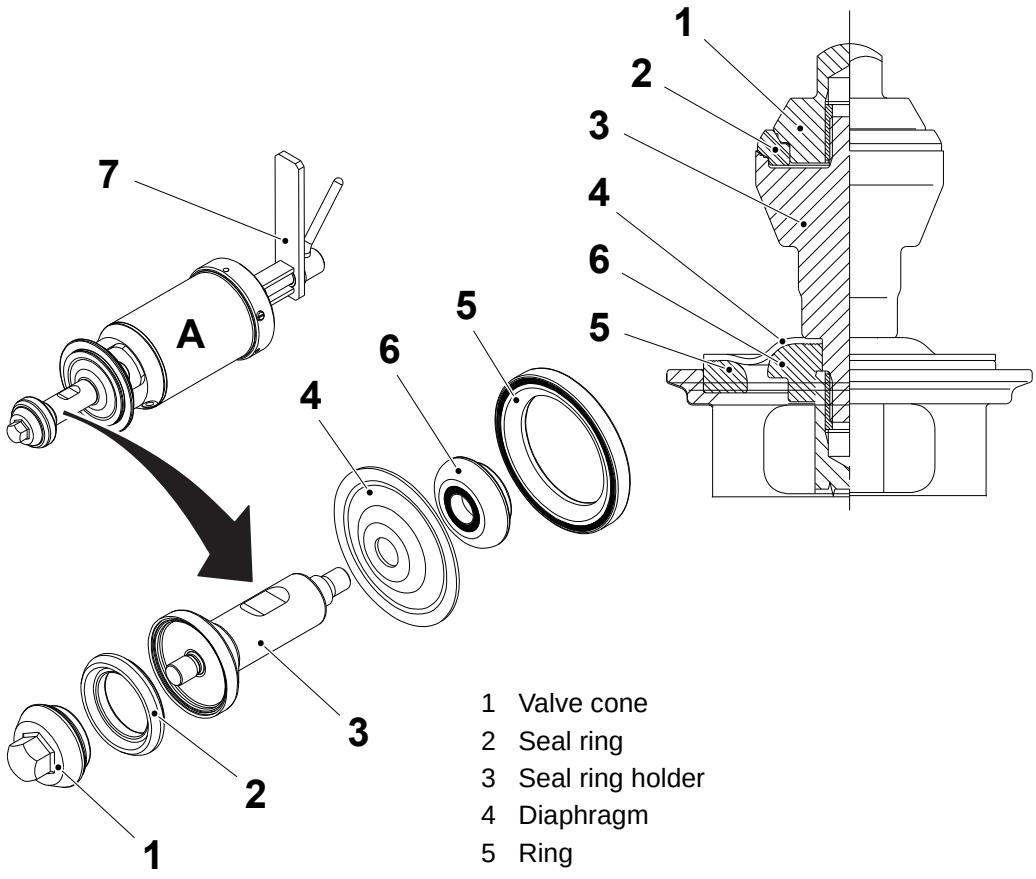

1 Valve cone
2 Seal ring
3 Seal ring holder
4 Diaphragm
5 Ring
6 Washer
7 Tool dismounting

TechPub_2614345_0108 - 0101_3048084_01.fm

(Cont'd)

(Cont'd)

CAUTION
Risk of serious production fault.
Fit the diaphragm (4) with the bulge pointing outside from the valve.

f) Fit the new diaphragm (4) and the complete seal ring holder (3) on to the piston rod.

g) Tighten the seal ring holder (3) completely.

h) Fit the seal ring (2) and the valve cone (1).

Note! Slowly tighten the valve cone (1) with a torque wrench set to 50 Nm.

i) Compress the cylinder spring completely using the tool dismounting (7).

j) Fit the cylinder and tighten the clamp ring (8).

k) Remove the tool dismounting (7) and screw in the sleeve (9) on the cylinder.

l) Fit the proximity switch bracket (10) and the air connection (11).

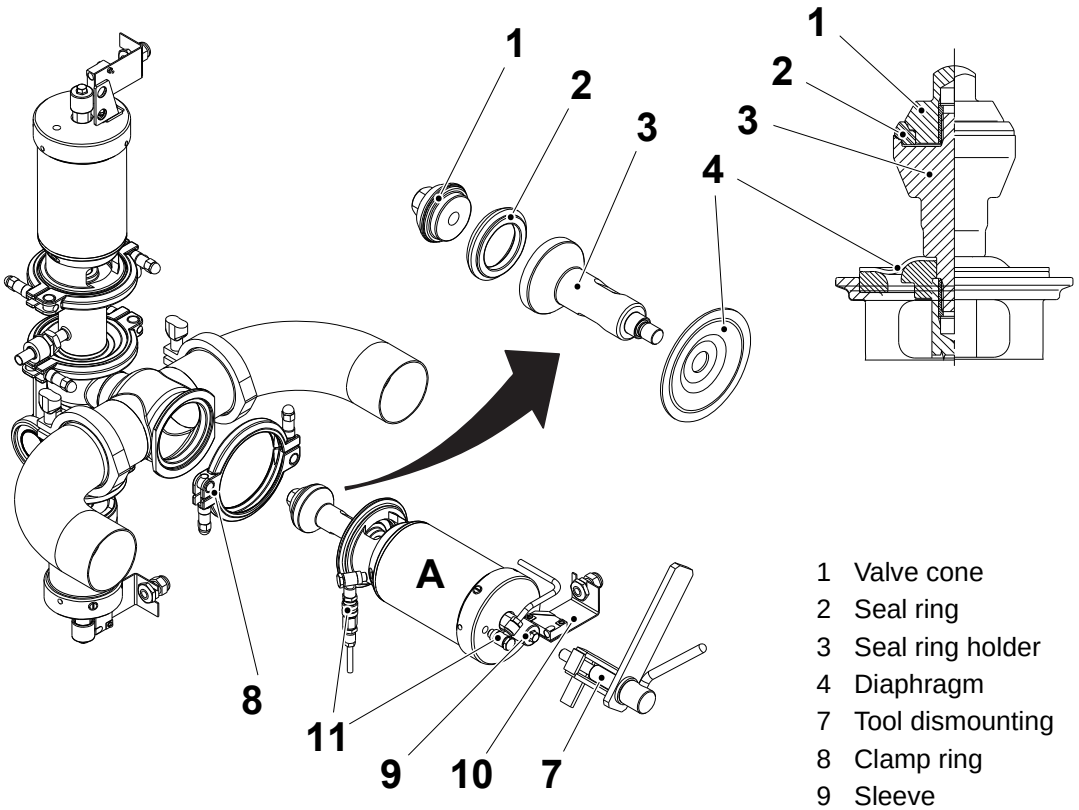

1 Valve cone
2 Seal ring
3 Seal ring holder
4 Diaphragm
7 Tool dismounting
8 Clamp ring
9 Sleeve
10 Bracket
11 Air connection

(Cont'd)

TechPub_2614345_0108 - 0101_3048084_01.fm

(Cont'd)

Sterile Air Valve (B)

a) Remove the valve, see 1.5.2-1 Product Valve - Remove Cylinders.

b) Release the cylinder spring completely using the tool dismounting (1).

c) Change the O-ring (2).

d) Remove the valve cone (3) and change the seal ring (4) and the rod seal (5).

e) Remove the washer (6) and change the O-ring (7).

f) Assemble in the reverse order.

Note! Tighten the valve cone (3) using a torque wrench set to 50 Nm.

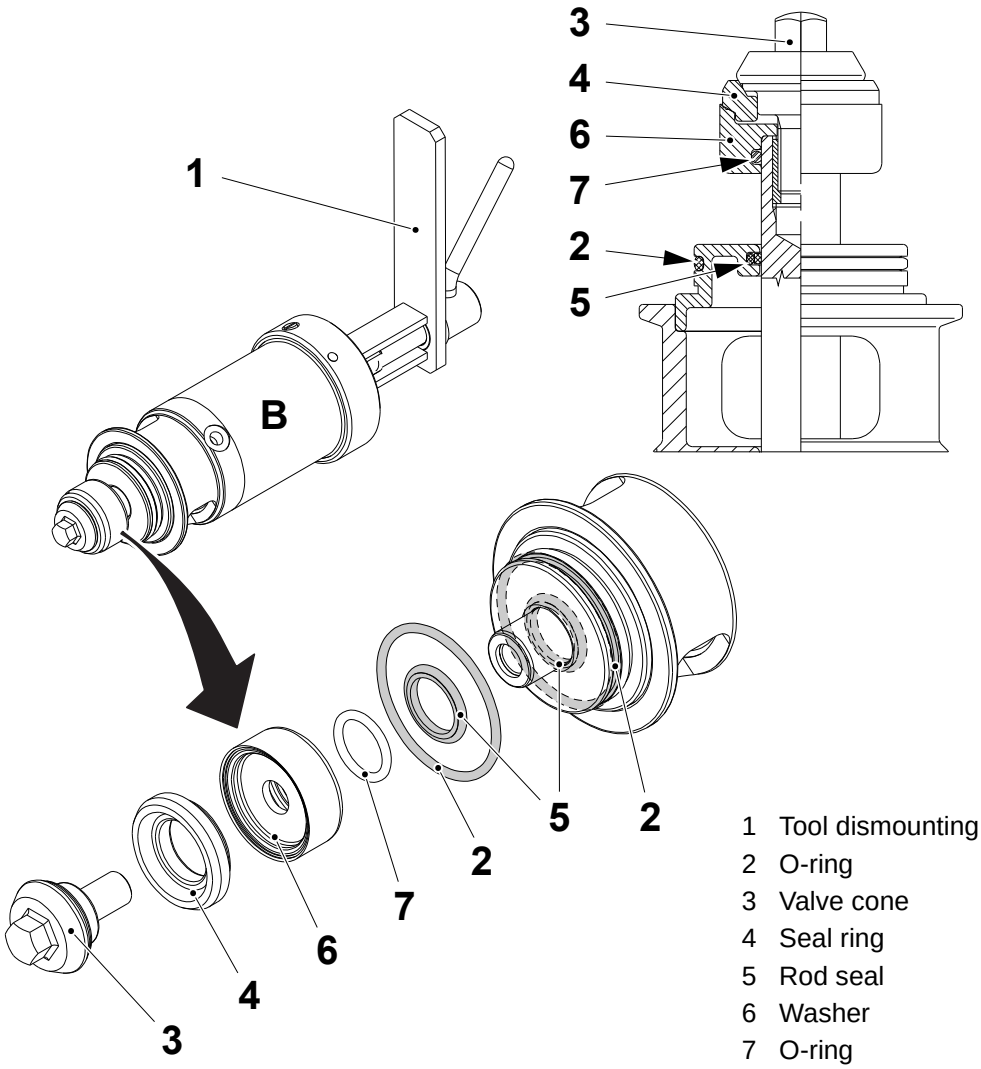

1 Tool dismounting
2 O-ring
3 Valve cone
4 Seal ring
5 Rod seal
6 Washer
7 O-ring

(Cont'd)

TechPub_2614345_0108 - 0101_3048084_01.fm

(Cont'd)

Steam Valve (C)

a) Remove the valve, see 1.5.2-1 Product Valve - Remove Cylinders.
b) Release the cylinder spring completely using the tool dismounting (1).
c) Remove the valve cone (2) and the ring (3).
d) Check the seal rings (4) and change if necessary.
e) Loosen the screws (5) and remove the holder (6).
f) Check the seal rings (7) and change if necessary.
g) Assemble in the reverse order.

Note! Tighten the valve cone (2) using a torque wrench set to 50 Nm.

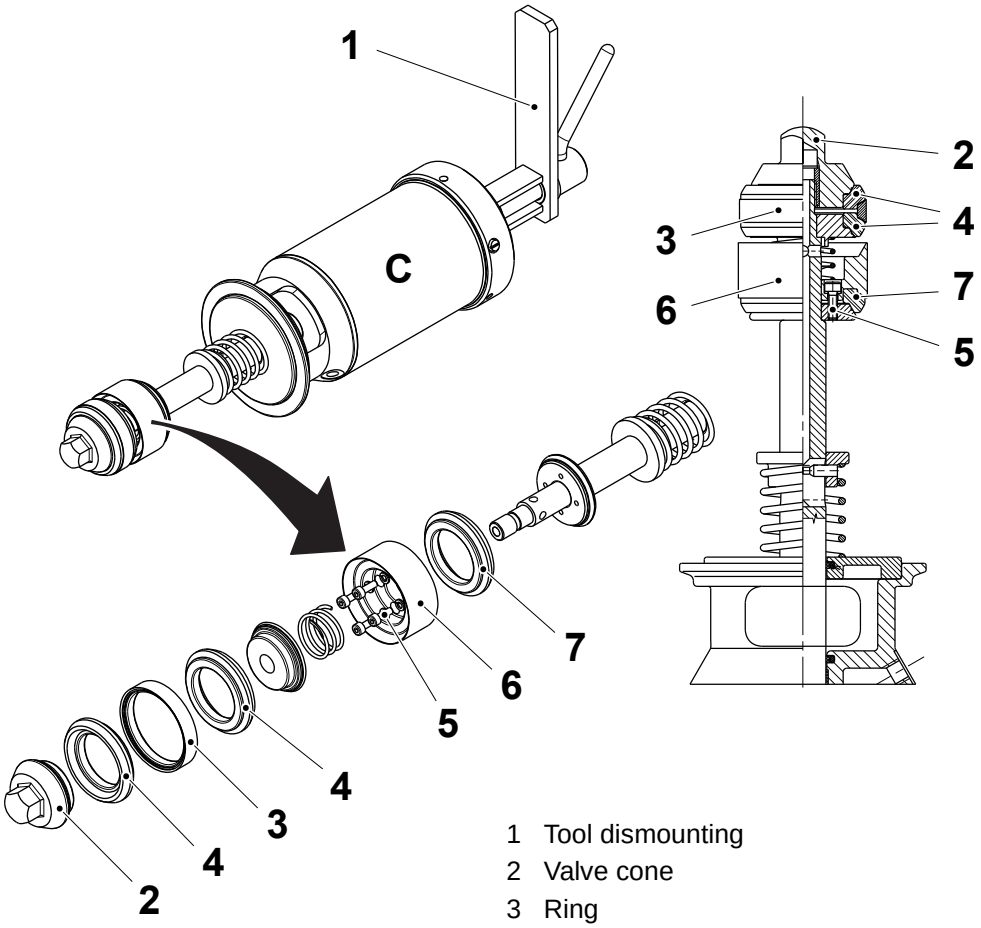

1 Tool dismounting
2 Valve cone
3 Ring
4 Seal ring
5 Screw
6 Holder
7 Seal ring

TechPub_2614345_0108 - 0101_3048084_01.fm

1.5.2-3 Product Valve - Change O-Rings

Machine Status	Mains Power OFF Air OFF Steam OFF Water OFF
Special Equipment	Tool Dismounting TP No.449969-0100
Consumables	Silicone Grease TP No. 90296-0009
SPC Reference	1558494-0400

WARNING

Risk of personal injury.

Make sure that the steam and the compressed air have been turned off. Make sure that there is no product, steam or cleaning liquid to the line. In case of accident call for medical attention.

CAUTION

Risk of serious production fault.

Never close the steam supply valve to the machine until the product line is idle and empty from product. The steam in the product valve forms an aseptic barrier between the machine and the product supply line. Closing the steam valve will disrupt this barrier.

(Cont'd)

TechPub_2614345_0108 - 0101_3048084_01.fm

(Cont'd)

A-Cylinder (Product Valve)

a) Remove the product valve, see 1.5.2-1 Product Valve - Remove Cylinders.

b) Remove the lock screws (1).

c) Loosen the tool dismounting (2) and remove the end section (3).

d) Check the O-ring (4), the wear ring (5) and the rod seal (6). Change if necessary.

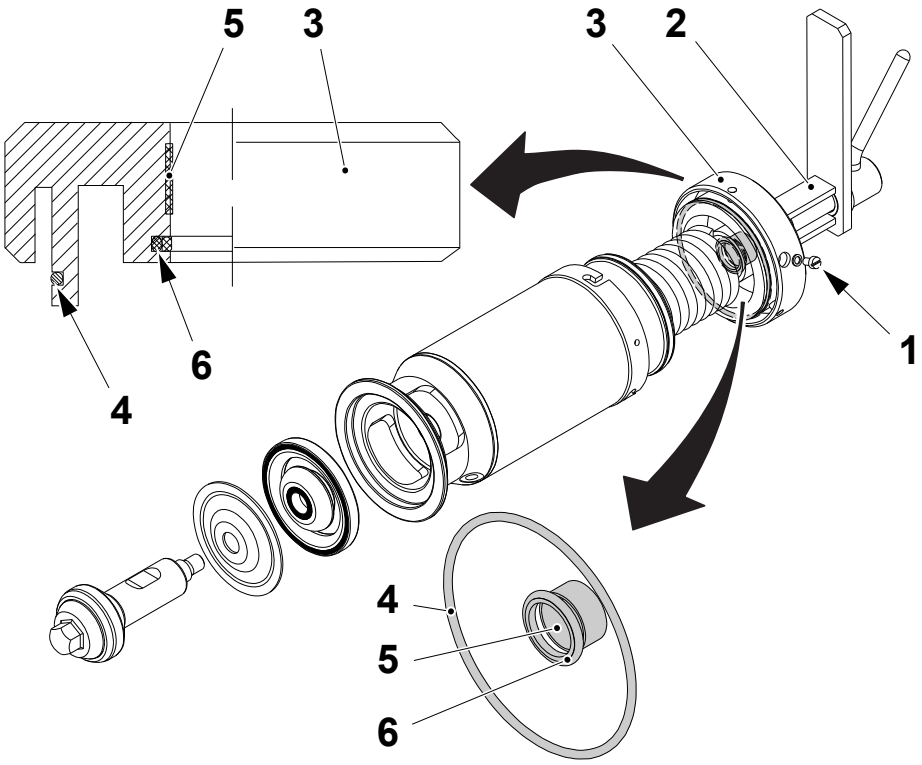

1 Lock screw
2 Tool dismounting
3 End section
4 O-ring
5 Wear ring
6 Rod seal

(Cont'd)

TechPub_2614345_0108 - 0101_3048084_01.fm

(Cont'd)

e) Remove the piston rod (7) together with the compression spring (8) and the piston (9).

f) Remove the locking washers (10) and disassemble the piston (9) from the piston rod (7).

g) Check the O-ring (11), the piston seal (12) the rod seal (13) and the wear ring (14). Change if necessary.

h) Lubricate the threads of the piston rod (7) with silicone grease TP No. 90296-0009, see 10.3.1 Lubricants.

i) Assemble in the reverse order.

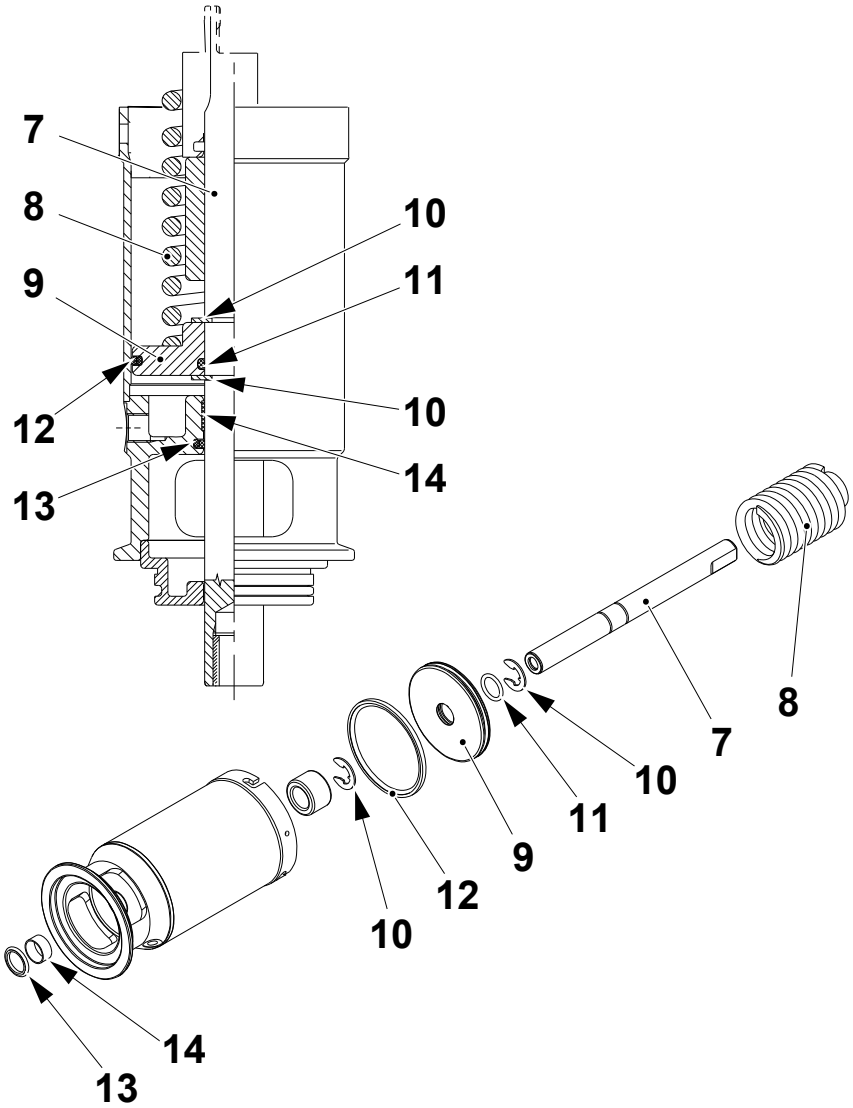

7 Piston rod
8 Compression spring
9 Piston
10 Locking washer
11 O-ring
12 Piston seal
13 Rod seal
14 Wear ring

(Cont'd)

TechPub_2614345_0108 - 0101_3048084_01.fm

(Cont'd)

B-Cylinder (Sterile Air Valve)

a) Remove the sterile air valve, see 1.5.2-1 Product Valve - Remove Cylinders.

b) Remove the lock screws (1).

c) Loosen the tool dismounting (2) and remove the end section (3).

d) Check the O-ring (4), the wear ring (5) and the rod seal (6). Change if necessary.

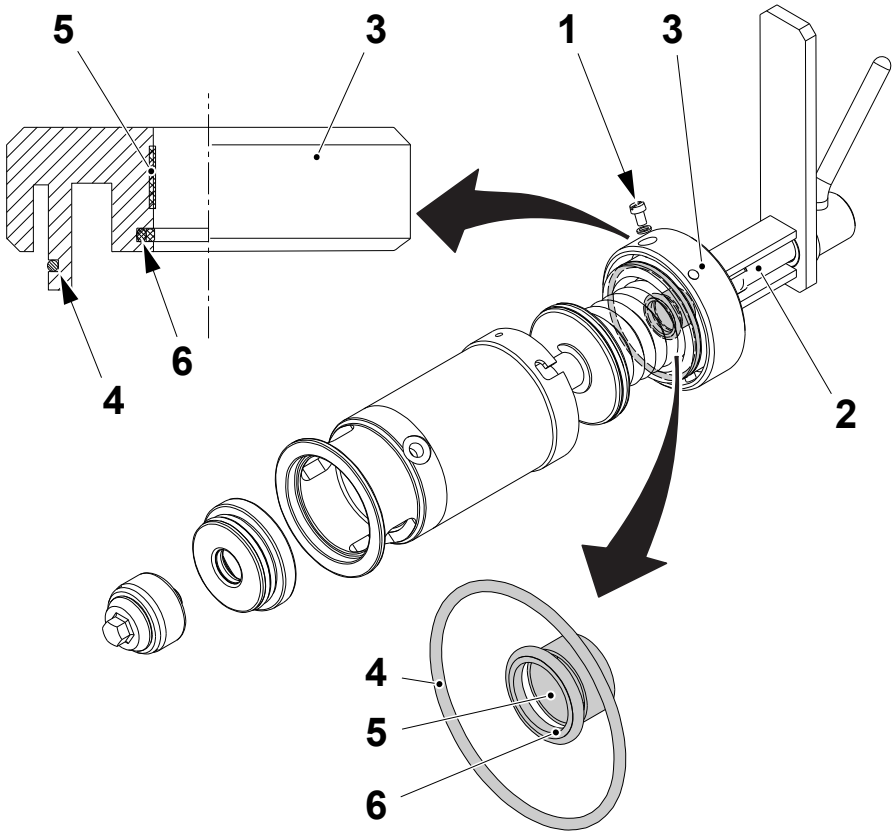

1 Lock screw
2 Tool dismounting
3 End section
4 O-ring
5 Wear ring
6 Rod seal

(Cont'd)

TechPub_2614345_0108 - 0101_3048084_01.fm

(Cont'd)

e) Remove the piston rod (7) with the compression spring (8) and the piston (9).

f) Remove the locking washers (10) and disassemble the piston (9) from the piston rod (7).

g) Check the O-rings (11), the piston seal (12), the rod seals (13) and the wear ring (14). Change them if necessary.

h) Lubricate the threads of the piston rod (7) with silicone grease TP No. 90296-0009, see 10.3.1 Lubricants.

i) Assemble in the reverse order.

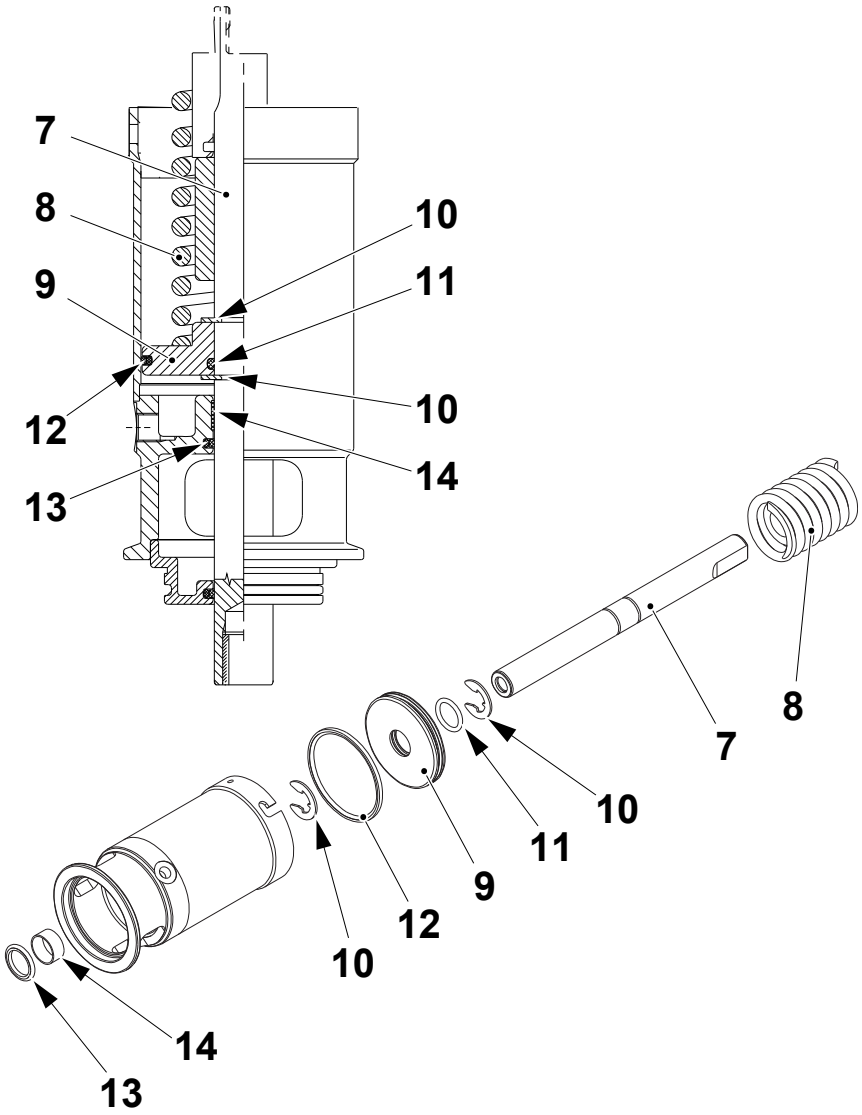

7 Piston rod
8 Compression spring
9 Piston
10 Locking washer
11 O-rings
12 Piston seal
13 Rod seal
14 Wear ring

TechPub_2614345_0108 - 0101_3048084_01.fm

(Cont'd)

(Cont'd)

C-Cylinder (Steam Valve)

a) Remove the steam valve, see 1.5.2-2 Product Valve - Change Seals and Membranes.

b) Remove the lock screws (1).

c) Loosen the tool dismounting (2) and remove the end section (3).

d) Check the O-ring (4), the wear ring (5), and the rod seal (6). Change if necessary.

e) Remove the cylindrical pin (7), the washer (8) and the compression spring (9).

f) Remove the sealing washer (10).

g) Check the rod seal (11). Change if necessary.

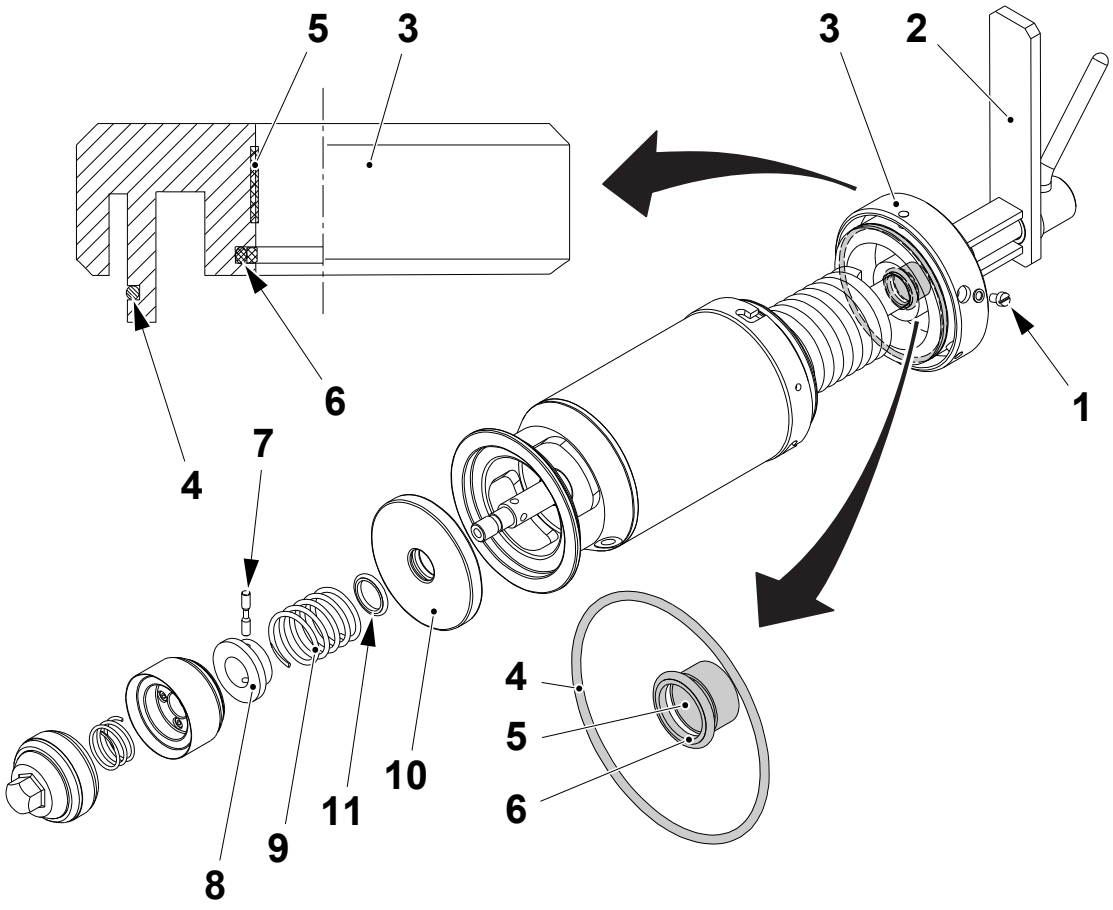

1 Lock screw
2 Tool dismounting
3 End section
4 O-ring
5 Wear ring
6 Rod seal
7 Cylindrical pin
8 Washer
9 Compression spring
10 Sealing washer
11 Rod seal

(Cont'd)

TechPub_2614345_0108 - 0101_3048084_01.fm

(Cont'd)

h) Remove the piston rod (12) with the compression spring (13) and the piston (14).

i) Remove the locking washers (15) and remove the piston (14) from the piston rod (12).

j) Check the O-rings (16), the piston seal (17), the rod seals (18) and the wear ring (19). Change them if necessary.

k) Lubricate the threads of the piston rod with silicone grease TP No. 90296-0009, see 10.3.1 Lubricants.

l) Assemble in the reverse order.

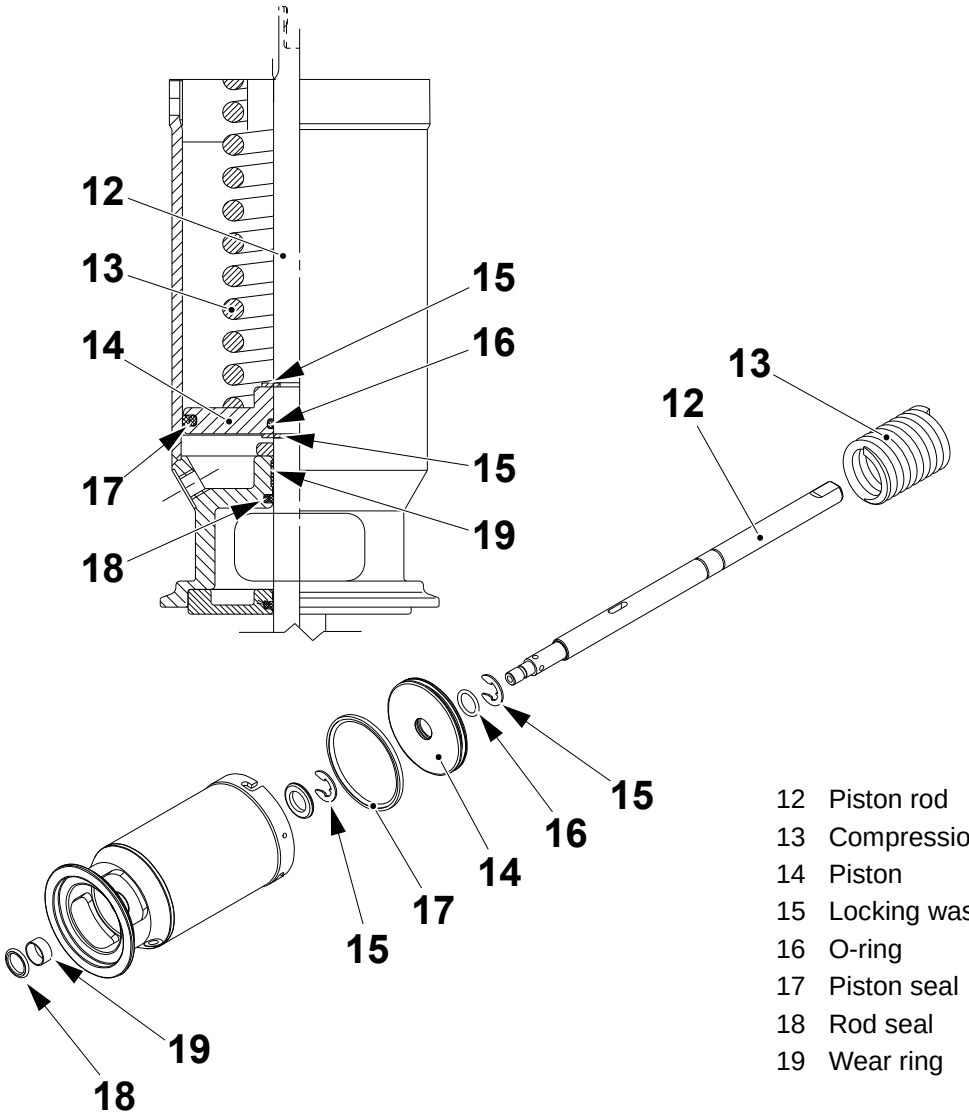

12 Piston rod
13 Compression spring
14 Piston
15 Locking washer
16 O-ring
17 Piston seal
18 Rod seal
19 Wear ring

TechPub_2614345_0108 - 0101_3048084_01.fm

1.5.2-4 Product Valve - Set Proximity Switches

Machine Status	Mains Power ON Air OFF Steam ON Water OFF
SPC Reference	1558494-0400

a) Set the position of the proximity switches (1) so that they are activated when the cylinder sleeve (3) is in its highest position.

b) Adjust by moving either the proximity switch (1) or the bracket (2).

c) Set the distance **A** between the proximity switch (1) and the cylinder sleeve (3).

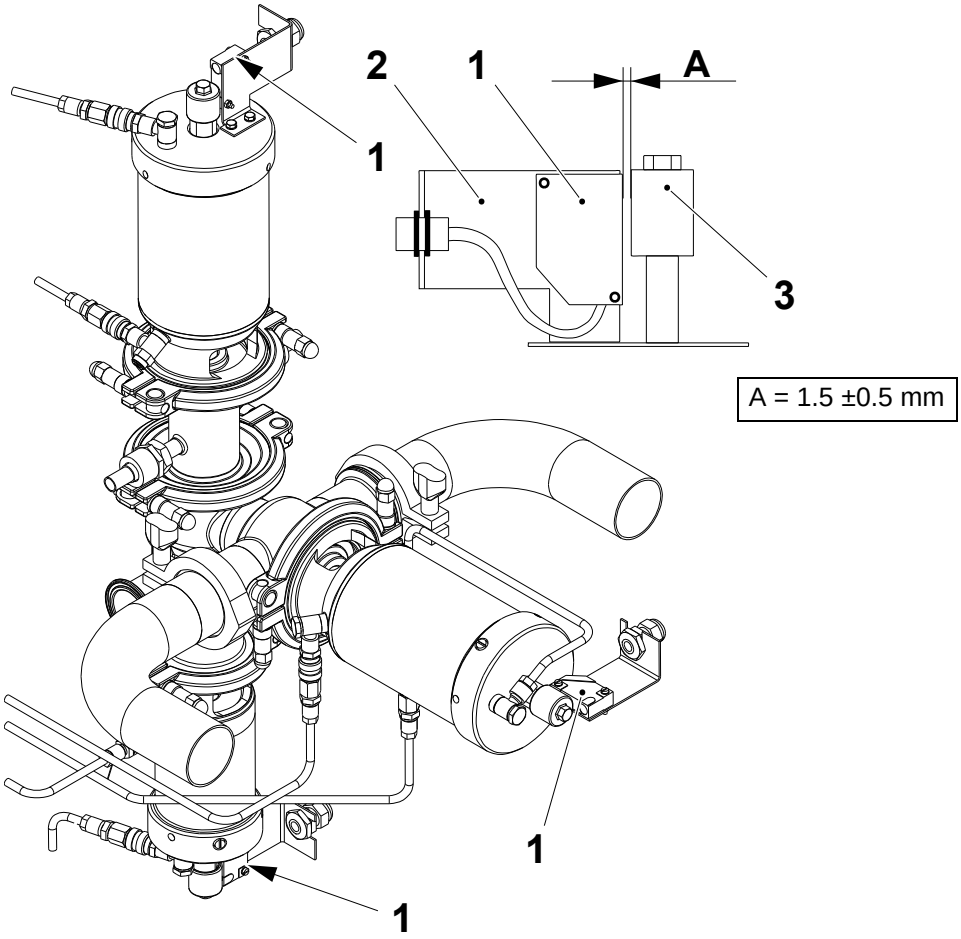

1 Proximity switch
2 Bracket
3 Cylinder sleeve

TechPub_2614345_0108 - 0101_3048084_01.fm

1.5.2-5 Product Valve - Empty Tube

Machine Status	PRODUCTION
SPC Reference	1558494-0200

If necessary, empty the tube by closing the A-valve in order to run the machine without product. Proceed as follows:

a) Touch the MAINTENANCE CONTROL button (1) and login, see 9.6.3-2 HMI - User Management Log On.

b) Touch the FILLING SYSTEM button (2).

c) Touch the EMPTY TUBE icon (3). The START/STOP buttons (4) are displayed.

d) Touch the ON button (4) to start the home position function.

e) Press the EXIT button (5).

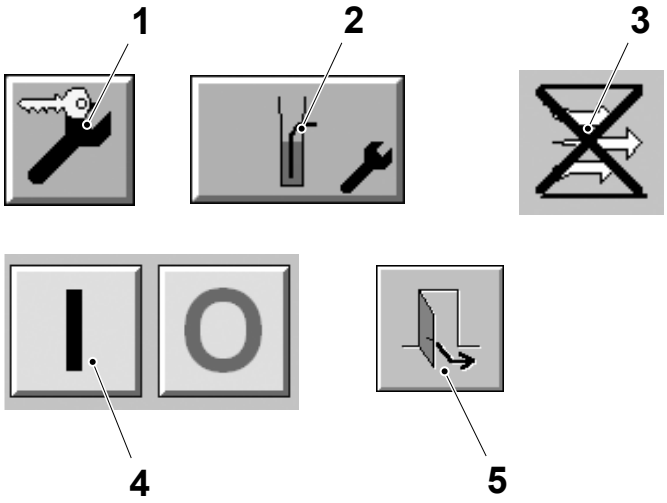

1 Maintenance control button
2 Filling system button
3 Empty tube icon
4 ON button
5 Exit button

TechPub_2614345_0108 - 0101_3048084_01.fm

1.5.3 Product Lines

1.5.3-1 Product Lines - Overhaul Regulating Valve

Machine Status	Mains Power OFF Air OFF Steam ON Water OFF
Special Equipment	Pipe Wrench TP No. 777200-0101
SPC Reference	2507060-0500

CAUTION

Risk of minor or moderate injury.

Spring under force.

(Cont'd)

TechPub_2614345_0108 - 0102_3048085_01.fm

(Cont'd)

a) Remove the connectors (1).
b) Loosen the screws (2) and remove the three electrical wires (3).
c) Disconnect the proximity switch (4).

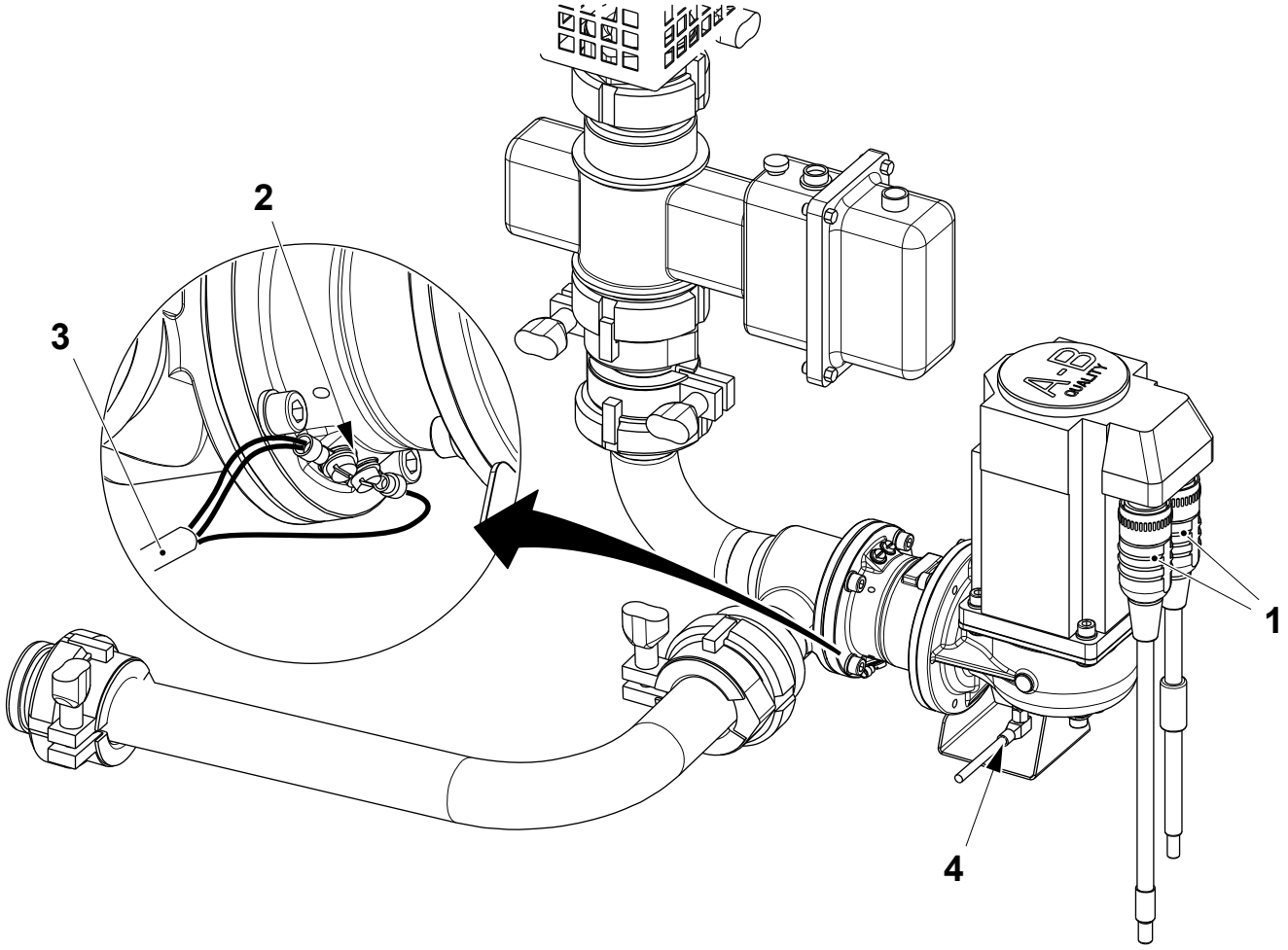

1 Connector
2 Screw
3 Electrical wires
4 Proximity switch

(Cont'd)

TechPub_2614345_0108 - 0102_3048085_01.fm

(Cont'd)

d) Loosen the clamps (5), the locking nuts (6) and remove the servo dosing valve (7).

e) Change the gasket (8).

Note! When assembling, first tighten manually the locking nuts (6) and then tighten them further to the mechanical stop using the pipe wrench tool TP No. 777200-0101.

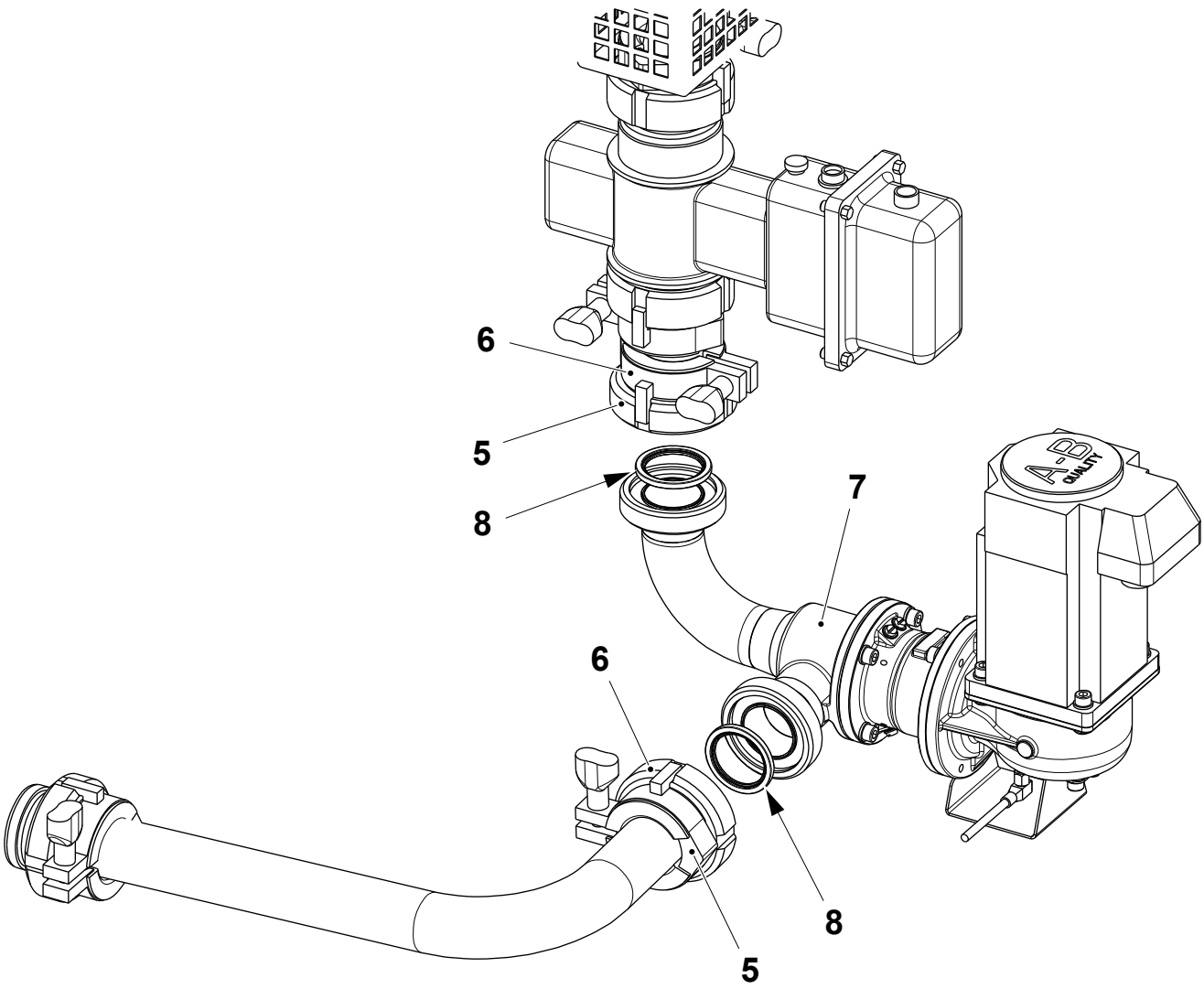

5 Clamp
6 Nut
7 Servo dosing valve
8 Gasket

(Cont'd)

TechPub_2614345_0108 - 0102_3048085_01.fm

(Cont'd)

f) Remove the regulating sleeve (9) by the screws (10).

g) Remove the servo motor (11) together with its support (12) by the screws (13).

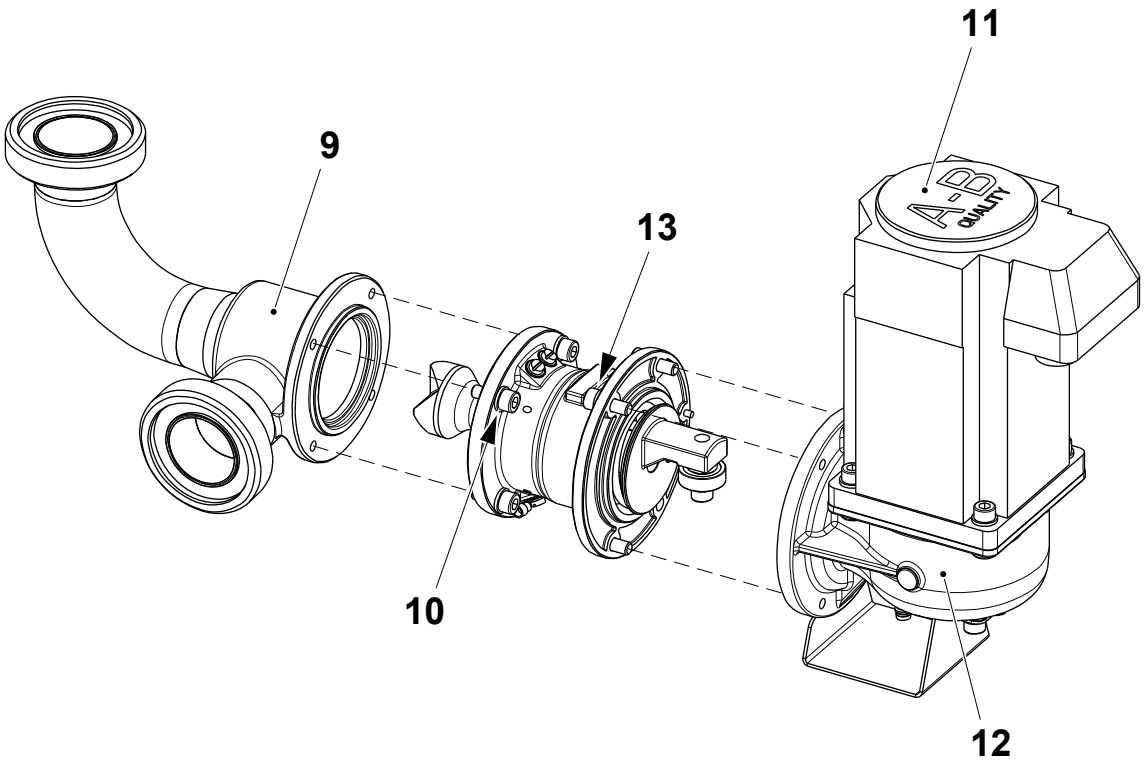

9 Regulating sleeve
10 Screw
11 Servo motor
12 Support
13 Screw

(Cont'd)

TechPub_2614345_0108 - 0102_3048085_01.fm

(Cont'd)

CAUTION
Risk of damage to the equipment.
Do not use an hammer to extract the cam (17). If it is blocked, remove the screw (15) and use an M8 screw as extractor.

h) Remove the servo motor (11) by the screws (14). Change the servo motor (11) if necessary.

i) Remove the screw (15).

j) Loosen the grub screw (16) and remove the cam (17) and the key (18).

k) Remove the screws (19) and the washer (20) and change the cam (17) if necessary.

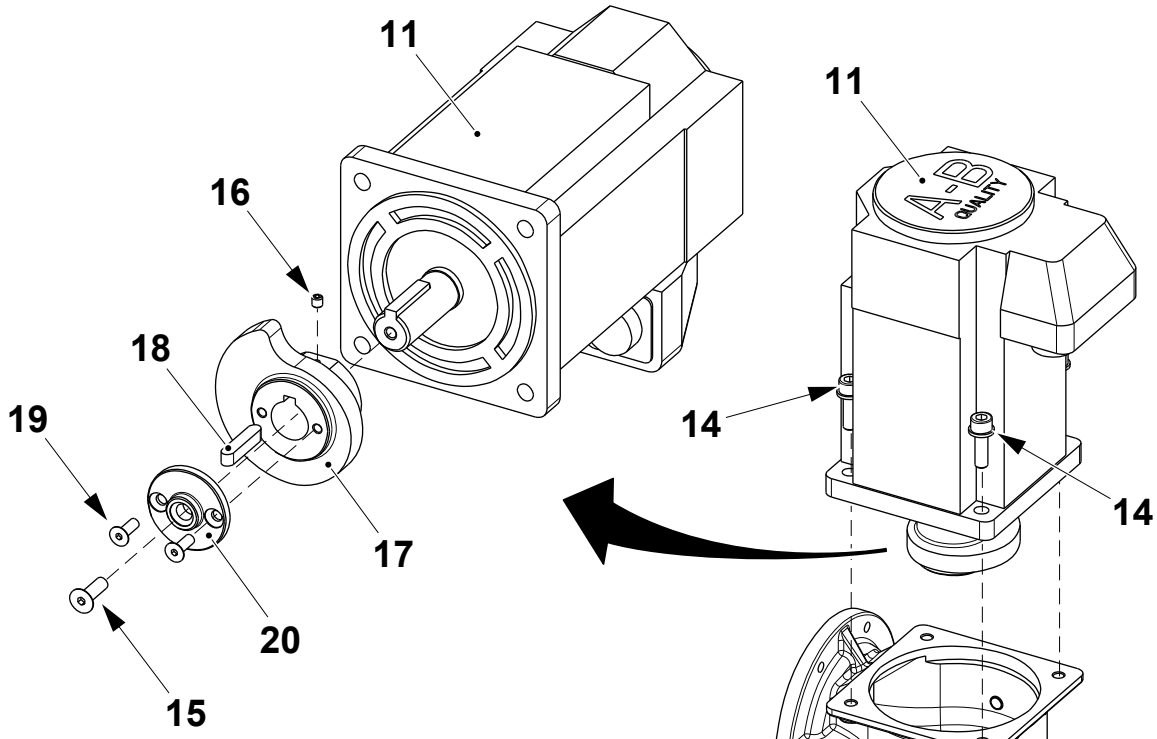

11 Servo motor
14 Screw
15 Screw
16 Grub screw
17 Cam
18 Key
19 Screw
20 Washer

(Cont'd)

TechPub_2614345_0108 - 0102_3048085_01.fm

(Cont'd)

l) Block the screw (21) with an allen key and unscrew the shutter (22).

m) Change the diaphragm (23).

n) Change the shaft (24) if damaged or worn out.

o) Remove the spring (25) and the spring cushion (26) out of the housing (27). Change if necessary.

p) If necessary change the ball bearing (28) with the screw (29).

q) Assemble in the reverse order.

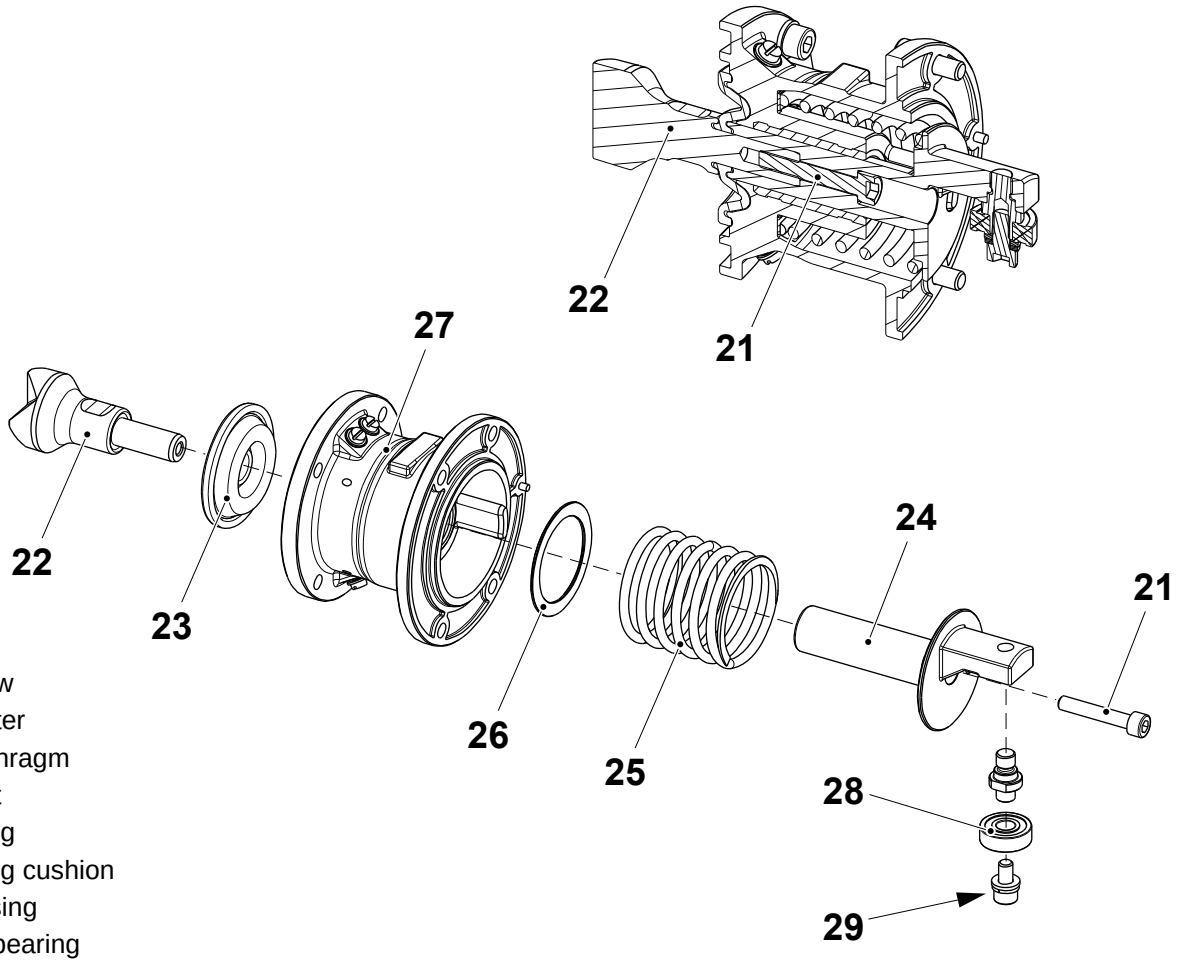

21 Screw
22 Shutter
23 Diaphragm
24 Shaft
25 Spring
26 Spring cushion
27 Housing
28 Ball bearing
29 Screw

TechPub_2614345_0108 - 0102_3048085_01.fm

1.5.3-2 Product Lines - Set Regulating Valve Proximity Switch

Machine Status	STEP ZERO
SPC Reference	2507060-0500

a) Loosen the nut (1) and screw out the proximity switch (2).
b) Screw in the proximity switch (2) until it just touches the screw (3).
c) Make sure that the LED on the proximity switch (2) lights up.
d) Screw the proximity switch (2) out half a turn and tighten the nut (1).
e) Make sure that the LED is still lit.

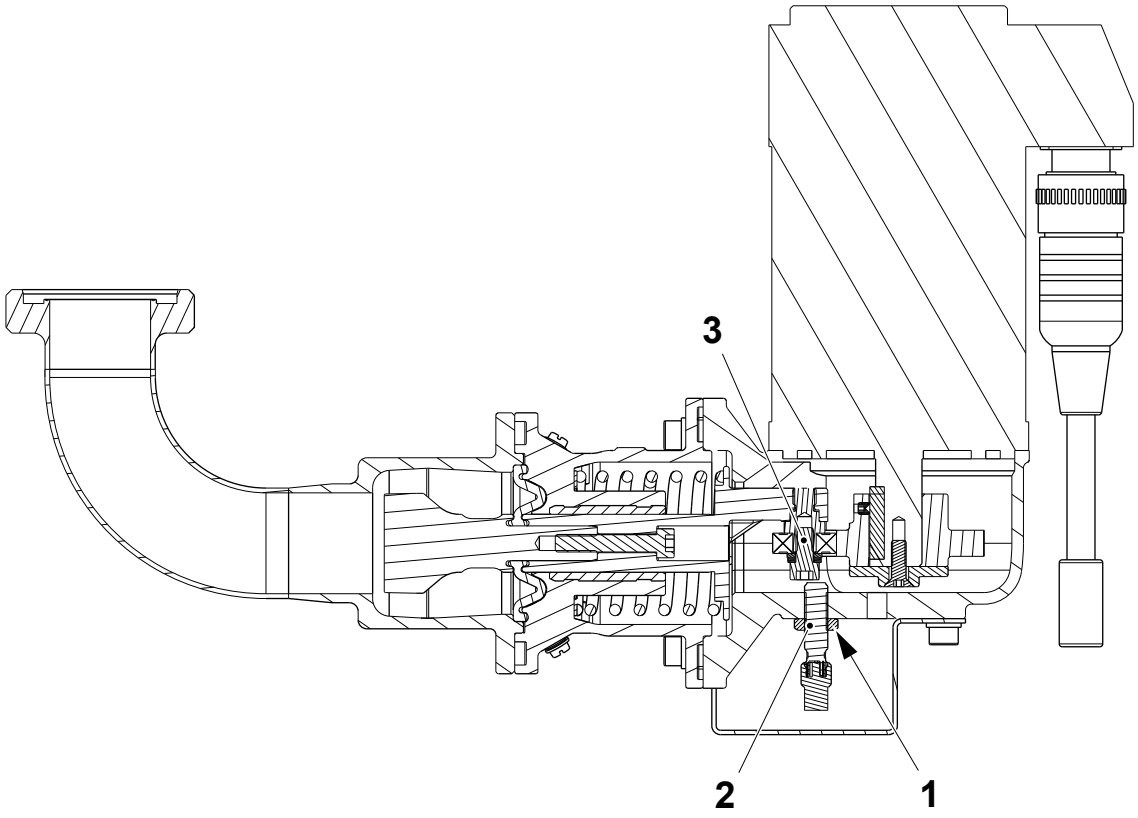

1 Nut
2 Proximity switch
3 Screw

TechPub_2614345_0108 - 0102_3048085_01.fm

1.5.3-3 Product Lines - Change Flow Meter Gaskets

Machine Status	Mains Power ON Air OFF Steam ON Water OFF
SPC Reference	2507060-0500

a) Loosen the locking rings (1) and unscrew the nuts (2) and remove the flow meter (3).

b) Change the gaskets (4). Change if necessary.

c) Assemble in the reverse order.

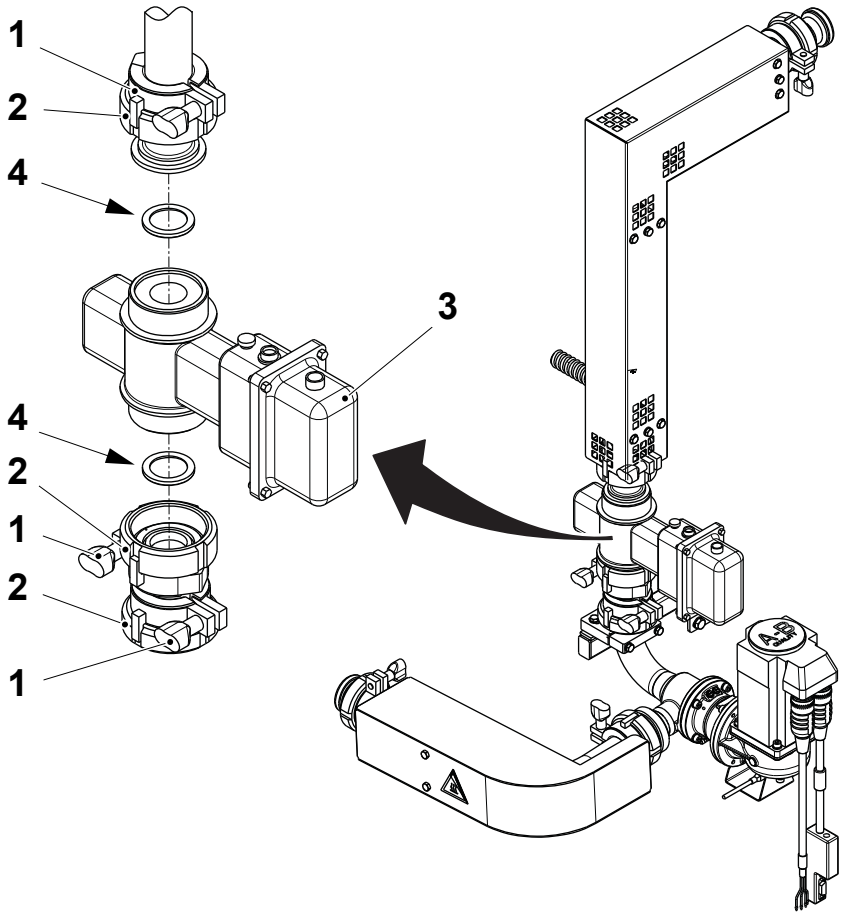

1 Locking ring
2 Nut
3 Flow meter
4 Gasket

TechPub_2614345_0108 - 0102_3048085_01.fm

1.5.3-4 Product Lines - Change Flow Meter

Machine Status	Mains Power ON Air OFF Steam ON Water OFF
SPC Reference	2507060-0500

a) Disconnect the connectors (1).

b) Loosen the locking rings (2) and the nuts (3) and remove the flow meter (4).

c) Change the gaskets (5).

d) Assemble the new flow meter in the reverse order and connect the connectors (1).

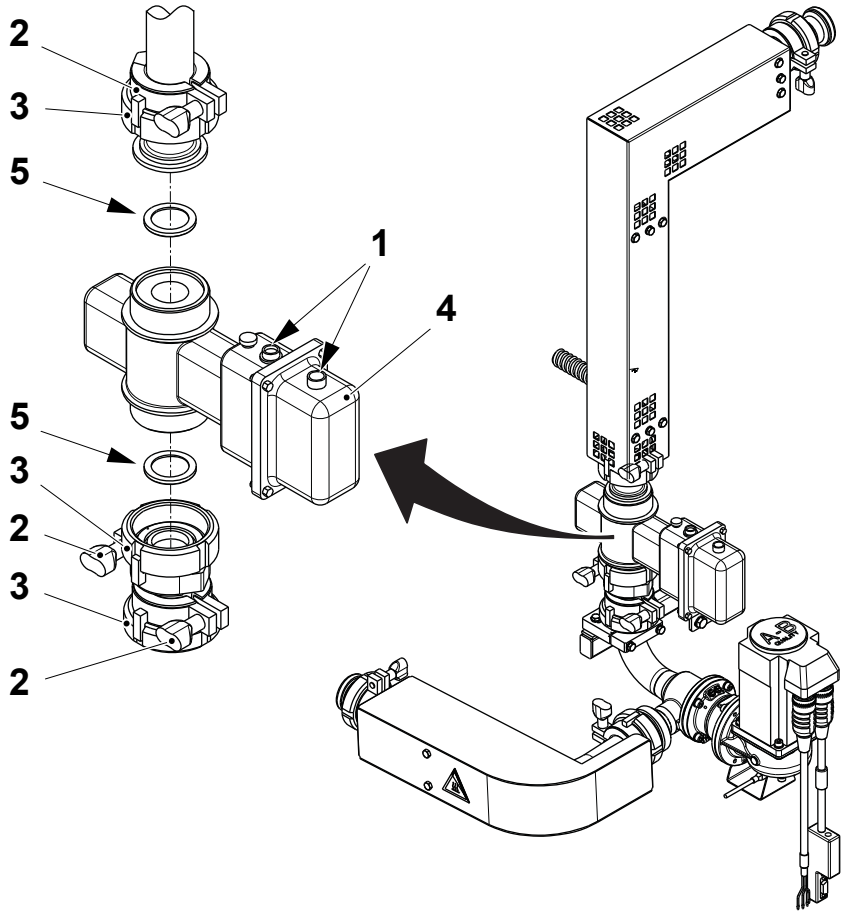

1 Connector
2 Locking ring
3 Nut
4 Flow meter
5 Gasket

(Cont'd)

TechPub_2614345_0108 - 0102_3048085_01.fm

(Cont'd)

e) Configure the flow meter as follows:
   - locate the front panel of the TMCC2 card A01K5210 (Filling System)
   - press the DOWN button (6) and the ENTER button (7) for at least 5 seconds, until the TMCC2 display (8) shows `TMCC2`
   - press the ENTER button (7), the TMCC2 card display (8) shows `RUN`
   - press the ENTER button (7) again to restart the program which restores the default flow meter configuration.

Note! By default the flow meter can read flows with a minimum conductivity of 30-35 µS/cm. If products with lower conductivity are used, set the EPIPE value to OFF, see the description in 9.8 TMCC2 Controller.

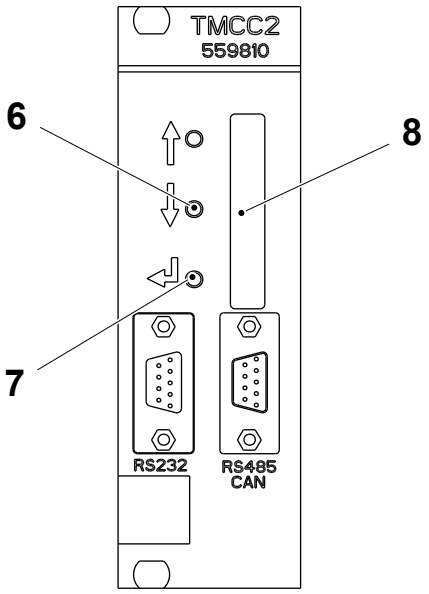

6 Down button
7 Enter button
8 Display

TechPub_2614345_0108 - 0102_3048085_01.fm

1.5.3-5 Product Lines - Move Regulating Valve

Machine Status	PREPARATION
SPC Reference	2507060-0500

Note! These functions are used only for diagnostics reasons. The regulating valve position is set automatically by the PLC program.

Regulating Valve Home Position

If necessary, set manually the regulating valve home position. Proceed as follows:

a) In step PREPARATION, touch the MAINTENANCE CONTROL button (1) and login, see 9.6.3-2 HMI - User Management Log On.

b) Touch the FILLING SYSTEM button (2).

c) Touch the HOME REGULATING VALVE icon (3). The START/STOP buttons (4) are displayed.

d) Touch the ON button (4) to start the home position function.

e) Press the EXIT button (5).

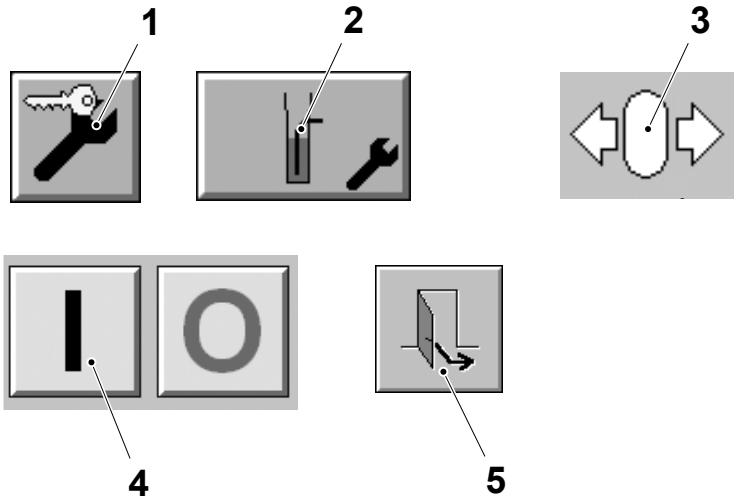

1 Maintenance control button
2 Filling system button
3 Home regulating valve icon
4 ON button
5 Exit button

(Cont'd)

TechPub_2614345_0108 - 0102_3048085_01.fm

(Cont'd)

Move Regulating Valve

To move the regulating valve in a specified position, proceed as follows:

a) In step PREPARATION, touch the MAINTENANCE CONTROL button (1) and login, see 9.6.3-2 HMI - User Management Log On.

b) Touch the FILLING SYSTEM button (2).

c) Touch the MOVE REGULATING VALVE icon (3).

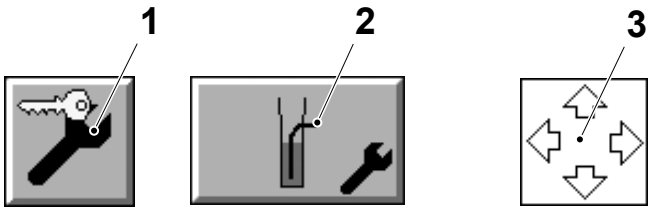

1 Maintenance control button
2 Filling system button
3 Move regulating valve icon

(Cont'd)

TechPub_2614345_0108 - 0102_3048085_01.fm

(Cont'd)

d) Set the target position by the ARROW buttons or the KEYBOARD button (4).

e) Touch the ON button (5) to start the function.

f) Touch the EXIT button (6).

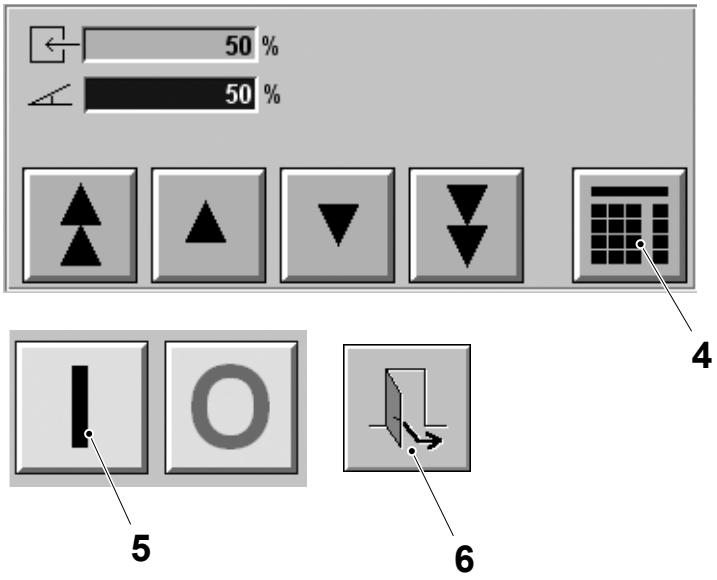

4 Keyboard button
5 ON button
6 Exit button

TechPub_2614345_0108 - 0102_3048085_01.fm

1.5.3-6 Product Lines - Product Pipes Assembly

Machine Status	Mains Power OFF Air OFF Steam ON Water OFF
Special Equipment	Pipe Wrench TP No. 777200-0101
SPC Reference	2507060-0500

WARNING

Burn hazard.

The product pipe and adjacent components may be hot. If necessary wear personal protective equipment.

Note! Follow this assembling procedure every time the regulating valve or the flow meter are removed for maintenance reasons.

a) Fit the product pipe (1) and gaskets (2) to the filling pipe (3).

b) Tighten manually the nut (4).

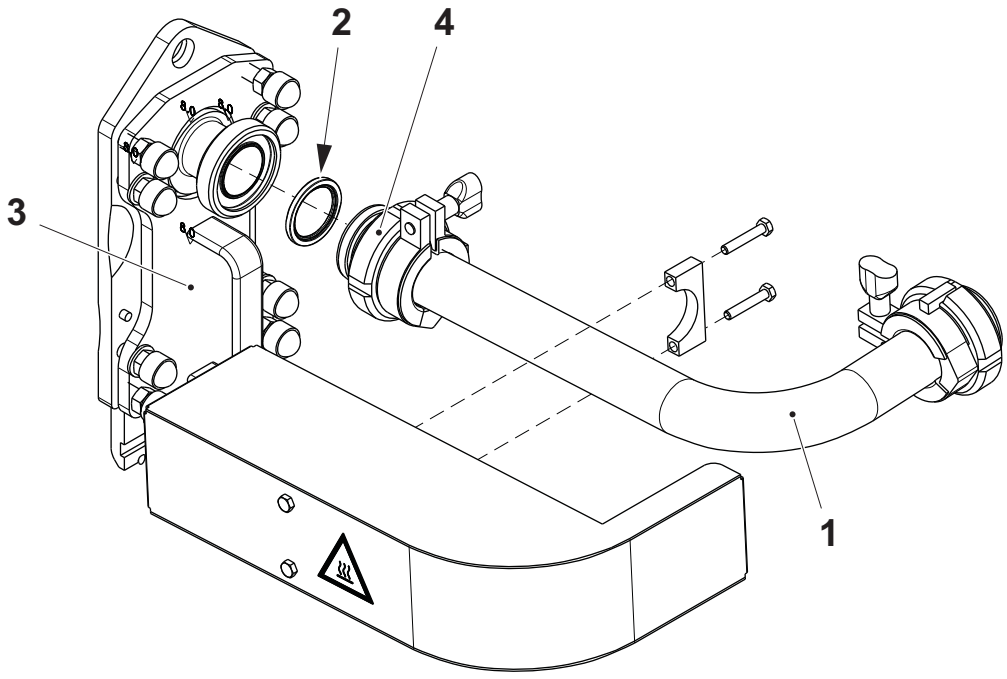

1 Product pipe
2 Gasket
3 Filling pipe
4 Nut

(Cont'd)

TechPub_2614345_0108 - 0102_3048085_01.fm

(Cont'd)

c) Fit the pipe (5) and the gasket (6) to the AP Valve (7).

d) Once the pipe (5) is in vertical position as much as possible, tighten manually the nut (8).

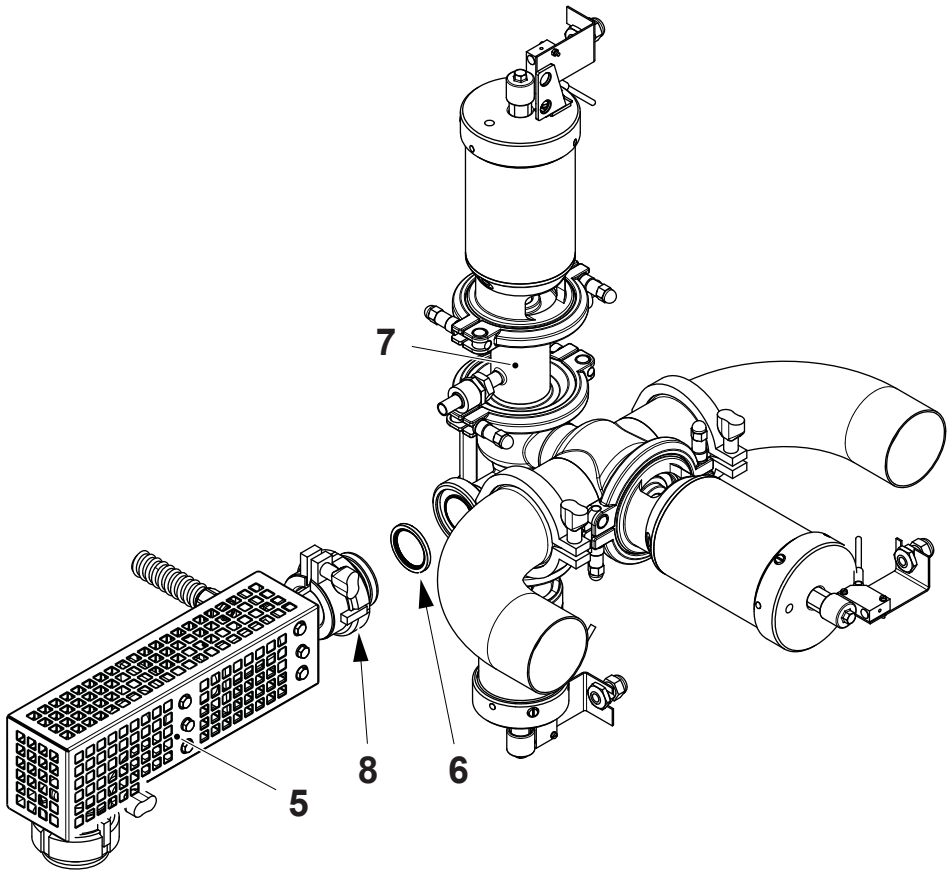

5 Pipe
6 Gasket
7 APValve
8 Nut

(Cont'd)

TechPub_2614345_0108 - 0102_3048085_01.fm

(Cont'd)

e) Fit the flow meter (9) and the gasket (10) to the pipe (5).

f) Hand tighten the nut (11).

g) Fit the gasket (12) and the eccentric pipe (13) to the flow meter (9).

h) Manually tighten the nut (14).

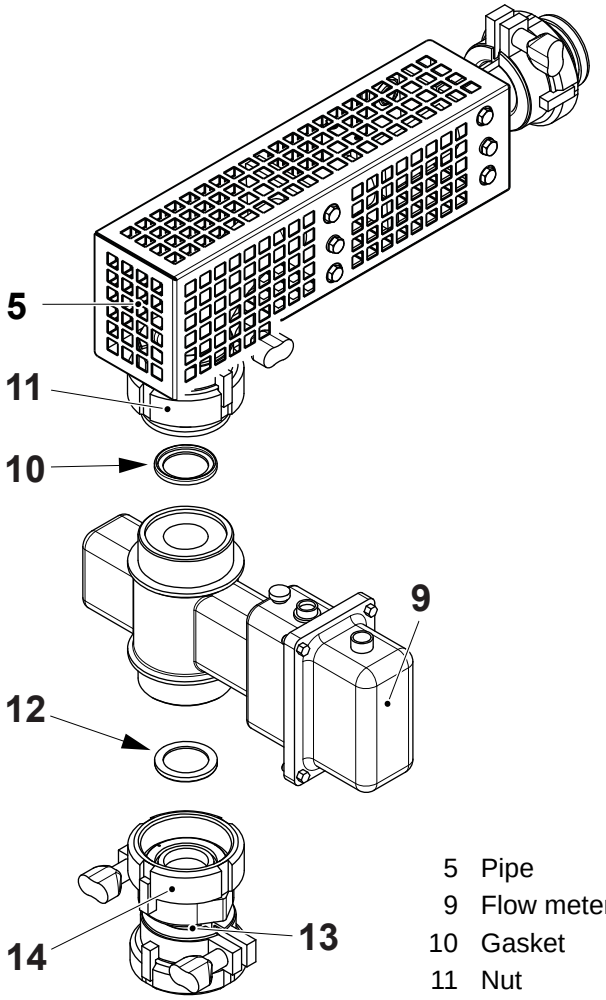

5 Pipe
9 Flow meter
10 Gasket
11 Nut
12 Gasket
13 Eccentric pipe
14 Nut

(Cont'd)

TechPub_2614345_0108 - 0102_3048085_01.fm

(Cont'd)

i) Fit the servo dosing valve (15) and the gasket (16) to the product pipe (1).

j) Tighten the nut (17).

k) Fit the gasket (18) between the eccentric pipe (13) and the servo dosing valve (15).

l) Rotate the eccentric pipe (13) until the connection surface of the eccentric pipe is in full contact with the connection surface of the servo dosing valve (15).

m) Tighten manually the nut (19).

1 Product pipe
13 Eccentric pipe
15 Servo dosing valve
16 Gasket
17 Nut
18 Gasket
19 Nut

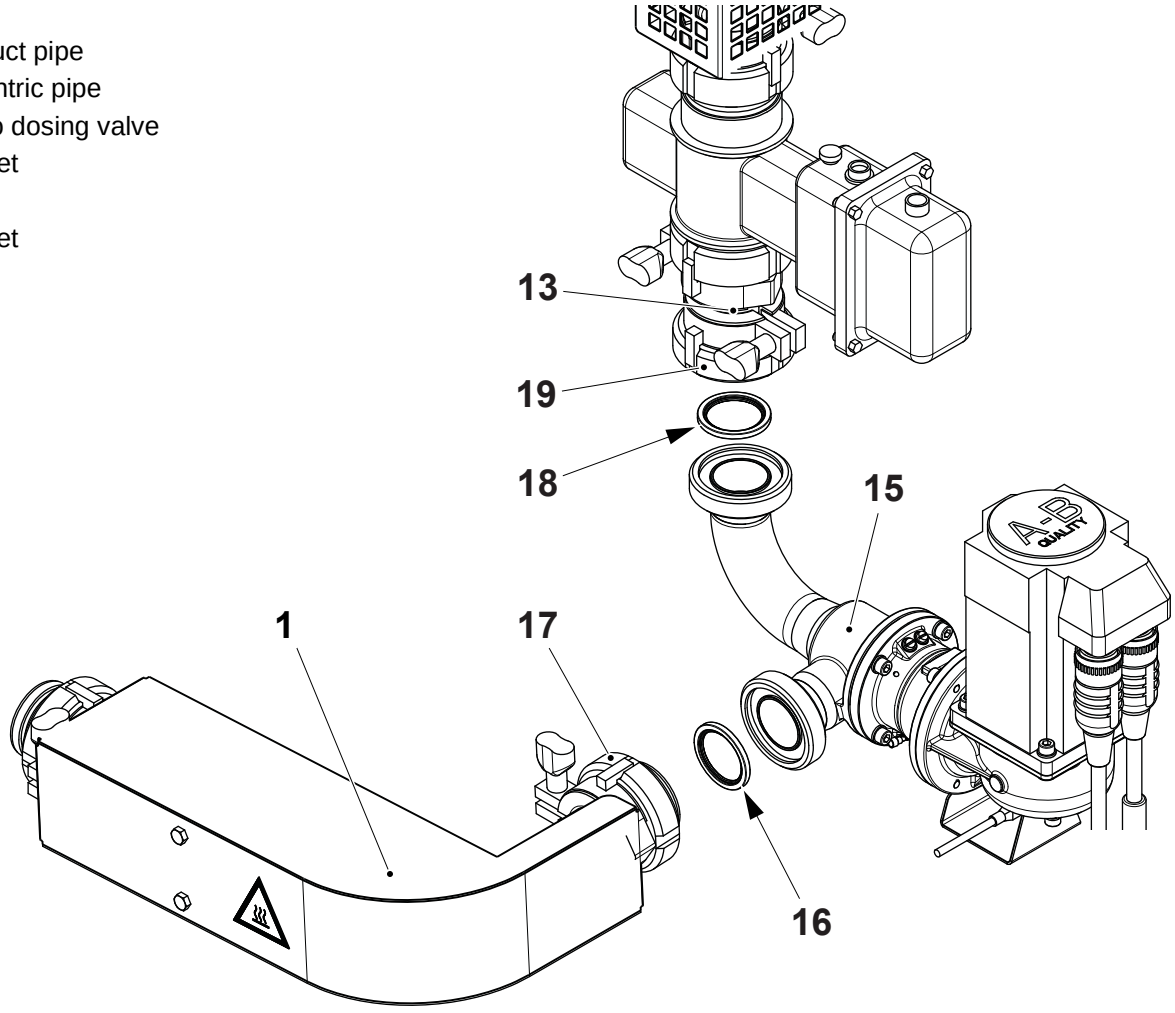

(Cont'd)

TechPub_2614345_0108 - 0102_3048085_01.fm

(Cont'd)

n) Well tighten all locking nuts further to the mechanical stop using the pipe wrench TP No. 777200-0101 starting from the APValve (7) and ending down to the filling pipe (3).

o) Fit and tighten the clamps (20), (21), (22), (23), (24) and (25).

p) Fit the servo dosing valve (15) to the bracket (26) with the screws (27).

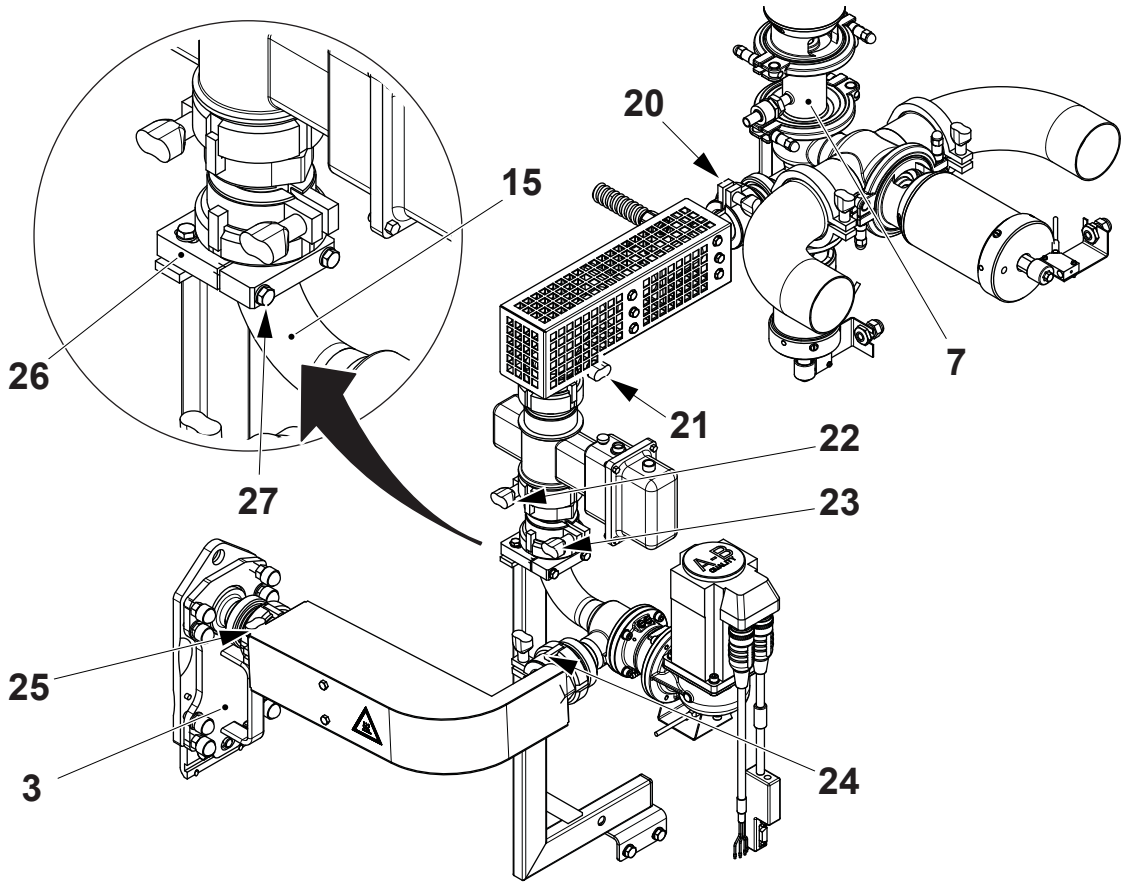

3 Filling pipe
7 APValve
15 Servo dosing valve
20 Clamp
21 Clamp
22 Clamp
23 Clamp
24 Clamp
25 Clamp
26 Bracket
27 Screw

(Cont'd)

TechPub_2614345_0108 - 0102_3048085_01.fm

(Cont'd)

q) Connect the proximity switch (28).
r) Fit the three electrical wires (29) with the screws (30).
s) Fit the connectors (31).
t) Connect the connectors (32) to the flow meter (9).

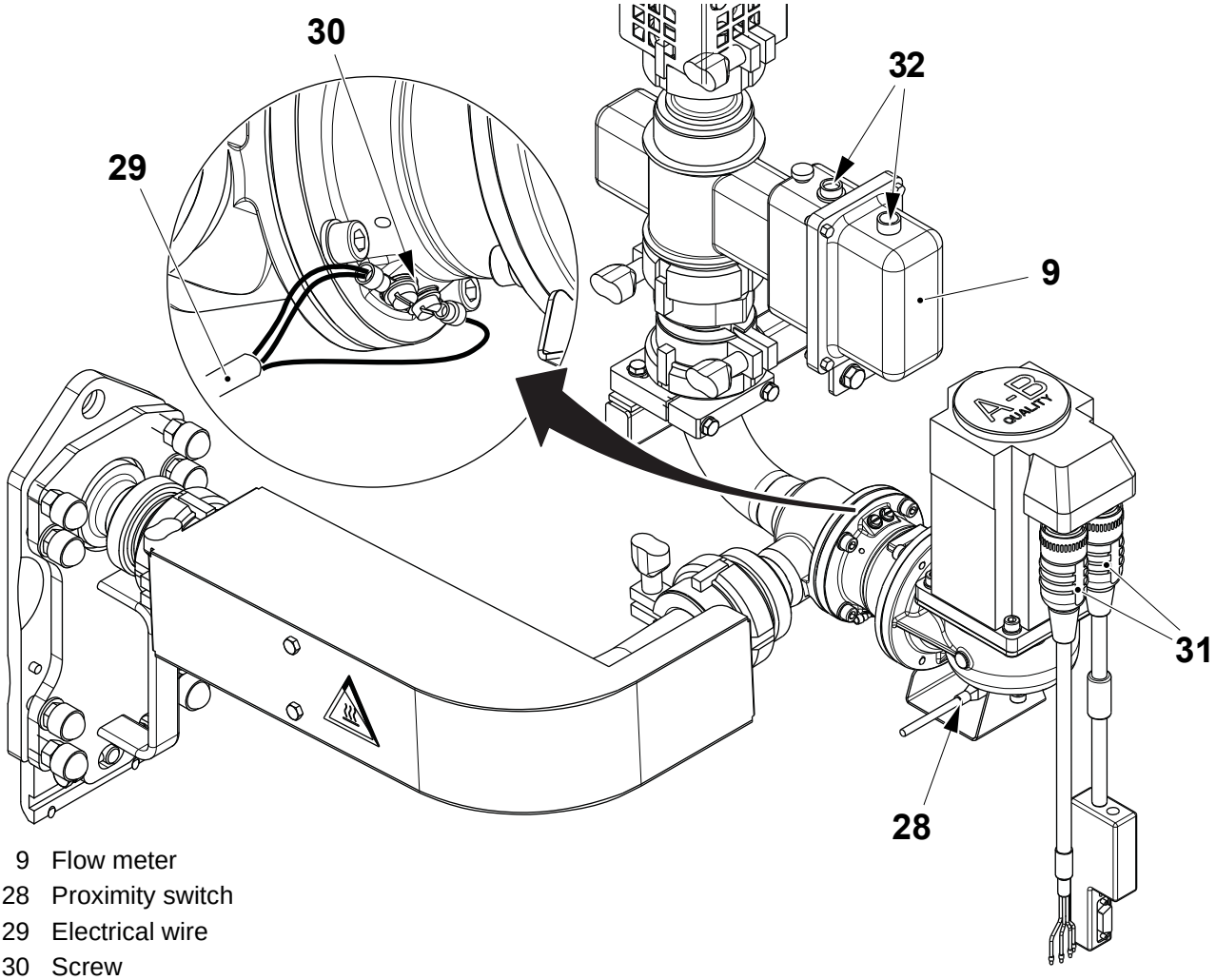

9 Flow meter
28 Proximity switch
29 Electrical wire
30 Screw
31 Connector
32 Connector

TechPub_2614345_0108 - 0102_3048085_01.fm

1.5.4 Steam System

1.5.4-1 Steam System - Clean Steam Trap

Machine Status	Mains Power OFF Air OFF Steam OFF Water OFF
Consumables	Lubricant TP No. 90296-57
SPC Reference	2545651-0600

WARNING

Risk of personal injury.

Turn off the steam and the compressed air. Make sure there is no product, steam or cleaning liquid on the line.

WARNING

Burn hazard.

The steam system and adjacent components may be hot. If necessary wear personal protective equipment.

CAUTION

Risk of serious production fault.

Never close the steam supply valve to the machine until the product line is idle and empty from product. The steam in the product valve forms an aseptic barrier between the machine and the product supply line. Closing the steam valve will disrupt this barrier.

(Cont'd)

TechPub_2614345_0108 - 0102_3048086_01.fm

(Cont'd)

a) Remove the steam trap (1) from the line.

b) Unscrew the cap (2).

c) Remove the spacer (3), the spring (4) and the strainer (5). Clean the parts if necessary.

d) Assemble in the reverse order.

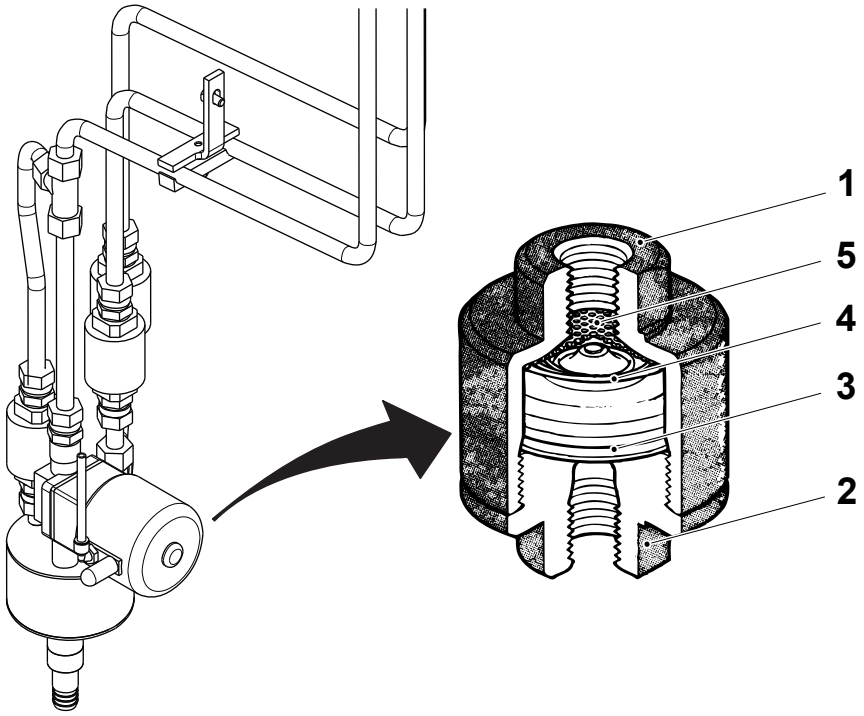

1 Steam trap
2 Cap
3 Spacer
4 Spring
5 Strainer

TechPub_2614345_0108 - 0102_3048086_01.fm

1.5.4-2 Steam System - Clean Filter

Machine Status	Mains Power OFF Air OFF Steam OFF Water OFF
Special Equipment	Tank 50 litres Filter Pall Profile 10µm Coalecher Element Pall SU range Thermometer Pressure Gauge
Consumables	Nitric Acid 14 - 15% (w/w)
SPC Reference	2545651-0600

WARNING

Risk of personal injury.

Turn off the steam and the compressed air. Make sure there is no product, steam or cleaning liquid in the line.

WARNING

Burn hazard.

The steam system and adjacent components may be hot. If necessary wear personal protective equipment.

CAUTION

Risk of serious production fault.

Never close the steam supply valve to the machine until the product line is idle and empty from product. The steam in the product valve forms an aseptic barrier between the machine and the product supply line. Closing the steam valve will disrupt this barrier.

(Cont'd)

TechPub_2614345_0108 - 0102_3048086_01.fm

(Cont'd)

Remove the O-ring (arrow) from the filter cartridge.

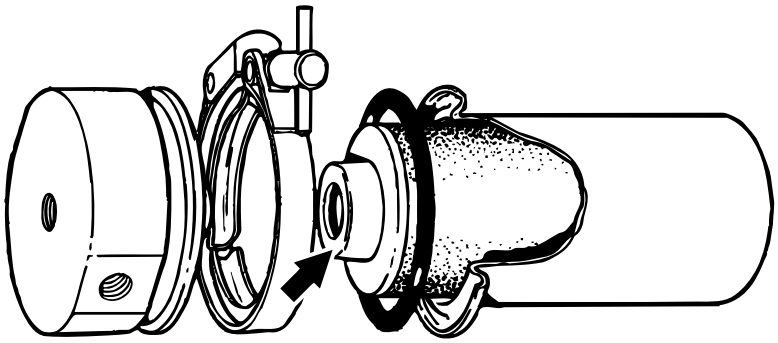

General Information

To obtain optimum performance of the filter cartridge:

- Clean the filter cartridge thoroughly before reusing (or return to Pall for cleaning and testing)
- First remove the O-ring, then label and store used cartridges.

Clean with distilled **and** filtered water.

Rinse using a 50 litre tank designed to avoid “dead spaces”. Filter the incoming water (renewal rate 5 l/min.) with a 10µm Pall Profile.

Agitate the contents of the tank with compressed air, filtered through a Pall SU Coalecher element.

(Cont'd)

TechPub_2614345_0108 - 0102_3048086_01.fm

(Cont'd)

Cleaning with Nitric Acid

WARNING

Risk of personal injury.
Follow the Safety Precautions. The cleaning procedure must not contravene any legal or local safety regulations.

Note! If the cartridge is highly contaminated or if the recommended temperature cannot be used, contact Pall Scientific & Laboratory Services for advice.

a) Immerse the filter cartridge in 14 - 15% (w/w) nitric acid at 60 - 70°C for 10 - 20 minutes.

b) Rinse the cartridge in water for at **least** 10 minutes.

c) Empty the tank and refill with water. Check the pH level of the tank contents is 6 - 8.

d) Rinse the cartridge again for at least two hours, or until the pH level of the tank contents is the same as that of the incoming water.

e) Flush the cartridge in the reverse direction with water. If the water from the cartridge is discoloured or is visibly contaminated, repeat steps a) and b).

(Cont'd)

TechPub_2614345_0108 - 0102_3048086_01.fm

(Cont'd)

Reverse Bubble Point Testing

Note! Do this **immediately** after the cleaning procedure.

a) Thoroughly soak the filter cartridge in water.

b) Plug one end of the cartridge and connect the other end to a compressed air line. The pressure should be 0 - 0.13 bar.

c) Submerge the filter cartridge in water. Keep the filter approximately 125 mm below the surface.

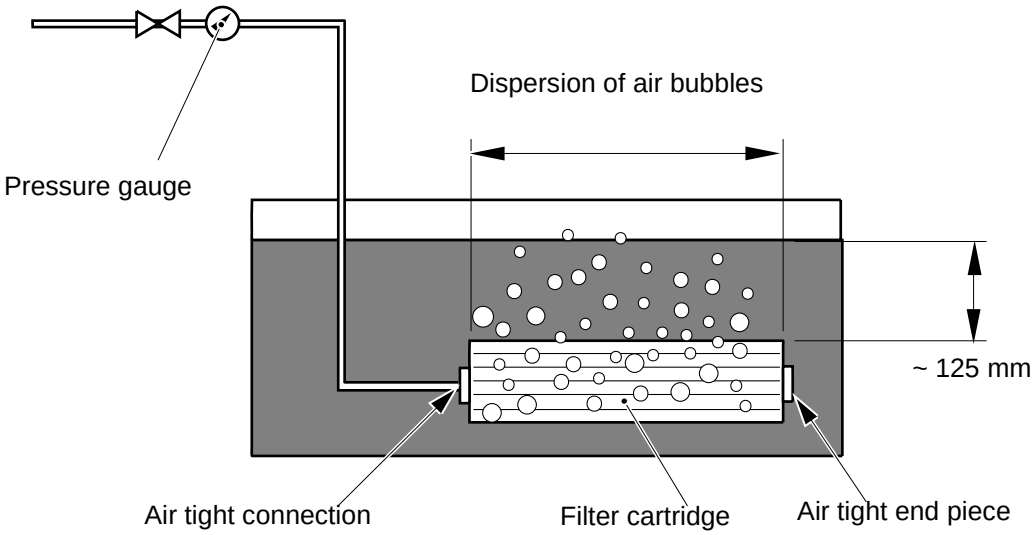

d) Gradually increase the air pressure while slowly rotating the cartridge, until air bubbles emerge. Record the air pressure at this point.

e) Carefully inspect the filter cartridge to ensure the air bubbles emerge at a similar rate from the entire cartridge.

f) Lower the pressure to half the recorded pressure. If air bubbles emerge from an isolated area of the cartridge at this pressure, replace the filter.

(Cont'd)

TechPub_2614345_0108 - 0102_3048086_01.fm

(Cont'd)

Drying Procedure

Dry the filter at 105 - 120°C for 1 - 2 hours.

After drying, visually check the filter cartridge for damage or corrosion. Change the cartridge if necessary.

Fit a new O-ring before fitting the filter cartridge.

TechPub_2614345_0108 - 0102_3048086_01.fm

1.5.4-3 Steam System - Check Membrane

Machine Status	Mains Power OFF Air OFF Steam OFF Water OFF
SPC Reference	2545651-0600

WARNING

Burn hazard.

The diaphragm valve and adjacent components may be hot. Wear heat-resistant protective gloves.

CAUTION

Risk of serious production fault.

Never close the steam supply valve to the machine until the product line is idle and empty from product. The steam in the product valve forms an aseptic barrier between the machine and the product supply line. Closing the steam valve will disrupt this barrier.

(Cont'd)

TechPub_2614345_0108 - 0102_3048086_01.fm

(Cont'd)

a) Remove the screws (1) and the diaphragm valve (2).

b) Remove and check the membrane (3) for wear or damage. Change if necessary.

c) Assemble in the reverse order.

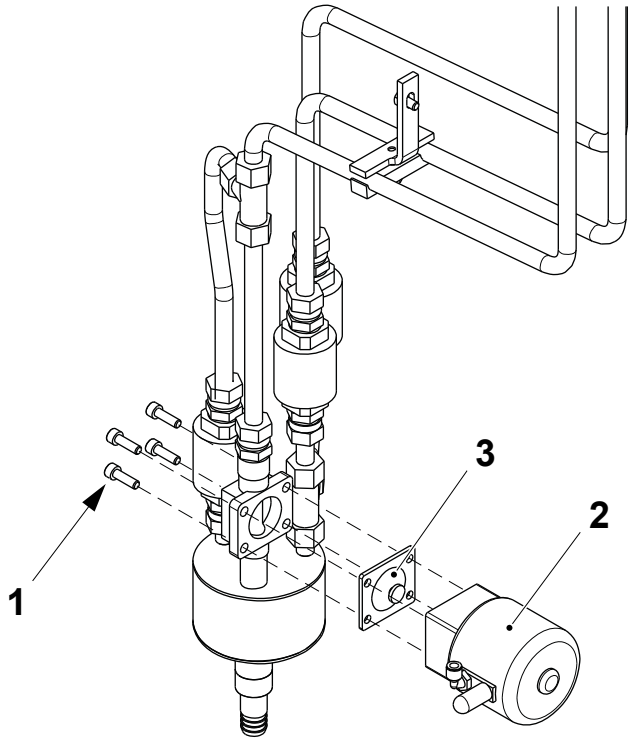

1 Screw
2 Diaphragm valve
3 Membrane

TechPub_2614345_0108 - 0102_3048086_01.fm

1.5.4-4 Steam System - Change Pressure Regulator

Machine Status	Mains Power OFF Air OFF Steam OFF Water OFF
SPC Reference	2545651-0600

WARNING

Burn hazard.

The pressure regulator and adjacent components may be hot. Wear heat-resistant protective gloves.

CAUTION

Risk of serious production fault.

Never close the steam supply valve to the machine until the product line is idle and empty from product. The steam in the product valve forms an aseptic barrier between the machine and the product supply line. Closing the steam valve will disrupt this barrier.

(Cont'd)

TechPub_2614345_0108 - 0102_3048086_01.fm

(Cont'd)

a) Close and padlock the steam supply valve (1) and turn OFF the air to the pressure regulator (2).

b) Remove the connection (3) and the couplings (4).

c) Change the pressure regulator (2).

d) Assemble in the reverse order.

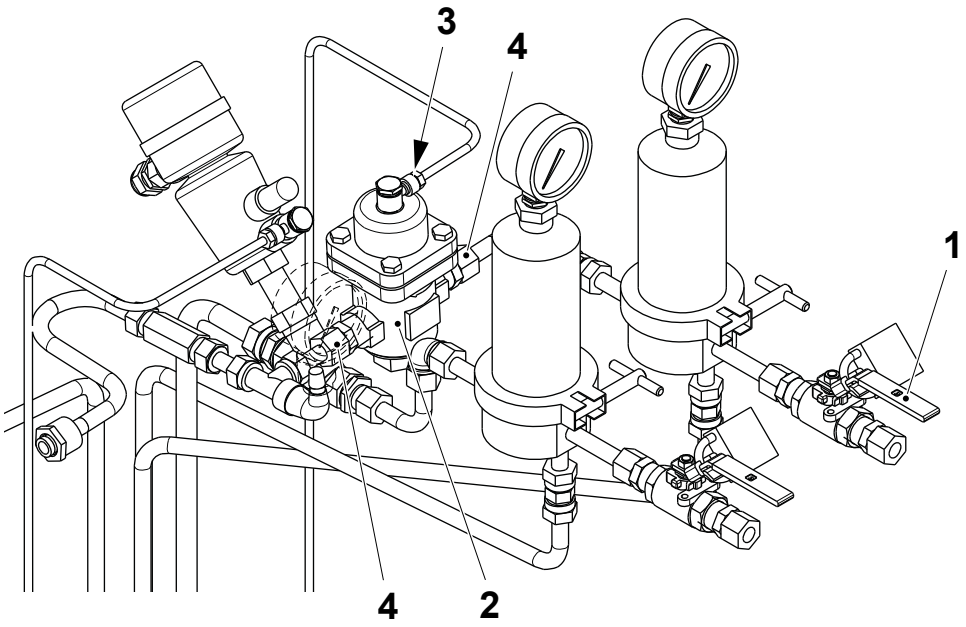

1 Steam supply valve
2 Pressure regulator
3 Connection
4 Coupling

TechPub_2614345_0108 - 0102_3048086_01.fm

1.5.4-5 Steam System - Set Pressure Regulator

Machine Status	PREPARATION
SPC Reference	2545651-0600

WARNING

Burn hazard.

Forcing the valves open allows hot steam to exit from the machine body. Keep the doors closed.

(Cont'd)

TechPub_2614345_0108 - 0102_3048086_01.fm

(Cont'd)

WARNING

Burn hazard.

Forcing the valves open allows hot steam to exit from the machine body. Keep the doors closed.

a) Open the steam supply valve (1).

b) Push the button (2) to force open the TCSB valve (U70K1500) (3) and the steam flush valve (U70K1430) (4).

c) Make sure the steam flush valve (U70K1430) (4) is open and that the steam is discharged under the machine body.

d) Set the steam temperature in the C-valve to 130-131° C by adjusting the pressure regulator (5), this corresponds to a steam pressure of 2.0 bar on the pressure gauge (6).

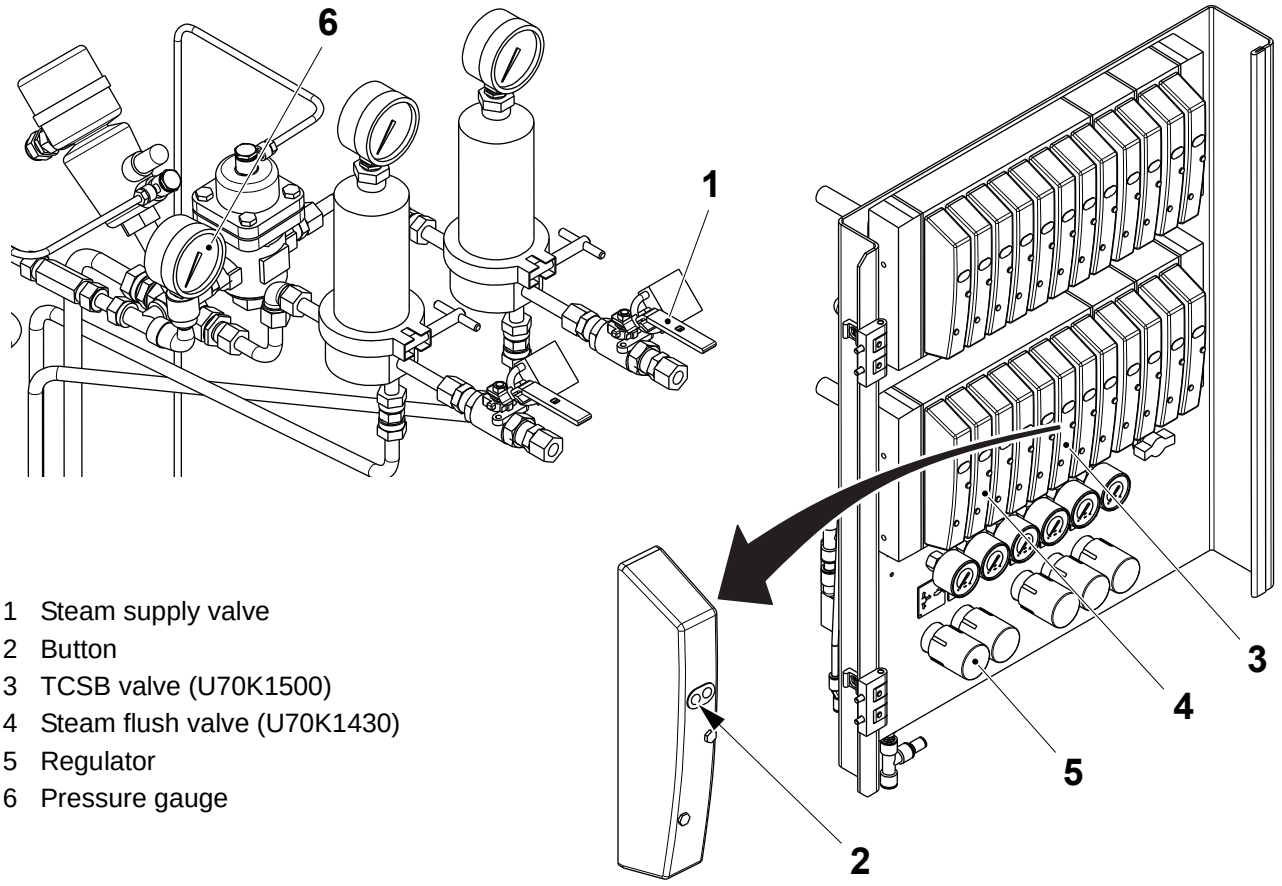

1 Steam supply valve
2 Button
3 TCSB valve (U70K1500)
4 Steam flush valve (U70K1430)
5 Regulator
6 Pressure gauge

TechPub_2614345_0108 - 0102_3048086_01.fm

1.5.4-6 Steam System - Set Steam Regulator

Machine Status	CLEANING CIP
SPC Reference	2545651-0600

WARNING

Burn hazard.

The steam regulator and adjacent components may be hot. Wear heat-resistant protective gloves.

a) Open the steam supply valve (1) for the cleaning system.

b) Fully open the steam pressure regulator (2).

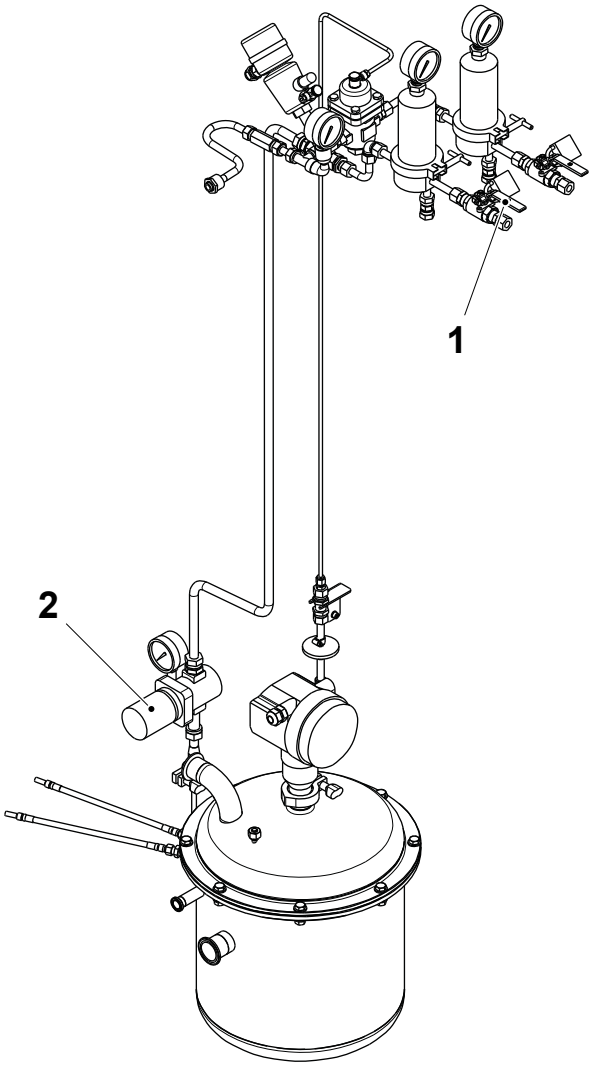

1 Steam supply valve
2 Pressure regulator

TechPub_2614345_0108 - 0102_3048086_01.fm

1.6 Cleaning System

SPC Reference	2512910-0500

1.6.1 Flow Switch

1.6.1-1 Flow Switch - Check Gaskets

Machine Status	Mains Power OFF Air OFF Steam ON Water OFF
Special Equipment	Pipe Wrench TP No. 777200-0101
SPC Reference	2539452-0400

Note! Only valid if the optional equipment automatic cleaning valve is not fitted.

Remove the clamp rings (1) and the swing pipe (2). Check the gaskets (3) for wear or damage. If necessary, change the gaskets (3).

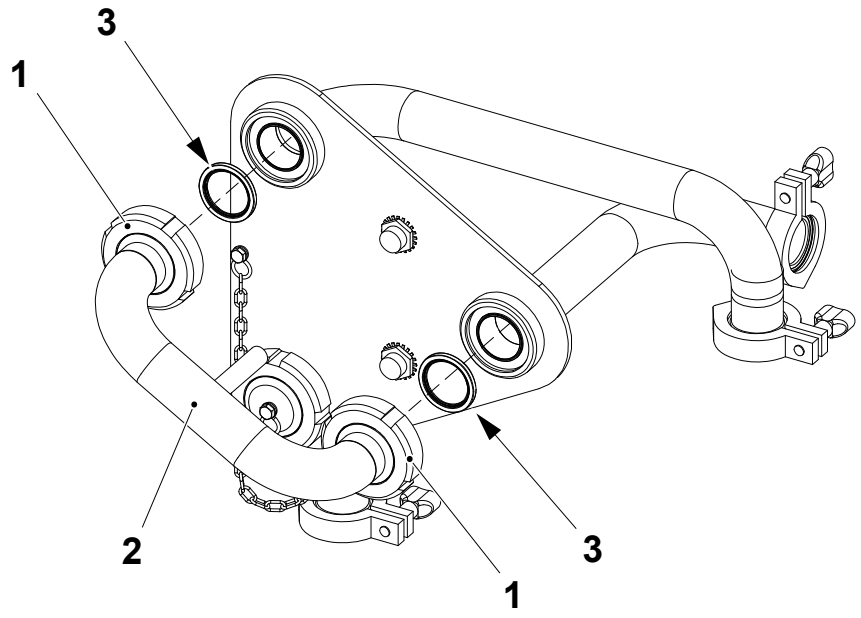

1 Clamp ring
2 Swing pipe
3 Gasket

TechPub_2614345_0108 - 0101_3048087_01.fm

1.6.1-2 Flow Switch - Set

Machine Status	Mains Power OFF Air OFF Steam ON Water OFF
SPC Reference	2539452-0400

a) Position the swing pipe (1) in the PRODUCTION position as shown below.

b) Set the distance **A** between the boss (2) and the proximity switch (3).

c) Remove the plug (4) and move the swing pipe (1) to the CLEANING position.

d) Set the distance **A** between the boss (2) and the proximity switch (5).

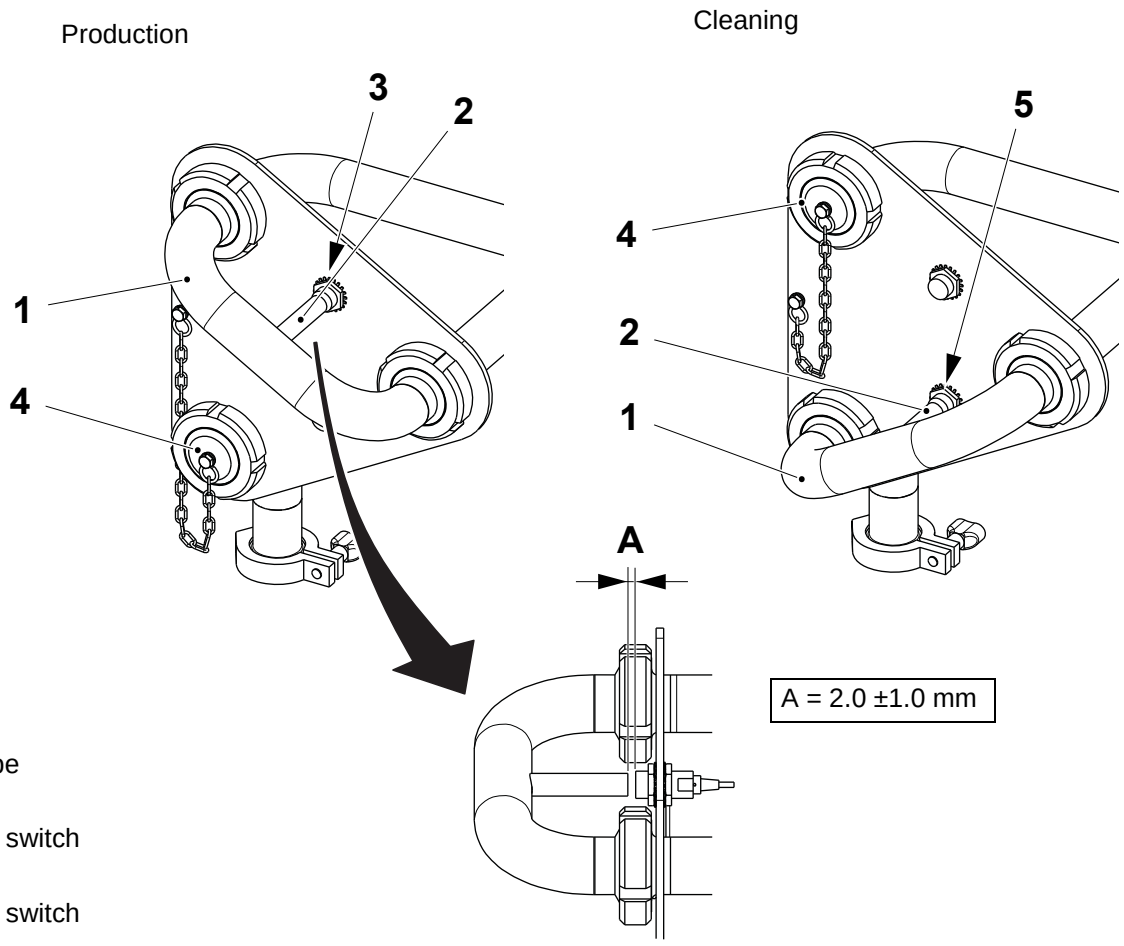

1 Swing pipe
2 Boss
3 Proximity switch
4 Plug
5 Proximity switch

TechPub_2614345_0108 - 0101_3048087_01.fm

1.6.1-3 Flow Switch - Change Sensor Gasket

Machine Status	Mains Power OFF Air OFF Steam ON Water OFF
SPC Reference	2539452-0400

a) Loosen the clamp (1) and remove the temperature sensor (2).

b) Change the gasket (3).

c) Assemble in the reverse order.

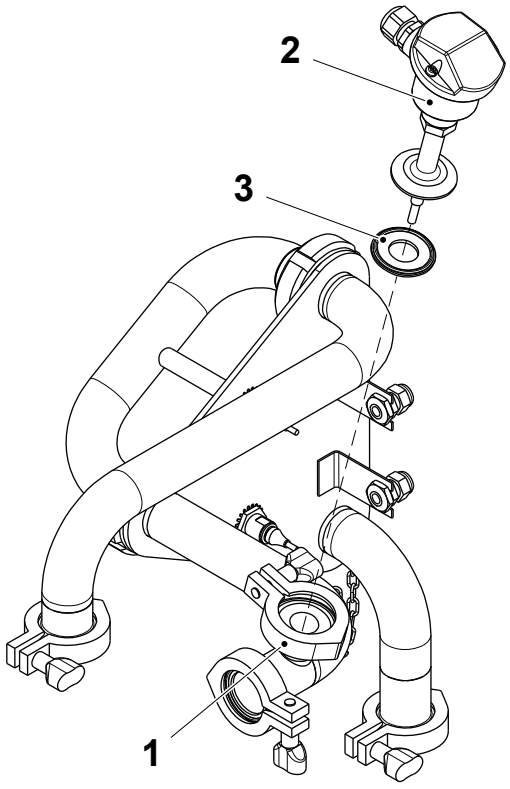

1 Clamp
2 Temperature sensor
3 Gasket

TechPub_2614345_0108 - 0101_3048087_01.fm

1.6.2 Cleaning Cup

1.6.2-1 Cleaning Cup - Check Gaskets

Machine Status	Mains Power OFF Air OFF Steam ON Water OFF
SPC Reference	2512938-0200

Check the gaskets (1) and (2). Change if necessary.

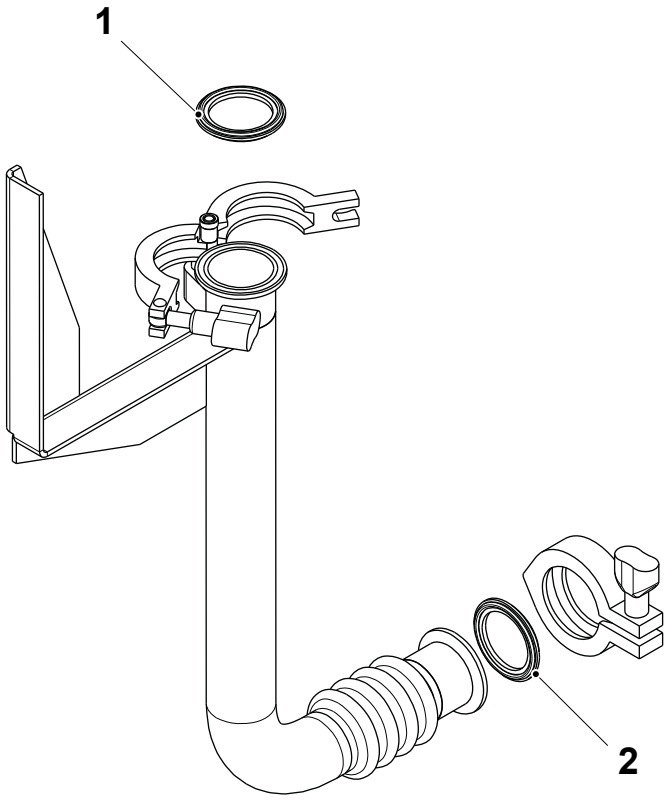

1 Gasket
2 Gasket

TechPub_2614345_0108 - 0101_3048088_01.fm

1.6.2-2 Cleaning Cup - Set Sensor

Machine Status	Mains Power OFF Air OFF Steam ON Water OFF
SPC Reference	2512938-0200

a) Fit the cleaning cup (1) onto the filling pipe (2).

b) Loosen the nuts (3) and set the distance **A** between the sensor (4) and the cleaning cup (1).

c) Tighten the nuts (3).

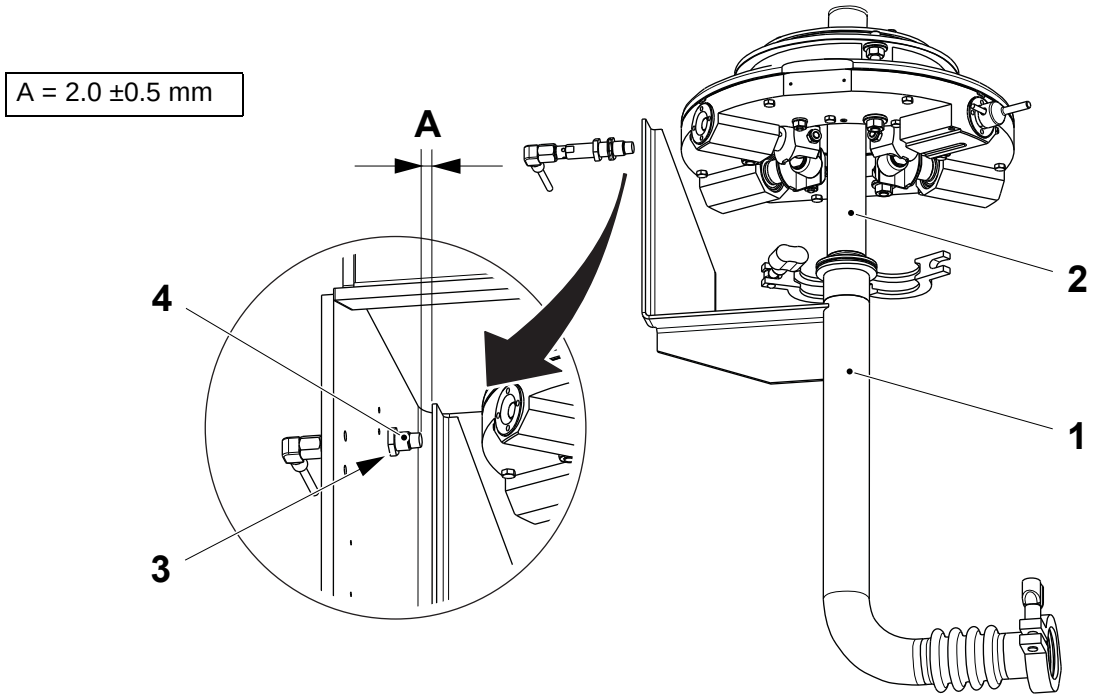

TechPub_2614345_0108 - 0101_3048088_01.fm

1.6.3 ICU

1.6.3-1 ICU - Check Leakages

Machine Status	CLEANING CIP
SPC Reference	2775100-0300

WARNING
Caustic soda and nitric acid.
Read the Safety Precautions.

(Cont'd)

TechPub_2614345_0108 - 0104_3048089_01.fm

(Cont'd)

Check that there are no leakages around the connections indicated by the arrows in the illustration. If necessary:

- loosen the clamps (1) and change the gaskets (2)
- change and tighten the hose clips (3).

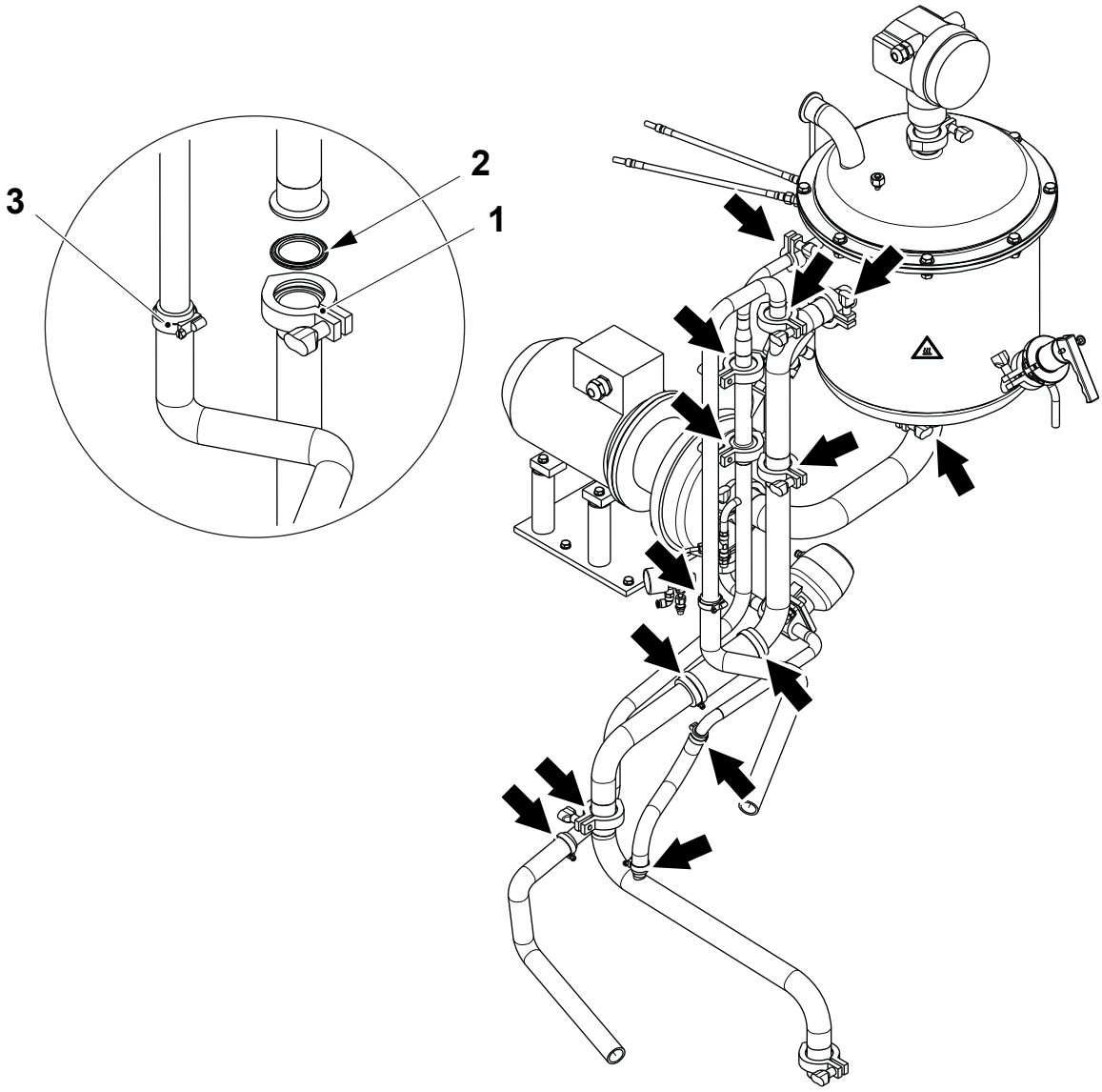

1 Clamp
2 Gasket
3 Hose clip

TechPub_2614345_0108 - 0104_3048089_01.fm

1.6.3-2 ICU - Check Pump

Machine Status	CLEANING CIP
SPC Reference	2775100-0300

WARNING

Risk of burns.

Never service the pump when it is hot.

WARNING

Caustic soda and nitric acid.

Read the Safety Precautions.

(Cont'd)

TechPub_2614345_0108 - 0104_3048089_01.fm

(Cont'd)

Check that there are no leakages:

- around the pump housing (1) and the connection indicated by the arrows; if necessary, loosen the clamps (2) and change the gasket (3).
- around the pneumatic valve (4); if necessary, remove the pneumatic valve (4) by the screws (5) and change the diaphragm (6).

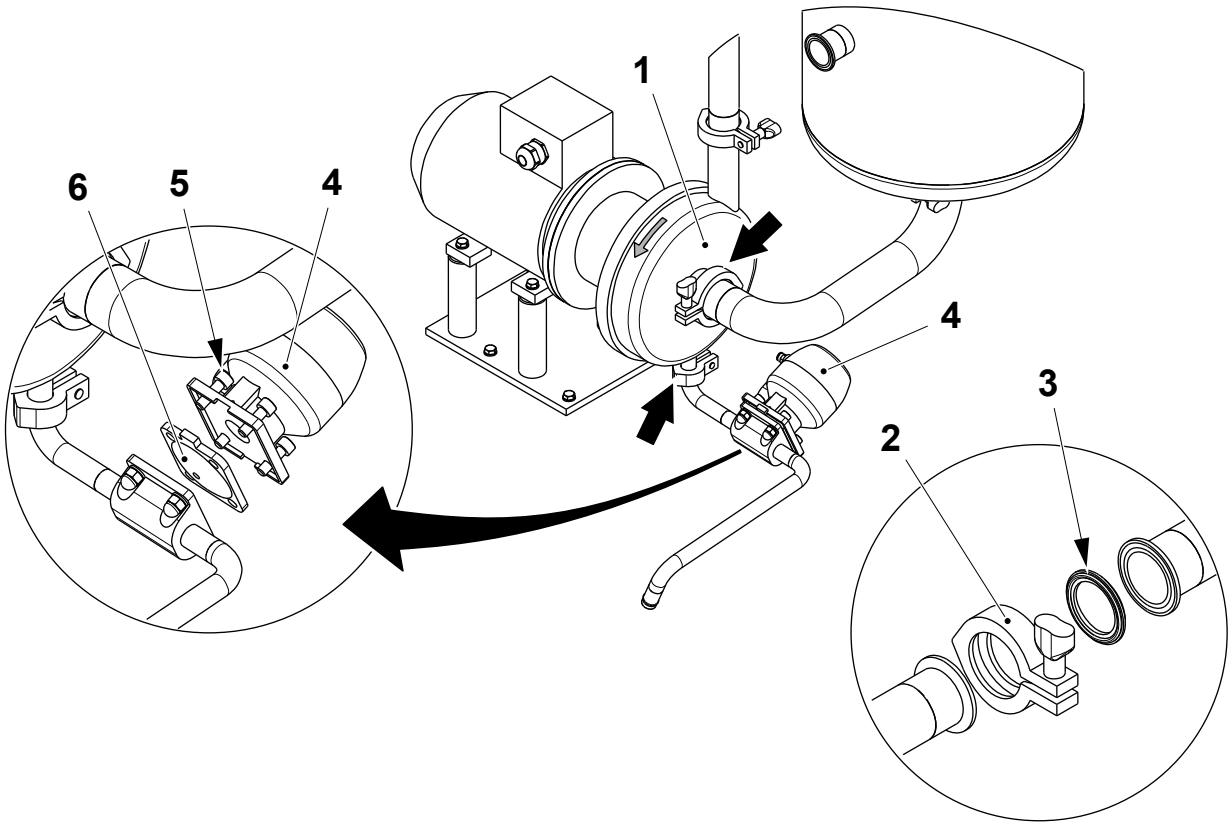

TechPub_2614345_0108 - 0104_3048089_01.fm

1 Pump housing
2 Clamp
3 Gasket
4 Pneumatic valve
5 Screw
6 Diaphragm

1.6.3-3 ICU - Change Pump Seals

Machine Status	Mains Power OFF Air OFF Steam ON Water OFF
Consumables	Silicone Grease TP No. 90296-0009
Special Equipment	Tools TP No. 6-962 90 3601 and 90602-7227
SPC Reference	2775100-0300

WARNING

Burn hazard.

Never service the pump when it is hot.

WARNING

Caustic soda and nitric acid.

Read the Safety Precautions.

a) Loosen the clamps indicated by the arrows.

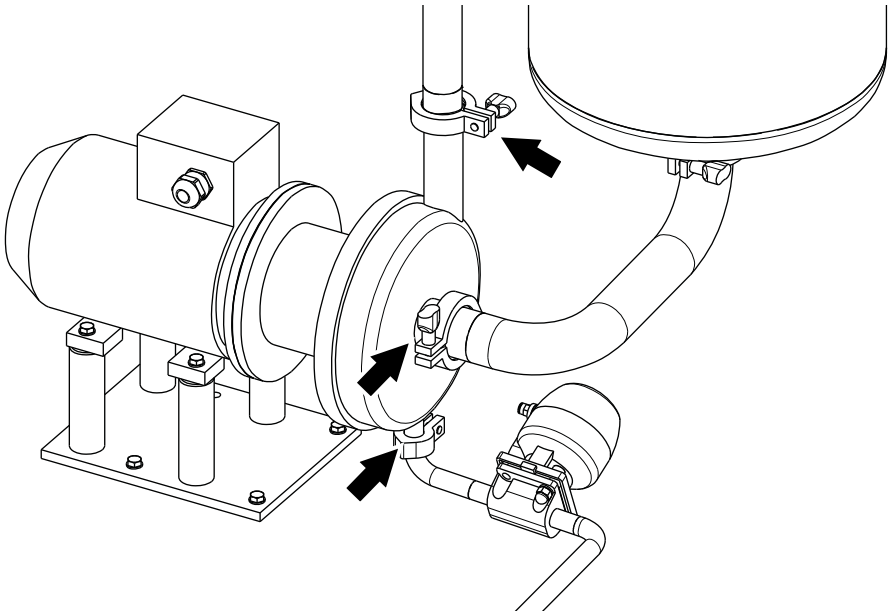

(Cont'd)

TechPub_2614345_0108 - 0104_3048089_01.fm

(Cont'd)

b) Remove the clamps (1) by the screws (2).

c) Remove the pump casing (3).

d) Remove the safety guards (4) by a screwdriver in the slots (5).

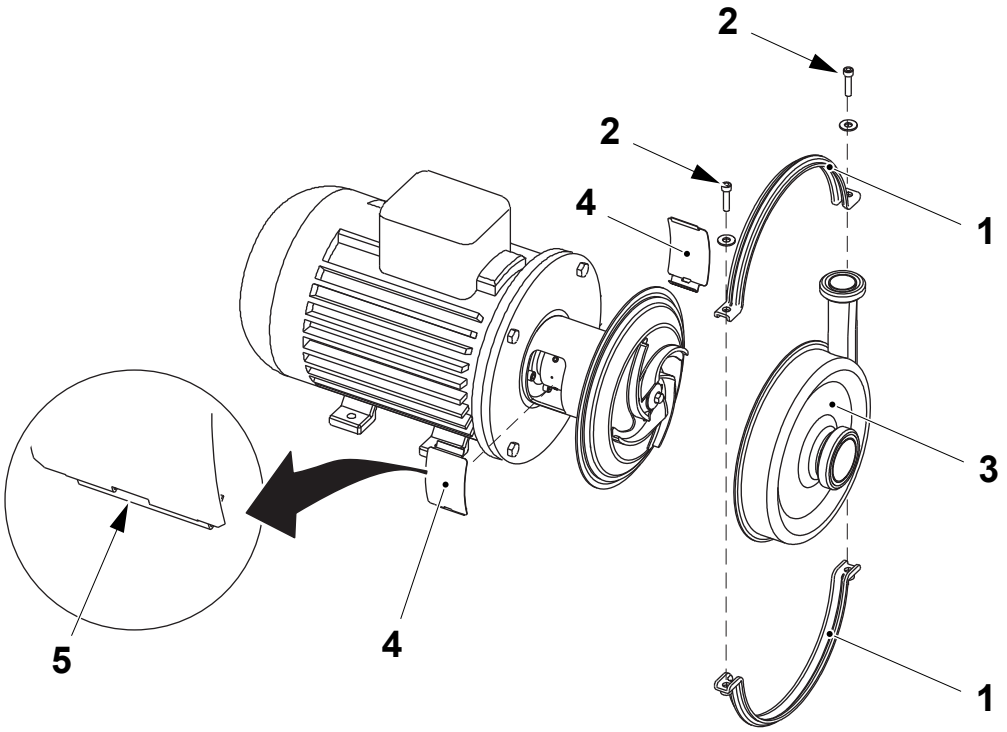

1 Clamp
2 Screw
3 Pump casing
4 Safety guard
5 Slot

TechPub_2614345_0108 - 0104_3048089_01.fm

(Cont'd)

(Cont'd)

e) Remove the screw (6).

f) Remove the impeller (7). If necessary, loosen the impeller (7) by tapping gently on the impeller vanes.

g) Remove the O-ring (8) from the impeller (7).

h) Remove the O-ring (9) from back plate (10).

i) Remove the nuts (11) and the back plate (10).

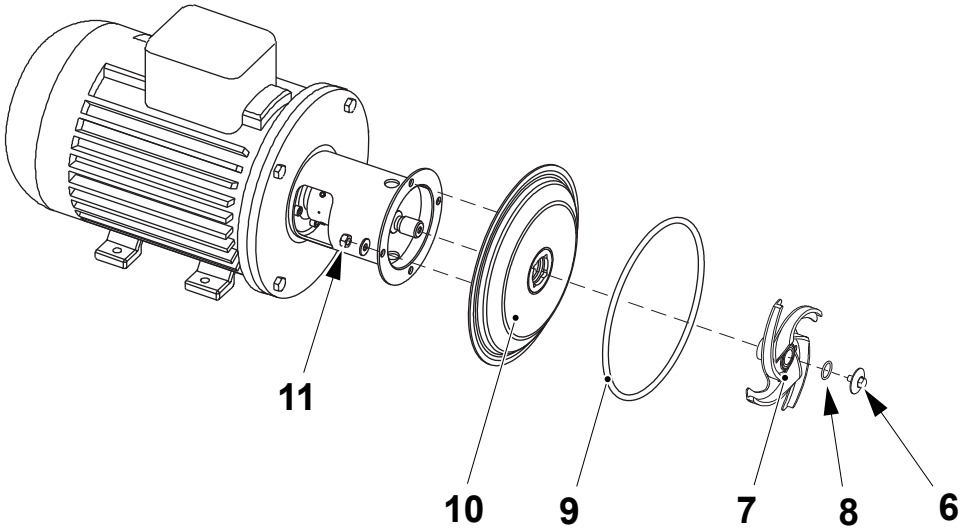

6 Screw
7 Impeller
8 O-ring
9 O-ring
10 Back plate
11 Nut

(Cont'd)

TechPub_2614345_0108 - 0104_3048089_01.fm

(Cont'd)

Note! The tools TP No. 6-962 90 3601 and 90602-7227 are provided with the pump.

j) Remove the stationary seal ring (12) by the tool (13).

k) Remove the O-ring (14) from the stationary seal ring (12).

l) Remove the complete shaft seal (15) from the stub shaft (16).

m) Remove the spring (17) and the rotating seal ring (18) from the drive ring (19). Change if necessary.

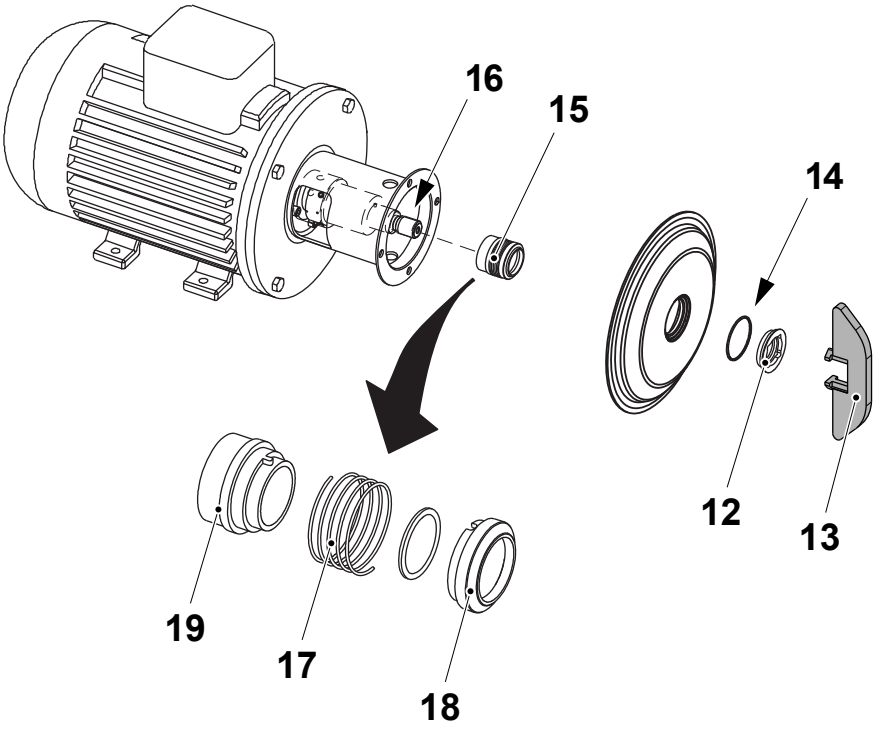

12 Stationary seal ring
13 Tool
14 O-ring
15 Complete shaft seal
16 Stub shaft
17 Spring
18 Rotating seal ring
19 Drive ring

(Cont'd)

TechPub_2614345_0108 - 0104_3048089_01.fm

(Cont'd)

CAUTION
Risk of damage to the equipment.
Ensure that the driver on the drive ring (19) enters the notch in the rotating seal ring (18).

Note! Make sure that the O-ring (20) has max. clearance from the sealing surface.

n) Lubricate the O-ring (20) and fit it in the rotating seal ring (18).

o) Fit the spring (17) on the rotating seal ring (18).

p) Fit the spring (17) and rotating seal ring (18) on the drive ring (19).

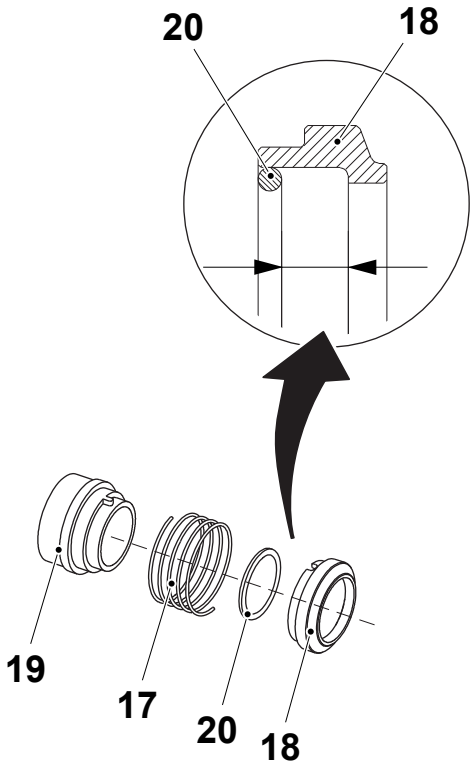

17 Spring
18 Rotating seal ring
19 Drive ring
20 O-ring

(Cont'd)

TechPub_2614345_0108 - 0104_3048089_01.fm

(Cont'd)

q) Fit the complete shaft seal (15) on stub shaft (16).

Note! Make sure that pin (21) on the stub shaft (16) enters the notch in drive ring (19).

r) Fit the O-ring (14) on stationary seal ring (12) and lubricate.

s) Screw the stationary seal ring (12) into back plate (10) with the tool (13).

CAUTION
Risk of damage to the equipment
Only tighten by hand to avoid deforming the stationary seal ring (12).

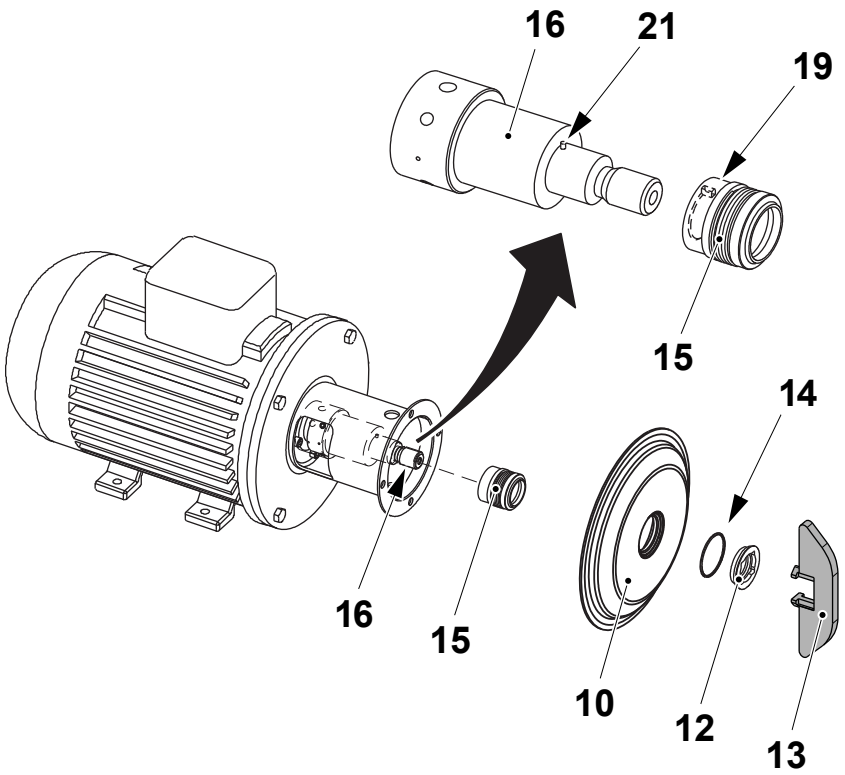

10 Back plate
12 Stationary seal ring
13 Tool
14 O-ring
15 Complete shaft seal
16 Stub shaft
19 Drive ring
21 Pin

(Cont'd)

TechPub_2614345_0108 - 0104_3048089_01.fm

(Cont'd)

t) Clean the sealing surfaces with contact cleaner before fitting the back plate (10).

u) Carefully guide the back plate (10) onto the adaptor (22).

v) Fit the washers and the nuts (11).

w) Lubricate the O-ring (9) and slide it onto the back plate (10).

x) Lubricate the O-ring (8) and fit it in impeller (7).

y) Lubricate the impeller hub with silicone grease or oil.

z) Fit the impeller (7) onto the stub shaft (16) by the screw (6).

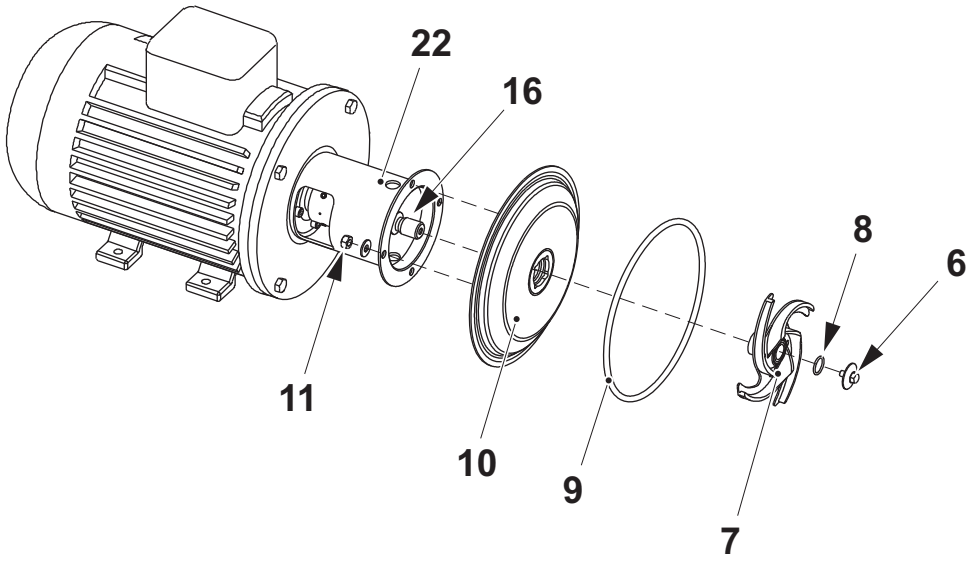

6 Screw
7 Impeller
8 O-ring
9 O-ring
10 Back plate
11 Nut
16 Stub shaft
22 Adaptor

(Cont'd)

TechPub_2614345_0108 - 0104_3048089_01.fm

(Cont'd)

aa) Check that the clearance between the impeller (7) and back plate (10) is 1 mm by using the tool (23) supplied. If not, set the pump shaft, see 1.6.3-4 ICU - Set Pump Shaft.

ab) Assemble in the reverse order from step d).

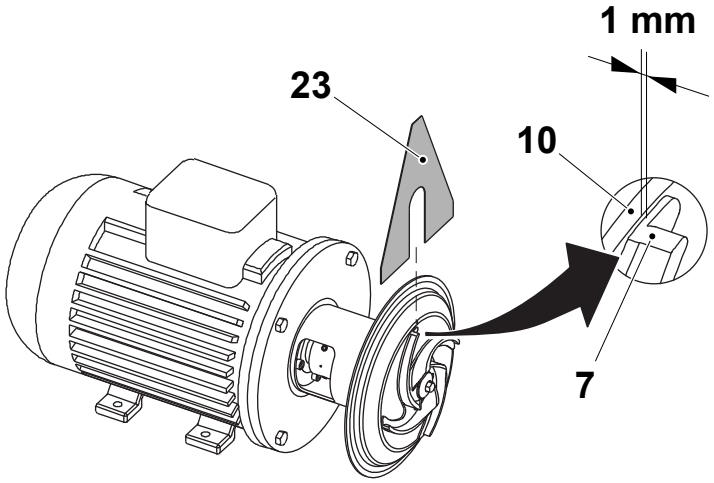

7 Impeller
10 Back plate
23 Tool

TechPub_2614345_0108 - 0104_3048089_01.fm

1.6.3-4 ICU - Set Pump Shaft

Machine Status	Mains Power OFF Air OFF Steam ON Water OFF
Special Equipment	Tool TP No. 90602-7227
SPC Reference	2775100-0300

WARNING
Burn hazard.
Never service the pump when it is hot.

WARNING
Caustic soda and nitric acid.
Read the Safety Precautions.

a) Remove the pump casing, the impeller and the back plate, see 1.6.3-3 ICU - Change Pump Seals, steps a) to l).

b) Loosen the screws (1).

c) Pull off stub shaft (2). Change if necessary.

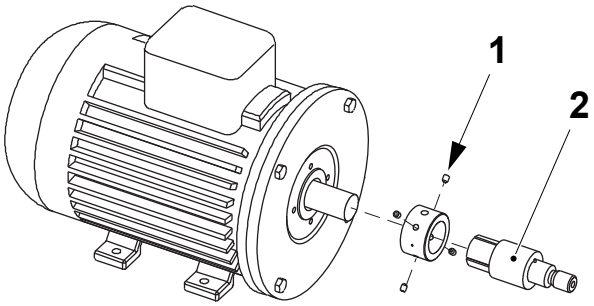

1 Screw
2 Stub shaft

(Cont'd)

TechPub_2614345_0108 - 0104_3048089_01.fm

(Cont'd)

d) Push the stub shaft (2) onto the motor shaft.

e) Check that the clearance between the end of the stub shaft (2) and the motor flange (3) is in the range of the distance **A**.

f) Tighten the screws (1) lightly and evenly.

g) Ensure that the stub shaft (2) can be moved on the motor shaft.

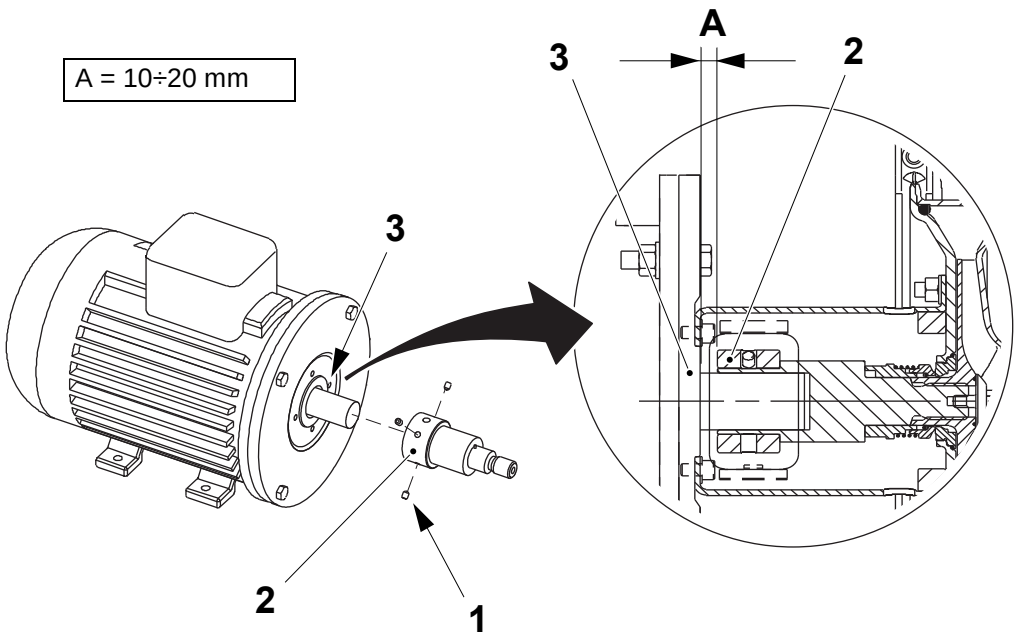

1 Screw
2 Stub shaft
3 Motor flange

TechPub_2614345_0108 - 0104_3048089_01.fm

(Cont'd)

(Cont'd)

Note! The tool TP No. 90602-7227 is provided with the pump.

h) Fit the back plate (4) by the nuts (5).

i) Fit the impeller (6) on the stub shaft (2) by the screw (7).

j) Check that the clearance between the impeller (6) and back plate (4) is 1 mm by using the tool (8) supplied.

k) Tighten screws (1) evenly to 18 Nm.

l) Fit back the pump casing, see 1.6.3-3 ICU - Change Pump Seals.

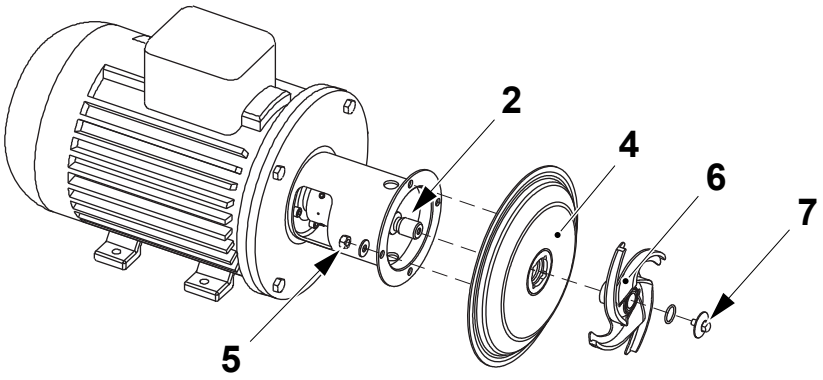

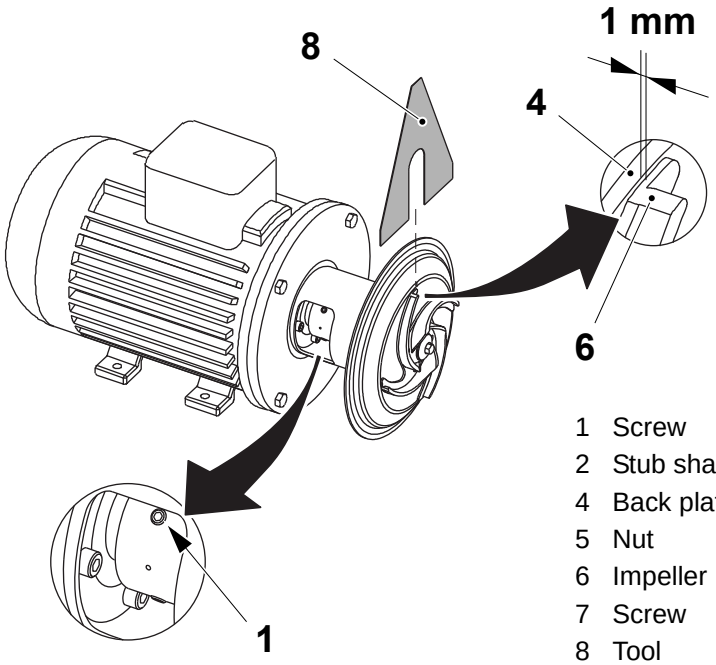

1 Screw
2 Stub shaft
4 Back plate
5 Nut
6 Impeller
7 Screw
8 Tool

TechPub_2614345_0108 - 0104_3048089_01.fm

1.6.3-5 ICU - Sample Cleaning Liquid

Machine Status	CLEANING CIP
SPC Reference	2775100-0300

WARNING
Caustic soda and nitric acid.
Read the Safety Precautions.

Note! The sampling of the cleaning liquid must be done by a skilled or instructed person using the key for the inspection door (1). The key to the lock must be removed by the technician and retained in his possession until all work is completed.

a) Open the inspection door (1) by the key (2).

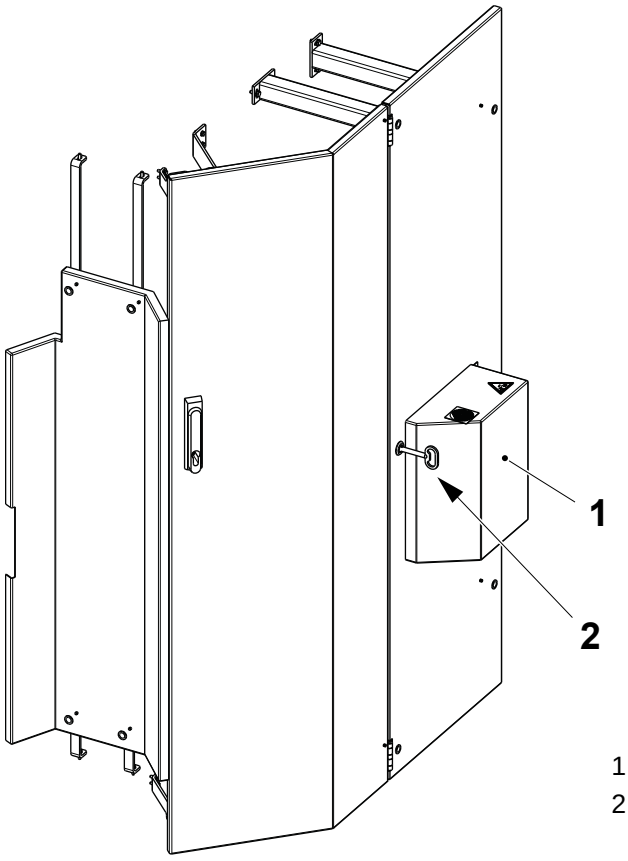

1 Inspection door
2 Key

(Cont'd)

TechPub_2614345_0108 - 0104_3048089_01.fm

(Cont'd)

b) Open the valve (3) and sample the cleaning liquid coming out from the pipe (4).

c) Close the valve (3).

d) Close and lock the door (1).

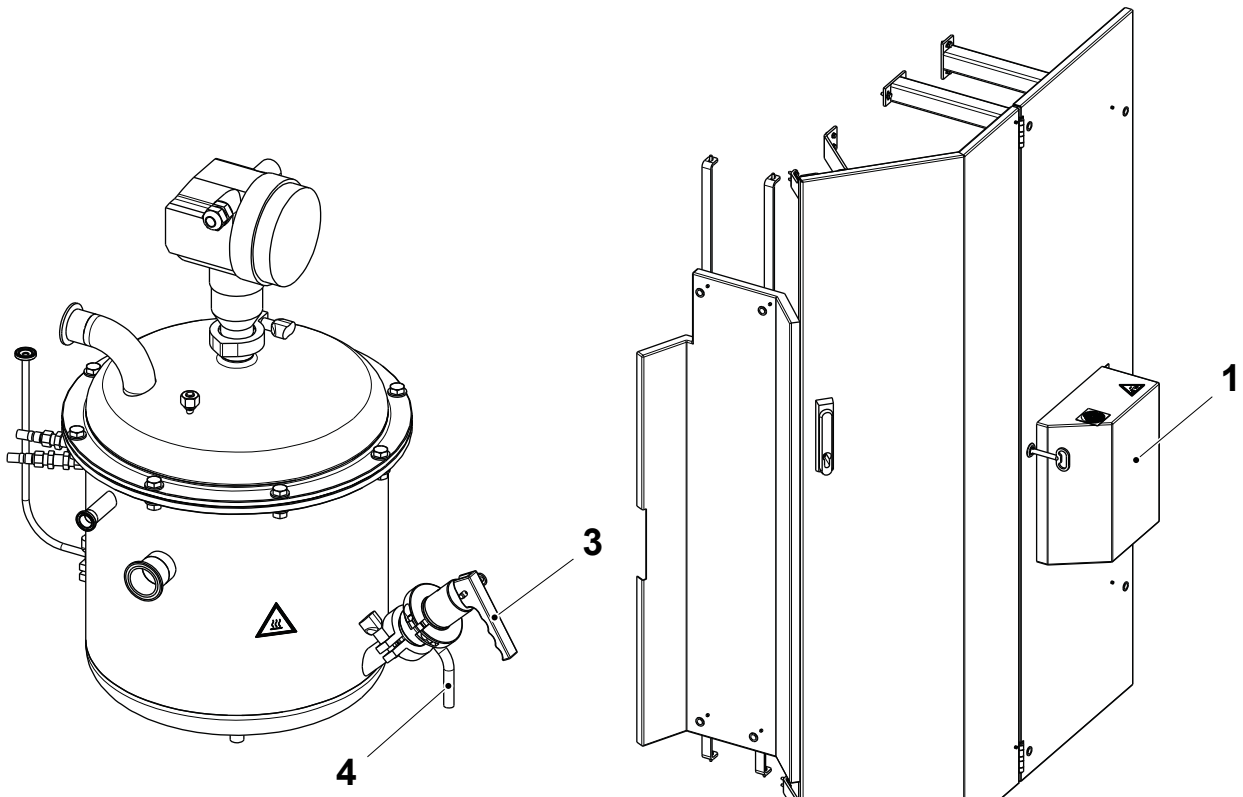

1 Door
3 Valve
4 Pipe

TechPub_2614345_0108 - 0104_3048089_01.fm

1.6.4 Pipe Work

1.6.4-1 Pipe Work - Check

Machine Status	CLEANING CIP
SPC Reference	2833350-0200

WARNING
Caustic soda and nitric acid.
Read the Safety Precautions.

Check that there are no leakages at the clamps (1) of the change over valve.

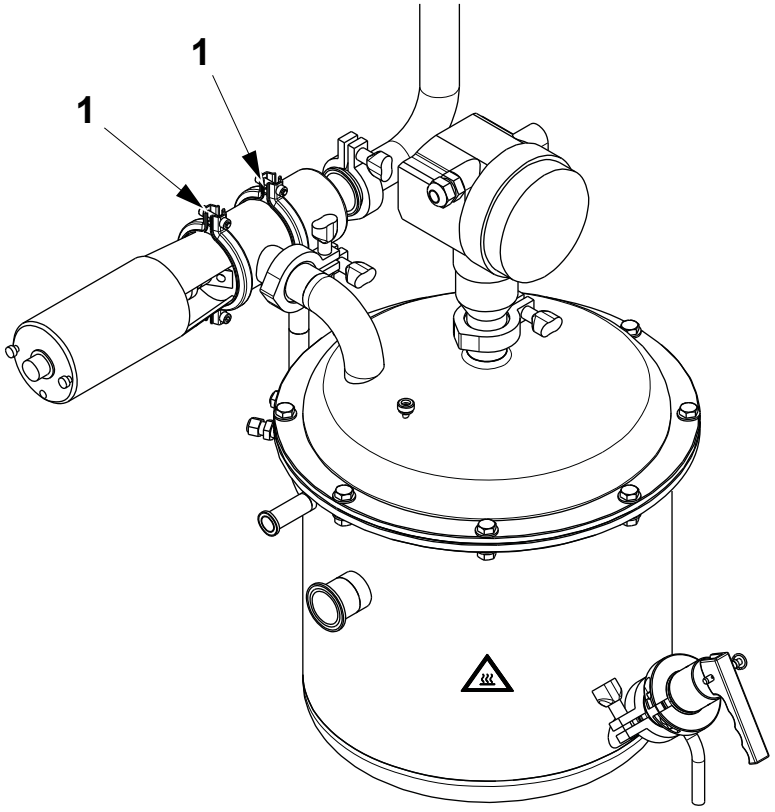

1 Clamp

(Cont'd)

TechPub_2614345_0108 - 0102_3048090_01.fm

(Cont'd)

Check that there are no leakages around the connections indicated by the arrows. Loosen the clamps (2) and change the gaskets (3) if necessary.

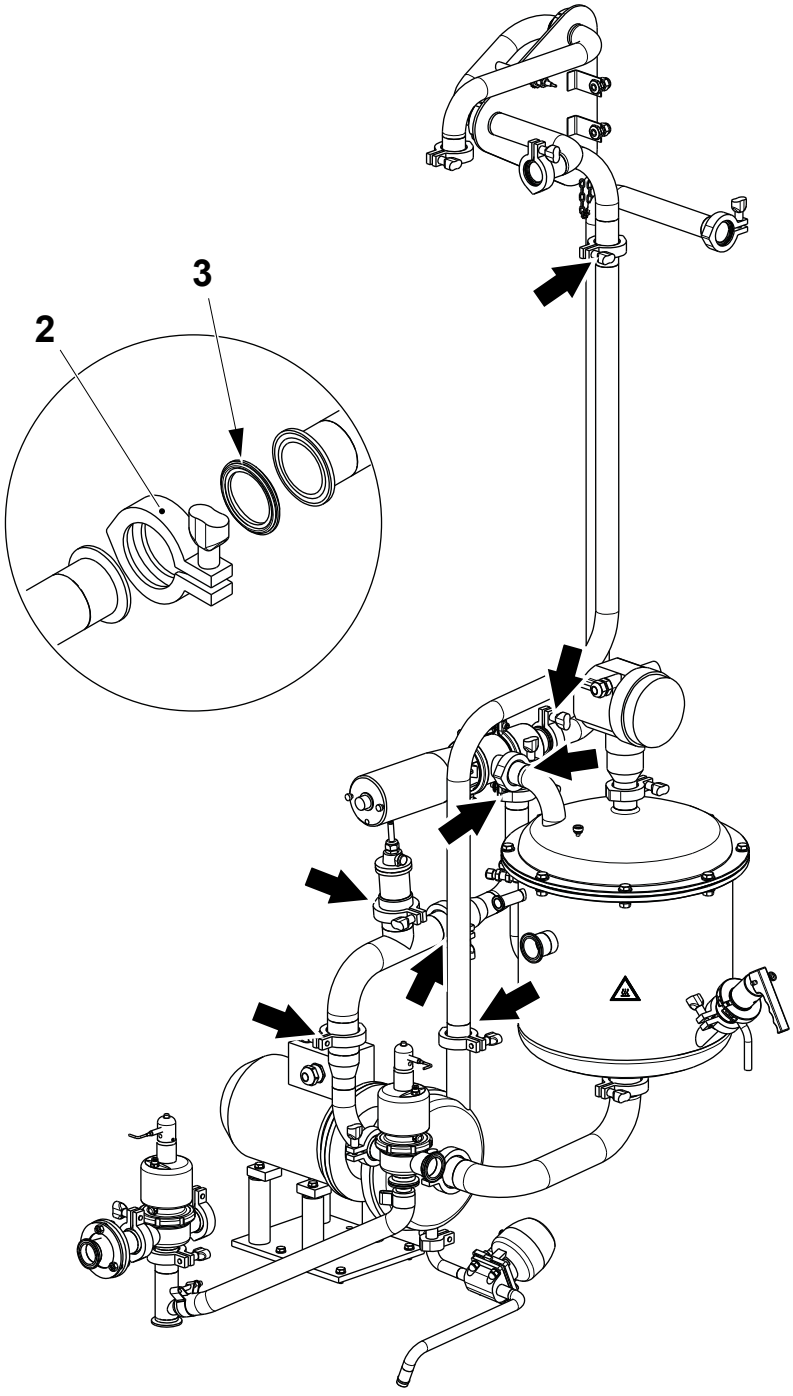

2 Clamp
3 Gasket

TechPub_2614345_0108 - 0102_3048090_01.fm

1.6.4-2 Pipe Work - Check Conductivity Sensor

Machine Status	Mains Power OFF Air OFF Steam ON Water OFF
SPC Reference	2833350-0200

WARNING

Burn hazard.

The components around the probe may be hot. Use protective gloves when removing the sensor.

WARNING

Caustic soda and nitric acid.

Read the Safety Precautions.

(Cont'd)

TechPub_2614345_0108 - 0102_3048090_01.fm

(Cont'd)

Note! Make sure that the probe (3) is fitted with the mark (5) oriented in the direction of the flow as indicated in the illustration. The flow must pass through the hole (6).

a) Remove the clamp (1) from the pipe (2) and the probe (3).

b) Clean the probe (3) with a non-abrasive brush.

c) Check the gasket (4). Change the gasket (4) if it is damaged or worn.

d) Assemble in the reverse order.

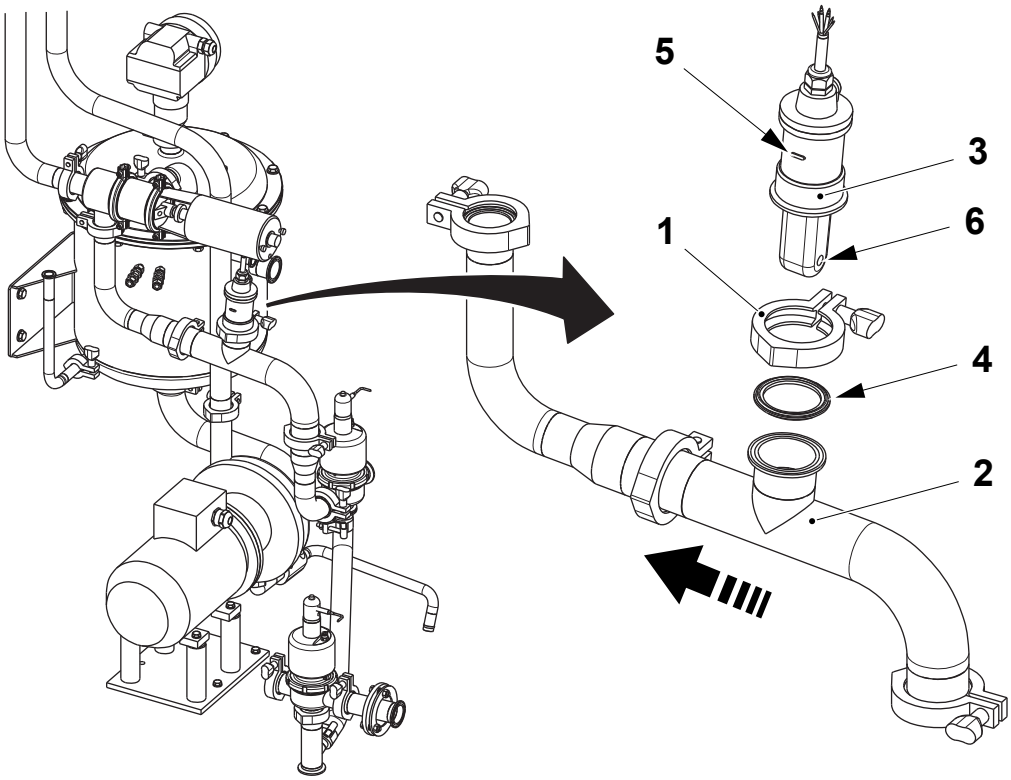

1 Clamp
2 Pipe
3 Probe
4 Gasket
5 Arrow
6 Hole

TechPub_2614345_0108 - 0102_3048090_01.fm

1.6.5 Draining

1.6.5-1 Draining - Check

Machine Status	CLEANING CIP
SPC Reference	2539448-0400

WARNING
Caustic soda and nitric acid.
Read the Safety Precautions.

Check that there are no leakages around the connections indicated by the arrows. Loosen the clamps (1) and change the gaskets (2) if necessary.

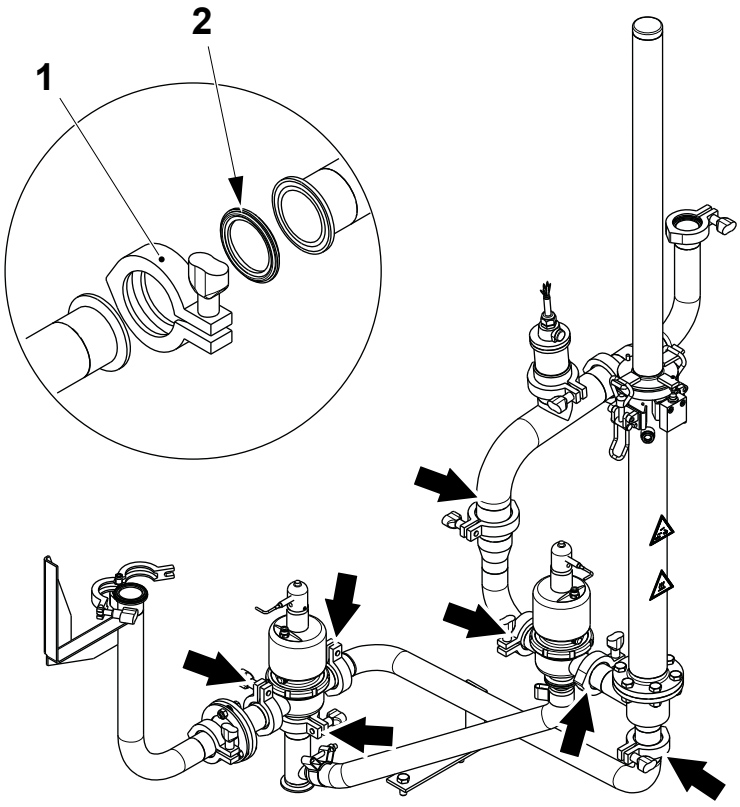

1 Clamp
2 Gasket

TechPub_2614345_0107 - 0102_3048091_01.fm

1.6.5-2 Draining - Change 3-Way Valve Diaphragm

Machine Status	Mains Power OFF Air OFF Steam ON Water OFF
SPC Reference	2539448-0400

WARNING

Caustic soda and nitric acid.
Read the Safety Precautions.

Note! The valves (1) are normally open valves. Use a spray gun into the air connection (2) to pressurize the actuators (3).

a) De-pressurize the actuator (3) of the valve (1) to reach the OPEN position.

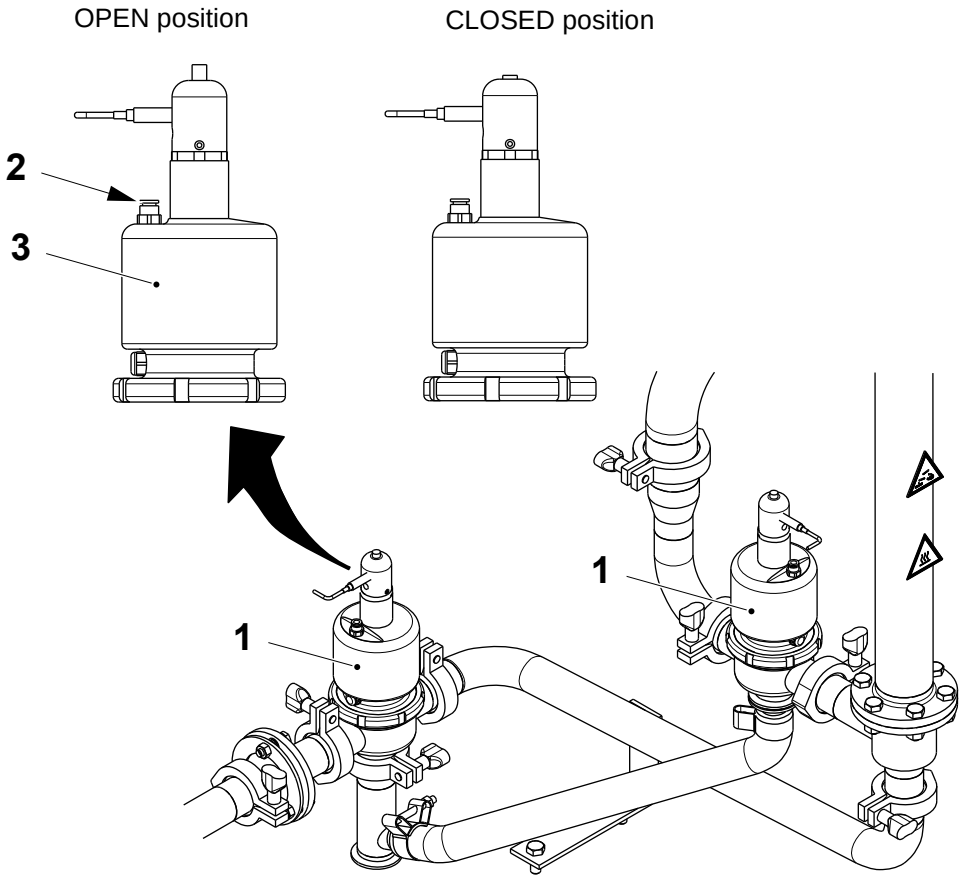

1 Valve
2 Connection
3 Actuator

(Cont'd)

TechPub_2614345_0107 - 0102_3048091_01.fm

(Cont'd)

b) Unscrew the locking ring (4) and remove the actuator (3).

c) Pressurize so that the actuator (3) reaches the CLOSED position.

d) Unscrew the diaphragm (5) and check for wear or damage. Change if necessary.

e) De-pressurize the actuator (3) to reach the OPEN position.

f) Place the actuator (3) on to the valve body (6). Tighten the locking ring (4) by hand and then seal by turning a half turn.

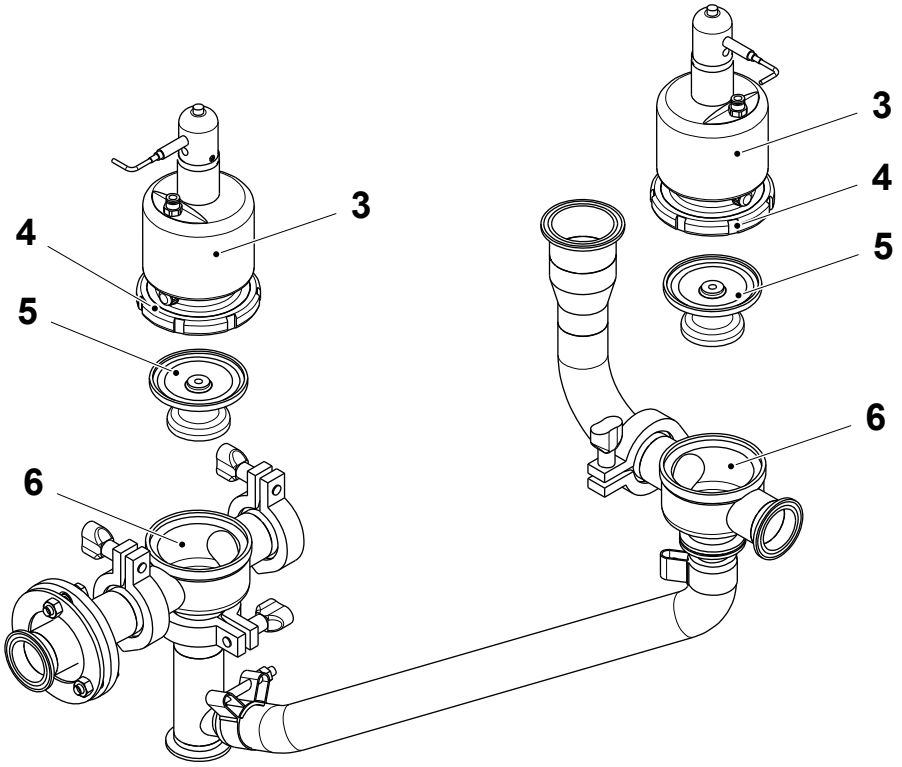

3 Actuator
4 Locking ring
5 Diaphragm
6 Valve body

TechPub_2614345_0107 - 0102_3048091_01.fm

1.6.5-3 Draining - Set 3-Way Valve Sensor

Machine Status	Mains Power ON Air OFF Steam ON Water OFF
SPC Reference	2539448-0400

a) Loosen the nut (1) and remove the holder (2).

b) Screw the sensor (3) until it touches the piston inside the holder (2) and then loosen it by a turn.

c) Check that the LED on the sensor (3) is lit.

d) Push manually the piston (4) and check that the LED on the sensor (3) switches off when the piston (4) is pushed into the holder and switches on when it is released.

e) Fit the holder (2) by the nut (1).

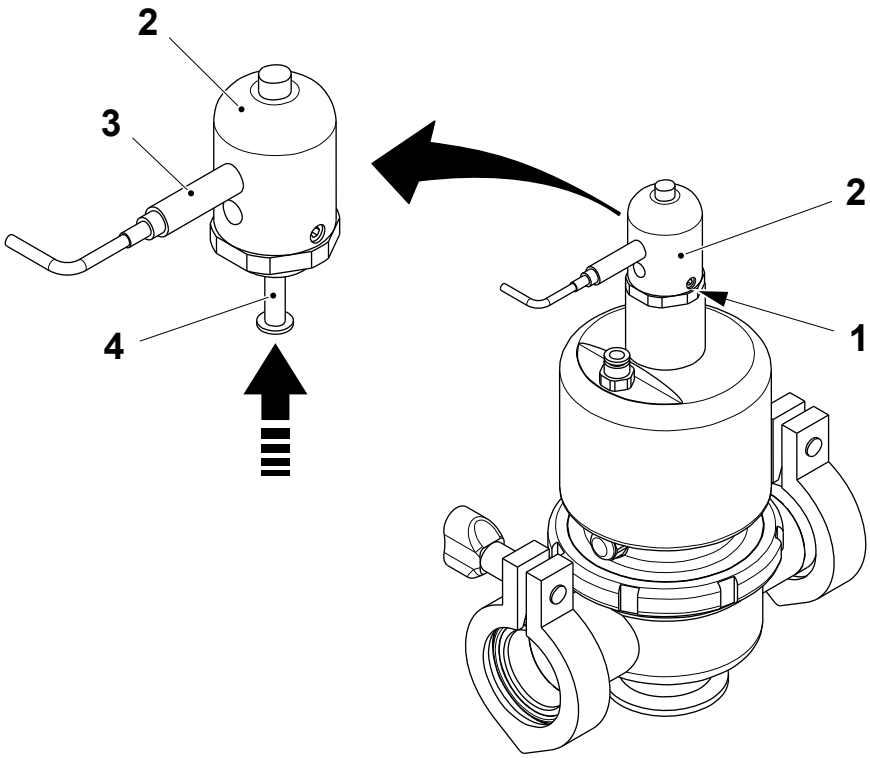

1 Nut
2 Holder
3 Sensor
4 Piston

TechPub_2614345_0107 - 0102_3048091_01.fm

1.6.6 Cleaning Section

1.6.6-1 Cleaning Section- Change Gaskets

Machine Status	Mains Power OFF Air OFF Steam ON Water OFF
SPC Reference	2512900-0600

WARNING

Caustic soda.

Some residues of caustic soda could be remained in the cleaning pipes.Follow the Safety Precautions.

(Cont'd)

TechPub_2614345_0107 - 0101_3048092_01.fm

(Cont'd)

Upper Gasket

a) Open the locking device (1) and remove the cleaning pipe lid (2).

b) Change the gasket (2).

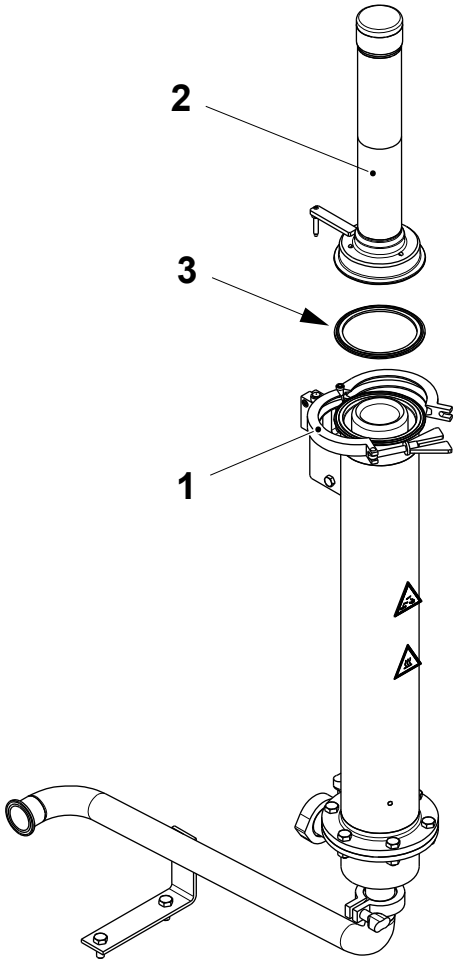

1 Locking device
2 Cleaning pipe lid
3 Gasket

(Cont'd)

TechPub_2614345_0107 - 0101_3048092_01.fm

(Cont'd)

Lower Gasket

a) Open the locking device (1) and remove the cleaning pipe lid (2).

b) Disconnect the proximity sensor connector (3) and the micro switch (4).

c) Remove the screws (5).

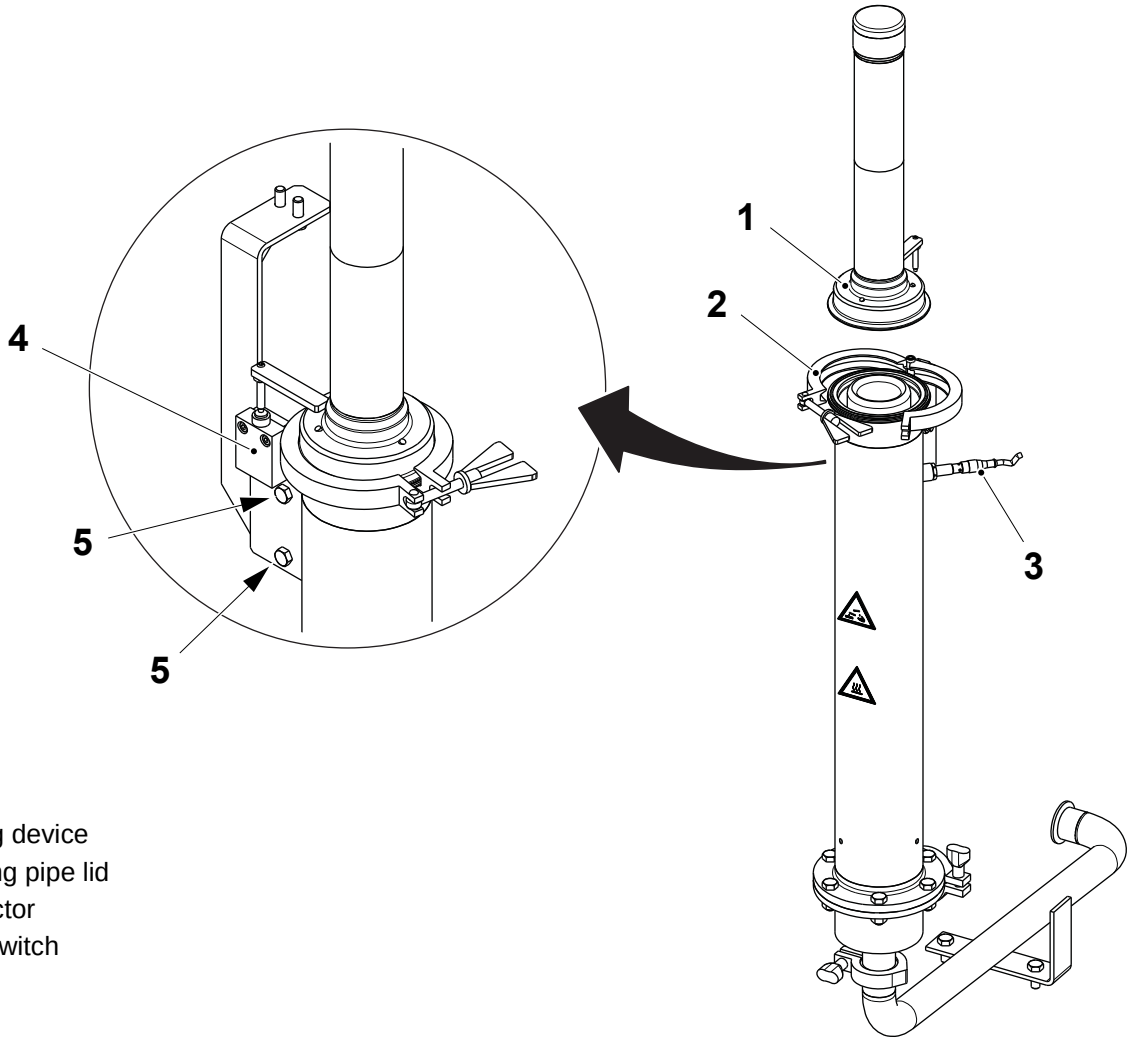

1 Locking device
2 Cleaning pipe lid
3 Connector
4 Micro switch
5 Screw

(Cont'd)

TechPub_2614345_0107 - 0101_3048092_01.fm

(Cont'd)

CAUTION
Risk of damage to the equipment.
When removing the cleaning pipe (7) pay attention to not damage the bucket (8).

d) Remove the screws (6) and slip off the cleaning pipe (7).

e) Change the O-ring (9).

f) Assemble in the reverse order.

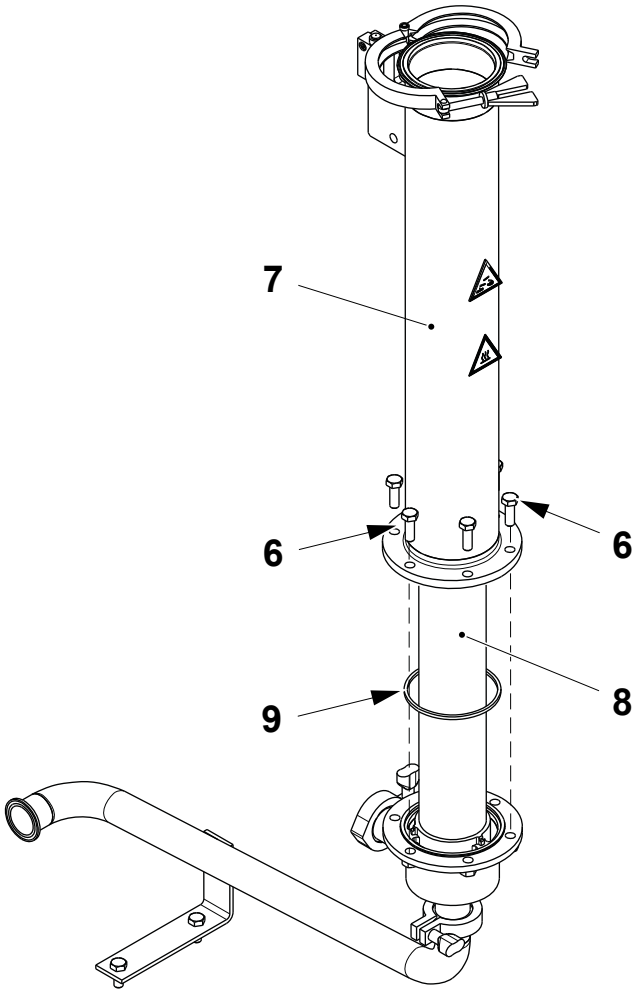

6 Screw
7 Cleaning pipe
8 Bucket
9 O-ring

TechPub_2614345_0107 - 0101_3048092_01.fm

1.6.6-2 Cleaning Section - Set

Machine Status	Mains Power OFF Air OFF Steam ON Water OFF
SPC Reference	2512900-0600

Bucket Limit Switch

a) Loosen the nut (1) and screw the screw (2) in or out so the actuator (3) of the limit switch (4) is depressed to within 2-3 mm of its end position when the cleaning pipe lid (5) is fitted.

b) Tighten the nut (1).

c) Open the locking device (6) and check that the cleaning system alarm immediately appears on the TPOP.

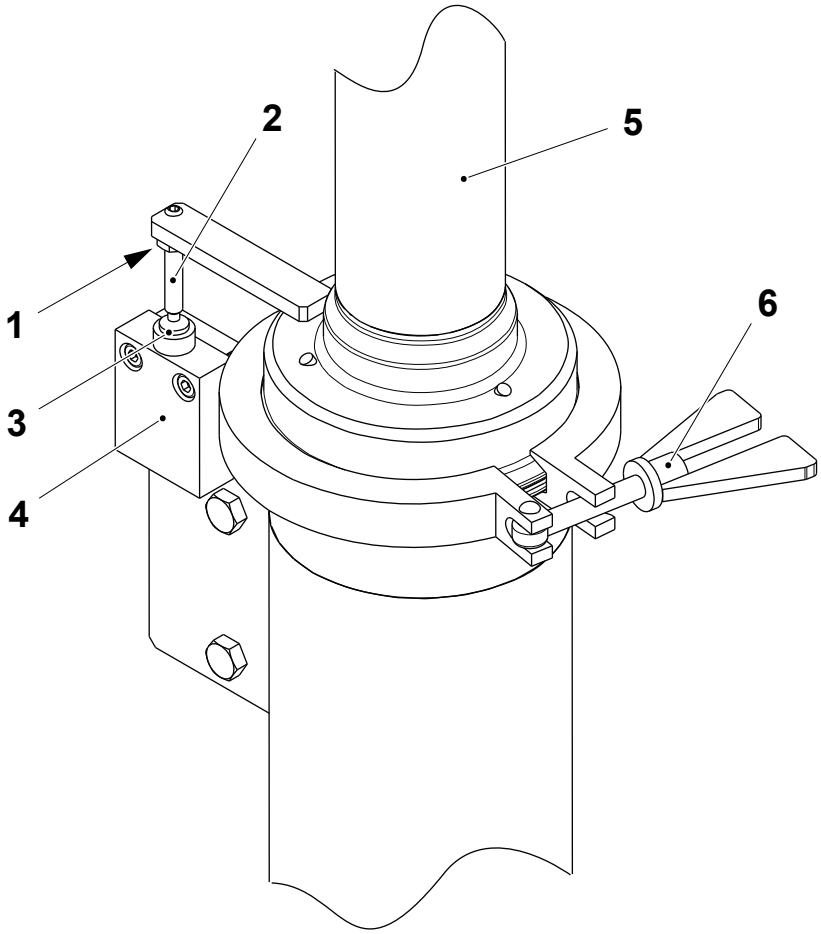

1 Nut
2 Screw
3 Actuator
4 Limit switch
5 Cleaning pipe lid
6 Clamp

(Cont'd)

TechPub_2614345_0107 - 0101_3048092_01.fm

(Cont'd)

Cleaning Pipe Proximity Switch

a) Remove the cleaning pipe lid (1) by opening the locking device (2).

b) Disconnect the proximity switch connector (3).

c) Screw the nut (4) onto the sensor.

d) Insert the proximity switch (5) carefully into the boss (6) until the end of the proximity switch is aligned with the wall of the cleaning pipe (7). If the proximity switch protrudes beyond the wall of the cleaning pipe (7) it may be damaged when the filling pipe is placed in the bucket.

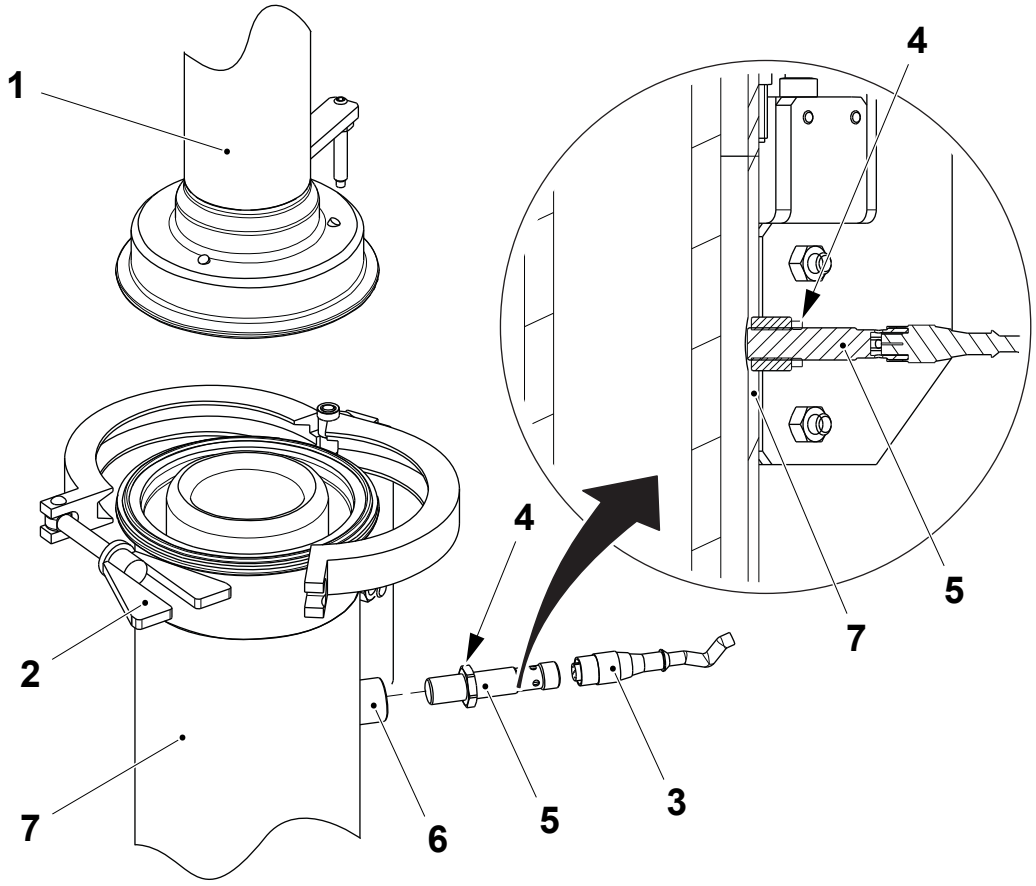

1 Cleaning pipe lid
2 Locking device
3 Connector
4 Nut
5 Proximity switch
6 Boss
7 Cleaning pipe

(Cont'd)

TechPub_2614345_0107 - 0101_3048092_01.fm

(Cont'd)

e) Tighten the nut (4) and connect the proximity switch connector (3).

f) Put the lower filling pipe in to the cleaning pipe (7) and rotate it manually to check that the proximity switch (5) is always activated.

g) Fit back the cleaning pipe lid (1).

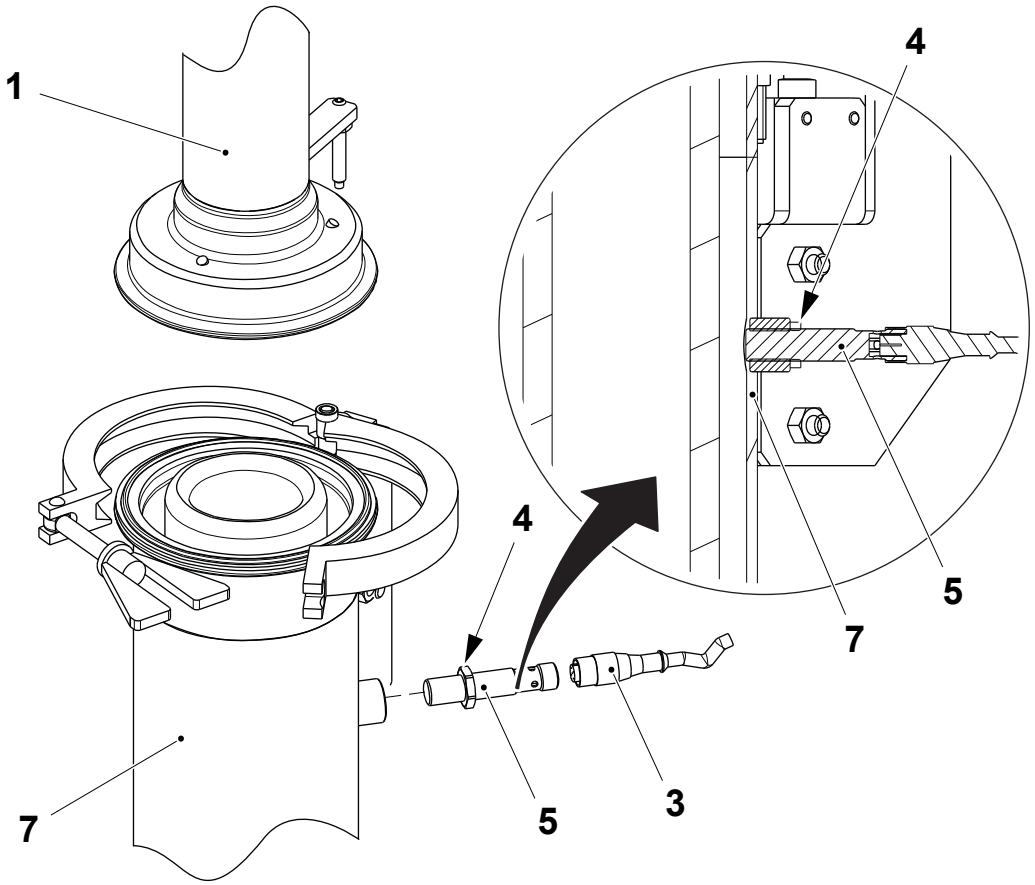

1 Cleaning pipe lid
3 Connector
4 Nut
5 Proximity switch
7 Cleaning pipe

TechPub_2614345_0107 - 0101_3048092_01.fm

1.7 Hydrogen Peroxide

SPC Reference	2541680-0300

1.7-1 Hydrogen Peroxide - Check Leaks

Machine Status	HEAT STERILISATION
SPC Reference	2541680-0300

WARNING
Hydrogen Peroxide.
Follow the Safety Precautions.

(Cont'd)

TechPub_2614345_0108 - 0102_3048093_01.fm

(Cont'd)

Check the connections for leaks at the following points:

- the peroxide pipes (1)
- the bath (2)
- the heat exchanger (3).

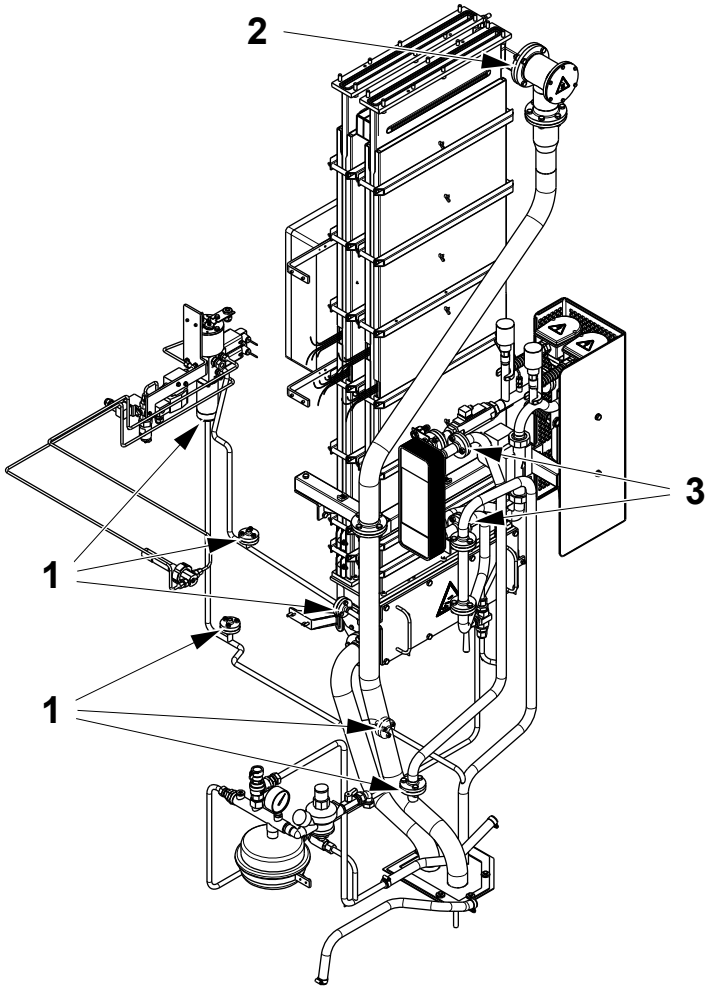

1 Peroxide pipes
2 Bath
3 Heat exchanger

TechPub_2614345_0108 - 0102_3048093_01.fm

1.7.1 Heating Unit

1.7.1-1 Heating Unit - Change Heating Elements

Machine Status	Mains Power OFF Air OFF Steam ON Water OFF
Special Equipment	Socket Wrench TP No. 90206-0330
Consumables	Thread Sealant TP No. 90157-0034
SPC Reference	1558495-0300

WARNING

Burn hazard.

The hydrogen peroxide system and adjacent components may be hot. Wear heat-resistant protective gloves.

a) Drain the water system by closing the shut off valve (1) and open the drain valve (2).

b) Remove the connection boxes (3).

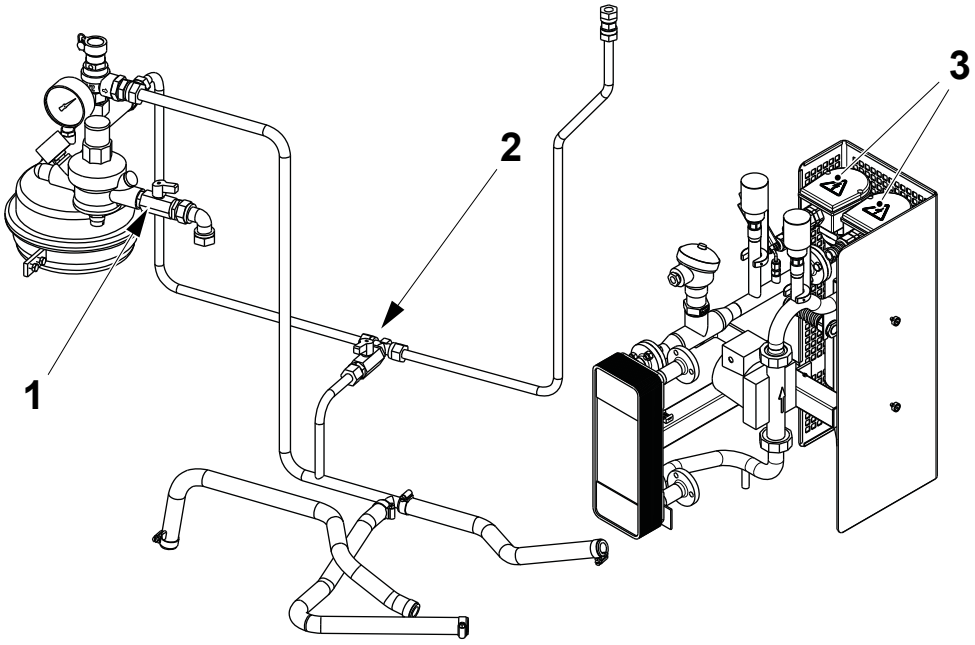

1 Shut off valve
2 Drain valve
3 Connection box

(Cont'd)

TechPub_2614345_0108 - 0102_3048093_01.fm

(Cont'd)

CAUTION
Risk of damage to the equipment.
Do not swap the position or the cables of the heating elements. The heating element (4) is marked U70R0340 and is connected with the cable (8) marked U70W0340, the heating element (5) is marked U70R0350 and is connected with the cable (9) marked U70W0350. See the EM circuit diagram.

c) Mark and remove all the electrical connections.

d) Remove the heating elements (4) and (5) with the aid of the tool (6).

e) Change the heating elements (4) and (5). Coat the threads (7) of the new heating elements with thread sealant.

f) Assemble in the reverse order. Refill the water circuit, see 1.7.2-2 Pressure Unit - Fill.

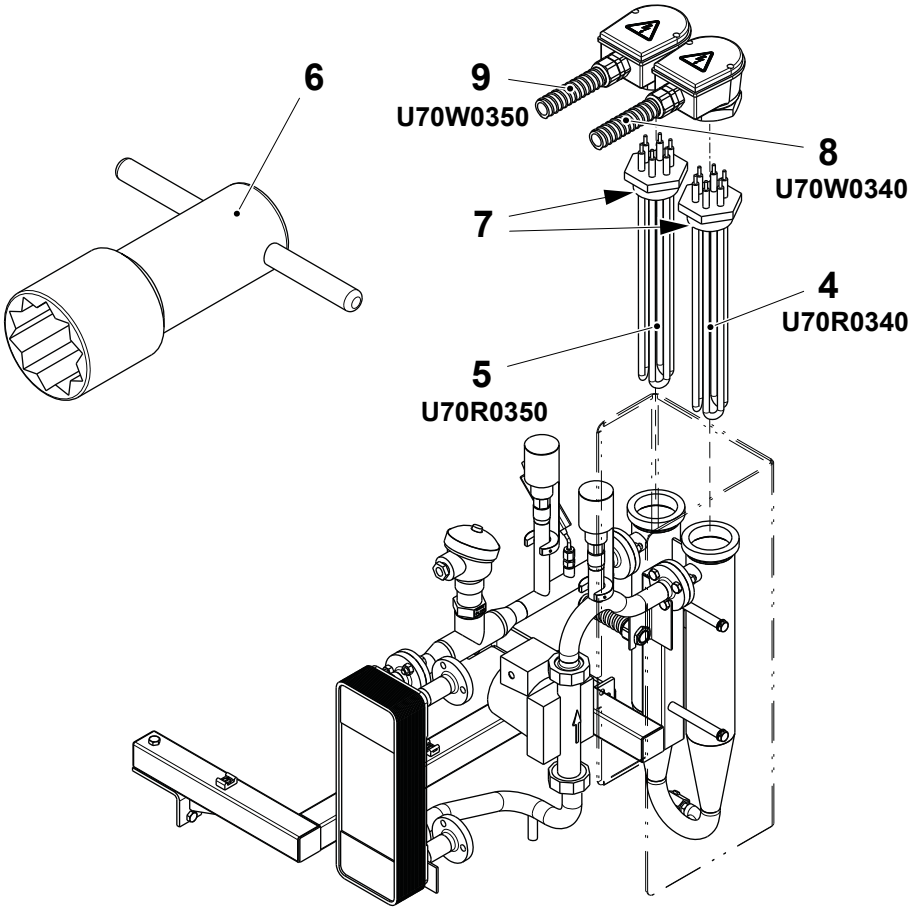

4 Heating element
5 Heating element
6 Tool
7 Thread
8 Cable
9 Cable

TechPub_2614345_0108 - 0102_3048093_01.fm

1.7.1-2 Heating Unit - Change Heat Exchanger

Machine Status	Mains Power OFF Air OFF Steam ON Water OFF
SPC Reference	1558495-0300

WARNING

Burn hazard.

The hydrogen peroxide system and adjacent components may be hot. Wear heat-resistant protective gloves.

a) Close the shut off valve (1).

b) Drain the water system by opening the drain valve (2).

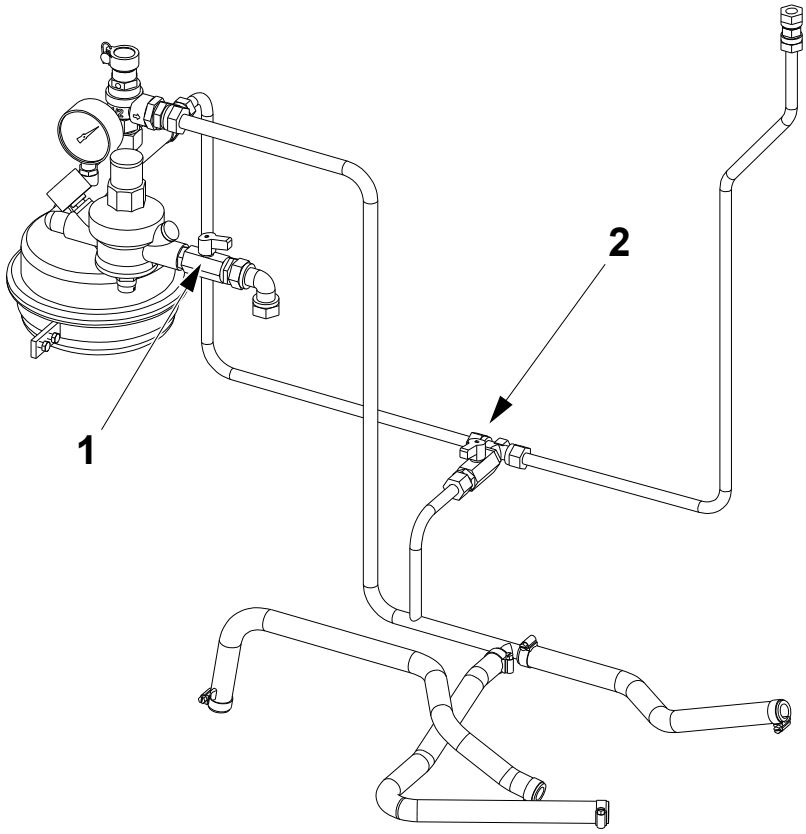

1 Shut off valve
2 Drain valve

(Cont'd)

TechPub_2614345_0108 - 0102_3048093_01.fm

(Cont'd)

c) Loosen the flanges (3) on the heat exchanger and remove it.

d) Change the heat exchanger, ensuring that the flanges (3) are sealed with new gaskets.

e) Close the drain valve (2) and open the shut off valve (1), see 1.7.2-2 Pressure Unit - Fill.

f) Check for leaks, see 1.7.2-1 Pressure Unit - Check Leaks.

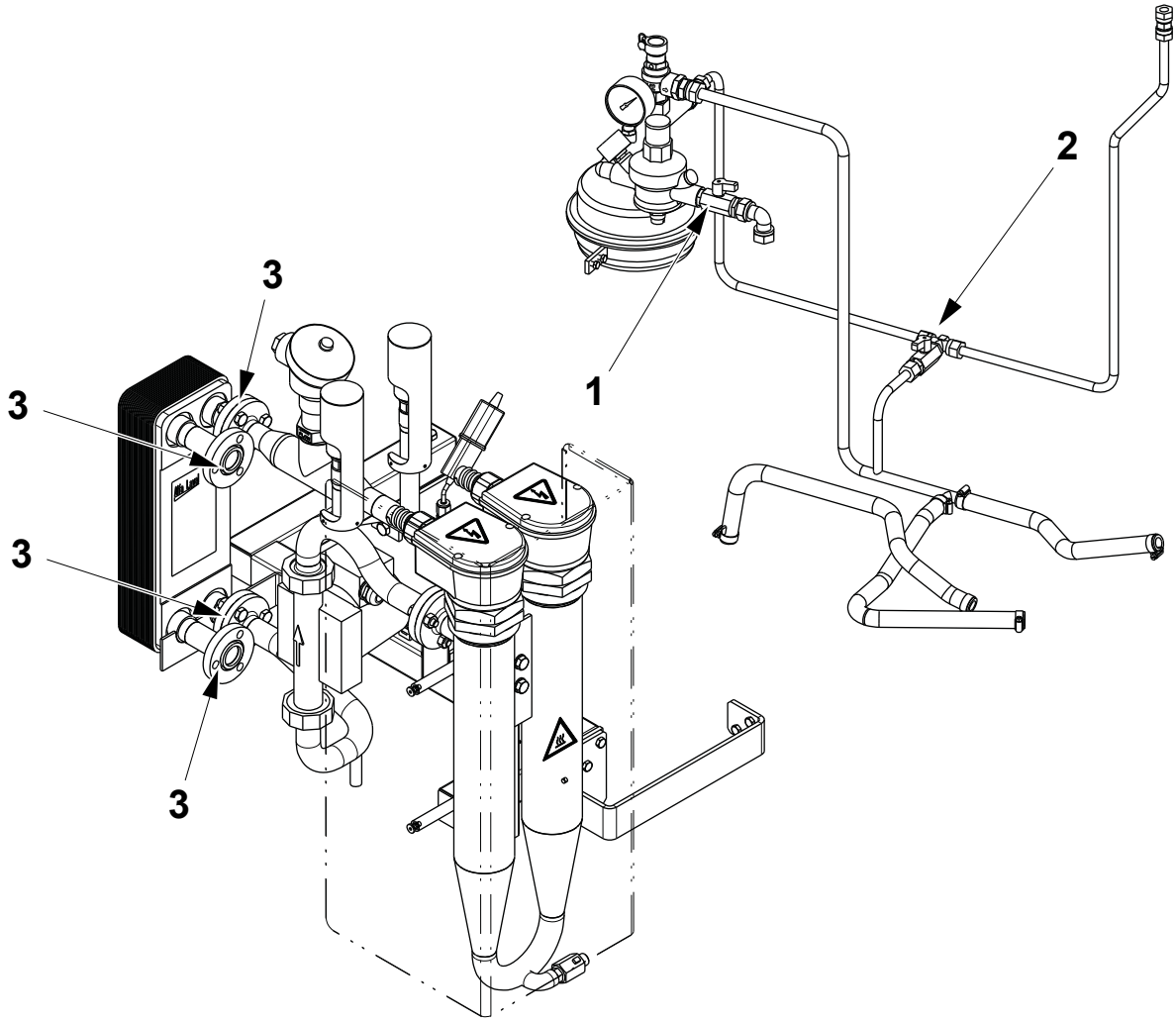

1 Shut off valve
2 Drain valve
3 Flange

TechPub_2614345_0108 - 0102_3048093_01.fm

1.7.1-3 Heating Unit - Drain U-bend

Machine Status	Mains Power OFF Air OFF Steam ON Water OFF
SPC Reference	1558495-0300

WARNING

Burn hazard.

The hydrogen peroxide system and adjacent components may be hot. Wear heat-resistant protective gloves.

Shut off the water supply to the heating unit and drain the system, see 1.7.1-2 Heating Unit - Change Heat Exchanger.

(Cont'd)

TechPub_2614345_0108 - 0102_3048093_01.fm

(Cont'd)

With the aid of a screwdriver, open the valve (1) and drain any water from the heating unit U-bend into a bucket.

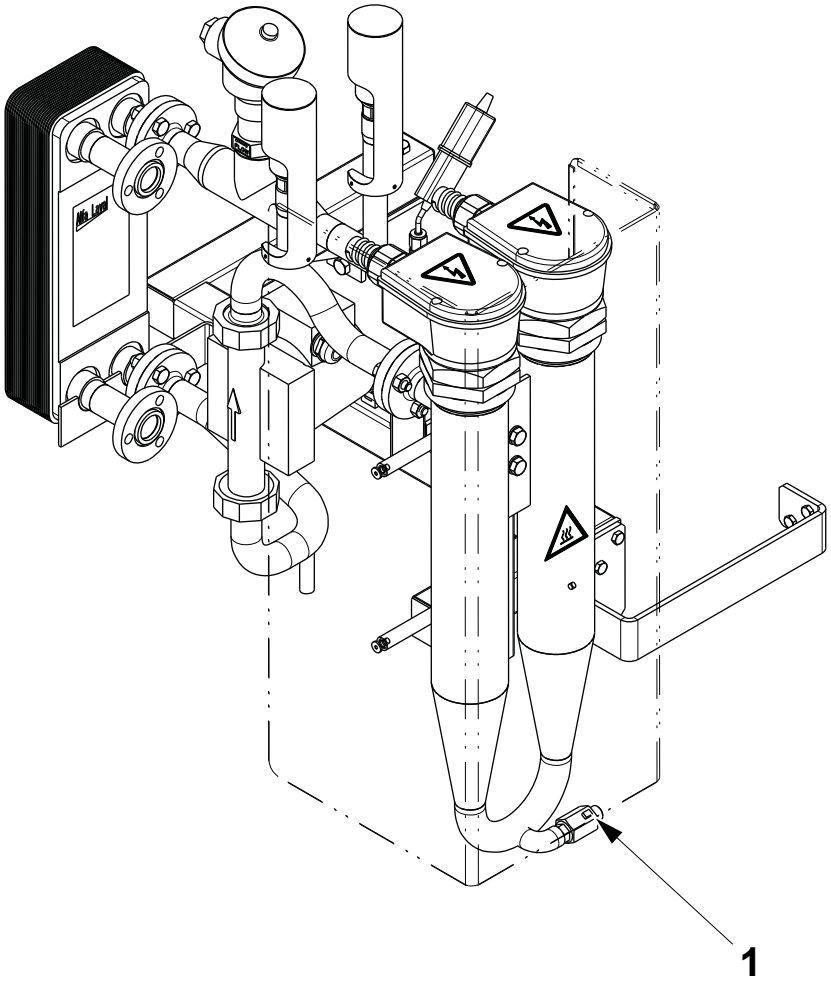

1 Valve

TechPub_2614345_0108 - 0102_3048093_01.fm

1.7.1-4 Heating Unit - Check Pump

Machine Status	HEAT STERILISATION
SPC Reference	1558495-0300

WARNING

Burn hazard.

The hydrogen peroxide system and adjacent components may be hot. Wear heat-resistant protective gloves.

Check the pump (1) for leaks or excessive noise.

Note! Make sure that the pump (1) is set at the highest speed: the selector (2) must be turned to the maximum value.

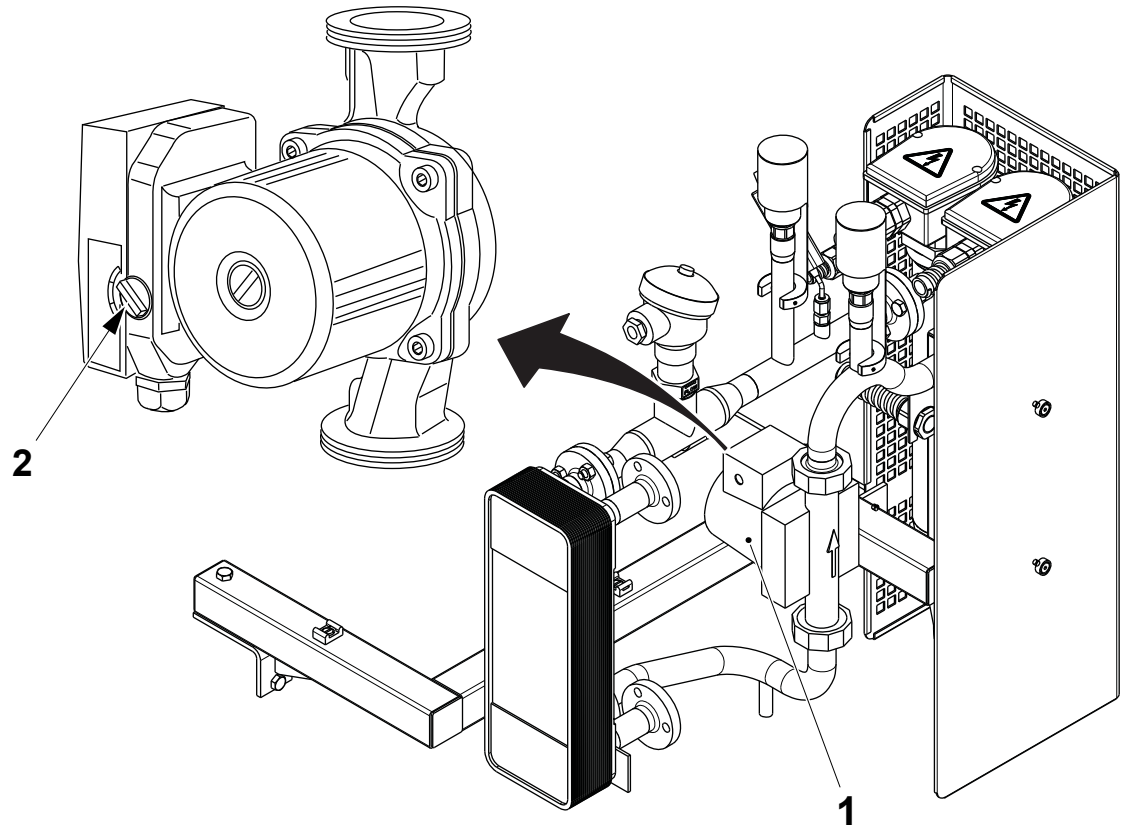

1 Pump
2 Selector

TechPub_2614345_0108 - 0102_3048093_01.fm

1.7.1-5 Heating Unit - Change Venting Valve

Machine Status	Mains Power ON Air OFF Steam ON Water OFF
SPC Reference	1558495-0300

WARNING

Burn hazard.

The hydrogen peroxide system and adjacent components may be hot. Wear heat-resistant protective gloves.

(Cont'd)

TechPub_2614345_0108 - 0102_3048093_01.fm

(Cont'd)

a) Shut off the water supply to the heating unit and drain the system, see items a) and b) in 1.7.1-2 Heating Unit - Change Heat Exchanger.

b) Remove the protection (1) with the three grub screws (2).

c) Remove the venting valve (3).

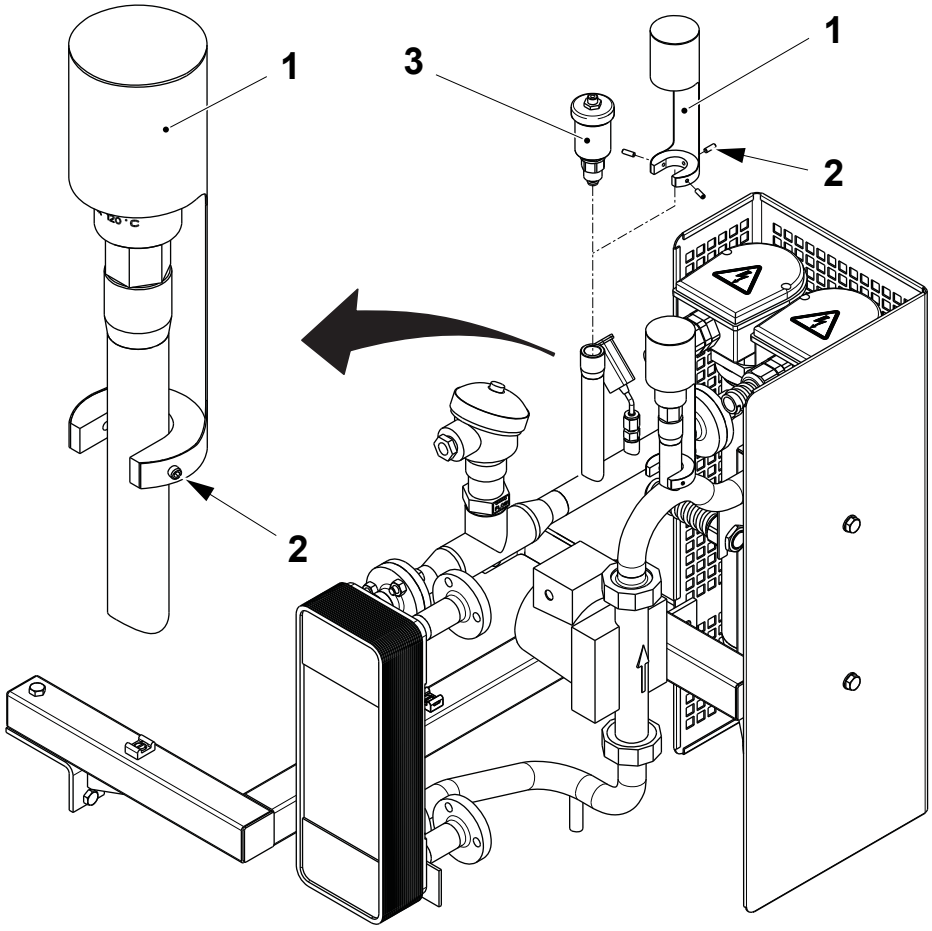

1 Protection
2 Grub screw
3 Venting valve

(Cont'd)

TechPub_2614345_0108 - 0102_3048093_01.fm

(Cont'd)

CAUTION
Risk of damage to the equipment.
The cap (5) must always be removed and discarded to ensure the correct function of the venting valve (4).

d) Before fitting the new venting valve (4), remove and discard the cap (5).

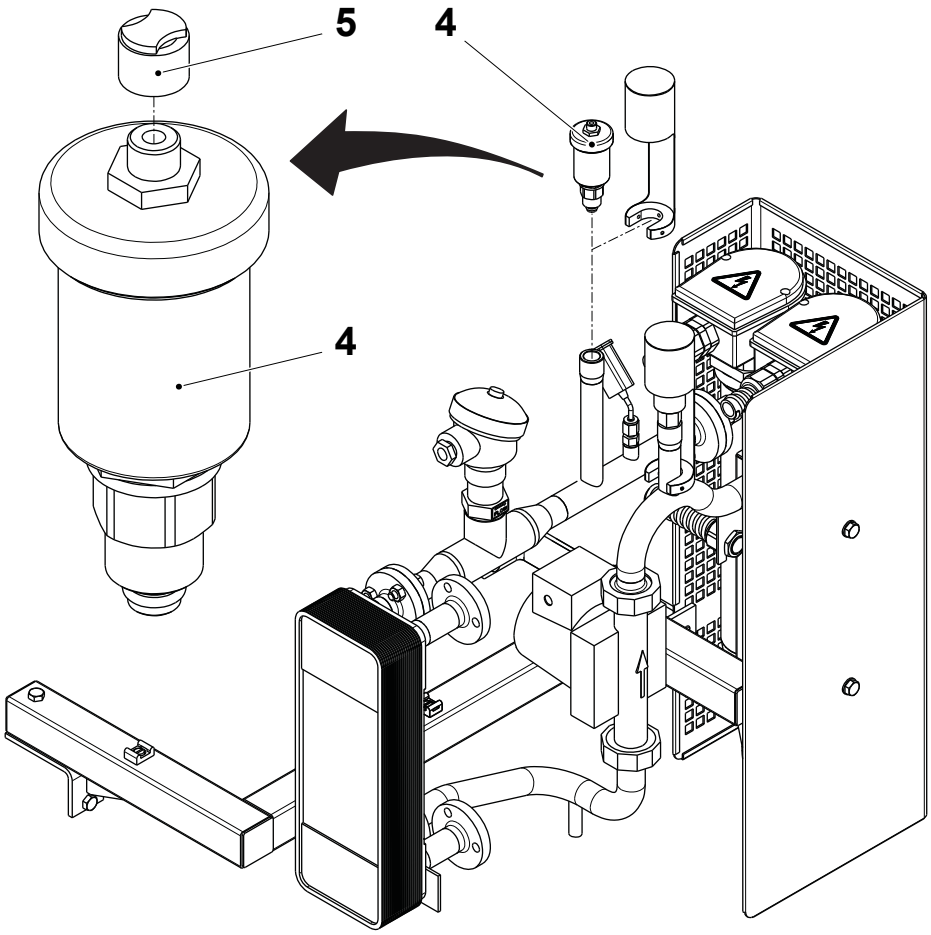

4 Venting valve
5 Cap

(Cont'd)

TechPub_2614345_0108 - 0102_3048093_01.fm

(Cont'd)

e) Assemble in the reverse order.

f) Fill the system with water, see 1.7.2-2 Pressure Unit - Fill.

Note! When assembling, ensure that the protections (1) are fitted at the distance **A** from the surface of the straight pipe (6) and the distance **B** from the surface of the curved pipe (7). Do not over-tighten the grub screws (2).

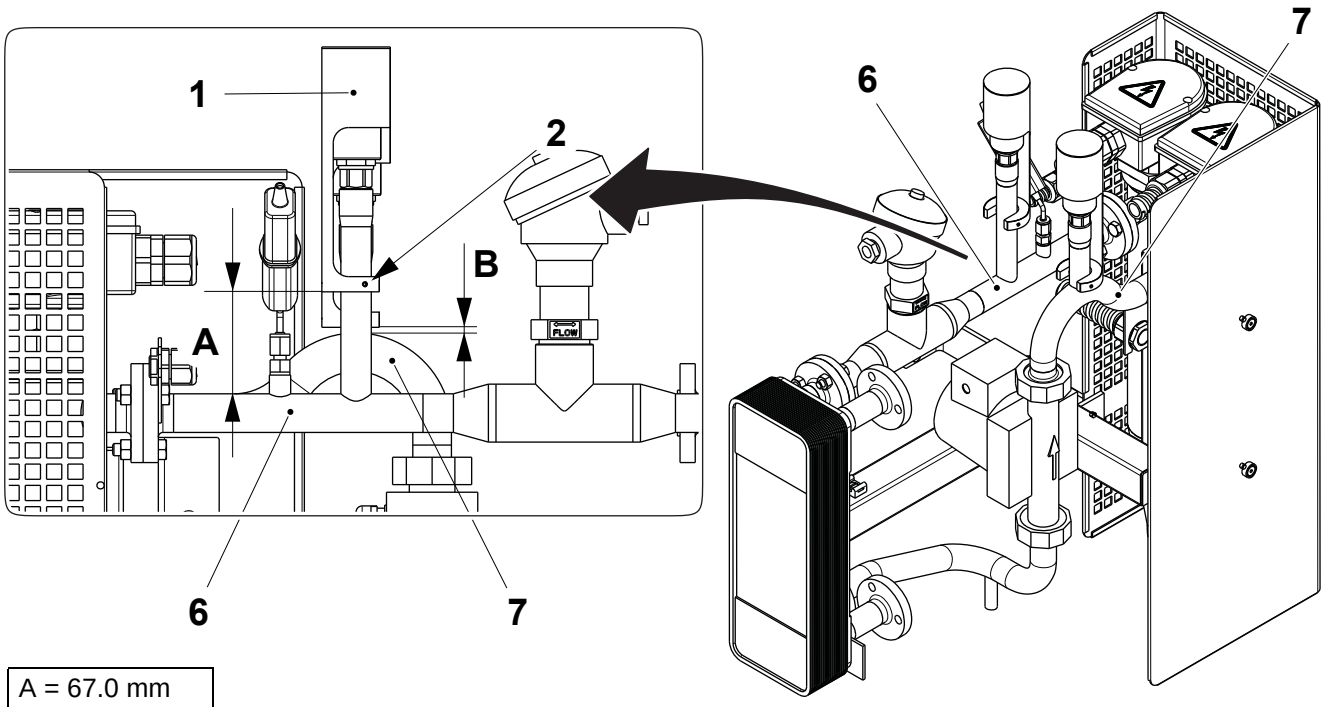

A = 67.0 mm B = 4.5 mm

1 Protection
2 Screw
6 Straight pipe
7 Curved pipe

TechPub_2614345_0108 - 0102_3048093_01.fm

1.7.1-6 Heating Unit - Check Venting Valve Floater

Machine Status	Mains Power ON Air OFF Steam ON Water OFF
Consumables	For Venting Valve TP No. 90600-6015: O-rings TP No. 315202-0721 and TP No. 90600-6021 For Venting Valve TP No. 90187-0105: O-rings TP No. 90600-4411 and TP No. 90600-4412
SPC Reference	1558495-0300

WARNING

Burn hazard.

The hydrogen peroxide system and adjacent components may be hot. Wear heat-resistant protective gloves.

a) Shut off the water supply to the heating unit and drain the system, see items a) and b) in 1.7.1-2 Heating Unit - Change Heat Exchanger.

(Cont'd)

TechPub_2614345_0108 - 0102_3048093_01.fm

(Cont'd)

b) Remove the protection (1) with the three grub screws (2).

c) Unscrew the venting valve body (3) from the nipple (4).

Note! Do not remove the nipple (4).

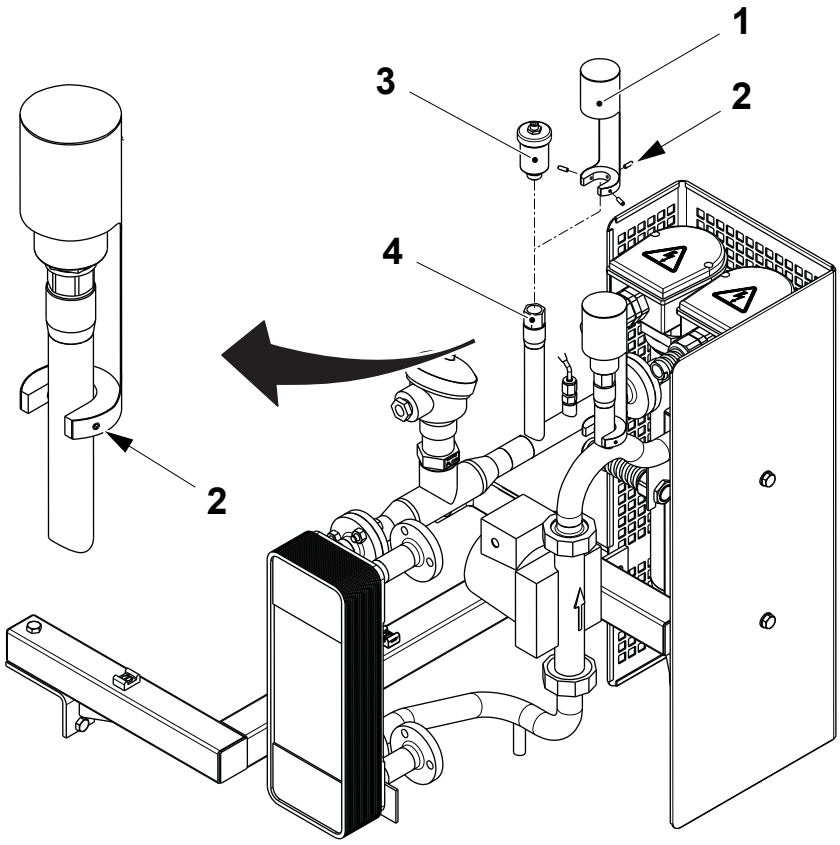

1 Protection
2 Grub screw
3 Venting valve body
4 Nipple

(Cont'd)

TechPub_2614345_0108 - 0102_3048093_01.fm

(Cont'd)

Note! Use the illustration to identify which type of venting valve is fitted to the machine.

d) Unscrew the venting valve lid (5) and check that the floater (6) inside the venting valve body (3) is not damaged and moves freely.

e) Check that the hole (7) is not clogged.

f) Clean inside the venting valve body (3) and remove any deposits of lime scale.

g) Change the o-rings (8).

Venting valve
TP No. 90600-6015

Venting valve
TP No. 90187-0105

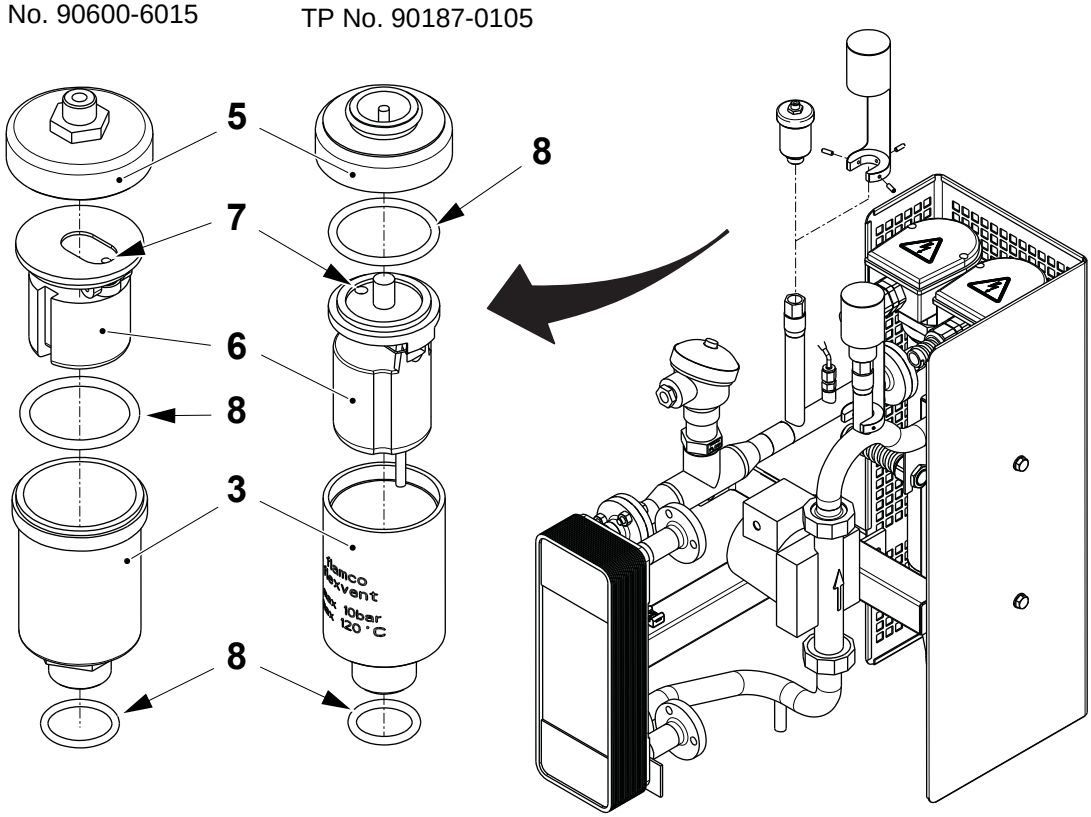

3 Venting valve body
5 Venting valve lid
6 Floater
7 Hole
8 O-ring

(Cont'd)

TechPub_2614345_0108 - 0102_3048093_01.fm

(Cont'd)

h) Assemble in the reverse order.

i) Fill the system with water, see1.7.2-2 Pressure Unit - Fill.

Note! When assembling, ensure that the protections (1) are fitted at the distance **A** from the surface of the straight pipe (9) and the distance **B** from the surface of the curved pipe (10). Do not over-tighten the grub screws (2).

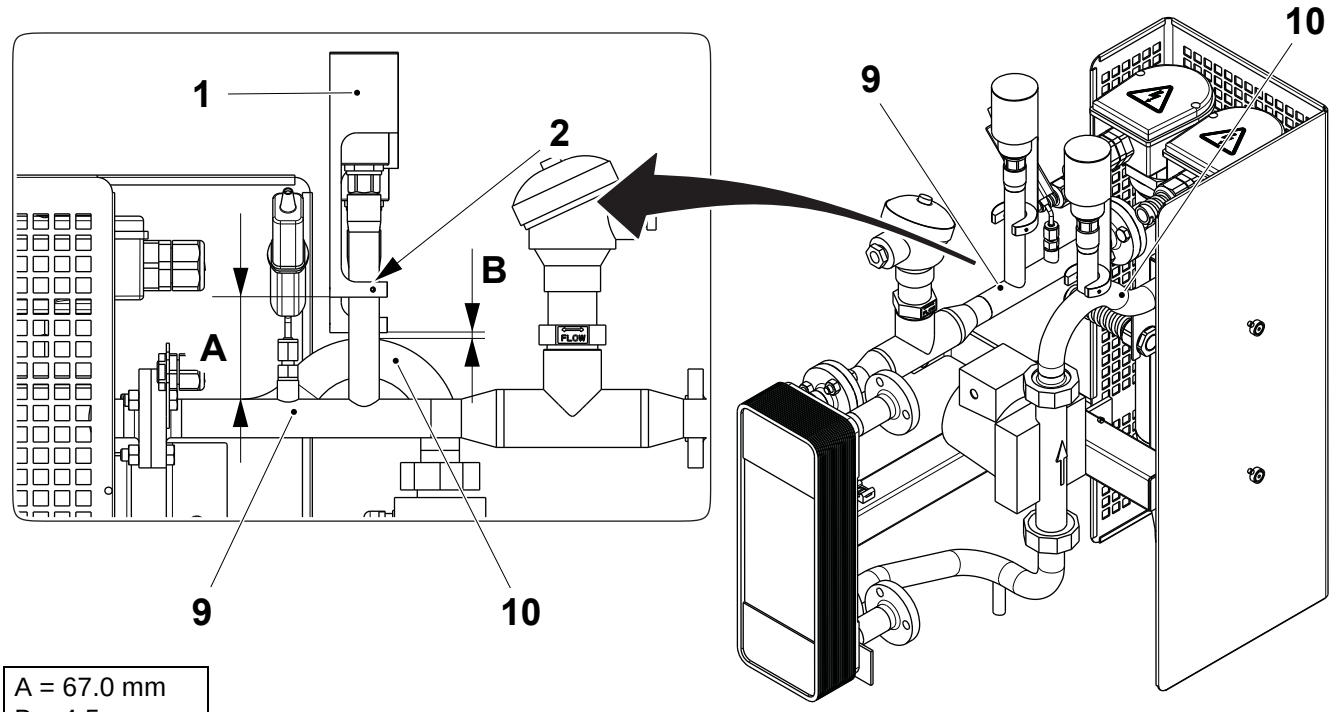

A = 67.0 mm
B = 4.5 mm

1 Protection
2 Grub screw
9 Straight pipe
10 Curved pipe

TechPub_2614345_0108 - 0102_3048093_01.fm

1.7.2 Pressure Unit

1.7.2-1 Pressure Unit - Check Leaks

Machine Status	Mains Power OFF Air OFF Steam ON Water ON
SPC Reference	2531052-0200

WARNING
Hydrogen Peroxide.
Follow the Safety Precautions.

(Cont'd)

TechPub_2614345_0108 - 0103_3048094_01.fm

(Cont'd)

a) With a cold machine, check that the pressure in the liquid container (1) indicated on the pressure gauge (2) reaches at least 1.8 bar. If not, set the pressure with the automatic feeder (3), see 1.7.2-3 Pressure Unit - Set Pressure.

b) Step up the machine to step HEAT STERILISATION.

c) Check the pipe connections for leaks, see arrows. Change the seals if necessary.

d) Check the pump (4) for abnormal noise or vibrations.

Note! The precharge pressure of the container (1) is preset. Do not touch the air precharge valve (5).

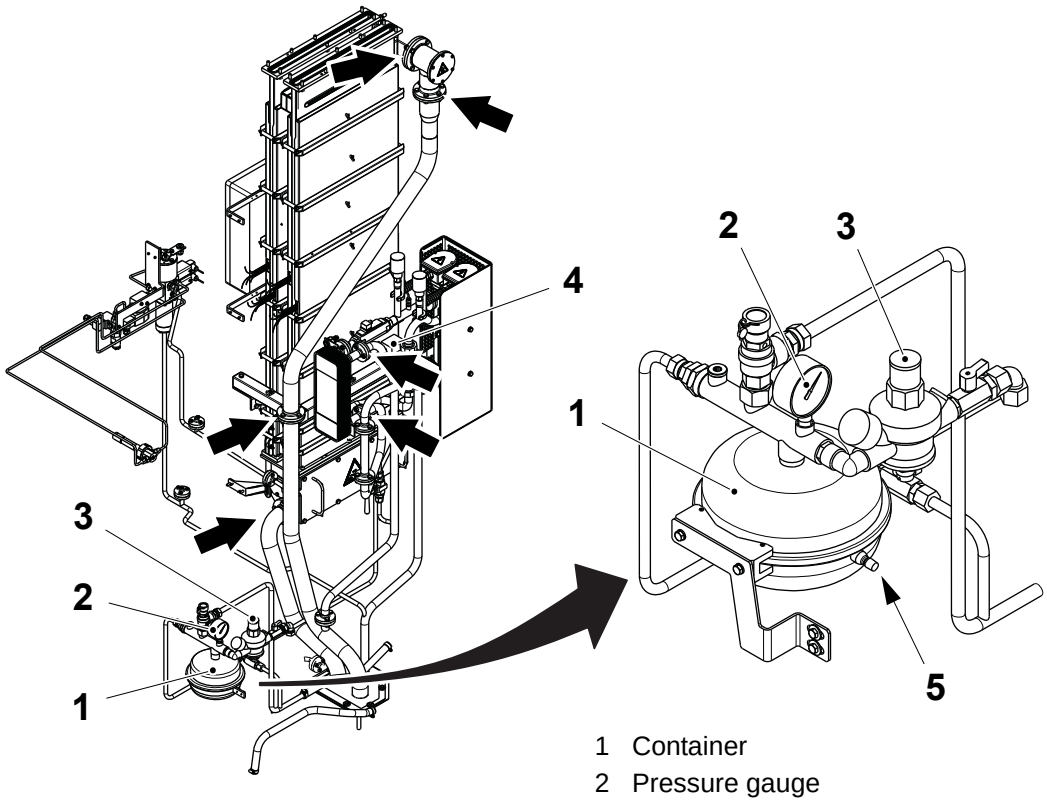

1 Container
2 Pressure gauge
3 Automatic feeder
4 Pump
5 Valve

TechPub_2614345_0108 - 0103_3048094_01.fm

1.7.2-2 Pressure Unit - Fill

Machine Status	Mains Power OFF Air OFF Steam ON Water ON
Special Equipment	Allen Key (10 mm)
SPC Reference	2531052-0200

WARNING
Hydrogen Peroxide.
Follow the Safety Precautions.

WARNING
Burn hazard.
The hydrogen peroxide system and adjacent components may be hot. Wear heat-resistant protective gloves.

(Cont'd)

TechPub_2614345_0108 - 0103_3048094_01.fm

(Cont'd)

a) Make sure the factory water supply is turned on.
b) Make sure the drain valve (1) is closed.
c) Open the shut off valve (2) to fill the system.

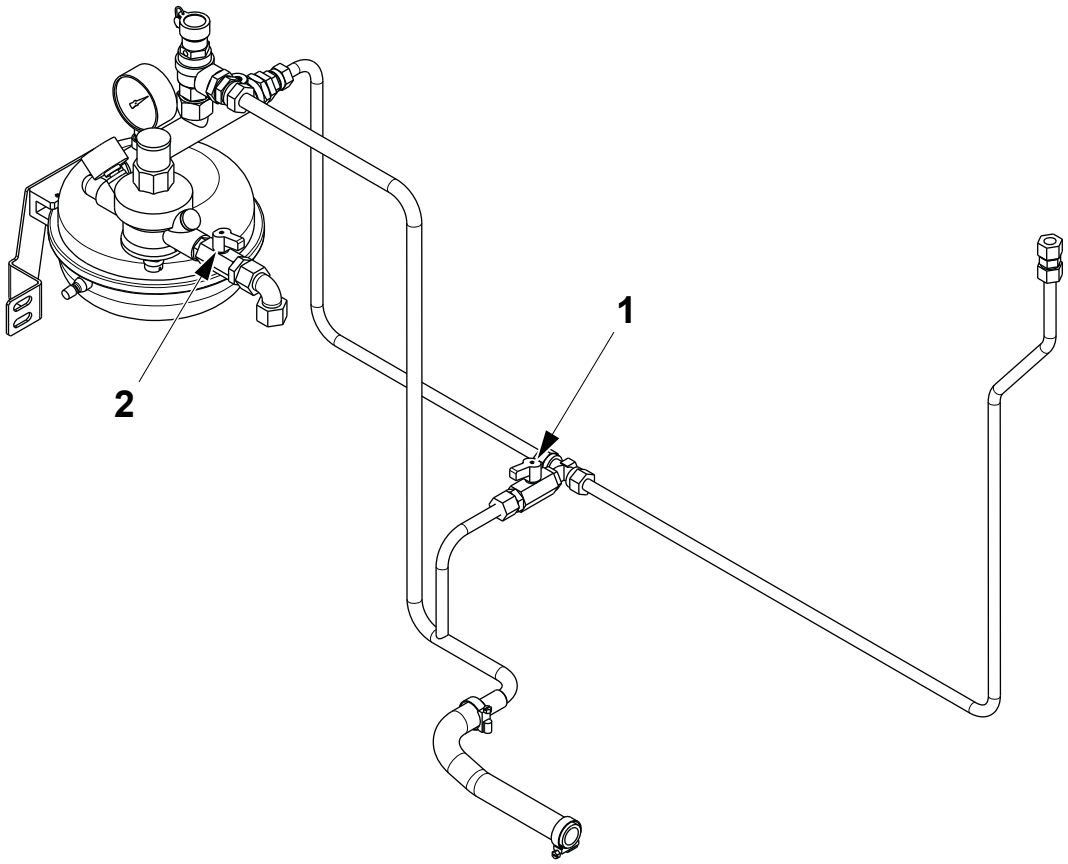

1 Drain valve
2 Shut off valve

(Cont'd)

TechPub_2614345_0108 - 0103_3048094_01.fm

(Cont'd)

Note! The shut off valve (2) must be left open to allow the circuit pressure to be held constant by the recharge valve (4).

d) Remove the cap (3) from the valve (4).

e) Turn the plug nut (5) with an allen key until a value of 1.8 ±0.3 bar is indicated by the pressure gauge (6).

f) Fit the cap (3) on to the valve (4).

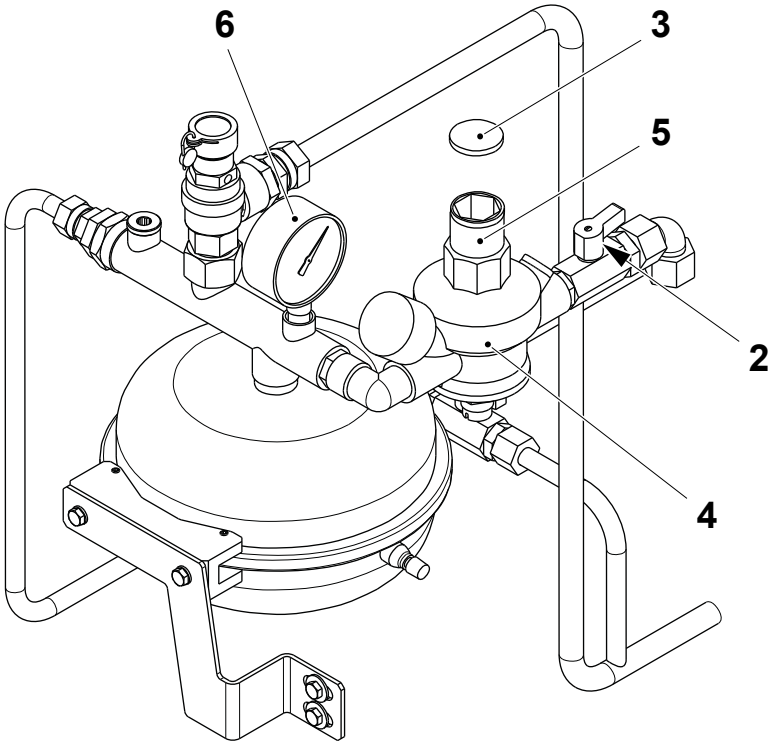

2 Shut off valve
3 Cap
4 Valve
5 Plug nut
6 Pressure gauge

TechPub_2614345_0108 - 0103_3048094_01.fm

1.7.2-3 Pressure Unit - Set Pressure

Machine Status	Mains Power OFF Air OFF Steam ON Water ON
Special Equipment	Allen Key (10 mm)
SPC Reference	2531052-0200

WARNING
Hydrogen Peroxide.
Follow the Safety Precautions.

(Cont'd)

TechPub_2614345_0108 - 0103_3048094_01.fm

(Cont'd)

a) Remove the cap (1) from the valve (2).

b) If the pressure is too high, first close the shut off valve (3), then tighten the plug nut (4) a few turns with an allen key. Release some pressure by opening and closing the draining valve (5).

c) Make sure that the draining valve (5) is closed, and that the shut off valve (3) is open.

d) Adjust the pressure to 1.8 ±0.3 bar by turning the plug nut (4) with an allen key.

e) Fit the cap (1) on to the valve (2).

Note! The precharge pressure of the container (6) is preset. Do not touch the air precharge valve (7).

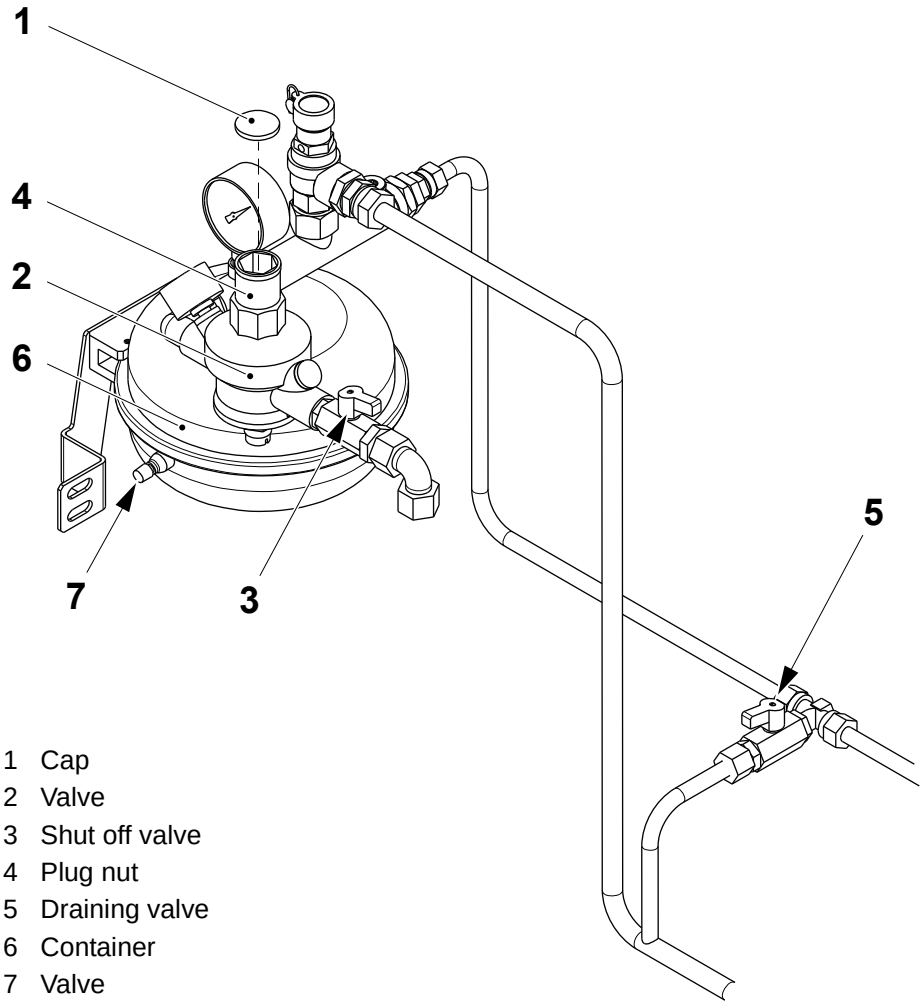

1 Cap
2 Valve
3 Shut off valve
4 Plug nut
5 Draining valve
6 Container
7 Valve

TechPub_2614345_0108 - 0103_3048094_01.fm

1.7.3 Bath

1.7.3-1 Bath - Check Roller

Machine Status	Mains Power ON Air OFF Steam ON Water OFF
SPC Reference	2715556-0300

WARNING

Hydrogen Peroxide.

Follow the Safety Precautions.

(Cont'd)

TechPub_2614345_0108 - 0104_3048095_01.fm

(Cont'd)

a) Loosen the two lower screws (1), remove the rest of the screws (2) and remove the bottom cover (3).

b) Remove the gasket (4) and check for wear or damage. Change if necessary.

c) Remove any LS strip residue from the peroxide bath (5) and the roller (6).

d) Check the surface and rotation of the peroxide bath roller (6). Make sure that the roller (6) rotates freely.

e) Check the radial play of the bearings on the roller (6). If excessive change them, see 1.7.3-2 Bath - Change Roller Bushings.

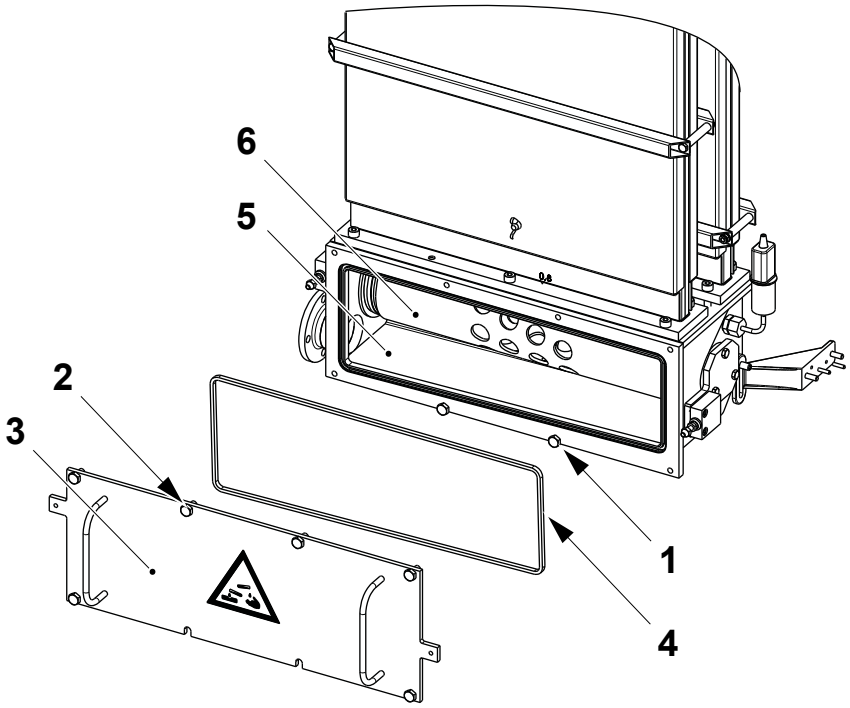

1 Screw
2 Screw
3 Bottom cover
4 Gasket
5 Bath
6 Roller

(Cont'd)

TechPub_2614345_0108 - 0104_3048095_01.fm

(Cont'd)

f) Assemble in the reverse order.

Note! The two micro switches (7) must not be activated until the screws (1) and (2) have been fully tightened. Make sure that the alarm functions on the TPOP display.

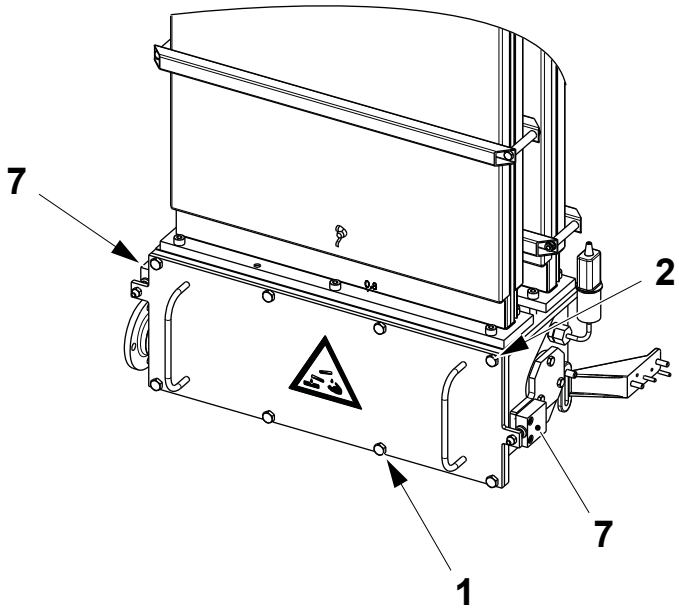

1 Screw
2 Screw
7 Micro switch

TechPub_2614345_0108 - 0104_3048095_01.fm

1.7.3-2 Bath - Change Roller Bushings

Machine Status	Mains Power OFF Air OFF Steam ON Water OFF
SPC Reference	2715556-0300

WARNING
Hydrogen Peroxide.
Follow the Safety Precautions.

(Cont'd)

TechPub_2614345_0108 - 0104_3048095_01.fm

(Cont'd)

a) Loosen the two screws (1), remove the six screws (2) and remove the bottom cover (3).

b) Remove and change the gasket (4).

c) Remove the screws (5) and the plate (6).

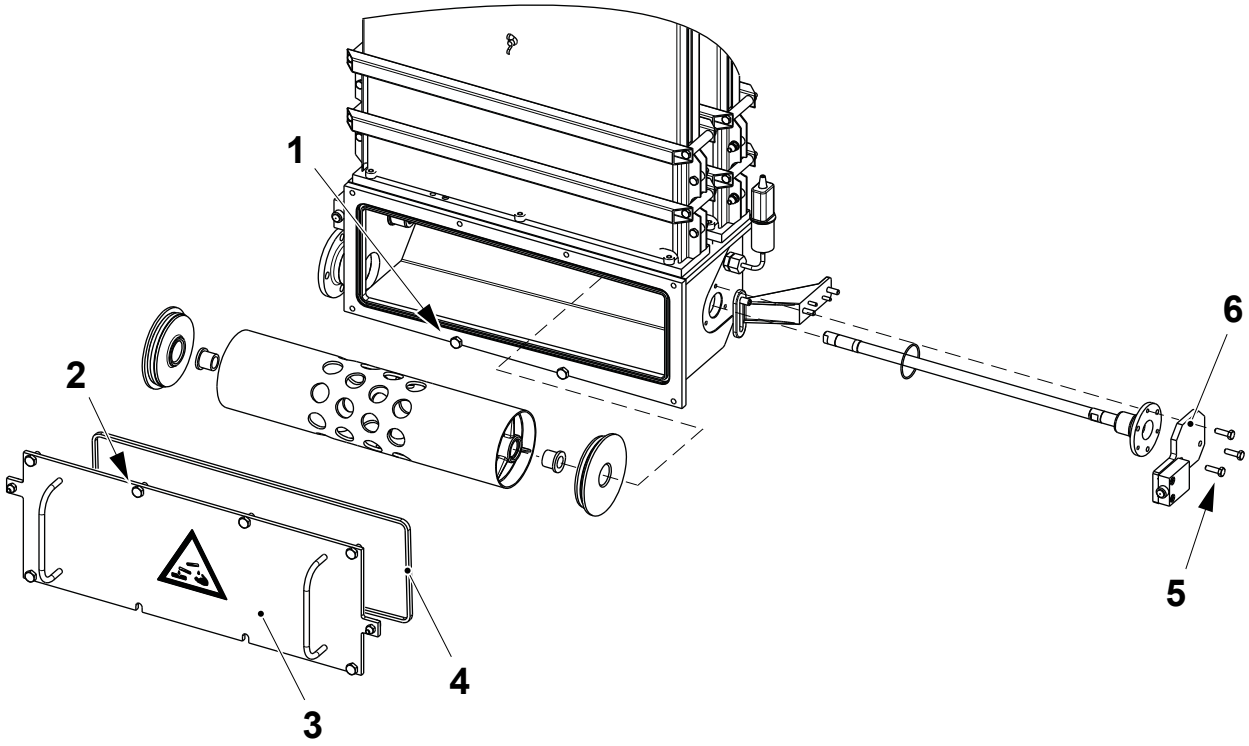

1 Screw
2 Screw
3 Bottom cover
4 Gasket
5 Screw
6 Plate

(Cont'd)

TechPub_2614345_0108 - 0104_3048095_01.fm

(Cont'd)

d) Extract the flange with the shaft (7) assembled. Change the O-ring (8).

e) Remove the bending roller (9) and the wheels (10).

f) Remove and change the bushings (11).

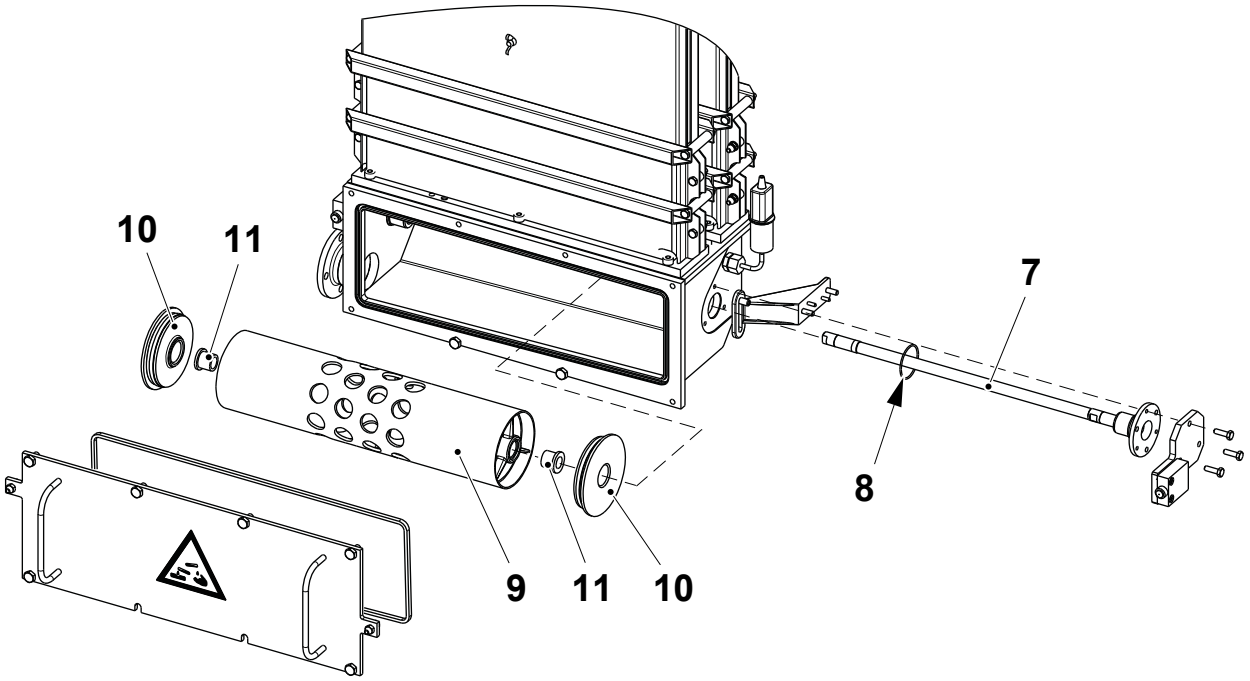

7 Flange with shaft
8 O-ring
9 Roller
10 Wheel
11 Bushing

(Cont'd)

TechPub_2614345_0108 - 0104_3048095_01.fm

(Cont'd)

g) Assemble in the reverse order.

Note! When assembling, rotate the flange with the shaft (7) assembled by 120°.

Note! The two micro switches (12) must not be activated until the two screws (1) and the six screws (2) have been fully tightened. Make sure that the alarm functions on the TPOP display.

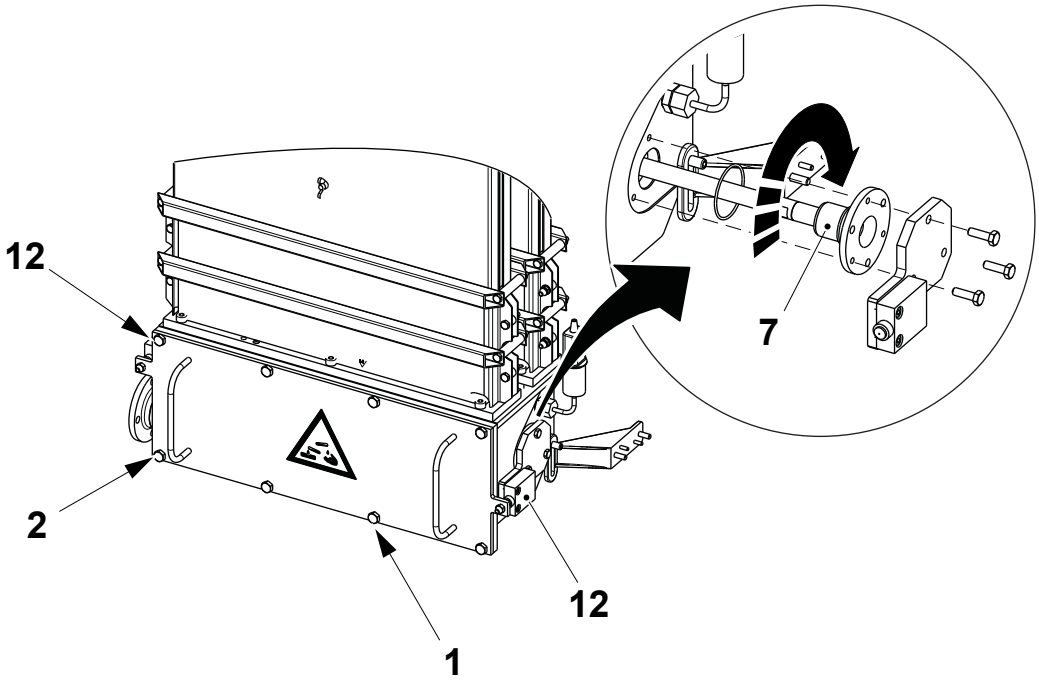

1 Screw
2 Screw
7 Flange with shaft
12 Micro switch

TechPub_2614345_0108 - 0104_3048095_01.fm

1.7.3-3 Bath - Change Heating Elements

Machine Status	Mains Power OFF Air OFF Steam ON Water OFF
Special Equipment	Template TP No. 3122373-0000
SPC Reference	2715556-0300

DANGER

Hazardous voltage.

Make sure the main switch is OFF.

WARNING

Hydrogen Peroxide.

Follow the Safety Precautions.

WARNING

Burn hazard.

The hydrogen peroxide system and adjacent components may be hot. Wear heat-resistant protective gloves.

(Cont'd)

TechPub_2614345_0108 - 0104_3048095_01.fm

(Cont'd)

Remove Peroxide Chamber

a) Open the lid (1) and the bottom cover (2).

b) Crank by the handle (3) until the carrier (4) is in the bottom section (5).

c) Open the chains (6) by the connecting links (7) and remove the carrier (4).

d) Remove the chains (6) from the top by cranking the handle (3).

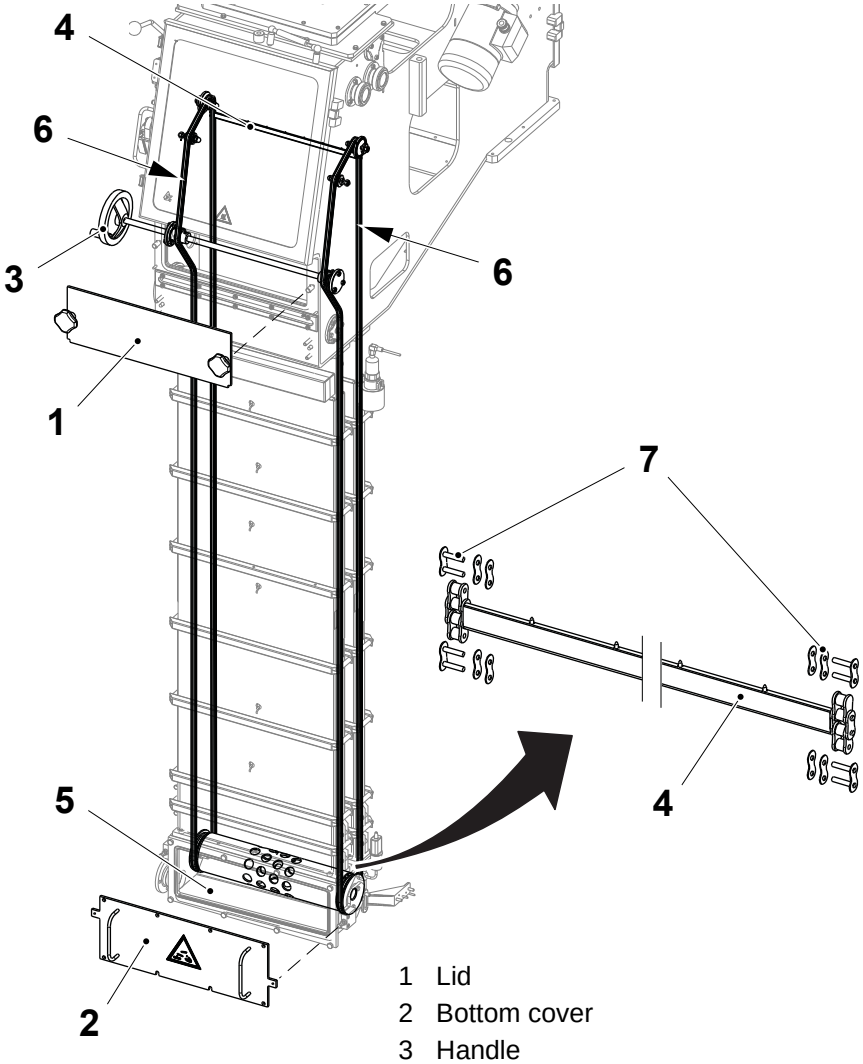

1 Lid
2 Bottom cover
3 Handle
4 Carrier
5 Bottom section
6 Chains
7 Connecting links

(Cont'd)

TechPub_2614345_0108 - 0104_3048095_01.fm

(Cont'd)

e) Disconnect the electrical connections (8) of the heating element.
f) Disconnect the sensor cable U70W2020 (9).
g) Remove the four screw (10) to disconnect the connection pipe (11).
h) Remove the screw (12).
i) Remove the six screw (13).

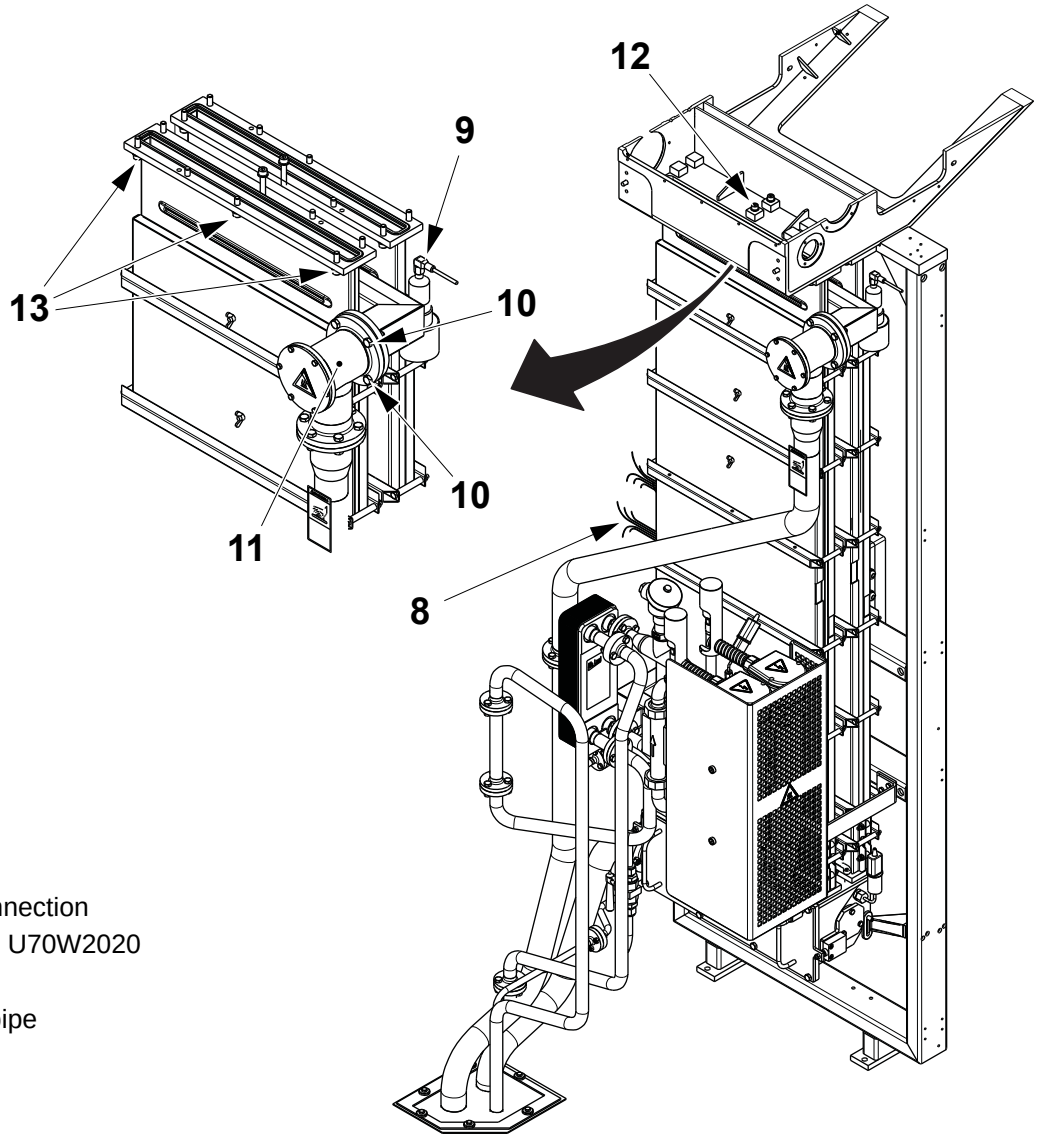

8 Electrical connection
9 Sensor cable U70W2020
10 Four screw
11 Connection pipe
12 Screw
13 Screw

(Cont'd)

TechPub_2614345_0108 - 0104_3048095_01.fm

(Cont'd)

j) Remove the screws (14) to remove the bracket (15).

k) Remove the six screws (16).

l) Disconnect the thermocouple U70B2630 (17).

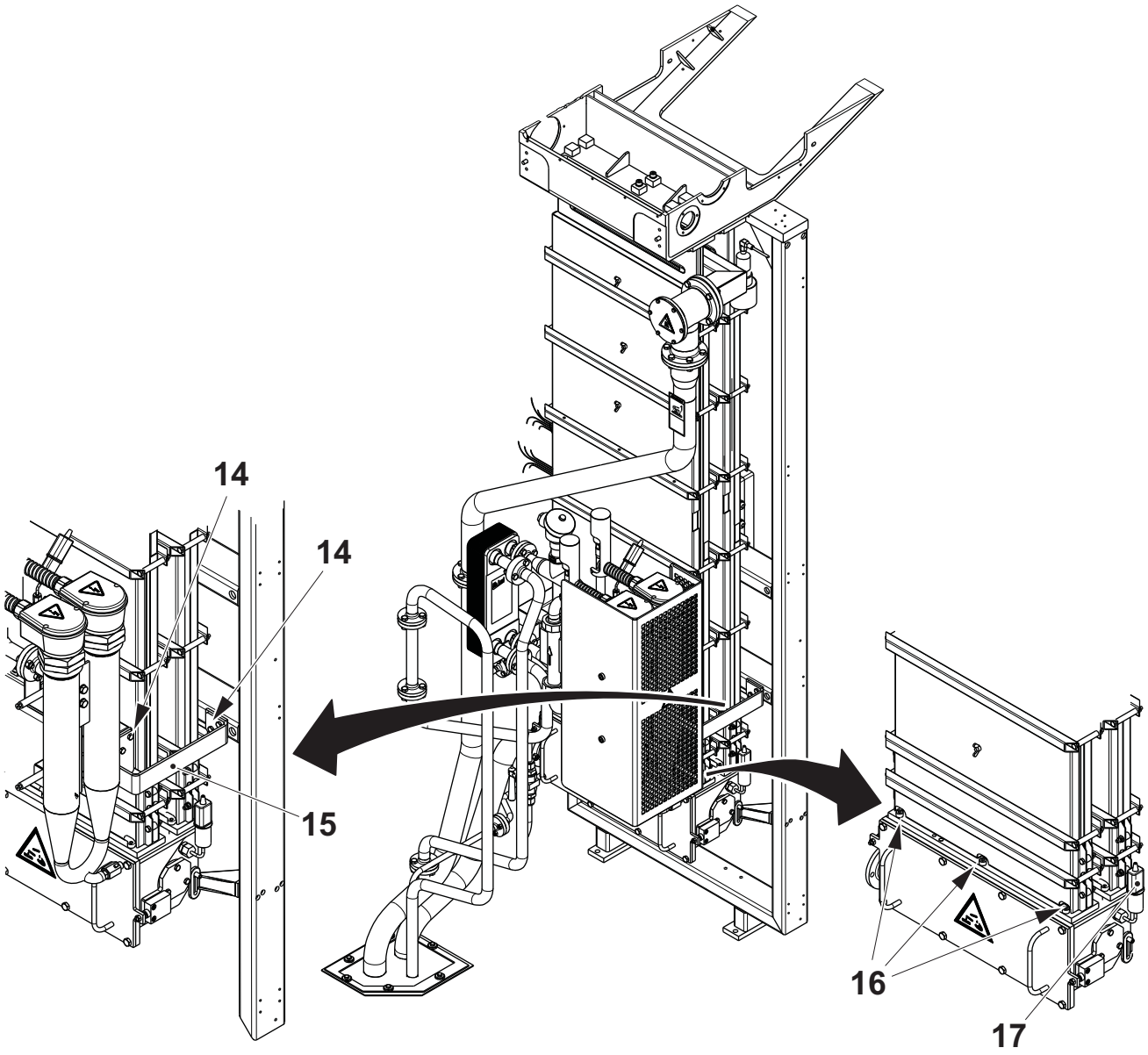

14 Screw
15 Bracket
16 Screw
17 Thermocouple U70B2630

(Cont'd)

TechPub_2614345_0108 - 0104_3048095_01.fm

(Cont'd)

m) Remove the peroxide chamber (18).

n) Change the gaskets (19).

o) Change the heating elements, see Change Heating Elements and assemble in the reverse order.

p) Repeat the same procedure for the second peroxide chamber.

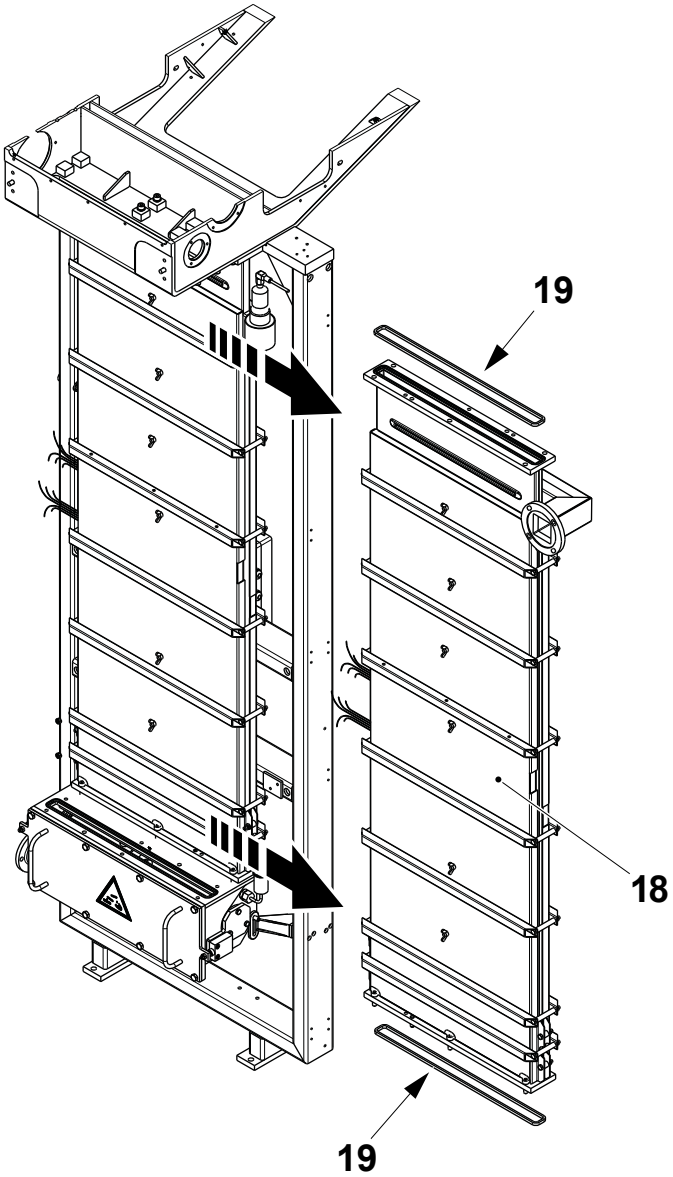

18 Peroxide chamber
19 Gasket

(Cont'd)

TechPub_2614345_0108 - 0104_3048095_01.fm

(Cont'd)

Change Heating Elements

CAUTION

Risk of damage to the equipment

The heating elements are fragile and must be handled with care. Do not fold the elements.

Note! The heating elements are not symmetrical. The surfaces of the heating elements are marked “in” and “out”. Make sure the inside of the heating elements are fitted facing the bath.

(Cont'd)

TechPub_2614345_0108 - 0104_3048095_01.fm

(Cont'd)

Note! When assembling, fit the same quantity of washers (3). If necessary, check the peroxide chamber by the template TP No. 3122373-0000.

a) Remove the screws (1) and the spacers (2) taking care of the washers (3).

b) Remove the wing nuts (4) and the cover (5).

c) Remove the insulating mat (6).

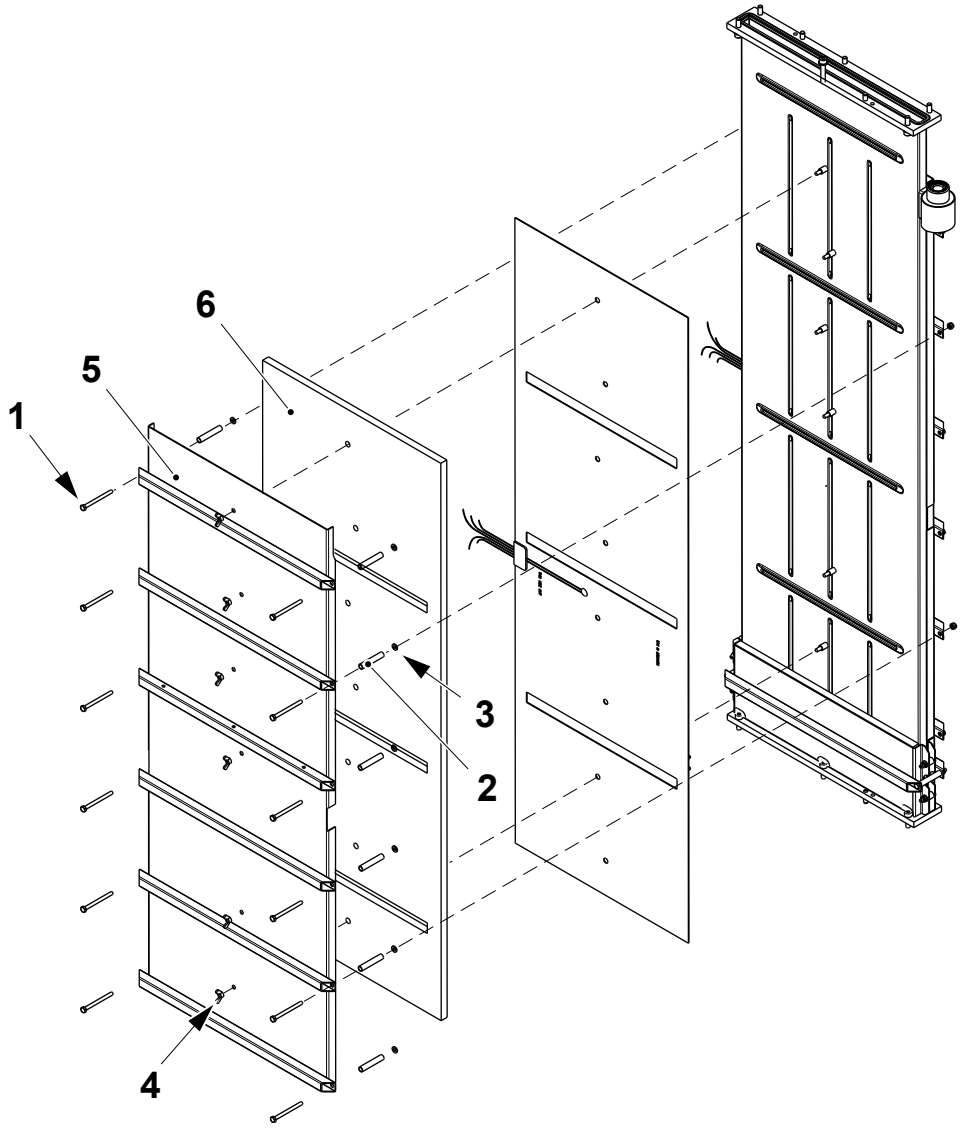

1 Screw
2 Spacer
3 Washer
4 Wing nut
5 Cover
6 Insulating mat

(Cont'd)

TechPub_2614345_0108 - 0104_3048095_01.fm

(Cont'd)

d) Change the heating element (7).

e) Assemble in the reverse order.

f) Check the peroxide chamber gap with the template TP No. 3122373-0000, see Check Transition Gap.

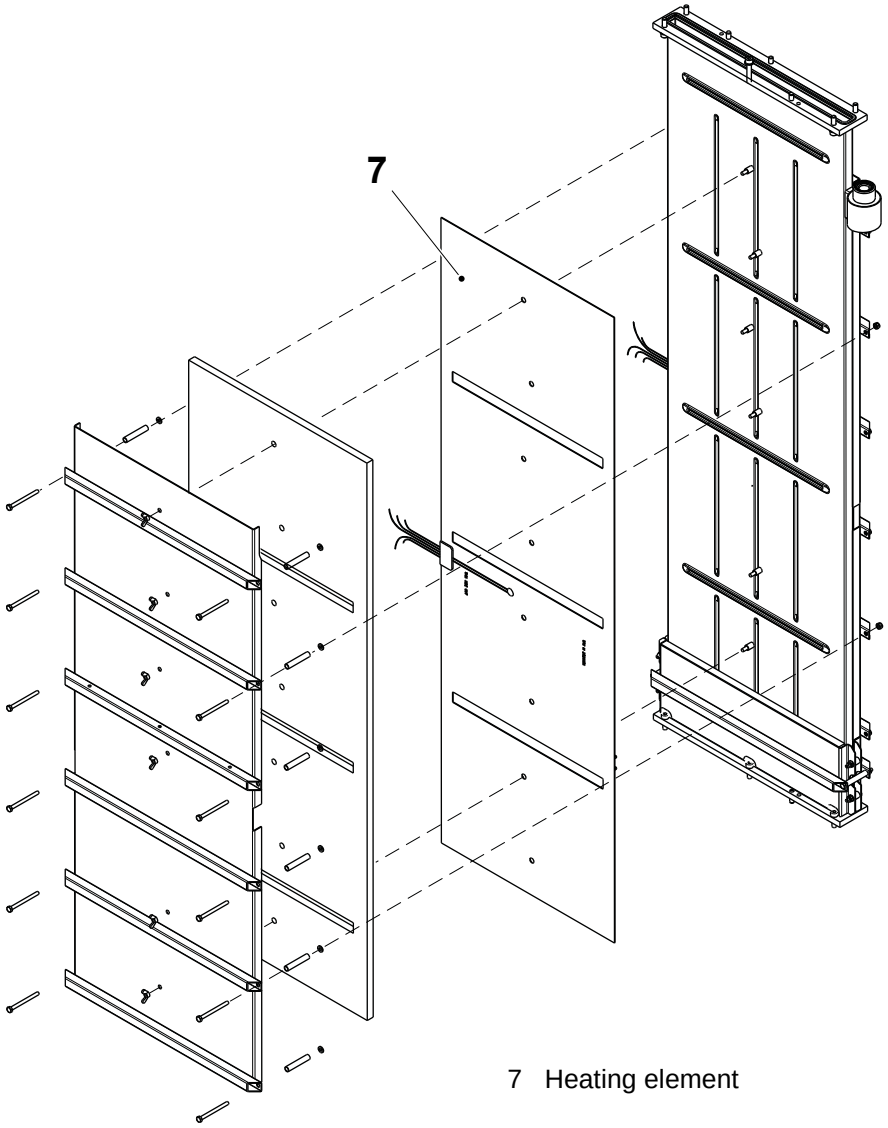

7 Heating element

(Cont'd)

TechPub_2614345_0108 - 0104_3048095_01.fm

(Cont'd)

Check Transition Gap

Note! The template (1) has two ends with different thickness: the end with the smaller thickness (12.0 mm) must pass through the peroxide chamber (3) while the end with the bigger thickness (12.6 mm) must not pass. The different size are marked on the template (1).

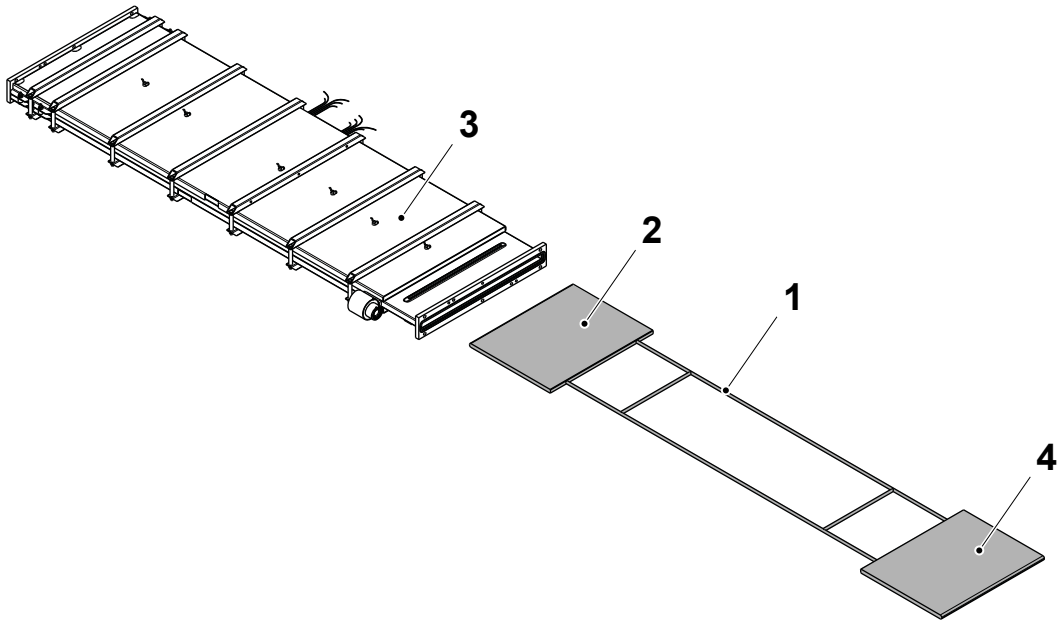

1 Template
2 Thinner end
3 Peroxide chamber
4 Thicker end

(Cont'd)

TechPub_2614345_0108 - 0104_3048095_01.fm

(Cont'd)

a) Insert the thinner end (2) of the template (1) into the peroxide chamber (3) and check that it goes through the chamber.

b) Remove the template (1), then try to insert the thicker end (4) of the template and check the it does not pass through the peroxide chamber (3).

c) If necessary, remove the screws (5) and add or remove washers (6) to the spacers (7) to increase or decrease the gap.

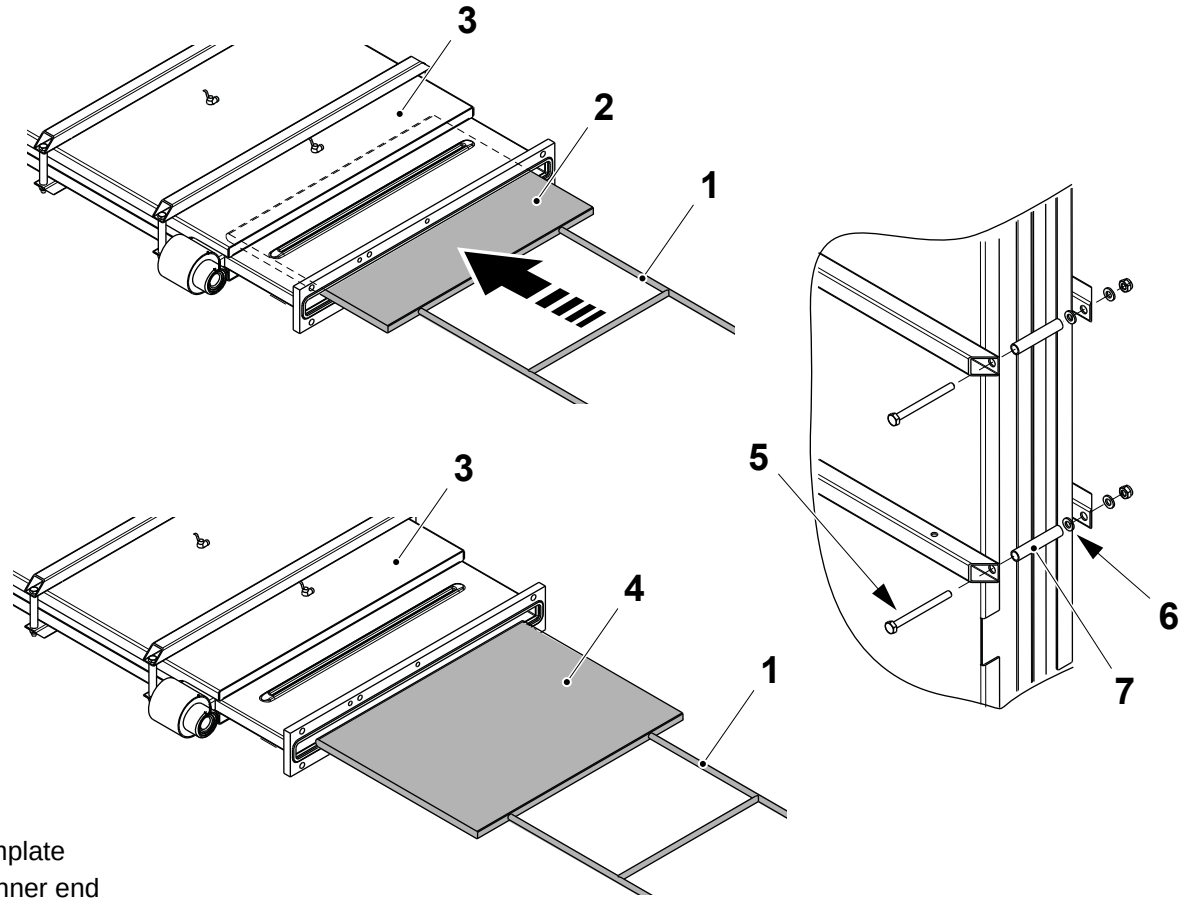

1 Template
2 Thinner end
3 Peroxide chamber
4 Thicker end
5 Screw
6 Washer
7 Spacer

TechPub_2614345_0108 - 0104_3048095_01.fm

1.7.3-4 Bath - Set Bottom Cover Sensor

Machine Status	Mains Power ON Air OFF Steam ON Water OFF
SPC Reference	2715556-0300

WARNING

Hydrogen Peroxide.
Follow the Safety Precautions.

Note! Make sure that the bottom cover (1) is fitted and the screws (2) are tight.

a) Turn the screw (3) away from the micro switch (4) until the alarm appears on the TPOP.

b) Turn back the screw (3) one turn.

c) Tighten the nut (5).

d) Repeat for the other micro switch on the other side.

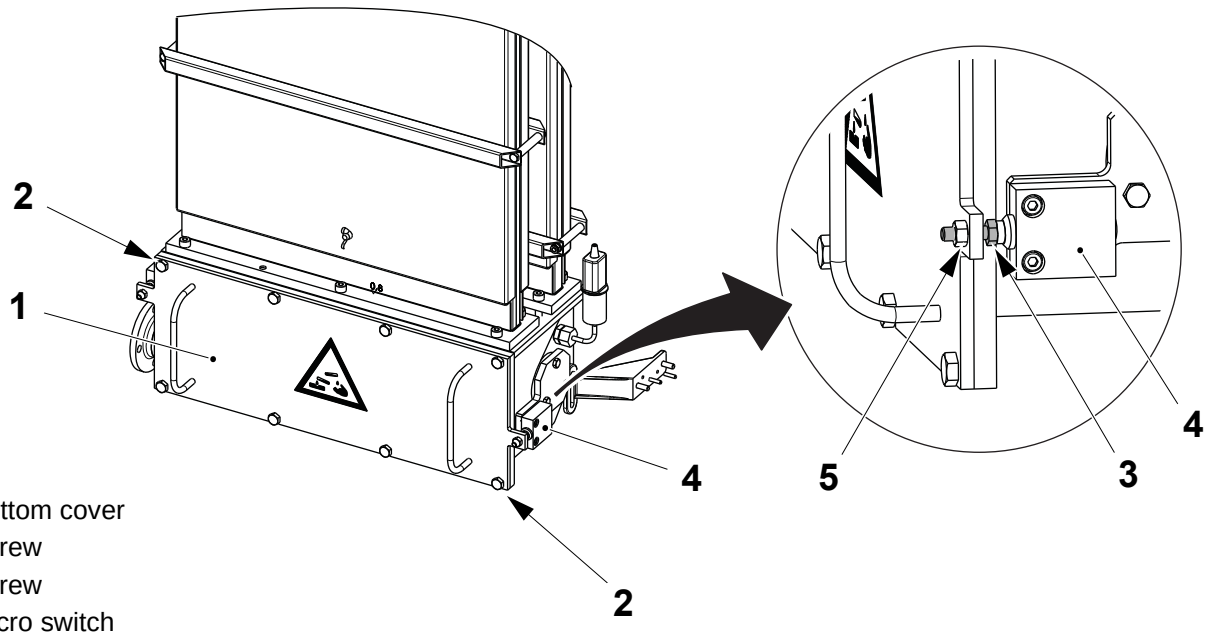

1 Bottom cover
2 Screw
3 Screw
4 Micro switch
5 Nut

TechPub_2614345_0108 - 0104_3048095_01.fm

1.7.4 Spray System

1.7.4-1 Spray System - Check

Machine Status	Mains Power OFF Air OFF Steam ON Water OFF
SPC Reference	2529485-0400

WARNING
Hydrogen Peroxide.
Follow the Safety Precautions.

Check for peroxide leakages in the spray unit.

Note! Mark all connections before removal.

Change the O-ring (1) if damaged or worn out.

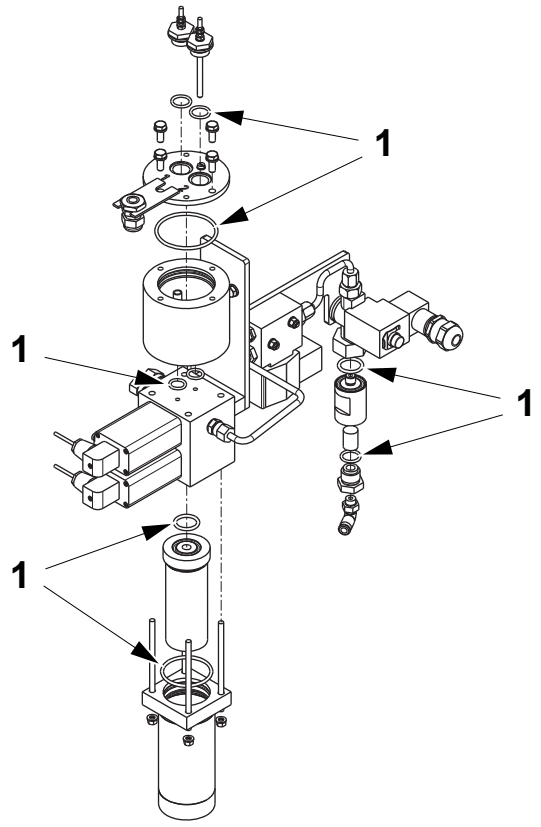

1 O-ring

TechPub_2614345_0108 - 0101_3048096_01.fm

1.7.4-2 Spray System - Clean Peroxide Filter

Machine Status	Mains Power OFF Air OFF Steam ON Water OFF
SPC Reference	2529485-0400

WARNING

Hydrogen Peroxide.

Follow the Safety Precautions.

(Cont'd)

TechPub_2614345_0108 - 0101_3048096_01.fm

(Cont'd)

a) Remove the nuts (1) and the filter housing (2).
b) Pull out the peroxide filter (3), rinse it with deionized water and clean it with compressed air.
c) If necessary change the peroxide filter (3).
d) Fit the peroxide filter (3) and the filter housing (2).
e) Tighten the nuts (1).

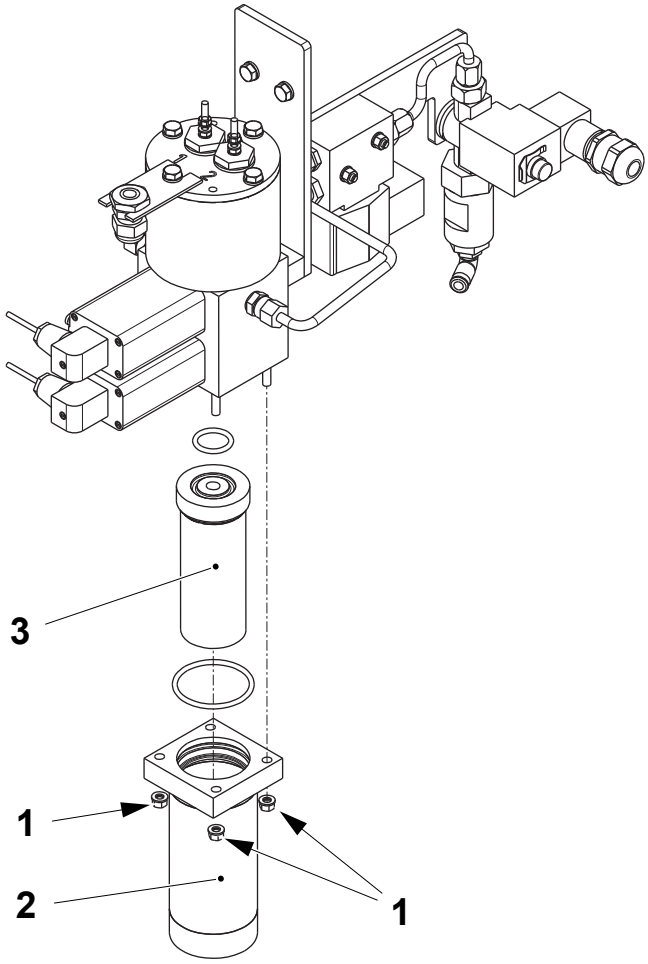

1 Nut
2 Filter housing
3 Peroxide filter

TechPub_2614345_0108 - 0101_3048096_01.fm

1.7.4-3 Spray System - Set Pressure

Machine Status	Mains Power OFF Air ON Steam ON Water OFF
SPC Reference	2529485-0400 2774455-0100

Set the air pressure for the spray system to 2.0 bar by the pressure regulator (1) located on the superstructure air panel. The pressure is shown on the pressure gauge (2).

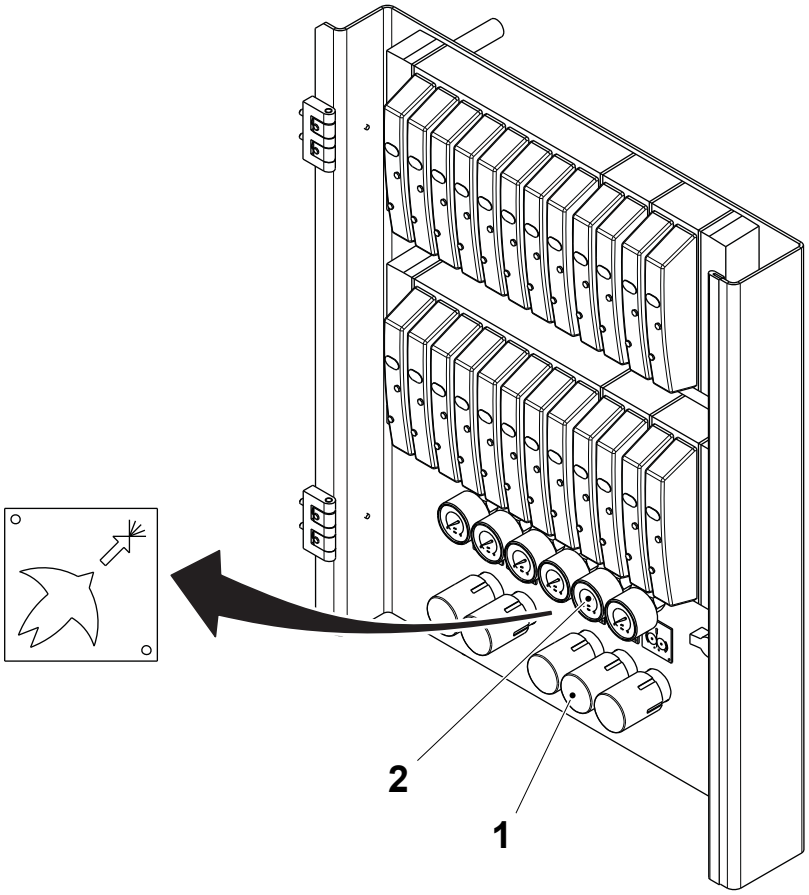

1 Pressure regulator
2 Pressure gauge

TechPub_2614345_0108 - 0101_3048096_01.fm

1.7.4-4 Spray System - Clean Filter

Machine Status	Mains Power OFF Air OFF Steam ON Water OFF
SPC Reference	2529485-0400

WARNING

Hydrogen Peroxide.

Follow the Safety precautions.

(Cont'd)

TechPub_2614345_0108 - 0101_3048096_01.fm

(Cont'd)

a) Remove the air pipe (1).
b) Remove the filter housing (2).
c) Remove the filter (3) from the filter housing (2).
d) Clean the filter (3) with compressed air.
e) Check the gaskets (4) for wear or damage and change if necessary.

Note! Make sure the gaskets (4) are fitted correctly during assembly.

f) Assemble in the reverse order.

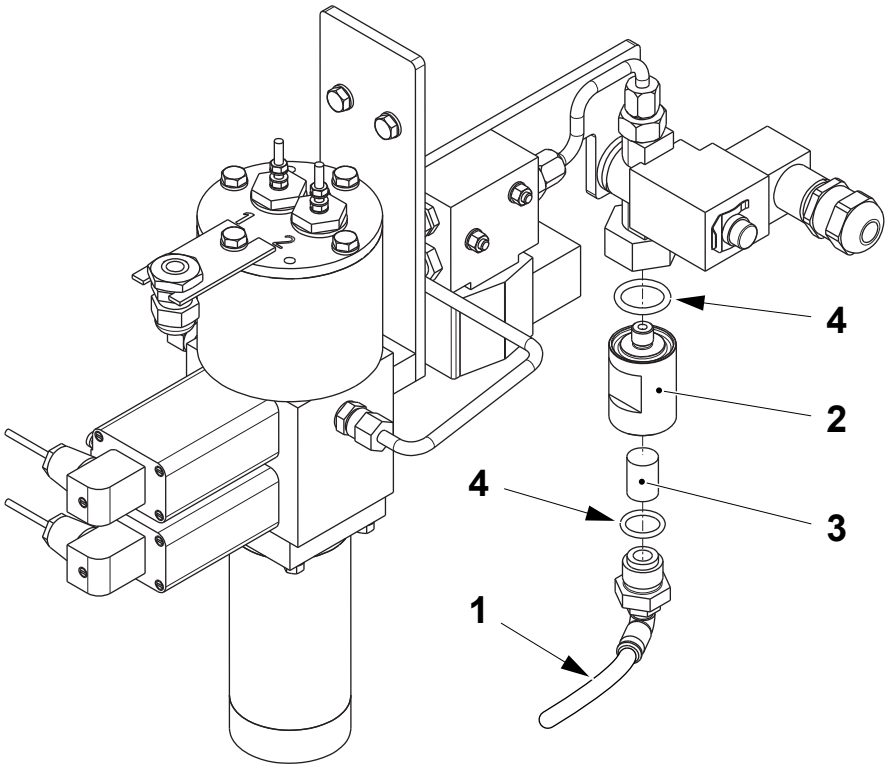

1 Air pipe
2 Filter housing
3 Filter
4 Gasket

TechPub_2614345_0108 - 0101_3048096_01.fm

1.8 Frame Section, Upper

SPC Reference	1558497-0500

1.8.1 Bending Roller

1.8.1-1 Bending Roller - Overhaul

Machine Status	Mains Power OFF Air OFF Steam ON Water OFF
SPC Reference	2552125-0200

a) Make sure that the brake unit (1) is set to ZERO.

b) Make sure that the roller (2) rotates freely. If not, change the ball bearings (3) as follows.

c) Loosen the adjusting knob (4) and unscrew the knob (5).

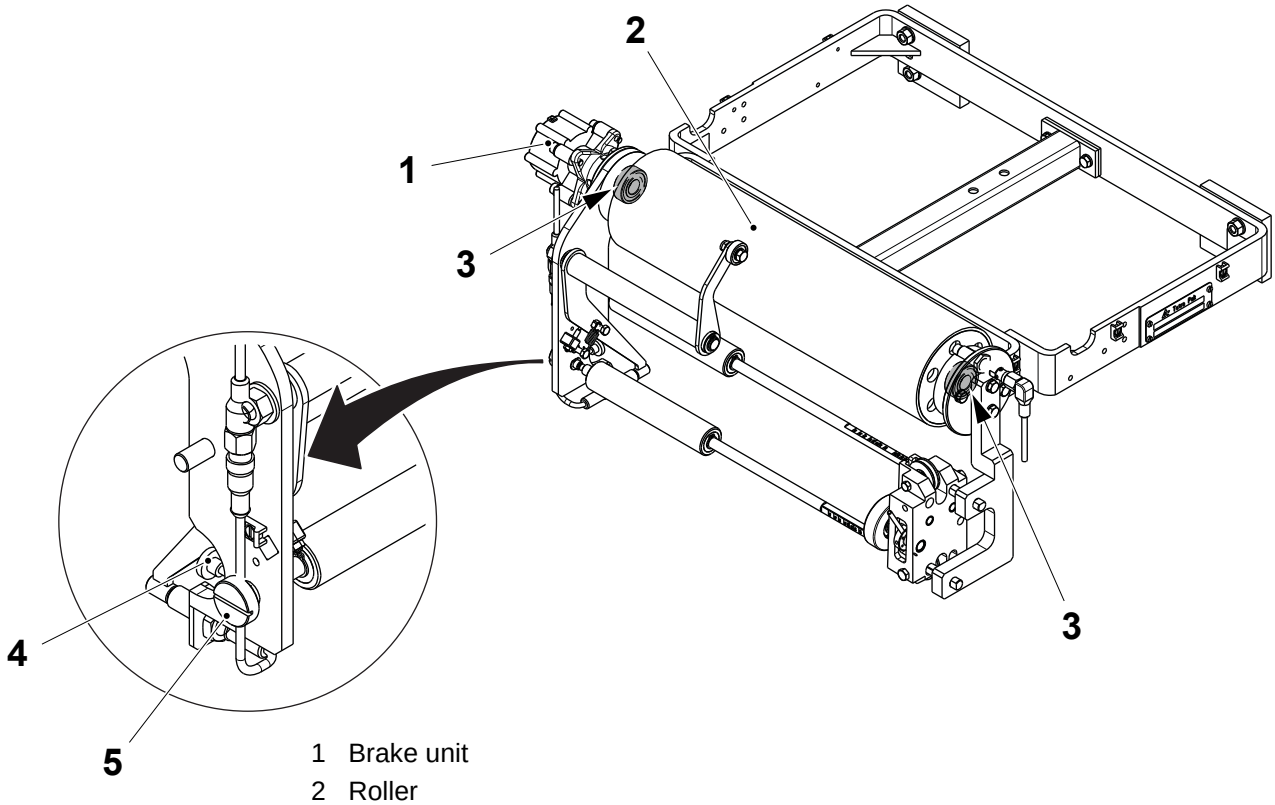

1 Brake unit
2 Roller
3 Ball bearing
4 Adjusting knob
5 Knob

(Cont'd)

TechPub_2614345_0108 - 0102_3048097_01.fm

(Cont'd)

d) Remove the screws (6), the brake unit (1) and the splice detector (7).

e) Remove the screws (8) and the plate (9).

f) Remove the bending roller (2) and change the bearings (3).

g) Assemble in the reverse order and adjust if necessary, see 1.8.1-3 Bending Roller - Set Splice Detector.

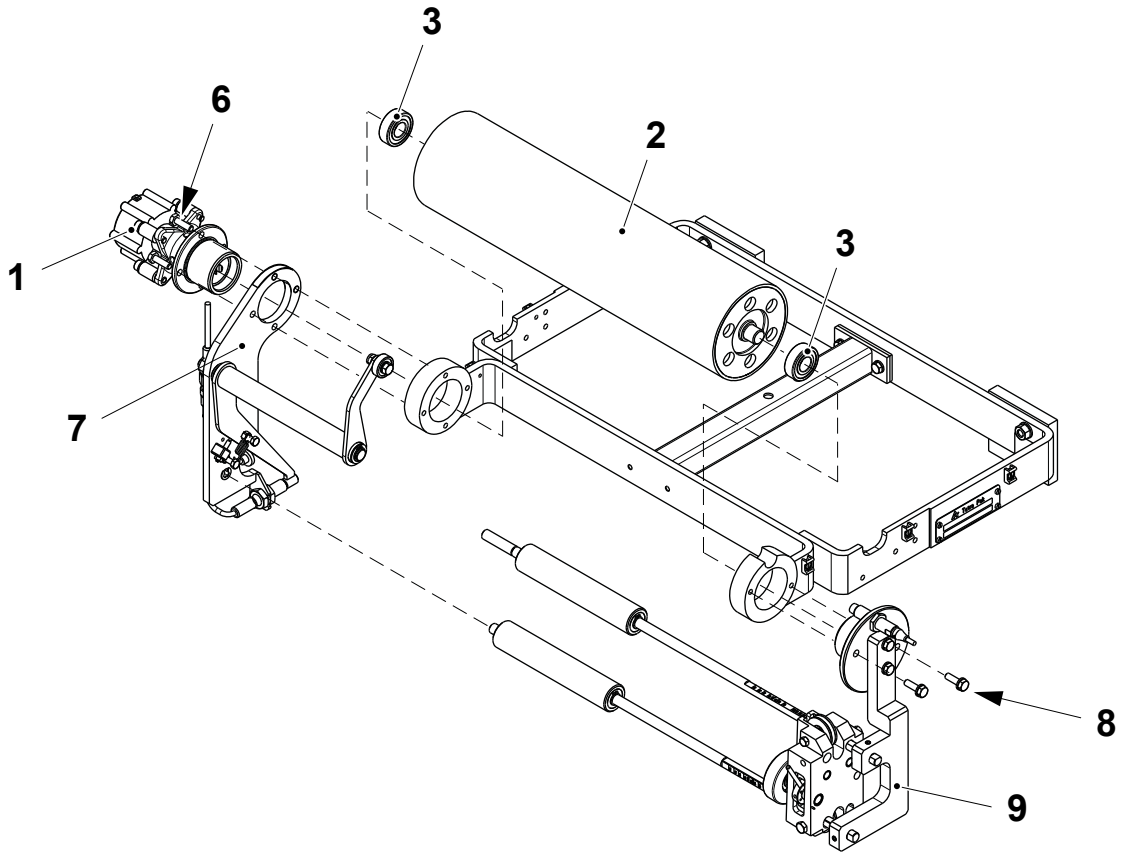

1 Brake unit
2 Bending roller
3 Bearing
6 Screw
7 Splice detector
8 Screw
9 Plate

TechPub_2614345_0108 - 0102_3048097_01.fm

1.8.1-2 Bending Roller - Check Splice Detector

Machine Status	Mains Power ON Air OFF Steam ON Water OFF
SPC Reference	2552125-0200

a) Make sure that the bearing (1) rotates easily, if not change it by removing the screw (2) and the nut (3).

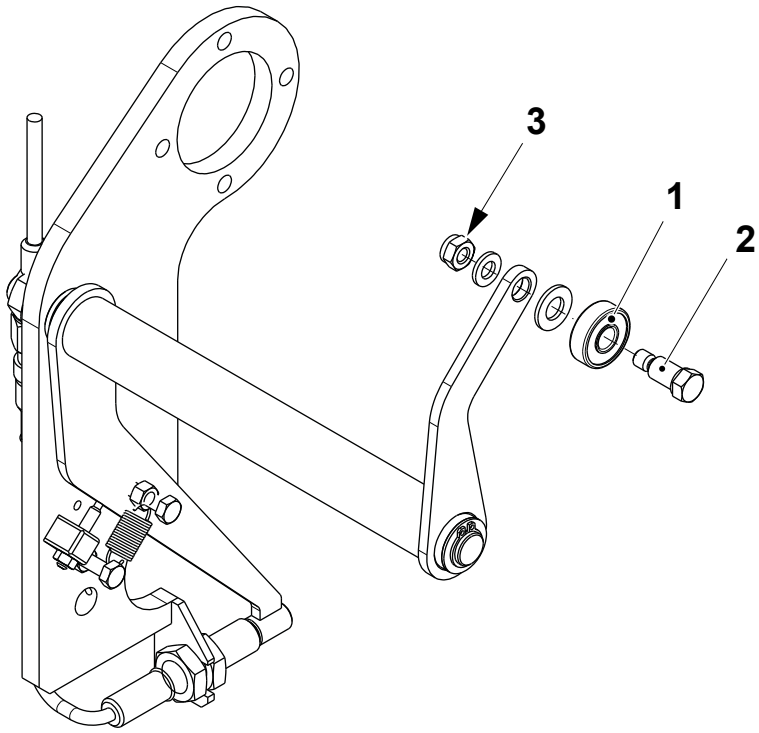

1 Bearing
2 Screw
3 Nut

(Cont'd)

TechPub_2614345_0108 - 0102_3048097_01.fm

(Cont'd)

b) Make sure that the spring (4) is intact, if not change it.

c) Make sure that the bracket (5) moves freely. If not, remove the retaining ring (6), the spring (4) and pull out the bracket. Clean the bushings (7) if necessary. Assemble in the reverse order.

d) Check the LED on the sensor (8) is OFF; slightly move the bracket (5) away from the sensor (8) and check the LED turns ON.

e) Check that the machine ejects three packages and that the package with the taped piece is among these.

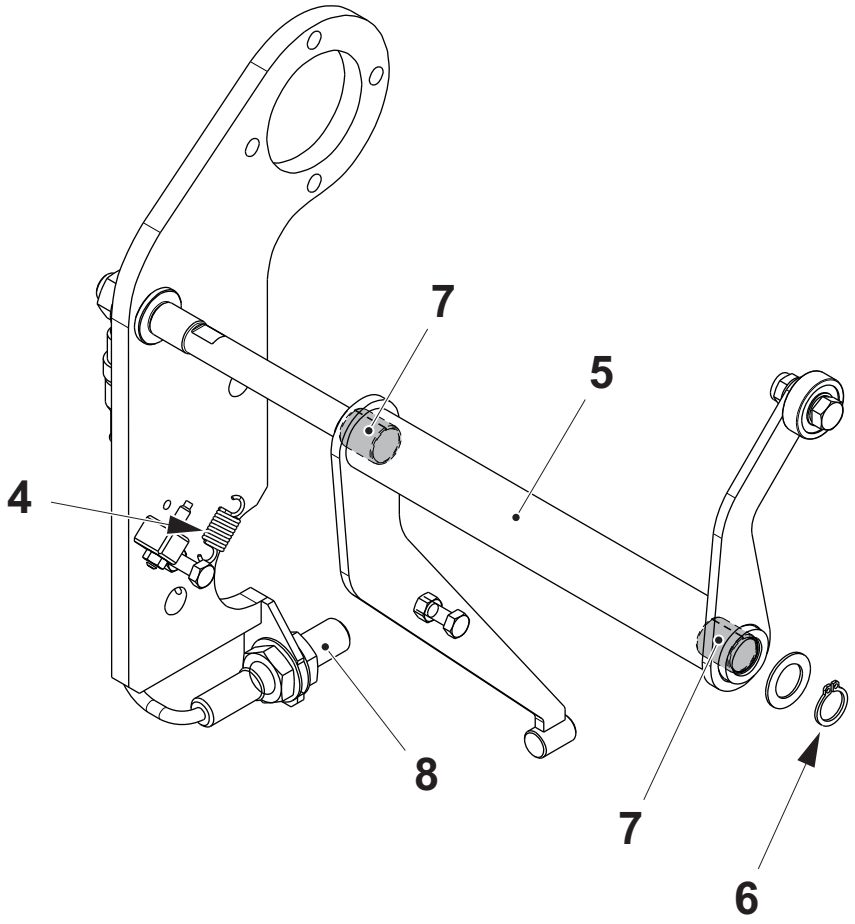

4 Spring
5 Bracket
6 Retaining ring
7 Bushing
8 Sensor

TechPub_2614345_0108 - 0102_3048097_01.fm

1.8.1-3 Bending Roller - Set Splice Detector

Machine Status	Mains Power ON Air OFF Steam ON Water OFF
SPC Reference	2552125-0200

(Cont'd)

TechPub_2614345_0108 - 0102_3048097_01.fm

(Cont'd)

a) With the packaging material (1) on the bending roller (2), adjust the grub screw (3) until the bearing (4) lightly touches the packaging material (1).

b) Check by manually moving the packaging material (1) that the bearing (4) rotates, but without marking the packaging material (1).

c) Insert a second layer of packaging material between the bending roller (2) and the bearing (4).

Note! The LED of the sensor (6) is ON when the sensor (6) is out of the working range.

d) Loosen the nuts (5) and adjust the position of the sensor (6) until the LED is ON, then make small adjustments to the position of the sensor (6) until the LED switches OFF.

e) Tight the nuts (5) and remove the second layer of packaging material.

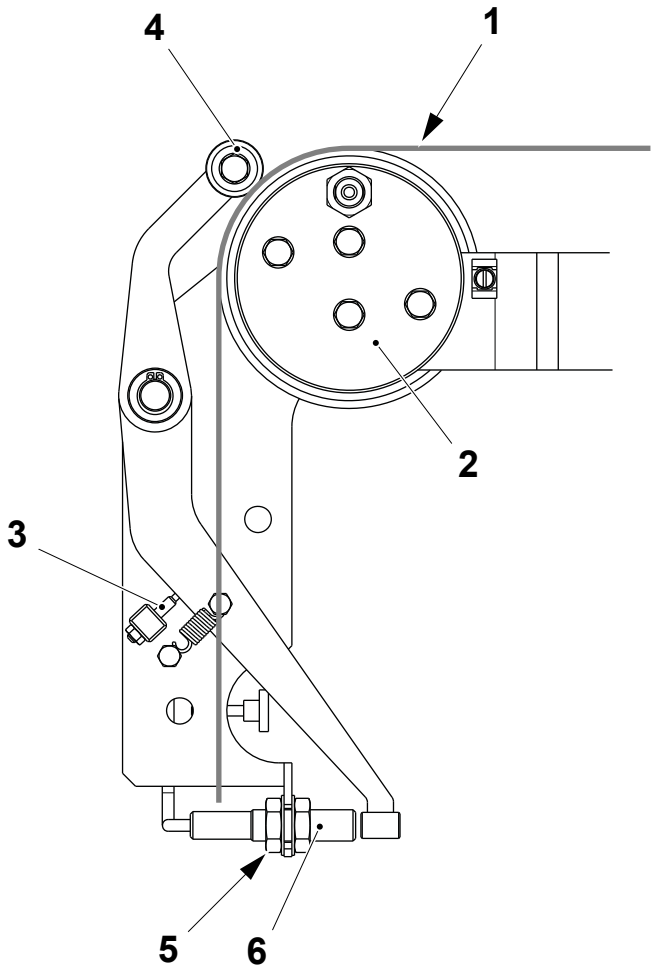

1 Packaging material
2 Bending roller
3 Screw
4 Bearing
5 Nut
6 Proximity sensor

TechPub_2614345_0108 - 0102_3048097_01.fm

1.8.1-4 Bending Roller - Set Paper Guide Position

Machine Status	Mains Power OFF Air OFF Steam ON Water OFF
SPC Reference	2552125-0200

Note! The paper guide (5) must be adjusted so that the packaging material (1) is approximately centred over the bending roller (2). The packaging material must pass in front of the roller (3) and behind the roller (4).

The paper guide (5) should be adjusted so that the packaging material passes between the guide rollers (6) and the edge guide roller (7) in such a way that the edge guide roller does not damage or bend the edge of the packaging material.

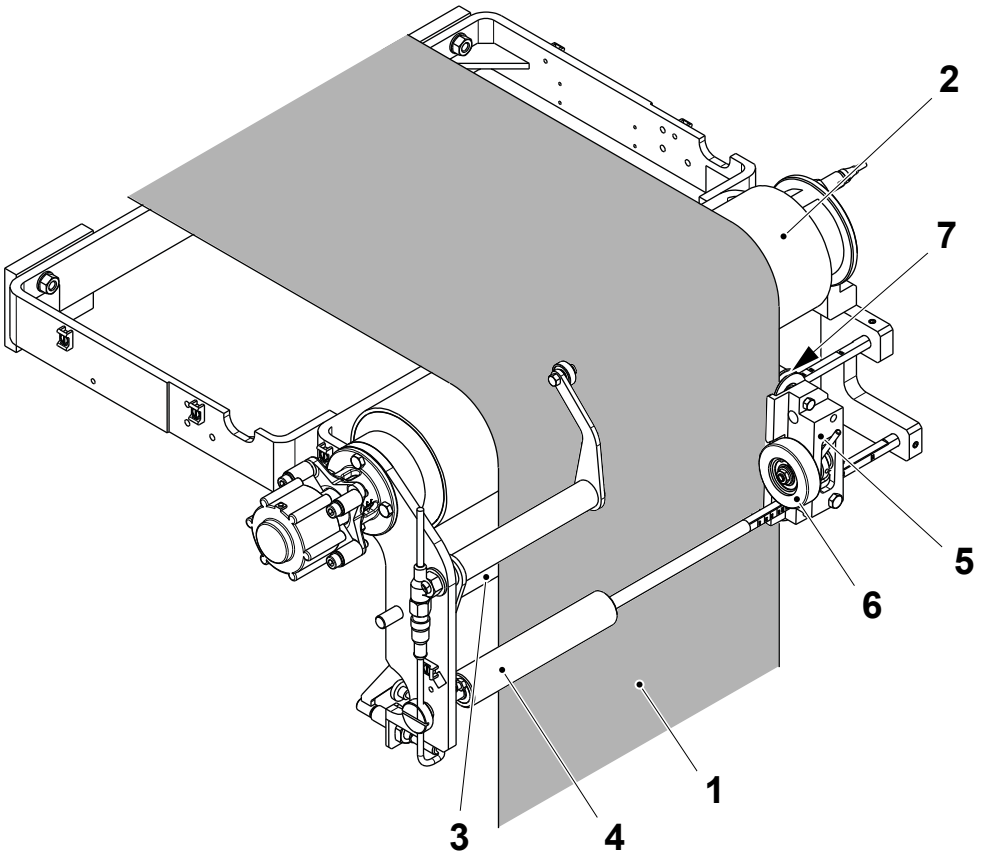

1 Packaging material
2 Bending roller
3 Roller
4 Roller
5 Paper guide
6 Guide roller
7 Edge guide roller

(Cont'd)

TechPub_2614345_0108 - 0102_3048097_01.fm

(Cont'd)

a) Loosen the screws (8) and (9).

b) Pull the lever (10) down to release the roller tension and feed the packaging material through the bending roller unit.

c) Pull the lever down and slide the paper guide (5) until the packaging material is positioned between the guide rollers (6) and between the flanges of the edge guide roller (4).

d) Release the lever and tighten the screws (8) and (9).

e) Turn the screw (11) to finely adjust the position of the packaging material between the flanges of the edge guide roller.

f) Tighten the adjusting knob (12).

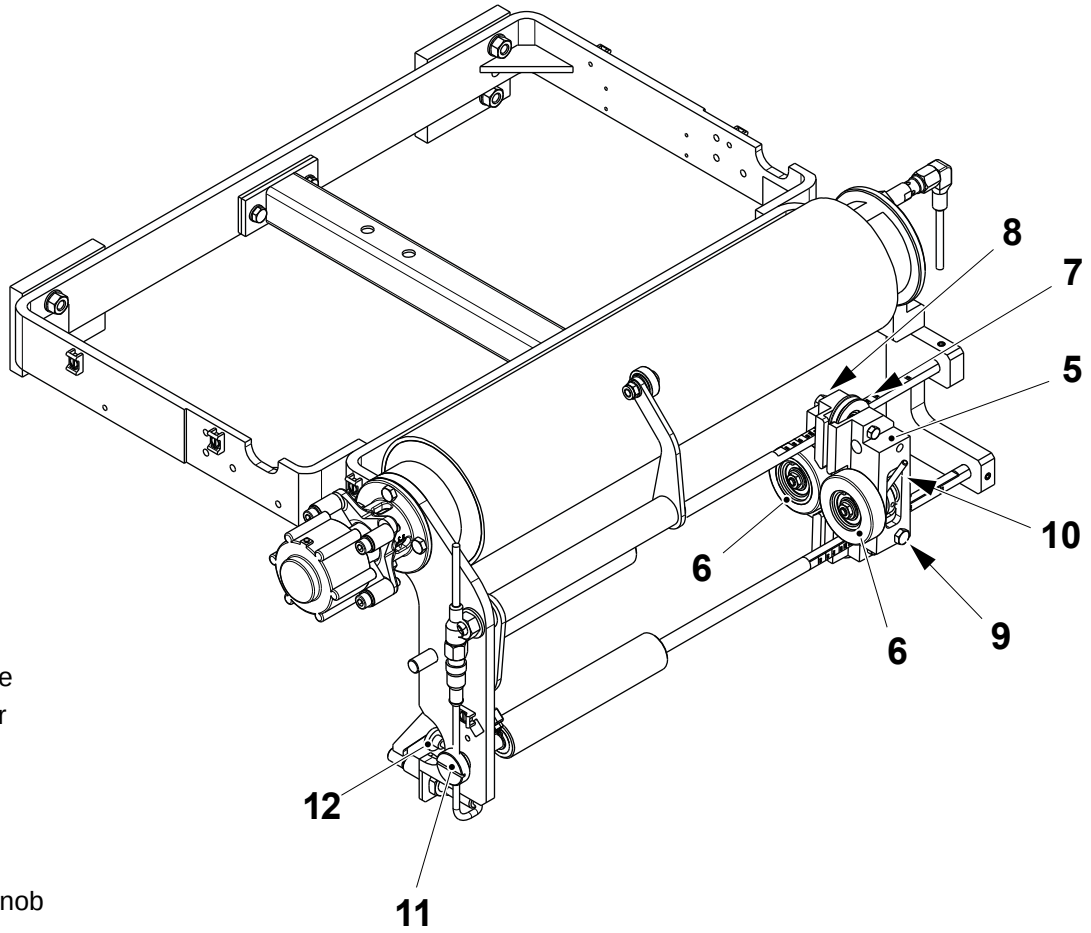

5 Paper guide
6 Guide roller
8 Screw
9 Screw
10 Lever
11 Screw
12 Adjusting knob

TechPub_2614345_0108 - 0102_3048097_01.fm

1.8.1-5 Bending Roller - Check Paper Guide

Machine Status	Mains Power OFF Air OFF Steam ON Water OFF
SPC Reference	2552125-0200

Check that the surfaces of the steel roller (1) and the rubber roller (2) are not damaged. Check also that they rotate freely. If there are any irregularities change the defective components, see the following pages.

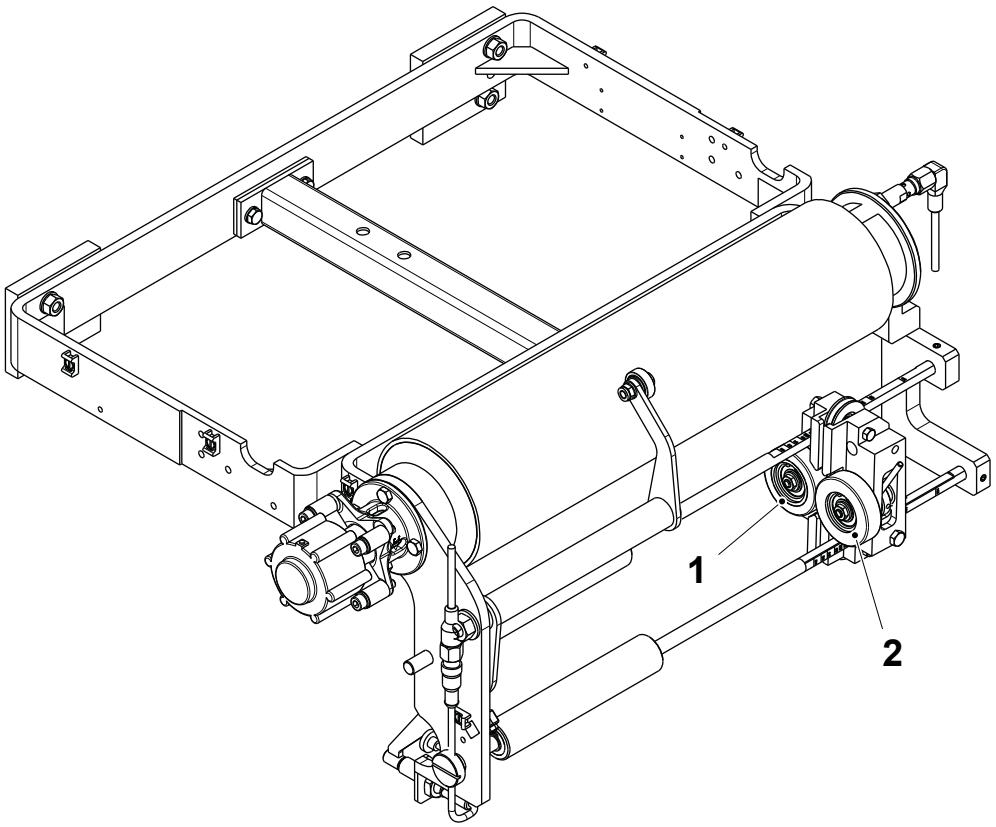

1 Steel roller
2 Rubber roller

(Cont'd)

TechPub_2614345_0108 - 0102_3048097_01.fm

(Cont'd)

Paper Guide Removal

a) Loosen the adjusting knob (1) and unscrew the knob (2).

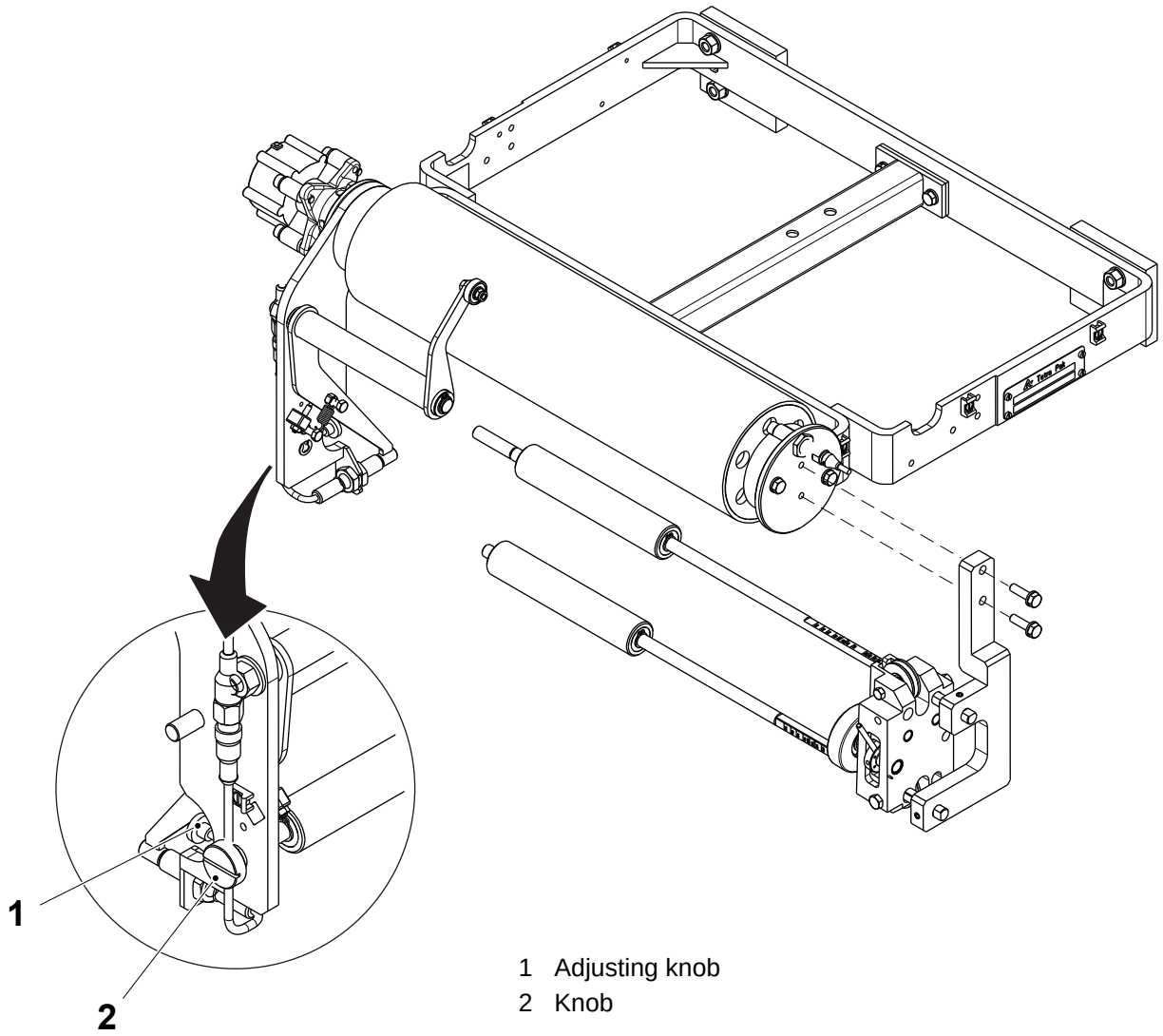

1 Adjusting knob
2 Knob

(Cont'd)

TechPub_2614345_0108 - 0102_3048097_01.fm

(Cont'd)

b) Remove the screws (3) and the paper guide assembly (4).

c) Loosen the grub screws (5) and remove the plate (6).

d) Loosen the screws (7) and slip off the paper guide (8).

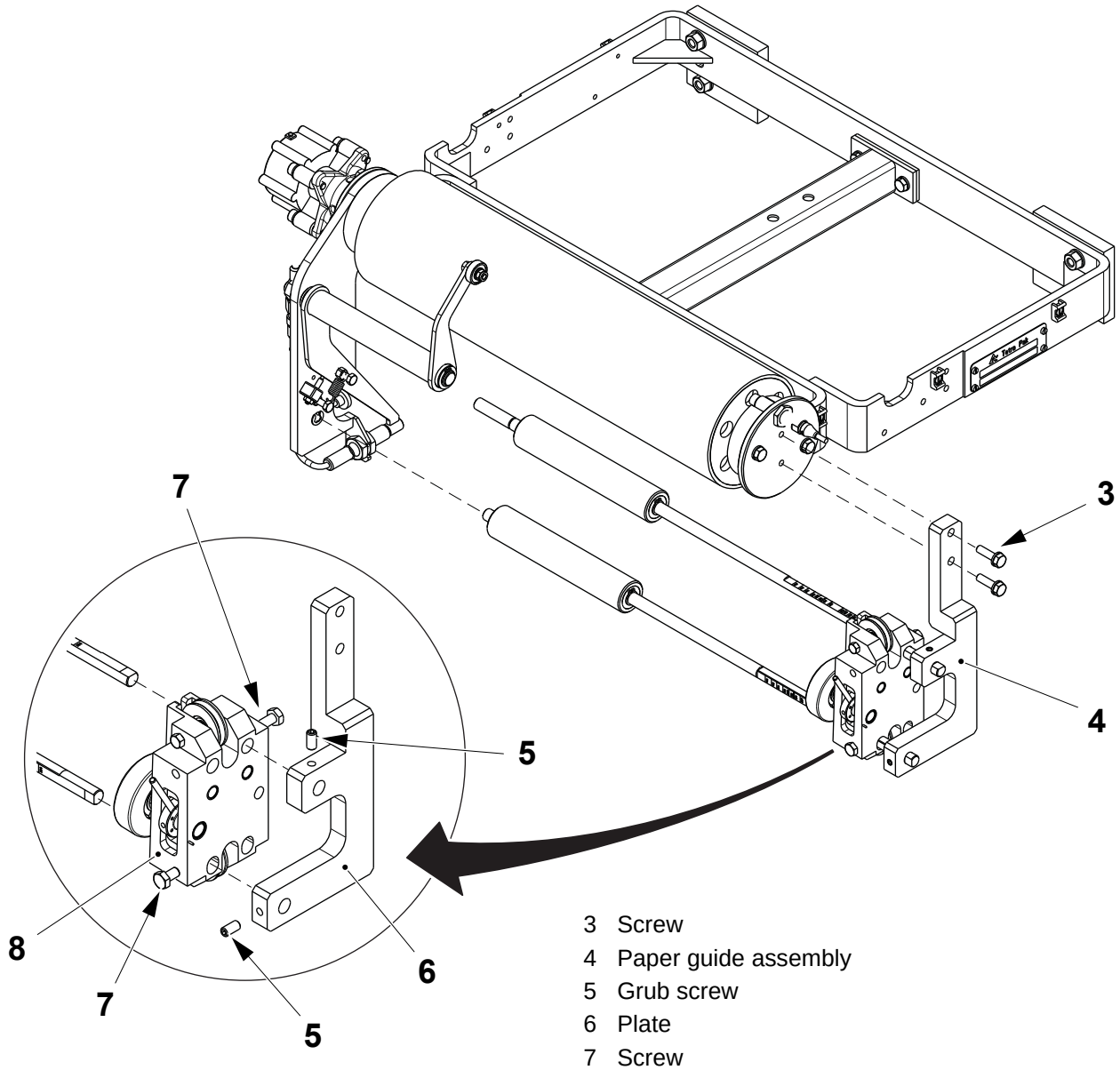

3 Screw
4 Paper guide assembly
5 Grub screw
6 Plate
7 Screw
8 Paper guide

(Cont'd)

TechPub_2614345_0108 - 0102_3048097_01.fm

(Cont'd)

e) Overhaul the paper guide, see Paper Guide Overhaul on page 1-441.

f) Assemble in the reverse order.

Note! When assembling, make sure that the ends of the rods (9) and (10) are aligned with the outer surface of the plate (6).

g) Set the correct packaging material width, see 1.8.1-6 Bending Roller - Set Web Width.

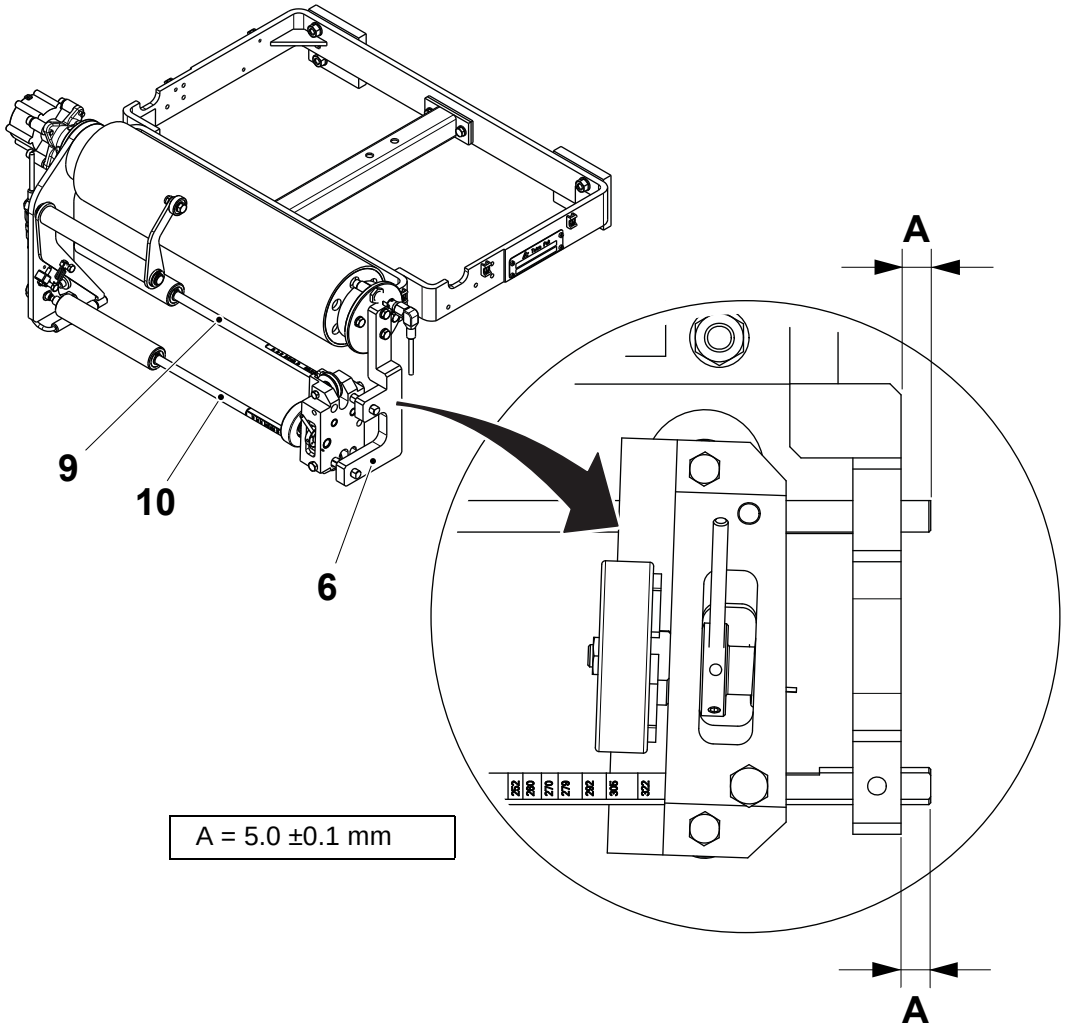

6 Plate
9 Rod
10 Rod

(Cont'd)

TechPub_2614345_0108 - 0102_3048097_01.fm

(Cont'd)

Paper Guide Overhaul

a) Remove the nuts (1), the washers (2) and the retaining rings (3).

b) Change the steel roller (4), the rubber roller (5) and the bearings (6).

c) Remove the shaft (7) and the wheel (8).

d) Change the bushing (9) and the bearing (10).

Note! When assembling, fit the rubber roller (5) on to the printed side of the packaging material web.

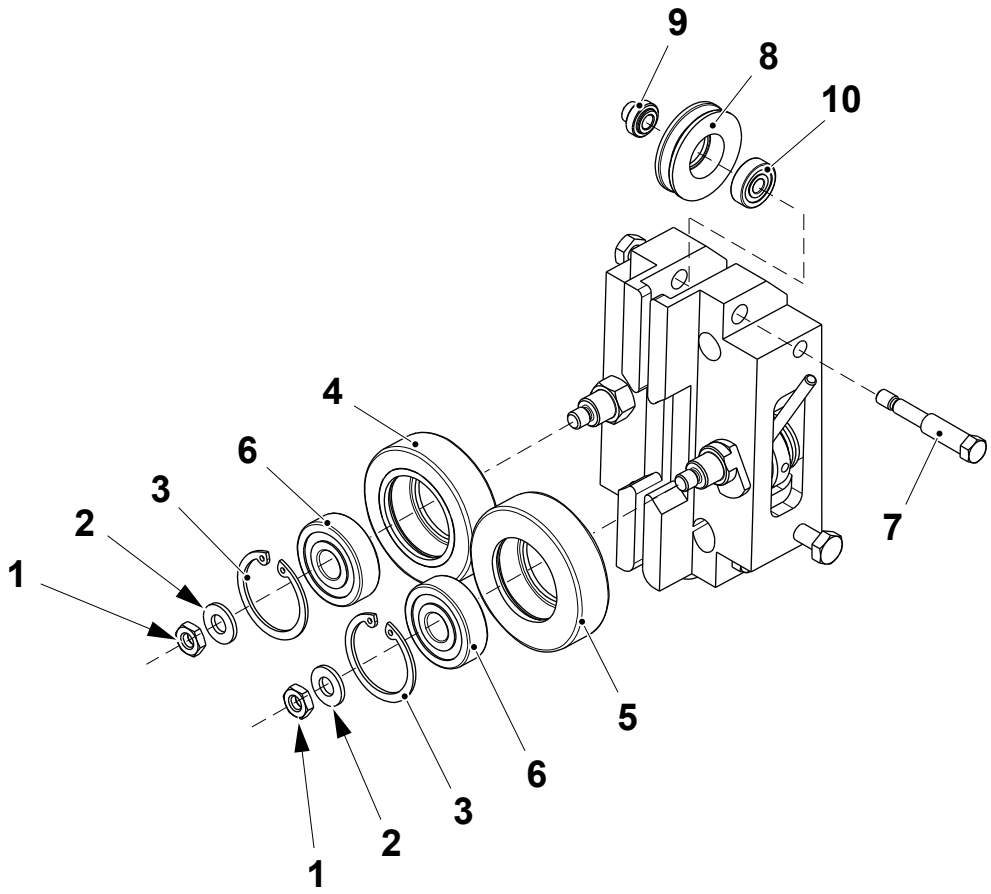

1 Nut
2 Washer
3 Retaining ring
4 Steel roller
5 Rubber roller
6 Bearing
7 Shaft
8 Wheel
9 Bushing
10 Bearing

(Cont'd)

TechPub_2614345_0108 - 0102_3048097_01.fm

(Cont'd)

e) Remove the lever (11).
f) Loosen the grub screw (12) and the eccentric shaft (13).
g) Remove the wheel (14) and change the spring (15).
h) Assemble in the reverse order.

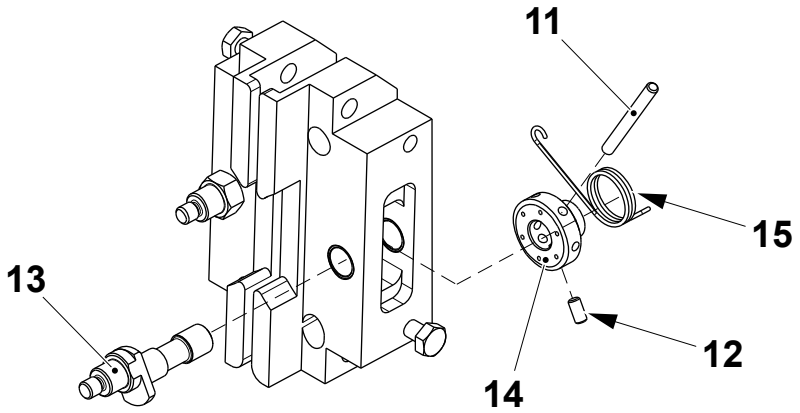

11 Lever
12 Grub screw
13 Shaft
14 Wheel
15 Spring

TechPub_2614345_0108 - 0102_3048097_01.fm

1.8.1-6 Bending Roller - Set Web Width

Machine Status	Mains Power OFF Air OFF Steam ON Water OFF
SPC Reference	2552125-0200

a) Loosen the screws (1) and set the web width, see the table on the next page, by aligning the correct datum line (2) on the rods (3) with the external surface of paper guide (4).

b) Fine adjust the web width with the knob (5).

c) Tighten the screws (1) and the adjusting knob (6).

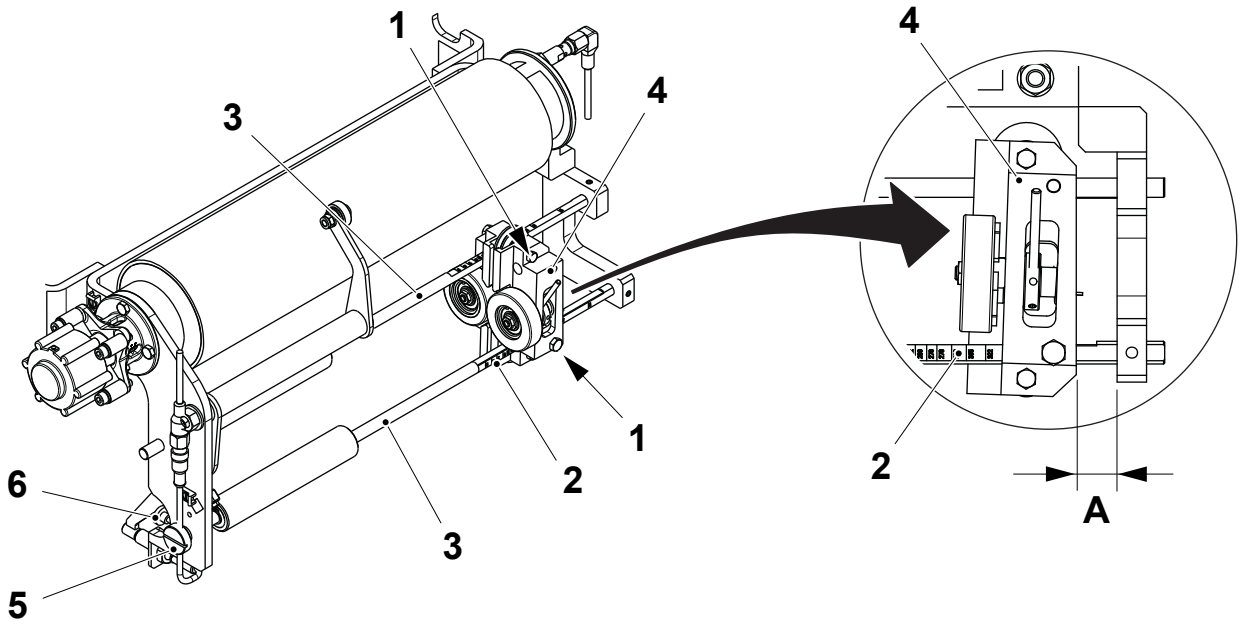

1 Screw
2 Datum line
3 Rod
4 Paper guide
5 Knob
6 Adjusting knob

(Cont'd)

TechPub_2614345_0108 - 0102_3048097_01.fm

(Cont'd)

Web Width

Package	Web width (mm)
TBA 200 S	174.0
TBA 250 B - TBA 200 B	214.0
TBA 250 S - TBA 200 M	188.0
TBA 125 S	162.0
TBA 1000 S	305.0
TBA 1000 Sq	292.0
TBA 1000 B	322.0

TechPub_2614345_0108 - 0102_3048097_01.fm

1.8.1-7 Bending Roller - Set Paper Guide Pressure

Machine Status	Mains Power OFF Air OFF Steam ON Water OFF
SPC Reference	2552125-0200

a) Remove the lever (1) and loosen the grub screw (2).

b) Rotate the wheel (3) to adjust the tension: increase the pressure on the roller (4) until the packaging material (5) stays up against the guide wheel (6). If the packaging material edge curls or is damaged in any way, the pressure has been increased too much.

c) Tighten the grub screw (2).

d) Fit the lever (1) to test the tension.

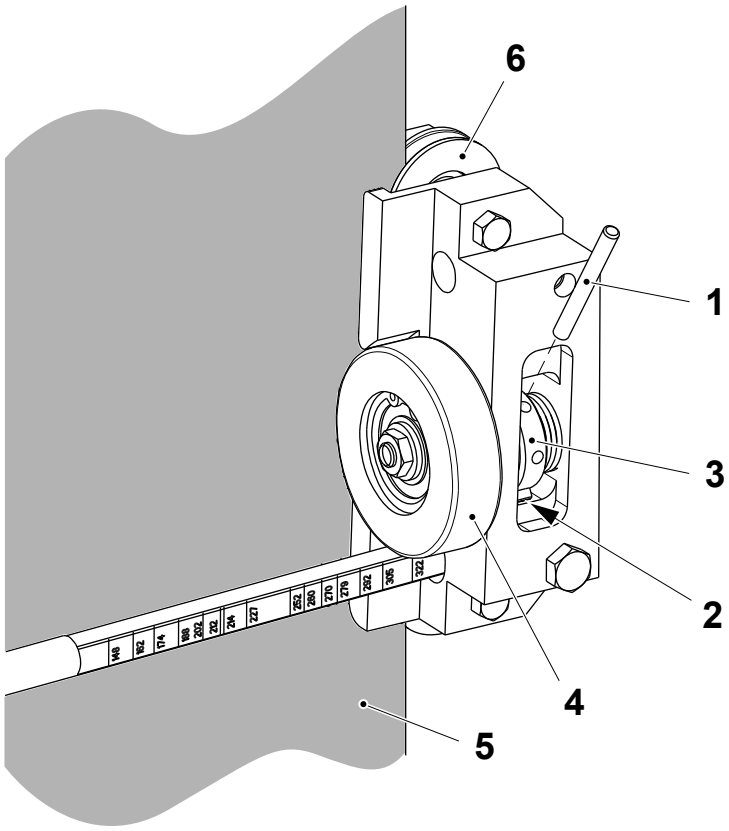

1 Lever
2 Grub screw
3 Wheel
4 Roller
5 Packaging material
6 Guide wheel

TechPub_2614345_0108 - 0102_3048097_01.fm

1.8.1-8 Bending Roller - Check Proximity Switch

Machine Status	Mains Power ON Air OFF Steam ON Water OFF
SPC Reference	2552125-0200

Check:

- the distance **A** between the roller (1) and the proximity switch (2).
- the function of the proximity switch (2). Turn the roller (1) and check that the proximity switch LED goes out when the proximity switch (2) passes over the holes in the bending roller (1).

Set the proximity switch if necessary, see 1.8.1-9 Bending Roller - Set Proximity Switch.

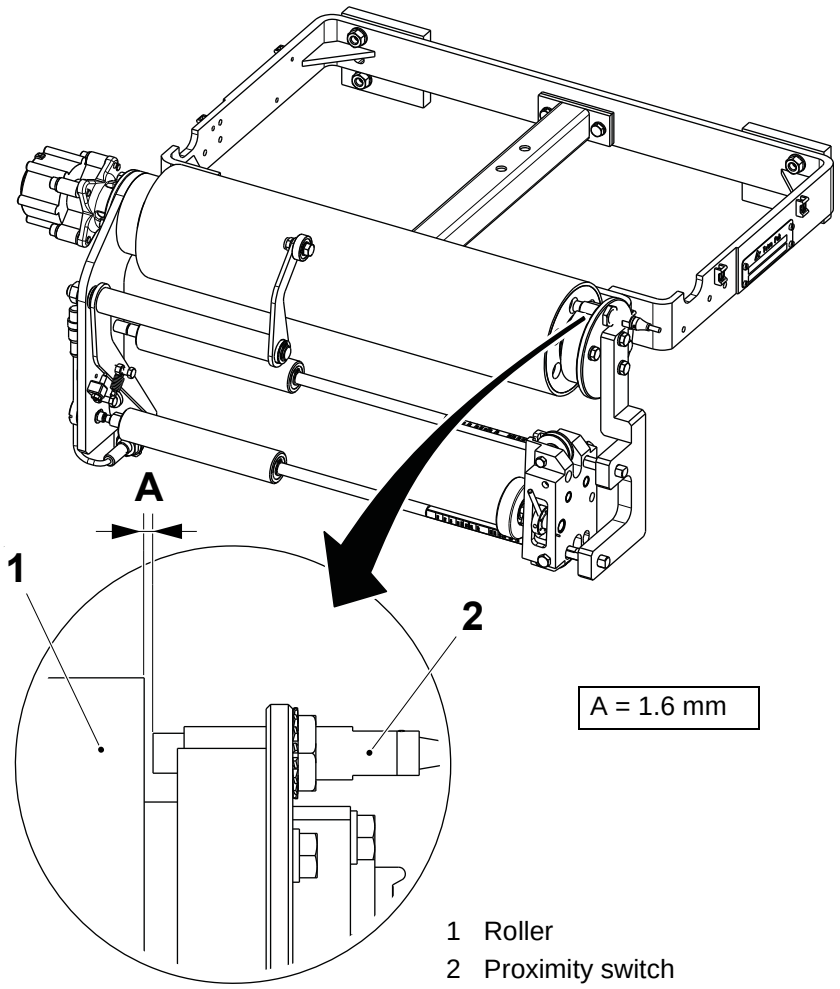

1 Roller
2 Proximity switch

TechPub_2614345_0108 - 0102_3048097_01.fm

1.8.1-9 Bending Roller - Set Proximity Switch

Machine Status	Mains Power ON Air OFF Steam ON Water OFF
SPC Reference	2552125-0200

a) Loosen the nut (1).

b) Set distance **A** between the proximity switch (2) and the surface of the roller (3).

c) Tighten the nut (1).

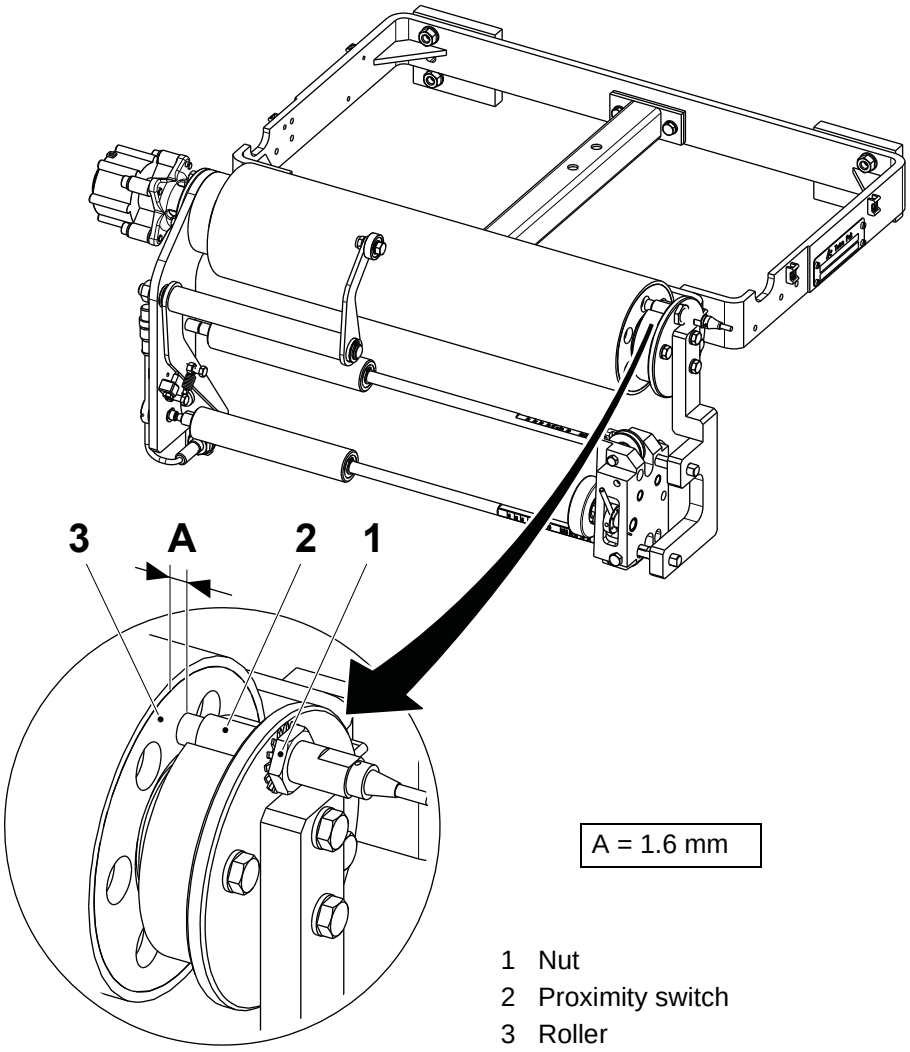

1 Nut
2 Proximity switch
3 Roller

TechPub_2614345_0108 - 0102_3048097_01.fm

1.8.2 Electrical Equipment

1.8.2-1 Electrical Equipment - Check Pressure Sensor

Machine Status	Mains Power ON Air ON Steam ON Water ON
SPC Reference	2986260-0100

a) Remove the hoses (1) and (2) from the pressure sensor (3).

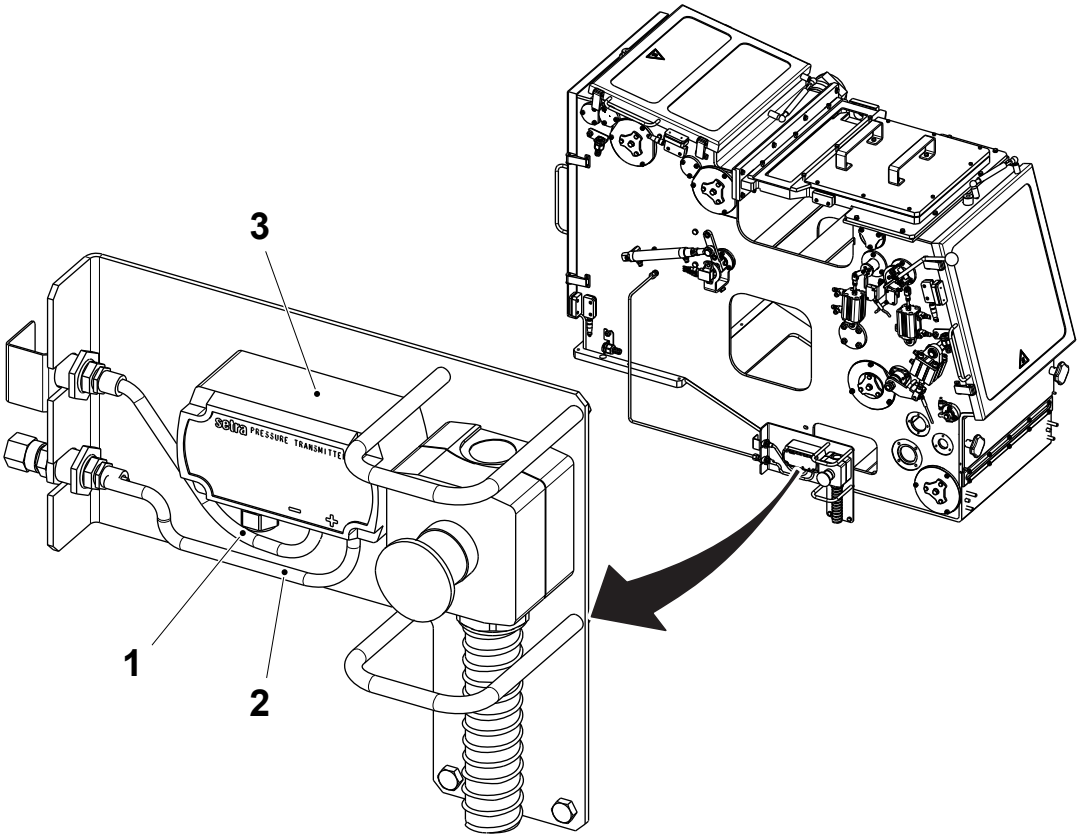

1 Hose
2 Hose
3 Pressure sensor

(Cont'd)

TechPub_2614345_0108 - 0101_3048098_01.fm

(Cont'd)

b) Touch the PRODUCTION CONTROL button (4) on the filling machine TPOP screen.

c) Touch the STERILE AIR SYSTEM button (5).

d) Touch the ASEPTIC CHAMBER AIR PRESSURE icon (6) to display the ASEPTIC CHAMBER AIR PRESSURE monitor (7).

e) The ASEPTIC CHAMBER AIR PRESSURE monitor (7) should show 0 ±2 units. If not, change the pressure sensor.

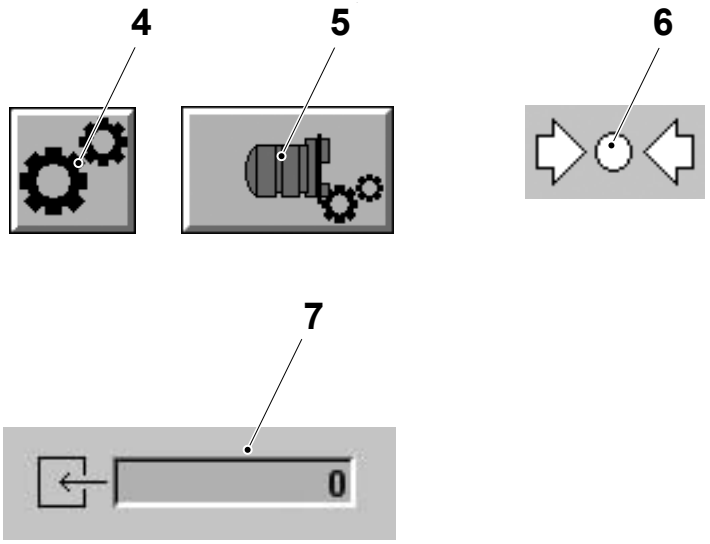

4 Production control button
5 Sterile air system button
6 Aseptic chamber air pressure icon
7 Aseptic chamber air pressure monitor

TechPub_2614345_0108 - 0101_3048098_01.fm

(Cont'd)

(Cont'd)

Note! If the pressure sensor must be changed, ensure that the cable (10) is wired and shielded according to the Electrical Manual.

Note! When assembling, make sure that the hoses (1) and (2) are properly connected.

f) Connect the hose (1) to the connection marked with the minus sign (8).

g) Connect the hose (2) from the aseptic chamber to the connection marked with the plus sign (9).

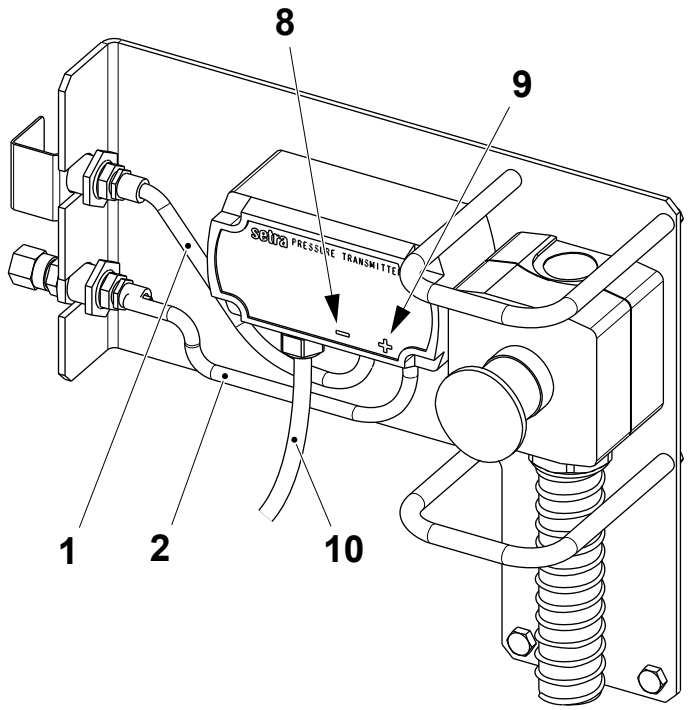

1 Hose
2 Hose
8 Minus sign
9 Plus sign
10 Cable

TechPub_2614345_0108 - 0101_3048098_01.fm

1.8.3 Tab Folding

1.8.3-1 Tab Folding - Set Pressure Wheel

Machine Status	Mains Power OFF Air OFF Steam ON Water OFF
SPC Reference	2758910-0300

Note! Valid for TBA 1000 S with PT Speed.

a) Fit the spring (1) in the slot of the shaft (2).

b) Adjust the nut (3) to set the distance **A** between the fork (4) and the support (5).

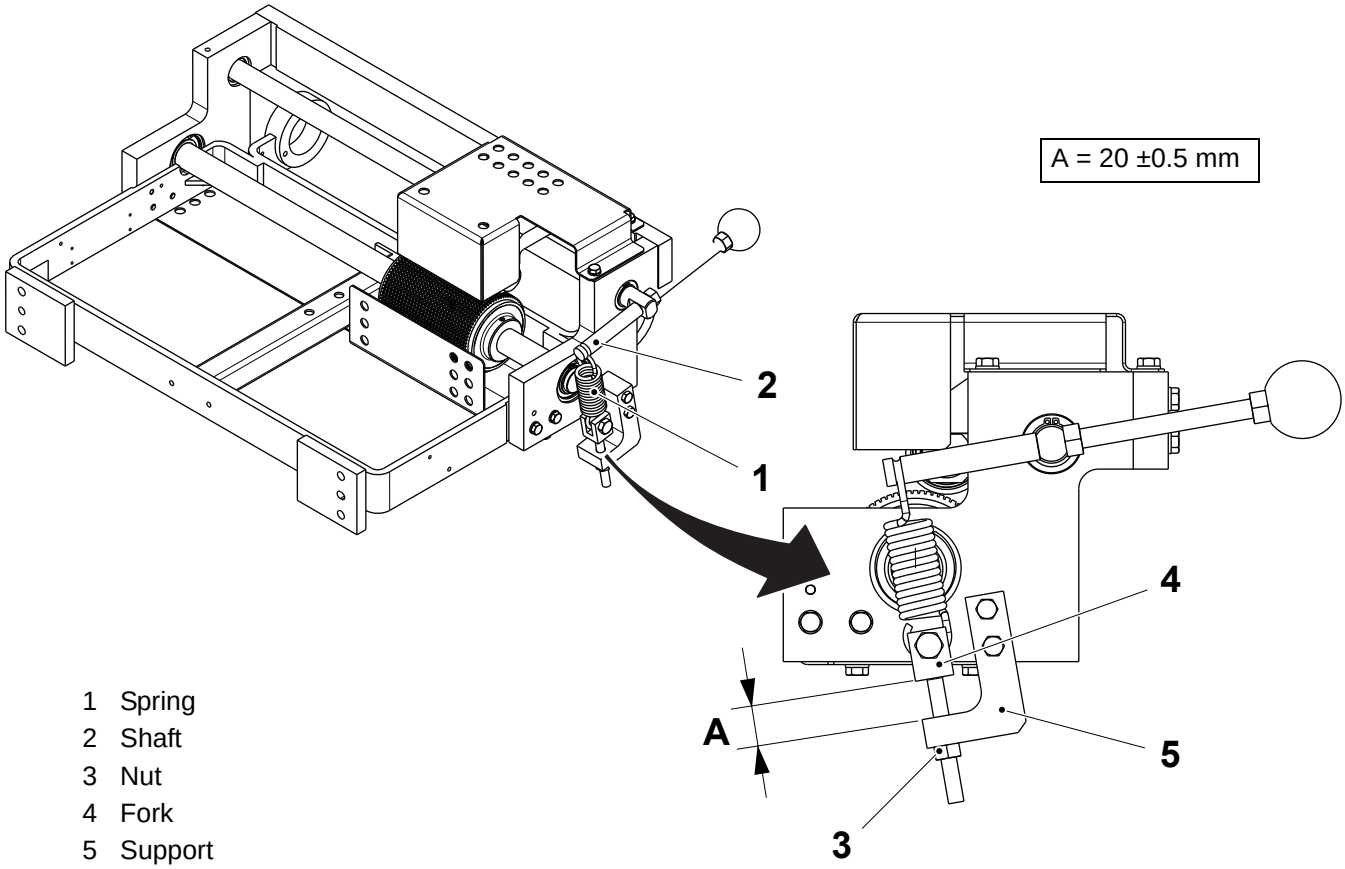

1 Spring
2 Shaft
3 Nut
4 Fork
5 Support

TechPub_2614345_0107 - 0101_3048099_01.fm

1.8.3-2 Tab Folding - Overhaul

Machine Status	Mains Power OFF Air OFF Steam ON Water OFF
SPC Reference	2758910-0300

Note! Valid for TBA 1000 S with PT Speed.

a) Remove the screws (1) and the touch guard (2).

b) Remove the roller assembly (3) from the shaft (4).

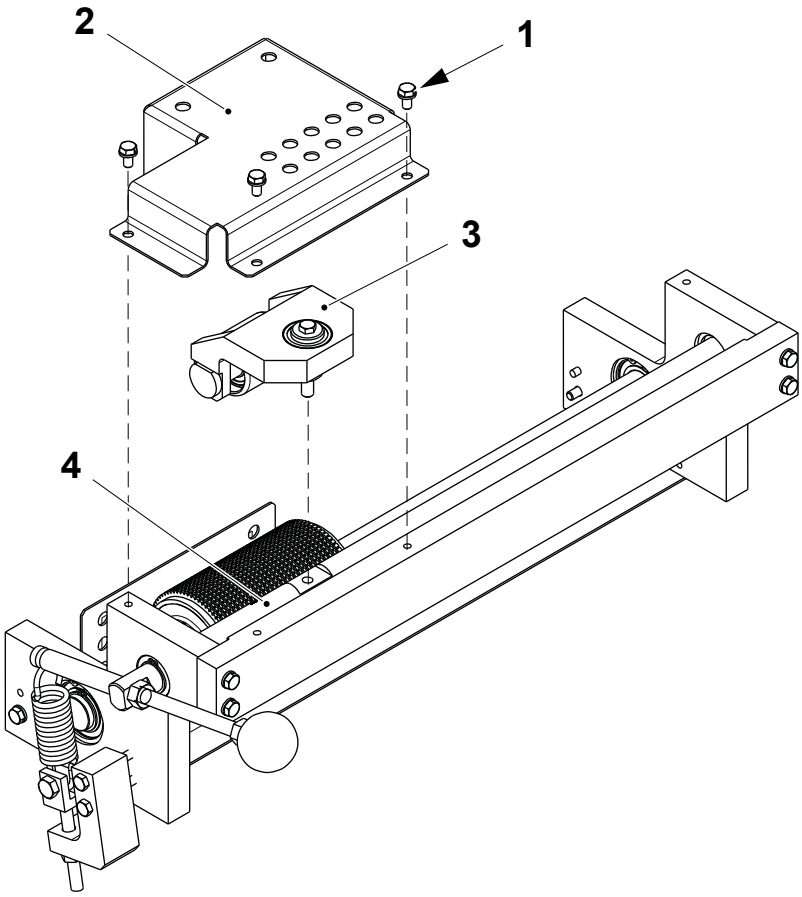

1 Screw
2 Touch guard
3 Roller assembly
4 Shaft

(Cont'd)

TechPub_2614345_0107 - 0101_3048099_01.fm

(Cont'd)

c) Remove the screw (5).

d) Remove the pin (6) and the ball bearings (7) from the bracket (8). Change if the necessary.

e) Loosen the nut (9) and remove the shaft (10).

f) Remove the wheel (11) and change the ball bearing (12).

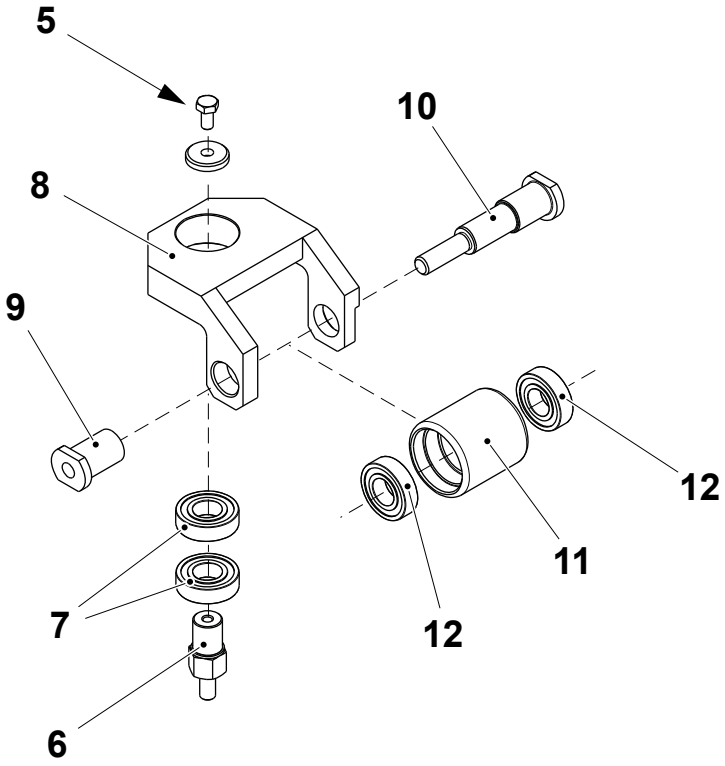

5 Screw
6 Pin
7 Ball bearing
8 Bracket
9 Nut
10 Shaft
11 Wheel
12 Ball bearing

(Cont'd)

TechPub_2614345_0107 - 0101_3048099_01.fm

(Cont'd)

Note! When assembling, centre the roller (13) on the shaft (14) by tightening the screw (15) in the hole (16).

g) Remove the spring (17).

h) Remove the retaining rings (18) and pull out the shaft (14).

i) Loosen the screw (15) and remove the roller (13).

j) Remove the retaining rings (19).

k) Remove and change the ball bearings (20).

l) Assemble in the reverse order.

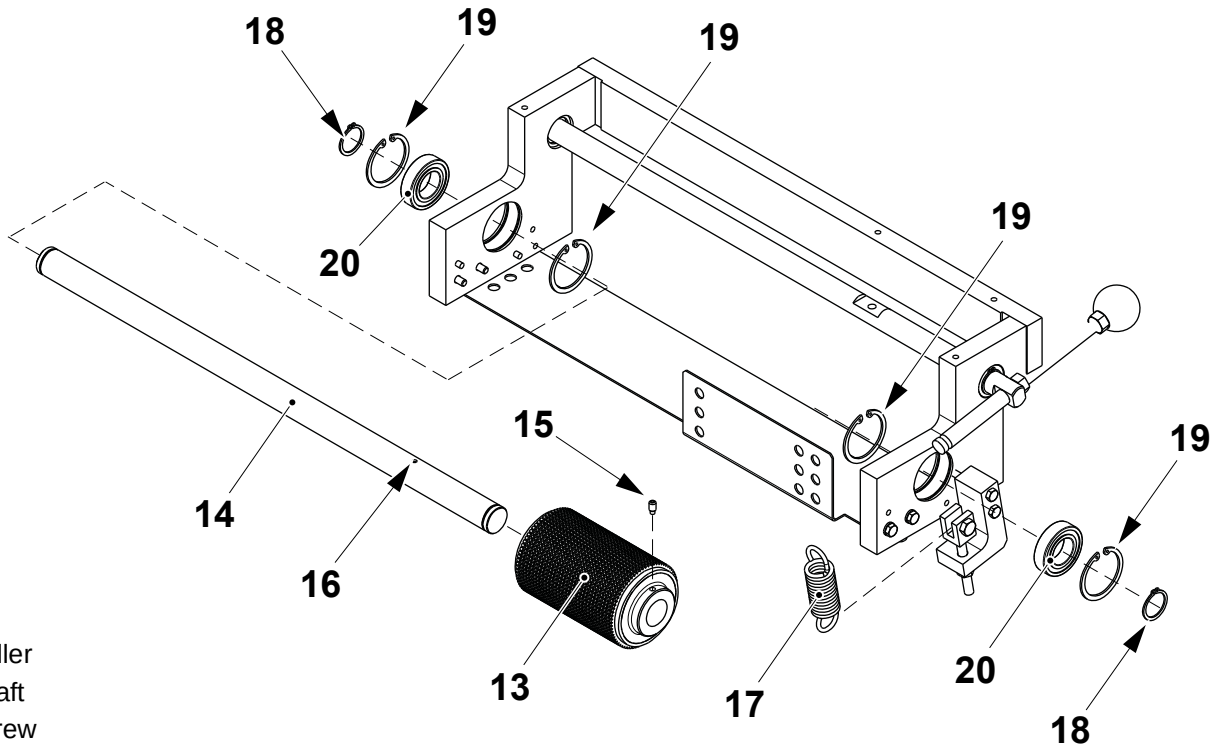

13 Roller
14 Shaft
15 Screw
16 Hole
17 Spring
18 Retaining ring
19 Retaining ring
20 Ball bearing

TechPub_2614345_0107 - 0101_3048099_01.fm

1.9 Pneumatic System

SPC Reference	2528079-0400

1.9-1 Pneumatic System - Check

Machine Status	PREPARATION
SPC Reference	2528079-0400

Check that:

- the pneumatic pipes do not leak
- the components on the valve panel are clean and undamaged.

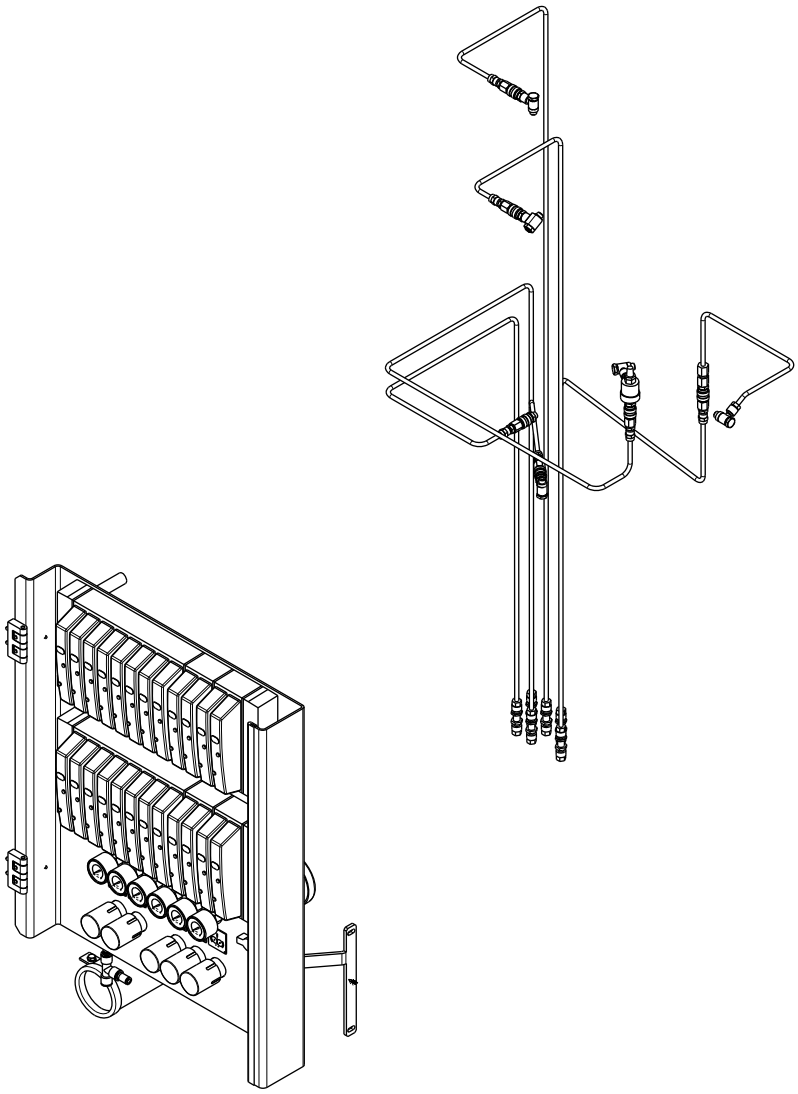

TechPub_2614345_0108 - 0102_3048100_01.fm

1.11 UV Lamp

SPC Reference	2540961-0200

1.11-1 UV Lamp- Check Functionality

Machine Status	PREPARATION
SPC Reference	2540961-0200

Check the functionality of the lamp (1) and the power supply unit (2).

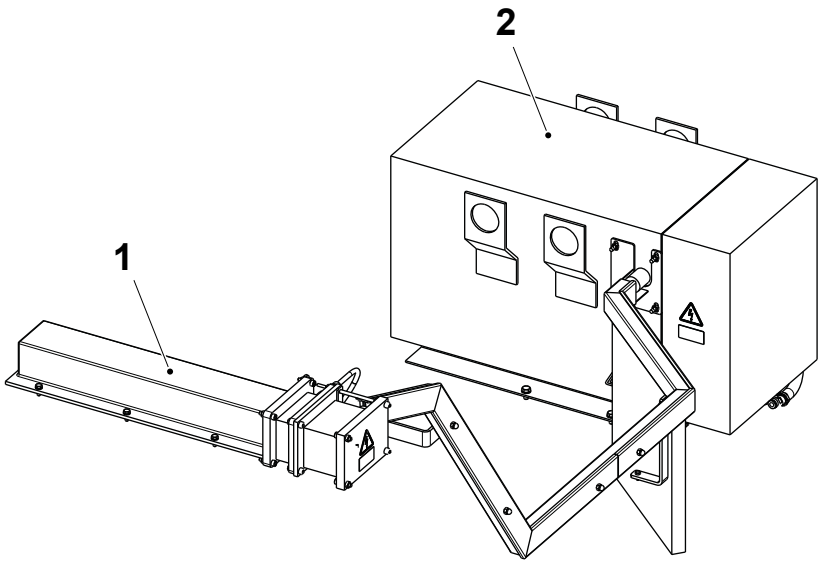

1 Lamp
2 Power supply unit

(Cont'd)

TechPub_2614345_0107 - 0102_3048101_01.fm

(Cont'd)

Proceed as follows:

a) In the TPOP panel, touch the MAINTENANCE CONTROL BUTTON (3) and enter the password required, see 9.6.3-2 HMI - User Management Log On.

a) Touch the UV LAMP button (4).

b) Touch the RUN GENERATOR icon (5) to enable the run generator function; the ON/OFF button appears.

c) Touch the ON button (6) to turn the power supply unit on.

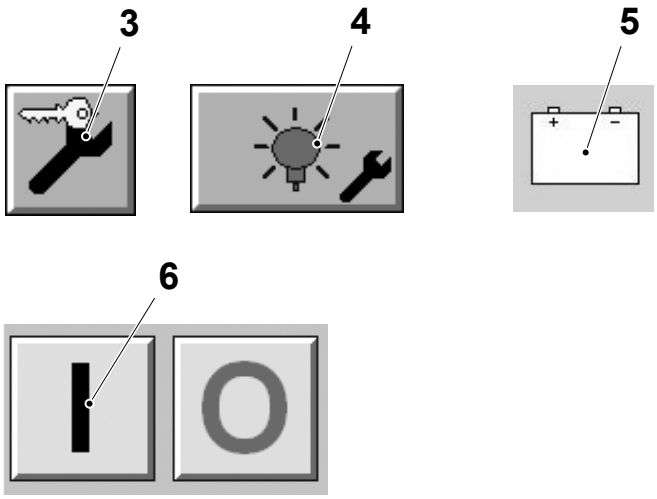

3 Maintenance control button
4 UV lamp button
5 Run generator icon
6 On button

(Cont'd)

TechPub_2614345_0107 - 0102_3048101_01.fm

(Cont'd)

d) Touch the RUN LAMP icon (7) to enable the run lamp function; the ON/OFF button appears.

e) Touch the ON button (8) to turn the lamp on.

f) Touch the GENERATOR POWER button (9).

g) Adjust the generator power, if necessary, by the arrow buttons (10) or the keyboard button (11): the working range is from 50% to 100%.

h) Check the radiometer intensity (12).

i) Touch the OFF button (13) to turn the lamp off.

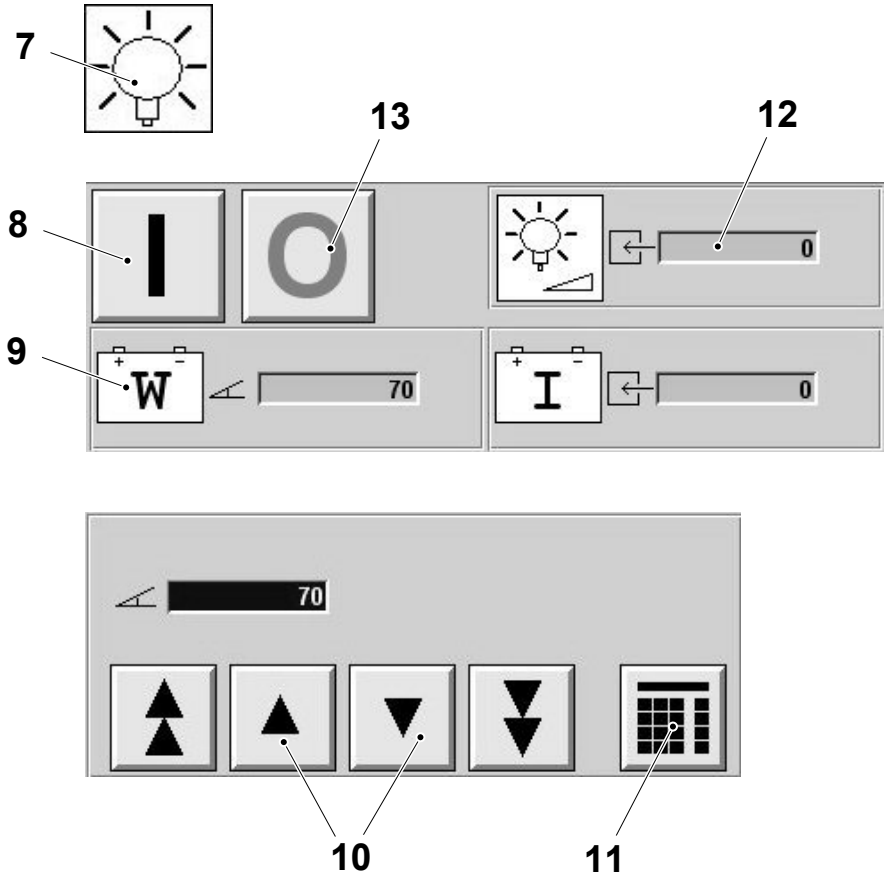

7 Run lamp icon
8 On button
9 Generator power button
10 Arrow button
11 Keyboard button
12 Radiometer intensity
13 Off button

(Cont'd)

TechPub_2614345_0107 - 0102_3048101_01.fm

(Cont'd)

j) Touch the `RUN GENERATOR` icon (5).

k) Touch the `OFF` button (14) to turn the power supply off.

l) Touch the `EXIT` button (15).

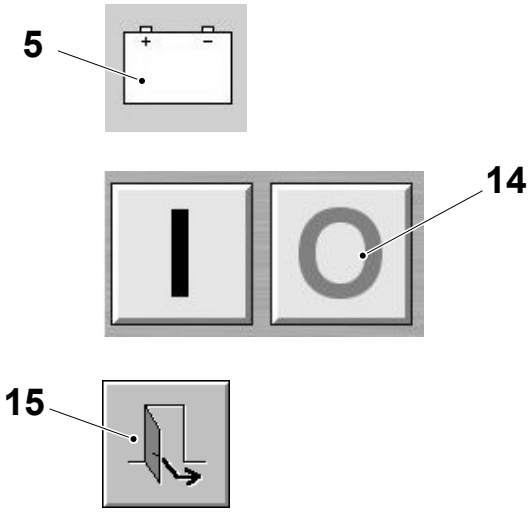

5 Run generator icon
14 Off button
15 Exit button

TechPub_2614345_0107 - 0102_3048101_01.fm

1.11.1 Irradiation Kit

1.11.1-1 Irradiation Kit - Check

Machine Status	PRODUCTION
SPC Reference	2539548-0100

Check the TPOP for possible warnings.

- If saturation warning or power current warning: replace the lamp film (1) and the radiometer film (2), see 1.11.1-3 Irradiation Kit - Change Film.
- If too low output warning: check the lamp status, see 1.11.1-2 Irradiation Kit - Overhaul.

Check that the radiometer (3) is properly installed.

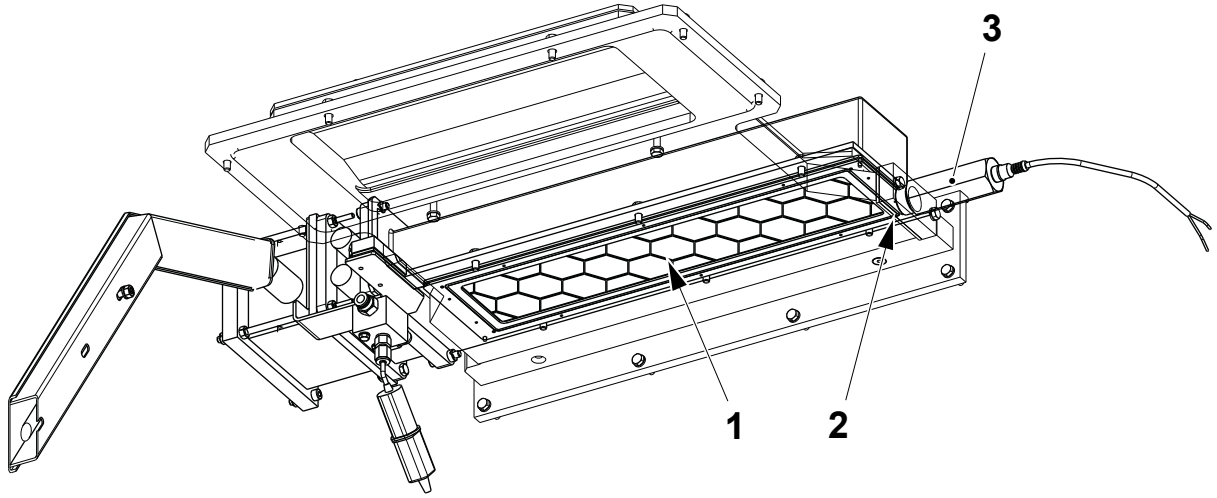

1 Lamp film
2 Radiometer film
3 Radiometer

TechPub_2614345_0107 - 0102_3048101_01.fm

1.11.1-2 Irradiation Kit - Overhaul

Machine Status	Mains Power OFF Air ON Steam ON Water ON
Special Equipment	Key, TP No.1517064-0000
SPC Reference	2539548-0100

DANGER

Hazardous voltage.

Make sure the main switch is OFF.

WARNING

UV radiation.

UV radiation is harmful to eyes and skin. Follow the Safety Precautions.

WARNING

Risk of burns.

Parts may be hot. Wear heat-resistant protective gloves.

(Cont'd)

TechPub_2614345_0107 - 0102_3048101_01.fm

(Cont'd)

Note! First remove the water IN and then the water OUT connectors: water may leak from the irradiation kit.

a) Remove the packaging material from the drying chamber.

b) Disconnect the cooling water connections (1) and (2).

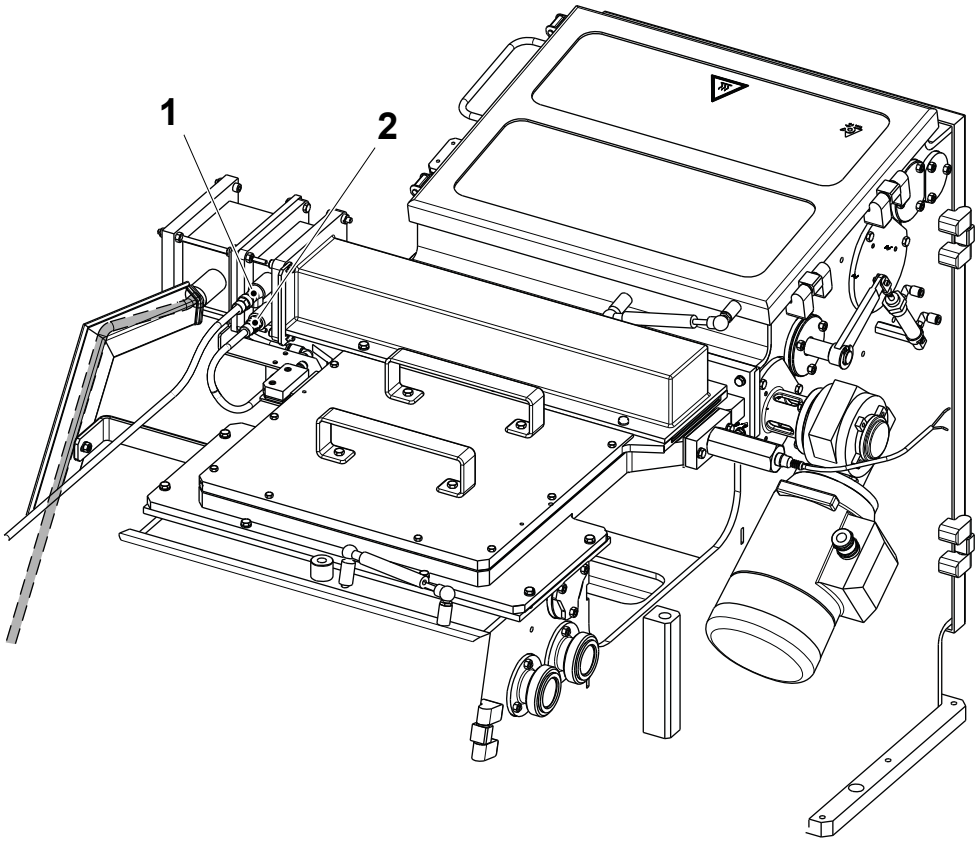

1 Water connection
2 Water connection

TechPub_2614345_0107 - 0102_3048101_01.fm

(Cont'd)

(Cont'd)

CAUTION
Risk of damage to the equipment.
Do not twist or tension the high voltage cable (7) and do not damage it against the edge of the cable duct (8).
Do not shorten the high voltage cable (7) for any reason: the generator is calibrated on the impedance of its own cable and shortening it may cause malfunctions.

c) Remove the two nuts (3) on the threaded rods (4) and the screws (5), then disconnect the high voltage head (6).

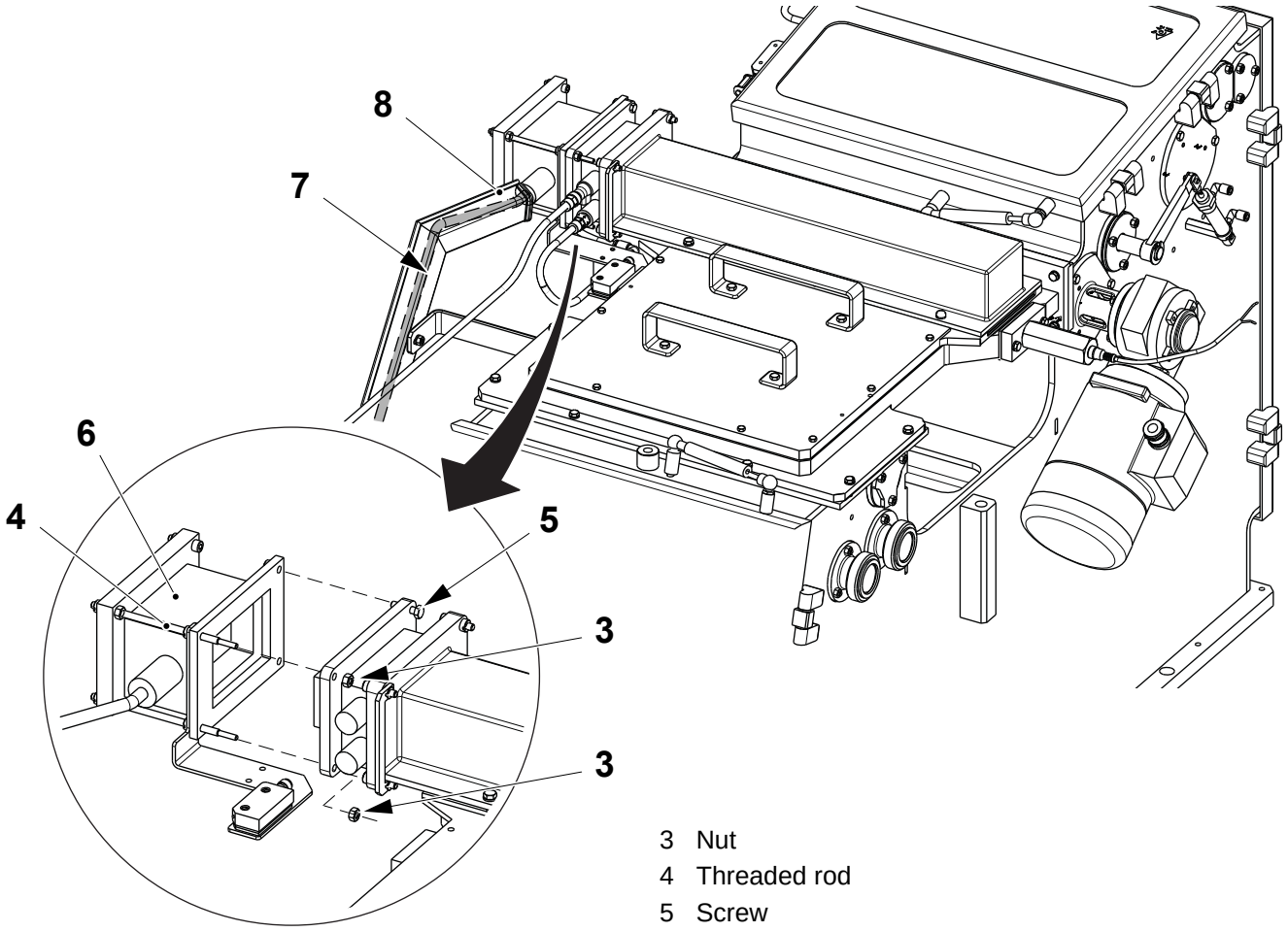

3 Nut
4 Threaded rod
5 Screw
6 High voltage head
7 High voltage cable
8 Cable duct

(Cont'd)

TechPub_2614345_0107 - 0102_3048101_01.fm

(Cont'd)

CAUTION

Risk of personal injury and/or damage to the equipment.

The irradiation kit (11) weights approx. 20 Kg and its components are fragile: remove and handle very carefully to prevent injuries or equipment damages.

d) Remove the three nuts (9) and the screws (10).

e) Remove the irradiation kit (11) and move it on the work bench

Note! If the broken irradiation kit is sent for being repaired, use the same box in which the new irradiation kit has been supplied.

Note! Check the lamp film and the radiometer film for reduced transparency. If necessary, replace them, see 1.11.1-3 Irradiation Kit - Change Film.

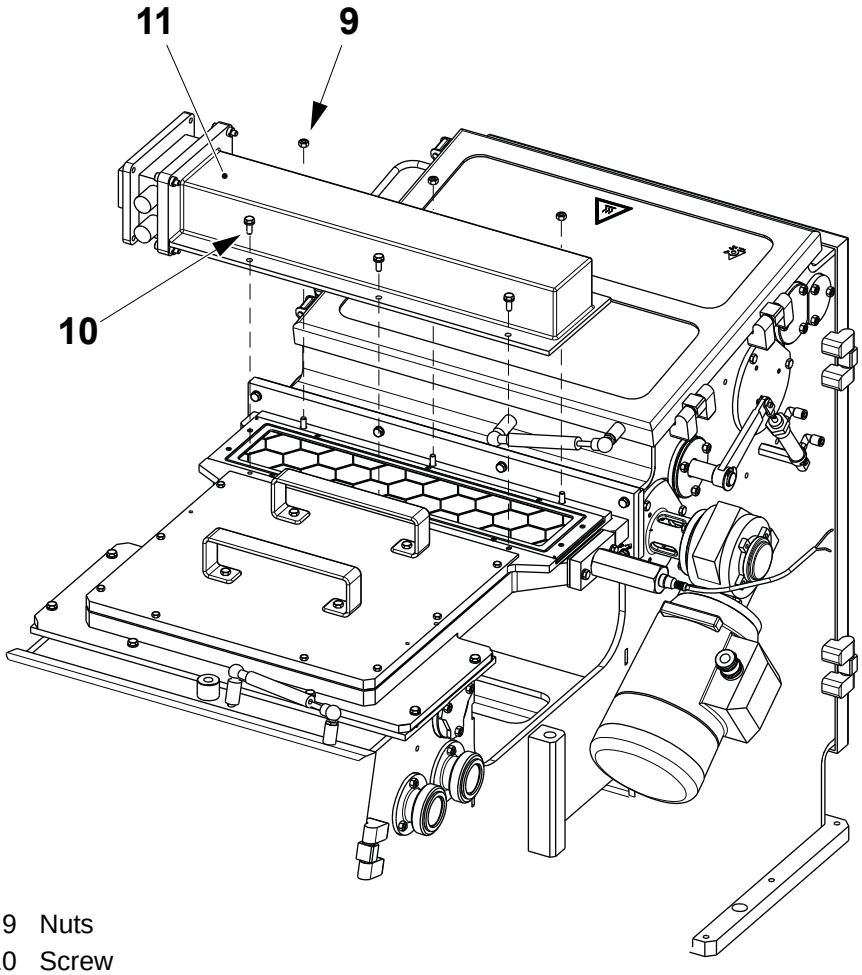

9 Nuts
10 Screw
11 Irradiation kit

(Cont'd)

TechPub_2614345_0107 - 0102_3048101_01.fm

(Cont'd)

CAUTION
Risk of damage to the equipment.
Make sure that the work bench is cleaned. Avoid touching the irradiation kit components with bare hands. Always wear linen gloves or use a linen cloth when handling them.

Note! The work bench (12) should have at least the double of the length of the irradiation kit (11) in order to allow complete guiding of the head assembly with the connected excimer lamp, when it is pulled out of the lamp housing.

f) Place the irradiation kit (11) sideways on a cleaned horizontal surface.

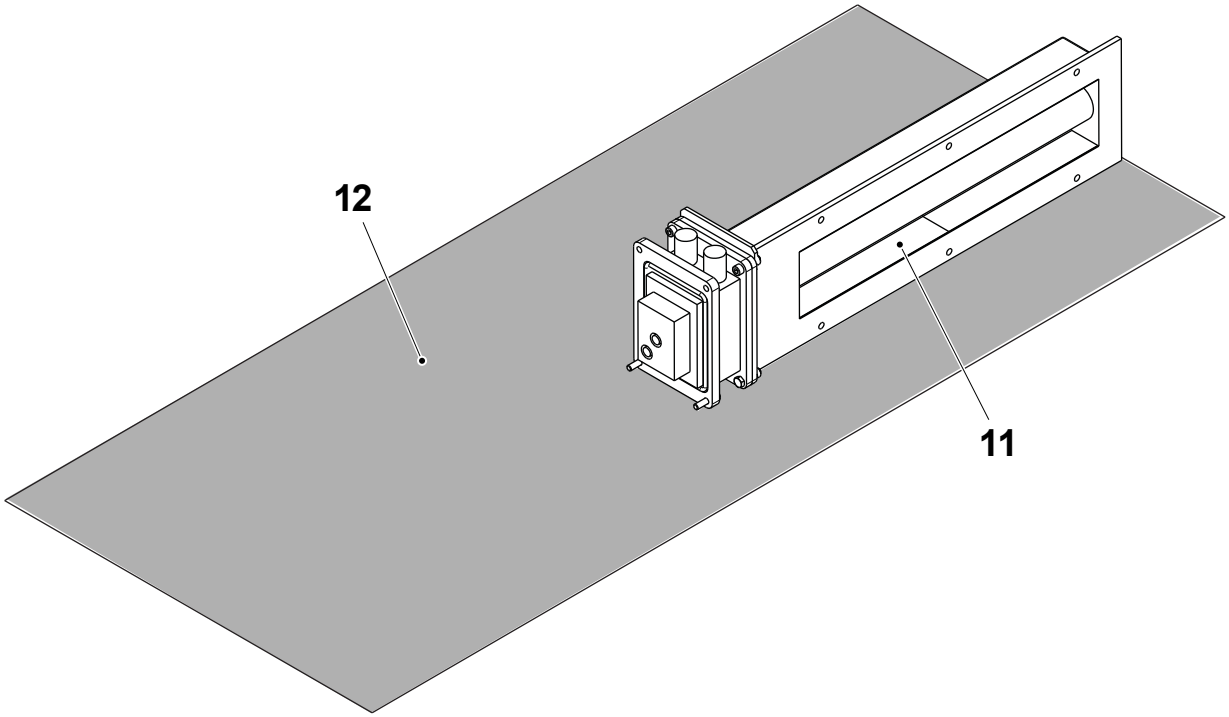

11 Irradiation kit
12 Work bench

(Cont'd)

TechPub_2614345_0107 - 0102_3048101_01.fm

(Cont'd)

CAUTION

Risk of damage to the equipment.

Separate very carefully the head assembly (13) from the lamp housing (14). The excimer lamp is fragile and might break.

Note! Some water is left inside the head assembly (13). Drain the water once the head assembly is open before proceeding with the maintenance steps.

g) With the aid of the key (15), remove the screws (16), the nuts (17) and the plate (18) on the water connections side.

h) Remove the screws (19) and the nuts (20) on the other side.

i) Pull out the head assembly (13) with the cladding tube (21) from the lamp housing (14).

j) Remove the O-ring (22). Change if necessary.

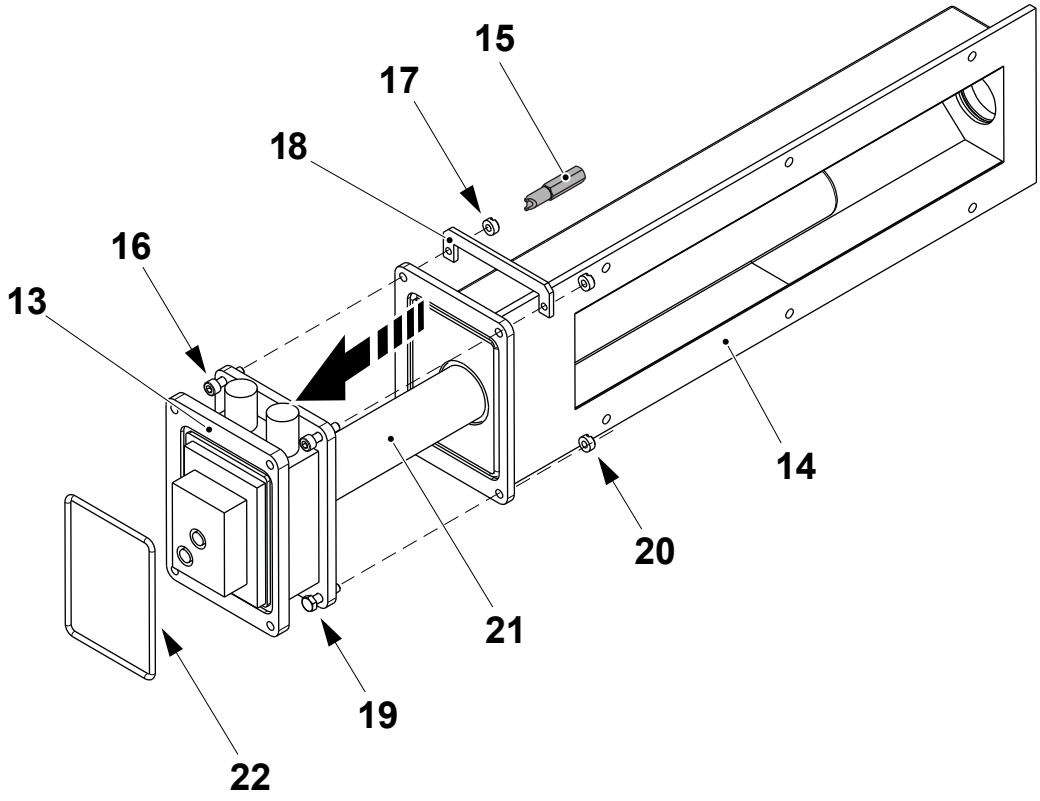

13 Head assembly
14 Lamp housing
15 Key
16 Screw
17 Nut
18 Plate
19 Screw
20 Nut
21 Cladding tube
22 O-ring

TechPub_2614345_0107 - 0102_3048101_01.fm

(Cont'd)

(Cont'd)

k) Remove the O-ring (23) from the lamp housing (14). Change if necessary.

l) Remove the O-ring (24). Change if necessary.

m) Check the reflectors (25). If they are blind, change them by removing the nuts (26).

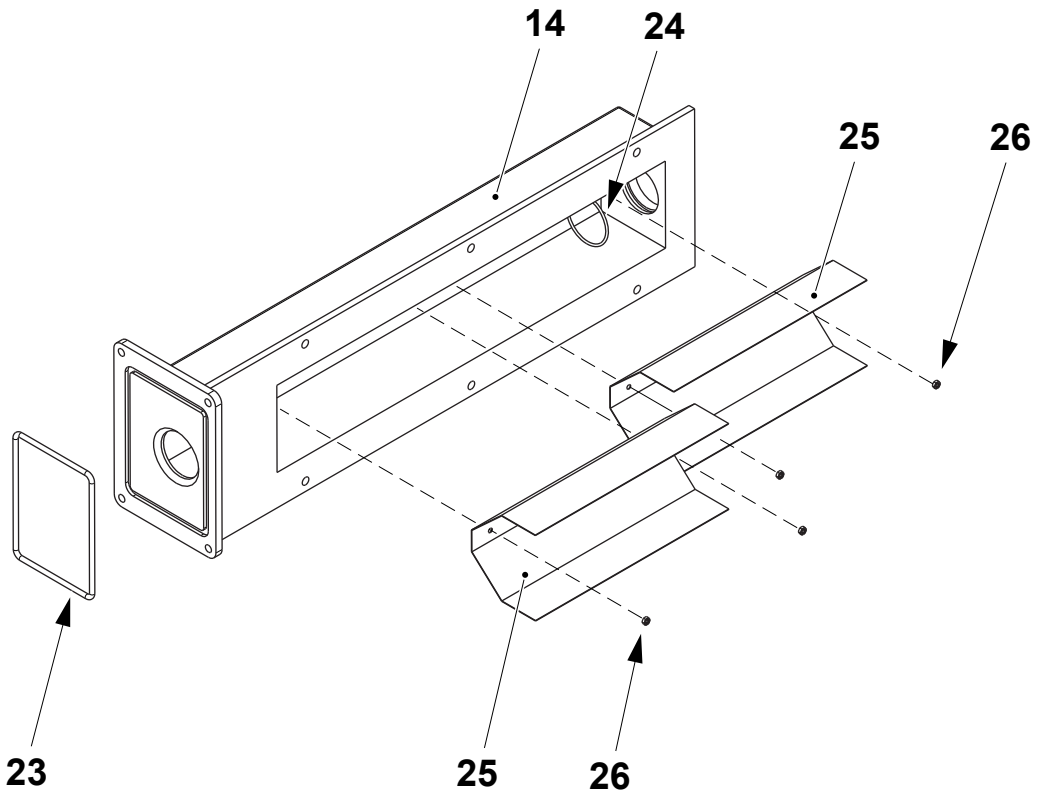

14 Lamp housing
23 O-ring
24 O-ring
25 Reflector
26 Nut

(Cont'd)

TechPub_2614345_0107 - 0102_3048101_01.fm

(Cont'd)

CAUTION
Risk of damage to the equipment.
When replacing the excimer lamp (27) the O-rings (28) and (29) must be always replaced. Moisten the O-ring (29) and insert the excimer lamp (27) very carefully to prevent breaks.

Note! Clean the cladding tube (21) with soapy water and dry it completely before assembling.

n) Remove and clean the cladding tube (21) and change the O-ring (28).

o) Remove the lamp spacer (30).

p) Change the excimer lamp (27) and the O-ring (29).

q) Assemble in the reverse order.

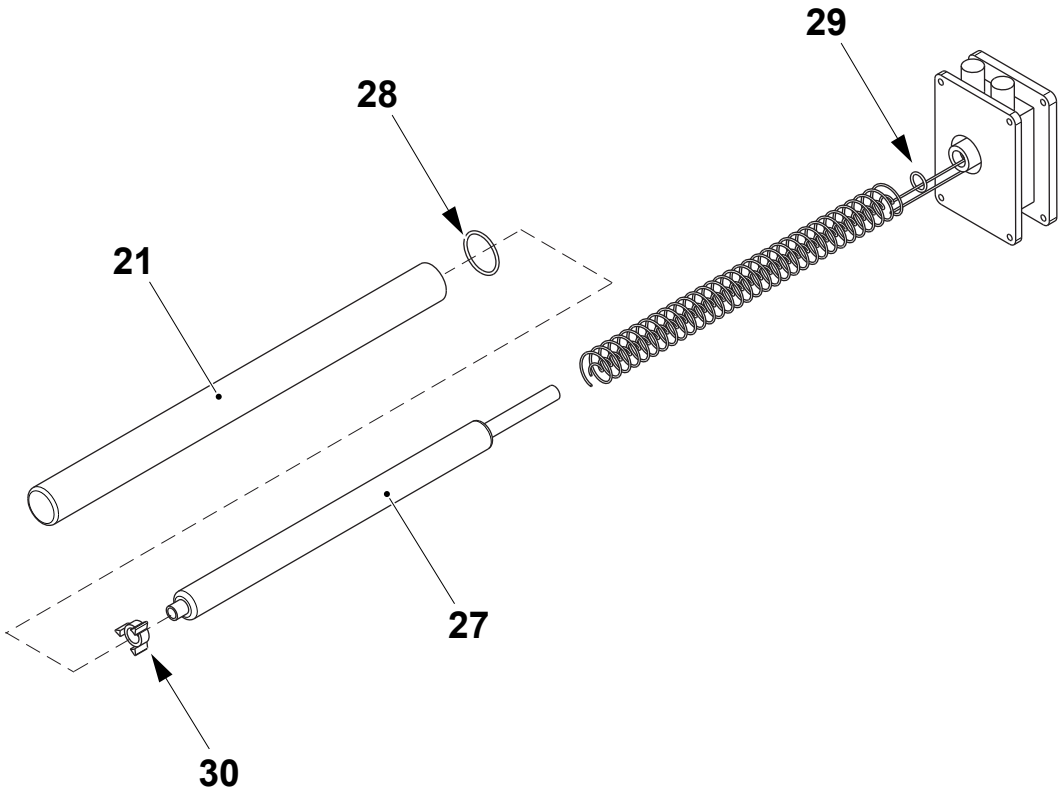

21 Cladding tube
27 Excimer lamp
28 O-ring
29 O-ring
30 Lamp spacer

TechPub_2614345_0107 - 0102_3048101_01.fm

(Cont'd)

(Cont'd)

CAUTION

Risk of water leaks.

When assembling, make sure the cooling water hoses are connected properly: water may leak from the hose connections. If leaks are detected, do not run the irradiation kit.

r) Refill the water circuit when the assembling is finished.

Note! When the high voltage head (6) is assembled on the irradiation kit (11), check that it is not possible to access the screws (31) by an allen key without removing before the threaded rods (4).

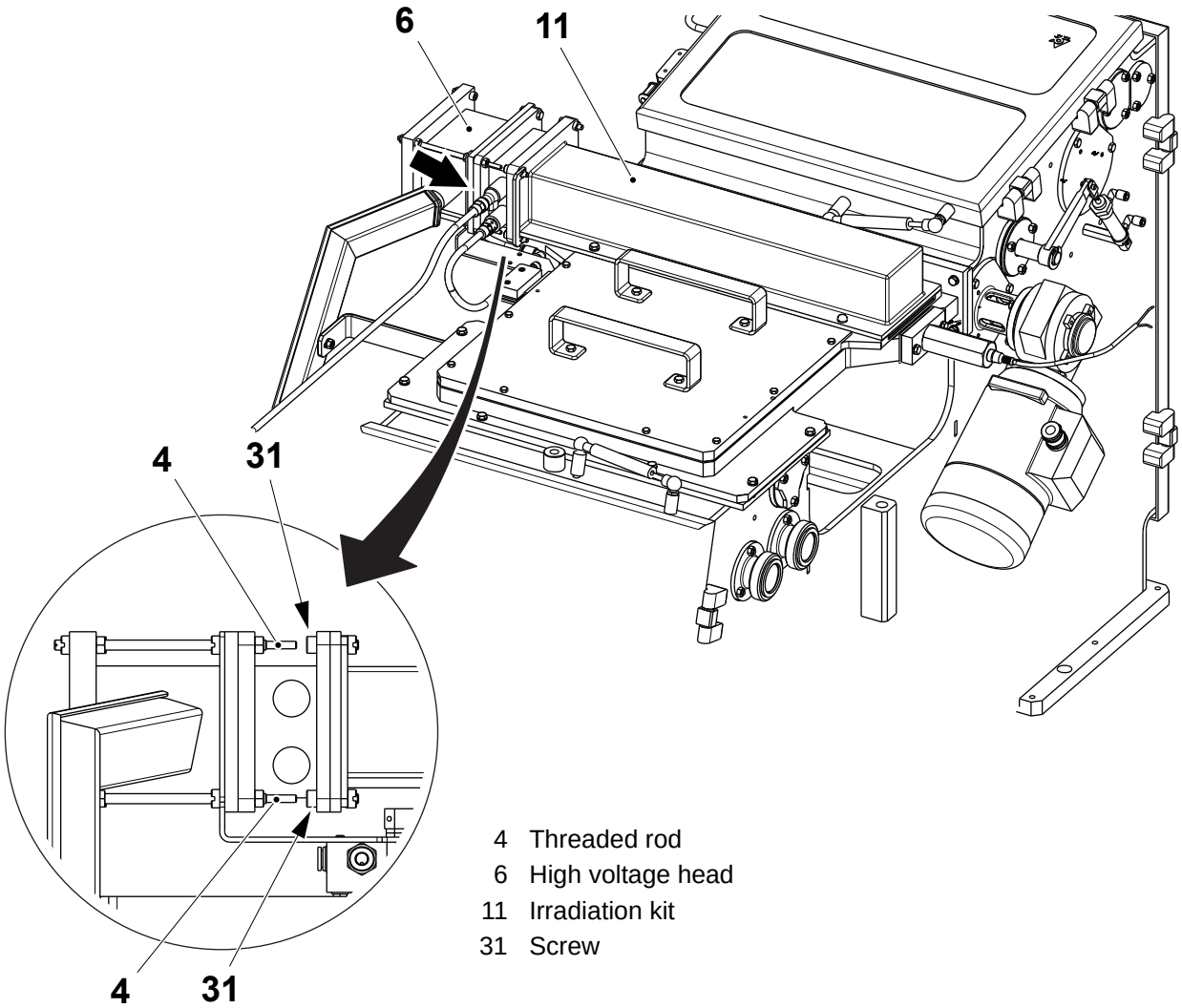

4 Threaded rod
6 High voltage head
11 Irradiation kit
31 Screw

TechPub_2614345_0107 - 0102_3048101_01.fm

1.11.1-3 Irradiation Kit - Change Film

Machine Status	Mains Power OFF Air OFF Steam ON Water OFF
SPC Reference	2539548-0100

DANGER

Hazardous voltage.
Make sure the main switch is OFF.

(Cont'd)

TechPub_2614345_0107 - 0102_3048101_01.fm

(Cont'd)

Lamp film

a) Remove the irradiation kit (1), see 1.11.1-2 Irradiation Kit - Overhaul, steps a) to step e).

b) Remove the grid assembly (2) and move it on the work bench.

c) Clean the surface of the lid (3) where the irradiation kit has to be placed with a sponge and demineralized water.

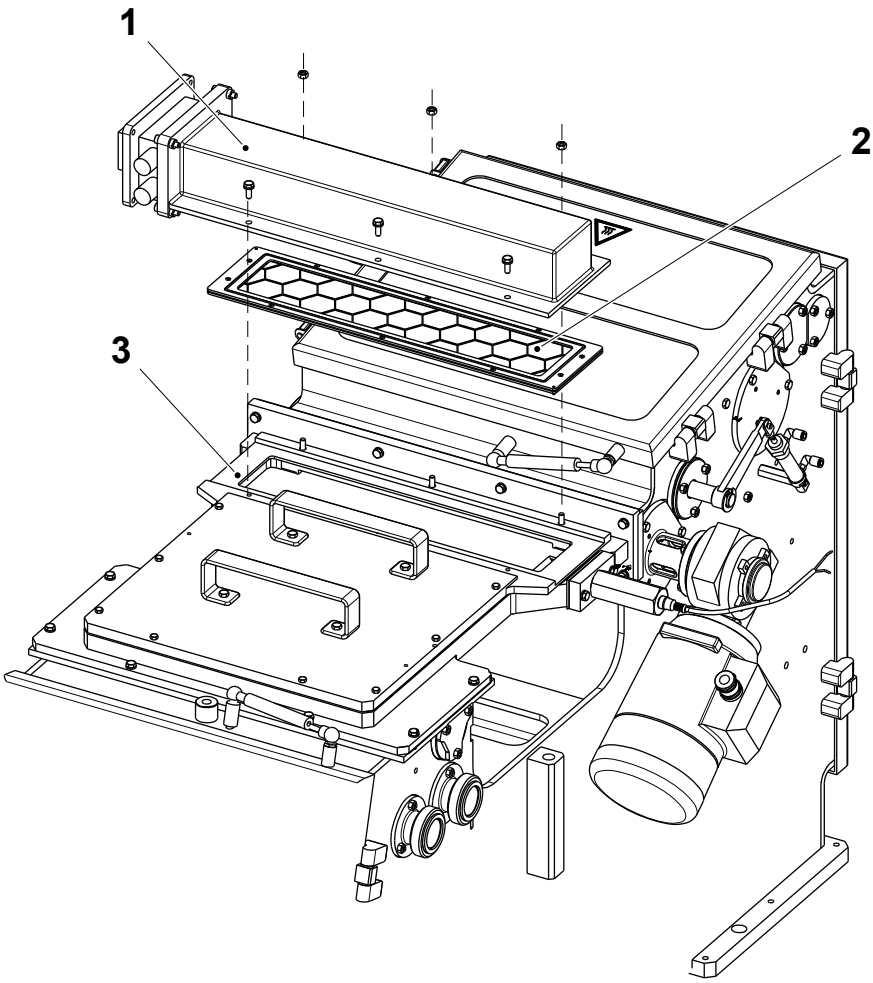

1 Irradiation kit
2 Grid assembly
3 Lid

(Cont'd)

TechPub_2614345_0107 - 0102_3048101_01.fm

(Cont'd)

CAUTION
Risk of damage to the equipment.
Pay attention when assembling the film and the grid elements: if they are not assembled in the proper way, water may leak.

d) Remove the screws (4) and the plate (5).
e) Remove the grid element (6).
f) Remove and change the film (7).
g) Remove the grid element (8) and the plate (9).
h) Assemble in the reverse order.

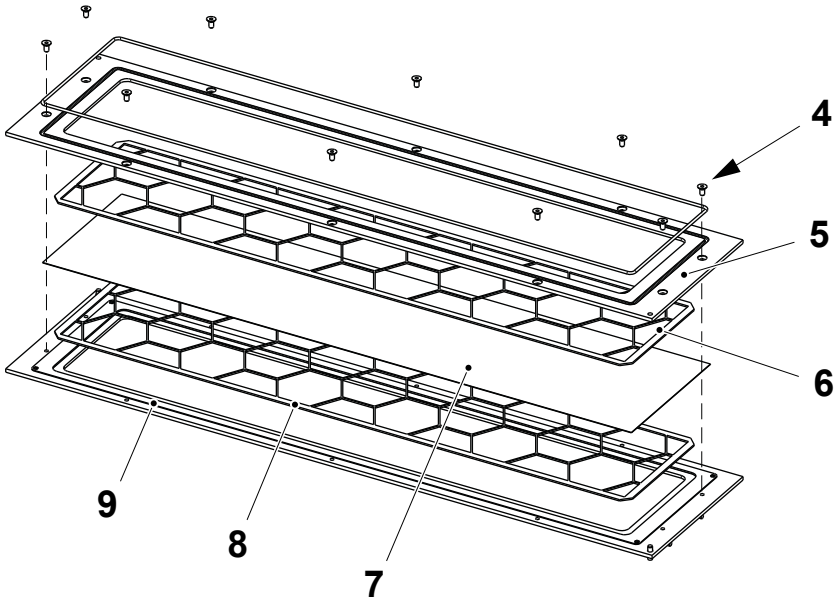

4 Screw
5 Plate
6 Grid element
7 Film
8 Grid element
9 Plate

(Cont'd)

TechPub_2614345_0107 - 0102_3048101_01.fm

(Cont'd)

Radiometer film

a) Remove the screws (1) and the radiometer (2).

b) Remove the film (3), the plate (4) and the gasket (5).

c) Change the gasket (5) if necessary.

d) Change the film (3).

e) Assemble in the reverse order.

Note! When assembling, centre the plate (4) on the pins (6).

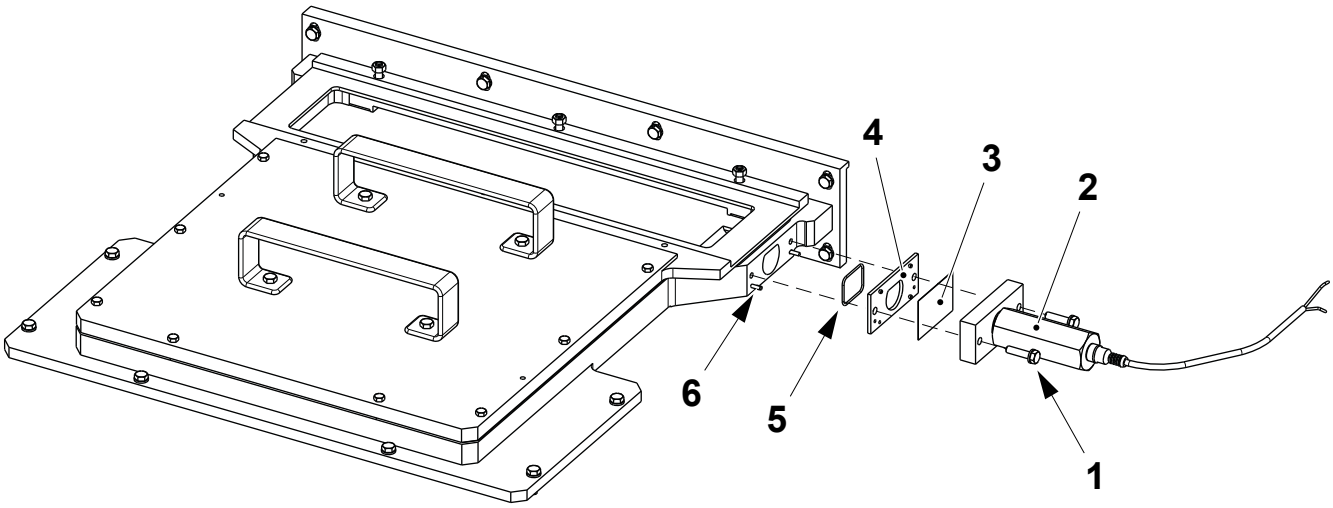

1 Screw
2 Radiometer
3 Film
4 Plate
5 Gasket
6 Pin

TechPub_2614345_0107 - 0102_3048101_01.fm

1.11.2 Power Supply Unit

1.11.2-1 Power Supply Unit - Change

Machine Status	Mains Power OFF Air ON Steam ON Water ON
SPC Reference	2510546-0300

DANGER

Hazardous voltage.
Make sure the main switch is OFF.

DANGER

Hazardous voltage.
Do not open the power supply.

Note! It is recommended to send the broken power supply unit for being repaired using the same box in which the new one has been supplied.

(Cont'd)

TechPub_2614345_0107 - 0102_3048102_01.fm

(Cont'd)

a) Turn the main switch OFF.

b) Close the water circuit on the service unit.

c) Disconnect the main connector (1) and the control connector (2).

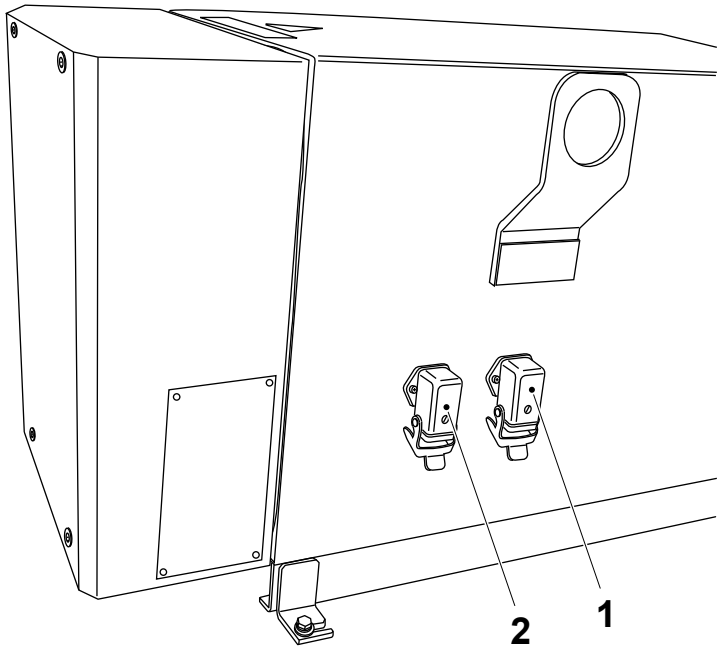

1 Main connector
2 Control connector

(Cont'd)

TechPub_2614345_0107 - 0102_3048102_01.fm

(Cont'd)

d) Remove the nuts (3) and the lids (4) from the cable duct (5)

e) Remove the two nuts (6) and the two screws (7), then disconnect the high voltage head (8).

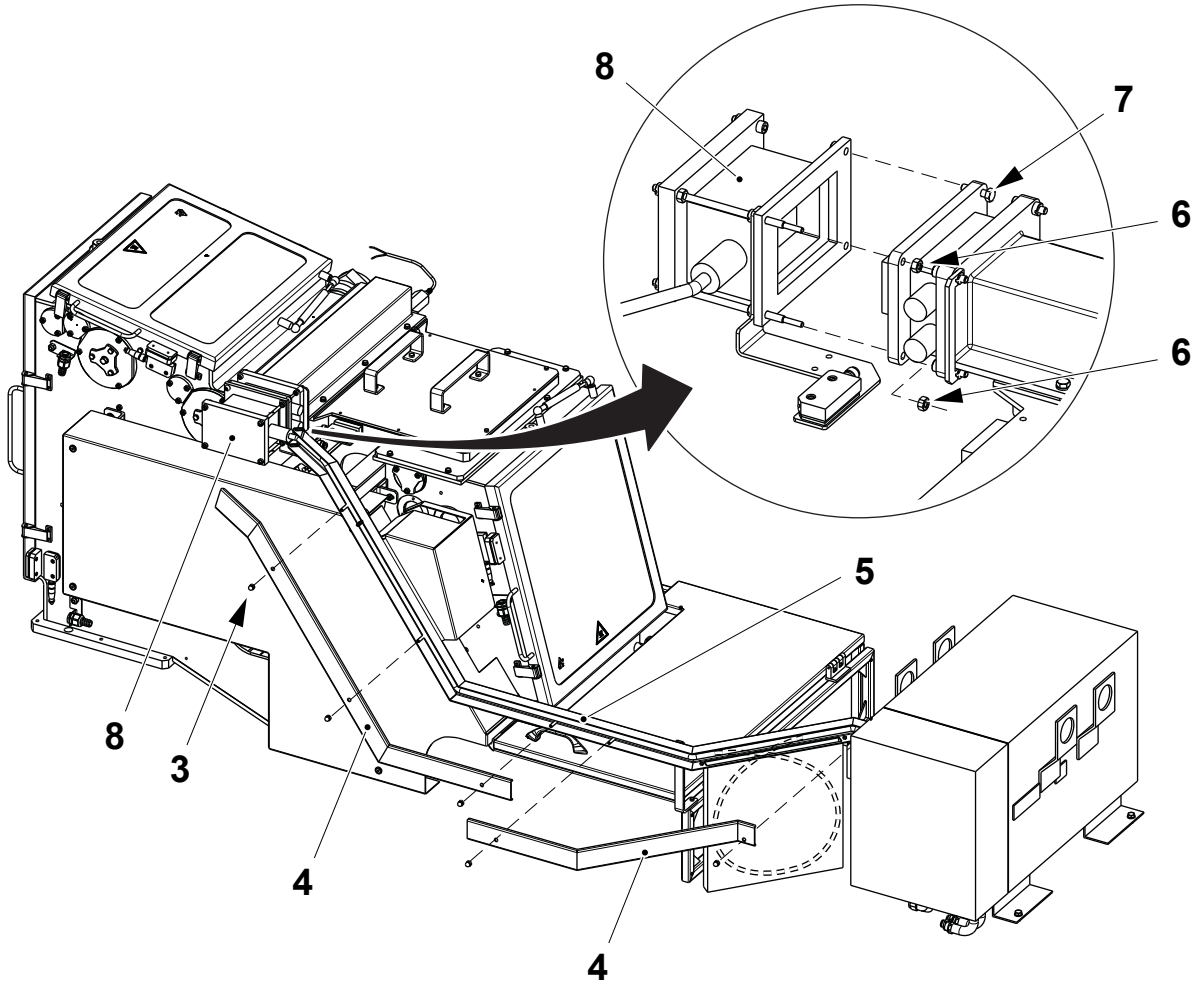

3 Nut
4 Lid
5 Cable duct
6 Nut
7 Screw
8 High voltage head

(Cont'd)

TechPub_2614345_0107 - 0102_3048102_01.fm

(Cont'd)

CAUTION
Risk of damage to the equipment.
Do not twist or tension the high voltage cable (9). It must not be bend to a radius of less than 100 mm.
Take the same care when the broken power supply unit and the high voltage cable are sent for being repaired.
Do not shorten the high voltage cable (9) for any reason: the generator is calibrated on the impedance of its own cable and shortening it may cause malfunctions.

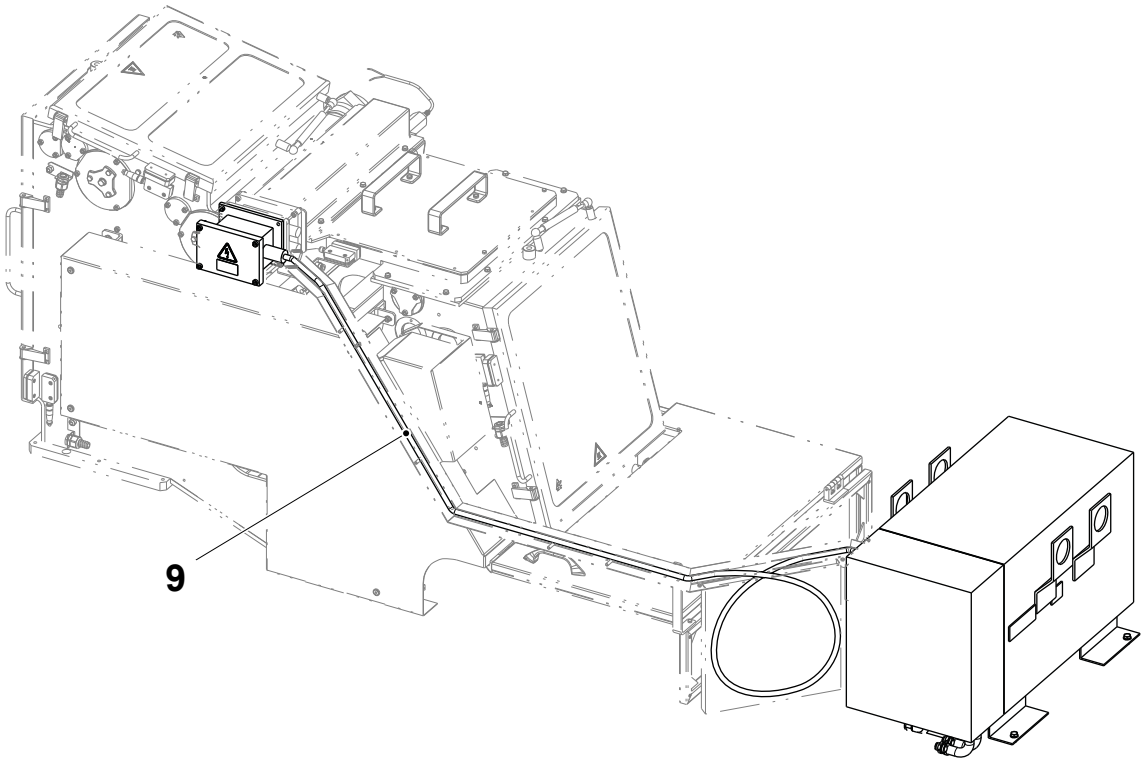

9 High voltage cable

(Cont'd)

TechPub_2614345_0107 - 0102_3048102_01.fm

(Cont'd)

f) Loosen the nuts (10).

g) Unscrew the threaded rods (11) to remove the plate (12) with the cooling water connections.

h) Place the high voltage head (8) on the top of the tunnel (13).

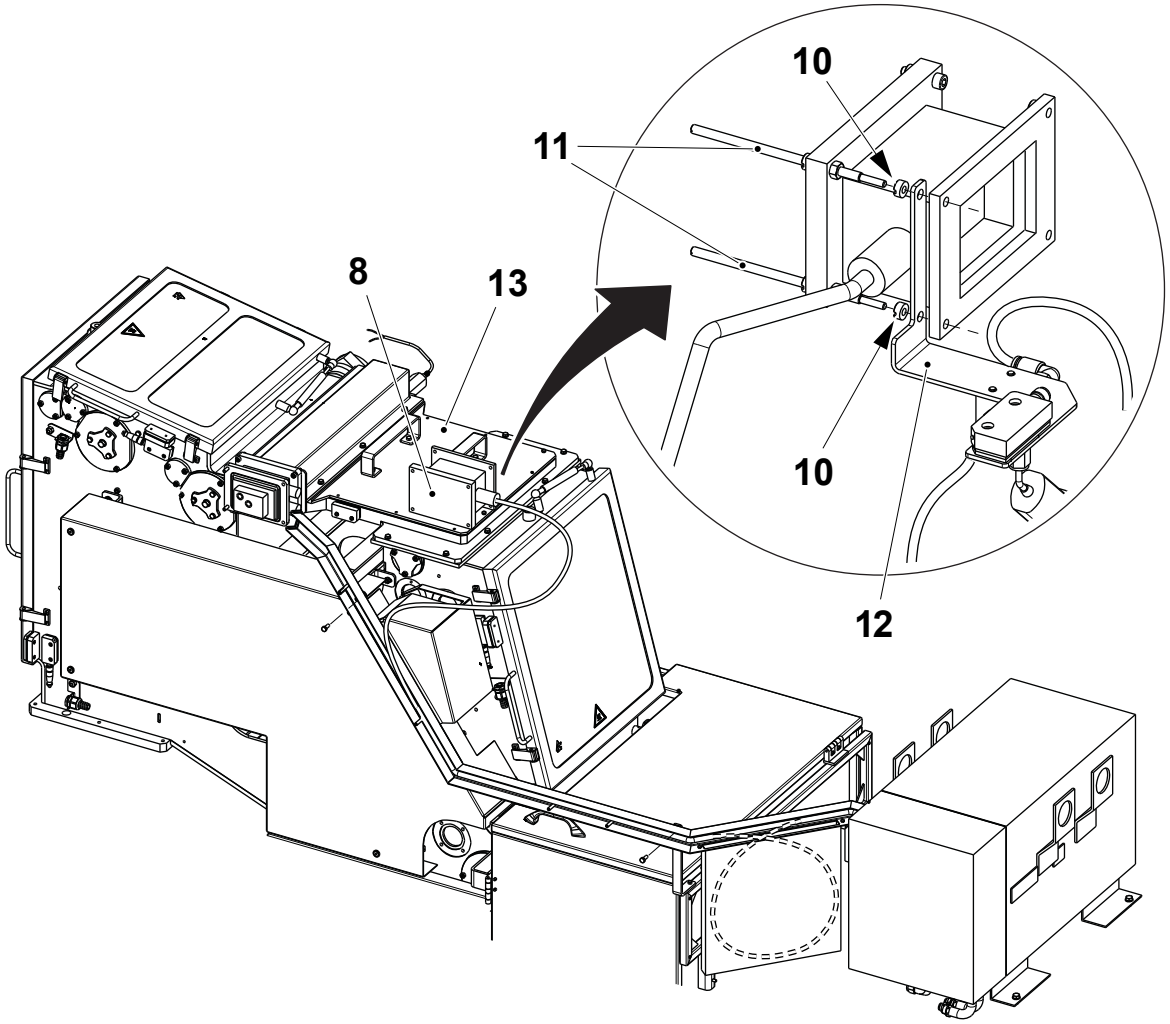

8 High voltage head
10 Nut
11 Threaded rod
12 Plate
13 Tunnel

(Cont'd)

TechPub_2614345_0107 - 0102_3048102_01.fm

(Cont'd)

i) Remove the four nuts (14).

j) Remove the screws (15) securing the cable duct (5) to the brackets (16) and (17).

k) Remove the cable duct (5).

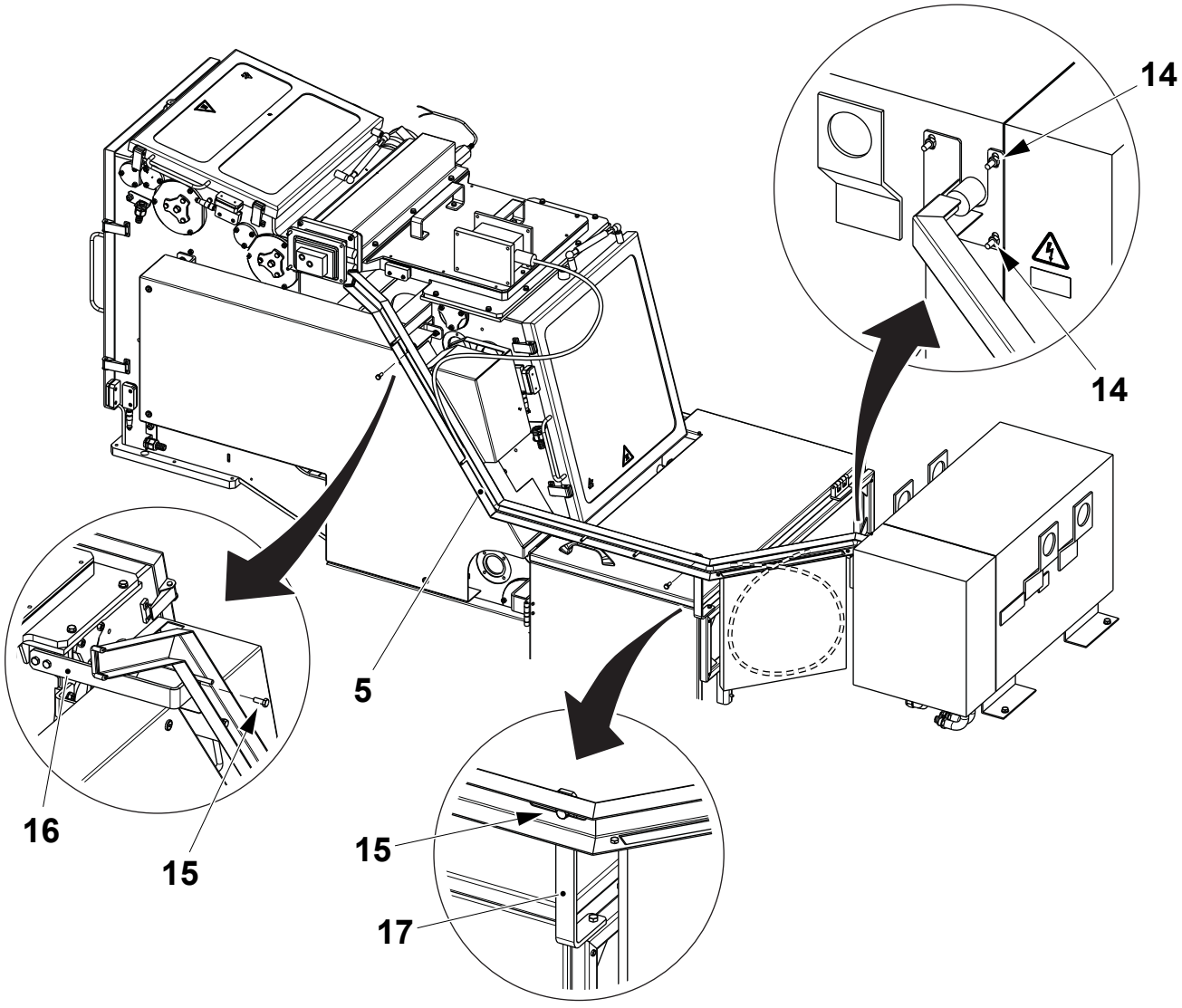

5 Cable duct
14 Nut
15 Screw
16 Bracket
17 Bracket

(Cont'd)

TechPub_2614345_0107 - 0102_3048102_01.fm

(Cont'd)

WARNING

Risk of crushing.

The power supply unit (18) weights approx. 50 Kg. Lift it with the aid of a mobile crane attaching the ropes or the chains to the lifting brackets (19).

l) Disconnect the cooling water hoses (20) and the water drain pipe (21).

m) Remove the screws (22).

n) Change the power supply unit (18) by means of a mobile crane.

o) Assemble in the reverse order.

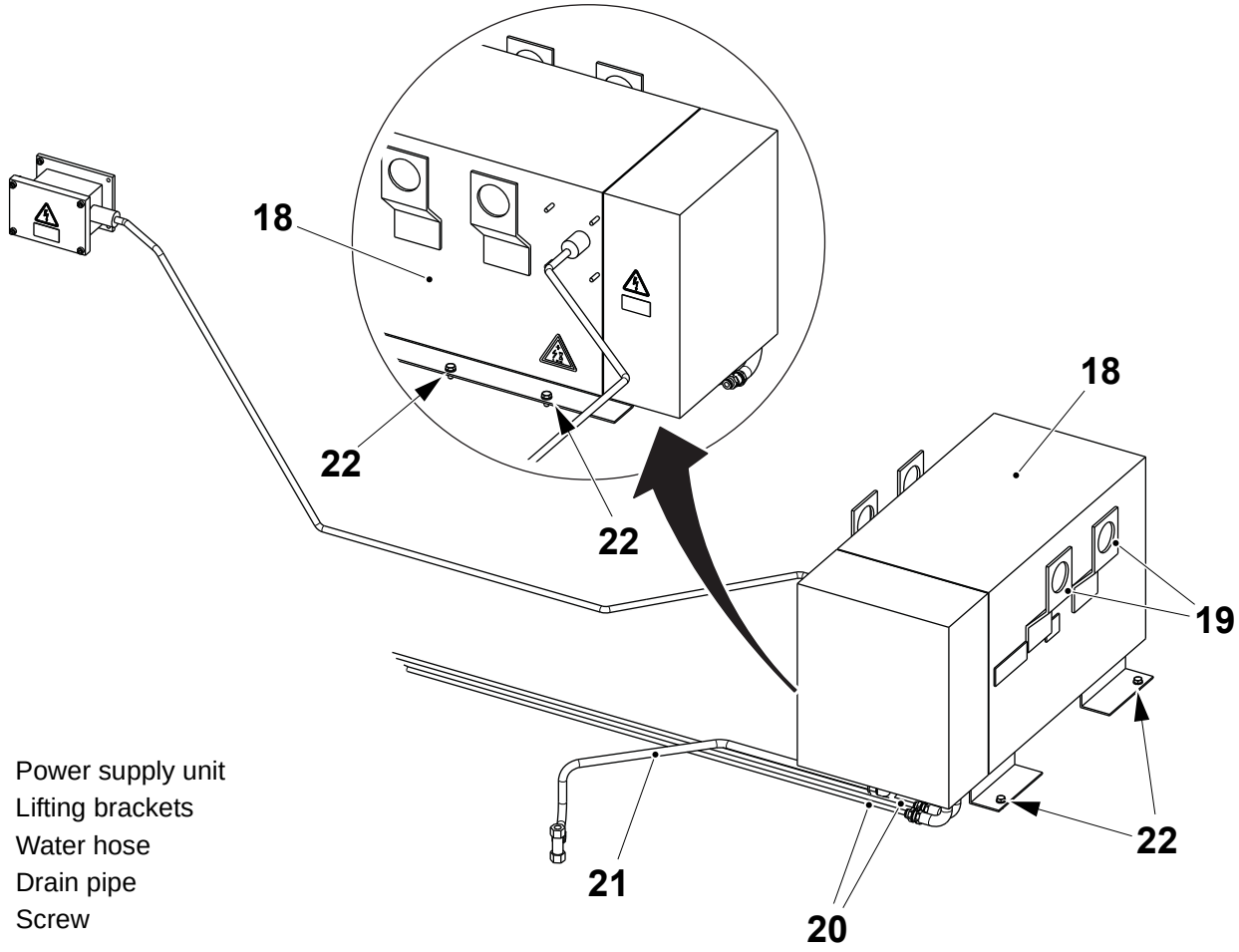

18 Power supply unit
19 Lifting brackets
20 Water hose
21 Drain pipe
22 Screw

TechPub_2614345_0107 - 0102_3048102_01.fm

1.11.2-2 Power Supply Unit - Troubleshoot

Machine Status	PREPARATION
SPC Reference	2510546-0200

Note! This troubleshooting may be performed in PRODUCTION or in PREPARATION during the lamp functionality check, see 1.11-1 UV Lamp-Check Functionality.

The power supply unit is equipped with a status panel (1) with 10 LEDs. Their function is shown in the table below.

LED	Colour	Description
1	Yellow	Control supply voltage 12V
2	Green	Remote control
3	Green	Lamp On
4	Red	N.C.
5	Red	Undervoltage
6	Red	Overcurrent
7	Red	Temperature transformer
8	Red	Temperature power stage
9	Red	N.C.
10	Red	Lamp fault

When the UV lamp is working properly, the LEDs 1, 2 and 3 are lit: if the alarm `UV POWER SUPPLY FAILURE` appears on the TPOP, the machine stops and the LEDs 5, 6, 7 and 8 may light.

Check the LED status to verify which alarm condition is happened.

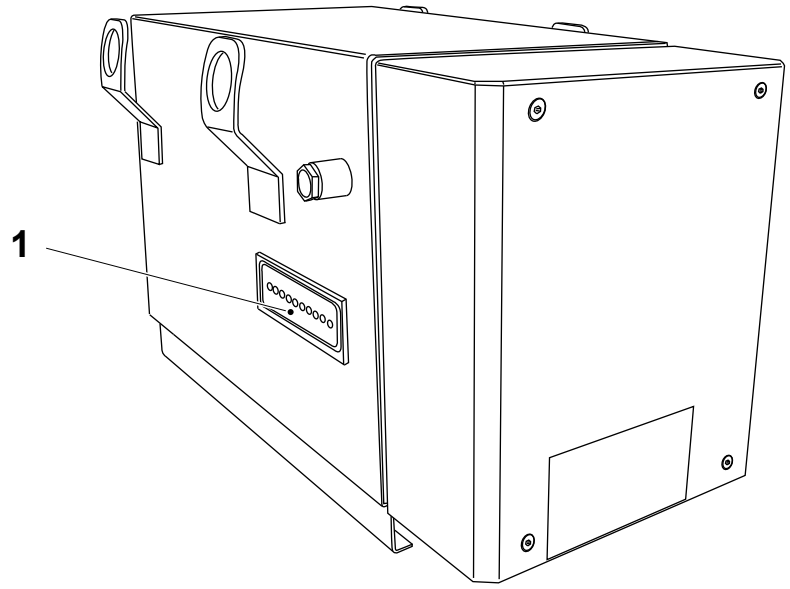

1 Status panel

(Cont'd)

TechPub_2614345_0107 - 0102_3048102_01.fm

(Cont'd)

Note! The following corrective actions are valid if the alarm condition is only `UV POWER SUPPLY FAILURE`.
If any other alarm (water flow, temperature...) is displayed on the TPOP, perform before the corrective actions for those alarms.

LED 5 “Undervoltage” (During Operation)

If the LED 5 turns on during operation check that the current shown on the TPOP panel is approx. 1.7 A, if the power control is set to 50%, and approx. 3.4 A if is set to 100%.

If the current exceeds 4 A an internal protection circuit shuts the power stage down resulting in “undervoltage” error.

Possible reasons of these malfunctions are:

- broken lamp; change the lamp, see 1.11.1-2 Irradiation Kit - Overhaul.
- impure water leading to excessive power dissipation; check the conductivity meter and change the filters, see 1.11.1-2 Water Circulation - Change Deionizer Cartridge and 1.11.1-3 Water Circulation - Change Filter.
- insufficient waterflow leading to boiling water: check the flow switch.
- damaged cable; change the power supply unit, see 1.11.2-4 Power Supply Unit - Change UV Cable.

LED 5 “Undervoltage” (Immediately after Reset)

After resetting any alarm all LEDs will light for half a second, then after approx. 5 seconds only the LEDs 1 and 2 should be lit and the system will be ready.

If after resetting the LED 5 stays light, the error is not resettable.

Check the fuse in the electrical cabinet of Filling Machine, see the Fuse Panel Label, and the fuses inside the power supply unit. Replace them if they are burnt, see 1.11.2-3 Power Supply Unit - Check Fuses.

Check if the safety switch of the heat exchanger is properly connected, see 1.11.2-3 Power Supply Unit - Check Fuses.

(Cont'd)

TechPub_2614345_0107 - 0102_3048102_01.fm

(Cont'd)

LED 6 “Overcurrent”
This LED appears together with the LED 5 if the current in the primary of the transformers exceeds the limit corresponding to the lamp voltage.

This happens when the lamp does not ignite; change the excimer lamp, see 1.11.1-2 Irradiation Kit - Overhaul.

Check also for water leaks in the high voltage head: if the high voltage head or the cable are damaged, change them, see 1.11.2-4 Power Supply Unit - Change UV Cable.

LED 7 “Temperature Transformer”
The LED 7 appears together with the LED 5 if the temperature of the transformer housing exceeds 71º C.

This could be caused by problems with the cooling water or with the fan inside the heat exchanger.

Note! If these LEDs are lit when the power supply unit has been just switched on, or when the power supply unit is cold, check that the temperature switches are correctly connected, see 1.11.2-3 Power Supply Unit - Check Fuses, step l).

Replace the power supply unit, see 1.11.2-1 Power Supply Unit - Change.

LED 8 “Overtemperature Power Stage”
The LED 8 appears together with the LED 5 if the temperature of the heat sink exceeds 71º C.

This could be caused by problems with the cooling water or with the fan inside the heat exchanger.

Replace the power supply unit, see 1.11.2-1 Power Supply Unit - Change.

TechPub_2614345_0107 - 0102_3048102_01.fm

1.11.2-3 Power Supply Unit - Check Fuses

Machine Status	Mains Power OFF Air ON Steam ON Water ON
SPC Reference	2510546-0300

DANGER

Hazardous voltage.

Make sure that the mains power is switched OFF.

a) Disconnect the main connectors (1) and the drain water hose.

b) Remove the screws (2).

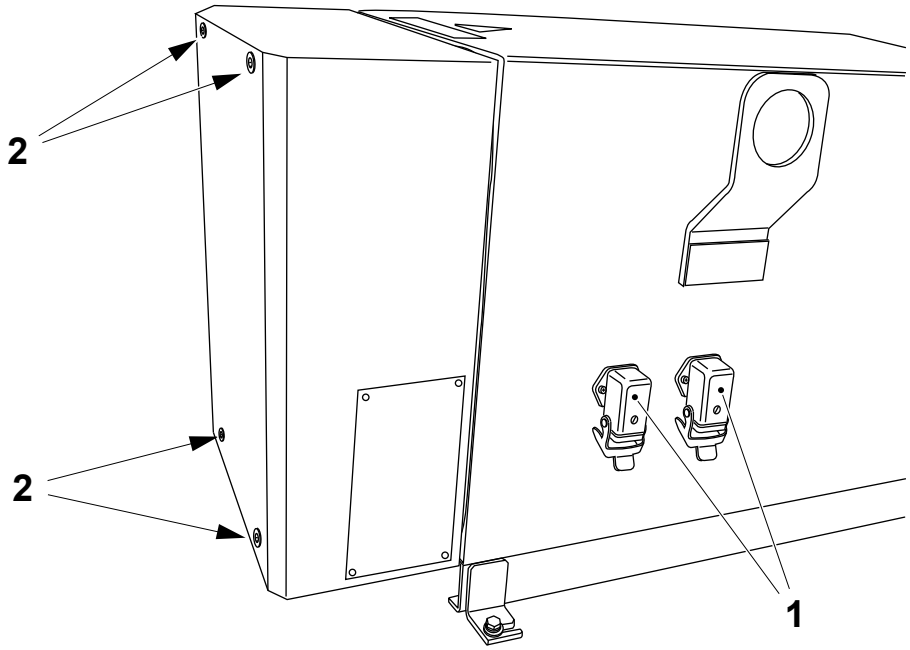

1 Main connectors
2 Screw

(Cont'd)

TechPub_2614345_0107 - 0102_3048102_01.fm

(Cont'd)

DANGER

Hazardous residual voltage.

Do not touch any terminals immediately after the power supply disconnector is turned off. Ensure that no residual voltage remains on the capacitors before touching. Wait five minutes.

c) Pull out the heat exchanger (3) without removing it completely.

d) Disconnect the electrical connection (4).

e) Remove the heat exchanger (3).

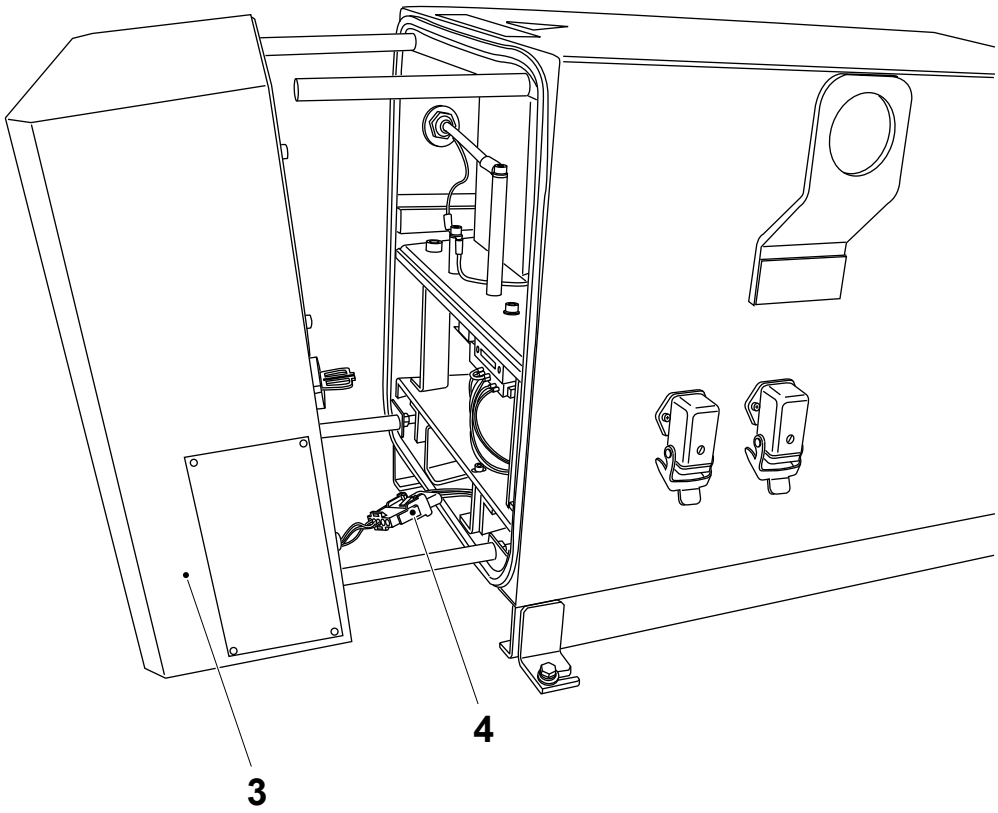

3 Heat exchanger
4 Electrical connection

(Cont'd)

TechPub_2614345_0107 - 0102_3048102_01.fm

(Cont'd)

f) Remove the screws (5) and (6) to disconnect the cables (7) and (8).
g) Loosen the nut (9) and pull the high voltage cable out from the housing.
h) Remove the screw (10).

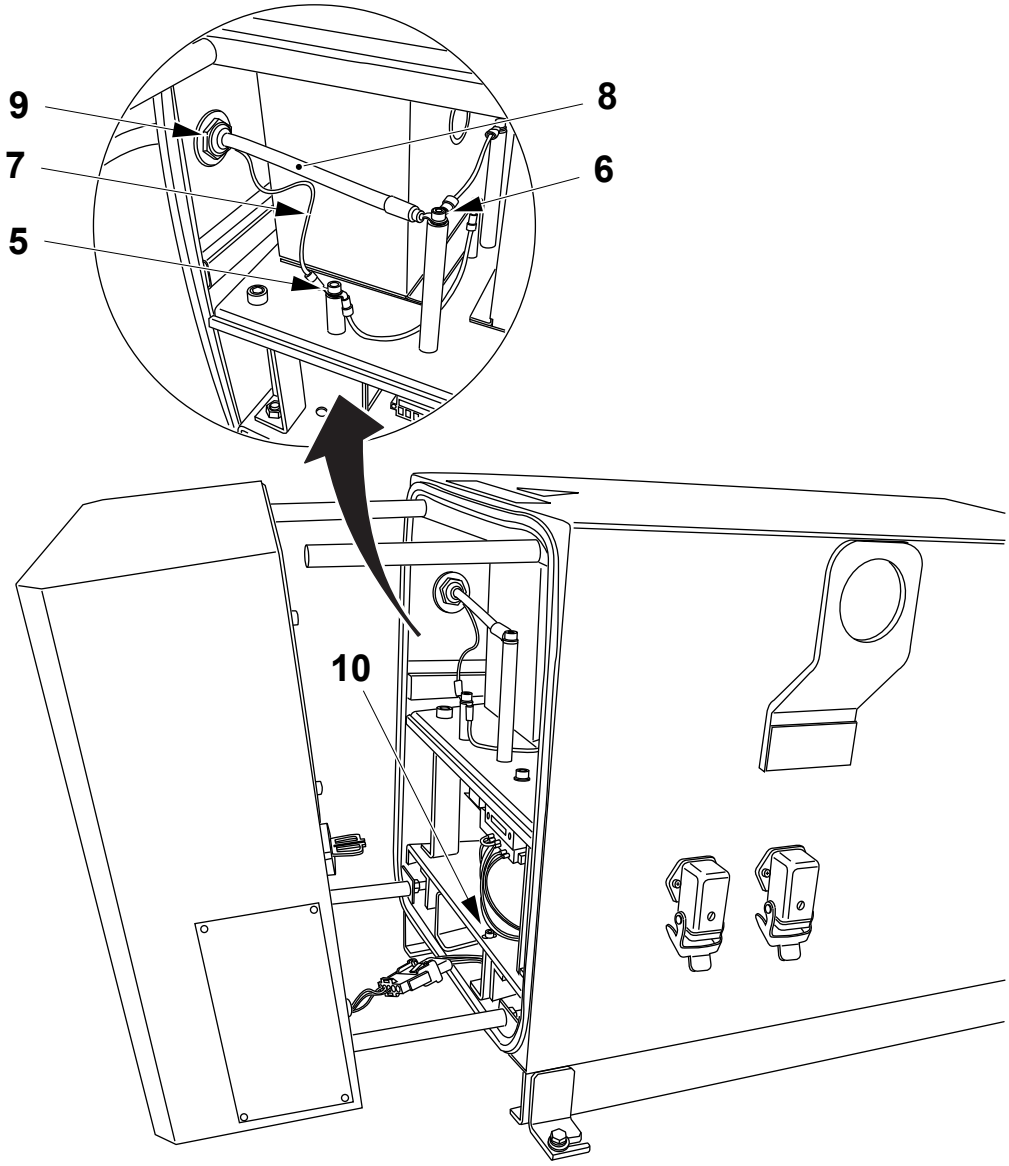

5 Screw
6 Screw
7 Cable
8 Cable
9 Nut
10 Screw

(Cont'd)

TechPub_2614345_0107 - 0102_3048102_01.fm

(Cont'd)

i) Pull the slider (11) out from the housing.

j) Check the fuses F1 (12), F2 (13) and F4 (14). Change them if necessary according to the table below.

k) With the aid of a screwdriver, check the fuse S1 (15). Change if necessary, see table.

Fuses	Power (A)	TP. No.
F1 - F2 - S1	10	90459-5840
F4	4	90459-5838

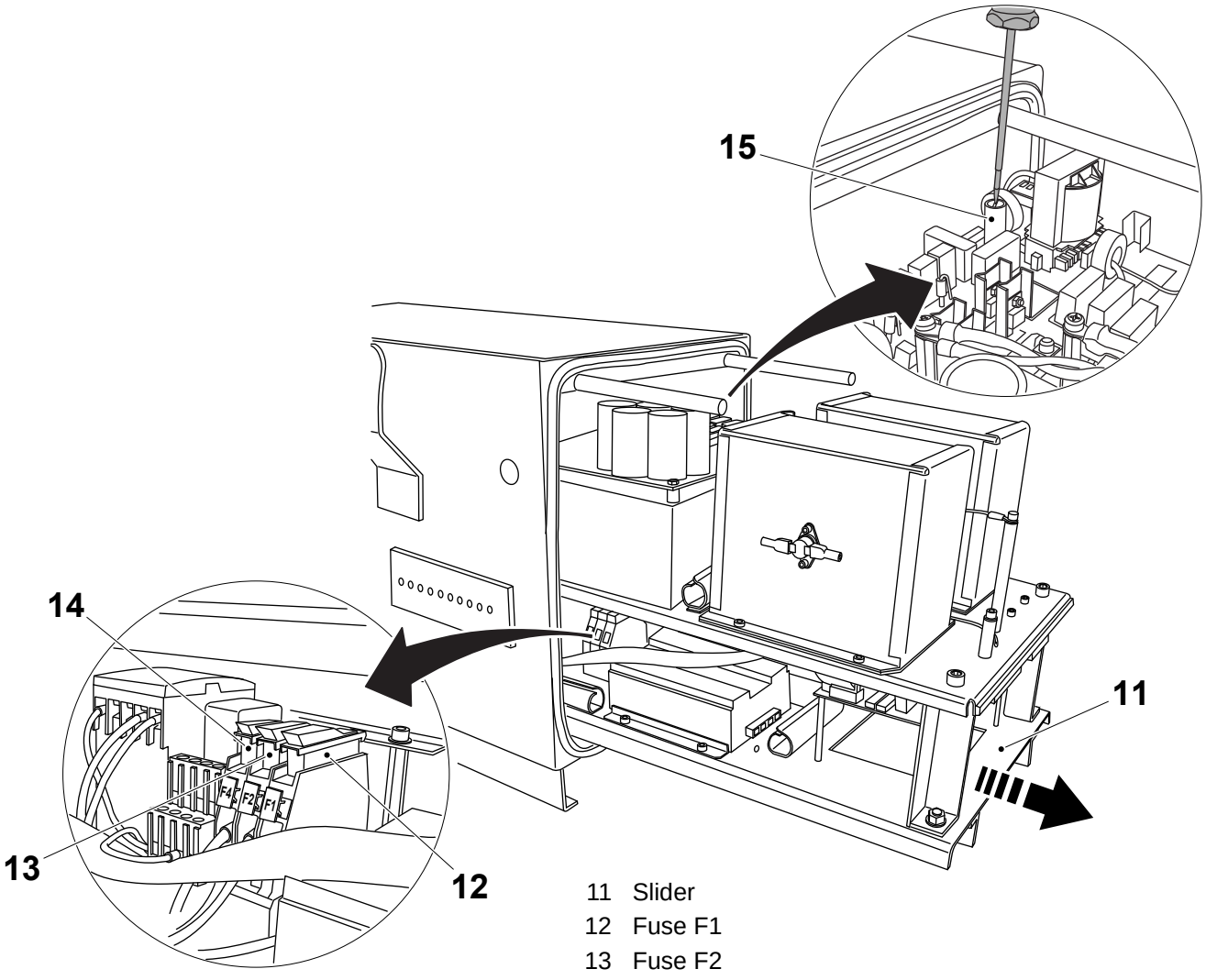

11 Slider
12 Fuse F1
13 Fuse F2
14 Fuse F4
15 Fuse S1

(Cont'd)

TechPub_2614345_0107 - 0102_3048102_01.fm

(Cont'd)

Note! When moving the slider (11), pay attention to the temperature switches (17) on the both the transformers (16). If they are disconnected, the alarm of temperature occurs.

l) On both the transformers (16), check the temperature switches (17) are connected.

m) Once the maintenance is finished, unlock the slider (11) and push it into the housing. The locking device is placed under the slider (11) itself.

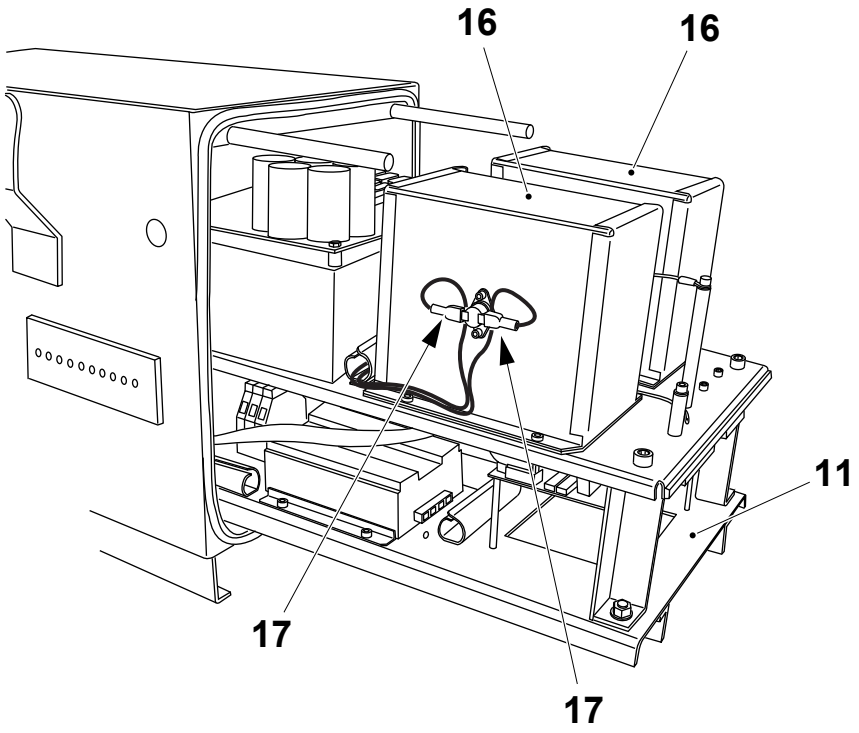

11 Slider
16 Transformer
17 Temperature switch

(Cont'd)

TechPub_2614345_0107 - 0102_3048102_01.fm

(Cont'd)

Note! When assembling, lock the slider position into the housing by means of the screw (10), so that the key (18) can be properly inserted into the safety switch (19).

n) Assemble in the reverse order.

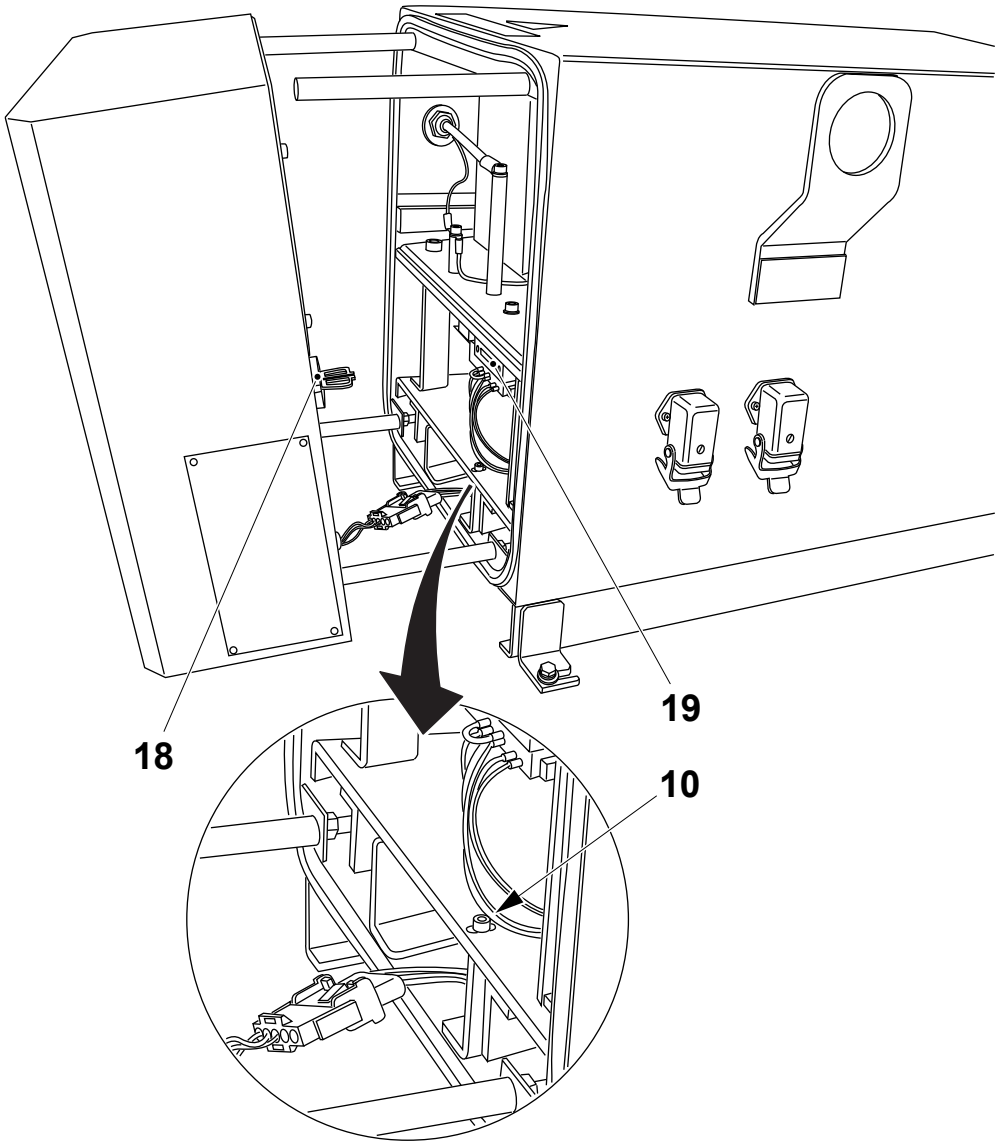

10 Screw
18 Key
19 Safety switch

TechPub_2614345_0107 - 0102_3048102_01.fm

1.11.2-4 Power Supply Unit - Change UV Cable

Machine Status	Mains Power OFF Air ON Steam ON Water ON
SPC Reference	2510546-0300

DANGER

Hazardous voltage.

Make sure that the mains power is switched OFF.

a) Disconnect the main connectors (1).

b) Disconnect the cooling water hoses (2) and the water drain pipe (3).

c) Disconnect the high voltage head following the procedure in 1.11.2-1 Power Supply Unit - Change, steps d) to h).

d) Remove the screws (4).

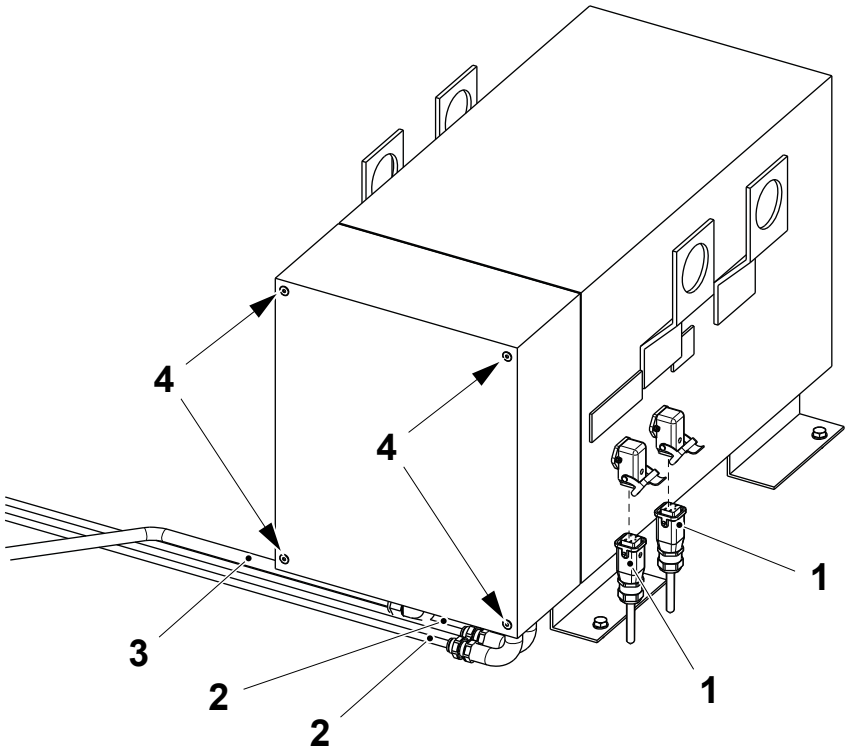

1 Main connectors
2 Hose
3 Drain pipe
4 Screw

(Cont'd)

TechPub_2614345_0107 - 0102_3048102_01.fm

(Cont'd)

DANGER

Hazardous residual voltage.

Do not touch any terminals immediately after the power supply disconnector is turned off. Ensure that no residual voltage remains on the capacitors before touching. Wait five minutes.

e) Pull out the heat exchanger (5) without removing it completely.

f) Disconnect the electrical connection (6).

g) Remove the heat exchanger (5).

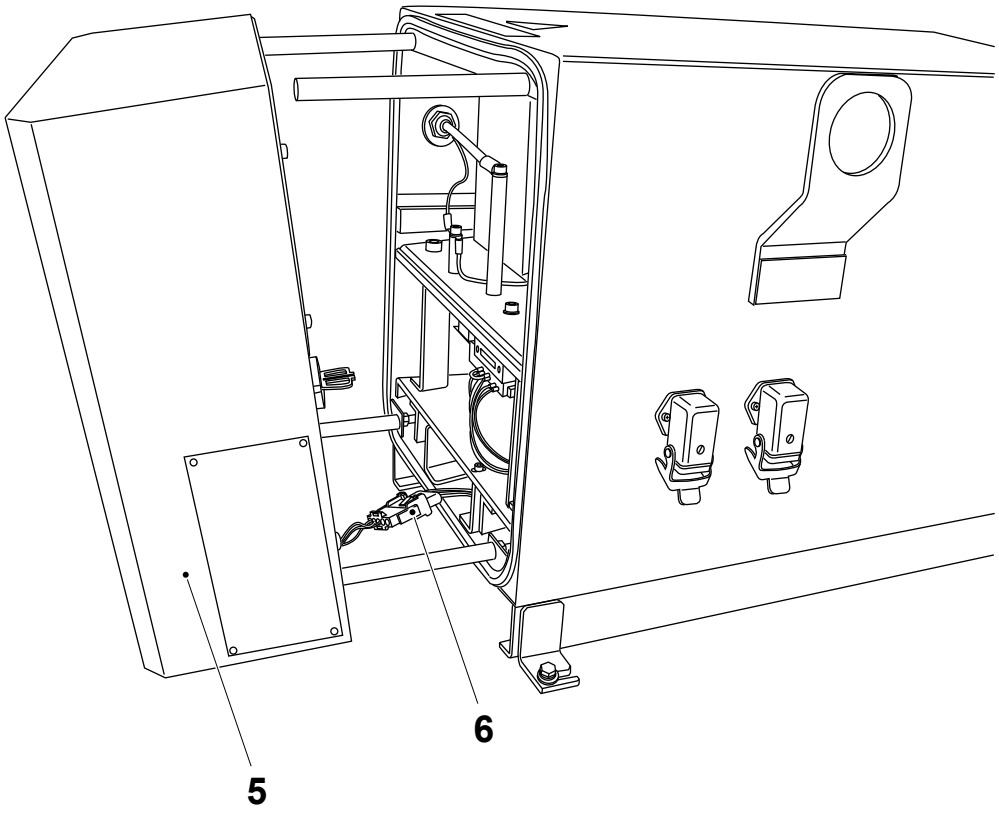

5 Heat exchanger
6 Electrical connection

(Cont'd)

TechPub_2614345_0107 - 0102_3048102_01.fm

(Cont'd)

h) Remove the screws (7) and (8) to disconnect the cables (9) and (10).

i) Loosen the nut (11) and pull the high voltage cable out from the housing.

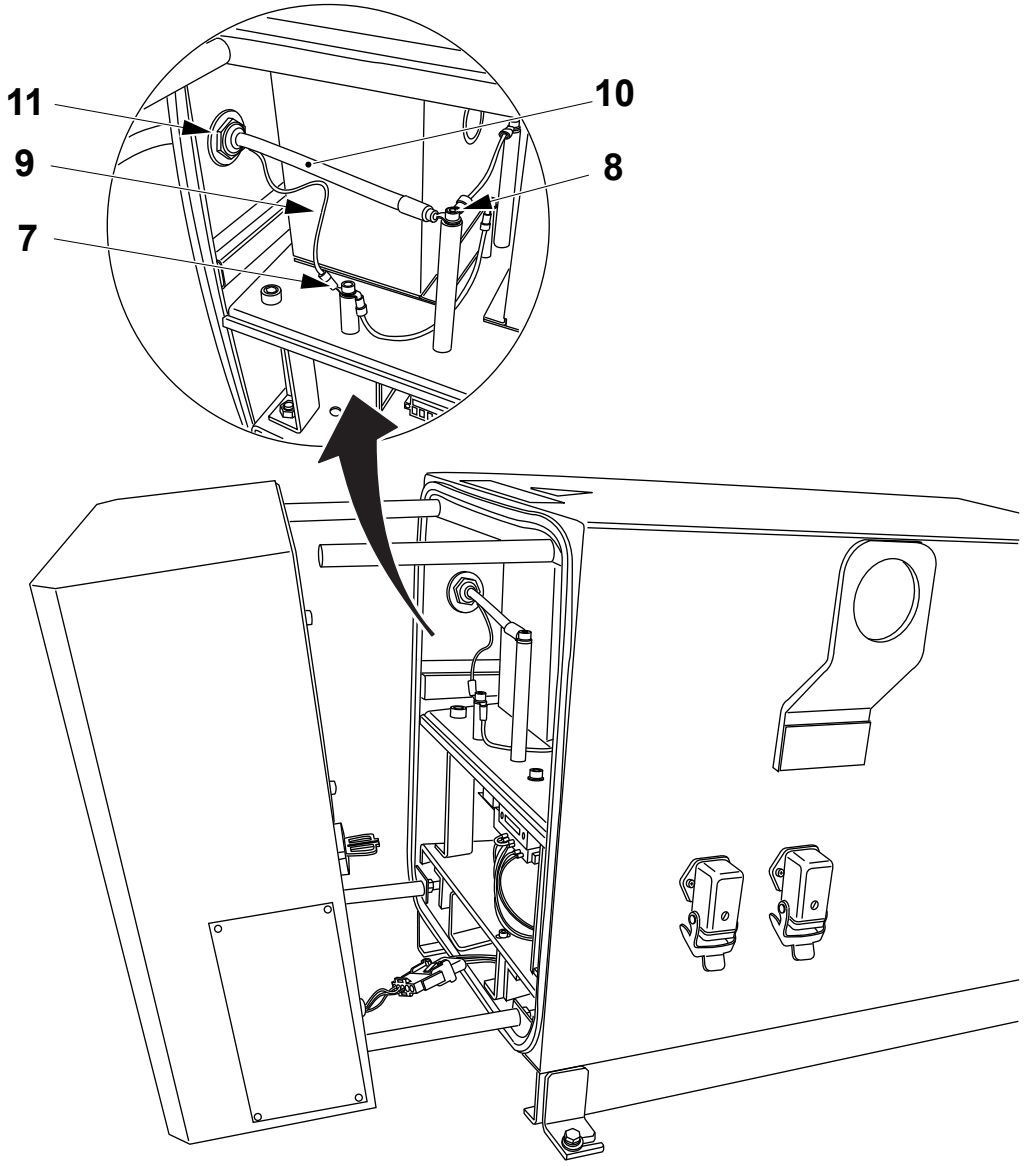

7 Screw
8 Screw
9 Cable
10 Cable
11 Nut

TechPub_2614345_0107 - 0102_3048102_01.fm

(Cont'd)

j) Change the high voltage cable (12) with the high voltage head (13) connected.

k) Assemble in the reverse order.

Note! When assembling, make sure that the key (14) is be properly inserted into the safety switch (15).

l) Fit back the high voltage head on the irradiation kit following in the reverse order the procedure in 1.11.2-1 Power Supply Unit - Change, starting from step g).

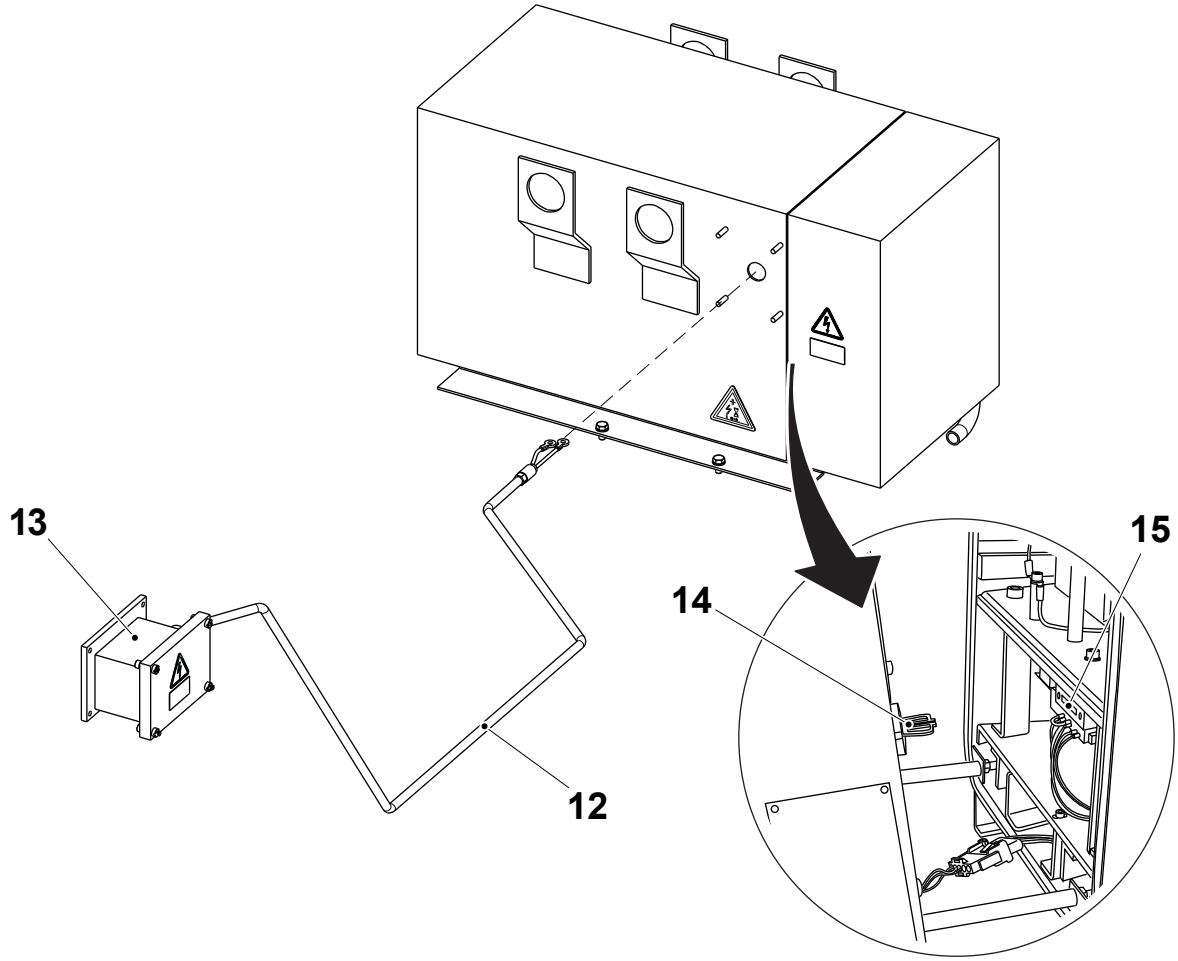

12 High voltage cable
13 High voltage head
14 Key
15 Safety switch

TechPub_2614345_0107 - 0102_3048102_01.fm

This page intentionally left blank

TechPub_2614345_0107 - 0102_3048102_01.fm

2 Machine Body

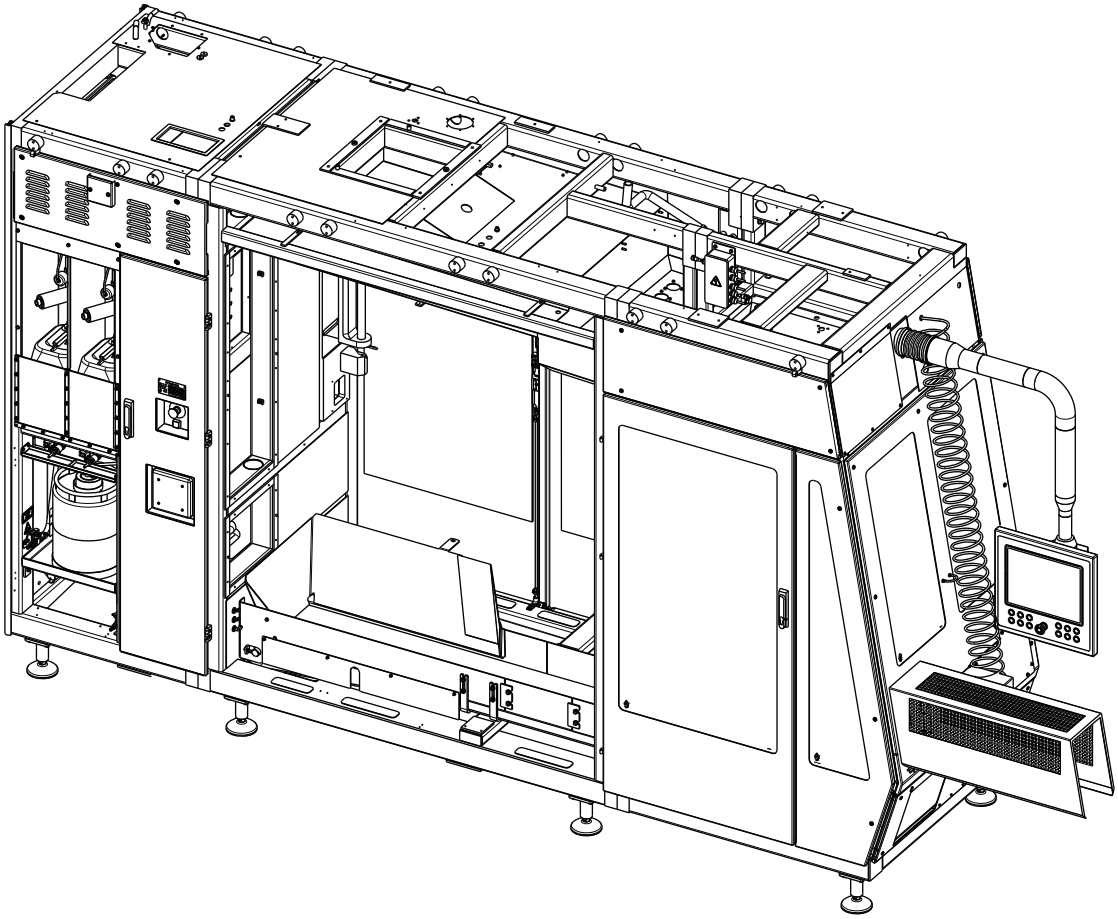

TechPub_2614345_0107 - 0202_3048103_01.fm

Machine Body - Description

SPC Reference	648560-0300

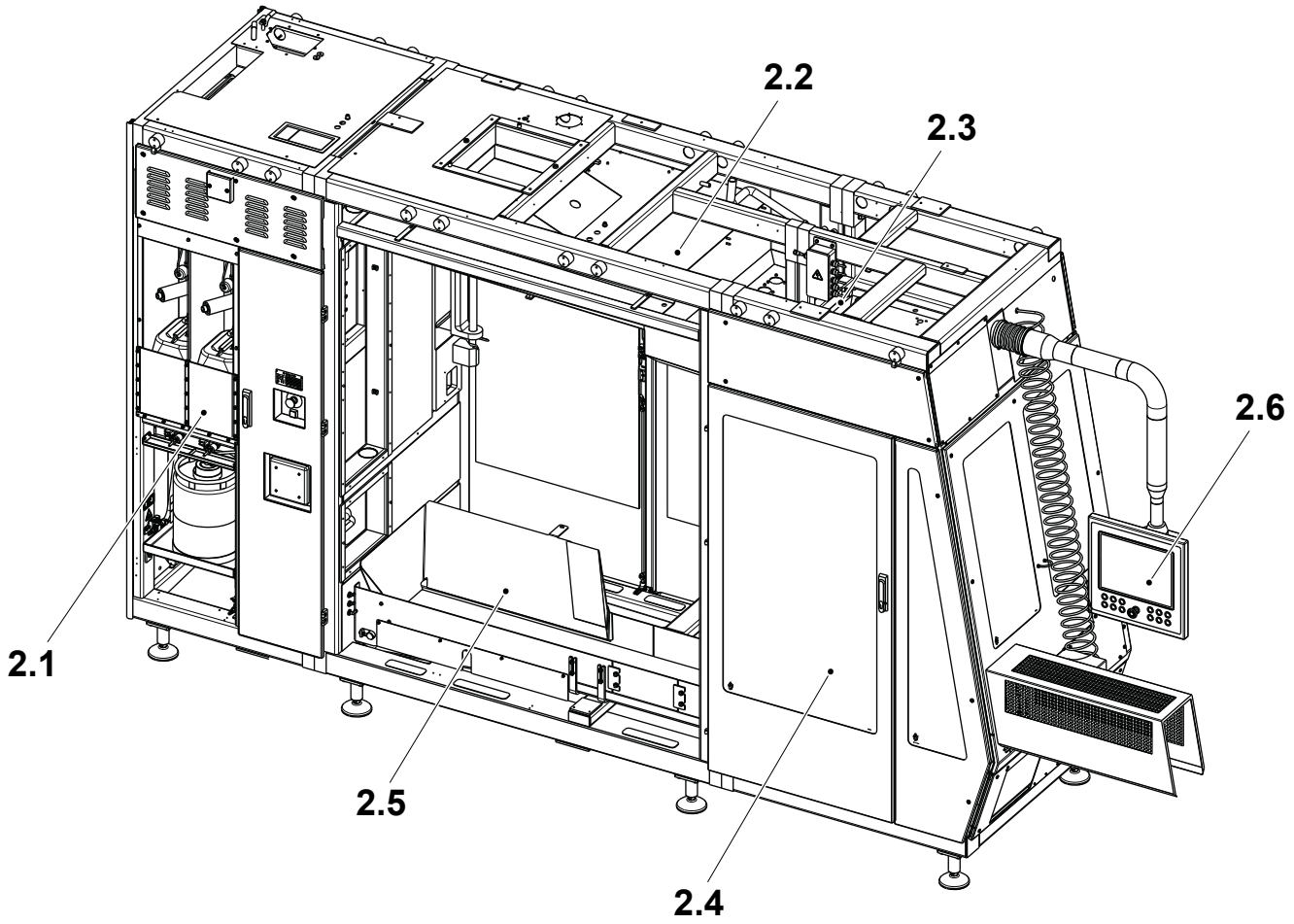

2.1 Rear Module
2.2 Central Module
2.3 Front Module
2.4 Doors and Covers
2.5 Waste Conveyor
2.6 TPOP

TechPub_2614345_0107 - 0202_3048103_01.fm

2.1 Rear Module . . . . . 2 - 7

2.1.1 Machine Body . . . . . 2 - 7

2.1.1.1 Bending Roller . . . . . 2 - 7

2.1.1.1-1 Bending Roller - Check . . . . . 2 - 7

2.1.1.1-2 Bending Roller - Change Ball Bearings . . . . . 2 - 8

2.1.2 Hydrogen Peroxide . . . . . 2 - 9

2.1.2-1 Hydrogen Peroxide - Check Leakages . . . . . 2 - 9

2.1.2-2 Hydrogen Peroxide - Check Pump . . . . . 2 - 11

2.1.2-3 Hydrogen Peroxide - Set Pressure . . . . . 2 - 12

2.1.2.1 Peroxide Tank . . . . . 2 - 13

2.1.2.1-1 Peroxide Tank - Check . . . . . 2 - 13

2.1.2.2 Peroxide Pipe . . . . . 2 - 15

2.1.2.2-1 Peroxide Pipe - Check . . . . . 2 - 15

2.1.2.2-2 Peroxide Pipe - Clean Strainer . . . . . 2 - 17

2.1.2.3 Air Pipe-Line . . . . . 2 - 19

2.1.2.3-1 Air Pipe-Line - Check . . . . . 2 - 19

2.1.2.3-2 Air Pipe-Line - Change Gasket and Non Return Valve . . . . . 2 - 22

2.1.2.4 Tank . . . . . 2 - 24

2.1.2.4-1 Tank - Check . . . . . 2 - 24

2.1.2.4-2 Tank - Clean . . . . . 2 - 26

2.1.2.5 Peroxide Pump . . . . . 2 - 28

2.1.2.5-1 Peroxide Pump - Change Pump . . . . . 2 - 28

2.1.2.5-2 Peroxide Pump - Overhaul Pump . . . . . 2 - 30

2.1.2.5-3 Peroxide Pump - Set Impeller Coupling . . . . . 2 - 36

2.1.2.6 Peroxide Container . . . . . 2 - 38

2.1.2.6-1 Peroxide Container - Check . . . . . 2 - 38

2.1.3 Chemicals . . . . . 2 - 40

2.1.3-1 Chemicals - Check . . . . . 2 - 40

2.1.4 Integrated Cleaning Unit . . . . . 2 - 42

2.1.4.1 Integrated Cleaning Unit . . . . . 2 - 42

2.1.4.1-1 Integrated Cleaning Unit - Check for Leakage . 2 - 42

2.1.4.1-2 Integrated Cleaning Unit - Drain . . . . . 2 - 45

TechPub_2614345_0107 - 0202_3048103_01.fm

2.1.4.1-3 Integrated Cleaning Unit - Check Floats . . . . . 2 - 46
2.1.4.1-4 Integrated Cleaning Unit - Check Float Function 2 - 51
2.1.4.1-5 Integrated Cleaning Unit - Set Proximity Sensor 2 - 53
2.1.4.2 Refilling . . . . . 2 - 55
2.1.4.2-1 Refilling - Check . . . . . 2 - 55
2.1.4.2-2 Refilling - Change Filter . . . . . 2 - 57
2.1.5 Pneumatic System . . . . . 2 - 58
2.1.5.1 Valve Panel . . . . . 2 - 58
2.1.5.1-1 Valve Panel - Check Photocell Filters . . . . . 2 - 58
2.1.5.1-2 Valve Panel - Set Peroxide Pump Pressure . . . . 2 - 59
2.1.5.1-3 Valve Panel- Change Filter . . . . . 2 - 60
2.1.6 Electrical Equipment . . . . . 2 - 63
2.1.6.1 H_2O_2 Concentration Meter . . . . . 2 - 63
2.1.6.1-1 H_2O_2 Concentration Meter - Check Desiccant Cartridge . . . . . 2 - 63
2.1.6.1-2 H_2O_2 Concentration Meter - Change O-ring . . . 2 - 65
2.1.6.1-3 H_2O_2 Concentration Meter - Remove . . . . . 2 - 69
2.1.6.1-4 H_2O_2 Concentration Meter - Check Pt100 Sensor . . . . . 2 - 72
2.1.6.1-5 H_2O_2 Concentration Meter - Change Pt100 Sensor . . . . . 2 - 73
2.1.6.1-6 H_2O_2 Concentration Meter - Check Prism and Led . . . . . 2 - 74
2.2 Central Module . . . . . 2 - 76
2.2.1 Cleaning System . . . . . 2 - 76
2.2.1-1 Cleaning System - Check Nozzles . . . . . 2 - 76
2.2.2 Pump Unit . . . . . 2 - 77
2.2.2-1 Pump Unit - Check . . . . . 2 - 77
2.2.2-2 Pump Unit - Change Pump . . . . . 2 - 78
2.2.3 Electric Equipment . . . . . 2 - 84
2.2.3-1 Electric Equipment - Check Fan . . . . . 2 - 84
2.2.3-2 Electric Equipment - Change Fan . . . . . 2 - 85
2.3 Front Module . . . . . 2 - 86

TechPub_2614345_0107 - 0202_3048103_01.fm

2.3.1 Pneumatic System . . . . . 2 - 86

2.3.1-1 Pneumatic System - Check . . . . . 2 - 86

2.3.1-2 Pneumatic System - Set I/P Transducer . . . . . 2 - 87

2.3.2 Cleaning System . . . . . 2 - 92

2.3.2-1 Cleaning System - Change Non-Return Valve . . 2 - 92

2.4 Doors and Covers . . . . . 2 - 93

2.4-1 Doors and Covers - Remove . . . . . 2 - 93

2.4-2 Doors and Covers - Grease Locking Devices . . 2 - 95

2.5 Waste Conveyor. . . . . 2 - 96

2.5-1 Waste Conveyor - Check . . . . . 2 - 96

2.5-2 Waste Conveyor - Change Coupling . . . . . 2 - 98

2.5-3 Waste Conveyor - Change Conveyor Belt . . . . . 2 - 99

2.5-4 Waste Conveyor - Tension Conveyor Belt . . . . 2 - 101

2.5-5 Waste Conveyor - Set Front Guard Pressure . . 2 - 103

2.6 TPOP. . . . . 2 - 104

2.6-1 TPOP - Open Front Panel . . . . . 2 - 106

2.6-2 TPOP - Change Push Button Module . . . . . 2 - 107

2.6-3 TPOP - Change AP Link SDL Receiver . . . . . 2 - 112

2.6-4 TPOP - Change Gateway PCB . . . . . 2 - 114

2.6-5 TPOP - Change Display Backlight . . . . . 2 - 116

2.6.1 Bar Code Scanner . . . . . 2 - 122

2.6.1-1 Bar Code Scanner - Configure and Test Bar . . 2 - 122

2.6.1-2 Bar Code Scanner - Change Cable . . . . . 2 - 131

TechPub_2614345_0107 - 0202_3048103_01.fm

This page intentionally left blank

TechPub_2614345_0107 - 0202_3048103_01.fm

2.1 Rear Module

SPC Reference	2504779-0300

2.1.1 Machine Body

2.1.1.1 Bending Roller

2.1.1.1-1 Bending Roller - Check

Machine Status	Mains Power OFF Air OFF Steam ON Water OFF
SPC Reference	2504784-0200

Check:

- the surface of the bending roller (1) for wear or damage
- for excessive play in the ball bearings by turning the bending roller (1) back and forwards
- that the material lock (2) grips the packaging material when it is positioned against the bending roller.

If necessary change the ball bearings or the bending roller, see 2.1.1.1-2 Bending Roller - Change Ball Bearings.

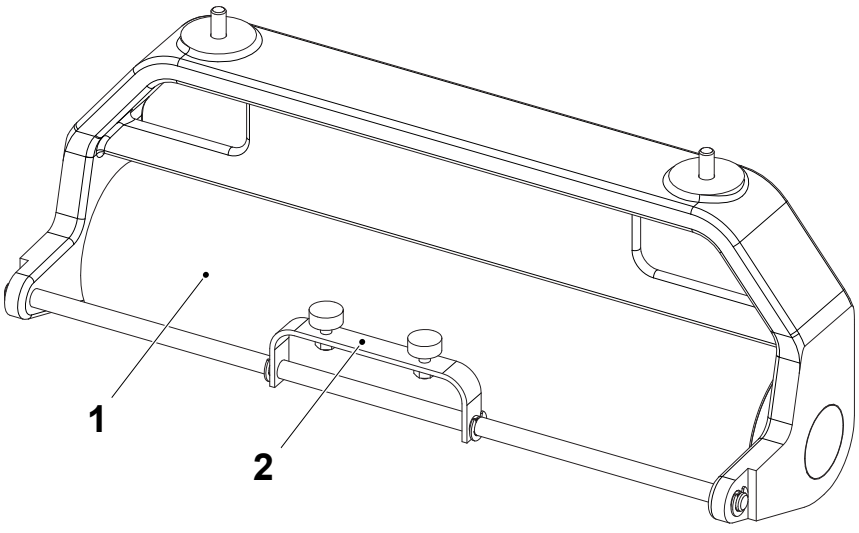

1 Bending roller
2 Material lock

TechPub_2614345_0107 - 0202_3048103_01.fm

2.1.1.1-2 Bending Roller - Change Ball Bearings

Machine Status	Mains Power OFF Air OFF Steam ON Water OFF
SPC Reference	2504784-0200

a) Remove the screws (1).

b) Remove the axle pins (2) and the bending roller (3).

c) Change the ball bearings (4).

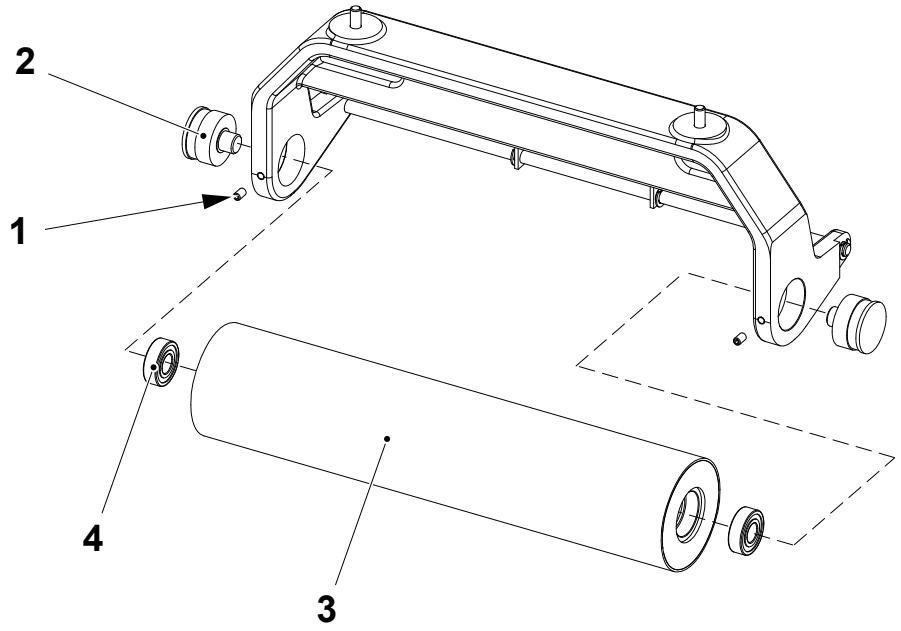

1 Screw
2 Axle pin
3 Bending roller
4 Ball bearing

TechPub_2614345_0107 - 0202_3048103_01.fm

2.1.2 Hydrogen Peroxide

2.1.2-1 Hydrogen Peroxide - Check Leakages

Machine Status	Mains Power OFF Air OFF Steam ON Water OFF
SPC Reference	2504781-0200

WARNING
Hydrogen Peroxide.
Follow the Safety Precautions.

(Cont'd)

TechPub_2614345_0108 - 0204_3048104_01.fm

(Cont'd)

Check the connections for leakages at:

- the cabinet (1)
- the peroxide pipe (2)
- the peroxide pump (3)
- the dilution tank (4)
- the peroxide tank (5).

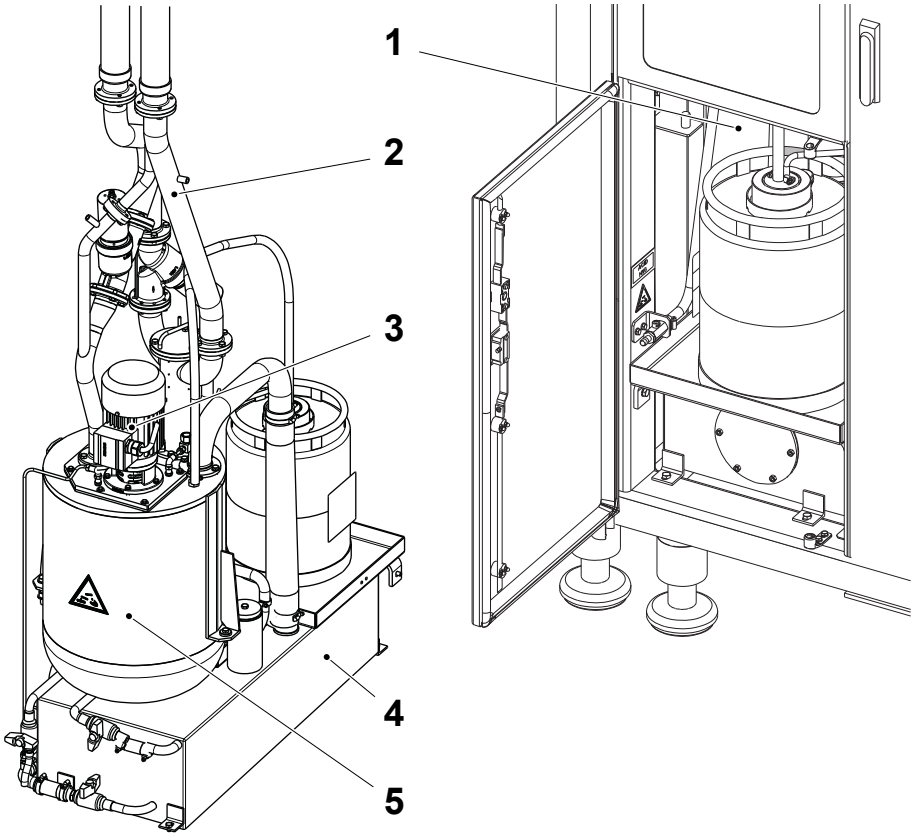

1 Cabinet
2 Peroxide pipe
3 Peroxide pump
4 Dilution tank
5 Peroxide tank

TechPub_2614345_0108 - 0204_3048104_01.fm

2.1.2-2 Hydrogen Peroxide - Check Pump

Machine Status	HEAT STERILIZATION
SPC Reference	2504781-0200

Place a screwdriver so that it is in contact with the peroxide pump (1). Check the peroxide pump (1) for abnormal noise or vibrations.

Change the peroxide pump (1) if necessary, see 2.1.2.5-1 Peroxide Pump - Change Pump.

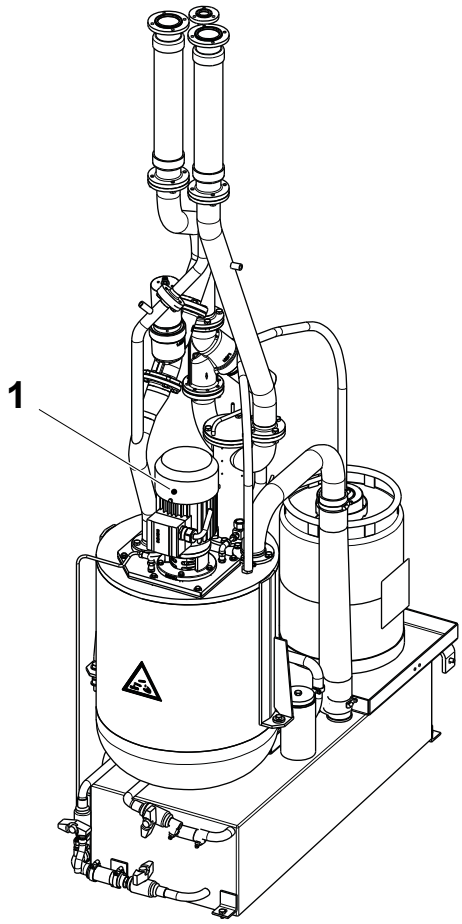

1 Peroxide pump

TechPub_2614345_0108 - 0204_3048104_01.fm

2.1.2-3 Hydrogen Peroxide - Set Pressure

Machine Status	HEAT STERILIZATION
SPC Reference	2504781-0200

Set the hydrogen peroxide tank filling pressure to 0.2 bar with the pressure regulator (1).

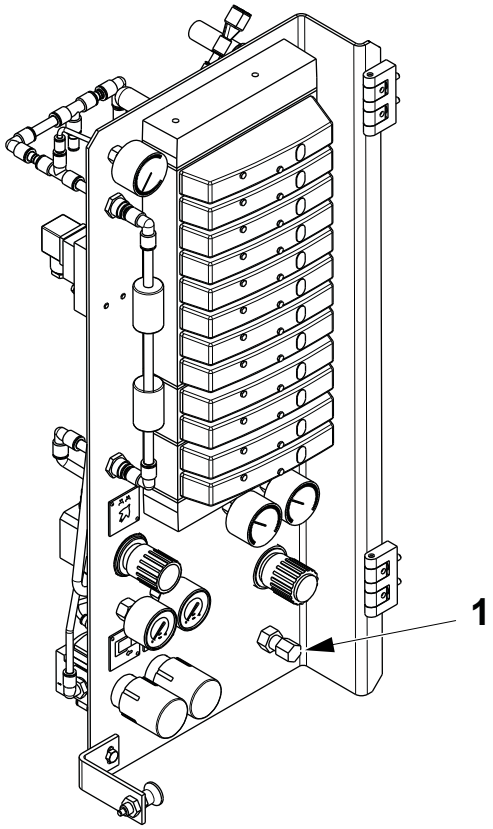

1 Pressure regulator

TechPub_2614345_0108 - 0204_3048104_01.fm

2.1.2.1 Peroxide Tank

2.1.2.1-1 Peroxide Tank - Check

Machine Status	Mains Power OFF Air OFF Steam ON Water OFF
Special Equipment	Brass Brush
SPC Reference	1282894-0200

WARNING
Hydrogen Peroxide.
Follow the Safety Precautions.

Check that:

- the electrical connections (1) are not rusted. Clean the connections with a brass brush if necessary

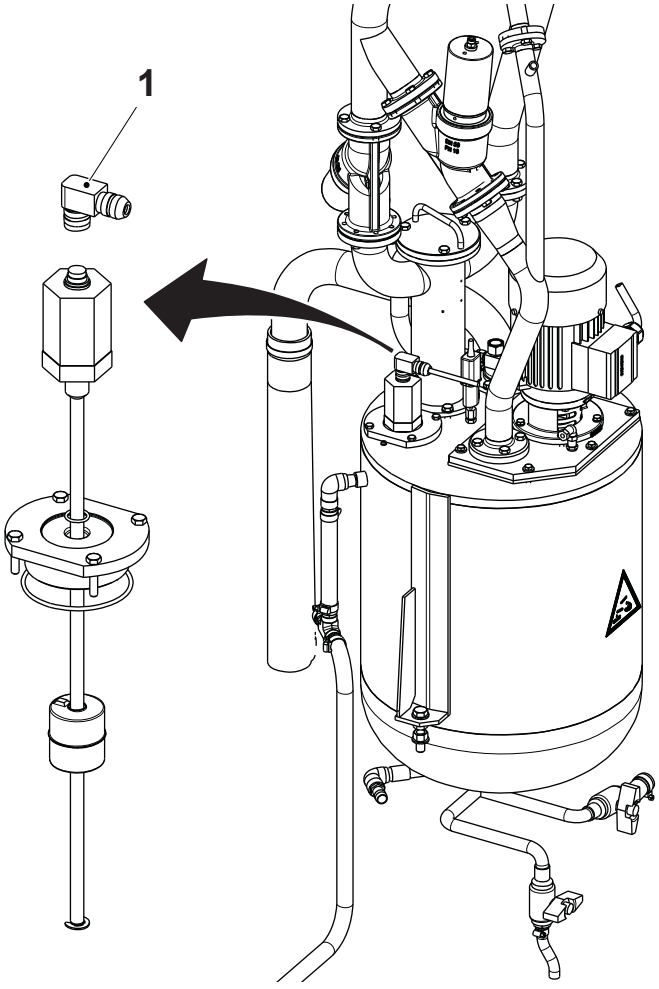

1 Connection

(Cont'd)

TechPub_2614345_0108 - 0204_3048104_01.fm

(Cont'd)

- there are no leaks at the connections (2) on the peroxide tank
- the float (3) is undamaged
- the O-rings (4) are not worn or damaged.

Change the parts if necessary.

Note! Make sure that the raised area (5) of the float (3) is facing up during the assembly.

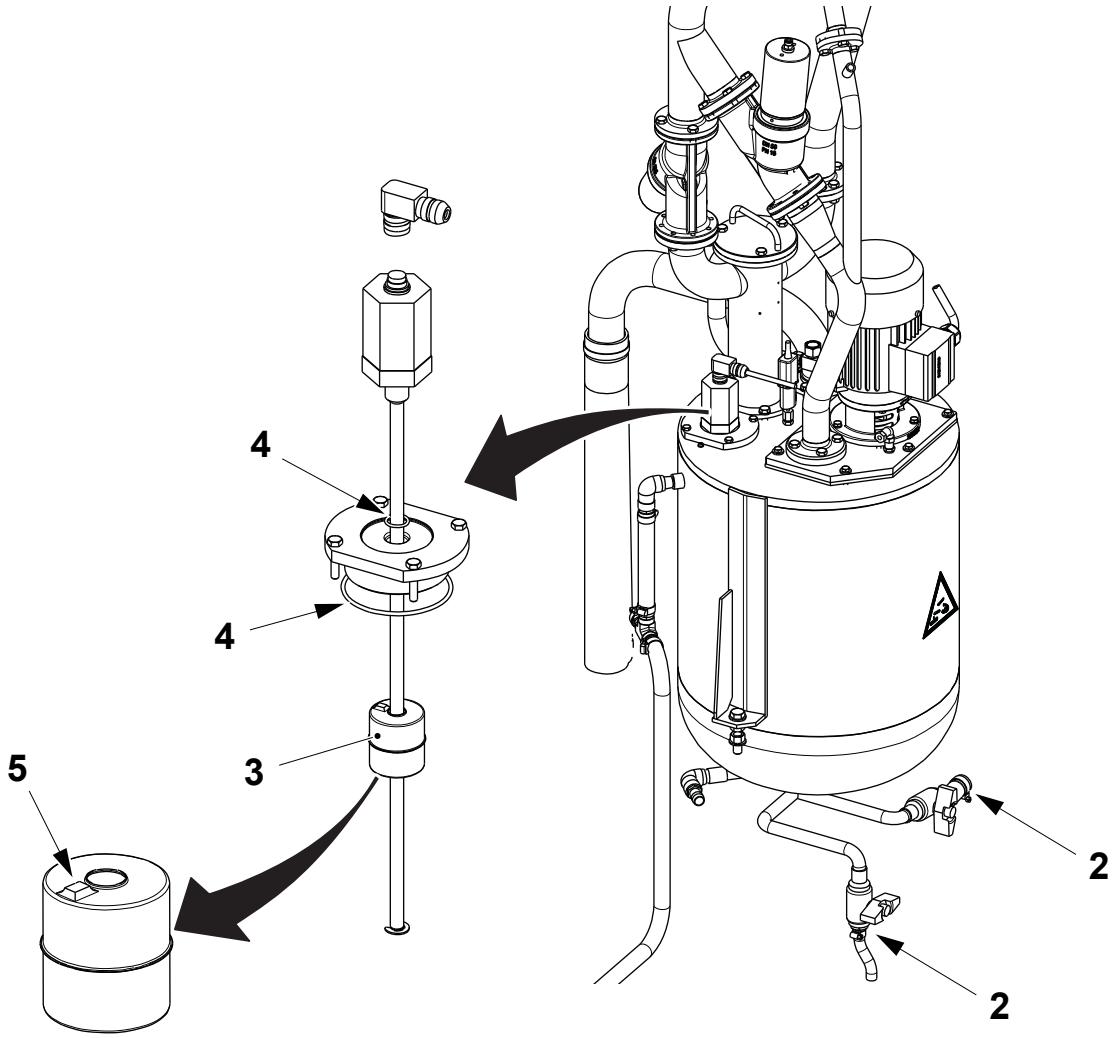

2 Connection
3 Float
4 O-ring
5 Raised area

TechPub_2614345_0108 - 0204_3048104_01.fm

2.1.2.2 Peroxide Pipe

2.1.2.2-1 Peroxide Pipe - Check

Machine Status	Mains Power OFF Air OFF Steam ON Water OFF
SPC Reference	1282895-0300

WARNING
Hydrogen Peroxide.
Follow the Safety Precautions.

Check that the strainer (1) is not dirty. Clean or change it if necessary, see 2.1.2.2-2 Peroxide Pipe - Clean Strainer.

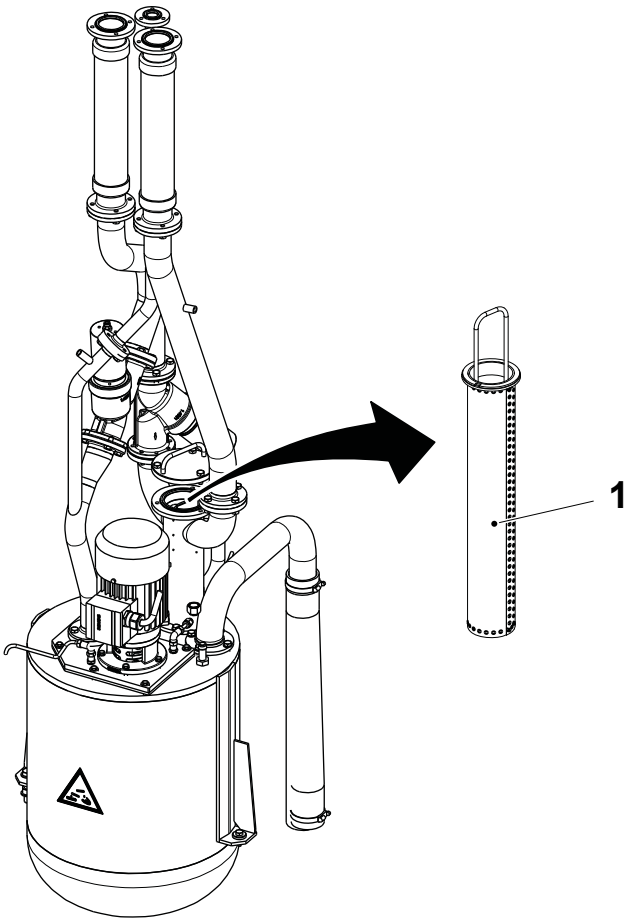

1 Strainer

(Cont'd)

TechPub_2614345_0108 - 0204_3048104_01.fm

(Cont'd)

Check during PRODUCTION

Turn the air and the mains power ON.

Check the pipe connections (indicated by the arrows) for any peroxide leakages. If there are leaks, change the gaskets (1) if necessary, as shown in the illustration below. Check that the hose clips are tight.

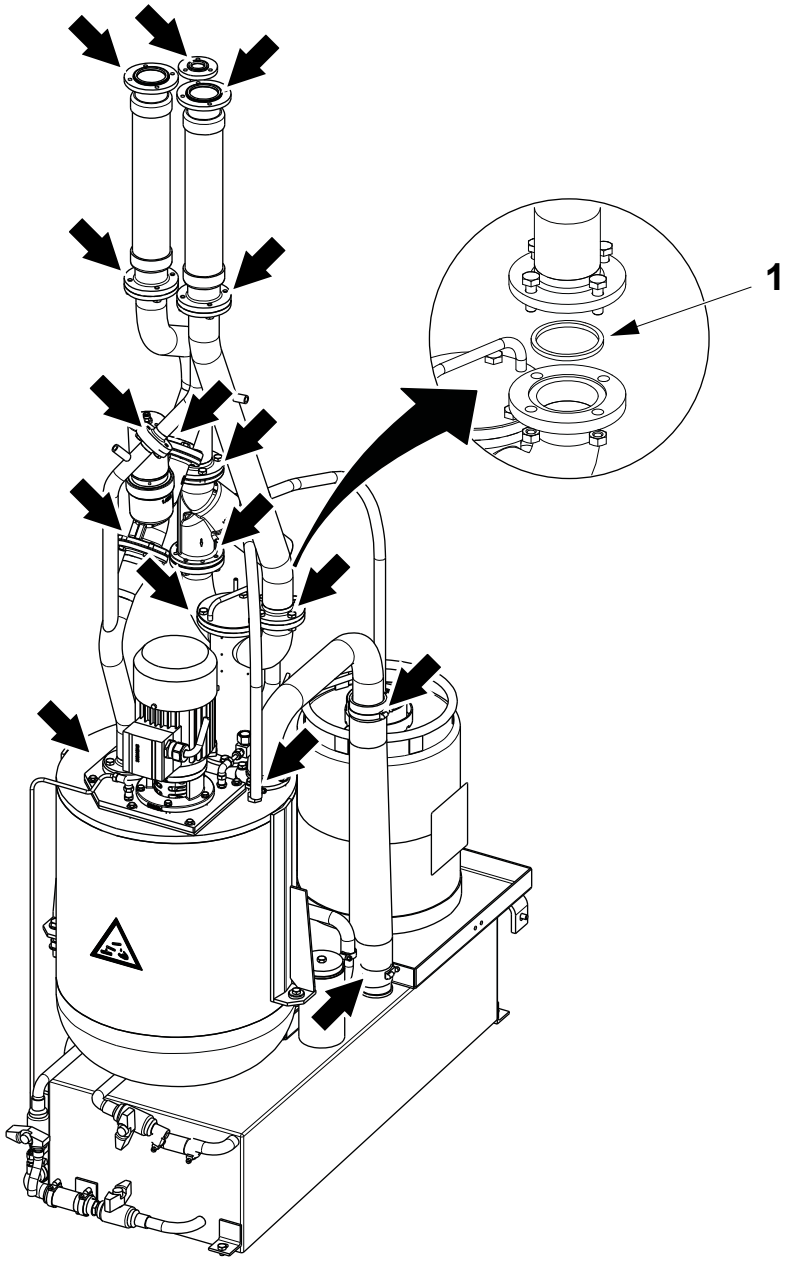

1 Gasket

TechPub_2614345_0108 - 0204_3048104_01.fm

2.1.2.2-2 Peroxide Pipe - Clean Strainer

Machine Status	Mains Power OFF Air OFF Steam ON Water OFF
SPC Reference	1282895-0300

WARNING
Hydrogen Peroxide.
Follow the Safety Precautions.

WARNING
Risk of eye injury.
Wear eye protection when blow drying the strainer.

(Cont'd)

TechPub_2614345_0108 - 0204_3048104_01.fm

(Cont'd)

a) Remove the screws (1).

b) Lift up the cover (2) and remove the strainer (3).

c) Clean the strainer (3) with distilled water and, if needed, blow dry with compressed air. Rinse the strainer (3) with distilled water.

d) Change the strainer (3) if necessary.

e) Check the gasket (4) and change it if necessary.

f) Assemble in the reverse order.

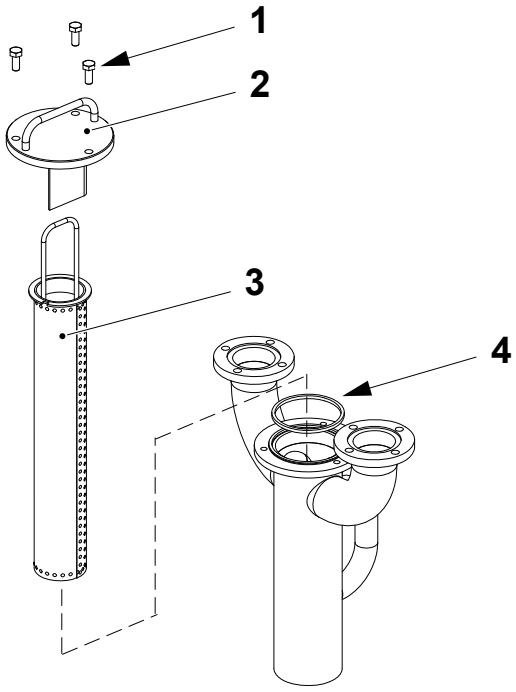

1 Screw
2 Cover
3 Strainer
4 Gasket

TechPub_2614345_0108 - 0204_3048104_01.fm

2.1.2.3 Air Pipe-Line

2.1.2.3-1 Air Pipe-Line - Check

Machine Status	Mains Power OFF Air OFF Steam ON Water OFF
SPC Reference	2506637-0200

WARNING
Hydrogen Peroxide.
Follow the Safety Precautions.

(Cont'd)

TechPub_2614345_0108 - 0204_3048104_01.fm

(Cont'd)

Check that:

- the hoses (1), the non return valve (2) and the gasket (3) do not leak. Change the non return valve (2) and the gasket (3) if necessary, see 2.1.2.3-2 Air Pipe-Line - Change Gasket and Non Return Valve
- the filter (4) on the valve panel (5) is not dirty. Clean or change if necessary, see 2.1.5.1-3 Valve Panel- Change Filter.

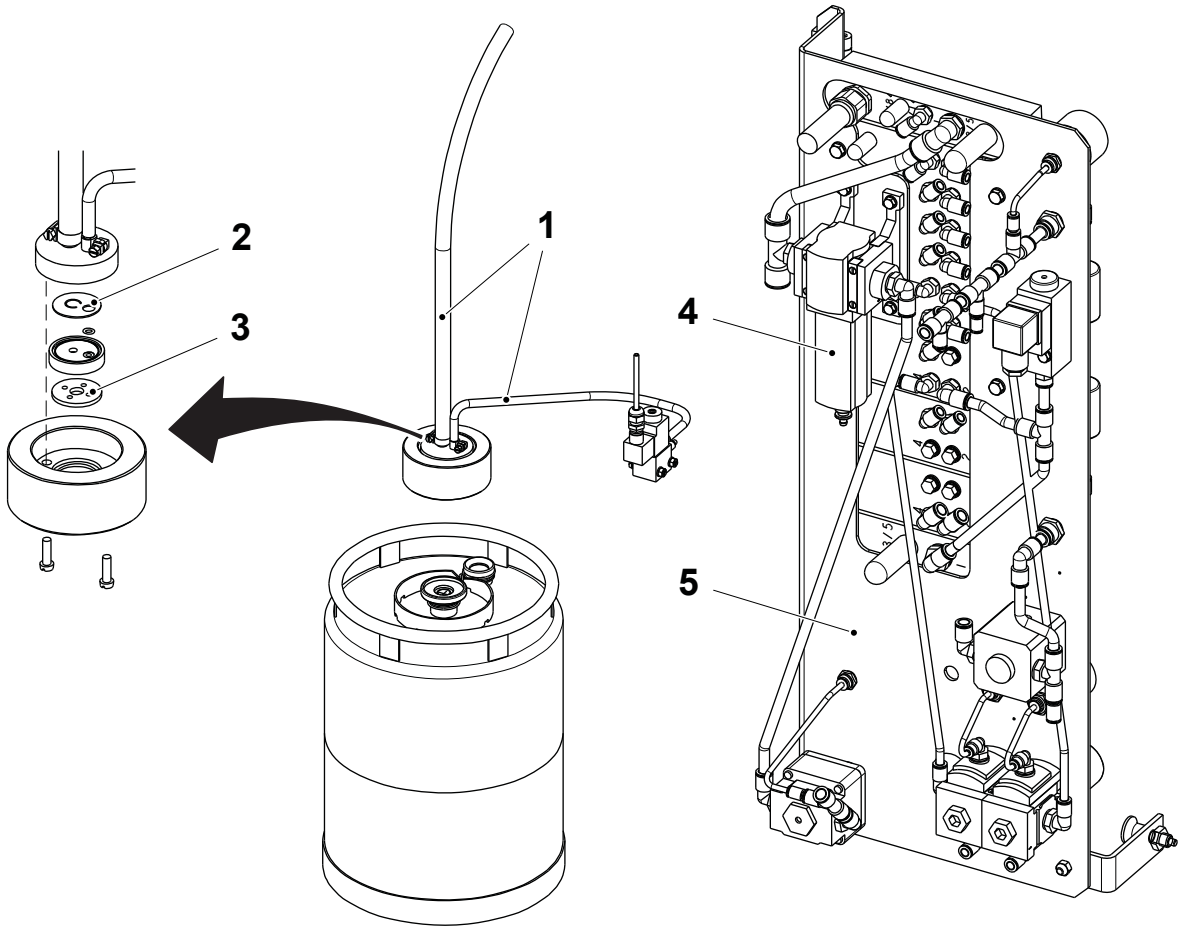

1 Hose
2 Non return valve
3 Gasket
4 Filter
5 Valve panel

(Cont'd)

TechPub_2614345_0108 - 0204_3048104_01.fm

(Cont'd)

Check During PRODUCTION

Check that the weight (6) is properly installed on the peroxide container (7) and that it does not leak.

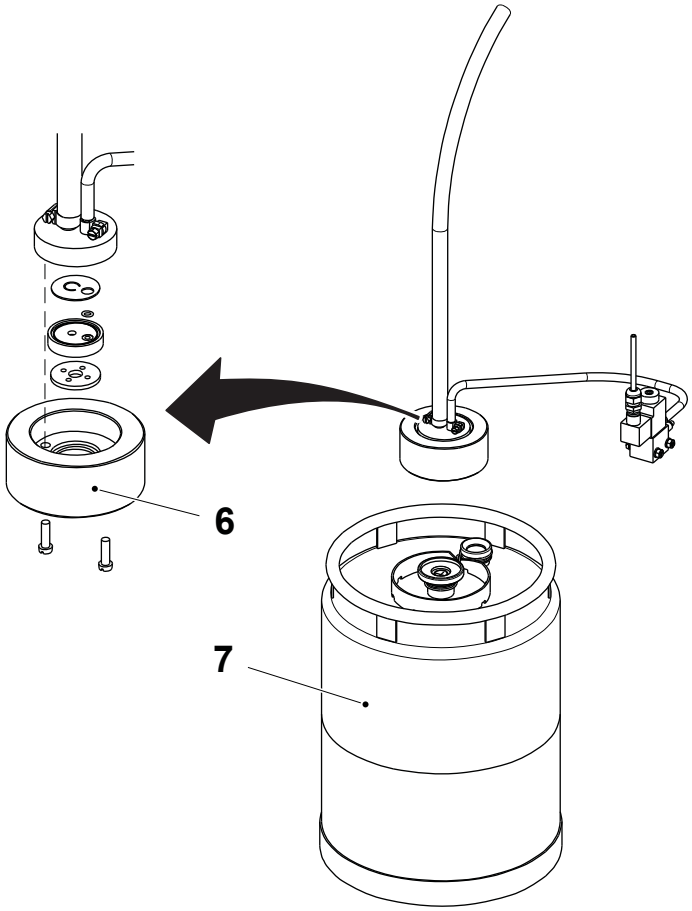

6 Weight
7 Peroxide container

TechPub_2614345_0108 - 0204_3048104_01.fm

2.1.2.3-2 Air Pipe-Line - Change Gasket and Non Return Valve

Machine Status	Mains Power OFF Air OFF Steam ON Water OFF
SPC Reference	2506637-0200

WARNING
Hydrogen Peroxide.
Follow the Safety Precautions.

(Cont'd)

TechPub_2614345_0108 - 0204_3048104_01.fm

(Cont'd)

a) Remove the weight (1) from the peroxide container (2).

b) Remove the two screws (3) securing the hose attachment (4) to the weight (1).

c) Remove the gasket (5) and change it if necessary.

d) Remove the washer (6) from the weight (1).

e) Remove the non-return valve (7) from the hose attachment (4). Change the non-return valve if necessary.

f) Assemble in the reverse order. Make sure that the O-ring (8) is fitted correctly.

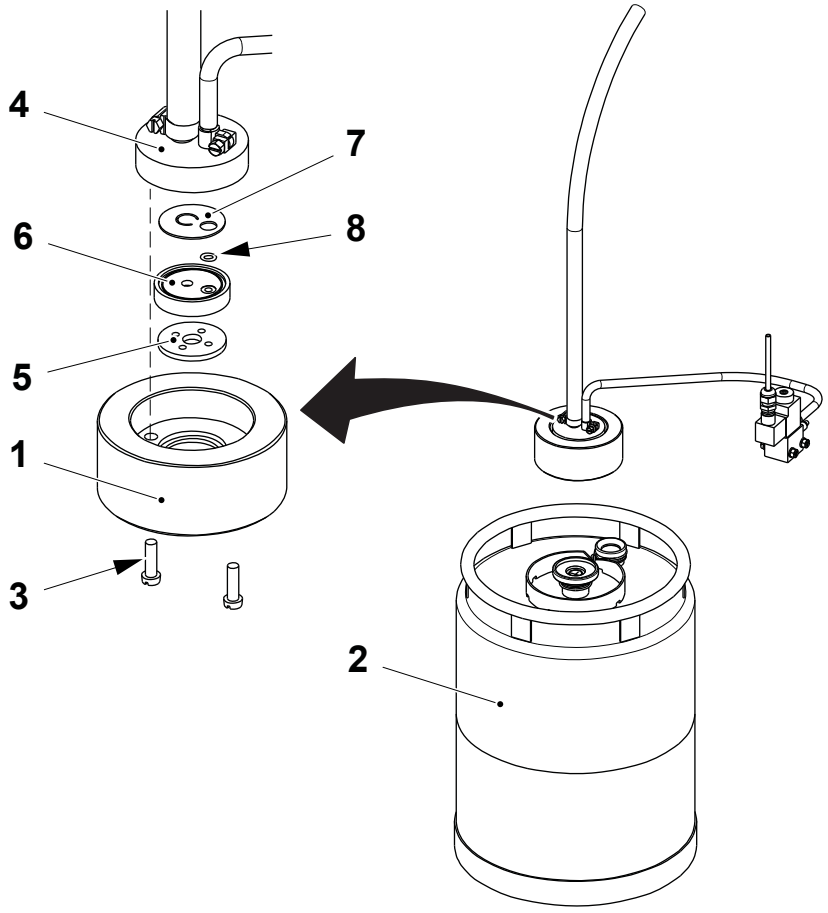

1 Weight
2 Peroxide container
3 Screw
4 Hose attachment
5 Gasket
6 Washer
7 Non return valve
8 O-ring

TechPub_2614345_0108 - 0204_3048104_01.fm

2.1.2.4 Tank

2.1.2.4-1 Tank - Check

Machine Status	PRODUCTION
SPC Reference	1282896-0200

WARNING
Hydrogen Peroxide.
Follow the Safety Precautions.

(Cont'd)

TechPub_2614345_0108 - 0204_3048104_01.fm

(Cont'd)

Check that:

- the drain hole (1) is not clogged. If necessary, clean the hole using an appropriate tool
- the pipe (2) is not clogged. If necessary, clean the pipe (2), see 2.1.2.4-2 Tank - Clean
- the outlet hoses (3) and (4) do not leak
- the cover (5) does not leak
- the valve (6) does not leak
- the safety lid (7) is not stuck. Make sure that it moves freely, lifting by hand. If necessary, remove and clean the safety lid (7) with water.

Note! To ensure the outlet concentration of peroxide is less than 1% w/w, run the machine for 24 hours in production before emptying the dilution tank.

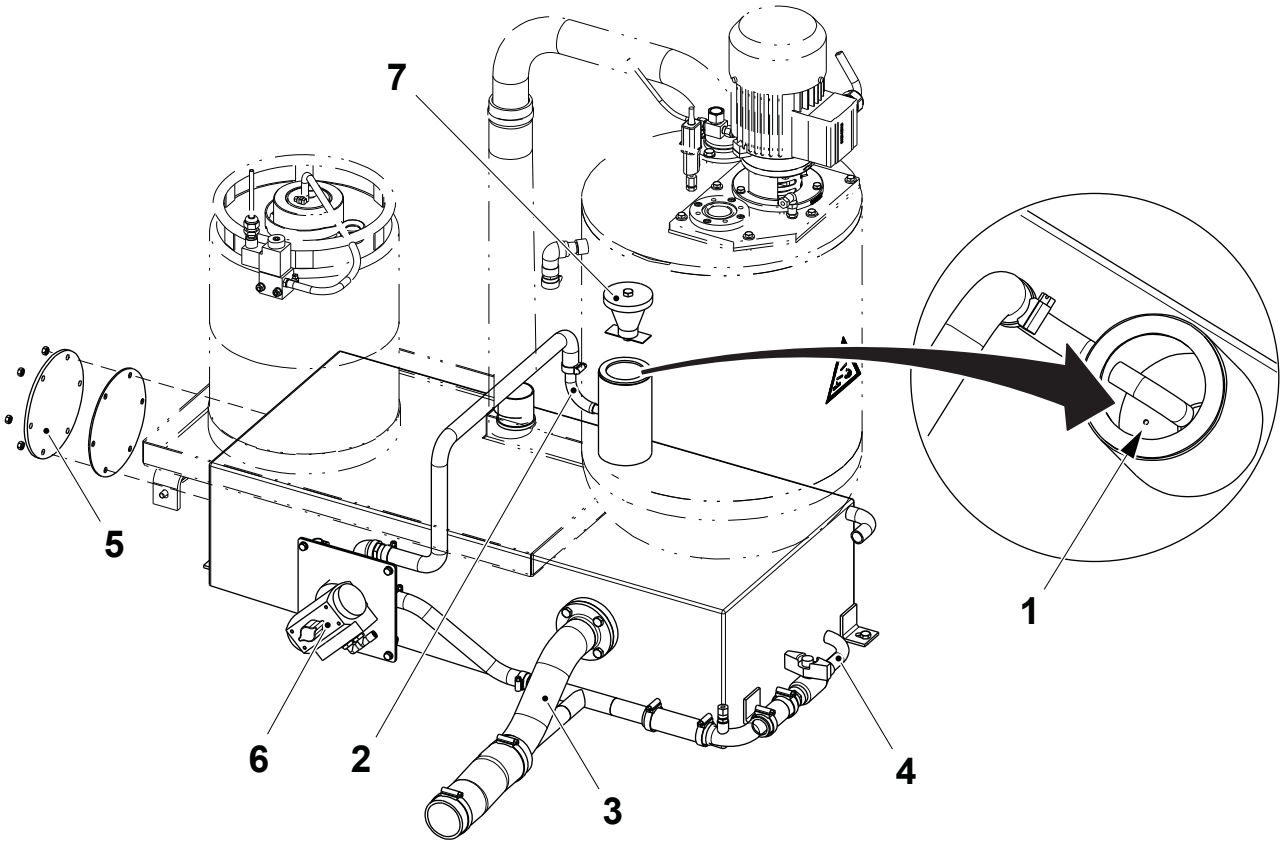

1 Drain hole
2 Pipe
3 Outlet hose
4 Outlet hose
5 Cover
6 Valve
7 Safety lid

TechPub_2614345_0108 - 0204_3048104_01.fm

2.1.2.4-2 Tank - Clean

Machine Status	Mains Power OFF Air OFF Steam ON Water OFF
SPC Reference	1282896-0200

WARNING
Hydrogen Peroxide.
Follow the Safety Precautions.

(Cont'd)

TechPub_2614345_0108 - 0204_3048104_01.fm

(Cont'd)

a) Remove the safety lid (1) and the hose (2).

b) Clean inside the pipe (3) using a deliming agent.

c) Remove the lime scale residue in the pipe (4) using a piece of iron wire, then pour deliming agent through the pipe (4).

d) Fit back the safety lid (1) and the hose (2).

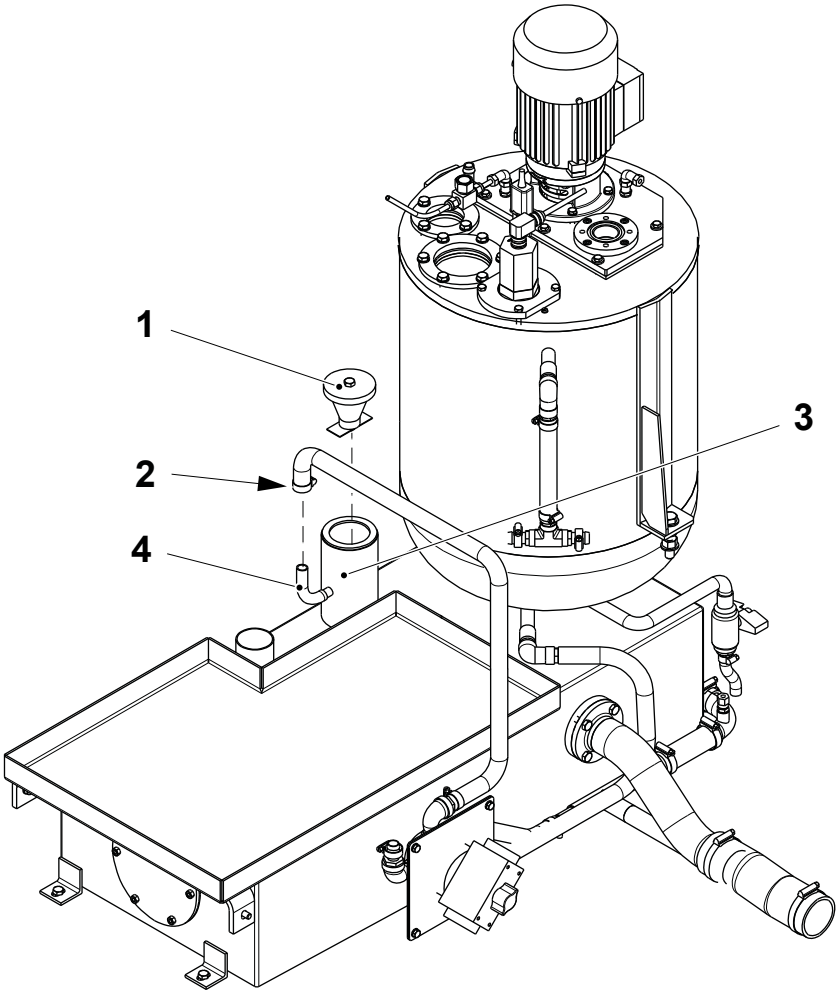

1 Safety lid
2 Hose
3 Pipe
4 Pipe

TechPub_2614345_0108 - 0204_3048104_01.fm

2.1.2.5 Peroxide Pump

2.1.2.5-1 Peroxide Pump - Change Pump

Machine Status	Mains Power OFF Air OFF Steam ON Water OFF
SPC Reference	996388-0800

WARNING
Hydrogen Peroxide.
Follow the Safety Precautions.

a) Make sure that the peroxide is not too concentrated and then drain the dilution tank.

b) Drain the hydrogen peroxide and rinse carefully with distilled water.

(Cont'd)

TechPub_2614345_0108 - 0204_3048104_01.fm

(Cont'd)

c) Label and disconnect the electrical connections to the motor (1).

d) Remove the screws at the flanges (2) and the pipe (3).

e) Remove the pipes (4) and (5).

f) Remove the screws (6) and lift and change the motor (1) together with the pump (7).

g) Assemble in the reverse order.

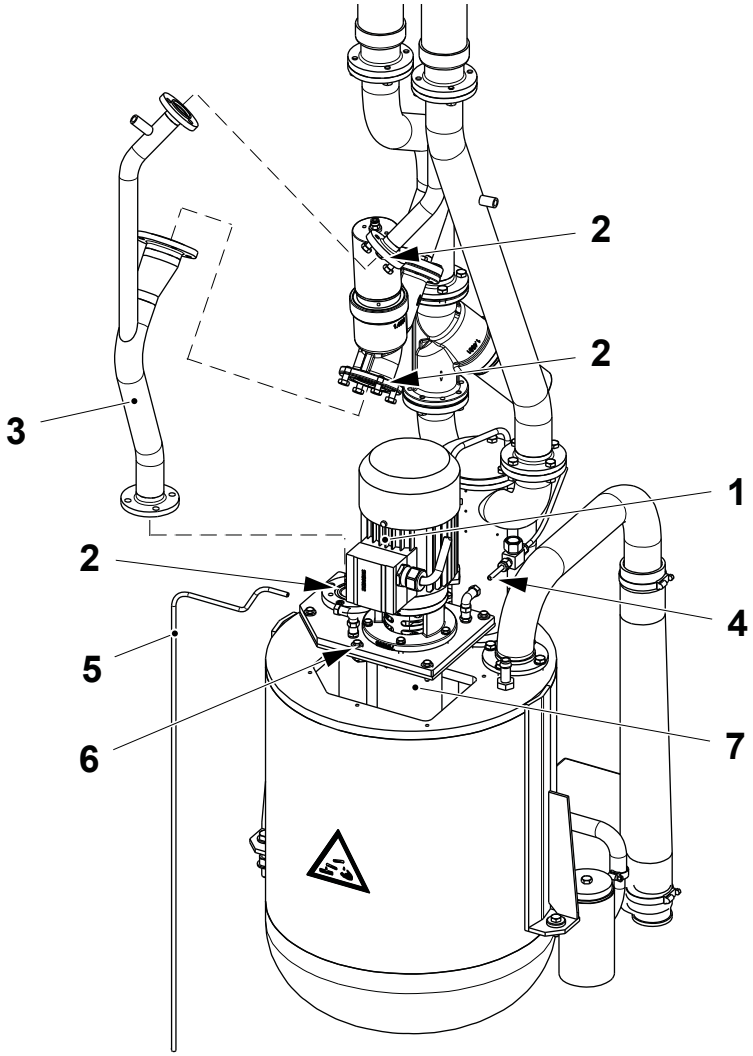

1 Motor
2 Flange
3 Pipe
4 Pipe
5 Pipe
6 Screw
7 Pump

TechPub_2614345_0108 - 0204_3048104_01.fm

2.1.2.5-2 Peroxide Pump - Overhaul Pump

Machine Status	Mains Power OFF Air OFF Steam ON Water OFF
SPC Reference	996388-0800

WARNING
Hydrogen Peroxide.
Follow the Safety precautions.

(Cont'd)

TechPub_2614345_0108 - 0204_3048104_01.fm

(Cont'd)

a) Remove the peroxide pump, see 2.1.2.5-1 Peroxide Pump - Change Pump.

b) Unscrew the screws (1) and remove the pipe (2).

c) Remove the O-rings (3), (4) and (5). Change them if necessary.

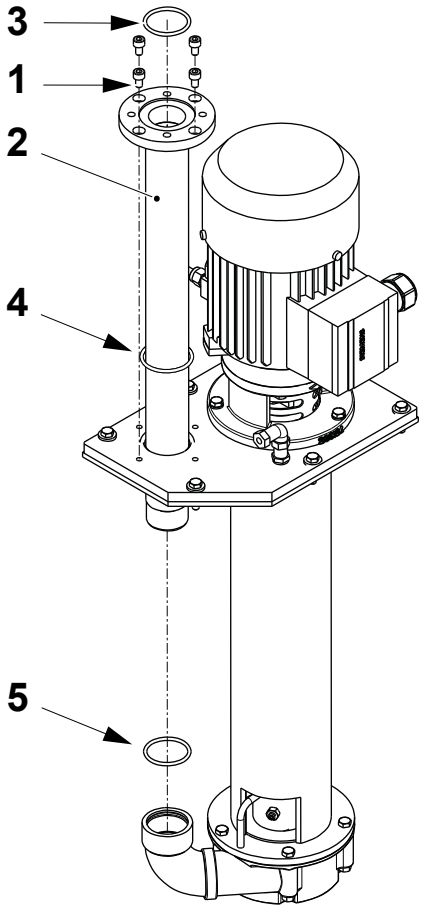

1 Screw
2 Pipe
3 O-ring
4 O-ring
5 O-ring

(Cont'd)

TechPub_2614345_0108 - 0204_3048104_01.fm

(Cont'd)

d) Mark the position of the pump housing (6) on the extension pipe (7).

e) Remove the screws (8), the nuts (9) and the pump housing (6).

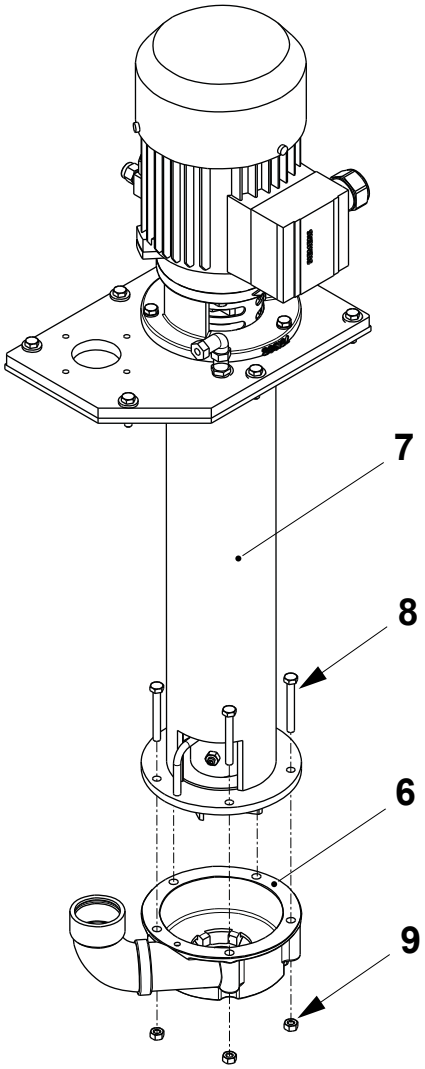

6 Pump housing
7 Extension pipe
8 Screw
9 Nut

(Cont'd)

TechPub_2614345_0108 - 0204_3048104_01.fm

(Cont'd)

f) Mark the position of the motor assembly (10) on the extension pipe (7).

g) Remove the screws (11) and the motor assembly (10).

h) Remove the cover (12).

i) Loosen the screw (13) and remove the coupling (14) from the motor shaft.

j) Remove the coupling disc (15).

k) Loosen the screw (16) and remove the coupling (17).

l) Remove the nut (18), the lock washer (19) and the spacer (20).

Note! When assembling the peroxide pump, check that the play between the coupling disc (15) and the couplings (14) and (17) is less than 0.3 mm with a feeler gauge.

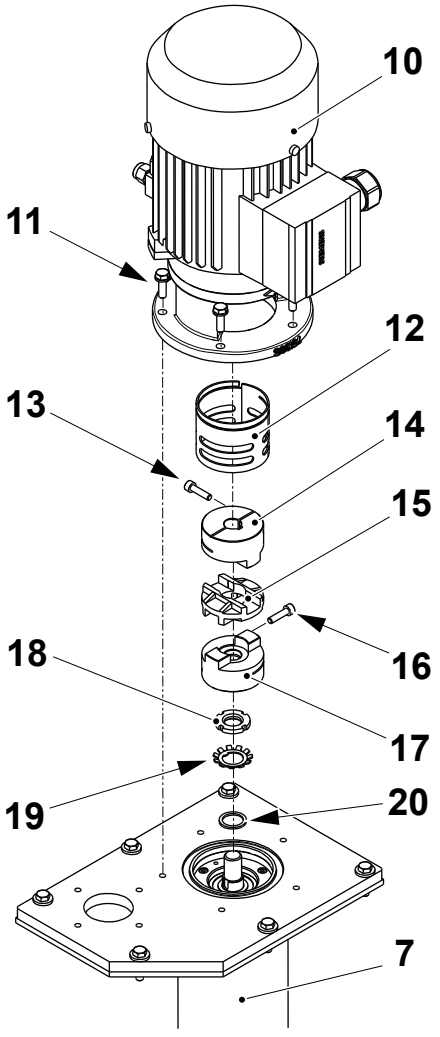

7 Extension pipe
10 Motor assembly
11 Screw
12 Cover
13 Screw
14 Coupling
15 Coupling disc
16 Screw
17 Coupling
18 Nut
19 Lock washer
20 Spacer

(Cont'd)

TechPub_2614345_0108 - 0204_3048104_01.fm

(Cont'd)

m) Loosen the nut (21) and the screw (22).

n) Slip off the impeller wheel (23) and the bushing (24). Change the impeller wheel (23) if necessary.

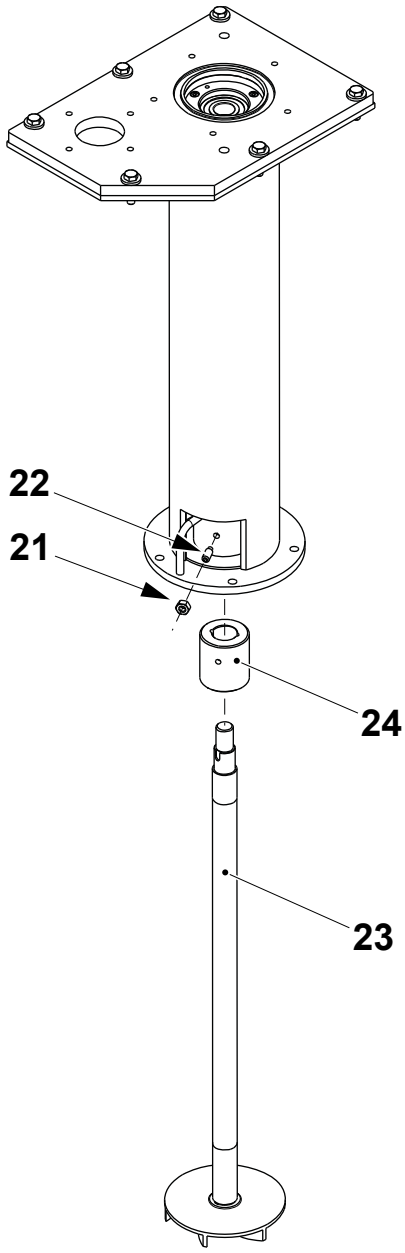

21 Nut
22 Screw
23 Impeller wheel
24 Bushing

(Cont'd)

TechPub_2614345_0108 - 0204_3048104_01.fm

(Cont'd)

o) Remove the screws (25) and the bushing (26).

p) Remove the ball bearing (27). Change if necessary.

q) Change the seal rings (28) and the O-rings (29).

r) Assemble in the reverse order.

s) Set the impeller, see 2.1.2.5-3 Peroxide Pump - Set Impeller Coupling.

Note! When assembling, centre the bushing (26) on the extension pipe (7) by the parallel pin (30).

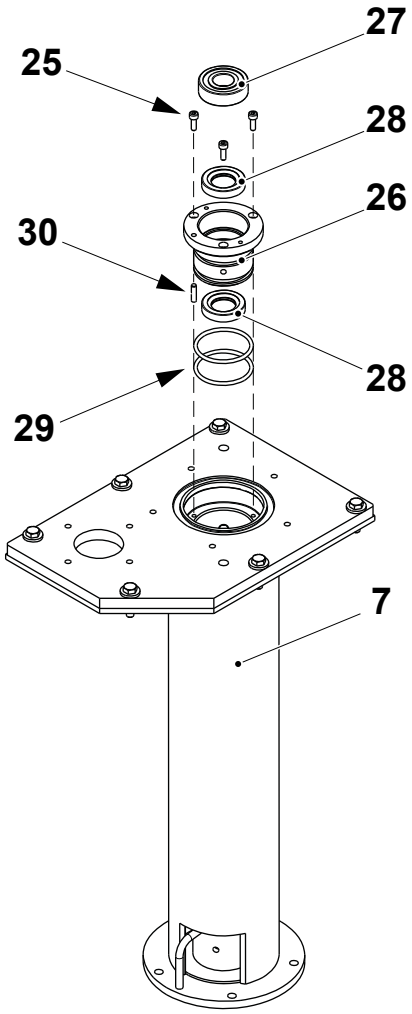

7 Extension pipe
25 Screw
26 Bushing
27 Ball bearing
28 Seal ring
29 O-ring
30 Parallel pin

TechPub_2614345_0108 - 0204_3048104_01.fm

2.1.2.5-3 Peroxide Pump - Set Impeller Coupling

Machine Status	Mains Power OFF Air OFF Steam ON Water OFF
SPC Reference	996388-0800

WARNING
Hydrogen Peroxide.
Follow the Safety Precautions.

a) Remove the peroxide pump, see 2.1.2.5-1 Peroxide Pump - Change Pump.

b) Remove the motor (1) by the screws (2).

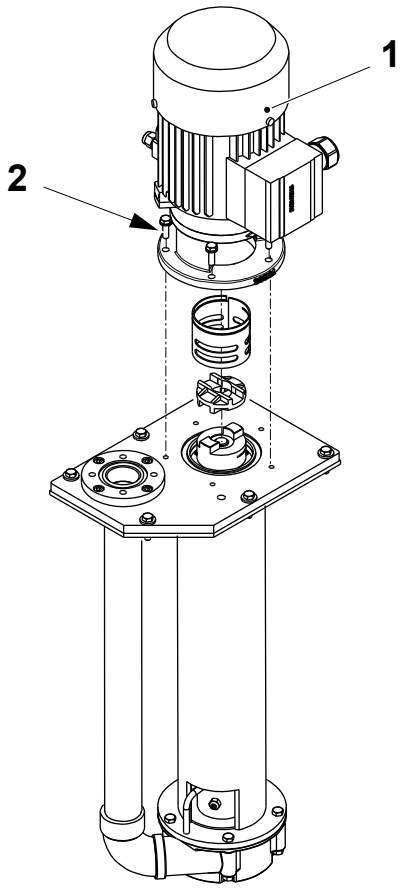

1 Motor
2 Screw

(Cont'd)

TechPub_2614345_0108 - 0204_3048104_01.fm

(Cont'd)

c) Check the total play, distance **A**, between the coupling (3), the coupling disc (4) and the coupling (5) by means of a feeler gauge. If necessary, proceed as follows to set the distance **A** between the coupling (3) and the coupling disc (4):
   - loosen the screw (6) to the coupling (5)
   - set the distance **A** by means of a feeler gauge
   - tighten the screw (6).

d) Assemble in the reverse order.

e) Fit the peroxide pump, see 2.1.2.5-1 Peroxide Pump - Change Pump.

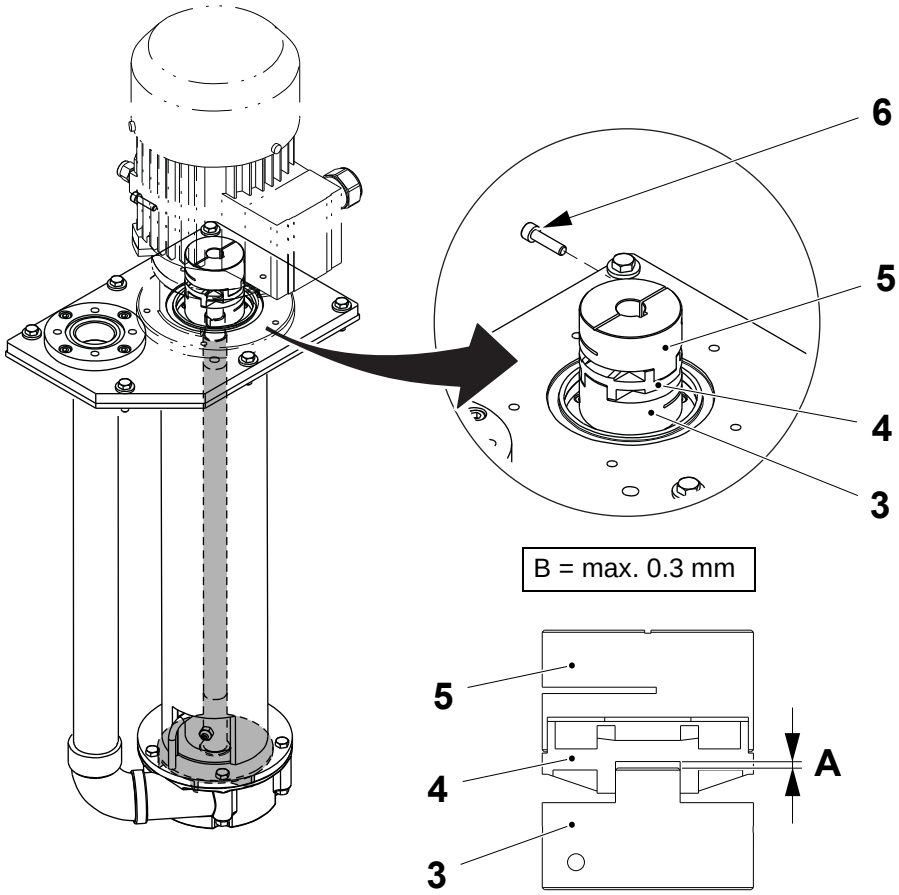

3 Coupling
4 Coupling disc
5 Coupling
6 Screw

TechPub_2614345_0108 - 0204_3048104_01.fm

2.1.2.6 Peroxide Container

2.1.2.6-1 Peroxide Container - Check

Machine Status	Mains Power OFF Air OFF Steam ON Water OFF
SPC Reference	527898-0100

WARNING
Hydrogen Peroxide.
Follow the Safety Precautions.

CAUTION
Ergonomic hazard.
Risk of personal injury due to strain when lifting heavy objects. The peroxide container is heavy (approximately 21 kg when full). Avoid twisting the body, especially when bending forward while lifting the peroxide container. Use a trolley when transporting the container.

a) Check that there is no leakage from the level glass nut (1). If it leaks, replace the O-ring.

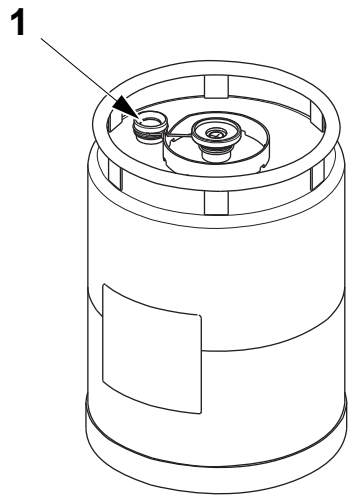

1 Level glass nut

(Cont'd)

TechPub_2614345_0108 - 0204_3048104_01.fm

(Cont'd)

b) Check the slit (2) on the membrane valve (3) in the cap nut. Replace the membrane valve if defective.

c) Check the washer (4). Replace the washer if defective.

d) Mark each container after it has been checked (with date and signature).

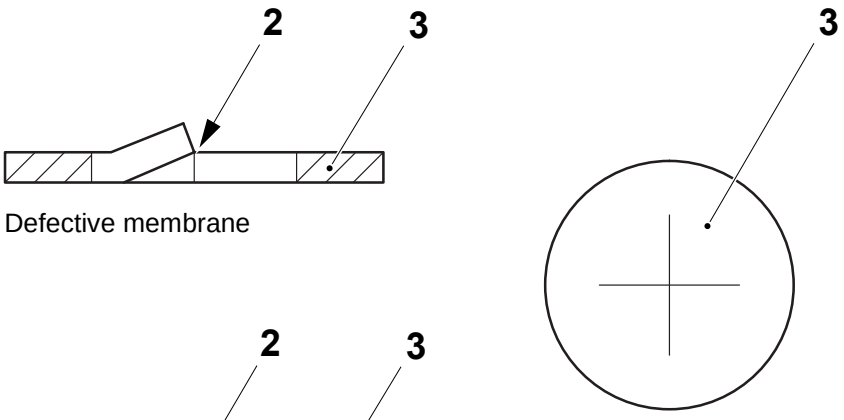

Defective membrane

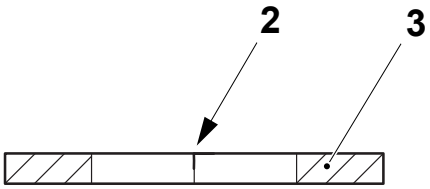

Intact membrane

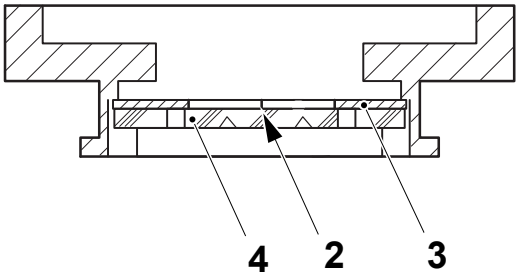

2 Slit
3 Membrane valve
4 Washer

TechPub_2614345_0108 - 0204_3048104_01.fm

2.1.3 Chemicals

2.1.3-1 Chemicals - Check

Machine Status	Mains Power ON Air ON Steam ON Water OFF
SPC Reference	2504782-0300

WARNING
Chemical products.
Follow the Safety Precautions.

(Cont'd)

TechPub_2614345_0108 - 0201_3048105_01.fm

(Cont'd)

Check that:

- the pump (1) runs smoothly without noise
- the pipe connections are free from detergent residue. Clean if necessary
- there are no leaks at the pipe connections
- the filter (2) is not clogged. Clean with compressed air or change if necessary.

Detergent	Consumption (l/cycle)
Alkali	1.2

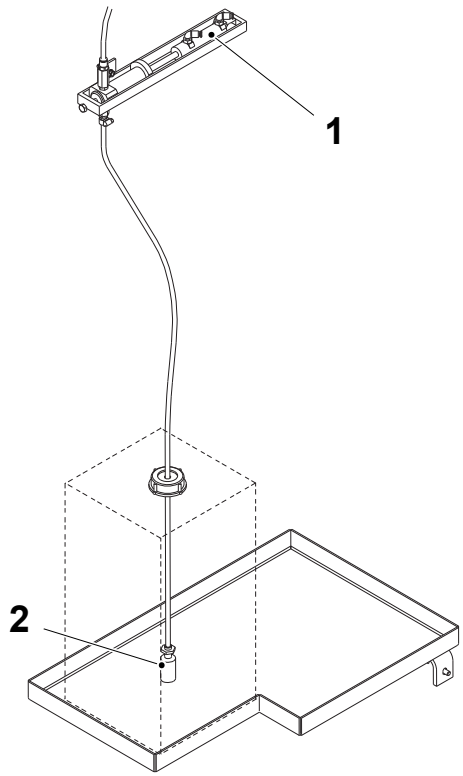

1 Pump
2 Filter

TechPub_2614345_0108 - 0201_3048105_01.fm

2.1.4 Integrated Cleaning Unit

2.1.4.1 Integrated Cleaning Unit

2.1.4.1-1 Integrated Cleaning Unit - Check for Leakage

Machine Status	CLEANING CIP
SPC Reference	2544326-0300

WARNING
Caustic soda and nitric acid.
Follow the Safety Precautions.

CAUTION
Risk of damage to the equipment.
Leakages in this area may lead to corrosive effects on the equipment leading to damages both on the mechanical surfaces and on the electronics motion controllers.

(Cont'd)

TechPub_2614345_0108 - 0202_3048106_01.fm

(Cont'd)

Check that there is no leakage:

- around the canisters (1)
- inside the ICU box (2)
- around the drain hoses (3) and drain valve connections (4)
- around the refilling valve connections (5).

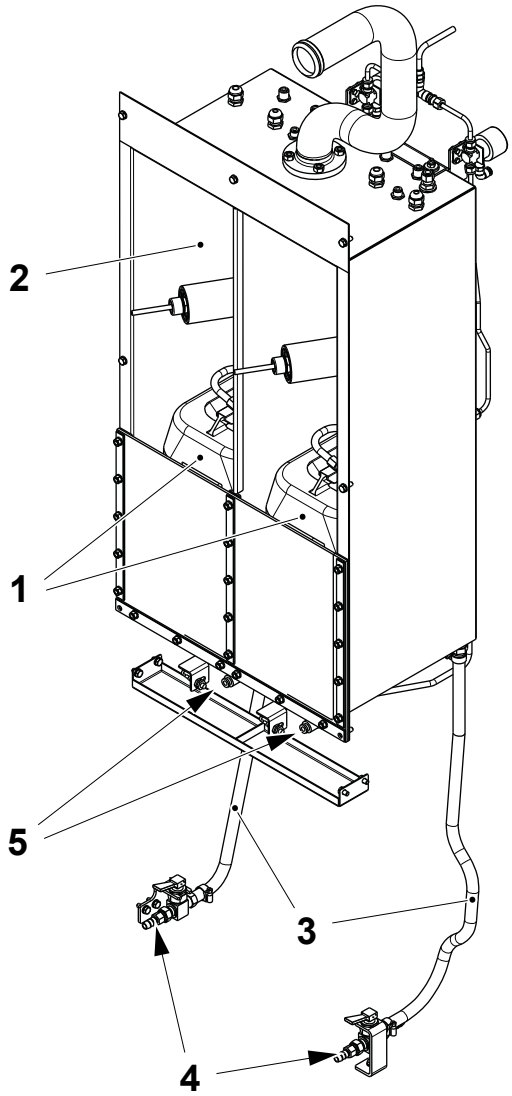

1 Canister
2 ICU box
3 Drain hoses
4 Valve connection
5 Valve connection

(Cont'd)

TechPub_2614345_0108 - 0202_3048106_01.fm

(Cont'd)

On both canisters, check that there is no leakage:

- in the connection indicated by the arrows
- around the plastic plug (6); if necessary change the O-ring (7).

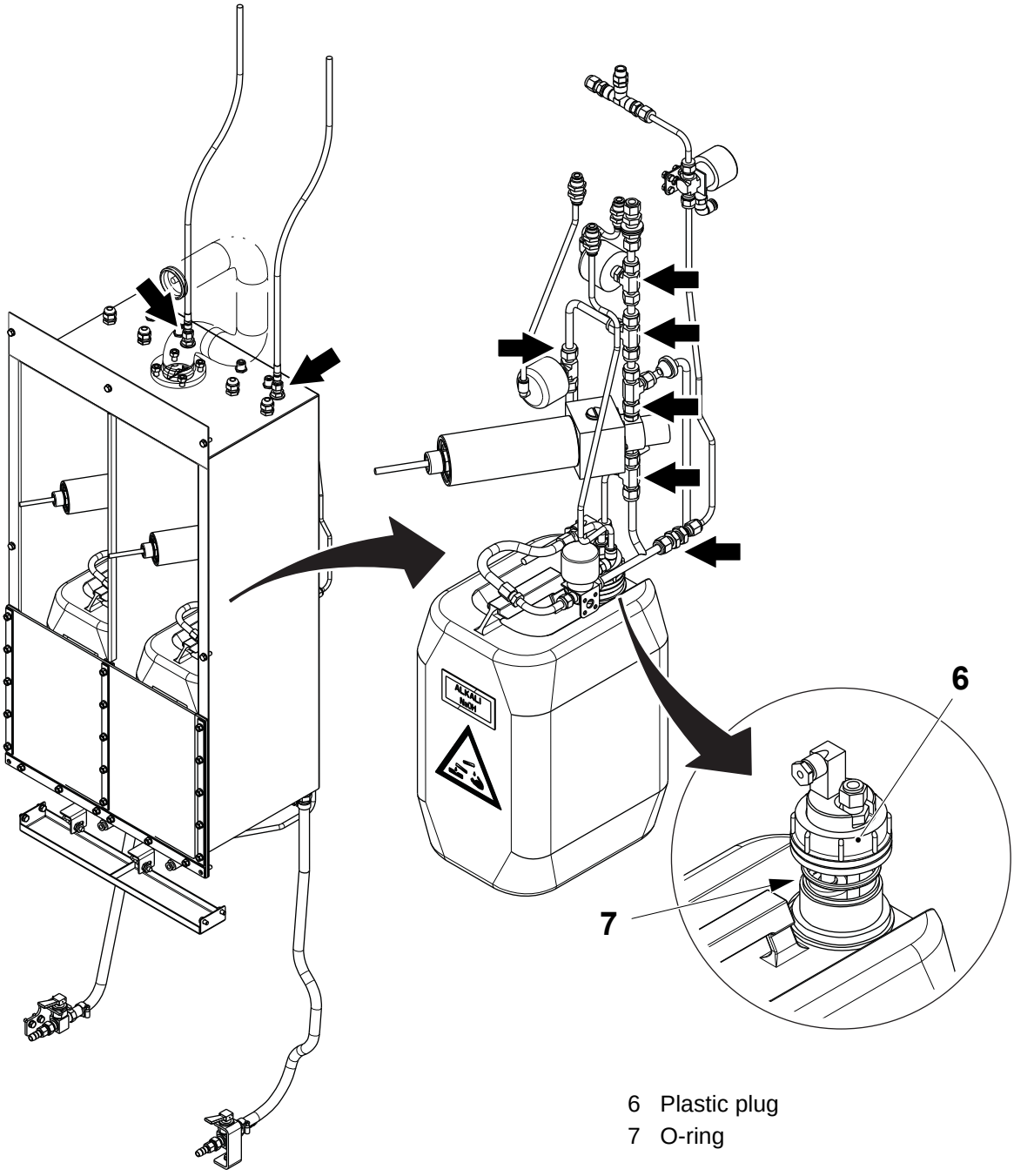

6 Plastic plug
7 O-ring

TechPub_2614345_0108 - 0202_3048106_01.fm

2.1.4.1-2 Integrated Cleaning Unit - Drain

Machine Status	Mains Power OFF Air OFF Steam ON Water OFF
SPC Reference	2544326-0300

WARNING

Caustic soda and nitric acid.

Follow the Safety Precautions.

Turn the mains power switch OFF and the system will automatically drain and return the chemicals to the canisters.

TechPub_2614345_0108 - 0202_3048106_01.fm

2.1.4.1-3 Integrated Cleaning Unit - Check Floats

Machine Status	Mains Power OFF Air OFF Steam ON Water OFF
SPC Reference	2544326-0300

WARNING
Caustic soda and nitric acid.
Follow the Safety Precautions.

(Cont'd)

TechPub_2614345_0108 - 0202_3048106_01.fm

(Cont'd)

a) Turn the mains power switch OFF.

b) Remove the captive screws (1) and the protective cover (2).

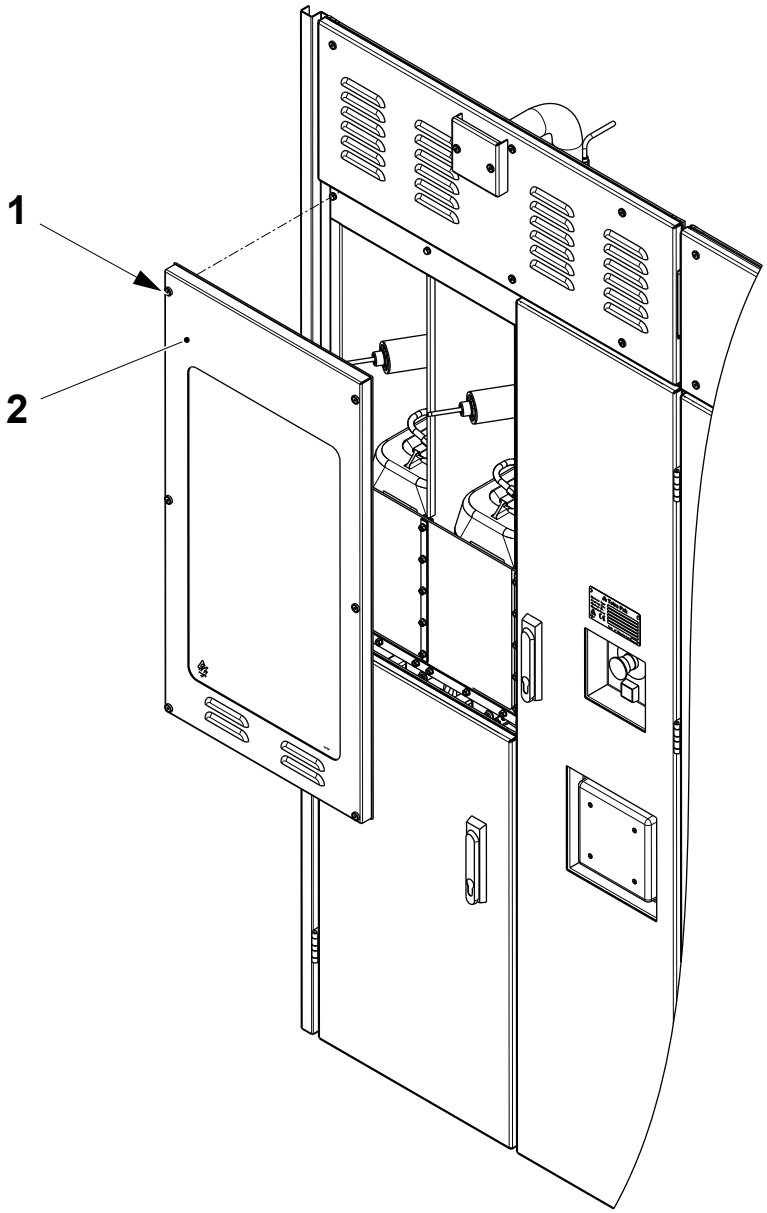

1 Captive screw
2 Protective cover

(Cont'd)

TechPub_2614345_0108 - 0202_3048106_01.fm

(Cont'd)

c) Disconnect the pipes (3) and (4) from the float (5).

d) Disconnect the electrical connection (6) from the float (5).

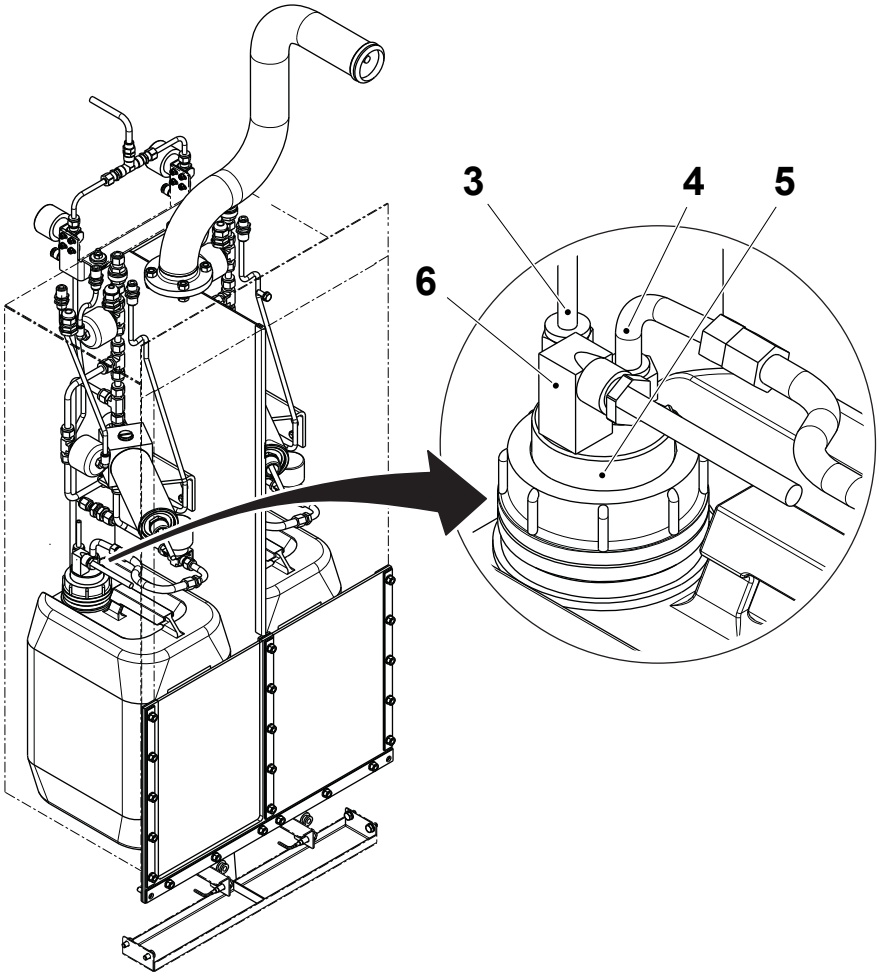

3 Pipe
4 Pipe
5 Float
6 Electrical connection

(Cont'd)

TechPub_2614345_0108 - 0202_3048106_01.fm

(Cont'd)

e) Unscrew and remove the float (5).

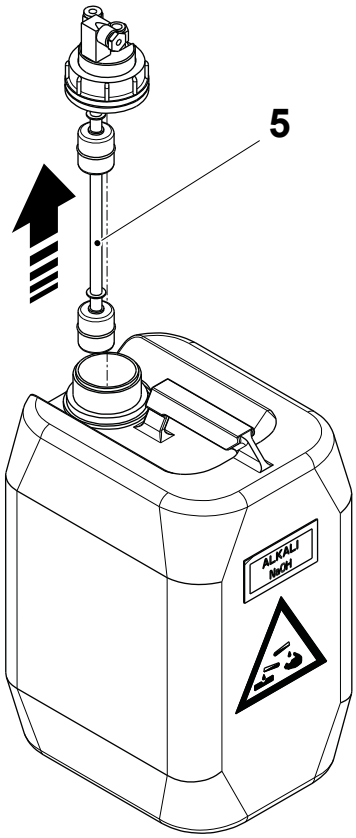

5 Float

(Cont'd)

TechPub_2614345_0108 - 0202_3048106_01.fm

(Cont'd)

f) Check that the safety hole (7) is not blocked.

g) Check that there are no holes in the floats (8) and that their movement is smooth and free.

h) Check that the circlips (9) are correctly installed and are not damaged.

i) Check that the O-ring (10) is not damaged.

j) Assemble in the reverse order.

k) Repeat the procedure for the other float.

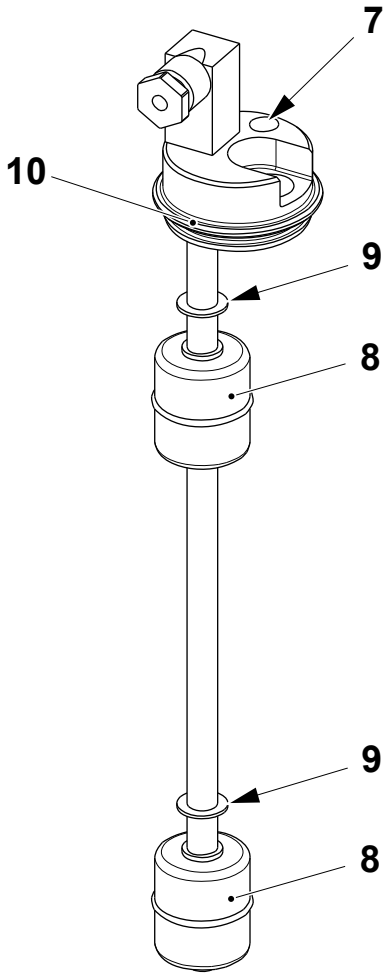

7 Safety hole
8 Float
9 Circlip
10 O-ring

TechPub_2614345_0108 - 0202_3048106_01.fm

2.1.4.1-4 Integrated Cleaning Unit - Check Float Function

Machine Status	Mains Power OFF Air OFF Steam ON Water OFF
SPC Reference	2544326-0300

WARNING
Caustic soda and nitric acid.
Follow the Safety Precautions.

a) Connect an ohmmeter between the connectors (1) and (2).

b) Lift the float (3) to its upper position and check that the value on the ohmmeter display is 0.

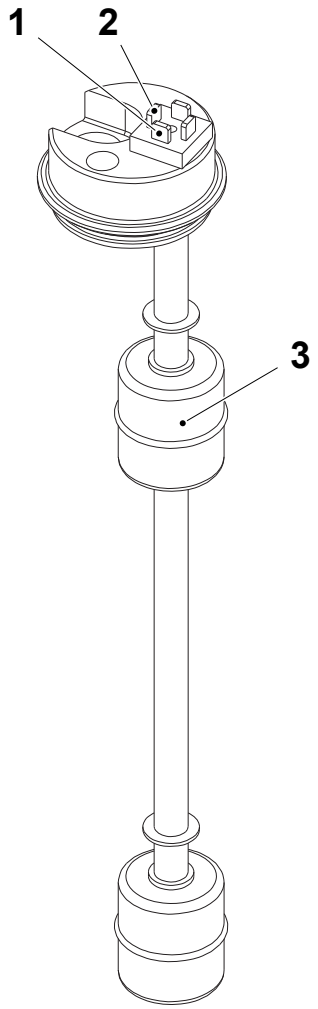

1 Connector
2 Connector
3 Float

(Cont'd)

TechPub_2614345_0108 - 0202_3048106_01.fm

(Cont'd)

c) Connect the ohmmeter between the connectors (1) and (4).

d) Lift the float (5) to its upper position and check that the value on the ohmmeter display is 0.

Note! If the value displayed on the ohmmeter is not 0, remove the float (3) or (5) turn them upside down and repeat the check. The numbering of the connectors in the illustration corresponds to the physical markings on the equipment and as stated in the EM.

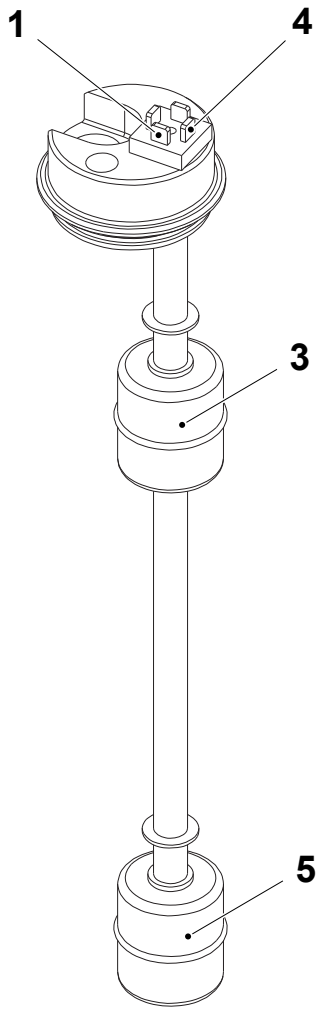

1 Connector
3 Float
4 Connector
5 Float

TechPub_2614345_0108 - 0202_3048106_01.fm

2.1.4.1-5 Integrated Cleaning Unit - Set Proximity Sensor

Machine Status	Mains Power ON Air OFF Steam ON Water OFF
SPC Reference	2544326-0300

WARNING
Caustic soda and nitric acid.
Follow the Safety Precautions.

(Cont'd)

TechPub_2614345_0108 - 0202_3048106_01.fm

(Cont'd)

a) Fit the refilling plug (1) to the connection (2).

b) Loosen the nuts (3) and set the distance **A** between the proximity sensor (4) and the refilling plug (1).

c) Check that the LED on the proximity sensor (4) turns ON.

d) Repeat the procedure to set the proximity sensor for the other connection.

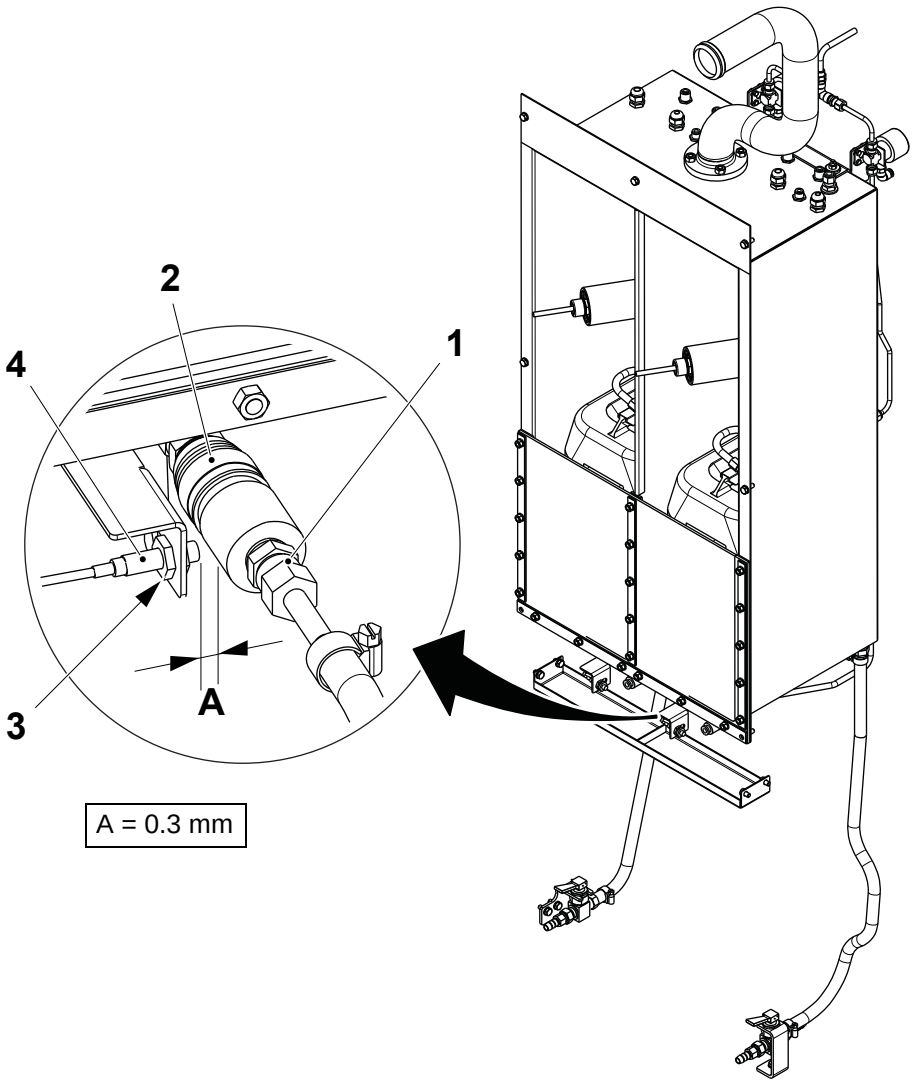

1 Refilling plug
2 Connection
3 Nut
4 Proximity sensor

TechPub_2614345_0108 - 0202_3048106_01.fm

2.1.4.2 Refilling

2.1.4.2-1 Refilling - Check

Machine Status	Mains Power OFF Air OFF Steam ON Water OFF
SPC Reference	2544326-0300

WARNING
Caustic soda and nitric acid.
Follow the Safety Precautions.

(Cont'd)

TechPub_2614345_0108 - 0202_3048106_01.fm

(Cont'd)

Check the two refilling pipe parts for the wear or damage:

- the plug (1)
- the pipe (2)
- the filter (3).

Change the parts if necessary.

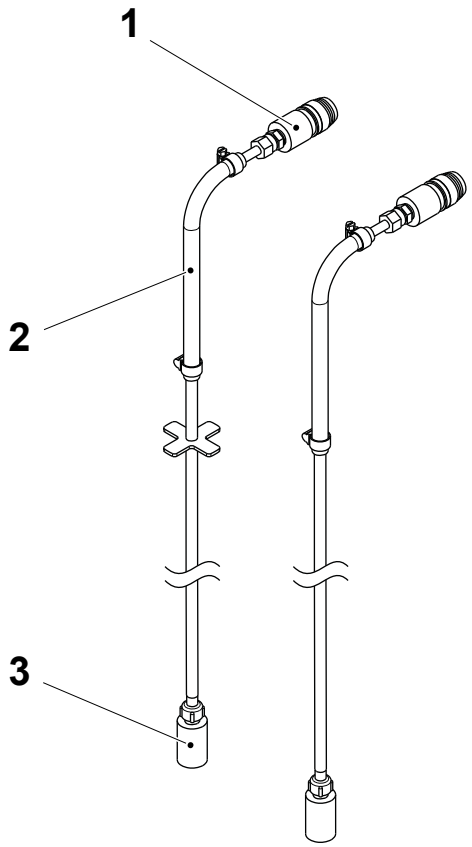

1 Plug
2 Pipe
3 Filter

TechPub_2614345_0108 - 0202_3048106_01.fm

2.1.4.2-2 Refilling - Change Filter

Machine Status	Mains Power OFF Air OFF Steam ON Water OFF
SPC Reference	2544326-0300

WARNING

Caustic soda.
Follow the Safety Precautions.

On both of the refilling pipes:

a) Loosen the nut (1).

b) Remove and change the filter (2).

c) Tighten the nut (1).

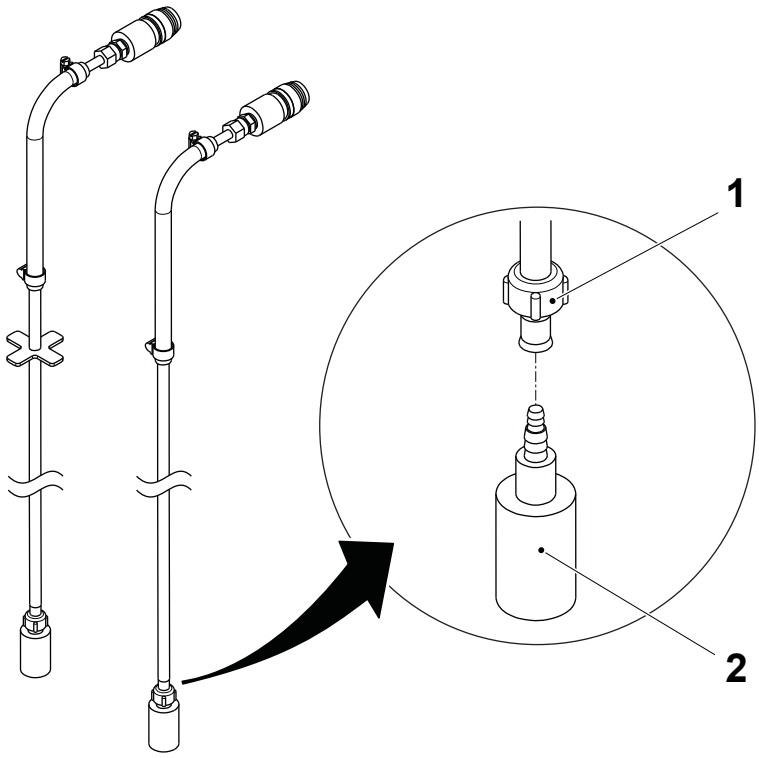

1 Nut
2 Filter

TechPub_2614345_0108 - 0202_3048106_01.fm

2.1.5 Pneumatic System

2.1.5.1 Valve Panel

2.1.5.1-1 Valve Panel - Check Photocell Filters

Machine Status	Mains Power OFF Air OFF Steam ON Water OFF
SPC Reference	2774463-0200

Check the following parts for wear or damage:

- the filter (1), the normal colour of the filter is white. If it is coloured RED, it must be changed

Note! Red indicates that water is in the air supply.

- the filter (2), the normal colour of the filter is blue. If it is coloured PINK, it must be changed

Note! Pink indicates that water is in the air supply.

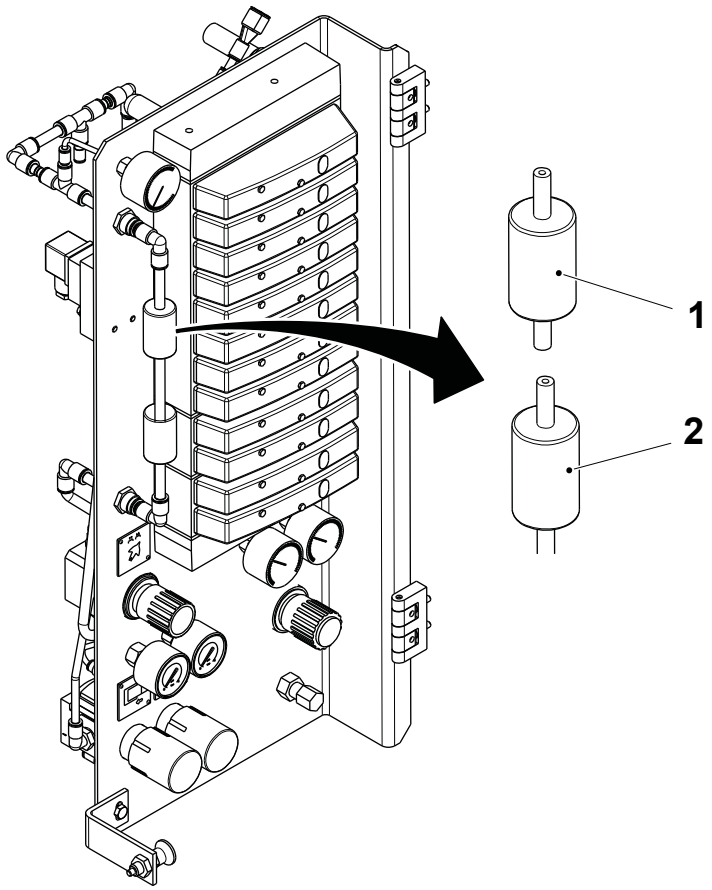

1 Filter
2 Filter

TechPub_2614345_0108 - 0201_3048107_01.fm

2.1.5.1-2 Valve Panel - Set Peroxide Pump Pressure

Machine Status	Mains Power OFF Air OFF Steam ON Water OFF
SPC Reference	2774463-0200

Note! Valid for machines with T-order: 21215/00190 and above.

Set the peroxide pump air pressure to 0.6 bar by means of the pressure regulator (1), on the machine body pneumatic panel (2).

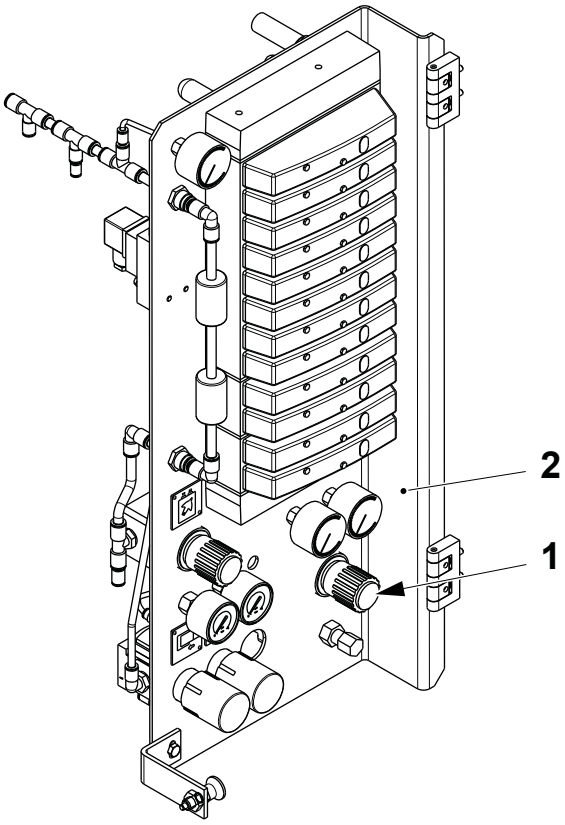

1 Pressure regulator
2 Pneumatic panel

TechPub_2614345_0108 - 0201_3048107_01.fm

2.1.5.1-3 Valve Panel- Change Filter

Machine Status	Mains Power OFF Air OFF Steam ON Water OFF
Special Equipment	Pliers
SPC Reference	2774463-0200

WARNING
Hydrogen Peroxide.
Follow the Safety Precautions.

(Cont'd)

TechPub_2614345_0108 - 0201_3048107_01.fm

(Cont'd)

Change Filter Assembly

a) Disconnect the push-in fittings (1) and (2).
b) Remove the screws (3).
c) Remove the end plates (4).
d) Change the filter assembly (5).
e) Assemble in the reverse order.

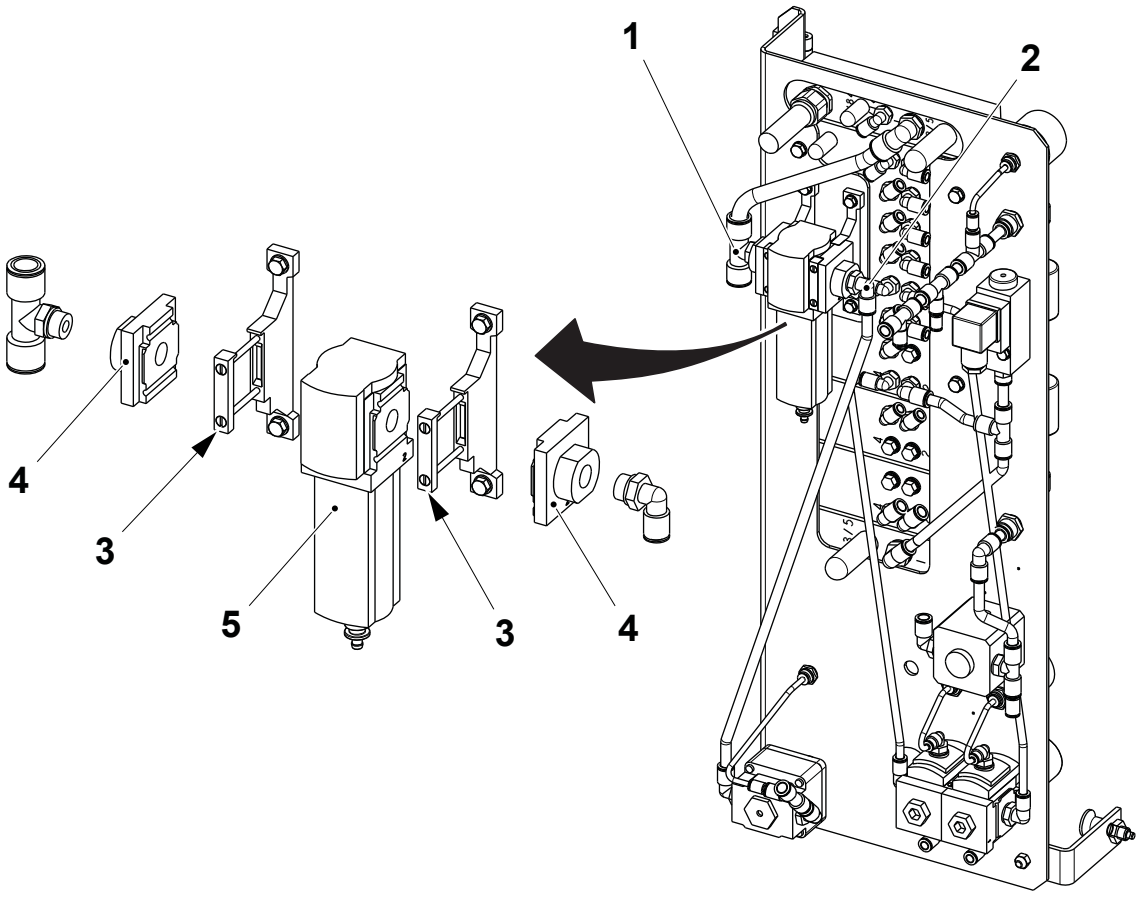

1 Push-in fitting
2 Push-in fitting
3 Screw
4 End plate
5 Filter assembly

(Cont'd)

TechPub_2614345_0108 - 0201_3048107_01.fm

(Cont'd)

Change Filter Insert

a) On the valve panel (1) remove the reservoir (2). Change the O-ring if necessary.

b) Using a pair of pliers, remove and change the filter insert (3) inside the reservoir (2).

c) Assemble in the reverse order.

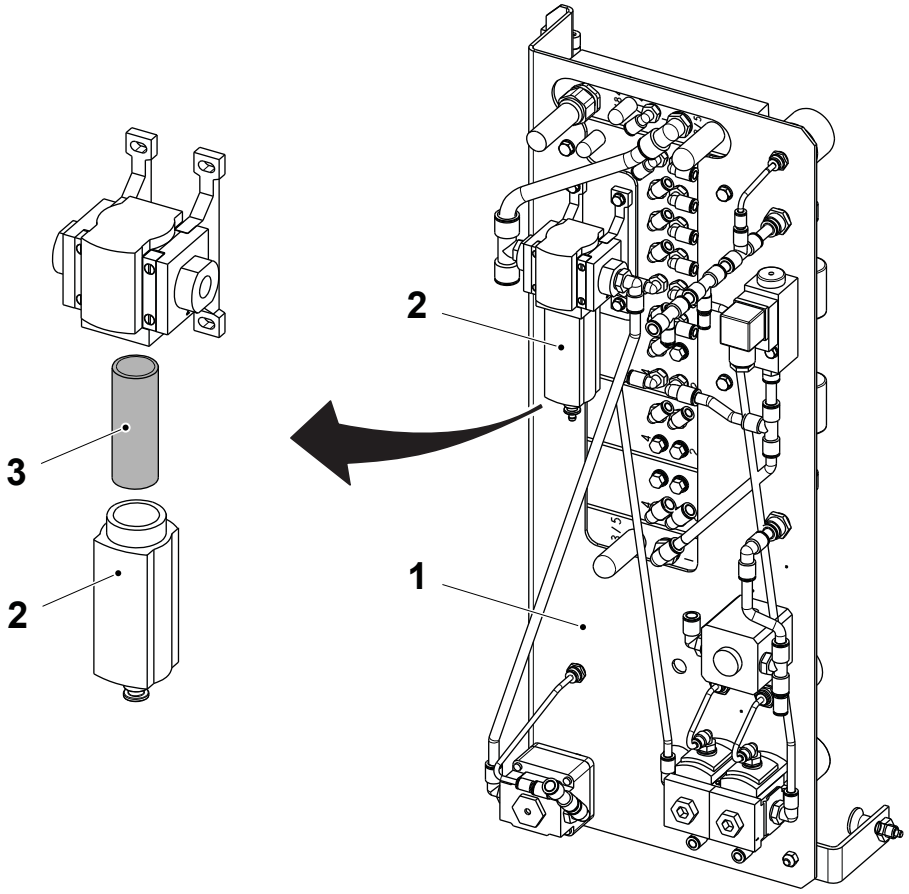

1 Valve panel
2 Reservoir
3 Filter

TechPub_2614345_0108 - 0201_3048107_01.fm

2.1.6 Electrical Equipment

2.1.6.1 H_2O_2 Concentration Meter

2.1.6.1-1 H_2O_2 Concentration Meter - Check Desiccant Cartridge

Machine Status	Mains Power OFF Air OFF Steam ON Water OFF
SPC Reference	2519574-0200

WARNING
Hydrogen Peroxide.
Follow the Safety Precautions.

CAUTION
Risk of damage to the equipment.
If the cartridge has to be changed, prepare the new cartridge before removing the old cartridge and perform the replacement as quickly as possible to avoid humidity entering the meter. Humidity may cause reading errors.

(Cont'd)

TechPub_2614345_0108 - 0201_3048108_01.fm

(Cont'd)

Check the colour of the cartridge (1). If the cartridge is coloured light cyan or white, change the cartridge as follows:

a) Unscrew the old cartridge using the plastic housing (2) of the new cartridge.

b) Fit the new cartridge.

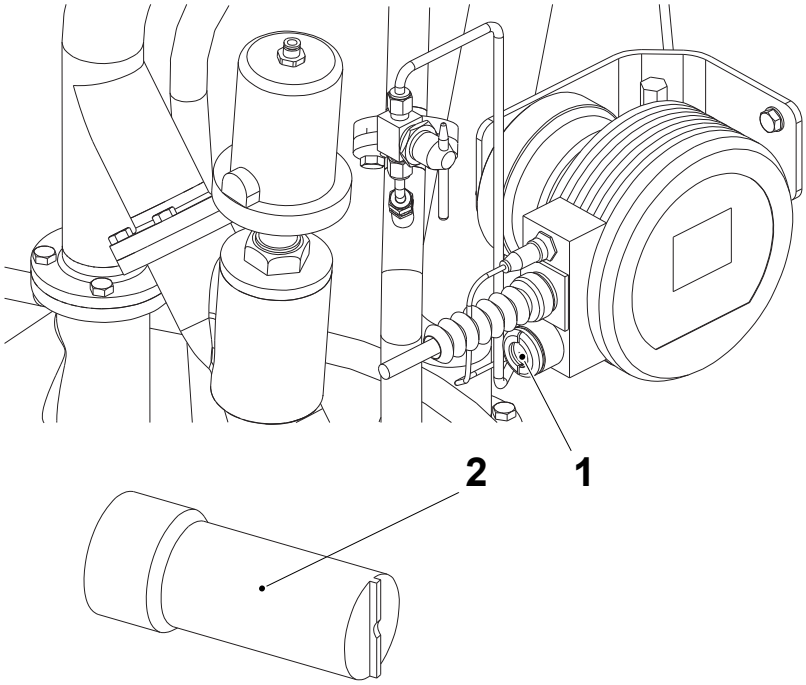

1 Cartridge
2 Housing

TechPub_2614345_0108 - 0201_3048108_01.fm

2.1.6.1-2 H_2O_2 Concentration Meter - Change O-ring

Machine Status	STEP ZERO
SPC Reference	2519574-0200

WARNING
Hydrogen Peroxide.
Follow the Safety Precautions.

CAUTION
Risk of damage to the equipment.
Sealing the cables with the plugs prevents oxidization and possible damage by peroxide.

(Cont'd)

TechPub_2614345_0108 - 0201_3048108_01.fm

(Cont'd)

a) Protect the pump (1) with a plastic bag, as peroxide may still be present inside the deflector (2) and close the tap (3).

b) Disconnect the power connection (4) and the PT100 connection (5).

c) Fit the plugs (6) and (7).

d) Seal the ends of the power connection (4) and the PT100 connection (5) with the plugs (8) and (9).

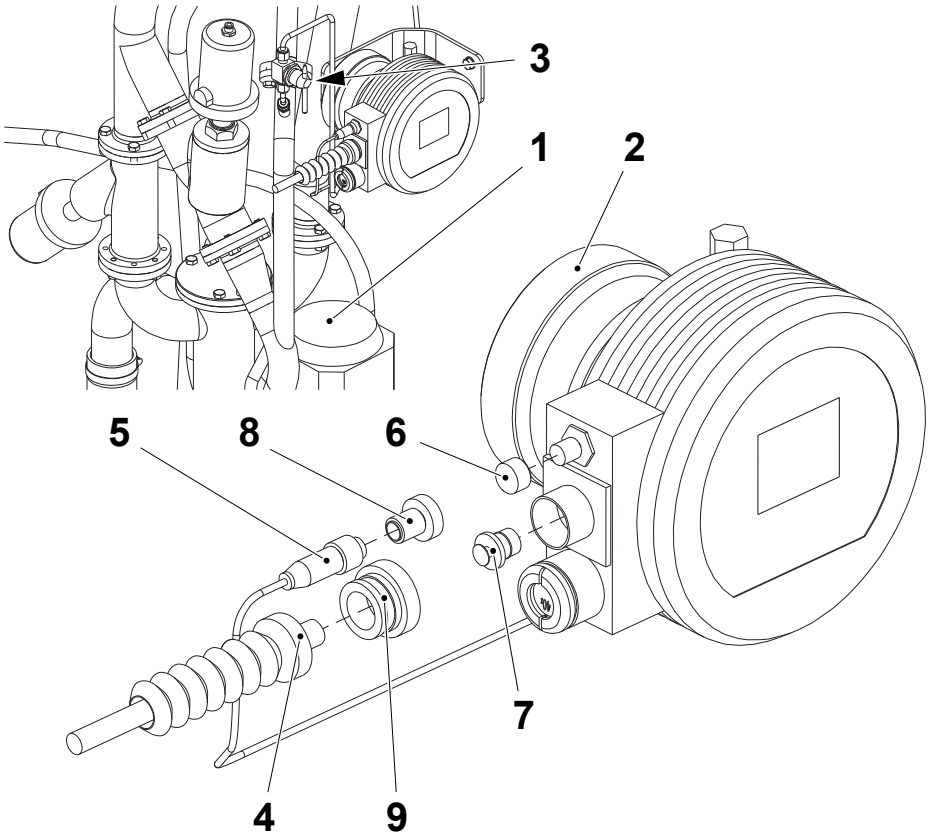

1 Pump
2 Deflector
3 Tap
4 Power connection
5 PT100 connection
6 Plug
7 Plug
8 Plug
9 Plug

(Cont'd)

TechPub_2614345_0108 - 0201_3048108_01.fm

(Cont'd)

CAUTION
Risk of damage to the equipment.
Avoid scratching the prism glass.

e) Remove the clamp (10) and the peroxide concentration meter (11).

f) Dissolve 7 grams of cleaning powder (TP No. 90459-1098) in 3 millilitres of distilled water. Pour the liquid on the prism (12) and wipe it off with clean paper to remove any peroxide residue.

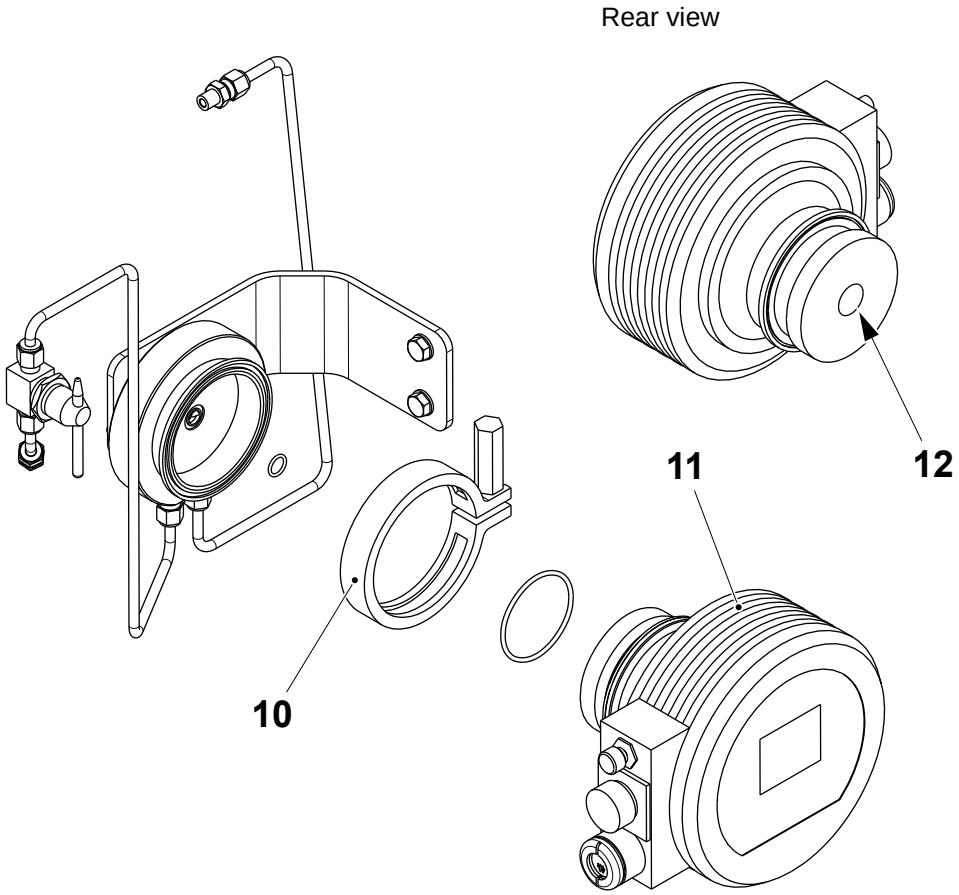

10 Clamp
11 Peroxide concentration meter
12 Prism

(Cont'd)

TechPub_2614345_0108 - 0201_3048108_01.fm

(Cont'd)

g) Remove any rubber residue remaining from the O-ring (13) and clean the deflector (2) with paper soaked in distilled water.

Note! When assembling, connect the PT100 connection first and the power connection last.

h) Change the O-rings (13) and (14) and assemble in the reverse order.

i) Open the tap (3).

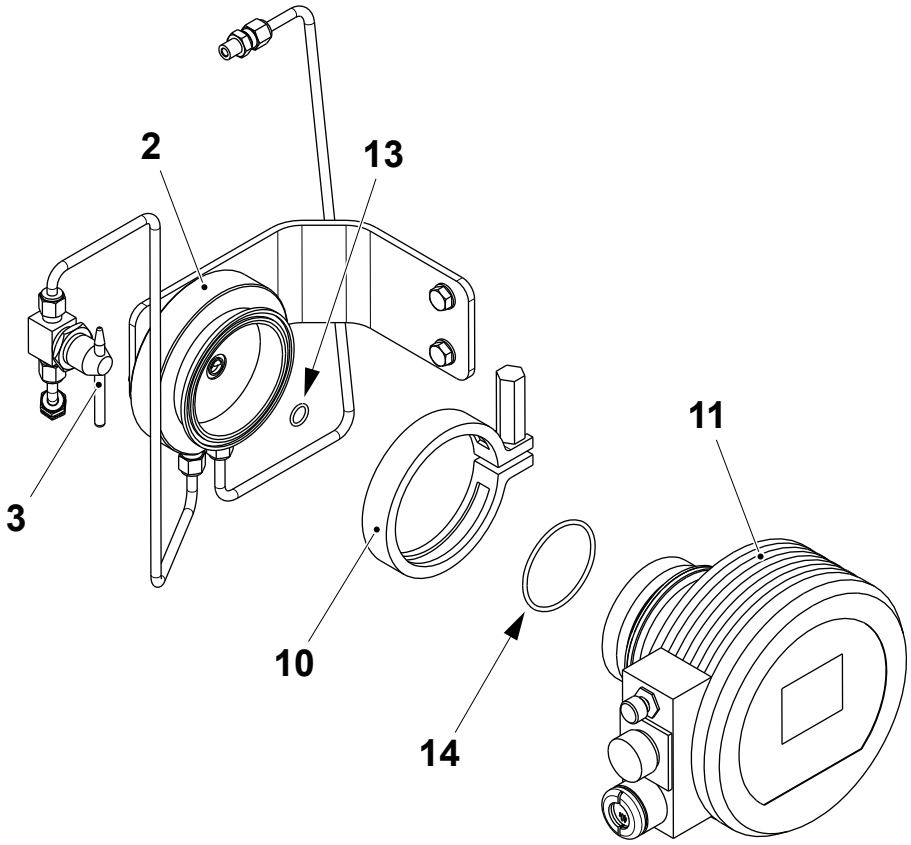

2 Deflector
3 Tap
13 O-ring
14 O-ring

TechPub_2614345_0108 - 0201_3048108_01.fm

2.1.6.1-3 H_2O_2 Concentration Meter - Remove

Machine Status	STEP ZERO
SPC Reference	2519574-0200

WARNING
Hydrogen Peroxide.
Follow the Safety Precautions.

CAUTION
Risk of damage to the equipment.
Sealing the cables with the plugs prevents oxidization and possible damage by peroxide.

(Cont'd)

TechPub_2614345_0108 - 0201_3048108_01.fm

(Cont'd)

a) Protect the pump (1) with a plastic bag, as peroxide may still be present inside the deflector (2).

b) Close the tap (3).

c) Disconnect the power connection (4) and the PT100 connection (5).

d) Fit the plugs (6) and (7).

e) Seal the cable ends (4) and (5) with the plugs (8) and (9).

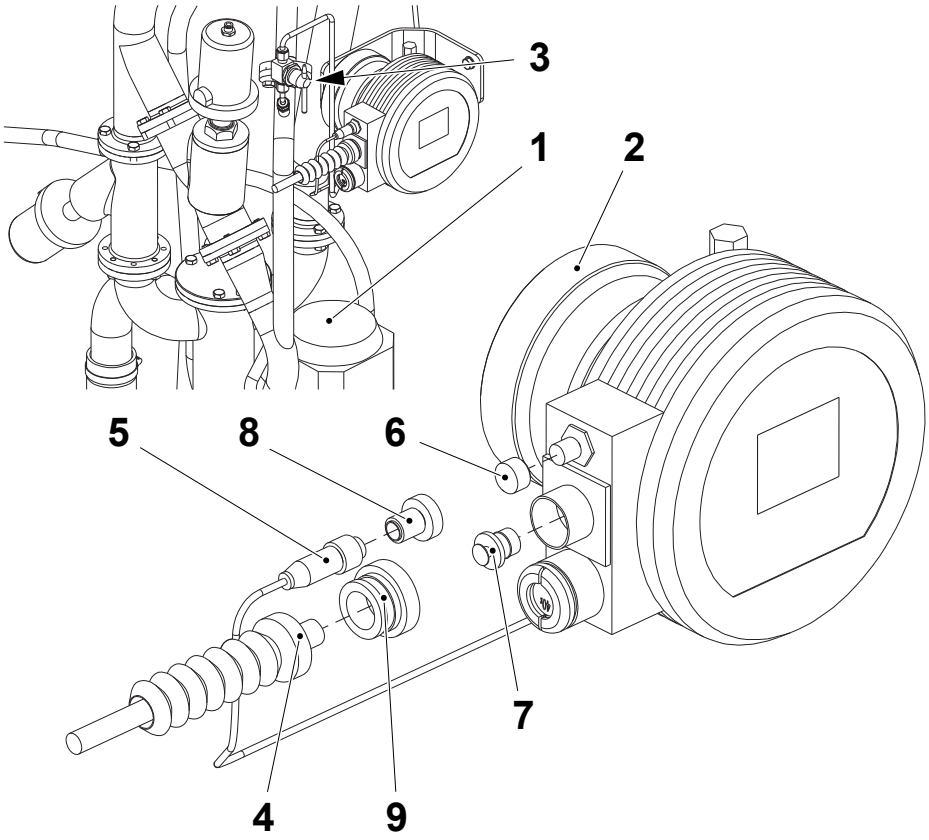

1 Pump
2 Deflector
3 Tap
4 Power connection
5 PT100 connection
6 Plug
7 Plug
8 Plug
9 Plug

(Cont'd)

TechPub_2614345_0108 - 0201_3048108_01.fm

(Cont'd)

WARNING

Risk of hydrogen peroxide leakage.

Make sure that the O-ring (14) is in place and in a good condition before assembling the plug (13).

f) Remove the clamp (10) and the peroxide concentration meter (11).

g) Fit the spacer (12) and the plug (13) onto the deflector (2) and lock it in to place with the clamp (10).

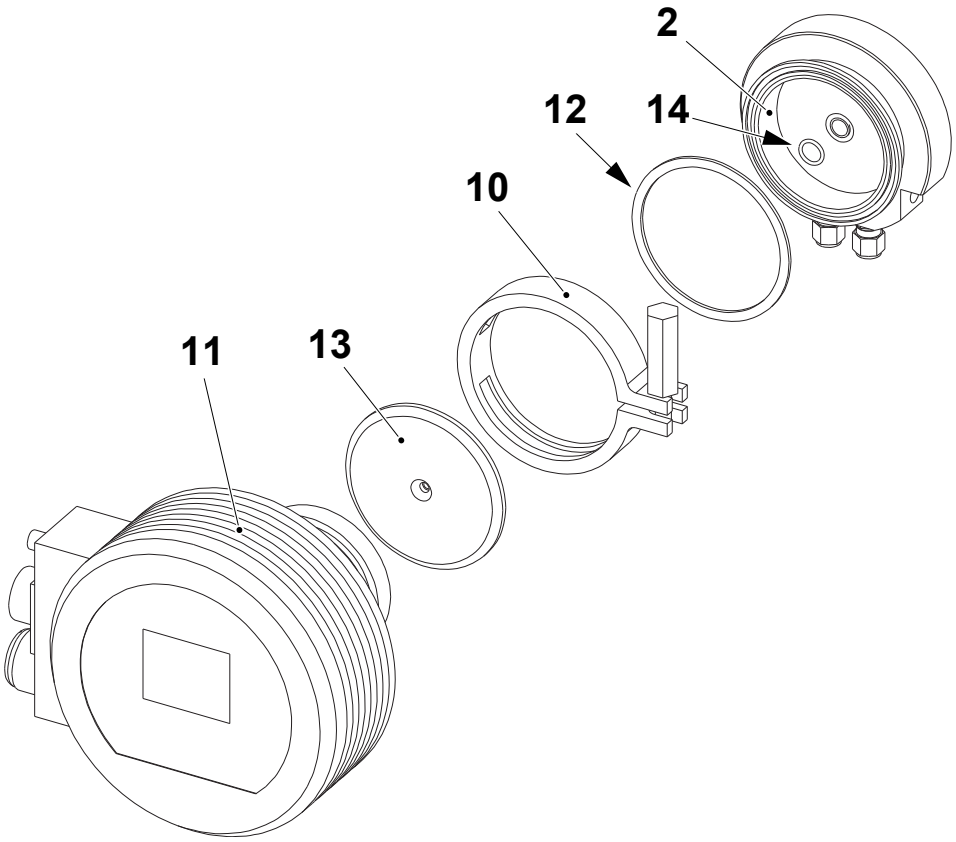

2 Deflector
10 Clamp
11 Peroxide concentration meter
12 Spacer
13 Plug
14 O-ring

TechPub_2614345_0108 - 0201_3048108_01.fm

2.1.6.1-4 H_2O_2 Concentration Meter - Check Pt100 Sensor

Machine Status	PRODUCTION
SPC Reference	2519574-0200

WARNING
Hydrogen Peroxide.
Follow the Safety Precautions.

Check the peroxide temperature, see the TPOP.

Check the peroxide temperature in the tank, see the TPOP. If the temperature values differ more than 3 to 5 °C, check the contacts of the PT100 connection (1) for oxidation. If necessary change the sensor, see 2.1.6.1-5 H_2O_2 Concentration Meter - Change Pt100 Sensor.

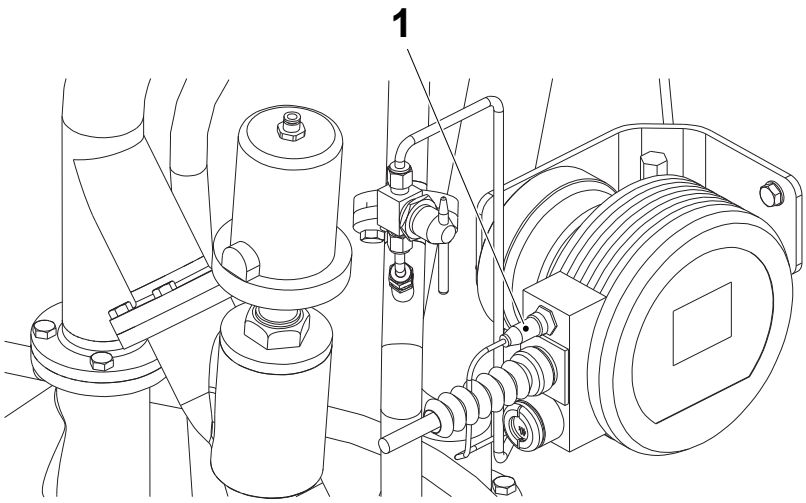

1 PT100 Connection

TechPub_2614345_0108 - 0201_3048108_01.fm

2.1.6.1-5 H_2O_2 Concentration Meter - Change Pt100 Sensor

Machine Status	STEP ZERO
SPC Reference	2519574-0200

CAUTION
Risk of damage to the equipment.
Apply teflon tape on threads before assembling the new sensor.

a) Close the tap (1).

b) Disconnect the power connection (2).

c) Protect the pump (3) with a plastic bag, as peroxide may still be present inside the deflector (4).

d) Disconnect the PT 100 connector (5) from the peroxide concentration meter (6) and unscrew the sensor (7) from the deflector (4).

e) Change the PT 100 sensor and assemble in the reverse order.

f) Connect the power connection (2).

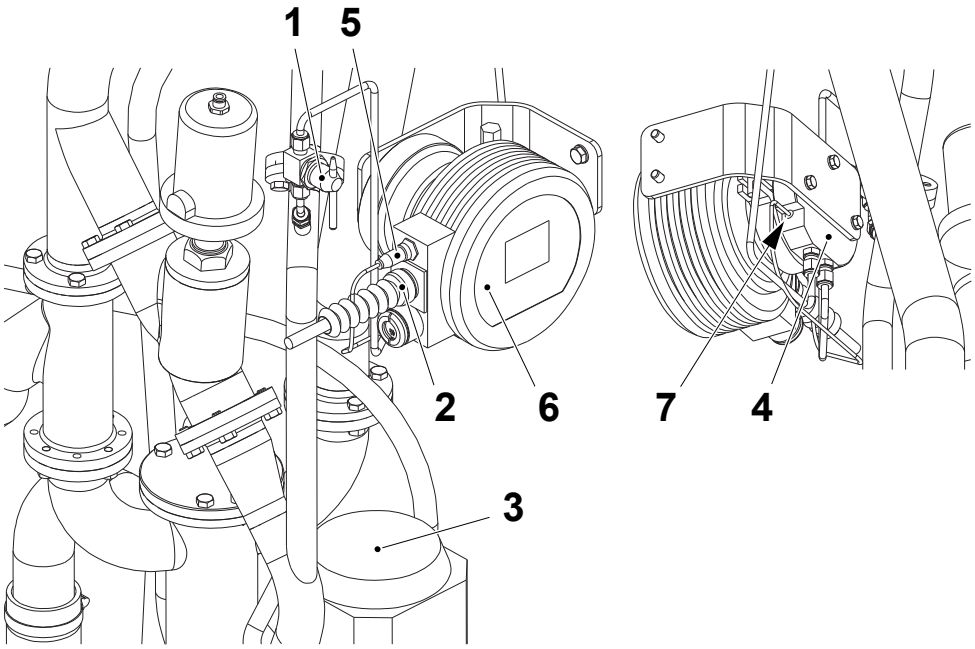

1 Tap
2 Power connection
3 Pump
4 Deflector
5 PT100 Connector
6 Peroxide concentration meter
7 Sensor

TechPub_2614345_0108 - 0201_3048108_01.fm

2.1.6.1-6 H_2O_2 Concentration Meter - Check Prism and Led

Machine Status	PRODUCTION
SPC Reference	2519574-0200

WARNING
Hydrogen Peroxide.
Follow the Safety precautions.

a) Press and hold the ENTER button (1) to display the menu.

b) Read the numeric value in the Deriv. value (2).

c) If the value is lower than 55000, clean the prism and change the O-ring, see 2.1.6.1-2 H_2O_2 Concentration Meter - Change O-ring.

d) Read the numeric value in the LED perform.% (3).

Note! If the value is lower than 50% the filling machine will stop.

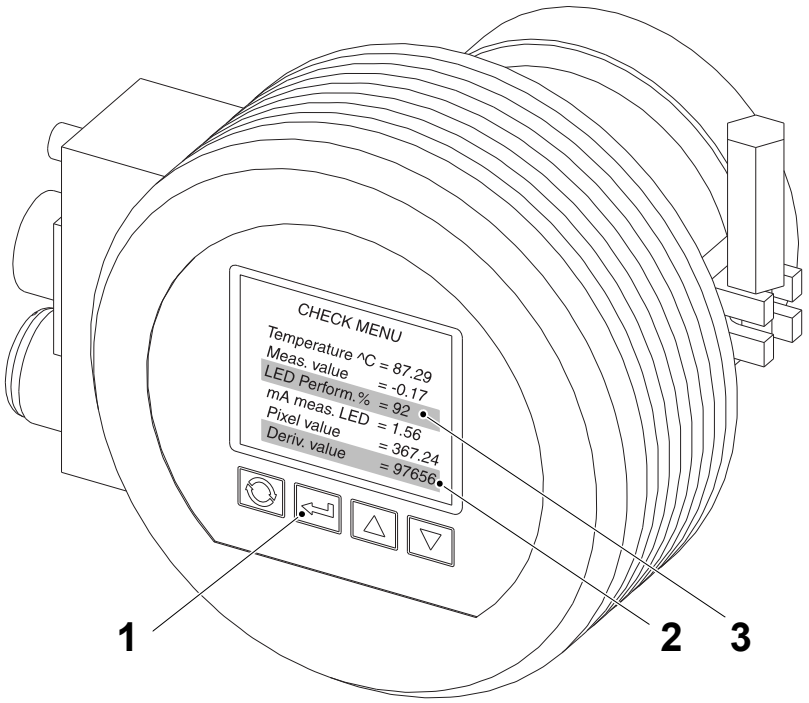

1 Button
2 Deriv. value
3 LED perform.%

(Cont'd)

TechPub_2614345_0108 - 0201_3048108_01.fm

(Cont'd)

e) If the value is between 50% and 60%, there will be a TPOP alarm. Clean the prism, see 2.1.6.1-2 H_2O_2 Concentration Meter - Change O-ring.

f) If after cleaning the alarm is still present, remove the instrument and send it to the manufacturer, see 2.1.6.1-3 H_2O_2 Concentration Meter - Remove.

g) To exit from the menu, press the ENTER button (1) twice.

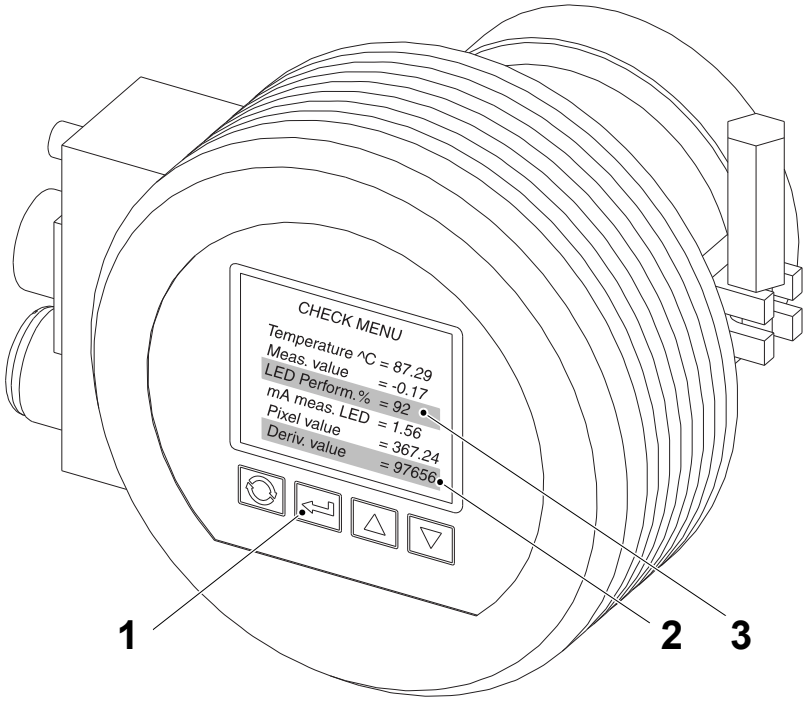

1 Button
2 Deriv. value
3 LED perform.%

TechPub_2614345_0108 - 0201_3048108_01.fm

2.2 Central Module

SPC Reference	2537854-0300

2.2.1 Cleaning System

2.2.1-1 Cleaning System - Check Nozzles

Machine Status	EXTERNAL CLEANING
SPC Reference	2537856-0200

Make sure that:

- the nozzles, indicated by the arrows in the illustration rotate easily
- the nozzles are not clogged and are free from any cleaning solution deposit.

If necessary, remove and clean the nozzles.

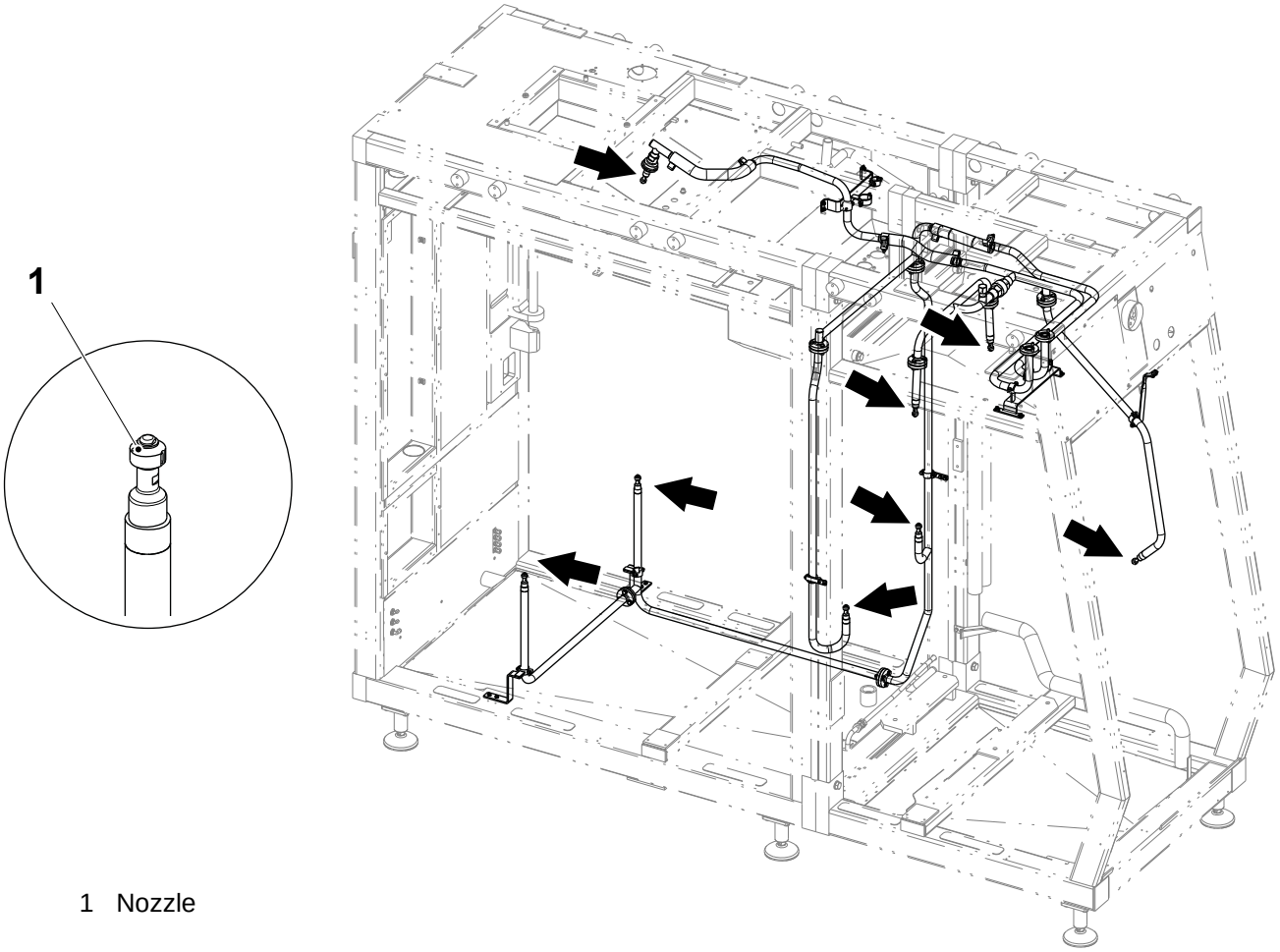

1 Nozzle

TechPub_2614345_0108 - 0201_3048109_01.fm

2.2.2 Pump Unit

2.2.2-1 Pump Unit - Check

Machine Status	PREPARATION
SPC Reference	2598203-0300

Check in the pressure gauge (1) that the pressure rises to 100-120 bar during the loading phase and then check that it drops to 30-50 bar for the rest of the greasing.

Check all the hoses and the connections in the pump unit for leaks.

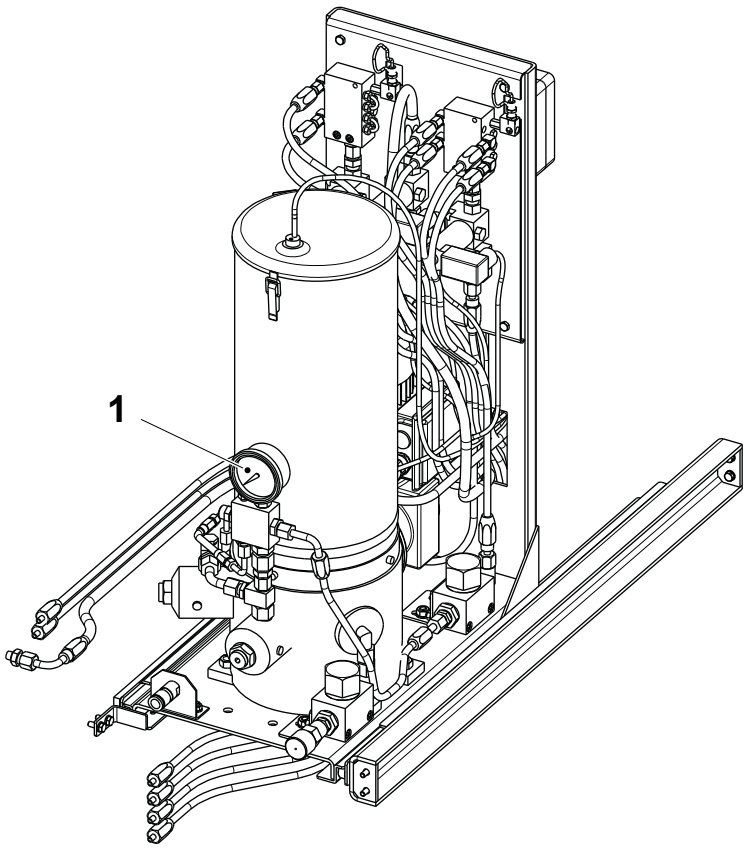

1 Pressure gauge

TechPub_2614345_0107 - 0201_3048112_01.fm

2.2.2-2 Pump Unit - Change Pump

Machine Status	Mains Power OFF Air OFF Steam ON Water OFF
SPC Reference	2598203-0300

a) Disconnect the air hose (1) from the connector (2).

b) Remove the screws (3) and the stop plate (4)

c) Slide the pump unit (5) off.

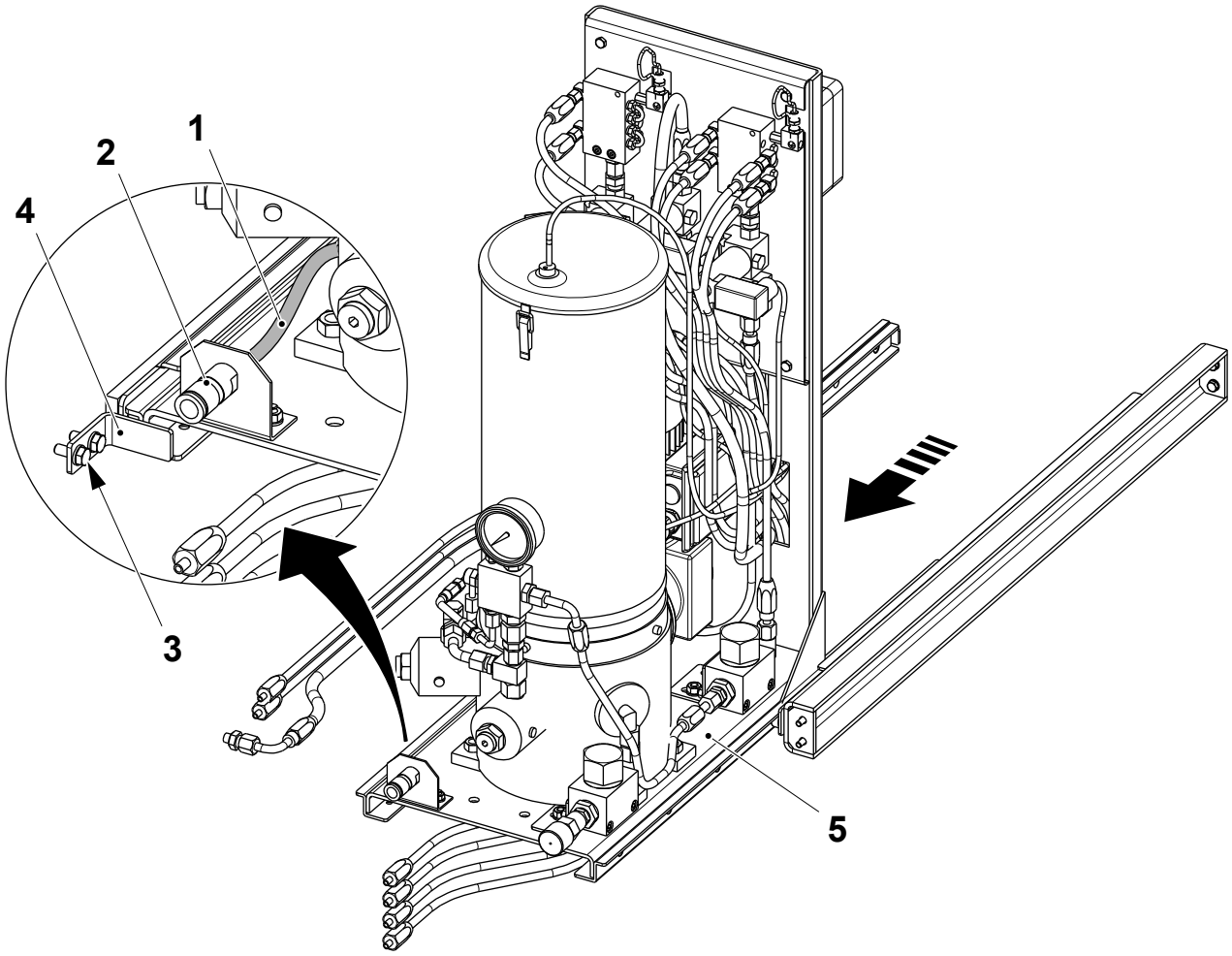

1 Air hose
2 Connector
3 Screw
4 Stop plate
5 Pump unit

(Cont'd)

TechPub_2614345_0107 - 0201_3048112_01.fm

(Cont'd)

d) Disconnect the cable T40W1171 (6) from the connection box T40X1170, see the wiring list in the EM.

e) Disconnect the cable A40W0040 (7) from the pump motor (8), see the wiring list in the EM; otherwise disconnect the connector A40X0040 (9) in the electrical cabinet and pull the cable A40W0040 into the pump compartment.

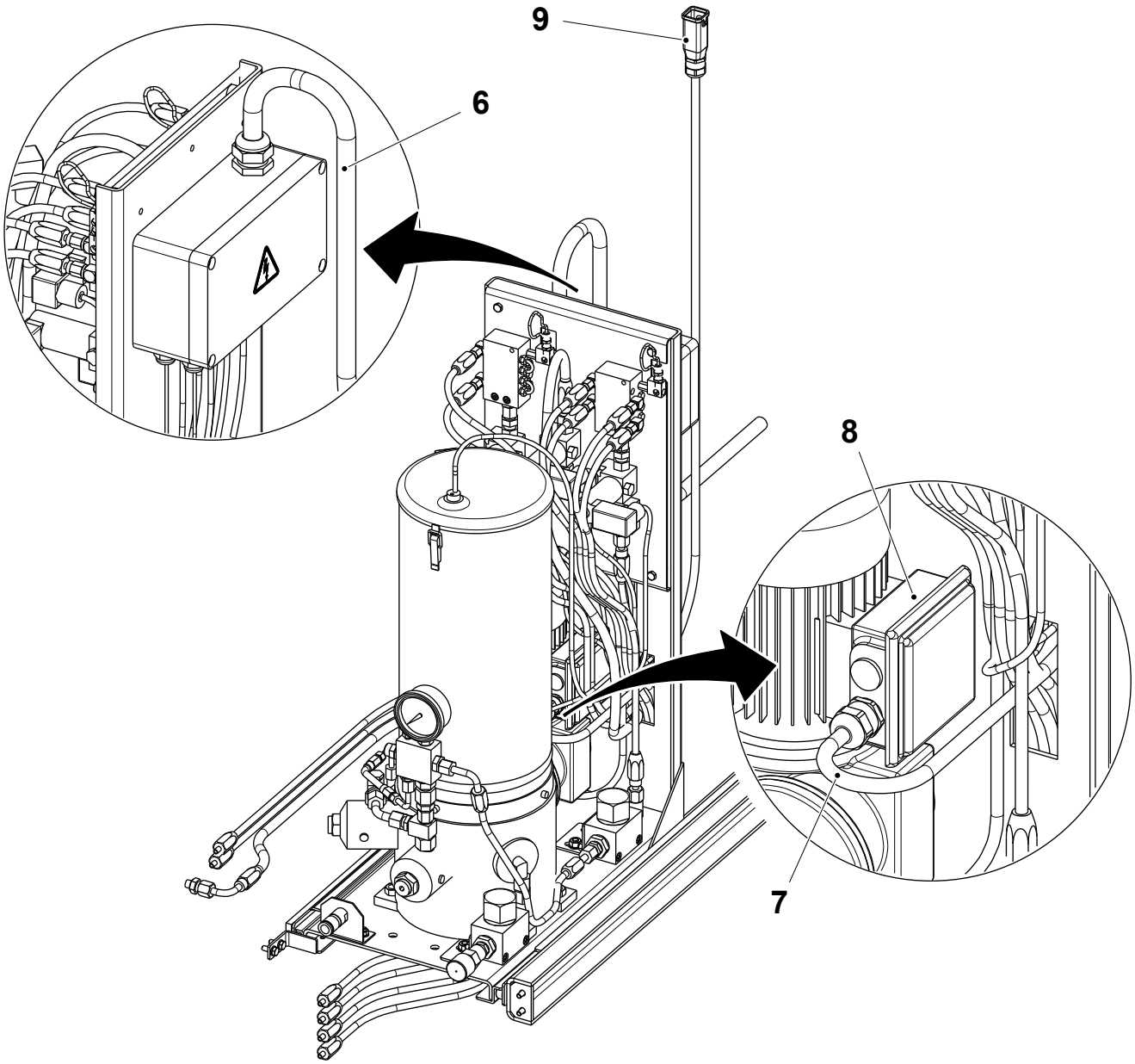

6 Cable T40W1171
7 Cable A40W0040
8 Pump motor
9 Connector A40X0040

(Cont'd)

TechPub_2614345_0107 - 0201_3048112_01.fm

(Cont'd)

f) Disconnect the grease pipes for the final folder (10), (11), (12) and (13) from the distribution block (14) on the pump unit and the connectors (15), (16), (17) and (18) on the distribution block (19).

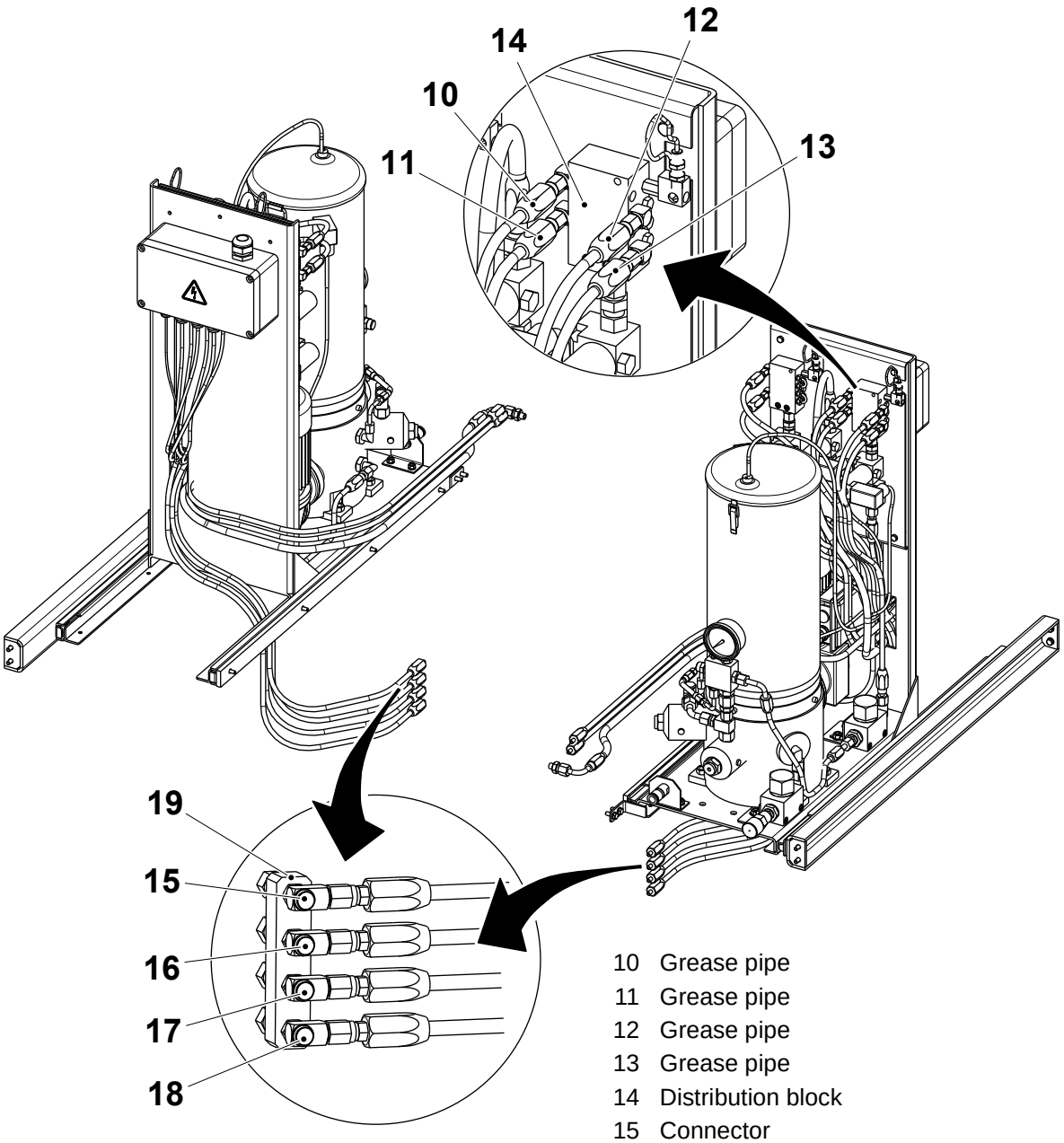

10 Grease pipe
11 Grease pipe
12 Grease pipe
13 Grease pipe
14 Distribution block
15 Connector
16 Connector
17 Connector
18 Connector
19 Distribution block

(Cont'd)

TechPub_2614345_0107 - 0201_3048112_01.fm

(Cont'd)

g) Disconnect the two smaller grease pipes (20) and (21) for the jaw unit from the distribution block (22) on the pump unit and the connectors (23) and (24) on the distribution block (25).

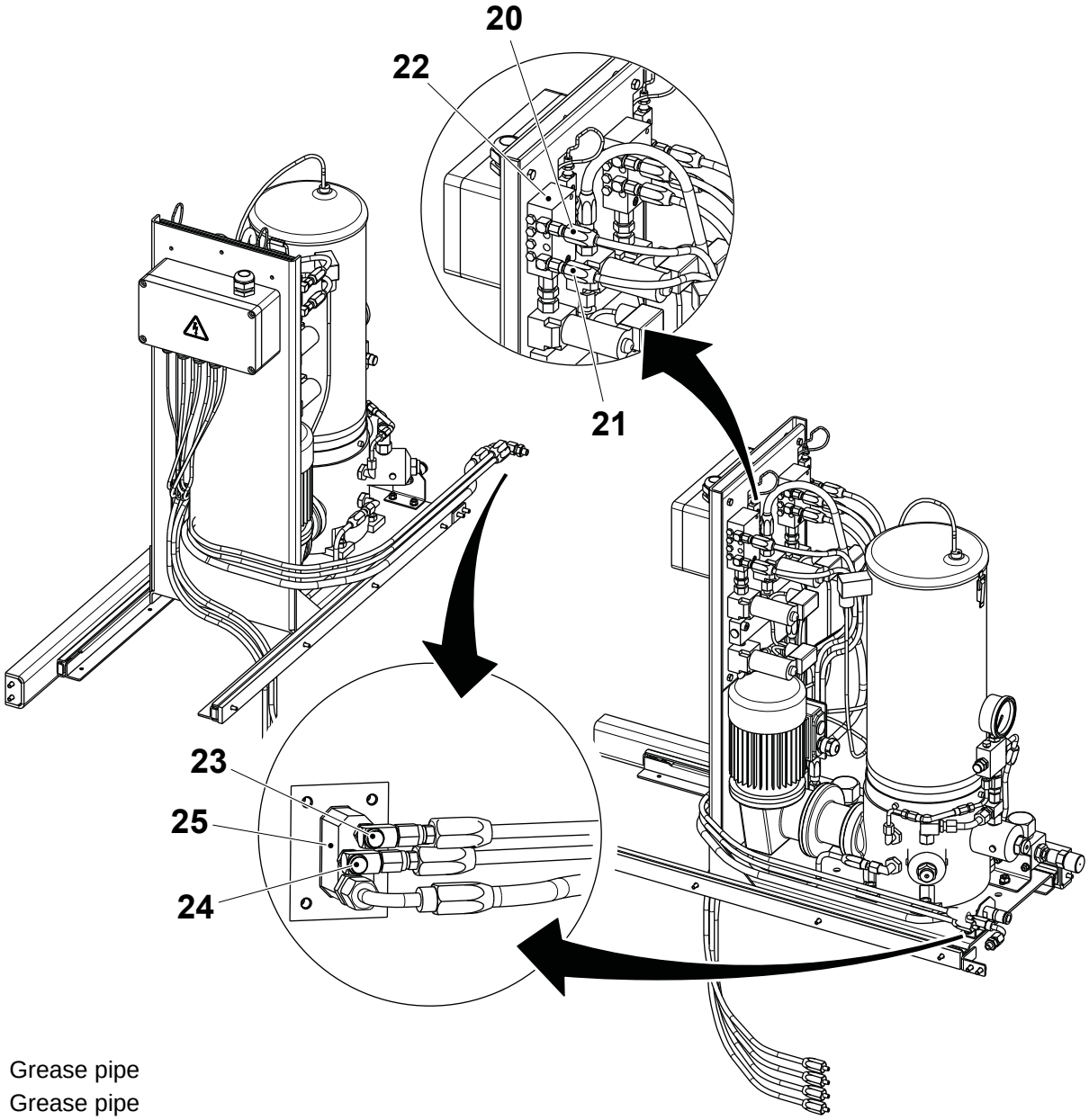

20 Grease pipe
21 Grease pipe
22 Distribution block
23 Connector
24 Connector
25 Distribution Block

(Cont'd)

TechPub_2614345_0107 - 0201_3048112_01.fm

(Cont'd)

h) Disconnect the larger grease pipe (26) for the jaw unit from the distribution block (27) on the pump unit and the connector (28) on the distribution block (25).

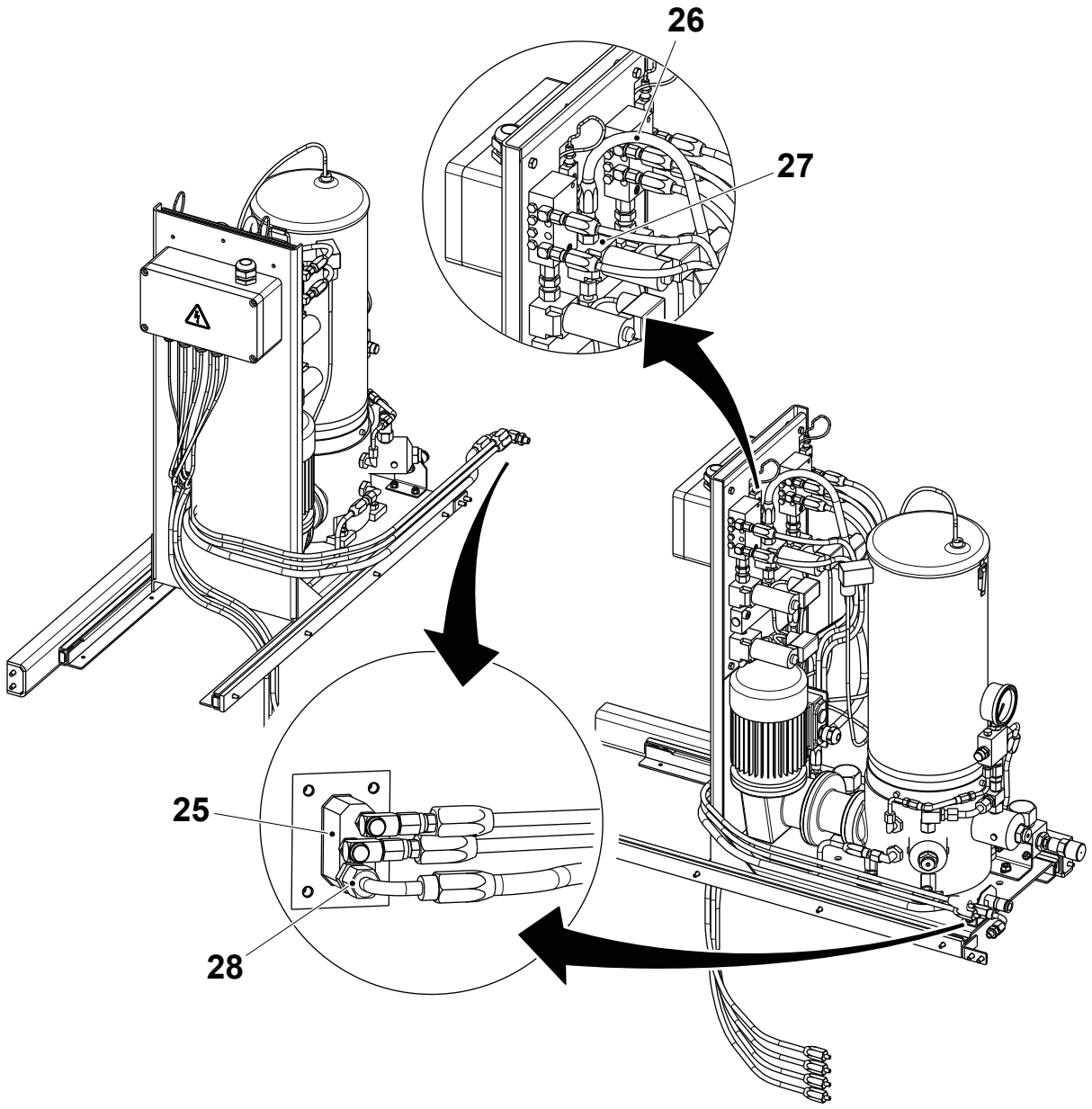

25 Distribution Block
26 Grease pipe
27 Distribution block
28 Connector

(Cont'd)

TechPub_2614345_0107 - 0201_3048112_01.fm

(Cont'd)

i) Remove the screws (29) and change the pump assembly (30).

j) Assemble in the reverse order.

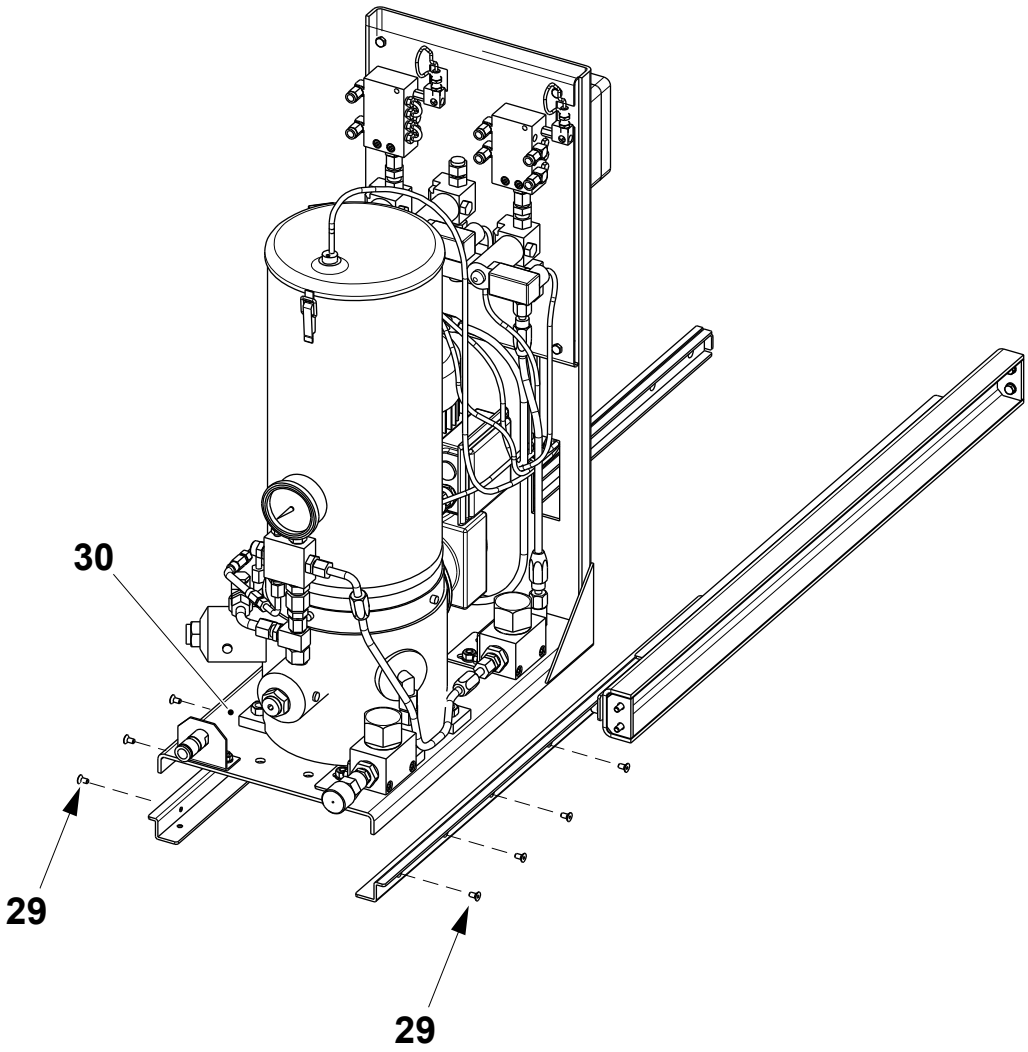

29 Screw

30 Pump assembly

TechPub_2614345_0107 - 0201_3048112_01.fm

2.2.3 Electric Equipment

2.2.3-1 Electric Equipment - Check Fan

Machine Status	PRODUCTION
SPC Reference	2537857-0200 2994296-0100

Check that:

- the fan (1) is working in step PRODUCTION
- the fan (1) is securely fixed and there is not excessive radial play. If necessary change the fan (1), see 2.2.3-2 Electric Equipment - Change Fan.

Clean any build up of dirt from the fan (1) blades.

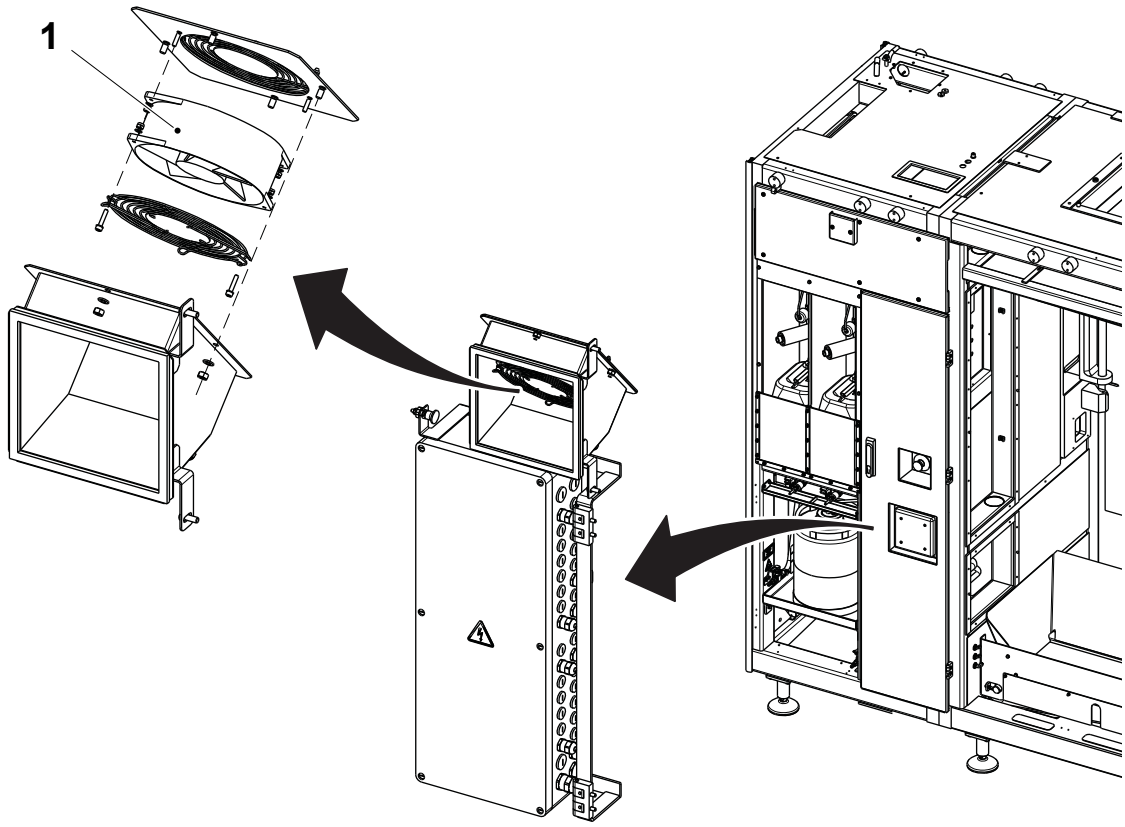

1 Fan

TechPub_2614345_0107 - 0202_3048113_01.fm

2.2.3-2 Electric Equipment - Change Fan

Machine Status	Mains Power OFF Air OFF Steam ON Water OFF
SPC Reference	2537857-0200 2994296-0100

To change the fan (1), proceed as follows:

a) Disconnect the cable T40W9510 (2).

b) Remove the plate (3) by the three screws (4).

c) Remove the finger guard (5) by the screws (6).

d) Remove and change the fan (1) by the nuts (7).

e) Assemble in the reverse order.

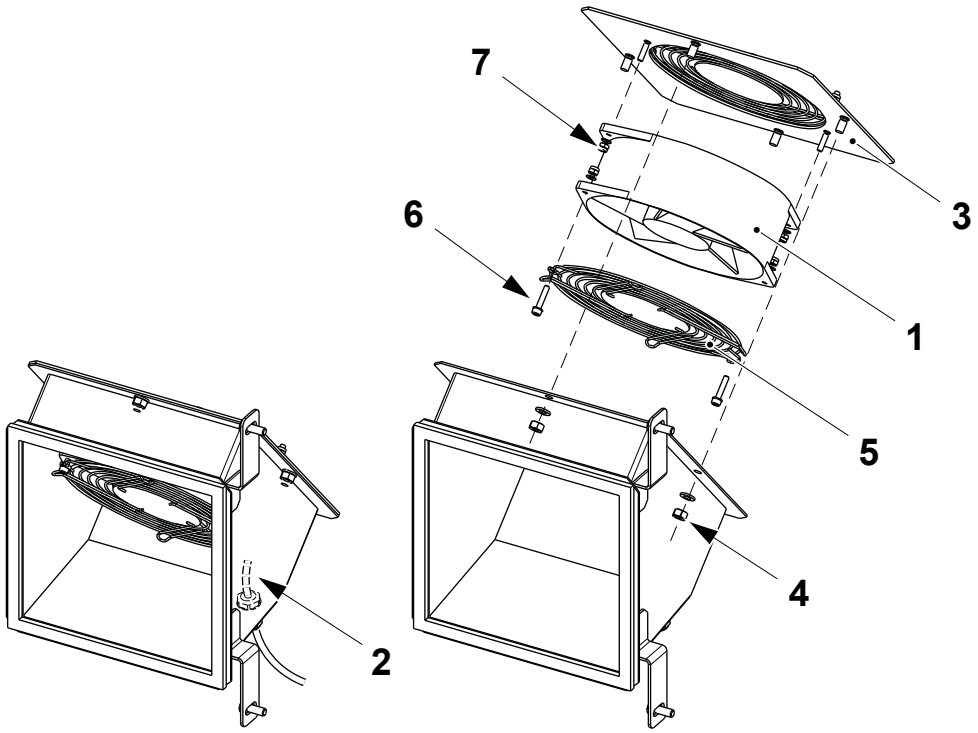

1 Fan
2 Cable T40W9510
3 Plate
4 Nut
5 Fingerboard
6 Screw
7 Nut

TechPub_2614345_0107 - 0202_3048113_01.fm

2.3 Front Module

SPC Reference	2504793-0200

2.3.1 Pneumatic System

2.3.1-1 Pneumatic System - Check

Machine Status	PRODUCTION
SPC Reference	2528044-0200

Make sure that:

- the hoses and the pipes are intact and their connections are secure
- there are no obvious obstructions or leaks
- all the hoses and cables are clamped securely.

Change if necessary.

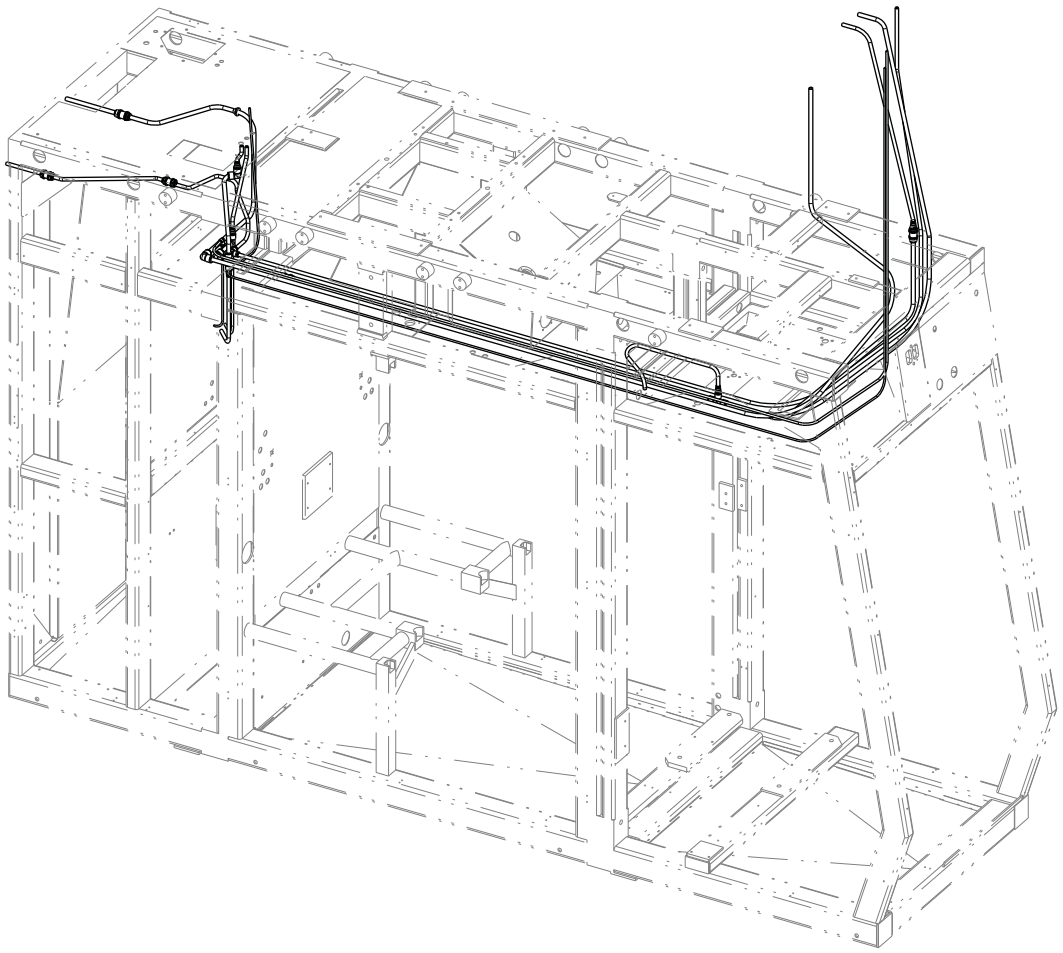

TechPub_2614345_0108 - 0201_3048114_01.fm

2.3.1-2 Pneumatic System - Set I/P Transducer

Machine Status	PREPARATION
SPC Reference	2528044-0200

CAUTION
Risk of damage to the equipment.
Be careful not to damage the trimmers with the screw driver.

Note! The I/P transducer No. T50T1540 is for the top flap heaters, the I/P transducer No. T50T1530 is for the bottom flap heaters.

(Cont'd)

TechPub_2614345_0108 - 0201_3048114_01.fm

(Cont'd)

a) Activate the flap heaters, see 5-4 Final Folder Unit - Activate Flap Heaters Air Flow.

b) On the I/P transducer for the flap heaters selected, remove the rubber cover (1) to display the three trimmers Z, S and G.

c) Turn the gain trimmer G (2) fully anti-clockwise.

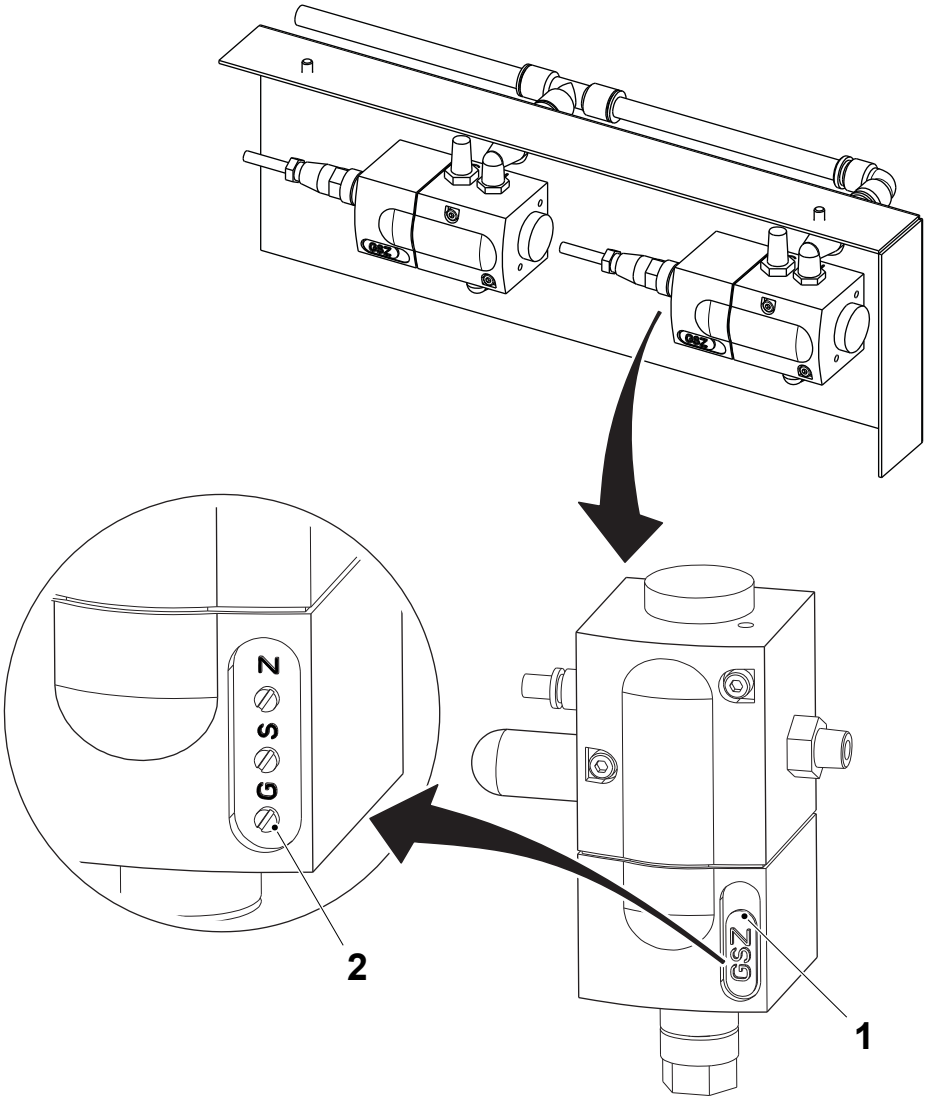

1 Rubber cover
2 Gain trimmer G

(Cont'd)

TechPub_2614345_0108 - 0201_3048114_01.fm

(Cont'd)

d) Touch the PRODUCTION CONTROL button (3).

e) Touch the FINAL FOLDER button (4).

f) Touch the FLAP HEATERS PRESSURE icon (5).

g) Touch the TOP FLAP HEATERS icon (6) or the BOTTOM FLAP HEATERS icon (7) to activate the couple of the flap heaters to be set.

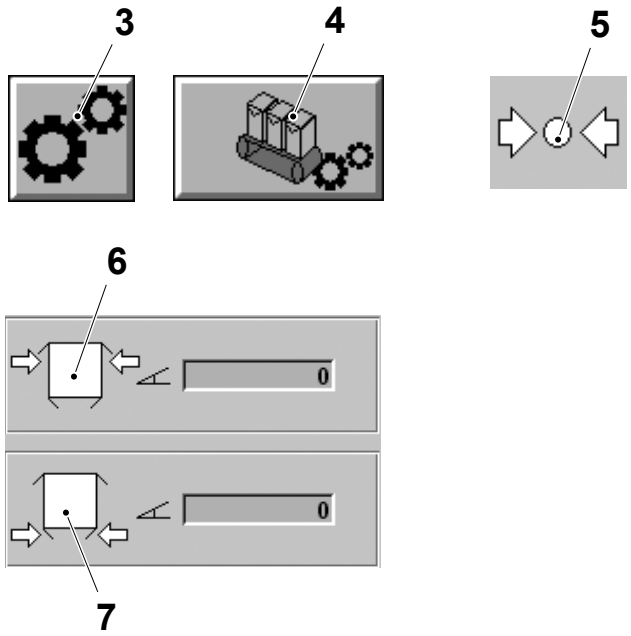

3 Production control button
4 Final folder button
5 Flap heaters pressure icon
6 Top flap heaters icon
7 Bottom flap heaters icon

(Cont'd)

TechPub_2614345_0108 - 0201_3048114_01.fm

(Cont'd)

h) Enter 0.0 bar as the SET POINT value (8) by the ARROWS buttons (9) or the KEYBOARD button (10).

i) Adjust the PROCESS value (11) to 0.1 bar by means of the trimmer Z (12).

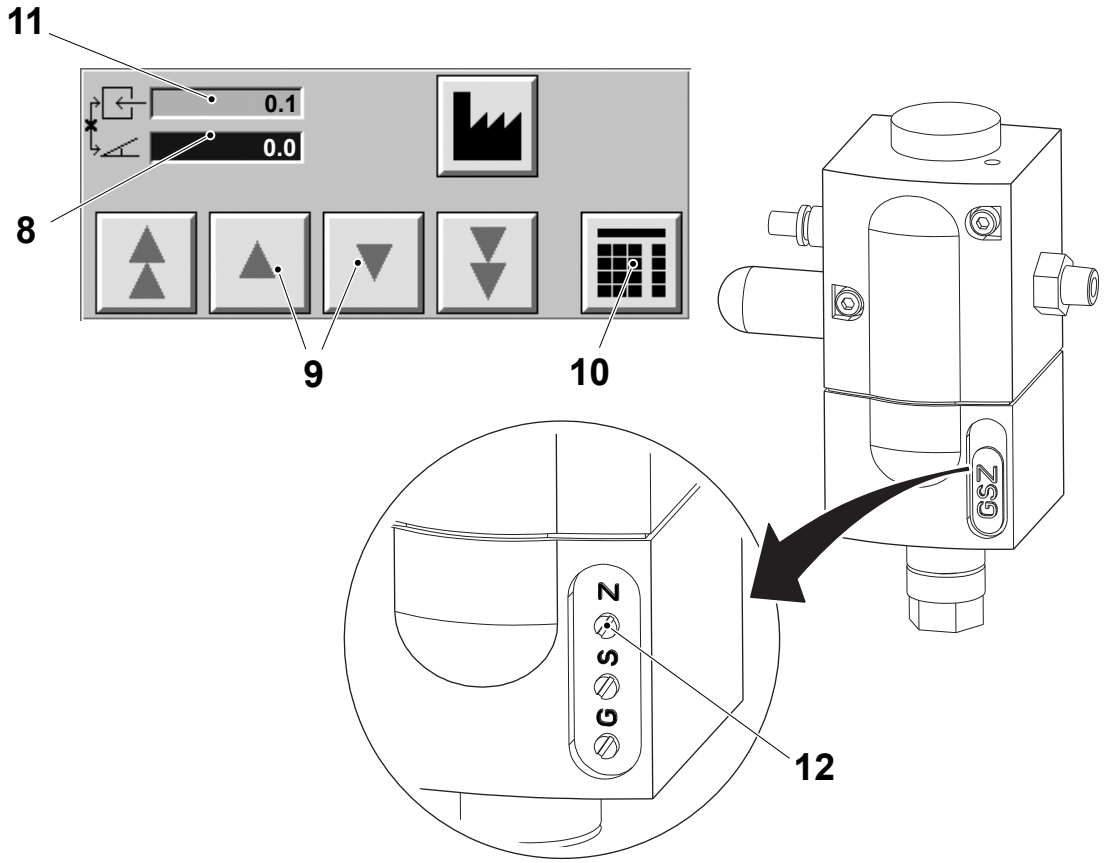

8 Set point value
9 Arrow button
10 Keyboard button
11 Process value
12 Trimmer Z

(Cont'd)

TechPub_2614345_0108 - 0201_3048114_01.fm

(Cont'd)

j) Enter 3.0 bar as set point value (8) by the ARROWS buttons (9) or the KEYBOARD button (10).

k) Check that the process value (11) corresponds to 3 bar; if not, adjust the pressure to 3.0 bar by means of the trimmer S (13).

l) Touch the EXIT button (14).

m) Fit back the rubber cover (1).

n) Repeat the same procedure for the other couple of flap heaters.

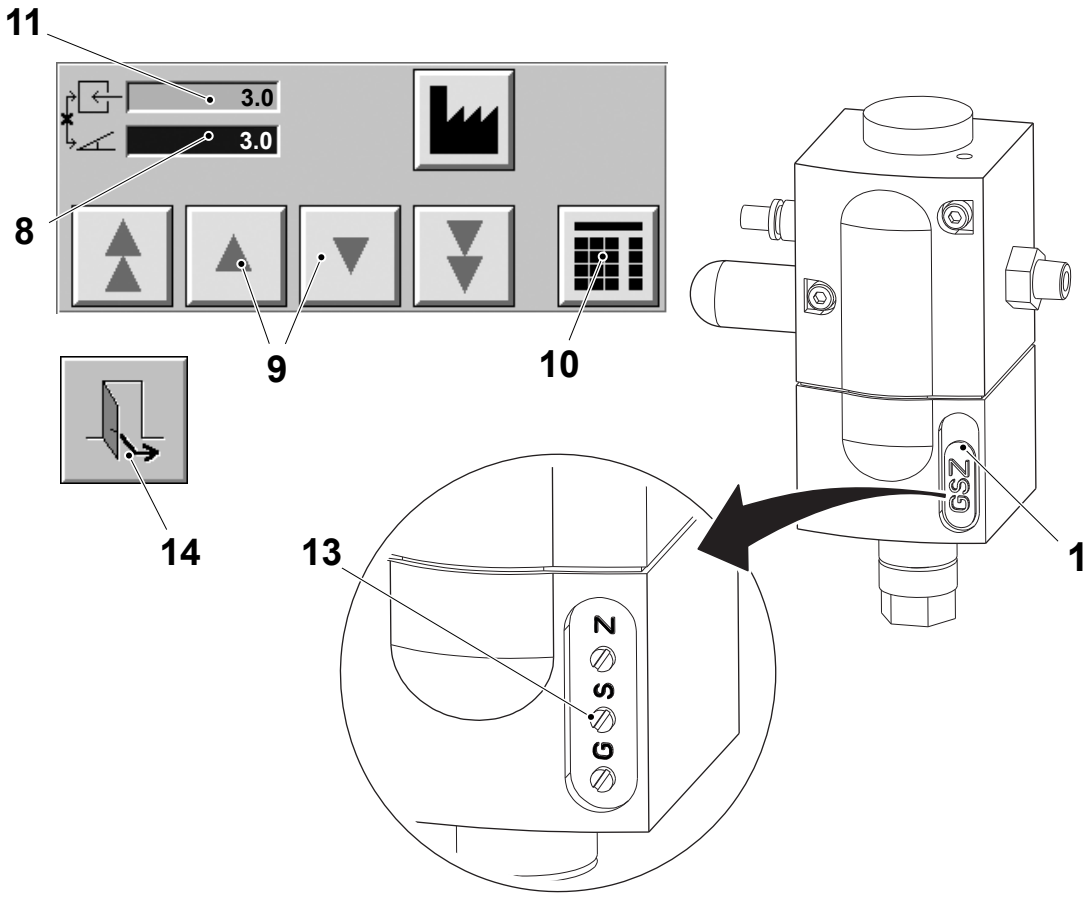

1 Rubber cover
8 Set point value
9 Arrow button
10 Keyboard button
11 Process value
13 Trimmer S
14 Exit button

TechPub_2614345_0108 - 0201_3048114_01.fm

2.3.2 Cleaning System

2.3.2-1 Cleaning System - Change Non-Return Valve

Machine Status	Mains Power OFF Air OFF Steam ON Water OFF
SPC Reference	2504795-0200

Change the non-return valve (1) under the platforms. Fit the non-return valve oriented in the direction of the flow, see arrow.

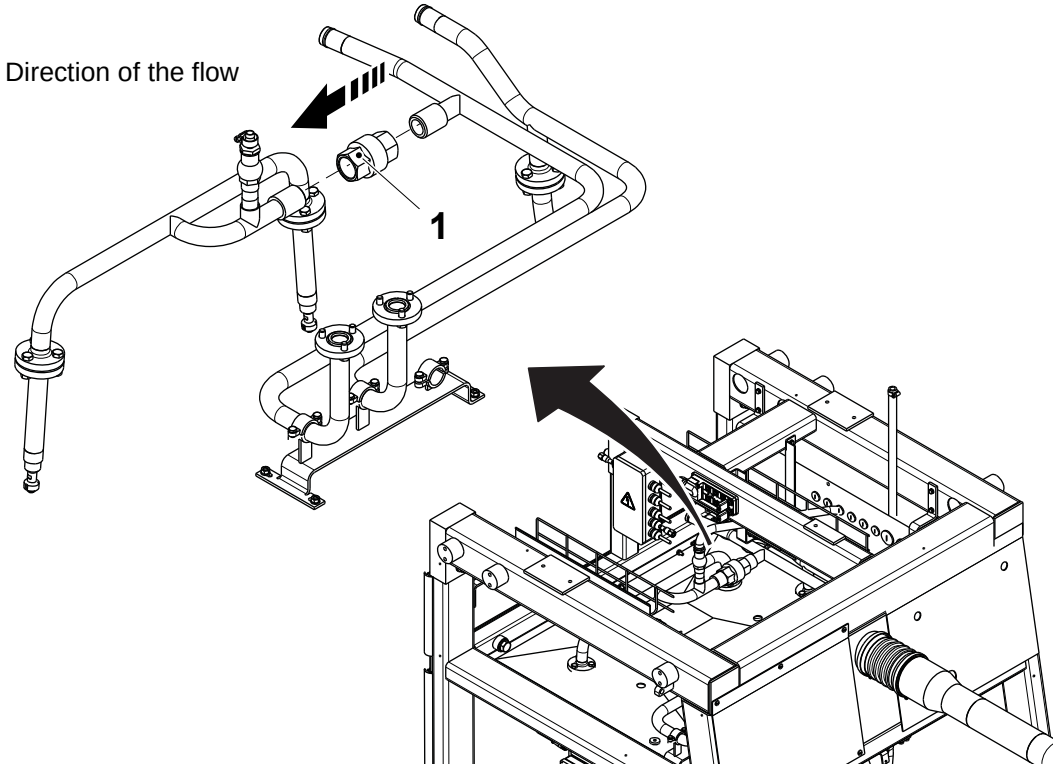

1 Non-return valve

TechPub_2614345_0108 - 0201_3048114_01.fm

2.4 Doors and Covers

SPC Reference	2504920-0300

2.4-1 Doors and Covers - Remove

Machine Status	Mains Power OFF Air OFF Steam ON Water OFF
SPC Reference	2504920-0300

Remove the doors and the covers following this procedure:

a) Close the corresponding LH side door or cover.

b) Support the RH side door or cover.

(Cont'd)

TechPub_2614345_0108 - 0201_3048115_01.fm

(Cont'd)

Note! The RH side door or cover (2) must always be removed first, even if only the LH side door or cover (1) needs to be removed. Disconnect any electrical connections from the doors before removal. Doors with glass panels are heavy.

Note! The hinge pins (3) must be tapped out from the underside of the hinge (5).

c) Tap out the pins (3) in the following order:
   - top hinge pin
   - bottom hinge pin
   - middle hinge pin (when used).

d) Move the LH door (1) or the RH door (2) to disengage the hinge blocks (4) from the hinges (5).

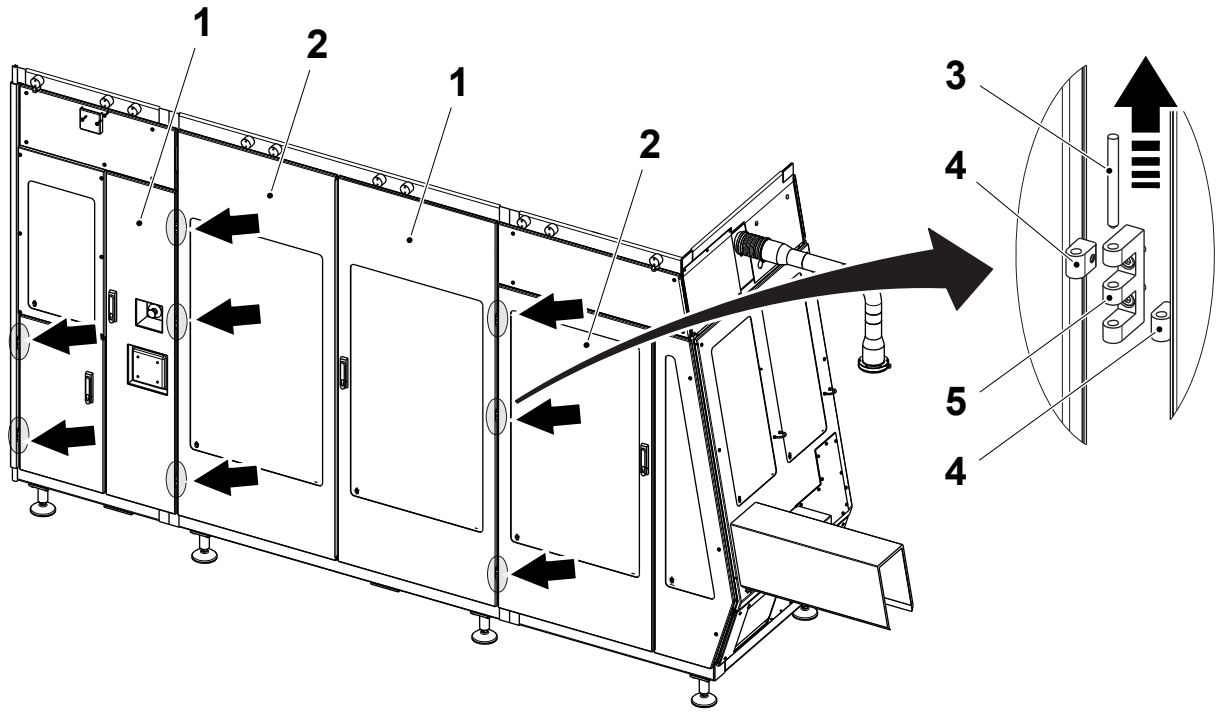

1 LH door
2 RH door
3 Hinge pin
4 Hinge block
5 Hinge

TechPub_2614345_0108 - 0201_3048115_01.fm

2.4-2 Doors and Covers - Grease Locking Devices

Machine Status	Mains Power OFF Air OFF Steam ON Water OFF
Consumables	Synthetic Grease TP No. 90459-7413
SPC Reference	2504920-0300

On both sides of the machine body, grease the locking device (1) in the jaw system/final folder doors (2), see parts shown in grey, then open and close the turning handle (3) to check that the movement is smooth.

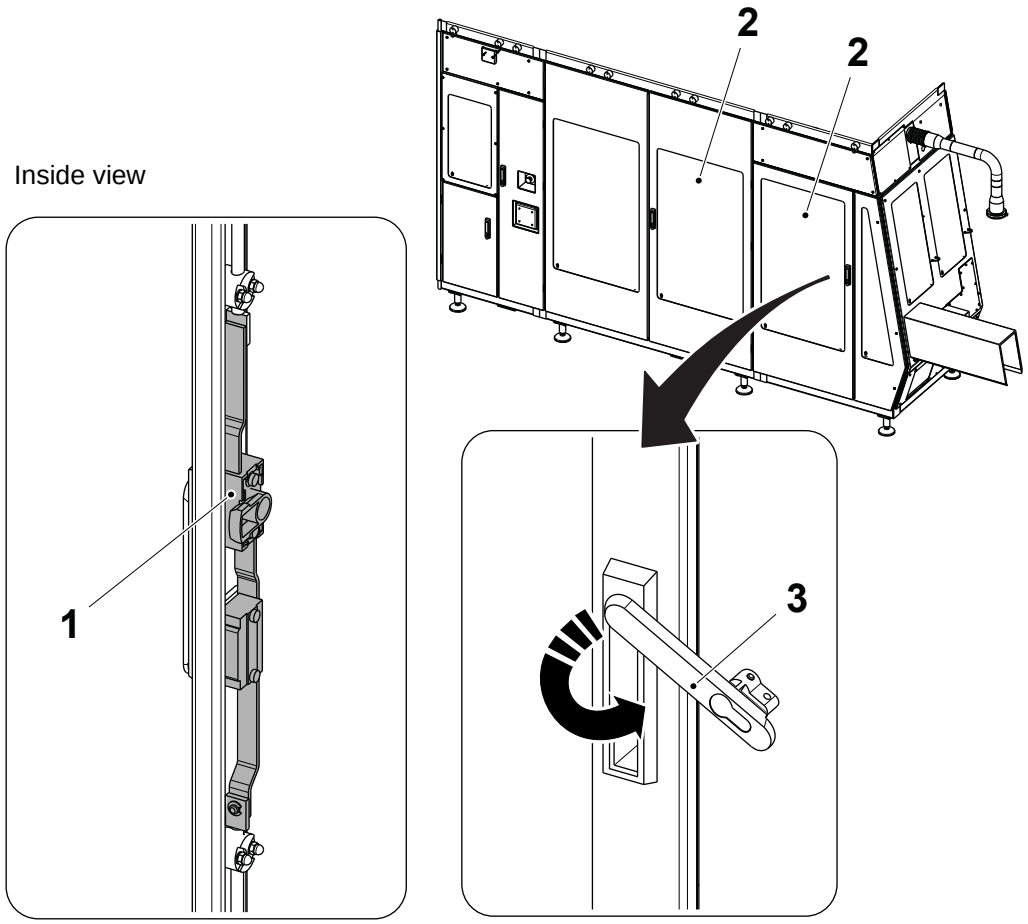

1 Locking device
2 Jaw system/final folder door
3 Turning handle

TechPub_2614345_0108 - 0201_3048115_01.fm

2.5 Waste Conveyor

SPC Reference	2930255-0100

2.5-1 Waste Conveyor - Check

Machine Status	Mains Power ON Air OFF Steam ON Water OFF
SPC Reference	2930255-0100

(Cont'd)

TechPub_2614345_0108 - 0201_3048116_01.fm

(Cont'd)

Check that:

- the hatch (1) moves freely in both directions:
  - disconnect the air lines from the cylinder (2)
  - move the hatch (1)
- the teeth edge of the guard plate (3) is not worn out
- the conveyor belt (4) is not damaged. Change if necessary, see 2.5-3 Waste Conveyor - Change Conveyor Belt.

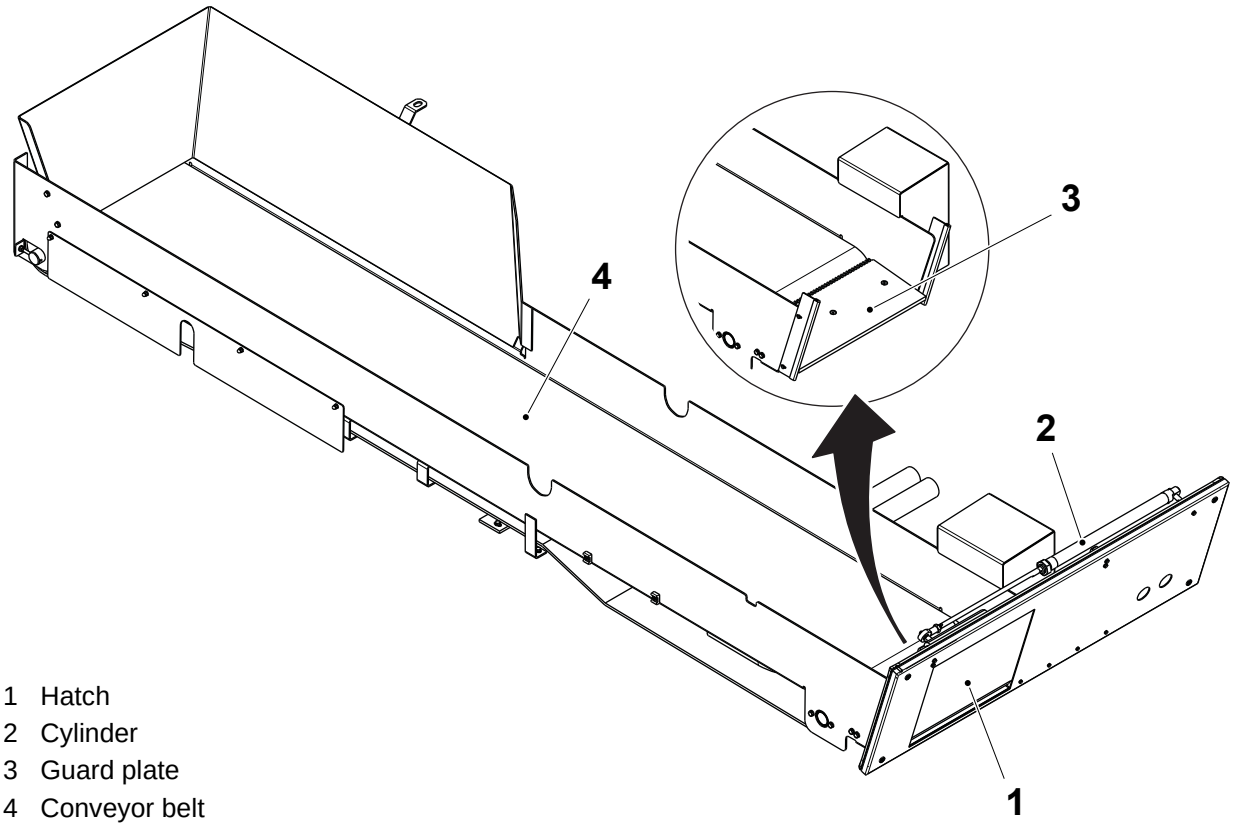

1 Hatch
2 Cylinder
3 Guard plate
4 Conveyor belt

TechPub_2614345_0108 - 0201_3048116_01.fm

2.5-2 Waste Conveyor - Change Coupling

Machine Status	Mains Power OFF Air OFF Steam ON Water OFF
SPC Reference	2930255-0100

a) Remove the nuts (1) and the motor cover (2).

b) Open the coupling (3).

c) Remove the screws (4) and remove the motor assembly (5).

d) Remove the coupling (3). Change it if necessary.

e) Assemble in the reverse order.

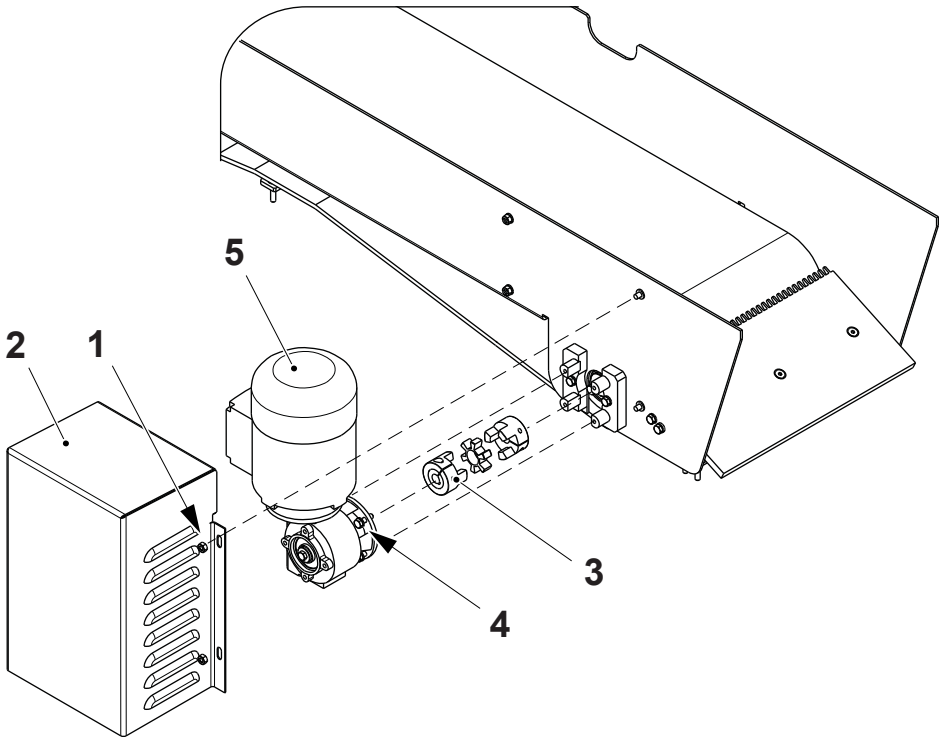

1 Nut
2 Motor cover
3 Coupling
4 Screw
5 Motor assembly

TechPub_2614345_0108 - 0201_3048116_01.fm

2.5-3 Waste Conveyor - Change Conveyor Belt

Machine Status	Mains Power OFF Air OFF Steam ON Water OFF
Special Equipment	4 mm Drift
SPC Reference	2930255-0100

(Cont'd)

TechPub_2614345_0108 - 0201_3048116_01.fm

(Cont'd)

a) Loosen the tensioning screws (1) on each side of the conveyor belt (2).

b) Release the tension of the conveyor belt (2).

c) Push out one of the plastic connecting pins (3) in the conveyor belt with the aid of a 4 mm drift.

d) Remove the conveyor belt and change it if necessary.

e) Assemble in the reverse order.

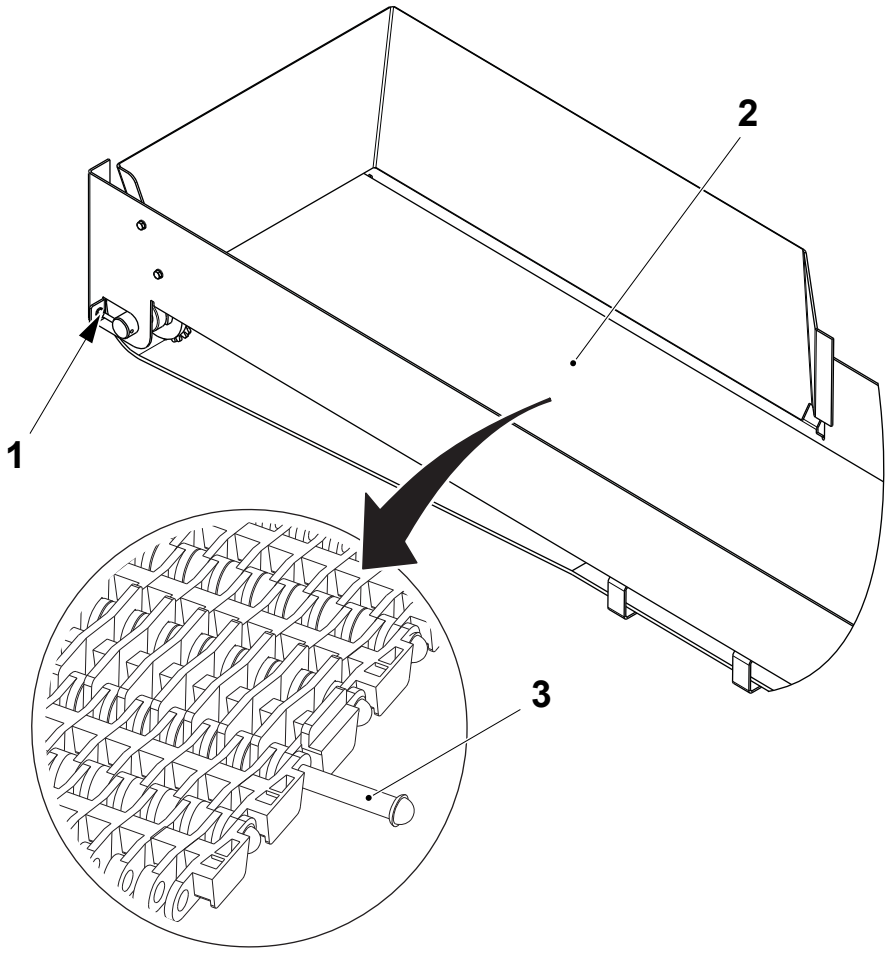

1 Screw
2 Conveyor belt
3 Pin

TechPub_2614345_0108 - 0201_3048116_01.fm

2.5-4 Waste Conveyor - Tension Conveyor Belt

Machine Status	Mains Power OFF Air OFF Steam ON Water OFF
Special Equipment	4 mm Drift
SPC Reference	2930255-0100

(Cont'd)

TechPub_2614345_0108 - 0201_3048116_01.fm

(Cont'd)

a) Loosen the tensioning screws (1) on each side of the conveyor belt (2).

b) Release the tension of the conveyor belt (2).

c) Push out two of the plastic connecting pins (3) in the conveyor belt with the aid of a 4 mm drift.

d) Remove one or more meshes (4) of the conveyor belt.

e) Assemble in the reverse order.

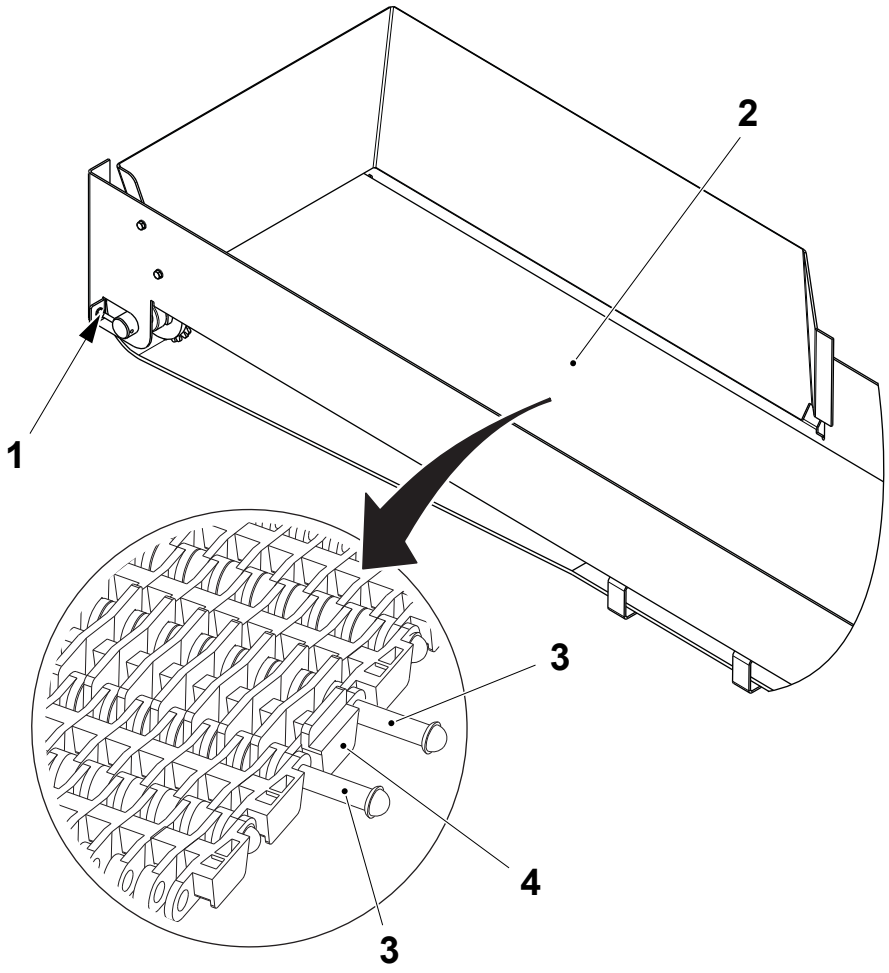

1 Screw
2 Conveyor belt
3 Pin
4 Mesh

TechPub_2614345_0108 - 0201_3048116_01.fm

2.5-5 Waste Conveyor - Set Front Guard Pressure

Machine Status	Mains Power ON Air ON Steam ON Water OFF
SPC Reference	2930255-0100

Set the pressure for the front guard cylinder (1) to 1.0 bar using the pressure regulator (2).

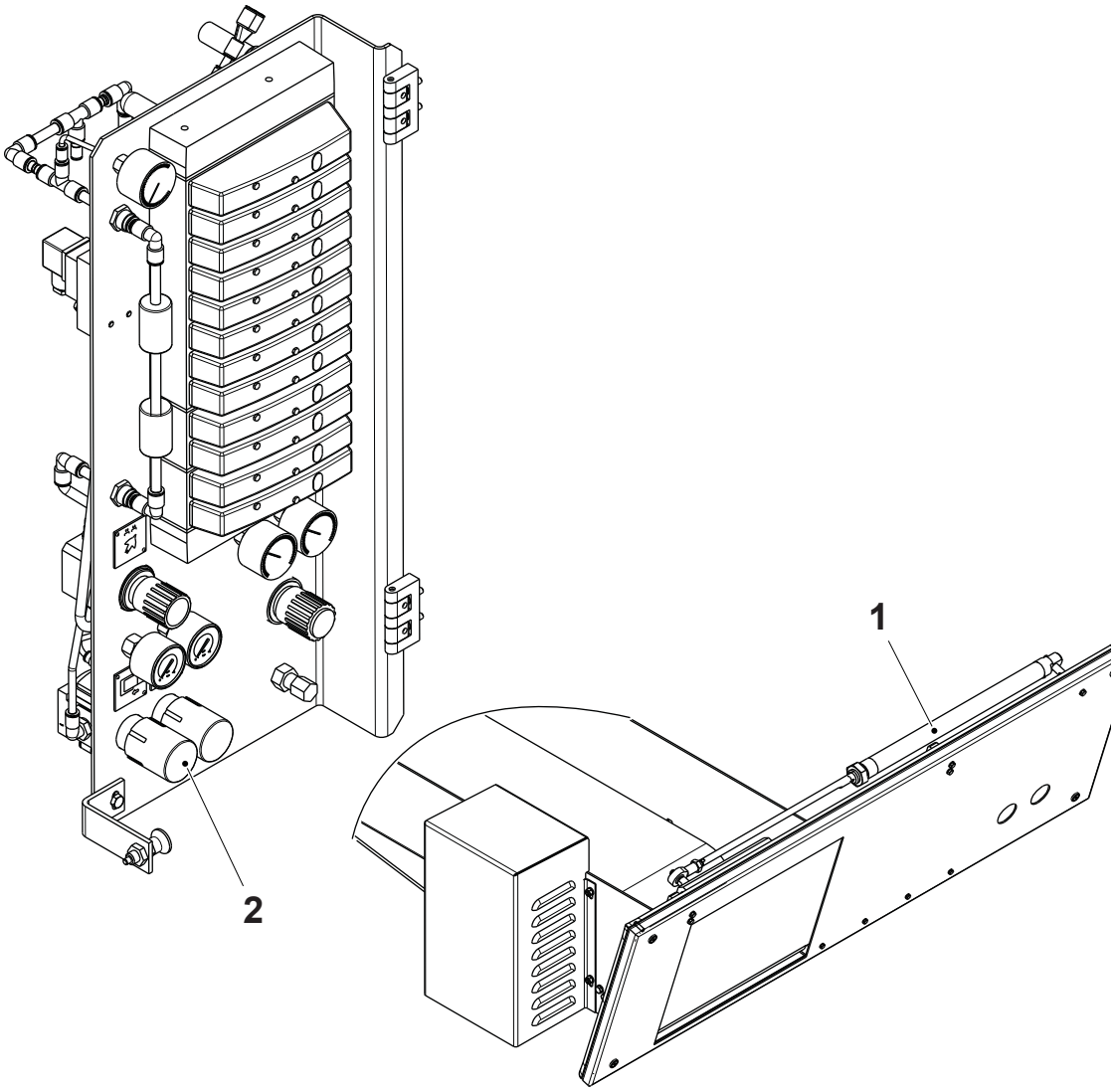

1 Cylinder
2 Pressure regulator

TechPub_2614345_0108 - 0201_3048116_01.fm

2.6 TPOP

SPC Reference	2980539-0100

The TPOP (Tetra Pak Operator Panel) is a touch screen where the control software allows operating and controlling filling machines.

- Arm connection (1)
- USB connectors (x3) (2), type A outlet
- Emergency stop button (3)
- Push buttons (x12) (4)
- Touch screen (5)

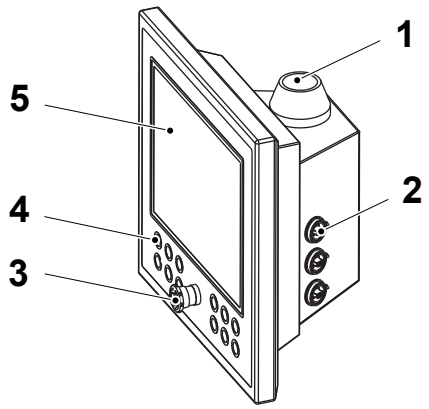

1 Arm connection
2 USB connector
3 Emergency stop button
4 Push button
5 Touch screen

(Cont'd)

TechPub_2614345_0108 - 0201_3048117_01.fm

(Cont'd)

- Display unit (6)
- X2X OUT (7)
- X2X IN (8)
- Power 24V DC (9)
- Push button module (10)
- Emergency stop (11)
- Push button module (12)
- Panel IN (13)
- Power 24V DC (14)
- DeviceNet & Ethernet/IP module (15)
  - 24V DC (16)
  - X2X (17)
  - DeviceNet (18)

Panel rear view

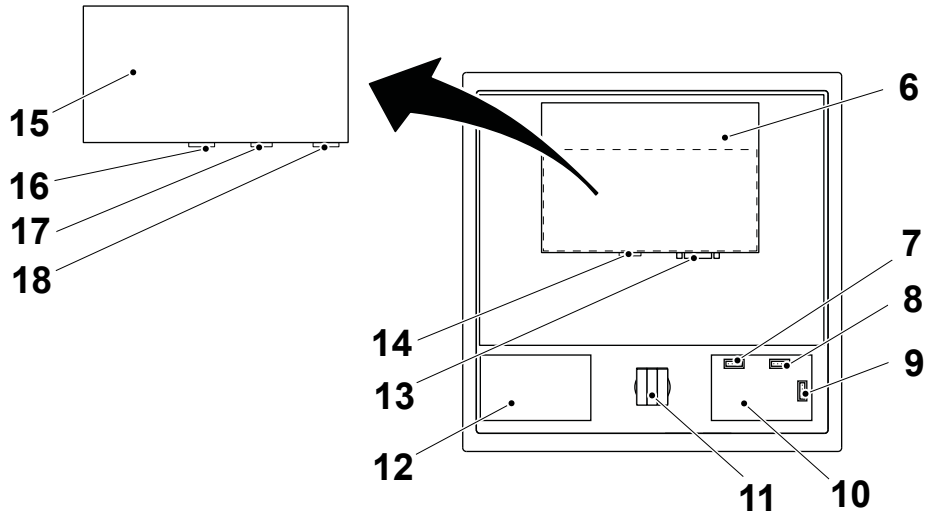

6 Display unit
7 X2X OUT
8 X2X IN
9 Power 24V DC
10 Push button module
11 Emergency stop
12 Push button module
13 Panel IN
14 Power 24V DC
15 DeviceNet & Ethernet/IP module
16 24V DC
17 X2X
18 DeviceNet

TechPub_2614345_0108 - 0201_3048117_01.fm

2.6-1 TPOP - Open Front Panel

Machine Status	Mains Power OFF Air OFF Steam ON Water OFF
SPC Reference	2980539-0100

WARNING

Hazardous voltage.

May shock, burn, or cause death. The main power supply connector must be switched off and secured with a lock before starting any work on the IPC.

a) Disconnect the IPC power supply.

b) Remove the 16 screws (1) on the TPOP front.

c) Lift the TPOP front (2) approximately 10 mm and then open it.

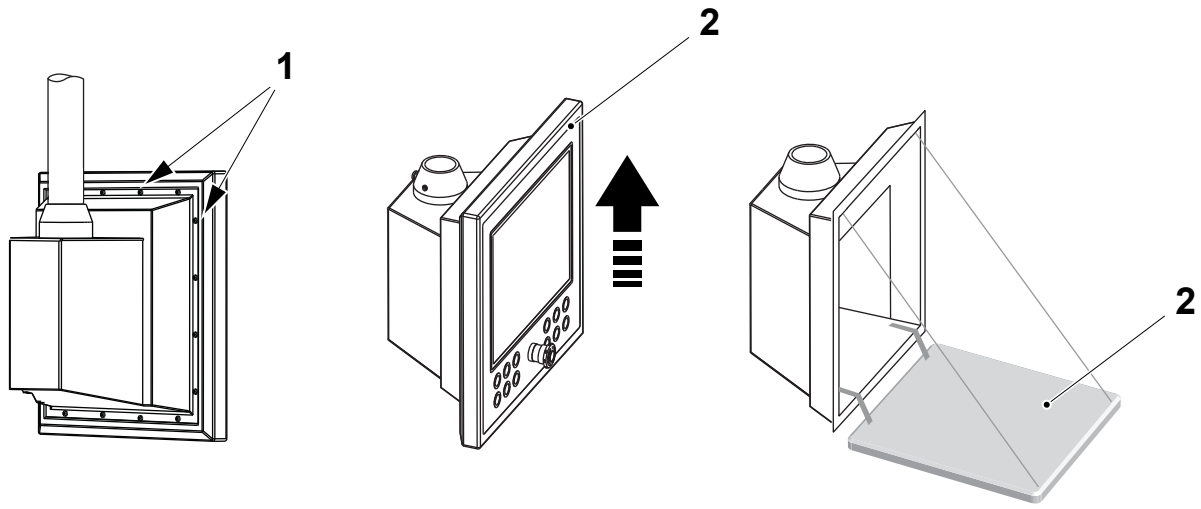

1 Screw
2 TPOP front

TechPub_2614345_0108 - 0201_3048117_01.fm

2.6-2 TPOP - Change Push Button Module

Machine Status	Mains Power OFF Air OFF Steam ON Water OFF
SPC Reference	2980539-0100

Open the TPOP front panel, see 2.6-1 TPOP - Open Front Panel.

If changing the right push button module (1), see Change Right Push Button Module on page 2-108.

If changing the left push button module (2), see Change Left Push Button Module on page 2-110.

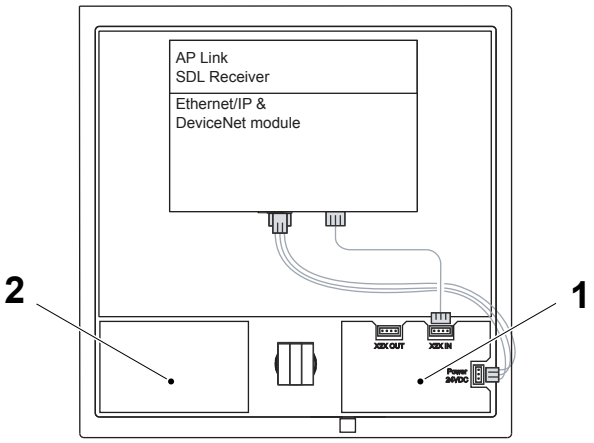

1 Push button module
2 Push button module

(Cont'd)

TechPub_2614345_0108 - 0201_3048117_01.fm

(Cont'd)

Change Right Push Button Module

a) Disconnect the X2X connector (1) and the 24V DC connector (2).

b) Remove the screws (3) securing the push button module and remove the metal top.

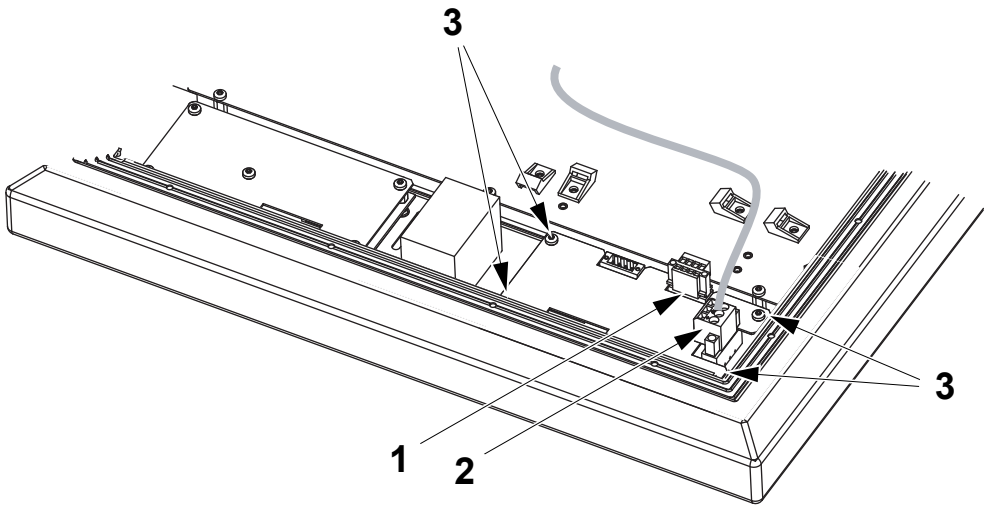

1 X2X connector
2 24V DC connector
3 Screw

(Cont'd)

TechPub_2614345_0108 - 0201_3048117_01.fm

(Cont'd)

c) Disconnect the flat cable (4) and remove the nuts (5).

d) Remove the push button module (6).

e) Assemble the new push button module in reverse order.

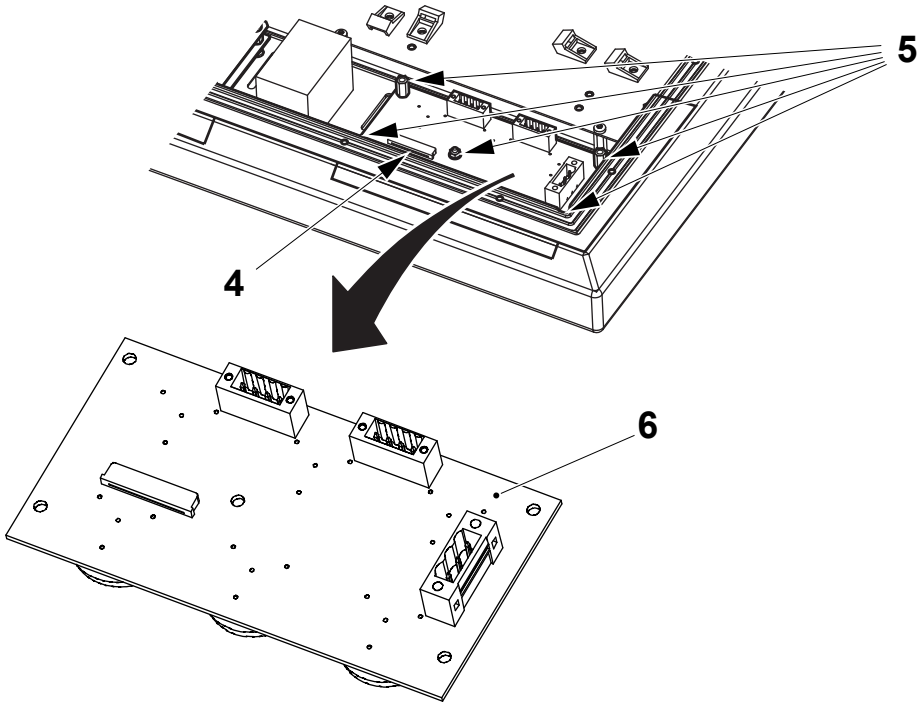

4 Flat cable
5 Nut
6 Push button module

(Cont'd)

TechPub_2614345_0108 - 0201_3048117_01.fm

(Cont'd)

Change Left Push Button Module

a) Remove the nuts (1) securing the push button module and lift the metal top.

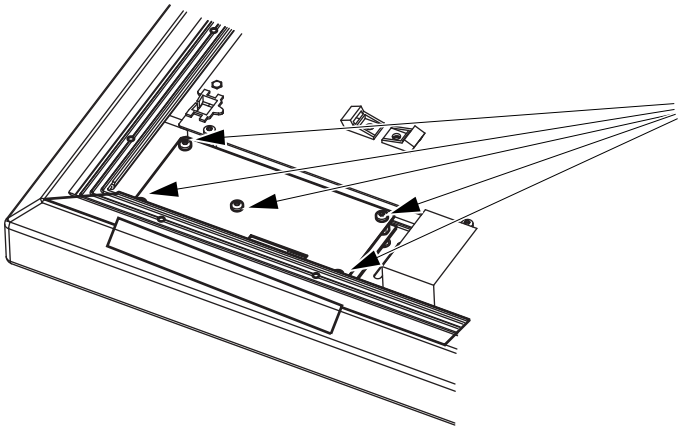

1 Nut

(Cont'd)

TechPub_2614345_0108 - 0201_3048117_01.fm

(Cont'd)

b) Disconnect the flat cable (2) and remove the nuts (3).

c) Remove the push button module (4).

d) Assemble the new push button module in reverse order.

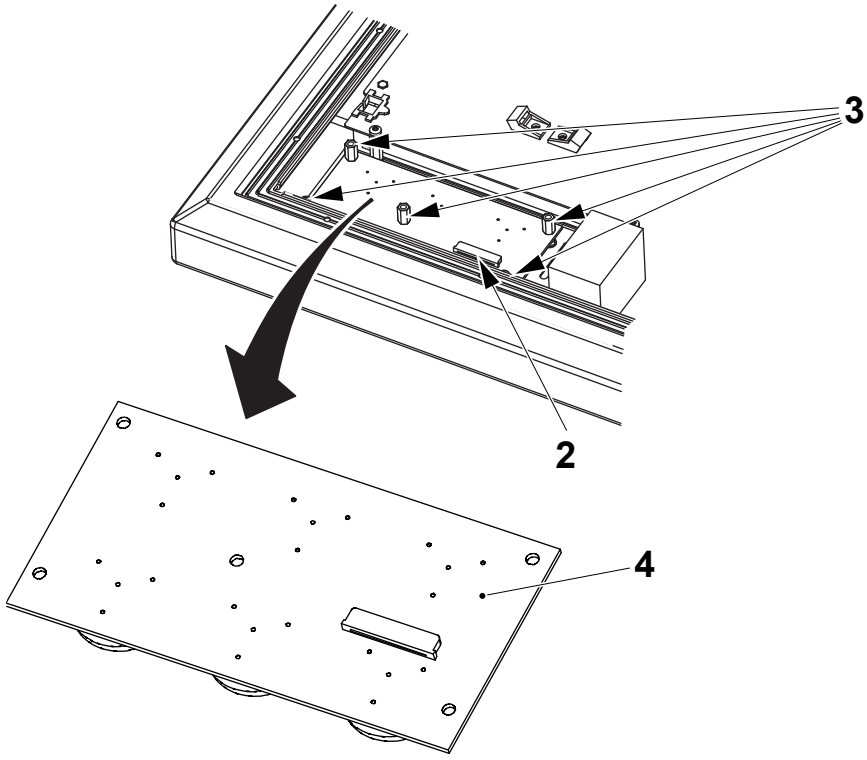

2 Flat cable
3 Nut
4 Push button module

TechPub_2614345_0108 - 0201_3048117_01.fm

2.6-3 TPOP - Change AP Link SDL Receiver

Machine Status	Mains Power OFF Air OFF Steam ON Water OFF
SPC Reference	2980539-0100

a) Open the TPOP front panel, see 2.6-1 TPOP - Open Front Panel.

b) Disconnect the SDL cable connector (1) by cutting the cable tie (2) and removing the connector securing screws.

c) Disconnect the 24V DC connector (3) and remove the cable tie anchors (4).

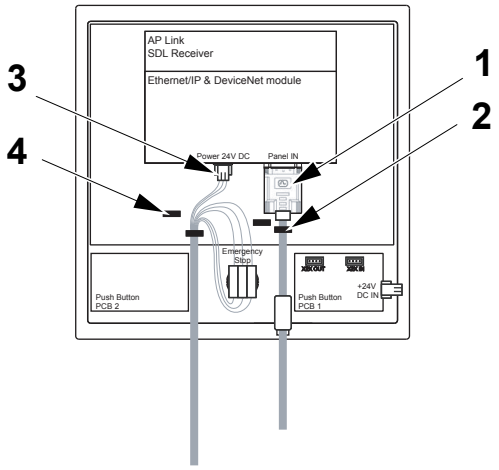

1 Cable connector
2 Cable tie
3 24V DC connector
4 Cable tie anchor

(Cont'd)

TechPub_2614345_0108 - 0201_3048117_01.fm

(Cont'd)

d) Remove the screws (5) and then remove the Panel Link SDL receiver (6).

e) Assemble the new SDL receiver in reverse order.

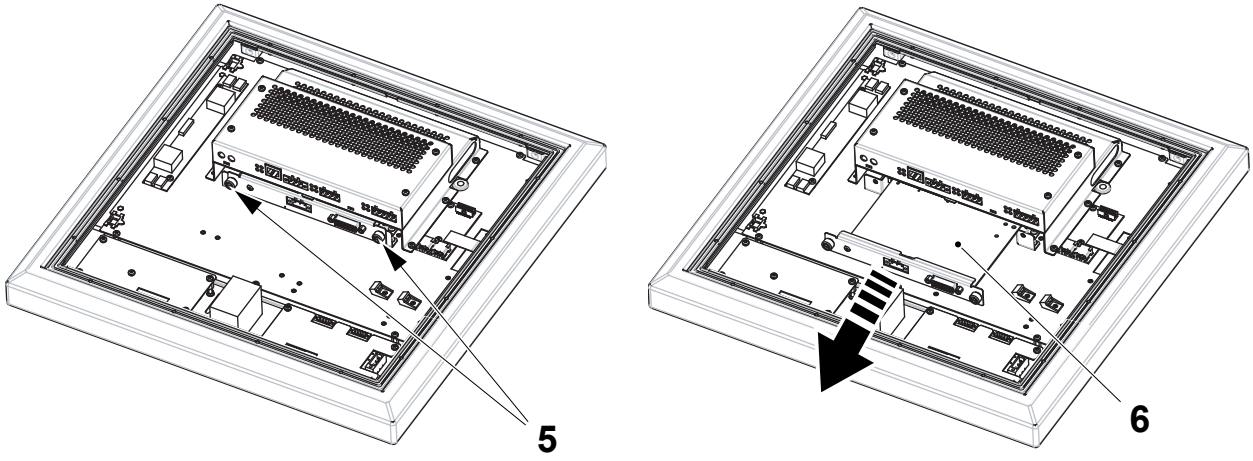

5 Screw
6 SDL receiver

TechPub_2614345_0108 - 0201_3048117_01.fm

2.6-4 TPOP - Change Gateway PCB

Machine Status	Mains Power OFF Air OFF Steam ON Water OFF
SPC Reference	2980539-0100

a) Open the TPOP front panel, see 2.6-1 TPOP - Open Front Panel.

b) Remove the 24V DC connector (1), the X2X connector (2), and the incoming Devicenet connection (3) from the Gateway PCB.

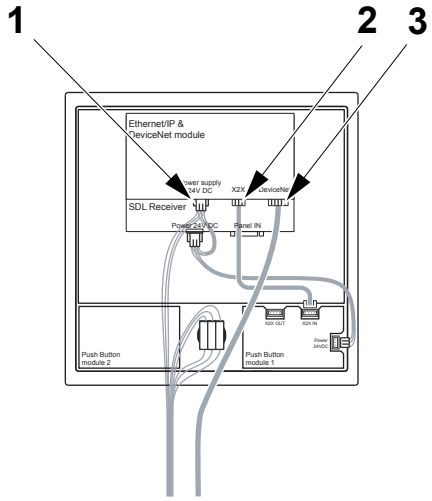

1 24V DC connector
2 X2X connector
3 Connection

(Cont'd)

TechPub_2614345_0108 - 0201_3048117_01.fm

(Cont'd)

c) Remove the screws (4) holding the metal cover.

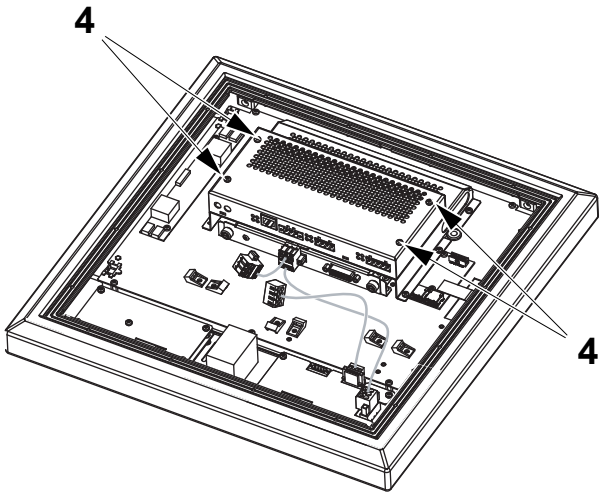

4 Screw

d) Remove the spacer nuts (5) and remove the Gateway PCB (6).

e) Assemble the new Gateway PCB in reverse order.

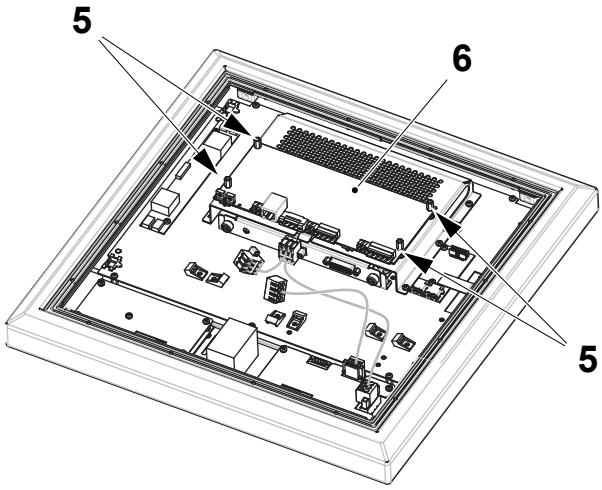

5 Screw
6 Gateway PCB

TechPub_2614345_0108 - 0201_3048117_01.fm

2.6-5 TPOP - Change Display Backlight

Machine Status	Mains Power OFF Air OFF Steam ON Water OFF
SPC Reference	2980539-0100

a) Open the TPOP front panel, see 2.6-1 TPOP - Open Front Panel.

b) Disconnect the 24V DC connectors (1), the communication connectors (2), and the SDL connector (3).

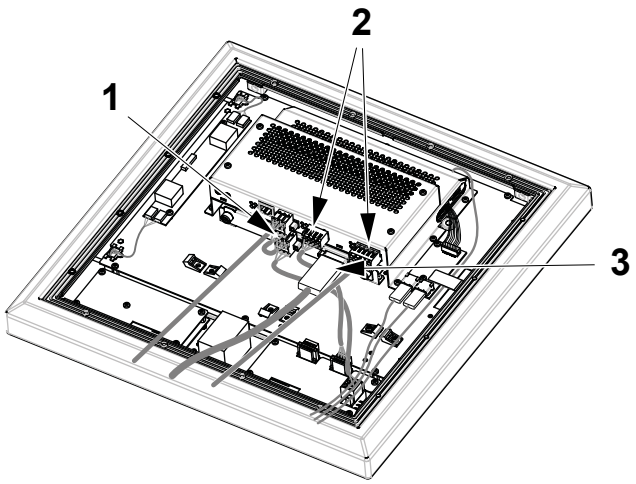

1 24V DC connector
2 Communication connectors
3 SDL connector

(Cont'd)

TechPub_2614345_0108 - 0201_3048117_01.fm

(Cont'd)

c) Disconnect the two standard USB connectors (4) from the touch screen controller circuit board (5).

d) Disconnect the USB connector (6) at the top of the display unit.

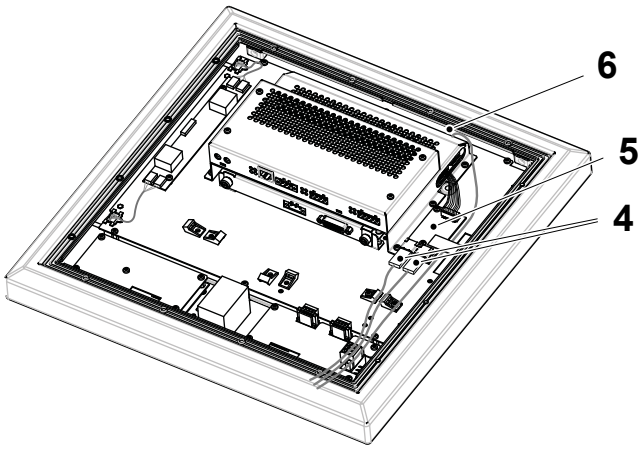

4 USB connector
5 Circuit board
6 USB connector

(Cont'd)

TechPub_2614345_0108 - 0201_3048117_01.fm

(Cont'd)

e) Disconnect the connector (7) from the touch screen controller circuit board.

f) Remove the screws (8) securing the circuit board to the display unit.

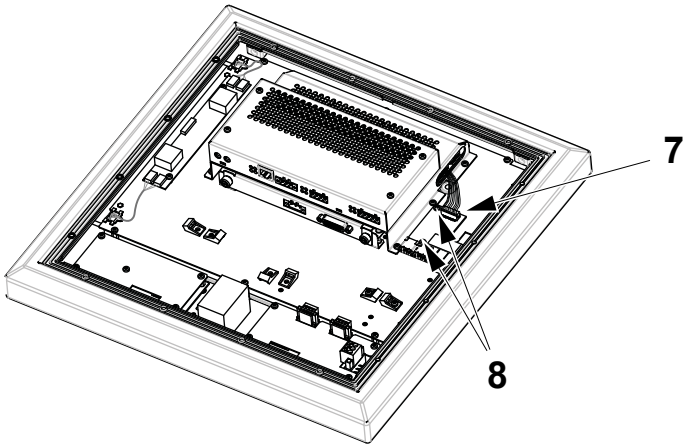

7 Connector
8 Screw

g) Remove the screws (9) and carefully remove the display unit from the panel. Place the display unit on a clean and level surface.

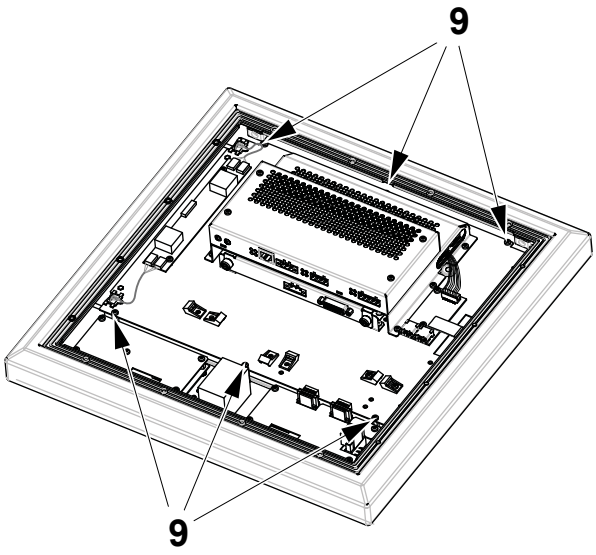

9 Screw

(Cont'd)

TechPub_2614345_0108 - 0201_3048117_01.fm

(Cont'd)

h) Cut both cable ties (10) and unplug the backlight connectors (11).

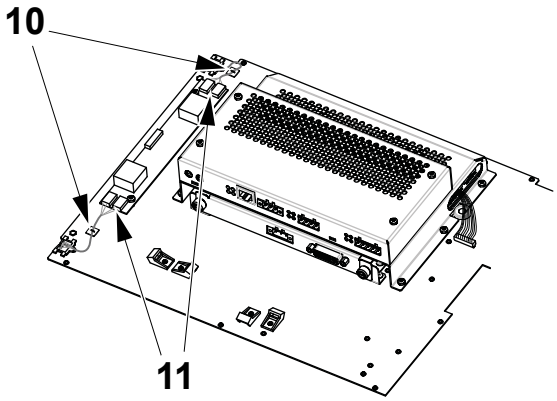

10 Cable tie
11 Connector

Note! The following instructions show the procedure for the lower backlight. The same procedure applies for the upper backlight.

i) Carefully lift the back plastic lip (12) of the cable protection. Remove the cable protection from the display mounting plate.

Note! Be careful when moving the cable strands (13).

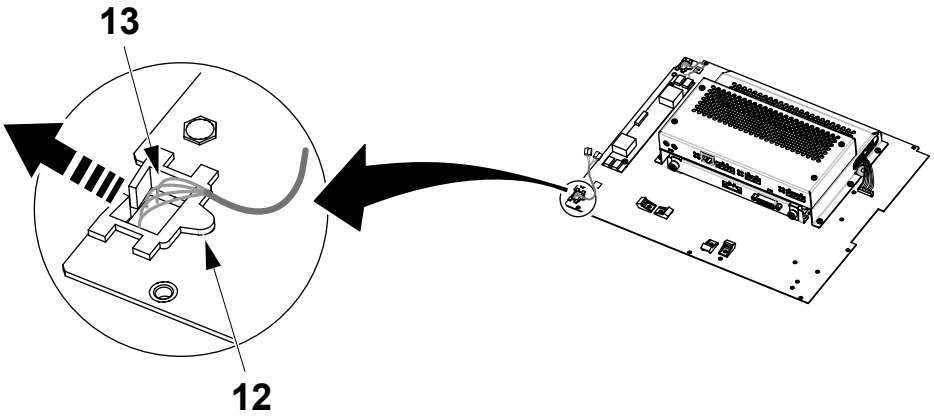

12 Plastic lip
13 Cable strand

(Cont'd)

TechPub_2614345_0108 - 0201_3048117_01.fm

(Cont'd)

j) Remove the screw (14).

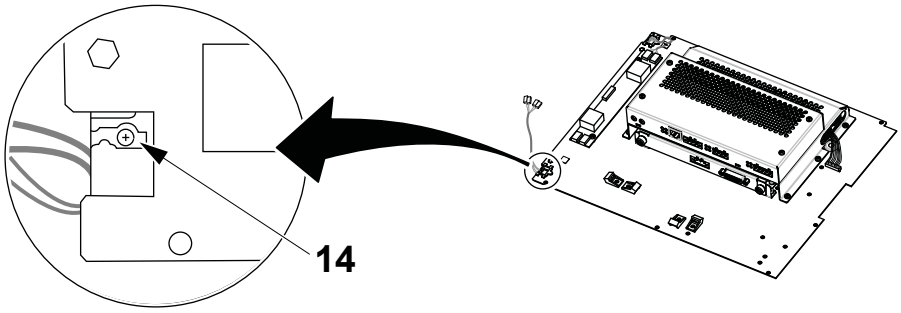

14 Screw

CAUTION
Equipment damage.
Risk of breaking the backlight. When removing the backlight, only pull the metal plate (15), do not pull the cables.

k) Use a small pair of flat nosed pliers (16) to pull out the backlight (17).

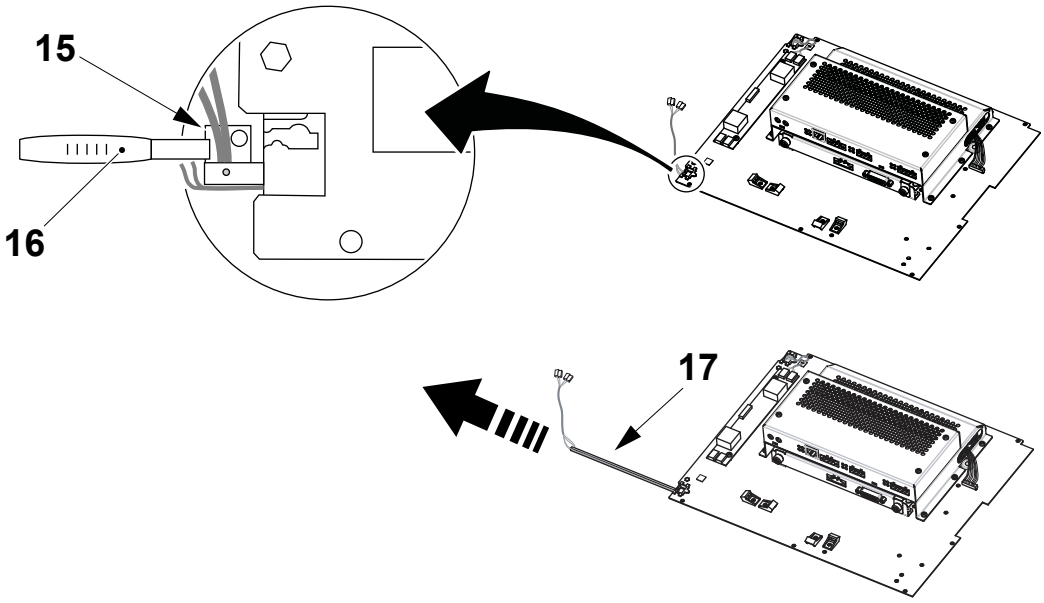

15 Metal plate
16 Pliers
17 Backlight

(Cont'd)

TechPub_2614345_0108 - 0201_3048117_01.fm

(Cont'd)

CAUTION
Equipment damage.
Risk of breaking the backlight. Be careful when inserting the backlight, it will easily bend and break if you push too hard and too quickly.

l) Assemble the new backlight in reverse order.

Note! Attach the red/white cables to the connectors (18) and (19). Attach the blue/brown cables to the connectors (20) and (21).

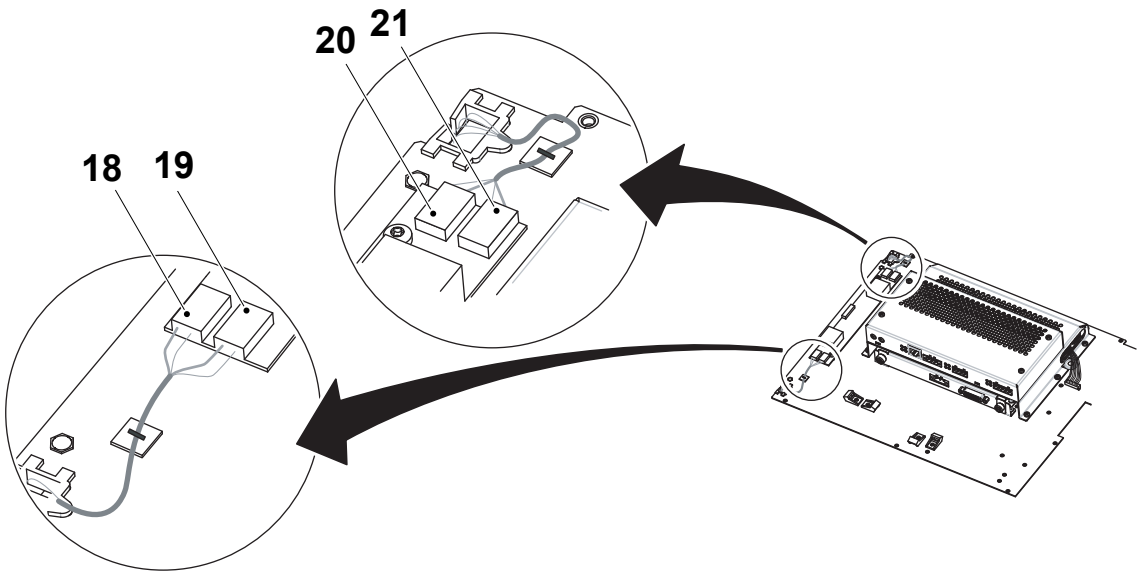

18 Cable connector
19 Cable connector
20 Cable connector
21 Cable connector

TechPub_2614345_0108 - 0201_3048117_01.fm

2.6.1 Bar Code Scanner

Note! The bar code scanner is an optional accessory.

2.6.1-1 Bar Code Scanner - Configure and Test Bar

Machine Status	Mains Power ON Air OFF Steam ON Water OFF
SPC Reference	90600-2982

To setup the bar code scanner for use with the TPOP and PLMS operator sheet, perform the following configuration and testing procedures in the given order.

Configuration

a) Reset the bar code scanner to the default factory settings by scanning the following bar code.

b) Wait for five seconds after the bar code has been scanned.

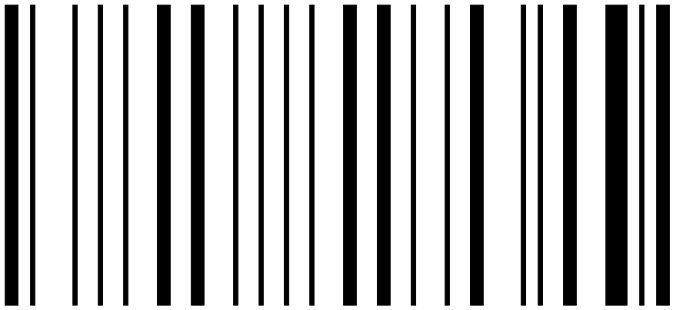

Bar code for factory setting

(Cont'd)

TechPub_2614345_0108 - 0201_3048117_01.fm

(Cont'd)

c) Set the scanner for use with the Tetra Pak operator sheet by scanning the following two bar codes.

d) Wait for five seconds after each bar code has been scanned.

e) Perform the Configuration Test on page 2-124.

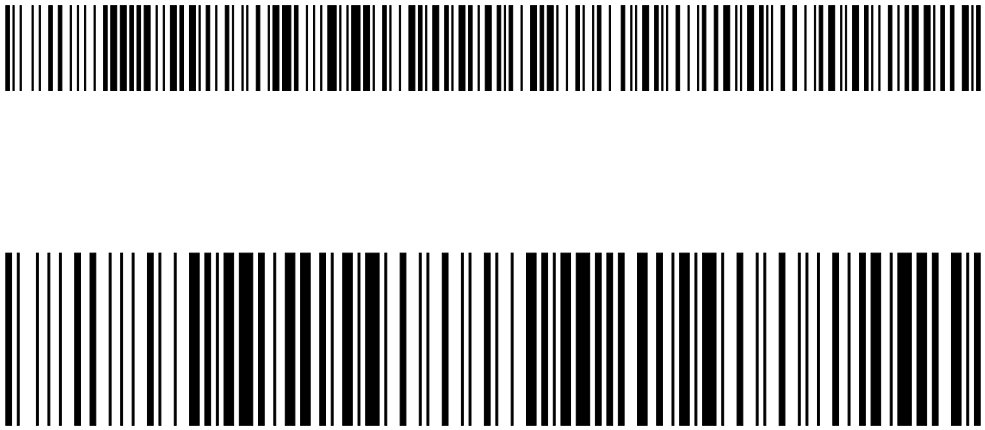

Bar codes for Tetra Pak operator sheet

(Cont'd)

TechPub_2614345_0108 - 0201_3048117_01.fm

(Cont'd)

Configuration Test

a) Navigate to the operator sheet on the TPOP and select the first operator sheet item to be entered.

b) To check that the bar code scanner is correctly configured to terminate the scanned entry with the `TAB` command and not with the `CARRIAGE RETURN` command, scan the bar code below.

After scanning the bar code, check that:

– the text displayed in the operator sheet is as indicated in the illustration

– the next operator sheet dialogue box has opened and is ready for the next entry to be scanned.

c) If after scanning the bar code the operator sheet is not as described above, repeat the Configuration procedure on page 2-122.

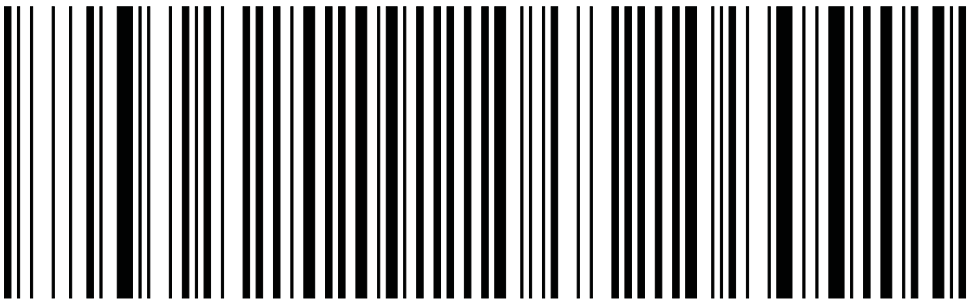

Bar code test for tab terminator

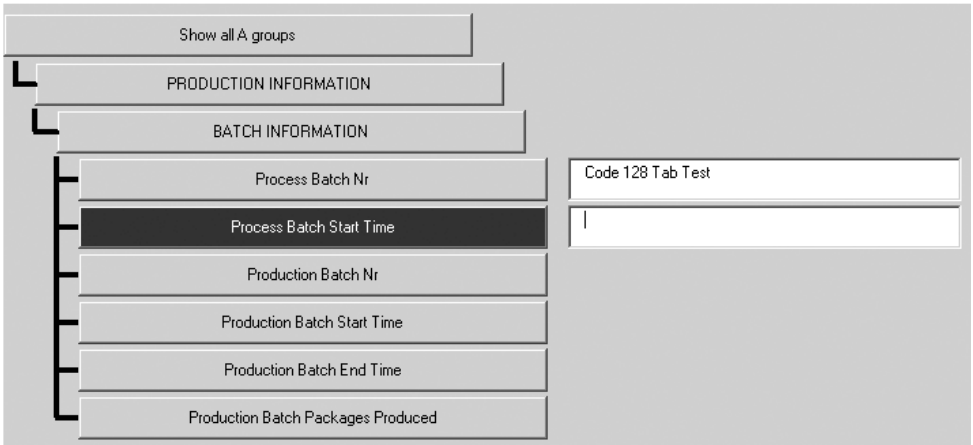

(Cont'd)

TechPub_2614345_0108 - 0201_3048117_01.fm

(Cont'd)

d) To check that the bar code scanner is correctly configured to register bar codes with text characters all in upper case, scan the bar code below.

After scanning the bar code, check that:

– the text displayed in the operator sheet is as indicated in the illustration.

– the next operator sheet dialogue box has opened and is ready for the next entry to be scanned.

e) If after scanning the bar code the operator sheet is not as described above, repeat the Configuration procedure on page 2-122.

Bar code test for all upper case characters

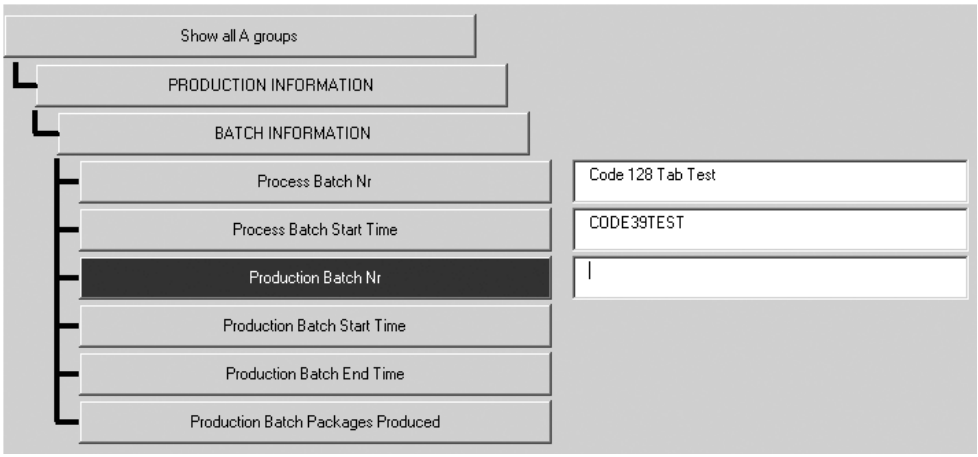

(Cont'd)

TechPub_2614345_0108 - 0201_3048117_01.fm

(Cont'd)

f) To check that the bar code scanner is correctly configured to register bar codes with text characters mixed in both upper case and lower case, scan the bar code below.

After scanning the bar code, check that:

– the text displayed in the operator sheet is as indicated in the illustration.

– the next operator sheet dialogue box has opened and is ready for the next entry to be scanned.

g) If after scanning the bar code the operator sheet is not as described above, repeat the Configuration procedure on page 2-122.

Bar code test for mixed upper and lower case characters

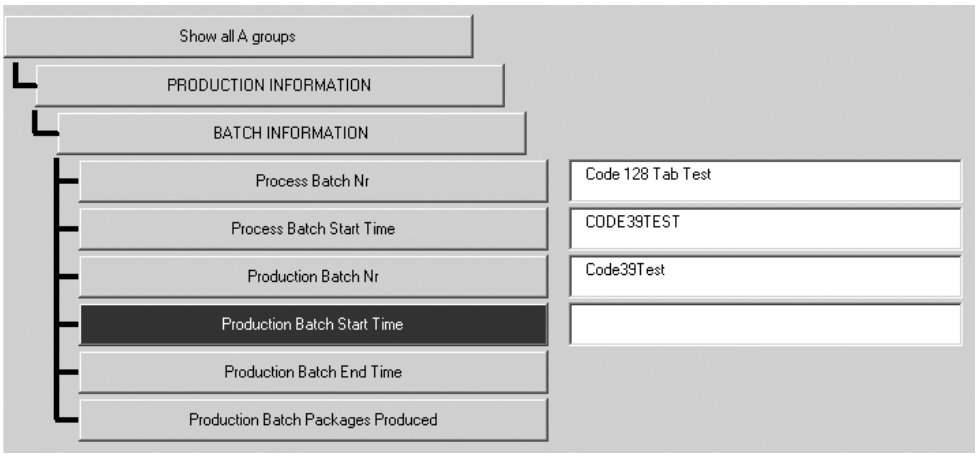

(Cont'd)

TechPub_2614345_0108 - 0201_3048117_01.fm

(Cont'd)

h) To check that the bar code scanner is correctly configured to register bar codes that require the replacement of separators with the special pipe text character (also known as broken bar), scan the bar code below.

After scanning the bar code, check that:

- the text displayed in the operator sheet is as indicated in the illustration
- in particular, that the special pipe text character positioned ninth from the end of the string is as indicated (by the arrow) in the illustration.
- the next operator sheet dialogue box has opened and is ready for the next entry to be scanned.

i) If after scanning the bar code the operator sheet is not as described above, repeat the Configuration procedure on page 2-122.



Bar code for character replacement

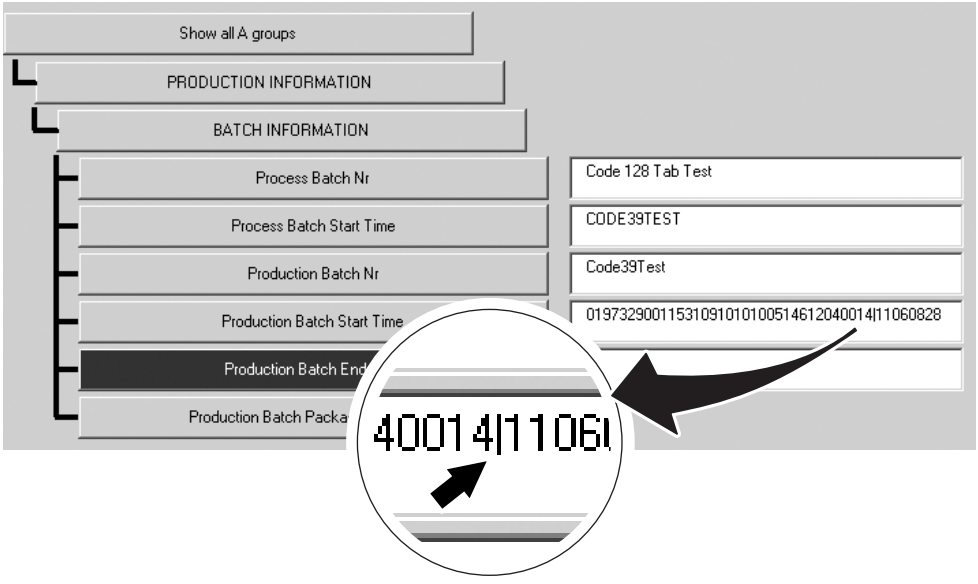

(Cont'd)

TechPub_2614345_0108 - 0201_3048117_01.fm

(Cont'd)

j) To check that the bar code scanner is correctly configured to register bar codes that require removal of parenthesis text characters, scan the bar code below.

After scanning the bar code, check that:

– the text displayed in the operator sheet is as indicated in the illustration

– in particular, the text is displayed and formatted without parenthesis text characters as indicated in the illustration.

– the next operator sheet dialogue box has opened and is ready for the next entry to be scanned.

k) If after scanning the bar code the operator sheet is not as described above, repeat the Configuration procedure on page 2-122.

l) The configuration test in now complete. If the bar code scanner will be used for the purpose of registering non-operator sheet bar coded information to the TPOP, continue with Configuration for Non-Operator Sheet Usage on page 2-129.

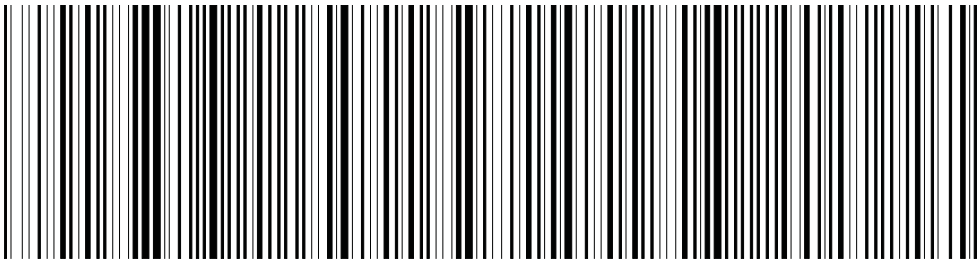

Bar code for parenthesis removal

TechPub_2614345_0108 - 0201_3048117_01.fm

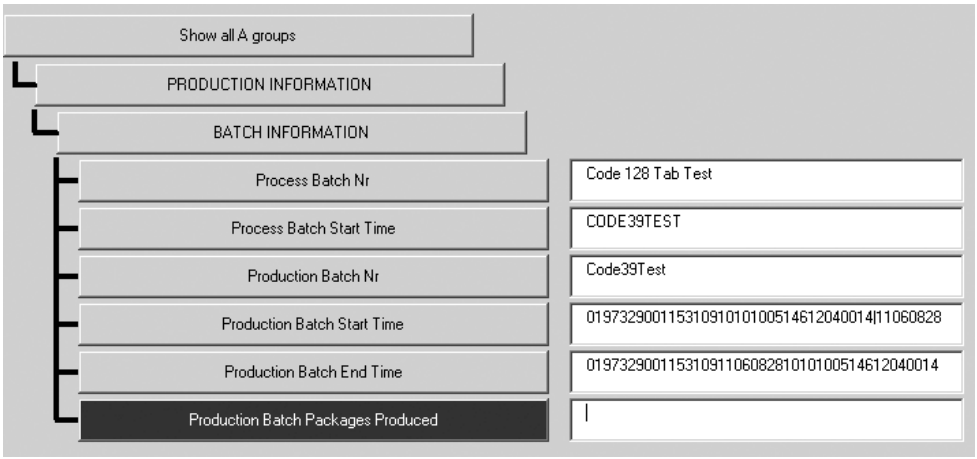

(Cont'd)

(Cont'd)

Note! The following configuration must only be performed if the bar code scanner will be used for registering non-operator sheet bar coded information to the TPOP.

Note! The following procedure must always be performed after the Configuration Test on page 2-124 has been performed.

Configuration for Non-Operator Sheet Usage

a) To configure the bar code scanner to terminate the scanned entry with the `CARRIAGE RETURN` command and not with the `TAB` command, scan the bar code below.

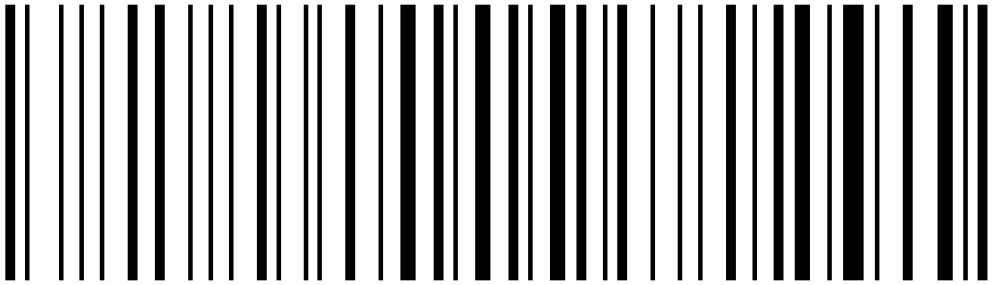

Bar code for CR terminator

(Cont'd)

TechPub_2614345_0108 - 0201_3048117_01.fm

(Cont'd)

b) To check that the bar code scanner is correctly configured to terminate the scanned entry with the `CARRIAGE RETURN` command and not with the `TAB` command, scan the bar code below.

After scanning the bar code, check that:

– the text displayed in the operator sheet is as indicated in the illustration

– the next operator sheet dialogue box has **not** automatically opened.

c) If after scanning the bar code the operator sheet is not as described above, repeat the Configuration for Non-Operator Sheet Usage procedure on page 2-129.



Bar code test for CR terminator

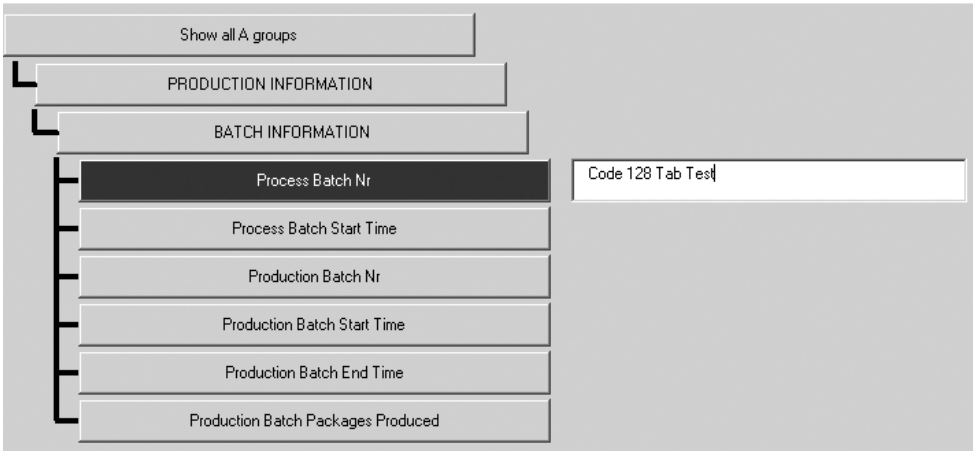

TechPub_2614345_0108 - 0201_3048117_01.fm

2.6.1-2 Bar Code Scanner - Change Cable

Machine Status	Mains Power OFF Air OFF Steam ON Water OFF
SPC Reference	90600-2982

Note! Identify the bar code scanner model fitted to the filling machine, for the Powerscan D8300 model see page 2-132. For the Dragon D131 model follow the procedure below.

Bar Code Scanner Model Dragon D131

a) Remove the screw (1) and the cable strain relief plate (2).

b) Remove the cover (3).

c) Remove the cable connector (4) from the bar code scanner (5) together with the plastic boot (6) and the rubber gasket (7).

d) Open the plastic boot (6) and remove the plastic boot (6) from the cable connector (4).

e) Remove the rubber gasket (6) from the cable connector (4).

f) Change the cable and assemble in the reverse order.

TechPub_2614345_0108 - 0201_3048117_01.fm

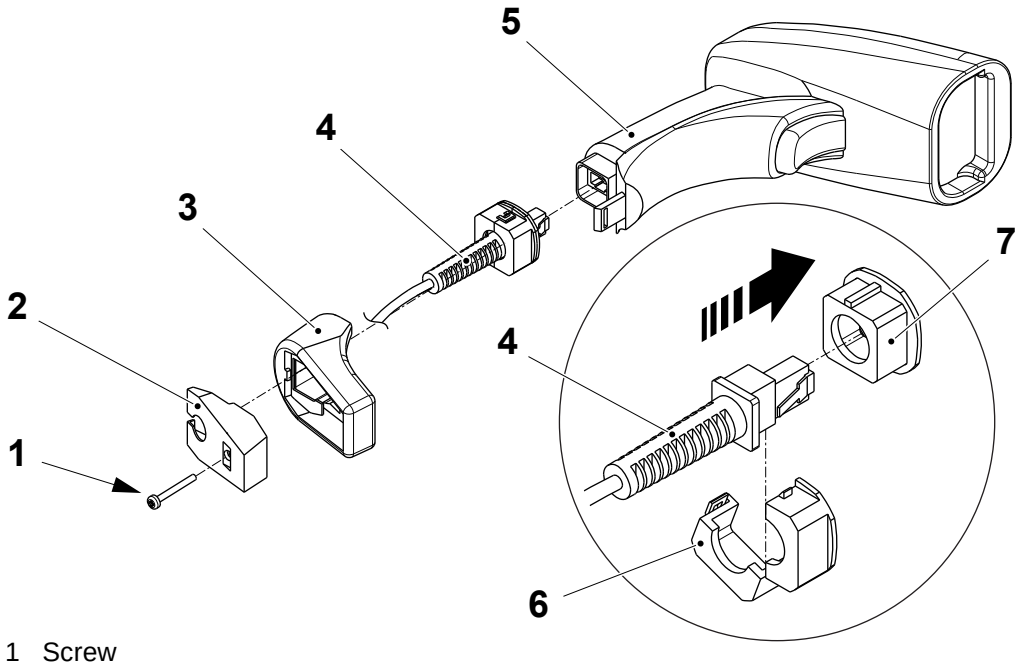

1 Screw
2 Cable strain relief plate
3 Cover
4 Cable connector
5 Bar code scanner
6 Plastic boot
7 Rubber gasket

(Cont'd)

(Cont'd)

Bar Code Scanner Model Powerscan D8300

a) Remove the screw (1) and the cable strain relief plate (2).

b) Remove the cover (3).

c) Remove the cable connector (4) from the bar code scanner (5) together with the plastic boot (6) and the rubber gasket (7).

d) Separate the plastic boot (6) and the rubber gasket (7) from the cable connector (4).

Note! Make sure that the plastic boot (6) is fitted with the tab (8) correctly aligned with the slot (9) in the rubber gasket (7).The plastic boot (6) must be fitted with the arrow (10) pointing towards the front of the bar code scanner (5).

e) Change the cable and assemble in the reverse order.

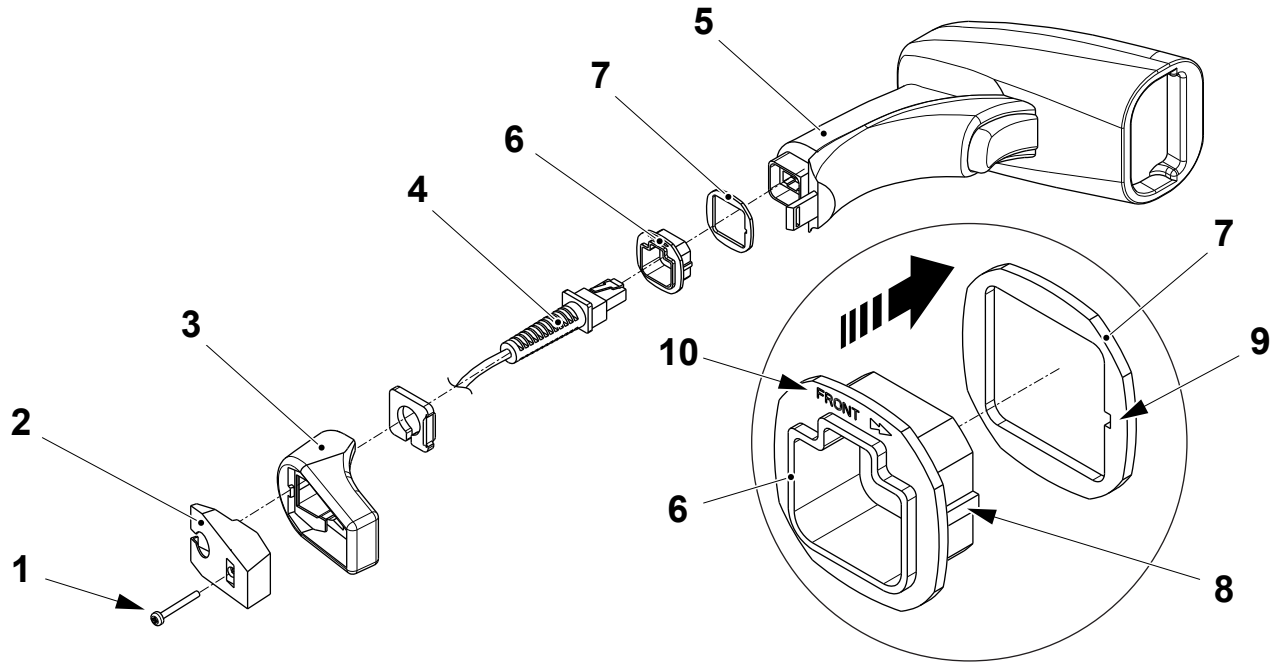

1 Screw
2 Cable strain relief plate
3 Cover
4 Cable connector
5 Bar code scanner
6 Plastic boot
7 Rubber gasket
8 Tab
9 Slot
10 Arrow

TechPub_2614345_0108 - 0201_3048117_01.fm

3 Drive Unit

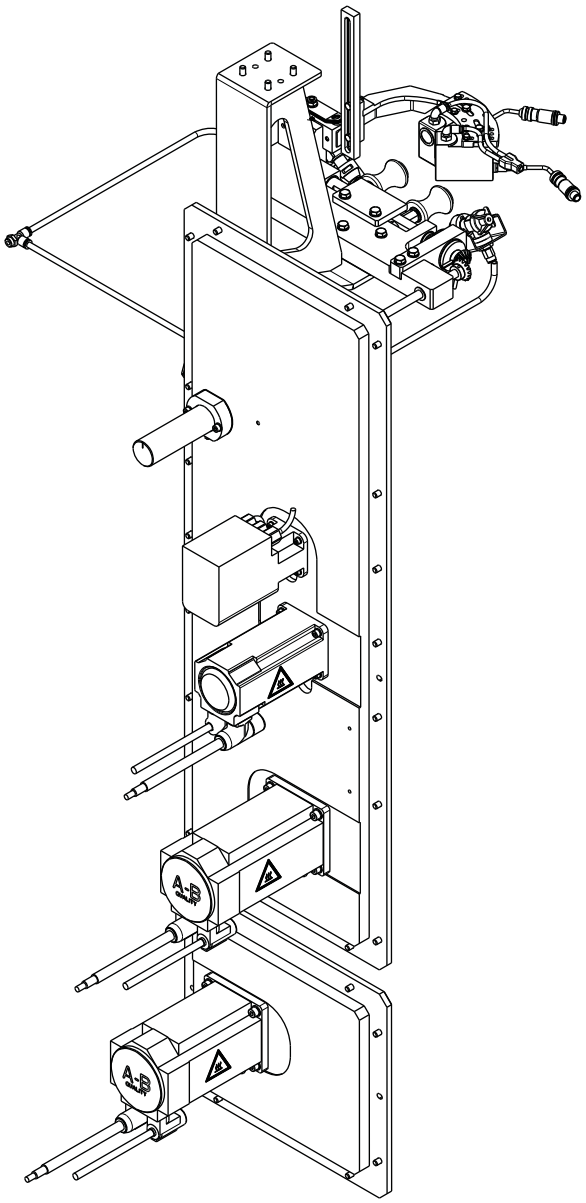

TechPub_2614345_0107 - 0302_3048125_01.fm

Drive Unit - Description

SPC Reference	648530-0400

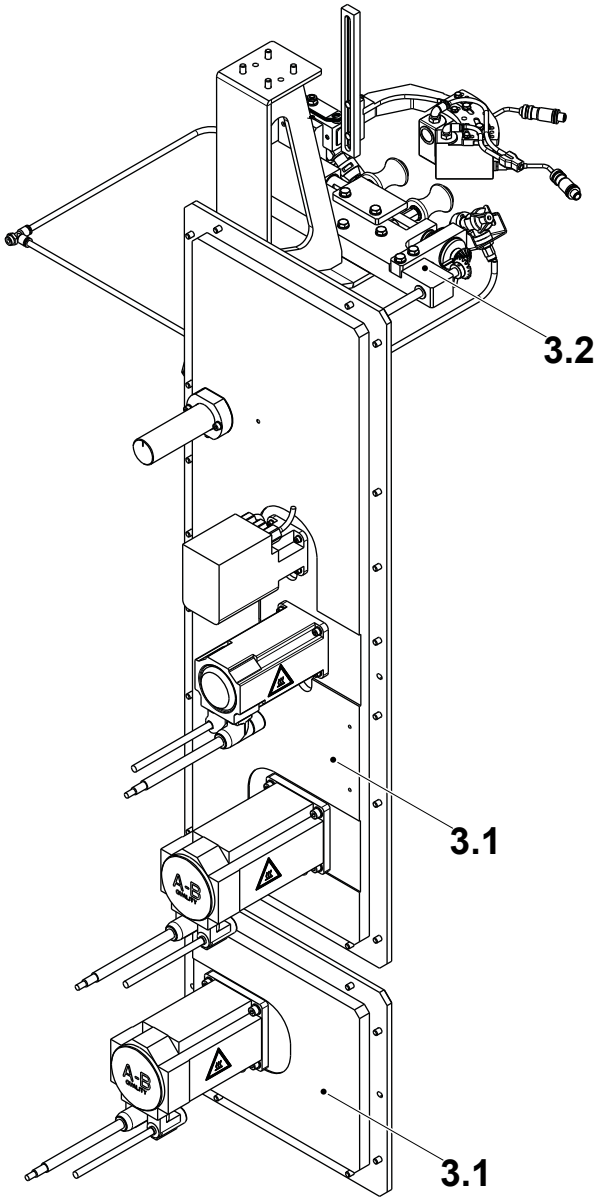

3.1 Plate
3.2 Photocell Unit

TechPub_2614345_0107 - 0302_3048125_01.fm

3 Drive Unit . . . . . 3 - 5

3-1 Drive Unit - Servo Motors Commissioning . . . . . 3 - 5

3-2 Drive Unit - Jog Volume Adjuster . . . . . 3 - 7

3-3 Drive Unit - Synchronise Volume Adjuster Motor 3 - 8

3.1 Plate . . . . . 3 - 10

3.1-1 Plate - Overhaul . . . . . 3 - 10

3.2 Photocell Unit . . . . . 3 - 25

3.2-1 Photocell Unit - Check . . . . . 3 - 25

3.2-2 Photocell Unit - Set . . . . . 3 - 26

3.2-3 Photocell Unit - Check Alignment . . . . . 3 - 38

3.2-4 Photocell Unit - Adjust Tube Centring . . . . . 3 - 40

3.2-5 Photocell Unit - Check Nozzles . . . . . 3 - 42

3.2-6 Photocell Unit - Change Ball Bearings . . . . . 3 - 43

TechPub_2614345_0107 - 0302_3048125_01.fm

This page intentionally left blank

TechPub_2614345_0107 - 0302_3048125_01.fm

3 Drive Unit

3-1 Drive Unit - Servo Motors Commissioning

Machine Status	PREPARATION
SPC Reference	648530-0400

a) On the TPOP, touch the `MAINTENANCE CONTROL` button (1) and enter the password required, see 9.6.3-2 HMI - User Management Log On.

b) Touch the `JAW SYSTEM` button (2) or the `FINAL FOLDER` button (3), depending on the servo motor to be commissioned.

c) Touch the appropriate `SERVO MOTOR TEST` icon (4) for the motor that has been changed.

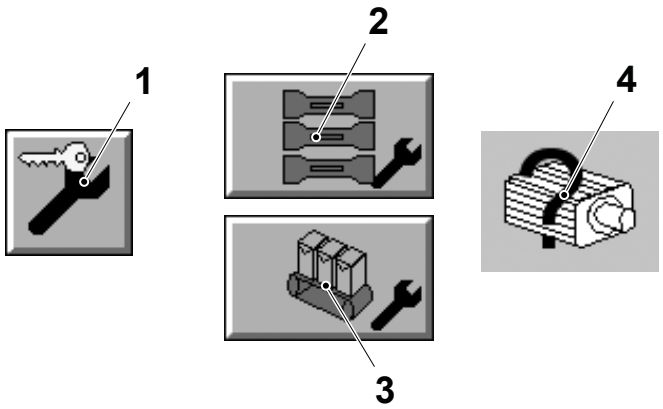

1 Maintenance control button
2 Jaw system button
3 Final folder button
4 Servo motor test icon

(Cont'd)

TechPub_2614345_0107 - 0302_3048125_01.fm

(Cont'd)

d) Touch the POWER button (5) and the OK button (6).

e) Check that the POWER button (5) turns green.
   – if the POWER button (5) turns green the servo motor test is complete
   – if the POWER button (5) does not turn green, there is a fault in the power cables or in the feedback cables. Continue with item g).

f) If testing the jaw system servo motor, release the brake for the servo motor, see 4-4 Jaw System - Release Brakes.

g) Touch the FEEDBACK button (7).

h) Touch the OK button (6).

i) Rotate the servo motor one complete revolution by hand.

j) Check that the FEEDBACK button (7) turns green.
   – if the FEEDBACK button (7) turns green the power cables are inverted, check the power cable connections
   – if the FEEDBACK button (7) does not turn green, the feedback cables are inverted, check the feedback cable connection.

k) Touch the ZERO button (8) and then touch the OK button (5) to return to the SERVO SETTINGS window.

l) Touch the EXIT button (9) to exit from the SERVO SETTINGS window.

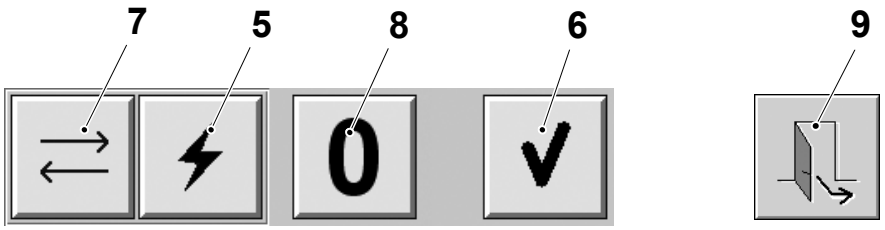

5 Power button
6 OK button
7 Feedback button
8 Zero button
9 Exit button

TechPub_2614345_0107 - 0302_3048125_01.fm

3-2 Drive Unit - Jog Volume Adjuster

Machine Status	PREPARATION
SPC Reference	648530-0400

Note! The jog function is used to run only the volume adjuster independently from the machine status, in order to check its functionality.

a) On the TPOP, touch the `MAINTENANCE CONTROL` button (1) and enter the password required, see 9.6.3-2 HMI - User Management Log On.

b) Touch the `JAW SYSTEM` button (2).

c) Touch the `JOG VOLUME ADJUSTER` icon (3).

d) Touch the `ON` button (4) to enable the jog function.

e) Touch one of the `ARROW` buttons (5) to start the jog in the direction selected.

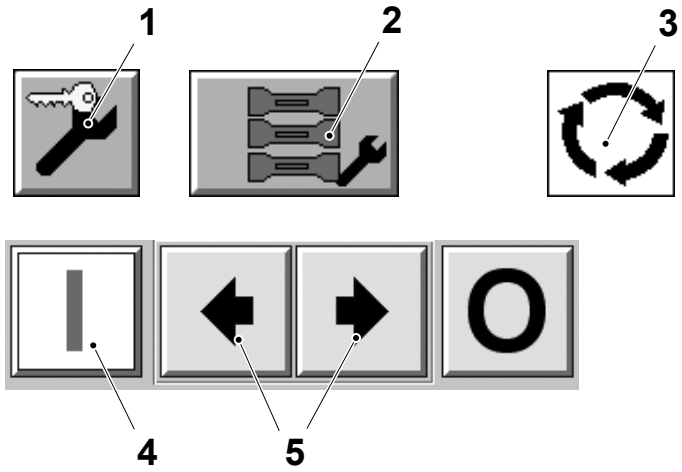

1 Maintenance control button
2 Jaw system button
3 Jog jaw chain icon
4 On button
5 ARROW button

TechPub_2614345_0107 - 0302_3048125_01.fm

3-3 Drive Unit - Synchronise Volume Adjuster Motor

Machine Status	PREPARATION
SPC Reference	648530-0400

Note! The referencing of the volume adjuster is controlled by TPOP, see 4-1 Jaw System - Synchronise. In case of software malfunction or if the motor is blocked it is possible to move manually the position of the volume adjuster.

a) On the TPOP, touch the MAINTENANCE CONTROL button (1) and enter the password required, see 9.6.3-2 HMI - User Management Log On.

b) Touch the JAW SYSTEM button (2).

c) Touch the VOLUME ADJUSTER icon (3). The ON/OFF buttons are displayed.

d) Touch the OFF button (4) and the OK button (5) to disable the control via TPOP.

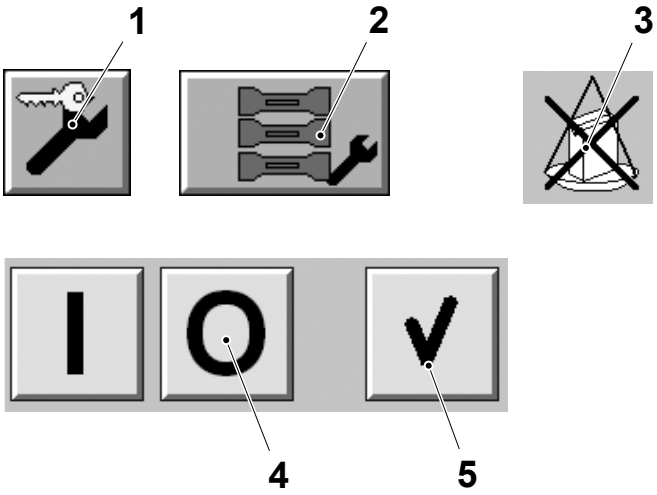

1 Maintenance control button
2 Jaw system button
3 Volume adjuster icon
4 OFF button
5 OK button

(Cont'd)

TechPub_2614345_0107 - 0302_3048125_01.fm

(Cont'd)

WARNING
Burn hazard.
Parts might be hot.

e) Using a screwdriver rotate the jog plus and minus switches (6) attached to the cover plate at the back of the motor (7) to move the position from -100 to +100 on the TPOP.

Note! The TPOP range -100/+100 corresponds to a shaft rotation range from 0º to 83º.

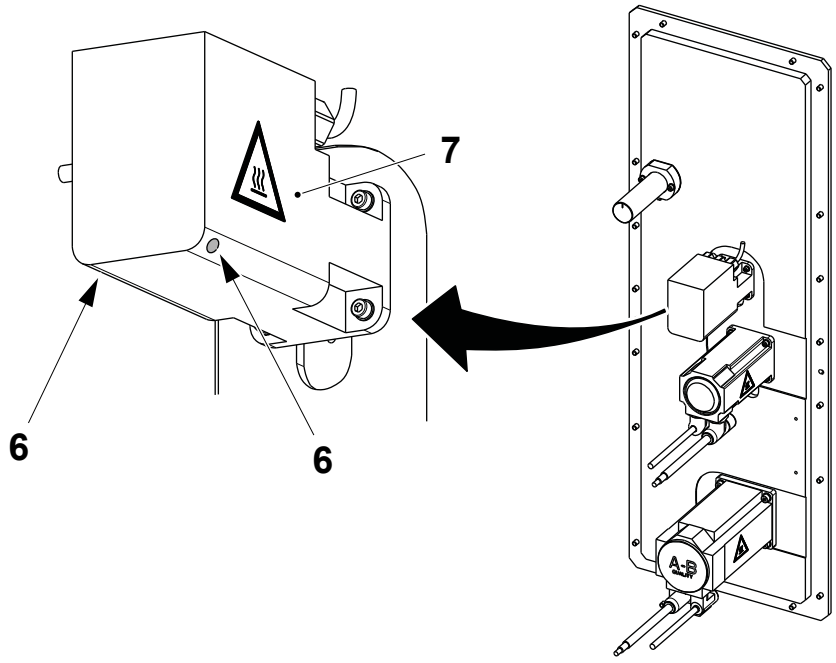

6 Jog switches
7 Motor

TechPub_2614345_0107 - 0302_3048125_01.fm

3.1 Plate

SPC Reference	2501251-0200

3.1-1 Plate - Overhaul

Machine Status	Mains Power OFF Air OFF Steam ON Water OFF
SPC Reference	2501251-0200

Note! The following instruction will prevent the waste box striking the conveyor frame when the jaw unit is swung open.

Note! For TBA 125 S machines the chute (2) is separated by the guides (3); it is necessary to remove first the guides (3) and then the chute (2).

a) Swing the brake assembly open.

b) Remove the screws (1) and the chute (2).

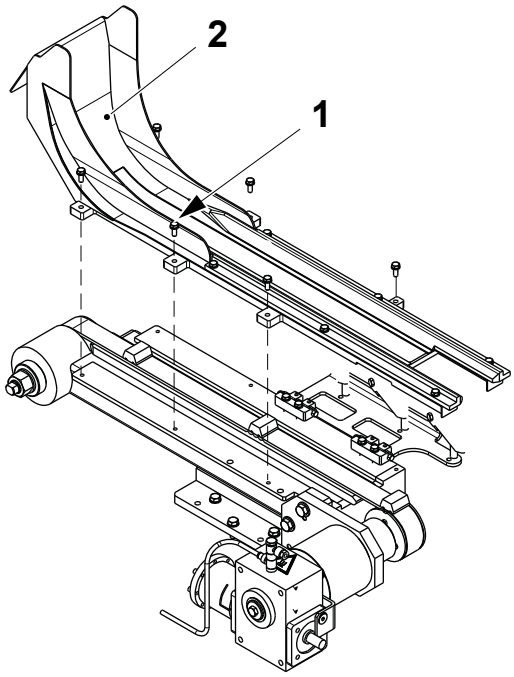

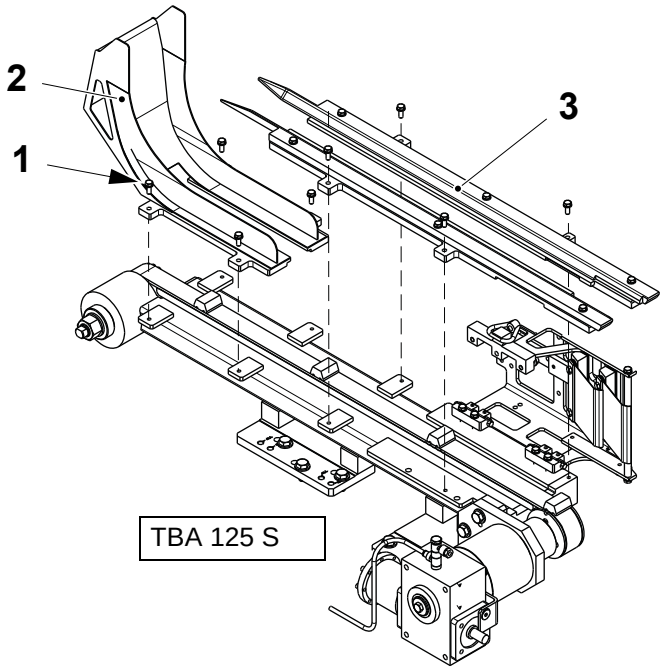

1 Screw
2 Chute
3 Guide

(Cont'd)

TechPub_2614345_0107 - 0302_3048126_01.fm

(Cont'd)

Note! The flushers (5) must be disconnected only for Family Packages machines.

c) Disconnect the water hose (4) from the flushers (5).

d) Disconnect the water hose (6).

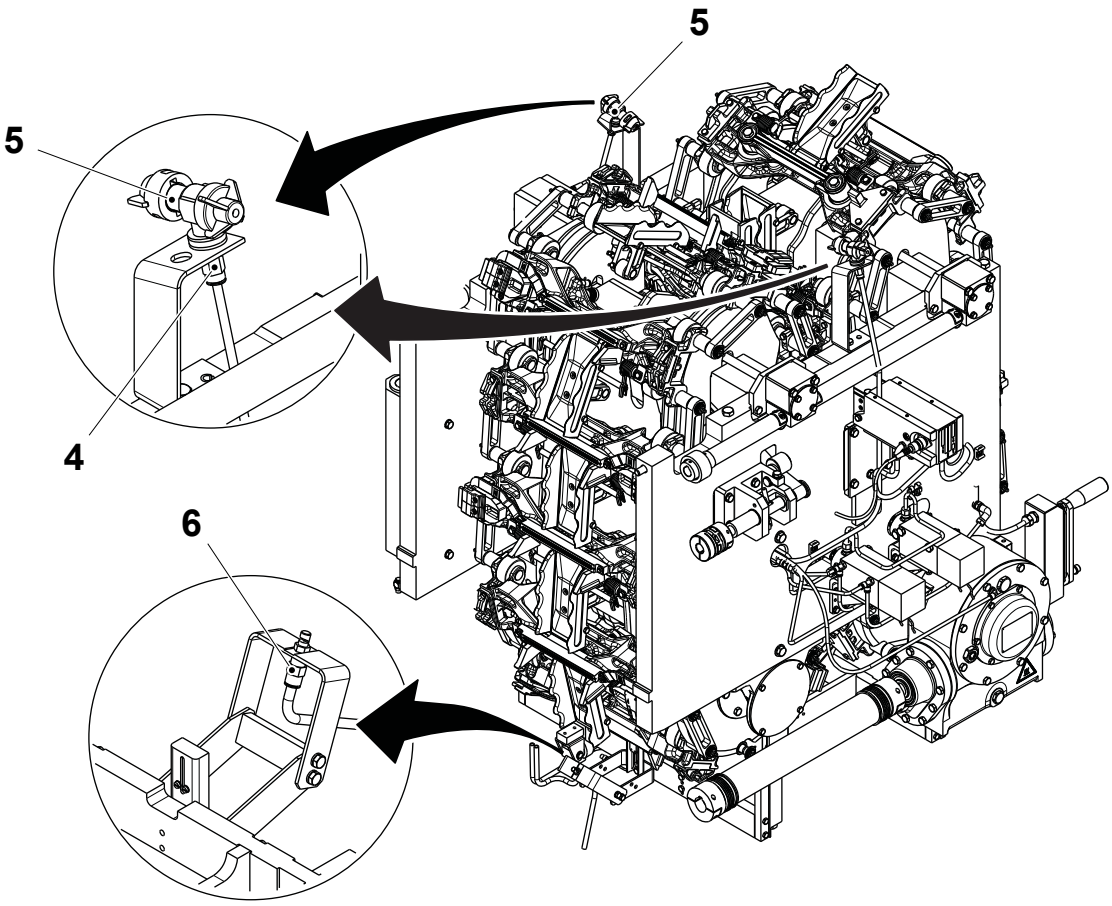

4 Water hose
5 Flusher
6 Water hose

(Cont'd)

TechPub_2614345_0107 - 0302_3048126_01.fm

(Cont'd)

e) Loosen the screws (7) and remove the clamp (8) on the intermediary shaft (9).

Note! Pay attention to the coupling (10) when swinging the jaw system open: the central piece (11) falls down.

Note! When assembling, tighten the screws (7) with a torque of 28.7 Nm.

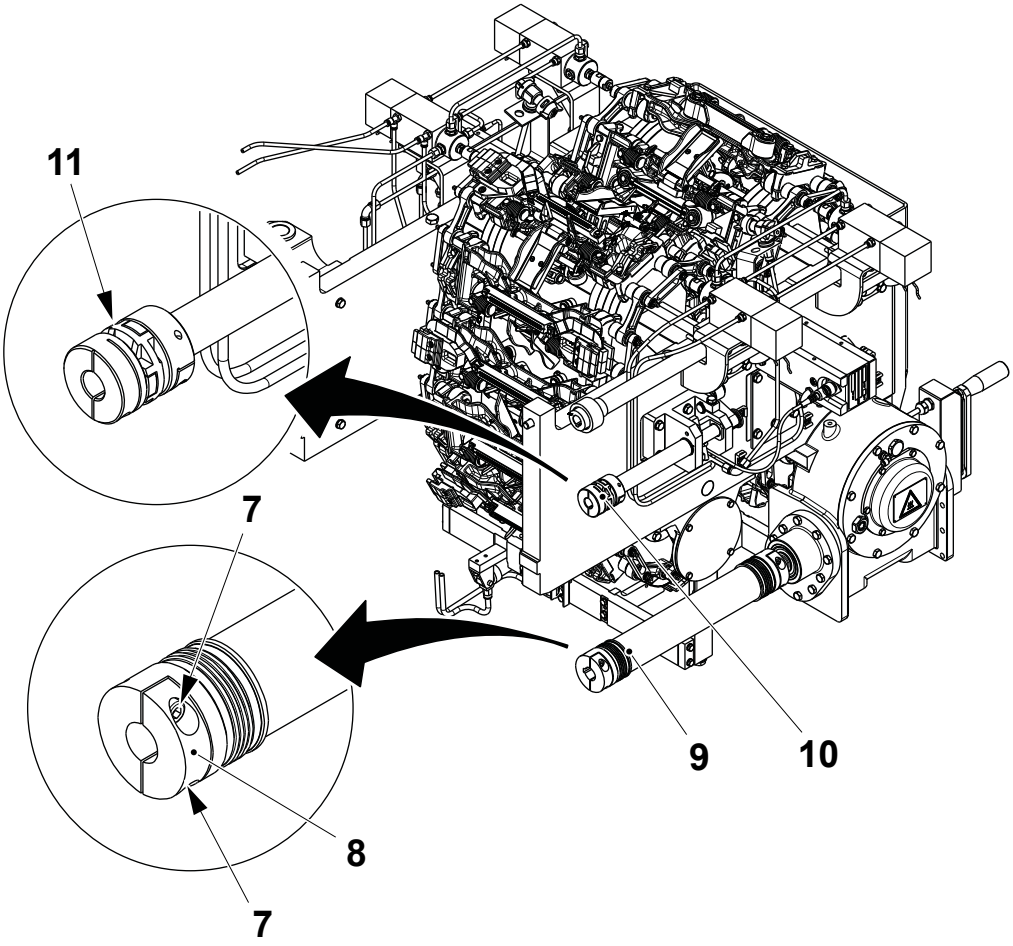

7 Screw
8 Clamp
9 Intermediary shaft
10 Coupling
11 Central piece

(Cont'd)

TechPub_2614345_0107 - 0302_3048126_01.fm

(Cont'd)

f) Remove the two screws (12) holding the jaw system to the bulkhead.

g) Swing the jaw system open.

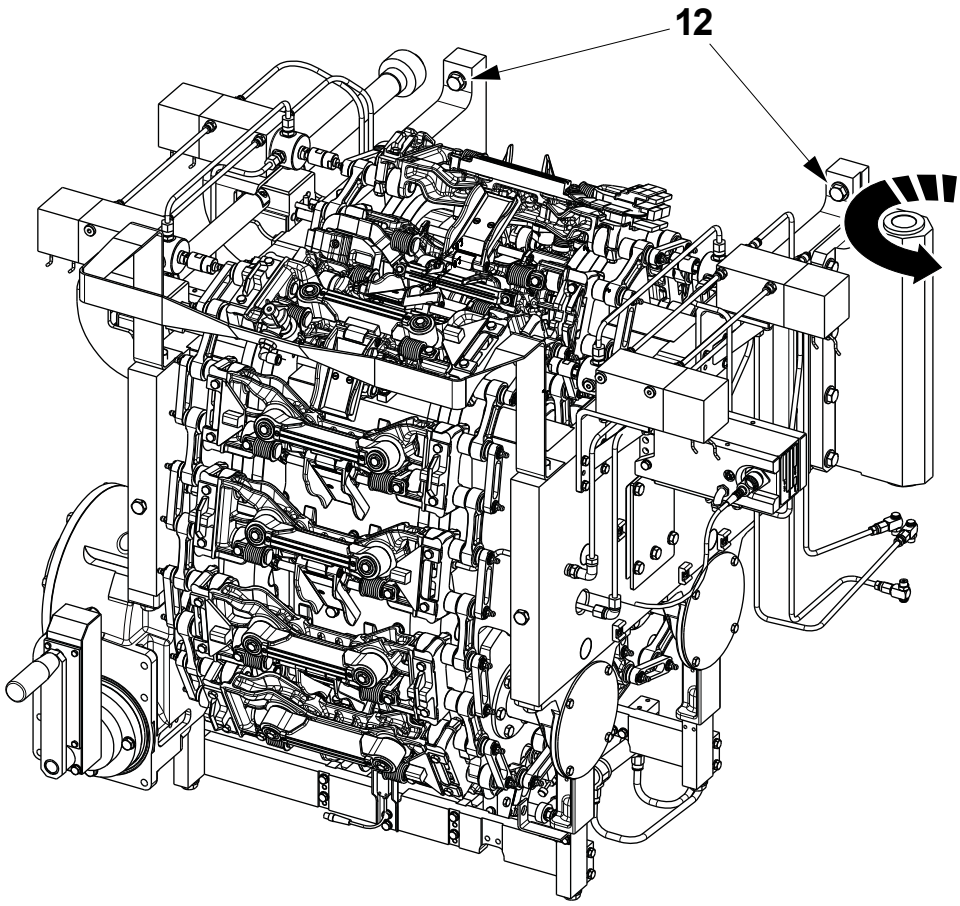

12 Screw

(Cont'd)

TechPub_2614345_0107 - 0302_3048126_01.fm

(Cont'd)

WARNING
Burn hazard.
Parts might be hot.

Jaw Unit Drive

a) Remove the screw (1).

b) Insert a screw as extractor into the shaft (2) and use a spanner to stop the shaft (2) turning.

c) Tighten the extractor screw and remove the shaft (2) and the gasket (3).

Note! As extractor use a M10 screw for Portion Packages machines and a M12 screw for Family Packages machines.

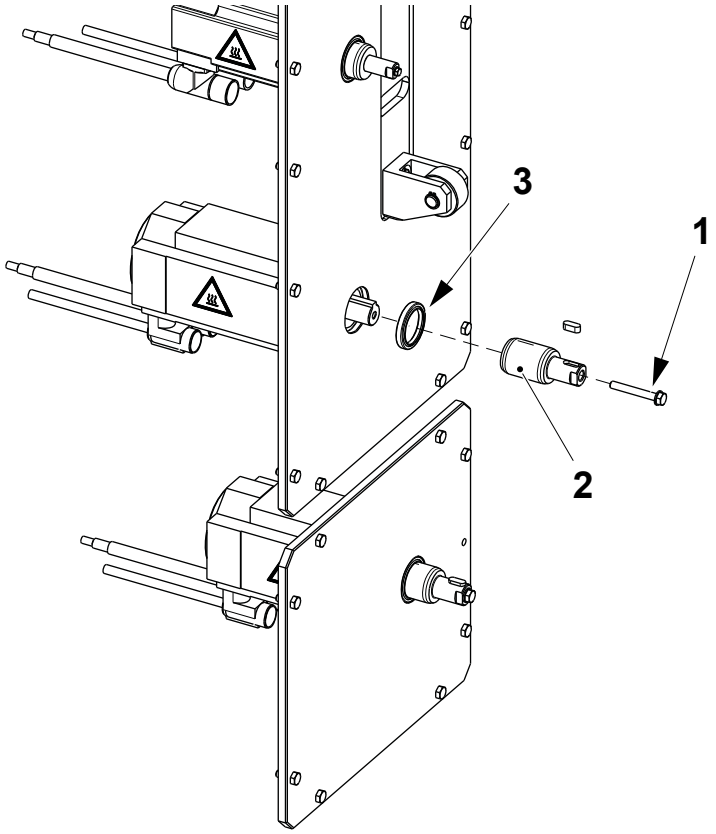

1 Screw
2 Shaft
3 Gasket

(Cont'd)

TechPub_2614345_0107 - 0302_3048126_01.fm

(Cont'd)

CAUTION

Risk of damage to the equipment and/or personal injury.

The servo motor (4) for Family Packages weights approximately 25 Kg. Pay attention to the gasket (3): it may be easily broken if the servo motor (4) is not fixed by the screws (6).

d) Check the servo motor (4) for wear or damage, if necessary change the servo motor as follows.

e) Remove the connectors (5) from the servo motor (4).

f) Remove the screws (6).

g) Remove the servo motor (4) from the plate (7).

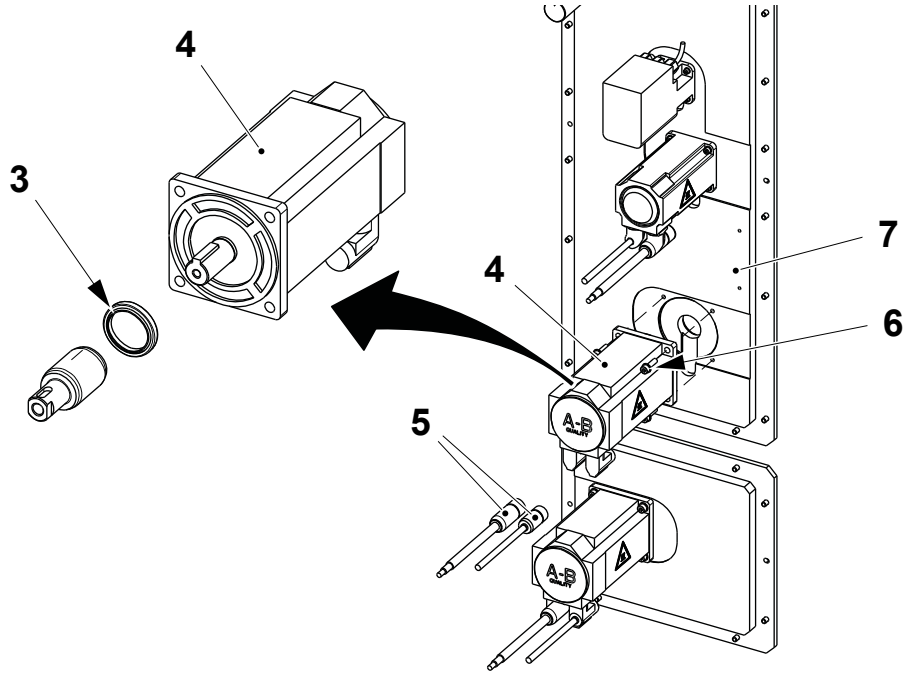

3 Gasket
4 Servo motor
5 Connector
6 Screw
7 Plate

(Cont'd)

TechPub_2614345_0107 - 0302_3048126_01.fm

(Cont'd)

h) Assemble in the reverse order.

Note! Only for Family Packages, assemble the servo motor (4) with side of the connectors (5) above.

Note! Grease the servo motor shaft (8), the inside of the shaft (2) and the gasket (3) when assembling.

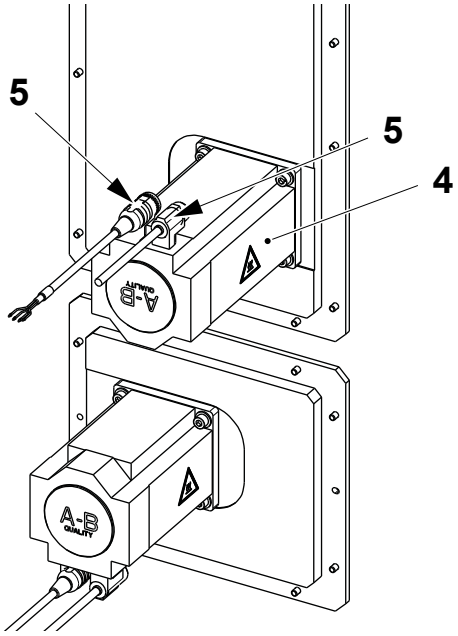

Jaw unit drive for Family Packages

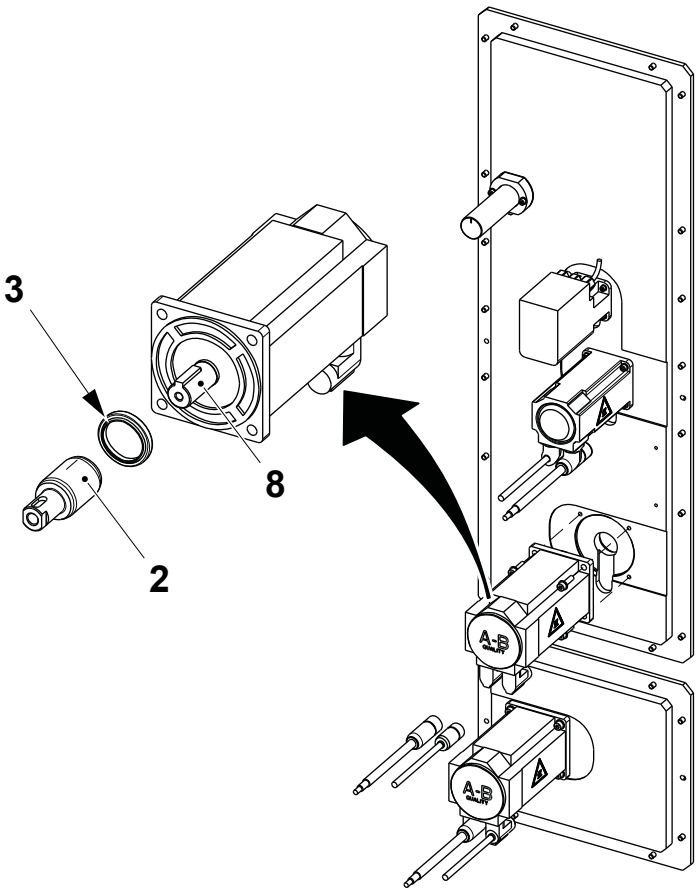

2 Shaft
3 Gasket
4 Servo motor
5 Connectors
8 Servo motor shaft

TechPub_2614345_0107 - 0302_3048126_01.fm

(Cont'd)

WARNING
Burn hazard.
Parts might be hot.

Final Folder Drive

a) Remove the shaft (1) by removing the screws (2) on both ends.

b) Loosen the screw (3) and remove the coupling (4).

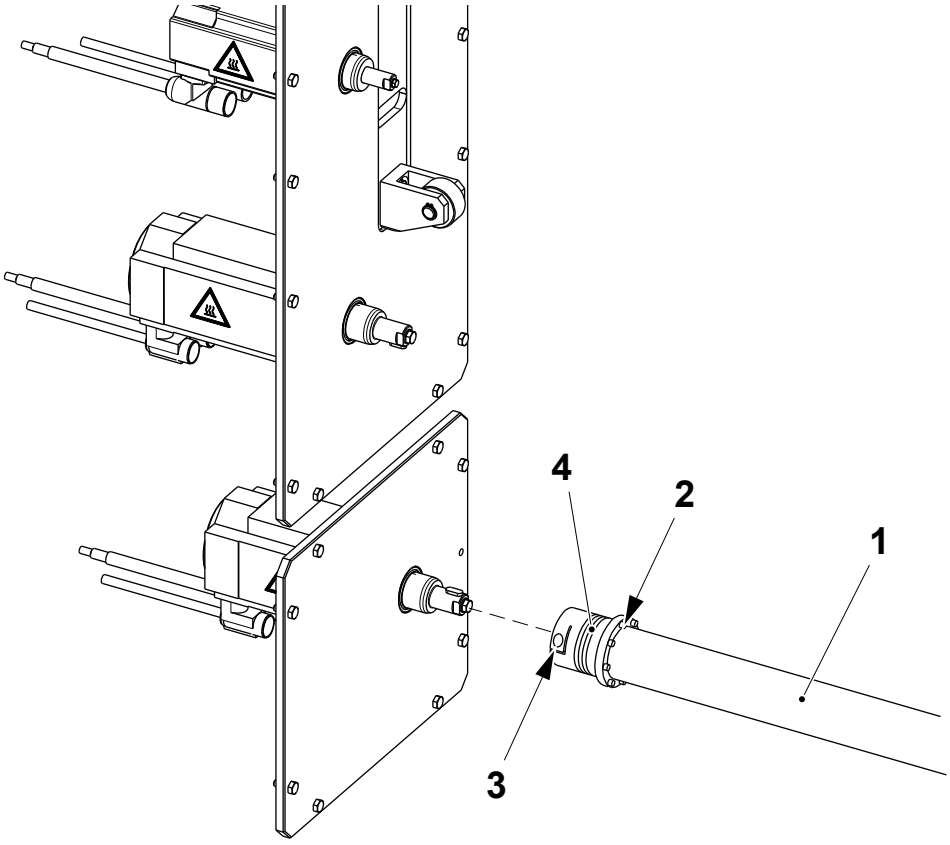

1 Shaft
2 Screw
3 Screw
4 Coupling

(Cont'd)

TechPub_2614345_0107 - 0302_3048126_01.fm

(Cont'd)

c) Remove the screw (5).

d) Insert a screw as extractor into the shaft (6) and use a spanner to stop the shaft (6) turning.

e) Tighten the extractor screw and remove the shaft (6) and the gasket (7).

Note! As extractor use a M10 screw for Portion Packages machines and a M12 screw for Family Packages machines.

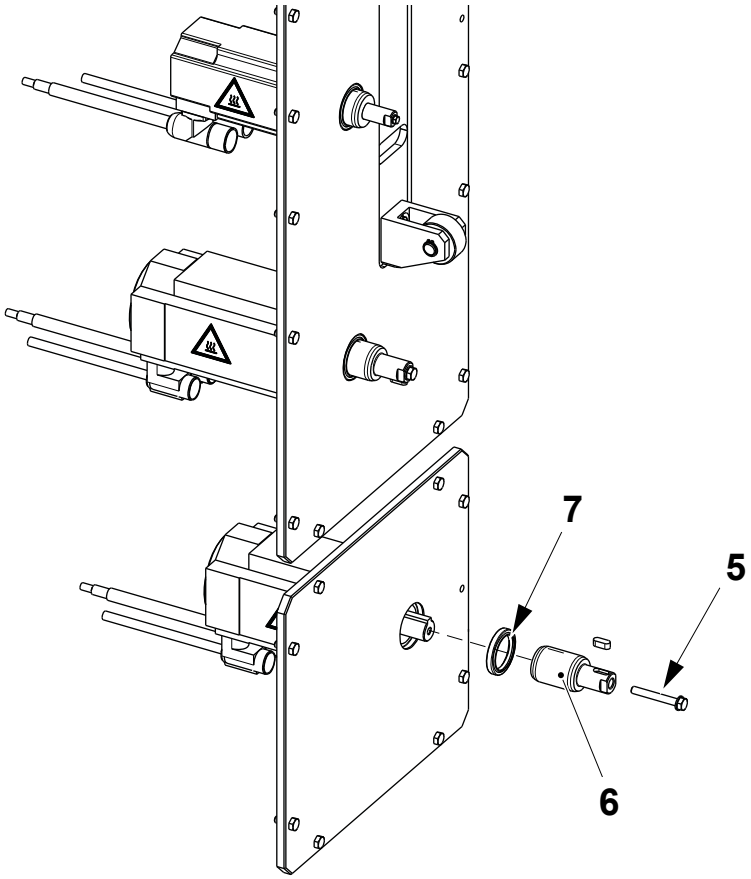

5 Screw
6 Shaft
7 Gasket

(Cont'd)

TechPub_2614345_0107 - 0302_3048126_01.fm

(Cont'd)

CAUTION

Risk of damage to the equipment and/or personal injury.

The servo motor (8) for Family Packages weights approximately 25 Kg. Pay attention to the gasket (7): it may be easily broken if the servo motor (8) is not fixed by the screws (10).

f) Check the servo motor (8) for wear or damage, if required change the servo motor as follows.

g) Remove the connectors (9) from the servo motor (8).

h) Remove the screws (10).

i) Remove the servo motor (8) from the plate (11).

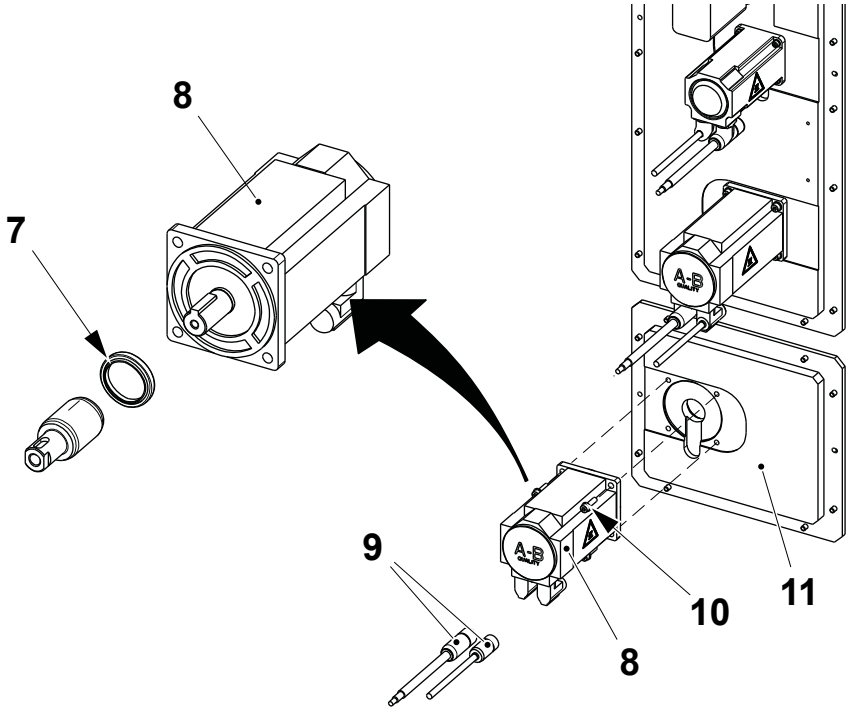

7 Gasket
8 Servo motor
9 Connector
10 Screw
11 Plate

(Cont'd)

TechPub_2614345_0107 - 0302_3048126_01.fm

(Cont'd)

j) Assemble in the reverse order.

Note! Grease the servo motor shaft (12), the inside of the shaft (6) and the gasket (7) when assembling.

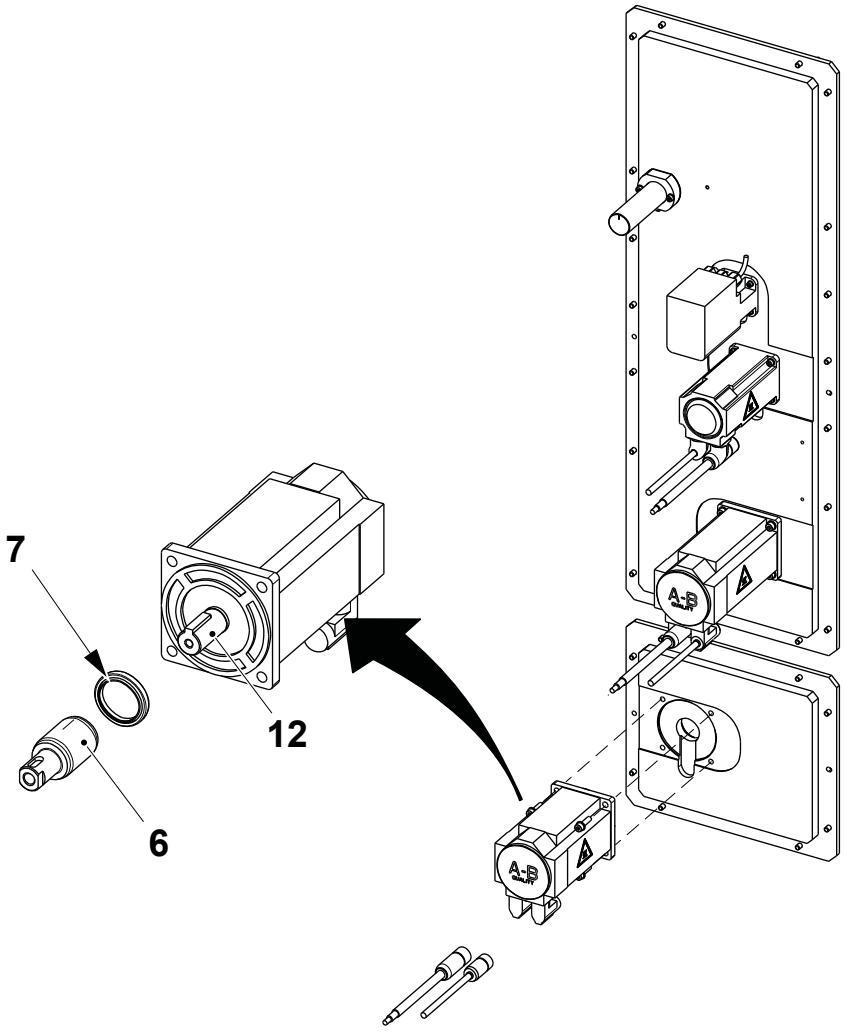

6 Shaft
7 Gasket
12 Servo motor shaft

(Cont'd)

TechPub_2614345_0107 - 0302_3048126_01.fm

(Cont'd)

WARNING
Burn hazard.
Parts might be hot.

Design Correction Drive

a) Loosen the screw (1) and remove the coupling part (2).

b) Remove the screw (3).

c) Insert a screw as extractor into the shaft (4) and use a spanner to stop the shaft (4) turning.

d) Tighten the extractor screw and remove the shaft (4) and the gasket (5).

Note! As extractor use a M6 screw for Portion Packages machines and a M10 screw for Family Packages machines.

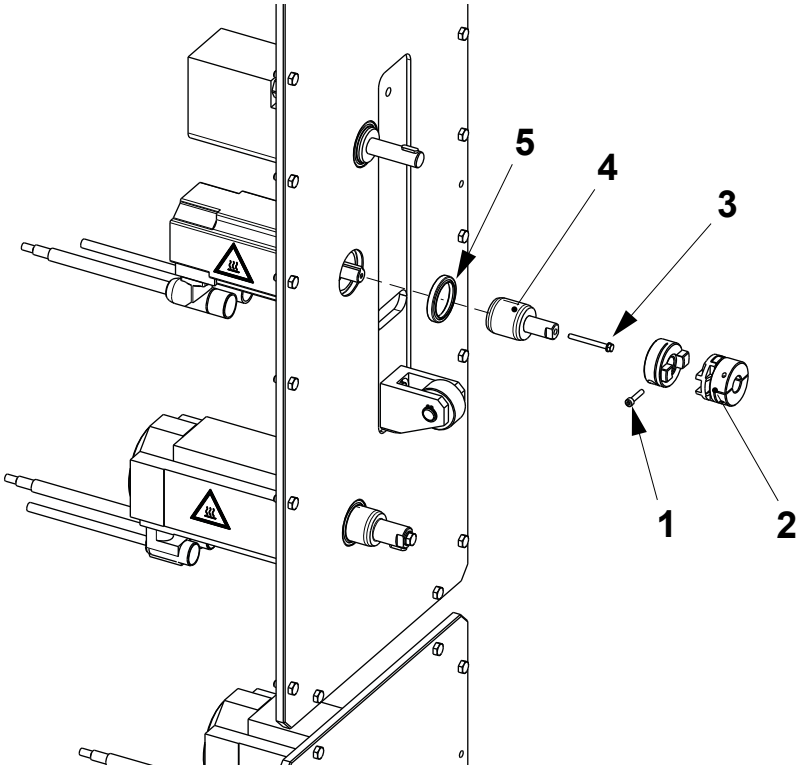

1 Screw
2 Coupling part
3 Screw
4 Shaft
5 Gasket

(Cont'd)

TechPub_2614345_0107 - 0302_3048126_01.fm

(Cont'd)

e) Check the servo motor (6) for wear or damage, if required change the servo motor as follows.

f) Remove the connectors (7) from the servo motor (6).

g) Remove the screws (8).

h) Remove the servo motor (6) from the plate (9).

i) Assemble in the reverse order.

Note! Grease the servo motor shaft (10), the inside of the shaft (4) and the gasket (5) when assembling.

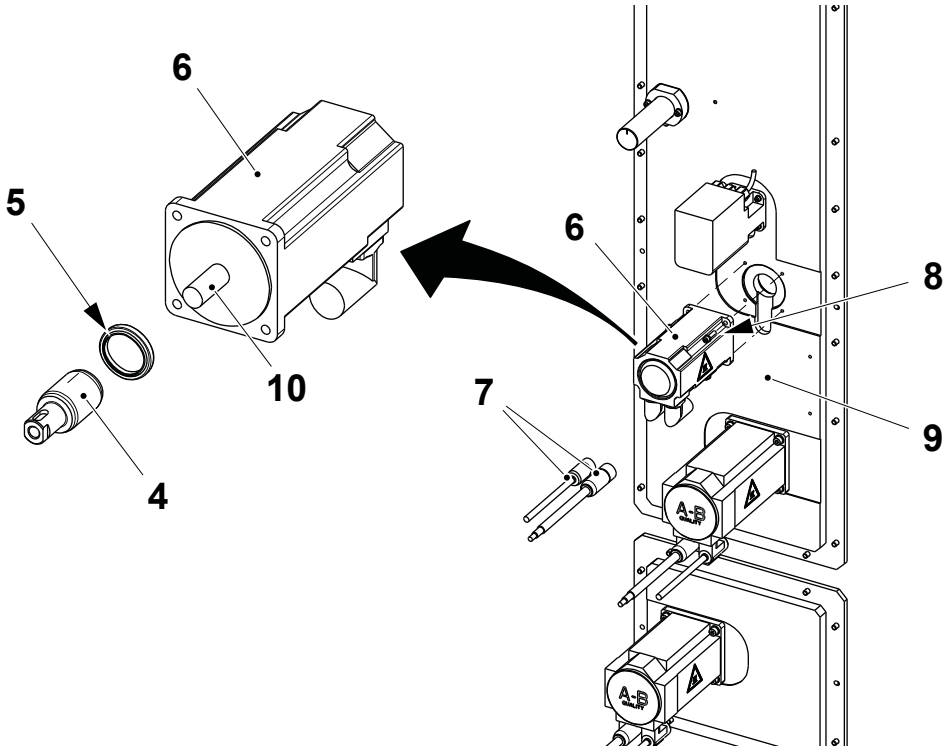

4 Shaft
5 Gasket
6 Servo motor
7 Connector
8 Screw
9 Plate
10 Servo motor shaft

(Cont'd)

TechPub_2614345_0107 - 0302_3048126_01.fm

(Cont'd)

WARNING
Burn hazard.
Parts might be hot.

Volume Adjuster Drive

a) Check the motor (1) for wear or damage, if required change the motor as follows.
b) Disconnect the cables from the motor (1), see the EM.
c) Remove the screws (2).
d) Remove the motor from the plate (3).
e) Remove the gasket (4).

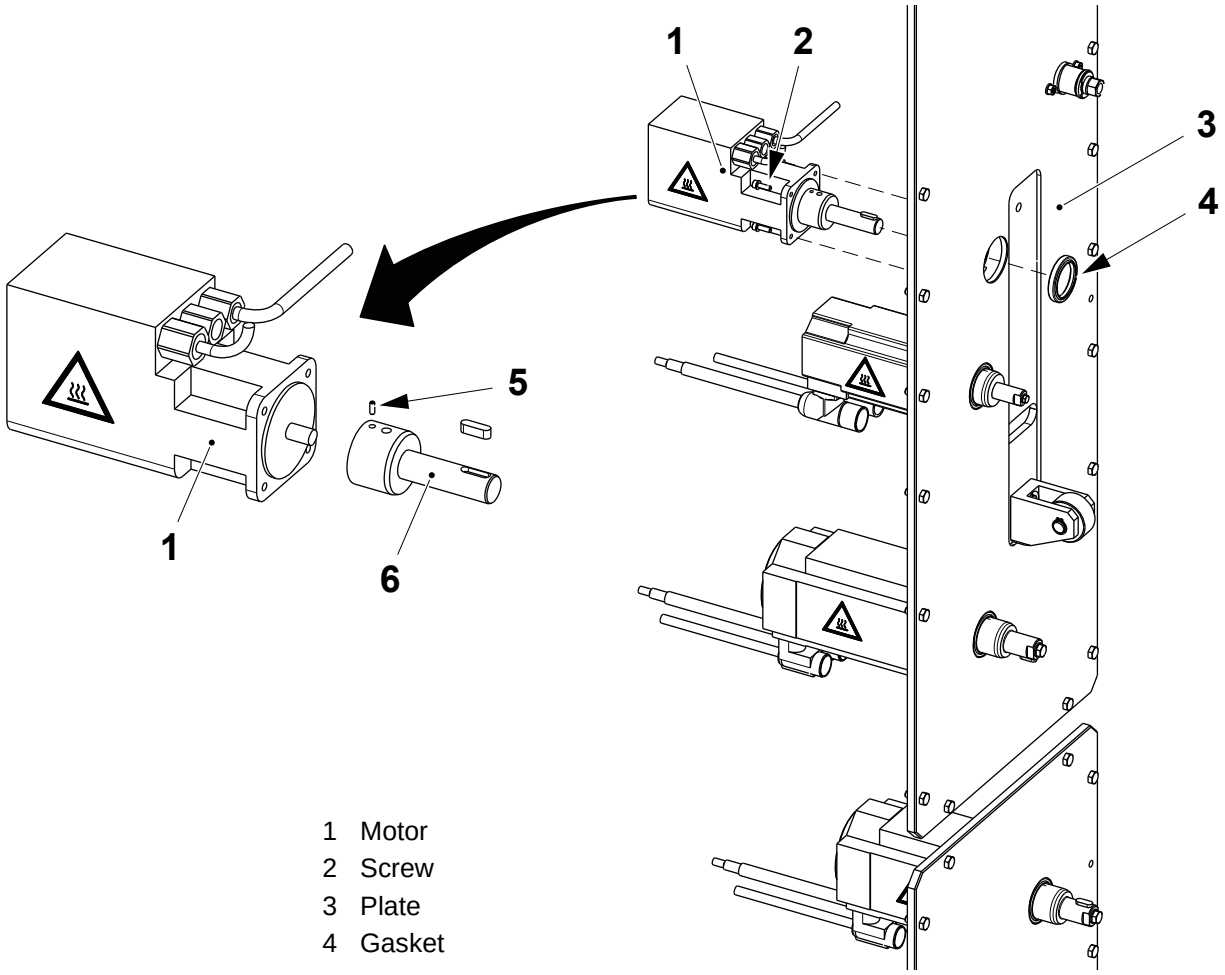

1 Motor
2 Screw
3 Plate
4 Gasket

(Cont'd)

TechPub_2614345_0107 - 0302_3048126_01.fm

(Cont'd)

f) Remove the grub screw (5) and separate the shaft (6) from the motor (1).

g) Assemble in the reverse order.

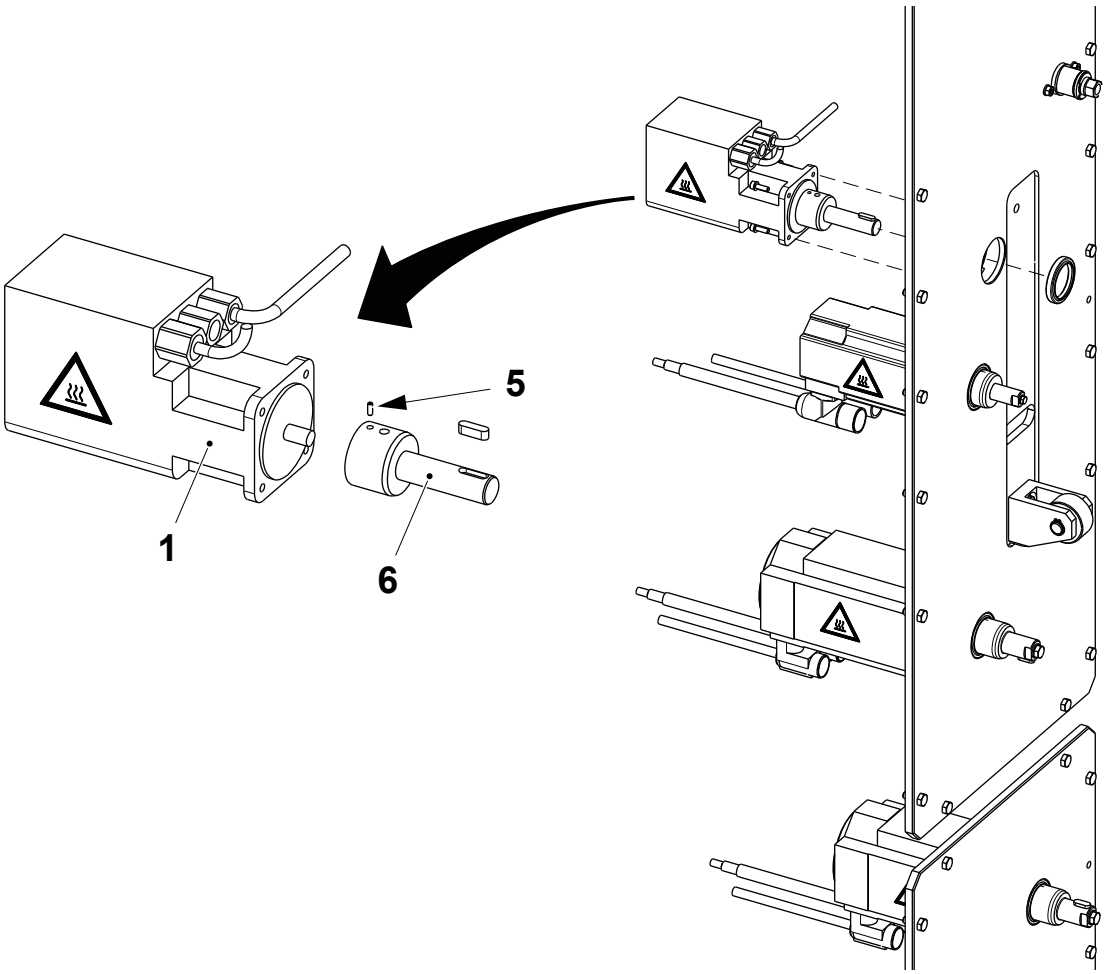

1 Motor
5 Grub screw
6 Shaft

TechPub_2614345_0107 - 0302_3048126_01.fm

3.2 Photocell Unit

SPC Reference	2522142-0300

3.2-1 Photocell Unit - Check

Machine Status	Mains Power ON Air OFF Steam ON Water OFF
Special Equipment	RS 232-C Communication Cable AT Compatible PC with CD drive
SPC Reference	2522142-0300

Check the following parts for wear and/or damage:

- the O-rings (1), check for air leaks. Change them if required
- the photocell lenses (2), make sure that the photocell lenses are intact and clean. If required, clean the lenses with a proper cleaning solution.

Note! In case of noticeable air leaks change the photocell.

TechPub_2614345_0107 - 0302_3048127_01.fm

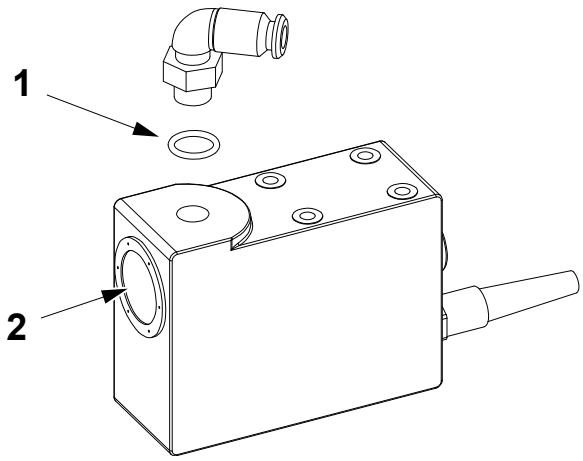

1 O-ring
2 Lens

3.2-2 Photocell Unit - Set

Machine Status	Mains Power ON Air ON Steam ON Water OFF
Special Equipment	Pin Punch
SPC Reference	2522142-0300

Set Alignment

a) Align the rollers (1) by turning the adjusting screw (2) until the hole (3) on the shaft (4) is centred with the slot on the spacer (5).

b) Check the alignment by inserting a Ø8 pin punch through the spacer (5), the shaft (4) and the hole behind the shaft (4).

TBA 250 B is shown

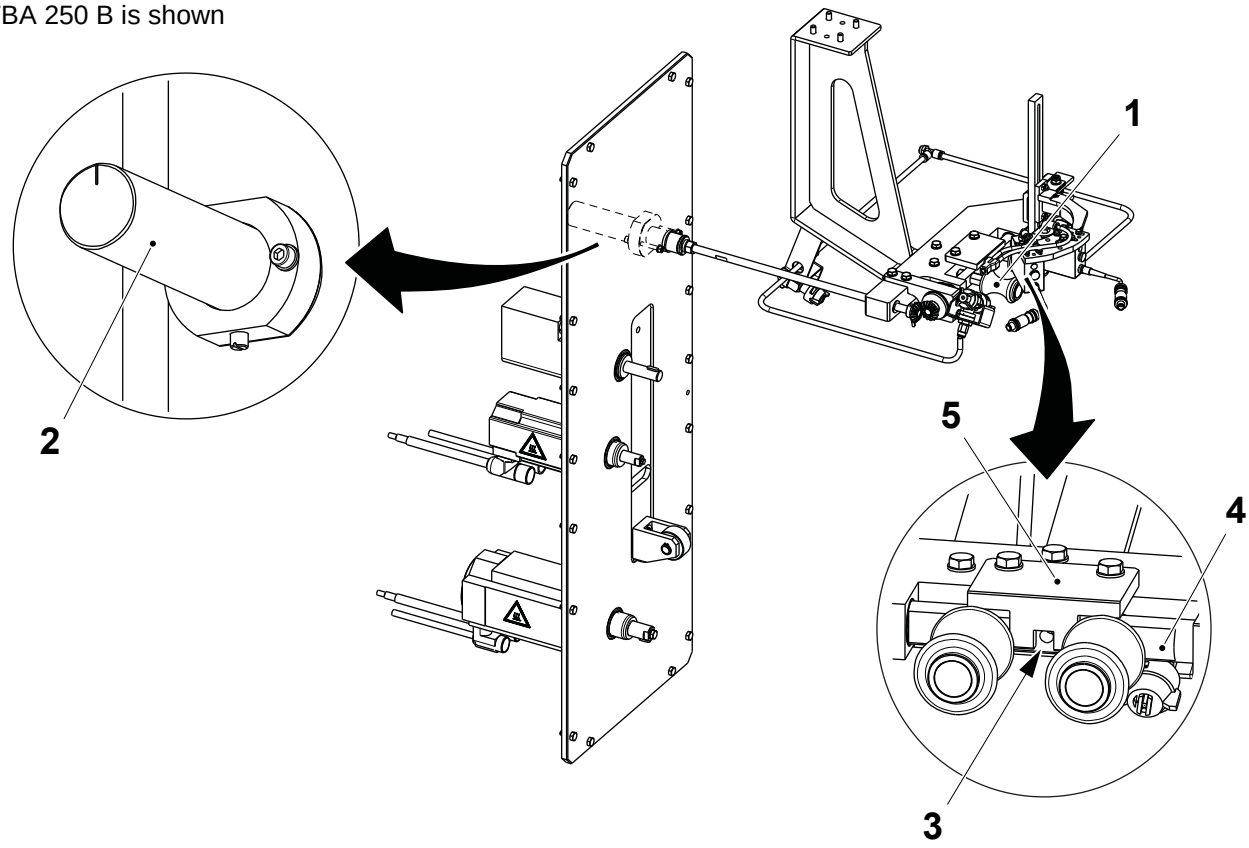

1 Roller
2 Adjusting screw
3 Hole
4 Shaft
5 Spacer

(Cont'd)

TechPub_2614345_0107 - 0302_3048127_01.fm

(Cont'd)

Note! The picture below shows the location of the adjusting screws (2) for Family Packages machines.

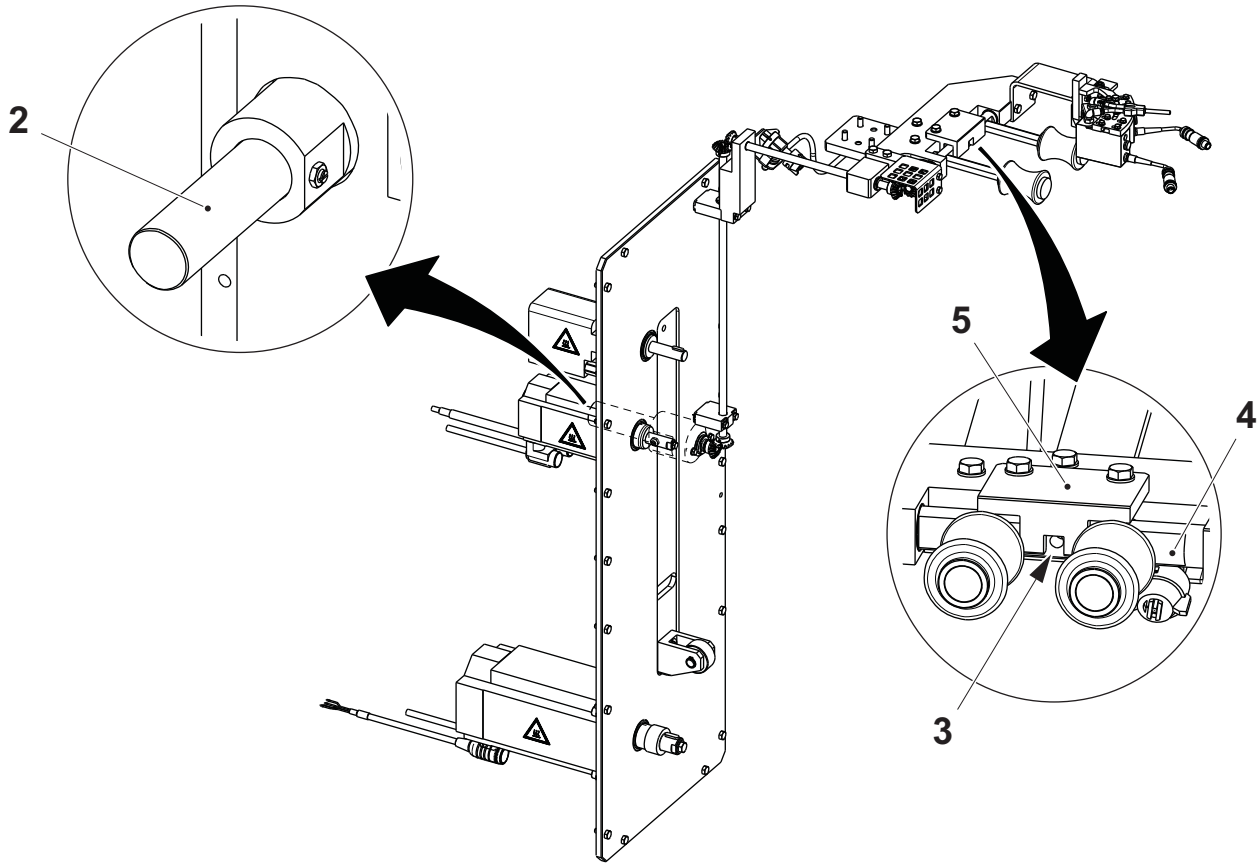

1 Roller
2 Adjusting screw
3 Hole
4 Shaft
5 Spacer

(Cont'd)

TechPub_2614345_0107 - 0302_3048127_01.fm

(Cont'd)

c) When the setting is done, block the adjusting screw (2) by tightening the screw (6).

d) Later when the machine is running, make fine adjustments with the adjusting screw (2), see 3.2-4 Photocell Unit - Adjust Tube Centring.

TBA 250 B is shown

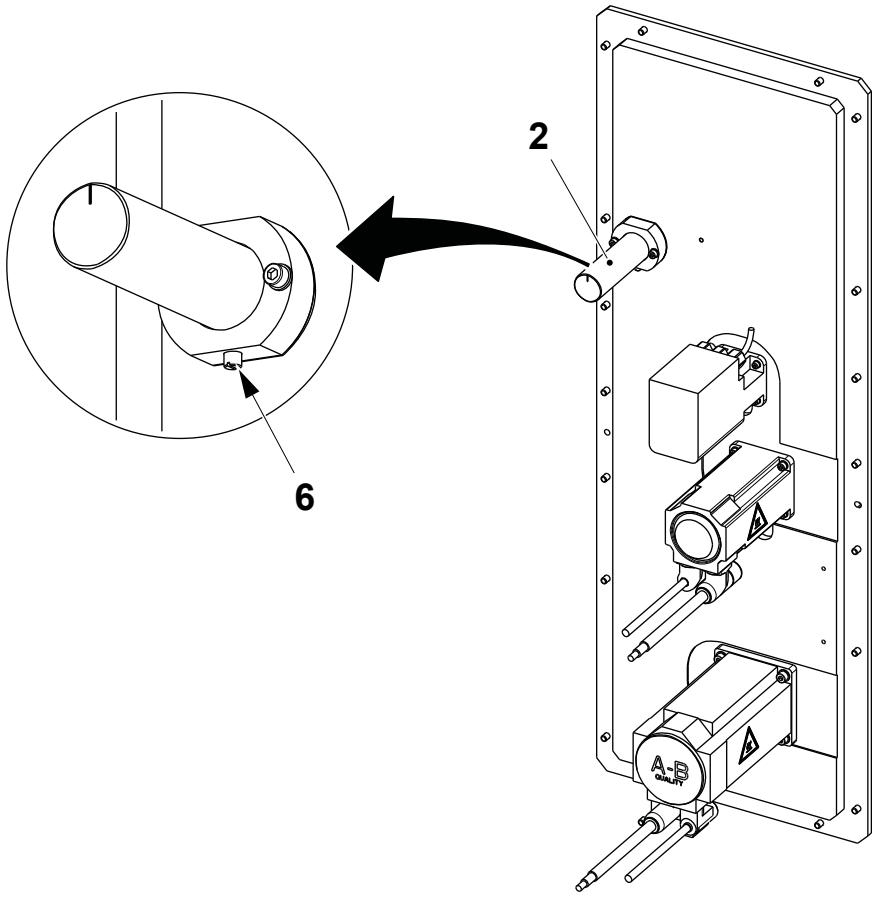

2 Adjusting screw
6 Screw

(Cont'd)

TechPub_2614345_0107 - 0302_3048127_01.fm

(Cont'd)

Note! The picture below shows the location of the adjusting screws (2) for Family Packages machines.

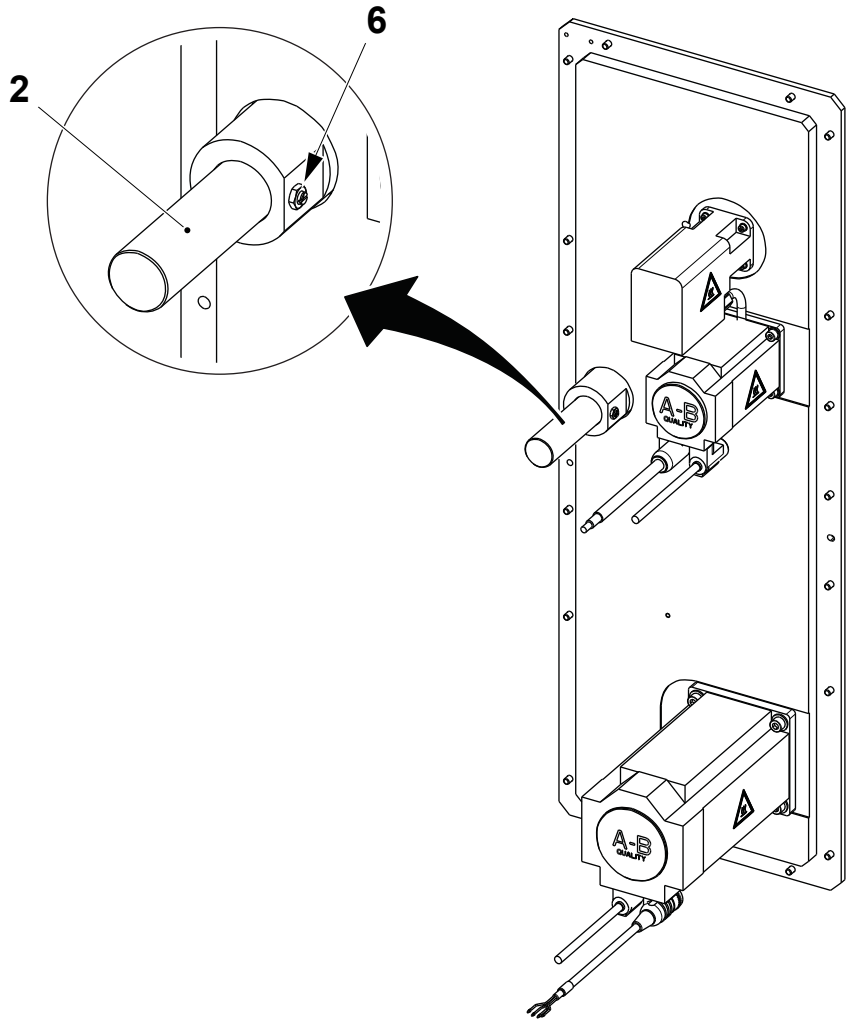

2 Adjusting screw
6 Screw

(Cont'd)

TechPub_2614345_0107 - 0302_3048127_01.fm

(Cont'd)

Set Bar Code Reading

a) Loosen the screws (1) and move the cantilever (2) to set the distance **A**, then tighten the screws (1).

Package	A ±1 (mm)
TBA 200 S	20
TBA 250 B	162
TBA 200 B	83
TBA 250 S	28
TBA 200 M	162
TBA 125 S	91
TBA 1000 S	41
TBA 1000 Sq	31
TBA 1000 B	16

Family Packages

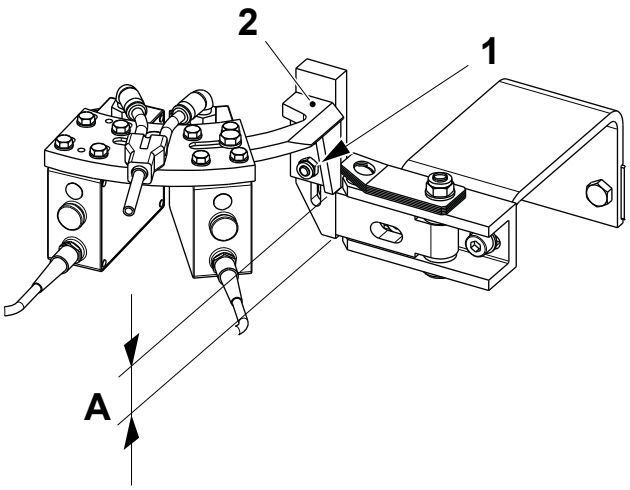

Portion Packages

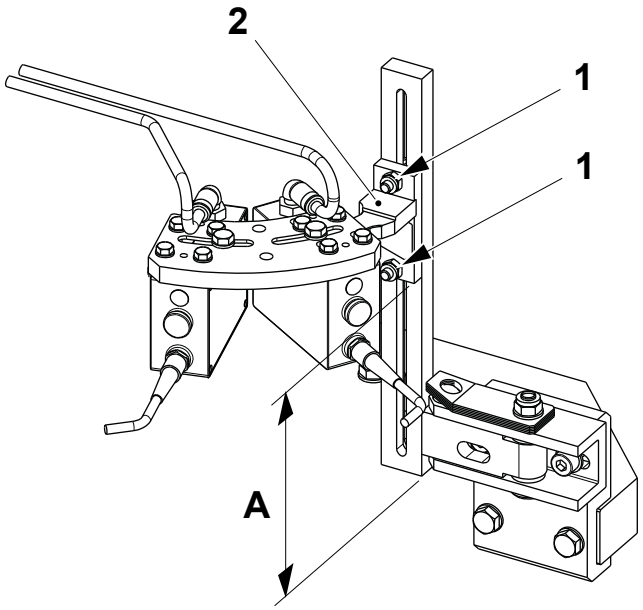

1 Screw
2 Cantilever

(Cont'd)

TechPub_2614345_0107 - 0302_3048127_01.fm

(Cont'd)

b) Set the distance **B** between the photocells (3) and the sealed tube (4) using the screws (5).

c) Centre the spots light onto the bar codes (6) using the screws (7).

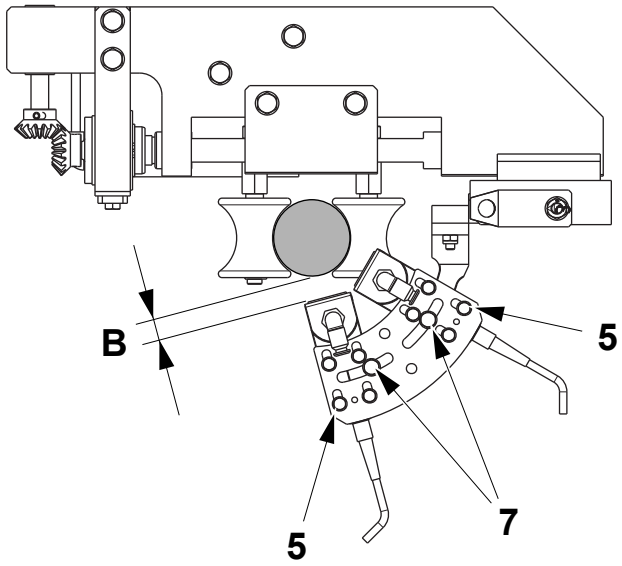

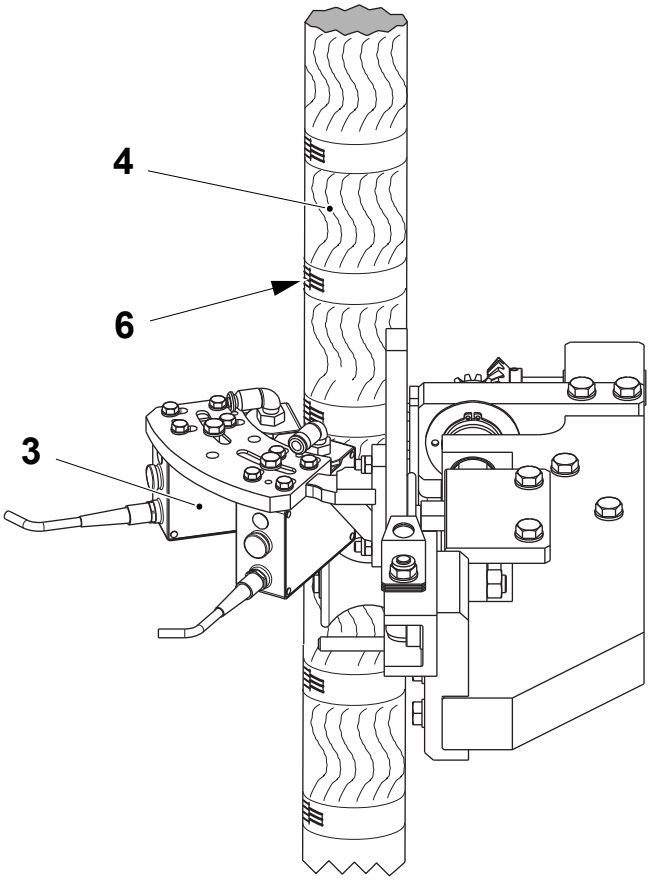

B = 9 ±1 mm

3 Photocell
4 Sealed tube
5 Screw
6 Bar code
7 Screw

(Cont'd)

TechPub_2614345_0107 - 0302_3048127_01.fm

(Cont'd)

Photocell Air Pressure Setting

Set the design correction air pressure to 0.2 bar by means of the pressure regulator (1) on the pneumatic panel (2).

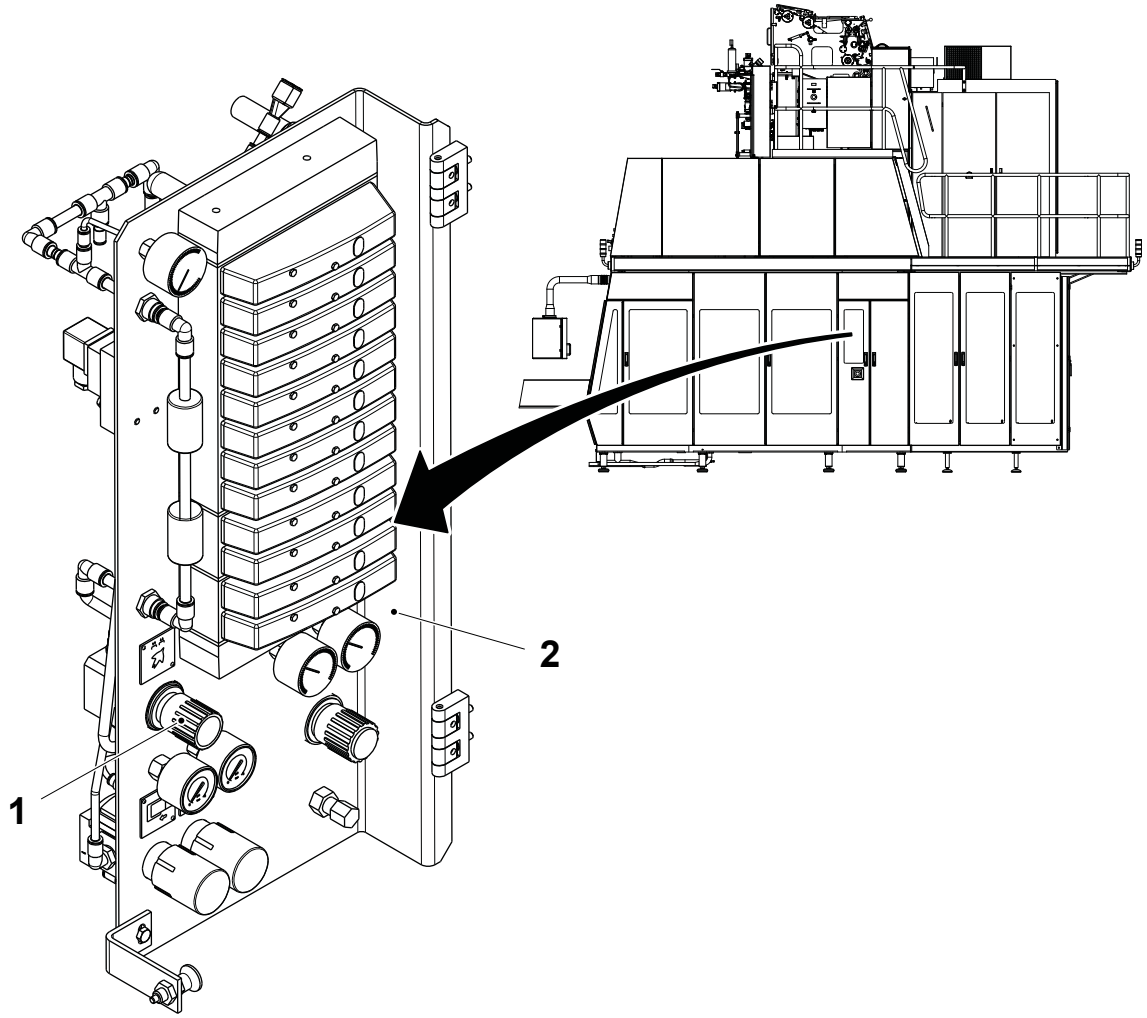

1 Pressure regulator
2 Pneumatic panel

(Cont'd)

TechPub_2614345_0107 - 0302_3048127_01.fm

(Cont'd)

Photocells Colour Setting and Sensitivity

By default, the photocell produces a green light spot. For most packaging material this is the correct setting and no further adjustment will be required.

If a bar code reading error occurs, the colour of the light spot can be changed to better match the foreground colour of the barcode by means of the TPOP, continue as follows:

a) Touch the PRODUCTION CONTROL button (1).

b) Touch the JAW SYSTEM button (2) and then touch the PHOTOCELL icon (3).

c) Touch the COLOR SPOT icon (4) to display the COLOR SPOT dialogue window (5).

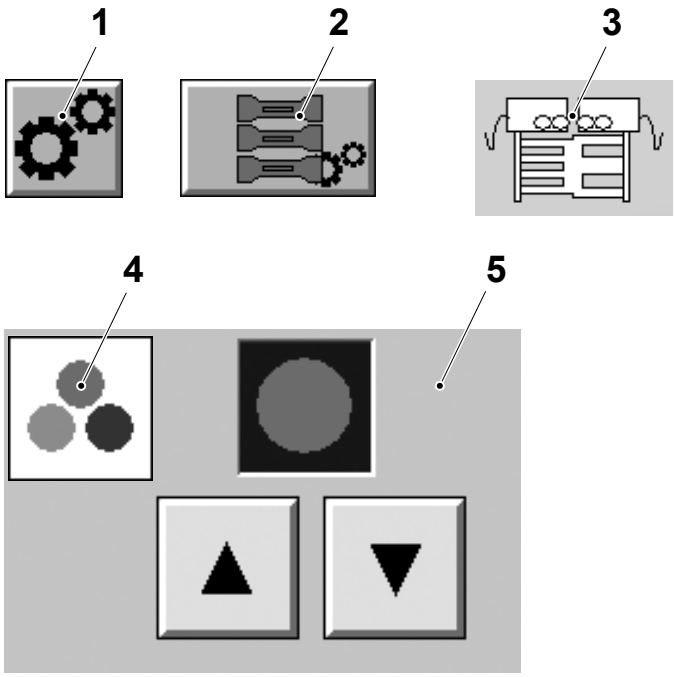

1 Production control button
2 Jaw system button
3 Photocell icon
4 Colour spot icon
5 Colour spot dialogue window

(Cont'd)

TechPub_2614345_0107 - 0302_3048127_01.fm

(Cont'd)

d) Use the ARROW buttons (6) to select a colour that suits the current packaging material, see the table below.

e) Touch the EXIT button (7).

Barcode Foreground Colour	Spot Colour
Black	Green, Red or Blue
Blue	Green or Red
Light blue/Cyan	Red
Green	Red or Blue
Yellow	Blue
Red	Green or Blue
Magenta	Green

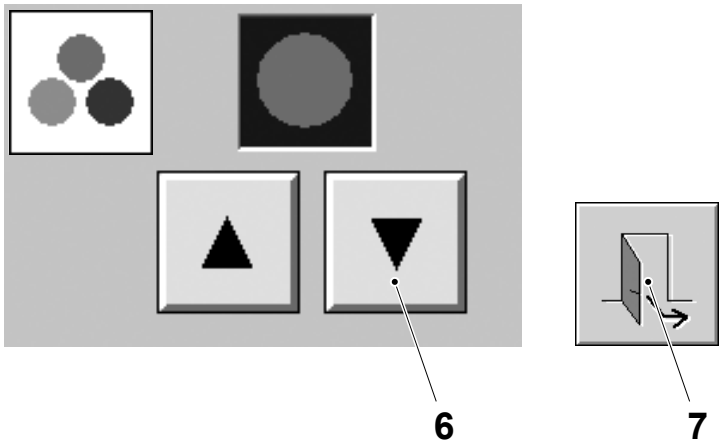

6 Arrow button
7 Exit button

(Cont'd)

TechPub_2614345_0107 - 0302_3048127_01.fm

(Cont'd)

If a barcode reading error continue to occur after the colour setting of the photocells, the photocells sensitivity can be adjusted by means of the TPOP, continue as follows:

a) Touch the PRODUCTION CONTROL button (1).

b) Touch the JAW SYSTEM button (2) and then touch the PHOTOCELL icon (3).

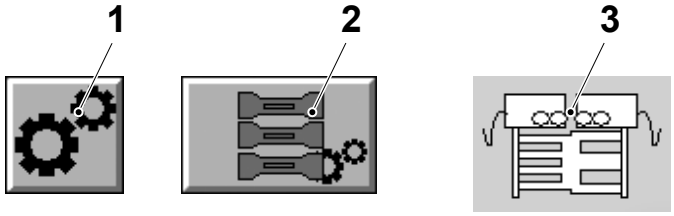

1 Production control button
2 Jaw system button
3 Photocell icon

(Cont'd)

TechPub_2614345_0107 - 0302_3048127_01.fm

(Cont'd)

c) Touch the SENSITIVITY icon (4) to display the SENSITIVITY dialogue window (5).

d) Use the ARROW buttons (6) to enter the new value in the ADJUSTMENT box (7).

Note! Higher values reduce sensitivity.

e) Touch the ENTER button (8) to accept the new value.

f) Touch the EXIT button (9) to exit the JAW SYSTEM window.

If errors continue to occur after the photocells colour and sensitivity setting, set the photocells manually, see 9.8-4 TMCC2 Controller - Photocells Manual Setting.

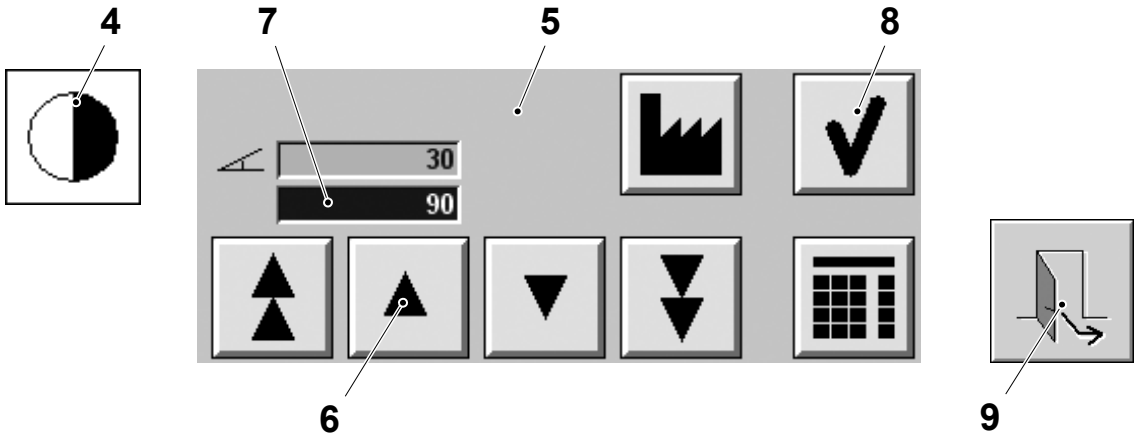

4 Sensitivity icon
5 Sensitivity dialogue window
6 Arrow button
7 Adjustment box
8 Enter button
9 Exit button

(Cont'd)

TechPub_2614345_0107 - 0302_3048127_01.fm

(Cont'd)

Design Correction Fine Setting

Check that the bottom creases are correctly positioned on the packages. To fine adjust the position of the bottom creases proceed as follows:

a) Step up the machine to PRODUCTION.

b) On the TPOP display touch the PRODUCTION CONTROL button (1).

c) Touch the JAW SYSTEM button (2).

d) Touch the DESIGN CORRECTION icon (3).

e) Touch the DESIGN CORRECTION OFFSET icon (4).

f) Use the ARROW buttons (5) or the KEYBOARD button (6) on the DESIGN CORRECTION window to fine set the position of the bottom creases.

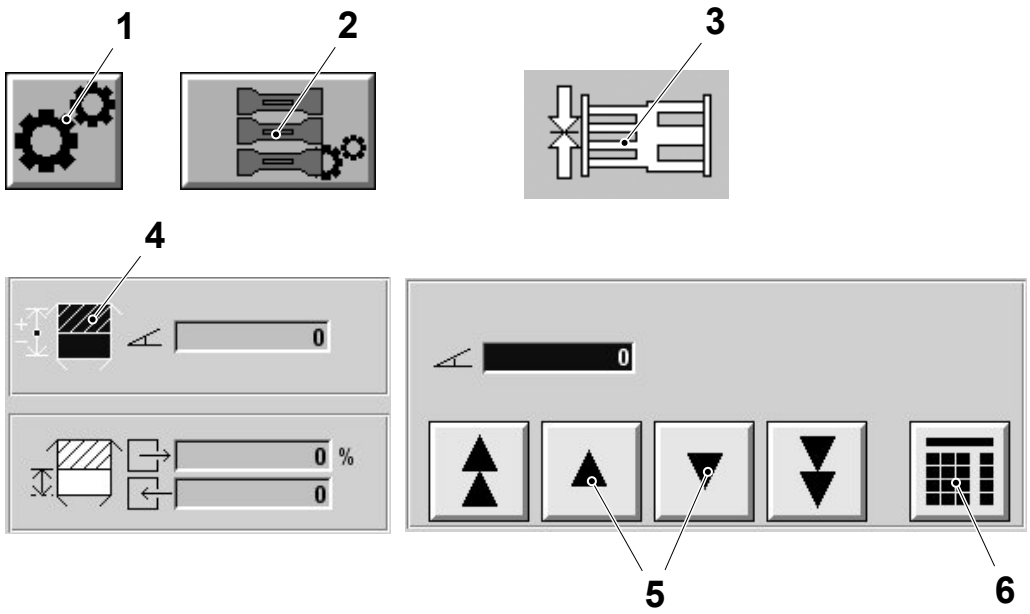

1 Production control button
2 Jaw system button
3 Design correction icon
4 design correction offset
5 Arrow button
6 Keyboard button

TechPub_2614345_0107 - 0302_3048127_01.fm

3.2-3 Photocell Unit - Check Alignment

Machine Status	PRODUCTION
Special Equipment	RS 232-C Communication Cable AT Compatible PC with CD drive
SPC Reference	2737941-0100

a) Configure a PC to be used as a hyperterminal and connect it to the TMCC2, see 9.8-2 TMCC2 Controller - Set Communication.

b) Connect the communication cable between the PC and the front panel connector (1) of the TMCC2 card A01K5200 (Photocells Decoder).

c) Type **H** and press the ENTER key.

d) Type **D1** and press the ENTER key.

e) Check that the value displayed is 1 ±0.20. This means that the spot light alignment is correct.

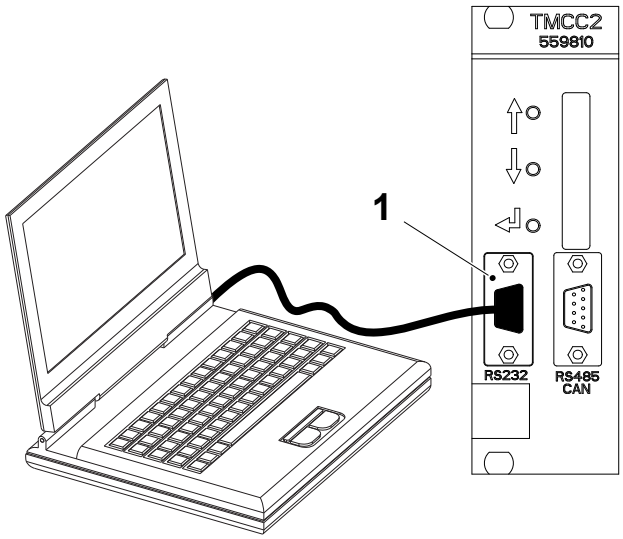

1 TMCC2 connector

(Cont'd)

TechPub_2614345_0107 - 0302_3048127_01.fm

(Cont'd)

f) If necessary, stop the machine in NORMAL STOP and adjust the photocells alignment by tightening or loosening the screws (2).

g) Repeat until the TMCC2 card displays the correct alignment value.

Note! If the value displayed is less than 0.8 the photocell has to be moved upwards, if the value is more than 1.2 the photocell has to be moved downwards.

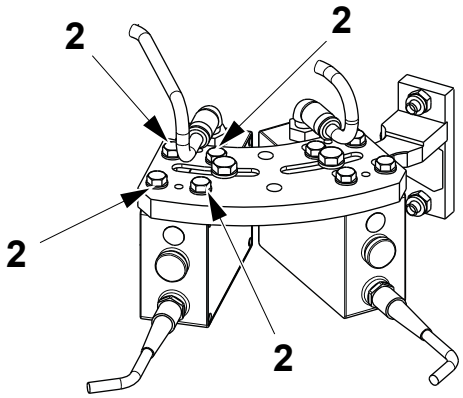

2 Screw

TechPub_2614345_0107 - 0302_3048127_01.fm

3.2-4 Photocell Unit - Adjust Tube Centring

Machine Status	PRODUCTION
SPC Reference	2522142-0300

Note! Turn the adjusting screw (1) **counter clockwise** to move the rollers (2) to the RH side, turn it **clockwise** to move the rollers (2) to the LH side.

Portion Packages shown

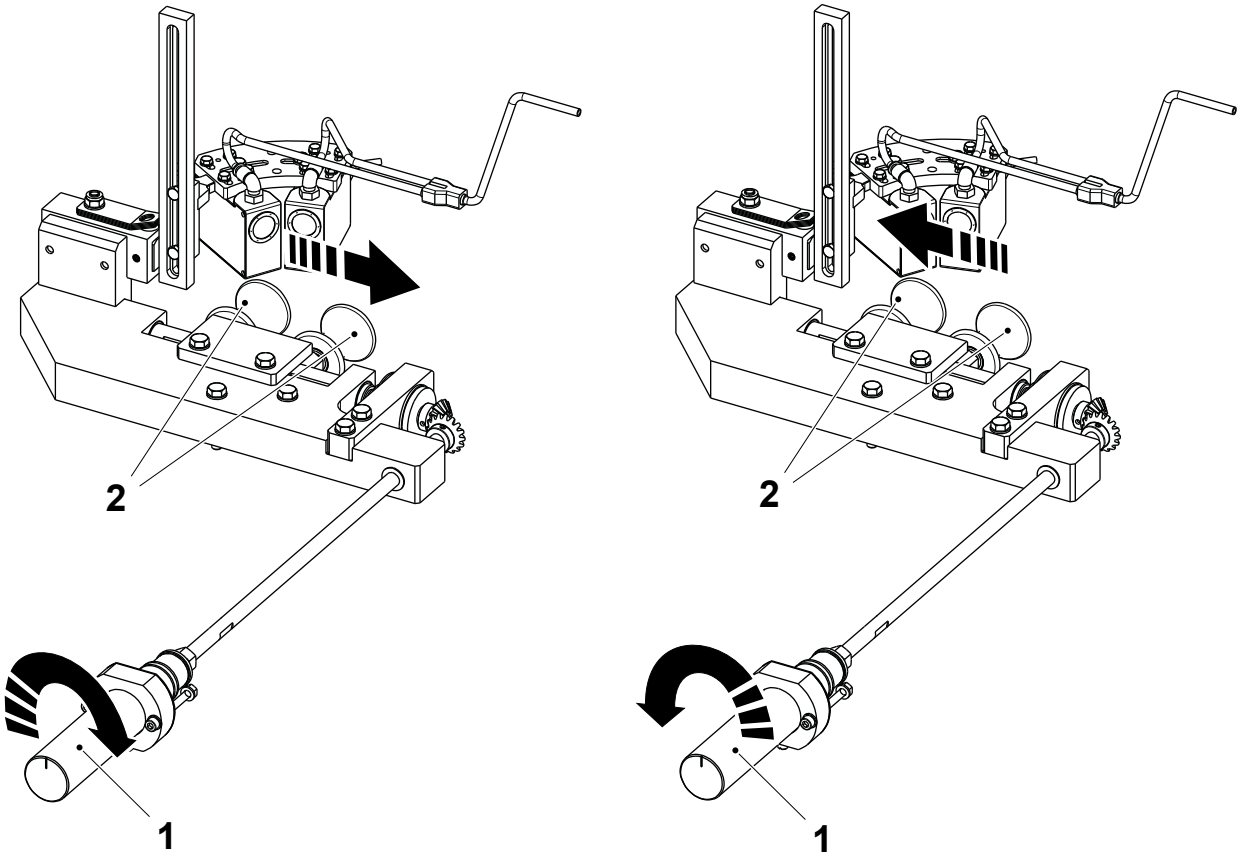

1 Adjusting screw
2 Roller

(Cont'd)

TechPub_2614345_0107 - 0302_3048127_01.fm

(Cont'd)

a) Pick two consecutive semi-finished packages and check that the short sides have the same shape. The picture below shows a section through a semi-finished package (3), seen from above, if the tube is not centred with the jaw system.

b) By means of the adjusting screw (1), move the rollers (2) in the direction of the bulged side to centre the tube with the jaw system.

Portion Packages shown

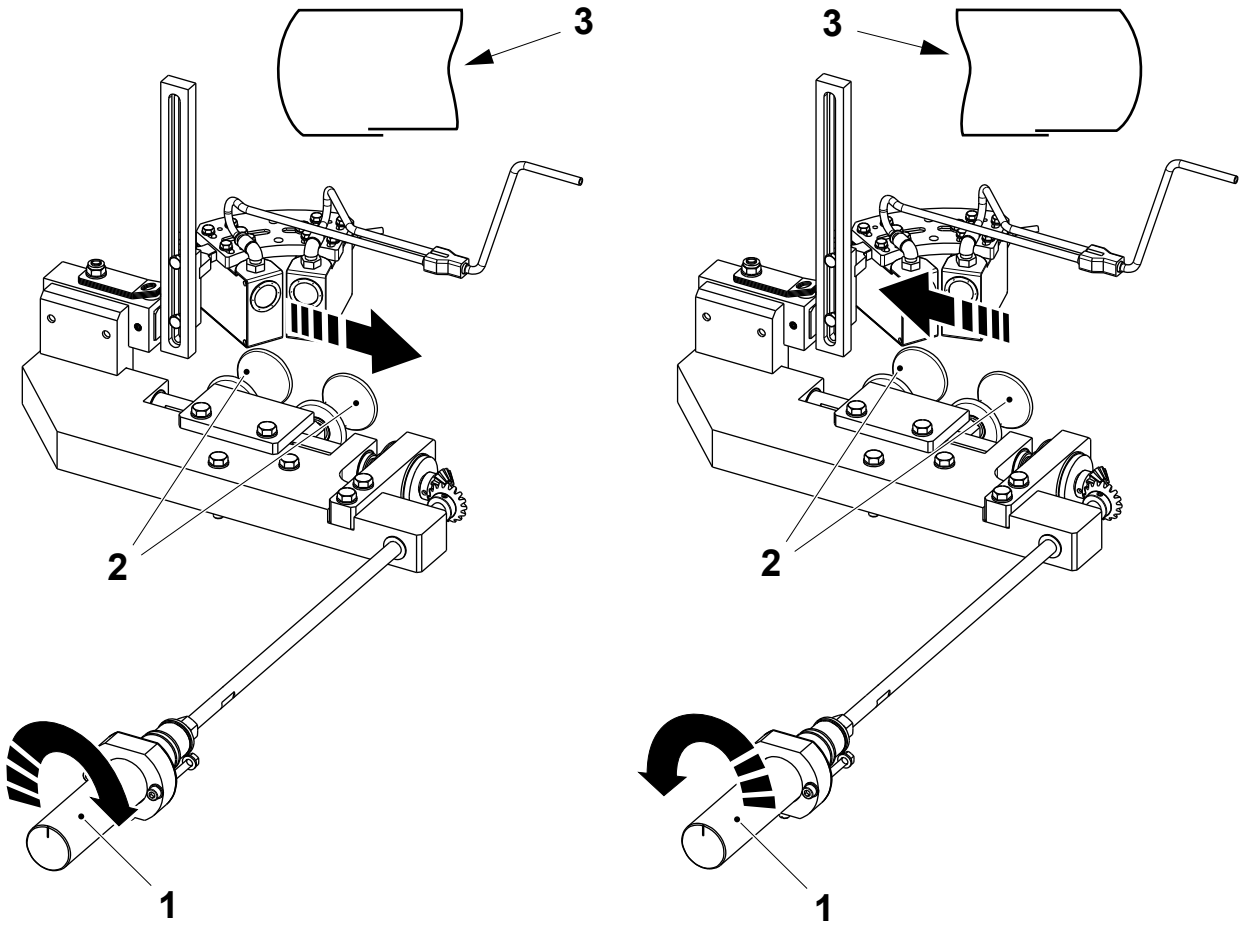

1 Adjusting screw
2 Roller
3 Semi-finished package section

TechPub_2614345_0107 - 0302_3048127_01.fm

3.2-5 Photocell Unit - Check Nozzles

Machine Status	Mains Power OFF Air ON Steam ON Water OFF
SPC Reference	2522142-0300

Remove the nozzles (1) for the tube flushing and check that they are not clogged and free from lime scale deposits.

If necessary dip the nozzles (1) into a container with deliming agent.

Portion Packages

Family Packages

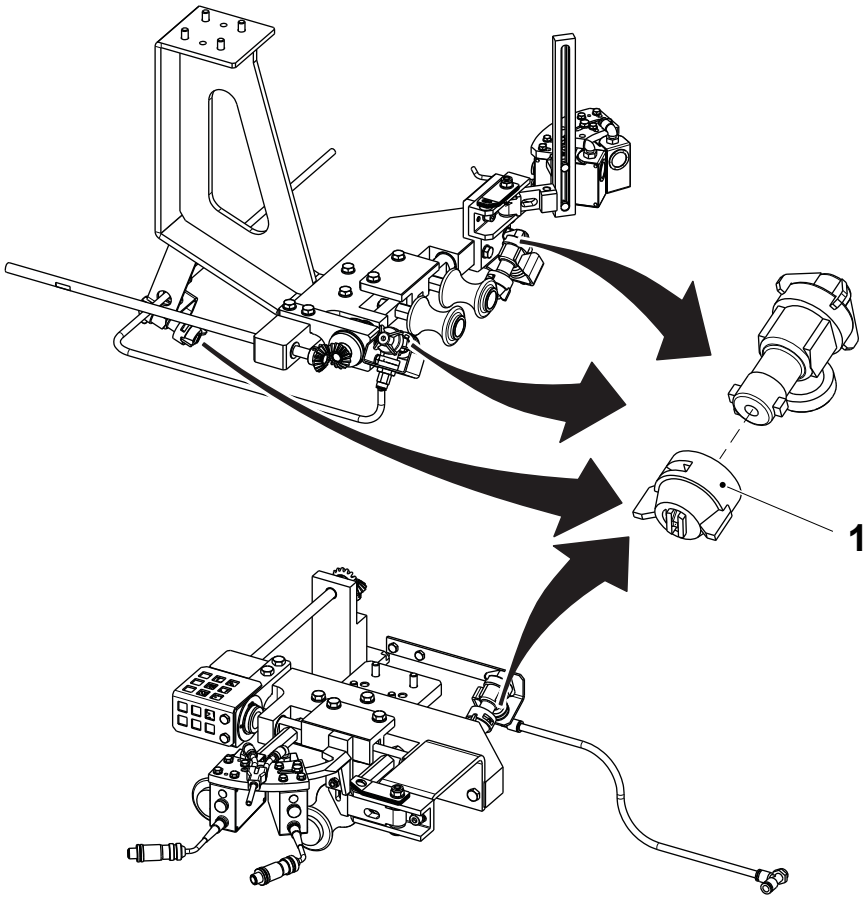

1 Nozzle

TechPub_2614345_0107 - 0302_3048127_01.fm

3.2-6 Photocell Unit - Change Ball Bearings

Machine Status	Mains Power OFF Air OFF Steam ON Water OFF
SPC Reference	2522142-0300

a) Remove the seal cover (1).

b) Remove the retaining ring (2) and pull out the roller (3).

c) Remove and change the ball bearings (4).

d) Assemble in the reverse order.

Note! When assembling the roller (3), pay attention to the mounting direction: the seal cover (1) must be fitted on the end with the deepest seat (5).

e) Repeat on the other roller.

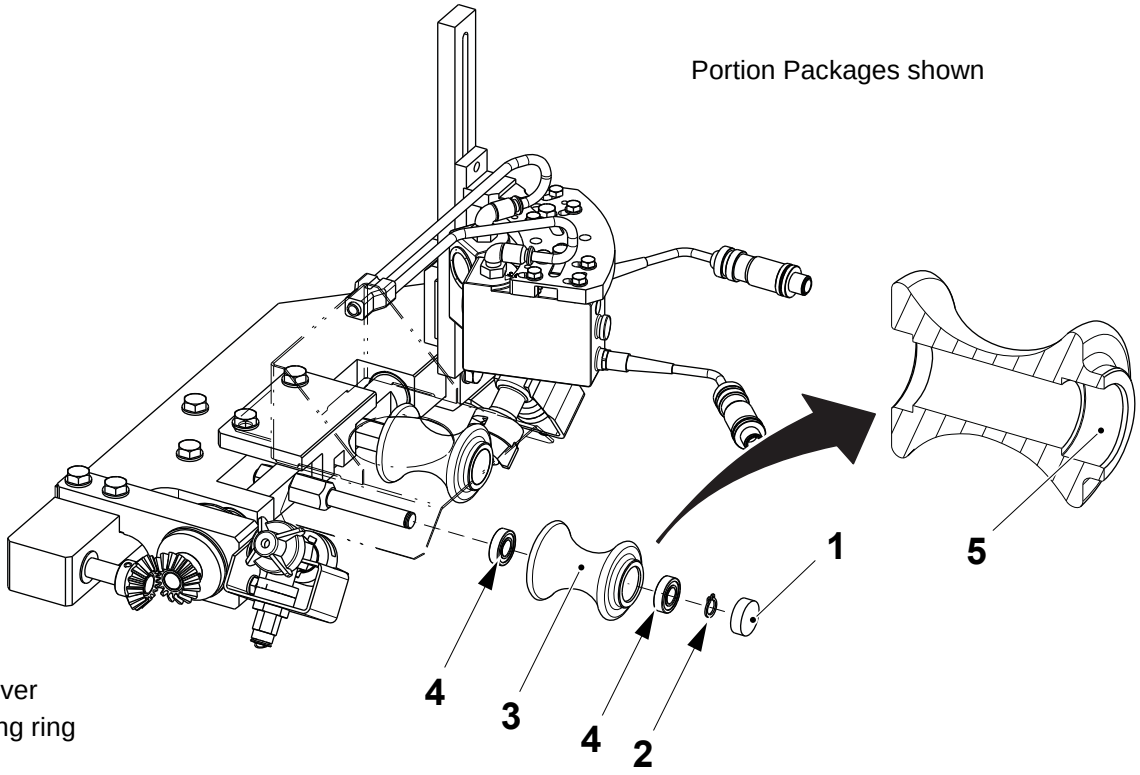

1 Seal cover
2 Retaining ring
3 Roller
4 Ball bearing
5 Seat

TechPub_2614345_0107 - 0302_3048127_01.fm

This page intentionally left blank

TechPub_2614345_0107 - 0302_3048127_01.fm

4 Jaw System

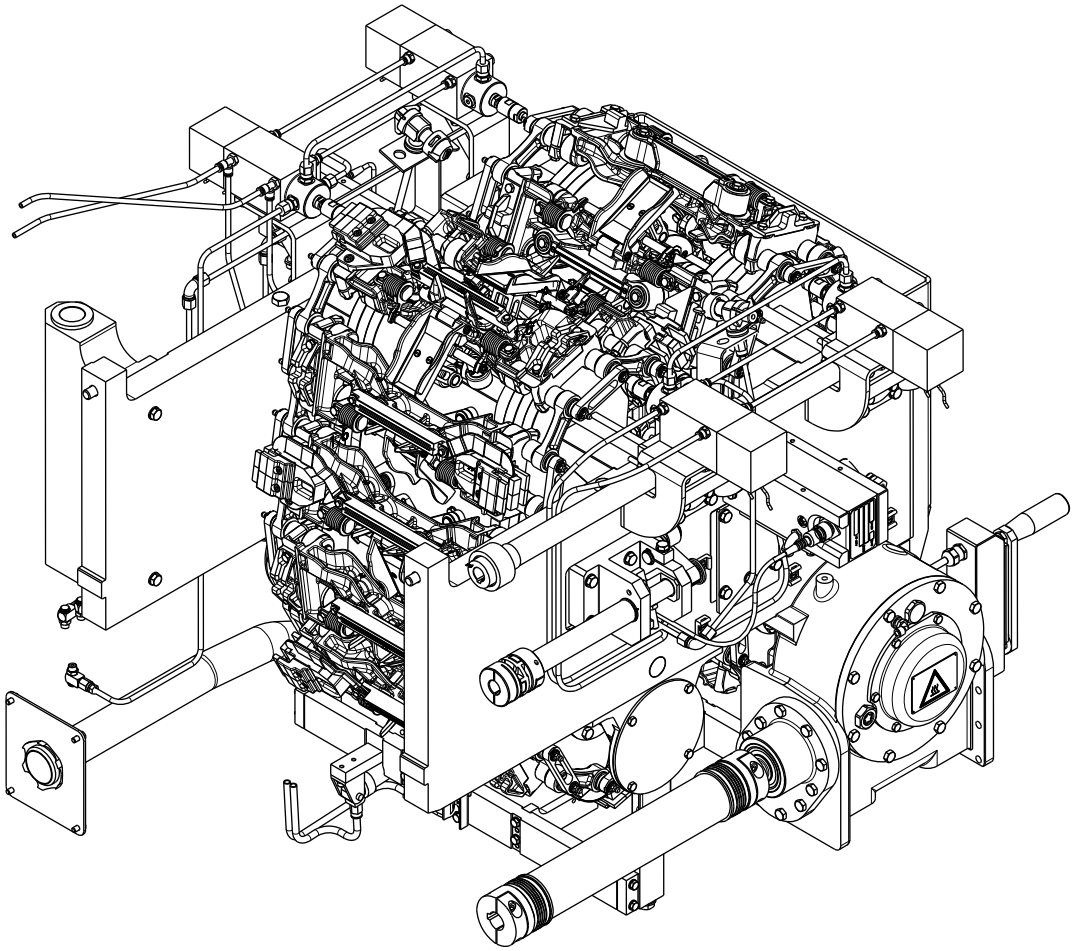

TechPub_2614345_0107 - 0404_30481142_01.fm

Jaw System - Description

SPC Reference	648536-0400

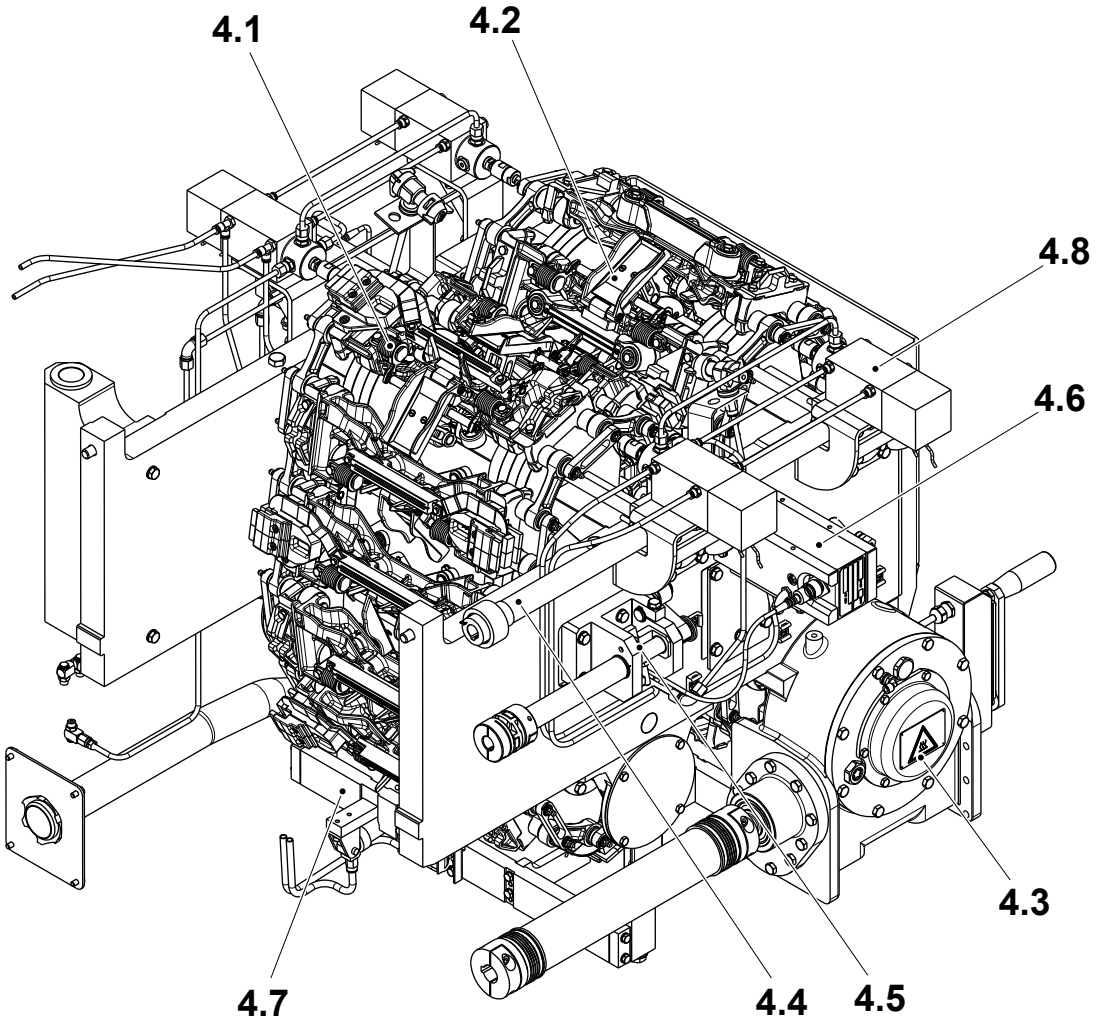

4.1 Sealing Jaw
4.2 Pressure Jaw
4.3 Drive Unit
4.4 Volume Adjuster
4.5 Design Correction
4.6 Electrical Connection
4.7 Waste Box
4.8 Grease Lubrication System

TechPub_2614345_0107 - 0404_3048142_01.fm

4 Jaw System . . . . . 4 - 7

4-1 Jaw System - Synchronise . . . . . 4 - 7
4-2 Jaw System - Inch and Go to Position . . . . . 4 - 8
4-3 Jaw System - Jog Jaw Chain . . . . . 4 - 15
4-4 Jaw System - Release Brakes . . . . . 4 - 17
4-5 Jaw System - Move Drop Chute Position . . . . . 4 - 18
4-6 Jaw System - Remove Waste Box . . . . . 4 - 19
4-7 Jaw System - Remove and Assemble Chains . . 4 - 25
4-8 Jaw System - Fill Gearbox Oil . . . . . 4 - 95
4-9 Jaw System - Check Bearing Rollers . . . . . 4 - 98
4-10 Jaw System - Check Nozzles . . . . . 4 - 102
4-11 Jaw System - Overhaul Cutting Device . . . . . 4 - 103

4.1 Sealing Jaw . . . . . 4 - 111

4.1-1 Sealing Jaw - Check Guides . . . . . 4 - 111
4.1-2 Sealing Jaw - Check Volume Flap Dampers . . 4 - 113
4.1-3 Sealing Jaw - Check Volume Flap Springs, Holder and Bushings . . . . . 4 - 113
4.1-4 Sealing Jaw - Check Volume Flap Rollers . . . . 4 - 113
4.1-5 Sealing Jaw - Check Cam Followers . . . . . 4 - 113
4.1-6 Sealing Jaw - Check Flap Folding . . . . . 4 - 114
4.1-7 Sealing Jaw - Check Inductor . . . . . 4 - 116
4.1-8 Sealing Jaw - Check Busbar and Ferrite . . . . . 4 - 120
4.1-9 Sealing Jaw - Change Guides . . . . . 4 - 121
4.1-10 Sealing Jaw - Change Busbar and Ferrite . . . . 4 - 122
4.1-11 Sealing Jaw - Change Ferrite Holder . . . . . 4 - 126
4.1-12 Sealing Jaw - Overhaul . . . . . 4 - 128
4.1-13 Sealing Jaw - Change Side Plates . . . . . 4 - 140

4.2 Pressure Jaw . . . . . 4 - 141

4.2-1 Pressure Jaw - Check Volume Flap Dampers . . 4 - 141
4.2-2 Pressure Jaw - Check Volume Flap Springs, Holder and Bushings . . . . . 4 - 143
4.2-3 Pressure Jaw - Check Volume Flap Rollers . . . 4 - 145
4.2-4 Pressure Jaw - Check Cam Followers . . . . . 4 - 146

TechPub_2614345_0107 - 0404_3048142_01.fm

4.2-5 Pressure Jaw - Change Volume Flap Springs, Holders and Bushings . . . . . 4 - 147
4.2-6 Pressure Jaw - Change Volume Flap Rollers . . 4 - 152
4.2-7 Pressure Jaw - Check Pressure Bar Springs . . 4 - 154
4.2-8 Pressure Jaw - Change Knife . . . . . 4 - 158
4.2-9 Pressure Jaw - Change Sealing Dollies . . . . . 4 - 160
4.2-10 Pressure Jaw - Change Mounting Blocks . . . . 4 - 162
4.2-11 Pressure Jaw - Overhaul . . . . . 4 - 164
4.2-12 Pressure Jaw - Set Jaw Unit Reference Sensor 4 - 181
4.2-13 Pressure Jaw - Change Side Plates . . . . . 4 - 182

4.3 Drive Unit . . . . . 4 - 183

4.3-1 Drive Unit - Overhaul . . . . . 4 - 183

4.4 Volume Adjuster. . . . . 4 - 202

4.4-1 Volume Adjuster - Set . . . . . 4 - 202
4.4-2 Volume Adjuster - Change Cams . . . . . 4 - 204

4.5 Design Correction . . . . . 4 - 208

4.5-1 Design Correction - Set Belt Tension . . . . . 4 - 208
4.5-2 Design Correction - Check Belt . . . . . 4 - 211
4.5-3 Design Correction - Change Belt . . . . . 4 - 212
4.5-4 Design Correction - Set Coupling . . . . . 4 - 214
4.5-5 Design Correction - Overhaul . . . . . 4 - 216
4.5-6 Design Correction - Set . . . . . 4 - 221

4.6 Electrical Connection . . . . . 4 - 224

4.6-1 Electrical Connection - Check Busbar and Core . . . . . 4 - 224
4.6-2 Electrical Connection - Check Transformer . . 4 - 231
4.6-3 Electrical Connection - Overhaul . . . . . 4 - 235
4.6-4 Electrical Connection - Check Position . . . . . 4 - 251

4.7 Waste Box. . . . . 4 - 255

4.7-1 Waste Box - Check . . . . . 4 - 255
4.7-2 Waste Box - Change Pneumatic Cylinder . . . . 4 - 256
4.7-3 Waste Box - Set Pneumatic Cylinder . . . . . 4 - 258
4.7-4 Waste Box - Change Bushings . . . . . 4 - 267

TechPub_2614345_0107 - 0404_3048142_01.fm

4.7-5 Waste Box - Check Pressure Switch . . . . . 4 - 271
4.7-6 Waste Box - Check Nozzle . . . . . 4 - 272

4.8 Grease Lubrication System . . . . . 4 - 273

4.8-1 Grease Lubrication System - Change Cylinders 4 - 273
4.8-2 Grease Lubrication System - Set Sensors . . . . 4 - 276

TechPub_2614345_0107 - 0404_30481142_01.fm

This page intentionally left blank

TechPub_2614345_0107 - 0404_3048142_01.fm

4 Jaw System

4-1 Jaw System - Synchronise

Machine Status	PREPARATION
SPC Reference	648536-0400

Note! The jaw chain referencing is set using the main motor as reference. Perform this procedure every time the jaw system has been swung open for maintenance reasons.

a) On the TPOP, touch the `MAINTENANCE CONTROL` button (1) and enter the password required, see 9.6.3-2 HMI - User Management Log On.

b) Touch the `PACKAGE FORMING UNIT` button (2).

c) Touch the `JAW CHAIN REFERENCING` icon (3). The `ON/OFF` buttons are displayed.

d) Touch the `ON` button (4) to enable the home position function.

e) Touch the `OK` button (5) to move the jaw system in home position.

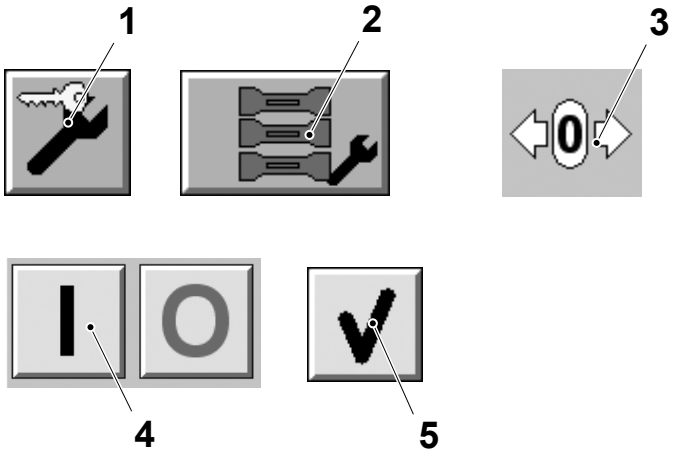

1 Maintenance control button
2 Jaw system button
3 Jaw chain referencing icon
4 On button
5 OK button

TechPub_2614345_0107 - 0404_3048142_01.fm

4-2 Jaw System - Inch and Go to Position

Machine Status	PREPARATION
SPC Reference	648536-0400

a) Step up the machine to PREPARATION.

b) Touch the PRODUCTION CONTROL button (1).

c) Touch the PACKAGE FORMING UNIT button (2) to display the PACKAGE FORMING UNIT window.

d) Touch the JAW INCHING icon (3) and the JAW INCHING window (4) is displayed.

e) Touch one of the following buttons:

- the SLOW INCHING button (5), to slow inch the jaw system to check the machine movement or to reach an approximate position
- the FAST INCHING button (6) to fast inch the jaw system to check the machine movement.

Note! The FAST INCHING can be done only in status higher than PREPARATION. If the FAST INCHING is selected, step up the machine.

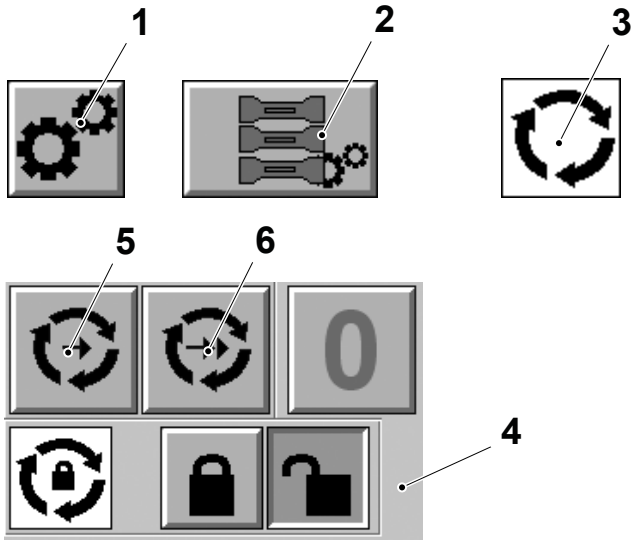

1 Production control button
2 Jaw system button
3 Jaw inching icon
4 Jaw inching window
5 Slow inching button
6 Fast inching button

(Cont'd)

TechPub_2614345_0107 - 0404_3048142_01.fm

(Cont'd)

Note! The inching lock button (7) permits the physical JAW SYSTEM INCHING button (8) to be released once the machine movement has started. The machine movement is stopped by pressing the SHORT STOP button (9). The INCHING LOCK button (7) is only available when logged on to the TPOP as a “tptechnician”, see 9.6.3-2 HMI - User Management Log On.

f) If necessary, touch the INCHING LOCK button (7).

g) Press and hold the JAW SYSTEM INCHING button (8) to slow inch the machine. If the INCHING LOCK button (7) has been enabled, release the JAW SYSTEM INCHING button (8) when the machine movement has started.

h) If the INCHING LOCK button (7) has been enabled, press the SHORT STOP button (9)or the INCHING UNLOCK button (10) to stop the machine movement.

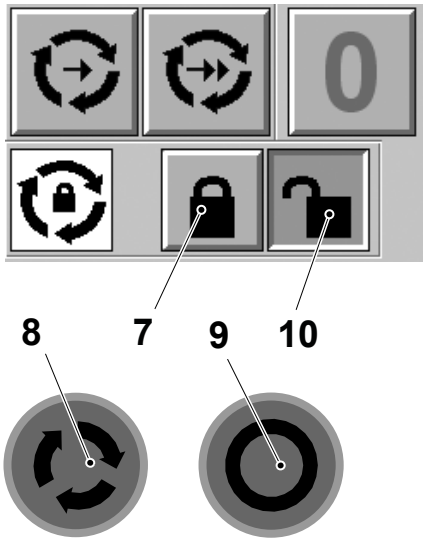

7 Inching lock button
8 Jaw system inching button
9 Short stop button
10 Inching unlock button

(Cont'd)

TechPub_2614345_0107 - 0404_3048142_01.fm

(Cont'd)

START, STOP and OK Buttons

The ON button (1), OFF button (2) and OK button (3) are used in the activation of the jaw system movement, the buttons use colours to indicate the status of the selected function. The colours have the following meaning:

- LIGHT GREY, the function is not enabled
- GREY, the function is enabled
- FLASHING WHITE, the function request has been accepted and the system is waiting for the command to start (e.g. pressing the OK button)
- WHITE, the function is active
- FLASHING GREEN, the function step has complete and the system is ready to receive new input parameters
- GREEN, the function is complete and a new instance of the function can be started.

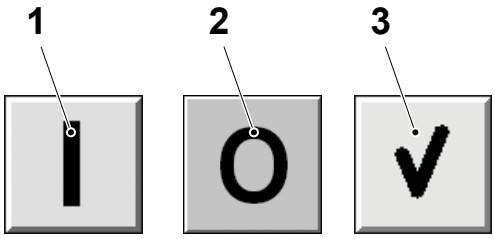

1 ON button
2 OFF button
3 OK button

(Cont'd)

TechPub_2614345_0107 - 0404_3048142_01.fm

(Cont'd)

Go To Position

Moves a pair of jaw system links in package cycle position.

a) Step up the machine to PRODUCTION.

b) Touch the `PRODUCTION CONTROL` button (1).

c) Touch the `PACKAGE FORMING UNIT` button (2) to display the `PACKAGE FORMING UNIT` window.

d) Touch the `JAW SYSTEM TARGET POSITION` icon (3).

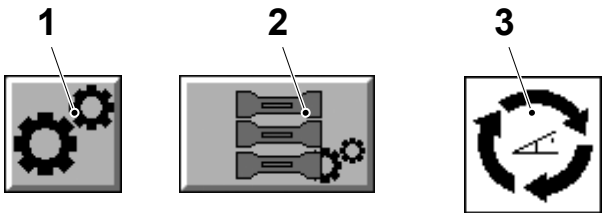

1 Setting system button
2 Jaw system button
3 Jaw system target position icon

(Cont'd)

TechPub_2614345_0107 - 0404_3048142_01.fm

(Cont'd)

e) Touch the JAW LINK NUMBER icon (4) and select the pair of the links to move using the ARROW buttons (5).

f) Touch the JAW LINK ANGLE icon (6) and select the angle position of the package cycle using the ARROW buttons (5).

g) Touch the ON button (7).

h) Touch the OK button (8) to start the jaw system movement.

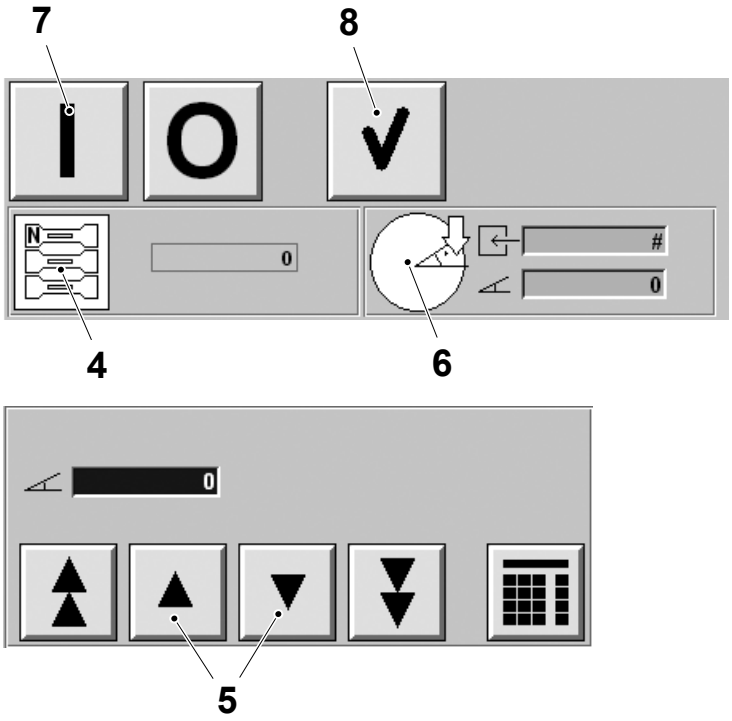

4 Jaw link number icon
5 Arrow button
6 Jaw link angle icon
7 ON button
8 OK button

(Cont'd)

TechPub_2614345_0107 - 0404_3048142_01.fm

(Cont'd)

Change Inductor

Moves a pair of jaw system links in maintenance position.

Note! The maintenance position is at the bottom of the jaw chain.

a) Touch the PRODUCTION CONTROL button (1).

b) Touch the PACKAGE FORMING UNIT button (2) to display the PACKAGE FORMING UNIT window.

c) Touch the CHANGE INDUCTOR icon (3).

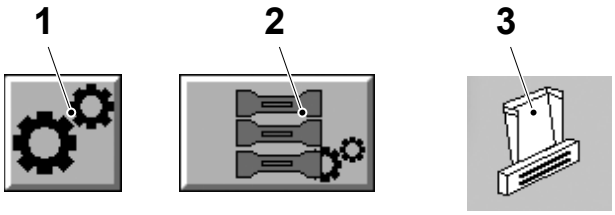

1 Setting system button
2 Jaw system button
3 Change inductor icon

(Cont'd)

TechPub_2614345_0107 - 0404_3048142_01.fm

(Cont'd)

d) Touch the JAW LINK NUMBER icon (4) and select the pair of the links to move in maintenance position using the ARROW buttons (5).

e) Touch the ON button (6).

f) Touch the OK button (7) to start the jaw system movement.

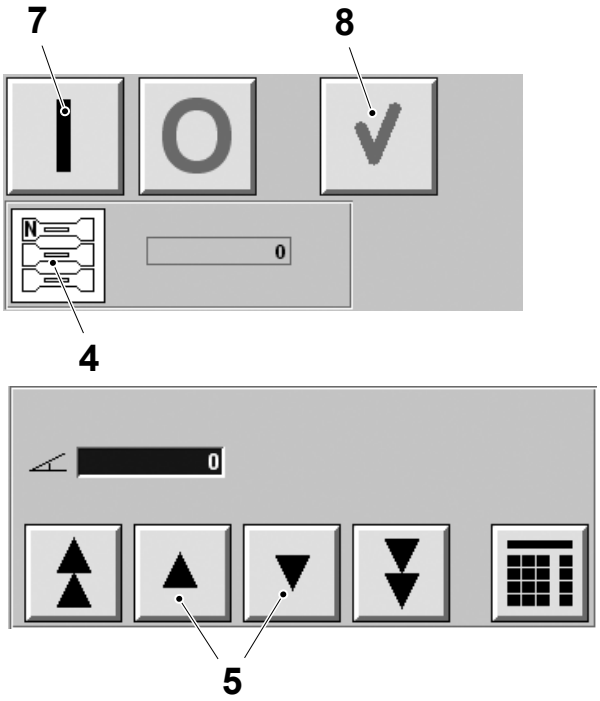

4 Jaw link number icon
5 Arrow button
6 ON button
7 OK button

TechPub_2614345_0107 - 0404_3048142_01.fm

4-3 Jaw System - Jog Jaw Chain

Machine Status	PREPARATION
SPC Reference	648536-0400

Note! The jog function is used to run only the jaw system independently from the machine status, in order to check the jaw chains functionality.

a) On the TPOP, touch the MAINTENANCE CONTROL button (1) and enter the password required, see 9.6.3-2 HMI - User Management Log On.

b) Touch the PACKAGE FORMING UNIT button (2).

c) Touch the JOG JAW CHAIN icon (3). The ON/OFF buttons are displayed.

d) Touch the JOG TIME icon (4) to set the jog duration using the ARROW buttons (5).

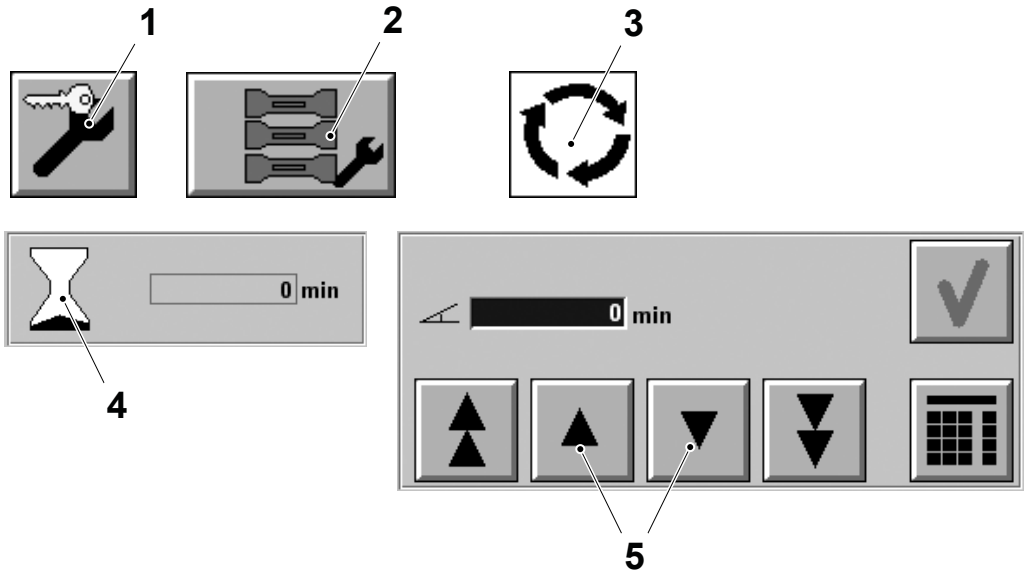

1 Maintenance control button
2 Jaw system button
3 Jog jaw chain icon
4 Jog time icon
5 Arrow button

(Cont'd)

TechPub_2614345_0107 - 0404_3048142_01.fm

(Cont'd)

e) Touch the jog speed icon (6) to set the jog speed using the arrow buttons (7).

f) Touch the ON button (8) and the OK button (9) to enable the jog function and start the machine movement.

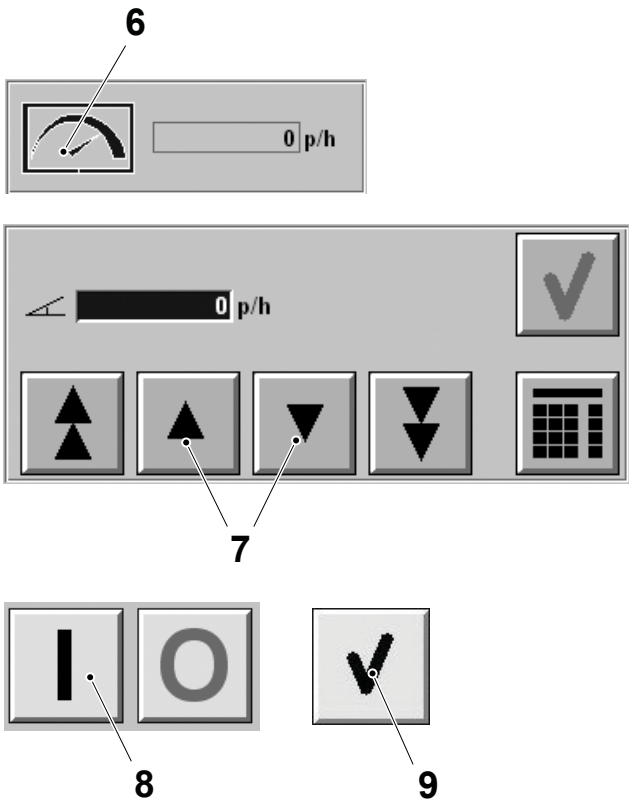

6 Jog speed icon
7 Arrow button
8 On button
9 OK button

TechPub_2614345_0107 - 0404_3048142_01.fm

4-4 Jaw System - Release Brakes

Machine Status	STEP ZERO
SPC Reference	648530-0400

Note! This procedure describes how to release the brakes on the jaw system drive when performing maintenance operations.

a) On the TPOP, touch the MAINTENANCE CONTROL button (1) and enter the password required, see 9.6.3-2 HMI - User Management Log On.

b) Touch the PACKAGE FORMING UNIT button (2).

c) Touch the JAW SYSTEM BRAKES icon (3). The ON/OFF buttons are displayed.

d) Touch the ON button (4) and the OK button (5) to release the brakes.

e) Perform all mechanical work necessary.

f) To engage the brakes, touch the OFF button (6) and the OK button (5).

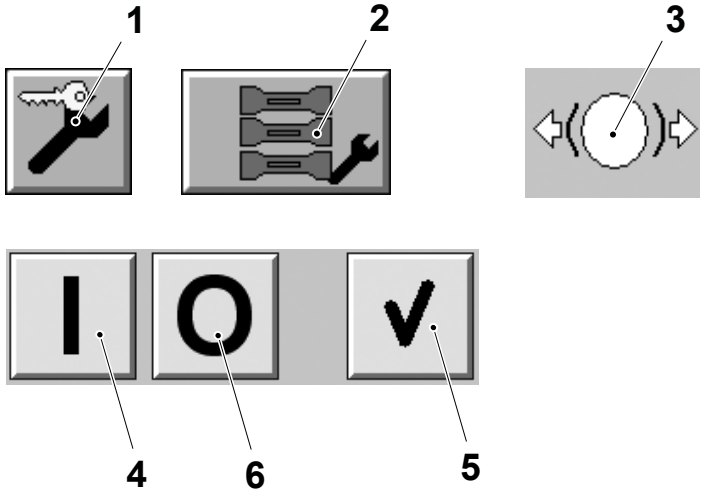

1 Maintenance control button
2 Jaw system button
3 Jaw system brakes icon
4 ON button
5 OK button
6 OFF button

TechPub_2614345_0107 - 0404_3048142_01.fm

4-5 Jaw System - Move Drop Chute Position

Machine Status	PREPARATION
SPC Reference	648530-0400

Note! This procedure describes how to force the drop chute in waste position or in production position. It can be performed in step PREPARATION or higher.

a) On the TPOP, touch the MAINTENANCE CONTROL button (1) and enter the password required, see 9.6.3-2 HMI - User Management Log On.

b) Touch the PACKAGE FORMING UNIT button (2).

c) Touch the FORCE DROP CHUTE POSITION icon (3). The ON/OFF buttons are displayed.

d) Touch the ON button (4) to enable the control of the drop chute.

e) Touch the WASTE button (5) or the PRODUCTION button (6) to move the drop chute in the position selected.

f) Touch the OFF button (7) to disable the control.

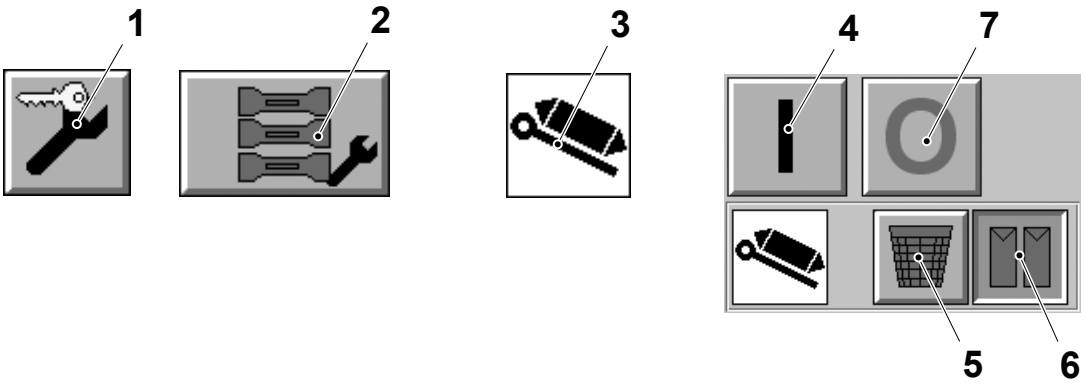

1 Maintenance control button
2 Jaw system button
3 Force drop chute position icon
4 ON button
5 Waste position
6 Production position
7 OFF button

TechPub_2614345_0107 - 0404_3048142_01.fm

4-6 Jaw System - Remove Waste Box

Machine Status	Mains Power OFF Air OFF Steam ON Water OFF
SPC Reference	648536-0400

Note! The following procedure will prevent the waste box striking the conveyor frame when the jaw unit is swung open.

Note! For TBA 125 S machines the chute (2) is separated by the guides (3); it is necessary to remove first the guides (3) and then the chute (2).

Note! When assembling, unless specified in the procedure, tighten all the screws according to the torque indicated in 10.1.1 Jaw System Screws Tightening Torque.

a) Swing the brake assembly open.

b) Remove the screws (1) and the chute (2).

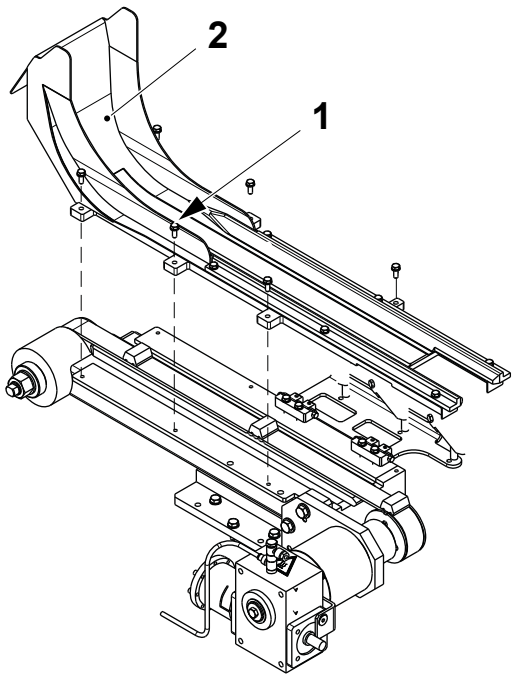

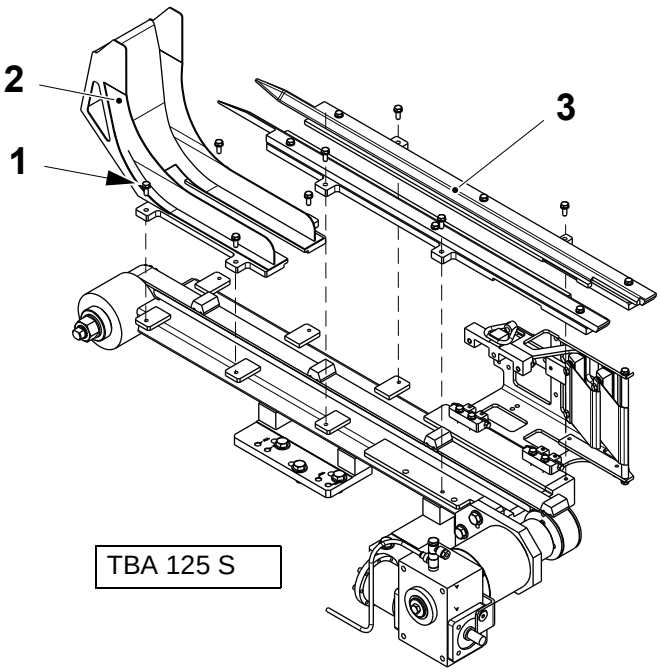

1 Screw
2 Chute
3 Guide

(Cont'd)

TechPub_2614345_0107 - 0404_30481142_01.fm

(Cont'd)

Note! The flushers (5) must be disconnected only for Family Packages machines.

c) Disconnect the water hose (4) from the flushers (5).

d) Disconnect the water hose (6).

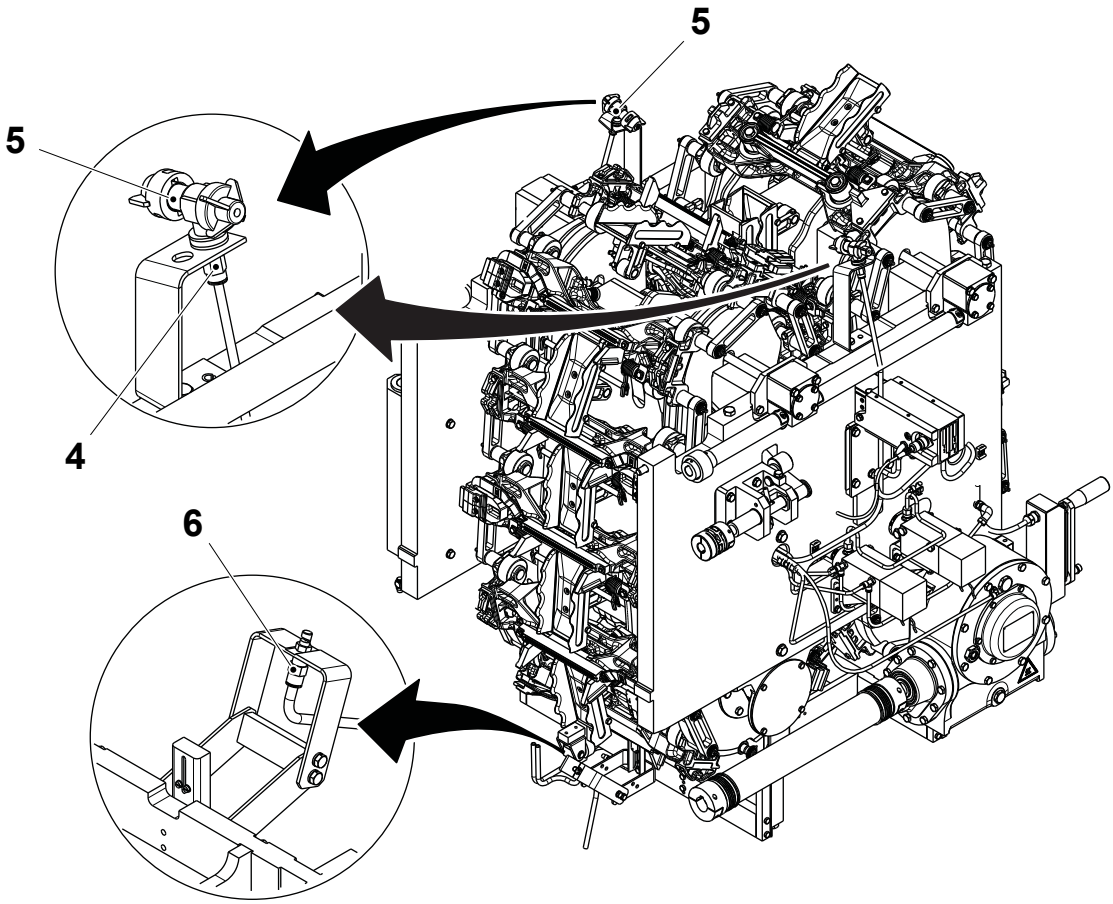

4 Water hose
5 Flusher
6 Water hose

(Cont'd)

TechPub_2614345_0107 - 0404_3048142_01.fm

(Cont'd)

e) Loosen the screws (7) and remove the clamp (8) on the intermediary shaft (9).

Note! Pay attention to the coupling (10) when swinging the jaw system open: the central piece (11) falls down.

Note! When assembling, tighten the screws (7) with a torque of 28.7 Nm.

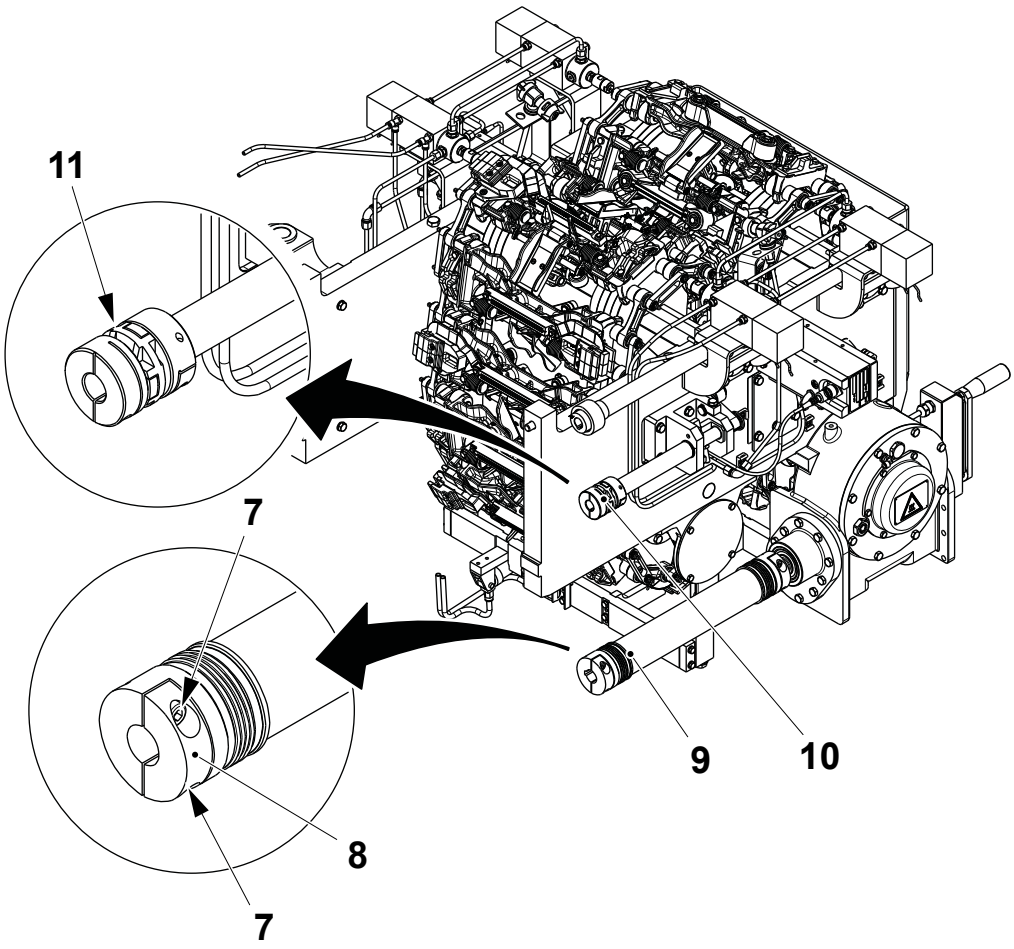

7 Screw
8 Clamp
9 Intermediary shaft
10 Coupling
11 Central piece

(Cont'd)

TechPub_2614345_0107 - 0404_30481142_01.fm

(Cont'd)

f) Remove the two screws (12) holding the jaw system to the bulkhead.

g) Swing the jaw system open.

h) Disconnect the air connection (13) from the waste box cylinder (14).

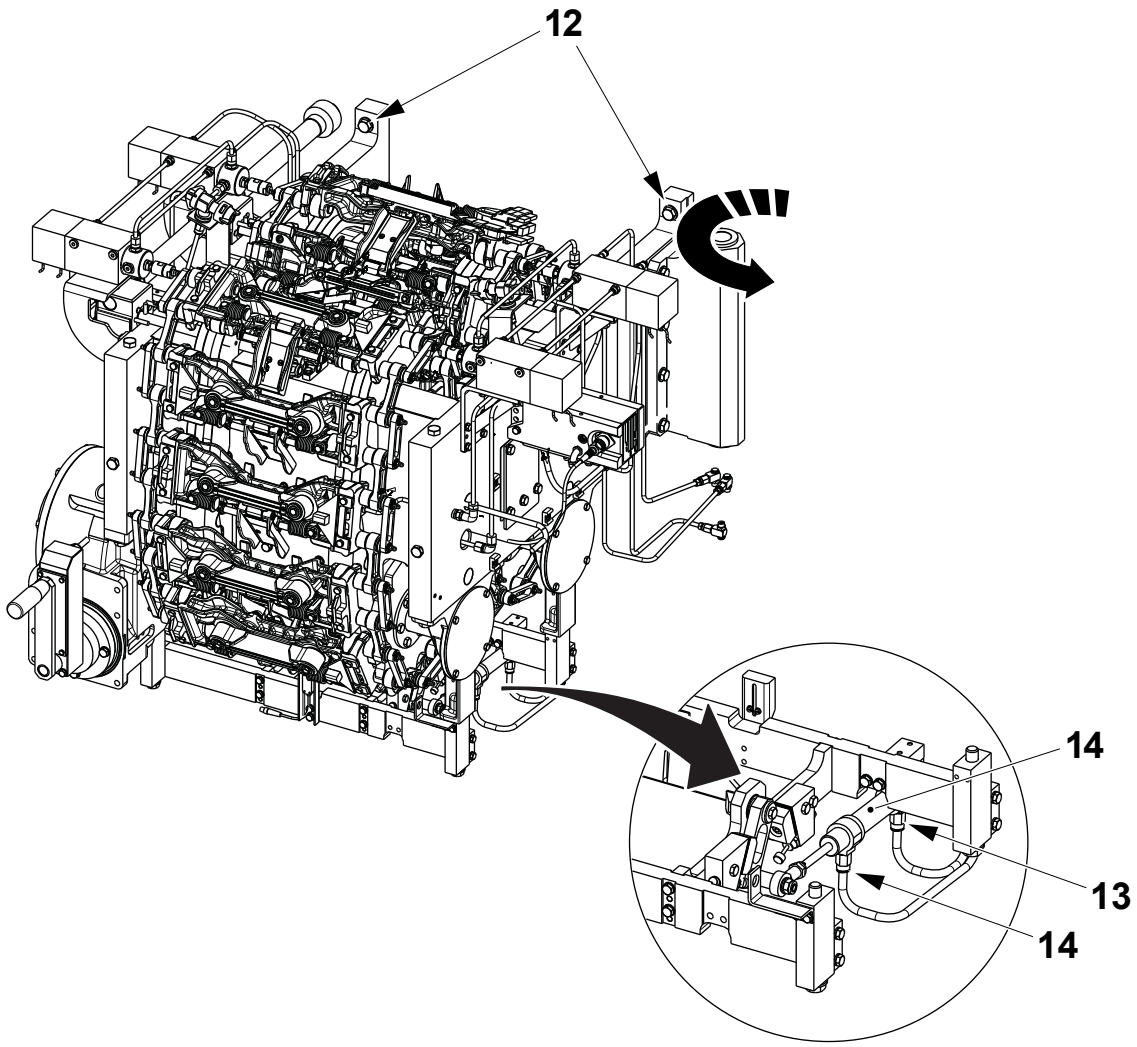

12 Screw
13 Water hose
14 Cylinder

(Cont'd)

TechPub_2614345_0107 - 0404_3048142_01.fm

(Cont'd)

CAUTION

Risk of damage to the equipment.

The ferrite (15) can be easily damaged if it bump against the waste box during the removal. Crank the jaw system so that the ferrite (15) is out of the waste box area.

a) Crank the jaw system so that the ferrite (15) of the sealing jaw is out of the waste box area as shown below.

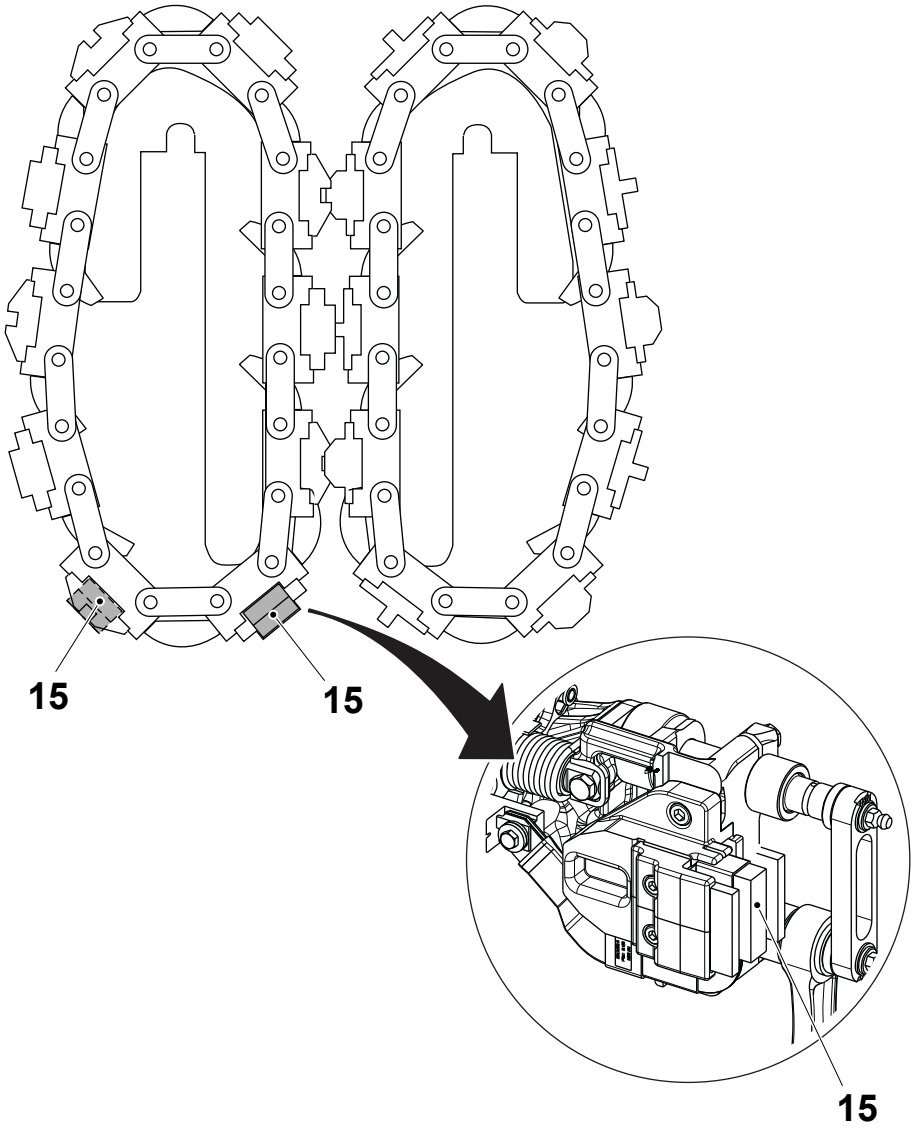

15 Ferrite

(Cont'd)

TechPub_2614345_0107 - 0404_3048142_01.fm

(Cont'd)

b) Remove the photocells brackets (16) and the sensor bracket (17).

c) Remove the waste box (18) by the screws (19).

d) Assemble in the reverse order.

e) Synchronize the jaw system, see 4-1 Jaw System - Synchronise.

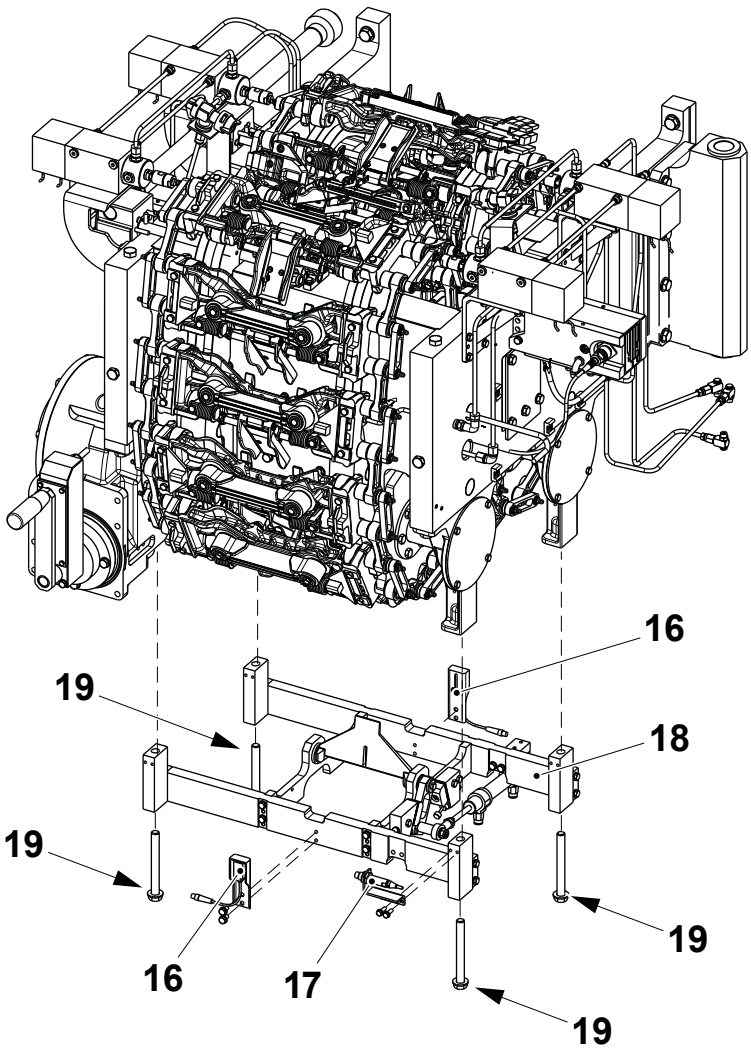

16 Photocell bracket
17 Sensor bracket
18 Waste box
19 Screw

TechPub_2614345_0107 - 0404_3048142_01.fm

4-7 Jaw System - Remove and Assemble Chains

Machine Status	Mains Power OFF Air OFF Steam ON Water OFF
Special Equipment	Pallet Truck Chain Lift Tool TP No. 2839739-0100
SPC Reference	648536-0400

Note! This procedure must be performed by at least two operators.

Follow the sequence below:

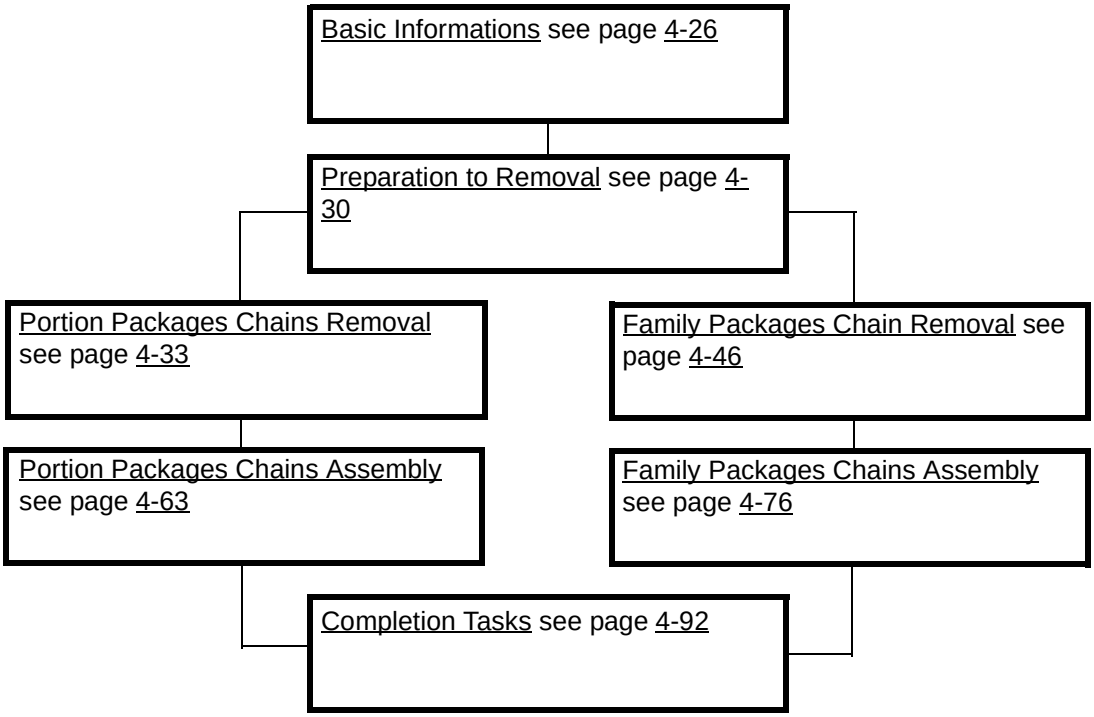

When connecting or disconnecting the chain links, always refer to Link Connections on page 4-56.

When connecting or disconnecting the dummy chain, always refer to Dummy Chain Connection on page 4-59.

(Cont'd)

TechPub_2614345_0107 - 0404_3048142_01.fm

(Cont'd)

Basic Informations

WARNING

Risk of entanglement.

Be careful not to trap your fingers between the links.

Shims are fitted to ensure that each volume box will produce a package of optimum size. For this reason it is important that mating pressure and sealing links are marked before the chains are removed.
When assembling, the numbered links must be matched again to ensure that packages are produced with the correct volume.

In the example below, the pressure and sealing jaws of link number 1 have been marked with an **X**.

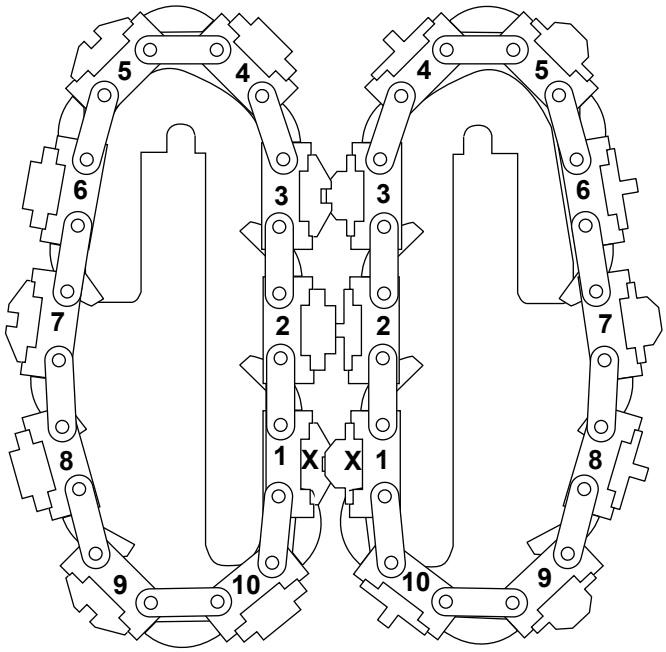

Sealing link chain Pressure link chain

(Cont'd)

TechPub_2614345_0107 - 0404_3048142_01.fm

(Cont'd)

WARNING

Risk of crushing.

Do not remove or assembly the chains without the Chain Lift Tool. The chain links are extremely heavy.

The chain removal and assembly must be done using the Chain Lift Tool shown below. The Chain Lift Tool is composed by:

- the dummy chain (1) which is used to lead a chain in or out of the jaw system engaging the other chain and avoiding sudden falls of the chain which is led in or out.
- the chain guide (2) which is used to guide the chains in or out the jaw system.

TechPub_2614345_0107 - 0404_3048142_01.fm

Chain Lift Tool for Portion Packages is shown

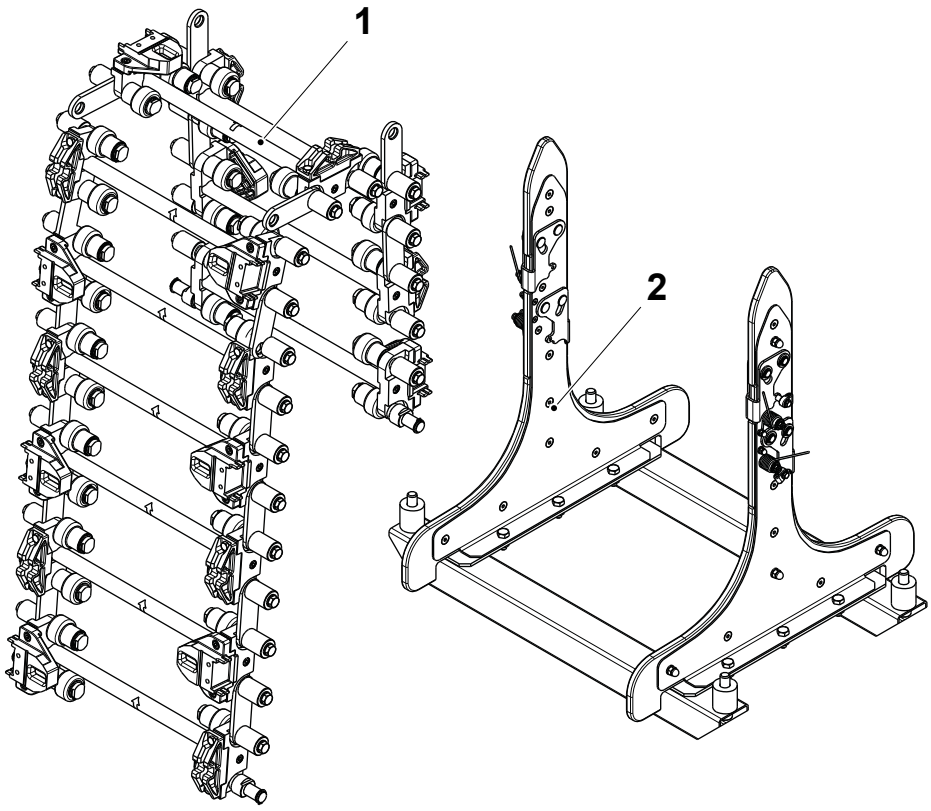

1 Dummy chain
2 Chain guide

(Cont'd)

(Cont'd)

Note! In the Chain Lift Tool for Family Packages, the chain guide (2) is composed by the upper parts (3) and the lower part.

Chain Lift Tool for Family Packages is shown

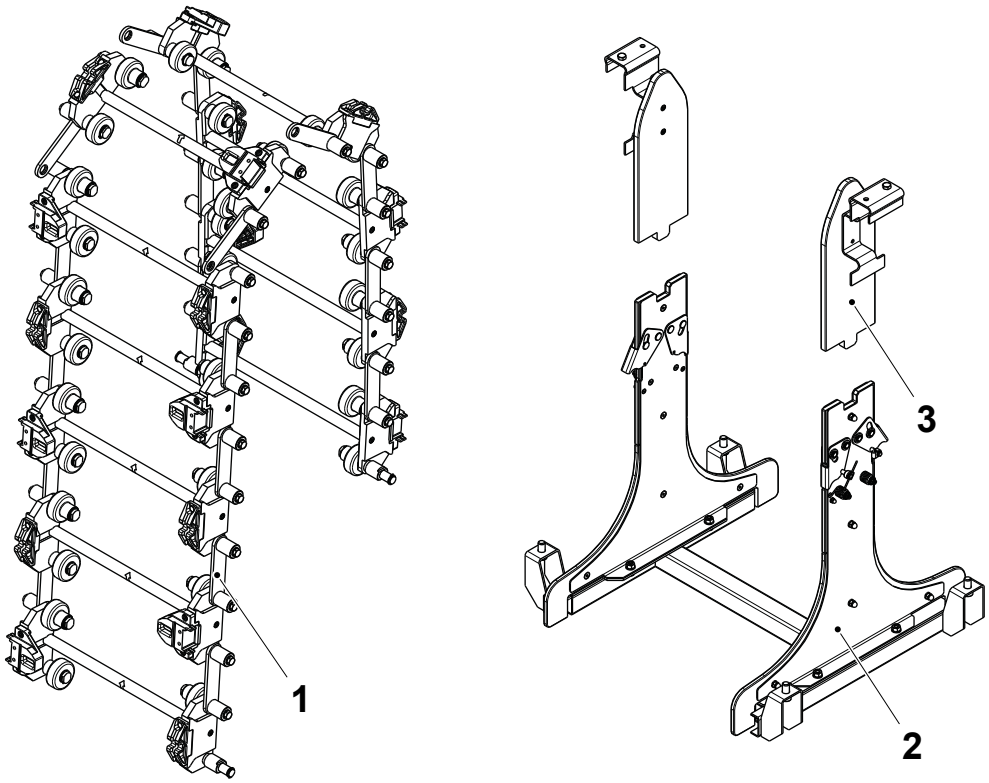

1 Dummy chain
2 Chain guide, lower part
3 Chain guide, upper part

(Cont'd)

TechPub_2614345_0107 - 0404_3048142_01.fm

(Cont'd)

CAUTION

Risk of damage to the equipment and/or personal injury.
Carefully inspect the Chain Lift Tool before using it.

Before using the Chain Lift Tool check that:

- all the screws are tightened
- the springs (4) are not damaged
- the springs (4) function correctly
- the connecting shafts (5) on both ends are tight
- the cams (6) are not bended or damaged.

Note! When not used, the Chain Lift Tool must be stored in a place dry and not exposed to the sunbeams.

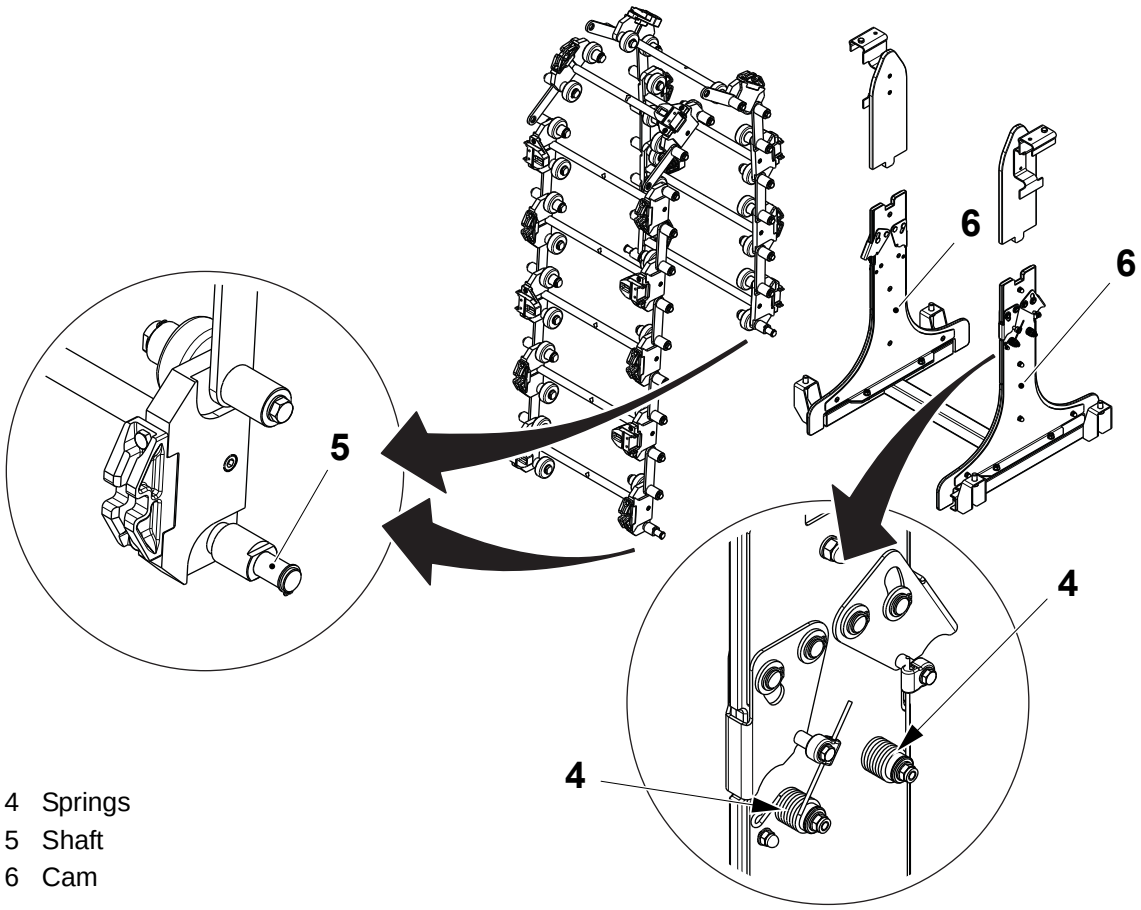

4 Springs
5 Shaft
6 Cam

(Cont'd)

TechPub_2614345_0107 - 0404_3048142_01.fm

(Cont'd)

Preparation to Removal

CAUTION

Risk of damage to the equipment.

When slipping off or inserting the busbar (4) pay attention to not damage the ferrite (5). Handle the ferrite (5) very carefully: it can be easily damaged.

a) Remove the waste box and swing the jaw system open, see 4-6 Jaw System - Remove Waste Box.

b) On every link of the sealing chain:
   - remove the screw (1) and the brackets (2)
   - remove the screws (3) and slip off the busbar (4)
   - remove the ferrite (5).

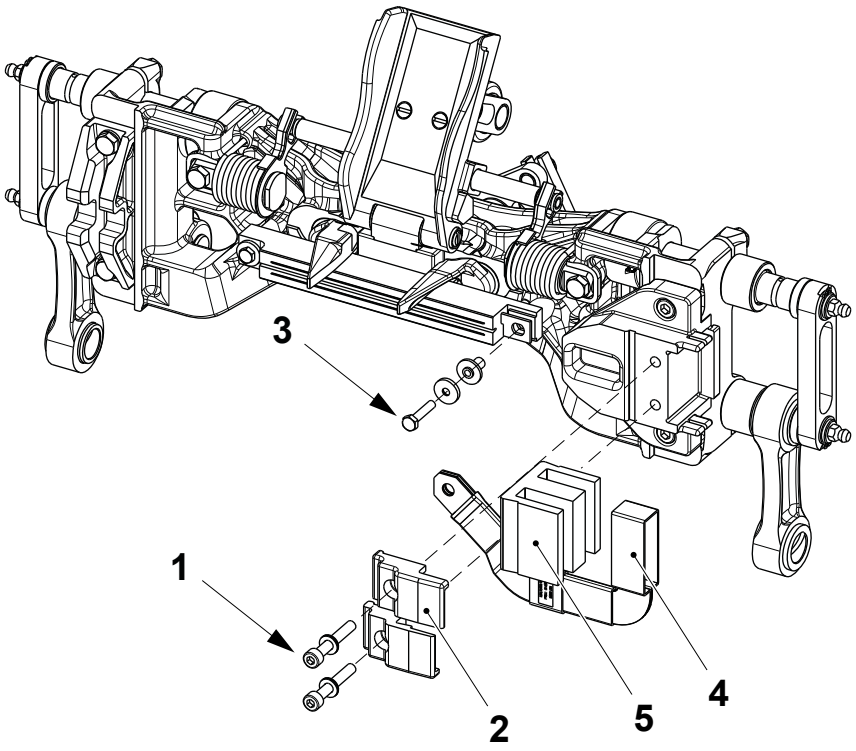

1 Screw
2 Screw
3 Bracket
4 Busbar
5 Ferrite

(Cont'd)

TechPub_2614345_0107 - 0404_3048142_01.fm

(Cont'd)

Note! The protection (6) is present only in Portion Packages machines.

c) Remove the protection (6) by the screws (7).

d) Remove both the IPT assemblies (8), see 4.6-1 Electrical Connection - Check Busbar and Core.

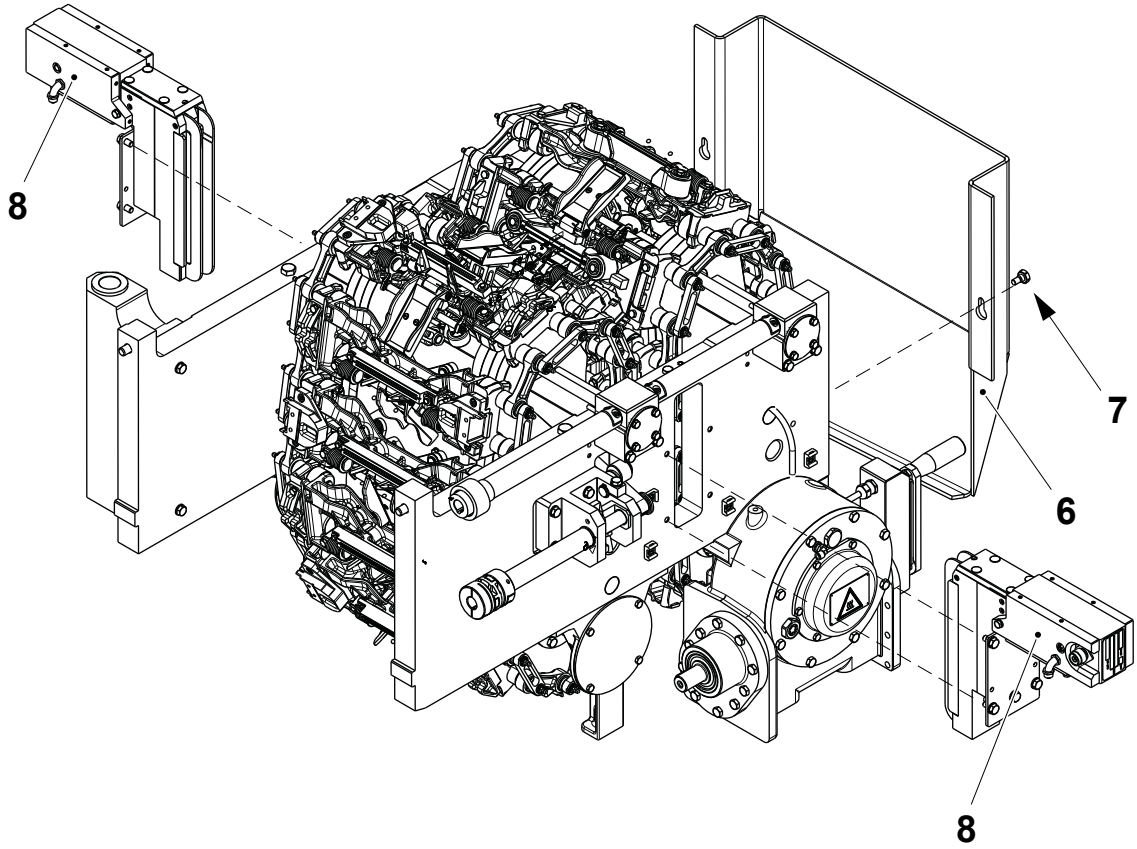

6 Protection
7 Screw
8 IPT assembly

(Cont'd)

TechPub_2614345_0107 - 0404_30481142_01.fm

(Cont'd)

e) On the reference link of the pressure chain, remove the mounting block (9) with the flag (10) by the screws (11).

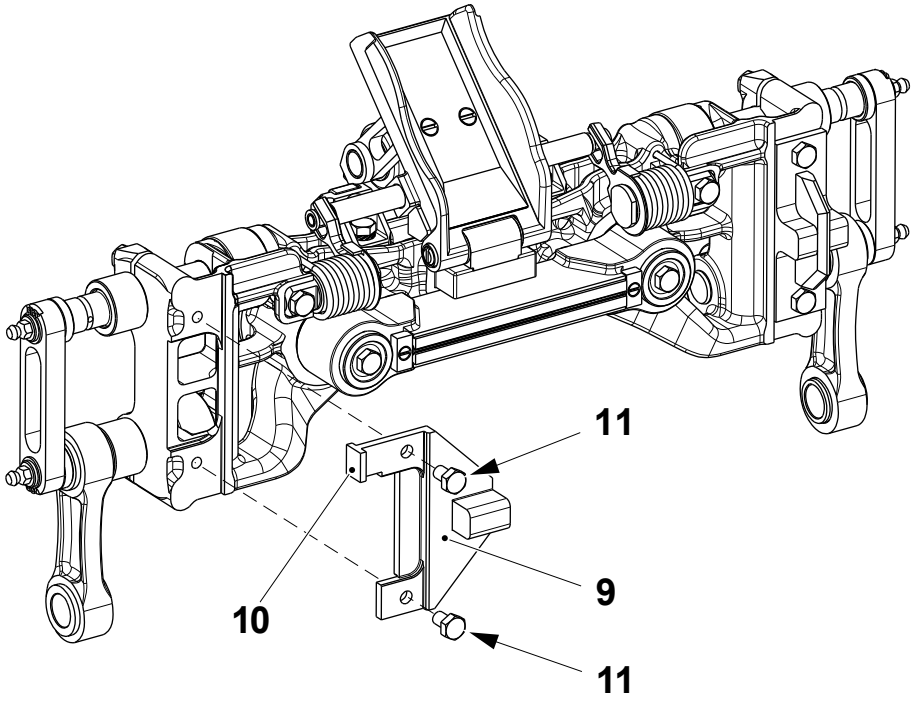

9 Mounting block
10 Flag
11 Screw

(Cont'd)

TechPub_2614345_0107 - 0404_3048142_01.fm

(Cont'd)

Portion Packages Chains Removal

a) Fit the chain guide (1) under the brackets (2) by the screws (3).

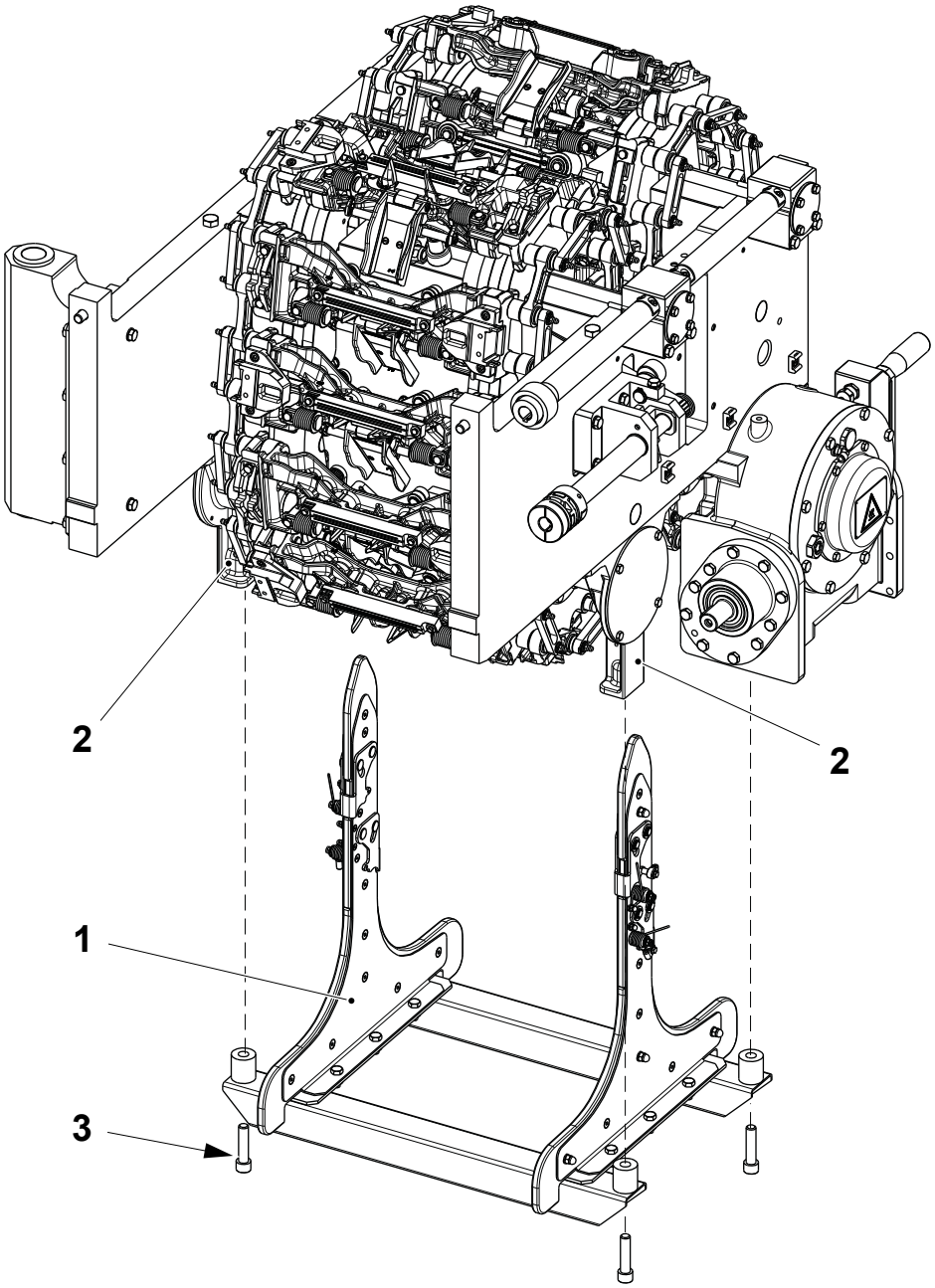

1 Chain guide
2 Bracket
3 Screw

(Cont'd)

TechPub_2614345_0107 - 0404_30481142_01.fm

(Cont'd)

CAUTION
Risk of damage to the equipment.
Pay attention to the external cleaning nozzle, see arrow, when moving the pallets close to the machine body.

b) Load a pallet truck with pallets and place a layer of cardboard on it. Push the pallet truck into position beneath the jaw system.

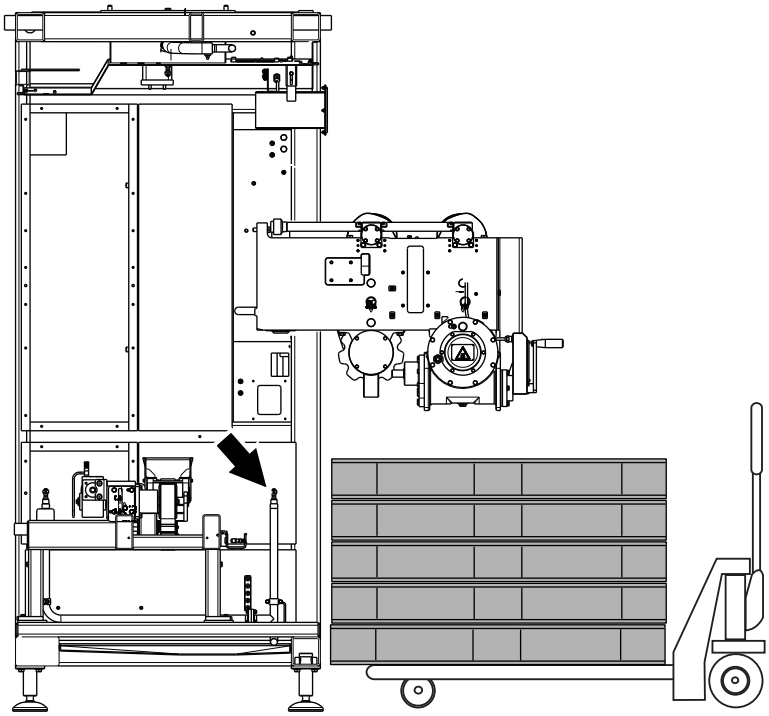

(Cont'd)

TechPub_2614345_0107 - 0404_3048142_01.fm

(Cont'd)

Note! Remove firstly the sealing link chain and then the pressure link chain.

c) To release the sealing link chain tension, insert two M8 x 80 hexagonal socket head screws (4) into the tensioning mechanism (5) and tighten them fully.

Note! Take care not to drop the screws into the jaw mechanism.

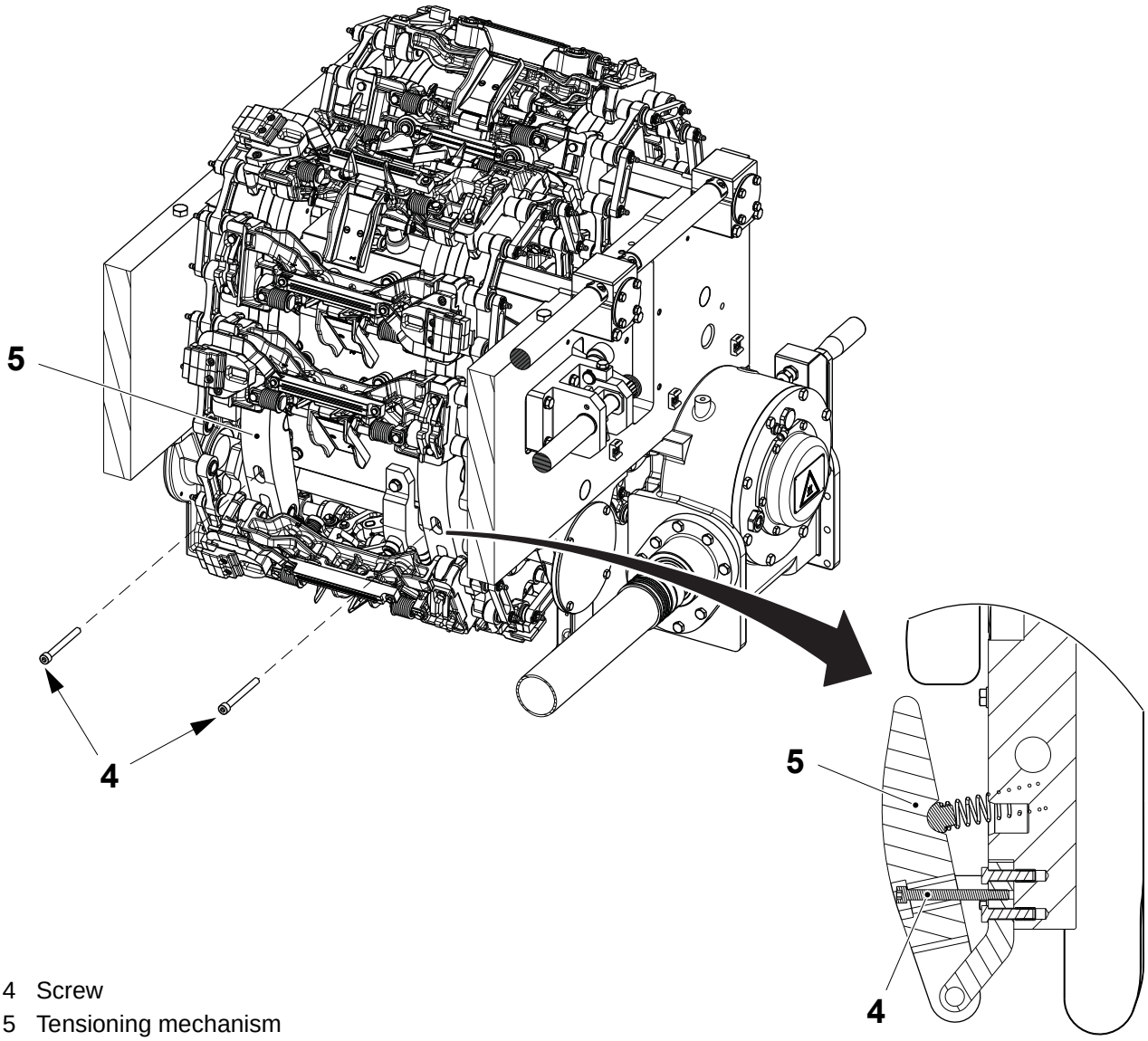

4 Screw
5 Tensioning mechanism

(Cont'd)

TechPub_2614345_0107 - 0404_30481142_01.fm

(Cont'd)

WARNING

Risk of crushing.

Do not access the area under the jaw system once the sealing link chain has been open.

d) Crank the jaw system until the link No. 10 of the sealing link chain is in the position indicated by the arrow, then separate it from the link No. 1, see Link Connections on page 4-56.

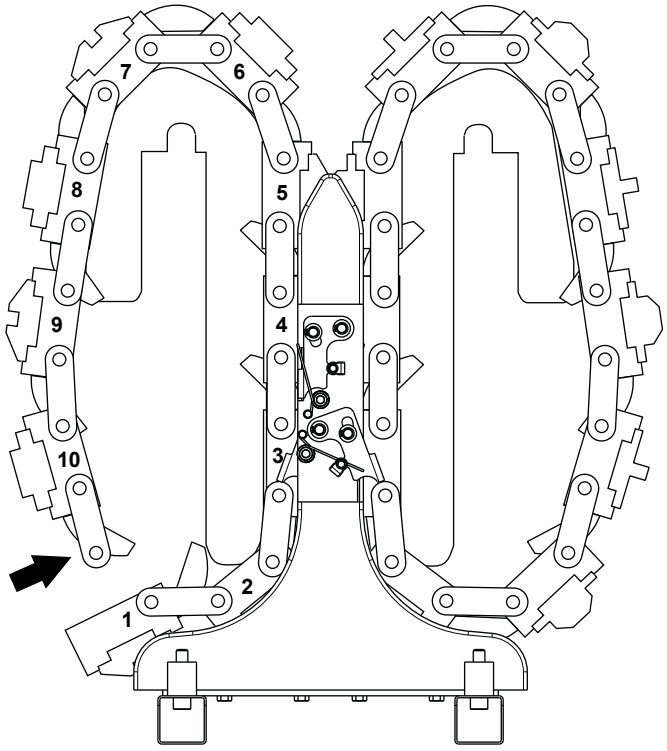

Sealing link chain Pressure link chain

(Cont'd)

TechPub_2614345_0107 - 0404_3048142_01.fm

(Cont'd)

WARNING

Risk of crushing.

Use caution when removing the chain due to the heavy weight. The chain must be always separated in two parts.

e) Start cranking the sealing link chain out of the jaw system.

f) When the link No. 10 is in the position indicated by the arrow, connect the dummy chain (6) to the link No.10, see Dummy Chain Connection on page 4-59.

g) Crank the dummy chain (6) into the jaw system while a second operator holds by hand the dummy chain (6): the sealing link chain must be guided onto the pallet keeping the dummy chain (6) slightly tensed.

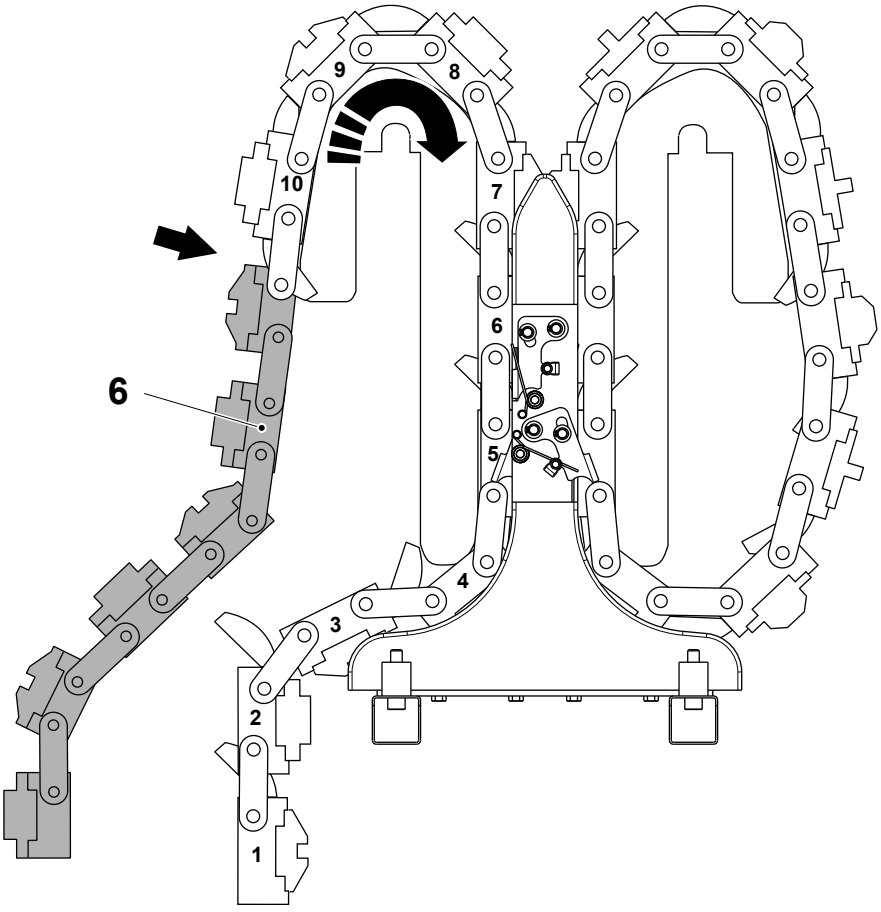

6 Dummy chain

(Cont'd)

TechPub_2614345_0107 - 0404_3048142_01.fm

(Cont'd)

Note! Keep the chain separated in two half parts for the assembly.

h) When 5 links are onto the pallet, separate the sealing link chain, see Link Connections on page 4-56 and remove the pallet with the half sealing link chain (7) above.

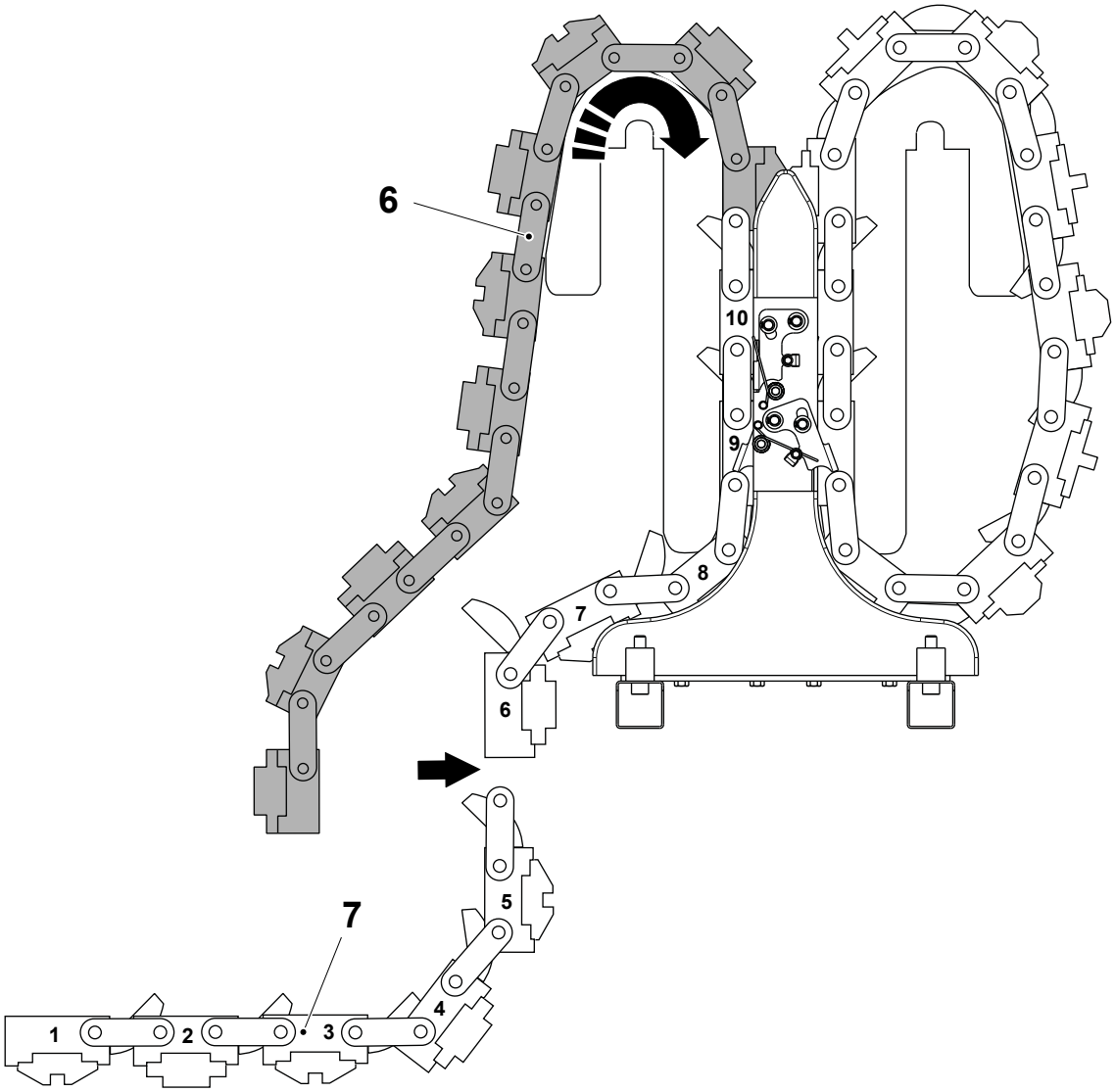

6 Dummy chain
7 Half sealing link chain

(Cont'd)

TechPub_2614345_0107 - 0404_3048142_01.fm

(Cont'd)

i) Put an other pallet under the jaw system and continue cranking the rest of the sealing link chain out of the jaw unit, while a second operator holds by hand the dummy chain (6): the chain must be guided onto the pallet keeping the dummy chain (6) slightly tensed.

j) When the other half of sealing link chain has exited the jaw unit, disconnect the dummy chain (6) and remove the pallet, see Dummy Chain Connection on page 4-59.

k) Crank the dummy chain (6) out of the jaw unit.

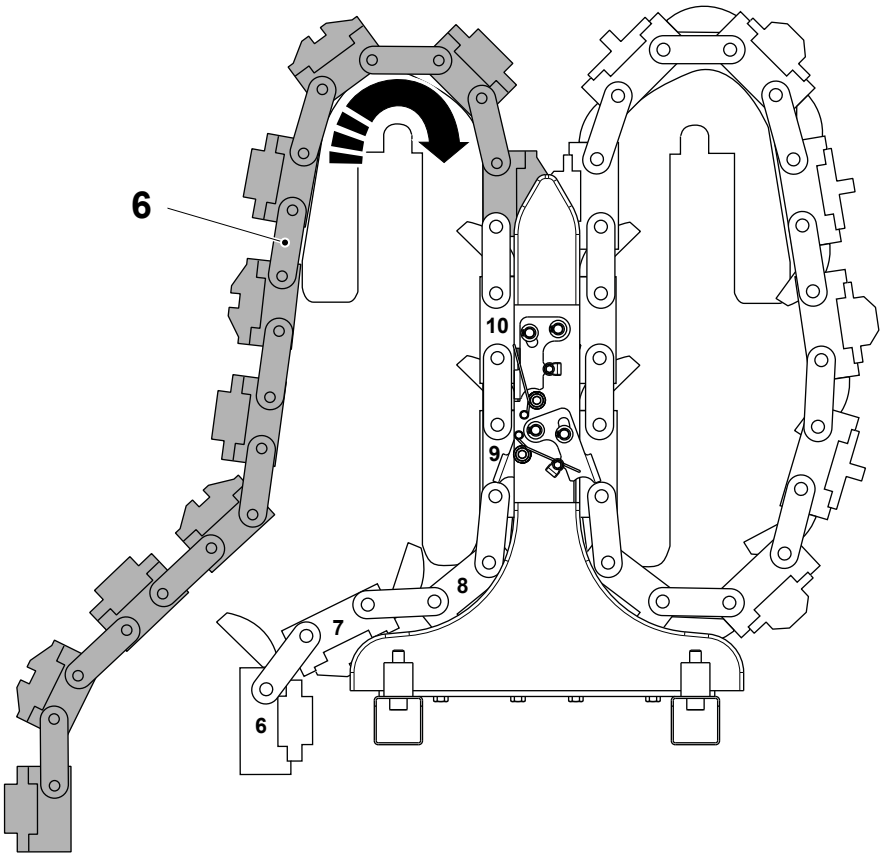

6 Dummy chain

(Cont'd)

TechPub_2614345_0107 - 0404_3048142_01.fm

(Cont'd)

l) To release the pressure link chain tension, insert two M8 x 80 hexagonal socket head screws (8) into the tensioning mechanism (9) and tighten them fully.

Note! Take care not to drop the screws into the jaw mechanism.

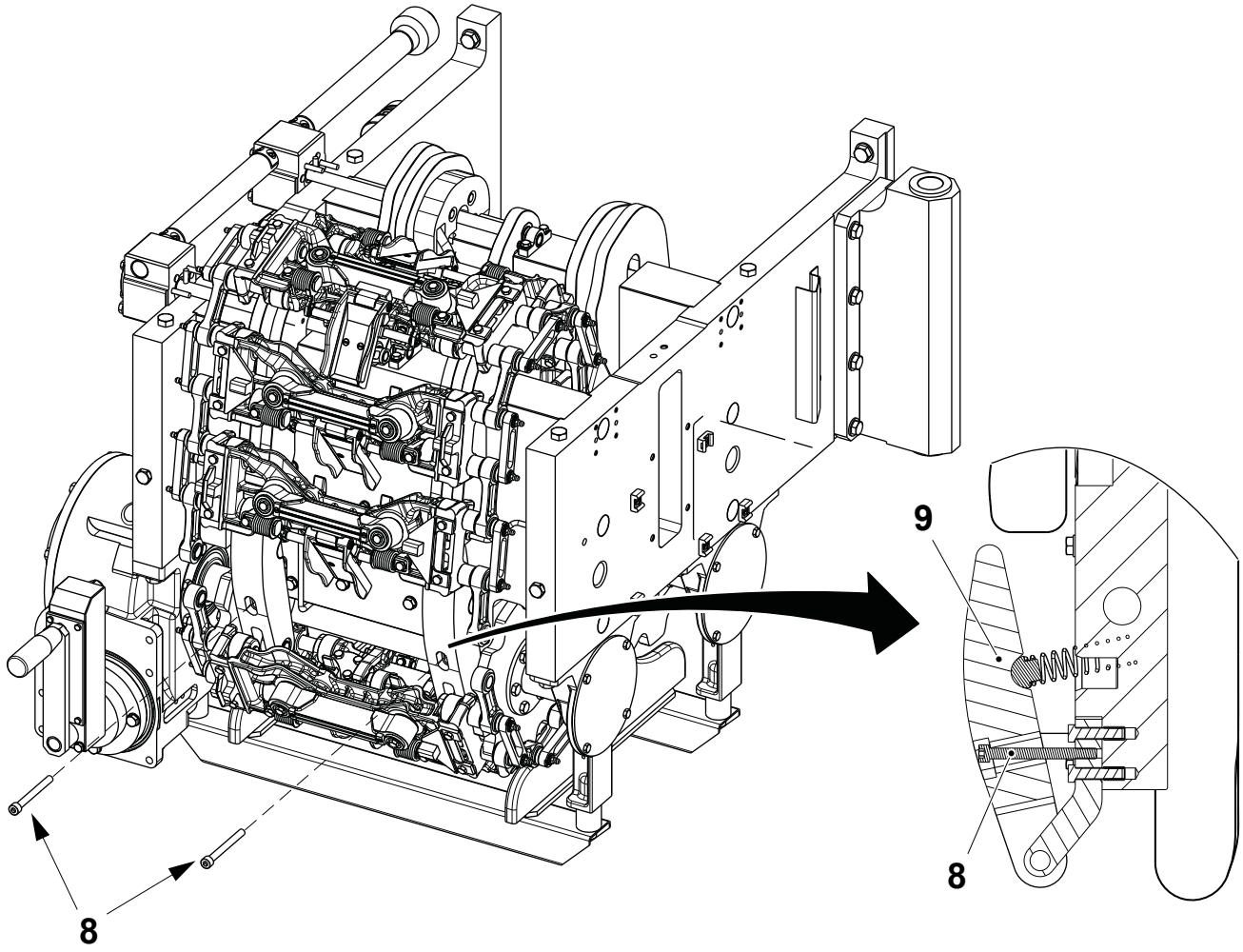

TechPub_2614345_0107 - 0404_3048142_01.fm

8 Screw
9 Tensioning mechanism

(Cont'd)

(Cont'd)

CAUTION

Risk of damage to the equipment.

Pay attention to the external cleaning nozzle, see arrow, when moving the pallets close to the machine body.

m) Load a pallet truck with pallets and place a layer of cardboard on it. Push the pallet truck into position beneath the jaw system.

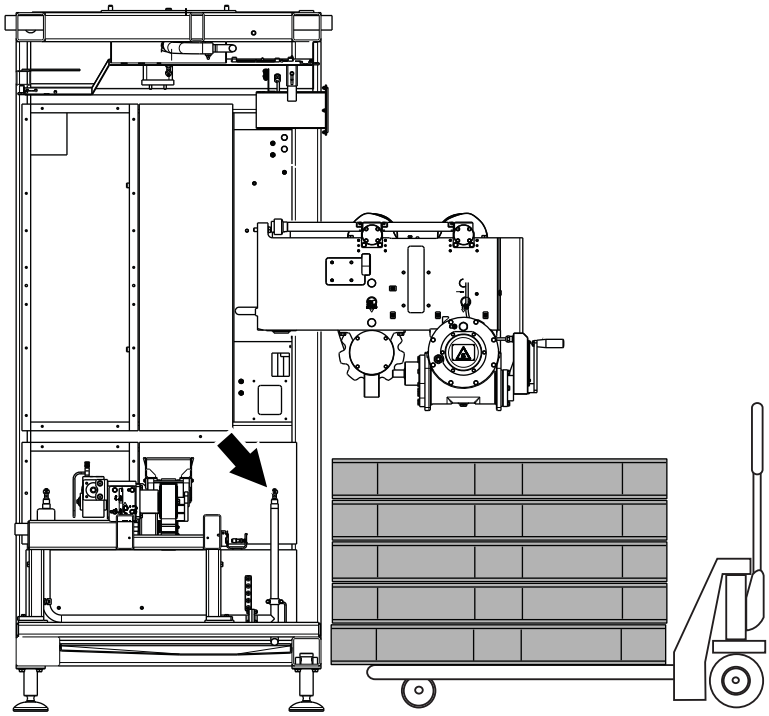

(Cont'd)

TechPub_2614345_0107 - 0404_30481142_01.fm

(Cont'd)

WARNING
Risk of crushing.
Use caution when removing the chain due to the heavy weight. The chain must be always separated in two parts.

WARNING
Risk of crushing.
Do not access the area under the jaw system once the pressure link chain has been open.

n) Crank the pressure link chain until the link No. 10 in the position indicated by the arrow, then separate it from the link No. 1, see Link Connections on page 4-56.

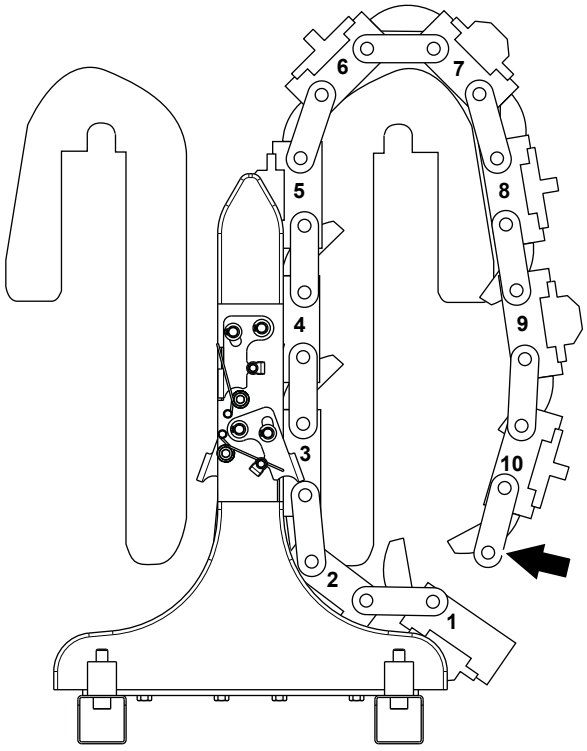

(Cont'd)

TechPub_2614345_0107 - 0404_3048142_01.fm

(Cont'd)

o) Start cranking the pressure link chain out of the jaw system.

p) When the link No. 10 is in the position indicated by the arrow, connect the dummy chain (6) to the link No.10, see Dummy Chain Connection on page 4-59.

q) Crank the dummy chain (6) into the jaw system and guide the pressure link chain onto the pallet.

r) Crank the dummy chain (6) into the jaw system while a second operator holds by hand the dummy chain (6): the pressure link chain must be guided onto the pallet keeping the dummy chain (6) slightly tensed.

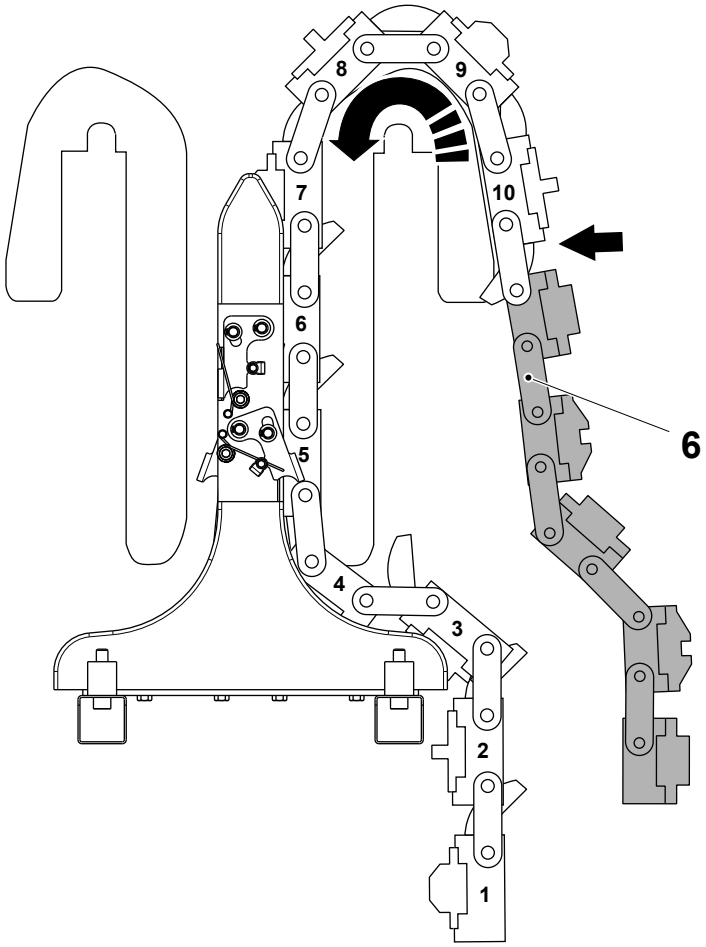

6 Dummy chain

(Cont'd)

TechPub_2614345_0107 - 0404_3048142_01.fm

(Cont'd)

Note! Keep the chain separated in two half parts for the assembly.

s) When 5 links are onto the pallet, separate the chain, see Link Connections on page 4-56 and remove the pallet with the half pressure link chain (10) above.

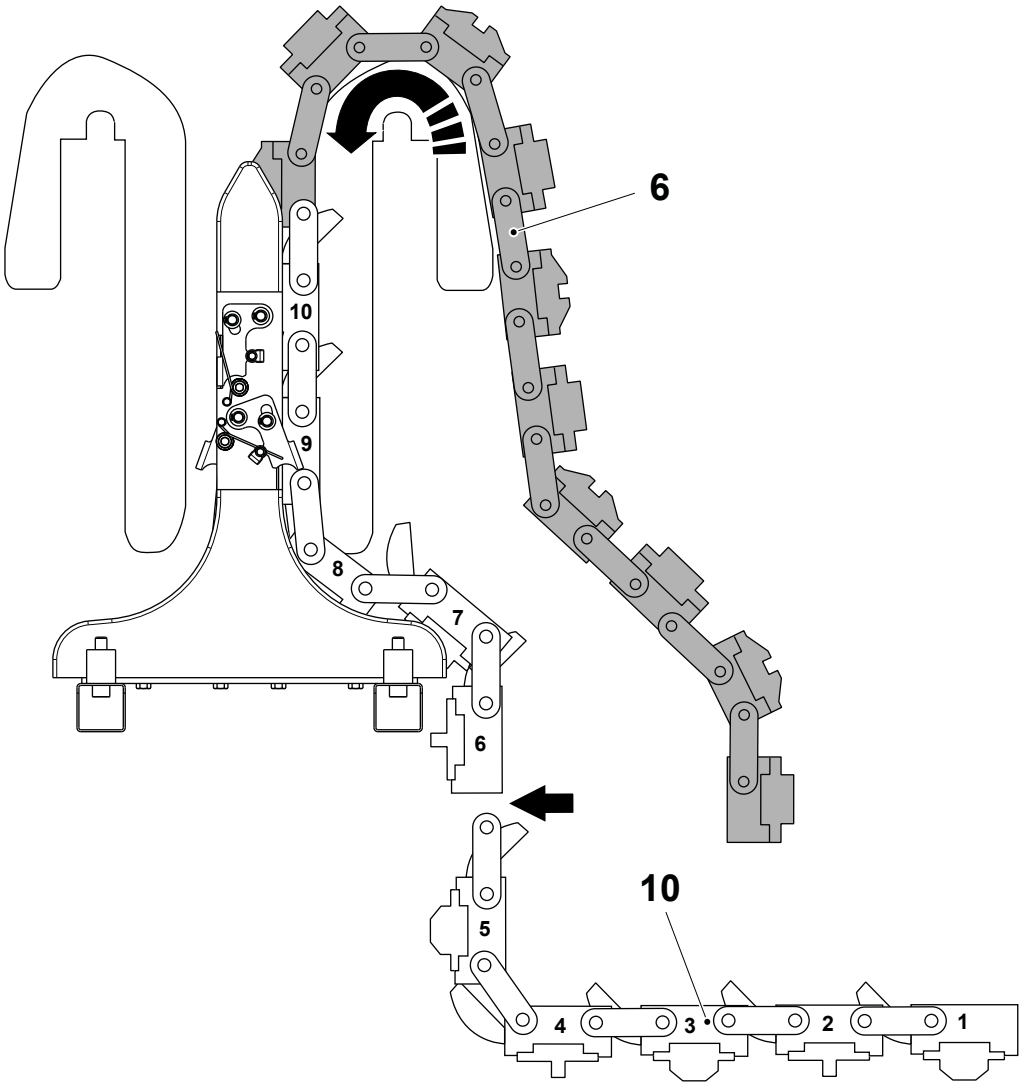

6 Dummy chain
10 Half pressure link chain

(Cont'd)

TechPub_2614345_0107 - 0404_3048142_01.fm

(Cont'd)

t) Put an other pallet under the jaw system and continue cranking the rest of the pressure link chain out of the jaw unit while a second operator holds by hand the dummy chain (6): the chain must be guided onto the pallet keeping the dummy chain (6) slightly tensed.

u) When the other half of pressure link chain has exited the jaw unit, disconnect the dummy chain (6) and remove the pallet, see Dummy Chain Connection on page 4-59.

v) Crank the dummy chain (6) out of the jaw unit.

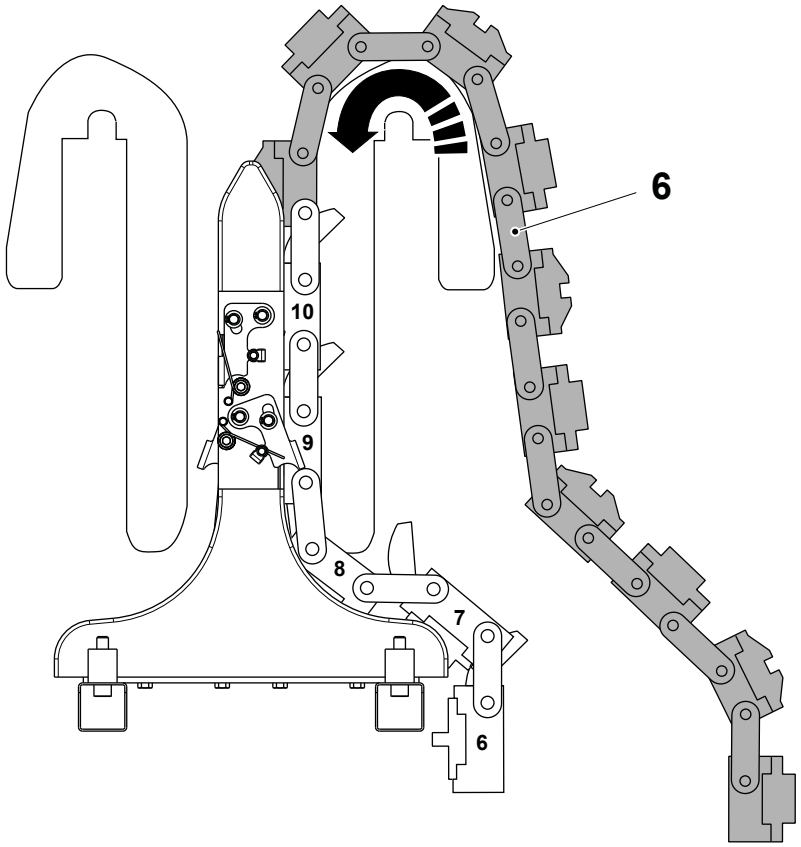

6 Dummy chain

(Cont'd)

TechPub_2614345_0107 - 0404_30481142_01.fm

(Cont'd)

Family Packages Chain Removal

a) Fit the lower part of the chain guide (1) under the brackets (2) by the screws (3).

b) Insert the upper parts of the chain guide (4) on both sides of the jaw system frame and secure them by the screws (5).

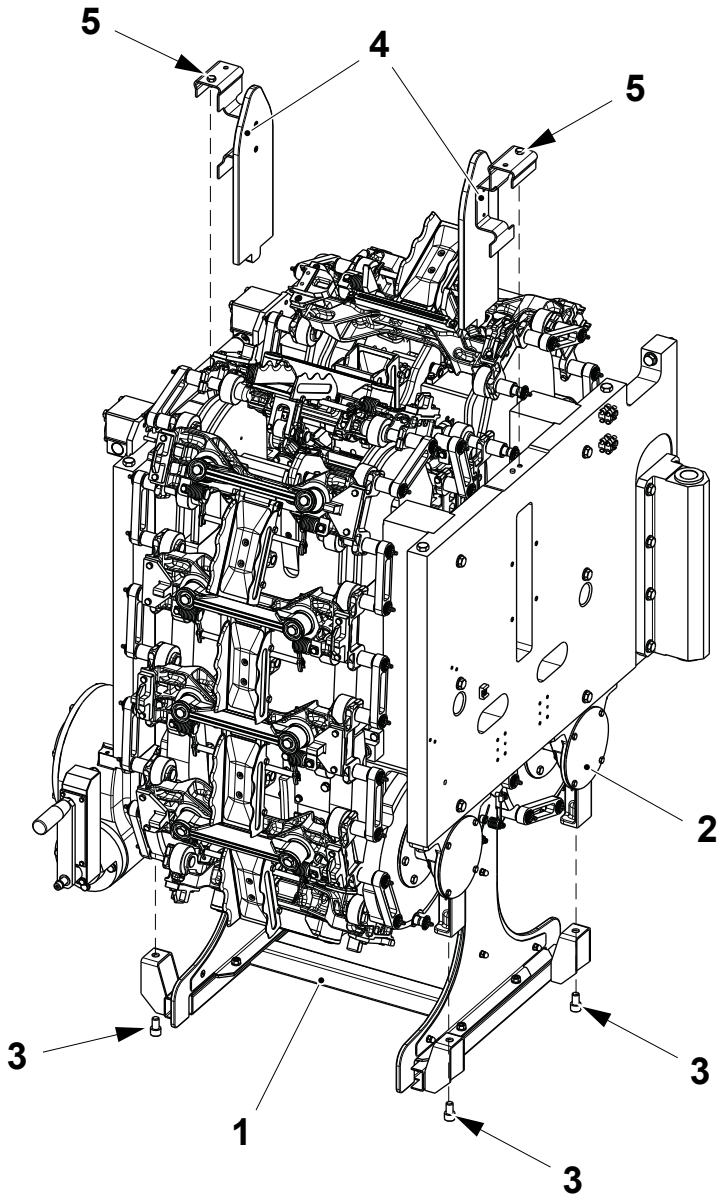

1 Chain guide, lower part
2 Brackets
3 Screw
4 Chain guide, upper part
5 Screw

(Cont'd)

TechPub_2614345_0107 - 0404_3048142_01.fm

(Cont'd)

CAUTION

Risk of damage to the equipment.

Pay attention to the external cleaning nozzles (6) and to the infeed chute (7) when moving the pallets into the machine body.

c) Load two pallet trucks with pallets. Push one pallet truck into position beneath the jaw system and the other in the opposite side of the machine body.

d) Fit an extension (8) of the plane through the machine body and lean it onto the two pallet planes, then place a layer of cardboard on it.

Note! The plane created by the pallets must be placed 900-1000 mm from the ground.

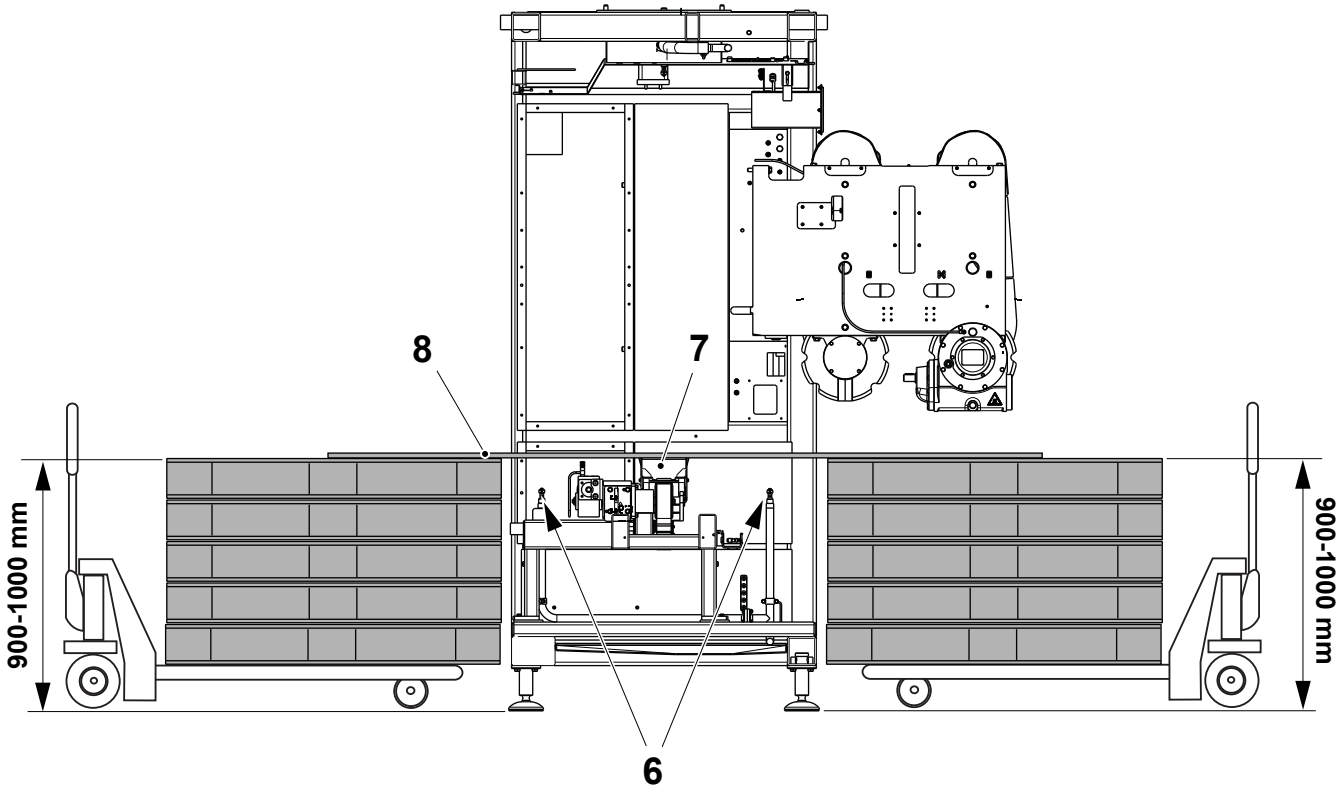

6 Nozzle
7 Infeed chute
8 Extension

(Cont'd)

TechPub_2614345_0107 - 0404_3048142_01.fm

(Cont'd)

Note! Remove firstly the sealing link chain and then the pressure link chain.

e) To release the sealing link chain tension, insert two M8 x 80 hexagonal socket head screws (9) into the tensioning mechanism (10) and tighten them fully.

Note! Take care not to drop the screws into the jaw mechanism.

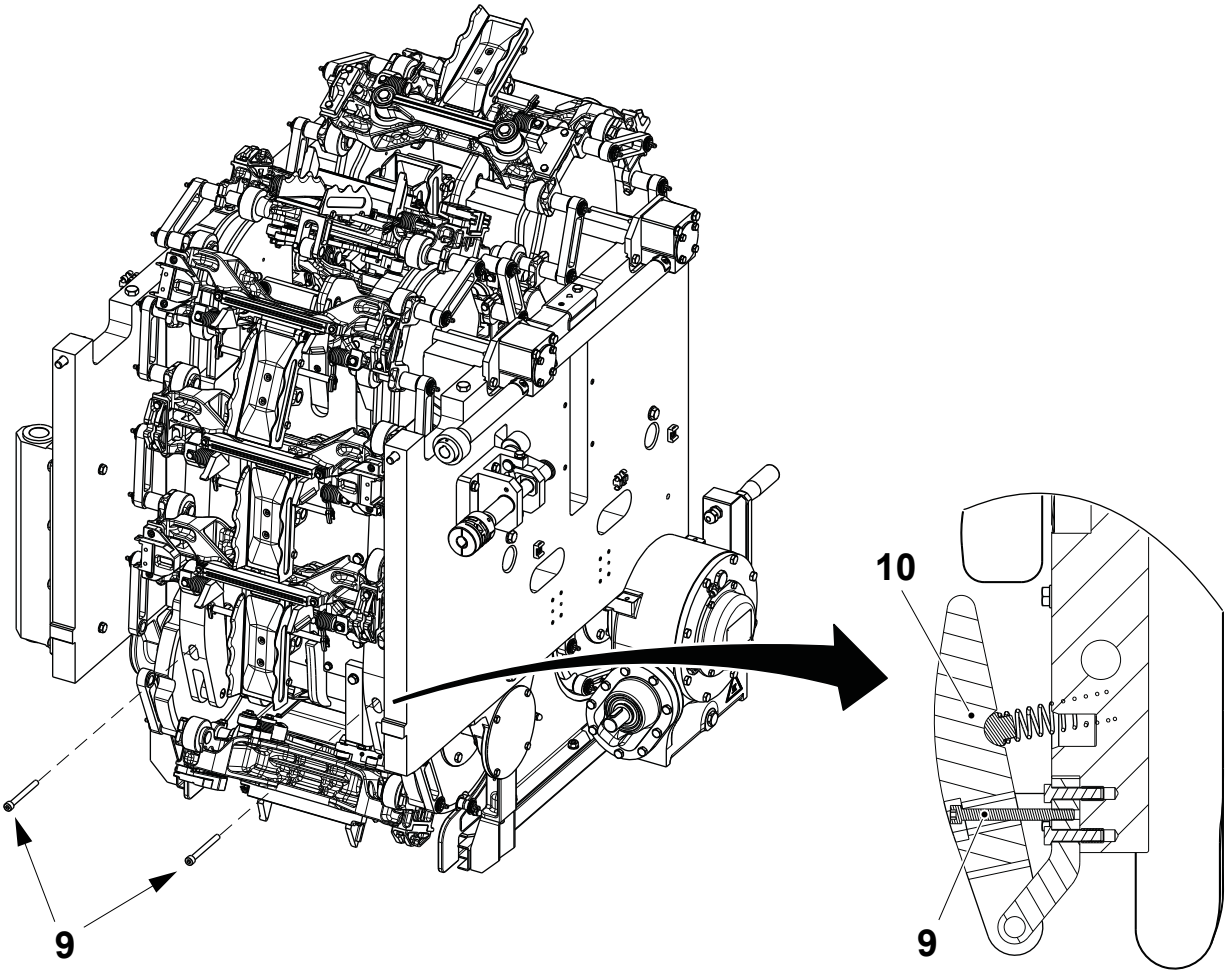

9 Screw
10 Tensioning mechanism

(Cont'd)

TechPub_2614345_0107 - 0404_3048142_01.fm

(Cont'd)

WARNING

Risk of crushing.

Do not access the area under the jaw system once the sealing link chain has been open.

f) Crank the jaw system until the link No. 10 of the sealing link chain is in the position indicated by the arrow, then separate it from the link No. 1, see Link Connections on page 4-56.

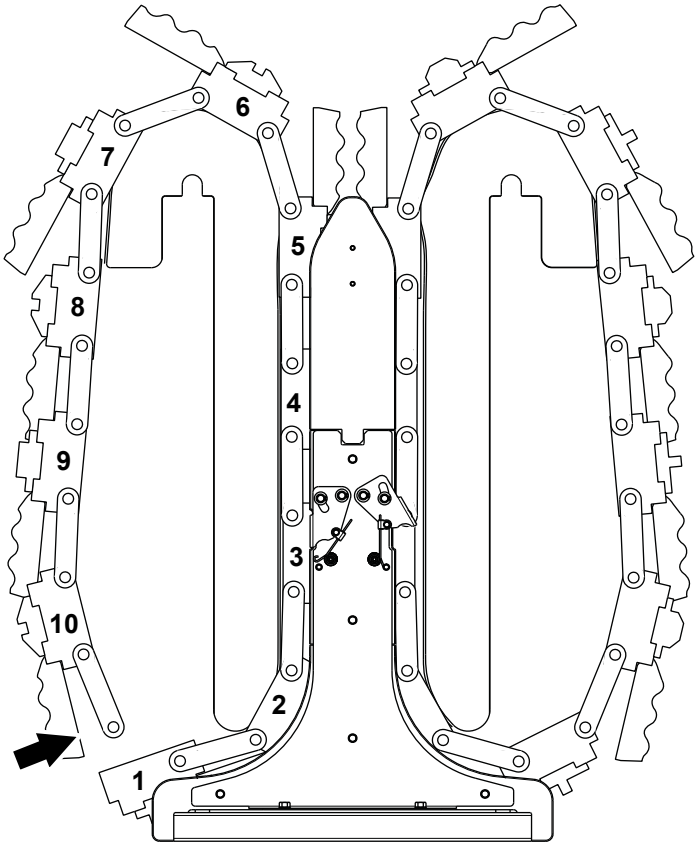

(Cont'd)

TechPub_2614345_0107 - 0404_3048142_01.fm

(Cont'd)

WARNING

Risk of crushing.

Use caution when removing the chain due to the heavy weight. Remove always two links per time.

g) Start cranking the sealing link chain out of the jaw system.

h) When two links are onto the plane, separate them from the sealing link chain, see Link Connections on page 4-56 and remove the plane with the two sealing link chain above.

i) Connect the dummy chain (11) to the link No.10, see Dummy Chain Connection on page 4-59.

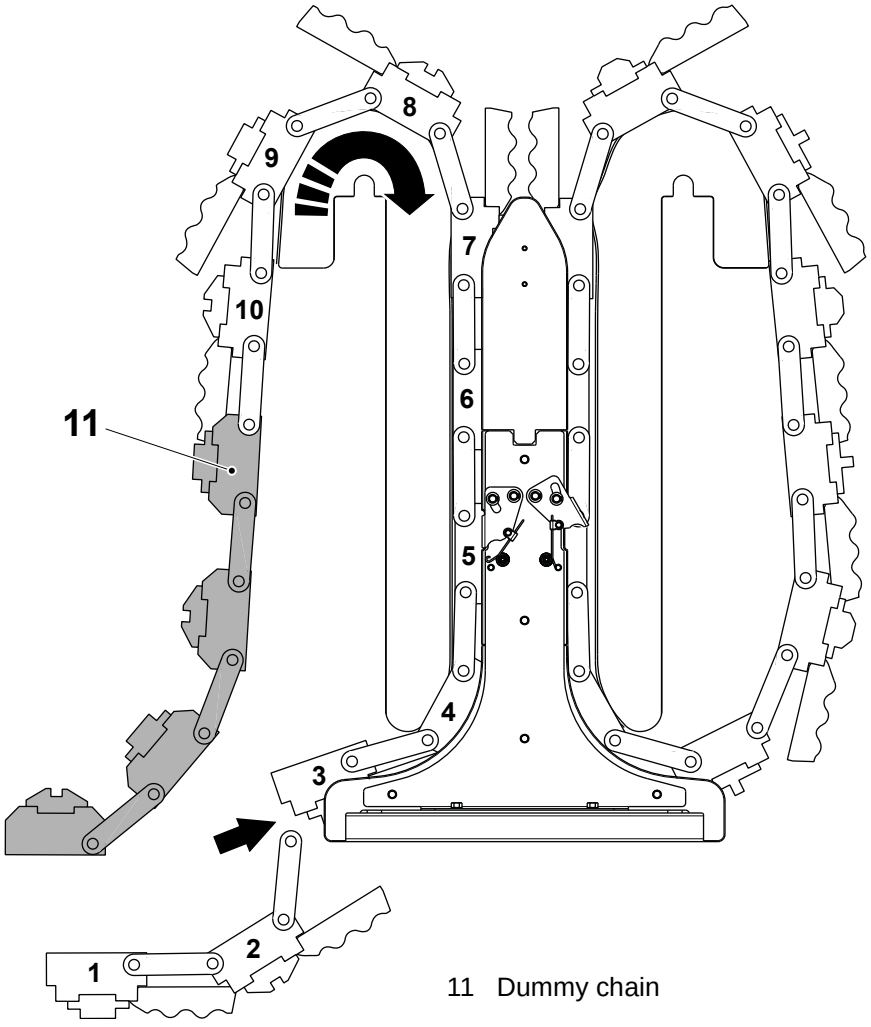

11 Dummy chain

(Cont'd)

TechPub_2614345_0107 - 0404_3048142_01.fm

(Cont'd)

Note! When cranking the dummy chain (11) into the jaw system pay attention that it does not interfere with the exiting sealing link chain.

Note! Check the engagement of the dummy chain (11) with the pressure link chain when they mate in the top position.

j) Crank the dummy chain (11) into the jaw system.

k) When other two links are onto the pallet, separate them from the sealing link chain, see Link Connections on page 4-56 and remove the plane with the removed links above.

l) Put an other plane onto the pallets and continue cranking the rest of the sealing link chain out of the jaw unit, always removing two link per time.

m) Crank the dummy chain (11) out of the jaw unit.

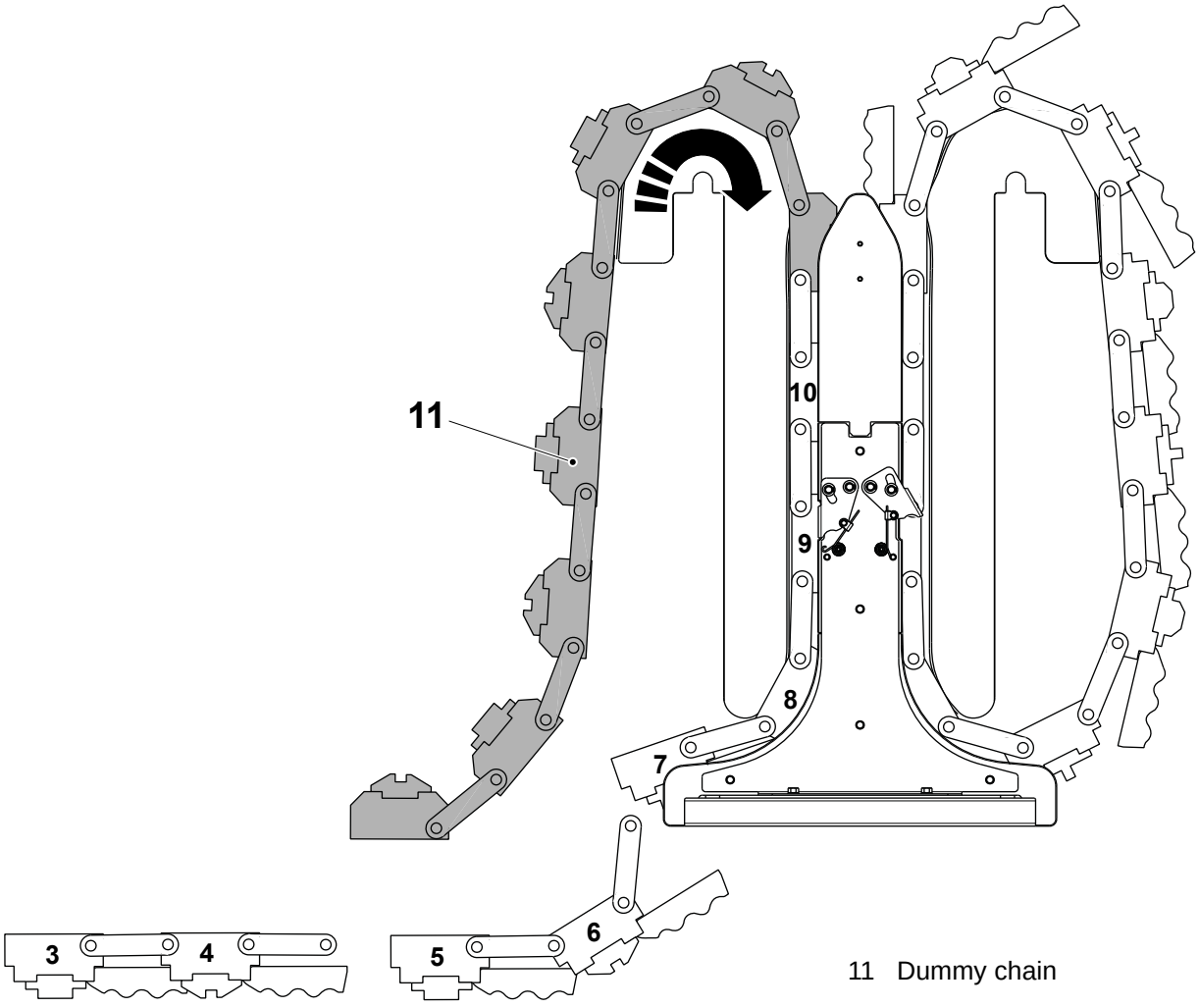

11 Dummy chain

(Cont'd)

TechPub_2614345_0107 - 0404_3048142_01.fm

(Cont'd)

n) To release the pressure link chain tension, insert two M8 x 80 hexagonal socket head screws (12) into the tensioning mechanism (13) and tighten them fully.

Note! Take care not to drop the screws into the jaw mechanism.

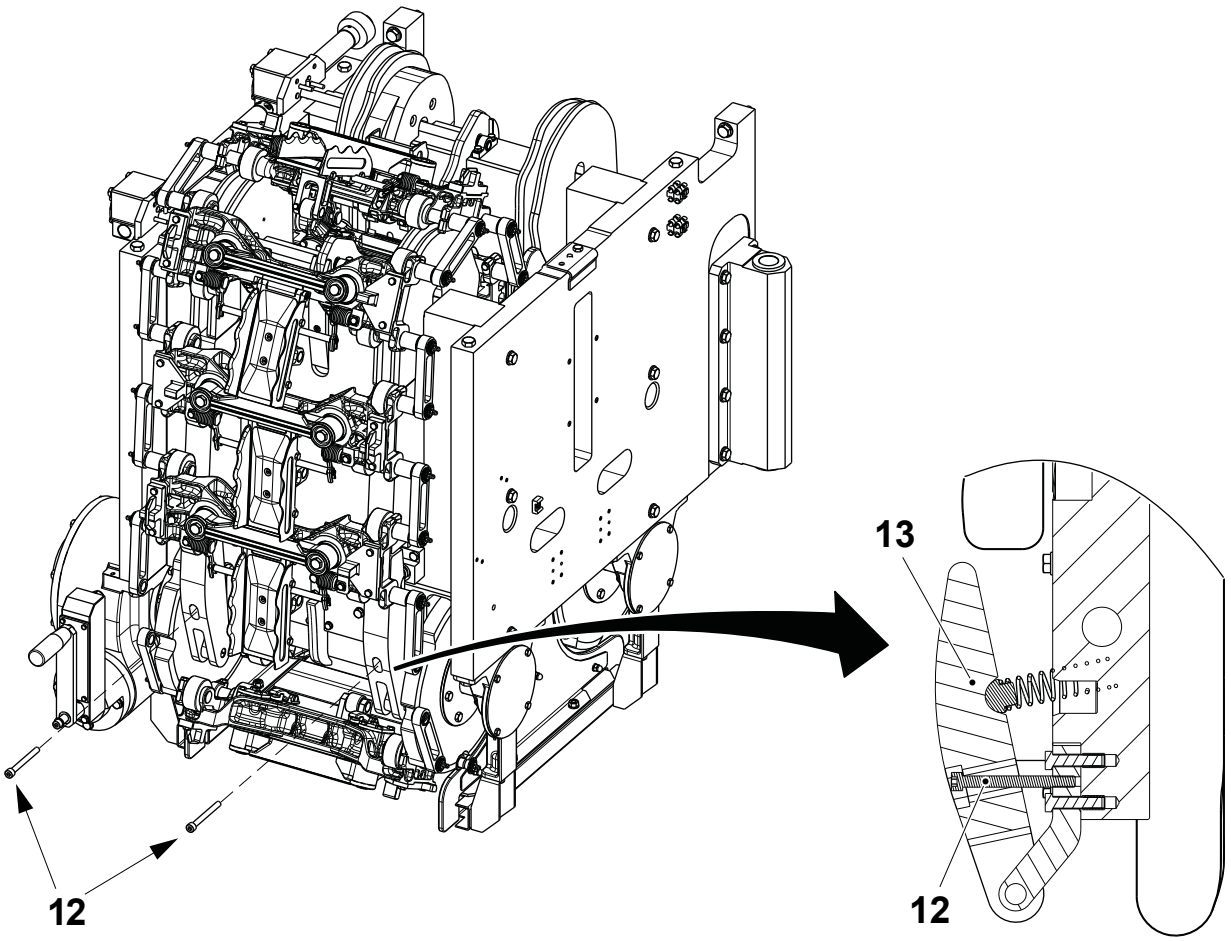

12 Screw
13 Tensioning mechanism

TechPub_2614345_0107 - 0404_3048142_01.fm

(Cont'd)

(Cont'd)

WARNING

Risk of crushing.

Use caution when removing the chain due to the heavy weight. Remove always two links per time.

WARNING

Risk of crushing.

Do not access the area under the jaw system once the pressure link chain has been open.

o) Crank the pressure link chain until the link No. 10 in the position indicated by the arrow, then separate it from the link No. 1, see Link Connections on page 4-56.

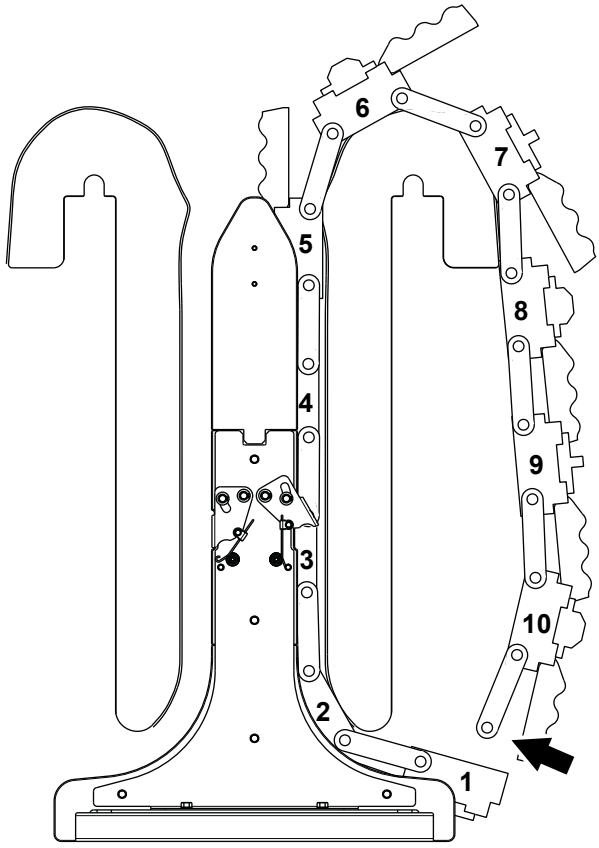

(Cont'd)

TechPub_2614345_0107 - 0404_3048142_01.fm

(Cont'd)

WARNING

Risk of crushing.

Use caution when removing the chain due to the heavy weight. Remove always two links per time.

p) Start cranking the pressure link chain out of the jaw system.

q) When two links are onto the plane, separate them from the pressure link chain, see Link Connections on page 4-56 and remove the plane with the two pressure link chain above.

r) Connect the dummy chain (11) to the link No.10, see Dummy Chain Connection on page 4-59.

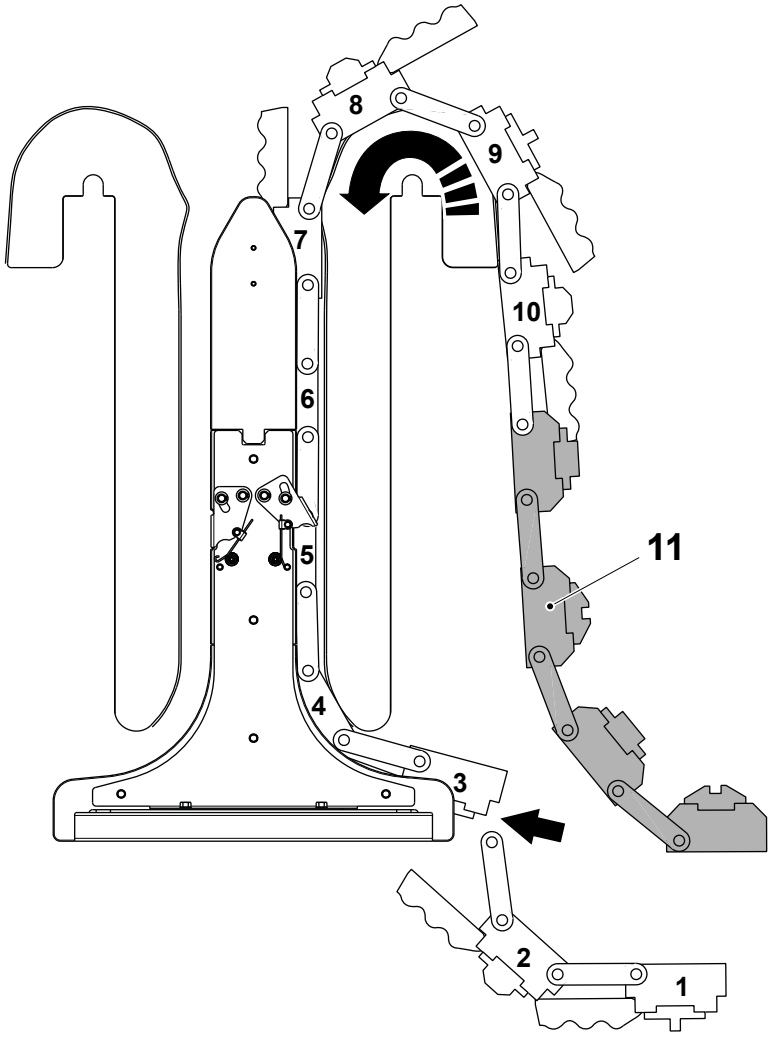

11 Dummy chain

(Cont'd)

TechPub_2614345_0107 - 0404_3048142_01.fm

(Cont'd)

Note! When cranking the dummy chain (11) into the jaw system pay attention that it not interfere with the exiting pressure link chain.

s) Crank the dummy chain (11) into the jaw system.

t) When other two links are onto the pallet, separate them from the pressure link chain, see Link Connections on page 4-56 and remove the plane with the removed links above.

u) Put an other plane onto the pallets and continue cranking the rest of the pressure link chain out of the jaw unit, always removing two link at a time.

v) Crank the dummy chain (11) out of the jaw unit.

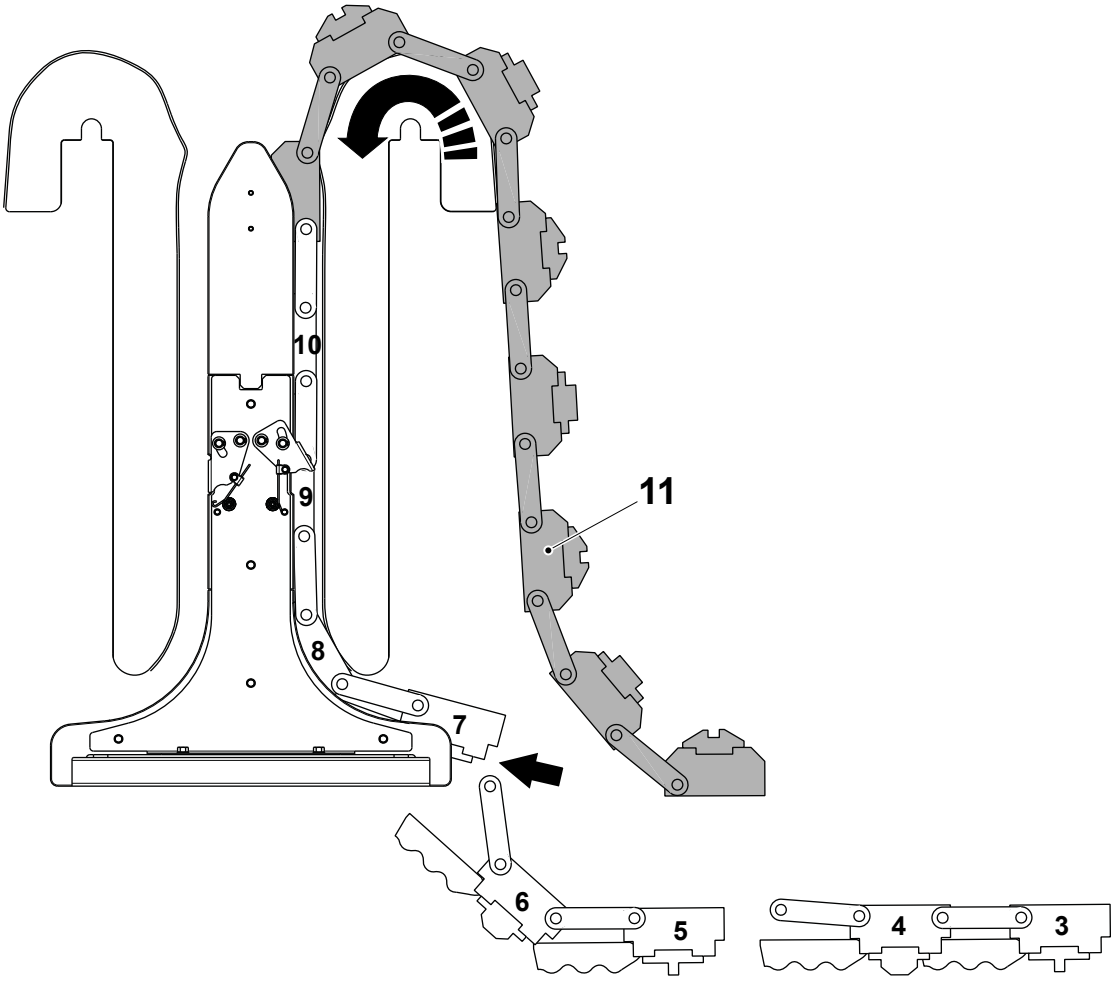

11 Dummy chain

(Cont'd)

TechPub_2614345_0107 - 0404_30481142_01.fm

(Cont'd)

Link Connections

Follow this instructions every time in the removal or assembly procedure the links must be separated or joined.

Note! Valid for Portion Packages links.

- To separate the links, on both ends:
  - remove the retaining rings (1) and the reinforcing links (2)
  - remove the spacers (3) and the chain link (4).

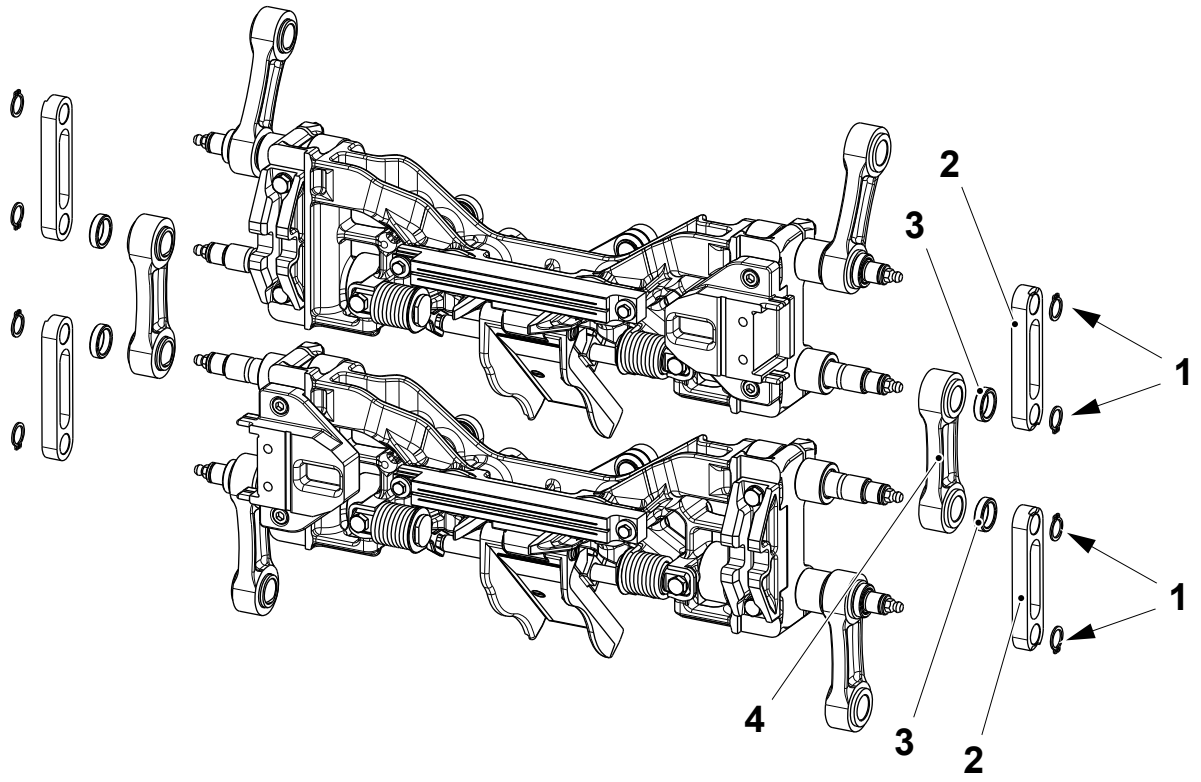

1 Retaining ring
2 Reinforcing link
3 Spacer
4 Chain link

(Cont'd)

TechPub_2614345_0107 - 0404_3048142_01.fm

(Cont'd)

- To join the links, on both ends:
  - fit the chain link (4) and the spacers (3)
  - fit the reinforcing links (2) and the retaining rings (1).

Note! Provide an amount of retaining rings (1) as spare parts. They may be easily damaged or lost.

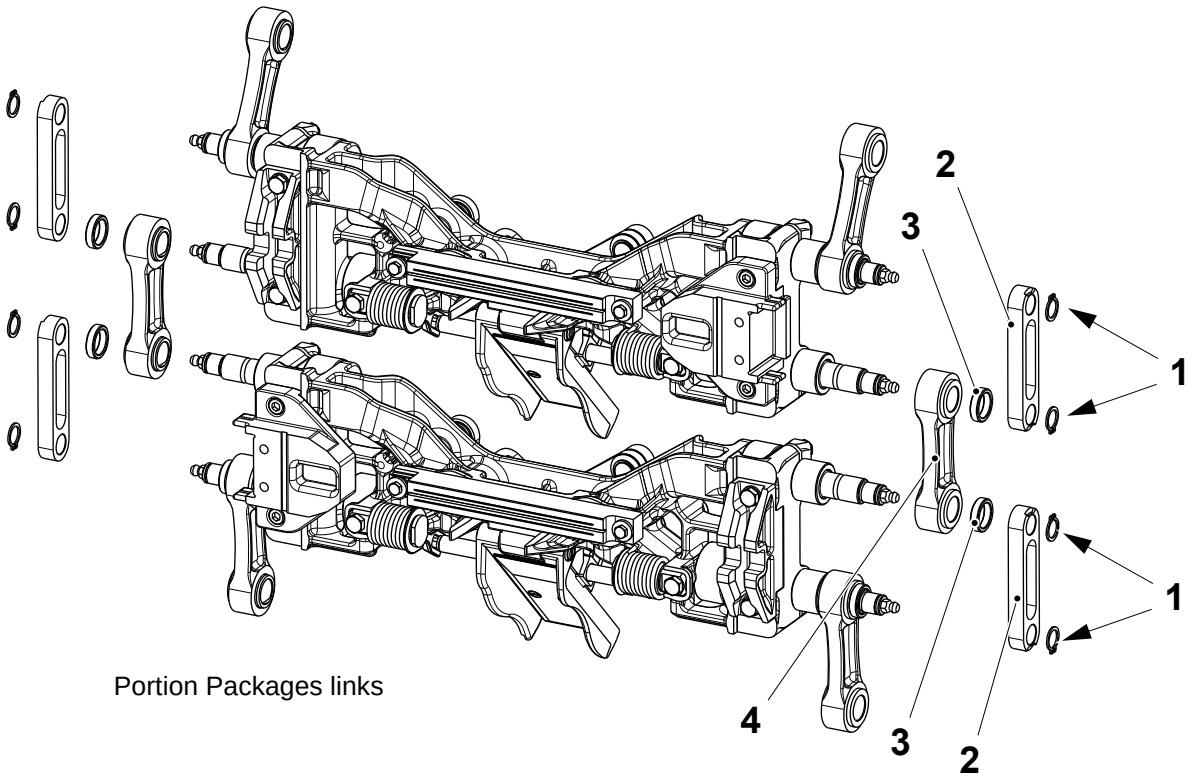

Portion Packages links

1 Retaining ring
2 Reinforcing link
3 Spacer
4 Chain link

(Cont'd)

TechPub_2614345_0107 - 0404_30481142_01.fm

(Cont'd)

Note! Valid for Family Packages links.

- To separate the links, on both ends remove the retaining rings (1), the washers (2) and extract the chain link (3).
- To join the links, on both ends fit the chain link (3), the washers (2) and secure them by the retaining rings (1).

Note! Provide an amount of retaining rings (1) as spare parts. They may be easily damaged or lost.

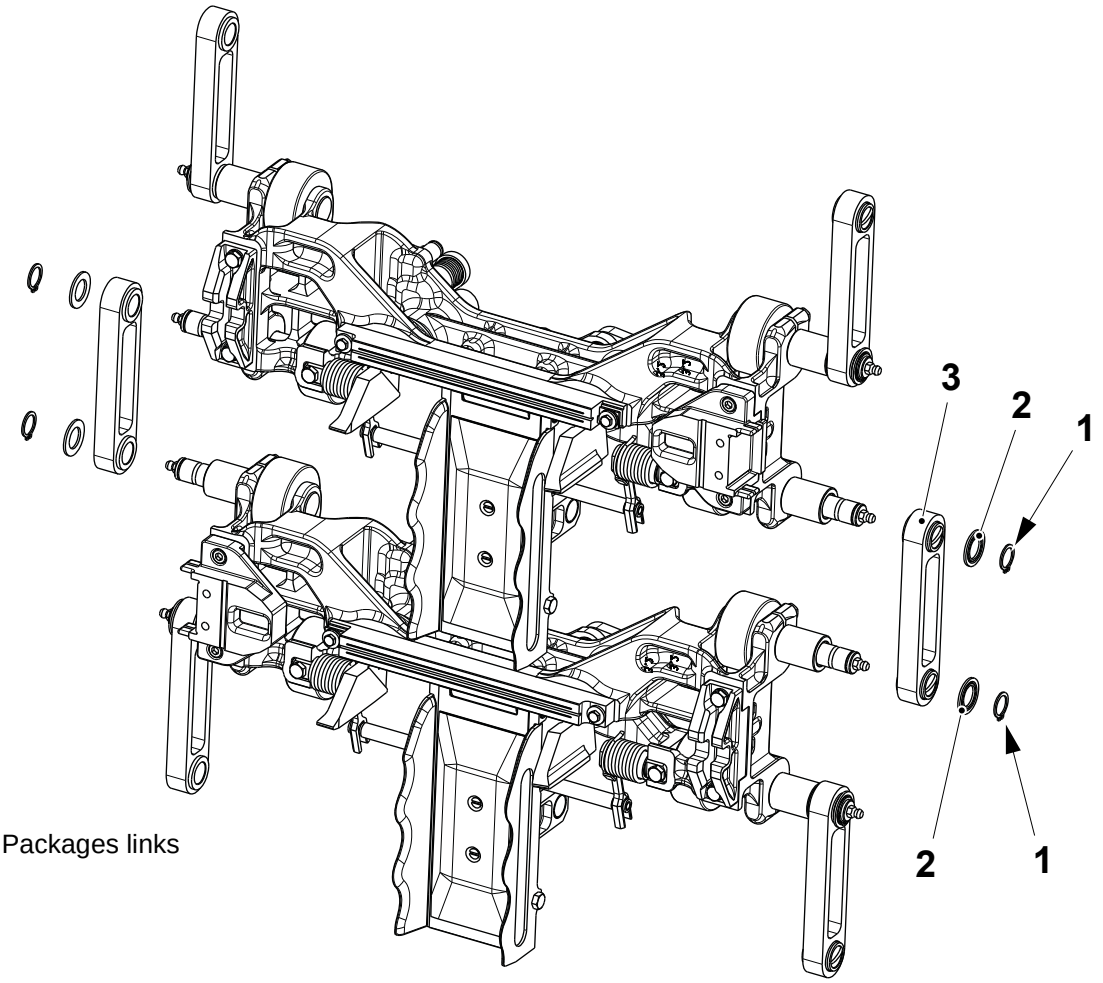

Family Packages links

1 Retaining ring
2 Washer
3 Chain link

(Cont'd)

TechPub_2614345_0107 - 0404_3048142_01.fm

(Cont'd)

Dummy Chain Connection

Follow this instruction every time the dummy chain have to be connected or separated from the sealing link chain or the pressure link chain.

When connecting the dummy chain connecting link (1) make sure that:

- the dummy chain guide (2) are in alternate sense as the link guide (3), see picture below
- the dummy chain rollers (4) have the same inside-outside alternation of the cam followers rollers (5), see picture below.

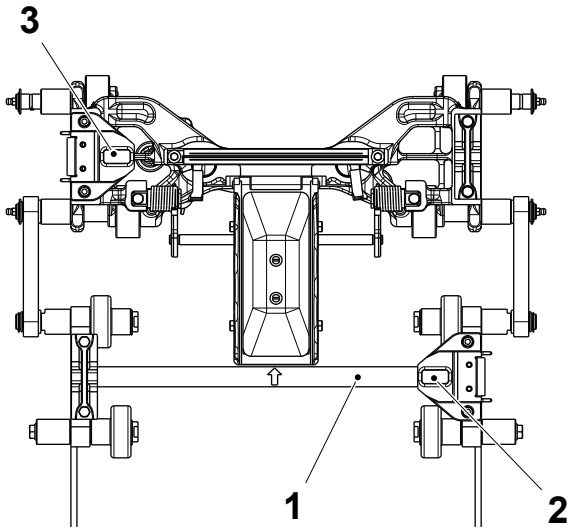

Front view

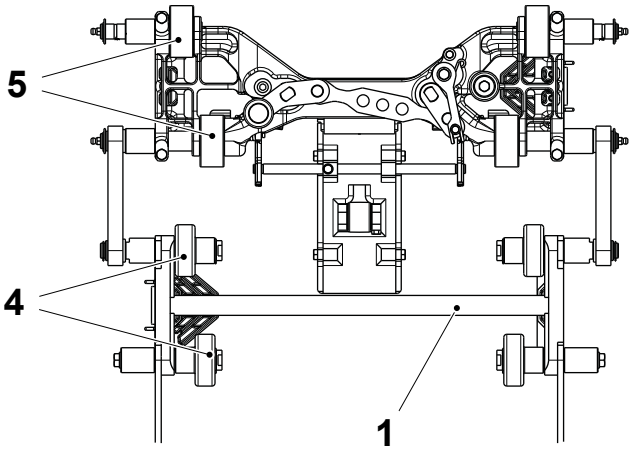

Back view

1 Connecting link
2 Dummy chain guide
3 Link guide
4 Dummy chain roller
5 Cam follower roller

(Cont'd)

TechPub_2614345_0107 - 0404_30481142_01.fm

(Cont'd)

Note! On the dummy chain shafts are marked arrows (6) indicating the direction of the dummy chain motion into the jaw system. When connecting or inserting the dummy chain, make sure that it works always respecting its motion direction.

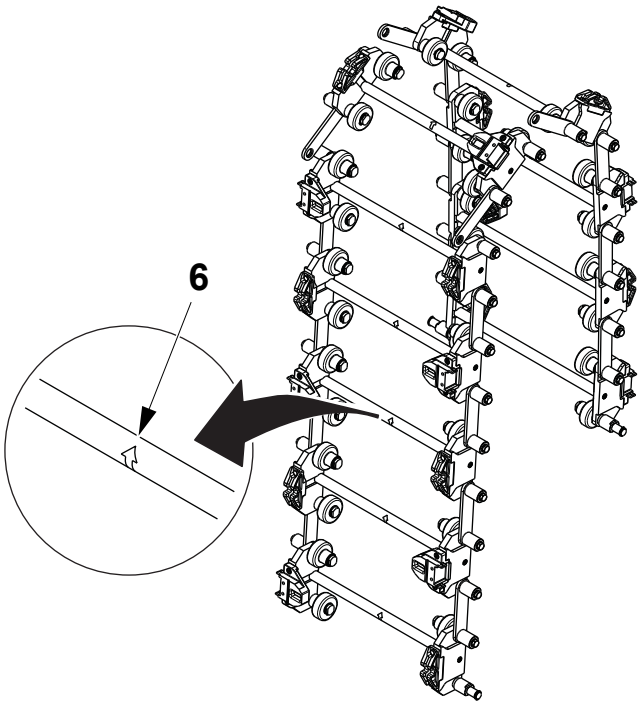

6 Arrow

(Cont'd)

TechPub_2614345_0107 - 0404_3048142_01.fm

(Cont'd)

Note! Valid for Portion Packages links.

To connect the dummy chain, join the dummy chain connecting link (1) to the chain links (7) by the retaining rings (8).

To remove the dummy chain, remove the retaining rings (8) and separate the chain links (7) from the dummy chain connecting link (1).

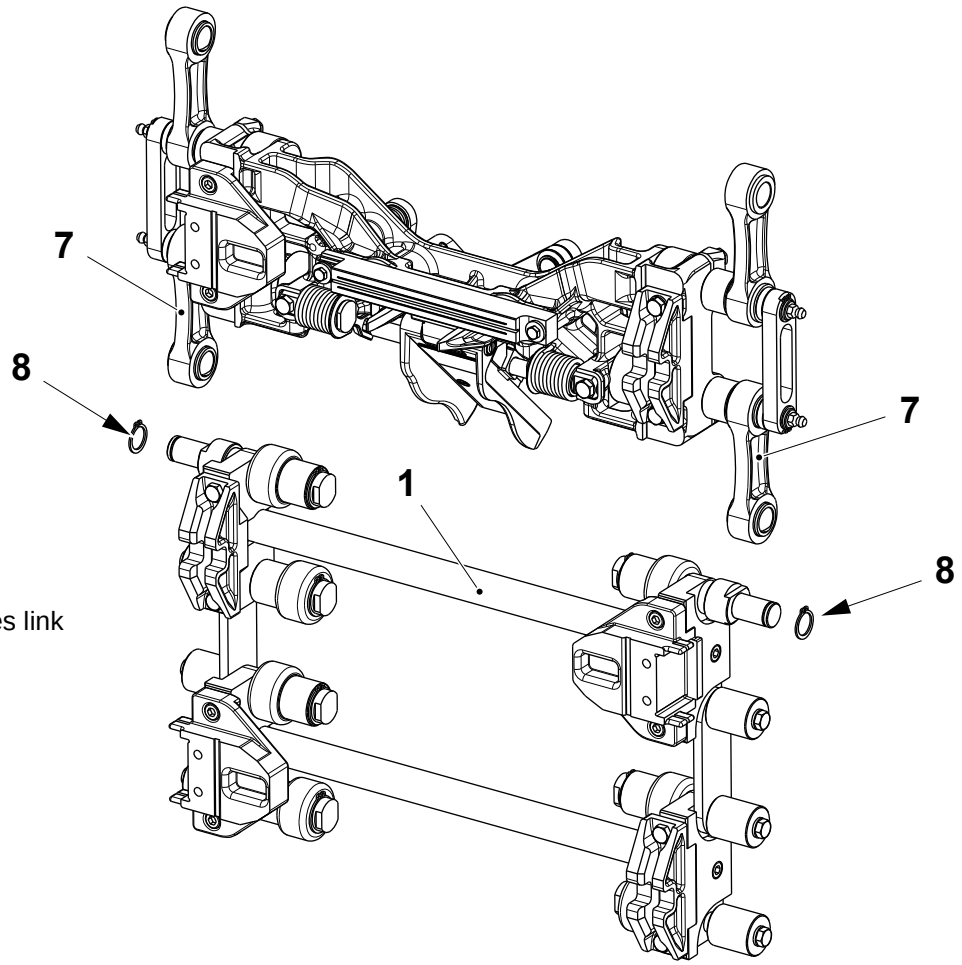

Portion Packages link

1 Connecting link
7 Chain link
8 Retaining ring

(Cont'd)

TechPub_2614345_0107 - 0404_3048142_01.fm

(Cont'd)

Note! Valid for Family Packages links.

To connect the dummy chain, join the dummy chain connecting link (1) to the chain links (7) with the washers (8) by the retaining rings (9).

To remove the dummy chain, remove the retaining rings (9), the washers (8) and separate the chain links (7) from the dummy chain connecting link (1).

Family Packages link

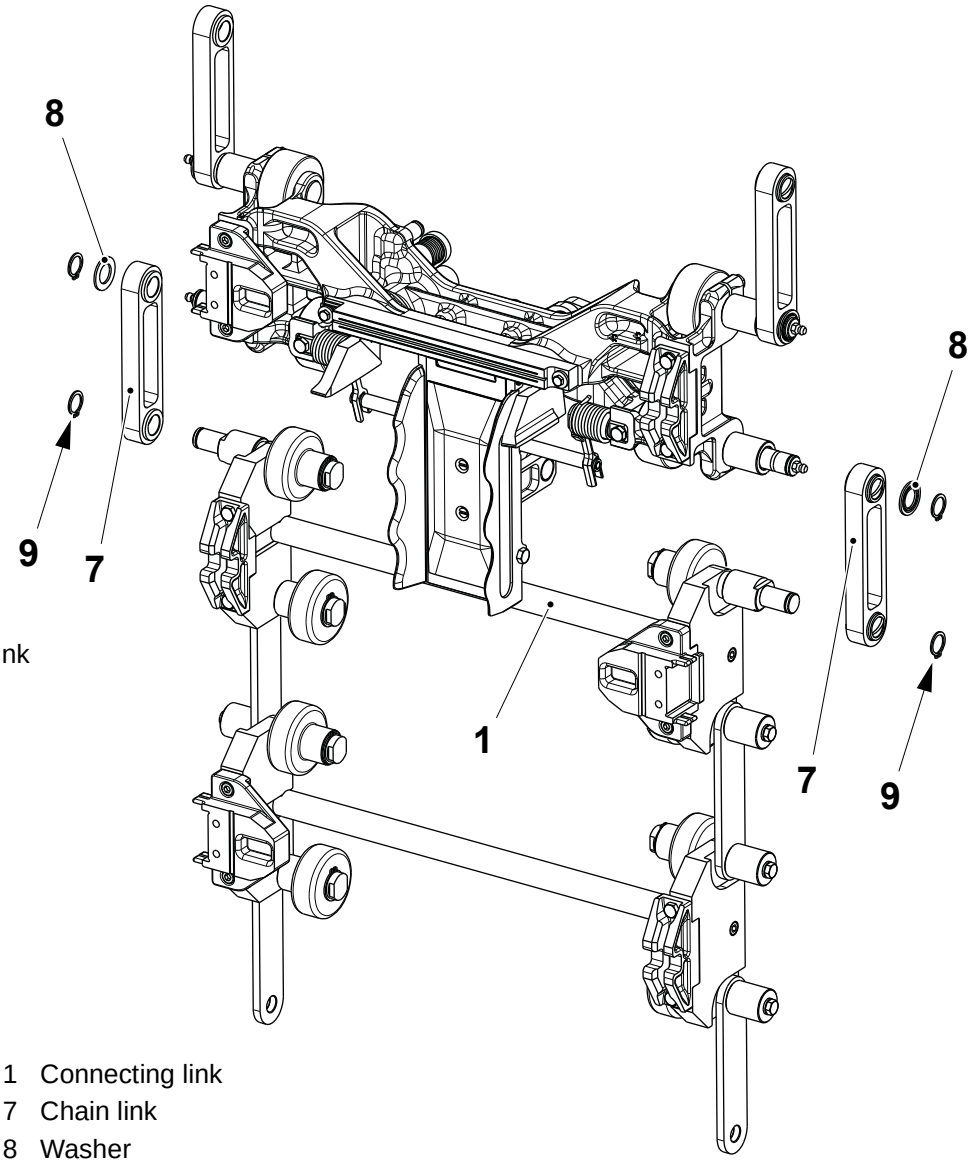

1 Connecting link
7 Chain link
8 Washer
9 Retaining ring

(Cont'd)

TechPub_2614345_0107 - 0404_3048142_01.fm

(Cont'd)

Portion Packages Chains Assembly

Note! Fit the pressure link chain firstly and then the sealing link chain.

WARNING

Risk of crushing.

The chains are extremely heavy and must be separated in two parts and assembled one part at a time. Make sure that the chains are separated in two parts, both composed by five links, as they have been removed.

Note! Make sure that the bottom chain guide (1) is fitted on the jaw unit.

a) Feed the dummy chain (2) into the jaw system so that at least two dummy chain shafts are engaged on the wheel (3).

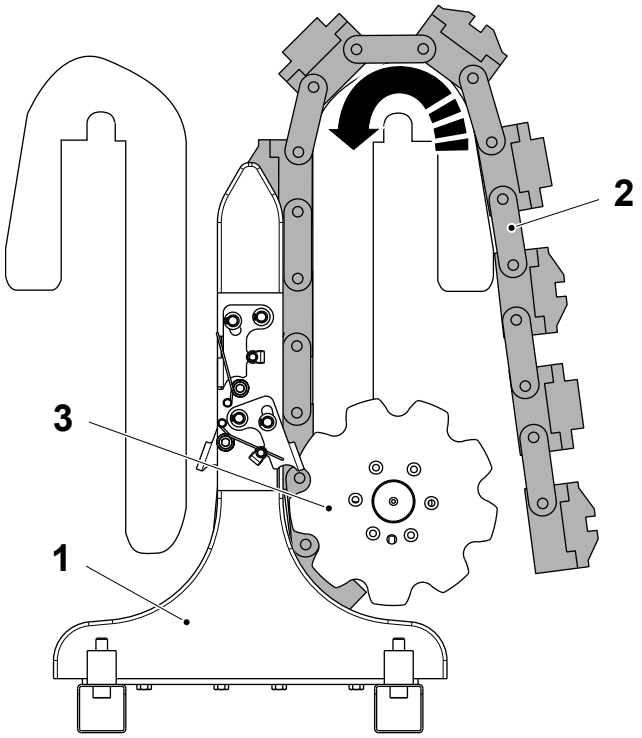

1 Chain guide
2 Dummy chain
3 Wheel

(Cont'd)

TechPub_2614345_0107 - 0404_30481142_01.fm

(Cont'd)

Note! Make sure the chain links lean onto the pallet with the guides and the volume boxes facing down.

b) Prepare the first half of the pressure link chain under the jaw system.

c) Connect the link No.1 of the pressure link chain to the connecting link (4) of the dummy chain (2), see Dummy Chain Connection on page 4-59.

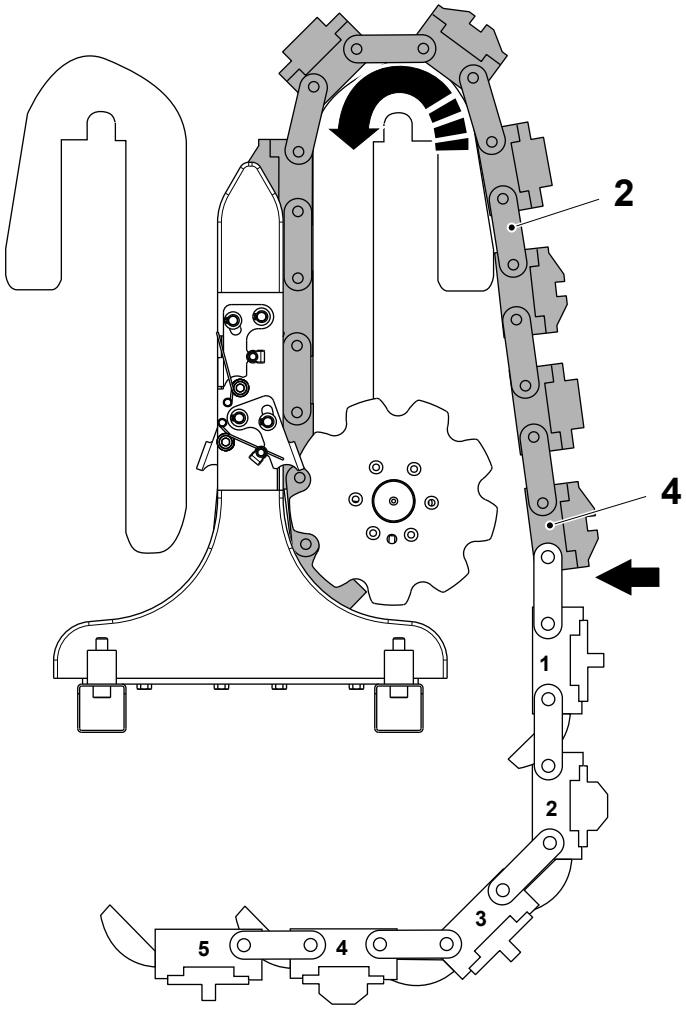

2 Dummy chain
4 Connecting link

(Cont'd)

TechPub_2614345_0107 - 0404_3048142_01.fm

(Cont'd)

d) Crank the dummy chain (2) and the first part of pressure link chain into the jaw system until the last link (5) is in the position indicated by the arrow.

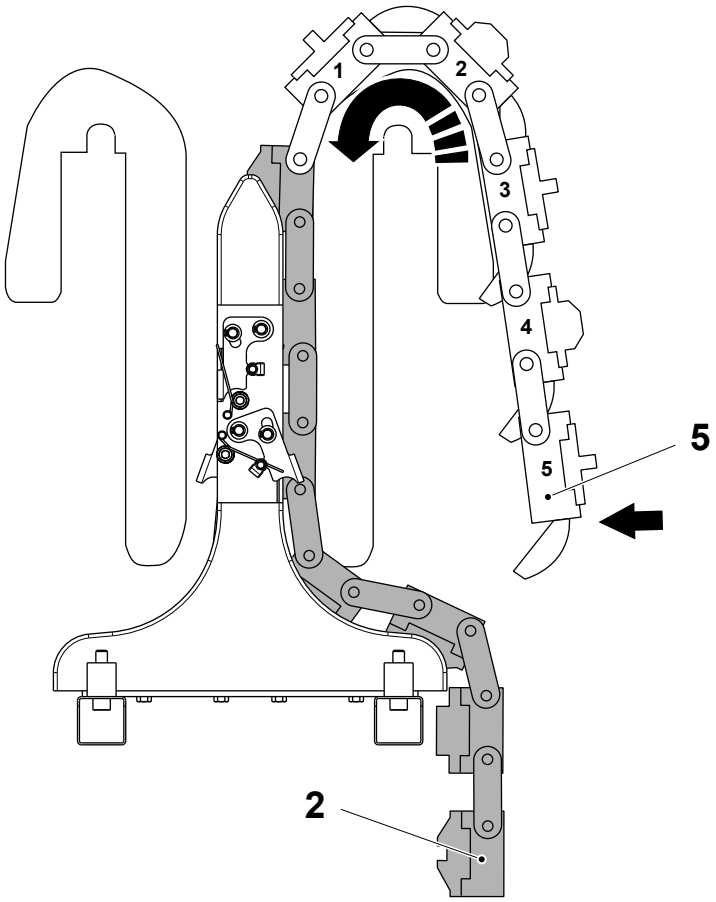

2 Dummy chain
5 Last link, first half

(Cont'd)

TechPub_2614345_0107 - 0404_30481142_01.fm

(Cont'd)

e) When the last link (5) is in the position indicated by the arrow, connect the second half of the pressure link chain (6), see Link Connections on page 4-56.

Note! While the pressure link chain is fed into the jaw system, the dummy chain (2) exits from the bottom and collides with the pressure link chain (6) going up: fold and hold manually the dummy chain (2) so that it does not interfere with the pressure link chain (6).

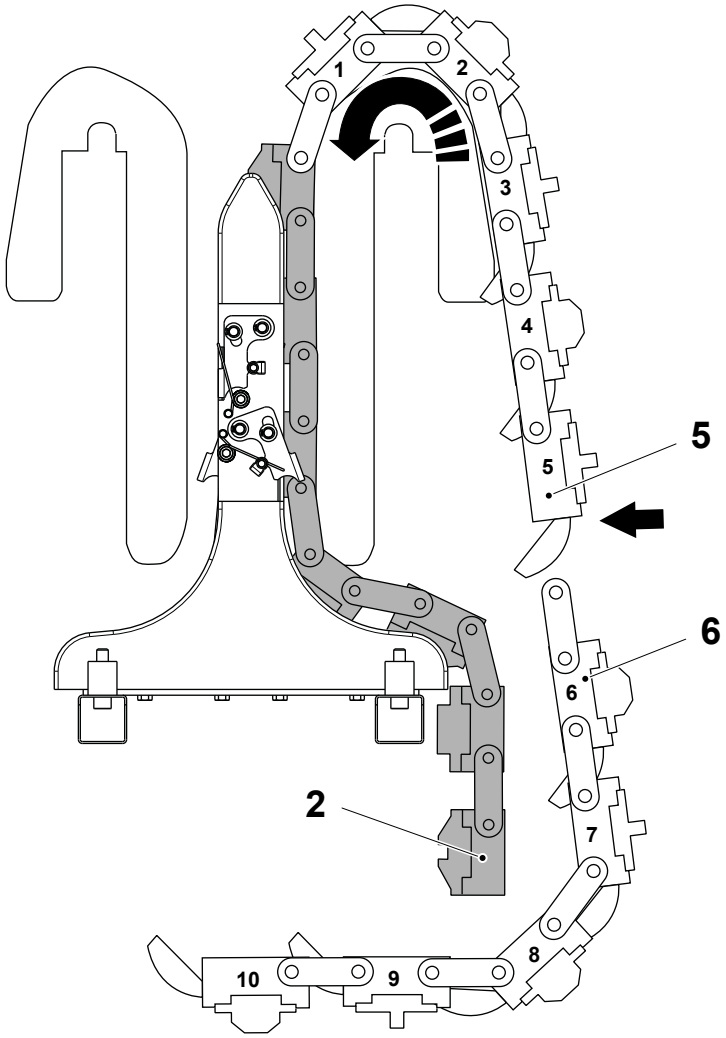

2 Dummy chain
5 Last link, first half
6 Pressure link chain, second half

(Cont'd)

TechPub_2614345_0107 - 0404_3048142_01.fm

(Cont'd)

f) Continue cranking until the link No.10 is the position indicated by the arrow.

g) Disconnect the connecting link (4) and remove the dummy chain (2), see Dummy Chain Connection on page 4-59.

h) Connect the link No.1 with the link No.10, see Link Connections on page 4-56.

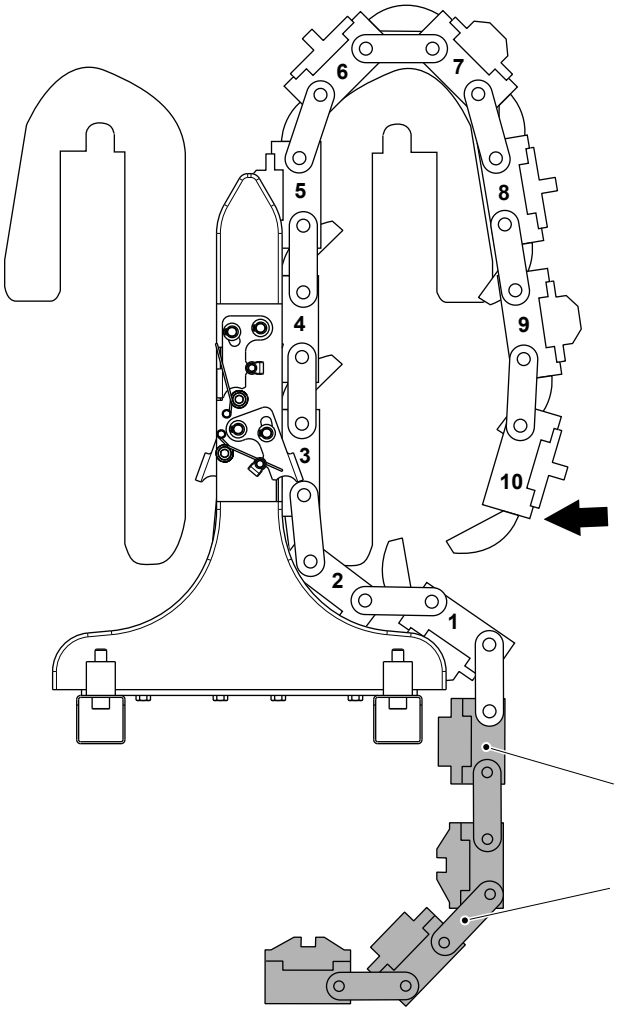

2 Dummy chain
4 Connecting link

TechPub_2614345_0107 - 0404_3048142_01.fm

(Cont'd)

i) Remove the two M8 x 80 hexagonal socket head screws (7) from the tensioning mechanism (8) to tense the pressure link chain.

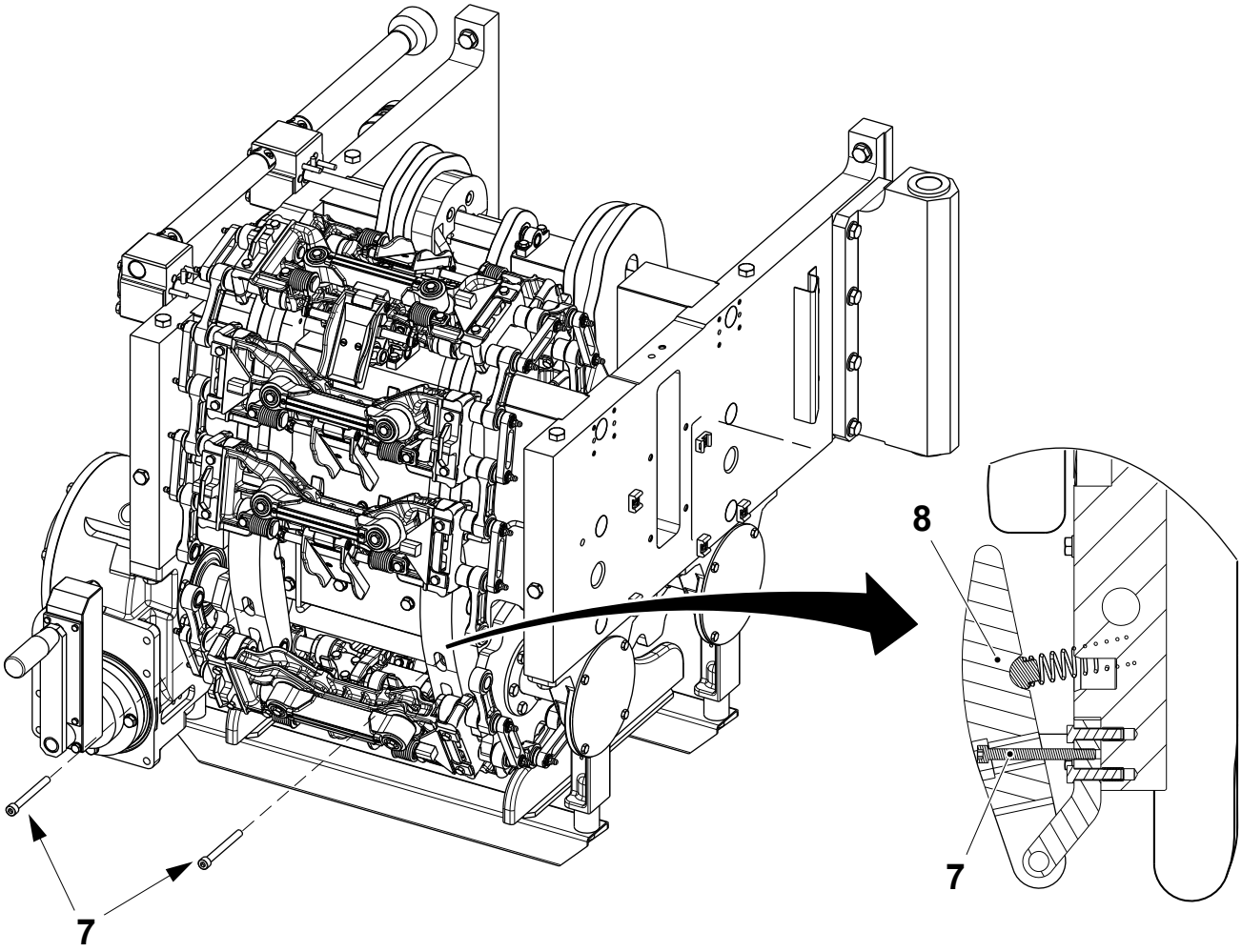

7 Screw
8 Tensioning mechanism

(Cont'd)

TechPub_2614345_0107 - 0404_3048142_01.fm

(Cont'd)

CAUTION

Risk of damage to the equipment.

Follow carefully the instructions so that the links of the sealing chain match exactly the correspondent links of the pressure chain. In case of error, it is not possible to crank backwards two links already engaged.

Note! The connecting link (4) o the dummy chain must have the same guide layout of the link No.1 of the sealing link chain.

j) Feed the dummy chain (2) into the jaw system and guide it so that the connecting link (4) of the dummy chain (2) engage the link marked No.1 of the pressure link chain.

k) Make sure that at least two of the dummy chain links are engaged with the pressure link chain.

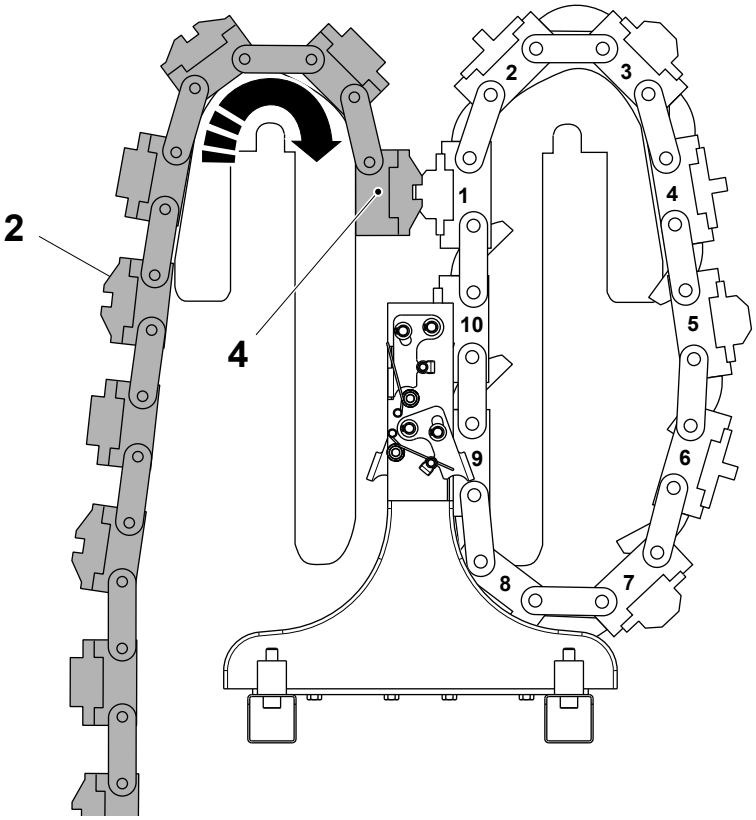

2 Dummy chain
4 Connecting link

(Cont'd)

TechPub_2614345_0107 - 0404_30481142_01.fm

(Cont'd)

l) Bring the pallet with the first half of the sealing chain, with the links from No.1 to No. 5, under the jaw system.

m) Crank the jaw system until the end of the dummy chain (2) is in the position indicated by the arrow.

n) Connect the connecting link (4) of the dummy chain (2) to the link marked No.1 of the sealing link chain, see Dummy Chain Connection on page 4-59.

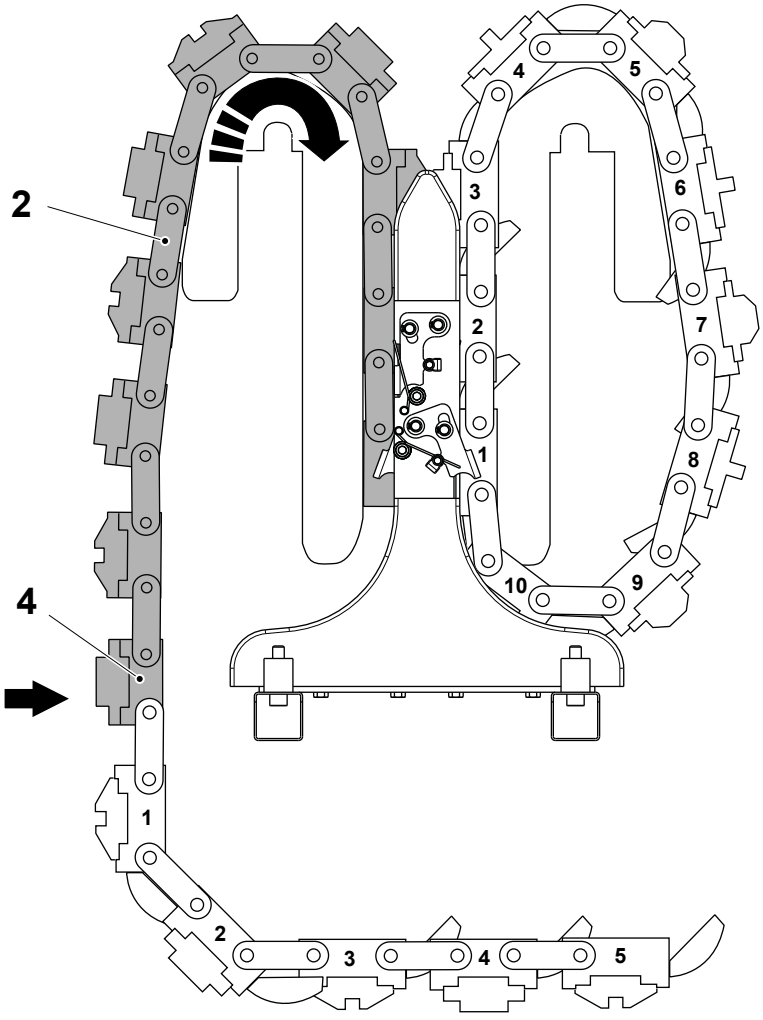

2 Dummy chain
4 Connecting link

(Cont'd)

TechPub_2614345_0107 - 0404_3048142_01.fm

(Cont'd)

o) Crank the dummy chain (2) and first half of the sealing link chain into the jaw system until the link No. 5 is in the position indicated by the arrow.

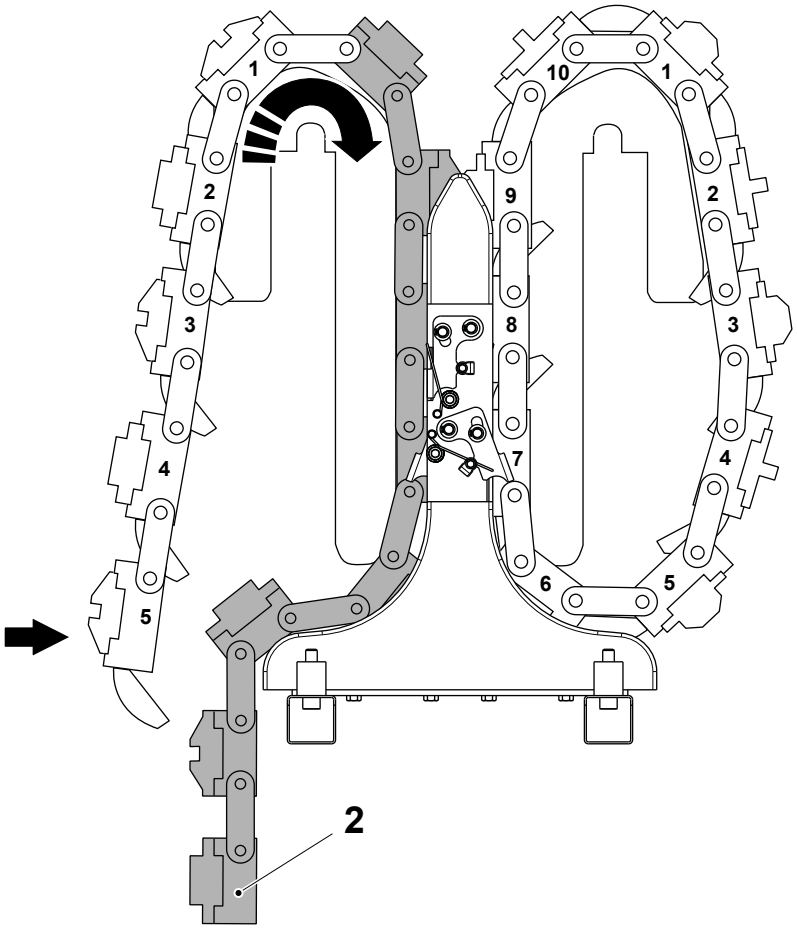

2 Dummy chain

(Cont'd)

TechPub_2614345_0107 - 0404_30481142_01.fm

(Cont'd)

p) Connect the second half (9) of the sealing link chain until, see Link Connections on page 4-56.

Note! While the sealing link chain is fed into the jaw system, the dummy chain (2) exits from the bottom and collides with the sealing link chain (9) going up: fold and hold manually the dummy chain (2) so that it does not interfere with the sealing link chain (9).

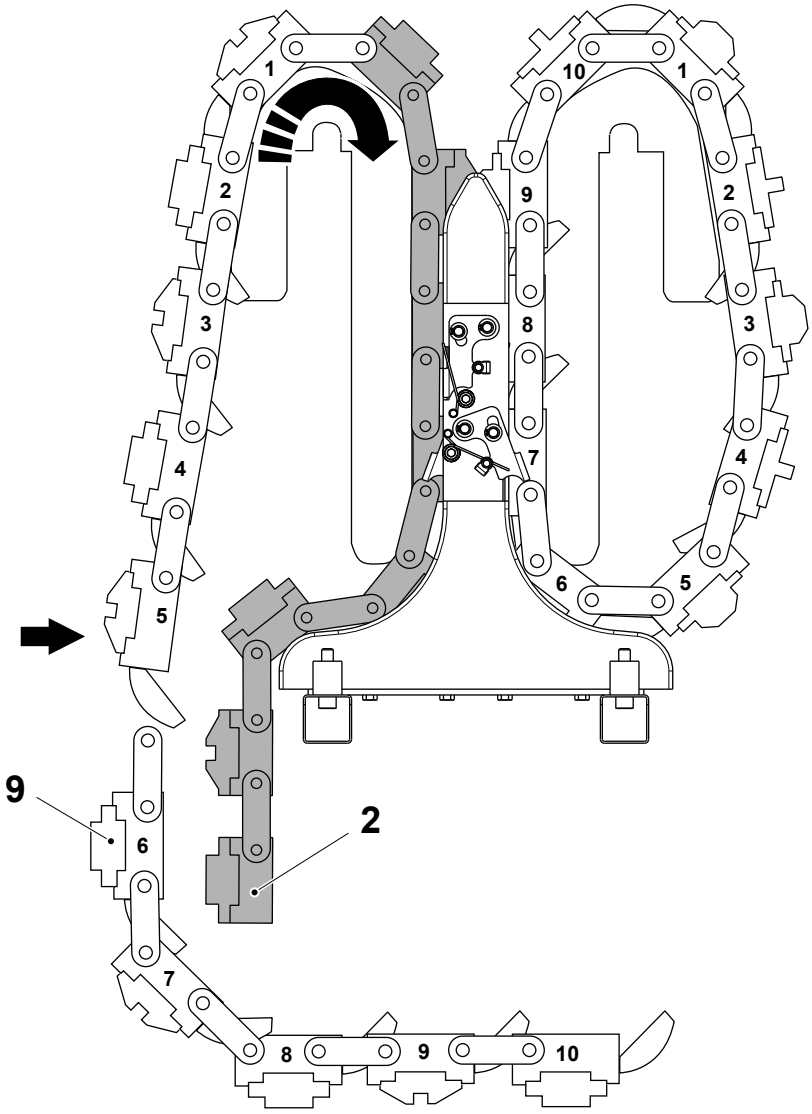

2 Dummy chain
9 Second half, sealing link chain

(Cont'd)

TechPub_2614345_0107 - 0404_3048142_01.fm

(Cont'd)

q) Continue cranking until the link No.10 is the position indicated by the arrow.

r) Disconnect the connecting link (4) from the link No.1 and remove the dummy chain (2), see Dummy Chain Connection on page 4-59.

s) Connect the link No.1 with the link No.10 of the sealing link chain, see Link Connections on page 4-56.

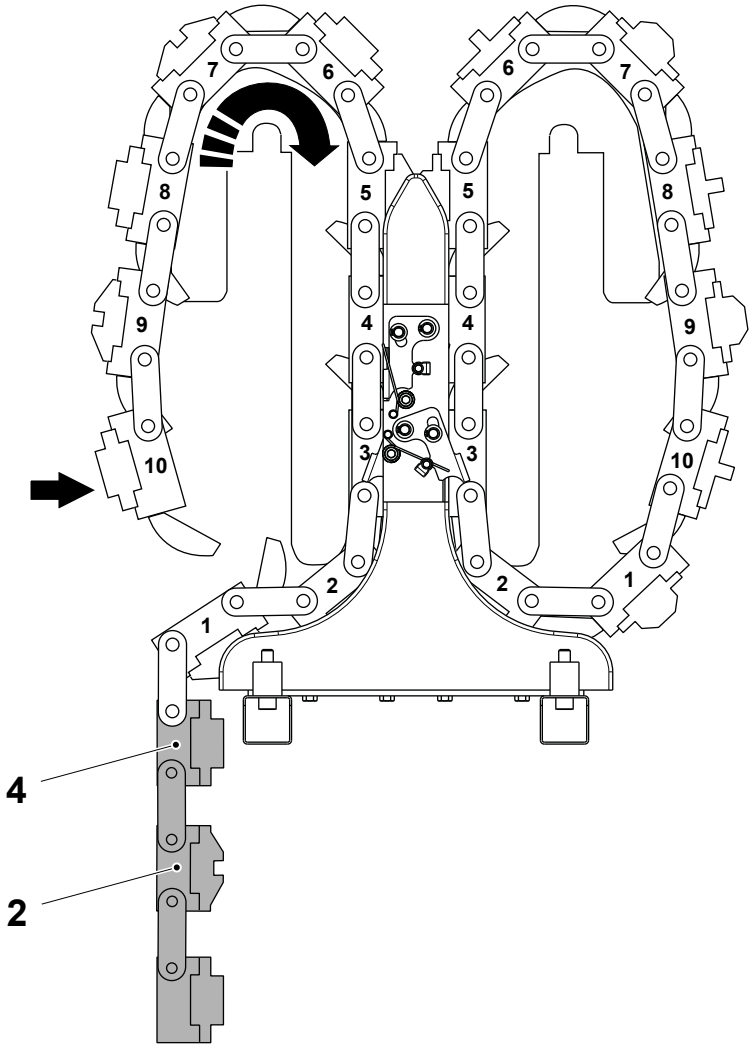

2 Dummy chain
4 Connecting link

(Cont'd)

TechPub_2614345_0107 - 0404_3048142_01.fm

(Cont'd)

t) Remove the screws (10).

u) Crank the jaw system to guide the chain guide (1) out of the jaw system.

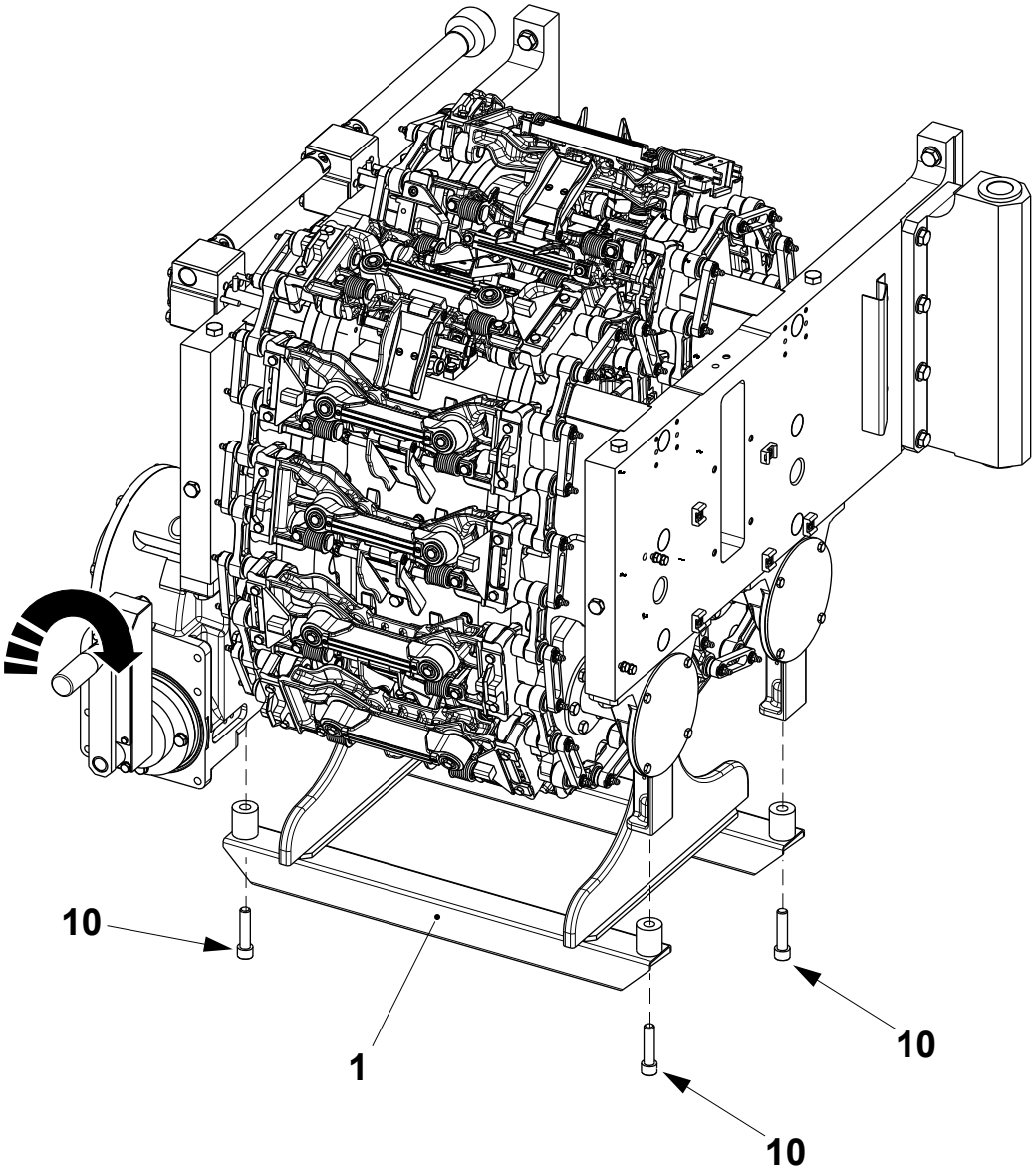

1 Chain guide
10 Screw

(Cont'd)

TechPub_2614345_0107 - 0404_3048142_01.fm

(Cont'd)

v) Remove the two M8 x 80 hexagonal socket head screws (11) from the tensioning mechanism (12) to tense the sealing link chain.

w) Complete the assembly with the Completion Tasks on page 4-92.

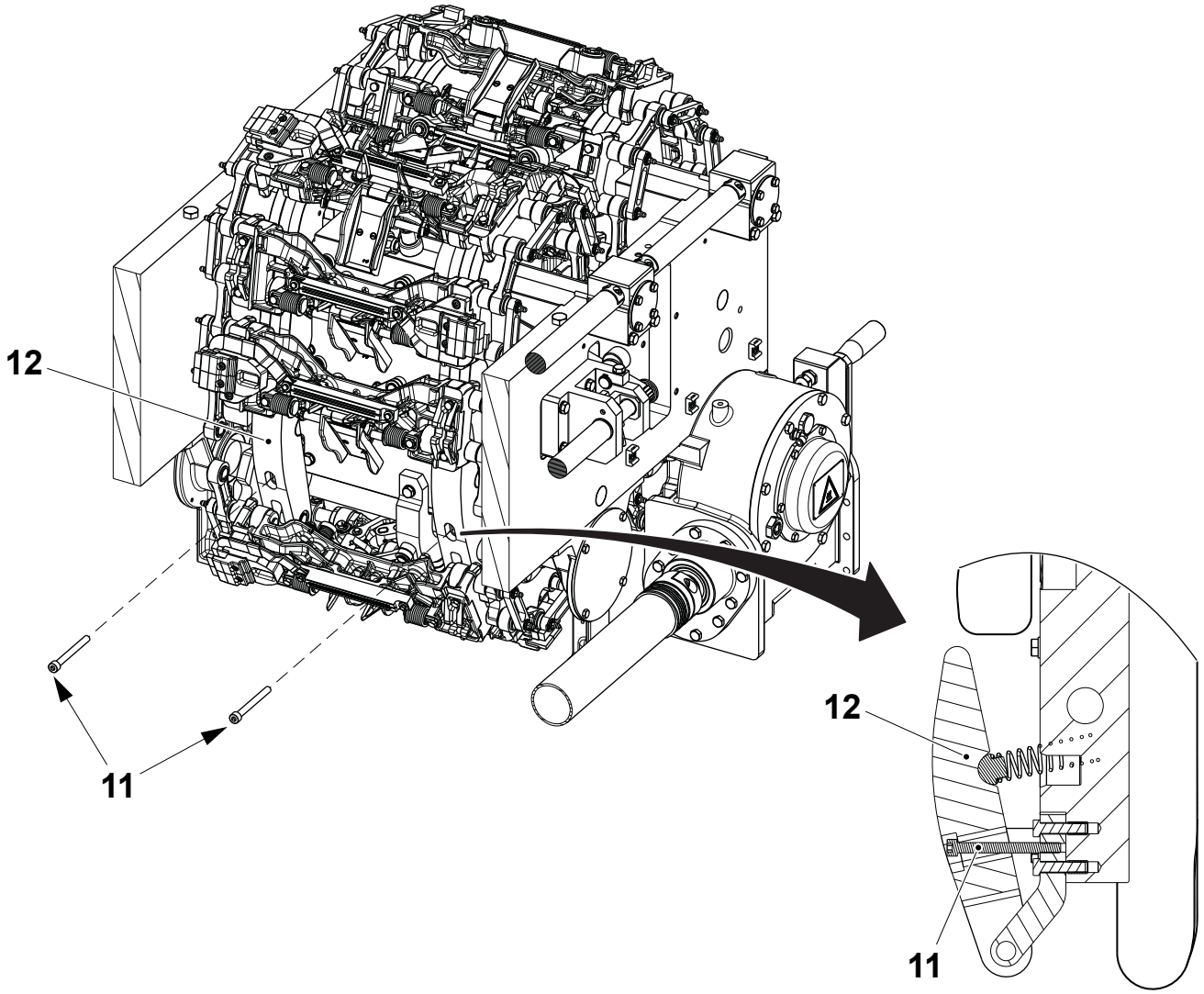

11 Screw
12 Tensioning mechanism

(Cont'd)

TechPub_2614345_0107 - 0404_30481142_01.fm

(Cont'd)

Family Packages Chains Assembly

CAUTION

Risk of damage to the equipment.

Pay attention to the external cleaning nozzles (1) and to the infeed chute (2) when moving the pallets into the machine body.

a) Load two pallet trucks with pallets. Push one pallet truck into position beneath the jaw system and the other in the opposite side of the machine body.

b) Fit an extension (3) of the plane through the machine body and lean it onto the two pallet planes, then place a layer of cardboard on it.

Note! The plane created by the pallets must be placed 900-1000 mm from the ground.

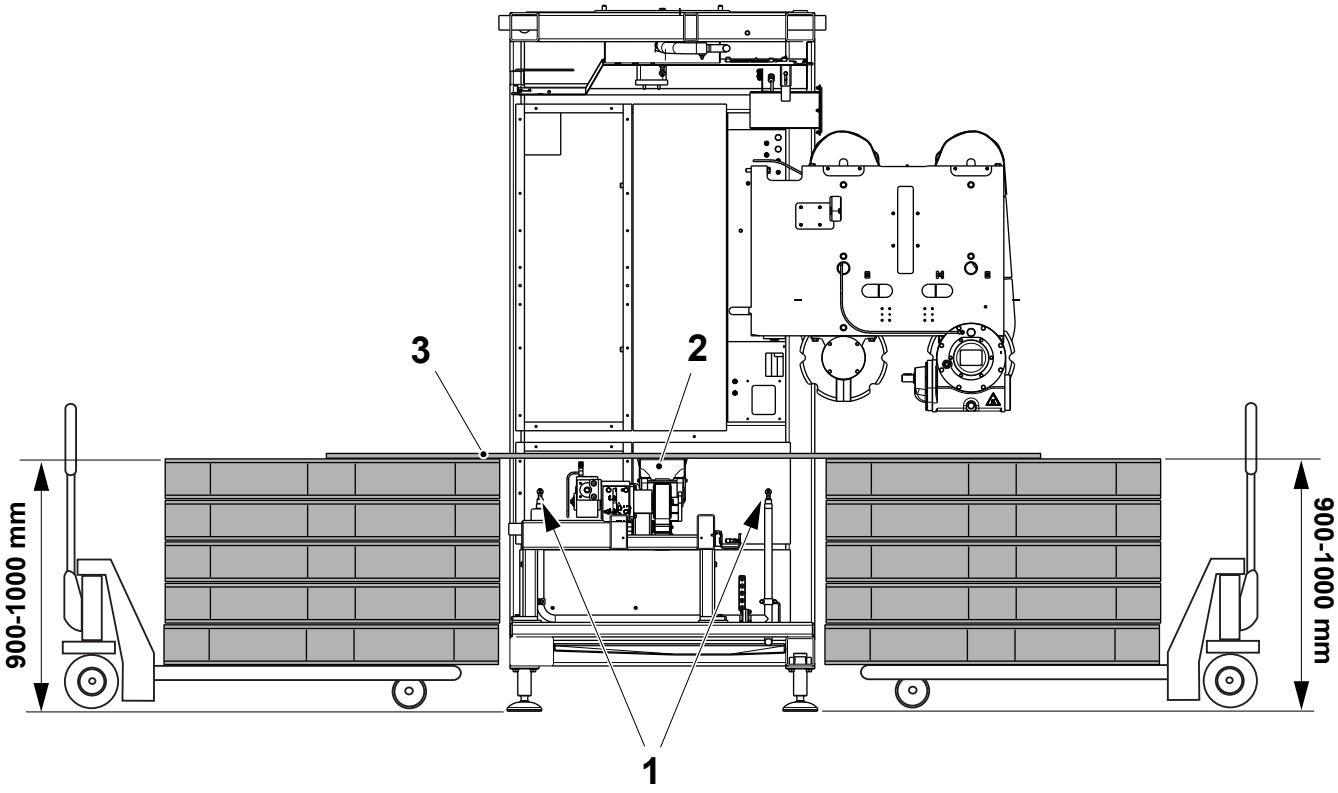

1 Nozzle
2 Infeed chute
3 Extension

(Cont'd)

TechPub_2614345_0107 - 0404_3048142_01.fm

(Cont'd)

Note! Fit the pressure link chain firstly and then the sealing link chain.

CAUTION

Risk of damage to the equipment.

Insert the dummy chain (2) making sure that the arrows marked above follow the direction of the jaw system motion.

Note! Make sure that the bottom chain guide (1) is fitted on the jaw unit.

a) Feed the dummy chain (2) into the jaw system so that at least two dummy chain shafts are engaged on the wheel (3).

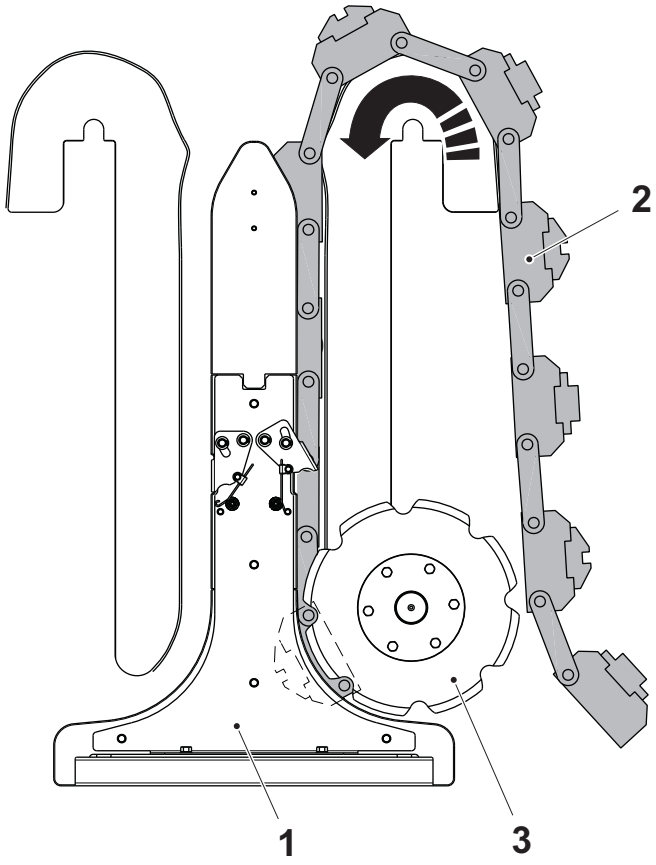

1 Chain guide
2 Dummy chain
3 Wheel

(Cont'd)

TechPub_2614345_0107 - 0404_3048142_01.fm

(Cont'd)

WARNING

Risk of crushing.

The chain links are heavy and must be assembled connecting one couple of links at a time. Make sure that the chains are separated in 5 couples of links, as they have been removed.

b) Prepare the first couple of the pressure links (links No. 1 and 2) onto the plane prepared with the pallet trucks.

c) Connect the link No.1 of the pressure link chain to the connecting link (4) of the dummy chain (2), see Dummy Chain Connection on page 4-59.

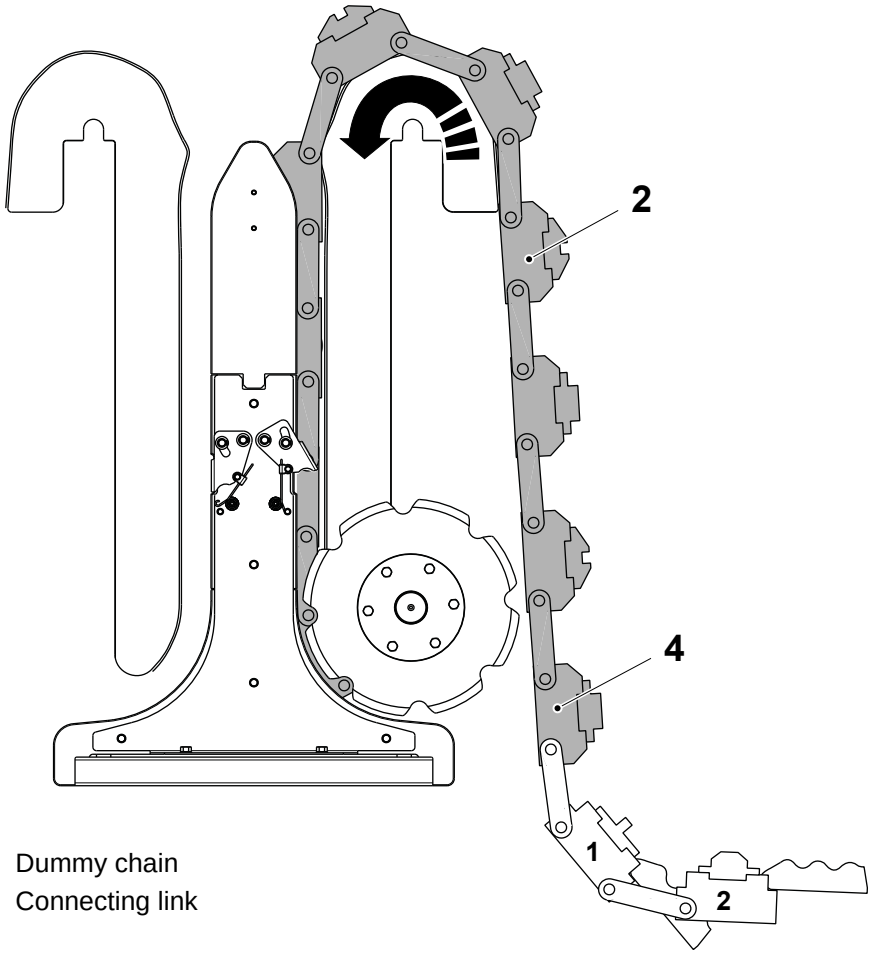

2 Dummy chain
4 Connecting link

(Cont'd)

TechPub_2614345_0107 - 0404_3048142_01.fm

(Cont'd)

d) Start cranking the dummy chain (2) into the jaw system.

e) When the link No.2 is in the position indicated by the arrow, fit the second couple of the pressure links (links No. 3 and 4) onto the plane prepared with the pallet trucks.

f) Connect the second couple of the pressure links, see Link Connections on page 4-56.

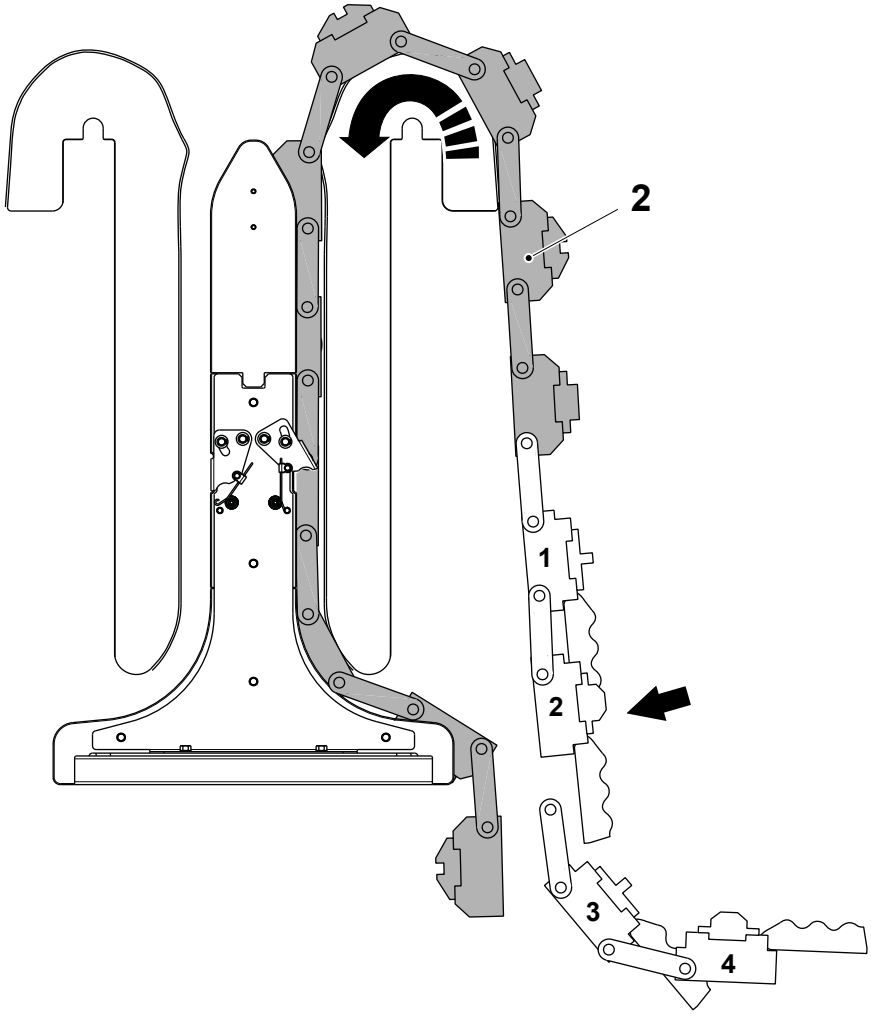

2 Dummy chain

(Cont'd)

TechPub_2614345_0107 - 0404_3048142_01.fm

(Cont'd)

g) Continue cranking the pressure link chain into the jaw system.

h) When the link No.4 is in the position indicated by the arrow, fit the third couple of the pressure links (links No. 5 and 6) onto the plane prepared with the pallet trucks.

i) Connect the third couple of the pressure links, see Link Connections on page 4-56.

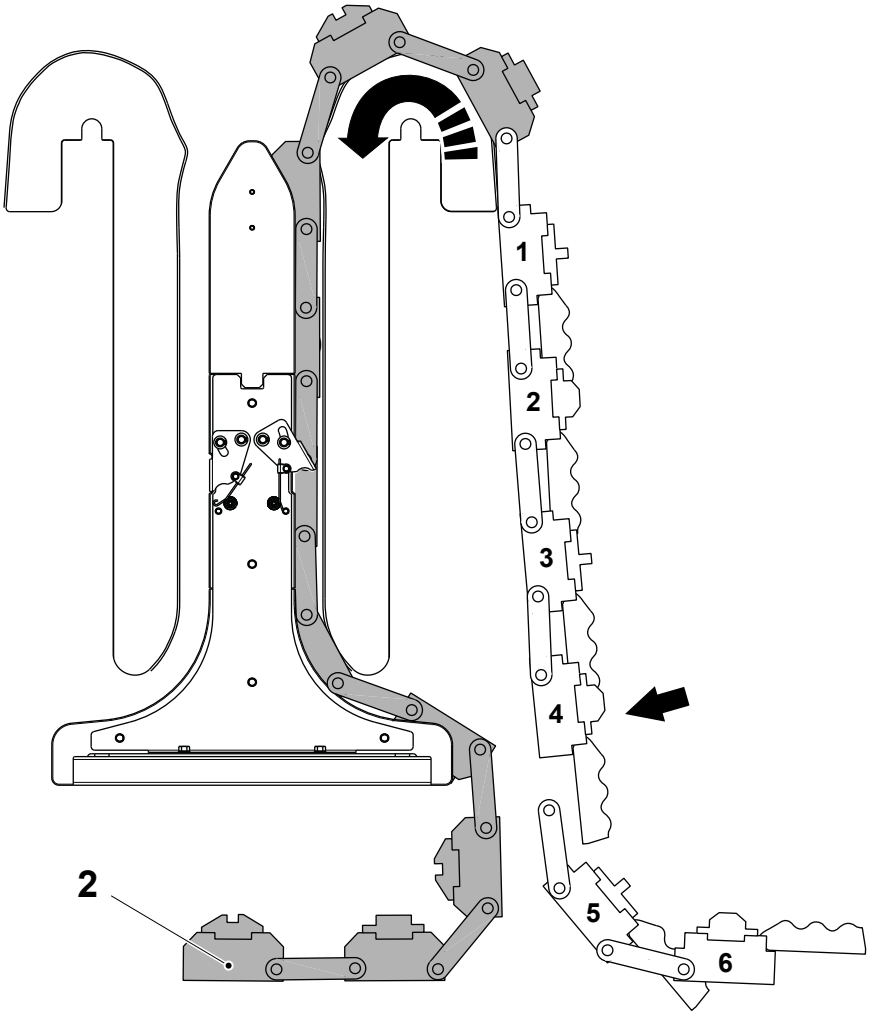

2 Dummy chain

(Cont'd)

TechPub_2614345_0107 - 0404_3048142_01.fm

(Cont'd)

j) Continue cranking and connect the other links in the same way, always connecting two links at a time.

Note! While the pressure link chain is fed into the jaw system, the dummy chain (2) exits from the bottom and collides with the pressure links going up: fold manually the dummy chain (2) in the opposite direction, as shown below.

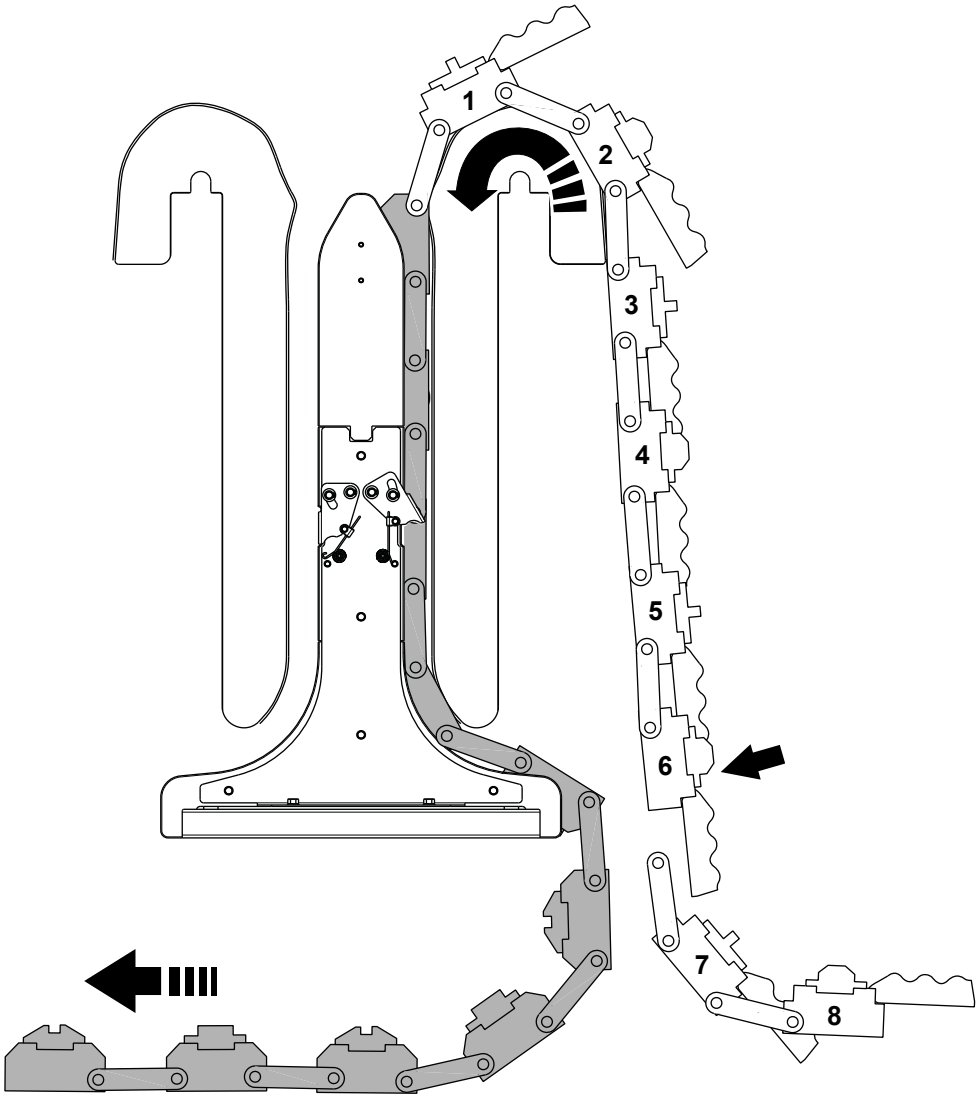

2 Dummy chain

(Cont'd)

TechPub_2614345_0107 - 0404_3048142_01.fm

(Cont'd)

k) Continue cranking until the link No.10 is the position indicated by the arrow.

l) Disconnect the and remove the dummy chain (2), see Dummy Chain Connection on page 4-59.

m) Connect the link No.1 with the link No.10, see Link Connections on page 4-56.

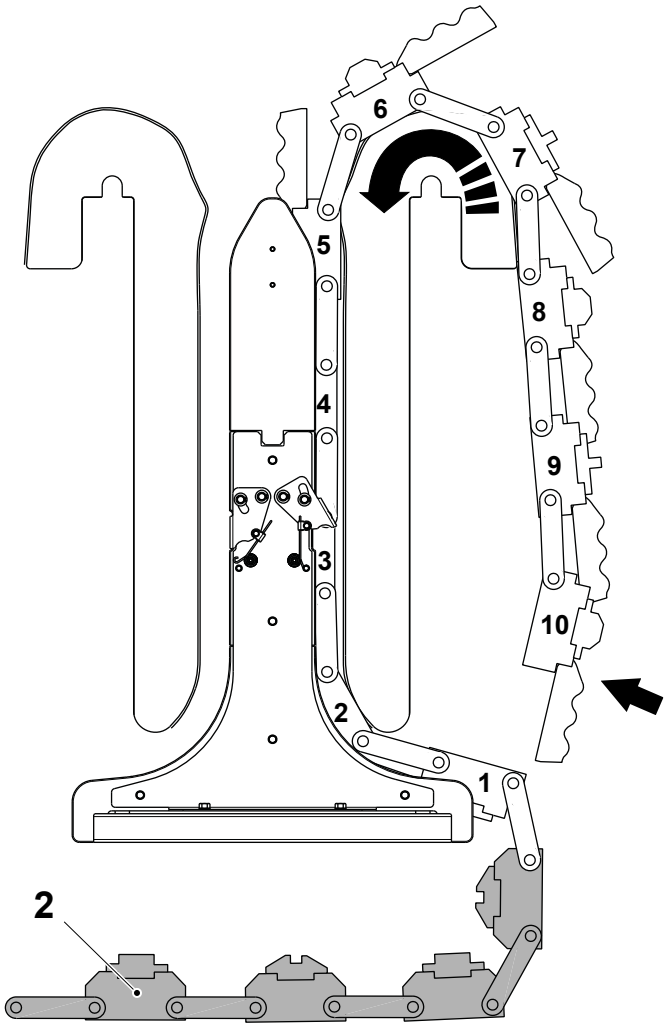

2 Dummy chain

TechPub_2614345_0107 - 0404_3048142_01.fm

(Cont'd)

n) Remove the two M8 x 80 hexagonal socket head screws (5) from the tensioning mechanism (6) to tense the pressure link chain.

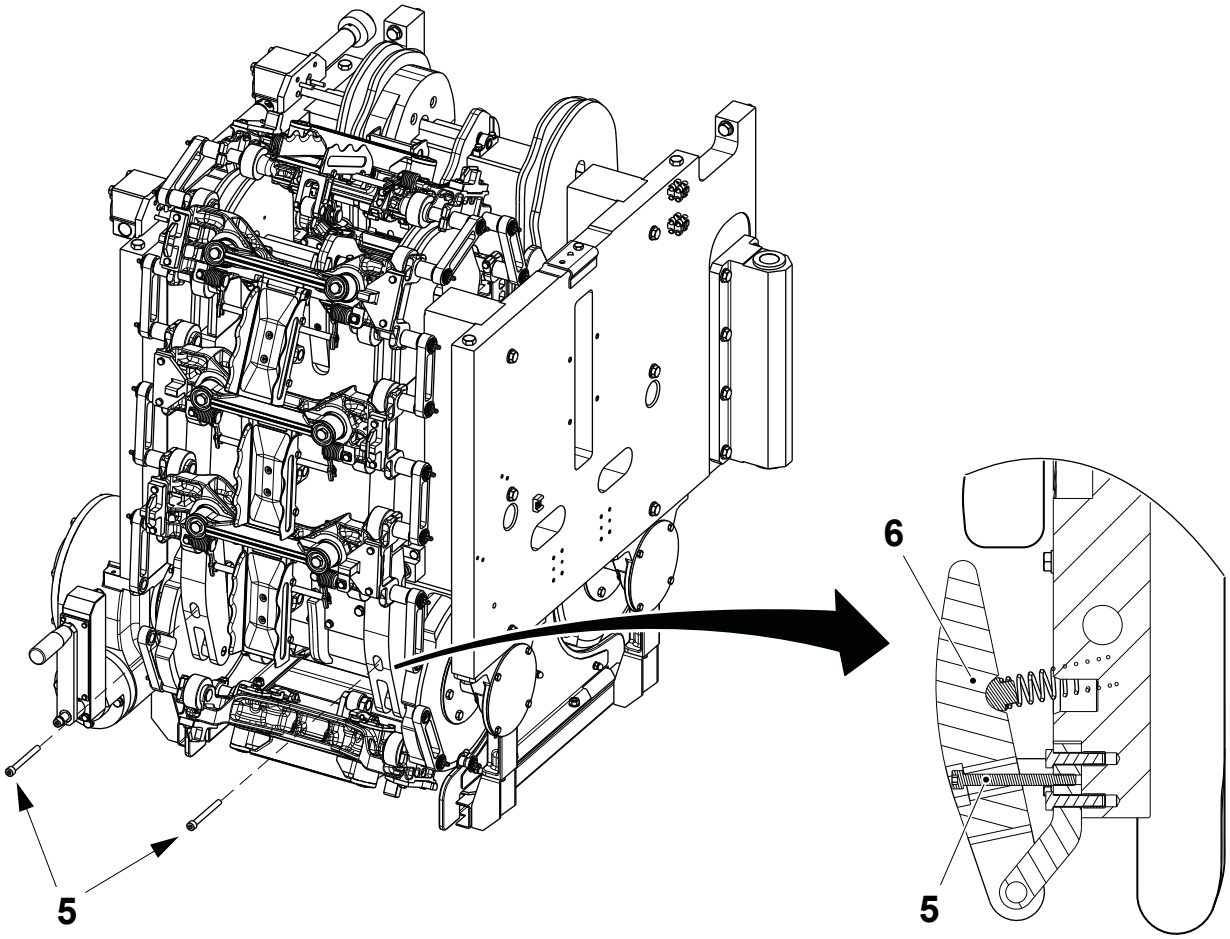

5 Screw
6 Tensioning mechanism

(Cont'd)

TechPub_2614345_0107 - 0404_30481142_01.fm

(Cont'd)

CAUTION
Risk of damage to the equipment.
Follow carefully the instructions so that the links of the sealing chain match exactly the correspondent links of the pressure chain. In case of error, is not possible to crank backwards two links already engaged.

CAUTION
Risk of damage to the equipment.
Insert the dummy chain (2) making sure that the arrows marked above follow the direction of the jaw system motion.

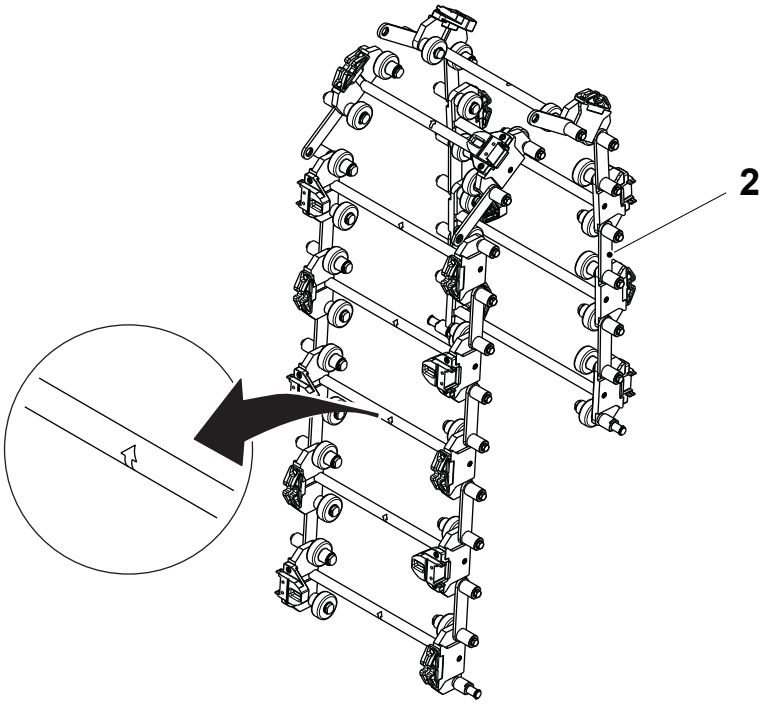

2 Dummy chain

(Cont'd)

TechPub_2614345_0107 - 0404_3048142_01.fm

(Cont'd)

Note! The connecting link (4) of the dummy chain must have the same guide layout of the link No.1 of the sealing link chain.

o) Feed the dummy chain (2) into the jaw system and guide it so that the connecting link (4) of the dummy chain (2) engage the link marked No.1 of the pressure link chain.

p) Make sure that at least two of the dummy chain links are engaged with the pressure link chain.

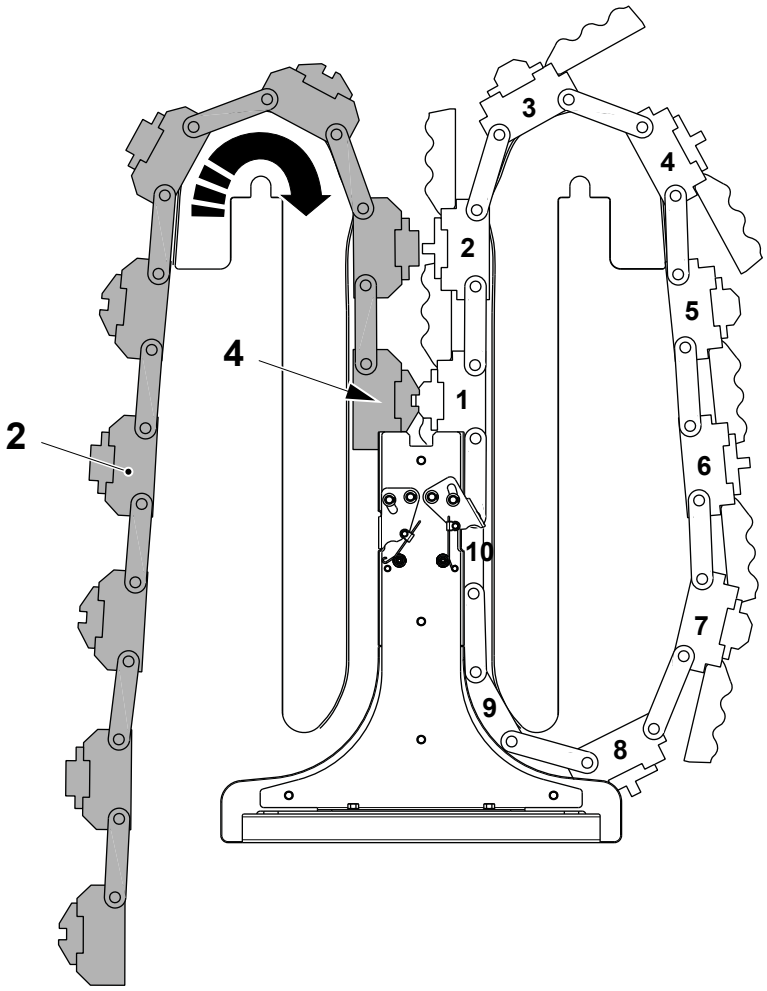

2 Dummy chain
4 Connecting link

(Cont'd)

TechPub_2614345_0107 - 0404_3048142_01.fm

(Cont'd)

WARNING

Risk of crushing.

The chain links are heavy and must be assembled connecting one couple of links at a time. Make sure that the chains are separated in 5 couples of links, as they have been removed.

q) Prepare the first couple of the sealing links (links No. 1 and 2) onto the plane prepared with the pallet trucks.

r) When the end of the dummy chain is in the position indicated by the arrow, connect the link No.1 of the sealing link chain to the dummy chain (2), see Dummy Chain Connection on page 4-59.

s) Start cranking the sealing links into the jaw system.

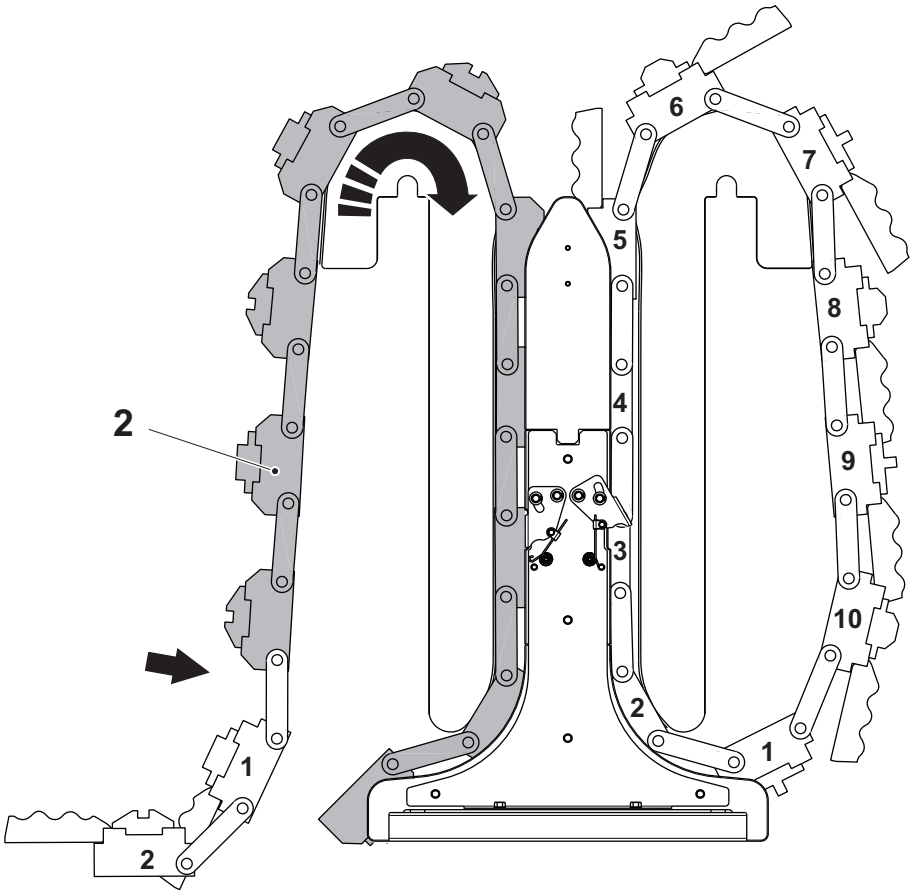

2 Dummy chain

(Cont'd)

TechPub_2614345_0107 - 0404_3048142_01.fm

(Cont'd)

t) When the link No.2 is in the position indicated by the arrow, fit the second couple of the sealing links (links No. 3 and 4) onto the plane prepared with the pallet trucks.

u) Connect the second couple of the pressure links, see Link Connections on page 4-56.

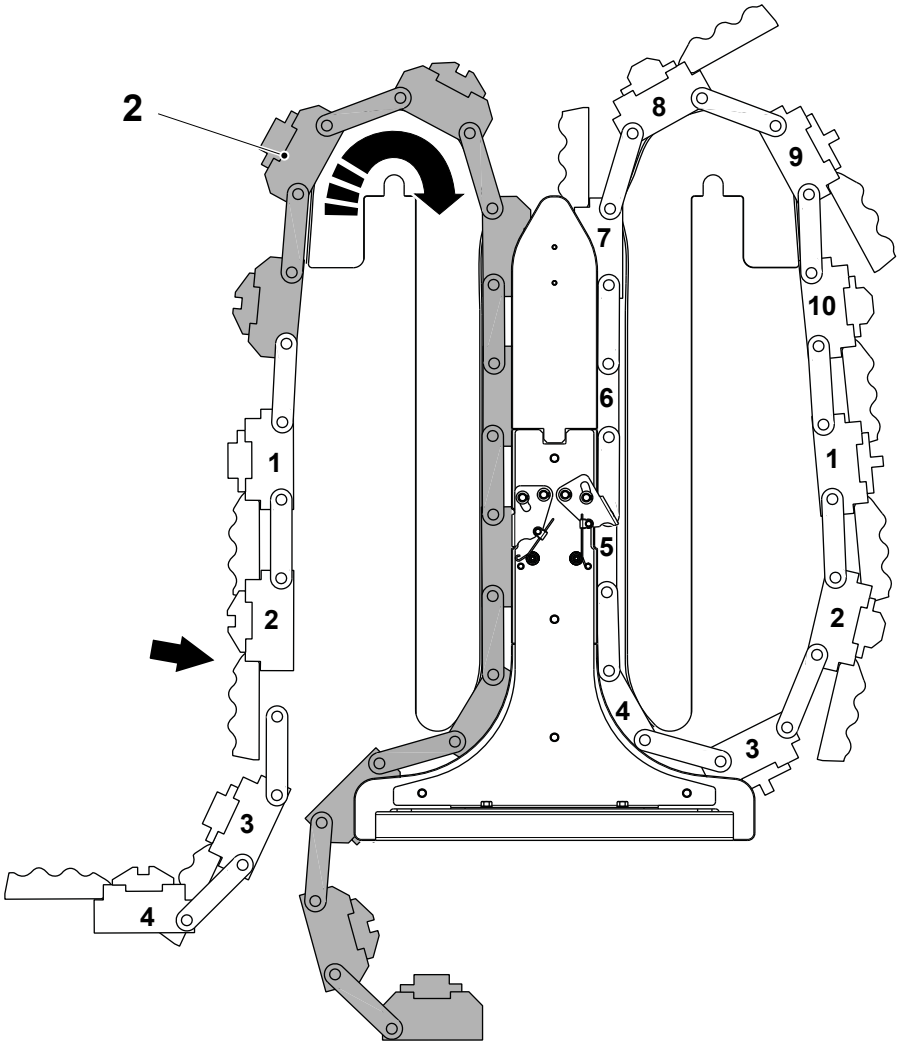

2 Dummy chain

(Cont'd)

TechPub_2614345_0107 - 0404_3048142_01.fm

(Cont'd)

v) Continue cranking the pressure link chain into the jaw system.

w) Continue cranking and connect the other links in the same way, always connecting two links at a time.

Note! While the pressure link chain is fed into the jaw system, the dummy chain (2) exits from the bottom and collides with the pressure links going up: fold manually the dummy chain (2) in the opposite direction, as shown below.

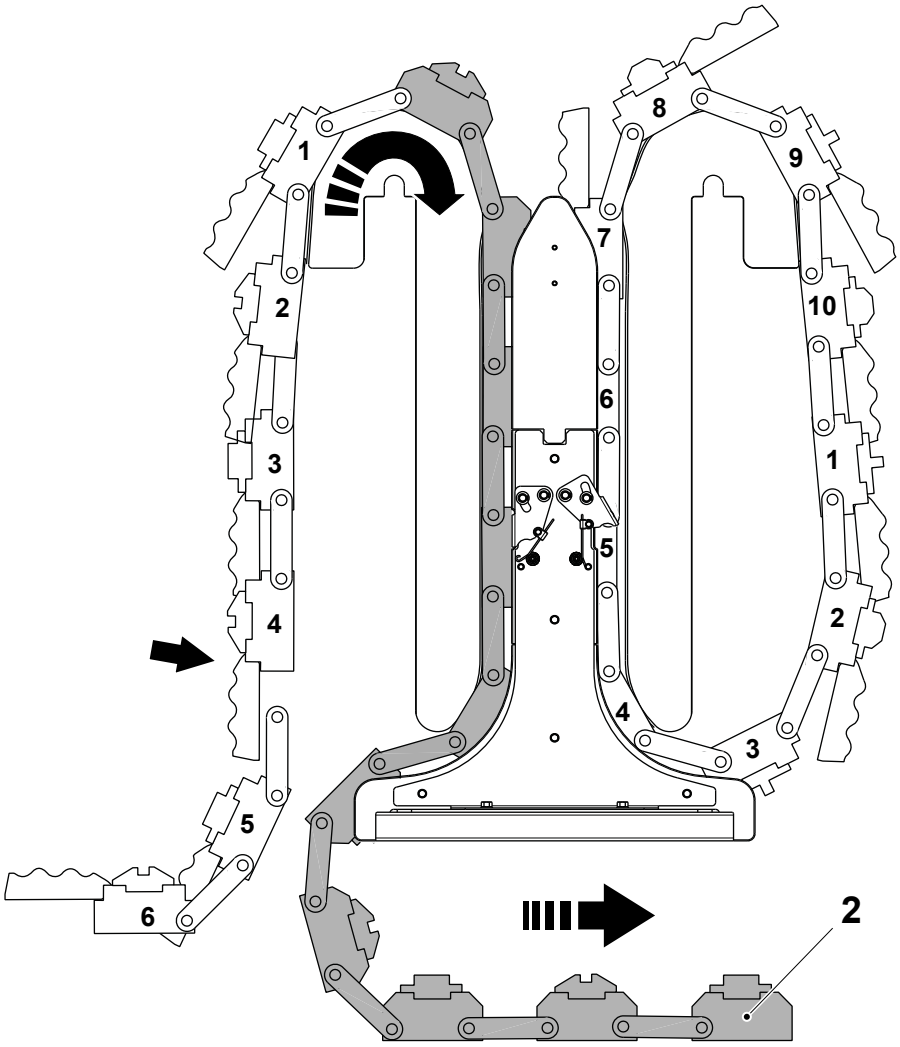

2 Dummy chain

(Cont'd)

TechPub_2614345_0107 - 0404_3048142_01.fm

(Cont'd)

x) Continue cranking until the link No.10 is the position indicated by the arrow.

y) Disconnect the dummy chain (2), see Dummy Chain Connection on page 4-59.

z) Connect the link No.1 with the link No.10, see Link Connections on page 4-56.

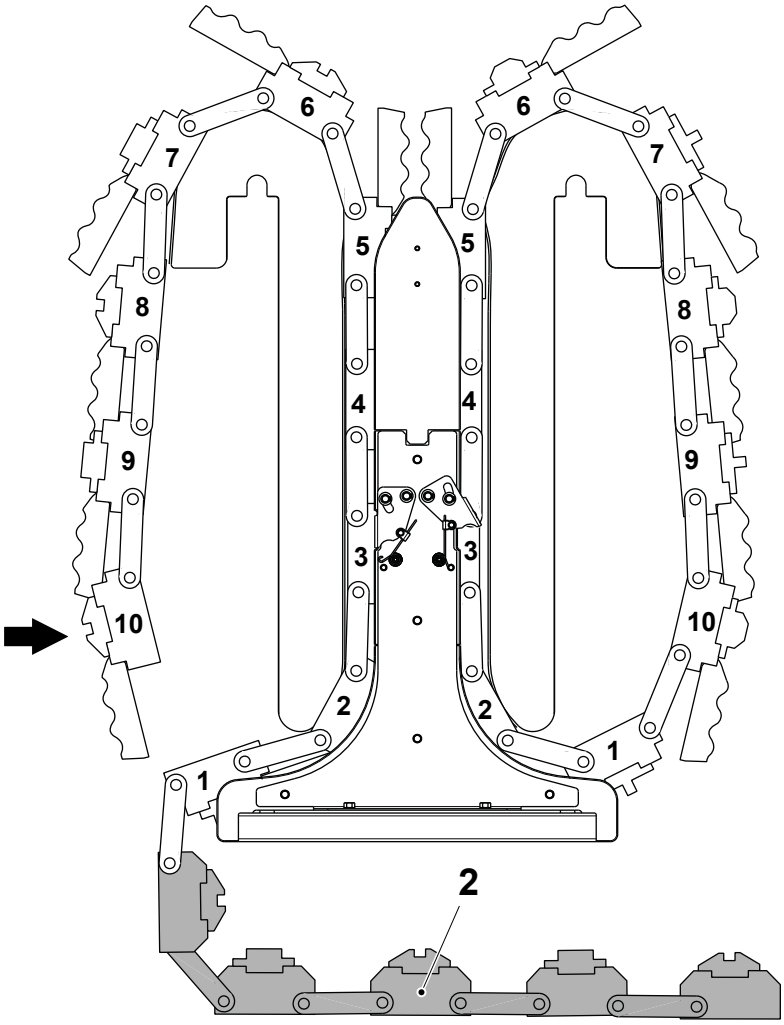

2 Dummy chain

(Cont'd)

TechPub_2614345_0107 - 0404_30481142_01.fm

(Cont'd)

aa) Remove the screws (7).

ab) Crank the jaw system to guide the chain guide (1) out of the jaw system.

ac) Remove the upper chain guides (8) from both sides of the jaw system frame.

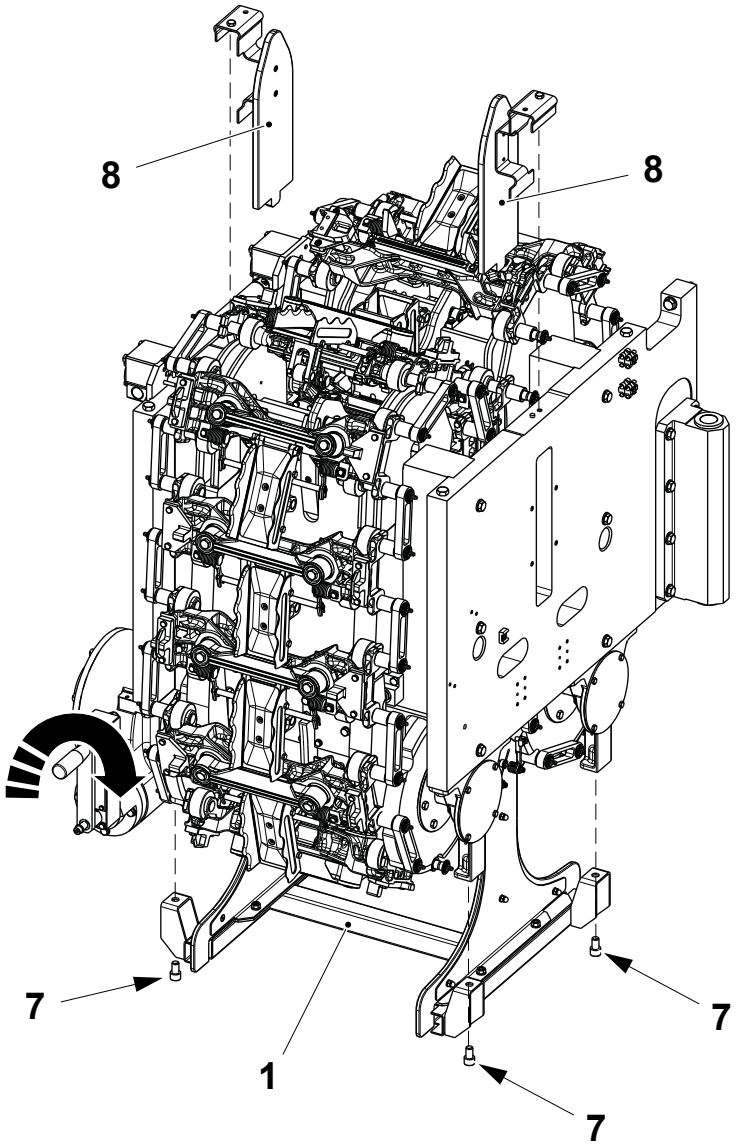

1 Chain guide
7 Screw
8 Upper chain guide

(Cont'd)

TechPub_2614345_0107 - 0404_3048142_01.fm

(Cont'd)

ad) Remove the two M8 x 80 hexagonal socket head screws (9) from the tensioning mechanism (10) to tense the sealing link chain.

ae) Complete the assembly with the Completion Tasks on page 4-92.

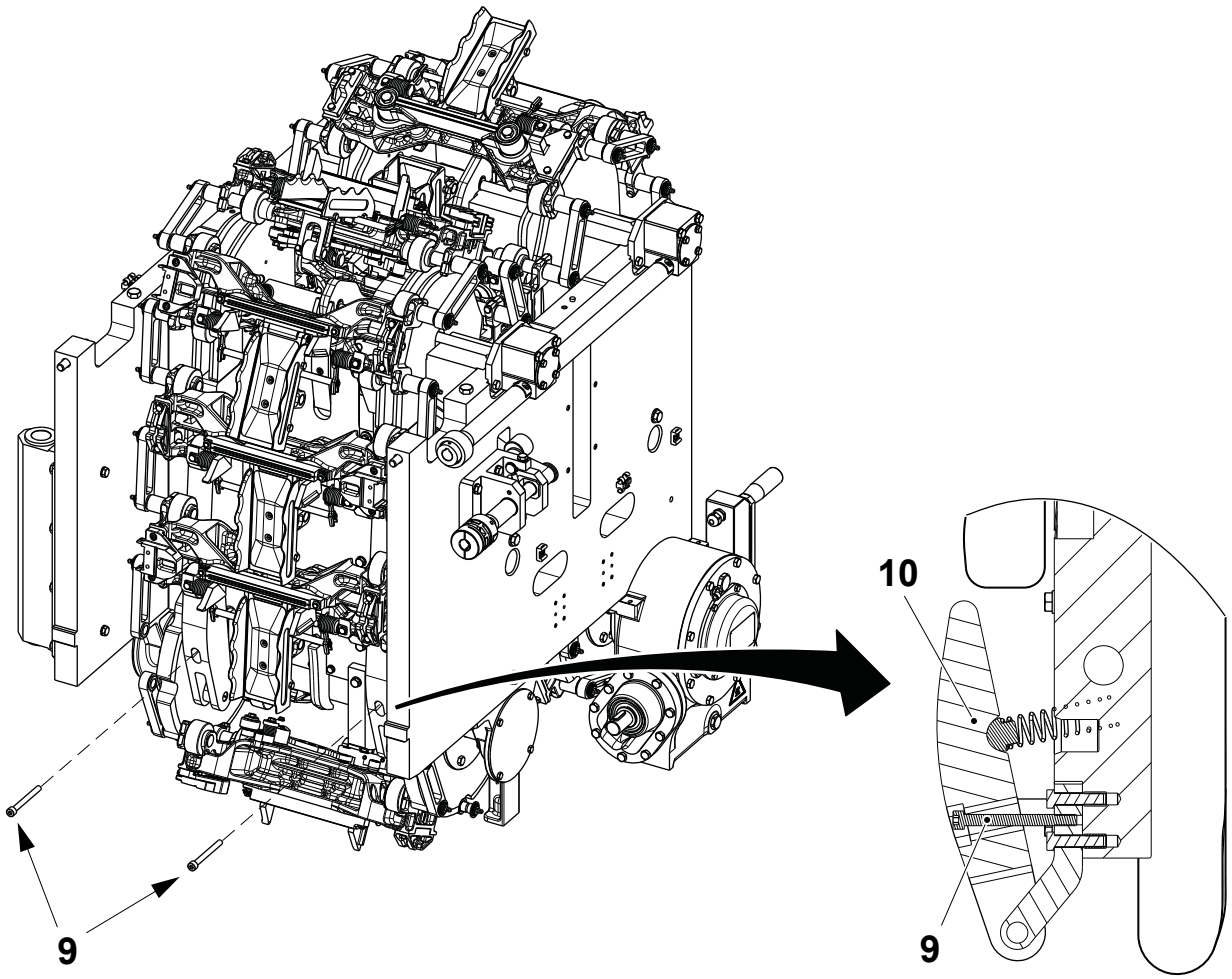

9 Screw
10 Tensioning mechanism

(Cont'd)

TechPub_2614345_0107 - 0404_30481142_01.fm

(Cont'd)

Completion Tasks

Note! When assembling, unless specified in the procedure, tighten all the screws according to the torque indicated in 10.1.1 Jaw System Screws Tightening Torque.

a) On the reference link of the pressure chain, fit the mounting block (1) with the flag (2) by the screws (3).

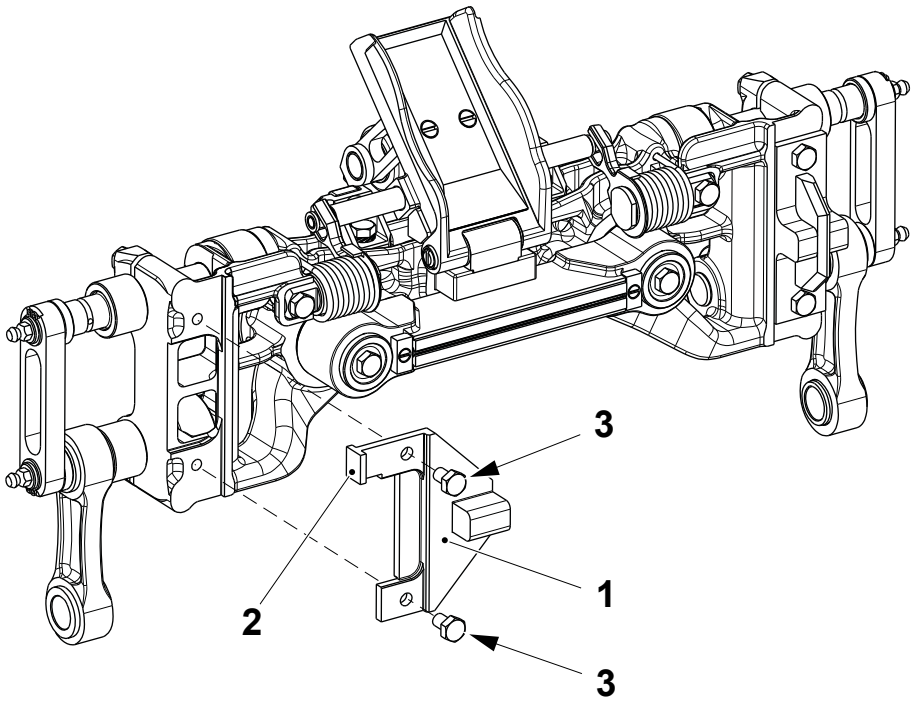

1 Mounting block
2 Flag
3 Screw

TechPub_2614345_0107 - 0404_3048142_01.fm

(Cont'd)

(Cont'd)

CAUTION
Risk of damage to the equipment.
Handle the ferrite (4) very carefully. It can be easily damaged.

Note! When fitting the screws (8) make sure that the disc springs (7) are oriented as shown below.

b) On every link of the sealing chain:
- assemble the ferrite (4) between the guide (5) and the brackets (6)
- fit the disc springs (7) and the screw (8) without tightening them
- insert the busbar (9) and fix it to the inductor by the screw (10)
- tighten the screw (8) to **2 Nm**.

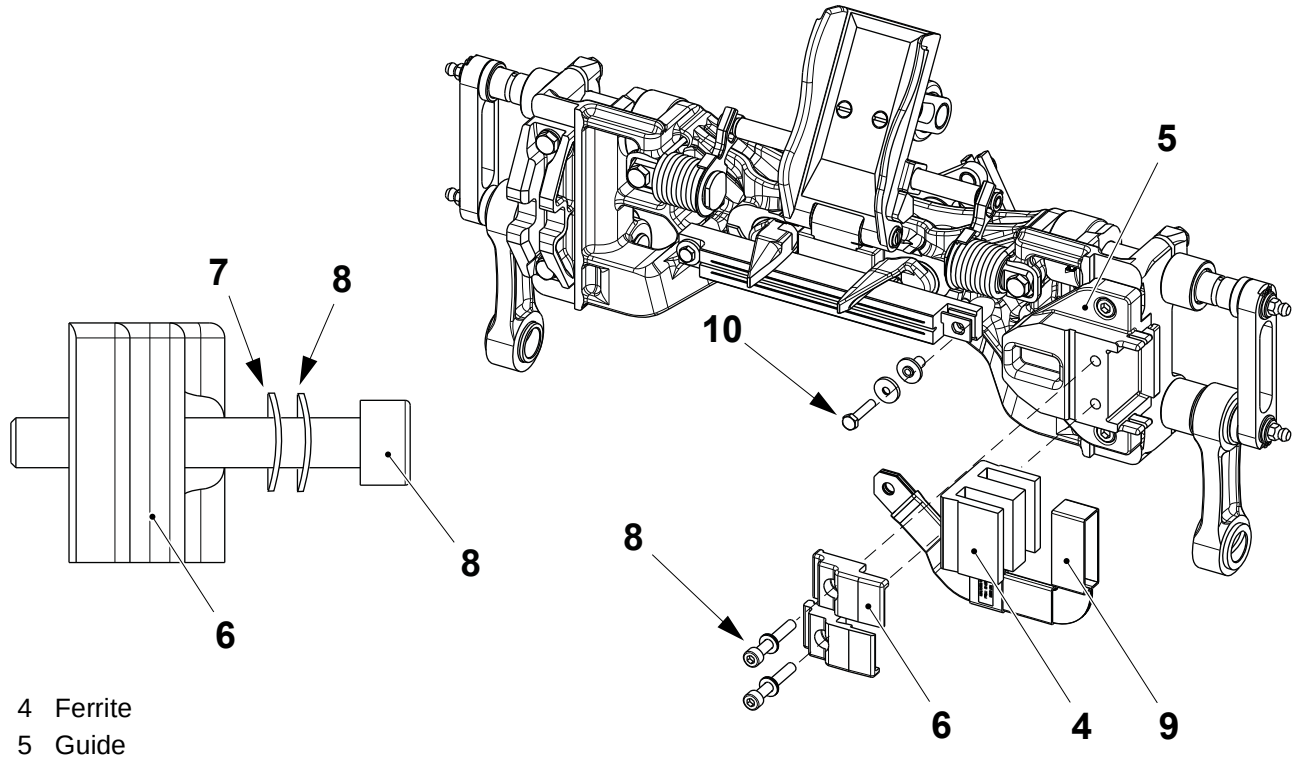

4 Ferrite
5 Guide
6 Bracket
7 Disc spring
8 Screw
9 Busbar
10 Screw

(Cont'd)

TechPub_2614345_0107 - 0404_3048142_01.fm

(Cont'd)

Note! The protection (12) is present only in Portion Packages machines.

c) Fit both the IPT assemblies (11), see 4.6-1 Electrical Connection - Check Busbar and Core.

d) Check the position of the IPT assemblies (11), see 4.6-4 Electrical Connection - Check Position.

e) Fit the protection (12) by the screws (13).

f) Fit back the waste box and swing back the jaw system, see 4-6 Jaw System - Remove Waste Box.

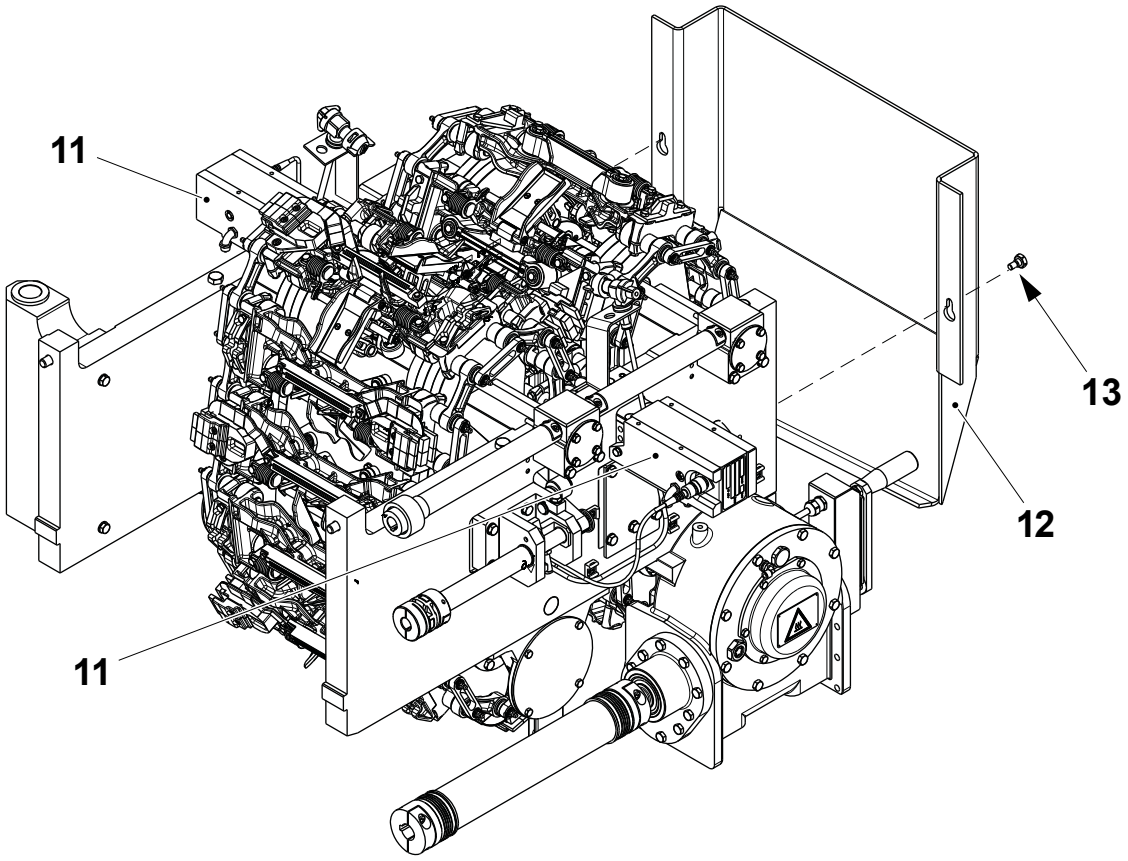

11 IPT assembly
12 Protection
13 Screw

TechPub_2614345_0107 - 0404_3048142_01.fm

4-8 Jaw System - Fill Gearbox Oil

Machine Status	Mains Power OFF Air OFF Steam ON Water OFF
Consumables	Lubricant Oil TP No. 90459-1041
SPC Reference	648536-0400

Note! Do not exceed the amount of oil stipulated below. Excess oil will cause overpressure and may lead to leakages.The correct amount of oil is **2.4 litres** for each gearbox.

Valid for Gearboxes Mounted on the Machine

a) Check the level of oil in the gearbox by looking at the oil level plug (1). The view below shows the correct level.

b) If the level is low, remove the oil inlet plug (2).

c) Using a funnel, top up the oil level with the correct lubricant, see 10.3 Consumables.

d) Fit back the inlet plug.

Note! An alternative oil can be used, see 10.3 Consumables.

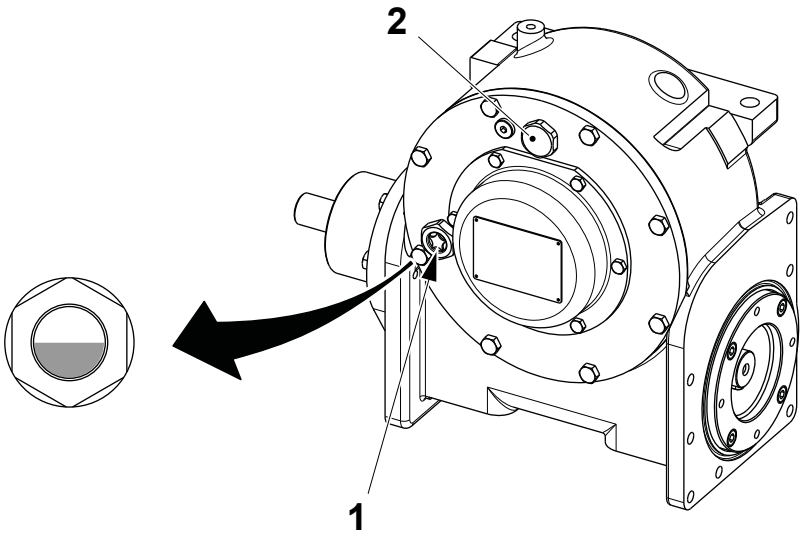

1 Oil level plug
2 Oil inlet plug

(Cont'd)

TechPub_2614345_0107 - 0404_30481142_01.fm

(Cont'd)

Valid for Gearboxes Not Mounted on the Machine

The oil in its clean state is virtual clear and is difficult to see below.

The best method to check the oil level is to tilt the gearbox until the upper surface of the oil can be seen in the oil level plug (1). If the oil cannot be seen this indicates that the gearbox is either completely full or empty.

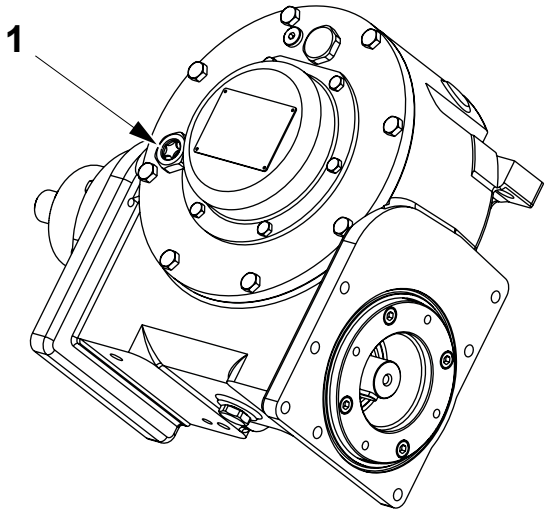

1 Oil level plug

(Cont'd)

TechPub_2614345_0107 - 0404_3048142_01.fm

(Cont'd)

The amount of oil in the gearbox should be checked and replenished as follows.

a) Remove the oil inlet plug (2) from the gearbox to be checked.

b) Remove the oil outlet plug (3) and drain off some oil.

c) Correct the oil level as follows:

- if there is no oil in the gearbox fit the oil outlet plug (3) and fill the gearbox with the correct amount of oil, see page 4-95.
- if the gearbox has an excess amount of oil, drain it completely into a suitable container (4) and then fit the oil outlet plug (3). Fill the gearbox with the correct amount of the oil just drained from it.

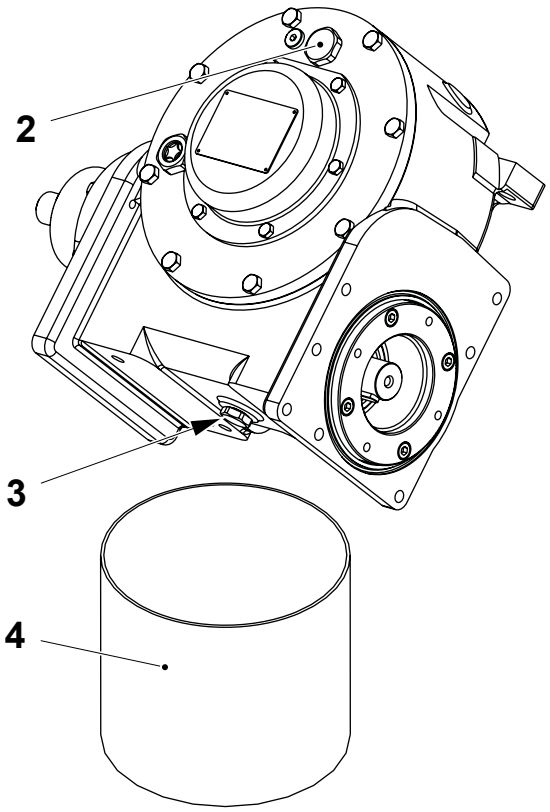

2 Oil inlet plug
3 Oil outlet plug
4 Container

TechPub_2614345_0107 - 0404_3048142_01.fm

4-9 Jaw System - Check Bearing Rollers

Machine Status	Mains Power OFF Air OFF Steam ON Water OFF
SPC Reference	648536-0400

WARNING

Burn hazard.
The Jaw Unit might be hot.

Note! When assembling, unless specified in the procedure, tighten all the screws according to the torque indicated in 10.1.1 Jaw System Screws Tightening Torque.

a) Remove the chains, see 4-7 Jaw System - Remove and Assemble Chains.

(Cont'd)

TechPub_2614345_0107 - 0404_3048142_01.fm

(Cont'd)

b) Check the bearing rollers (1) and (2) for damage, wear or play. If necessary change the bearing rollers (1) and (2) as follows.

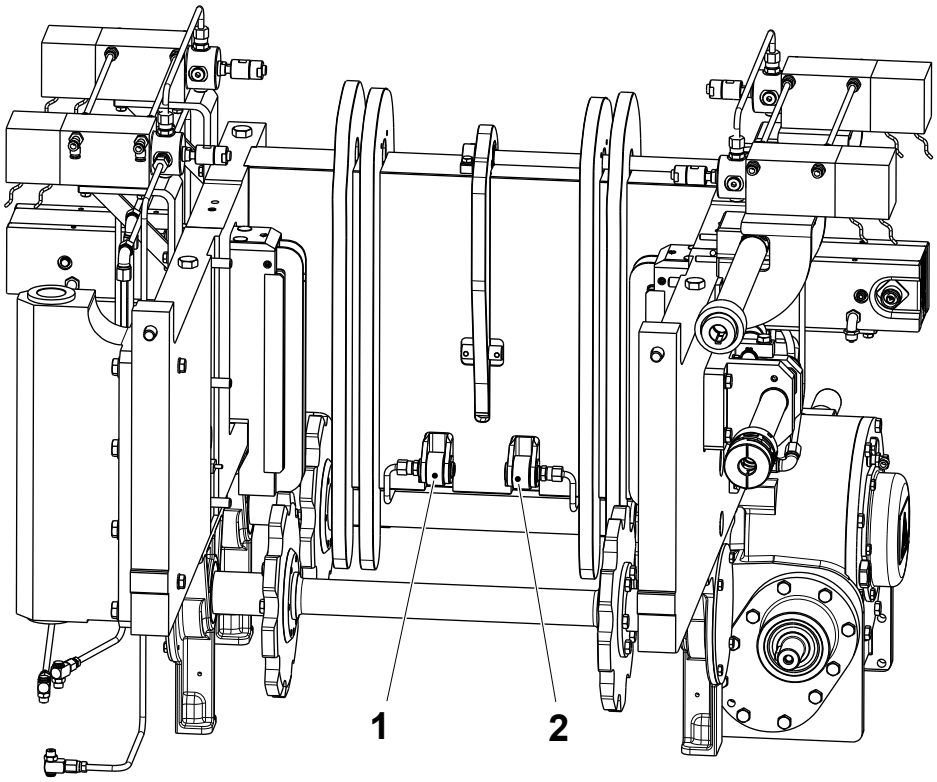

1 Bearing roller
2 Bearing roller

(Cont'd)

TechPub_2614345_0107 - 0404_30481142_01.fm

(Cont'd)

c) Remove the screws (3) and (4).

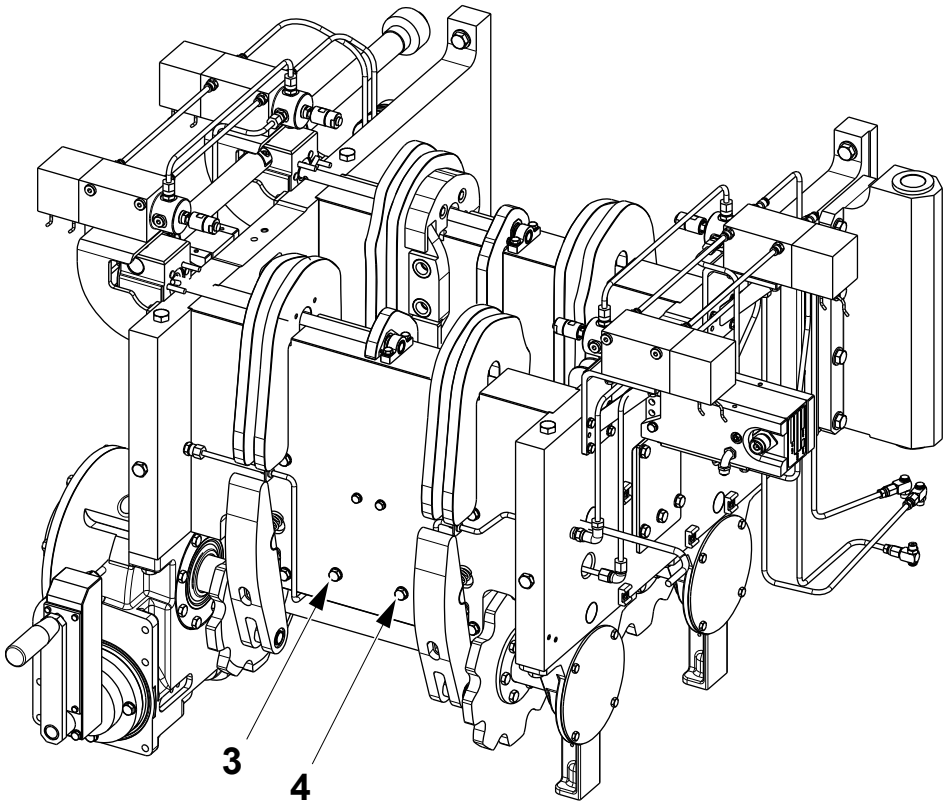

3 Screw
4 Screw

(Cont'd)

TechPub_2614345_0107 - 0404_3048142_01.fm

(Cont'd)

d) Disconnect the grease pipes connectors (5) and (6) and remove the bearing roller assemblies (7) and (8).

e) On both bearing rollers, remove the retaining ring (9) and pull out the shaft (10).

f) Change the bearing rollers (1) and (2).

g) Assemble in the reverse order.

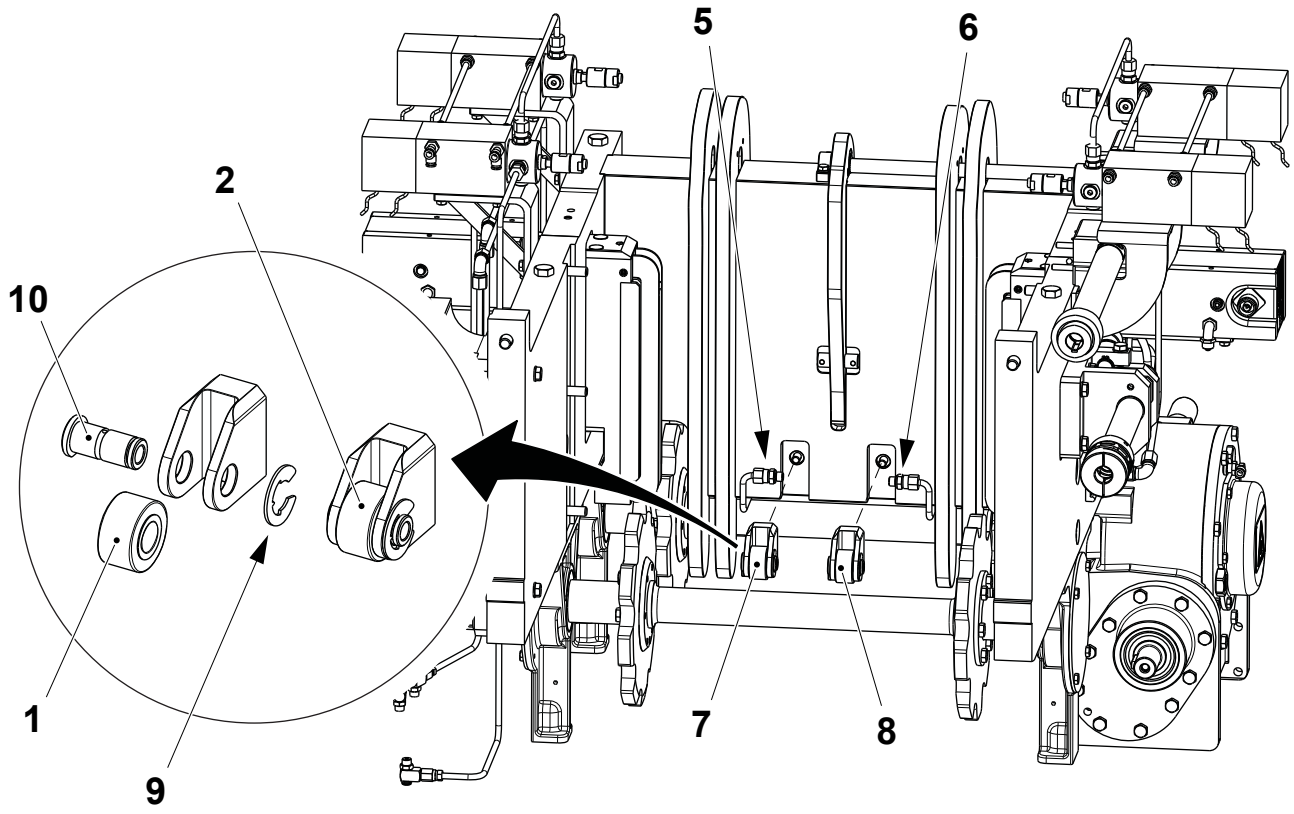

1 Bearing roller
2 Bearing roller
5 Connector
6 Connector
7 Bearing roller assembly
8 Bearing roller assembly
9 Retaining ring
10 Shaft

TechPub_2614345_0107 - 0404_3048142_01.fm

4-10 Jaw System - Check Nozzles

Machine Status	Mains Power OFF Air OFF Steam ON Water OFF
SPC Reference	648536-0400

Note! Valid for Family Packages only.

Remove the nozzle (1) from the flushers (2) and check that it is not clogged and free from lime scale deposits.

If necessary dip the nozzle (1) into a container with deliming agent.

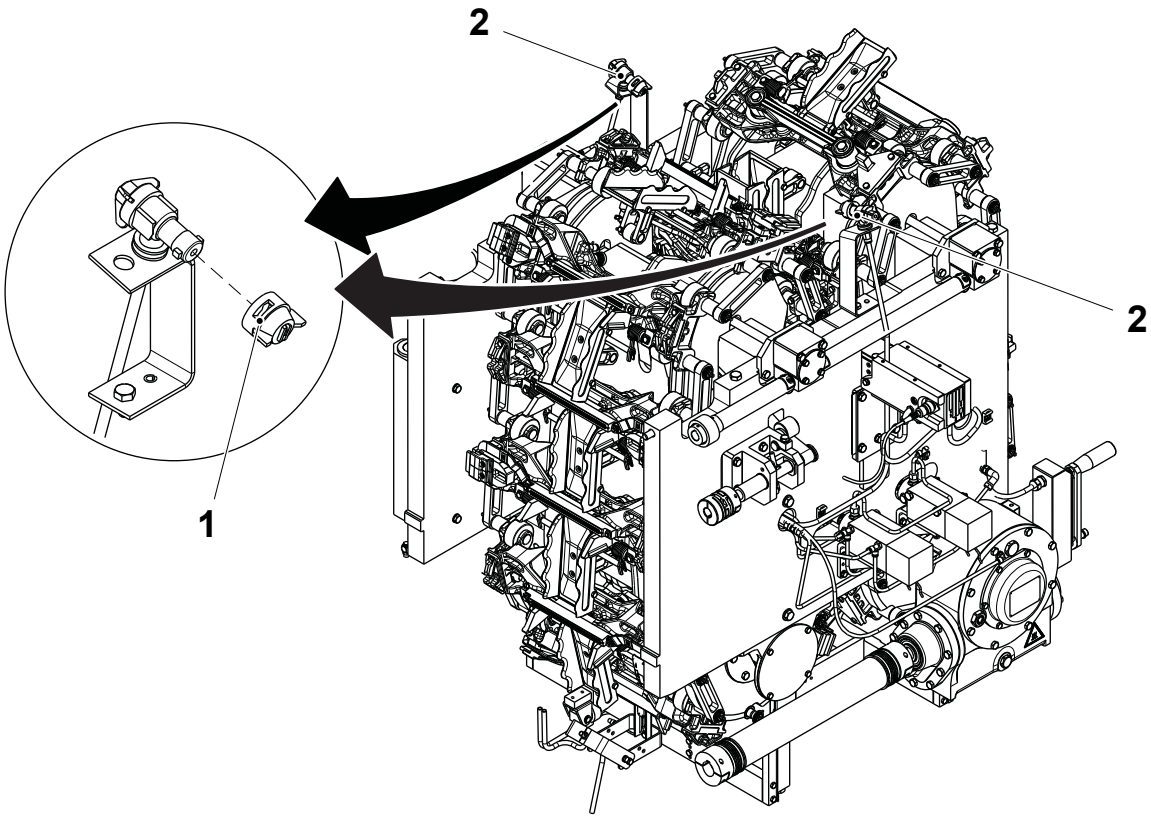

1 Nozzle
2 Flusher

TechPub_2614345_0107 - 0404_3048142_01.fm

4-11 Jaw System - Overhaul Cutting Device

Machine Status	Mains Power OFF Air OFF Steam ON Water OFF
Special Equipment	Tool TP No. 3010398-0000
SPC Reference	648536-0400 2964422-0100

Note! Valid for TBA 1000 Sq PT Speed only.

Note! When assembling, unless specified in the procedure, tighten all the screws according to the torque indicated in 10.1.1 Jaw System Screws Tightening Torque.

a) Release the jaw system brakes, see 4-4 Jaw System - Release Brakes.

(Cont'd)

TechPub_2614345_0107 - 0404_3048142_01.fm

(Cont'd)

CAUTION

Risk of damage to the equipment and /or personal injury.

The tools (1) prevent the pressure chain rotation: fully tighten the screws (2) to fasten them to the frame jaw system.

b) Fit the tools (1) on the jaw system frame by two screws M12 (2).

c) Tighten the screws (2).

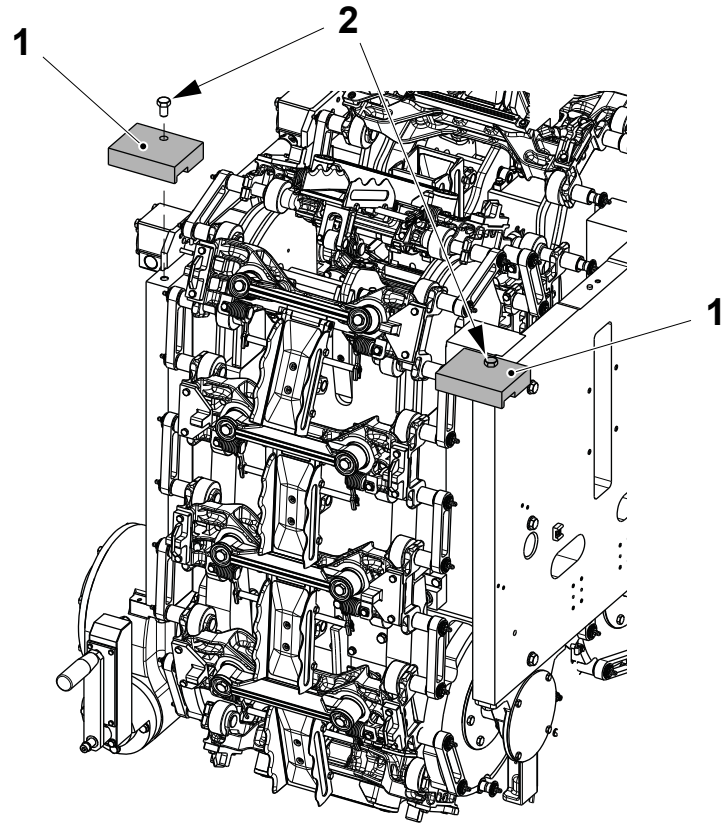

1 Tool
2 Screw M12

(Cont'd)

TechPub_2614345_0107 - 0404_3048142_01.fm

(Cont'd)

d) Slowly crank the jaw system until the link shafts (3) touch the tools (1).

e) Separate the pressure chain links where indicated by the arrow in order to access the cutting device (4), see 4-7 Jaw System - Remove and Assemble Chains, Link Connections on page 4-56.

f) Lay carefully the pressure chain links on the infeed frame.

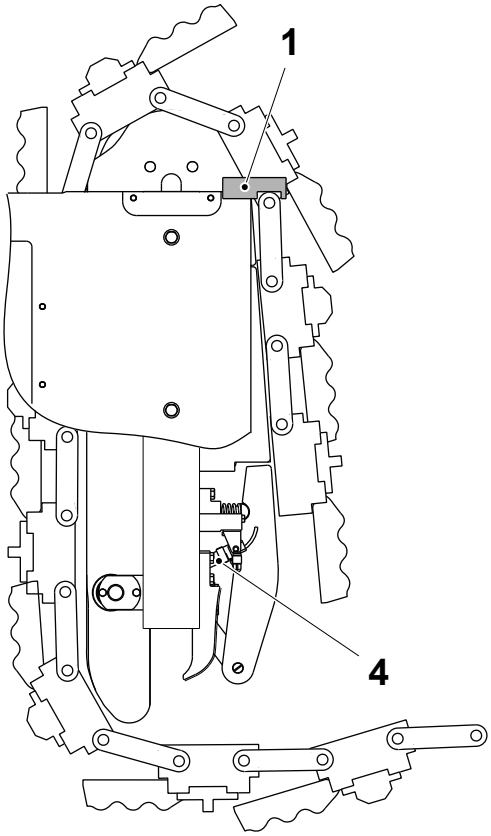

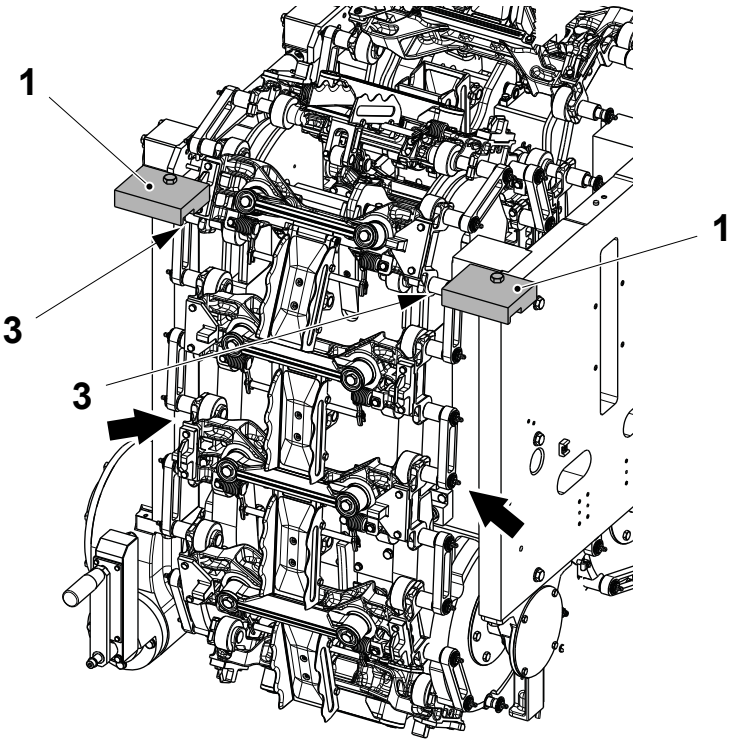

1 Tool
3 Link shaft
4 Cutting device

(Cont'd)

TechPub_2614345_0107 - 0404_3048142_01.fm

(Cont'd)

g) On both cylinders, disconnect the sensors:
   – for cylinders with proximity sensors (5) TP No. 90458-2534, loosen the clamps (6) and remove the sensors (5)
   – for cylinders with sensors (7) TP No. 5985309-7004, disconnect the connector (8).

h) Remove the screws (9).

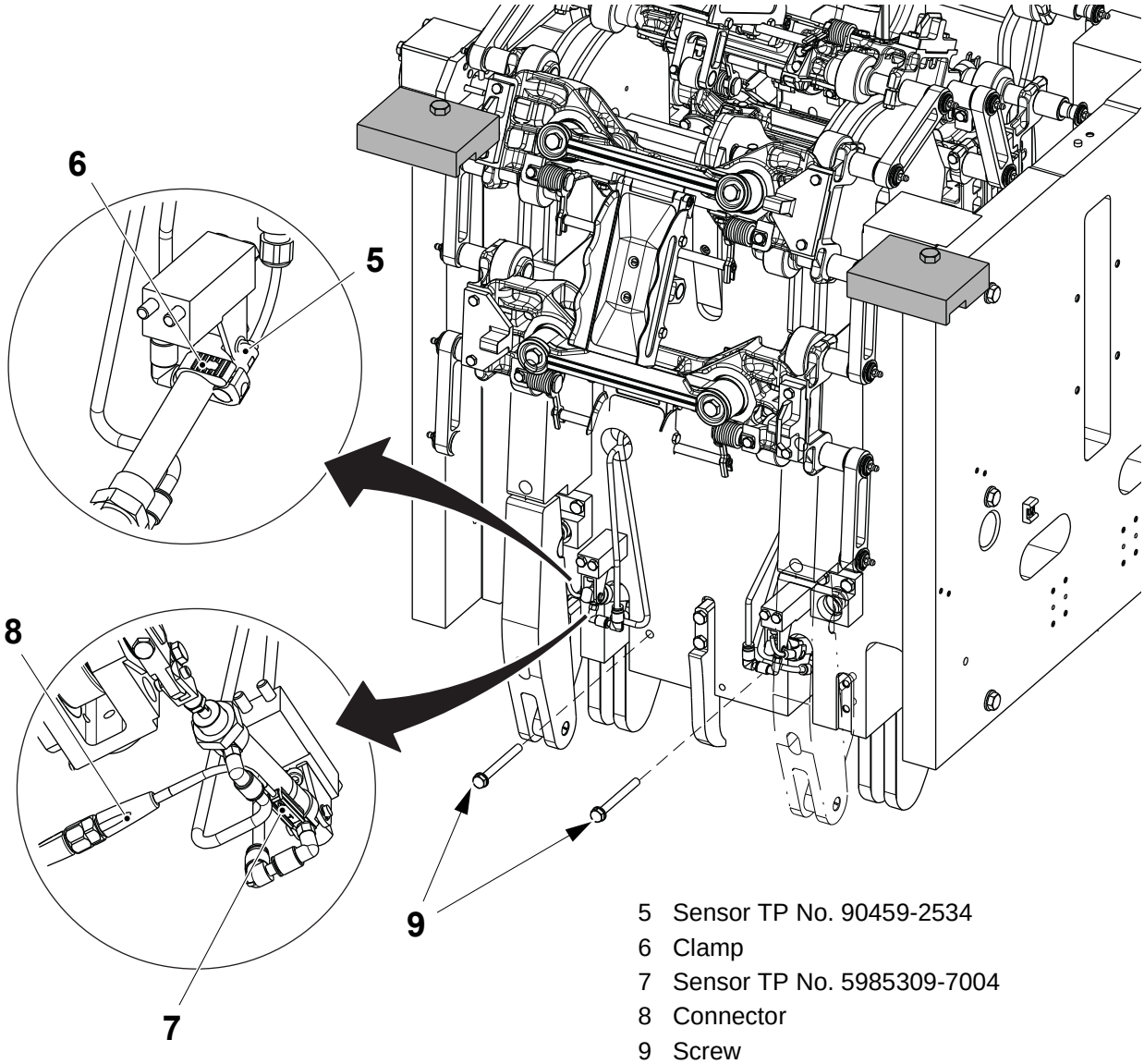

5 Sensor TP No. 90459-2534
6 Clamp
7 Sensor TP No. 5985309-7004
8 Connector
9 Screw

(Cont'd)

TechPub_2614345_0107 - 0404_3048142_01.fm

(Cont'd)

i) Disconnect the pneumatic hoses from the cylinders (10).

j) Remove the screws (11).

k) Lower and remove both the cutting device assembly (12) and move them to the work bench.

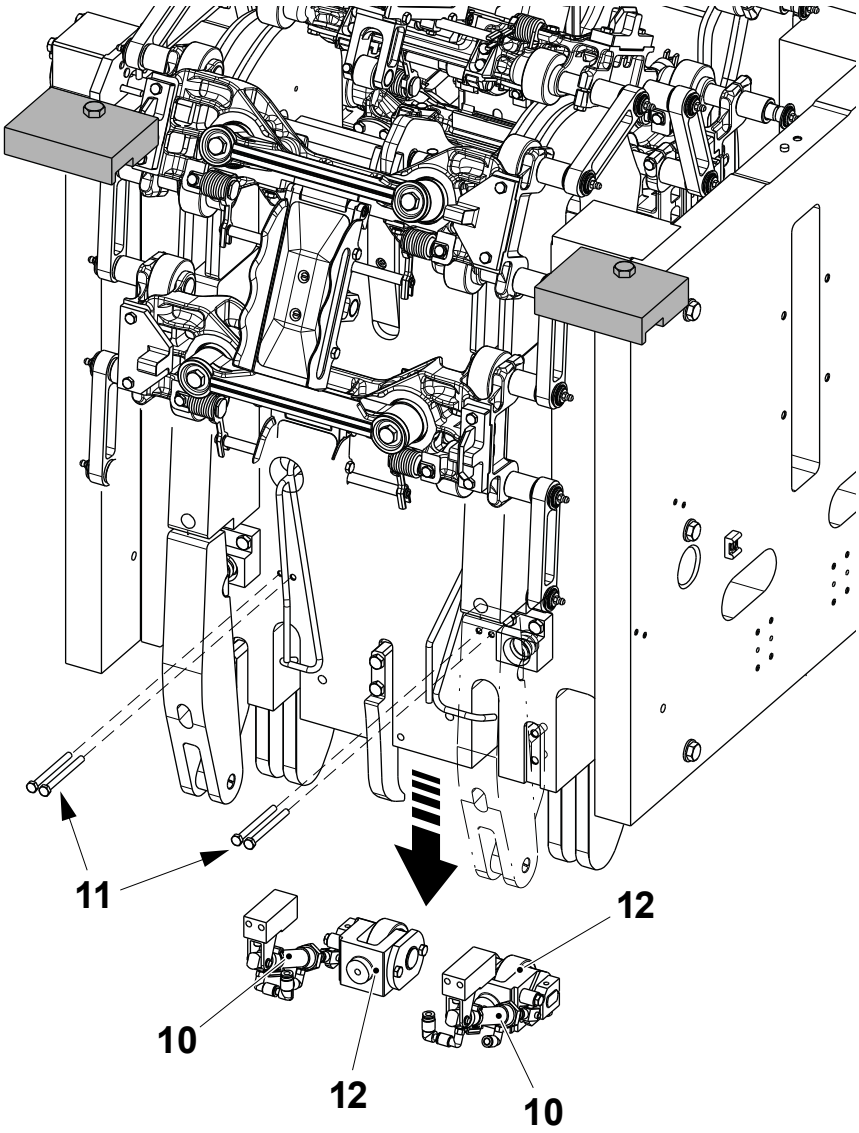

10 Cylinder
11 Screw
12 Cutting device assembly

(Cont'd)

TechPub_2614345_0107 - 0404_30481142_01.fm

(Cont'd)

l) Remove the screw (13) and separate the lever (14).

m) Remove the cylinder fork (15) and change the bushing (16).

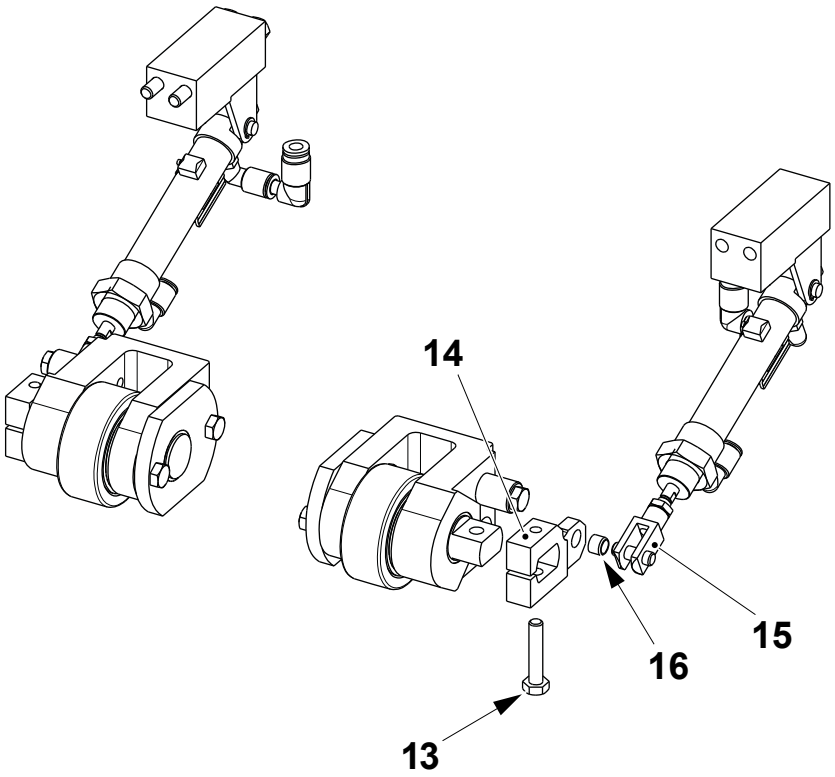

13 Screw
14 Lever
15 Cylinder fork
16 Bushing

(Cont'd)

TechPub_2614345_0107 - 0404_3048142_01.fm

(Cont'd)

n) Remove the screws (17) and the flange (18).

o) Extract the shaft (19).

p) Remove the roller (20) and change the bushing (21).

q) Remove and change the bushings (22) and (23).

Note! Cut the excess of material in the flange of the bushing (22) to insert the flange (18) in the holder (24).

r) Repeat on the other cutting device assembly.

s) Assemble in the reverse order.

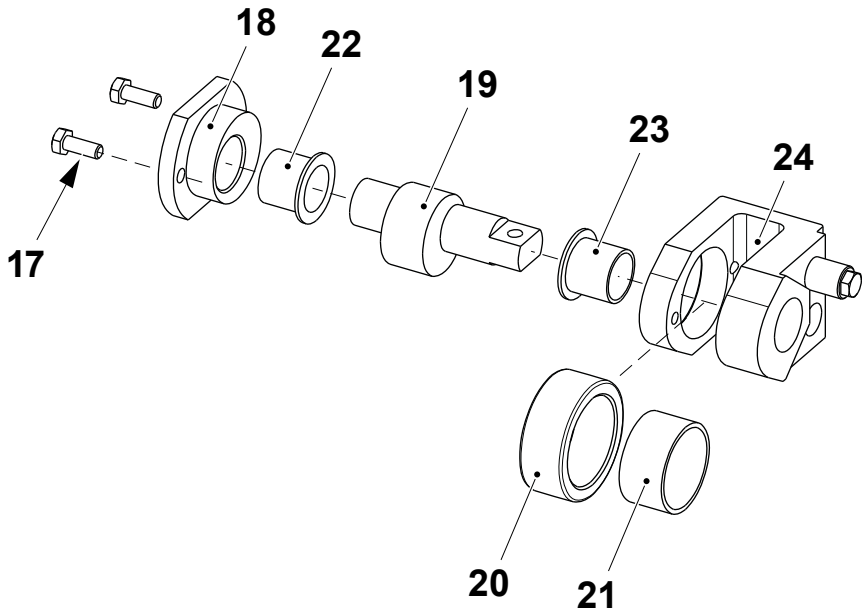

17 Screw
18 Flange
19 Shaft
20 Roller
21 Bushing
22 Bushing
23 Bushing
24 Holder

(Cont'd)

TechPub_2614345_0107 - 0404_30481142_01.fm

(Cont'd)

t) Before assembling the cutting device assembly on the jaw system, set the cylinder stroke as follows:
   – when the cylinder (10) is fully open, set the distance **A** by the nut (25).

u) When the cutting device is assembled on the jaw system, check the sensor (26) as follows:
   – when the cylinder in fully retracted and the lever (14) touches the mechanical stop (27), the LED sensor turns off.

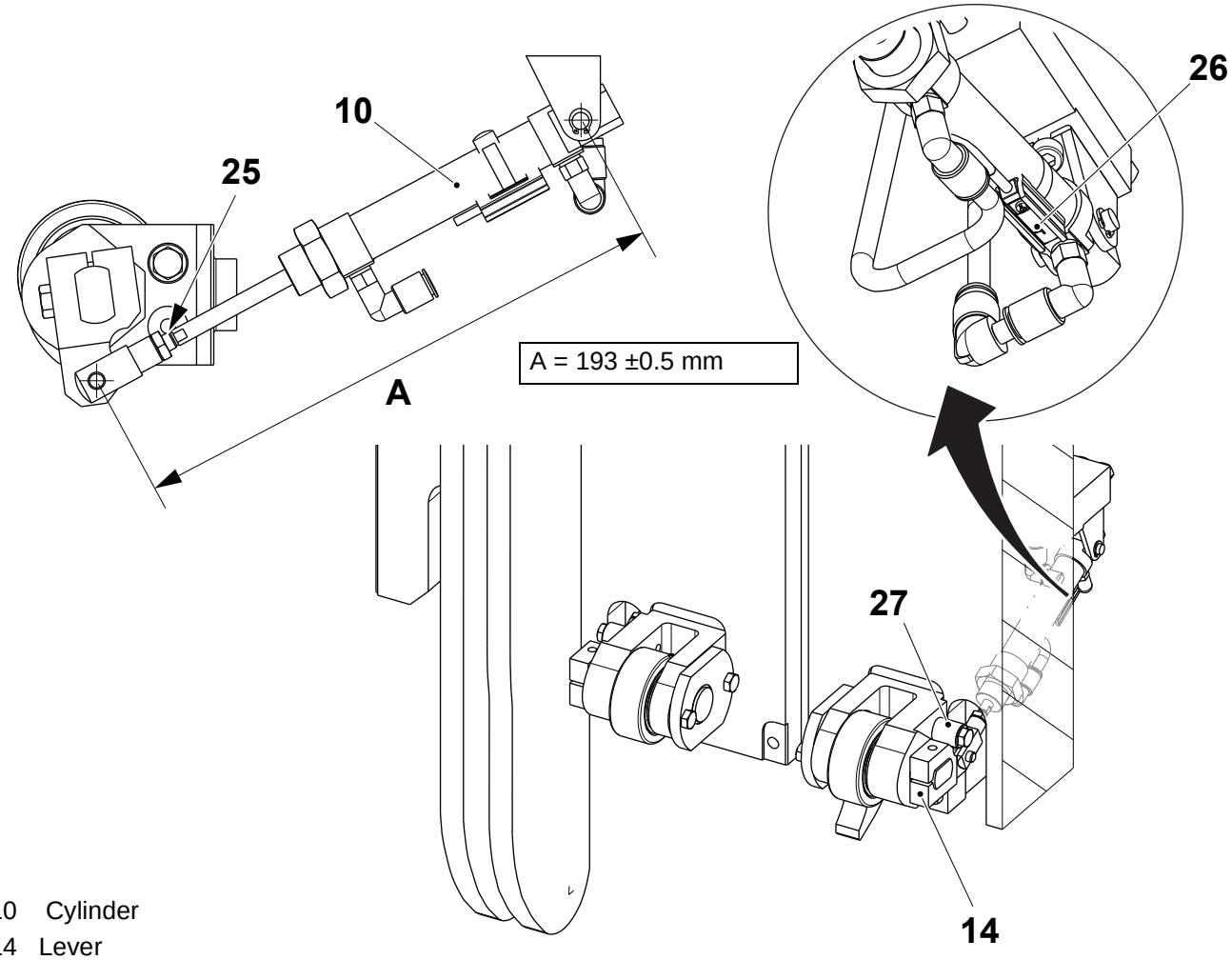

10 Cylinder
14 Lever
25 Nut
26 Proximity sensor
27 Mechanical stop

TechPub_2614345_0107 - 0404_3048142_01.fm

4.1 Sealing Jaw

SPC Reference	2529794-0400 2529795-0400 2500387-0300 2500388-0300

4.1-1 Sealing Jaw - Check Guides

Machine Status	Mains Power OFF Air OFF Steam ON Water OFF
SPC Reference	2529794-0400 2529795-0400 2500387-0300 2500388-0300

WARNING
Burn hazard.
Parts might be hot.

(Cont'd)

TechPub_2614345_0107 - 0403_3048143_01.fm

(Cont'd)

Crank the jaw system and check that the guide (1) and the ferrite holder (2) are not worn or damaged. If necessary, change the guide (1), see 4.1-9 Sealing Jaw - Change Guides and the ferrite holder (2), see 4.1-11 Sealing Jaw - Change Ferrite Holder.

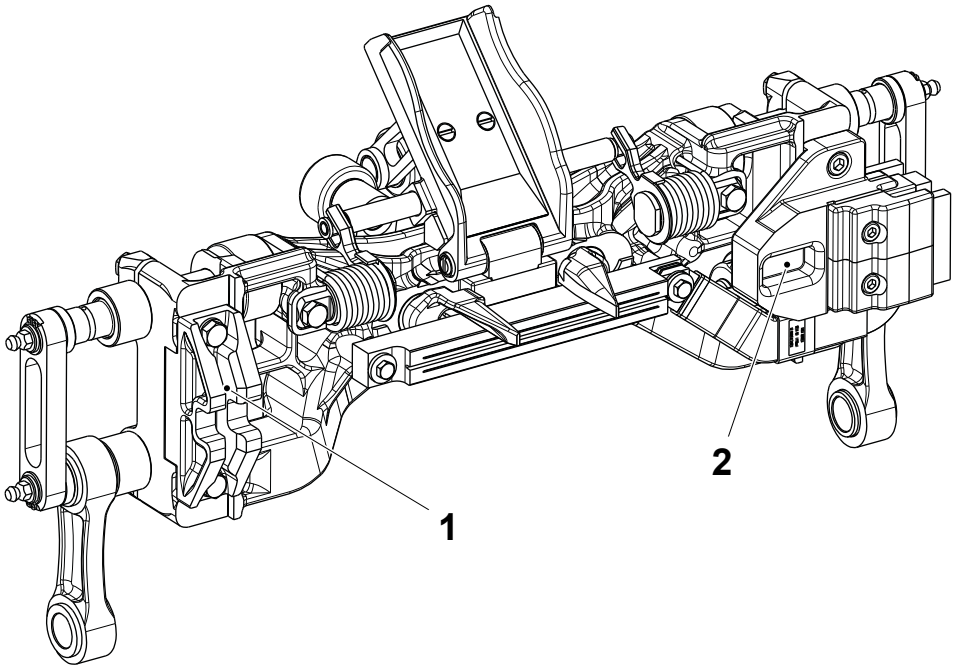

1 Guide
2 Ferrite holder

TechPub_2614345_0107 - 0403_3048143_01.fm

4.1-2 Sealing Jaw - Check Volume Flap Dampers

SPC Reference	2529794-0400 2529795-0400 2500387-0300 2500388-0300

Check volume flap damper, see 4.2-1 Pressure Jaw - Check Volume Flap Dampers.

4.1-3 Sealing Jaw - Check Volume Flap Springs, Holder and Bushings

SPC Reference	2529794-0400 2529795-0400 2500387-0300 2500388-0300

Check the volume flap springs, holder and bushing, see 4.2-2 Pressure Jaw - Check Volume Flap Springs, Holder and Bushings.

4.1-4 Sealing Jaw - Check Volume Flap Rollers

SPC Reference	2529794-0400 2529795-0400 2500387-0300 2500388-0300

Check the roller, see 4.2-3 Pressure Jaw - Check Volume Flap Rollers.

4.1-5 Sealing Jaw - Check Cam Followers

SPC Reference	2529794-0400 2529795-0400 2500387-0300 2500388-0300

Check the cam follower rollers, see 4.2-4 Pressure Jaw - Check Cam Followers.

TechPub_2614345_0107 - 0403_3048143_01.fm

4.1-6 Sealing Jaw - Check Flap Folding

Machine Status	Mains Power OFF Air OFF Steam ON Water OFF
SPC Reference	2529794-0400 2529795-0400 2500387-0300 2500388-0300

WARNING
Burn hazard.
Parts might be hot.

a) Check the shafts (1), (2), (3), (4) and (5) for wear or damage. Change any worn or damaged shaft, see 4.1-12 Sealing Jaw - Overhaul.

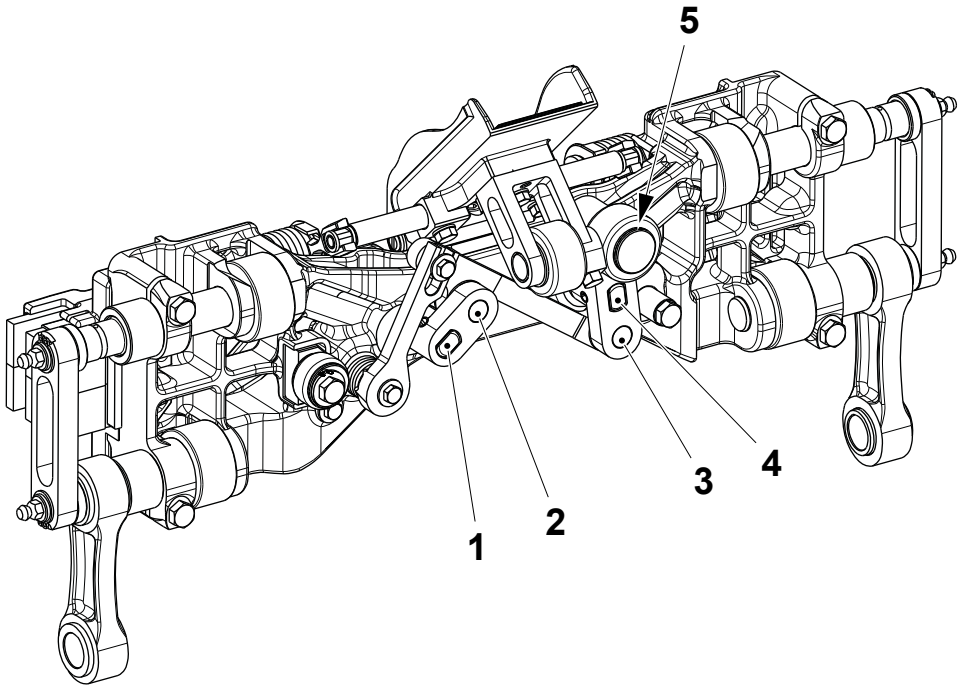

1 Shaft
2 Shaft
3 Shaft
4 Shaft
5 Shaft

(Cont'd)

TechPub_2614345_0107 - 0403_3048143_01.fm

(Cont'd)

b) Check the spring (6) for wear or damage and replace if necessary, see 4.1-12 Sealing Jaw - Overhaul.

c) Check that the roller (7) is not stuck or it does not have excessive play. Change the bushing if necessary, see 4.1-12 Sealing Jaw - Overhaul.

d) Repeat the procedure on the other links.

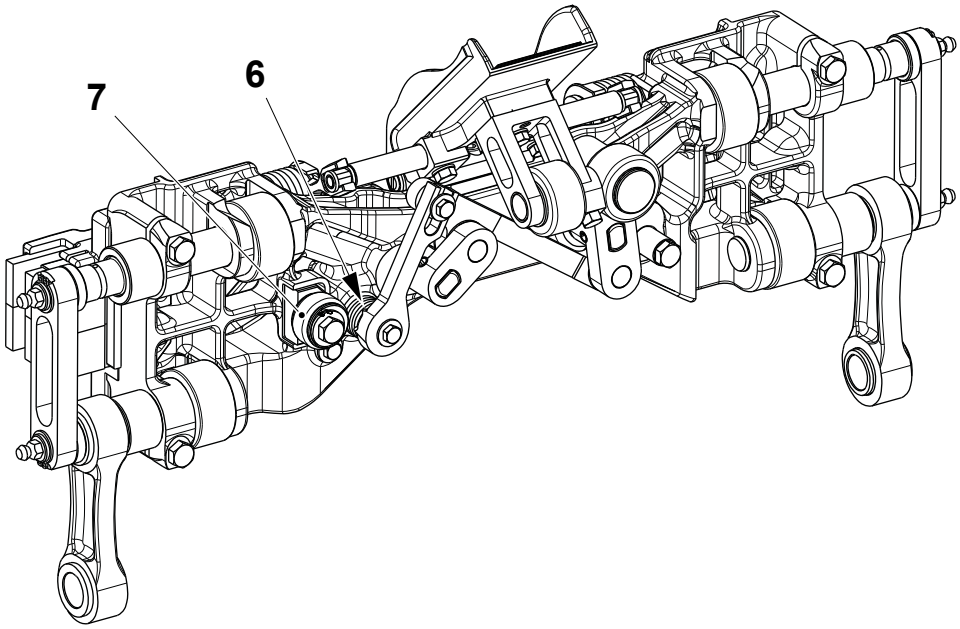

6 Spring
7 Roller

TechPub_2614345_0107 - 0403_3048143_01.fm

4.1-7 Sealing Jaw - Check Inductor

Machine Status	PRODUCTION
Special Equipment	Tool TP No. 2908997-0100, see 10.2 Templates and Tools
SPC Reference	2529794-0400 2529795-0400 2500387-0300 2500388-0300

WARNING
Burn hazard.
Parts might be hot.

Check the TS quality, see the OM and the BoC.

(Cont'd)

TechPub_2614345_0107 - 0403_3048143_01.fm

(Cont'd)

Note! When assembling, unless specified in the procedure, tighten all the screws according to the torque indicated in 10.1.1 Jaw System Screws Tightening Torque.

Move the inductor to be checked in maintenance position, see Change Inductor in 4-2 Jaw System - Inch and Go to Position. If necessary, perform the following check on the inductor (2).

a) On one jaw, remove the screws (1) and the inductor (2).

b) Check the inductor (2) for visual wear or damage. If necessary, change the inductor (2).

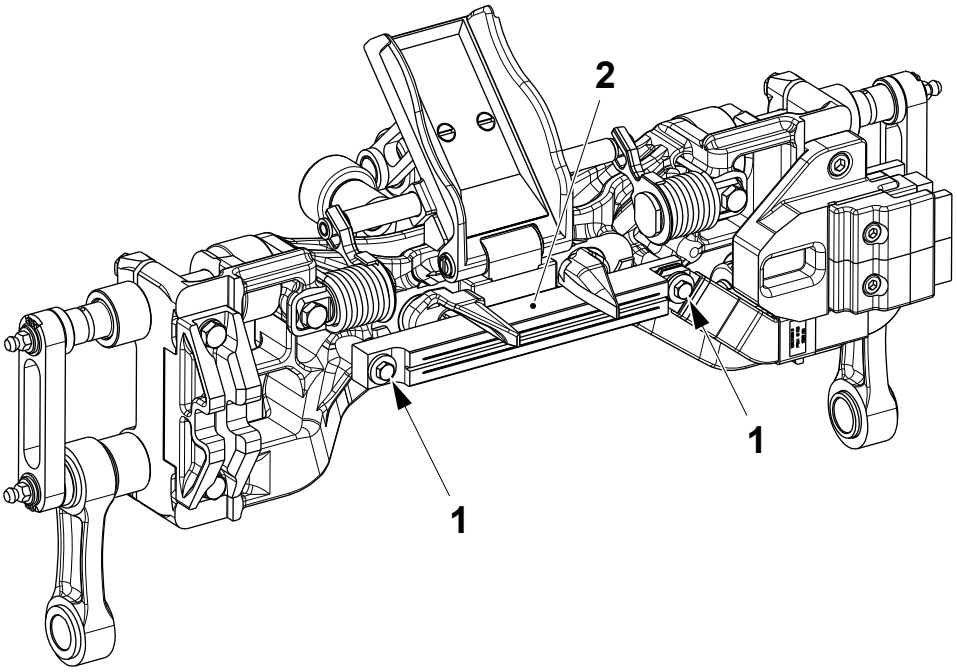

1 Screw
2 Inductor

(Cont'd)

TechPub_2614345_0107 - 0403_3048143_01.fm

(Cont'd)

c) Reset the tool (3) by fitting the template (4) under the slide (5).

d) Remove the template (4).

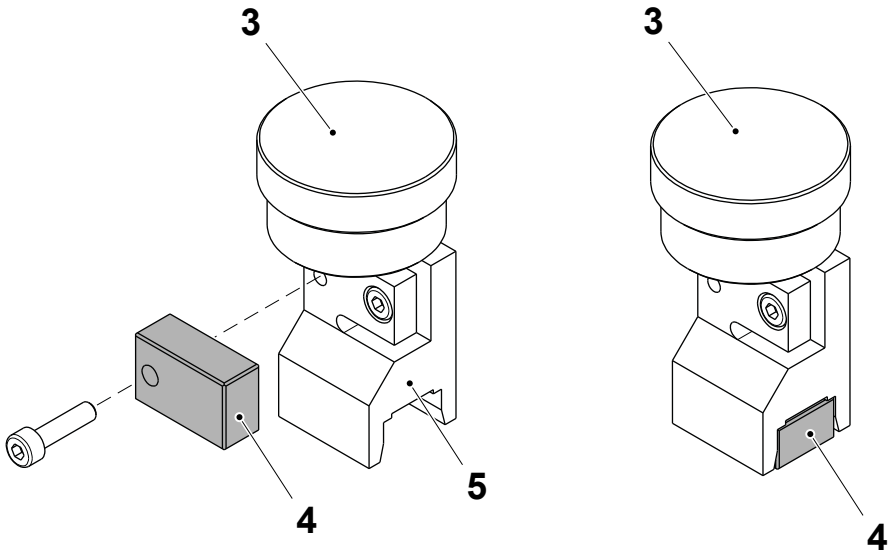

3 Tool
4 Template
5 Slide

(Cont'd)

TechPub_2614345_0107 - 0403_3048143_01.fm

(Cont'd)

e) Fit the tool (3) above the inductor (2) and move it on the inductor (2) to check that the thickness of the ridge (6) is **A** throughout the inductor length.

f) Remove the tool (3), rotate it by 180º and fit it back on the inductor (2) to check the same distance in the second ridge (7).

g) If the ridge thickness in some part is lower than 0.2 mm, change the inductor (2).

h) Repeat the procedure on the other links.

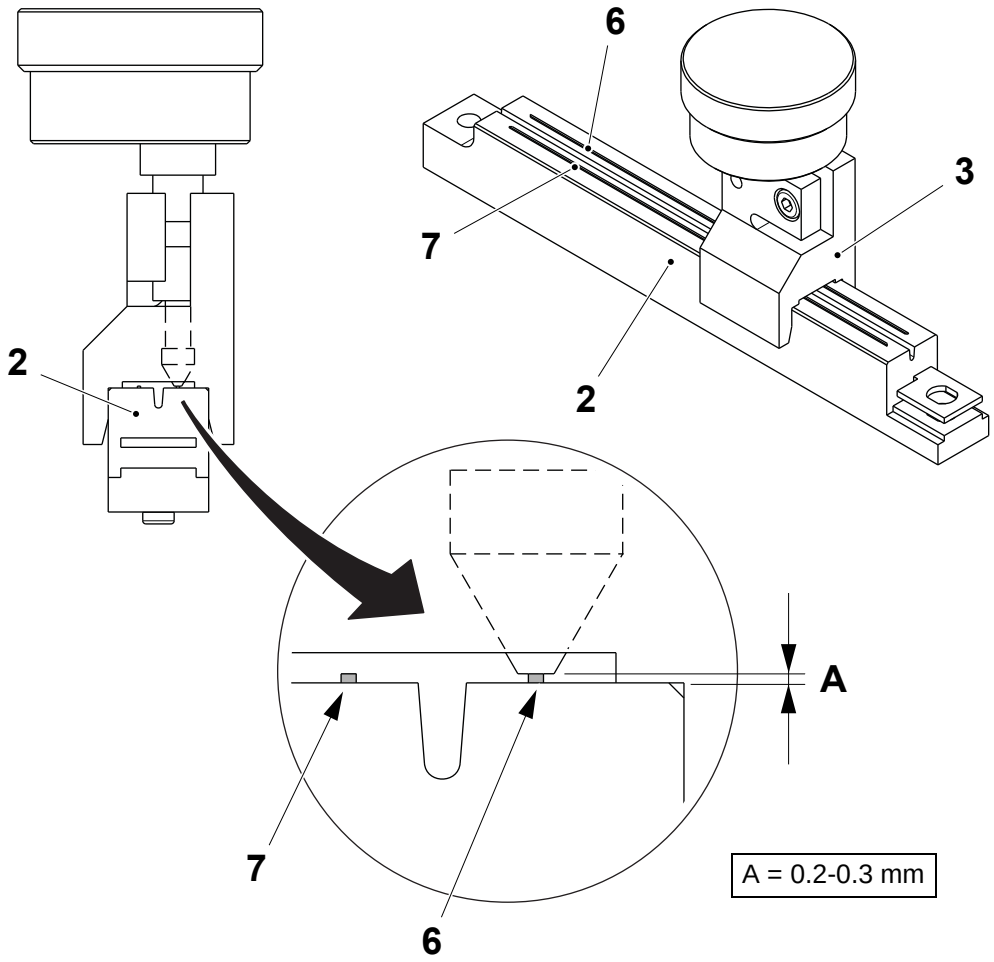

2 Inductor
3 Tool
6 Ridge
7 Ridge

TechPub_2614345_0107 - 0403_3048143_01.fm

4.1-8 Sealing Jaw - Check Busbar and Ferrite

Machine Status	Mains Power OFF Air OFF Steam ON Water OFF
SPC Reference	2529794-0400 2529795-0400 2500387-0300 2500388-0300

WARNING
Burn hazard.
Parts might be hot.

Check the busbar (1) and the ferrite (2) for damage. If necessary, change them, see 4.1-10 Sealing Jaw - Change Busbar and Ferrite.

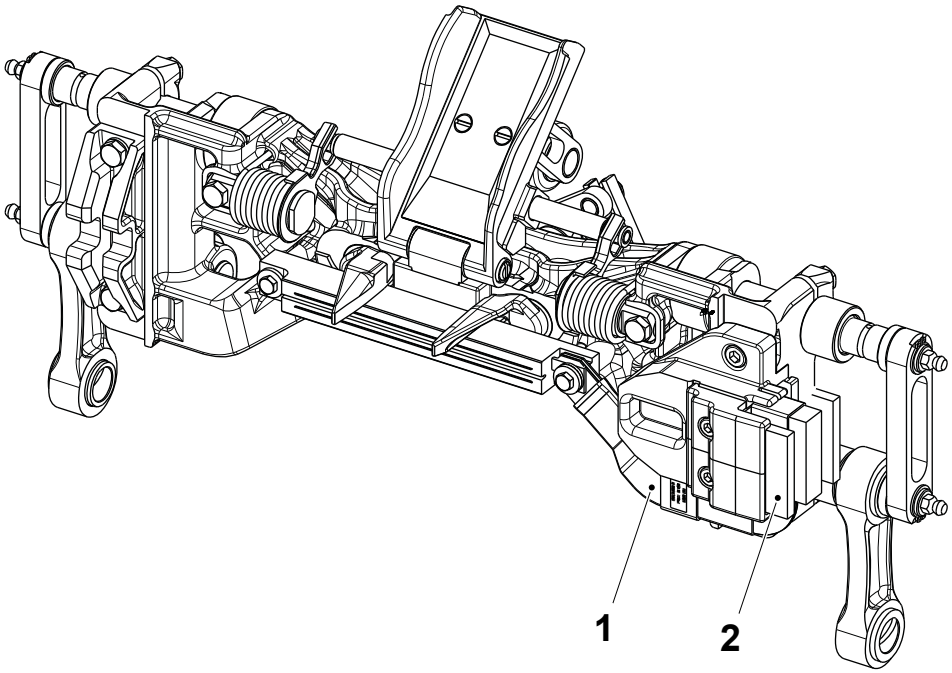

1 Busbar
2 Ferrite

TechPub_2614345_0107 - 0403_3048143_01.fm

4.1-9 Sealing Jaw - Change Guides

Machine Status	Mains Power OFF Air OFF Steam ON Water OFF
SPC Reference	2529794-0400 2529795-0400 2500387-0300 2500388-0300

WARNING
Burn hazard.
Parts might be hot.

Note! When assembling, unless specified in the procedure, tighten all the screws according to the torque indicated in 10.1.1 Jaw System Screws Tightening Torque.

Remove the screws (1) and change the guide (2). Tighten the screws (1) to **6 Nm** with a torque wrench.

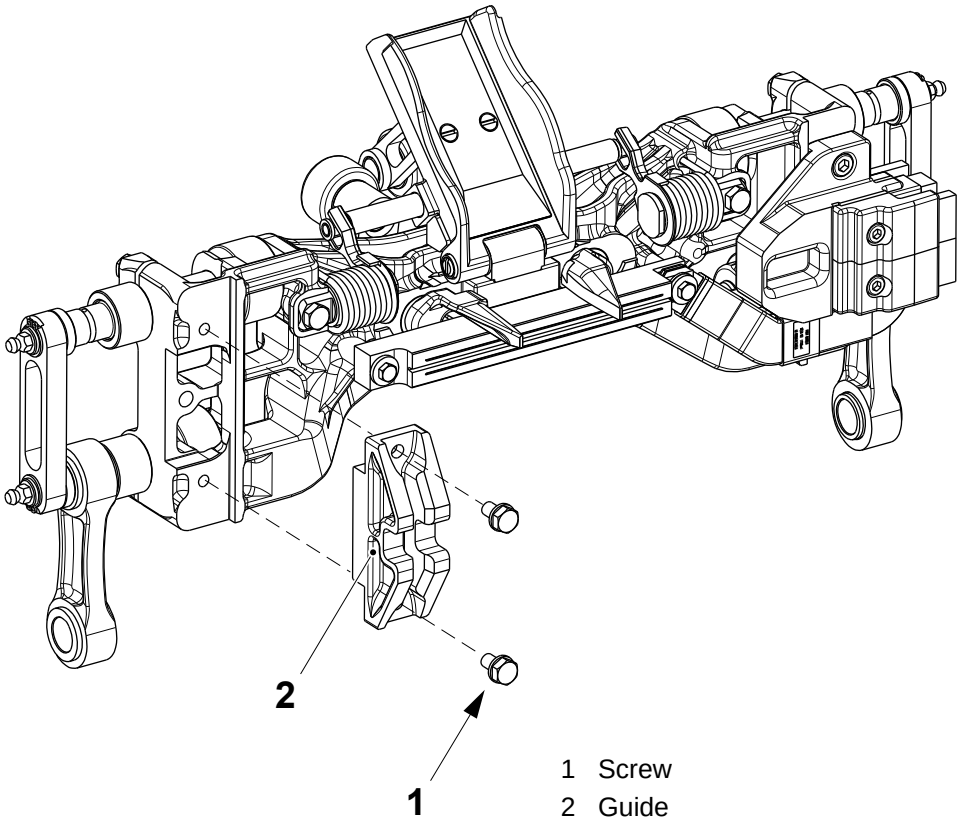

1 Screw
2 Guide

TechPub_2614345_0107 - 0403_3048143_01.fm

4.1-10 Sealing Jaw - Change Busbar and Ferrite

Machine Status	Mains Power OFF Air OFF Steam ON Water OFF
SPC Reference	2529794-0400 2529795-0400 2500387-0300 2500388-0300

WARNING
Burn hazard.
Parts might be hot.

Note! When assembling, unless specified in the procedure, tighten all the screws according to the torque indicated in 10.1.1 Jaw System Screws Tightening Torque.

(Cont'd)

TechPub_2614345_0107 - 0403_3048143_01.fm

(Cont'd)

CAUTION
Risk of damage to the equipment.
When slipping off or inserting the busbar (5) pay attention to not damage the ferrite (6).

a) Remove the screws (1) and the brackets (2).
b) Remove the screw (3) and the insulation nut (4).
c) Slip off the busbar (5). Change it if necessary.

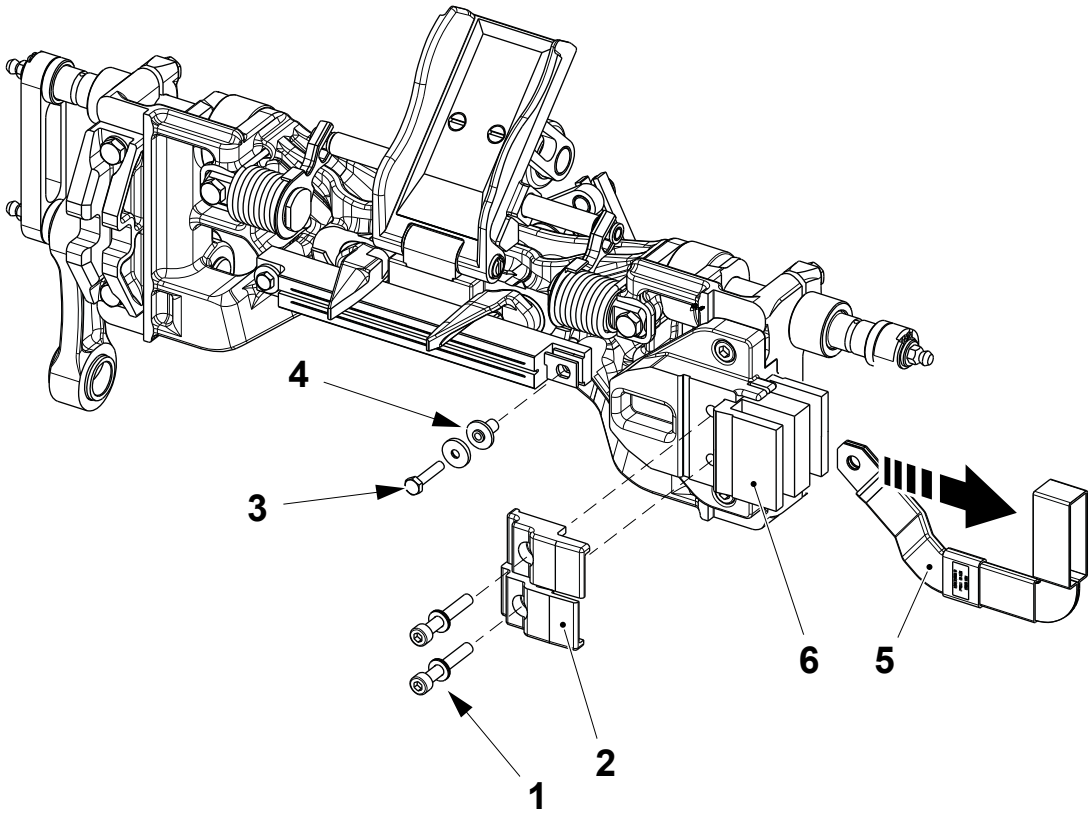

1 Screw
2 Bracket
3 Screw
4 Insulation nut
5 Busbar
6 Ferrite

(Cont'd)

TechPub_2614345_0107 - 0403_3048143_01.fm

(Cont'd)

CAUTION
Risk of damage to the equipment.
Handle the ferrite (6) very carefully. It can be easily damaged.

d) Remove the ferrite (6) and change it if necessary.

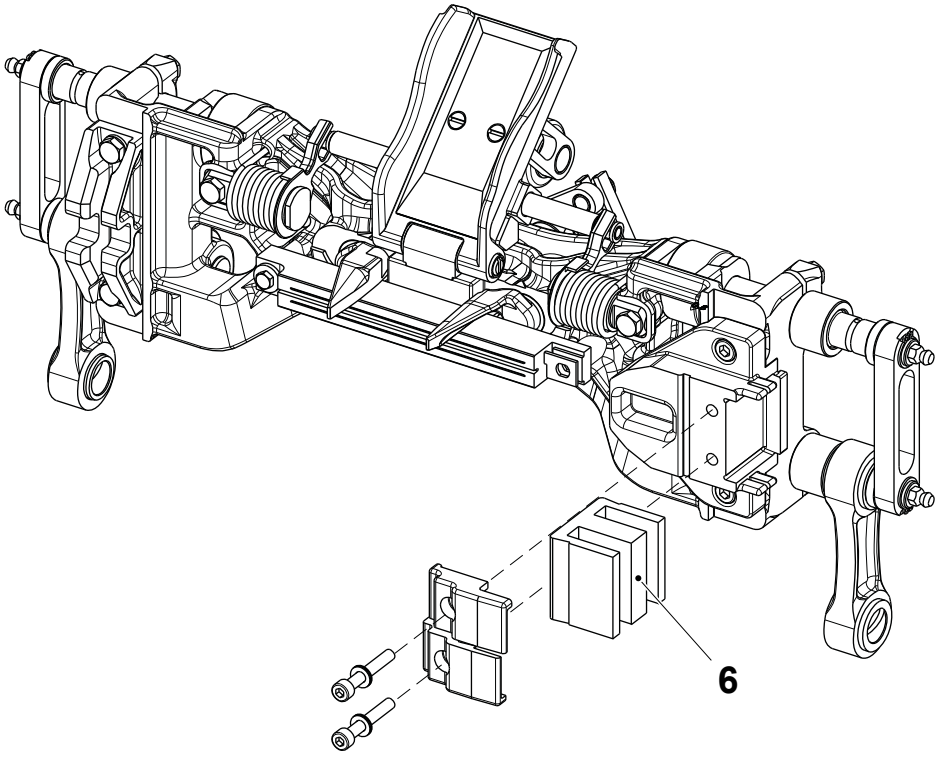

6 Ferrite

(Cont'd)

TechPub_2614345_0107 - 0403_3048143_01.fm

(Cont'd)

e) Assemble in the reverse order.

f) When assembling:

- close the ferrite (6) between the brackets (2) and the ferrite holder (7)
- insert the disc springs (8), oriented as shown below, and the screws (1)
- tighten the screws (1) to **2 Nm** with a torque wrench.

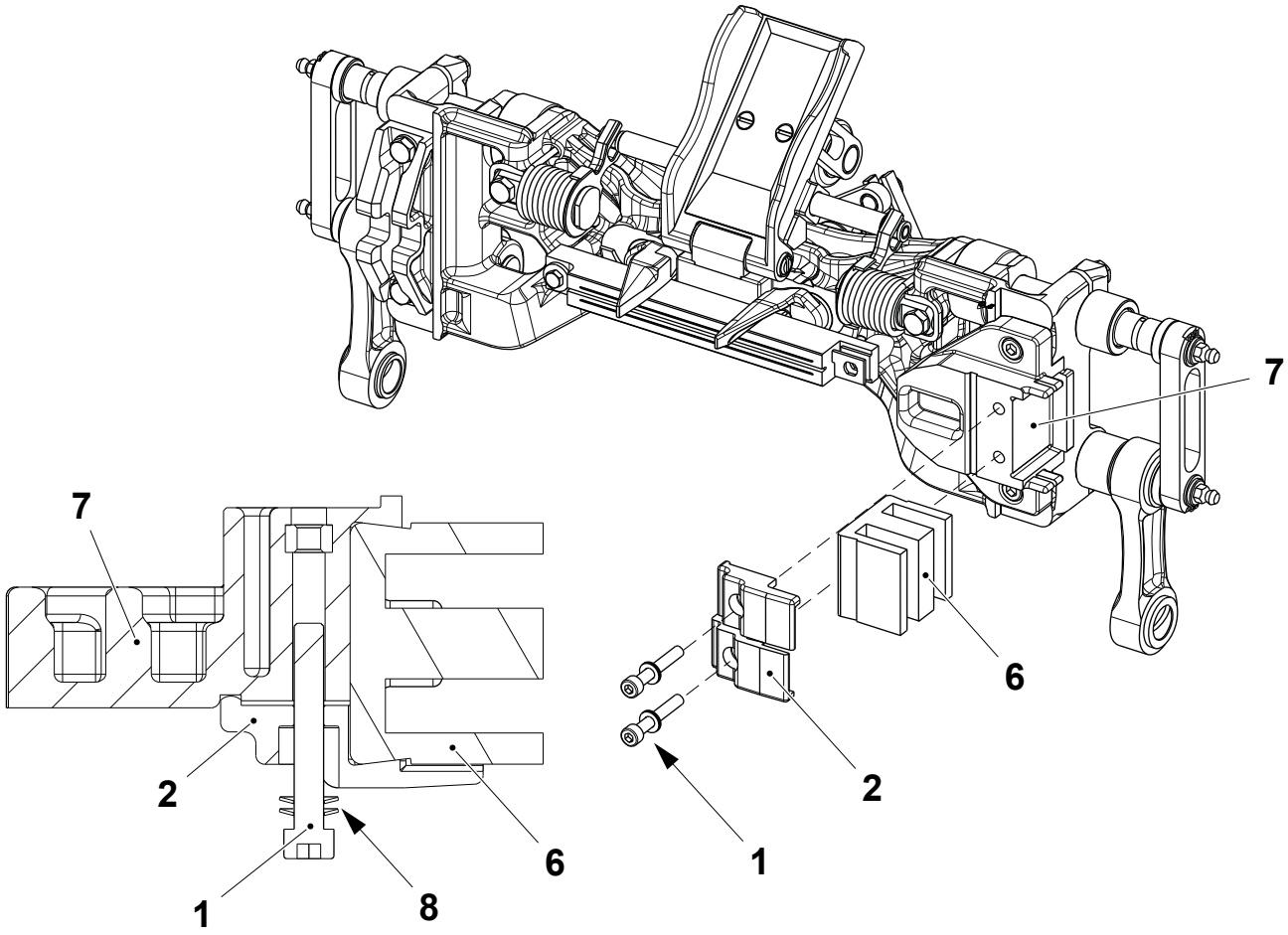

1 Screw
2 Bracket
6 Ferrite
7 Ferrites holder
8 Disc spring

TechPub_2614345_0107 - 0403_3048143_01.fm

4.1-11 Sealing Jaw - Change Ferrite Holder

Machine Status	Mains Power OFF Air OFF Steam ON Water OFF
SPC Reference	2529794-0400 2529795-0400 2500387-0300 2500388-0300

WARNING
Burn hazard.
Parts might be hot.

Note! When assembling, unless specified in the procedure, tighten all the screws according to the torque indicated in 10.1.1 Jaw System Screws Tightening Torque.

a) Remove the busbar and the ferrites, see 4.1-10 Sealing Jaw - Change Busbar and Ferrite.

(Cont'd)

TechPub_2614345_0107 - 0403_3048143_01.fm

(Cont'd)

b) Remove the screws (1) and the ferrite holder (2).

c) Change the ferrite holder (2) and fit it back by tightening the screws (1) to **6 Nm** with a torque wrench.

Note! When assembling make sure that the ferrites holder (2) adheres perfectly to the worked surface (shown below as grey) on the link.

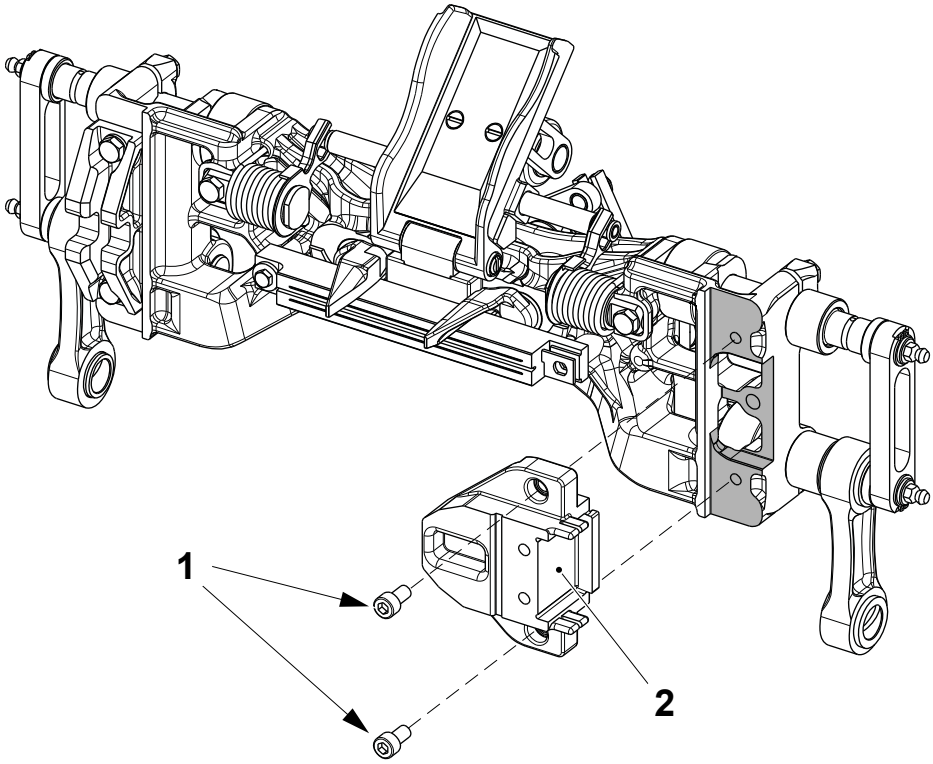

1 Screw
2 Ferrite holder

TechPub_2614345_0107 - 0403_3048143_01.fm

4.1-12 Sealing Jaw - Overhaul

Machine Status	Mains Power OFF Air OFF Steam ON Water OFF
Special Equipment	Axle Extractor TP No. 1487215-0100
SPC Reference	2529794-0400 2529795-0400 2500387-0300 2500388-0300

WARNING

Burn hazard.

Parts might be hot.

Note! When assembling, unless specified in the procedure, tighten all the screws according to the torque indicated in 10.1.1 Jaw System Screws Tightening Torque.

Remove the chains, see 4-7 Jaw System - Remove and Assemble Chains.

(Cont'd)

TechPub_2614345_0107 - 0403_3048143_01.fm

(Cont'd)

Note! Valid for Portion Packages.

a) Remove the grease nipples (1).

b) Remove the retaining rings (2) and the reinforcement link (3). Change the reinforcement link (3) if necessary.

c) Remove the spacers (4) and the chain link (5). Change the chain link (5) if necessary.

d) Overhaul the volume flap (6), see 4.2-5 Pressure Jaw - Change Volume Flap Springs, Holders and Bushings.

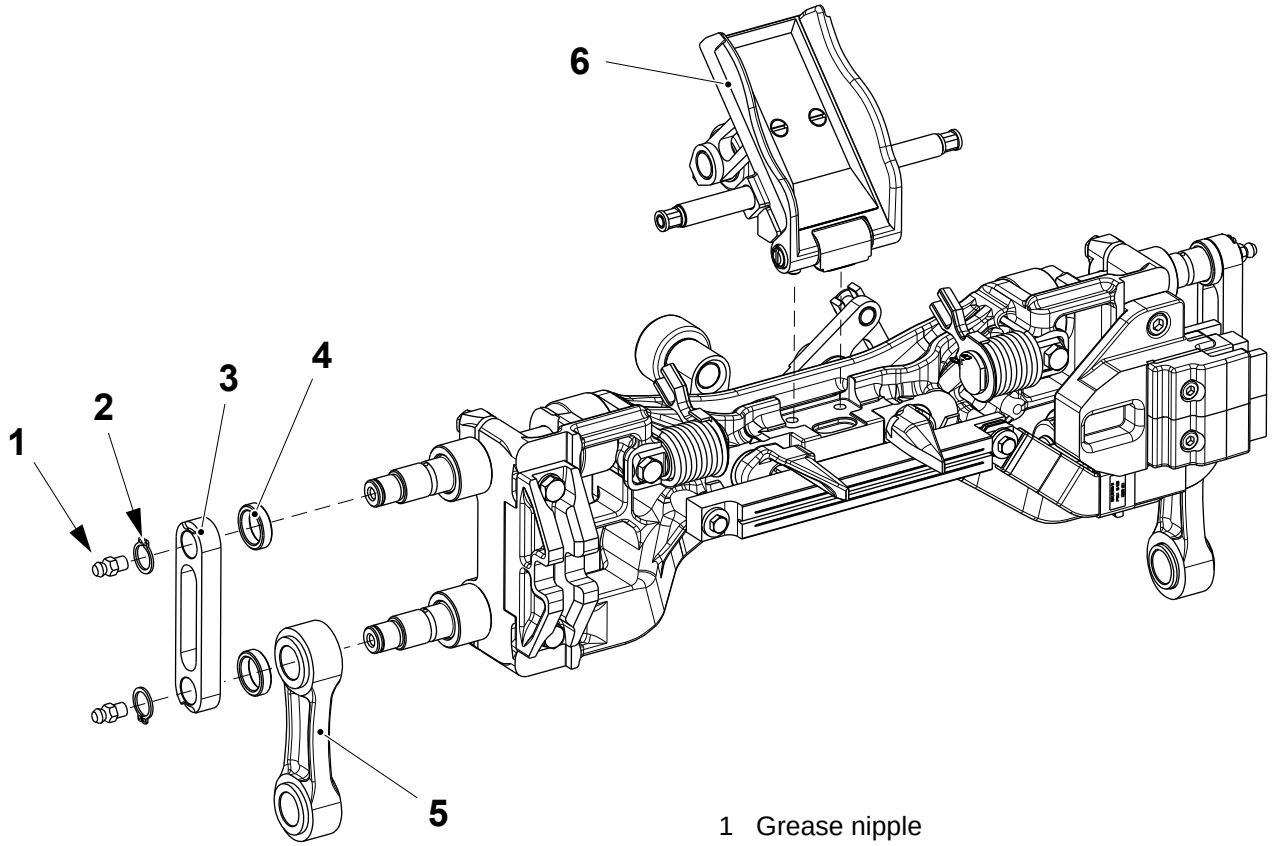

1 Grease nipple
2 Retaining ring
3 Reinforcement link
4 Spacer
5 Chain link
6 Volume flap

(Cont'd)

TechPub_2614345_0107 - 0403_3048143_01.fm

(Cont'd)

Note! Valid for Family Packages.

a) Remove the grease nipples (1).

b) Remove the retaining rings (2), the washers (3) and the chain link (4). Change the chain link (4) if necessary.

c) Overhaul the volume flap (5), see 4.2-5 Pressure Jaw - Change Volume Flap Springs, Holders and Bushings.

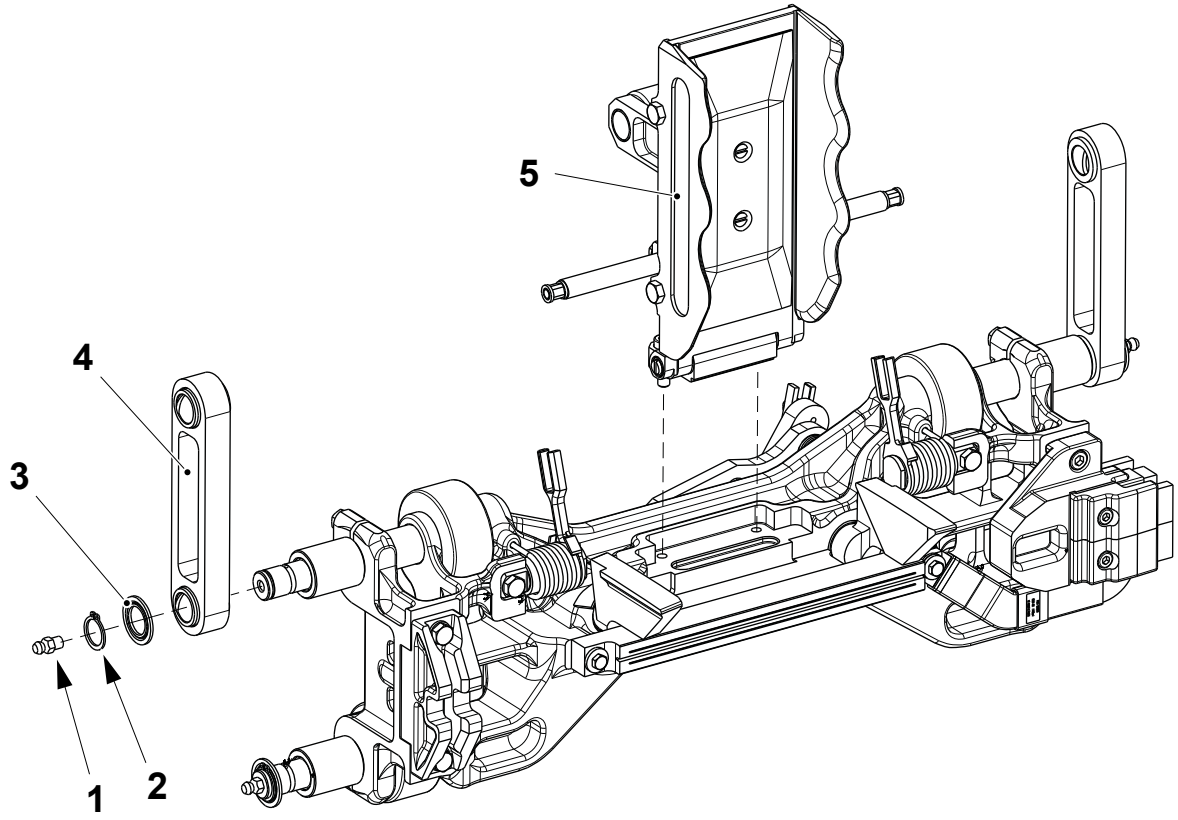

1 Grease nipple
2 Retaining ring
3 Washer
4 Chain link
5 Volume flap

TechPub_2614345_0107 - 0403_3048143_01.fm

(Cont'd)

(Cont'd)

Overhaul Design Correction System

Note! Valid for Portion Packages.

a) Remove the screws (1) and the lever (2).

b) Remove the screw (3) and change the spring (4).

c) Remove the spring pins (5) and (6), and remove the design correction control link (7).

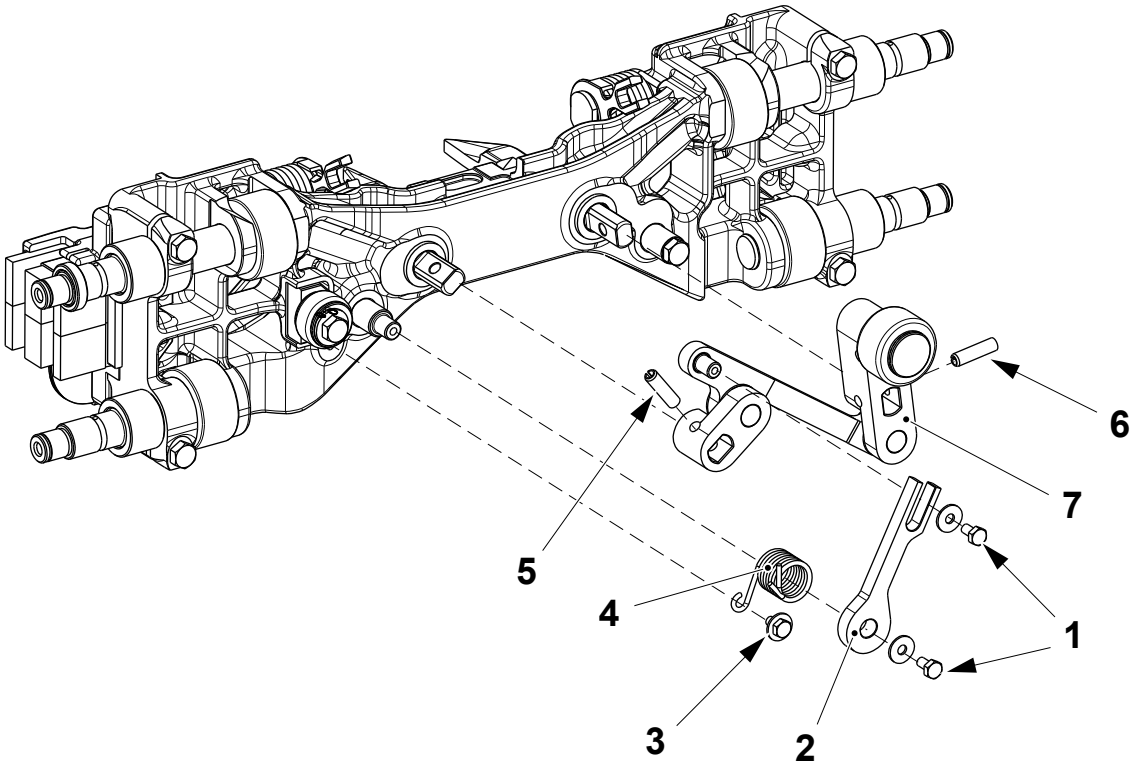

1 Screw
2 Lever
3 Screw
4 Spring
5 Spring pin
6 Spring pin
7 Design correction control link

(Cont'd)

TechPub_2614345_0107 - 0403_3048143_01.fm

(Cont'd)

d) Remove the retaining rings (8) and the shafts (9).

e) Remove the arm (10) and (11).

f) Change the bushings (12) of the link arm (13).

g) Remove the spring pin (14) from the arm (11) and pull out the shaft (15) and the roller (16).

h) Change the bushings (17).

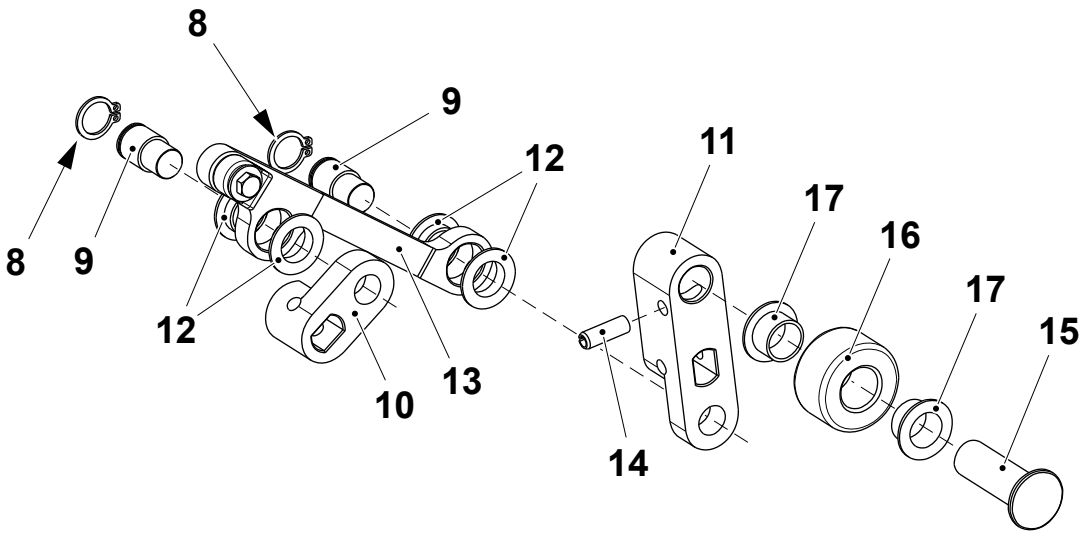

8 Retaining ring
9 Shaft
10 Arm
11 Arm
12 Bushings
13 Link arm
14 Spring pin
15 Shaft
16 Roller
17 Bushings

(Cont'd)

TechPub_2614345_0107 - 0403_3048143_01.fm

(Cont'd)

i) Pull out the folding flaps (18) and change the bushings (19).
j) Remove the screws (20) and the roller (21) with the support (22).
k) Change the bushing (23).
l) Assemble in the reverse order.

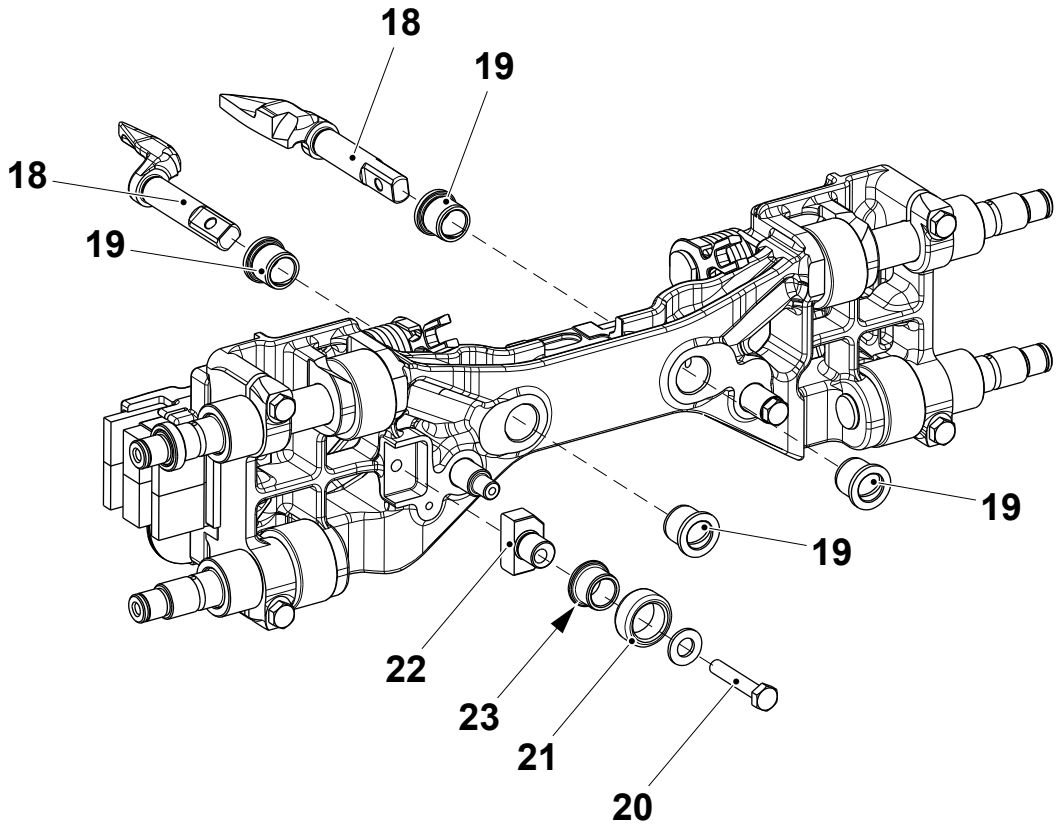

18 Folding flaps
19 Bushing
20 Screw
21 Roller
22 Support
23 Bushing

(Cont'd)

TechPub_2614345_0107 - 0403_3048143_01.fm

(Cont'd)

Note! Valid for Family Packages.

a) Remove the screws (1) and (2) and the lever (3).

b) Remove the screw (4) and change the spring (5).

c) Check the bushing (6). Change if necessary.

d) Remove the spring pins (7), and remove the design correction control link (8).

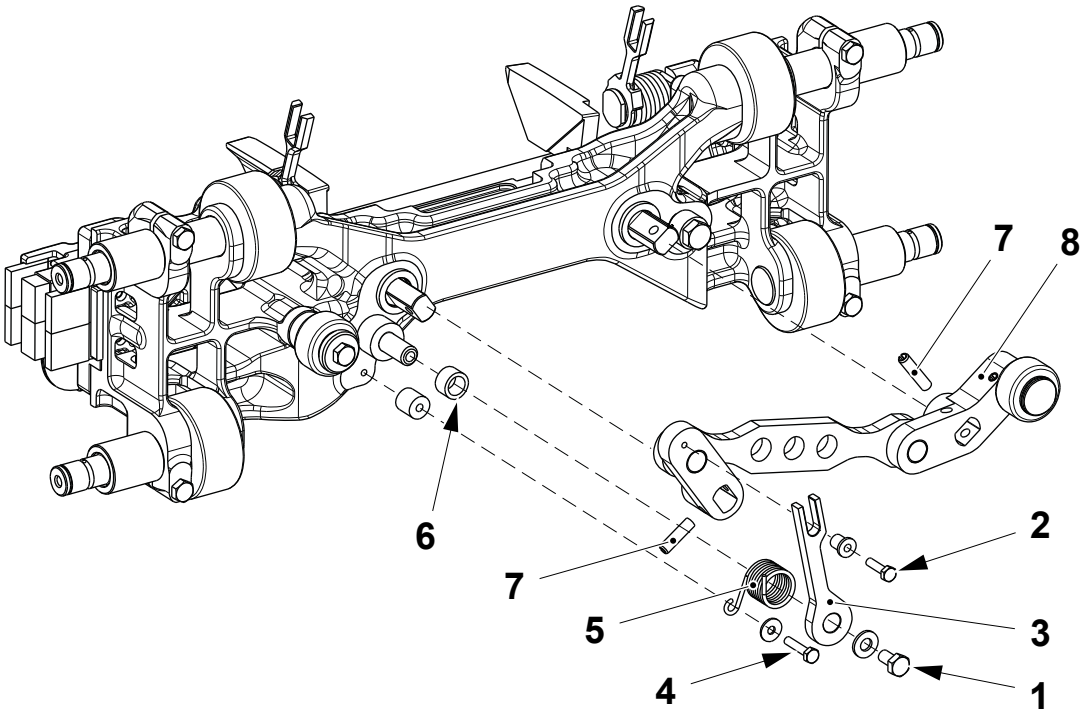

1 Screw
2 Screw
3 Lever
4 Screw
5 Spring
6 Bushing
7 Spring pin
8 Design correction control link

(Cont'd)

TechPub_2614345_0107 - 0403_3048143_01.fm

(Cont'd)

e) Remove the retaining rings (9) and the shafts (10).

f) Remove the arm (11) and (12).

g) Change the bushings (13) of the link arm (14).

h) Remove the spring pin (15) from the arm (12) and pull out the shaft (16) and the roller (17).

i) Change the bushings (18).

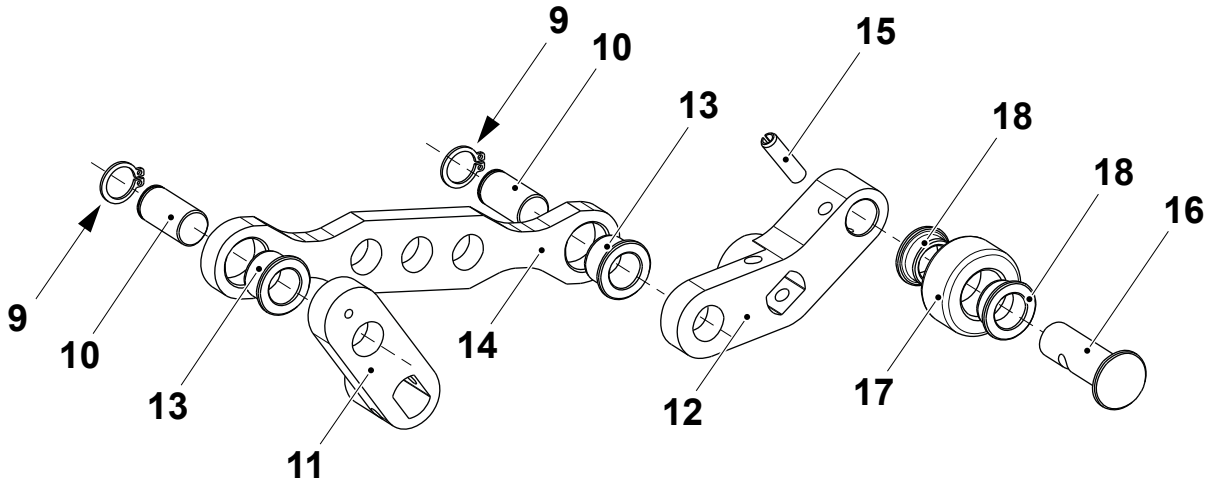

9 Retaining ring
10 Shaft
11 Arm
12 Arm
13 Bushings
14 Link arm
15 Spring pin
16 Shaft
17 Roller
18 Bushings

(Cont'd)

TechPub_2614345_0107 - 0403_3048143_01.fm

(Cont'd)

j) Pull out the folding flaps (19) and change the bushings (20).

k) Remove the screws (21) and the roller (22) with the support (23).

l) Change the bushing (24).

m) Assemble in the reverse order.

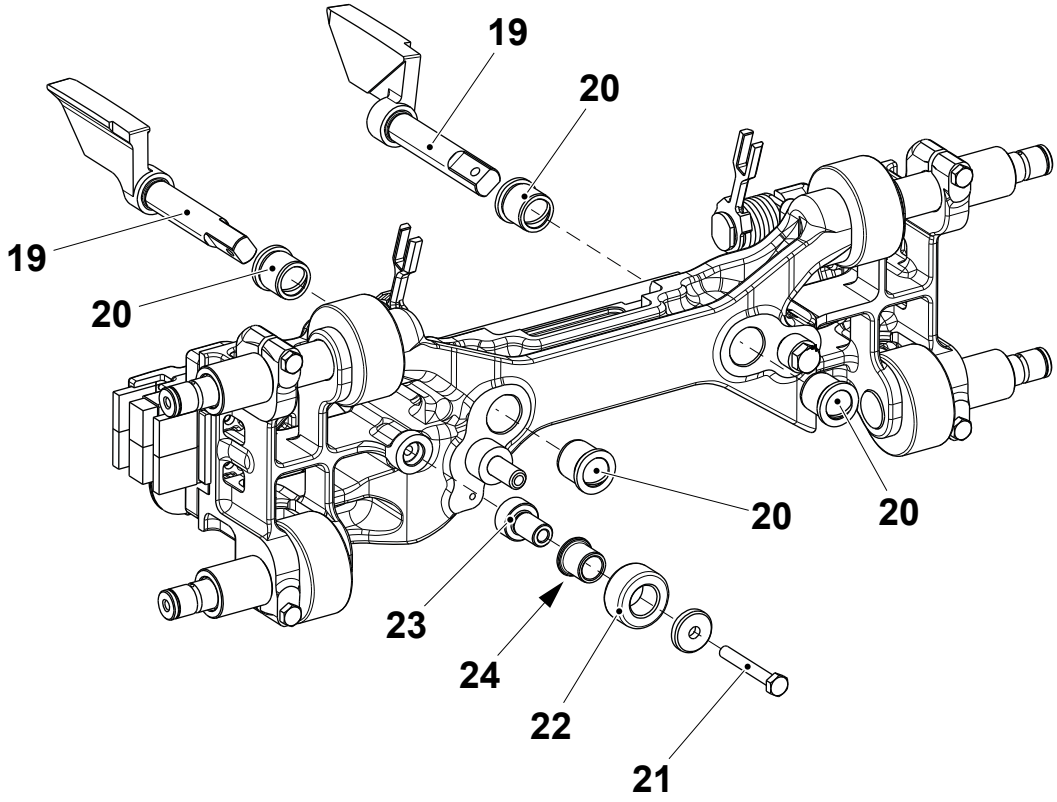

19 Folding flaps
20 Bushing
21 Screw
22 Roller
23 Support
24 Bushing

(Cont'd)

TechPub_2614345_0107 - 0403_3048143_01.fm

(Cont'd)

Overhaul Cam Followers

CAUTION
Risk of damage to the equipment.
Do not try to split the link by inserting a tool into the groove (1).

a) Make sure that the holder (2) marked “Sealing Link” is fitted on the axle extractor (3).

b) Loosen the screw (4).

c) Slide the end of the axle extractor (3) over the shaft (5) until it touches the frame (6).

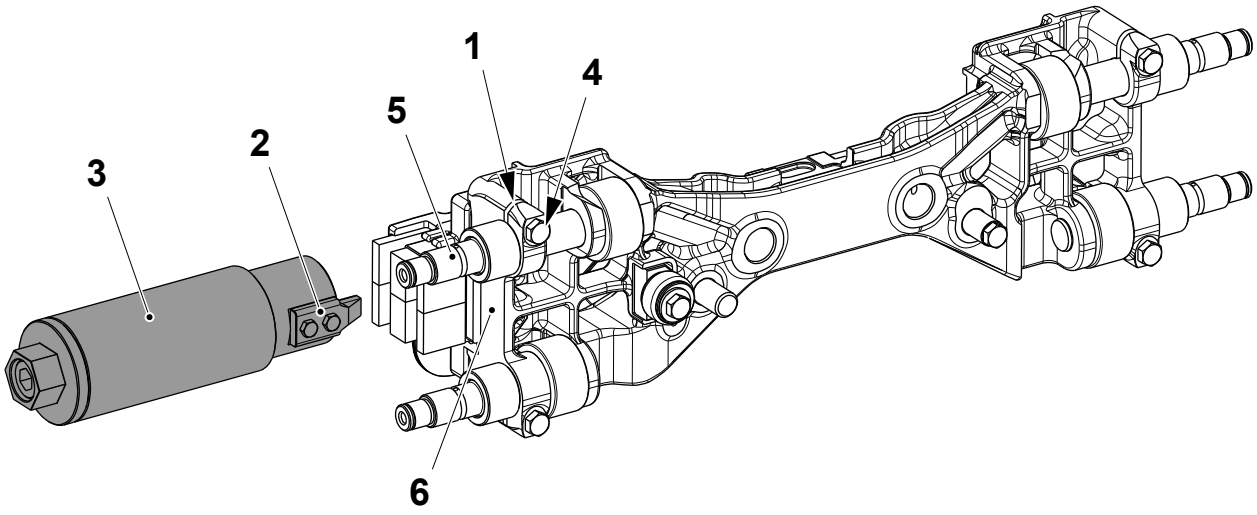

1 Groove
2 Holder
3 Axle extractor
4 Screw
5 Shaft
6 Frame

(Cont'd)

TechPub_2614345_0107 - 0403_3048143_01.fm

(Cont'd)

Note! Do not over tighten the bolt (8).

d) Rotate the knurled part (7) of the axle extractor (3) counter-clockwise approximately 10 turns.

e) Push the bolt (8) through the axle extractor (3) and screw it into the hole where the grease nipple is normally fitted.

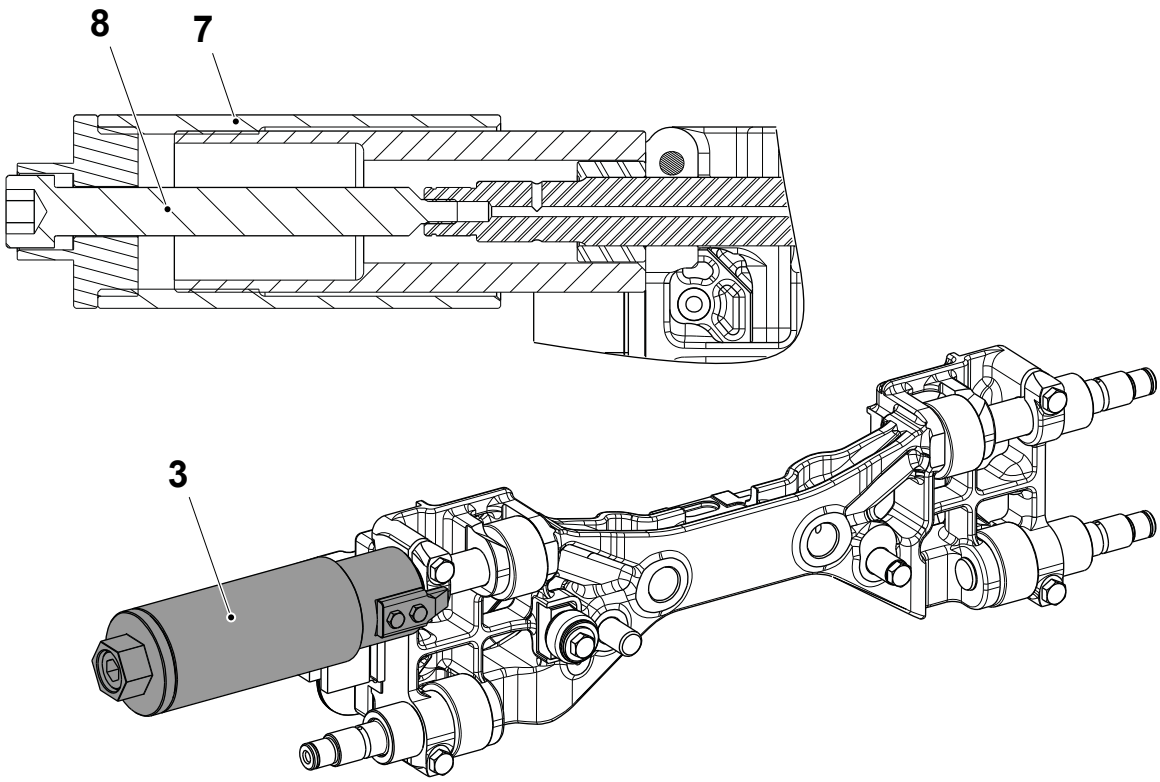

3 Axle extractor
7 Knurled part
8 Bolt

(Cont'd)

TechPub_2614345_0107 - 0403_3048143_01.fm

(Cont'd)

CAUTION
Risk of damage to the equipment.
When assembling, tighten the screws (4) using a torque wrench set to 12 Nm. Do not overtighten the screws (4).

f) Keep the bolt (8) hold and rotate the knurled part (7) of the axle extractor (3) clockwise to extract the shaft (5).

g) Change the roller (9).

h) Repeat the procedure for the other rollers.

i) Assemble in the reverse order.

j) Fit and tension the chains, see 4-7 Jaw System - Remove and Assemble Chains.

k) Grease the jaw system.

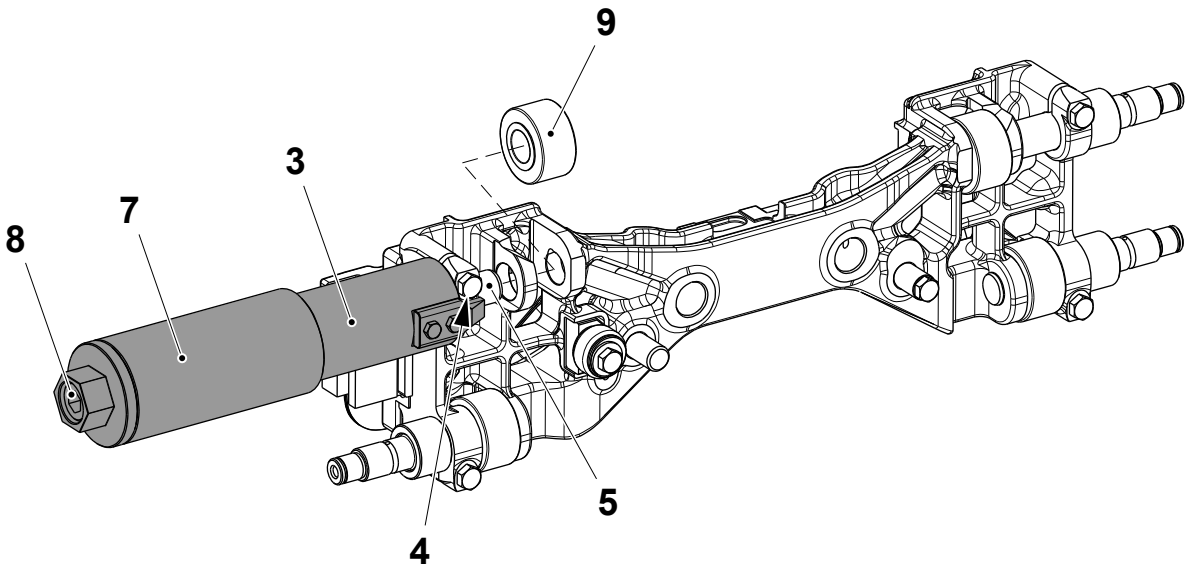

3 Axle extractor
4 Screw
5 Shaft
7 Knurled part
8 Bolt
9 Roller

TechPub_2614345_0107 - 0403_3048143_01.fm

4.1-13 Sealing Jaw - Change Side Plates

Machine Status	Mains Power OFF Air OFF Steam ON Water OFF
SPC Reference	2500387-0300 2500388-0300

Note! Valid for Family Packages only.

Change the side plates, see 4.2-13 Pressure Jaw - Change Side Plates.

TechPub_2614345_0107 - 0403_3048143_01.fm

4.2 Pressure Jaw

SPC Reference	2529791-0400 2529792-0400 2529793-0400 2500389-0300 2500390-0300 2500391-0300

4.2-1 Pressure Jaw - Check Volume Flap Dampers

Machine Status	Mains Power OFF Air OFF Steam ON Water OFF
SPC Reference	2529791-0400 2529792-0400 2529793-0400 2500389-0300 2500390-0300 2500391-0300

WARNING
Burn hazard.
Parts might be hot.

Note! When assembling, unless specified in the procedure, tighten all the screws according to the torque indicated in 10.1.1 Jaw System Screws Tightening Torque.

Note! Valid also for Sealing Jaw 2529794-0400, 2529795-0400, 2500387-0300 and 2500388-0300.

(Cont'd)

TechPub_2614345_0107 - 0404_3048144_01.fm

(Cont'd)

Lift the volume flap (1) and check the damper (2) for wear or damage. If necessary, remove the screw (3) and change the damper (2).

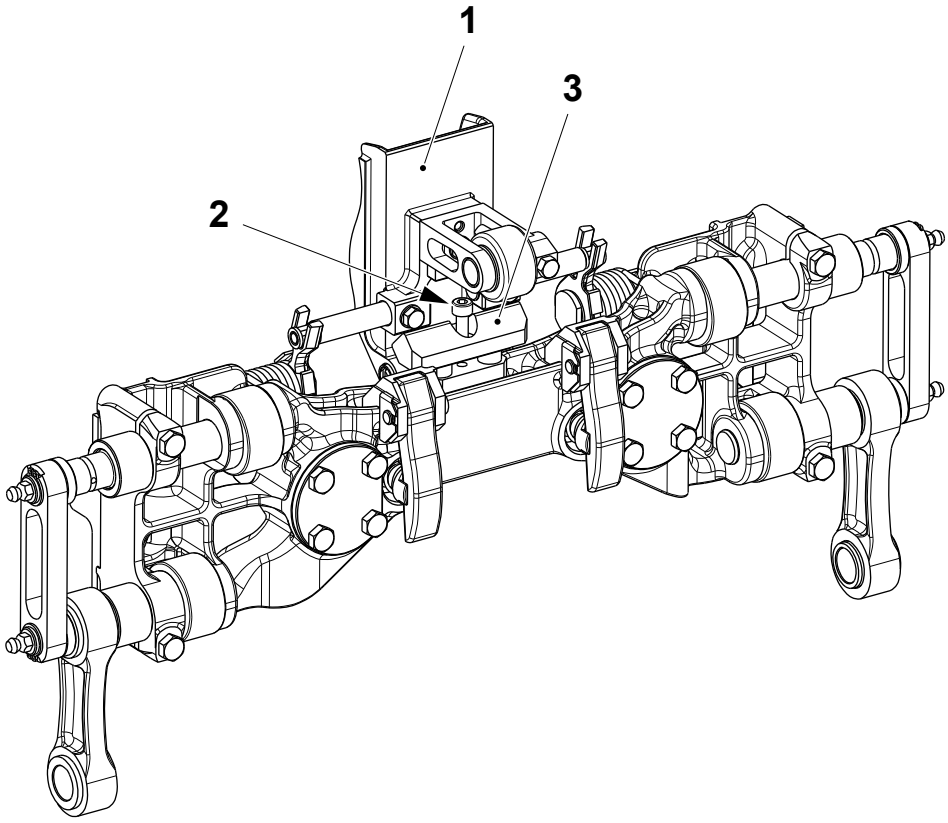

1 Volume flap
2 Damper
3 Screw

TechPub_2614345_0107 - 0404_3048144_01.fm

4.2-2 Pressure Jaw - Check Volume Flap Springs, Holder and Bushings

Machine Status	Mains Power OFF Air OFF Steam ON Water OFF
SPC Reference	2529791-0400 2529792-0400 2529793-0400 2500389-0300 2500390-0300 2500391-0300

WARNING
Burn hazard.
Parts might be hot.

Note! Valid also for Sealing Jaw 2529794-0400, 2529795-0400, 2500387-0300 and 2500388-0300.

(Cont'd)

TechPub_2614345_0107 - 0404_3048144_01.fm

(Cont'd)

On both sides check:

- for excessive play in the volume flap bushings (1)
- the spring (2) for damage
- the bushings (3) for wear
- the lever (4) for wear and damage
- the bushing (5) for wear.

Change any worn or damaged part, see 4.2-5 Pressure Jaw - Change Volume Flap Springs, Holders and Bushings.

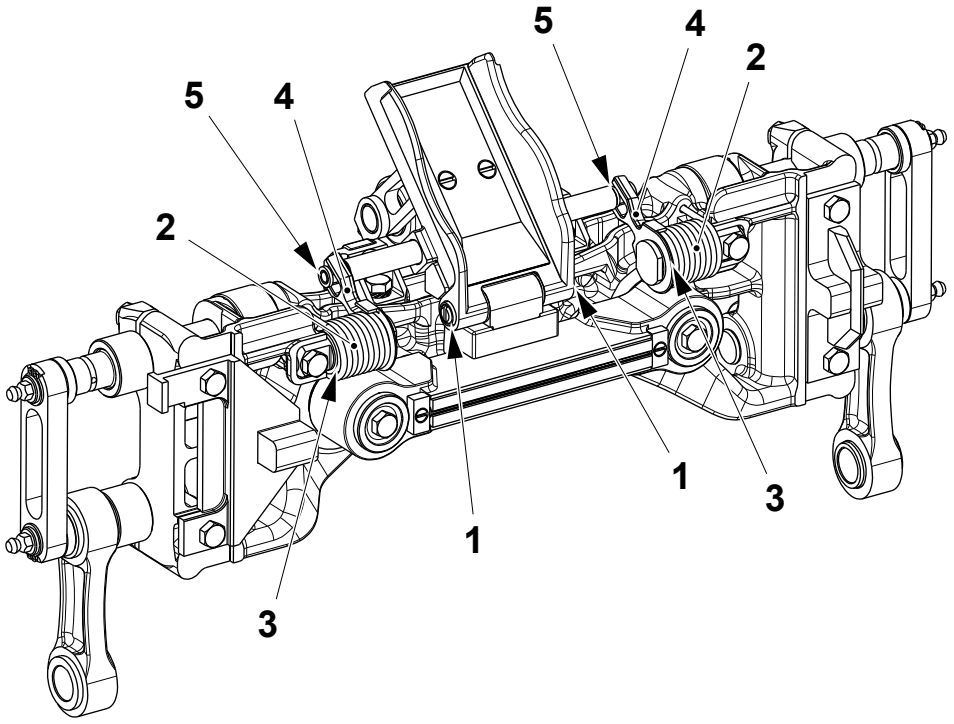

1 Bushing
2 Spring
3 Bushing
4 Lever
5 Bushing

TechPub_2614345_0107 - 0404_3048144_01.fm

4.2-3 Pressure Jaw - Check Volume Flap Rollers

Machine Status	Mains Power OFF Air OFF Steam ON Water OFF
SPC Reference	2529791-0400 2529792-0400 2529793-0400 2500389-0300 2500390-0300 2500391-0300

WARNING
Burn hazard.
Parts might be hot.

Note! Valid also for Sealing Jaw 2529794-0400, 2529795-0400, 2500387-0300 and 2500388-0300.

Check that the roller (1) rotates freely. If necessary, change the bushings, see 4.2-6 Pressure Jaw - Change Volume Flap Rollers.

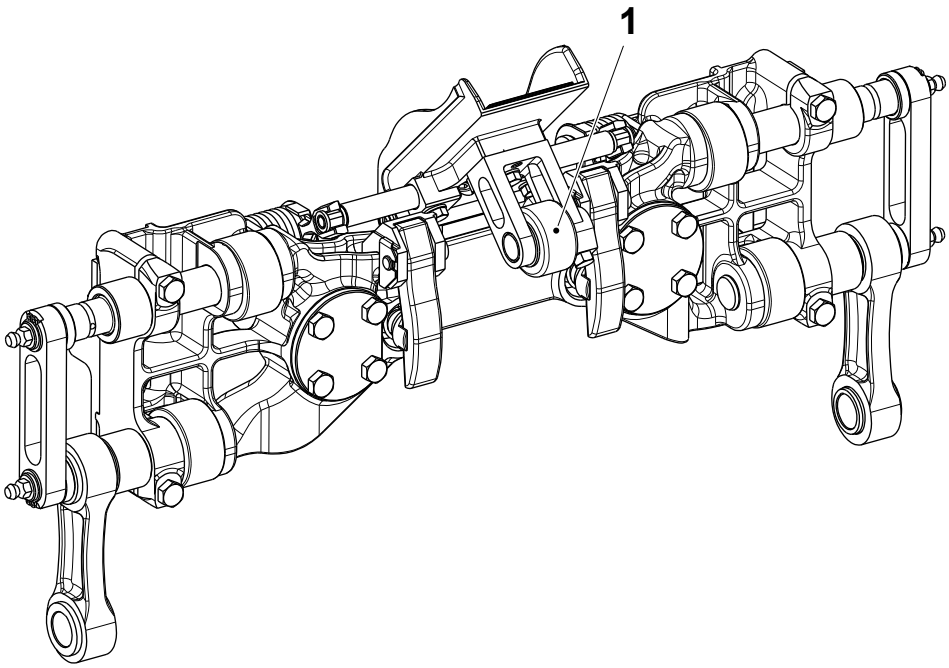

1 Roller

TechPub_2614345_0107 - 0404_3048144_01.fm

4.2-4 Pressure Jaw - Check Cam Followers

Machine Status	Mains Power OFF Air OFF Steam ON Water OFF
SPC Reference	2529791-0400 2529792-0400 2529793-0400 2500389-0300 2500390-0300 2500391-0300

WARNING
Burn hazard.
Parts might be hot.

Note! Valid also for Sealing Jaw 2529794-0400, 2529795-0400, 2500387-0300 and 2500388-0300.

Check the cam follower rollers (1) for wear or damage and replace if necessary. See 4.2-11 Pressure Jaw - Overhaul and 4.1-12 Sealing Jaw - Overhaul.

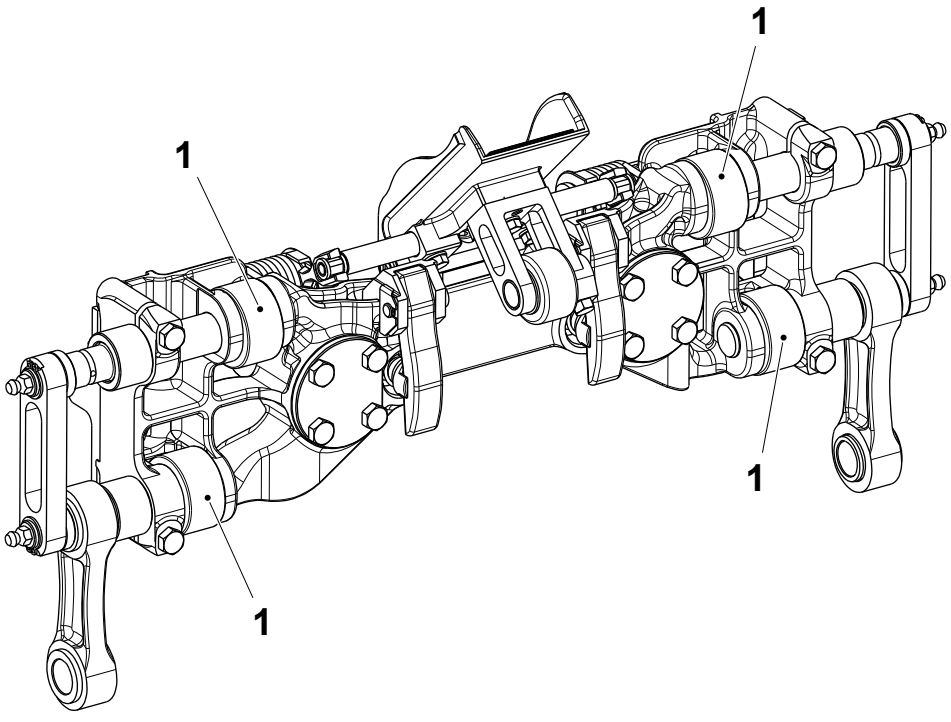

1 Roller

TechPub_2614345_0107 - 0404_3048144_01.fm

4.2-5 Pressure Jaw - Change Volume Flap Springs, Holders and Bushings

Machine Status	Mains Power OFF Air OFF Steam ON Water OFF
SPC Reference	2529791-0400 2529792-0400 2529793-0400 2500389-0300 2500390-0300 2500391-0300

WARNING
Burn hazard.
Parts might be hot.

Note! When assembling, unless specified in the procedure, tighten all the screws according to the torque indicated in 10.1.1 Jaw System Screws Tightening Torque.

Note! Valid also for Sealing Jaw 2529794-0400, 2529795-0400, 2500387-0300 and 2500388-0300.

(Cont'd)

TechPub_2614345_0107 - 0404_3048144_01.fm

(Cont'd)

a) Remove the screw (1) and the shaft (2).
b) Change the spring (3) and the bushing (4).
c) Repeat at the other side.

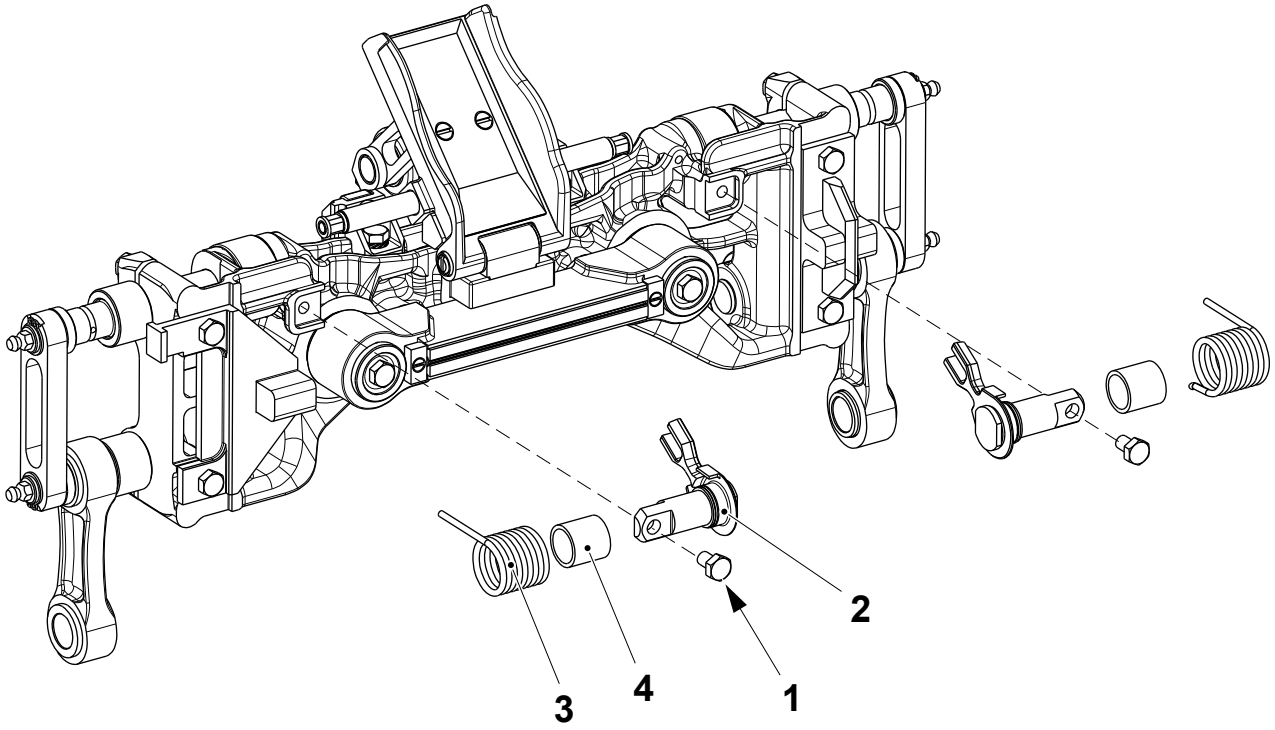

1 Screw
2 Shaft
3 Spring
4 Bushing

(Cont'd)

TechPub_2614345_0107 - 0404_3048144_01.fm

(Cont'd)

d) Lift the volume flap (5).
e) Remove the screw (6) and the damper (7).
f) Remove the screws (8) and the volume flap (5).

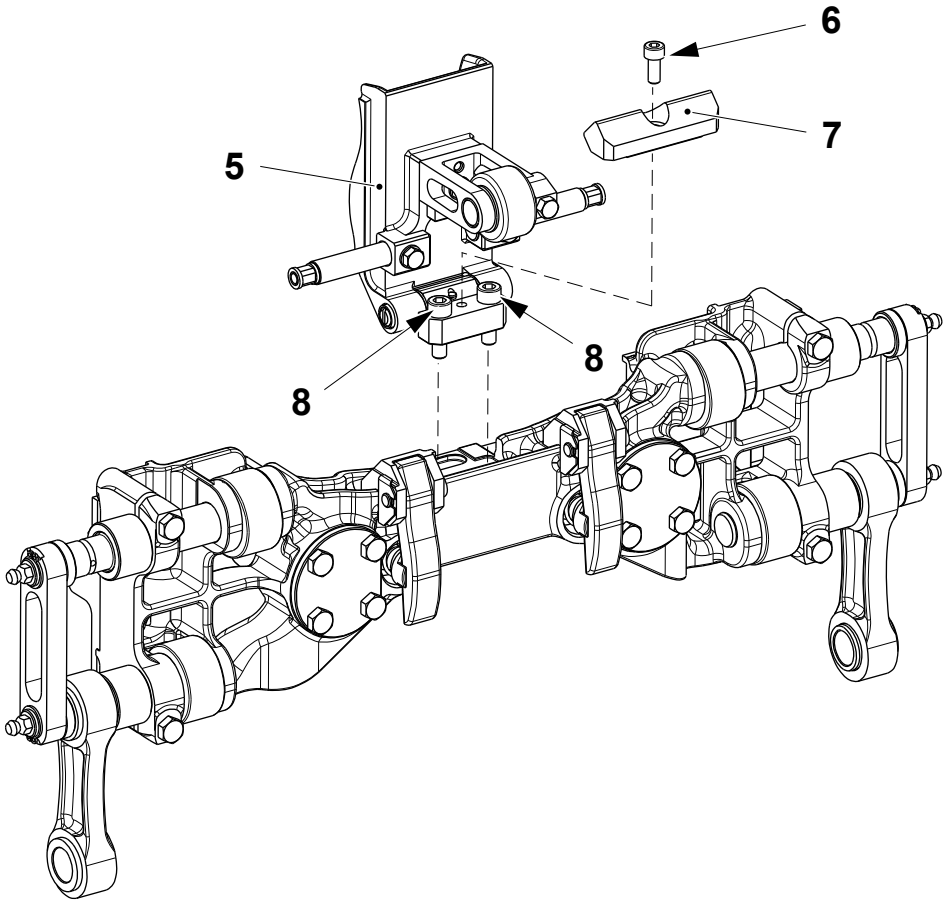

5 Volume flap
6 Screw
7 Damper
8 Screw

(Cont'd)

TechPub_2614345_0107 - 0404_3048144_01.fm

(Cont'd)

g) Remove the pin (9) and pull out the shaft (10) to separate the bracket (11) from the volume flap (5).

h) Remove and change the bushings (12) and (13).

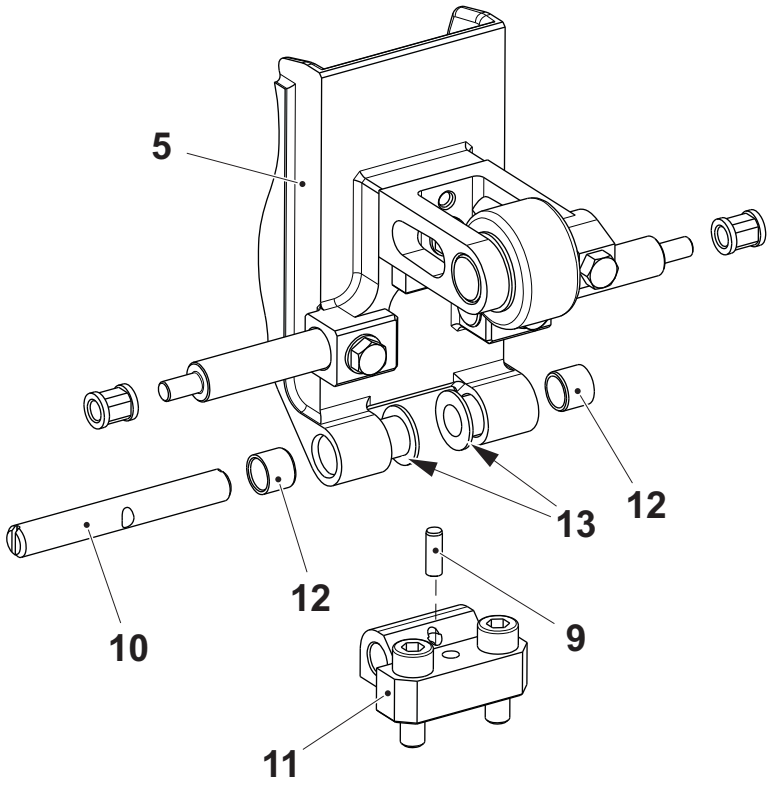

5 Volume flap
9 Pin
10 Shaft
11 Bracket
12 Bushing
13 Bushing

(Cont'd)

TechPub_2614345_0107 - 0404_3048144_01.fm

(Cont'd)

i) Remove the bushing (14). Rotate or change them if necessary.

Note! The bushings (14) have four flat surfaces (15). If a couple of surfaces is worn, the bushing can be rotated by 90º to use the other surfaces.

j) Assemble in the reverse order.

Note! When assembling apply Loctite type 242 locking fluid (TP No. 90157-0016) on the thread of the screws (8).

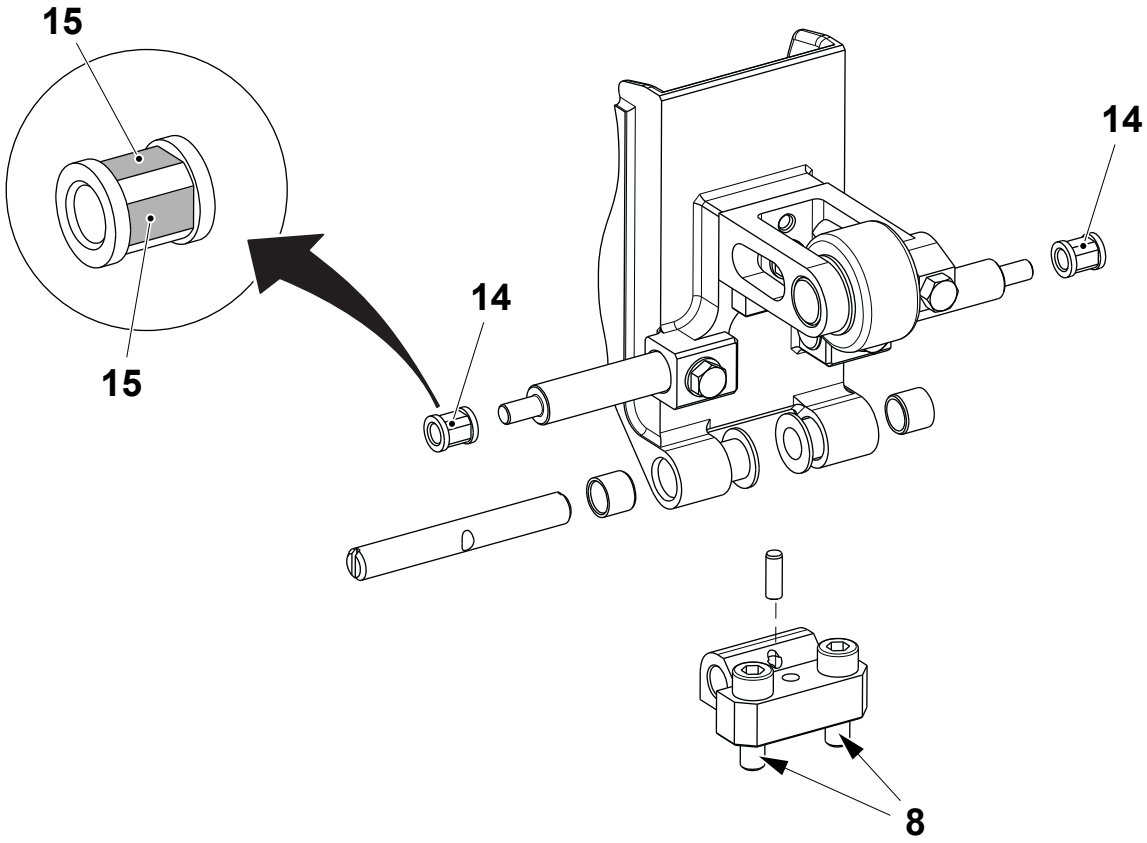

8 Screw
14 Bushing
15 Flat surface

TechPub_2614345_0107 - 0404_3048144_01.fm

4.2-6 Pressure Jaw - Change Volume Flap Rollers

Machine Status	Mains Power OFF Air OFF Steam ON Water OFF
SPC Reference	2529791-0400 2529792-0400 2529793-0400 2500389-0300 2500390-0300 2500391-0300

WARNING

Burn hazard.

Parts might be hot.

Note! When assembling, unless specified in the procedure, tighten all the screws according to the torque indicated in 10.1.1 Jaw System Screws Tightening Torque.

Note! Valid also for Sealing Jaw 2529794-0400, 2529795-0400, 2500387-0300 and 2500388-0300.

(Cont'd)

TechPub_2614345_0107 - 0404_3048144_01.fm

(Cont'd)

a) Remove the screw (1) and press out the shaft (2).
b) Pull out the roller (3) and change the bushings (4).
c) Assemble in the reverse order.

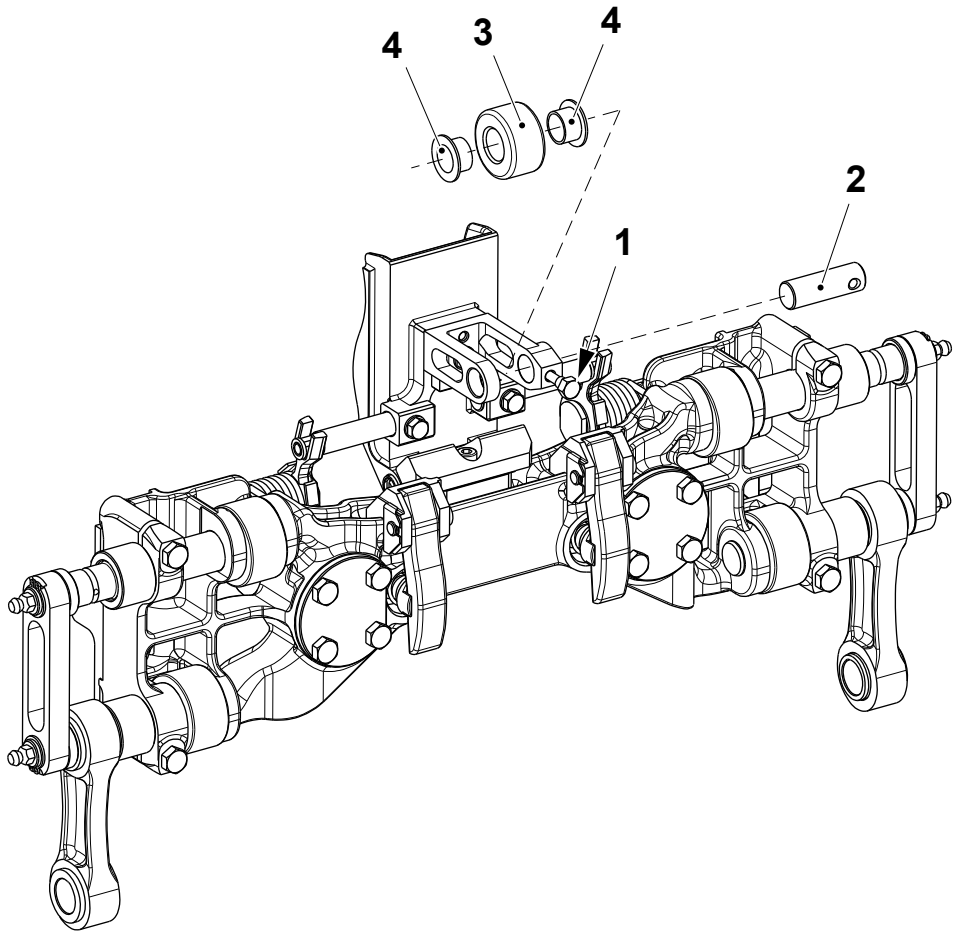

1 Screw
2 Shaft
3 Roller
4 Bushing

TechPub_2614345_0107 - 0404_3048144_01.fm

4.2-7 Pressure Jaw - Check Pressure Bar Springs

Machine Status	Mains Power OFF Air OFF Steam ON Water OFF
Consumables	Synthetic Grease TP No. 90459-7413
SPC Reference	2529791-0400 2529792-0400 2529793-0400 2500389-0300 2500390-0300 2500391-0300

WARNING
Burn hazard.
Parts might be hot.

WARNING
Blade hazard.
Knife is sharp.

Note! When assembling, unless specified in the procedure, tighten all the screws according to the torque indicated in 10.1.1 Jaw System Screws Tightening Torque.

(Cont'd)

TechPub_2614345_0107 - 0404_3048144_01.fm

(Cont'd)

a) Loosen alternately the screws (1).

b) Remove the screws (1), the washers (2) and the pressure bar (3).

c) Remove the sleeves (4).

d) Pull out and check the springs (5) and the rubber bushings (6) for damage. Change if necessary.

Note! Before assembling grease the springs (5) with synthetic grease TP No. 90459-7413.

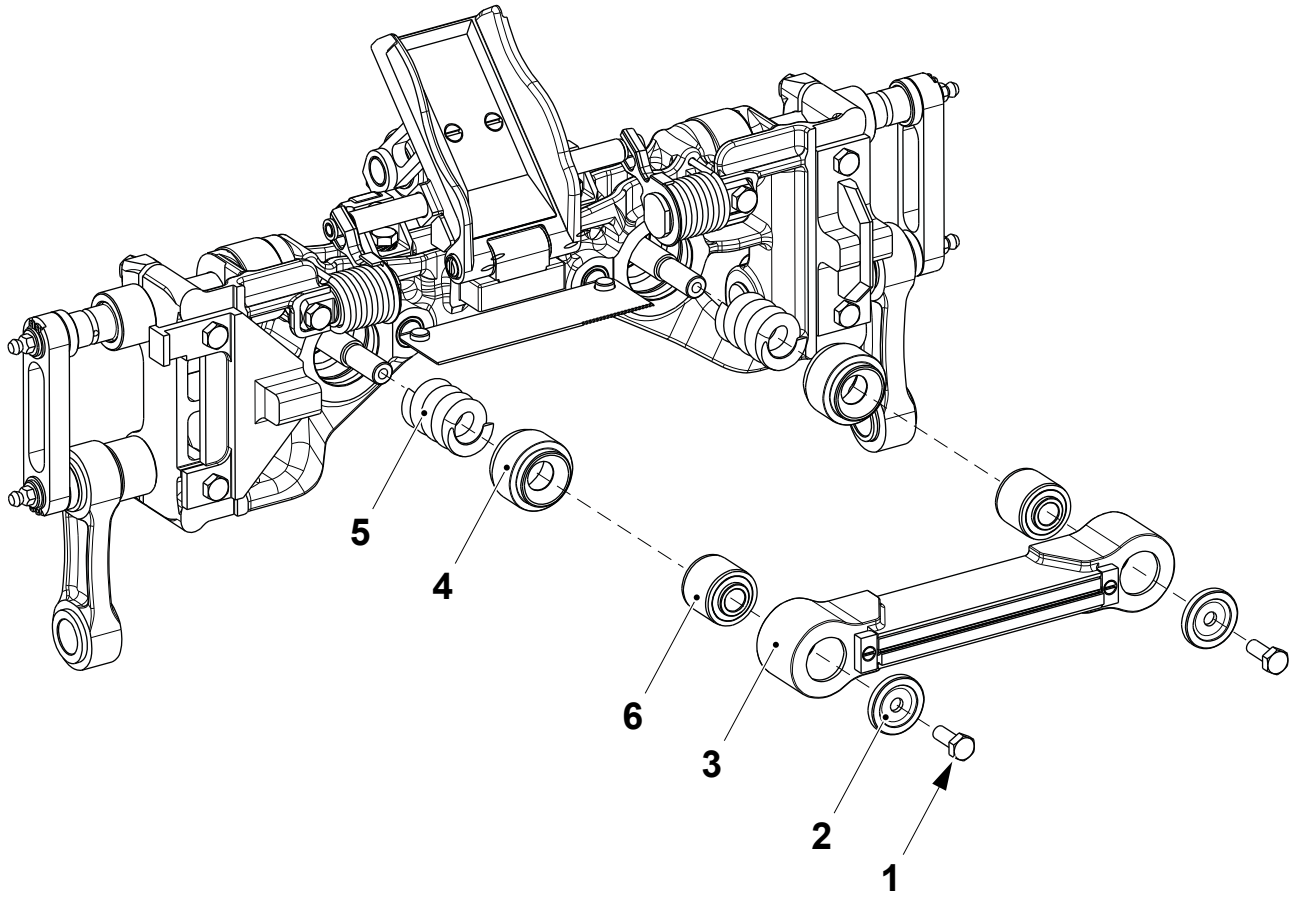

1 Screw
2 Washer
3 Pressure bar
4 Sleeve
5 Spring
6 Rubber bushing

(Cont'd)

TechPub_2614345_0107 - 0404_3048144_01.fm

(Cont'd)

Note! Lubricate the screws (1) before assembling.

e) Assemble in the reverse order.

f) Tighten the screws (1) by a spanner giving alternately two turns for each screw.

g) Tighten the screw (1) according to the torque indicated in 10.1.1 Jaw System Screws Tightening Torque.

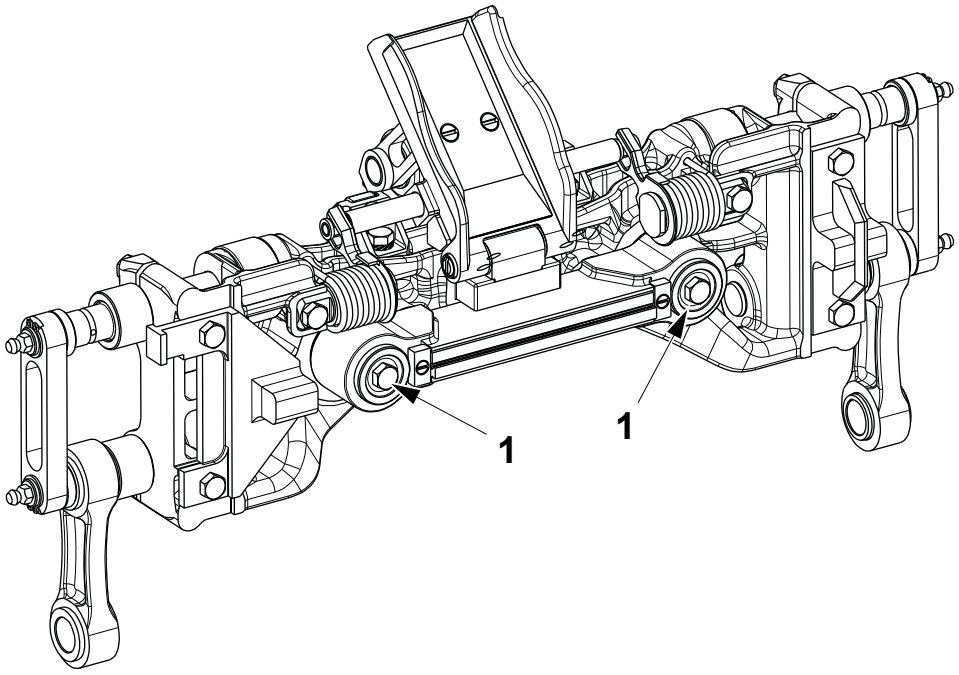

1 Screw

(Cont'd)

TechPub_2614345_0107 - 0404_3048144_01.fm

(Cont'd)

h) Check the parallelism between the pressure bar (3) and the link: the distance **A** must be the same on both sides.

Volume	A (mm)
Portion Packages	2.0
Family Packages	4.0

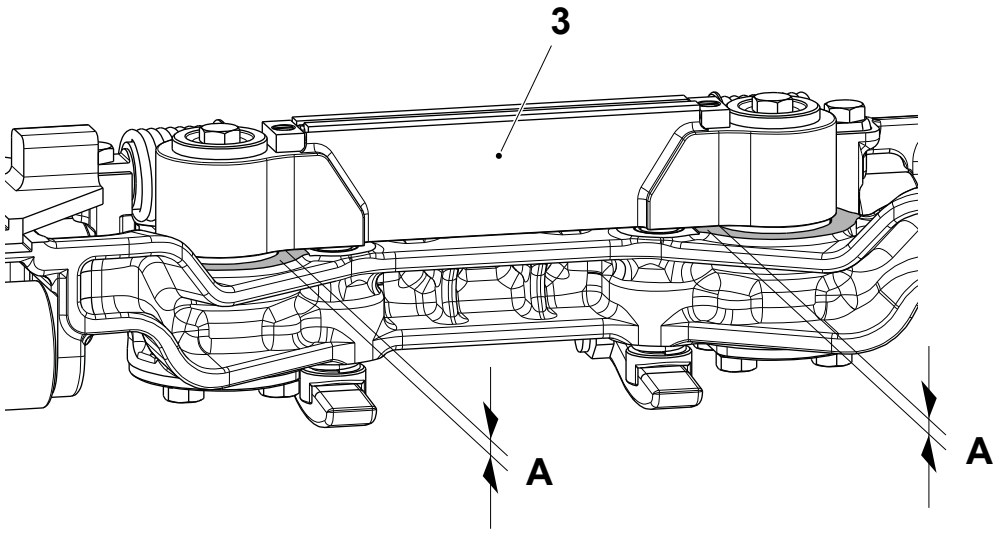

3 Pressure bar

TechPub_2614345_0107 - 0404_30481144_01.fm

4.2-8 Pressure Jaw - Change Knife

Machine Status	Mains Power OFF Air OFF Steam ON Water OFF
Consumables	Synthetic Grease TP No. 90459-7413
SPC Reference	2529791-0400 2529792-0400 2529793-0400 2500389-0300 2500390-0300 2500391-0300

WARNING
Burn hazard.
Parts might be hot.

WARNING
Blade hazard.
Knife is sharp.

Note! When assembling, unless specified in the procedure, tighten all the screws according to the torque indicated in 10.1.1 Jaw System Screws Tightening Torque.

(Cont'd)

TechPub_2614345_0107 - 0404_3048144_01.fm

(Cont'd)

a) Loosen alternately the screws (1).

b) Remove the screws (1), the washers (2) and the pressure bar (3).

c) Remove and change the knife (4).

d) Remove the sleeves (5).

e) Remove and grease the springs (6) with synthetic grease TP No. 90459-7413.

f) Assemble in the reverse order.

g) Tighten the screws (1) following the procedure shown in 4.2-7 Pressure Jaw - Check Pressure Bar Springs, steps f) to h).

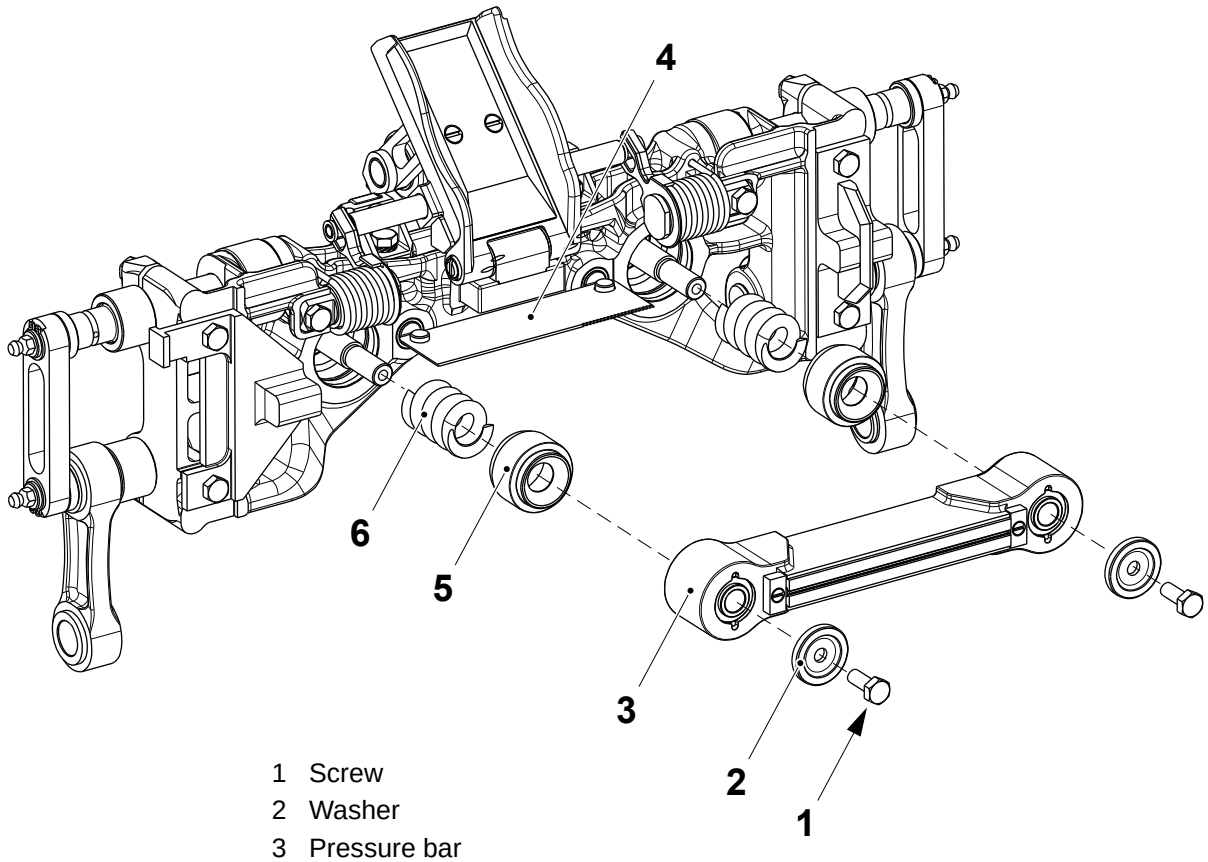

1 Screw
2 Washer
3 Pressure bar
4 Knife
5 Sleeve
6 Spring

TechPub_2614345_0107 - 0404_3048144_01.fm

4.2-9 Pressure Jaw - Change Sealing Dollies

Machine Status	Mains Power OFF Air OFF Steam ON Water OFF
SPC Reference	2529791-0400 2529792-0400 2529793-0400 2500389-0300 2500390-0300 2500391-0300

WARNING
Burn hazard.
Parts might be hot.

(Cont'd)

TechPub_2614345_0107 - 0404_3048144_01.fm

(Cont'd)

Check the condition of the dollies (1) and change them if they are hardened, worn or damaged.

To change the dollies (1), pull them out from the pressure bar (2) and insert the new dollies in to the correct direction, making sure they are seated properly.

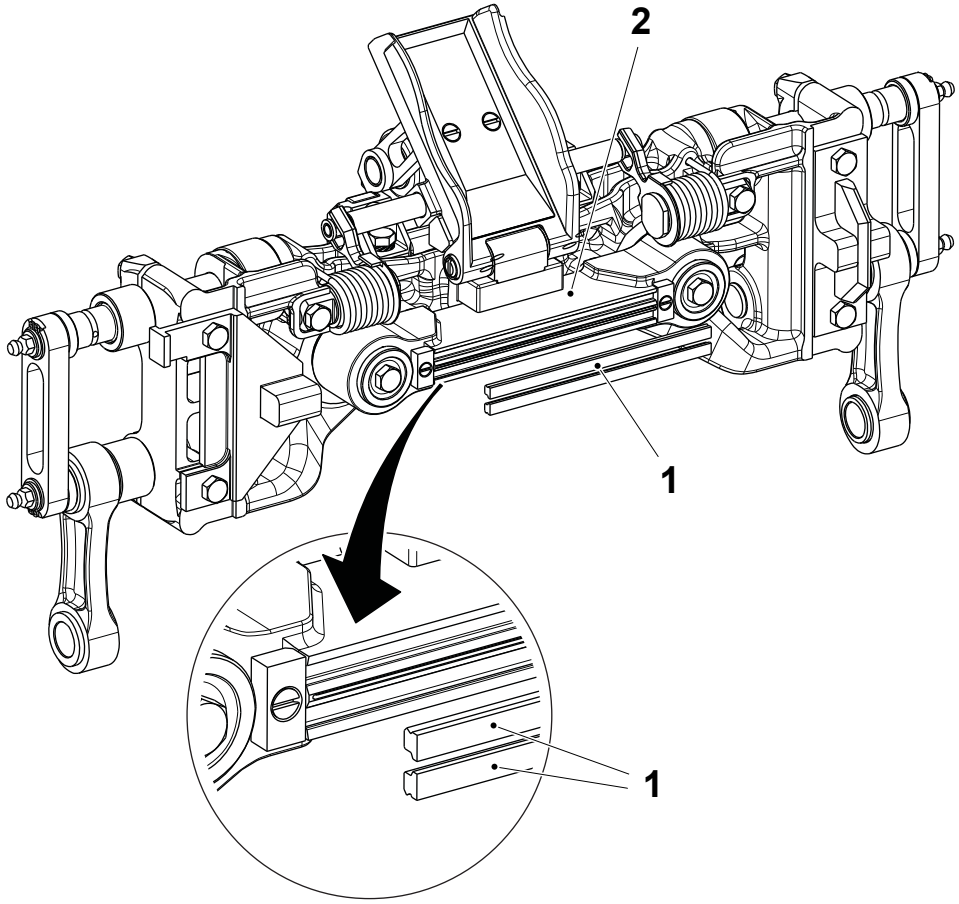

1 Dolly
2 Pressure bar

TechPub_2614345_0107 - 0404_3048144_01.fm

4.2-10 Pressure Jaw - Change Mounting Blocks

Machine Status	Mains Power OFF Air OFF Steam ON Water OFF
Consumables	Synthetic Grease TP No. 90459-7413
SPC Reference	2529791-0400 2529792-0400 2529793-0400 2500389-0300 2500390-0300 2500391-0300

WARNING
Burn hazard.
Parts might be hot.

Note! When assembling, unless specified in the procedure, tighten all the screws according to the torque indicated in 10.1.1 Jaw System Screws Tightening Torque.

(Cont'd)

TechPub_2614345_0107 - 0404_3048144_01.fm

(Cont'd)

Check the condition of the mounting blocks (1) and (2) and change them if they are hardened, worn or damaged.

If necessary:

- remove the screws (3) and change the mounting block (1).
- remove the screws (4) and change the mounting block (2).

Grease the new mounting blocks (1) and (2) with synthetic grease TP No. 90459-7413.

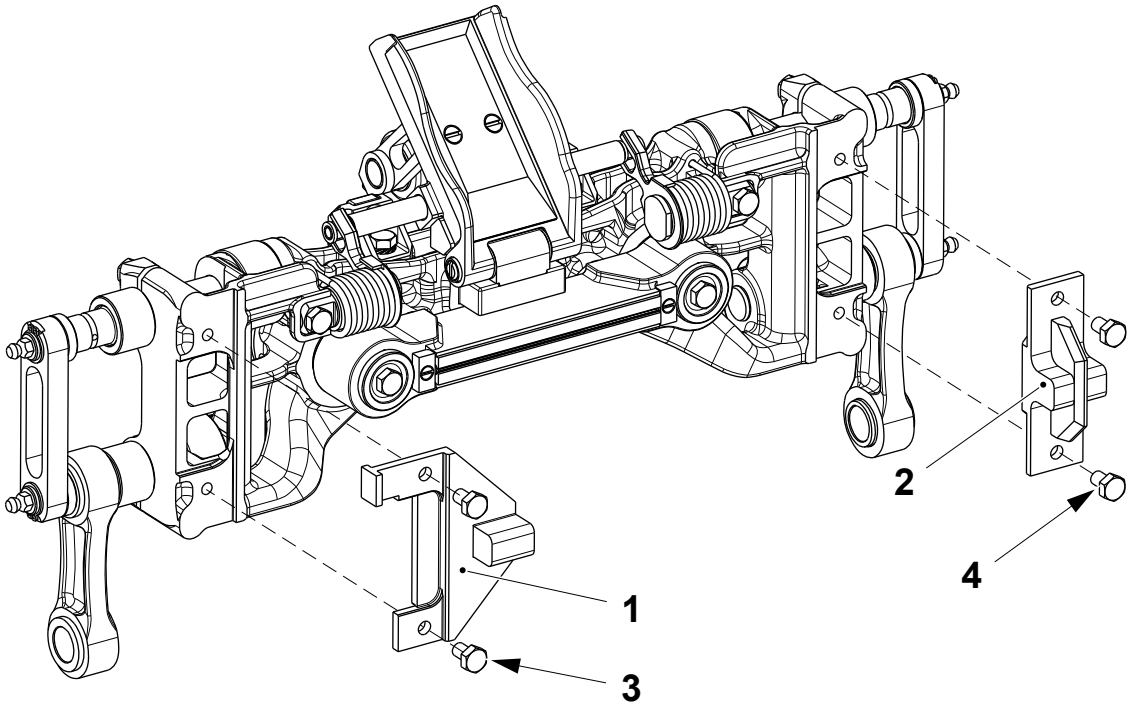

1 Mounting block
2 Mounting block
3 Screw
4 Screw

TechPub_2614345_0107 - 0404_3048144_01.fm

4.2-11 Pressure Jaw - Overhaul

Machine Status	Mains Power OFF Air OFF Steam ON Water OFF
Special Equipment	Axle Extractor TP No. 1487215-0100 Bushing Tool TP No. 2715353-0000
Consumables	Synthetic Grease TP No. 90459-7413
SPC Reference	2529791-0400 2529792-0400 2529793-0400 2500389-0300 2500390-0300 2500391-0300

WARNING

Burn hazard.

Parts might be hot.

Note! When assembling, unless specified in the procedure, tighten all the screws according to the torque indicated in 10.1.1 Jaw System Screws Tightening Torque.

Remove the chains, see 4-7 Jaw System - Remove and Assemble Chains.

(Cont'd)

TechPub_2614345_0107 - 0404_3048144_01.fm

(Cont'd)

Note! Valid for Portion Packages.

h) Remove the grease nipples (1).

i) Remove the retaining rings (2)and the reinforcement link (3). Change the reinforcement link (3) if necessary.

j) Remove the spacers (4) and the chain link (5). Change the chain link (5) if necessary.

k) Overhaul the volume flap (6), see 4.2-5 Pressure Jaw - Change Volume Flap Springs, Holders and Bushings.

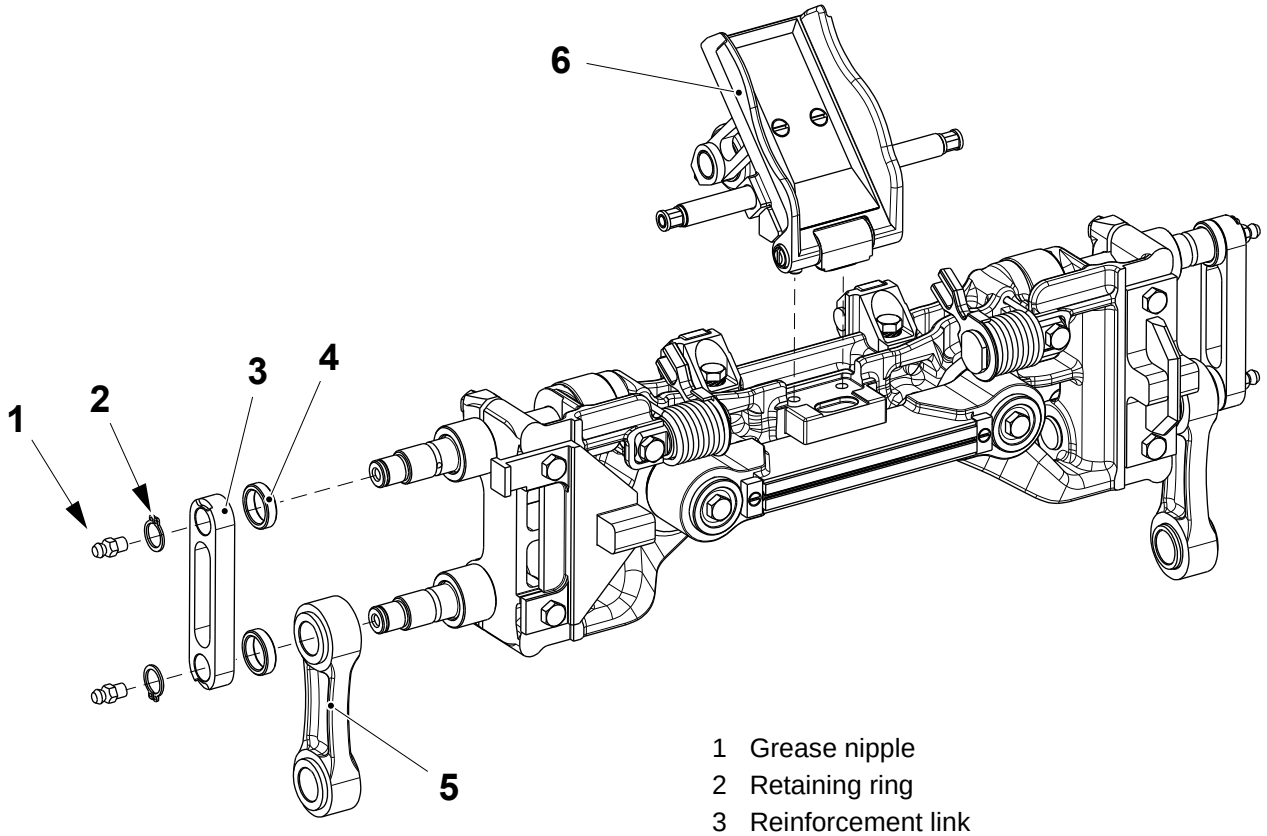

1 Grease nipple
2 Retaining ring
3 Reinforcement link
4 Spacer
5 Chain link
6 Volume flap

(Cont'd)

TechPub_2614345_0107 - 0404_3048144_01.fm

(Cont'd)

WARNING
Blade hazard.
Knife is sharp.

l) Remove the screws (7), the washers (8) and the pressure bar (9).

m) Remove the rubber bushings (10).

n) Change the sleeves (11), the springs (12) and the O-rings (13).

o) Change the knife (14).

Note! When assembling, Tighten the screws (1) following the procedure shown in 4.2-7 Pressure Jaw - Check Pressure Bar Springs, steps f) to h).

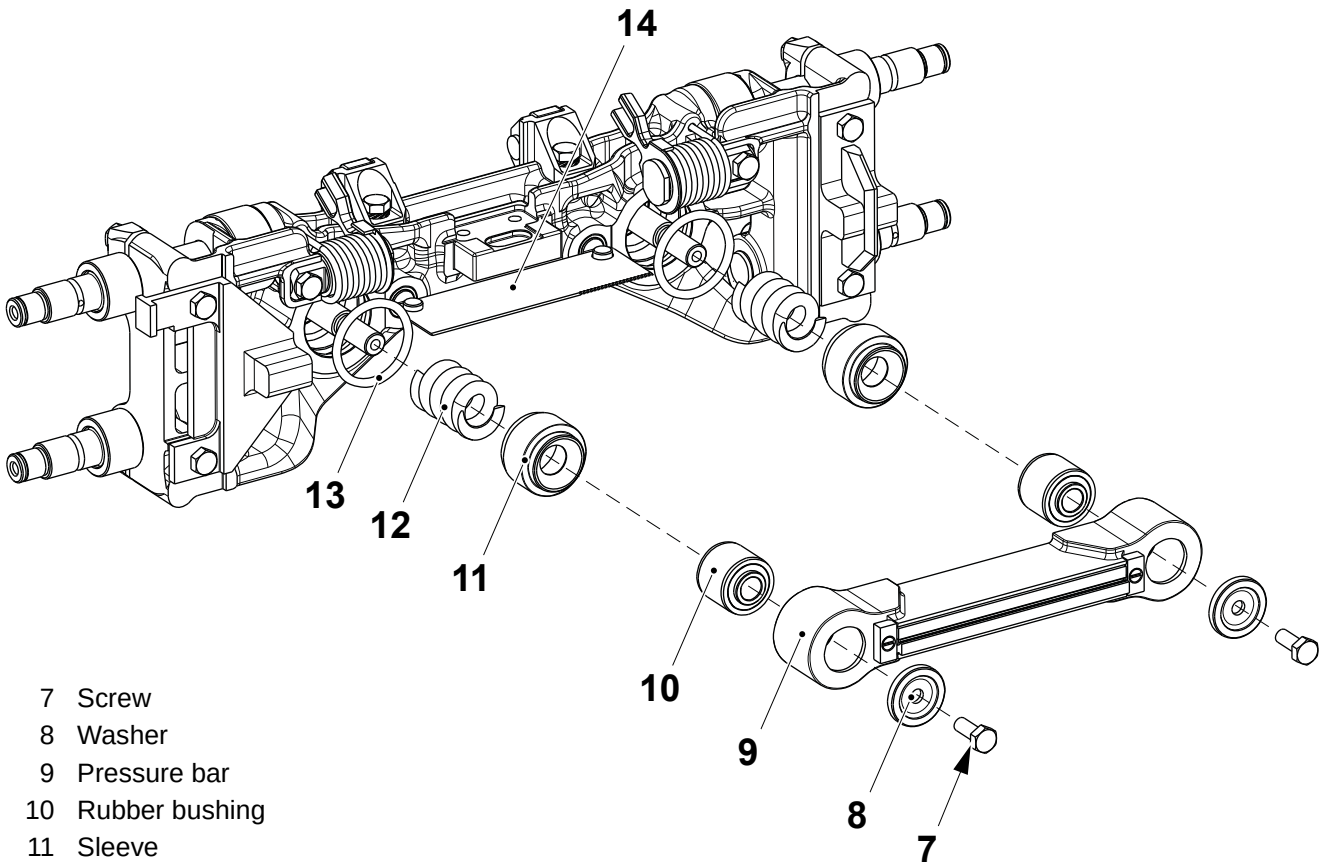

7 Screw
8 Washer
9 Pressure bar
10 Rubber bushing
11 Sleeve
12 Spring
13 O-ring
14 Knife

TechPub_2614345_0107 - 0404_3048144_01.fm

(Cont'd)

(Cont'd)

Note! Valid for Family Packages.

a) Remove the grease nipples (1).

b) Remove the retaining rings (2), the washers (3) and the chain link (4). Change the chain link (4) if necessary.

c) Overhaul the volume flap (5), see 4.2-5 Pressure Jaw - Change Volume Flap Springs, Holders and Bushings.

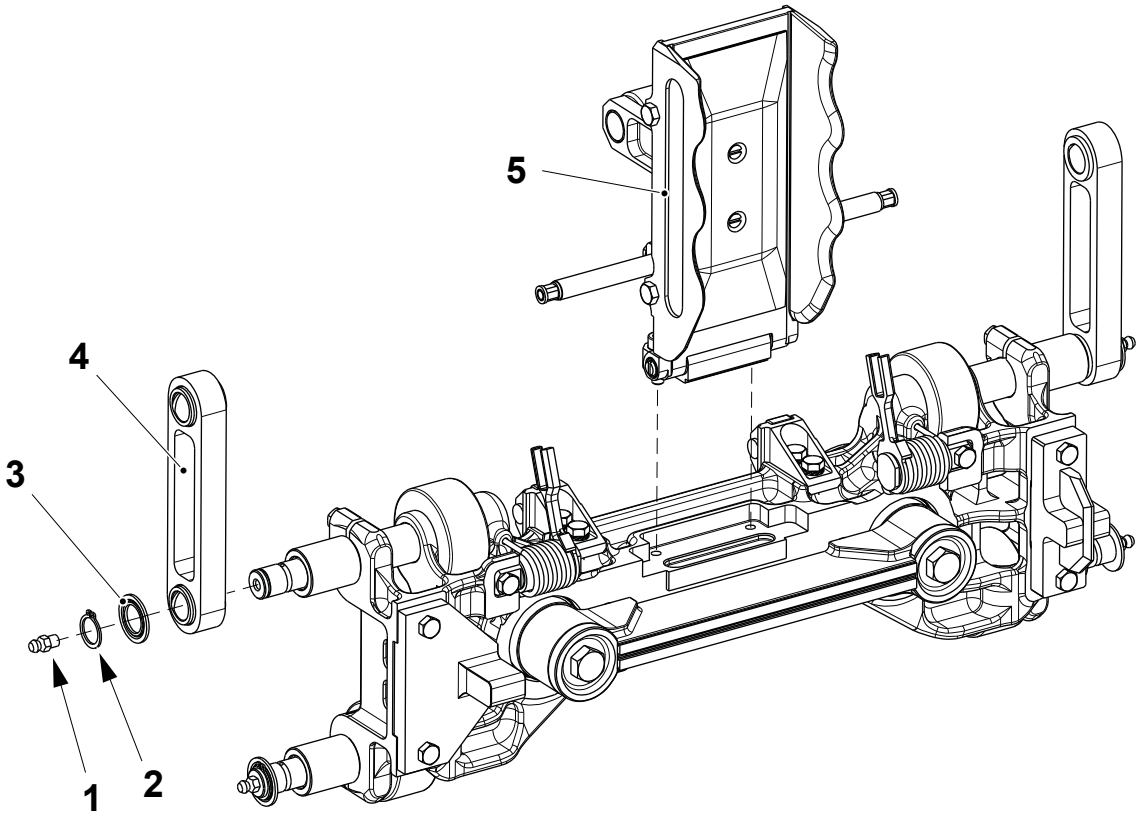

1 Grease nipple
2 Retaining ring
3 Washer
4 Chain link
5 Volume flap

(Cont'd)

TechPub_2614345_0107 - 0404_3048144_01.fm

(Cont'd)

WARNING
Blade hazard.
Knife is sharp.

d) Remove the screws (6), the washers (7) and the pressure bar (8).

e) Remove the rubber bushings (9).

f) Change the sleeves (10), the springs (11) and the gaskets (12).

Note! When assembling grease the springs (10) with synthetic grease TP No. 90459-7413.

g) Change the knife (13).

Note! When assembling, Tighten the screws (1) following the procedure shown in 4.2-7 Pressure Jaw - Check Pressure Bar Springs, steps f) to h).

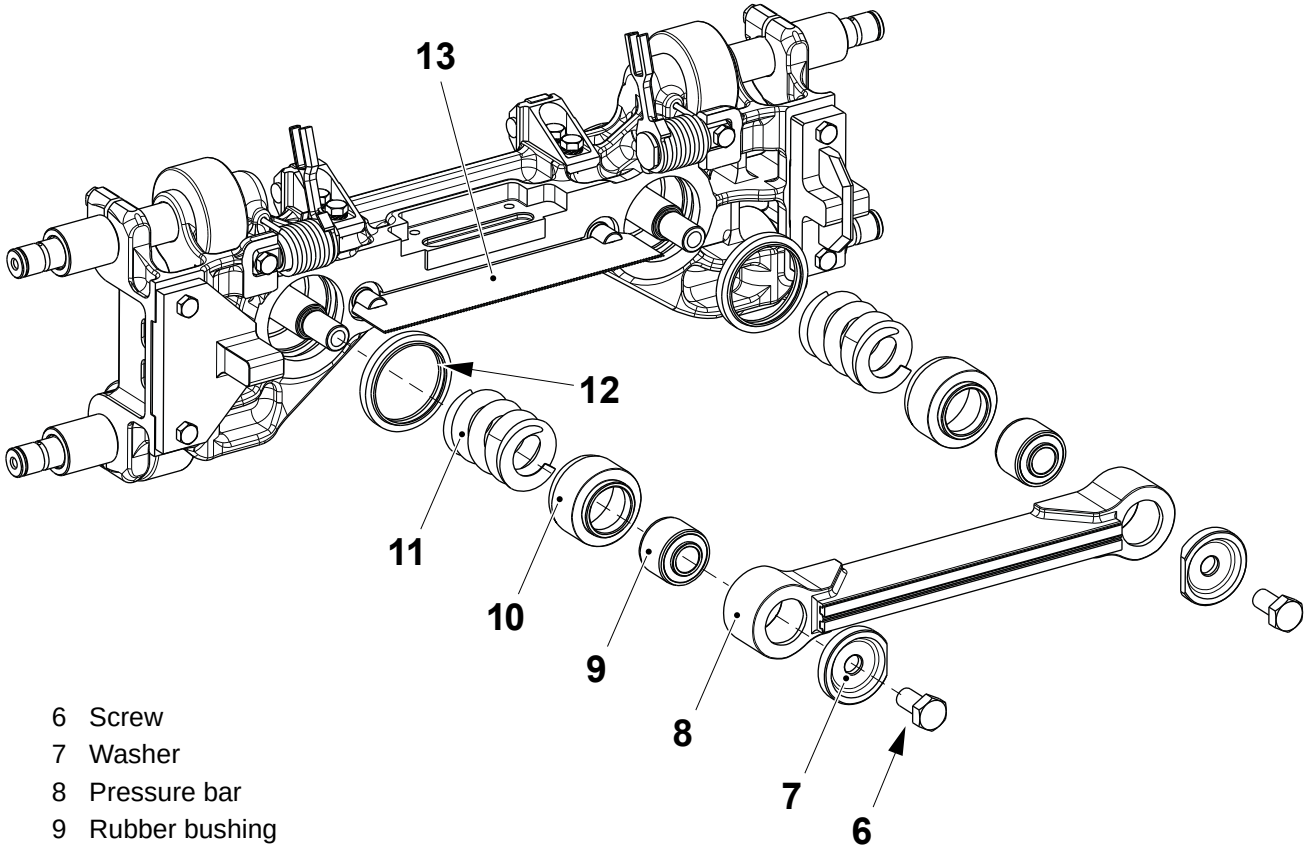

6 Screw
7 Washer
8 Pressure bar
9 Rubber bushing
10 Sleeve
11 Spring
12 Gasket
13 Knife

TechPub_2614345_0107 - 0404_3048144_01.fm

(Cont'd)

(Cont'd)

Overhaul Cutting Cams

Note! Valid for Portion Packages.

CAUTION

Risk of damage to the equipment.

Do not separate the lock washers (2). They are supplied as a pair of washers held together by an adhesive.

a) Remove the screws (1), the lock washers (2) and the cam assemblies (3).

b) Pull out the shafts (4) and the springs (5). Change the springs (5) if necessary.

Note! If the cam (3) is disassembled, make sure the plate (6) is reassembled as shown below, see on page 4-173 for the cutting cam assembling procedure.

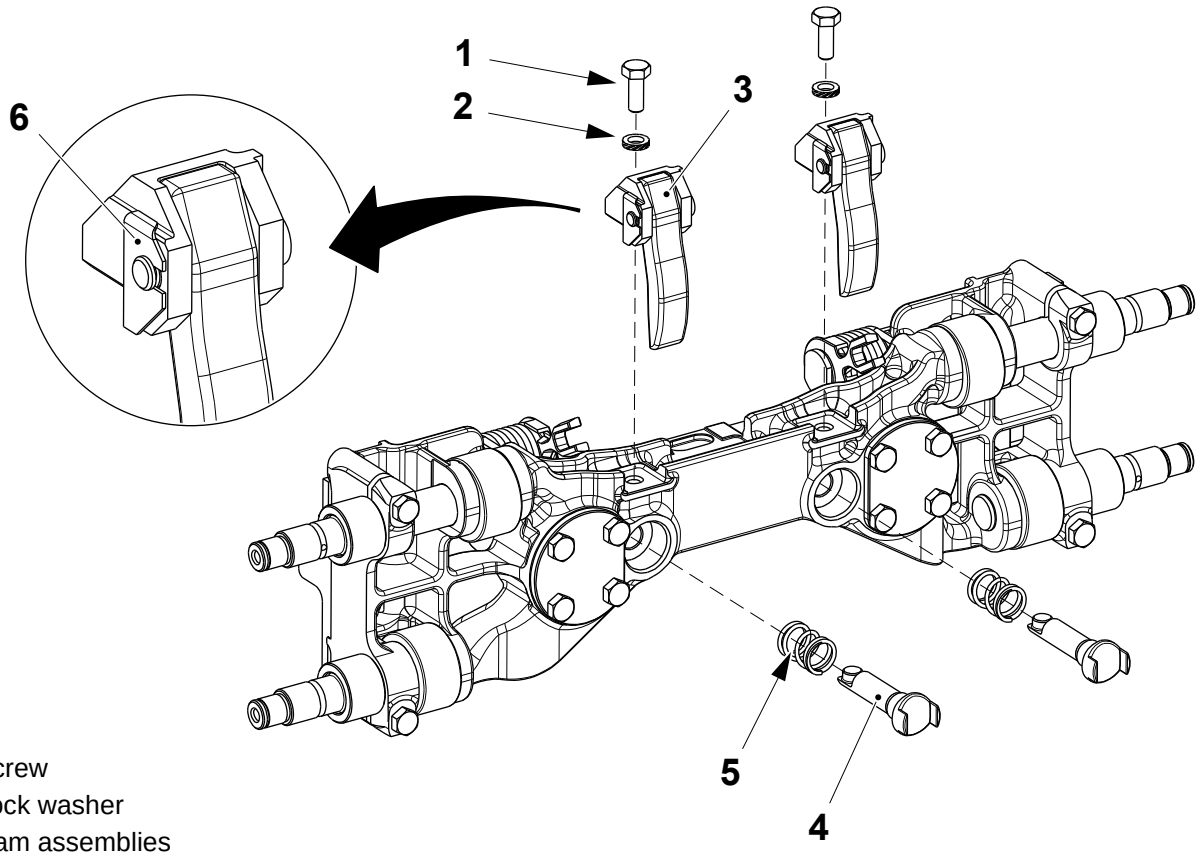

1 Screw
2 Lock washer
3 Cam assemblies
4 Shafts
5 Springs
6 Plate

(Cont'd)

TechPub_2614345_0107 - 0404_3048144_01.fm

(Cont'd)

c) Change the bushing (7) with the aid of the tool (8):
   - insert the two parts of the tool (8) through the bushing (7) and screw them together.
   - pull out the tool (8) with the bushing (7) between

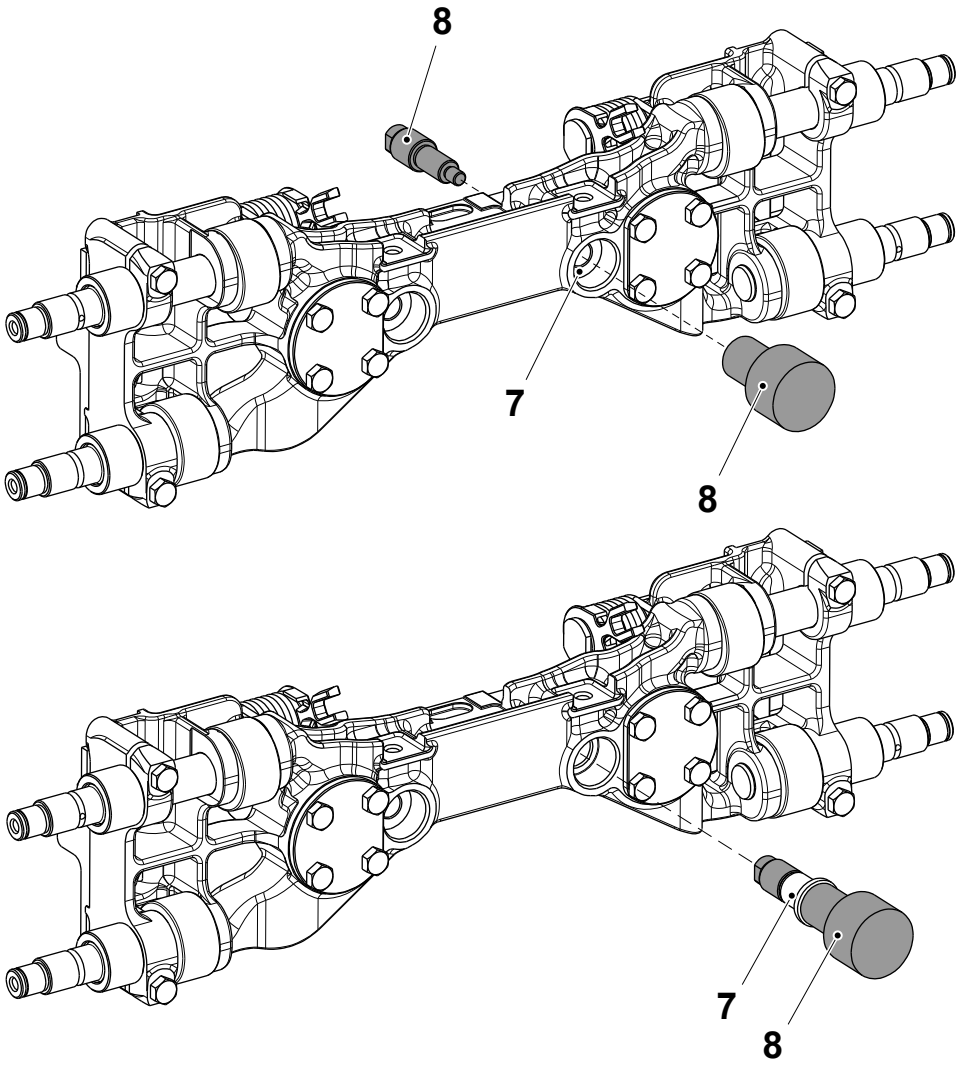

7 Bushing
8 Tool

(Cont'd)

TechPub_2614345_0107 - 0404_3048144_01.fm

(Cont'd)

– separate the tool (8) and change the bushing (7)
– fit the bushing (7) oriented as shown between the two parts of the tool (8) and screw them together
– push the tool (8) with the bushing (7) through the locating hole (9) until the bushing (7) is in firm contact with the surface (10).

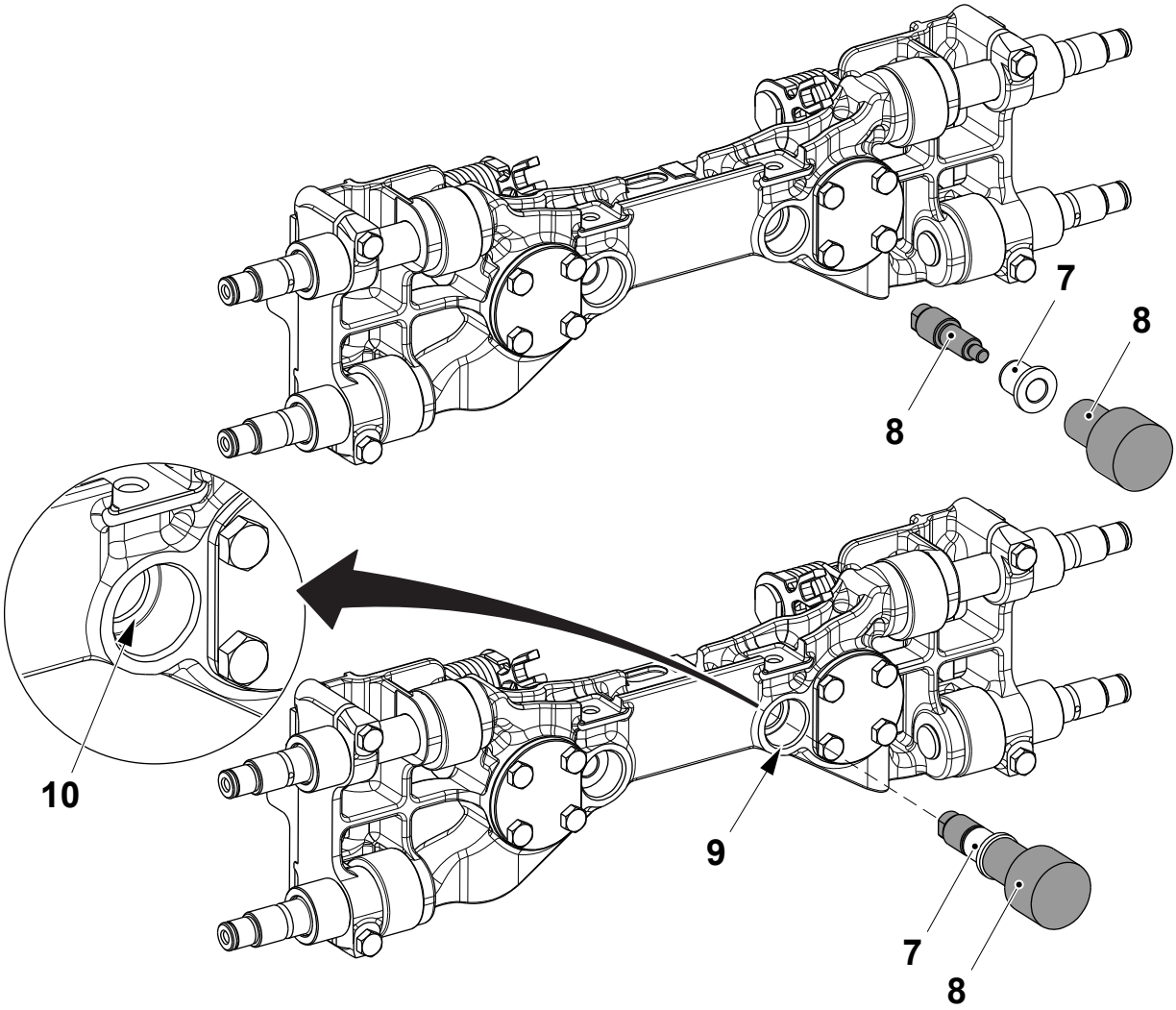

7 Bushing
8 Tool
9 Locating hole
10 Surface

(Cont'd)

TechPub_2614345_0107 - 0404_3048144_01.fm

(Cont'd)

– when the bushing (7) is in the correct position, unscrew the two parts of the tool (8) and remove them.
– repeat the procedure for the other bushing.

d) Assemble in the reverse order.

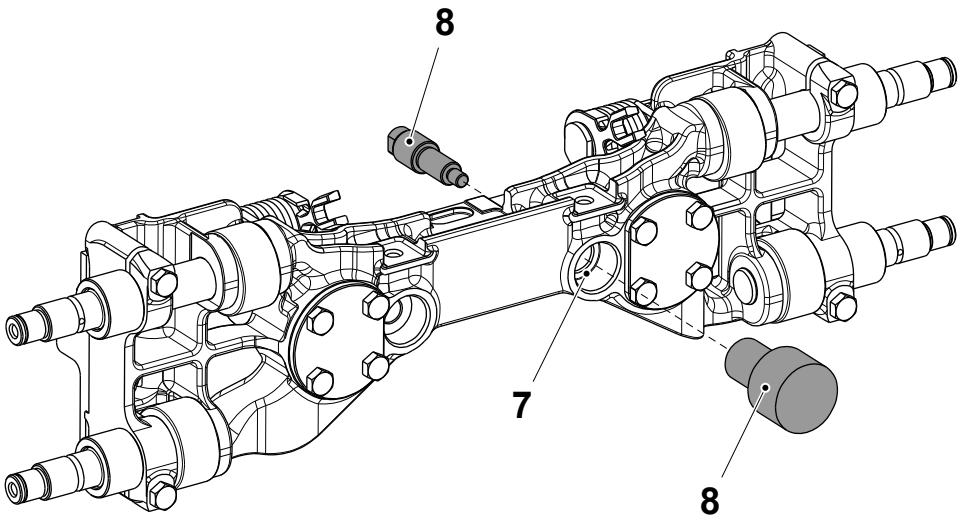

7 Bushing
8 Tool

(Cont'd)

TechPub_2614345_0107 - 0404_3048144_01.fm

(Cont'd)

Note! When assembling the cutting cams, follow the procedure below.

e) Clean the seat (11) for the cam assembly (3).

f) Apply a thin layer of grease TP No. 90459-7413 on the surface of the cam.

Note! When the cam assembly (3) is placed on the seat (11) make sure the retaining plate (6) is in position when the screw (1) and the lock washer (2) are fitted.

g) Place the cam assembly (3) on the seat (11) and hold it in position with the screw (1) and the washer (2). Do not tighten the screw (1).

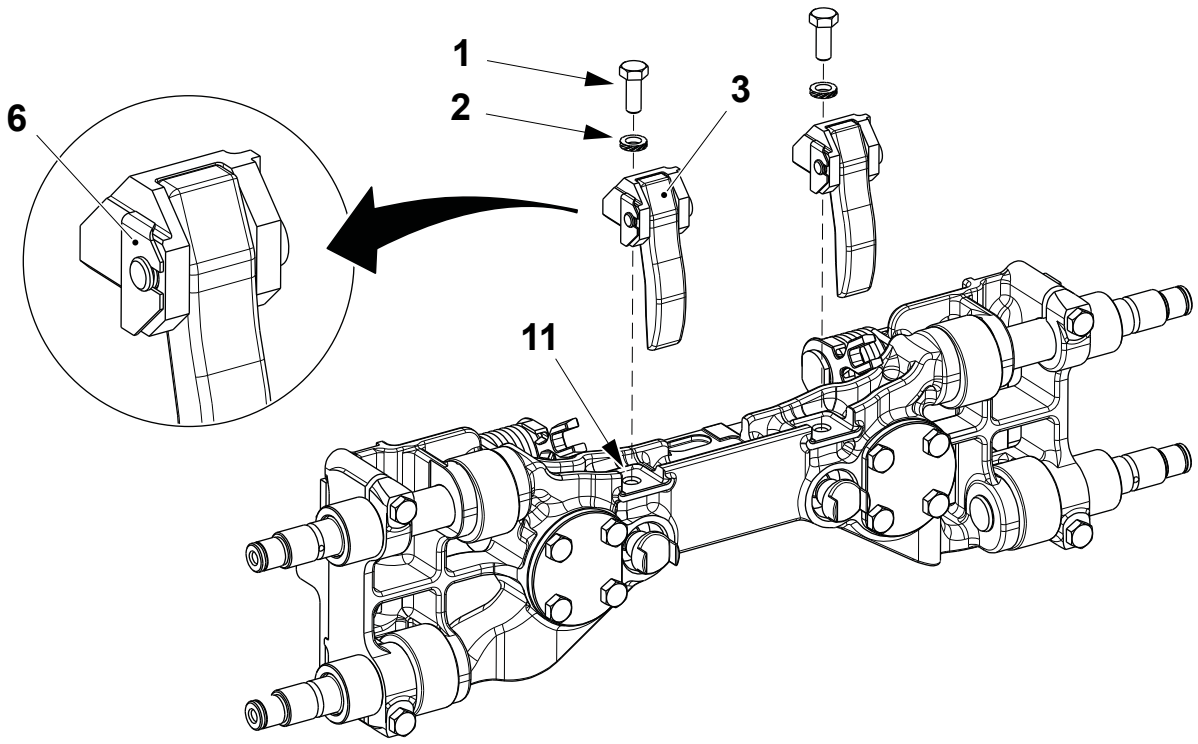

1 Screw
2 Lock washer
3 Cam assembly
6 Retaining plate
11 Seat

(Cont'd)

TechPub_2614345_0107 - 0404_3048144_01.fm

(Cont'd)

Note! Use a torque wrench, set to 10 Nm, to tighten the screws (1).

h) Press the cam assembly (3) against the link (12) and tighten the screw (1).

i) With the aid of a 0.02 mm feeler gauge, check the distance **A** between the cam assembly (3) and the link (12), i.e. check that the cam assembly (3) is in contact with the link (12).

Note! If the feeler gauge can be inserted between the cam assembly (3) and the link (12), loosen the screw (1) and tighten it again making sure that the cam assembly (3) is pressed firmly against the link (12).

j) Repeat for the other cam assembly.

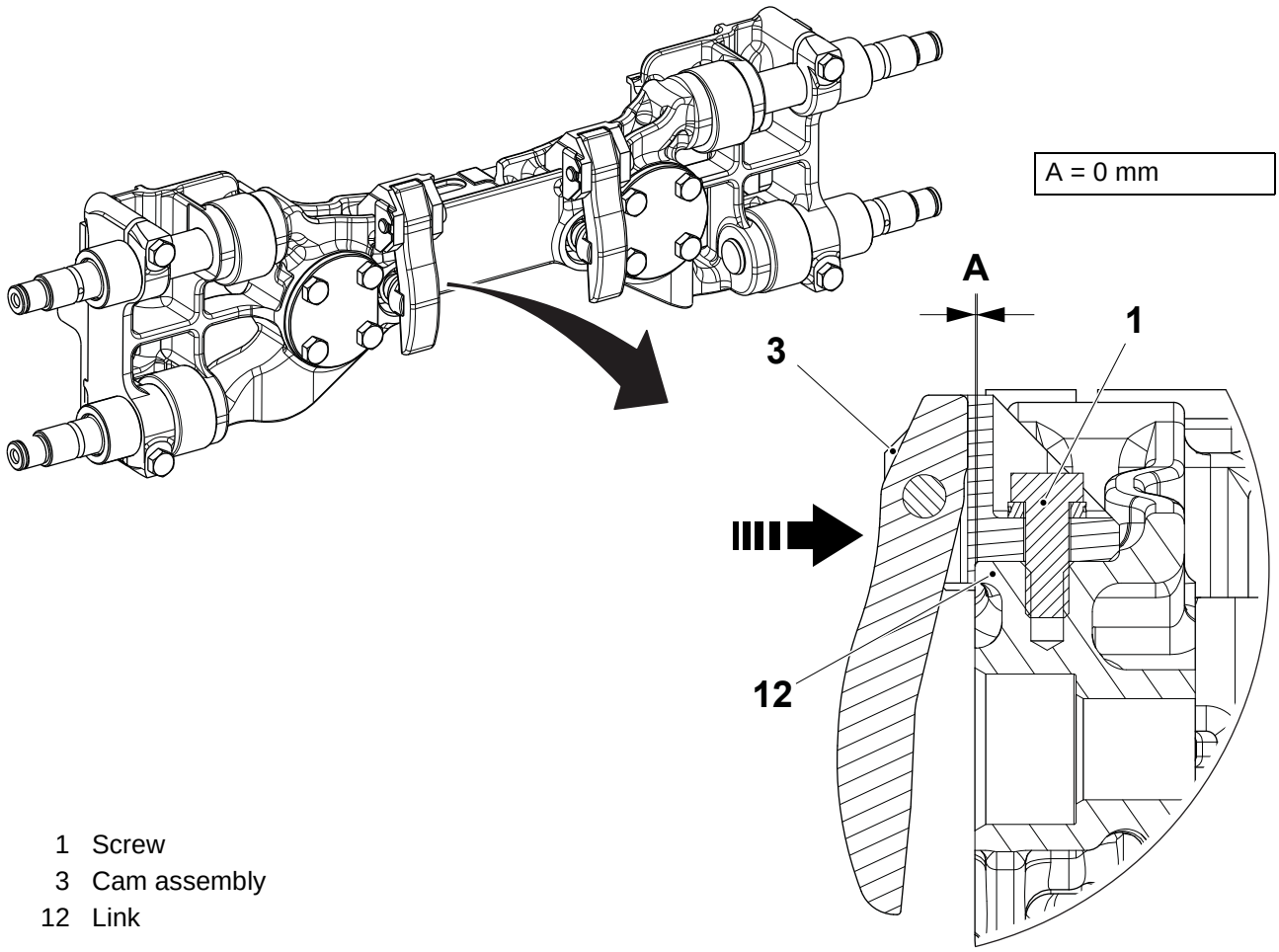

1 Screw
3 Cam assembly
12 Link

TechPub_2614345_0107 - 0404_3048144_01.fm

(Cont'd)

(Cont'd)

Note! Valid for Family Packages.

CAUTION
Risk of damage to the equipment.
Do not separate the lock washers (2). They are supplied as a pair of washers held together by an adhesive.

a) Remove the screws (1), the lock washers (2) and the cam assemblies (3).

b) Pull out the shafts (4) and the springs (5). Change the springs (5) if necessary.

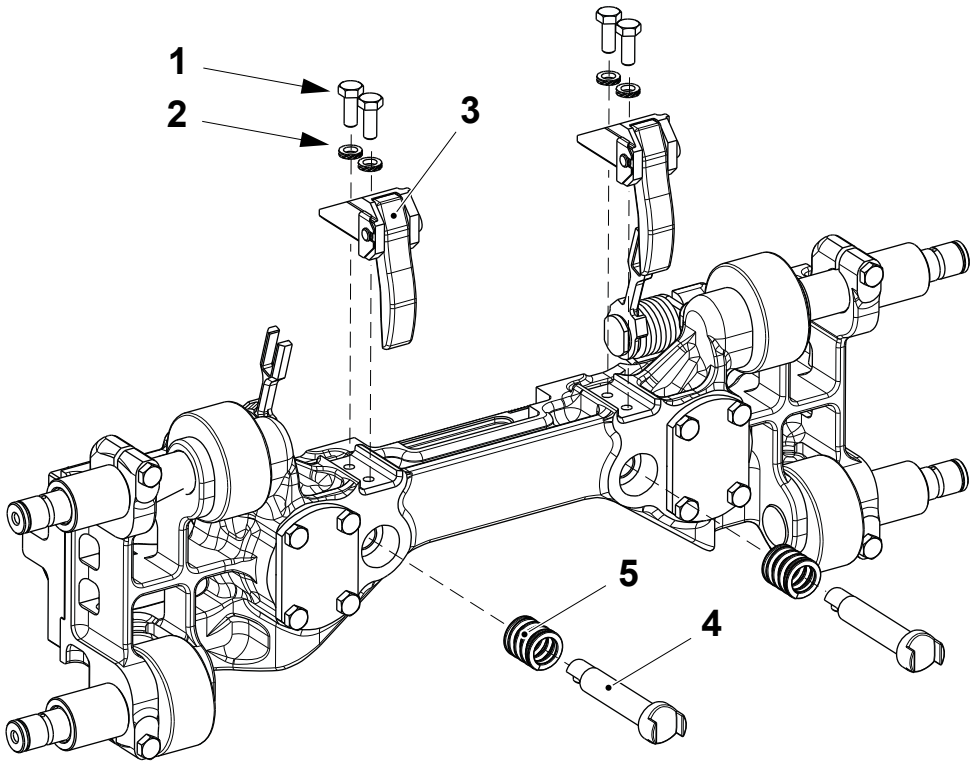

1 Screw
2 Lock washer
3 Cam assemblies
4 Shafts
5 Springs

(Cont'd)

TechPub_2614345_0107 - 0404_3048144_01.fm

(Cont'd)

Note! If the cam (3) is disassembled, make sure the plate (6) is reassembled as shown below.

c) Clean the seat (7) for the cam assembly (3).

d) Apply a thin layer of grease TP No. 90459-7413 on the surface of the cam.

Note! When the cam assembly (3) is placed on the seat (7) make sure the retaining plate (6) is in position when the screw (1) and the lock washer (2) are fitted.

e) Place the cam assembly (3) on the seat (7) and hold it in position with the screw (1) and the washer (2). Do not tighten the screw (1).

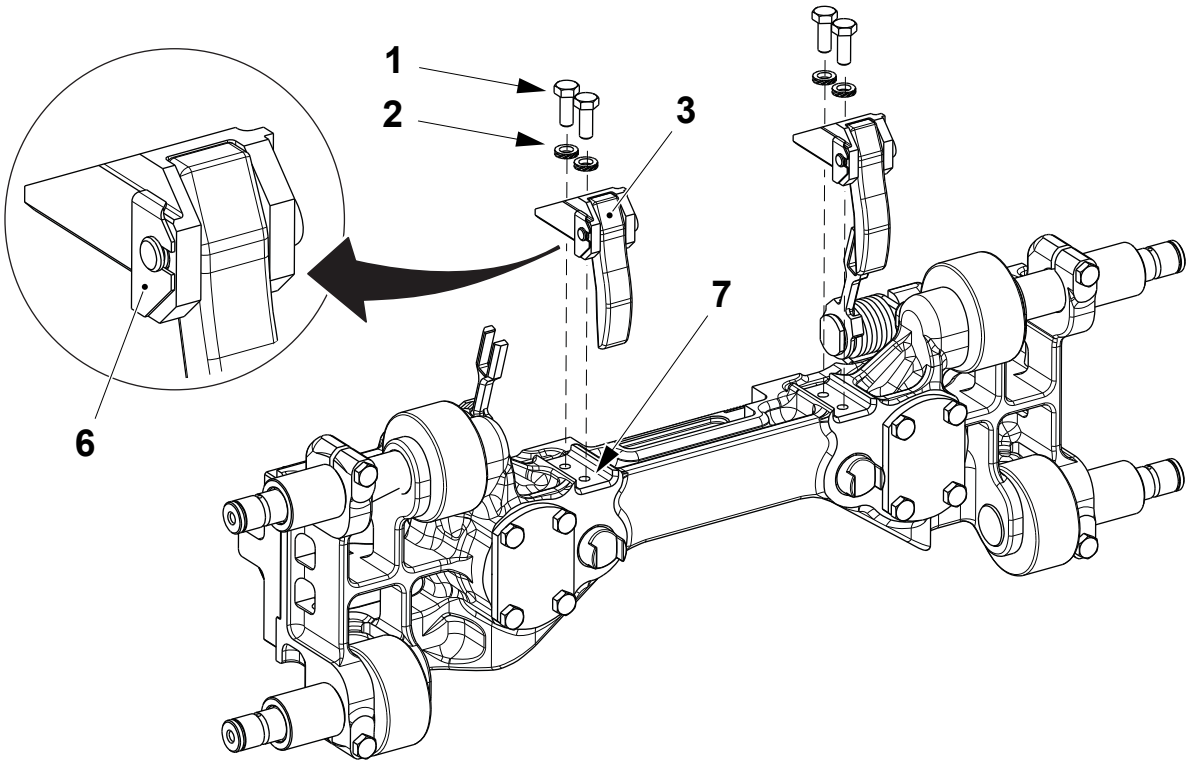

1 Screw
2 Lock washer
3 Cam assembly
6 Retaining plate
7 Seat

(Cont'd)

TechPub_2614345_0107 - 0404_3048144_01.fm

(Cont'd)

Note! Use a torque wrench, set to 10 Nm, to tighten the screws (1).

f) Press the cam assembly (3) against the link (8) and tighten the screw (1).

g) With the aid of a 0.02 mm feeler gauge, check the distance **A** between the cam assembly (3) and the link (8), i.e. check that the cam assembly (3) is in contact with the link (8).

Note! If the feeler gauge can be inserted between the cam assembly (3) and the link (8), loosen the screw (1) and tighten it again making sure that the cam assembly (3) is pressed firmly against the link (8).

h) Repeat for the other cam assembly.

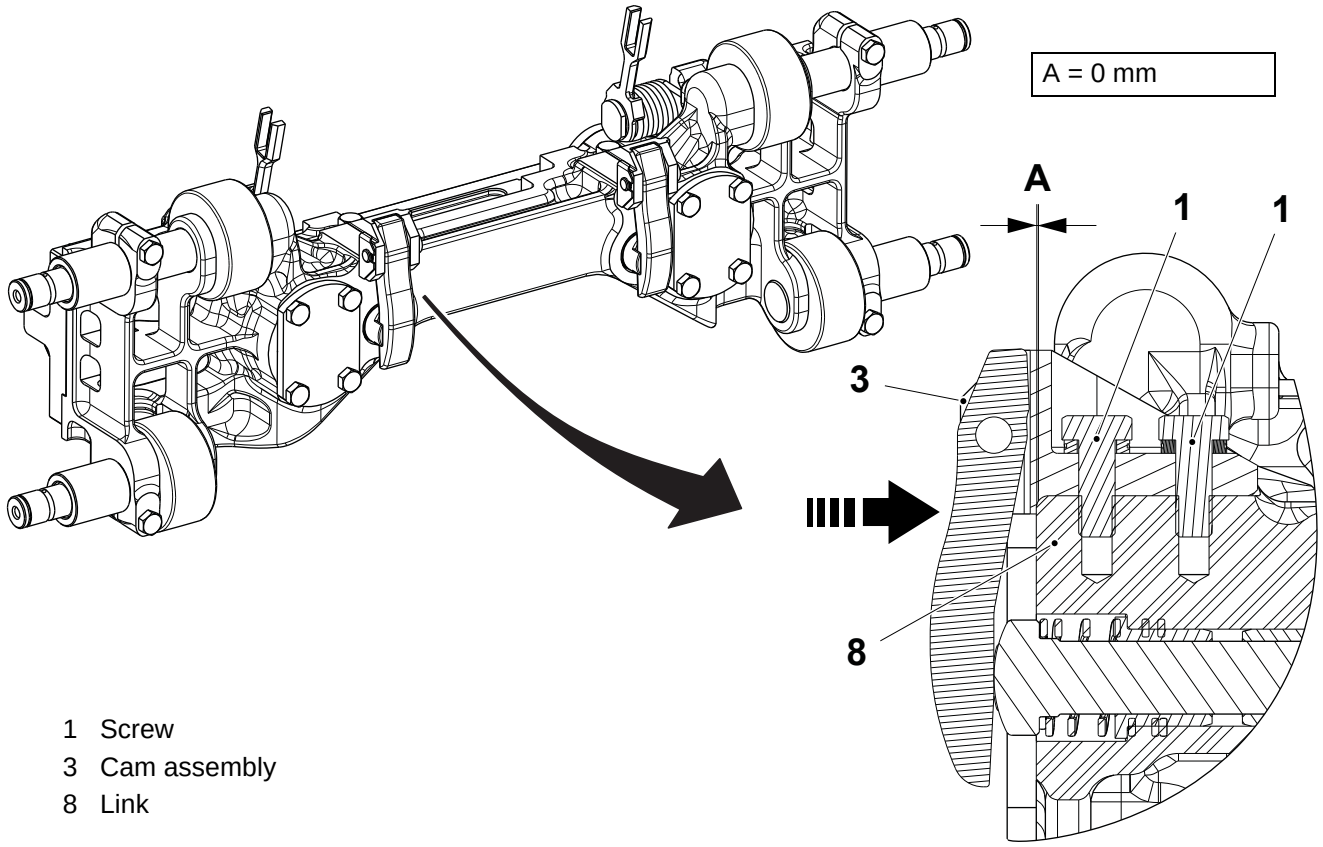

1 Screw
3 Cam assembly
8 Link

(Cont'd)

TechPub_2614345_0107 - 0404_3048144_01.fm

(Cont'd)

Overhaul Cam Followers

CAUTION
Risk of damage to the equipment.
Do not try to split the link by inserting a tool into the groove (1).

a) Make sure that the holder (2) marked “Pressure Link” is fitted on the axle extractor (3).

b) Loosen the screw (4).

c) Slide the end of the axle extractor (3) over the shaft (5) until it touches the frame (6).

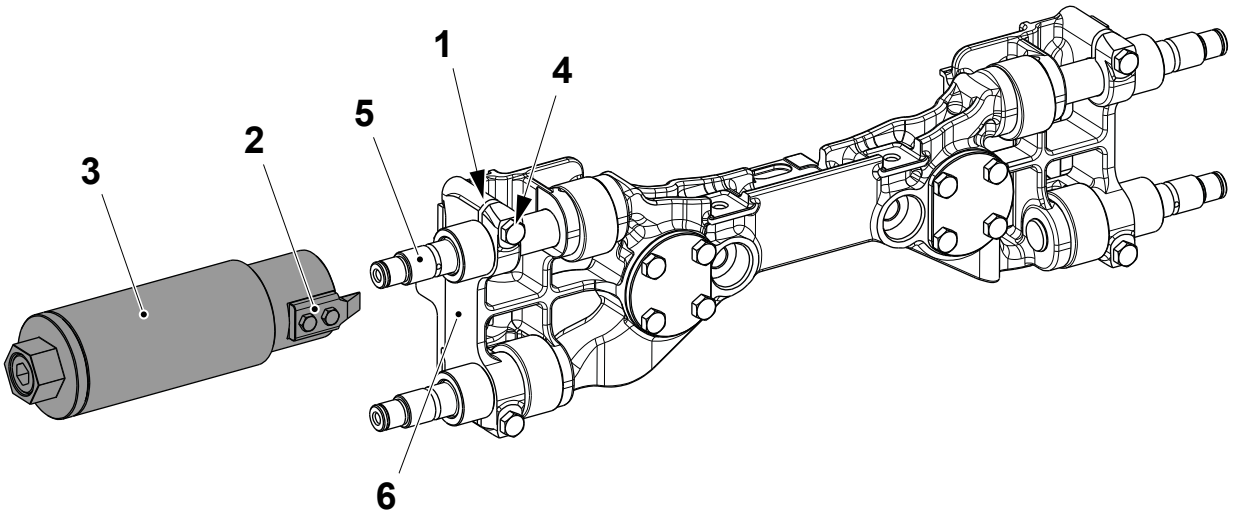

1 Groove
2 Holder
3 Axle extractor
4 Screw
5 Shaft
6 Frame

(Cont'd)

TechPub_2614345_0107 - 0404_3048144_01.fm

(Cont'd)

Note! Do not over tighten the bolt (8).

d) Rotate the knurled part (7) of the axle extractor (3) counter-clockwise approximately 10 turns.

e) Push the bolt (8) through the axle extractor (3) and screw it into the hole where the grease nipple is normally fitted.

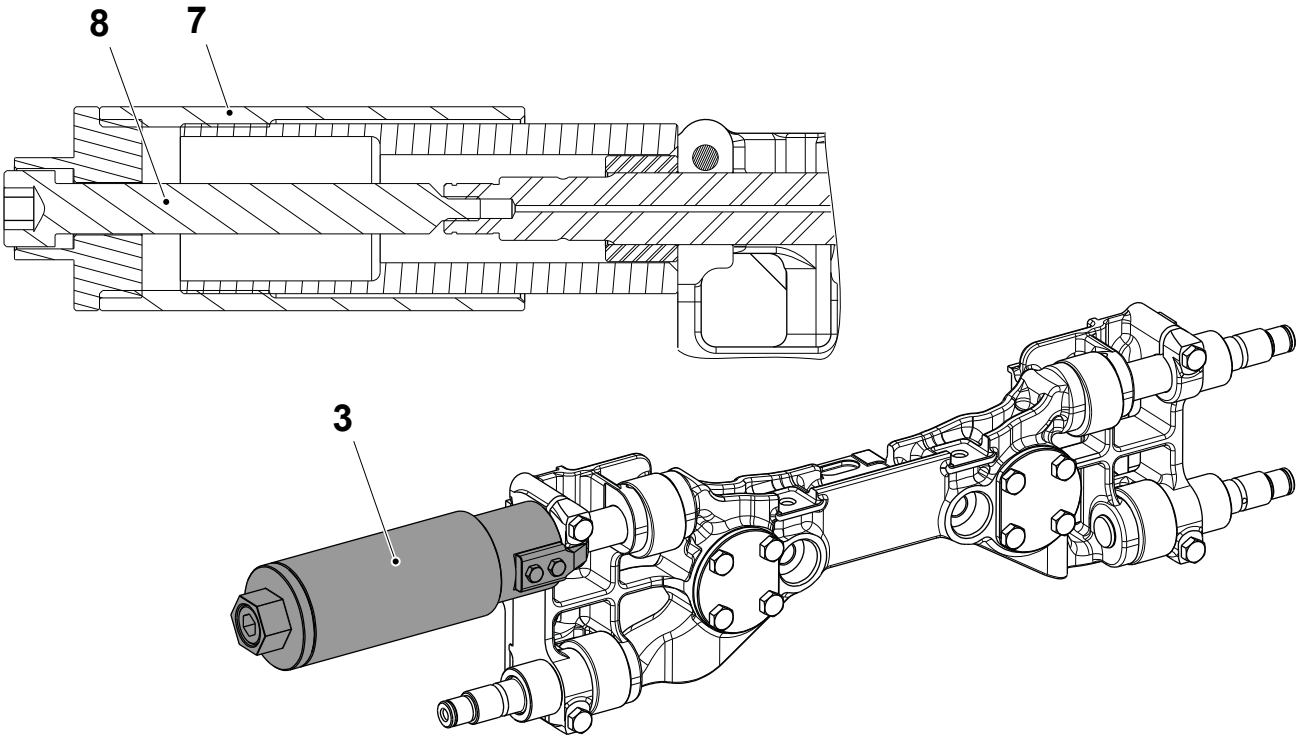

3 Axle extractor
7 Knurled part
8 Bolt

(Cont'd)

TechPub_2614345_0107 - 0404_3048144_01.fm

(Cont'd)

CAUTION
Risk of damage to the equipment.
When assembling, tighten the screws (4) using a torque wrench set to 10 Nm. Do not overtighten the screws (4).

f) Keep the bolt (8) hold and rotate the knurled part (7) of the axle extractor (3) clockwise to extract the shaft (5).

g) Change the roller (9).

h) Repeat the procedure for the other rollers.

i) Assemble in the reverse order.

j) Fit and tension the chains, see 4-7 Jaw System - Remove and Assemble Chains.

k) Grease the jaw system.

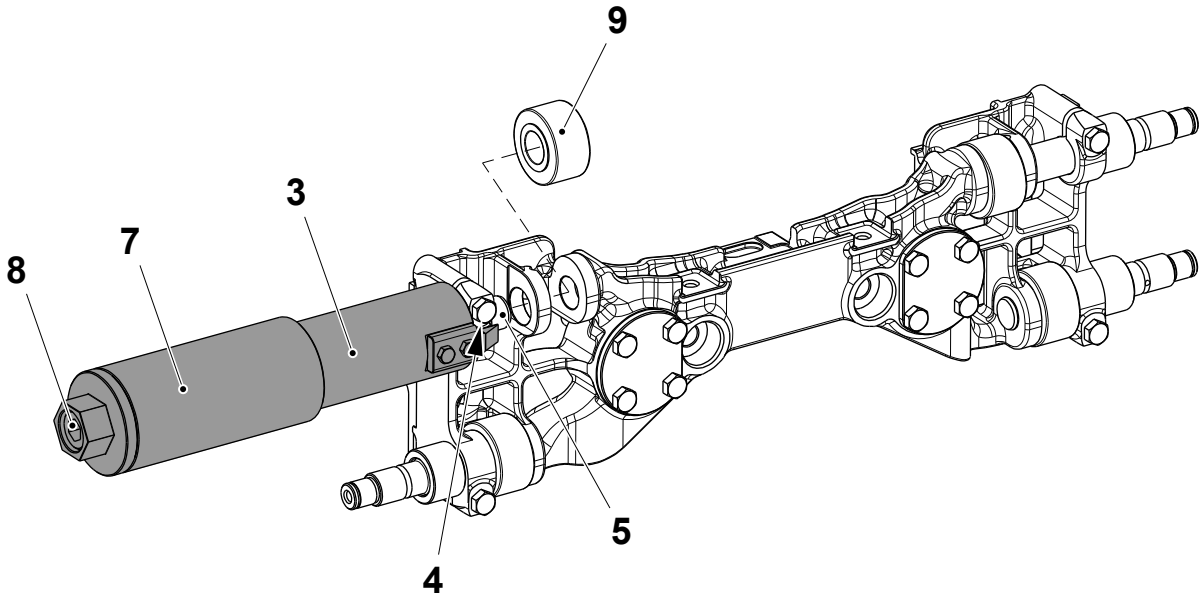

3 Axle extractor
4 Screw
5 Shaft
7 Knurled part
8 Bolt
9 Roller

TechPub_2614345_0107 - 0404_3048144_01.fm

4.2-12 Pressure Jaw - Set Jaw Unit Reference Sensor

Machine Status	Mains Power ON Air OFF Steam ON Water OFF
SPC Reference	2529791-0400 2500391-0300

a) Crank the jaw system until the flag (1) on pressure jaw No. 10 is positioned in front of the inductive switch (2).

b) Set the distance **A** between the flag (1) and the inductive switch (2).

c) Crank the jaw system slowly around until the flag (1) activates the inductive switch (2) and the LED in the inductive switch comes ON.

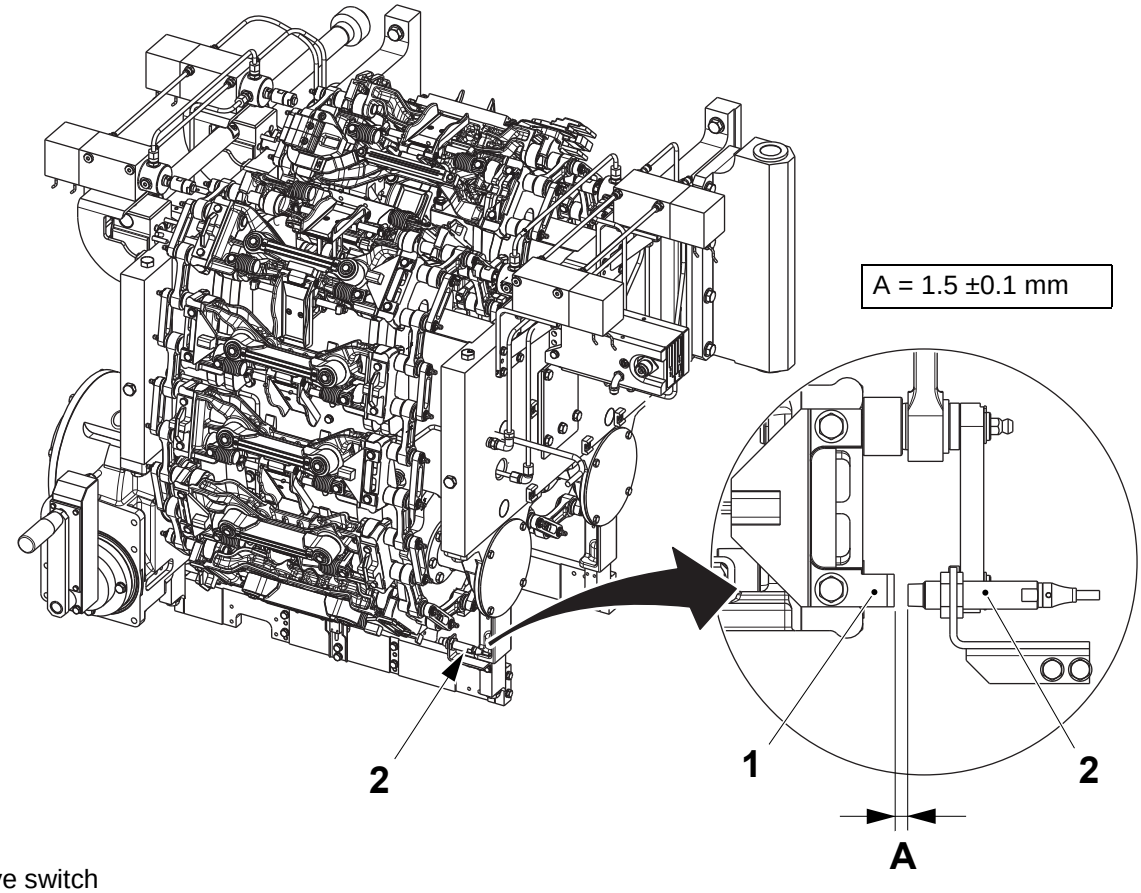

1 Flag
2 Inductive switch

TechPub_2614345_0107 - 0404_3048144_01.fm

4.2-13 Pressure Jaw - Change Side Plates

Machine Status	Mains Power ON Air OFF Steam ON Water OFF
SPC Reference	2500389-0300 2500390-0300 2500391-0300

Note! Valid for Family Packages only.

Note! When assembling, unless specified in the procedure, tighten all the screws according to the torque indicated in 10.1.1 Jaw System Screws Tightening Torque.

Remove the screws (1) and change the side plates (2) of the volume flap. Assemble in the reverse order.

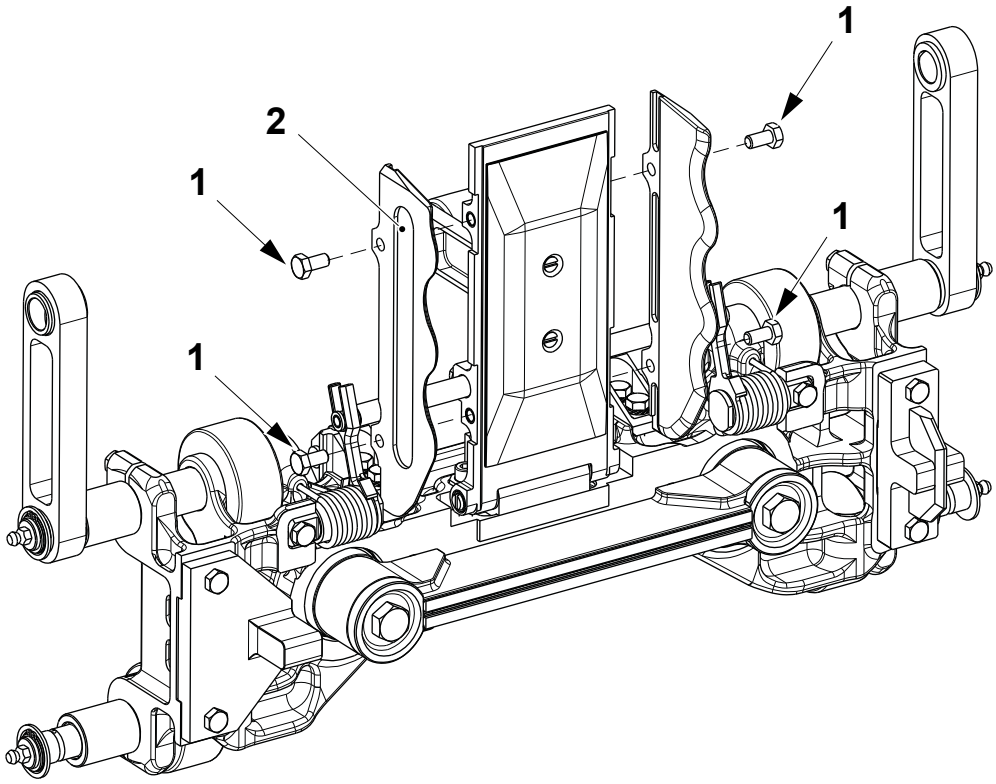

1 Screw
2 Side plate

TechPub_2614345_0107 - 0404_3048144_01.fm

4.3 Drive Unit

SPC Reference	2500383-0400

4.3-1 Drive Unit - Overhaul

Machine Status	Mains Power OFF Air OFF Steam ON Water OFF
Special Equipment	Extractor Device TP No. 90459-4501 Template TP No. 2640362-0000 Template TP No. 2656105-0000
Consumables	Synthetic grease TP No. 90459-7413
SPC Reference	2500383-0400

WARNING

Burn hazard.

The gearbox might be hot.

Note! When assembling, unless specified in the procedure, tighten all the screws according to the torque indicated in 10.1.1 Jaw System Screws Tightening Torque.

a) Remove the waste box and chains, see 4-7 Jaw System - Remove and Assemble Chains.

(Cont'd)

TechPub_2614345_0107 - 0402_3048145_01.fm

(Cont'd)

b) Remove the screw (1) and the cam (2).

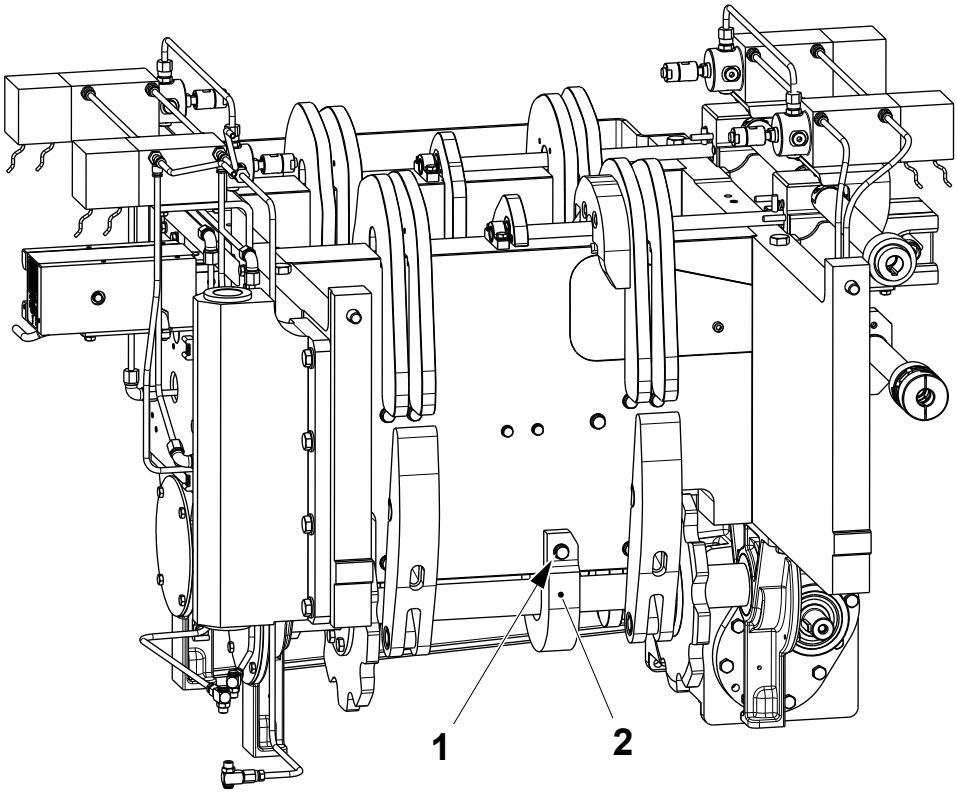

1 Screw
2 Cam

(Cont'd)

TechPub_2614345_0107 - 0402_3048145_01.fm

(Cont'd)

CAUTION
Risk of damage to the equipment.
Do not remove the sensor from the holder (3).

c) Remove the screws (4) and the hand crank assembly (5) leaving the cable (6) connected.

d) Disconnect the tube (7).

e) Prepare a pallet truck and place it below the jaw unit

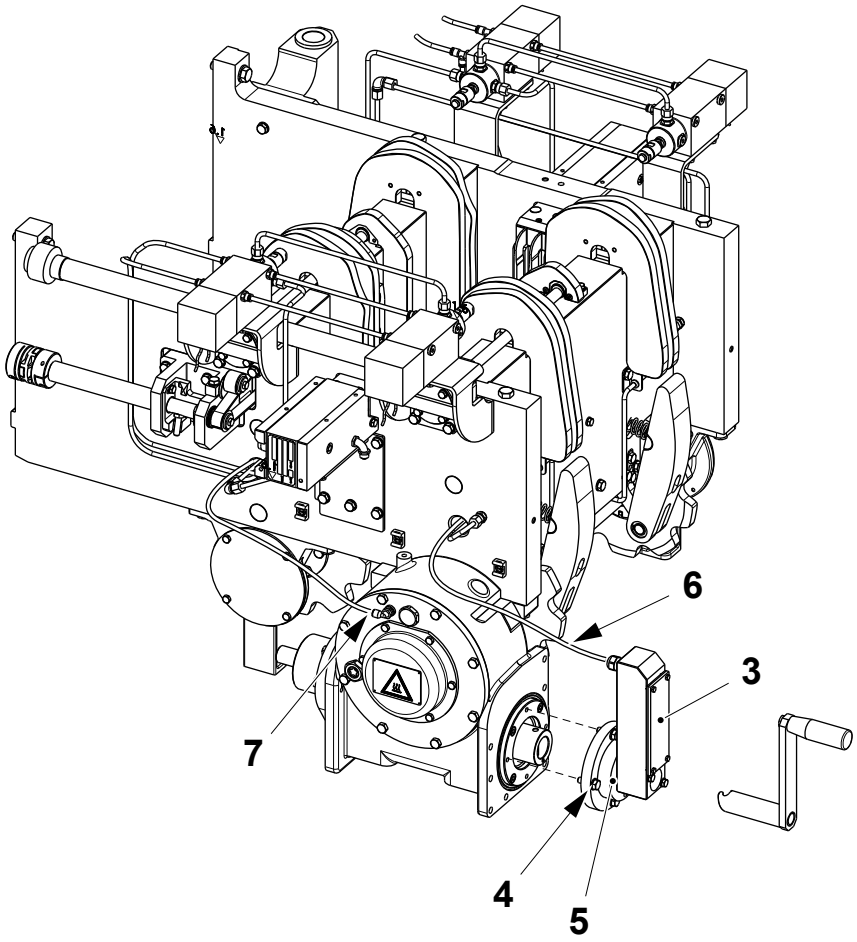

3 Holder
4 Screw
5 Hand crank assembly
6 Cable
7 Tube

(Cont'd)

TechPub_2614345_0107 - 0402_3048145_01.fm

(Cont'd)

f) Remove the screws (8) and pull down the axle (9) driven by the gearbox (10).

g) Remove the screws (11) and the pull down the idle axle (12).

h) Move the axle assemblies on the pallet to a work bench.

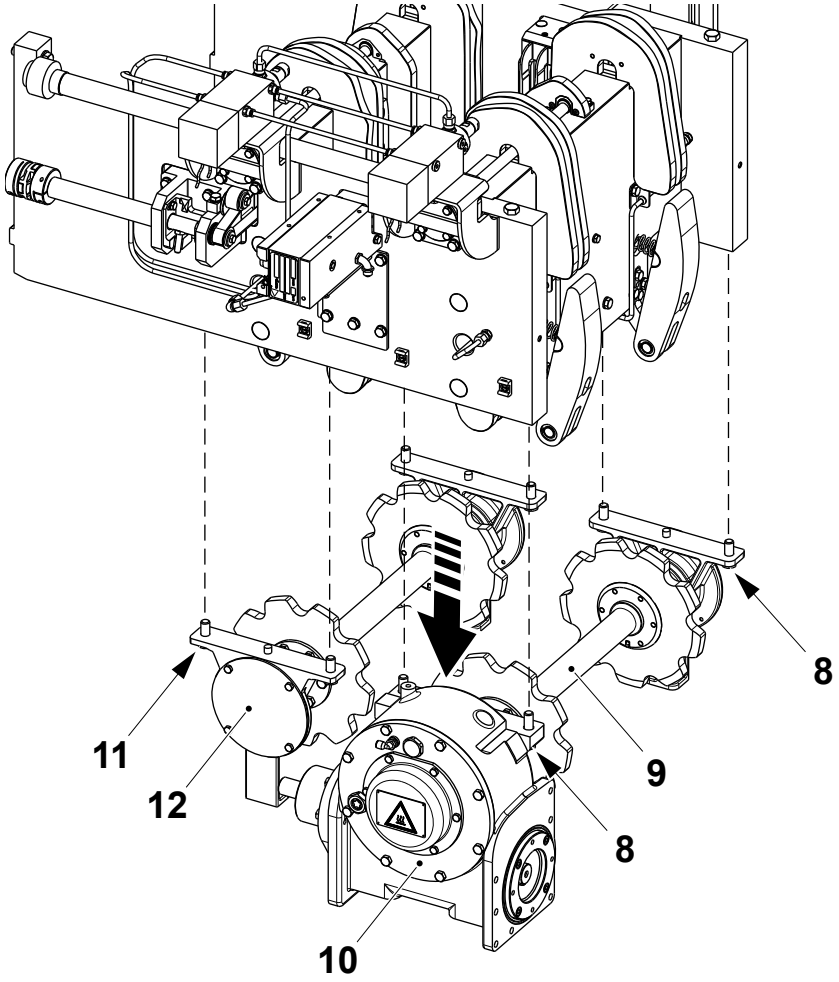

8 Screw
9 Axle
10 Gearbox
11 Screw
12 Axle

(Cont'd)

TechPub_2614345_0107 - 0402_3048145_01.fm

(Cont'd)

Overhaul Idle Axle

a) Remove the screws (1) and the disc (2).

b) Remove the O-ring (3). Change if necessary.

c) Remove the retaining ring (4).

Note! The retaining ring (4) is present only in one side.

d) Remove the retaining ring (5) and change the ball bearing (6).

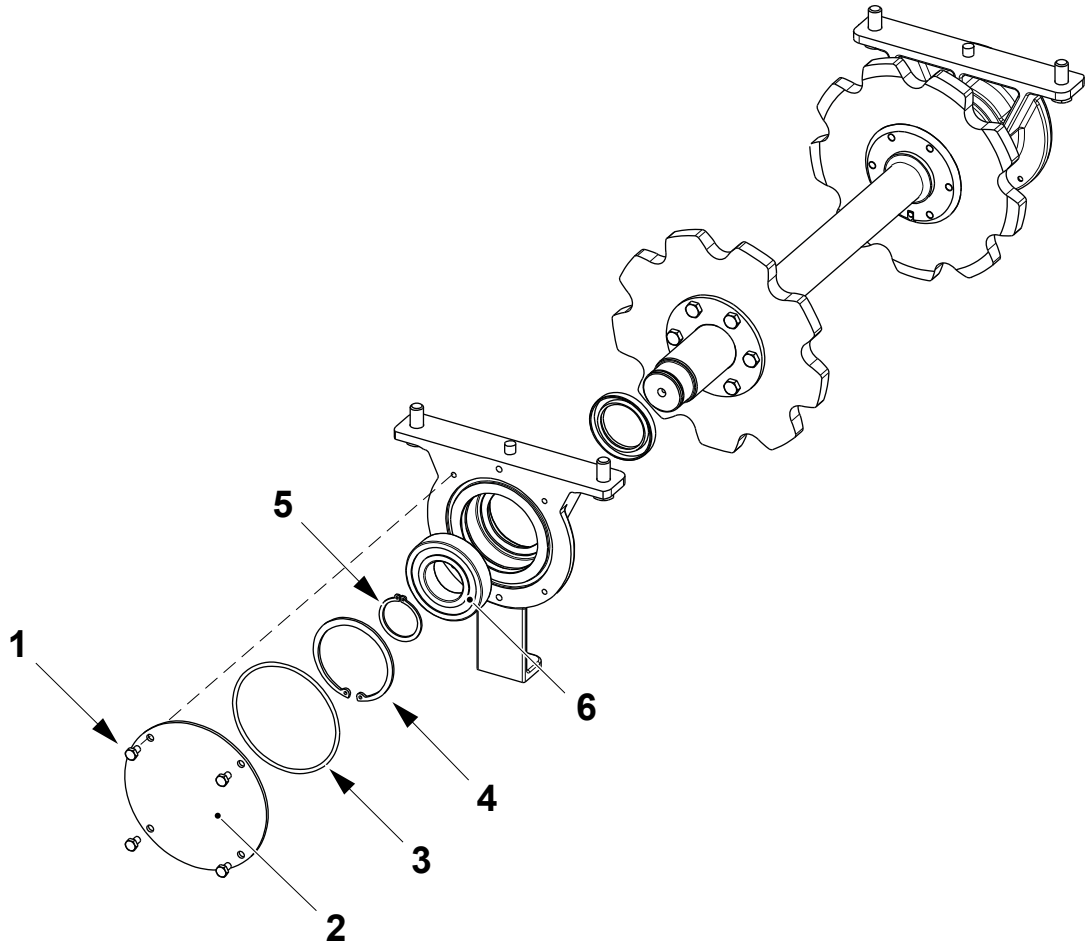

1 Screw
2 Disc
3 O-ring
4 Retaining ring
5 Retaining ring
6 Ball bearing

(Cont'd)

TechPub_2614345_0107 - 0402_3048145_01.fm

(Cont'd)

e) Remove the plates (7) from the shaft (8).

f) Change the radial seal (9).

Note! Lubricate the sealing lips of the radial seal (9) with synthetic grease TP No. 90459-7413.

g) Repeat the same steps for the other plate (10).

h) Assemble in the reverse order.

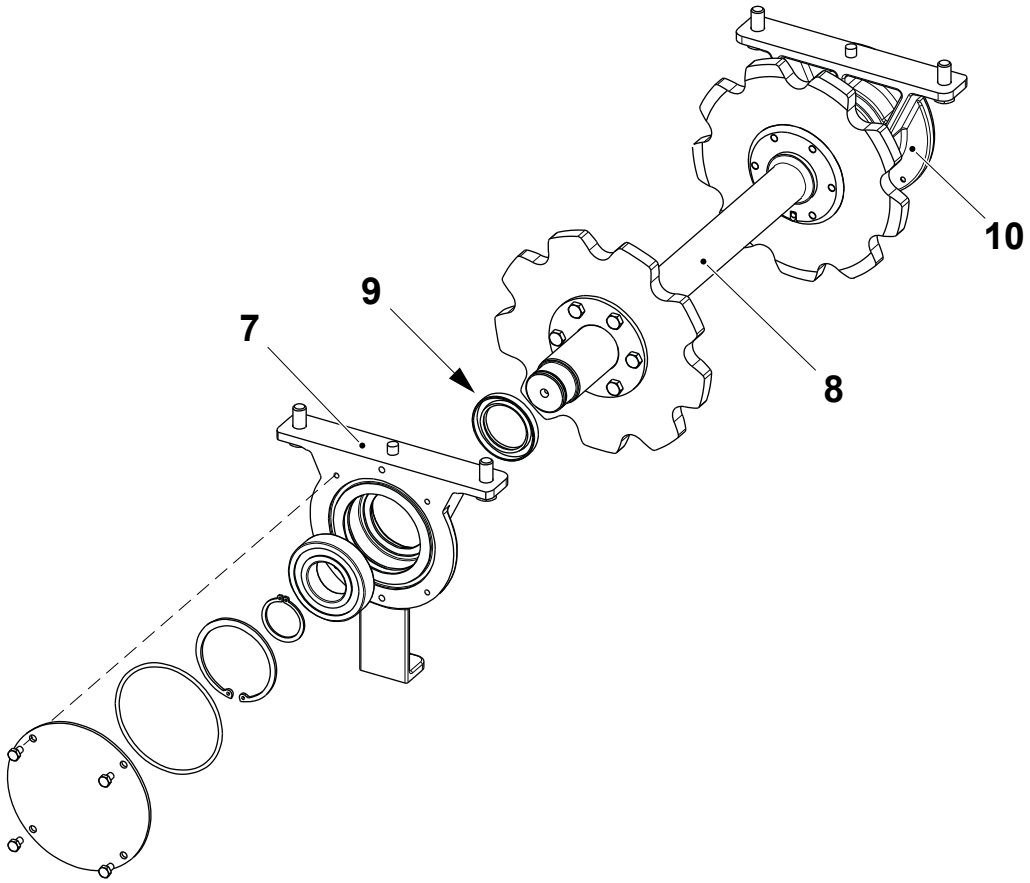

7 Plate
8 Shaft
9 Radial seal
10 Plate

(Cont'd)

TechPub_2614345_0107 - 0402_3048145_01.fm

(Cont'd)

Overhaul Axle with the Gearbox

a) Remove the screws (1) and the disc (2).

b) Remove the O-ring (3). Change if necessary.

c) Remove the retaining ring (4) and change the ball bearing (5).

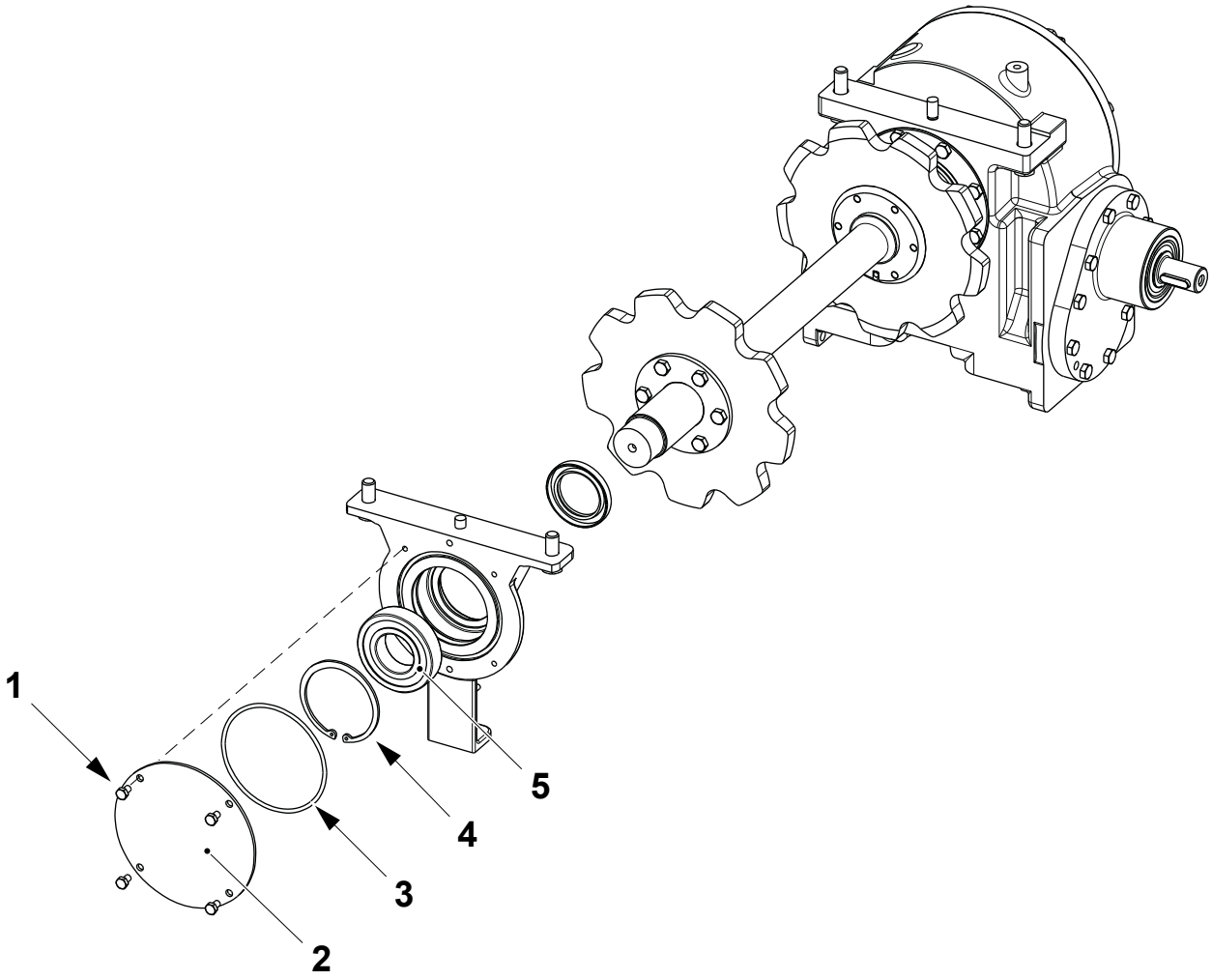

1 Screw
2 Disc
3 O-ring
4 Retaining ring
5 Ball bearing

(Cont'd)

TechPub_2614345_0107 - 0402_3048145_01.fm

(Cont'd)

d) Remove the plates (6) from the shaft (7).

e) Change the radial seal (8).

Note! Lubricate the sealing lips of the radial seal (8) with synthetic grease TP No. 90459-7413.

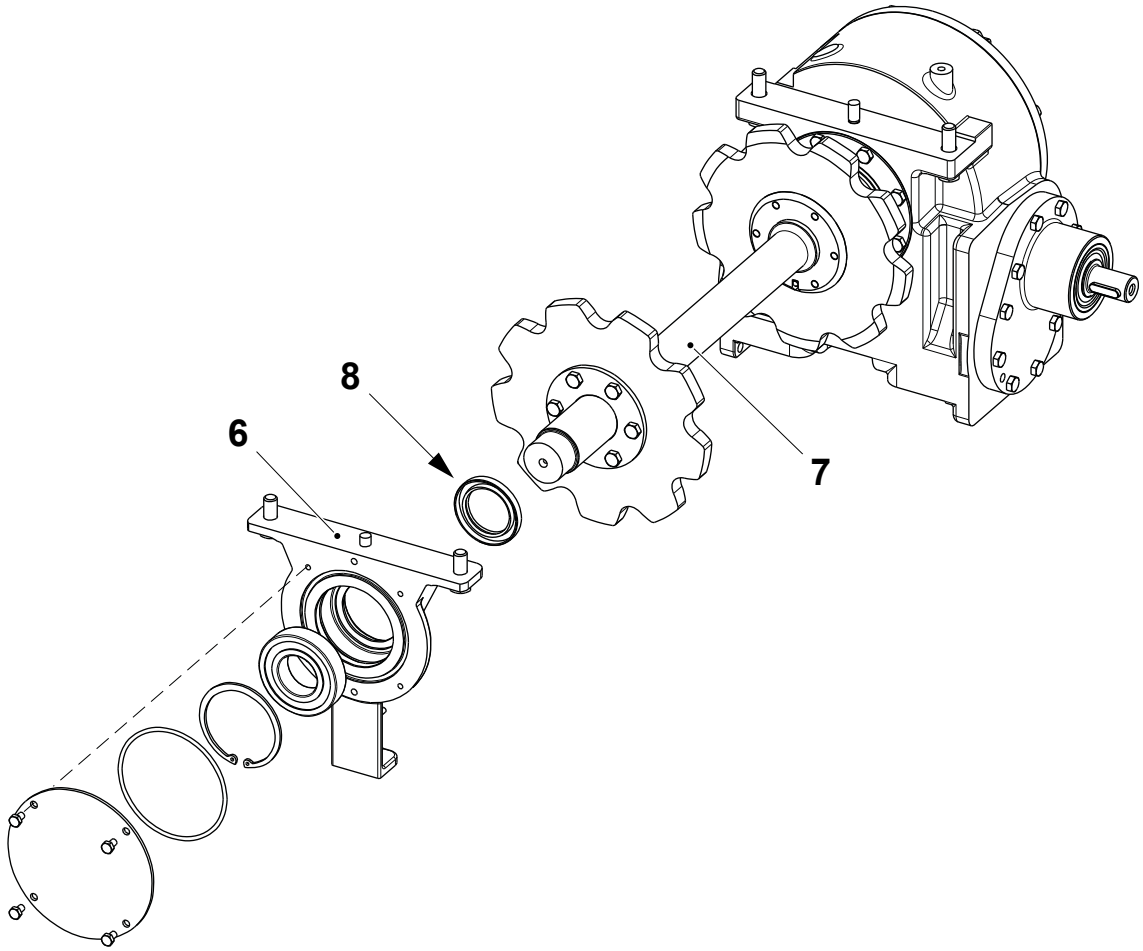

6 Plate
7 Shaft
8 Radial seal

(Cont'd)

TechPub_2614345_0107 - 0402_3048145_01.fm

(Cont'd)

f) Remove the screws (9) and the cover (10) from the gearbox (11).

g) Loosen the screws (12) and remove the clamp (13).

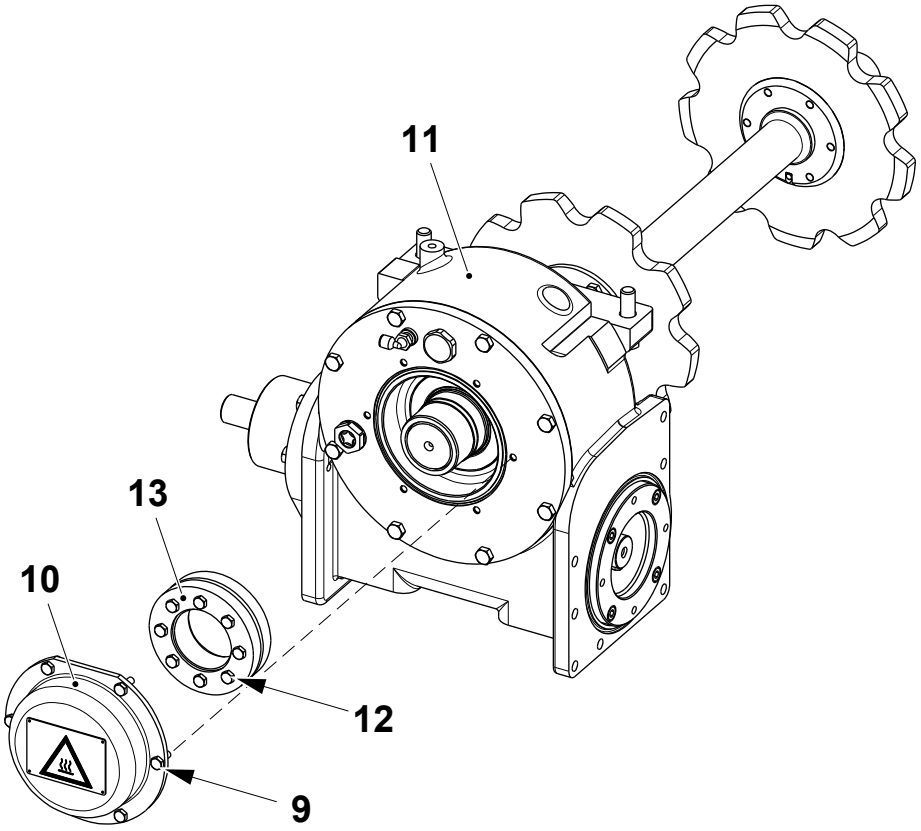

9 Screw
10 Cover
11 Gearbox
12 Screw
13 Clamp

(Cont'd)

TechPub_2614345_0107 - 0402_3048145_01.fm

(Cont'd)

h) Turn the shaft (14) of the shaft removal tool (15) counter-clockwise as far as possible.

i) Screw the body (16) of the shaft removal tool (14) onto the shaft (7) until it is tight.

j) Screw the shaft (14) of the shaft removal tool (15) clockwise to push the shaft (7) out of the gearbox (11).

k) Change the gearbox (11) if necessary.

l) Change the wheel (17) and (18) if necessary, see

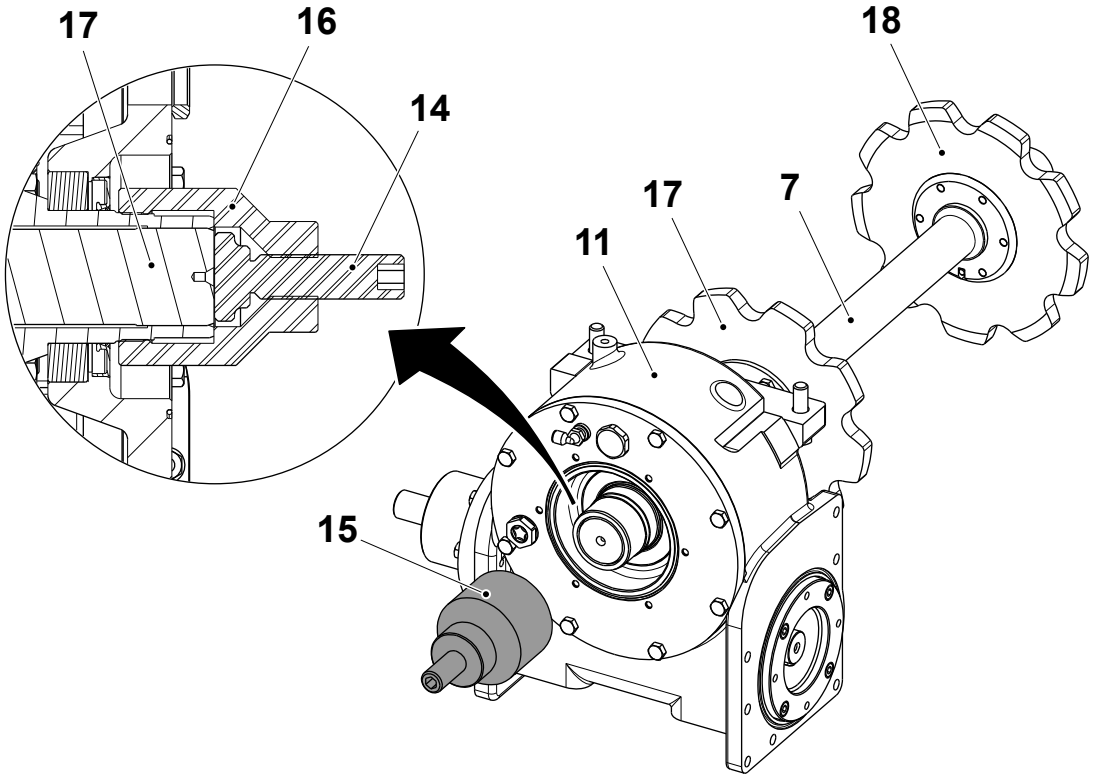

7 Shaft
11 Gearbox
14 Shaft
15 Shaft removal tool
16 Body
17 Wheel
18 Wheel

TechPub_2614345_0107 - 0402_3048145_01.fm

(Cont'd)

(Cont'd)

Note! Tighten the screws (12) by hand.

m) Assemble in the reverse order by fitting the clamp (13) as follows:

- assemble the outer ring (19) together with the ring (20) and the inner ring (21)and slide them onto the gearbox shaft (7)
- push the clamp (13) until the inner ring (21) presses against the shoulder (22) on the flange (23) and tighten the screws (12).

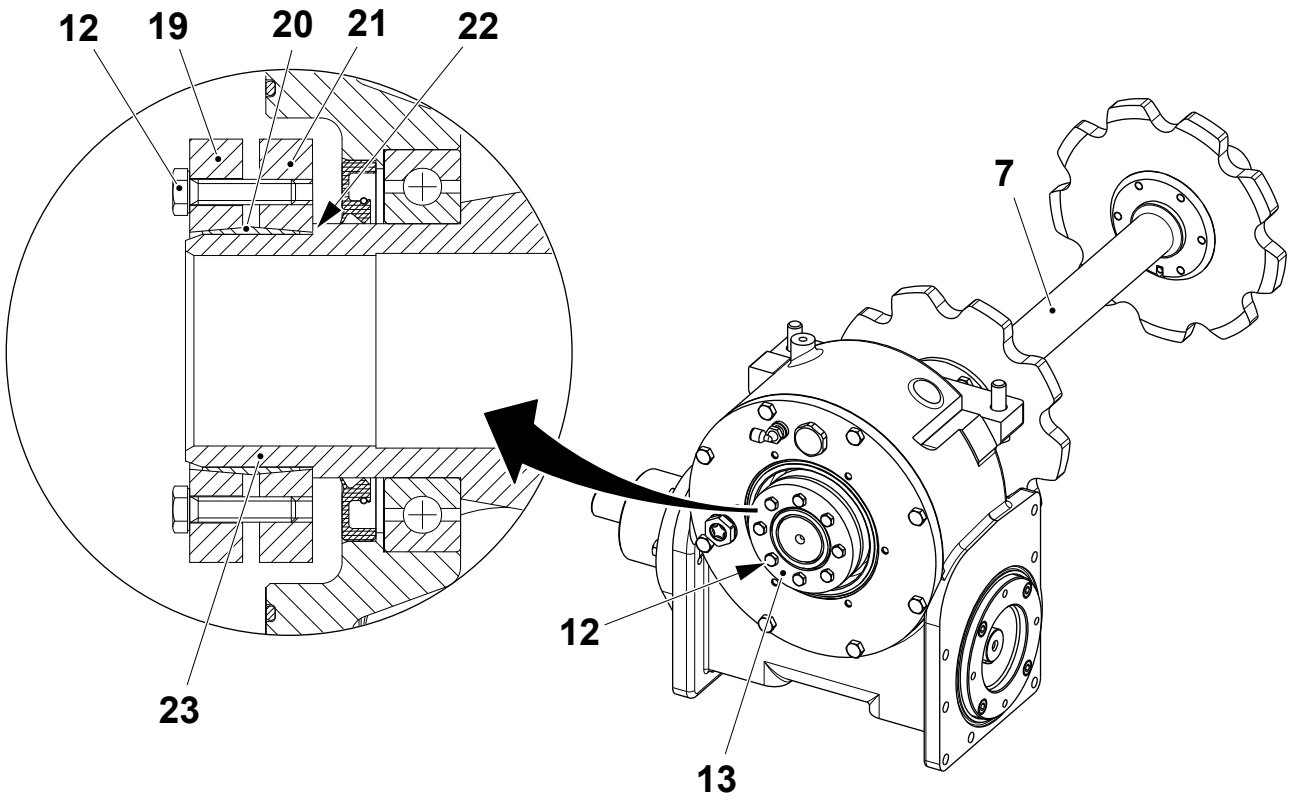

7 Shaft
12 Screw
13 Clamp
19 Outer ring
20 Ring
21 Inner ring
22 Shoulder
23 Flange

(Cont'd)

TechPub_2614345_0107 - 0402_3048145_01.fm

(Cont'd)

Overhaul Wheels and Shaft

Note! Valid both for the idle axle both for the drive axle.

a) Remove the screws (1), the flange (2) and the wheel (3) from the shaft (4).

b) Remove the bushings (5) and the reference pin (6) from the wheel (3). Retain the bushings (5) and the pin (6).

c) Check the O-ring (7) for wear. Change if necessary.

Note! The O-ring (7) is not present in the idle axle.

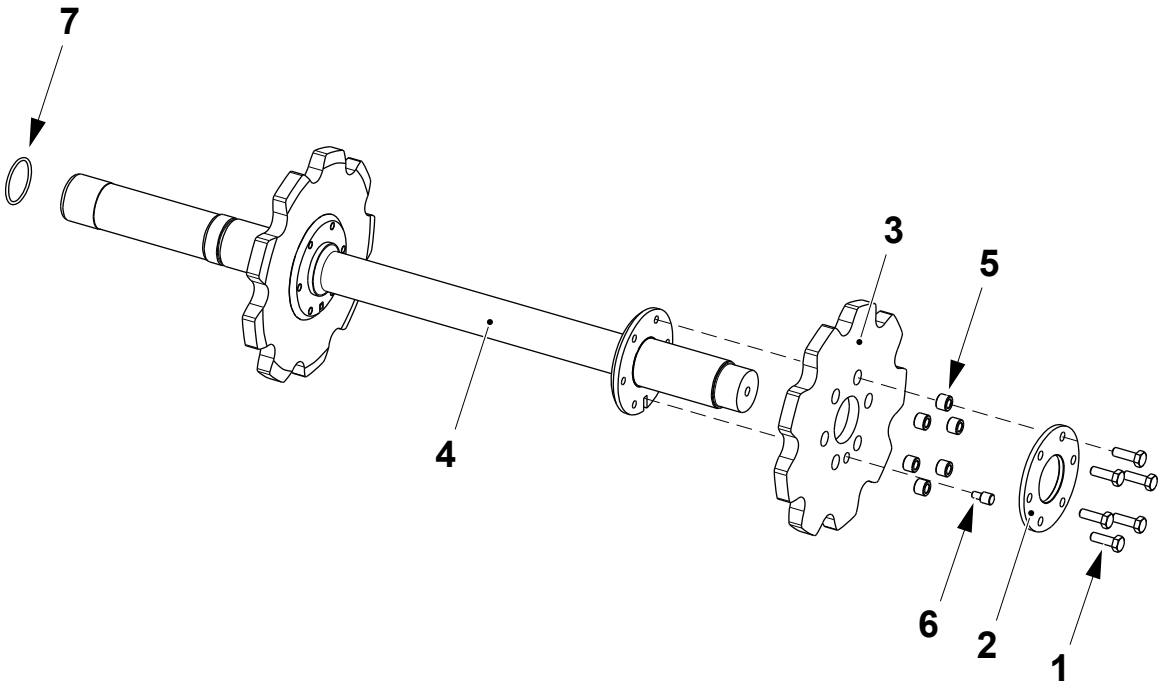

1 Screw
2 Flange
3 Wheel
4 Shaft
5 Bushing
6 Reference pin
7 O-ring

TechPub_2614345_0107 - 0402_3048145_01.fm

(Cont'd)

(Cont'd)

d) Fit the bushings (5) and the pin (6) in the new wheel (3).

e) Assemble the wheel (3) on the shaft (4) so that the reference pin (6) mates with the slot (8).

f) Fit the flange (2) and tighten the screws (1) crosswise to **30 ±5 Nm**.

g) Repeat the procedure for the other wheel (9).

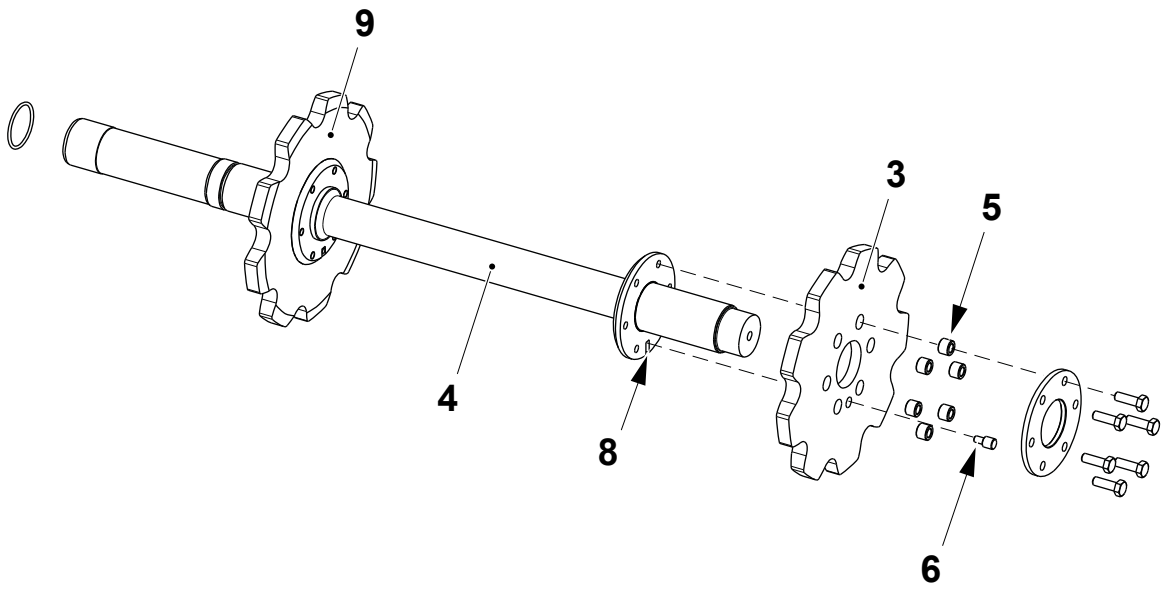

3 Wheel
4 Shaft
5 Bushing
6 Reference pin
8 Slot
9 Wheel

(Cont'd)

TechPub_2614345_0107 - 0402_3048145_01.fm

(Cont'd)

Assemble Drive Unit

a) Place the idle axle (1) and the drive axle (2) with the gearbox (3) on a pallet truck and move them under the jaw system.

b) Connect the idle axle (1) to the jaw system frame by means of the screws (4).

c) Connect the drive axle (2) to the jaw system frame by means of the screws (5).

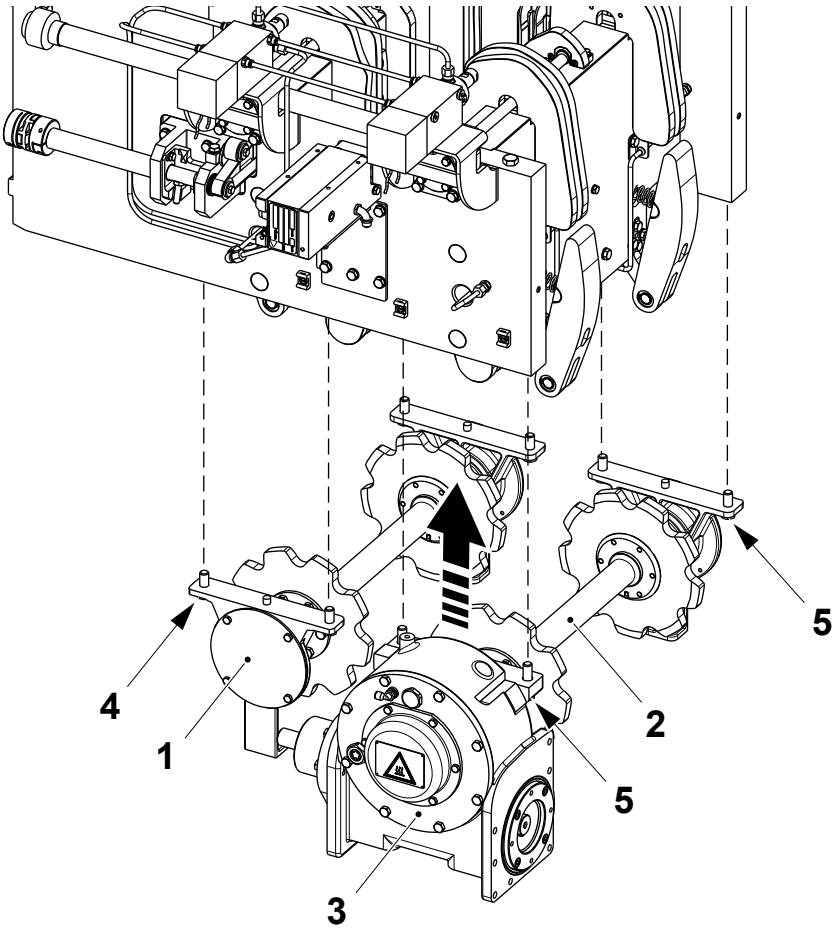

1 Idle axle
2 Drive axle
3 Gearbox
4 Screw
5 Screw

(Cont'd)

TechPub_2614345_0107 - 0402_3048145_01.fm

(Cont'd)

d) Fit the hand crank assembly (6) on the gearbox (3) by means of the screws (7).

e) Connect the tube (8).

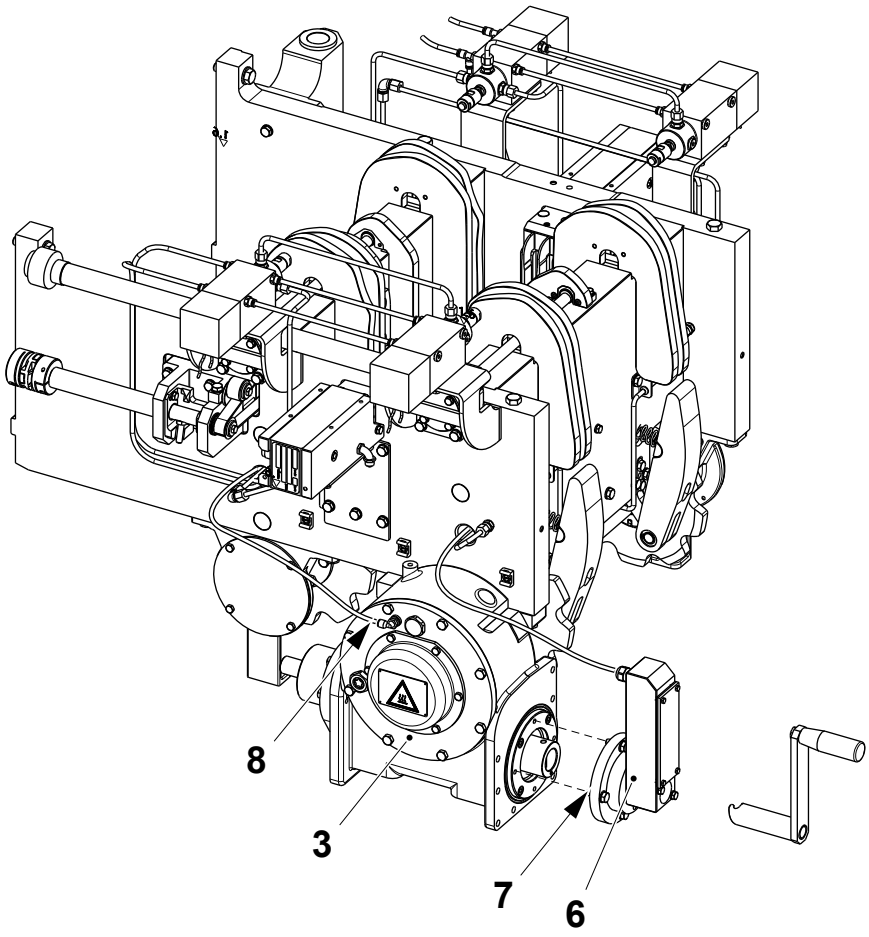

3 Gearbox
6 Hand crank assembly
7 Screw
8 Tube

(Cont'd)

TechPub_2614345_0107 - 0402_3048145_01.fm

(Cont'd)

Set Gearbox Position

a) At the pressure link side, insert the tool (1) oriented as shown, between the cam (2) and the wheel (3).

b) Push the wheel (3) so that it clamps the tool (1) between itself and the cam (2).

c) Tighten the screws (4) in the clamp (5) to 12±2 Nm.

d) Remove the tool (1).

Volume	Template	A (mm)
Portion Packages	2640362-0000	17.1
Family Packages	2656105-0000	19.1

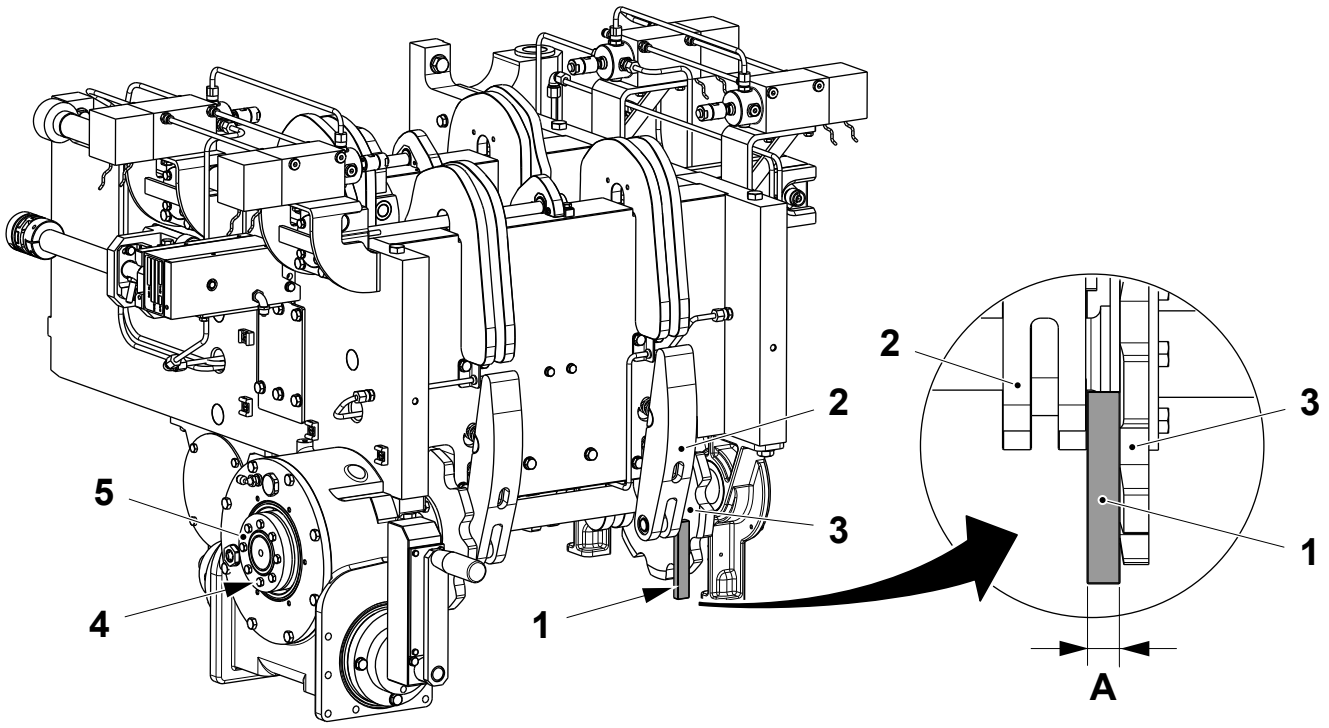

1 Tool
2 Cam
3 Wheel
4 Screw
5 Clamp

(Cont'd)

TechPub_2614345_0107 - 0402_3048145_01.fm

(Cont'd)

Completion Tasks

a) Fit back the cam (1) by means of the screw (2).

b) Fit the chains, see 4-7 Jaw System - Remove and Assemble Chains.

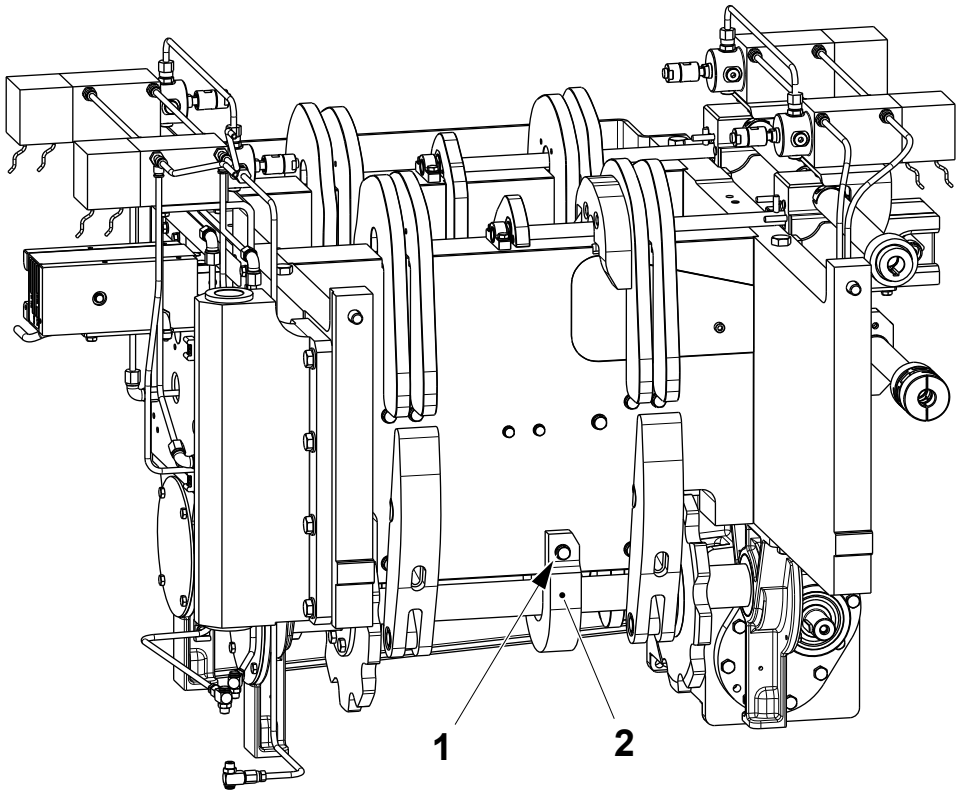

1 Cam
2 Screw

(Cont'd)

TechPub_2614345_0107 - 0402_3048145_01.fm

(Cont'd)

c) Crank the jaw system slowly until the chains have made two complete revolutions.

d) Push the clamp (3) until the inner ring (4) presses against the shoulder (5) of the flange (6).

e) Tighten the screws (7) to 12 ±2 Nm.

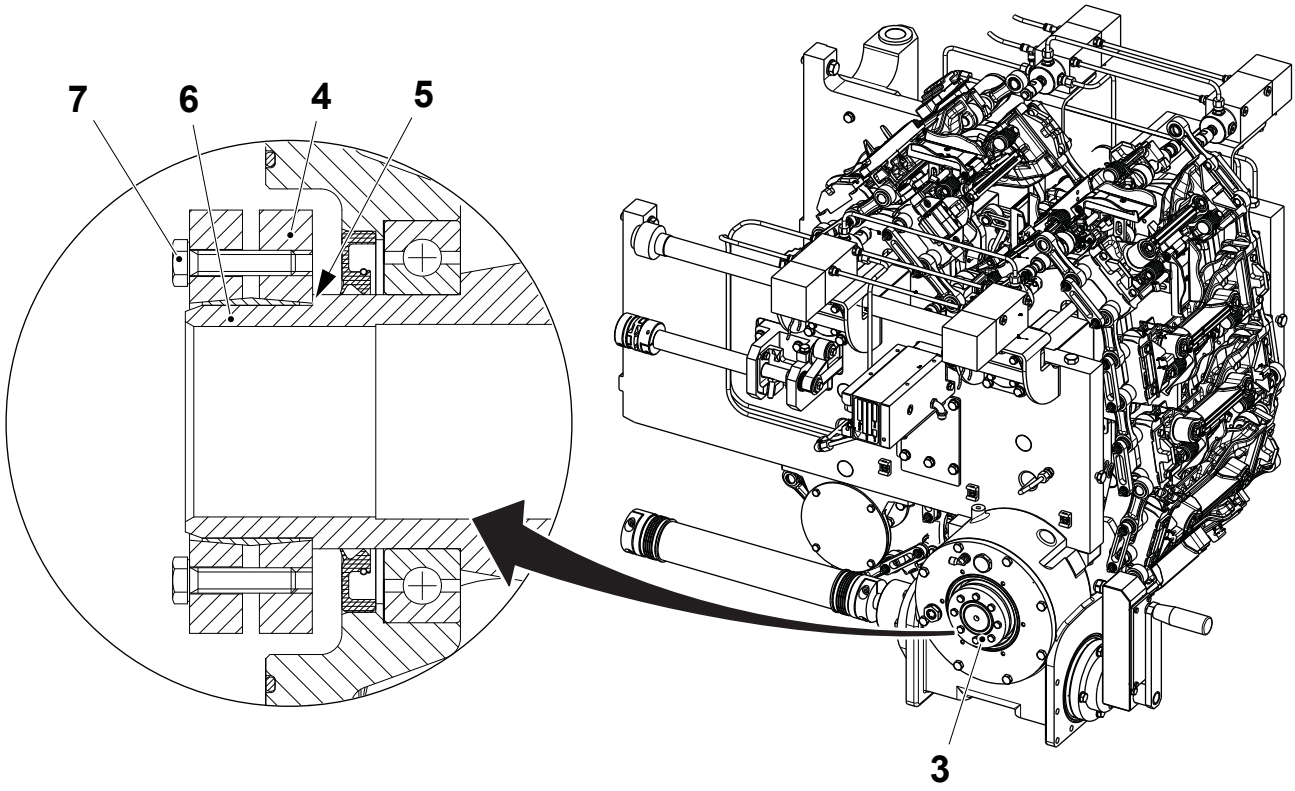

3 Clamp
4 Inner ring
5 Shoulder
6 Flange
7 Screw

TechPub_2614345_0107 - 0402_3048145_01.fm

(Cont'd)

(Cont'd)

Note! It is important that the area immediately behind the cover (9) is packed with grease before the cover (9) is fitted.

f) Apply grease (8) code **R** to the components at the end of the drive shafts.

g) Fit the covers (9) on the gearbox (10).

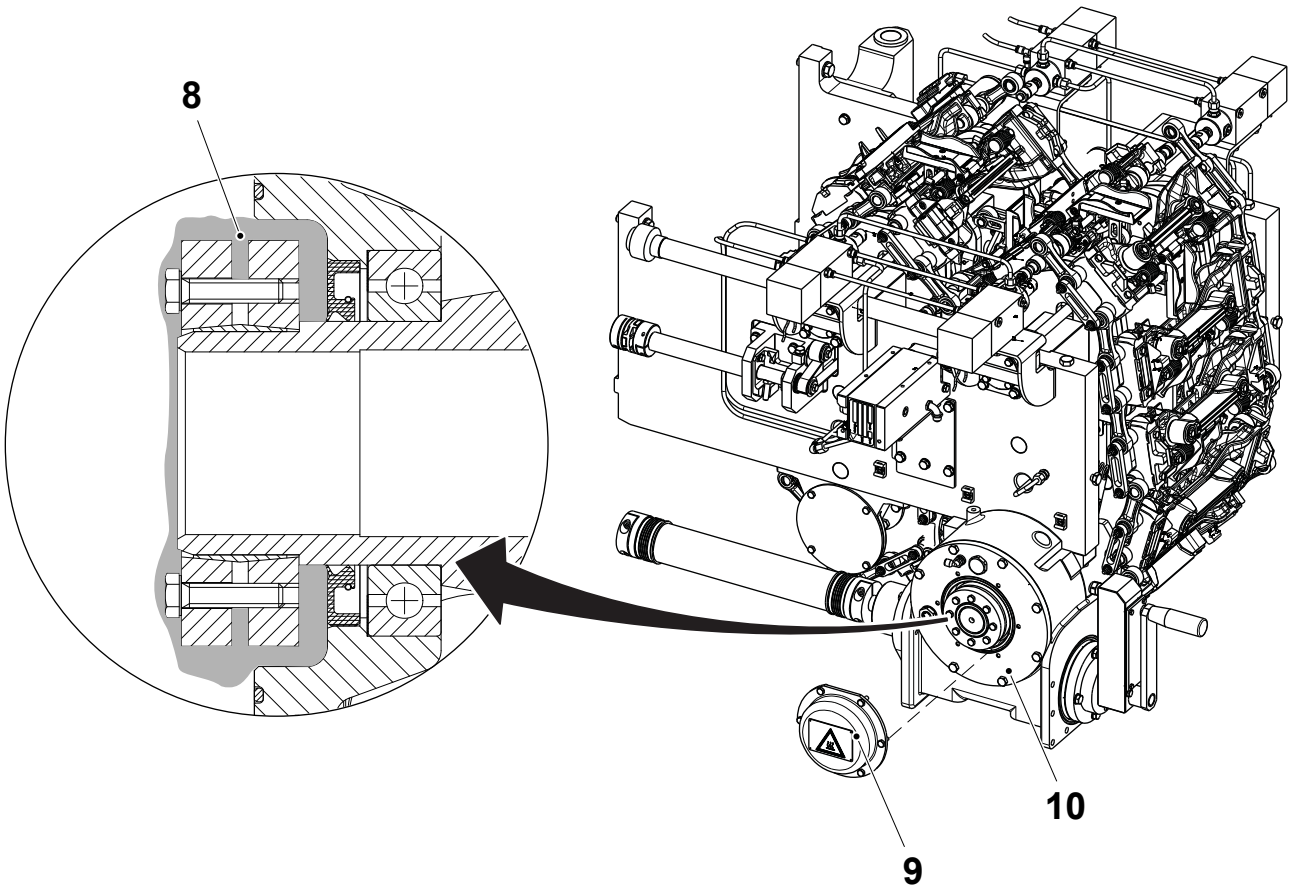

8 Grease
9 Cover
10 Gearbox

TechPub_2614345_0107 - 0402_3048145_01.fm

4.4 Volume Adjuster

SPC Reference	2500386-0100

4.4-1 Volume Adjuster - Set

Machine Status	Mains Power OFF Air OFF Steam ON Water OFF
SPC Reference	2500386-0100

WARNING
Burn hazard.
Parts might be hot.

(Cont'd)

TechPub_2614345_0107 - 0402_3048146_01.fm

(Cont'd)

a) Loosen the screw (1).
b) Turn the shaft (2) until the stop pin (3) reaches the outside stop as shown.
c) Turn the shaft (4) until the stop pin (5) reaches the outside stop as shown.
d) Tighten the screws (1).

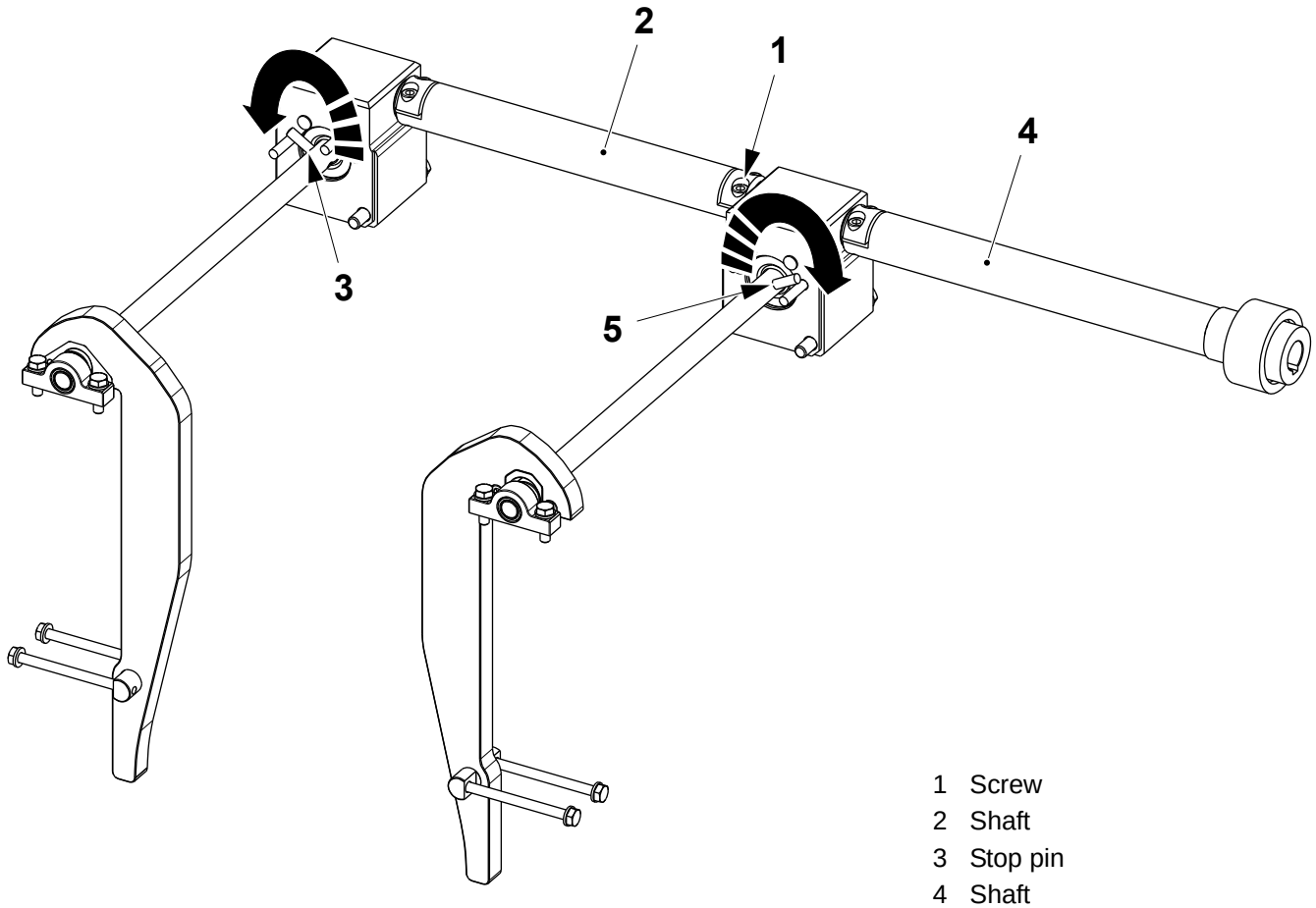

1 Screw
2 Shaft
3 Stop pin
4 Shaft
5 Stop pin

TechPub_2614345_0107 - 0402_3048146_01.fm

4.4-2 Volume Adjuster - Change Cams

Machine Status	Mains Power OFF Air OFF Steam ON Water OFF
SPC Reference	2500386-0100

Note! When assembling, unless specified in the procedure, tighten all the screws according to the torque indicated in 10.1.1 Jaw System Screws Tightening Torque.

a) Swing the jaw system open and remove the waste box, see 4-6 Jaw System - Remove Waste Box.

(Cont'd)

TechPub_2614345_0107 - 0402_3048146_01.fm

(Cont'd)

b) To release the chain tension, insert four M8 x 80 hexagonal socket head screws (1) into the tensioning mechanism (2) and tighten them fully. Take care not to drop the bolts into the jaw mechanism.

c) Remove the one of the chains, see 4-7 Jaw System - Remove and Assemble Chains.

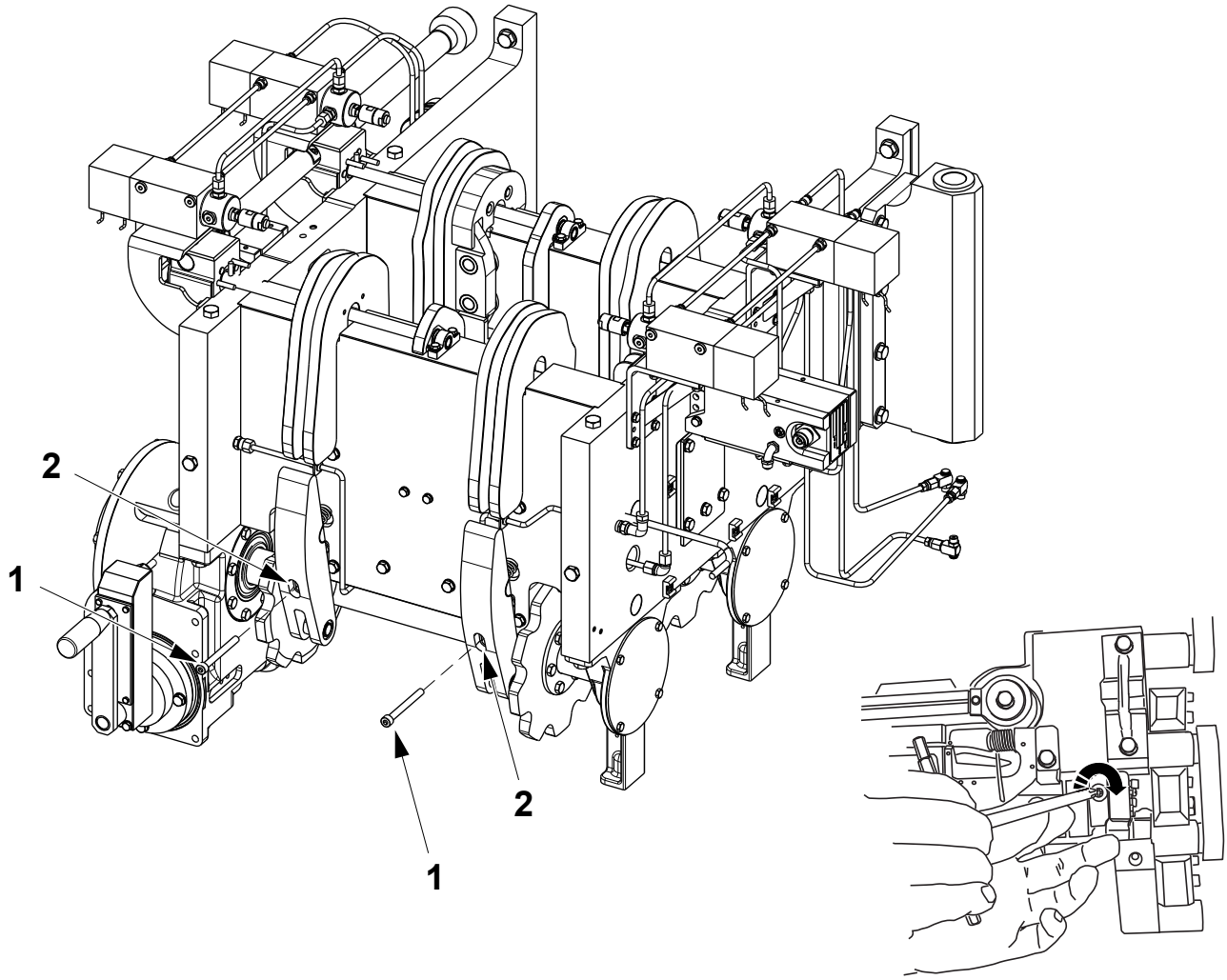

1 Screw
2 Tensioner mechanism

(Cont'd)

TechPub_2614345_0107 - 0402_3048146_01.fm

(Cont'd)

Note! The support (6) is not present for Family Packages.

d) Remove the screws (3) and pull out the cam (4).

e) Remove the screws (5), the support (6) and the axle (7).

f) Change the cams (4).

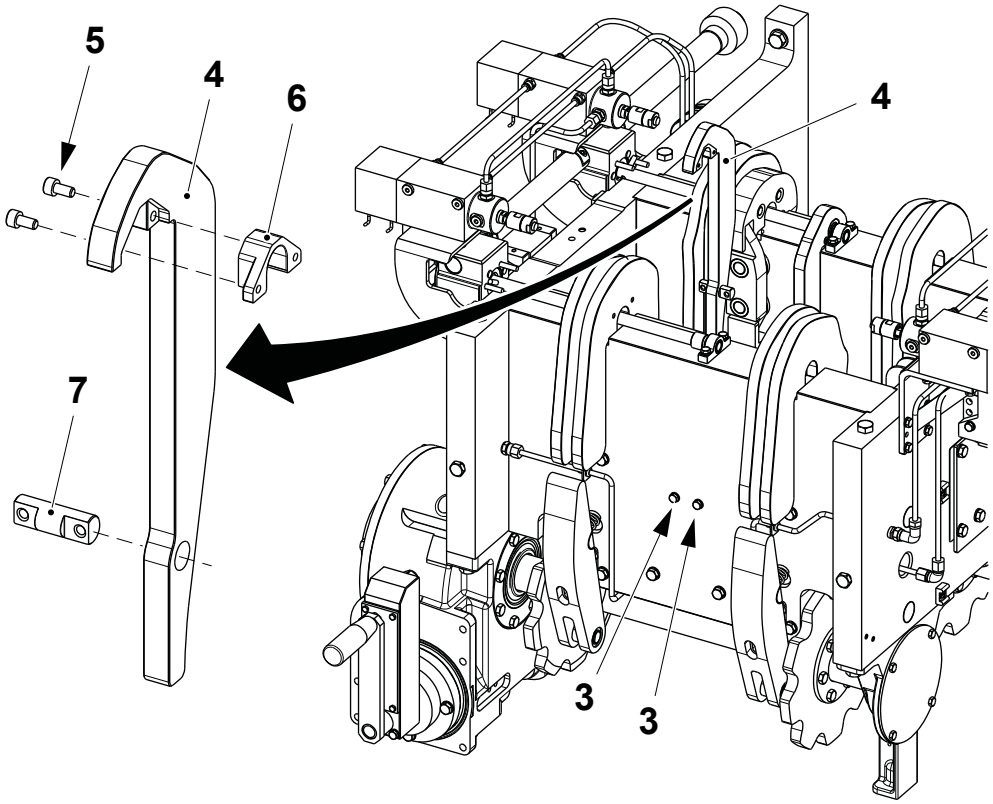

3 Screw
4 Cam
5 Screw
6 Support
7 Axle

(Cont'd)

TechPub_2614345_0107 - 0402_3048146_01.fm

(Cont'd)

Note! The cam for Portion Packages (except TBA 125 S and TBA 200 B) is composed by an upper cam (8) and a lower cam (9) joined by the axle (7).

g) Assemble in the reverse order.

h) Repeat on the other chain.

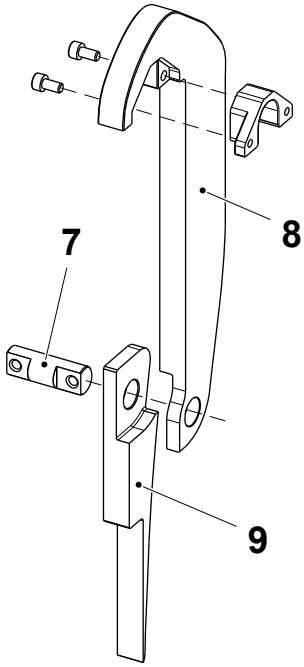

Cam for Portion Packages (except TBA 125 S and TBA 200 B)

7 Axle
8 Upper cam
9 Lower cam

TechPub_2614345_0107 - 0402_3048146_01.fm

4.5 Design Correction

SPC Reference	2500385-0200

4.5-1 Design Correction - Set Belt Tension

Machine Status	Mains Power OFF Air OFF Steam ON Water OFF
Special Equipment	Tensiometer TP No. 90600-3415
SPC Reference	2500385-0200

a) Rotate by hand the shaft (1) so that the pin (2) touches the lower mechanical stop (3).

TBA 1000 S shown

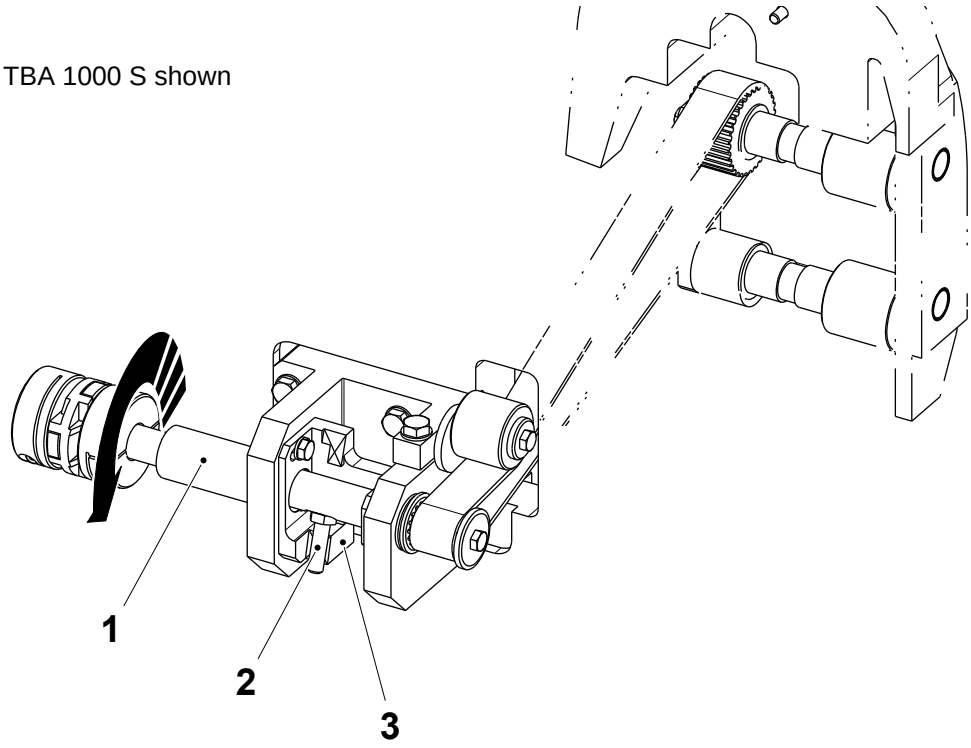

1 Shaft
2 Pin
3 Mechanical stop

(Cont'd)

TechPub_2614345_0107 - 0403_3048147_01.fm

(Cont'd)

b) Position the tensiometer sensor at the distance of 5-10 mm from the belt (4).

c) Press the reset icon on the tensiometer.

d) Tap the belt (4) by a finger.

e) Check that the frequency recorded is **A**, see table.

Package	A (Hz)
Portion Packages	75 ±3
Family Packages	70 ±3

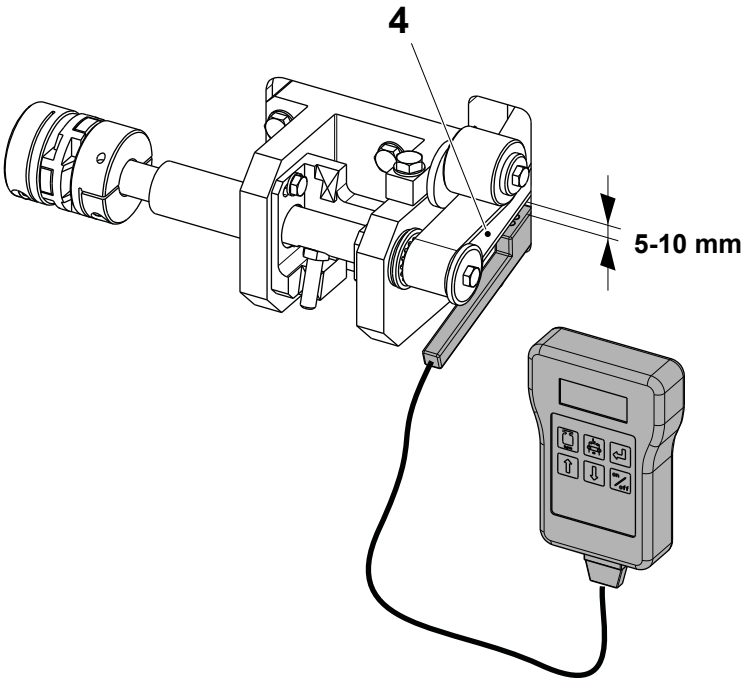

4 Belt

(Cont'd)

TechPub_2614345_0107 - 0403_30481147_01.fm

(Cont'd)

f) If necessary, add or release tension as follows:
- loosen the screw (5)
- press or release the roller (6)
- tighten the screw (5).

TBA 1000 S shown

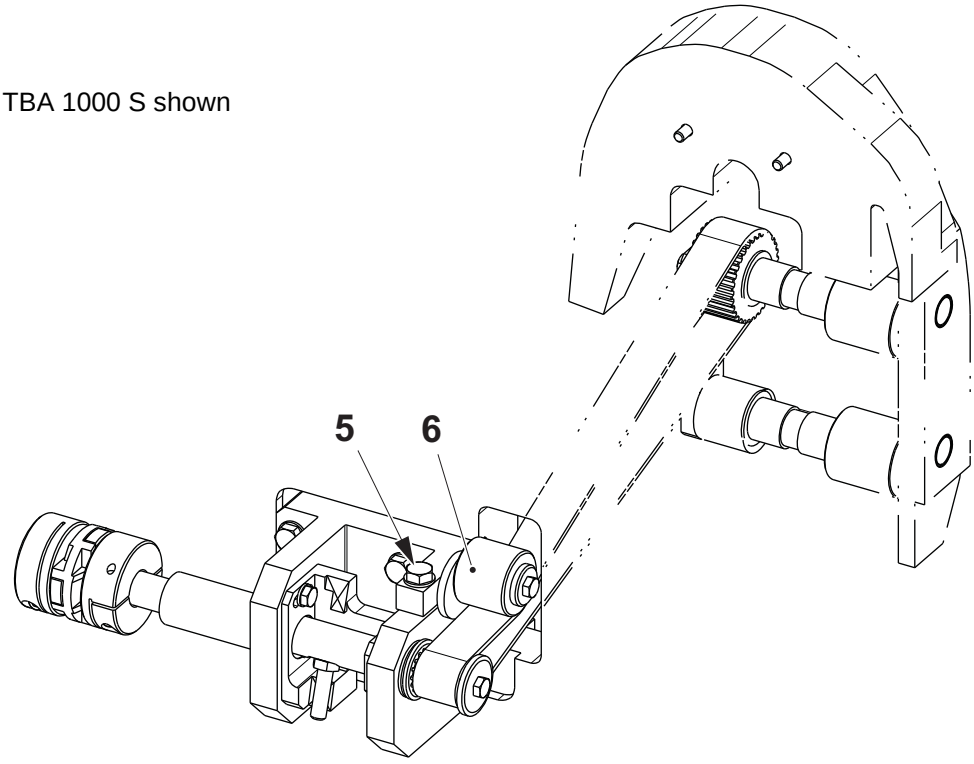

5 Screw
6 Roller

TechPub_2614345_0107 - 0403_3048147_01.fm

4.5-2 Design Correction - Check Belt

Machine Status	Mains Power OFF Air OFF Steam ON Water OFF
SPC Reference	2500385-0200

Check the belt (1) for wear or damage. Change if necessary, see 4.5-3 Design Correction - Change Belt.

TBA 200 S shown

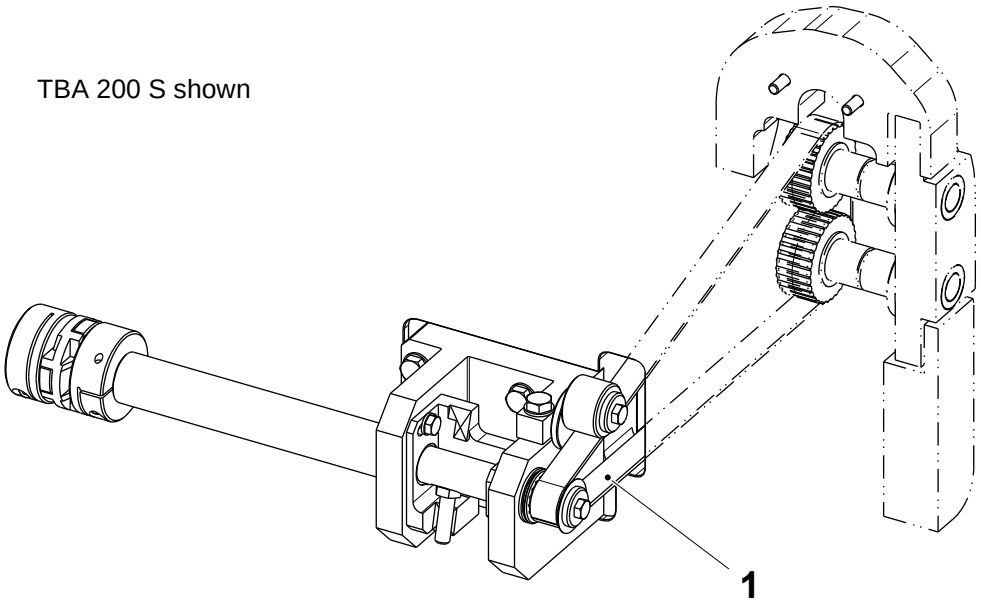

1 Belt

TechPub_2614345_0107 - 0403_30481147_01.fm

4.5-3 Design Correction - Change Belt

Machine Status	Mains Power OFF Air OFF Steam ON Water OFF
SPC Reference	2500385-0200

Remove the sealing chain, see 4-7 Jaw System - Remove and Assemble Chains.

Note! Valid for Portion Packages.

a) Loosen the screw (1) and move the roller (2) to loosen the belt (3).

b) Remove and change the belt (3).

c) Assemble in the reverse order.

d) Set the coupling, see 4.5-4 Design Correction - Set Coupling.

e) Set the belt, see 4.5-6 Design Correction - Set.

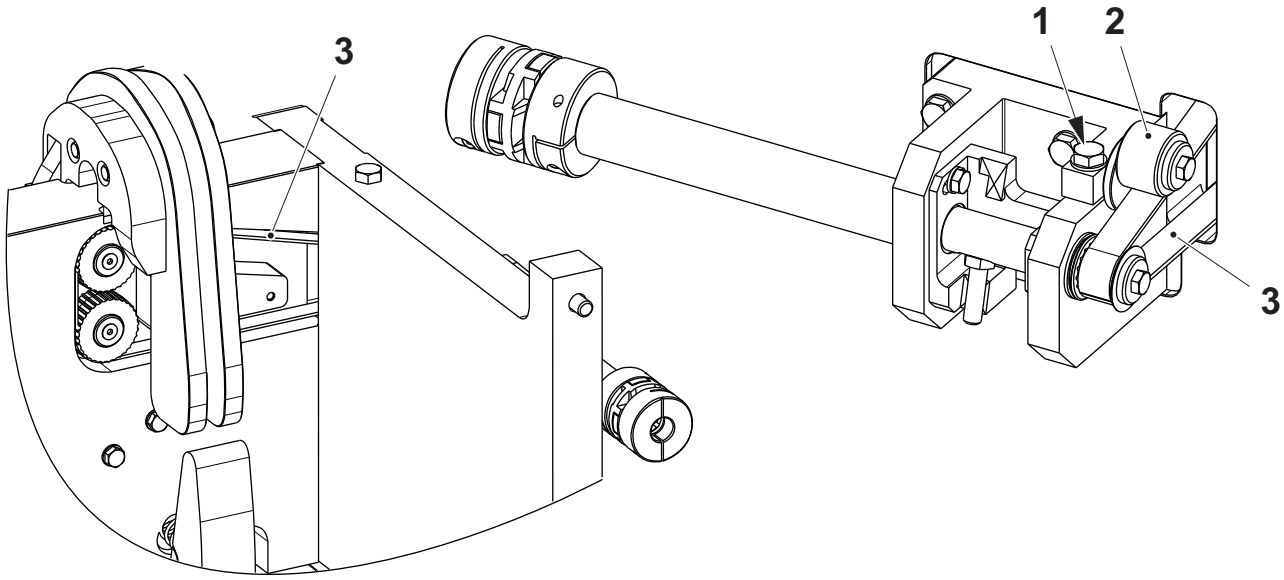

1 Screw
2 Roller
3 Belt

(Cont'd)

TechPub_2614345_0107 - 0403_3048147_01.fm

(Cont'd)

Note! Valid for Family Packages.

a) Loosen the screw (1) and move the roller (2) to loosen the belt (3).
b) Remove the screws (4) and the link (5).
c) Remove and change the belt (3).
d) Assemble in the reverse order.
e) Set the coupling, see 4.5-4 Design Correction - Set Coupling.
f) Set the belt, see 4.5-6 Design Correction - Set.

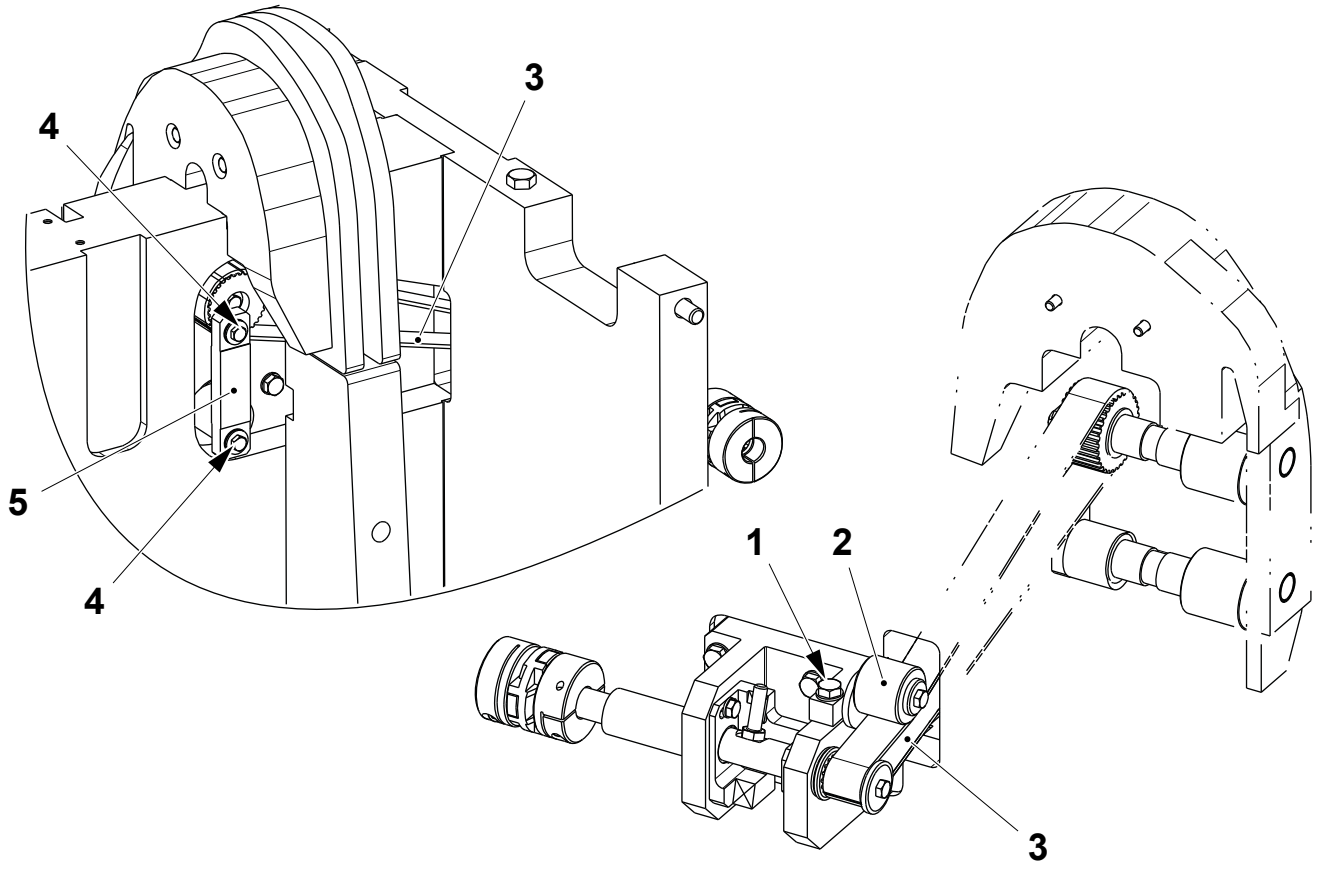

1 Screw
2 Roller
3 Belt
4 Screw
5 Link

TechPub_2614345_0107 - 0403_3048147_01.fm

4.5-4 Design Correction - Set Coupling

Machine Status	Mains Power OFF Air OFF Steam ON Water OFF
SPC Reference	2500385-0200

Note! When assembling, unless specified in the procedure, tighten all the screws according to the torque indicated in 10.1.1 Jaw System Screws Tightening Torque.

Check the coupling (1) for signs of wear, damage or play. Change if necessary.

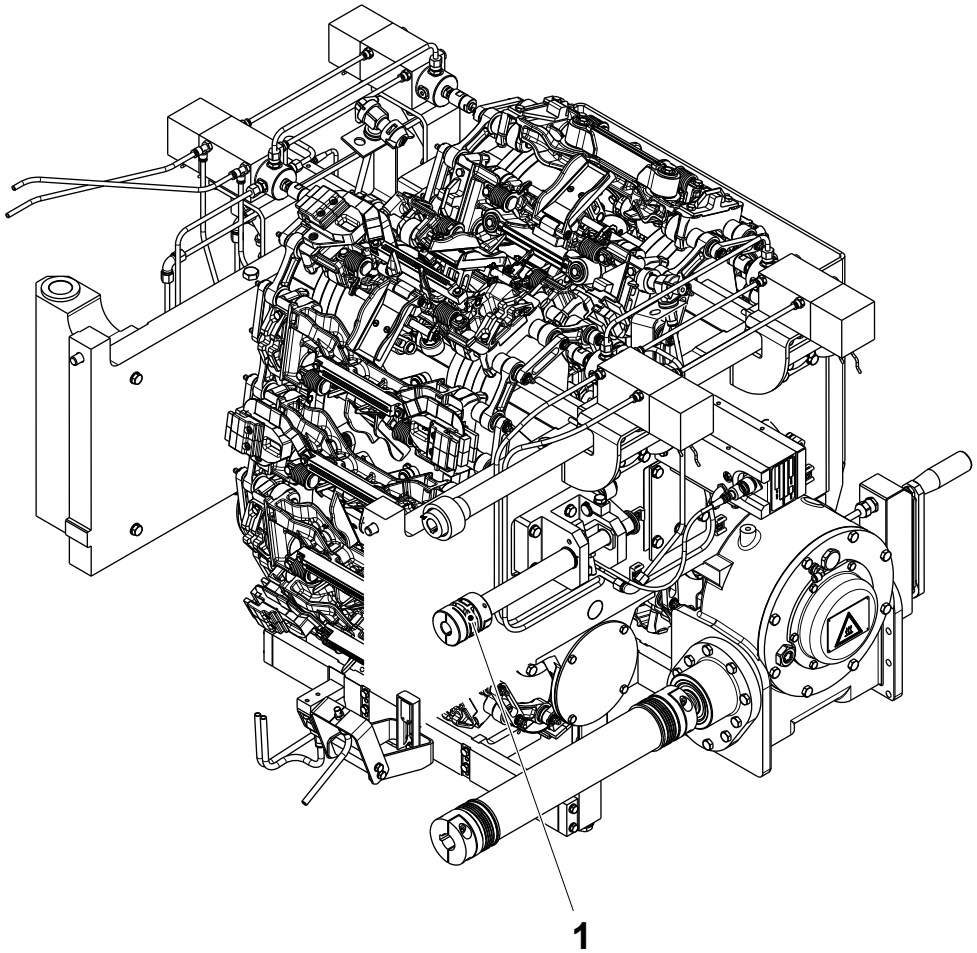

1 Coupling

(Cont'd)

TechPub_2614345_0107 - 0403_3048147_01.fm

(Cont'd)

Note! Tighten the screws (2) and (3) with the torque indicated: if not, problems in the folding flaps working may occur.

Set the coupling as follows:

a) Loosen the screws (2) and (3).

b) Push the hub (4) completely against the shaft (5) and tighten the screw (2) with a torque of **4 Nm**.

c) Fit the disc (6) and the hub (7).

d) Insert a feeler gauge with the thickness **A** between the disc (6) and the hub (7).

e) Hold the feeler gauge in position with the hub (7) and tighten the screw (3) with a torque of **4 Nm**.

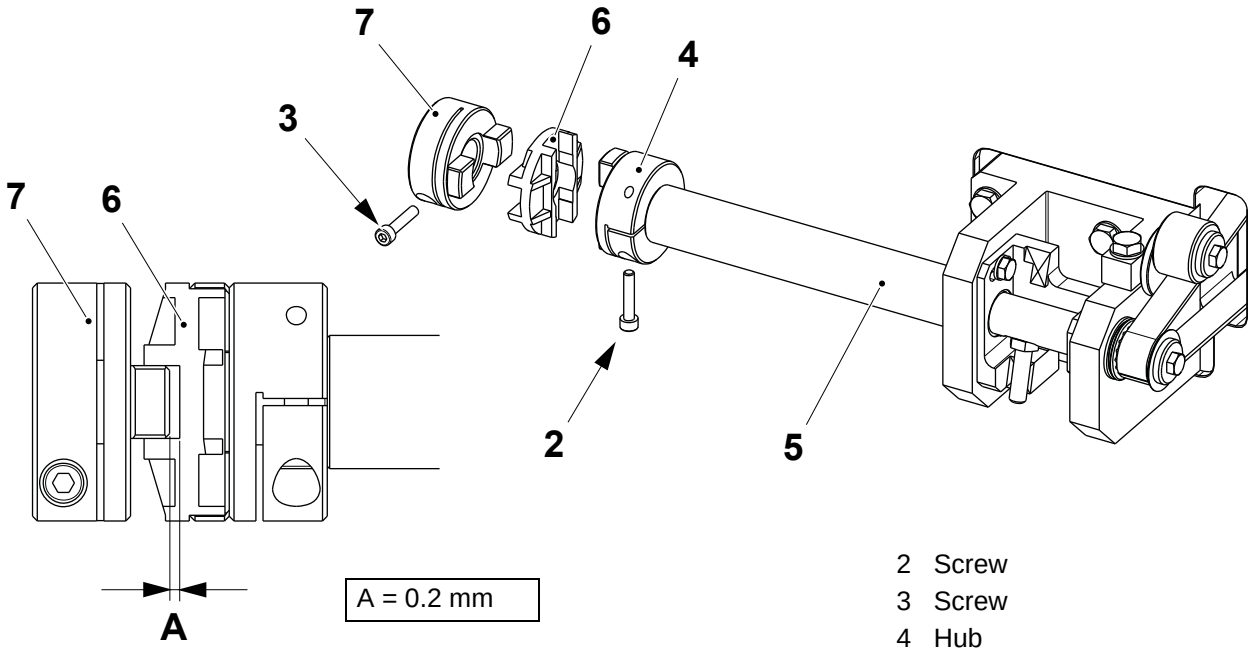

2 Screw
3 Screw
4 Hub
5 Shaft
6 Disc
7 Hub

TechPub_2614345_0107 - 0403_3048147_01.fm

4.5-5 Design Correction - Overhaul

Machine Status	Mains Power OFF Air OFF Steam ON Water OFF
SPC Reference	2500385-0200

Note! Valid for Portion Packages.

Note! When assembling, unless specified in the procedure, tighten all the screws according to the torque indicated in 10.1.1 Jaw System Screws Tightening Torque.

a) Remove the belt, see 4.5-3 Design Correction - Change Belt.

b) Remove the screws (1) and the washers (2).

c) Remove the rollers (3).

d) Change the bushings (4).

e) Remove and retain the key (5) for later use.

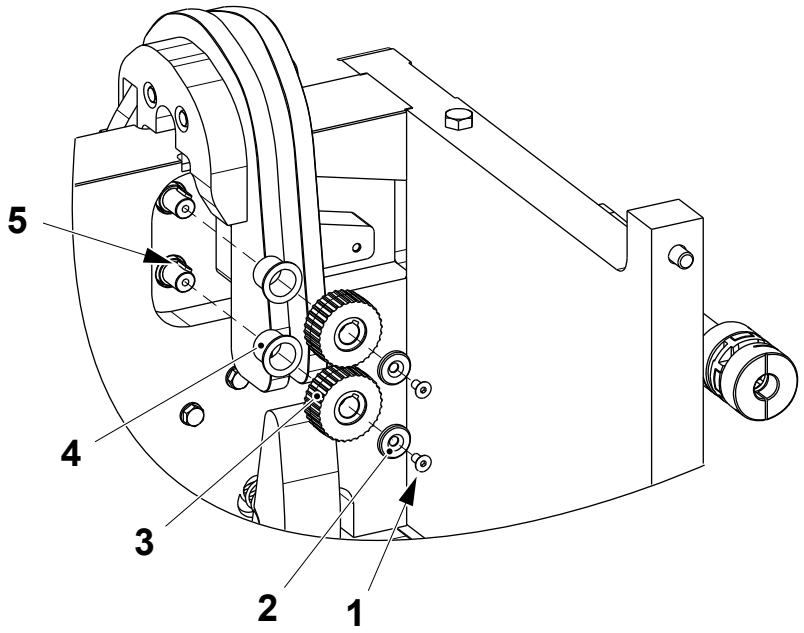

1 Screw
2 Washer
3 Roller
4 Bushing
5 Key

(Cont'd)

TechPub_2614345_0107 - 0403_3048147_01.fm

(Cont'd)

f) Remove the cam (6).
g) Remove and change the cam (7).
h) Remove the eccentrics (8).
i) Change the bushings (9) and (10).
j) Assemble in reverse order.
k) Set the design correction, see 4.5-6 Design Correction - Set.
l) Fit the chains, see 4-7 Jaw System - Remove and Assemble Chains.

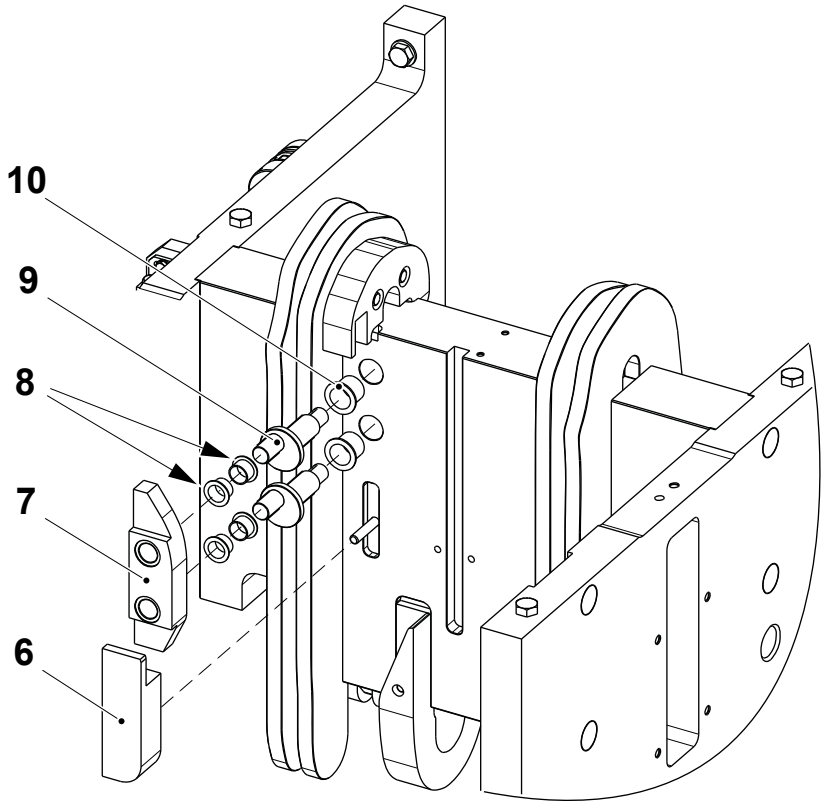

6 Cam
7 Cam
8 Eccentric
9 Bushing
10 Bushing

(Cont'd)

TechPub_2614345_0107 - 0403_3048147_01.fm

(Cont'd)

Note! Valid for Family Packages.

a) Remove the belt by removing previously the screws (1) and the link (2), see 4.5-3 Design Correction - Change Belt.

b) Change the bushings (3).

c) Remove the shafts (4).

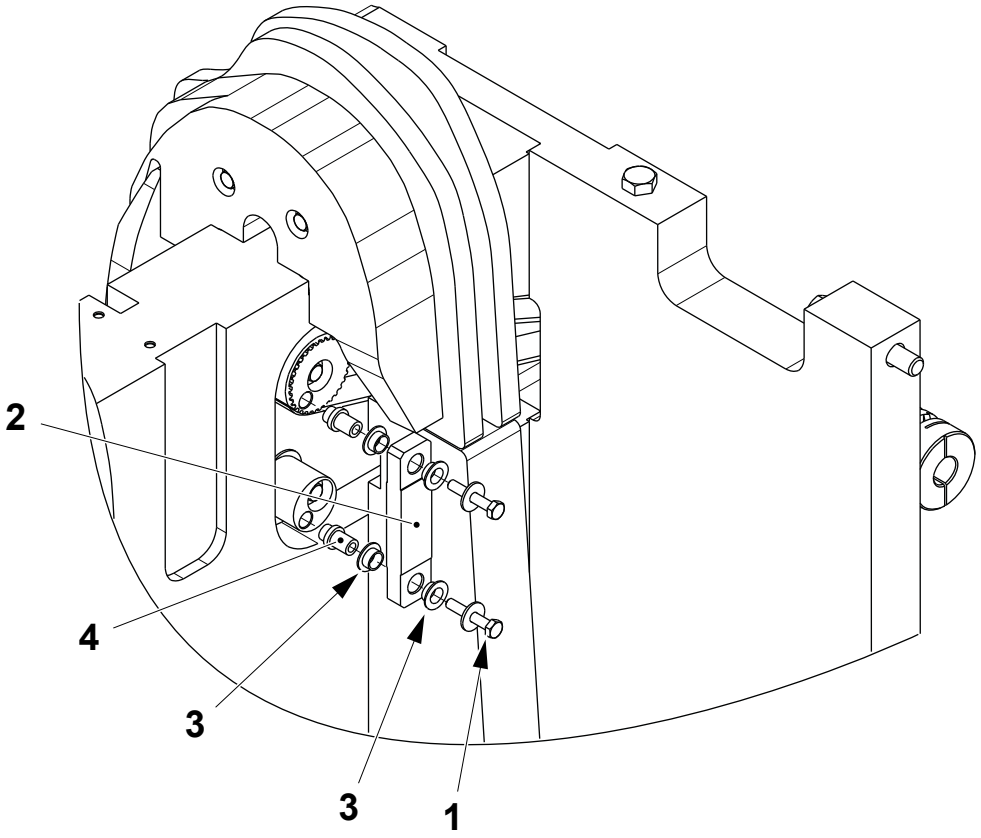

1 Screw
2 Link
3 Bushing
4 Shaft

(Cont'd)

TechPub_2614345_0107 - 0403_3048147_01.fm

(Cont'd)

d) On both axis remove the screws (5) and the washers (6).
e) Remove the pulley (7) and the eccentric arm (8).
f) Change the bushings (9).
g) Remove and retain the keys (10) for later use.

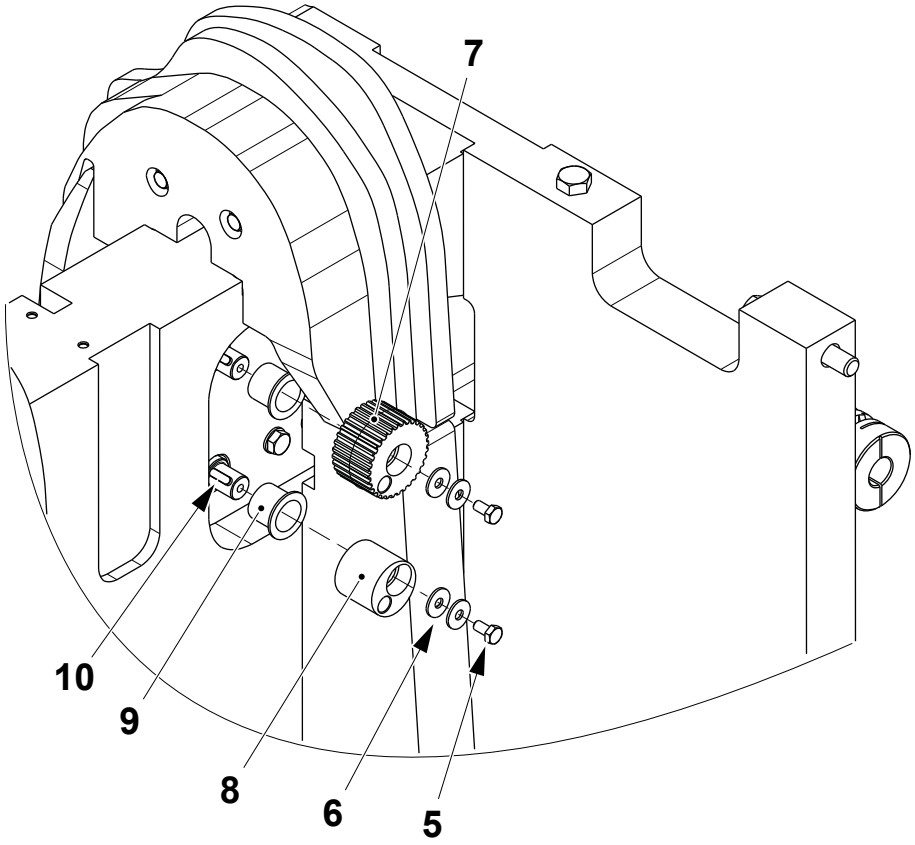

5 Screw
6 Washer
7 Pulley
8 Eccentric arm
9 Bushing
10 Key

(Cont'd)

TechPub_2614345_0107 - 0403_3048147_01.fm

(Cont'd)

h) Remove the cam (11).
i) Remove and change the cam (12).
j) Remove the eccentrics (13).
k) Change the bushings (14) and (15).
l) Assemble in reverse order.
m) Set the design correction, see 4.5-6 Design Correction - Set.
n) Fit the chains, see 4-7 Jaw System - Remove and Assemble Chains.

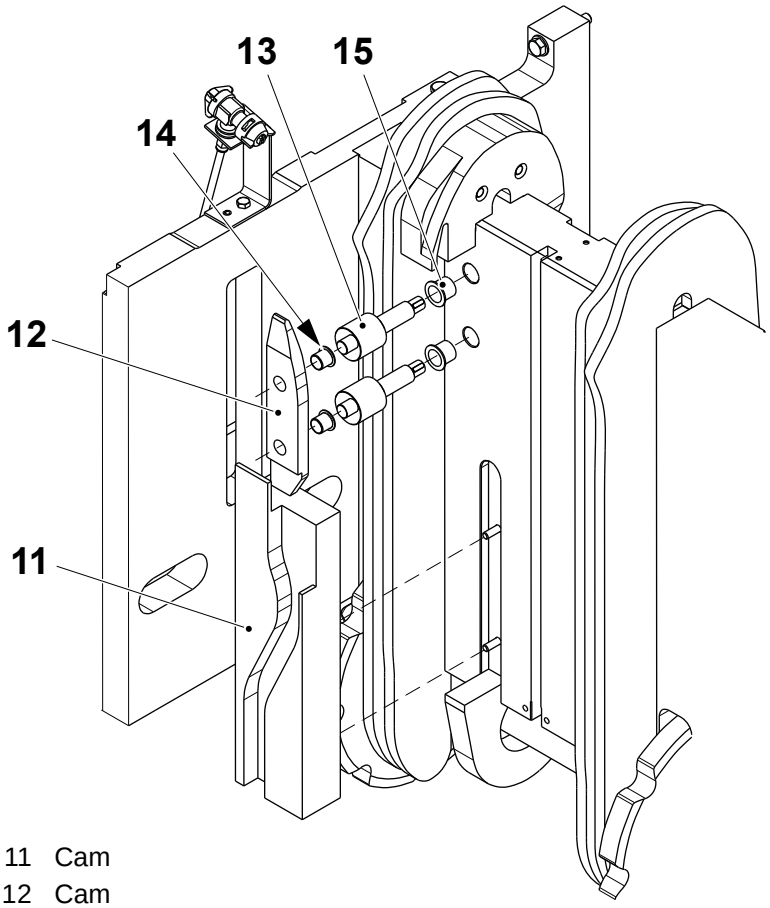

11 Cam
12 Cam
13 Eccentric
14 Bushing
15 Bushing

TechPub_2614345_0107 - 0403_3048147_01.fm

4.5-6 Design Correction - Set

Machine Status	Mains Power OFF Air OFF Steam ON Water OFF
SPC Reference	2500385-0200

a) Add some tension to the belt as follows:
   - loosen the screw (1)
   - press manually the roller (2)
   - tighten the screw (1).

TBA 200 S shown

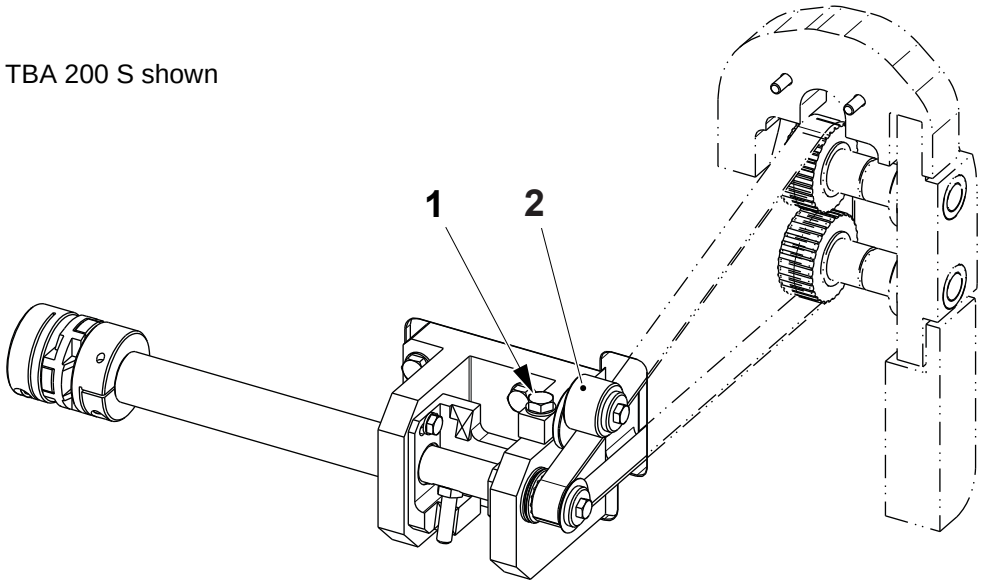

1 Screw
2 Roller

(Cont'd)

TechPub_2614345_0107 - 0403_30481147_01.fm

(Cont'd)

b) Rotate the coupling (3) by hand so that the shaft (4) is fully against the opposite stop (5).

c) Crank the jaw system until the folding flaps (6) are completely closed.

d) Insert a feeler gauge with the thickness **A**, in four points between the folding flaps (6) and the inductor (7).

e) In order to reach the distance of **A** loosen the screw (8) so the stop (5) can be set in the proper position then tight the screw (8) to lock the stop (5).

Note! The minimum distance must be not less than **A**.

Package	**A (mm)**
Portion Packages	0.5
Family Packages	0.8

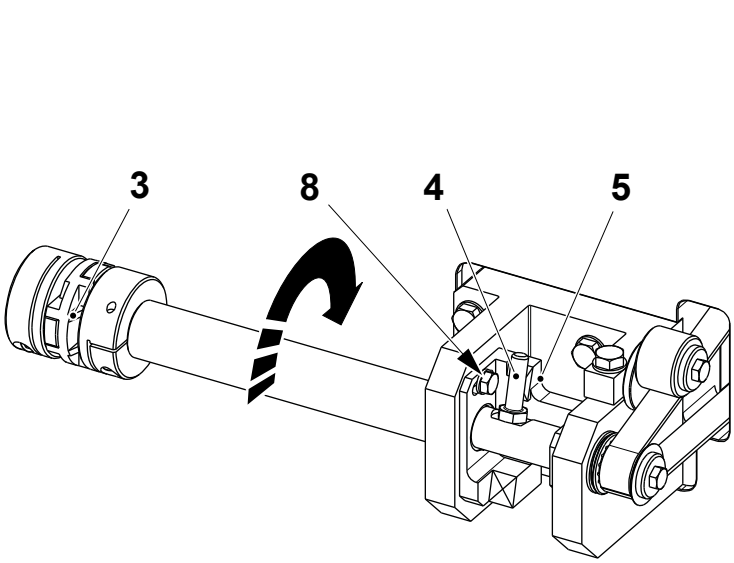

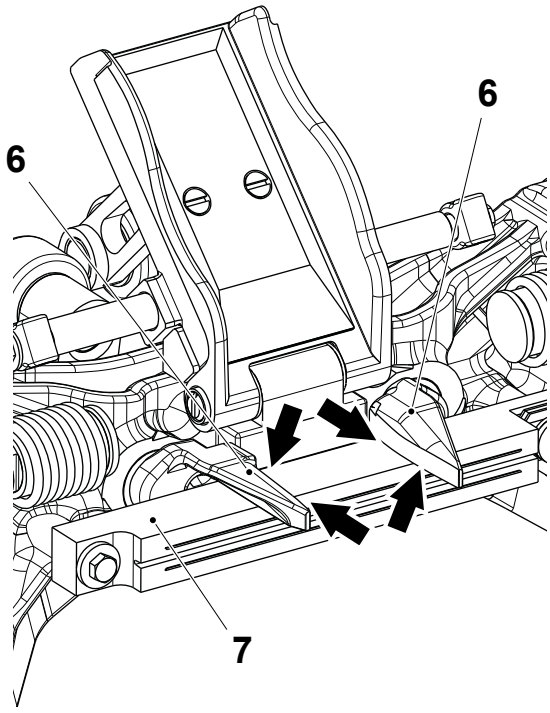

3 Coupling
4 Shaft
5 Stop
6 Folding flap
7 Inductor

TechPub_2614345_0107 - 0403_3048147_01.fm

(Cont'd)

(Cont'd)

f) If the setting range of the slot under the screw (8) is not enough remove the pulley (9) and let the belt (10) skip the necessary pulley teeth.

g) Repeat the item e) to set the distance to **A**.

h) For fine setting, see Design Correction Fine Setting in 3.2-2 Photocell Unit - Set.

i) Set the belt tension, see 4.5-1 Design Correction - Set Belt Tension.

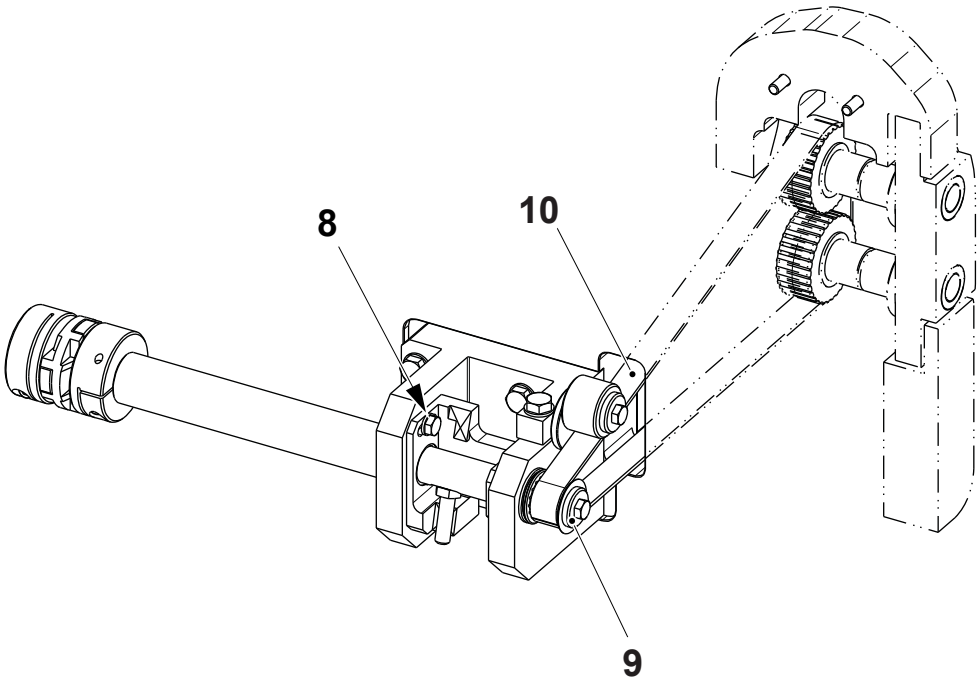

8 Screw
9 Pulley
10 Belt

TechPub_2614345_0107 - 0403_3048147_01.fm

4.6 Electrical Connection

SPC Reference	2691475-0100

4.6-1 Electrical Connection - Check Busbar and Core

Machine Status	Mains Power ON Air OFF Steam ON Water OFF
SPC Reference	2691475-0100

Note! When assembling, unless specified in the procedure, tighten all the screws according to the torque indicated in 10.1.1 Jaw System Screws Tightening Torque.

a) Close the cooling water valves (1).

b) Disconnect the cooling water hoses (2) and (3).

c) Disconnect the connector (4) of the coaxial cable.

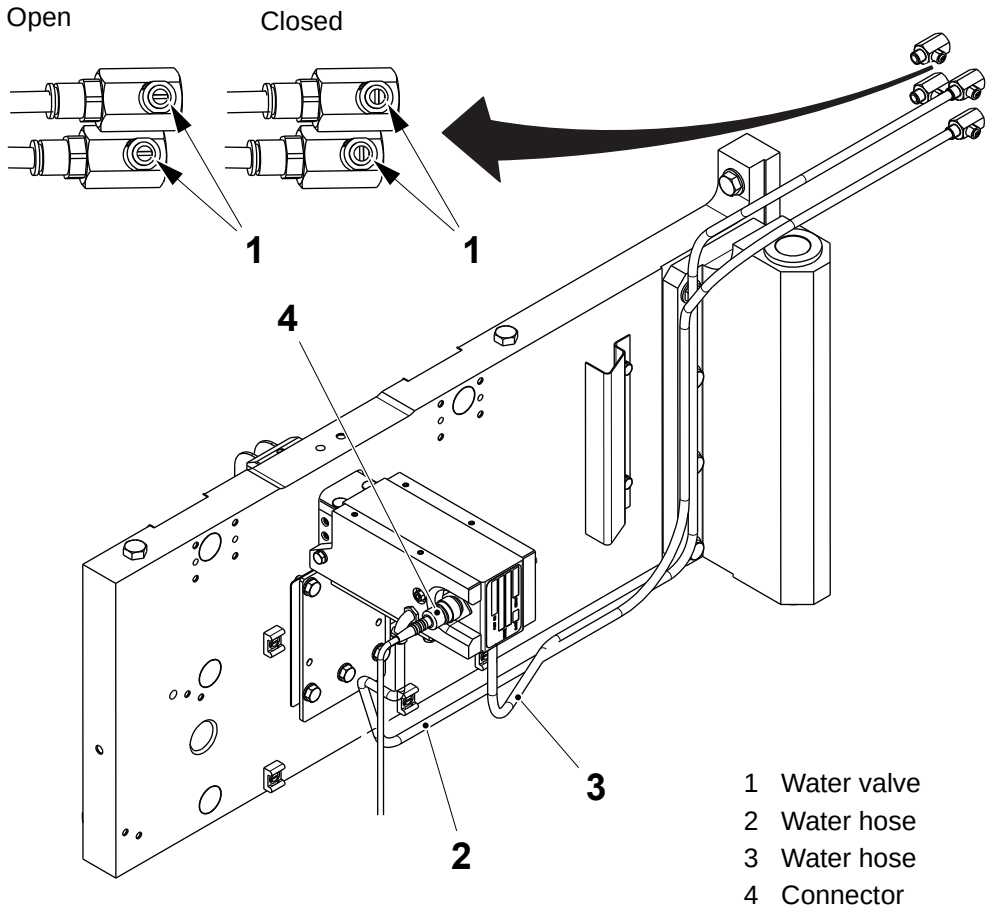

1 Water valve
2 Water hose
3 Water hose
4 Connector

(Cont'd)

TechPub_2614345_0107 - 0402_3048148_01.fm

(Cont'd)

d) Release the jaw system brakes, see 4-4 Jaw System - Release Brakes.

e) Crank manually the sealing link chain to a certain angle, see table on the next page, so that the ferrite (5) of the sealing link is just over the busbar (6).

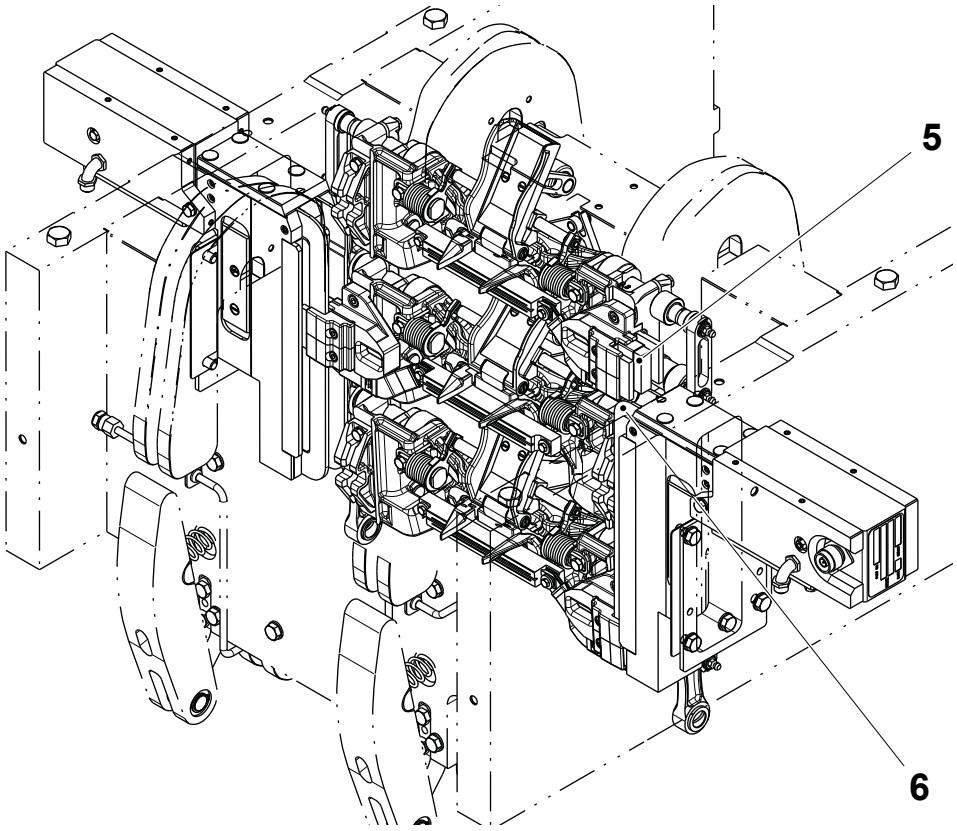

5 Ferrite
6 Busbar

(Cont'd)

TechPub_2614345_0107 - 0402_3048148_01.fm

(Cont'd)

CAUTION
Risk of damage to the equipment.
If the ferrites are not in the position indicated below, they may be easily damaged during the IPT removal and assembling procedure.

f) Check on the TPOP by touching the PRODUCTION CONTROL button (7), the PACKAGE FORMING UNIT button (8) and the JAW SYSTEM CURRENT POSITION icon (9).

Package	Angle
TBA 125S - TBA 200S - TBA 200B - TBA 250S - TBA 200 M	359º
TBA 250 B - TBA 1000 B	11º
TBA 1000 S	324º
TBA 1000 Sq	331º

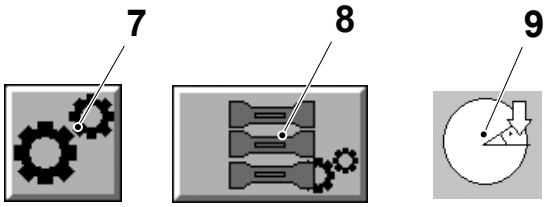

7 Production control button
8 Package forming unit button
9 Jaw system current position icon

(Cont'd)

TechPub_2614345_0107 - 0402_3048148_01.fm

(Cont'd)

CAUTION
Risk of damage to the equipment.
The IPT assemblies are set in different ways on the LH side and on the RH side of the jaw system: when assembling, do not swap them.

g) Mark the IPT assemblies (10) to identify the one of the LH side and the one of the RH side.

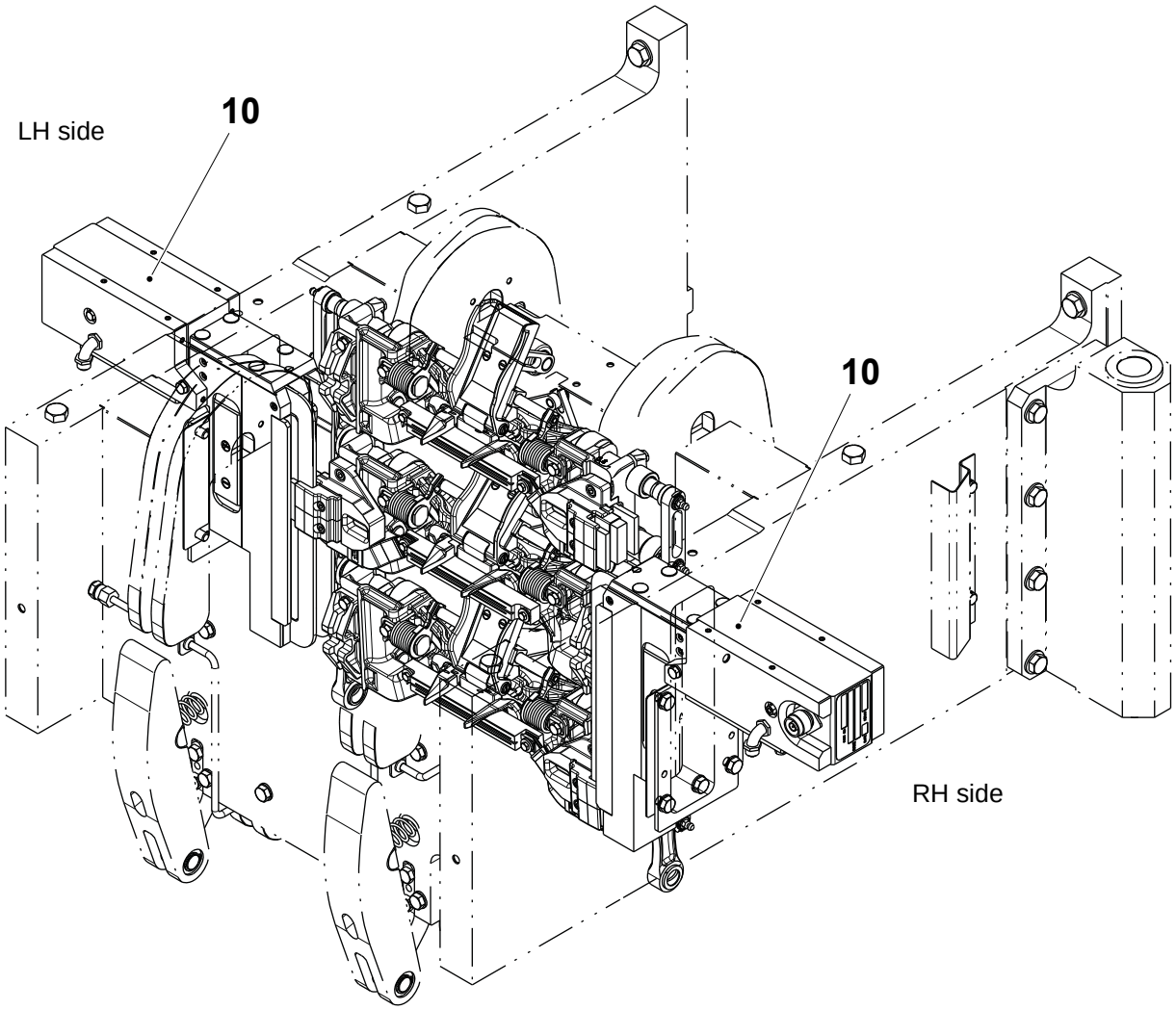

10 IPT assembly

(Cont'd)

TechPub_2614345_0107 - 0402_3048148_01.fm

(Cont'd)

Valid for Portion Packages

CAUTION

Risk of damage to the equipment.

Handle the IPT assembly (10) very carefully: the core (11) can be easily damaged if bumping against the frame.

Note! Do not remove the two screws (12) in the middle of the bracket (13).

h) Remove only the four external screws (14).

i) Extract the IPT assembly (10) from the jaw system frame taking care of the shims (15).

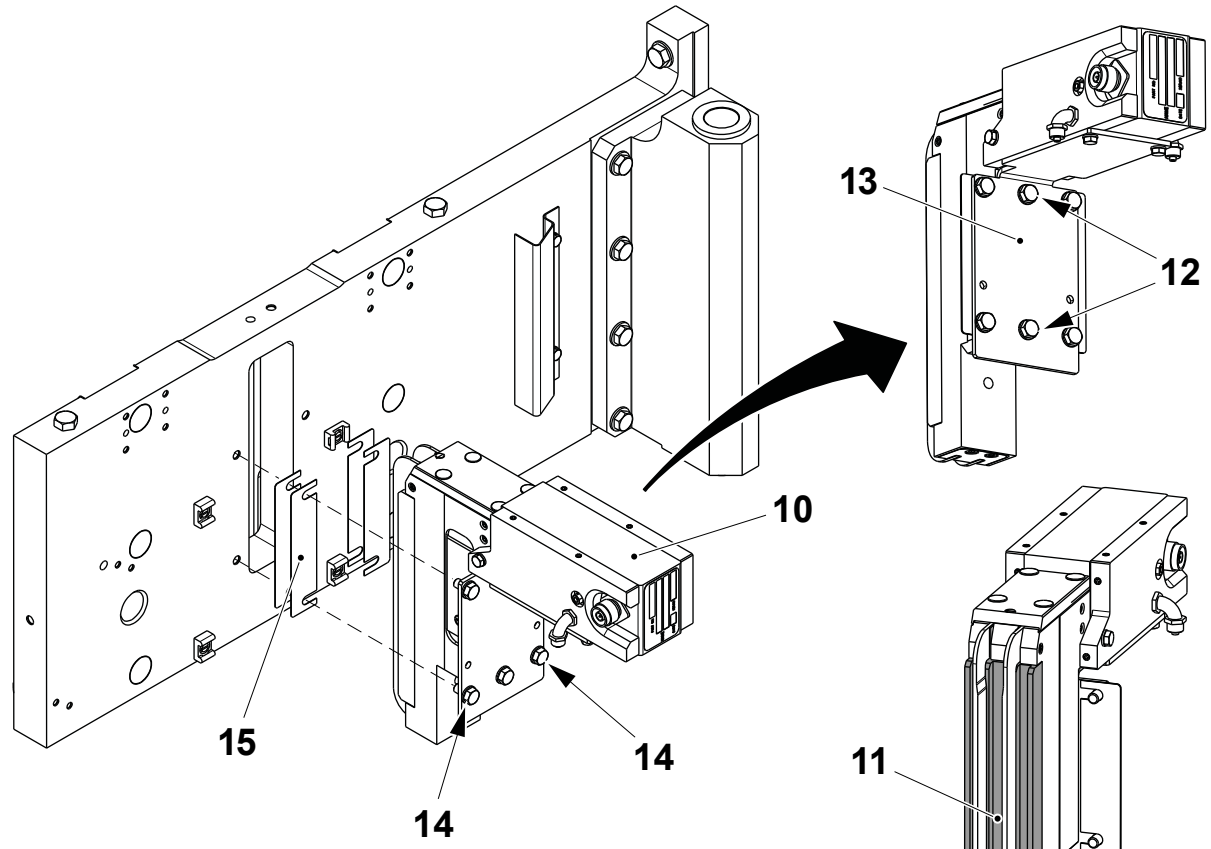

10 IPT assembly
11 Core
12 Screw
13 Bracket
14 Screw
15 Shim

(Cont'd)

TechPub_2614345_0107 - 0402_3048148_01.fm

(Cont'd)

Valid for Family Packages

CAUTION

Risk of damage to the equipment and /or personal injury.
Do not remove the screws (16) supporting the spacer (17): it is heavy and will fall suddenly once the screws (14) have been removed.

CAUTION

Risk of damage to the equipment.
Handle the IPT assembly (10) very carefully: the core (11) can be easily damaged if bumping against the frame.

Note! Do not remove the two screws (12) in the middle of the bracket (13).

j) Remove only the four external screws (14).

k) Extract the IPT assembly (10) from the jaw system frame taking care of the shims (15).

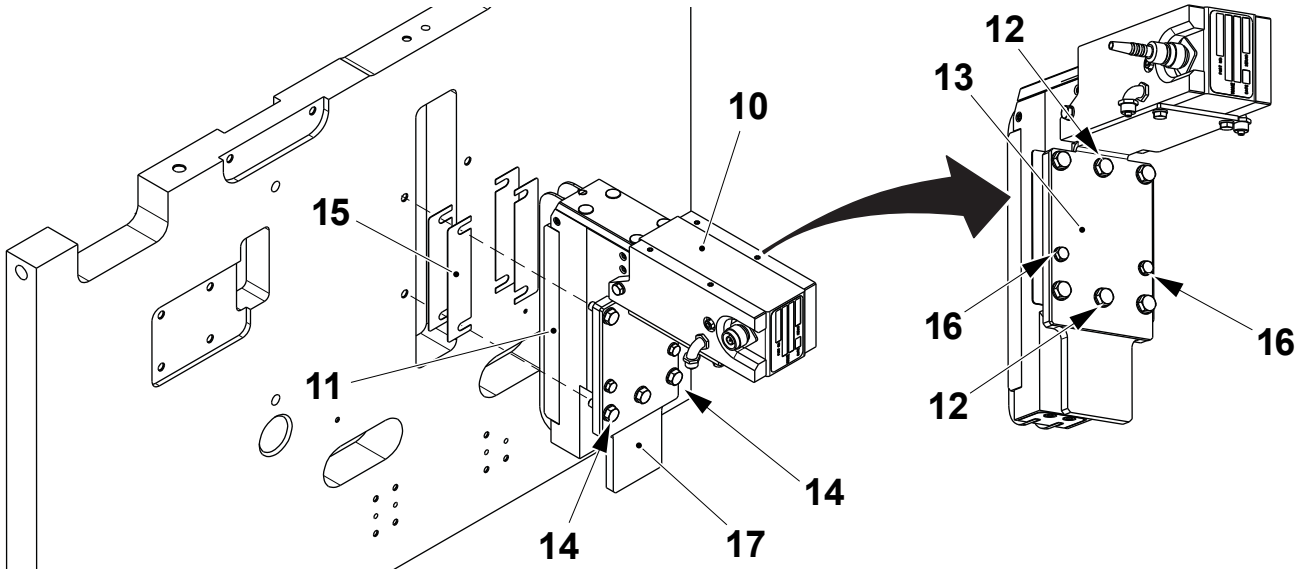

10	IPT assembly	14	Screw
11	Core	15	Shim
12	Screw	16	Screw
13	Bracket	17	Spacer

(Cont'd)

TechPub_2614345_0107 - 0402_3048148_01.fm

(Cont'd)

Valid for All Volumes

l) Check that:

- the busbar (6) and the core (11) are free from grease or packaging material deposits; if necessary, clean with waterjet
- the busbar (6) is not bended and the core (11) is not broken; if necessary, change them, see 4.6-3 Electrical Connection - Overhaul.
- all screws are tightened.

m) Assemble in the reverse order fitting back the same number of shims (15) that have been removed.

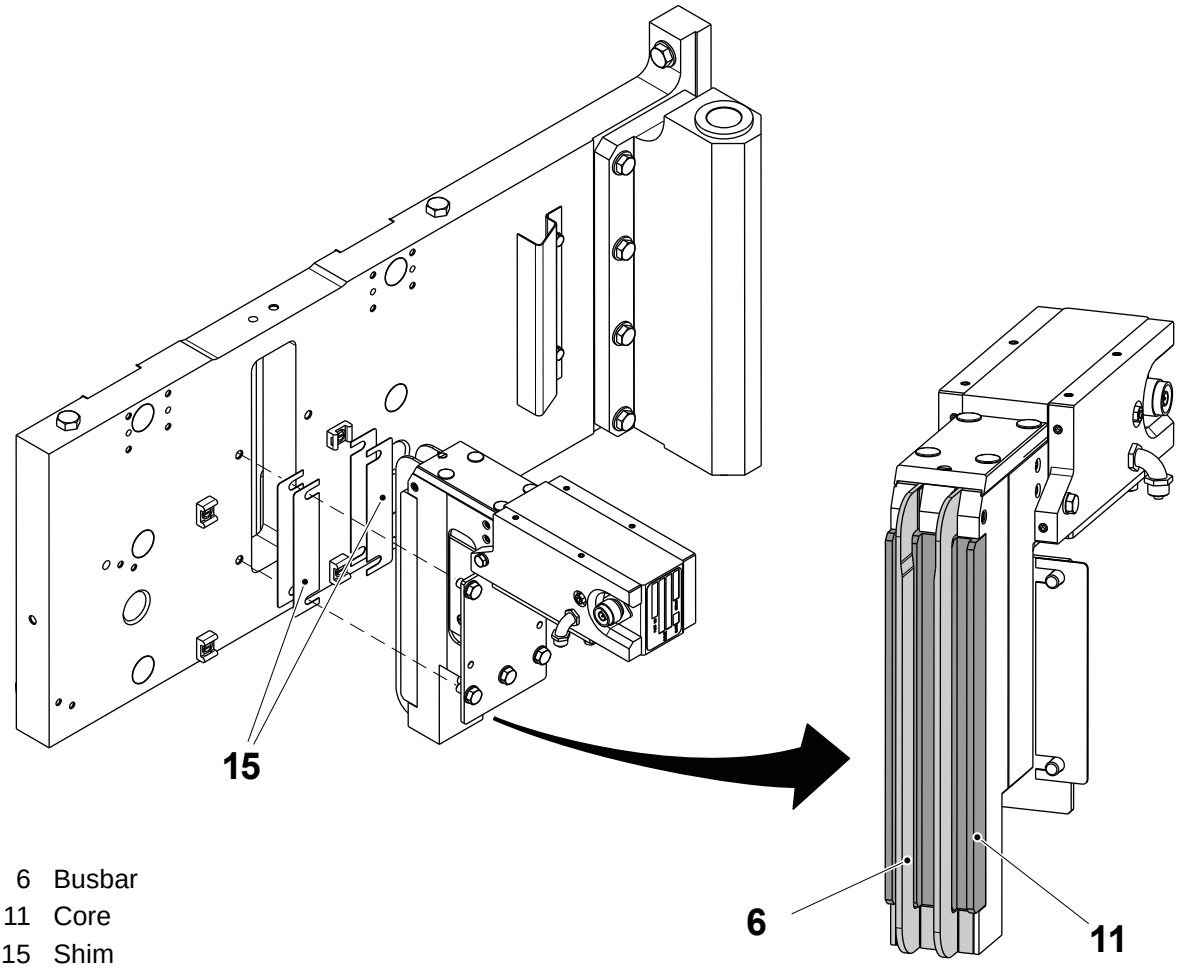

6 Busbar
11 Core
15 Shim

TechPub_2614345_0107 - 0402_3048148_01.fm

4.6-2 Electrical Connection - Check Transformer

Machine Status	Mains Power OFF Air OFF Steam ON Water OFF
SPC Reference	2691475-0100

Note! When assembling, unless specified in the procedure, tighten all the screws according to the torque indicated in 10.1.1 Jaw System Screws Tightening Torque.

a) Close the cooling water valves (1).

b) Disconnect the cooling water hoses (2) and (3).

c) Disconnect the connector (4) of the coaxial cable.

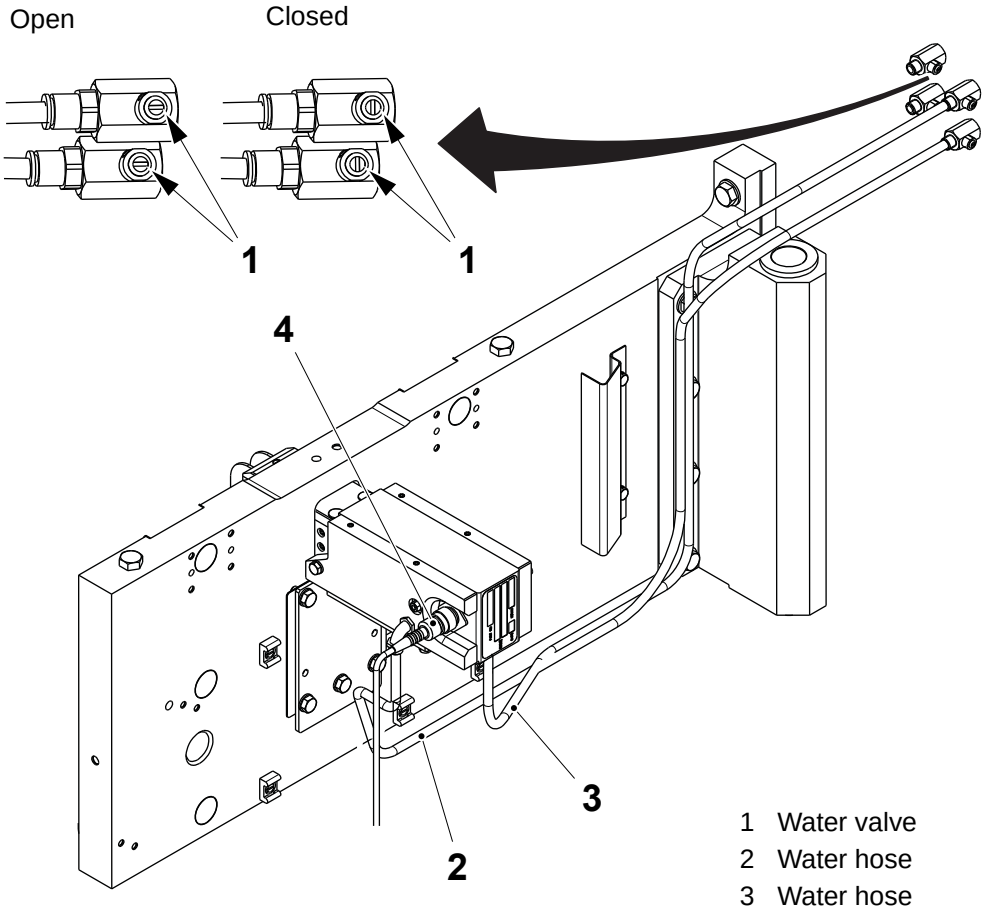

1 Water valve
2 Water hose
3 Water hose
4 Connector

(Cont'd)

TechPub_2614345_0107 - 0402_3048148_01.fm

(Cont'd)

d) On both sides, loosen the grub screws (5)
e) Remove the screw (6).
f) On both sides, loosen the screws (7).
g) Loosen the screw (8).
h) Slip off the transformer (9).
i) Remove the screws (7) and (8) and the cooling plates (10) and (11).

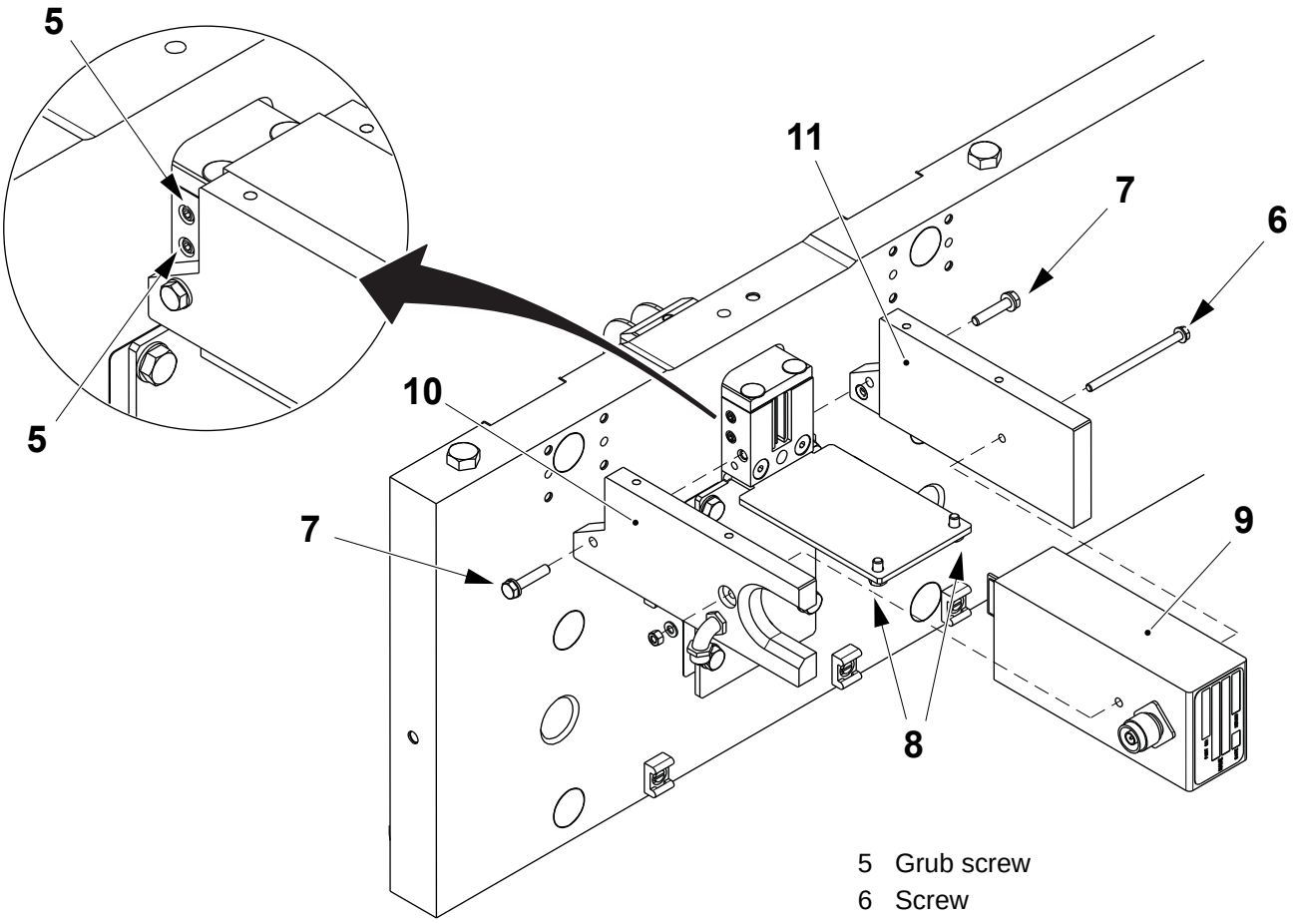

5 Grub screw
6 Screw
7 Screw
8 Screw
9 Transformer
10 Cooling plate
11 Cooling plate

(Cont'd)

TechPub_2614345_0107 - 0402_3048148_01.fm

(Cont'd)

j) Check that the transformer (9) is not damaged and the copper contacts (12) and (13) are clean. Change the transformer (9) if necessary.

k) Check that the O-rings (14) are in their seats in the cooling plates (10) and (11).

l) Fit back the cooling plates (10) and (11) by the screws (7) and (8).

Note! Do not tighten the screws (7) and (8).

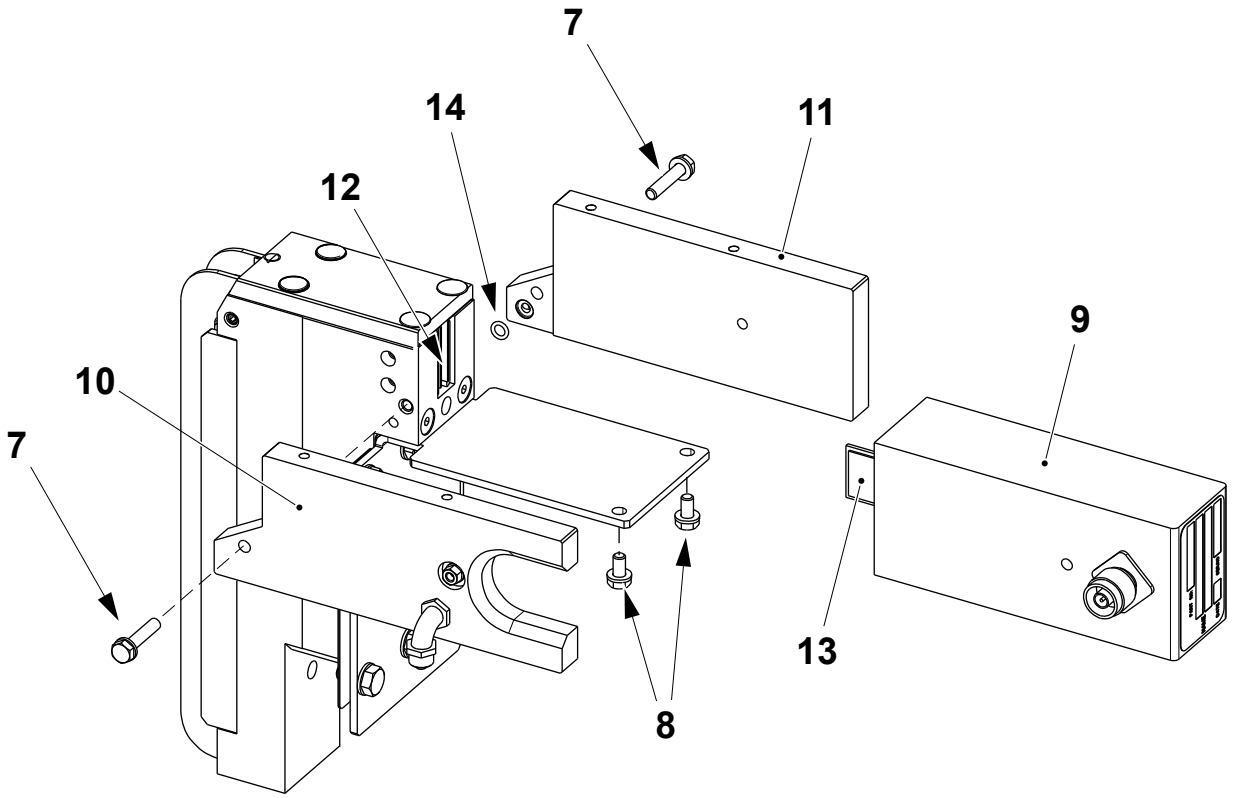

7 Screw
8 Screw
9 Transformer
10 Cooling plate
11 Cooling plate
12 Copper contact
13 Copper contact
14 O-ring

(Cont'd)

TechPub_2614345_0107 - 0402_3048148_01.fm

(Cont'd)

m) Insert the transformer (9).
n) Fit the screw (6) and the nut (15). Do not tighten.
o) Tighten the grub screws (5) on both sides.
p) Tighten the screw (6) and the nut (15).
q) Tighten the screws (7) and (8) on both sides.

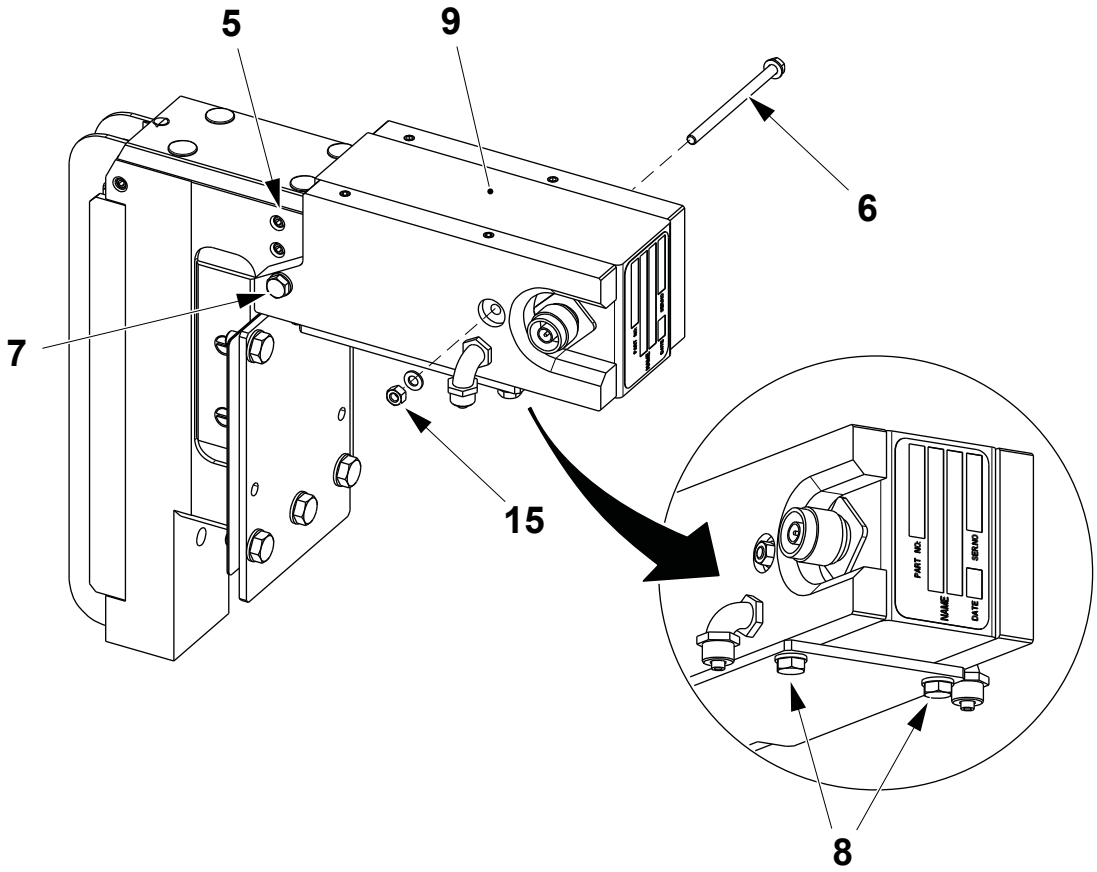

5 Grub crew
6 Screw
7 Screw
8 Screw
9 Transformer
15 Nut

TechPub_2614345_0107 - 0402_3048148_01.fm

4.6-3 Electrical Connection - Overhaul

Machine Status	Mains Power OFF Air OFF Steam ON Water OFF
Special Equipment	Vice
Consumables	Silicone Grease TP No. 90296-0009
SPC Reference	2691475-0100

Note! When assembling, unless specified in the procedure, tighten all the screws according to the torque indicated in 10.1.1 Jaw System Screws Tightening Torque.

Disassembly

a) Remove the transformer and the cooling plates, see 4.6-2 Electrical Connection - Check Transformer.

b) Remove the IPT assembly, see 4.6-1 Electrical Connection - Check Busbar and Core.

(Cont'd)

TechPub_2614345_0107 - 0402_3048148_01.fm

(Cont'd)

CAUTION
Risk of damage to the equipment.
Do not grasp the IPT assembly on the busbar (1). Handle the IPT assembly very carefully: the core can be easily damaged.

c) Put the IPT assembly on the work bench and secure it by a vice with the busbar (1) facing up.

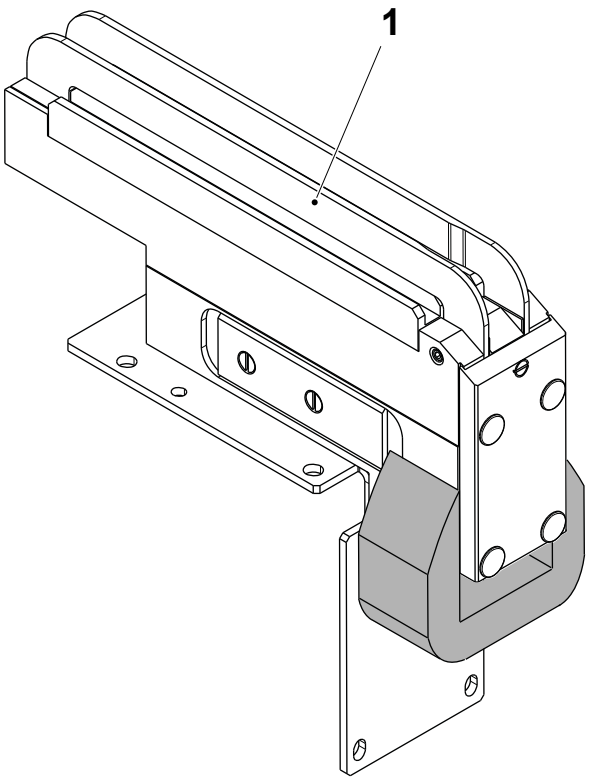

1 Busbar

(Cont'd)

TechPub_2614345_0107 - 0402_3048148_01.fm

(Cont'd)

Note! Record the number of the shims (4): when assembling it is important to fit back the same quantity of shims (4) in order to have the correct distance between the IPT assembly and the jaw links.

Note! Do not remove the spacer (5), if present. Only the Family Packages machines are equipped with the spacer (5).

d) Remove the screws (2), the bracket (3) and the shims (4).

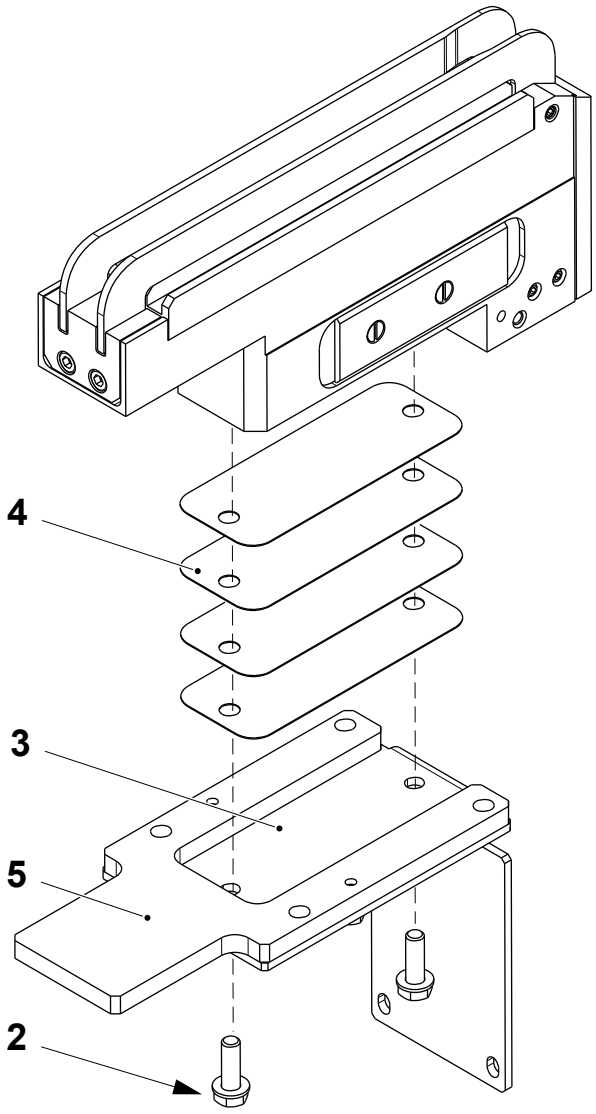

IPT assembly for Family Packages is shown

2 Screw
3 Bracket
4 Shim
5 Spacer

(Cont'd)

TechPub_2614345_0107 - 0402_3048148_01.fm

(Cont'd)

e) Loosen the stop screw (6).

f) Remove the plugs (7), the screws (8) and the plate (9).

g) Loosen the grub screw (10) and remove the spacer (11).

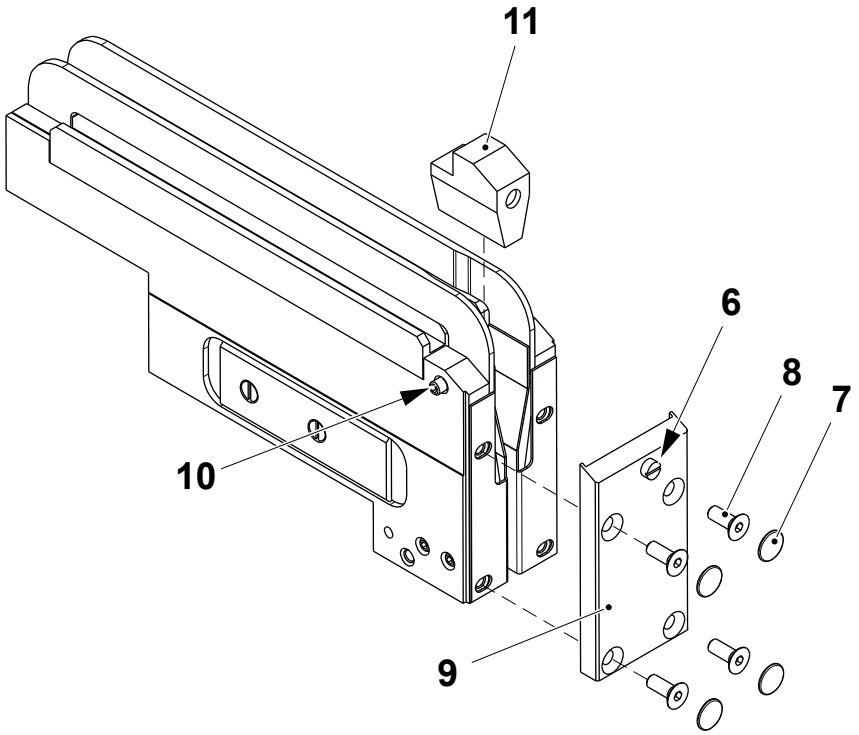

6 Stop screw
7 Plug
8 Screw
9 Plate
10 Grub screw
11 Spacer

(Cont'd)

TechPub_2614345_0107 - 0402_3048148_01.fm

(Cont'd)

h) Remove the screws (12) and slip off upwards the busbar (1). Change the busbar (2) if necessary.

i) Change the O-rings (13).

j) Remove the O-rings (14) and change them if necessary.

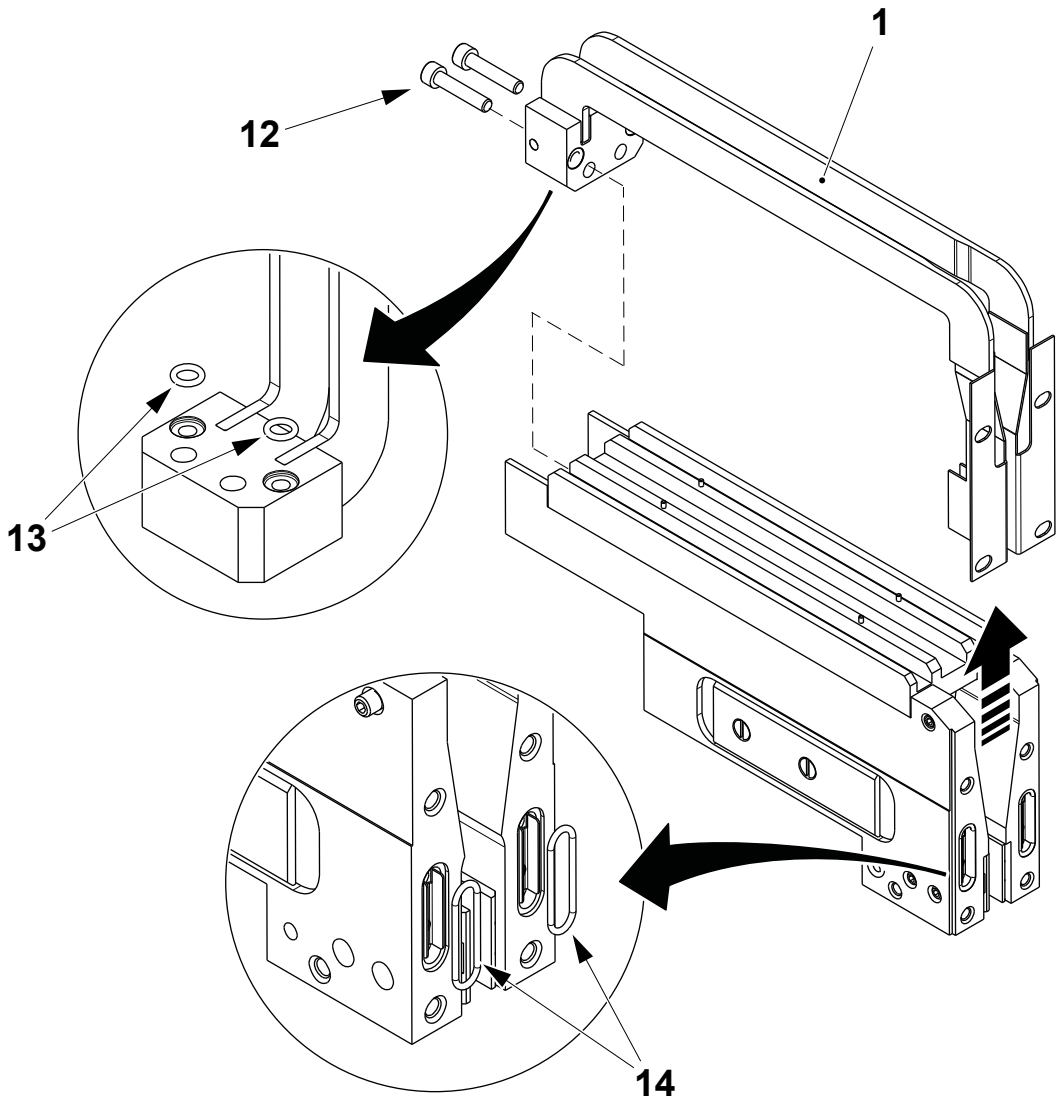

1 Busbar
12 Screw
13 O-ring
14 O-ring

(Cont'd)

TechPub_2614345_0107 - 0402_3048148_01.fm

(Cont'd)

CAUTION
Risk of damage to the equipment.
Handle the core (17) very carefully: it could be easily damaged.

k) Remove the bracket (15) from the vice and put it on the work bench in vertical position.

l) Remove the screws (16) and the core (17).

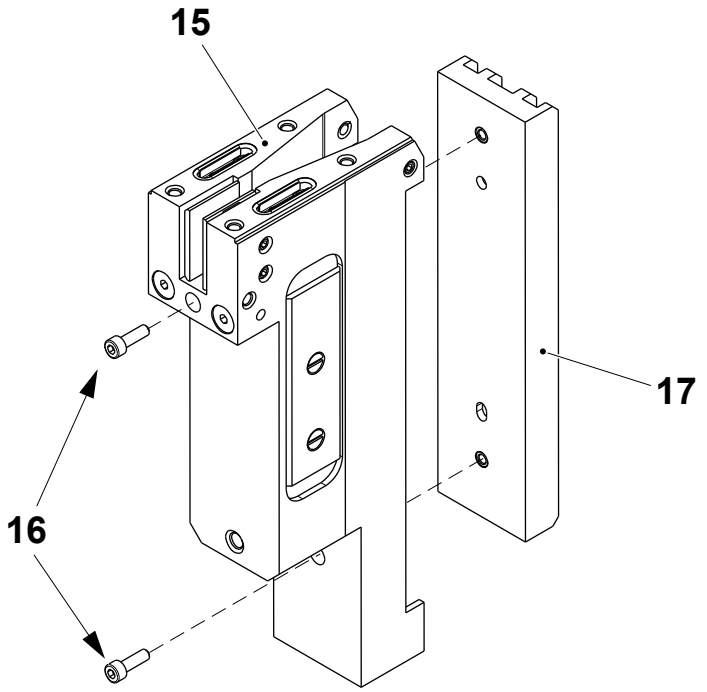

15 Bracket
16 Screw
17 Core

(Cont'd)

TechPub_2614345_0107 - 0402_3048148_01.fm

(Cont'd)

CAUTION
Risk of damage to the equipment.
Handle the core (3) very carefully. Do not overtighten the screws (4): if the tightening torque is over 2 Nm the core (3) could be damaged.

Assembly

a) Fit the plates (1) into their seats on the bracket (2), making sure that the holes of the plates (1) correspond to the holes of the bracket (2).

b) Push the plates (1) in position with an hammer to avoid that they exit out of their seat.

c) Put the bracket (2) in vertical position on the work bench.

d) Fit the core (3) by the screws (4).

e) Tighten the screws (4) with a torque of **2 Nm**.

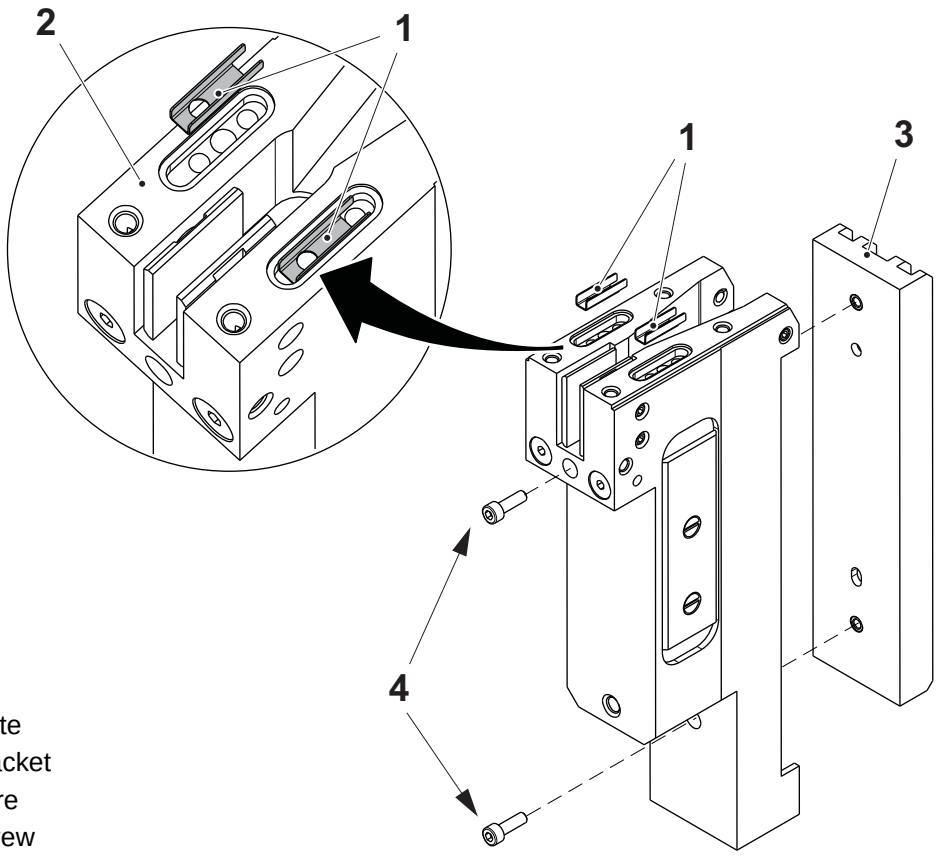

1 Plate
2 Bracket
3 Core
4 Screw

(Cont'd)

TechPub_2614345_0107 - 0402_3048148_01.fm

(Cont'd)

f) Fit the O-rings (5) on the bracket (2) applying silicone Grease TP No. 90296-0009, in order to avoid that they exit out from their seats.

g) Secure the bracket (2) by a vice with the core (3) facing up.

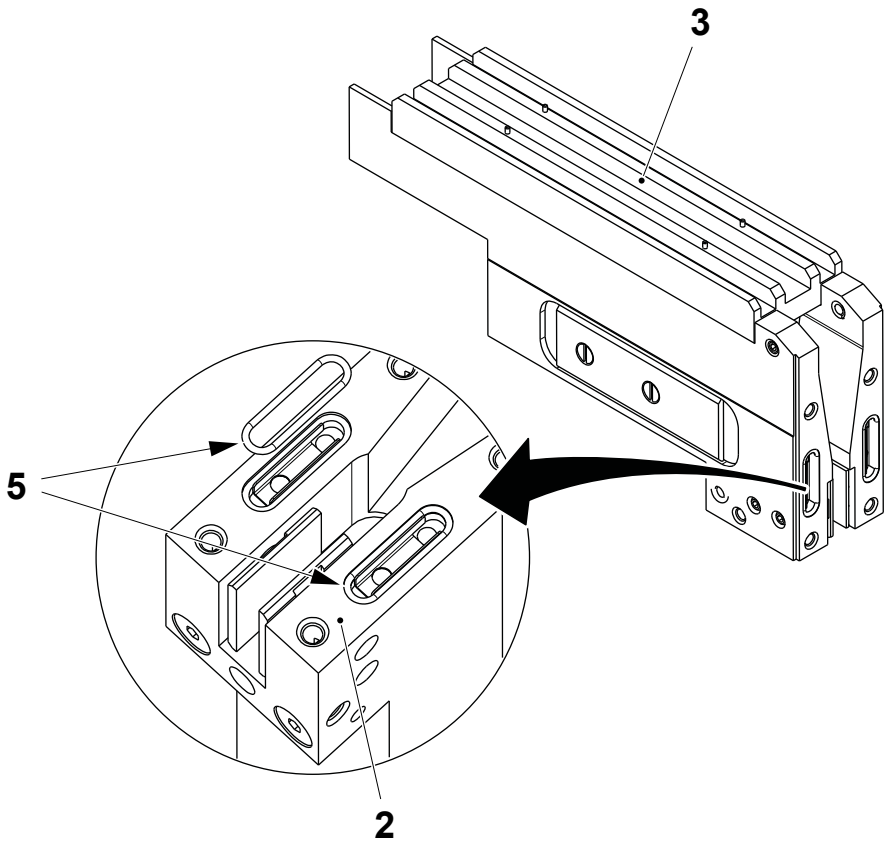

2 Bracket
3 Core
5 O-ring

(Cont'd)

TechPub_2614345_0107 - 0402_3048148_01.fm

(Cont'd)

CAUTION
Risk of damage to the equipment.
Handle the busbar (7) very carefully: it may be easily bended or damaged.

h) Fit the O-rings (6) on the busbar (7).

i) Fit the busbar (7) by inserting the screws (8) without tightening them.

Note! Pay attention to the O-rings (6).

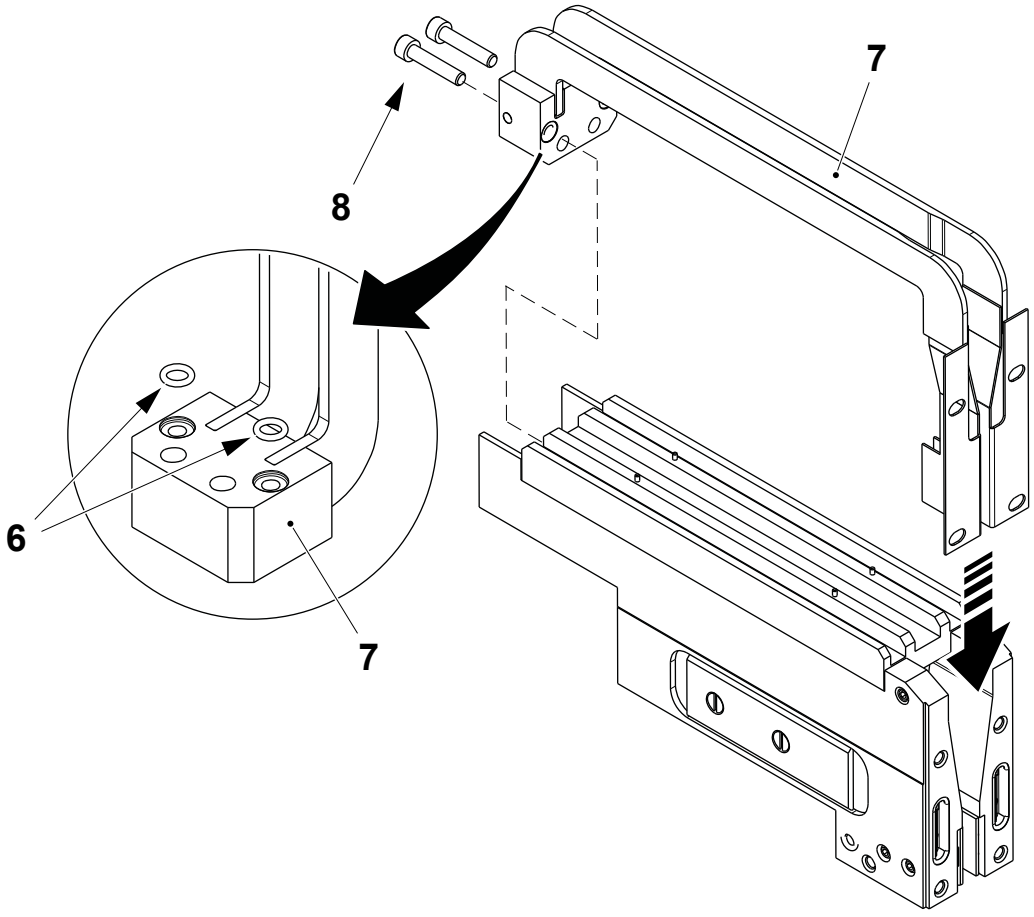

6 O-ring
7 Busbar
8 Screw

(Cont'd)

TechPub_2614345_0107 - 0402_3048148_01.fm

(Cont'd)

Note! The stop screw (11) must be made of plastic.

j) Insert the spacer (9).

k) Fit the plate (10) by the stop screw (11).

l) Fit the screws (12) without tightening them.

m) Fit the grub screws (13) without tightening them.

n) Press gently the busbar (7) against the core (3) and tighten the grub screws (13) on both sides with a torque of **1Nm**.

o) Tighten the screws (8) with a torque of **2 Nm**.

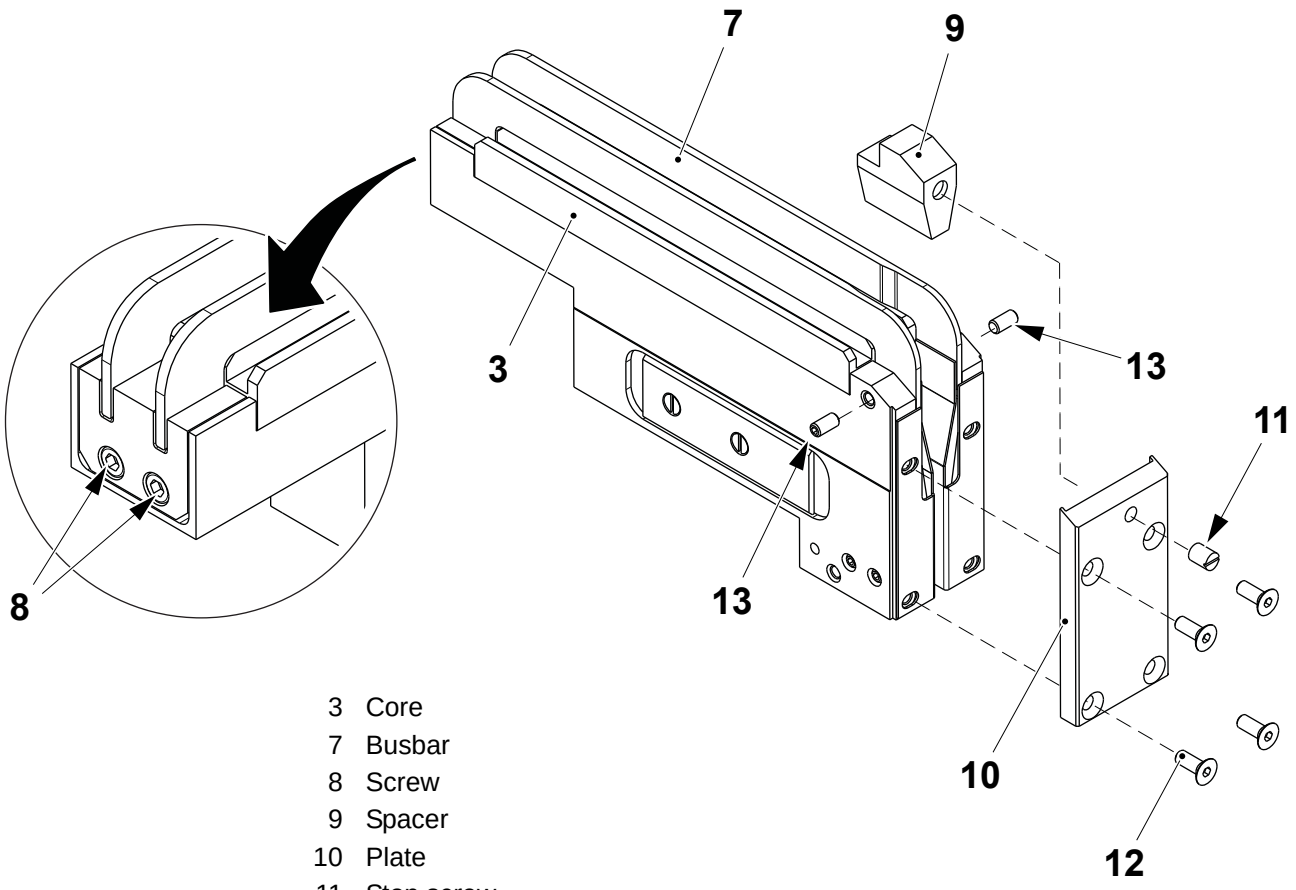

3 Core
7 Busbar
8 Screw
9 Spacer
10 Plate
11 Stop screw
12 Screw
13 Grub screw

TechPub_2614345_0107 - 0402_3048148_01.fm

(Cont'd)

(Cont'd)

Note! The washers (14) must be inserted with the groove facing out.

p) Insert the washers (14) between the busbar (7) and the bracket (2).

q) Screw the grub screws (15) until the tip comes out the distance **A** from the bracket edge (16).

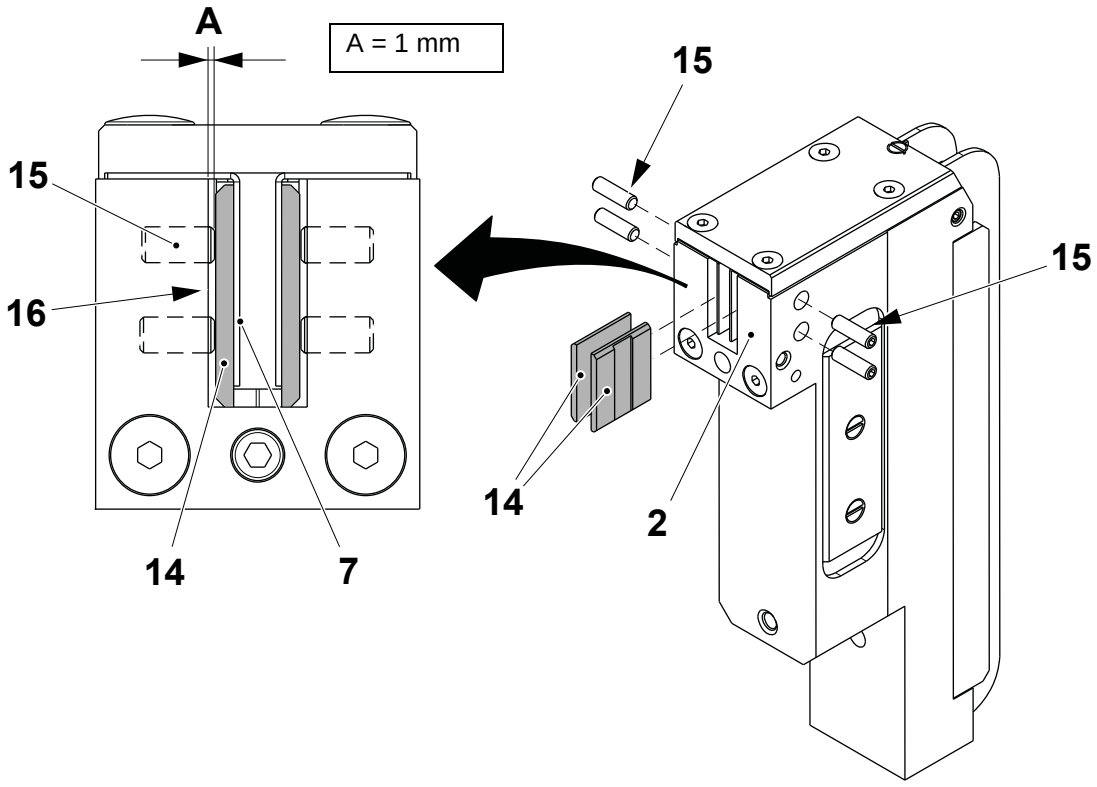

2 Bracket
7 Busbar
14 Washer
15 Grub screw
16 Bracket edge

(Cont'd)

TechPub_2614345_0107 - 0402_3048148_01.fm

(Cont'd)

Note! Fit back the same quantity of shims (18) that had been removed, see page 4-237.

r) Fit the bracket (17) with the shims (18) by the screws (19).

IPT assembly for Family Packages is shown

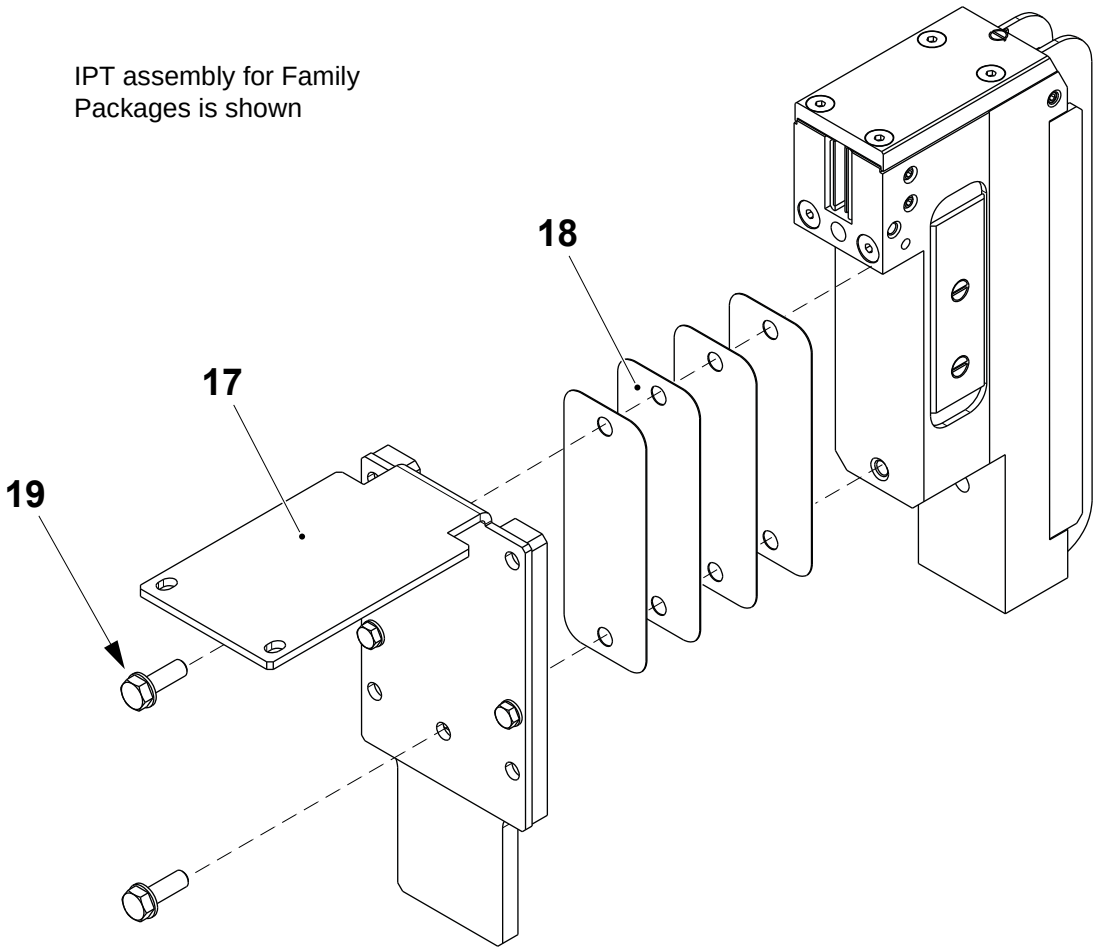

17 Bracket
18 Shim
19 Screw

TechPub_2614345_0107 - 0402_3048148_01.fm

(Cont'd)

(Cont'd)

CAUTION
Risk of damage to the equipment.
When assembling, handle the IPT assembly (20) very carefully: the core (3) could be easily damaged if bumping against the frame.

Note! Fit back the same quantity of shims (21) that had been removed.

s) Fit the IPT assembly (20) with the shims (21) on the jaw system frame by the screws (22).

t) Tighten the screws (22) and (23).

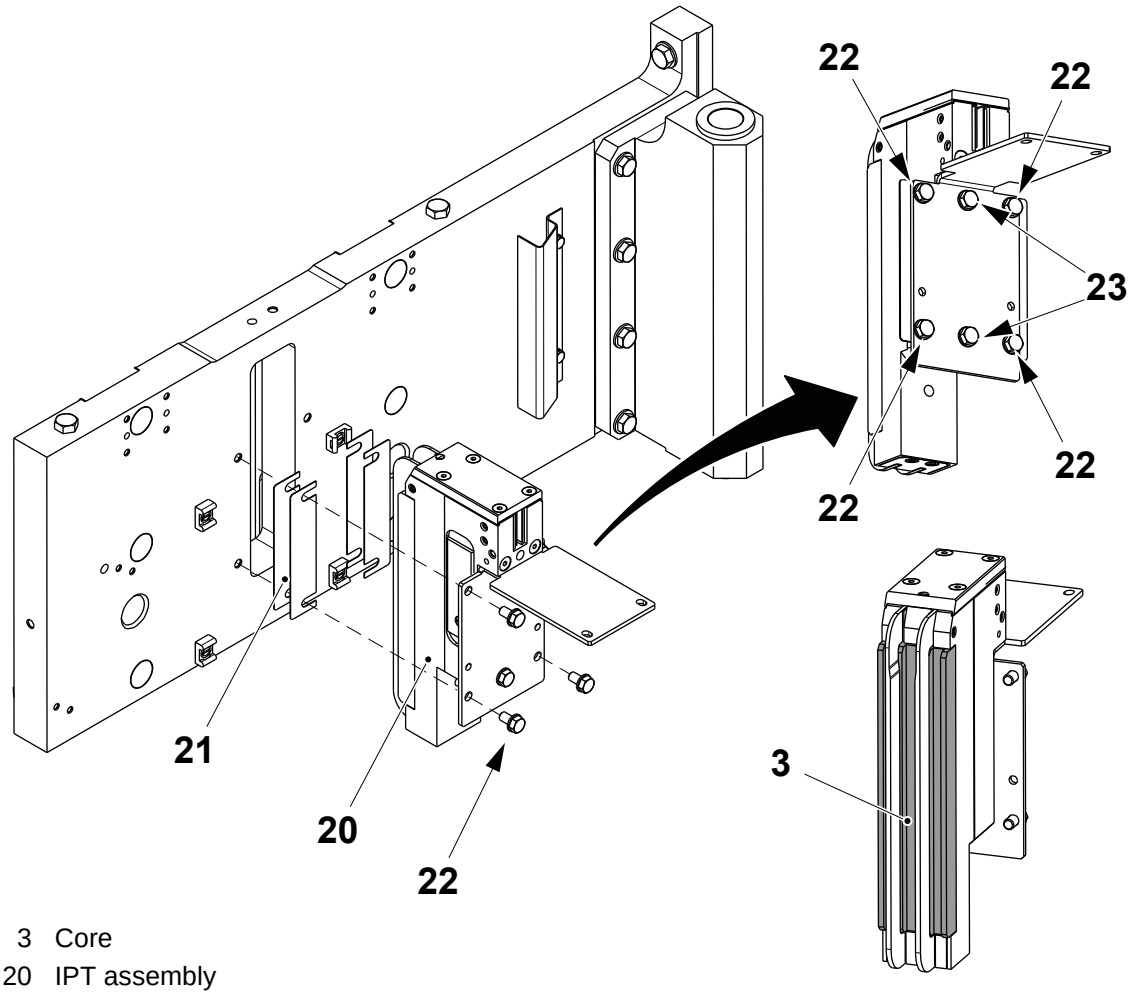

3 Core
20 IPT assembly
21 Shim
22 Screw
23 Screw

(Cont'd)

TechPub_2614345_0107 - 0402_3048148_01.fm

(Cont'd)

Note! Do not tighten the screws (27) and (28).

u) Check that the O-rings (24) are into their seats in the cooling plates (25) and (26).

v) Assemble the cooling plates (25) and (26) by the screws (27) and (28).

w) Insert the transformer (29).

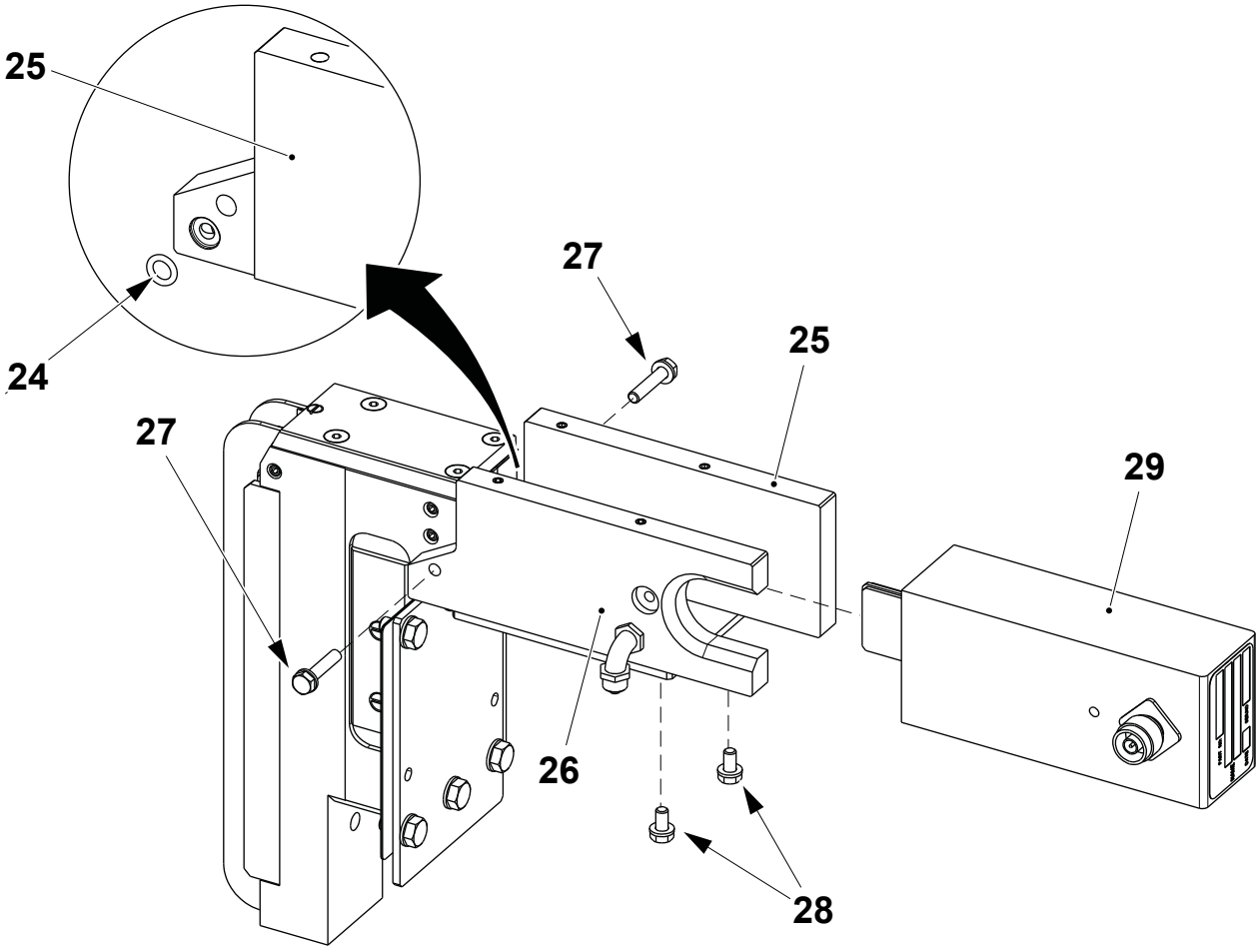

24 O-ring
25 Cooling plate
26 Cooling plate
27 Screw
28 Screw
29 Transformer

TechPub_2614345_0107 - 0402_3048148_01.fm

(Cont'd)

(Cont'd)

WARNING
Hazardous voltage.
Do not forget to fit back the plugs (31). When the assembly is installed, they insulate the screws (12) in case of accidental contact with the hands.

x) Insert the screw (30) through the cooling plates and the transformer.

y) Tighten alternately on both sides the grub screws (15) against the washers (14).

z) Tighten the screws (12) with a torque of **3 Nm** and fit back the plugs (31).

aa) Tighten the nut (32).

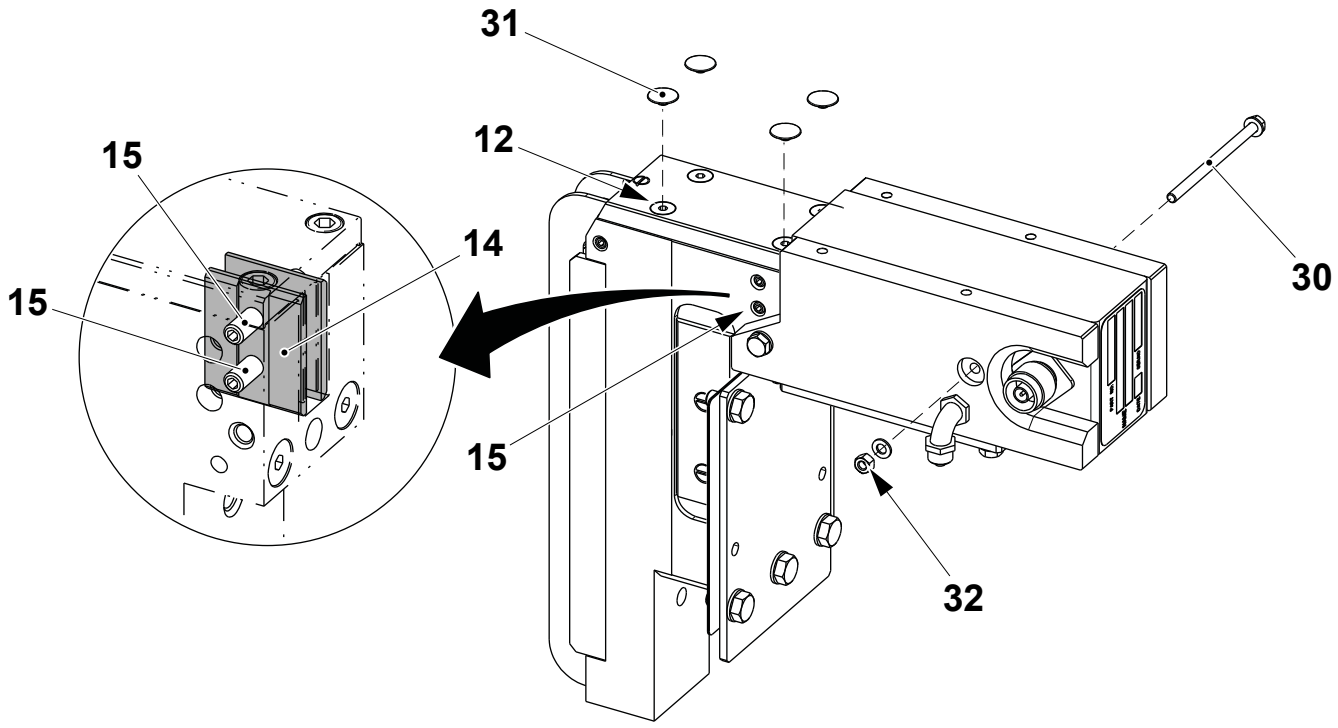

12 Screw
14 Washer
15 Grub screw
30 Screw
31 Plug
32 Nut

(Cont'd)

TechPub_2614345_0107 - 0402_3048148_01.fm

(Cont'd)

ab) Tighten the screws (27) and (28).

ac) Check the cooling circuit by blowing air or by flowing water from the elbow pipe (33): the air or the water must exit from the opposite elbow pipe (34).

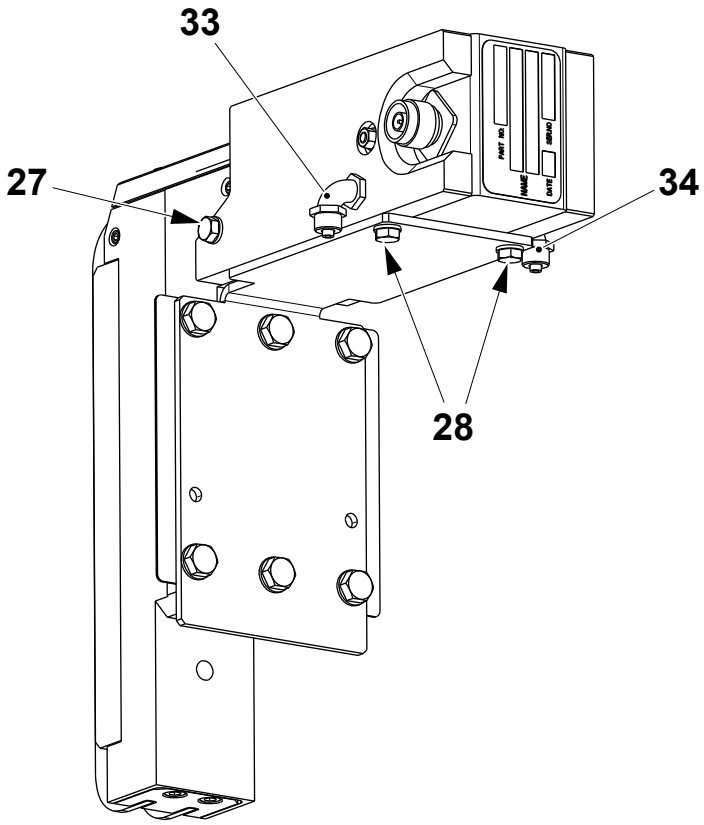

27 Screw
28 Screw
33 Elbow pipe
34 Elbow pipe

TechPub_2614345_0107 - 0402_3048148_01.fm

4.6-4 Electrical Connection - Check Position

Machine Status	Mains Power OFF Air OFF Steam ON Water OFF
SPC Reference	2691475-0100

CAUTION
Risk of damage to the equipment.
The IPT assemblies (1) and (2) are set in different ways on the LH side and on the RH side of the jaw system: when assembling, do not swap them.

Perform this procedure when assembling the IPT assemblies (1) and (2) on the jaw system frame after maintenance work on the sealing and pressure chains.

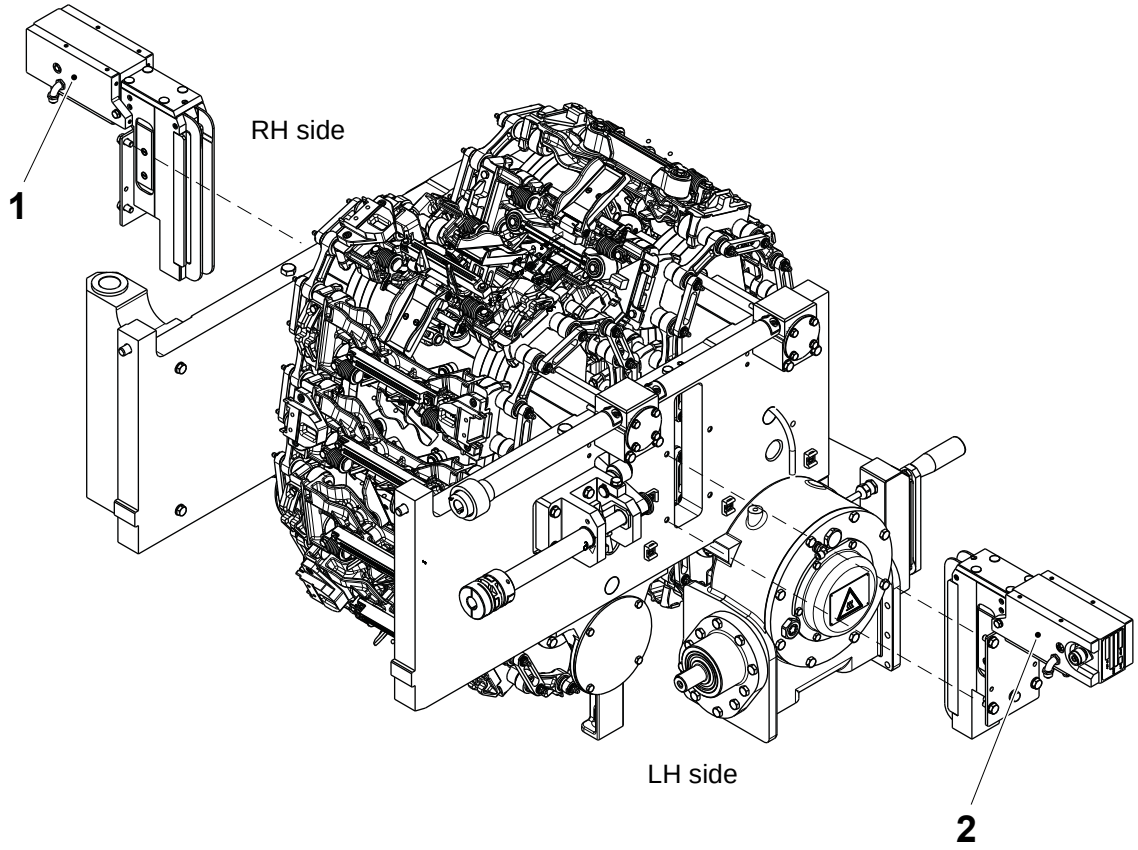

1 IPT assembly
2 IPT assembly

(Cont'd)

TechPub_2614345_0107 - 0402_3048148_01.fm

(Cont'd)

Note! The distances **A**, **B** and **C** must be checked on all the links. Proceed the proper adjustments only if the dissimilarities are found on all the links.

a) On both sides check the distances **A**, **B** and **C** between the ferrite (3) on the links and the ferrite (4) on the IPT assemblies.

Note! In the picture the ferrites (3) and (4) are grey marked.

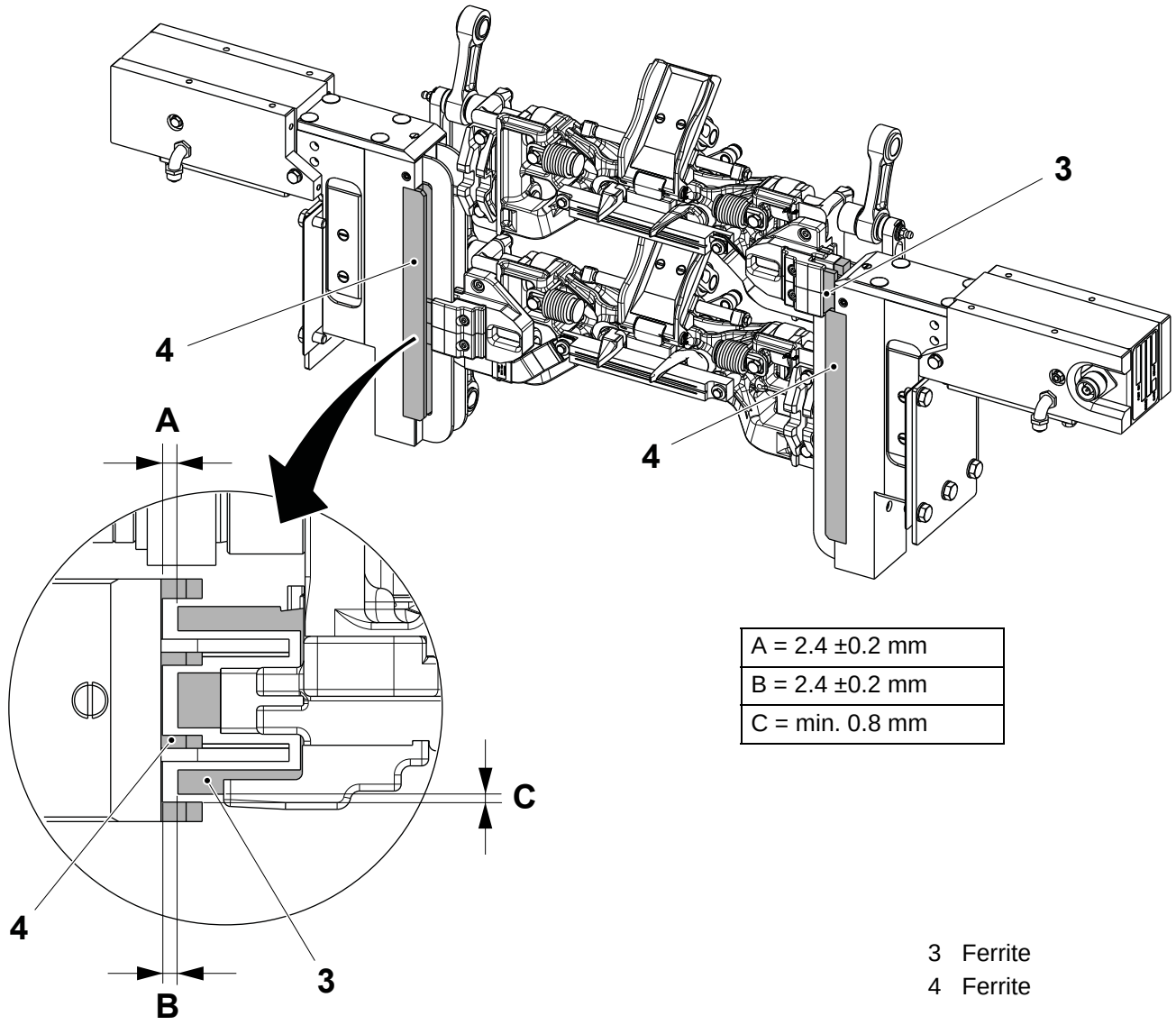

A = 2.4 ±0.2 mm
B = 2.4 ±0.2 mm
C = min. 0.8 mm

3 Ferrite
4 Ferrite

(Cont'd)

TechPub_2614345_0107 - 0402_3048148_01.fm

(Cont'd)

Note! The shim (6) is shown exploded only for example.

b) If necessary, adjust the distances **A** and **B** as follows:

- add the shims (5) to increase the space between the ferrites (3) and (4).
- remove the shims (5) or add the shims (6) to decrease the distance, see 4.6-3 Electrical Connection - Overhaul.

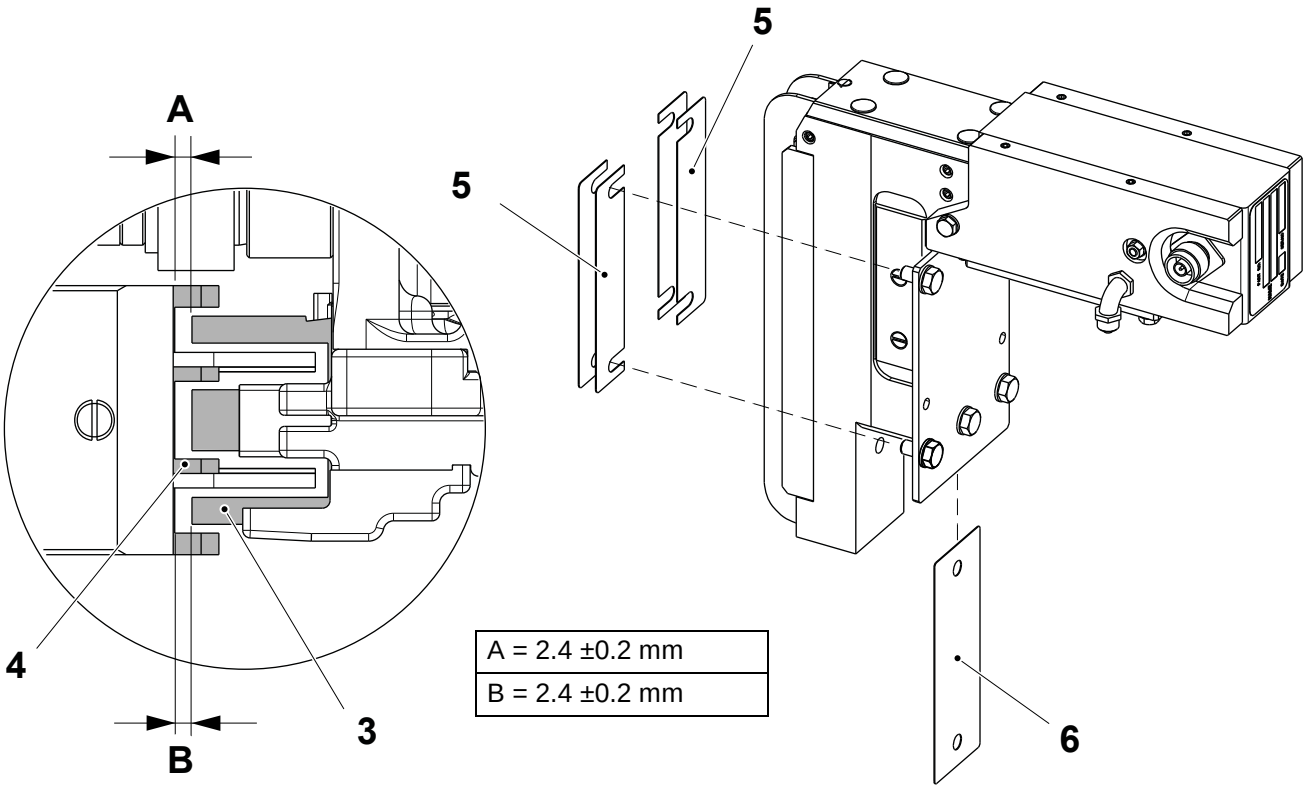

A = 2.4 ±0.2 mm
B = 2.4 ±0.2 mm

3 Ferrite
4 Ferrite
5 Shim
6 Shim

(Cont'd)

TechPub_2614345_0107 - 0402_3048148_01.fm

(Cont'd)

c) If necessary, adjust the distance **C** as follows:

- remove the screws (7) and add or remove shims (8) to obtain the distance **C**.
- compensate the distance modified on the other side: the shims (8) that have been removed must be fitted on the other shims (9) in order to restore the total width **D**.
- tighten the screws (7) on both the shims blocks.

Note! When assembling, unless specified in the procedure, tighten all the screws according to the torque indicated in 10.1.1 Jaw System Screws Tightening Torque.

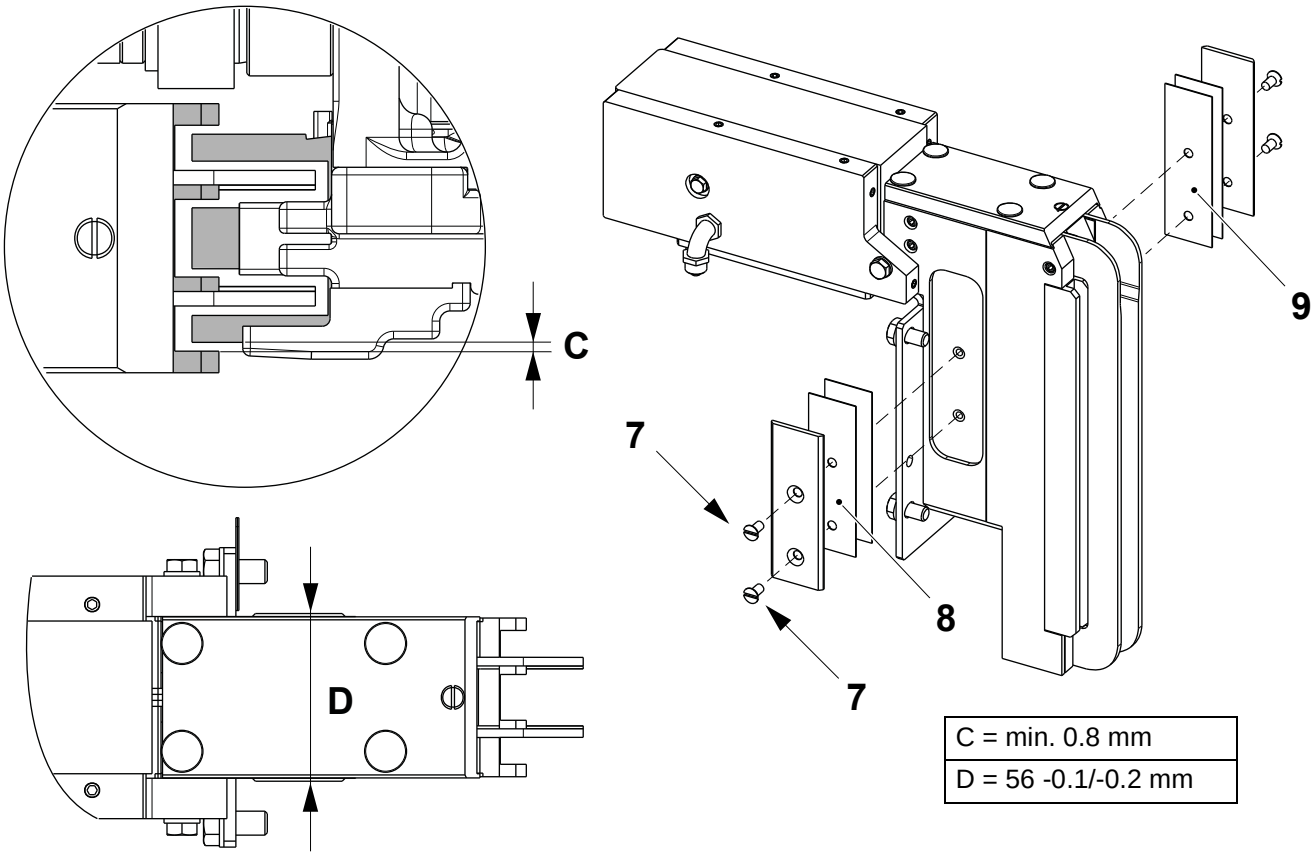

C = min. 0.8 mm
D = 56 -0.1/-0.2 mm

7 Screw
8 Shim
9 Shim

TechPub_2614345_0107 - 0402_3048148_01.fm

4.7 Waste Box

SPC Reference	2811727-0100

4.7-1 Waste Box - Check

Machine Status	Mains Power OFF Steam ON Water OFF Air OFF
SPC Reference	2811727-0100

Check the rod and the seal (1) for wear. If either component is worn, replace the pneumatic cylinder. See 4.7-2 Waste Box - Change Pneumatic Cylinder.

Check that the plate (2) moves freely in both directions, if not change the bushings (3), see 4.7-4 Waste Box - Change Bushings.

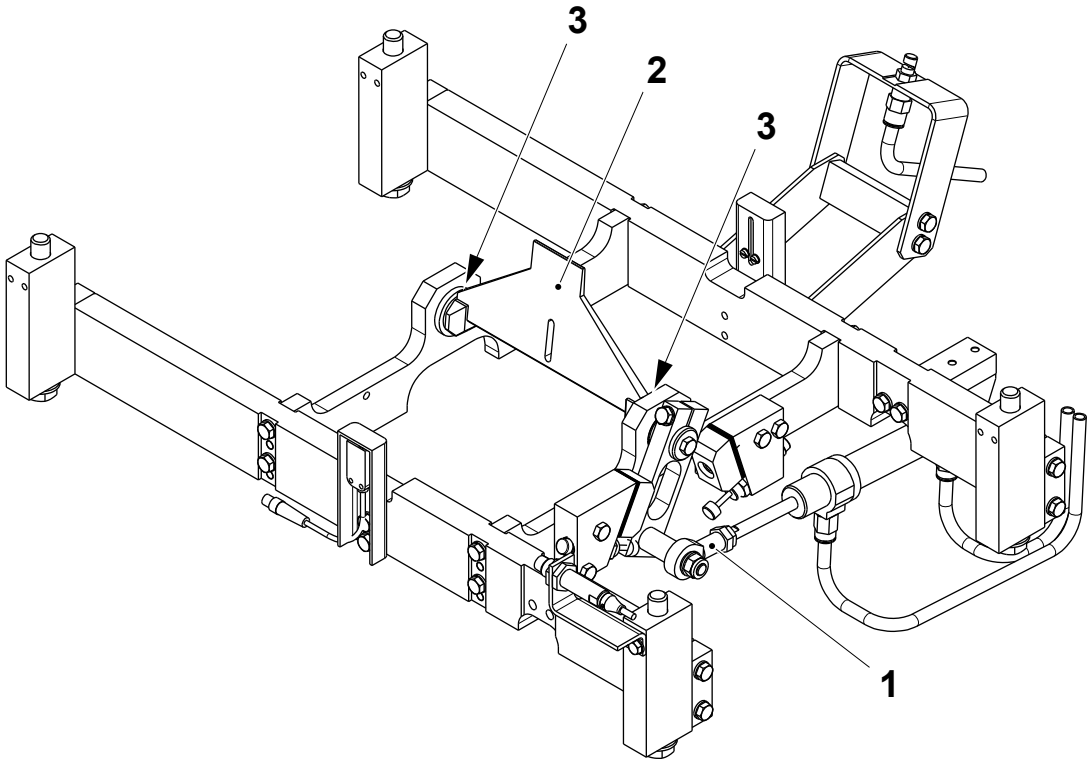

1 Rod/Seal
2 Plate
3 Bushing

TechPub_2614345_0107 - 0403_3048149_01.fm

4.7-2 Waste Box - Change Pneumatic Cylinder

Machine Status	Mains Power OFF Steam ON Water OFF Air OFF
SPC Reference	2811727-0100

Note! When assembling, unless specified in the procedure, tighten all the screws according to the torque indicated in 10.1.1 Jaw System Screws Tightening Torque.

Note! Labelling items avoids confusion during assembly.

a) Remove the nut (1) and disconnect the rod end (2) from the arm (3).

b) Label and remove the air hoses (4) and (5).

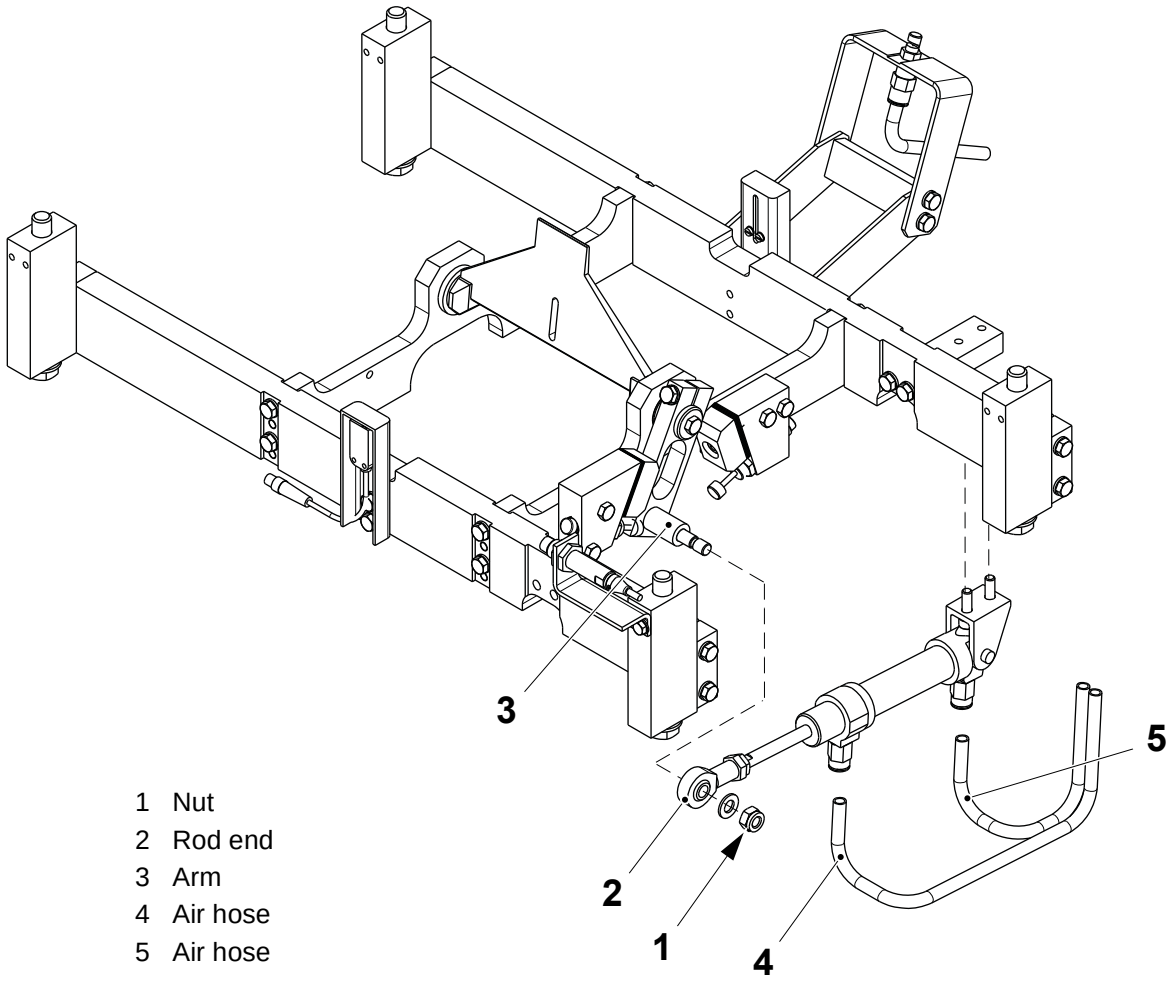

1 Nut
2 Rod end
3 Arm
4 Air hose
5 Air hose

(Cont'd)

TechPub_2614345_0107 - 0403_3048149_01.fm

(Cont'd)

c) Remove the screws (6) and the cylinder (7).

d) Replace the pneumatic cylinder and assemble in the reverse order, taking care to refit the air lines correctly.

Note! Check that the throttle valves (8) are fully open.

e) Set the pneumatic cylinder, see 4.7-3 Waste Box - Set Pneumatic Cylinder.

Note! If the air hoses (4) and (5) have to be replaced, make sure that the length of both the new air hoses is 1500 mm. If not, problems in the waste box working may occur.

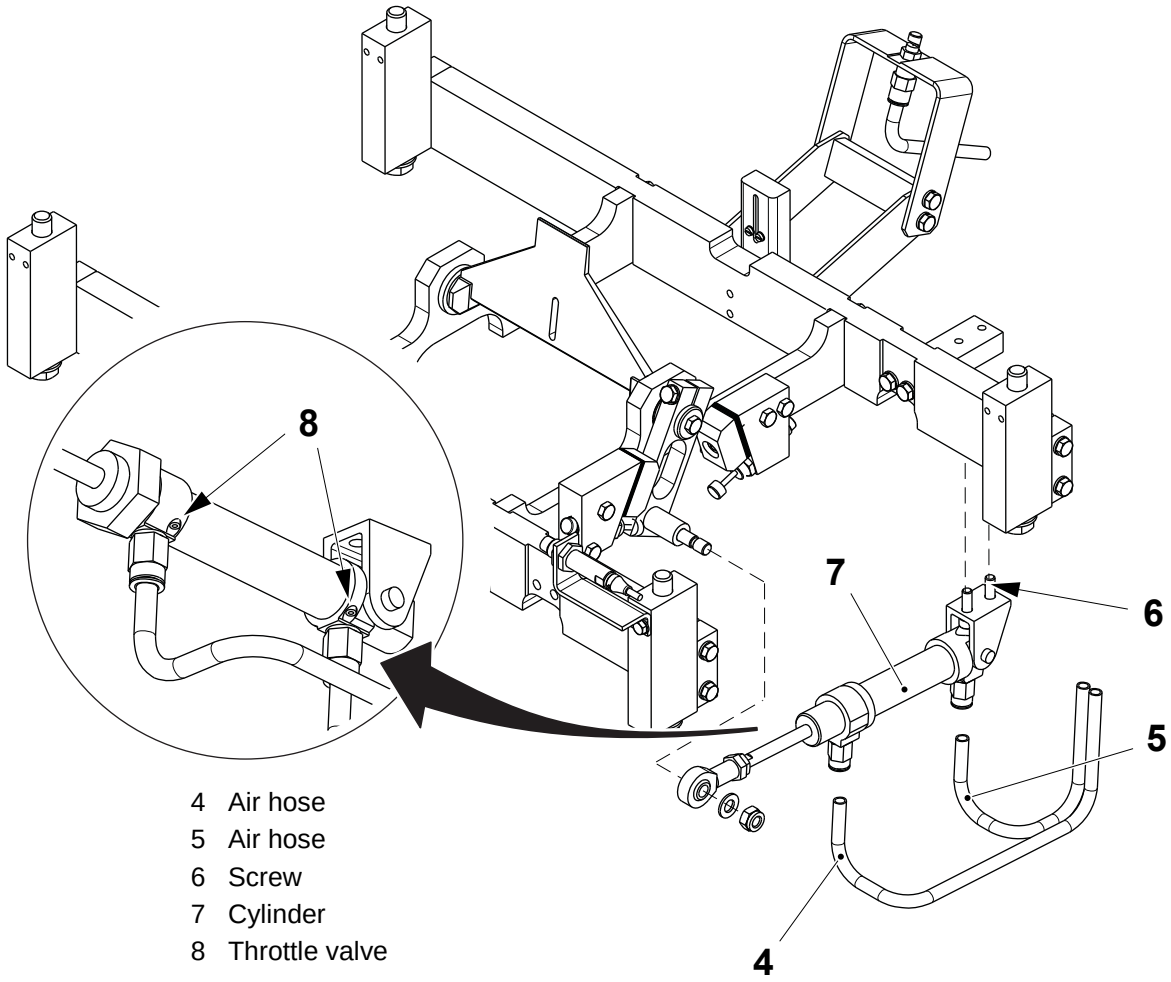

4 Air hose
5 Air hose
6 Screw
7 Cylinder
8 Throttle valve

TechPub_2614345_0107 - 0403_3048149_01.fm

4.7-3 Waste Box - Set Pneumatic Cylinder

Machine Status	Mains Power OFF Steam ON Water OFF Air OFF
Special Equipment	Tool (for Portion Packages) No. 2954995-0000 or 3053983-0000
SPC Reference	2811727-0100

Valid for Portion Packages

a) Fit the tool (1) on the waste box frame as shown below.

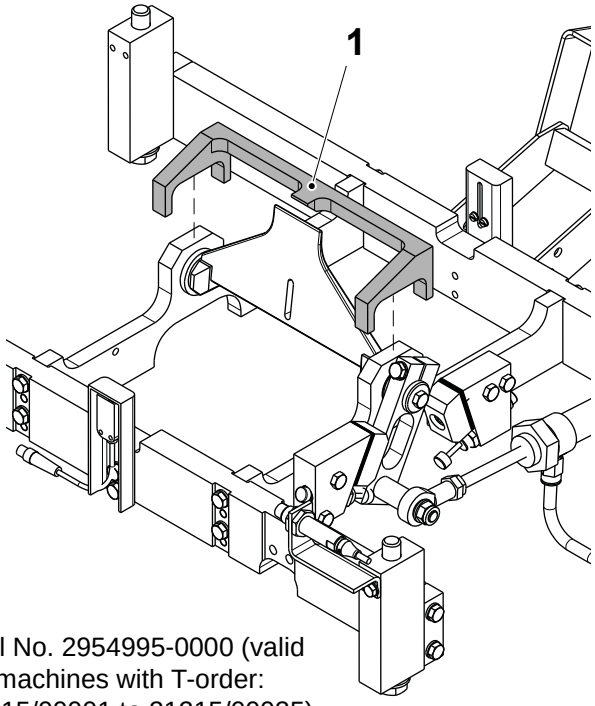

Tool No. 2954995-0000 (valid for machines with T-order: 21215/00001 to 21215/00035)

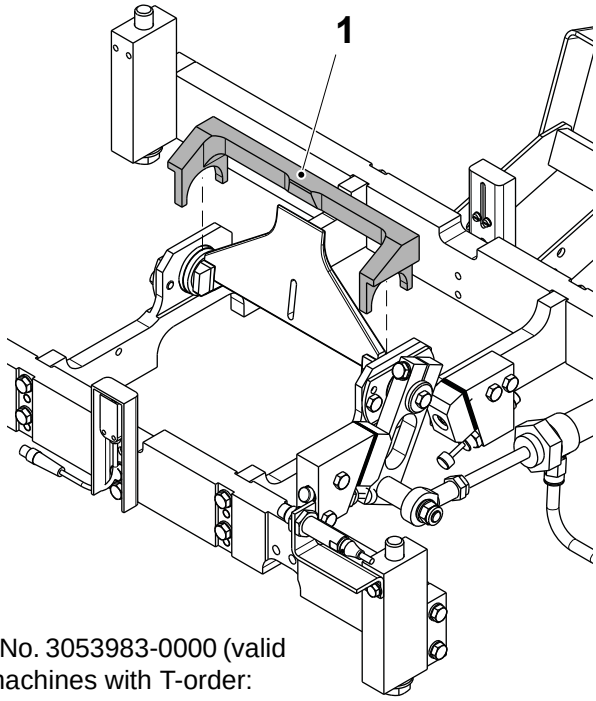

Tool No. 3053983-0000 (valid for machines with T-order: 21215/00035 and above)

1 Tool

(Cont'd)

TechPub_2614345_0107 - 0403_3048149_01.fm

(Cont'd)

b) Move the plate (2) in production position until it touches the tooth of the tool (1).

c) If necessary, adjust the stroke of the piston rod (3) by the nut (4) so that the end stroke is when the plate (2) touches the tool (1).

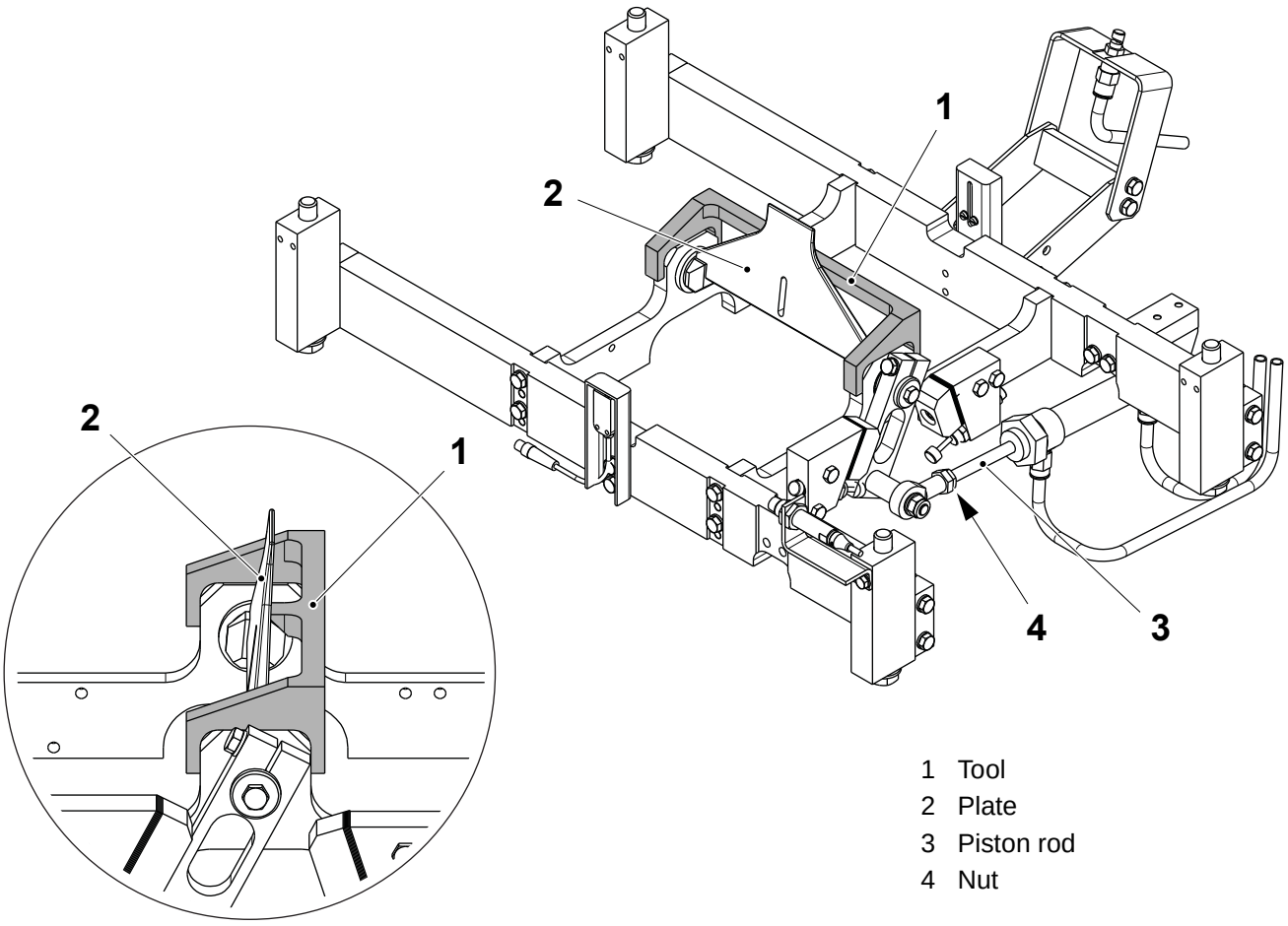

1 Tool
2 Plate
3 Piston rod
4 Nut

(Cont'd)

TechPub_2614345_0107 - 0403_3048149_01.fm

(Cont'd)

Note! A quantity of shims is fit under the damper (5) in order that the arm (7) ends its stroke mating perfectly the damper surface.

d) Insert under the damper (5) the shims (6) which are needed so that the arm (7) touches the damper (5) at the end of the stroke.

e) Allow 0.3 mm of extra stroke to the piston rod (3) by the nut (4).

f) Remove the tool (1).

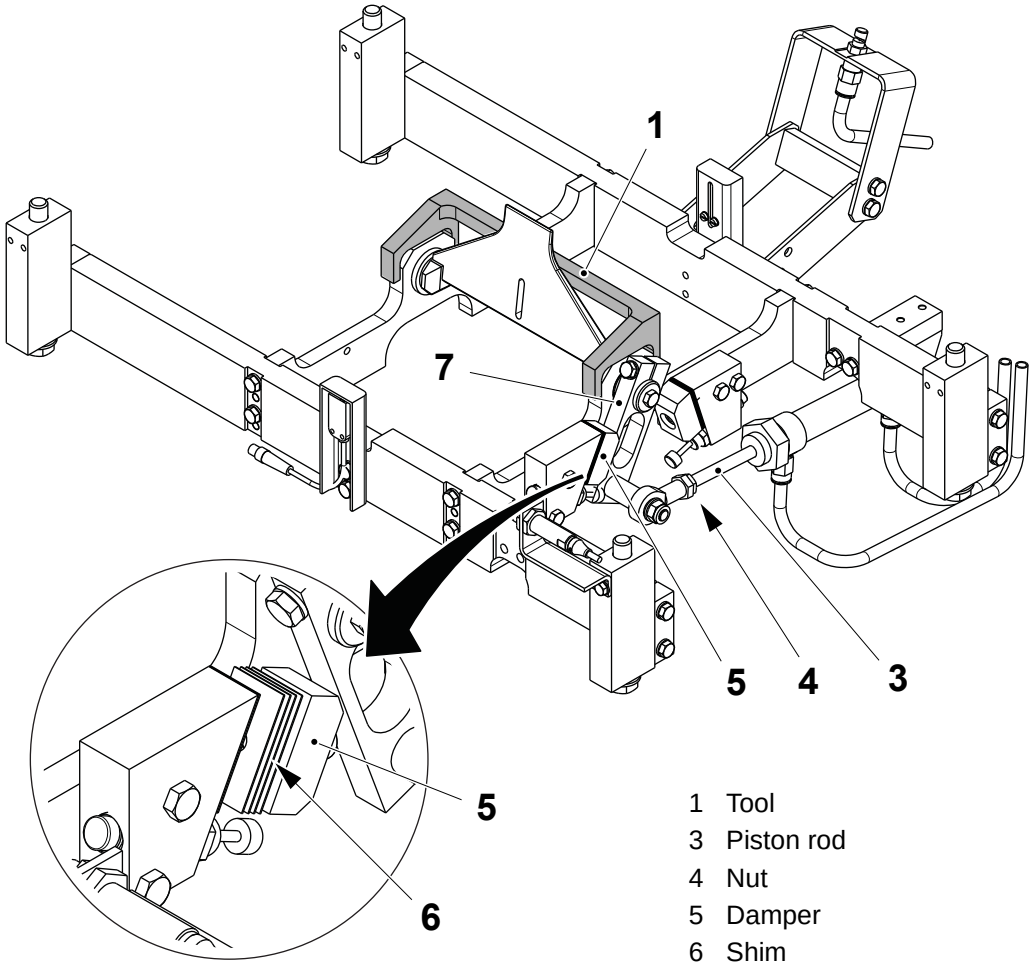

1 Tool
3 Piston rod
4 Nut
5 Damper
6 Shim
7 Arm

TechPub_2614345_0107 - 0403_3048149_01.fm

(Cont'd)

(Cont'd)

Note! A quantity of shims is fit under the damper (8) in order that the arm (7) ends its stroke mating perfectly the damper surface.

g) Fully retract the piston rod (3) in waste position.

h) Insert under the damper (8) the shims (6) which are needed so that the arm (7) ends its stroke against the damper (8).

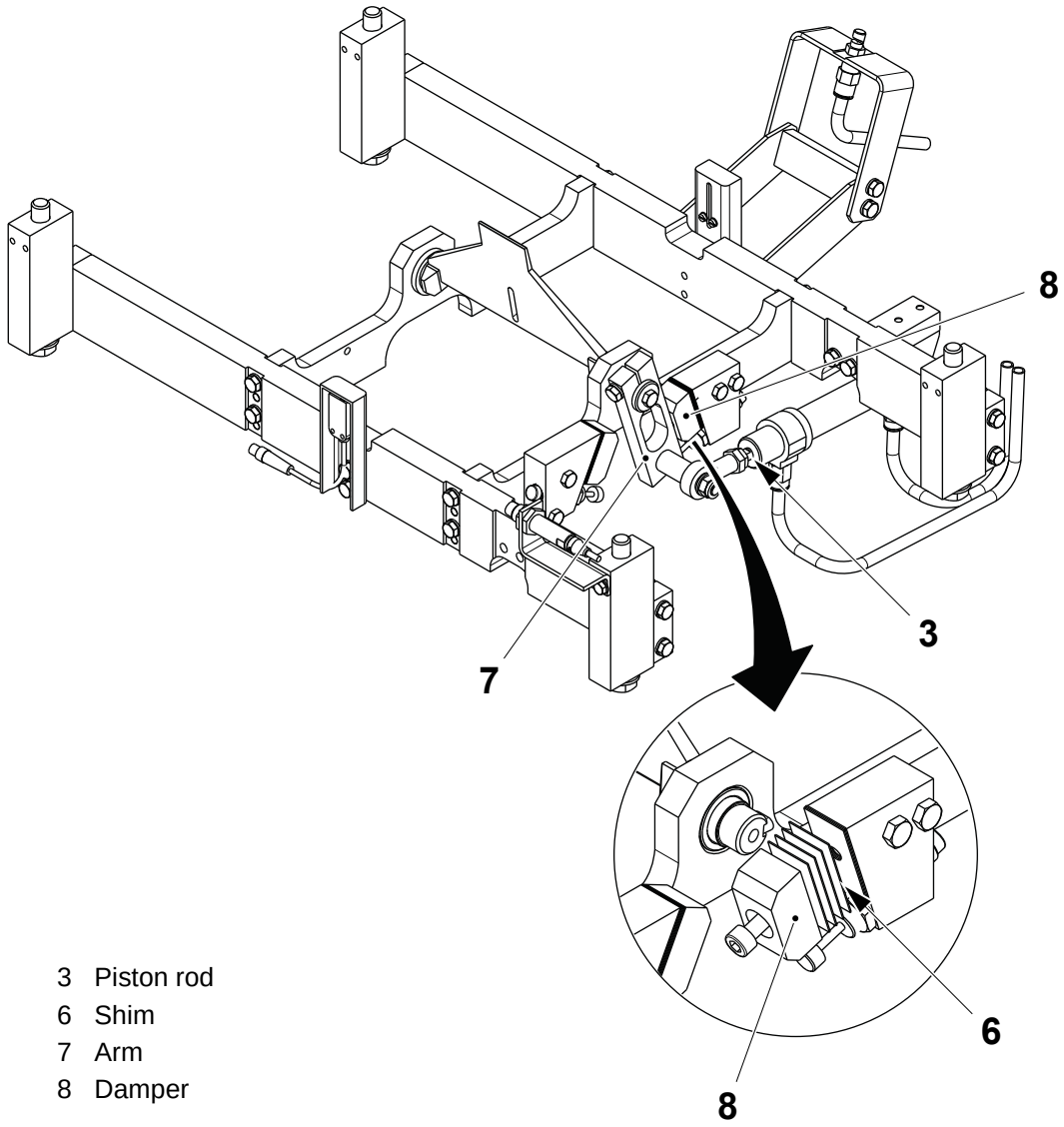

3 Piston rod
6 Shim
7 Arm
8 Damper

(Cont'd)

TechPub_2614345_0107 - 0403_3048149_01.fm

(Cont'd)

Note! The rods (10) of the shock absorbers (9) should retract 10 mm when they are pushed by the arm (7).

i) For both the shock absorbers (9) set the distance **A** between the rod (10) fully extended and the dampers (5) and (8) by the nut (11).

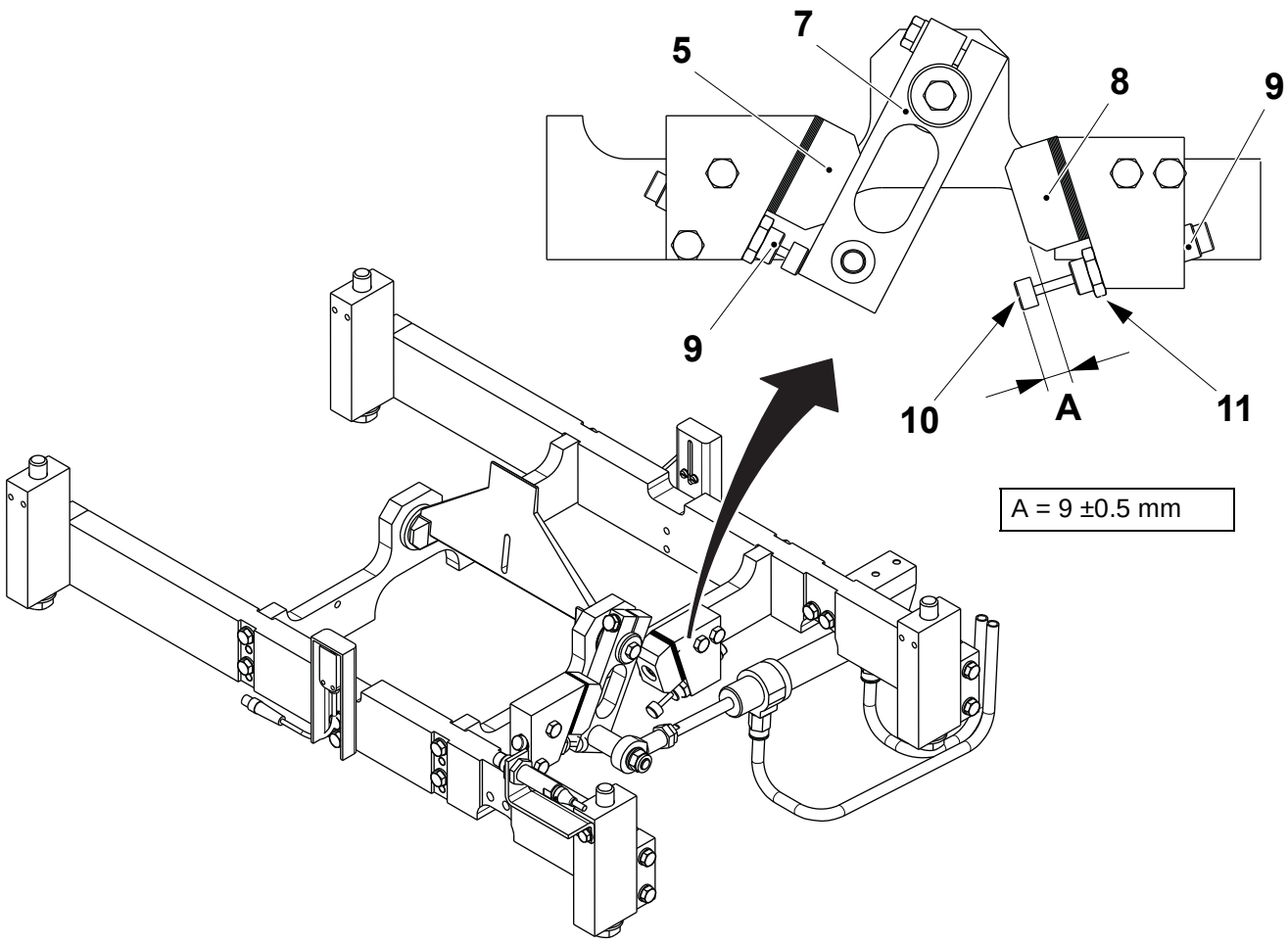

5 Damper
7 Arm
8 Damper
9 Shock absorber
10 Rod
11 Nut

(Cont'd)

TechPub_2614345_0107 - 0403_3048149_01.fm

(Cont'd)

Valid for Family Packages

Note! A quantity of shims is fit under the dampers (1) and (2) in order that the arm (3) ends its stroke mating perfectly the damper surface. The table resumes the No. of shims to be fitted under the dampers (1) and (2) for each volume.

Package	**No. of shims**	
	Damper (1)	Damper (2)
TBA 1000 S	6	6
TBA 1000 Sq	0	6
TBA 1000 B	6	6

Production Position Waste Position

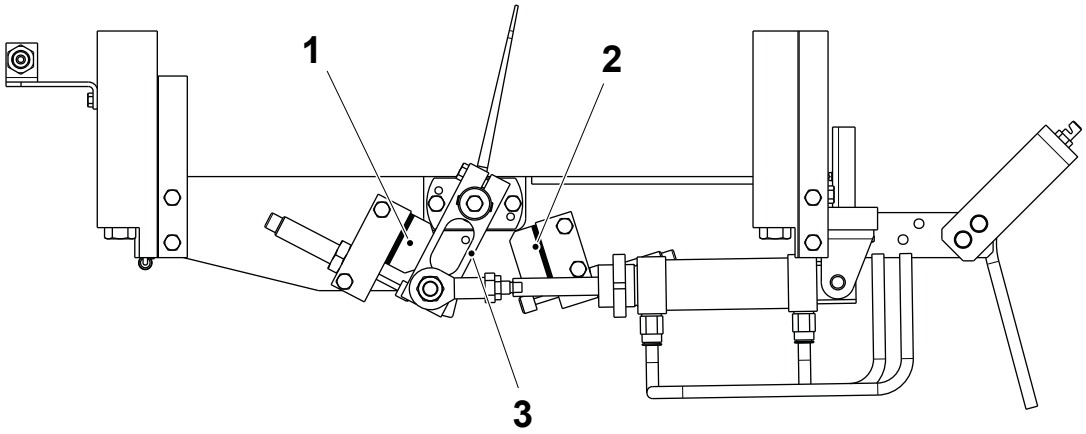

1 Damper
2 Damper
3 Arm

(Cont'd)

TechPub_2614345_0107 - 0403_3048149_01.fm

(Cont'd)

a) Move the arm (3) against the damper (1) in production position and align the plate (4) to the chute (5) as shown below.

b) Insert under the damper (1) the shims (6) which are needed so that the arm (3) touches the damper (1) when the plate (4) and the chute (5) are aligned, see table on page 4-263.

c) Allow 0.3 mm of extra stroke to the piston rod (7) by the nut (8).

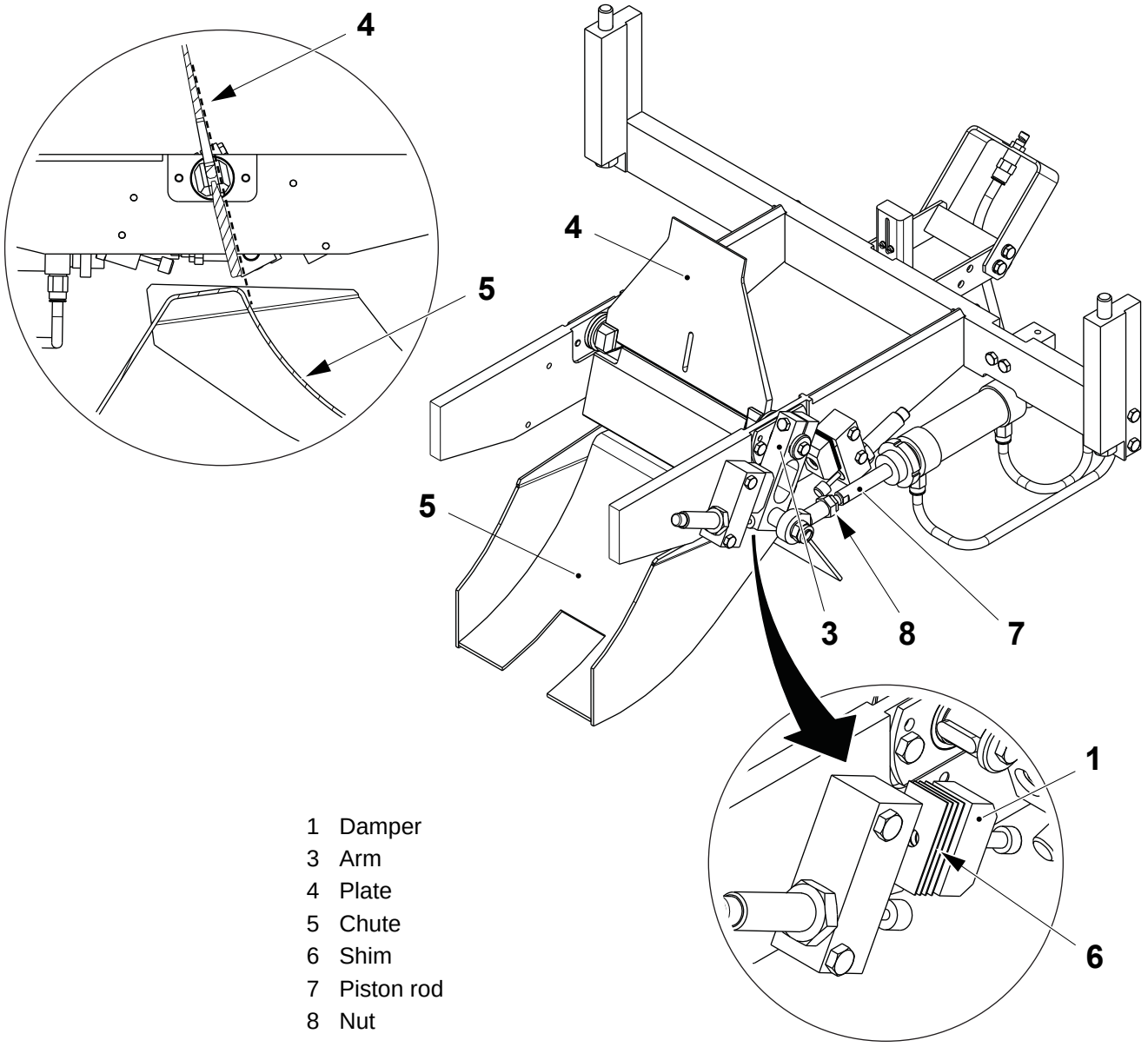

1 Damper
3 Arm
4 Plate
5 Chute
6 Shim
7 Piston rod
8 Nut

(Cont'd)

TechPub_2614345_0107 - 0403_3048149_01.fm

(Cont'd)

d) Fully retract the piston rod (7) in waste position.

e) Insert under the damper (2) the shims (6) which are needed so that the arm (3) ends its stroke against the damper (2), see table on page 4-263.

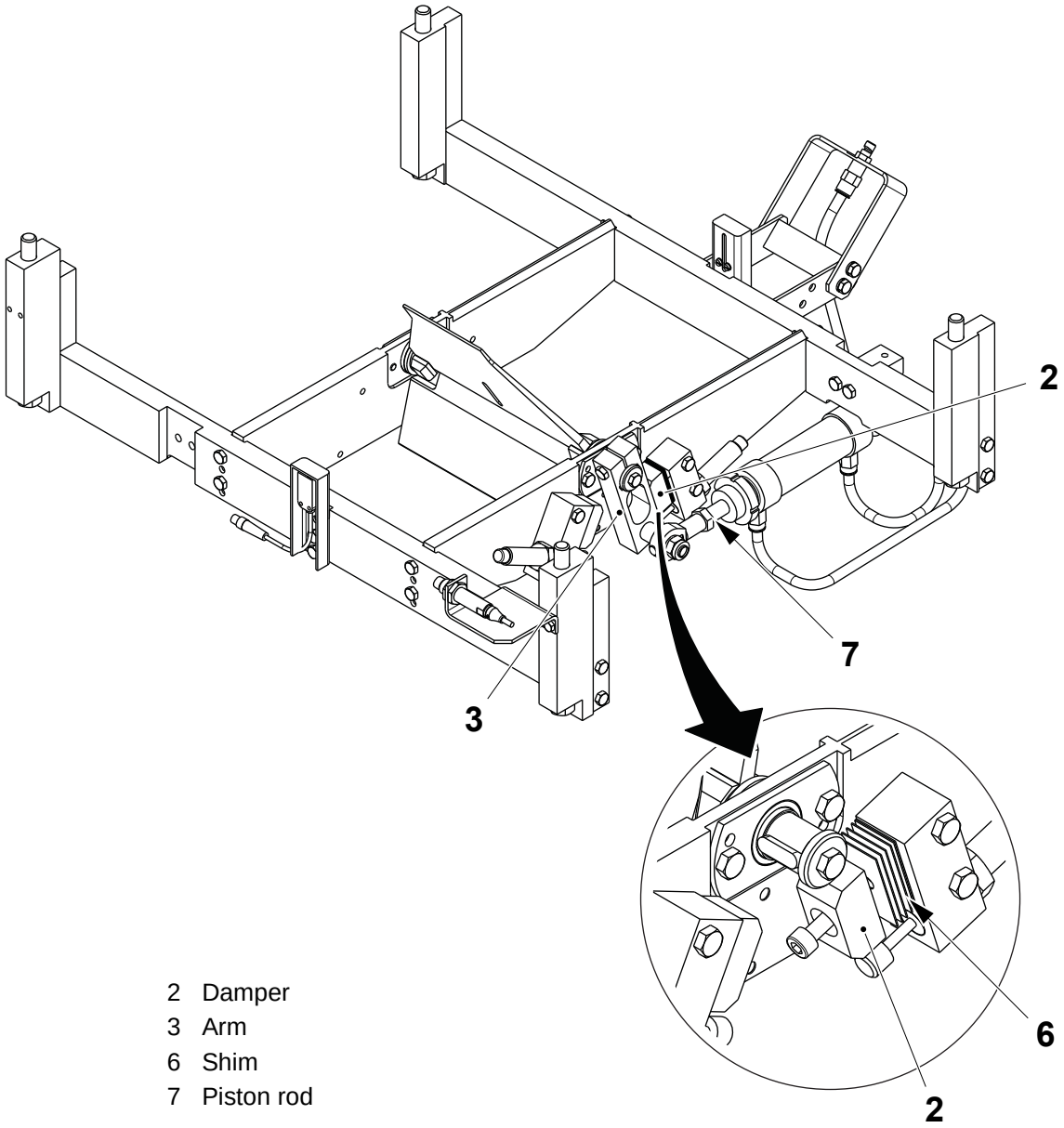

2 Damper
3 Arm
6 Shim
7 Piston rod

(Cont'd)

TechPub_2614345_0107 - 0403_3048149_01.fm

(Cont'd)

Note! The rods (10) of the shock absorbers (9) should retract 10 mm when they are pushed by the arm (3).

f) For both the shock absorbers (9) set the distance **A** between the rod (10) fully extended and the dampers (1) and (2) by the nut (11).

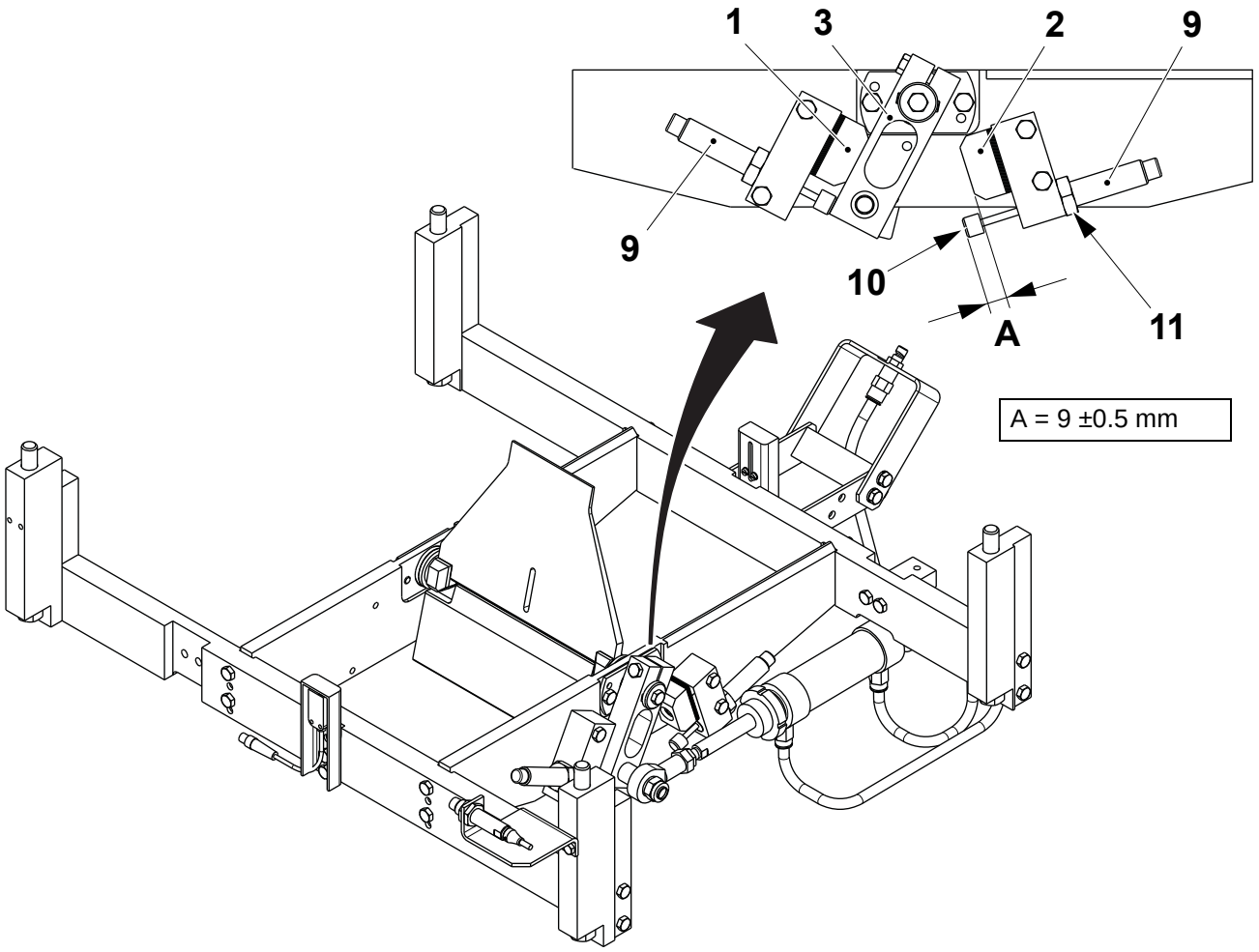

1 Damper
2 Damper
3 Arm
9 Shock absorber
10 Rod
11 Nut

TechPub_2614345_0107 - 0403_3048149_01.fm

4.7-4 Waste Box - Change Bushings

Machine Status	Mains Power OFF Steam ON Water OFF Air OFF
SPC Reference	2811727-0100

Note! When assembling, unless specified in the procedure, tighten all the screws according to the torque indicated in 10.1.1 Jaw System Screws Tightening Torque.

Remove the waste box, see 4-7 Jaw System - Remove and Assemble Chains and place it on the work bench.

(Cont'd)

TechPub_2614345_0107 - 0403_3048149_01.fm

(Cont'd)

Valid for Machines with T-order: 21215/00001 to 25215/00035

a) Remove the pneumatic cylinder (1), see 4.7-2 Waste Box - Change Pneumatic Cylinder.

b) Remove the screws (2) and the plate (3).

c) Remove the screws (4) and the plate (5).

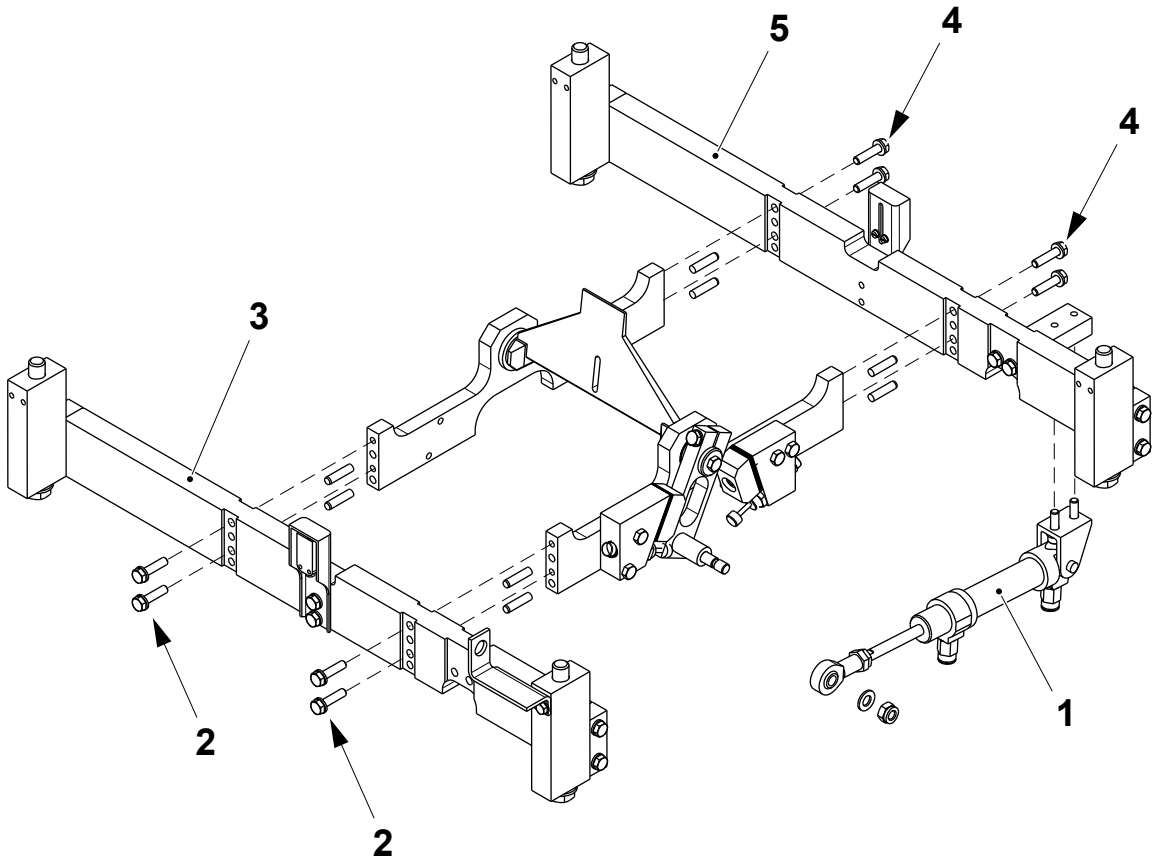

1 Cylinder
2 Screw
3 Plate
4 Screw
5 Plate

TechPub_2614345_0107 - 0403_3048149_01.fm

(Cont'd)

(Cont'd)

d) Remove the screw (6).
e) Remove the screw (7) and the arm (8).
f) Separate the two side frames (9) and (10).
g) Remove the plate (11) and change the bushings (12).
h) Assemble in the reverse order.

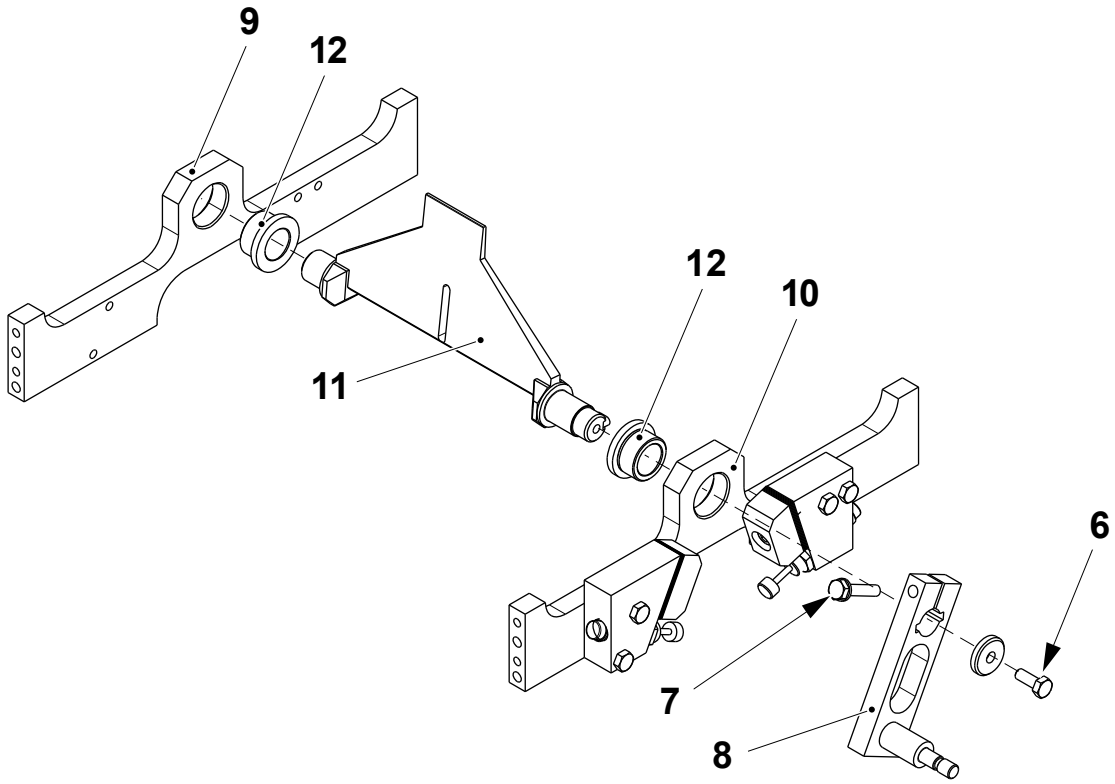

6 Screw
7 Screw
8 Arm
9 Side frame
10 Side frame
11 Plate
12 Bushing

(Cont'd)

TechPub_2614345_0107 - 0403_3048149_01.fm

(Cont'd)

Valid for Machines with T-order: 21215/00035 and above

a) Remove the pneumatic cylinder (1), see 4.7-2 Waste Box - Change Pneumatic Cylinder.

b) Remove the screw (2).

c) Loosen the screw (3) and remove the arm (4).

d) On both sides, remove the screws (5) and the flanges (6).

e) Remove and change the bushings (7).

f) Assemble in the reverse order.

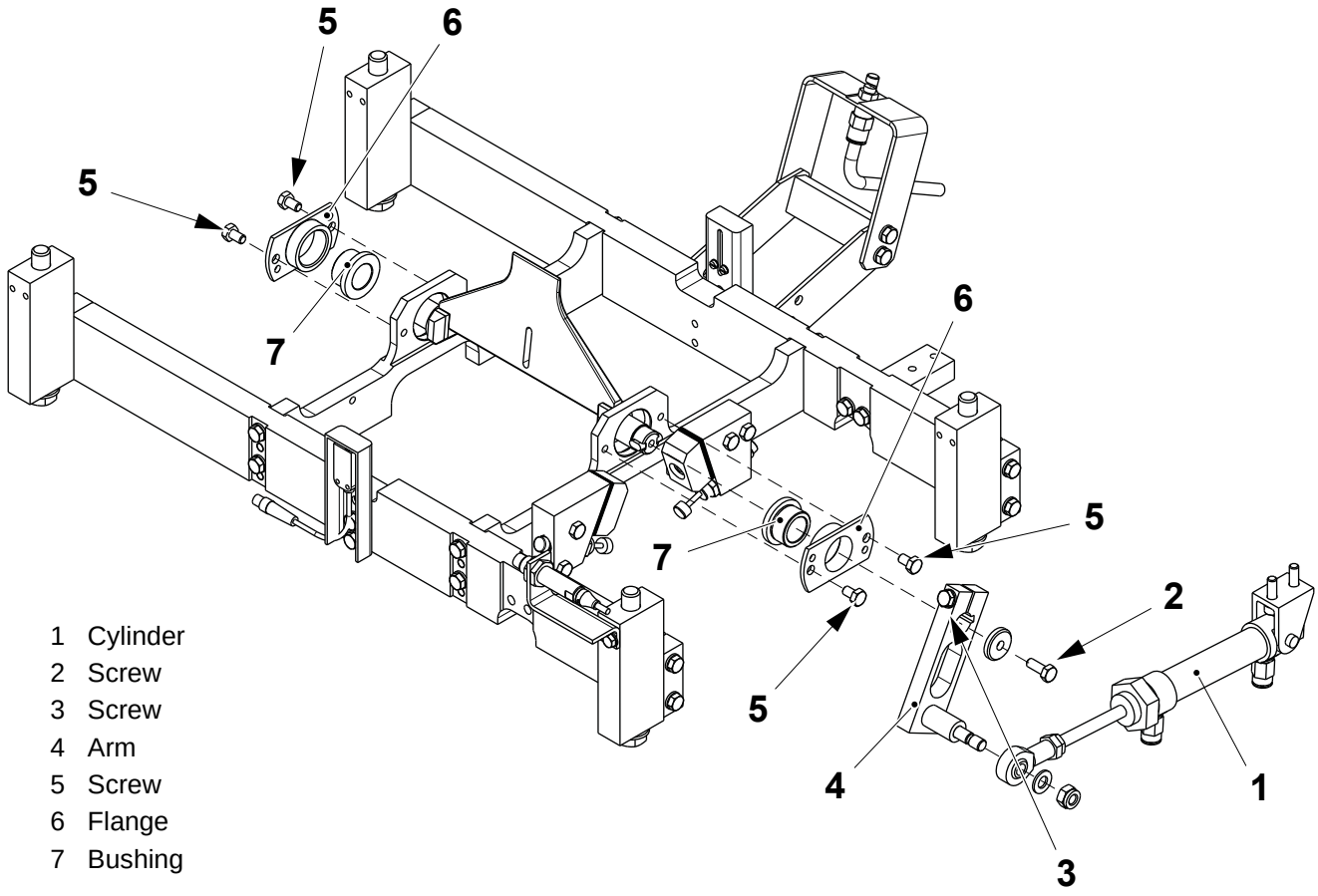

1 Cylinder
2 Screw
3 Screw
4 Arm
5 Screw
6 Flange
7 Bushing

TechPub_2614345_0107 - 0403_3048149_01.fm

4.7-5 Waste Box - Check Pressure Switch

Machine Status	PREPARATION
SPC Reference	2811727-0100 2774463-0100

a) Open a door of the Jaw System/Final Folder compartment.

b) On the valve panel (1), force the valve T40K9700 (2) by the buttons (3) and (4) and check that the waste box does not move. If the drop chute moves, check the setting of the pressure switch (5).

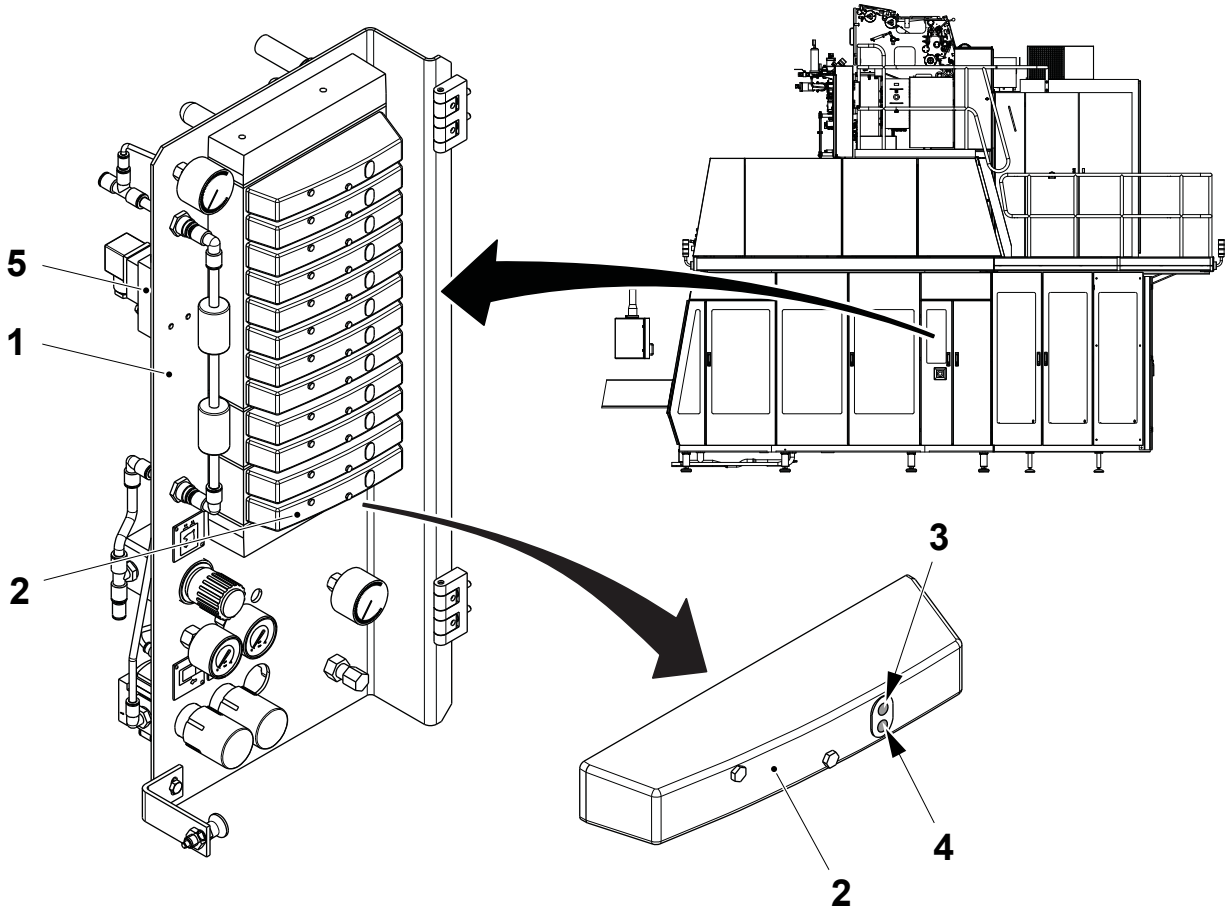

1 Valve panel
2 Valve T40K9700
3 Button
4 Button
5 Pressure switch

TechPub_2614345_0107 - 0403_3048149_01.fm

4.7-6 Waste Box - Check Nozzle

Machine Status	Mains Power OFF Steam ON Water OFF Air OFF
SPC Reference	2811727-0100

Remove the nozzle (1) from the push-in fitting (2) and check that is not clogged and free from lime scale deposits.

If necessary dip the nozzle (1) into a container with deliming agent.

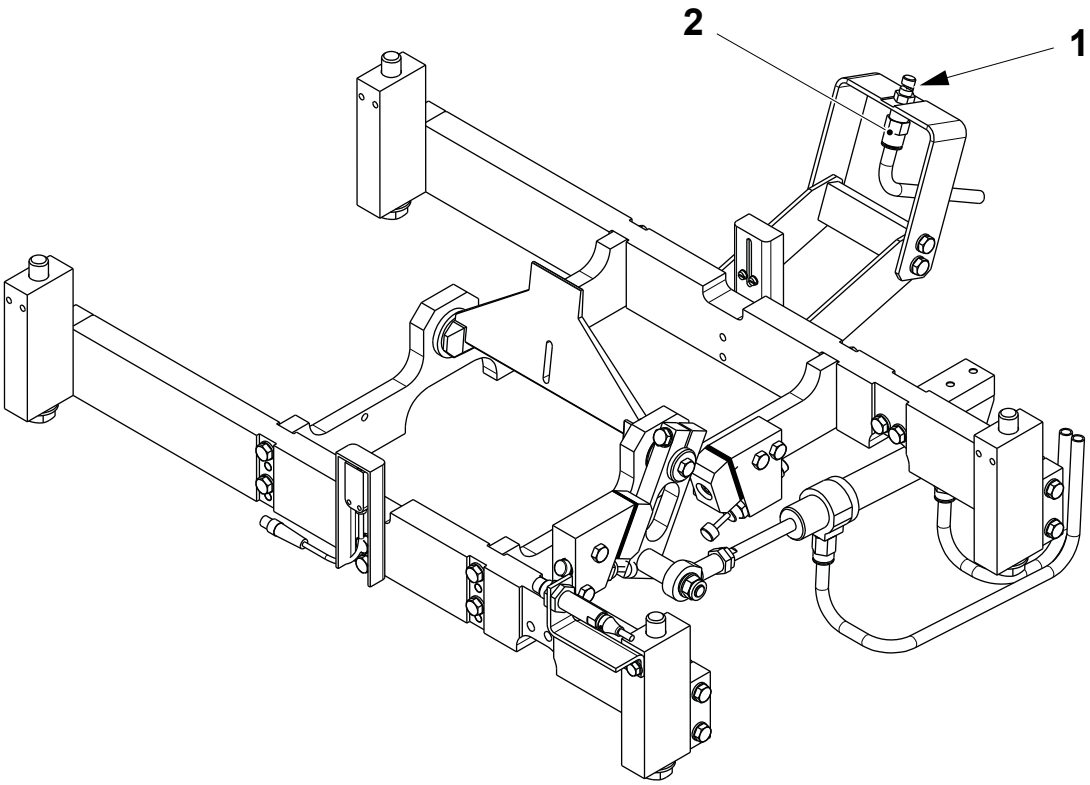

1 Nozzle
2 Push-in fitting

TechPub_2614345_0107 - 0403_3048149_01.fm

4.8 Grease Lubrication System

SPC Reference	2639006-0100

4.8-1 Grease Lubrication System - Change Cylinders

Machine Status	Mains Power OFF Steam ON Water OFF Air OFF
SPC Reference	2639006-0200

Note! When assembling, unless specified in the procedure, tighten all the screws according to the torque indicated in 10.1.1 Jaw System Screws Tightening Torque.

(Cont'd)

TechPub_2614345_0107 - 0402_3048150_01.fm

(Cont'd)

a) Disconnect the air pipes (shaded grey) (1) from the cylinder to be changed.

b) Disconnect the grease pipes and the connectors (2) from the cylinder to be changed.

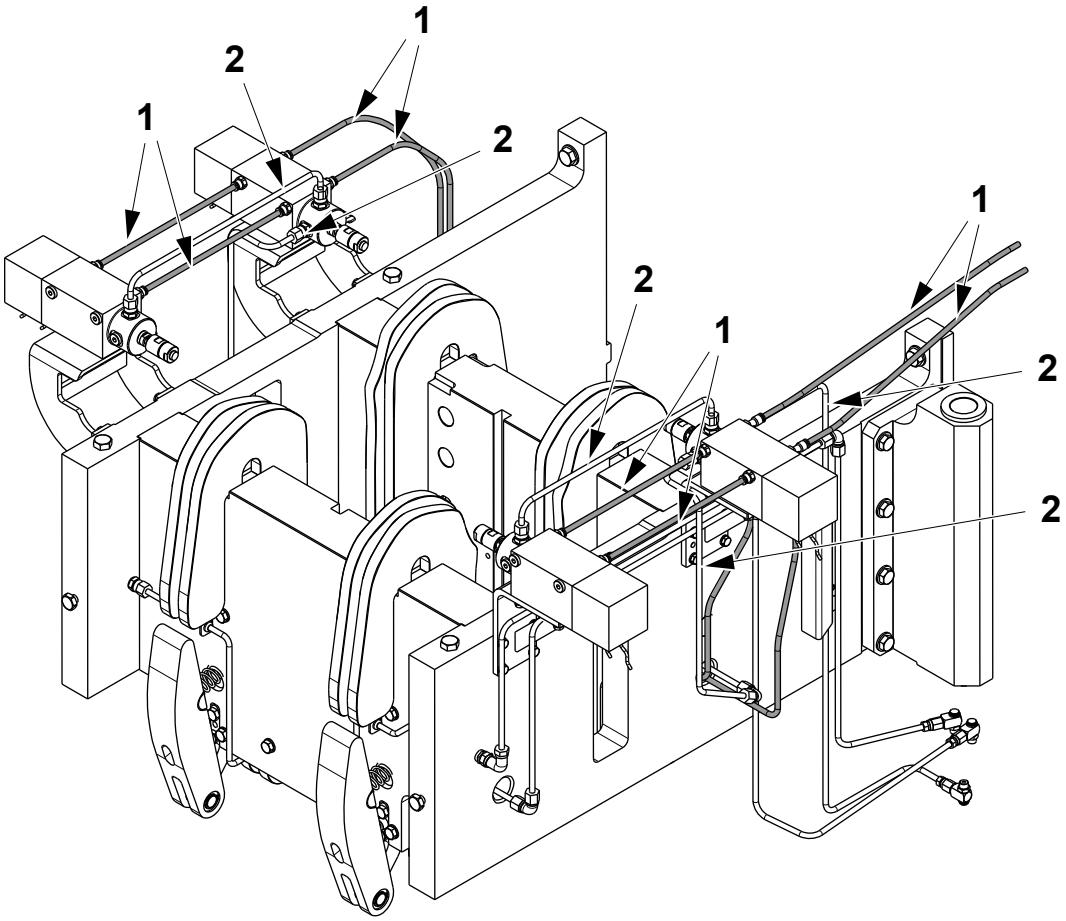

1 Air pipe
2 Grease pipe

(Cont'd)

TechPub_2614345_0107 - 0402_3048150_01.fm

(Cont'd)

c) Remove the cover (3).

d) Remove the screws (4) and the sensor bracket (5) from the cylinder (6).

e) Remove the screws (7) and the appropriate cylinder (6) from the plates (8) and (9).

f) Change the cylinder and assemble in the reverse order.

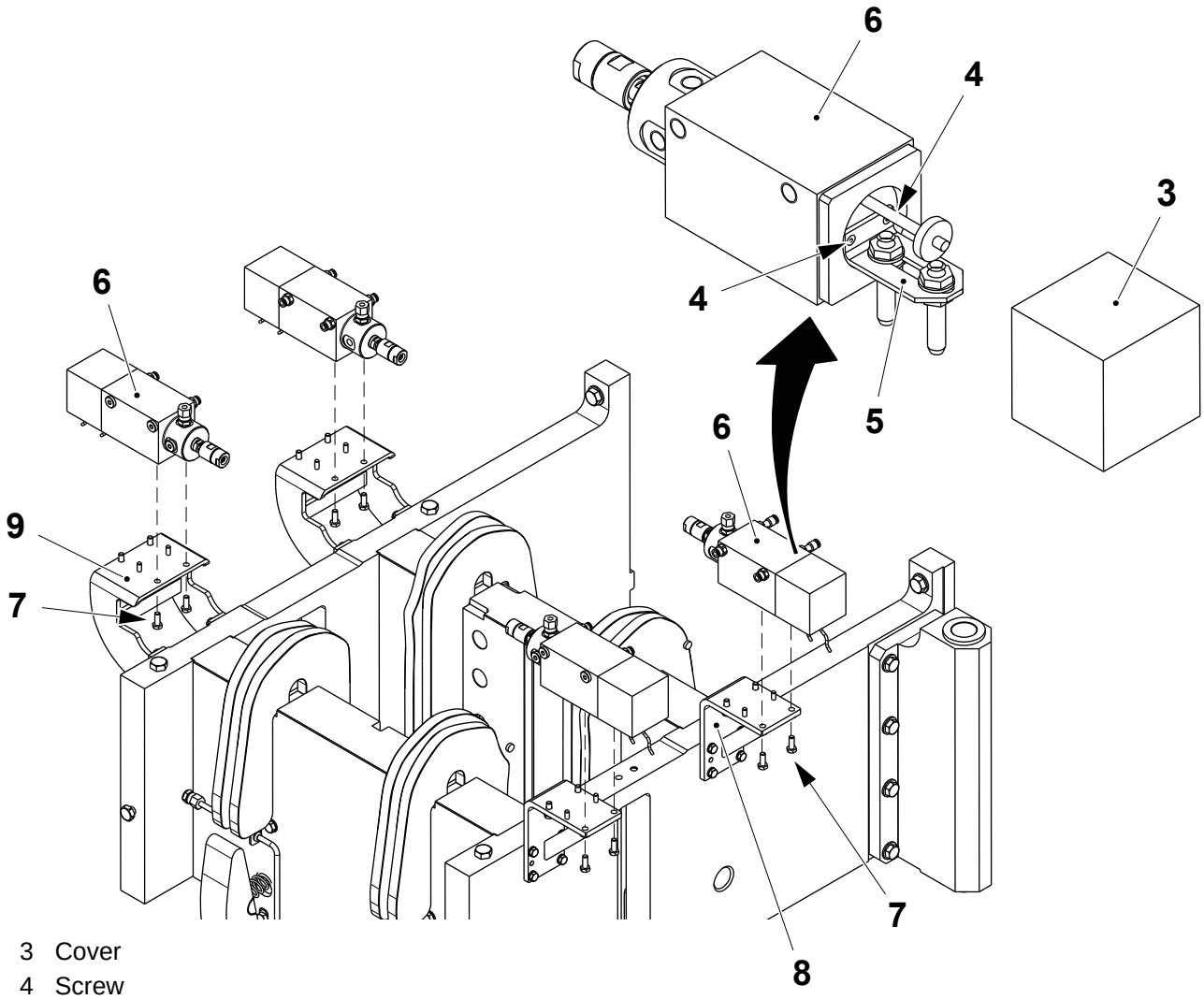

3 Cover
4 Screw
5 Bracket
6 Cylinder
7 Screw
8 Cylinder
9 Plate

TechPub_2614345_0107 - 0402_3048150_01.fm

4.8-2 Grease Lubrication System - Set Sensors

Machine Status	Mains Power ON Steam ON Water OFF Air ON
SPC Reference	2639006-0200

WARNING

Risk of crushing.

When about to move a cylinder, give warning to others to prevent injury.

a) Loosen the locknuts (1) and (2) on the sensors (3) and (4).

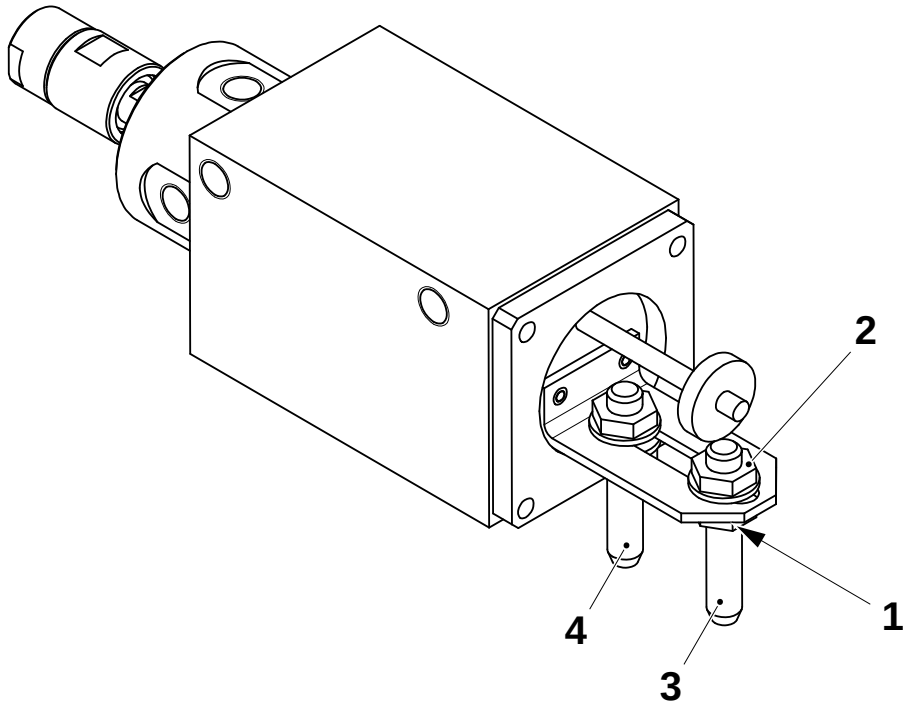

1 Locknut
2 Locknut
3 Sensor
4 Sensor

(Cont'd)

TechPub_2614345_0107 - 0402_3048150_01.fm

(Cont'd)

Note! Distance **B** is the distance between the end of the plate (7) and the centre of the wheel (8). The centre of the sensor (4) must be aligned with the centre of the wheel (8).

b) Push the button (5) to activate valve T40K9680 (6).

c) When the cylinder piston stops moving, at the END POSITION SHAFT GREASING**,** move the inner sensor (4) to set the distances **A** and **B**.

d) Tighten the lock nuts on the inner sensor (4) when the sensor (4) is in the correct position.

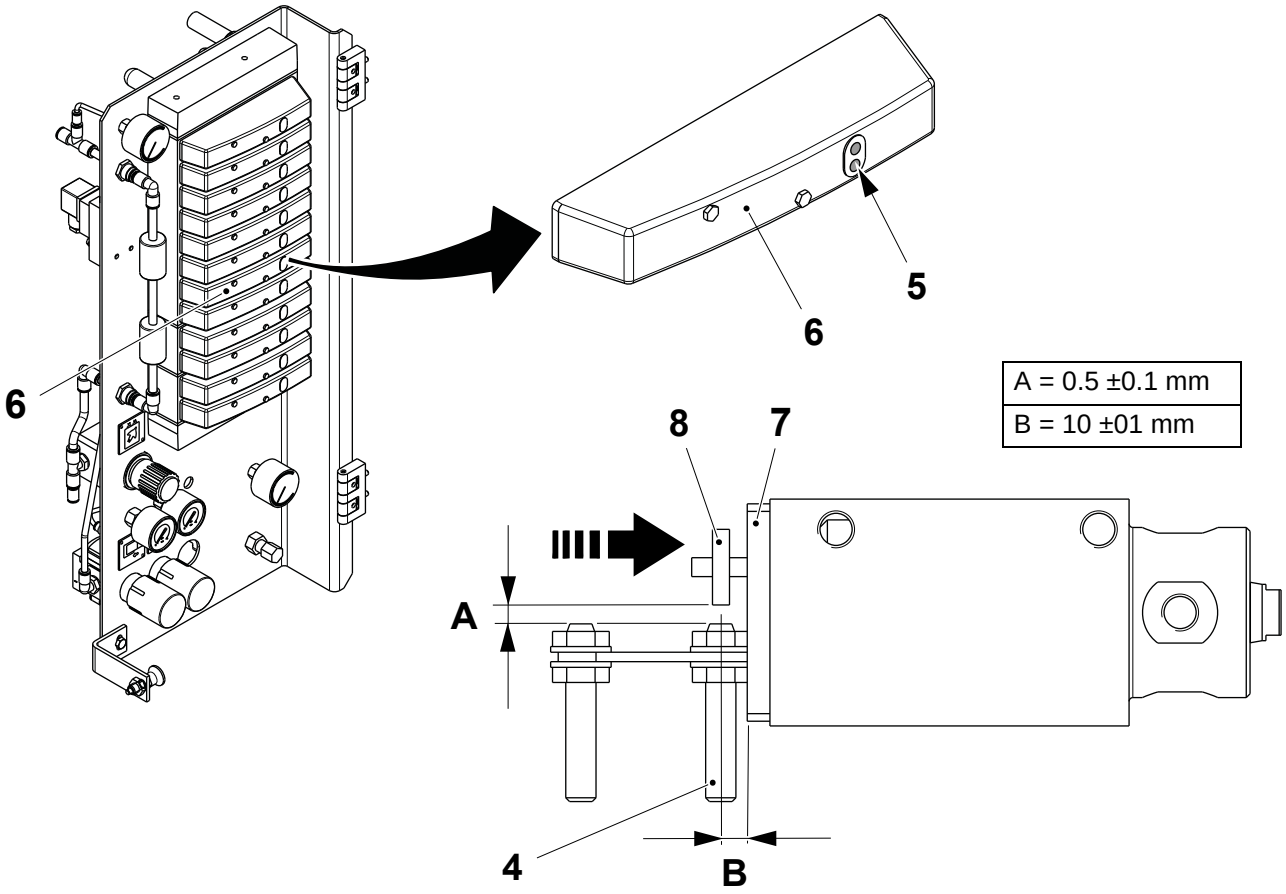

4 Sensor
5 Button
6 Valve T40K9680
7 Plate
8 Wheel

(Cont'd)

TechPub_2614345_0107 - 0402_3048150_01.fm

(Cont'd)

Note! Distance **C** is the distance between the end of the plate (7) and the centre of the wheel (8). The centre of the sensor (3) must be aligned with the centre of the wheel (8).

e) Release the button (5) to de-activate valve T40K9680 (6).

f) When the cylinder piston stops moving, at the SHAFT GREASING CYCLE COMPLETE position**,** move the outer sensor (3) to set the distances **A** and **C**.

g) Tighten the locknuts on the outer sensor (3) when the sensor (3) is in the correct position.

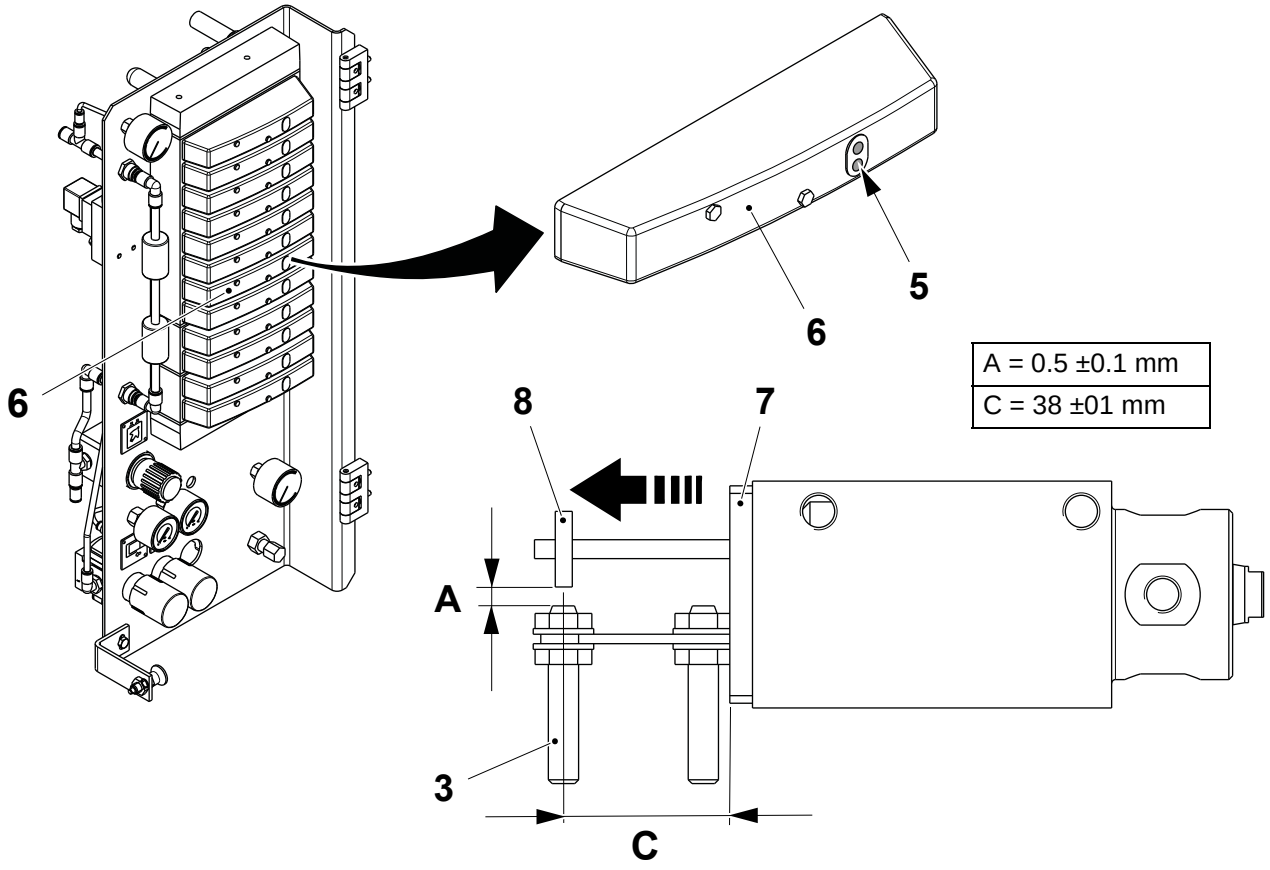

A = 0.5 ±0.1 mm
C = 38 ±01 mm

3 Sensor
5 Button
6 Valve T40K9680
7 Plate
8 Wheel

TechPub_2614345_0107 - 0402_3048150_01.fm

5 Final Folder

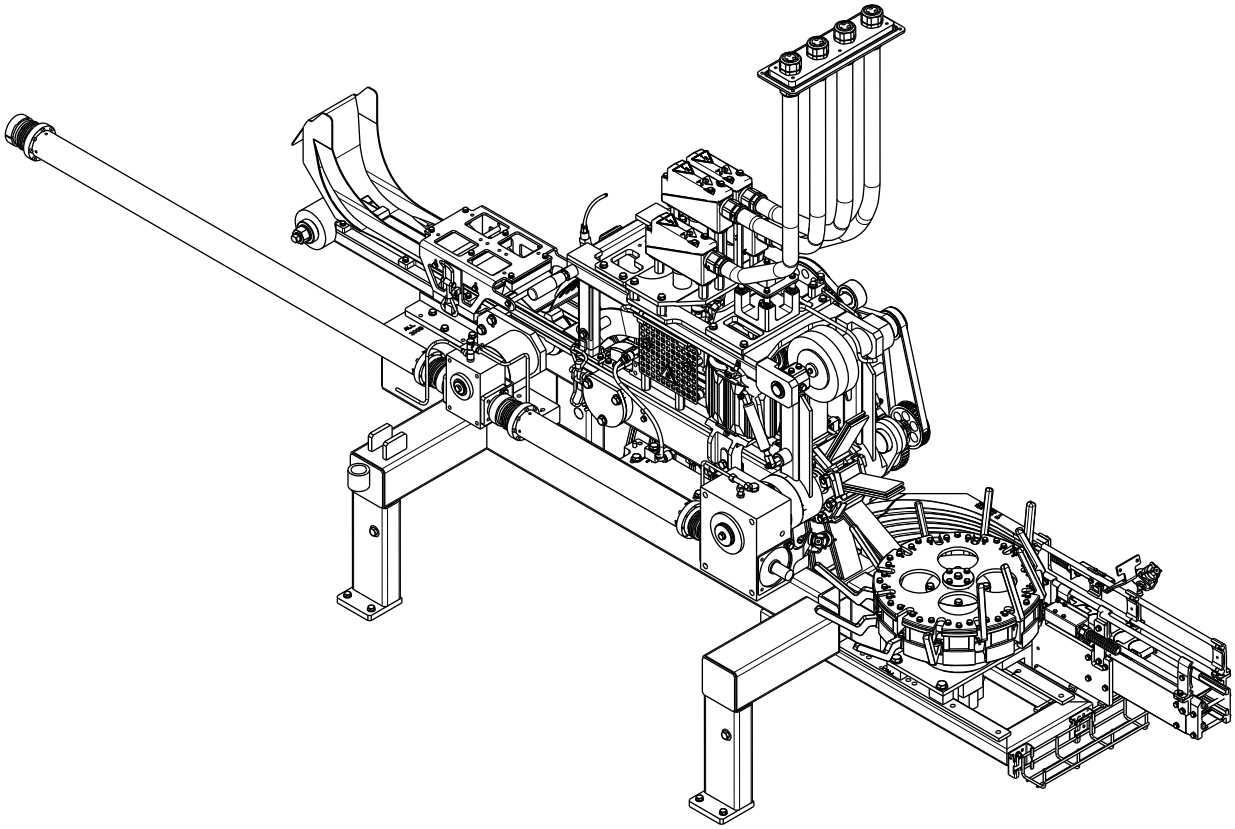

TechPub_2614345_0107 - 0503_3048163_01.fm

Final Folder - Description

SPC Reference	648537-0500

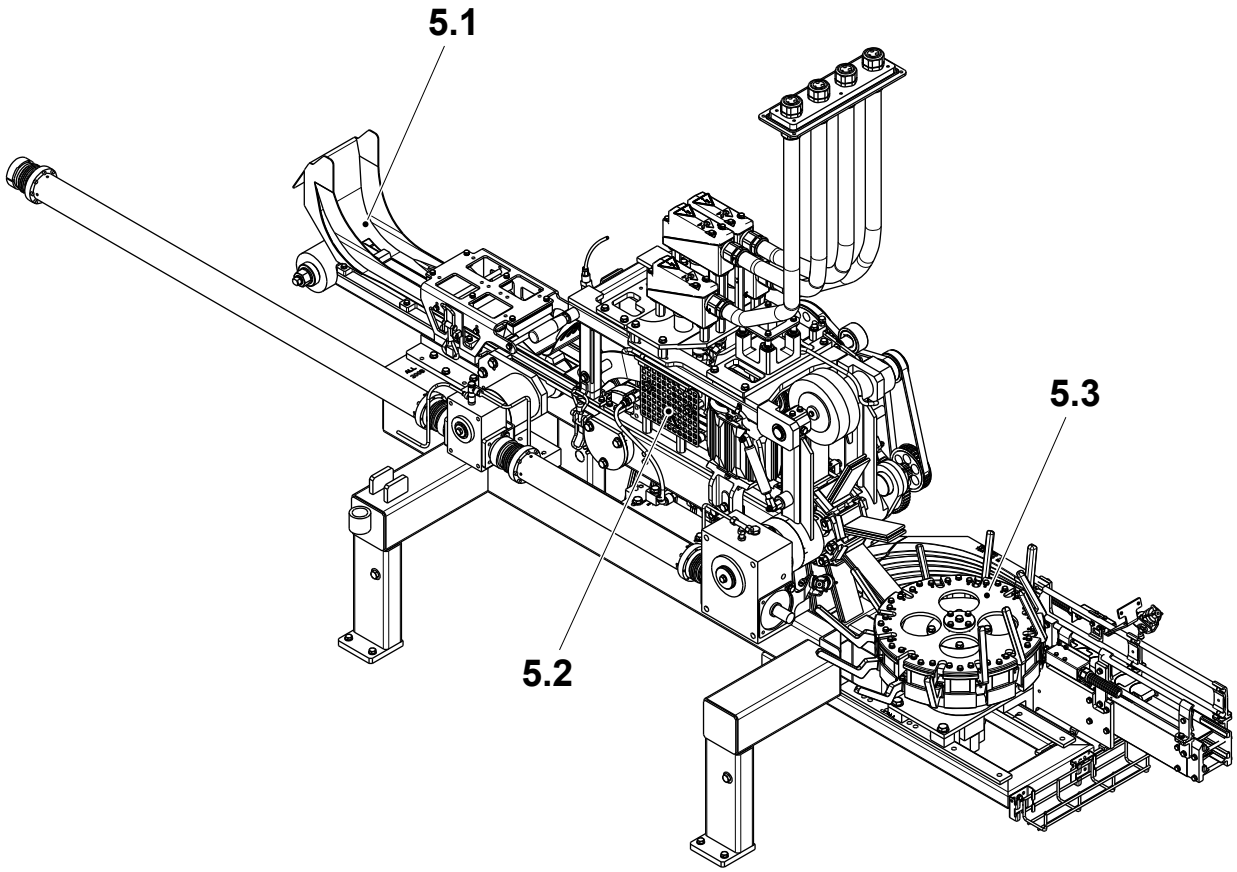

5.1 Conveyor
5.2 Final Folder
5.3 Discharge Device

TechPub_2614345_0107 - 0503_3048163_01.fm

5 Final Folder . . . . . 5 - 7

5-1 Final Folder Unit - Synchronise . . . . . 5 - 7

5-2 Final Folder Unit - Inch . . . . . 5 - 17

5-3 Final Folder Unit - Jog Infeed and Outfeed Unit 5 - 19

5-4 Final Folder Unit - Activate Flap Heaters Air Flow . . . . . 5 - 21

5-5 Final Folder Unit - Check Coupling . . . . . 5 - 22

5-6 Final Folder Unit - Change Gearbox Oil . . . . . 5 - 23

5-7 Final Folder Unit - Check Nozzles . . . . . 5 - 25

5.1 Conveyor . . . . . 5 - 27

5.1-1 Conveyor - Change Belt . . . . . 5 - 27

5.1-2 Conveyor - Check Bearings . . . . . 5 - 33

5.1-3 Conveyor - Overhaul . . . . . 5 - 34

5.1-4 Conveyor - Set Brake . . . . . 5 - 44

5.1-5 Conveyor - Change Roller . . . . . 5 - 49

5.1-6 Conveyor - Set Roller . . . . . 5 - 50

5.1-7 Conveyor - Set Belt . . . . . 5 - 51

5.2 Final Folder . . . . . 5 - 53

5.2.1 Station Chain . . . . . 5 - 53

5.2.1-1 Station Chain - Change . . . . . 5 - 53

5.2.1-2 Station Chain - Overhaul . . . . . 5 - 60

5.2.1-3 Station Chain - Turn Shafts . . . . . 5 - 62

5.2.1-4 Station Chain - Check Sliders . . . . . 5 - 64

5.2.1-5 Station Chain - Check Plates . . . . . 5 - 65

5.2.1-6 Station Chain - Change Pins and Bushings . . . . 5 - 66

5.2.1-7 Station Chain - Change Cam . . . . . 5 - 67

5.2.2 Swing Frame. . . . . 5 - 68

5.2.2-1 Swing Frame - Check Pulley . . . . . 5 - 68

5.2.2-2 Swing Frame - Change Belt . . . . . 5 - 69

5.2.2-3 Swing Frame - Set Belt . . . . . 5 - 72

5.2.2-4 Swing Frame - Overhaul . . . . . 5 - 75

5.2.2-5 Swing Frame - Set Air Nozzle Pressure . . . . . 5 - 80

5.2.2-6 Swing Frame - Change Rollers . . . . . 5 - 81

TechPub_2614345_0107 - 0503_3048163_01.fm

5.2.3 Chain Support . . . . . 5 - 82

5.2.3-1 Chain Support - Check Chain Guide . . . . . 5 - 82
5.2.3-2 Chain Support - Change Chain Guide . . . . . 5 - 83
5.2.3-3 Chain Support - Overhaul . . . . . 5 - 85
5.2.3-4 Chain Support - Change Brushes . . . . . 5 - 98
5.2.3-5 Chain Support - Change Belt . . . . . 5 - 101
5.2.3-6 Chain Support - Set Belt . . . . . 5 - 102
5.2.3-7 Chain Support - Change Oil Brush . . . . . 5 - 105
5.2.3-8 Chain Support - Change Fin Guide . . . . . 5 - 106

5.2.4 Squeezer . . . . . 5 - 107

5.2.4-1 Squeezer - Set Position . . . . . 5 - 107
5.2.4-2 Squeezer - Change Side Belt . . . . . 5 - 116
5.2.4-3 Squeezer - Change Top Belt . . . . . 5 - 119
5.2.4-4 Squeezer - Side Squeezer Overhaul . . . . . 5 - 120
5.2.4-5 Squeezer - Top Squeezer Overhaul . . . . . 5 - 123
5.2.4-6 Squeezer - Check Side Squeezer Clearances . . 5 - 129
5.2.4-7 Squeezer - Check Top Squeezer Bushings . . . 5 - 134
5.2.4-8 Squeezer - Set Top Squeezer Coupling . . . . . 5 - 136
5.2.4-9 Squeezer - Change Coupling Plates . . . . . 5 - 137

5.2.5 Heating Chamber. . . . . 5 - 138

5.2.5-1 Heating Chamber - Set Flap Sealing Nozzles . 5 - 138
5.2.5-2 Heating Chamber - Set Flap Sealing Temperature . . . . . 5 - 144
5.2.5-3 Heating Chamber - Set Flap Heater Pressure . 5 - 147
5.2.5-4 Heating Chamber - Overhaul . . . . . 5 - 148

5.3 Discharge Device. . . . . 5 - 154

5.3.1 Outfeed Unit. . . . . 5 - 154

5.3.1-1 Outfeed Unit - Check Carriers . . . . . 5 - 154
5.3.1-2 Outfeed Unit - Change Motor . . . . . 5 - 170
5.3.1-3 Outfeed Unit - Change Rollers . . . . . 5 - 173
5.3.1-4 Outfeed Unit - Change Brush . . . . . 5 - 174

5.3.2 Curve Wheel. . . . . 5 - 175

5.3.2-1 Curve Wheel - Set Counting Photocells . . . . . 5 - 175
5.3.2-2 Curve Wheel - Overhaul . . . . . 5 - 177

TechPub_2614345_0107 - 0503_3048163_01.fm

5.3.2-3 Curve Wheel - Change Drive Wheel Ball Bearings . . . . . 5 - 182

TechPub_2614345_0107 - 0503_3048163_01.fm

This page intentionally left blank

TechPub_2614345_0107 - 0503_3048163_01.fm

5 Final Folder

5-1 Final Folder Unit - Synchronise

Machine Status	PREPARATION
SPC Reference	648537-0500

a) Turn the shaft (1) to align the carton station (2) with the mark (3) on the guide (4).

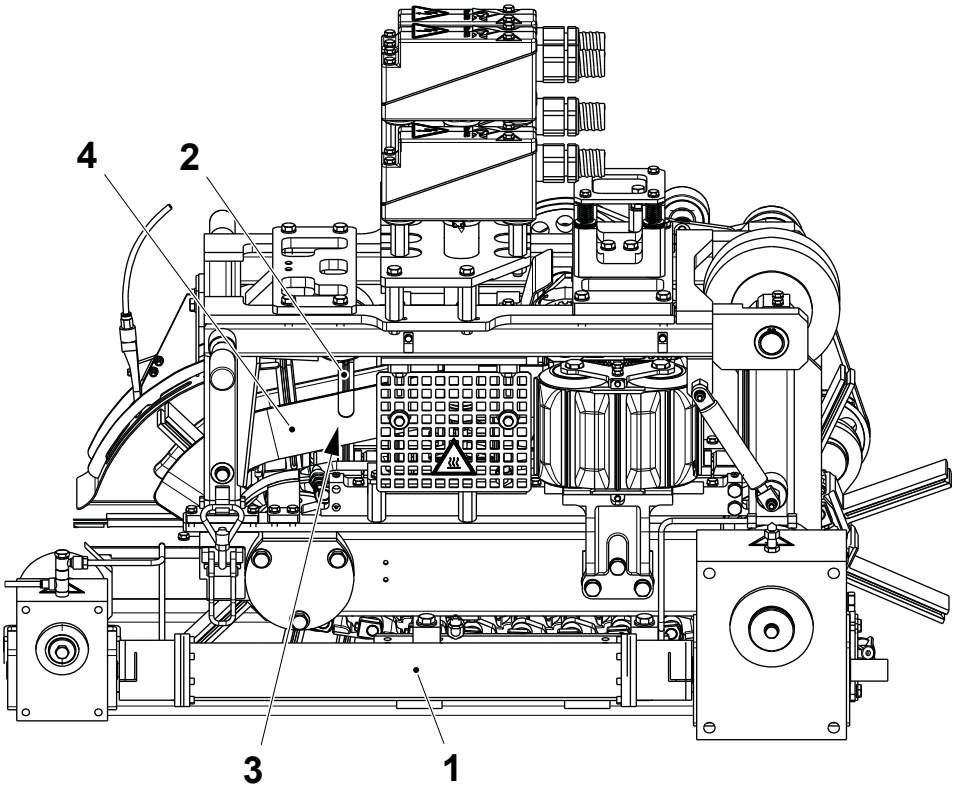

1 Shaft
2 Carton station
3 Mark
4 Guide

(Cont'd)

TechPub_2614345_0107 - 0503_3048163_01.fm

(Cont'd)

b) Loosen the screws in the coupling (5).

c) Turn the shaft (6) to set the distance **A** (see next page) between the first carrier (7) of the belt (8) and the shoulder (9) of the carton station (10).

d) Tighten the screws in the coupling (5).

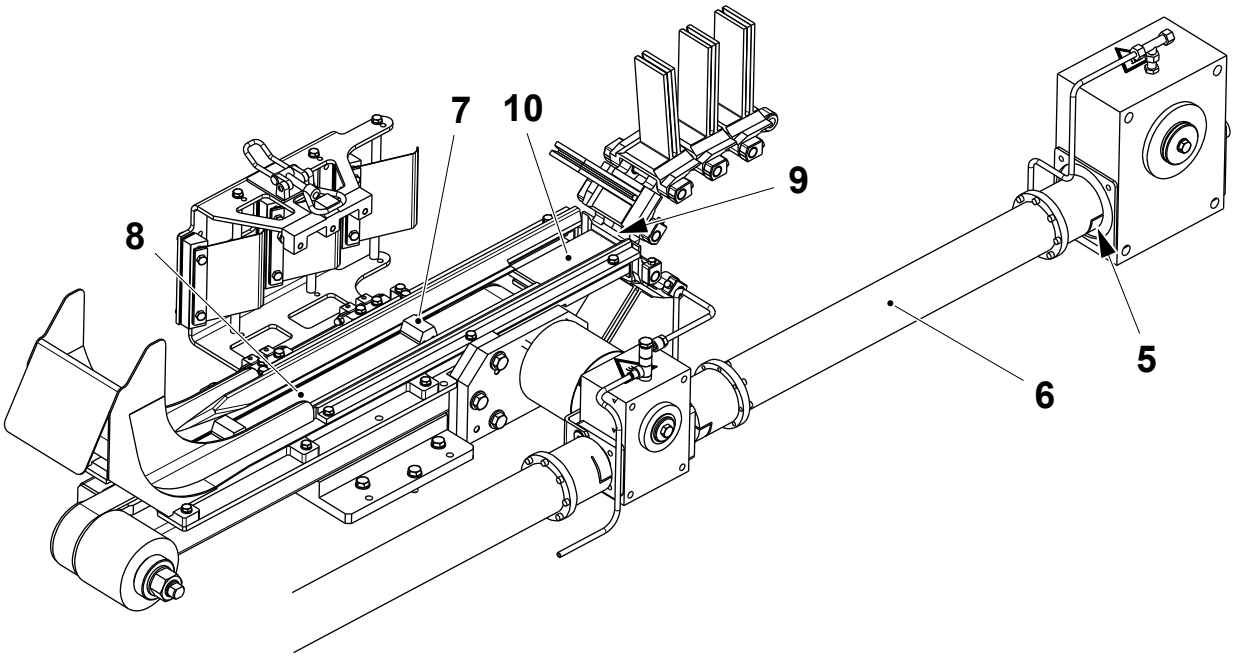

5 Coupling
6 Shaft
7 Carrier
8 Belt
9 Shoulder
10 Carton station

TechPub_2614345_0107 - 0503_3048163_01.fm

(Cont'd)

(Cont'd)

Note! Here below the distance between the carrier (7) and the carton station (10).

Package	A ±3 (mm)
TBA 200 S - TBA 250 S	400
TBA 250 B	362
TBA 200 B	335
TBA 200 M	365
TBA 125 S	342
TBA 1000 S	555
TBA 1000 Sq	585
TBA 1000 B	525

Portion packages

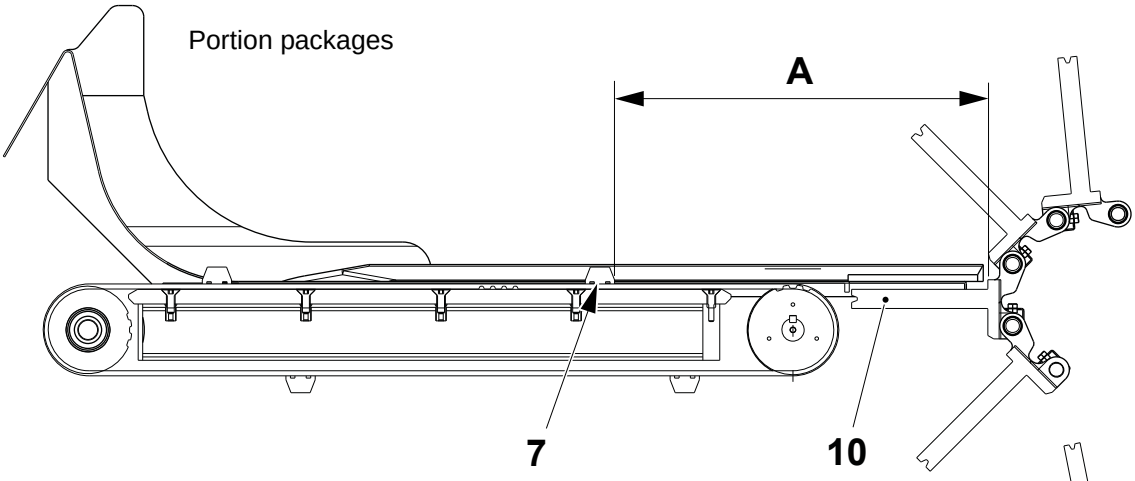

Family packages

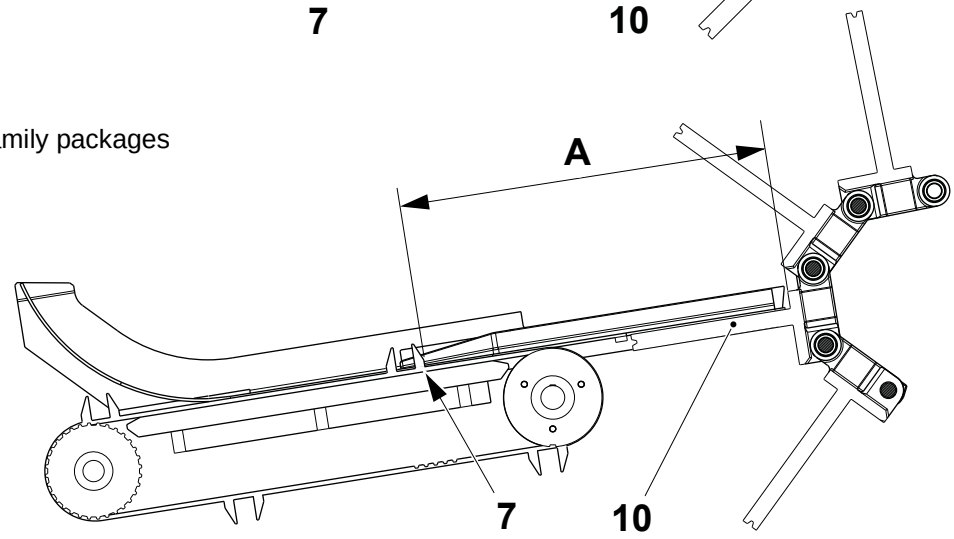

7 Carrier
10 Carton station

(Cont'd)

TechPub_2614345_0107 - 0503_3048163_01.fm

(Cont'd)

e) On the TPOP, touch the MAINTENANCE CONTROL button (11) and enter the password required, see 9.6.3-2 HMI - User Management Log On.

f) Touch the FINAL FOLDER button (12)

g) Touch the INFEED REFERENCING icon (13). The ON/OFF buttons are displayed.

h) Touch the ON button (14) to enable the home position function. The ON button (14) and the OK button (15) start flashing.

i) Press the OK button (15) to execute the home position.

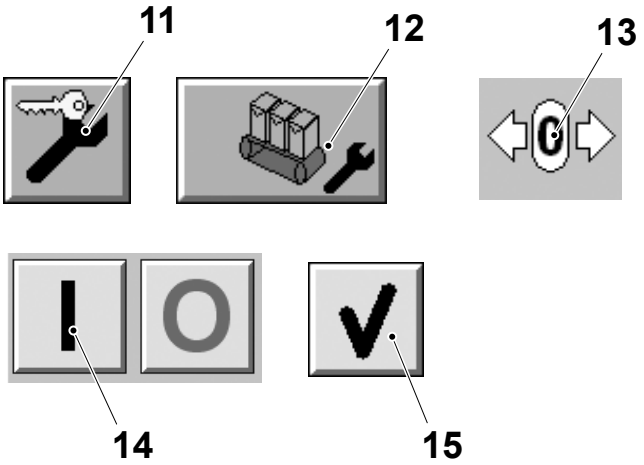

11 Maintenance control button
12 Final folder button
13 Infeed referencing icon
14 ON button
15 OK button

TechPub_2614345_0107 - 0503_3048163_01.fm

(Cont'd)

(Cont'd)

Note! Valid for volumes with normal outfeed, see table in 5.3.1-1 Outfeed Unit - Check Carriers.

j) Rotate manually the shaft (6) and turn the outfeed (16) until one of the carton station (17) in horizontal position collides with the tip of the carrier (18).

k) Set the distance **B** between the carton station (17) and the carrier (18) with the aid of a feeler gauge.

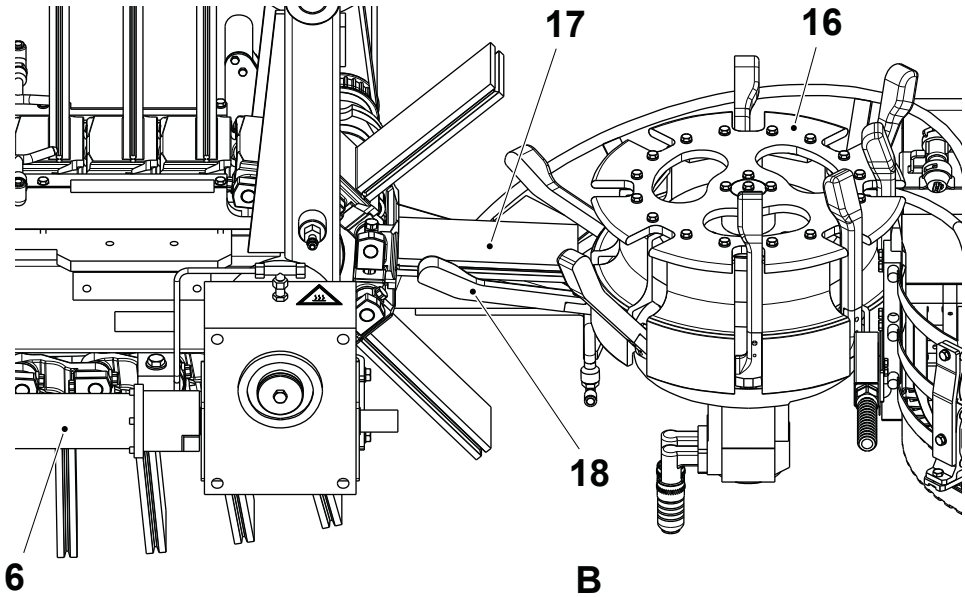

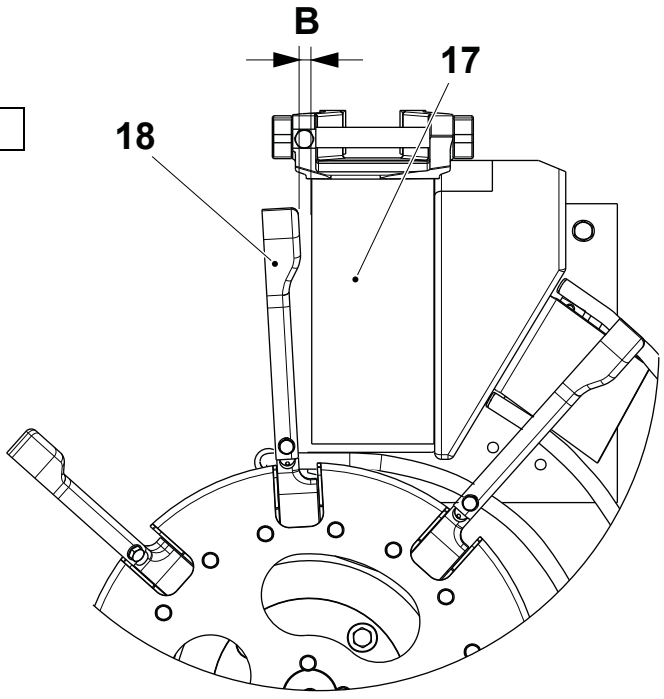

B = 1 mm

6 Shaft
16 Outfeed
17 Carton station
18 Carrier

(Cont'd)

TechPub_2614345_0107 - 0503_3048163_01.fm

(Cont'd)

Note! Valid for volumes with lower outfeed, see table in 5.3.1-1 Outfeed Unit - Check Carriers.

l) Rotate manually the shaft (6) and turn the outfeed (16) until one of the carton station (17) collides with the side surface of the carrier (18).

m) Set the distance **B** between the carton station (17) and the carrier (18) with the aid of a feeler gauge.

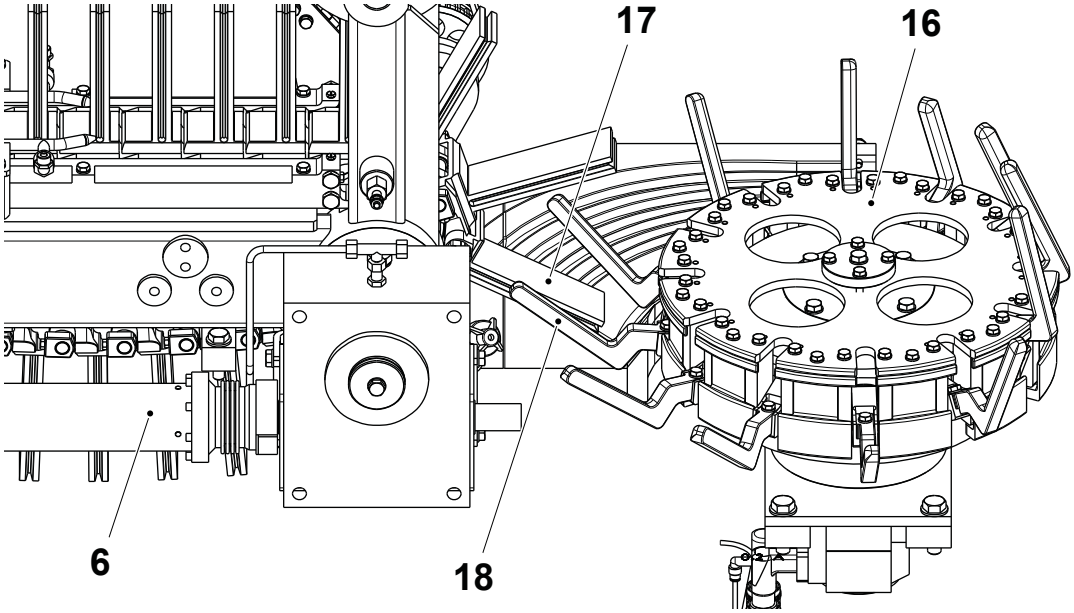

B = 1 mm

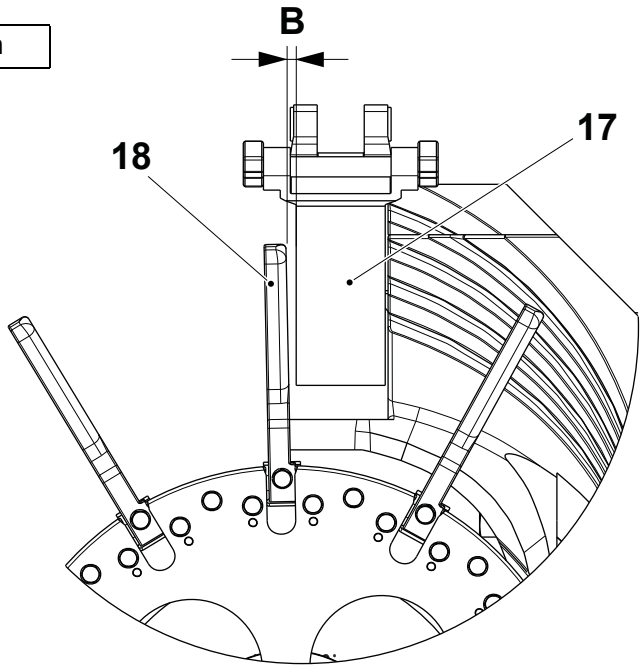

6 Shaft
16 Outfeed
17 Carton station
18 Carrier

(Cont'd)

TechPub_2614345_0107 - 0503_3048163_01.fm

(Cont'd)

n) Touch the OUTFEED REFERENCING button (19). The ON/OFF buttons are displayed.

o) Touch the ON button (20) to enable the home position function. The ON button (20) and the OK button (15) start flashing.

p) Press the OK button (15) to execute the outfeed home position.

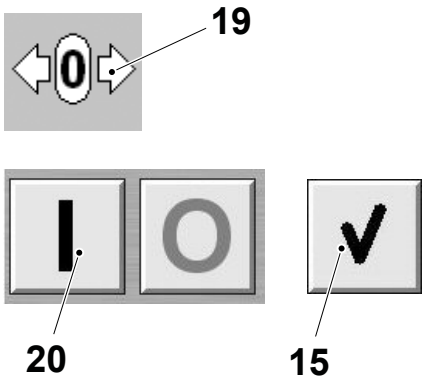

15 Program up button
19 Outfeed referencing button
20 OK button

(Cont'd)

TechPub_2614345_0107 - 0503_3048163_01.fm

(Cont'd)

Outfeed Synchronization Offset

CAUTION

Risk of damage to the equipment.

Perform this procedure proceeding step by step when the final folder is in slow inching phase. Do not perform it in PRODUCTION to avoid jams destructive for the equipment.

It is possible to modify the distance **B** in while the final folder is running.

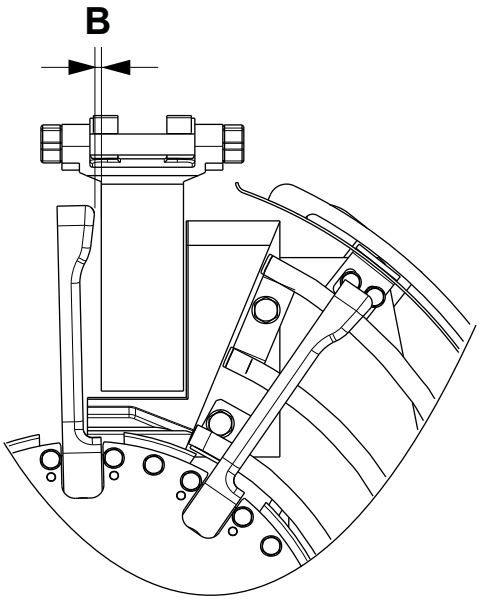

(Cont'd)

TechPub_2614345_0107 - 0503_3048163_01.fm

(Cont'd)

Proceed as follows:

a) On the TPOP, touch the MAINTENANCE CONTROL button (1) and enter the password required, see 9.6.3-2 HMI - User Management Log On.

b) Touch the FINAL FOLDER button (2)

c) Touch the OUTFEED SYNCHRONIZATION icon (3).

d) In the keypad displayed, change the value using the ARROW buttons (4) or the KEYBOARD button (5).

e) Touch the EXIT button (6).

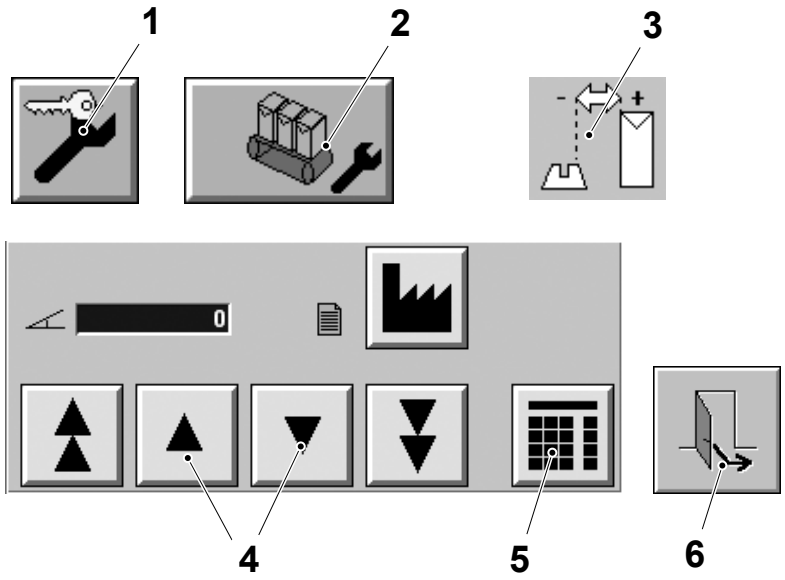

1 Maintenance control button
2 Final folder button
3 Outfeed synchronization icon
4 Arrow button
5 Keyboard button
6 Exit button

(Cont'd)

TechPub_2614345_0107 - 0503_3048163_01.fm

(Cont'd)

Set Outfeed Conveyor Speed

This procedure describes how to set the speed of the outfeed conveyor.

a) On the TPOP, touch the SETTING SYSTEM button (1).

b) Touch the FINAL FOLDER button (2).

c) Touch the OUTFEED CONVEYOR SPEED button (3).

d) Change the value using the ARROW buttons (5) or the KEYBOARD button (6).

e) Touch the EXIT button (7).

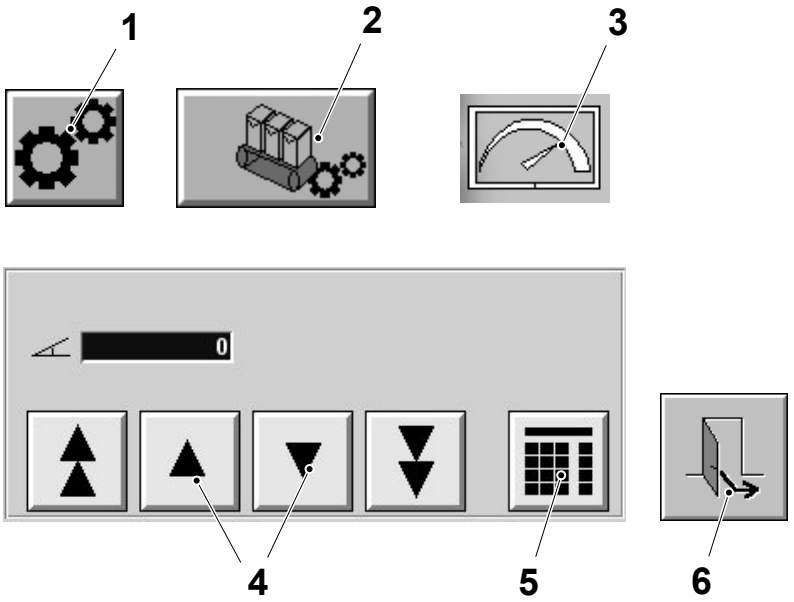

1 Setting system button
2 Final folder button
3 Outfeed conveyor speed button
4 Arrow button
5 Keyboard button
6 Exit button

TechPub_2614345_0107 - 0503_3048163_01.fm

5-2 Final Folder Unit - Inch

Machine Status	PREPARATION
SPC Reference	648537-0500

a) Step up the machine to PREPARATION.

b) Touch the PRODUCTION CONTROL button (1).

c) Touch the FINAL FOLDER button (2) to display the FINAL FOLDER window.

d) Touch the FINAL FOLDER INCHING icon (3) and the FINAL FOLDER INCHING window (4) is displayed.

e) Touch one of the following buttons:

- the SLOW INCHING button (5), to slow inch the final folder to check the machine movement or to reach an approximate position
- the FAST INCHING button (6) to fast inch the final folder to check the machine movement.

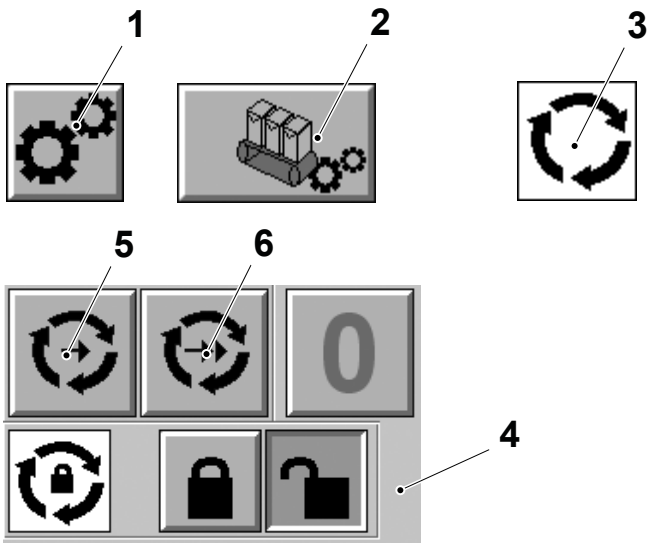

1 Production control button
2 Final folder button
3 Final folder icon
4 Final folder inching window
5 Slow inching button
6 Fast inching button

(Cont'd)

TechPub_2614345_0107 - 0503_3048163_01.fm

(Cont'd)

Note! The INCHING LOCK button (7) permits the physical FINAL FOLDER INCHING button (8) to be released once the machine movement has started. The machine movement is stopped by pressing the SHORT STOP button (9). The INCHING LOCK button (7) is only available when logged on to the TPOP as a “tptechnician”, see 9.6.3-2 HMI - User Management Log On.

f) If necessary, touch the INCHING LOCK button (7).

g) Press and hold the FINAL FOLDER INCHING button (8) to slow inch the machine. If the INCHING LOCK button (7) has been enabled, release the FINAL FOLDER INCHING button (8) when the machine movement has started.

h) If the INCHING LOCK button (7) has been enabled, press the SHORT STOP button (9)or the INCHING UNLOCK button (10) to stop the machine movement.

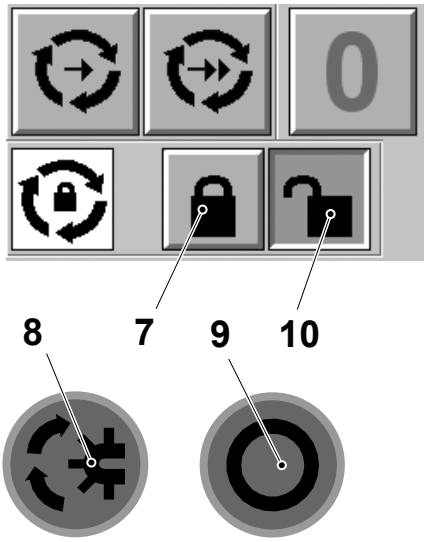

7 Inching lock button
8 Final folder inching button
9 Short stop button
10 Inching unlock button

TechPub_2614345_0107 - 0503_3048163_01.fm

5-3 Final Folder Unit - Jog Infeed and Outfeed Unit

Machine Status	PREPARATION
SPC Reference	648537-0500

Note! The jog function is used to run only the infeed unit or the outfeed unit independently from the machine status, in order to check their functionality.

Note! The movement of the unit which is running is not synchronous with the other unit: collisions may occur.

(Cont'd)

TechPub_2614345_0107 - 0503_3048163_01.fm

(Cont'd)

a) On the TPOP, touch the MAINTENANCE CONTROL button (1) and enter the password required, see 9.6.3-2 HMI - User Management Log On.

b) Touch the FINAL FOLDER button (2).

c) Touch the JOG icon (3) corresponding to the unit to be run, infeed or outfeed. The ON/OFF buttons are displayed.

d) Touch the ON button (4) and the OK button (5) to enable the jog function.

e) Press and hold the FINAL FOLDER INCHING button (6) to run the unit.

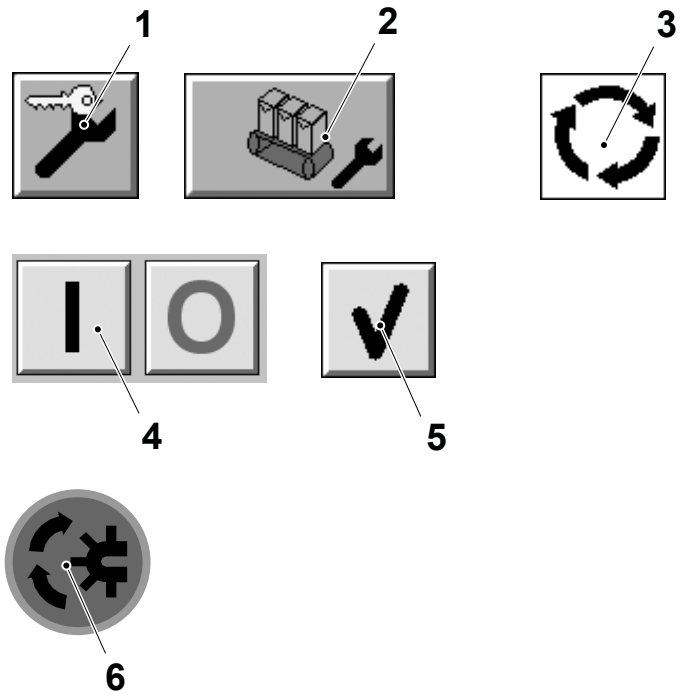

1 Maintenance control button
2 Final folder button
3 Jog icon
4 On button
5 OK button
6 Final folder inching button

TechPub_2614345_0107 - 0503_3048163_01.fm

5-4 Final Folder Unit - Activate Flap Heaters Air Flow

Machine Status	PREPARATION
SPC Reference	648537-0500

Note! This function is used to control the air flow in the flap heaters.

a) In the TPOP panel, touch the MAINTENANCE CONTROL button (1) and enter the password required, see 9.6.3-2 HMI - User Management Log On.

b) Touch the FINAL FOLDER button (2).

c) Touch the FLAP HEATERS PRESSURE icon (3).

d) Touch the TOP FLAP HEATERS icon (4) or the BOTTOM FLAP HEATERS icon (5) to activate the air flow on the couple of the flap heaters selected.

Note! The air flow is deactivated by touching the OFF button (6).

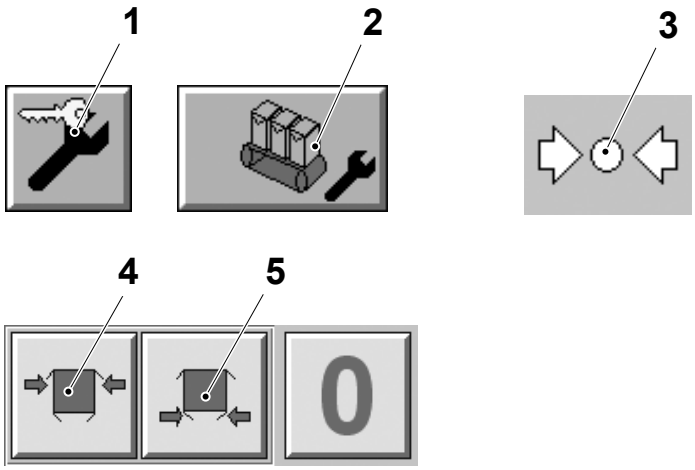

1 Maintenance control button
2 Final folder button
3 Flap heater pressure icon
4 Top flap heaters icon
5 Bottom flap heaters icon
6 OFF button

TechPub_2614345_0107 - 0503_3048163_01.fm

5-5 Final Folder Unit - Check Coupling

Machine Status	Mains Power OFF Air OFF Steam ON Water OFF
SPC Reference	648537-0500

Check the couplings (see arrows) for signs of wear, damage or play. Change if necessary.

After replacement of couplings, synchronize the final folder module, see 5-1 Final Folder Unit - Synchronise.

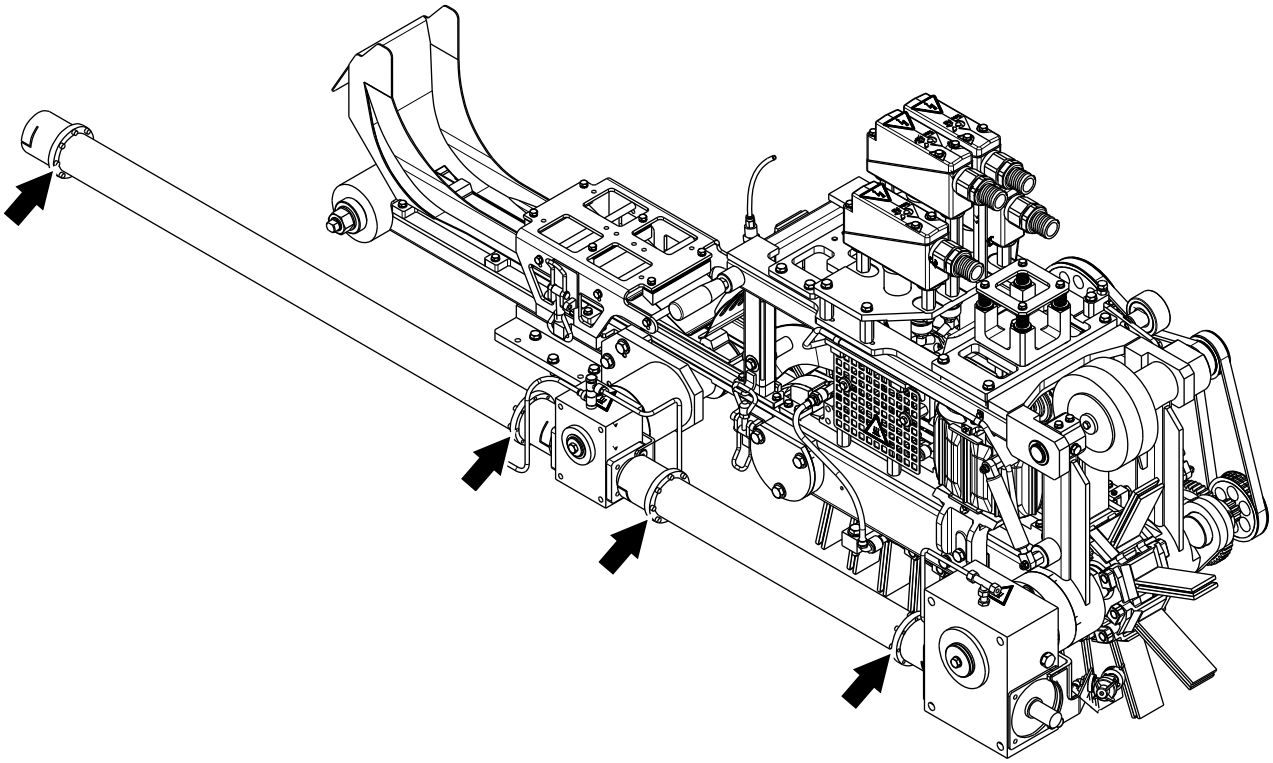

TechPub_2614345_0107 - 0503_3048163_01.fm

5-6 Final Folder Unit - Change Gearbox Oil

Machine Status	Mains Power OFF Air OFF Steam ON Water OFF
Consumables	Lubricant TP No. 330002-3201
SPC Reference	648537-0500

CAUTION
Risk of damage to the equipment.
Do not exceed the amount of oil stipulated below. Excess oil will cause overpressure and may lead to leakages.

(Cont'd)

TechPub_2614345_0107 - 0503_3048163_01.fm

(Cont'd)

Note! Do not remove the screw (3).

a) At the gearboxes (1) and (2), remove the coupling on the top and the draining plug on the bottom.

b) Drain the worn oil and refit the plug.

c) Fill the gearboxes (1) and (2) with **0.2 litres** with **0.75 litres** of high pressure oil TP No. 330002-3201, see 10.3 Consumables. The cut-away view below shows the correct level of oil in the gearboxes and the position of the screws (3).

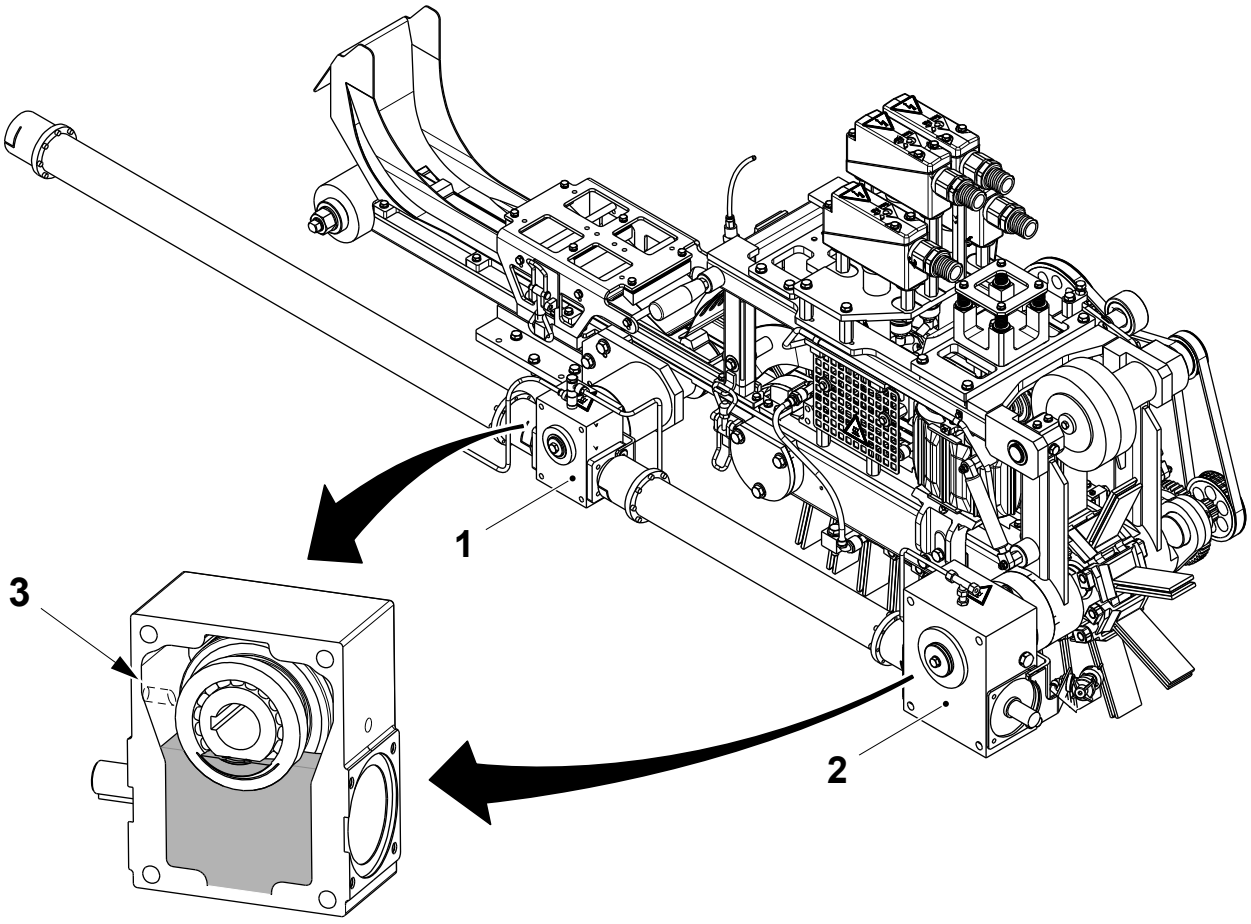

1 Gearbox
2 Gearbox
3 Screw

TechPub_2614345_0107 - 0503_3048163_01.fm

5-7 Final Folder Unit - Check Nozzles

Machine Status	Mains Power OFF Air OFF Steam ON Water OFF
SPC Reference	648537-0500

Note! Valid for Portion Packages.

Remove the nozzles (1) for the final folder module flushing and check that they are not clogged and free from lime scale deposits.

If necessary dip the nozzles (1) into a container with deliming agent.

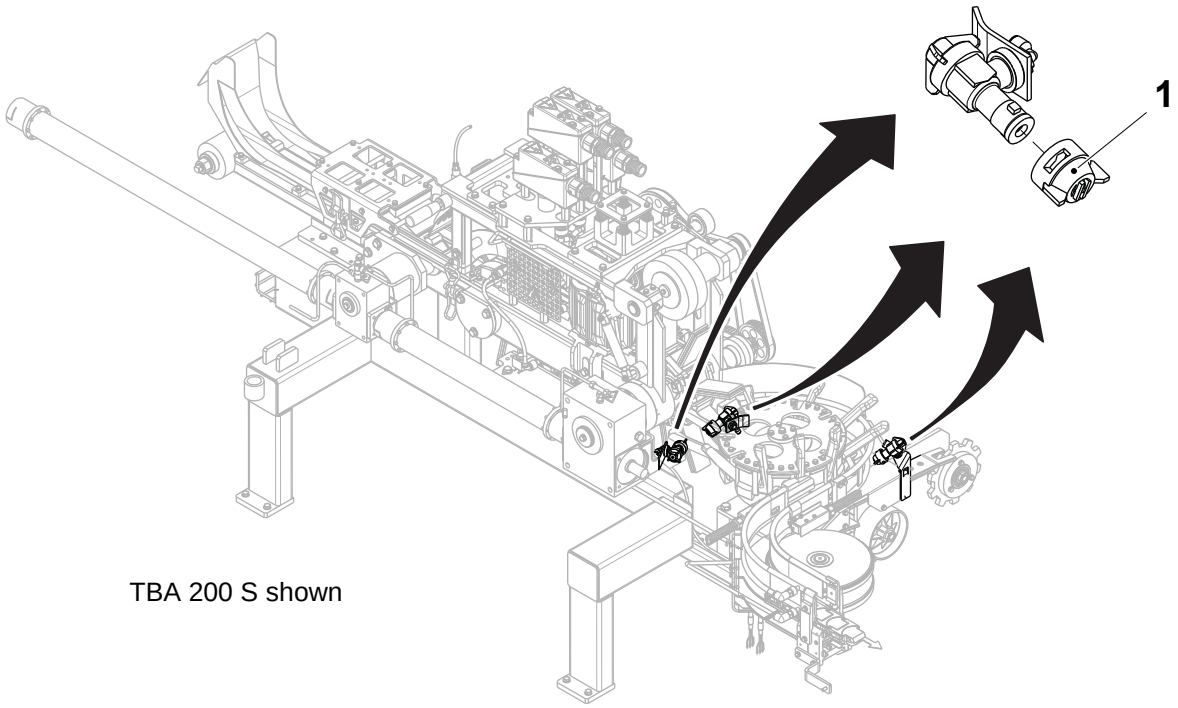

TBA 200 S shown

1 Nozzle

(Cont'd)

TechPub_2614345_0107 - 0503_3048163_01.fm

(Cont'd)

Note! Valid for Family Packages.

Remove the nozzles (1) for the final folder module flushing and check that they are not clogged and free from lime scale deposits.

If necessary dip the nozzles (1) into a container with deliming agent.

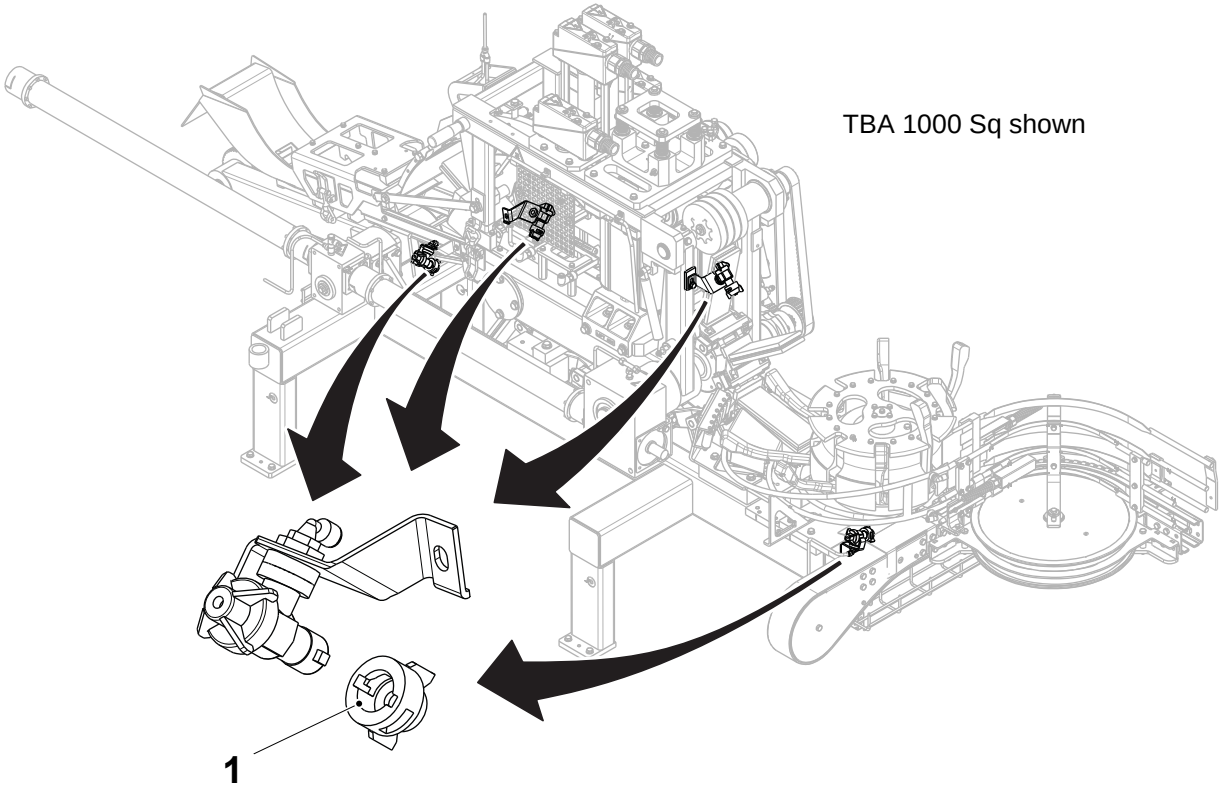

1 Nozzle

TechPub_2614345_0107 - 0503_3048163_01.fm

5.1 Conveyor

SPC Reference	1346814-0400

5.1-1 Conveyor - Change Belt

Machine Status	Mains Power OFF Air OFF Steam ON Water OFF
SPC Reference	1346814-0400

Valid for Portion Packages

Check the belt (1) and its teeth (2) for wear or damage. If necessary, change the belt (1) as follows:

a) Swing the brake assembly (3) open.

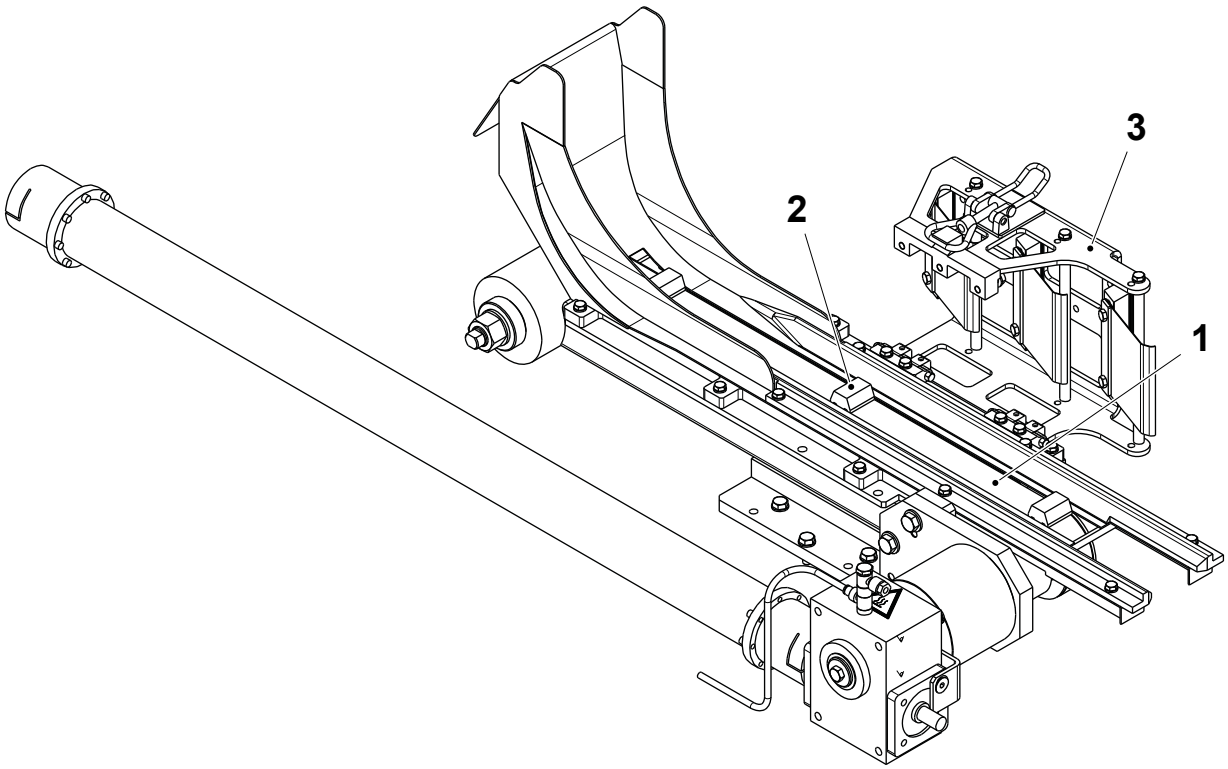

1 Belt
2 Tooth
3 Brake assembly

(Cont'd)

TechPub_2614345_0107 - 0503_3048164_01.fm

(Cont'd)

Note! For TBA 125 S machines the chute (5) is separated by the guides (6); it is necessary to remove first the guides (6) by the screws (7) and then the chute (5).

b) Loosen the screws (4) and remove the chute (5).

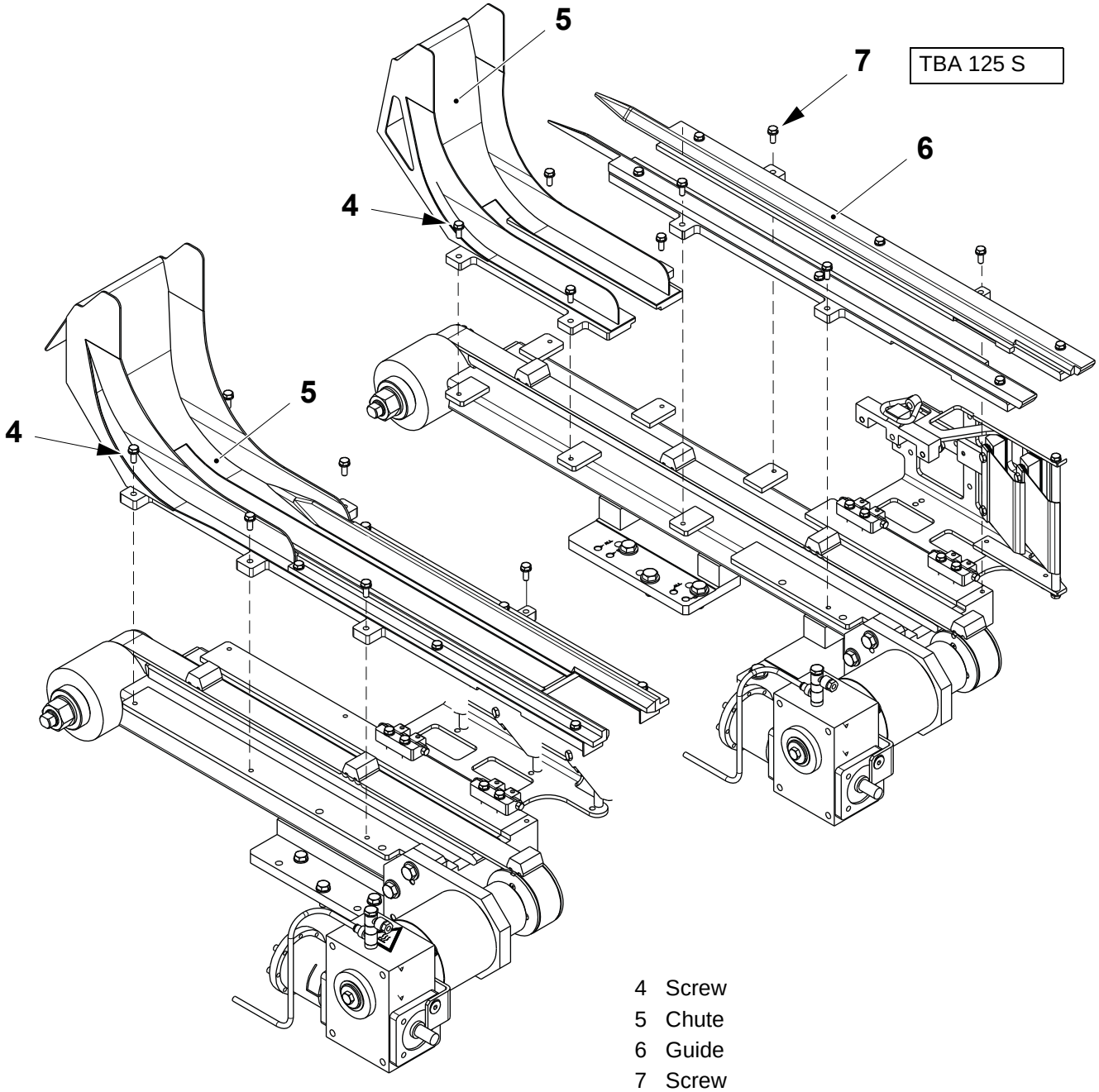

4 Screw
5 Chute
6 Guide
7 Screw

(Cont'd)

TechPub_2614345_0107 - 0503_3048164_01.fm

(Cont'd)

c) Reduce the belt tension by loosening the nut (8) and then turning the eccentric shaft (9).

d) Remove and change the belt (1).

e) Align the tooth (2) with the notch (10).

f) Using a torque wrench, tighten the eccentric shaft (9) to **25 Nm**.

g) Tighten the nut (8) and assemble in the reverse order.

h) Synchronise the conveyor, see 5-1 Final Folder Unit - Synchronise, from step g).

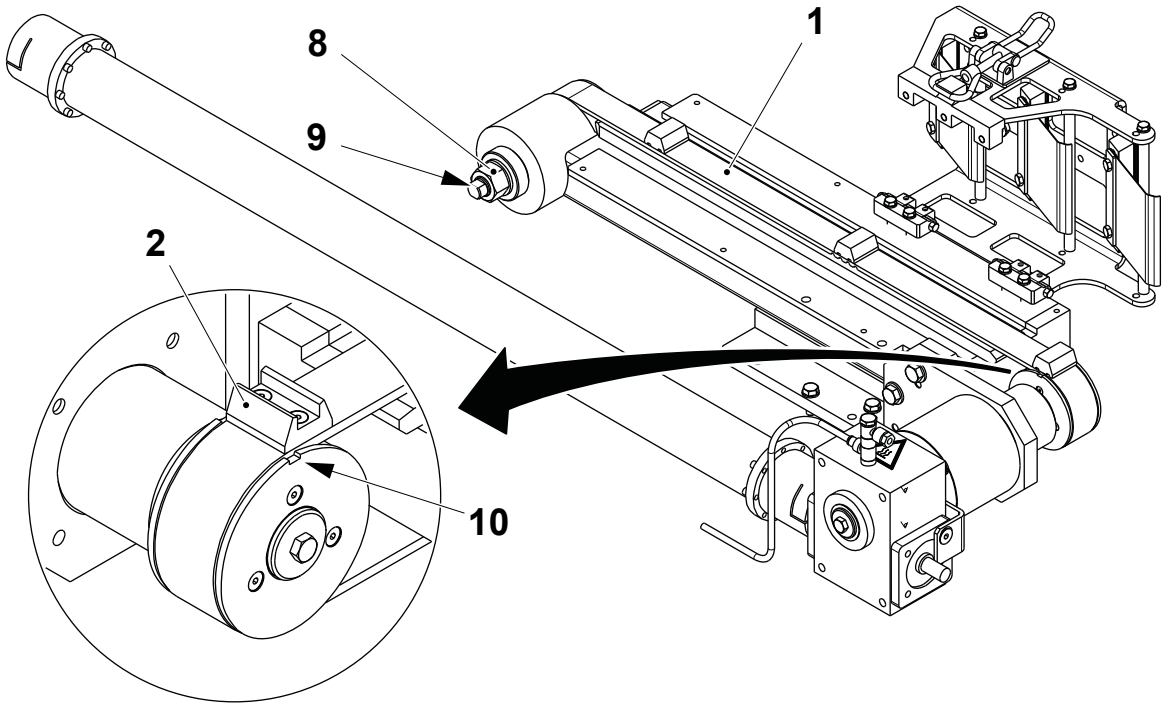

1 Belt
2 Tooth
8 Nut
9 Shaft
10 Notch

(Cont'd)

TechPub_2614345_0107 - 0503_3048164_01.fm

(Cont'd)

Valid for Family Packages

Check the belt (1) and its teeth (2) for wear or damage. If necessary, change the belt (1) as follows:

a) Swing the brake assembly (3) open.

b) Loosen the screws (4) to release the supports (5).

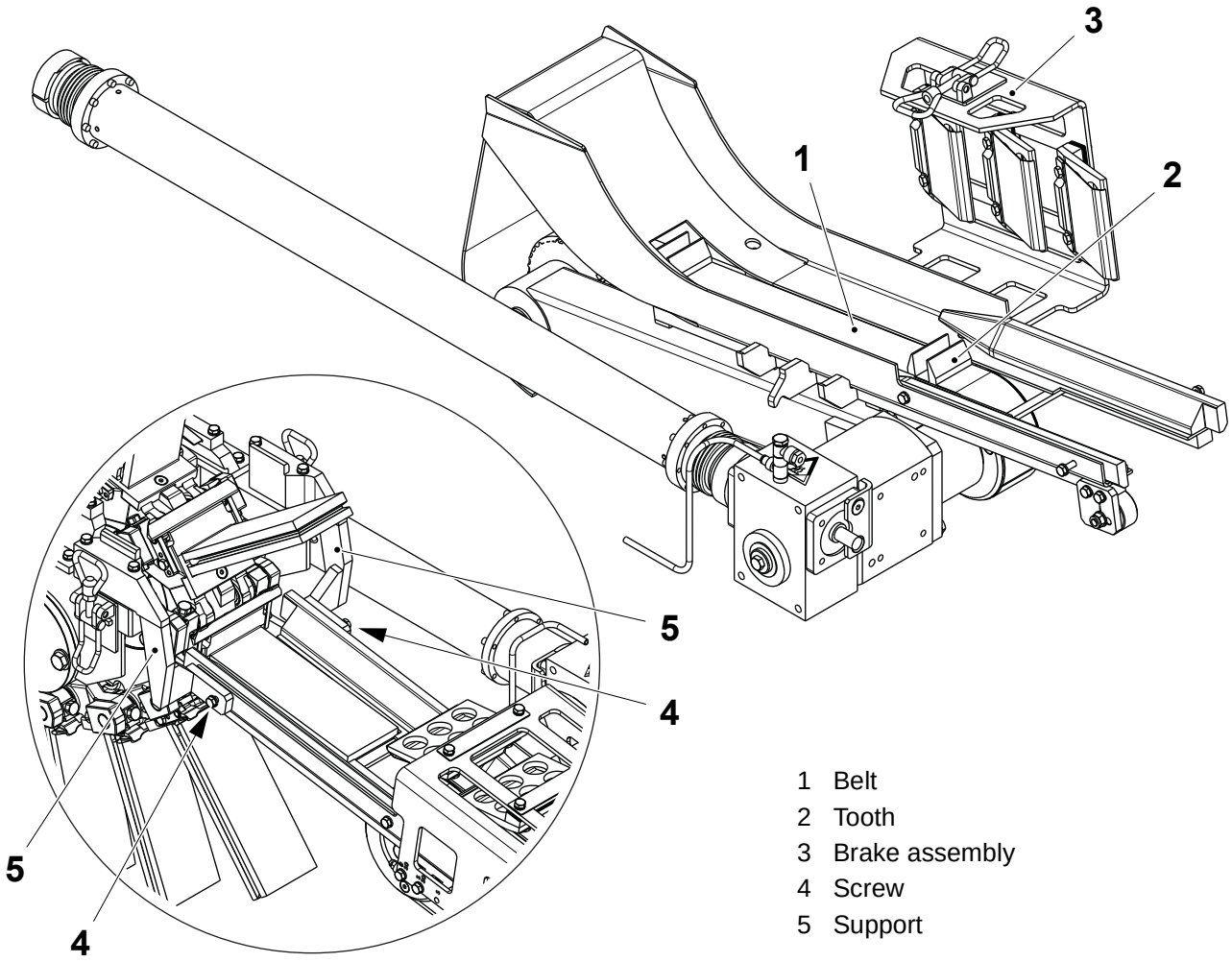

1 Belt
2 Tooth
3 Brake assembly
4 Screw
5 Support

(Cont'd)

TechPub_2614345_0107 - 0503_3048164_01.fm

(Cont'd)

c) Remove the screws (6) and the guides (7).

d) Remove the screws (8) and the chute (9) with the brake assembly (3).

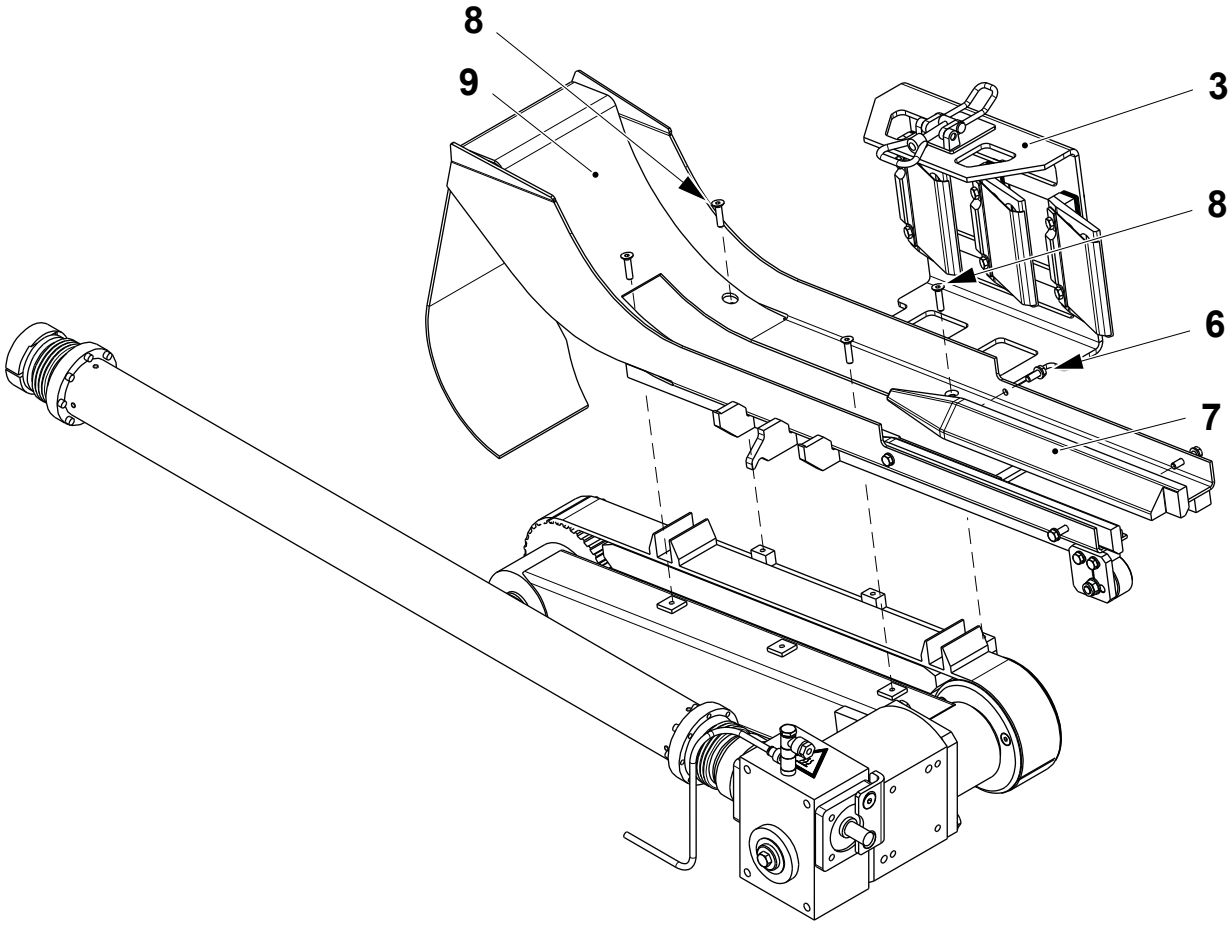

3 Brake assembly
6 Screw
7 Guide
8 Screw
9 Chute

(Cont'd)

TechPub_2614345_0107 - 0503_3048164_01.fm

(Cont'd)

e) Reduce the belt tension by loosening the nut (10) and then turning the eccentric shaft (11).

f) Remove and change the belt (1).

g) Align the tooth (2) with the notch (12).

h) Using a torque wrench, tighten the eccentric shaft (11) to **25 Nm**.

i) Set the belt (1), see 5.1-7 Conveyor - Set Belt.

j) Tighten the nut (10) and assemble in the reverse order.

k) Synchronise the conveyor, see 5-1 Final Folder Unit - Synchronise, from step g).

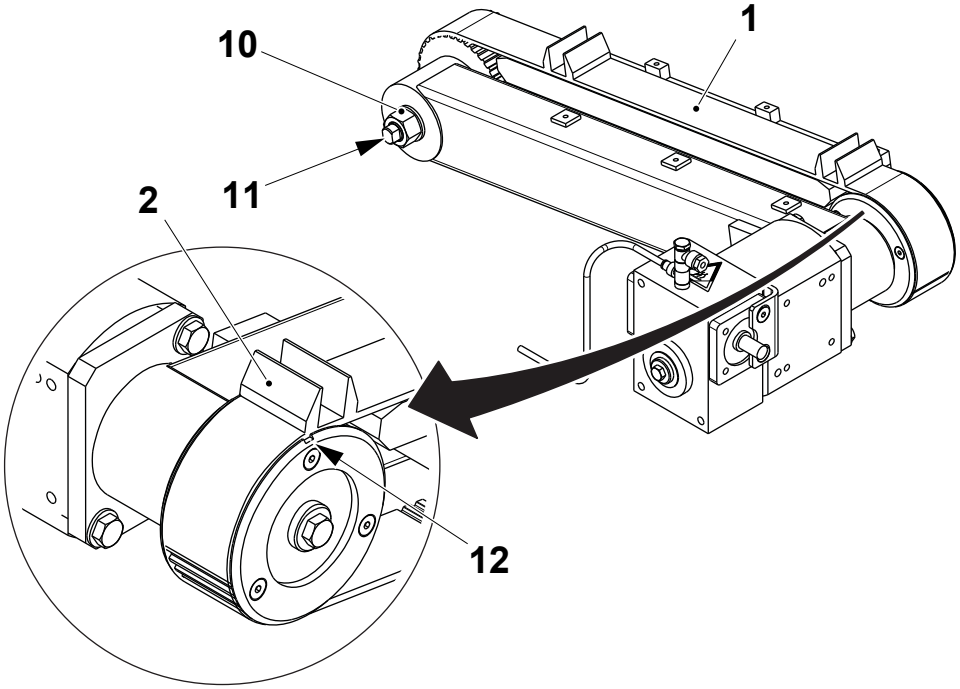

1 Belt
2 Tooth
10 Nut
11 Shaft
12 Notch

TechPub_2614345_0107 - 0503_3048164_01.fm

5.1-2 Conveyor - Check Bearings

Machine Status	Mains Power OFF Air OFF Steam ON Water OFF
SPC Reference	1346814-0400

a) Reduce the belt tension by loosening the nut (1) and then turning the eccentric shaft (2).

b) Check that the bearings into the pulleys (3) and (4) rotate smoothly in both directions.

c) Set the belt tension, see 5.1-3 Conveyor - Overhaul, from step q).

d) Synchronise the conveyor, see 5-1 Final Folder Unit - Synchronise.

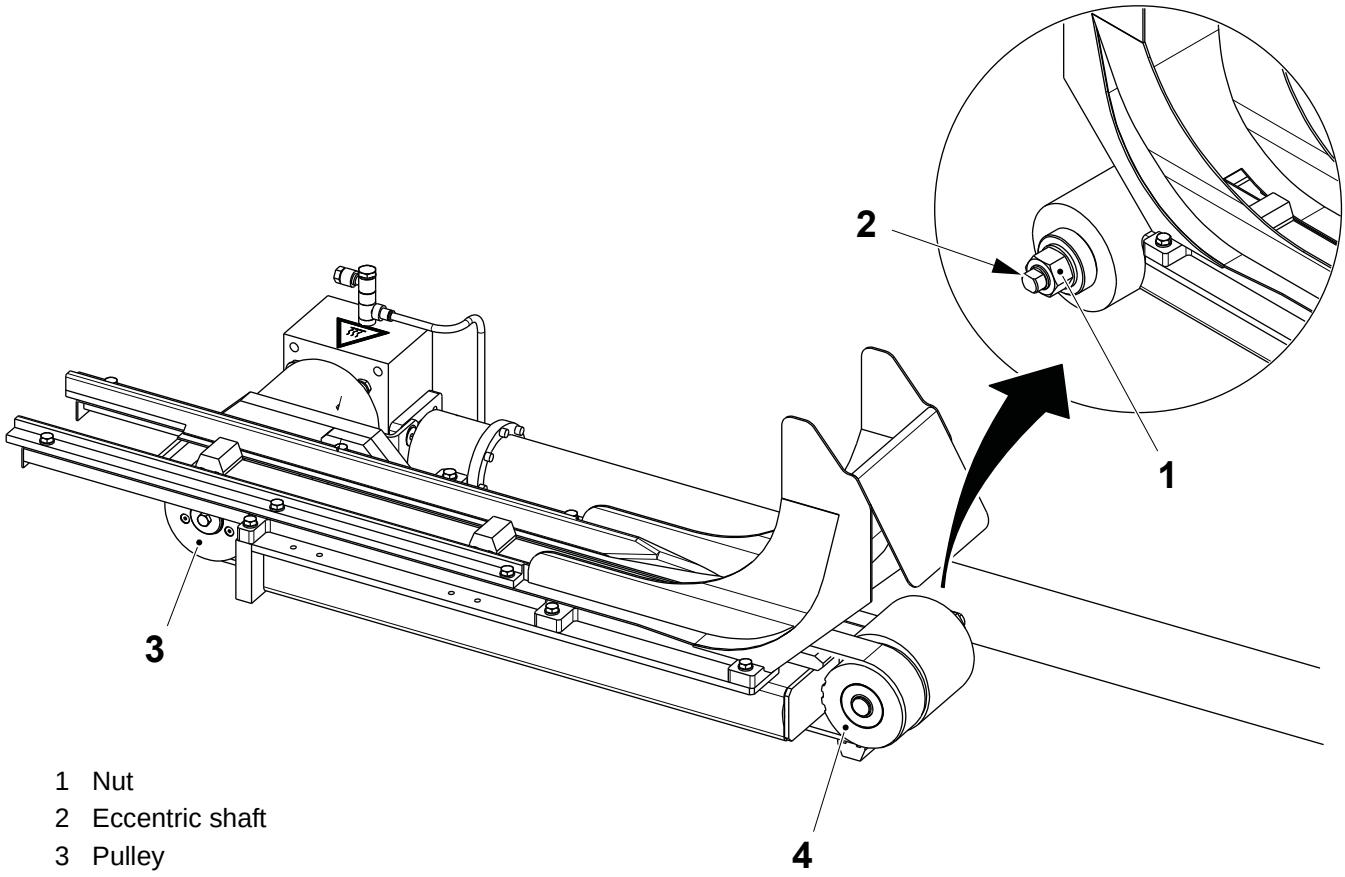

1 Nut
2 Eccentric shaft
3 Pulley
4 Pulley

TechPub_2614345_0107 - 0503_3048164_01.fm

5.1-3 Conveyor - Overhaul

Machine Status	Mains Power OFF Air OFF Steam ON Water OFF
Special Equipment	Torque Wrench min. 25 Nm
SPC Reference	1346814-0400

Valid for Portion Packages

Note! Labelling items avoids confusion during assembly.

a) Remove the belt (1), see 5.1-1 Conveyor - Change Belt.

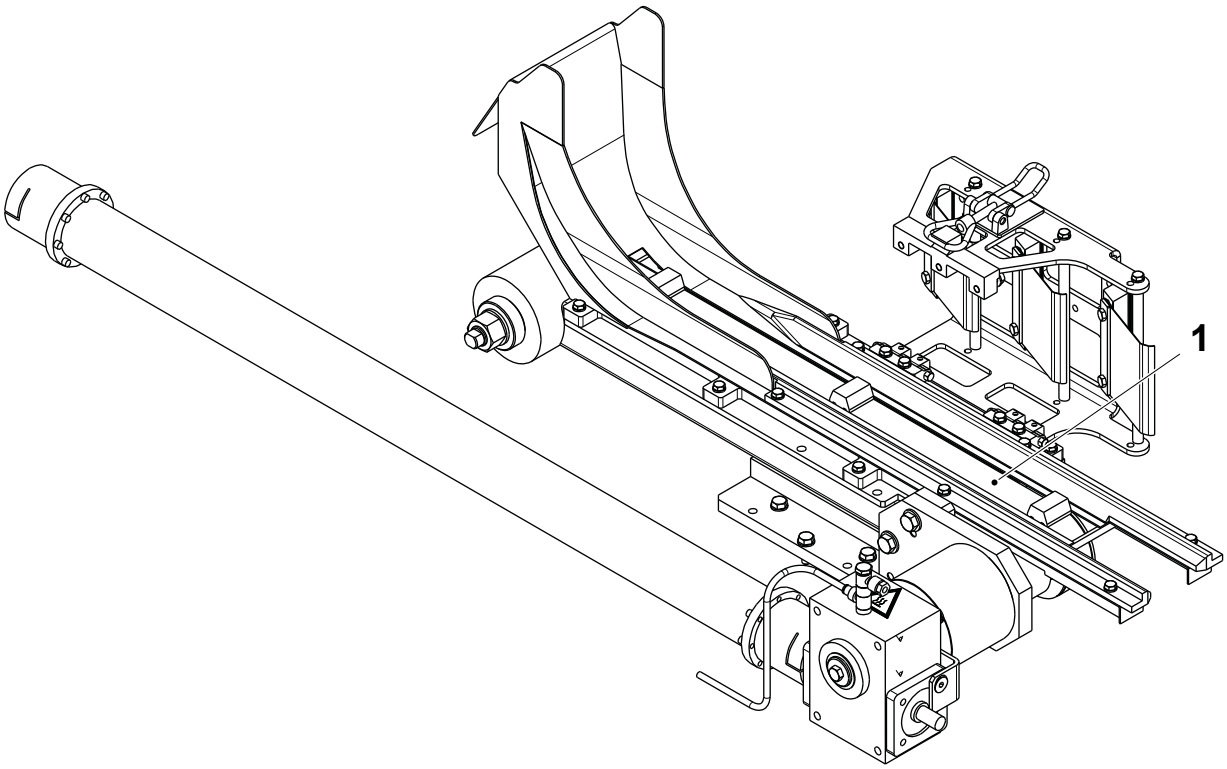

1 Belt

(Cont'd)

TechPub_2614345_0107 - 0503_3048164_01.fm

(Cont'd)

b) Remove the seal (2) and the retaining ring (3).
c) Remove the pulley (4).
d) Remove the seal (5) and change the ball bearings (6).
e) Remove the screw (7) and the pulley (8).

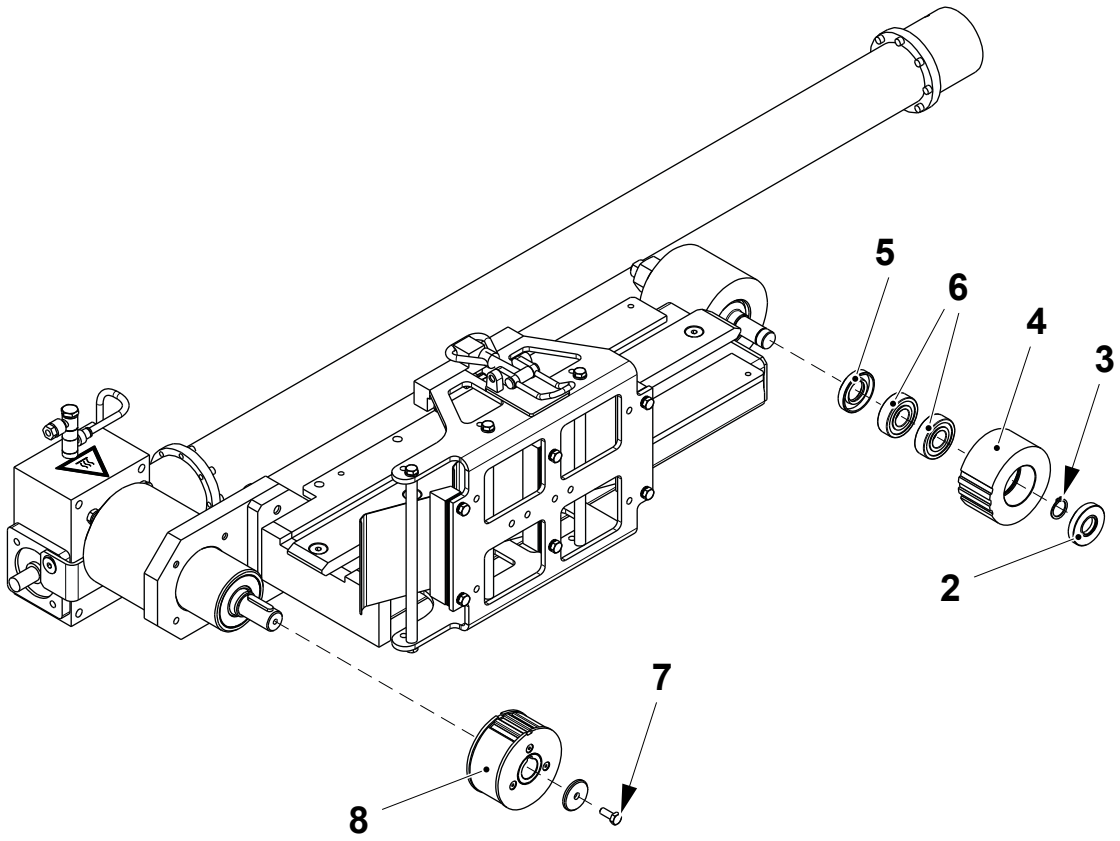

2 Seal
3 Retaining ring
4 Pulley
5 Seal
6 Ball bearing
7 Screw
8 Pulley

(Cont'd)

TechPub_2614345_0107 - 0503_3048164_01.fm

(Cont'd)

Note! Before removing the couplings take of the distance between the end of the gearbox and the end of the couplings. This will ensure the intermediate shaft is centralized between the two gearboxes when assembling.

f) Remove the screws (9) and the intermediate shafts (10) and (11).

g) Loosen the screws (12) and remove the coupling (13) and (14).

h) Remove the screw (15).

Note! When assembling, tighten the screws (9) with a torque of 7 Nm and the screws (12) with a torque of 28 Nm.

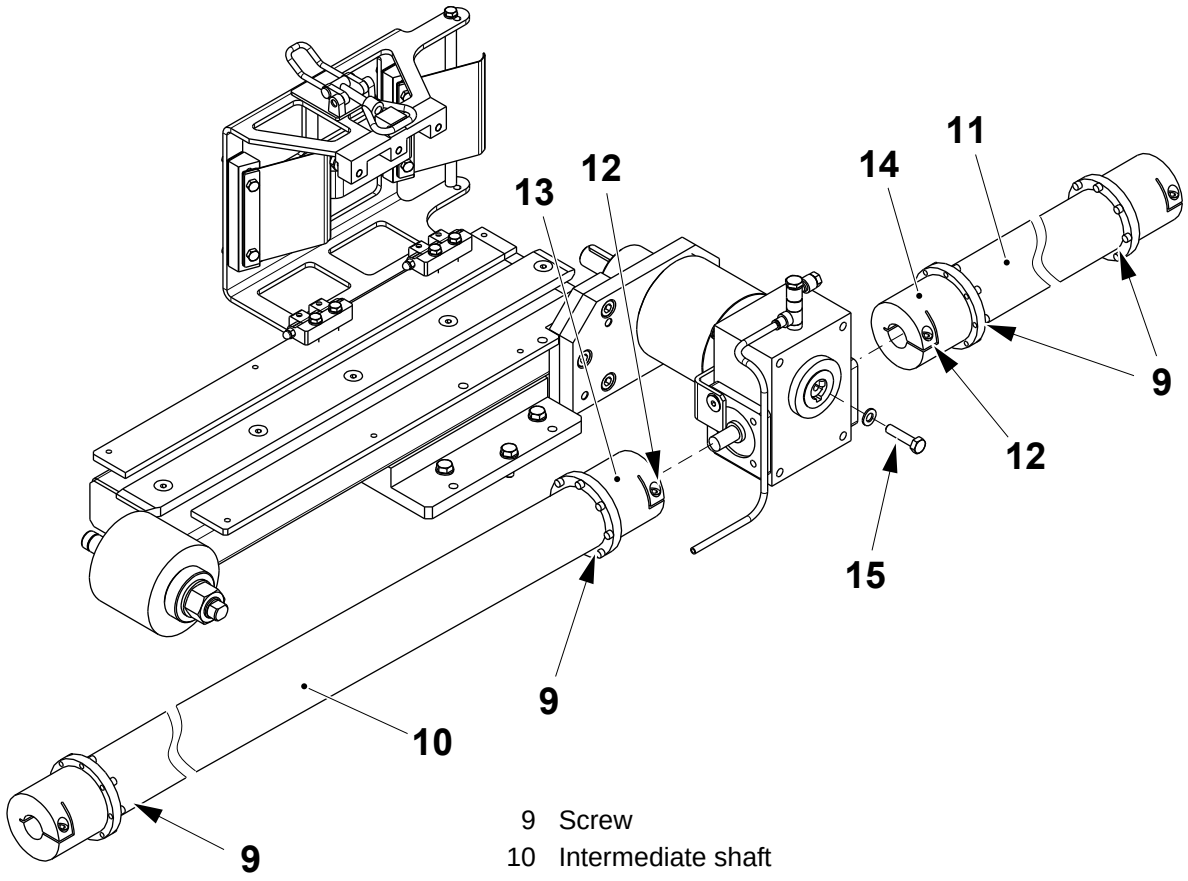

9 Screw
10 Intermediate shaft
11 Intermediate shaft
12 Screw
13 Coupling
14 Coupling
15 Screw

(Cont'd)

TechPub_2614345_0107 - 0503_3048164_01.fm

(Cont'd)

i) At both sides of the gear box (16), remove the screws (17) securing the gear box to the plate (18).

j) Pull off the gearbox (16).

k) Remove the screws (19) and the plate (18).

l) Remove and change the seals (20).

m) Remove the retaining rings (21) and (22).

n) Pull out the shaft (23) in the direction shown.

o) Remove and change the ball bearings (24).

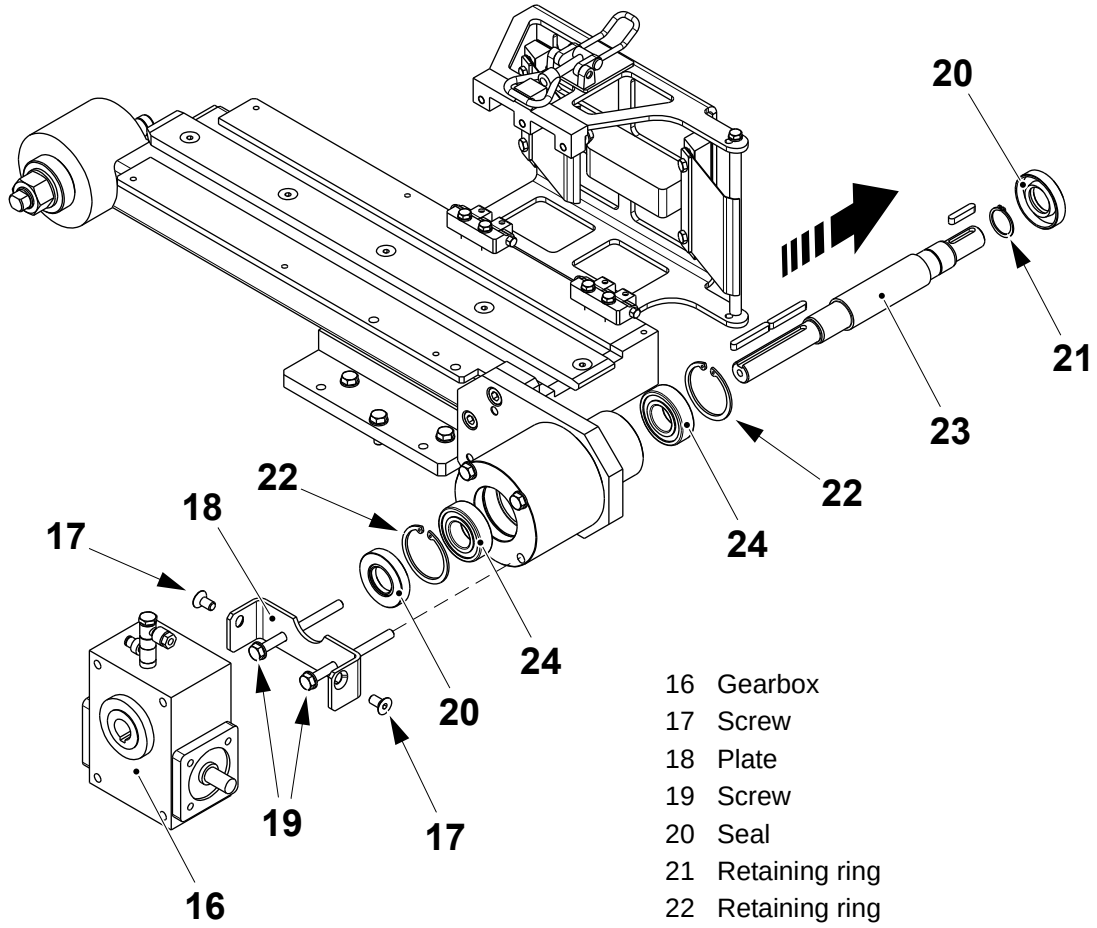

16 Gearbox
17 Screw
18 Plate
19 Screw
20 Seal
21 Retaining ring
22 Retaining ring
23 Shaft
24 Ball bearing

(Cont'd)

TechPub_2614345_0107 - 0503_3048164_01.fm

(Cont'd)

p) Assemble in the reverse order. When fitting the belt (1), align the tooth (25) with the notch (26).

q) Set the belt tension by loosening the nut (27) and then tightening the eccentric shaft (28) to **25 Nm** with a torque wrench.

r) Tighten the nut (27).

s) Synchronise the conveyor, see 5-1 Final Folder Unit - Synchronise, from step g).

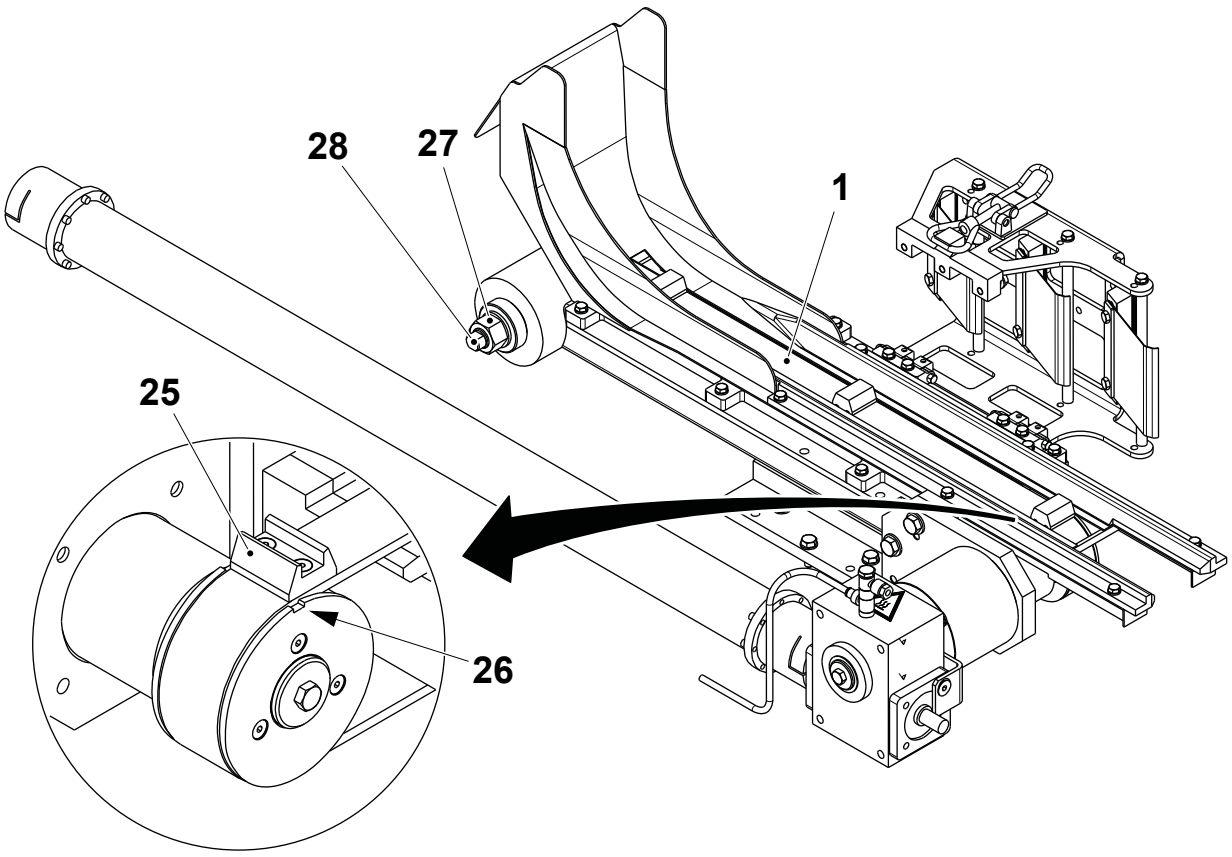

1 Belt
25 Tooth
26 Notch
27 Nut
28 Shaft

(Cont'd)

TechPub_2614345_0107 - 0503_3048164_01.fm

(Cont'd)

Valid for Family Packages

Note! Labelling items avoids confusion during assembly.

a) Remove the belt (1), see 5.1-1 Conveyor - Change Belt.

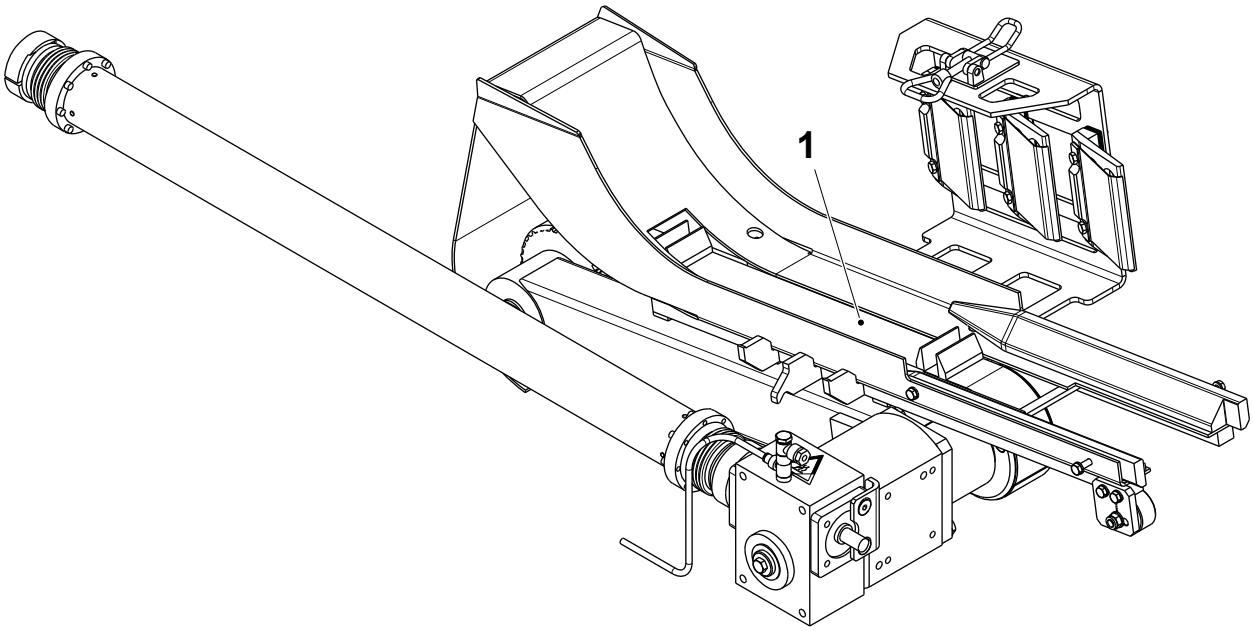

1 Belt

(Cont'd)

TechPub_2614345_0107 - 0503_3048164_01.fm

(Cont'd)

b) Remove the screws (2) and the flange (3). Change the O-ring (4) if necessary.

c) Remove the screw (5).

d) Remove the pulley (6).

e) Remove the seal (7), the ball bearings (8) and the spacer (9). Change the ball bearings (8).

f) Remove the screw (10) and the pulley (11).

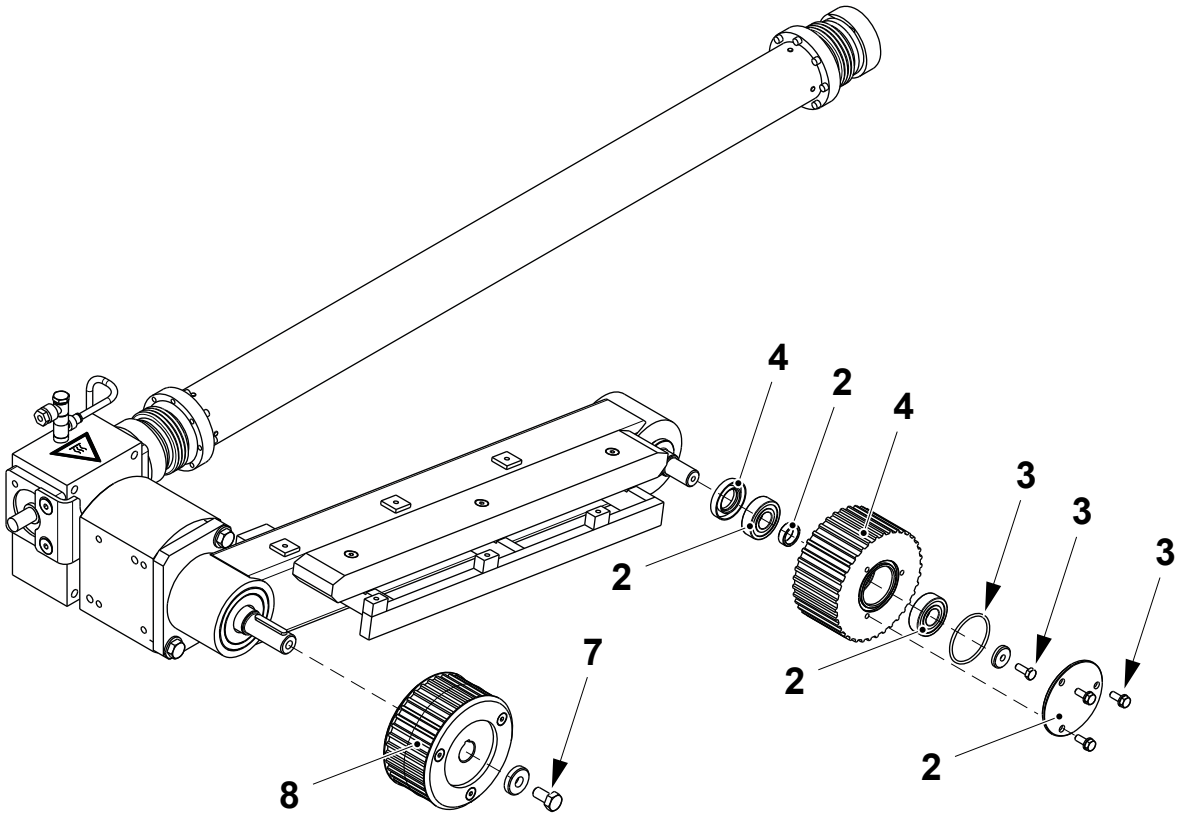

2	Screw	7	Seal
3	Flange	8	Ball bearing
4	O-ring	9	Spacer
5	Screw	10	Screw
6	Pulley	11	Pulley

(Cont'd)

TechPub_2614345_0107 - 0503_3048164_01.fm

(Cont'd)

Note! Before removing the couplings take of the distance between the end of the gearbox and the end of the couplings. This will ensure the intermediate shaft is centralized between the two gearboxes when assembling.

g) Remove the screws (12) and the intermediate shafts (13) and (14).

h) Loosen the screws (15) and remove the coupling (16) and (17).

i) Remove the screw (18).

Note! When assembling, tighten the screws (12) with a torque of 7 Nm and the screws (15) with a torque of 28 Nm.

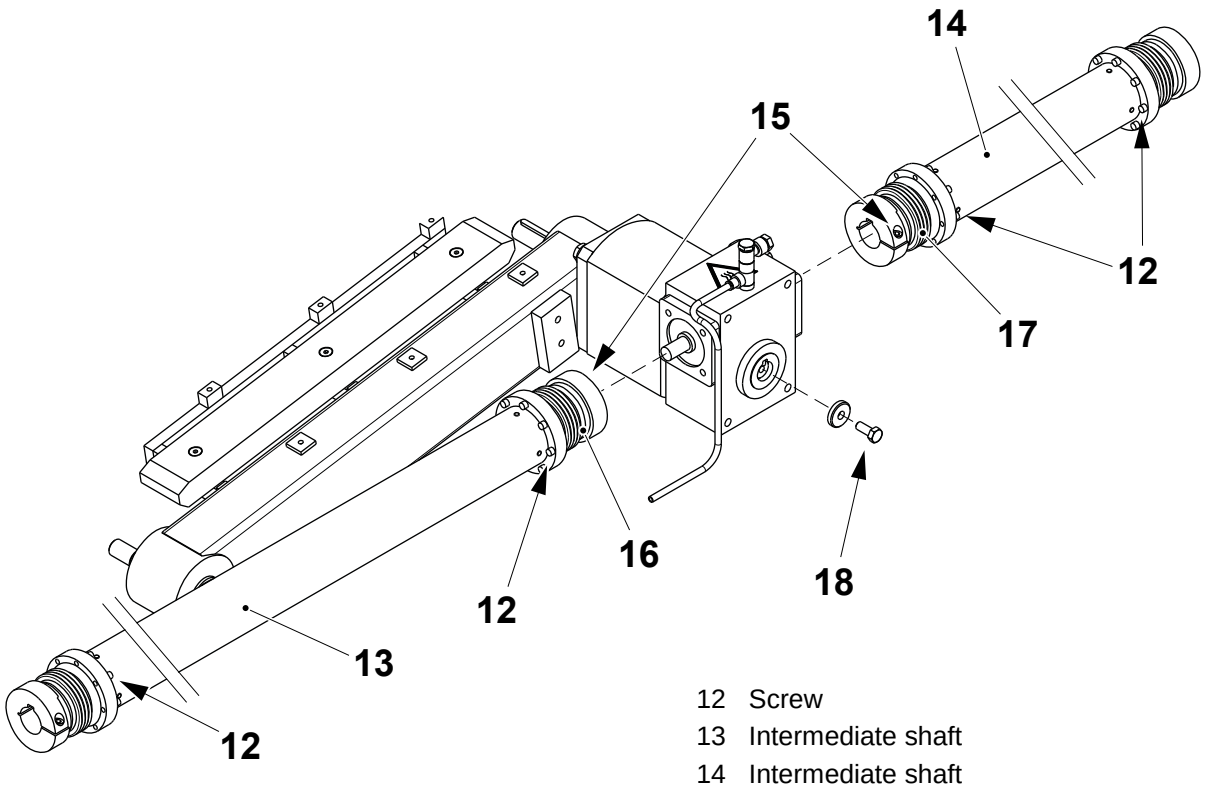

12 Screw
13 Intermediate shaft
14 Intermediate shaft
15 Screw
16 Coupling
17 Coupling
18 Screw

(Cont'd)

TechPub_2614345_0107 - 0503_3048164_01.fm

(Cont'd)

j) At both sides of the gear box (19), remove the screws (20) securing the gear box to the plate (21).

k) Pull off the gearbox (19).

l) Remove the screws (22) and the plate (21).

m) Remove and change the seals (23).

n) Remove the retaining rings (24) and (25).

o) Pull out the shaft (26) in the direction shown.

p) Remove and change the ball bearings (27).

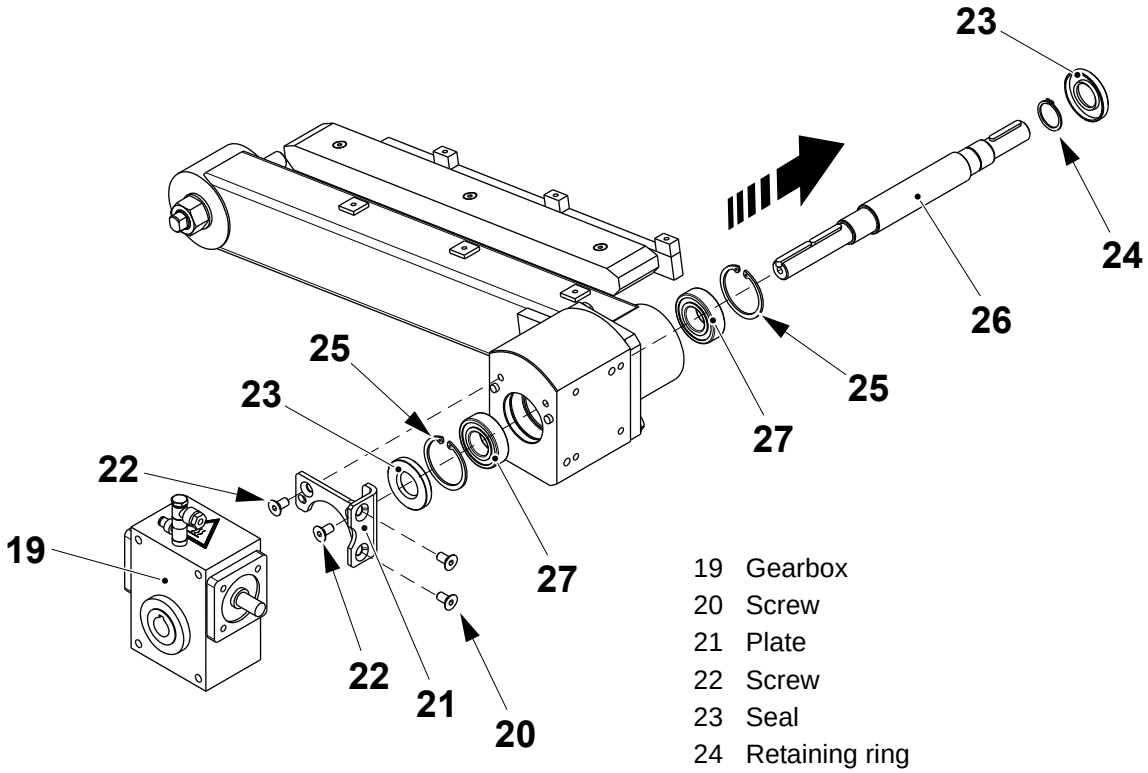

19 Gearbox
20 Screw
21 Plate
22 Screw
23 Seal
24 Retaining ring
25 Retaining ring
26 Shaft
27 Ball bearing

TechPub_2614345_0107 - 0503_3048164_01.fm

(Cont'd)

(Cont'd)

q) Assemble in the reverse order. When fitting the belt (1), align the tooth (28) with the notch (29).

r) Set the belt tension by loosening the nut (30) and then tightening the eccentric shaft (31) to **25 Nm** with a torque wrench.

s) Set the belt (1), see 5.1-7 Conveyor - Set Belt.

t) Tighten the nut (30).

u) Synchronise the conveyor, see 5-1 Final Folder Unit - Synchronise, from step g).

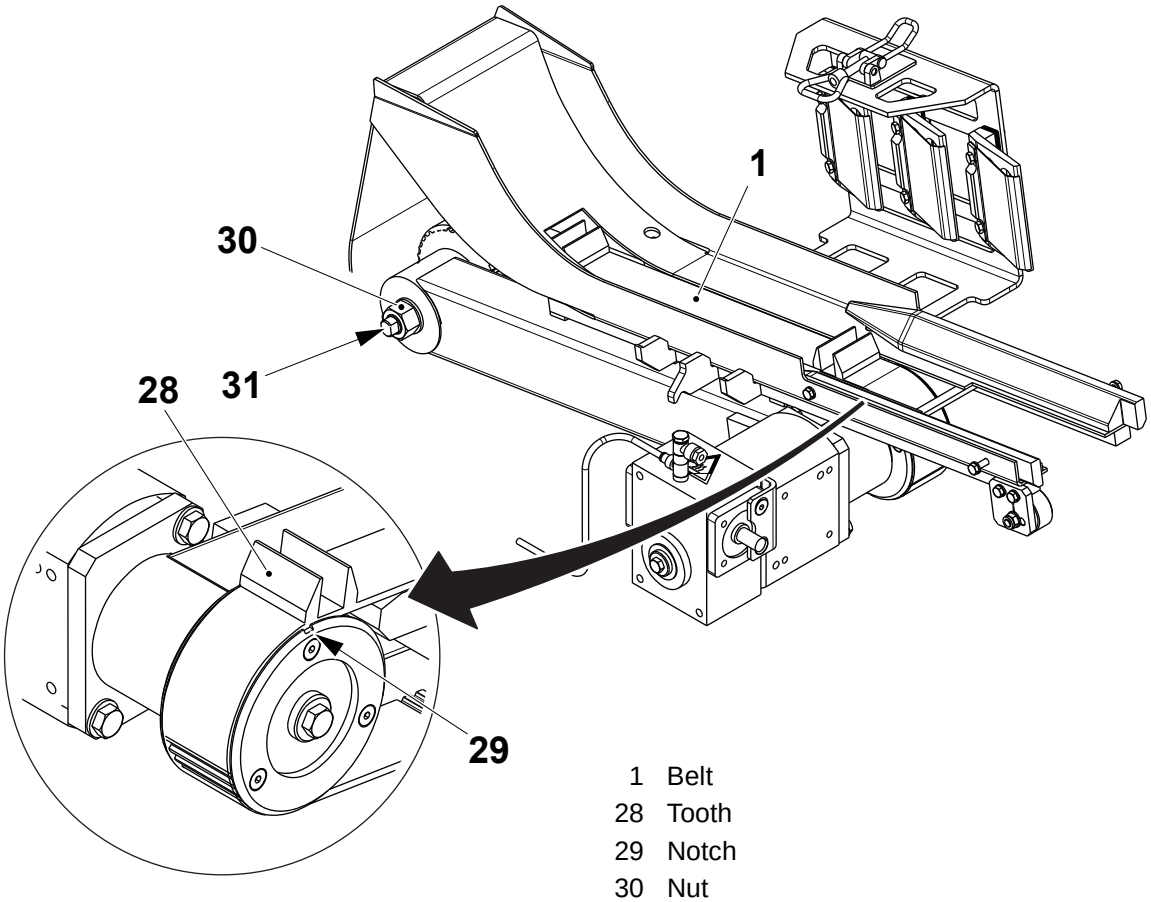

1 Belt
28 Tooth
29 Notch
30 Nut
31 Shaft

TechPub_2614345_0107 - 0503_3048164_01.fm

5.1-4 Conveyor - Set Brake

Machine Status	Mains Power OFF Air OFF Steam ON Water OFF
Special Equipment	Template, see 10.2 Templates and Tools
SPC Reference	1346814-0400

Valid for Portion Packages with T-order 21215/00001 to 21215/000127.

a) Swing the brake assembly (1) open.

b) Insert the template (2) with the milled surface facing up under the brake assembly spring (3).

c) Swing the brake assembly (1) close.

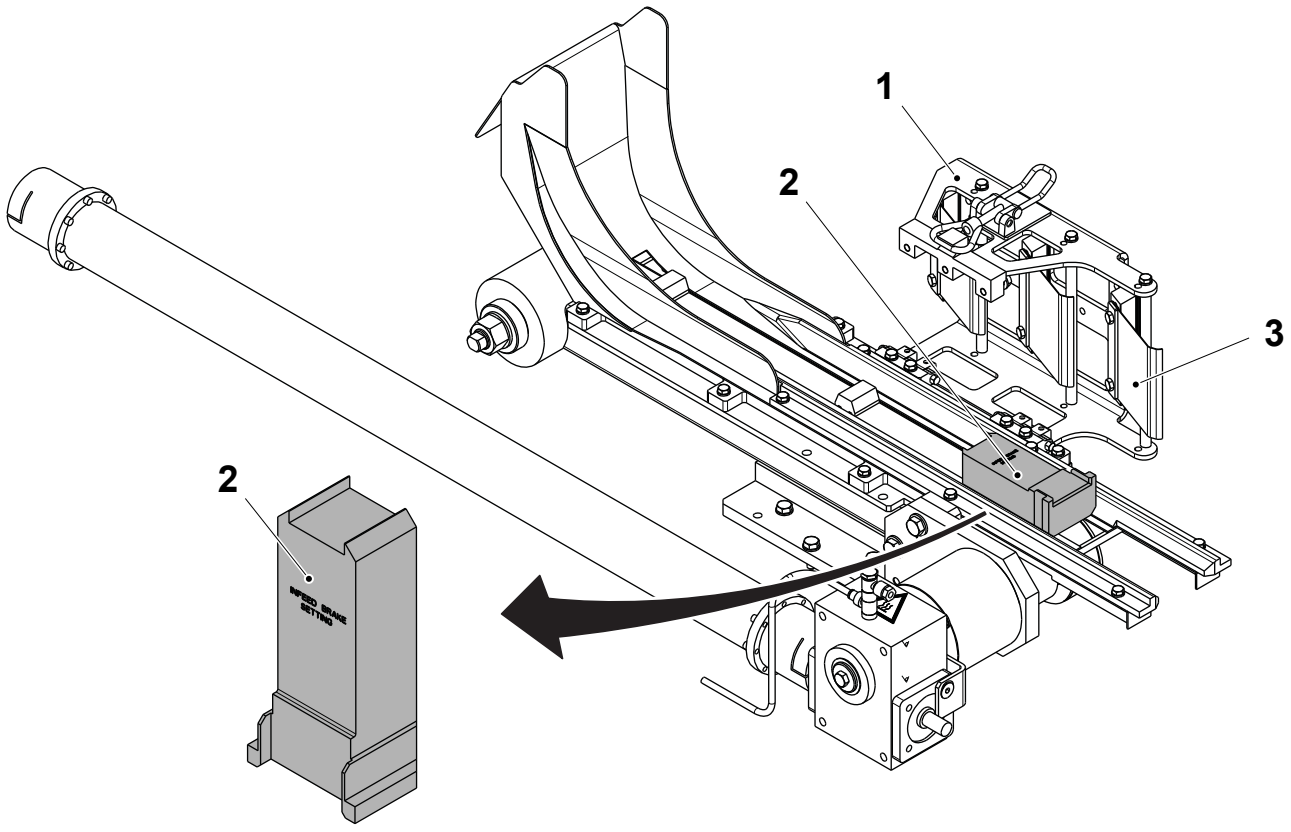

1 Brake assembly
2 Template
3 Spring

(Cont'd)

TechPub_2614345_0107 - 0503_3048164_01.fm

(Cont'd)

Note! The shims (7) move the spring (3) of 1 mm at a time while the shims (5), since they are positioned on a oblique plan, move the spring (3) of 0.5 mm at a time. Use the shims (5) for fine setting.

d) Check that the spring (3) touches the milled surface of the template (2).

e) If necessary, remove the screws (4) and add or remove the shims (5).

f) If necessary, remove the screws (6) and add or remove the shims (7).

g) Repeat the setting for the other springs of the brake assembly (2).

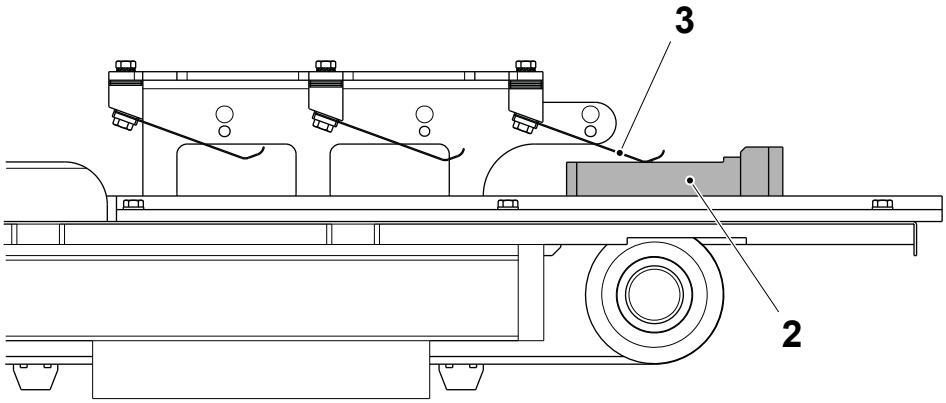

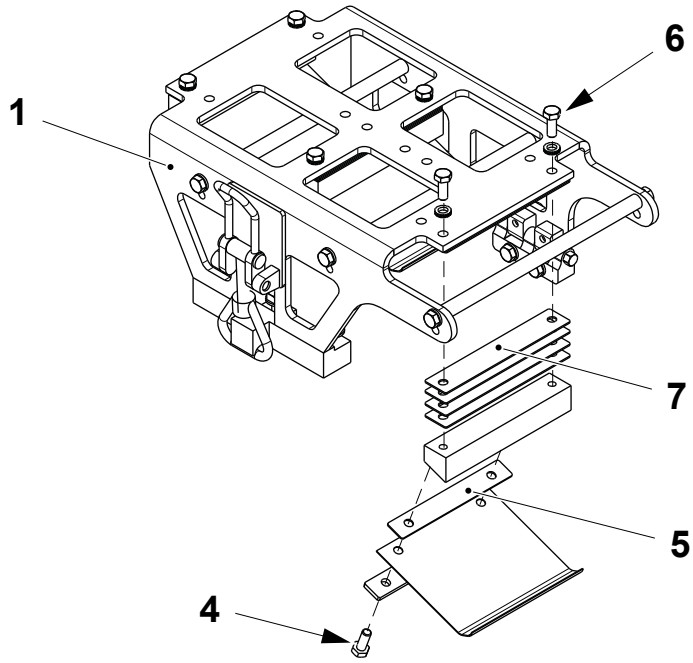

1 Brake assembly
2 Template
3 Spring
4 Screw
5 Shim
6 Screw
7 Shim

(Cont'd)

TechPub_2614345_0107 - 0503_3048164_01.fm

(Cont'd)

Valid for Family Packages and Portion Packages with T-order 21215/00128 and above.

a) Swing the brake assembly (1) open.

b) Insert the template (2) with the milled surface facing up under the brake assembly spring (3).

c) Swing the brake assembly (1) close.

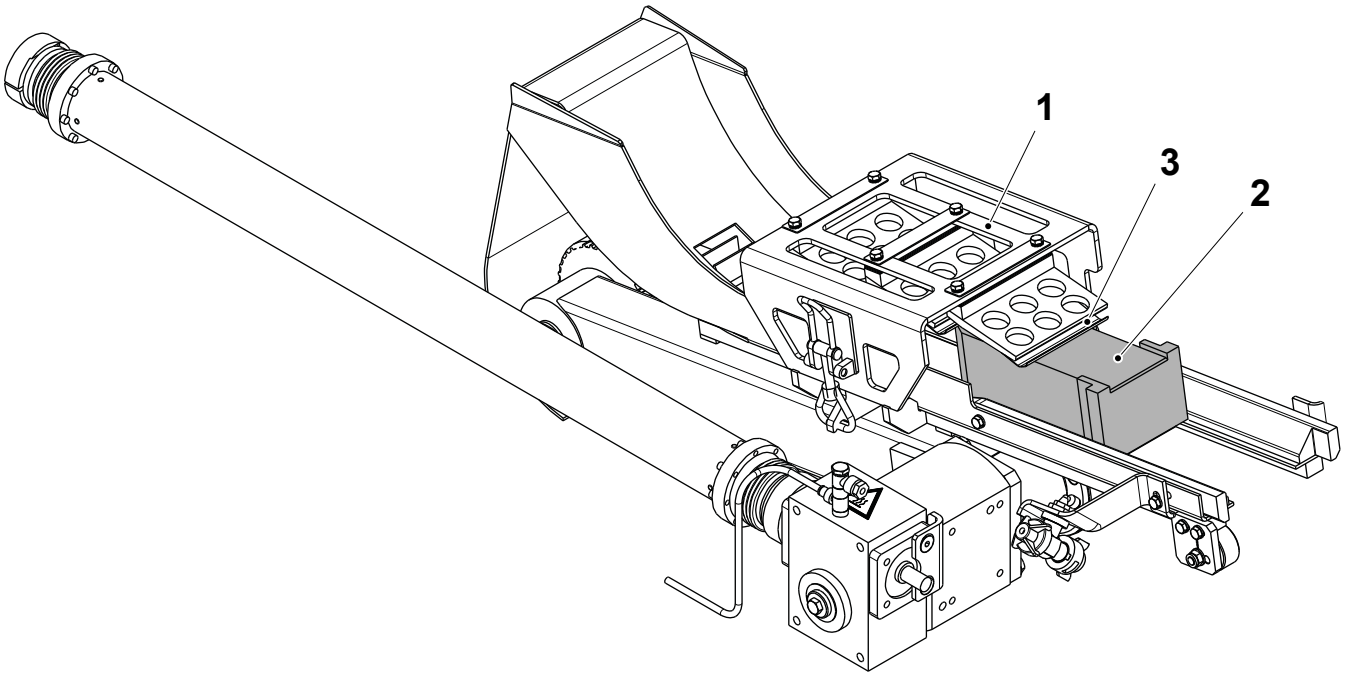

1 Brake assembly
2 Template
3 Spring

TechPub_2614345_0107 - 0503_3048164_01.fm

(Cont'd)

(Cont'd)

d) Check that the spring (3) touches the milled surface of the template (2).

e) If necessary, remove the screws (4) and the support (5).

f) Add or remove the shims (6) to set the position of the spring (3), see the table on the next page for Portion Packages.

g) Assemble in the reverse order.

h) Repeat the setting for the other springs of the brake assembly (2).

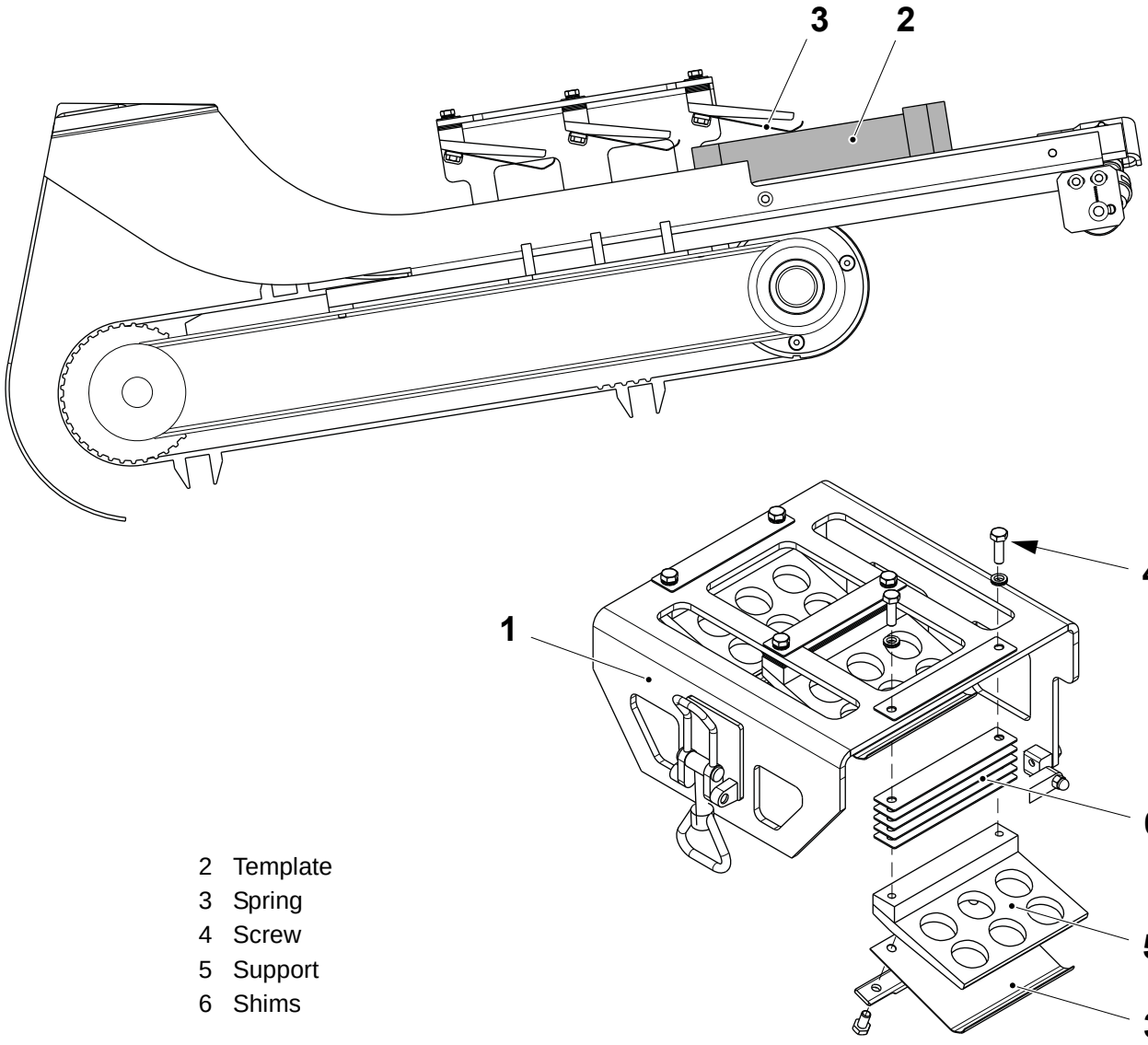

2 Template
3 Spring
4 Screw
5 Support
6 Shims

(Cont'd)

TechPub_2614345_0107 - 0503_3048164_01.fm

(Cont'd)

Note! Refer to the table below for Portion Packages.

Package	**Quantity of Shims**		
	A	B	C
TBA 200 S	5	4	3
TBA 250 S	5	4	3
TBA 200 B	1	0	0
TBA 250 B	4	3	2
TBA 200 M	5	4	3
TBA 125 S	-	2	3

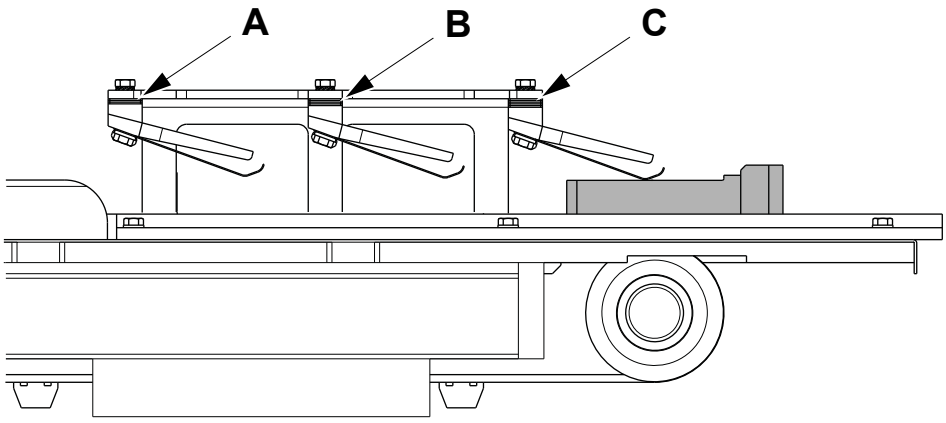

TechPub_2614345_0107 - 0503_3048164_01.fm

5.1-5 Conveyor - Change Roller

Machine Status	Mains Power OFF Air OFF Steam ON Water OFF
SPC Reference	1346814-0400

Note! Valid for TBA 1000 Sq only.

a) Remove the nut (1) and the roller assembly.

b) Remove the retaining ring (2) and the shaft (3).

c) Change the roller (4) and the bushings (5).

d) Assemble in the reverse order.

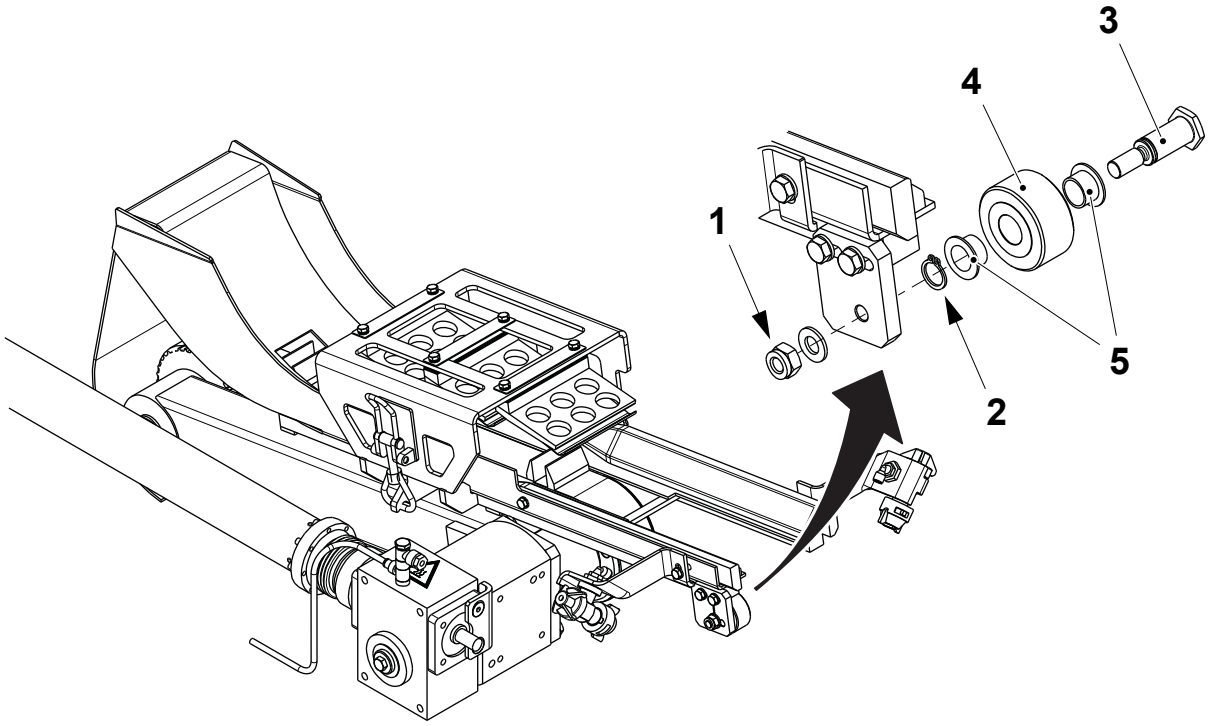

1 Nut
2 Retaining ring
3 Shaft
4 Roller
5 Bushing

TechPub_2614345_0107 - 0503_3048164_01.fm

5.1-6 Conveyor - Set Roller

Machine Status	Mains Power OFF Air OFF Steam ON Water OFF
SPC Reference	1346814-0400

Note! Valid for TBA 1000 Sq only.

Loosen the screws (1) and move the plate (2) until the roller (3) touches the plate (4). Tighten the screws (1).

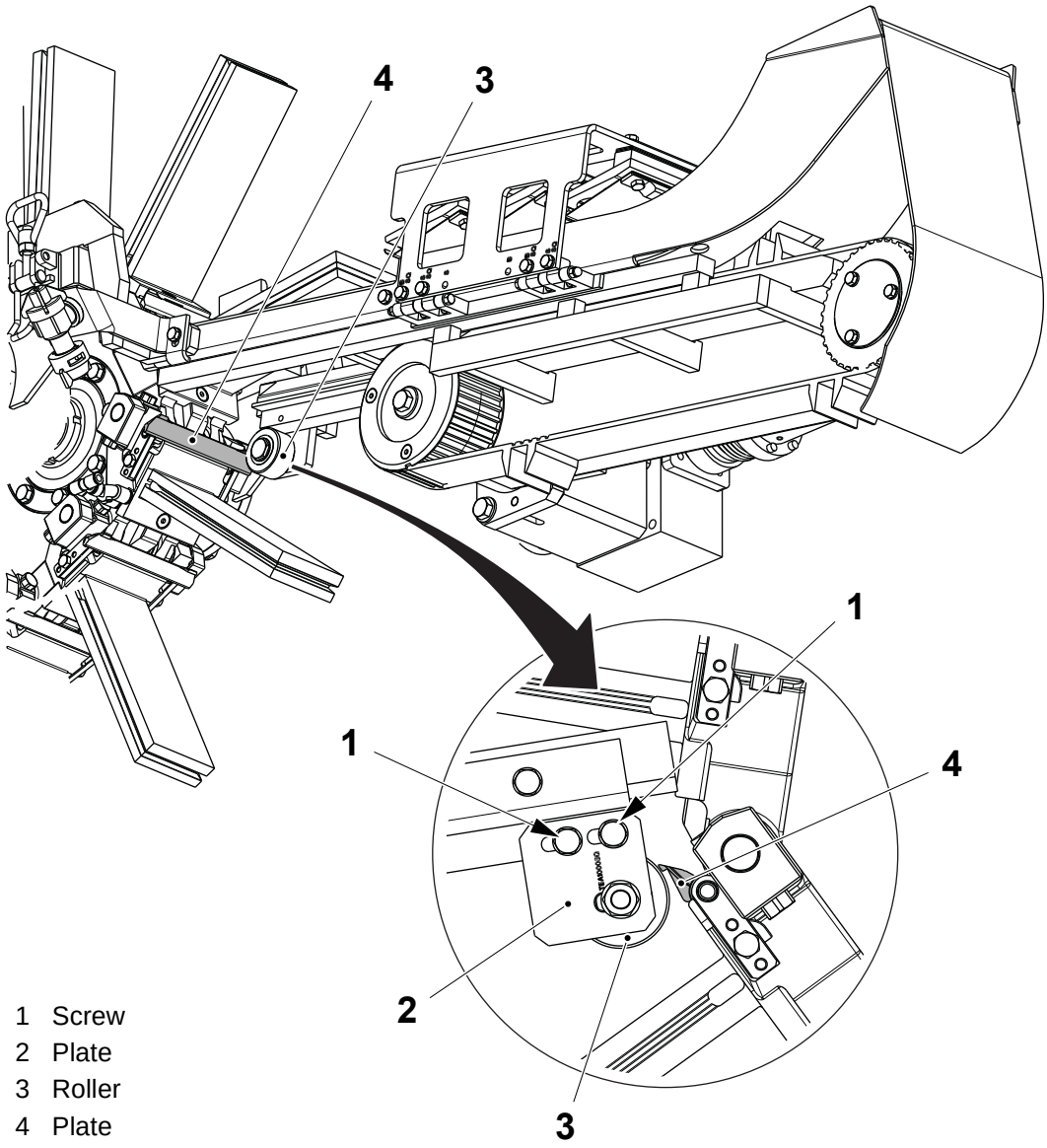

1 Screw
2 Plate
3 Roller
4 Plate

TechPub_2614345_0107 - 0503_3048164_01.fm

5.1-7 Conveyor - Set Belt

Machine Status	Mains Power OFF Air OFF Steam ON Water OFF
Special Equipment	Tensiometer TP No. 90600-3415
SPC Reference	1346814-0400

Note! Valid for Family Packages only.

Note! The arrows (3) and (4) are marked on machines with T-order: 21215/00128 and above.

a) Loosen the nut (1) and turn the eccentric shaft (2) until the arrow (3) marked on the eccentric shaft (2) itself and the arrow (4) marked on the frame are pointing each other.

b) Tighten the nut (1).

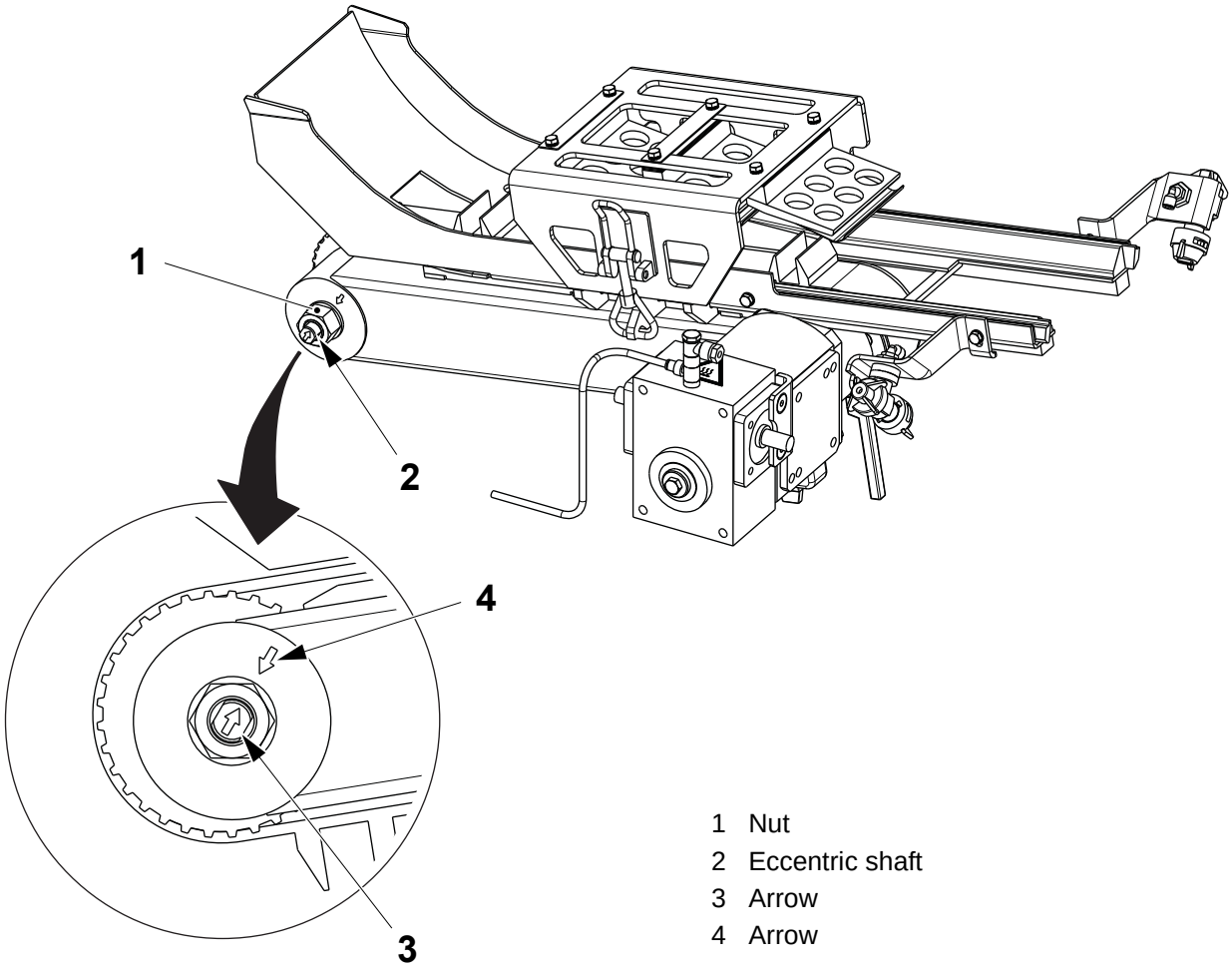

1 Nut
2 Eccentric shaft
3 Arrow
4 Arrow

(Cont'd)

TechPub_2614345_0107 - 0503_3048164_01.fm

(Cont'd)

c) Position the tensiometer sensor between the two pulleys at the distance of 5-10 mm from the belt (5).

d) Press the reset icon on the tensiometer.

e) Tap the belt (5) by a finger.

f) Check that the frequency recorded is 34.7 Hz (with tolerance 0/-2).

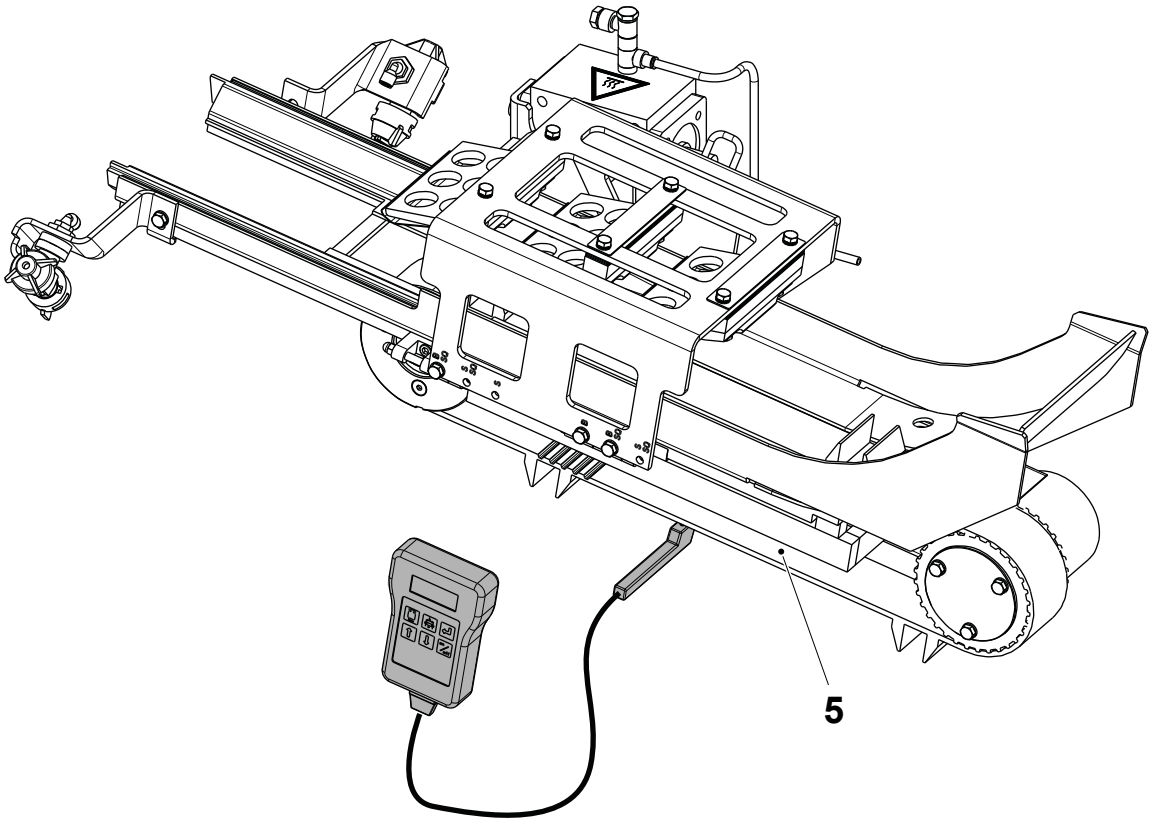

5 Belt

TechPub_2614345_0107 - 0503_3048164_01.fm

5.2 Final Folder

SPC Reference	1346815-0500

5.2.1 Station Chain

5.2.1-1 Station Chain - Change

Machine Status	Mains Power OFF Air OFF Steam ON Water OFF
Consumables	Locking fluid TP No. 90602-4847
SPC Reference	2531774-0200

CAUTION

Risk of personal injury and/or damage to the equipment.

Put a beam on to the frame to avoid that the chain falls suddenly in the waste conveyor when it is opened.

a) Remove the conveyor chute, see 5.1-1 Conveyor - Change Belt, steps a) to b).

(Cont'd)

TechPub_2614345_0107 - 0503_3048165_01.fm

(Cont'd)

b) Lift the swing frame and put a beam (1) as shown to block the station chain.

c) On both sides, remove the screws (2) and the guide (3).

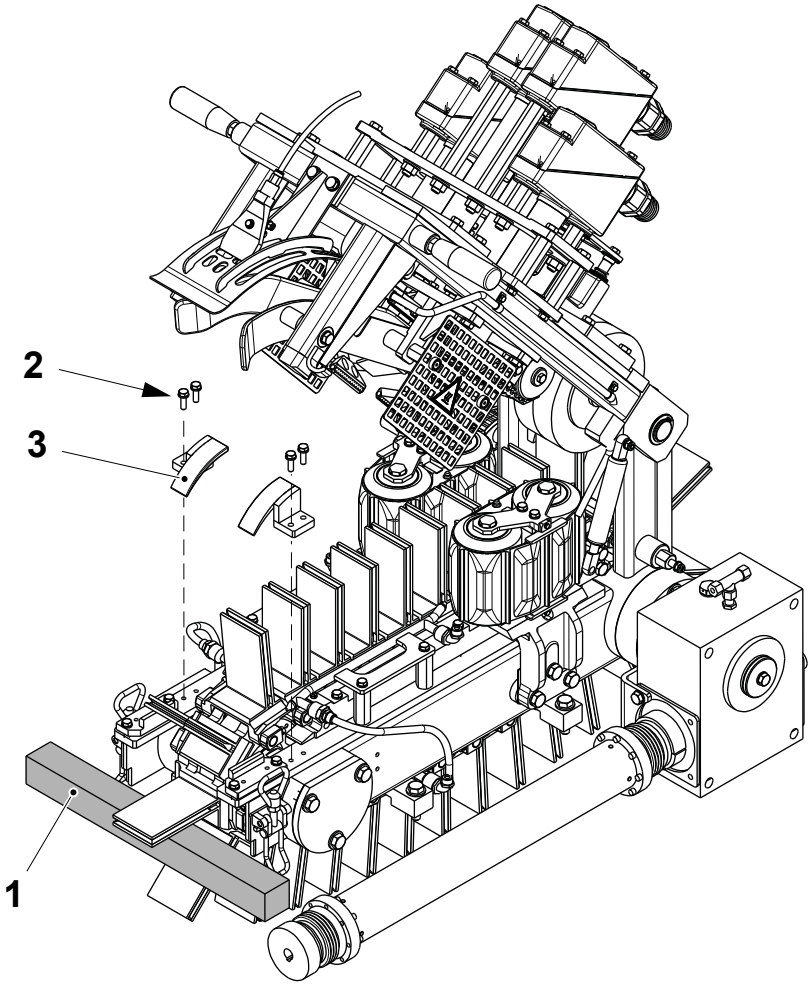

1 Beam
2 Screw
3 Guide

(Cont'd)

TechPub_2614345_0107 - 0503_3048165_01.fm

(Cont'd)

Note! Valid for Family Packages only.

d) Remove the tension to the station chain by tightening the nut (4). When assembling, loosen the nut (4) to add tension to the station chain.

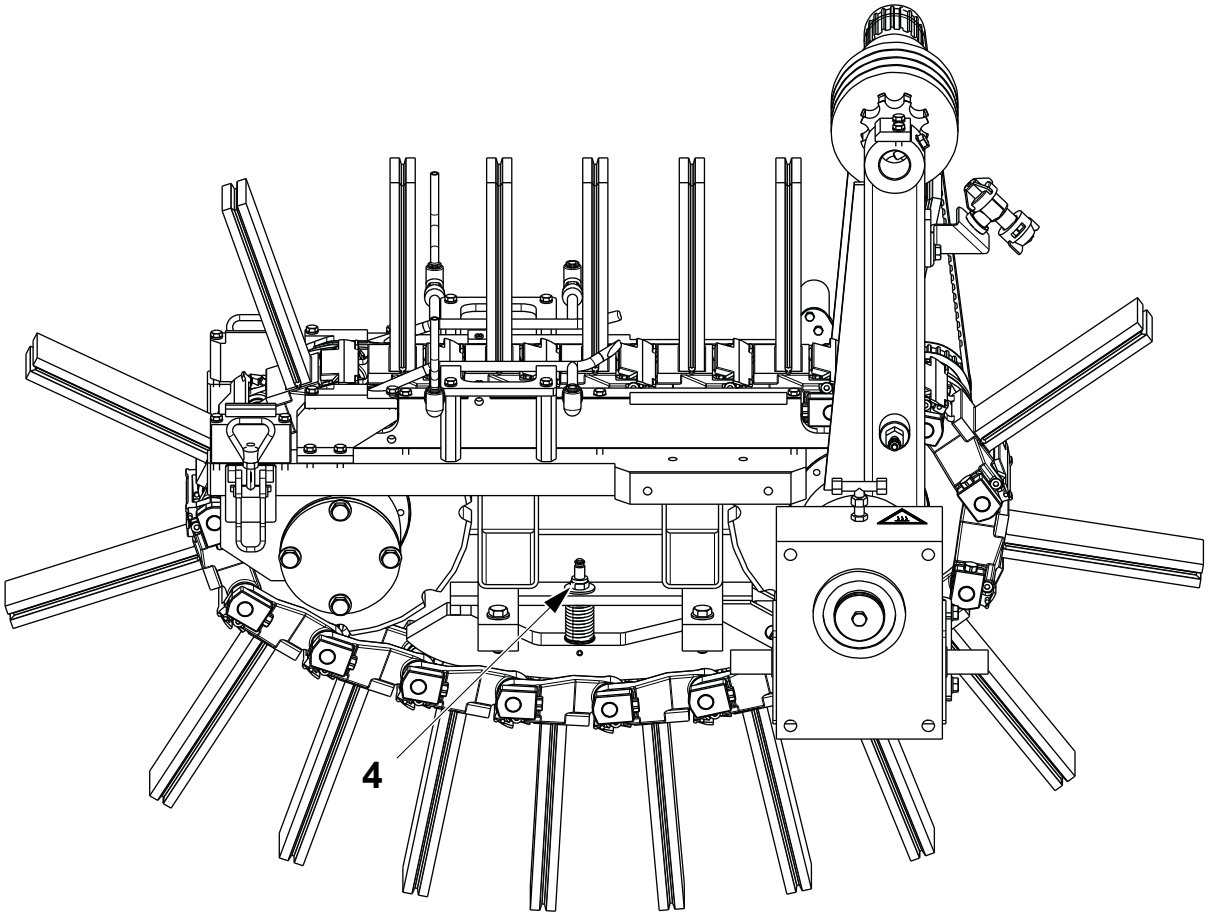

4 Nut

(Cont'd)

TechPub_2614345_0107 - 0503_3048165_01.fm

(Cont'd)

e) Rotate the shaft (5) until a link in the station chain can be accessed at the infeed of the folder.

f) At the link, remove the screws (6) and (7) and the sliders (8).

g) Push out the shaft (9).

h) Rotate the shaft (4) to remove the station chain.

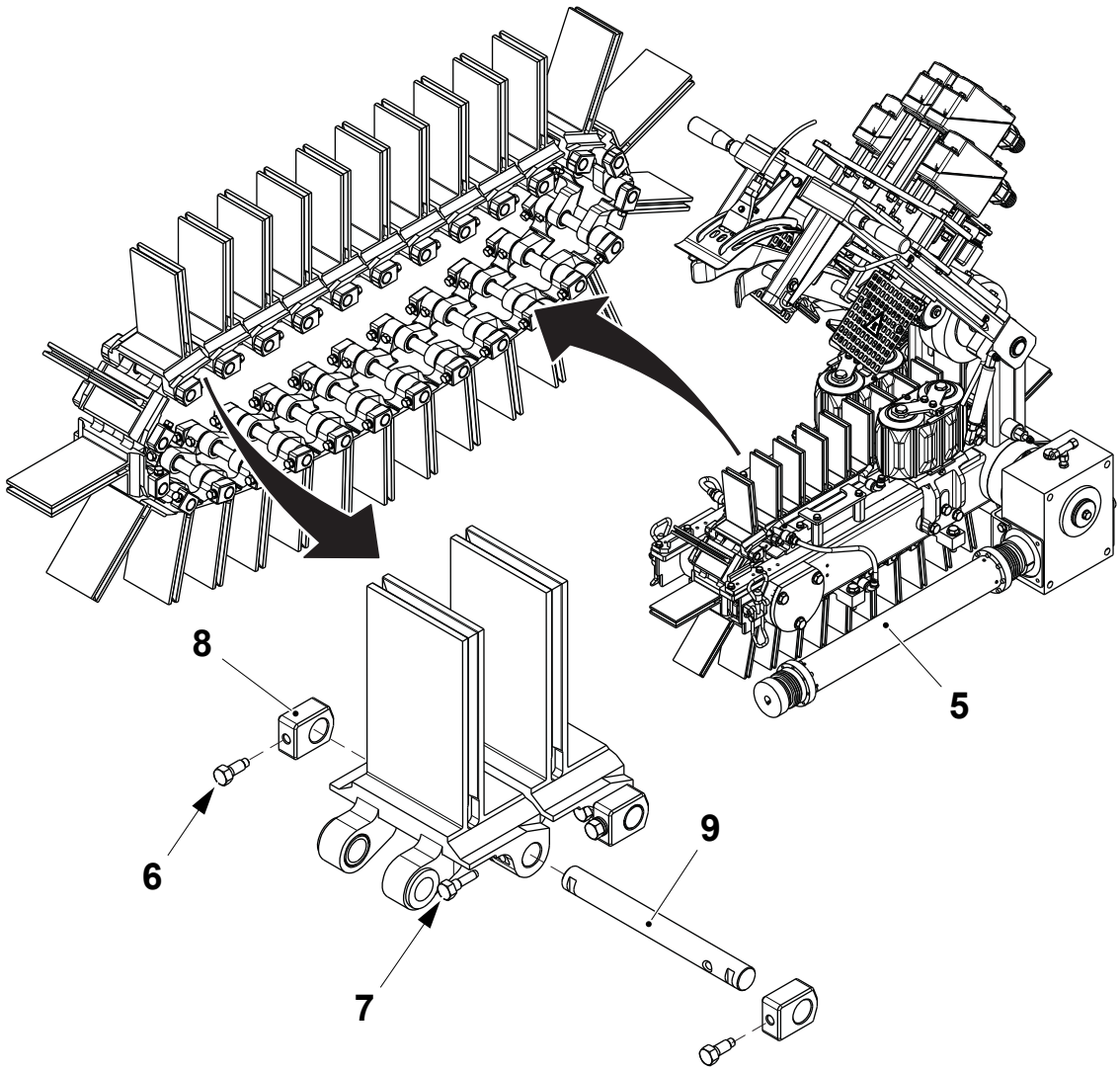

5 Shaft
6 Screw
7 Slider
8 Screw
9 Shaft

(Cont'd)

TechPub_2614345_0107 - 0503_3048165_01.fm

(Cont'd)

i) Insert a smooth plate (10) of wood under the station chain in order to avoid that the carton stations get stuck in the waste conveyor when rotating the shaft (4).

j) Remove the beam (1) supporting the opened station chain and lay the station chain on the plate (10).

k) Rotate the shaft (4) to remove the station chain.

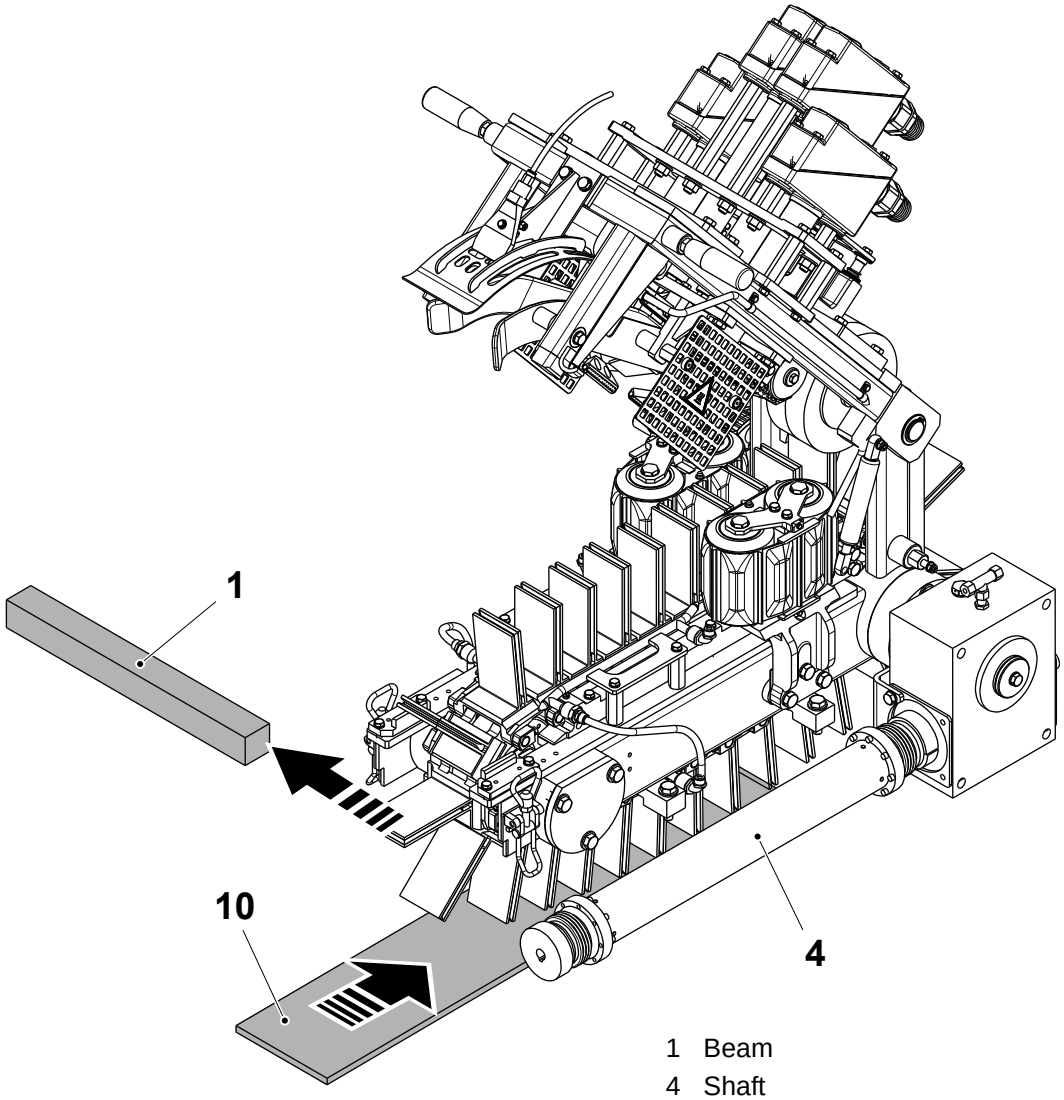

1 Beam
4 Shaft
10 Plate

(Cont'd)

TechPub_2614345_0107 - 0503_3048165_01.fm

(Cont'd)

WARNING
Risk of cutting.
Be careful not to trap your fingers when removing the chain.

CAUTION
Risk of damage to the equipment.
Pay attention that the station chain slides smoothly on the plate (10) while turning the shaft.

Note! Two people are recommended for the station chain removal.

l) Separate the station chain in three or four parts (according to the volume) to make easier the removal, repeating the steps e) and f).

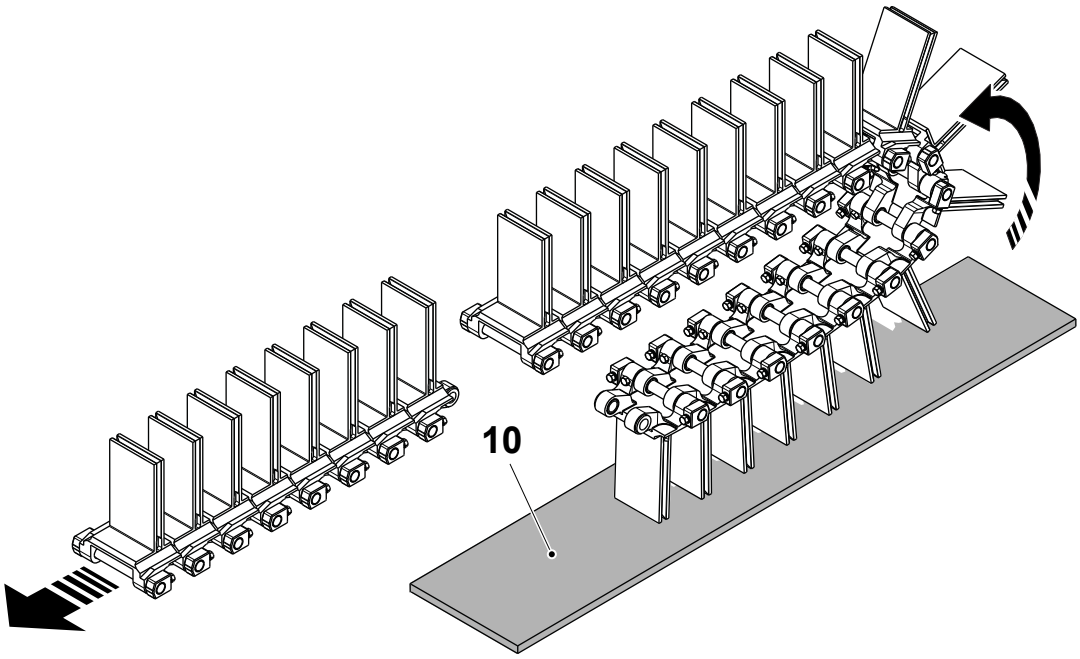

10 Plate

(Cont'd)

TechPub_2614345_0107 - 0503_3048165_01.fm

(Cont'd)

CAUTION
Risk of damage to the equipment.
Pay attention inserting the shaft (9) in to the chain link: do not force it with a hammer: it could damage the bushings.

Note! Apply Loctite TP No. 90602-4847, to screws (6) and (7) before assembly.

m) Assemble in the reverse order.

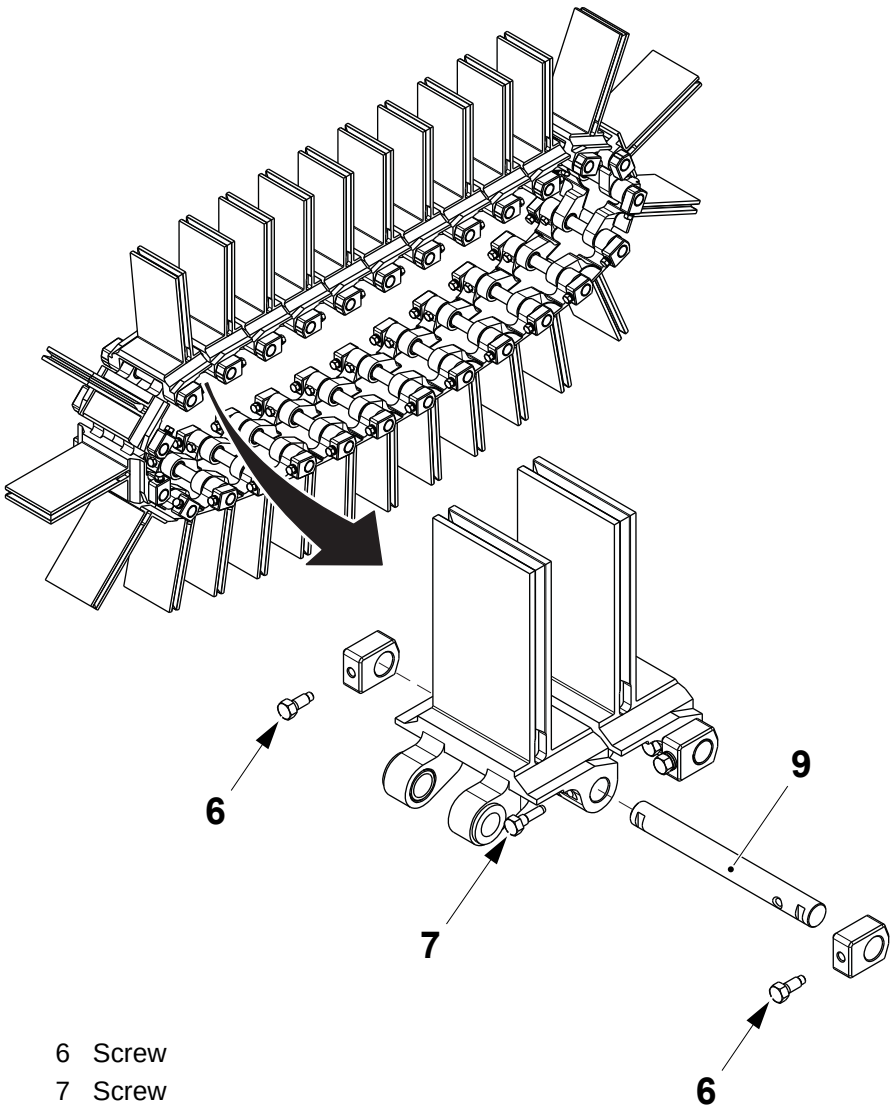

6 Screw
7 Screw
9 Shaft

TechPub_2614345_0107 - 0503_3048165_01.fm

5.2.1-2 Station Chain - Overhaul

Machine Status	Mains Power OFF Air OFF Steam ON Water OFF
Consumables	Locking fluid TP No. 90602-4847
SPC Reference	2531774-0200

Remove the station chain, see 5.2.1-1 Station Chain - Change and move it on the work bench.

a) Remove the screws (1) and (2).

b) Push out the shaft (3) and change the shaft (3) and the sliders (4).

c) Pull out and change the bushings (5).

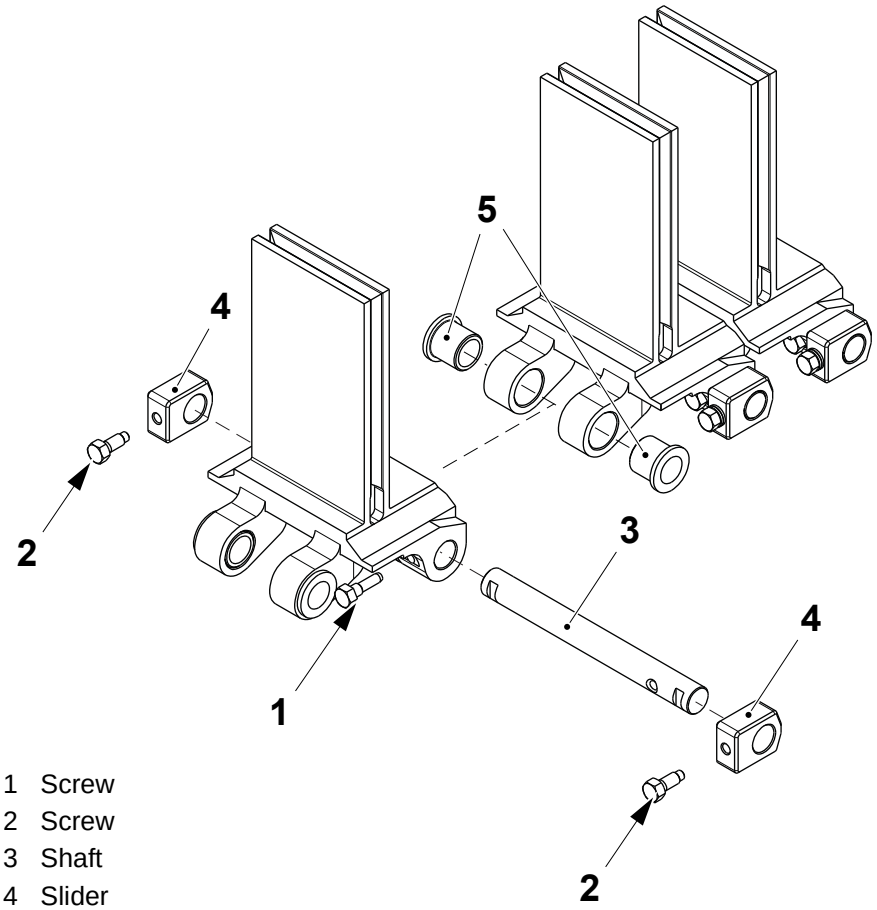

1 Screw
2 Screw
3 Shaft
4 Slider
5 Bushing

(Cont'd)

TechPub_2614345_0107 - 0503_3048165_01.fm

(Cont'd)

CAUTION
Risk of damage to the equipment.
Pay attention inserting the shaft (3) into the chain link: do not force it with a hammer: it could damage the bushings.

Note! Lubricate the shaft (3) and apply a thin layer of grease on the sliders (4) before assembling.

Note! Apply locking fluid TP No. 90602-4847 on the thread of the screws (1) and (2) before assembly.

d) Assemble in the reverse order.

e) Repeat on the other links.

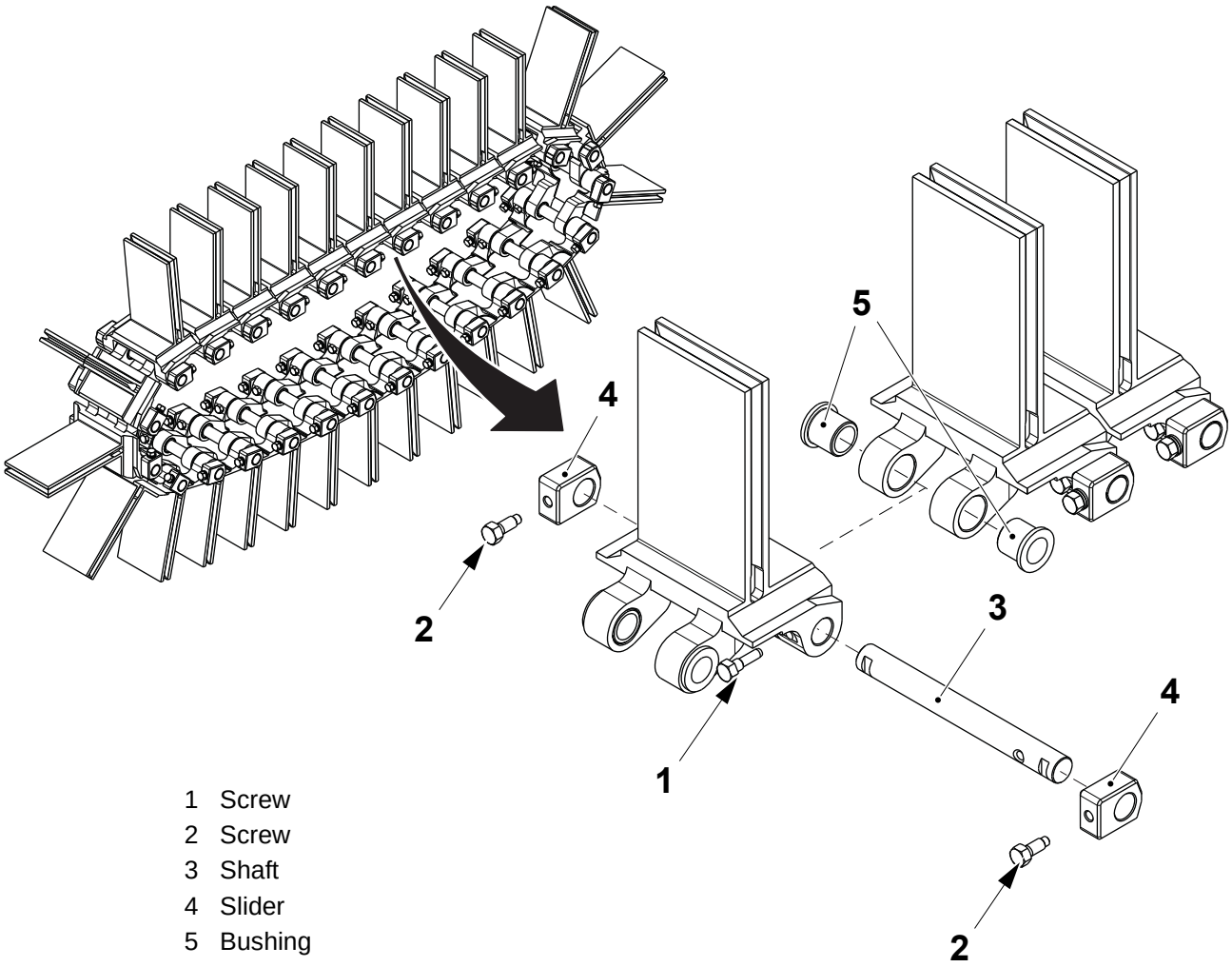

1 Screw
2 Screw
3 Shaft
4 Slider
5 Bushing

TechPub_2614345_0107 - 0503_3048165_01.fm

5.2.1-3 Station Chain - Turn Shafts

Machine Status	Mains Power OFF Air OFF Steam ON Water OFF
SPC Reference	2531774-0200

a) Lift the swing frame and remove the guides to access the station chain, see 5.2.1-1 Station Chain - Change.

(Cont'd)

TechPub_2614345_0107 - 0503_3048165_01.fm

(Cont'd)

b) Remove the screw (1).

c) On both sides of the chain, loosen the screws (2) and pull off the sliders (3).

d) Turn the shaft (4) through a **180°**.

e) Fit the sliders (3), tighten the screws (2) and insert and tighten the screw (1).

f) Repeat for the other shafts.

Note! When assembling apply Loctite type 243 locking fluid (TP No. 90602-4847) on the thread of the screws (2).

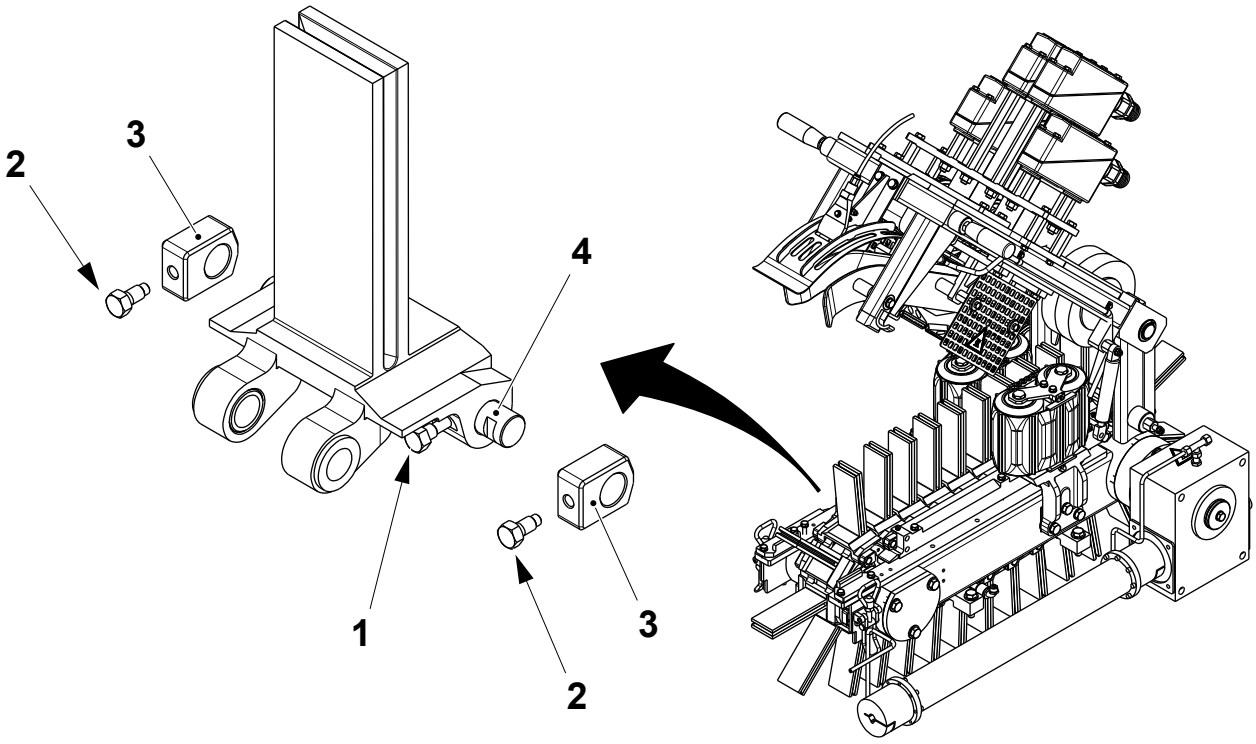

1 Screw
2 Screw
3 Slider
4 Shaft

TechPub_2614345_0107 - 0503_3048165_01.fm

5.2.1-4 Station Chain - Check Sliders

Machine Status	Mains Power OFF Air OFF Steam ON Water OFF
SPC Reference	2531774-0200

Check the surface (1) of the sliders (2) for wear. If required change the sliders as follow:

Remove the screws (3) and change the sliders (2).

Note! Apply a thin layer of grease on the sliders (2) before assembling.

Note! When assembling apply Loctite type 243 locking fluid (TP No. 90602-4847) on the thread of the screws (3).

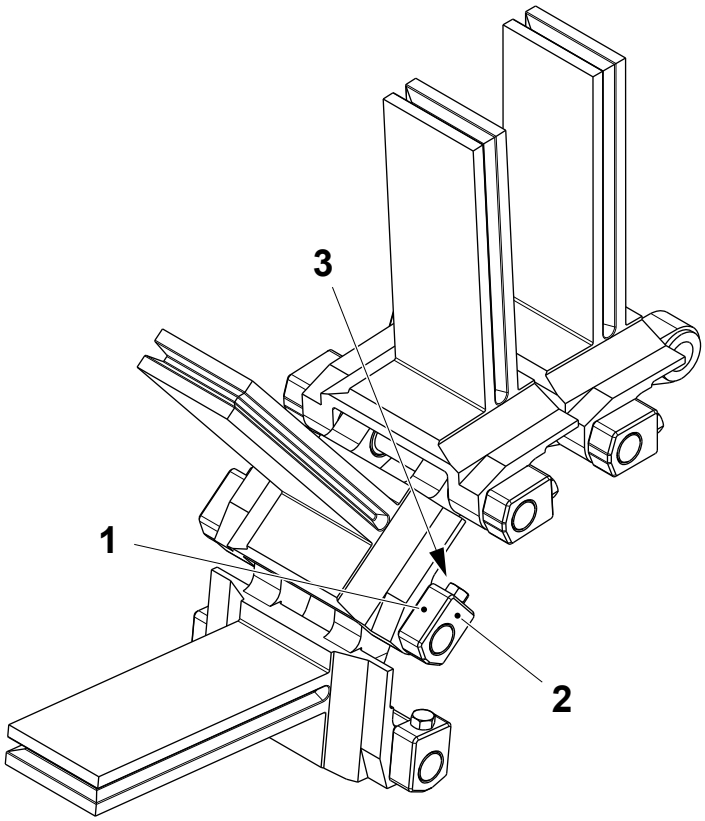

1 Surface
2 Slider
3 Screw

TechPub_2614345_0107 - 0503_3048165_01.fm

5.2.1-5 Station Chain - Check Plates

Machine Status	Mains Power OFF Air OFF Steam ON Water OFF
SPC Reference	2531774-0200

Note! Valid for TBA 1000 Sq only.

Make sure that the plates (1) have a play. If not, change the plate (1) as follows:

a) Loosen the screw (2) and remove the support (3) using the screw (2) as extractor.

b) Remove and change the plate (1).

c) Assemble in the reverse order.

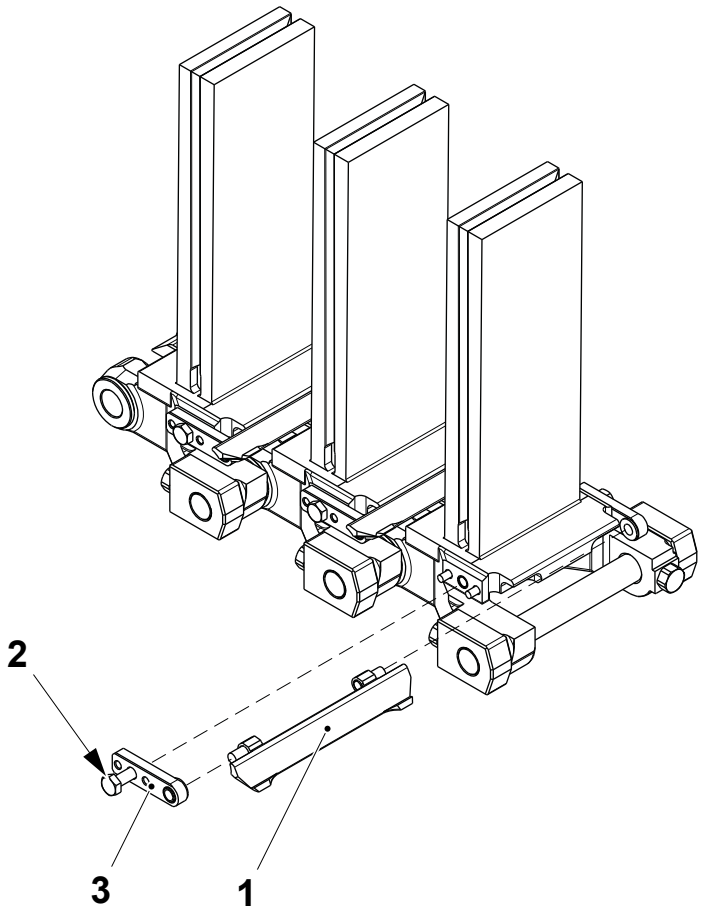

1 Plate
2 Screw
3 Support

TechPub_2614345_0107 - 0503_3048165_01.fm

5.2.1-6 Station Chain - Change Pins and Bushings

Machine Status	Mains Power OFF Air OFF Steam ON Water OFF
SPC Reference	2531774-0200

Note! Valid for TBA 1000 Sq only.

a) Remove the plate (1), see 5.2.1-5 Station Chain - Check Plates.

b) Remove the pins (2) and the bushings (3). Change if necessary.

c) Assemble in the reverse order.

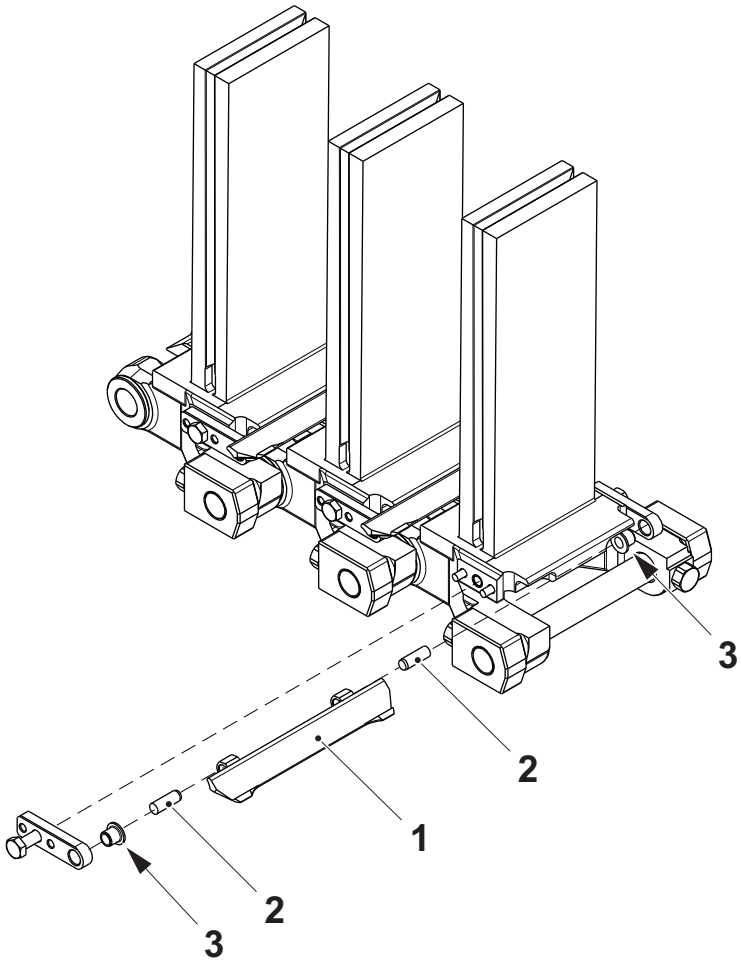

1 Plate
2 Pin
3 Bushing

TechPub_2614345_0107 - 0503_3048165_01.fm

5.2.1-7 Station Chain - Change Cam

Machine Status	Mains Power OFF Air OFF Steam ON Water OFF
SPC Reference	2531774-0200

Note! Valid for TBA 1000 Sq.

When the carton station is the position shown below, check the cam (1) for wear or damage; if necessary, remove and change the cam (1) by the screw (2).

Repeat the same procedure for the other carton stations.

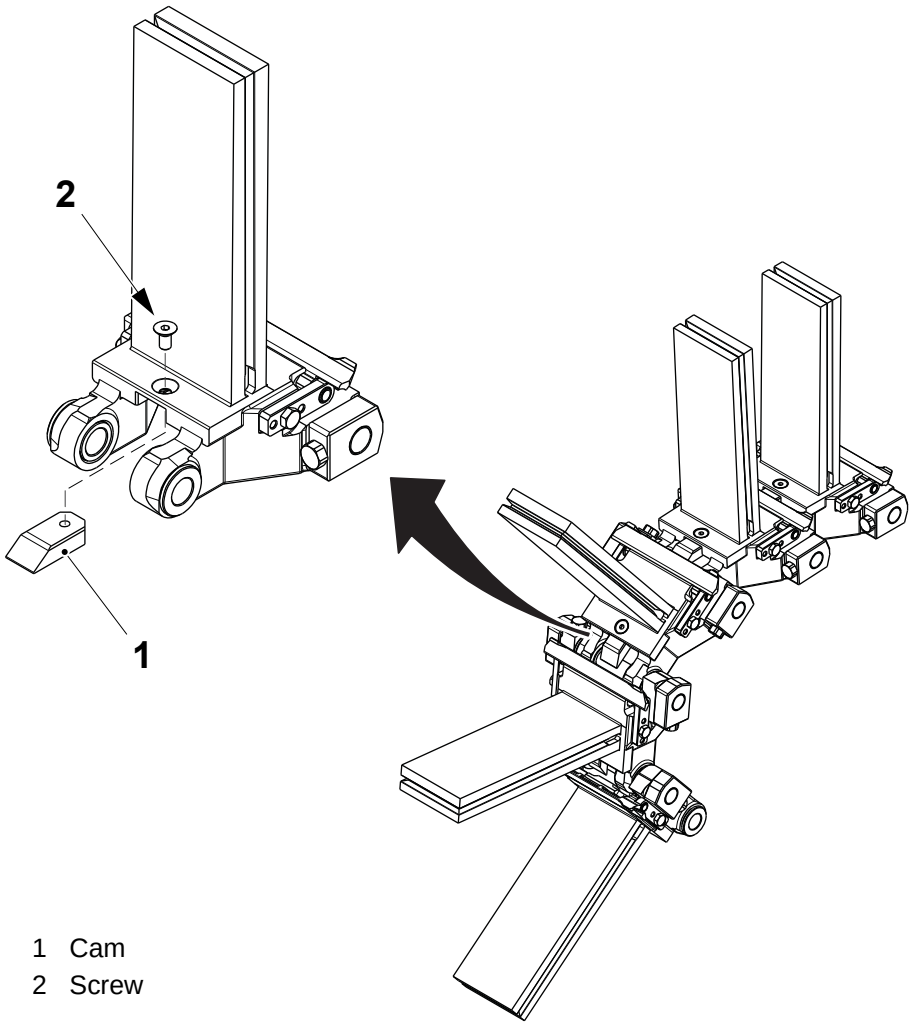

1 Cam
2 Screw

TechPub_2614345_0107 - 0503_3048165_01.fm

5.2.2 Swing Frame

5.2.2-1 Swing Frame - Check Pulley

Machine Status	Mains Power OFF Air OFF Steam ON Water OFF
SPC Reference	1349500-0500

Note! Valid for all volumes except TBA 1000 Sq.

Check that the pulley (1) rotates freely, if not:

a) Remove the screws (2) and lift out the pulley bracket (3).

b) Remove the screw (4) and pull out the pin (5).

c) Change the bushings (6) and if necessary the pulley (1).

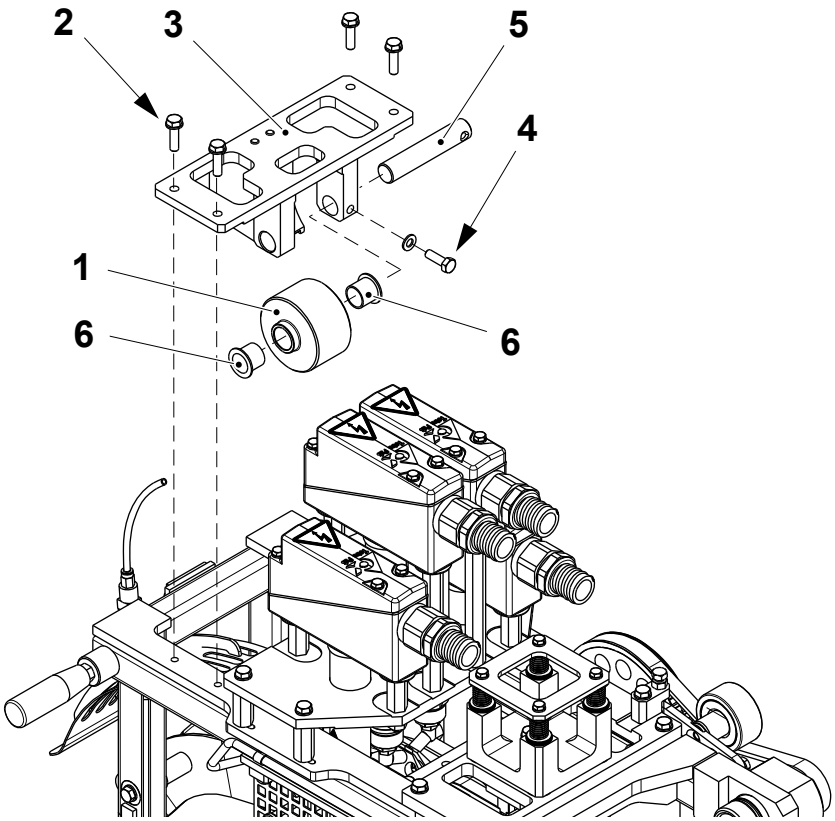

1 Pulley
2 Screw
3 Bracket
4 Screw
5 Pin
6 Bushing

TechPub_2614345_0107 - 0502_3048166_01.fm

5.2.2-2 Swing Frame - Change Belt

Machine Status	Mains Power OFF Air OFF Steam ON Water OFF
SPC Reference	1349500-0500

Check the belt (1) for wear or damage.

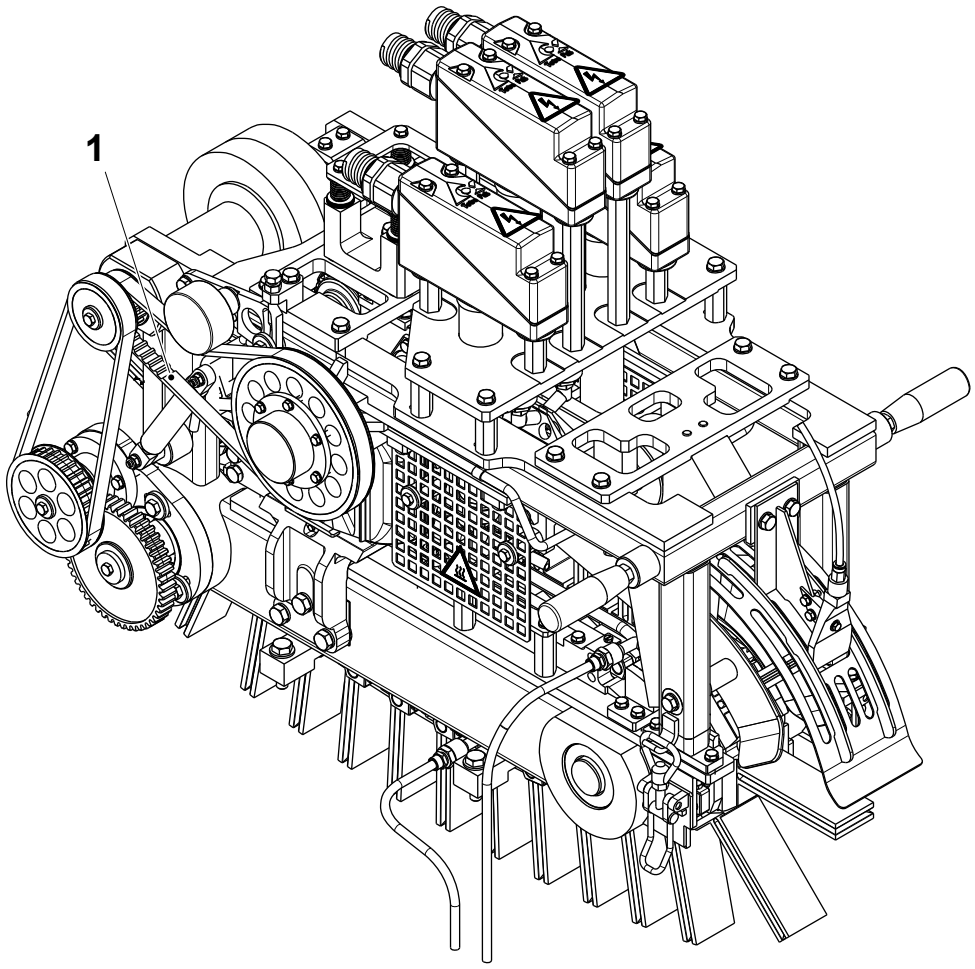

1 Belt

(Cont'd)

TechPub_2614345_0107 - 0502_3048166_01.fm

(Cont'd)

If required change the belt as follows:

a) Loosen the screw (2) and turn the flange (3) clockwise to reduce the tension of the belt (4).

b) Remove the belt (4).

c) Loosen the screw (5) to reduce the tension of the belt (1).

d) Remove and change the belt (1).

e) Assemble in the reverse order.

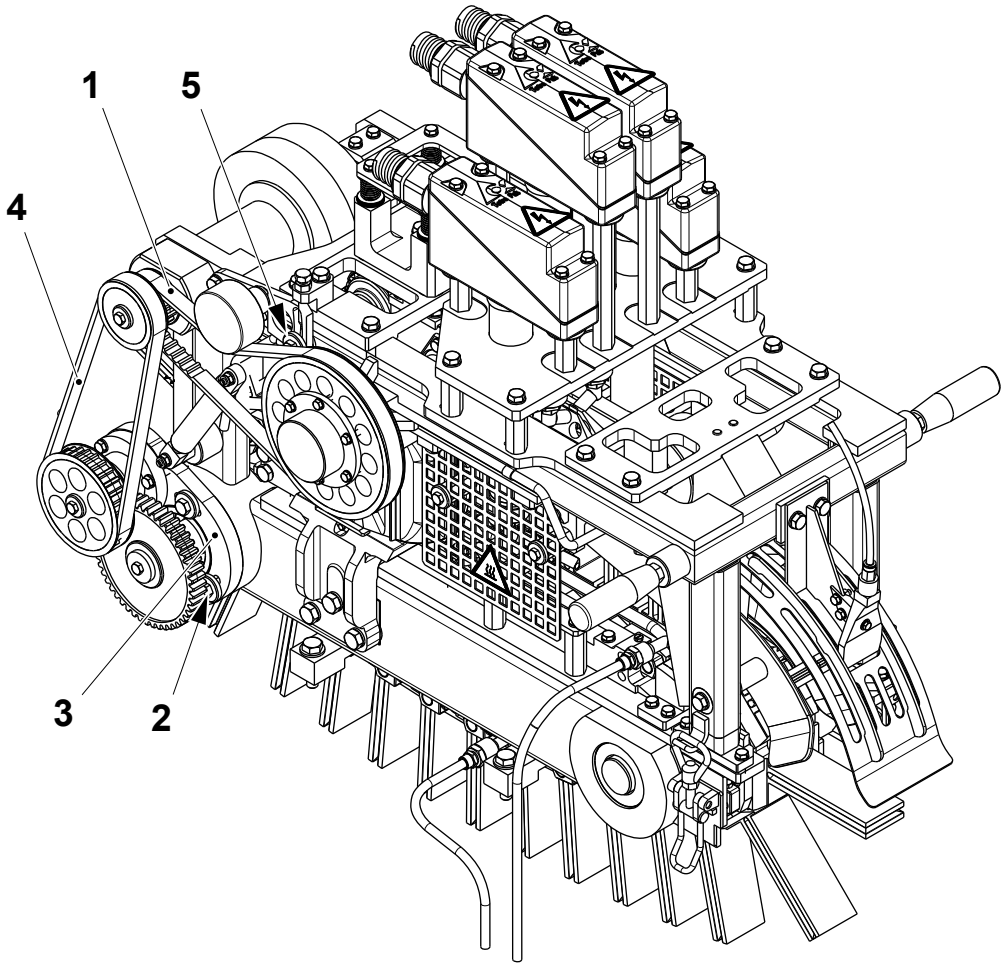

1 Belt
2 Screw
3 Flange
4 Belt
5 Screw

(Cont'd)

TechPub_2614345_0107 - 0502_3048166_01.fm

(Cont'd)

f) Set the tension of the belt (1), see 5.2.2-3 Swing Frame - Set Belt.
g) Set the tension of the belt (4), see 5.2.3-6 Chain Support - Set Belt.
h) Set the top squeezer belt, see 5.2.4-1 Squeezer - Set Position.

TechPub_2614345_0107 - 0502_3048166_01.fm

5.2.2-3 Swing Frame - Set Belt

Machine Status	Mains Power OFF Air OFF Steam ON Water OFF
Special Equipment	Force Gauge TP No. 90459-1467 Tensiometer TP No. 90600-3415
SPC Reference	1349500-0500

This setting can be done using a force gauge or a tensiometer, see following pages.

(Cont'd)

TechPub_2614345_0107 - 0502_3048166_01.fm

(Cont'd)

Belt Setting using the Force Gauge

a) Loosen the screws (1).

b) Check with the force gauge that the deflection at the mid-point of the belt (2) is **A** when a force of **B** is applied.

Package	A (mm)	B (N)
Portion Packages	4.5	25
Family Packages	5.0	15

c) If necessary, add or release tension by the screw (3).

d) Tighten the screws (1).

e) Set the top squeezer belt, see 5.2.4-1 Squeezer - Set Position.

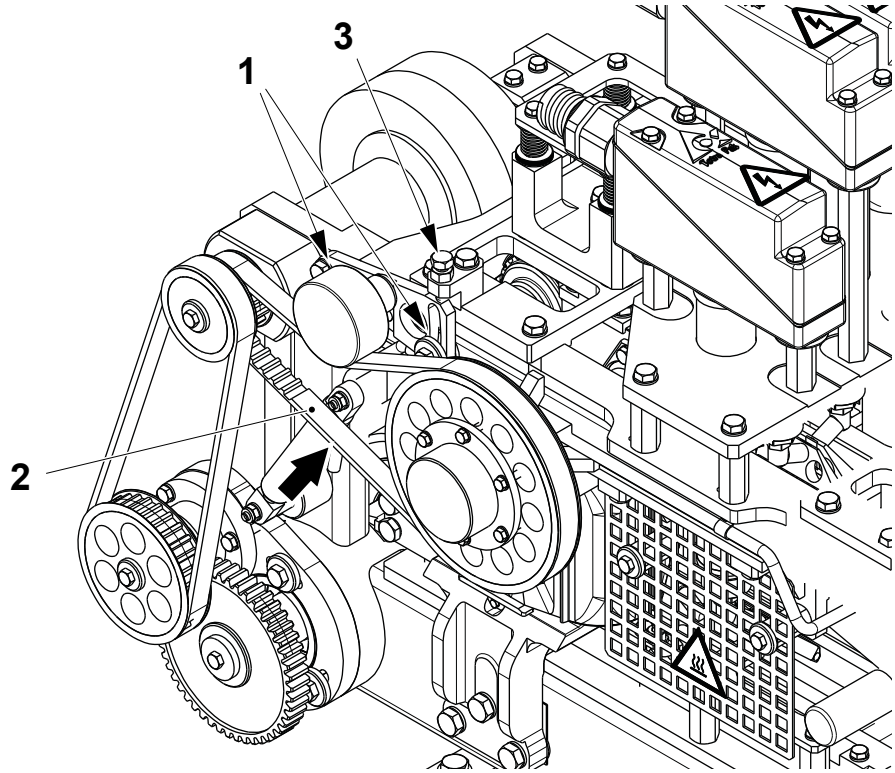

1 Screw
2 Belt
3 Screw

(Cont'd)

TechPub_2614345_0107 - 0502_3048166_01.fm

(Cont'd)

Belt Setting using the Tensiometer

a) Loosen the screws (1).

b) Position the tensiometer sensor at the distance of 10 mm from the mid-point of the belt (2).

c) Press the reset icon on the tensiometer.

d) Tap the belt (2) with a screwdriver or similar tool.

e) Check that the frequency recorded is **A**, see table.

Package	A (Hz)
Portion Packages	95
Family Packages	67

f) If necessary, add or release tension by the screw (3).

g) Tighten the screws (1).

h) Set the top squeezer belt, see 5.2.4-1 Squeezer - Set Position.

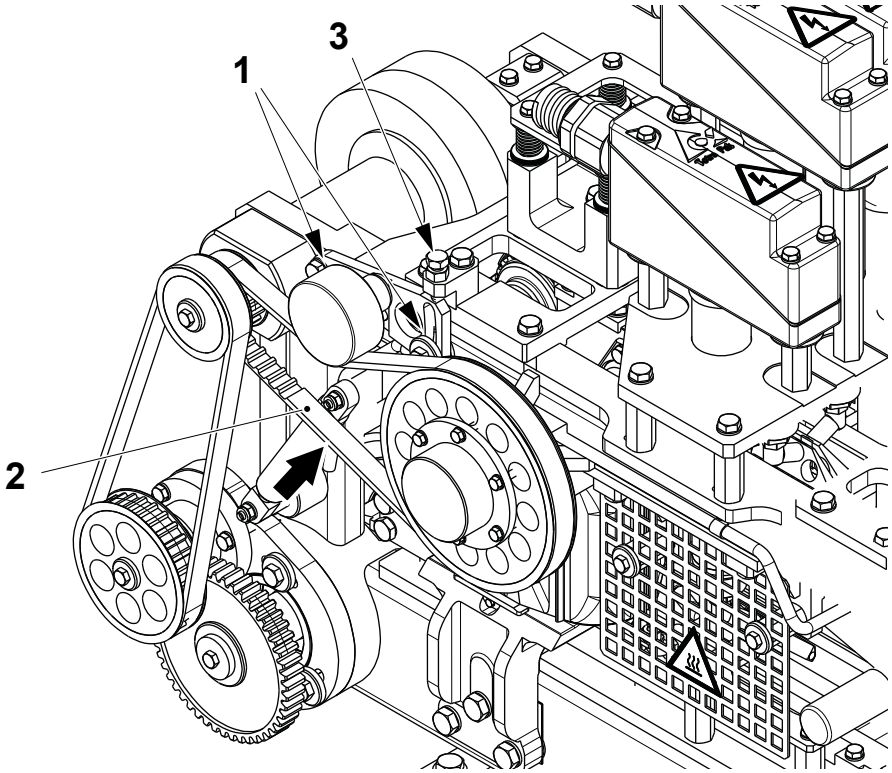

1 Screw
2 Belt
3 Screw

TechPub_2614345_0107 - 0502_3048166_01.fm

5.2.2-4 Swing Frame - Overhaul

Machine Status	Mains Power OFF Air OFF Steam ON Water OFF
Special Equipment	Torque Wrench
SPC Reference	1349500-0500

Remove the belt (1), see 5.2.2-2 Swing Frame - Change Belt.

Top Squeezer Drive

a) Remove the screws (2) and the cover (3).

b) Remove and change the O-ring (4).

c) Remove the screws (5) and the plate (6).

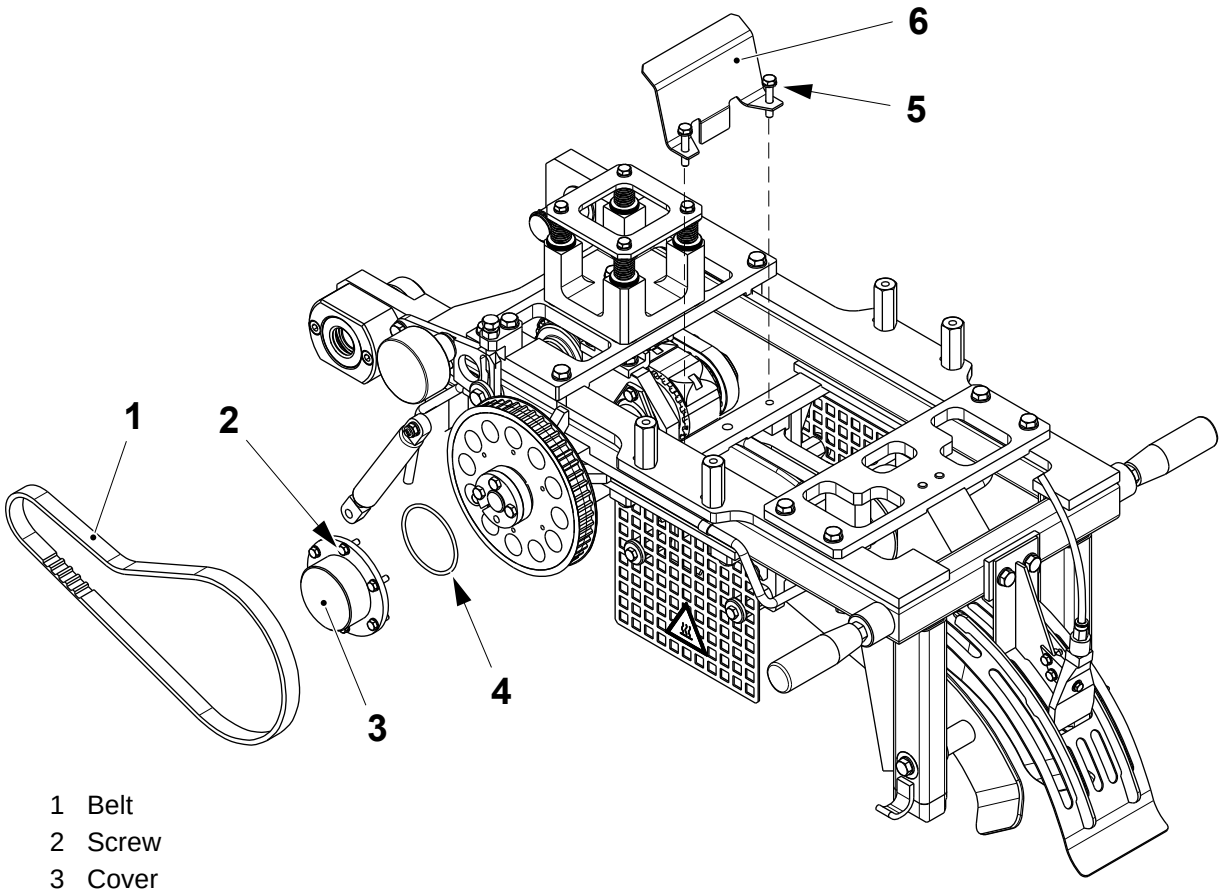

1 Belt
2 Screw
3 Cover
4 O-ring
5 Screw
6 Plate

(Cont'd)

TechPub_2614345_0107 - 0502_3048166_01.fm

(Cont'd)

Note! When opening the coupling (8) pay attention to hold the central body (9) and the plates (10).

d) Disconnect the cooling water tubes (7).

e) Open the coupling (8) of the top squeezer drive.

f) Remove the screws (11) and lift the top squeezer (12).

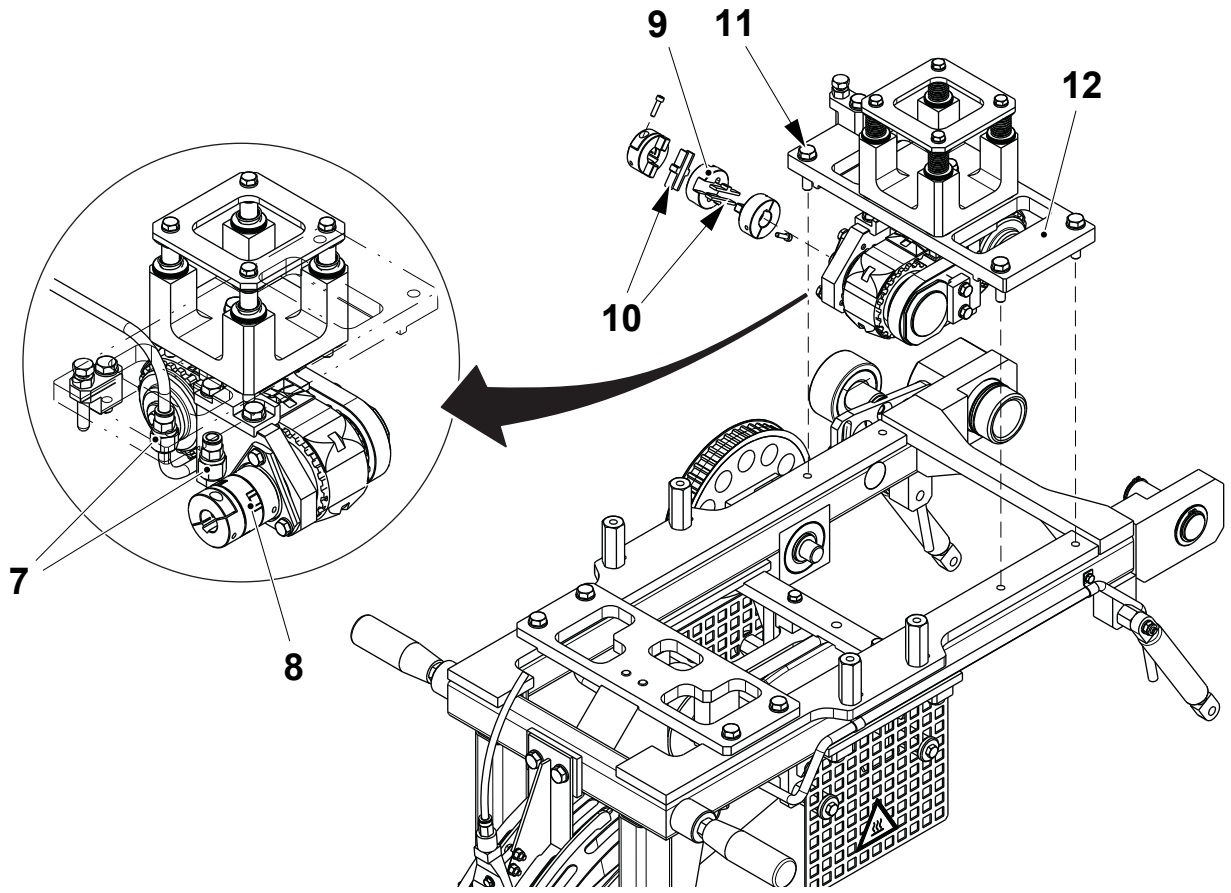

7 Tube
8 Coupling
9 Central body
10 Plate
11 Screw
12 Top Squeezer

(Cont'd)

TechPub_2614345_0107 - 0502_3048166_01.fm

(Cont'd)

Note! When assembling tighten the screws (20) of the clamping element (13) using a torque wrench set to 11.5 Nm.

g) Remove the clamping element (13).

h) Remove the pulley (14) and change the O-ring (15).

i) Remove the seal rings (16). Change if necessary.

j) Remove the retaining rings (17), the shaft (18) and the ball bearings (19). Change the ball bearings (19) if necessary.

k) Assemble in the reverse order.

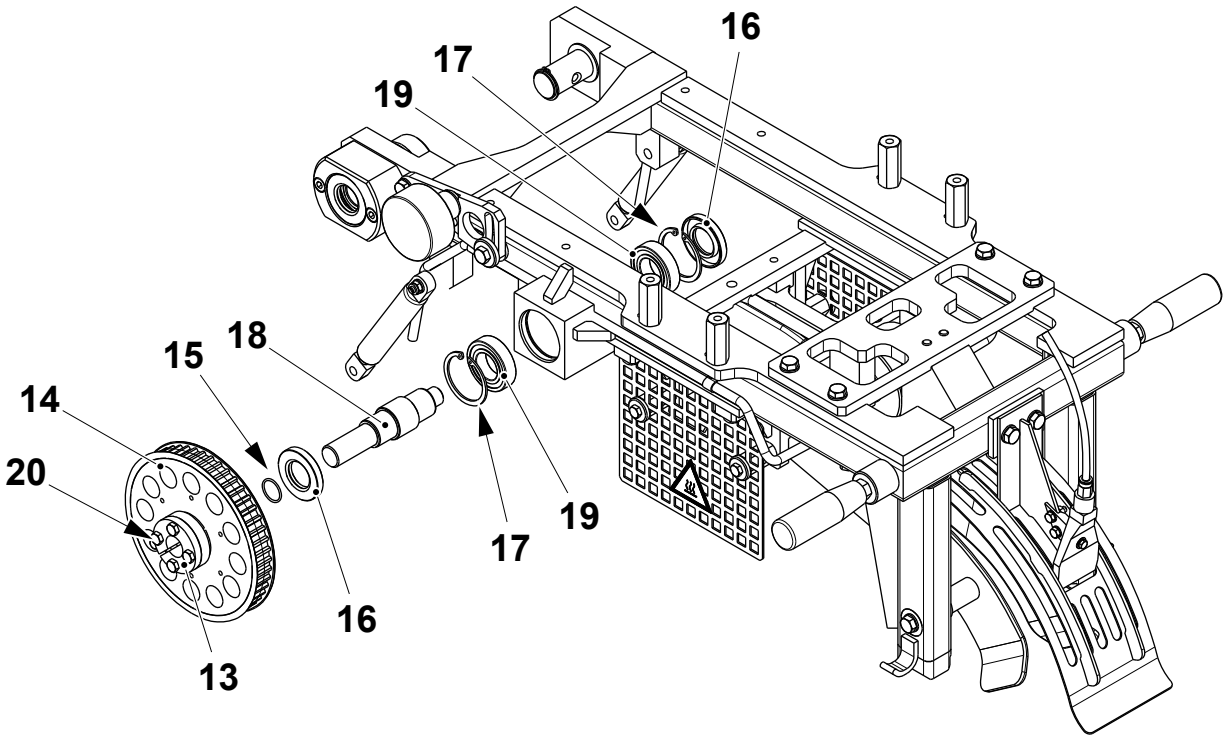

13 Clamping element
14 Pulley
15 O-ring
16 Seal ring
17 Retaining ring
18 Shaft
19 Ball bearing
20 Screw

(Cont'd)

TechPub_2614345_0107 - 0502_3048166_01.fm

(Cont'd)

Belt Tensioner

a) Loosen the screws (1) and (2).

b) Remove the support (3).

c) Loosen the screw (4) and separate the roller assembly.

d) Remove the seal ring (5). Change if necessary.

e) Remove the retaining ring (6) and the roller (7).

f) Remove the retaining rings (8) and pull out the ball bearing (9) from the shaft (10). Change the ball bearing (9) if necessary.

g) Assemble in the reverse order.

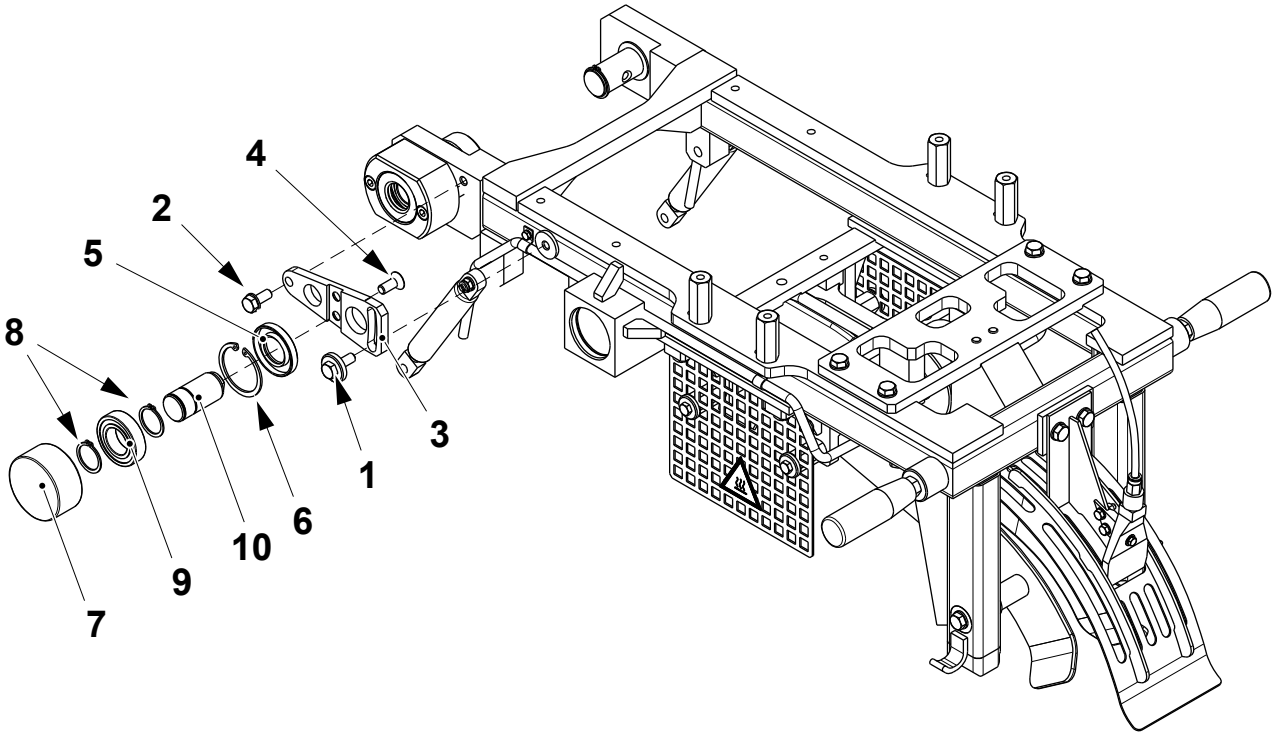

TechPub_2614345_0107 - 0502_3048166_01.fm

1 Screw
2 Screw
3 Support
4 Screw
5 Seal ring
6 Retaining ring
7 Roller
8 Retaining ring
9 Ball bearing
10 Shaft

(Cont'd)

(Cont'd)

Swing Frame Pivot

a) Loosen the screw (1).

b) Remove the retaining rings (2) and pull out the pin (3)

c) Remove and change the bushing (4).

d) Assemble in the reverse order.

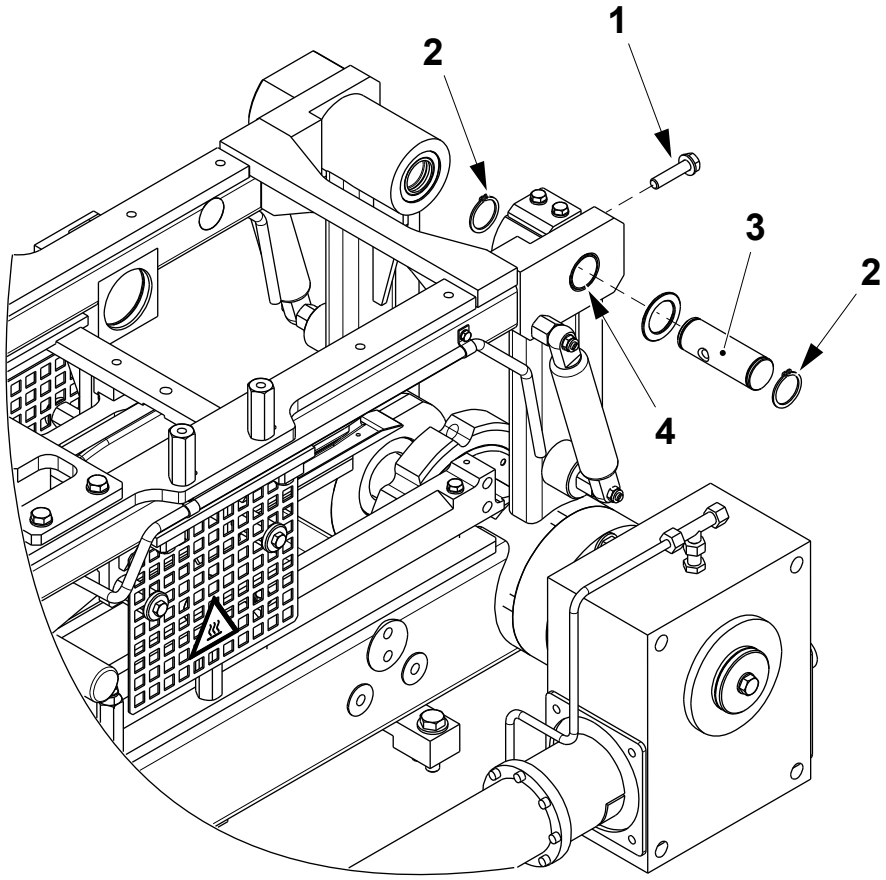

1 Screw
2 Retaining ring
3 Pin
4 Bushing

TechPub_2614345_0107 - 0502_3048166_01.fm

5.2.2-5 Swing Frame - Set Air Nozzle Pressure

Machine Status	PRODUCTION
SPC Reference	1349500-0500

Set the pressure for the air nozzle (1) to 4 bar by the pressure regulator (2) located in the pneumatic panel (3).

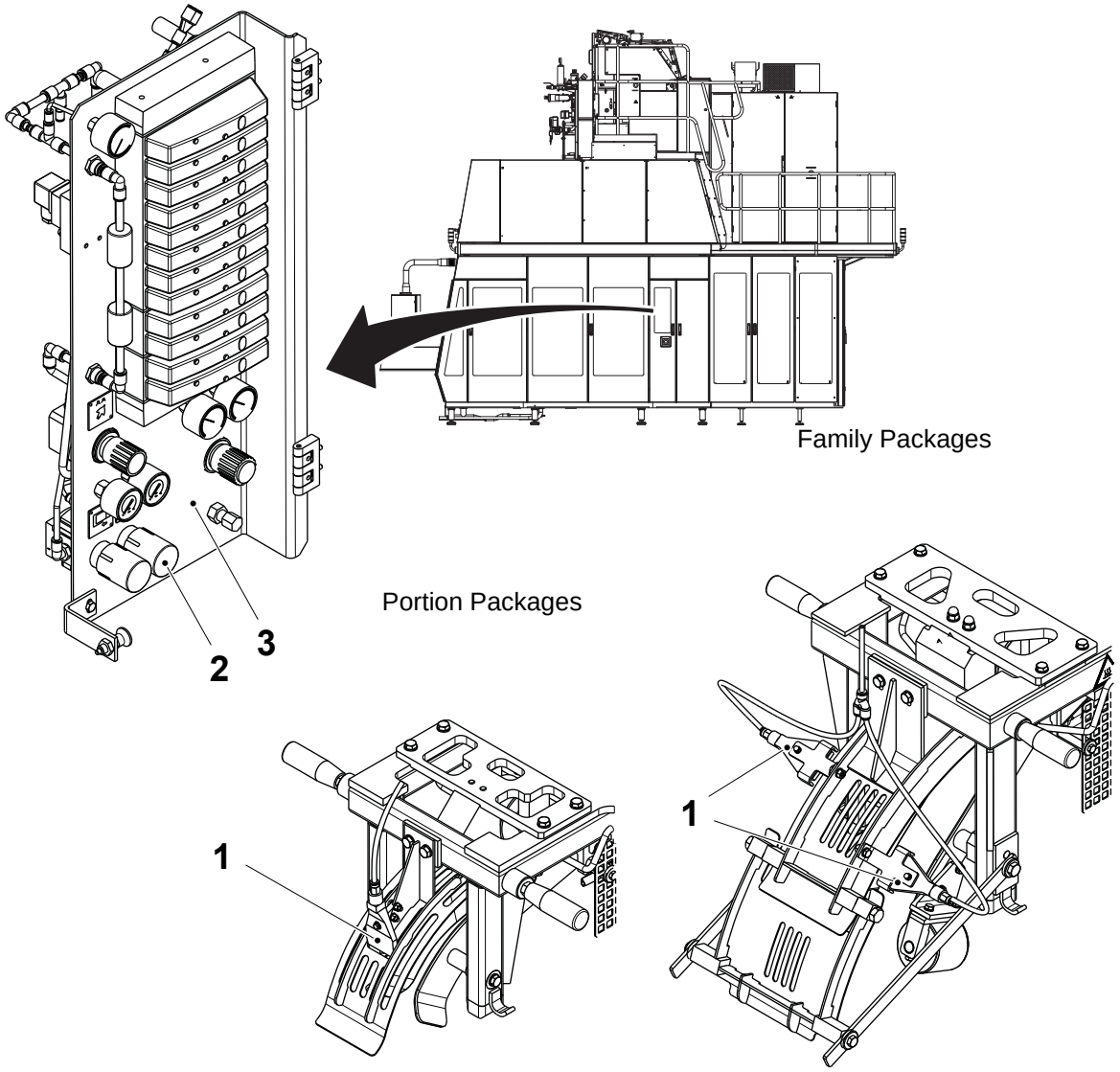

1 Air nozzle
2 Pressure regulator
3 Pneumatic panel

TechPub_2614345_0107 - 0502_3048166_01.fm

5.2.2-6 Swing Frame - Change Rollers

Machine Status	Mains Power OFF Air OFF Steam ON Water OFF
SPC Reference	1349500-0500

Note! Valid for TBA 1000 Sq only.

Check the rollers (1) for wear. If necessary remove the screws (2), the shaft (3) and change the rollers (1) and the bushings (4).

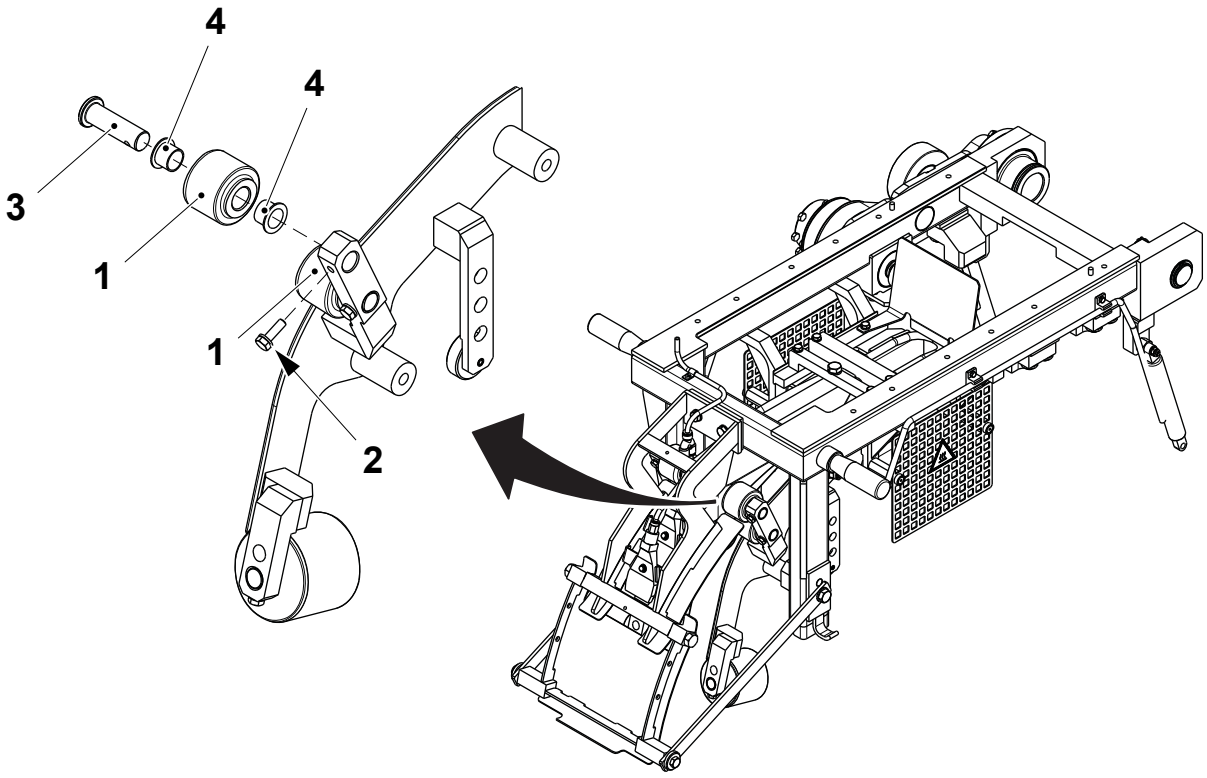

1 Roller
2 Screw
3 Shaft
4 Bushing

TechPub_2614345_0107 - 0502_3048166_01.fm

5.2.3 Chain Support

5.2.3-1 Chain Support - Check Chain Guide

Machine Status	Mains Power OFF Air OFF Steam ON Water OFF
SPC Reference	1349498-0400

Check the internal surfaces of the chain guide (1) at both sides of the folder for wear or damage. Change if required, see 5.2.3-2 Chain Support - Change Chain Guide.

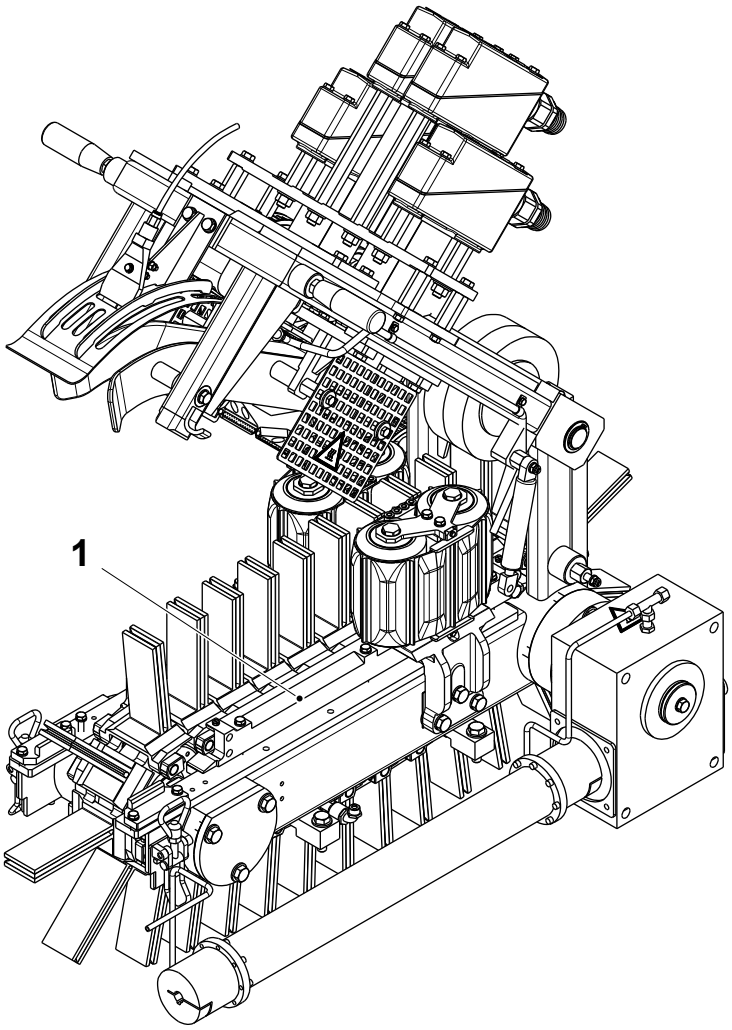

1 Chain guide

TechPub_2614345_0107 - 0501_3048167_01.fm

5.2.3-2 Chain Support - Change Chain Guide

Machine Status	Mains Power OFF Air OFF Steam ON Water OFF
Consumables	Synthetic Grease TP No. 90459-7413
SPC Reference	1349498-0400

a) Remove the station chain (1), see 5.2.1-1 Station Chain - Change.

b) On both sides, remove the side squeezers (2) by the screws (3), see 5.2.4-4 Squeezer - Side Squeezer Overhaul.

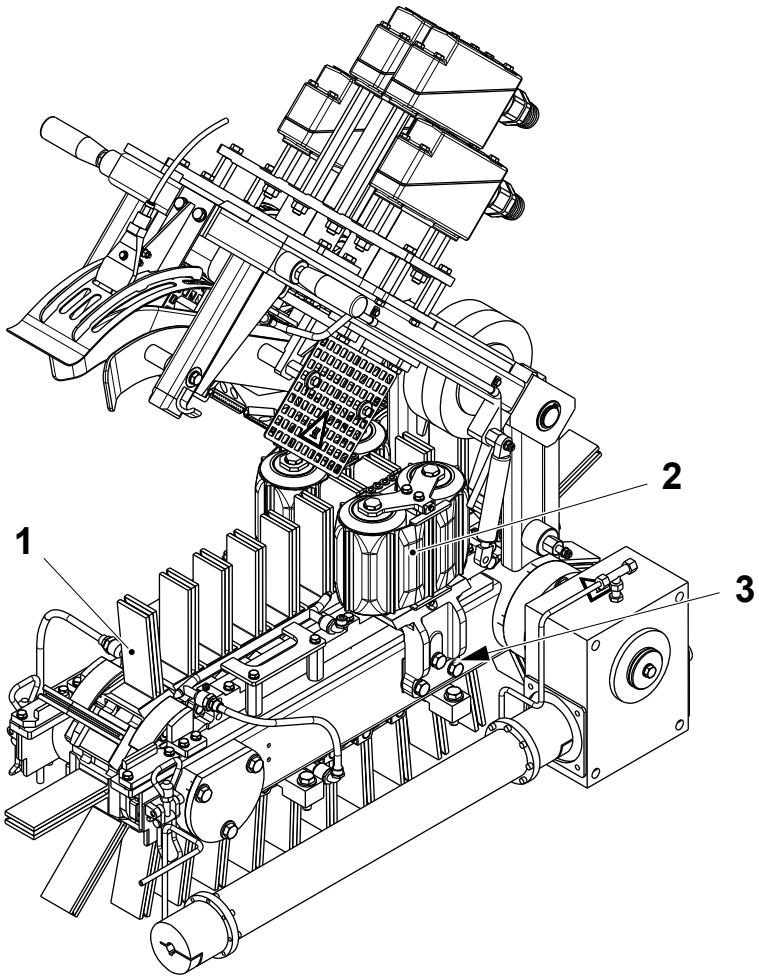

1 Station chain
2 Side squeezer
3 Screw

(Cont'd)

TechPub_2614345_0107 - 0501_3048167_01.fm

(Cont'd)

c) On both sides, disconnect the grease pipes (4).
d) Remove the couplings (5).
e) Remove the screws (6) and the chain guides (7).
f) Change the chain guides (7).
g) Assemble in the reverse order.
h) Grease the chain guides (7).

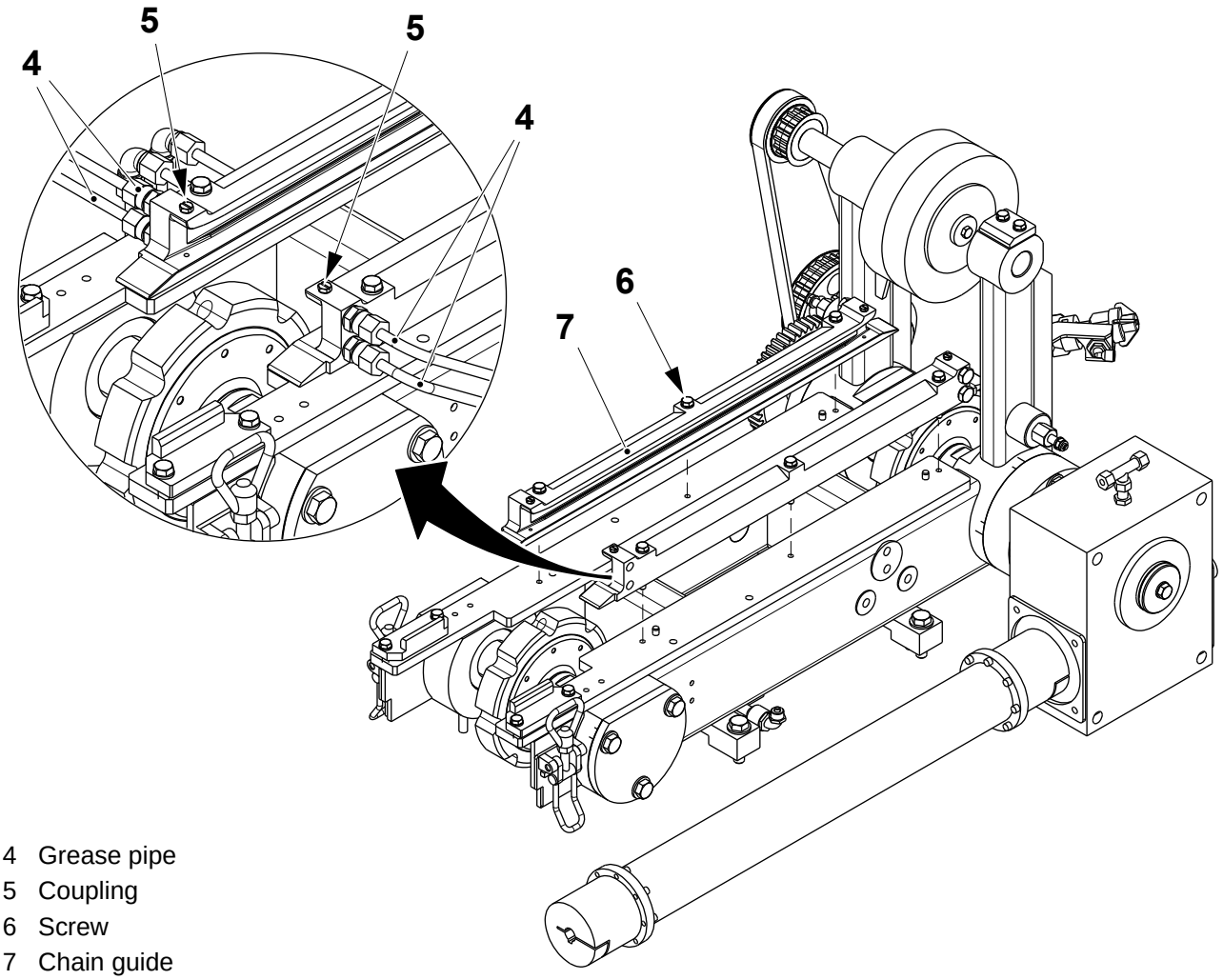

4 Grease pipe
5 Coupling
6 Screw
7 Chain guide

TechPub_2614345_0107 - 0501_3048167_01.fm

5.2.3-3 Chain Support - Overhaul

Machine Status	Mains Power OFF Air OFF Steam ON Water OFF
Consumables	Synthetic Grease TP No. 90459-7413
SPC Reference	1349498-0400

Note! In the pictures some parts have been removed for clarity.

Remove the chain guides, see 5.2.3-2 Chain Support - Change Chain Guide.

(Cont'd)

TechPub_2614345_0107 - 0501_3048167_01.fm

(Cont'd)

Brush Drive

a) Remove the belts (1) and (2), see 5.2.2-2 Swing Frame - Change Belt.

b) Loosen the screw (3) and remove the pulley (4).

c) Loosen the screw (5) and remove the pulleys (6) and (7)

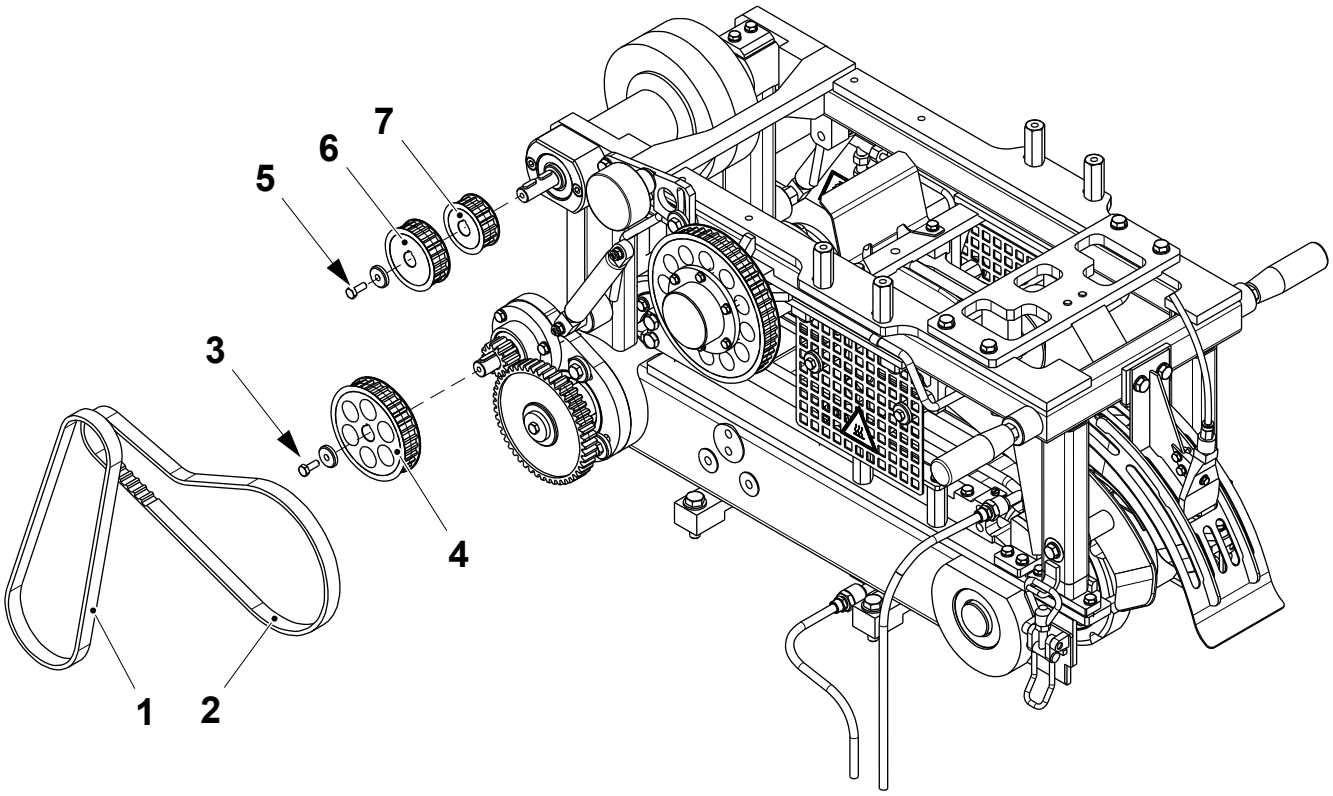

1 Belt
2 Belt
3 Screw
4 Pulley
5 Screw
6 Pulley
7 Pulley

(Cont'd)

TechPub_2614345_0107 - 0501_3048167_01.fm

(Cont'd)

d) Remove the screw (8) and the brushes (9).

e) Remove the radial seal (10) and the retaining ring (11).

f) Remove the screws (12) and the flange (13). Change the O-ring (14) if necessary.

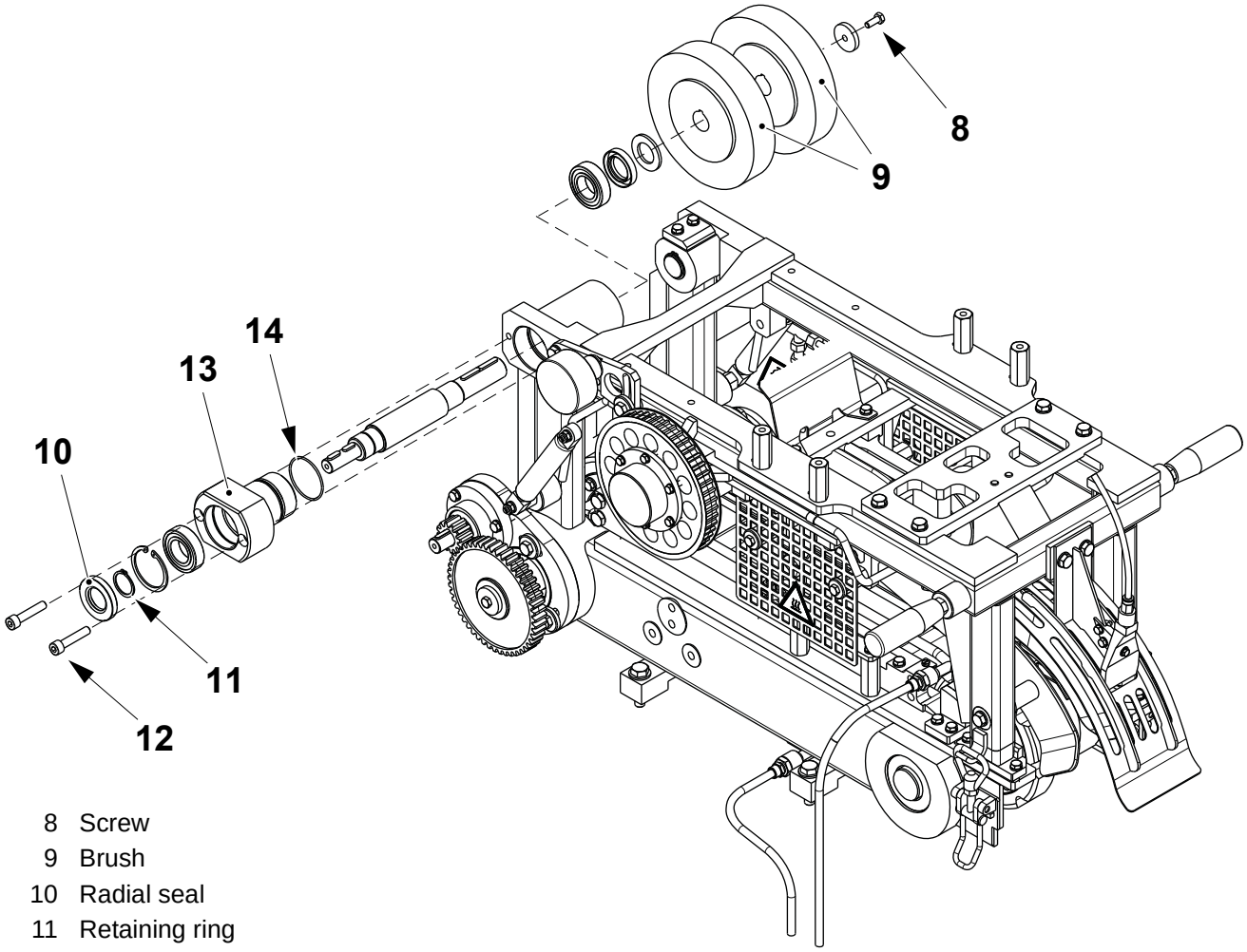

8 Screw
9 Brush
10 Radial seal
11 Retaining ring
12 Screw
13 Flange
14 O-ring

(Cont'd)

TechPub_2614345_0107 - 0501_3048167_01.fm

(Cont'd)

g) Remove the retaining ring (15) and the ball bearing (16). Change the ball bearing (16) if necessary.

h) Extract the shaft (17).

i) Remove the spacer (18), the seal (19) and the ball bearing (20). Change the ball bearing (20) if necessary.

j) Assemble in the reverse order.

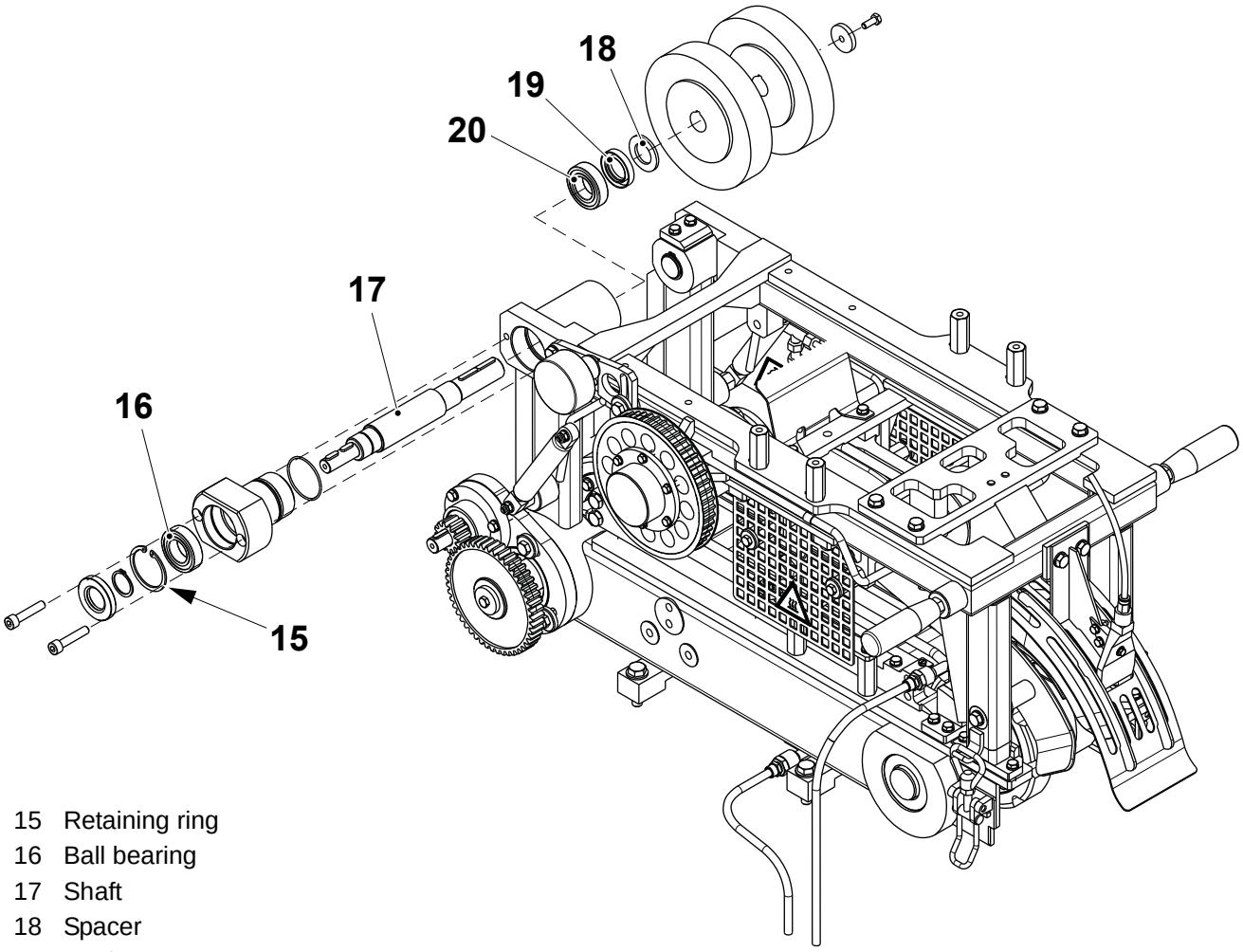

15 Retaining ring
16 Ball bearing
17 Shaft
18 Spacer
19 Seal
20 Shaft

(Cont'd)

TechPub_2614345_0107 - 0501_3048167_01.fm

(Cont'd)

Note! Before removing the couplings take of the distance between the end of the gearbox and the end of the couplings. This will ensure the intermediate shaft is centralized between the two gearboxes when assembling.

Chain Drive Outfeed End

a) Disconnect the grease pipe (1).

b) Remove the screws (2) and remove the intermediate shaft (3).

c) Loosen the screw (4) and remove the coupling (5).

Note! When assembling, tighten the screw (4) with a torque of 28.7 Nm.

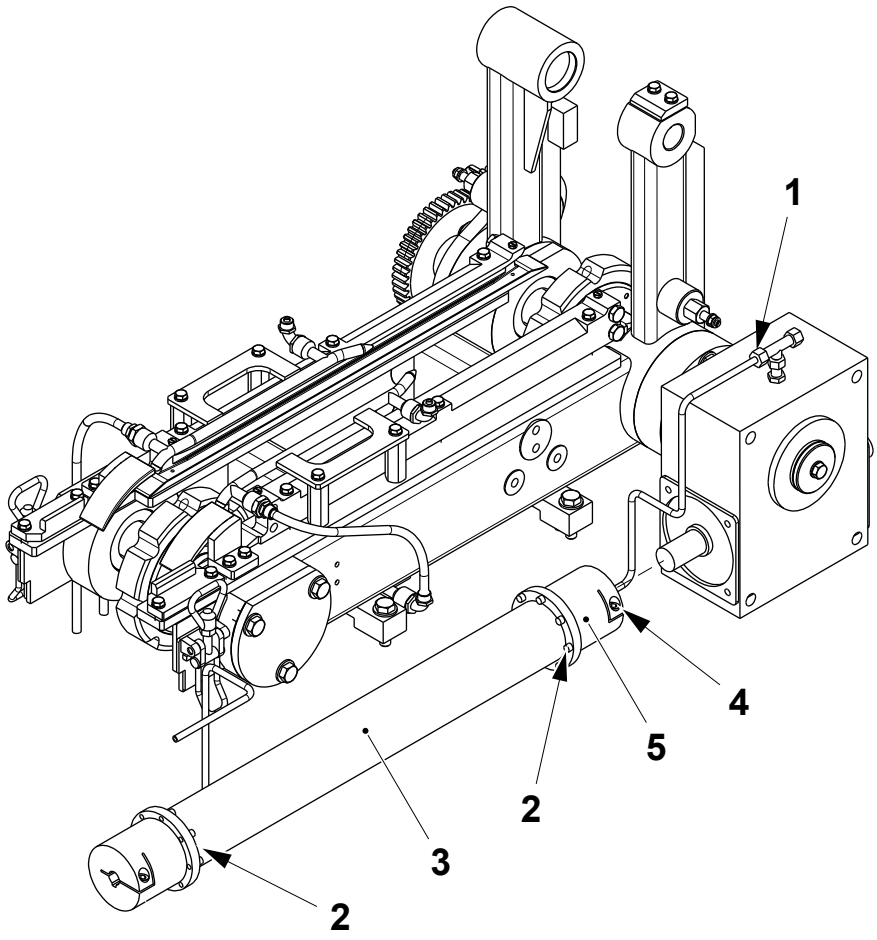

1 Pipe
2 Screw
3 Shaft
4 Screw
5 Coupling

(Cont'd)

TechPub_2614345_0107 - 0501_3048167_01.fm

(Cont'd)

d) Remove the screw (6).
e) Remove the screws (7) and pull out the gearbox (8).
f) Remove the spacer (9).
g) Remove the screws (10) and the support (11).
h) Remove and change the O-ring (12).
i) Remove and change the seal ring (13).

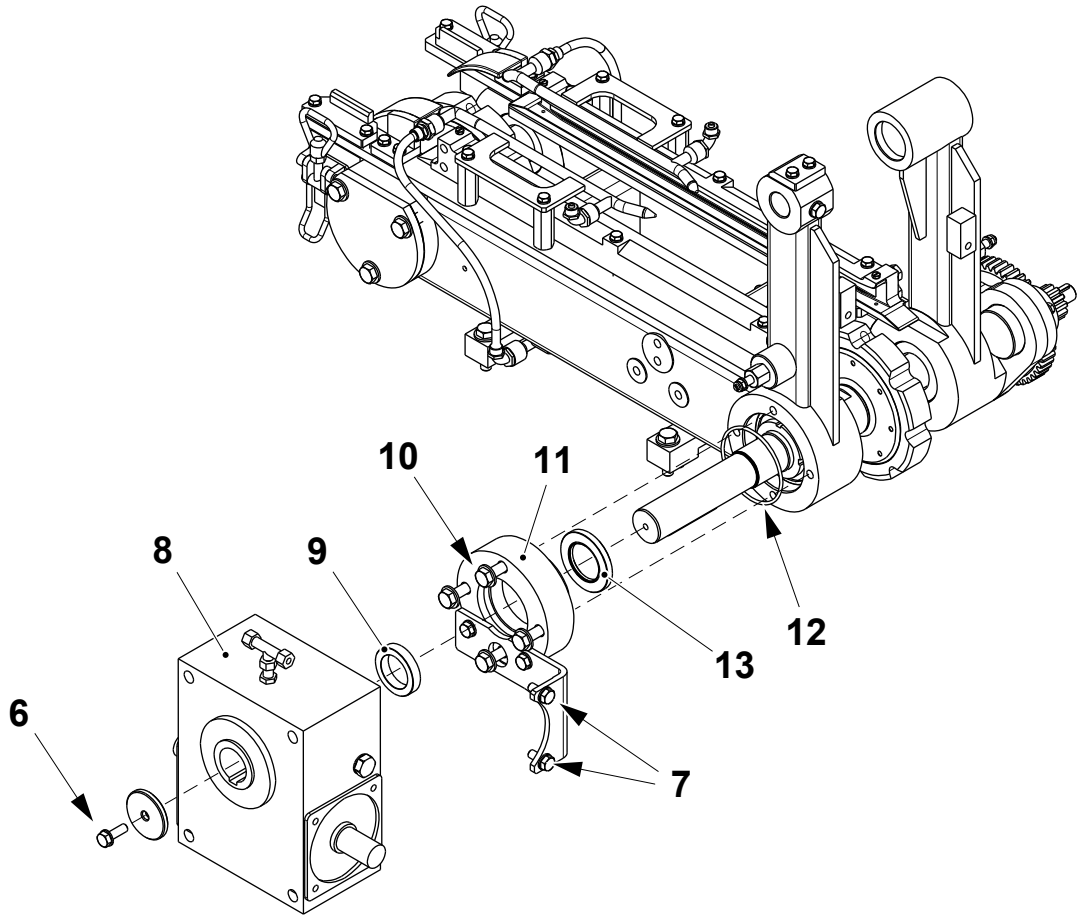

6 Screw
7 Screw
8 Gearbox
9 Spacer
10 Screw
11 Support
12 O-ring
13 Seal ring

TechPub_2614345_0107 - 0501_3048167_01.fm

(Cont'd)

(Cont'd)

j) Remove the gear (14).
k) Remove the screw (15) and the gear (16).
l) Remove the screws (17) and the plate (18).
m) Remove the seal ring (19). Change if necessary.
n) Remove the retaining ring (20) and pull out the shaft (21).
o) Remove the retaining ring (22) and change the ball bearing (22).

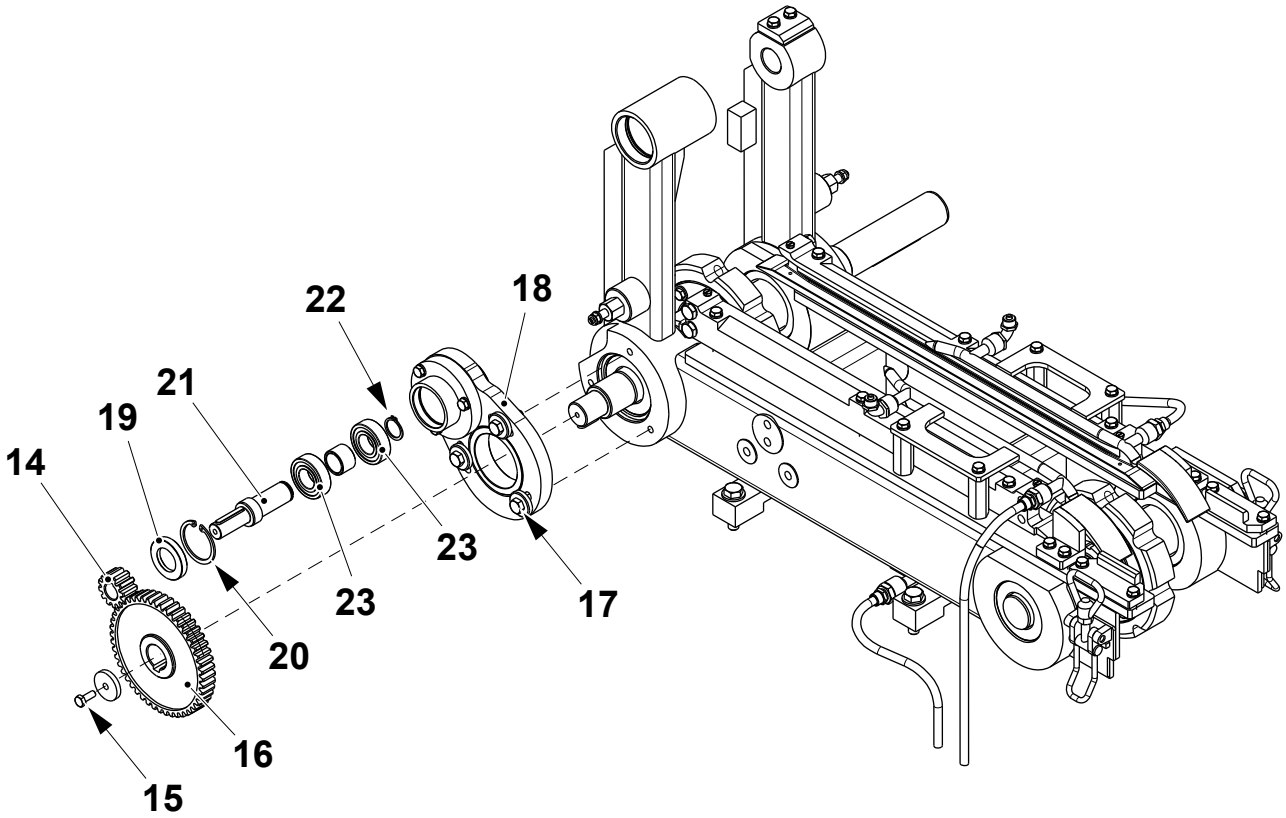

14 Gear
15 Screw
16 Gear
17 Screw
18 Plate
19 Seal ring
20 Retaining ring
21 Shaft
22 Retaining ring
23 Ball bearing

(Cont'd)

TechPub_2614345_0107 - 0501_3048167_01.fm

(Cont'd)

p) Remove the screws (24) and move aside the sprocket (25).
q) Remove the stop screws (26).
r) Loosen the nuts (27) and (28).

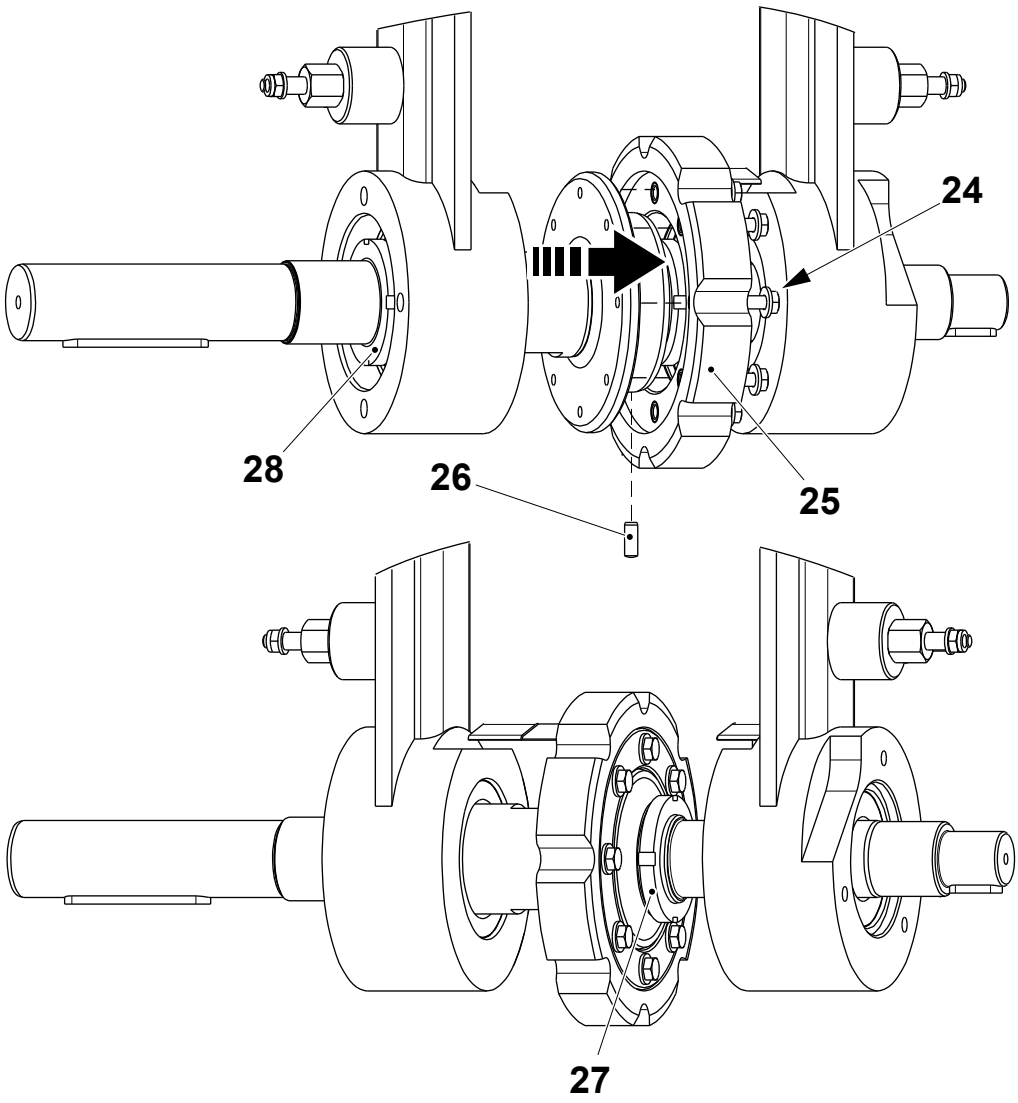

24 Screw
25 Sprocket
26 Stop screw
27 Nut
28 Nut

(Cont'd)

TechPub_2614345_0107 - 0501_3048167_01.fm

(Cont'd)

s) Remove the nut (27) and extract the shaft (29) slipping off the flange (30), the sprocket (25) and the nut (28).

t) Remove and change the ball bearing (31).

u) Remove the seal (32). Change if necessary.

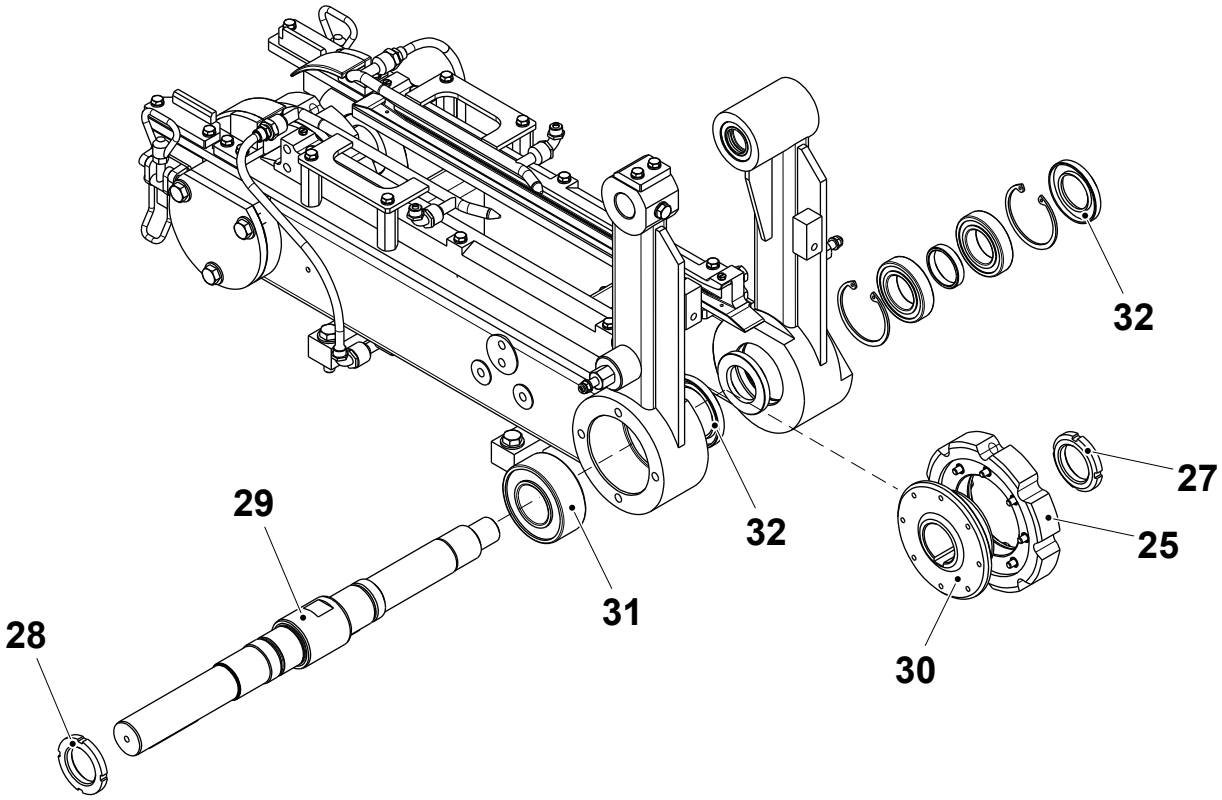

25 Sprocket
27 Nut
28 Nut
29 Shaft
30 Flange
31 Ball bearing
32 Seal

(Cont'd)

TechPub_2614345_0107 - 0501_3048167_01.fm

(Cont'd)

Note! Before assembling, apply Synthetic Grease TP No. 90459-7413 on the ball bearing (31) and on the surfaces of the shaft (29) in contact with the seal rings.

v) Overhaul the other flange by removing the seals (33), the retaining rings (34), the ball bearings (35) and the spacer (36). Change the ball bearings (35) if necessary.

w) Assemble in the reverse order.

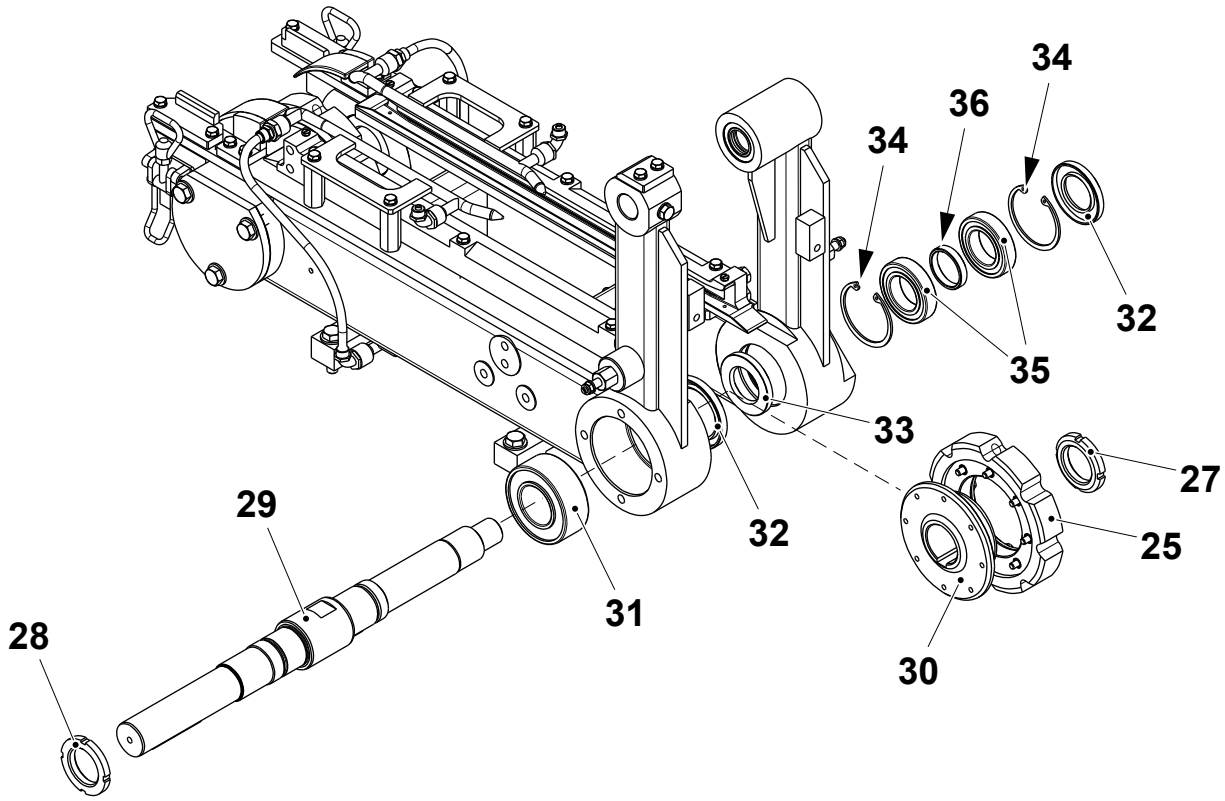

29 Shaft
31 Ball bearing
33 Seal
34 Retaining ring
35 Ball bearing
36 Spacer

(Cont'd)

TechPub_2614345_0107 - 0501_3048167_01.fm

(Cont'd)

Chain Drive Infeed End

a) Remove the screws (1) and move aside the sprocket (2).

b) Remove the stop screw (3).

c) Remove the screws (4) and the cover (5).

d) Remove and change the O-ring (6).

e) Loosen the nuts (7) and (8).

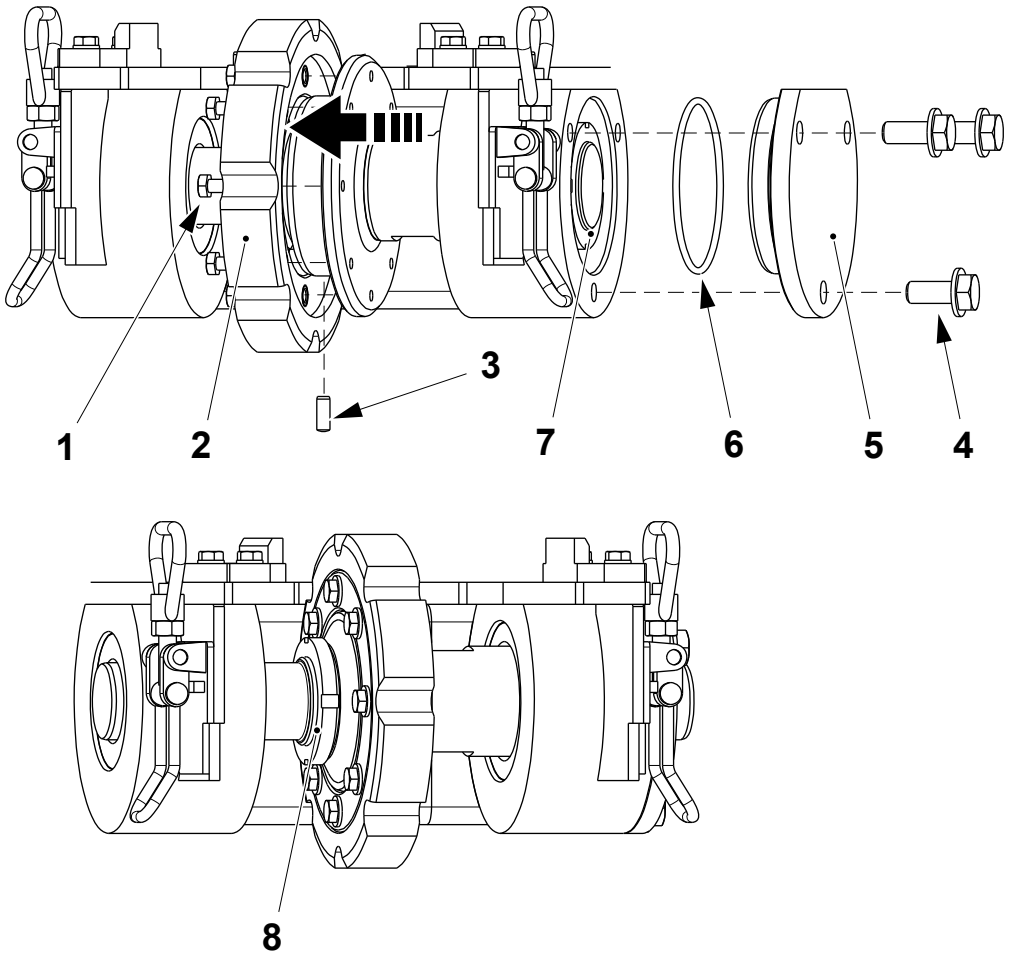

1 Screw
2 Sprocket
3 Stop screw
4 Screw
5 Cover
6 O-ring
7 Nut
8 Nut

(Cont'd)

TechPub_2614345_0107 - 0501_3048167_01.fm

(Cont'd)

Note! Before assembling, apply grease code **R** on the ball bearing (9) and on the surfaces of the shaft (11) in contact with the seal rings.

f) Remove the nut (7) and change the ball bearing (9).

g) Remove the seal (10) and extract the shaft (11) slipping off the flange (12), the sprocket (2) and the nut (8).

h) Overhaul the other flange by removing the seals (13), the retaining rings (14), the ball bearings (15) and the spacer (16). Change the ball bearings (15) if necessary.

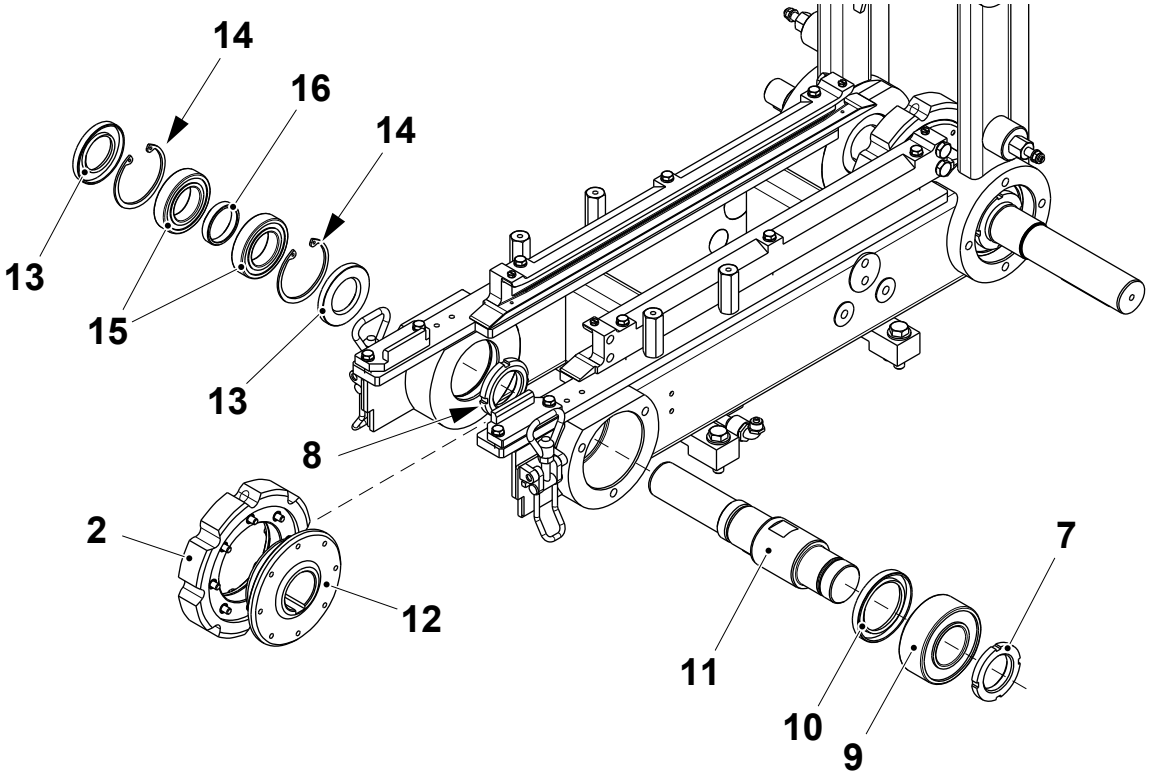

2 Sprocket
7 Nut
8 Nut
9 Ball bearing
10 Seal
11 Shaft
12 Flange
13 Seal
14 Retaining ring
15 Ball bearing
16 Spacer

(Cont'd)

TechPub_2614345_0107 - 0501_3048167_01.fm

(Cont'd)

i) Assemble in the reverse order.
j) Set the squeezer position, see 5.2.4-1 Squeezer - Set Position.
k) Synchronise the final folder, see 5-1 Final Folder Unit - Synchronise.

TechPub_2614345_0107 - 0501_3048167_01.fm

5.2.3-4 Chain Support - Change Brushes

Machine Status	Mains Power OFF Air OFF Steam ON Water OFF
SPC Reference	1349498-0400

Valid for Portion Packages

Remove the screw (1) and slip off the brushes (2). Change the brushes (2) and assemble in the reverse order.

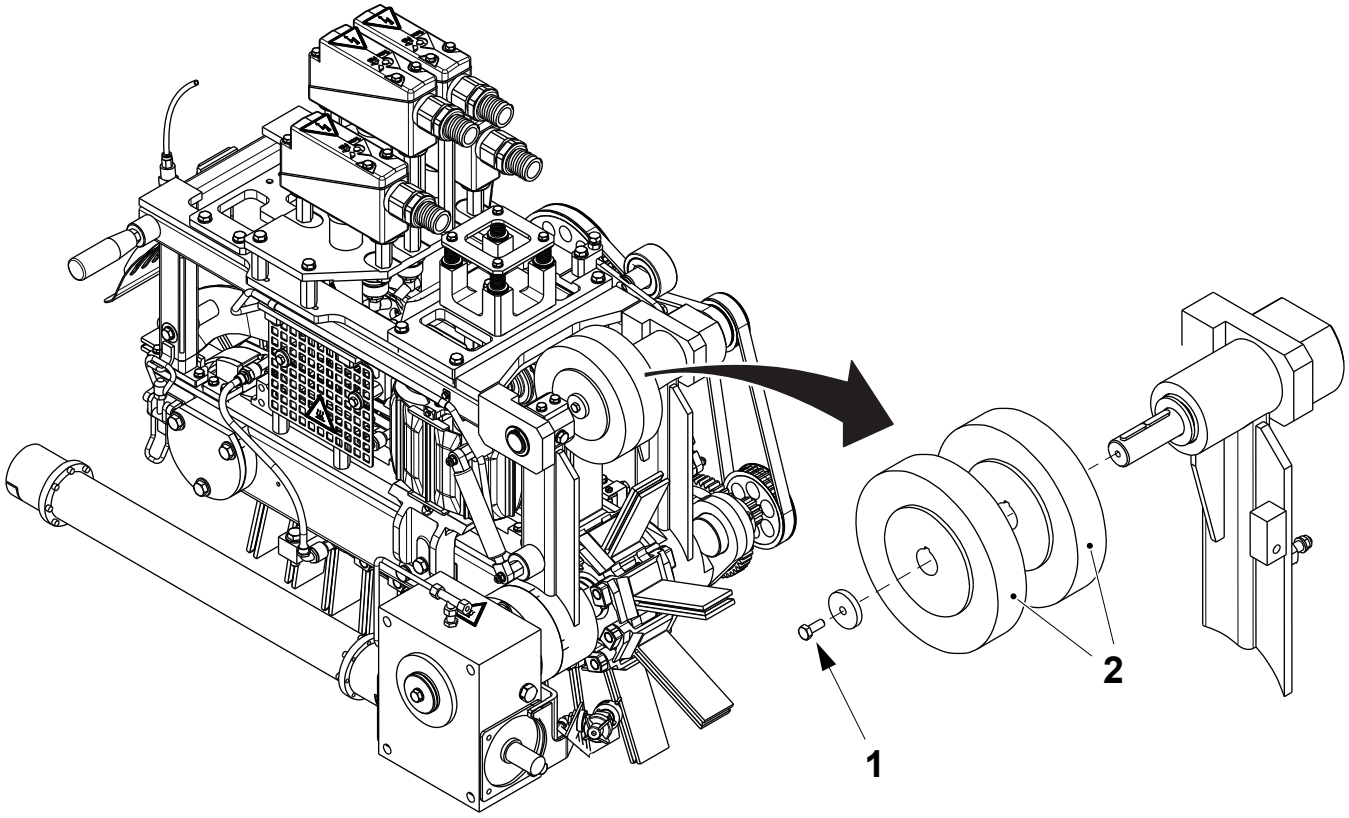

1 Screw
2 Brush

TechPub_2614345_0107 - 0501_3048167_01.fm

(Cont'd)

(Cont'd)

Valid for Family Packages

a) Remove the brushes (1) from the hubs (2).

b) Remove the screw (3) and the hubs (2).

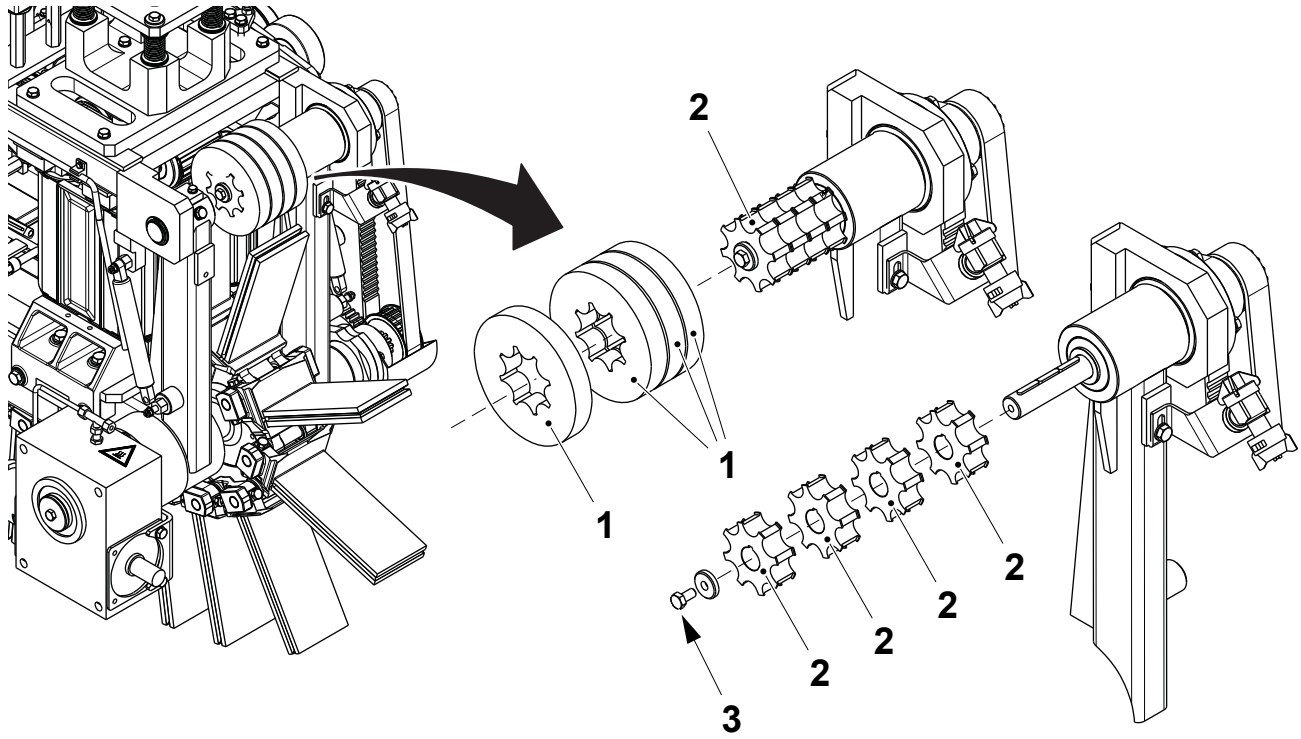

1 Brush
2 Hub
3 Screw

(Cont'd)

TechPub_2614345_0107 - 0501_3048167_01.fm

(Cont'd)

Note! Insert the new brushes on the shaft (5) holding the hubs (2) and not the sponge brushes (4).

c) Fit the new brush (4) on each hub (2).

d) Insert the hubs (2) with the brushes (4) on the shaft (5).

e) Tighten the screw (3).

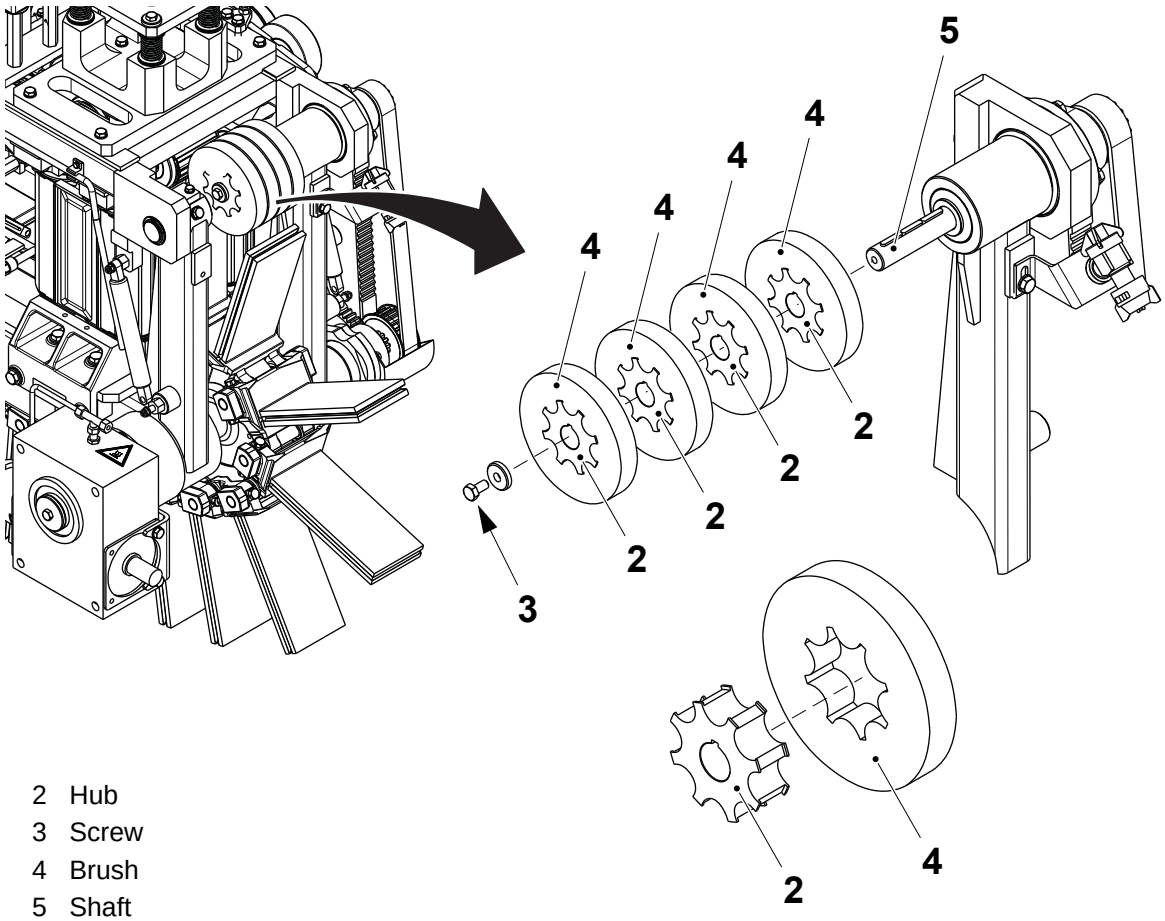

2 Hub
3 Screw
4 Brush
5 Shaft

TechPub_2614345_0107 - 0501_3048167_01.fm

5.2.3-5 Chain Support - Change Belt

Machine Status	Mains Power OFF Air OFF Steam ON Water OFF
SPC Reference	1349498-0400

Check the belt (1) for wear or damage. If necessary change the belt as follows:

a) Loosen the screws (2).

b) Turn the flange (3) clockwise to reduce the belt tension.

c) Change the belt (1).

d) Assemble in the reverse order.

e) Set the belt tension, see 5.2.3-6 Chain Support - Set Belt.

f) Set the top squeezer belt, see 5.2.4-1 Squeezer - Set Position.

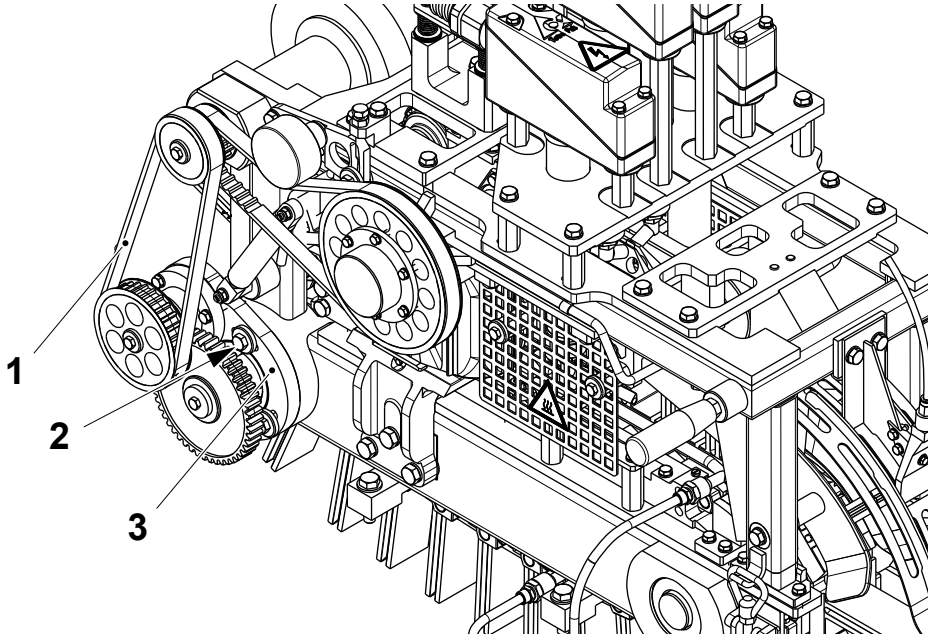

1 Belt
2 Screw
3 Flange

TechPub_2614345_0107 - 0501_3048167_01.fm

5.2.3-6 Chain Support - Set Belt

Machine Status	Mains Power OFF Air OFF Steam ON Water OFF
Special Equipment	Force Gauge TP No. 90459-1467 Tensiometer TP No. 90600-3415
SPC Reference	1349498-0400

This setting can be done using a force gauge or a tensiometer, see following pages.

(Cont'd)

TechPub_2614345_0107 - 0501_3048167_01.fm

(Cont'd)

Belt Setting using the Force Gauge

a) Check that the deflection at the mid-point of the belt (1) is **A** when a force **B** is applied, see table.

Package	A (mm)	B (N)
TBA 200 S - TBA 250 B - TBA 250 S	5.5	36
TBA 125 S - TBA 200 B - TBA 200 M	5.0	40
TBA 1000 S - TBA 1000 Sq - TBA 1000 B	5.0	15

b) If necessary, loosen the screws (2) and turn the flange (3) to add or release tension.

c) Tighten the screw (2).

d) Set the top squeezer belt, see 5.2.4-1 Squeezer - Set Position.

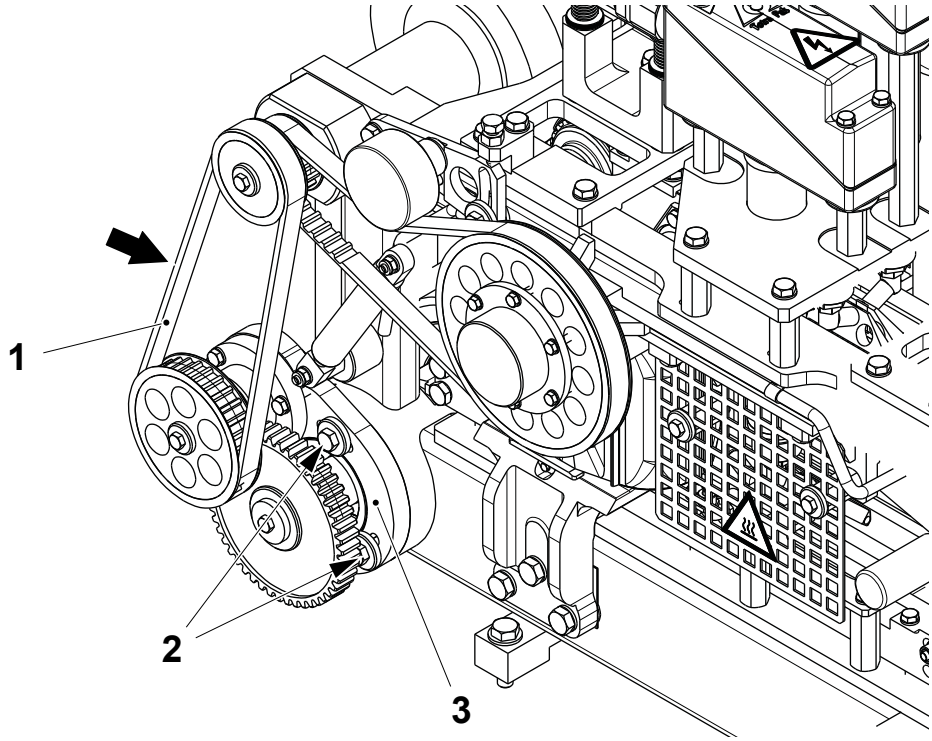

1 Belt
2 Screw
3 Flange

(Cont'd)

TechPub_2614345_0107 - 0501_3048167_01.fm

(Cont'd)

Belt Setting using the Tensiometer

a) Position the tensiometer sensor at the distance of 10 mm from the mid-point of the belt (1).

b) Press the reset icon on the tensiometer.

c) Tap the belt (1) with a screwdriver or similar tool.

d) Check that the frequency recorded is **A**, see table.

Package	A (Hz)
TBA 200 S - TBA 250 B - TBA 250 S	86.5
TBA 125 S - TBA 200 B - TBA 200 M	81
TBA 1000 S - TBA 1000 Sq - TBA 1000 B	67

e) If necessary, loosen the screws (2) and turn the flange (3) to add or release tension.

f) Tighten the screws (2).

g) Set the top squeezer belt, see 5.2.4-1 Squeezer - Set Position.

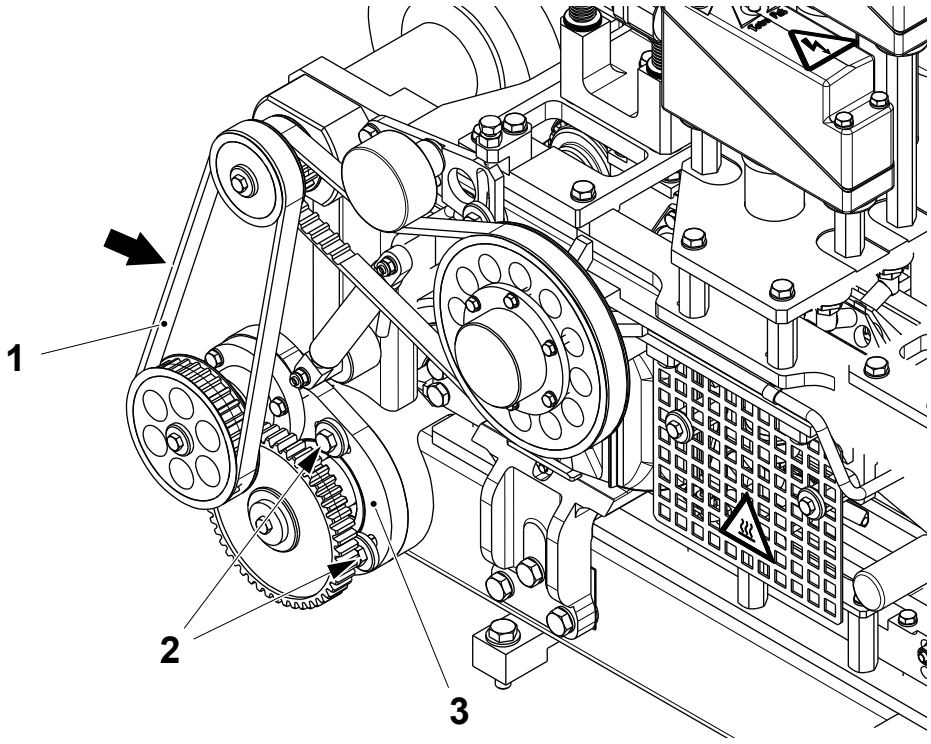

1 Belt
2 Screw
3 Flange

TechPub_2614345_0107 - 0501_3048167_01.fm

5.2.3-7 Chain Support - Change Oil Brush

Machine Status	Mains Power OFF Air OFF Steam ON Water OFF
SPC Reference	1349498-0400

Loosen the nipple (1) and disconnect the oil brush (2) from the spacer (3). Change the oil brush (2) and assemble in the reverse order.

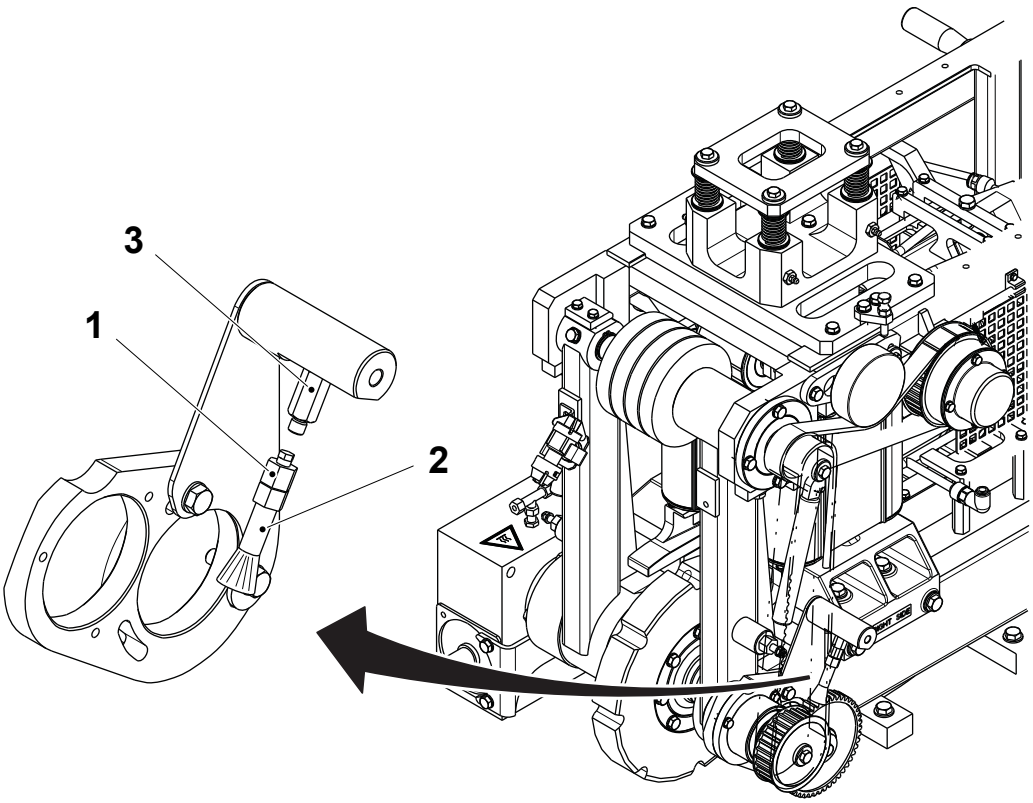

1 Nipple
2 Oil brush
3 Spacer

TechPub_2614345_0107 - 0501_3048167_01.fm

5.2.3-8 Chain Support - Change Fin Guide

Machine Status	Mains Power OFF Air OFF Steam ON Water OFF
SPC Reference	1349498-0400

Note! Valid for TBA 1000 Sq.

a) Lift the swing frame.

b) Remove the screws (1) and the guide (2).

c) Remove the screws (3) and the fin guide (4). Change the fin guide (4) and assemble in the reverse order.

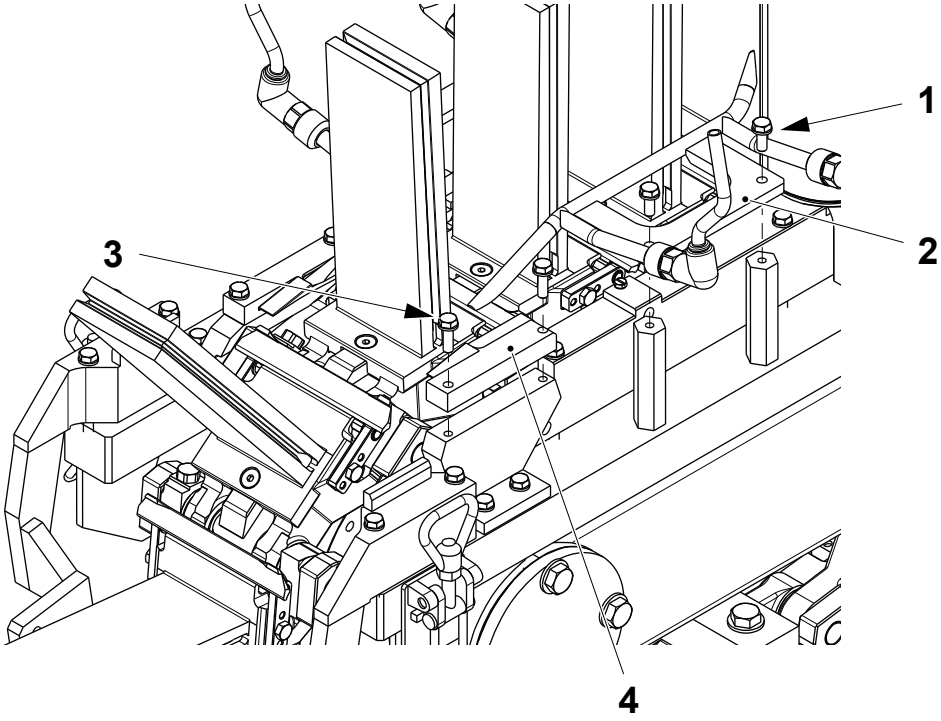

1 Screw
2 Guide
3 Screw
4 Fin guide

TechPub_2614345_0107 - 0501_3048167_01.fm

5.2.4 Squeezer

5.2.4-1 Squeezer - Set Position

Machine Status	Mains Power OFF Air OFF Steam ON Water OFF
Special Equipment	Needle Pressure Gauge TP No. 1478583-0100
SPC Reference	1549868-0300

Top Squeezer Belt Gap

Note! It is recommended to check the distance **A** at least on two carton stations (1).

Check the distance **A** between the top edge of the carton stations (1) and the top belt (2).

Package	**A (mm)**
TBA 1000 B	2.5
All other volumes	0.3

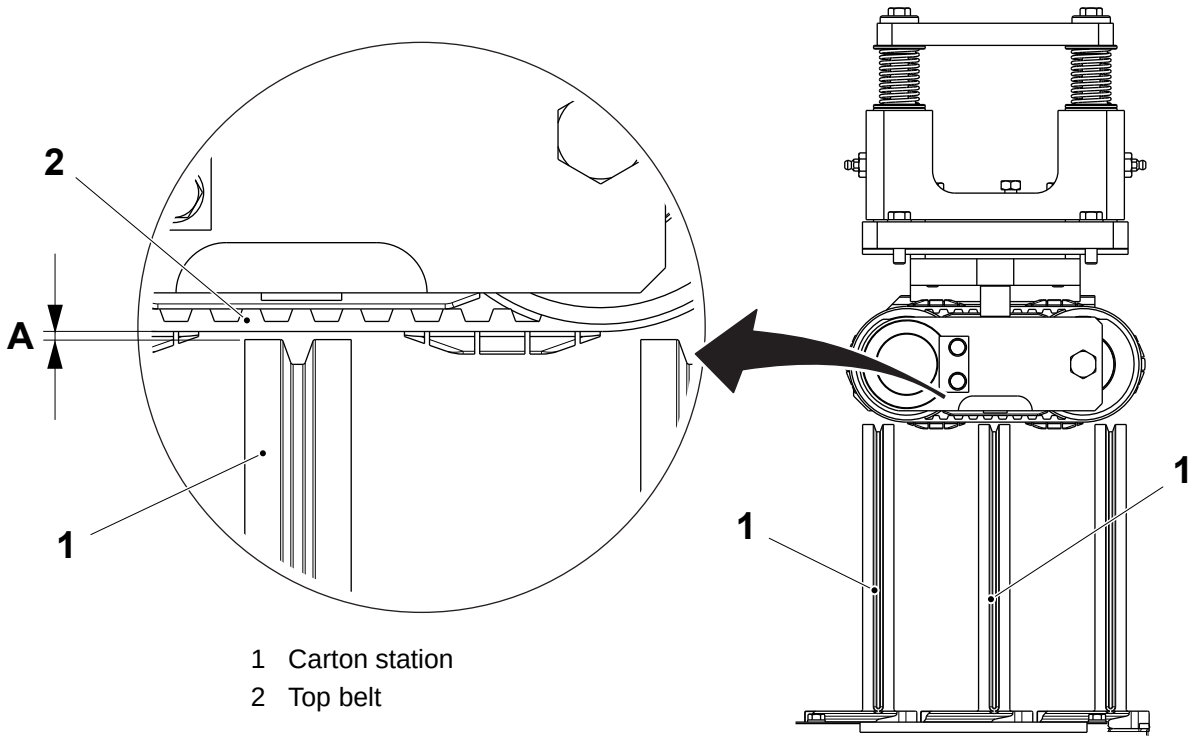

1 Carton station
2 Top belt

(Cont'd)

TechPub_2614345_0107 - 0504_3048168_01.fm

(Cont'd)

If necessary, set the distance **A** as follows:

a) Open the swing frame and remove the screws (3)

b) Separate the belt assembly (4) from the top squeezer frame (5).

c) Remove the screw (6) and the spacer (7).

d) Add or remove shims (8) to set the distance **A**.

Package	A (mm)
TBA 1000 B	2.5
All other volumes	0.3

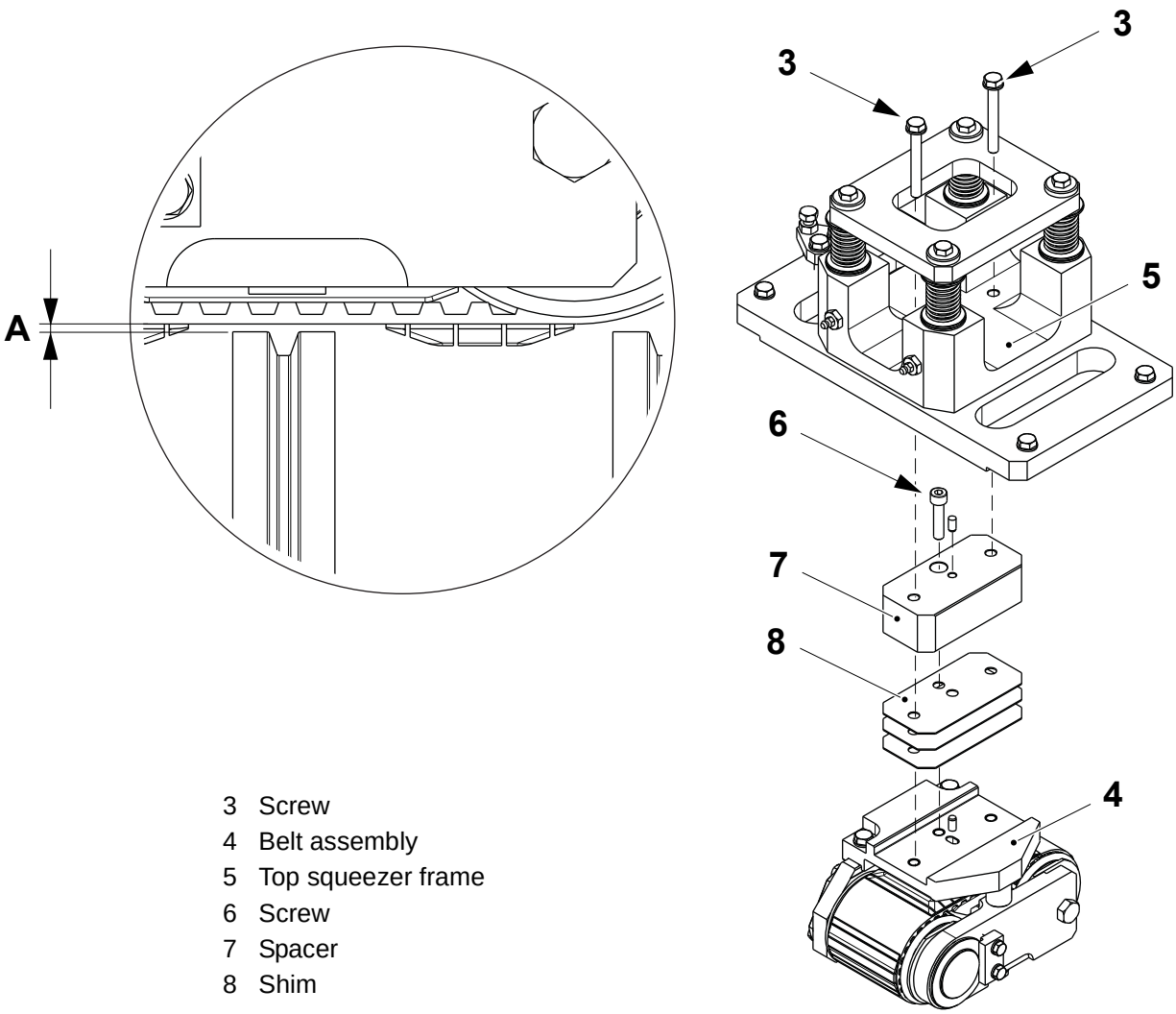

3 Screw
4 Belt assembly
5 Top squeezer frame
6 Screw
7 Spacer
8 Shim

(Cont'd)

TechPub_2614345_0107 - 0504_3048168_01.fm

(Cont'd)

e) Assemble in the reverse order.

Note! Before assembling the belt assembly (4) on the top squeezer frame (5), secure the shims (8) and the spacer (7) on the belt assembly (4) by the screw (6).

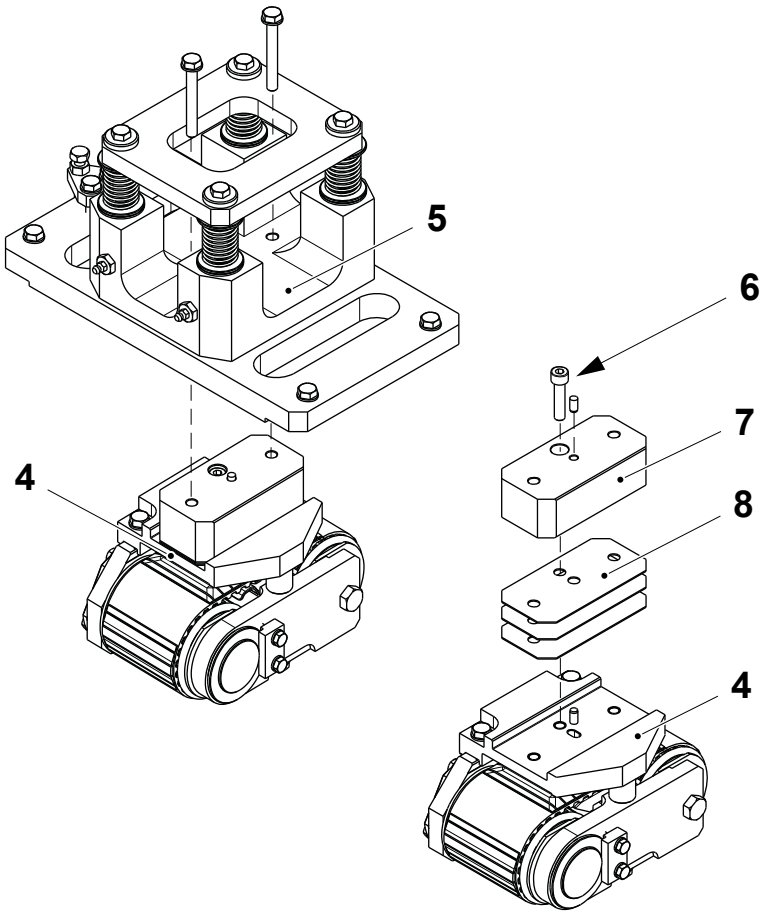

4 Belt assembly
5 Top squeezer frame
6 Screw
7 Spacer
8 Shim

(Cont'd)

TechPub_2614345_0107 - 0504_3048168_01.fm

(Cont'd)

f) Perform a complete rotation of the station chain by turning the shaft (9) and check that there are no contact between the carton stations (1) and the top squeezer belt (2).

g) Assemble in the reverse order.

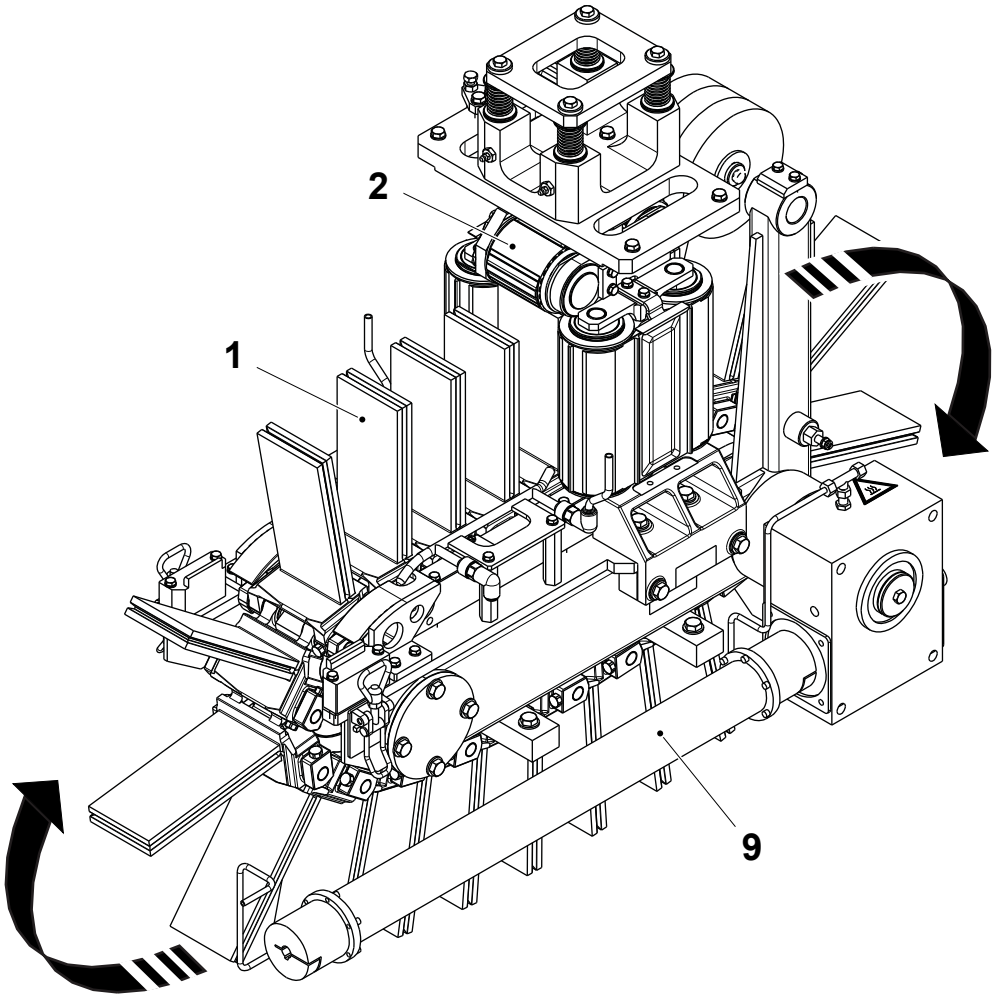

1 Carton station
2 Top belt
9 Shaft

(Cont'd)

TechPub_2614345_0107 - 0504_3048168_01.fm

(Cont'd)

Top Squeezer Belt Position

Note! Valid for Portion Packages only.

a) Check that the teeth (1) in the side belts (2) fit the slots (3) at the side of the carton stations (4).

b) If not, loosen the screws (5) to move backwards the side squeezers and turn the side belts (2) until the teeth (1) are aligned with the slots (3) at the side of the carton stations (4); then tighten the screws (5).

Note! Make sure the side squeezer clearance is according to 5.2.4-6 Squeezer - Check Side Squeezer Clearances.

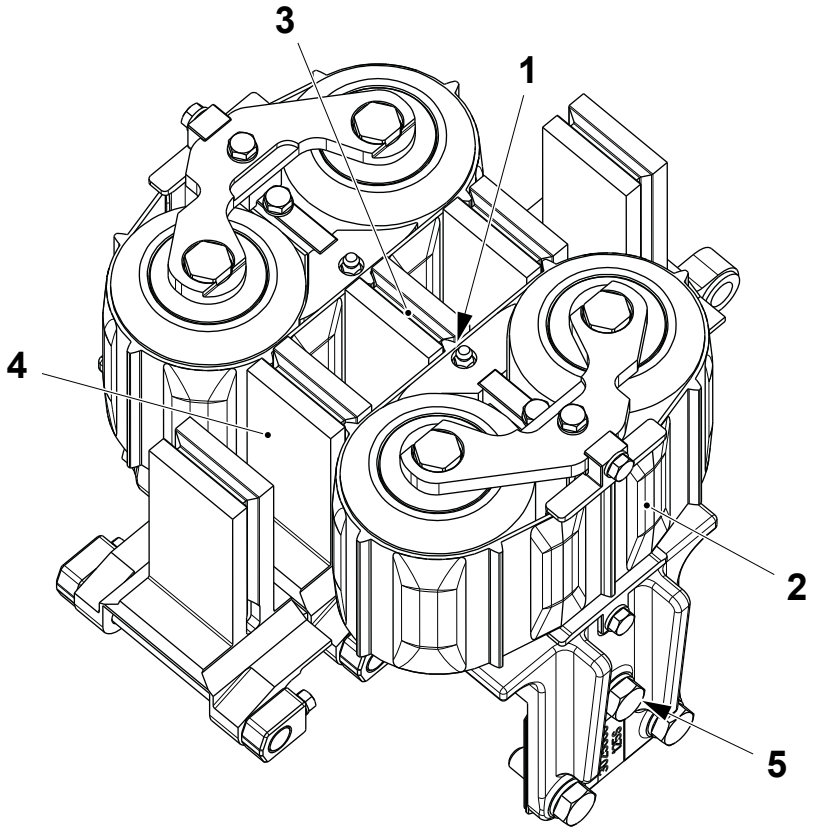

1 Tooth
2 Side belt
3 Slot
4 Carton station
5 Screw

(Cont'd)

TechPub_2614345_0107 - 0504_3048168_01.fm

(Cont'd)

c) Close the swing frame and perform a complete rotation of the station chain to recover the plays.

d) Check that the bulge (6) on the top belt (7) is at the distance **A** from the carton station (4) behind (LH side in the picture below). If not, proceed as follows:

- remove the cover (8) by the screws (9)
- loosen the clamping element (10)
- rotate manually the coupling (11) until the bulge (6) is exactly between the carton stations (4).
- tighten the clamping element (10) using a torque wrench set to 11.5 Nm and fit back the cover (8).

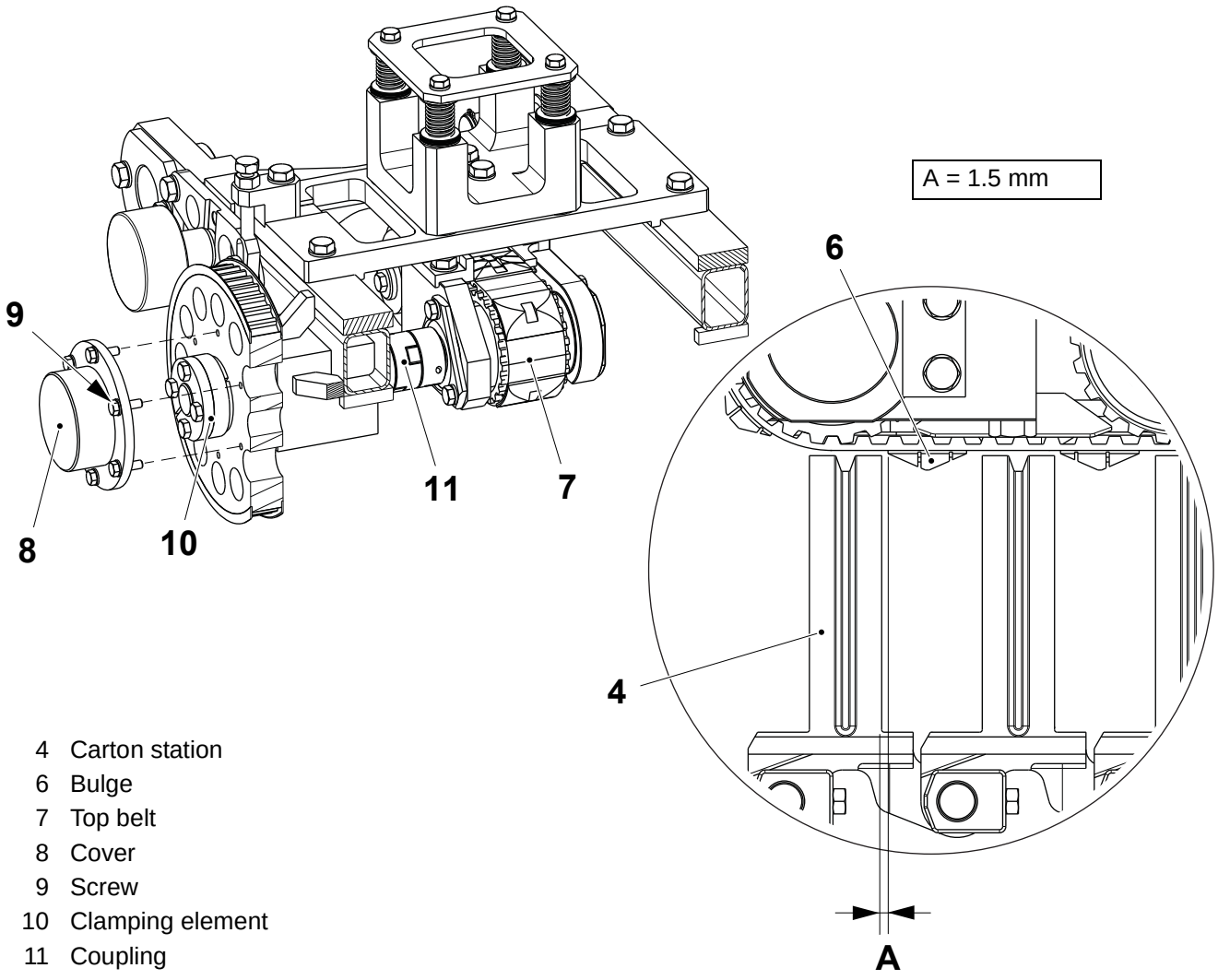

4 Carton station
6 Bulge
7 Top belt
8 Cover
9 Screw
10 Clamping element
11 Coupling

TechPub_2614345_0107 - 0504_3048168_01.fm

(Cont'd)

(Cont'd)

Note! Valid for Family Packages only.

a) Check that the teeth (1) in the side belts fit the slots (2) at the side of the carton stations.

b) If not, proceed as follows:
   - remove the screws (3) and loosen the screws (4)
   - turn the side belt until the teeth are aligned with the slots in the side of the carton stations
   - tighten the screws (3) and (4).

Note! Make sure the side squeezer clearance is according to 5.2.4-6 Squeezer - Check Side Squeezer Clearances.

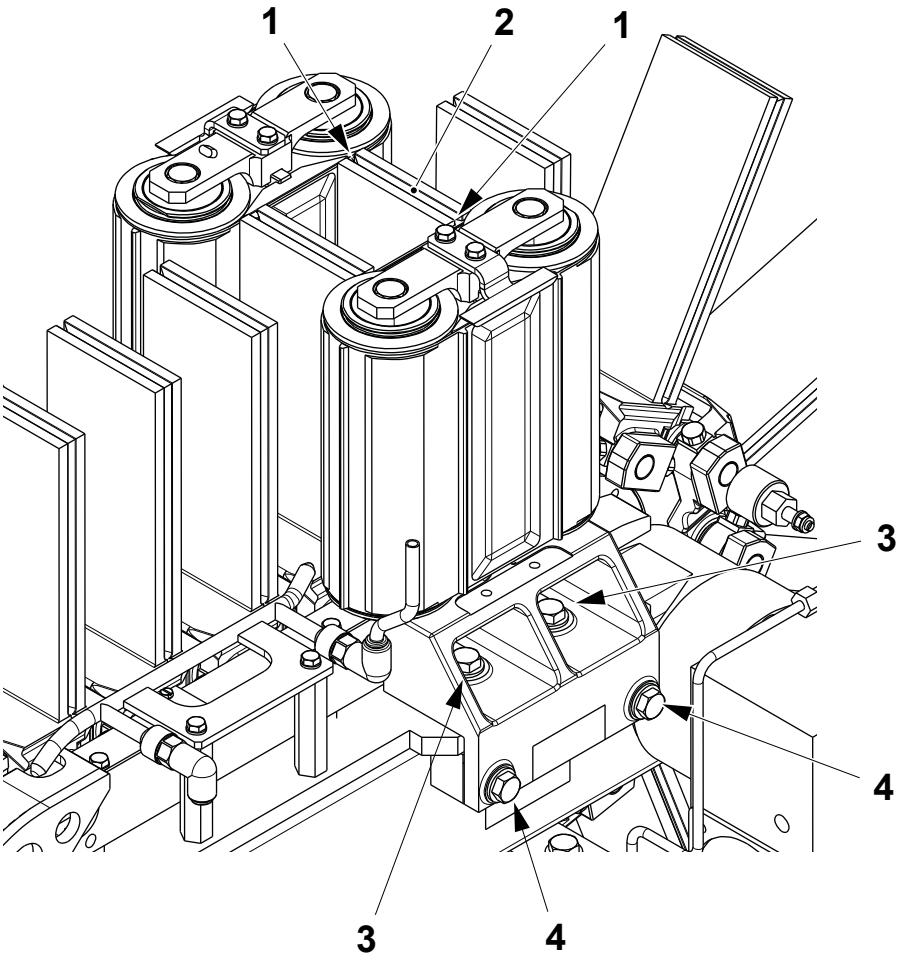

1 Tooth
2 Slot
3 Screw
4 Screw

(Cont'd)

TechPub_2614345_0107 - 0504_3048168_01.fm

(Cont'd)

c) Close the swing frame and perform a complete rotation of the station chain to recover the plays.

d) Check that the bulge (5) on the top belt is in the centre of the space between the carton stations (6). If not, proceed as follows:

- loosen the screws (7) and remove the cover (8)
- loosen the clamping element (9)
- rotate manually the coupling (10) until the bulge (5) is exactly between the carton stations
- tighten the clamping element (9) using a torque of 11.5 Nm and fit back the cover (8).

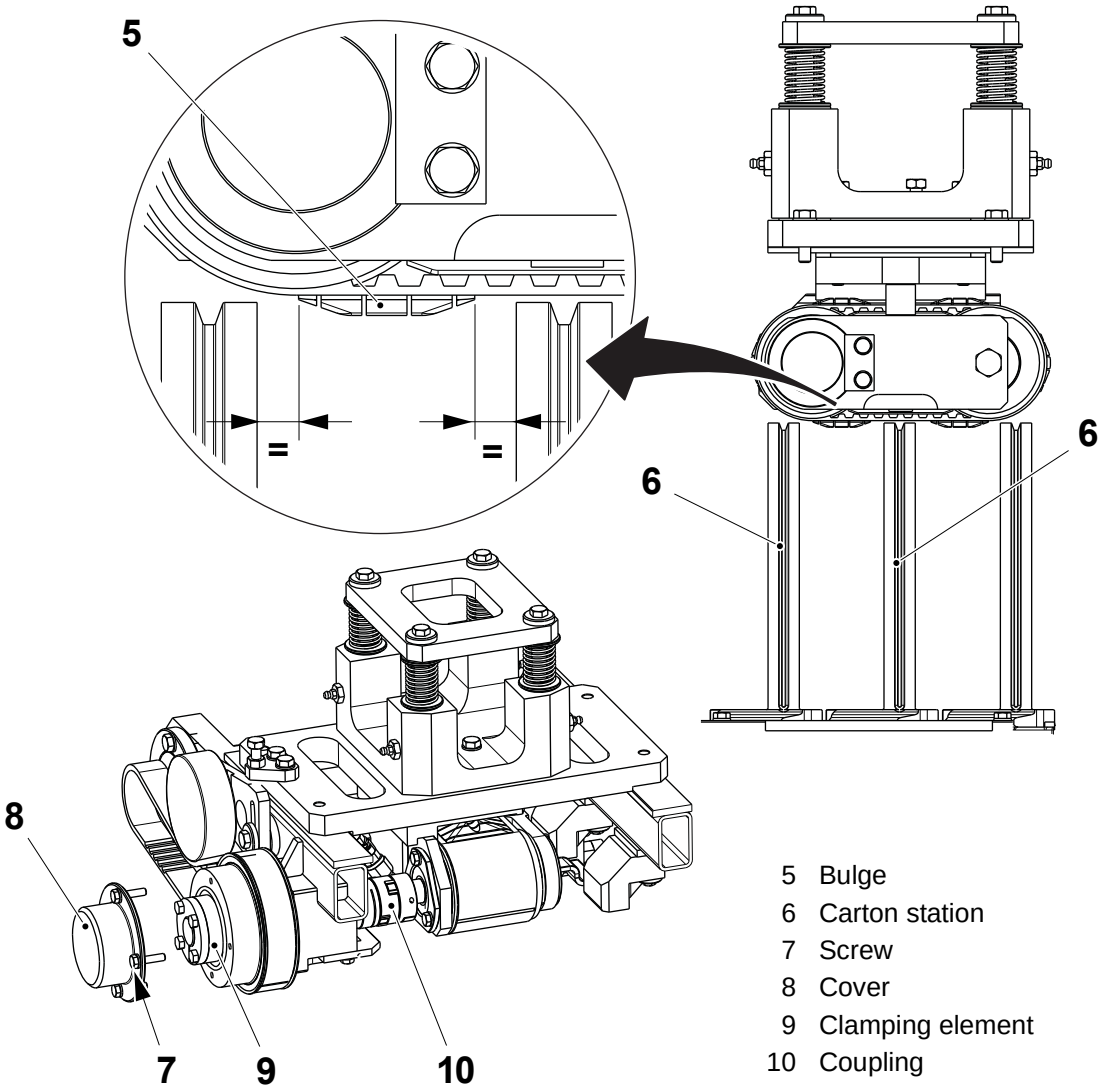

5 Bulge
6 Carton station
7 Screw
8 Cover
9 Clamping element
10 Coupling

(Cont'd)

TechPub_2614345_0107 - 0504_3048168_01.fm

(Cont'd)

Package Pressure Checks

Note! The swing frame must be closed when performing the package pressure check.

a) Insert at least 3 packages between the squeezers.

b) Close and fasten the swing frame.

c) Use a needle pressure gauge (1) to check the pressure inside the package (2). The pressure should be between **0.4** and **0.5 bar**. If not:

– add or remove side squeezer shims to obtain correct pressure, see 5.2.4-6 Squeezer - Check Side Squeezer Clearances.

Note! Make sure that the package (2) to be checked has the correct nominal weight.

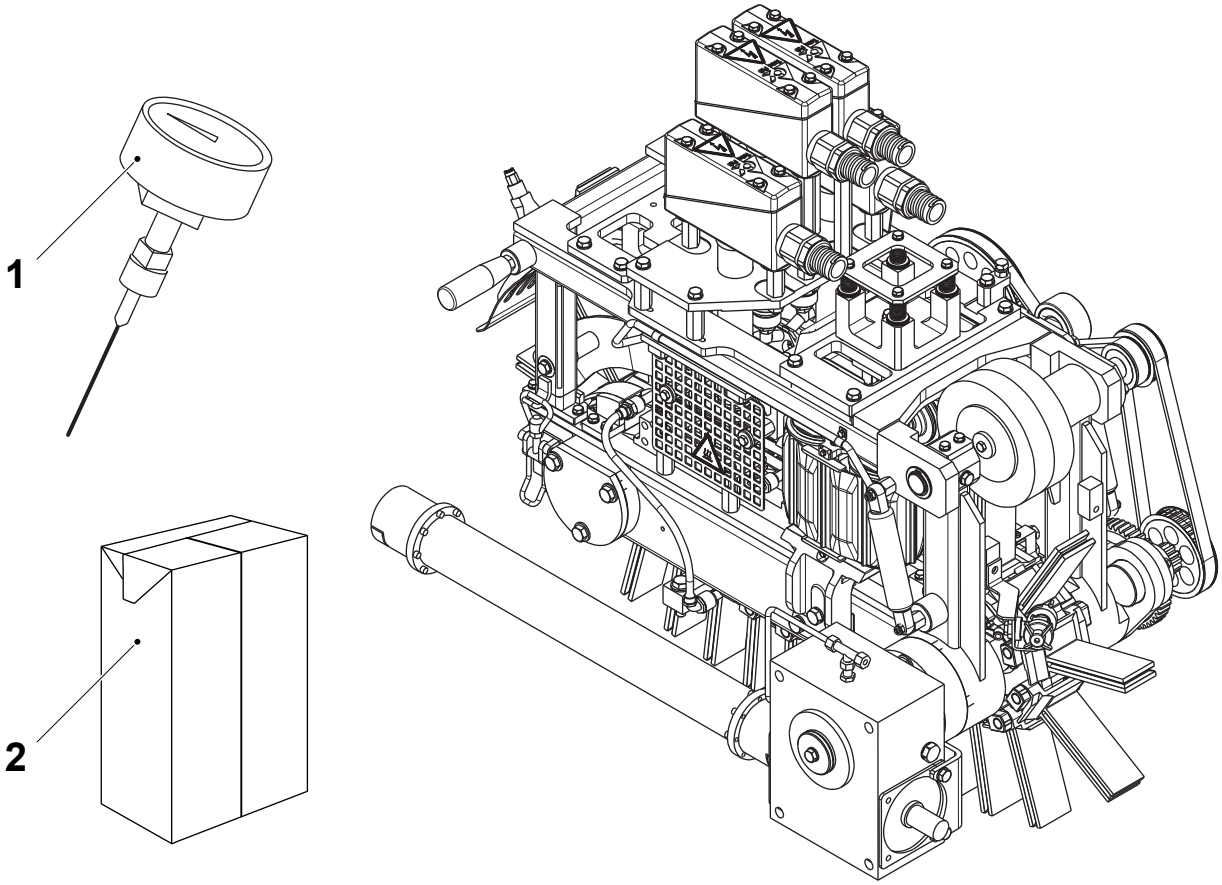

1 Needle pressure gauge
2 Package

TechPub_2614345_0107 - 0504_3048168_01.fm

5.2.4-2 Squeezer - Change Side Belt

Machine Status	Mains Power OFF Air OFF Steam ON Water OFF
SPC Reference	1549868-0300

Check the side pressure belts (1) for damage. If damaged, change them:

a) Lift the swing frame.

b) Remove the screws (2).

c) Remove the side squeezer (3) and the shims (4) and (5).

Note! The shims (5) are present only for Portion Packages and they have different thickness depending on the fact that the machine is running with or without the Headspace Unit (OE). The mark “HI” or “NO HI” on the shim identifies which shim has to be used.

Portion packages shown

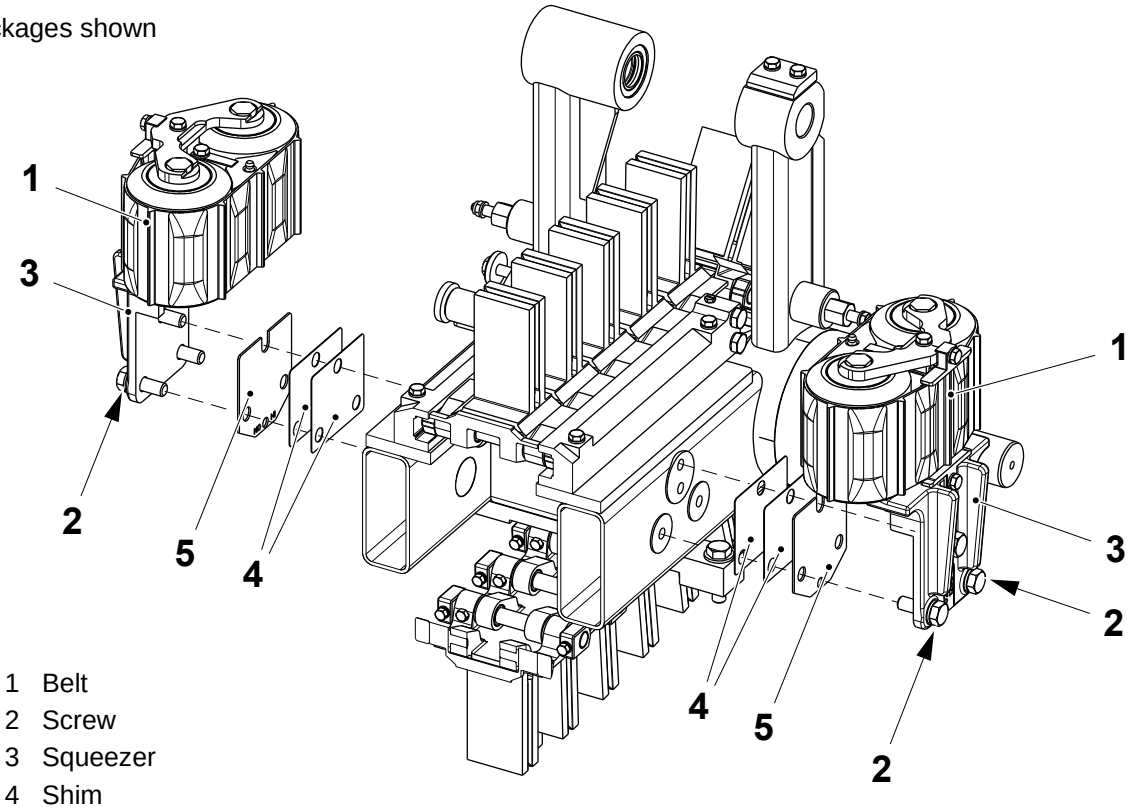

1 Belt
2 Screw
3 Squeezer
4 Shim
5 Shim

(Cont'd)

TechPub_2614345_0107 - 0504_3048168_01.fm

(Cont'd)

d) Remove the screws (6) and the bracket (6).

e) Remove and change the belt (1).

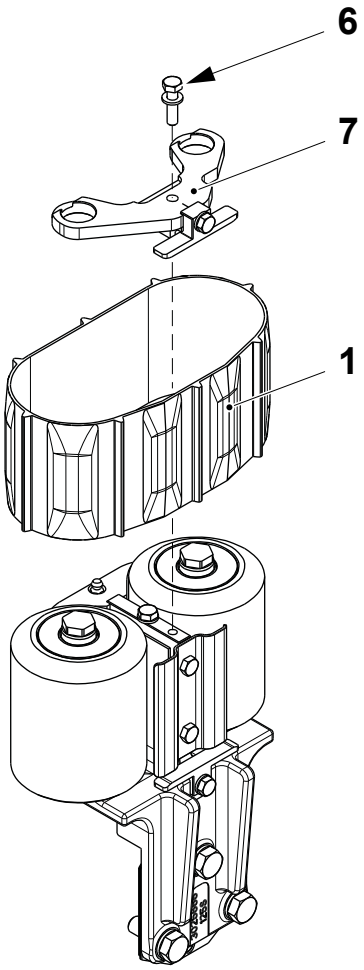

1 Belt
6 Screw
7 Bracket

(Cont'd)

TechPub_2614345_0107 - 0504_3048168_01.fm

(Cont'd)

Note! For Portion packages with T-order: 21215/00001 to 21215/000189, when assembling make sure that the parallel pins (7) lean on the frame (8). For Portion Packages with T-order: 21215/000190 and above the side squeezer supports mate the frame (8) without parallel pins.

f) Assemble in the reverse order and set the squeezer position, see 5.2.4-1 Squeezer - Set Position.

Portion packages with T-order: 21215/00001 to 21215/000189 is shown

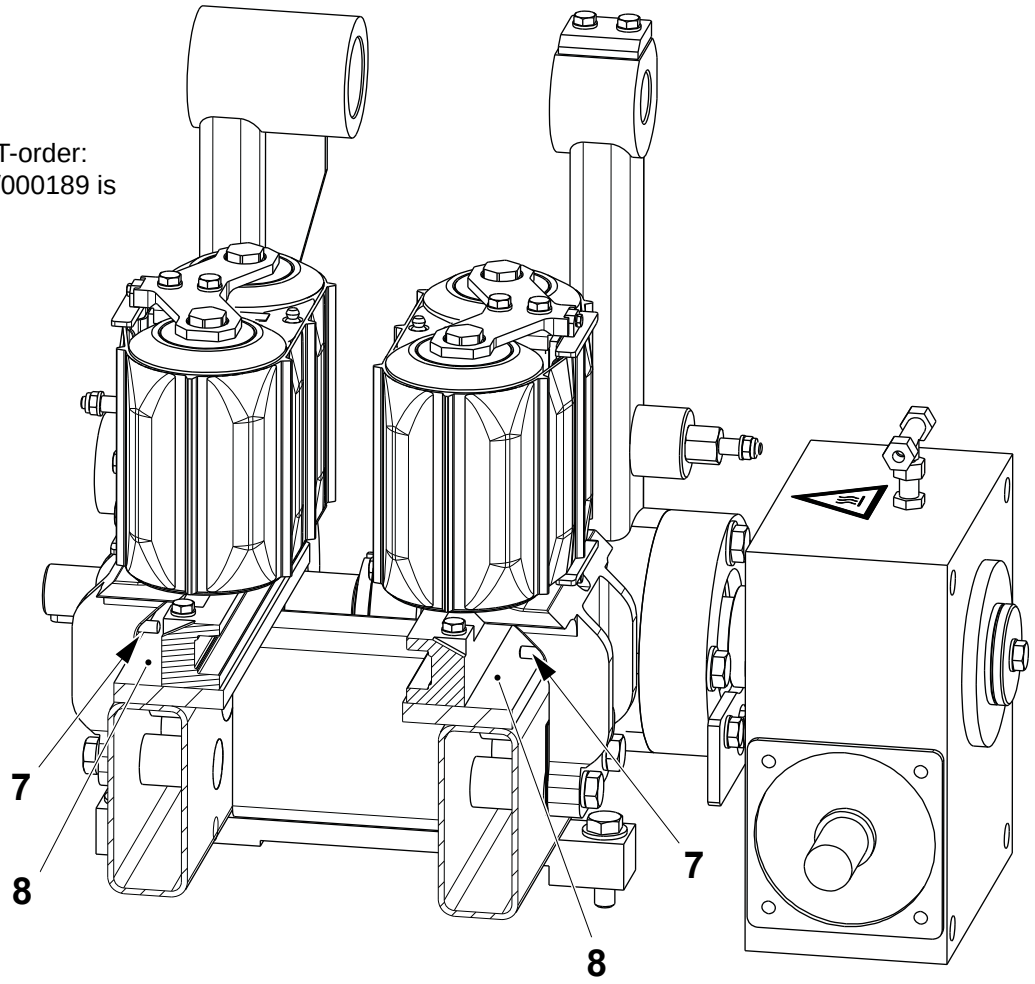

8 Parallel pin
9 Frame

TechPub_2614345_0107 - 0504_3048168_01.fm

5.2.4-3 Squeezer - Change Top Belt

Machine Status	Mains Power OFF Air OFF Steam ON Water OFF
SPC Reference	1549868-0300

Check the top pressure belt (1) for damage. If damaged, change it:

a) Remove the screw (2) and extract the guide (3).

b) Remove and change the belt (1).

c) Assemble in the reverse order and set the squeezer position, see 5.2.4-1 Squeezer - Set Position.

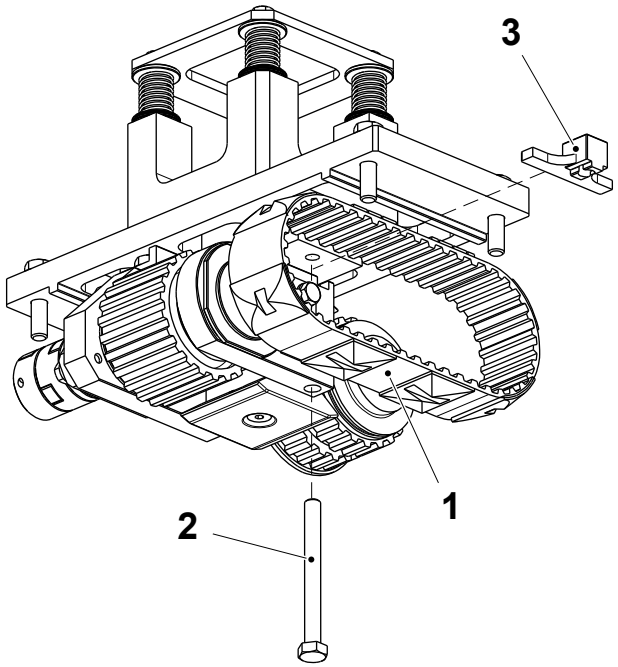

1 Belt
2 Screw
3 Guide

TechPub_2614345_0107 - 0504_3048168_01.fm

5.2.4-4 Squeezer - Side Squeezer Overhaul

Machine Status	Mains Power OFF Air OFF Steam ON Water OFF
SPC Reference	1549868-0300

CAUTION
Risk of damage to the equipment.
Wrong unscrewing can cause damage to the threading. The shafts (2) must be loosened **counter-clockwise**.

a) Remove the side belt (1), see 5.2.4-2 Squeezer - Change Side Belt.

b) Unscrew the shaft (2) and remove the roller assembly (3) from the support (4).

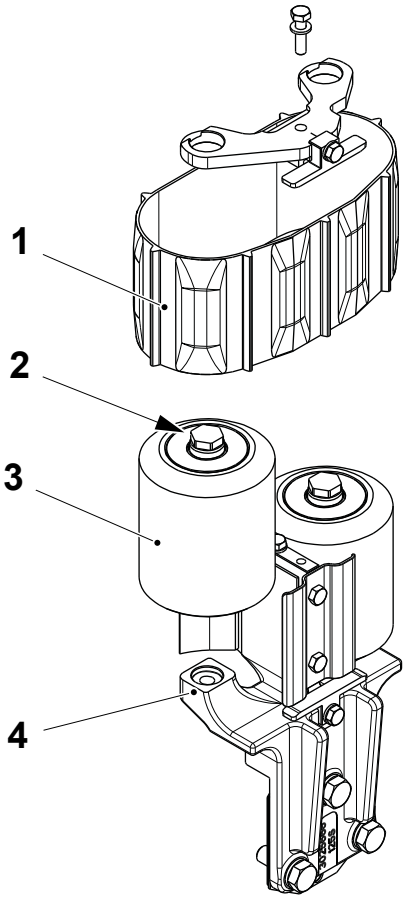

1 Belt
2 Shaft
3 Roller assembly
4 Bracket

(Cont'd)

TechPub_2614345_0107 - 0504_3048168_01.fm

(Cont'd)

c) Remove the seal (5) and the retaining ring (6).
d) Remove and change the ball bearing (7).
e) Remove the seal (8) and the retaining ring (9).
f) Push the shaft (2) out of the roller (10).
g) Remove the spacer (11) and change the ball bearing (12).
h) Apply grease on the shaft (2) and on the ball bearings (7) and (12).
i) Repeat on the other roller.

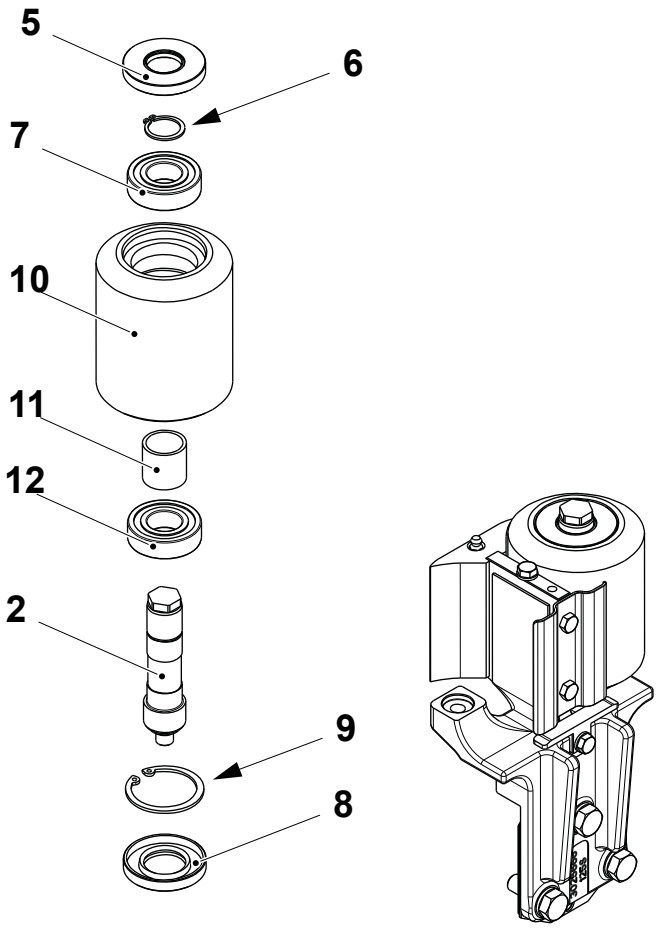

2 Shaft
5 Seal
6 Retaining ring
7 Ball bearing
8 Seal
9 Retaining ring
10 Roller
11 Spacer
12 Ball bearing

(Cont'd)

TechPub_2614345_0107 - 0504_3048168_01.fm

(Cont'd)

j) Remove the screws (13) and the sliders (14) and (15).

k) Change the sliders (14) and (15).

Note! Only for Portion Packages, remove the grease nipple (16).

l) Assemble in the reverse order.

m) Set the squeezer position, see 5.2.4-1 Squeezer - Set Position.

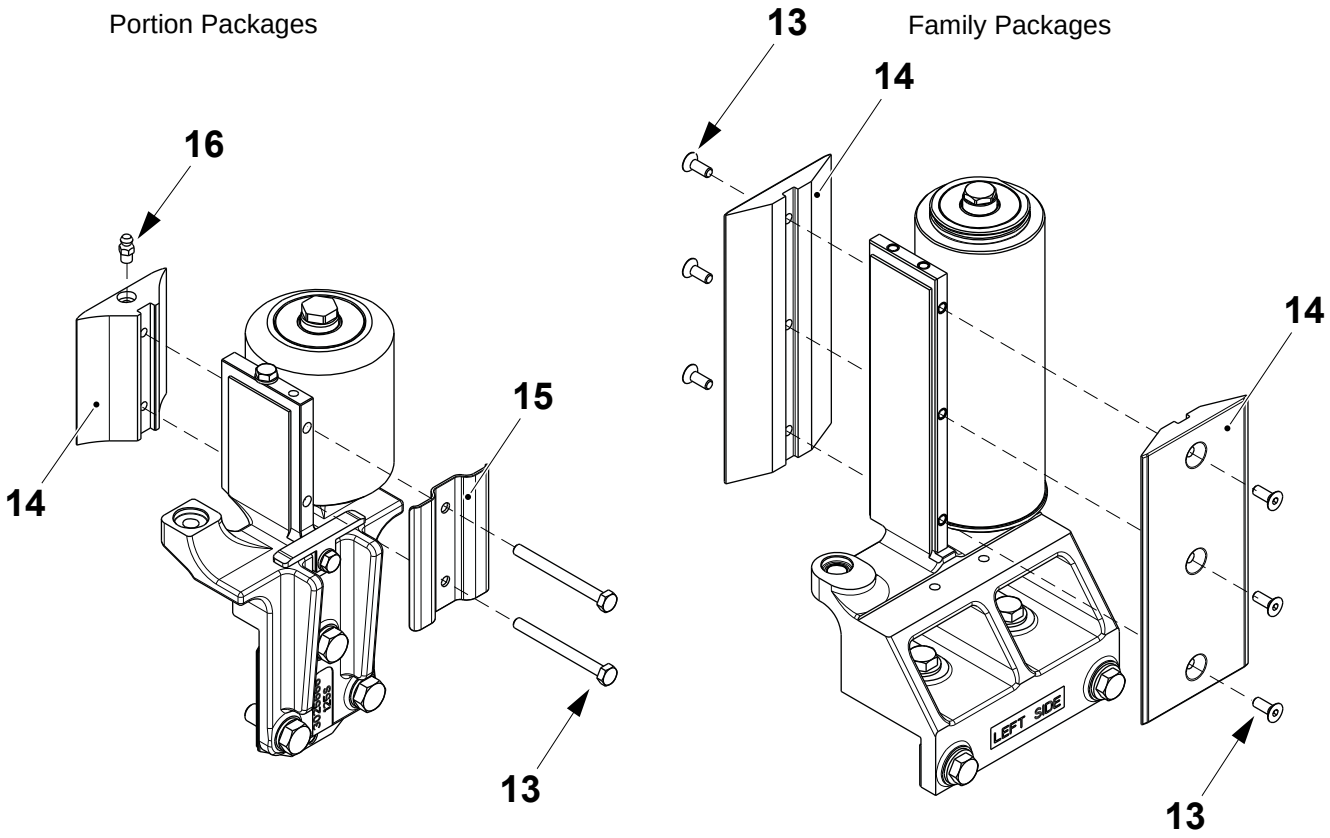

13 Screw
14 Slider
15 Slider
16 Grease nipple

TechPub_2614345_0107 - 0504_3048168_01.fm

5.2.4-5 Squeezer - Top Squeezer Overhaul

Machine Status	Mains Power OFF Air OFF Steam ON Water OFF
SPC Reference	1549868-0300

Note! When opening the coupling (1) pay attention to hold the central body (2) and the plates (3).

a) Close the water supply valves in the service unit.

b) Disconnect the cooling water tubes (4).

c) Lift the swing frame and open the coupling (1).

d) Remove the screws (5) and the top squeezer assembly (6).

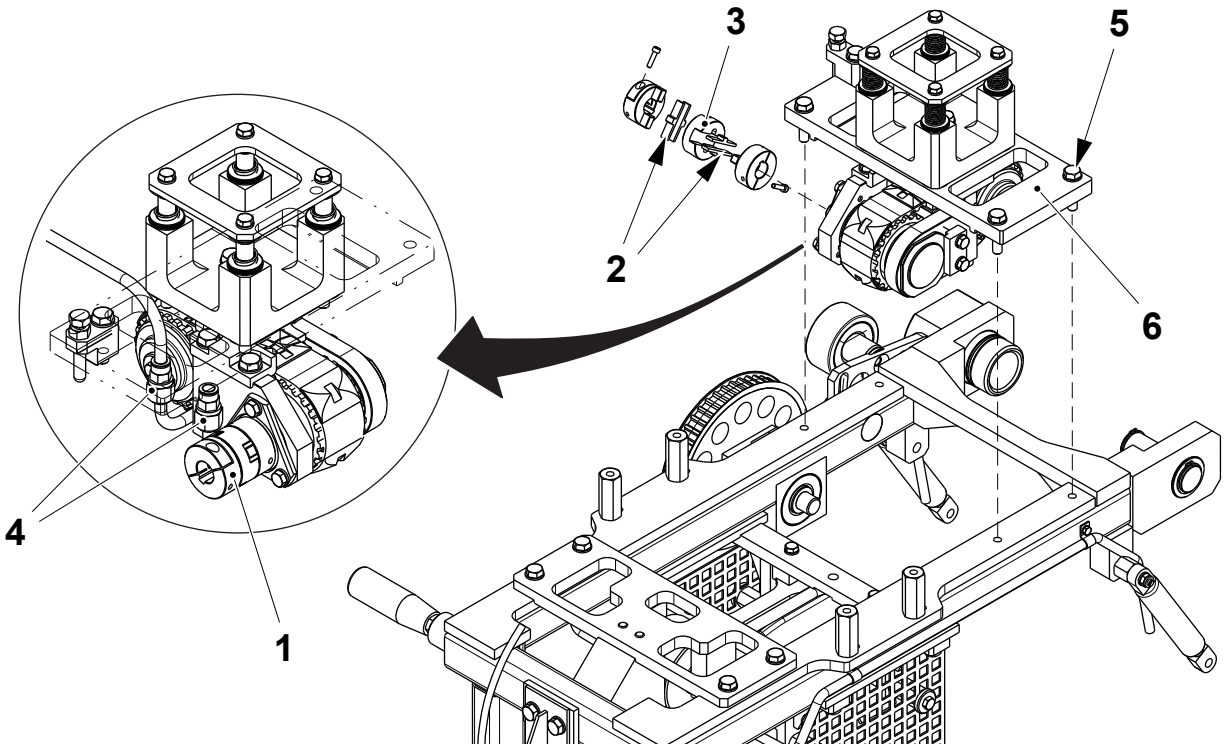

1 Coupling
2 Central body
3 Plate
4 Tube
5 Screw
6 Top squeezer

(Cont'd)

TechPub_2614345_0107 - 0504_3048168_01.fm

(Cont'd)

Note! When assembling, pay attention to fit back the same shims (12) that had been removed.

e) Remove the belt (7), see 5.2.4-3 Squeezer - Change Top Belt.

f) Remove the screws (8) to separate the belt assembly (9) from the top squeezer frame.

g) Remove the screw (10).

h) Remove the spacer block (11) and the shims (12).

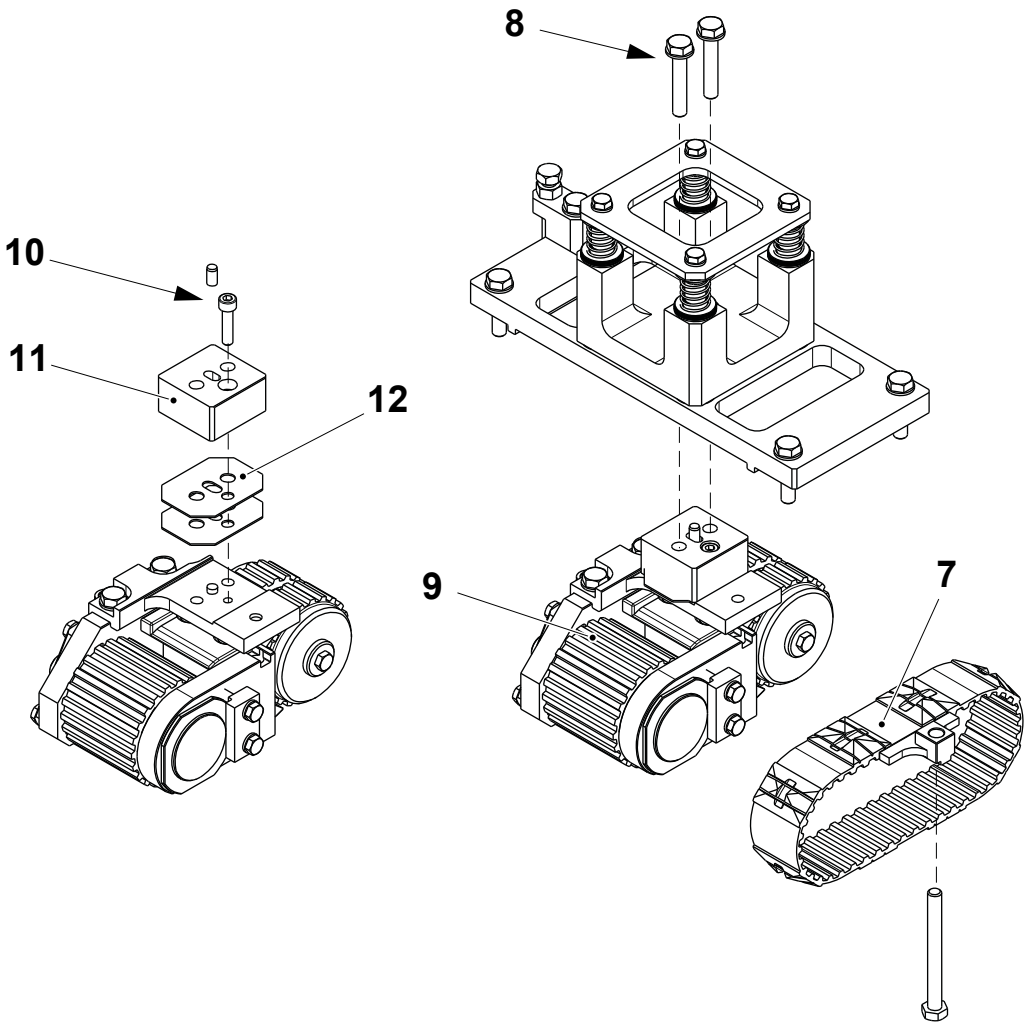

7 Belt
8 Screw
9 Belt assembly
10 Screw
11 Spacer block
12 Shims

TechPub_2614345_0107 - 0504_3048168_01.fm

(Cont'd)

(Cont'd)

Note! The upper slider (16) has to be changed only in Portion Packages machines.

i) Remove the screws (13) and the support (14).

j) Remove the screws (15) and change the slider (16).

k) Remove the screws (17) and change the cooled slider (18).

Portion packages

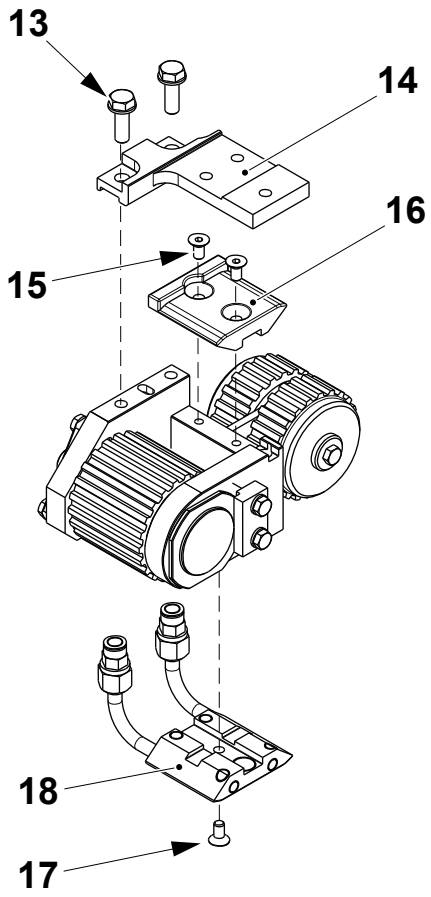

Family packages

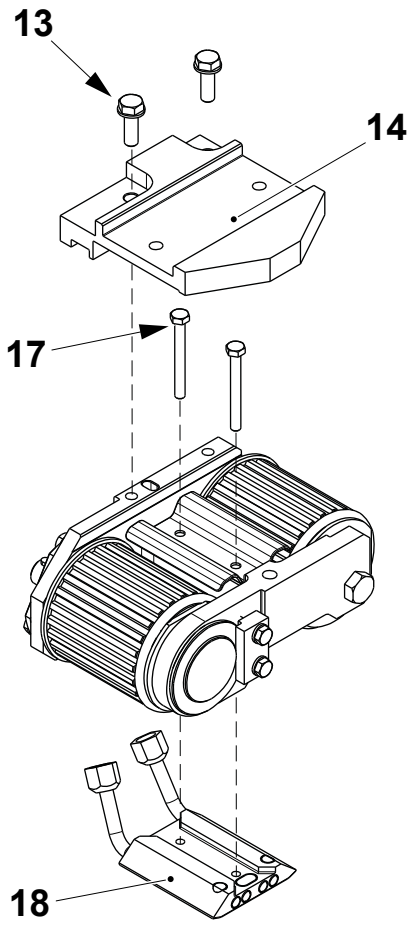

13 Screw
14 Support
15 Screw
16 Slider
17 Screw
18 Cooled slider

(Cont'd)

TechPub_2614345_0107 - 0504_3048168_01.fm

(Cont'd)

l) Loosen the screws (19) and remove the plate (20).

m) Loosen the screws (21) and move aside the shaft assembly (22).

n) Remove the retaining ring (23).

o) Remove the screws (21) and extract the shaft assembly (22) removing the pulley (24).

p) Remove the flange (25).

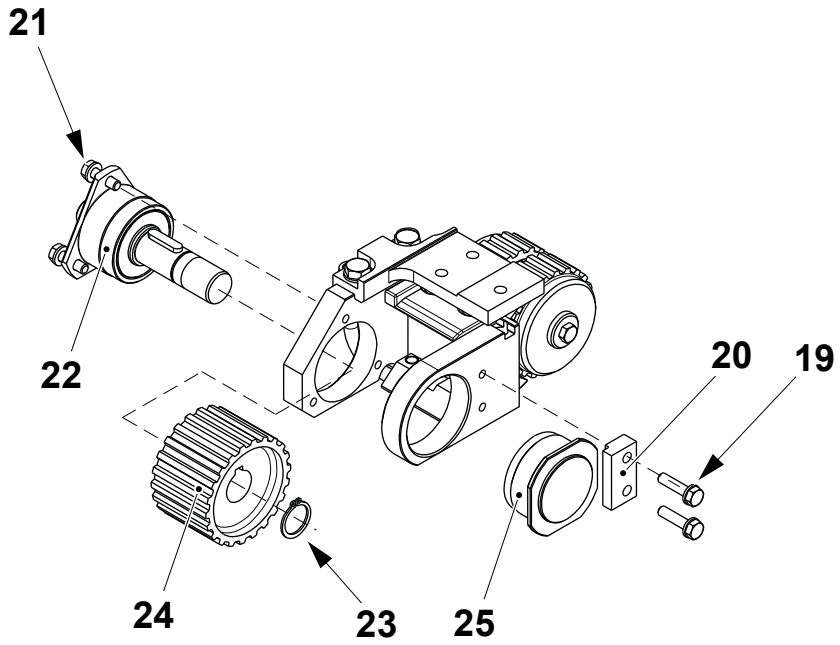

19 Screw
20 Plate
21 Screw
22 Shaft assembly
23 Retaining ring
24 Pulley
25 Flange

(Cont'd)

TechPub_2614345_0107 - 0504_3048168_01.fm

(Cont'd)

q) On the shaft assembly (22), remove the seal rings (26).

r) Remove the retaining ring (27) and slip off the shaft (28).

s) Remove the retaining ring (29) from the flange (30) and change the ball bearing (31).

t) On the flange (25), remove the seal ring (32) and the retaining ring (33).

u) Remove and change the ball bearing (34).

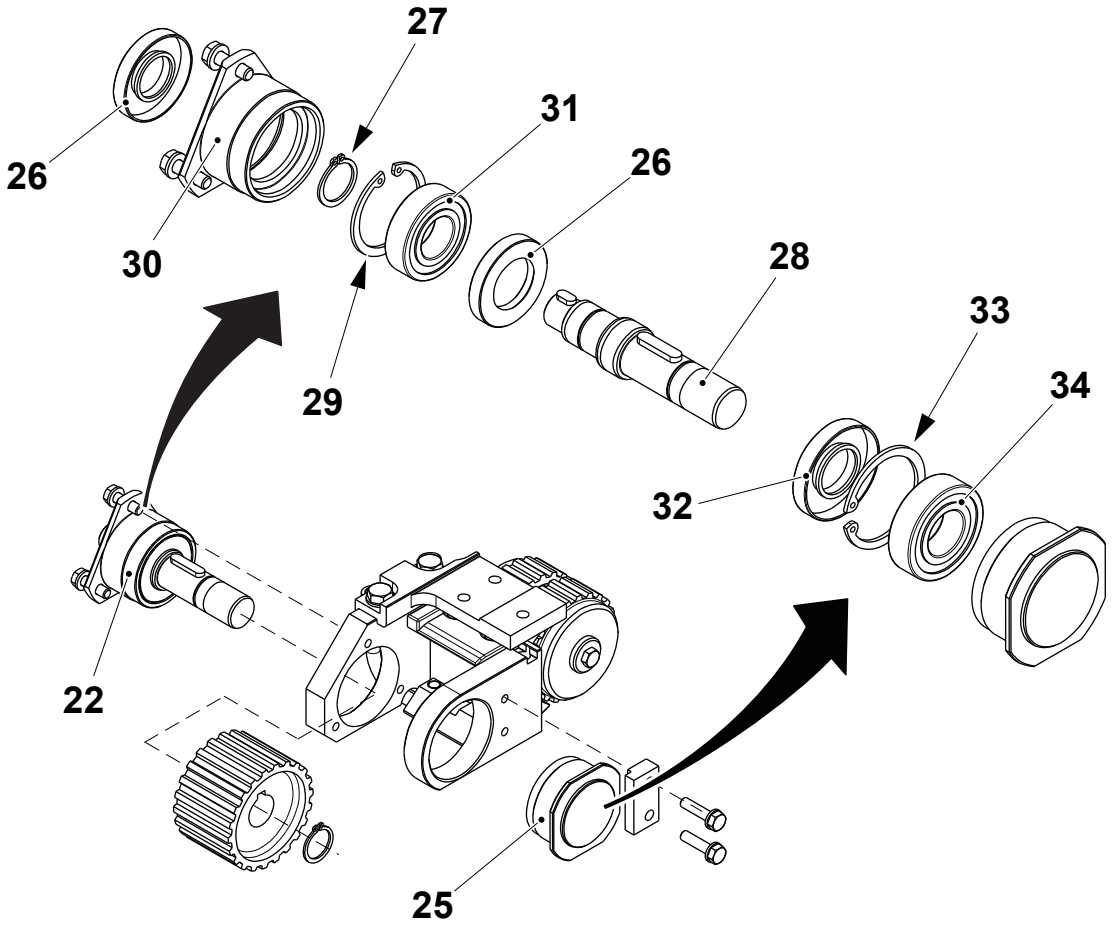

22 Shaft assembly
14 Flange
26 Seal ring
27 Retaining ring
28 Shaft
29 Retaining ring
30 Flange
31 Ball bearing
32 Seal ring
33 Retaining ring
34 Ball bearing

(Cont'd)

TechPub_2614345_0107 - 0504_3048168_01.fm

(Cont'd)

v) On both sides, remove the screw (35) and the pulley (36).
w) Remove the seal rings (37) and the retaining rings (38).
x) Remove the shaft (39) and change the ball bearings (40).
y) Assemble in the reverse order.
z) Set the top squeezer position, see 5.2.4-1 Squeezer - Set Position.

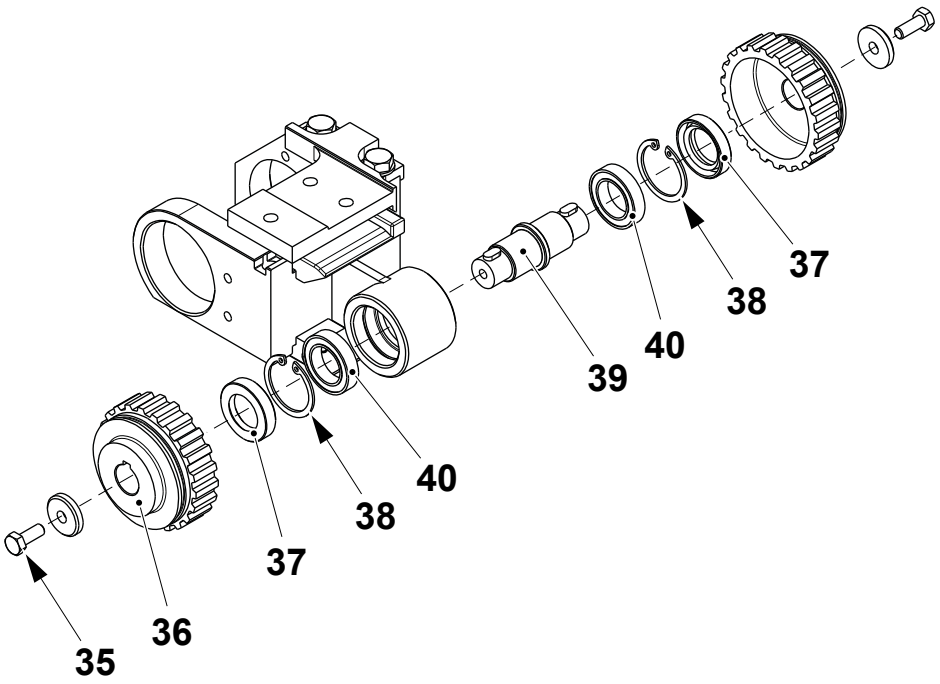

35 Screw
36 Pulley
37 Seal ring
38 Retaining ring
39 Shaft
40 Ball bearing

TechPub_2614345_0107 - 0504_3048168_01.fm

5.2.4-6 Squeezer - Check Side Squeezer Clearances

Machine Status	Mains Power OFF Air OFF Steam ON Water OFF
SPC Reference	1549868-0300

Note! Verify the clearance by fitting the feeler gauges where indicated by the arrows, see pictures on the next pages.

(Cont'd)

TechPub_2614345_0107 - 0504_3048168_01.fm

(Cont'd)

Valid for Portion Packages (except TBA 125 S) with T-order: 21215/00001 to 21215/00189

a) Rotate the final folder drive shaft by hand until the carton station (1) is in line with the centre of the side squeezers.

b) With a feeler gauge, check that the clearance between the side of the carton station (1) and the belts (2) on both sides squeezers is 0.5 mm.

c) Adjust the clearance by inserting or removing shims (3) behind the supports (4).

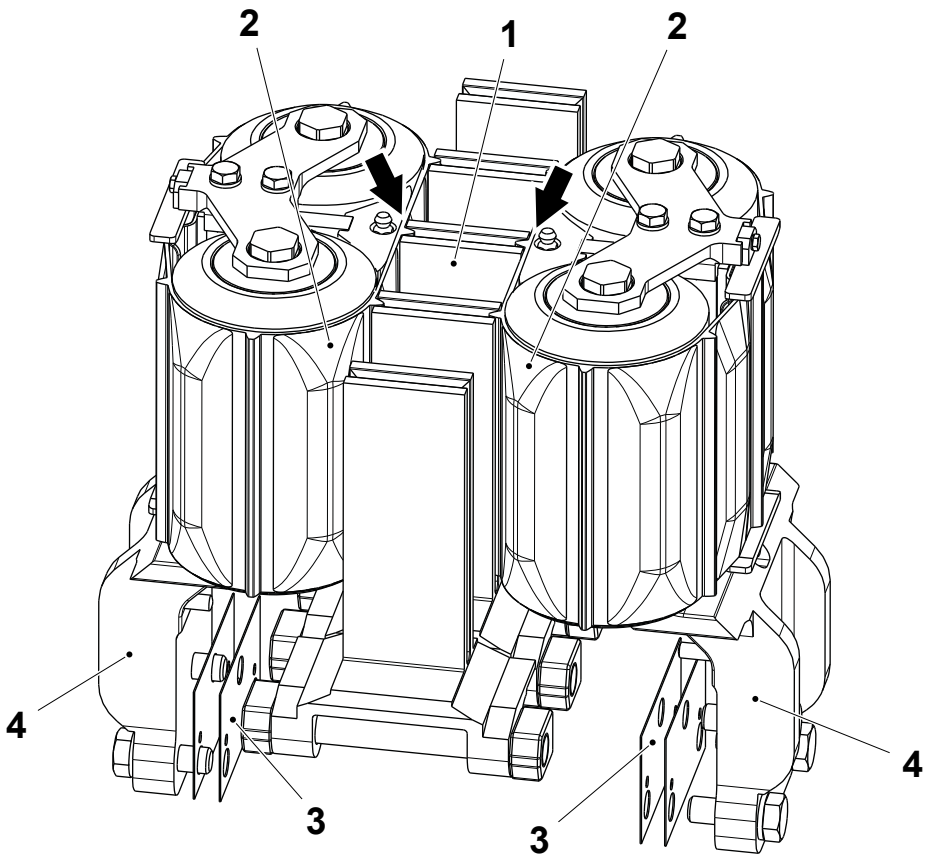

1 Carton station
2 Belt
3 Shim
4 Support

(Cont'd)

TechPub_2614345_0107 - 0504_3048168_01.fm

(Cont'd)

Valid for TBA 125 S and for Portion Packages with T-order: 21215/00190 and above

Note! Two pair of special shims (shown below as grey) with different thickness marked “HI” or “NO HI” are supplied. Fit the shims marked “HI” if the Headspace Unit (OE) is running on the machine, or the shims “NO HI” if it is not running.

a) Rotate the final folder drive shaft by hand until the carton station (1) is in line with the centre of the side squeezers.

b) With a feeler gauge, check that the clearance between the side of the carton station (1) and the belts (2) is 0.6 mm on both sides squeezers, see arrows.

Note! If the HI is installed, the distance to be checked is 0.3 mm.

c) Adjust the clearance by inserting or removing shims (3).

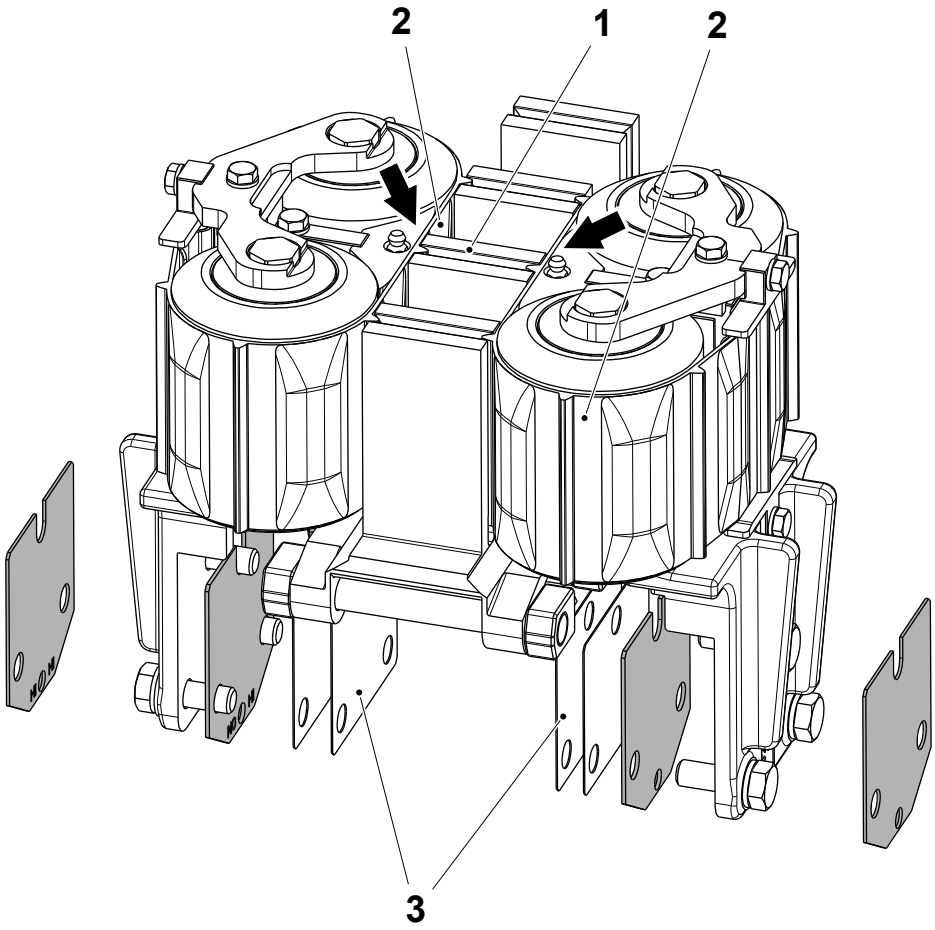

1 Carton station
2 Belt
3 Shim

(Cont'd)

TechPub_2614345_0107 - 0504_3048168_01.fm

(Cont'd)

Valid for Family Packages

a) Rotate the final folder drive shaft by hand until the carton station (1) is in line with the centre of the side squeezers.

b) With a feeler gauge, check that the clearance between the side of the carton station (1) and the belts (2) on both sides squeezers is according the table below.

Package	Clearance (mm)
TBA 1000 S - TBA 1000 Sq	1.3
TBA 1000 B	1.5

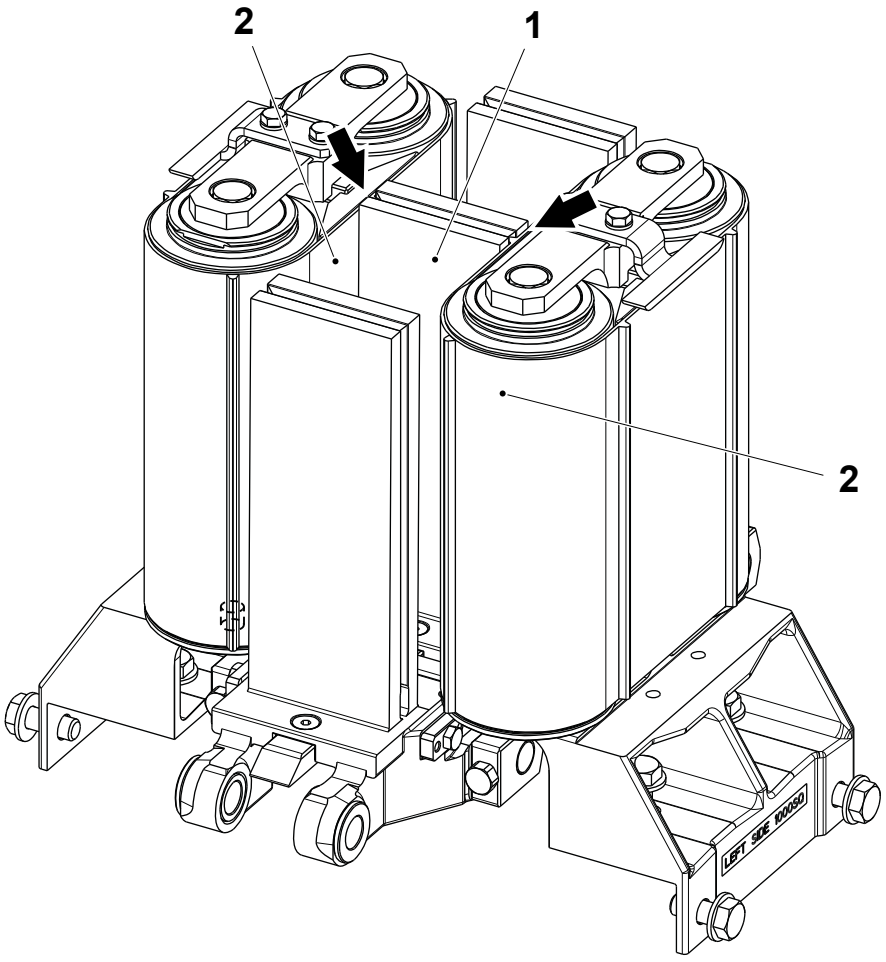

1 Carton station
2 Belt

(Cont'd)

TechPub_2614345_0107 - 0504_3048168_01.fm

(Cont'd)

c) Adjust the clearance by inserting or removing shims (3) behind the supports (4).

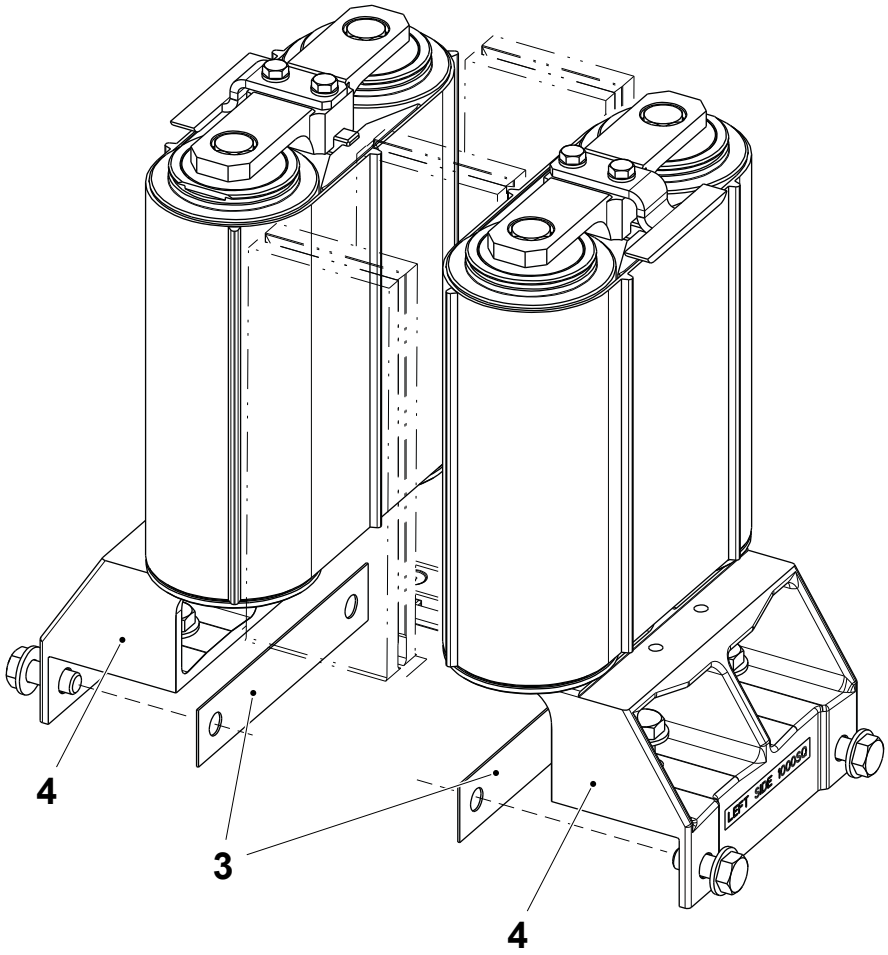

3 Shim
4 Support

TechPub_2614345_0107 - 0504_3048168_01.fm

5.2.4-7 Squeezer - Check Top Squeezer Bushings

Machine Status	Mains Power OFF Air OFF Steam ON Water OFF
SPC Reference	1549868-0300

a) Remove the screws (1) and the plate (2).

b) Remove the springs (3) with the washers (4) and (5). Change the springs (3) if necessary.

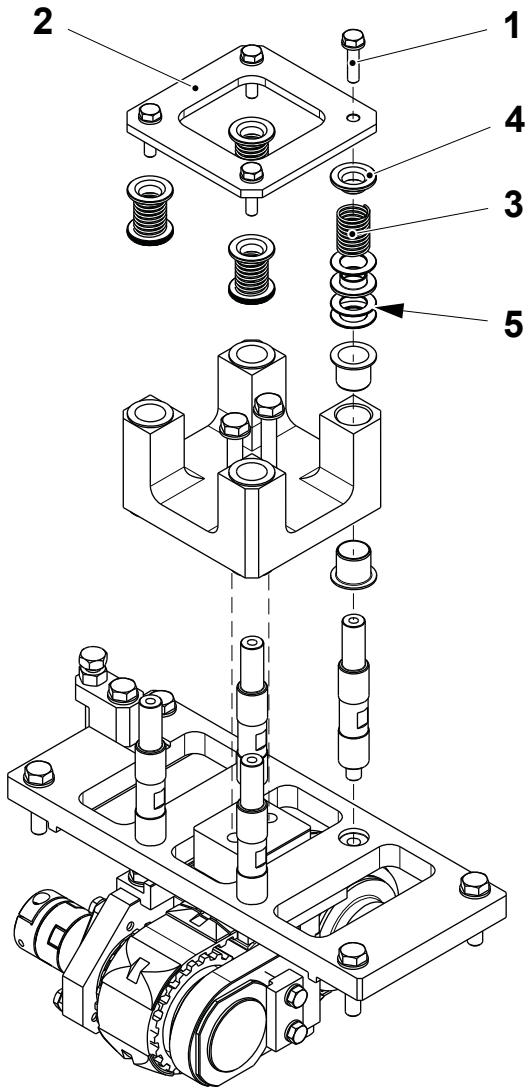

1 Screw
2 Plate
3 Spring
4 Washer
5 Washer

(Cont'd)

TechPub_2614345_0107 - 0504_3048168_01.fm

(Cont'd)

c) Remove the screws (6) and slip off the guide bracket (7).

d) Remove the bushings (8) and check for wear or damage. Change if necessary.

e) Assemble in the reverse order.

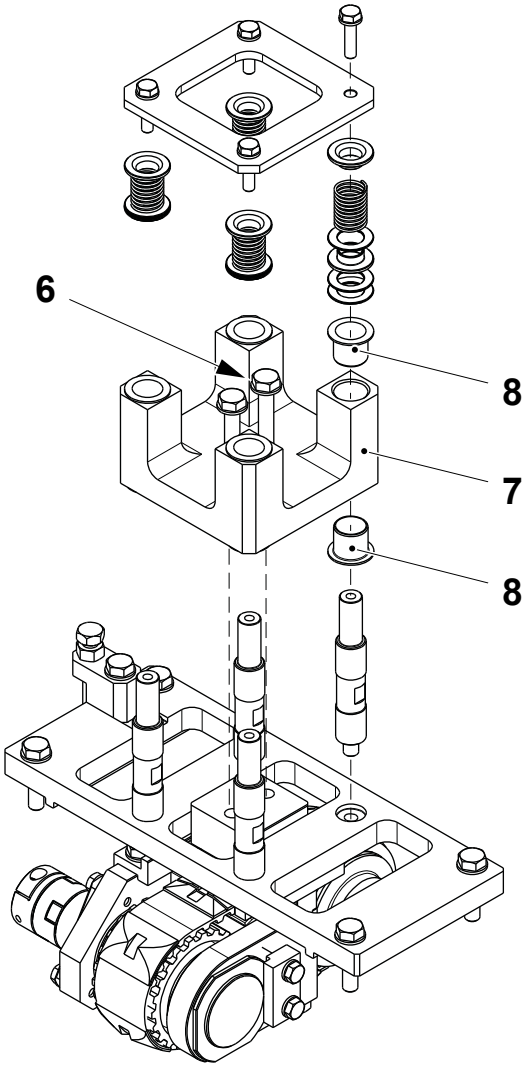

6 Screw
7 Guide bracket
8 Bushing

TechPub_2614345_0107 - 0504_3048168_01.fm

5.2.4-8 Squeezer - Set Top Squeezer Coupling

Machine Status	Mains Power OFF Air OFF Steam ON Water OFF
SPC Reference	1549868-0300

a) Loosen the screw (1) and move the hub (2) against the shoulder of the top squeezer shaft.

b) Tighten the screw (1).

c) Loosen the screw (3) to release the hub (4).

d) With the aid of a feeler gauge, set the distance **A** between the coupling (5) and the hubs (2) and (4).

e) Tighten the screw (3).

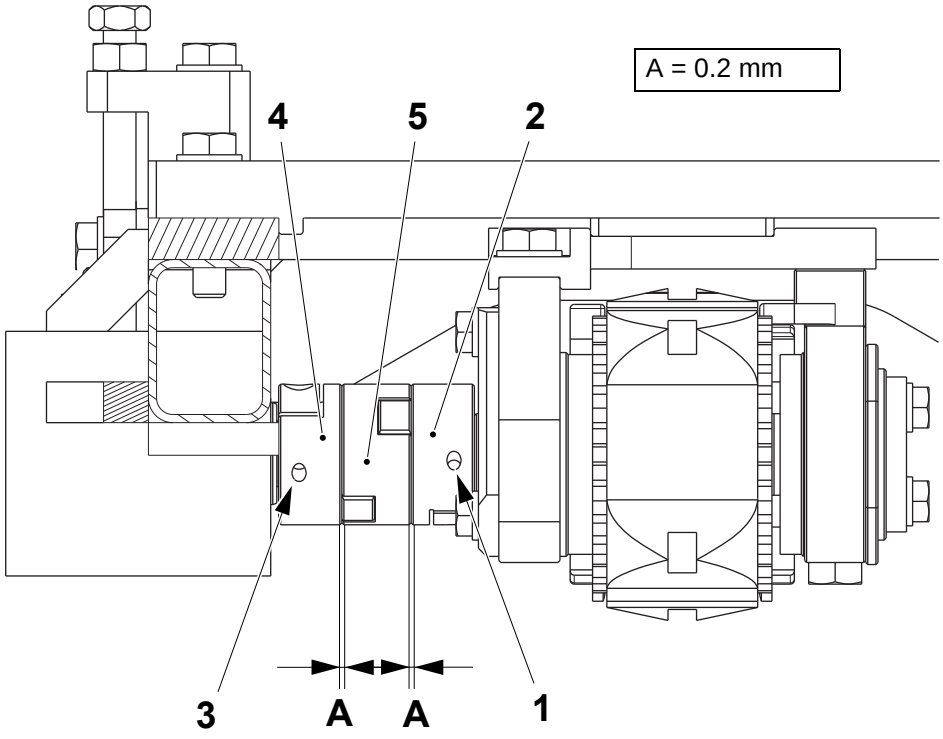

1 Screw
2 Hub
3 Screw
4 Hub
5 Coupling

TechPub_2614345_0107 - 0504_3048168_01.fm

5.2.4-9 Squeezer - Change Coupling Plates

Machine Status	Mains Power OFF Air OFF Steam ON Water OFF
SPC Reference	1549868-0300

Note! When opening the coupling pay attention to hold the central body (3) and the plates (2).

Separate the coupling by loosening the screws (1) and change the plates (2) on the central body (3) of the coupling.

After the assembly, set the top squeezer belt, see 5.2.4-1 Squeezer - Set Position.

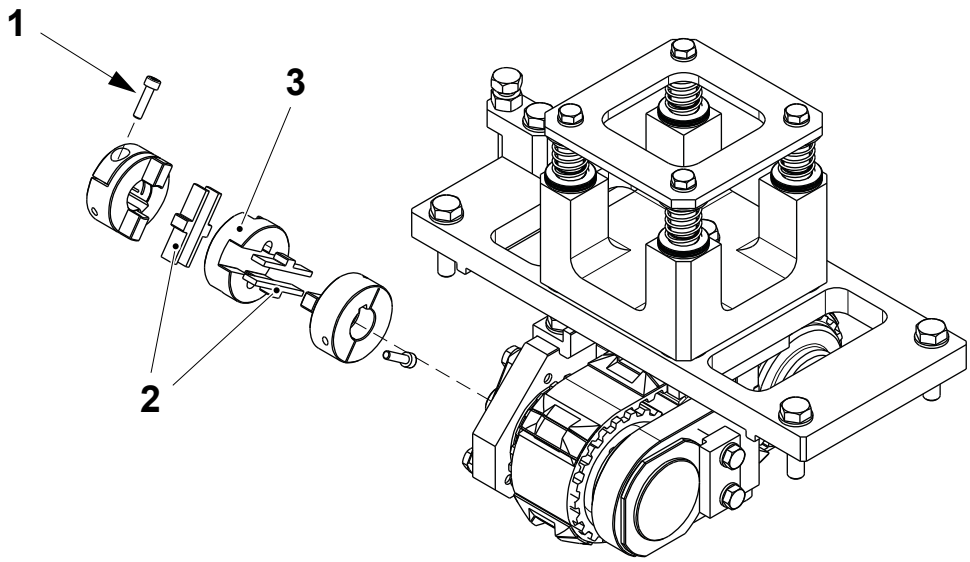

1 Screw
2 Plate
3 Central body

TechPub_2614345_0107 - 0504_3048168_01.fm

5.2.5 Heating Chamber

5.2.5-1 Heating Chamber - Set Flap Sealing Nozzles

Machine Status	Mains Power OFF Air OFF Steam ON Water OFF
Special Equipment	Template, see 10.2 Templates and Tools
SPC Reference	2867510-0100

WARNING

Burn hazard.

Nozzles might be hot.

a) Lift the swing frame (1).

b) Remove the pulley assembly (2) by the screws (3).

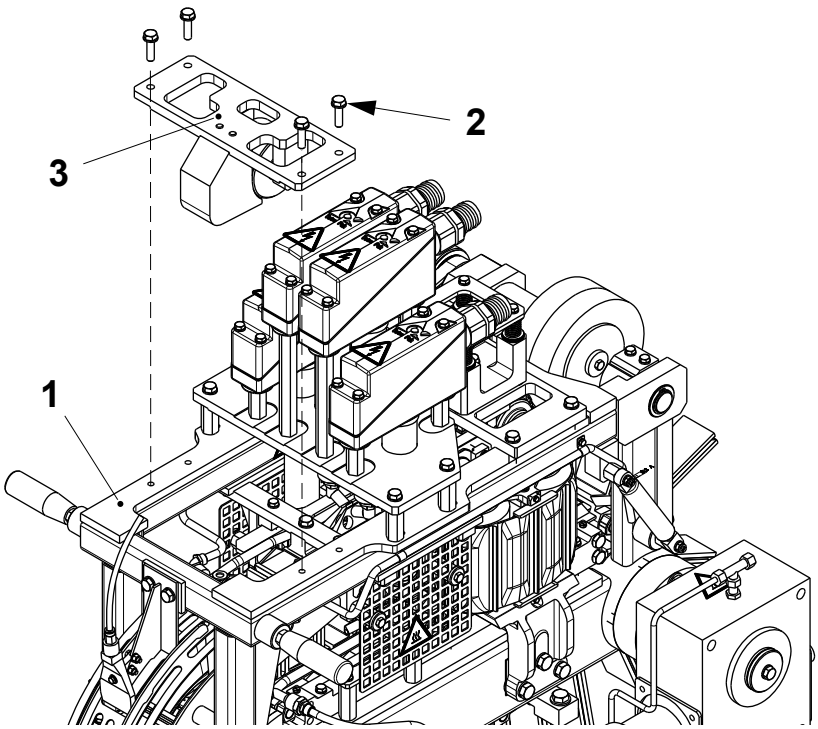

1 Swing frame
2 Pulley assembly
3 Screw

(Cont'd)

TechPub_2614345_0107 - 0502_3048169_01.fm

(Cont'd)

c) Loosen the nozzles (4) and (5).

d) Fit the template (6) in to the station chain, positioning the template below the heating chamber.

e) Carefully lower the swing frame and turn the shaft (7) until the template (6) is below the nozzles (4).

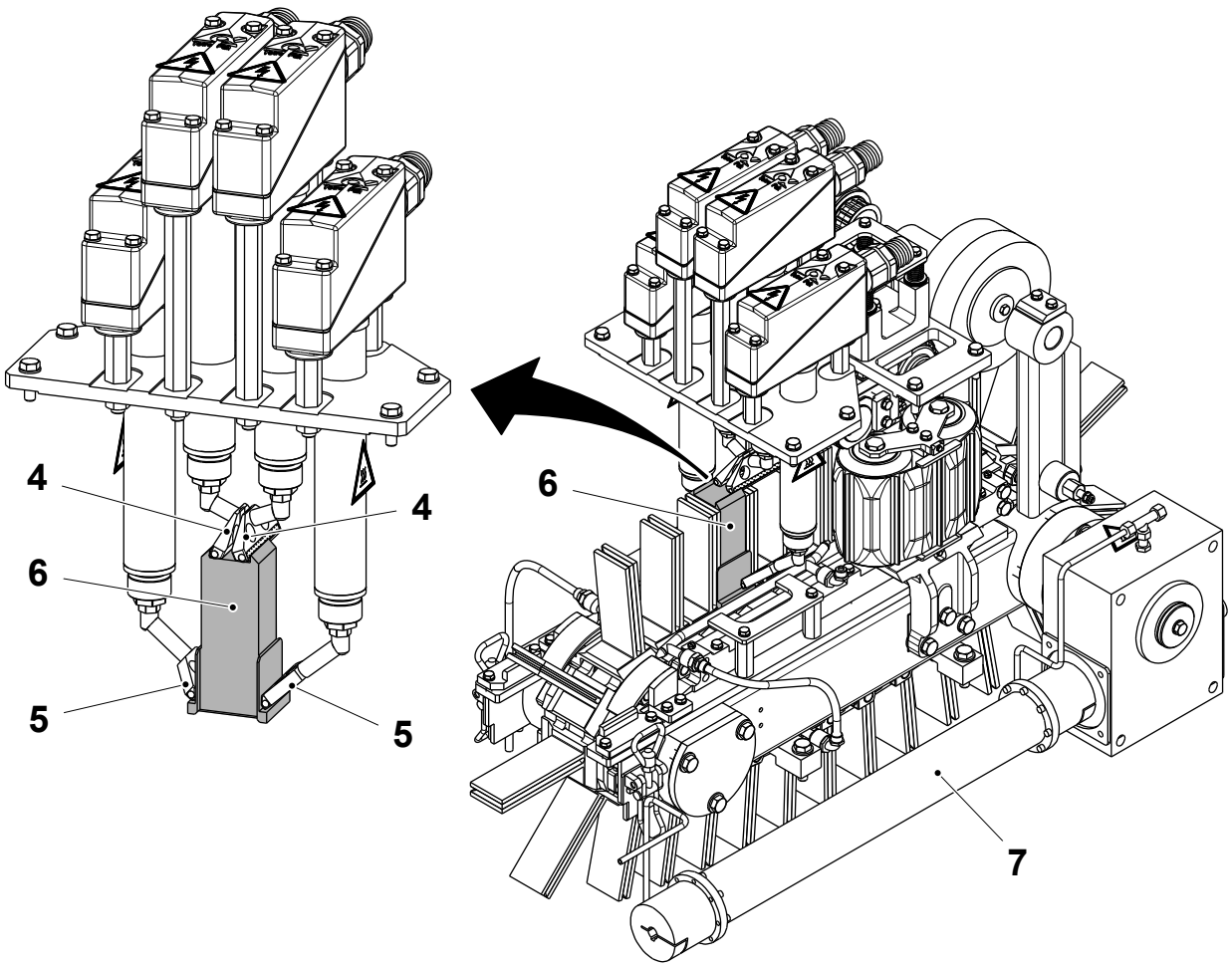

4 Nozzle
5 Nozzle
6 Template
7 Shaft

(Cont'd)

TechPub_2614345_0107 - 0502_3048169_01.fm

(Cont'd)

Note! At least one shim (8) must be left on each nozzle.

f) Add or remove shims (8) until the nozzles (4) are as close as possible to the top of the template (6).

g) Set the nozzles (5) sideways so that they lightly touch the template (6).

h) Tighten the nozzles (4) and (5) by hand and remove the template (6).

i) Remove the heating chamber and tighten the nozzles with a torque of 110 Nm; only for Portion Packages see the procedure Final Tightening in the following pages.

Note! The final tightening is necessary to prevent the loosening and the consequent falling of the nozzles into the station chain when the machine is running.

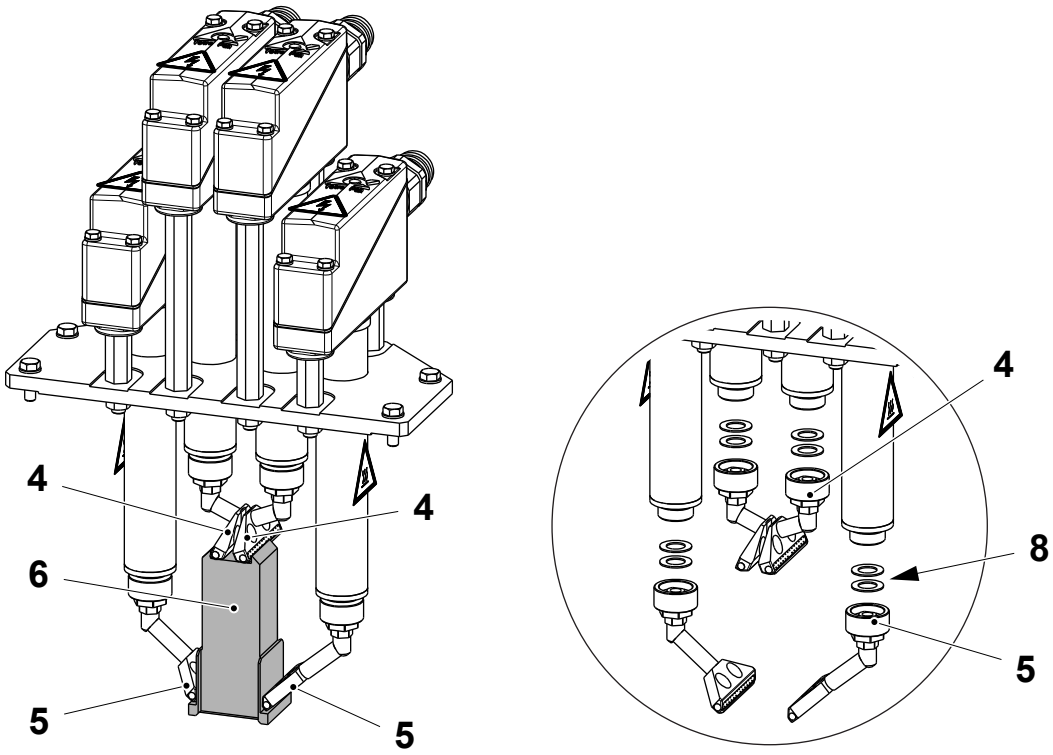

4 Nozzle
5 Nozzle
6 Template
8 Shim

(Cont'd)

TechPub_2614345_0107 - 0502_3048169_01.fm

(Cont'd)

Final Tightening

Note! Valid for Portion Packages only.

a) Remove the touch guards (1) by the screws (2).

b) Remove the screw (3).

c) Unscrew the spacers (4) and remove the guide (5).

d) Repeat the same for the other guide (6).

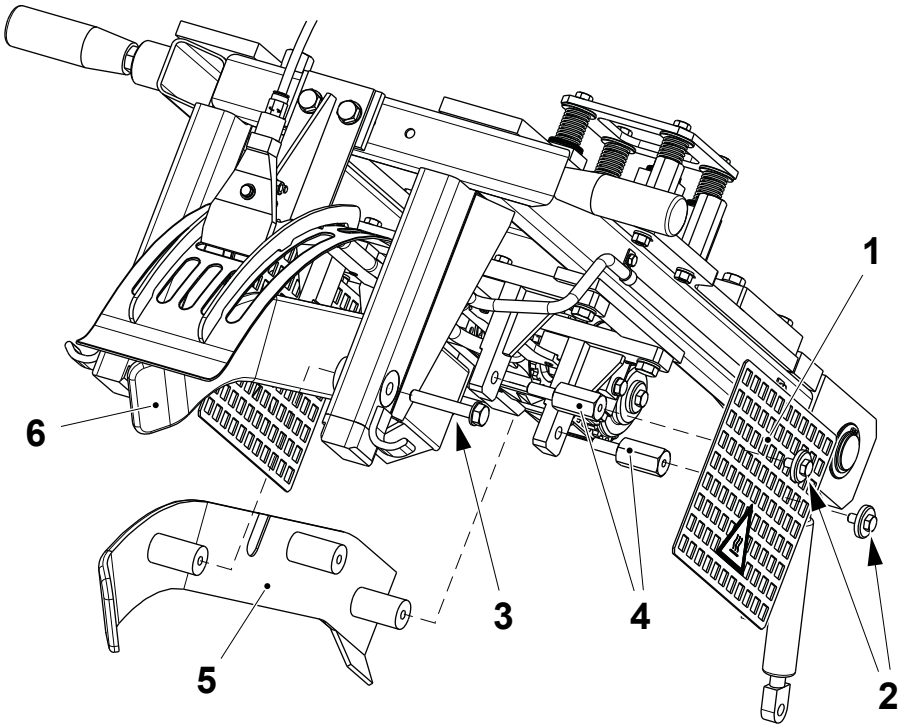

1 Touch guard
2 Screw
3 Screw
4 Spacer
5 Guide
6 Guide

(Cont'd)

TechPub_2614345_0107 - 0502_3048169_01.fm

(Cont'd)

e) Disconnect the water hoses (7) of the guide (8).

f) Remove the guide (8) by the four screws (9).

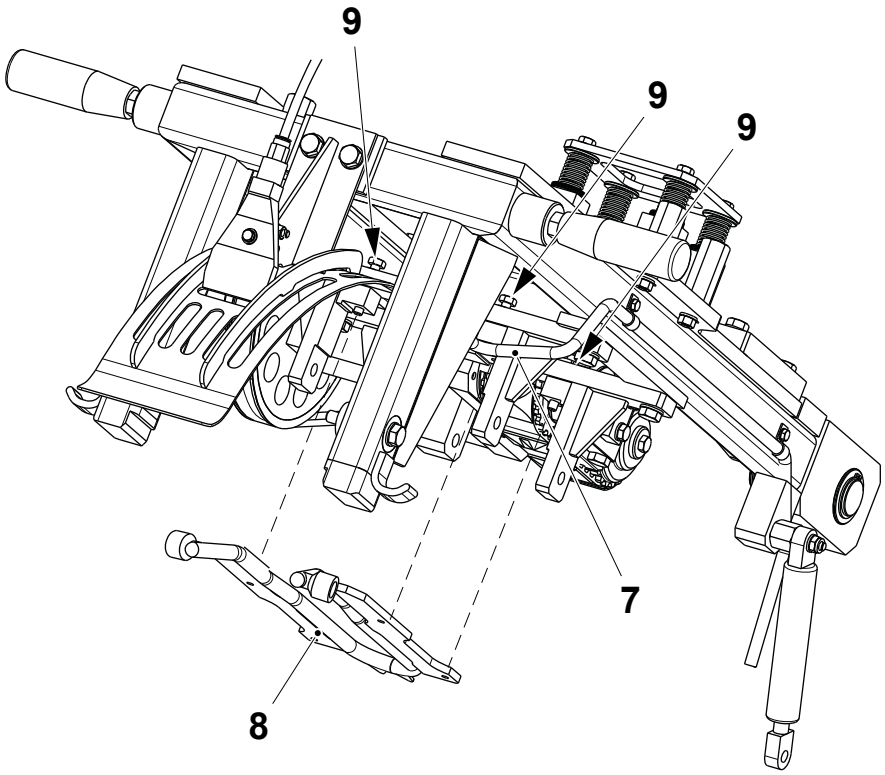

7 Water hose
8 Guide
9 Screw

(Cont'd)

TechPub_2614345_0107 - 0502_3048169_01.fm

(Cont'd)

CAUTION
Risk of damage to the equipment.
If the nozzles (12) and (13) are not tightened with the recommended tightening torque, they might loosen and fall into the station chain.

g) Remove the screws (10).

h) Extract the heating chamber assembly (11) and place it on the swing frame as shown below.

i) Tighten the nozzles (12) and (13) with a torque of 110 Nm.

j) Assemble in the reverse order.

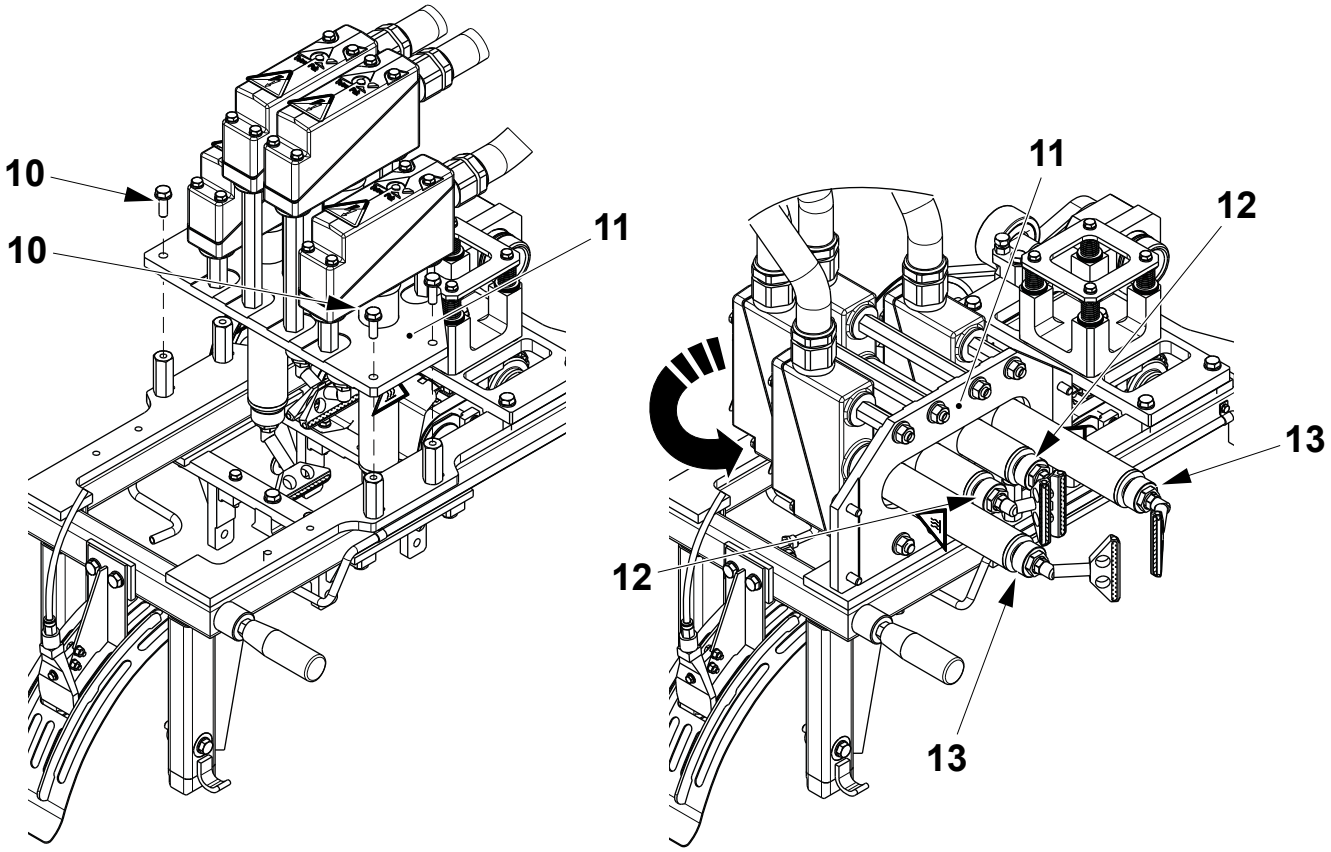

10 Screw
11 Heating chamber assembly
12 Nozzle
13 Nozzle

TechPub_2614345_0107 - 0502_3048169_01.fm

5.2.5-2 Heating Chamber - Set Flap Sealing Temperature

Machine Status	PRODUCTION
SPC Reference	2867510-0100

a) Touch the PRODUCTION CONTROL button (1) on the TPOP.

b) Touch the FINAL FOLDER button (2).

c) In the FINAL FOLDER window, touch the TEMPERATURE icon (3).

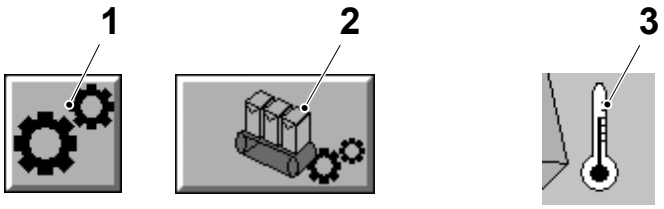

1 Production control button
2 Final folder button
3 Temperature icon

(Cont'd)

TechPub_2614345_0107 - 0502_3048169_01.fm

(Cont'd)

d) Touch one of the four regulator panels:
   - the lower LH nozzle icon (4)
   - the lower RH nozzle icon (5)
   - the upper LH nozzle icon (6)
   - the upper LH nozzle icon (7).

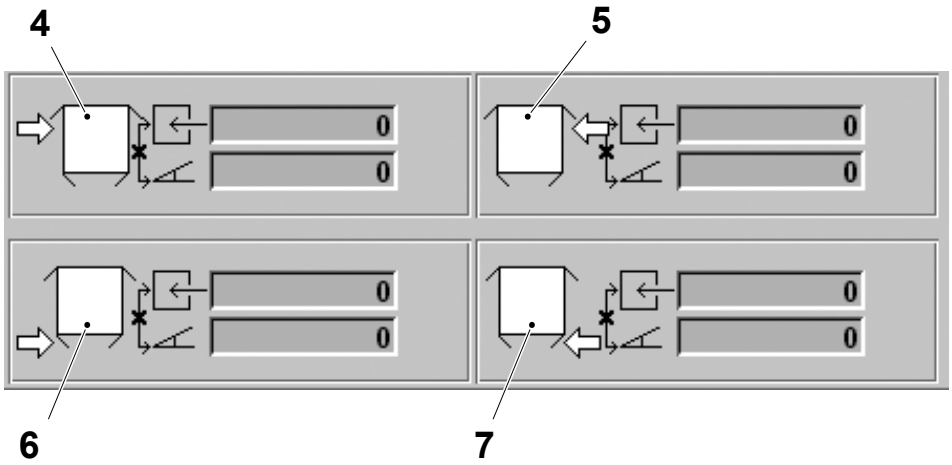

4 Lower LH nozzle icon
5 Lower RH nozzle icon
6 Upper LH nozzle icon
7 Upper RH nozzle icon

(Cont'd)

TechPub_2614345_0107 - 0502_3048169_01.fm

(Cont'd)

e) Use the ARROW buttons (8) to adjust the temperature setting.

f) Press the EXIT button (9).

Note! The flap heater temperature is a parameter set in the recipe and depends on the product and the packaging material being produced. The values in the table are provided as a reference only.

Flap Heating	Temperature (ºC)
Top (left and right)	450 ±70
Bottom (left and right)	500 ±70

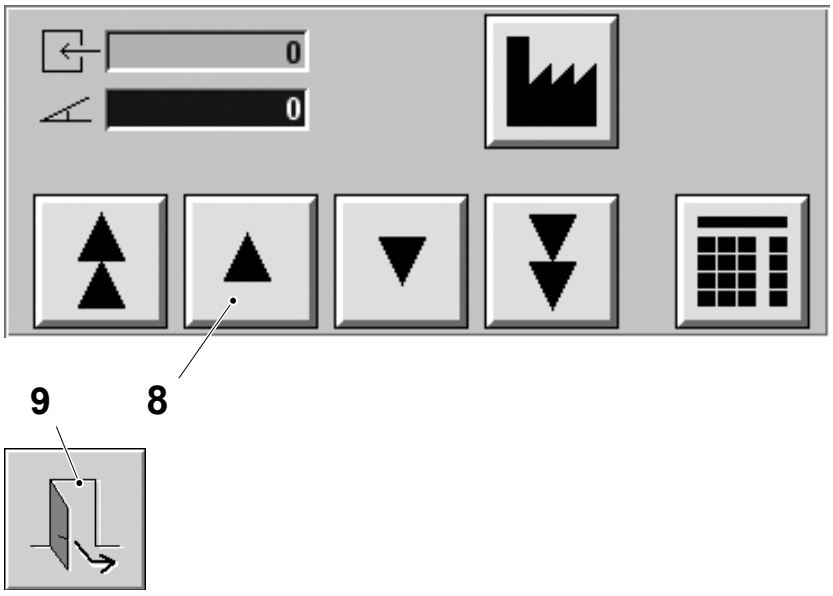

8 Arrow button
9 Exit button

TechPub_2614345_0107 - 0502_3048169_01.fm

5.2.5-3 Heating Chamber - Set Flap Heater Pressure

Machine Status	PREPARATION
SPC Reference	2867510-0100

The pressure of the flap heaters is controlled by the I/P transducers, see 2.3.1-2 Pneumatic System - Set I/P Transducer.

TechPub_2614345_0107 - 0502_3048169_01.fm

5.2.5-4 Heating Chamber - Overhaul

Machine Status	Mains Power OFF Air OFF Steam ON Water OFF
SPC Reference	2867510-0100

DANGER

Hazardous voltage.
Follow the Safety precautions.

WARNING

Burn hazard.
Nozzles might be hot.

(Cont'd)

TechPub_2614345_0107 - 0502_3048169_01.fm

(Cont'd)

Change Nozzles (Valid for Portion Packages)

a) Unscrew and remove the nozzles (1).

b) Remove the nuts (2) and extract upwards the heating elements (3) with the nozzles (4), then unscrew and remove the nozzles (4).

c) Check that the air holes in the nozzles (1) and (4) are not clogged. Clean with a brass wire brush if necessary.

d) Inspect the nozzles for damage and change them if necessary.

Note! When assembling, tighten the nozzles (1) and (4) with a torque of 110 Nm. The nozzles (4) must be tightened on the heating elements (3) before fitting them back in the heating chamber.

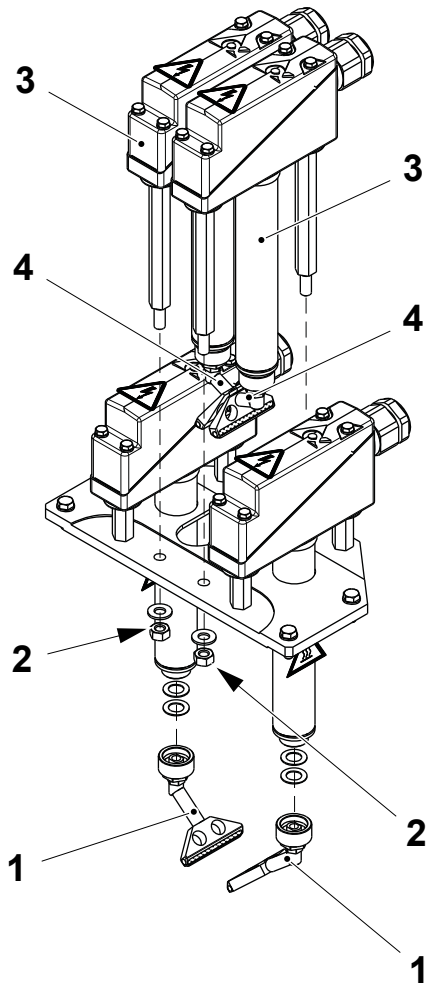

1 Nozzle
2 Nut
3 Heating element
4 Nozzle

(Cont'd)

TechPub_2614345_0107 - 0502_3048169_01.fm

(Cont'd)

Change Nozzles (Valid for Family Packages)

a) Unscrew and remove the nozzles (1).

b) Remove the screws (2) and extract upwards the heating elements (3) with the nozzles (4), then unscrew and remove the nozzles (4).

c) Check that the air holes in the nozzles (1) and (4) are not clogged. Clean with a brass wire brush if necessary.

d) Inspect the nozzles for damage and change them if necessary.

Note! When assembling, tighten the nozzles (1) and (4) with a torque of 110 Nm. The nozzles (4) must be tightened on the heating elements (3) before fitting them back in the heating chamber.

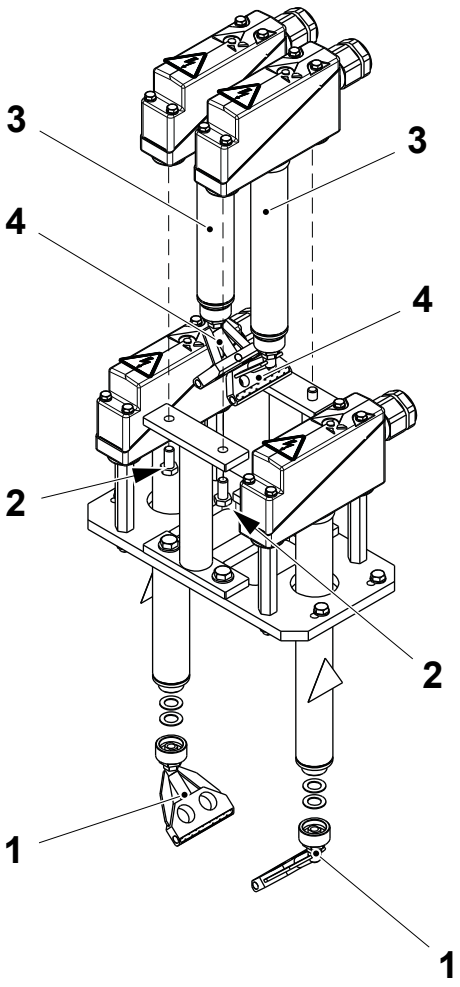

1 Nozzle
2 Screw
3 Heating element
4 Nozzle

(Cont'd)

TechPub_2614345_0107 - 0502_3048169_01.fm

(Cont'd)

Change Heating Elements

a) Remove the screws (1) and lift off the top covers (2).

b) Remove the seals (3).

c) Disconnect the male plug (4)

d) Disconnect the wires from the terminal block (5).

e) Disconnect the air tube (6).

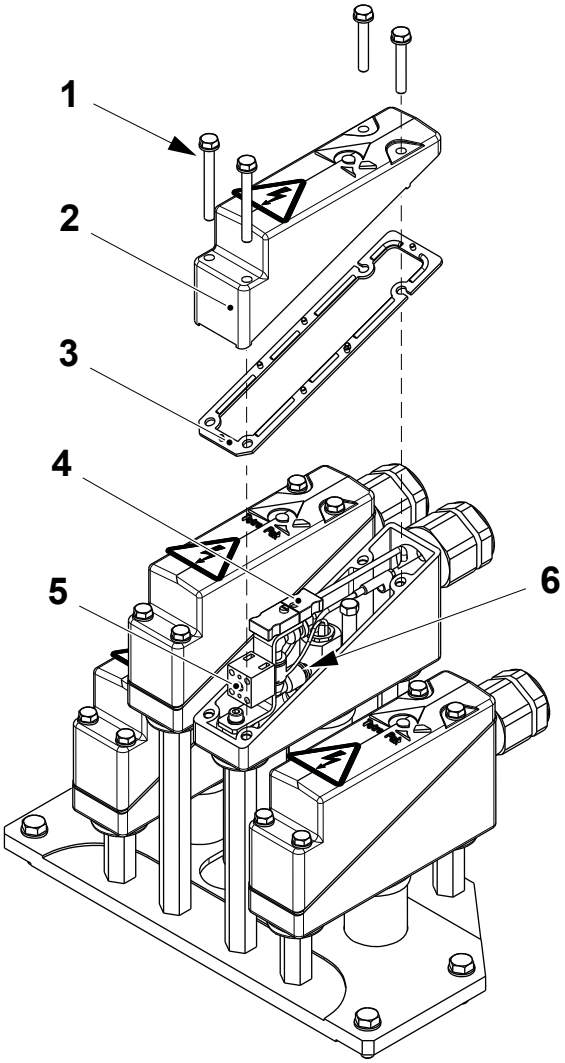

1 Screw
2 Top cover
3 Seal
4 Male plug
5 Terminal block
6 Air tube

(Cont'd)

TechPub_2614345_0107 - 0502_3048169_01.fm

(Cont'd)

f) Remove the screw (7) and the bracket (8).

g) Loosen the screw (9).

h) Extract the heating element (10). Change if necessary.

i) Remove and change the O-ring (11), if necessary.

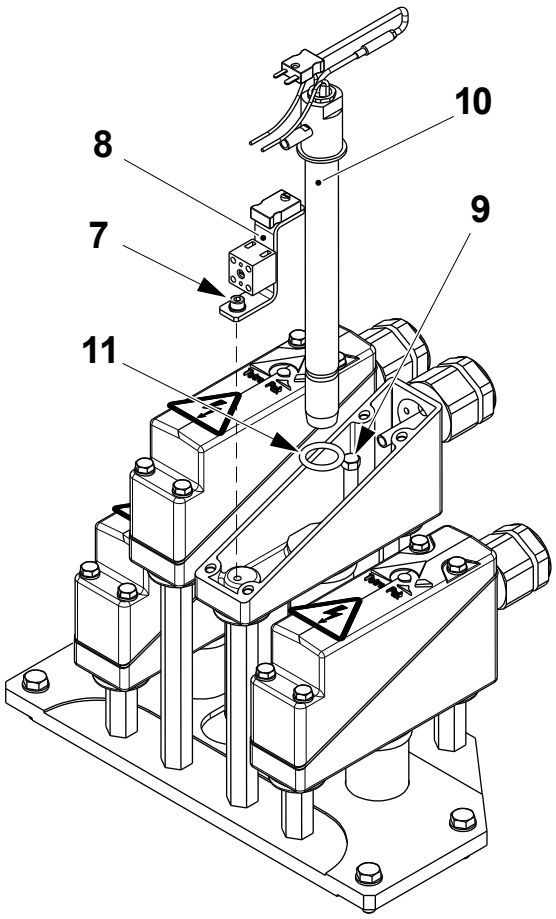

7 Screw
8 Bracket
9 Screw
10 Heating element
11 O-ring

(Cont'd)

TechPub_2614345_0107 - 0502_3048169_01.fm

(Cont'd)

CAUTION
Risk of damage to the equipment.
When assembling, pay attention to fit the seal (4): if wrongly fitted or crushed, water can seep into the heating unit.

j) Assemble in the reverse order paying attention to not damage the seal (3).

k) Tighten the screws (1) until the mechanical stops (12) on the top cover (2) touch the base (13) of the heating element. Apply a torque of 9.3 Nm.

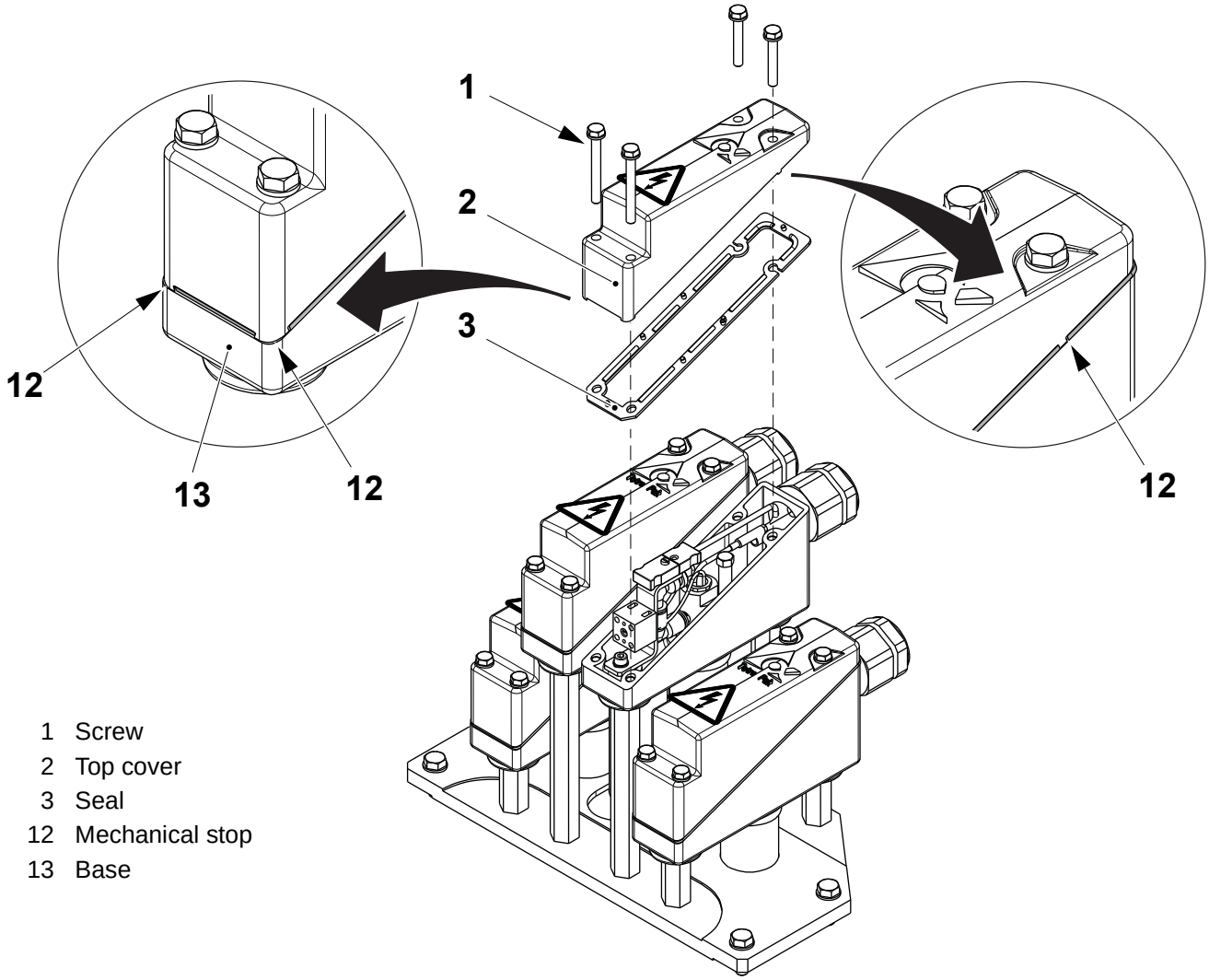

1 Screw
2 Top cover
3 Seal
12 Mechanical stop
13 Base

TechPub_2614345_0107 - 0502_3048169_01.fm

5.3 Discharge Device

SPC Reference	1346816-0400 2914617-0100

5.3.1 Outfeed Unit

5.3.1-1 Outfeed Unit - Check Carriers

Machine Status	Mains Power OFF Air OFF Steam ON Water OFF
SPC Reference	2914620-0100 1349502-0400

Three types of maintenance are possible on the carriers: on the single carrier, on the carrier fingers or the complete overhaul (see the following pages).

Note! In Portion Packages machines the outfeed unit is supplied in two different configurations, “normal” outfeed or “lower” outfeed, according to the volume performed, see the table below.

Outfeed Type	**Package**
Normal outfeed	TBA 200 B - TBA 250 B
Normal outfeed	TBA 125 S - TBA 200 S (T-order 21215/00001 to 21215/00069)
Lower outfeed	TBA 125 S - TBA 200 S (T-order 21215/00070 and above)
Lower outfeed	TBA 250 S - TBA 200 M

(Cont'd)

TechPub_2614345_0107 - 0503_3048170_01.fm

(Cont'd)

Single Carrier Maintenance

Check that each carrier (1) moves freely with no horizontal play in its bushings. If you find a defective carrier, proceed as follows:

a) Rotate the drum (2) to access easily the carrier to be replaced.

b) Remove the two screws (3) and slide off the carrier assembly (4).

c) Change the carrier, see Drum Assembly Overhaul on page 5-158.

Portion Packages (normal outfeed)

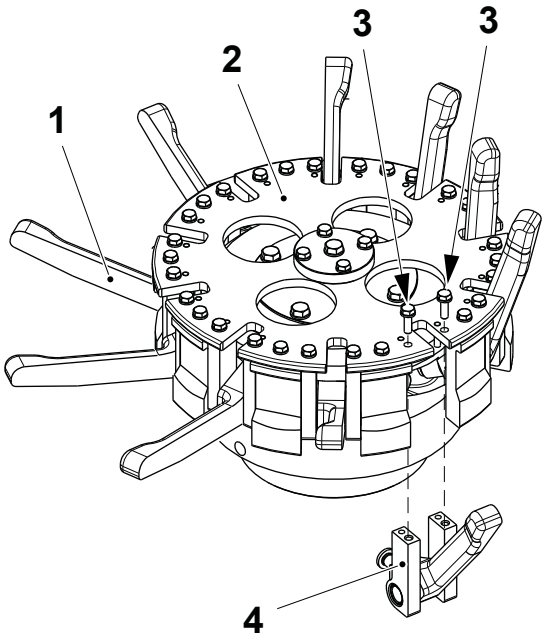

Family Packages

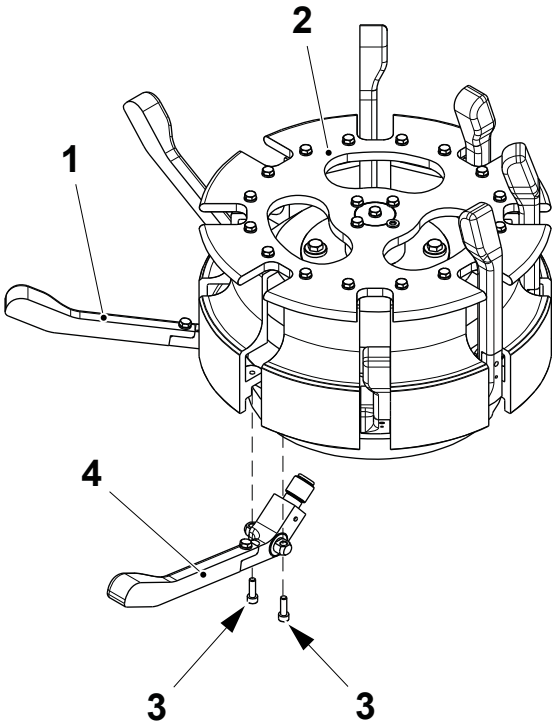

1 Carrier
2 Drum
3 Screw
4 Carrier assembly

(Cont'd)

TechPub_2614345_0107 - 0503_3048170_01.fm

(Cont'd)

Note! For Portion Packages with lower outfeed, remove before the screws (5) and the guides (6) that are beside the carrier assembly (4).

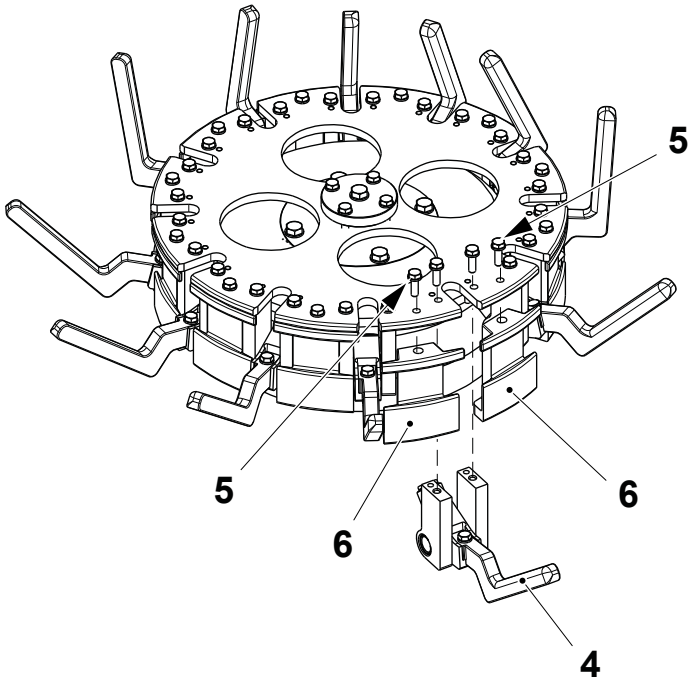

4 Carrier assembly
5 Screw
6 Guide

(Cont'd)

TechPub_2614345_0107 - 0503_3048170_01.fm

(Cont'd)

Carrier Finger Maintenance

a) Rotate the drum to access easily the carrier to be replaced.

b) Remove the screw (1), the bushing (2) and change the finger (3) of the carrier.

c) Assemble in the reverse order.

Family Packages

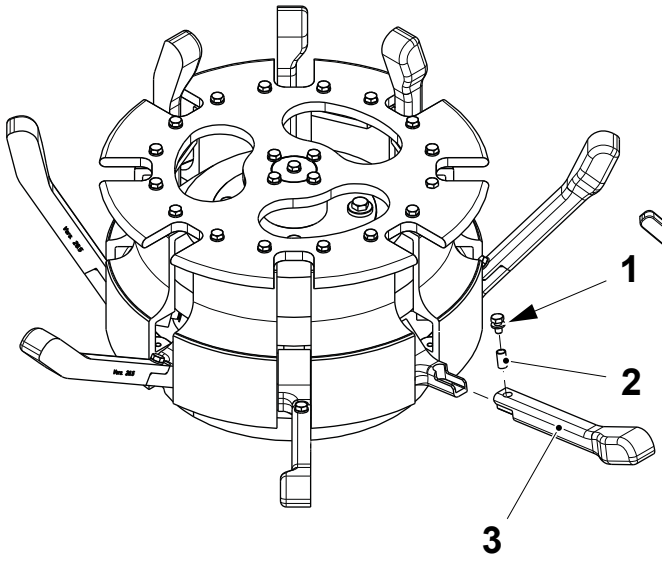

Portion Packages (lower outfeed)

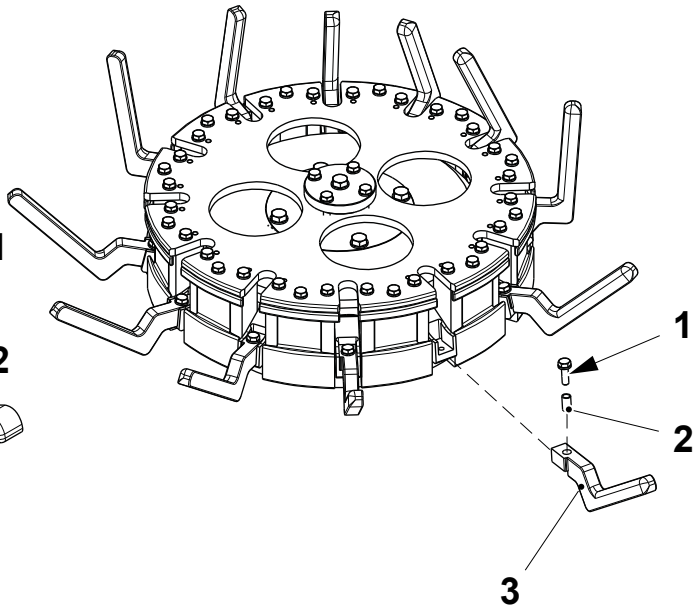

1 Screw
2 Bushing
3 Finger

(Cont'd)

TechPub_2614345_0107 - 0503_3048170_01.fm

(Cont'd)

Drum Assembly Overhaul

Note! Valid for Portion Packages with normal outfeed.

When the maintenance operations are required on all the carriers, remove the drum (1) and overhaul the carriers on the work bench. Proceed as follows:

a) Remove the screw (2).

b) Remove the four screws (3) and the flange (4).

c) Rotate the drum (1) to access the four screws (5) through the slots (6).

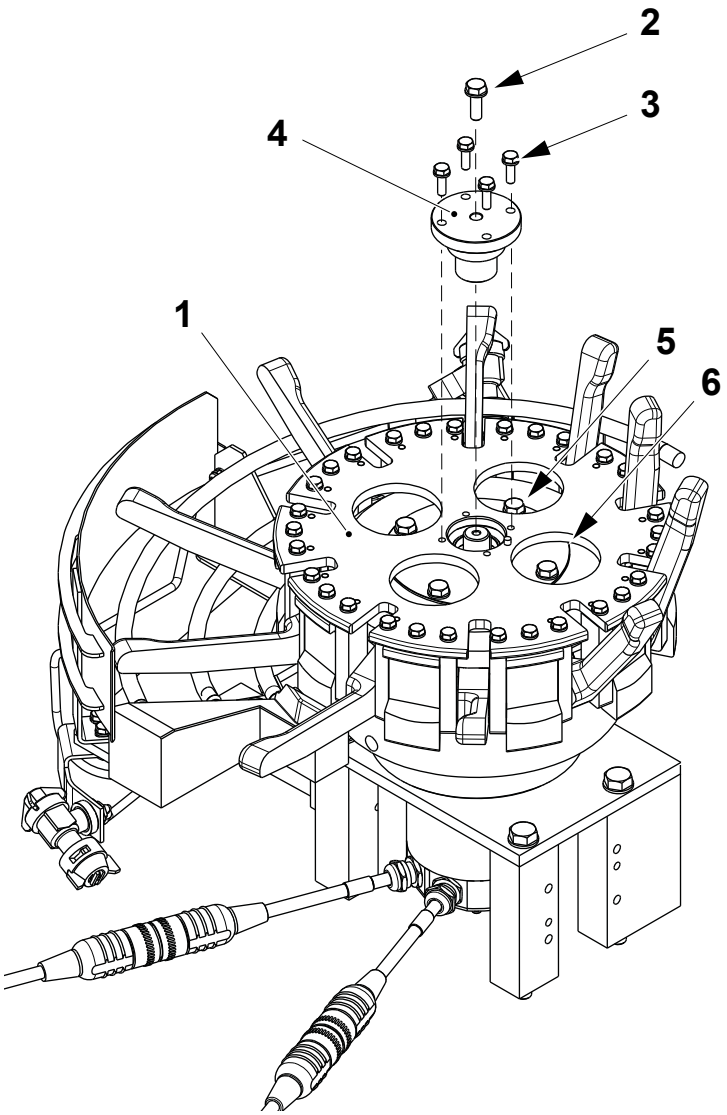

1 Drum
2 Screw
3 Screw
4 Flange
5 Screw
6 Slot

(Cont'd)

TechPub_2614345_0107 - 0503_3048170_01.fm

(Cont'd)

CAUTION
Risk of damage to the equipment.
The drum (1) weights approximately 20 Kg. It must be moved by two people.

d) Remove the four screws (5) and lift the drum (1) with the cam (7).

e) Place the drum (1) on the work bench.

Note! When assembling centre the cam (7) by the parallel pin (8).

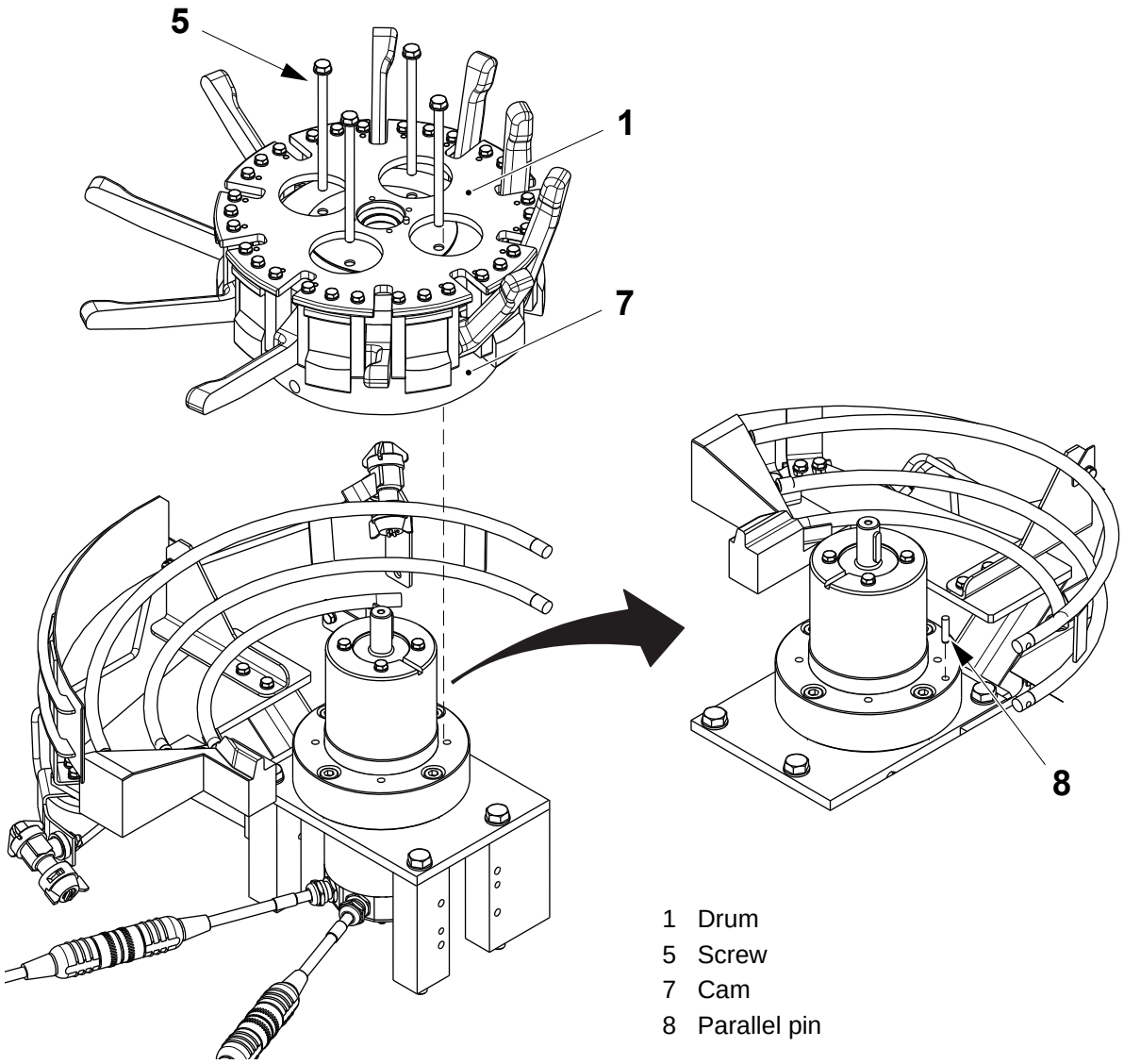

1 Drum
5 Screw
7 Cam
8 Parallel pin

(Cont'd)

TechPub_2614345_0107 - 0503_3048170_01.fm

(Cont'd)

f) Remove the screws (9) and the carrier assembly (10).

Note! Slightly beat upwards the parallel pins (11); when assembling the carrier assembly (10) centre the parallel pins (11) and drive them again.

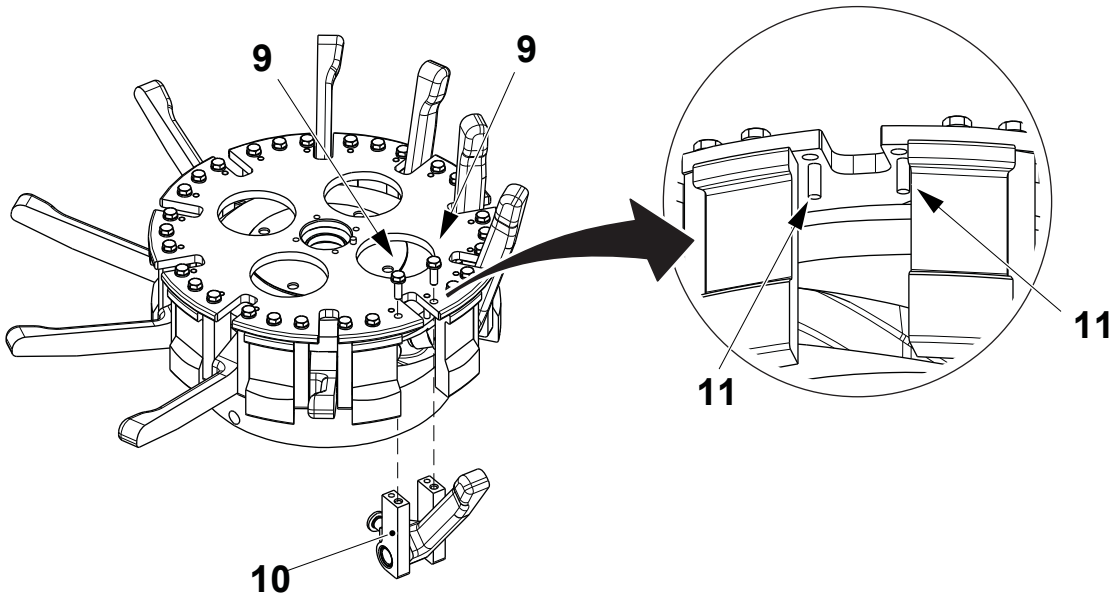

9 Screw
10 Carrier assembly
11 Parallel pin

(Cont'd)

TechPub_2614345_0107 - 0503_3048170_01.fm

(Cont'd)

g) Remove the pin (12) and pull out the shaft (13), the bushing (14) and the roller (15). Change the bushing (14) if necessary.

h) Remove the shaft (16) from the side plates (17). Change the bushings (18) if necessary.

i) Change the carrier (19) if necessary.

j) Assemble in the reverse order and repeat on the other carriers.

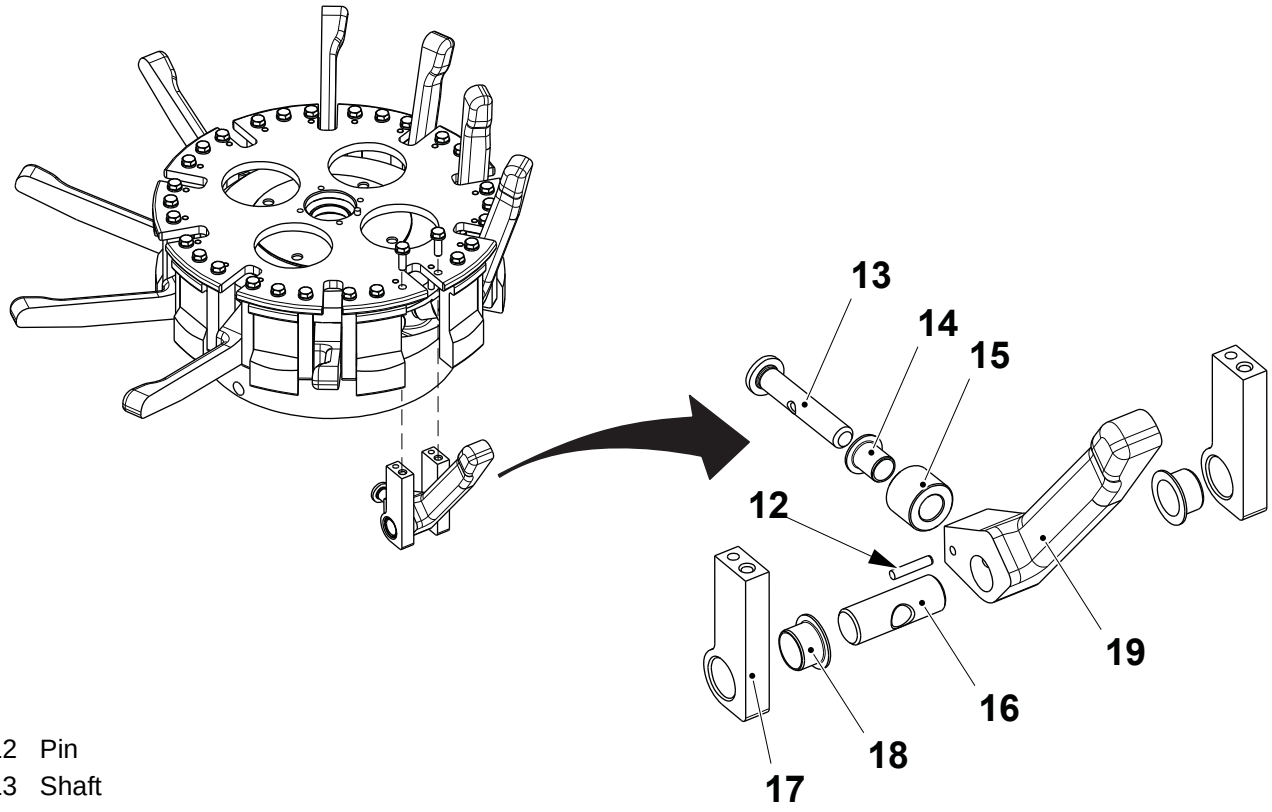

12 Pin
13 Shaft
14 Bushing
15 Roller
16 Shaft
17 Side plate
18 Bushing
19 Carrier

(Cont'd)

TechPub_2614345_0107 - 0503_3048170_01.fm

(Cont'd)

Note! Valid for Portion Packages with lower outfeed.

When the maintenance operations are required on all the carriers, remove the drum (1) and overhaul the carriers on the work bench. Proceed as follows:

a) Remove the screw (2).

b) Remove the four screws (3) and the flange (4).

c) Rotate the drum (1) to access the four screws (5) through the slots (6).

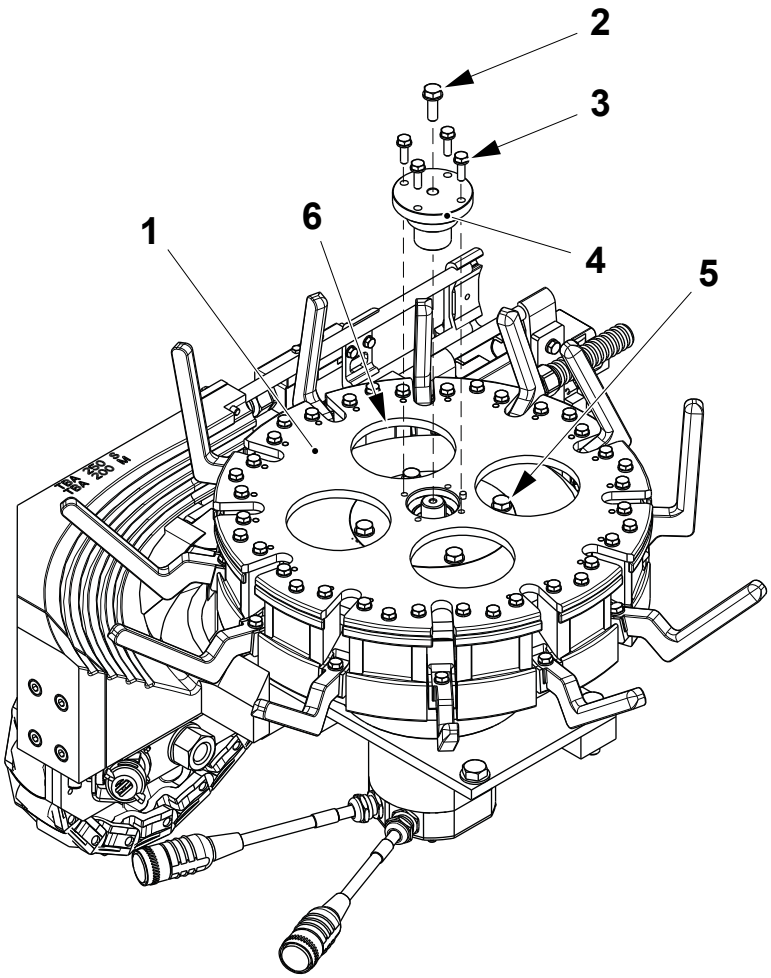

1 Drum
2 Screw
3 Screw
4 Flange
5 Screw
6 Slot

(Cont'd)

TechPub_2614345_0107 - 0503_3048170_01.fm

(Cont'd)

CAUTION
Risk of damage to the equipment.
The drum (1) weights approximately 20 Kg. It must be moved by two people.

d) Remove the four screws (5) and lift the drum (1) with the cam (7).

e) Place the drum (1) on the work bench.

Note! When assembling centre the cam (7) by the parallel pin (8).

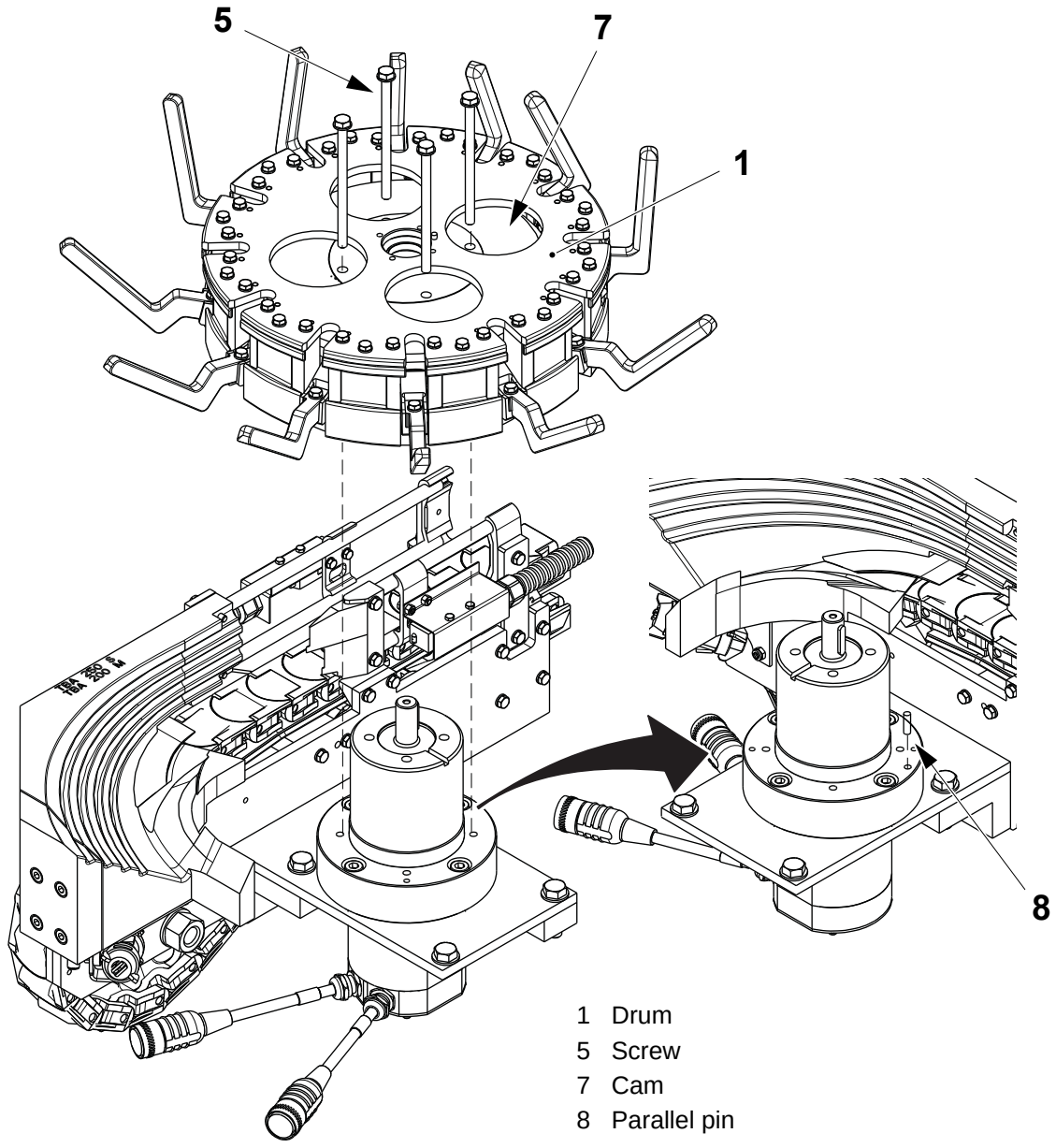

1 Drum
5 Screw
7 Cam
8 Parallel pin

(Cont'd)

TechPub_2614345_0107 - 0503_3048170_01.fm

(Cont'd)

f) Remove the screws (9) and the guides (10).

g) Remove the screws (11) and the carrier assembly (12).

Note! Slightly beat upwards the parallel pins (13); when assembling the carrier assembly (12) centre the parallel pins (13) and drive them again.

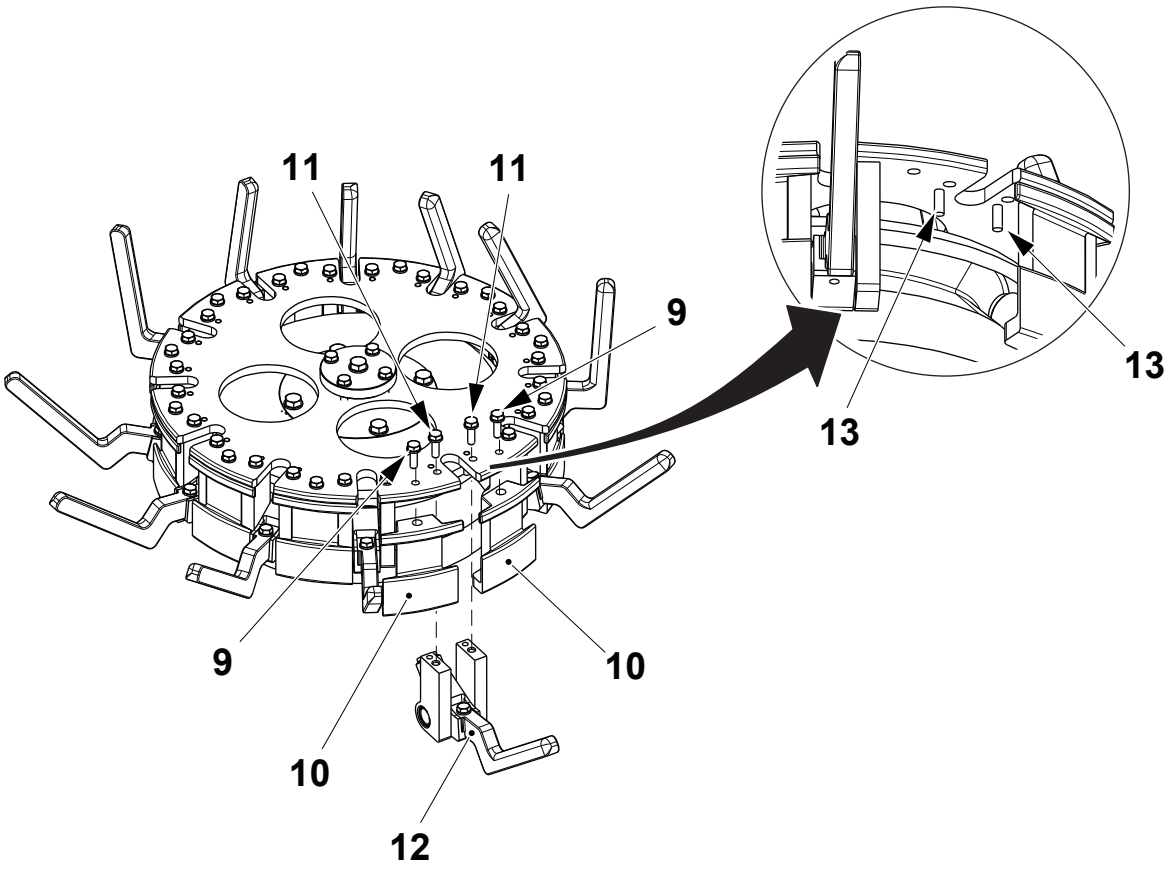

9 Screw
10 Guide
11 Screw
12 Carrier assembly
13 Parallel pin

(Cont'd)

TechPub_2614345_0107 - 0503_3048170_01.fm

(Cont'd)

h) Remove the pin (14) and pull out the shaft (15), the bushing (16) and the roller (17). Change the bushing (16) if necessary.

i) Remove the shaft (18) from the side plates (19). Change the bushings (20) if necessary.

j) Change the carrier (21) if necessary.

k) Assemble in the reverse order and repeat on the other carriers.

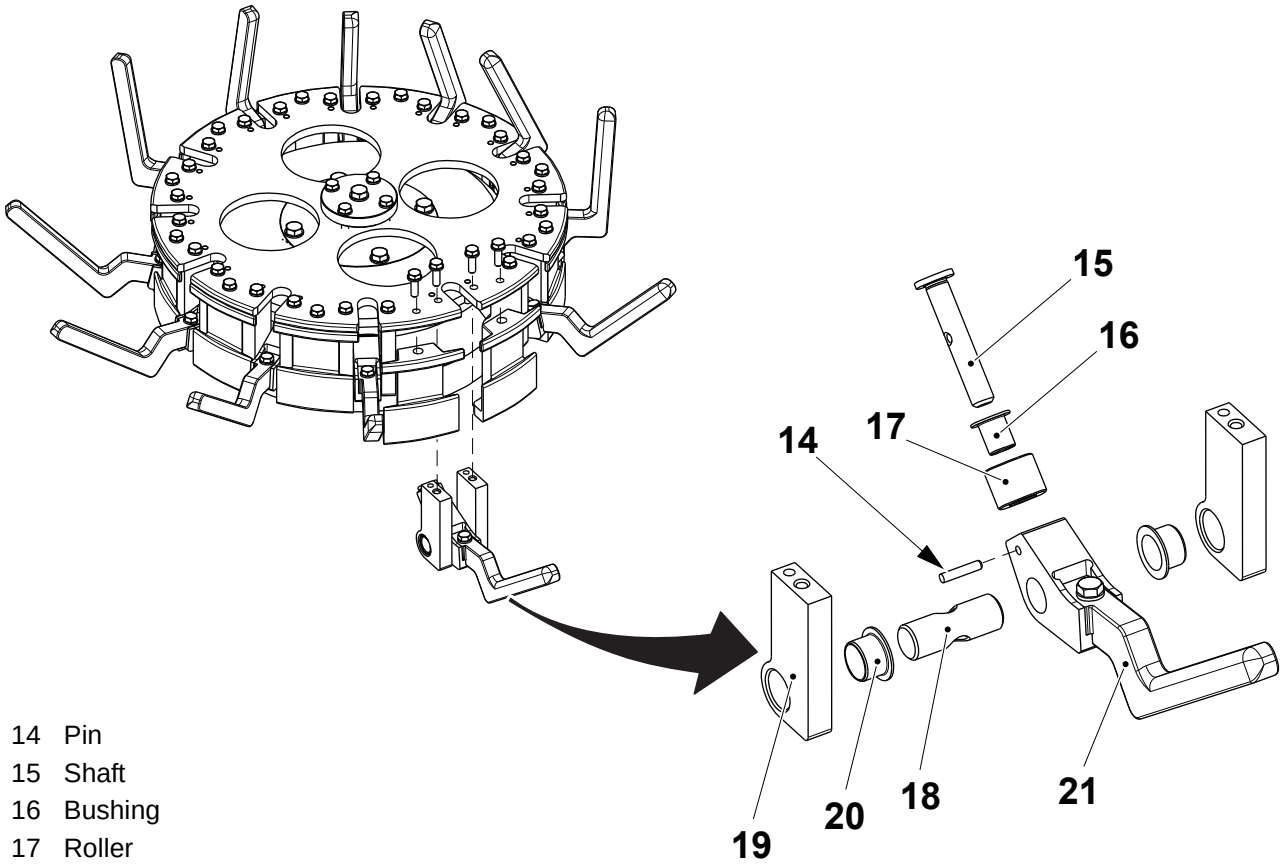

14 Pin
15 Shaft
16 Bushing
17 Roller
18 Shaft
19 Side plate
20 Bushing
21 Carrier

(Cont'd)

TechPub_2614345_0107 - 0503_3048170_01.fm

(Cont'd)

Note! Valid for Family Packages only.

When the maintenance operations are required on all the carriers, remove the drum (1) and overhaul the carriers on the work bench. Proceed as follows:

a) Remove the screw (2).

b) Rotate the drum (1) to access the four screws (3) through the slots.

Note! Only for TBA 1000 Sq, remove the screws (4) and (5) and remove the brush support (6).

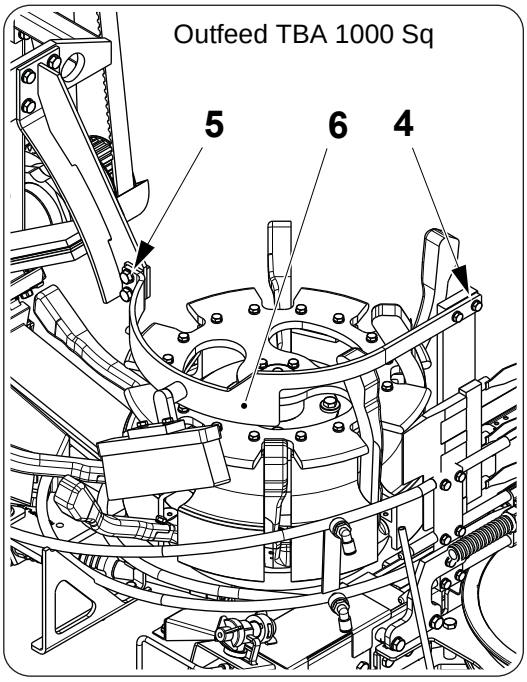

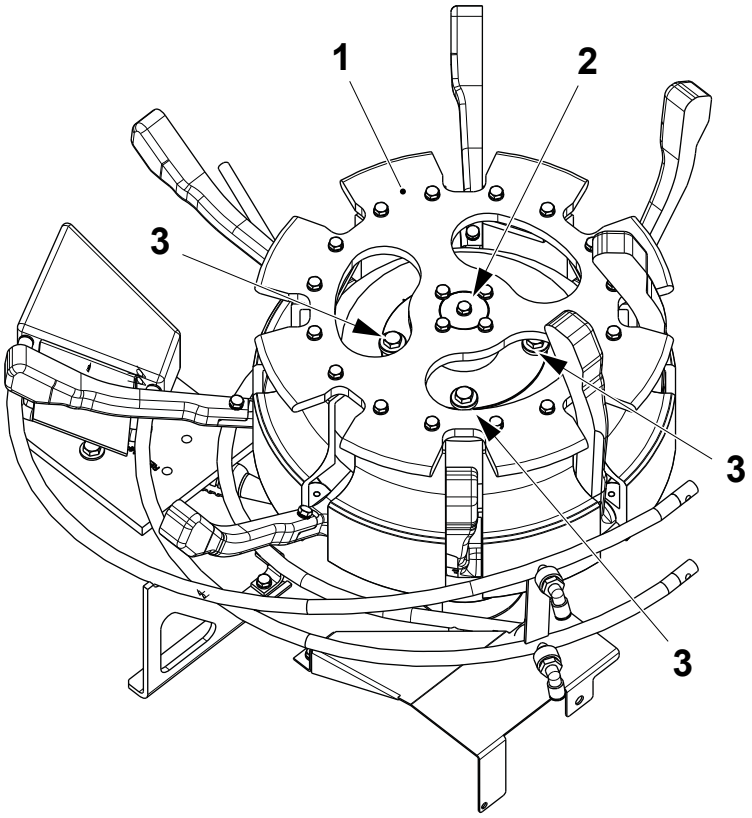

1 Drum
2 Screw
3 Screw
4 Screw
5 Screw
6 Brush support

(Cont'd)

TechPub_2614345_0107 - 0503_3048170_01.fm

(Cont'd)

CAUTION
Risk of damage to the equipment.
The drum (1) weights approximately 20 Kg. It must be moved by two people.

c) Remove the four screws (3) and lift the drum (1) with the cam (7).

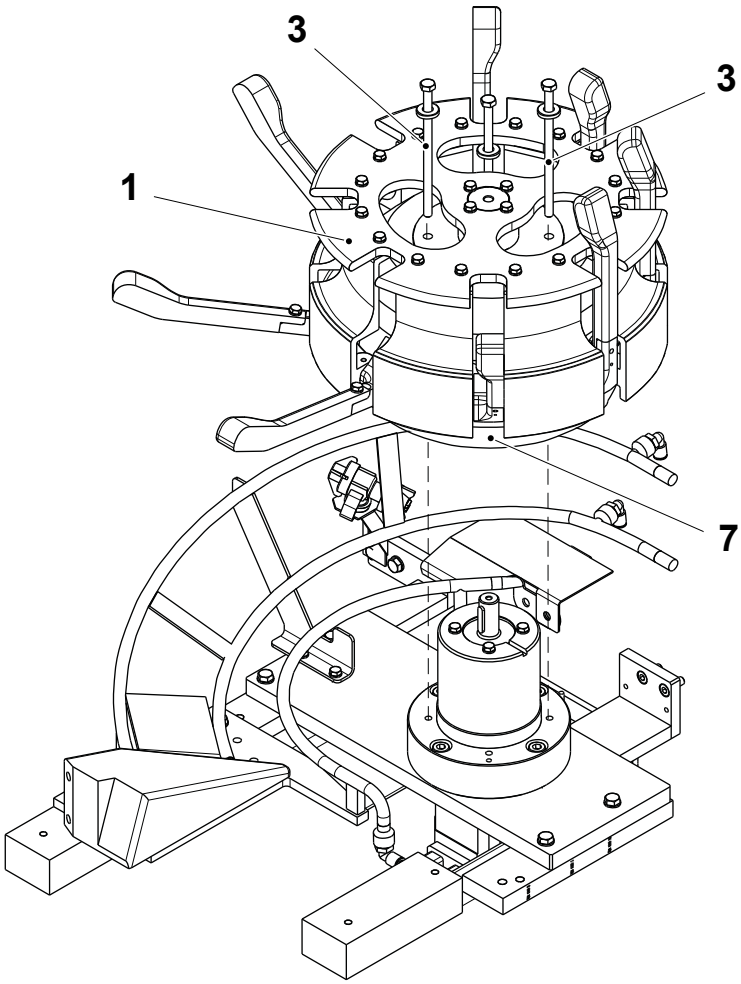

1 Drum
3 Screw
7 Cam

(Cont'd)

TechPub_2614345_0107 - 0503_3048170_01.fm

(Cont'd)

CAUTION
Risk of damage to the equipment.
When placing the upset drum (1) on the work bench, pay attention to not damage the carriers (8). Use a piece of wood (9) to keep the drum assembly raised a bit.

d) Place the drum (1) on the work bench.

e) Turn upside down the drum (1).

f) Remove the screws (10) and the carriers (8).

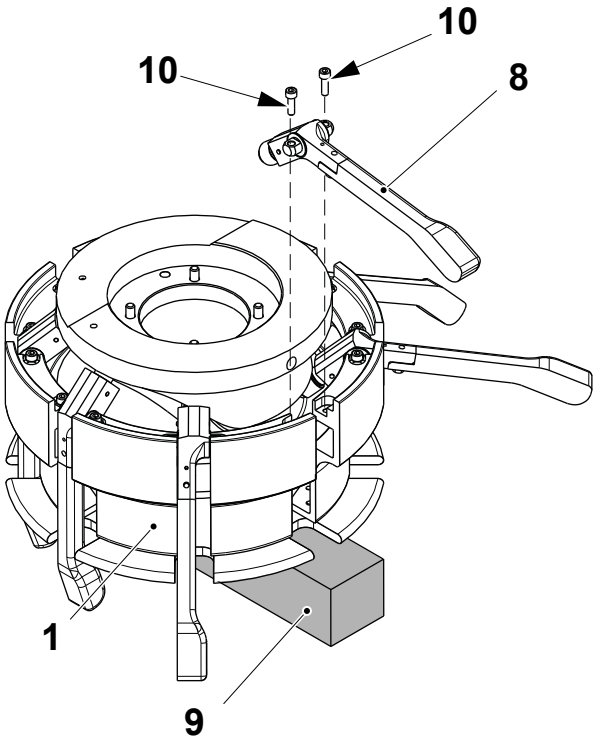

1 Drum
8 Carrier
9 Piece of wood
10 Screw

(Cont'd)

TechPub_2614345_0107 - 0503_3048170_01.fm

(Cont'd)

g) Remove the shaft (11) and push out the pin (12).
h) Remove the shaft (13) and the spacer (14).
i) Change the bushings (15) and the roller (16) if necessary.
j) Remove and change the bushings (17), if necessary.
k) Assemble in the reverse order.

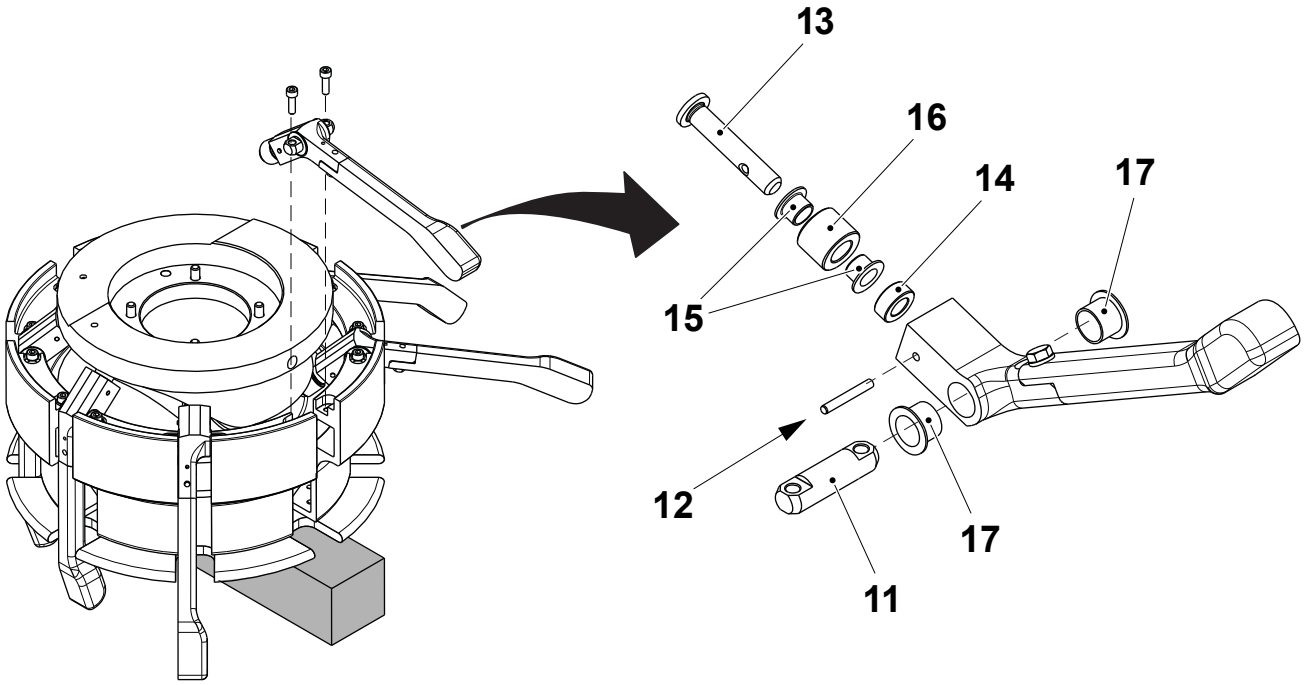

11 Shaft
12 Pin
13 Shaft
14 Spacer
15 Bushing
16 Roller
17 Bushing

TechPub_2614345_0107 - 0503_3048170_01.fm

5.3.1-2 Outfeed Unit - Change Motor

Machine Status	Mains Power OFF Air OFF Steam ON Water OFF
SPC Reference	2914620-0100 1349502-0400

a) Remove the drum assembly, see 5.3.1-3 Outfeed Unit - Change Rollers, section Drum Assembly Overhaul, steps a) to d).

(Cont'd)

TechPub_2614345_0107 - 0503_3048170_01.fm

(Cont'd)

b) Disconnect the cables (1) and the air connection (2).

c) Remove the screws (3).

d) Holding the motor (4), remove the screws (5) and the support (6).

e) Slip off the motor (4) with the gearbox assembled and move it on the work bench.

Note! When assembling, centre the support (6) by the pins (7).

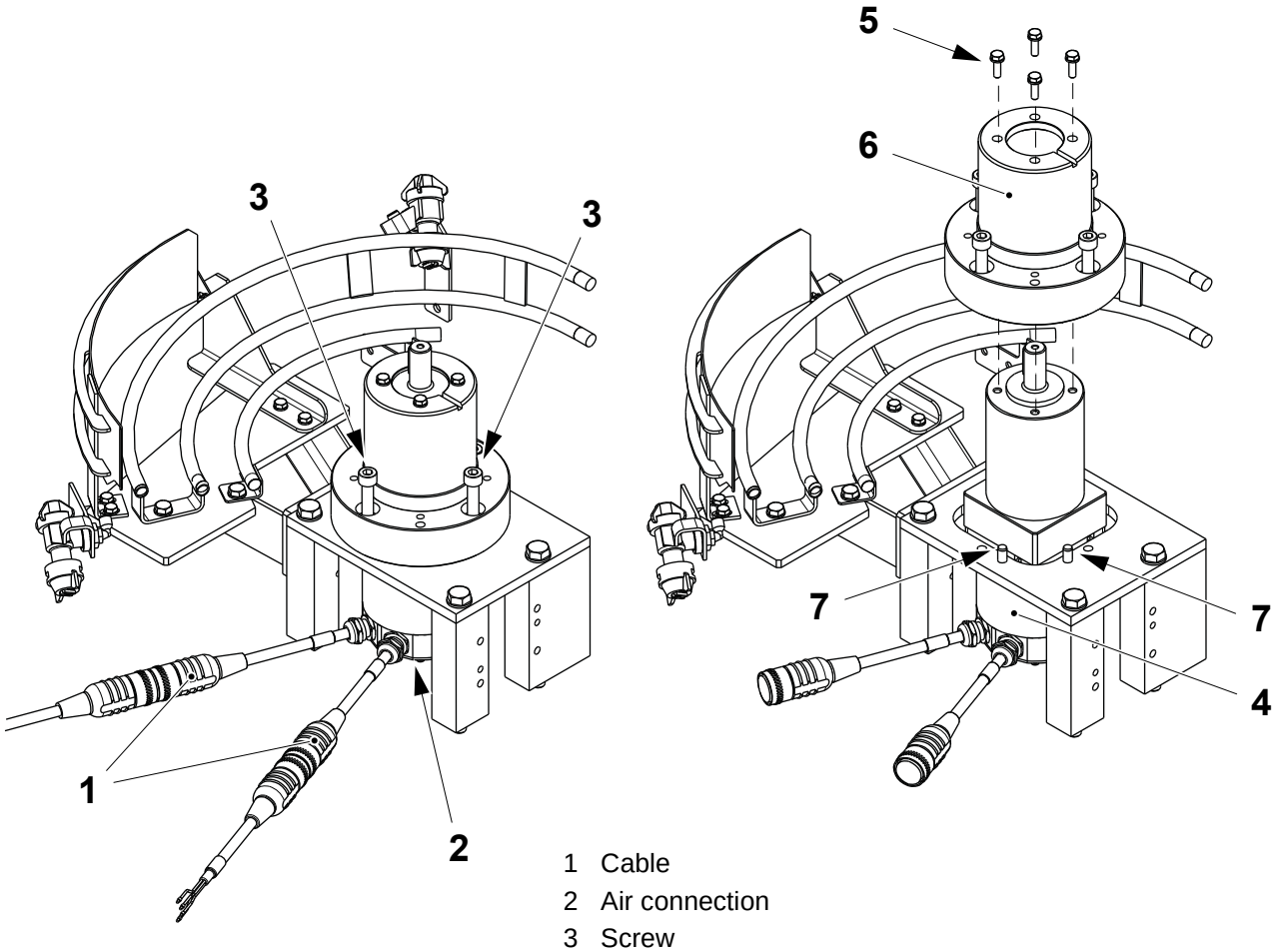

1 Cable
2 Air connection
3 Screw
4 Motor
5 Screw
6 Support
7 Pin

(Cont'd)

TechPub_2614345_0107 - 0503_3048170_01.fm

(Cont'd)

f) Remove the plug (8).

g) Insert an allen key through the hole (9) and loosen the screw (10).

h) Remove the screws (11) and separate the motor (4) from the gearbox (12).

i) Change the motor (4) if necessary.

j) Assemble in the reverse order.

Note! When assembling, tighten the screw (10) with a torque of 11 Nm.

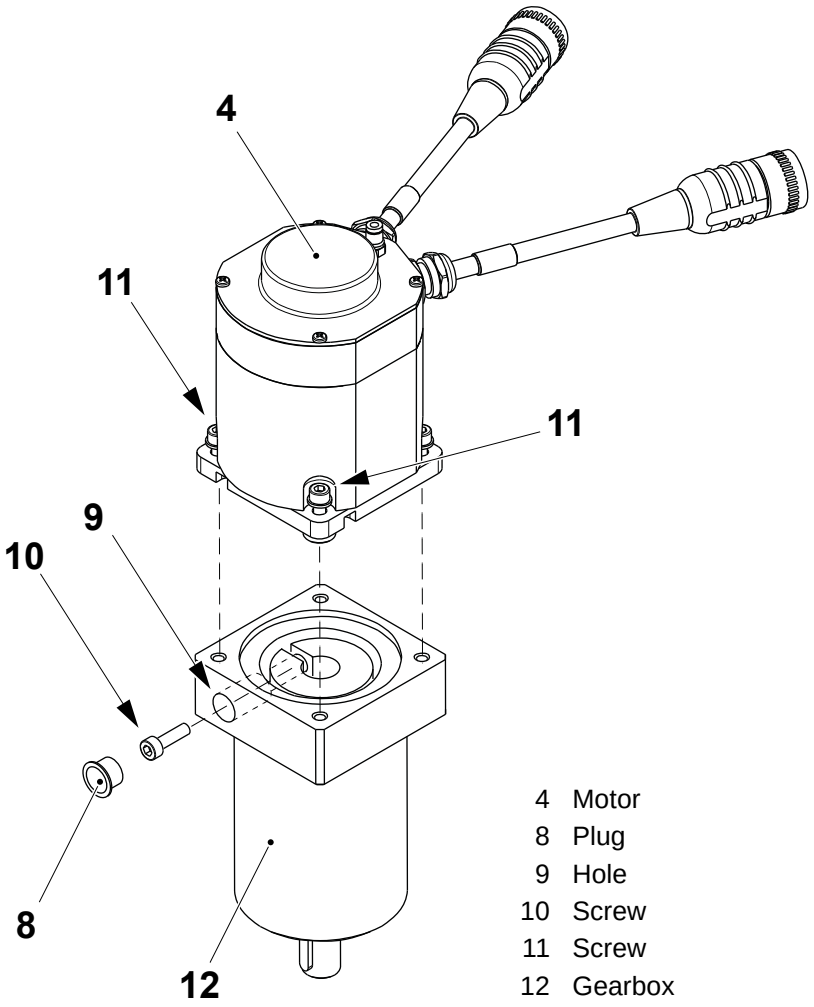

4 Motor
8 Plug
9 Hole
10 Screw
11 Screw
12 Gearbox

TechPub_2614345_0107 - 0503_3048170_01.fm

5.3.1-3 Outfeed Unit - Change Rollers

Machine Status	Mains Power OFF Air OFF Steam ON Water OFF
SPC Reference	1349502-0400

Note! Valid for TBA 1000 Sq only.

Check the rollers (1) for wear. If necessary remove the screws (2) and change the rollers (1) and the bushings (3).

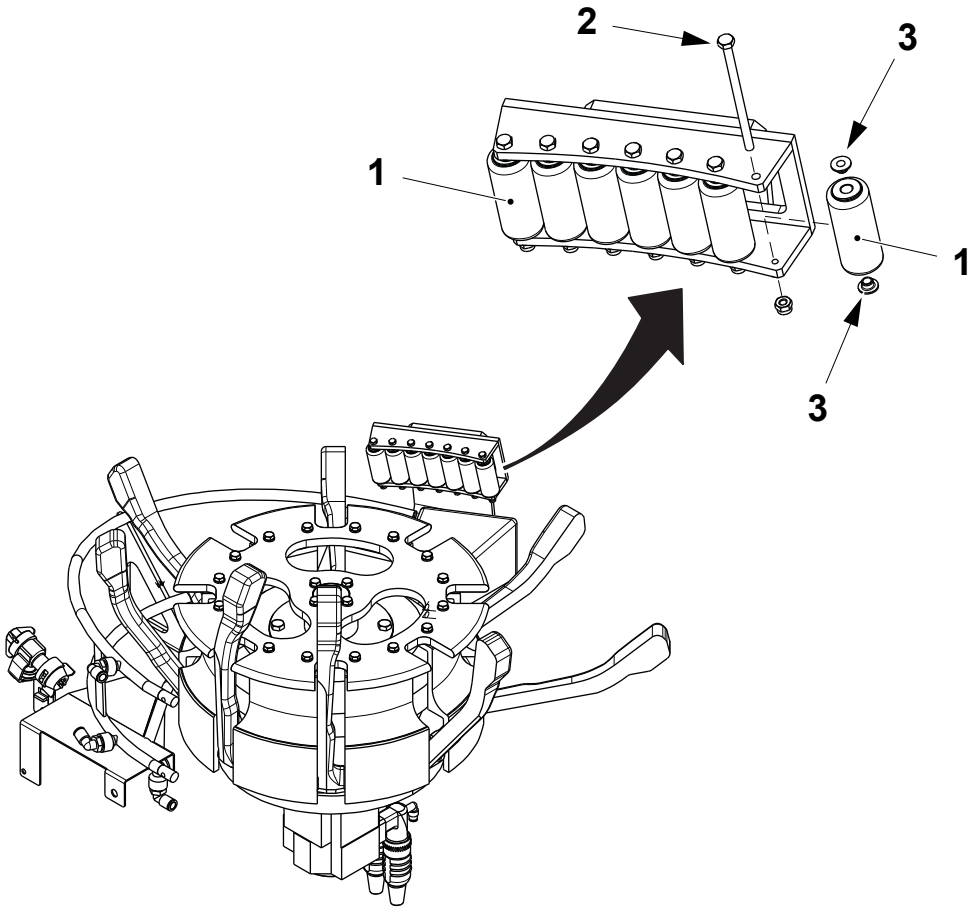

1 Screw
2 Roller
3 Bushing

TechPub_2614345_0107 - 0503_3048170_01.fm

5.3.1-4 Outfeed Unit - Change Brush

Machine Status	Mains Power OFF Air OFF Steam ON Water OFF
SPC Reference	1349502-0400

Note! Valid for TBA 1000 Sq only.

Check the brush (1) for wear. If necessary remove the screws (2) and change the brush (1).

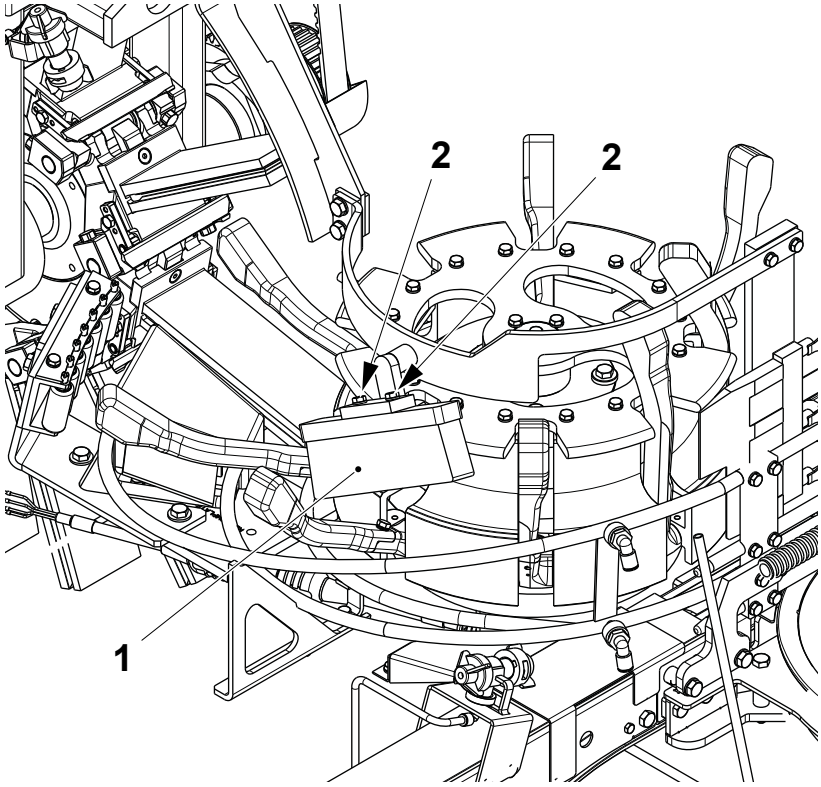

1 Screw
2 Brush

TechPub_2614345_0107 - 0503_3048170_01.fm

5.3.2 Curve Wheel

5.3.2-1 Curve Wheel - Set Counting Photocells

Machine Status	Mains Power ON Air OFF Steam ON Water OFF
SPC Reference	2877411-0100 2696142-0100

a) The photocells are composed of one transmitter (1) and one receiver (2) and they must be positioned in front of each other.

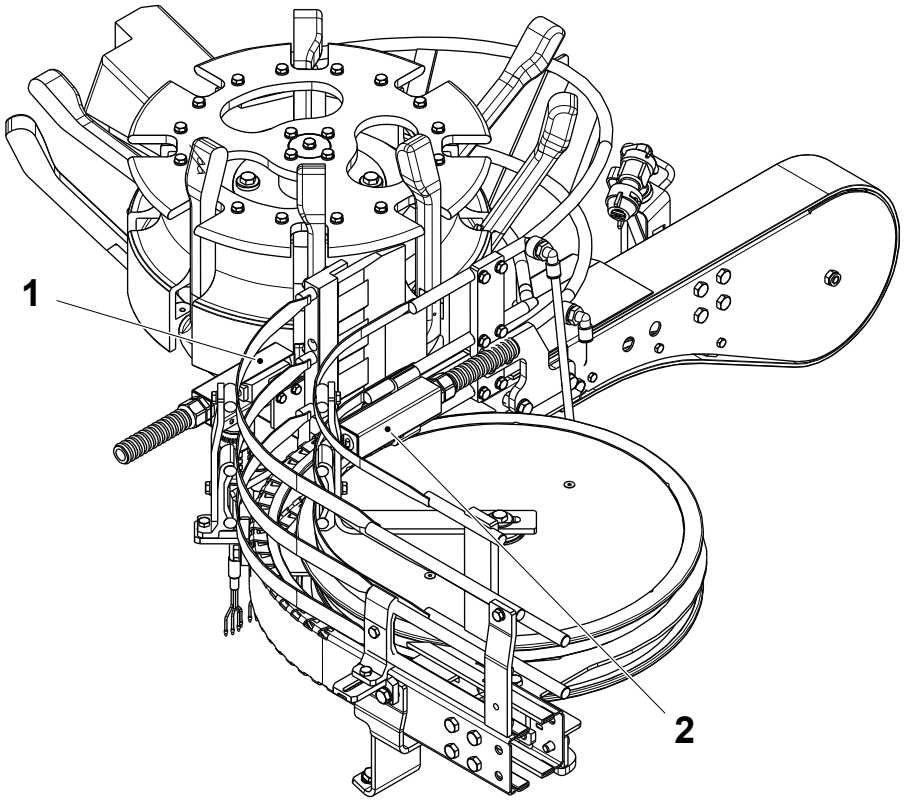

1 Transmitter
2 Receiver

(Cont'd)

TechPub_2614345_0107 - 0501_3048171_01.fm

(Cont'd)

b) Open the cover (3) on the receiver photocell (2).

c) Make sure that the receiver photocell (2) is set to PNP (positive logic) and L-ON (the signal will be sent when NO object is detected between the photocells), see figure below.

d) Check the transmitter (1) and the receiver (2) photocells position, see figure below.

e) Begin without any object to be detected. Turn the sensitivity potentiometer (4) anti-clockwise (toward min.) and then clockwise until both the green LED (5) and the red LED (6) light up. To secure the setting turn clockwise the sensitivity potentiometer (4) just a little bit more.

f) Place the package to be detected between the photocells. Check that the green LED (5) comes on and the red LED (6) light goes off.

g) Close the cover (3) on the receiver photocell (2).

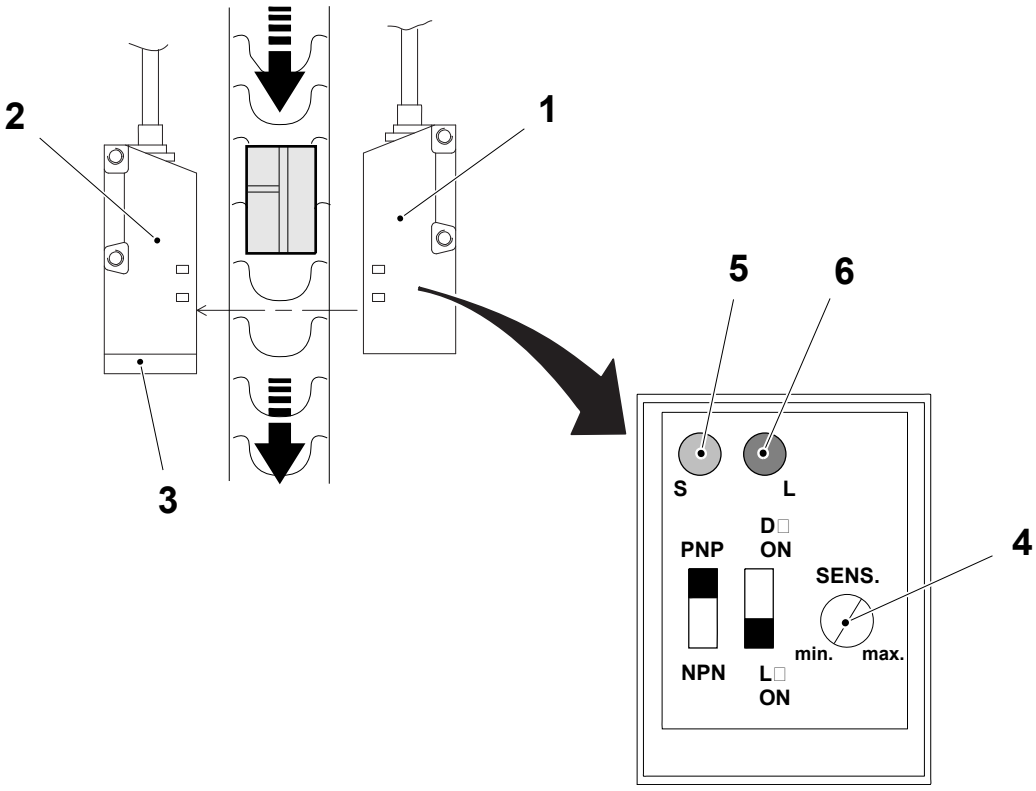

1 Transmitter
2 Receiver
3 Cover
4 Potentiometer
5 Green LED
6 Red LED

TechPub_2614345_0107 - 0501_3048171_01.fm

5.3.2-2 Curve Wheel - Overhaul

Machine Status	Mains Power OFF Air OFF Steam ON Water OFF
SPC Reference	2696142-0100 2877411-0100

Note! Valid for Family Packages.

a) Remove the chain from the curve wheel.

(Cont'd)

TechPub_2614345_0107 - 0501_3048171_01.fm

(Cont'd)

b) Remove the screws (1),(2) and the bracket (3).
c) Remove the washer (4) and the top wheel (5).
d) Remove and change the ball bearings (6).

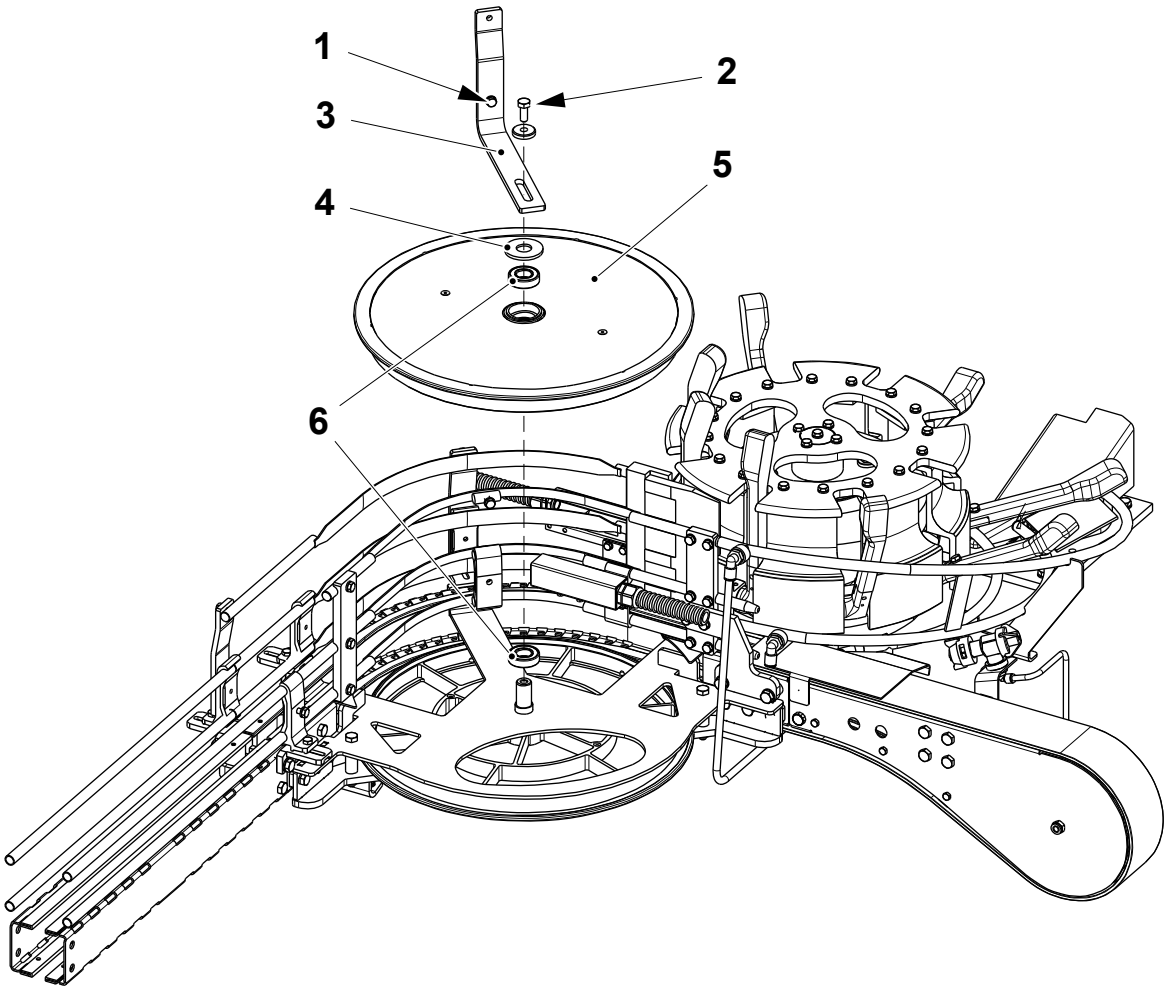

1 Screw
2 Screw
3 Bracket
4 Washer
5 Wheel
6 Ball bearings

(Cont'd)

TechPub_2614345_0107 - 0501_3048171_01.fm

(Cont'd)

e) Remove the screws (7) and the bottom panel (8) with the shaft (9).
f) Slip off the bottom wheel (10).
g) Remove and change the ball bearings (11).
h) Assemble in the reverse order.

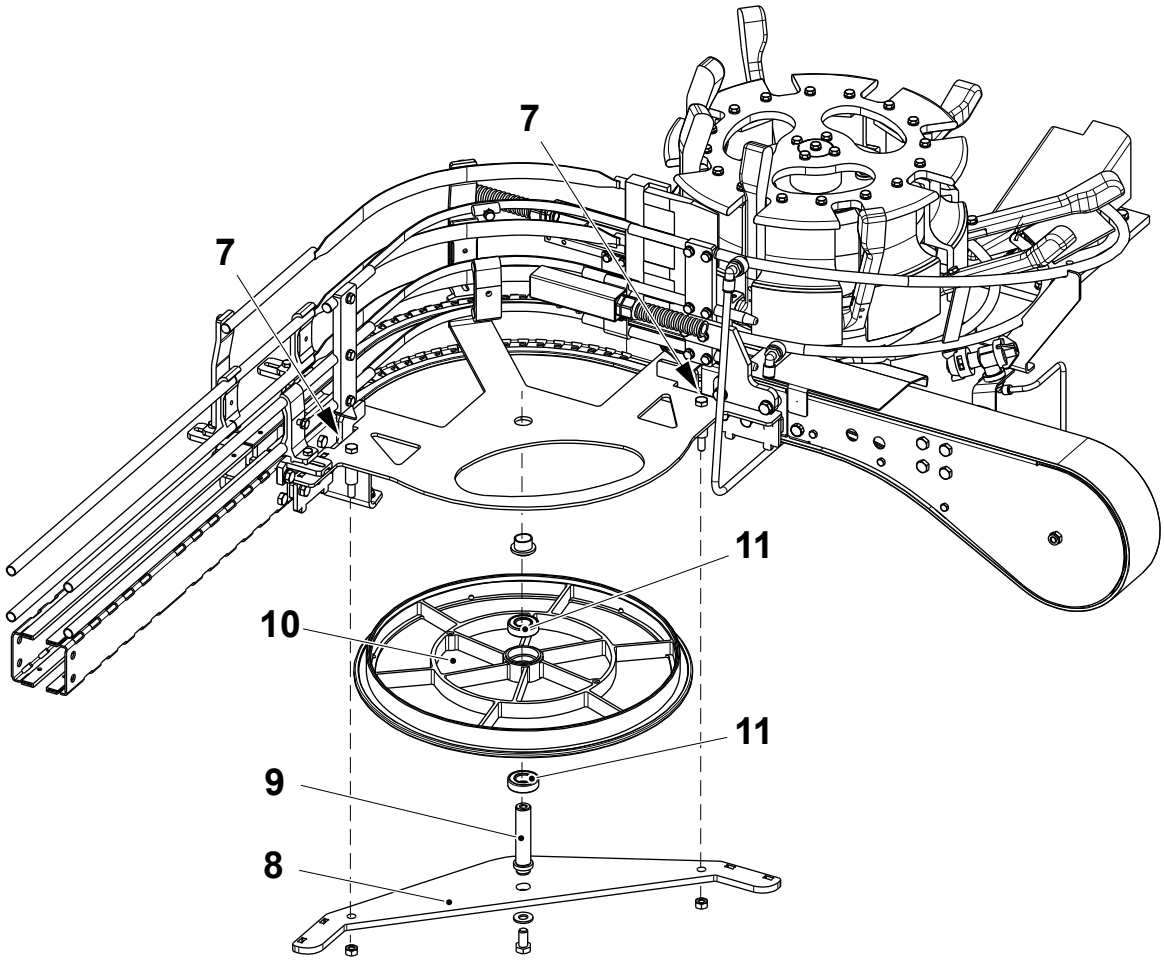

7 Screw
8 Bottom panel
9 Shaft
10 Wheel
11 Ball bearing

(Cont'd)

TechPub_2614345_0107 - 0501_3048171_01.fm

(Cont'd)

Note! Valid for Portion Packages.

a) Remove the screws (1) and (2).

b) Remove the support (3) with the wheels (4) assembled and fit it on the work bench.

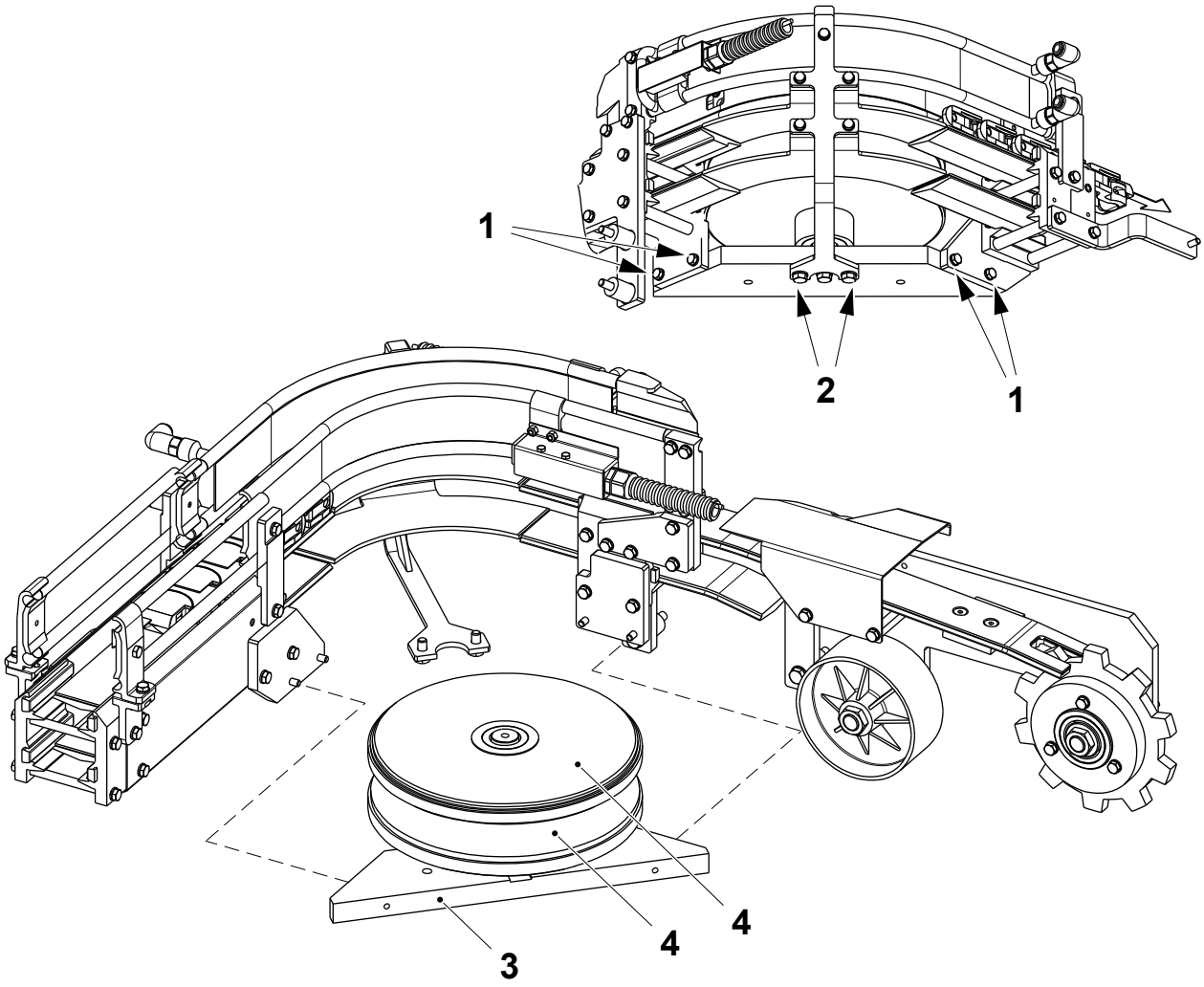

1 Screw
2 Screw
3 Support
4 Wheel

(Cont'd)

TechPub_2614345_0107 - 0501_3048171_01.fm

(Cont'd)

c) Remove the screw (5) and the support (3).

d) Remove the seal (6) and the retaining ring (7).

e) Slip off the lower wheel (4).

f) On the shaft (8), remove the retaining ring (9) and slip off the ball bearings (10) and the spacer (11). Change the ball bearings (10).

g) Remove the retaining ring (12) and the seal (13).

h) Repeat the same procedure for the upper wheel (4).

i) Assemble in the reverse order.

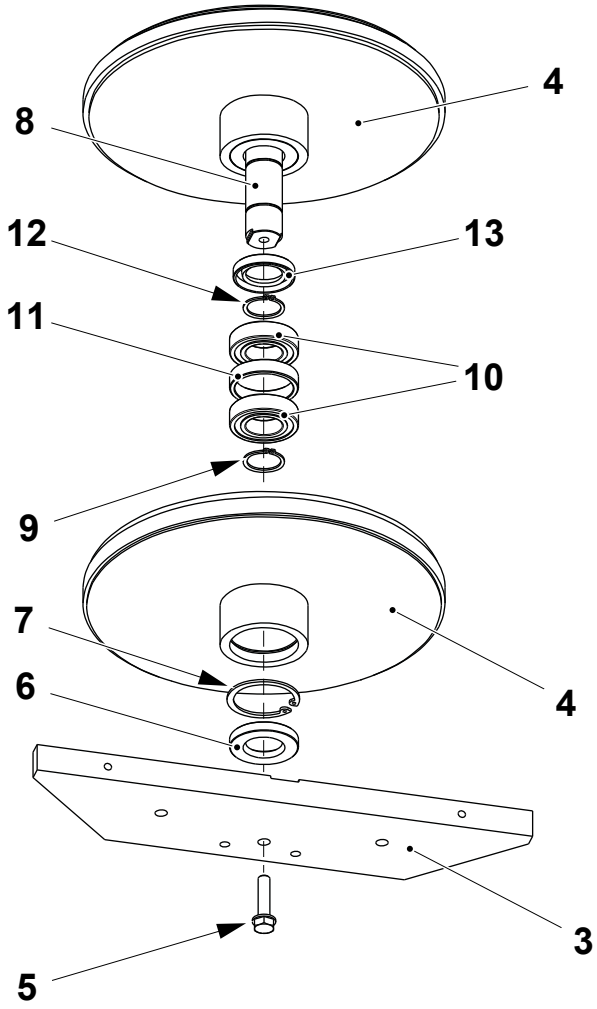

3 Support
4 Wheel
5 Screw
6 Seal
7 Retaining ring
8 Shaft
9 Retaining ring
10 Ball bearing
11 Spacer
12 Retaining ring
13 Seal

TechPub_2614345_0107 - 0501_3048171_01.fm

5.3.2-3 Curve Wheel - Change Drive Wheel Ball Bearings

Machine Status	Mains Power OFF Air OFF Steam ON Water OFF
SPC Reference	2877411-0100

Note! Valid for Portion Packages only.

a) Open the chain (1).

b) Remove the nut (2) and extract the drive wheel (3).

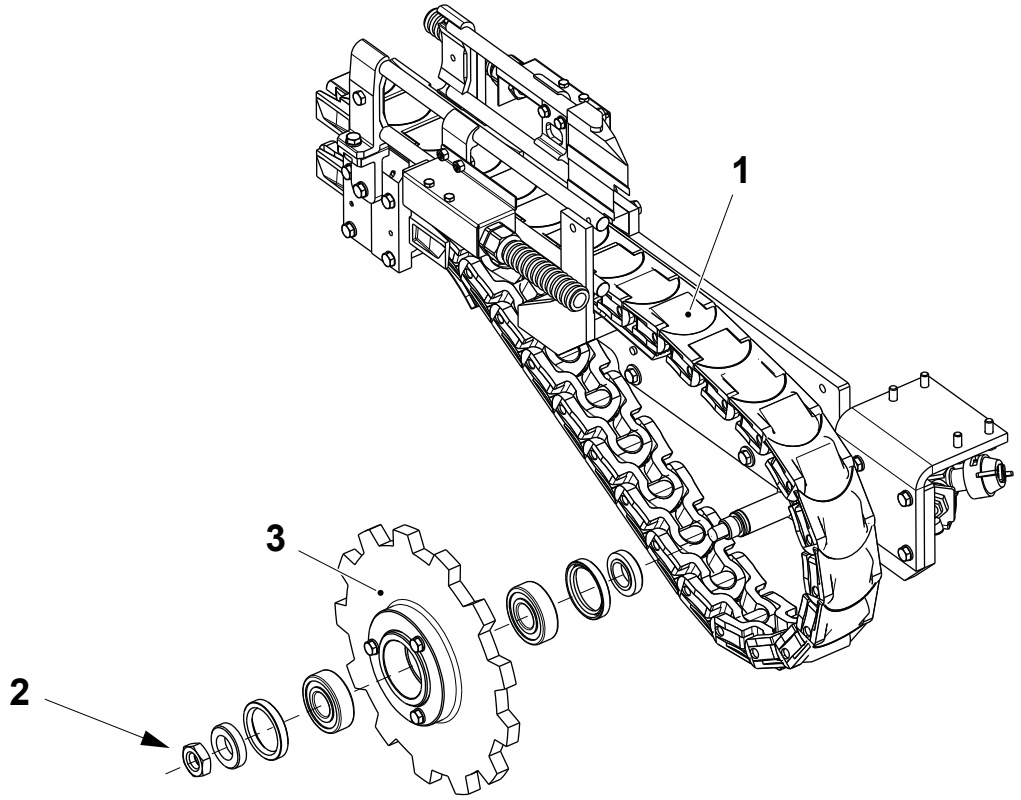

1 Chain
2 Nut
3 Drive wheel

(Cont'd)

TechPub_2614345_0107 - 0501_3048171_01.fm

(Cont'd)

c) Remove the spacers (4) and the radial seals (5).
d) Remove and change the ball bearings (6).
e) Change the O-rings (7) on the shaft (8).
f) Assemble in the reverse order.

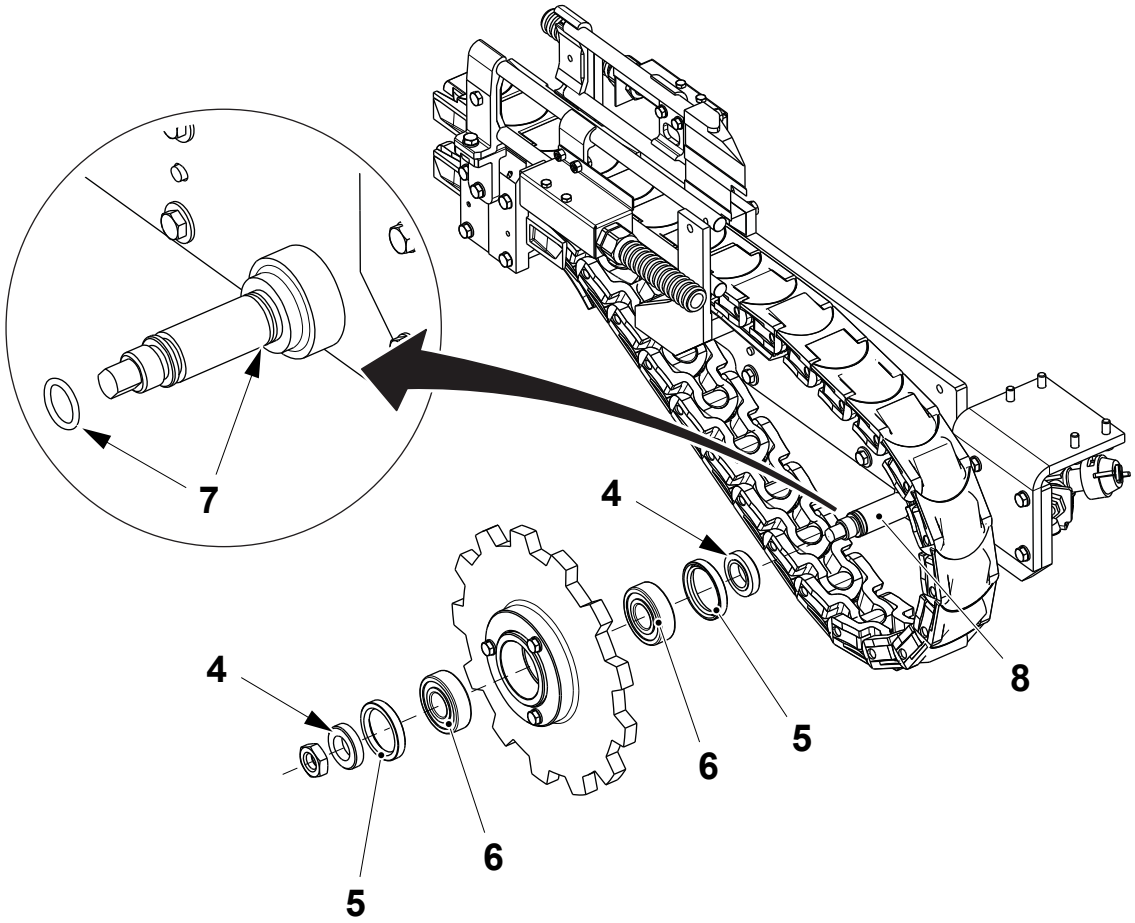

4 Spacer
5 Radial seal
6 Ball bearing
7 O-ring
8 Shaft

TechPub_2614345_0107 - 0501_3048171_01.fm

This page intentionally left blank

TechPub_2614345_0107 - 0501_3048171_01.fm

6 Conveyor Section

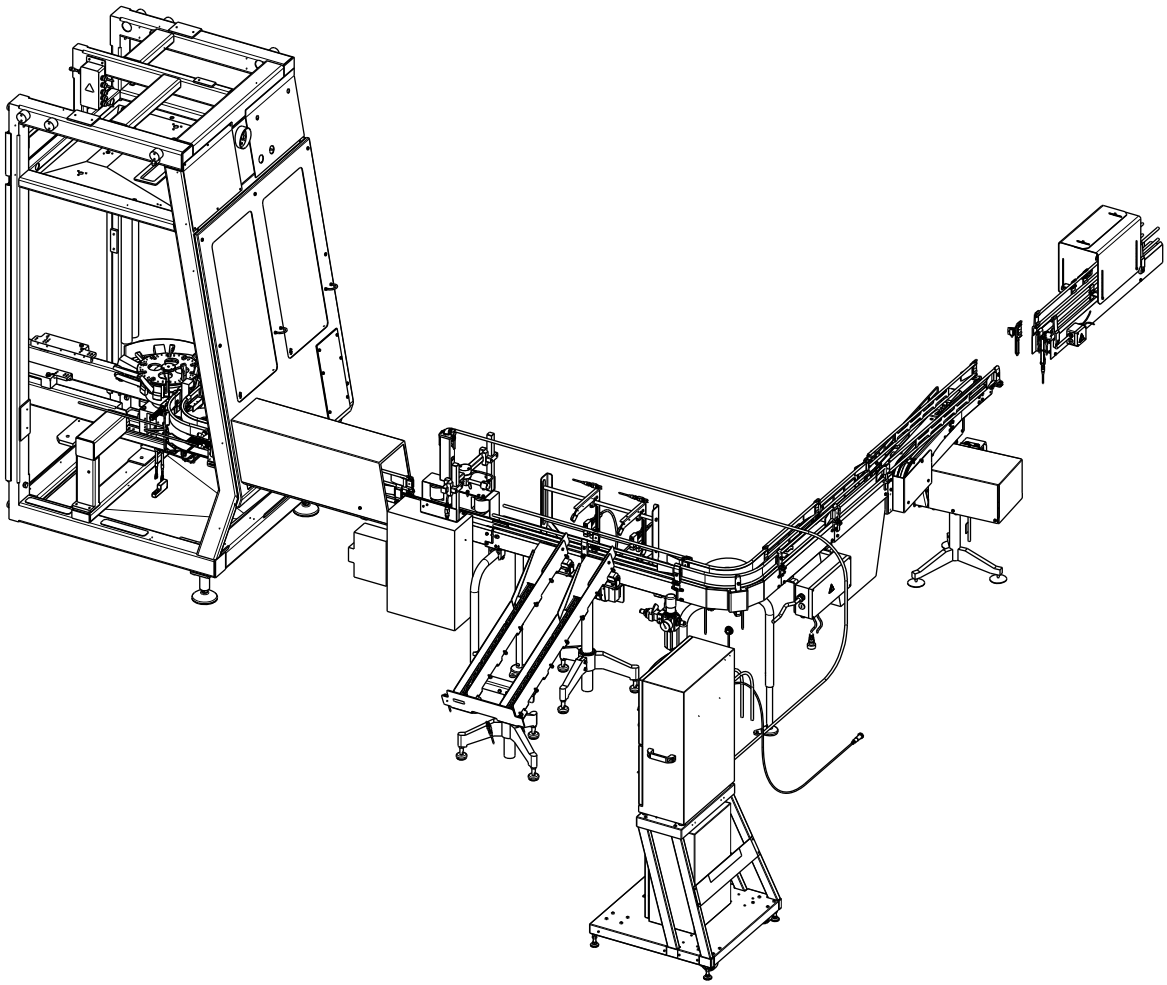

TechPub_2614345_0107 - 1103_3048188_01.fm

Conveyor Section - Description

SPC Reference	648585-0100

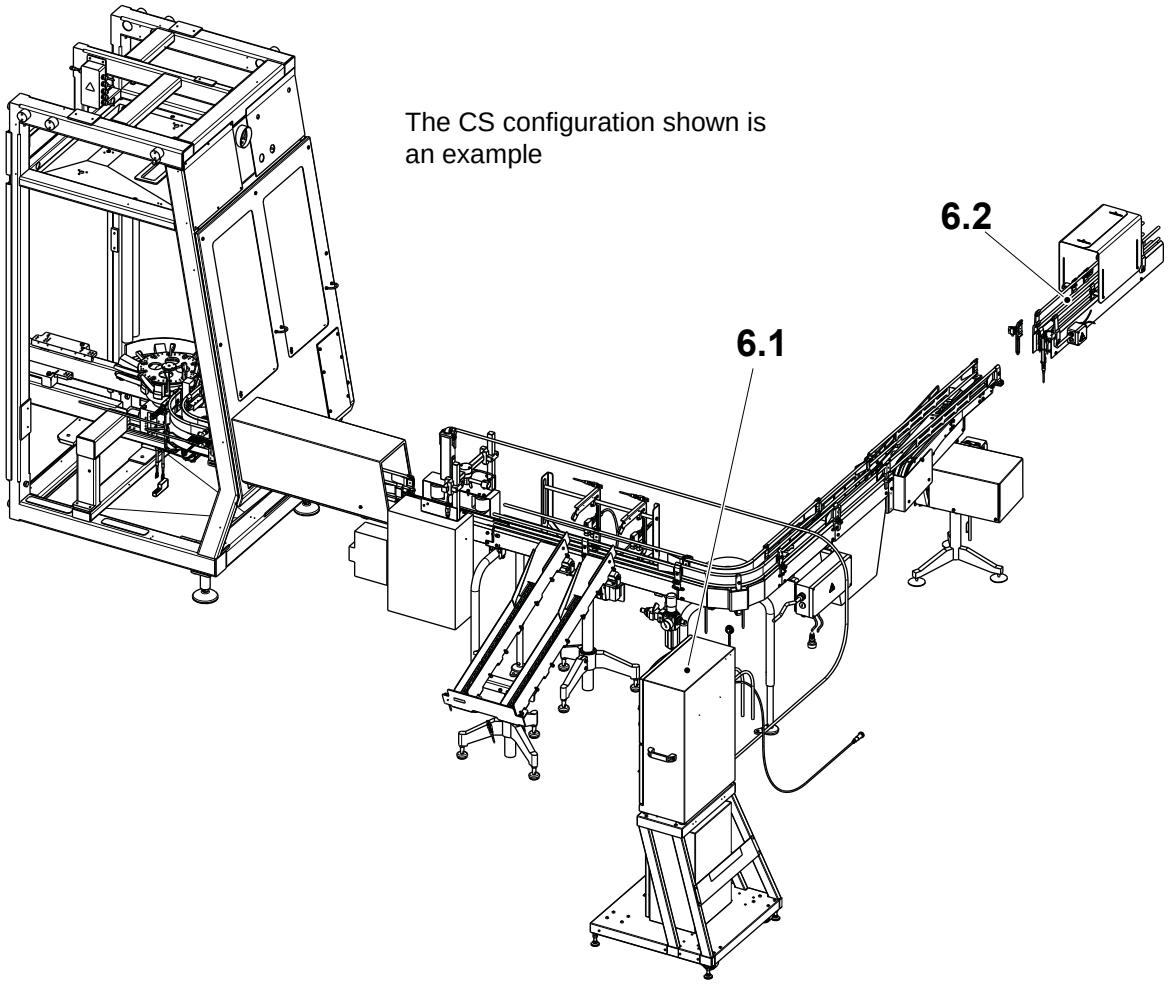

6.1 Date Unit
6.2 Last Point DE

TechPub_2614345_0107 - 1103_3048188_01.fm

6 Conveyor Section . . . . . 6 - 5

6-1 Conveyor Section - Set Queue Photocells . . . . . 6 - 5

6-2 Conveyor Section - Check, Settings and Adjustments . . . . . 6 - 7

6-3 Conveyor Section - Set Congestion and Discharge Time . . . . . 6 - 9

6-4 Conveyor Section - Disable Line Automation Control . . . . . 6 - 11

6-5 Conveyor Section - Set Line Interface Option . . 6 - 12

6.1 Date Unit . . . . . 6 - 14

6.1-1 Date Unit - Set Date Unit . . . . . 6 - 14

6.1-2 Date Unit- Configure Printer Interface . . . . . 6 - 16

6.1-3 Date Unit - Set JEID Mode . . . . . 6 - 18

6.2 Last Point DE . . . . . 6 - 20

6.2-1 Last Point DE - Set Photocells . . . . . 6 - 20

6.2-2 Last Point DE - Set Queue Photocells . . . . . 6 - 21

TechPub_2614345_0107 - 1103_3048188_01.fm

This page intentionally left blank

TechPub_2614345_0107 - 1103_3048188_01.fm

6 Conveyor Section

6-1 Conveyor Section - Set Queue Photocells

Machine Status	Mains Power ON Steam ON Water OFF Air OFF
SPC Reference	648585-0200

a) The photocells are composed of one transmitter (1) and one receiver (2) and they must be positioned in front of each other.

b) Open the cover (3) on the receiver photocell (2).

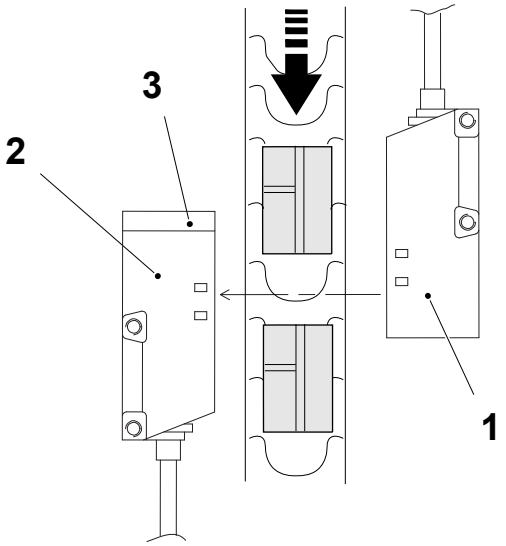

1 Transmitter
2 Receiver
3 Cover

(Cont'd)

TechPub_2614345_0107 - 1103_3048188_01.fm

(Cont'd)

c) Make sure that the receiver photocell (2) is set to PNP (positive logic) and L-ON (the signal will be sent when NO object is detected between the photocells), see figure below.

d) Check the transmitter (1) and the receiver (2) photocells position, see figure below.

e) Begin without any object to be detected. Turn the sensitivity potentiometer (4) anti-clockwise (toward min.) and then clockwise until both the green LED (5) and the red LED (6) light up. To secure the setting turn clockwise the sensitivity potentiometer (4) just a little bit more.

f) Place the package to be detected between the photocells. Check that the green LED (5) comes on and the red LED (6) light goes off.

g) Close the cover (3) on the receiver photocell (2).

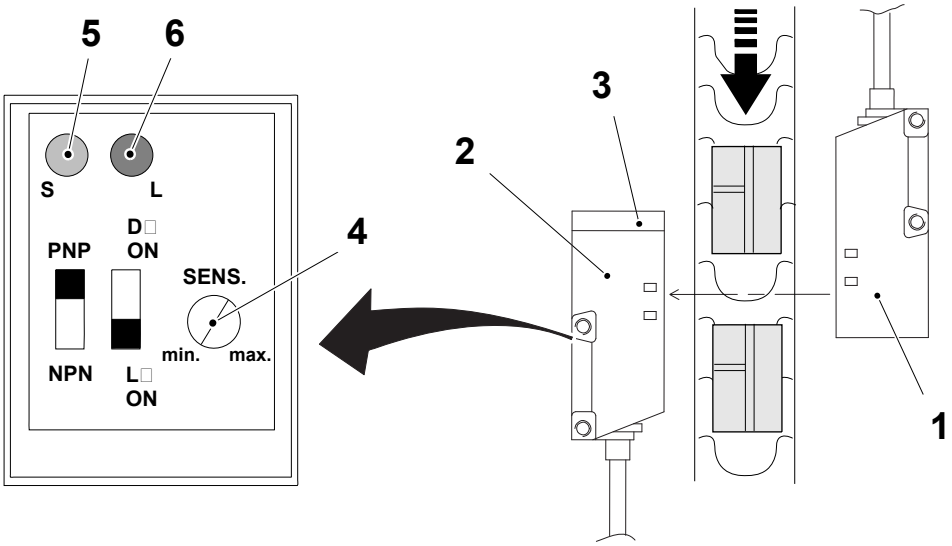

1 Transmitter
2 Receiver
3 Cover
4 Potentiometer
5 Green LED
6 Red LED

TechPub_2614345_0107 - 1103_3048188_01.fm

6-2 Conveyor Section - Check, Settings and Adjustments

Machine Status	PRODUCTION
SPC Reference	648568-0200

Note! The sampling unit (4) and the Domino printer (5) are Optional Equipments.

a) Check the operation of the belt brake (1) and print head (2) making sure that the printed text appears in the correct position on the packages. See the documentation for the belt brake and print head to make any necessary adjustments.

b) Check the operation of the conveyor (3), see the documentation for the conveyor.

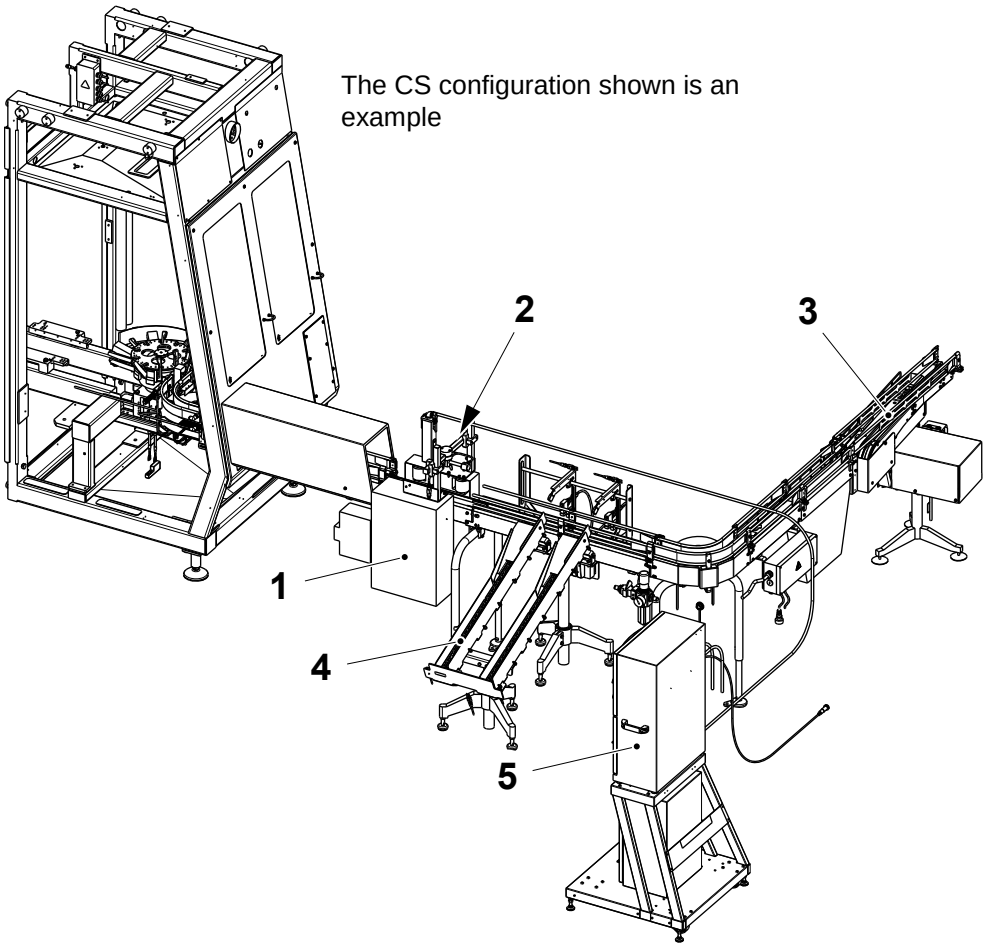

1 Belt brake
2 Print head
3 Conveyor
4 Sampling unit
5 Printer

(Cont'd)

TechPub_2614345_0107 - 1103_3048188_01.fm

(Cont'd)

c) Check the operation of the sampling unit (4), see the documentation for the sampling unit.

d) Check the operation of the Domino printer (5). Check also that the PRINT DELAY is set to a minimum to prevent interference between consecutive PRINT signals. See the documentation for the Domino printer for exact details.

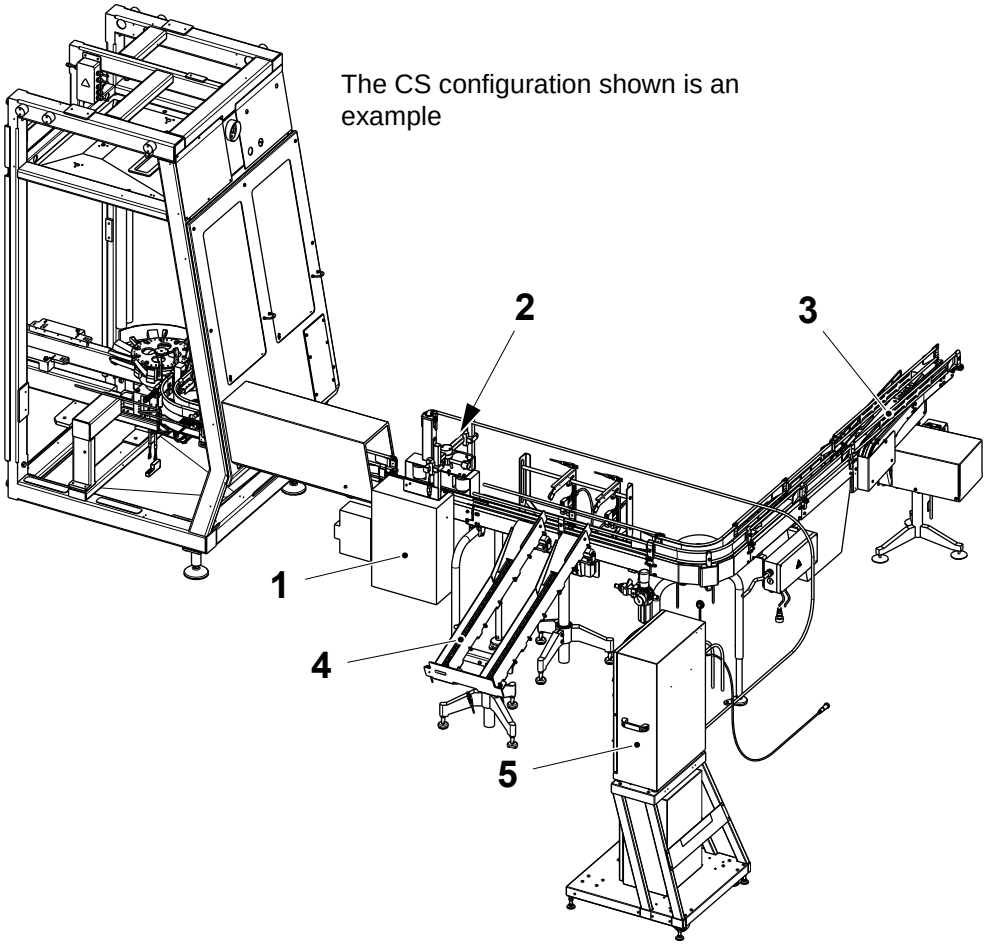

1 Belt brake
2 Print head
3 Conveyor
4 Sampling unit
5 Printer

TechPub_2614345_0107 - 1103_3048188_01.fm

6-3 Conveyor Section - Set Congestion and Discharge Time

Machine Status	PREPARATION
SPC Reference	648585-0200

Congestion Time

Set the maximum time after that the package congestion alarm on the external conveyor appears.

a) On the TPOP, touch the MAINTENANCE CONTROL button (1) and enter the password required, see 9.6.3-2 HMI - User Management Log On.

b) Touch the DOWNSTREAM button (2).

c) Touch the CONGESTION GUARD TIME icon (3).

d) Change the value using the ARROW buttons (4) or the KEYBOARD button (5).

e) Touch the EXIT button (6).

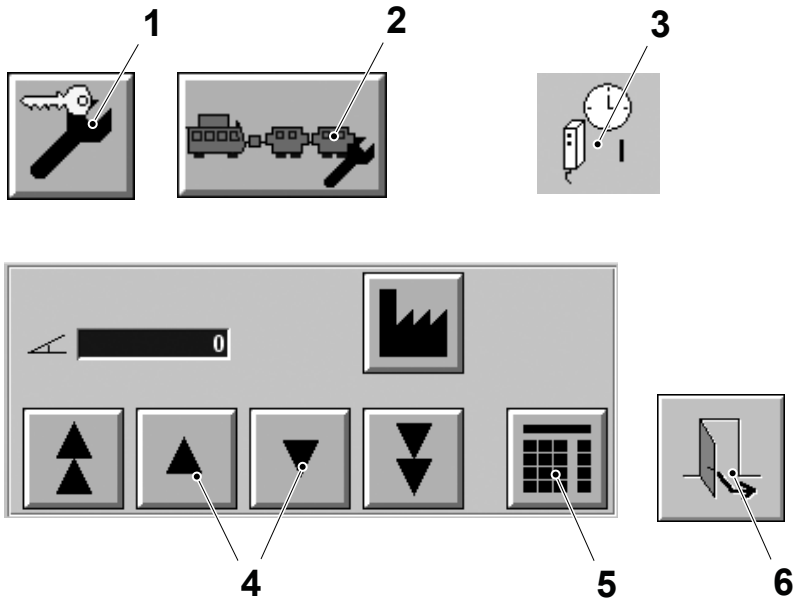

1 Maintenance control button
2 Downstream button
3 Congestion guard time icon
4 Arrow button
5 Keyboard button
6 Exit button

(Cont'd)

TechPub_2614345_0107 - 1103_3048188_01.fm

(Cont'd)

Discharge Time

Set the maximum time required for the external conveyor to discharge the packages queue.

a) On the TPOP, touch the MAINTENANCE CONTROL button (1) and enter the password required, see 9.6.3-2 HMI - User Management Log On.

b) Touch the DOWNSTREAM button (2).

c) Touch the DISCHARGE TIME icon (3).

d) Change the value using the ARROW buttons (4) or the KEYBOARD button (5).

e) Touch the EXIT button (6).

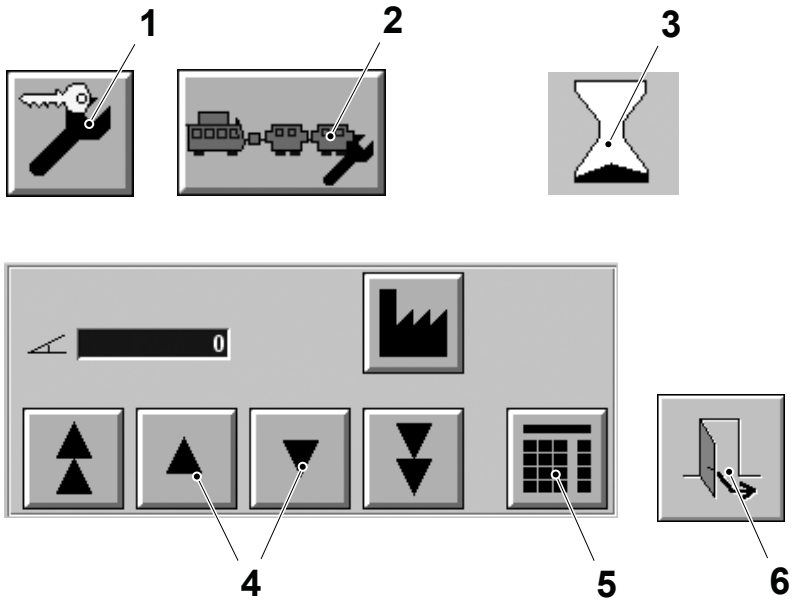

1 Maintenance control button
2 Downstream button
3 Discharge time icon
4 Arrow button
5 Keyboard button
6 Exit button

TechPub_2614345_0107 - 1103_3048188_01.fm

6-4 Conveyor Section - Disable Line Automation Control

Machine Status	STEP ZERO
SPC Reference	648585-0200

a) On the TPOP, touch the MAINTENANCE CONTROL button (1) and enter the password required, see 9.6.3-2 HMI - User Management Log On.

b) Touch the DOWNSTREAM button (2).

c) Touch the LINE AUTOMATION INTERFACE icon (3). The ON/OFF buttons appear.

d) Touch the ON button (4) to disconnect the filling machine from the line automation control.

e) To restore the line automation control, touch the OFF button (5).

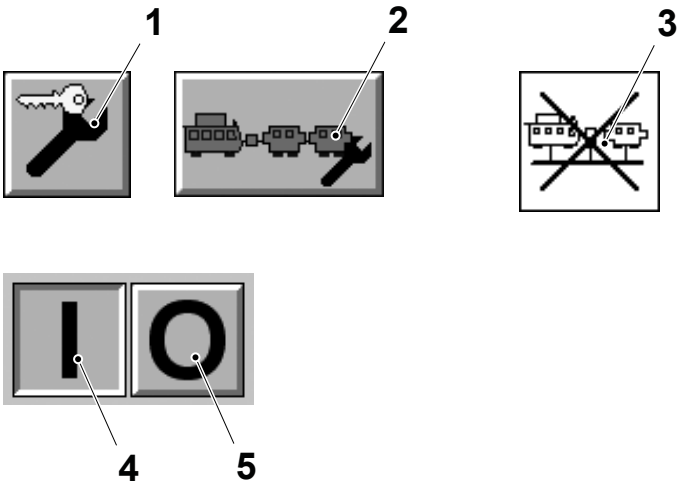

1 Maintenance control button
2 Downstream button
3 Line automation interface icon
4 ON button
5 OFF button

TechPub_2614345_0107 - 1103_3048188_01.fm

6-5 Conveyor Section - Set Line Interface Option

Machine Status	STEP ZERO
SPC Reference	648585-0200

a) On the TPOP, log on as a `TPTECHNICIAN`, see 9.6.3-2 HMI - User Management Log On.

(Cont'd)

TechPub_2614345_0107 - 1103_3048188_01.fm

(Cont'd)

b) Touch the MACHINE CONFIGURATION button (1).

c) Touch the OPTION LINE INTERFACE button (2). The ARROW buttons (3) are displayed.

d) Touch the ARROW buttons (3) to select one of the available interface option:
   - Line Controller (4)
   - Series Ninty Protocol (SNP) (5)
   - Genius (6).

Note! Select the icon (7) to uninstall the option.

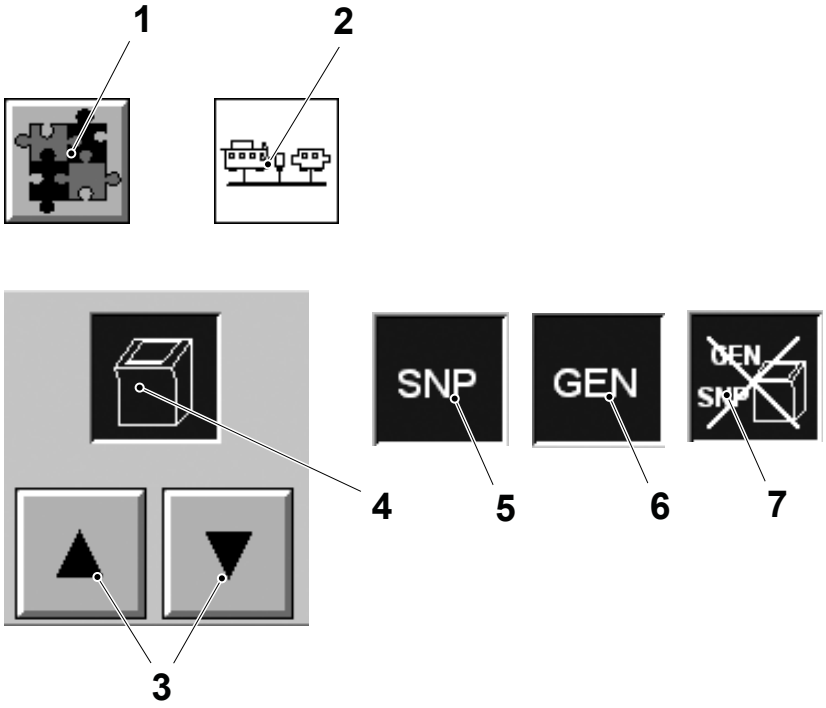

1 Machine configuration button
2 Option line Interface button
3 Arrow button
4 Line Controller icon
5 SNP icon
6 Genius icon
7 Option disabled icon

TechPub_2614345_0107 - 1103_3048188_01.fm

6.1 Date Unit

SPC Reference	3005198-0100

6.1-1 Date Unit - Set Date Unit

Machine Status	Mains Power ON Air OFF Steam ON Water OFF
SPC Reference	3005198-0100

a) On the TPOP, log on as a TPTECHNICIAN, see 9.6.3-2 HMI - User Management Log On.

b) Touch the MACHINE CONFIGURATION button (1).

c) Touch the DATE UNIT button (2). The ARROW buttons (3) are displayed.

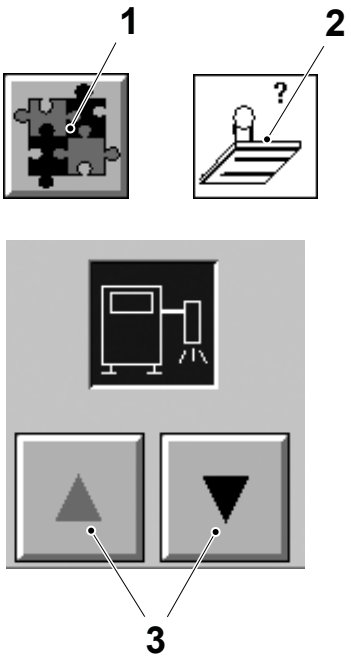

1 Machine configuration button
2 Date unit button
3 Arrow button

(Cont'd)

TechPub_2614345_0107 - 1102_3048189_01.fm

(Cont'd)

d) Touch the ARROW buttons (3) to select one of the available date unit option:
   - TP DATE UNIT (4): a TP printer connected by two wires, signals and alarms
   - NO TP DATE UNIT (5) a third-party printer connected by two wires, signals and alarms
   - PRINTER INTERFACE (6): Domino A300 Plus connected by Ethernet cable for communication and alarms
   - PRINTER INTERFACE WIRED (7): TP date unit with Ethernet communication and separated alarm cable
   - NO TP PRINTER INTERFACE WIRED (8): a third-party date unit with Ethernet communication and separated alarm cable

Note! Select the icon (9) to uninstall the option.

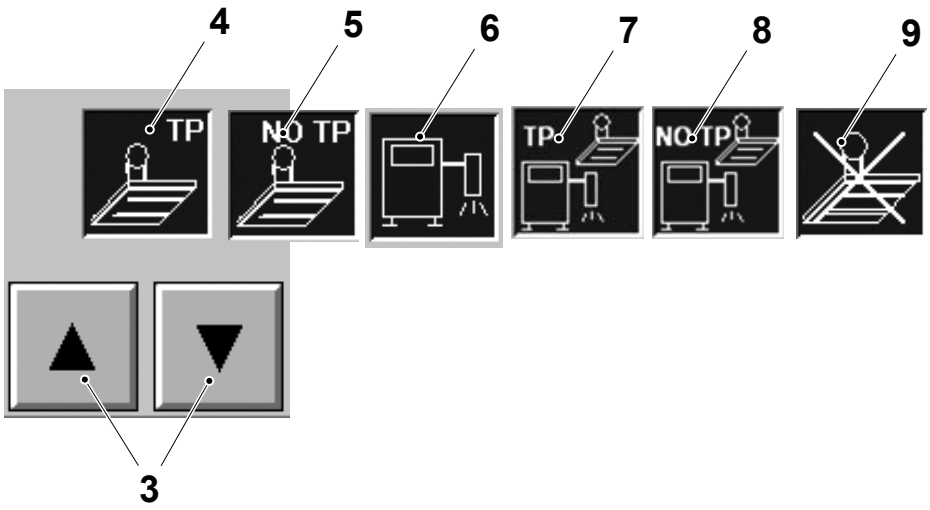

3 Arrow button
4 TP date unit icon
5 NO TP date unit icon
6 Printer interface icon
7 Printer interface wired icon
8 NO TP Printer interface wired icon
9 Option disabled icon

TechPub_2614345_0107 - 1102_3048189_01.fm

6.1-2 Date Unit- Configure Printer Interface

Machine Status	Mains Power ON Air OFF Steam ON Water OFF
SPC Reference	3005198-0100

a) On the TPOP, log on as a TPTECHNICIAN, see 9.6.3-2 HMI - User Management Log On.

b) Touch the PRODUCTION CONTROL button (1)

c) Touch the DOWNSTREAM button (2)

d) Touch the PRINTER INTERFACE icon (3).

e) Touch the LAYOUT SELECTION icon (4) to load the print layout.

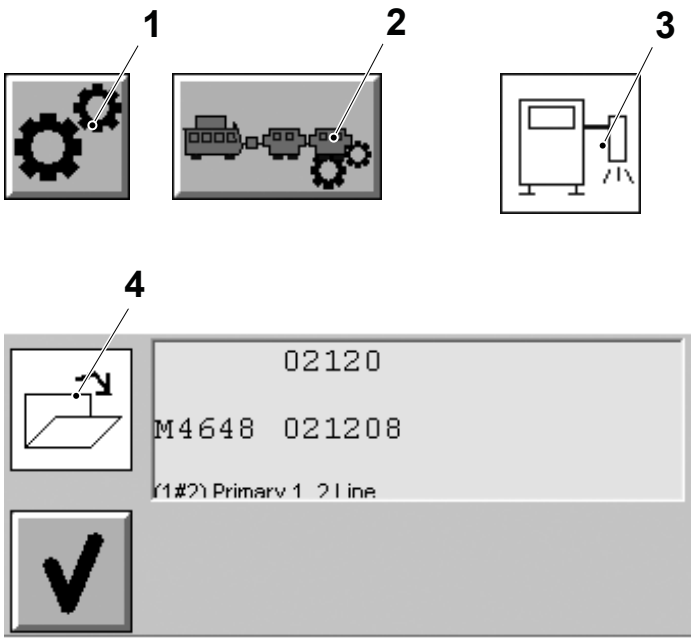

1 Production control button
2 Downstream button
3 Printer interface icon
4 Layout selection icon

(Cont'd)

TechPub_2614345_0107 - 1102_3048189_01.fm

(Cont'd)

f) A set of informations may be entered by touching the following icons:
- FACTORY (5)
- LINE (6)
- PRODUCT (7)
- BATCH (8)
- PRODUCTION SHIFT (9)
- GENERIC FIELDS (10) and (11)
- BEST BEFORE DATE (12).

Note! It is possible to lock the best before date by touching the LOCK button (13) (for example in case of production between two days).

g) Touch the OK button (14) for 5 seconds to load the configuration.

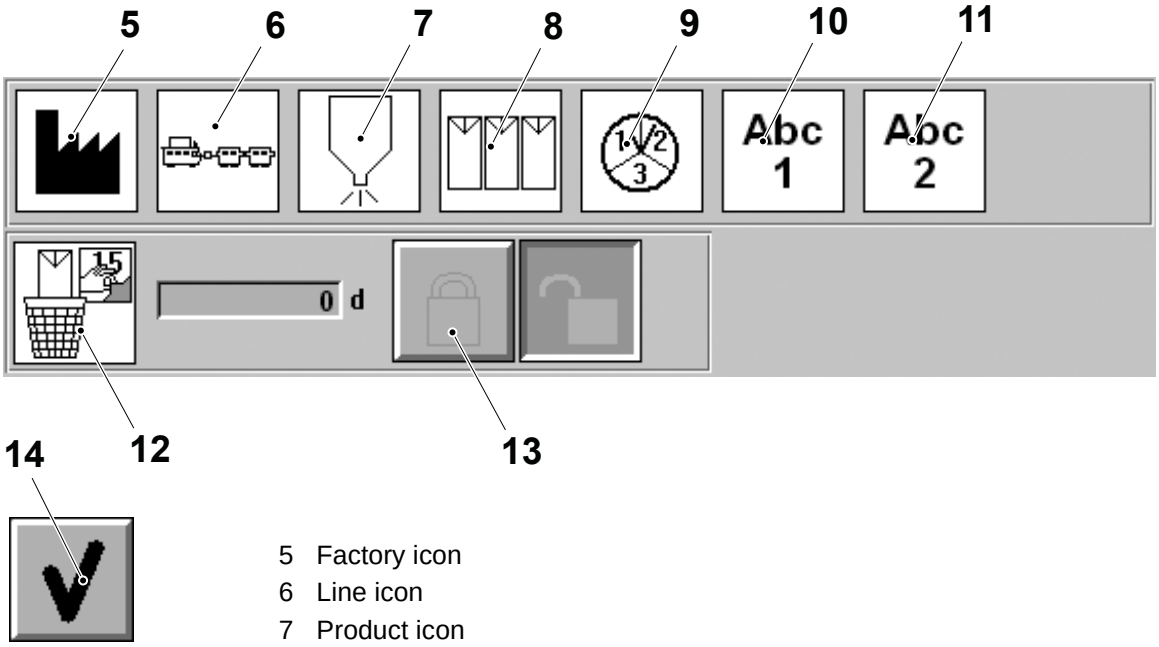

5 Factory icon
6 Line icon
7 Product icon
8 Batch icon
9 Shift icon
10 Generic field icon
11 Generic field icon
12 Best before date icon
13 Lock button
14 Ok button

TechPub_2614345_0107 - 1102_3048189_01.fm

6.1-3 Date Unit - Set JEID Mode

Machine Status	Mains Power ON Air OFF Steam ON Water OFF
SPC Reference	3005198-0100

Note! This procedure describes how to select the Jaw and Event ID working mode. For working modes details, see 9.8 TMCC2 Controller.

(Cont'd)

TechPub_2614345_0107 - 1102_3048189_01.fm

(Cont'd)

a) On the TPOP, touch the PRODUCTION CONTROL button (1).

b) Touch the DOWNSTREAM button (2).

c) Touch the JEID MODE SELECTOR icon (3).The ARROW buttons (4) are displayed.

d) Select the working mode by the ARROW buttons (4): DISABLED MODE (5), AUTOMATIC MODE (6) or MANUAL MODE (7).

e) Touch the OK button (8) to confirm the selection.

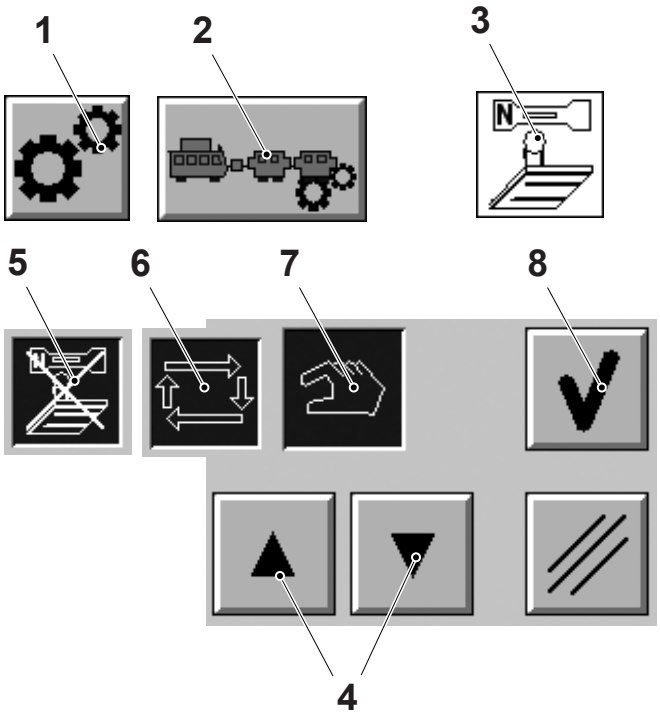

1 Production control button
2 Downstream button
3 JEID mode selector icon
4 Arrow button
5 Disabled mode
6 Automatic mode
7 Manual mode
8 Ok button

TechPub_2614345_0107 - 1102_3048189_01.fm

6.2 Last Point DE

SPC Reference	2872916-0200

6.2-1 Last Point DE - Set Photocells

Machine Status	Mains Power ON Air OFF Steam ON Water OFF
SPC Reference	2872916-0200

Set the photocells (1) position of the last point DE, see 5.3.2-1 Curve Wheel - Set Counting Photocells.

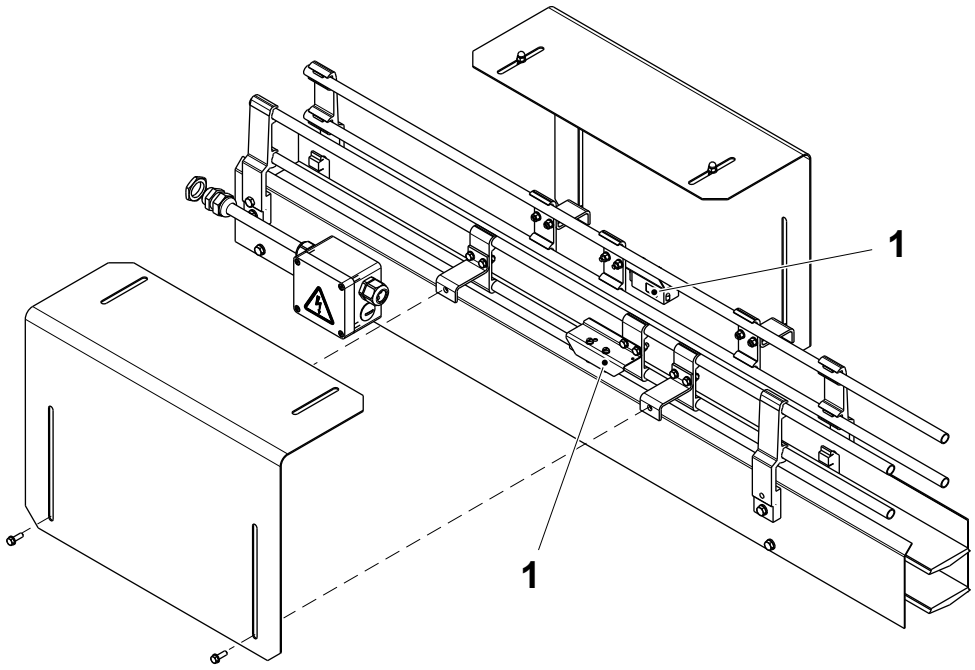

1 Photocell

TechPub_2614345_0107 - 1102_3048189_01.fm

6.2-2 Last Point DE - Set Queue Photocells

Machine Status	Mains Power ON Air OFF Steam ON Water OFF
SPC Reference	2872916-0200

a) The photocells are composed of one transmitter (1) and one receiver (2) and they must be positioned in front of each other.

b) Open the cover (3) on the receiver photocell (2).

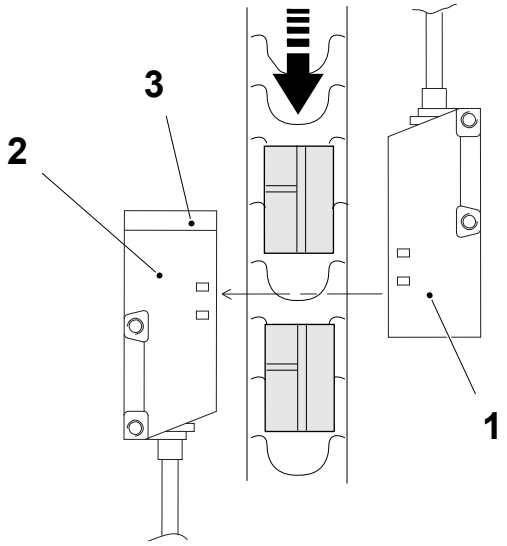

1 Transmitter
2 Receiver
3 Cover

(Cont'd)

TechPub_2614345_0107 - 1102_3048189_01.fm

(Cont'd)

c) Make sure that the receiver photocell (2) is set to PNP (positive logic) and L-ON (the signal will be sent when NO object is detected between the photocells), see figure below.

d) Check the transmitter (1) and the receiver (2) photocells position, see figure below.

e) Begin without any object to be detected. Turn the sensitivity potentiometer (4) anti-clockwise (toward min.) and then clockwise until both the green LED (5) and the red LED (6) light up. To secure the setting turn clockwise the sensitivity potentiometer (4) just a little bit more.

f) Place the package to be detected between the photocells. Check that the green LED (5) comes on and the red LED (6) light goes off.

g) Close the cover (3) on the receiver photocell (2).

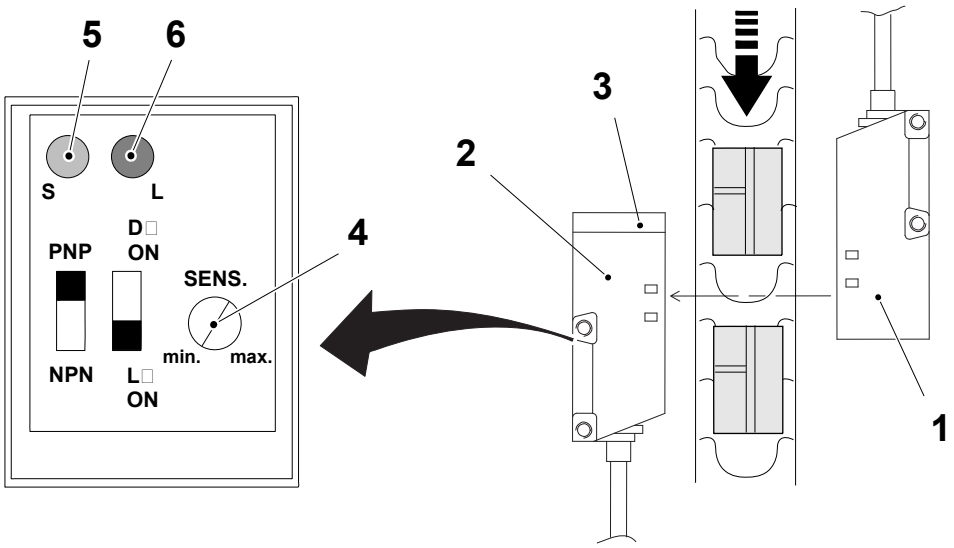

1 Transmitter
2 Receiver
3 Cover
4 Potentiometer
5 Green LED
6 Red LED

TechPub_2614345_0107 - 1102_3048189_01.fm

7 Service Unit

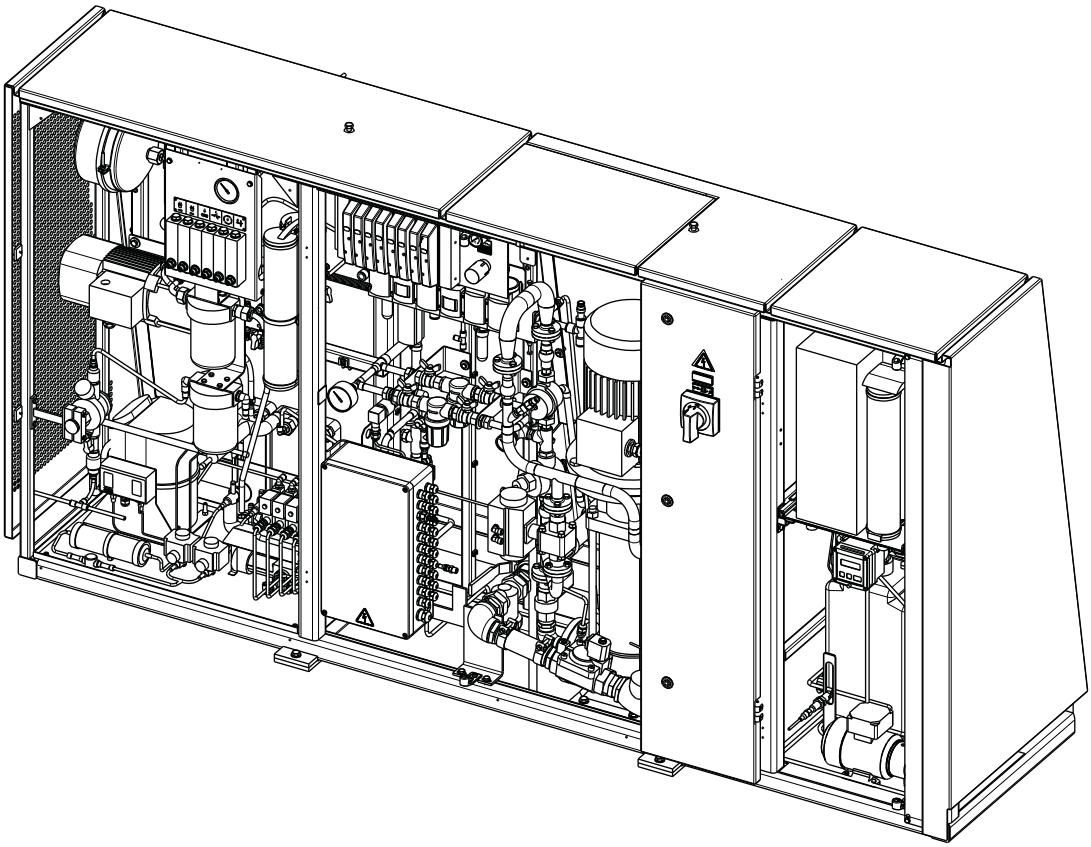

TechPub_2614345_0108 - 0603_3048190_01.fm

Service Unit - Description

SPC Reference	648506-0600

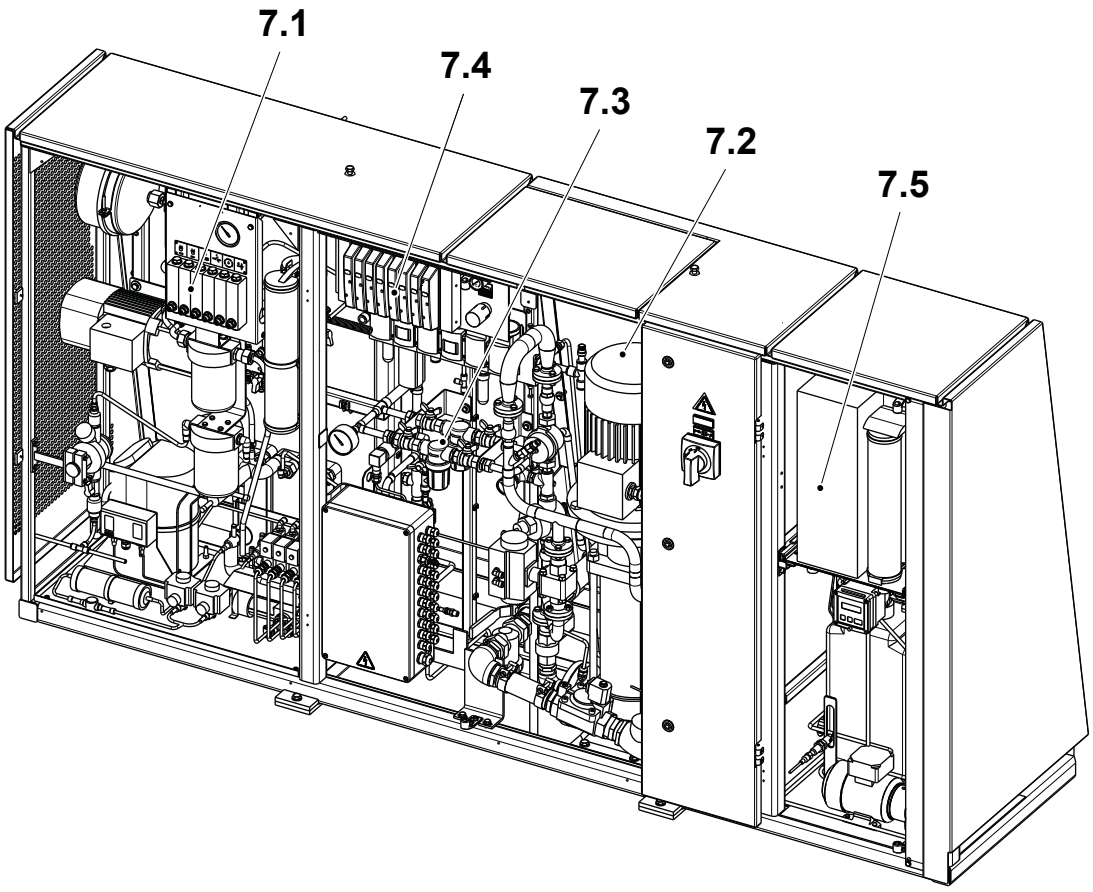

7.1 Cooling Water System
7.2 Foaming Unit
7.3 Water Panel
7.4 Supply System
7.5 Water System

TechPub_2614345_0108 - 0603_3048190_01.fm

7.1 Cooling Water System . . . . . 7 - 5

7.1-1 Cooling Water System - Check . . . . . 7 - 5

7.1-2 Cooling Water System - Fill . . . . . 7 - 7

7.1.1 Compressor Unit . . . . . 7 - 8

7.1.1-1 Compressor Unit - Check Sight Glass . . . . . 7 - 8

7.1.1-2 Compressor Unit - Check . . . . . 7 - 10

7.1.2 Flow Meter . . . . . 7 - 11

7.1.2-1 Flow Meter - Change Filter . . . . . 7 - 11

7.1.2-2 Flow Meter - Set Flows . . . . . 7 - 13

7.1.2-3 Flow Meter - Change Filter Insert . . . . . 7 - 14

7.2 Foaming Unit . . . . . 7 - 16

7.2-1 Foaming Unit - Check Connections . . . . . 7 - 16

7.2-2 Foaming Unit - Set Pressures . . . . . 7 - 17

7.2.1 Pipe . . . . . 7 - 18

7.2.1-1 Pipe - Change Filter . . . . . 7 - 18

7.2.2 Pump . . . . . 7 - 19

7.2.2-1 Pump - Change Gaskets . . . . . 7 - 19

7.3 Water Panel . . . . . 7 - 21

7.3-1 Water Panel - Check Pressure Switch . . . . . 7 - 21

7.3-2 Water Panel - Clean Filters . . . . . 7 - 22

7.4 Supply System . . . . . 7 - 24

7.4.1 Pneumatic Panel . . . . . 7 - 24

7.4.1-1 Pneumatic Panel - Check . . . . . 7 - 24

7.4.1-2 Pneumatic Panel - Set Pressure . . . . . 7 - 26

7.4.1-3 Pneumatic Panel - Clean Filter Insert . . . . . 7 - 27

7.5 Water System . . . . . 7 - 28

7.5.1 Filter . . . . . 7 - 28

7.5.1-1 Filter - Change Pressure Regulator . . . . . 7 - 28

7.5.1-2 Filter - Set Pressure Regulator . . . . . 7 - 30

7.5.1-3 Filter - Change Filter Insert . . . . . 7 - 31

TechPub_2614345_0108 - 0603_3048190_01.fm

7.5.2 Sterile Water System . . . . . 7 - 32

7.5.2-1 Sterile Water System - Start-Up . . . . . 7 - 32

7.5.2-2 Sterile Water System - Set . . . . . 7 - 35

7.5.2-3 Sterile Water System - Clean Reverse Osmosis Cartridge . . . . . 7 - 38

7.5.2-4 Sterile Water System - Change Progard Pack . . 7 - 40

7.5.2-5 Sterile Water System - Drain Reservoir . . . . . 7 - 43

7.5.2-6 Sterile Water System - Change Configuration . . 7 - 44

7.5.3 Electrical Connection . . . . . 7 - 46

7.5.3-1 Electrical Connection - Set Sensor Sensitivity . 7 - 46

7.5.4 Circuit . . . . . 7 - 47

7.5.4-1 Circuit - Set Conductivity Meter . . . . . 7 - 47

7.5.4-2 Circuit - Change Filter . . . . . 7 - 51

TechPub_2614345_0108 - 0603_3048190_01.fm

7.1 Cooling Water System

SPC Reference	1095612-0500

7.1-1 Cooling Water System - Check

Machine Status	PRODUCTION
SPC Reference	1095612-0500

WARNING

Refrigerant gas.

Cooling media R407C, follow the Safety Precautions.

(Cont'd)

TechPub_2614345_0108 - 0603_3048190_01.fm

(Cont'd)

Check that:

- there are no water leaks at the connections
- the pump (1) runs smoothly without excessive noise or vibrations
- the water pressure gauge (2) shows the correct water pressure in the circuit, see 10.1 Technical Data
- the values of the flow meter (3) are correct. Set the flows if necessary, see 7.1.2-2 Flow Meter - Set Flows.

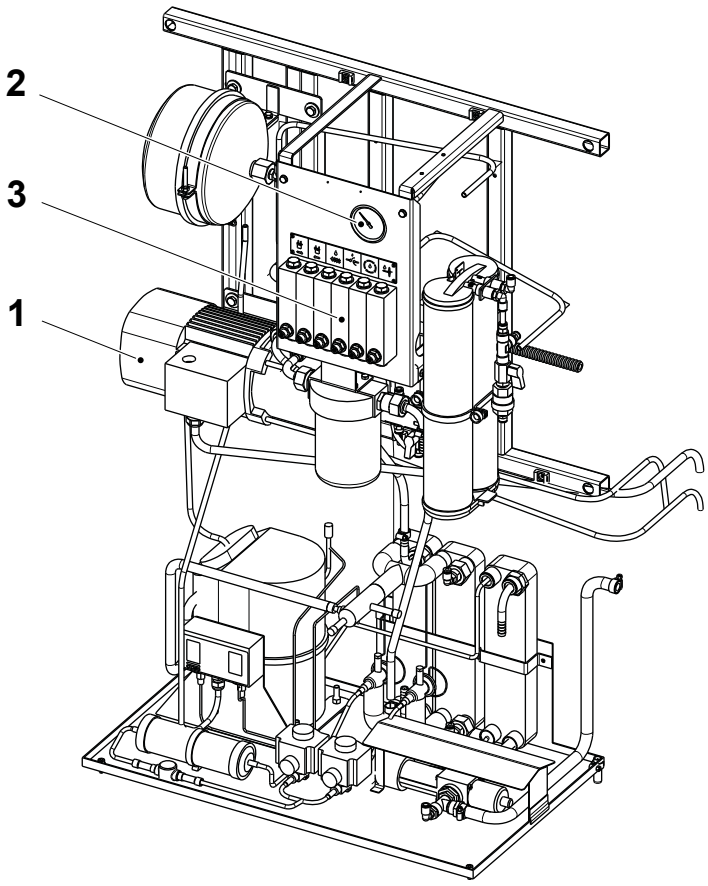

1 Pump
2 Pressure gauge
3 Flow meters

TechPub_2614345_0108 - 0603_3048190_01.fm

7.1-2 Cooling Water System - Fill

Machine Status	PREPARATION
SPC Reference	1095612-0500

WARNING

Refrigerant gas.
Cooling media R407C, follow the Safety Precautions.

Note! Make sure that the circuit is correctly connected and that the valves located in the final folder chamber are open.

a) Open the water valve (1) to fill the cooling water circuit.

b) Leave the pump (2) running for approximately one minute.

c) When the water pressure gauge (3) reaches 2 bar, close the valve (1).

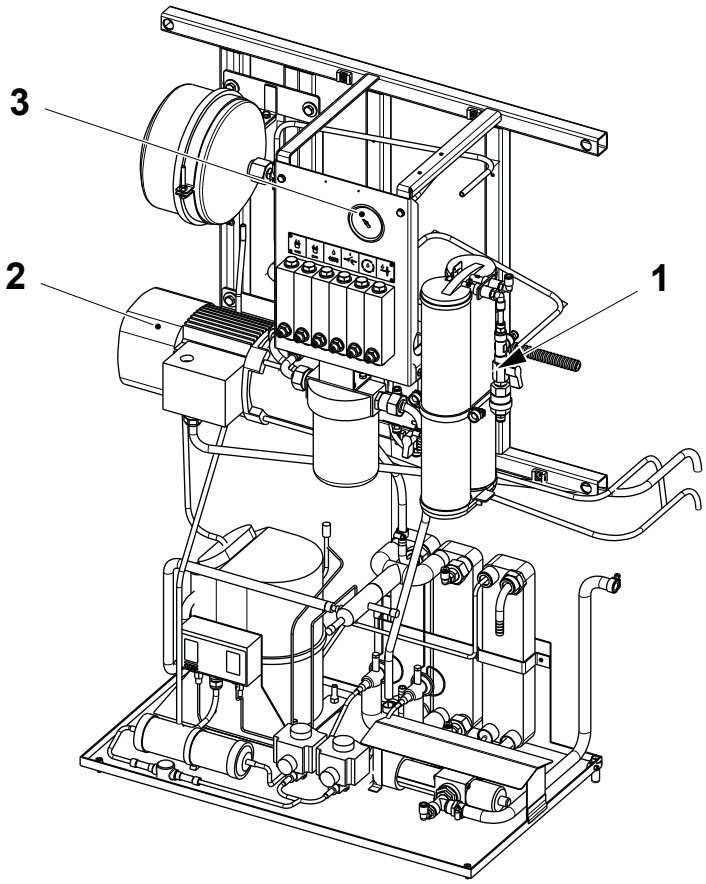

1 Valve
2 Pump
3 Pressure gauge

TechPub_2614345_0108 - 0603_3048190_01.fm

7.1.1 Compressor Unit

7.1.1-1 Compressor Unit - Check Sight Glass

Machine Status	Mains Power ON Air ON Steam ON Water ON
SPC Reference	1095710-0400

WARNING

Refrigerant gas.

Cooling media R407C, follow the Safety Precautions.

Note! The compressor unit must only be serviced or repaired by a company authorised in the repair and service of refrigeration units. See the SPC for the compressor's internal serviceable spare part codes.

(Cont'd)

TechPub_2614345_0108 - 0603_3048190_01.fm

(Cont'd)

Check that:

- there are not gas bubbles in the sight glass (1). If air bubbles are present call the local Tetra Pak Service
- the pin inside the sight glass (1) is GREEN. If the pin is YELLOW call a local authorised service for refrigerating units.

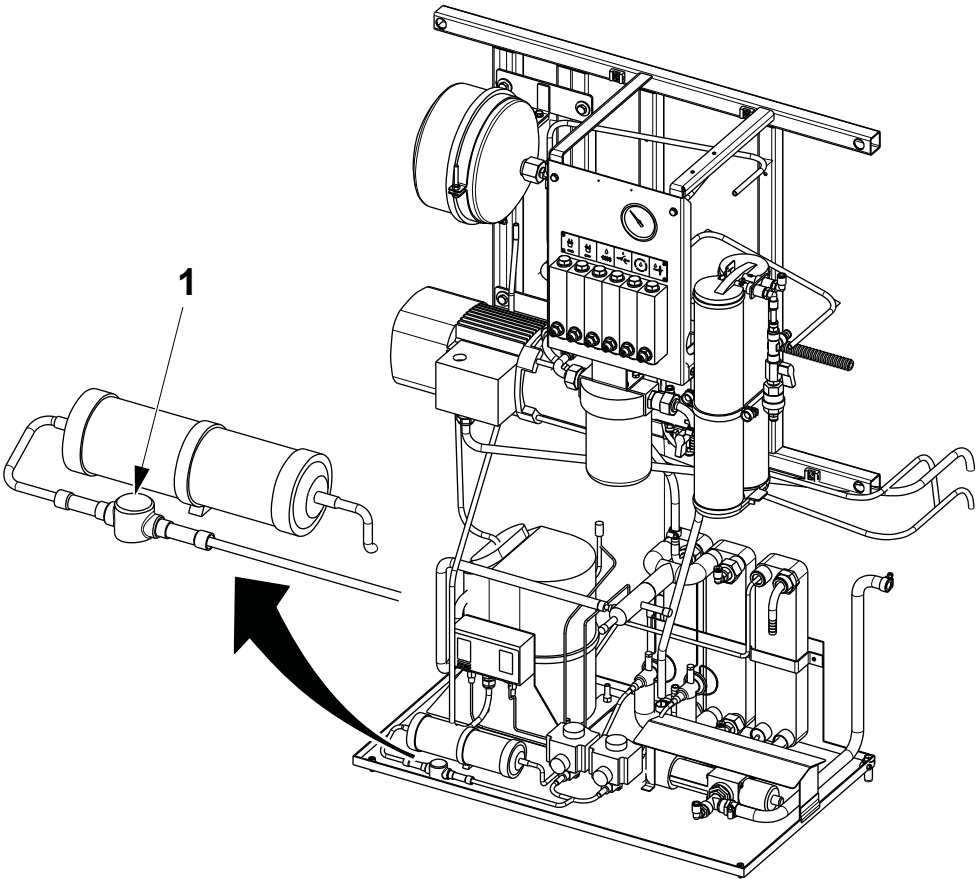

1 Sight glass

TechPub_2614345_0108 - 0603_3048190_01.fm

7.1.1-2 Compressor Unit - Check

Machine Status	PRODUCTION
Special Equipment	Thermometer min. 40°C
SPC Reference	1095710-0400

WARNING

Refrigerant gas.

Cooling media R407C, follow the Safety Precautions.

Use a thermometer to check the temperature of the water from the hose (1). The temperature must be between 30°C and 35°C when the compressor (2) is running.

If not, call the local Tetra Pak Service.

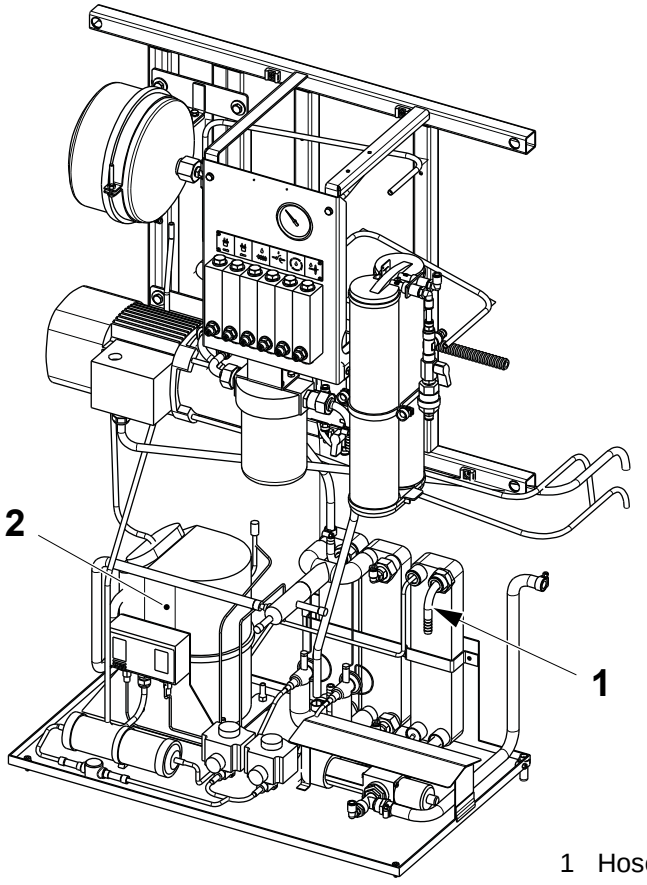

1 Hose
2 Compressor

TechPub_2614345_0108 - 0603_3048190_01.fm

7.1.2 Flow Meter

7.1.2-1 Flow Meter - Change Filter

Machine Status	Mains Power OFF Air OFF Steam ON Water OFF
SPC Reference	2552113-0300

WARNING

Refrigerant gas.

Cooling media R407C, follow the Safety Precautions.

a) Close the circuit flow meter (1) by means of the screw (2).

b) Remove the two knobs (3) to release the support (4).

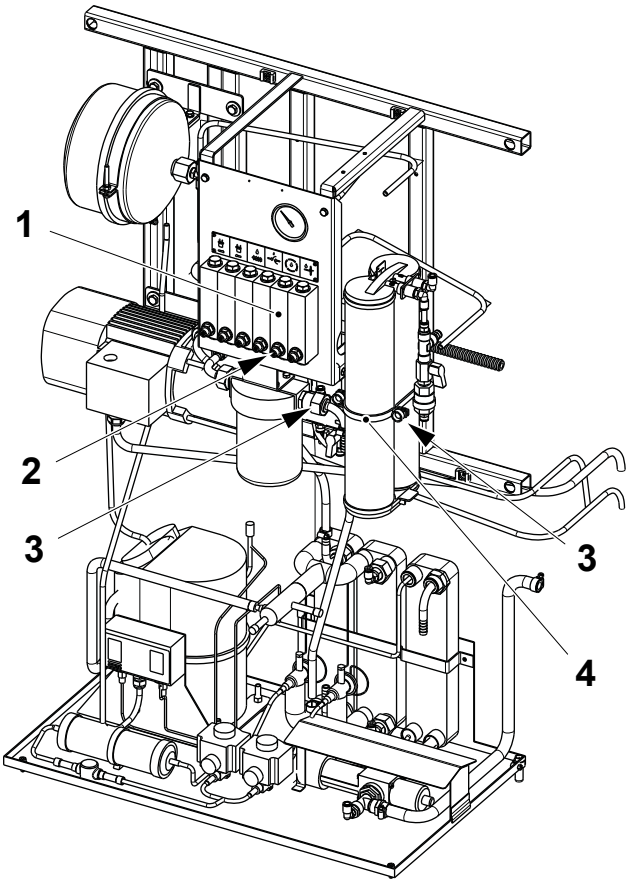

1 Flow meter
2 Screw
3 Knob
4 Support

(Cont'd)

TechPub_2614345_0108 - 0603_3048191_01.fm

(Cont'd)

c) Remove the fastening plate (5) and pull out the connection block (6).

d) Remove the filter cartridge (7).

e) Fit the new filter cartridge and assemble in the reverse order.

f) Open the circuit flow meter (1) by means of the screw (2).

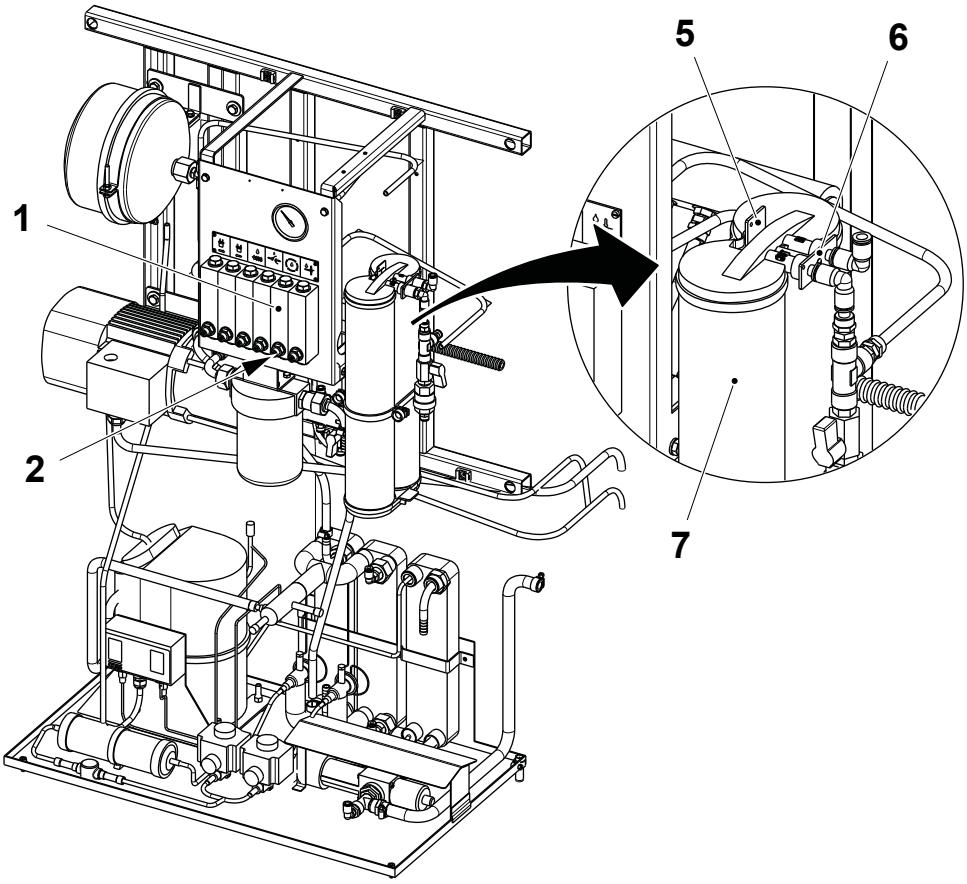

1 Flow meter
2 Screw
5 Fastening plate
6 Connection block
7 Filter cartridge

TechPub_2614345_0108 - 0603_3048191_01.fm

7.1.2-2 Flow Meter - Set Flows

Machine Status	PRODUCTION
SPC Reference	2552113-0300

Set the flows by turning the setting screw (7) for each of the flow meters (1), (2), (3), (4), (5) and (6) as indicated in the following table:

Flow meters	**Flow rate (l/min.)**
TS right (jaw system)	See 10.1 Technical Data
TS left (jaw system)	See 10.1 Technical Data
Final folder	See 10.1 Technical Data
IH transfer LS sealing	See 10.1 Technical Data
De-ionizer (DI) circuit	See 10.1 Technical Data
Strip applicator	see 10.1 Technical Data

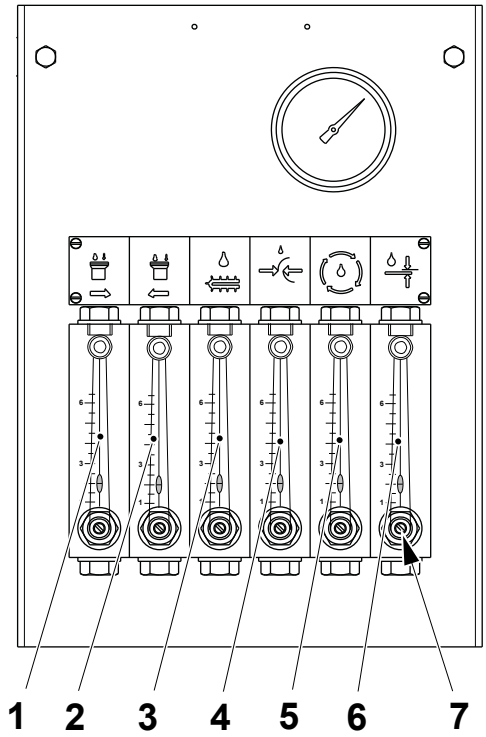

1 Flow meter TS left (jaw system)
2 Flow meter TS right (jaw system)
3 Flow meter Final folder
4 Flow meter IH-LS transformator
5 Flow meter DI-circuit
6 Flow meter Strip Applicator
7 Setting screw

TechPub_2614345_0108 - 0603_3048191_01.fm

7.1.2-3 Flow Meter - Change Filter Insert

Machine Status	Mains Power OFF Air OFF Steam ON Water OFF
SPC Reference	2552113-0300

a) Open the valve (2) to release the cooling system pressure. Approximately one litre of water must be discarded.

b) When the pressure gauge (1) shows 0 bar close the valve (2).

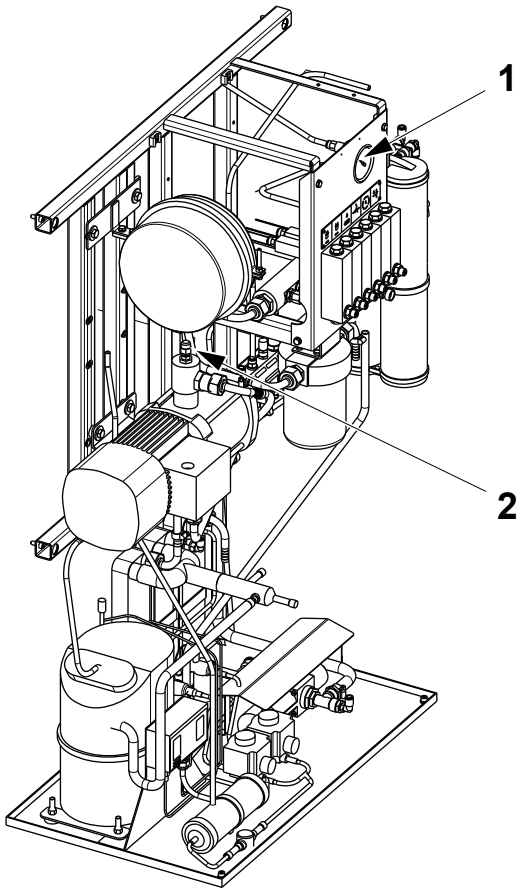

1 Pressure gauge
2 Valve

(Cont'd)

TechPub_2614345_0108 - 0603_3048191_01.fm

(Cont'd)

c) Screw out the filter housing (3) and remove the filter insert (4). Clean the filter insert with compressed air or change if necessary.

d) Check the O-ring (5) for damage. Change if necessary.

e) Fit back the filter insert (4), the O-ring (5) and the filter housing (3).

f) Fill the cooling water system, see 7.1-2 Cooling Water System - Fill.

Note! Check during PRODUCTION that there are no leaks.

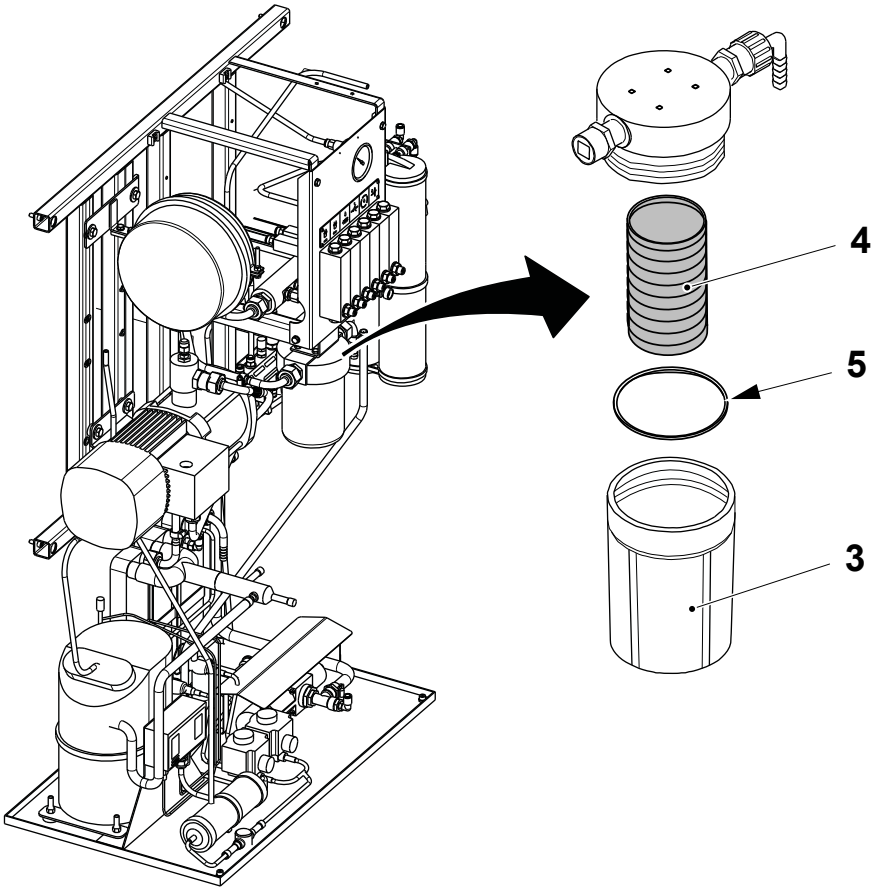

3 Filter housing
4 Filter insert
5 O-ring

TechPub_2614345_0108 - 0603_3048191_01.fm

7.2 Foaming Unit

SPC Reference	1095627-0400

7.2-1 Foaming Unit - Check Connections

Machine Status	EXTERNAL CLEANING
SPC Reference	1095627-0400

Check:

- for leakages in the pipe connections, see arrows. Change the seals if necessary
- for leakages in the cleaning pump connections, see arrows. Change the seals if necessary.

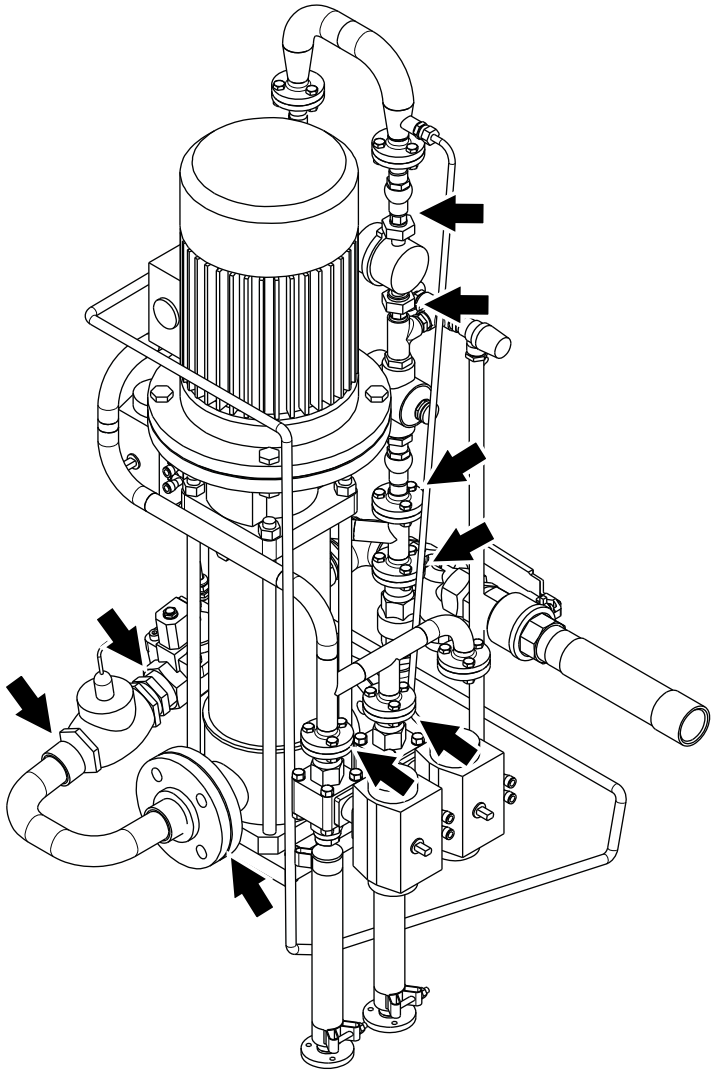

TechPub_2614345_0108 - 0602_3048192_01.fm

7.2-2 Foaming Unit - Set Pressures

Machine Status	EXTERNAL CLEANING
SPC Reference	1095627-0400

Cleaning Pressure

Step up the machine to EXTERNAL CLEANING.

Check the pressure gauge (1) and set the cleaning pressure by means of the adjustment screw (2) on the pressure regulator (3), see 10.1 Technical Data.

Foam Pressure

Set the foam pressure by means of the pressure regulator (4), see 10.1 Technical Data.

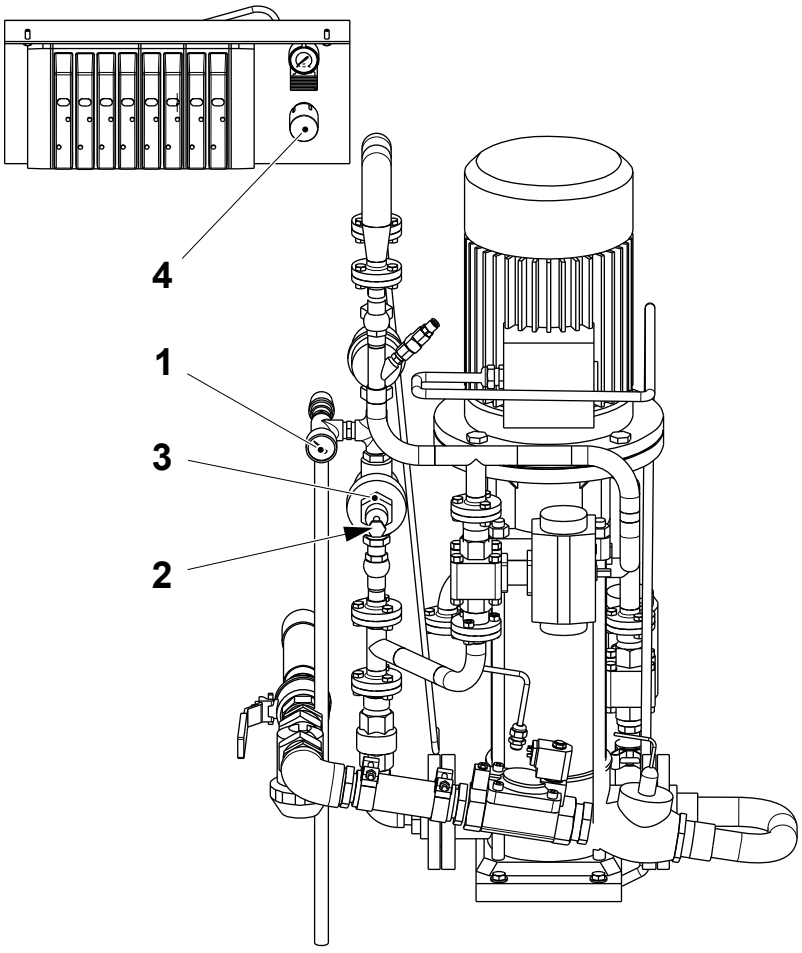

1 Pressure gauge
2 Adjustment screw
3 Pressure regulator
4 Pressure regulator

TechPub_2614345_0108 - 0602_3048192_01.fm

7.2.1 Pipe

7.2.1-1 Pipe - Change Filter

Machine Status	Mains Power OFF Air OFF Steam ON Water OFF
SPC Reference	1095672-0200

a) Close the valve (1).

b) Remove the filter housing (2) and pull out the filter insert (3). Clean or change the filter insert.

c) Check the O-ring (4) for damage. Change if necessary.

d) Install the filter insert (3), the O-ring (4) and the filter housing (2).

e) Open the valve (1).

f) Make sure during EXTERNAL CLEANING that there are no leaks at the filter housing (2).

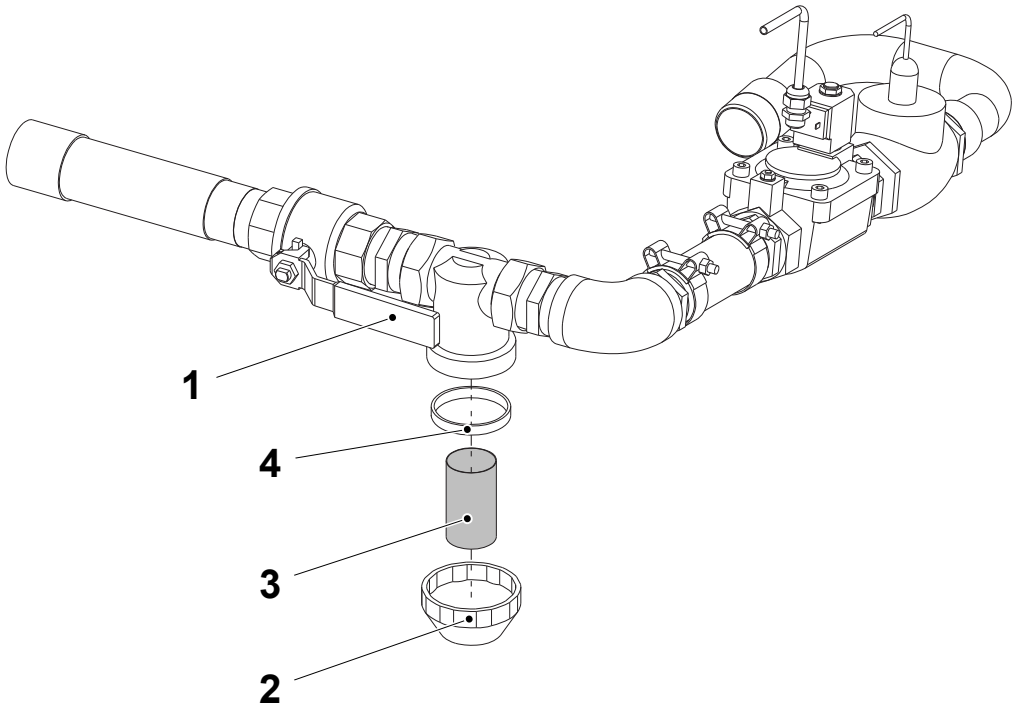

1 Valve
2 Filter housing
3 Filter insert
4 O-ring

TechPub_2614345_0108 - 0602_3048192_01.fm

7.2.2 Pump

7.2.2-1 Pump - Change Gaskets

Machine Status	Mains Power OFF Air OFF Steam ON Water OFF
SPC Reference	1095676-0200 1095675-0200

a) Remove the screws (1) and the pipe (2).

b) Change the gaskets (3).

c) Fit the pipe (2) by means of the screws (1).

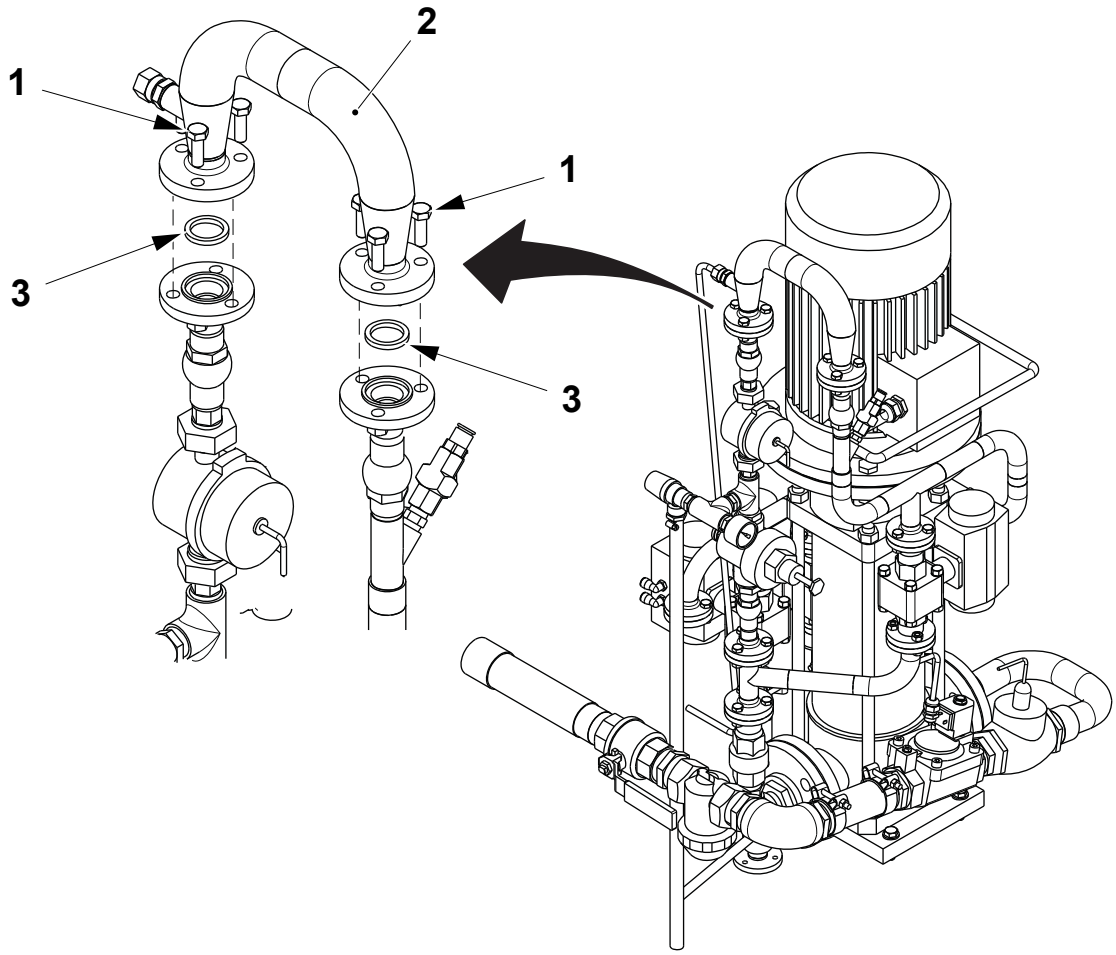

1 Screw
2 Pipe
3 Gasket

(Cont'd)

TechPub_2614345_0108 - 0602_3048192_01.fm

(Cont'd)

d) Remove the screws (4) and the pipe (5).
e) Change the gaskets (6).
f) Remove the non-return valve (7) and change the gasket (8).
g) Fit back the non-return valve (7).
h) Fit the pipe (5) by means of the screws (4).

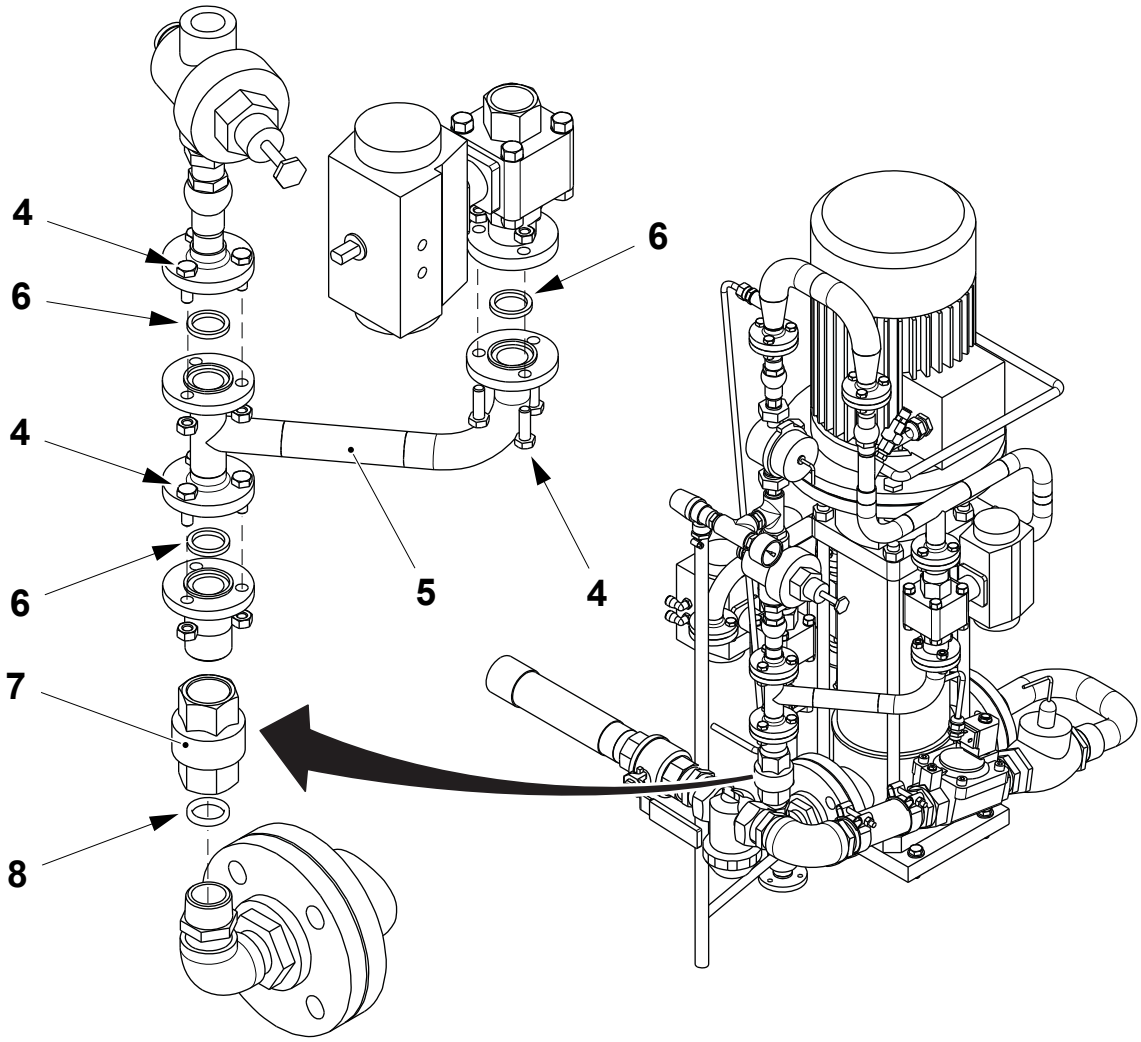

4 Screw
5 Pipe
6 Gasket
7 Non-return valve
8 Gasket

TechPub_2614345_0108 - 0602_3048192_01.fm

7.3 Water Panel

SPC Reference	1095608-0200

7.3-1 Water Panel - Check Pressure Switch

Machine Status	Mains Power ON Air ON Steam ON Water ON
SPC Reference	1095608-0200

a) Slowly close the valve (1) on the open line and make sure that the `WATER SUPPLY` alarm on the TPOP display comes ON when the pressure gauge (2) drops below 2 bar.

b) If not, change the pressure switch (3).

c) Open the valve (1).

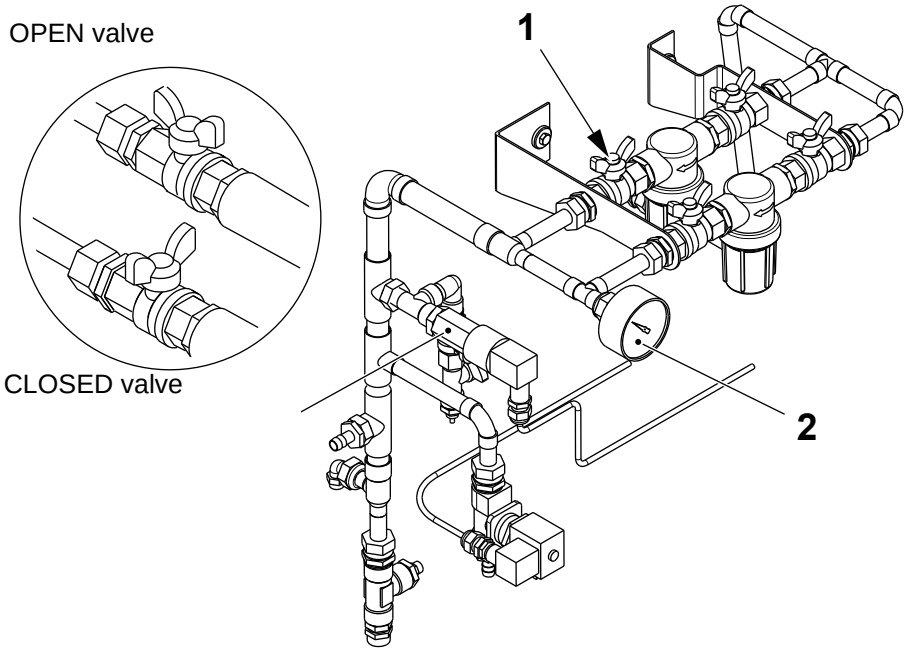

1 Valve
2 Pressure gauge
3 Pressure switch

TechPub_2614345_0108 - 0601_3048193_01.fm

7.3-2 Water Panel - Clean Filters

Machine Status	Mains Power OFF Air OFF Steam ON Water OFF
SPC Reference	1095608-0200

(Cont'd)

TechPub_2614345_0108 - 0601_3048193_01.fm

(Cont'd)

Cold Water

a) Close the four cold water supply valves (1).

b) Remove the filter housing (2) and pull out the filter insert (3). Clean the filter insert with compressed air or change if necessary.

c) Check the O-ring (4) for damage. Change if necessary.

d) Install the filter insert (3), the O-ring (4) and the filter housing (2).

e) Repeat items b) to d) on the other filter.

f) Open both water supply valves on one filtering line.

g) Make sure that during PRODUCTION there are no leaks from the filter housings (2).

Note! During PRODUCTION only one filtering line should be open at any time.

During PRODUCTION

Clean the filter insert on the closed line. Then open both valves on the closed line, close both valves on the other line and clean the other filter insert.

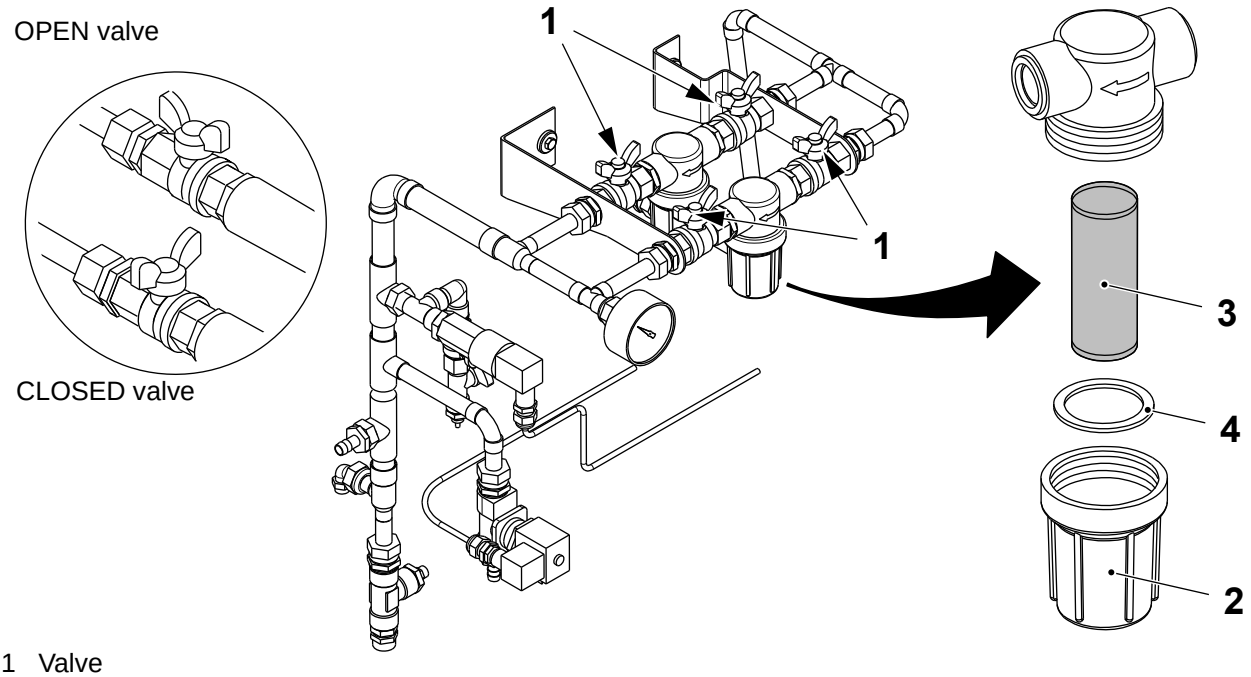

1 Valve
2 Filter housing
3 Filter insert
4 O-ring

TechPub_2614345_0108 - 0601_3048193_01.fm

7.4 Supply System

SPC Reference	1095714-0400

7.4.1 Pneumatic Panel

7.4.1-1 Pneumatic Panel - Check

Machine Status	PREPARATION
SPC Reference	2708544-0100

a) Make sure that there are no leaks at the pneumatic unit.

(Cont'd)

TechPub_2614345_0108 - 0602_3048194_01.fm

(Cont'd)

b) Record the pressure on the air pressure gauge (4).

c) Lower the pressure to 5 bar using the pressure regulator (2) and make sure that the air supply alarm starts to flash on the TPOP.

d) Set the pressure to the previously recorded value.

e) Close the shut-off valve (3) and make sure that the pressure gauge (4) indicates zero. If not change the shut-off valve (3) or the pressure gauge (4).

f) Open the shut-off valve (3).

g) Check the filter insert (5). If the pressure is too low, clean or change it, see 7.4.1-3 Pneumatic Panel - Clean Filter Insert.

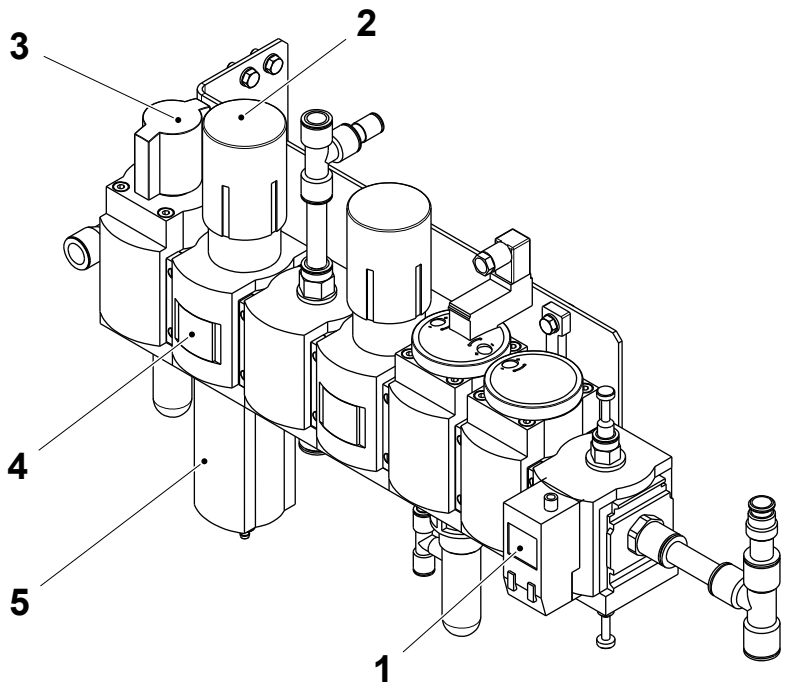

1 Pressure switch
2 Pressure regulator
3 Shut-off valve
4 Pressure gauge
5 Filter insert

TechPub_2614345_0108 - 0602_3048194_01.fm

7.4.1-2 Pneumatic Panel - Set Pressure

Machine Status	Mains Power ON Air ON Steam ON Water OFF
SPC Reference	2708544-0100

Set the main air pressure regulator (1) so that the pressure gauge (2) shows the correct pressure as stated in 10.1 Technical Data.

Set the pilot air pressure regulator (3) so that the pressure gauge (4) shows the correct pressure as stated in 10.1 Technical Data.

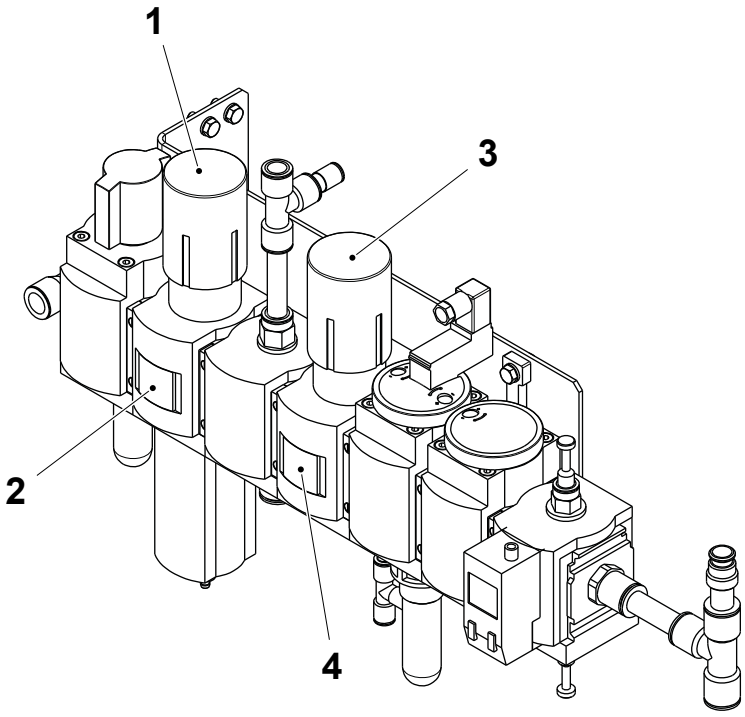

1 Pressure regulator
2 Pressure gauge
3 Pressure regulator
4 Pressure gauge

TechPub_2614345_0108 - 0602_3048194_01.fm

7.4.1-3 Pneumatic Panel - Clean Filter Insert

Machine Status	Mains Power ON Air ON Steam ON Water OFF
Consumables	Soap
SPC Reference	2708544-0100

a) Turn off the main air supply using the shut-off valve (1).

b) Remove the reservoir (2) and change the O-ring if necessary.

c) Clean the reservoir (2) with soapy water and rinse with plenty of clean water.

d) Remove and clean the filter insert (3) inside the reservoir (2). Change if necessary.

e) Install the reservoir and make sure that the O-ring is correctly fitted.

f) Open the air inlet valve and make sure there are no leaks from the reservoir.

TechPub_2614345_0108 - 0602_3048194_01.fm

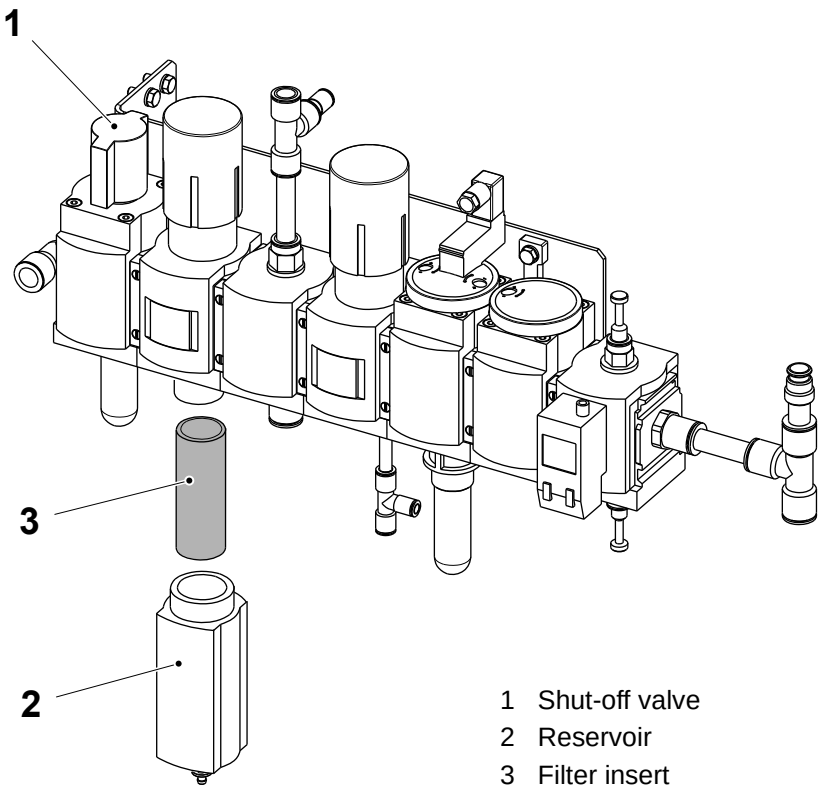

1 Shut-off valve
2 Reservoir
3 Filter insert

7.5 Water System

SPC Reference	2833381-0200

7.5.1 Filter

7.5.1-1 Filter - Change Pressure Regulator

Machine Status	Mains Power OFF Air OFF Steam ON Water OFF
SPC Reference	2795888-0200

a) Close the valve (1).

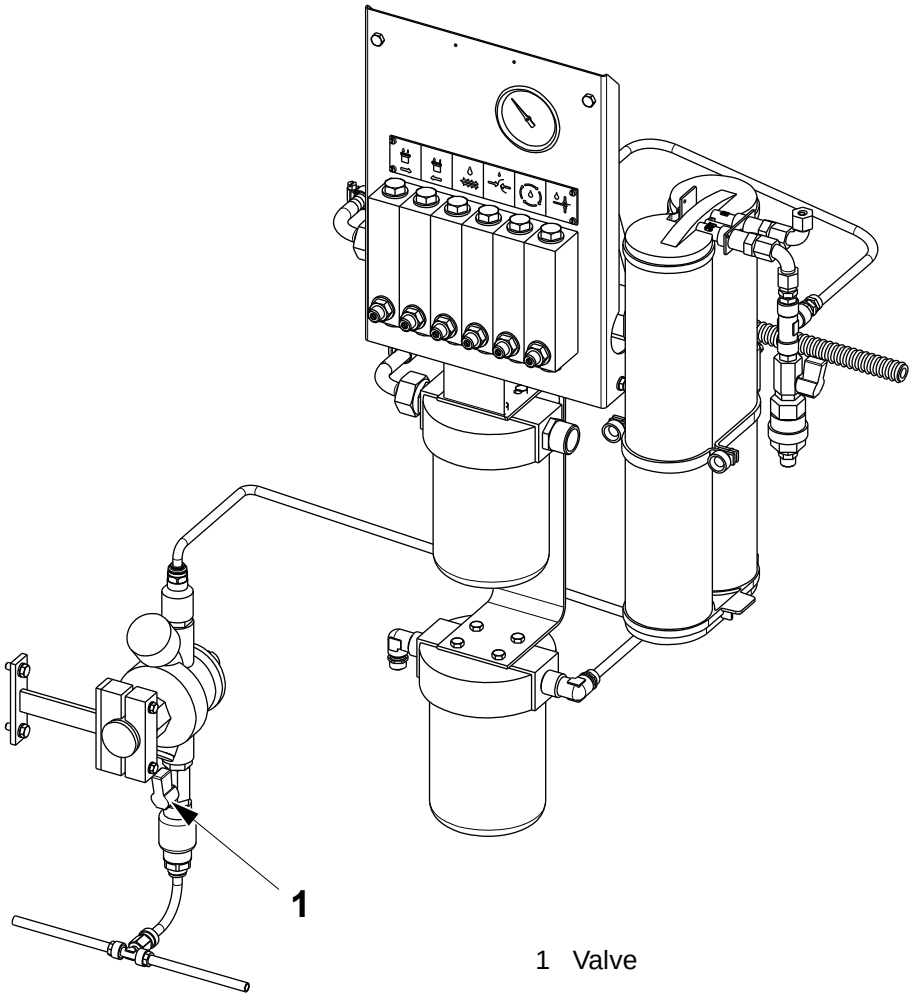

1 Valve

(Cont'd)

TechPub_2614345_0108 - 0601_3048195_01.fm

(Cont'd)

b) Remove the pipe connections (2) and (3).
c) Remove the screws (4) the holder (5) and the pressure regulator (6).
d) Fit the new pressure regulator, assemble in the reverse order.
e) Open the valve (1).
f) Set the pressure regulator, see 7.5.1-2 Filter - Set Pressure Regulator.

1 Valve
2 Pipe connection
3 Pipe connection
4 Screw
5 Holder
6 Pressure regulator

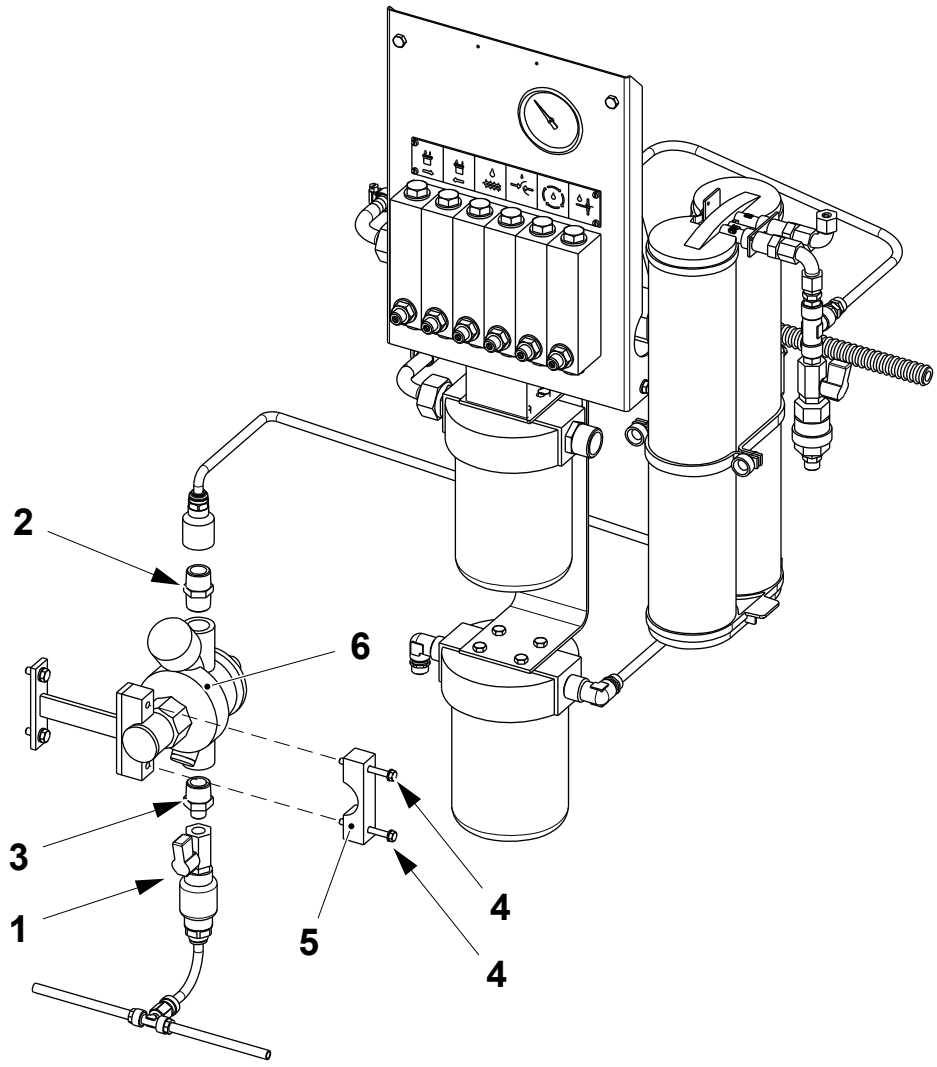

TechPub_2614345_0108 - 0601_3048195_01.fm

7.5.1-2 Filter - Set Pressure Regulator

Machine Status	Mains Power OFF Air ON Steam ON Water OFF
SPC Reference	2795888-0200

a) Remove the cap (1).

b) Set the water pressure on the manometer (2) to 3.5 bar.

c) Fit the cap (2).

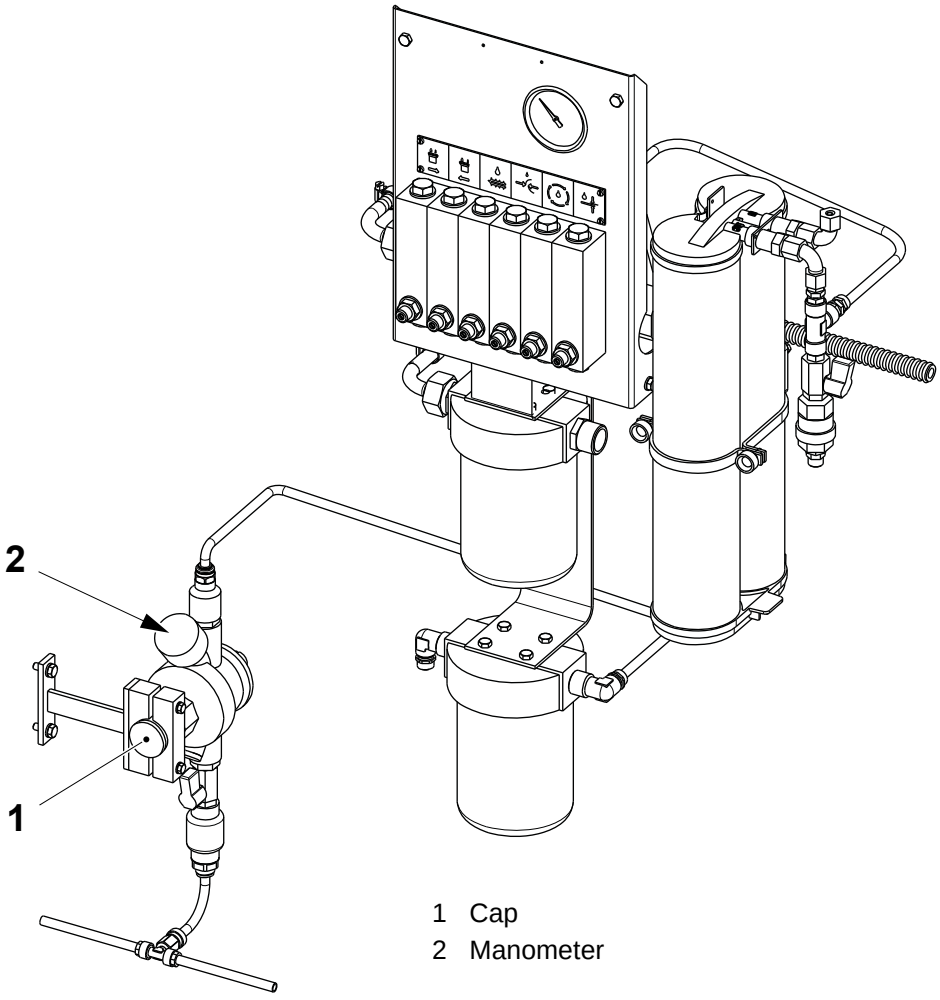

1 Cap
2 Manometer

TechPub_2614345_0108 - 0601_3048195_01.fm

7.5.1-3 Filter - Change Filter Insert

Machine Status	Mains Power OFF Air OFF Steam ON Water OFF
SPC Reference	2795888-0200

Follow the instructions in 7.1.2-3 Flow Meter - Change Filter Insert to change the peroxide reducer filter insert (1).

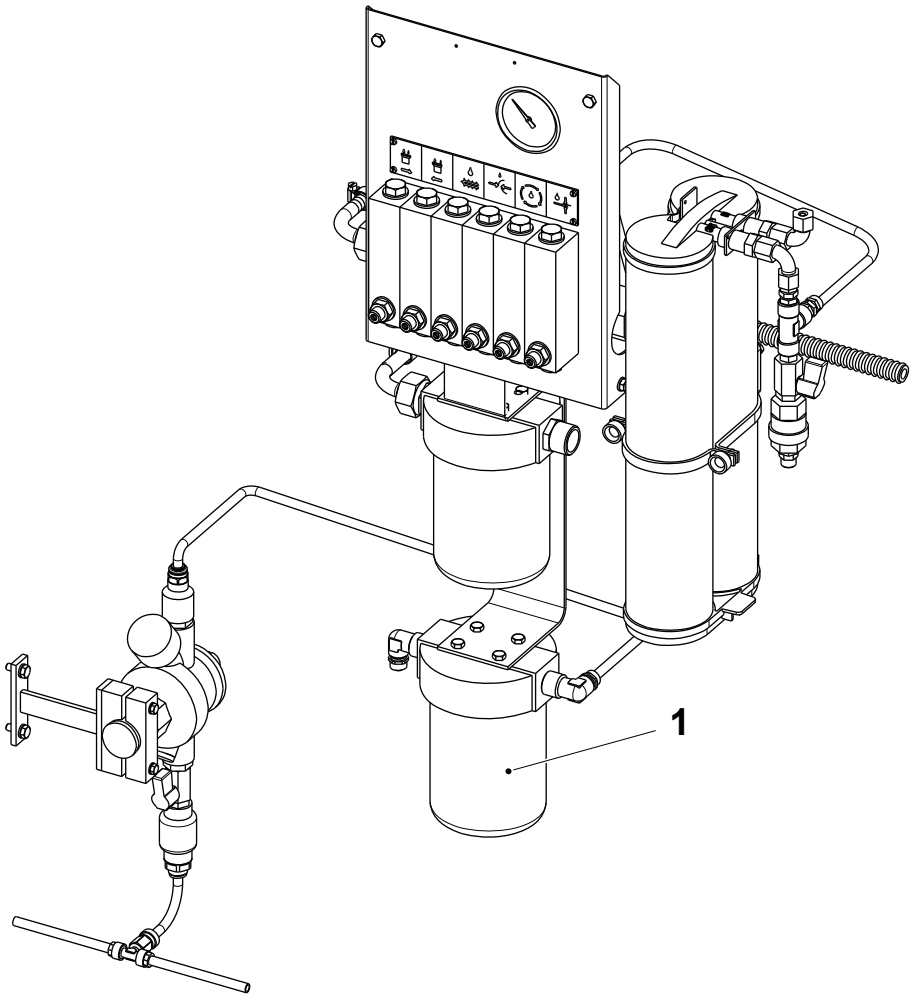

1 Filter insert

TechPub_2614345_0108 - 0601_3048195_01.fm

7.5.2 Sterile Water System

7.5.2-1 Sterile Water System - Start-Up

Machine Status	Mains Power ON Air OFF Steam ON Water ON
SPC Reference	2879650-0200

a) Make sure that the water supply valves (1) and (2) are open.

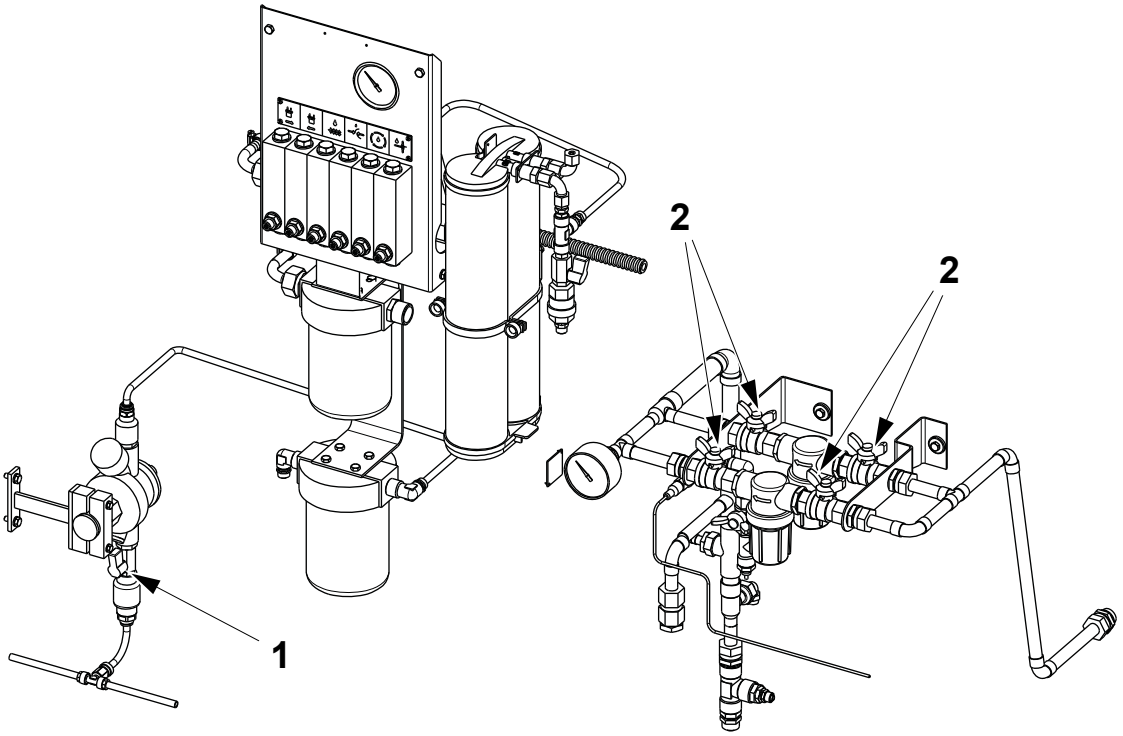

1 Valve
2 Valve

(Cont'd)

TechPub_2614345_0108 - 0601_3048196_01.fm

(Cont'd)

b) Turn the power ON by the switch (3). The display (4) shows the serial number for 10 sec.

Note! If the LOW PRESSURE alarm is displayed on the display (4), press the OPERATE/STANDBY button (5) for 2 seconds.

c) Press the MENU button (6) for 2 seconds: the display (4) shows the lifetime of the Progard pack (7).

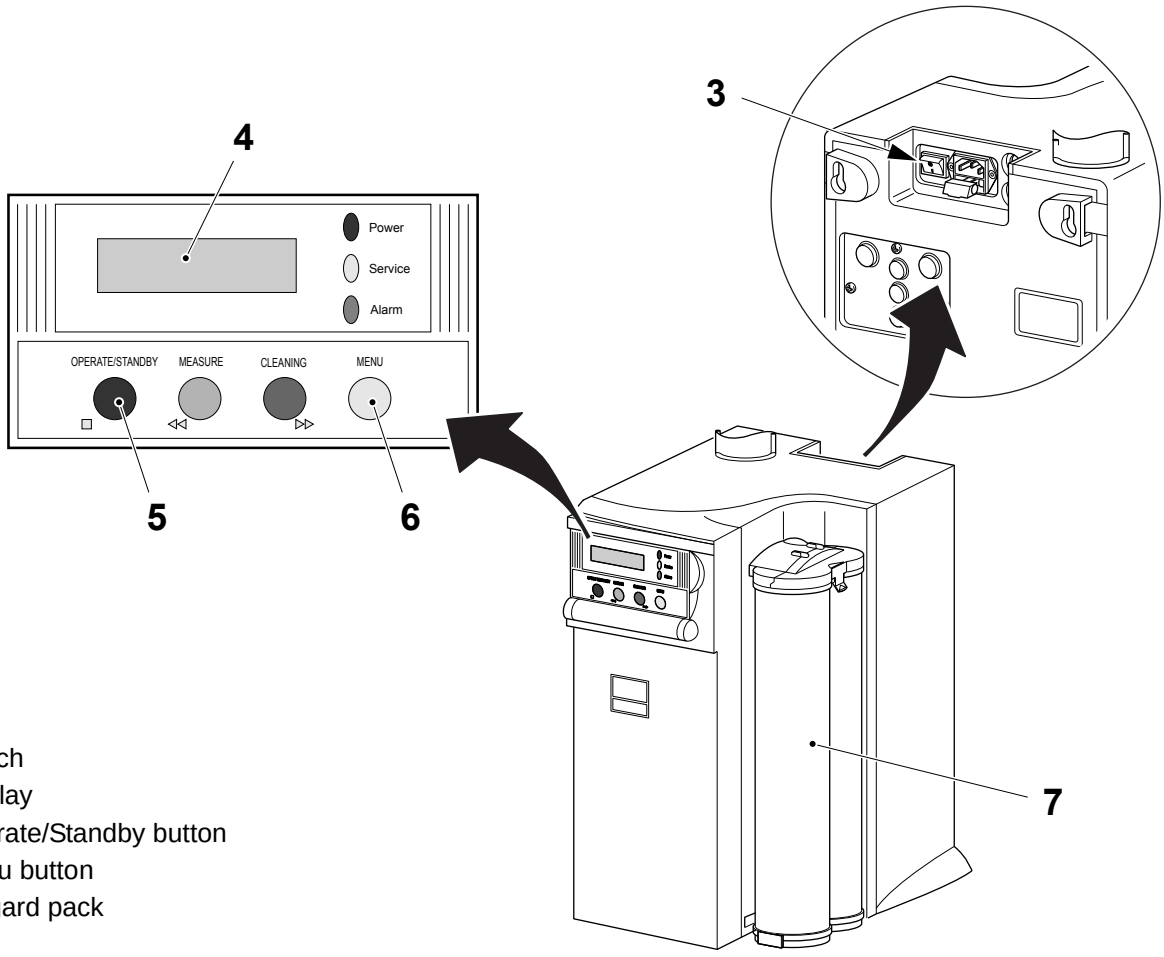

3 Switch
4 Display
5 Operate/Standby button
6 menu button
7 Progard pack

(Cont'd)

TechPub_2614345_0108 - 0601_3048196_01.fm

(Cont'd)

d) Press twice the MENU button (6): the rinsing cycle starts after a 10 seconds delay and the display (4) shows the countdown of the remaining time.

Note! The rinsing cycle requires 4 hours about: it is mandatory when the sterile water system is starting-up and every time a new Progard pack (7) is installed.

At the end of the system rinse cycle, the display (4) shows TANK FULL and the sterile water system switches automatically to OPERATE mode in order to fill the reservoir.

Note! When the machine is in step PREPARATION, the pump starts filling the UV lamp cooling circuit: the LOW FLOW alarm is shown on the TPOP until the circuit is completely filled and working.

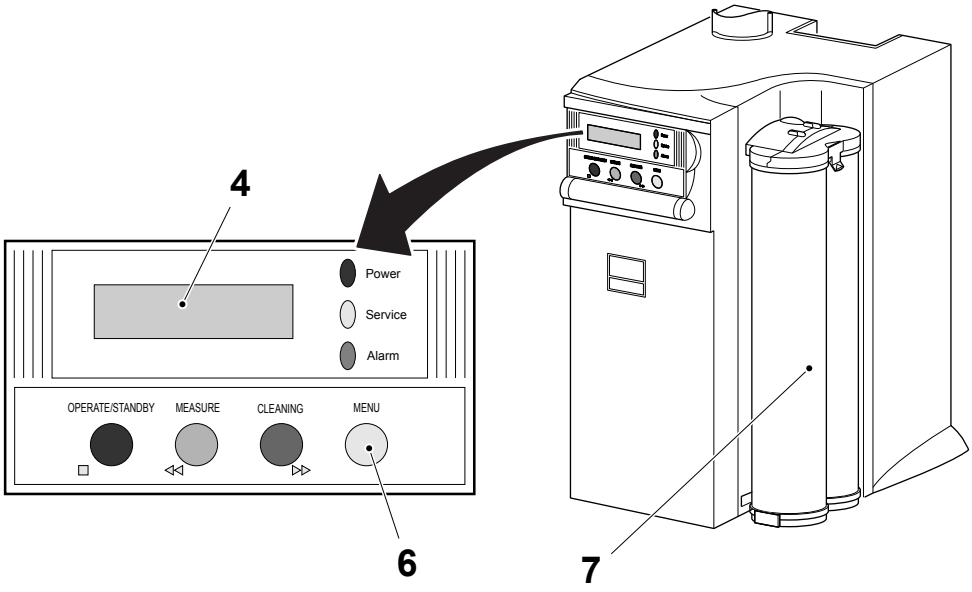

4 Display
6 Menu button
7 Progard pack

TechPub_2614345_0108 - 0601_3048196_01.fm

7.5.2-2 Sterile Water System - Set

Machine Status	Mains Power ON Air OFF Steam ON Water ON
SPC Reference	2879650-0200

Note! The following settings; Language, Alarm Signal and Measurement Unit, can be set in sequence by pressing the OPERATE/STANDBY button (4) after each single setting.

Language

a) Press the MENU button (1) for two seconds.

b) Press the MENU button (1) again.

c) Press the CLEANING button (2) to scroll through the available languages.

d) When the desired language is displayed, press the MENU button (1) for two seconds to validate the choice. The displays returns to the start mode.

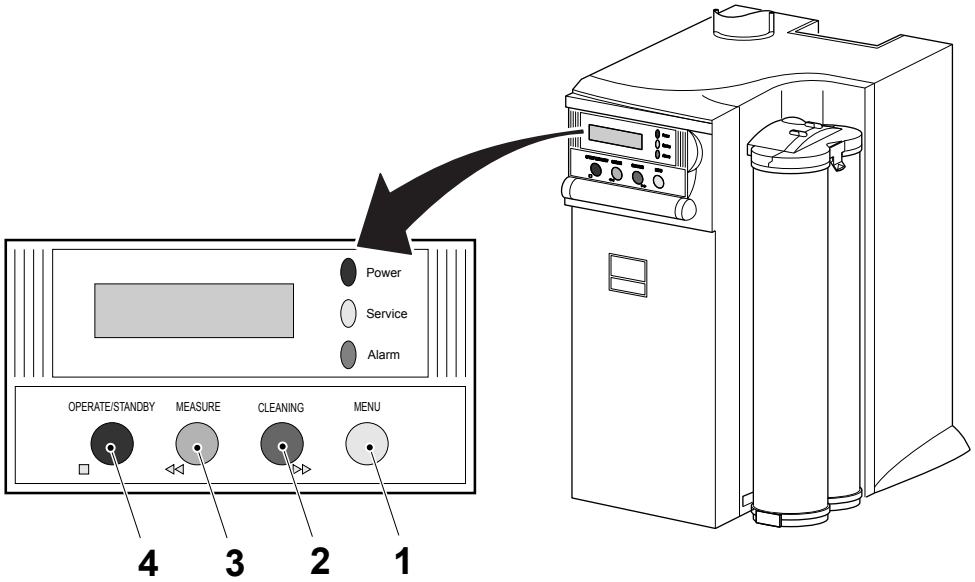

1 Menu button
2 Cleaning button
3 Measure button
4 Operate/Standby button

(Cont'd)

TechPub_2614345_0108 - 0601_3048196_01.fm

(Cont'd)

Alarm Signal ON/OFF

Note! The alarm signal is OFF by default: it is important to switch it ON.

a) Press the MENU button (1) for two seconds.

b) Press the MENU button (1) a second time.

c) Press the OPERATE/STANDBY button (4).

d) Press the CLEANING button (2) to activate the alarm signal.

e) Press the MENU button (1) for two seconds to validate and to return to the start mode.

Measurement Unit (µS)

a) Press the MENU button (1) for two seconds.

b) Press the MENU button (1) a second time.

c) Press three times the OPERATE/STANDBY button (4).

d) Press the CLEANING button (2) or the MEASURE button (3) to select µS as measurement unit.

e) Press the MENU button (1) for two seconds to validate units and to return to the start mode.

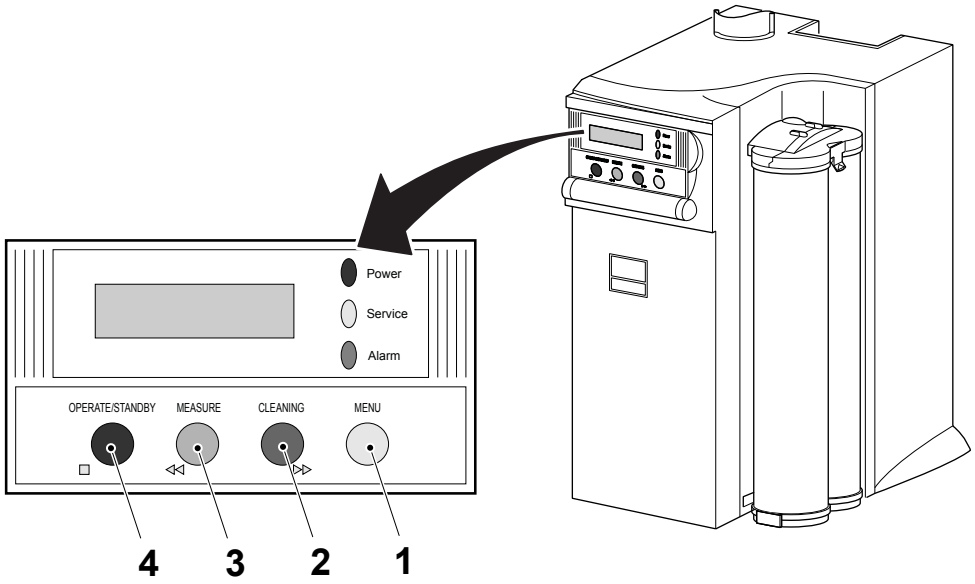

1 Menu button
2 Cleaning button
3 Measure button
4 Operate/Standby button

TechPub_2614345_0108 - 0601_3048196_01.fm

(Cont'd)

(Cont'd)

Date and Time

a) Press the MENU button (1) for two seconds.

b) Press the MENU button (1) four times. The calendar screen is displayed and the hours digits are flashing.

c) Press the CLEANING button (2) or the MEASURE button (3) to change the hours.

d) Press the OPERATE/STANDBY button (4) to validate.

e) Repeat the same steps to change the minutes, the day of the week, the month, the date and the year.

f) Press the MENU button (1) for more than two seconds to return to the start mode.

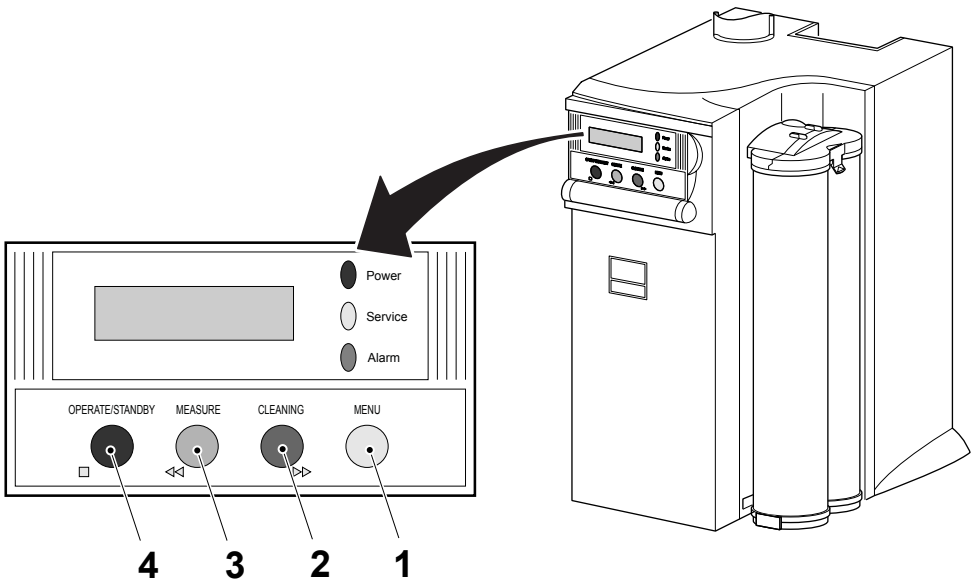

1 Menu button
2 Cleaning button
3 Measure button
4 Operate/Standby button

TechPub_2614345_0108 - 0601_3048196_01.fm

7.5.2-3 Sterile Water System - Clean Reverse Osmosis Cartridge

Machine Status	PRODUCTION
Special Equipment	Chlorine Tablets TP No. 90600-5773
SPC Reference	2879650-0200

WARNING
Hazardous substances.
Follow the Safety Precautions.

Note! The reverse osmosis cartridge is inside the sterile water system. To keep it clean and efficient a chlorine tablets must be added every three months.

(Cont'd)

TechPub_2614345_0108 - 0601_3048196_01.fm

(Cont'd)

Note! The message "START AUTOCLEAN" on the display (1) informs that the chlorine tablet must be added.

a) Press the OPERATE/STANDBY button (2) for two seconds. The message "STANDBY" on the display (1) flashes.

b) When message "STANDBY" on the display (1) stops flashing, open the plug (3) and drop in a chlorine tablet.

c) Close and tighten the plug (3) without forcing.

d) Press the CLEANING button (4) for two seconds. The chlorine cleaning cycle starts after a 10 seconds delay.

At the end of this cycle the sterile water system switches automatically in OPERATE mode.

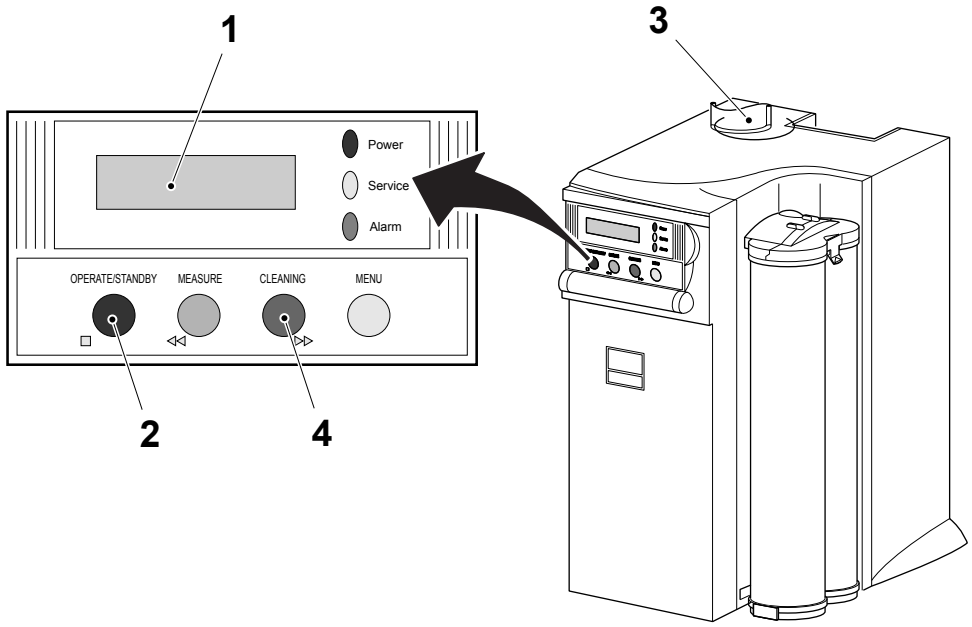

1 Display
2 Operate/Standby button
3 Plug
4 Cleaning button

TechPub_2614345_0108 - 0601_3048196_01.fm

7.5.2-4 Sterile Water System - Change Progard Pack

Machine Status	Mains Power ON Air OFF Steam ON Water ON
Special Equipment	Maintenance Kit TP No. 90600-3267
SPC Reference	2879650-0200

Note! The Progard pack (1) is a pretreatment pack that removes particles and free chlorine from the incoming water. In addition, it helps to prevent mineral scaling in hard water areas. The Progard pack (1) must be replaced maximum every six months.

a) Press the OPERATE/STANDBY button (2) for two seconds. The message "STANDBY" on the display (3) flashes.

b) When message "STANDBY" on the display (3) stops flashing, lift the pack adapter cover (4).

c) Remove the locking clip (5).

d) Remove the Progard pack (1).

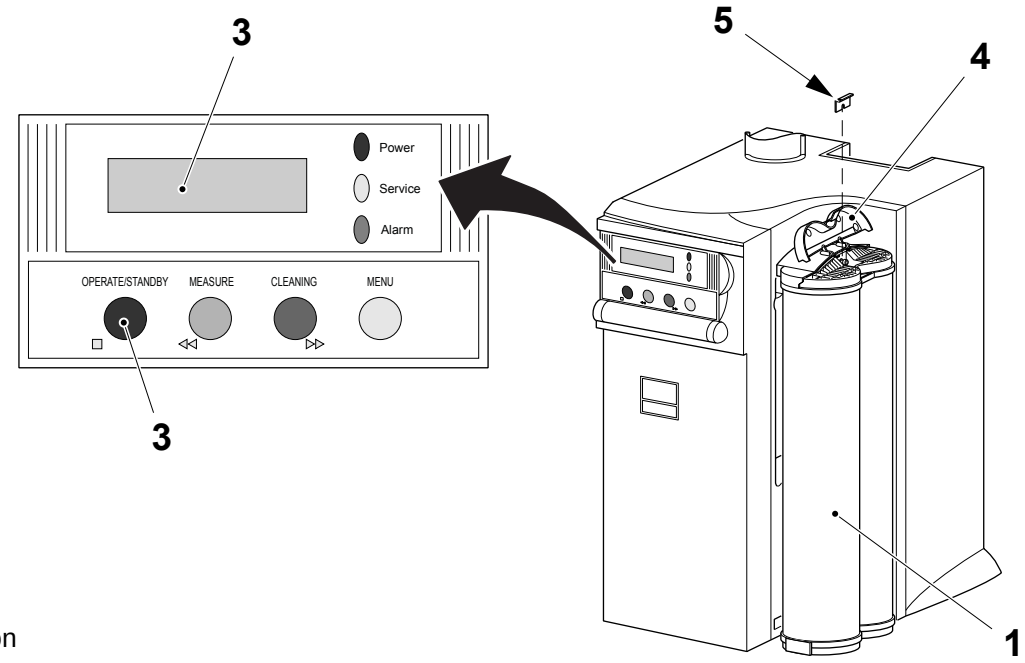

1 Progard Pack
2 Operate/Standby button
3 Display
4 Pack adapter cover
5 Locking clip

(Cont'd)

TechPub_2614345_0108 - 0601_3048196_01.fm

(Cont'd)

e) Remove the protective plugs (6) from the Progard pack (1) and wet the pack O-rings (7) using a few drop of clean water.

f) Slide the Progard pack (1) onto the metal guide pin (8).
   – lift up the pack slightly and push the bottom of the pack into the lower slot (9)
   – push the pack completely in the upper slots (10).

g) Lock the pack in place with the locking clip (5).

h) Lower the pack adapter cover (4).

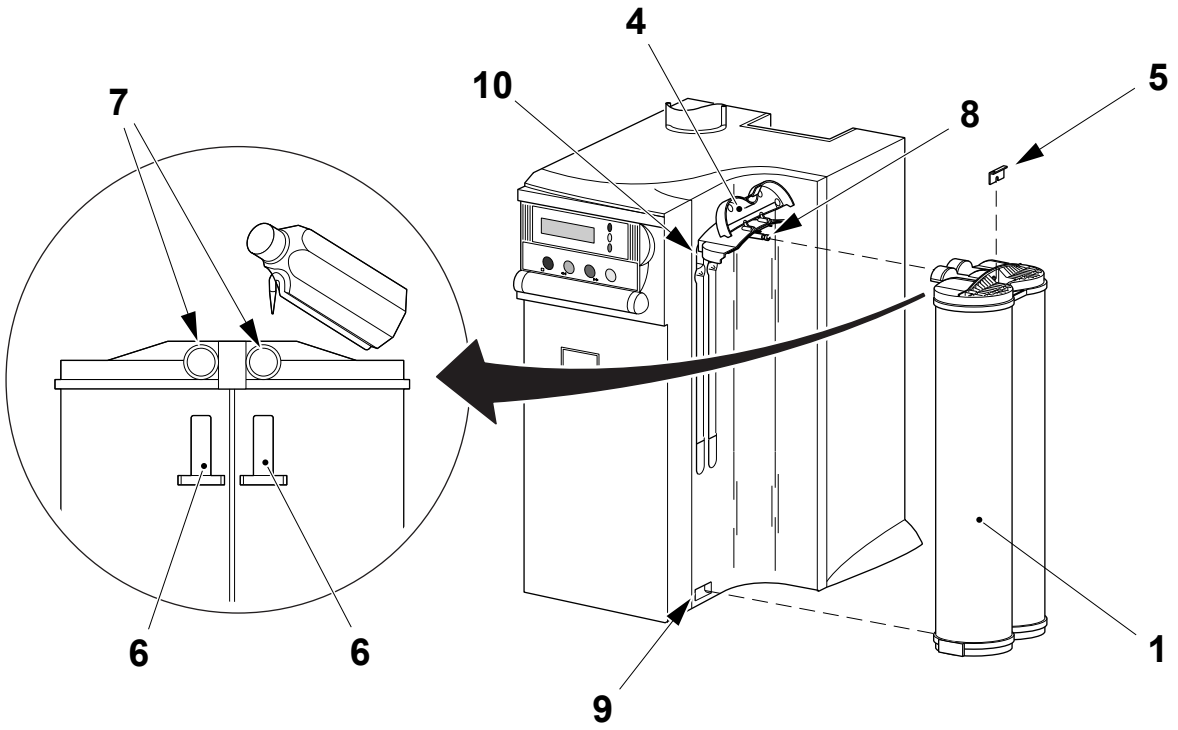

1 Progard Pack
4 Pack adapter cover
5 Locking clip
6 Protective plugs
7 O-ring
8 Guide pin
9 Lower slot
10 Upper slot

(Cont'd)

TechPub_2614345_0108 - 0601_3048196_01.fm

(Cont'd)

Note! In order to not exceed the capacity of the vent filter (13), it is recommended to replace it at the same time that the Progard pack is changed.

i) Remove the plug (11) of the reservoir (12) and change the vent filter (13) inside the plug (11).

j) Perform the rinsing cycle, see 7.5.2-1 Sterile Water System - Start-Up from step c).

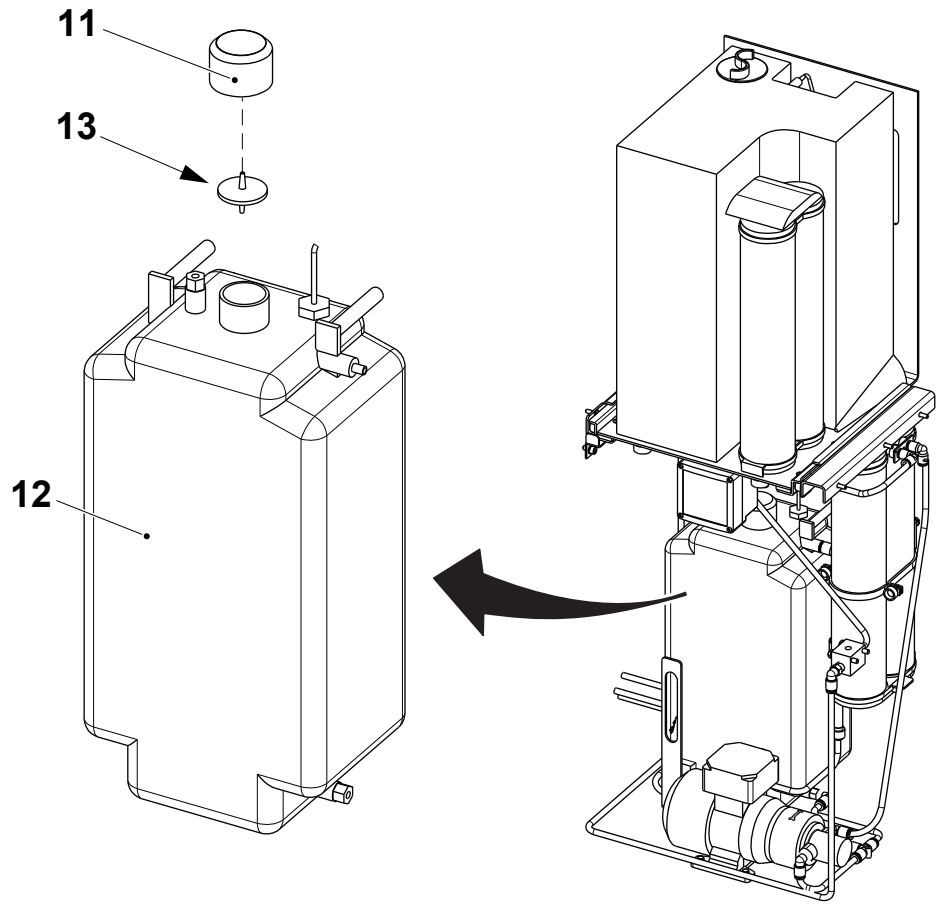

11 Plug
12 Reservoir
13 Vent filter

TechPub_2614345_0108 - 0601_3048196_01.fm

7.5.2-5 Sterile Water System - Drain Reservoir

Machine Status	Mains Power ON Air OFF Steam ON Water ON
SPC Reference	2879650-0200

Note! If the machine has been stopped for a protracted time (approximately two weeks) it is suggested to drain the reservoir (1).

Drain the distilled water in the reservoir (1) as follows.

a) Press the OPERATE/STANDBY button (2) for two seconds. The message "STANDBY" on the display (3) flashes.

b) When message "STANDBY" on the display (3) stops flashing, open the valve (4).

c) When the reservoir is empty, close the valve (4).

When restarting the machine, make sure that the valve (4) is closed, then press the OPERATE/STANDBY button (2).

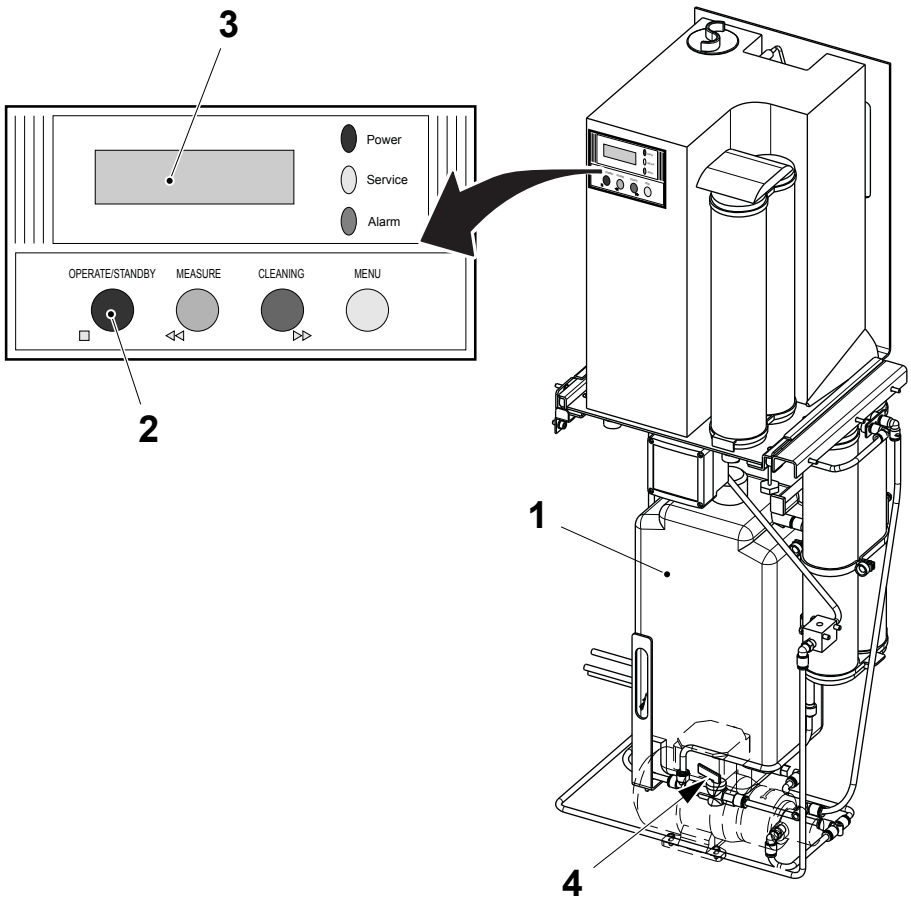

1 Reservoir
2 Operate/Standby button
3 Display
4 Valve

TechPub_2614345_0108 - 0601_3048196_01.fm

7.5.2-6 Sterile Water System - Change Configuration

Machine Status	Mains Power ON Air OFF Steam ON Water ON
SPC Reference	2879650-0200

Note! Change the Low TDS (Total Dissolved Salt) configuration **only** if the sterile water unit is fed with distilled or deionized water (conductivity of the inlet water less than 50 µS). Do not change this setting if not necessary.

Note! The normal setting (factory default) of `LOW TDS CONF` is OFF. When set to ON, the alarms `ERROR 8`, `ERROR 10` and `% REJ. < S.P.` will not be shown. `ERROR 8` (Feed < 13.5 S/cm) and `ERROR 10` (Permeate < 0.5 S/cm) and `% REJ. < S.P.` occur frequently when a system is fed with distilled or deionised water. Setting `LOW TDS CONF` to ON will prevent these three alarms from being displayed.

(Cont'd)

TechPub_2614345_0108 - 0601_3048196_01.fm

(Cont'd)

a) Press at the same time the MENU button (1), the CLEANING button (2) and the MEASURE button (3) to enter the Field Service Software.

b) Press six times the MENU button (1) until `SERVICE CONFIG.PAK LIFE: 1500 h` is displayed.

c) Press six times the OPERATE/STANDBY button (4) until `SERVICE CONFIG.LOW TDS CONF: OFF` is displayed.

d) Press the CLEANING button (2) to change the setting to `ON`.

e) Press the MENU button (1) for two seconds to validate and to return to the start mode.

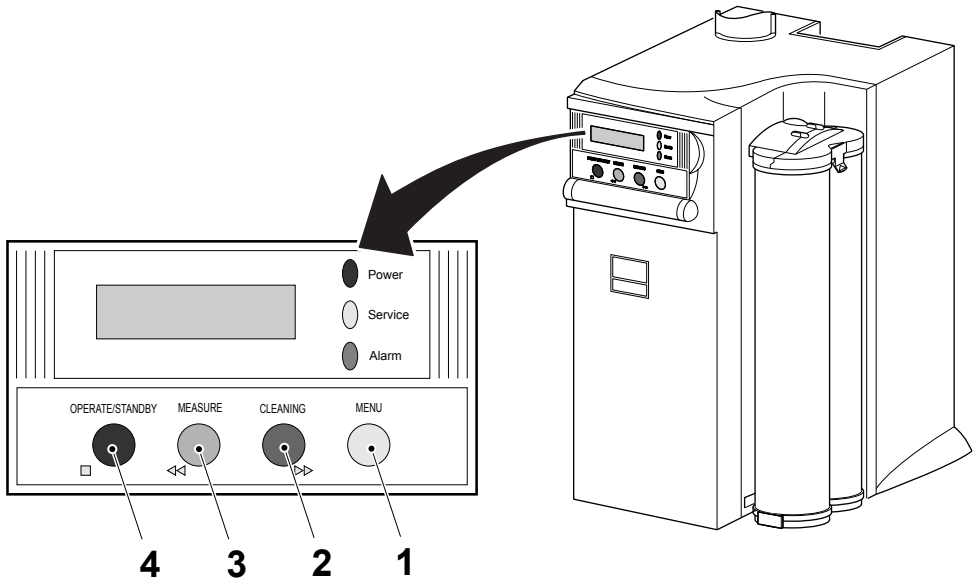

1 Menu button
2 Cleaning button
3 Measure button
4 Operate/Standby button

TechPub_2614345_0108 - 0601_3048196_01.fm

7.5.3 Electrical Connection

7.5.3-1 Electrical Connection - Set Sensor Sensitivity

Machine Status	Mains Power ON Air OFF Steam ON Water OFF
SPC Reference	2879651-0100

Use a screwdriver to set the sensitivity of the sensor (1) to the minimum.

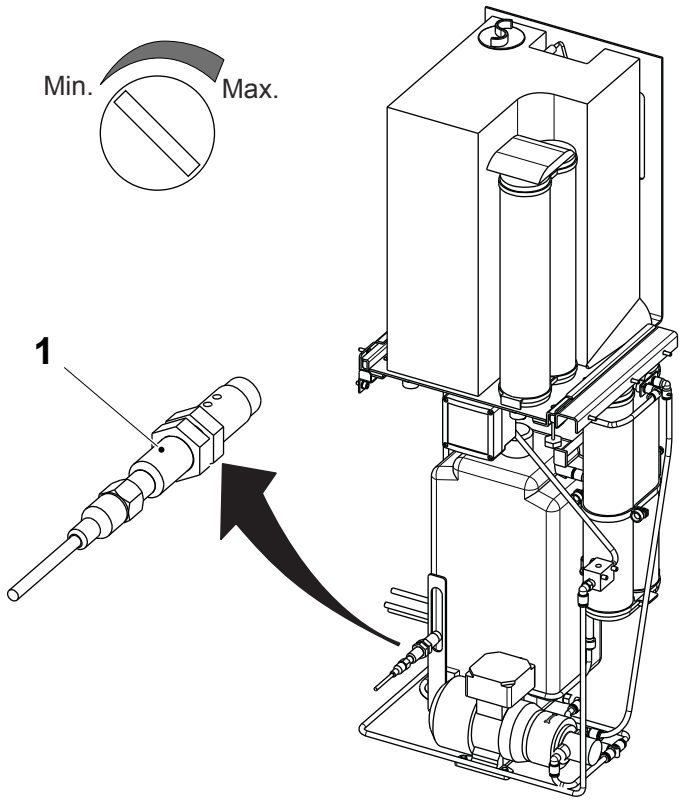

1 Sensor

TechPub_2614345_0108 - 0602_3048197_01.fm

7.5.4 Circuit

7.5.4-1 Circuit - Set Conductivity Meter

Machine Status	Mains Power ON Air OFF Steam ON Water OFF
SPC Reference	2879650-0200

Note! In the normal operating mode, touching the button (1) will switch the display (3) between indicating the conductivity (µS), temperature (°C) or output signal (mA).

a) Touch and hold the button (1) and the ENTER button (2) for five seconds to enter the conductivity meter calibration mode.

b) Touch the buttons (1) or (4) until `UNIT` is shown in the display (3) and touch the ENTER button (2).

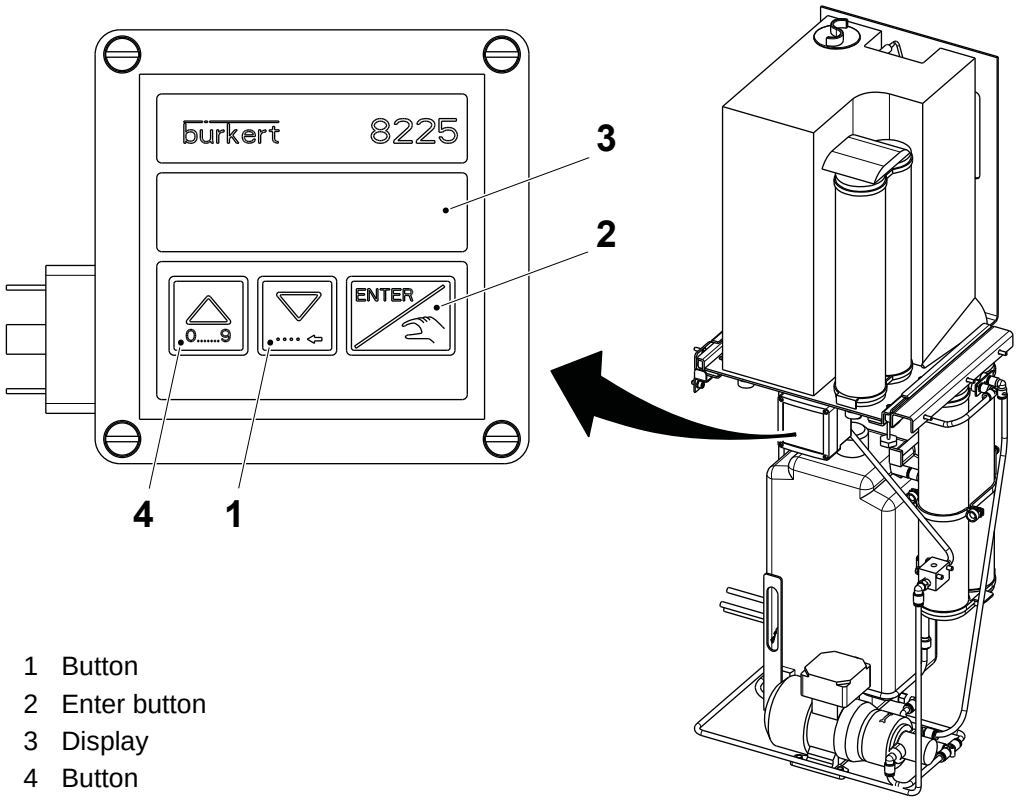

1 Button
2 Enter button
3 Display
4 Button

(Cont'd)

TechPub_2614345_0108 - 0602_3048197_01.fm

(Cont'd)

c) Touch the buttons (1) or (4) to set µS as unit of measurement for the conductivity and touch the ENTER button (2).

d) Check that the unit is set to two decimal digits and touch the ENTER button (2).

e) Check that the unit of measurement fort the temperature is set to `CELSIUS` and touch the ENTER button (2).

f) The `CELL CST` is shown in the display (3): touch the ENTER button (2).

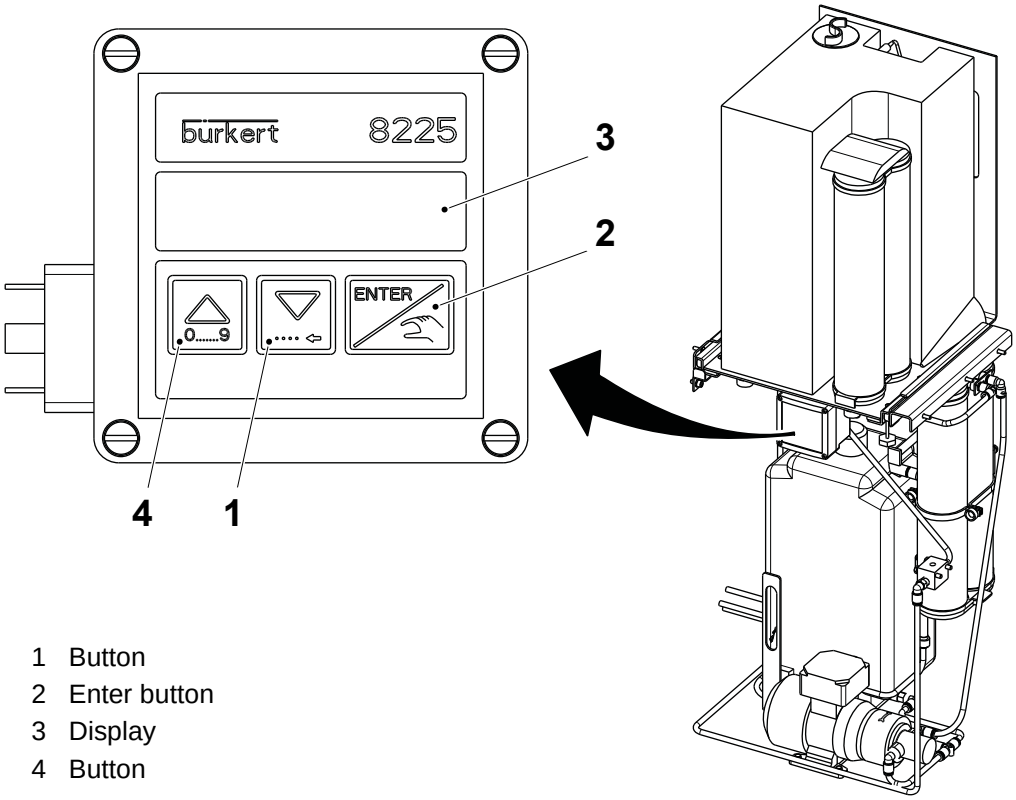

1 Button
2 Enter button
3 Display
4 Button

(Cont'd)

TechPub_2614345_0108 - 0602_3048197_01.fm

(Cont'd)

Note! The CELL CONSTANT value is indicated on the label attached to the conductivity meter.

g) Enter the CELL CONSTANT value by means of the buttons (1) and (4).
   - the button (4) changes the value of a digit
   - the button (1) is used to move from one digit to the next digit.

h) Touch the ENTER button (2).

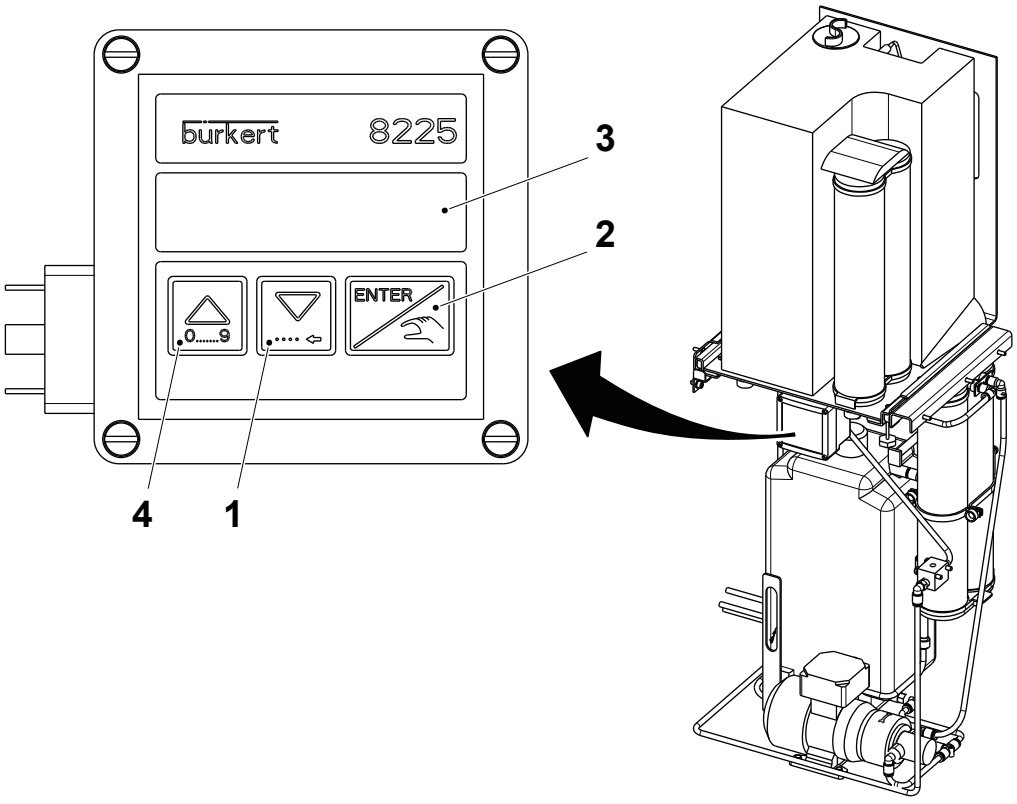

1 Button
2 Enter button
3 Display
4 Button

(Cont'd)

TechPub_2614345_0108 - 0602_3048197_01.fm

(Cont'd)

i) Touch the button (1) until CURRENT is shown in the display (3) and then touch the ENTER button (2).

Note! The output current range is 4-20 mA.

j) The starting value of the conductivity measuring range is displayed. Enter the value 00.00 by means of the buttons (1) and (4).

k) Touch the ENTER button (2). The end value of the measuring range is displayed. Enter the value 04.00 by means of the buttons (1) and (4).

l) Touch the ENTER button (2).

m) Touch the button (1) until END is shown in the display (3) and then touch the ENTER button (2). The new parameters are saved and the conductivity meter returns to its operating mode.

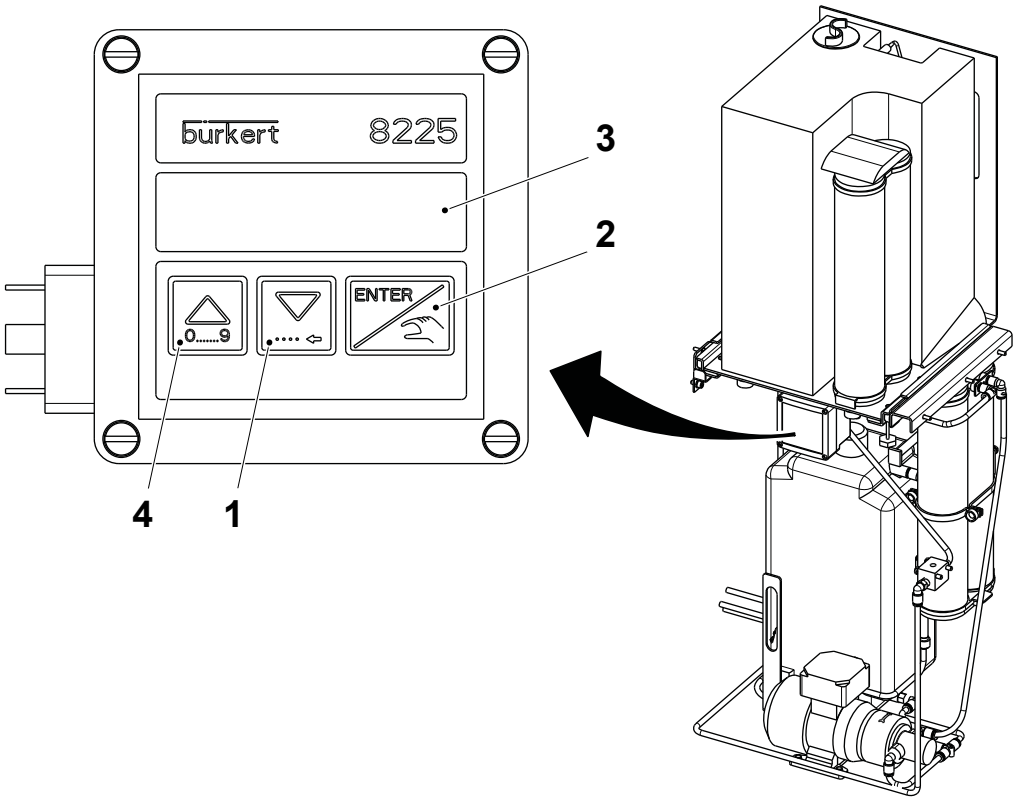

1 Button
2 Enter button
3 Display
4 Button

TechPub_2614345_0108 - 0602_3048197_01.fm

7.5.4-2 Circuit - Change Filter

Machine Status	Mains Power ON Air OFF Steam ON Water OFF
SPC Reference	2879650-0200

a) Remove the two knobs (1) to release the support (2).

b) Remove the fastening plate (3) and pull out the connection block (4).

c) Remove the filter cartridge (5).

d) Fit the new filter cartridge and assemble in the reverse order.

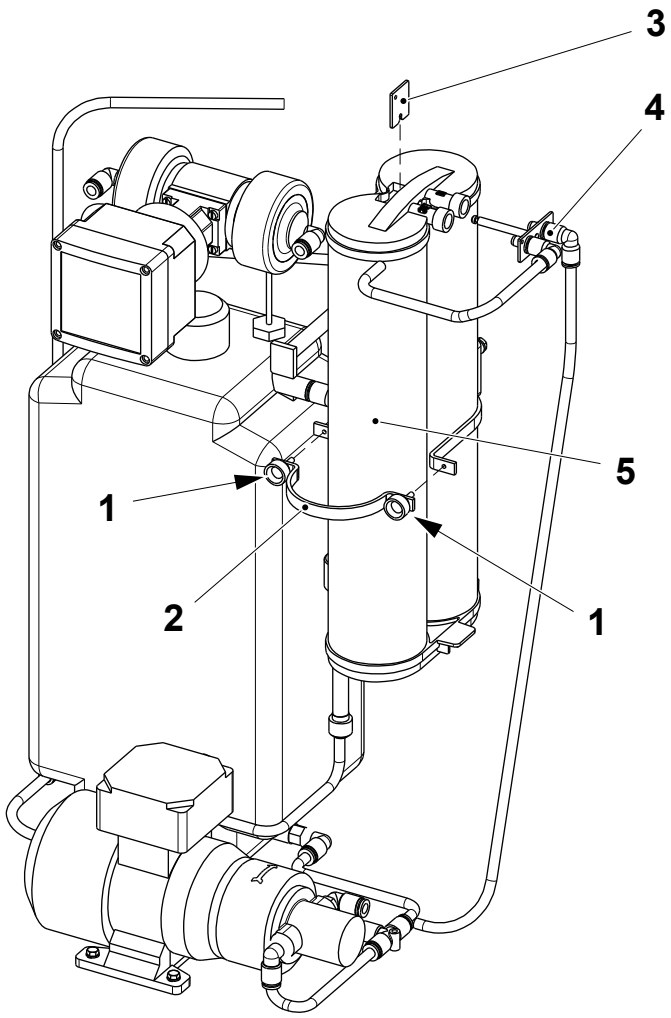

1 Knob
2 Support
3 Fastening plate
4 Connection block
5 Filter cartridge

TechPub_2614345_0108 - 0602_3048197_01.fm

This page intentionally left blank

TechPub_2614345_0108 - 0602_3048197_01.fm

8 Automatic Splicing Unit

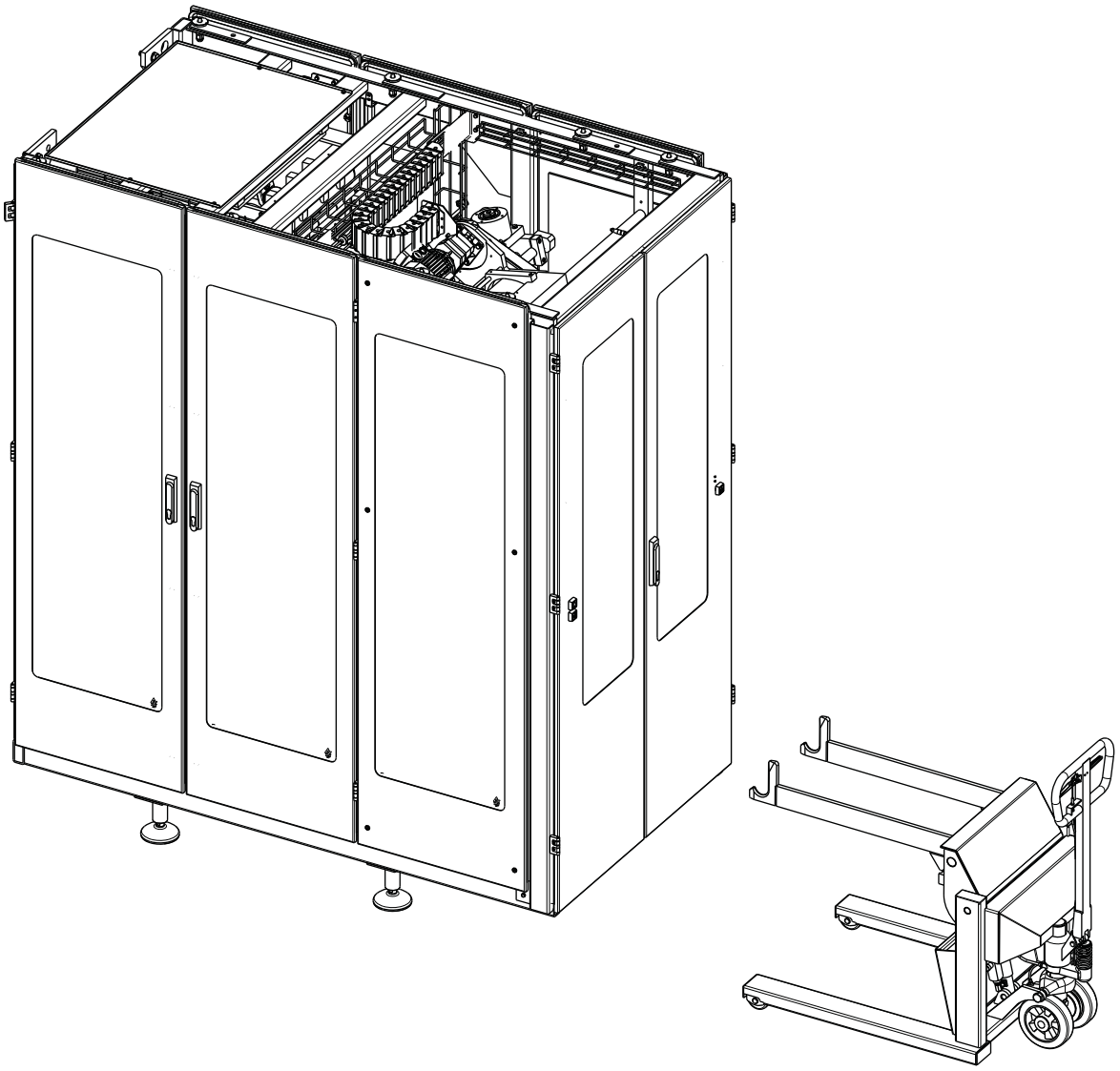

TechPub_2614345_0108 - 0702_3048198_01.fm

Automatic Splicing Unit - Description

SPC Reference	648528-0400

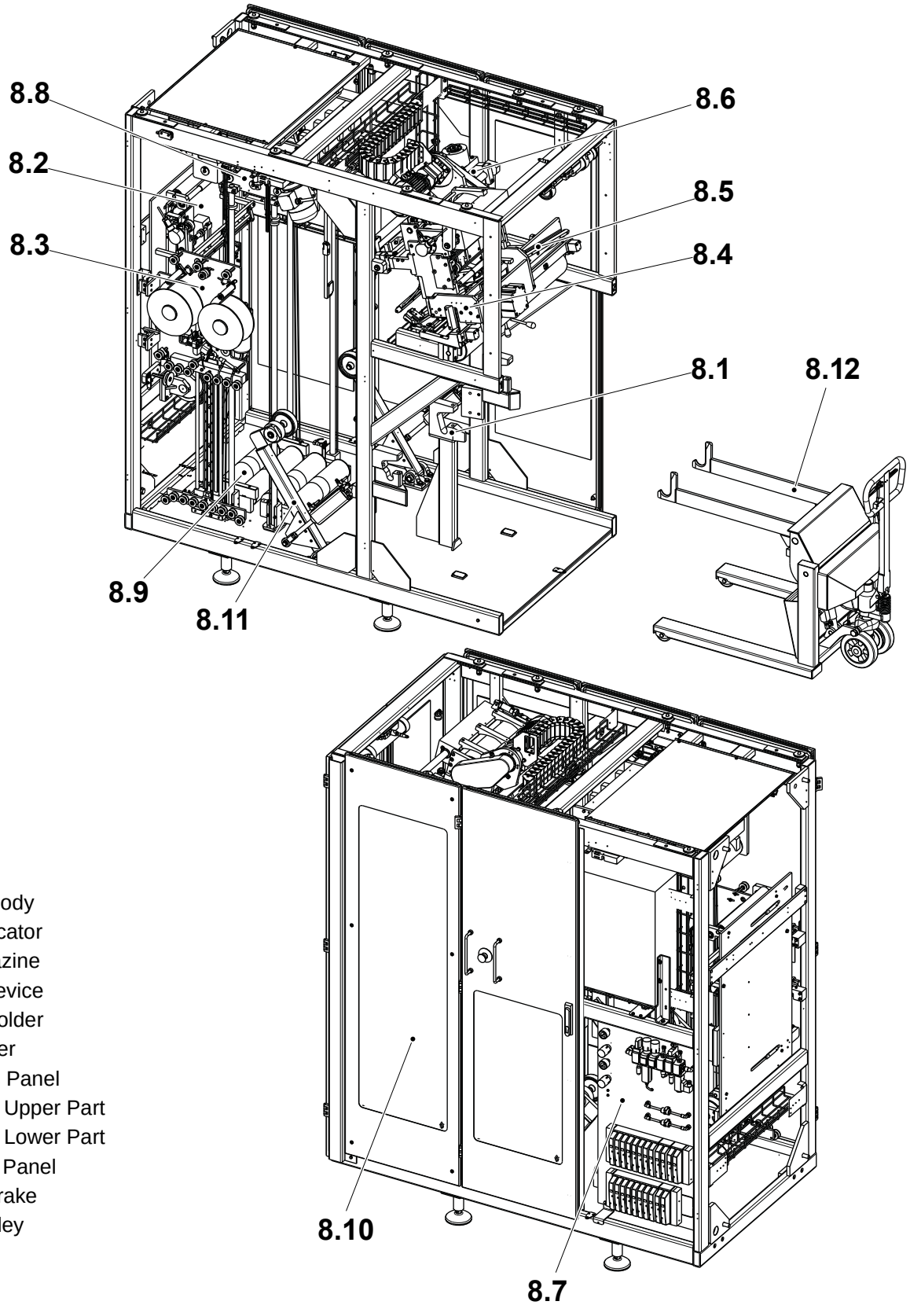

8.1 Machine Body
8.2 Strip Applicator
8.3 Strip Magazine
8.4 Splicing Device
8.5 Material Holder
8.6 Side Feeder
8.7 Pneumatic Panel
8.8 Magazine, Upper Part
8.9 Magazine, Lower Part
8.10 Covering Panel
8.11 Bobbin Brake
8.12 Reel Trolley

TechPub_2614345_0108 - 0702_3048198_01.fm

8 ASU . . . . . 8 - 9

8-1 ASU - Setting Sequence . . . . . 8 - 9

8-2 ASU - Check Function . . . . . 8 - 11

8-3 ASU - Force Manual Splice Out of Design . . . . 8 - 19

8.1 Machine Body . . . . . 8 - 20

8.1-1 Machine Body - Check Bearing Blocks . . . . . 8 - 20

8.1-2 Machine Body - Change Bearing Blocks . . . . . 8 - 21

8.1-3 Machine Body - Check Bending Roller . . . . . 8 - 22

8.1-4 Machine Body - Overhaul Bending Roller . . . . 8 - 23

8.1-5 Machine Body - Set Photocell Position . . . . . 8 - 25

8.1-6 Machine Body - Set Photocell Sensitivity . . . . . 8 - 27

8.1-7 Machine Body - Set Alignment . . . . . 8 - 28

8.1.1 Connection Box . . . . . 8 - 29

8.1.1-1 Connection Box - Change Transformer . . . . . 8 - 29

8.2 Strip Applicator . . . . . 8 - 31

8.2.1 Splice Detector . . . . . 8 - 31

8.2.1-1 Splice Detector - Check . . . . . 8 - 31

8.2.1-2 Splice Detector - Set . . . . . 8 - 32

8.2.2 Inductor . . . . . 8 - 33

8.2.2-1 Inductor - Check . . . . . 8 - 33

8.2.2-2 Inductor - Change Transformer . . . . . 8 - 34

8.2.2-3 Inductor - Change Rollers . . . . . 8 - 39

8.2.2-4 Inductor - Set Position . . . . . 8 - 41

8.2.2-5 Inductor - Set Volume . . . . . 8 - 43

8.2.2-6 Inductor - Check Pressure Rollers . . . . . 8 - 46

8.2.2-7 Inductor - Change Pressure Rollers . . . . . 8 - 47

8.2.2-8 Inductor - Set Pressure Roller . . . . . 8 - 48

8.2.2-9 Inductor - Set Proximity Switch . . . . . 8 - 49

8.2.2-10 Inductor - Change Adhesive Tape . . . . . 8 - 50

8.2.2-11 Inductor - Change Pulley Ball Bearings . . . . . 8 - 54

8.2.2.1 Air Nozzle . . . . . 8 - 55

8.2.2.1-1 Air Nozzle - Set . . . . . 8 - 55

TechPub_2614345_0108 - 0702_3048198_01.fm

8.2.3 Strip Guide . . . . . 8 - 58

8.2.3-1 Strip Guide - Check . . . . . 8 - 58

8.2.3-2 Strip Guide - Set . . . . . 8 - 59

8.2.3-3 Strip Guide - Change Guide Wheel Ball Bearing 8 - 63

8.2.4 Rollers . . . . . 8 - 64

8.2.4-1 Rollers - Change Bearings . . . . . 8 - 64

8.2.4-2 Rollers - Check Upper Roller . . . . . 8 - 68

8.2.5 Bending Roller . . . . . 8 - 69

8.2.5-1 Bending Roller - Change Bearings . . . . . 8 - 69

8.3 Strip Magazine . . . . . 8 - 70

8.3-1 Strip Magazine - Check Rollers . . . . . 8 - 70

8.3-2 Strip Magazine - Change Transducer . . . . . 8 - 71

8.3-3 Strip Magazine - Set Sensor and Spring . . . . . 8 - 73

8.3.1 Heating Device . . . . . 8 - 74

8.3.1-1 Heating Device - Check . . . . . 8 - 74

8.3.1-2 Heating Device - Set Position . . . . . 8 - 76

8.3.1-3 Heating Device - Change Plunger . . . . . 8 - 79

8.3.2 Hub . . . . . 8 - 80

8.3.2-1 Hub - Change Motor . . . . . 8 - 80

8.3.2-2 Hub - Set Spring Loaded Screw . . . . . 8 - 81

8.3.3 Buffer . . . . . 8 - 82

8.3.3-1 Buffer - Check . . . . . 8 - 82

8.3.4 Cutting Table . . . . . 8 - 83

8.3.4-1 Cutting Table - Check . . . . . 8 - 83

8.3.4-2 Cutting Table - Change Pads and Finger . . . . . 8 - 84

8.3.4-3 Cutting Table - Set . . . . . 8 - 86

8.3.5 Mounting Sheet . . . . . 8 - 87

8.3.5-1 Mounting Sheet - Check Rollers . . . . . 8 - 87

8.4 Splicing Device . . . . . 8 - 88

8.4-1 Splicing Device - Check Drive Unit . . . . . 8 - 88

8.4-2 Splicing Device - Drive Unit Overhaul . . . . . 8 - 89

8.4-3 Splicing Device - Set Drive Unit Belt . . . . . 8 - 93

TechPub_2614345_0108 - 0702_3048198_01.fm

8.4-4 Splicing Device - Change Photocell . . . . . 8 - 94
8.4-5 Splicing Device - Set Photocell Position . . . . . 8 - 96
8.4-6 Splicing Device - Set Photocell Sensitivity . . . . 8 - 98
8.4-7 Splicing Device - Set Photocell Alignment . . . . 8 - 99
8.4-8 Splicing Device - Move to Maintenance Position . . . . . 8 - 102
8.4-9 Splicing Device - Change Bearings . . . . . 8 - 103
8.4-10 Splicing Device - Check Pressure Jaw Position 8 - 105
8.4-11 Splicing Device - Set Air Nozzle . . . . . 8 - 107

8.4.1 Paper Guide . . . . . 8 - 108

8.4.1-1 Paper Guide - Check . . . . . 8 - 108
8.4.1-2 Paper Guide - Change Ball Bearings and Bushings . . . . . 8 - 109
8.4.1-3 Paper Guide - Change Guide Wheels Ball Bearings . . . . . 8 - 111
8.4.1-4 Paper Guide - Set Position . . . . . 8 - 112
8.4.1-5 Paper Guide - Set Spring Tension . . . . . 8 - 114

8.4.2 Paper Slide . . . . . 8 - 115

8.4.2-1 Paper Slide - Check . . . . . 8 - 115
8.4.2-2 Paper Slide - Change Rollers . . . . . 8 - 116

8.4.3 Pressure Jaw . . . . . 8 - 117

8.4.3-1 Pressure Jaw - Check Knife and Dolly . . . . . 8 - 117
8.4.3-2 Pressure Jaw - Change Cylinders . . . . . 8 - 122

8.4.4 Heating Unit . . . . . 8 - 127

8.4.4-1 Heating Unit - Check Sealing Plate . . . . . 8 - 127
8.4.4-2 Heating Unit - Change Heating Bar . . . . . 8 - 130
8.4.4-3 Heating Unit - Change Guides . . . . . 8 - 135
8.4.4-4 Heating Unit - Change Pneumatic Hose . . . . . 8 - 137
8.4.4-5 Heating Unit - Check Pneumatic Hose . . . . . 8 - 138

8.4.5 Counter Roller . . . . . 8 - 139

8.4.5-1 Counter Roller - Check . . . . . 8 - 139
8.4.5-2 Counter Roller - Overhaul . . . . . 8 - 140
8.4.5-3 Counter Roller - Set Cylinder . . . . . 8 - 143

TechPub_2614345_0108 - 0702_3048198_01.fm

8.5 Material Holder . . . . . 8 - 144

8.5-1 Material Holder - Change Blade . . . . . 8 - 144
8.5-2 Material Holder - Set Proximity Sensor . . . . . 8 - 148
8.5-3 Material Holder - Change Ball Bearings . . . . . 8 - 150
8.5-4 Material Holder - Set Cutting Table . . . . . 8 - 153
8.5-5 Material Holder - Check Blade Setting . . . . . 8 - 158

8.6 Side Feeder. . . . . 8 - 160

8.6-1 Side Feeder - Referencing . . . . . 8 - 160
8.6-2 Side Feeder - Change Timing Belt . . . . . 8 - 162
8.6-3 Side Feeder - Check Timing Belt Tension . . . . 8 - 164
8.6-4 Side Feeder - Overhaul . . . . . 8 - 166

8.7 Pneumatic Panel . . . . . 8 - 172

8.7-1 Pneumatic Panel - Set Pressure Switch . . . . . 8 - 172
8.7-2 Pneumatic Panel - Change Filters . . . . . 8 - 174
8.7-3 Pneumatic Panel - Set Pilot Valve Pressure . . . 8 - 177
8.7-4 Pneumatic Panel - Set Jumbo Reel Brake Pressure . . . . . 8 - 178

8.8 Magazine, Upper Part . . . . . 8 - 179

8.8-1 Magazine, Upper Part - Change Roller Bearings . . . . . 8 - 179
8.8-2 Magazine - Check Pressure Roller . . . . . 8 - 184
8.8-3 Magazine - Change Pressure Roller Bearings . 8 - 185
8.8-4 Magazine - Set Pressure Roller . . . . . 8 - 187
8.8-5 Magazine - Check Spacer Position . . . . . 8 - 189

8.8.1 Paper Guide . . . . . 8 - 190

8.8.1-1 Paper Guide - Check . . . . . 8 - 190
8.8.1-3 Paper Guide - Set Position . . . . . 8 - 191

8.8.2 Counter Roller . . . . . 8 - 193

8.8.2-1 Counter Roller - Change . . . . . 8 - 193
8.8.2-2 Counter Roller - Set Alignment . . . . . 8 - 195

8.9 Magazine, Lower Part . . . . . 8 - 196

8.9-1 Magazine, Lower Part - Check . . . . . 8 - 196
8.9-2 Magazine, Lower Part - Change Ball Bearings 8 - 197

TechPub_2614345_0108 - 0702_3048198_01.fm

8.9-3 Magazine, Lower Part - Set Proximity Switch . 8 - 198
8.9-4 Magazine, Lower Part - Set Dampers . . . . . 8 - 199
8.9-5 Magazine - Change Ropes . . . . . 8 - 200
8.9-6 Magazine, Lower Part - Set Locking Devices . 8 - 202

8.10 Covering Panel . . . . . 8 - 206

8.10-1 Covering Panel - Check . . . . . 8 - 206
8.10-2 Covering Panel - Set Safety Switches . . . . . 8 - 208
8.10-3 Covering Panel - Change Safety Key . . . . . 8 - 209

8.11 Bobbin Brake . . . . . 8 - 210

8.11-1 Bobbin Brake - Set . . . . . 8 - 210

8.12 Reel Trolley . . . . . 8 - 214

8.12-1 Reel Trolley - Check . . . . . 8 - 214
8.12-2 Reel Trolley - Change Pump Cylinder . . . . . 8 - 216
8.12-3 Reel Trolley - Set Regulating Valve . . . . . 8 - 218
8.12-4 Reel Trolley - Change Sink Valve . . . . . 8 - 219
8.12-5 Reel Trolley - Overhaul Lifting Cylinder . . . . . 8 - 222
8.12-6 Reel Trolley - Remove Fork Wheel . . . . . 8 - 223
8.12-7 Reel Trolley - Remove Guide Wheel . . . . . 8 - 224
8.12-8 Reel Trolley - Set Brake . . . . . 8 - 225

TechPub_2614345_0108 - 0702_3048198_01.fm

This page intentionally left blank

TechPub_2614345_0108 - 0702_3048198_01.fm

8 ASU

8-1 ASU - Setting Sequence

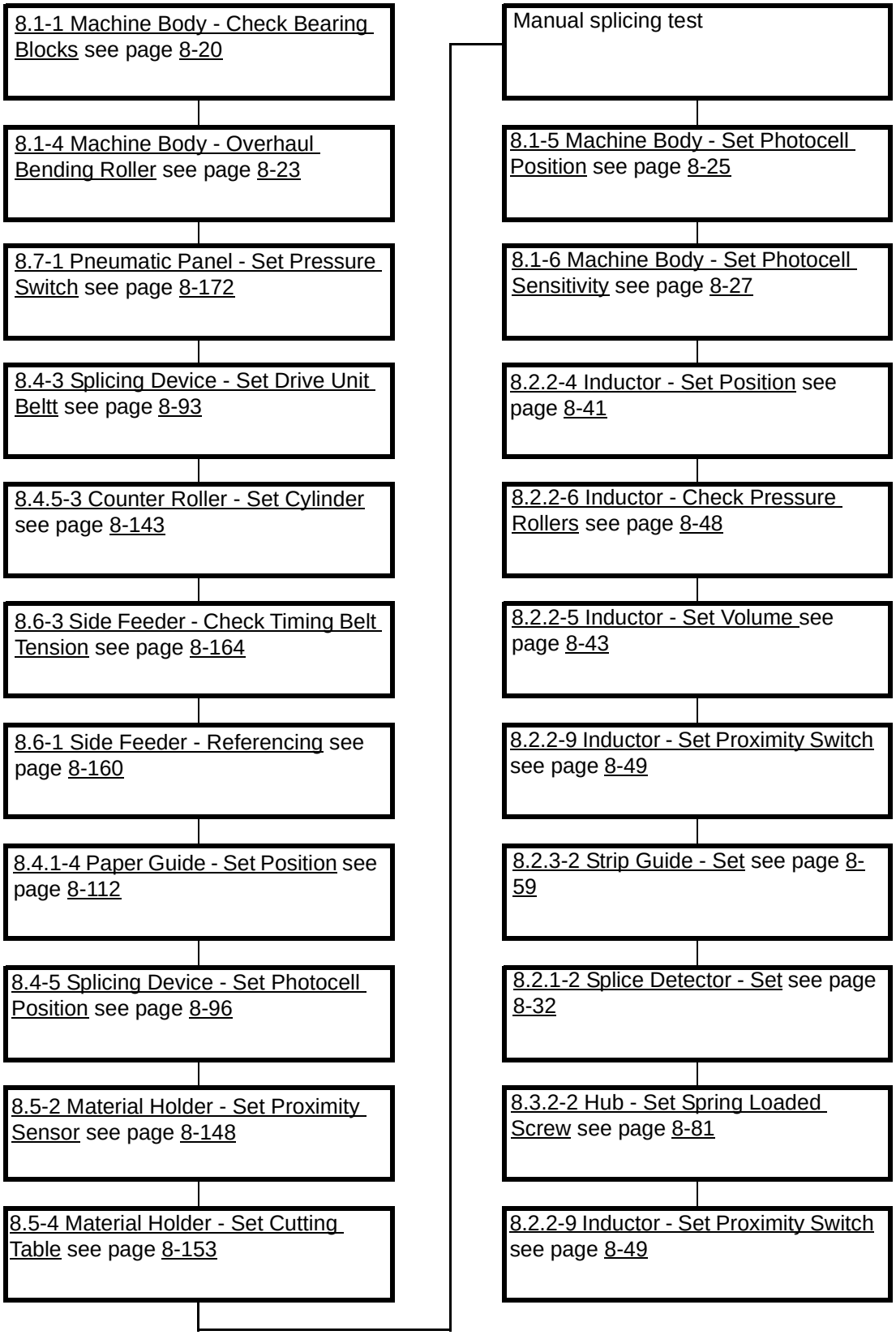

(Cont'd)

TechPub_2614345_0108 - 0702_3048198_01.fm

(Cont'd)

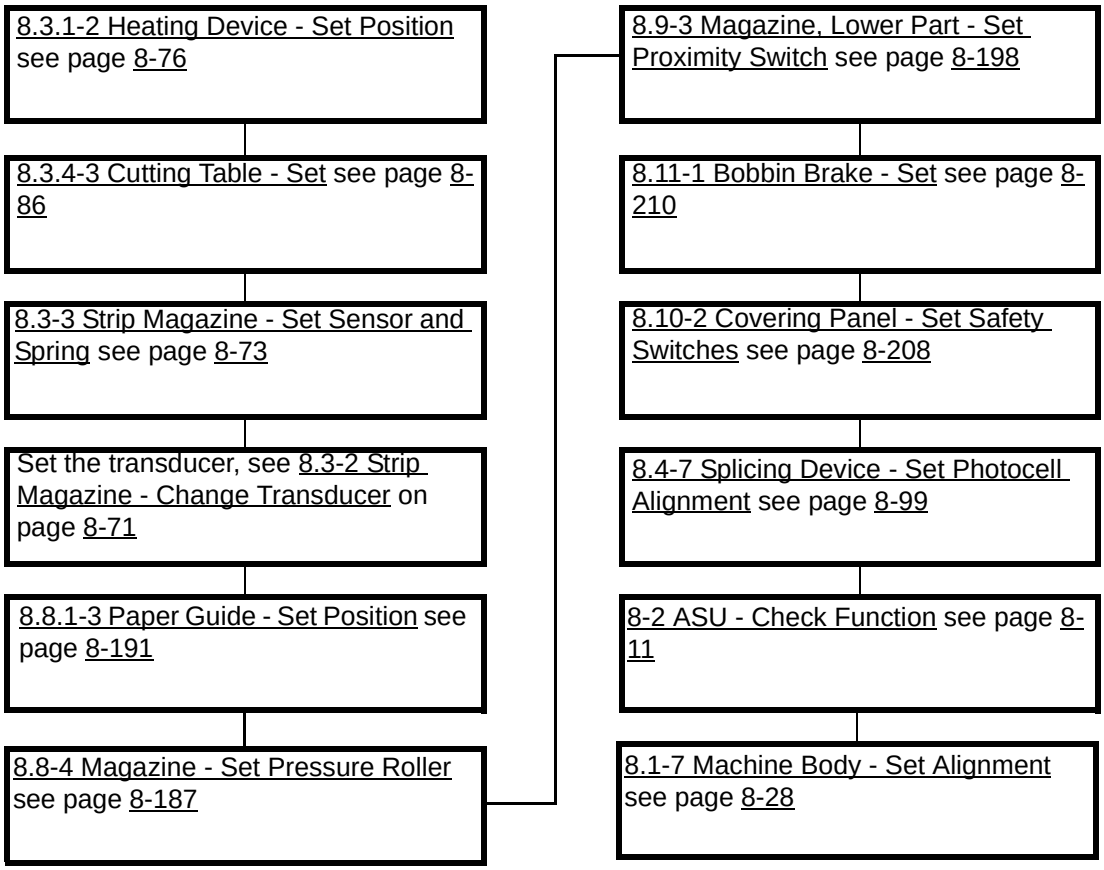

TechPub_2614345_0108 - 0702_3048198_01.fm

8-2 ASU - Check Function

Machine Status	PRODUCTION
SPC Reference	648528-0400

Raise the empty material holder and thread the packaging material through the material holder. Push the MATERIAL LOCKING button and check that the packaging material is correctly locked.

Perform a manual splice for each reel of packaging material, and check the following:

- Sealing alignment
- Overlap
- Sealing parallelism
- Spliced package length
- Cutting
- Sealing.

(Cont'd)

TechPub_2614345_0108 - 0702_3048198_01.fm

(Cont'd)

Sideways Sealing Alignment

Note! Check the alignment on the strip application side of the packaging material.

Check that the new and old pieces of packaging material on the two packages with a splice are aligned within the tolerance (distance **A**).

If necessary, set the sealing alignment, see 8.4.1-4 Paper Guide - Set Position and 8.5-4 Material Holder - Set Cutting Table.

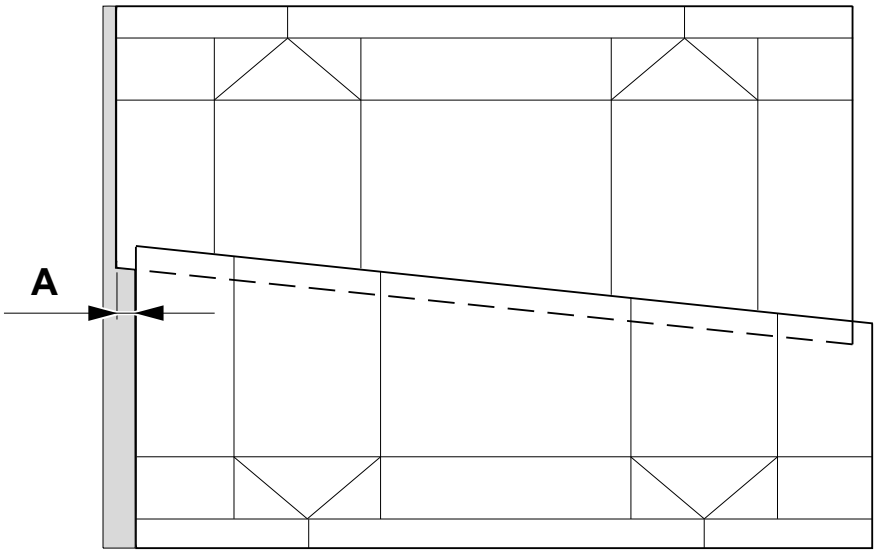

A = 0 ±0.5 mm

(Cont'd)

TechPub_2614345_0108 - 0702_3048198_01.fm

(Cont'd)

Overlap

Check that the overlap is correct. The over lap is the distance **B** between the edge of the manual cut (1) and the edge (2) cut by the splicing device.

If necessary, set the material holder position. See 8.5-4 Material Holder - Set Cutting Table on page 8-153.

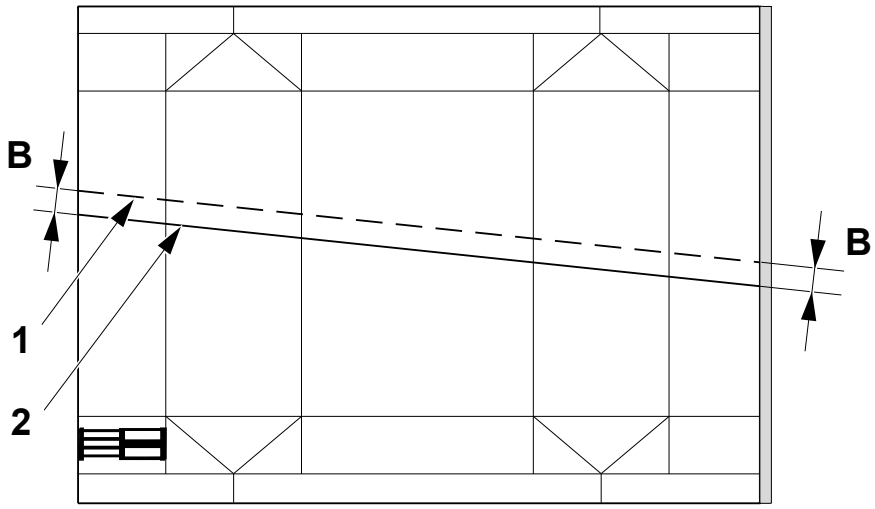

B = 16.5 ±0.5 mm

1 Manual cut
2 Edge

(Cont'd)

TechPub_2614345_0108 - 0702_3048198_01.fm

(Cont'd)

Sealing Parallelism

Check the parallelism, distance **C**, between the new and the old packaging material web.

With the aid of a straight edge (1) check that the new packaging material web diverges by not more than the distance **C** in 1 metre from the splice. If necessary set the sealing parallelism, see 8.5-4 Material Holder - Set Cutting Table.

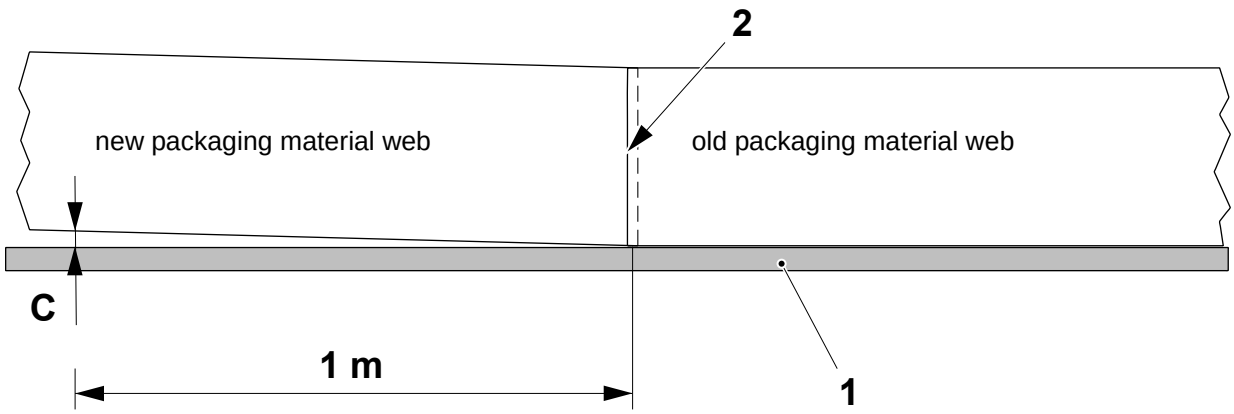

C = max 1.0 mm

1 Edge
2 Splice

(Cont'd)

TechPub_2614345_0108 - 0702_3048198_01.fm

(Cont'd)

Spliced Package Length

Measure that the distance **D** between the top and the bottom creases of the package spliced by the ASU and compare it with a normal package.

If the distance **D** diverges by 1.5 mm from the normal package length, set the spliced package repeat length offset, proceed as follows.

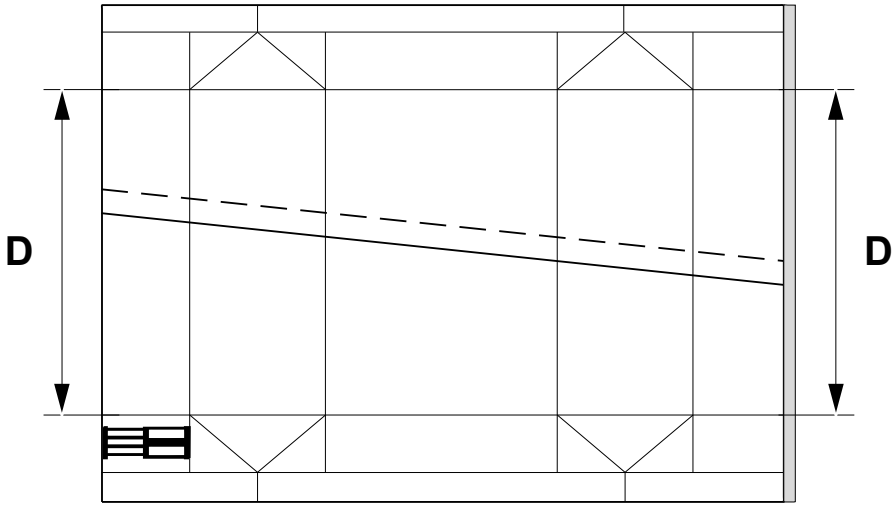

D = ±1.5 mm

(Cont'd)

TechPub_2614345_0108 - 0702_3048198_01.fm

(Cont'd)

a) Touch the PRODUCTION CONTROL button (1).

b) Touch the ASU button (2).

c) Touch the SPLICED PACKAGE REPEAT LENGTH OFFSET icon (3).

d) Change the current value with the ARROW buttons (4) or the KEYBOARD button (5), or reset the factory value by the FACTORY button (6).

Note! The repeat length can be corrected with this adjustment if the error is maximum 1mm.

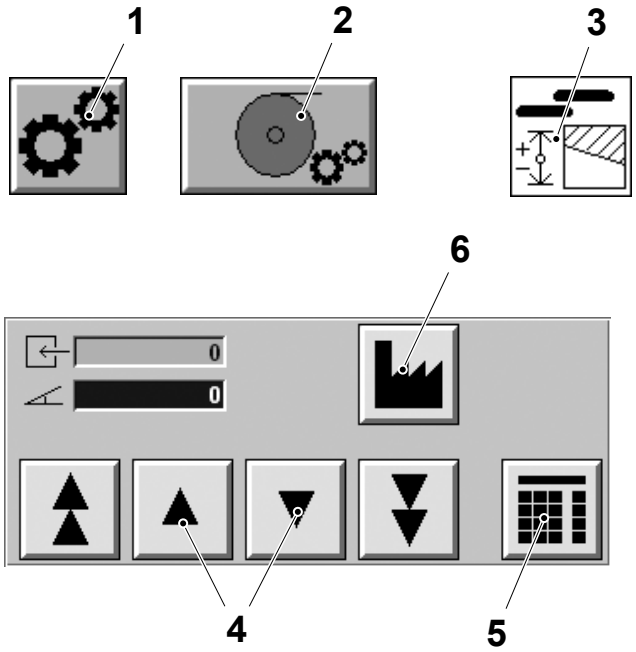

1 Production control button
2 ASU button
3 Spliced package repeat length icon
4 Arrow button
5 Keyboard button
6 Factory button

(Cont'd)

TechPub_2614345_0108 - 0702_3048198_01.fm

(Cont'd)

Cutting

Check that the manually cut paper edge is OK. If not change the material holder knife, see 8.5-1 Material Holder - Change Blade.

Check that the automatically cut paper edge is OK. If not change the splicing device knife, see 8.4.3-1 Pressure Jaw - Check Knife and Dolly.

Splice

Pull apart and examine the splice (1).

The splice is acceptable if it remains intact and:

- a delamination between the two inner coating takes place
- a rupture takes place in the printed paper board layer.

The splice is defective if:

- the splice is so weak the two plastic layers separate without rupturing.

If the splice is defective, check the heating device, see 8.4.4-1 Heating Unit - Check Sealing Plate.

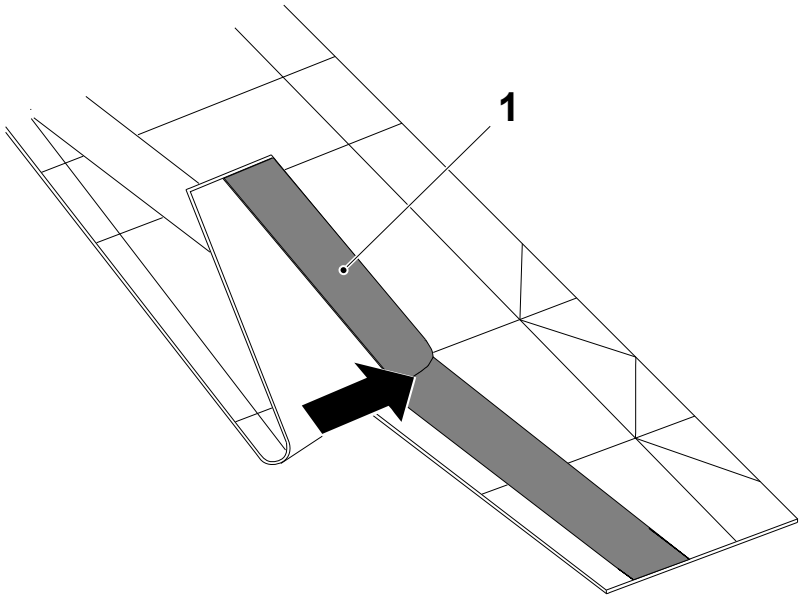

1 Splice

(Cont'd)

TechPub_2614345_0108 - 0702_3048198_01.fm

(Cont'd)

If necessary, change the current value of the constant heat bar temperature. Proceed as follows:

a) Touch the PRODUCTION CONTROL button (2).

b) Touch the ASU button (3).

c) Touch the CONSTANT HEAT BAR TEMPERATURE icon (4).

d) Change the current value with the ARROW buttons (5) or the KEYBOARD button (6), or reset the factory value by the FACTORY button (7).

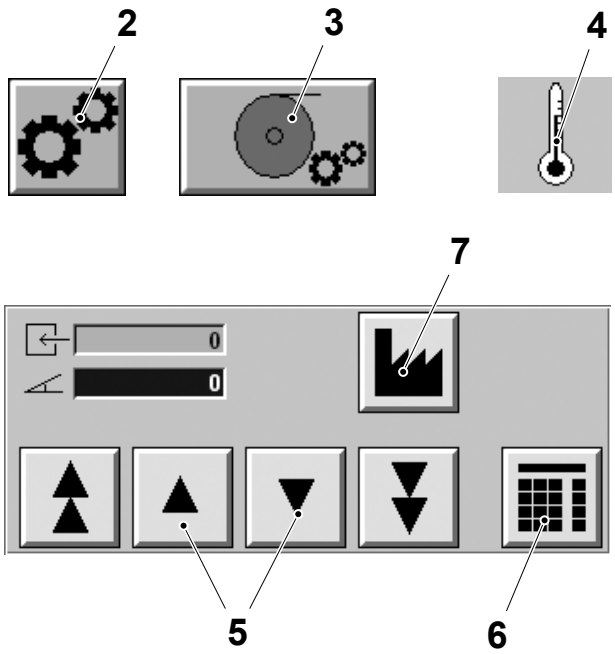

2 PRODUCTION CONTROL button
3 ASU button
4 Constant heat bar temperature icon
5 Arrow button
6 Keyboard button
7 Factory button

TechPub_2614345_0108 - 0702_3048198_01.fm

8-3 ASU - Force Manual Splice Out of Design

Machine Status	PREPARATION
SPC Reference	648528-0400

Note! Perform this procedure to execute a packaging material splice regardless the bar code position and by-passing the alarm conditions. The machine must be in step PREPARATION or higher.

a) In the TPOP panel, touch the MAINTENANCE CONTROL button (1) and enter the password required, see 9.6.3-2 HMI - User Management Log On.

b) Touch the ASU button (2).

c) Touch the FORCE MANUAL SPLICE icon (3). The ON/OFF buttons are displayed.

d) Touch the ON button (4) to enable the function.

e) Press the MANUAL WEB SPLICE button (5) to perform the packaging material splice.

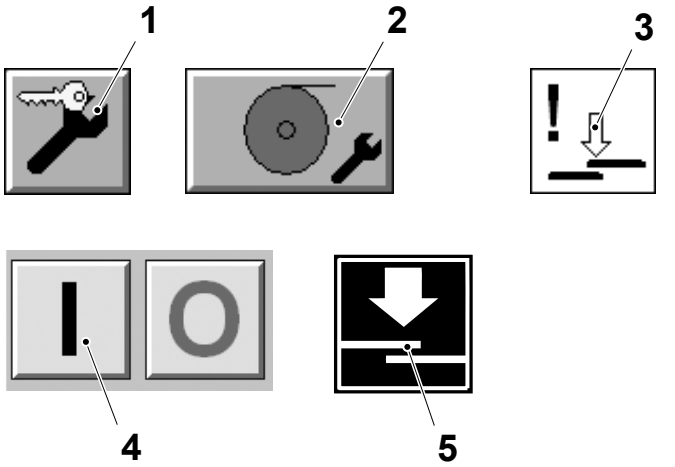

1 Maintenance control button
2 ASU button
3 Force manual splice icon
4 On button
5 Manual web splice button

TechPub_2614345_0108 - 0702_3048198_01.fm

8.1 Machine Body

SPC Reference	2741026-0200

8.1-1 Machine Body - Check Bearing Blocks

Machine Status	Mains Power OFF Air OFF Steam ON Water OFF
SPC Reference	2741026-0200

Check if the bearing blocks (1) are worn or damaged.

If the distance **A** is less than the value given below, change the bearing blocks, see 8.1-2 Machine Body - Change Bearing Blocks.

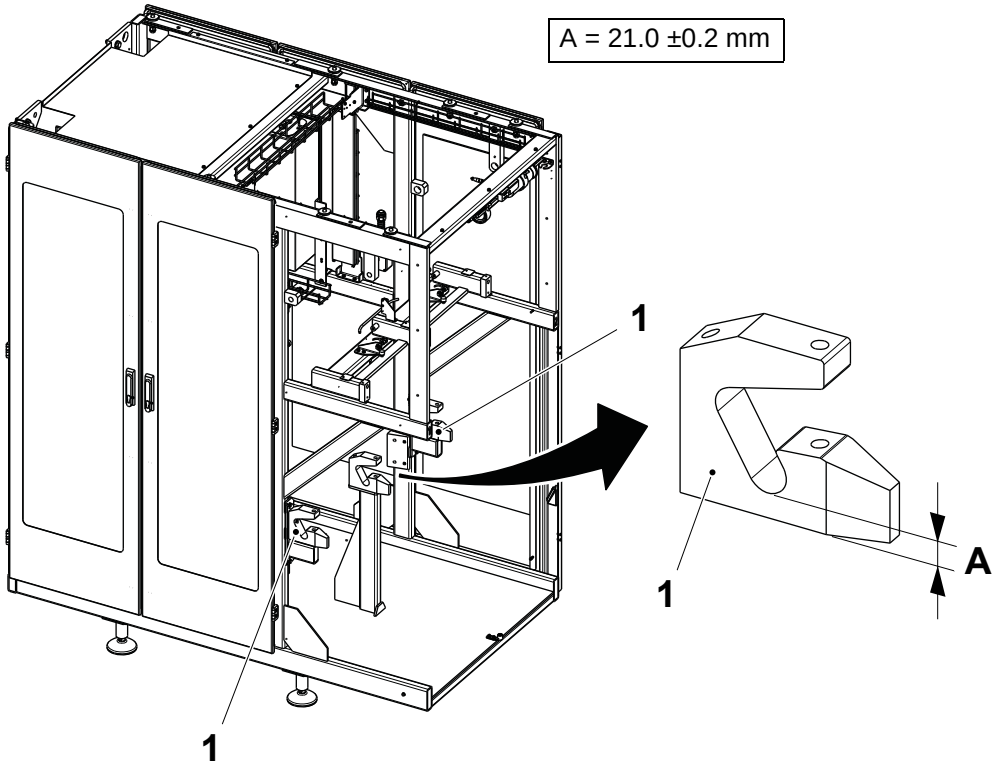

1 Bearing block

TechPub_2614345_0108 - 0701_3048199_01.fm

8.1-2 Machine Body - Change Bearing Blocks

Machine Status	Mains Power OFF Air OFF Steam ON Water OFF
SPC Reference	2741026-0200

a) Remove the screws (1) and (2) to change the side bearing blocks (3).

b) Take note of the shims, if present, under the bearing blocks (3) and (5).

c) Remove the screws (4) to change the central bearing block (5).

d) Assemble in the reverse order fitting back the same quantity of shims, if present, under the bearing blocks (3) and (5).

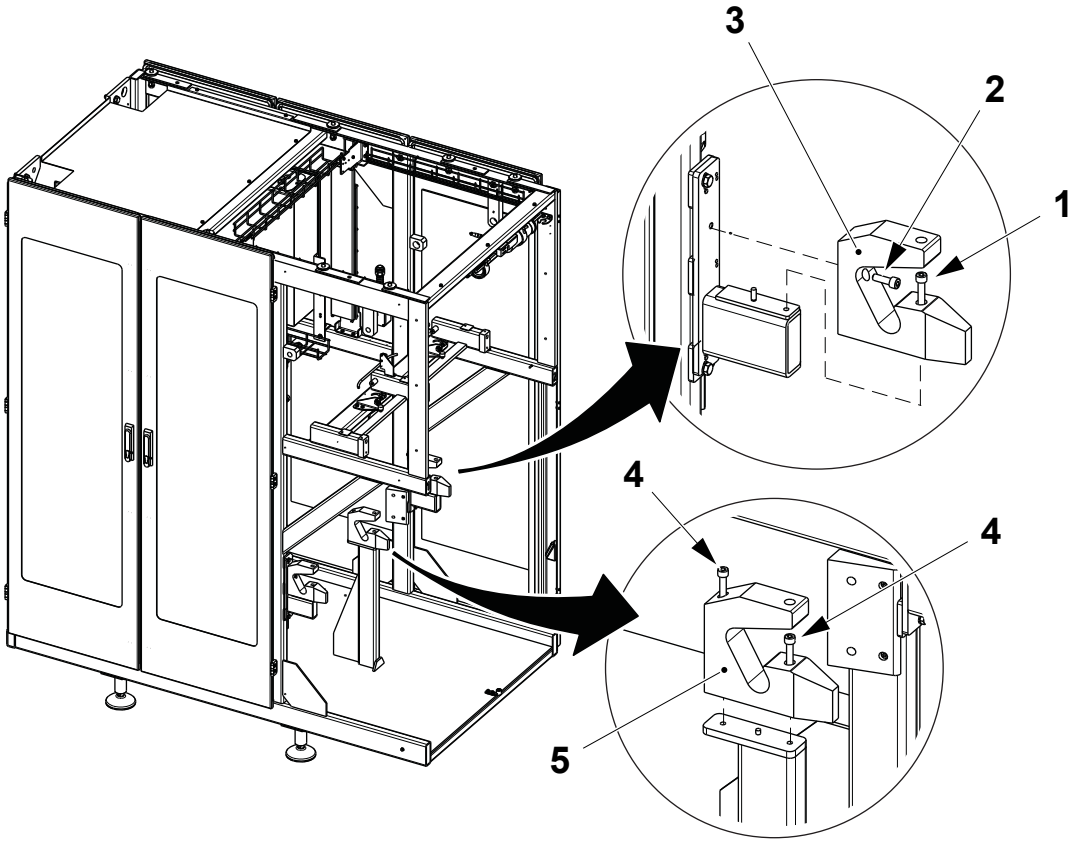

1 Screw
2 Screw
3 Bearing block
4 Screw
5 Bearing block

TechPub_2614345_0108 - 0701_3048199_01.fm

8.1-3 Machine Body - Check Bending Roller

Machine Status	Mains Power OFF Air OFF Steam ON Water OFF
SPC Reference	2741026-0200

Check that:

- the bending roller (1) rotates freely without play
- the surface of the roller (1) is not worn or damaged.

If necessary, change the ball bearings and the roller (1), see 8.1-4 Machine Body - Overhaul Bending Roller.

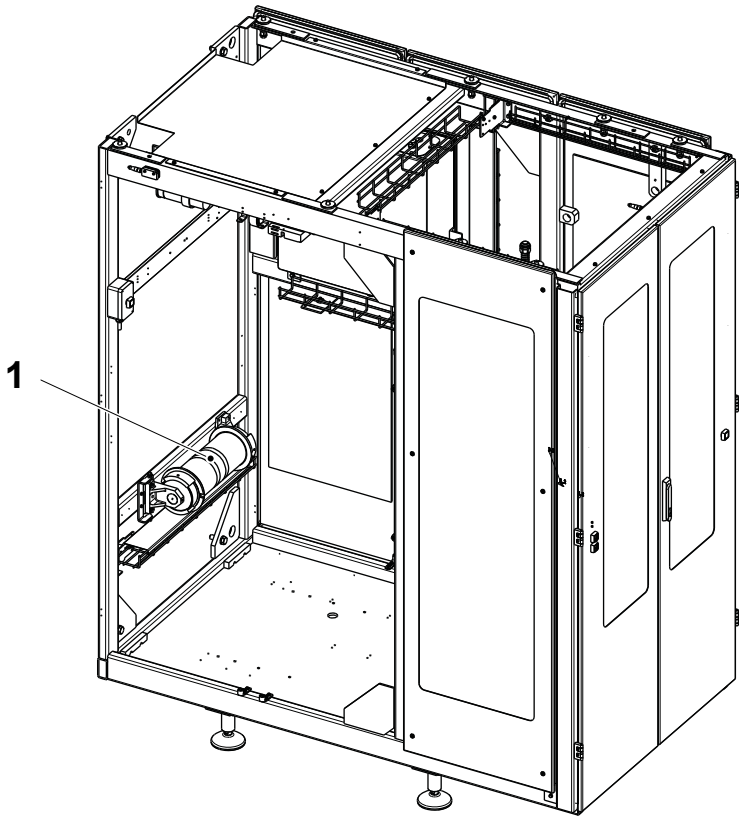

1 Bending roller

TechPub_2614345_0108 - 0701_3048199_01.fm

8.1-4 Machine Body - Overhaul Bending Roller

Machine Status	Mains Power OFF Air OFF Steam ON Water OFF
SPC Reference	2741026-0200

a) Remove the grub screw (1).

b) Remove the screws (2), the two stoppers (3) and the roller assembly (4).

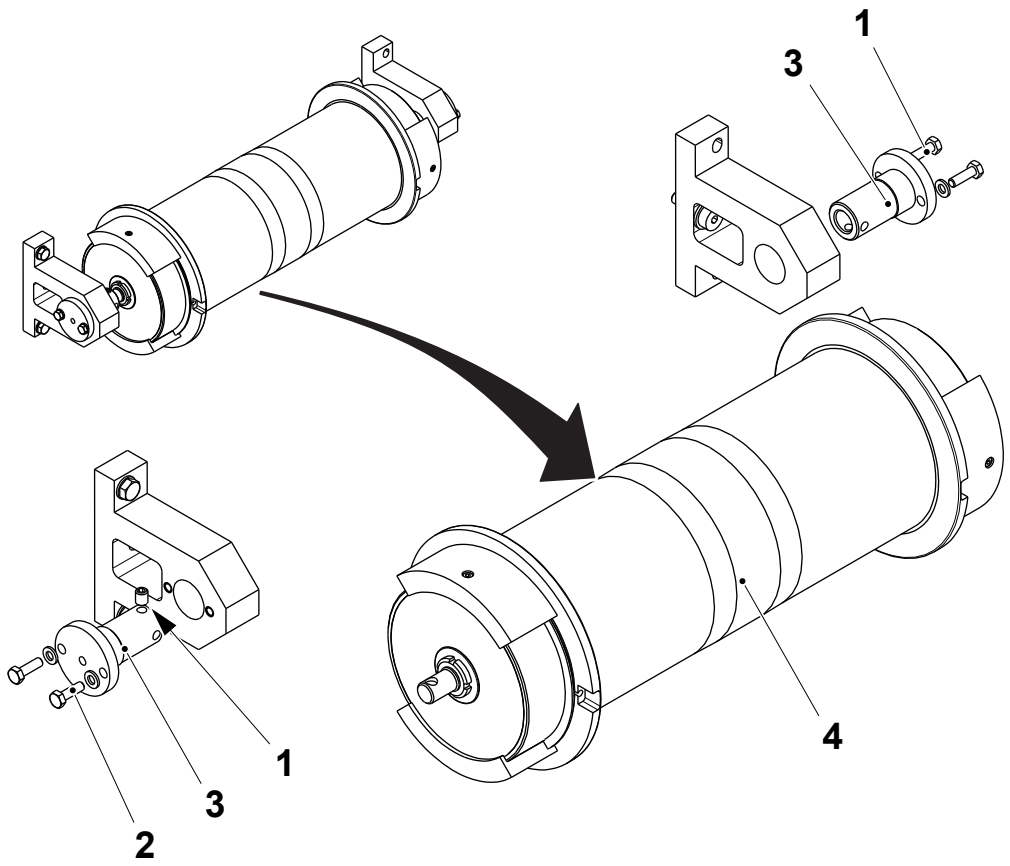

1 Grub screw
2 Screw
3 Stopper
4 Roller

(Cont'd)

TechPub_2614345_0108 - 0701_3048199_01.fm

(Cont'd)

c) Remove the lock nut (5), the retaining ring (6) and the two ball bearings (7).

d) Change the ball bearings (7).

e) Remove the screws (8), the four brackets (9) and the two flanges (10).

f) Change the roller (4) and the flanges (10).

g) Assemble in the reverse order.

Note! The lock nut (5) makes the roller (4) rotate in just one direction.

h) Make sure that the roller (4) rotate in a clockwise direction.

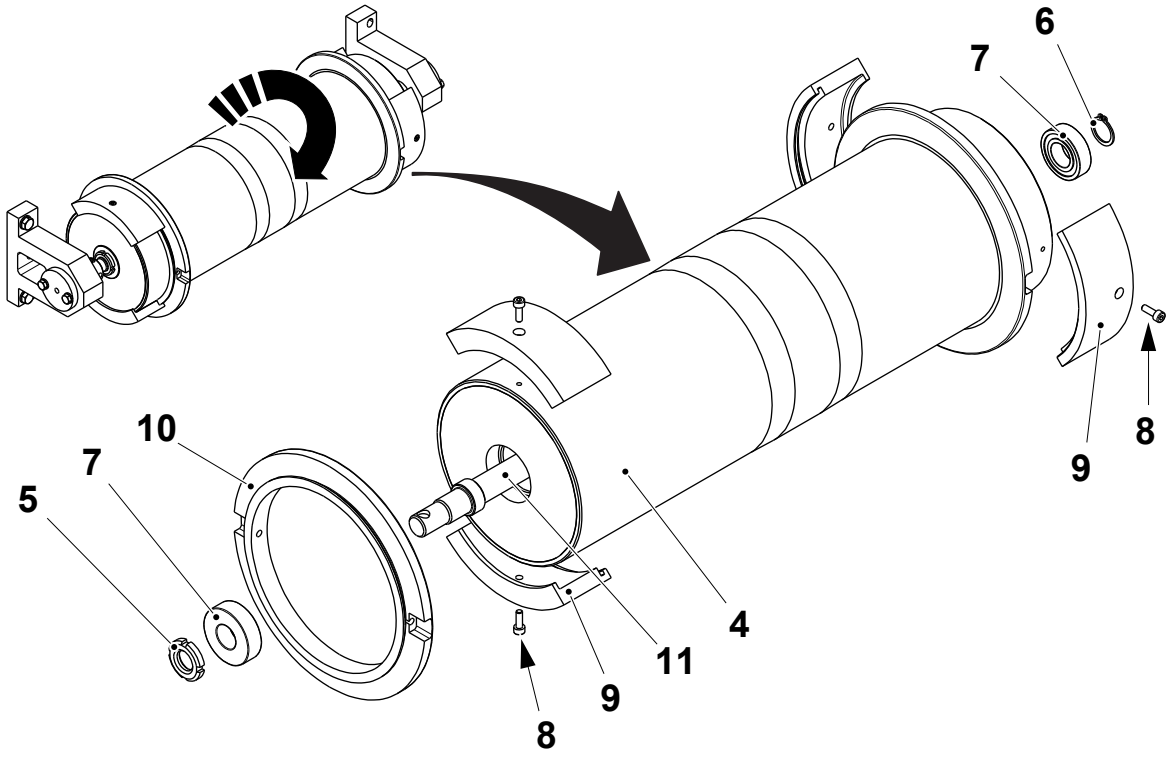

4 Roller
5 Nut
6 Retaining ring
7 Ball bearing
8 Screw
9 Bracket
10 Flange
11 Shaft

TechPub_2614345_0108 - 0701_3048199_01.fm

8.1-5 Machine Body - Set Photocell Position

Machine Status	Mains Power ON Air OFF Steam ON Water OFF
SPC Reference	2741026-0200

Empty Loop - Full Loop Photocells

Adjust the position of the photocell (1) until it is levelled in height with the reflector (2) and the green LED (3) is lit on the photocell (1); when the packaging material loop is present, also the red LED (4) is lit.

Repeat the procedure for the photocell (5) and the reflector (6). Both the LEDs (3) and (4) must be lit on the photocell (2) when there is not any packaging material in between.

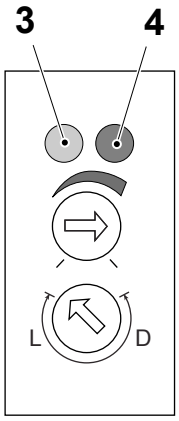

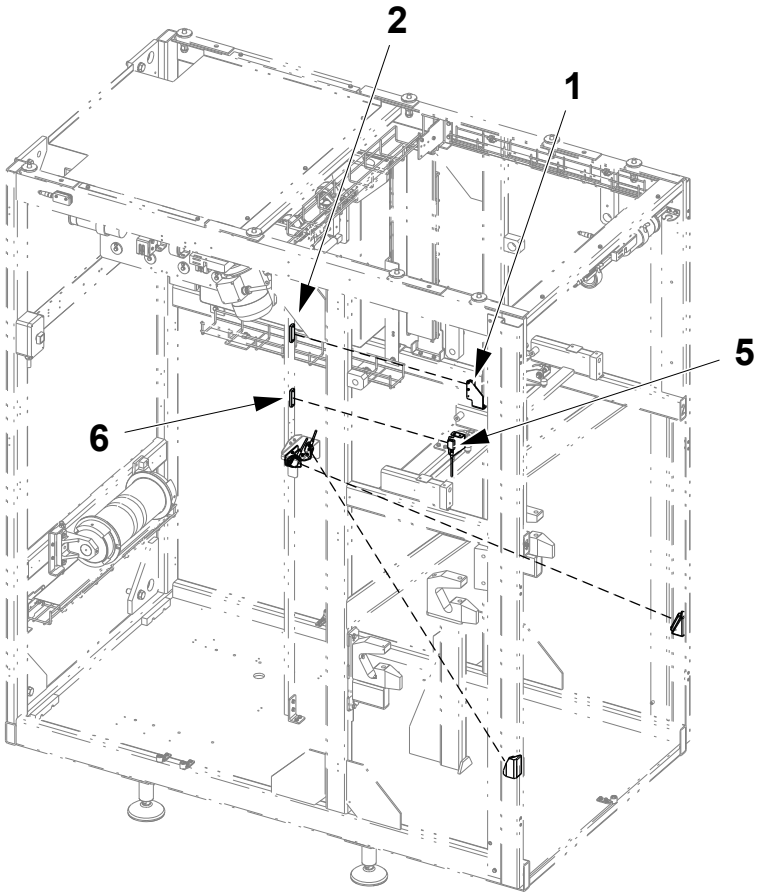

1 Photocell
2 Reflector
3 Green LED
4 Red LED
5 Photocell
6 Reflector

(Cont'd)

TechPub_2614345_0108 - 0701_3048199_01.fm

(Cont'd)

Empty Bobbin Reel Photocells

Set the angle of the photocells (7) for the empty reels so that the signal is received crosswise from the reflectors (8) on the opposite side. Only the green LED (3) must be lit when the reel is empty or missing.

Adjust the angle of the photocells (7) as follows:

a) Fit a reel core (9) in position into the reel holder.

b) Put a piece of packaging material (10) on the reel core (9) and check that both the LEDs (3) and (4) are lit.

c) Move the packaging material (10) up and check that the red LED (4) shut off when there is a window of 10 mm between the packaging material (10) and the reel core (9).

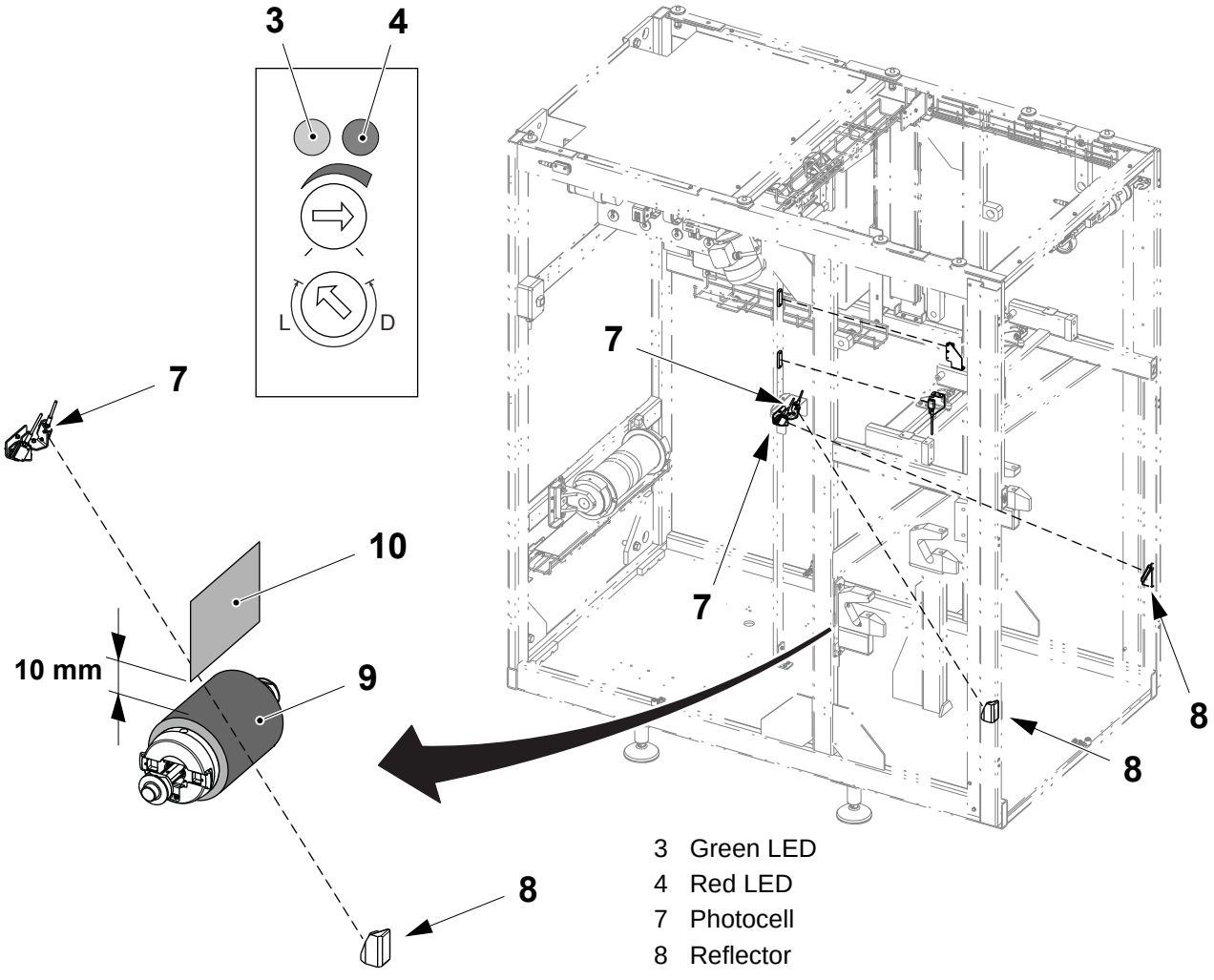

3 Green LED
4 Red LED
7 Photocell
8 Reflector
9 Reel core
10 Packaging material

TechPub_2614345_0108 - 0701_3048199_01.fm

8.1-6 Machine Body - Set Photocell Sensitivity

Machine Status	Mains Power ON Air OFF Steam ON Water OFF
SPC Reference	2741026-0200

Set Photocell (1) for Empty Loop Detection

Turn the switch (4) so that the arrow points to D. Turn the switch (5) so that the arrow points to the maximum of the signal intensity.

Set Photocell (2) for Empty Bobbin Reel Detection on Both Lines

Turn the switch (4) so that the arrow points to D. Turn the switch (5) so that the arrow points to the maximum of the signal intensity.

Set Photocell (3) for Full Loop Detection

Turn the switch (4) so that the arrow points to L. Turn the switch (5) so that the arrow points to the maximum of the signal intensity.

The green LED (6) indicates that the power is ON. The red LED (7) indicates that the signal is received from the reflector.

TechPub_2614345_0108 - 0701_3048199_01.fm

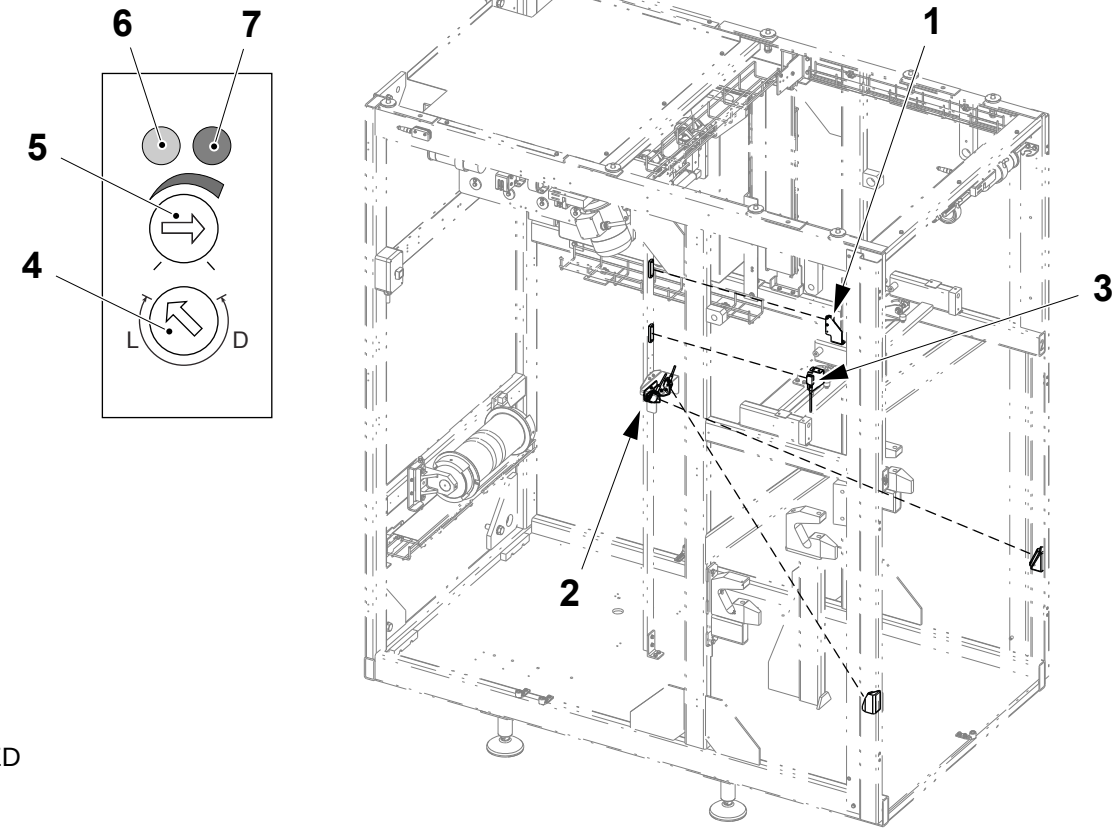

1 Photocell
2 Photocell
3 Photocell
4 Switch
5 Switch
6 Green LED
7 Red LED

8.1-7 Machine Body - Set Alignment

Machine Status	TUBE SEALING
SPC Reference	2741026-0200

Note! The packaging material edge (3) must lay without friction on the flange (2) on the strip applicator side.

Adjust the alignment of the bending roller (1) as follows:

a) Set the inductor position, see 8.2.2-5 Inductor - Set Volume, Basic Setting.

b) Pull the packaging material in contact with the flange (2).

c) Perform the fine setting of the inductor, see 8.2.2-5 Inductor - Set Volume, Fine Setting.

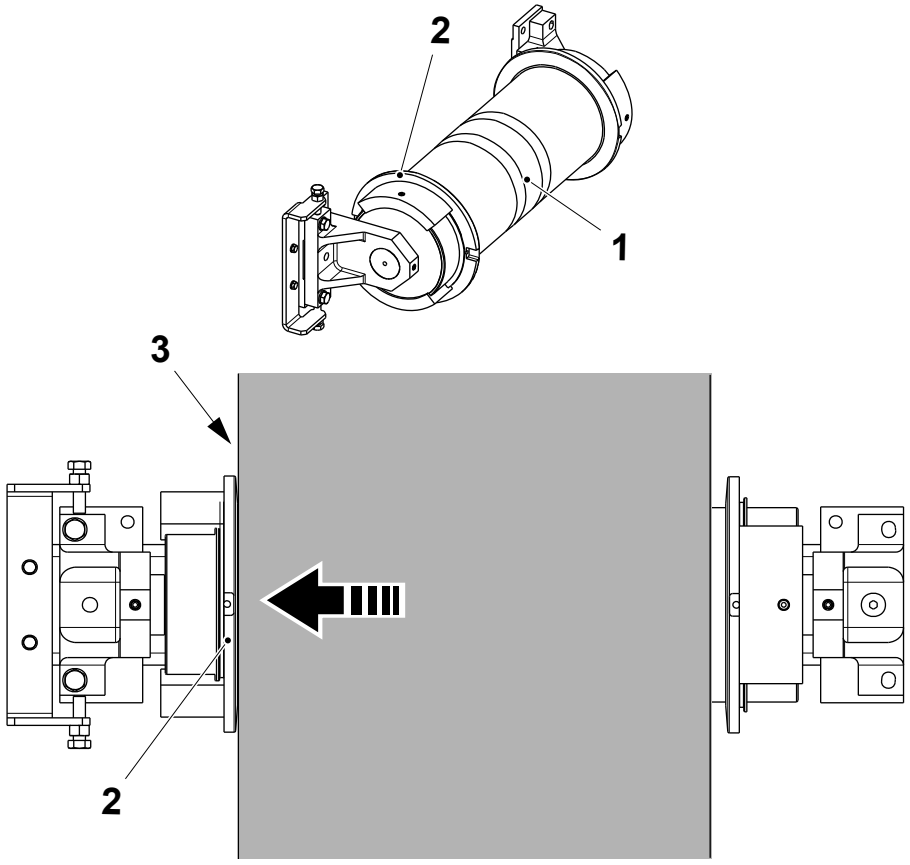

1 Bending roller
2 Flange
3 Packaging material edge

TechPub_2614345_0108 - 0701_3048199_01.fm

8.1.1 Connection Box

8.1.1-1 Connection Box - Change Transformer

Machine Status	Mains Power OFF Air OFF Steam ON Water OFF
SPC Reference	2806682-0200

DANGER

Hazardous voltage.

Will cause shock, burns or even death. Perform the lockout procedure before starting any work.

(Cont'd)

TechPub_2614345_0108 - 0701_3048200_01.fm

(Cont'd)

a) Disconnect the transformer cables according to the Electrical Manual.

b) Remove the transformer (1) by the screws (2).

c) Assemble in the reverse order.

Note! Connect the power cable to the terminal (3) corresponding to the voltage used in the country where the machine is installed. The different voltage are marked on the terminals (3).

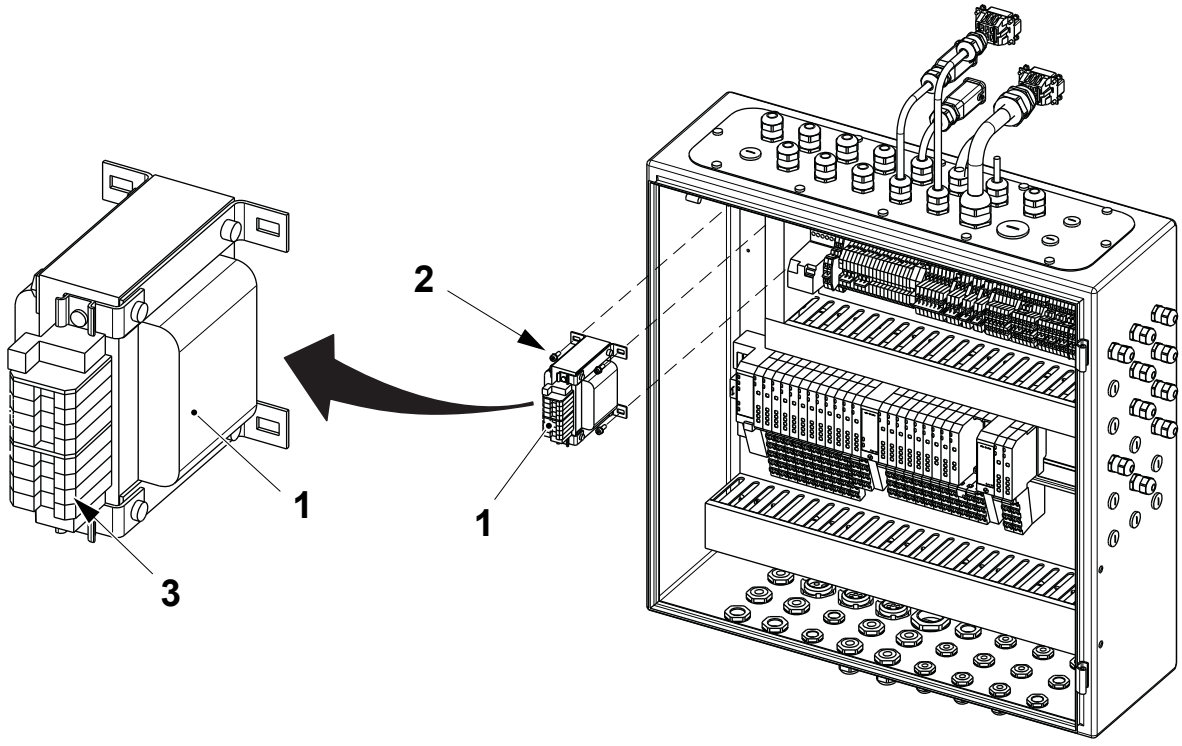

1 Transformer
2 Screw
3 Terminal

TechPub_2614345_0108 - 0701_3048200_01.fm

8.2 Strip Applicator

SPC Reference	2765667-0200

8.2.1 Splice Detector

8.2.1-1 Splice Detector - Check

Machine Status	Mains Power ON Air OFF Steam ON Water OFF
SPC Reference	2994565-0100

Check that:

- the ball bearings (1) rotates easily. Change if necessary
- the spring (2) works correctly. Change if necessary.

Note! Take note that the LED of the analogue sensor (3) should be OFF with one or two pieces of packaging material between the ball bearings (1).

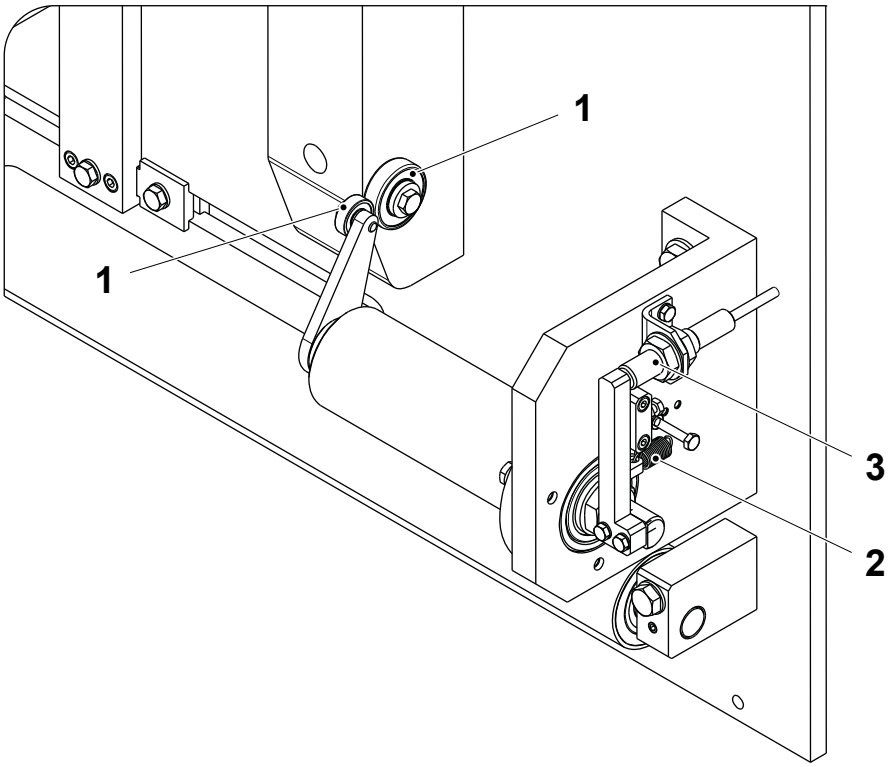

1 Ball bearing
2 Spring
3 Sensor

TechPub_2614345_0108 - 0702_3048201_01.fm

8.2.1-2 Splice Detector - Set

Machine Status	Mains Power ON Air OFF Steam ON Water OFF
SPC Reference	2994565-0100

a) Remove the packaging material.

b) When the ball bearing (1) on the splice detector is in contact with the ball bearing (2) on the strip applicator, loosen the nuts (3) and move the proximity switch (4) in contact with the bar (5), then tighten the nuts (3).

Note! Take note that the LED of the analogue sensor (4) should be OFF with one or two pieces of packaging material between the ball bearings (1) and (2).

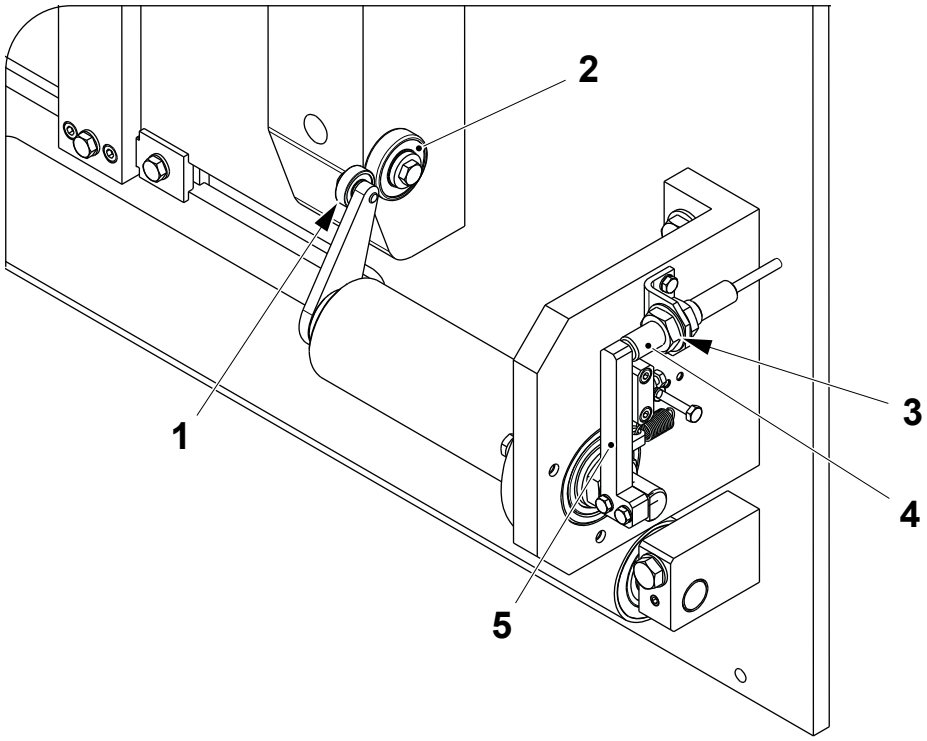

1 Ball bearing
2 Ball bearing
3 Nut
4 Proximity switch
5 Bar

TechPub_2614345_0108 - 0702_3048201_01.fm

8.2.2 Inductor

8.2.2-1 Inductor - Check

Machine Status	Mains Power OFF Air OFF Steam ON Water OFF
SPC Reference	2765668-0100

Check:

- the inductor (1) for wear or damage. If necessary, clean the inductor (1) by removing any plastic residue and change the adhesive teflon tape, see 8.2.2-10 Inductor - Change Adhesive Tape
- the transformer (2) for wear or damage. If necessary, change the transformer (2), see 8.2.2-2 Inductor - Change Transformer
- the rollers (3) for wear or damage. If necessary, change the roller (3), see 8.2.2-3 Inductor - Change Rollers
- that the rollers (3) rotate freely without play and the silicon rubber layer on the surface of each roller (3) is undamaged. If necessary, change the rollers, see 8.2.2-3 Inductor - Change Rollers.

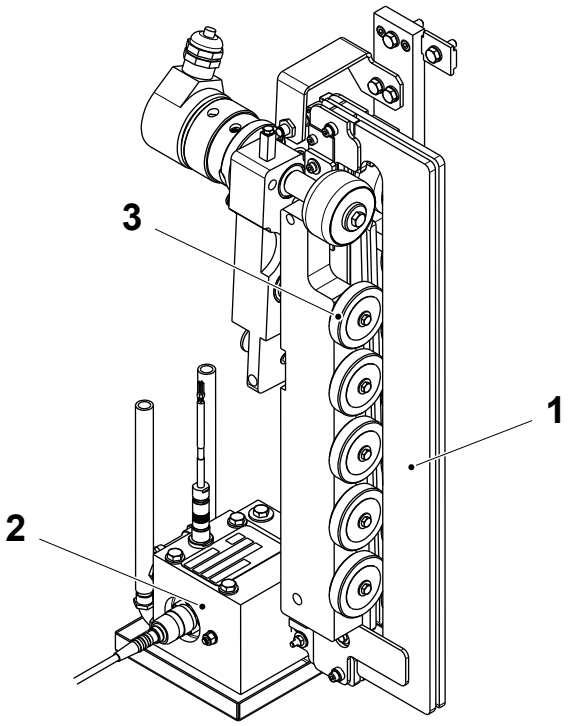

1 Inductor
2 Transformer
3 Roller

TechPub_2614345_0108 - 0705_3048202_01.fm

8.2.2-2 Inductor - Change Transformer

Machine Status	Mains Power OFF Air OFF Steam ON Water OFF
SPC Reference	2765668-0100

a) Close the cooling water valves in the machine body.

b) Disconnect the coaxial cable (1) and the VMN cable (2).

c) Disconnect the cooling hoses (3).

d) Loosen the nut (4).

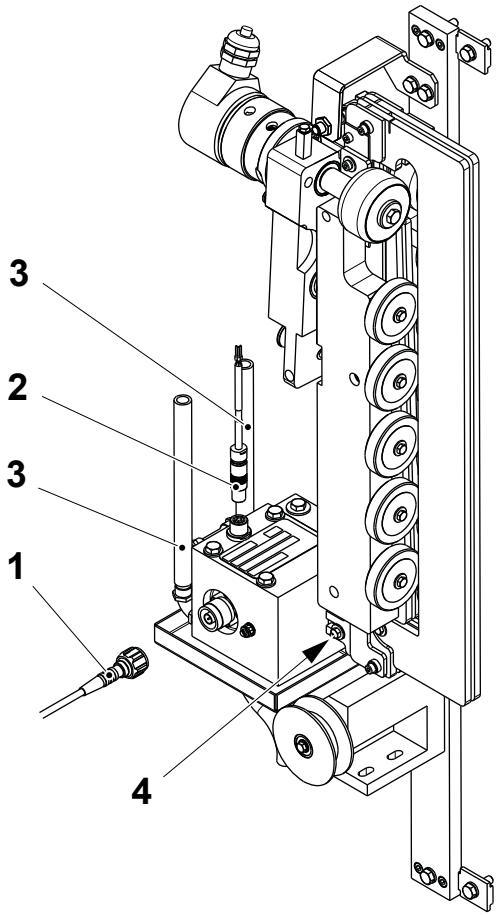

1 Coaxial cable
2 VMN cable
3 Hose
4 Nut

(Cont'd)

TechPub_2614345_0108 - 0705_3048202_01.fm

(Cont'd)

e) Remove the screws (5) and extract the transformer assembly (6).

f) Move the transformer assembly (6) on the work bench.

g) Remove the nut (7) and slip off the transformer (8).

h) Remove the screw (9) and the insulator (10) from the copper contact (11) and fit them on the new transformer.

5 Screw
6 Transformer assembly
7 Nut
8 Transformer
9 Screw
10 Insulator
11 Copper contact

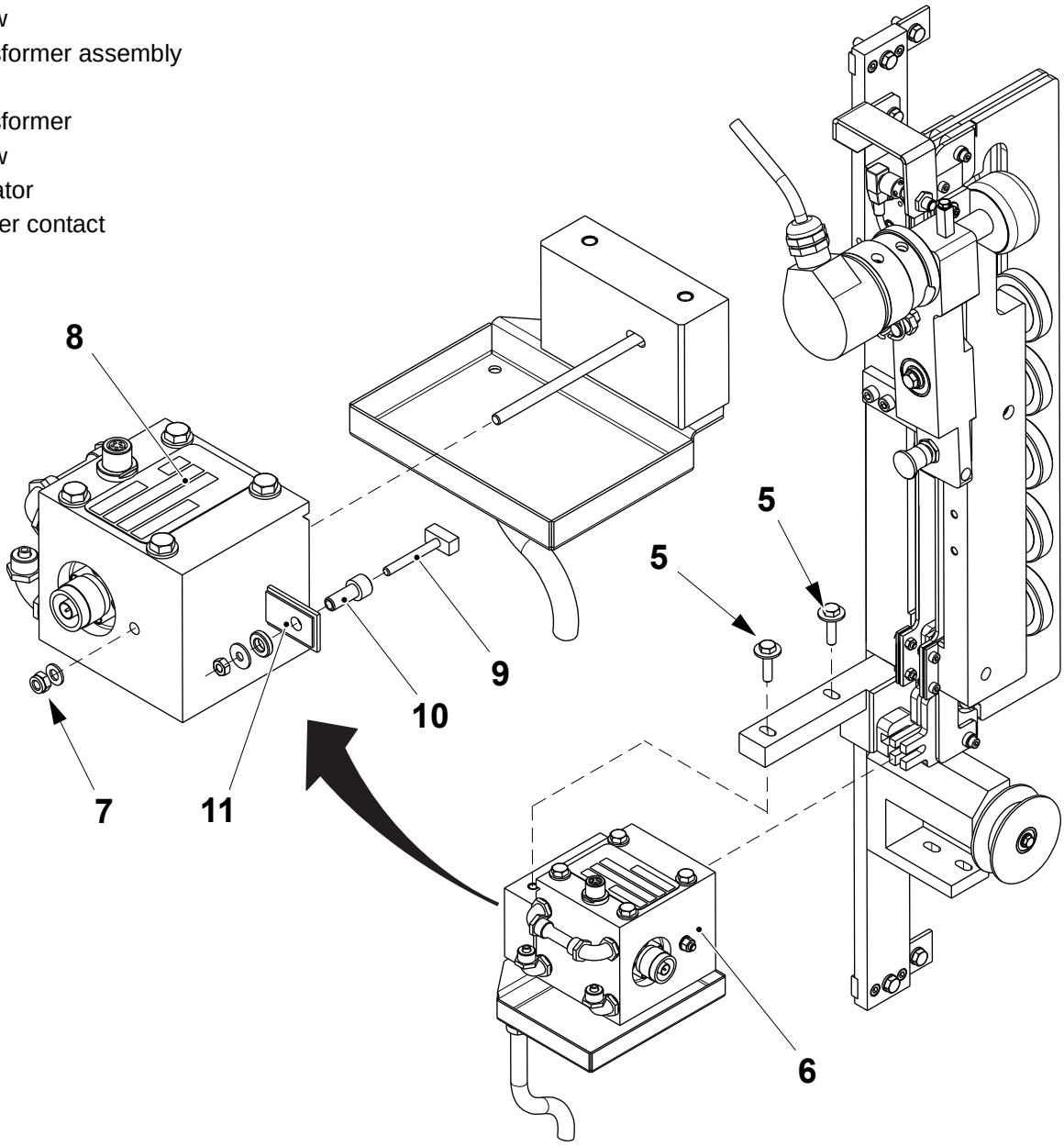

(Cont'd)

TechPub_2614345_0108 - 0705_3048202_01.fm

(Cont'd)

i) Assemble the new transformer (8) on the screw (12) without tightening the nut (7).

j) Push the transformer assembly (6) in the slot of the inductor plate (13) so that the copper contact (11) is as much as possible in contact with the inductor plate (13).

k) Tighten the nut (4)

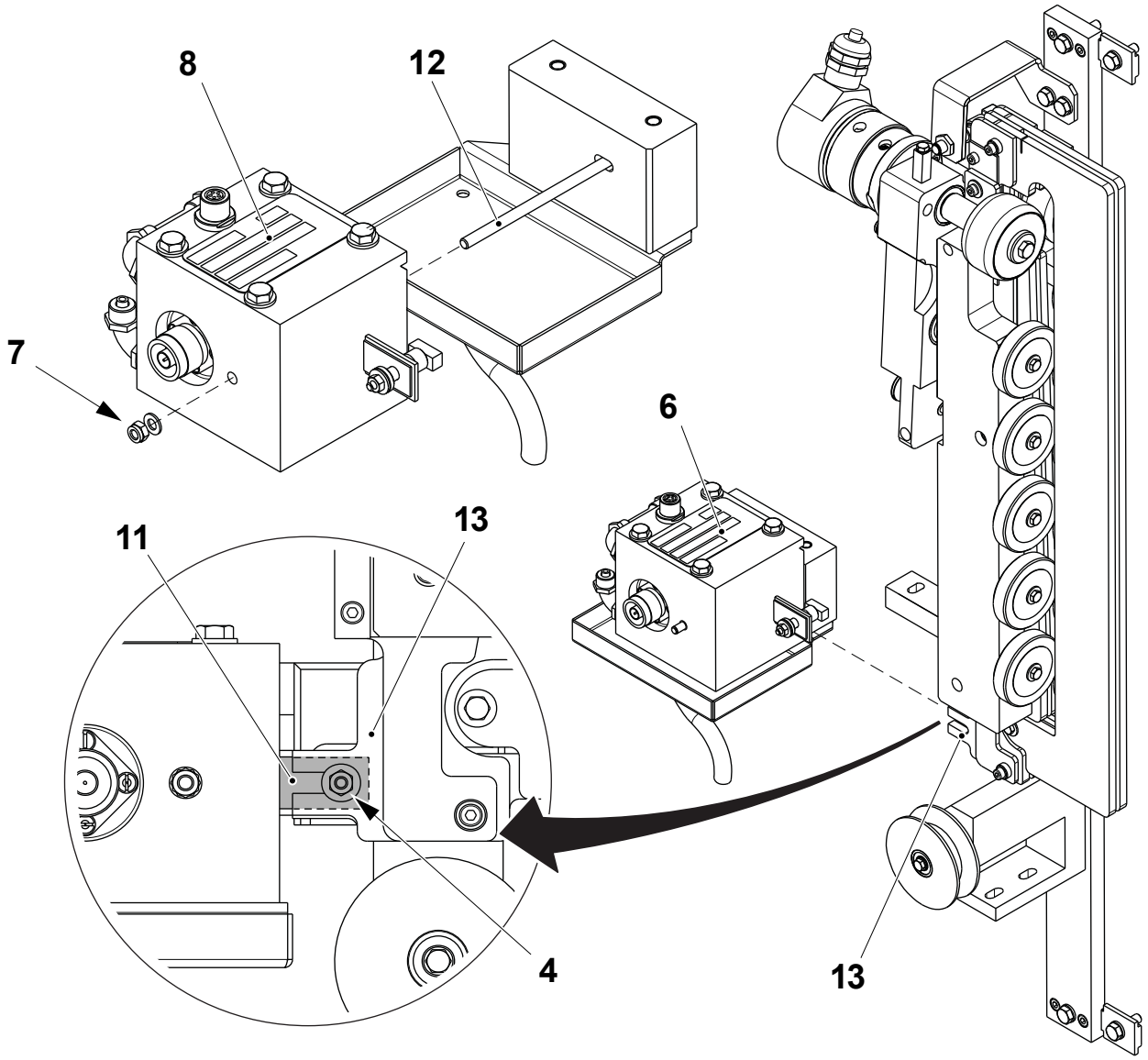

4 Nut
6 Transformer assembly
7 Nut
8 Transformer
11 Copper contact
12 Screw
13 Inductor plate

(Cont'd)

TechPub_2614345_0108 - 0705_3048202_01.fm

(Cont'd)

Note! Once the nuts (4) and (7) are tight, the transformer (8) is in the correct position. Do not overtighten the screws (5): the transformer (8) might be bent against the support (14).

l) Tighten the nut (7).

m) Tighten the screw (5) paying attention to not bend the transformer (8) against the support (14).

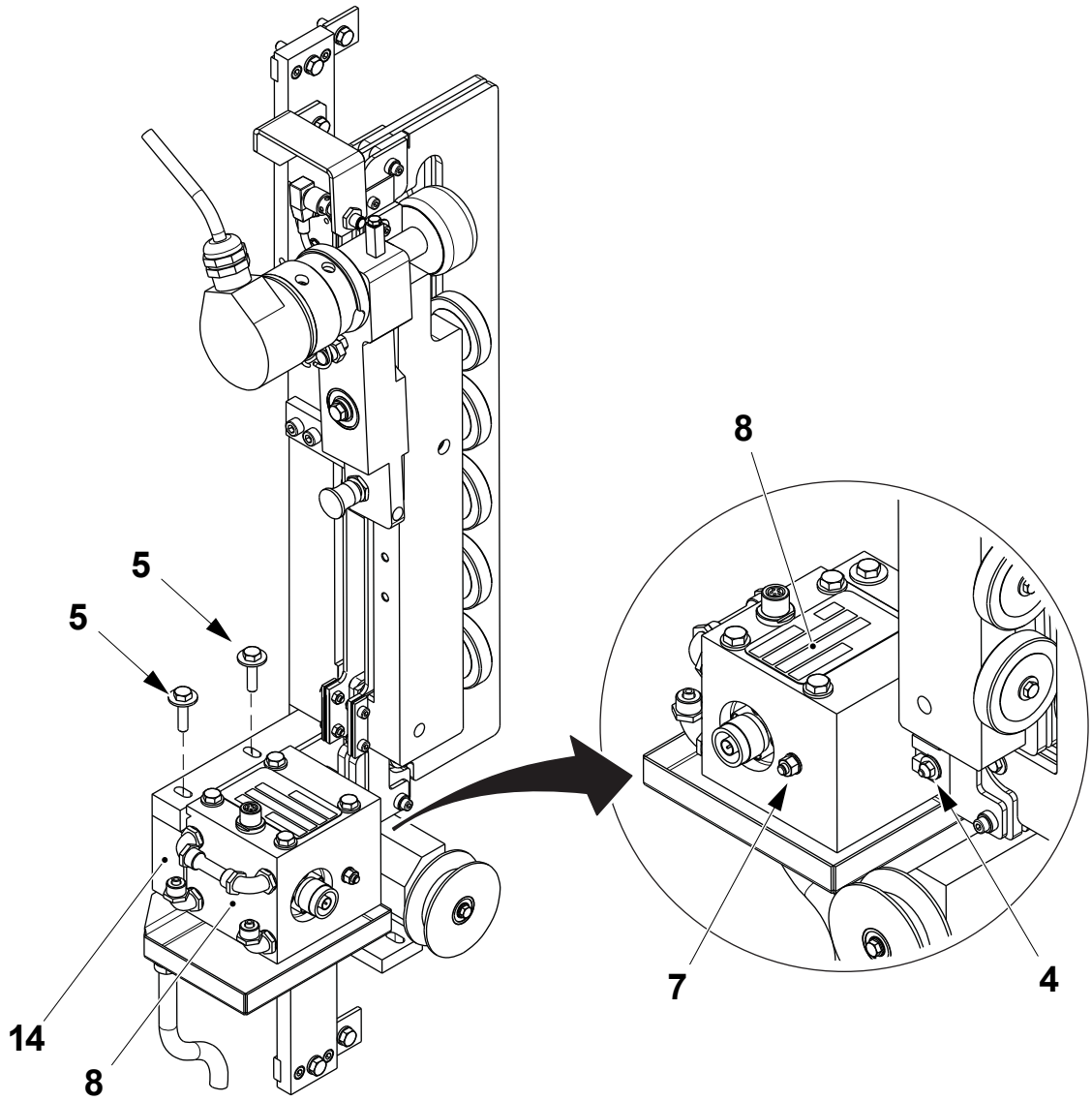

4 Nut
5 Screw
7 Nut
8 Transformer
14 Support

(Cont'd)

TechPub_2614345_0108 - 0705_3048202_01.fm

(Cont'd)

n) Fit back the cooling hoses (3).
o) Connect the coaxial cable (1) and the VMN cable (2).
p) Open the cooling water valves in the machine body.

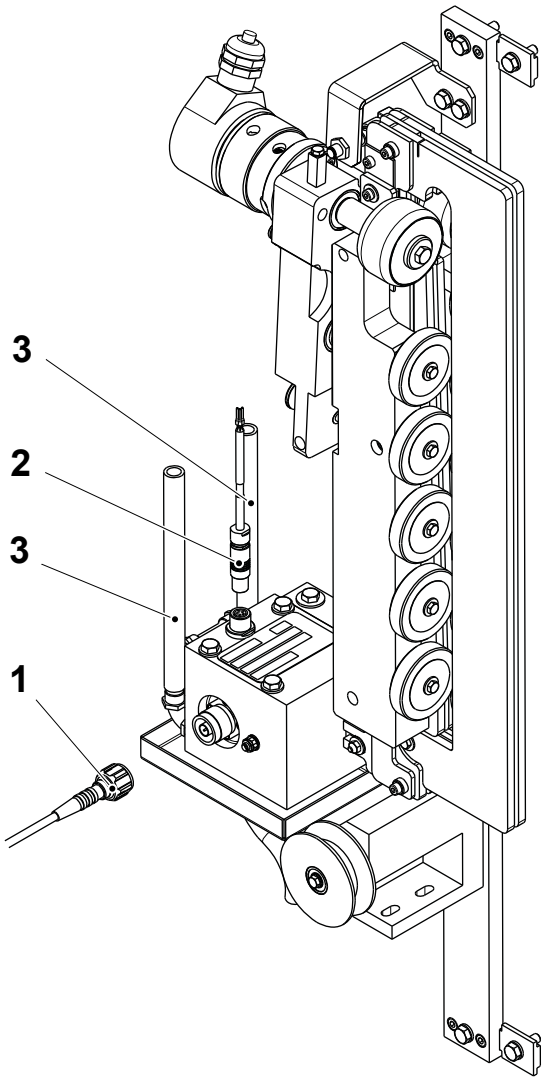

1 Coaxial cable
2 VMN cable
3 Hose

TechPub_2614345_0108 - 0705_3048202_01.fm

8.2.2-3 Inductor - Change Rollers

Machine Status	Mains Power OFF Air OFF Steam ON Water OFF
SPC Reference	2765668-0100

a) Remove the transformer (1), see 8.2.2-2 Inductor - Change Transformer.
b) Disconnect the encoder cable (2).
c) Remove the spring (3).
d) Remove the screw (4) and the roller assembly (5).
e) Place the roller assembly (5) on the work bench.
f) Remove the screws (6) and change the rollers (7).

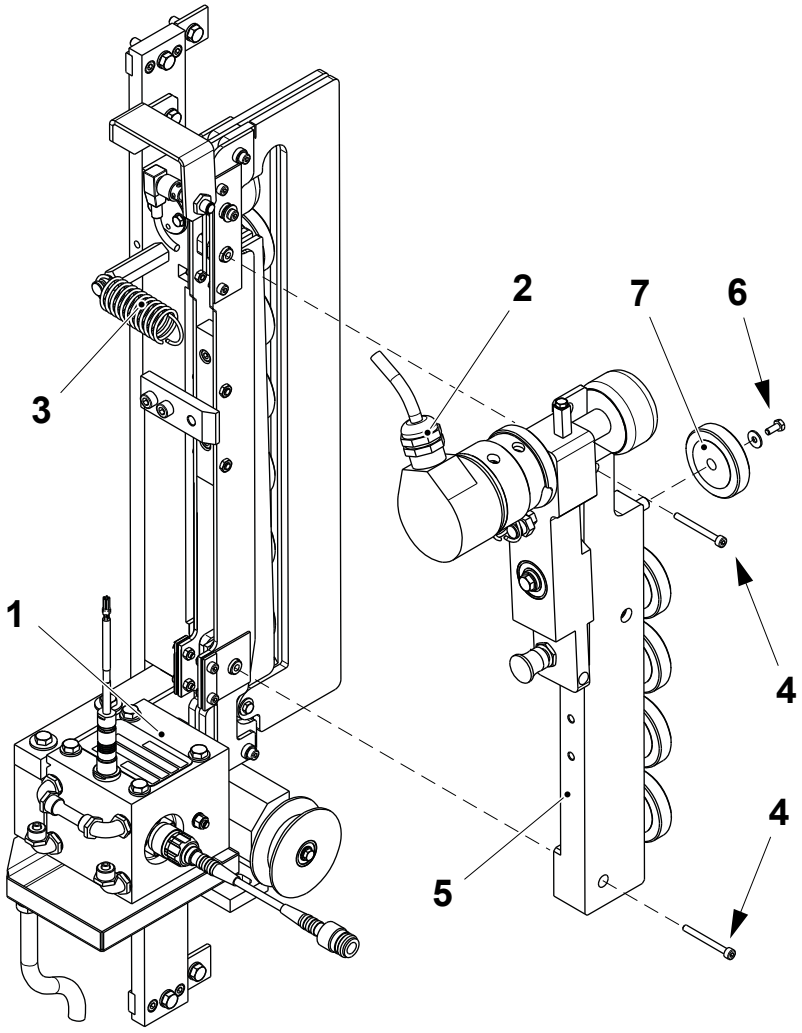

1 Transformer
2 Encoder cable
3 Spring
4 Screw
5 Roller assembly
6 Screw
7 Roller

(Cont'd)

TechPub_2614345_0108 - 0705_3048202_01.fm

(Cont'd)

g) Remove the screw (8) and the inductor (9).
h) Remove the screws (10) and change the rollers (11).
i) Remove the screw (12) and change the counter roller (13).
j) Assemble in the reverse order.

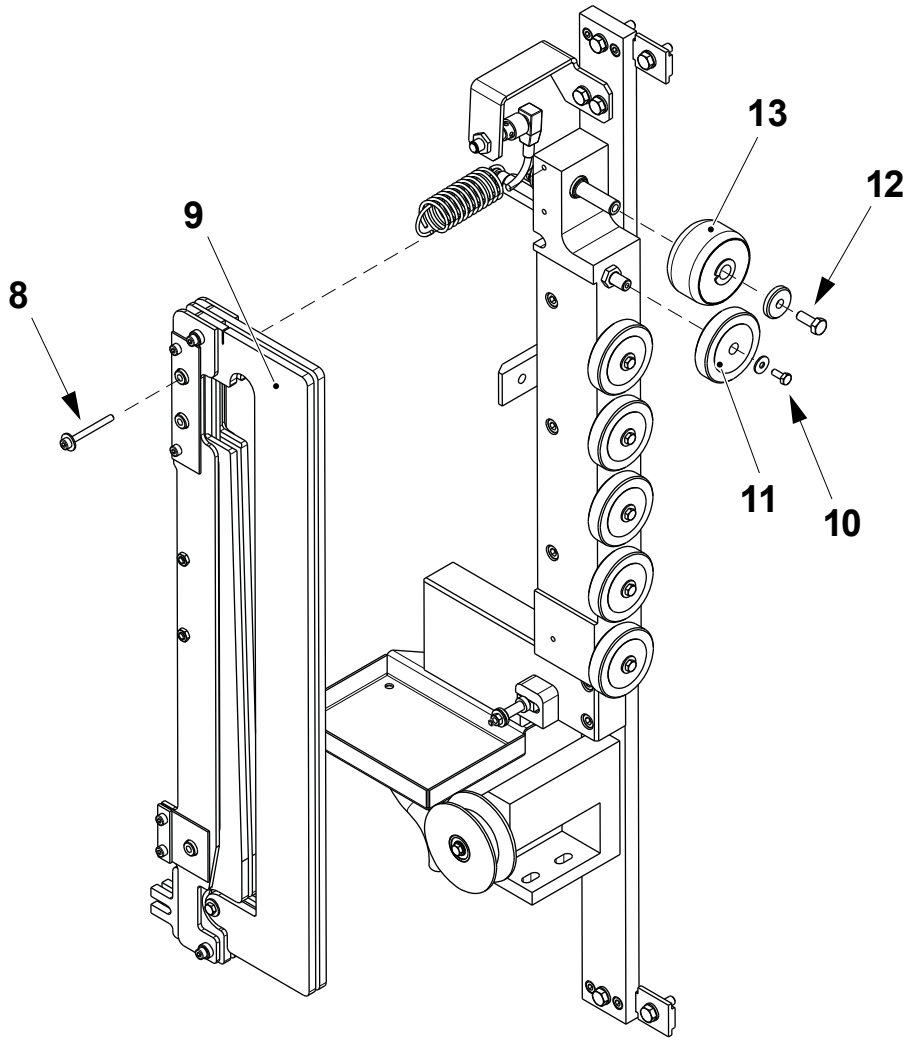

8 Screw
9 Inductor
10 Screw
11 Roller
12 Screw
13 Counter roller

TechPub_2614345_0108 - 0705_3048202_01.fm

8.2.2-4 Inductor - Set Position

Machine Status	Mains Power OFF Air OFF Steam ON Water OFF
SPC Reference	2765668-0100

Check that the plumb line (1) stretched over the rollers (2) is at the distance **A** from the inductor plates (3). Check the distance **B** between the rollers (4). If not,

- remove the strip applicator plate and move it on the work bench
- set the inductor position as follows.

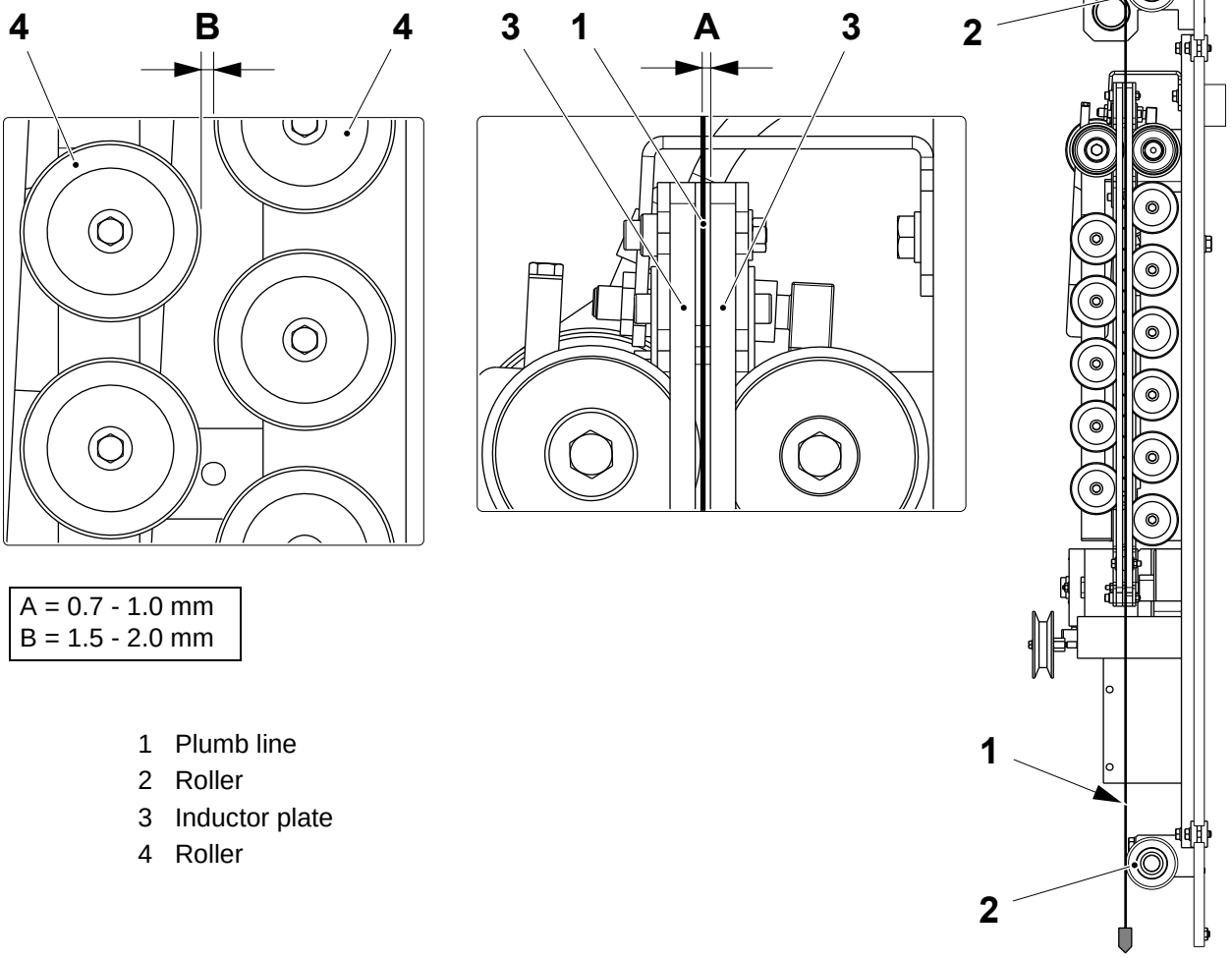

A = 0.7 - 1.0 mm
B = 1.5 - 2.0 mm

1 Plumb line
2 Roller
3 Inductor plate
4 Roller

(Cont'd)

TechPub_2614345_0108 - 0705_3048202_01.fm

(Cont'd)

Set Inductor Position

a) Remove the transformer (5), see 8.2.2-2 Inductor - Change Transformer.

b) Remove the spring (6).

c) Remove the two screws (7) and the screw (8).

d) Remove the inductor assembly (9).

e) Add or remove shims (10) and (11) to move the inductor in order to obtain the distance **A**, see previous page.

f) Add or remove shims (12) and (13) to move the inductor in order to obtain the distance **B**, see previous page.

g) Assemble in the reverse order.

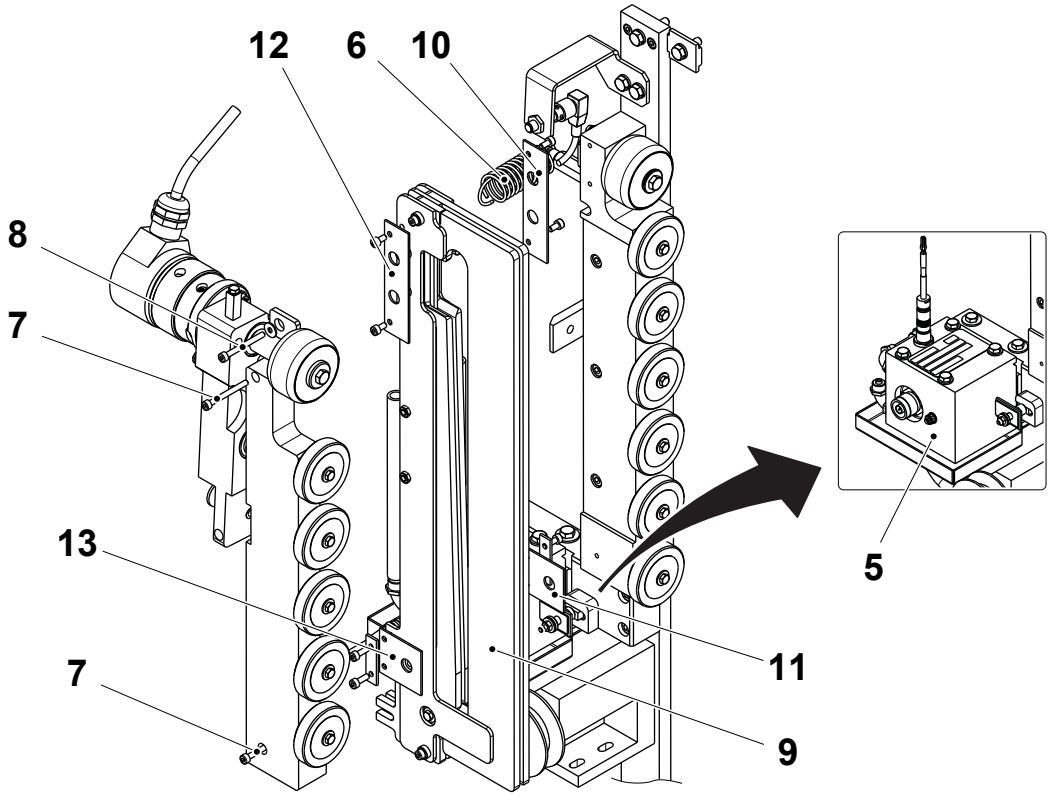

5 Transformer
6 Spring
7 Screw
8 Screw
9 Inductor assembly
10 Shim
11 Shim
12 Shim
13 Shim

TechPub_2614345_0108 - 0705_3048202_01.fm

8.2.2-5 Inductor - Set Volume

Machine Status	Mains Power OFF Air OFF Steam ON Water OFF
SPC Reference	2765668-0100

Basic Setting

Package	**A ±1.0 (mm)**
TBA 125 S	235.0
TBA 200 S	230.0
TBA 250 B - TBA 200 B	208.0
TBA 250 S - TBA 200 M	219.0
TBA 1000 S	163.0
TBA 1000 Sq	168.0
TBA 1000 B	154.0

(Cont'd)

TechPub_2614345_0108 - 0705_3048202_01.fm

(Cont'd)

a) Loosen the screws (1), (2) and (3).

b) Set the distance **A** between the edge of the fastening bracket (4) and the edge of the bottom panel (5).

c) Tighten the screws (1), (2) and (3).

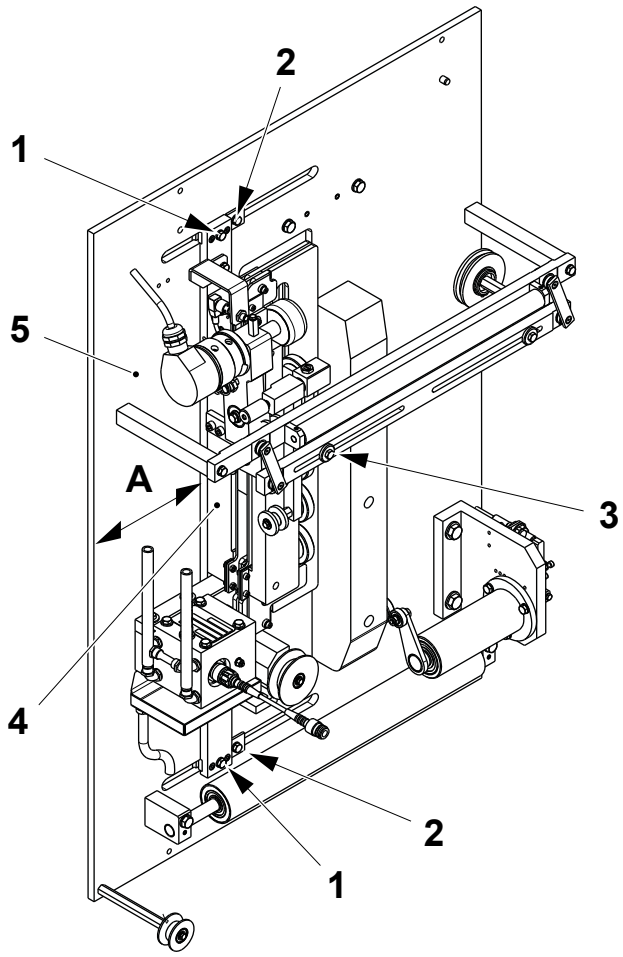

1 Screw
2 Screw
3 Screw
4 Fastening bracket
5 Bottom panel

(Cont'd)

TechPub_2614345_0108 - 0705_3048202_01.fm

(Cont'd)

Fine Setting

a) Step up the machine to TUBE SEALING.

b) Make sure that the packaging material is in contact with the bending roller (1) flange, see arrow.

c) Move the inductor (2) by the screws (3) and (4) so that:
   - the packaging material edge (5) is aligned with the notch (6) on the top of the sealing plate
   - the packaging material edge (5) is aligned with the bottom edge (7) of the sealing plate.

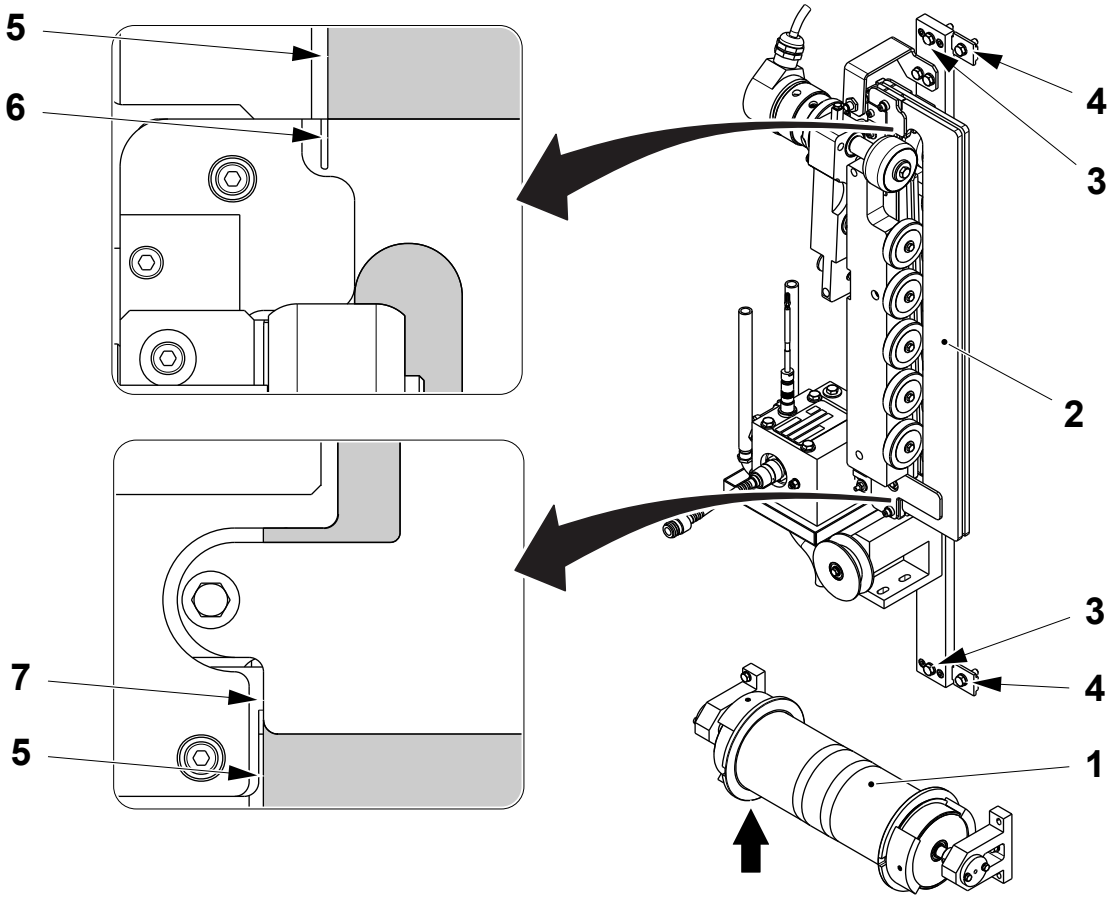

1 Bending roller
2 Inductor
3 Screw
4 Screw
5 Packaging material edge
6 Notch
7 Bottom edge

TechPub_2614345_0108 - 0705_3048202_01.fm

8.2.2-6 Inductor - Check Pressure Rollers

Machine Status	Mains Power OFF Air OFF Steam ON Water OFF
SPC Reference	2765668-0100

Check:

- the rollers (1) and (2) for excessive wear
- the roller (1) for radial play. The maximum allowable radial play is 0.3 mm
- that the rollers (1) and (2) rotate freely without play and the silicon rubber layer on the surface of each roller is undamaged.

If necessary, change the roller (1), see 8.2.2-7 Inductor - Change Pressure Rollers and the roller (2), see 8.2.2-3 Inductor - Change Rollers.

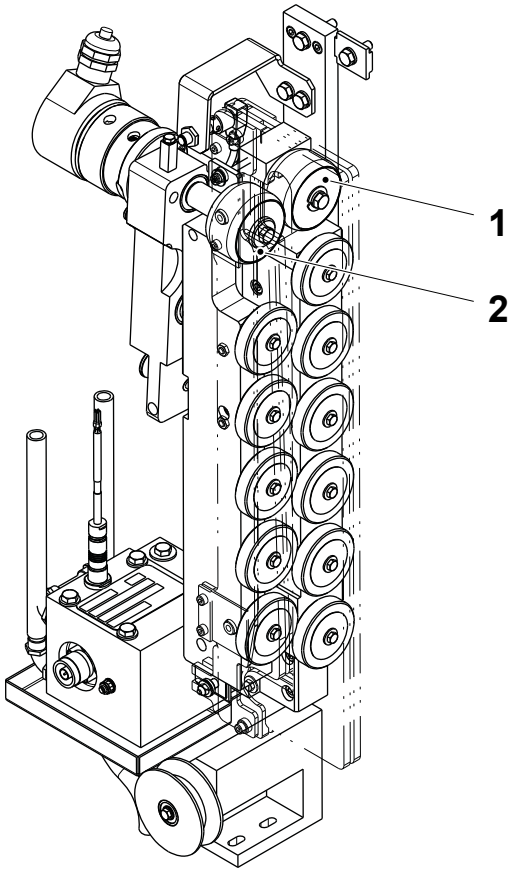

1 Roller
2 Roller

TechPub_2614345_0108 - 0705_3048202_01.fm

8.2.2-7 Inductor - Change Pressure Rollers

Machine Status	Mains Power OFF Air OFF Steam ON Water OFF
SPC Reference	2765668-0100

a) Open the rollers by the arm (1).

b) Hold the shaft (2) by a key, see arrow, and remove the screw (3) to change the pressure roller (4).

c) Remove the screws (5).

d) Remove the screws (6) and slip off the shaft (7) holding the roller (8) by hand.

e) Remove and change the roller (8).

f) Assemble in the reverse order.

g) Check that the roller (8) rotate freely on the shaft (7).

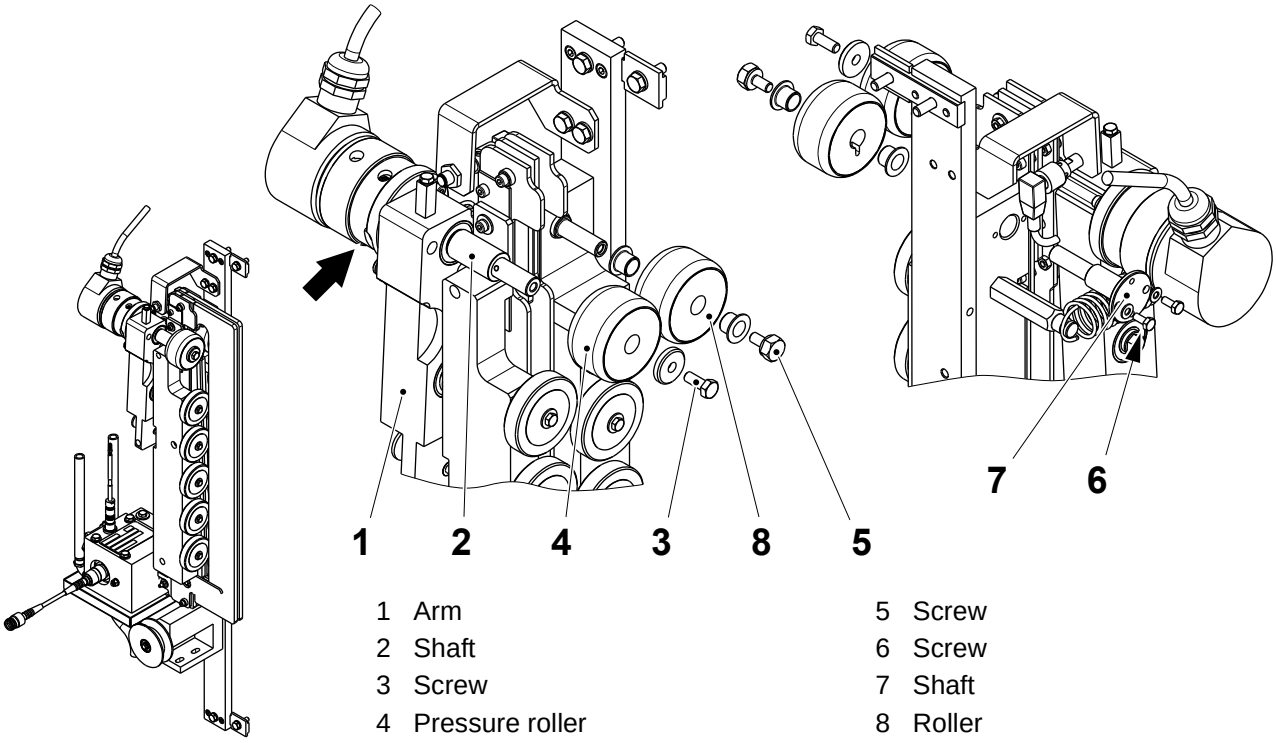

1 Arm
2 Shaft
3 Screw
4 Pressure roller
5 Screw
6 Screw
7 Shaft
8 Roller

TechPub_2614345_0108 - 0705_3048202_01.fm

8.2.2-8 Inductor - Set Pressure Roller

Machine Status	Mains Power OFF Air OFF Steam ON Water OFF
Special Equipment	Force gauge, TP No. 90459-1467
SPC Reference	2765668-0100

a) Insert a piece of packaging material (1) and a piece of LS strip (2) under the roller (3).

b) Fit the push force gauge in the groove (4) of the arm (5).

c) Push the arm (5) to measure the force of the spring (2).

d) Pull the LS strip (2) and push the arm (5) at the same time.

e) The spring force is the value displayed on the dynamometer when the LS strip (2) starts sliding. The value must be **25 N**.

f) Set the tension of the spring (6) by turning the eccentric shaft (7). If the spring (6) is changed then repeat items a) to e).

Note! If a pull force gauge is used, pull the shaft (8): the spring force when the LS strip (2) starts sliding must be 21-22 N.

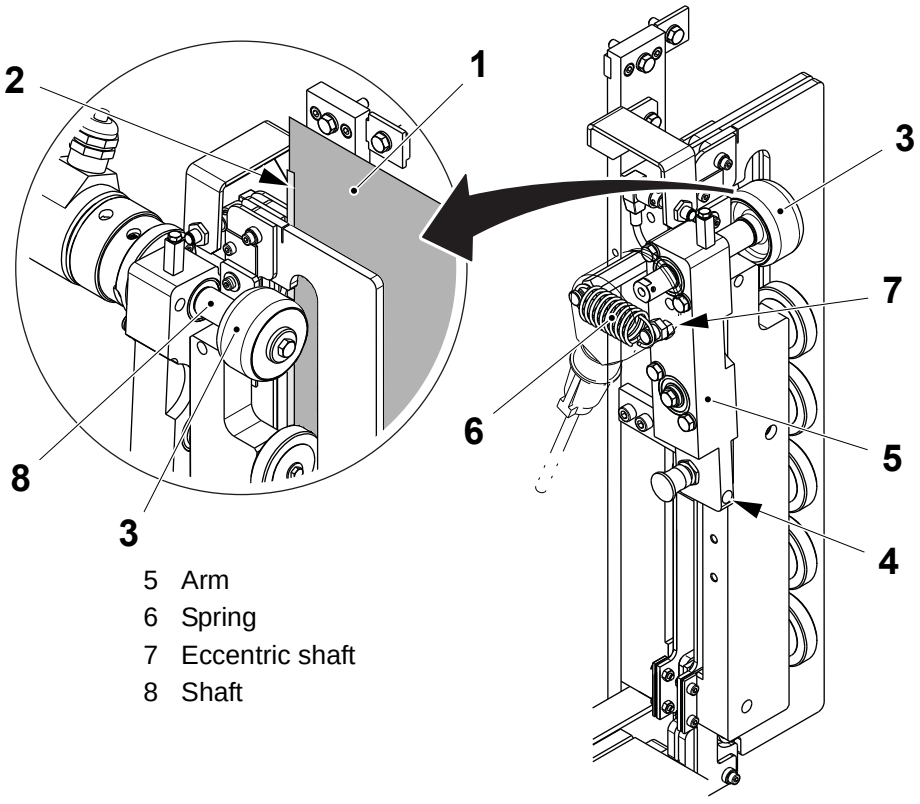

1 Packaging material
2 LS strip
3 Roller
4 Groove
5 Arm
6 Spring
7 Eccentric shaft
8 Shaft

TechPub_2614345_0108 - 0705_3048202_01.fm

8.2.2-9 Inductor - Set Proximity Switch

Machine Status	Mains Power ON Air OFF Steam ON Water OFF
SPC Reference	2765668-0100

a) Insert a piece of packaging material (1) under the roller (2).

b) Loosen the nuts (3).

c) Set the distance **A** between the head of the proximity switch (4) and the cam (5) by moving the proximity switch (4).

d) Tighten the nuts (3).

Note! Make sure that the LED on the proximity switch (4) is still lit when manually moving the roller (2) sideways.

A = 0.5 to 1.0 mm

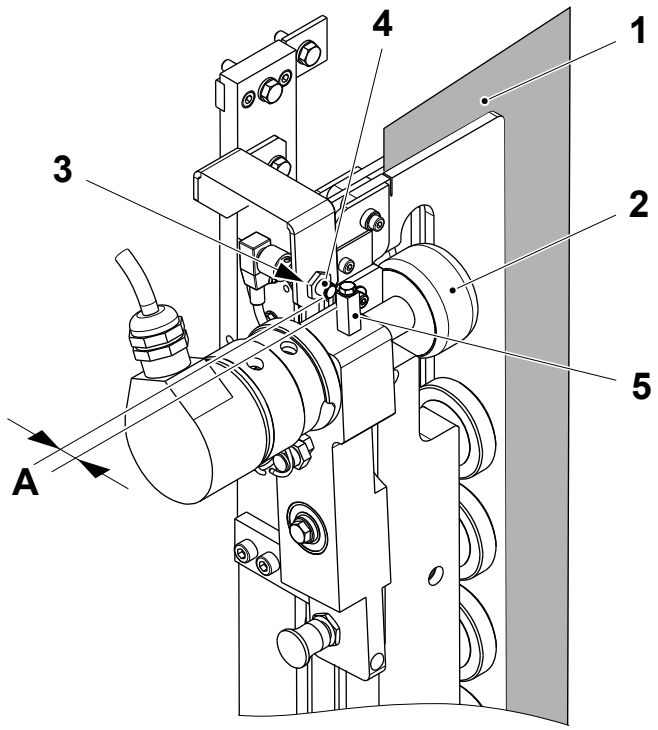

1 Packaging material
2 Roller
3 Nut
4 Proximity switch
5 Cam

TechPub_2614345_0108 - 0705_3048202_01.fm

8.2.2-10 Inductor - Change Adhesive Tape

Machine Status	Mains Power OFF Air OFF Steam ON Water OFF
Special Equipment	Tape, TP No. 90459-2130
SPC Reference	2765668-0100

a) Remove the inductor (1), see 8.2.2-3 Inductor - Change Rollers and place it on the work bench.

b) Remove the external screws (2) and all the spacers (3).

c) Extract the sealing plates (4).

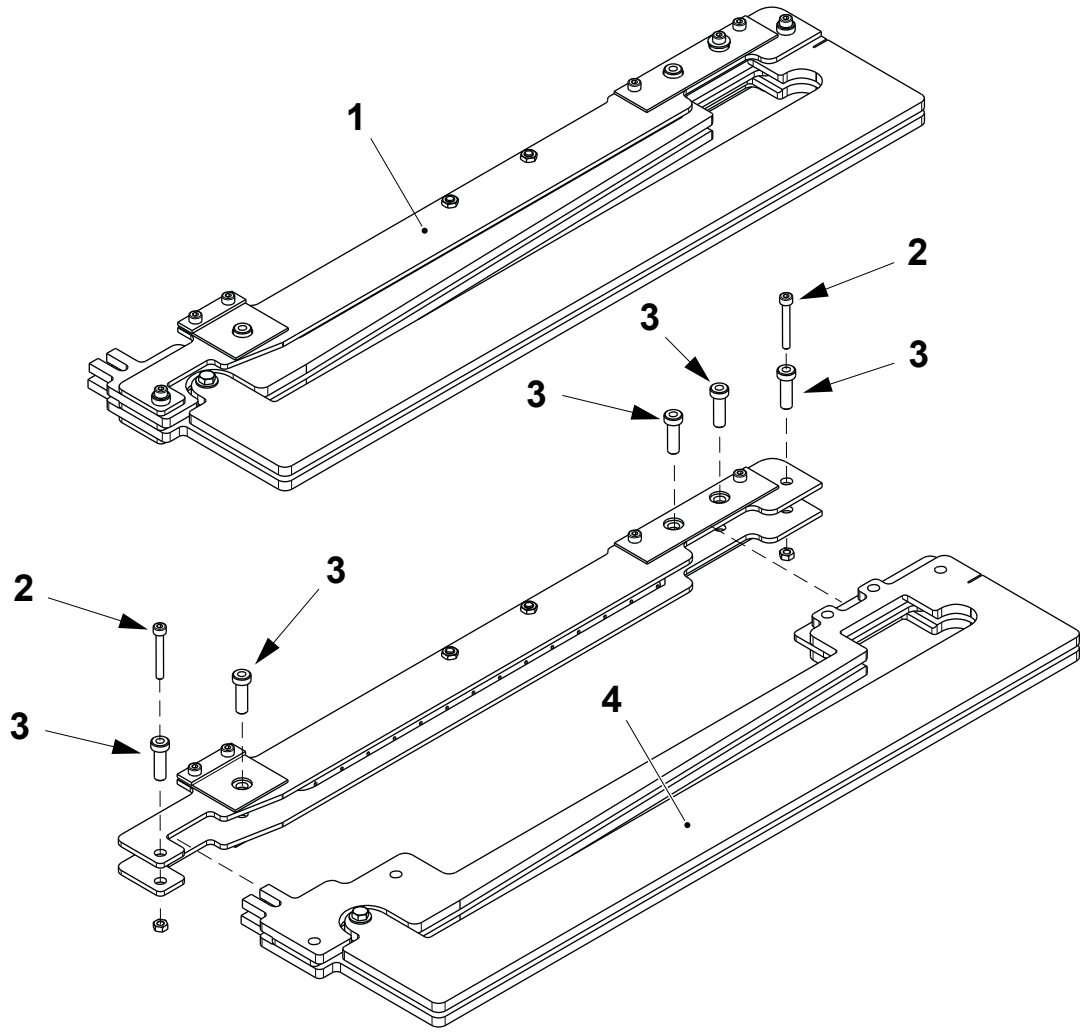

1 Inductor
2 Screw
3 Spacer
4 Sealing plate

TechPub_2614345_0108 - 0705_3048202_01.fm

(Cont'd)

(Cont'd)

d) Remove the screw (5).

e) Separate the sealing plates (4) from the insulating plates (6) and (7).

f) Remove the worn adhesive teflon tape from the internal surface of each sealing plate (4).

g) Clean the internal surface of each sealing plate (4) with an alcoholic detergent and a non-metallic object.

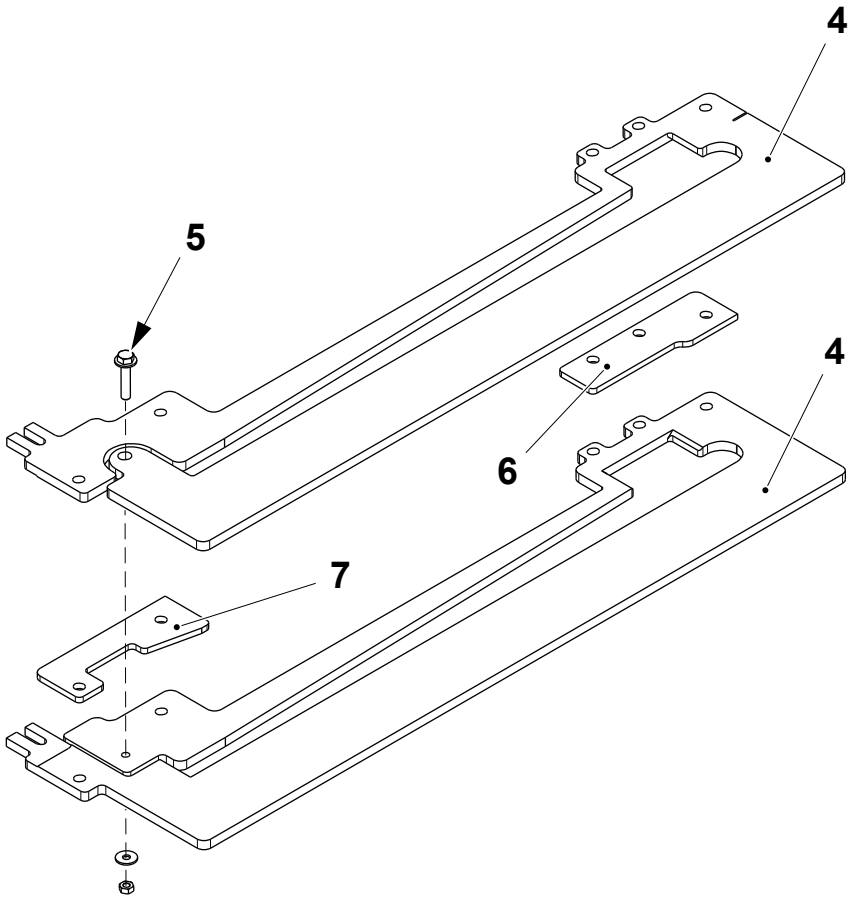

4 Sealing plate
5 Screw
6 Insulating plate
7 Insulating plate

(Cont'd)

TechPub_2614345_0108 - 0705_3048202_01.fm

(Cont'd)

Note! The adhesive teflon tape must be applied carefully avoiding to leave air bubbles or scrapes. Use a teflon plate so that the tape adheres perfectly on the surfaces.

h) Apply the adhesive teflon tape TP No. 90459-2130 on the internal surface of each sealing plate, just on the areas shown as grey (8). The ends of the adhesive teflon tape are folded over the sealing plate edges to the other side of the sealing plate, around 30-40 mm on the other side without any overlaps of the tape.

i) Cut the exceeding adhesive teflon tape along the edge of the sealing plates.

Note! Pay attention to not apply the adhesive teflon tape on the area in contact with the insulating plates (6) and (7). Leave a space of 1-2 mm between the adhesive teflon tape and the insulating plates (6) and (7).

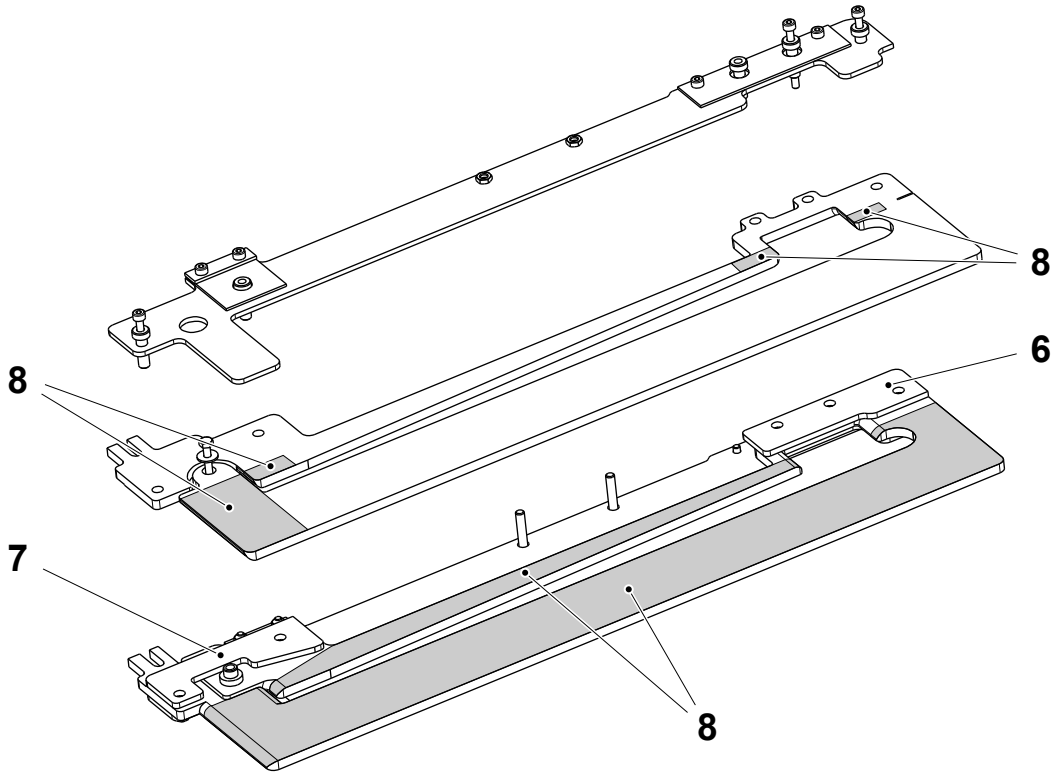

6 Insulating plate
7 Insulating plate
8 Adhesive teflon tape area

(Cont'd)

TechPub_2614345_0108 - 0705_3048202_01.fm

(Cont'd)

j) Assemble in the reverse order without tightening the external screws (2) and the screw (5).

k) With the aid of a spacer, set the distance **A** between the sealing plate edges (9) and (10).

l) Tighten the screw (5).

m) Tighten the external screws (2).

n) Assemble the inductor on the strip applicator, following 8.2.2-3 Inductor - Change Rollers in the reverse order.

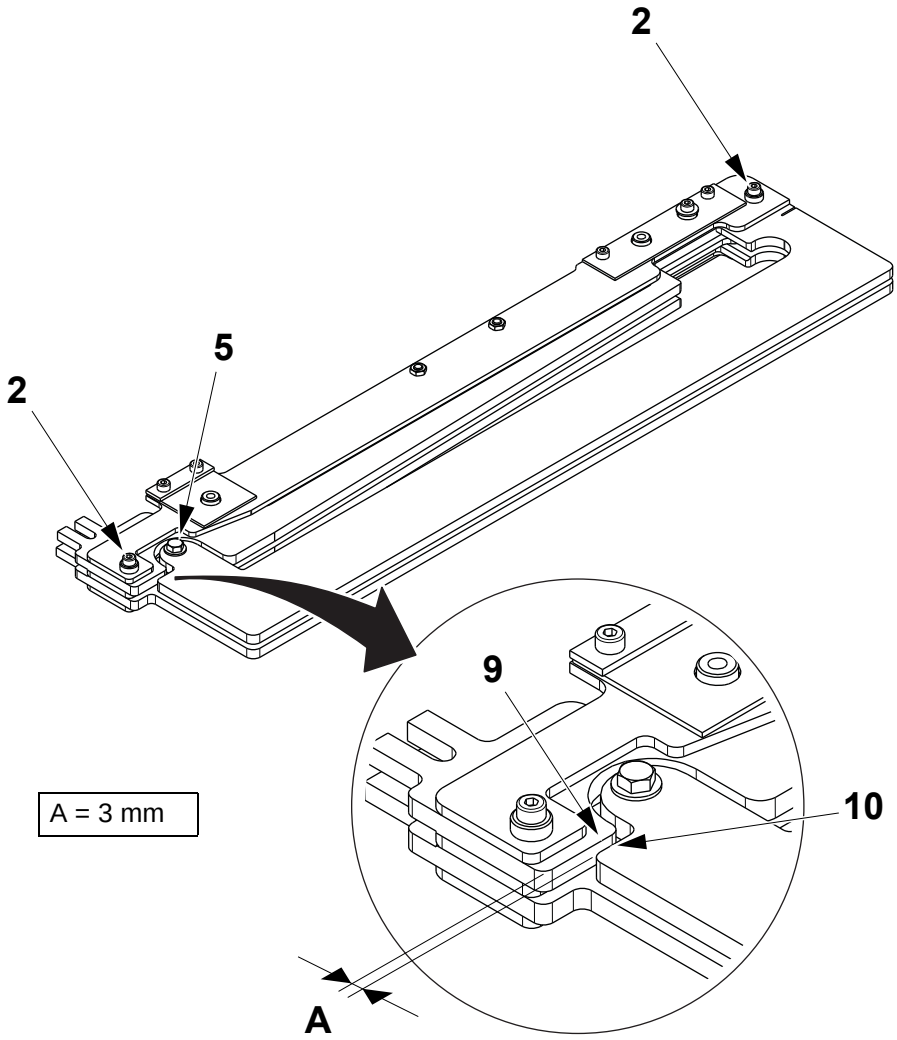

2 Screw
5 Screw
9 Sealing plate edge
10 Sealing plate edge

TechPub_2614345_0108 - 0705_3048202_01.fm

8.2.2-11 Inductor - Change Pulley Ball Bearings

Machine Status	Mains Power OFF Air OFF Steam ON Water OFF
SPC Reference	2765668-0100

a) Remove the screw (1) and the pulley (2).

b) Change the ball bearings (3).

c) Fit back the pulley (2) by the screws (1).

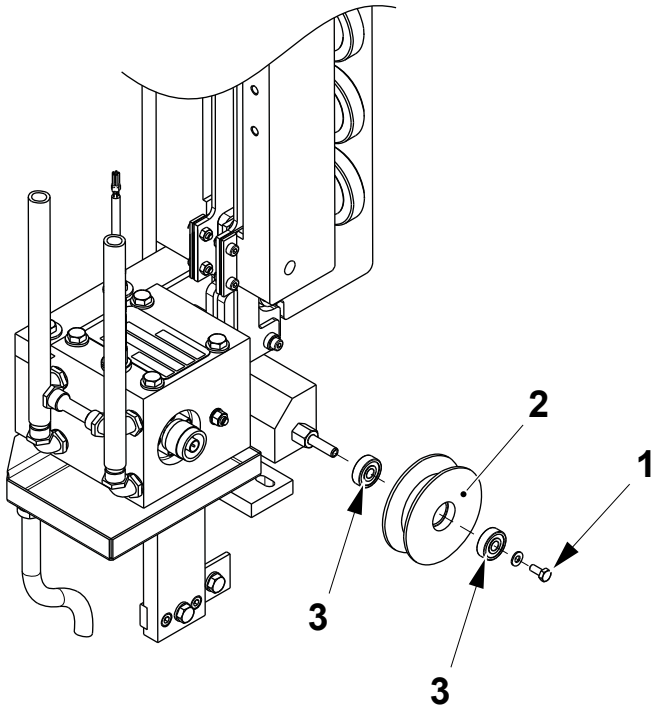

1 Screw
2 Pulley
3 Ball bearings

TechPub_2614345_0108 - 0705_3048202_01.fm

8.2.2.1 Air Nozzle

8.2.2.1-1 Air Nozzle - Set

Machine Status	Mains Power ON Air OFF Steam ON Water OFF
SPC Reference	2900027-0100

Note! Only valid for machines TBA 1000 S with PT Speed.

a) Tighten the screws (1) inserting a shim to obtain the distance **A** between the rollers (2).

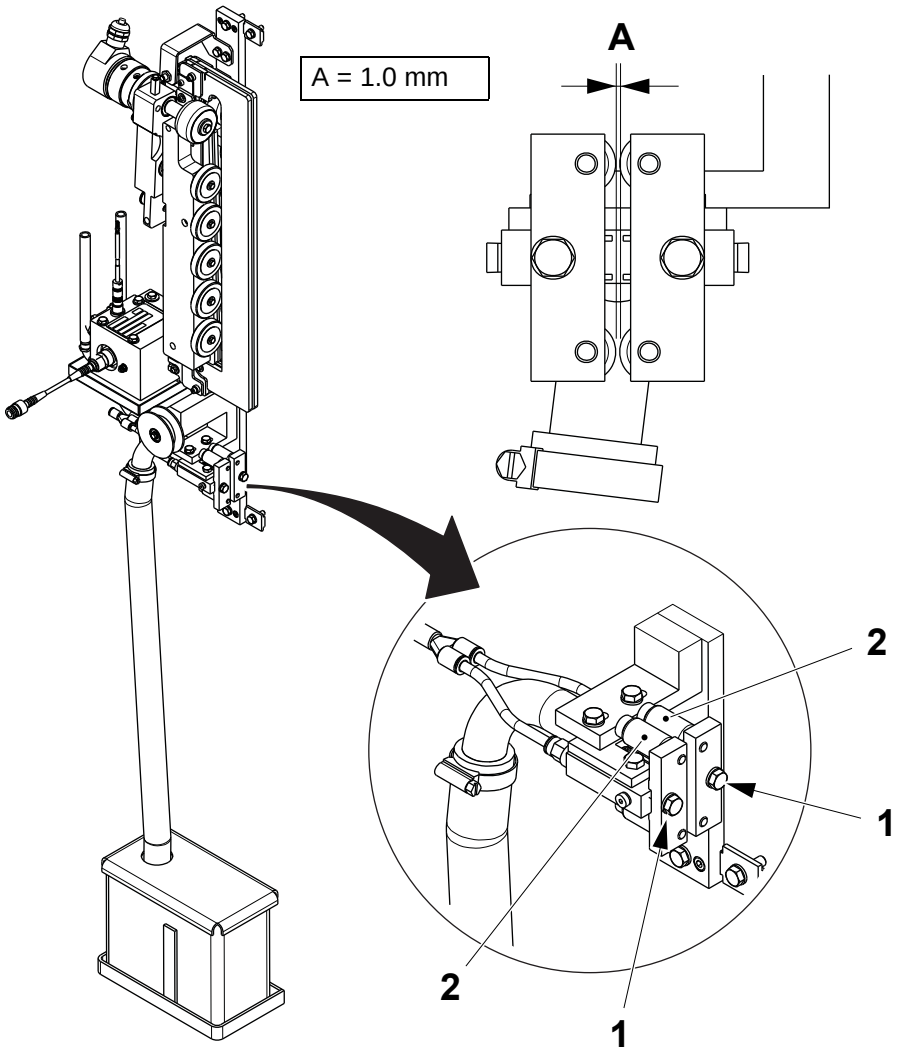

1 Screw
2 Roller

(Cont'd)

TechPub_2614345_0108 - 0705_3048202_01.fm

(Cont'd)

b) Loosen the screws (3) and move the air nozzle assembly (4) so that the packaging material (5) enters through it without bending its path.

c) Tighten the screws (3).

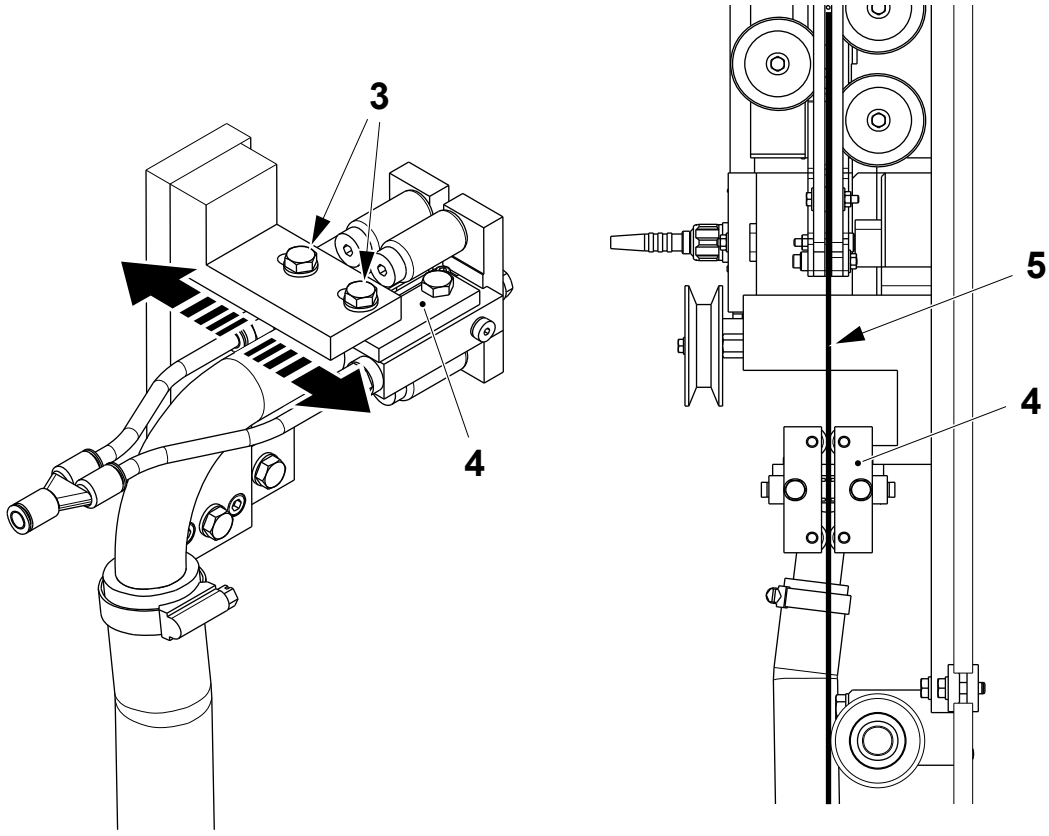

3 Screw
4 Air nozzle assembly
5 Packaging material

(Cont'd)

TechPub_2614345_0108 - 0705_3048202_01.fm

(Cont'd)

d) Set the pressure for the air nozzle to 1.0 ±0.5 bar by the pressure regulator (6).

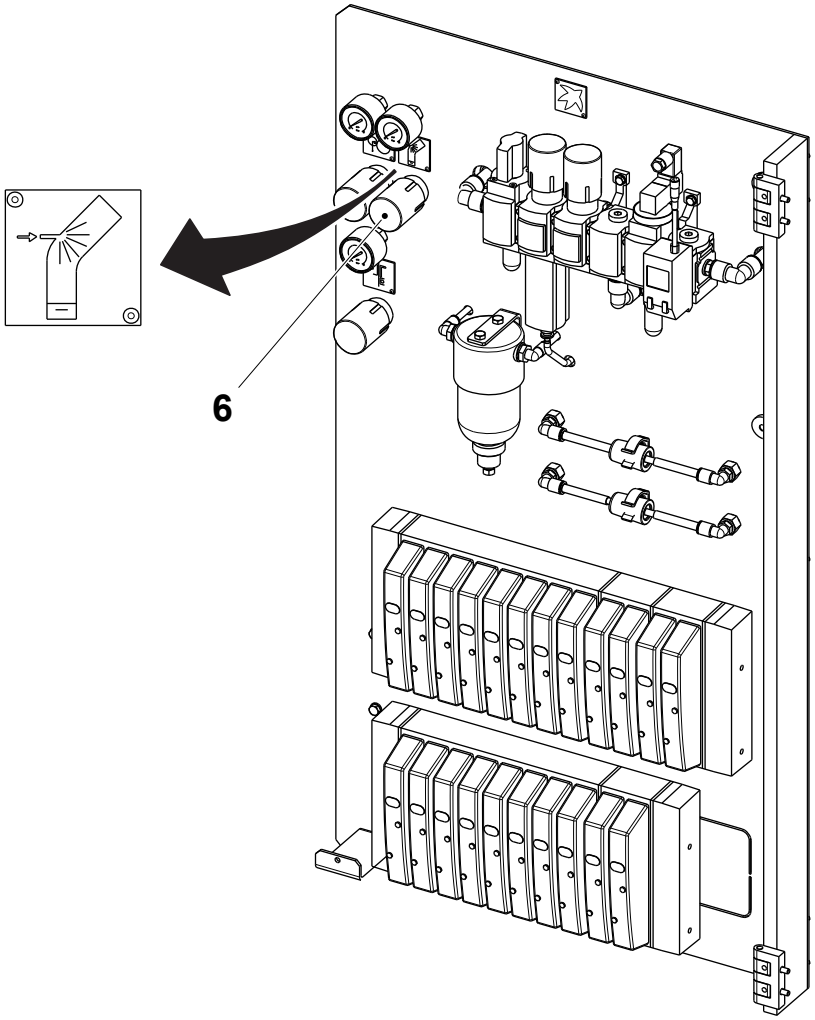

6 Pressure regulator

TechPub_2614345_0108 - 0705_3048202_01.fm

8.2.3 Strip Guide

8.2.3-1 Strip Guide - Check

Machine Status	Mains Power OFF Air OFF Steam ON Water OFF
SPC Reference	2806658-0100

Check that:

- the guide wheel (1) and the rollers (2) rotate freely. The rollers (2) may have a maximum radial play of 1.0 mm and a maximum axial play of 0.5 mm. If necessary, change the guide wheel (1) and the rollers (2).
- the surfaces of the guide wheel (1) and the rollers (2) are undamaged
- the LS strip lies in the centre of the rollers (2). If not, adjust the position of the rollers, see 8.2.3-2 Strip Guide - Set.

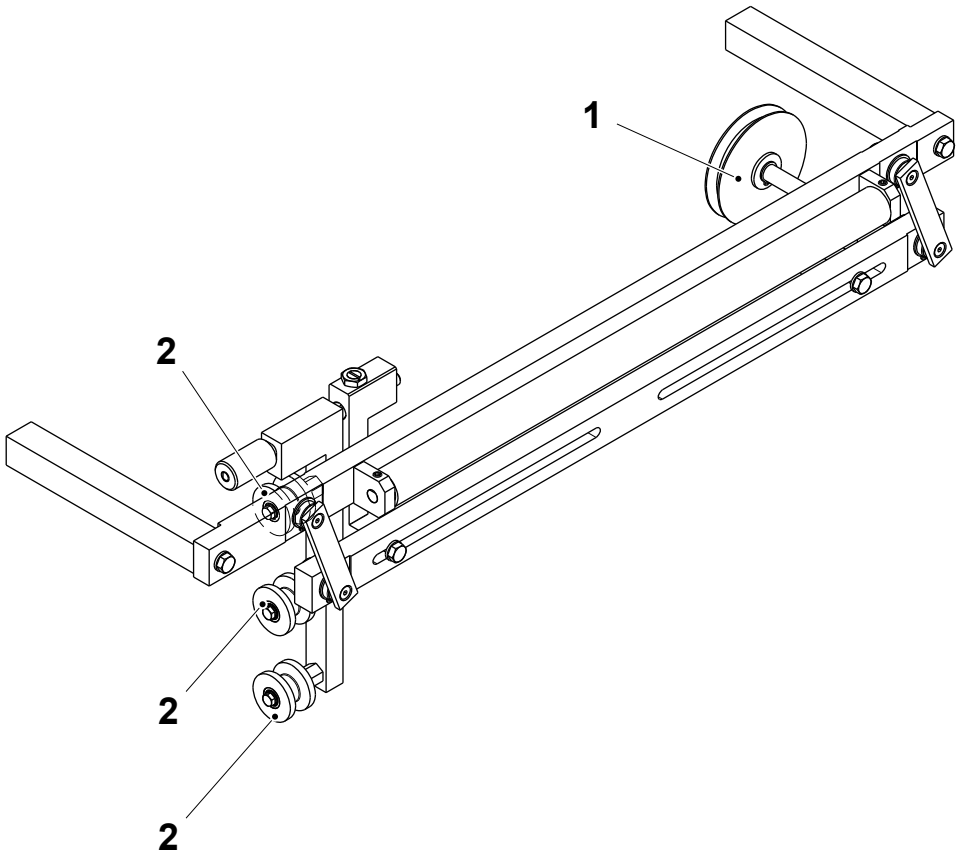

1 Guide wheel
2 Roller

TechPub_2614345_0108 - 0701_3048203_01.fm

8.2.3-2 Strip Guide - Set

Machine Status	Mains Power OFF Air OFF Steam ON Water OFF
SPC Reference	2806658-0100

a) Remove the screws (1) and the strip guide (2).

b) Place the strip guide (2) on the work bench.

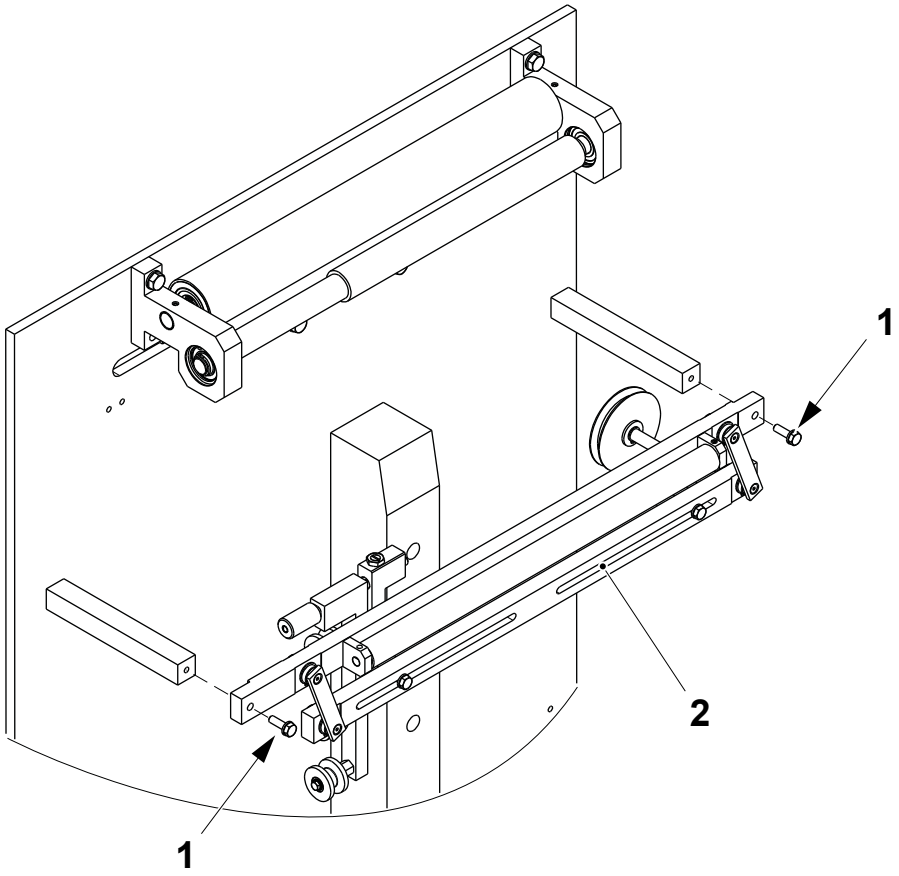

1 Screw
2 Strip guide

(Cont'd)

TechPub_2614345_0108 - 0701_3048203_01.fm

(Cont'd)

c) Loosen the screws (3) and (4).

d) Set the distance **A** between the bracket (5) and the end of the rod (6) by moving the bracket (5).

e) Tighten the screw (3).

Package	A ±0.5 (mm)
TBA 125 S	153
TBA 200 S	150
TBA 250 B - TBA 200 B	126
TBA 250 S - TBA 200 M	139
TBA 1000 S	76.0
TBA 1000 Sq	86.0
	72.5
TBA 1000 B	70

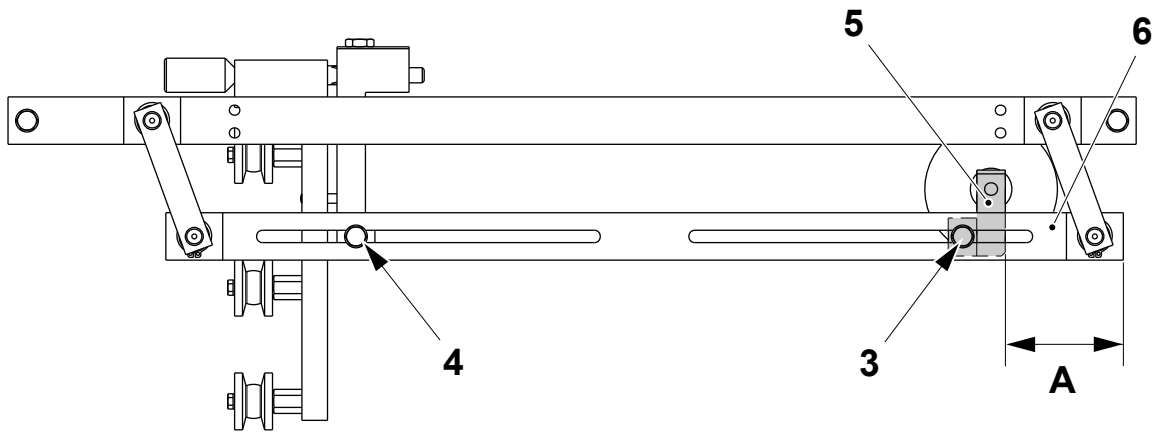

3 Screw
4 Screw
5 Bracket
6 Rod

(Cont'd)

TechPub_2614345_0108 - 0701_3048203_01.fm

(Cont'd)

f) Set the distance **B** between the bracket (5) and the bracket (7) by moving the rod (6).

g) Tighten the screw (4).

h) Set the distance **C** between the brackets (7) and the support (8) by turning the adjusting screw (9).

Package	B ±0.5 (mm)	C ±1.0 (mm)
TBA 125 S	125	6
TBA 200 S	138	6
TBA 250 B - TBA 200 B	176	6
TBA 250 S - TBA 200 M	150	6
TBA 1000 S	269.0	6.0
TBA 1000 Sq	255.0	6.0
	278.5	6.0
TBA 1000 B	284	6

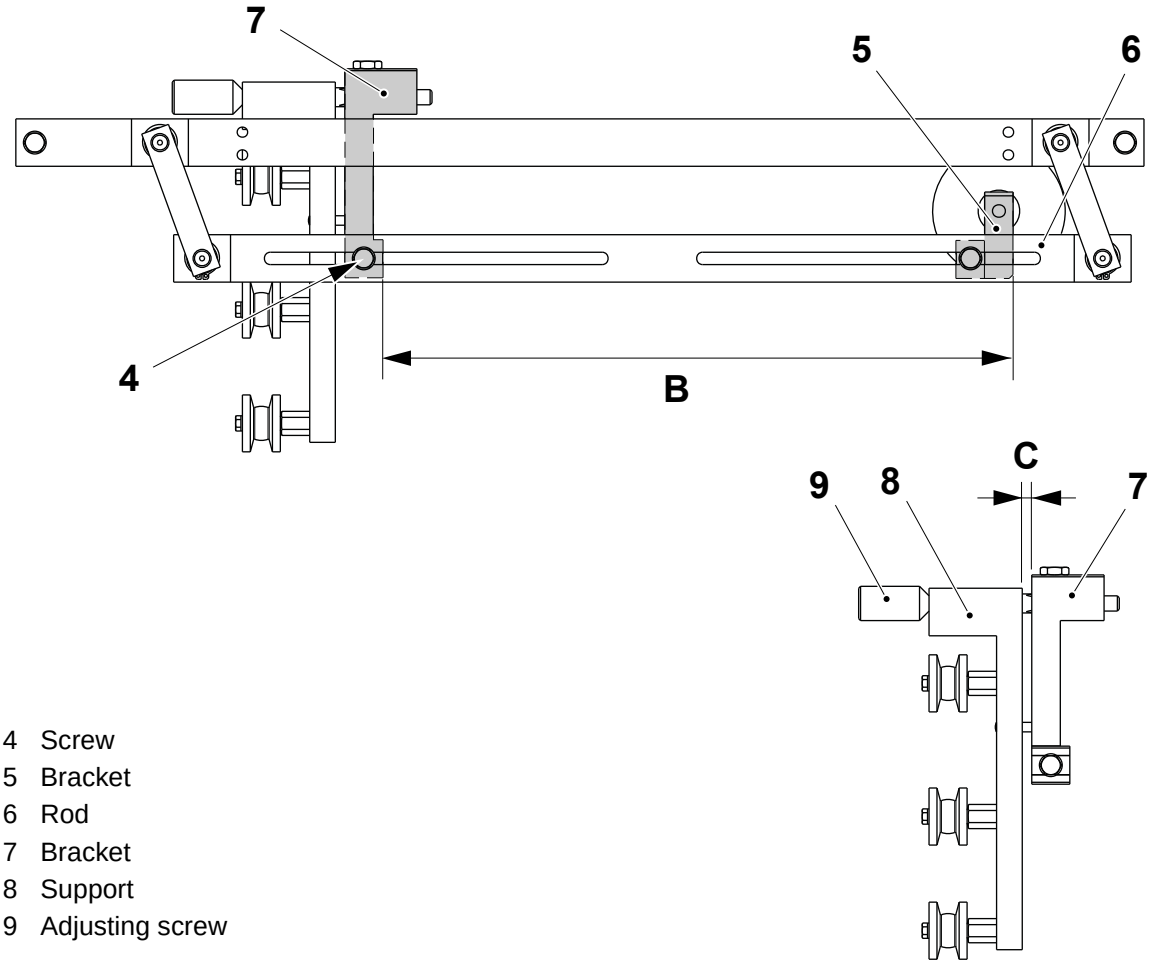

4 Screw
5 Bracket
6 Rod
7 Bracket
8 Support
9 Adjusting screw

(Cont'd)

TechPub_2614345_0108 - 0701_3048203_01.fm

(Cont'd)

i) During PRODUCTION, check that the strip (10) is positioned symmetrically over the edge of the packaging material (11). If necessary, adjust the strips position by turning the adjusting screw (9).

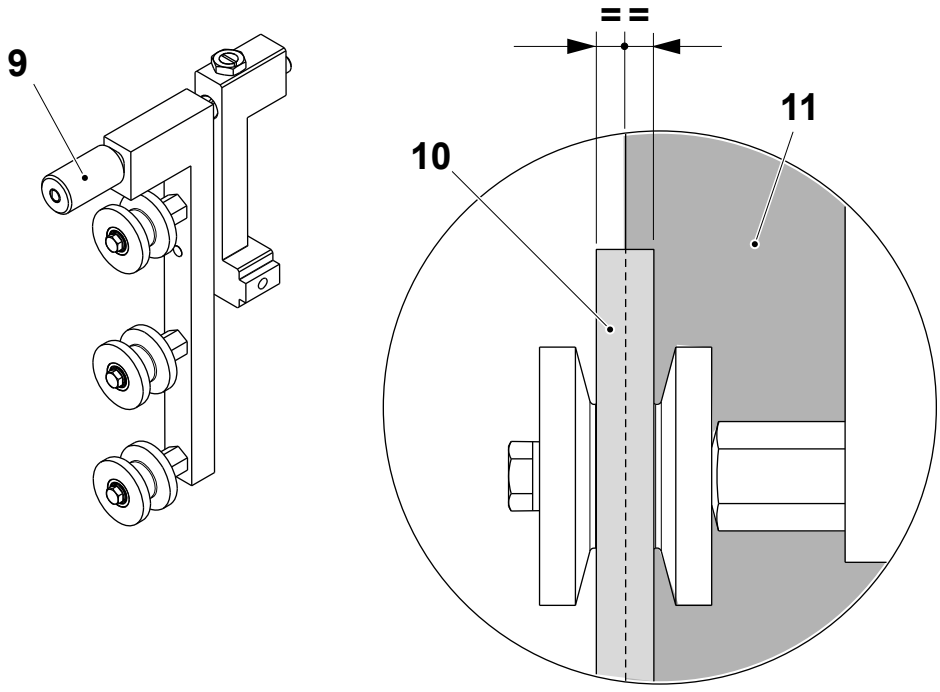

9 Adjusting screw
10 Strip
11 Packaging material

TechPub_2614345_0108 - 0701_3048203_01.fm

8.2.3-3 Strip Guide - Change Guide Wheel Ball Bearing

Machine Status	Mains Power OFF Air OFF Steam ON Water OFF
SPC Reference	2806658-0100

a) Remove the screws (1) and bring the strip guide (2) on the work bench.
b) Remove the nut (3), the washer (4) and extract the guide wheel (5).
c) Remove the retaining ring (6) and change the ball bearing (7).
d) Assemble in the reverse order.

1 Screw
2 Strip guide
3 Nut
4 Washer
5 Guide wheel
6 Retaining ring
7 Ball bearing

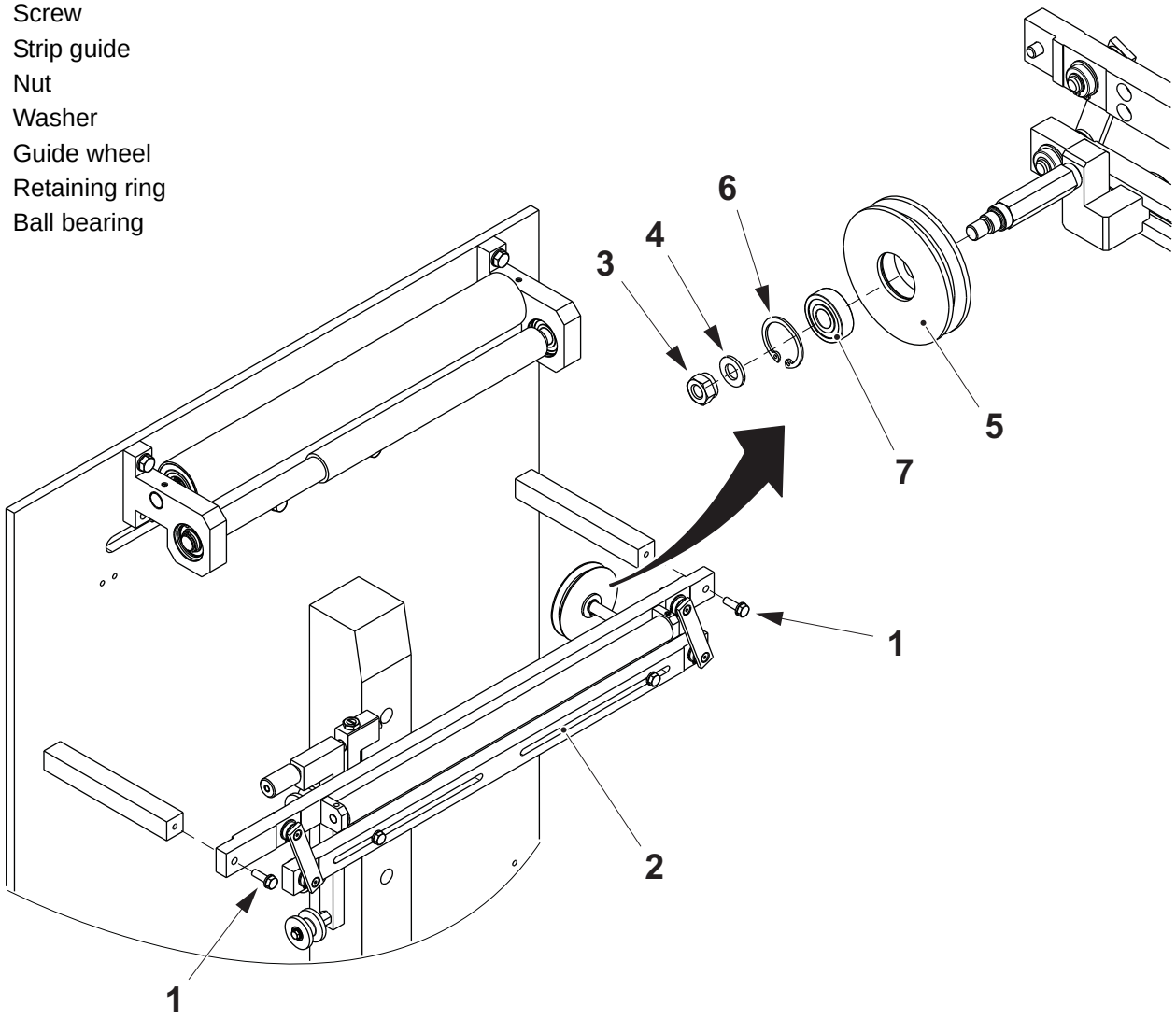

TechPub_2614345_0108 - 0701_3048203_01.fm

8.2.4 Rollers

8.2.4-1 Rollers - Change Bearings

Machine Status	Mains Power OFF Water OFF Steam ON Air OFF
SPC Reference	2771065-0100 2771070-0100 2863550-0100

Remove and place on the work bench:

- the screws (1) and the upper roller assembly (2)
- the screws (3) and the lower roller assembly (4)
- the screws (5) and the middle roller assembly (6).

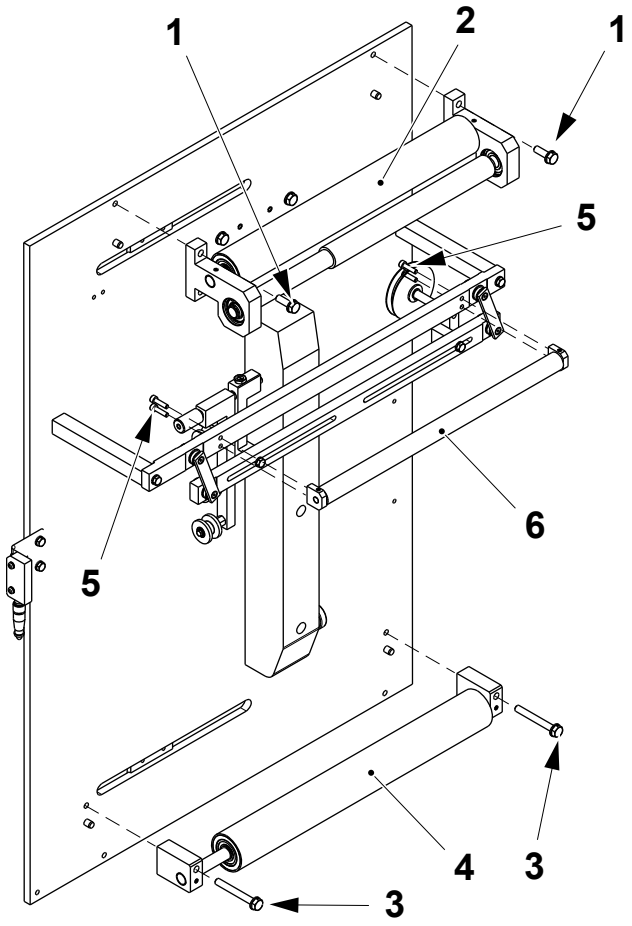

1 Screw
2 Upper roller assembly
3 Screw
4 Lower roller assembly
5 Screw
6 Middle roller assembly

(Cont'd)

TechPub_2614345_0108 - 0702_3048204_01.fm

(Cont'd)

Upper Roller

a) Remove the retaining rings (1) and (2).
b) Loosen the grub screws (3).
c) Pull the supports (4) off the rollers (5) and (6).
d) Extract and change the ball bearings (7).
e) Remove the retaining rings (8).
f) Extract and change the ball bearings (9).
g) Assemble in the reverse order.

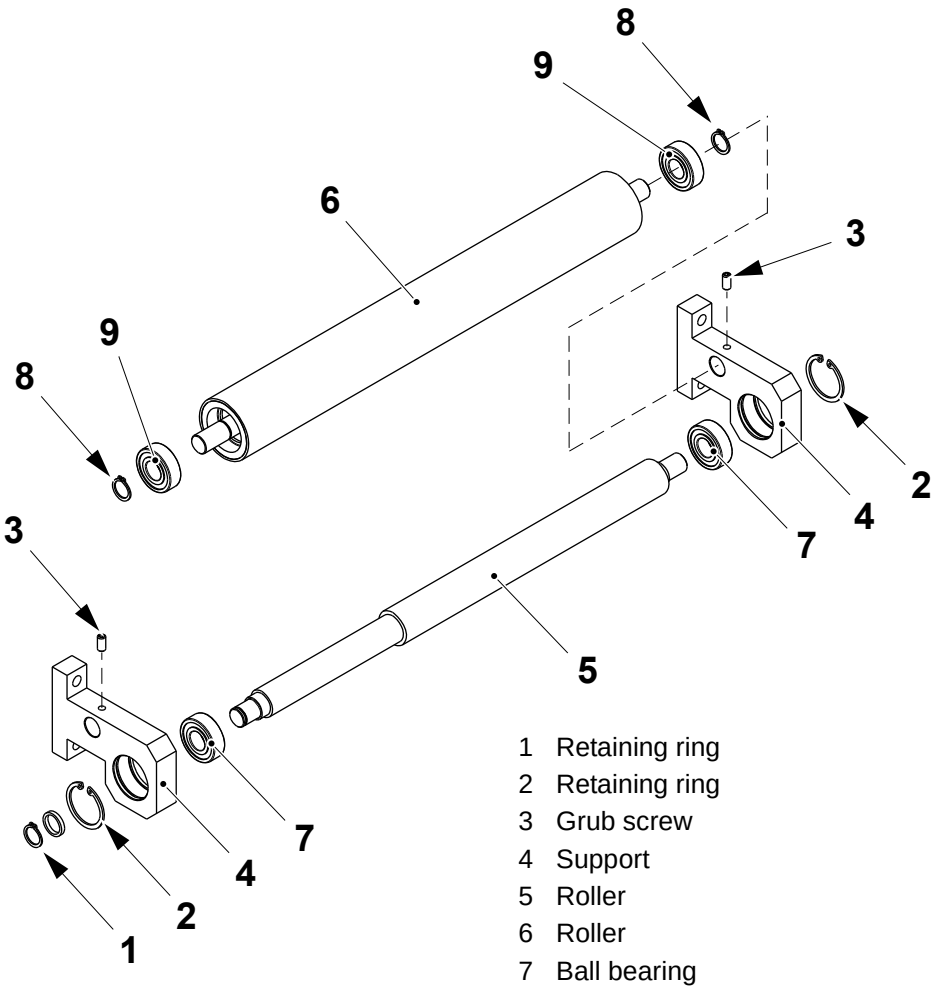

1 Retaining ring
2 Retaining ring
3 Grub screw
4 Support
5 Roller
6 Roller
7 Ball bearing
8 Retaining ring
9 Ball bearing

(Cont'd)

TechPub_2614345_0108 - 0702_3048204_01.fm

(Cont'd)

Lower Roller

a) Loosen the grub screws (1).

b) Pull the supports (2) off the roller (3).

c) Remove the retaining rings (4).

d) Extract and change the ball bearings (5).

e) Assemble in the reverse order.

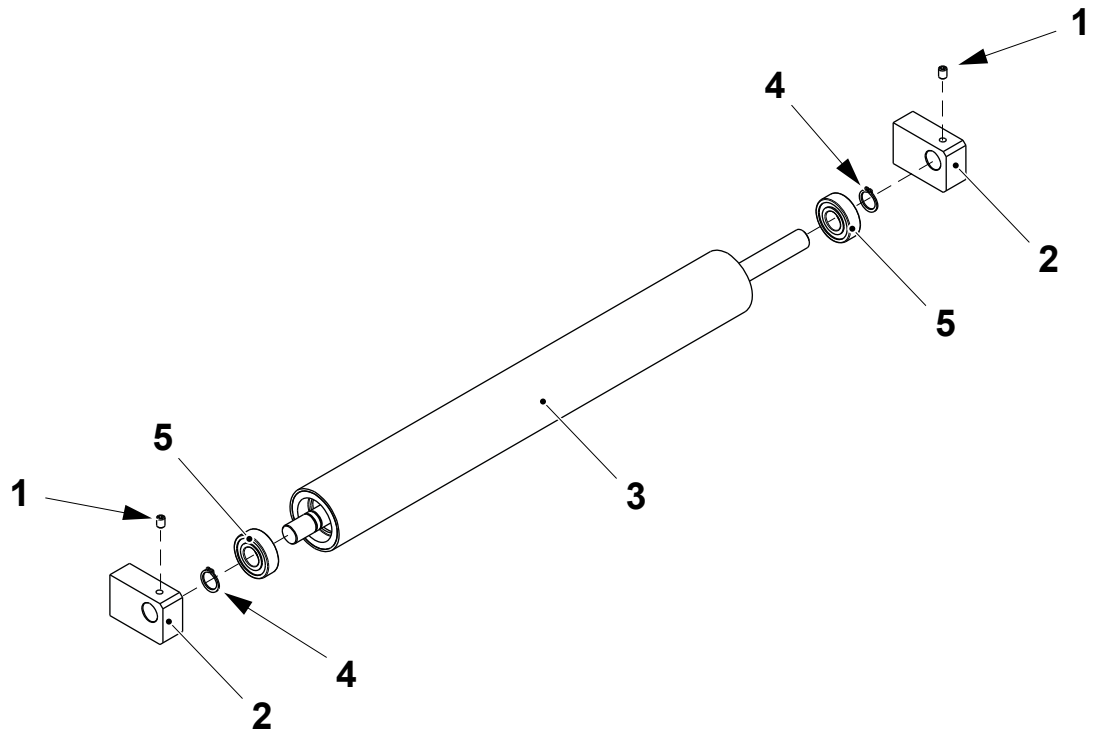

1 Grub screw
2 Support
3 Roller
4 Retaining ring
5 Ball bearing

TechPub_2614345_0108 - 0702_3048204_01.fm

(Cont'd)

(Cont'd)

Middle Roller

a) Loosen the grub screw (1).
b) Pull the brackets (2) out of the roller (3).
c) Remove the pins (4).
d) Remove and change the ball bearings (5).
e) Assemble in the reverse order.

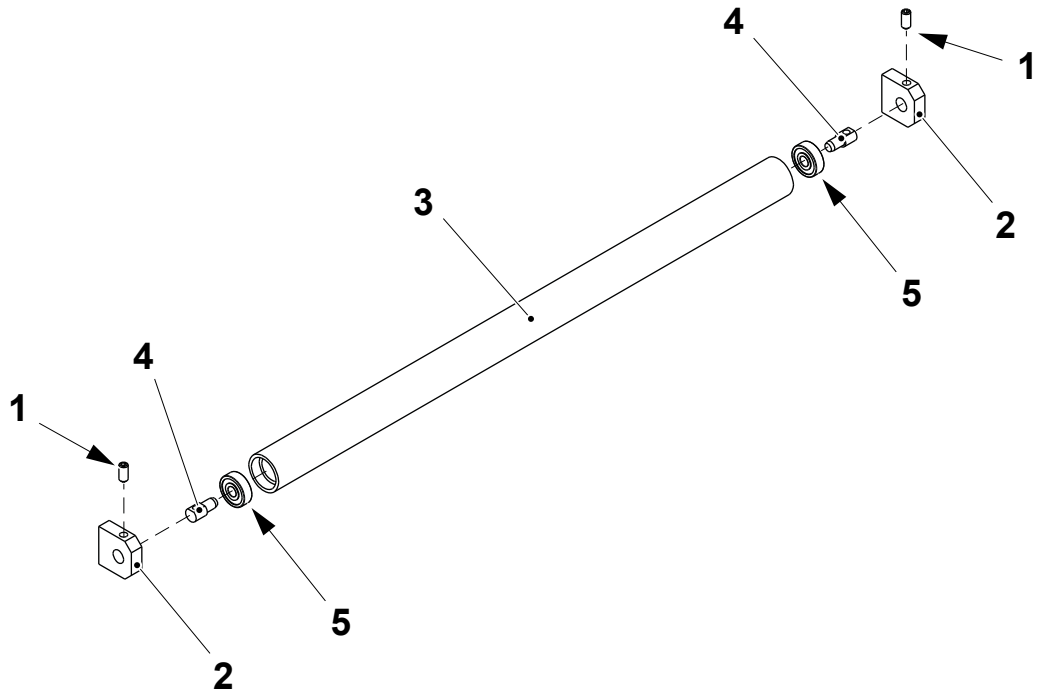

1 Grub screw
2 Bracket
3 Roller
4 Pin
5 Ball bearing

TechPub_2614345_0108 - 0702_3048204_01.fm

8.2.4-2 Rollers - Check Upper Roller

Machine Status	Mains Power OFF Water OFF Steam ON Air OFF
SPC Reference	2771065-0100

Check the distance **A** between the ring (1) and the packaging material edge (2). If necessary,

- loosen the grub screw (3)
- set the distance **A**
- tighten the grub screw (3).

A = 20 ±0.5 mm

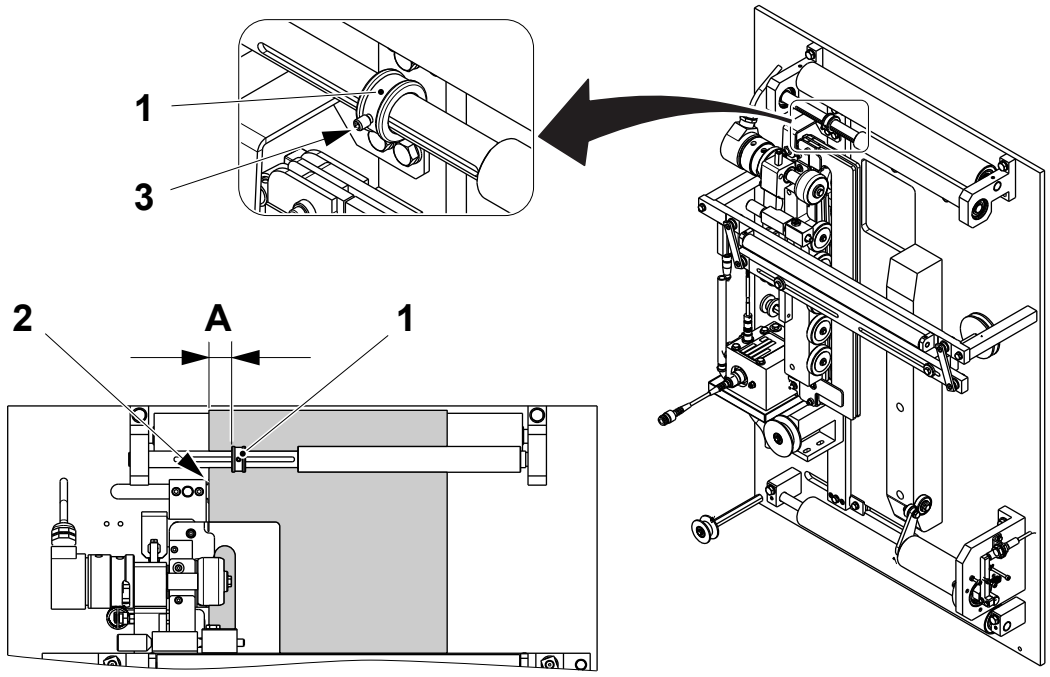

1 Ring
2 Packaging material edge
3 Screw

TechPub_2614345_0108 - 0702_3048204_01.fm

8.2.5 Bending Roller

8.2.5-1 Bending Roller - Change Bearings

Machine Status	Mains Power OFF Water OFF Steam ON Air OFF
SPC Reference	2771081-0100

a) Remove the screw (1).

b) Remove the roller (2) and the bearings (3).

c) Change the bearings (3).

d) Assemble in the reverse order.

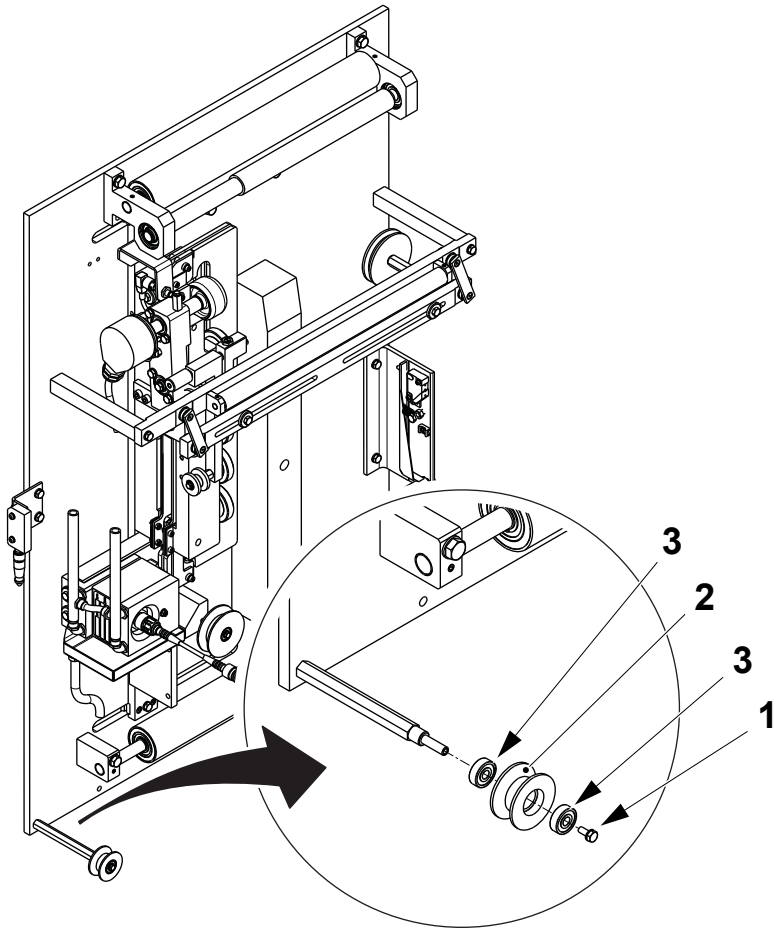

1 Screw
2 Roller
3 Bearing

TechPub_2614345_0108 - 0702_3048205_01.fm

8.3 Strip Magazine

SPC Reference	2843884-0200

8.3-1 Strip Magazine - Check Rollers

Machine Status	Mains Power OFF Air OFF Steam ON Water OFF
SPC Reference	2843884-0200

Check that:

- all the rollers in the strip magazine are intact and rotate freely. If necessary, remove the screw (1) and change the ball bearings (2) and the roller (3)
- the rollers are free from strip material. Clean the rollers if necessary.

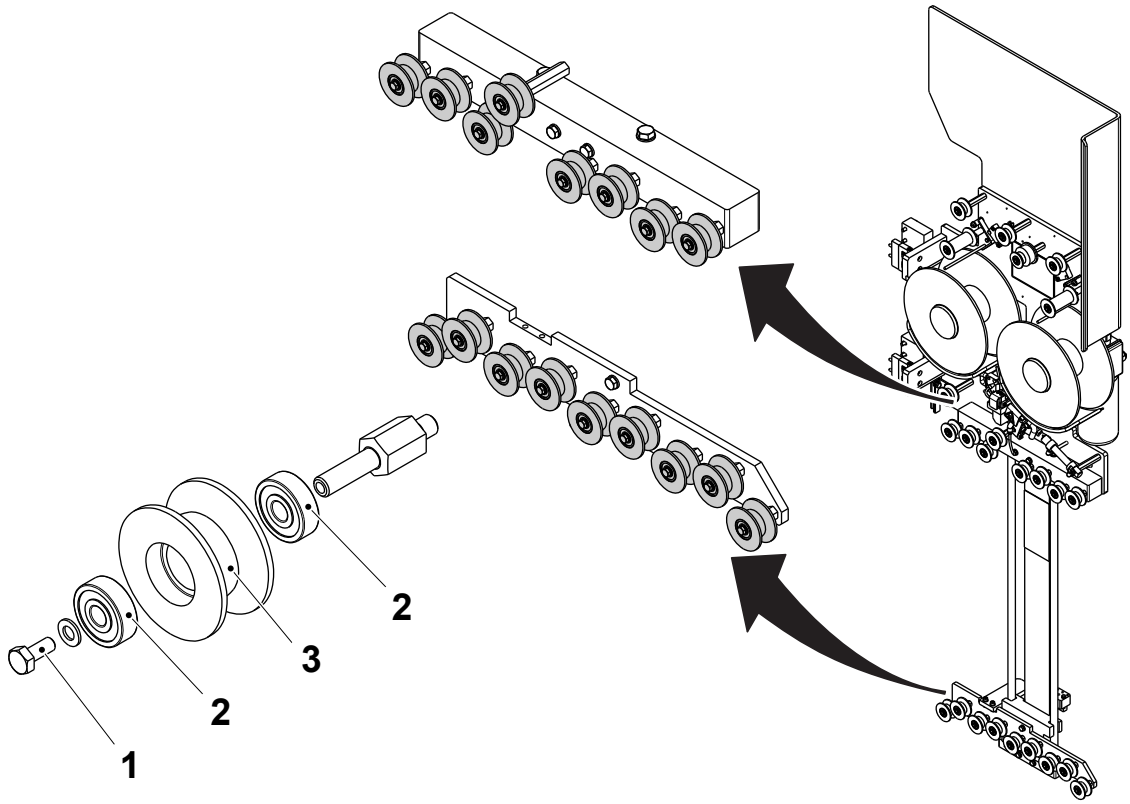

TechPub_2614345_0108 - 0703_3048206_01.fm

1 Screw
2 Ball bearing
3 Roller

8.3-2 Strip Magazine - Change Transducer

Machine Status	Mains Power OFF Air OFF Steam ON Water OFF
SPC Reference	2843884-0200

a) Disconnect the electrical connection (1).

b) Remove the screws (2) and the transducer (3).

c) Slip off the clamps (4) and change the transducer (3).

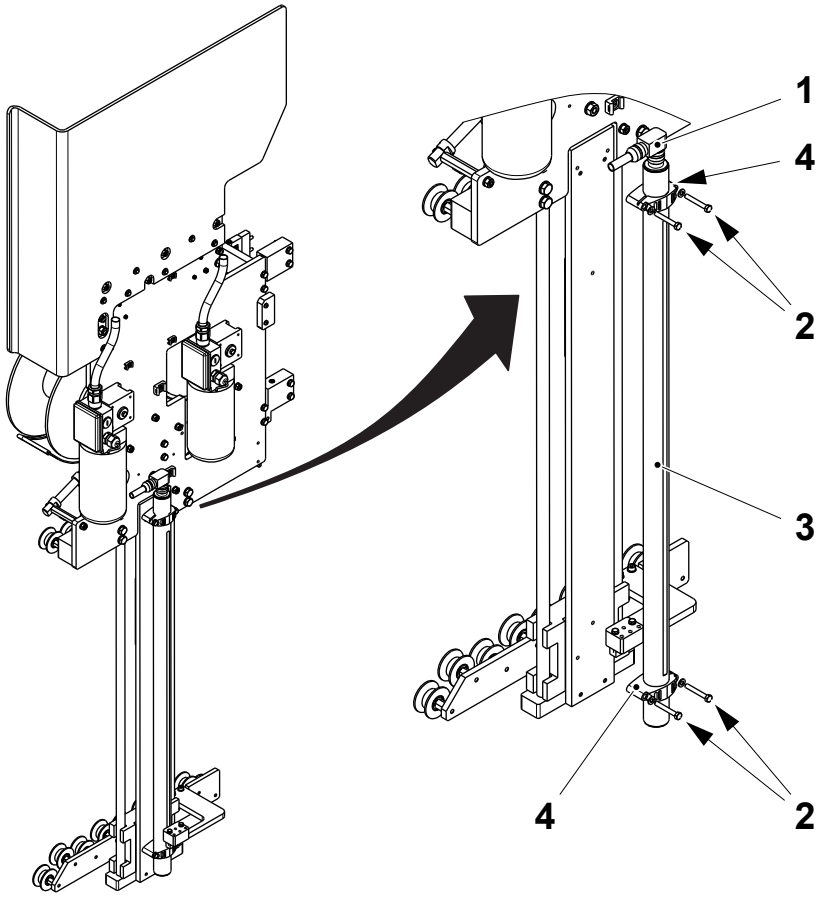

1 Electrical connection
2 Screw
3 Transducer
4 Clamp

(Cont'd)

TechPub_2614345_0108 - 0703_3048206_01.fm

(Cont'd)

d) Assemble in the reverse order making sure to set the distance **A** between the top of the magnet (5) and the mark (6) on the transducer (3) when the magazine (7) is raised in its upper position.

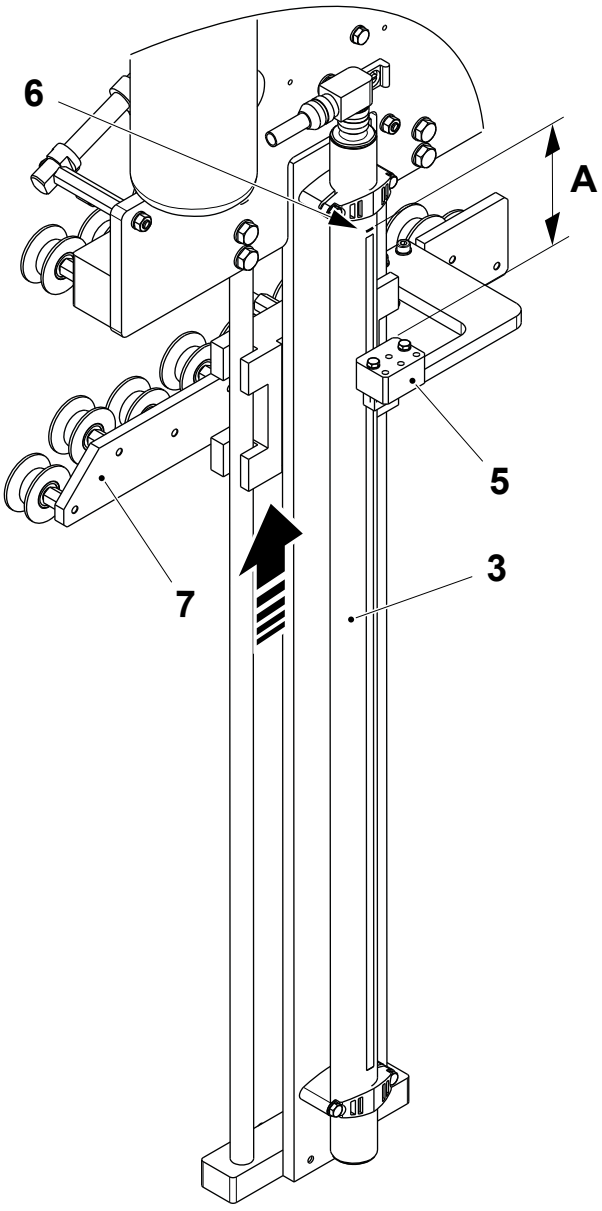

A = 10 ±0.1 mm

3 Transducer
5 Magnet
6 Mark
7 Magazine

TechPub_2614345_0108 - 0703_3048206_01.fm

8.3-3 Strip Magazine - Set Sensor and Spring

Machine Status	Mains Power ON Air OFF Steam ON Water OFF
SPC Reference	2843884-0200

Set the spring (1) in front of the symbol (2) on the sensor (3). If the LED on the sensor is ON**,** when the strip is prepared, adjust the spring by turning it.

Note! The sensor (3) must be in contact with the spring (1) pushing slightly on it. This will prevent reading problems due to the vibrations of the spring (1).

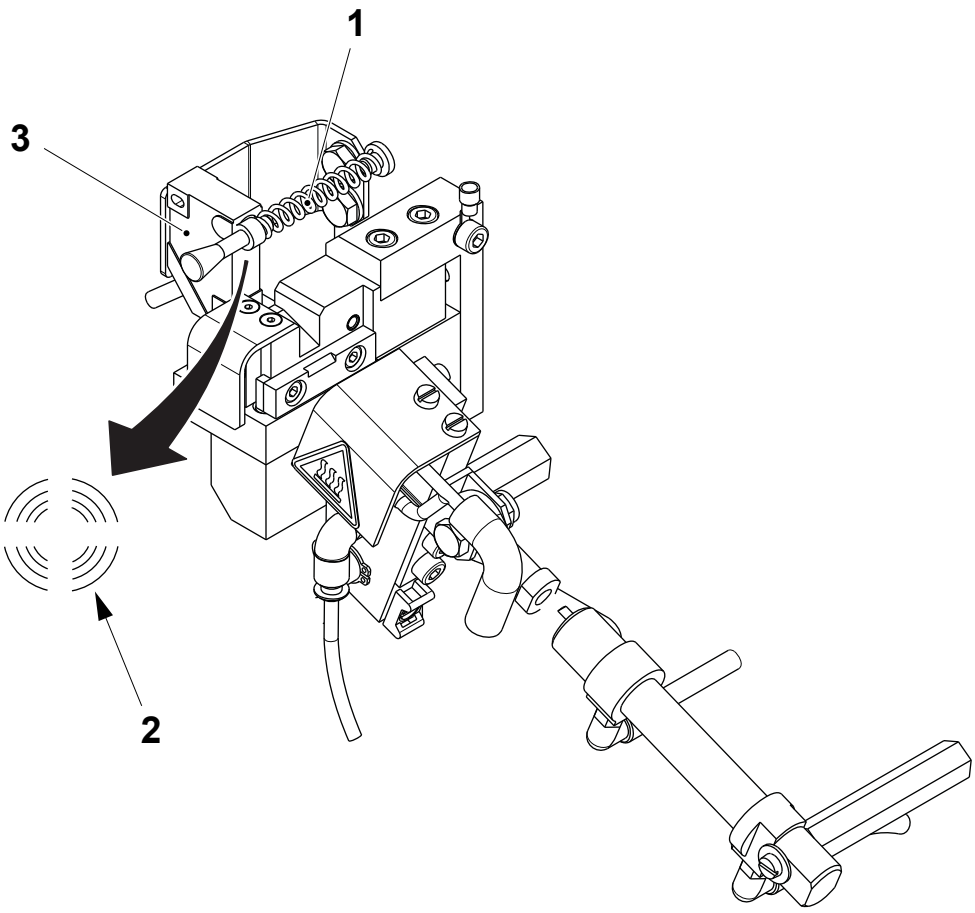

1 Spring
2 Symbol
3 Sensor

TechPub_2614345_0108 - 0703_3048206_01.fm

8.3.1 Heating Device

8.3.1-1 Heating Device - Check

Machine Status	Mains Power ON Air OFF Steam ON Water OFF
SPC Reference	2765649-0100

WARNING

Burn hazard.

Some parts may be hot. Wear personal protective equipment.

(Cont'd)

TechPub_2614345_0108 - 0703_3048206_01.fm

(Cont'd)

CAUTION
Risk of damage to the equipment.
Do not clean the sealing block (1).

Note! When fitting the sealing block (1) make sure that it is correctly positioned, see 8.3.1-2 Heating Device - Set Position.

Check that:

- the sealing block (1) is intact. If necessary, remove the screws (2) and change the sealing block (1), see 8.3.1-2 Heating Device - Set Position.
- the cylinder piston (3) moves freely and smoothly
- there are no air leaks in the air connections (4) and (5).

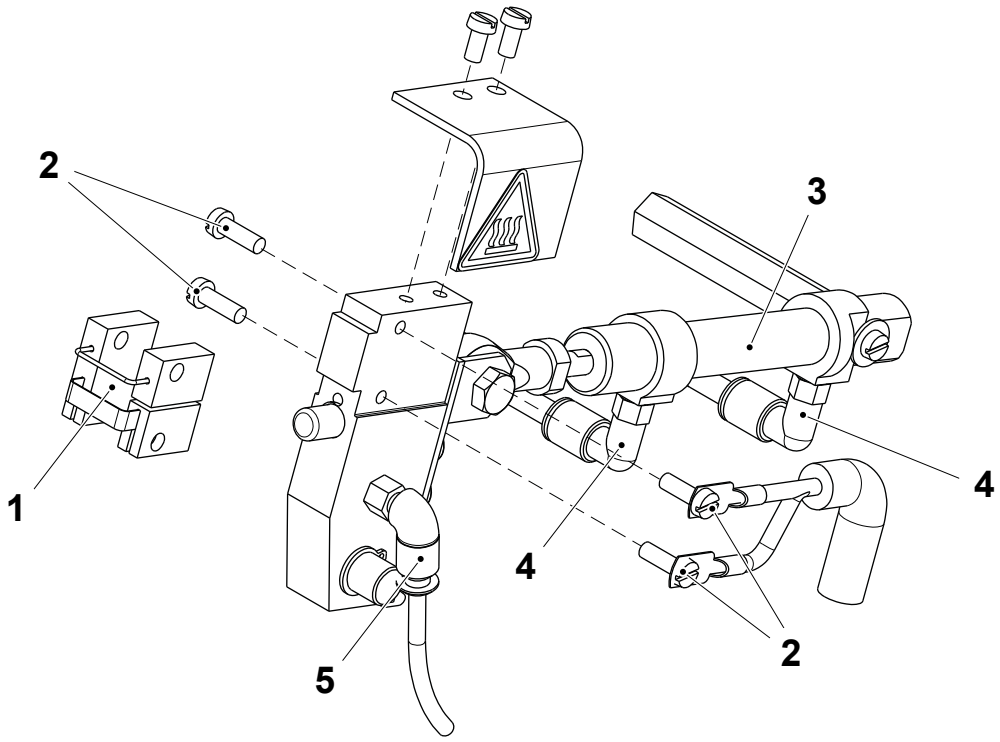

1 Sealing block
2 Screw
3 Cylinder piston
4 Air connection
5 Air connection

TechPub_2614345_0108 - 0703_3048206_01.fm

8.3.1-2 Heating Device - Set Position

Machine Status	Mains Power OFF Air OFF Steam ON Water OFF
SPC Reference	2765649-0100

WARNING

Burn hazard.

Some parts may be hot. Wear personal protective equipment.

a) Loosen the screw (1).

b) Push the strip sealing (2) up and then to the left so the RH side of the strip sealing (2) is aligned with the edge of the holder (3).

c) Tighten the screw (1).

d) Make sure that the connector block (4) does not touch the connector block (5). If necessary, loosen the screw (6) and move the connector block (5) away from the connector block (4) until there is a gap between the blocks.

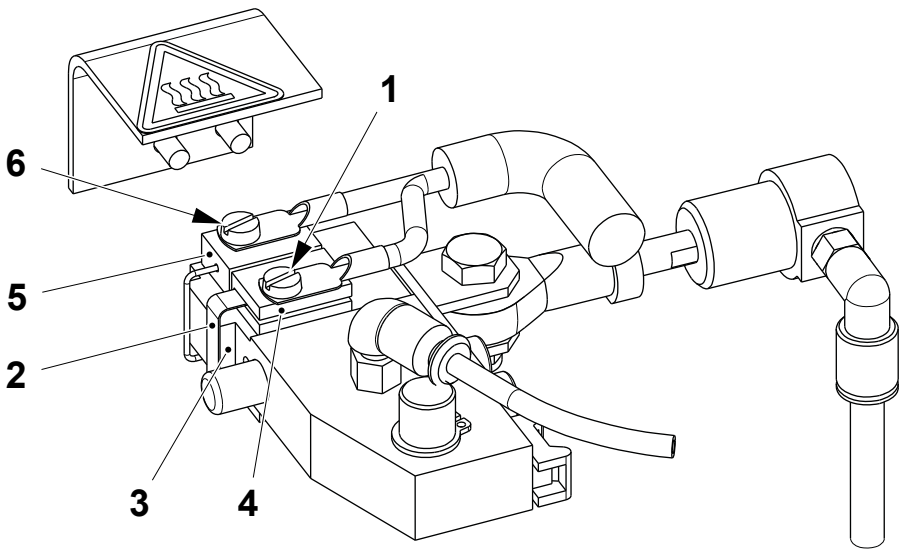

1 Screw
2 Strip sealing
3 Holder
4 Connector block
5 Connector block
6 Screw

(Cont'd)

TechPub_2614345_0108 - 0703_3048206_01.fm

(Cont'd)

e) Set the parallelism between the holder (3) and the pad (7) by means of the screws (8) at the rear of the plate (9).

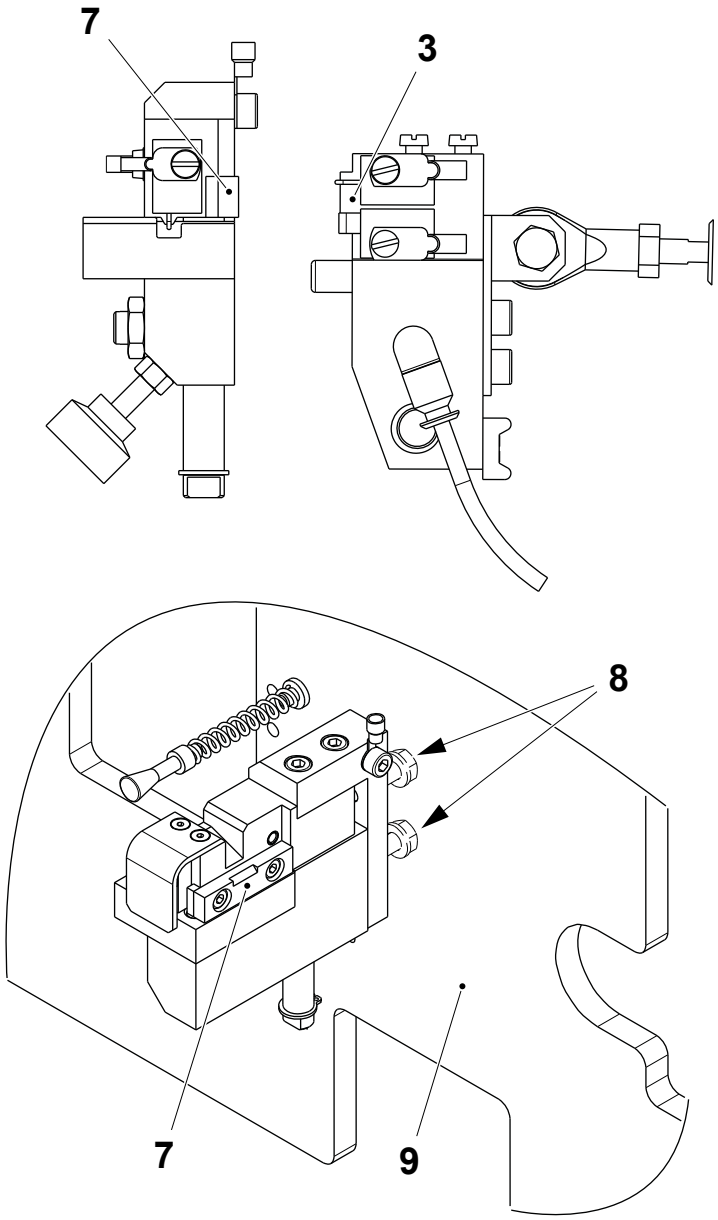

3 Holder
7 Pad
8 Screw
9 Plate

(Cont'd)

TechPub_2614345_0108 - 0703_3048206_01.fm

(Cont'd)

f) Push the piston rod of the cylinder (10) fully in by hand.

g) Loosen the nut (11).

h) Set the distance **A** between the plunger (12) and the block (13) by turning the piston rod (14).

i) Tighten the nut (11).

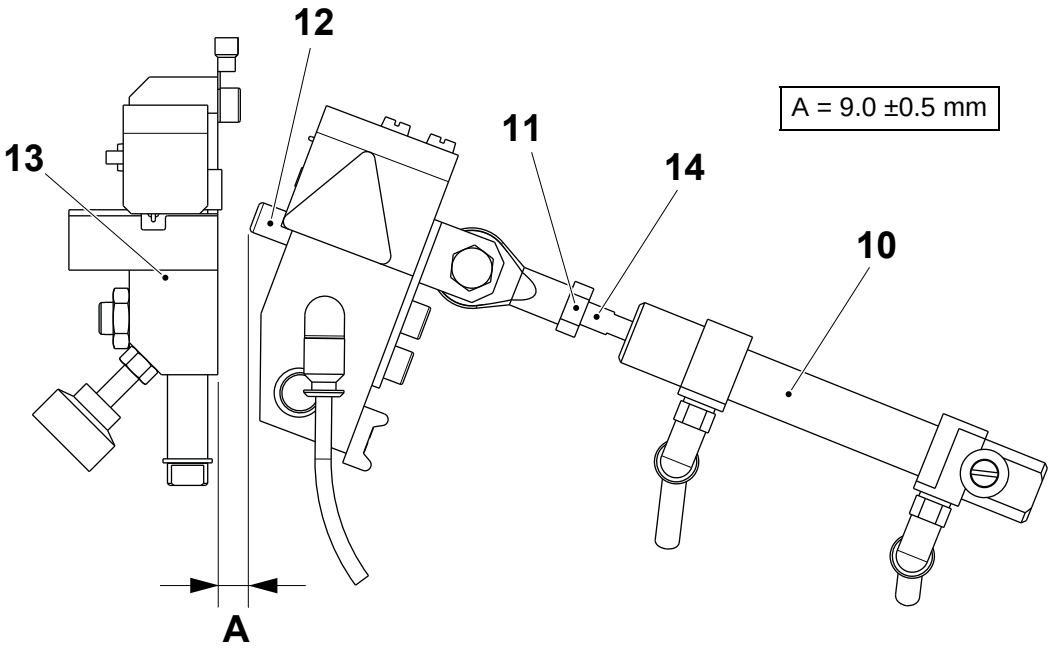

10 Cylinder
11 Nut
12 Plunger
13 Block
14 Piston rod

TechPub_2614345_0108 - 0703_3048206_01.fm

8.3.1-3 Heating Device - Change Plunger

Machine Status	Mains Power OFF Air OFF Steam ON Water OFF
SPC Reference	2765649-0100

WARNING

Burn hazard.

Some parts may be hot. Wear personal protective equipment.

a) Remove the screws (1).

b) Remove the spring (2).

c) Remove and change the plunger (3).

d) Assemble in the reverse order.

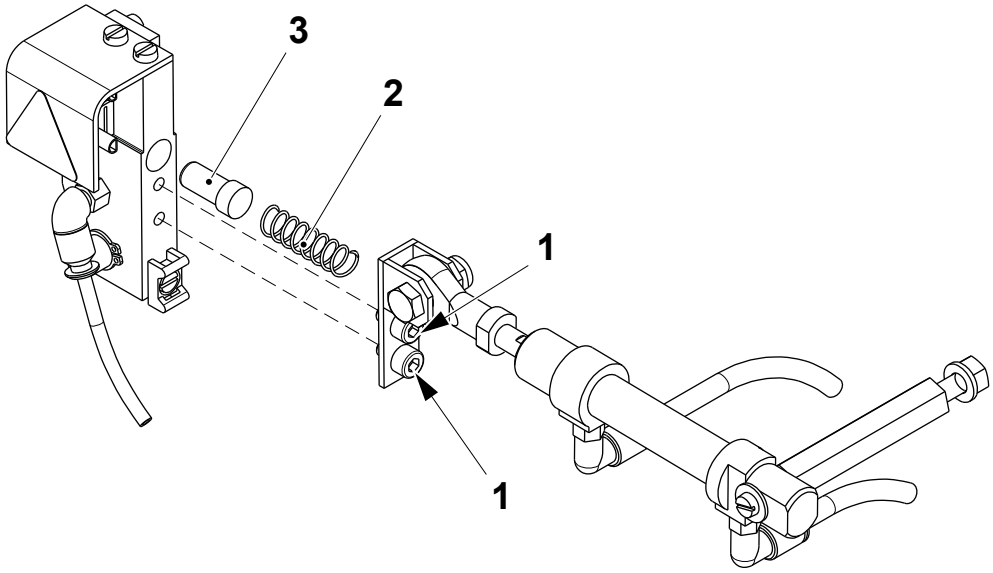

1 Screw
2 Spring
3 Plunger

TechPub_2614345_0108 - 0703_3048206_01.fm

8.3.2 Hub

8.3.2-1 Hub - Change Motor

Machine Status	Mains Power OFF Air OFF Steam ON Water OFF
SPC Reference	2843840-0100

a) Remove the bobbin holder (1).

b) Remove the screw (2) and the hub (3).

c) Disconnect the motor cable, see the Electrical Manual.

d) Remove the screws (4) and change the motor (5).

e) Assemble in the reverse order and check the axle rotation.

f) Check that the bobbin holder (1) is properly locked onto the hub (3) by the spring-loaded screws (6). If necessary, set the spring-loaded screws, see 8.3.2-2 Hub - Set Spring Loaded Screw.

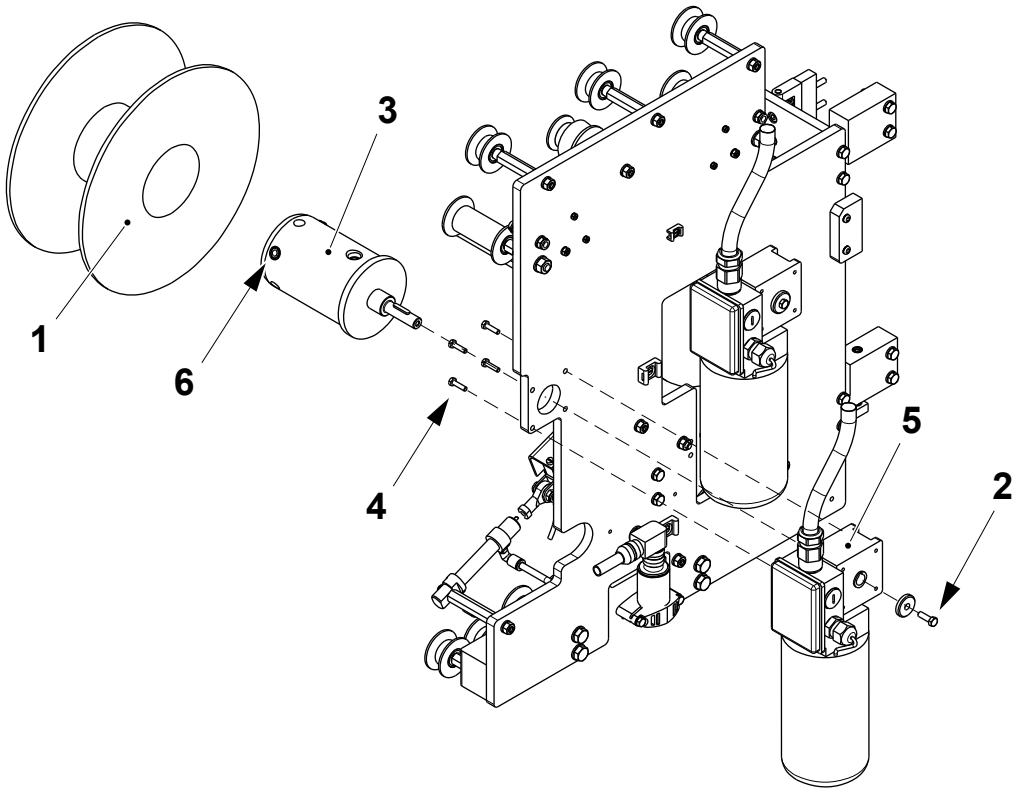

1 Bobbin holder
2 Screw
3 Hub
4 Screw
5 Motor
6 Spring-loaded screw

TechPub_2614345_0108 - 0701_3048207_01.fm

8.3.2-2 Hub - Set Spring Loaded Screw

Machine Status	Mains Power OFF Air OFF Steam ON Water OFF
Consumables	Locking Fluid, TP No. 90157-0016
SPC Reference	2843840-0100

a) Remove the old spring-loaded screw (1) from the hub (2) and clean the thread.

b) Apply locking fluid to the thread and fit the spring-loaded screw to the hub (2).

c) Turn the screw (1) to set the distance **A** between the top of the screw and the surface of the hub (2).

d) Repeat steps a) to c) for the other spring-loaded screws on the two hubs.

e) Fit a bobbin on the hub. If the bobbin is too tight or too loose, adjust the spring loaded screws.

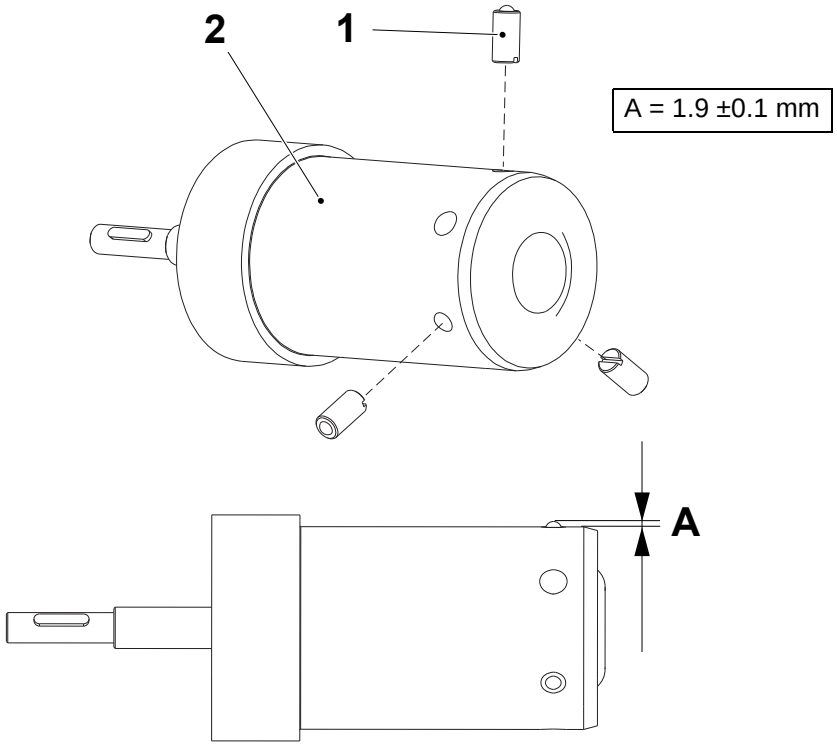

1 Spring-loaded screw
2 Hub

TechPub_2614345_0108 - 0701_3048207_01.fm

8.3.3 Buffer

SPC Reference	2843848-0100

8.3.3-1 Buffer - Check

Machine Status	Mains Power OFF Air OFF Steam ON Water OFF
SPC Reference	2843848-0100

Lift the bracket (1) and check that it moves smoothly. If not, clean the guides (2).

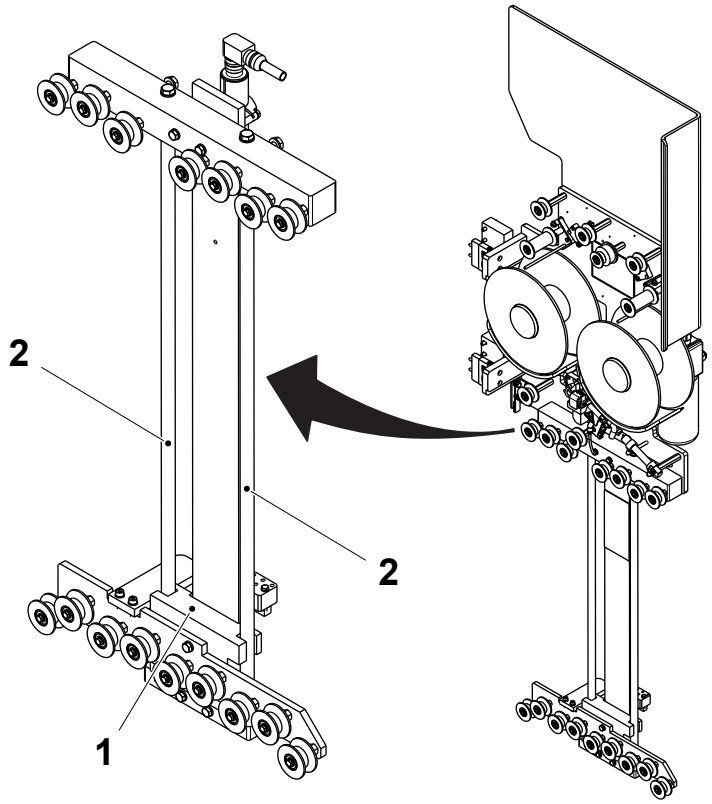

1 Bracket
2 Guide

TechPub_2614345_0108 - 0701_3048208_01.fm

8.3.4 Cutting Table

8.3.4-1 Cutting Table - Check

Machine Status	Mains Power OFF Air OFF Steam ON Water OFF
SPC Reference	2765653-0100

Lift the knob (1) up and down and check that the slider (2) moves easily. If not, clean the slider (2), the shaft (3) and the splicing table (4).

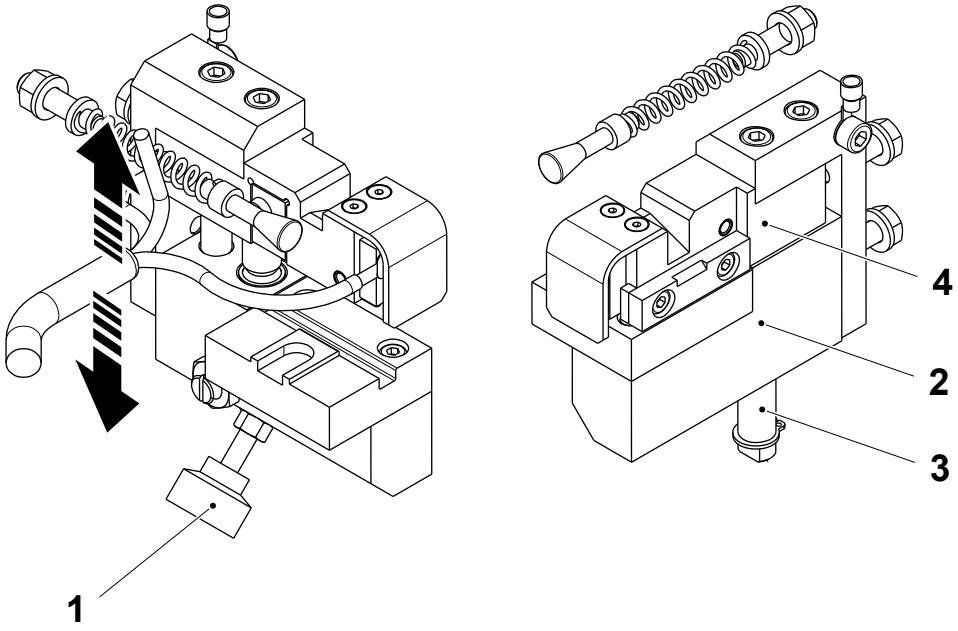

1 Knob
2 Slider
3 Shaft
4 Splicing table

TechPub_2614345_0108 - 0701_3048209_01.fm

8.3.4-2 Cutting Table - Change Pads and Finger

Machine Status	Mains Power OFF Air OFF Steam ON Water OFF
SPC Reference	2765653-0100

a) Remove the nut (1) and change the finger (2).

b) Remove the screws (3) and change the pad (4).

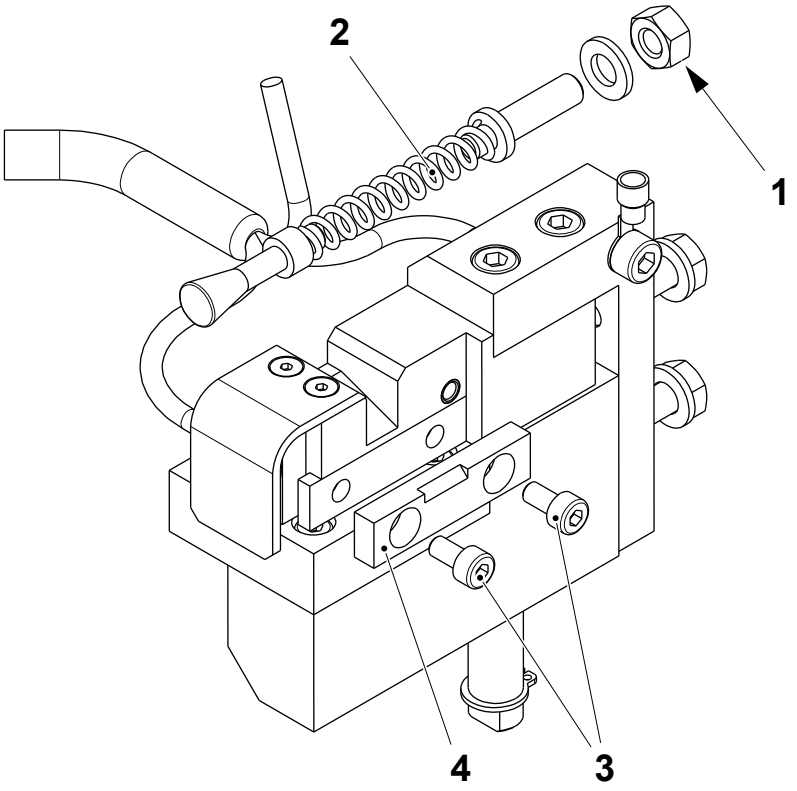

1 Nut
2 Finger
3 Screw
4 Pad

(Cont'd)

TechPub_2614345_0108 - 0701_3048209_01.fm

(Cont'd)

c) Loosen the nut (5) and the screw (6).

d) Pull down the slider (7) by means of the handle (8).

e) Remove the screws (9) and change the pad (10).

f) Assemble in the reverse order. Set the cutting table, see 8.3.4-3 Cutting Table - Set.

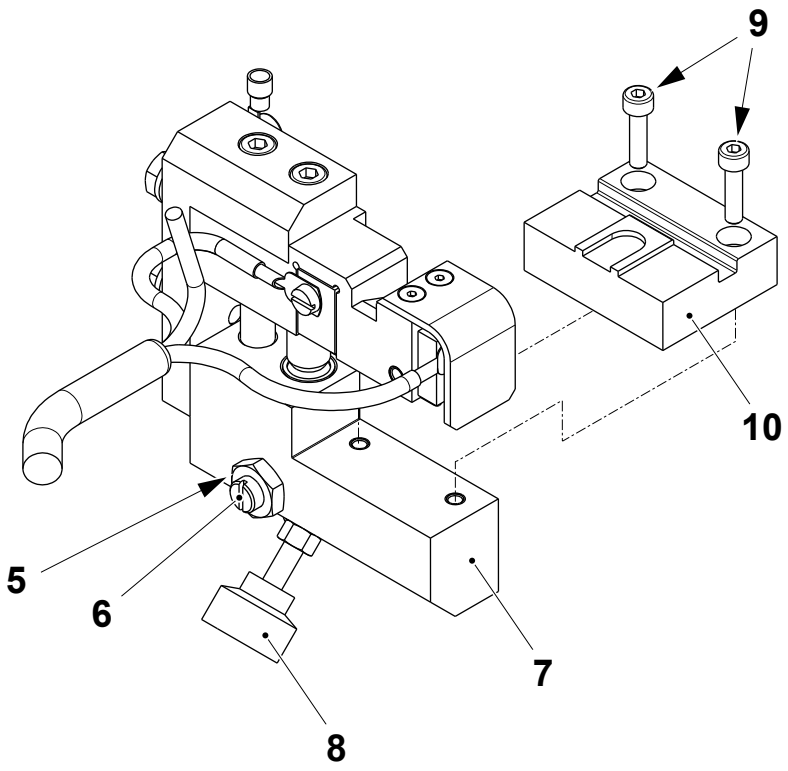

5 Nut
6 Screw
7 Slider
8 Handle
9 Screw
10 Pad

TechPub_2614345_0108 - 0701_3048209_01.fm

8.3.4-3 Cutting Table - Set

Machine Status	Mains Power OFF Air OFF Steam ON Water OFF
SPC Reference	2765653-0100

a) Loosen the nut (1) and the screw (2).

b) Move the slider (3) up and down.

c) Adjust the screw (2) until the slider (3) clicks into place.

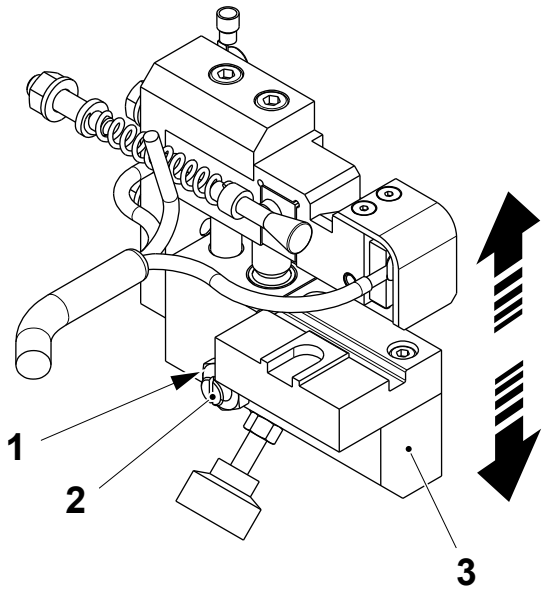

1 Nut
2 Screw
3 Slider

TechPub_2614345_0108 - 0701_3048209_01.fm

8.3.5 Mounting Sheet

8.3.5-1 Mounting Sheet - Check Rollers

Machine Status	Mains Power OFF Air OFF Steam ON Water OFF
SPC Reference	2843883-0100

Check that:

- the nine rollers on the mounting sheet are intact and rotate freely. If necessary, remove the screw (1) and change the bearings (2) and the roller (3)
- the rollers are free from strip material. Clean the rollers if necessary.

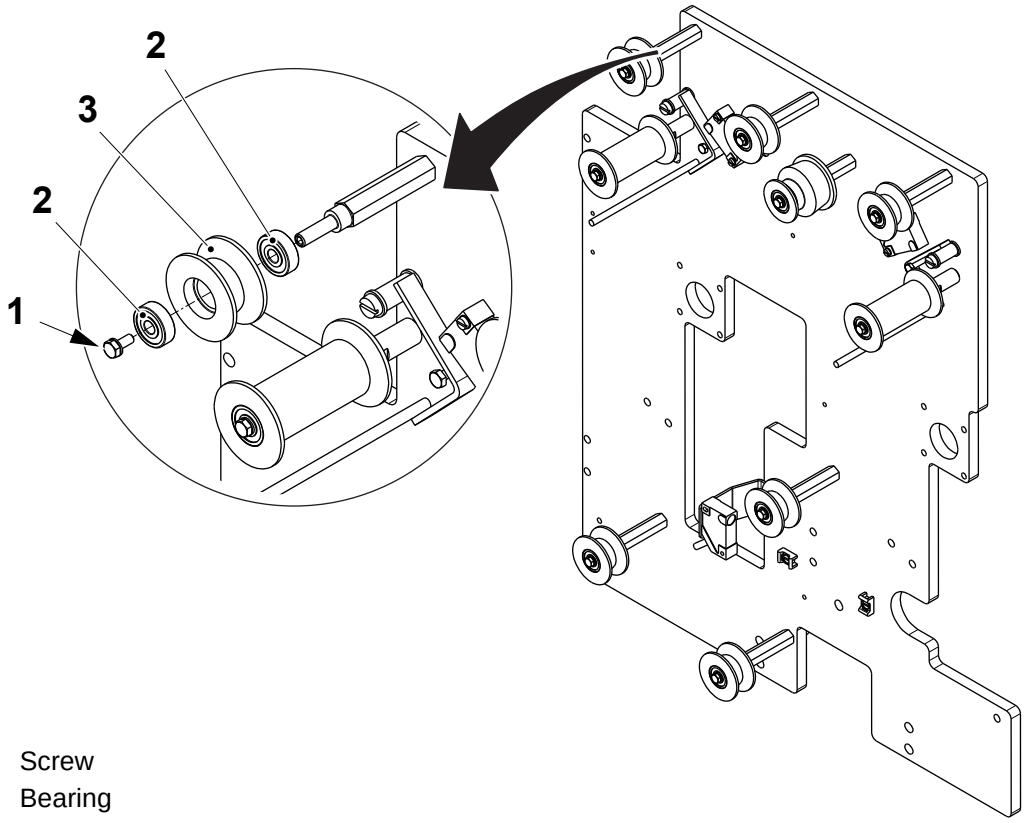

1 Screw
2 Bearing
3 Roller

TechPub_2614345_0108 - 0701_3048210_01.fm

8.4 Splicing Device

SPC Reference	2737941-0200

8.4-1 Splicing Device - Check Drive Unit

Machine Status	Mains Power OFF Air OFF Steam ON Water OFF
SPC Reference	2737941-0200

a) Loosen the captive screws (1) and remove the cover (2).

b) Check:
   - the timing belt (3) for wear or damage
   - the timing belt (3) tension, see 8.4-3 Splicing Device - Set Drive Unit Belt
   - the roller (4) for wear, damage or excessive radial play.

c) If necessary, change any worn or damaged parts, see 8.4-2 Splicing Device - Drive Unit Overhaul.

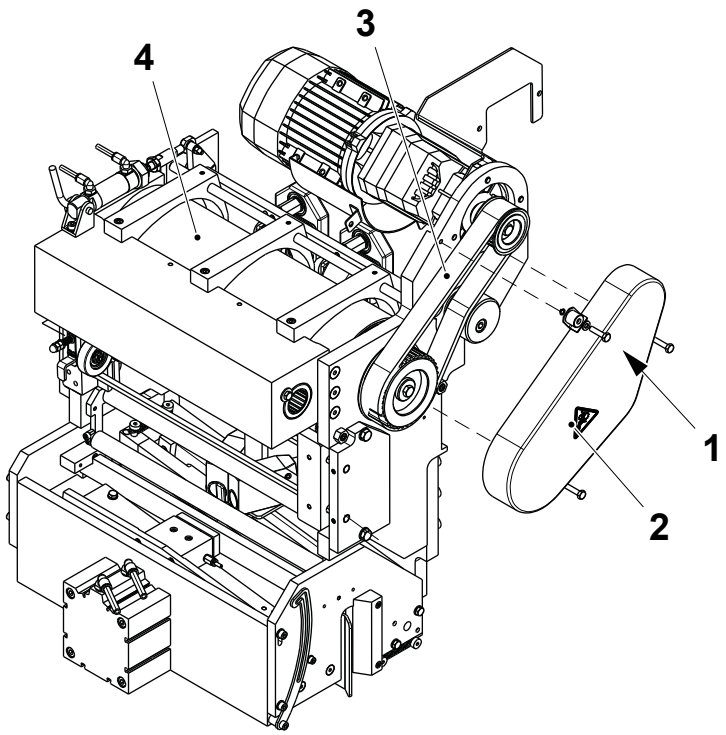

1 Captive screw
2 Cover
3 Timing belt
4 Roller

TechPub_2614345_0108 - 0705_3048211_01.fm

8.4-2 Splicing Device - Drive Unit Overhaul

Machine Status	Mains Power OFF Air OFF Steam ON Water OFF
SPC Reference	2737941-0200

a) Loosen the captive screws (1) and remove the cover (2).

b) Loosen the screw (3) and remove the straining pulley (4).

c) Remove and change the timing belt (5).

d) Remove the screw (6) and the toothed pulley (7).

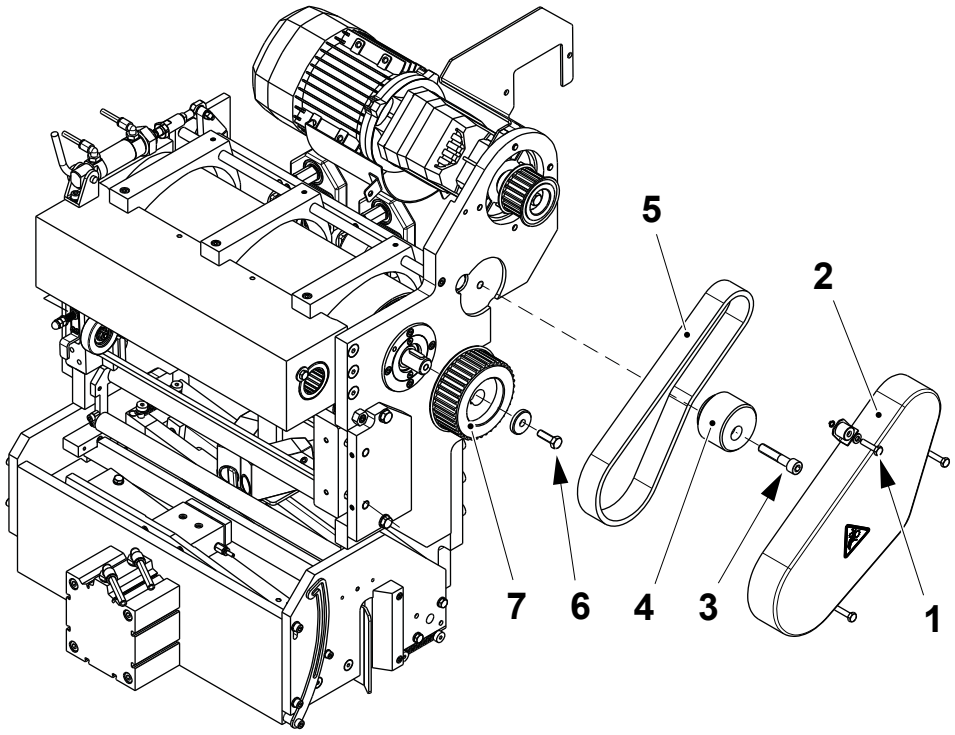

1 Captive screw
2 Cover
3 Screw
4 Straining pulley
5 Timing belt
6 Screw
7 Toothed pulley

(Cont'd)

TechPub_2614345_0108 - 0705_3048211_01.fm

(Cont'd)

e) Remove the paper guide (8) and the pressure roller (9), see 8.4.5-2 Counter Roller - Overhaul.

f) Loosen the screw (10) to release the clamp that fastens the encoder (11).

g) Remove the two screws (12) and the encoder (11).

h) Remove the screws (13) and the flange (14).

i) Remove the retaining ring (15) and change the ball bearing (16).

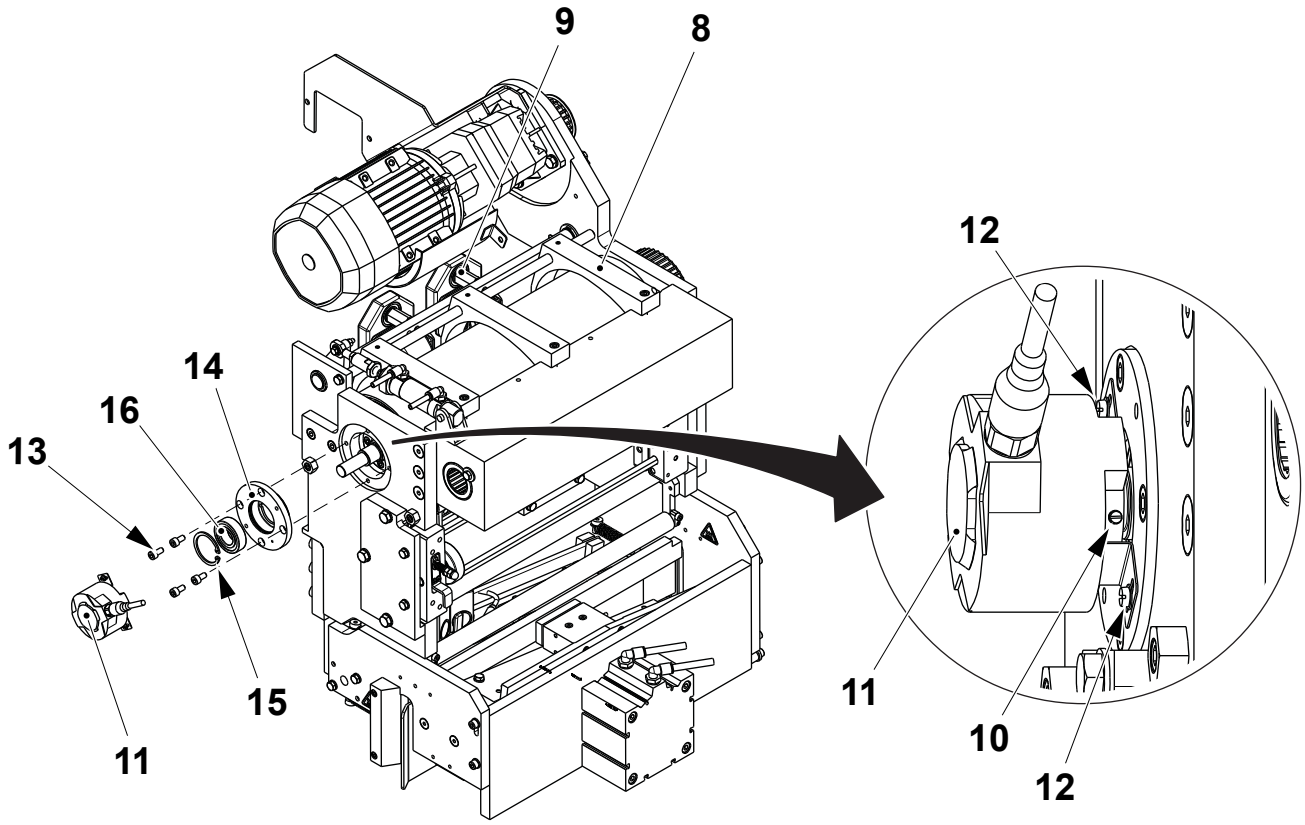

8 Paper guide
9 Pressure roller
10 Screw
11 Encoder
12 Screw
13 Screw
14 Flange
15 Retaining ring
16 Ball bearing

(Cont'd)

TechPub_2614345_0108 - 0705_3048211_01.fm

(Cont'd)

j) Remove the nuts (17), the pins (18) and the roller (19).

k) Remove the key (20) by inserting a pin punch through the hole (21).

l) Remove the screws (22) and the flange (23) using the screws (22) as extractor.

m) Remove the screws (24) and the ring (25).

n) Remove and change the ball bearing (26).

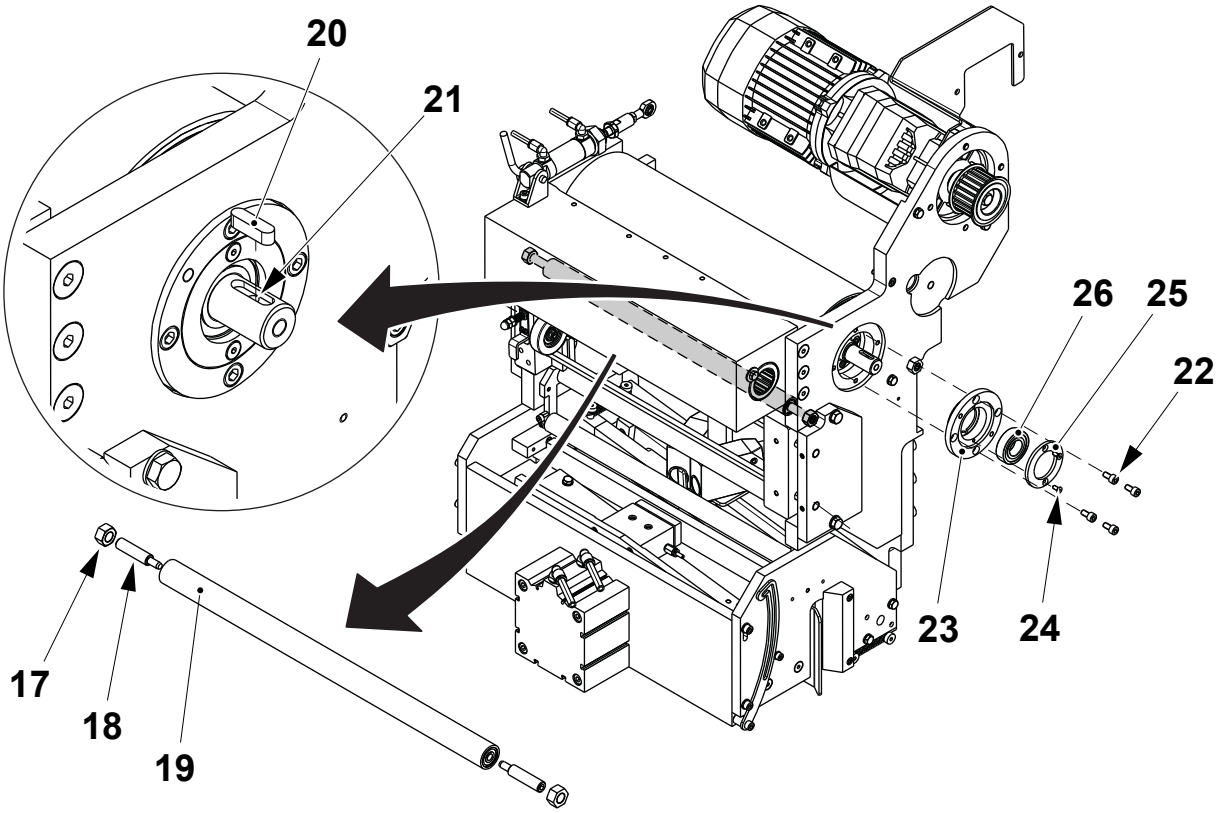

17 Nut
18 Pin
19 Roller
20 Key
21 Hole
22 Screw
23 Flange
24 Screw
25 Ring
26 Ball bearing

(Cont'd)

TechPub_2614345_0108 - 0705_3048211_01.fm

(Cont'd)

o) On both sides, remove the screws (27) and the shaft (28).

p) Remove the roller (29); change it if necessary.

q) Remove the screw (30) and the protection (31). Clean the protection (31) from the residues of oil.

r) Assemble in the reverse order.

s) Set the timing belt tension, see 8.4-3 Splicing Device - Set Drive Unit Belt.

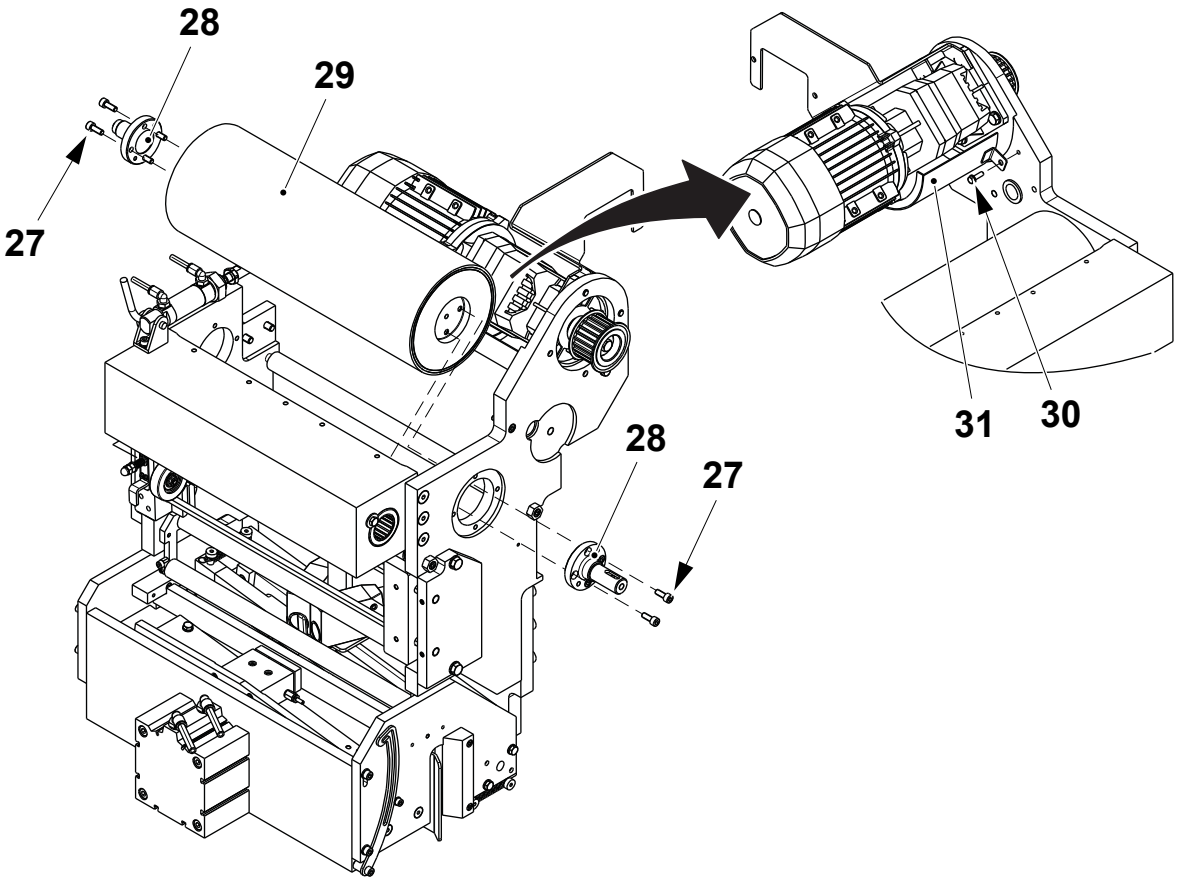

27 Screw
28 Shaft
29 Roller
30 Screw
31 Protection

TechPub_2614345_0108 - 0705_3048211_01.fm

8.4-3 Splicing Device - Set Drive Unit Belt

Machine Status	Mains Power OFF Air OFF Steam ON Water OFF
Special Equipment	Force gauge TP No. 90459-1467
SPC Reference	2737941-0200

a) Loosen the captive screws (1) and remove the cover (2).

b) Use the dynamometer to apply a force of 32 N in the middle of the belt (3), see arrow. The belt (3) should deflect 4.5 mm.

c) To adjust the belt tension, loosen the screw (4) and turn the straining pulley (5).

d) Tighten the screw (3) and fit back the cover (2) with the captive screws (1).

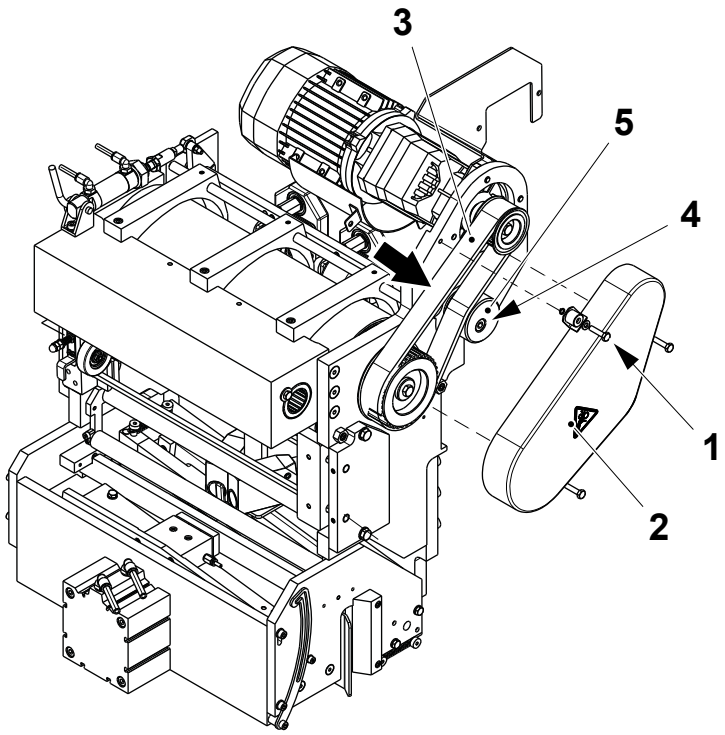

1 Screw
2 Cover
3 Belt
4 Screw
5 Straining pulley

TechPub_2614345_0108 - 0705_3048211_01.fm

8.4-4 Splicing Device - Change Photocell

Machine Status	Mains Power OFF Air OFF Steam ON Water OFF
SPC Reference	2737941-0200

WARNING

Burns hazard.

Parts under the photocells may be hot.

a) Remove the screws (1) and the guide rail (2).

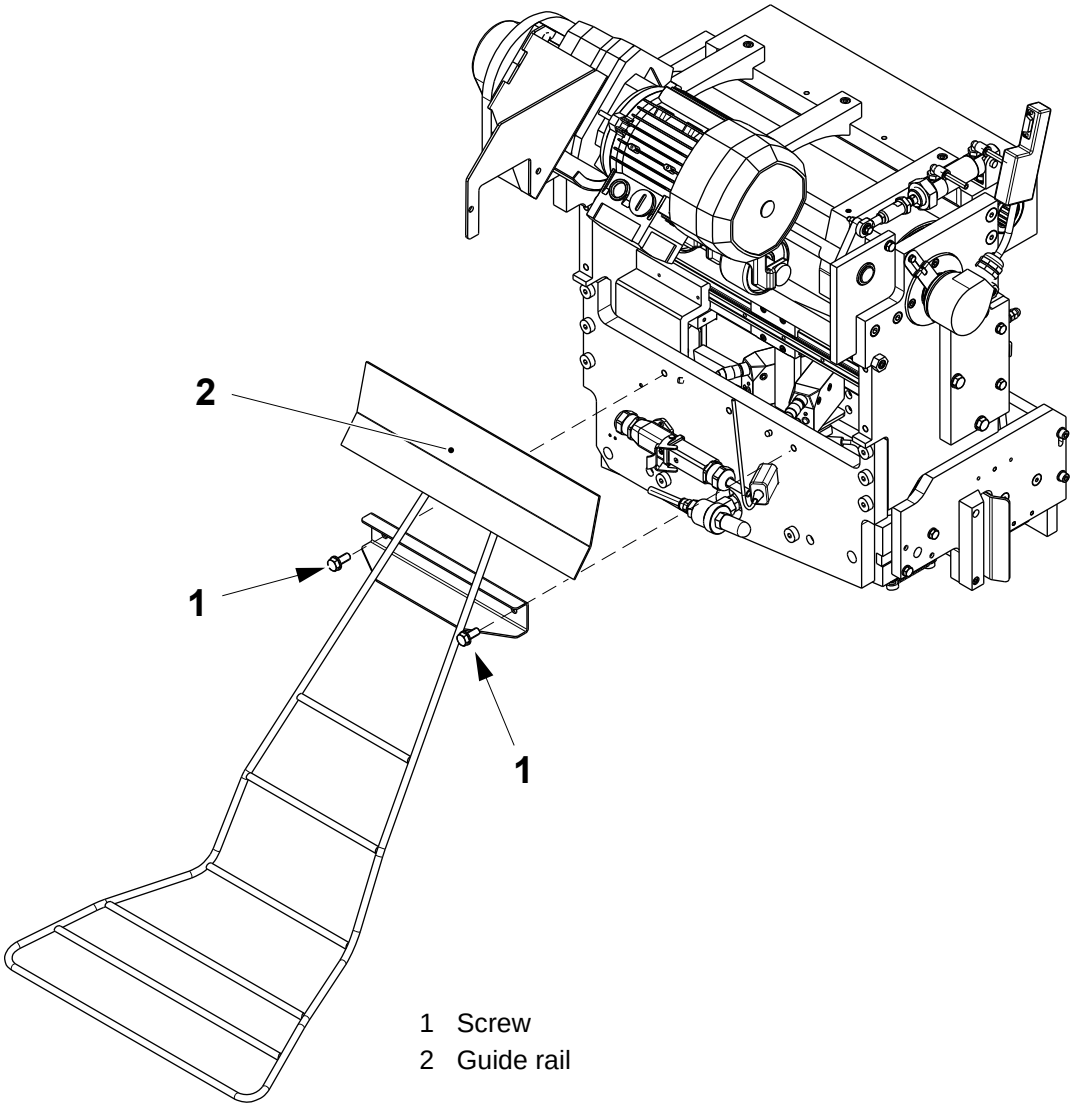

1 Screw
2 Guide rail

(Cont'd)

TechPub_2614345_0108 - 0705_3048211_01.fm

(Cont'd)

b) Hold by hand the photocells unit (3) while a second person removes the screws (4).

c) Remove the photocells unit (3) from the back of the splicing device.

d) Disconnect the cable (5) from the rear of the photocells (6).

e) Remove the screws (7) and change the photocell (6).

f) Assemble in the reverse order.

Note! Do not loosen the knob (8) to keep the position setting of the support (9).

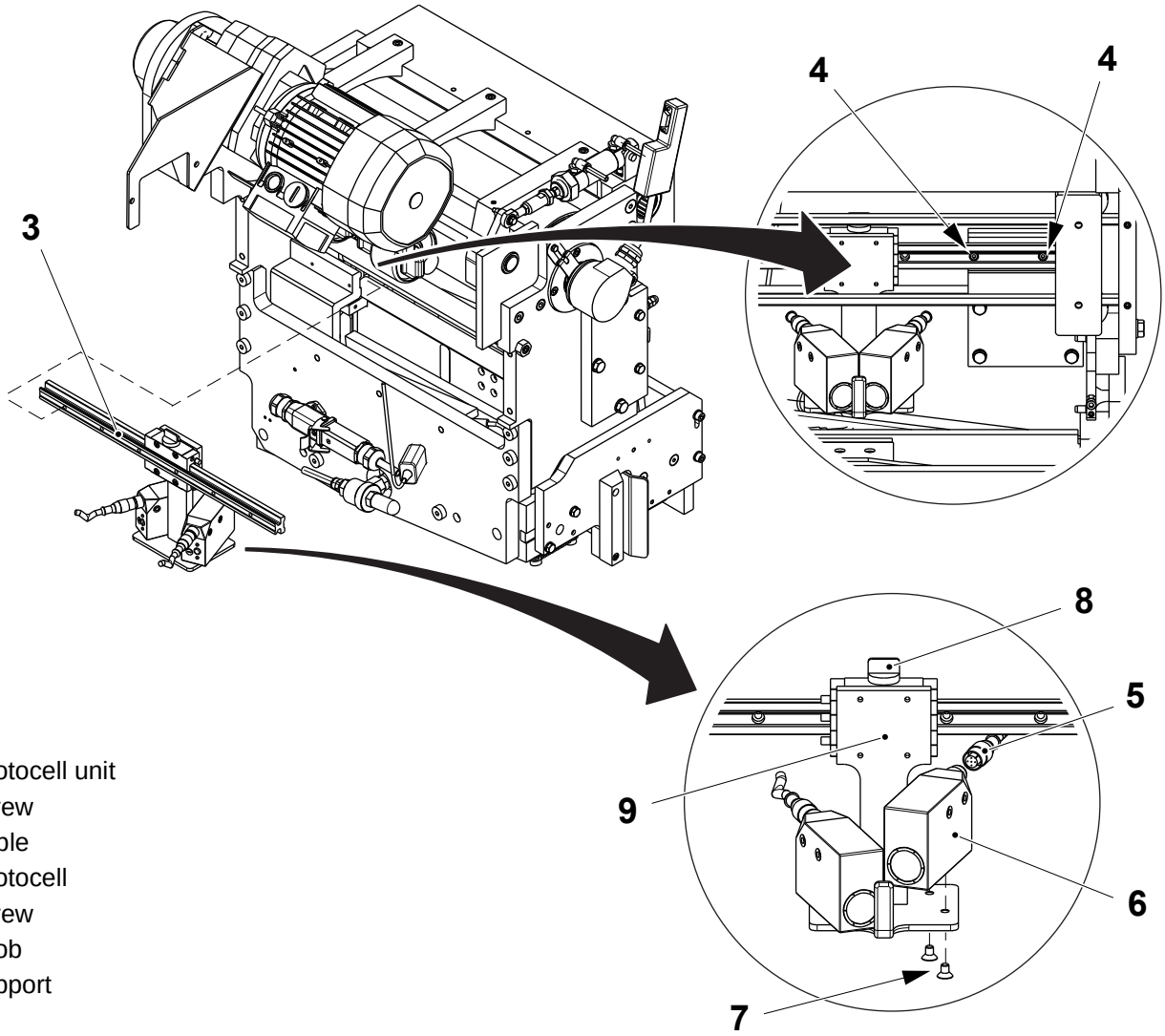

3 Photocell unit
4 Screw
5 Cable
6 Photocell
7 Screw
8 Knob
9 Support

TechPub_2614345_0108 - 0705_3048211_01.fm

8.4-5 Splicing Device - Set Photocell Position

Machine Status	Mains Power ON Air OFF Steam ON Water OFF
SPC Reference	2737941-0200

WARNING

Risk of crushing.

If the splicing device is moved out of position it will return rapidly to its former position when the doors are closed.

a) Prepare a piece of packaging material (1) making two cuts (2) on the bar code (3).

b) Apply a piece of opaque adhesive tape (4) on the bar code (3).

Note! The adhesive tape must be opaque in order to see the green spot lights.

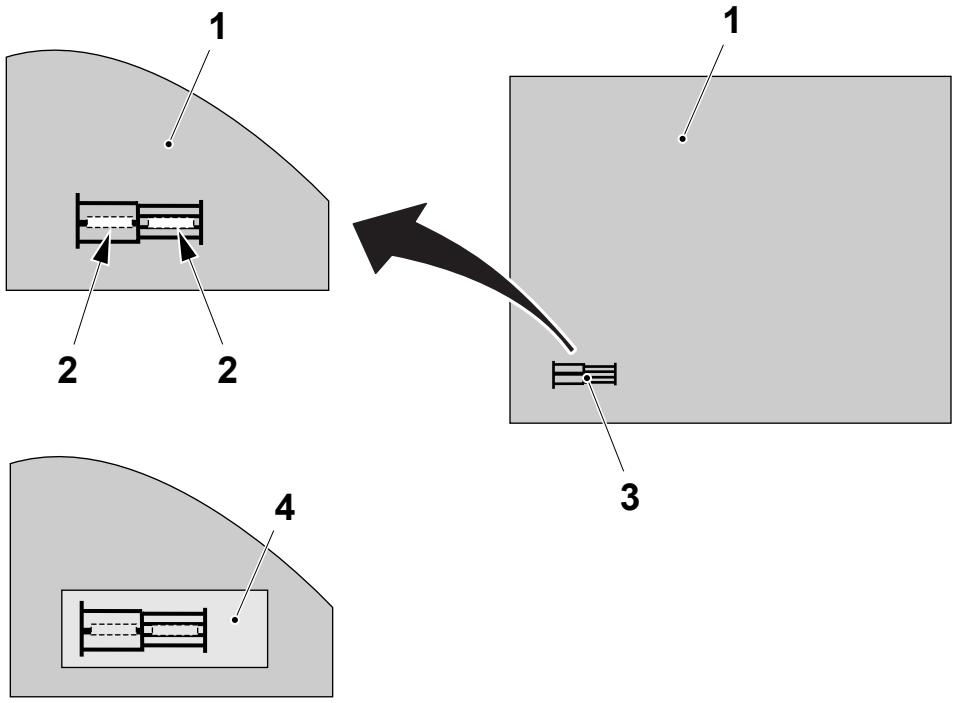

1 Packaging material
2 Cut
3 Bar code
4 Opaque adhesive tape

TechPub_2614345_0108 - 0705_3048211_01.fm

(Cont'd)

(Cont'd)

Note! The colour of the photocell spot light (6) must be set according to the bar code foreground colour, see 3.2-2 Photocell Unit - Set.

c) Insert the piece of packaging material (1) through the paper guide (5).

d) Check that the spot lights (6) are centred on the two parts of the bar code.

e) If necessary, loosen the knob (7) and move the photocells support (8) until the spot lights (6) are centred; then tighten the knob (7).

Note! Use always the paper guide (5) as reference. If the bar code is on the RH side, cut a piece of packaging material “L” shaped.

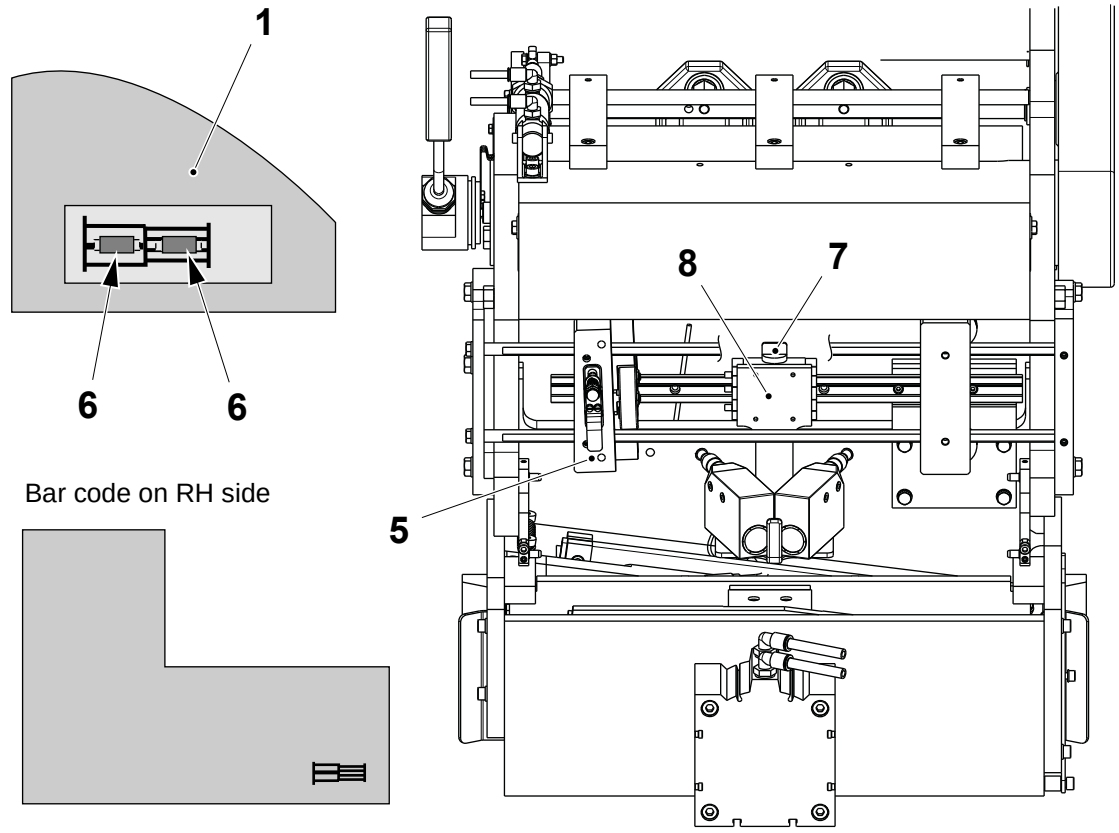

1 Packaging material
5 Paper guide
6 Spot light
7 Knob
8 Support

TechPub_2614345_0108 - 0705_3048211_01.fm

8.4-6 Splicing Device - Set Photocell Sensitivity

Machine Status	Mains Power ON Air OFF Steam ON Water OFF
SPC Reference	2737941-0200

Set the photocells, see Photocells Colour Setting and Sensitivity in 3.2-2 Photocell Unit - Set.

TechPub_2614345_0108 - 0705_3048211_01.fm

8.4-7 Splicing Device - Set Photocell Alignment

Machine Status	PRODUCTION
Special Equipment	PC and RS 232-C Communication Cable
SPC Reference	2737941-0200

Check Alignment

a) Configure a PC to be used as a hyperterminal and connect it to the TMCC2, see 9.8-2 TMCC2 Controller - Set Communication.

b) Connect the communication cable between the PC and the front panel connector (1) of the TMCC2 card A01K5200 (Photocells Decoder).

c) Type `H` and press the ENTER key.

d) Type `A1` and press the ENTER key.

e) Check that the value displayed is 1 ±0.20. This means that the spot light alignment is correct.

f) If necessary, stop the machine in NORMAL STOP and modify the photocells alignment as follows.

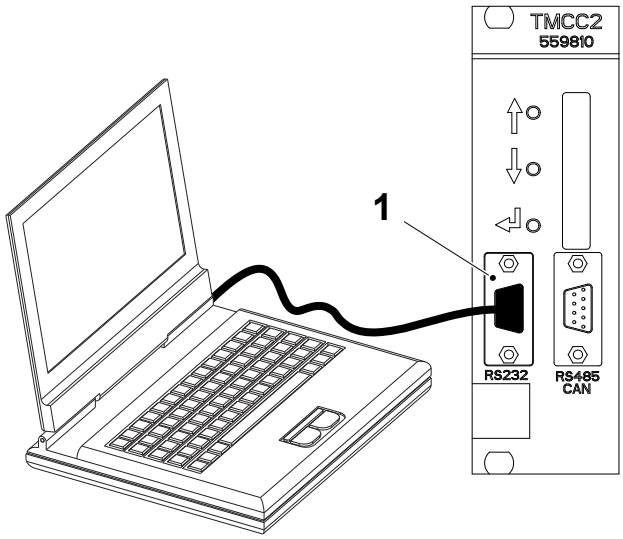

1 TMCC2 connector

(Cont'd)

TechPub_2614345_0108 - 0705_3048211_01.fm

(Cont'd)

Set Alignment

a) Remove the screws (1) and the guide rail (2).

b) Modify the alignment of the photocell support (3) by the screws (4).

Note! If the value displayed is less than 0.8 the photocell (5) pointing the barcode with 3 bars has to be moved upwards, if the value is more than 1.2 the photocell (5) pointing the barcode with 3 bars has to be moved downwards.

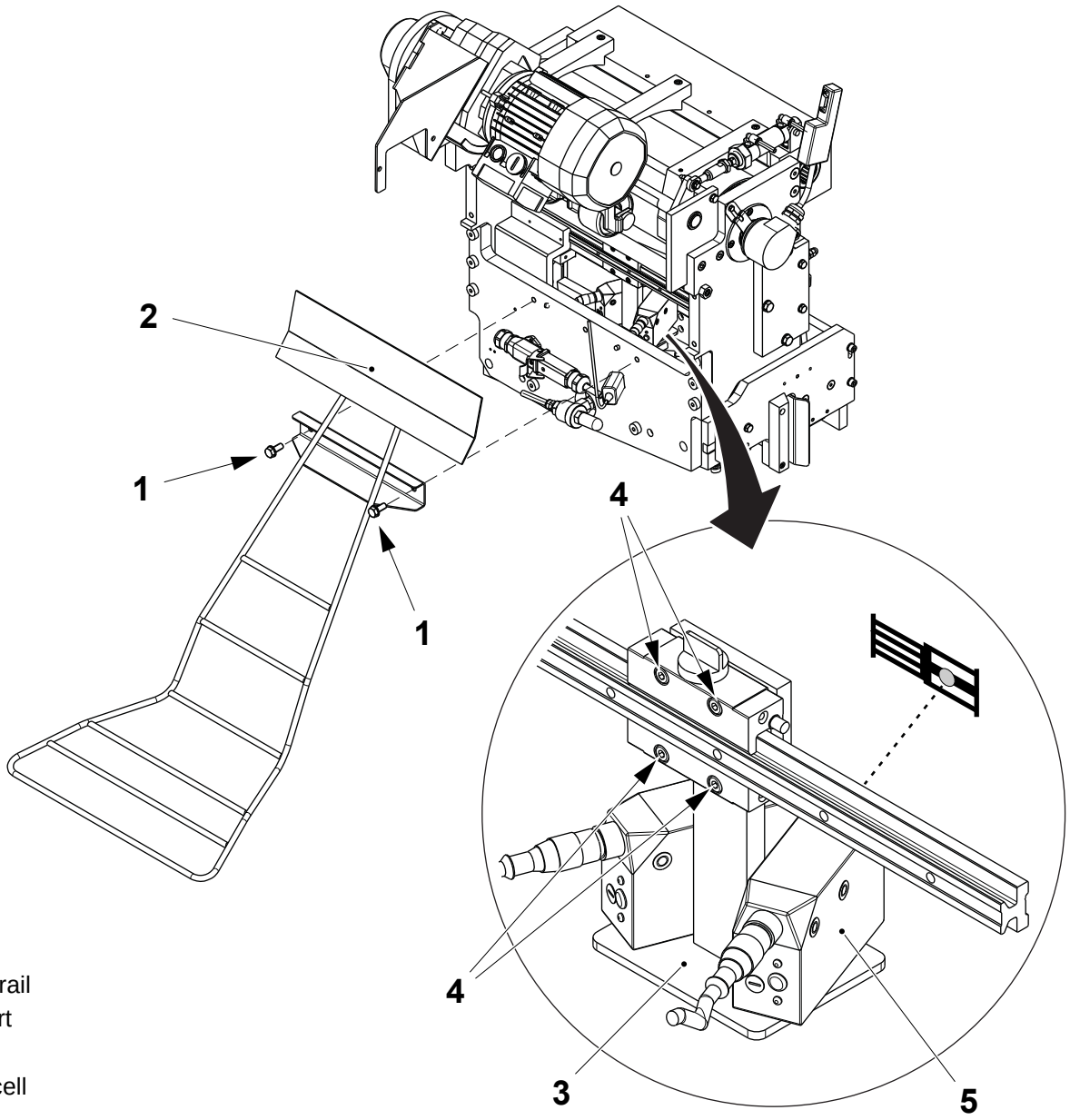

1 Screw
2 Guide rail
3 Support
4 Screw
5 Photocell

(Cont'd)

TechPub_2614345_0108 - 0705_3048211_01.fm

(Cont'd)

c) Assemble in the reverse order and check again the alignment, see Check Alignment.

d) Repeat until the TMCC2 card displays the correct alignment value.

TechPub_2614345_0108 - 0705_3048211_01.fm

8.4-8 Splicing Device - Move to Maintenance Position

Machine Status	PREPARATION
SPC Reference	2737941-0200

Note! The current position of the splicing head is indicated by the green coloured arrow button.

a) Touch the PRODUCTION CONTROL button (1).

b) Touch the ASU button (2).

c) Touch the MOVE SPLICING HEAD button (3).

d) Touch the CENTRAL POSITION button (4) to move the splicing head in central position between the material holders.

e) Touch the OK button (5) to start the splicing head movement.

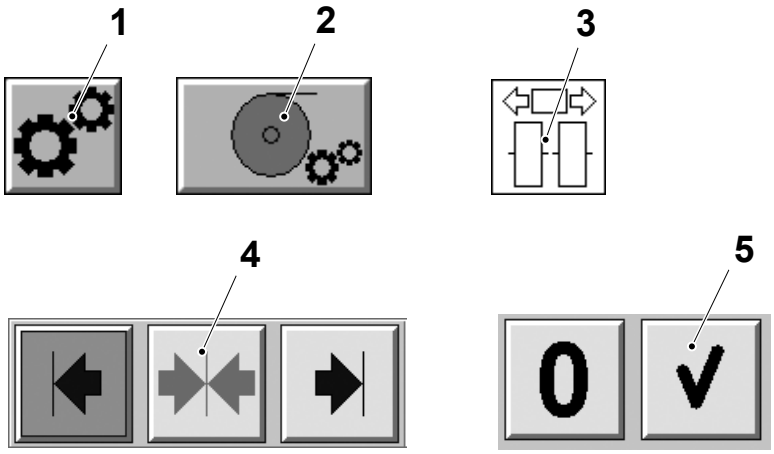

1 Production control button
2 ASU button
3 Move splicing head button
4 Central position button
5 OK button

TechPub_2614345_0108 - 0705_3048211_01.fm

8.4-9 Splicing Device - Change Bearings

Machine Status	Mains Power ON Air OFF Steam ON Water OFF
SPC Reference	2737941-0200

a) Remove the screws (1) and the two rollers (2).

b) Separate the rollers from the brackets (3) and change the bearings (4).

c) Remove the screws (5) and the roller (6).

d) Change the bearings (7).

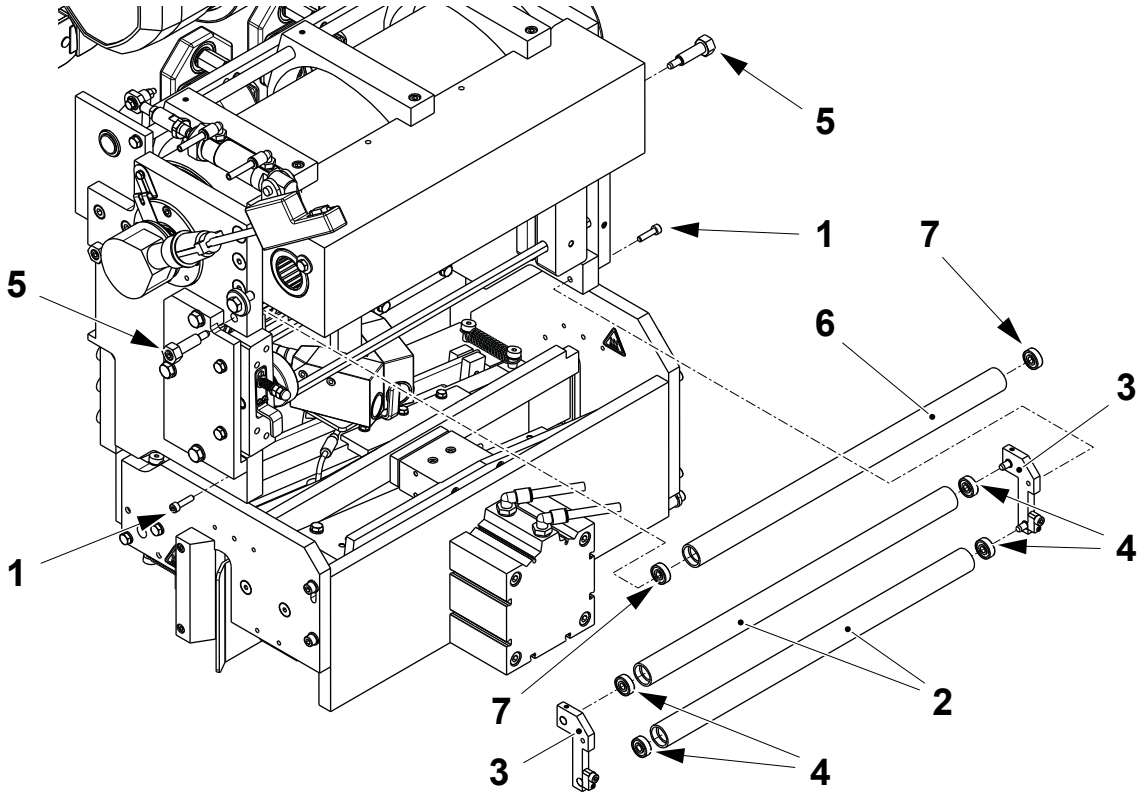

1 Screw
2 Roller
3 Bracket
4 Bearing
5 Screw
6 Roller
7 Bearing

(Cont'd)

TechPub_2614345_0108 - 0705_3048211_01.fm

(Cont'd)

e) Remove the screws (8) and the roller (9).

f) Change the bearings (10).

g) Assemble in the reverse order.

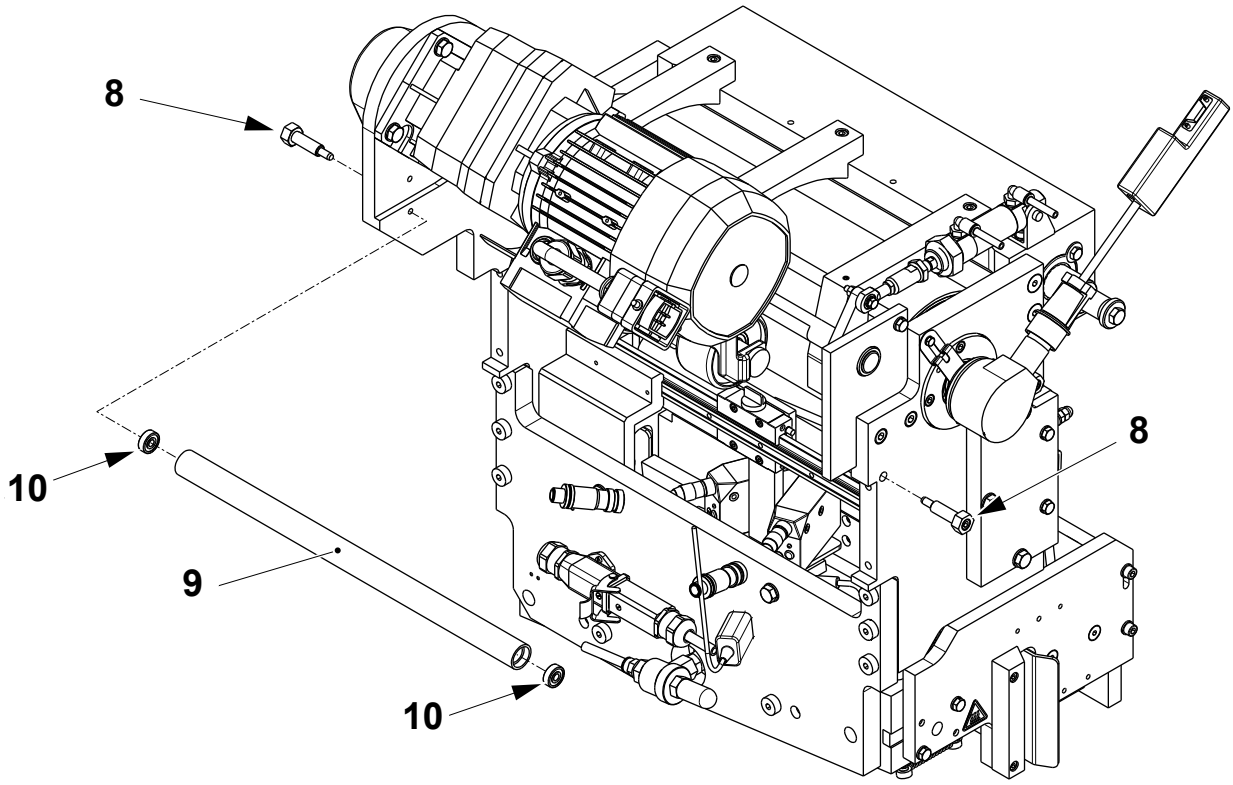

8 Screw
9 Roller
10 Bearing

TechPub_2614345_0108 - 0705_3048211_01.fm

8.4-10 Splicing Device - Check Pressure Jaw Position

Machine Status	PREPARATION
SPC Reference	2737941-0200

WARNING

Risk of burns.

The sealing plate is hot after use. Nearby parts may also be hot. Wear heat resistant protective gloves.

a) Press the MATERIAL LOCKING button (1) for at least 5 seconds to release the material holder.

Note! After one minute the material holder locks automatically.

b) Fit a straight steel ruler (2) in the cutting table (3).

c) Check the distance **A** between the steel ruler (2) and the dolly (4) with a feeler gauge. If necessary, adjust the pressure jaw position, see Set Pressure Jaw Position on next page.

d) Press the MATERIAL LOCKING button (1) for at least 5 seconds and remove the steel ruler (2).

TechPub_2614345_0108 - 0705_3048211_01.fm

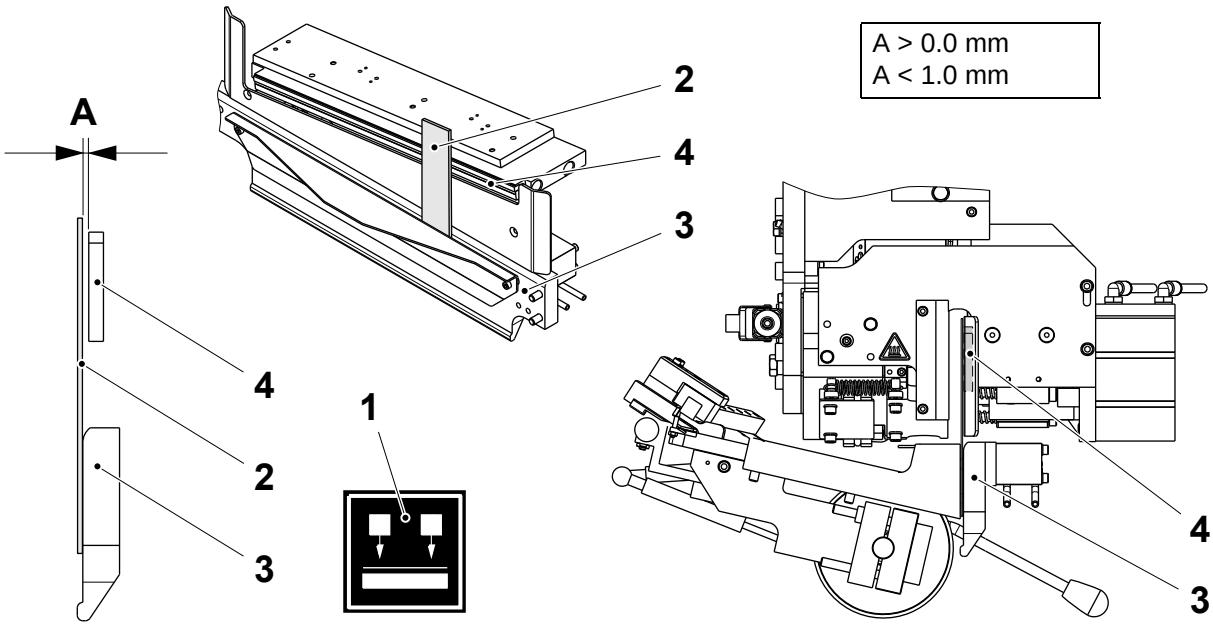

1 Material locking button
2 Ruler
3 Cutting table
4 Dolly

(Cont'd)

(Cont'd)

Set Pressure Jaw Position

a) Make sure that the splicing device is not in the maintenance position.

b) Loosen the two screws (1).

c) Remove the shim (2) and peel away layers on the shim (2) to reach the correct distance **A** (see previous page).

d) Fit the shim (2) and tighten the two screws (1).

e) Check the distance **A**, see 8.4-10 Splicing Device - Check Pressure Jaw Position.

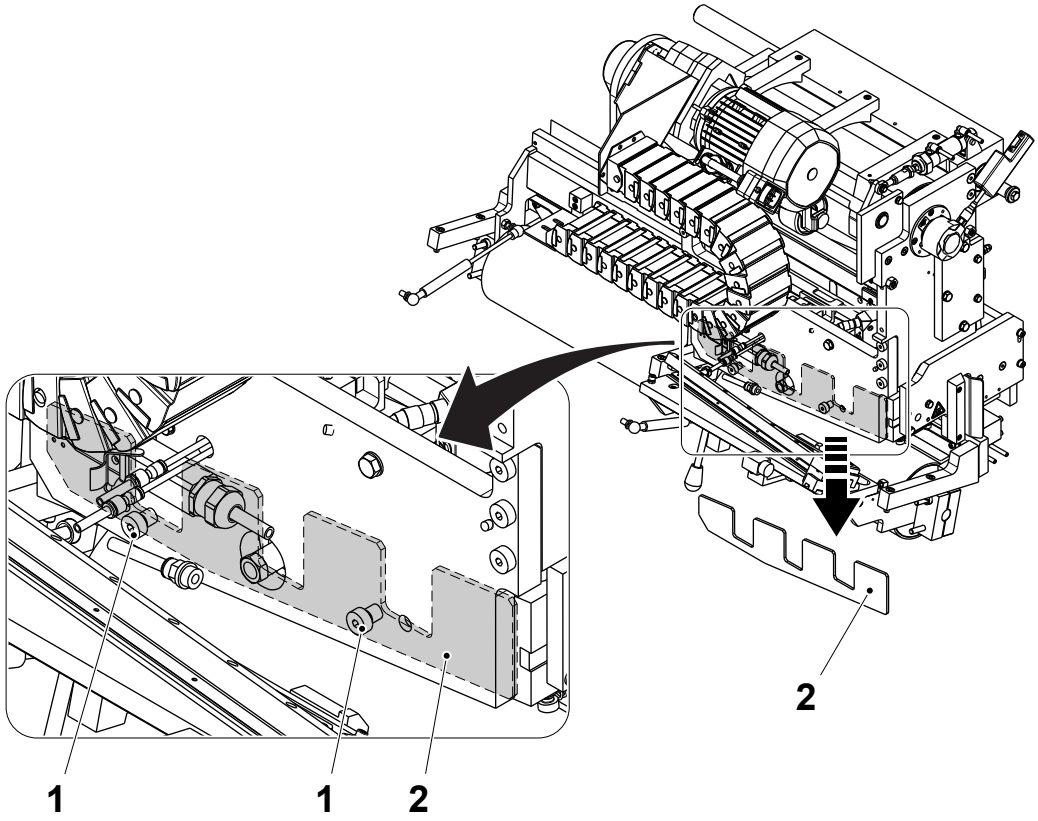

1 Screw
2 Shim

TechPub_2614345_0108 - 0705_3048211_01.fm

8.4-11 Splicing Device - Set Air Nozzle

Machine Status	PREPARATION
SPC Reference	2737941-0200 3062179-0100

a) Loosen the screws (1).

b) Set the distance **A** between the air nozzle (2) and the edge of the cylinder (3).

c) Tighten the screws (1).

d) Set the valve (4) to position E5.

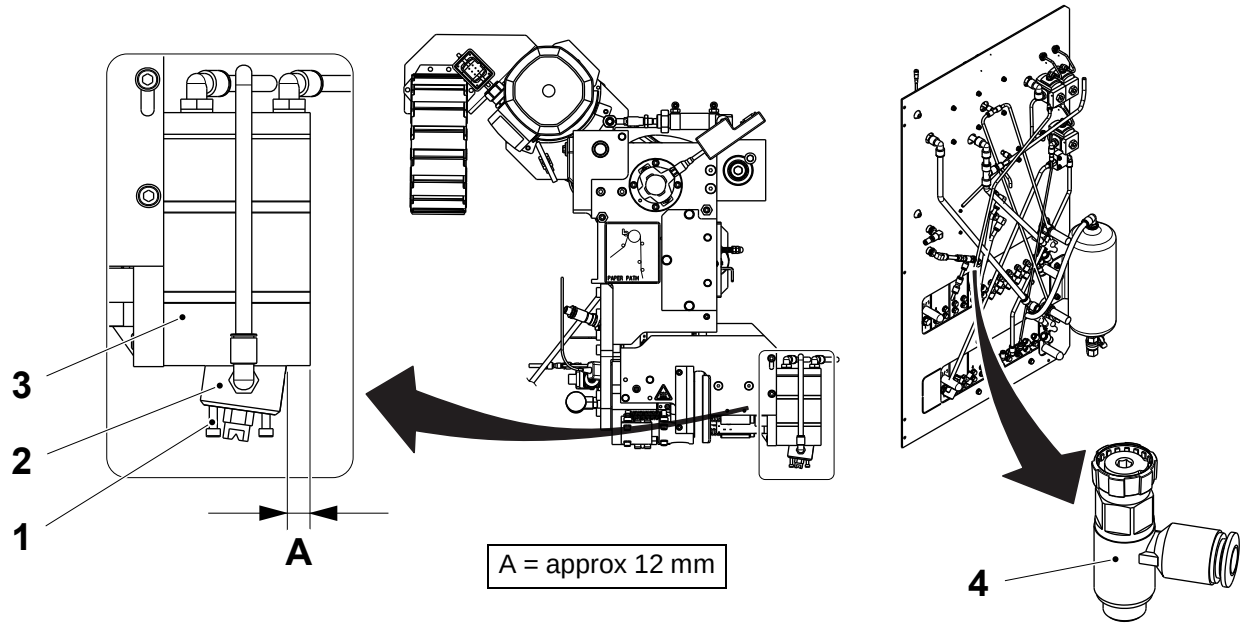

1 Screw
2 Nozzle
3 Screw
4 Valve

TechPub_2614345_0108 - 0705_3048211_01.fm

8.4.1 Paper Guide

8.4.1-1 Paper Guide - Check

Machine Status	Mains Power OFF Air OFF Steam ON Water OFF
SPC Reference	2737931-0100

Check that:

- the surfaces of the pressure rollers (1) and the guide rollers (2) are undamaged. If damaged, change the guide rollers, see 8.4.1-2 Paper Guide - Change Ball Bearings and Bushings and 8.4.1-3 Paper Guide - Change Guide Wheels Ball Bearings.
- the pressure rollers (1) and the guide rollers (2) rotate freely. If not, change the ball bearings, see 8.4.1-2 Paper Guide - Change Ball Bearings and Bushings and 8.4.1-3 Paper Guide - Change Guide Wheels Ball Bearings.
- the packaging material can be moved up and down causing the pressure rollers (1) to rotate without marking the packaging material. If not, see 8.4.1-5 Paper Guide - Set Spring Tension.

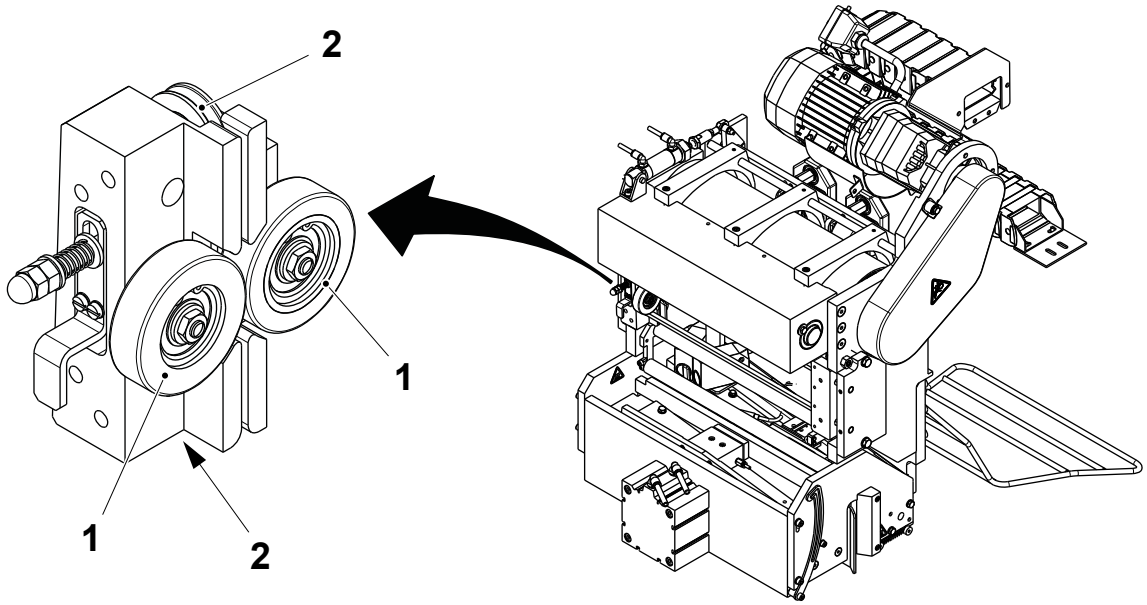

1 Pressure roller
2 Guide roller

TechPub_2614345_0108 - 0701_3048212_01.fm

8.4.1-2 Paper Guide - Change Ball Bearings and Bushings

Machine Status	Mains Power OFF Air OFF Steam ON Water OFF
SPC Reference	2737931-0100

Note! The rubber coated roller (4) must be fitted on the printed side of the packaging material web.

a) Remove the nuts (1) and the retaining rings (2).

b) Remove the rollers (3) and (4) and the ball bearings (5). Change them if necessary.

c) Remove the nuts (6) and the spring (7).

d) Remove the screw (8), the eccentric shaft (9) and the sleeve (10).

e) Check the bushings (11). Change them if necessary.

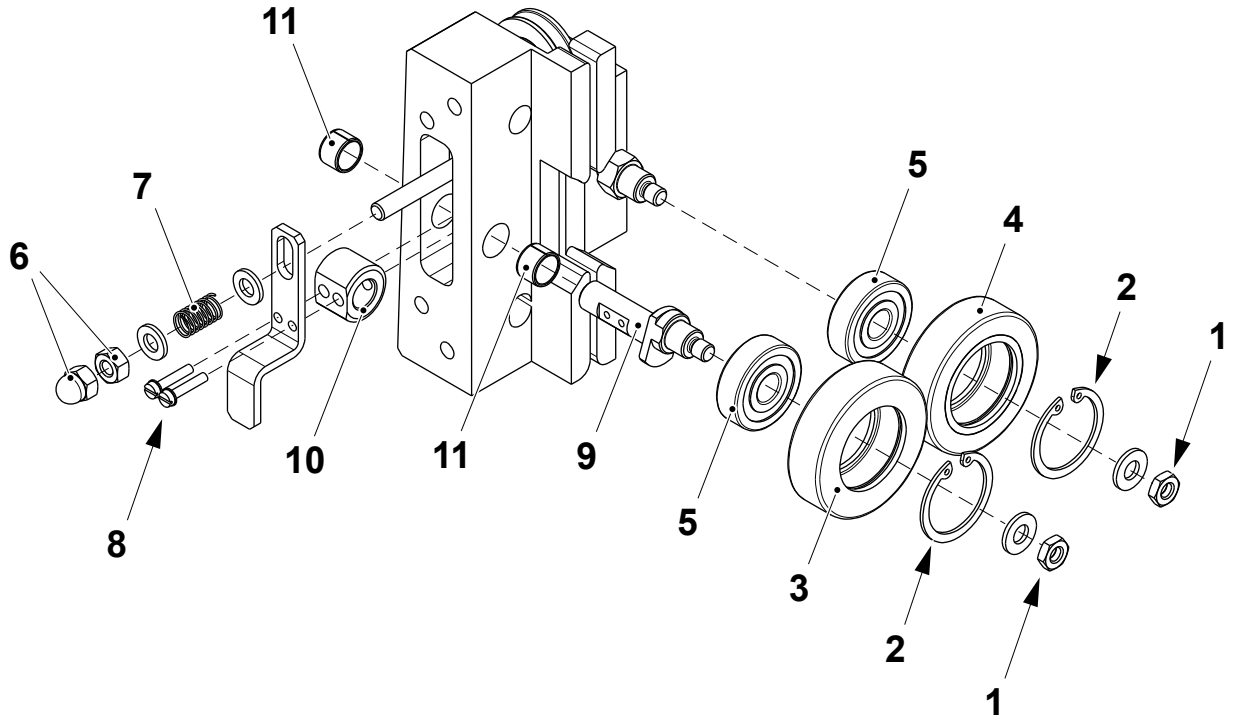

1 Nut
2 Retaining ring
3 Roller
4 Roller
5 Ball bearing
6 Nut
7 Spring
8 Screw
9 Eccentric shaft
10 Sleeve
11 Bushing

(Cont'd)

TechPub_2614345_0108 - 0701_3048212_01.fm

(Cont'd)

f) Assemble in the reverse order.

g) Set the spring tension, see 8.4.1-5 Paper Guide - Set Spring Tension.

Note! When the paper guide is removed for maintenance, after having fit it back always perform the following settings: 8.4.1-4 Paper Guide - Set Position and 8.4-5 Splicing Device - Set Photocell Position.

TechPub_2614345_0108 - 0701_3048212_01.fm

8.4.1-3 Paper Guide - Change Guide Wheels Ball Bearings

Machine Status	Mains Power OFF Air OFF Steam ON Water OFF
SPC Reference	2737931-0100

a) Remove the nuts (1).

b) Remove the guide wheels (2) and the ball bearings (3). Change them if necessary.

c) Assemble in the reverse order.

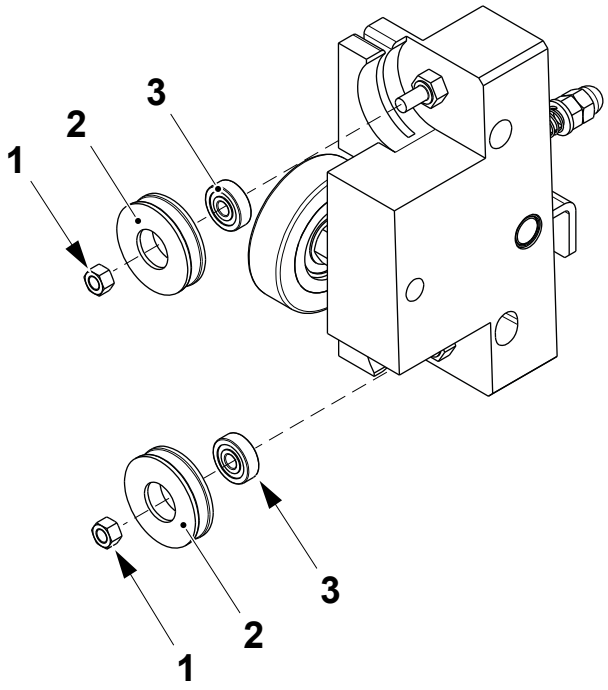

1 Nut
2 Guide wheel
3 Ball bearing

TechPub_2614345_0108 - 0701_3048212_01.fm

8.4.1-4 Paper Guide - Set Position

Machine Status	Mains Power OFF Air OFF Steam ON Water OFF
SPC Reference	2737931-0100

Package	**A ±0.5 (mm)**
TBA 125 S	122.0
TBA 200 S	116.0
TBA 250 B - TBA 200 B	95.0
TBA 250 S - TBA 200 M	107.0
TBA 1000 S	51.0
TBA 1000 Sq	56.0
TBA 1000 B	41.0

(Cont'd)

TechPub_2614345_0108 - 0701_3048212_01.fm

(Cont'd)

a) Loosen the grub screws (1).

b) Set the distance **A** between the paper guide (2) and the frame (3), see the table on the previous page.

c) Tighten the grub screws (1).

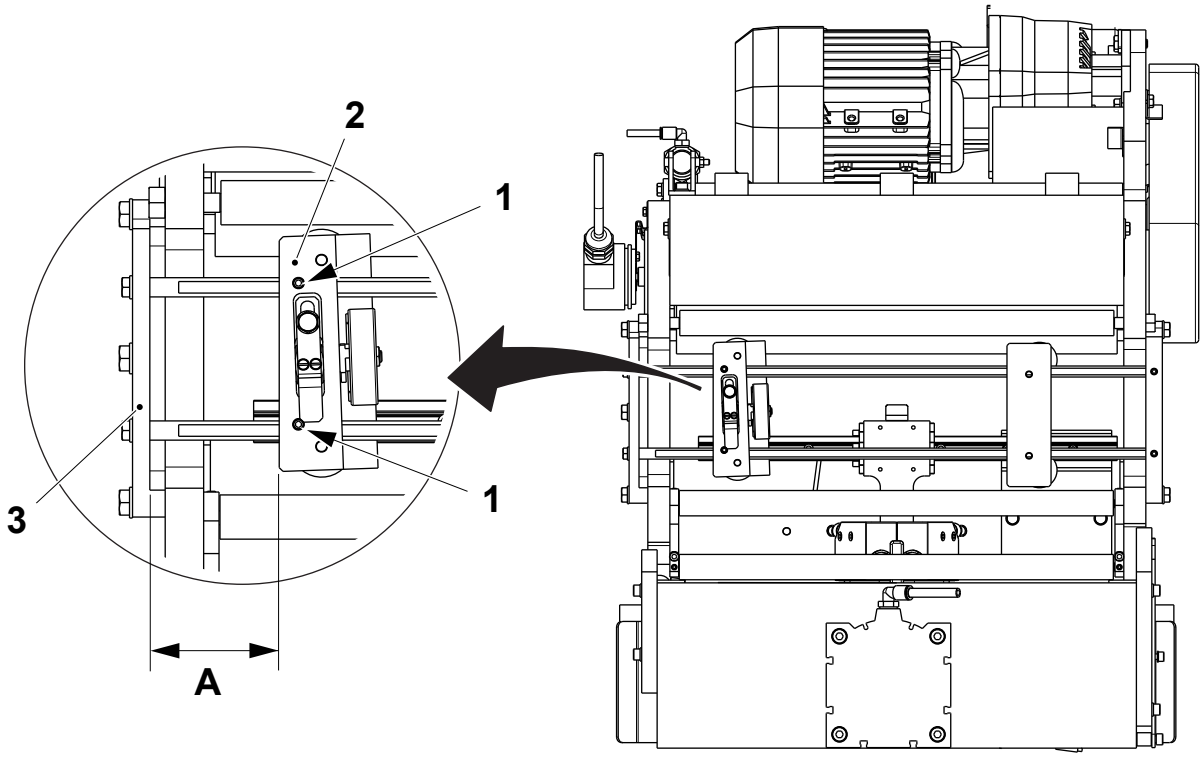

1 Grub screw
2 Paper guide
3 Frame

TechPub_2614345_0108 - 0701_3048212_01.fm

8.4.1-5 Paper Guide - Set Spring Tension

Machine Status	Mains Power OFF Air OFF Steam ON Water OFF
SPC Reference	2737931-0100

Adjust the pressure between the rollers (1) with the nuts (2), compress the spring (3) to increase the pressure. The two rollers must grip the packaging material (4) firmly without marking it.

Make sure that the edge of the packaging material (4) just touch the inside of the guide rollers (5) to avoid damaging the edge of the packaging material (4).

Note! If the roller applies too much pressure when set, the packaging material will be damaged. If it applies too little pressure, the packaging material may slip out of the guide.

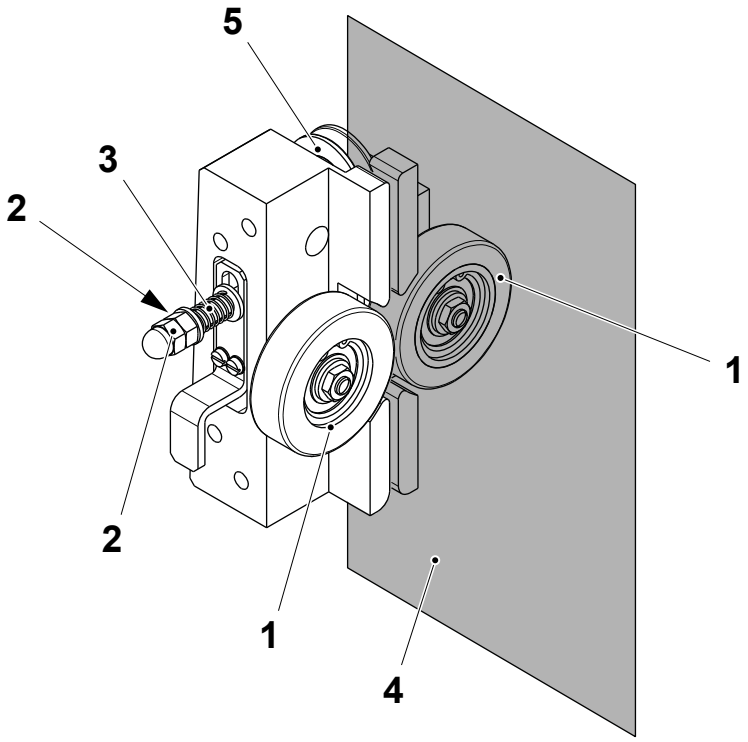

1 Roller
2 Nut
3 Spring
4 Packaging material
5 Roller

TechPub_2614345_0108 - 0701_3048212_01.fm

8.4.2 Paper Slide

8.4.2-1 Paper Slide - Check

Machine Status	Mains Power OFF Air OFF Steam ON Water OFF
SPC Reference	2985585-0100

Check that the rollers (1) rotate freely and the surfaces of the rollers (1) are undamaged. If necessary, change the roller and the ball bearings, see 8.4.2-2 Paper Slide - Change Rollers.

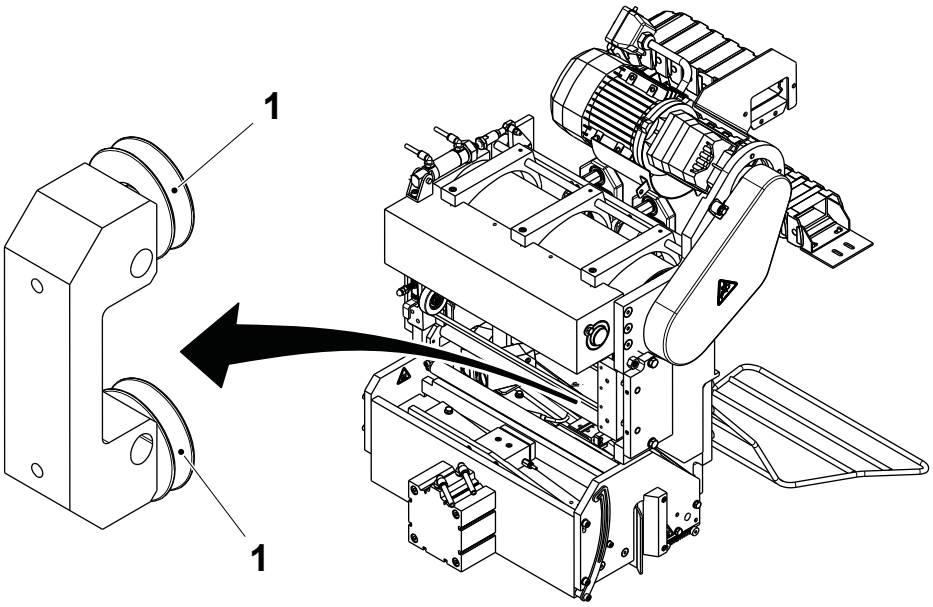

1 Roller

TechPub_2614345_0108 - 0701_3048213_01.fm

8.4.2-2 Paper Slide - Change Rollers

Machine Status	Mains Power OFF Air OFF Steam ON Water OFF
SPC Reference	2985585-0100

a) Remove the nuts (1).

b) Remove and change the rollers (2) and the ball bearings (3).

c) Assemble in the reverse order.

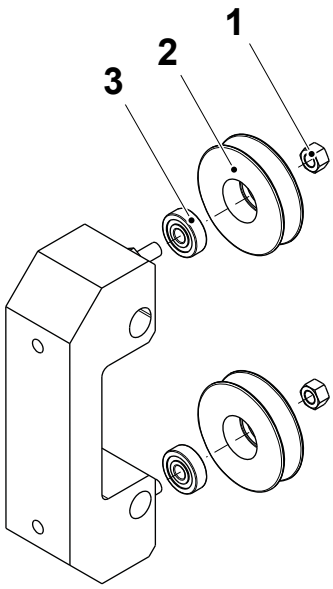

1 Screw
2 Roller
3 Ball bearing

TechPub_2614345_0108 - 0701_3048213_01.fm

8.4.3 Pressure Jaw

8.4.3-1 Pressure Jaw - Check Knife and Dolly

Machine Status	Mains Power ON Air ON Steam ON Water ON
SPC Reference	2741003-0100

WARNING

Risk of burns.

The sealing plate is hot after use. Nearby parts may also be hot. Wear heat resistant protective gloves.

(Cont'd)

TechPub_2614345_0108 - 0702_3048214_01.fm

(Cont'd)

a) Move the splicing device in maintenance position, see 8.4-8 Splicing Device - Move to Maintenance Position.

b) Remove the screws (1) and loosen the screws (2).

c) Move the plate (3) downwards and swing it open.

d) Lock the plate (3) in position with the catch (4).

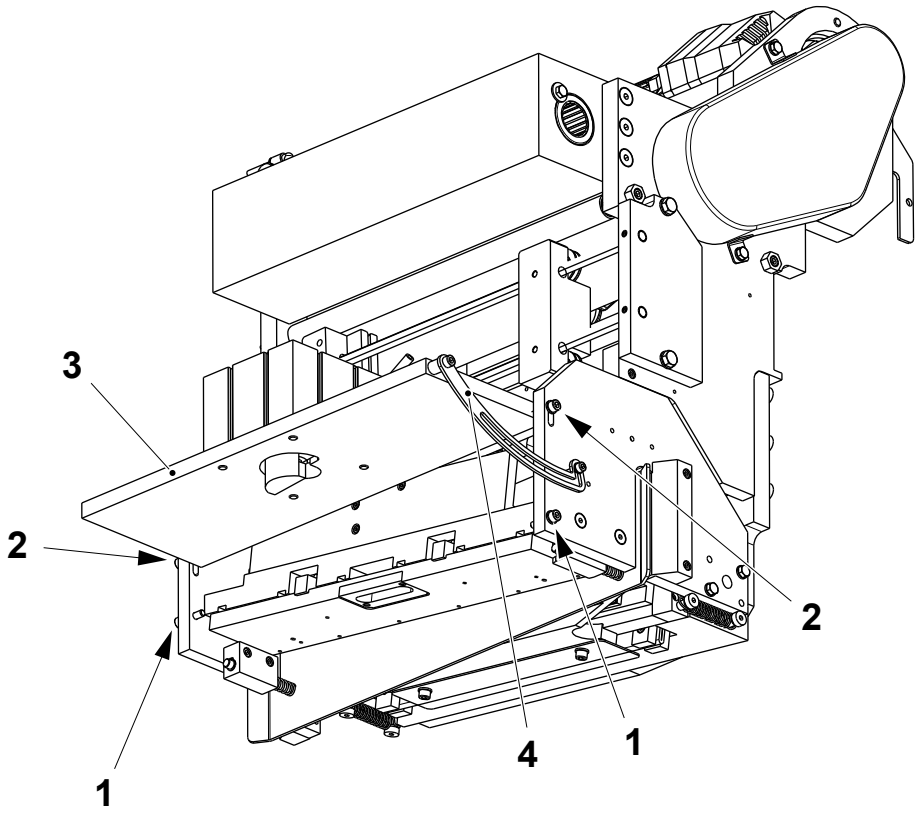

1 Screw
2 Screw
3 Plate
4 Catch

(Cont'd)

TechPub_2614345_0108 - 0702_3048214_01.fm

(Cont'd)

WARNING

Blade hazard.

The knife is sharp. Wear personal protective equipment.

e) Slip off the knife holder (5).

f) Check the knife (6) for wear or damage. If necessary, remove the screws (7) and change the knife (6).

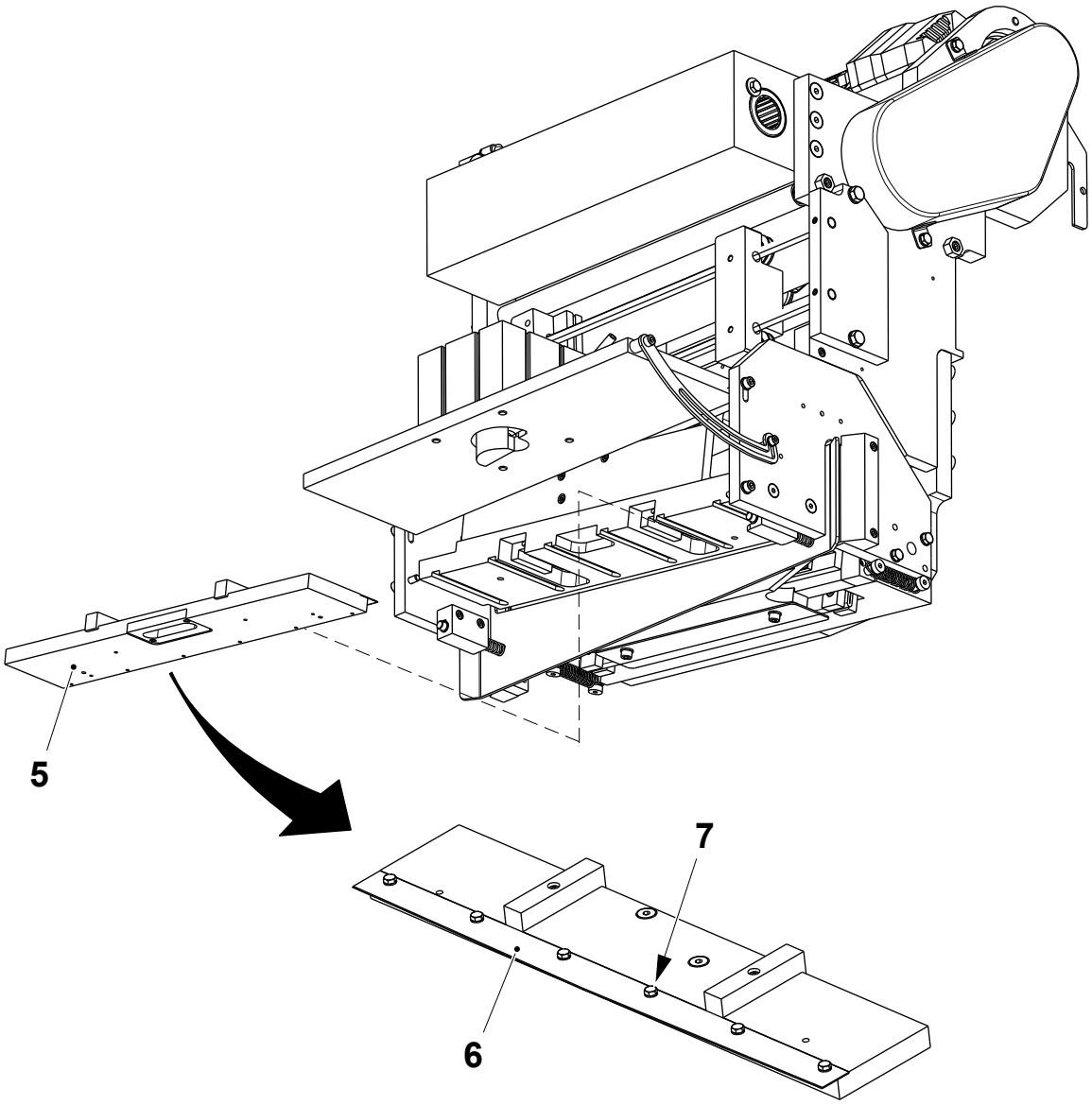

5 Knife holder
6 Knife
7 Screw

(Cont'd)

TechPub_2614345_0108 - 0702_3048214_01.fm

(Cont'd)

g) Remove the screws (8) and rotate the support (9) by 90º.

h) Remove the plate (10) from the guide (11) and slip it off sideways from RH side to LH side.

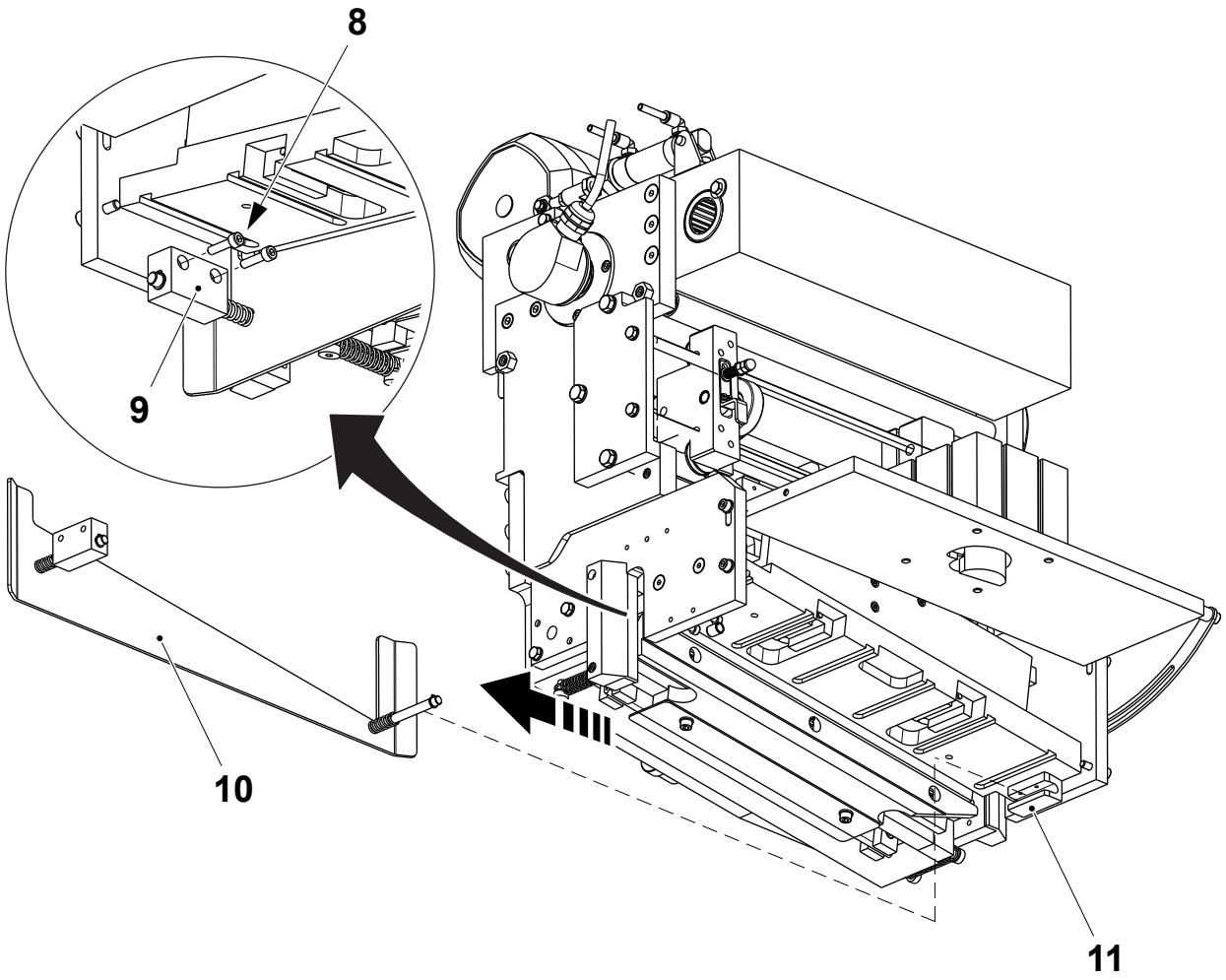

8 Screw
9 Support
10 Plate
11 Guide

(Cont'd)

TechPub_2614345_0108 - 0702_3048214_01.fm

(Cont'd)

i) Disconnect the air hoses from the web tension cylinder (12).

j) Remove the screws (13) and pull out the dolly holder (14).

k) Check the dolly (15) for wear or damage. If necessary, change the dolly (15).

l) Assemble in the reverse order.

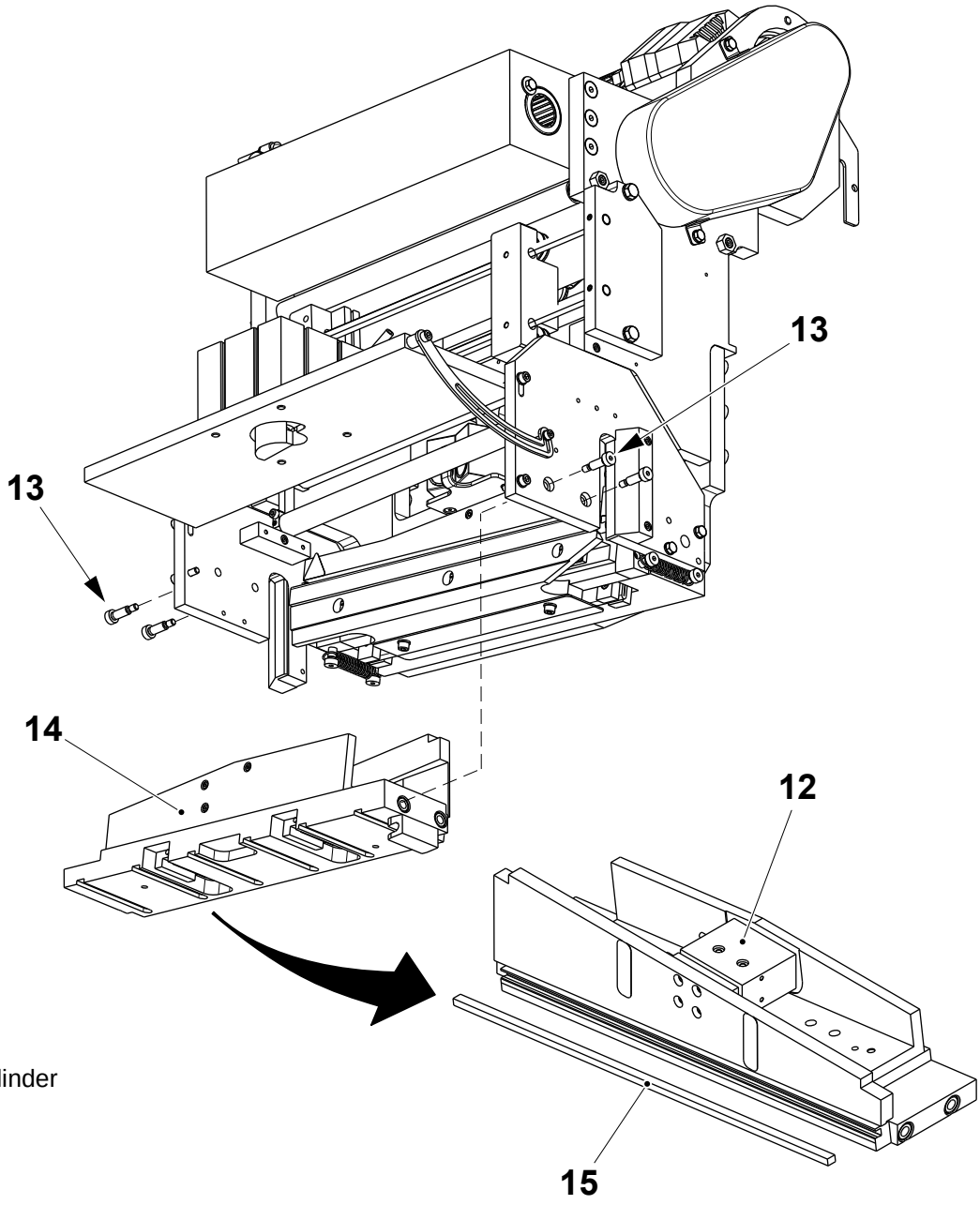

12 Web tension cylinder
13 Screw
14 Dolly holder
15 Dolly

TechPub_2614345_0108 - 0702_3048214_01.fm

8.4.3-2 Pressure Jaw - Change Cylinders

Machine Status	Mains Power OFF Air OFF Steam ON Water OFF
Special Equipment	Locking Fluid TP No. 90157-0016
SPC Reference	2741003-0100

Cutting Cylinder

a) Lift the plate (1), see 8.4.3-1 Pressure Jaw - Check Knife and Dolly.

b) Disconnect the air hoses (2) from the cylinder (3).

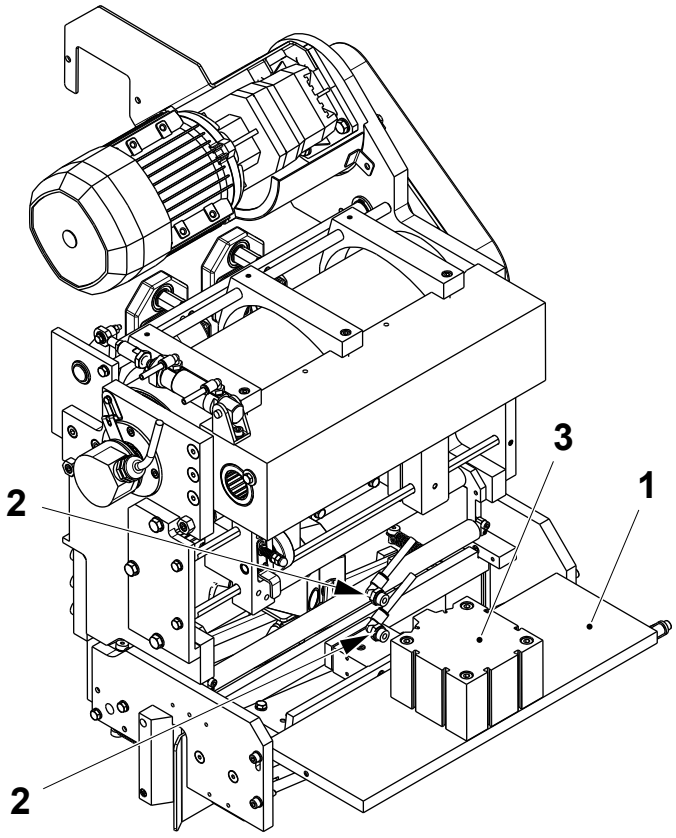

1 Plate
2 Air hose
3 Cylinder

(Cont'd)

TechPub_2614345_0108 - 0702_3048214_01.fm

(Cont'd)

c) Remove the screws (4).

d) Remove the cylinder (3).

e) Hold the cylinder piston (5) with the spanner and turn the pin (6) to separate it from the cylinder (3).

f) Apply locking fluid to the threads of the pin (6) and fit it in the new cylinder.

g) Assemble in the reverse order.

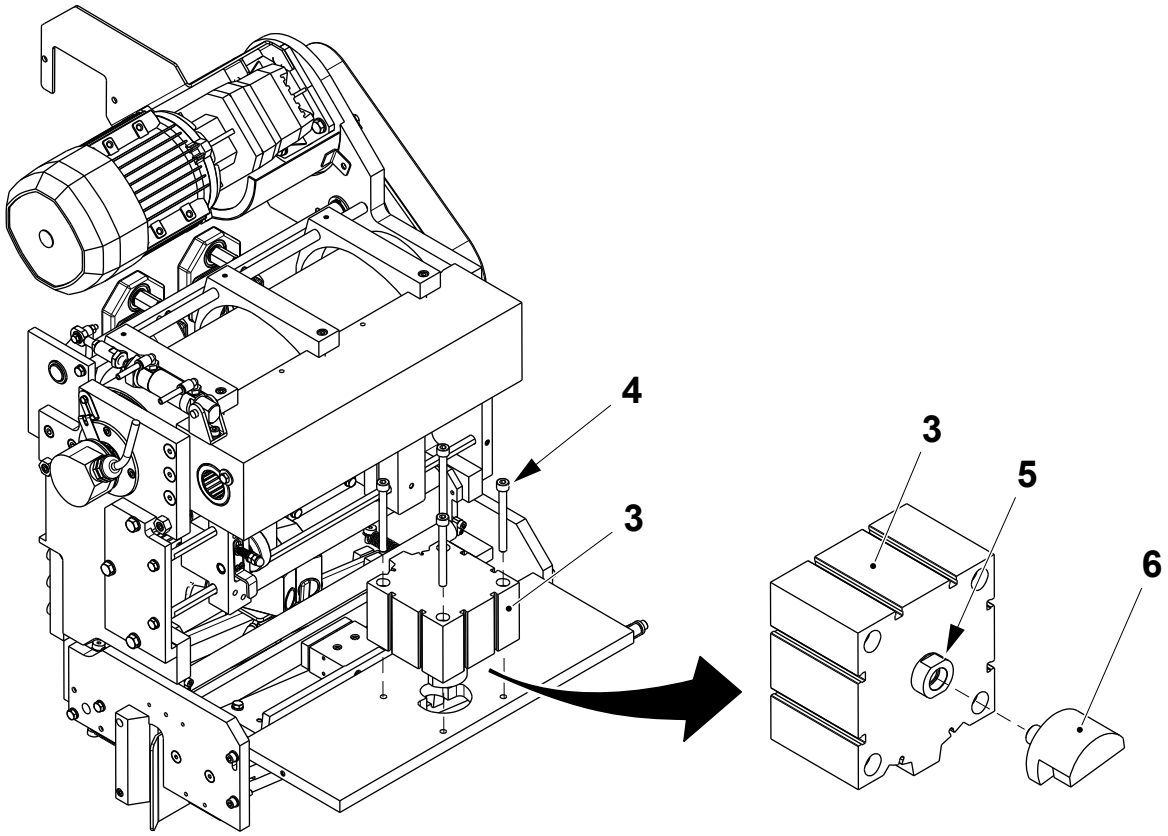

3 Cylinder
4 Screw
5 Cylinder piston
6 Pin

(Cont'd)

TechPub_2614345_0108 - 0702_3048214_01.fm

(Cont'd)

WARNING

Blade hazard.

The knife is sharp. Wear personal protective equipment.

Web Tension Cylinder

a) Move the splicing device in maintenance position, see 8.4-8 Splicing Device - Move to Maintenance Position.

b) Disconnect the air hoses from the cylinder (1).

c) Remove the knife holder (2), the plate (3) and the dolly holder (4), see 8.4.3-1 Pressure Jaw - Check Knife and Dolly.

d) Place the dolly holder (4) on the work bench.

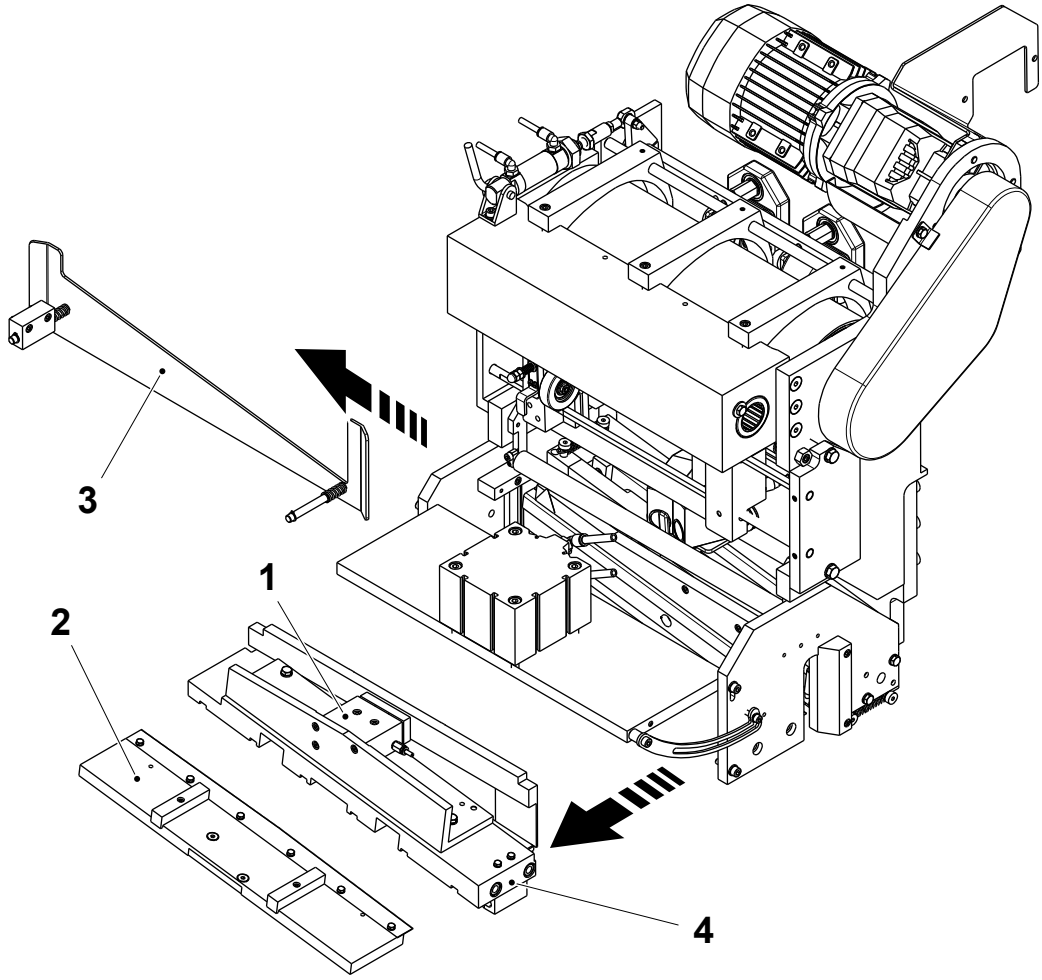

1 Cylinder
2 Knife holder
3 Plate
4 Dolly holder

(Cont'd)

TechPub_2614345_0108 - 0702_3048214_01.fm

(Cont'd)

e) Remove the screw (5) and the rail (6).
f) Remove the screws (7) and change the cylinder (1).
g) Fit back the rail (6) by the screws (5).
h) Assemble in the reverse order.

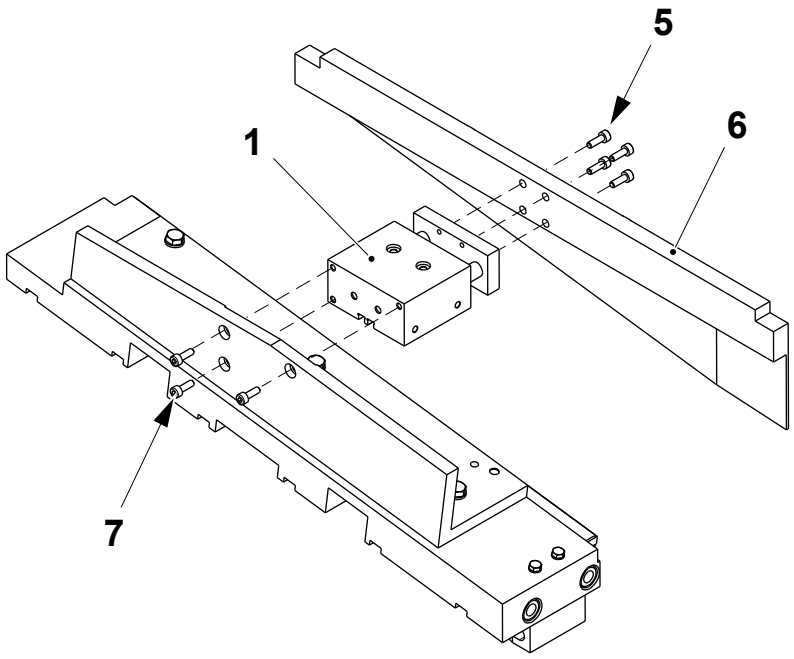

1 Cylinder
5 Screw
6 Rail
7 Screw

(Cont'd)

TechPub_2614345_0108 - 0702_3048214_01.fm

(Cont'd)

i) Check that the web tension is set to 2 bar. If the pressure is wrong, turn the control knob (8) until the pressure gauge (9) indicates the correct pressure.

j) Check that the air circuit is set to the correct pressure, see 10.1 Technical Data. If the pressure is wrong, turn the control knob (10) until the pressure gauge (11) indicates the correct pressure.

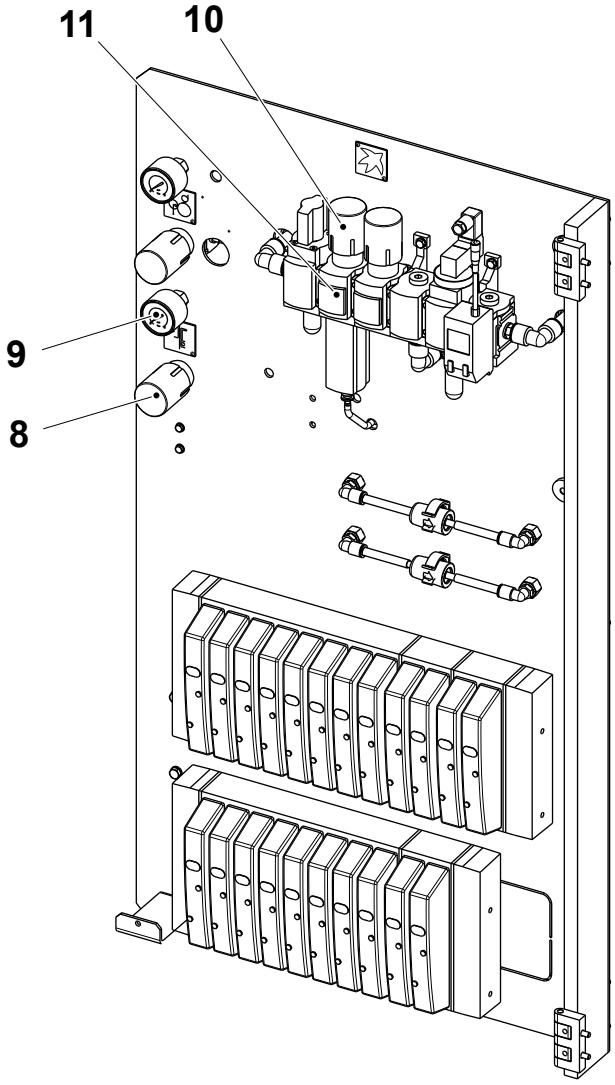

8 Control knob
9 Pressure gauge
10 Control knob
11 Pressure gauge

TechPub_2614345_0108 - 0702_3048214_01.fm

8.4.4 Heating Unit

8.4.4-1 Heating Unit - Check Sealing Plate

Machine Status	Mains Power OFF Air OFF Steam ON Water OFF
Special Equipment	Sealing Plate Cleaning Tool TP No. 2994287-0000
SPC Reference	2797149-0100

WARNING

Risk of burns.

The sealing plate is hot after use. Nearby parts may also be hot. Wear heat resistant protective gloves.

a) Move the splicing device in maintenance position, see 8.4-8 Splicing Device - Move to Maintenance Position.

(Cont'd)

TechPub_2614345_0108 - 0703_3048215_01.fm

(Cont'd)

WARNING
Blade hazard.
The knife is sharp. Wear personal protective equipment.

b) Swing the plate (1) open and remove the knife holder (2) and the plate (3), see 8.4.3-1 Pressure Jaw - Check Knife and Dolly.

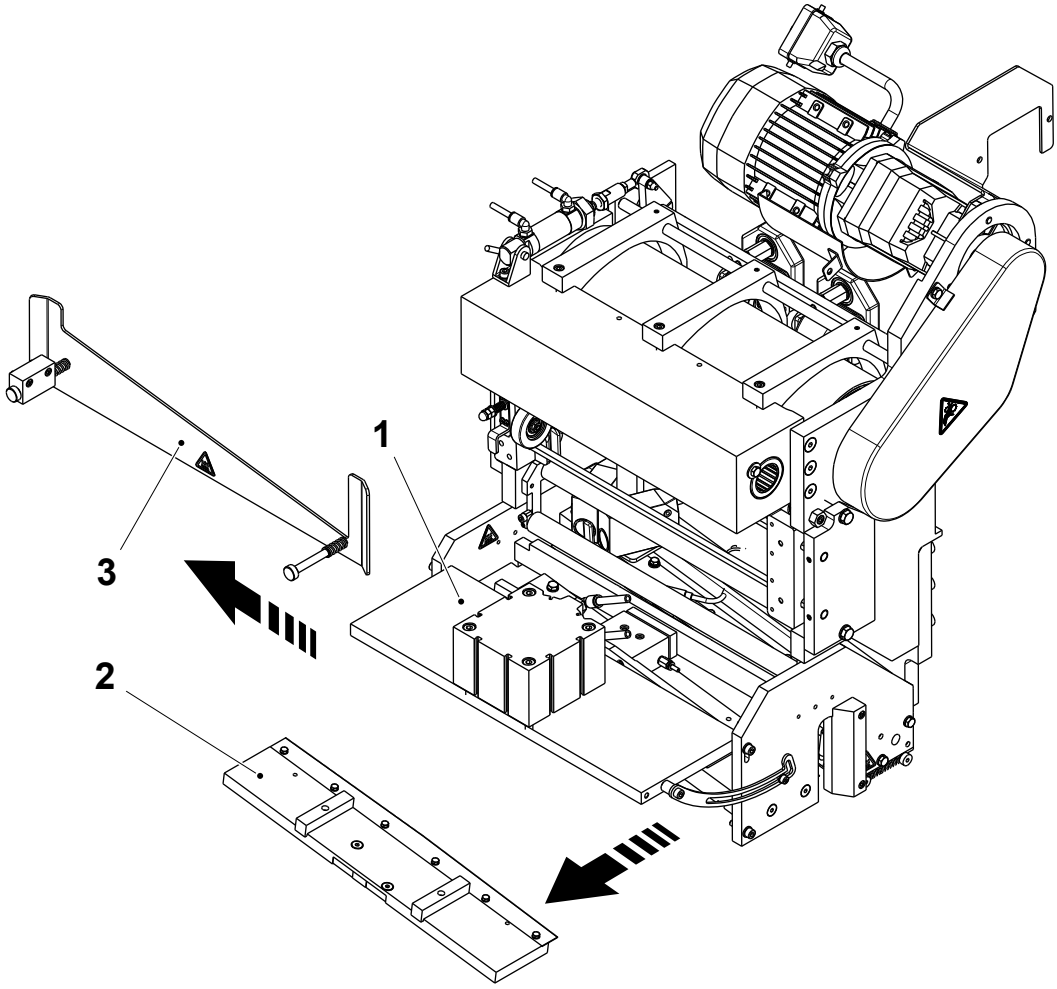

1 Plate
2 Knife Holder
3 Plate

(Cont'd)

TechPub_2614345_0108 - 0703_3048215_01.fm

(Cont'd)

CAUTION
Risk of damage to the equipment.
Do not use metallic or abrasive tools for cleaning. The surface treatment on the sealing plate is easily damaged.

c) Check the sealing plate (4) for wear or damage. Change if necessary, see 8.4.4-2 Heating Unit - Change Heating Bar.

d) Check that the sealing plate (4) is free from packaging material deposits. Clean if necessary with the tool (5) TP No. 2994287-0000.

Note! Perform the cleaning when the sealing plate is still warm.

e) With aid of a feeler gauge, check the distance **A** between the sealing plate (4) and the counter bar (6).

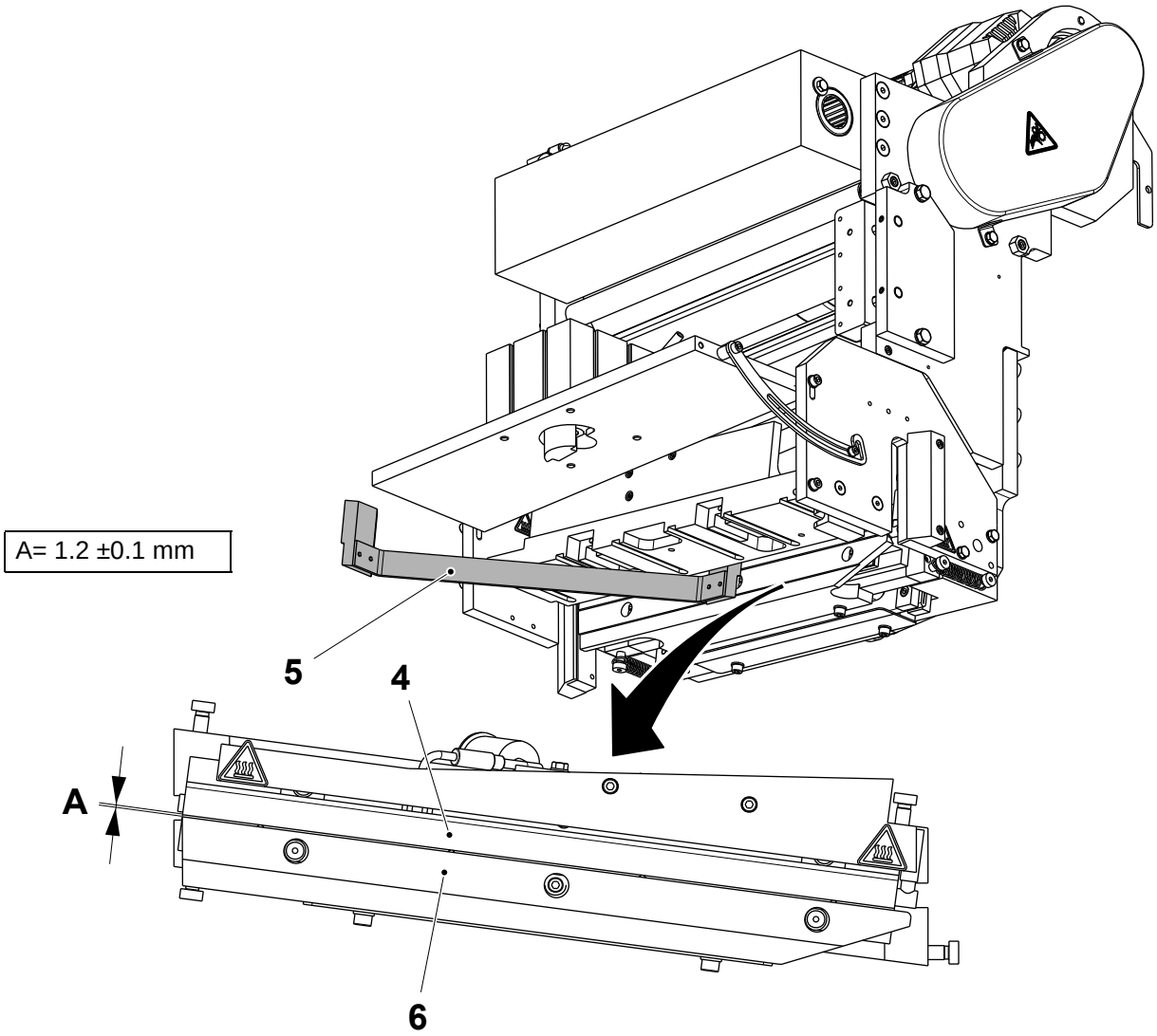

4 Sealing plate
5 Tool
6 Counter bar

TechPub_2614345_0108 - 0703_3048215_01.fm

8.4.4-2 Heating Unit - Change Heating Bar

Machine Status	Mains Power OFF Air OFF Steam ON Water OFF
Consumables	Silicone Paste TP No. 90296-0051
SPC Reference	2797149-0100

WARNING

Risk of burns.

The sealing plate is hot after use. Nearby parts may also be hot. Wear heat resistant protective gloves.

a) Move the splicing device in maintenance position, see 8.4-8 Splicing Device - Move to Maintenance Position.

(Cont'd)

TechPub_2614345_0108 - 0703_3048215_01.fm

(Cont'd)

WARNING
Blade hazard.
The knife is sharp. Wear personal protective equipment.

b) Swing the plate (1) open and remove the knife holder, the plate and the dolly holder, see 8.4.3-1 Pressure Jaw - Check Knife and Dolly.

c) Disconnect the air hoses (2) from the cylinder (3).

d) Remove the screws (4) and (5) and remove the plate (1).

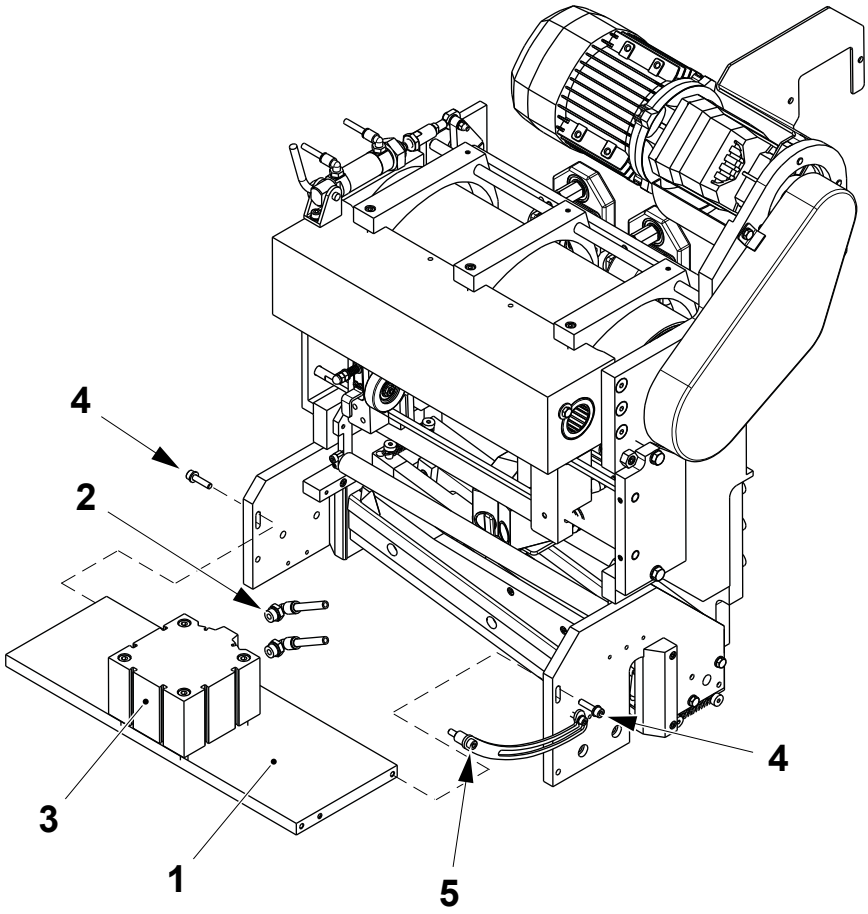

1 Plate
2 Air hose
3 Cylinder
4 Screw
5 Screw

(Cont'd)

TechPub_2614345_0108 - 0703_3048215_01.fm

(Cont'd)

e) Disconnect the electrical connection (6) and the thermocouple (7).

f) Unhook the four springs (8) securing the four shoulder screws (9) and remove the constant heat device (10).

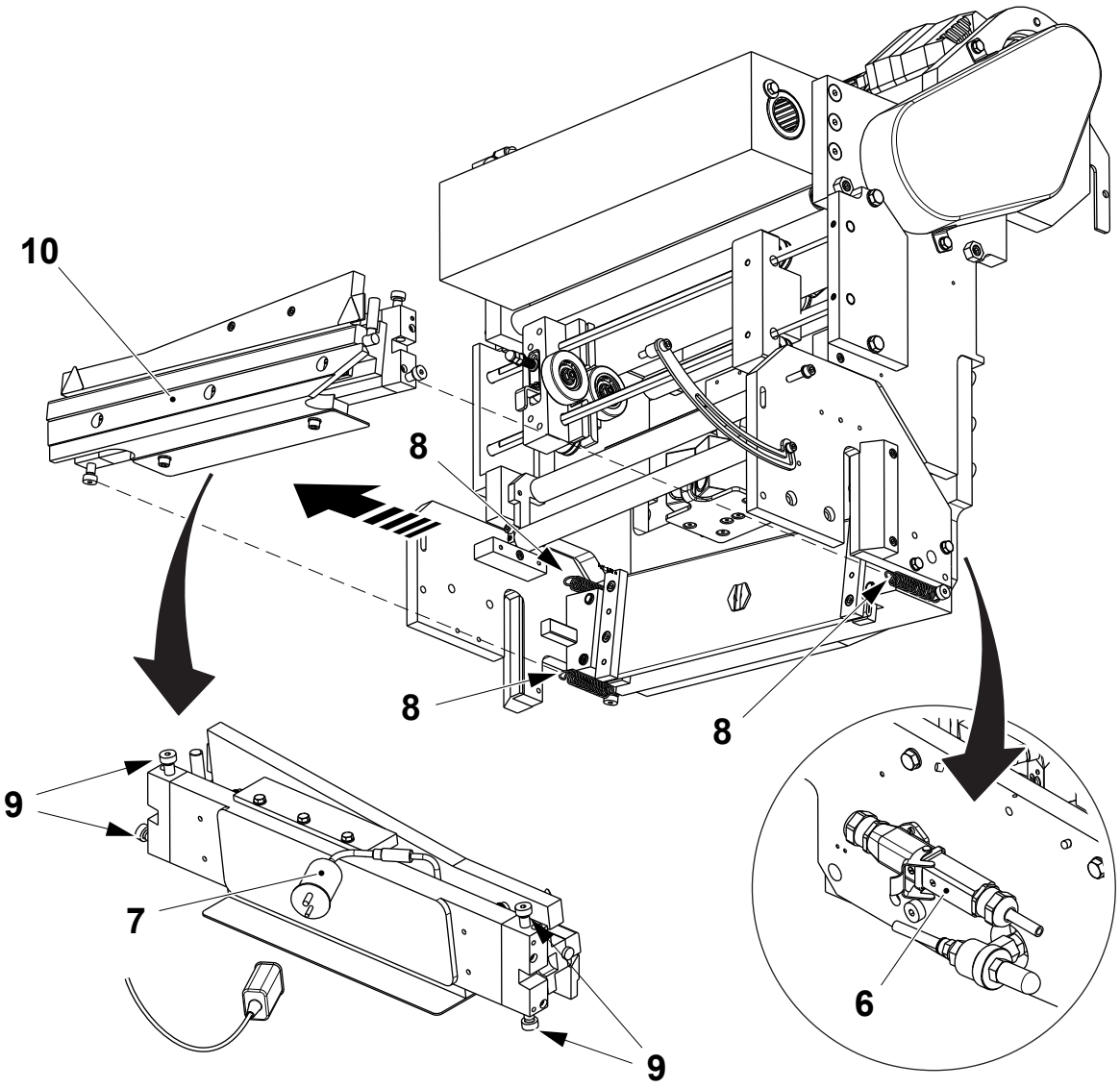

6 Electrical connection
7 Thermocouple
8 Spring
9 Shoulder screw
10 Constant heat device

(Cont'd)

TechPub_2614345_0108 - 0703_3048215_01.fm

(Cont'd)

g) Remove the screws (11) and the plate (12).

h) Remove the screws (13) and the counter bar (14).

i) Remove the two screws (15) and the spacers (16).

j) Remove the four screws (17) taking care of the washers (18), the plate (19) and the spacers (20).

Note! When assembling insert the washers (18) as shown below.

k) Remove the sealing plate assembly (21).

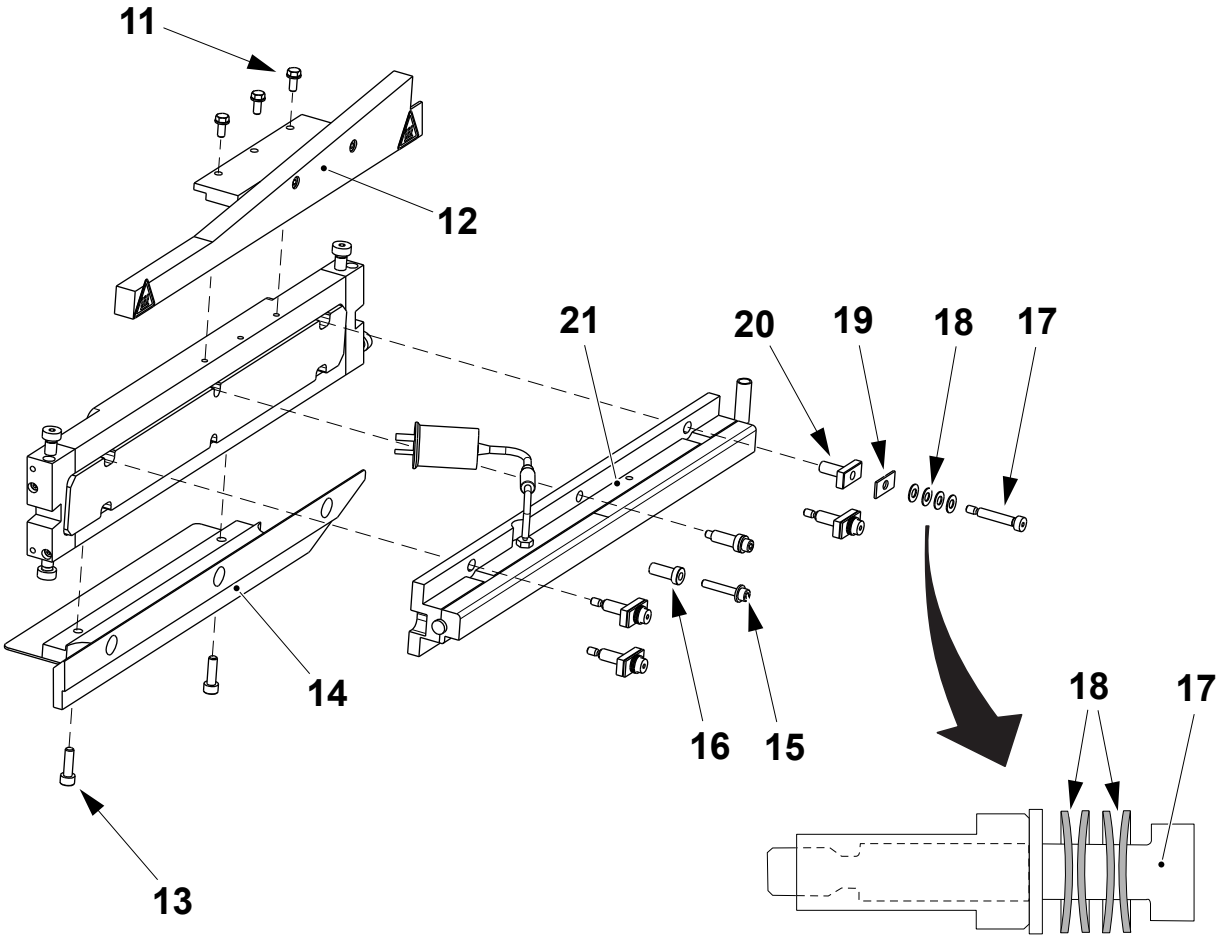

11 Screw
12 Plate
13 Screw
14 Counter bar
15 Screw
16 Spacer
17 Screw
18 Washer
19 Plate
20 Spacer
21 Sealing plate assembly

(Cont'd)

TechPub_2614345_0108 - 0703_3048215_01.fm

(Cont'd)

Note! Apply the silicone paste on the new heating bar (24).

l) Loosen the screws (22) and remove the sealing plate (23) and the heating bar (24).

m) Change the heating bar (24) if necessary, applying on it the silicone paste.

n) Assemble in the reverse order.

Note! When assembling set the distance **A** between the end of the heating bar (24) and the sealing plate (23).

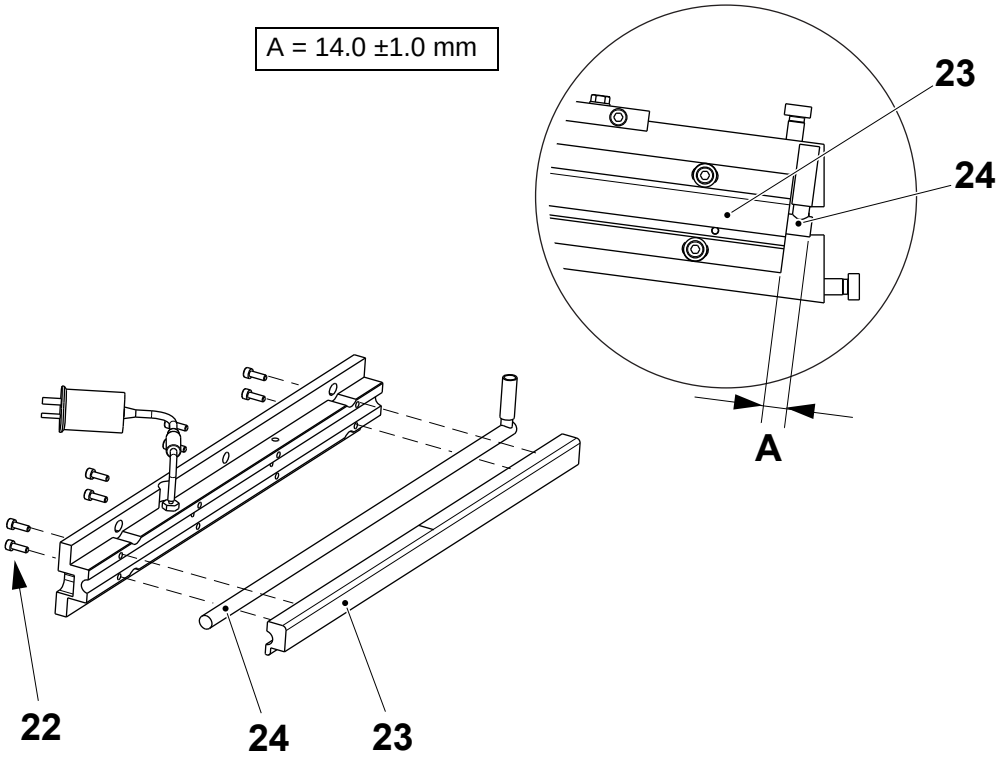

22 Screw
23 Sealing plate
24 Heating bar

TechPub_2614345_0108 - 0703_3048215_01.fm

8.4.4-3 Heating Unit - Change Guides

Machine Status	Mains Power OFF Air OFF Steam ON Water OFF
SPC Reference	2797149-0100

a) Remove the heating unit (1), see 8.4.4-2 Heating Unit - Change Heating Bar from step a) to f).

b) Remove the shoulder screws (2).

c) Remove the screws (3) and change the guides (4).

d) Assemble the guides (4) on the heating unit (1) by centring the pins (5).

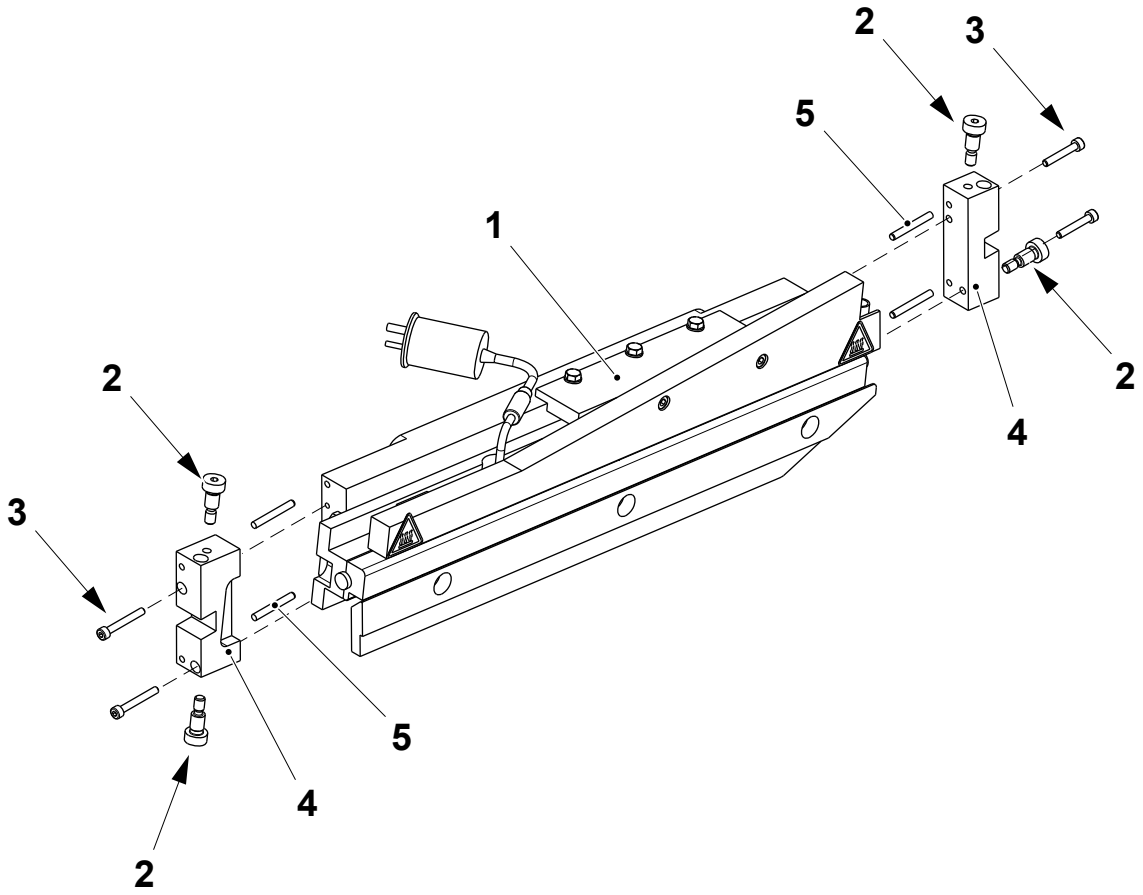

1 Heating unit
2 Shoulder screw
3 Screw
4 Guide
5 Pin

(Cont'd)

TechPub_2614345_0108 - 0703_3048215_01.fm

(Cont'd)

Note! Make sure that the heating unit has been removed from the splicing device.

e) On both sides of the splicing device frame remove the screw (6) and change the guide (7).

f) Assemble in the reverse order.

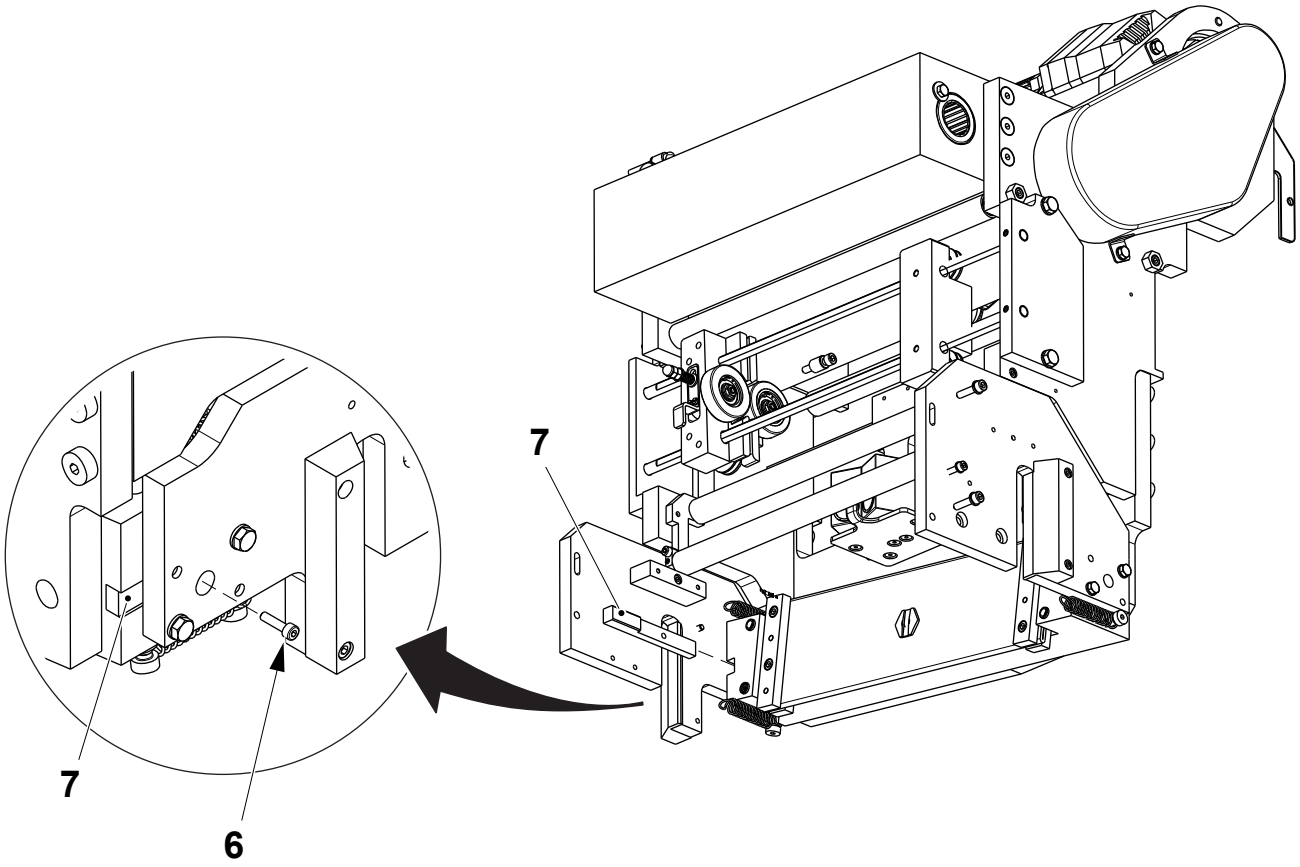

6 Screw
7 Guide

TechPub_2614345_0108 - 0703_3048215_01.fm

8.4.4-4 Heating Unit - Change Pneumatic Hose

Machine Status	Mains Power OFF Air OFF Steam ON Water OFF
SPC Reference	2797149-0100

a) Remove the constant heat device, see 8.4.4-2 Heating Unit - Change Heating Bar from step a) to f).

b) With the aid of two keys hold the nipple (1) and loosen the quick exhaust valve (2).

c) Remove and change the pneumatic hose (3).

d) Assemble in the reverse order.

Note! When assembling wrap the quick exhaust valve (2) with teflon tape.

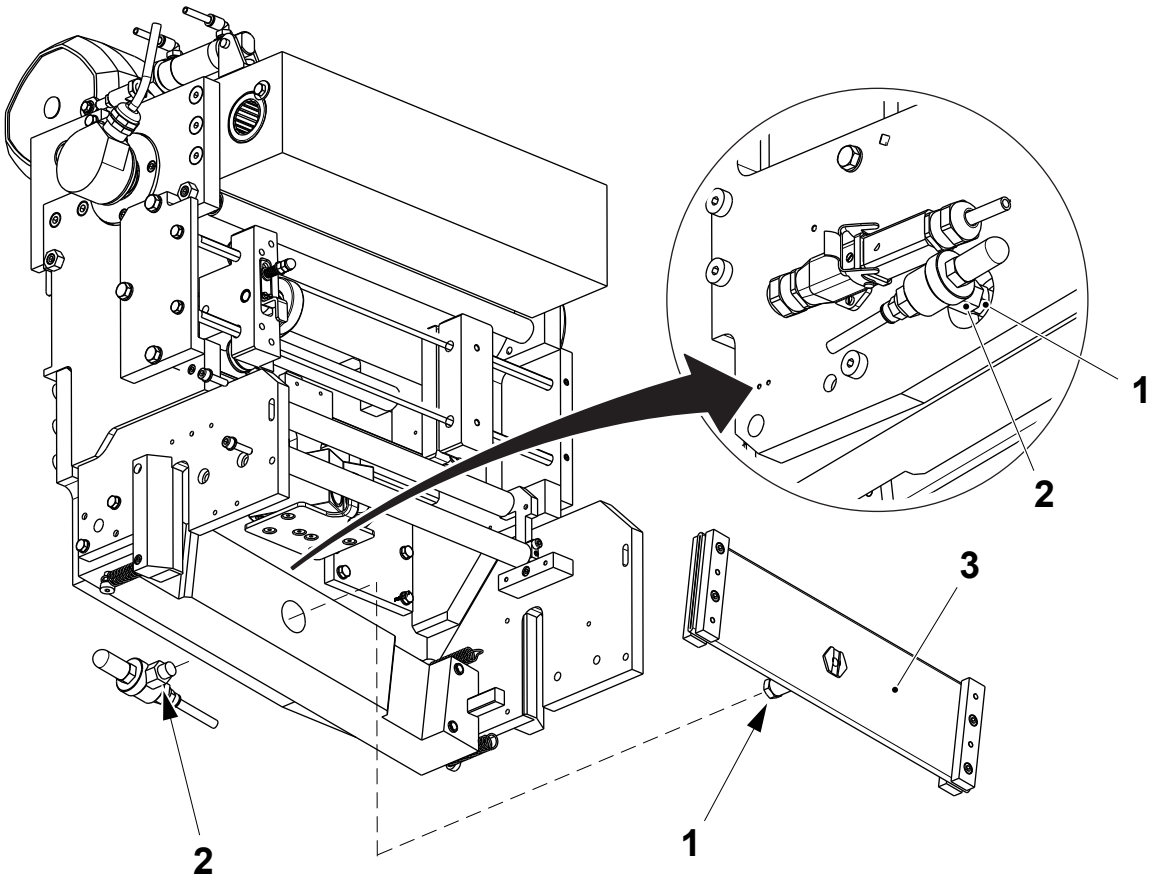

1 Nipple
2 Quick exhaust valve
3 Pneumatic hose

TechPub_2614345_0108 - 0703_3048215_01.fm

8.4.4-5 Heating Unit - Check Pneumatic Hose

Machine Status	Mains Power ON Air ON Steam ON Water ON
SPC Reference	2797149-0100

a) Perform a manual splice and listen for any leakages from the pneumatic hose (1). If any excessive sound of escaping pneumatic air is present then change the pneumatic hose (1), see 8.4.4-4 Heating Unit - Change Pneumatic Hose.

b) Remove the constant heat device (2), see 8.4.4-2 Heating Unit - Change Heating Bar from step a) to f).

c) Check the surface of the pneumatic hose (1) for any cracks. If necessary, change the pneumatic hose (1), see 8.4.4-4 Heating Unit - Change Pneumatic Hose.

d) Assemble in the reverse order.

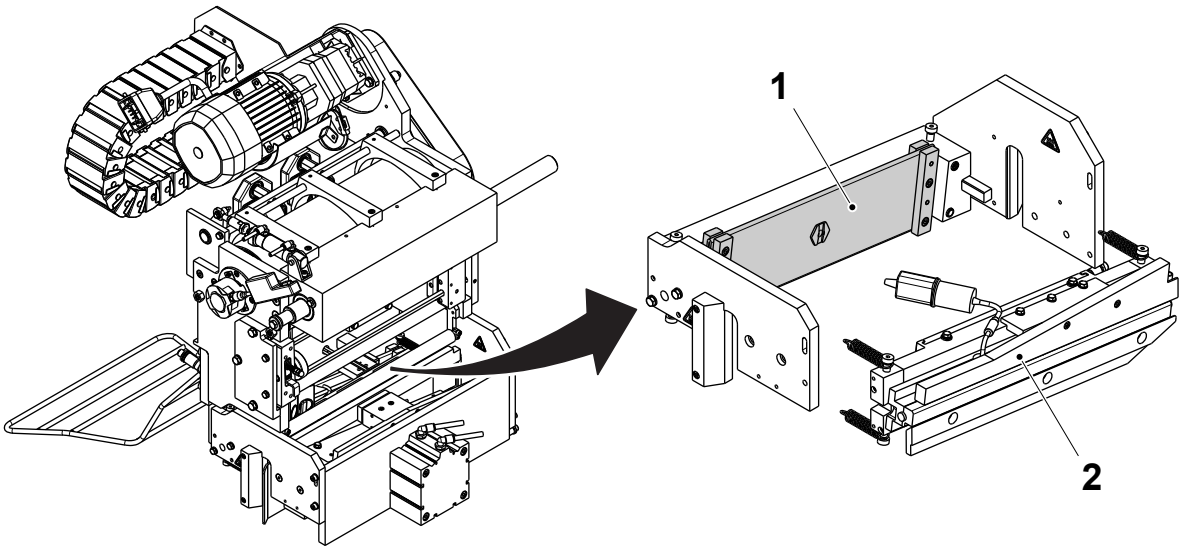

1 Pneumatic hose
2 Heat device

TechPub_2614345_0108 - 0703_3048215_01.fm

8.4.5 Counter Roller

8.4.5-1 Counter Roller - Check

Machine Status	Mains Power OFF Air OFF Steam ON Water OFF
SPC Reference	2806679-0100

Check that:

- the counter rollers (1) work correctly when they are moved from the cylinder (2). If not, set the cylinder, see 8.4.5-3 Counter Roller - Set Cylinder.
- the surface of the counter rollers (1) are not worn or damaged and the ball bearings rotate freely. If not, change any worn parts, see 8.4.5-2 Counter Roller - Overhaul.

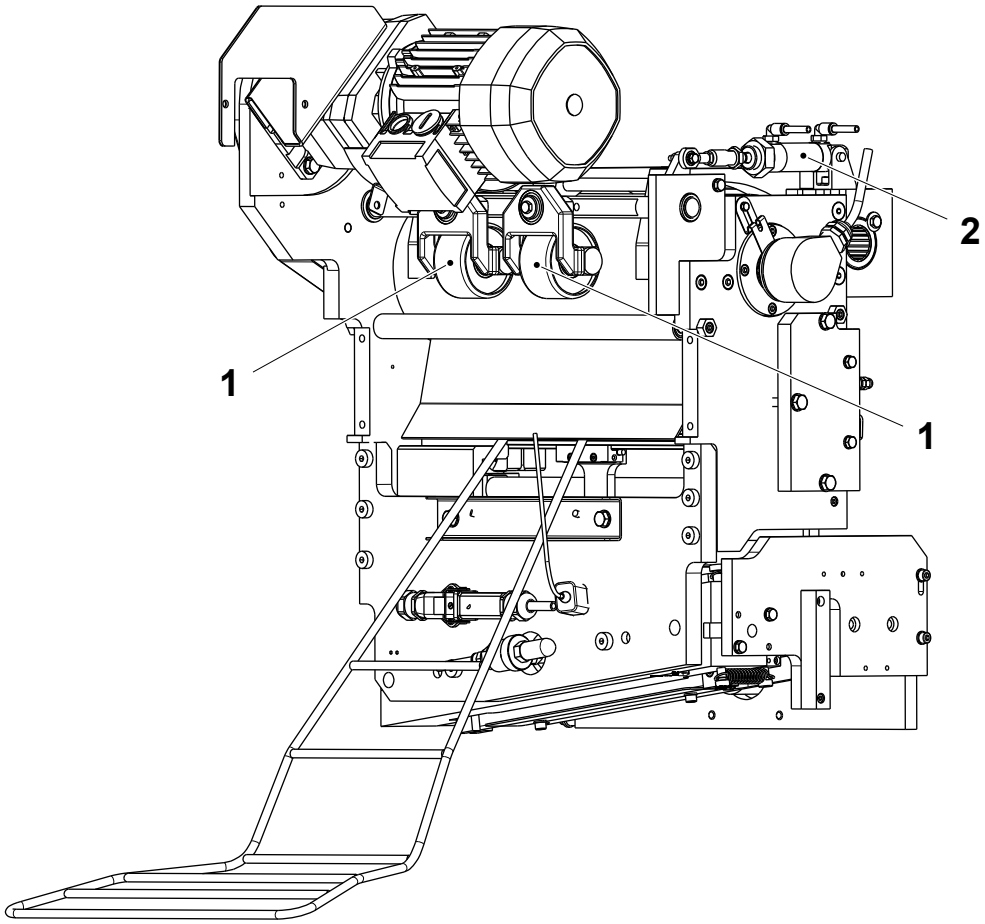

1 Counter roller
2 Cylinder

TechPub_2614345_0108 - 0701_3048216_01.fm

8.4.5-2 Counter Roller - Overhaul

Machine Status	Mains Power OFF Air OFF Steam ON Water OFF
SPC Reference	2806679-0100

a) Loosen the captive screws (1) and remove the cover (2).

a) Remove the screws (3) and (4).

b) Remove the screws (5) and the paper guide (6).

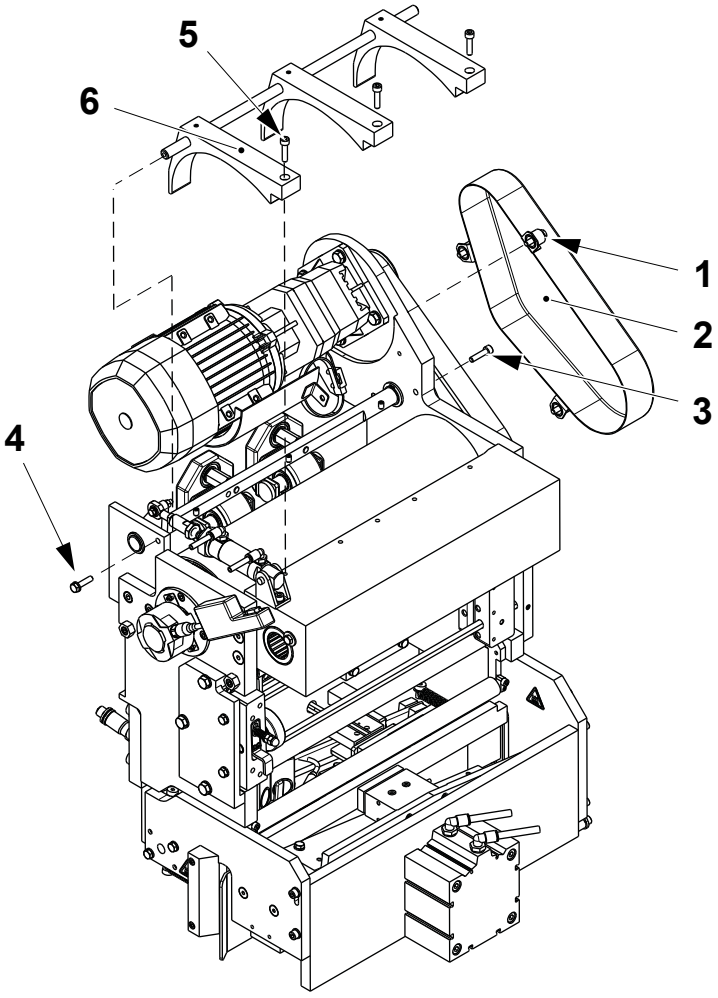

1 Captive screw
2 Cover
3 Screw
4 Screw
5 Screw
6 Paper guide

(Cont'd)

TechPub_2614345_0108 - 0701_3048216_01.fm

(Cont'd)

c) Remove the nut (7) and disconnect the cylinder rod end (8) from the lever (9).

d) Remove the retaining ring (10).

e) Remove the screws (11) and the counter roller assembly (12)

f) Change the flange bearing (13).

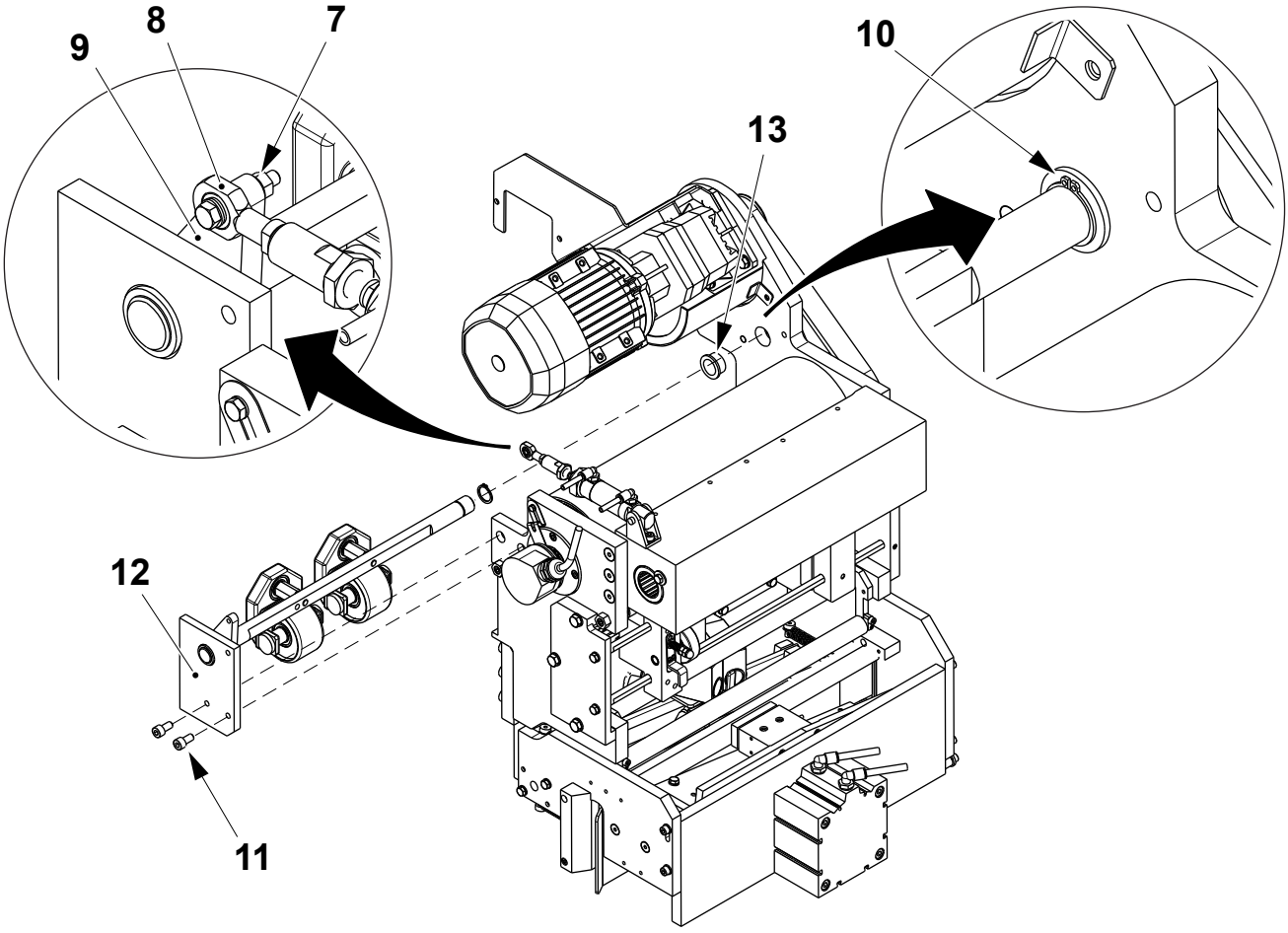

7 Nut
8 Rod end
9 Lever
10 Retaining ring
11 Screw
12 Counter roller assembly
13 Flange bearing

(Cont'd)

TechPub_2614345_0108 - 0701_3048216_01.fm

(Cont'd)

g) Remove the retaining ring (14) and separate the shaft (15) from the plate (16).

h) Change the flange bearing (17).

i) Remove the counter rollers from the shaft (15) by the screw (18)

j) Remove the ball bearings (19) and change them if necessary.

k) Loosen the nut (20) and remove the axle (21).

l) Remove the wheel (22) and change the ball bearings (23) if necessary.

m) Assemble in the reverse.

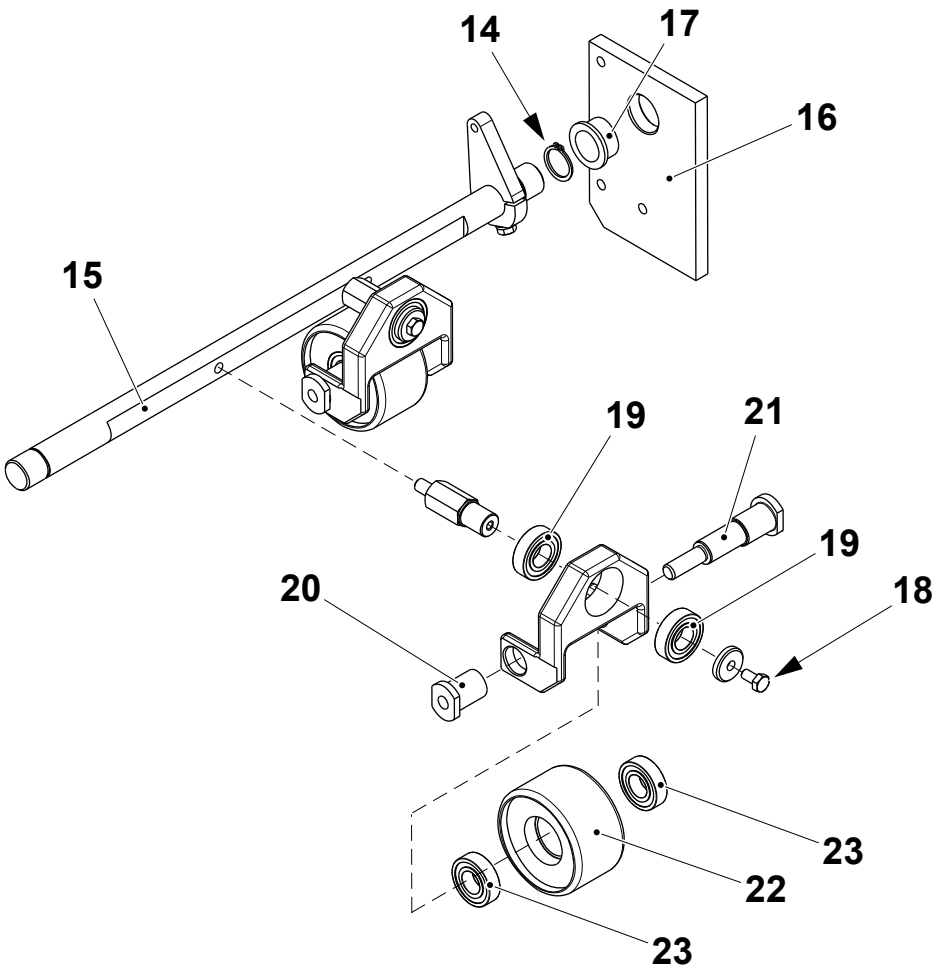

14 Retaining ring
15 Shaft
16 Plate
17 Flange bearing
18 Screw
19 Ball bearing
20 Nut
21 Axle
22 Wheel
23 Ball bearing

TechPub_2614345_0108 - 0701_3048216_01.fm

8.4.5-3 Counter Roller - Set Cylinder

Machine Status	Mains Power OFF Air OFF Steam ON Water OFF
SPC Reference	2806679-0100

When the cylinder (1) is fully retracted, set the distance **A** between the centre of the rod eye (2) and the threaded base (3) by means of the nut (4).

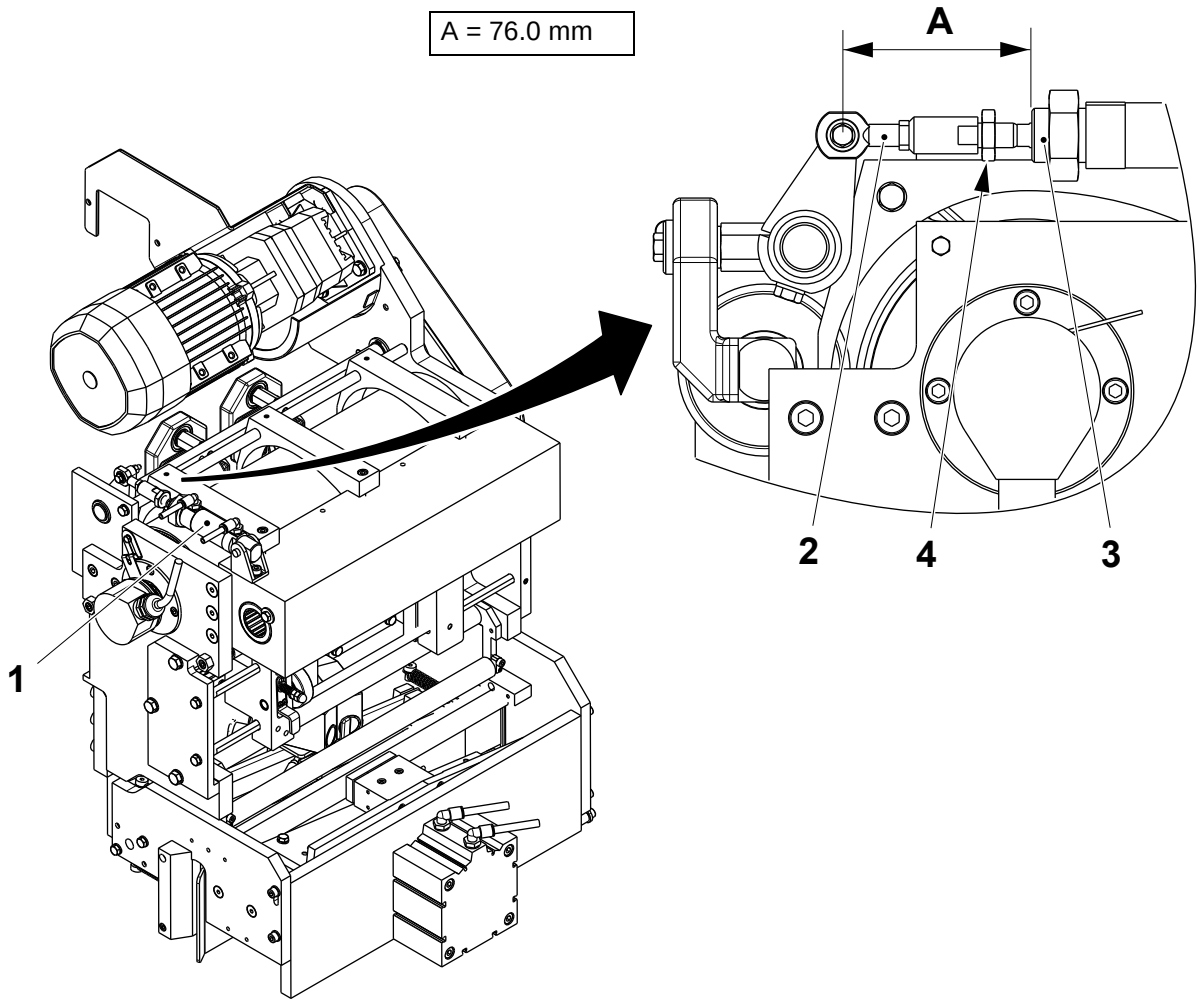

1 Cylinder
2 Rod eye
3 Threaded base
4 Nut

TechPub_2614345_0108 - 0701_3048216_01.fm

8.5 Material Holder

8.5-1 Material Holder - Change Blade

Machine Status	Mains Power OFF Air OFF Steam ON Water OFF
SPC Reference	2731220-0200

Note! The blade (1) must be placed on the blade holder (2) so that the sharp edge cuts the packaging material by moving the slide (3) from RH side to LH side on the cutting table (4), see arrow.

a) Check the sharpness of the blade (1) by moving the slide (3) over a piece of packaging material.

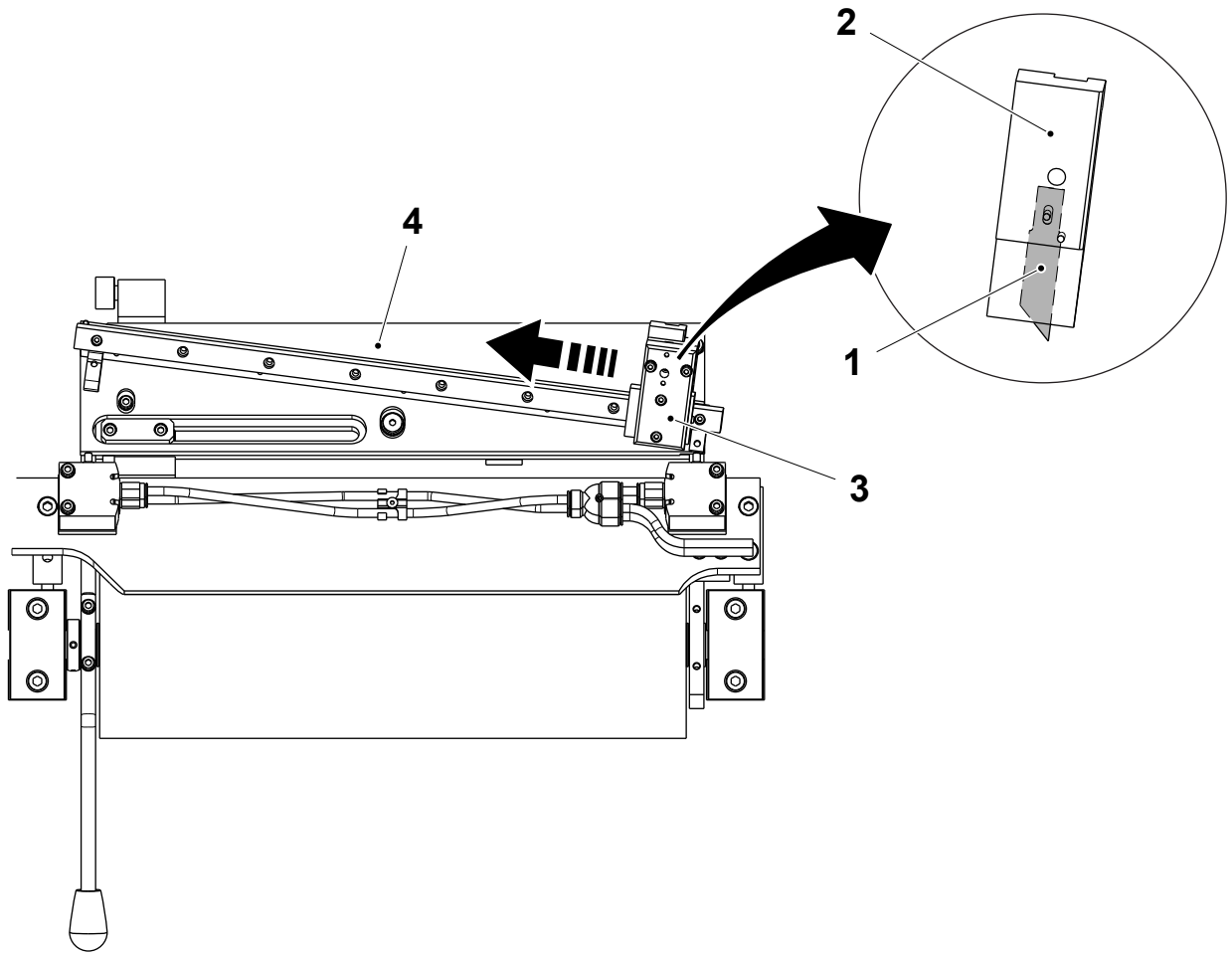

1 Blade
2 Blade holder
3 Slide
4 Cutting table

TechPub_2614345_0108 - 0703_3048217_01.fm

(Cont'd)

(Cont'd)

b) If necessary, change the blade (1):
   - loosen the grub screw (5) and remove the blade holder (2)
   - change the blade (1)
   - clean the blade holder (2) of any packaging material residue
   - assemble in the reverse order.

Note! Check the grub screw (6) is in line with the surface of the blade (1). This grub screw (6) prevents the wrong fitting of the blade (1).

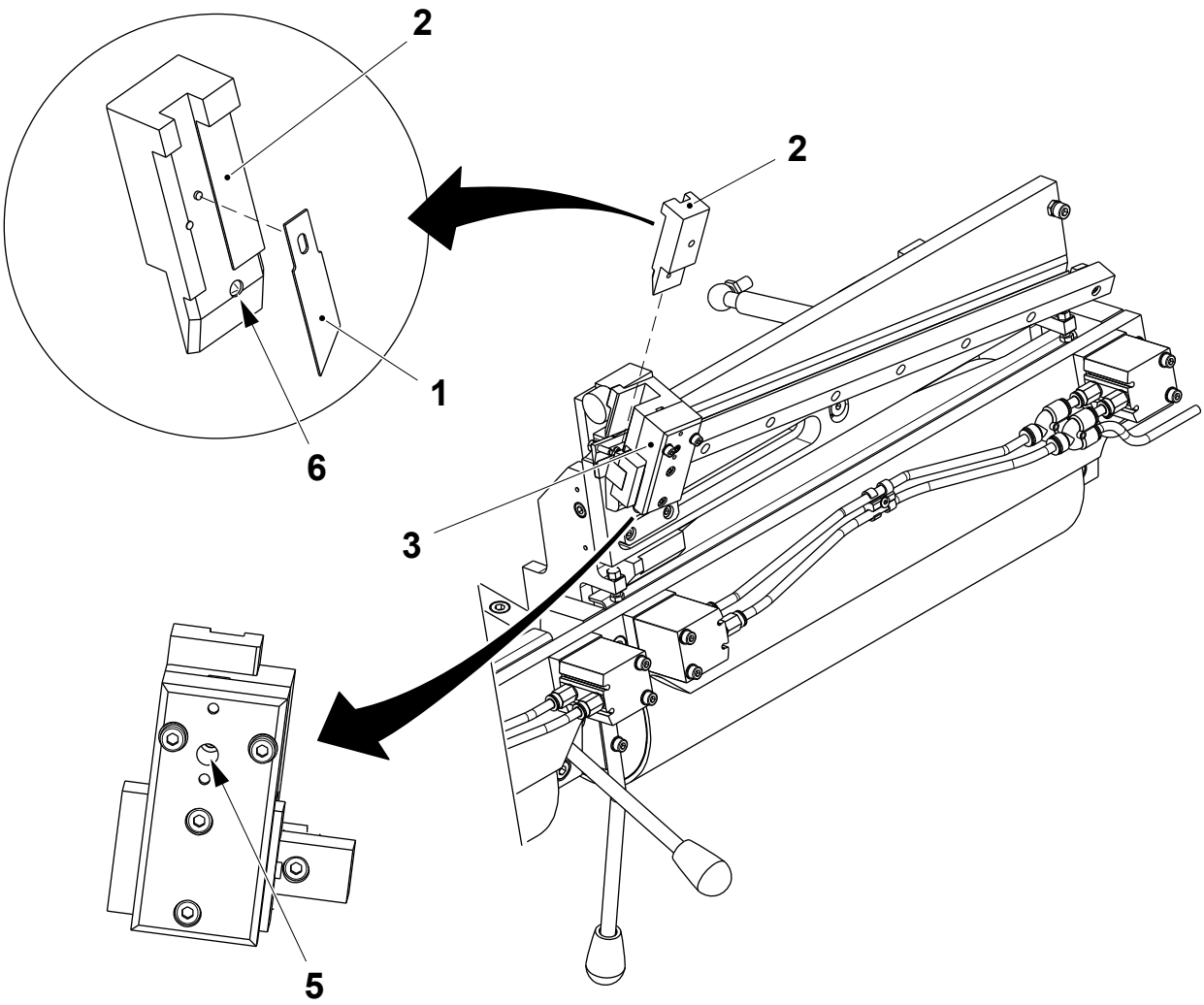

1 Blade
2 Blade holder
3 Slide
5 Grub screw
6 Grub screw

(Cont'd)

TechPub_2614345_0108 - 0703_3048217_01.fm

(Cont'd)

c) Check the distance **A** between the blade (1) and the ruler (7).

d) If necessary, remove the screws (8) and (9) and add or remove shims (10) between the bracket (11) and the runner block (12).

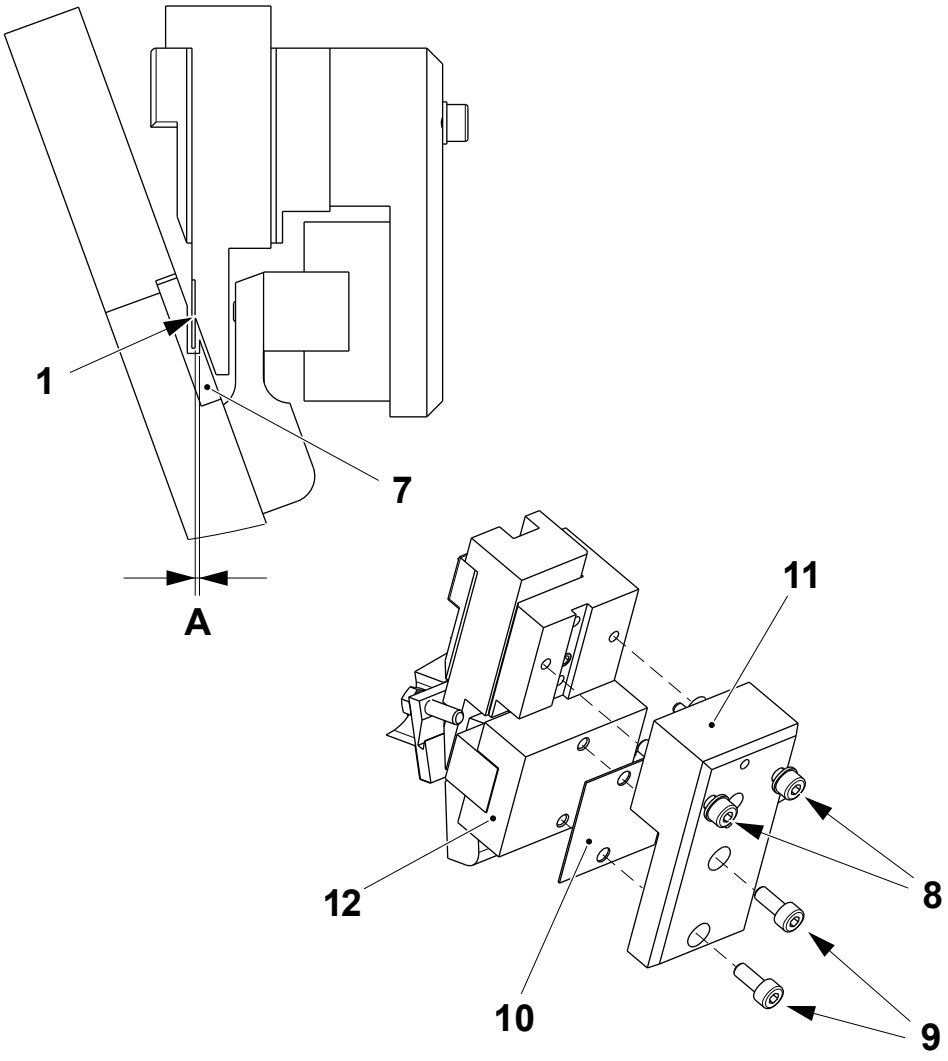

A = 0.2 mm

1 Blade
7 Ruler
8 Screw
9 Screw
10 Shim
11 Bracket
12 Runner block

TechPub_2614345_0108 - 0703_3048217_01.fm

(Cont'd)

(Cont'd)

Reset the Counter

a) In the TPOP panel, touch the MAINTENANCE CONTROL button (1) and enter the password required, see 9.6.3-2 HMI - User Management Log On.

b) Touch the ASU button (2).

c) Touch the PREPARATION DEVICE icon (3).

d) Touch the RESET button (4) to reset the counter for maximum number of splices before replacement.

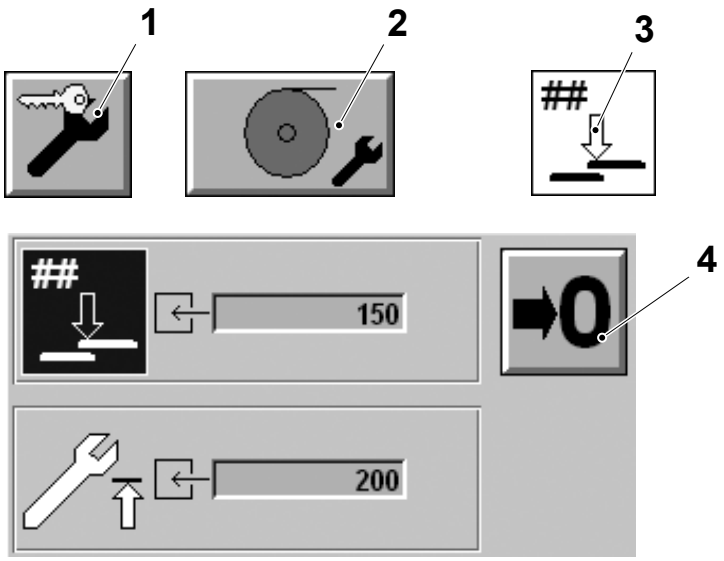

1 Maintenance control button
2 ASU button
3 Preparation device icon
4 Reset button

TechPub_2614345_0108 - 0703_3048217_01.fm

8.5-2 Material Holder - Set Proximity Sensor

Machine Status	Mains Power OFF Air OFF Steam ON Water OFF
SPC Reference	2731220-0200

a) Loosen the nuts (1).

b) Set the distance **A** between the proximity sensor (2) and the bracket (3). Check that the proximity sensor (2) LED is working.

c) Tighten the nuts (1).

A = 1.2 ±0.5 mm

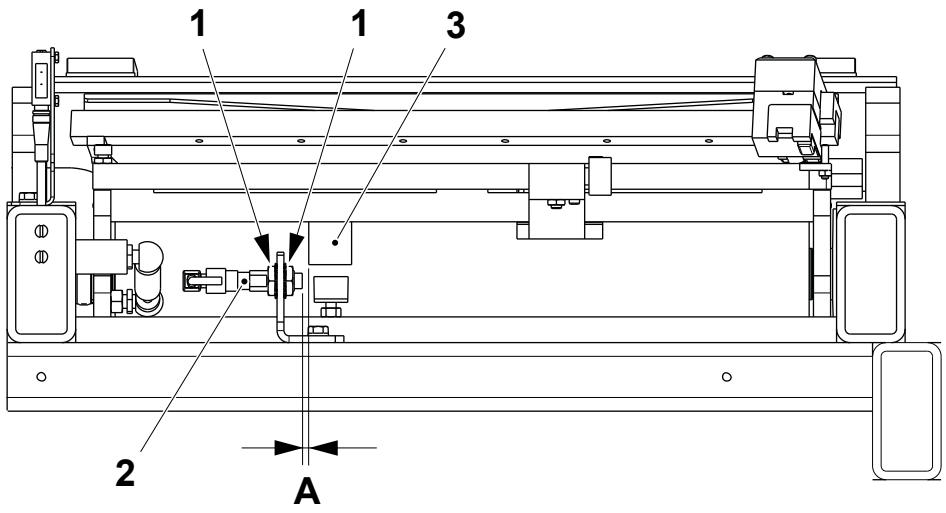

1 Nut
2 Proximity sensor
3 Bracket

TechPub_2614345_0108 - 0703_3048217_01.fm

(Cont'd)

(Cont'd)

d) Set the distance **B** from the frame (4) to the cutting table (5) by the damper (6): this is the lowest position of the cutting table (5).

Note! If the distance B is higher than 7.5 mm the proximity switch will not detect the cutting table presence.

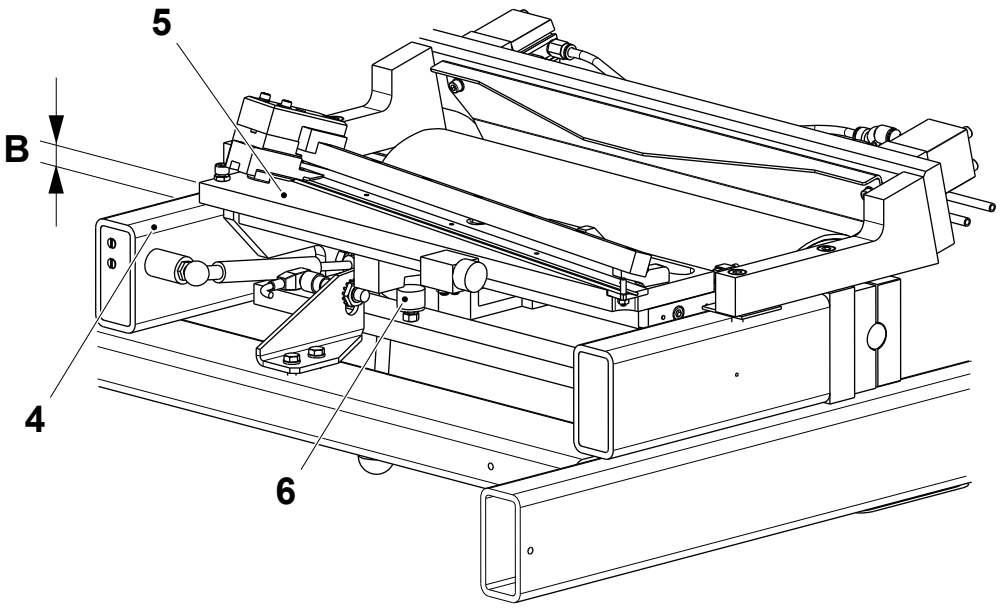

B = 5.5 ±1.0 mm

4 Frame
5 Cutting table
6 Damper

TechPub_2614345_0108 - 0703_3048217_01.fm

8.5-3 Material Holder - Change Ball Bearings

Machine Status	Mains Power OFF Air OFF Steam ON Water OFF
SPC Reference	2731220-0200

a) Use a screwdriver to disconnect the caps (1) and remove the gas spring (2).

b) Remove the screws (3) and the shaft brackets (4).

c) Remove the roller and cutting table assembly (5) and place it on the work bench.

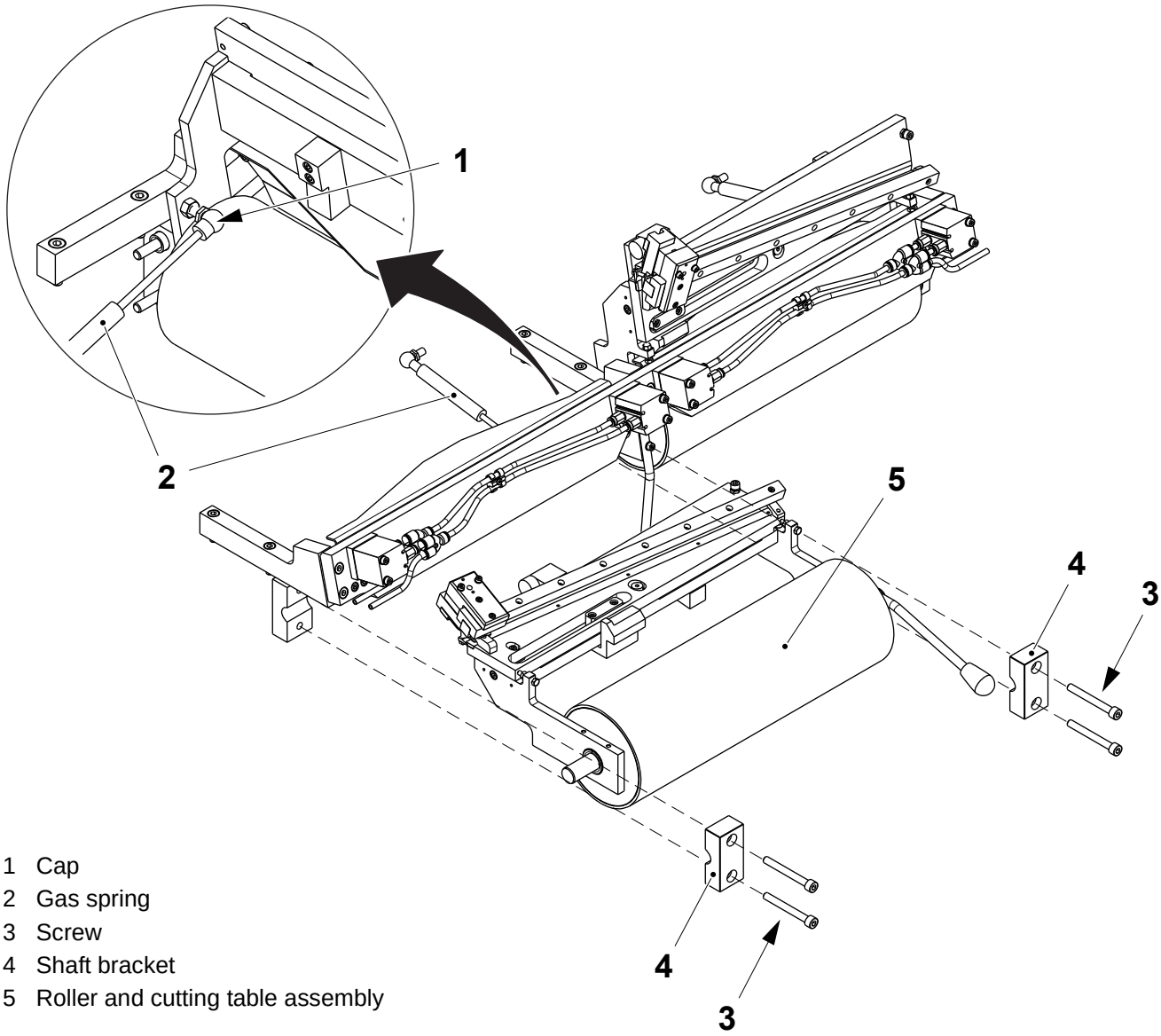

1 Cap
2 Gas spring
3 Screw
4 Shaft bracket
5 Roller and cutting table assembly

(Cont'd)

TechPub_2614345_0108 - 0703_3048217_01.fm

(Cont'd)

d) Loosen the grub screws (6) and remove the spacer (7).

e) Remove the shaft (8) taking care of the spacers (9).

f) Remove the bending roller (10) and change the ball bearings (11).

g) Remove the flange bushings (12) from the brackets (13). Change the flange bushings (12) if necessary.

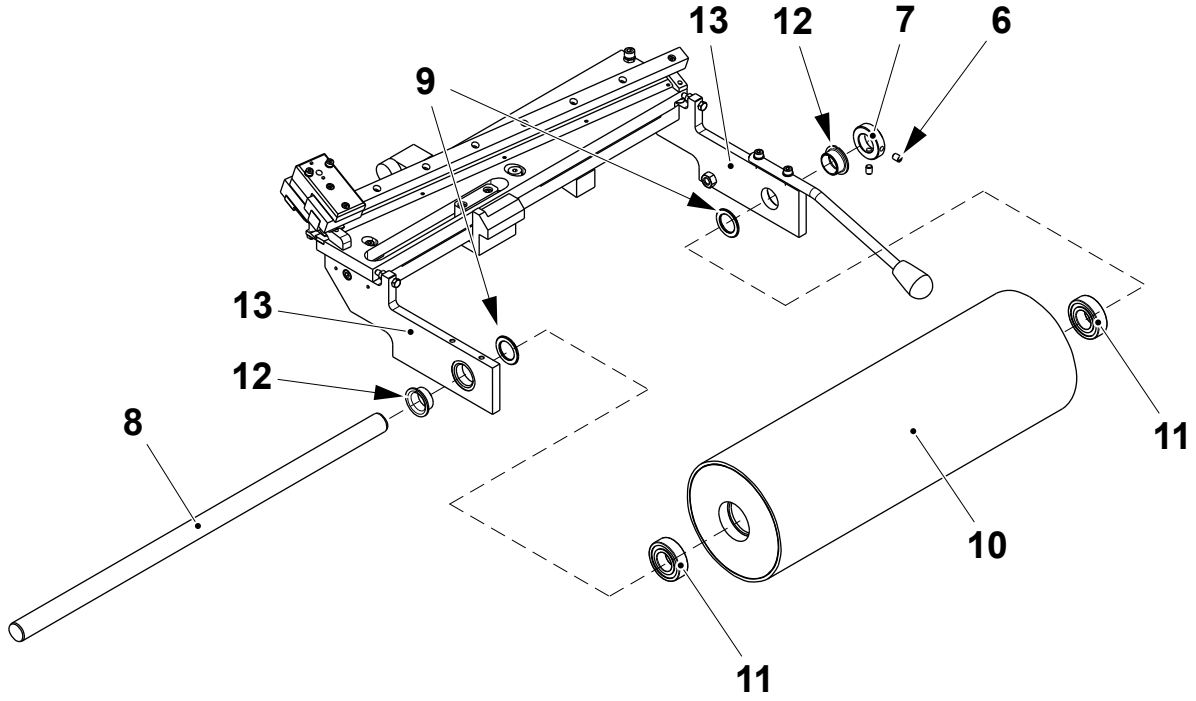

6 Grub screw
7 Spacer
8 Shaft
9 Spacer
10 Bending roller
11 Ball bearing
12 Flange bushing
13 Bracket

(Cont'd)

TechPub_2614345_0108 - 0703_3048217_01.fm

(Cont'd)

h) Assemble in the reverse order.

i) When assembling take care of the following procedures on both the material holders in order to align them correctly:

- make sure that the ends of the shafts (8) mate each other in the middle of the shaft bracket (4)
- push the bracket (13) towards the outer side of the module, see arrows, then move the spacer (7) against the bracket (13) and tighten the grub screw (6).

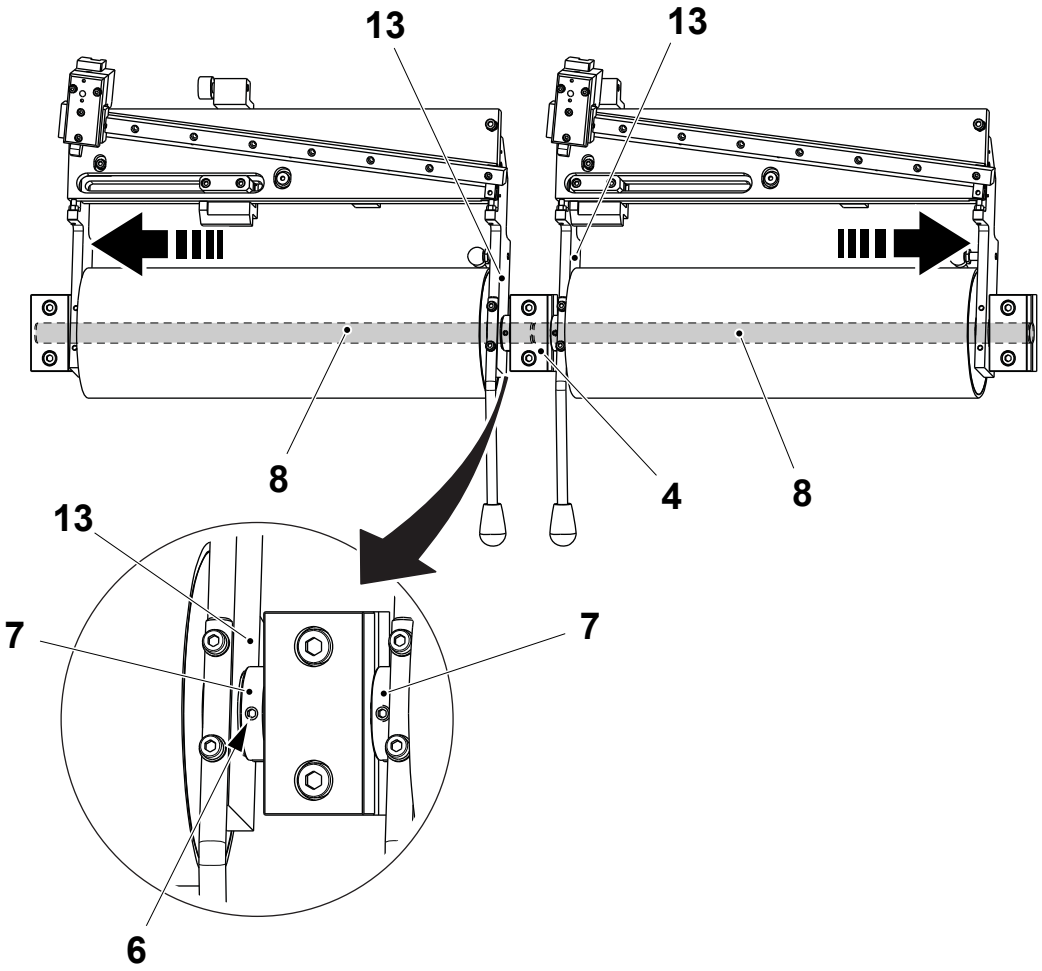

4 Shaft bracket
6 Grub screw
7 Spacer
8 Shaft
13 Bracket

TechPub_2614345_0108 - 0703_3048217_01.fm

8.5-4 Material Holder - Set Cutting Table

Machine Status	PREPARATION
SPC Reference	2731220-0200

Sideways Alignment - Basic Setting

a) Set the paper guide (3), see 8.4.1-4 Paper Guide - Set Position.

b) Thread the packaging material through the material holder (1), the splicing device (4) up to the drive roller of the magazine.

c) Prepare the material holder (2) for the splice without threading the packaging material through.

d) Perform a new splice; the splicing device (4) moves on the material holder (2).

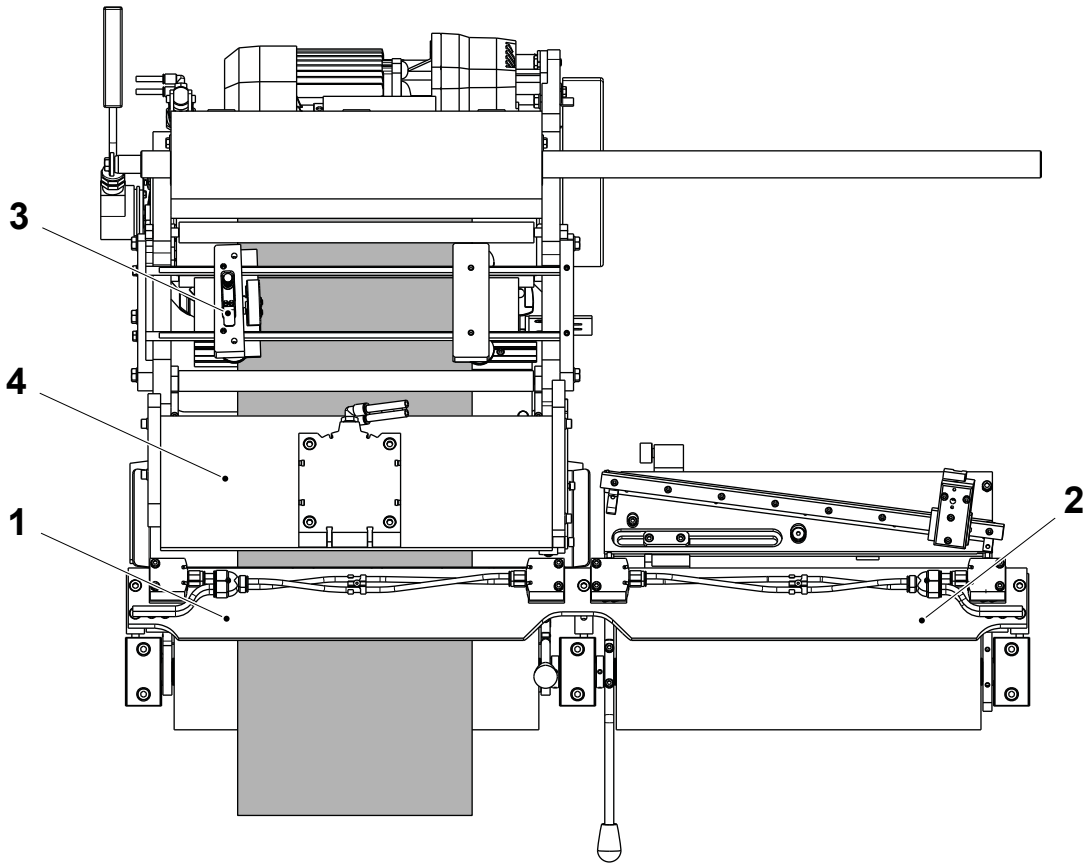

1 Material holder
2 Material holder
3 Paper guide
4 Splicing device

(Cont'd)

TechPub_2614345_0108 - 0703_3048217_01.fm

(Cont'd)

e) Lift the cutting table (5) of the material holder (1).

f) Loosen the screws (6) and move the guide (7) so that the tooth (8) and touch the packaging material edge.

g) Tighten the screws (6).

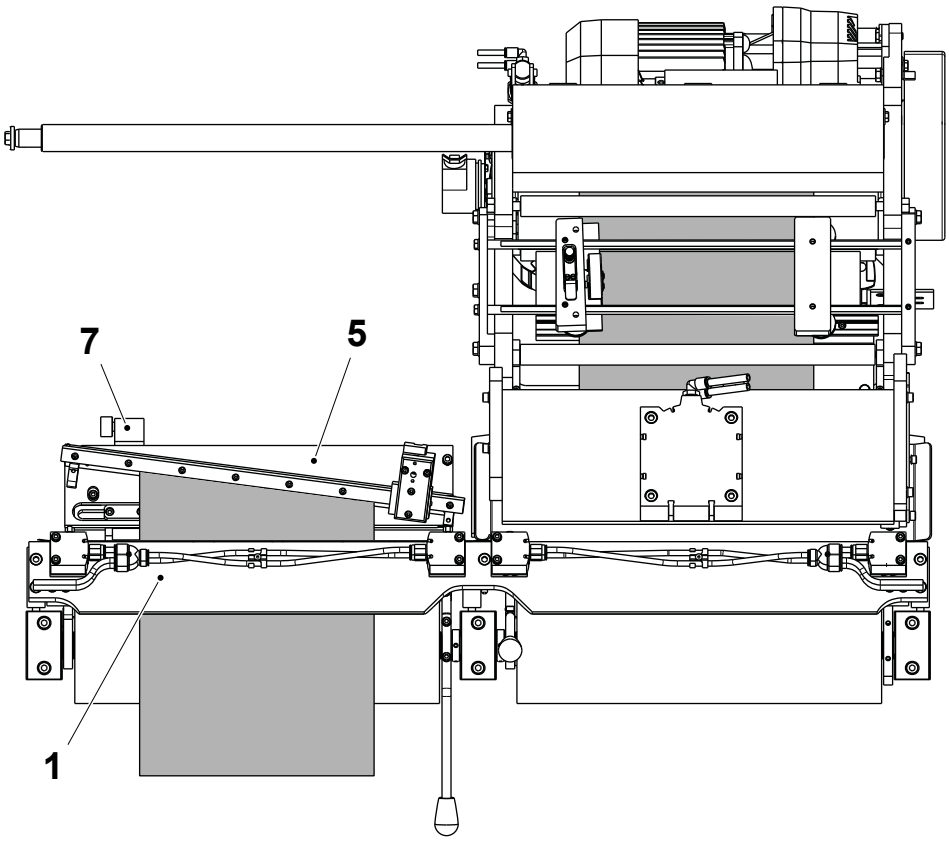

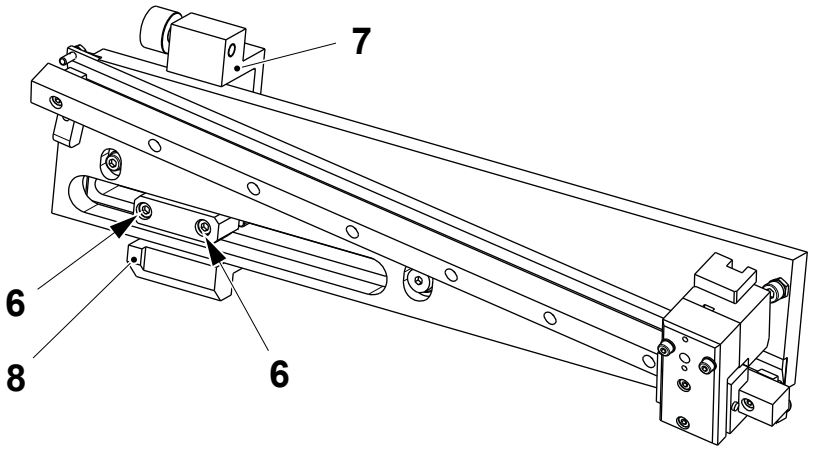

1 Material holder
5 Cutting table
6 Screw
7 Guide
8 Tooth

TechPub_2614345_0108 - 0703_3048217_01.fm

(Cont'd)

Sideways Alignment - Fine Adjustment

a) Loosen the screws (1) and move slightly the guide (2) to set the sideways alignment within the tolerance (distance **A**).

b) Tighten the screws (1).

a) Perform a new splice and check the new sideways alignment is correct.

Note! Check the alignment on the strip application side of the packaging material.

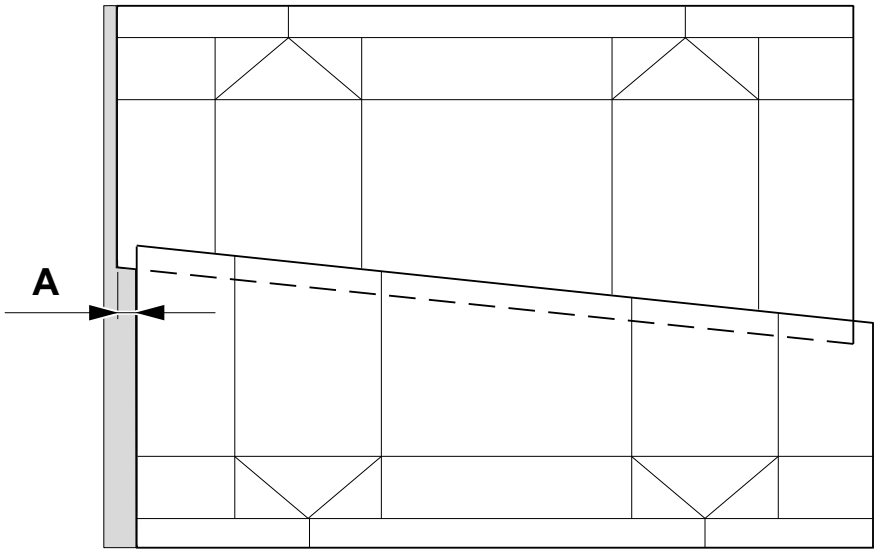

A = 0 ±0.5 mm

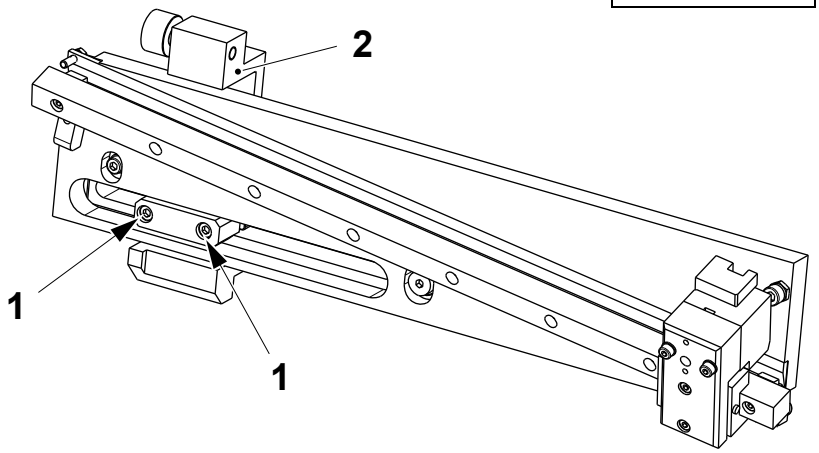

1 Nut
2 Guide

(Cont'd)

TechPub_2614345_0108 - 0703_3048217_01.fm

(Cont'd)

Overlap - Fine Adjustment

a) Loosen the shoulder screw (1) and the screw (2)

b) Adjust the position of the cutting table (3) by means of the screws (4).

c) Tighten the shoulder screw (1) and the screw (2).

d) Tighten the nuts (5).

e) Perform a new splice and check that the new splice overlap is correct (distance **B**).

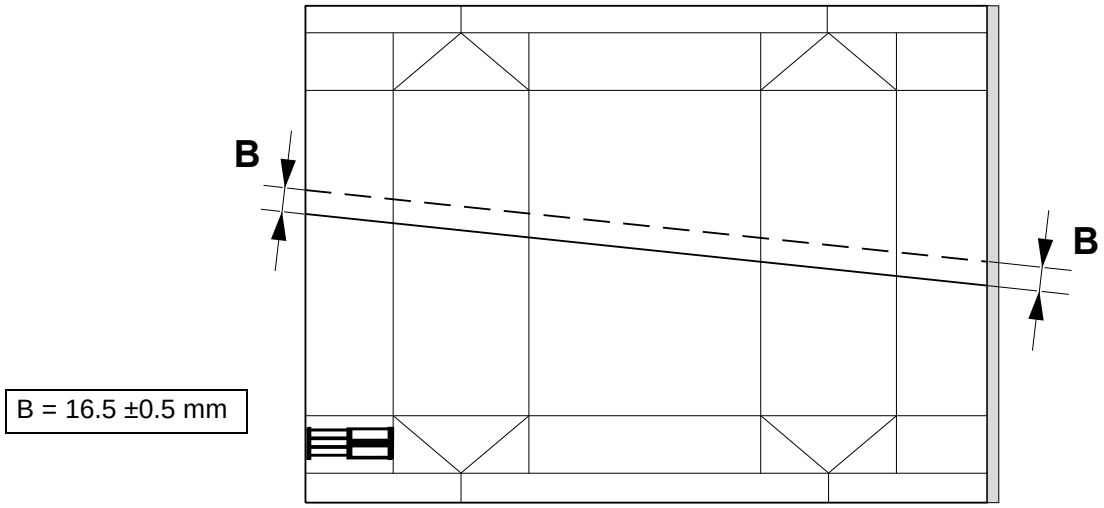

B = 16.5 ±0.5 mm

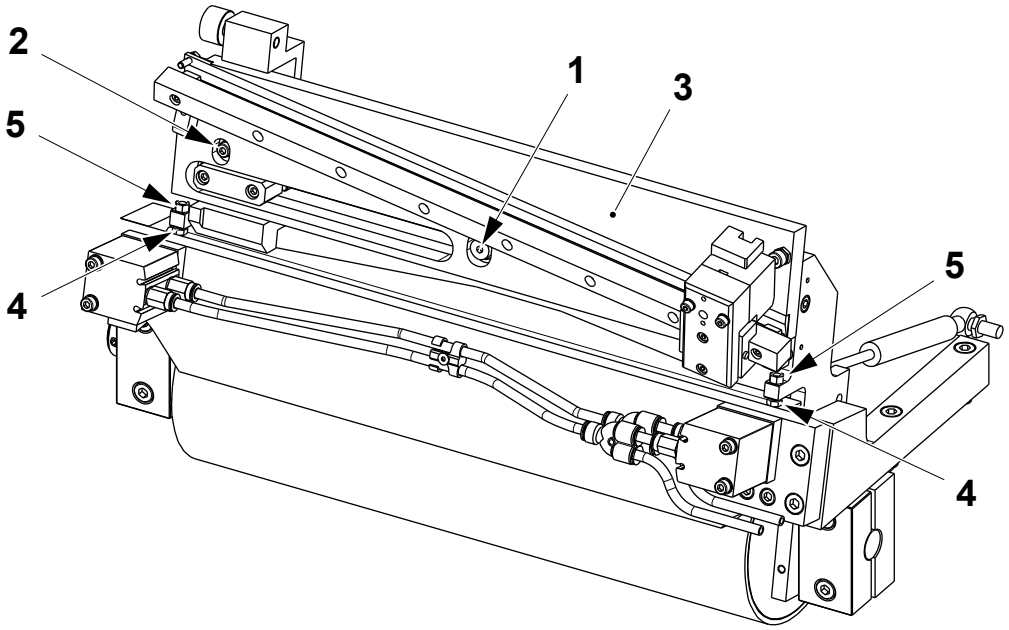

1 Shoulder screw
2 Screw
3 Cutting table
4 Screw
5 Nut

(Cont'd)

TechPub_2614345_0108 - 0703_3048217_01.fm

(Cont'd)

Sealing Parallelism

a) Modify the parallelism as follows: loosen the grub screw (1) and turn the adjusting screw (2) click by click to move the surface that has to be in contact with the packaging material, then tighten the grub screw (1).

b) Perform a new splice and check that the new packaging material web diverges by not more than the distance **C** in 1 metre from the splice.

Note! The packaging material edge (3) is shown as a dashed line. One click of the adjusting screw (2) corresponds to a movement of 1 mm.

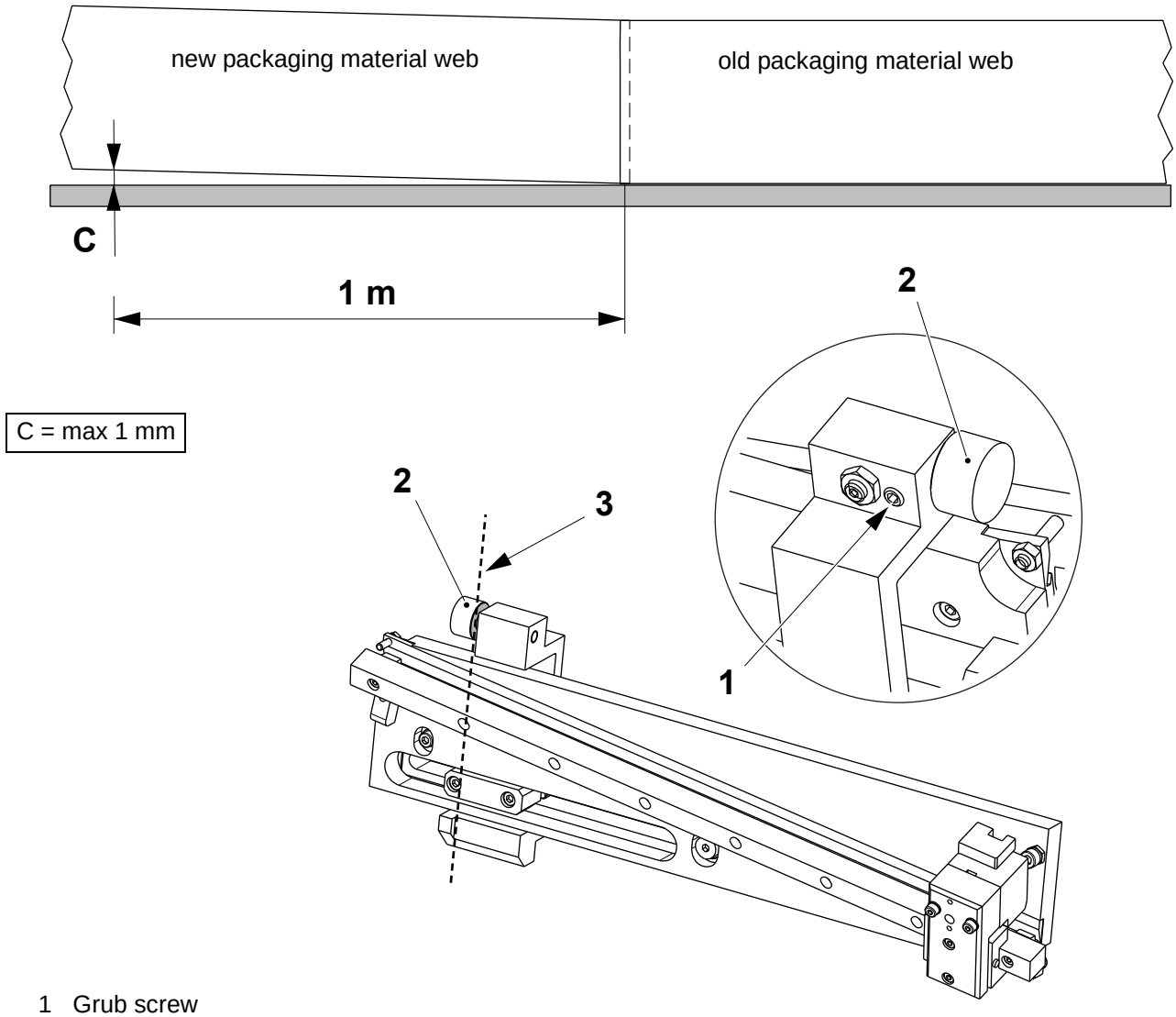

1 Grub screw
2 Adjusting screw
3 Packaging material edge

TechPub_2614345_0108 - 0703_3048217_01.fm

8.5-5 Material Holder - Check Blade Setting

Machine Status	Mains Power OFF Air OFF Steam ON Water OFF
SPC Reference	2731220-0200

Note! The material holder has been updated so that some parts can not be changed between an old and a new cutting table, see arrows. These changes are introduced for Tetra Pak A3/Speed from T-order 21215/00070.

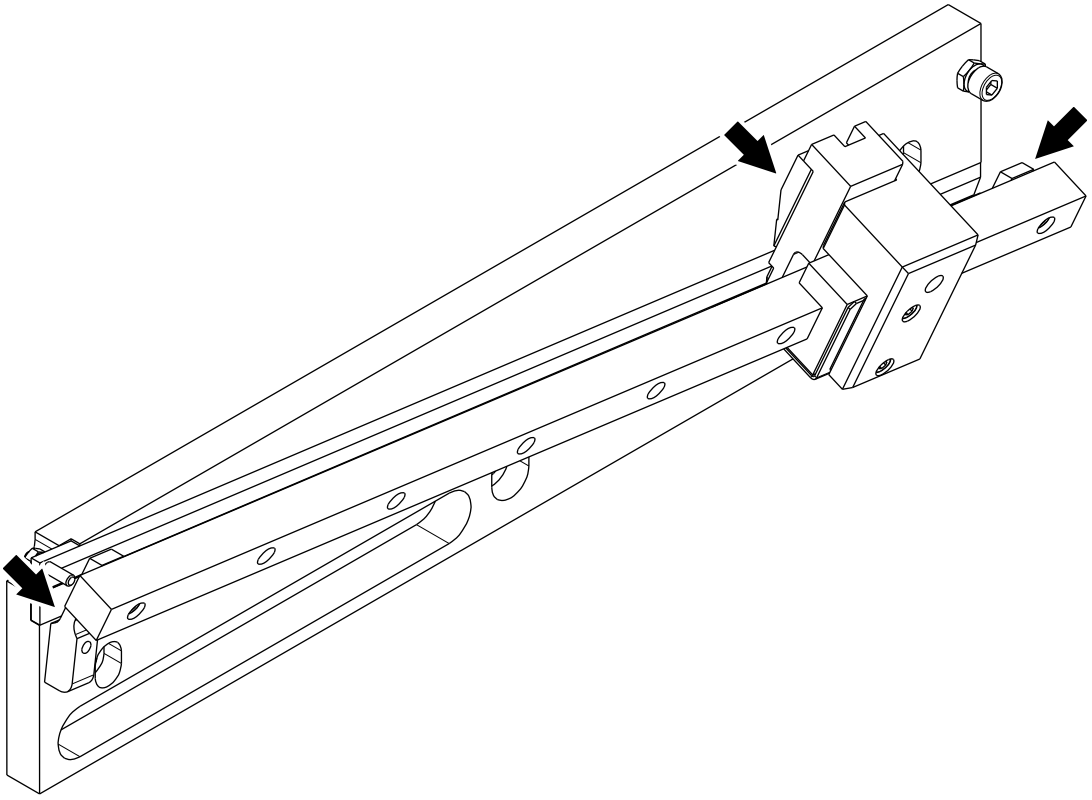

TechPub_2614345_0108 - 0703_3048217_01.fm

(Cont'd)

(Cont'd)

a) Check the distance **A** between the bracket (1) and the ruler (2) on both the RH side and the LH side of the cutting table (3). If necessary, adjust the distance **A** with the washers (4), TP No. 2033-0017, between the guide bar (5) and the two shoes (6).

b) Check the distance **B** between the blade (7) and the ruler (2). If necessary, adjust the distance **B** with the shim (8).

Note! The shim (8) is from the beginning 0.5 mm thick and each layer of the shim (8) is 0.05 mm thick.

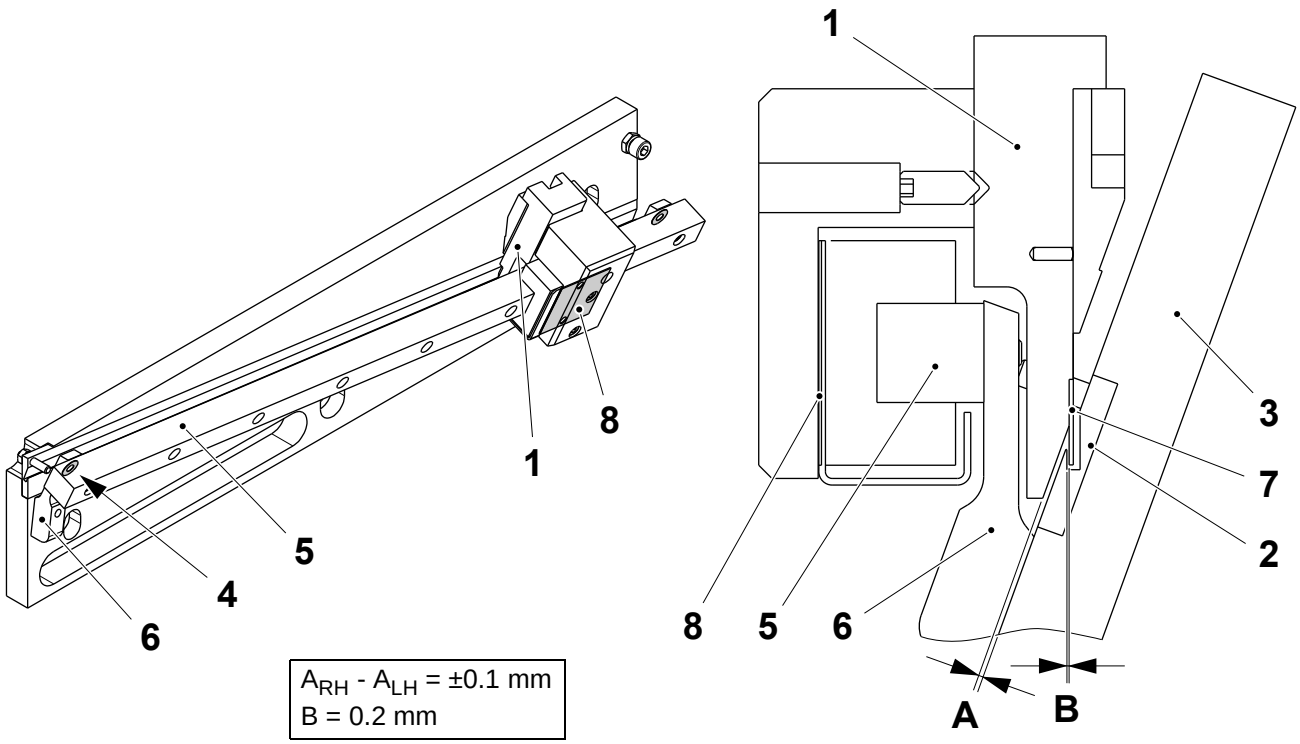

$A_{RH} - A_{LH} = \pm 0.1$ mm
B = 0.2 mm

1 Bracket
2 Ruler
3 Cutting table
4 Washer
5 Guide bar
6 Shoe
7 Blade
8 Shim

TechPub_2614345_0108 - 0703_3048217_01.fm

8.6 Side Feeder

8.6-1 Side Feeder - Referencing

Machine Status	PREPARATION
SPC Reference	2751571-0200 2751571-0300

Note! Perform this procedure after every time a maintenance operation on the side feeder is executed.

Note! Cover the ASU loop photocells by a tape before referencing.

(Cont'd)

TechPub_2614345_0108 - 0703_3048218_01.fm

(Cont'd)

a) In the TPOP panel, touch the MAINTENANCE CONTROL button (1) and enter the password required, see 9.6.3-2 HMI - User Management Log On.

b) Touch the ASU button (2).

c) Touch the SPLICING HEAD HOME POSITION icon (3). The ON/OFF buttons are displayed.

d) Touch the ON button (4) to enable the home position function.

e) Touch the OK button (5) to move the splicing device in home position.

Note! If there is an obstacle in the splicing device stroke, the home position function aborts and a green dot appears on the SPLICING HEAD HOME POSITION icon (3) on the TPOP: in this case remove the obstacle and repeat the procedure.

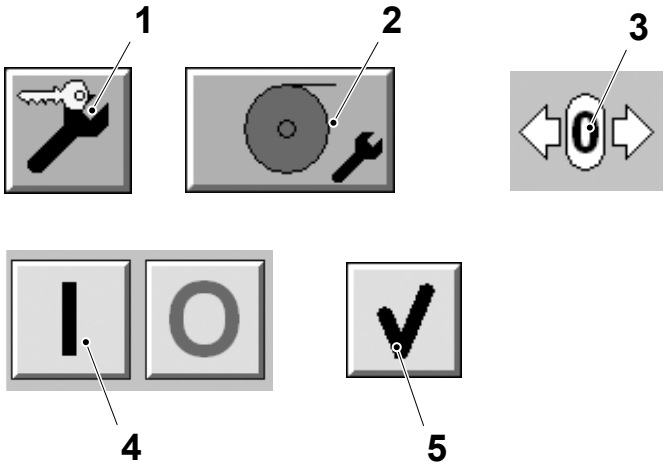

1 Maintenance control button
2 ASU button
3 Splicing head home position icon
4 On button
5 OK button

TechPub_2614345_0108 - 0703_3048218_01.fm

8.6-2 Side Feeder - Change Timing Belt

Machine Status	Mains Power OFF Air OFF Steam ON Water OFF
SPC Reference	2751571-0200 2751571-0300

a) Remove the cover (1) by the captive screws (2).
b) Loosen the screws (3).
c) Loosen the nut (4) and remove the threaded bar (5).
d) Loosen the screws (6) and remove the plates (7).
e) Remove and change the timing belt (8).

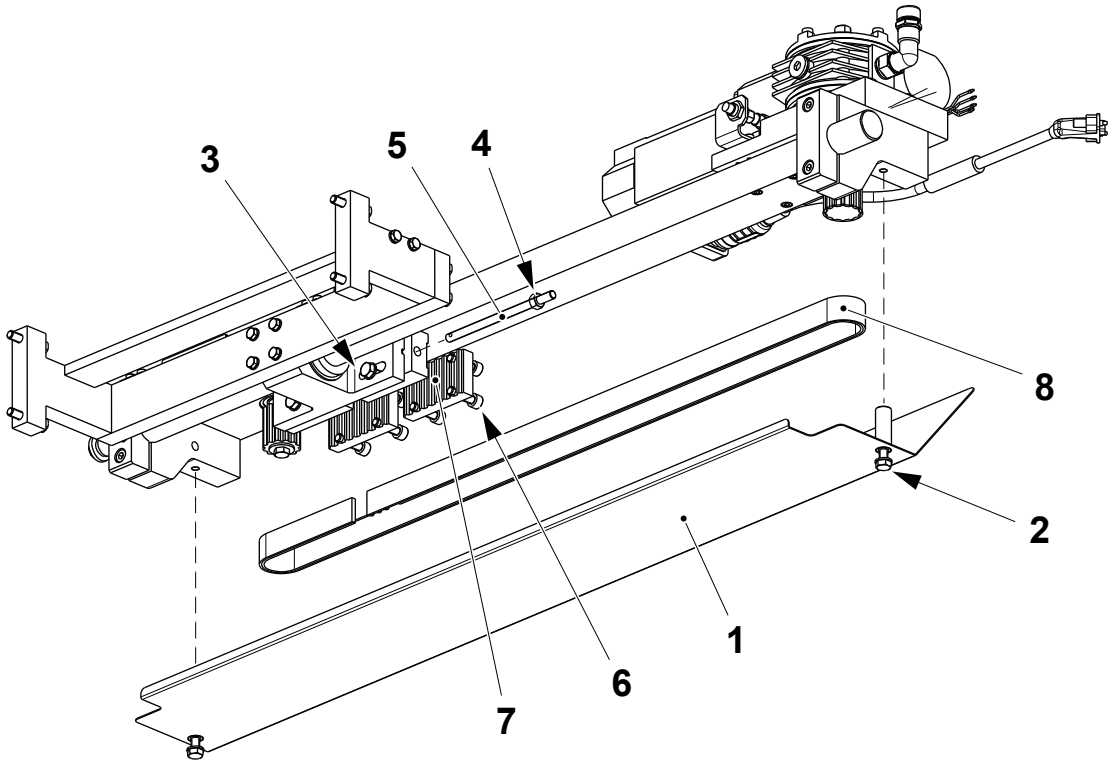

1 Cover
2 Captive screw
3 Screw
4 Nut
5 Threaded bar
6 Screw
7 Plate
8 Timing belt

(Cont'd)

TechPub_2614345_0108 - 0703_3048218_01.fm

(Cont'd)

f) Assemble in the reverse order.

g) Set the timing belt tension, see 8.6-3 Side Feeder - Check Timing Belt Tension.

h) Set the home position of the splicing device, see 8.6-1 Side Feeder - Referencing.

TechPub_2614345_0108 - 0703_3048218_01.fm

8.6-3 Side Feeder - Check Timing Belt Tension

Machine Status	Mains Power OFF Air OFF Steam ON Water OFF
Special Equipment	Tensiometer TP No. 90600-3415
SPC Reference	2751571-0200 2751571-0300

Remove the cover (1) by the captive screws (2) and check the tension of the timing belt (3) by means of a tensiometer:

a) Position the end of the tensiometer sensor 10 mm from the timing belt (3).

b) Press the reset icon on the tensiometer.

c) Tap the timing belt (3) with a screw driver or similar tool. Record the reading from the tensiometer.

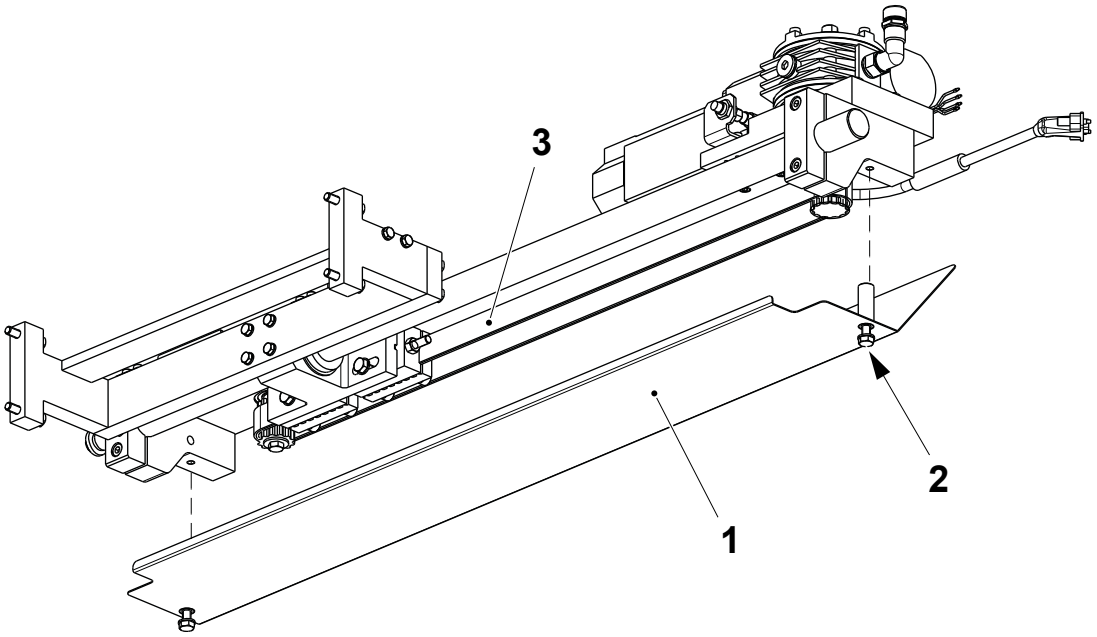

1 Cover
2 Captive screw
3 Timing belt

(Cont'd)

TechPub_2614345_0108 - 0703_3048218_01.fm

(Cont'd)

If the reading is outside the 32-33 Hz range the drive belt tension requires adjustment. Proceed as follows:

a) Loosen the screws (4).

b) Tighten or loosen the hexagonal nut (5) by small increments:
   – loosening the nut decreases the timing belt (3) tension
   – tightening the nut increases the timing belt (3) tension.

c) Tighten the screws (4).

d) Assemble in the reverse order.

e) Set the home position of the splicing device, see 8.6-1 Side Feeder - Referencing.

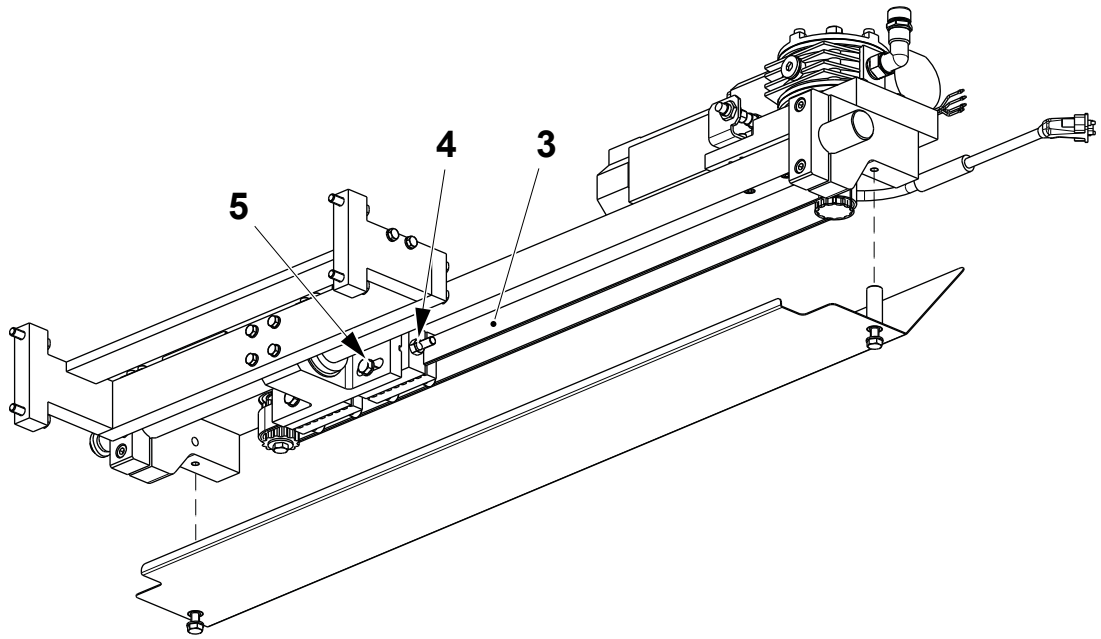

3 Timing belt
4 Screw
5 Nut

TechPub_2614345_0108 - 0703_3048218_01.fm

8.6-4 Side Feeder - Overhaul

Machine Status	Mains Power OFF Air OFF Steam ON Water OFF
Special Equipment	Rope
SPC Reference	2751571-0200 2751571-0300

Change Ball Bearings

a) Remove the timing belt (1), see 8.6-2 Side Feeder - Change Timing Belt.

b) Remove the screws (2) and the cover (3).

c) Remove the retaining ring (4) and the ball bearing (5). Change the ball bearings (5) if necessary.

1 Timing belt
2 Screw
3 Cover
4 Retaining ring
5 Ball bearing

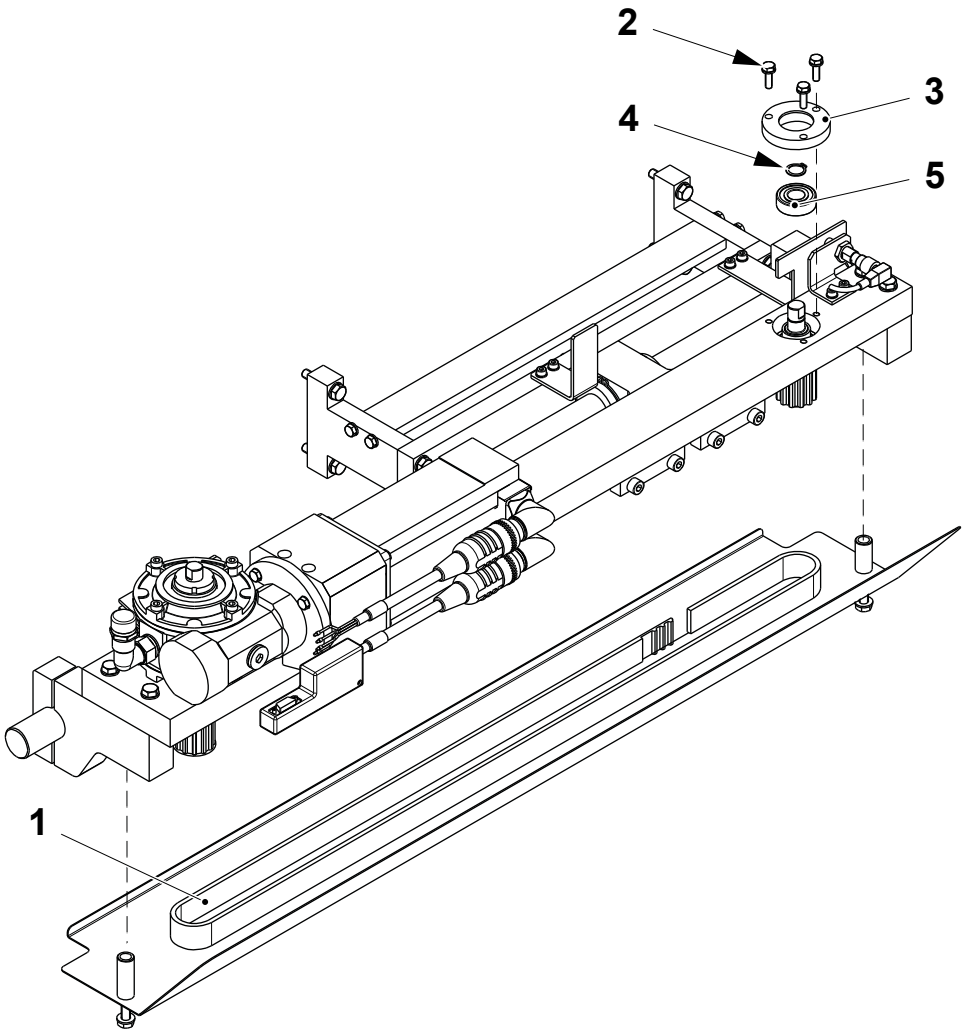

TechPub_2614345_0108 - 0703_3048218_01.fm

(Cont'd)

(Cont'd)

d) Remove the screw (6) and the pulley (7).

e) Remove the screws (8) and pull out the shaft (9).

f) Remove the spacer (10) and the ball bearing (11). Change the ball bearing (11) if necessary.

g) Assemble in the reverse order.

h) Set the home position of the splicing device, see 8.6-1 Side Feeder - Referencing.

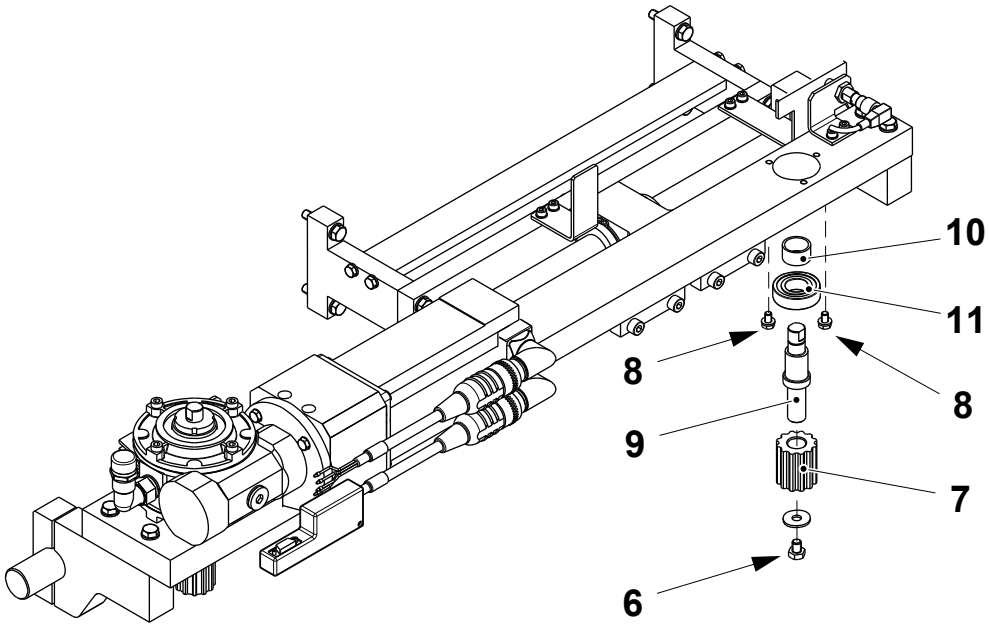

6 Screw
7 Pulley
8 Screw
9 Shaft
10 Spacer
11 Ball bearing

(Cont'd)

TechPub_2614345_0108 - 0703_3048218_01.fm

(Cont'd)

WARNING

Risk of crushing.

Secure the splicing device (2) to the ASU frame using a rope. When the splicing device (2) is separated from the side feeder (3), it swings freely on the shaft (4).

Change Linear Bushing

a) Remove the screws (1) to separate the splicing device (2) from the side feeder (3).

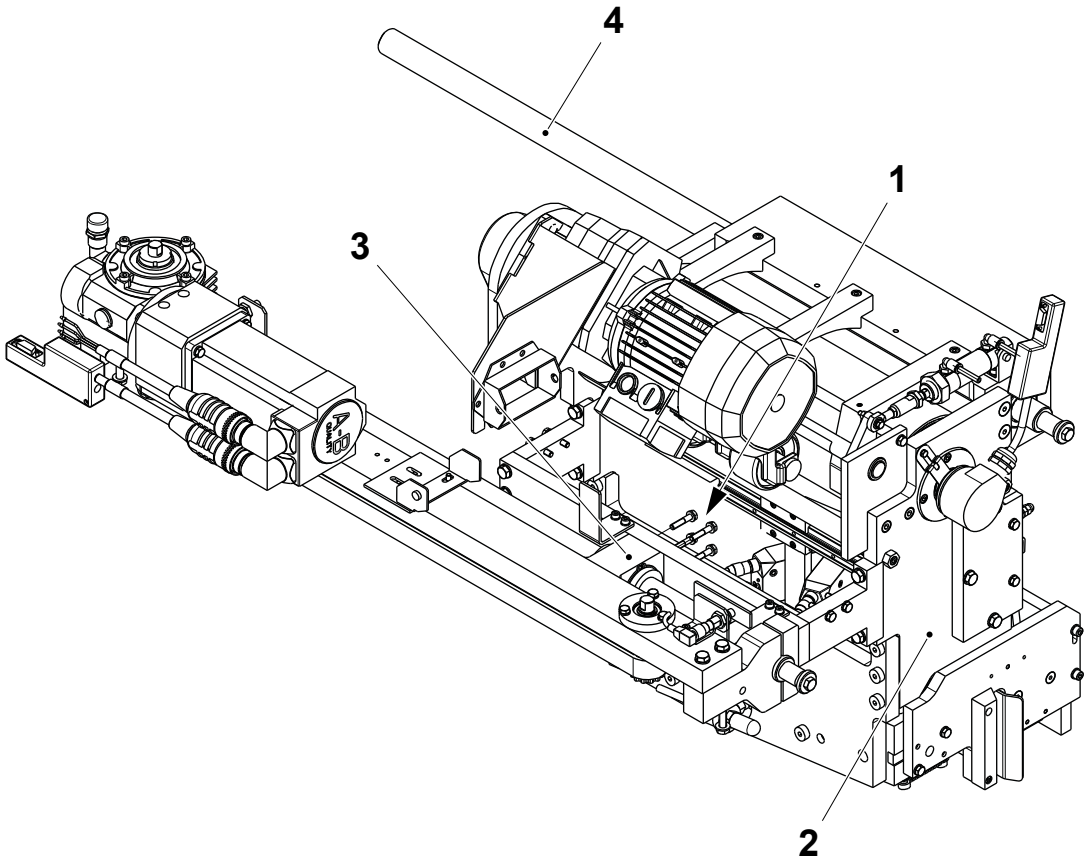

1 Screw
2 Splicing device
3 Side feeder

(Cont'd)

TechPub_2614345_0108 - 0703_3048218_01.fm

(Cont'd)

b) Remove the screw (4).
c) Remove the covering panel (5).
d) Loosen the screws (6).
e) Slip off the shaft (7) beyond the bushing support (8).
f) Remove the retaining ring (9) and change the linear bushing (10).
g) Assemble in the reverse order.
h) Set the home position of the splicing device, see 8.6-1 Side Feeder - Referencing.

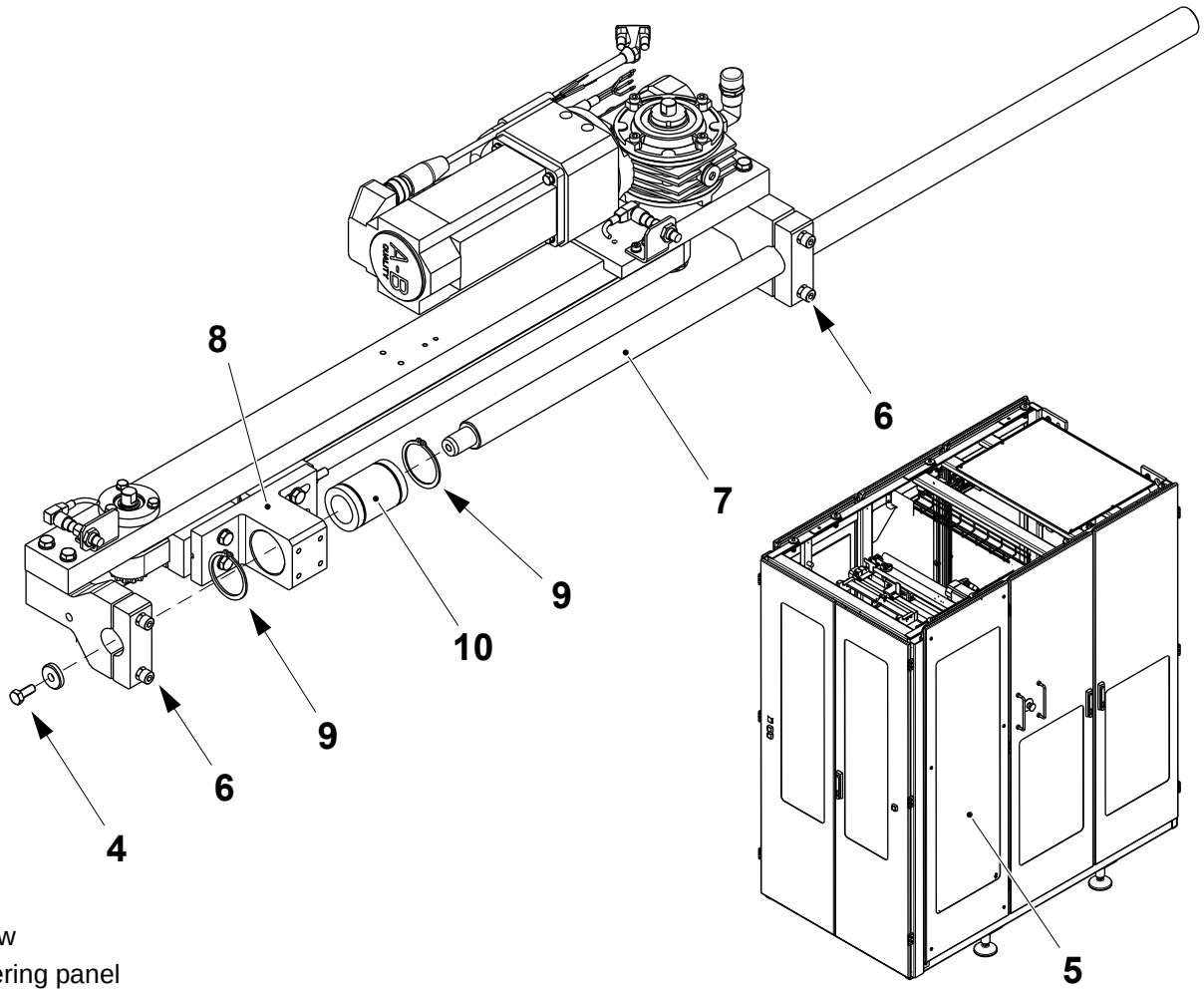

4 Screw
5 Covering panel
6 Screw
7 Shaft
8 Bushing support
9 Retaining ring
10 Linear bushing

(Cont'd)

TechPub_2614345_0108 - 0703_3048218_01.fm

(Cont'd)

Change Worm Gear

a) Remove the timing belt, see 8.6-2 Side Feeder - Change Timing Belt.

b) Disconnect the two motor cables (1).

Note! The previously used motor (4) have three motor cables (1).

c) Remove the screws (2) and move the worm gear (3) with the motor (4) and the pulley (5) on the work bench.

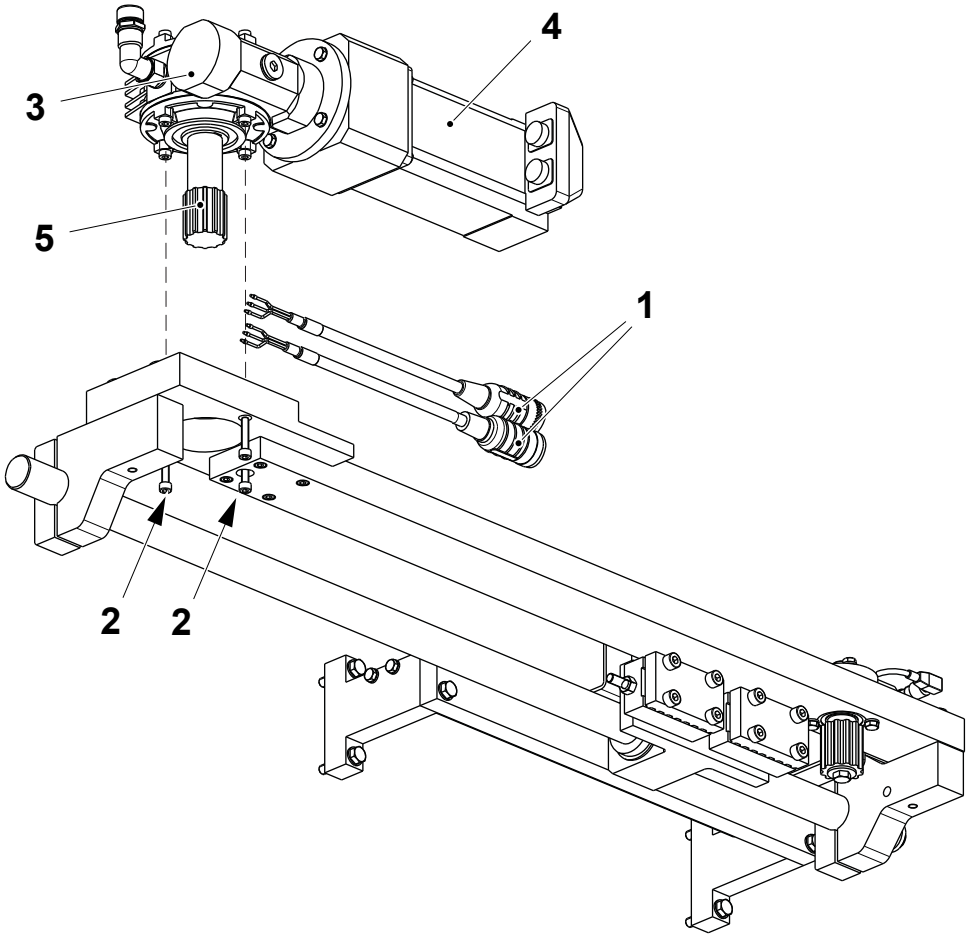

1 Cables
2 Screw
3 Worm gear
4 Motor
5 Pulley

(Cont'd)

TechPub_2614345_0108 - 0703_3048218_01.fm

(Cont'd)

d) On the work bench, remove the clamping element (6) and slip off the pulley (5).

e) Remove the screws (7) and the worm gear (3).

f) Remove the screws (8) and the flange (9).

g) Remove the coupling (10) and the shaft (11).

h) Assemble in the reverse order, tightening the clamping element with a torque of 95 N.

Note! When assembling, take care that the coupling (10) is beating on the motor (4) and the shaft (11) is beating on the coupling (10).

i) Set the home position of the splicing device, see 8.6-1 Side Feeder - Referencing.

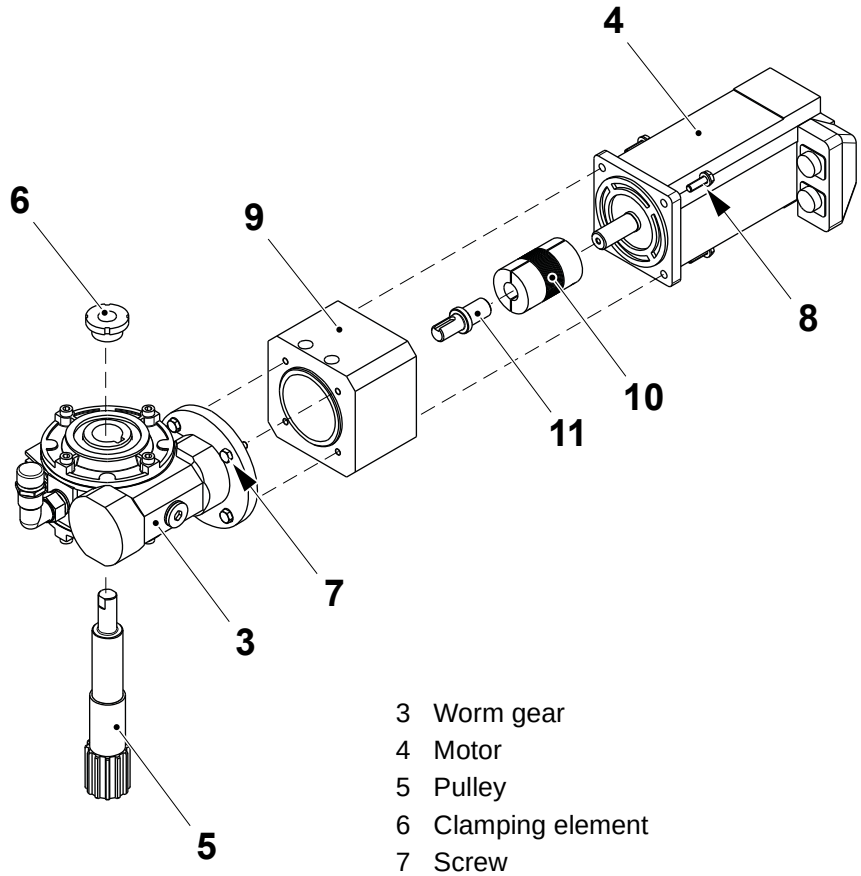

3 Worm gear
4 Motor
5 Pulley
6 Clamping element
7 Screw
8 Screw
9 Flange
10 Coupling
11 Shaft

TechPub_2614345_0108 - 0703_3048218_01.fm

8.7 Pneumatic Panel

SPC Reference	2790920-0100

8.7-1 Pneumatic Panel - Set Pressure Switch

Machine Status	Mains Power ON Air ON Steam ON Water OFF
SPC Reference	2790920-0100

a) Press the EDIT button (1) and select "A" with the UP button (2) or the DOWN button (3).

b) Press the EDIT button (1) and select "THRESHOLD COMPARATOR" with the UP button (2) or the DOWN button (3).

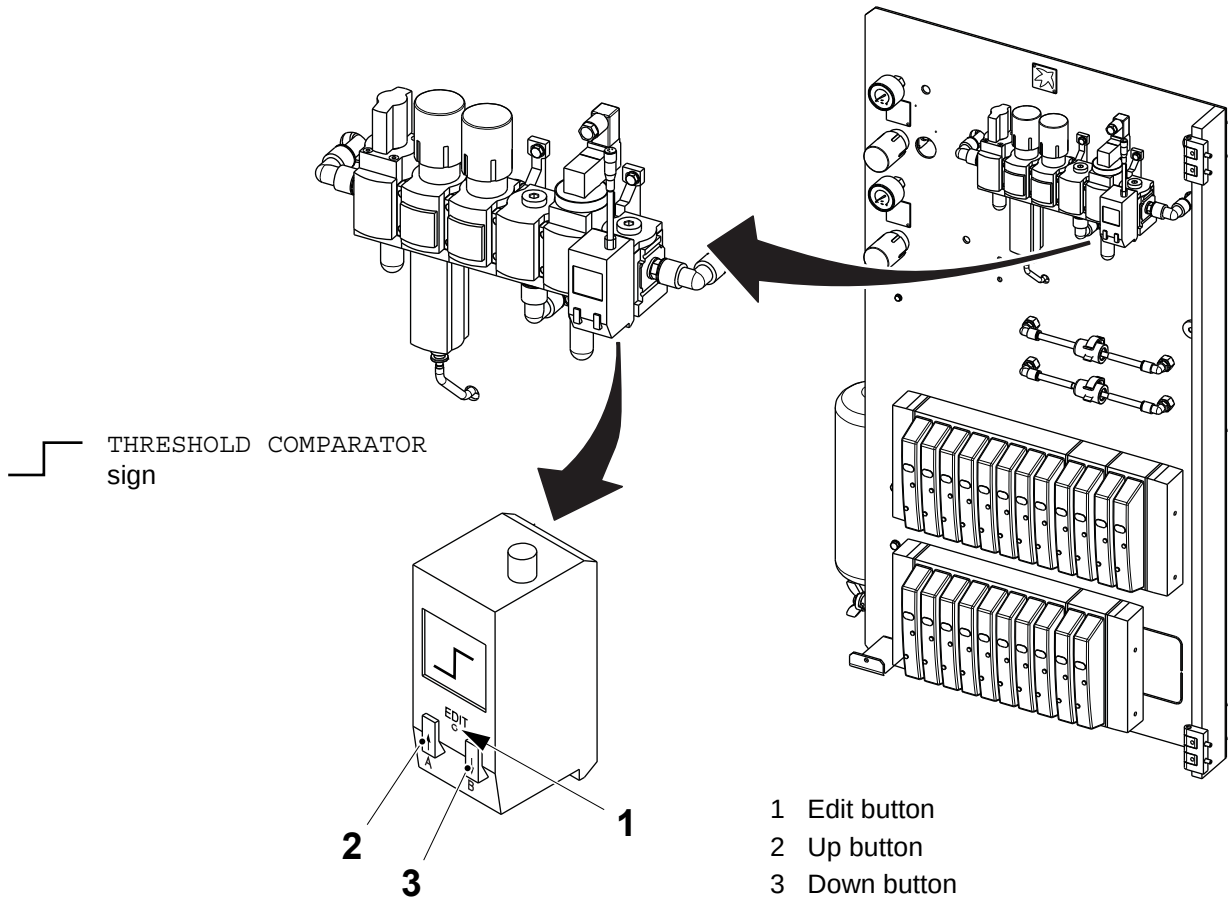

1 Edit button
2 Up button
3 Down button

TechPub_2614345_0108 - 0703_3048219_01.fm

(Cont'd)

(Cont'd)

c) Press the EDIT button (1) and set "SP" (SWITCHING PRESSURE), to 4.5 bar with the UP button (2) or the DOWN button (3).

d) Press the EDIT button (1) and set "HY" (HYSTERESIS), to 0 with the UP button (2) or the DOWN button (3).

e) Press the EDIT button (1) and select "NC" (NORMALLY CLOSED CONTACT), with the UP button (2) or the DOWN button (3).

f) Press the EDIT button (1).

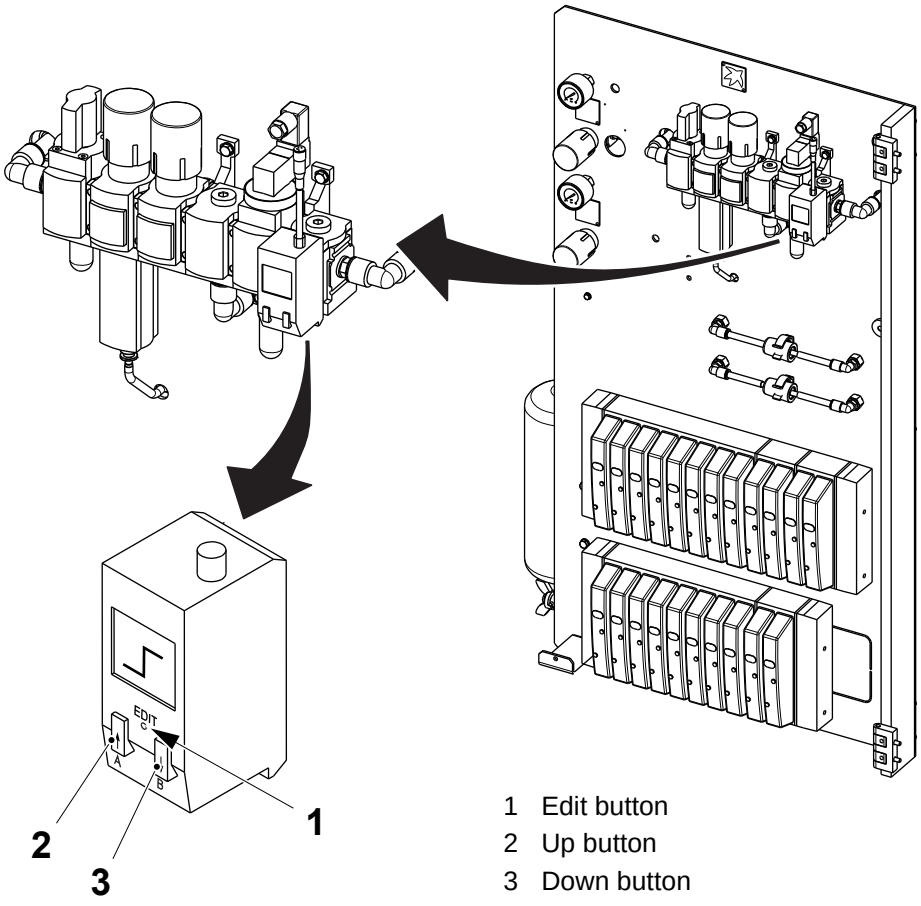

1 Edit button
2 Up button
3 Down button

TechPub_2614345_0108 - 0703_3048219_01.fm

8.7-2 Pneumatic Panel - Change Filters

Machine Status	Mains Power OFF Air OFF Steam ON Water OFF
SPC Reference	2790920-0100

SA Inductor Air Filters

Check the filters (1) for wear or damage: the filters (1) normally have the white colour. If it is different, change them.

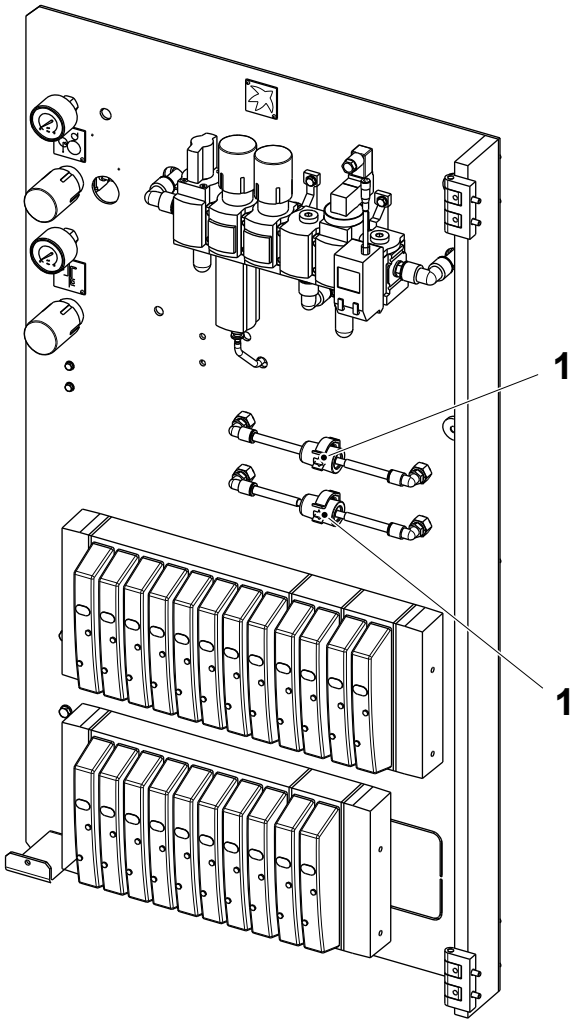

1 Filter

(Cont'd)

TechPub_2614345_0108 - 0703_3048219_01.fm

(Cont'd)

Main Air Pressure Regulator Filter

Remove the reservoir (1) of the main air pressure regulator (2) and change the filter (3).

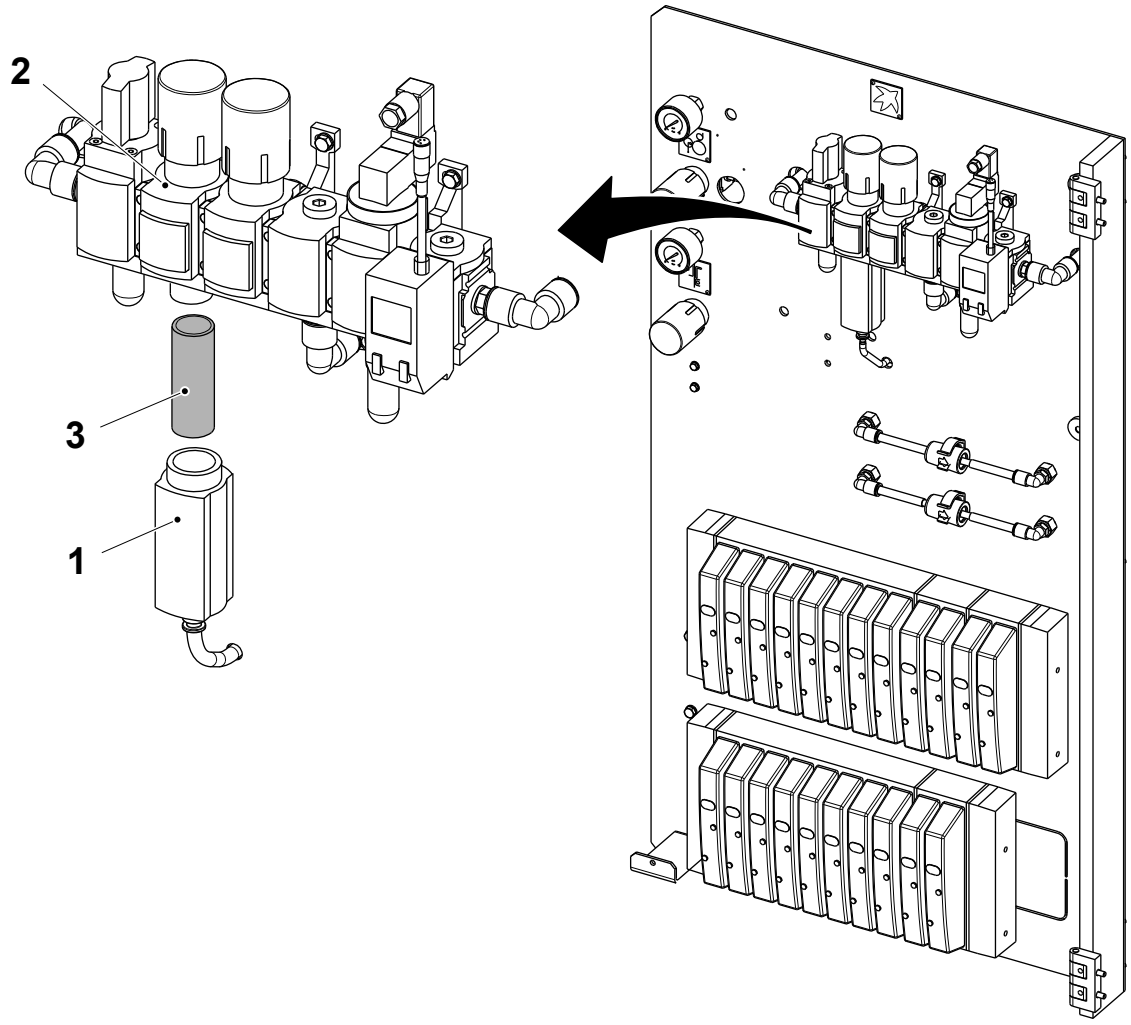

1 Reservoir
2 Pressure regulator
3 Filter

(Cont'd)

TechPub_2614345_0108 - 0703_3048219_01.fm

(Cont'd)

Note! Only valid for machines TBA 1000 S with PT Speed.

Air Nozzle Filter

Check if there is any liquid in the filter reservoir (1). If liquid is present, remove the plug (2) and drain off the liquid.

If necessary, change the filter cartridge (3) as follows:

a) Remove the reservoir (1) from the filter housing (4).

b) Remove the filter holder (5).

c) Change the filter cartridge (3).

d) Assemble in the reverse order.

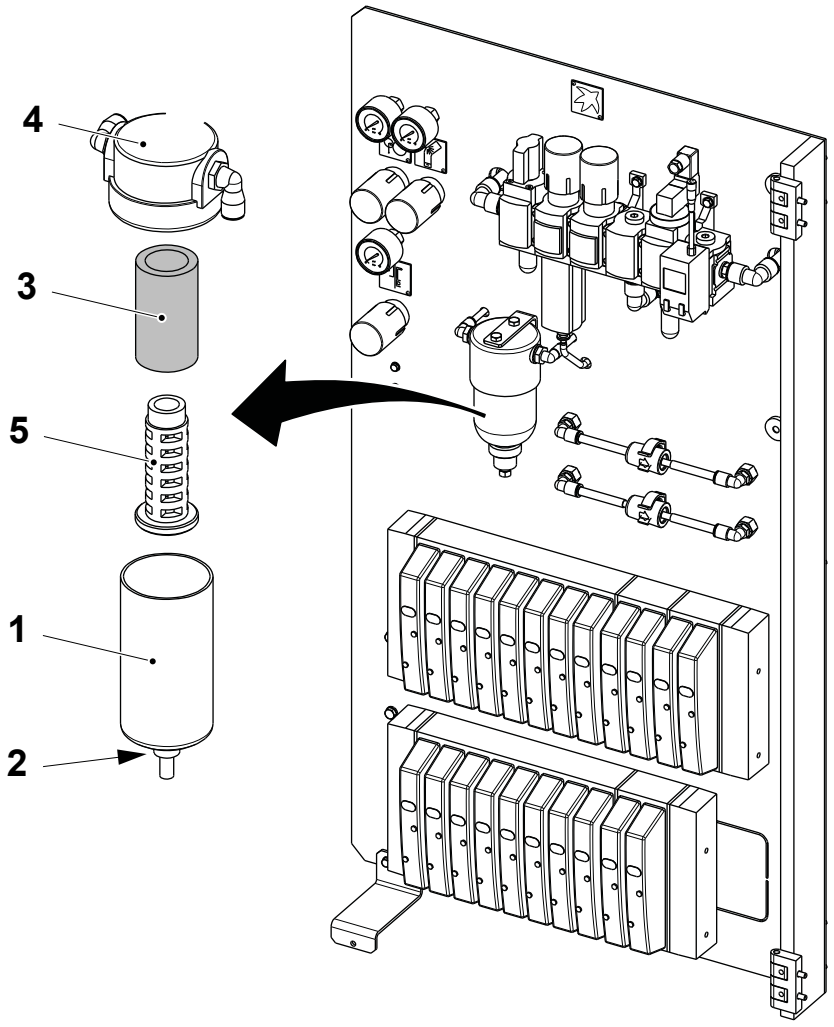

1 Reservoir
2 Plug
3 Filter cartridge
4 Filter housing
5 Filter holder

TechPub_2614345_0108 - 0703_3048219_01.fm

8.7-3 Pneumatic Panel - Set Pilot Valve Pressure

Machine Status	Mains Power OFF Air ON Steam ON Water OFF
SPC Reference	2790920-0100

Set the pilot valve pressure to 4-5 bar with the pressure regulator (1).

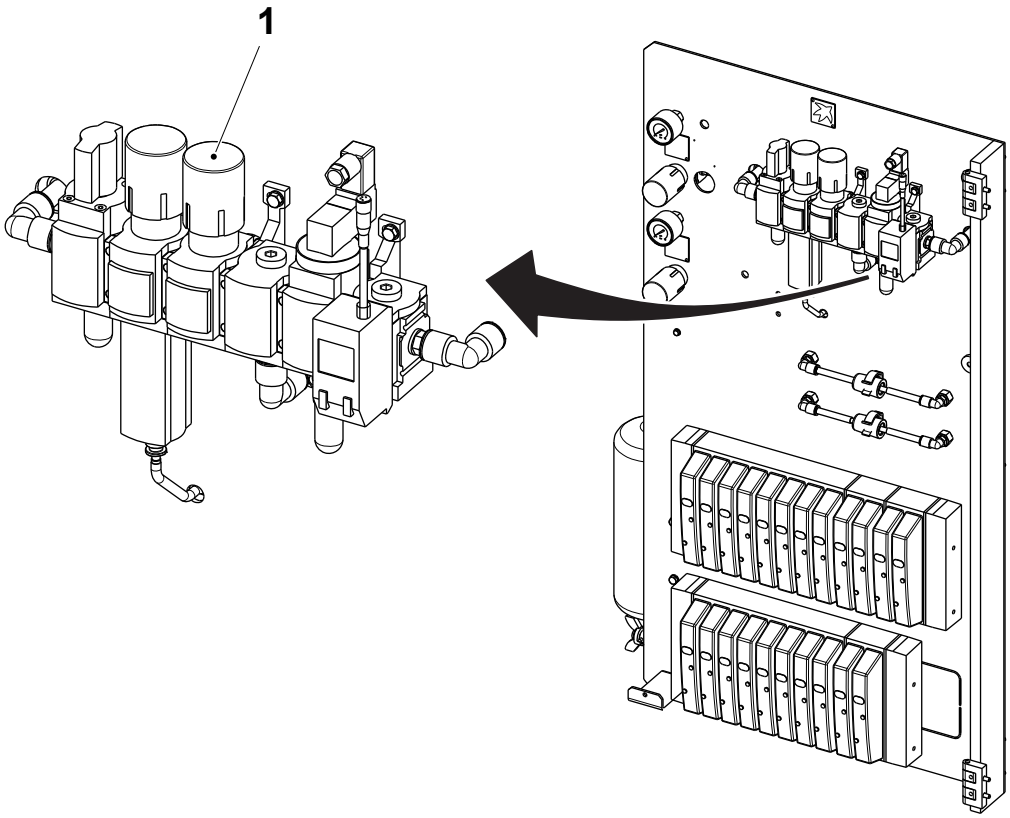

1 Pressure regulator

TechPub_2614345_0108 - 0703_3048219_01.fm

8.7-4 Pneumatic Panel - Set Jumbo Reel Brake Pressure

Machine Status	Mains Power ON Air ON Steam ON Water OFF
SPC Reference	2790920-0100

CAUTION

Risk of personal injury.

Do not set the bobbin brake pressure higher than recommended to avoid that the bobbin brake cylinders are too powerful. Lock the pressure regulator (1) with a padlock after setting.

a) Remove the lock from the pressure regulator (1).

b) Set the bobbin brake pressure with the pressure regulator (1), see 10.1 Technical Data for the correct value.

c) Fit the lock to the pressure regulator (1).

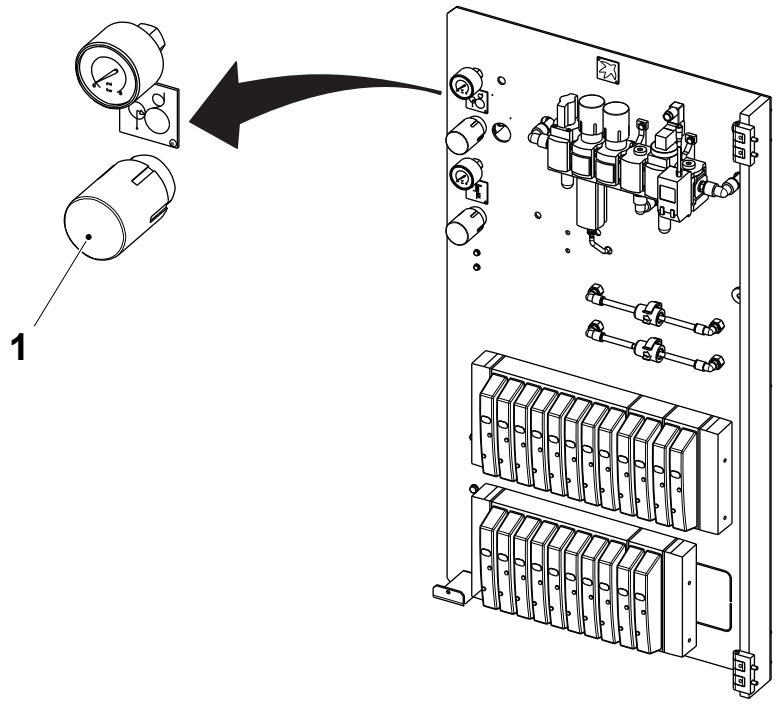

1 Pressure regulator

TechPub_2614345_0108 - 0703_3048219_01.fm

8.8 Magazine, Upper Part

SPC Reference	3023632-0100

8.8-1 Magazine, Upper Part - Change Roller Bearings

Machine Status	Mains Power OFF Air OFF Steam ON Water OFF
Special Equipment	Rope 2.5 m
SPC Reference	3023632-0100

(Cont'd)

TechPub_2614345_0108 - 0703_3048220_01.fm

(Cont'd)

Drive Unit

Note! Secure the worm gear motor (7) to the side of the ASU using a rope.

a) Remove the pressure roller assembly, see 8.8-3 Magazine - Change Pressure Roller Bearings.

b) Loosen the grub screws (1) and remove the shafts (2) with the paper guides (3) installed.

Note! Do not move the paper guides (3) along the shafts (2) in order to not lose the setting.

c) Remove the screw (4) and the washer (5).

d) Remove the four screws (6) and the worm gear motor (7).

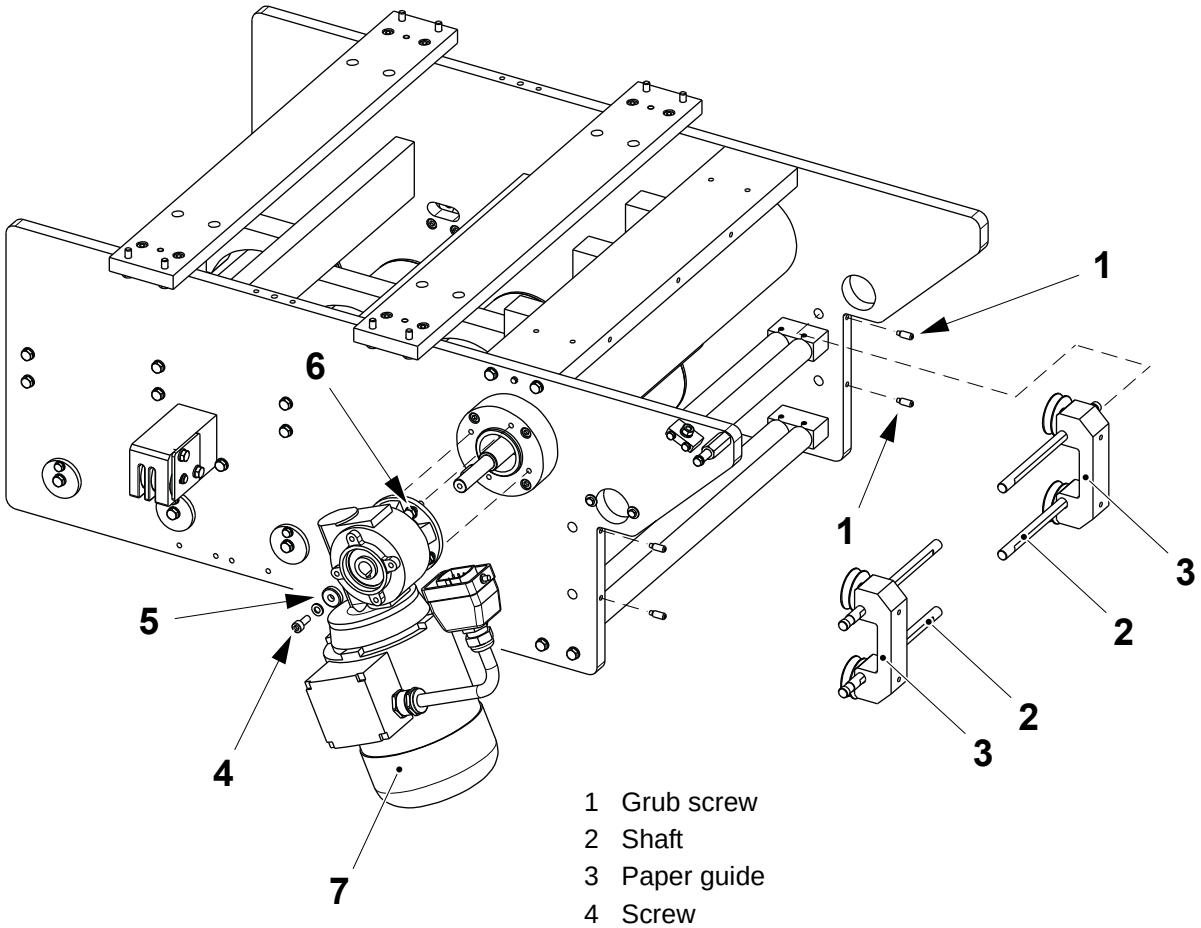

1 Grub screw
2 Shaft
3 Paper guide
4 Screw
5 Washer
6 Screw
7 Worm gear

(Cont'd)

TechPub_2614345_0108 - 0703_3048220_01.fm

(Cont'd)

e) Remove the three screws (8) to separate the shaft (9) from the bending roller (10).

f) Remove screws (11) and the pin (12) holding by hand the bending roller (10).

g) Remove the bending roller (10) and change the ball bearing (13).

h) Change the bending roller (10) if necessary.

i) Assemble in the reverse order.

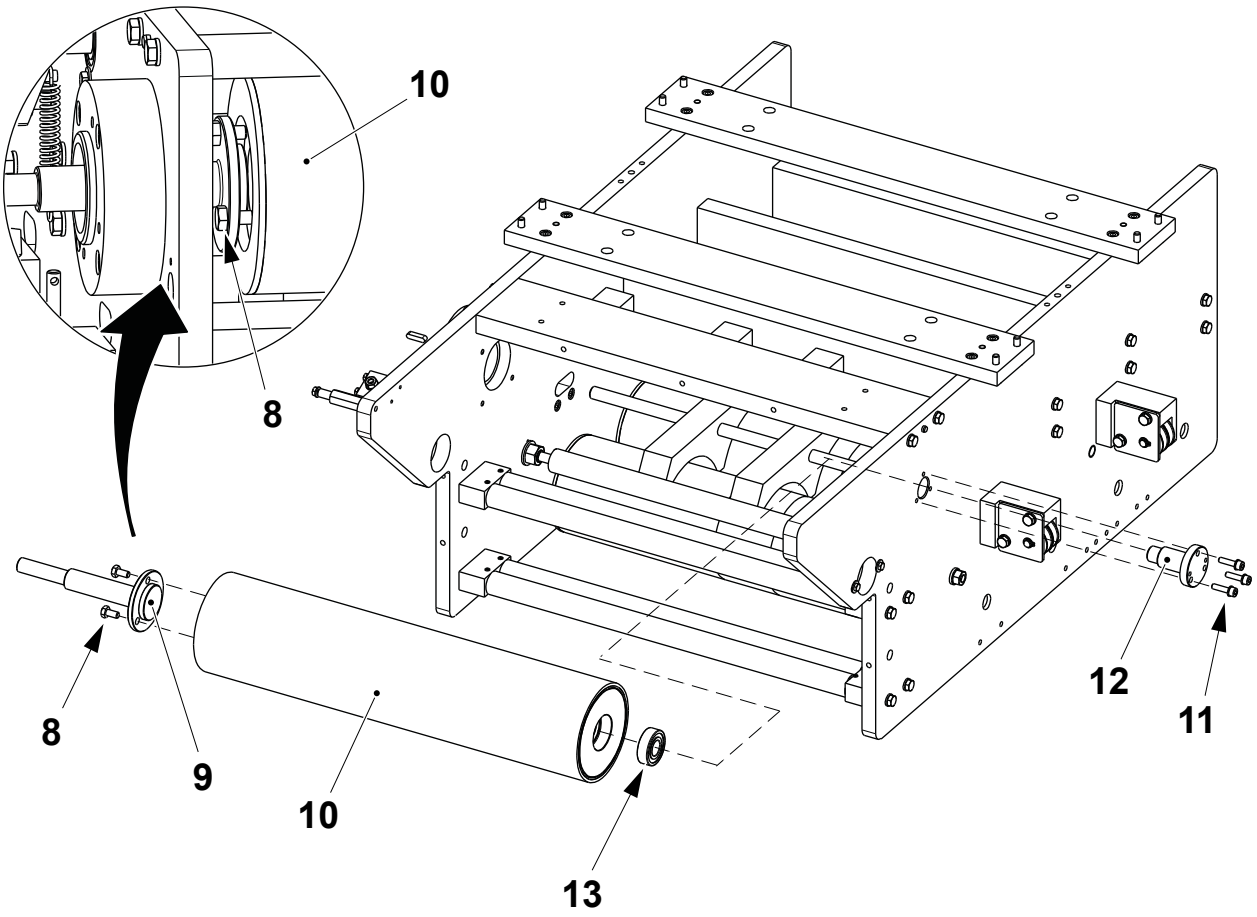

8 Screw
9 Shaft
10 Bending roller
11 Screw
12 Pin
13 Ball bearing

(Cont'd)

TechPub_2614345_0108 - 0703_3048220_01.fm

(Cont'd)

Bending Rollers

a) Remove the screws (1) and (2).
b) Remove the pin (3) holding by hand the bending roller (4).
c) Remove the bending roller (4).
d) Remove the retaining rings (5) and change the ball bearings (6).
e) Repeat the same procedure for the other bending rollers.
f) Assemble in the reverse order.

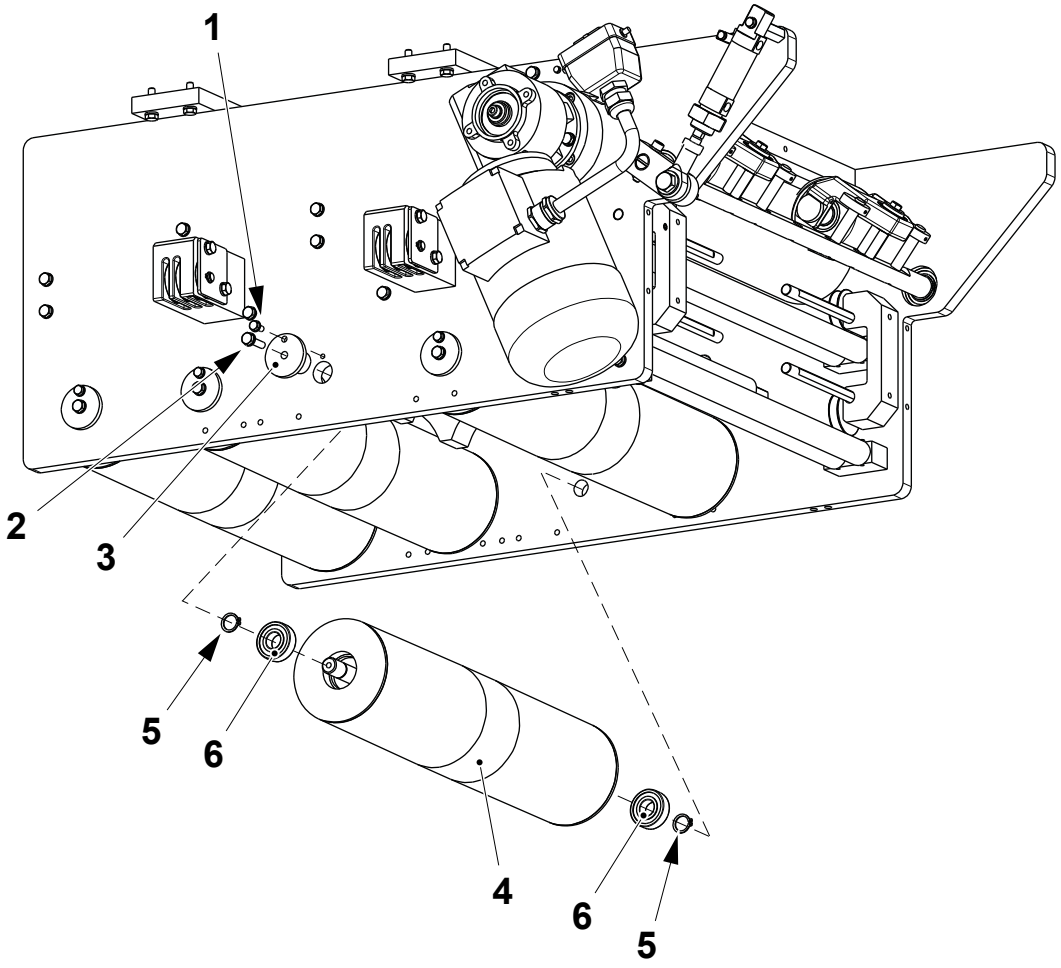

1 Screw
2 Screw
3 Pin
4 Bending roller
5 Retaining ring
6 Ball bearing

TechPub_2614345_0108 - 0703_3048220_01.fm

(Cont'd)

(Cont'd)

Roller

a) Remove the screws (1) and the roller assembly.

b) Loosen the grub screws (2) and remove the rollers (3).

c) Change the bearings (4).

d) Repeat the same procedure for the other rollers (5).

e) Assemble in the reverse order.

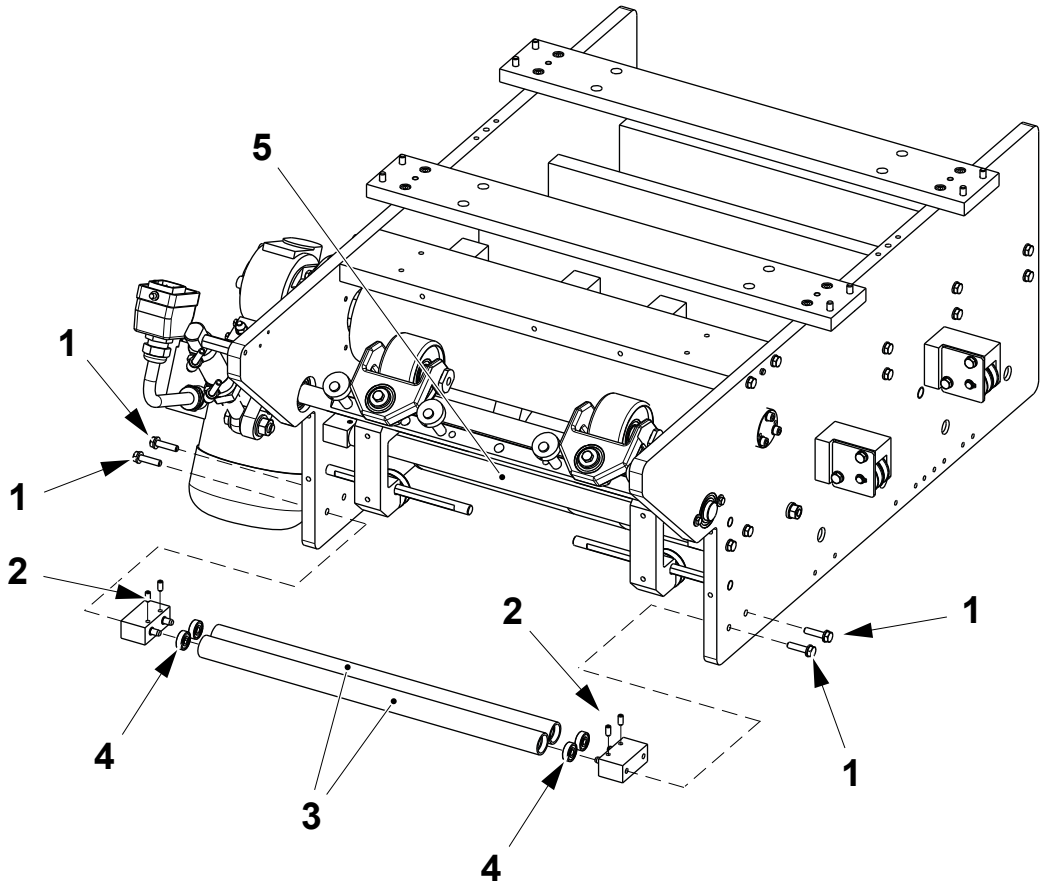

1 Screw
2 Screw
3 Roller
4 Bearing
5 Roller

TechPub_2614345_0108 - 0703_3048220_01.fm

8.8-2 Magazine - Check Pressure Roller

Machine Status	Mains Power OFF Air OFF Steam ON Water OFF
SPC Reference	3023632-0100

Check that:

- the cylinder (1) moves the counter rollers (2) is in contact with the drive roller (3). If not set the spring (4), see 8.8-4 Magazine - Set Pressure Roller.
- both the counter roller (2) touch simultaneously the drive roller (3). If not, set the alignment of the counter rollers (2), see 8.8.2-2 Counter Roller - Set Alignment.
- the counter rollers (2) are not twisted on the drive roller (3). If not, set the cams, see 8.8-4 Magazine - Set Pressure Roller.
- the counter roller (2) rotates freely and that it is not worn or damaged. Change if necessary, see 8.8.2-1 Counter Roller - Change.

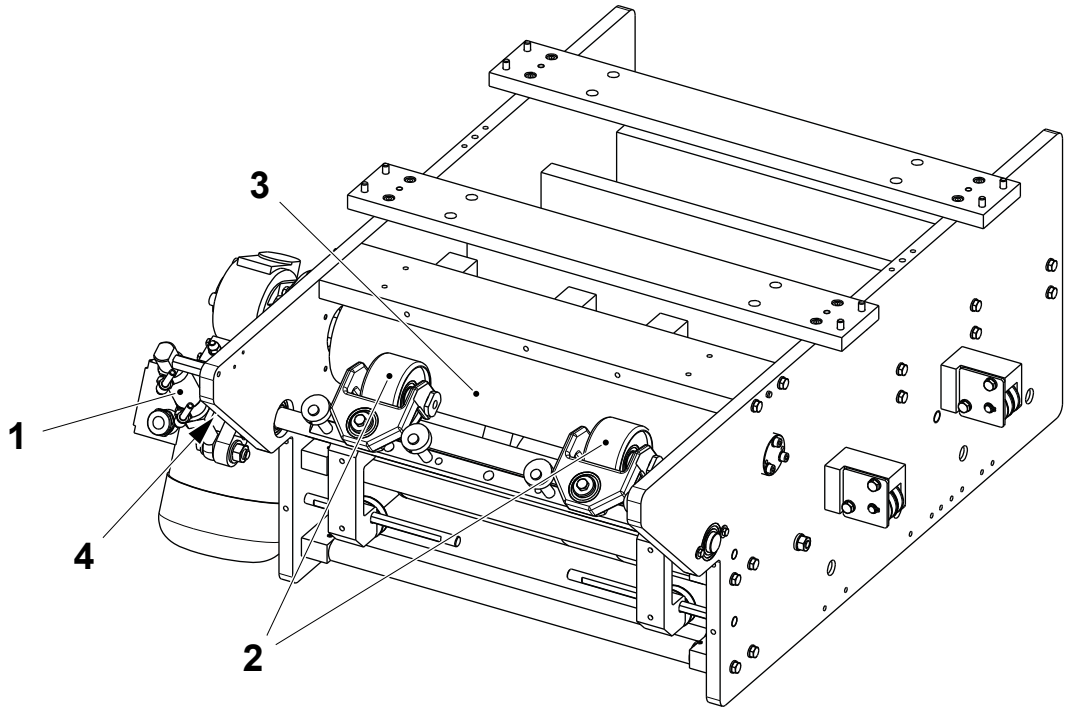

1 Cylinder
2 Counter roller
3 Drive roller
4 Spring

TechPub_2614345_0108 - 0703_3048220_01.fm

8.8-3 Magazine - Change Pressure Roller Bearings

Machine Status	Mains Power OFF Air OFF Steam ON Water OFF
SPC Reference	3023632-0100

a) Loosen the nut (1) and remove the spring (2).

b) Remove the screw (3) to make the shaft (4) free from the rocker arm (5).

c) Remove the retaining rings (6).

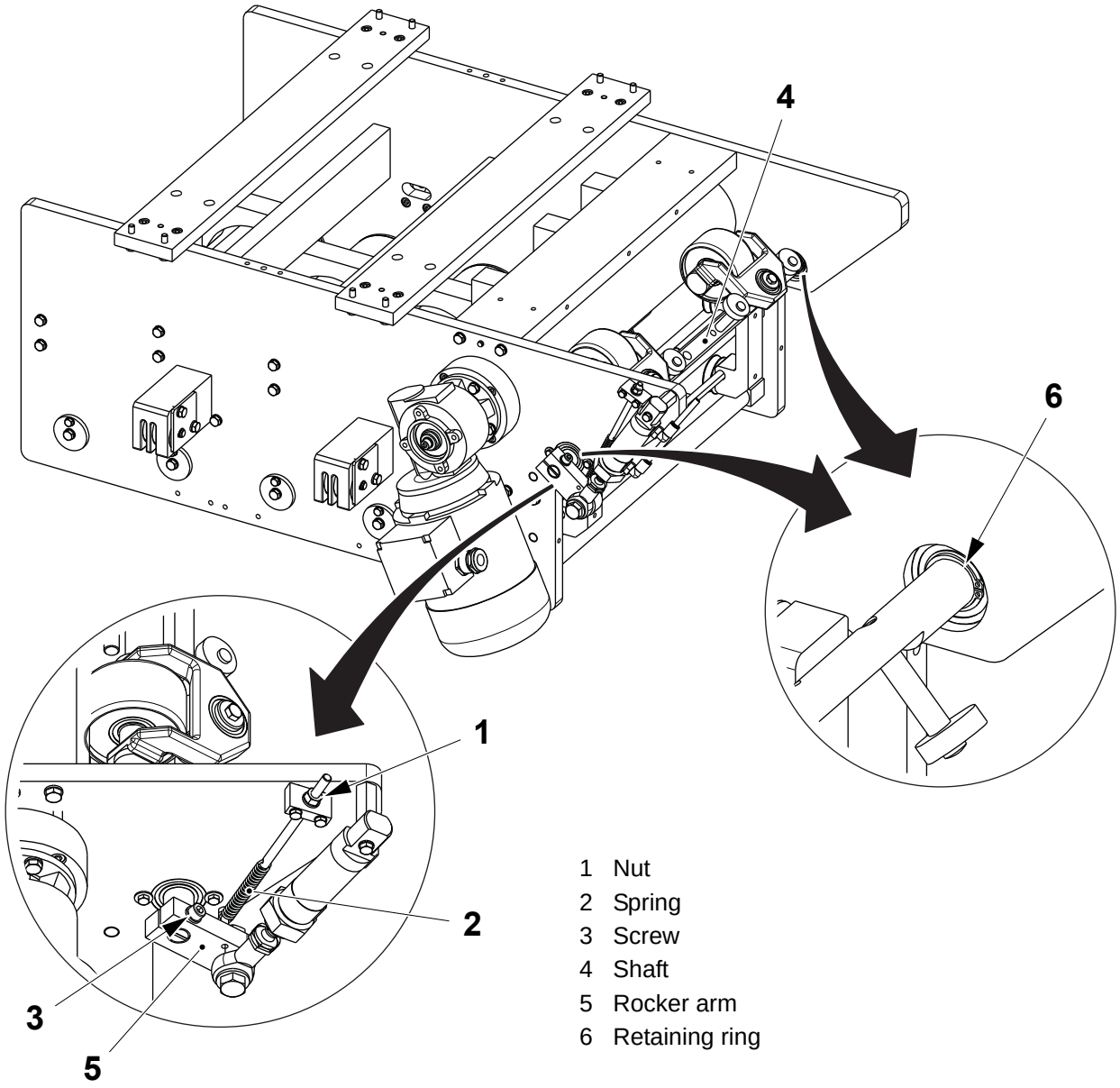

1 Nut
2 Spring
3 Screw
4 Shaft
5 Rocker arm
6 Retaining ring

(Cont'd)

TechPub_2614345_0108 - 0703_3048220_01.fm

(Cont'd)

d) Remove the screws (7) on both sides.
e) Move sideways the shaft (4) and slip it off.
f) Change the ball bearings (8).
g) Assemble in the reverse order.
h) Set the pressure roller, see 8.8-4 Magazine - Set Pressure Roller.

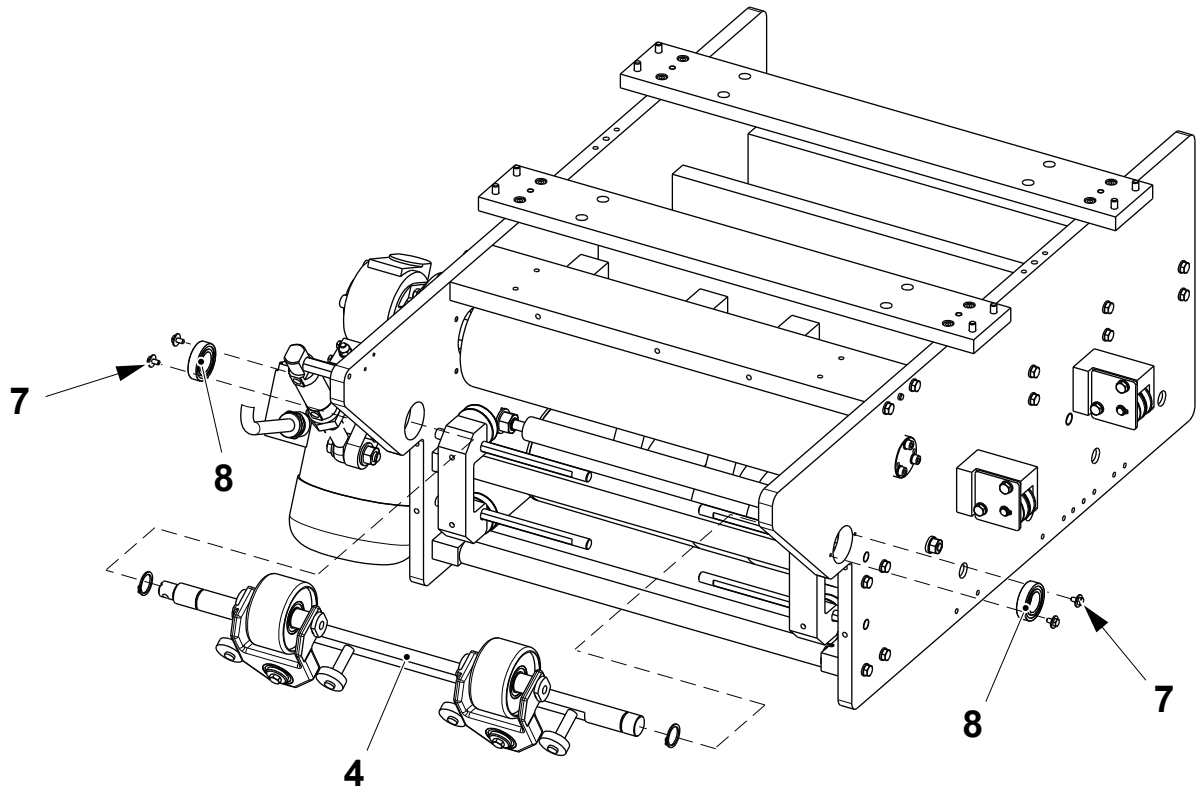

4 Shaft
7 Screw
8 Ball bearings

TechPub_2614345_0108 - 0703_3048220_01.fm

8.8-4 Magazine - Set Pressure Roller

Machine Status	Mains Power ON Air ON Steam ON Water OFF
SPC Reference	3023632-0100

a) Release the grub screw (1) and the cams (2).

b) Pull the counter roller (3) as far from the drive roller (4) as possible.

c) Adjust the nut (5) until the distance **A** is obtained.

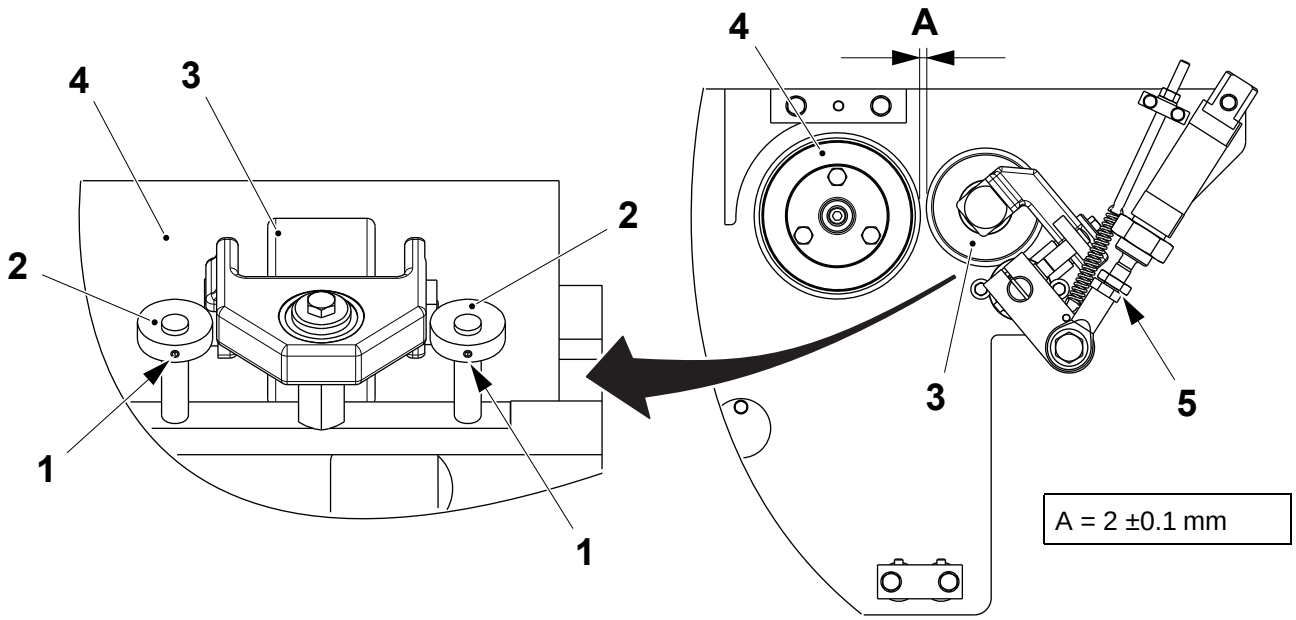

1 Grub screw
2 Cam
3 Counter roller
4 Drive roller
5 Nut

(Cont'd)

TechPub_2614345_0108 - 0703_3048220_01.fm

(Cont'd)

d) Position the counter roller (3) in to the offset position (6).

e) Push the counter roller (3) against the drive roller (4) and turn the drive roller (4).

f) When the counter roller (3) centres itself, set the cams (2) to the distance of **0.2 mm** from the counter roller bracket.

g) Tighten the grub screw (1).

h) Set the tension of the spring (7) by adjusting the nut (8) until the distance **B** is obtained.

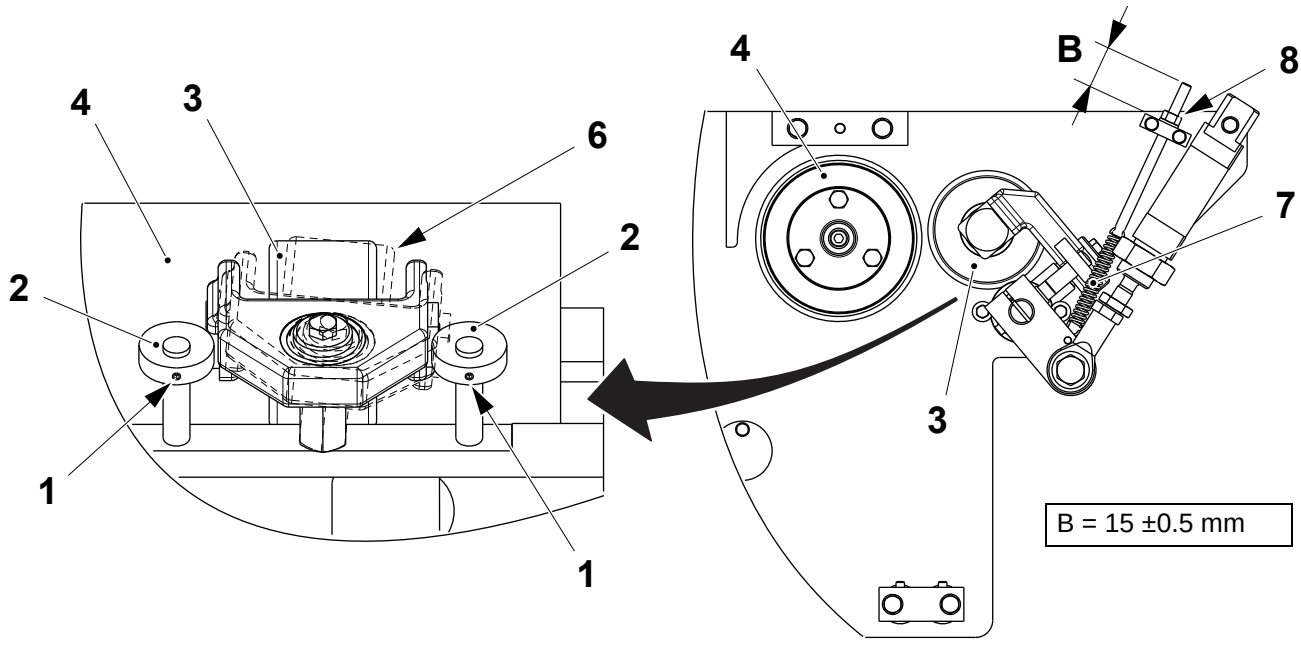

1 Grub screw
2 Cam
3 Counter roller
4 Drive roller
6 Offset position
7 Spring
8 Nut

TechPub_2614345_0108 - 0703_3048220_01.fm

8.8-5 Magazine - Check Spacer Position

Machine Status	Mains Power OFF Air OFF Steam ON Water OFF
SPC Reference	3023632-0100

Check the distance **A** between the two front brackets (1) and the two spacers (2). If necessary, set the distance **A**.

Set Distance A

a) Loosen the grub screw (3).

b) Set the distance **A**.

c) Tighten the grub screw (3).

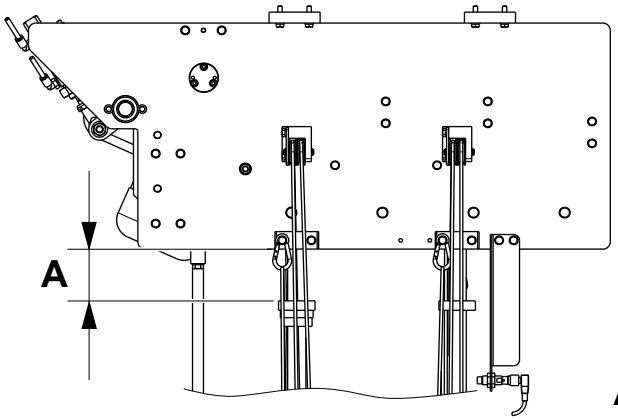

A = 50.0 ±1.0 mm

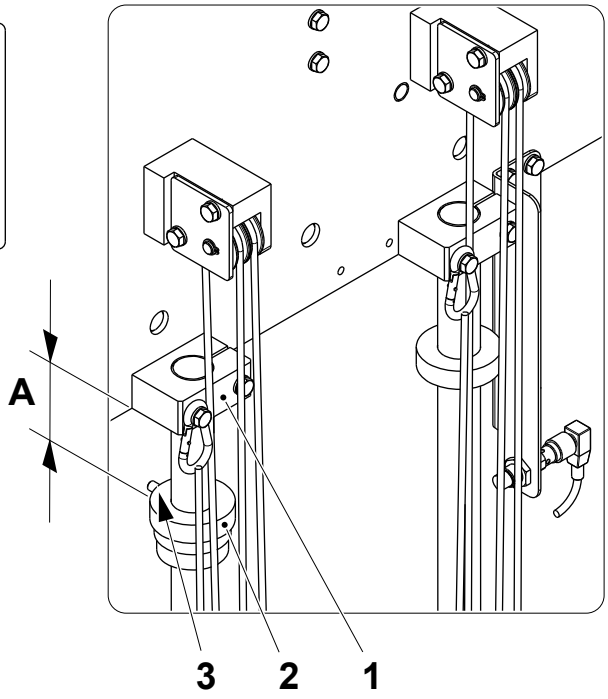

1 Bracket
2 Spacer
3 Screw

TechPub_2614345_0108 - 0703_3048220_01.fm

8.8.1 Paper Guide

8.8.1-1 Paper Guide - Check

Machine Status	Mains Power OFF Air OFF Steam ON Water OFF
SPC Reference	2985585-0100

Check that the rollers (1) rotate freely and the surfaces of the rollers (1) are undamaged. If necessary, change the roller and the ball bearings, see 8.4.2-2 Paper Slide - Change Rollers.

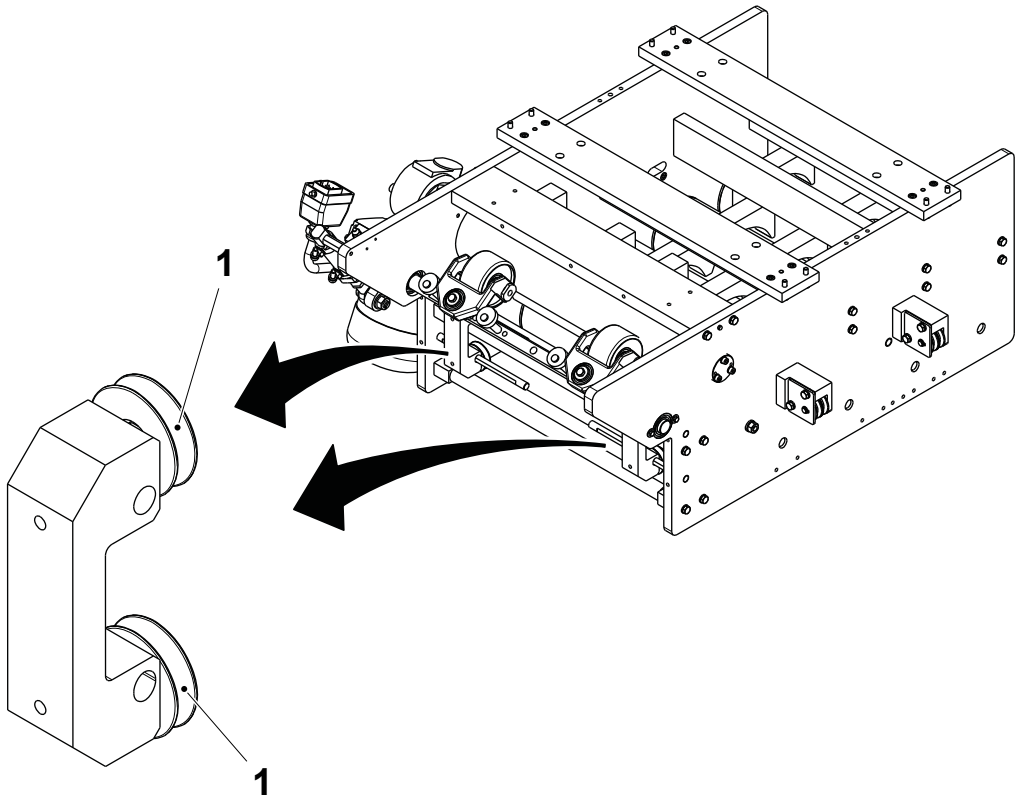

1 Roller

TechPub_2614345_0108 - 0703_3048220_01.fm

8.8.1-3 Paper Guide - Set Position

Machine Status	Mains Power OFF Air OFF Steam ON Water OFF
SPC Reference	2985585-0100

Package	**A ±0.5 (mm)**
TBA 125 S	120
TBA 200 S	114.5
TBA 250 B - TBA 200 B	94.5
TBA 250 S - TBA 200 M	107.5
TBA 1000 S	48.0
TBA 1000 Sq	54.0
TBA 1000 B	40.5

(Cont'd)

TechPub_2614345_0108 - 0703_3048220_01.fm

(Cont'd)

Loosen the grub screws (1) and set the distance **A** between the paper guide (2) and the frame (3). Tighten the grub screws (1).

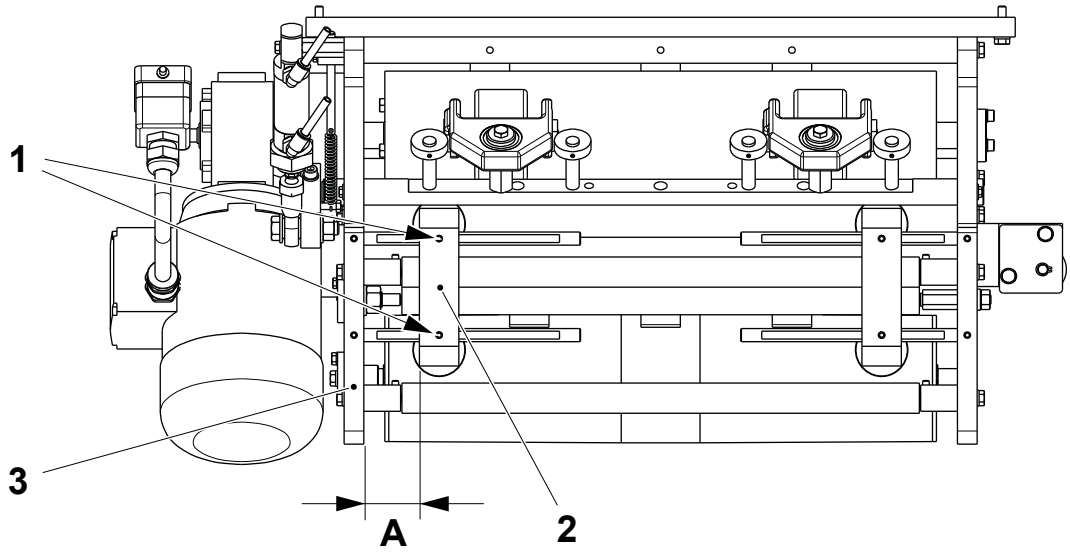

1 Grub screw
2 Paper guide
3 Frame

TechPub_2614345_0108 - 0703_3048220_01.fm

8.8.2 Counter Roller

8.8.2-1 Counter Roller - Change

Machine Status	Mains Power OFF Air OFF Steam ON Water OFF
SPC Reference	2564069-0100

Note! Do not touch the grub screw (2) and the cam (3), unless necessary.

a) Release the pressure in the cylinder (1).

b) Remove the counter roller assembly (4) by turning the threaded pin (5) taking care of the shims (6).

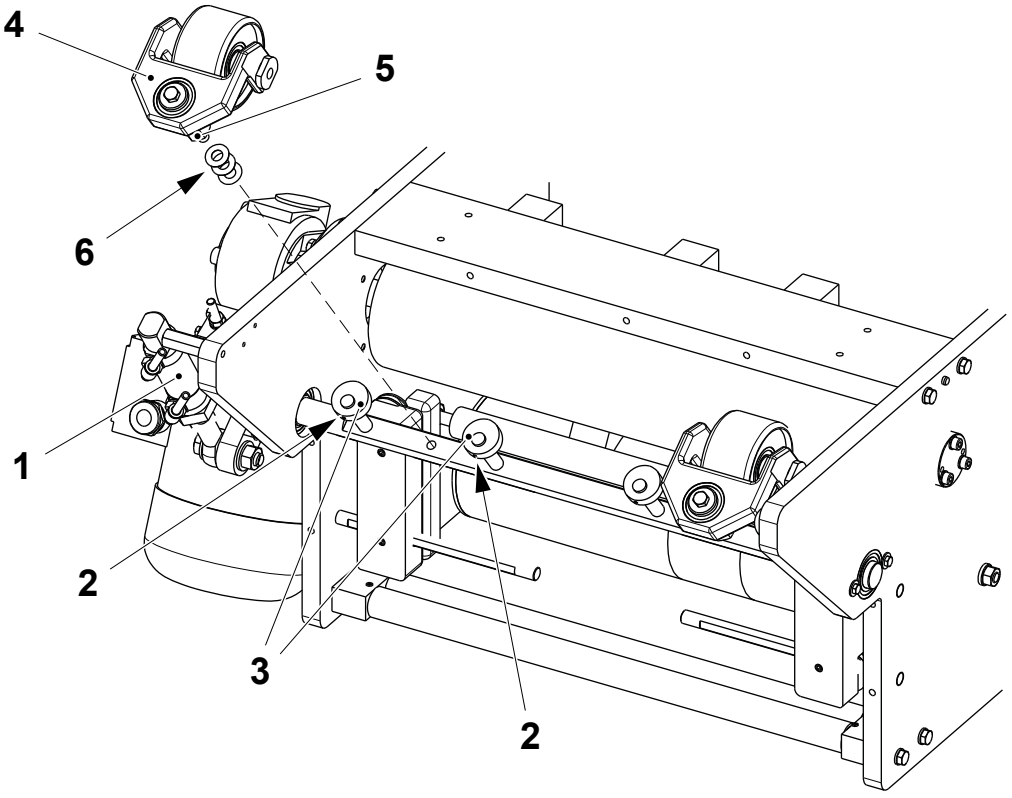

1 Cylinder
2 Grub screw
3 Cam
4 Counter roller assembly
5 Pin
6 Shim

(Cont'd)

TechPub_2614345_0108 - 0701_3048221_01.fm

(Cont'd)

c) Remove the screw (7).
d) Remove the ball bearings (8)and change them if necessary.
e) Remove the nut (9) and the bolt (10).
f) Remove the roller (11) and the ball bearings (12). Change if necessary.
g) Assemble in the reverse order.

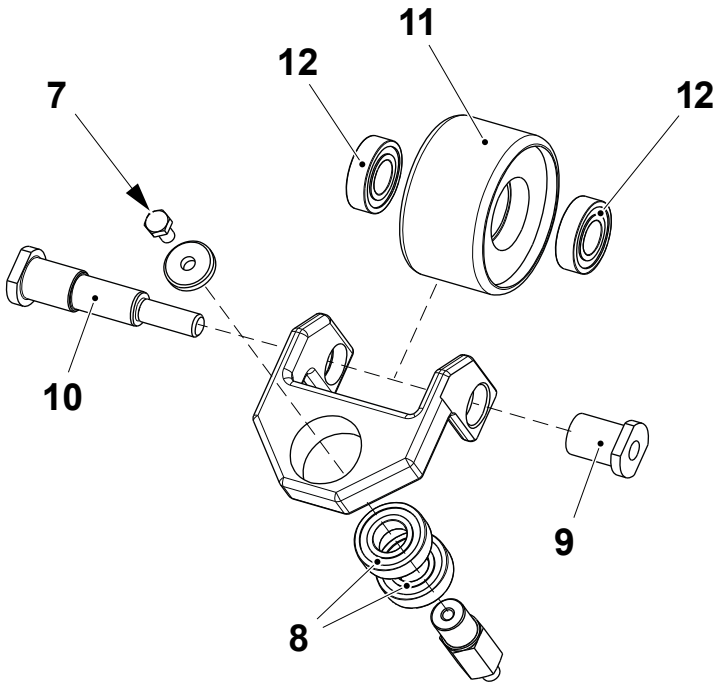

7 Screw
8 Ball bearing
9 Nut
10 Bolt
11 Roller
12 Ball bearing

TechPub_2614345_0108 - 0701_3048221_01.fm

8.8.2-2 Counter Roller - Set Alignment

Machine Status	Mains Power OFF Air OFF Steam ON Water OFF
SPC Reference	2564069-0100

Check with a feeler gauge that both the counter rollers (1) are in contact with the drive roller (2). If the counter rollers (1) are misaligned, add or remove shims (3) until they touch simultaneously the drive roller (2).

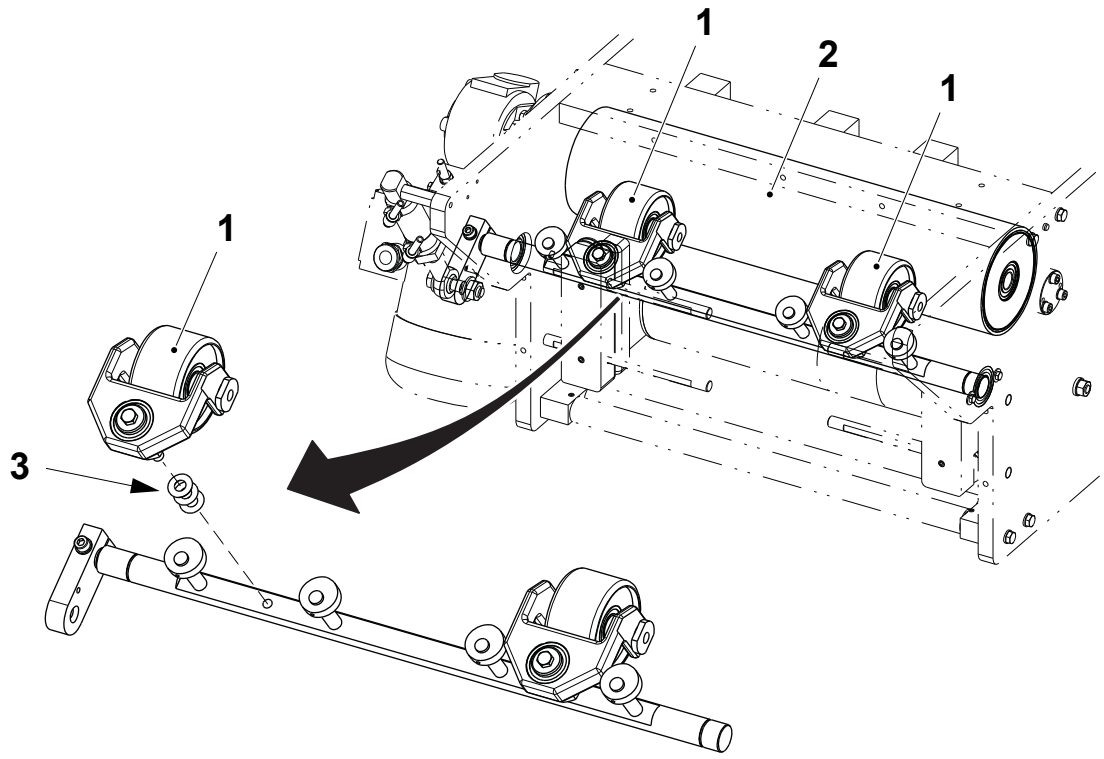

1 Counter roller
2 Drive roller
3 Shim

TechPub_2614345_0108 - 0701_3048221_01.fm

8.9 Magazine, Lower Part

SPC Reference	2746324-0200

8.9-1 Magazine, Lower Part - Check

Machine Status	Mains Power OFF Air OFF Steam ON Water OFF
SPC Reference	2746324-0200

Check that:

- the rollers (1) rotate freely without play and that the surfaces of the rollers are not worn or damaged. If necessary change the rollers, see 8.9-2 Magazine, Lower Part - Change Ball Bearings.
- the rollers rise and fall smoothly when they are moved by the ropes (2).
- the LED of the proximity switch (3) is ON when the bracket is moved to its upper or lower position. If not set the proximity switches, see 8.9-3 Magazine, Lower Part - Set Proximity Switch.

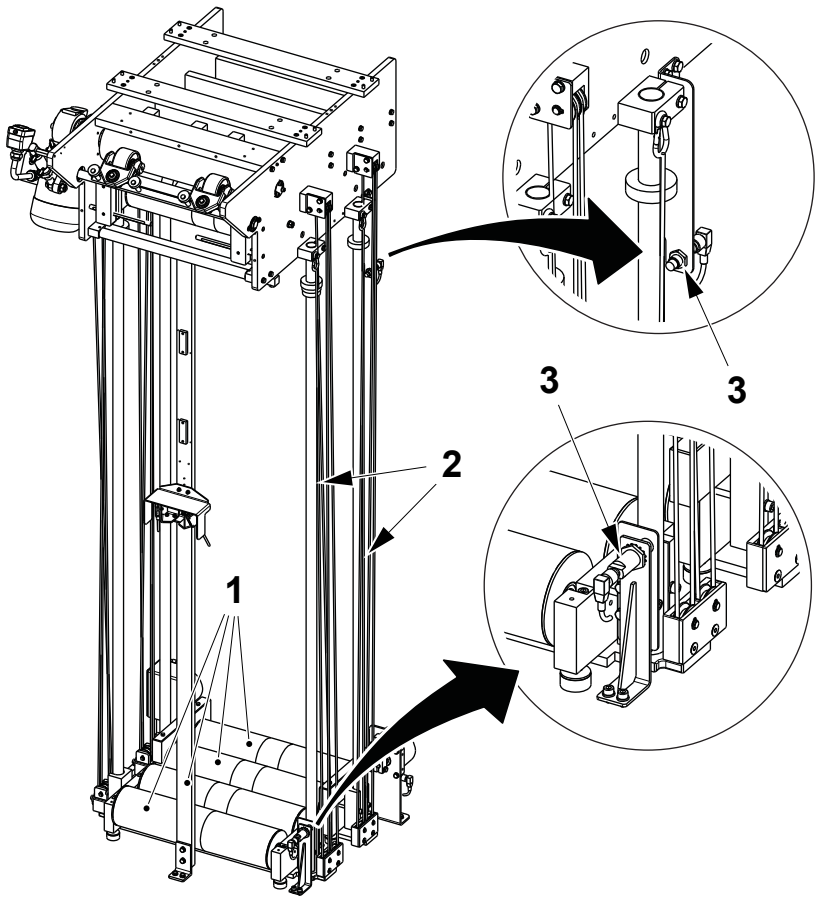

1 Roller
2 Rope
3 Proximity switch

TechPub_2614345_0108 - 0702_3048222_01.fm

8.9-2 Magazine, Lower Part - Change Ball Bearings

Machine Status	Mains Power OFF Air OFF Steam ON Water OFF
SPC Reference	2746324-0200

a) Remove the screw (1) and lift out the roller (2).

b) Remove the retaining rings (3).

c) Remove and change the ball bearings (4).

d) Before removing the two rear dance rollers (5), remove the screws (6) and the ballasts (7).

e) Assemble in the reverse order.

1 Screw
2 Dance roller
3 Retaining ring
4 Ball bearing
5 Roller
6 Screw
7 Ballast

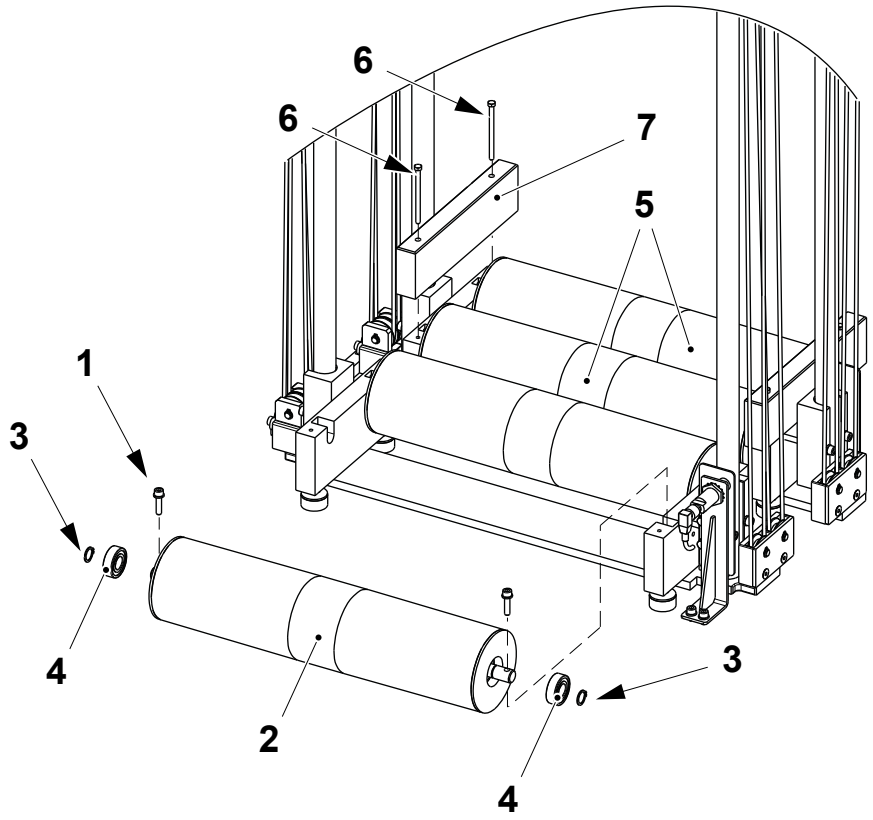

TechPub_2614345_0108 - 0702_3048222_01.fm

8.9-3 Magazine, Lower Part - Set Proximity Switch

Machine Status	Mains Power ON Air OFF Steam ON Water OFF
SPC Reference	2746324-0200

a) Make sure that the two front rollers (1) are in the lower position.

b) Loosen the nut (2) and move the proximity switch (3) to set the distance **A** between the plate (4) and the proximity switch (3).

c) Check that the LED of the proximity switch (3) is ON. If not, repeat point b).

d) Move the two rear rollers (5) in the upper position and repeat the same setting for the upper proximity switch (6).

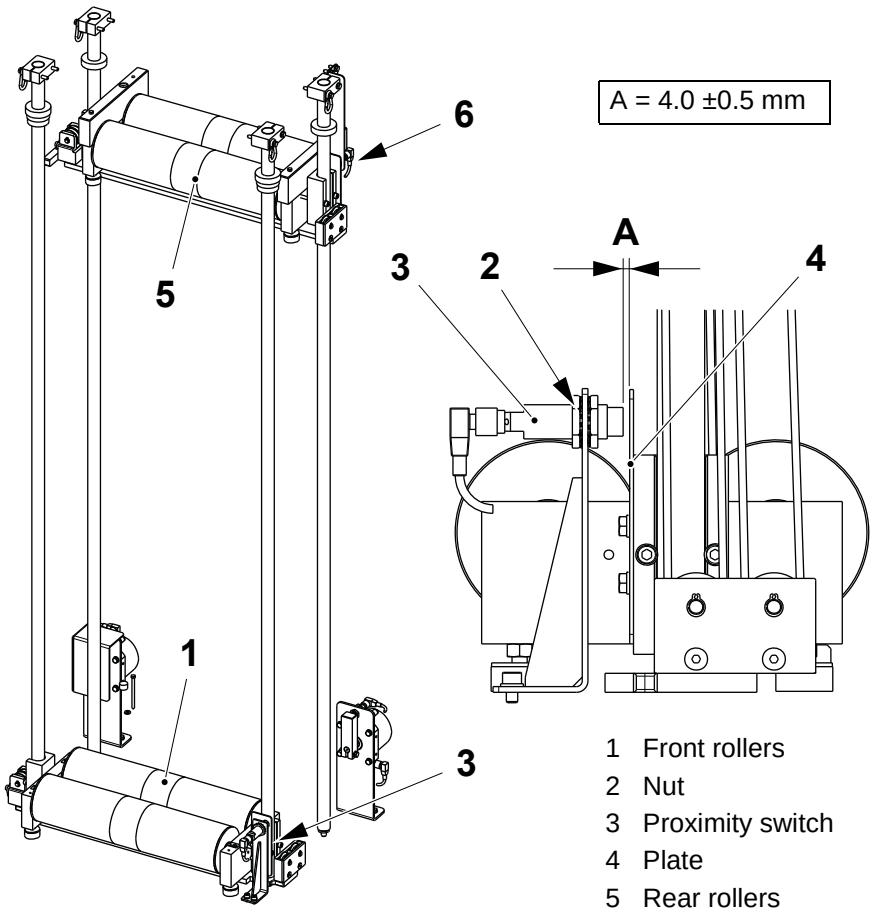

1 Front rollers
2 Nut
3 Proximity switch
4 Plate
5 Rear rollers
6 Proximity switch

TechPub_2614345_0108 - 0702_3048222_01.fm

8.9-4 Magazine, Lower Part - Set Dampers

Machine Status	Mains Power OFF Air OFF Steam ON Water OFF
SPC Reference	2746324-0200

a) Loosen the nut (1) and set the distance **A** between the damper (2) and the bracket (3).

b) Tighten the nut (1).

c) Repeat the procedure for all the dampers.

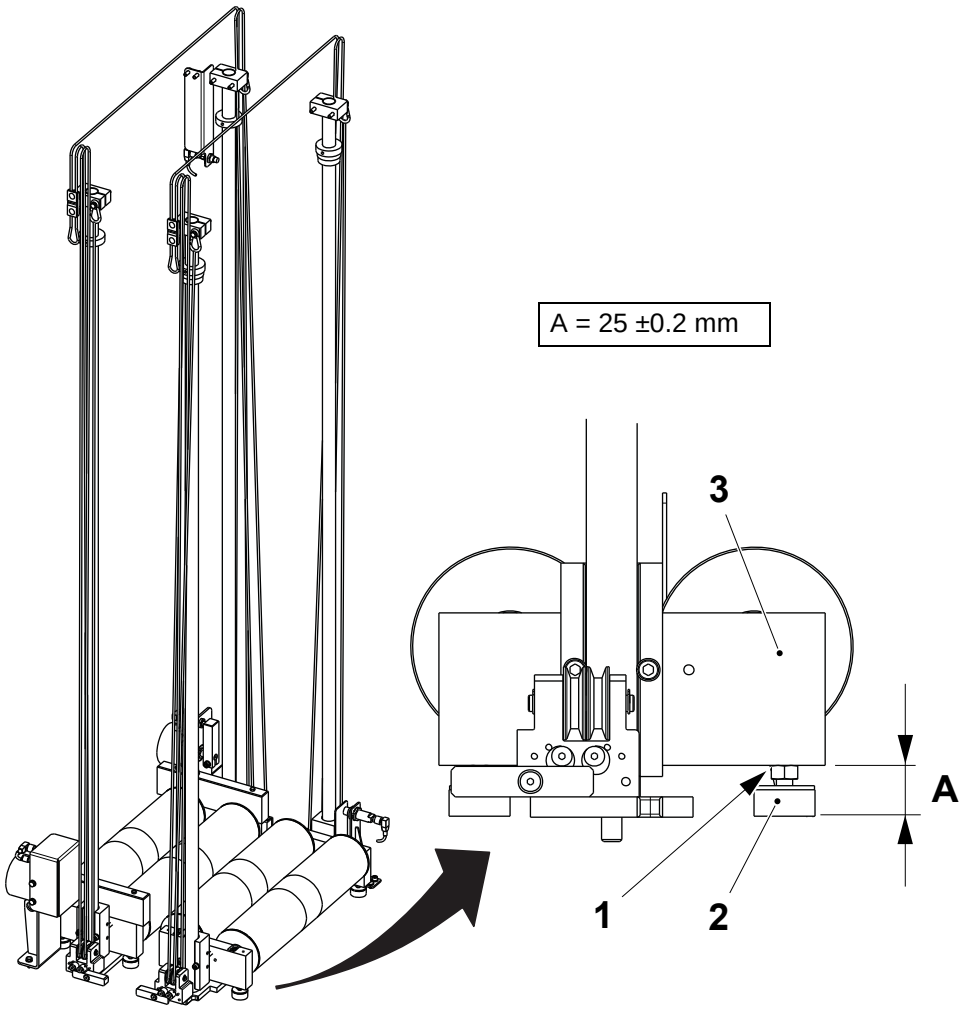

1 Nut
2 Damper
3 Bracket

TechPub_2614345_0108 - 0702_3048222_01.fm

8.9-5 Magazine - Change Ropes

Machine Status	Mains Power OFF Steam ON Water OFF Air OFF
SPC Reference	2746324-0200

a) Remove the wire lock (1).

b) Loosen one end of the rope from the snap hook (2).

c) Connect the end of the rope with the end of the new rope by melting together the rope ends.

d) Secure the other end of the new rope to the snap hook (2).

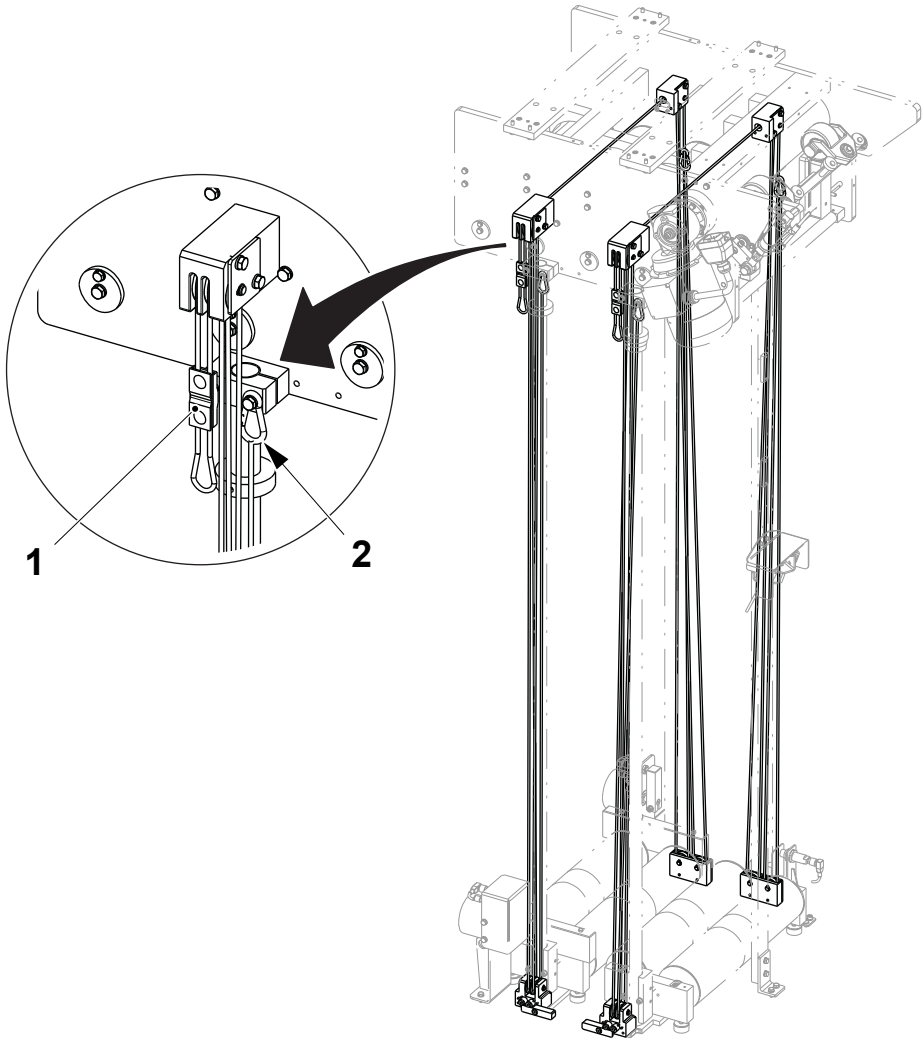

1 Wire lock
2 Snap hook

(Cont'd)

TechPub_2614345_0108 - 0702_3048222_01.fm

(Cont'd)

e) Loosen the other end of the rope from the opposite snap hook (3).

f) Slip off the rope by pulling it: when the old rope is wholly out, the new rope is fitted in its place.

g) Separate the new rope from the old one and connect the end of the new rope to the snap hook (3).

h) Pull the rope from the pulley (4) in order to create a loop and fit the wire lock (1) approximately 10 cm under the pulley (4).

i) Repeat the same procedure for the other rope.

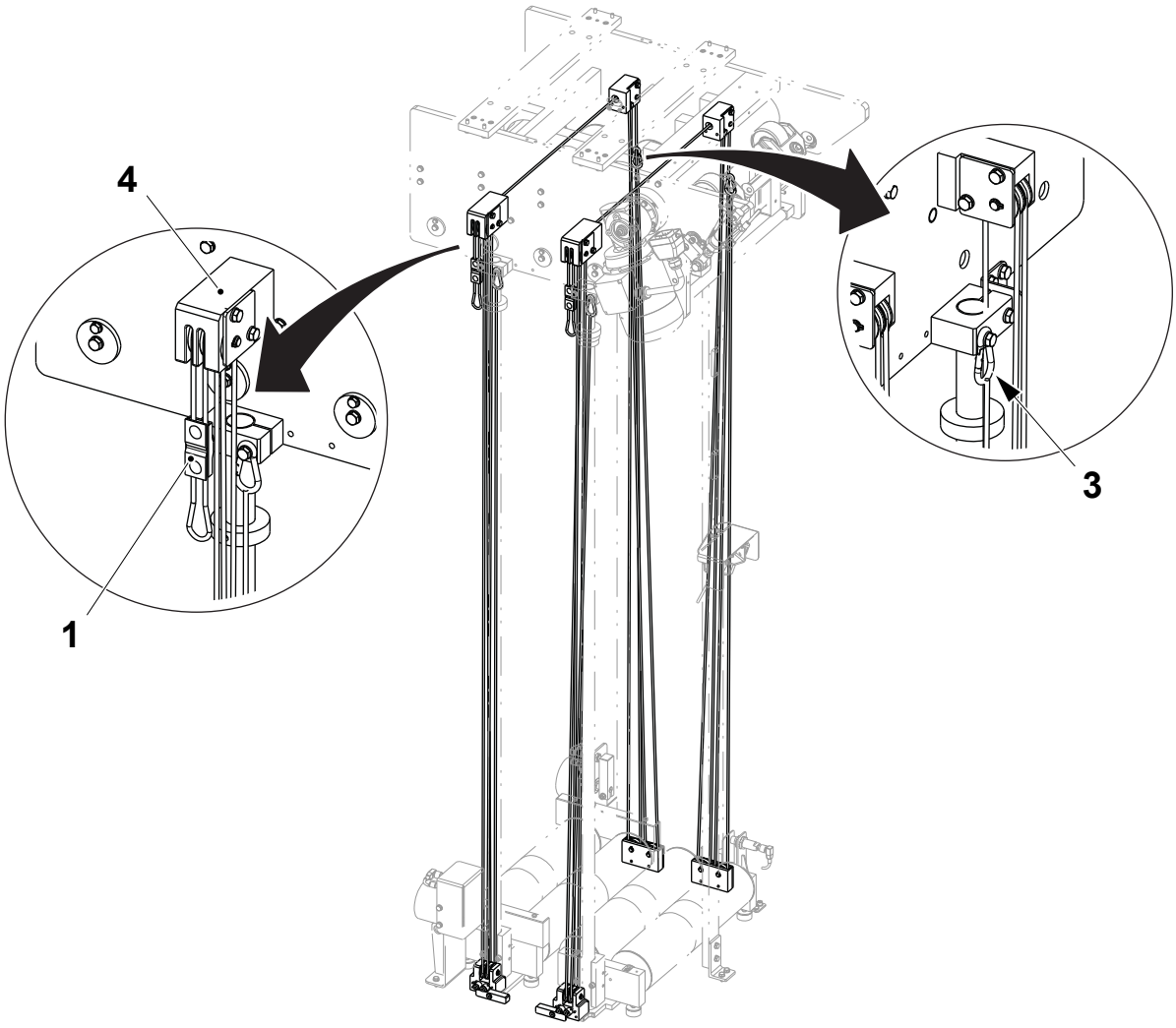

1 Wire lock
3 Snap hook
4 Pulley

TechPub_2614345_0108 - 0702_3048222_01.fm

8.9-6 Magazine, Lower Part - Set Locking Devices

Machine Status	Mains Power ON Air OFF Steam ON Water OFF
SPC Reference	2746324-0200

Low Magazine Proximity Switch

On the locking device (1) on the LH side (valve panel side), loosen the nuts (2) and move the proximity switch (3) to set the distance **A** between the ballast (4) and the proximity switch (3).

Check that the LED of the proximity switch (3) is ON, then tighten the nut (2).

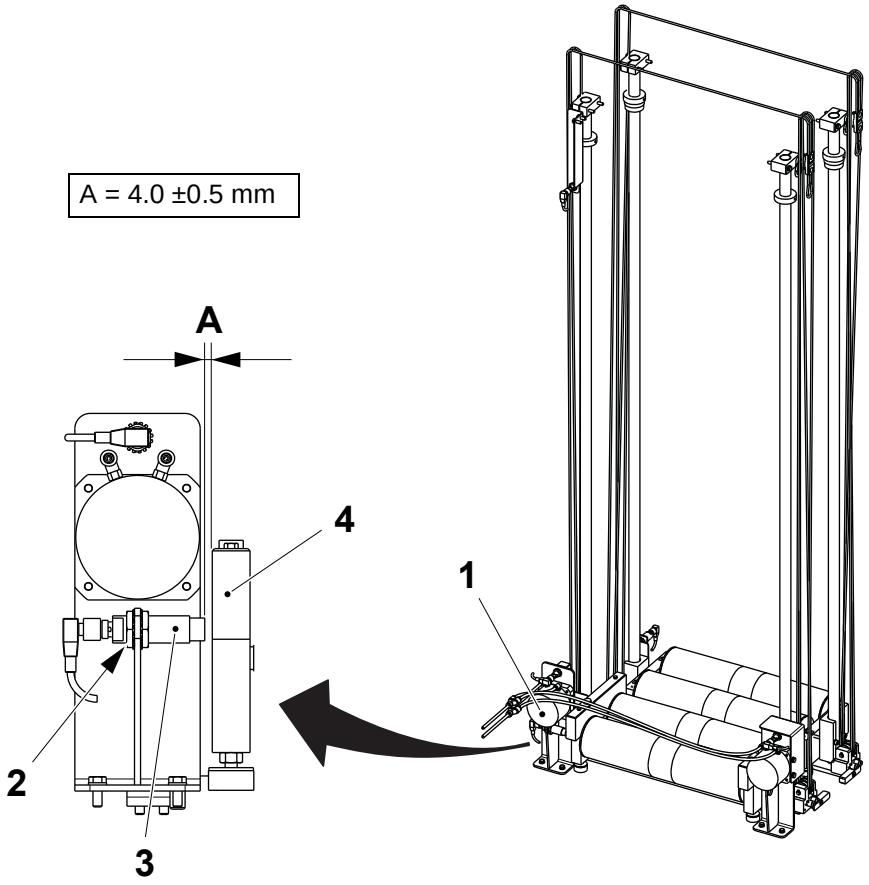

1 Locking device
2 Nut
3 Proximity switch
4 Ballast

(Cont'd)

TechPub_2614345_0108 - 0702_3048222_01.fm

(Cont'd)

Rocker Arm Proximity Switches

On both locking device (1) loosen the nuts (2) and move the proximity switch (3) to set the distance **A** between the rocker arm (4) and the proximity switch (3).

Check that the LED of the proximity switch (3) is ON, then tighten the nut (2).

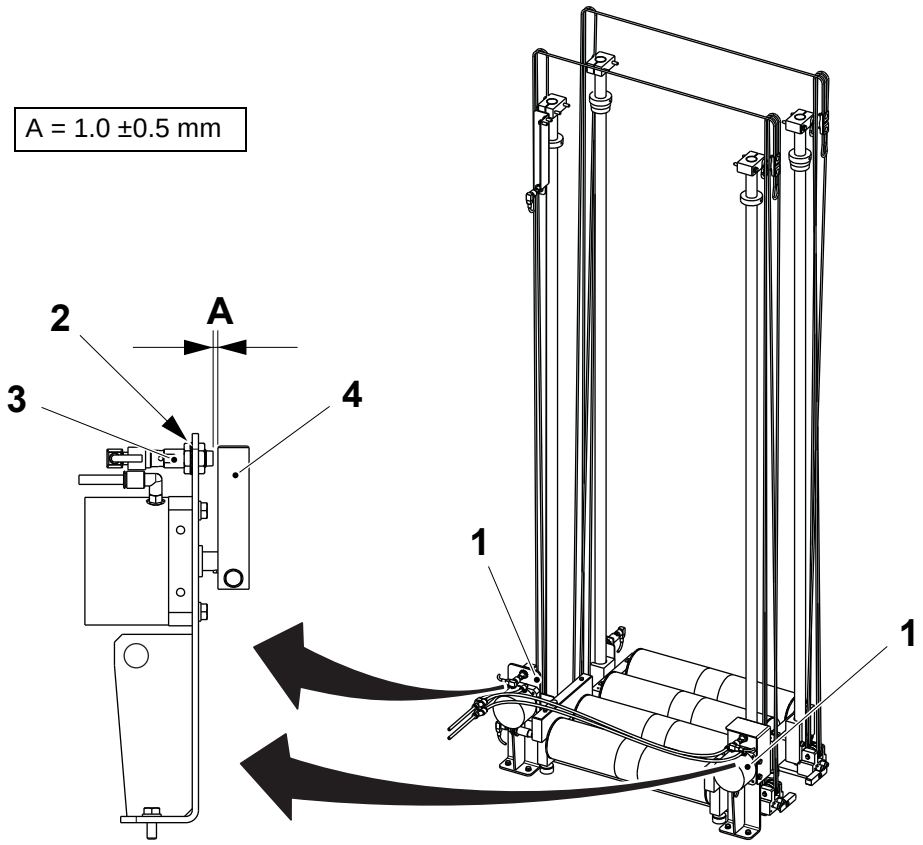

1 Locking device
2 Nut
3 Proximity switch
4 Rocker arm

(Cont'd)

TechPub_2614345_0108 - 0702_3048222_01.fm

(Cont'd)

Mechanical Stops

a) On the locking device on the LH side (valve panel side), remove the protection (1).

b) Loosen the screw (2) and move the mechanical stop (3) to 120º.

c) Loosen the screw (4) and move the mechanical stop (5) to 356º.

d) Fit back the protection (1).

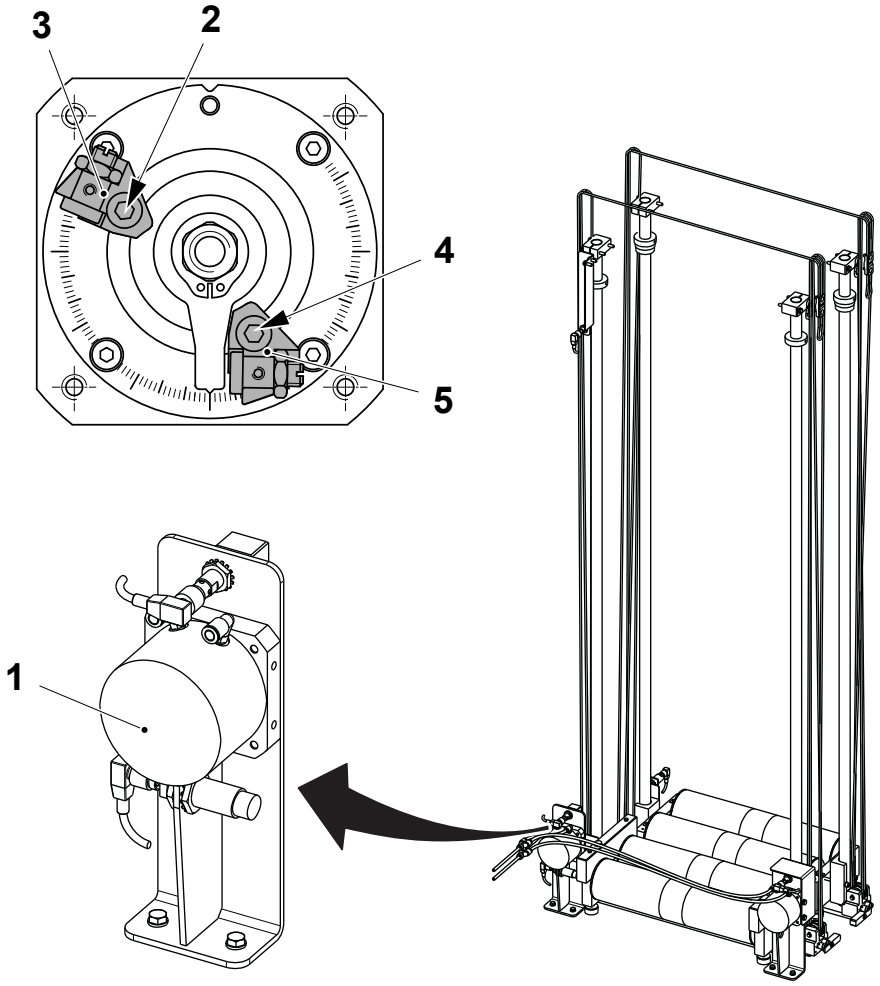

1 Protection
2 Screw
3 Mechanical stop
4 Screw
5 Mechanical stop

(Cont'd)

TechPub_2614345_0108 - 0702_3048222_01.fm

(Cont'd)

e) On the locking device on the RH side (strip magazine side), remove the protection (6).

f) Loosen the screw (7) and move the mechanical stop (8) to 4º.

g) Loosen the screw (9) and move the mechanical stop (10) to 240º.

h) Fit back the protection (6).

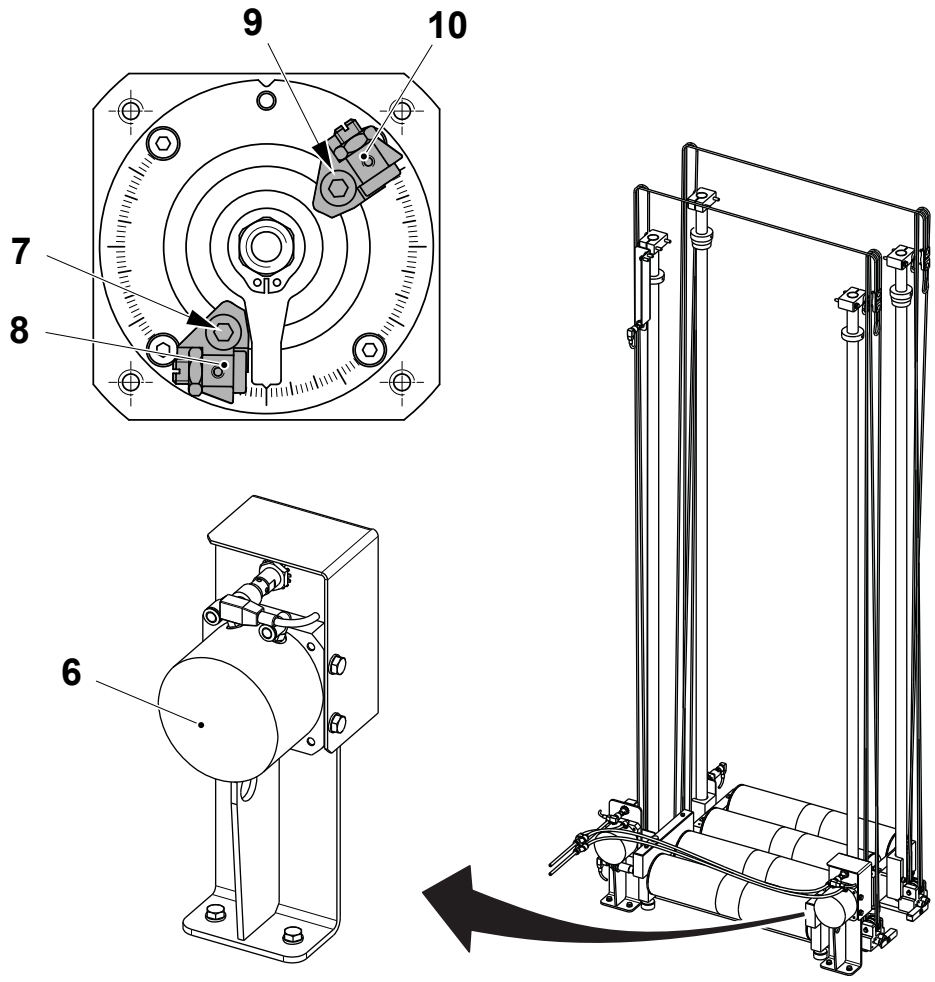

6 Protection
7 Screw
8 Mechanical stop
9 Screw
10 Mechanical stop

TechPub_2614345_0108 - 0702_3048222_01.fm

8.10 Covering Panel

SPC Reference	2746328-0200

8.10-1 Covering Panel - Check

Machine Status	Mains Power ON Air OFF Steam ON Water OFF
SPC Reference	2746328-0200

Check that:

- the safety switches operate when the doors are opened. If not, change the defective switch and set it, see 8.10-2 Covering Panel - Set Safety Switches.

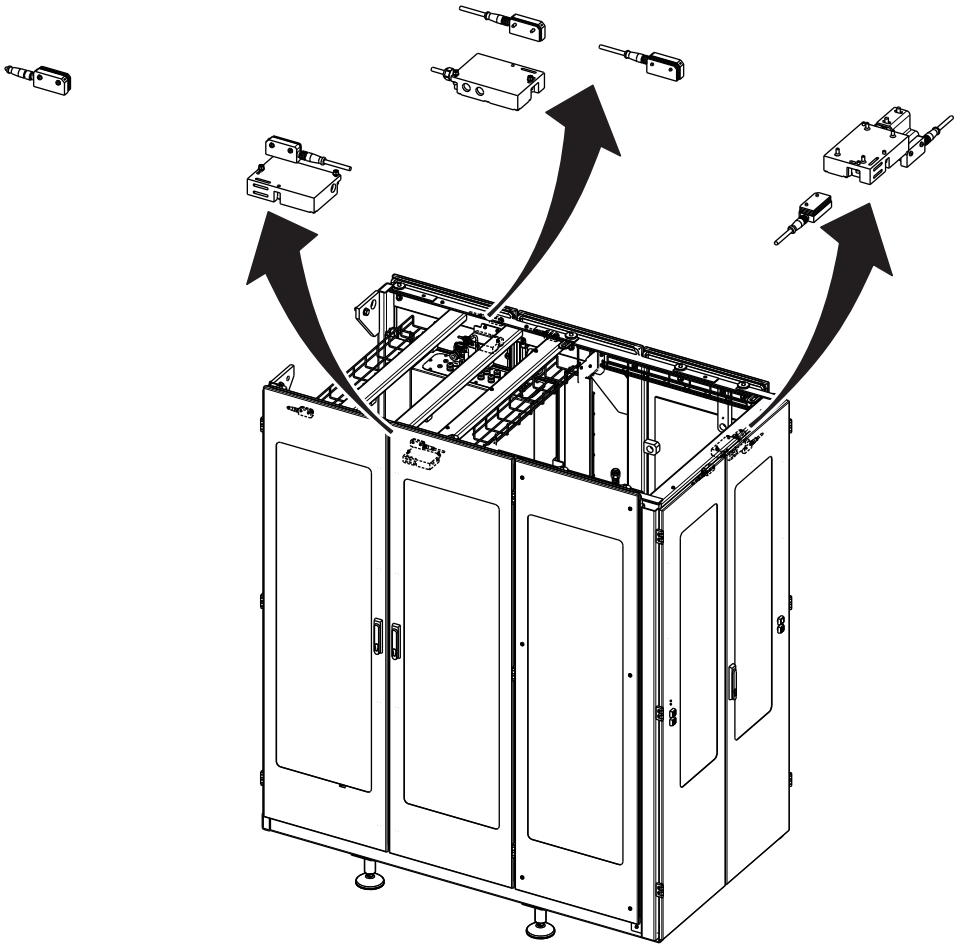

(Cont'd)

TechPub_2614345_0108 - 0702_3048223_01.fm

(Cont'd)

- the rubber strip (1) is not worn or damaged. If necessary, change the rubber strip (1)
- the rubber strip (1) is fitted correctly. If necessary, adjust the rubber strip (1)
- the locking arms (2) run smoothly in the guide lugs (3)
- the locking arms (2) engage with the locking plates (4) and (5) when the door is closed
- the locking arms (2) are free from the locking plates (4) and (5) when the door is opened
- the latch (6) locks when the door is closed

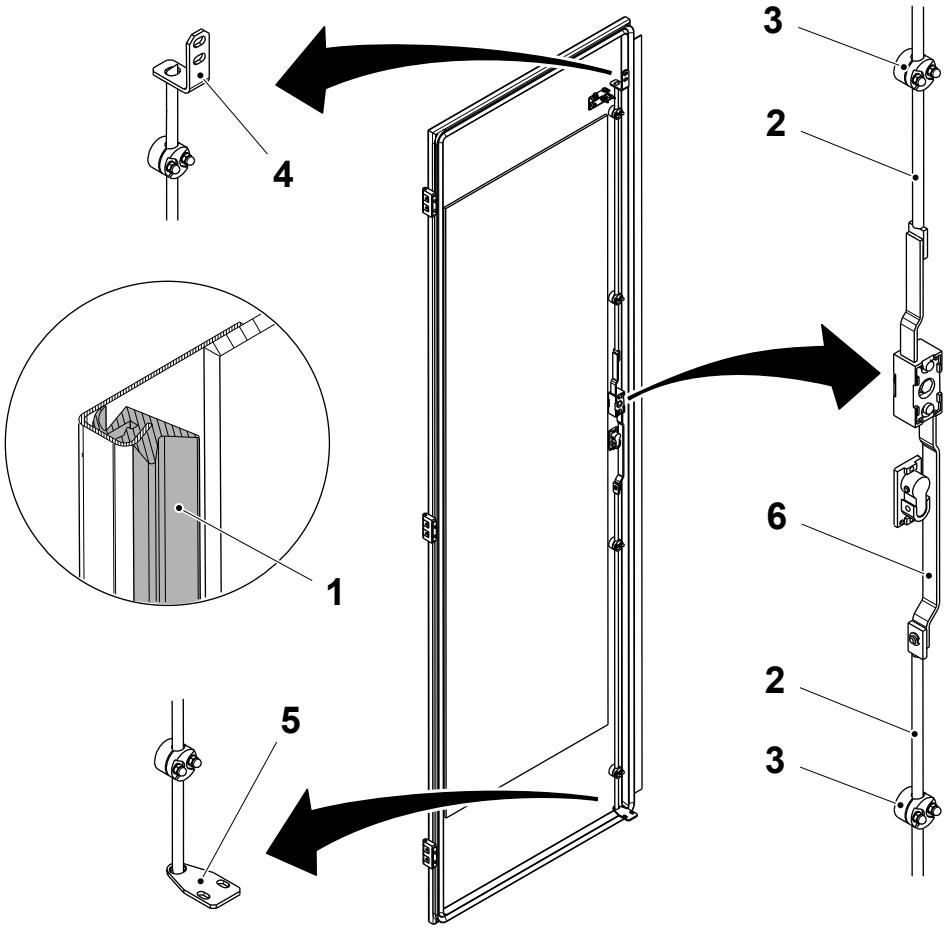

1 Rubber strip
2 Locking arm
3 Guide lug
4 Locking plate
5 Locking plate
6 Latch

TechPub_2614345_0108 - 0702_3048223_01.fm

8.10-2 Covering Panel - Set Safety Switches

Machine Status	Mains Power ON Air OFF Steam ON Water OFF
SPC Reference	2746328-0200

a) On every safety switches (grey marked) loosen the screws (1) set the distance **A** between the switch (2) and the key holder (3).

b) Close the doors.

c) Check if the DOOR OPEN alarm on the TPOP is still ON. If the alarm is ON, repeat the procedure until the doors can be closed without any alarm.

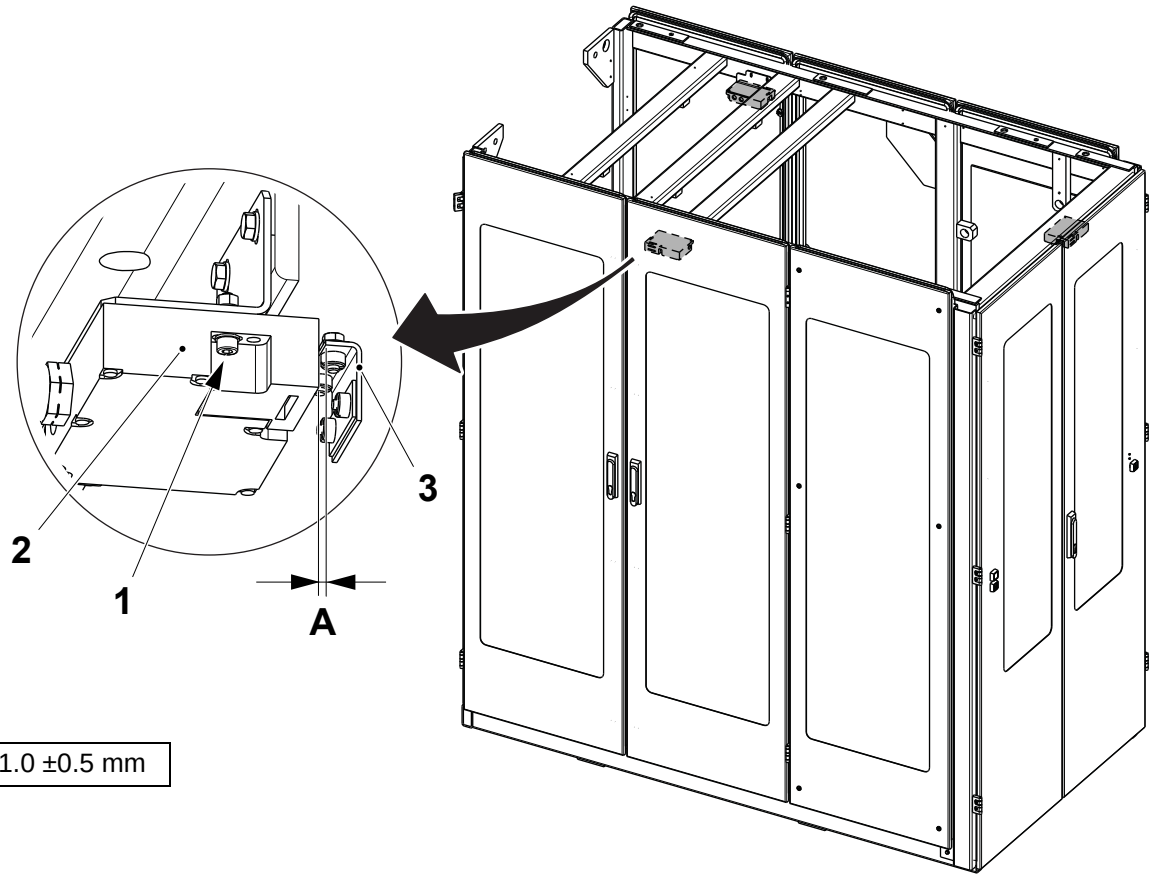

A = 1.0 ±0.5 mm

1 Screw
2 Switch
3 Key holder

TechPub_2614345_0108 - 0702_3048223_01.fm

8.10-3 Covering Panel - Change Safety Key

Machine Status	Mains Power OFF Air OFF Steam ON Water OFF
Special Equipment	Tool for Snake Eyes M5 Screws TP No. 90600-2975 Tool for Special Round Nuts TP No. 2863968-0000
SPC Reference	2746328-0200

If the safety key (1) is broken or damaged, change as follows.

a) Loosen the nuts (2) using the required tool.

b) Remove the screws (3) and change the safety key (1).

c) Tighten the nuts (2) using the required tool.

d) Set the safety switch, see 8.10-2 Covering Panel - Set Safety Switches.

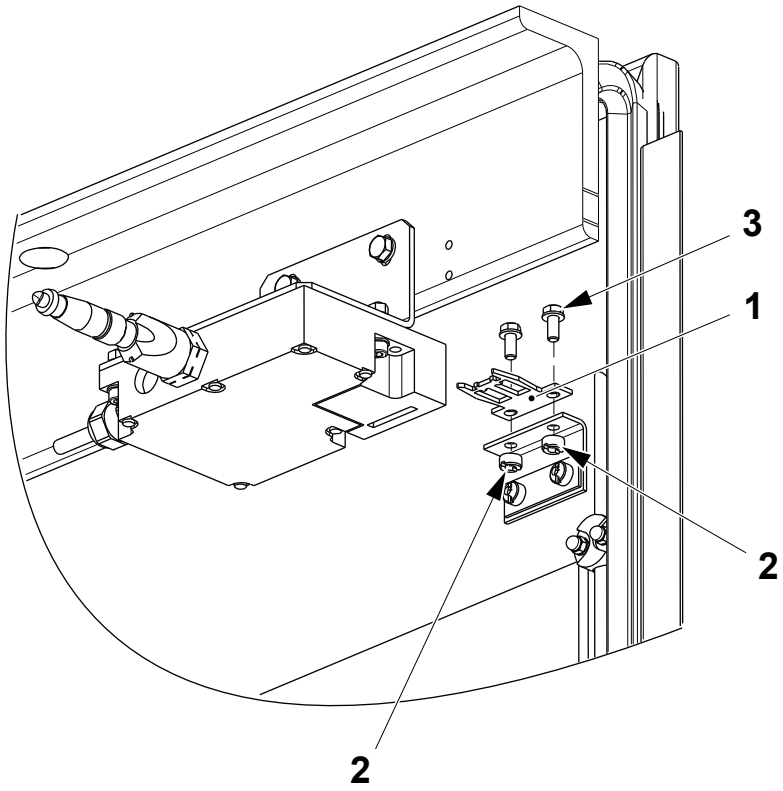

1 Safety key
2 Nut
3 Screw

TechPub_2614345_0108 - 0702_3048223_01.fm

8.11 Bobbin Brake

SPC Reference	2731222-0100

8.11-1 Bobbin Brake - Set

Machine Status	Mains Power OFF Air OFF Steam ON Water OFF
SPC Reference	2731222-0100

Note! To set the pressure of the cylinder (2) see 8.7-4 Pneumatic Panel - Set Jumbo Reel Brake Pressure.

a) When the piston rod (1) of the cylinder (2) is fully open, set the distance **A** by means of the nut (3).

Note! Take note that the mounting plate (4) is updated. The new mounting plate (4) is introduced for Tetra Pak A3/Speed from T-order 21215/00070.

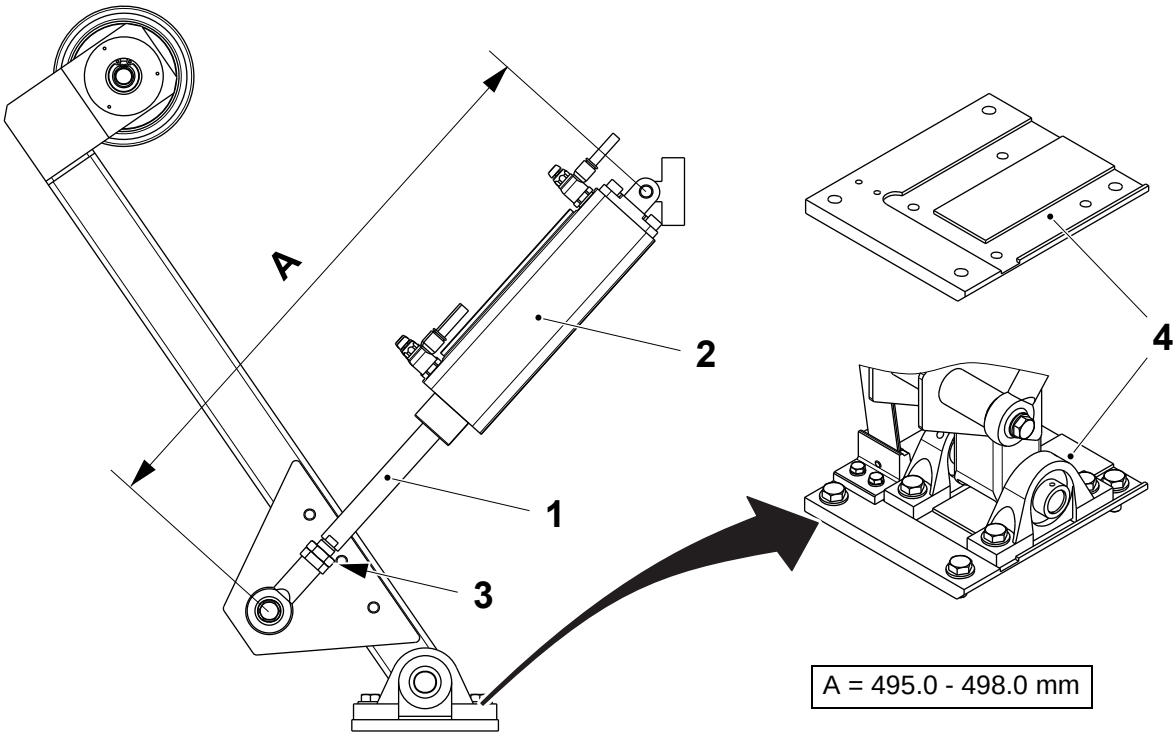

1 Piston rod
2 Cylinder
3 Nut
4 Plate

(Cont'd)

TechPub_2614345_0108 - 0703_3048224_01.fm

(Cont'd)

Mounting Plate Before T-order 21215/00070 for Tetra Pak A3/ Speed

b) Set the distance **B** between the wheel (5) and the magazine rod (6) by adjusting the position of the plate (7) with the screws (8).

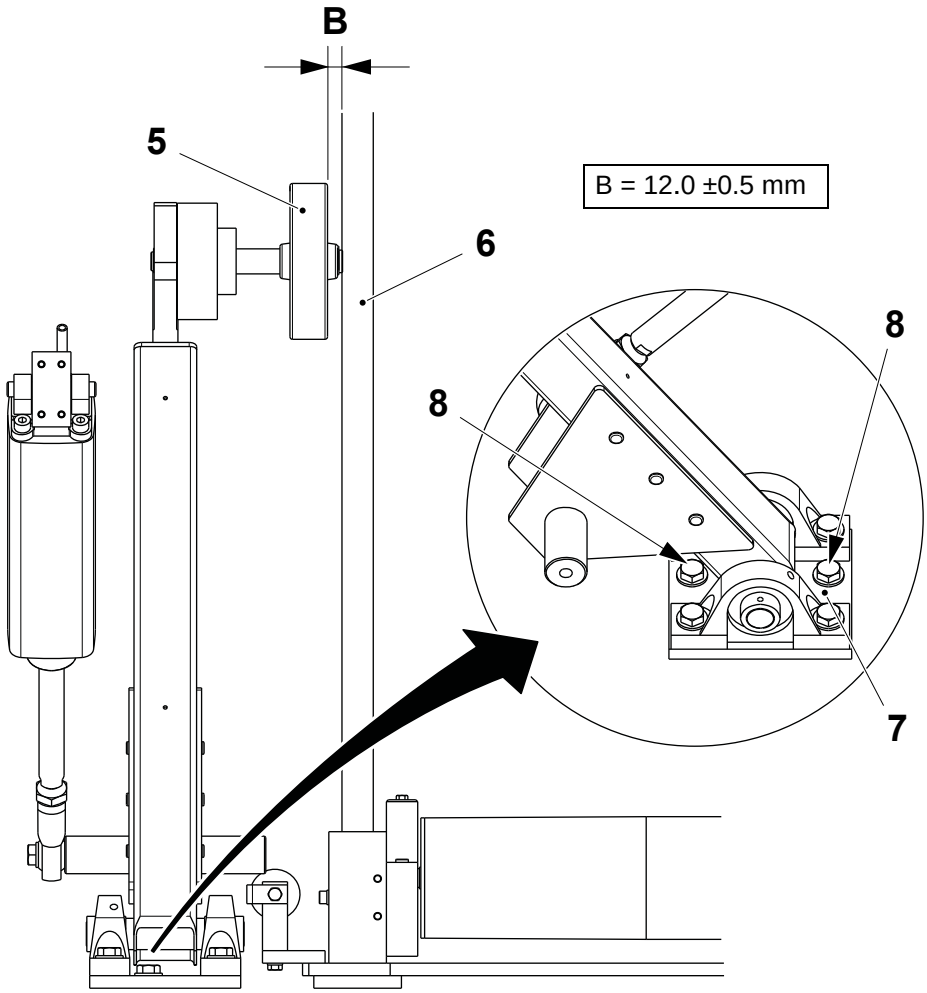

5 Wheel
6 Magazine rod
7 Plate
8 Screw

(Cont'd)

TechPub_2614345_0108 - 0703_3048224_01.fm

(Cont'd)

Mounting Plate From T-order 21215/00070 for Tetra Pak A3/Speed

c) Check that the two bearing housings (9) are in contact with the mounting plate (4) edge, see arrows.

d) Check that the wheel (5) is aligned and in full contact with the packaging material reel. If necessary, loosen the screws (10) and adjust the bearing housings (9) position.

e) Check that the cylinder (2) can rotate freely around the joint (11).

f) Check that the wheel (5) is not in contact with the magazine (12) when the cylinder (2) is fully extended.

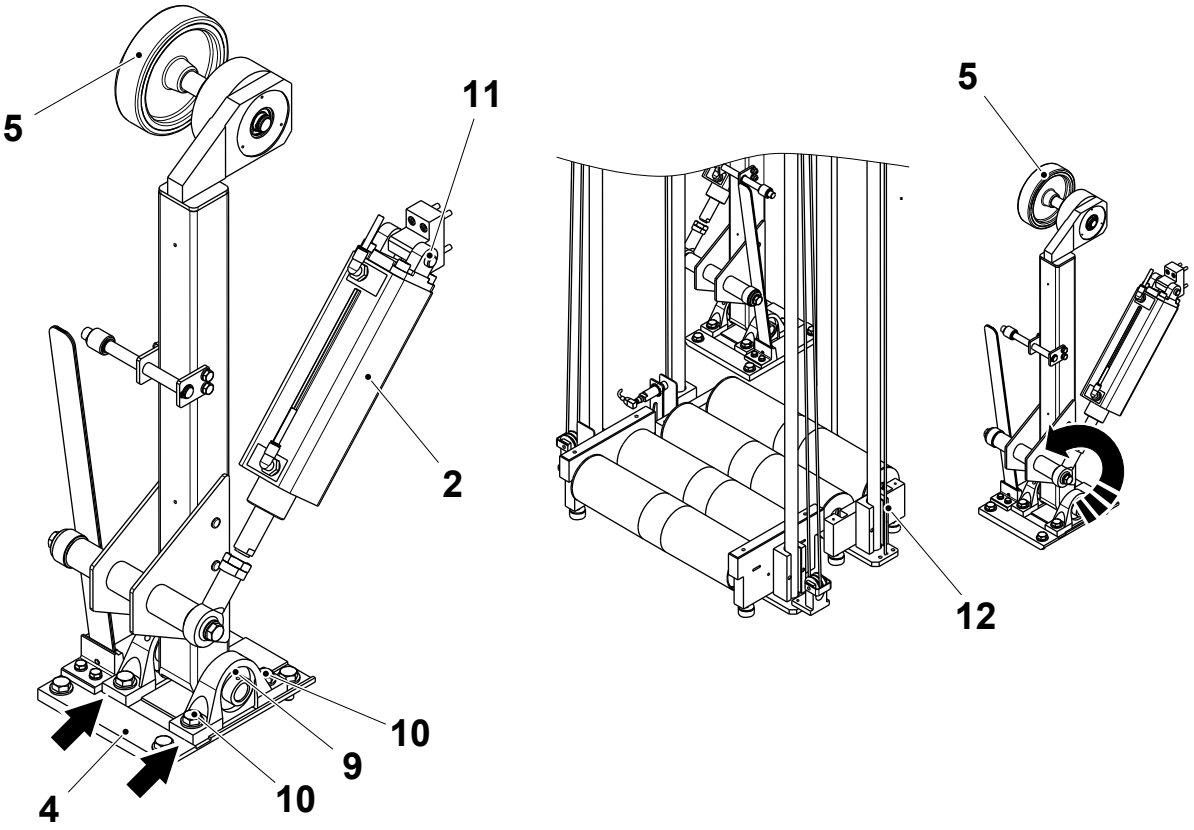

2 Cylinder
4 Plate
5 Wheel
9 Bearing housing
10 Screw
11 Joint
12 Magazine

(Cont'd)

TechPub_2614345_0108 - 0703_3048224_01.fm

(Cont'd)

Set Pressure

CAUTION

Risk of personal injury.

Do not set the bobbin brake pressure higher than recommended to avoid that the bobbin brake cylinders are too powerful. Lock the pressure regulator (1) with a padlock after setting.

a) Turn the air valve ON.

b) Remove the lock from the pressure regulator (1).

c) Set the bobbin brake pressure with the pressure regulator (1), see 10.1 Technical Data for the correct value.

d) Fit the lock to the pressure regulator (1).

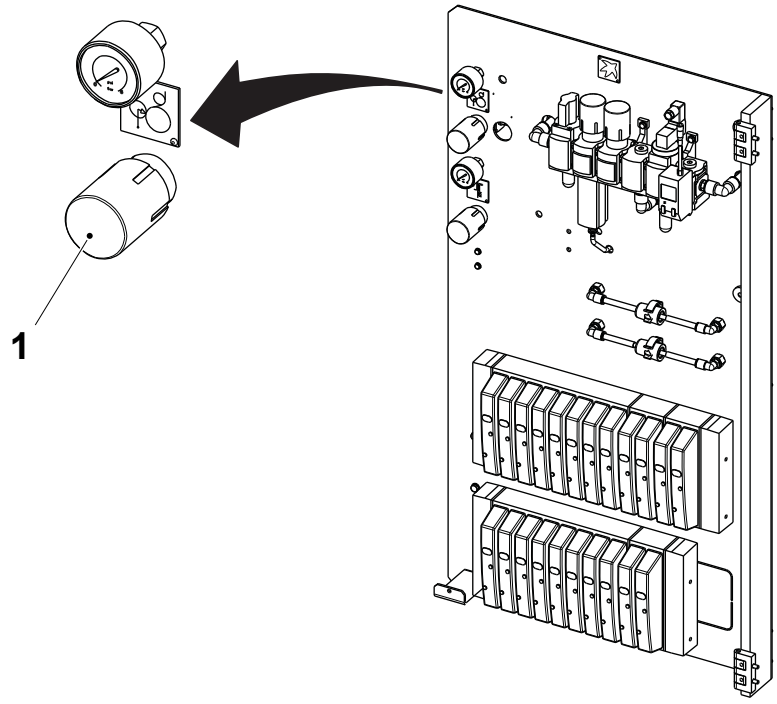

1 Pressure regulator

TechPub_2614345_0108 - 0703_3048224_01.fm

8.12 Reel Trolley

SPC Reference	90600-3339

8.12-1 Reel Trolley - Check

Machine Status	Mains Power OFF Air OFF Steam ON Water OFF
SPC Reference	90600-3339

a) Pull the brake handle (1) and check that the brake releases. If not, see 8.12-8 Reel Trolley - Set Brake.

b) Check that all connections are free from oil. Clean if necessary.

c) Pump up the arms to their highest position and check that the cylinder piston (2) is dry. Clean if necessary.

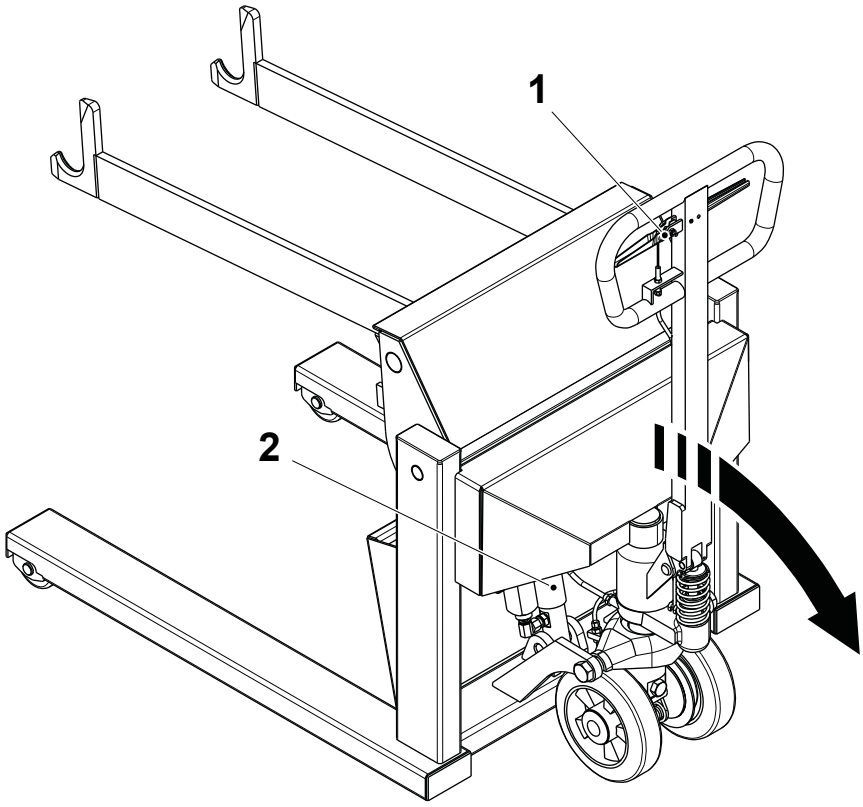

1 Handle
2 Cylinder piston

(Cont'd)

TechPub_2614345_0108 - 0702_3048225_01.fm

(Cont'd)

d) Put a packaging material reel in the trolley and pump up the arms until the reel lifts from the floor. Wait for 10 minutes.

e) Make sure that the reel does not sink, sinking can be caused by a broken pump cylinder (3). Change if necessary, see 8.12-2 Reel Trolley - Change Pump Cylinder.

f) Pump up the arms again until the reel lifts from the floor and then let it down while pulling the handle (1). If the arms sink very quickly, set the regulating valve (4), see 8.12-3 Reel Trolley - Set Regulating Valve.

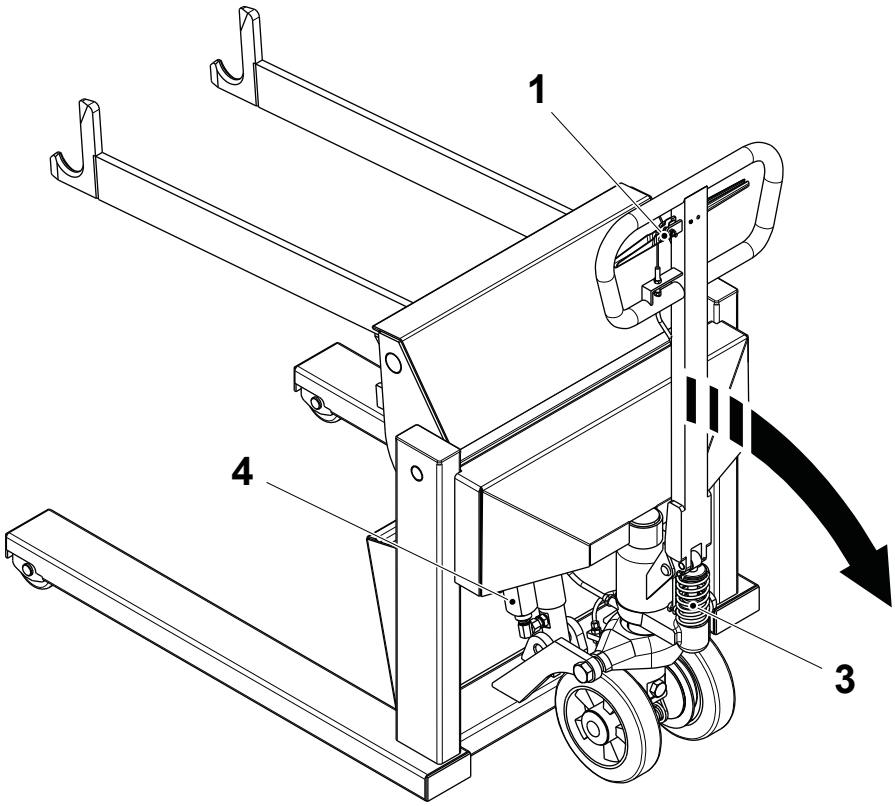

1 Handle
3 Pump cylinder
4 Regulating valve

TechPub_2614345_0108 - 0702_3048225_01.fm

8.12-2 Reel Trolley - Change Pump Cylinder

Machine Status	Mains Power OFF Air OFF Steam ON Water OFF
Consumables	Hydraulic Oil, TP No. 90459-1310
SPC Reference	90600-3339

a) Release the tie rod (1) from the valve arm (2).
b) Remove the screw (3) from the axle pin (4).
c) Turn the axle pin (4) clockwise a little and pull out the tie rod (1).
d) Pull out the axle pin (4) and remove the handle (5).
e) Remove the split pin (6), the washer (7) and the spring (8).

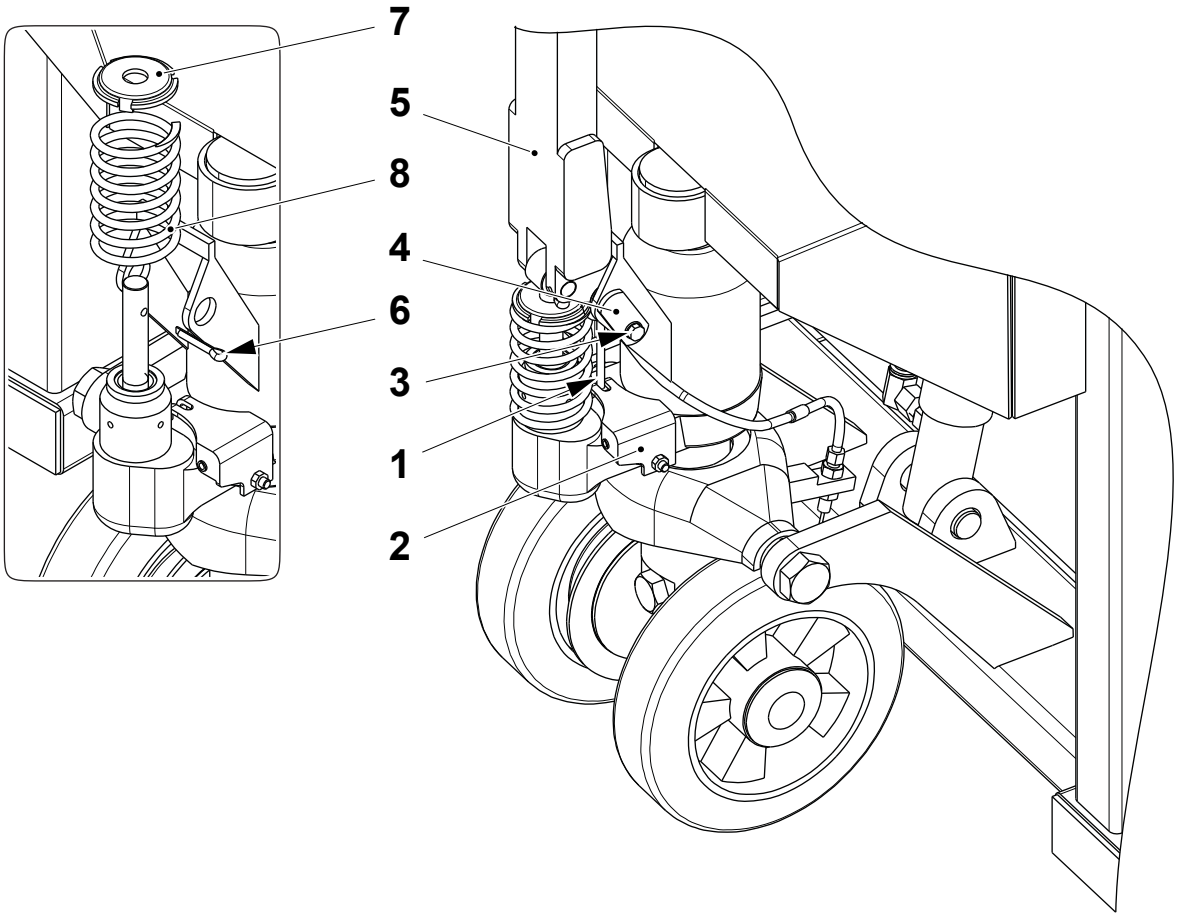

1 Tie rod
2 Valve arm
3 Screw
4 Axle pin
5 Handle
6 Split pin
7 Washer
8 Spring

(Cont'd)

TechPub_2614345_0108 - 0702_3048225_01.fm

(Cont'd)

f) Unscrew the cylinder (9).

g) Remove and change the O-ring (10).

h) Pull the axle (11) in the direction indicated by the arrow in the illustration.

i) Remove the oil seal (12), the retaining ring (13), the spacer (14) and the seal (15).

j) Change the oil seal (12) and the seal (15).

k) Assemble in the reverse order.

l) Put the arms in the lowered position. If necessary, remove the plug (16) and fill with oil, code **C**, see 10.3.1 Lubricants. Fill until oil starts to flow out of the plug hole.

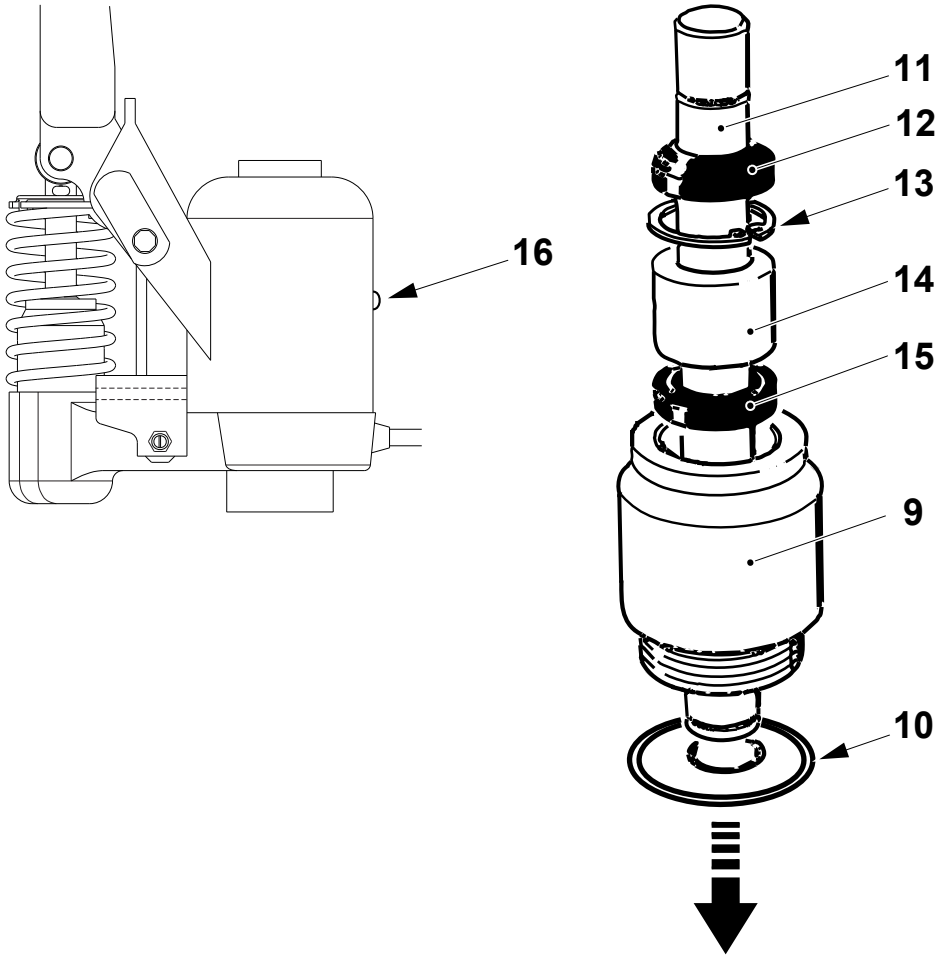

9 Cylinder
10 O-ring
11 Axle
12 Oil seal
13 Retaining ring
14 Spacer
15 Seal
16 Plug

TechPub_2614345_0108 - 0702_3048225_01.fm

8.12-3 Reel Trolley - Set Regulating Valve

Machine Status	Mains Power OFF Air OFF Steam ON Water OFF
SPC Reference	90600-3339

a) Pump up the handle (1) to lift the arms (2) to their highest position.

b) Pull in the handle (3) to lower the arms. Set the knob (4) so that the arms reach the lowest position in 8 - 9 seconds.

c) If it is not possible to set the correct value, change the sink valve, see 8.12-4 Reel Trolley - Change Sink Valve.

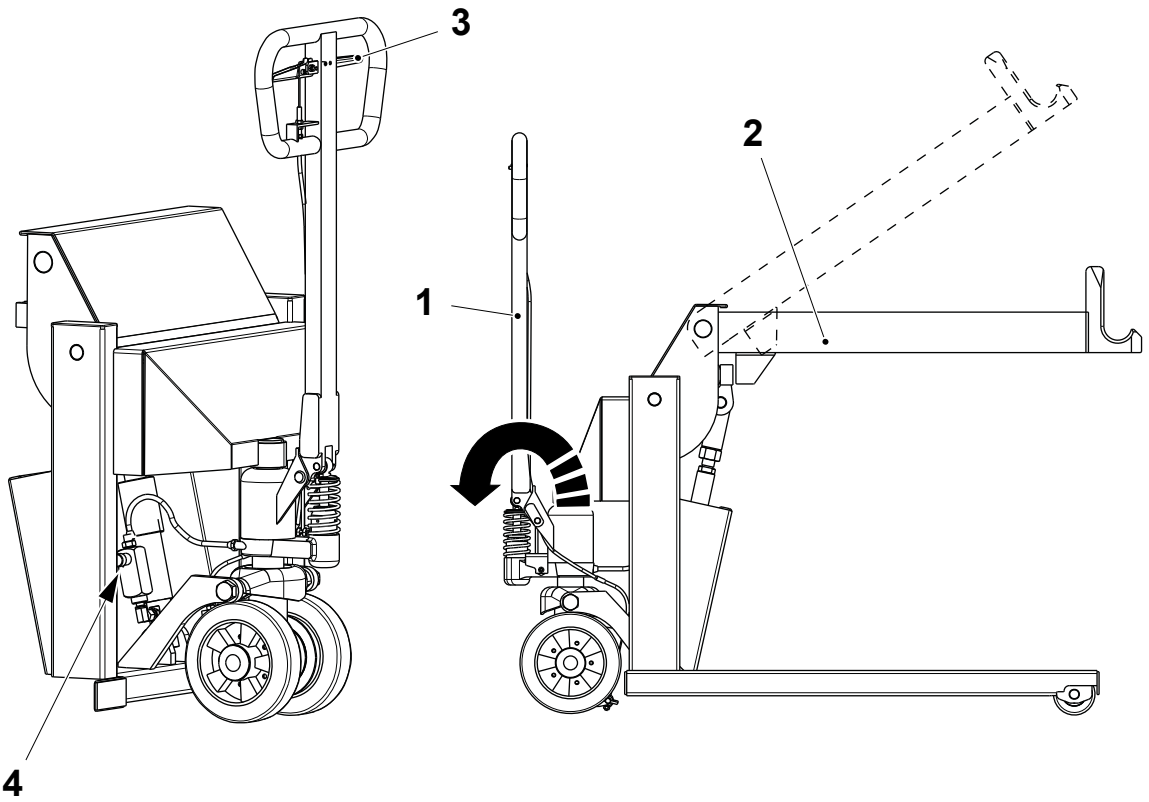

1 Handle
2 Arm
3 Handle
4 Knob

TechPub_2614345_0108 - 0702_3048225_01.fm

8.12-4 Reel Trolley - Change Sink Valve

Machine Status	Mains Power OFF Air OFF Steam ON Water OFF
Consumables	Hydraulic Oil, TP No. 90459-1310
SPC Reference	90600-3339

a) Release the tie rod (1) and drive out the spring pin (2).

b) Remove the valve arm (3).

c) Unscrew and remove the sink valve (4).

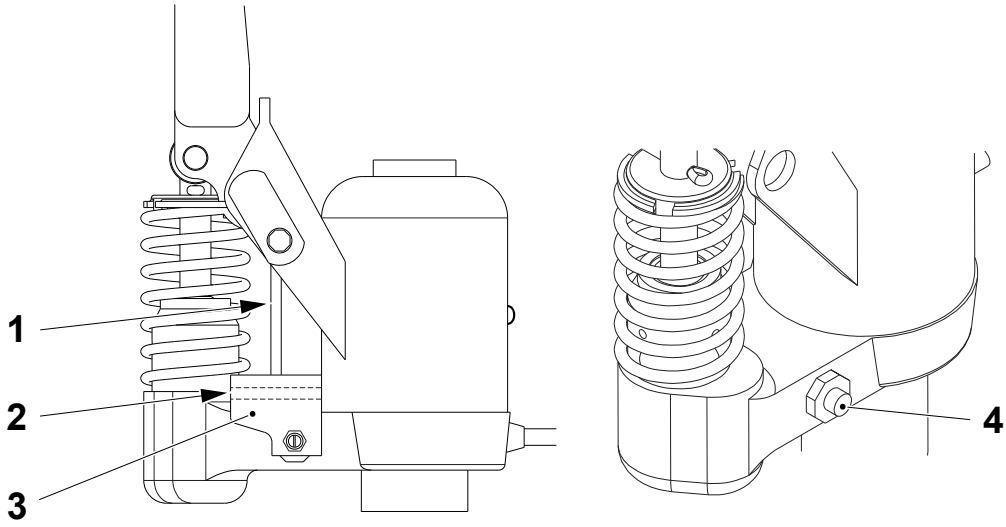

1 Tie rod
2 Spring pin
3 Valve arm
4 Sink valve

(Cont'd)

TechPub_2614345_0108 - 0702_3048225_01.fm

(Cont'd)

d) Remove and change the O-rings (5), the copper washer (6) and the teflon washer (7).

e) Assemble in the reverse order.

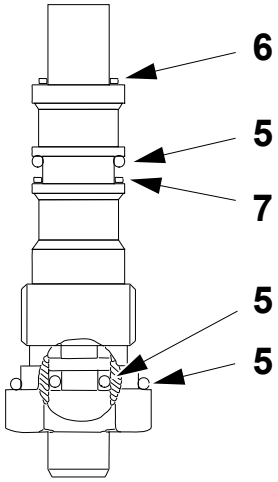

5 O-ring
6 Copper washer
7 Teflon washer

(Cont'd)

TechPub_2614345_0108 - 0702_3048225_01.fm

(Cont'd)

f) Pump up the arms to their highest position.

g) Loosen the lock nut (8).

h) Unscrew the setting screw (9).

i) Press in the handle (sink) and, at the same time, turn the screw (9) to the point out, where the lifting arms start to sink.

j) Without moving the screw (9), tighten the lock nut (8).

k) Put the arms of the trolley in their lowest position. If necessary, remove the plug (10) and fill with oil, code **C**, see 10.3.1 Lubricants. Fill until oil starts to flow out of the plug hole.

l) Set the sink time, see 8.12-3 Reel Trolley - Set Regulating Valve.

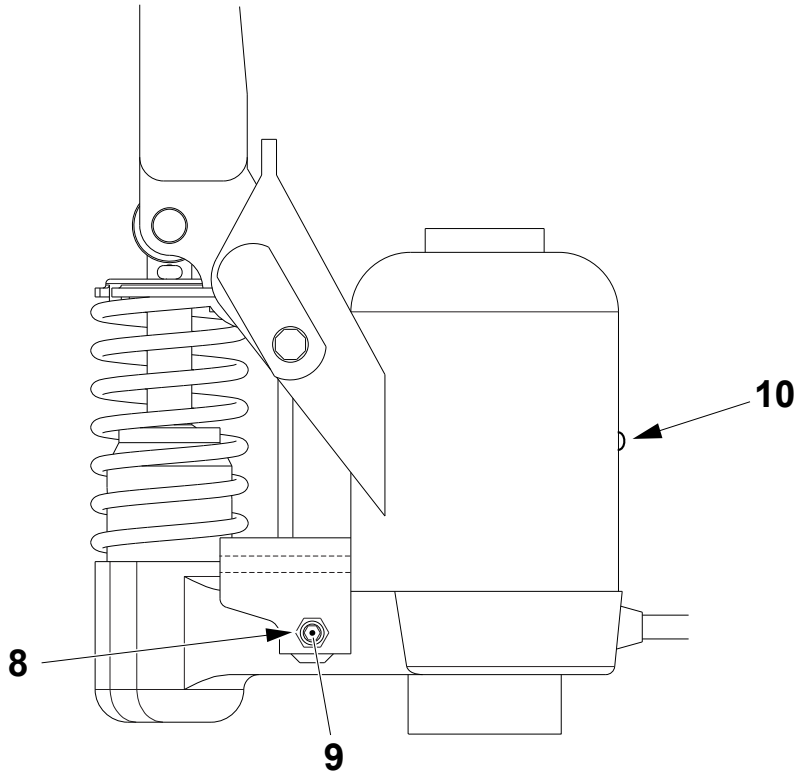

8 Lock nut
9 Setting screw
10 Plug

TechPub_2614345_0108 - 0702_3048225_01.fm

8.12-5 Reel Trolley - Overhaul Lifting Cylinder

Machine Status	Mains Power OFF Air OFF Steam ON Water OFF
Consumables	Hydraulic Oil, TP No. 90459-1310
SPC Reference	90600-3339

a) Disconnect the oil connection (1).

b) Drive out the spring pins (2) and remove the axles (3).

c) Pull out the cylinder piston (4) and change the seal (5).

d) Remove the retaining ring (6) and the spacer (7).

e) Change the seal (8).

f) Assemble in the reverse order. If necessary, remove the plug (9) and fill with oil, code **C**, see 10.3.1 Lubricants. Fill until oil starts to flow out of the plug hole.

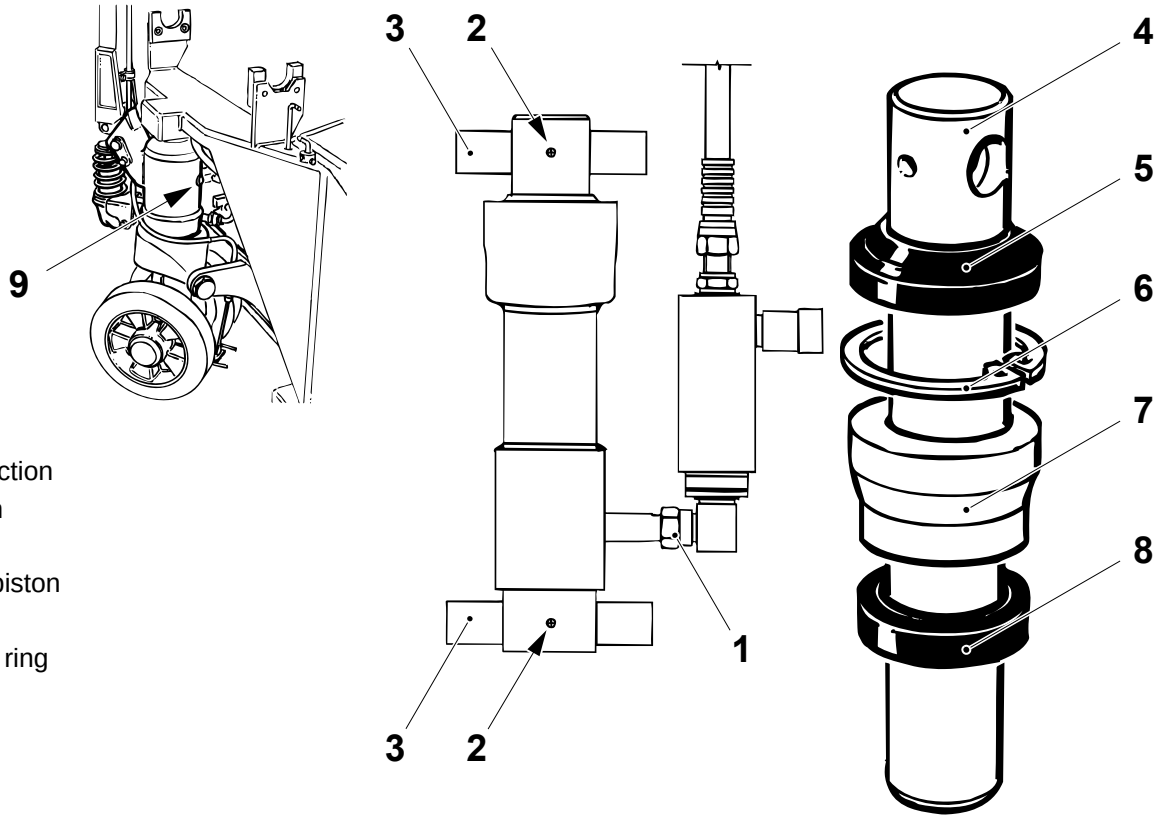

1 Oil connection
2 Spring pin
3 Axle
4 Cylinder piston
5 Seal
6 Retaining ring
7 Spacer
8 Seal
9 Oil plug

TechPub_2614345_0108 - 0702_3048225_01.fm

8.12-6 Reel Trolley - Remove Fork Wheel

Machine Status	Mains Power OFF Air OFF Steam ON Water OFF
SPC Reference	90600-3339

a) Position the trolley on its side.

b) Remove the pins (1) from the axle (2) and pull out the axle.

c) Remove the wheel (3) and the sleeves (4).

d) Assemble in the reverse order.

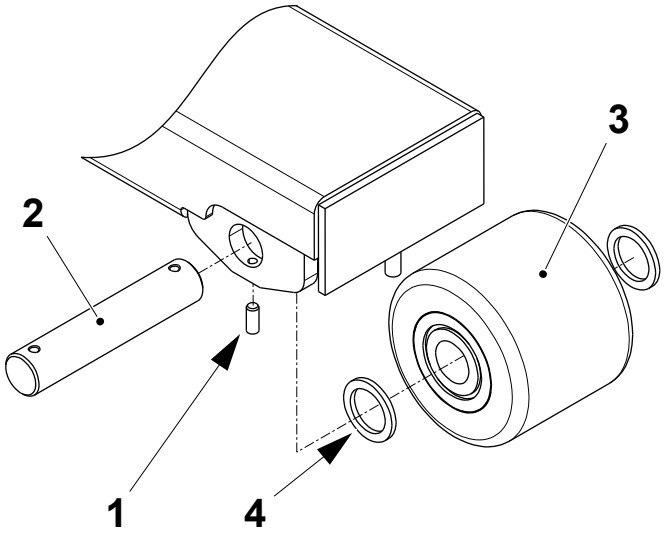

1 Pin
2 Axle
3 Wheel
4 Sleeve

TechPub_2614345_0108 - 0702_3048225_01.fm

8.12-7 Reel Trolley - Remove Guide Wheel

Machine Status	Mains Power OFF Air OFF Steam ON Water OFF
SPC Reference	90600-3339

a) Position the trolley on its side.
b) Remove the plastic plug (1), the retaining ring (2) and the wheel (3).
c) Release the torsion spring (4).
d) Remove the spring (5) holding the two brake linings (6) together.
e) Assemble in the reverse order.

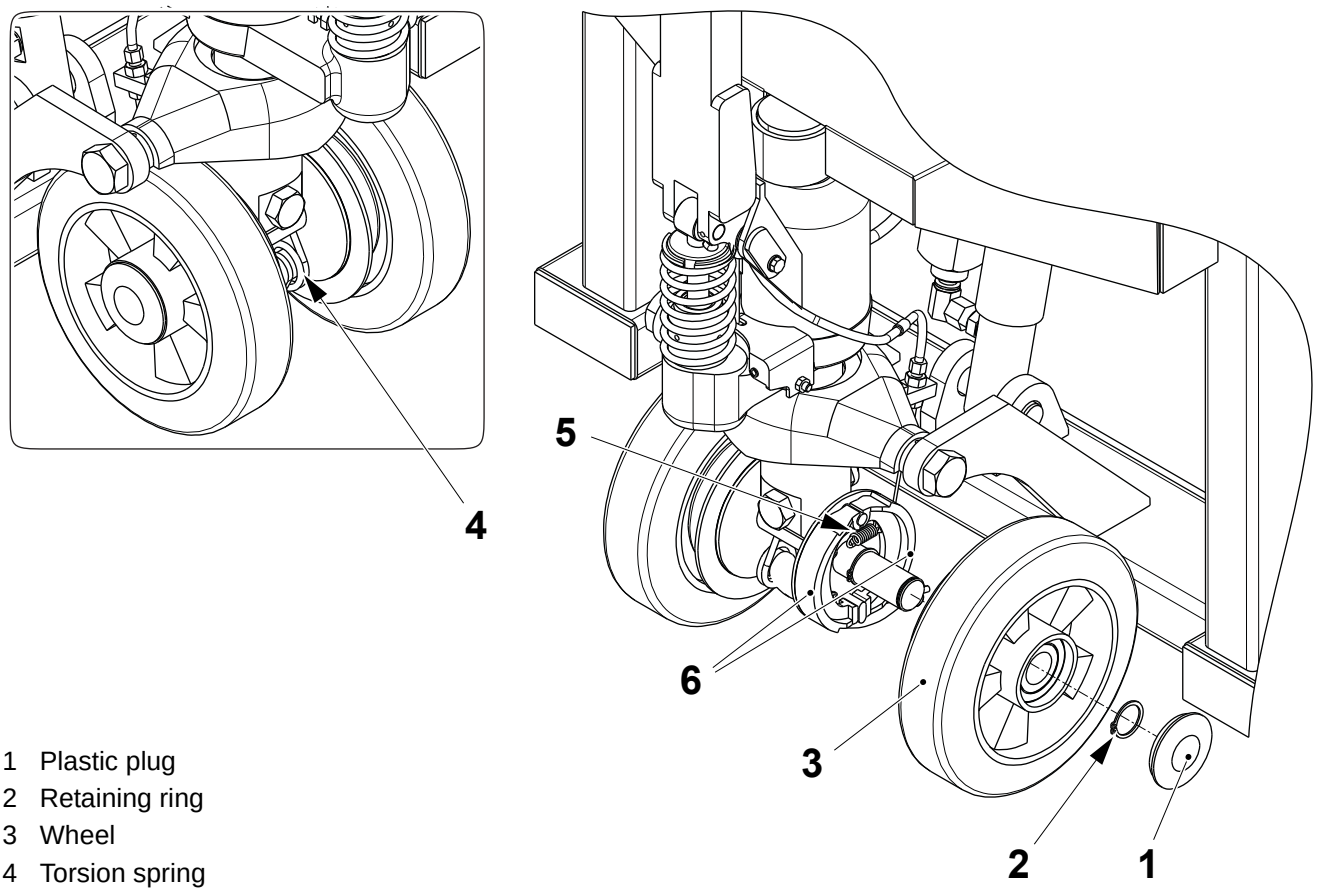

1 Plastic plug
2 Retaining ring
3 Wheel
4 Torsion spring
5 Spring
6 Brake lining

TechPub_2614345_0108 - 0702_3048225_01.fm

8.12-8 Reel Trolley - Set Brake

Machine Status	Mains Power OFF Air OFF Steam ON Water OFF
SPC Reference	90600-3339

Press in the brake handle to the distance **A**.

Adjust the nuts (1) and (2) until the brake releases.

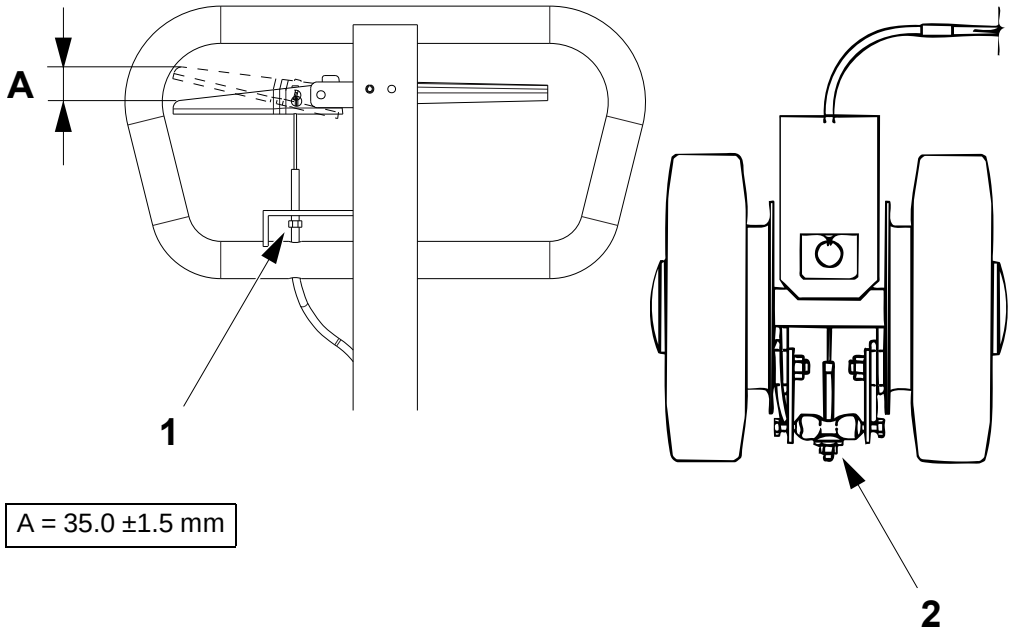

A = 35.0 ±1.5 mm

1 Nut
2 Nut

TechPub_2614345_0108 - 0702_3048225_01.fm

This page intentionally left blank

TechPub_2614345_0108 - 0702_3048225_01.fm

9 Electrical System

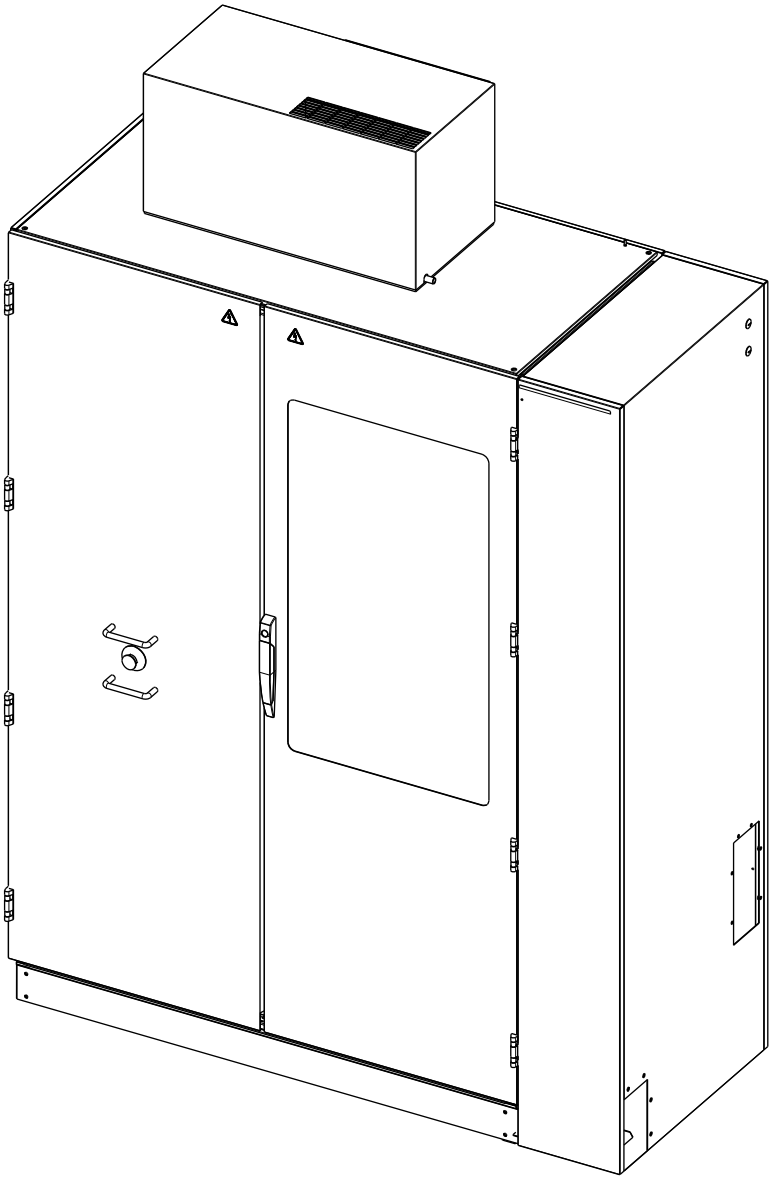

TechPub_2614345_0108 - 0802_3048226_01.fm

Electrical System - Description

SPC Reference	648539-0400

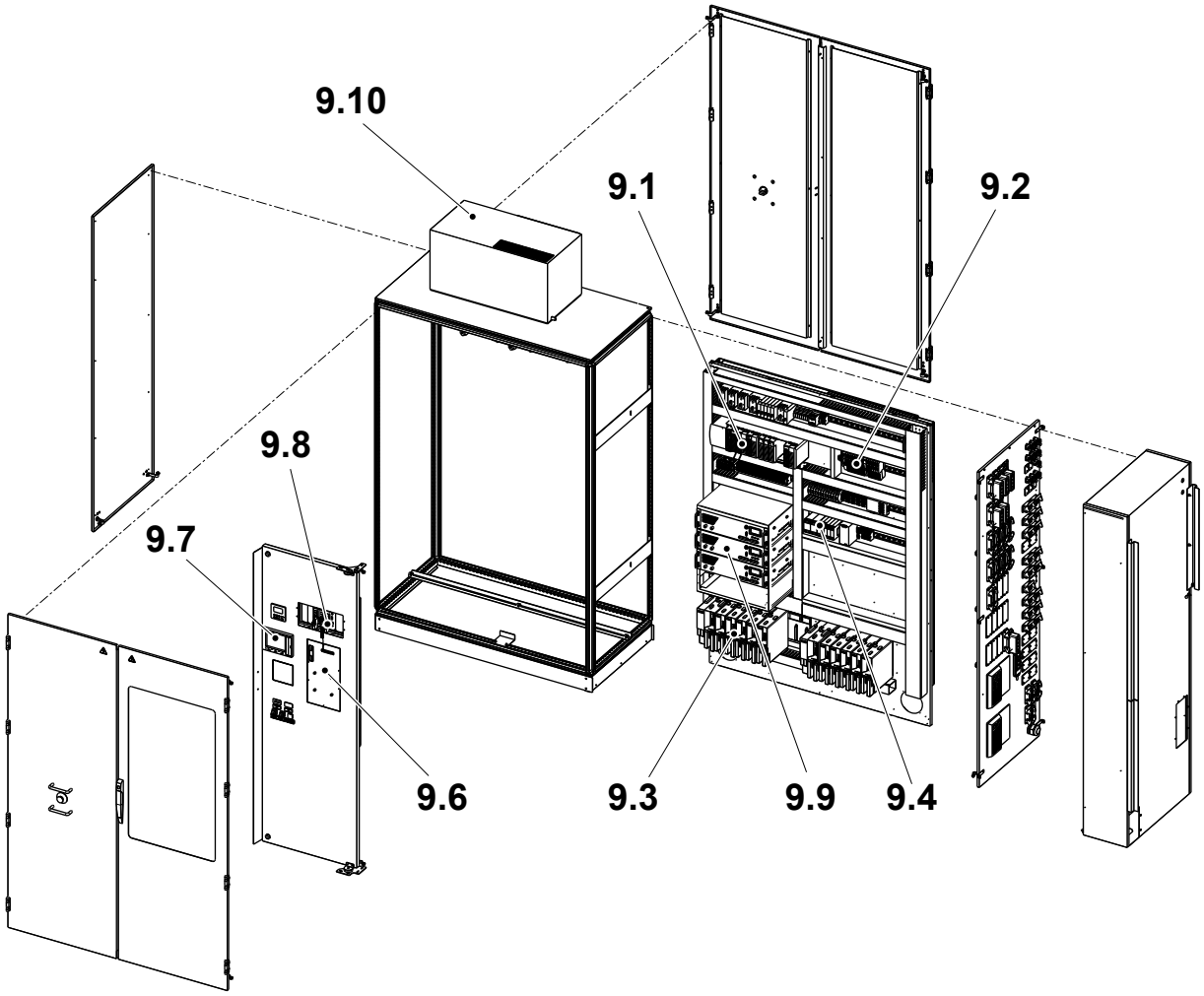

9.1 PLC
9.2 Distributed I/O
9.3 Servo System
9.4 Safety System
9.5 Power Supply
9.6 HMI and PLMS
9.7 Control Devices and Sensors
9.8 TMCC2 Controller
9.9 TPIH
9.10 Cooling System

TechPub_2614345_0108 - 0802_3048226_01.fm

9.1 PLC . . . . . 9 - 9

9.1.1 Preparation for PLC Communication . . . . . 9 - 9

9.1.1-1 Preparation for PLC Communication - Configure PC Network Communications . . . . . 9 - 9

9.1.1-2 Preparations for PLC Communication - Configure RSLinx . . . . . 9 - 17

9.1.2 CPU Module . . . . . 9 - 21

9.1.2-1 CPU Module - Change . . . . . 9 - 21

9.1.2-2 CPU Module - Load Firmware . . . . . 9 - 27

9.1.2-3 CPU Module - Download Program . . . . . 9 - 31

9.1.2-4 CPU Module - LED Description . . . . . 9 - 42

9.1.2-5 CPU Module - Change Battery . . . . . 9 - 44

9.1.3 EtherNet/IP Module . . . . . 9 - 46

9.1.3-1 EtherNet/IP Module - Change . . . . . 9 - 46

9.1.3-2 EtherNet/IP Module - Set IP Address . . . . . 9 - 51

9.1.3-3 EtherNet/IP Module - Load Firmware . . . . . 9 - 57

9.1.3-4 EtherNet/IP Module - LED Description . . . . . 9 - 58

9.1.4 Digital I/O Modules . . . . . 9 - 60

9.1.4-1 Digital I/O Modules - Change . . . . . 9 - 60

9.1.4-2 Digital I/O Modules - LED Description . . . . . 9 - 65

9.2 Distributed I/O . . . . . 9 - 68

9.2-1 Distributed I/O - Description . . . . . 9 - 68

9.2.1 DeviceNet Scanner Module . . . . . 9 - 70

9.2.1-1 DeviceNet Scanner Module - Change . . . . . 9 - 70

9.2.1-2 DeviceNet Scanner Module - Set Node Address and Baud Rate . . . . . 9 - 75

9.2.1-3 DeviceNet Scanner Module - Load Firmware . . 9 - 76

9.2.1-4 DeviceNet Scanner Module - Download Program . . . . . 9 - 77

9.2.1-5 DeviceNet Scanner Module - LED Description . 9 - 81

9.2.1-6 DeviceNet Scanner Module - Error Codes . . . . . 9 - 83

9.2.1-7 DeviceNet Scanner Module - Register EDS File(s) . . . . . 9 - 87

9.2.2 DeviceNet Point I/O . . . . . 9 - 98

TechPub_2614345_0108 - 0802_3048226_01.fm

9.2.2.1 DeviceNet Point I/O Adapter . . . . . 9 - 98

9.2.2.1-1 DeviceNet Point I/O Adapter - Change . . . . . 9 - 98

9.2.2.1-2 DeviceNet Point I/O Adapter - Set Node Address . . . . . 9 - 102

9.2.2.1-3 DeviceNet Point I/O Adapter - Download Program . . . . . 9 - 103

9.2.2.1-4 DeviceNet Point I/O Adapter - LED Description . . . . . 9 - 107

9.2.2.2 DeviceNet Point I/O Module. . . . . 9 - 111

9.2.2.2-1 DeviceNet Point I/O Module - Change . . . . . .9 - 111

9.2.2.2-2 DeviceNet Point I/O Module - LED Description . . . . . 9 - 115

9.2.3 DeviceNet Compact Block I/O . . . . . 9 - 122

9.2.3-1 DeviceNet Compact Block I/O - Change . . . . 9 - 122

9.2.3-2 DeviceNet Compact Block I/O - Set Node Address . . . . . 9 - 125

9.2.3-3 DeviceNet Compact Block I/O - Download Program . . . . . 9 - 126

9.2.3-4 DeviceNet Compact Block I/O - LED Description . . . . . 9 - 130

9.2.4 DeviceNet PowerFlex . . . . . 9 - 132

9.2.4.1 DeviceNet PowerFlex Adapter . . . . . 9 - 132

9.2.4.1-1 DeviceNet PowerFlex Adapter - Change . . . . 9 - 132

9.2.4.1-2 DeviceNet PowerFlex Adapter - Set Node Address and Baud Rate . . . . . 9 - 136

9.2.4.1-3 DeviceNet PowerFlex Adapter - Download Program . . . . . 9 - 139

9.2.4.1-4 DeviceNet PowerFlex Adapter - LED Description . . . . . 9 - 143

9.3 Servo System . . . . . 9 - 149

9.3-1 Servo System - Description . . . . . 9 - 149

9.3.1 Sercos Module. . . . . 9 - 154

9.3.1-1 Sercos Module - Change . . . . . 9 - 154

9.3.1-2 Sercos Module - Load Firmware . . . . . 9 - 158

9.3.1-3 Sercos Module - LED Description . . . . . 9 - 159

9.3.2 Servo Drive . . . . . 9 - 163

9.3.2-1 Servo Drive - Change . . . . . 9 - 163

TechPub_2614345_0108 - 0802_3048226_01.fm

9.3.2-2 Servo Drive - Set Baud Rate . . . . . 9 - 169
9.3.2-3 Servo Drive - Load Firmware . . . . . 9 - 170
9.3.2-4 Servo Drive - LED Description . . . . . 9 - 171
9.3.2-5 Servo Drive - Error Codes . . . . . 9 - 173

9.3.3 Stepper Motor . . . . . 9 - 179

9.3.3-1 Stepper Motor - Set . . . . . 9 - 179
9.3.3-2 Stepper Motor - LED Description . . . . . 9 - 180

9.4 Safety System . . . . . 9 - 184

Description . . . . . 9 - 184
9.4-1 Safety System - Check . . . . . 9 - 185
9.4-2 Safety System - Troubleshooting . . . . . 9 - 197

9.4.1 Pluto Module . . . . . 9 - 199

9.4.1-1 Pluto Module - Load Program . . . . . 9 - 199
9.4.1-2 Pluto Module - LED Description . . . . . 9 - 206
9.4.1-3 Pluto Module - Configure in an Existing Application . . . . . 9 - 210
9.4.1-4 Pluto Module - Set ID-FIX Address after Replacing an ID-FIX . . . . . 9 - 213

9.5 Power Supply . . . . . 9 - 221

9.5.1 Frequency Converter . . . . . 9 - 221

9.5.1-1 Frequency Converter - Change Parameters . . . 9 - 221
9.5.1-2 Frequency Converters - Error Codes . . . . . 9 - 227

9.5.2 Overload Protection . . . . . 9 - 229

9.5.2-1 Overload Protection - Set . . . . . 9 - 229
9.5.2-2 Overload Protection - Set Base Unit(s) . . . . . 9 - 230

9.5.3 Residual Current Device . . . . . 9 - 231

9.5.3-1 Residual Current Device - Check . . . . . 9 - 231

9.5.4 Power Failure Relay . . . . . 9 - 233

9.5.4-1 Power Failure Relay - Set . . . . . 9 - 233

9.6 HMI and PLMS . . . . . 9 - 235

9.6-1 HMI and PLMS - Description . . . . . 9 - 235
9.6-2 HMI and PLMS - Log On Procedure . . . . . 9 - 237

TechPub_2614345_0108 - 0802_3048226_01.fm

9.6-3 HMI and PLMS - Install Software . . . . . 9 - 240
9.6-4 HMI and PLMS - Install DE Config Files . . . . 9 - 247
9.6.1 PLMS NRG Configurator. . . . . 9 - 249
Description . . . . . 9 - 249
9.6.1-2 PLMS NRG Configurator - Set Machine ID . . 9 - 250
9.6.1-3 PLMS NRG Configurator - Select Allowed Languages . . . . . 9 - 251
9.6.1-4 PLMS NRG Configurator - Export/Import Configuration . . . . . 9 - 252
9.6.1-5 PLMS NRG Configurator - Translate Non-Tetra Pak DE Event Codes . . . . . 9 - 256
9.6.1-6 PLMS NRG Configurator - Distribution Equipment Setup . . . . . 9 - 259
9.6.1-7 PLMS NRG Configurator - Defragment the IPC Hard Disk . . . . . 9 - 267
9.6.1-8 PLMS NRG Configurator - Set Date and Time 9 - 269
9.6.1-9 PLMS NRG Configurator - Operator Sheet Set Up . . . . . 9 - 272
9.6.2 PLMS NRG . . . . . 9 - 281
9.6.2-1 PLMS NRG - Copy Performance and Process Data . . . . . 9 - 281
9.6.3 HMI . . . . . 9 - 289
9.6.3-1 HMI - User Management Description . . . . . 9 - 289
9.6.3-2 HMI - User Management Log On . . . . . 9 - 291
9.6.3-3 HMI - User Management Change Password . . 9 - 294
9.6.4 Traceability. . . . . 9 - 301
9.6.4-1 Traceability - Configure JEID . . . . . 9 - 301
9.6.4-2 Traceability - Configure Printer Interface Layout . . . . . 9 - 306
9.6.4-3 Traceability - Load Printer Interface Layout . . 9 - 312
9.7 Control Devices and Sensors . . . . . 9 - 314
9.7.1 IPC . . . . . 9 - 314
Description . . . . . 9 - 314
9.7.1-2 IPC - Change CompactFlash Memory Card . . 9 - 317
9.7.1-3 IPC - Change Battery . . . . . 9 - 318
9.7.1-4 IPC - Change Fan Kit . . . . . 9 - 320

TechPub_2614345_0108 - 0802_3048226_01.fm

9.7.1-5 IPC - Change Fan Filter . . . . . 9 - 326

9.7.1-6 IPC - Change DVD ROM . . . . . 9 - 328

9.7.2 Level Control . . . . . 9 - 330

Description . . . . . 9 - 330

9.7.2-2 Level Control - Set . . . . . 9 - 332

9.7.3 Conductivity Meter. . . . . 9 - 333

Description 9 - 333

9.7.3-1 Conductivity Meter - Identify Conductivity Sensor Cell Constant . . . . . 9 - 338

9.7.3-2 Conductivity Meter - Check . . . . . 9 - 341

9.7.3-3 Conductivity Meter - Set . . . . . 9 - 345

9.7.3-4 Conductivity Meter - Calibrate . . . . . 9 - 351

9.7.3-5 Conductivity Meter - Error Codes . . . . . 9 - 357

9.7.3-6 Conductivity Meter - Change Conductivity Sensor . . . . . 9 - 362

9.7.3-7 Conductivity Meter - Change Fuse . . . . . 9 - 365

9.7.4 Recorder . . . . . 9 - 366

Description . . . . . 9 - 366

9.7.4-2 Recorder - Set Date, Time and Language . . . . 9 - 374

9.7.4-3 Recorder - Load Configuration Data . . . . . 9 - 378

9.7.4-4 Recorder - Calibrate . . . . . 9 - 384

9.7.4-5 Recorder - Log In and Log Off . . . . . 9 - 388

9.7.4-6 Recorder - Change CompactFlash Card . . . . . 9 - 391

9.7.4-7 Recorder - Configure Archived Data for Colour Printing . . . . . 9 - 393

9.7.5 Temperature Regulators . . . . . 9 - 401

9.7.5-1 Temperature Regulators - Calibrate . . . . . 9 - 401

9.7.5.1 Calibrator . . . . . 9 - 418

9.7.5.1-1 Calibrator - Set Fluke 714 . . . . . 9 - 418

9.7.5.1-2 Calibrator - Set Micromite II . . . . . 9 - 421

9.7.6 Thermocouples . . . . . 9 - 424

9.7.6-1 Thermocouples - Check . . . . . 9 - 424

9.8 TMCC2 Controller . . . . . 9 - 428

9.8-2 TMCC2 Controller - Set Communication . . . . 9 - 457

TechPub_2614345_0108 - 0802_3048226_01.fm

9.8-3 TMCC2 Controller - Load Program . . . . . 9 - 459
9.8-4 TMCC2 Controller - Photocells Manual Setting . . . . . 9 - 462
9.8-5 TMCC2 Controller - Set Filling Window . . . . 9 - 464
9.8-6 TMCC2 Controller - Display Report . . . . . 9 - 465
9.8-7 TMCC2 Controller - Load JEID Configuration 9 - 476
9.8-8 TMCC2 Controller - Upgrade Firmware . . . . . 9 - 478

9.9 TPIH . . . . . 9 - 482

9.9-1 TPIH Description . . . . . 9 - 482

9.9.1 IH Equipment . . . . . 9 - 486

9.9.1-1 IH Equipment - LCD Display . . . . . 9 - 486
9.9.1-2 IH Equipment - Error Handling . . . . . 9 - 490
9.9.1-3 IH Equipment - Check Function . . . . . 9 - 498
9.9.1-4 IH Equipment - Check Cables . . . . . 9 - 502
9.9.1-5 IH Equipment - Change Generator . . . . . 9 - 503
9.9.1-6 IH Equipment - Set Sealing . . . . . 9 - 505
9.9.1-7 IH Equipment - Set CAN Communication . . . 9 - 512
9.9.1-8 IH Equipment - Load Firmware . . . . . 9 - 514
9.9.1-9 IH Equipment - Set Display Contrast . . . . . 9 - 521

9.10 Cooling System . . . . . 9 - 522

9.10.1 Cooling Unit . . . . . 9 - 522

9.10.1-1 Cooling Unit - Clean Filter . . . . . 9 - 522
9.10.1-2 Cooling Unit - Change Filter . . . . . 9 - 524
9.10.1-3 Cooling Unit - Check . . . . . 9 - 526
9.10.1-4 Cooling Unit - Overhaul . . . . . 9 - 528
9.10.1-5 Cooling Unit - Troubleshooting . . . . . 9 - 534

9.11 Signal Exchange . . . . . 9 - 535

9.11.1 Signal Exchange . . . . . 9 - 535

9.11.1-1 Signal Exchange - Configuration . . . . . 9 - 535

TechPub_2614345_0108 - 0802_3048226_01.fm

9.1 PLC

SPC Reference	2840930-0100

9.1.1 Preparation for PLC Communication

9.1.1-1 Preparation for PLC Communication - Configure PC Network Communications

Machine Status	Mains Power ON Air OFF Steam ON Water OFF
Special Equipment	PC with CD drive
SPC Reference	2840930-0100

Before data can be sent to the PLC from the PC via an ethernet cable, the PC network settings must first be configured. The following procedure describes how to configure the PC network communications.

Note! If after configuring the PC network communications it is not possible to connect to the PLC, it is recommended to disable the PC firewall protection. Contact the local IT administrator for assistance in disabling the PC firewall protection.

(Cont'd)

TechPub_2614345_0108 - 0802_3048226_01.fm

(Cont'd)

Disable Wireless Network Connection

a) Open the START MENU (1) on the PC and select SETTINGS (2) and then NETWORK CONNECTIONS (3) to open the NETWORK CONNECTIONS window (4).

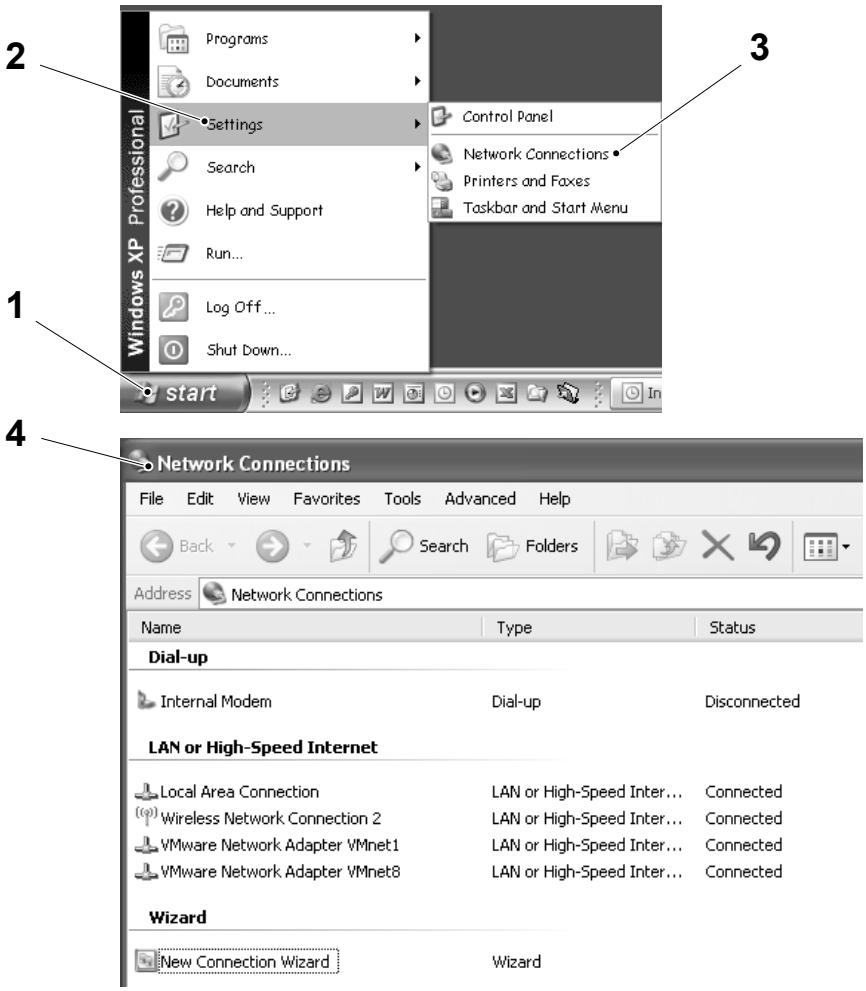

1 Start menu
2 Settings
3 Network connections
4 Network connections window

(Cont'd)

TechPub_2614345_0108 - 0802_3048226_01.fm

(Cont'd)

b) In the NETWORK CONNECTIONS window (4) select the WIRELESS NETWORK CONNECTION (5).

c) Right click the PC mouse and select DISABLE (6).

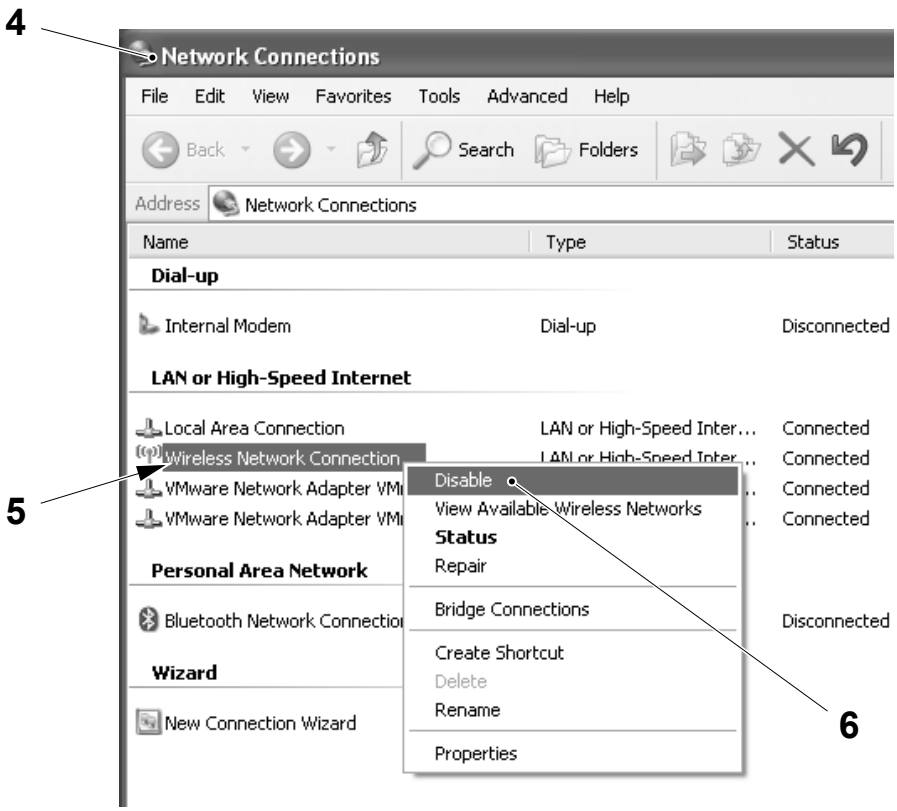

4 Network connections window
5 Wireless network connection
6 Disable

(Cont'd)

TechPub_2614345_0108 - 0802_3048226_01.fm

(Cont'd)

Configure PC IP Address

a) Open the START MENU (1) on the PC and select SETTINGS (2) and then NETWORK CONNECTIONS (3) to open the NETWORK CONNECTIONS window (4).

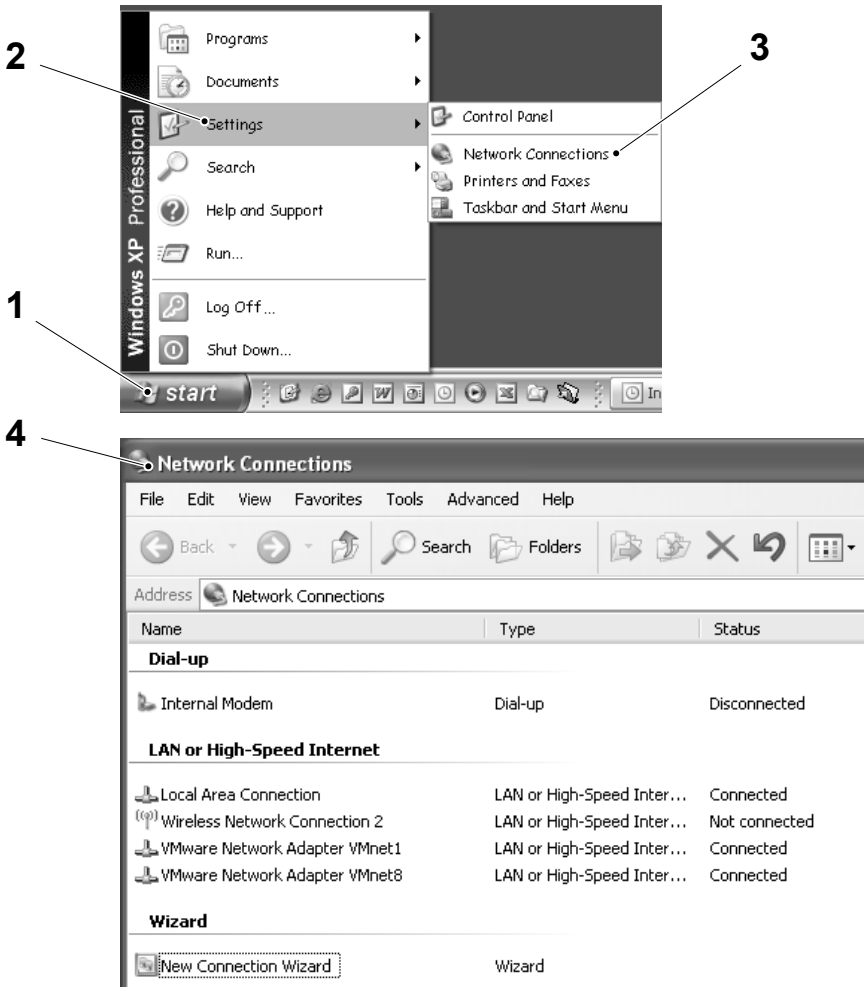

1 Start menu
2 Settings
3 Network connections
4 Network connections window

(Cont'd)

TechPub_2614345_0108 - 0802_3048226_01.fm

(Cont'd)

Note! The LOCAL AREA CONNECTION (5) is given only as an example, if multiple area connections are listed in the NETWORK CONNECTIONS WINDOW (4), select the required network connection.

b) In the NETWORK CONNECTIONS window (4) select the LOCAL AREA CONNECTION (5) and right click the PC mouse to select PROPERTIES (6).

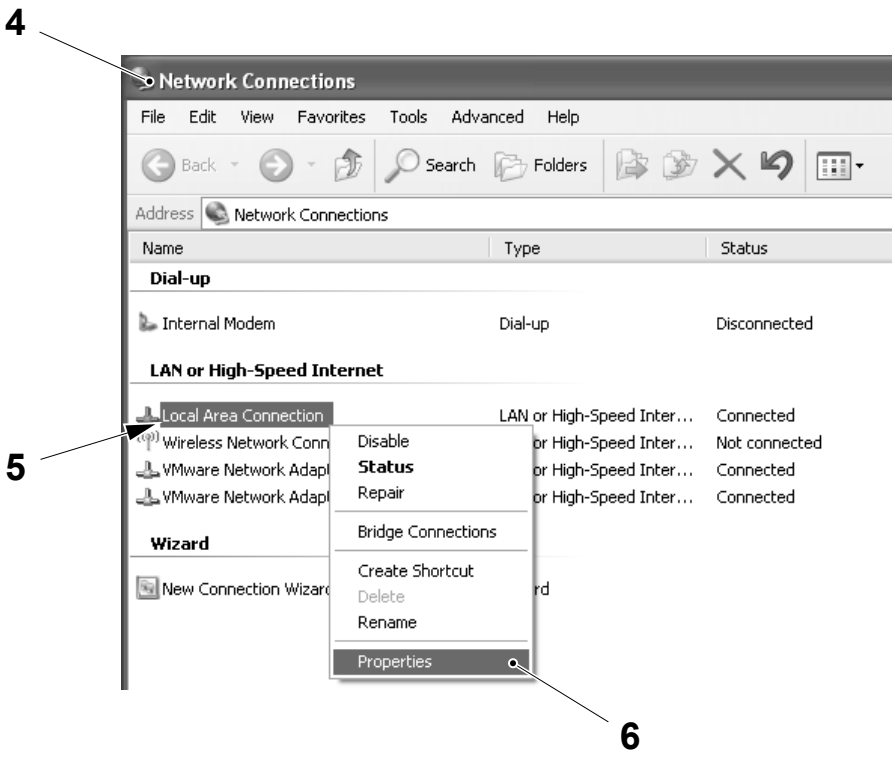

4 Network connections window
5 Local area connection
6 Properties window

(Cont'd)

TechPub_2614345_0108 - 0802_3048226_01.fm

(Cont'd)

c) In the LOCAL AREA CONNECTION PROPERTIES window (7) select INTERNET PROTOCOL (TCP/IP) (8) and then select PROPERTIES (9).

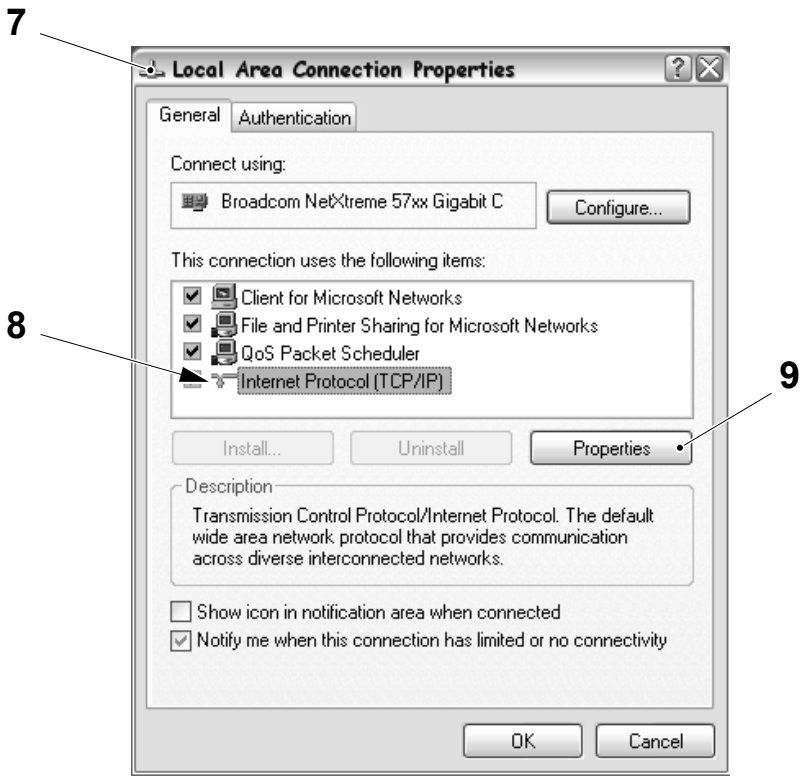

7 Local area connection properties window
8 Internet protocol (TCP/IP)
9 Properties

(Cont'd)

TechPub_2614345_0108 - 0802_3048226_01.fm

(Cont'd)

Note! The unique number “XX” must be within the range of the permitted IP addresses if the PC firewall protection is configured to allow a range of IP addresses and higher than the number 30 to avoid possible conflicts with machine device IP addresses, see the Table of Assigned IP Addresses for A3/Flex and A3/Speed on the following page.

d) Check the USE THE FOLLOWING IP ADDRESS button (10) and the USE THE FOLLOWING DNS SERVER ADDRESSES button (11).

e) In the IP ADDRESS box (12) enter an IP address using the following format: 10.255.1.XX, where “XX” is a unique number not already assigned to any PC or PLC connected to the same network.

f) In the SUBNET MASK box (13) enter the subnet mask as indicated in the illustration.

g) Select the OK button (14) to confirm the setting and close the window.

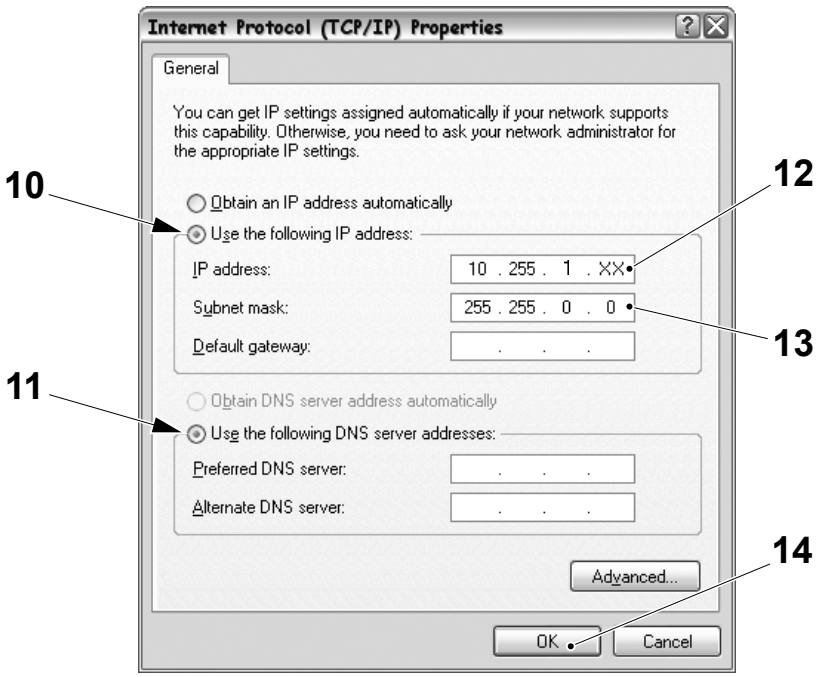

10 Use the following IP address button
11 Use the following DNS server addresses button
12 IP address box
13 Subnet mask box
14 OK button

(Cont'd)

TechPub_2614345_0108 - 0802_3048226_01.fm

(Cont'd)

Table of Assigned IP Addresses for A3/Flex and A3/Speed

Machine	Device	IP address	Subnet mask
A3/Flex A3/Speed	TPOP	10.255.1.0	255.255.0.0
A3/Flex A3/Speed	PLC FM	10.255.1.21	255.255.0.0
A3/Flex A3/Speed	PLC DIMC PLC PT Flex PLC PT Speed	10.255.1.22	255.255.0.0

TechPub_2614345_0108 - 0802_3048226_01.fm

9.1.1-2 Preparations for PLC Communication - Configure RSLinx

Machine Status	Mains Power ON Air OFF Steam ON Water OFF
Special Equipment	PC with CD drive Ethernet communication cable
SPC Reference	2840930-0100

The RSLinx software enables seamless communication between the PC and the PLC and its components over different networks such as ethernet and DeviceNet. Before communication is possible, the network and IP addresses for the PC and PLC must be set in RSLinx as follows:

a) Open the START menu on the PC and select PROGRAMS (1), ROCKWELL SOFTWARE (2), RSLINX (3) and then RSLINX CLASSIC (4).

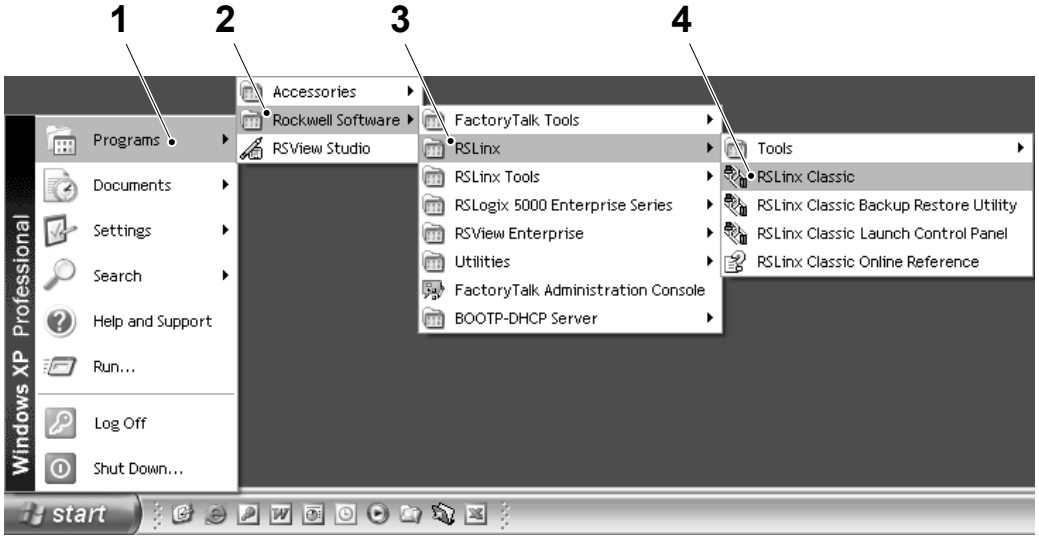

1 Programs
2 Rockwell software
3 RSLinx
4 RSLinx Classic

(Cont'd)

TechPub_2614345_0108 - 0802_3048226_01.fm

(Cont'd)

b) The RSLINX CLASSIC PROFESSIONAL window (5) appears, select the CONFIGURE DRIVERS button (6).

c) In the CONFIGURE DRIVERS window (7), select ETHERNET DEVICES (8) from the drop down menu.

d) Select the ADD NEW button (9).

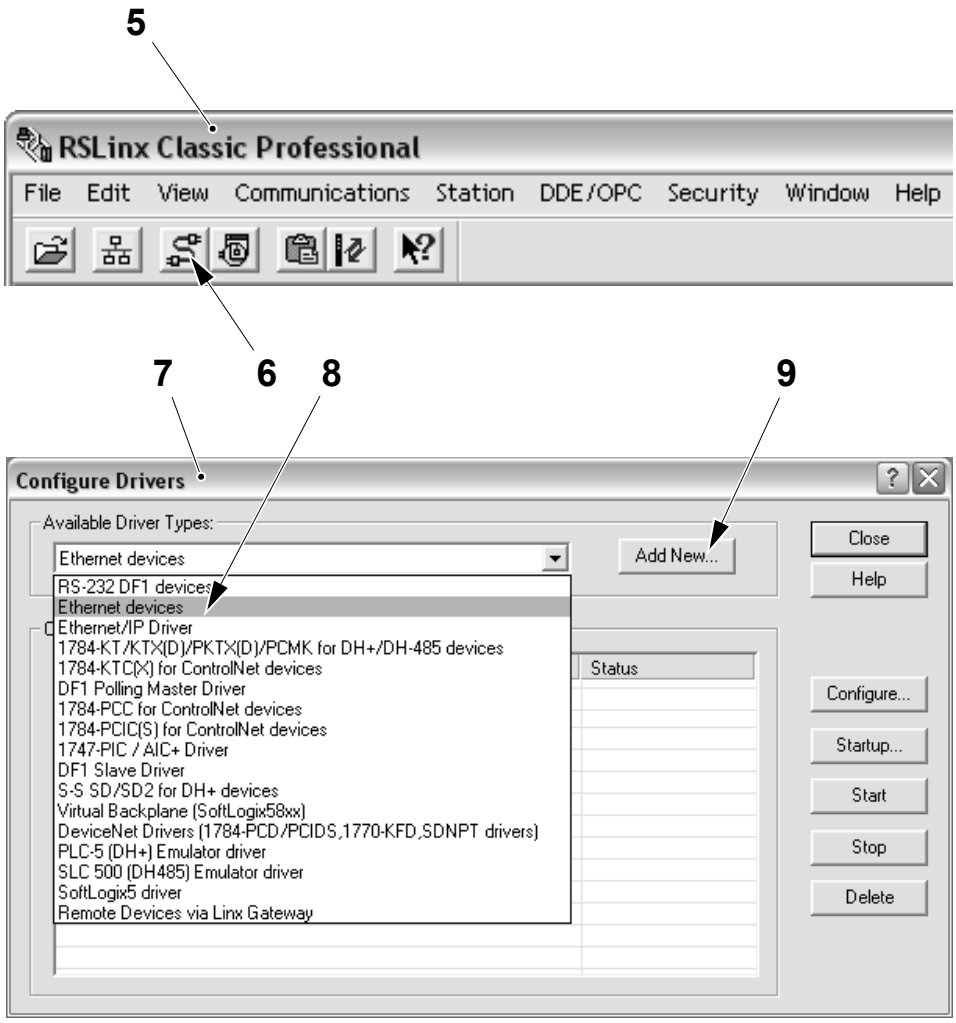

5 RSlinx classic professional window
6 Configure drivers button
7 Configure drivers window
8 Ethernet devices
9 Add new button

(Cont'd)

TechPub_2614345_0108 - 0802_3048226_01.fm

(Cont'd)

e) Accept the default driver name that appears by selecting the OK button (10).

f) Enter the PC's IP address (set in 9.1.1-1 Preparation for PLC Communication - Configure PC Network Communications) in the HOST NAME field (11) and then select the ADD NEW button (12).

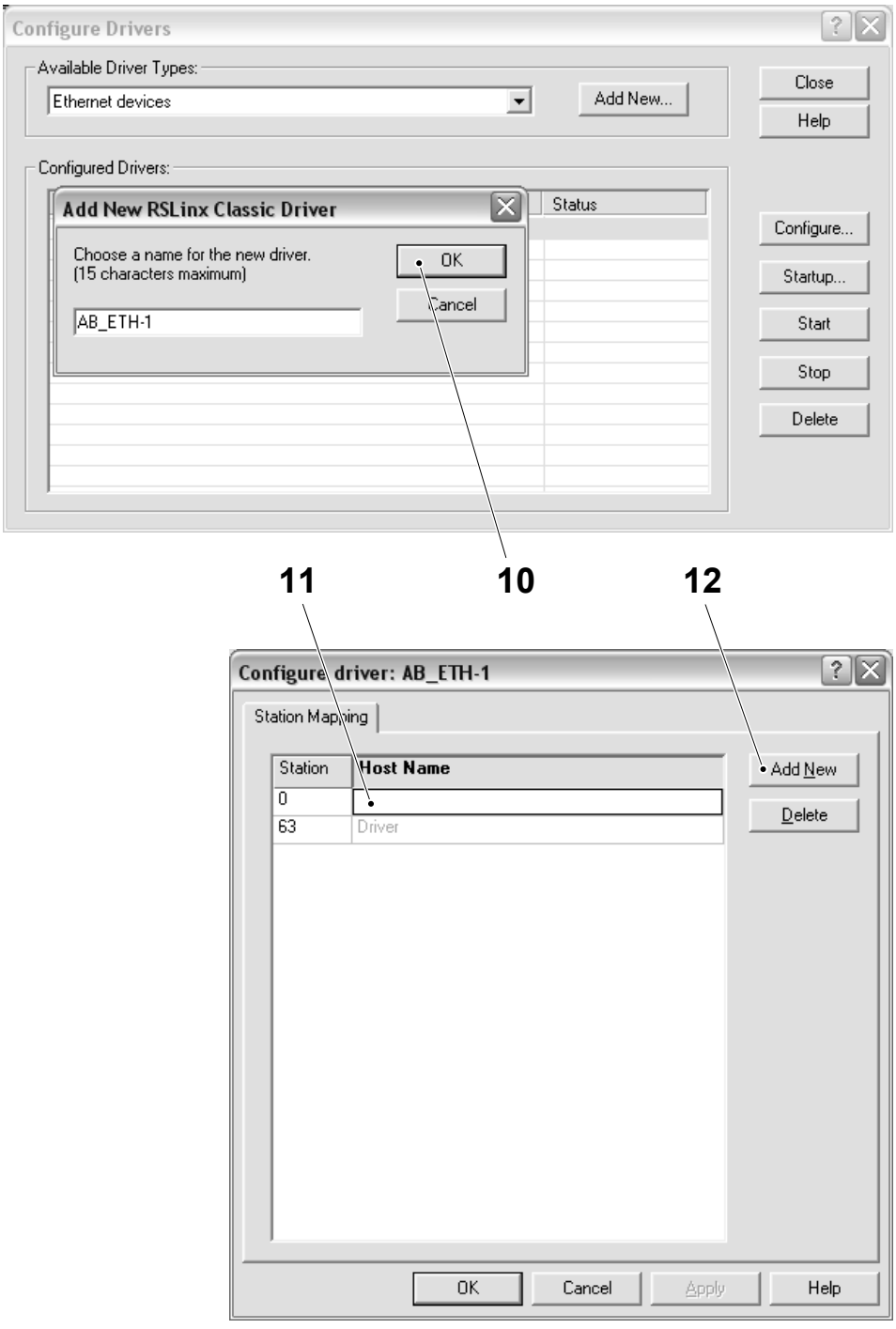

10 OK button
11 Host name field
12 Add new button

(Cont'd)

TechPub_2614345_0108 - 0802_3048226_01.fm

(Cont'd)

g) Enter the IP address 10.255.1.21 for the PLC in the HOST NAME field (13).

h) Select the OK button (14) to save the configuration.



13 Host name field
14 OK button

TechPub_2614345_0108 - 0802_3048226_01.fm

9.1.2 CPU Module

9.1.2-1 CPU Module - Change

Machine Status	Mains Power OFF Air OFF Steam ON Water OFF
SPC Reference	90459-6559

Note! New CPU modules are supplied with basic firmware. The correct firmware revision must be installed before the PLC program can be downloaded to the CPU module.

Preparation

Before changing the CPU module:

- Use the RSLinx Classic program to verify and record the firmware version of the PLC program.
- Use the Flow Chart of Procedures for Changing the CPU module on the next page to determine which procedures must be performed and their correct sequence.

(Cont'd)

TechPub_2614345_0108 - 0802_3048227_01.fm

(Cont'd)

Flow Chart of Procedures for Changing the CPU module

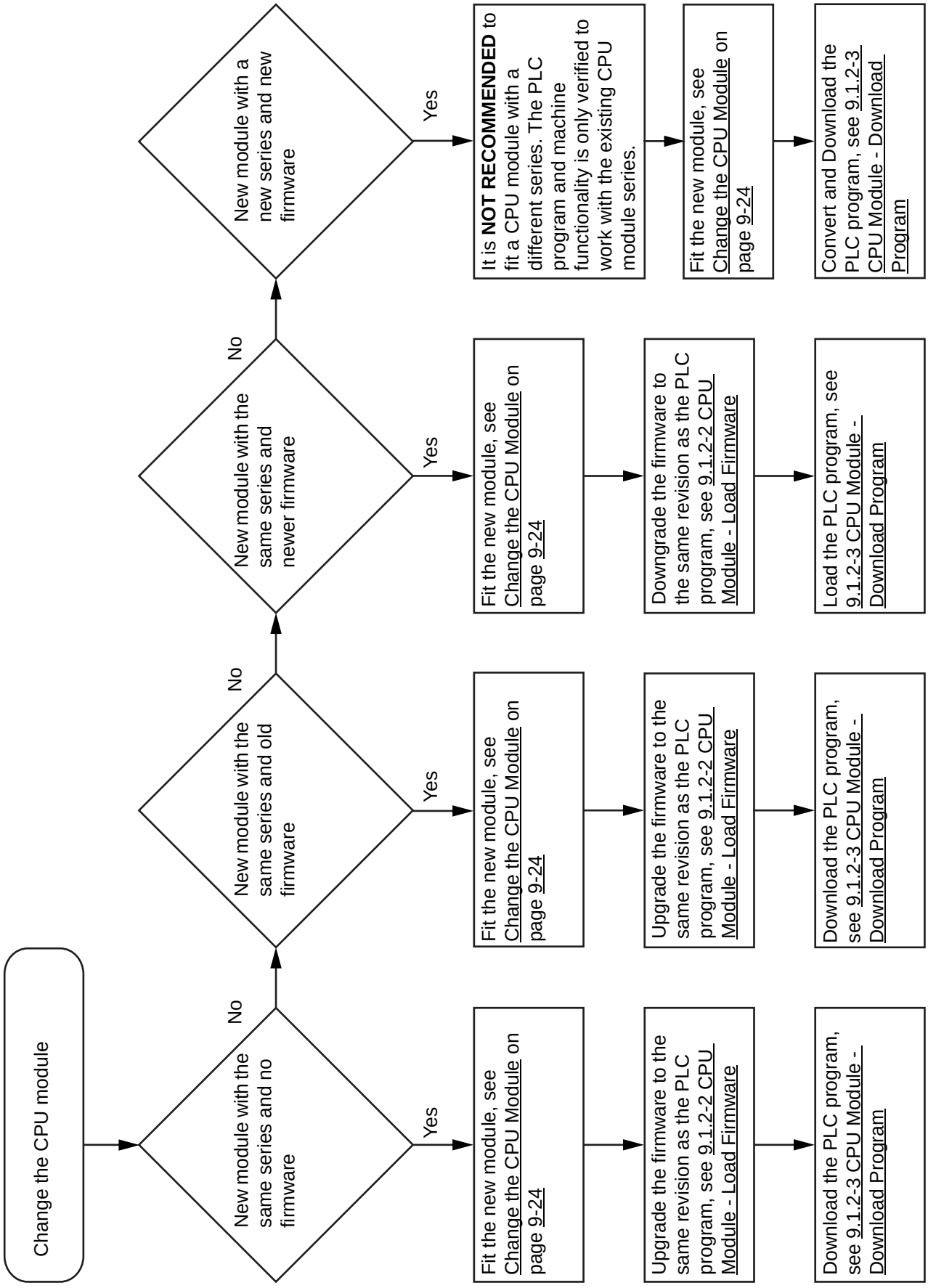

(Cont'd)

TechPub_2614345_0108 - 0802_3048227_01.fm

(Cont'd)

Note! It is recommended that the mains power is turned OFF before the PLC is removed or installed. The PLC may be removed or installed with the chassis power ON and the system operating, but doing this repeatedly may cause excessive wear to the contacts on the module and its mating connector. Worn contacts can create electrical resistance that may effect the operation of the module.

Note! If the CPU module is removed with the power turned ON, all the devices connected to CPU module will go to their configured default state.

Note! A CompactFlash card fitted inside the CPU module is used to store the filling machines package and volume recipe parameters. When the CPU module is changed, the CompactFlash card must be transferred from the old CPU module to the new CPU module.

(Cont'd)

TechPub_2614345_0108 - 0802_3048227_01.fm

(Cont'd)

Change the CPU Module

a) Press the locking tabs on the top and the bottom of the CPU module.

b) Slide the CPU module out of the chassis.

c) Push the retaining clip (1) to the LH side and press the eject button (2) to remove the CompactFlash card (3) from the CPU module.

d) Store the CompactFlash card (3) in a safe and clean place.

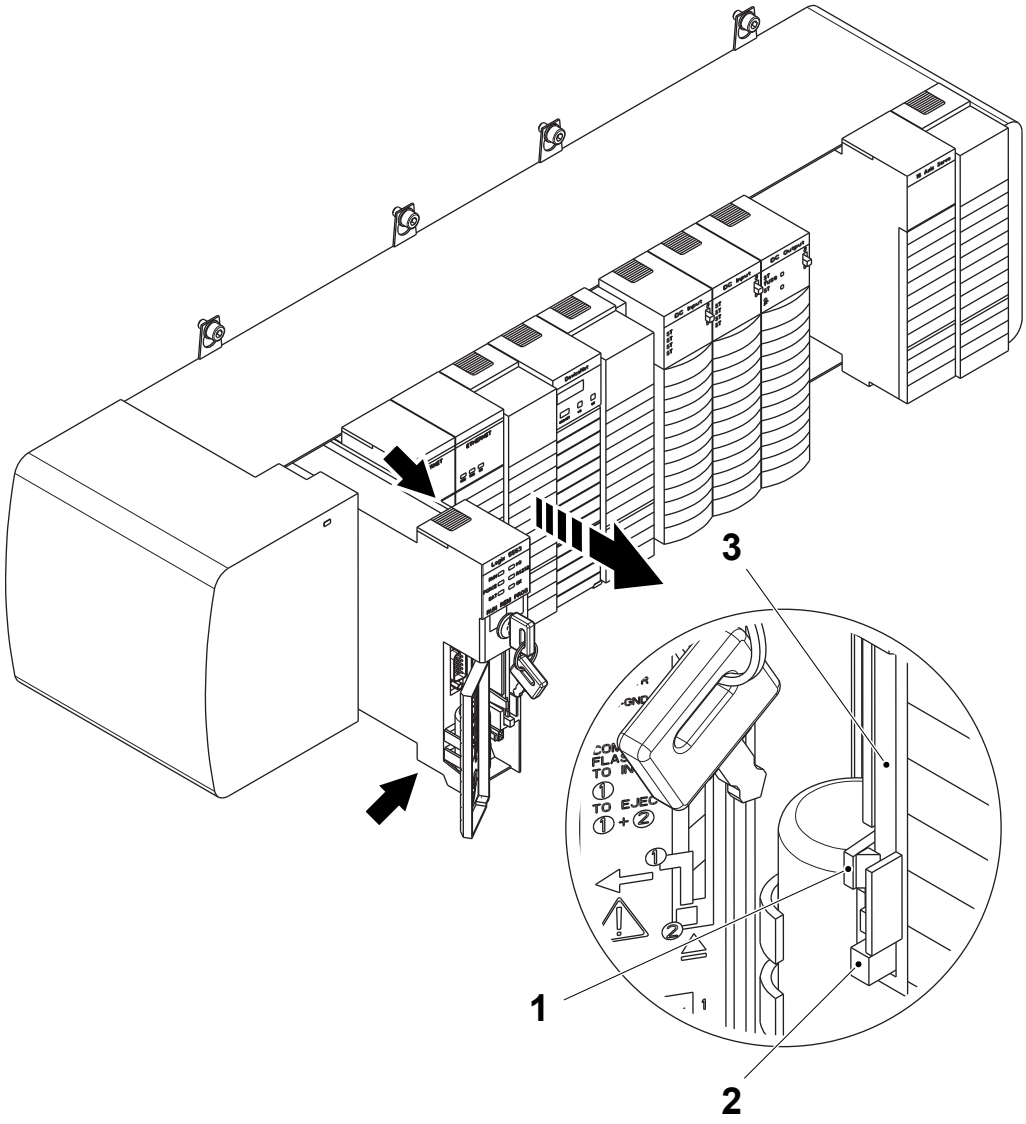

1 Retaining clip
2 Eject button
3 CompactFlash card

(Cont'd)

TechPub_2614345_0108 - 0802_3048227_01.fm

(Cont'd)

e) Fit the CompactFlash card (3) into the new CPU module.

f) Insert the key (4) into the new CPU module.

g) Turn the key (4) to the REM position.

h) Align the new CPU module with the top and the bottom guides in the chassis.

i) Slide the CPU module into the chassis. Make sure it is flush with the power supply or the other modules and the top and bottom latches are engaged.

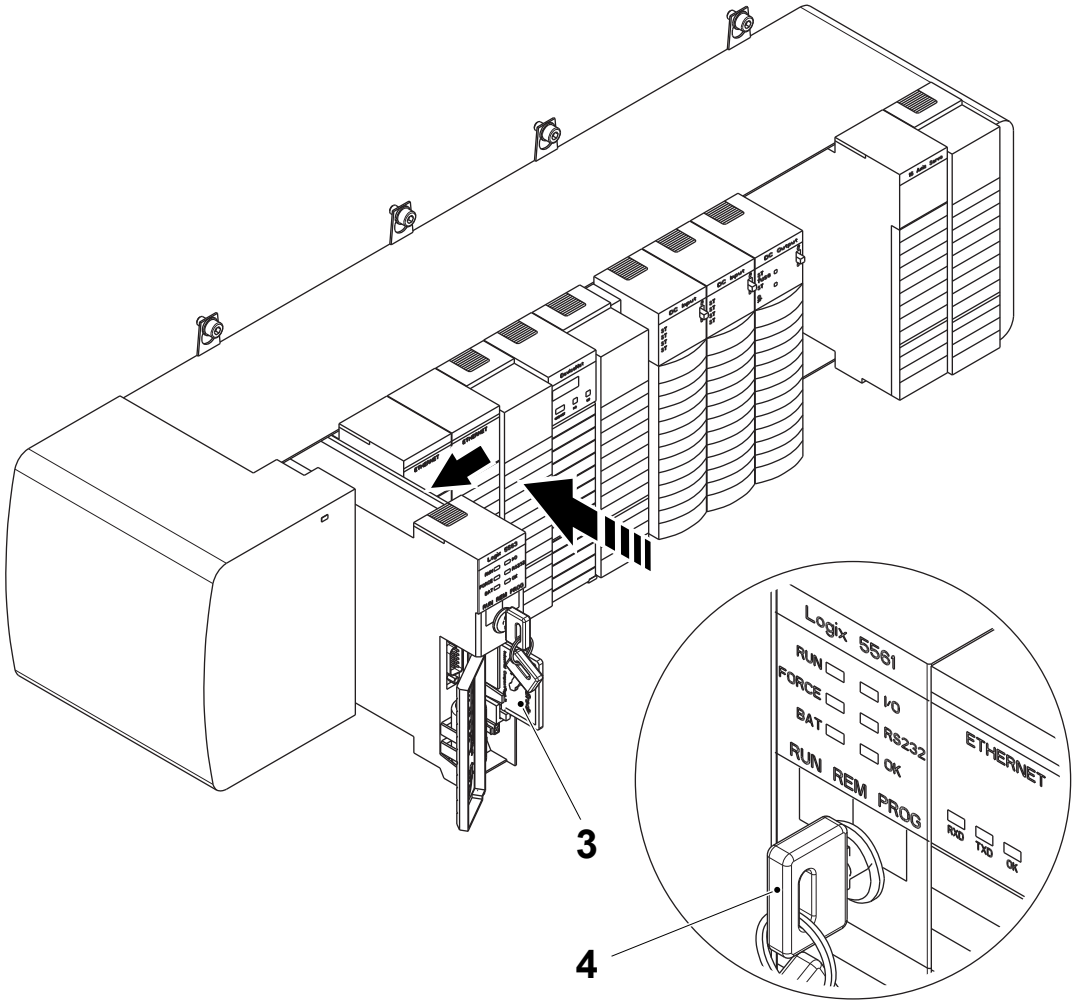

3 CompactFlash card
4 Key

(Cont'd)

TechPub_2614345_0108 - 0802_3048227_01.fm

(Cont'd)

j) Turn the mains power switch to the ON position.

k) Check the status of the CPU module LED's according to the table in section 9.1.2-4 CPU Module - LED Description.

l) Continue with the necessary procedures as described in Flow Chart of Procedures for Changing the CPU module on page 9-22.

TechPub_2614345_0108 - 0802_3048227_01.fm

9.1.2-2 CPU Module - Load Firmware

Machine Status	Mains Power ON Air OFF Steam ON Water OFF
Special Equipment	PC with CD Drive Ethernet communication cable
SPC Reference	90459-6559

CAUTION
Risk of damage to the equipment.
If a firmware download is interrupted, for example by a loss of power or if the communication fails between the module and the PC, the module will be corrupted.

Note! The table lists the required firmware versions for all rack mounted or distributed devices. The device firmware should be equal to or higher than the revision stated in the table. Do not upgrade the firmware unnecessarily and never downgrade the device firmware.

Use the table below to identify the correct firmware revision for the module to be flashed.

TechPub_2614345_0108 - 0802_3048227_01.fm

PLC					
Slot No.	**Pos. No.**	**Module type**	**TP No.**	**Firmware revision**	**Note**
0	A01K2000	1756-L63/B	90459-6559	=15.4.31	
1	A01K2010	1756-ENBT	90459-2477	= 3.9.1	
2	A01K2020	1756-ENBT	90459-2477	= 3.9.1	
4	A01K2040	1756-DNB A/B	90459-2479	= 7.1	
		1756-DNB C	90600-4543	= 11.002	
		1756-DNB D	90600-5840	= 11.002	
6	A01K2060	1756-IB32B	90459-6556	>= 3.5	
7	A01K2070	1756-IB32B	90459-6556	>= 3.5	
8	A01K2080	1756-OB16E/A	90459-2474	>= 3.3	
9	A01K2090	1756-OB16IS	90600-4033	>= 1.2	
13	A01K2120	1756-M08SE	90459-2480	= 15.37	

(Cont'd)

(Cont'd)

MOTION				
Pos. No.	**Module type**	**TP No.**	**Firmware revision**	**Note**
T50T9000	2094-BM02 SERIES A	90459-7215	= 1.92.03	
	2094-BM02 SERIES B	90600-5216	= 1.118	
T50T9010	2094-BMP5 SERIES A	90459-7213	= 1.92.03	
	2094-BMP5 SERIES B	90600-5213	= 1.118	
T10T9020	2094-BM01 SERIES A	90459-7214	= 1.92.03	
	2094-BM01 SERIES B	90600-5214	= 1.118	
U70T9030	2094-BM01 SERIES A	90459-7214	= 1.92.03	
	2094-BM01 SERIES B	90600-5214	= 1.118	
T40T9040	2094-BM01 SERIES A	90459-7214	= 1.92.03	
	2094-BM01 SERIES B	90600-5214	= 1.118	
T40T9050	2094-BC02-BM02 SERIES A	90459-7211	= 1.92.03	
	2094-BC02-BM02 SERIES B	90600-5212	= 1.118	

(Cont'd)

TechPub_2614345_0108 - 0802_3048227_01.fm

(Cont'd)

a) Make sure that the PC is configured as described in 9.1.1-1 Preparation for PLC Communication - Configure PC Network Communications and in 9.1.1-2 Preparations for PLC Communication - Configure RSLinx.

b) Open the start menu on the PC and select `PROGRAMS` (1), `FLASH PROGRAMMING TOOLS` (2) and `CONTROL FLASH` (3).

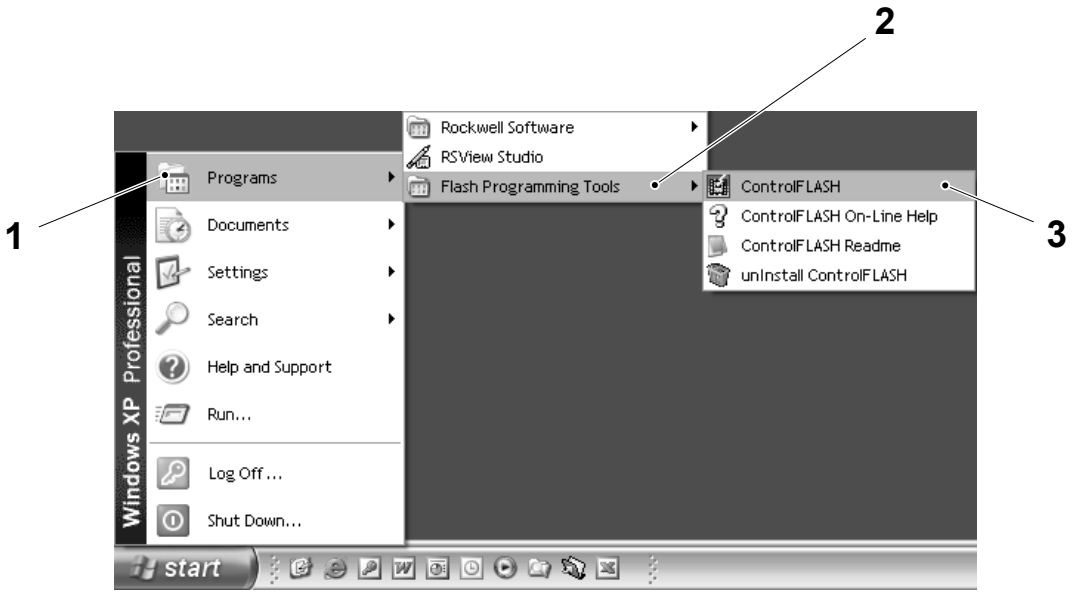

1 Programs
2 Flash programming tools
3 Control flash

(Cont'd)

TechPub_2614345_0108 - 0802_3048227_01.fm

(Cont'd)

c) Follow the instructions in the `CONTROL FLASH PROGRAM` window (4) to load the firmware.



4 Control Flash program window

TechPub_2614345_0108 - 0802_3048227_01.fm

9.1.2-3 CPU Module - Download Program

Machine Status	Mains Power ON Air OFF Steam ON Water OFF
Special Equipment	Ethernet communication cable PC with CD drive
SPC Reference	90459-6559

Note! To connect to the CPU module using an ethernet communication cable, the PC must first be configured for this type of communication. See 9.1.1-1 Preparation for PLC Communication - Configure PC Network Communications and 9.1.1-2 Preparations for PLC Communication - Configure RSLinx for more details.

a) Connect the ethernet communication cable between a vacant connection port on the ethernet switch (1) and the PC (2).

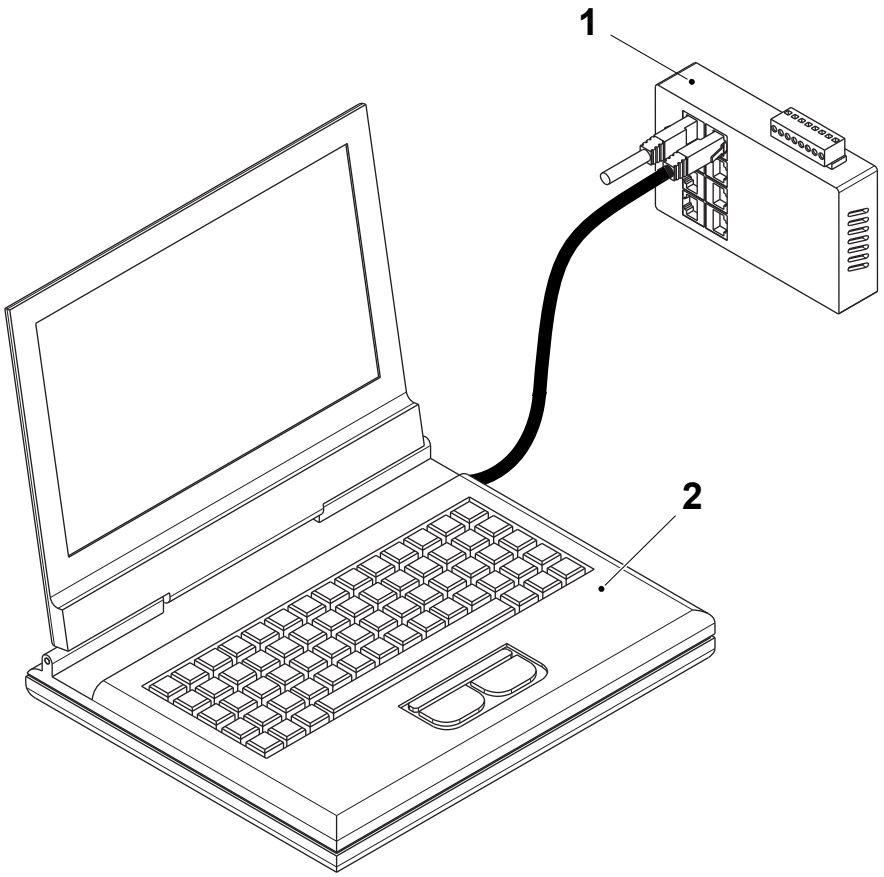

1 Ethernet switch
2 PC

(Cont'd)

TechPub_2614345_0108 - 0802_3048227_01.fm

(Cont'd)

b) Insert the CD marked Softw_CD_A3_S into the PC CD drive.

c) Browse to the CD drive and copy the compressed program folder to the PC desktop and extract the program file.

d) Double click on the program file to automatically start the RSLogix program and open the program file.

e) Select the COMMUNICATION menu (1) and then select GO ONLINE (2).

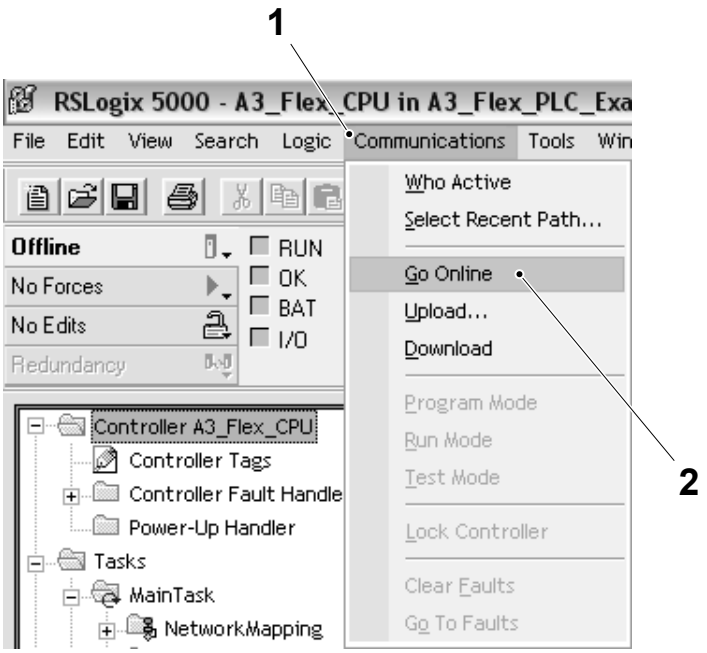

1 Communication menu
2 Go online

(Cont'd)

TechPub_2614345_0108 - 0802_3048227_01.fm

(Cont'd)

Note! If the program matches the program in the CPU module, an online connection will be established without any further messages. A download of the program is not necessary.

f) The CONNECTED TO GO ONLINE window (3) appears.

g) Select the DOWNLOAD button (4).

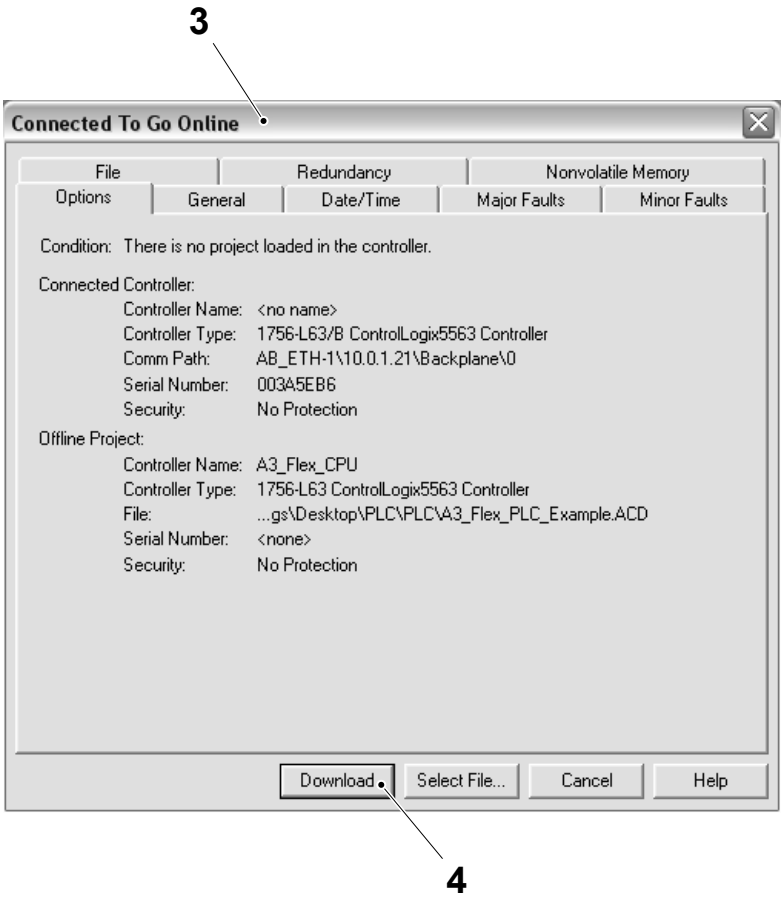

3 Connected to go online window

4 Download button

(Cont'd)

TechPub_2614345_0108 - 0802_3048227_01.fm

(Cont'd)

Note! All the values and settings in the CPU module will be replaced with those from the downloaded program.

h) Select the DOWNLOAD button (5) in the DOWNLOAD window (6).

i) When the download is complete the dialogue box (7) appears, select the YES button (8) to put the PLC in RUN MODE.

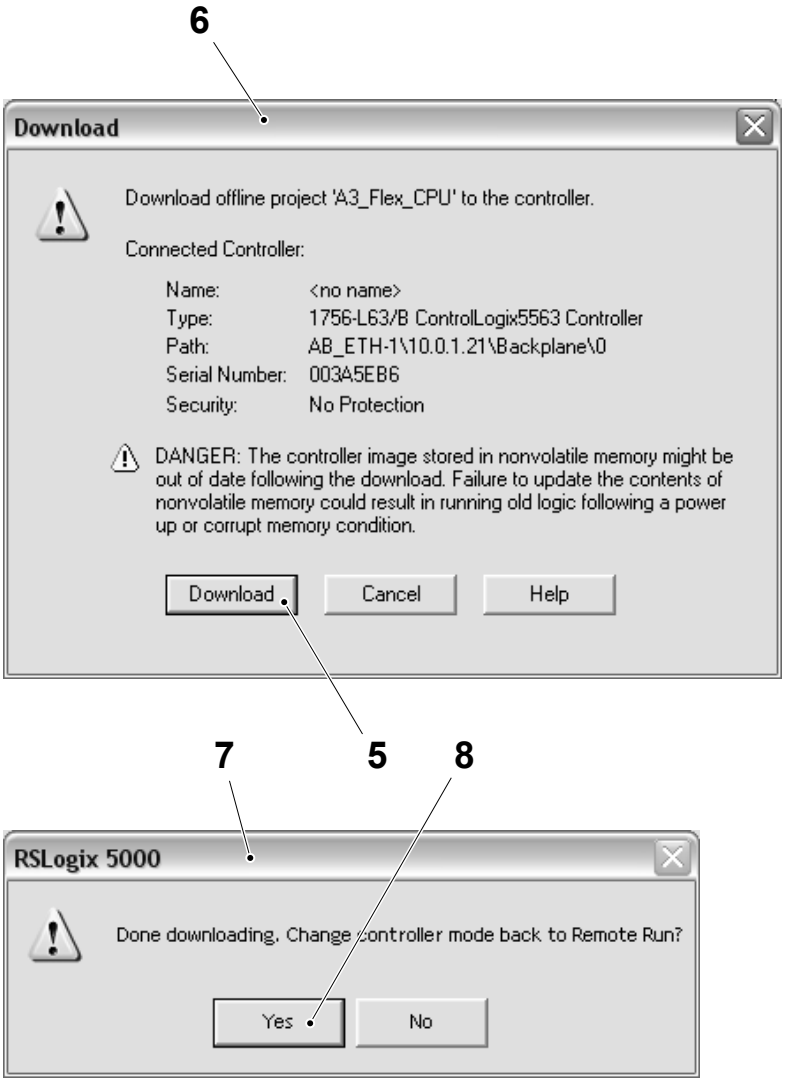

5 Download button
6 Download window
7 Dialogue box
8 Yes button

(Cont'd)

TechPub_2614345_0108 - 0802_3048227_01.fm

(Cont'd)

j) If the download is to a replacement PLC controller continue with the procedure below to set the nonvolatile memory.

Set Nonvolatile Memory

a) Select the `COMMUNICATION` menu (1) and then select `GO ONLINE` (2).

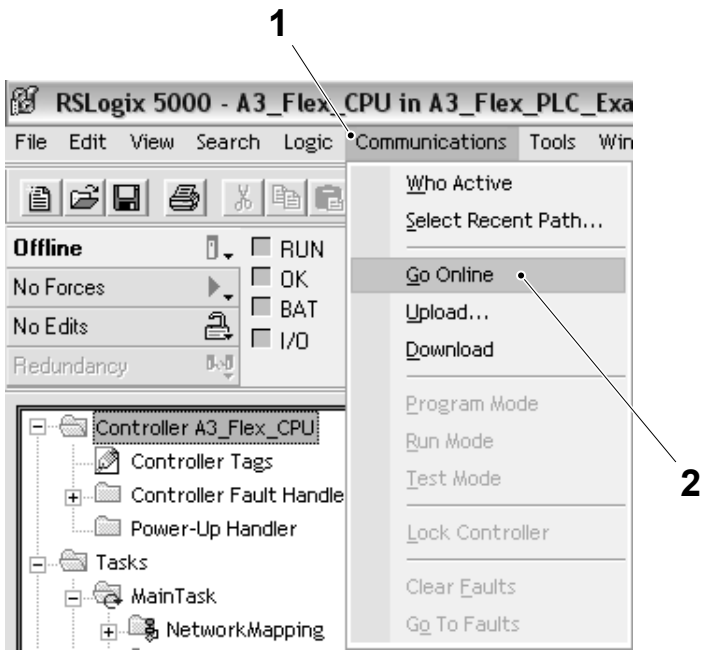

1 Communication menu
2 Go online

(Cont'd)

TechPub_2614345_0108 - 0802_3048227_01.fm

(Cont'd)

b) Select the COMMUNICATION menu (1), then select PROGRAM MODE (3).

c) When the dialogue box (4) appears, select the YES button (5) to put the PLC in PROGRAM MODE.

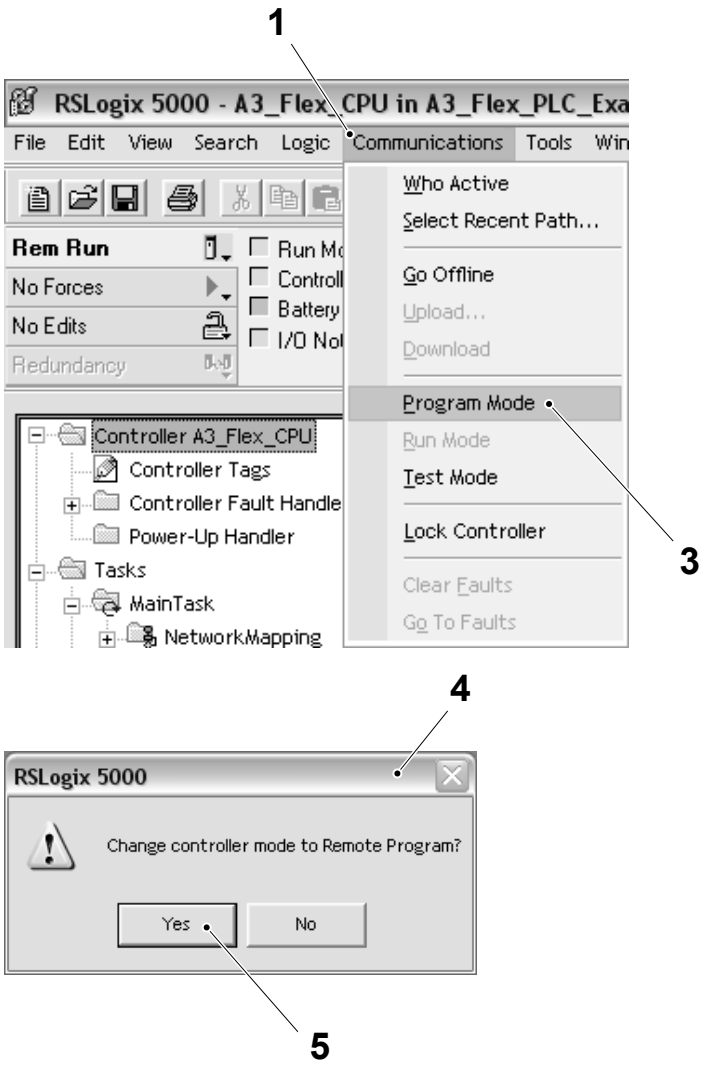

1 Communication menu
3 Program mode
4 Dialogue box
5 Yes button

(Cont'd)

TechPub_2614345_0108 - 0802_3048227_01.fm

(Cont'd)

d) On the ONLINE tool bar, select the CONTROLLER PROPERTIES button (6).

e) Select the NONVOLATILE MEMORY tab (7).

f) Select the LOAD/STORE button (8).

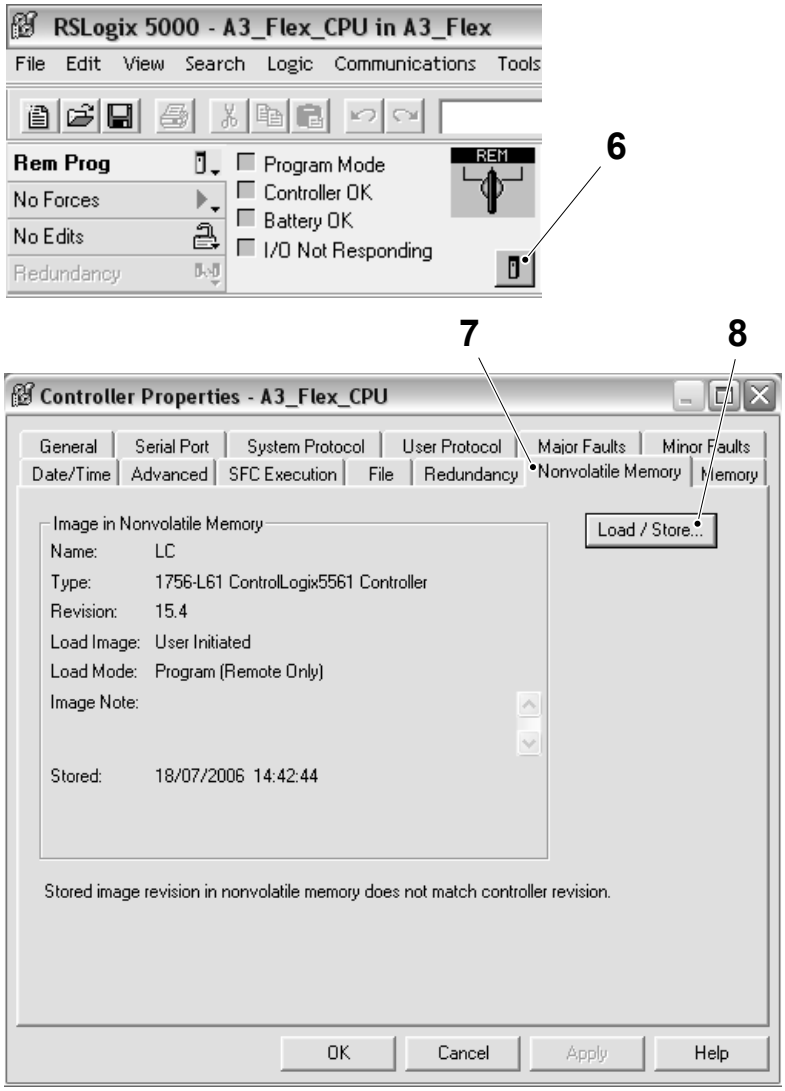

6 Controller properties button
7 Nonvolatile memory tab
8 Load/store button

(Cont'd)

TechPub_2614345_0108 - 0802_3048227_01.fm

(Cont'd)

g) In the NONVOLATILE MEMORY LOAD/STORE window (9), select ON CORRUPT MEMORY from the drop down list of the LOAD IMAGE option (10).

h) In the NONVOLATILE MEMORY LOAD/STORE window (9), select RUN (REMOTE ONLY) from the drop down list of the LOAD MODE option (11).

i) Select the STORE button (12).

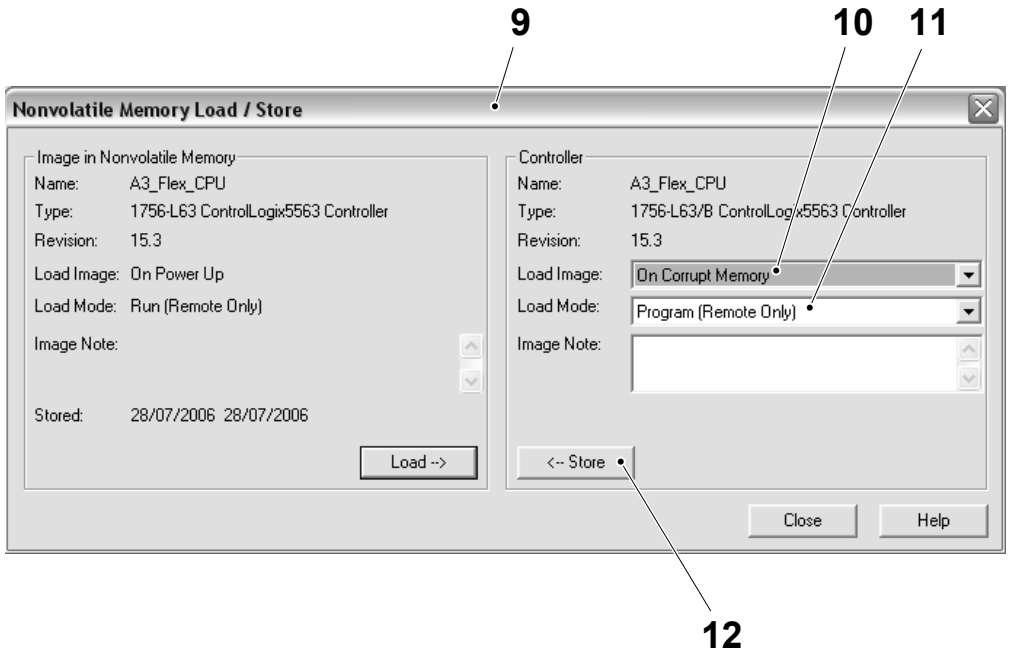

9 Nonvolatile memory load/store window
10 Load image option
11 Load mode option
12 Store button

(Cont'd)

TechPub_2614345_0108 - 0802_3048227_01.fm

(Cont'd)

j) Select the YES button (13) to confirm the store.

k) During the process a dialogue box indicates that the store is in progress, select the OK button (14).

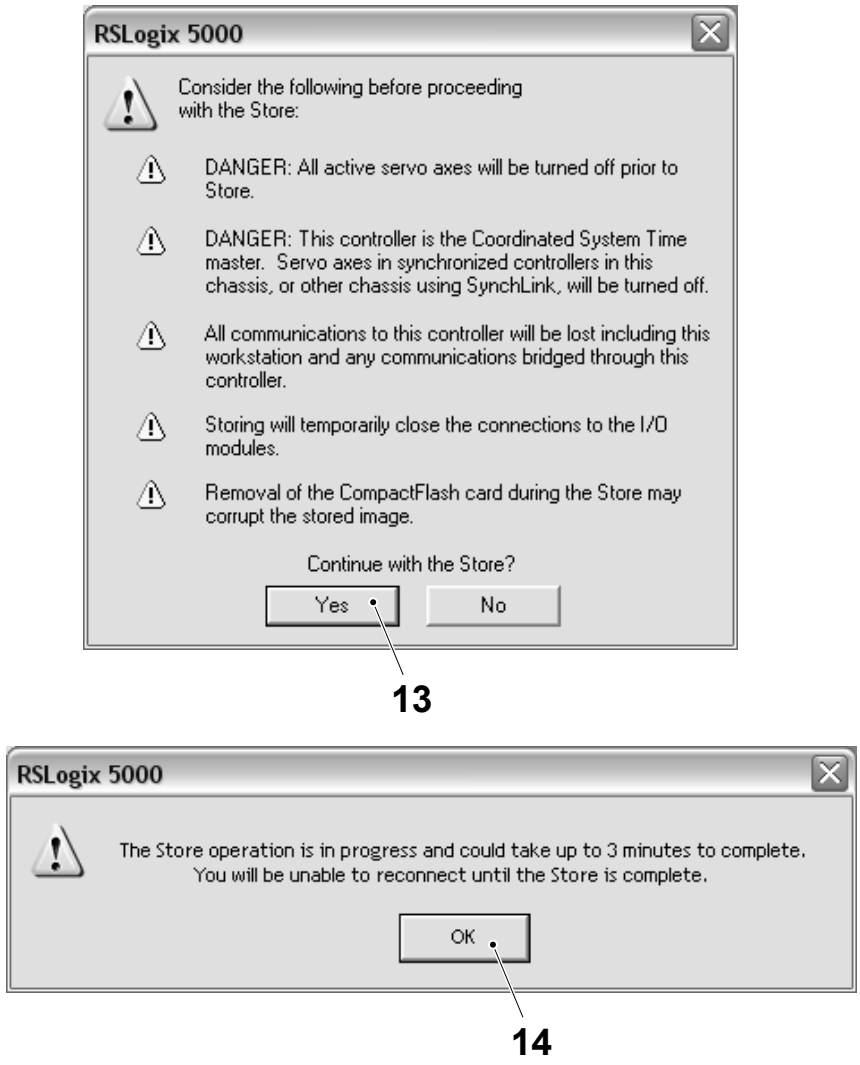

13 Yes button
14 OK button

(Cont'd)

TechPub_2614345_0108 - 0802_3048227_01.fm

(Cont'd)

l) Select the OK button (15) to close the CONTROLLER PROPERTIES window.

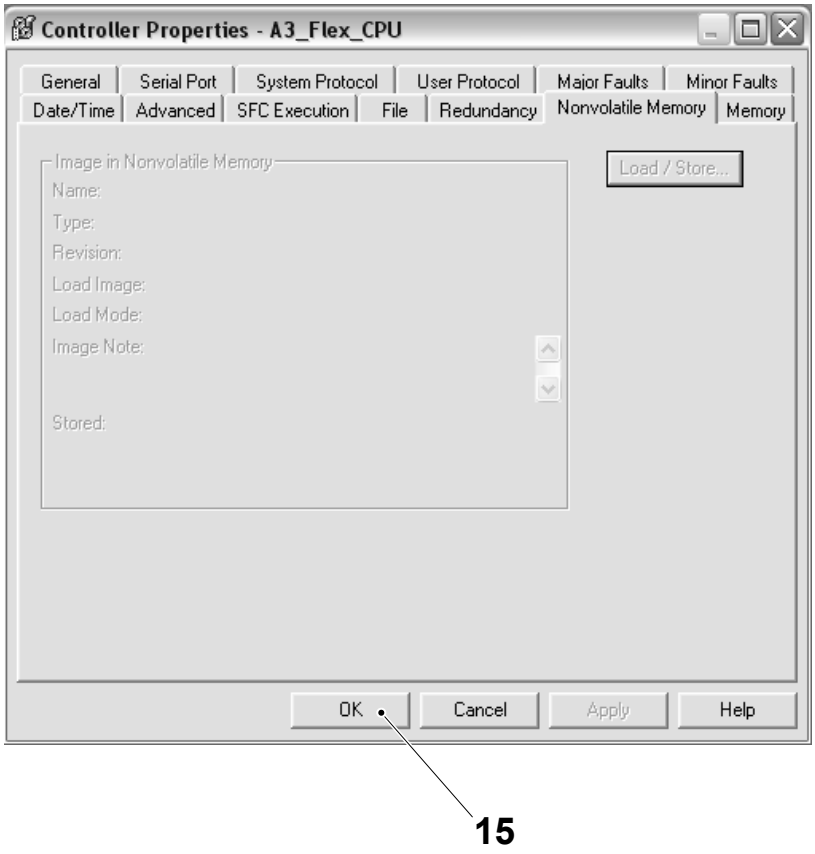

15 OK button

(Cont'd)

TechPub_2614345_0108 - 0802_3048227_01.fm

(Cont'd)

m) Select the COMMUNICATION menu (1) and then select GO ONLINE (2).

n) Select the COMMUNICATION menu (1), then select RUN MODE (16) to put the PLC in RUN MODE.

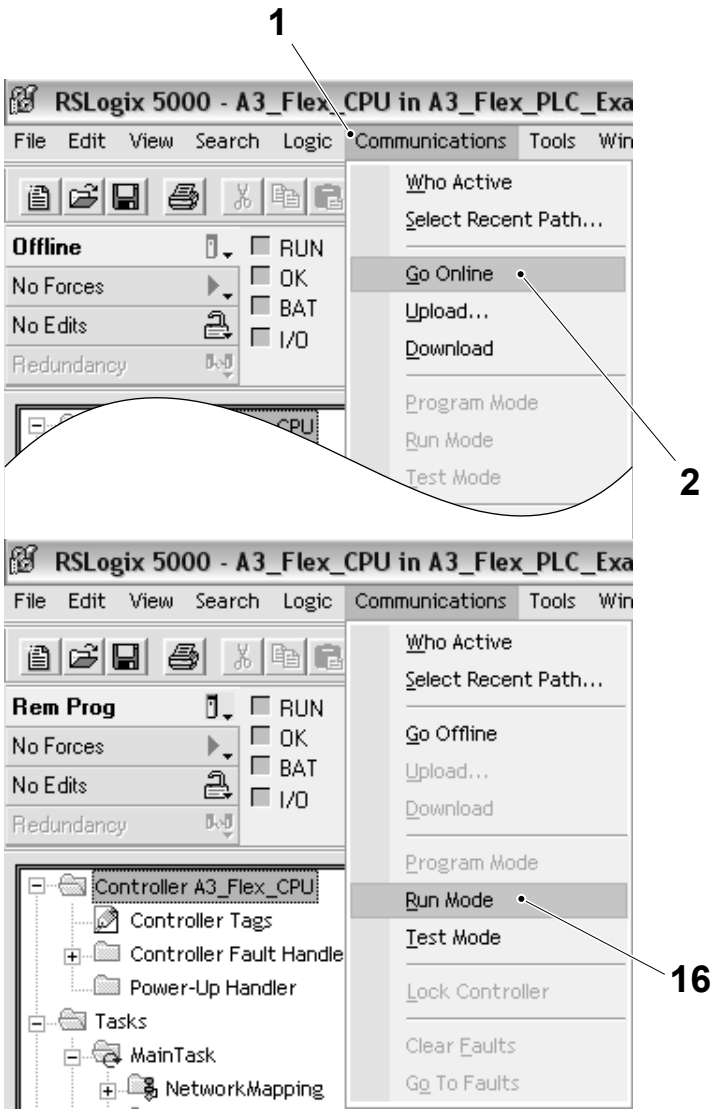

1 Communication menu
2 Go online
16 Run mode

TechPub_2614345_0108 - 0802_3048227_01.fm

9.1.2-4 CPU Module - LED Description

Machine Status	Mains Power ON
SPC Reference	90459-6559

LED	Colour	Description
RUN (1)	Off	The module is in Program or Test mode.
	Solid green	The module is in Run mode.
I/O (2)	Off	There are no devices in the I/O configuration of the module. or The module does not contain a project (module memory is empty).
	Solid green	The module is communicating with all the devices in its I/O configuration.
	Flashing green	One or more devices in the I/O configuration of the module are not responding.
	Flashing red	The chassis is bad. Replace the chassis.
FORCE (3)	Off	No tags contain I/O force values. I/O forces are inactive (disabled).
	Solid amber	I/O forces are active (enabled). I/O force values may or may not exist.
RS232 (4)	Off	There is no activity.
	Solid green	Data is being received or transmitted.

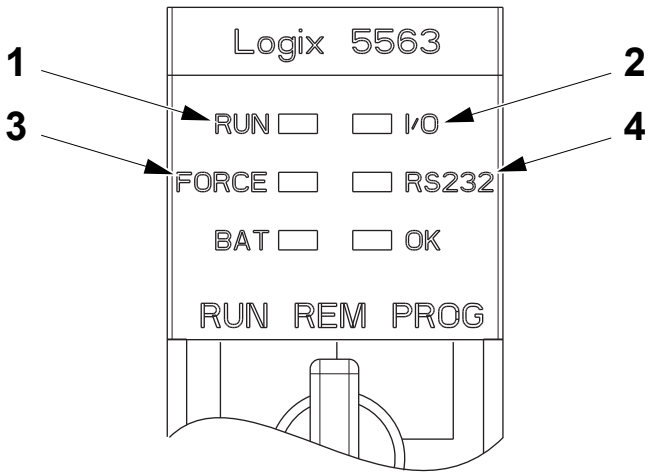

1 Run LED
2 I/O LED
3 Force LED
4 RS232 LED

(Cont'd)

TechPub_2614345_0108 - 0802_3048227_01.fm

(Cont'd)

LED	Colour	Description
BAT (5)	Off	The battery supports memory.
	Solid red	The battery is not installed. or The battery is 95% discharged and should be replaced.
OK (6)	Off	No power is applied.
	Flashing red	If the module is new, then the module requires a firmware update. If the module is **not** new, then a board major fault has occurred. To clear the fault, either turn the key switch to PROG, then to RUN and then back to PROG again or go on-line with RSLogix 5000 software.
	Solid red	The module detected a non-recoverable fault, so it cleared the project from memory. To recover: 1. Cycle power to the chassis. 2. Download the project. 3. Change to Run mode. If the OK LED remains solid red, contact your Rockwell Automation representative or local distributor.
	Solid green	The module is ok.
	Flashing green	The module is storing or loading a project to or from nonvolatile memory.

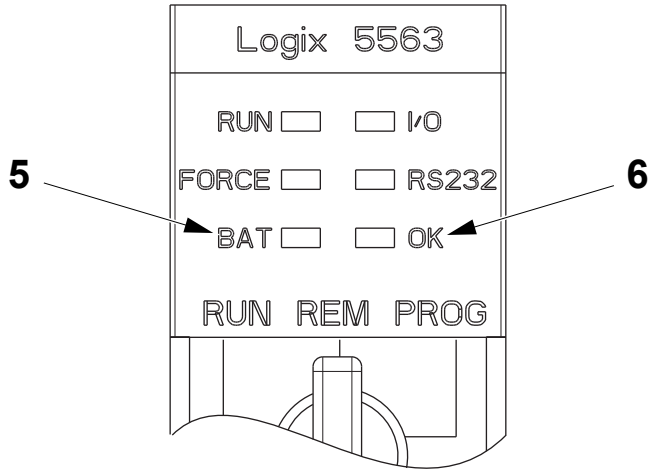

5 Bat LED
6 OK LED

TechPub_2614345_0108 - 0802_3048227_01.fm

9.1.2-5 CPU Module - Change Battery

Machine Status	Mains Power ON Air OFF Steam ON Water OFF
SPC Reference	90459-6559

CAUTION
Loss of data.
Make sure that the mains power switch is turned to the ON position. Failure to do this may result in the data stored in the CPU module being lost.

(Cont'd)

TechPub_2614345_0108 - 0802_3048227_01.fm

(Cont'd)

a) Press the clip (1) and disconnect the battery cable connection (2) from the connection (3) and remove the battery (4).

b) Connect the battery cable for the new battery to the connection (3) and fit the new battery. Make sure that the new battery is fitted with the arrow (5) pointing upwards.

c) Write the date of the battery installation on the battery label (6).

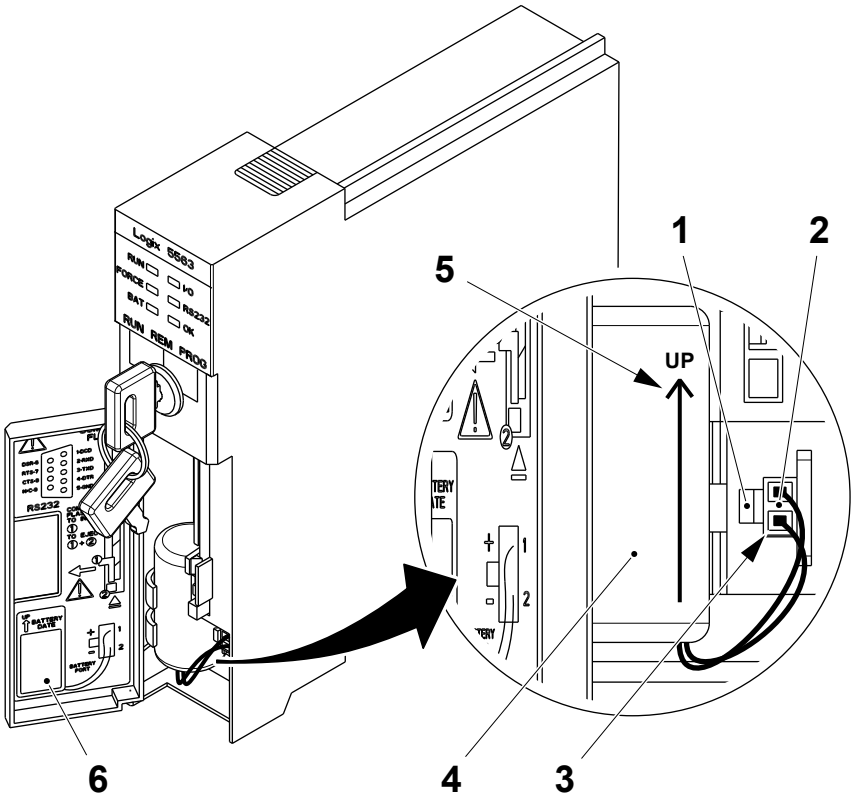

1 Clip
2 Battery cable connection
3 Connection
4 Battery
5 Arrow
6 Label

TechPub_2614345_0108 - 0802_3048227_01.fm

9.1.3 EtherNet/IP Module

9.1.3-1 EtherNet/IP Module - Change

Machine Status	Mains Power OFF Air OFF Steam ON Water OFF
SPC Reference	90459-2477

Note! The firmware revision of the new EtherNet/IP module maybe equal to, or newer than the firmware revision of the old EtherNet/IP module. Using a newer firmware revision may create errors when going online, such as unrecognized device or device mismatch if the PC does not contain the very latest EDS files.

Preparation

Before changing the EtherNet/IP module:

- Use the RSLinx Classic program to verify and record the firmware version of the existing EtherNet/IP module.
- Use the Flow Chart of Procedures for Changing the EtherNet/IP Module on the next page to determine which procedures must be performed and their correct sequence.

(Cont'd)

TechPub_2614345_0108 - 0801_3048228_01.fm

(Cont'd)

Flow Chart of Procedures for Changing the EtherNet/IP Module

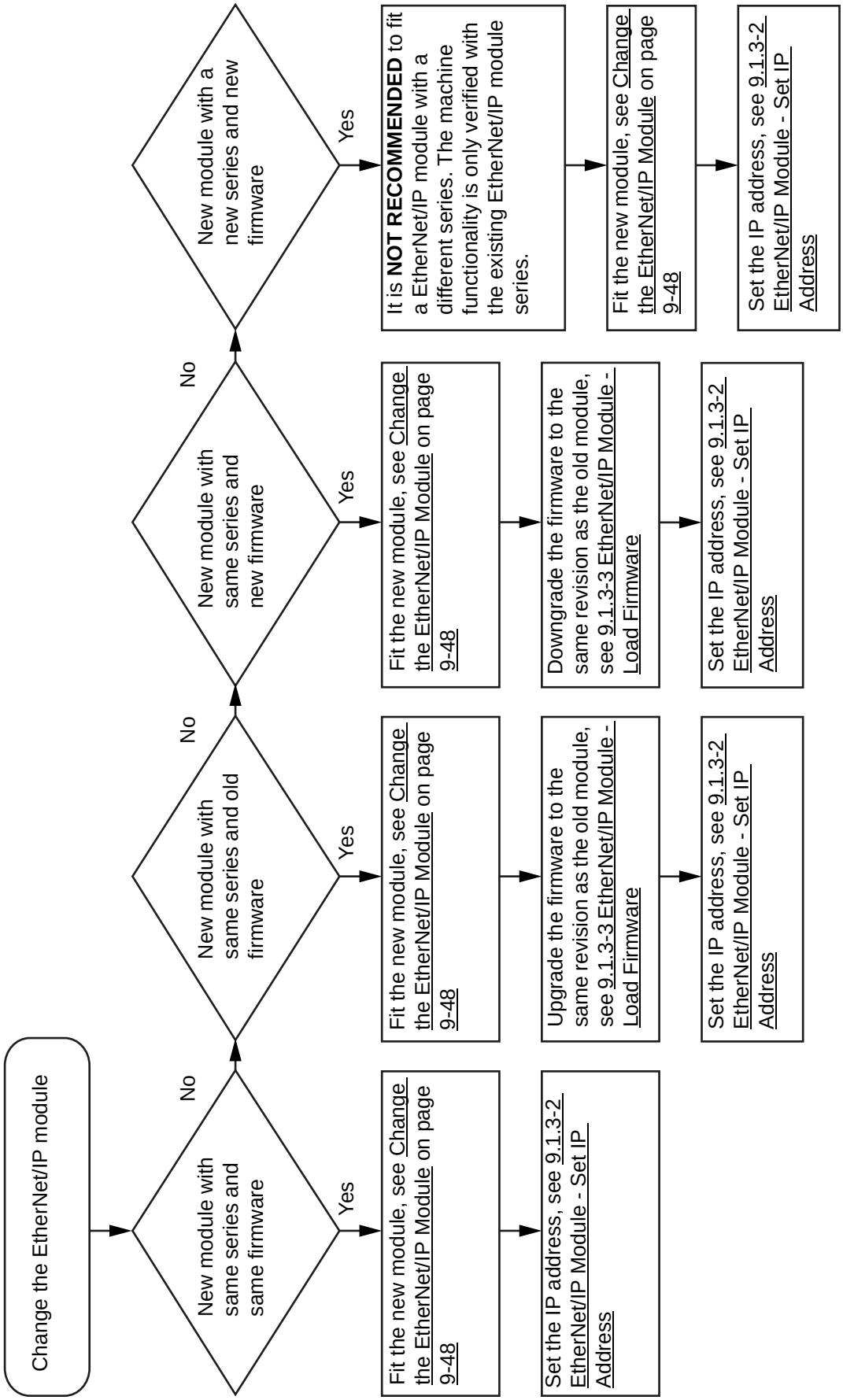

(Cont'd)

TechPub_2614345_0108 - 0801_3048228_01.fm

(Cont'd)

Change the EtherNet/IP Module

a) Remove the cable connection (1) from the EtherNet/IP module.

b) Press the locking tabs on the top and the bottom of the EtherNet/IP module.

c) Slide the EtherNet/IP module out of the chassis.

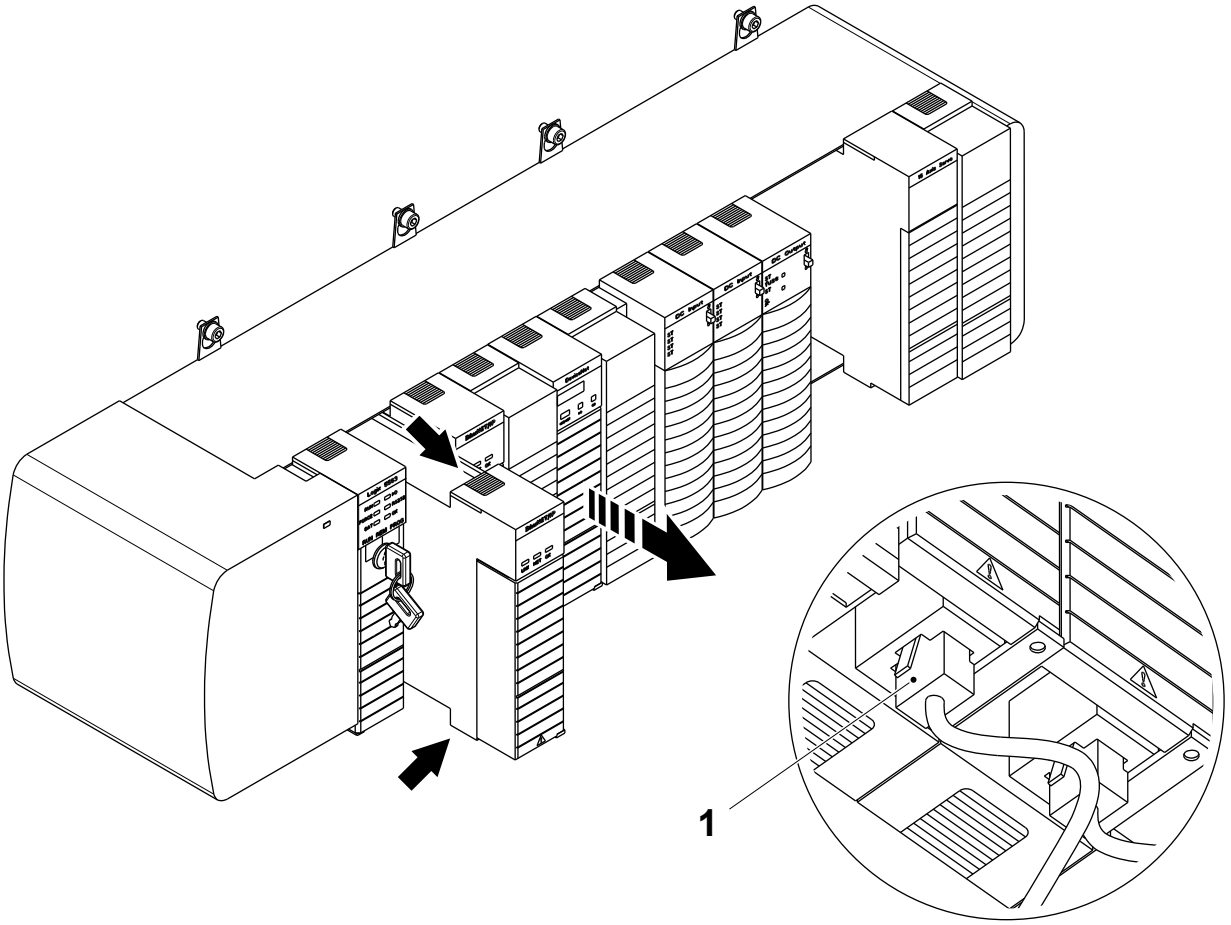

1 Cable connection

(Cont'd)

TechPub_2614345_0108 - 0801_3048228_01.fm

(Cont'd)

d) Verify and record the MAC address (2) of the new EtherNet/IP module printed in the position indicated in the illustration.

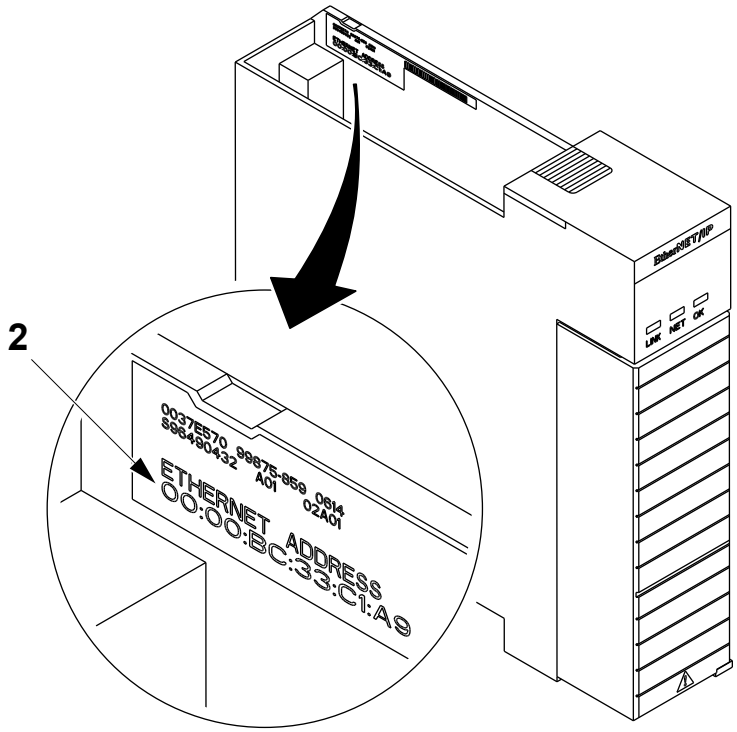

2 MAC address

(Cont'd)

TechPub_2614345_0108 - 0801_3048228_01.fm

(Cont'd)

e) Align the new EtherNet/IP module with the top and the bottom guides in the chassis.

f) Slide the EtherNet/IP module into the chassis. Make sure it is flush with the other modules and the top and bottom latches are engaged.

g) Fit the cable connection (1) to the EtherNet/IP module.

h) Turn the mains power switch to the ON position.

i) Check the status of the EtherNet/IP module LED's according to the table in section 9.1.3-4 EtherNet/IP Module - LED Description.

j) Continue with the necessary procedures as described in Flow Chart of Procedures for Changing the EtherNet/IP Module on page 9-47.

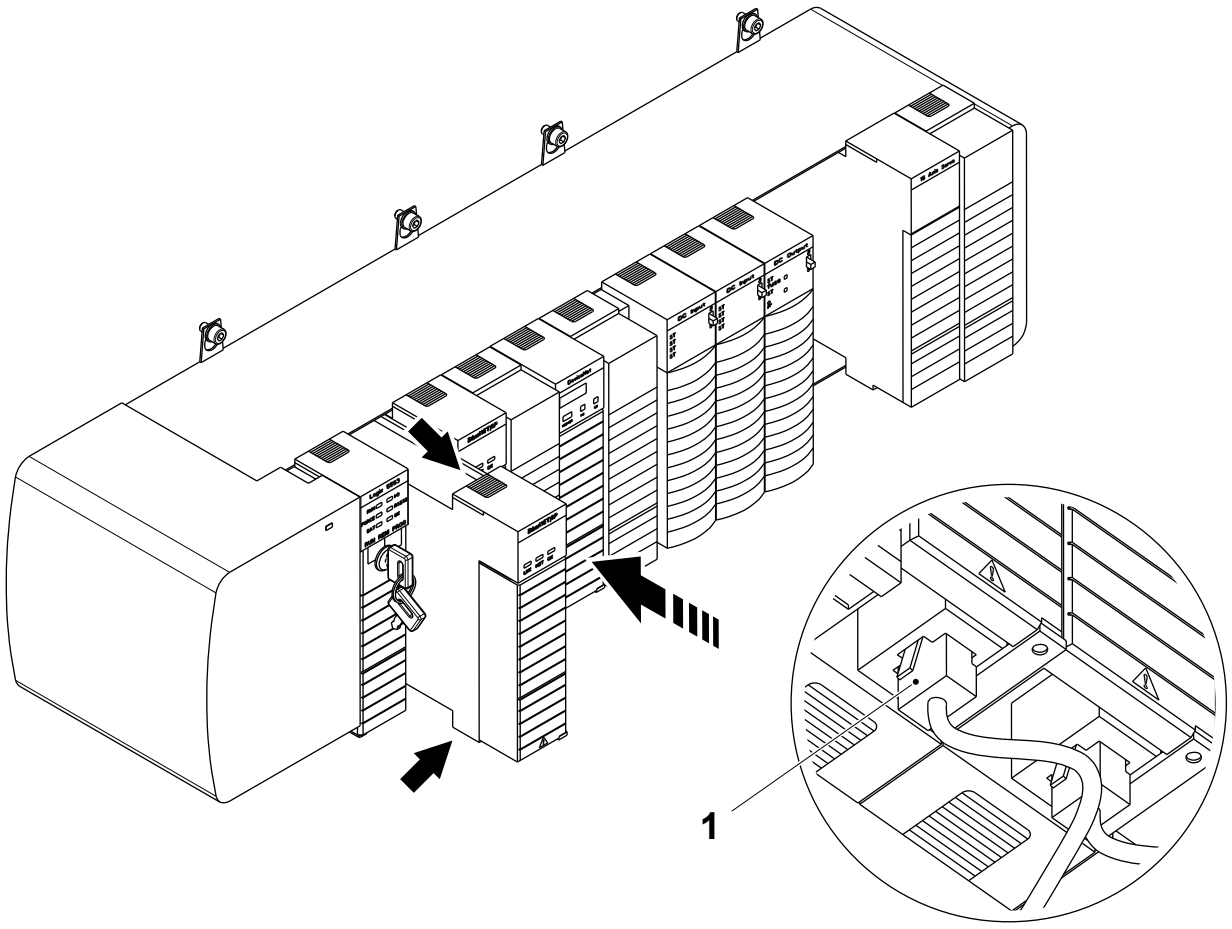

1 Cable connection

TechPub_2614345_0108 - 0801_3048228_01.fm

9.1.3-2 EtherNet/IP Module - Set IP Address

Machine Status	Mains Power ON Air OFF Steam ON Water OFF
SPC Reference	90459-2477

New EtherNet/IP modules have a MAC address programmed as a factory setting. The MAC address must be changed to an IP address as described below:

a) Connect the ethernet communication cable between a vacant connection port on the ethernet switch (1) and the PC (2).

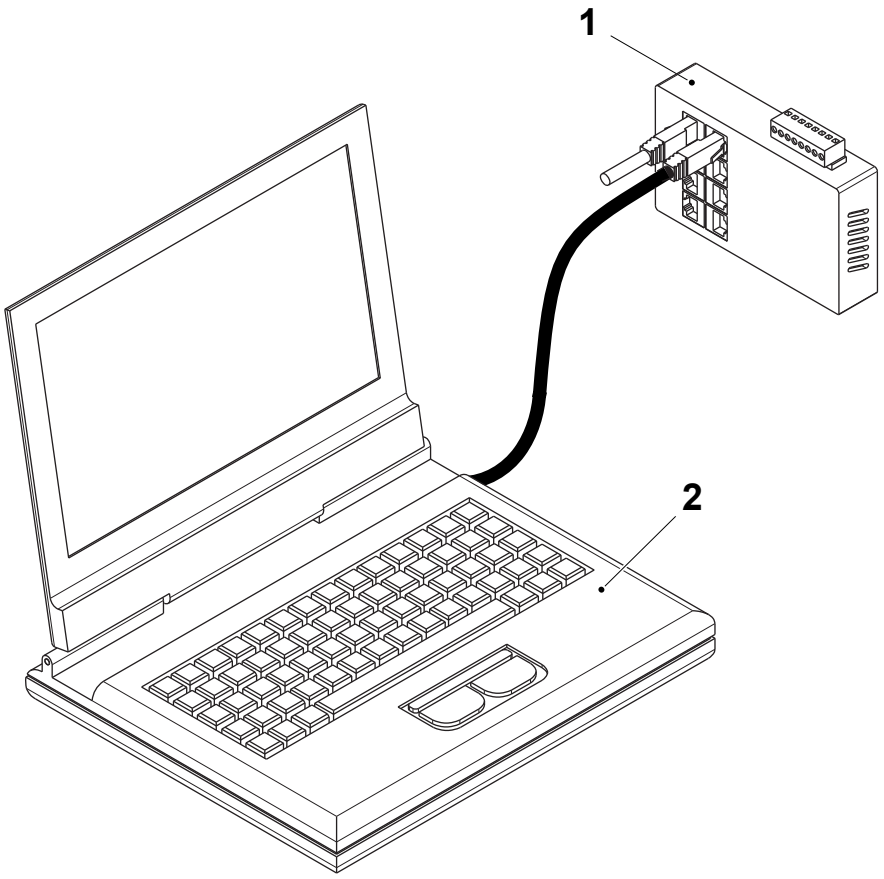

1 Ethernet switch
2 PC

(Cont'd)

TechPub_2614345_0108 - 0801_3048228_01.fm

(Cont'd)

b) Make sure that the network cable between the Ethernet switch and the EtherNet/IP module is connected.

c) Open the RSLINX CLASSIC PROFESSIONAL program and select EXIT AND SHUTDOWN (1).

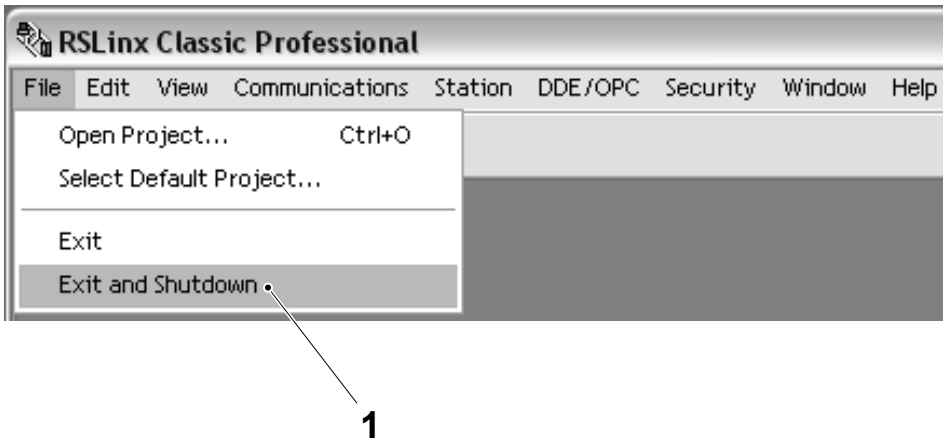

1 Exit and shutdown

(Cont'd)

TechPub_2614345_0108 - 0801_3048228_01.fm

(Cont'd)

d) Open the START menu on the PC and select PROGRAMS (2), ROCKWELL SOFTWARE (3), BOOTP DHCP SERVER (4) and then BOOTP DHCP SERVER (5).

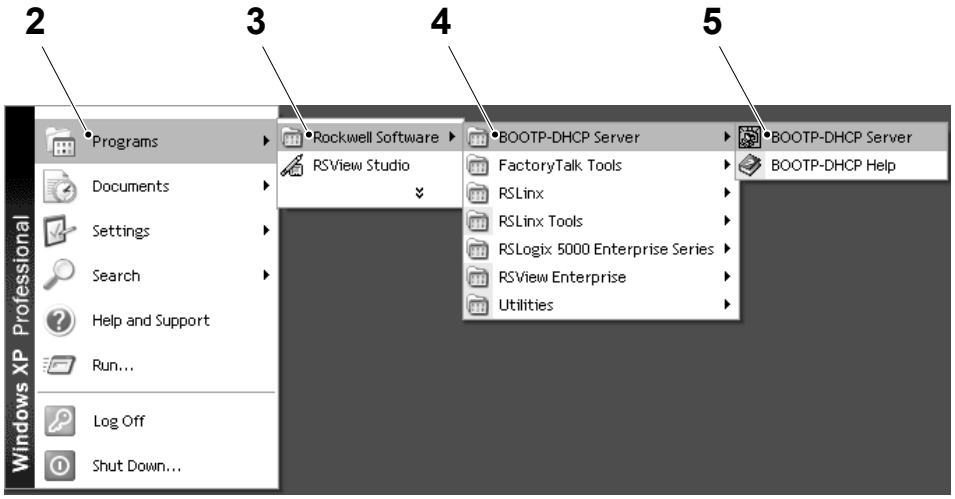

2 Program
3 Rockwell software
4 BOOTP DHCP server
5 BOOTP DHCP server

(Cont'd)

TechPub_2614345_0108 - 0801_3048228_01.fm

(Cont'd)

Note! If it is the first time the `BOOT DHCP Server` program is used, a network setting will be requested. Otherwise continue with step g)

e) Enter `255.255.0.0` as the `SUBNET MASK` (6). All other settings should be set to zero.

f) Select the `OK` button (7).

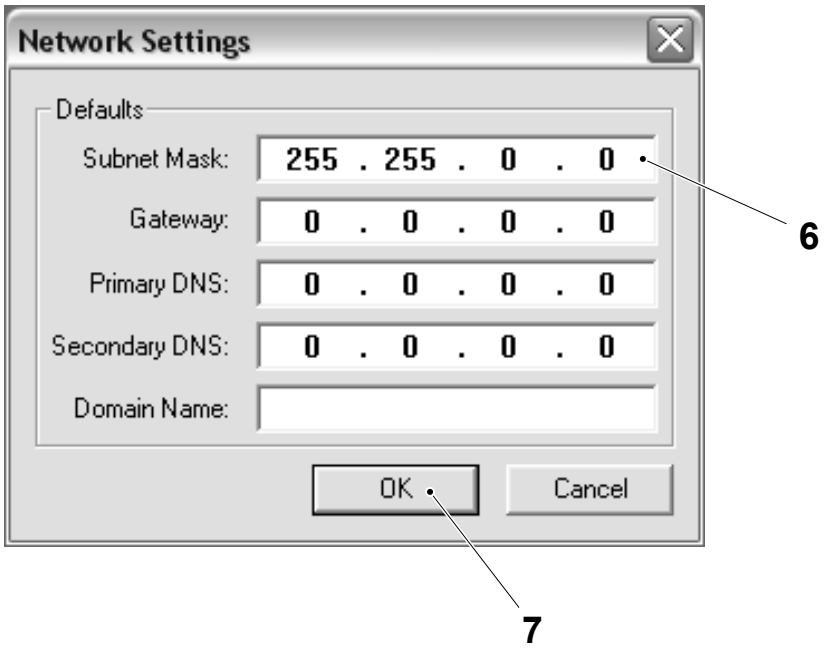

6 Subnet Mask
7 OK button

(Cont'd)

TechPub_2614345_0108 - 0801_3048228_01.fm

(Cont'd)

g) When the MAC address appears in the REQUEST HISTORY window (8) of the BOOTP DHCP SERVER window (9), check that the same address is displayed on the EtherNet module and select the NEW button (10) to begin the conversion from the MAC address to an IP address.

h) When the MAC address appears in the RELATION LIST window (11), select the MAC address.

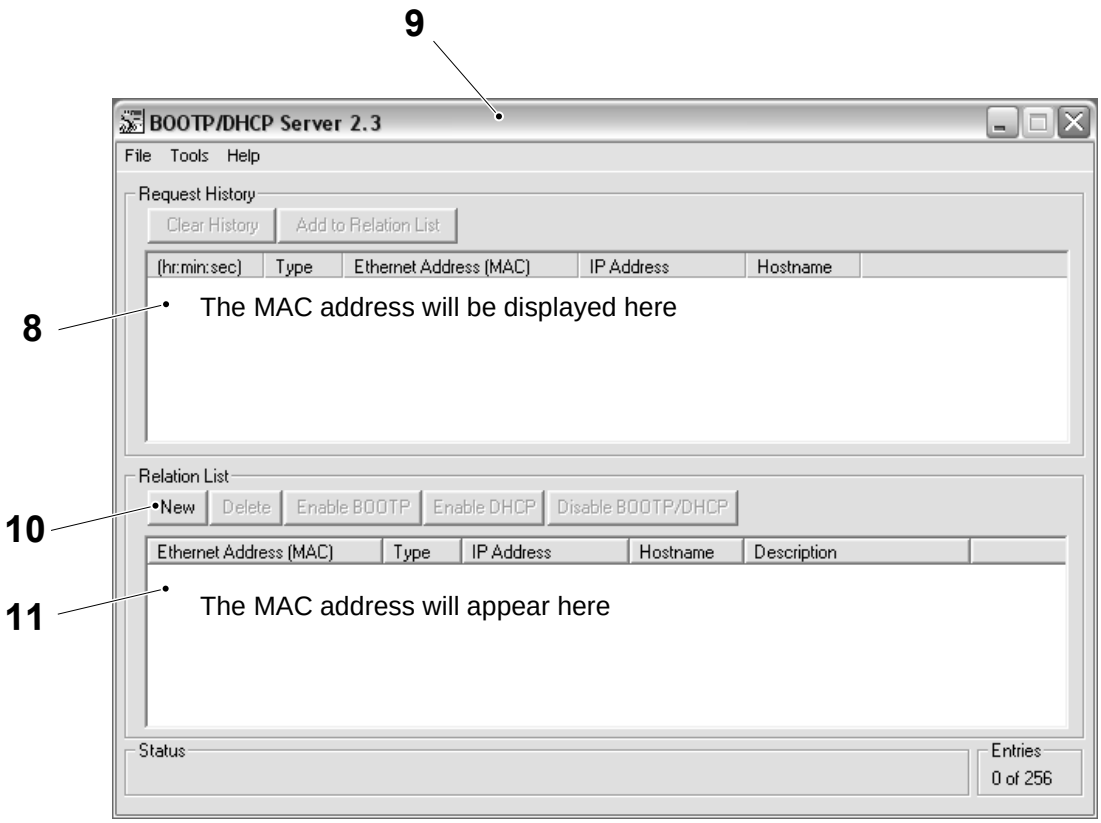

8 Request history window
9 BOOT DHCP server window
10 New button
11 Relation list window

(Cont'd)

TechPub_2614345_0108 - 0801_3048228_01.fm

(Cont'd)

EtherNet/IP Module			
PLC Slot No.	**Pos. No.**	**Module type**	**IP address**
1	A01K2010	1756-ENBT	10.255.1.21
2	A01K2020	1756-ENBT	10.0.0.201

i) Enter the MAC address in the MAC ADDRESS field (12) and the new IP address (see the table above) in the IP ADDRESS field (13) of the NEW ENTRY window (14).

j) Select the OK button (15). The new IP address will appear in the REQUEST HISTORY window (8).

k) Select the EtherNet/IP module in the RELATION LIST window (11) and then select the DISABLE BOOTP/DHCP button (16).

l) After the EtherNet/IP module has been configured, check that the correct IP address appears on the display on the EtherNet/IP module.

m) Disconnect the PC from the Ethernet switch.

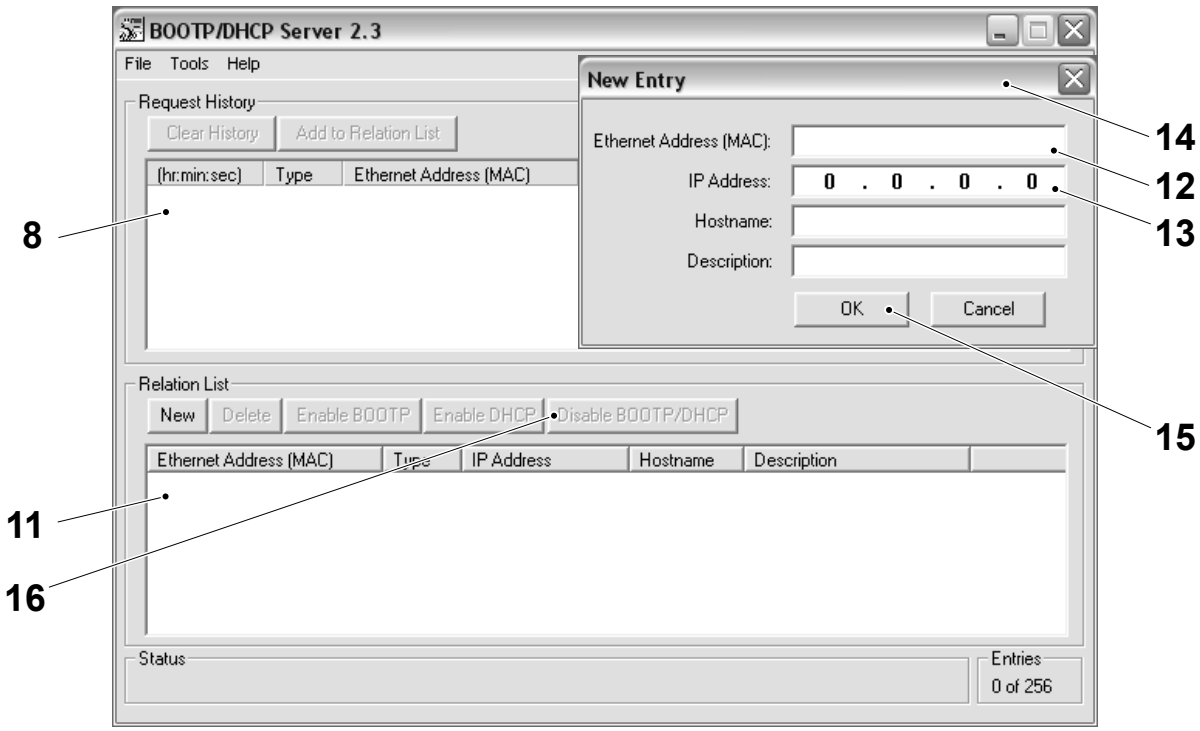

8 Request history window
11 Relation list window
12 MAC address field
13 IP address field
14 New entry window
15 OK button
16 Disable BOOTP/DHCP button

TechPub_2614345_0108 - 0801_3048228_01.fm

9.1.3-3 EtherNet/IP Module - Load Firmware

Machine Status	Mains Power ON Air OFF Steam ON Water OFF
Special Equipment	PC with CD Drive Ethernet communication cable
SPC Reference	90459-2477

Follow the procedure described in 9.1.2-2 CPU Module - Load Firmware to load the firmware for the EtherNet/IP module.

TechPub_2614345_0108 - 0801_3048228_01.fm

9.1.3-4 EtherNet/IP Module - LED Description

Machine Status	Mains Power ON Air OFF Steam ON Water OFF
SPC Reference	90459-2477

LED	Colour	Description
LINK (1)	Off	No data transmission. Module is not ready for transmission
	Solid green	Ready. Module is ready to communicate.
	Flashing green	Module is communicating over the network.
NET (2)	Off	Module is not powered or does not have an IP address. Verify there is chassis power and make sure the module has been configured.
	Solid green	Module has an IP address and has established at least one connection.
	Flashing green	Module has an IP address and but has no established connections.
	Solid red	A duplicate IP address has been detected. Make sure that the IP address assigned to this module is not the same as that for any other device already on the network.
	Flashing red	A connection has timed out. One or more of the connections targeting the module has timed out.

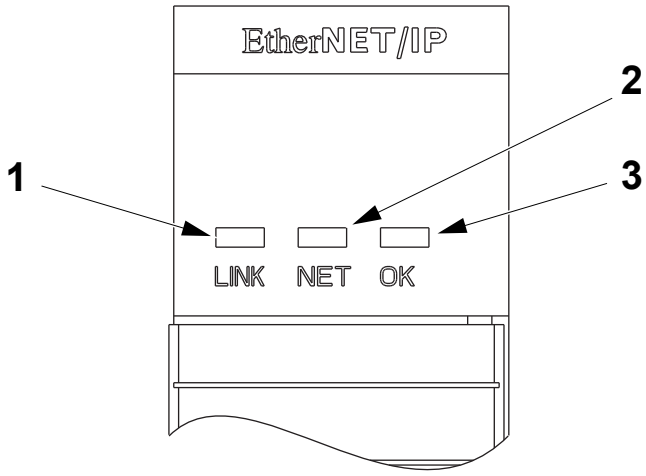

1 LINK LED
2 NET LED
3 OK LED

(Cont'd)

TechPub_2614345_0108 - 0801_3048228_01.fm

(Cont'd)

LED	Colour	Description
OK (3)	Off	The module does not have 24 V DC power. Verify there is chassis power and make sure the module has been correctly inserted in the chassis.
	Solid green	Module is operating correctly.
	Flashing green	Module is not configured.
	Solid red	Major fault. An non-recoverable fault has been detected, cycle the power to the module. If the fault remains replace the module.
	Flashing red	A duplicate IP address has been detected. Make sure that the IP address assigned to this module is not the same as that for any other device already on the network. Or A recoverable fault has been detected. This could be caused by an error in the configuration.
	Flashing red/ green	The module is performing the self-test on power up.

TechPub_2614345_0108 - 0801_3048228_01.fm

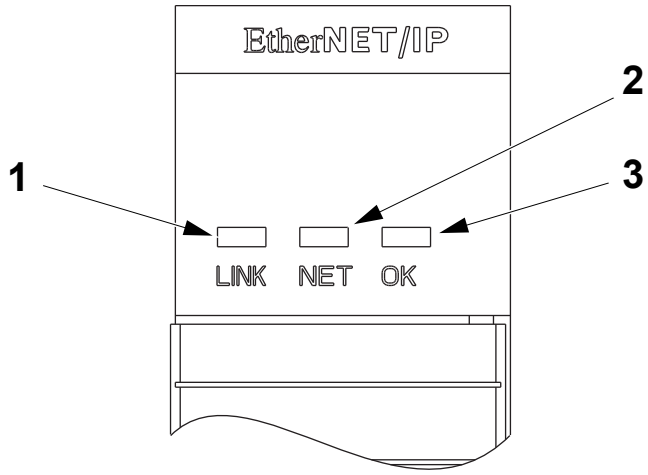

1 LINK LED
2 NET LED
3 OK LED

9.1.4 Digital I/O Modules

9.1.4-1 Digital I/O Modules - Change

Machine Status	Mains Power OFF Air OFF Steam ON Water OFF
SPC Reference	90459-6556 90459-2474 90600-4033

Note! Before removing the module from the chassis, it is necessary to remove the removable terminal block (1) from the module.

a) Unlock the locking tab (2) at the top of the module.

b) Open the door of the removable terminal block (1) and pull the removable terminal block (1) off the module.

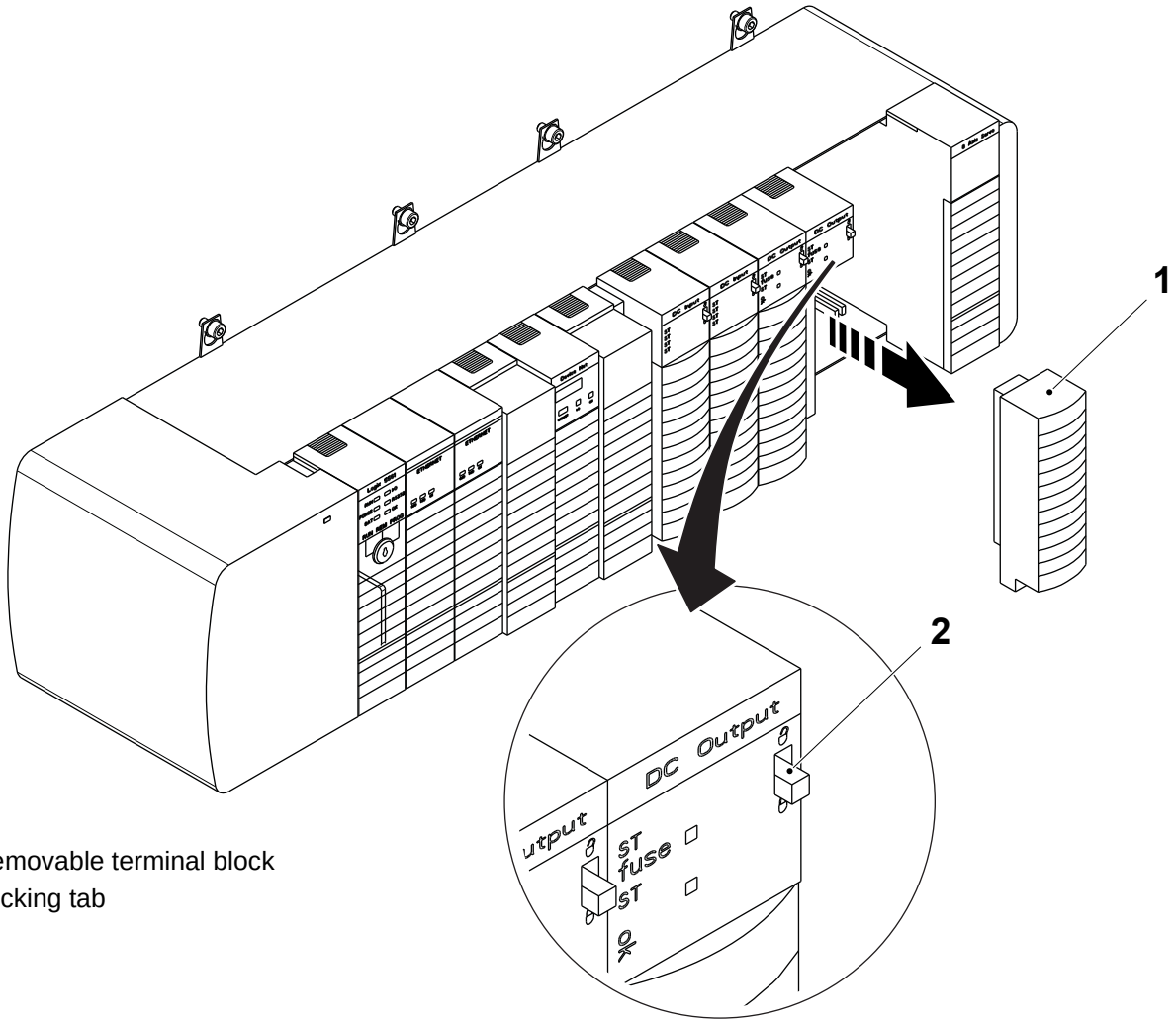

1 Removable terminal block
2 Locking tab

TechPub_2614345_0108 - 0801_3048229_01.fm

(Cont'd)

(Cont'd)

c) Press the locking tabs on the top and the bottom of the Digital Input/ Output module (3).

d) Slide the Digital Input/Output module (3) out of the chassis.

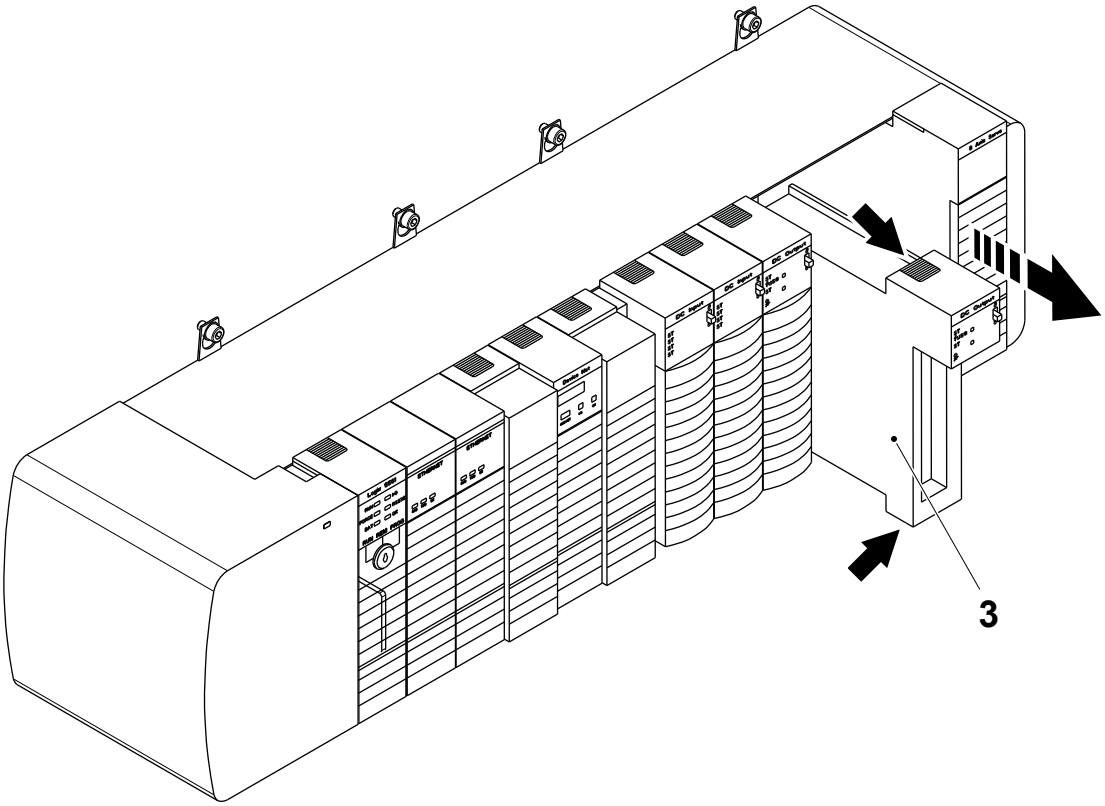

3 Digital I/O module

(Cont'd)

TechPub_2614345_0108 - 0801_3048229_01.fm

(Cont'd)

e) Align the new Digital Input/Output module (3) with the top and the bottom guides in the chassis.

f) Slide the Digital Input/Output module (3) into the chassis. Make sure it is flush with the other modules and the top and bottom latches are engaged.

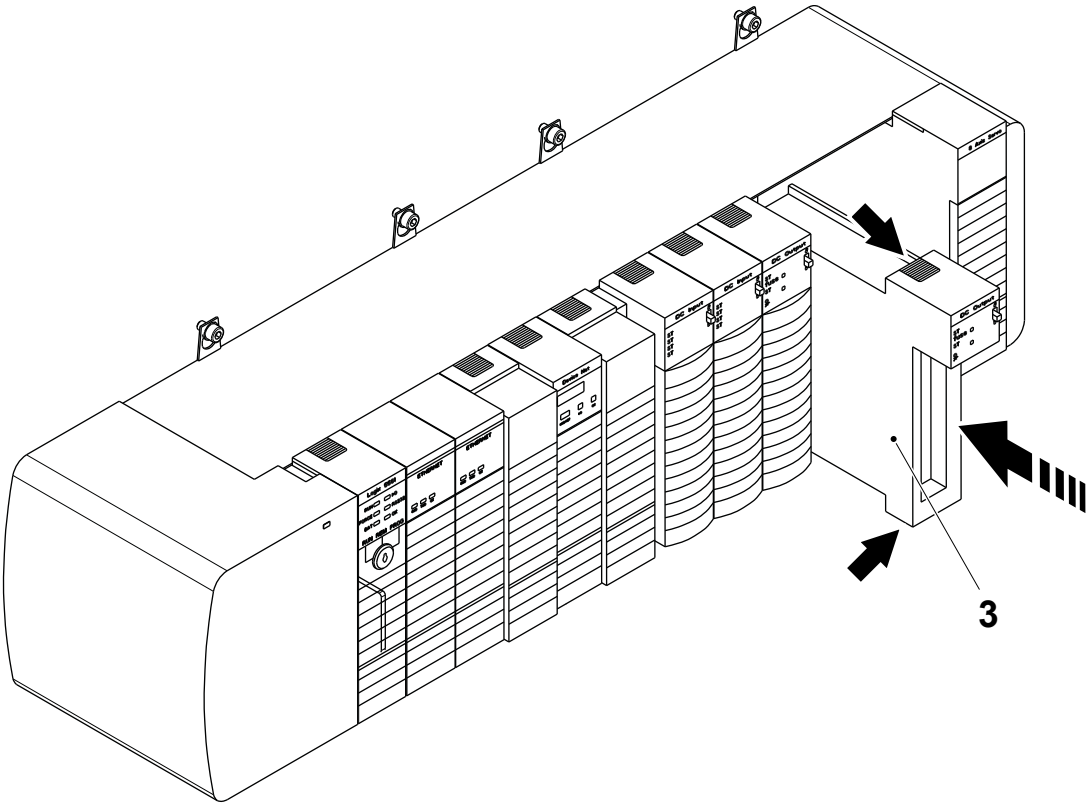

3 Digital I/O module

(Cont'd)

TechPub_2614345_0108 - 0801_3048229_01.fm

(Cont'd)

g) If necessary, change the removable terminal block (1) as follows:
- Wire the terminal plate (4) according to the EM.
- Align the grooves at the bottom of each side of the housing (5) with the side edges of the terminal plate (4).
- Slide the terminal plate (4) into the housing (5) until it snaps into place.

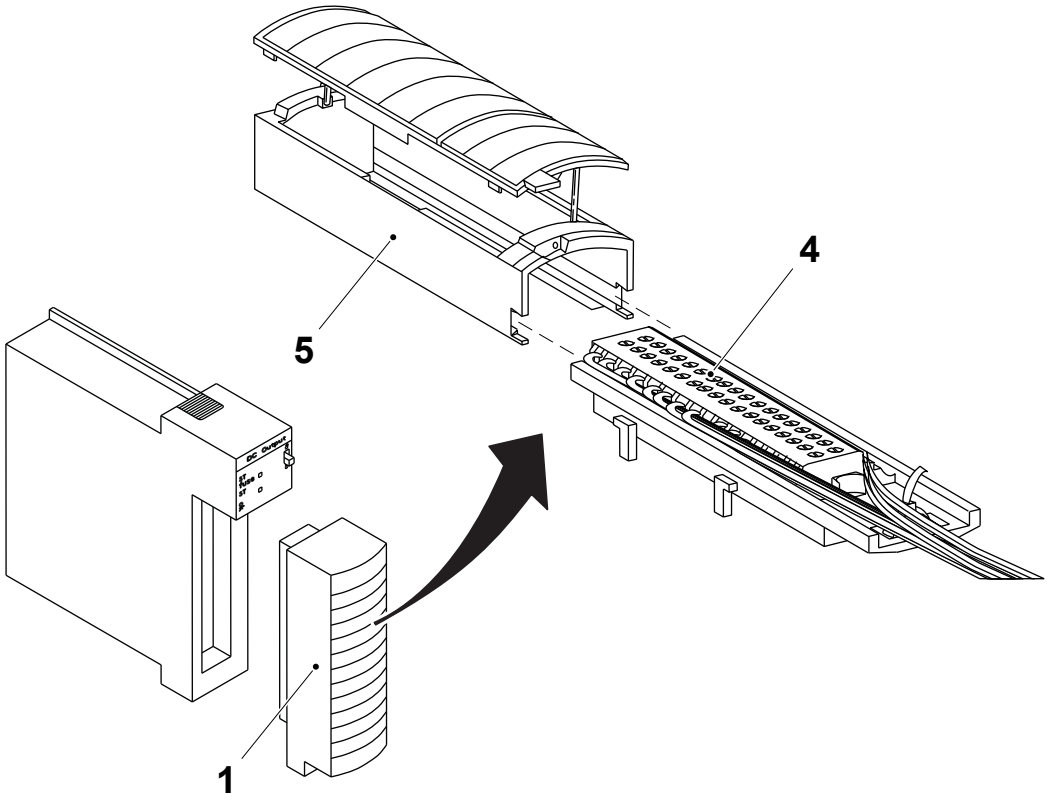

1 Removable terminal block
4 Terminal plate
5 Housing

(Cont'd)

TechPub_2614345_0108 - 0801_3048229_01.fm

(Cont'd)

h) Align the top, bottom and left side guides of the removable terminal block (1) with the guides on the module (3).

i) Press quickly and evenly to seat the removable terminal block (1) on the module (3) until the latches snap into place.

j) Slide the locking tab (2) down to lock the removable terminal block (1) onto the module (3).

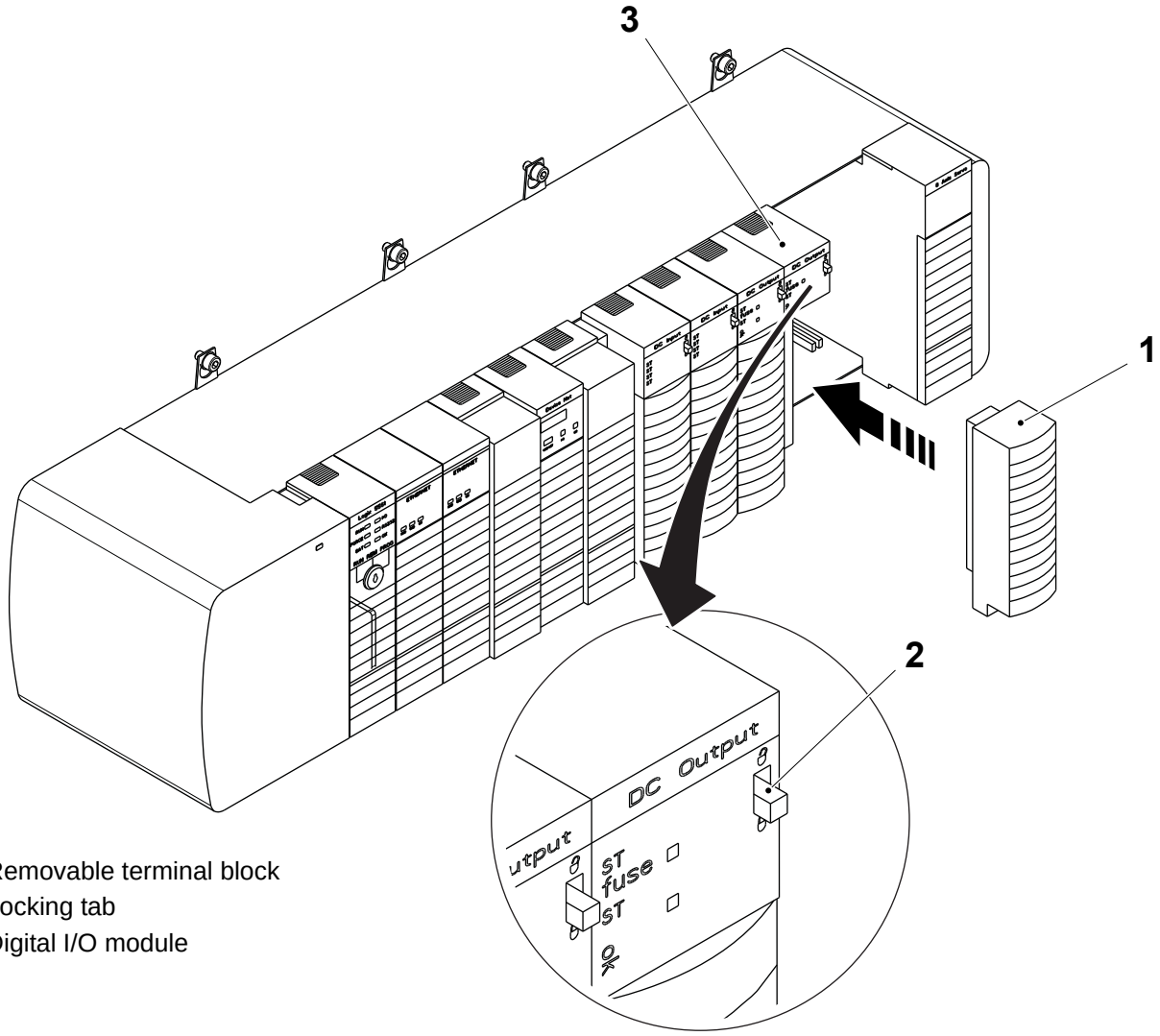

1 Removable terminal block
2 Locking tab
3 Digital I/O module

TechPub_2614345_0108 - 0801_3048229_01.fm

9.1.4-2 Digital I/O Modules - LED Description

Machine Status	Mains Power OFF Air OFF Steam ON Water OFF
SPC Reference	90459-6556 90459-2474 90600-4033

Each ControlLogix diagnostic digital I/O module has an LED indicator on the front of the module that allows you to check the module health and operational status of a module. The LED displays vary for each module.

The following status can be checked with the LED indicators:

- **I/O status** - This yellow display indicates the ON/OFF state of the field device.
- **Module status** - This green display indicates the module communication status.
- **Fuse status** - This display is only found on electronically fused modules and indicates the state of the module fuse.

(Cont'd)

TechPub_2614345_0108 - 0801_3048229_01.fm

(Cont'd)

Input Module 1756-IB/32 LED Description

LED indicators	Colour	Description
OK (1)	Green light	The inputs are being multicast and in normal operating state.
	Flashing green light	The module has passed internal diagnostics but is not multicasting inputs or it is inhibited.
	Flashing red light	Previously established communication has timed out. Check controller and chassis communication.
	Red light	The module must be replaced.
I/O STATE (2)	Yellow	The input is active.

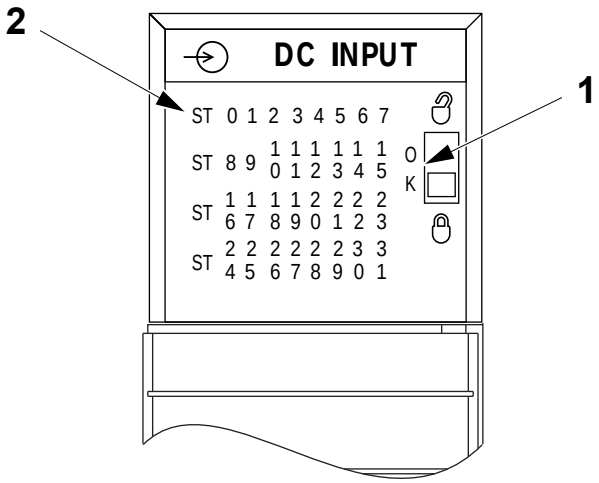

1 Module status
2 I/O status

(Cont'd)

TechPub_2614345_0108 - 0801_3048229_01.fm

(Cont'd)

Input Module 1756-OB16E and OB16IS LED Description

LED indicators	Colour	Description
OK (1)	Steady green light	The outputs are actively being controlled by a system processor.
	Flashing green light	The module has passed internal diagnostics but is not multicasting inputs or it is inhibited.
	Flashing red light	Previously established communication has timed out. Check controller and chassis communication.
	Steady red light	The module must be replaced.
I/O STATE (2)	Yellow	The output is active.
I/O FUSE (3)	Red	A short overload fault has occurred for a point in this group. Check wiring for short overload. Check the module properties in RSLogix 5000 and reset the fuse.

Output module 1756-OB16E

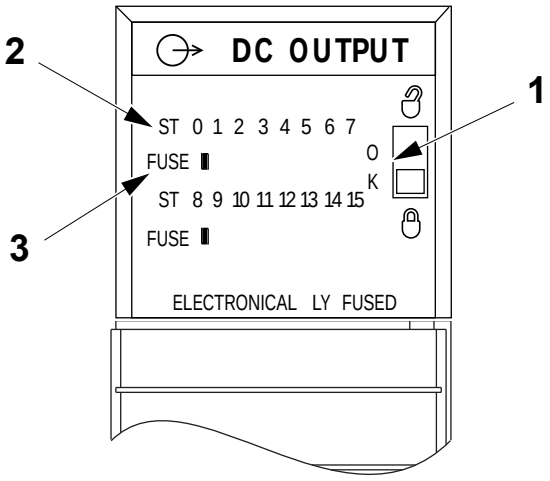

Output module 1756-OB16IS

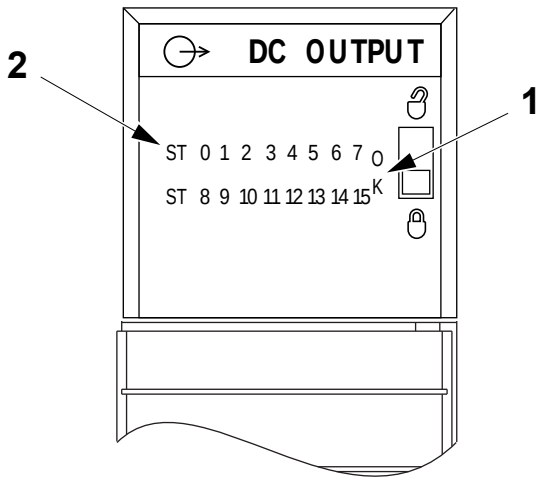

1 Module status
2 I/O status
3 Fuse status

TechPub_2614345_0108 - 0801_3048229_01.fm

9.2 Distributed I/O

SPC Reference	2840947-0100

9.2-1 Distributed I/O - Description

SPC Reference	2840947-0100

Communication between all the distributed I/O devices in the filling machine is provided through a DeviceNet network. DeviceNet is a bi-directional communications network which allows communication between the PLC module and distributed I/O devices such as sensors and actuators.

(Cont'd)

TechPub_2614345_0108 - 0802_3048230_01.fm

(Cont'd)

The DeviceNet network on the filling machine utilizes a master and slave architecture and the physical network is composed of a trunk line (1) with multiple drops (2). Each drop terminates with a slave node (3) and each sensor or actuator in the filling machine is connected to a node. The DeviceNet master (4) is located in the PLC rack serving as a intermediary allowing direct communication with the CPU module. For filling machines fitted with a pre-applicator unit, the DeviceNet master in the PLC rack of the pre-applicator electrical cabinet acts as both a slave node to the DeviceNet master located in the filling machine PLC rack and also as a DeviceNet master to the slave nodes in the pre-applicator unit.

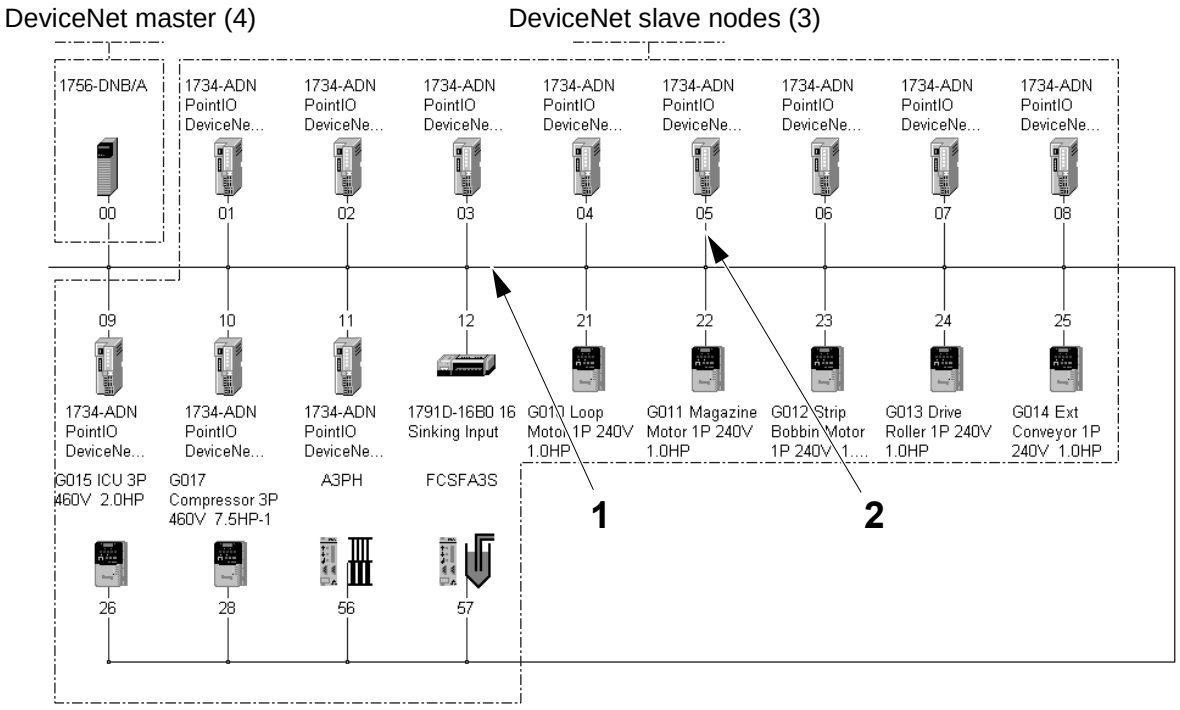

1 Trunk line
2 Drop
3 Slave node
4 DeviceNet master

TechPub_2614345_0108 - 0802_3048230_01.fm

9.2.1 DeviceNet Scanner Module

9.2.1-1 DeviceNet Scanner Module - Change

Machine Status	Mains Power ON Air OFF Steam ON Water OFF
Special Equipment	PC with CD Drive Ethernet communication cable
SPC Reference	90459-2479

Note! The firmware revision of the new DeviceNet scanner module maybe equal to, or newer than the firmware revision of the old DeviceNet scanner module. Using a newer firmware revision may create errors when going online, such as unrecognized device or device mismatch if the PC does not contain the very latest EDS files.

Preparation

Before changing the DeviceNet scanner module:

- Use the RSLinx Classic program to verify and record the firmware version of the DeviceNet scanner module.
- Use the RSLogix program to select `PROGRAM MODE` from the `COMMUNICATION` menu.
- Use the Flow Chart of Procedures for Changing the DeviceNet Scanner Module on the next page to determine which procedures must be performed and their correct sequence.

(Cont'd)

TechPub_2614345_0108 - 0802_3048230_01.fm

(Cont'd)

Flow Chart of Procedures for Changing the DeviceNet Scanner Module

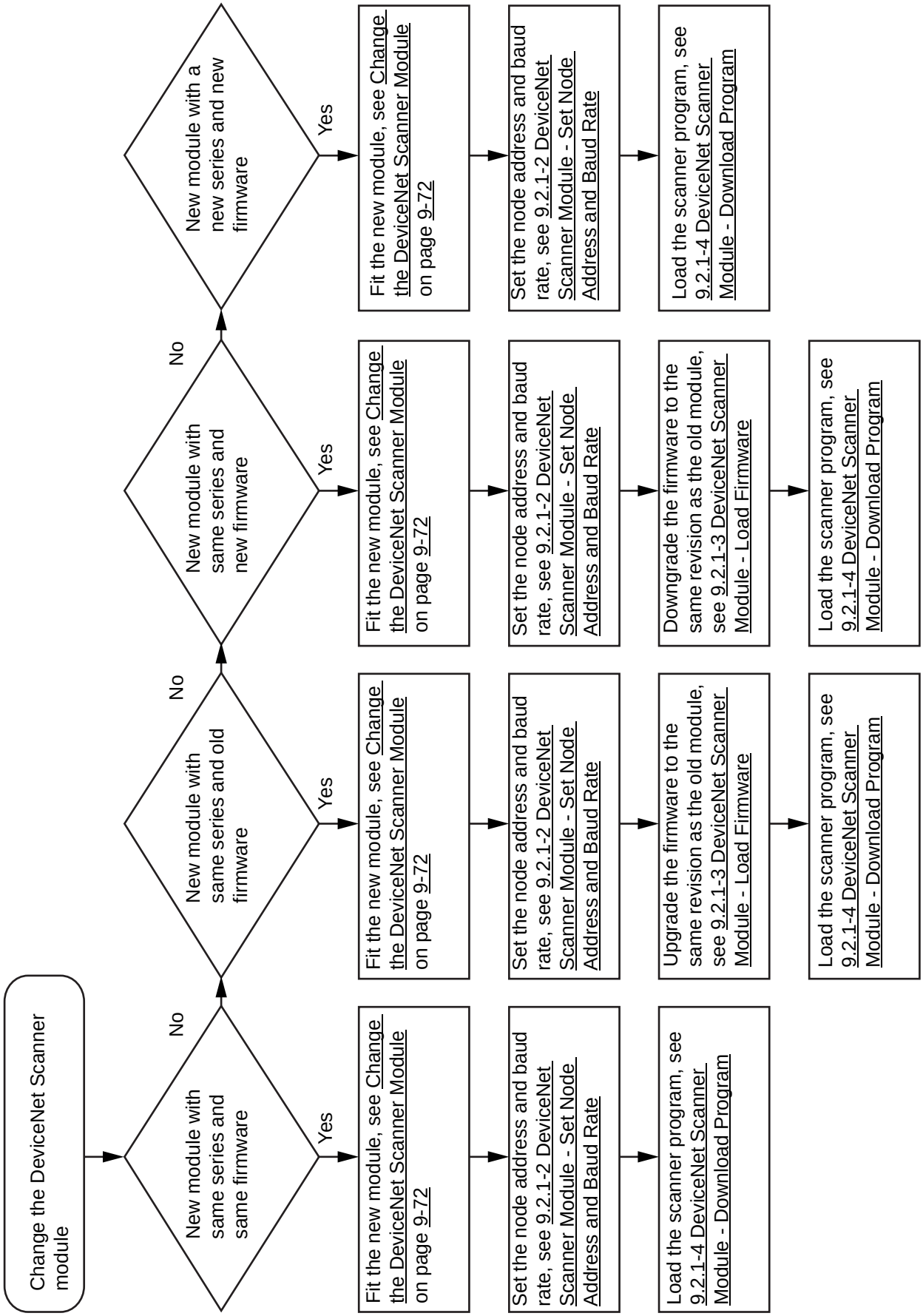

(Cont'd)

TechPub_2614345_0108 - 0802_3048230_01.fm

(Cont'd)

Change the DeviceNet Scanner Module

a) Remove the cable connection (1) from the DeviceNet scanner module.

b) Press the locking tabs on the top and the bottom of the DeviceNet scanner module.

c) Slide the DeviceNet scanner module out of the chassis.

A DeviceNet scanner module series A/B is shown

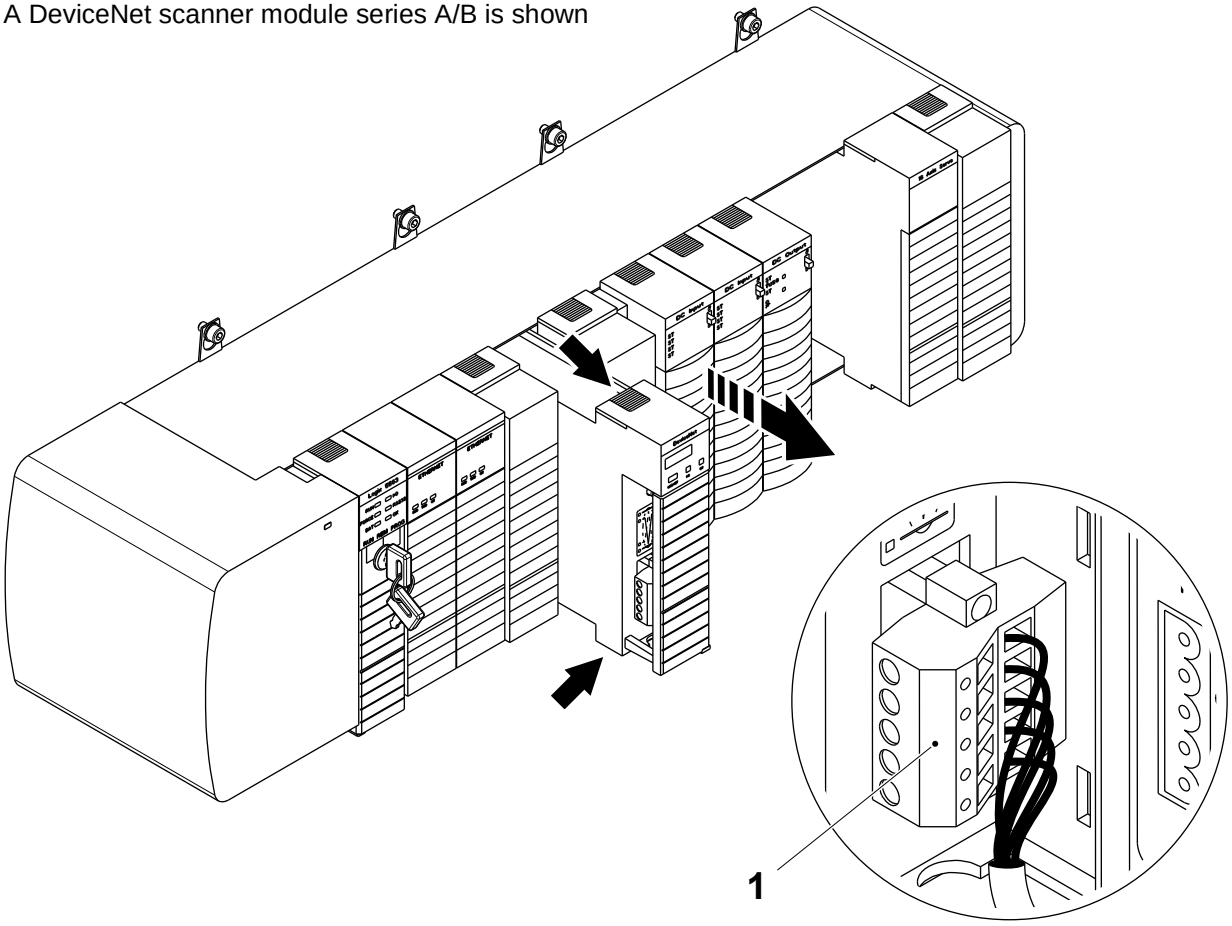

1 Cable connection

(Cont'd)

TechPub_2614345_0108 - 0802_3048230_01.fm

(Cont'd)

Note! For DeviceNet scanner module series C, the node address and baud rate must be set before fitting the module, see 9.2.1-2 DeviceNet Scanner Module - Set Node Address and Baud Rate

d) Align the new DeviceNet scanner module with the top and the bottom guides in the chassis.

e) Slide the DeviceNet scanner module into the chassis. Make sure it is flush with the other modules and the top and bottom latches are engaged.

f) Fit the cable connection (1) to the DeviceNet scanner module. If necessary, see the illustration or the EM for wiring of the cable connection (1).

A DeviceNet scanner module series A/B is shown

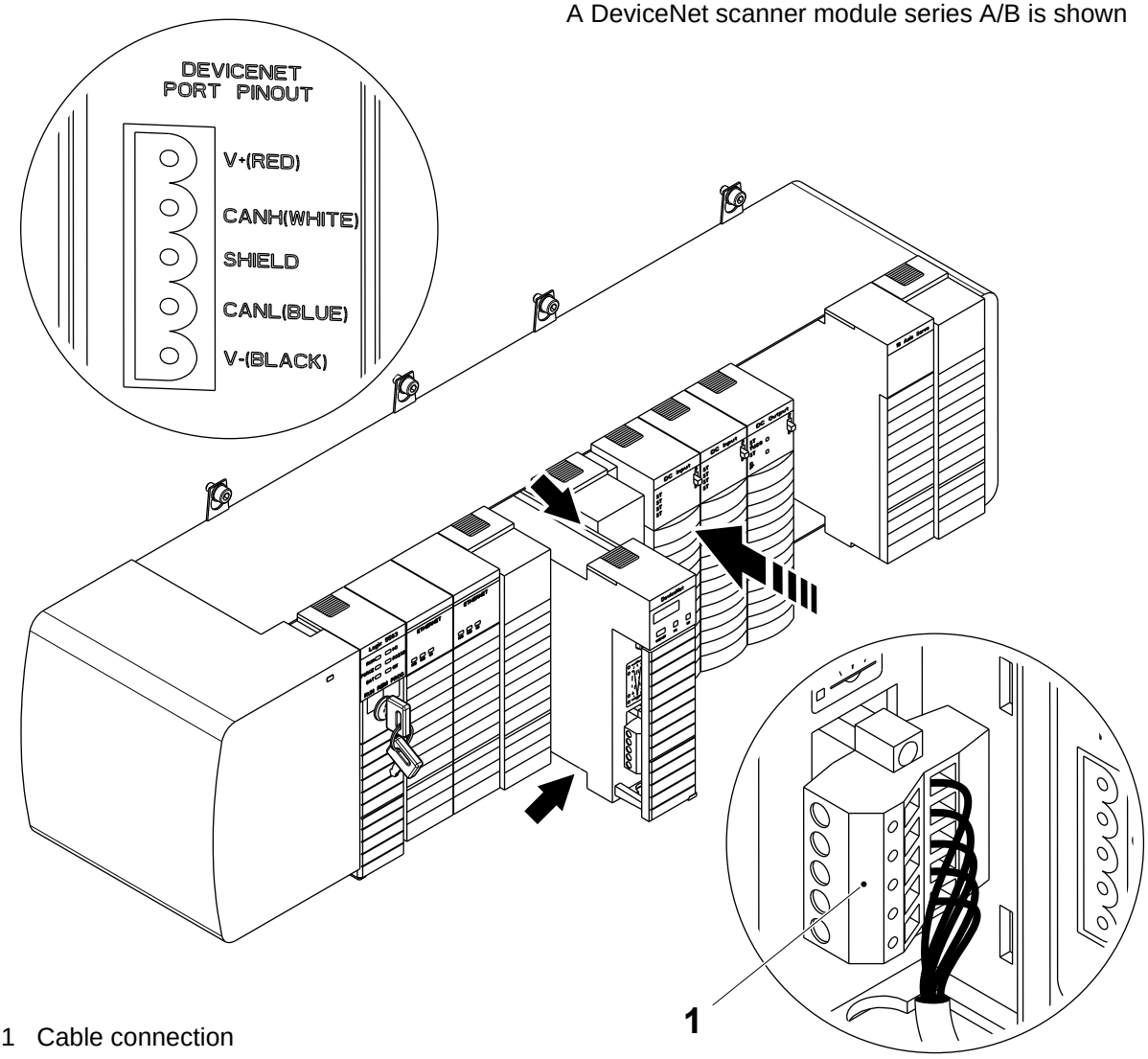

1 Cable connection

(Cont'd)

TechPub_2614345_0108 - 0802_3048230_01.fm

(Cont'd)

g) Turn the mains power switch to the ON position.

h) Check the status of the DeviceNet scanner module LED's according to the table in section 9.2.1-5 DeviceNet Scanner Module - LED Description.

i) Continue with the necessary procedures as described in Flow Chart of Procedures for Changing the DeviceNet Scanner Module on page 9-71.

TechPub_2614345_0108 - 0802_3048230_01.fm

9.2.1-2 DeviceNet Scanner Module - Set Node Address and Baud Rate

Machine Status	Mains Power ON Air OFF Steam ON Water OFF
SPC Reference	90600-5840 (Series D)

Set the switches (1), (2) and (3) according to the table below.

Switch Number	Setting Position	Note
1	2	Sets the baud rate to 500 Kbps
2	0	Sets the first digit of the node address
3	0	Sets the second digit of the node address

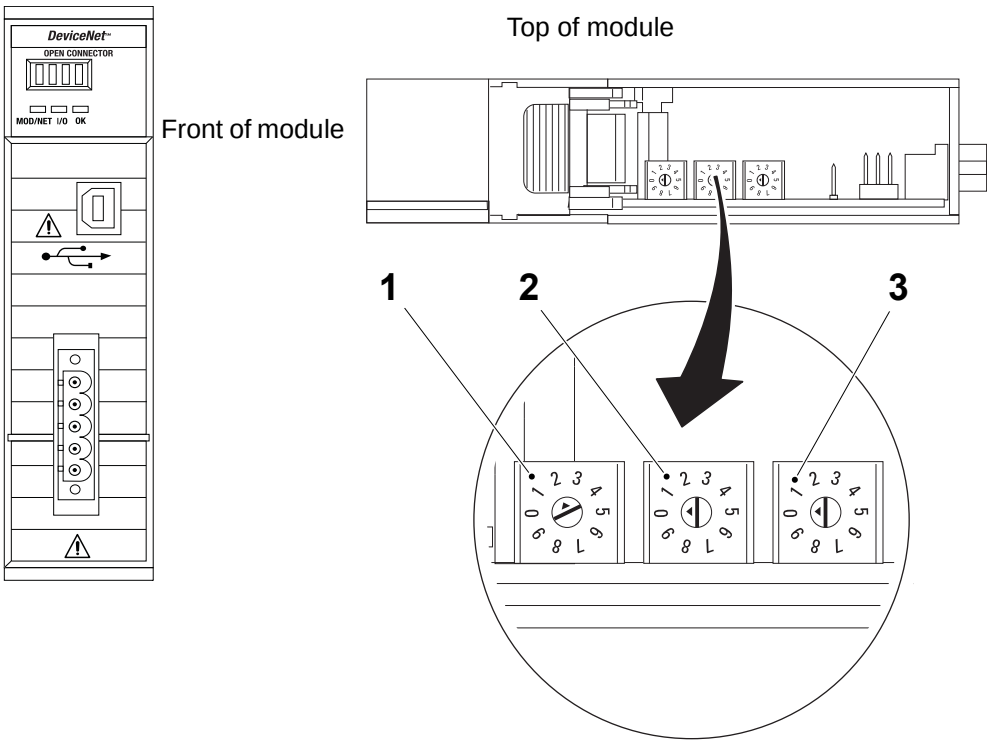

1 Switch for baud rate
2 Switch for first node digit
3 Switch for second node digit

TechPub_2614345_0108 - 0802_3048230_01.fm

9.2.1-3 DeviceNet Scanner Module - Load Firmware

Machine Status	Mains Power ON Air OFF Steam ON Water OFF
Special Equipment	PC with CD Drive Ethernet communication cable
SPC Reference	90600-5840

Follow the procedure described in 9.1.2-2 CPU Module - Load Firmware to load the firmware for the DeviceNet scanner module.

TechPub_2614345_0108 - 0802_3048230_01.fm

9.2.1-4 DeviceNet Scanner Module - Download Program

Machine Status	Mains Power ON Air OFF Steam ON Water OFF
Special Equipment	PC with CD Drive Ethernet communication cable
SPC Reference	90600-5840

Note! To connect to the CPU module using an ethernet communication cable, the PC must first be configured for this type of communication. See 9.1.1-1 Preparation for PLC Communication - Configure PC Network Communications and 9.1.1-2 Preparations for PLC Communication - Configure RSLinx for more details.

(Cont'd)

TechPub_2614345_0108 - 0802_3048230_01.fm

(Cont'd)

a) Set the address and baud rate for the DeviceNet scanner module, see 9.2.1-2 DeviceNet Scanner Module - Set Node Address and Baud Rate.

b) Connect the ethernet communication cable between a vacant connection port on the ethernet switch (1) and the PC (2).

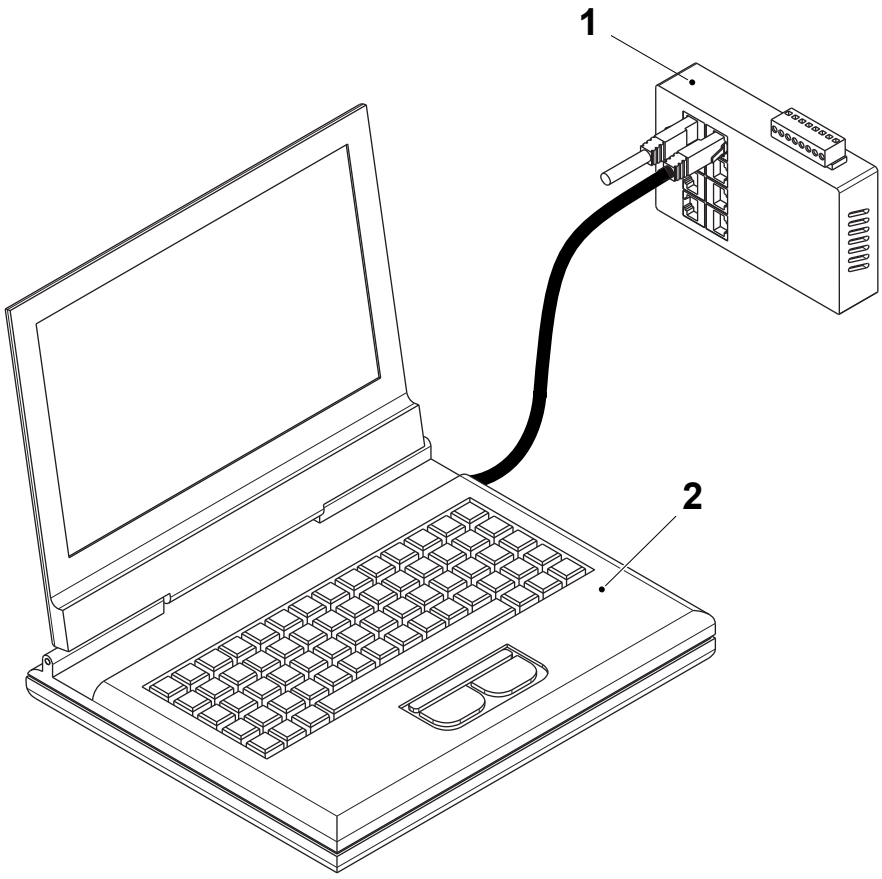

1 Ethernet switch
2 PC

(Cont'd)

TechPub_2614345_0108 - 0802_3048230_01.fm

(Cont'd)

Note! The CPU module must not be in RUN position for the program load.

c) Turn the key on the CPU module to the PROG mode position.

d) Insert the CD marked Softw_CD_A3_S into the PC CD drive.

e) Browse to the CD drive and copy the compressed program folder to the PC desktop and extract the program file.

f) Double click on the program file to automatically start the RSNetWorx program and to open the program file.

g) Select the NETWORK menu (3) and then select ONLINE (4).

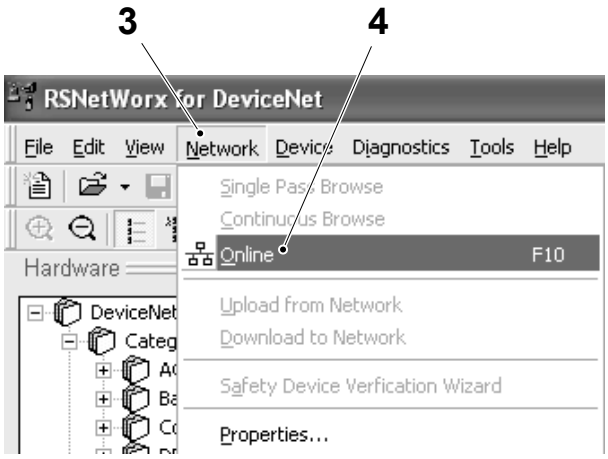

3 Network menu
4 Online

(Cont'd)

TechPub_2614345_0108 - 0802_3048230_01.fm

(Cont'd)

h) Highlight the DeviceNet scanner (5) and right click the PC mouse, select `DOWNLOAD TO DEVICE` (6) to start the download.

i) When the dialogue box (7) appears, select the `YES` button (8) to continue.

j) When the download is complete, close the RSNetWorx program and turn the key on the CPU module to the REM mode position.

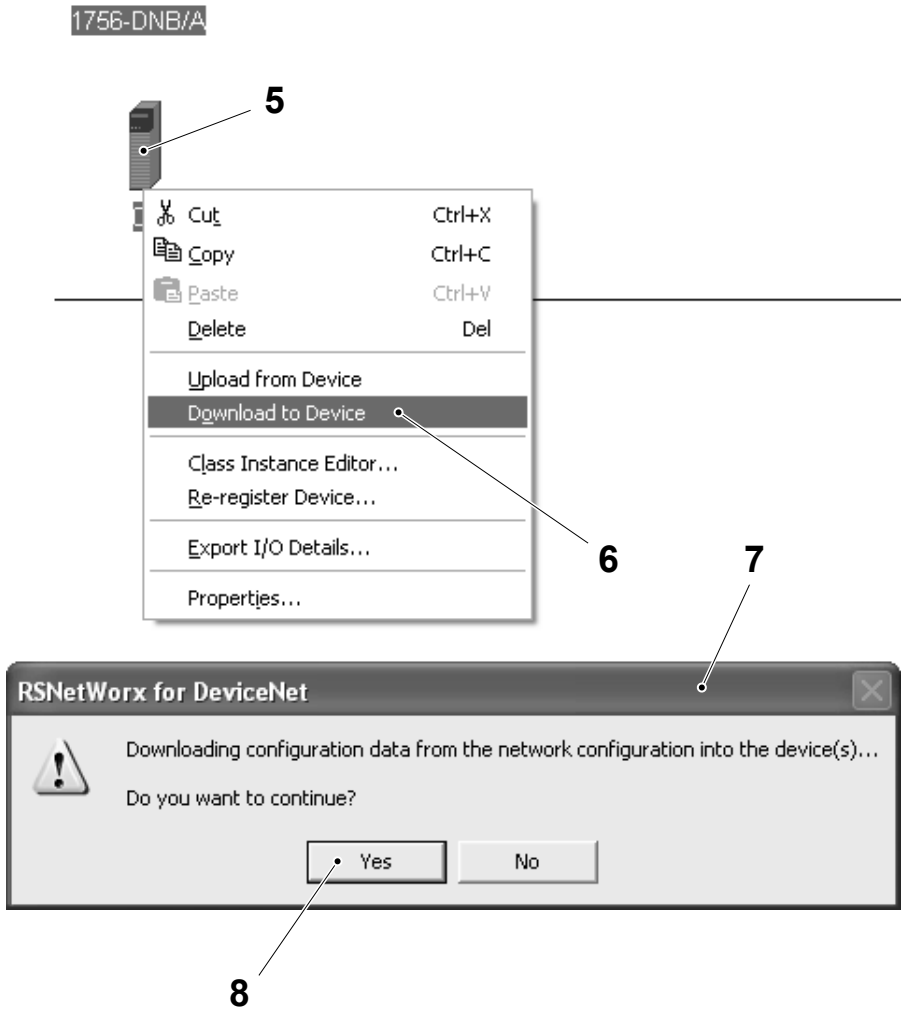

5 DeviceNet scanner
6 Download to device
7 Dialogue box
8 Yes button

TechPub_2614345_0108 - 0802_3048230_01.fm

9.2.1-5 DeviceNet Scanner Module - LED Description

Machine Status	Mains Power ON Air OFF Steam ON Water OFF
SPC Reference	90600-5840

LED	Colour	Description
MOD/NET (1)	Off	Scanner is not online. The scanner has not completed the Dup_MAC_ID test or the device is not powered
	Solid green	Scanner is operating normally and is online with connections established
	Flashing green	Scanner is operating normally and is online but with NO connections established. The Scanner has passed the Dup_MAC_ID test but has NO established connections to other Nodes
	Flashing red	Recoverable fault and/or one or more I/O connection in timed out state
	Solid red	Scanner has an unrecoverable fault and made need to be replaced. Failed communication device. The Scanner has detected an error (duplicate MAC ID or bus-off) that has rendered it incapable of communicating on the network

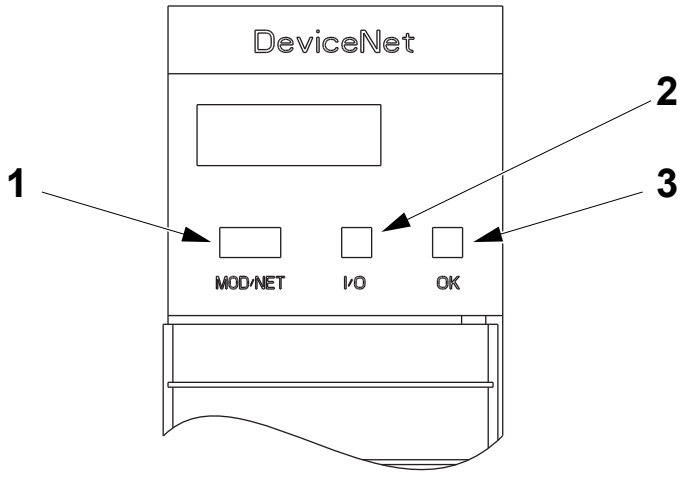

1 MOD/NET LED
2 I/O LED
3 OK LED

(Cont'd)

TechPub_2614345_0108 - 0802_3048230_01.fm

(Cont'd)

LED	Colour	Description
I/O (2)	Off	Scanner is not online
	Solid green	Scanner is in RUN mode, outputs are under control and inputs are being consumed
	Flashing green	Scanner is in IDLE mode, outputs are not under control and inputs are being consumed
OK (3)	Off	No power applied to the scanner. Apply chassis power. Verify module is completely inserted into chassis and backplane
	Solid green	Scanner is operating normally. The scanner is connected to at least one CPU module
	Flashing green	Stand-by mode. The scanner is operating correctly, however no CPU module is controlling the scanner. Verify the scanner is correctly configured in the CPU module I/O configuration
	Solid red	The scanner has an unrecoverable fault; change the device or the scanner is in self test during power up; wait until self test has finished

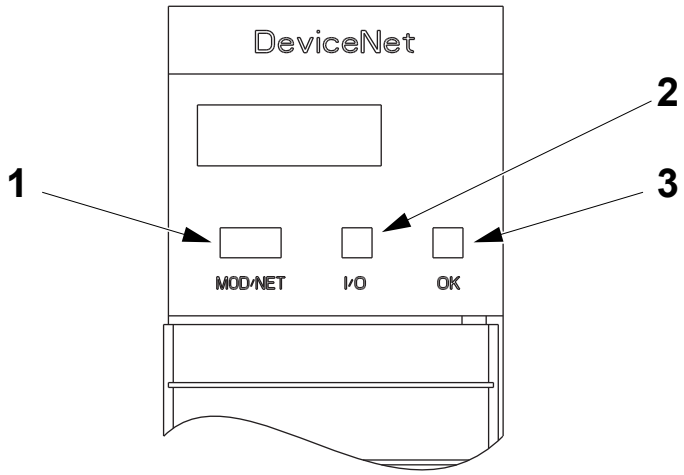

1 MOD/NET LED
2 I/O LED
3 OK LED

TechPub_2614345_0108 - 0802_3048230_01.fm

9.2.1-6 DeviceNet Scanner Module - Error Codes

Machine Status	Mains Power ON Air OFF Steam ON Water OFF
Special Equipment	PC with CD Drive Ethernet communication cable
SPC Reference	90600-5840

During normal operation the display (1) toggles between displaying the node address of the DeviceNet scanner module and the current operating mode.

When an error occurs, the display (1) toggles between displaying the node address of the DeviceNet scanner module followed by the node address of the device from where the error originated and finally the error code.

Refer to the error codes table below to identify error code and the corrective actions.

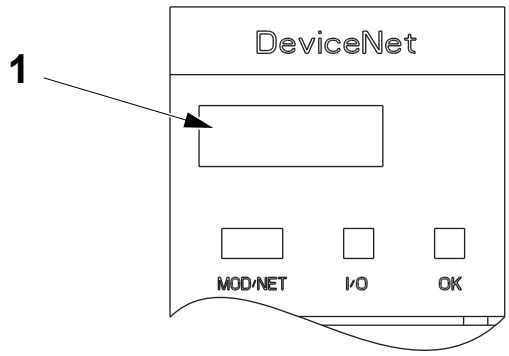

1 Display

(Cont'd)

TechPub_2614345_0108 - 0802_3048230_01.fm

(Cont'd)

Error code	Description	Action
70	Scanner failed Duplicate Node Address check. The display shows the message “Duplicate Node Address”	Change the scanner address to the correct node address A#00
71	Illegal data in scan list table (node number alternately flashes)	Reconfigure the scan list table and remove any illegal data
72	Slave device stopped communicating (node number alternately flashes)	Inspect the slave devices and verify the connections
73	Device’s identity information does not match electronic key in scan list table entry (node number alternately flashes)	Verify that the correct device is at this node number. Make sure that the device at the scrolling node address matches the desired electronic key (vendor, product code, product type, etc.)
74	Data overrun on port detected	Modify your configuration and check for invalid data. Check network communication traffic
75	No traffic detected on network	Check the network configuration
76	No direct network traffic for scanner detected	None. The scanner hears other network communication but none for itself
77	Data size expected by the device does not match scan list entry (node number alternately flashes)	Reconfigure the module for the correct transmit and receive data sizes
78	Slave device in scan list table does not exist (node number alternately flashes)	Add the device to the network or delete the scan list entry for that device

(Cont'd)

TechPub_2614345_0108 - 0802_3048230_01.fm

(Cont'd)

Error code	Description	Action
79	Scanner has failed to transmit a message	Make sure the module is connected to the network. Check for disconnected cables
80	Scanner is in IDLE mode	Put the module in run mode. Enable RUN bit in Module Command Register
81	Scanner is in FAULT mode	Check Module Command Register for FAULT bit set
82	Error detected in sequence of fragmented I/O messages from device (node number alternately flashes)	Check scan list table entry for slave device
83	Slave device is returning error responses when scanner attempts to communicate with it (node number alternately flashes)	Check accuracy of scan list table entry. Check slave device configuration. Slave device may be in another master's scan list. Reboot slave device
84	Scanner is initializing the DeviceNet network.	None. This code clears itself once scanner attempts to initialize all devices on the network
85	Data size was incorrect for this device at runtime.	Slave device is transmitting incorrect length data. Try replacing slave device
86	Device is producing zero length data (idle state) while scanner is in RUN mode.	Check device configuration and slave node status
90	User has disabled communication port.	Check Module Command Register for DISABLE bit set
91	Bus-off condition detected con comm. port. Scanner is detecting communication errors.	Check DeviceNet connections and physical media integrity. Check system for failed slave devices or other possible sources of network interference

(Cont'd)

TechPub_2614345_0108 - 0802_3048230_01.fm

(Cont'd)

Error code	Description	Action
92	No network power detected on communication port.	Provide network power. Make sure that module drop cable is proving network power to scanner communication port
95	Application FLASH update in progress.	None. Do not disconnect the module while application flash is in progress. If this is done existing data in the scanner's memory will be lost.
97	Scanner halted by user command.	Check Module Command Register for HALT bit set
98	General firmware error.	Replace module
A#00 to A#63	Normal operation. The numeric display matches the scanners node address on the DeviceNet network.	No action
IDLE	Scanner is in IDLE mode.	Put the CPU module in RUN mode. Enable RUN bit in Module Command Register
Network Disabled	User has disabled communication port.	Reconfigure the module. Check Module Command Register
No Network Power	No network power detected on communication port.	Provide network power. Make sure that module drop cable is proving network power to scanner communication port
NoRX	No scan list is active in the module or no messages have been received by the scanner.	Enter a scan list. Check DeviceNet connection on front of module
NoTX	No direct network traffic for scanner device.	None. The scanner hears other network communication

TechPub_2614345_0108 - 0802_3048230_01.fm

9.2.1-7 DeviceNet Scanner Module - Register EDS File(s)

Machine Status	Mains Power ON Air OFF Steam ON Water OFF
Special Equipment	PC with CD Drive Ethernet communication cable Software CD
SPC Reference	90600-5840

Note! If a distributed I/O device is graphically represented with a question mark and not with the correct icon, this means that the EDS file registered in RSNetWorx for the DeviceNet program needs to be updated.

a) Insert the software CD into the PC CD drive.

b) Start the `RSNETWORX FOR DEVICENET` program.

(Cont'd)

TechPub_2614345_0108 - 0802_3048230_01.fm

(Cont'd)

c) Select the TOOLS menu (1) and then select the EDS WIZARD (2).

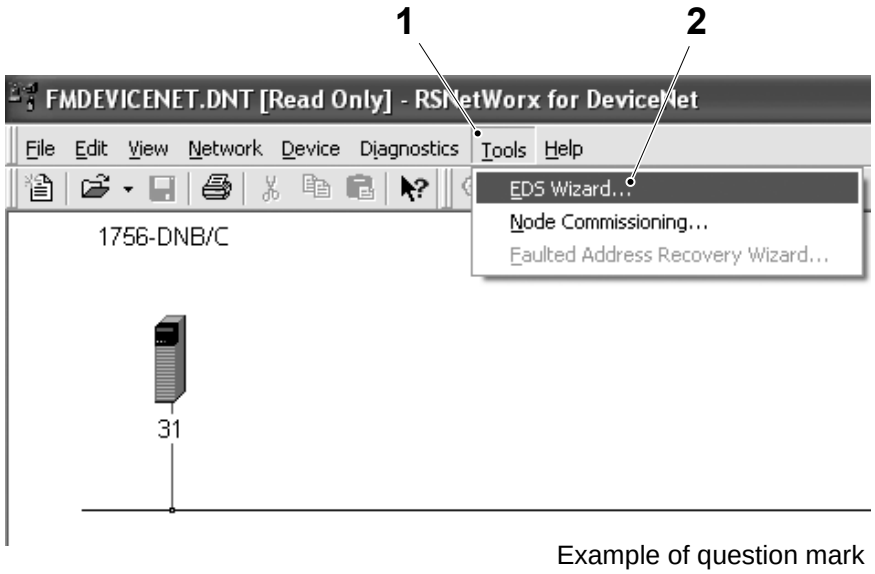

Example of question mark

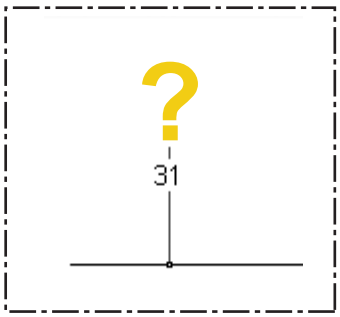

1 Tools menu
2 EDS wizard

(Cont'd)

TechPub_2614345_0108 - 0802_3048230_01.fm

(Cont'd)

d) Select the NEXT button (3) in the EDS WIZARD dialogue window.

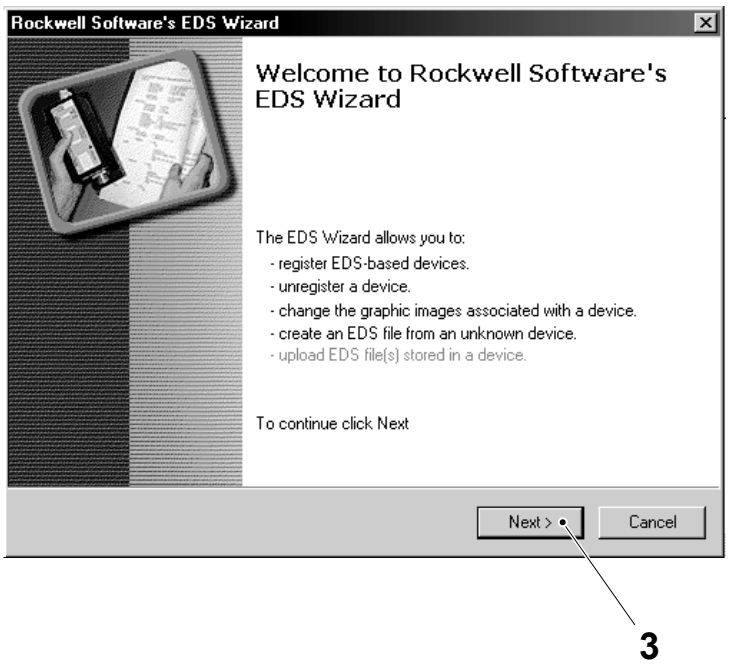

3 Next button

(Cont'd)

TechPub_2614345_0108 - 0802_3048230_01.fm

(Cont'd)

e) In the OPTIONS dialogue window, select the REGISTER AN EDS FILE(S) option (4) and then select the NEXT button (5)

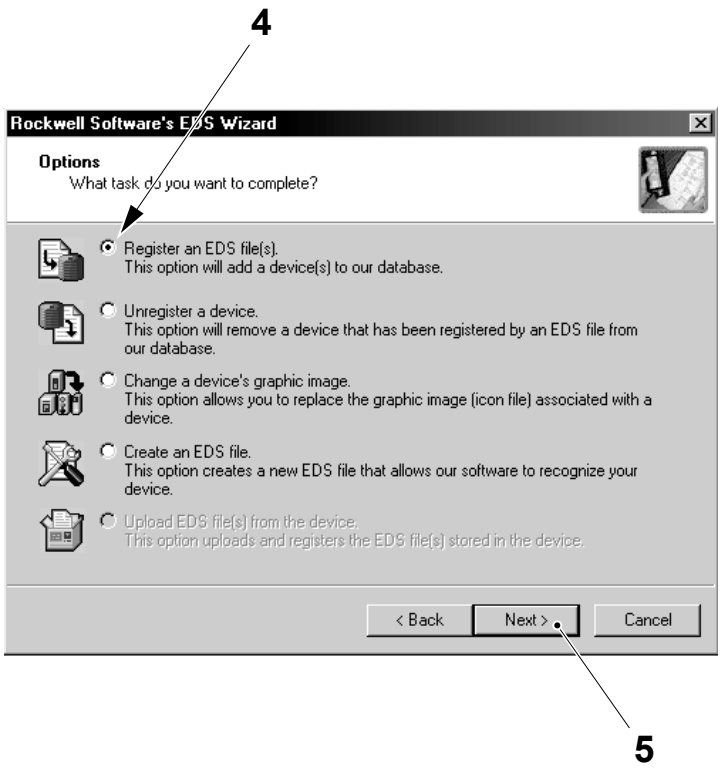

4 Register an EDS file(s) option
5 Next button

(Cont'd)

TechPub_2614345_0108 - 0802_3048230_01.fm

(Cont'd)

f) In the REGISTRATION dialogue window, select the REGISTER A DIRECTORY OF EDS FILES option (6) and then select the BROWSE button (7)

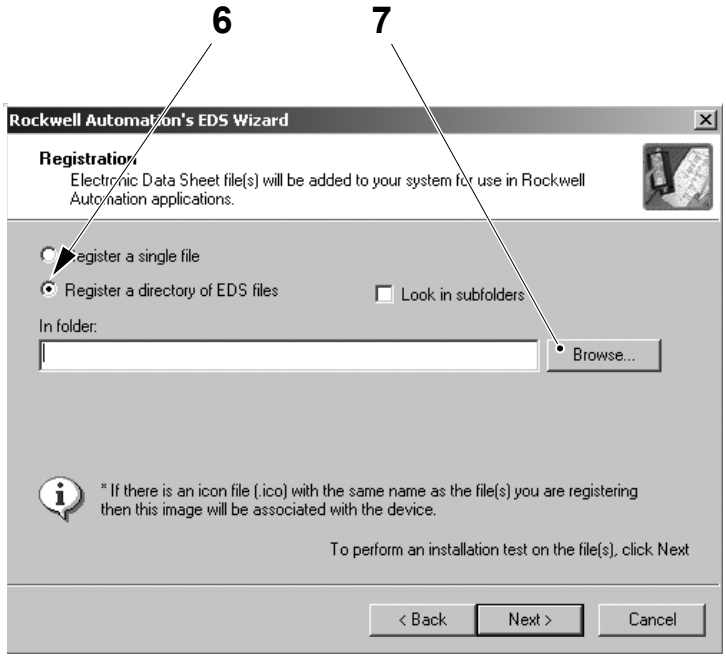

6 Register a directory of EDS files option
7 Browse button

(Cont'd)

TechPub_2614345_0108 - 0802_3048230_01.fm

(Cont'd)

g) Browse to the CD and select the `EDS FILE` directory (8) and then select the `OK` button (9).

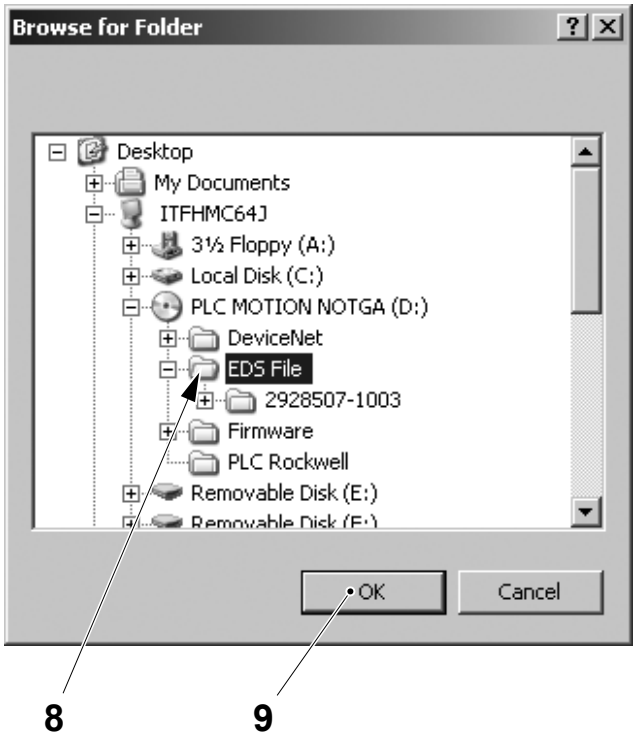

8 EDS file directory
9 OK button

(Cont'd)

TechPub_2614345_0108 - 0802_3048230_01.fm

(Cont'd)

h) In the REGISTRATION dialogue window select the LOOK IN THE SUBFOLDERS check box (10) and then select the NEXT button (11)

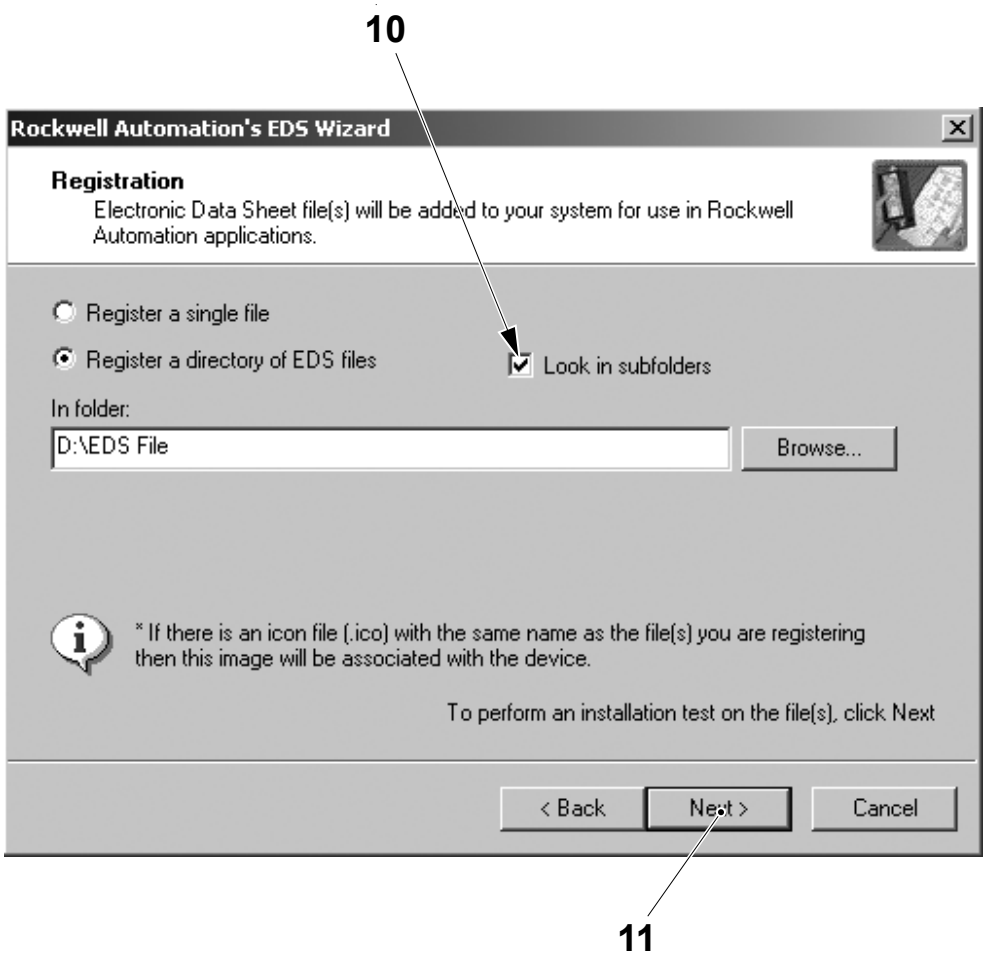

10 Look in the subfolders check box
11 Next button

(Cont'd)

TechPub_2614345_0108 - 0802_3048230_01.fm

(Cont'd)

i) In the EDS FILE INSTALLATION TEST RESULTS dialogue window, select the NEXT button (12).

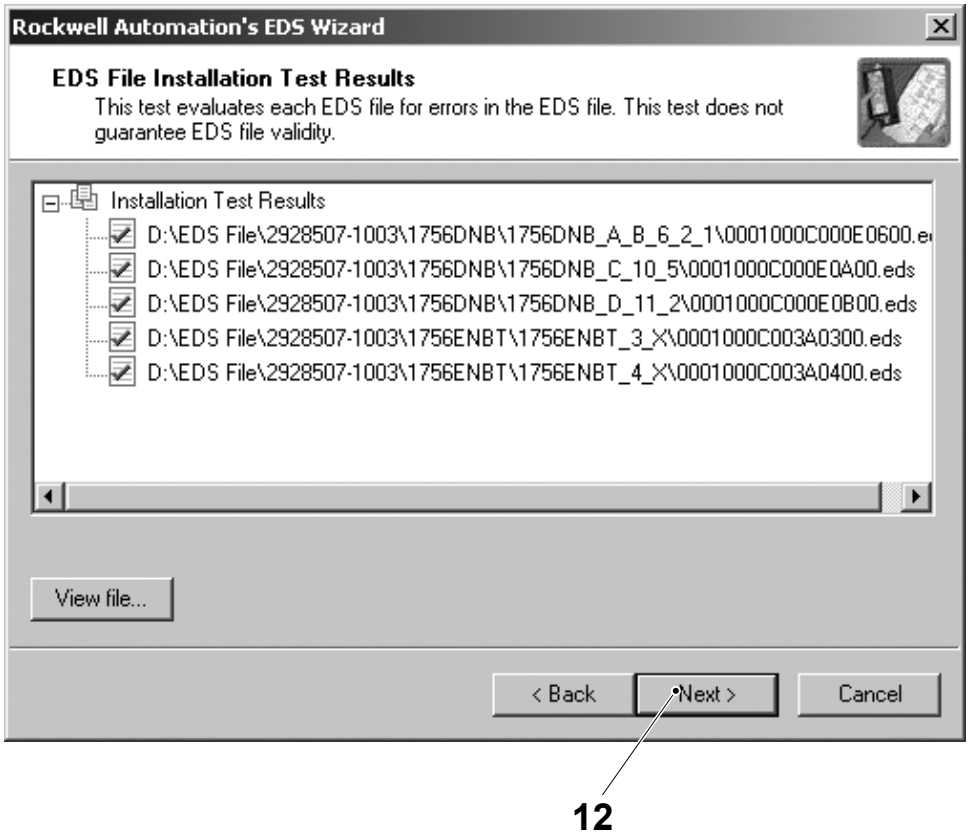

12 Next button

(Cont'd)

TechPub_2614345_0108 - 0802_3048230_01.fm

(Cont'd)

j) In the CHANGE GRAPHIC IMAGE dialogue window, select the NEXT button (13).

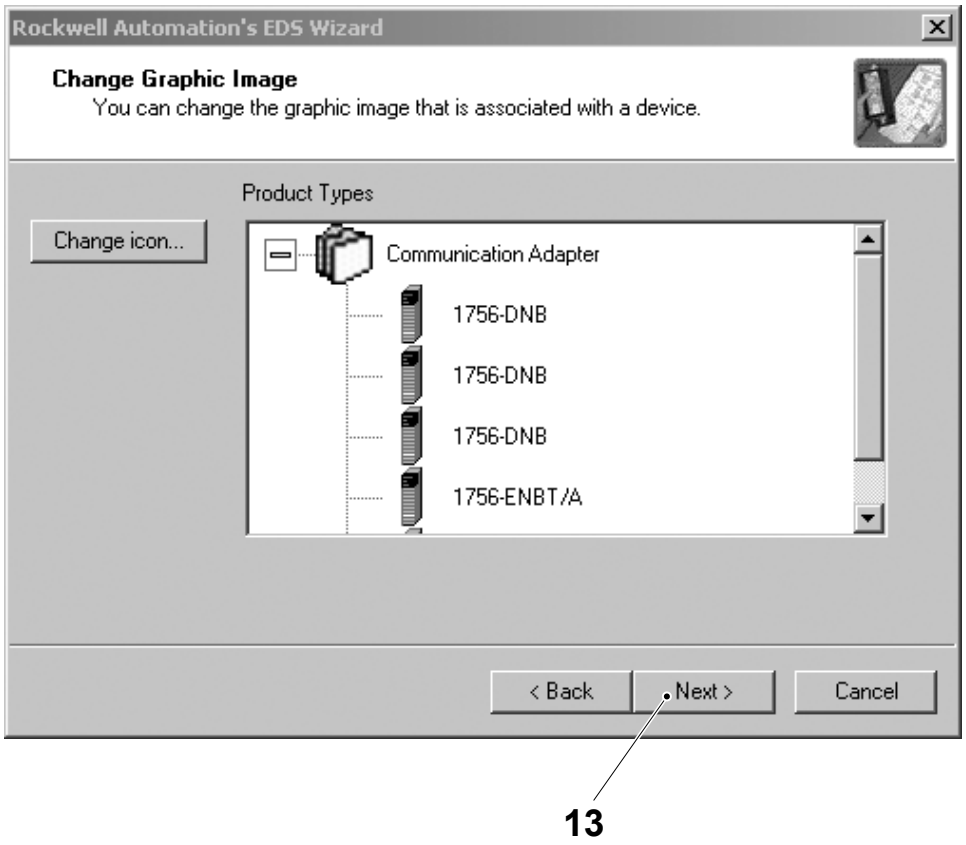

13 Next button

(Cont'd)

TechPub_2614345_0108 - 0802_3048230_01.fm

(Cont'd)

k) In the FINAL TASK SUMMARY dialogue window, select the NEXT button (14).

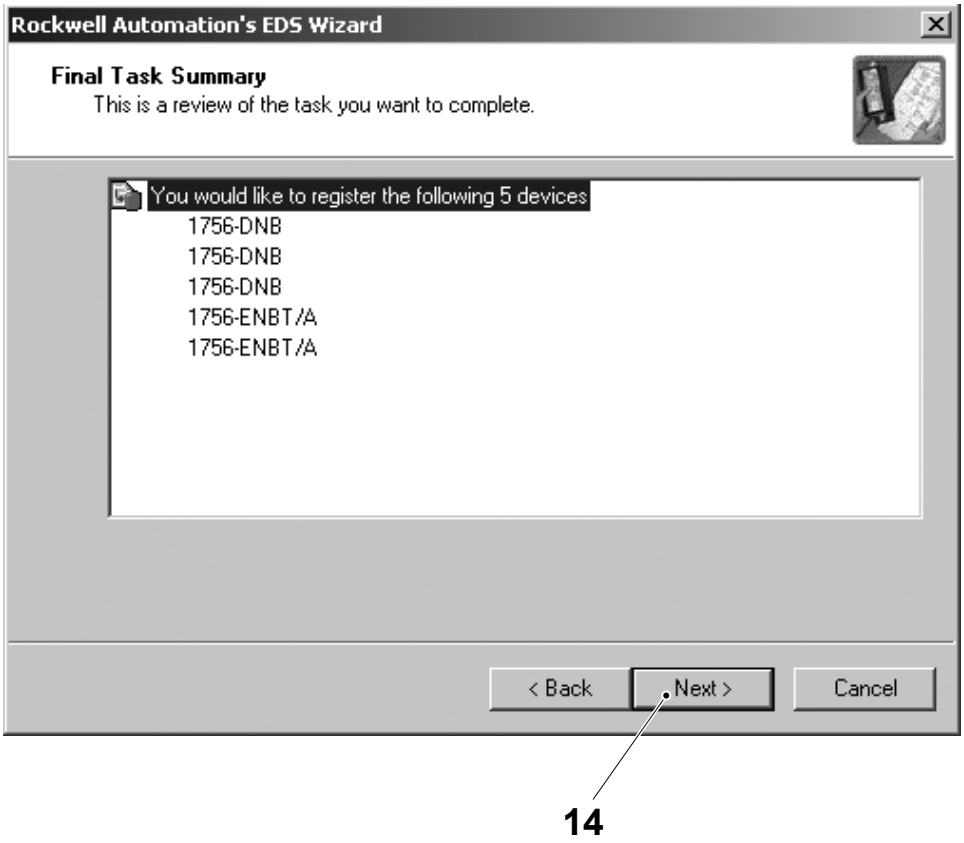

14 Next button

(Cont'd)

TechPub_2614345_0108 - 0802_3048230_01.fm

(Cont'd)

l) In the final dialogue window, select the FINISH button (15).

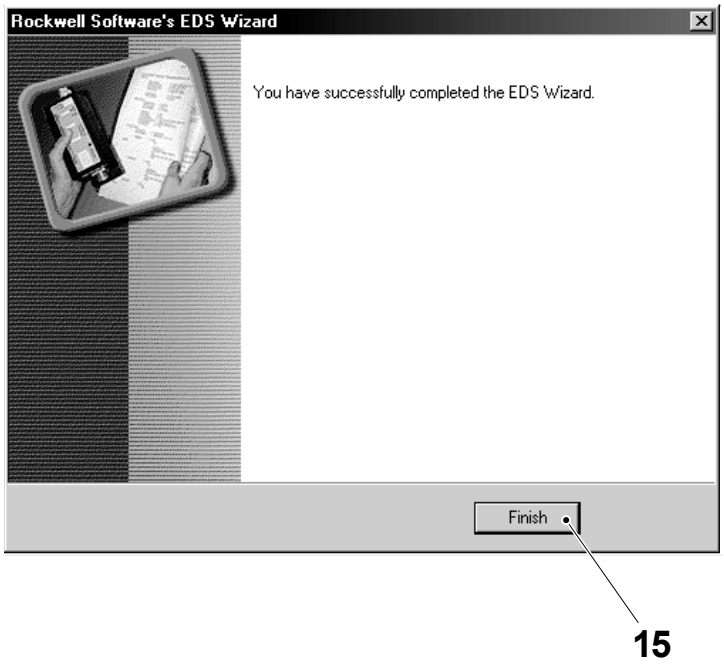

15 Finish button

TechPub_2614345_0108 - 0802_3048230_01.fm

9.2.2 DeviceNet Point I/O

9.2.2.1 DeviceNet Point I/O Adapter

9.2.2.1-1 DeviceNet Point I/O Adapter - Change

Machine Status	Mains Power ON Air OFF Steam ON Water OFF
Special Equipment	PC with CD Drive Ethernet communication cable
SPC Reference	90459-2494

Note! The firmware revision of the new DeviceNet Point I/O adapter maybe equal to, or newer than the firmware revision of the old DeviceNet Point I/O adapter. Using a newer firmware revision may create errors when going online, such as unrecognized device or device mismatch if the PC does not contain the very latest EDS files.

Preparation

Before changing the DeviceNet Point I/O adapter:

- Use the RSLinx Classic program to verify and record the firmware version of the DeviceNet Point I/O adapter.
- Verify and record the node address of the DeviceNet Point I/O adapter.
- Use the Flow Chart of Procedures for Changing the DeviceNet Point I/O Adapter on the next page to determine which procedures must be performed and their correct sequence.

(Cont'd)

TechPub_2614345_0108 - 0801_3048231_01.fm

(Cont'd)

Flow Chart of Procedures for Changing the DeviceNet Point I/O Adapter

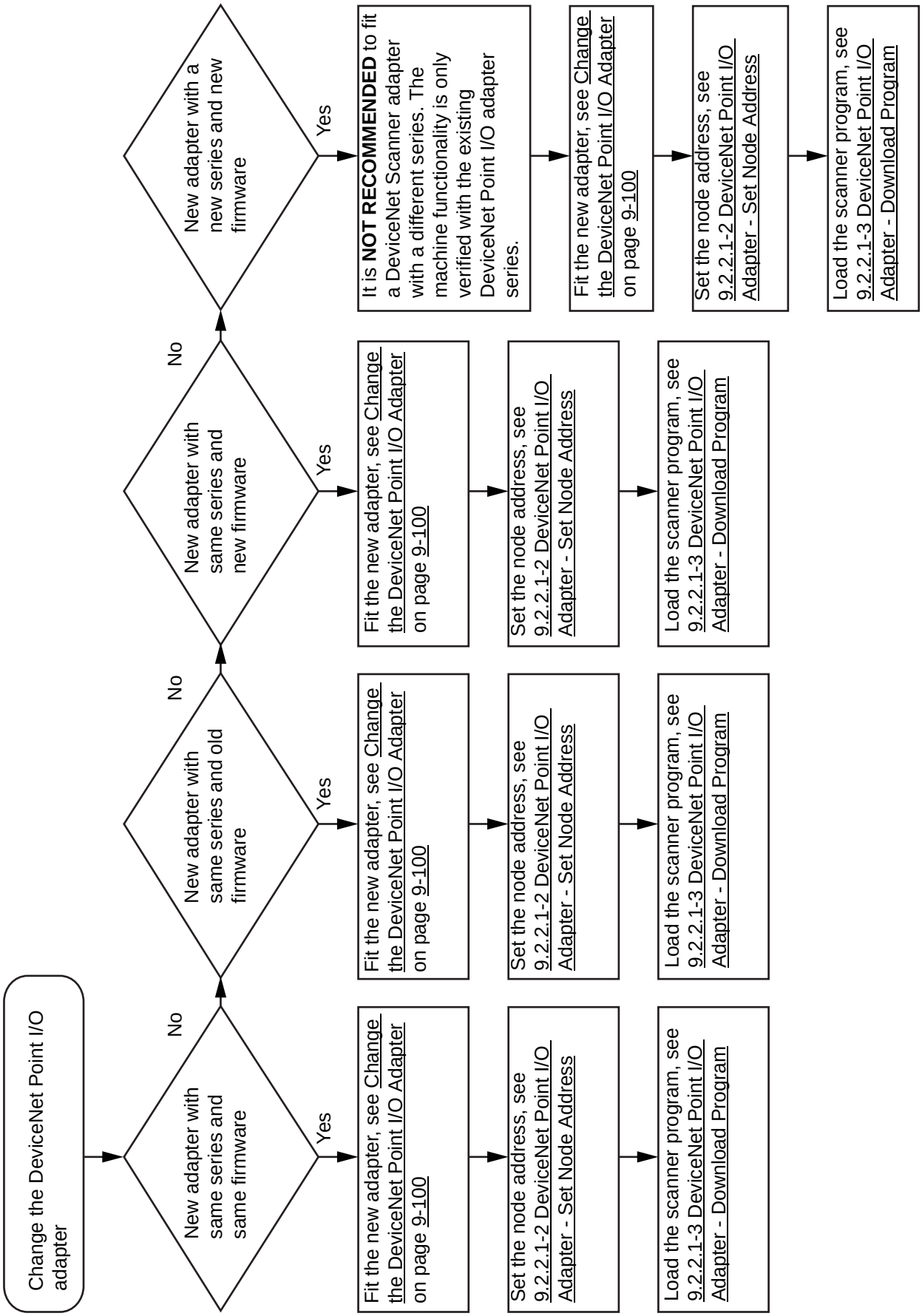

(Cont'd)

TechPub_2614345_0108 - 0801_3048231_01.fm

(Cont'd)

Change the DeviceNet Point I/O Adapter

a) Remove the power connection (1).

b) Remove the cable connection (2).

c) Remove the first I/O module (3).

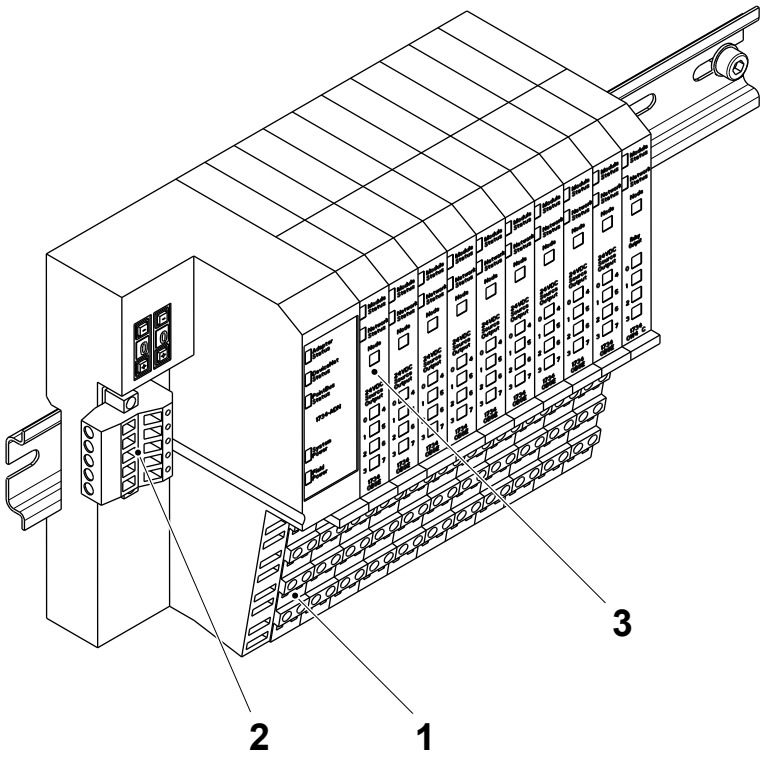

1 Power connection
2 Cable connection
3 I/O module

(Cont'd)

TechPub_2614345_0108 - 0801_3048231_01.fm

(Cont'd)

d) Turn the screw (4) to release the Point I/O adapter (5) and slide out the adapter.

e) Remove the blank connectors and the cover plate from the new adapter.

f) Fit the new adapter and turn the screw (4).

g) Fit the I/O module (3).

h) Fit the cable connection (2).

i) Fit the power connection (1).

j) Continue with the necessary procedures as described in Flow Chart of Procedures for Changing the DeviceNet Point I/O Adapter on page 9-99.

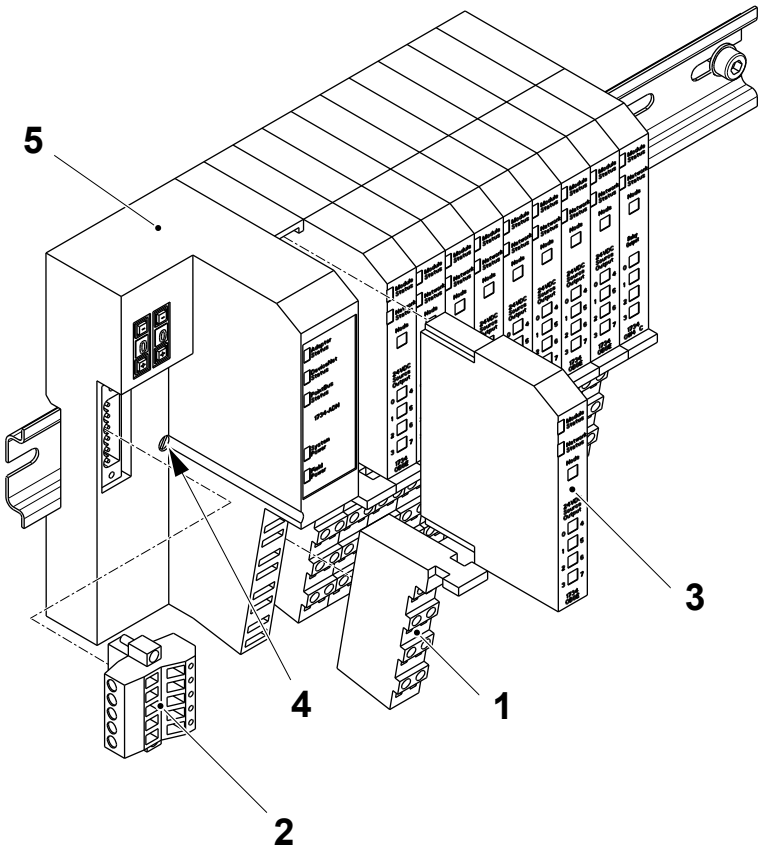

1 Power connection
2 Cable connection
3 I/O module
4 Screw
5 Point I/O adapter

TechPub_2614345_0108 - 0801_3048231_01.fm

9.2.2.1-2 DeviceNet Point I/O Adapter - Set Node Address

Machine Status	Mains Power ON Air OFF Steam ON Water OFF
SPC Reference	90459-2494

Note! For this type of adapter the baud rate is set automatically.

Note! Check the EM for the filling machine if the node address is unknown.

Use the push buttons (1) to set the node address for the Point I/O adapter.

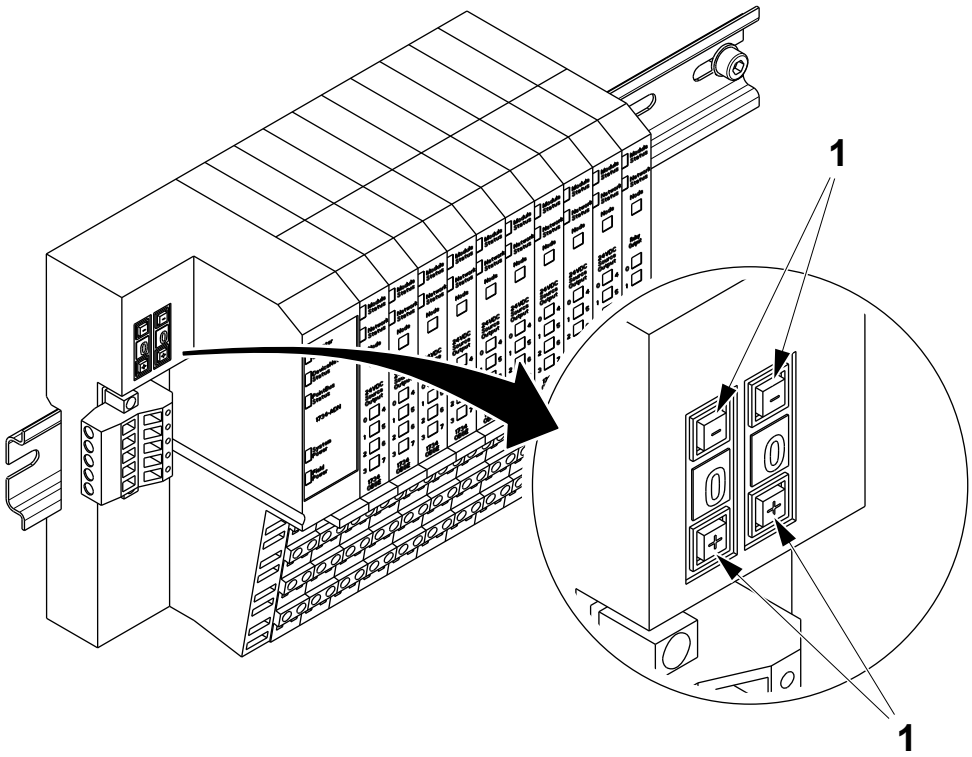

1 Push button

TechPub_2614345_0108 - 0801_3048231_01.fm

9.2.2.1-3 DeviceNet Point I/O Adapter - Download Program

Machine Status	Mains Power ON Air OFF Steam ON Water OFF
Special Equipment	PC with CD Drive Ethernet communication cable
SPC Reference	90459-2494

Note! To connect to the CPU module using an ethernet communication cable, the PC must first be configured for this type of communication. See 9.1.1-1 Preparation for PLC Communication - Configure PC Network Communications and 9.1.1-2 Preparations for PLC Communication - Configure RSLinx for more details.

(Cont'd)

TechPub_2614345_0108 - 0801_3048231_01.fm

(Cont'd)

a) Set the node address for the DeviceNet Point I/O adapter, see 9.2.2.1-2 DeviceNet Point I/O Adapter - Set Node Address.

b) Connect the ethernet communication cable between a vacant connection port on the ethernet switch (1) and the PC (2).

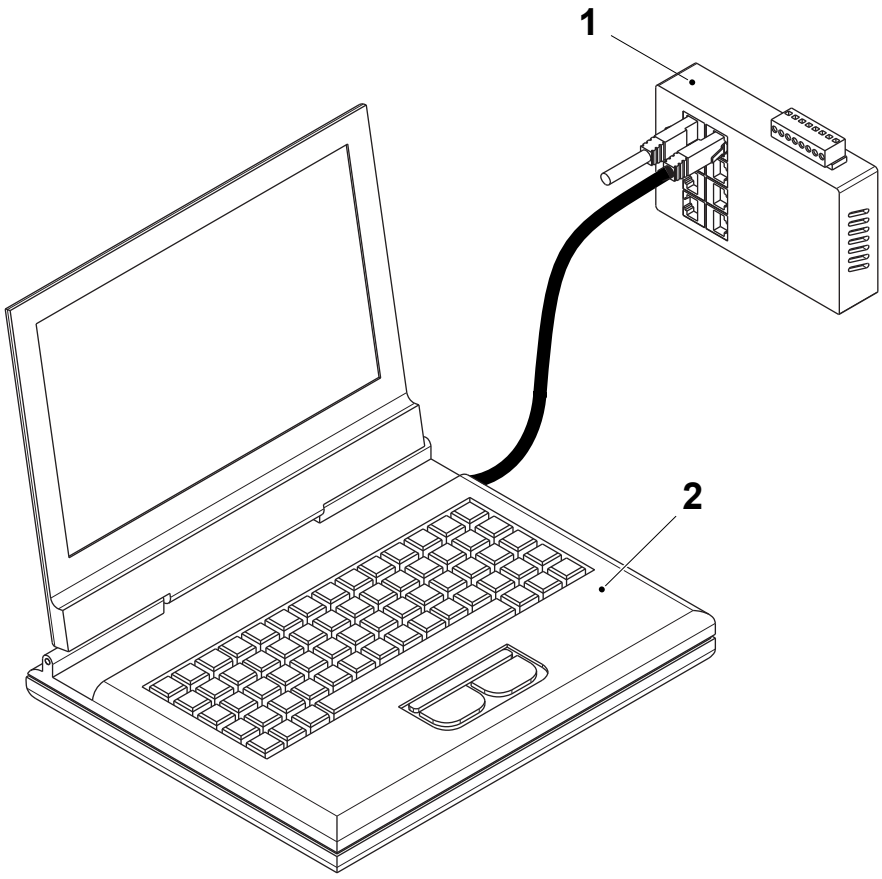

1 Ethernet switch
2 PC

(Cont'd)

TechPub_2614345_0108 - 0801_3048231_01.fm

(Cont'd)

Note! The CPU module must not be in RUN position for the program load.

c) Turn the key on the CPU module to the PROG mode position.

d) Insert the CD marked software CD Softw_CD_A3_S into the PC CD drive.

e) Browse to the CD drive and copy the compressed program folder to the PC desktop and extract the program file.

f) Double click on the program file to automatically start the RSNetWorx program and to open the program file.

g) Select the NETWORK menu (3) and then select ONLINE (4).

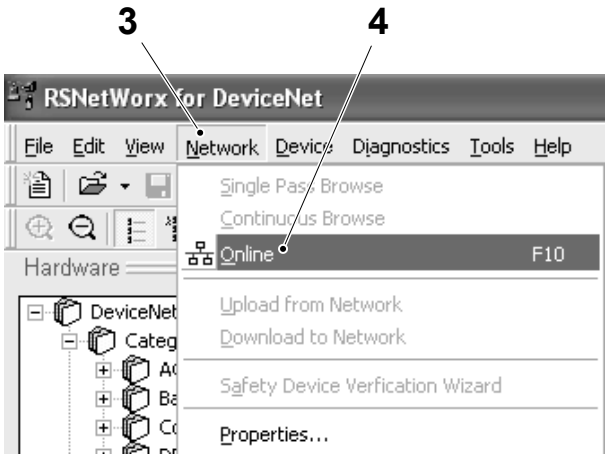

3 Network menu
4 Online

(Cont'd)

TechPub_2614345_0108 - 0801_3048231_01.fm

(Cont'd)

h) Highlight the `DeviceNet Point I/O adapter` (5) and right click the PC mouse, select `DOWNLOAD TO DEVICE` (6) to start the download.

i) When the dialogue box (7) appears, select the `YES` button (8) to continue.

j) When the download is complete, close the RSNetWorx program and turn the key on the CPU module to the REM mode position.

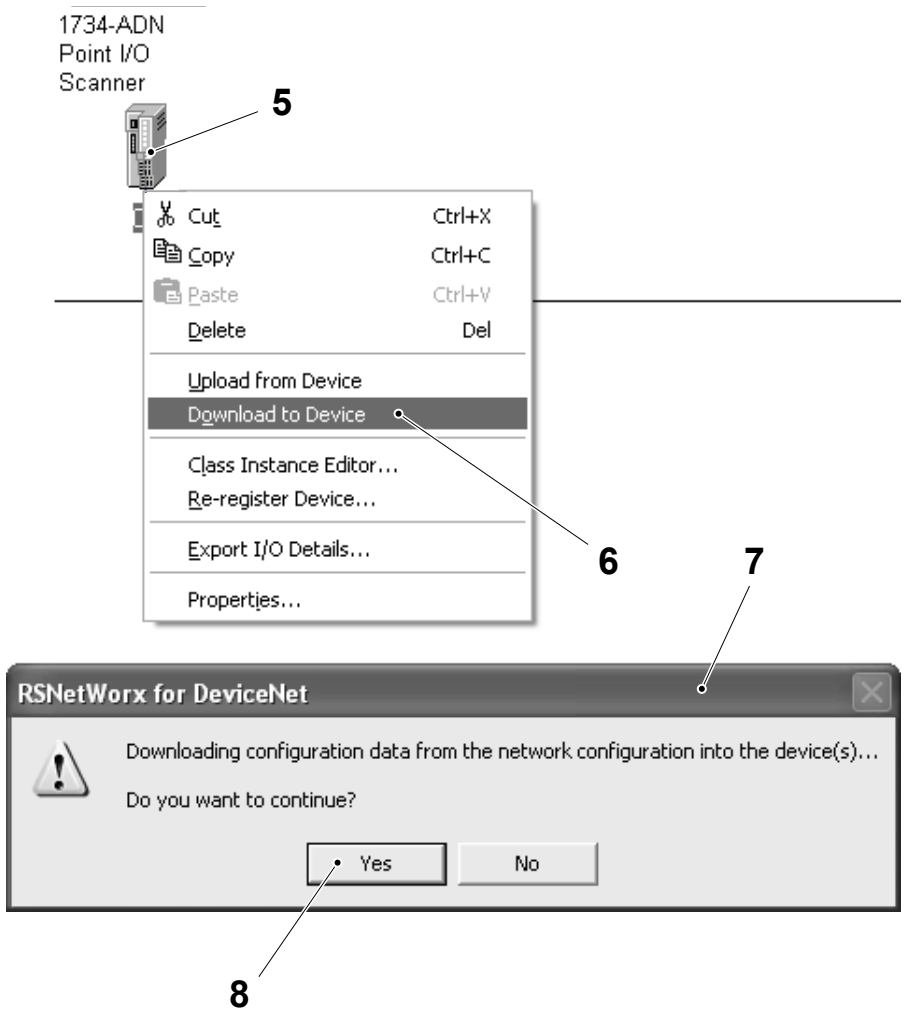

5 DeviceNet Point I/O adapter
6 Download to device
7 Dialogue box
8 Yes button

TechPub_2614345_0108 - 0801_3048231_01.fm

9.2.2.1-4 DeviceNet Point I/O Adapter - LED Description

Machine Status	Mains Power ON Air OFF Steam ON Water OFF
SPC Reference	90459-2494

LED	Colour	Description
Adapter status (1)	Off	No power is applied to the device.
	Solid green	Device is operating normally.
	Flashing green	Device needs to be commissioned because configuration is missing, incomplete or incorrect.
	Flashing red	Recoverable fault is present.
	Solid red	Unrecoverable fault may require the adapter to be changed.
	Flashing red/ green	Device is in self-test

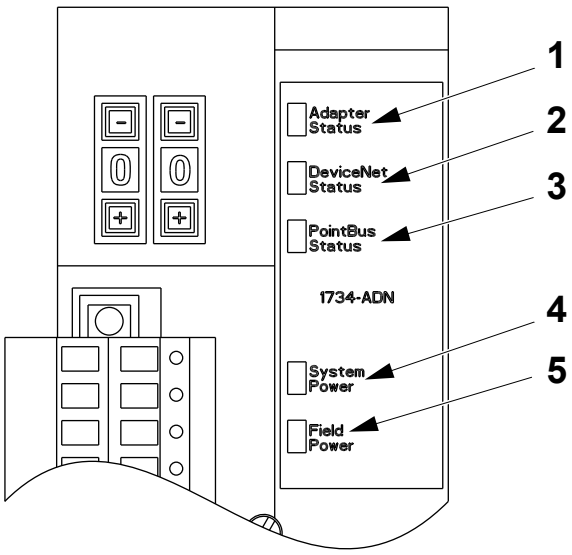

1 Adapter status LED
2 DeviceNet status LED
3 PointBus status LED
4 System power
5 Field power

(Cont'd)

TechPub_2614345_0108 - 0801_3048231_01.fm

(Cont'd)

LED	Colour	Description
DeviceNet status (2)	Off	Device is not online: - the device is autobauding. - the device has not completed the dup_MAC_id test. Check the adapter status indicator to determine if more time is required to complete the dup_MAC_id test or if power is required at the module.
	Solid green	Device is online and has connections in the established state
	Flashing green	Device is online but has no connections in the established state
	Flashing red	1 or more I/O connections are in a timed-out state. Determine the cause of the time-out. An increase in packet rate may be required.
	Solid red	Critical link failure - communication device failed. Device detected error that prevents it from communicating on the network. Make sure the device is using the correct MAC ID and baud rate.

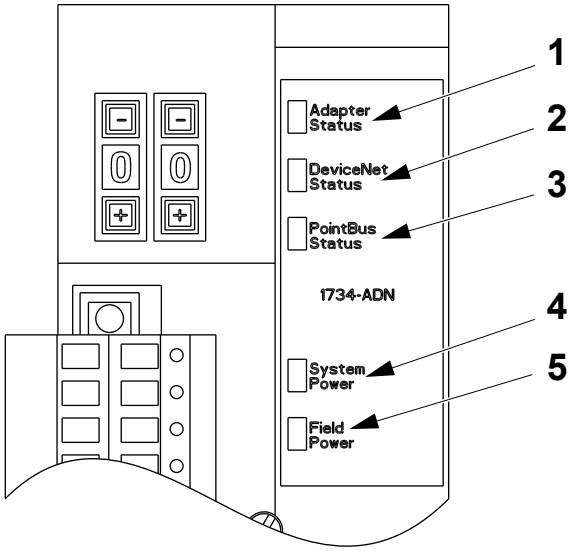

1 Adapter status LED
2 DeviceNet status LED
3 PointBus status LED
4 System power
5 Field power

(Cont'd)

TechPub_2614345_0108 - 0801_3048231_01.fm

(Cont'd)

LED	Colour	Description
PointBus status (3)	Off	Device is not online: - the device is autobauding. - the device has not completed the dup_MAC_id test. Check the adapter status indicator to determine if more time is required to complete the dup_MAC_id test or if power is required at the module.
	Solid green	Device is online and has connections in the established state
	Flashing green	Device is online but has no connections in the established state
	Flashing red	No scan list is available. I/O module is missing. Make sure all I/O modules are connecting and using the correct MAC ID's. Check the "Cycling Node Status" parameter in RSNetWorx for DeviceNet.
	Solid red	Critical link failure - communication device failed. Device detected error that prevents it from communicating on the network. Make sure an I/O module is not using the MAC ID = 0. Make sure all backplane modules are connecting at the correct baud rate.

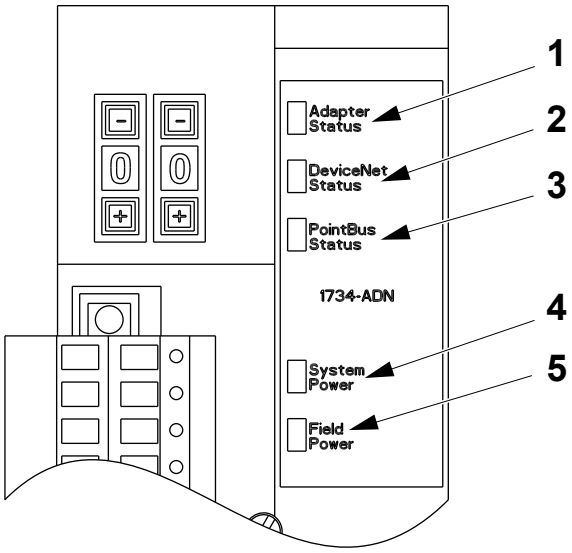

1 Adapter status LED
2 DeviceNet status LED
3 PointBus status LED
4 System power
5 Field power

(Cont'd)

TechPub_2614345_0108 - 0801_3048231_01.fm

(Cont'd)

LED	Colour	Description
System power (4)	Off	Field power is OFF. DC-DC converter problem. Check adapter configuration. Turn the Field power ON.
	Solid green	System power is ON. DC-DC converter is active (5V)
Field power (5)	Off	Check adapter configuration. Turn the Field power ON.
	Solid green	Power is ON with 24V present.

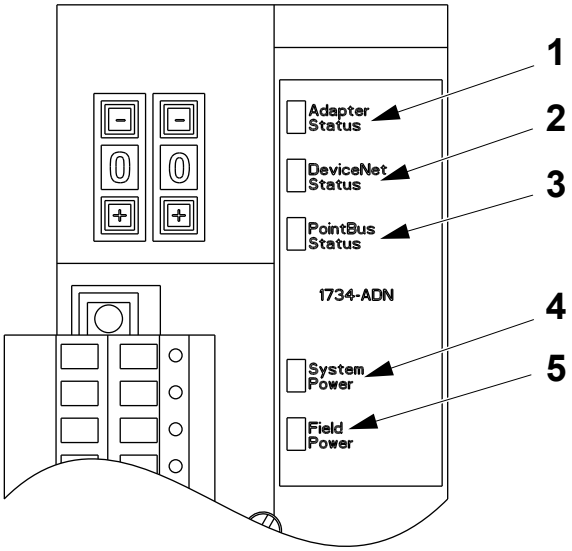

1 Adapter status LED
2 DeviceNet status LED
3 PointBus status LED
4 System power
5 Field power

TechPub_2614345_0108 - 0801_3048231_01.fm

9.2.2.2 DeviceNet Point I/O Module

9.2.2.2-1 DeviceNet Point I/O Module - Change

Machine Status	Mains Power ON Air OFF
Special Equipment	PC with CD Drive Ethernet communication cable
SPC Reference	2887527-0100 2888718-0100

Preparation

Before changing the DeviceNet Point I/O module:

- Use the RSLinx Classic program to verify and record the firmware version of the DeviceNet Point I/O module.
- Use the Flow Chart of Procedures for Changing the DeviceNet Point I/O Adapter on the next page to determine which procedures must be performed and their correct sequence.

Note! The Point I/O module configuration parameter set is stored in the Point I/O Adapter. Each time power is applied to a Point I/O module, the configuration is restored. If problems occur, then download the program to the Point I/O Adapter, see 9.2.2.1-3 DeviceNet Point I/O Adapter - Download Program for more details.

(Cont'd)

TechPub_2614345_0108 - 0801_3048231_01.fm

(Cont'd)

Flow Chart of Procedures for Changing a DeviceNet Point I/O Module

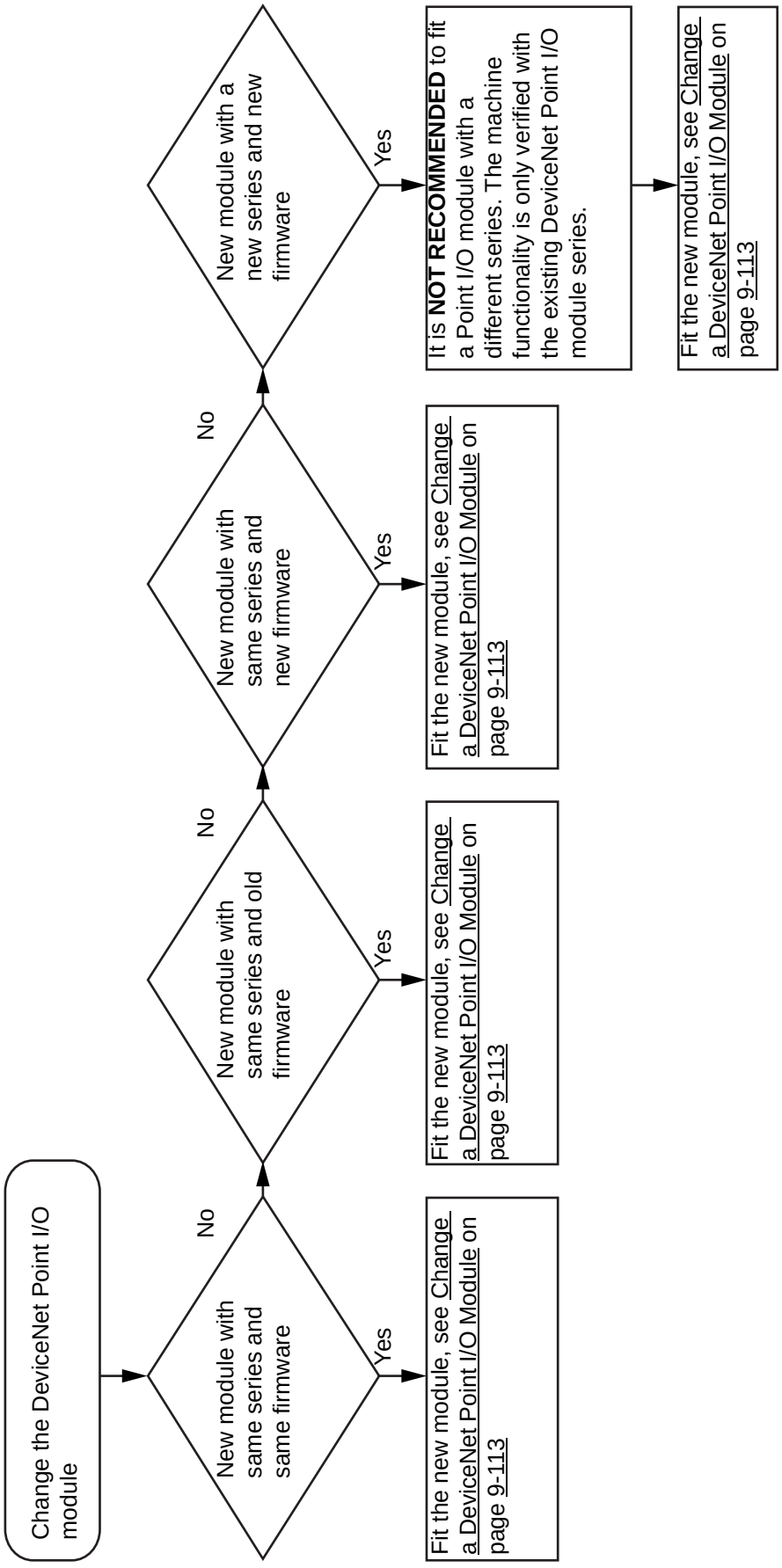

(Cont'd)

TechPub_2614345_0108 - 0801_3048231_01.fm

(Cont'd)

Change a DeviceNet Point I/O Module

a) Remove the power connection (1).

b) Remove the cable connection (2).

c) Remove the I/O module (3).

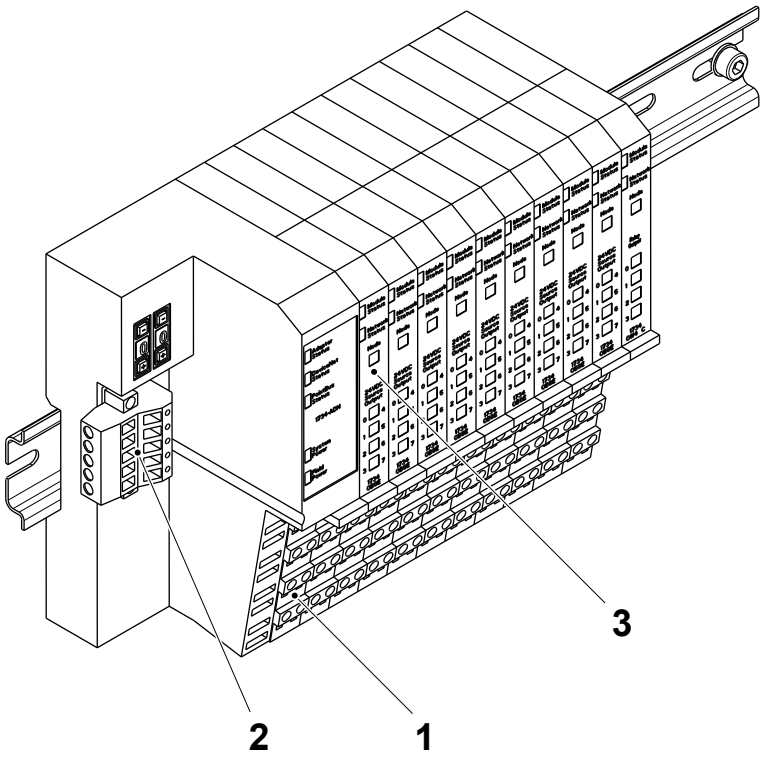

1 Power connection
2 Cable connection
3 I/O module

(Cont'd)

TechPub_2614345_0108 - 0801_3048231_01.fm

(Cont'd)

d) Fit the new I/O module (4).

e) Fit the cable connection (2).

f) Fit the power connection (1).

g) Continue with the necessary procedures as described in Flow Chart of Procedures for Changing a DeviceNet Point I/O Module on page 9-112.

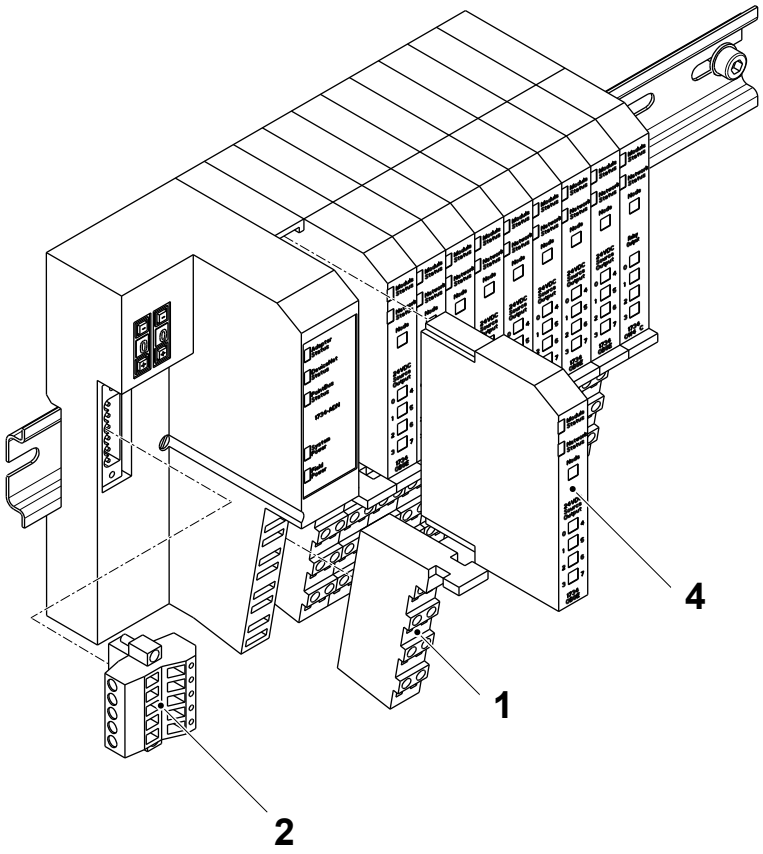

1 Power connection
2 Cable connection
4 I/O module

TechPub_2614345_0108 - 0801_3048231_01.fm

9.2.2.2-2 DeviceNet Point I/O Module - LED Description

Machine Status	Mains Power ON Air OFF
SPC Reference	2887527-0100 2888718-0100

Note! The module and network status LED descriptions are the same for all types of DeviceNet Point I/O modules, see the following pages for module specific LED descriptions.

Module and Network Status LEDS

LED	Colour	Description
Module status (1)	Green	Device operating normally
	Flashing Green	Device needs commissioning due to configuration missing, incomplete or incorrect
	Flashing Red	Recoverable fault
	Red	Unrecoverable fault may require device replacement
	Flashing Red/ Green	Device is in self-test

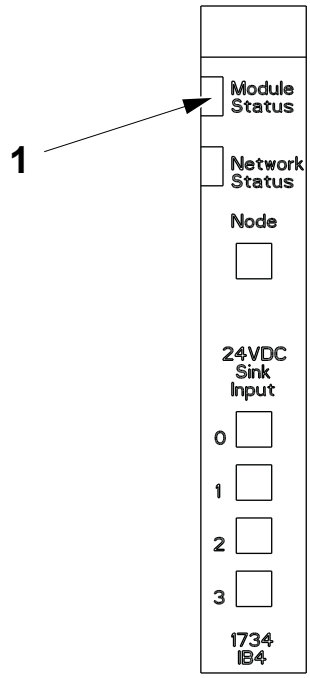

1 Module status LED

(Cont'd)

TechPub_2614345_0108 - 0801_3048231_01.fm

(Cont'd)

LED	Colour	Description
Network status (2)	Off	Device is not on-line - Device has not completed dup_MAC_id test. - Device not powered - check module status indicator
	Flashing Green	Device is on-line but has no connections in the established state
	Green	Device on-line and has connections in the established state
	Flashing Red	One or more I/O connections in timed-out state
	Red	Critical link failure - failed communication device. Device detected error that prevents it communicating on the network
	Flashing Red/ Green	Communication faulted device - the device has detected a network access error and is in communication faulted state. Device has received and accepted an Identify Communication Faulted Request - long protocol message

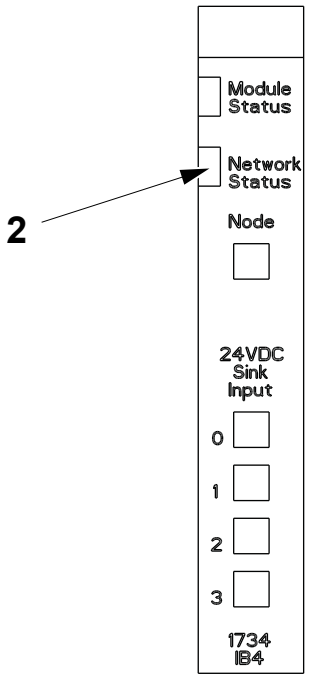

2 Network status LED

(Cont'd)

TechPub_2614345_0108 - 0801_3048231_01.fm

(Cont'd)

Digital Input Module

LED	Colour	Description
Input status (1)	Off	Input is in the off-state
	Yellow	Input is in the on-state

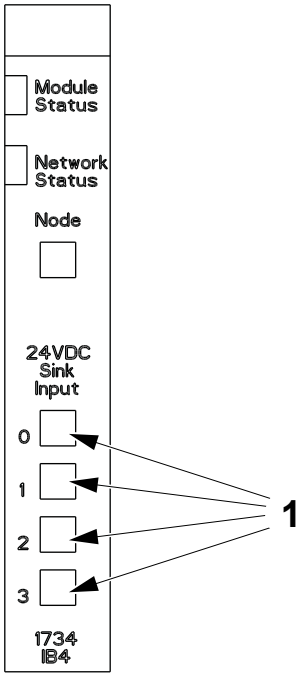

1 Input status LED

(Cont'd)

TechPub_2614345_0108 - 0801_3048231_01.fm

(Cont'd)

Digital Output Module

LED	Colour	Description
Output status (1)	Off	All outputs are inactive
	Yellow	One or more output is active and under control
	Flashing red	Open circuit detected - no load (Off-state only). Connect load or disable no load detection
	Solid Red	Short circuit detected (On-state only). Remove short or overloaded circuit

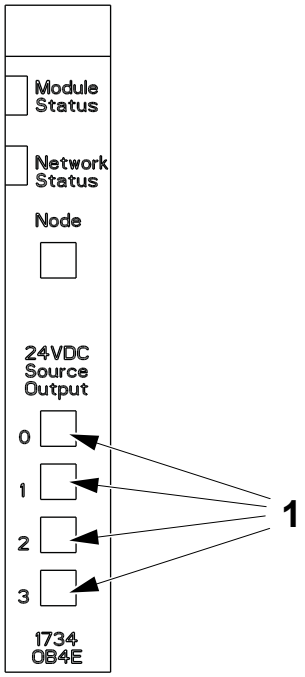

1 Output Status LED

TechPub_2614345_0108 - 0801_3048231_01.fm

(Cont'd)

(Cont'd)

Thermocouple Module

LED	Colour	Description
Thermocouple input status (1)	Off	Module in CAL mode
	Solid Green	Normal (channel scanning inputs)
	Flashing Green	Channel being calibrated
	Solid Red	Major channel fault
	Flashing Red	Channel at end of range (over or under)

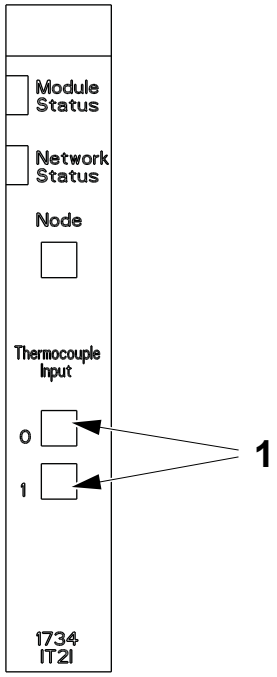

1 Thermocouple input status LED

(Cont'd)

TechPub_2614345_0108 - 0801_3048231_01.fm

(Cont'd)

Analog Output Module

LED	Colour	Description
Analogue output status (1)	Off	Module in CAL mode
	Solid Green	Normal operation present with channel actively controlling outputs
	Flashing Green	Channel being calibrated
	Flashing Red	No field power is present. Apply field power
	Solid Red	A Low or High Clamp alarm is present. Operate within normal range

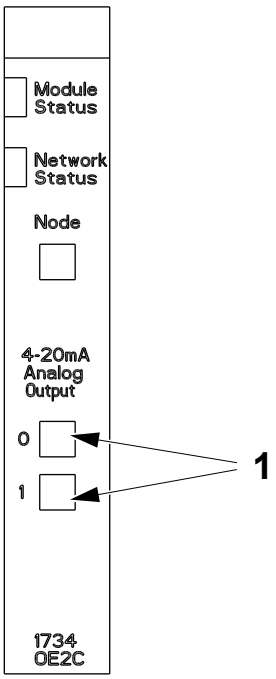

1 Analogue output status LED

(Cont'd)

TechPub_2614345_0108 - 0801_3048231_01.fm

(Cont'd)

Counter/Encoder Module

LED	Colour	Description
Input status (1)	Off	Input is inactive
	Yellow	Input is active and under control

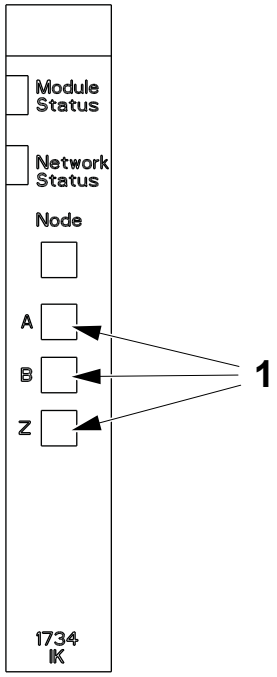

1 Input status LED

TechPub_2614345_0108 - 0801_3048231_01.fm

9.2.3 DeviceNet Compact Block I/O

9.2.3-1 DeviceNet Compact Block I/O - Change

Machine Status	Mains Power ON Air OFF
Special Equipment	PC with CD Drive Ethernet communication cable
SPC Reference	90459-2497

Preparation

Before changing the DeviceNet compact block I/O:

- Verify and record the node address of the DeviceNet compact block I/O.
- Use the Flow Chart of Procedures for Changing the DeviceNet Compact Block I/O on the next page to determine which procedures must be performed and their correct sequence.

(Cont'd)

TechPub_2614345_0108 - 0801_3048232_01.fm

(Cont'd)

Flow Chart of Procedures for Changing the DeviceNet Compact Block I/O

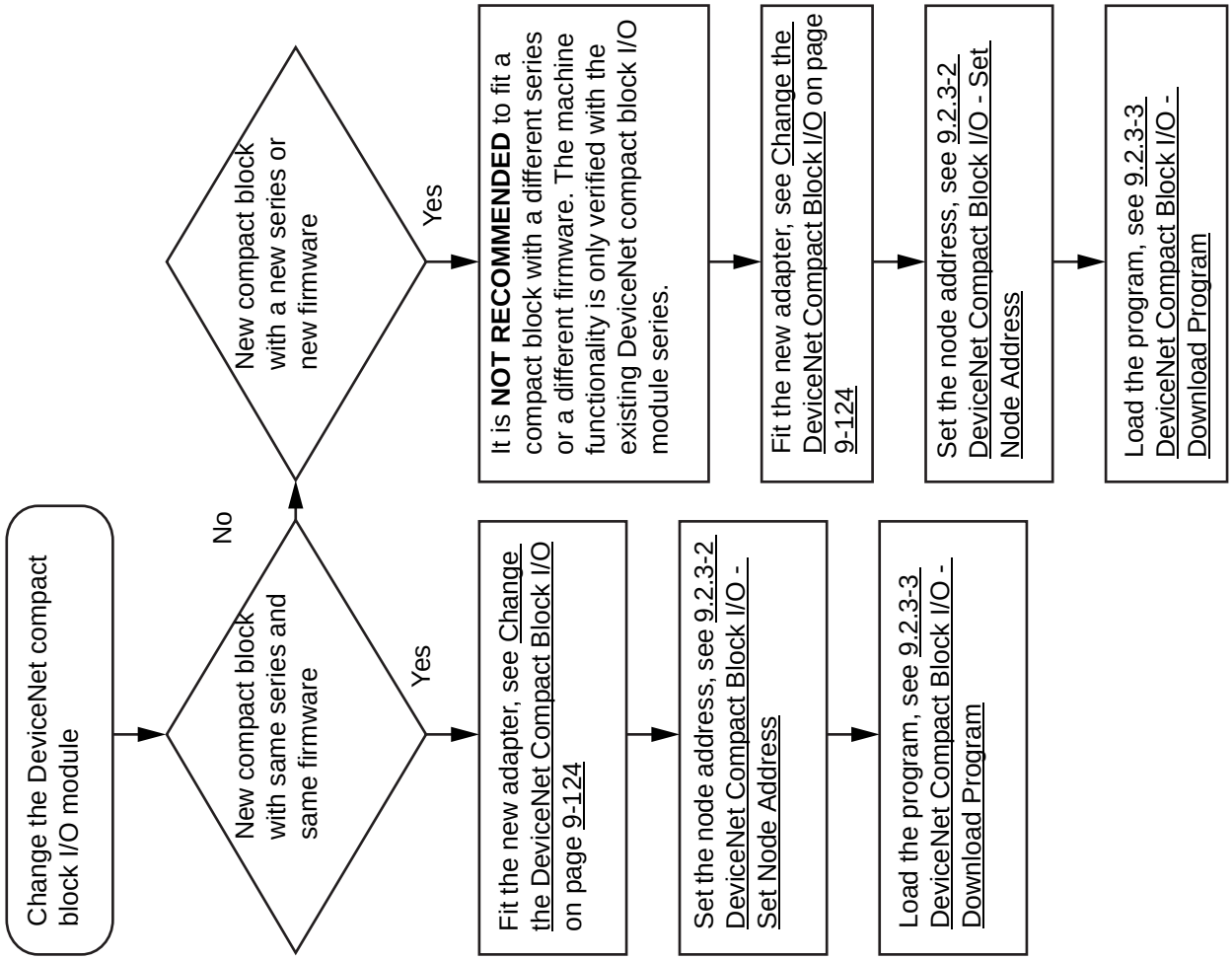

(Cont'd)

TechPub_2614345_0108 - 0801_3048232_01.fm

(Cont'd)

Change the DeviceNet Compact Block I/O

a) Remove the cable connection (1).

b) Remove the screws (2) and pull off the terminal block (3).

c) Pull out the lever (4) to release the compact block (5) from the rail (6) and remove the compact block (5).

d) To fit the new compact block (5), pull out the lever (4) and push down on the compact block (5) to lock the new compact block (5) to the rail (6).

e) Fit the terminal block (3) with the screws (2).

f) Fit the cable connection (1).

g) Continue with the necessary procedures as described in Flow Chart of Procedures for Changing the DeviceNet Compact Block I/O on page 9-123.

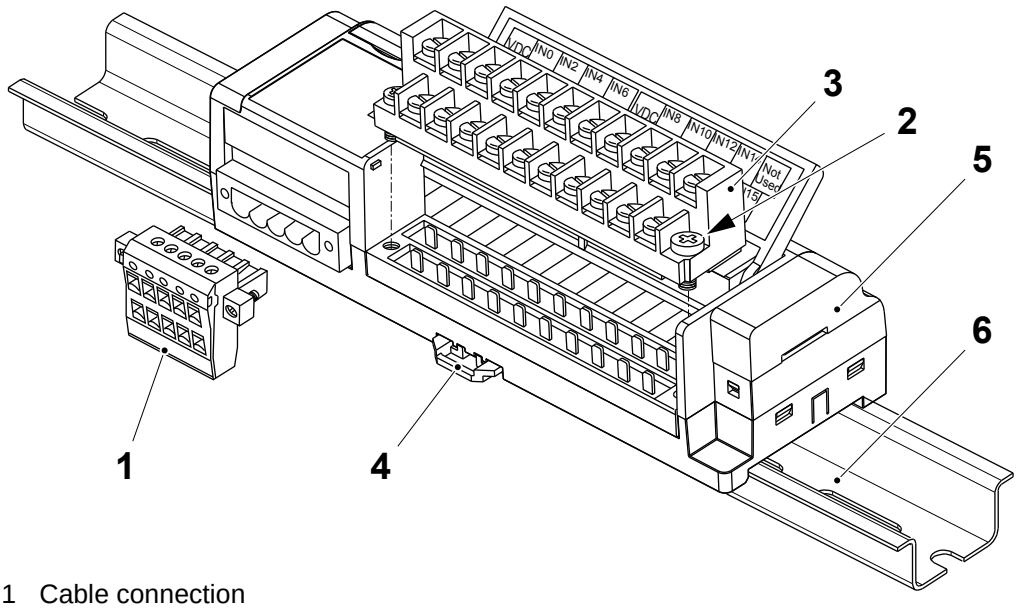

1 Cable connection
2 Screw
3 Terminal block
4 Lever
5 Compact block
6 Rail

TechPub_2614345_0108 - 0801_3048232_01.fm

9.2.3-2 DeviceNet Compact Block I/O - Set Node Address

Machine Status	Mains Power ON Air OFF
SPC Reference	90459-2497

Note! For this type of adapter the baud rate is set automatically.

Set the two rotary switches, under the cover (1) to the node address 12 for the compact block I/O module.

Switch	Number
MSD	1
LSD	2

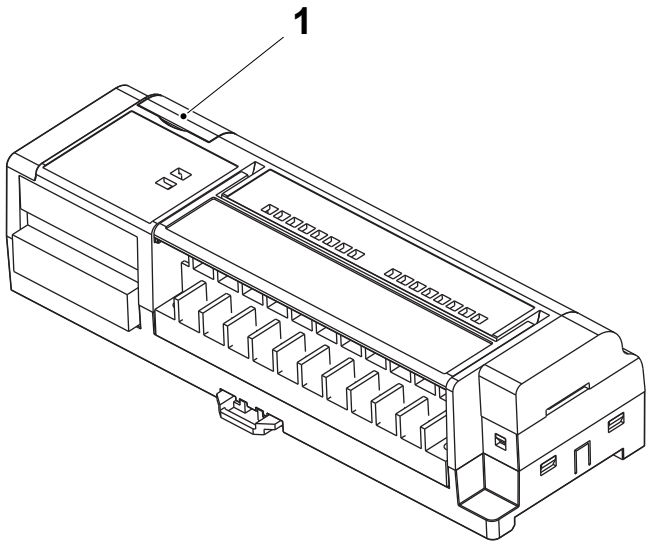

1 Cover

TechPub_2614345_0108 - 0801_3048232_01.fm

9.2.3-3 DeviceNet Compact Block I/O - Download Program

Machine Status	Mains Power ON Air OFF
Special Equipment	PC with CD Drive Ethernet communication cable
SPC Reference	90459-2497

Note! To connect to the CPU module using an ethernet communication cable, the PC must first be configured for this type of communication. See 9.1.1-2 Preparations for PLC Communication - Configure RSLinx and 9.1.2-1 CPU Module - Change for more details.

(Cont'd)

TechPub_2614345_0108 - 0801_3048232_01.fm

(Cont'd)

a) Set the node address for the compact block I/O module, see 9.2.3-2 DeviceNet Compact Block I/O - Set Node Address.

b) Connect the ethernet communication cable between a vacant connection port on the ethernet switch (1) and the PC (2).

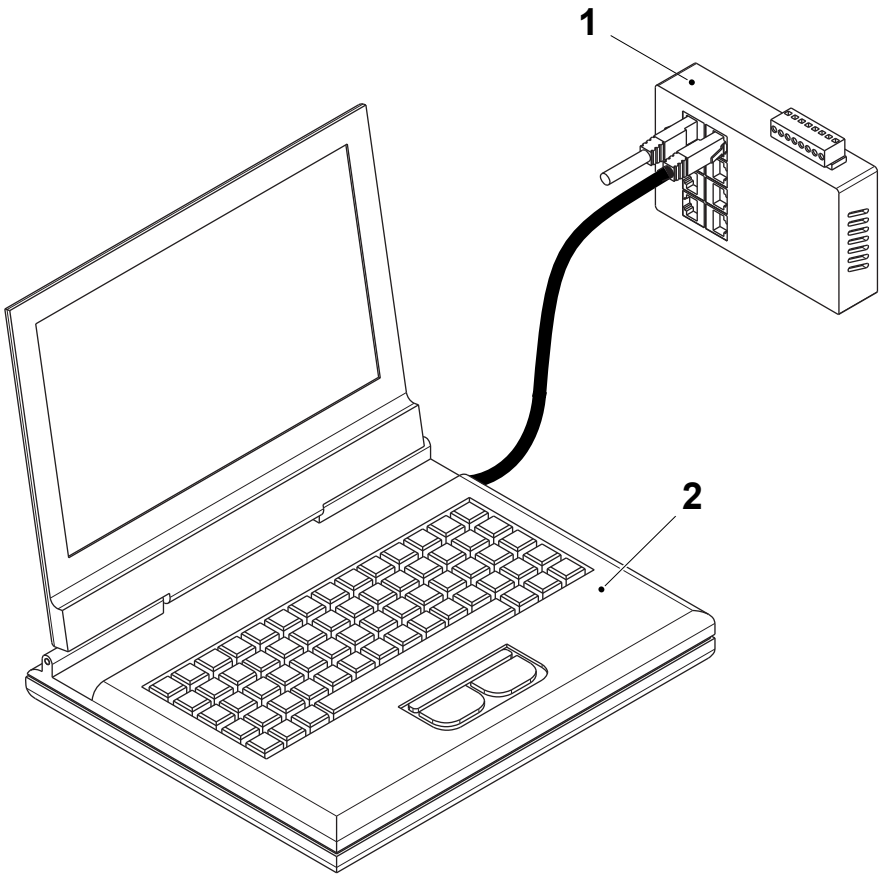

1 Ethernet switch
2 PC

(Cont'd)

TechPub_2614345_0108 - 0801_3048232_01.fm

(Cont'd)

Note! The CPU module must not be in RUN position for the program load.

c) Turn the key on the CPU module to the PROG mode position.

d) Insert the CD marked SOFTW_CD_A3_Sinto the PC CD drive.

e) Browse to the CD drive and copy the compressed program folder to the PC desktop and extract the program file.

f) Double click on the program file to automatically start the RSNetWorx program and to open the program file.

g) Select the NETWORK menu (3) and then select ONLINE (4).

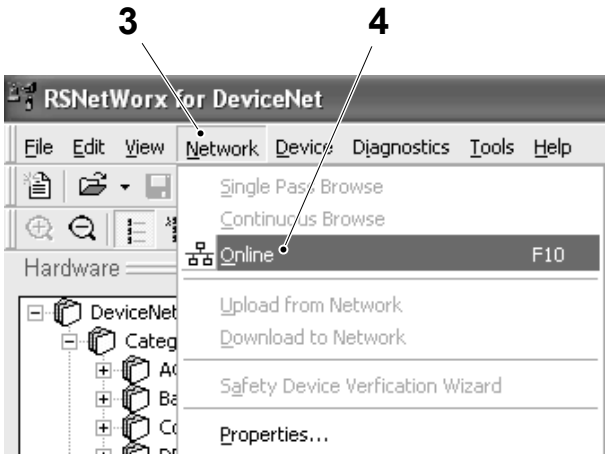

3 Network menu
4 Online

(Cont'd)

TechPub_2614345_0108 - 0801_3048232_01.fm

(Cont'd)

h) Highlight the DEVICENET COMPACT BLOCK I/O (5) and right click the PC mouse, select DOWNLOAD TO DEVICE (6) to start the download.

i) When the dialogue box (7) appears, select the YES button (8) to continue.

j) When the download is complete, close the RSNetWorx program and turn the key on the CPU module to the REM mode position.

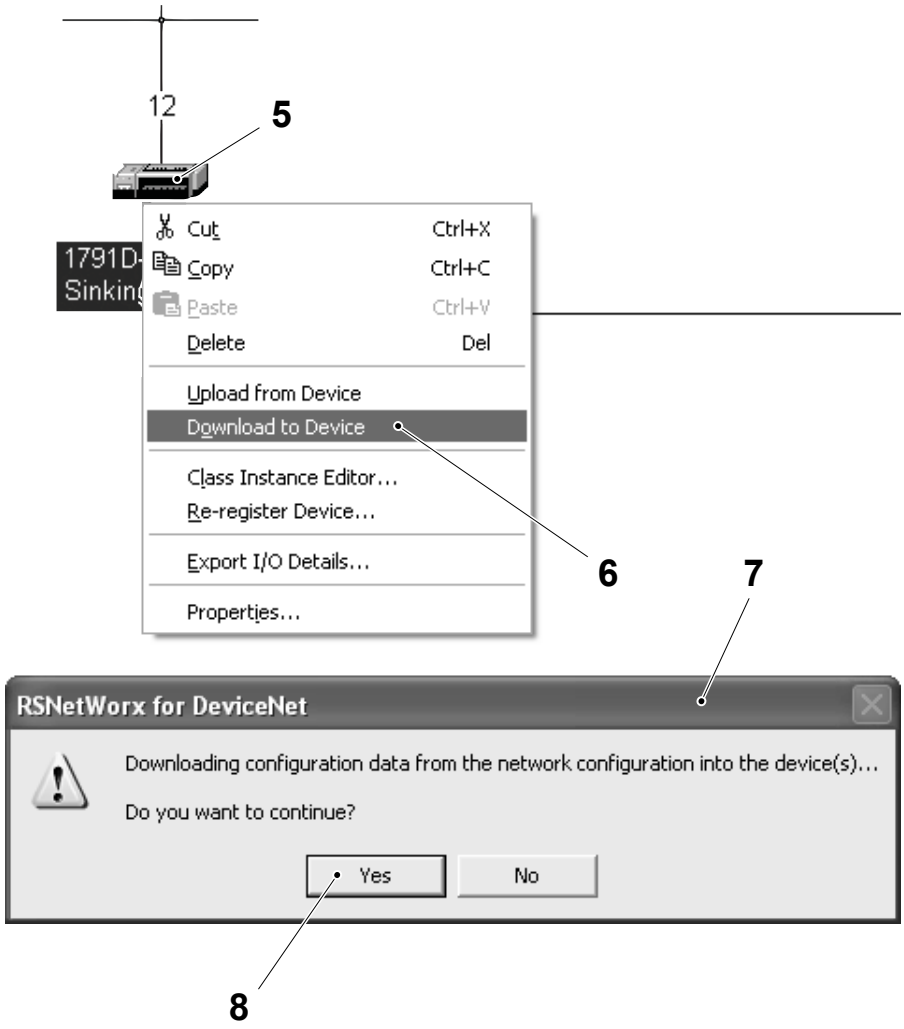

5 DeviceNet compact block I/O
6 Download to device
7 Dialogue box
8 Yes button

(Cont'd)

TechPub_2614345_0108 - 0801_3048232_01.fm

9.2.3-4 DeviceNet Compact Block I/O - LED Description

Machine Status	Mains Power ON Air OFF
SPC Reference	90459-2497

LED	Colour	Description
Network Status (1)	Off	No power or auto bauding
	Flashing Green/Off	On line but not connected
	Solid Green	On line, link OK, connected
	Flashing Red	Recoverable fault - (expansion module fault or module configuration error)
		I/O connection fault - one or more I/O connections in the timed-out state
	Solid Red	Unrecoverable fault
		Communication failure - duplicate node address present or incorrect baud rate
	Green to Red to Off	At powerup only - LED test

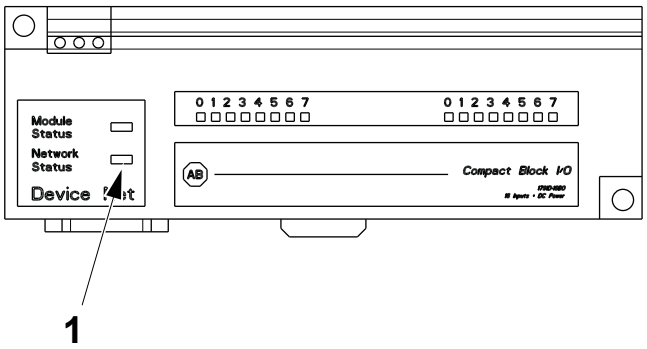

1 Network status LED

(Cont'd)

TechPub_2614345_0108 - 0801_3048232_01.fm

(Cont'd)

LED	Colour	Description
Module Status (2)	Off	Logic is disabled
	Solid Green	Logic is enabled
	Flashing Green	Local forces are applied and local logic is enabled
I/O Status (3)	Outputs	None - Output not energized
		Yellow - Output energized
	Inputs	None - No valid input
		Yellow - Valid input

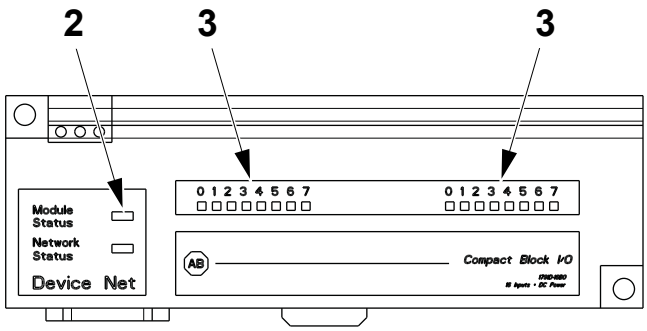

2 Module status LED
3 I/O status LED

TechPub_2614345_0108 - 0801_3048232_01.fm

9.2.4 DeviceNet PowerFlex

9.2.4.1 DeviceNet PowerFlex Adapter

9.2.4.1-1 DeviceNet PowerFlex Adapter - Change

Machine Status	Mains Power ON Air OFF Steam ON Water OFF
Special Equipment	PC with CD Drive Ethernet communication cable
SPC Reference	90459-2614

Note! The firmware revision of the new DeviceNet PowerFlex adapter maybe equal to, or newer than the firmware revision of the old DeviceNet PowerFlex adapter. Using a newer firmware revision may create errors when going online, such as unrecognized device or device mismatch if the PC does not contain the very latest EDS files.

Preparation

Before changing the DeviceNet PowerFlex adapter:

- Use the RSLinx Classic program to verify and record the firmware version of the DeviceNet PowerFlex adapter.
- Verify and record the node address of the DeviceNet PowerFlex adapter.
- Use the Flow Chart of Procedures for Changing the DeviceNet PowerFlex Adapter on the next page to determine which procedures must be performed and their correct sequence.

(Cont'd)

TechPub_2614345_0108 - 0801_3048233_01.fm

(Cont'd)

Flow Chart of Procedures for Changing the DeviceNet PowerFlex Adapter

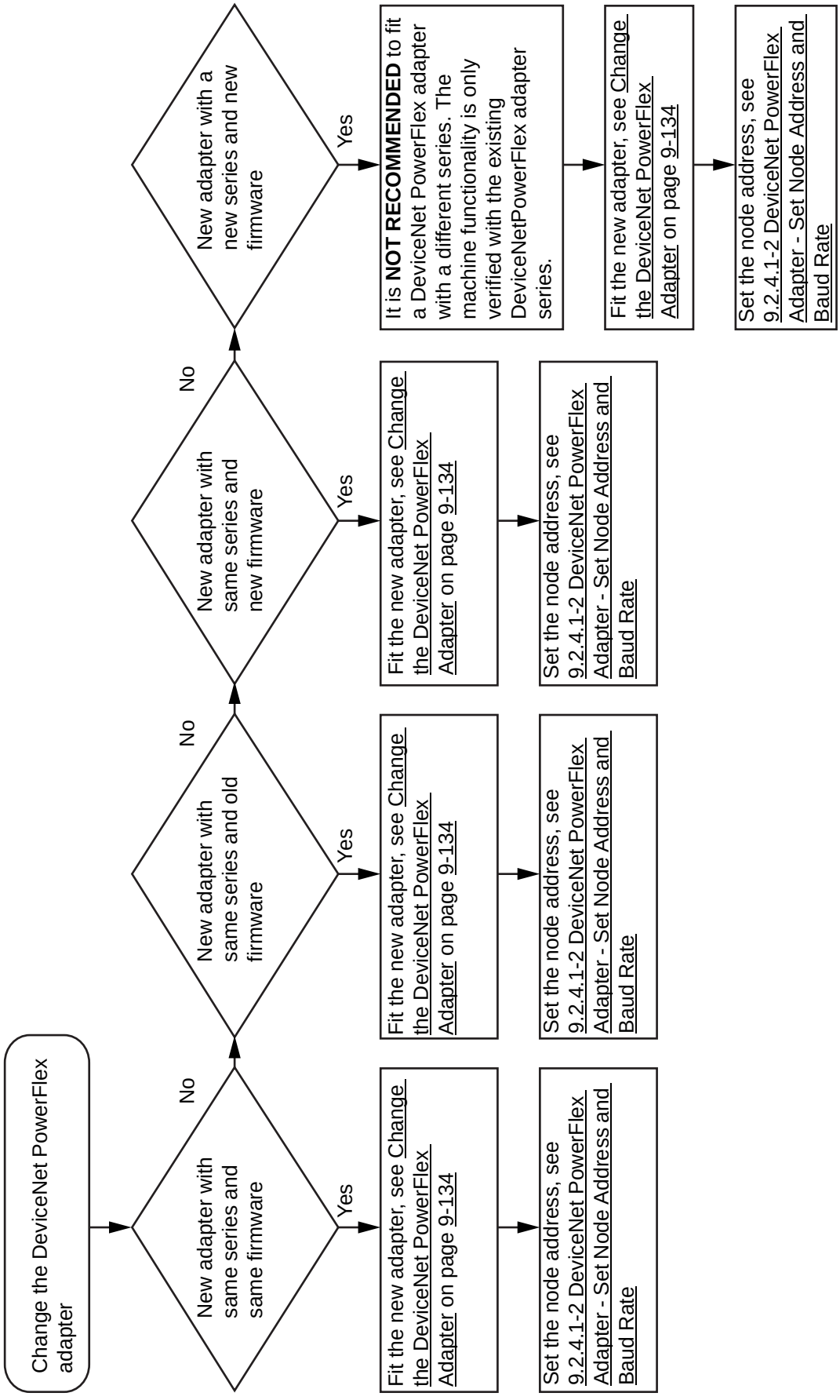

(Cont'd)

TechPub_2614345_0108 - 0801_3048233_01.fm

(Cont'd)

Change the DeviceNet PowerFlex Adapter

a) Remove the cover (1) from the front of the PowerFlex drive (2).

b) Disconnect the devicenet cable (3) and the internal interface cable (4) from the adapter (5).

c) Press the clips (6) and pull out the adapter (5) from the cover (1).

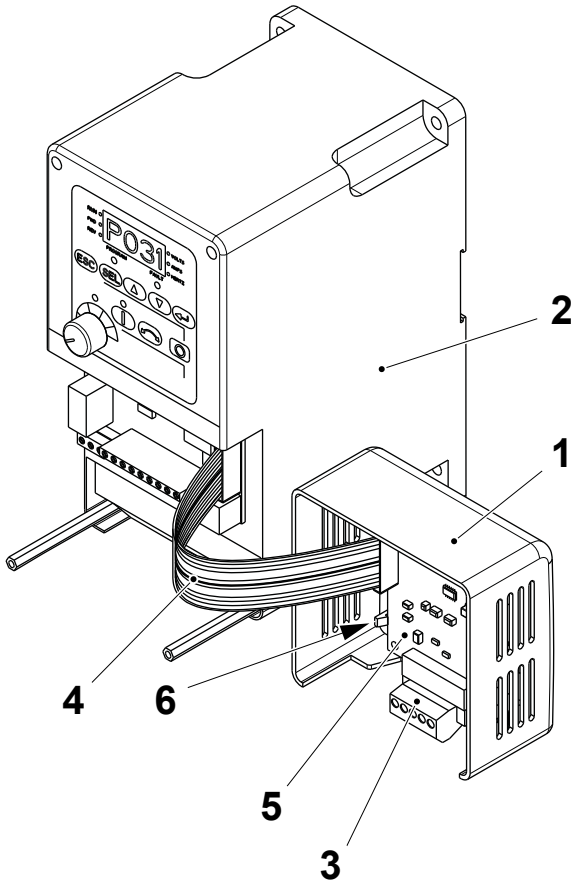

1 Cover
2 PowerFlex drive
3 DeviceNet cable
4 Internal interface cable
5 Adapter
6 Clip

(Cont'd)

TechPub_2614345_0108 - 0801_3048233_01.fm

(Cont'd)

d) Fit the new adapter and assemble in the reverse order.

e) Continue with the necessary procedures as described in Flow Chart of Procedures for Changing the DeviceNet PowerFlex Adapter on page 9-133.

TechPub_2614345_0108 - 0801_3048233_01.fm

9.2.4.1-2 DeviceNet PowerFlex Adapter - Set Node Address and Baud Rate

Machine Status	Mains Power ON Air OFF Steam ON Water OFF
SPC Reference	90459-2614

Note! Check the frequency converter in the filling machine Electrical Manual for the correct node address and baud rate settings.

The DIP switches (1) under the frequency converter front cover (2) are used to set the baud rate and node number of the DeviceNet PowerFlex adapter.

The DIP switches 1-6 determine the node address and the F/C switches 7 and 8 determine the baud rate. Set the DIP switches (1) according to the table on the following page.

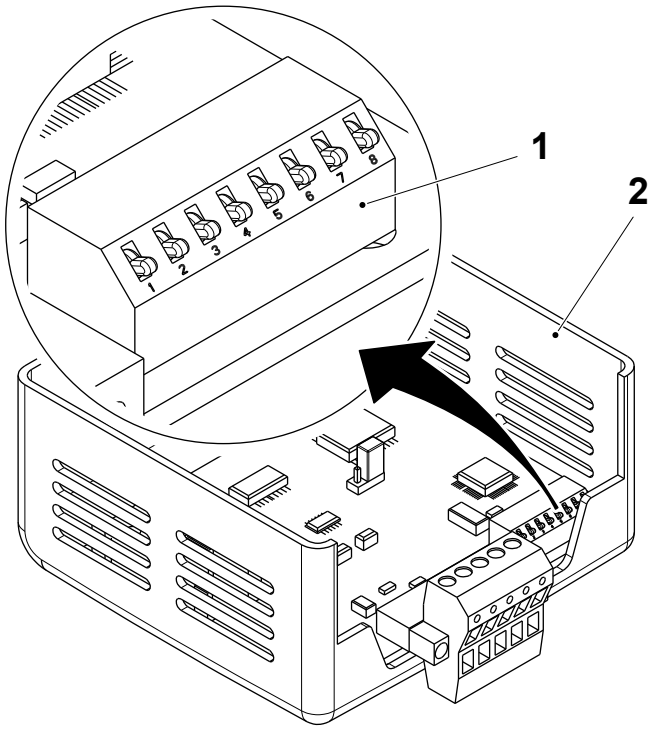

1 DIP switch
2 Front cover

(Cont'd)

TechPub_2614345_0108 - 0801_3048233_01.fm

(Cont'd)

Note! The baud rate determined by the position of the switches 7 and 8, as indicated in the table, corresponds to 500 kbps.

DNet Power Flex Adaptor	Node No.	Switch No.							
		1	2	3	4	5	6	7	8
T10T0160 ASU Loop	**21**	UP	DOWN	UP	DOWN	UP	DOWN	DOWN	UP
T10T0170 ASU Magazine	**22**	DOWN	UP	UP	DOWN	UP	DOWN	DOWN	UP
T10T0180 Strip Bobbin	**23**	UP	UP	UP	DOWN	UP	DOWN	DOWN	UP
U70T0310 Drive Roller	**24**	DOWN	DOWN	DOWN	UP	UP	DOWN	DOWN	UP
T50T0260 Ext. Conv.	**25**	UP	DOWN	DOWN	UP	UP	DOWN	DOWN	UP
U70T0320 ICU Pump	**26**	DOWN	UP	DOWN	UP	UP	DOWN	DOWN	UP
U30T0220 Perox. Pump	29	UP	DOWN	UP	UP	UP	DOWN	DOWN	UP
T50T0090 Belt Brake	31	UP	UP	UP	UP	UP	DOWN	DOWN	UP
U70T0300 Compressor	28	DOWN	DOWN	UP	UP	UP	DOWN	DOWN	UP

TechPub_2614345_0108 - 0801_3048233_01.fm

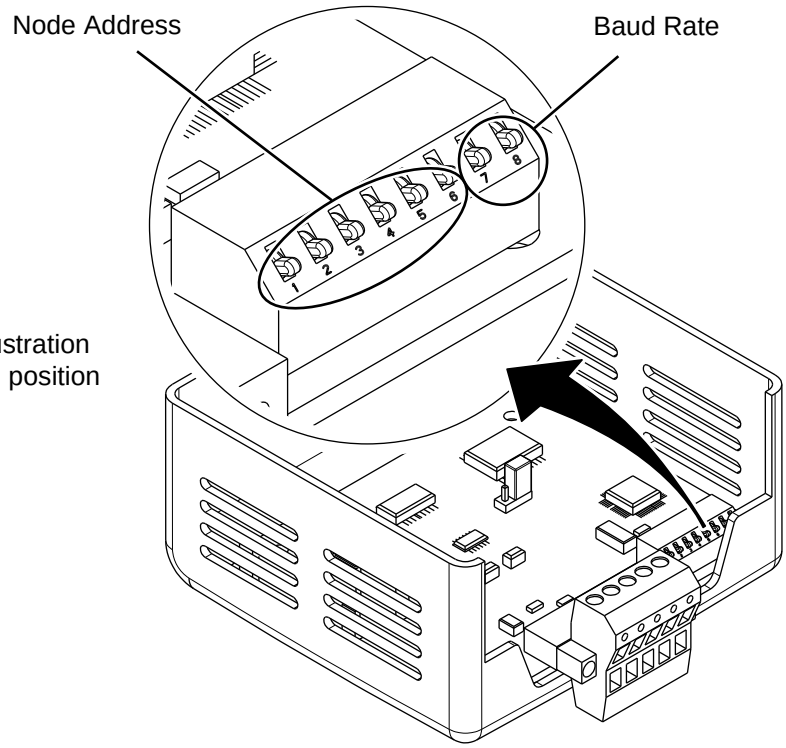

The switches in the illustration are shown in the down position

(Cont'd)

(Cont'd)

The jumper (3) on the connector (4) determines the operating mode of the adapter. Set the jumper (3) to the right as shown in the illustration to select the SINGLE DRIVE mode.

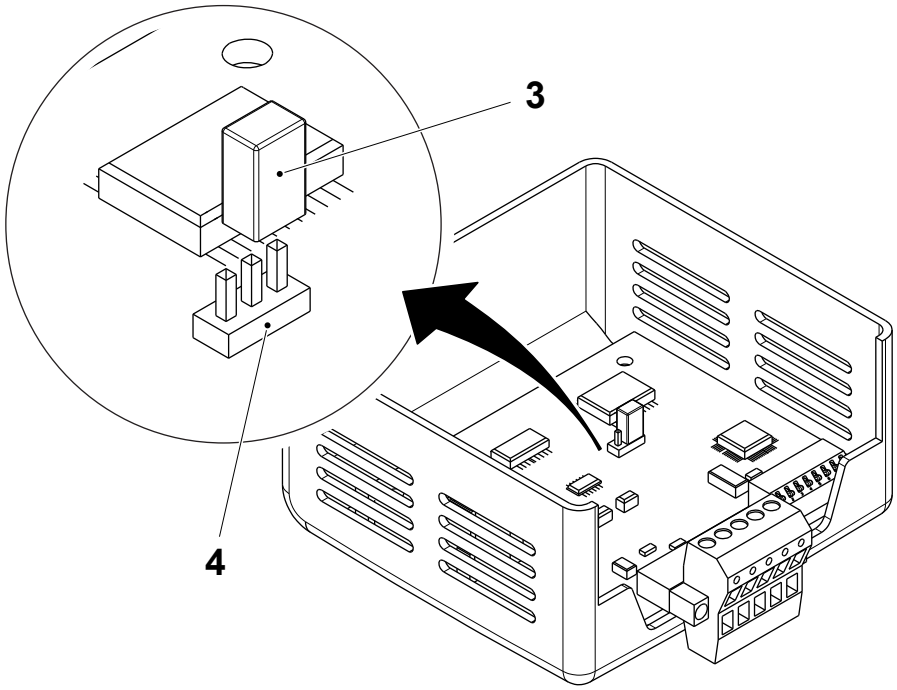

3 Jumper
4 Connector

TechPub_2614345_0108 - 0801_3048233_01.fm

9.2.4.1-3 DeviceNet PowerFlex Adapter - Download Program

Machine Status	Mains Power ON Air OFF Steam ON Water OFF
Special Equipment	PC with CD Drive Ethernet communication cable
SPC Reference	90459-2494

Note! To connect to the CPU module using an ethernet communication cable, the PC must first be configured for this type of communication. See 9.1.1-1 Preparation for PLC Communication - Configure PC Network Communications and 9.1.1-2 Preparations for PLC Communication - Configure RSLinx for more details.

(Cont'd)

TechPub_2614345_0108 - 0801_3048233_01.fm

(Cont'd)

a) Set the node address for the DeviceNet PowerFlex adapter, see 9.2.4.1-2 DeviceNet PowerFlex Adapter - Set Node Address and Baud Rate.

b) Connect the ethernet communication cable between a vacant connection port on the ethernet switch (1) and the PC (2).

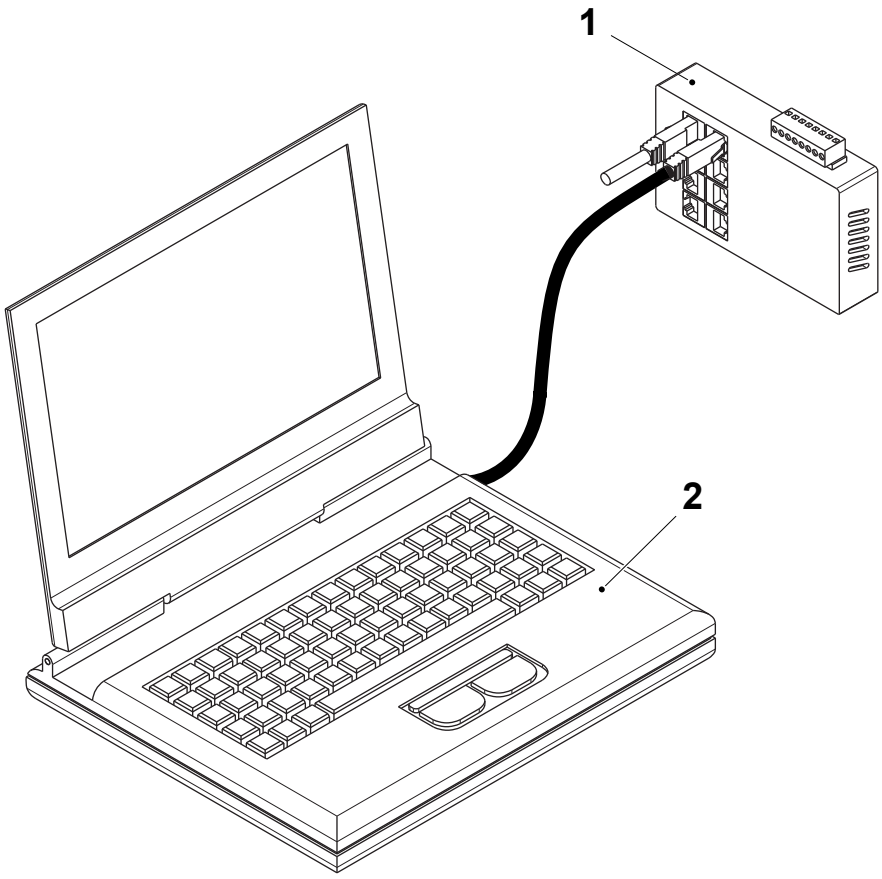

1 Ethernet switch
2 PC

(Cont'd)

TechPub_2614345_0108 - 0801_3048233_01.fm

(Cont'd)

Note! The CPU module must not be in RUN position for the program load.

c) Turn the key on the CPU module to the PROG mode position.

d) Insert the CD marked SOFTW_CD_A3_S into the PC CD drive.

e) Browse to the CD drive and copy the compressed program folder to the PC desktop and extract the program file.

f) Double click on the program file to automatically start the RSNetWorx program and to open the program file.

g) Select the NETWORK menu (3) and then select ONLINE (4).

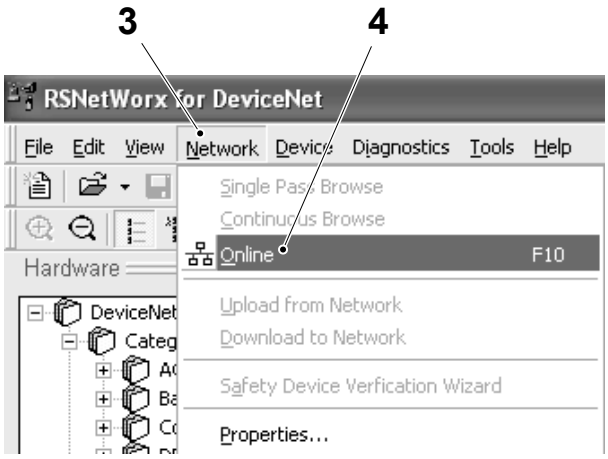

3 Network menu
4 Online

(Cont'd)

TechPub_2614345_0108 - 0801_3048233_01.fm

(Cont'd)

h) Highlight the `DeviceNet PowerFlex adapter` (5) and right click the PC mouse, select `DOWNLOAD TO DEVICE` (6) to start the download.

i) When the dialogue box (7) appears, select the `YES` button (8) to continue.

j) When the download is complete, close the RSNetWorx program and turn the key on the CPU module to the REM mode position.

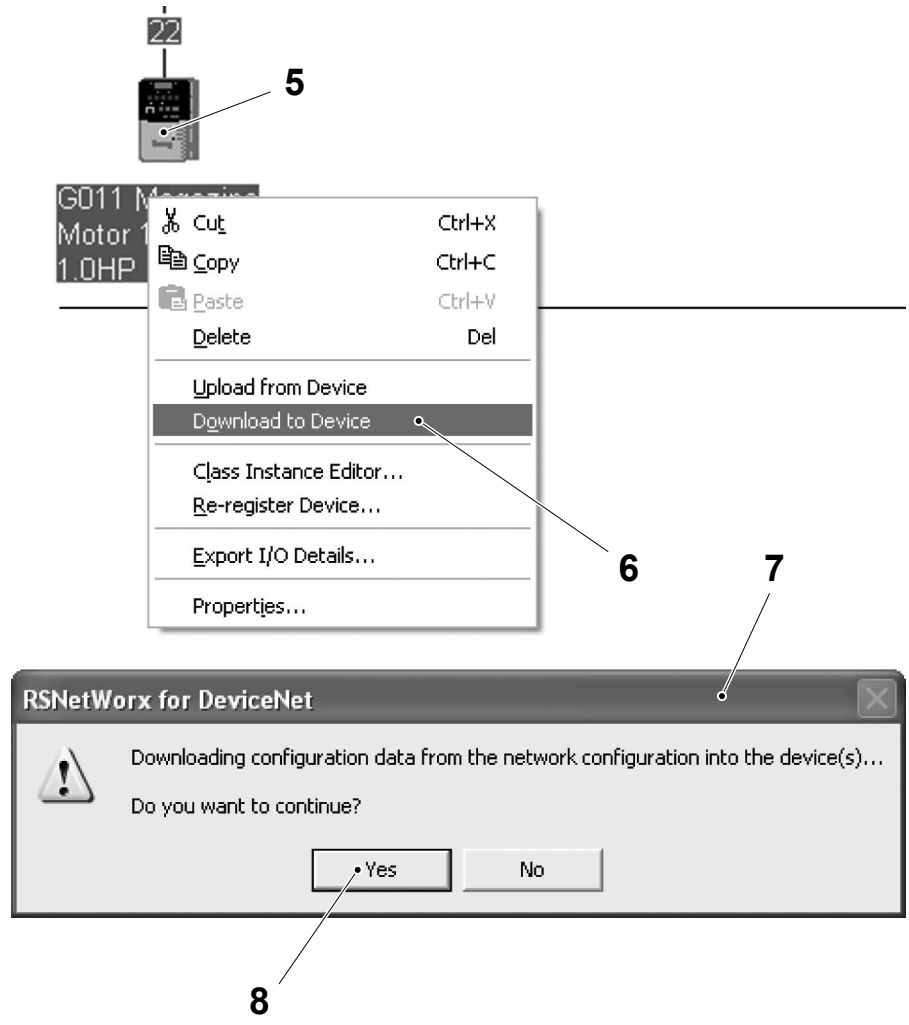

5 Devicenet adapter
6 Download to device
7 Dialogue box
8 Yes button

TechPub_2614345_0108 - 0801_3048233_01.fm

9.2.4.1-4 DeviceNet PowerFlex Adapter - LED Description

Machine Status	Mains Power ON Air OFF Steam ON Water OFF
SPC Reference	90459-2614

LED	Colour	Description
PORT (1)	Off	The adapter is not powered or connected correctly to the drive. Check the ribbon cable connecting the adapter is securely fitted to the drive. Apply power to the adapter.
	Solid green	The adapter is properly connected and is communicating with the drive.
	Flashing green	The adapter is establishing an I/O connection to the drive or (DSI I/O Config) is configured for all I/O disabled. The LED will turn GREEN or RED. Check the setting of parameter 15 (DSI I/O Config). The adapter is operating normally if no DSI I/O is enabled.

TechPub_2614345_0108 - 0801_3048233_01.fm

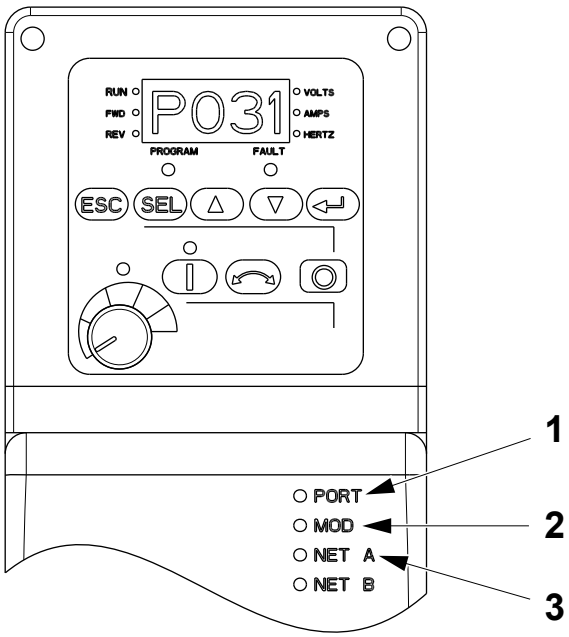

1 PORT LED
2 MOD LED
3 NET A LED

(Cont'd)

(Cont'd)

LED	Colour	Description
PORT (1)	Flashing red	The adapter is not receiving communications from a drive, a connected drive has failed or a drive is missing. Clear any drive faults, Check that all cables are securely connected. Cycle power to the drive.
	Solid red	The drive has refused an I/O connection from the adapter. Another DSI peripheral is using the same DSI port as the adapter. Check that all DSI cables are securely connected and undamaged. If necessary, replace any damaged cable.
	Solid orange	Daisy-chained devices in the Multi-Drive mode are not of the correct type. Install the correct modules.

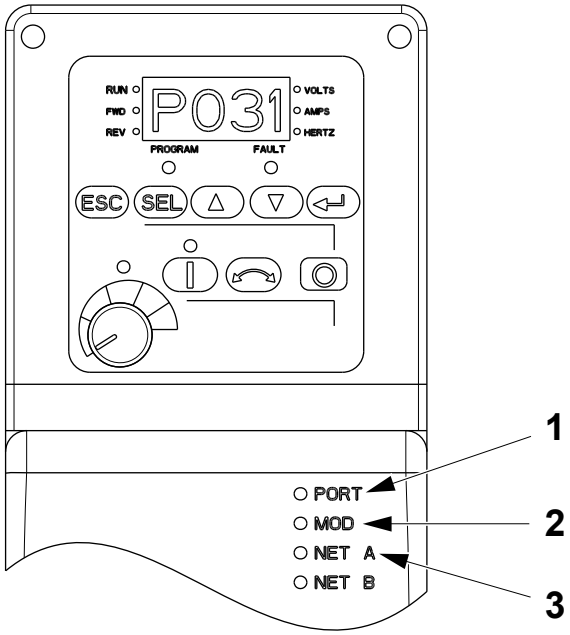

1 PORT LED
2 MOD LED
3 NET A LED

(Cont'd)

TechPub_2614345_0108 - 0801_3048233_01.fm

(Cont'd)

LED	Colour	Description
MOD (2)	Off	The adapter is not powered or connected correctly to the drive. Check the ribbon cable connecting the adapter is securely fitted to the drive. Apply power to the adapter.
	Solid green	The adapter is operational and transferring I/O data.
	Flashing green	The adapter is operational but is not transferring I/O data. Put the scanner in the RUN mode. Program the controller to recognize and transmit I/O data to the adapter. Configure the adapter for the program in the controller. The adapter is operating normally if no DSI I/O is enabled.

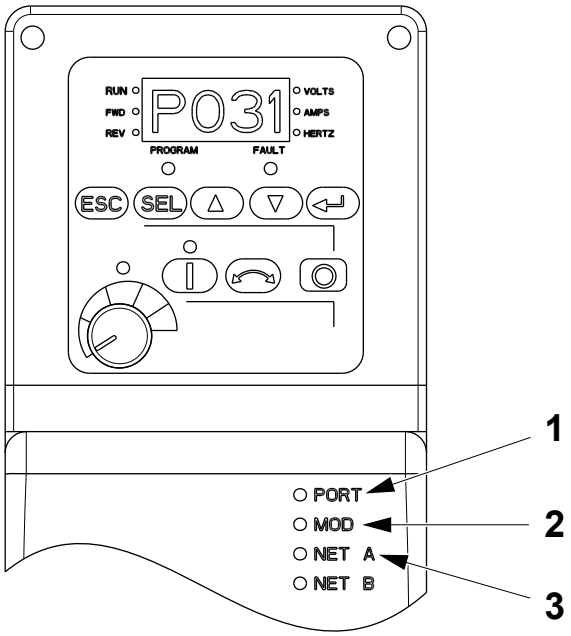

1 PORT LED
2 MOD LED
3 NET A LED

(Cont'd)

TechPub_2614345_0108 - 0801_3048233_01.fm

(Cont'd)

LED	Colour	Description
MOD (2)	Flashing red	The adapter has failed the firmware test, a connected drive has failed or a drive is missing. Clear any drive faults. Cycle power to the drive. If cycling power does not correct the problem, the parameter settings may have been corrupted. Restore default values reconfigure the adapter. If restoring default values does not correct the problem, flash the adapter with the latest firmware release. Determine which drive is missing or has failed. Check cabling and configuration settings.
	Solid red	The adapter has failed the hardware test Cycle power to the drive. Replace the adapter.

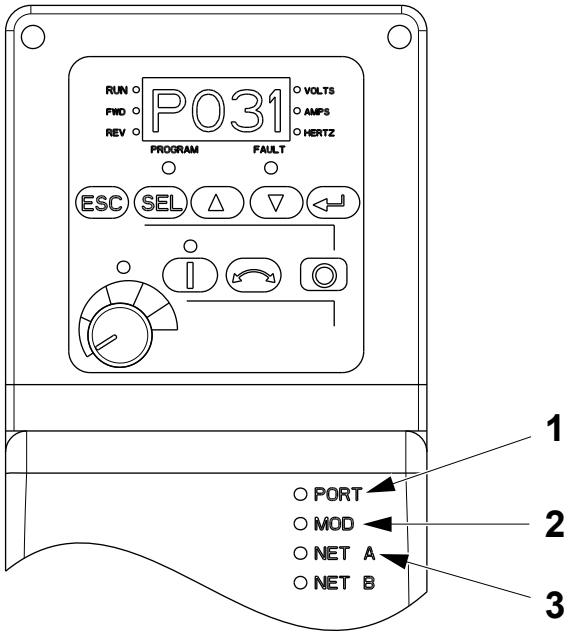

1 PORT LED
2 MOD LED
3 NET A LED

(Cont'd)

TechPub_2614345_0108 - 0801_3048233_01.fm

(Cont'd)

LED	Colour	Description
NET A (3)	Off	The adapter and/or the network is not powered or the adapter is not connected correctly to the network. Check that the ribbon cable is securely connected to the adapter and to the drive. Check that the DeviceNet cable is correctly connected. Apply power to the adapter and the network.
	Solid green	The adapter is properly connected and is communicating with devices on the network.
	Flashing green	The adapter is properly connected but is not communicating with any devices on the network. Put the scanner in the RUN mode, or apply power to the peer device that will send I/O data. Configure a controller or peer device to recognize and transmit I/O to the adapter. Configure the adapter for the program in the controller or the I/O from the peer device.

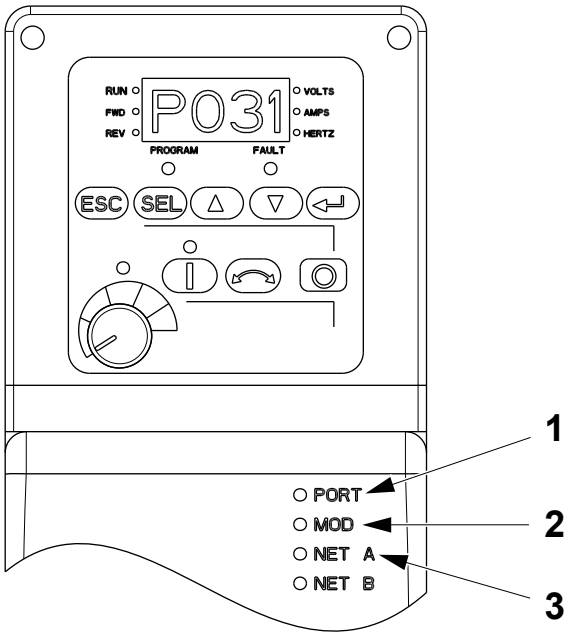

1 PORT LED
2 MOD LED
3 NET A LED

(Cont'd)

TechPub_2614345_0108 - 0801_3048233_01.fm

(Cont'd)

LED	Colour	Description
NET A (3)	Flashing red	A DeviceNet I/O connection has timed out. Put the scanner in the RUN mode, or apply power to the peer device that will send I/O data. Check the amount of traffic on the network.
	Solid red	Failed duplicate node detection test or bus off condition exists.

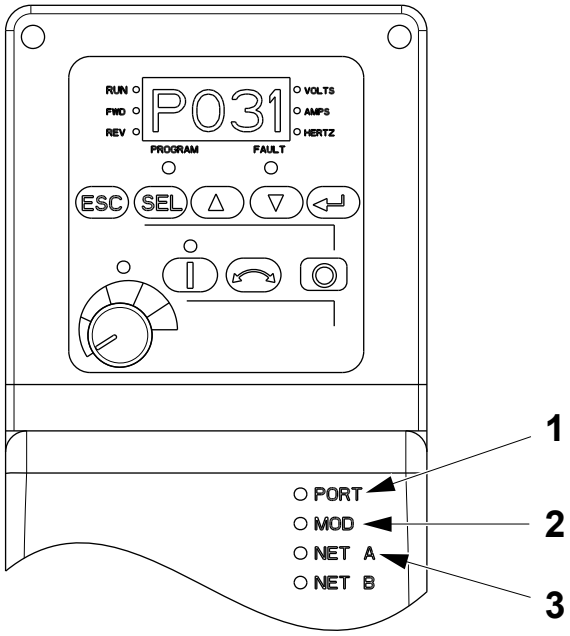

1 PORT LED
2 MOD LED
3 NET A LED

TechPub_2614345_0108 - 0801_3048233_01.fm

9.3 Servo System

SPC Reference	2840936-0100

9.3-1 Servo System - Description

SPC Reference	2840936-0100

The servo system is managed by the CPU module (1) which communicates with the Sercos module (2) through the backplane of the PLC rack (3). The Sercos module (2) communicates through an optical fiber network (4) with the two servo racks (5) containing the IAM (Integrated Axis Modules) (6) and the AM (Axis Module) servo drives (7).

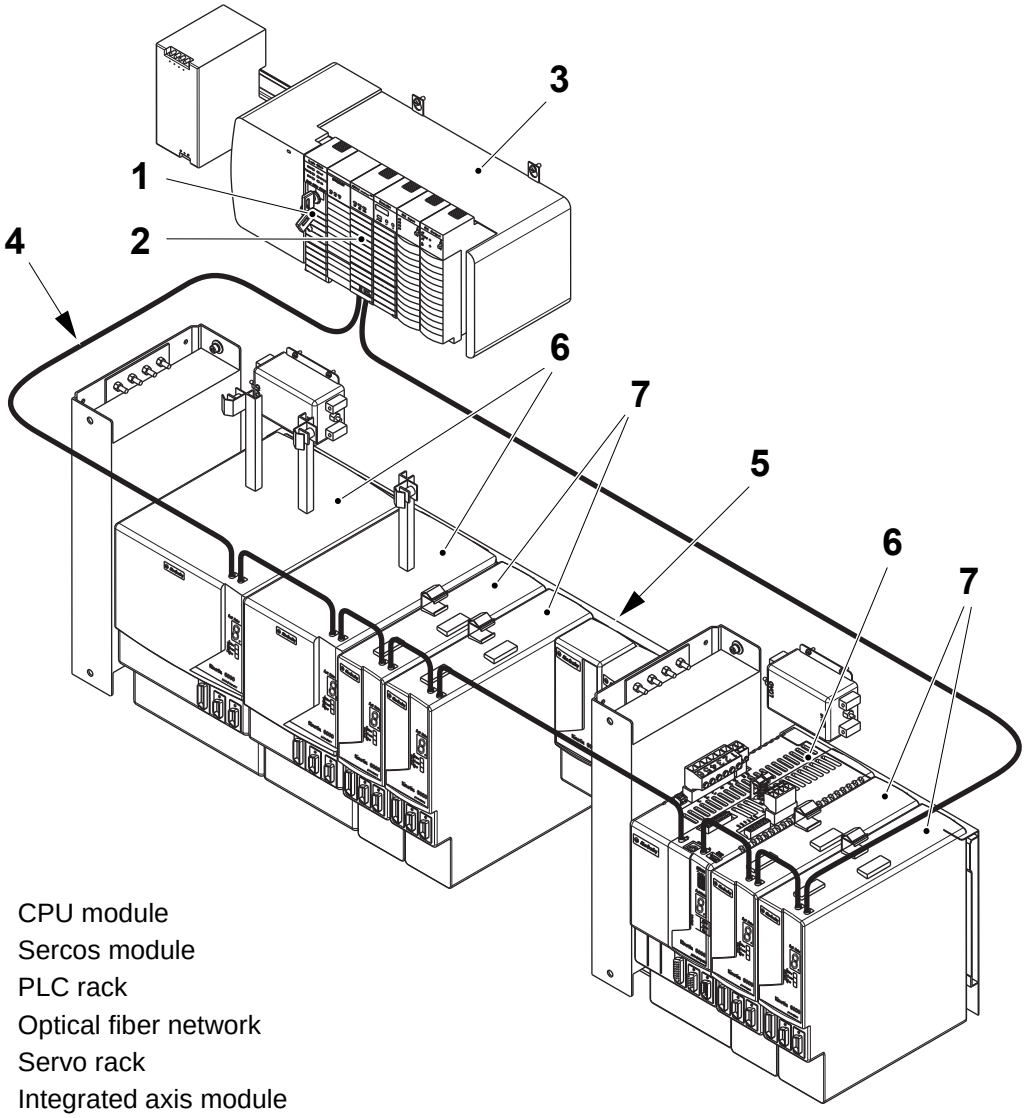

1 CPU module
2 Sercos module
3 PLC rack
4 Optical fiber network
5 Servo rack
6 Integrated axis module
7 Axis module

(Cont'd)

TechPub_2614345_0108 - 0801_3048234_01.fm

(Cont'd)

The servo drive racks each contain an IAM drive and the AM servo drives.

Each servo drive rack is powered with 400 V/AC via the power connector (1) on the top of the IAM and control power 240V/AC to the AM drives is supplied through the control power connector (2) on top of the IAM. A DC bus through the servo drive rack backplane provides the drives with DC power.

The IAM (3) provides power to the AM servo drives (4) in the servo drive rack (5) and also functions as a servo drive for one servo motor. Each rack has a base node number, which is set by the plus and minus switches (6) on the IAM.

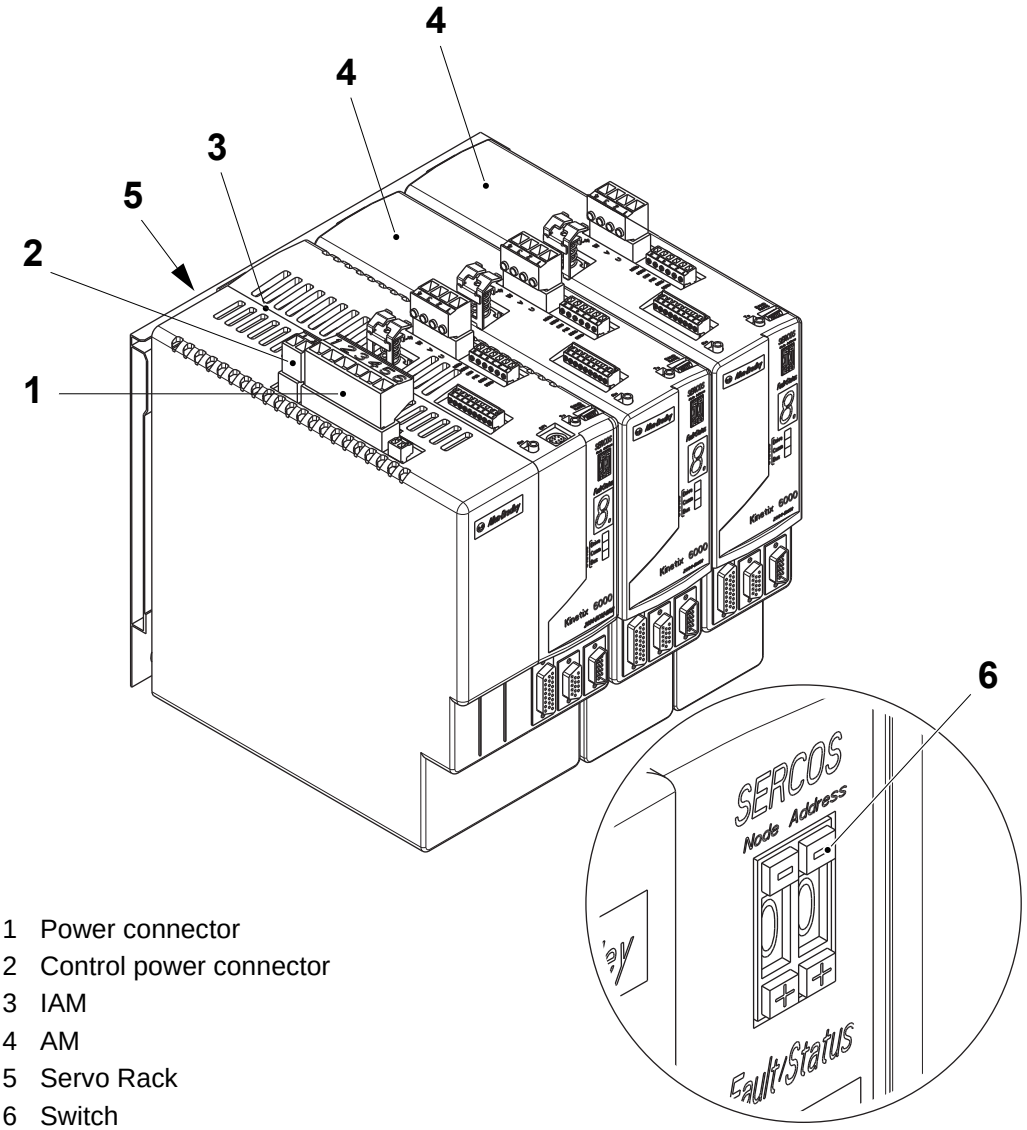

1 Power connector
2 Control power connector
3 IAM
4 AM
5 Servo Rack
6 Switch

(Cont'd)

TechPub_2614345_0108 - 0801_3048234_01.fm

(Cont'd)

The AM servo drives each have a node number which is determined by the base node number set on the IAM and by the rack slot in which the drive is located.

The fault/status display (7) on the AM servo drive indicates the current system status, when the:

- LED segments are displayed alternatively in a rotating pattern, this indicates the system is checking for a closed optical ring
- digit “1” is displayed, this indicates that the optical ring has been checked and that the physical communication is in place. The system is now checking for active nodes
- digit “2” is displayed, this indicates that all nodes in the optical ring are active. The system is now checking the configuration of the nodes

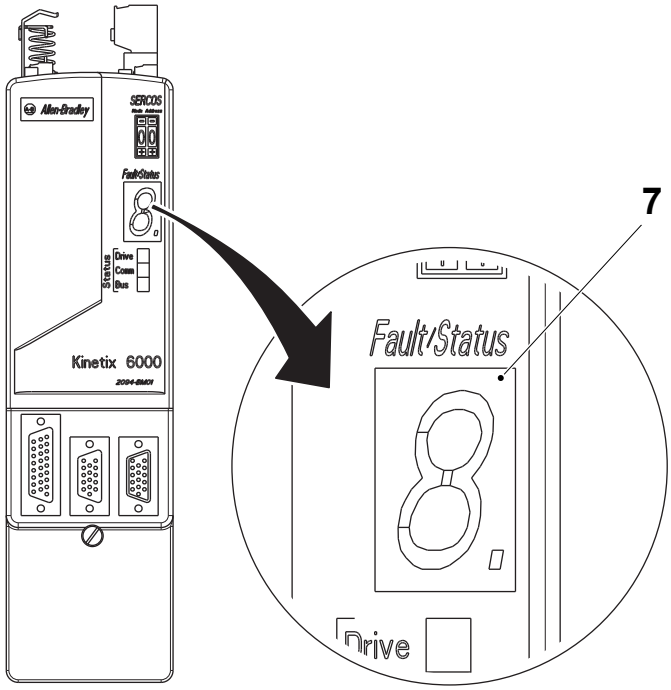

7 Fault/status display

(Cont'd)

TechPub_2614345_0108 - 0801_3048234_01.fm

(Cont'd)

- digit “3” is displayed, this indicates that all nodes are configured according to the application software. The system is now checking for motor types
- digit “4” is displayed, this indicates that the motor type matching for all axis is complete and the system is running
- letter “E” is displayed, this indicate an error, see section 9.3.2-5 Servo Drive - Error Codes.

(Cont'd)

TechPub_2614345_0108 - 0801_3048234_01.fm

(Cont'd)

On the front of each AM servo drive are three D-sub connectors:

- connector (8) is for I/O communications
- connector (9) is for position feedback from the servo motor
- connector (10) is for auxiliary position feedback.

The AM servo drives (4) are connected to the servo motors with uninterrupted cabling which is used to:

- supply power to the servo motors
- receive signals with position indicator feedback
- activate and deactivate if fitted, the servo motors mechanical brake.

The connectors for servo motor power (11) and brake power (12) to the mechanical brake of the motor are located on top of the drive.

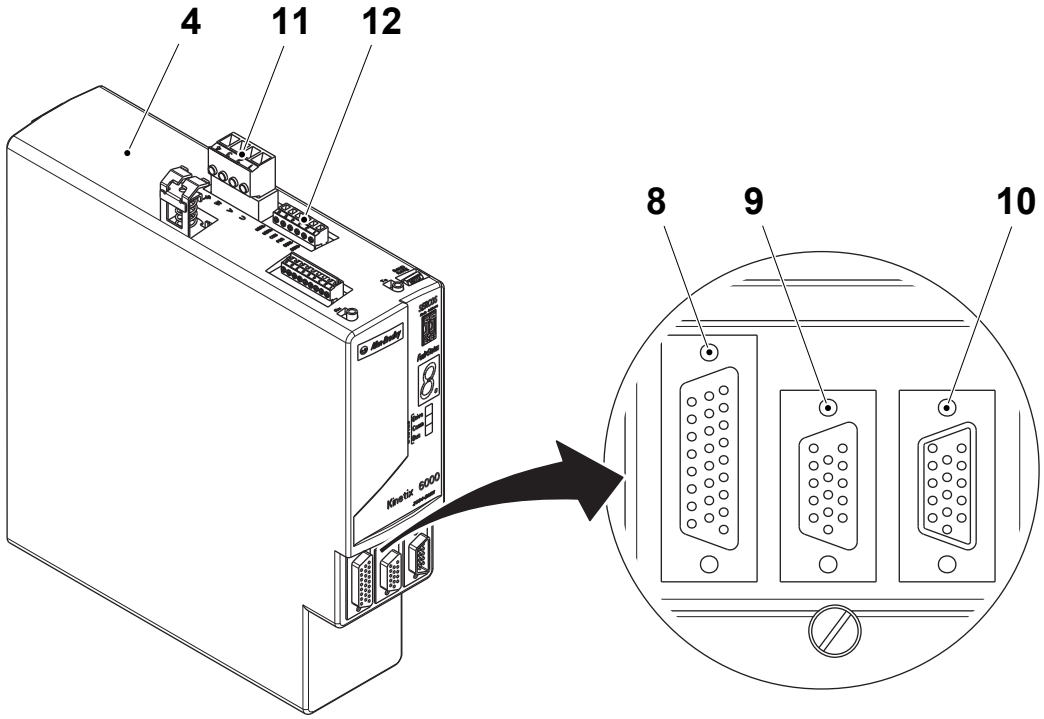

4 Servo drive
8 Connector for I/O communication
9 Connector for position feedback
10 Connector
11 Motor power
12 Brake power

(Cont'd)

TechPub_2614345_0108 - 0801_3048234_01.fm

9.3.1 Sercos Module

9.3.1-1 Sercos Module - Change

Machine Status	Mains Power OFF Air OFF Steam ON Water OFF
SPC Reference	90459-2481

Preparation

Before changing the Sercos module:

- Use the RSLinx Classic program to verify and record the firmware version of the existing Sercos module.
- Use the Flow Chart of Procedures for Changing the Sercos Module on the next page to determine which procedures must be performed and their correct sequence.

(Cont'd)

TechPub_2614345_0108 - 0801_3048234_01.fm

(Cont'd)

Flow Chart of Procedures for Changing the Sercos Module

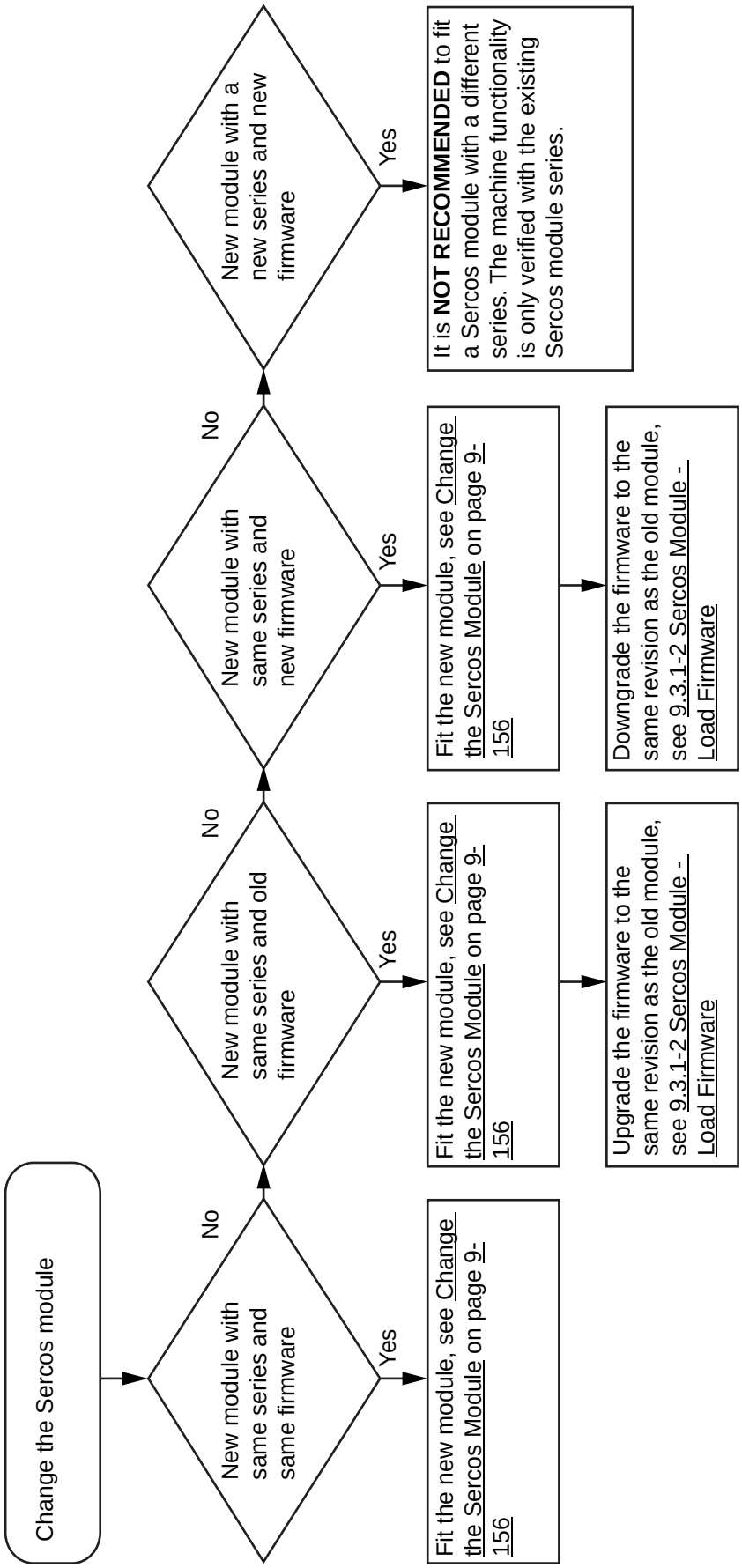

(Cont'd)

TechPub_2614345_0108 - 0801_3048234_01.fm

(Cont'd)

Change the Sercos Module

a) Mark the receive connector (1) and the transmit connector (2) and remove the connectors from the Sercos module (3).

b) Push in and hold the top and bottom locking tabs (4) on the Sercos module (3).

c) Pull the Sercos module (3) out of the chassis (5).

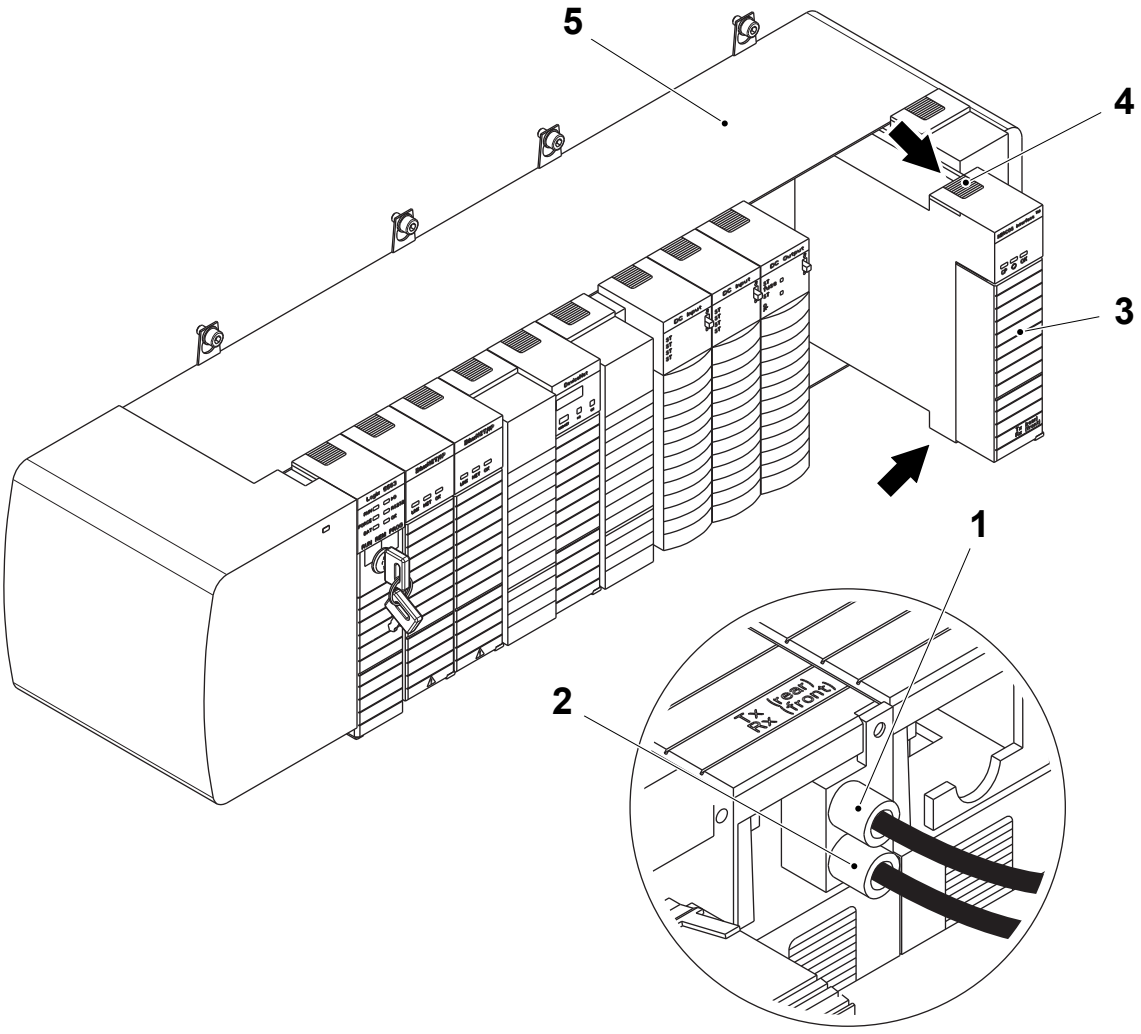

1 Receive connector, Rx
2 Transmit connector, Tx
3 Sercos module
4 Locking tab
5 Chassis

(Cont'd)

TechPub_2614345_0108 - 0801_3048234_01.fm

(Cont'd)

d) Align the new Sercos module (3) with the top and the bottom guides in the chassis.

e) Slide the Sercos module (3) into the chassis. Make sure it is flush with the other modules and the top and bottom latches are engaged.

f) Connect the receive connector (1) and the transmit connector (2) to the Sercos module (3).

g) Continue with the necessary procedures as described in Flow Chart of Procedures for Changing the Sercos Module on page 9-155.

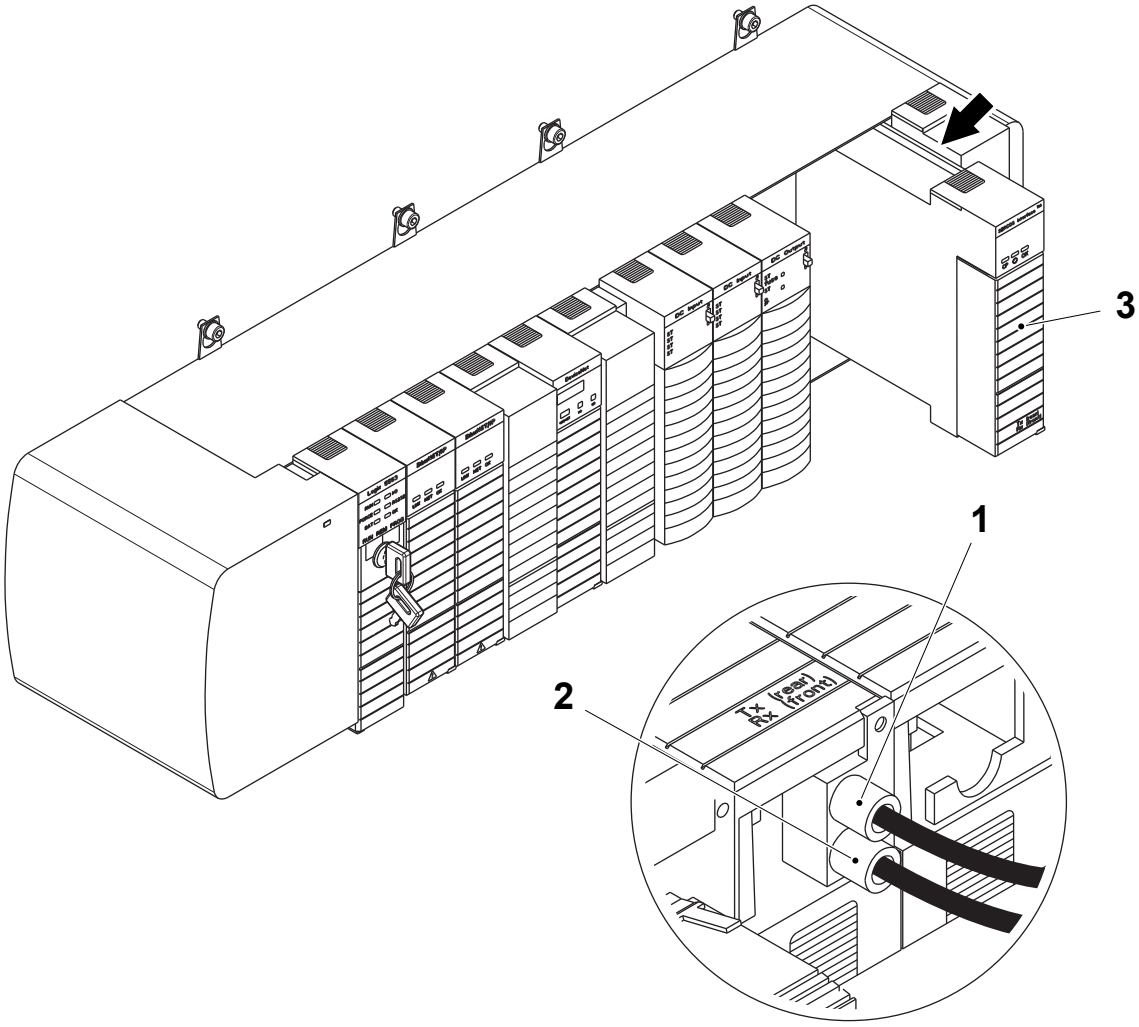

1 Receive connector, Rx
2 Transmit connector, Tx
3 Sercos module

TechPub_2614345_0108 - 0801_3048234_01.fm

9.3.1-2 Sercos Module - Load Firmware

Machine Status	Mains Power ON Air OFF Steam ON Water OFF
Special Equipment	PC with CD Drive Ethernet communication cable
SPC Reference	90459-2481

Follow the procedure described in 9.1.2-2 CPU Module - Load Firmware to load the firmware for the Sercos module.

TechPub_2614345_0108 - 0801_3048234_01.fm

9.3.1-3 Sercos Module - LED Description

Machine Status	Mains Power ON Air OFF Steam ON Water OFF
SPC Reference	90459-2481

The Sercos module has three LED’s indicating the state of the system.

- The CP LED (Sercos communication) (1) displays the status of the communication phases
- The Sercos ring LED (2) displays the status of the Sercos network
- The OK LED (3) indicates the status of the module and the communication.

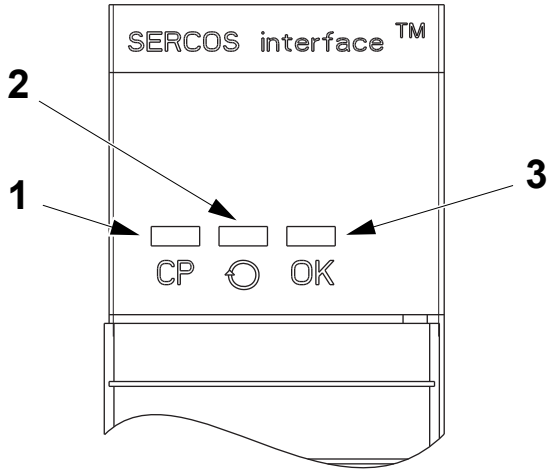

1 Sercos communication LED
2 Sercos ring LED
3 OK LED

(Cont'd)

TechPub_2614345_0108 - 0801_3048234_01.fm

(Cont'd)

During power up, the module completes a self test that includes an indicator test. All LEDs go red for one second, green for one second and OFF for one second.

LED	Colour	Description
CP (1)	Solid Orange	In Phase -1: Autobaud detection in progress.
	Off	In Phase 0: looking for a closed ring.
	Flashing Red	In Phase 1: looking for active nodes.
	Alternating Red/Green	In Phase 2: configuration of nodes for communication.
	Flashing Green	In Phase 3: configuration of device specific parameters
	Solid Green	In Phase 4: configured and active.
Sercos ring (2)	Solid Green	The ring, drive, and axes are configured and are actively communicating through to the nodes on the ring.
	Flashing Red	The module has detected a setup or configuration fault with the ring. Check the configuration as follows: - Ensure drive and axes addresses are correct - Remove excess axes from ring - Make sure application program has selected the proper ring cycle period and baud rate.

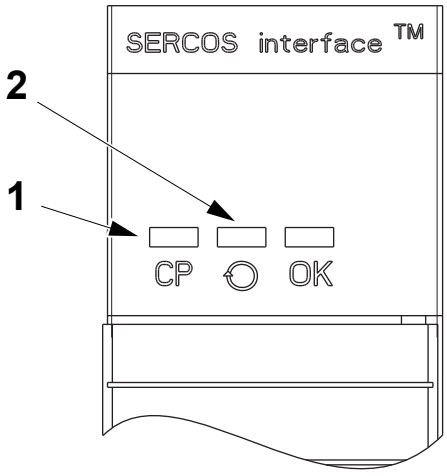

1 Sercos communication LED
2 Sercos ring LED

TechPub_2614345_0108 - 0801_3048234_01.fm

(Cont'd)

LED	Colour	Description
Sercos ring (2)	Solid Red	The module has detected a hardware or installation fault with the ring. Check as follows: - Make sure all cables are properly installed - Make sure the cable is of the correct type and length - Make sure application program has configured the ring transmit level of the module to high when using specified cables - Make sure the transmit levels of the drive are set appropriately - Inspect cables for damage - Inspect the drives for any faults
	Off	The module has detected no ring data on its receiver or has not successfully completed phase 2. Check as follows: - Make sure all cables are properly installed - Inspect cable for wear and damage - Inspect drives for faults.
	Flashing Green	The ring, drive, or axes are not configured but, at least one has been identified. Not a problem if the system has not been configured. If you are having configuration problems with the ring, drive, and axes, make sure that the application program is setup properly for the equipment in use.

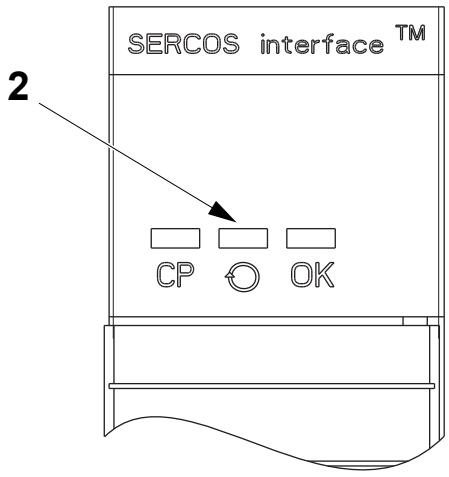

2 Sercos ring LED

(Cont'd)

TechPub_2614345_0108 - 0801_3048234_01.fm

(Cont'd)

OK (3)	Off	The module is not operating. Apply chassis power. Verify the module is completely inserted into the chassis and backplane.
	Flashing Green	The module has passed internal diagnostics, but has not established active communications.
	Steady Green	Data is being exchanged and the module is in the normal operating state.
	Flashing Red	A major recoverable failure has occurred or an firmware upgrade is in progress. If an firmware upgrade is in progress, complete the upgrade. If a firmware upgrade is not in progress, cycle the power.
	Solid Red	A potential non-recoverable fault has occurred. Cycle the power to the module. If the solid red persists, replace the module.

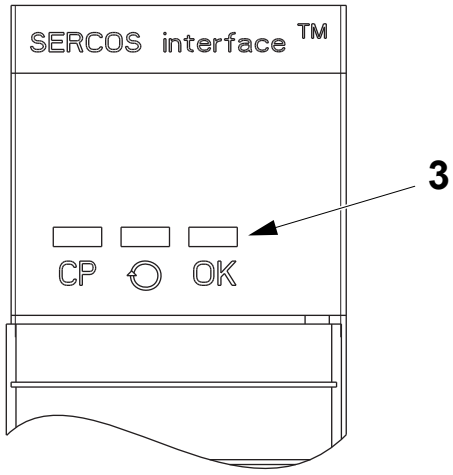

3 OK LED

TechPub_2614345_0108 - 0801_3048234_01.fm

9.3.2 Servo Drive

9.3.2-1 Servo Drive - Change

Machine Status	Mains Power OFF Air OFF Steam ON Water OFF
SPC Reference	2840936-0100

Note! Make sure that the new servo drive series is listed in the table in the section 9.1.2-2 CPU Module - Load Firmware. The PLC program and machine functionality is only verified to work with servo drive series listed in the table.

Preparation

Before changing the servo drive:

- Use the RSLinx Classic program to verify and record the firmware version of the servo drive.
- Use the Flow Chart of Procedures for Changing an IAM or AM Drive on the next page to determine which procedures must be performed and their correct sequence.

(Cont'd)

TechPub_2614345_0108 - 0802_3048235_01.fm

(Cont'd)

Flow Chart of Procedures for Changing an IAM or AM Drive

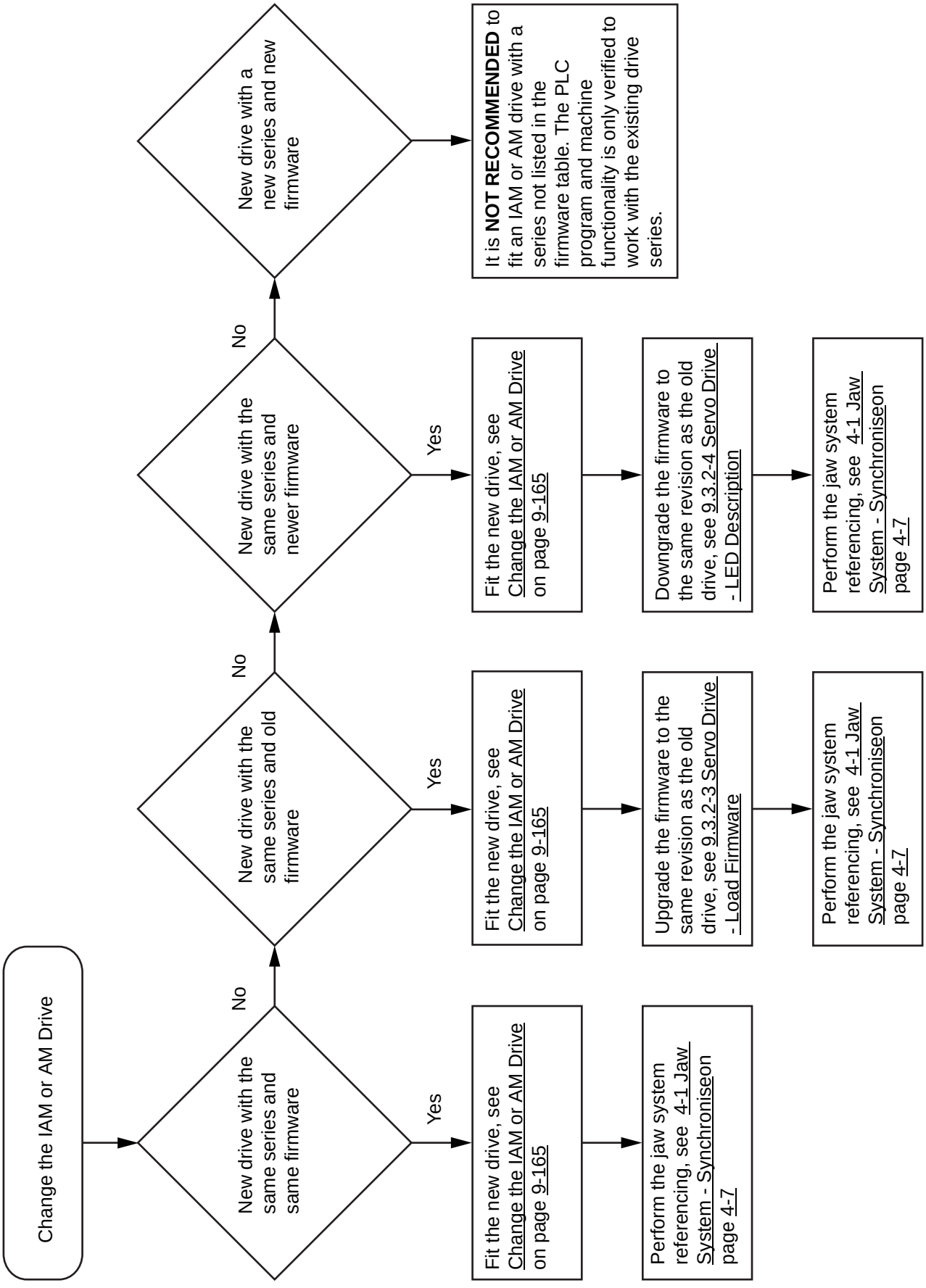

(Cont'd)

TechPub_2614345_0108 - 0802_3048235_01.fm

(Cont'd)

WARNING

Hazardous voltage.

Make sure that all control and input power has been removed from the servo system. Wait five minutes for the DC bus to completely discharge before proceeding.

Change the IAM or AM Drive

a) Mark and record the position of all connectors from the servo drive and then remove the connectors.

b) Use a screwdriver to remove the motor cable (1) from the cable shield clamp (2).

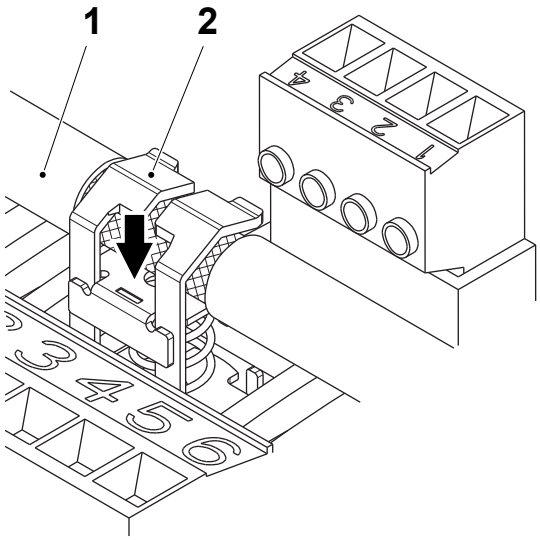

1 Motor cable
2 Clamp

(Cont'd)

TechPub_2614345_0108 - 0802_3048235_01.fm

(Cont'd)

c) Loosen the screw (3).

d) Grip the top and bottom of the servo drive (4) and gently pull the servo drive away from the connectors enough to clear the guide pins (5) (the servo drive will pivot on the top bracket). Lift the bracket out of the power rail slot (6) and remove the servo drive from the power rail.

e) If the servo drive to be changed is an IAM module, record the node address (7) and baud rate settings (8).

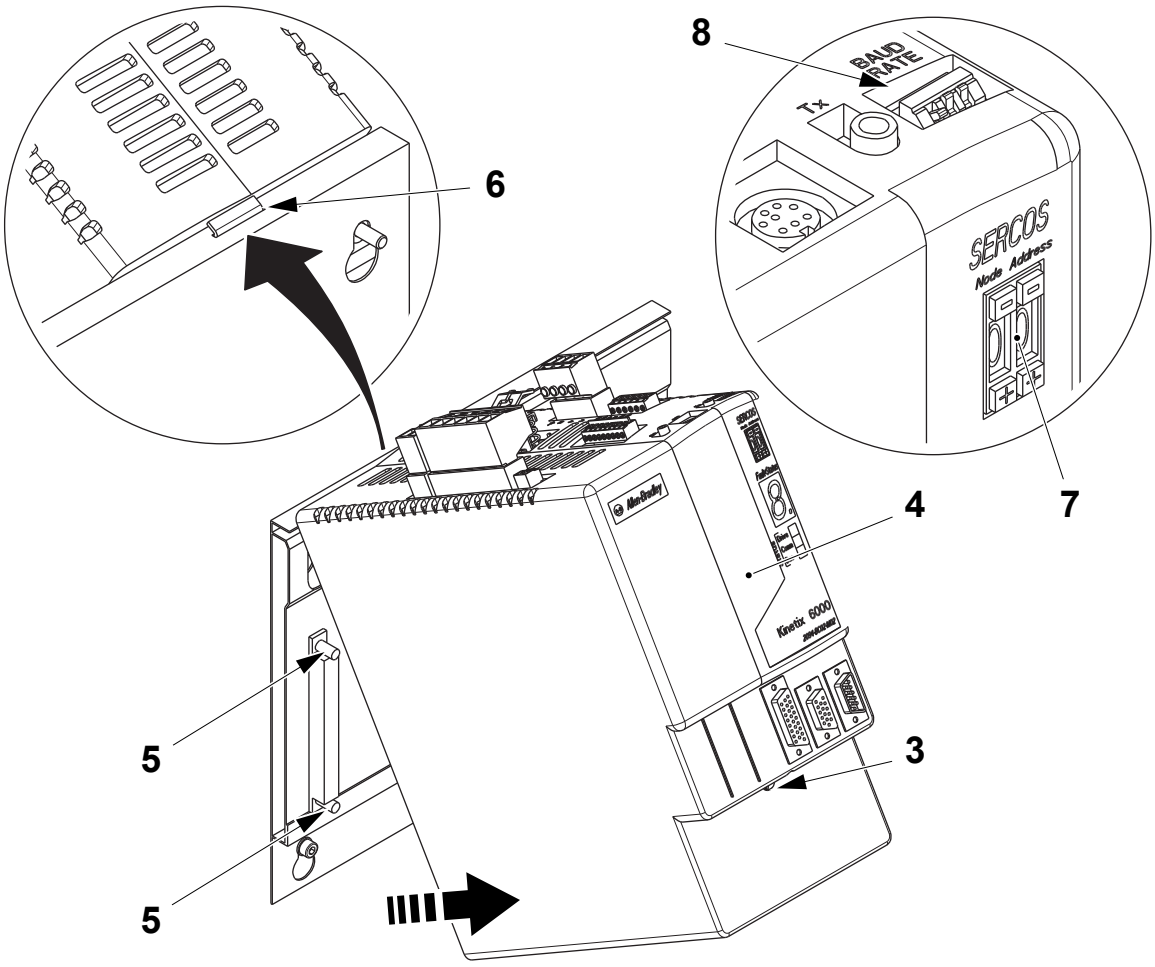

3 Screw
4 Servo drive
5 Guide pin
6 Power rail slot
7 Node address
8 Baud rate

(Cont'd)

TechPub_2614345_0108 - 0802_3048235_01.fm

(Cont'd)

CAUTION
Risk of damage to the equipment.
Make sure the guide pins (5) are correctly seated.

f) Attach the new servo drive with the mounting bracket (9) to the slot (10) in the power rail (11).

Note! The IAM has two power rail connectors and guide pins (5), all other servo drives have only one connector and one guide pin (5).

g) Align the guide pins (5) on the power rail with the guide pin holes in the back of the servo drive (4).

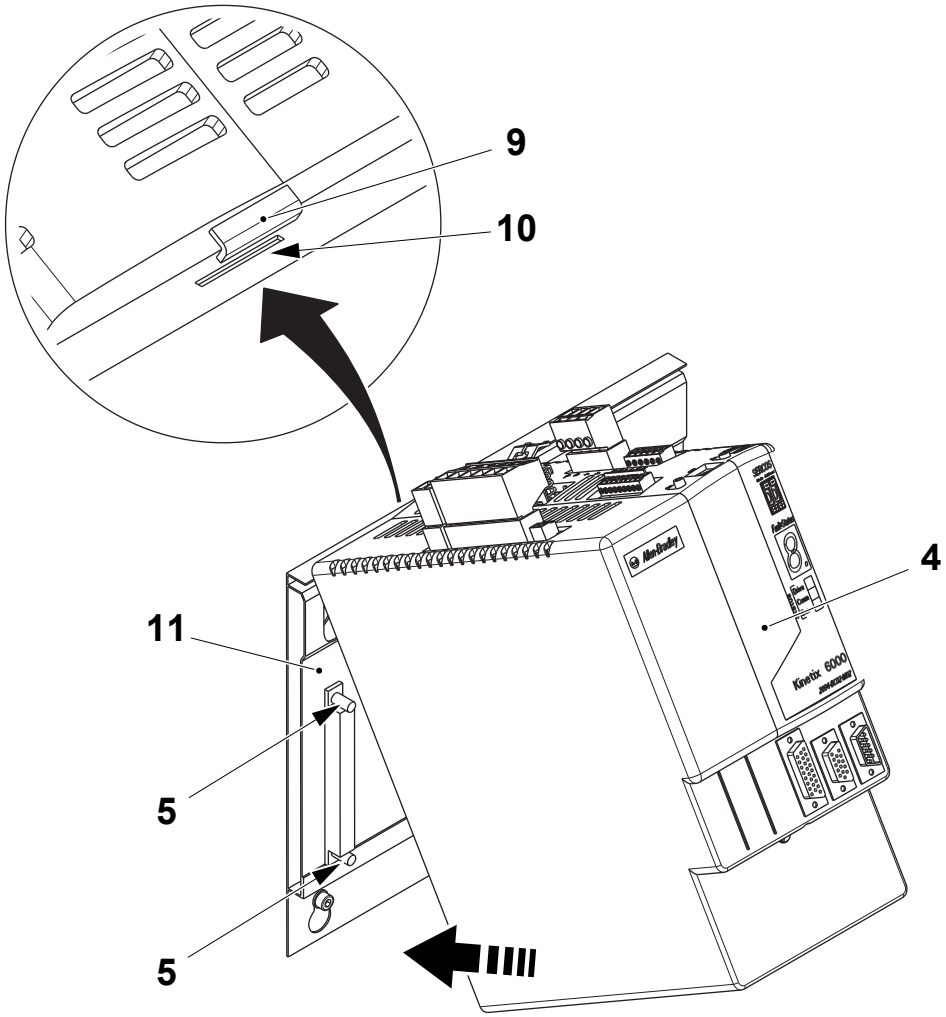

4 Servo drive
5 Guide pin
9 Mounting bracket
10 Slot
11 Power rail

(Cont'd)

TechPub_2614345_0108 - 0802_3048235_01.fm

(Cont'd)

h) Tighten the screw (3) to a torque of 2.26 Nm.

i) If the servo drive is an IAM, set the node address (7) and the baud rate (8) according to the setting recorded previously.

j) Connect the servo drive connectors and apply power to the system.

k) Check that the system is operating properly, see 9.3.2-4 Servo Drive - LED Description.

l) Continue with the necessary procedures as described in Flow Chart of Procedures for Changing an IAM or AM Drive on page 9-164.

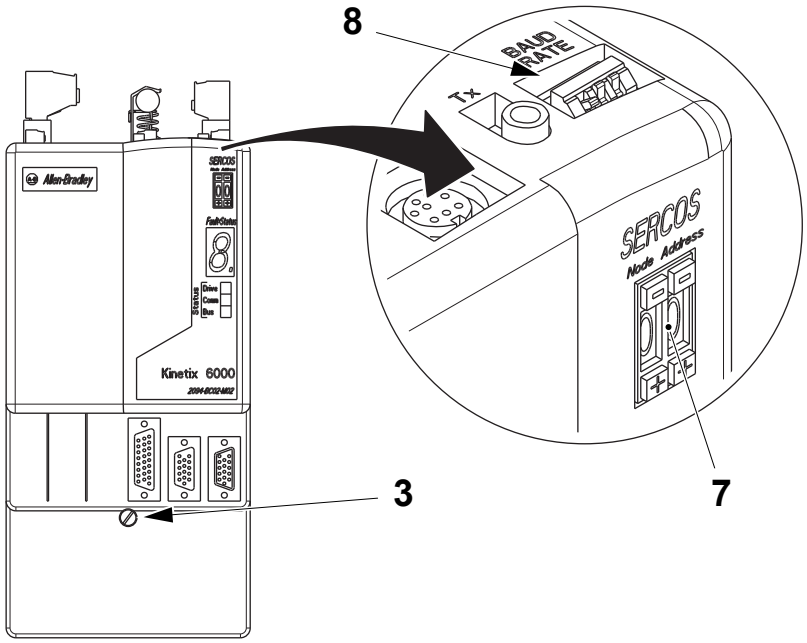

3 Screw
7 Node address
8 Baud rate

TechPub_2614345_0108 - 0802_3048235_01.fm

9.3.2-2 Servo Drive - Set Baud Rate

Machine Status	Mains Power OFF Air OFF Steam ON Water OFF
SPC Reference	2840936-0100

Set the DIP switches for the IAM and AM drives according to the table and the illustration below.

Optical power (1)	On
Baud rate LSB (2)	On
Baud rate MSB (3)	Off

The illustration shows an Integrated Axis Module

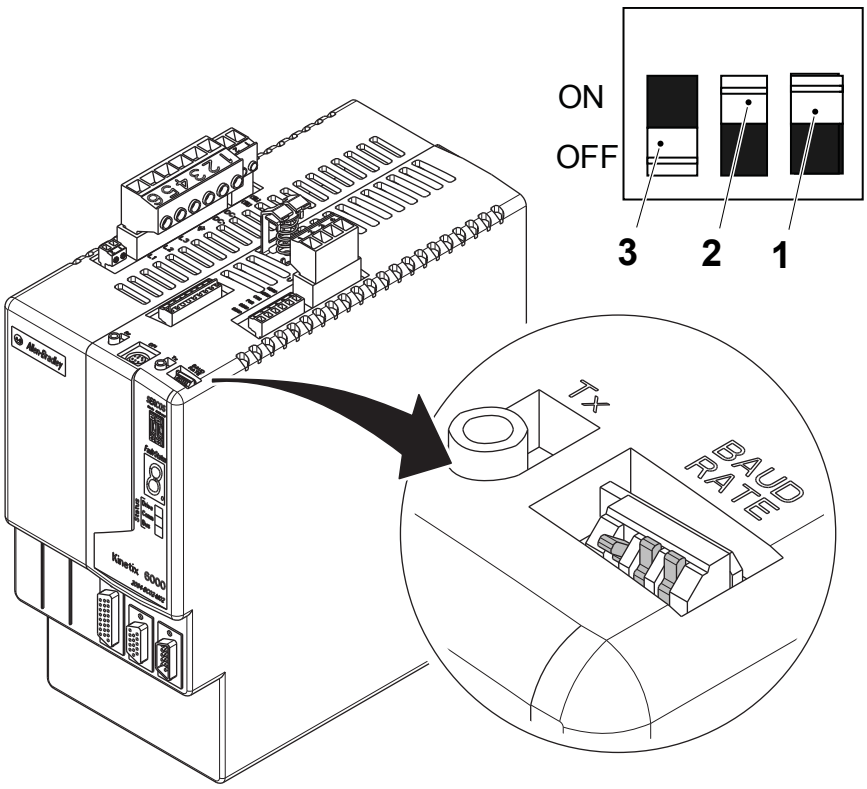

1 DIP switch optical power
2 DIP switch baud rate LSB
3 DIP switch baud rate MSB

TechPub_2614345_0108 - 0802_3048235_01.fm

9.3.2-3 Servo Drive - Load Firmware

Machine Status	Mains Power ON Air OFF Steam ON Water OFF
SPC Reference	2840936-0100

CAUTION
Risk of damage to the equipment.
To avoid injury or damage to the equipment due to unpredictable motor activity, do not apply AC input power or establish communications with the SERCOS module.

Follow the procedure described in 9.1.2-2 CPU Module - Load Firmware to load the firmware for the servo drive.

TechPub_2614345_0108 - 0802_3048235_01.fm

9.3.2-4 Servo Drive - LED Description

Machine Status	Mains Power ON Air OFF Steam ON Water OFF
SPC Reference	2840936-0100

LED	Colour	Status	Action
Drive Status (1)	Off	Normal, no faults	
	Solid red	Drive faulted	Read the error code in the Fault status display and see the section Error codes
Comm Status (2)	Off	No communication	Check for loose fiber optic connection or damaged fiber optic cable. Check that the fiber optic cables are not cross-connected.
	Flashing green	Establishing communication	System is still in the process of establishing SERCOS communication.
	Solid green	Communication ready	No faults or failures

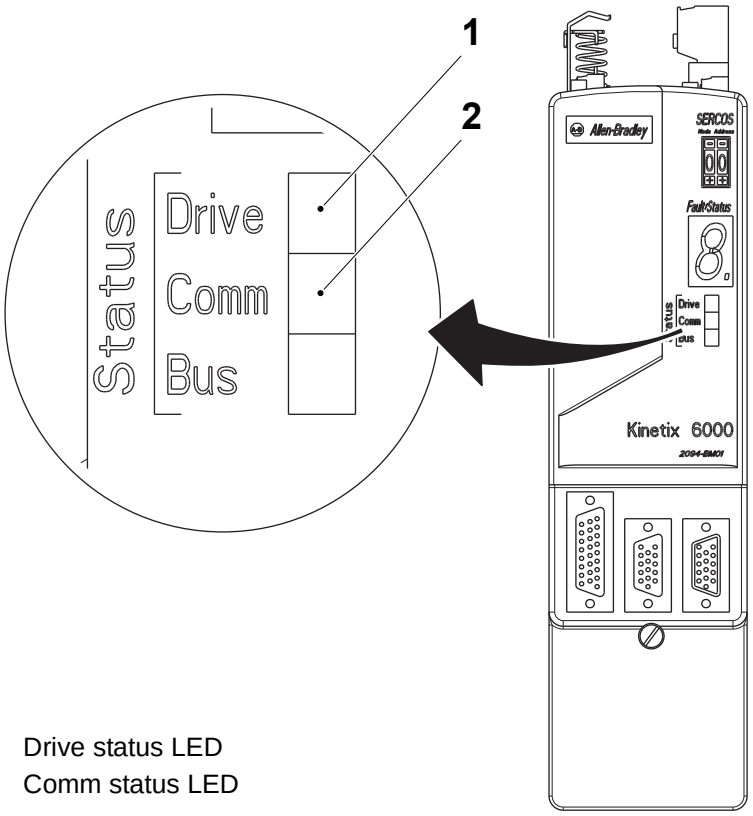

1 Drive status LED
2 Comm status LED

(Cont'd)

TechPub_2614345_0108 - 0802_3048235_01.fm

(Cont'd)

LED	Colour	Status	Action
Bus Status (3)	Off	Bus power not present	
	Flashing green	Power is present, axis enabled. No faults or failures.	Normal when: 24V is **not** applied to Hardware Enable Input (IOD-2). or MSO instruction is **not** commanded in RSLogix 5000 software.
	Solid green	Power is present, axis enabled. No faults or failures.	Normal when: 24V is applied to Hardware Enable Input (IOD-2). or MSO instruction is commanded in RSLogix 5000 software.

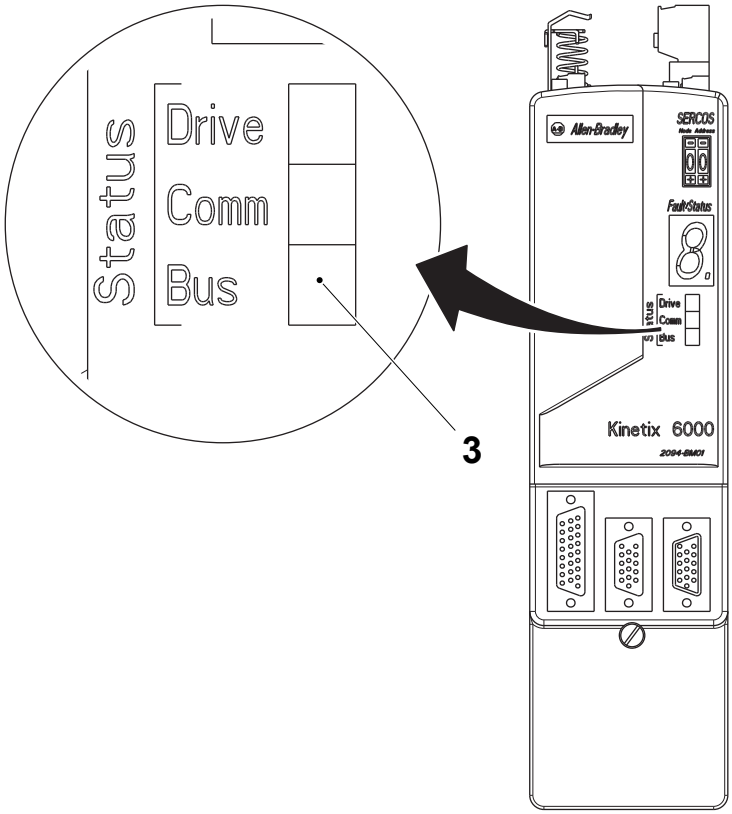

3 Bus status LED

TechPub_2614345_0108 - 0802_3048235_01.fm

9.3.2-5 Servo Drive - Error Codes

Machine Status	Mains Power ON Air OFF Steam ON Water OFF
SPC Reference	2840936-0100

When an error occurs, the fault/status LED on the front of the servo drive will display the letter E followed by a two-digit error code, one digit at a time. Refer to the error codes table below to identify error codes and the corrective actions.

Error code	Fault message RSLogix (HIM)	Problem	Description	Action
		Power indicator not ON	No AC power or auxiliary logic power	Verify AC control power is applied to the Kinetix 6000.
			Internal power supply malfunction	Change the module
		Motor jumps when first enabled.	Motor wiring error	Check motor wiring. Run Hookup test in RSLogix 5000
			Incorrect motor chosen	Verify the proper motor is selected
		Digital I/O not working correctly	I/O power supply disconnected	Verify connections and I/O power source
E00	**BusUndervoltage Fault** (Blown fuse)	A blown fuse was detected on the inverter PCB	Blown fuse	Change the module
E04	**MotorOvertemp Fault** (Motor Overtemp)	Motor thermal switch tripped	High motor ambient temperature and/or excessive current	Operate within (not above) the continuous torque rating for the ambient temperature (40°C maximum). Lower ambient temperature, increase motor cooling
			Motor wiring error	Check motor wiring at MF connector on the IAM/AM
			Incorrect motor selection	Verify the proper motor has been selected

TechPub_2614345_0108 - 0802_3048235_01.fm

Error code	Fault message RSLogix (HIM)	Problem	Description	Action
E05	**DriveOvercurrent Fault** (Power Fault)	Self-protection of the Intelligent Power Module (IPM) is indicating a major power related fault condition	Motor cables short circuit	Verify continuity of motor power cable and connector
			Motor winding internal short circuit internally	Disconnect motor power cables from the motor. If the motor is difficult to turn by hand, it may need to be replaced
			Kinetix 6000 temperature too high	Check for clogged vents or defective fan. - Make sure cooling is not restricted by insufficient space around the unit.
			Operation above continuous power rating and/or product environmental ratings	Verify ambient temperature is not too high. Operate within the continuous power rating. Reduce acceleration rates
			Kinetix 6000 has a short circuit, over current, or failed component	Remove all power and motor connections, and perform a continuity check from the DC bus to the U, V, and W motor outputs. If a continuity exists, check for wire fibers between terminals, or send drive in for repair
E06	**HardOvertravel Fault** (+/- Hard Overtravel)	Axis moved beyond the physical travel limits in the positive/negative direction	Dedicated over travel input is inactive	Check wiring. Verify motion profile. Verify axis configuration in software
E07	**MotFeedbackFault** (Motor Feedback Loss)	The feedback wiring is open, has a short circuit, or missing		Check motor encoder wiring. Run Hookup test in RSLogix 5000
E09	**BusUndervoltage Fault** (Bus Under Voltage)	With three-phase power present, the DC bus voltage is below limits	DC bus voltage for 460V system is below 275V DC bus voltage for 230V system is below 137V	Verify voltage level of the incoming AC power. Check AC power source for glitches or line drop. Install an uninterrupted power supply (UPS) on your AC input
		DC bus voltage fell below the undervoltage limit while an axis on the follower power rail was enabled		Disable follower axis before removing the power

TechPub_2614345_0108 - 0802_3048235_01.fm

Error code	Fault message RSLogix (HIM)	Problem	Description	Action
E10	**DriveOvervoltage Fault** (Bus Overvoltage)	The DC bus voltage is above limits	Excessive regeneration of power. When the motor is driven by an external mechanical power source, it may regenerate too much peak energy through the Kinetix 6000's power supply. The system faults to save itself from an overload	Contact Tetra Pak
			DC bus voltage for 460V system is over 820V DC bus voltage for 230V system is over 410V	Verify input is within specifications
E11	**MotFeedbackFault** (Illegal Hall State)	State of Hall feedback inputs is incorrect	Bad connections	Verify the Hall wiring at the MF connector on the IAM/AM. Verify 5V power supply to the encoder
E16	**Softovertravel Fault** (+/- Software Overtravel)	Axis position exceeded maximum software setting		Verify motion profile. Verify over-travel settings are appropriate
E18	**OverSpeedFault** (Overspeed Fault)	Motor speed has exceeded 150% of maximum rated speed. The 100% trip point is dictated by the lesser of the user velocity limits or the motor rated base speed		Check cables for noise. Check tuning
E19	**PositionErrorFault** (Follow Error)	Position error limit was exceeded		Verify sizing of system. Verify mechanical integrity of system within specification limits
E20	**MotFeedbackFault** (Mtr Fdbk AQB)	Motor Encoder State Error	The motor encoder encountered an illegal transition	Use shielded cables with twisted pair wires. Route the feedback away from potential noise sources. Check the system grounds. Replace the motor/encoder
E21	**AuxFeedback Fault** (Aux Feedback Comm)	Communication was not established with an intelligent encoder.		Verify auxiliary encoder wiring
E30	**MotFeedbackFault** (Motor Feedback Comm)	Communication was not established with an intelligent encoder		Verify motor selection. Verify the motor supports automatic identification. Verify motor encoder wiring

TechPub_2614345_0108 - 0802_3048235_01.fm

Error code	Fault message RSLogix (HIM)	Problem	Description	Action
E34	**GroundShortFault** (Ground Fault)	Excessive ground current in the converter was detected	Wiring error	Check motor power wiring. Check input power wiring (refer to Kinetix 6000 Installation Manual, publication 2094-IN001x-EN-P, regarding use of isolation transformer)
			Motor internal ground short	Replace motor
			Internal malfunction	Disconnect motor power cable from drive and enable drive with current limit set to 0. If fault clears, then a wiring error or motor internal problem exists. If fault remains, call your A-B representative
			Grounded control power terminal (applies to 230V systems only)	Remove ground from control power input. Source control power from three phase input power. Add isolation transformer for control power.
E35	**DriveUndervoltage Fault** (Precharge Fault)	Converter pre-charge cycle failed.	Low AC input voltage	Check input AC voltage on all phases
			Internal malfunction	Call your A-B representative
E36	**DriveOvertemp Fault** (System Overtemperature)	Converter thermal switch tripped	Excessive heat exists in the power circuitry	Check for clogged vents or defective fan. Ensure cooling is not restricted by insufficient space around the unit
E37	**PowerPhaseLoss** Fault	One or more phases of the input AC power is missing. Axis was enabled when main (3-phase) power was removed. Common bus follower axis was enabled when DC bus power was removed.		Check input AC voltage on all phases. Disable axis before removing power. Clear fault
E38	**SERCOSFault** (SERCOS Ring Flt)	The SERCOS ring is not active after being active and operational	Cable disconnected	Check that the fiber optic cable is present and connected properly.
E39	**DriveHardFault** (Self Sense Flt)	Control hardware fault detected	Motion required for self-sensing start-up commutation was obstructed	Verify that there are no impediments to motion at startup, such as hard limits. Check motor or encoder wiring using wiring diagnostics
E43	**DriveEnableInput** (Drive Enable Flt)	Missing Drive Enable Input Signal	An attempt was made to enable the axis through software while the Drive Enable hardware input was inactive. The Drive Enable input transitioned from active to inactive while the axis was enabled	Disable the Drive Enable Input fault. Verify that Drive Enable hardware input is active whenever the drive is enabled through software

TechPub_2614345_0108 - 0802_3048235_01.fm

Error code	Fault message RSLogix (HIM)	Problem	Description	Action
E49	**DriveHardFault** (Safe-off HW Flt)	Safe-off function mismatch. Drive will not allow motion.	Loose wiring at SO connector. Cable/header not seated properly in SO connector. Safe-off circuit missing +24V DC.	Verify wire terminations, cable/ header connections, and +24V. Reset error and run proof test. If error persists, return the drive to Allen-Bradley.
E50	**SERCOSFault** (Sercos Same ADDR)	Duplicate node address detected on SERCOS ring		Verify that each SERCOS drive is assigned an unique node address
E54	**DriveHardFault** (Ifbk HW Fault)	Current feedback hardware fault detected.		Replace the module
E60	**DriveHardFault** (Unknown Axis)	Illegal ID bits detected		Replace the module
E61	**AuxFeedback Fault** (Aux Fdbk AQB)	Auxiliary Encoder State Error	The auxiliary encoder encountered an illegal transition	Use shielded cables with twisted pair wires. Route the feedback away from potential noise sources. Check the system grounds. Replace the motor/encoder
E62	**AuxFeedback Fault** (Aux Fdbk Loss)	The feedback wiring is open, has a short circuit, or missing		Check the motor feedback cable connectors/wiring to the IAM/ AM and motor
E63	**AuxFeedback Noise** (Aux Fdbk Noise)	Noise on auxiliary feedback cable.	Recommended grounding, per installation instructions, has not been followed.	Verify grounding. Route feedback cable away from noise sources. Refer to System Design for Control of Electrical Noise Reference Manual, publication GMC-RM001.
E64	**MotorFeedback Noise** (Mtr Fdbk Noise)	Noise on motor feedback cable.		
E65	**No Fault Message** (condition indicated by on-screen message) (Hookup Fault)	Hookup procedure failed	Motor or feedback device malfunction	Check motor power/feedback wiring. Refer to on-screen message for resolution
E66	**No Fault Message** (condition indicated by on-screen message) (Atune Flt)	Autotune procedure failed	Motor or feedback device malfunction	Check motor power/feedback wiring. Refer to on-screen message solution. Perform Hookup in RSLogix 5000. Consult RSLogix 5000 for help screen
E67	**DriveHardFault** (Task init)	Operation system failed.	Software initalization fault detected due to hardware failure.	Cycle power. If fault persists, replace module.
E68	**DriveHardFault** (SCANport™Comm)	DPI communication failed	The DPI device or cable is faulty	Check DPI connections
E69	**HardDriveFault** (Objects init)	Non-volatile memory is corrupt due to control board hardware failure		Load default parameters, save to non-volatile memory, and recycle power or reset the drive
E70	**DriveHardFault** (NV Mem Init)	Non-volatile memory is corrupt due to control board software error		Load default parameters, save to non-volatile memory, and recycle power or reset the drive

TechPub_2614345_0108 - 0802_3048235_01.fm

Error code	Fault message RSLogix (HIM)	Problem	Description	Action
E71	**DriveHardFault** (Memory Init)	RAM or flash memory validation failure		Cycle power. If fault persists, replace module
E72	**DriveOvertemp Fault** (Drive Overtemp)	Inverter thermal switch tripped	The fan on the IAM or an AM failed	Replace the failed module
			The cabinet ambient temperature is above rating.	Check the cabinet temperature
			The machine duty cycle requires an RMS current exceeding the continuous rating of the module	Contact Tetra Pak
			The airflow access to the Kinetix 6000 is limited or blocked	Check airflow and re-route cables away from the Kinetix 6000 system
E73	**Communicate** (Backplane Comm)	Power rail CAN communications failed		Check module for proper mount
		Power rail connection has a short circuit or is open		Check power rail and module for foreign objects
E74	**DriveOvercurrent Fault** (BusOverCurrent)	DC link current exceeds rating	Motor or transmission malfunction	Check for proper motor sizing. Check/replace transmission device. Check/replace motor
			IAM not properly sized	Contact Tetra Pak
E75	**DriveOvervoltage Fault** (Shunt Time Out)	The IAM or AM has exceeded its shunt resistor continuous rating		Use properly sized shunt or modify duty cycle of the application. System uses internal shunt and requires external shunt for additional capacity.
E76	**DriveHardFault** (Can Init)	DPI hardware initialization fault detected	Control board hardware failure	Reset system. If fault persists, replace the module
E77	**DriveHardFault** (Module Mismatch)	Either 230V AM is installed on power rail with 460V IAM, or 460V AM is installed on power rail with 230V IAM		Replace mismatched module
E78	**DriveHardFault** (SERCOS Init)	Control hardware fault detected		Cycle power. If fault persists, replace module
E79	**DriveOvervoltage Fault** (Shunt Module Flt)	SM Temperature Fault LED status is solid Red		Refer to Temperature Fault LED description
		SM Shunt Fault LED status is solid Red		Refer to Shunt Fault LED description
		Module missing from power rail		Install missing module on power rail. Fill empty slot with slot filler module
E80	**HardwareFault** (CPLD FLT)	Control hardware fault detected		Replace module
E81	**DriveHardFault** (Common Bus Flt)	Follower IAM detected ac input power being applied.		Remove ac input power connections from follower IAM.
E90	**DriveHardFault** (Pre-charge Timeout Flt)	Pre-charge resistor power exceeds the resistor rating.		Allow resistor to cool.

TechPub_2614345_0108 - 0802_3048235_01.fm

9.3.3 Stepper Motor

9.3.3-1 Stepper Motor - Set

Machine Status	Mains Power OFF Air OFF Steam ON Water OFF
SPC Reference	90459-7195

Open the connection box on the servo motor and set trimmers according to the table below:

Trimmer	Volume Adjuster Motor	Steering Device Motor
Baud Rate (1)	2	2
High Address (2)	4	4
Low Address (3)	0	1

When the machine steps up to PREPARATION, the referencing of the servo motor is automatically executed.

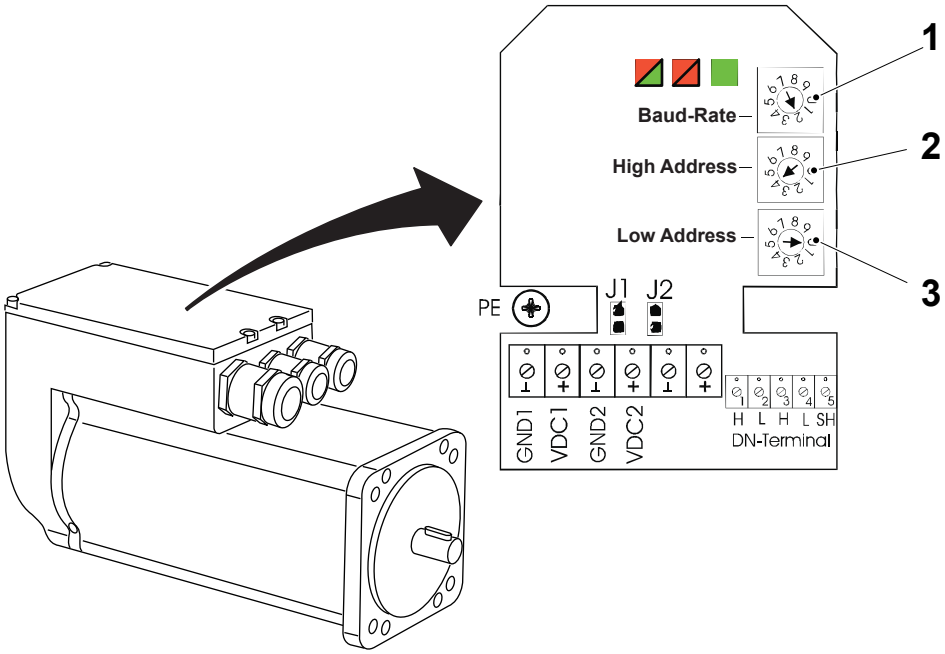

1 Baude rate trimmer
2 High address trimmer
3 Low address trimmer

TechPub_2614345_0107 - 0801_3048236_01.fm

9.3.3-2 Stepper Motor - LED Description

Machine Status	Mains Power OFF Air OFF Steam ON Water OFF
SPC Reference	90459-7195

LED	Colour	Description	Action
POWER ON (1)	Off	Not powered, no logic power to device	Check power connection
	Solid green	Powered, logic power to device	No action required

Note! If the Network Status LED goes Steady-red at power-up, it could mean there is a Duplicate MAC ID. The user response should be to test all devices for unique addresses. If the symptom persists, it means a Bus-OFF error.

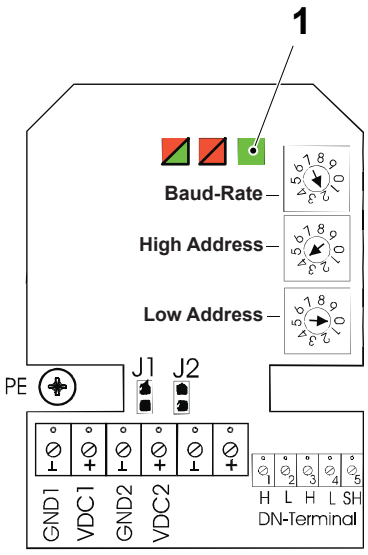

1 Power ON LED

(Cont'd)

TechPub_2614345_0107 - 0801_3048236_01.fm

(Cont'd)

LED	Colour	Description	Action
DN Status (2)	Off	Not powered, no power to device Not On-Line, failed to Duplicate MAC ID check	Check that one or more nodes are communicating on the network. Check that at least one other node on the network is operational and the data rate is the same as the servo motor
	Flashing green	On-Line, Passed Duplicate MAC ID check Not connected, connection not yet established	No action is needed. The LED is flashing to signify that there are no open communication connections between the servo motor and any other device. Any connection (IO or explicit message) made to the encoder will cause the LED to stop flashing and remain Steady-ON for the duration of any open connection.

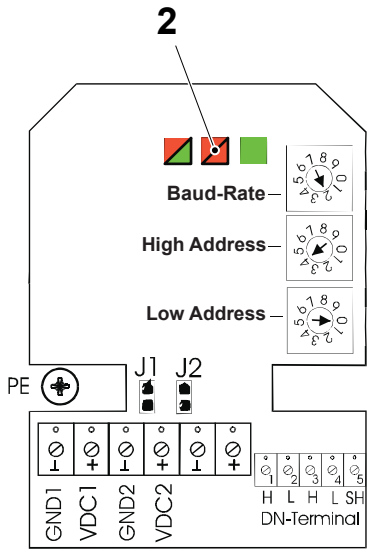

2 DN-status LED

(Cont'd)

TechPub_2614345_0107 - 0801_3048236_01.fm

(Cont'd)

LED	Colour	Description	Action
DN Status (2)	Solid green	On-Line, connected One or more connection has been established	No action required
	Flashing red	On-Line Time-out, at least one IO connection has timed out	Re-initiate IO messaging by PLC controller. Reduce traffic or errors on the network so that messages can get through.
	Solid red	Network Failure Failed Duplicate MAC ID check, Bus-OFF	Ensure that all nodes have unique addresses. If all node addresses are unique, examine network for correct media installation. Ensure that all nodes have the same data rate.

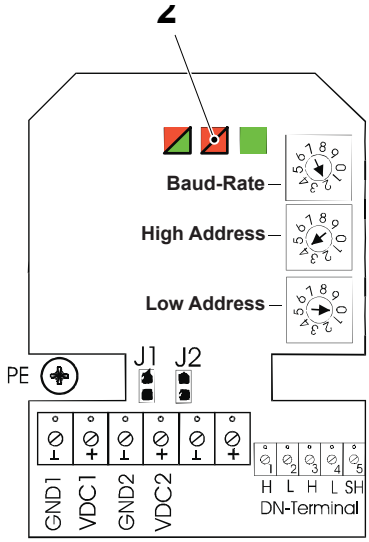

3 DN-status LED

TechPub_2614345_0107 - 0801_3048236_01.fm

(Cont'd)

LED	Colour	Description	Action
RS485 Fault (3)	Off	Not powered, no power to device	Check power connection
	Flashing green or flashing red	Self-test period (approx. 1 sec. after power on)	No action required
	Solid green	Communication OK One or more connection has been established	No action required
	Solid red or orange	Communication fault, no response or servo motor not powered	Fault acknowledge or power on cycle

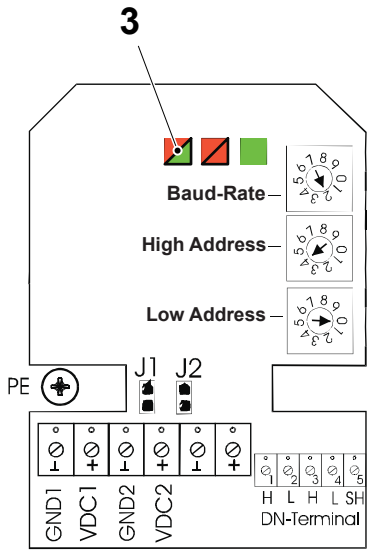

4 RS485 FAULT led

TechPub_2614345_0107 - 0801_3048236_01.fm

9.4 Safety System

SPC Reference	2840934-0200

Description

The safety system of the filling machine is managed by the two Pluto Safety PLC modules F01K5000 and F01K5010. To increase the number of input and output possibilities, the modules are assisted by five expansion relays (F01K5020, F01K5030, F01K5040, F01K5050 and F01K5060).

The pluto system monitors the:

- emergency stop buttons
- door safety switches
- machine covers fitted with a safety switch
- contactors for AC motor driven units
- modules for the servo controlled units
- contactors for units using AC power.

When an emergency stop button is pushed, a door is opened or a cover is removed, an emergency stop signal is sent to the CPU module which then takes the necessary actions to stop the machine.

When the emergency stop button is released, the door is closed or the cover is replaced, a reset signal is generated by the CPU module when the alarm is reset.

TechPub_2614345_0108 - 0801_3048237_01.fm

9.4-1 Safety System - Check

Machine Status	PREPARATION
SPC Reference	2840934-0200

Note! A manual check of all the emergency stop push buttons, safeguards and doors and covers fitted with interlocking devices must be performed regularly on a monthly basis. The manual check is to ensure that all emergency stop buttons and safeguards are in place and operational. See the Safety Precautions chapter for the location of emergency stop buttons and safeguards.

(Cont'd)

TechPub_2614345_0108 - 0801_3048237_01.fm

(Cont'd)

To verify the functionality of the safety expansion relays, check that the safety outputs are lit when the alarms are deactivated and that they switch off when an alarm is activated by an open door or an emergency stop push button pressed.

Follow the instructions to check the functionality of a specific safety expansion relay, see the following pages. Check the reference designation on the label to locate the specific safety relay in the electrical cabinet.

Safety Relay	**Safety Line**
F01K5020	Emergency Stop Push Buttons
F01K5030	Jaw System/Final Folder doors
F01K5040	Jaw System/Final Folder doors
F10K5050	ASU doors
F70K5060	Superstructure doors UV lamp

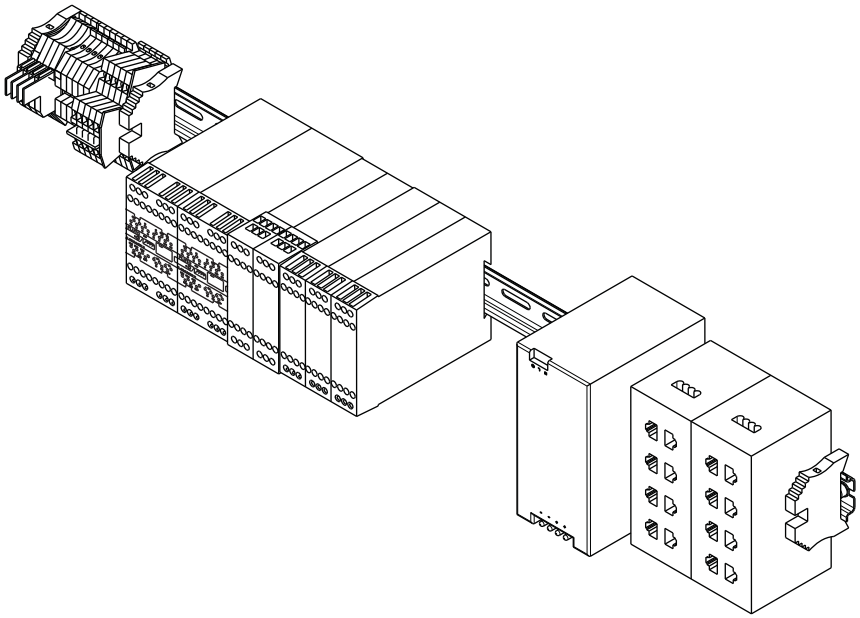

(Cont'd)

TechPub_2614345_0108 - 0801_3048237_01.fm

(Cont'd)

Reset Button

The RESET buttons located on the ASU and Machine Body doors are intended to inform the operator when a machine body or ASU door is open and the safety system must be reset.

The light of the RESET button flashes when a door is open and after the door has been closed will remain ON until the RESET button has been pressed and safety system has completed the system reset.

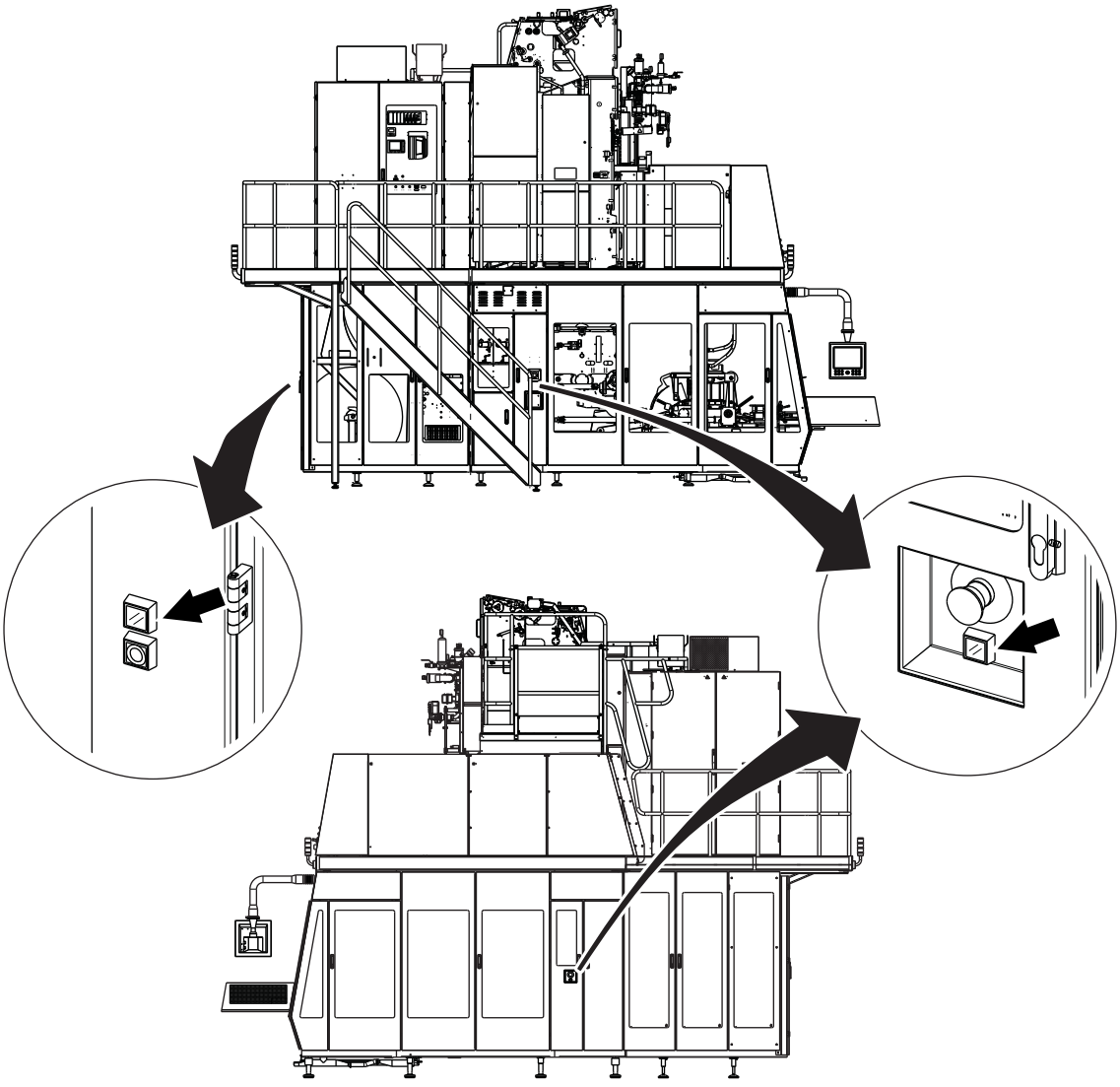

(Cont'd)

TechPub_2614345_0108 - 0801_3048237_01.fm

(Cont'd)

Emergency Stop Push Button - Safety Expansion Relay F01K5020

a) Identify the safety relay F01K5020 in the electrical cabinet.

b) Make sure that all the EMERGENCY STOP PUSH buttons are deactivated and any alarms are reset by touching the alarm ACKNOWLEDGE button on the TPOP panel. Check in the electrical cabinet that the safety output F01K5020 is ON.

(Cont'd)

TechPub_2614345_0108 - 0801_3048237_01.fm

(Cont'd)

c) Press the first selected EMERGENCY STOP PUSH button and make sure that the safety relay is tripped (the LED switches off).

d) With the EMERGENCY STOP PUSH button still activated, attempt to start the machine by pressing the PROGRAM UP button. Check that the machine does not start and that the safety relay remains tripped.

e) Deactivate (pull-out) the EMERGENCY STOP PUSH button, attempt to start the machine by pressing the PROGRAM UP button. Check that the machine does not start and that the safety relay remains tripped.

f) Repeat items b) to e) for the other selected emergency stop devices.

g) Release the EMERGENCY STOP PUSH button and reset any alarms by touching the alarm ACKNOWLEDGE button on the TPOP panel. Check in the electrical cabinet that the safety output F01K5020 is ON.

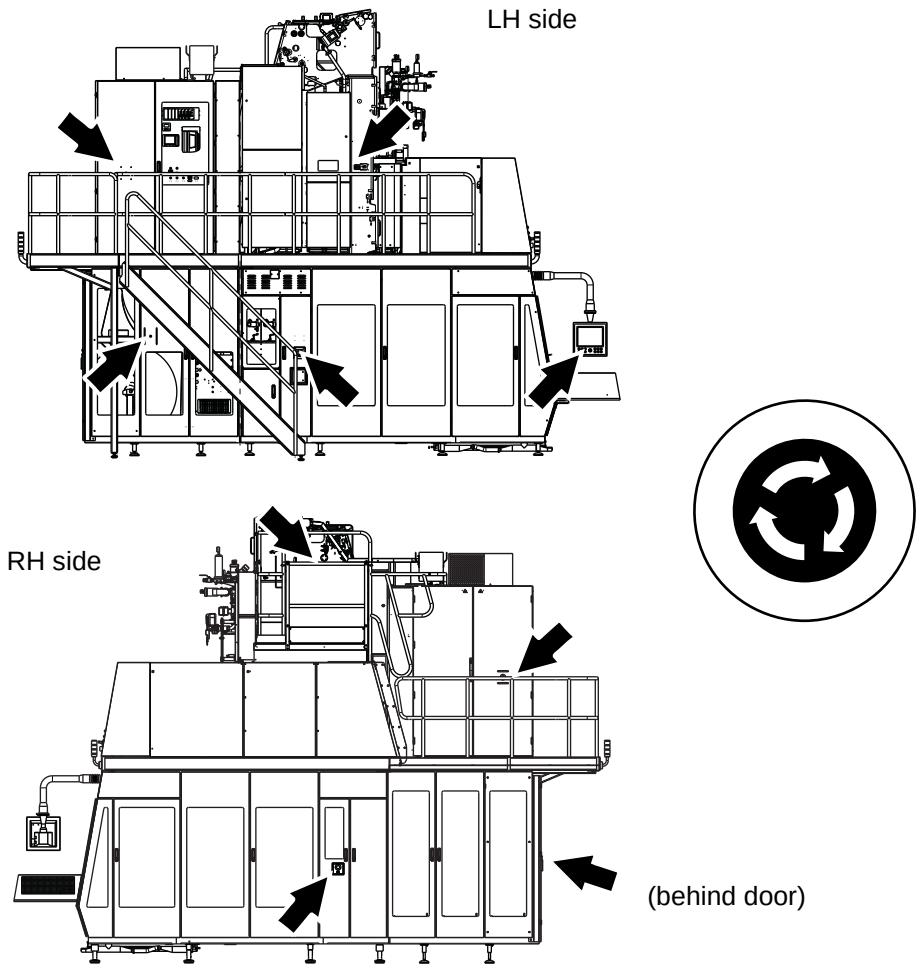

(Cont'd)

TechPub_2614345_0108 - 0801_3048237_01.fm

(Cont'd)

Machine Body Door Guards - Safety Expansion Relays F01K5030 and F01K5040

a) Identify the safety relays F01K5030 and F01K5040 in the electrical cabinet.

b) Make sure that all the doors at the machine body are closed and any alarms have been cleared by touching the alarm ACKNOWLEDGE button and by pressing the RESET button on the machine body. Check in the electrical cabinet that the safety outputs F01K5030 and F01K5040 are ON.

(Cont'd)

TechPub_2614345_0108 - 0801_3048237_01.fm

(Cont'd)

c) Open the first door and make sure that the safety relays are tripped (the LED switches off).

d) With the door still open, attempt to start the machine by pressing the PROGRAM UP button. Check that the machine does not start and that the safety relay remains tripped.

e) Close the door and press the RESET button on the TPOP panel to reset the safety system. Touch the alarm ACKNOWLEDGE button to clear any alarms on the TPOP.

f) Repeat items c) to e) for the other doors in the final folder unit and jaw system.

g) Close the doors and reset the alarm after the test by touching the alarm ACKNOWLEDGE button and by pressing the RESET button on machine body. Check in the electrical cabinet that the safety outputs F01K5030 and F01K5040 are ON.

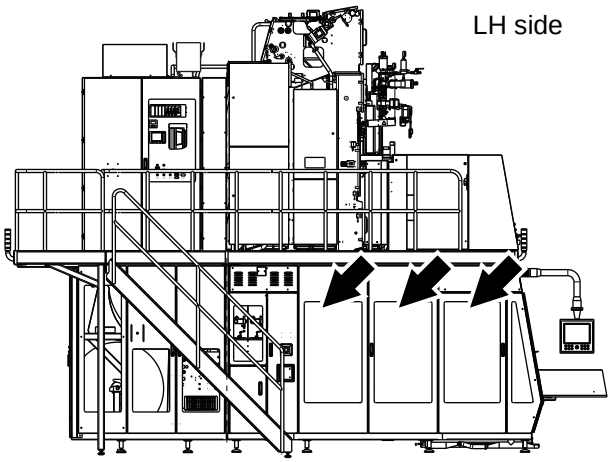

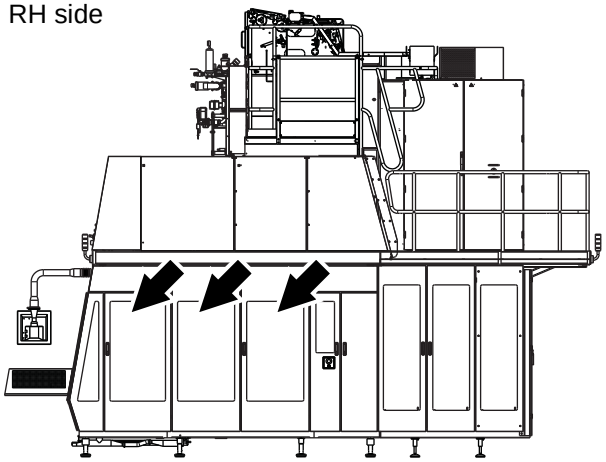

(Cont'd)

TechPub_2614345_0108 - 0801_3048237_01.fm

(Cont'd)

ASU Splicing Head Door Guard - Safety Expansion Relay F10K5050

a) Identify the safety relay F10K5050 in the electrical cabinet.

b) Make sure that all the doors in the ASU are closed and any alarms have been cleared by touching the alarm ACKNOWLEDGE button and by pressing the RESET button on the ASU door. Check in the electrical cabinet that the safety output F10K5050 is ON.

c) Open the first ASU door and make sure that the safety relay is tripped (the LED switches off).

d) With the door still open, attempt to start the machine by pressing the PROGRAM UP button. Check that the machine does not start and that the safety relay remains tripped.

e) Close the door and press the RESET button on the ASU door to reset the safety system. Touch the alarm ACKNOWLEDGE button to clear any alarms on the TPOP.

f) Repeat items b) to e) for the other ASU door.

g) Close the doors and reset the alarm after the test by touching the alarm ACKNOWLEDGE button and by pressing the RESET button on the ASU door. Check in the electrical cabinet that the safety output F10K5050 is ON.

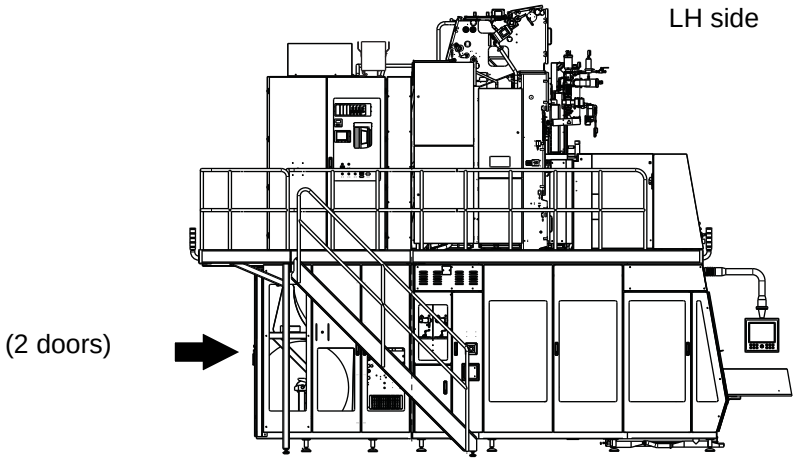

(Cont'd)

TechPub_2614345_0108 - 0801_3048237_01.fm

(Cont'd)

ASU Magazine Door Guards - Safety Relay F01K5010-Q0

a) Identify the safety relay F01K5010-Q0 in the electrical cabinet.

Note! Check the output Q0 of the safety relay F01K5010.

b) Make sure that all the side doors of the ASU module are closed and any alarms have been cleared by touching the alarm ACKNOWLEDGE button and by pressing the RESET button on the ASU door. Check in the electrical cabinet that the safety output F01K5010-Q0 is ON.

(Cont'd)

TechPub_2614345_0108 - 0801_3048237_01.fm

(Cont'd)

c) Open the first ASU side door and make sure that the safety relay is tripped (the LED switches OFF).

d) With the door still open, attempt to start the machine by pressing the PROGRAM UP button. Check that the machine does not start and that the safety relay remains tripped.

e) Close the door and press the RESET button on the ASU door to reset the safety system. Touch the alarm ACKNOWLEDGE button to clear any alarms on the TPOP.

f) Repeat items b) to e) for the other ASU door.

g) Close the doors and reset the alarm after the test by touching the alarm ACKNOWLEDGE button and by pressing the RESET button on the ASU door. Check in the electrical cabinet that the safety output F01K5010-Q0 is ON.

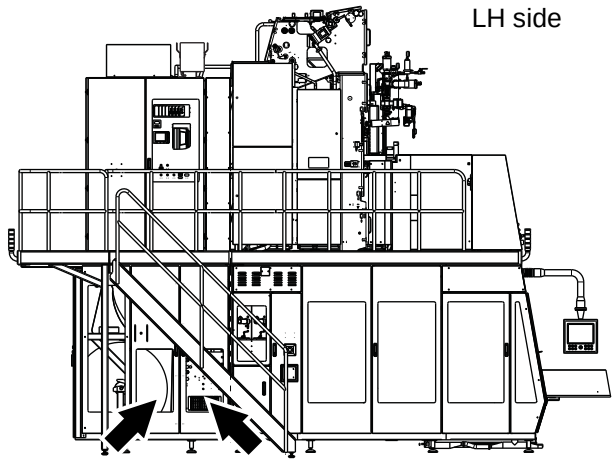

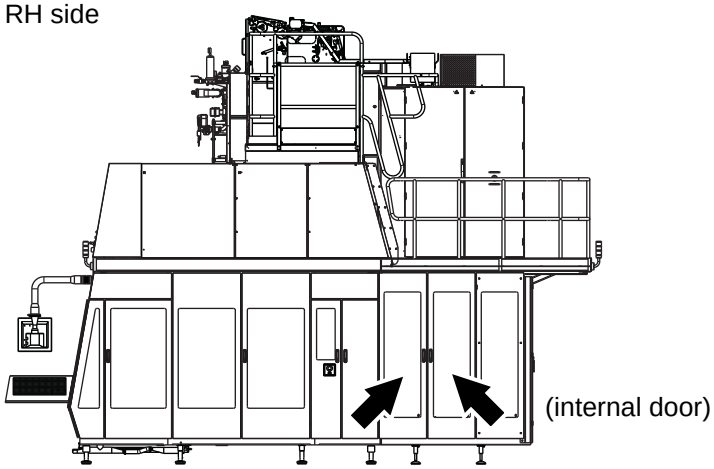

(Cont'd)

TechPub_2614345_0108 - 0801_3048237_01.fm

(Cont'd)

Superstructure Door Guards - Safety Expansion Relay F70K5060

a) Identify the safety relay F01K5060 in the electrical cabinet.

b) Make sure that all the top doors in the superstructure are closed and any alarms have been cleared by touching the alarm ACKNOWLEDGE button on the TPOP panel. Check in the electrical cabinet that the safety output F70K5060 is ON.

c) Open the first door in the aseptic chamber or drying chamber and make sure that the safety relay is tripped (the LED switches OFF).

d) With the door still open, attempt to start the machine by pressing the PROGRAM UP button. Check that the machine does not start and that the safety relay remains tripped.

e) Close the door and touch the alarm ACKNOWLEDGE button on the TPOP panel to reset the alarm.

f) Repeat items c) to e) for the other doors in the superstructure aseptic chamber and drying chamber.

g) Close the doors and reset the alarm after the test by touching the alarm ACKNOWLEDGE button on the TPOP. Check in the electrical cabinet that the safety output F01K5060 is ON.

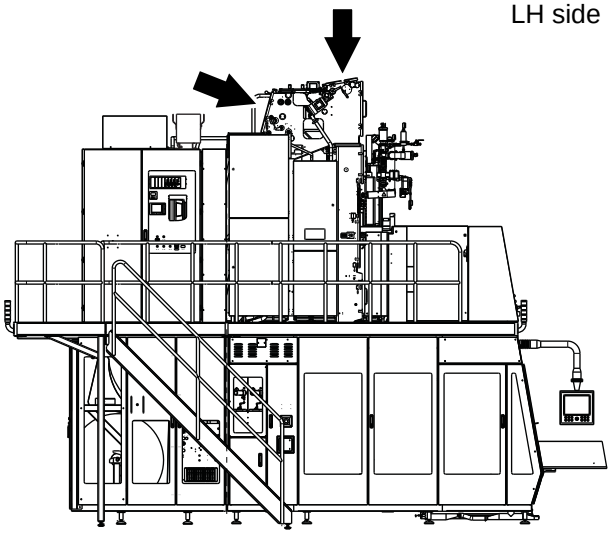

(Cont'd)

TechPub_2614345_0108 - 0801_3048237_01.fm

(Cont'd)

UV Lamp Door Guards - Safety Expansion Relay F70K5060

a) Identify the safety relay F01K5060 in the electrical cabinet.

b) Make sure that the UV lamp high voltage head is connected and any alarms have been cleared by touching the alarm ACKNOWLEDGE button on the TPOP panel. Check in the electrical cabinet that the safety output F70K5060 is ON.

c) Disconnect the high voltage head, see 1.11.1-2 Irradiation Kit - Overhaul, and make sure that the safety relay is tripped (the LED switches OFF).

d) With the high voltage head still disconnected, attempt to start the machine by pressing the PROGRAM UP button. Check that the machine does not start and that the safety relay remains tripped.

e) Fit back the high voltage head and touch the alarm ACKNOWLEDGE button on the TPOP panel to reset the alarm. Check in the electrical cabinet that the safety output F70K5060 is ON

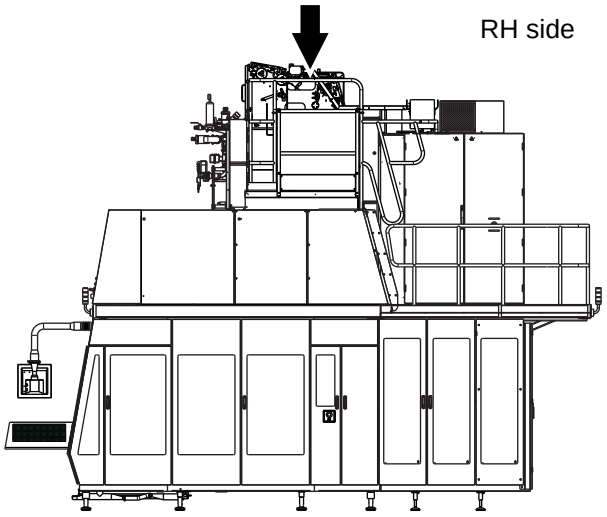

TechPub_2614345_0108 - 0801_3048237_01.fm

9.4-2 Safety System - Troubleshooting

Machine Status	Mains Power ON Air OFF Steam ON Water OFF
SPC Reference	2840934-0200

Note! The PLC only monitors the channel with constant +24V DC.

When the safety system alarm symbol (1) appears on the TPOP, this indicates that the PLC has received an input that all door safety switches and emergency stop buttons are in the OK condition, but that the safety system has not been reset.

Two types of fault may cause this condition, two channel faults and feedback faults, see the table on the following page to identify the fault type and the relevant actions to be taken.

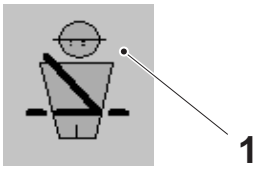

1 Safety system alarm symbol

(Cont'd)

TechPub_2614345_0108 - 0801_3048237_01.fm

(Cont'd)

Two Channel Fault		
Problem	**Description**	**Action**
The system will trip but it will not automatically reset when the input is OK again.	One of the channels (inputs) may have been temporarily interrupted but is now OK. The LED associated with the faulty input will flash as will the information output to the PLC.	Open and close both channels (for example by opening and closing a door in the affected circuit) and reset the alarm.
The system will trip and cannot be reset.	One or both channels are permanently off. The LED associated with the faulty input is OFF.	Repair the faulty circuit, open and close both channels (for example by opening and closing a door in the affected circuit) and reset the alarm.
Feedback Fault		
Problem	**Description**	**Action**
The system cannot be reset.	One of the feedback circuits has not been closed when the output has tripped. The LED associated with the faulty input (feedback circuit) is OFF and the information output to the PLC will be ON.	Repair the faulty circuit or contactor and reset the alarm.

TechPub_2614345_0108 - 0801_3048237_01.fm

9.4.1 Pluto Module

9.4.1-1 Pluto Module - Load Program

Machine Status	Mains Power ON Air OFF Steam ON Water OFF
Special Equipment	PC with Pluto Manager Pluto Communication Cable TP No. 90459-6033
SPC Reference	2840934-0200

Note! Pluto Manager software version 1.25 or above is needed to load the program. A registration code is required to run the Pluto Manager software, when prompted for a registration code type MUTE in the dialogue box.

(Cont'd)

TechPub_2614345_0108 - 0801_3048237_01.fm

(Cont'd)

a) Connect the PC (1) to the Pluto module (2).

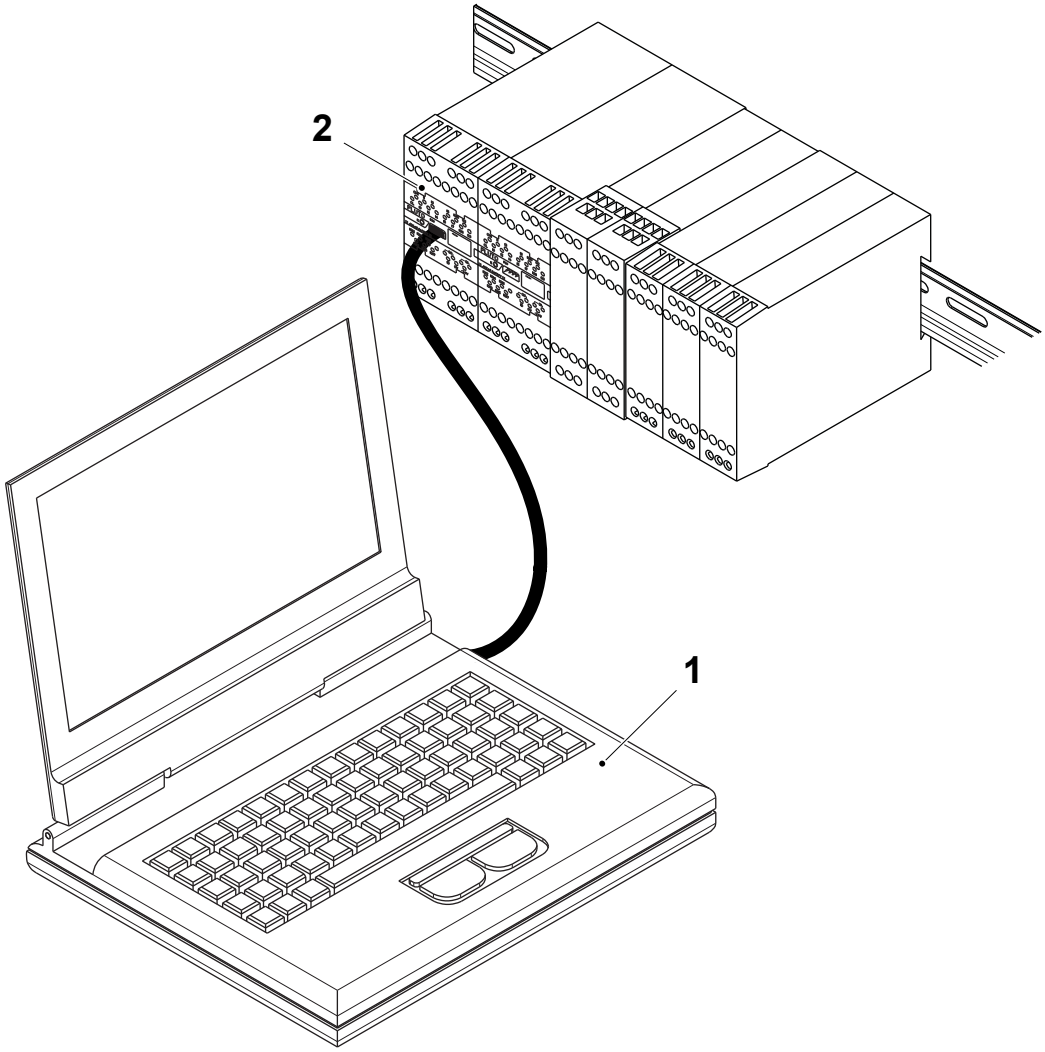

1 PC
2 Pluto module

(Cont'd)

TechPub_2614345_0108 - 0801_3048237_01.fm

(Cont'd)

b) Open the Pluto Manager by double clicking the PLUTO MANAGER icon (3) on the PC desktop.

c) In the Pluto Manager window, select PROJECTS (4) and then select OPEN (5).

Note! Make sure that the files *.spe and *.hps are available and stored in the same directory before to start the download procedure.

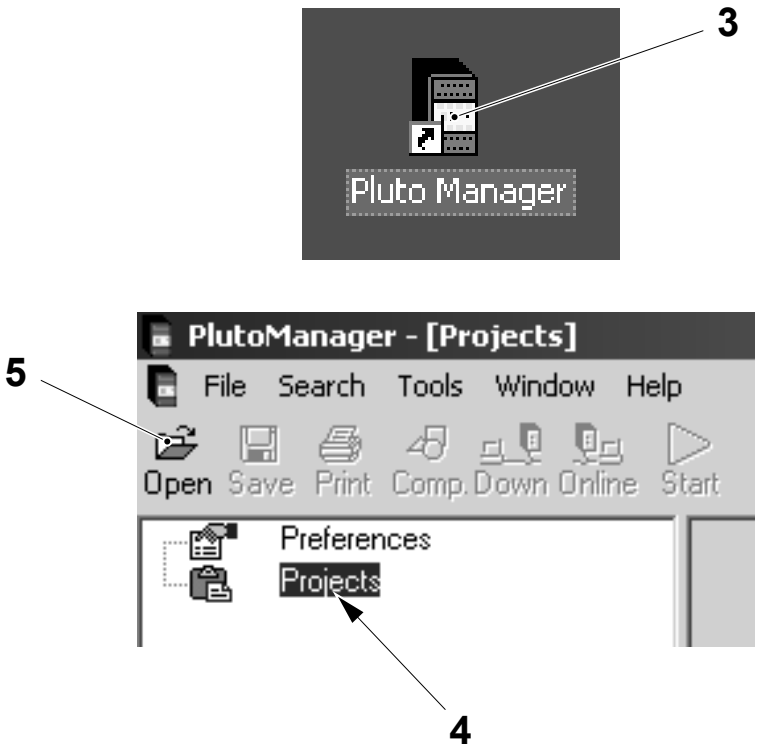

3 Pluto manager icon
4 Projects
5 Open

(Cont'd)

TechPub_2614345_0108 - 0801_3048237_01.fm

(Cont'd)

Note! The project number shown in the illustration is an example.

d) Select the required `PROJECT FILE*.spe` (6) and then select `OPEN` (7).

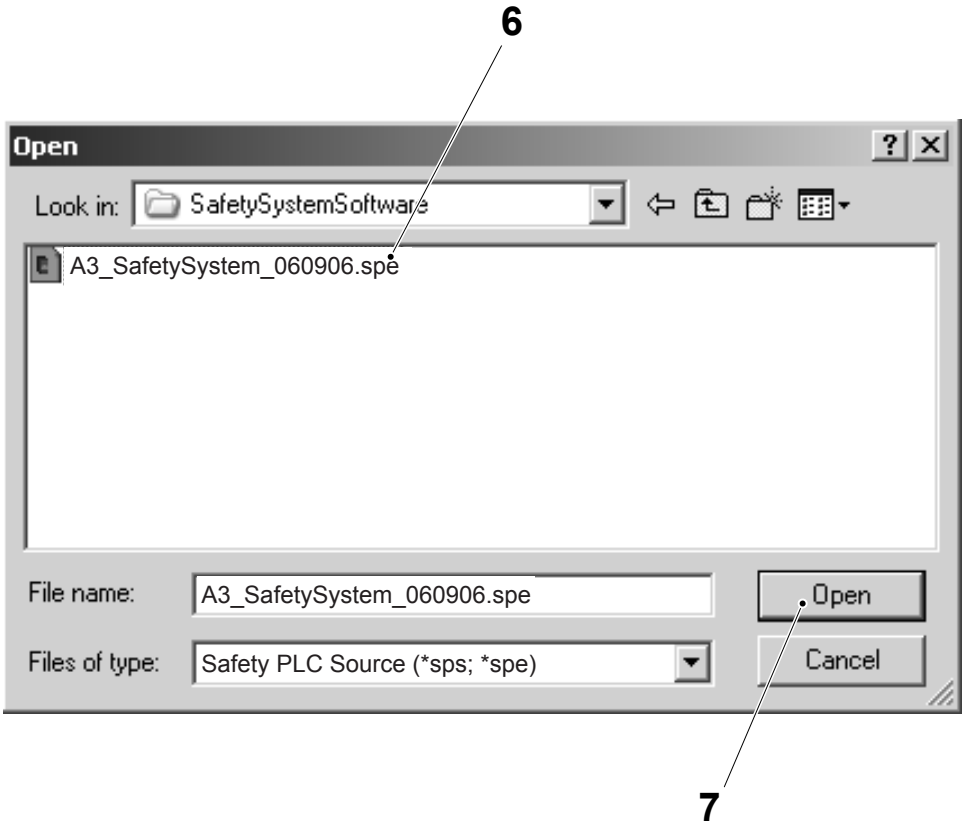

6 Project
7 Open

(Cont'd)

TechPub_2614345_0108 - 0801_3048237_01.fm

(Cont'd)

e) Select the DOWN button (8).

f) If the Pluto module is not assigned with a password, a dialogue window appears asking for a new password. Enter the password **abc80** in the PASSWORD field (9).

g) Repeat the password in the CONFIRM PASSWORD field (10) and then select the OK button (11).

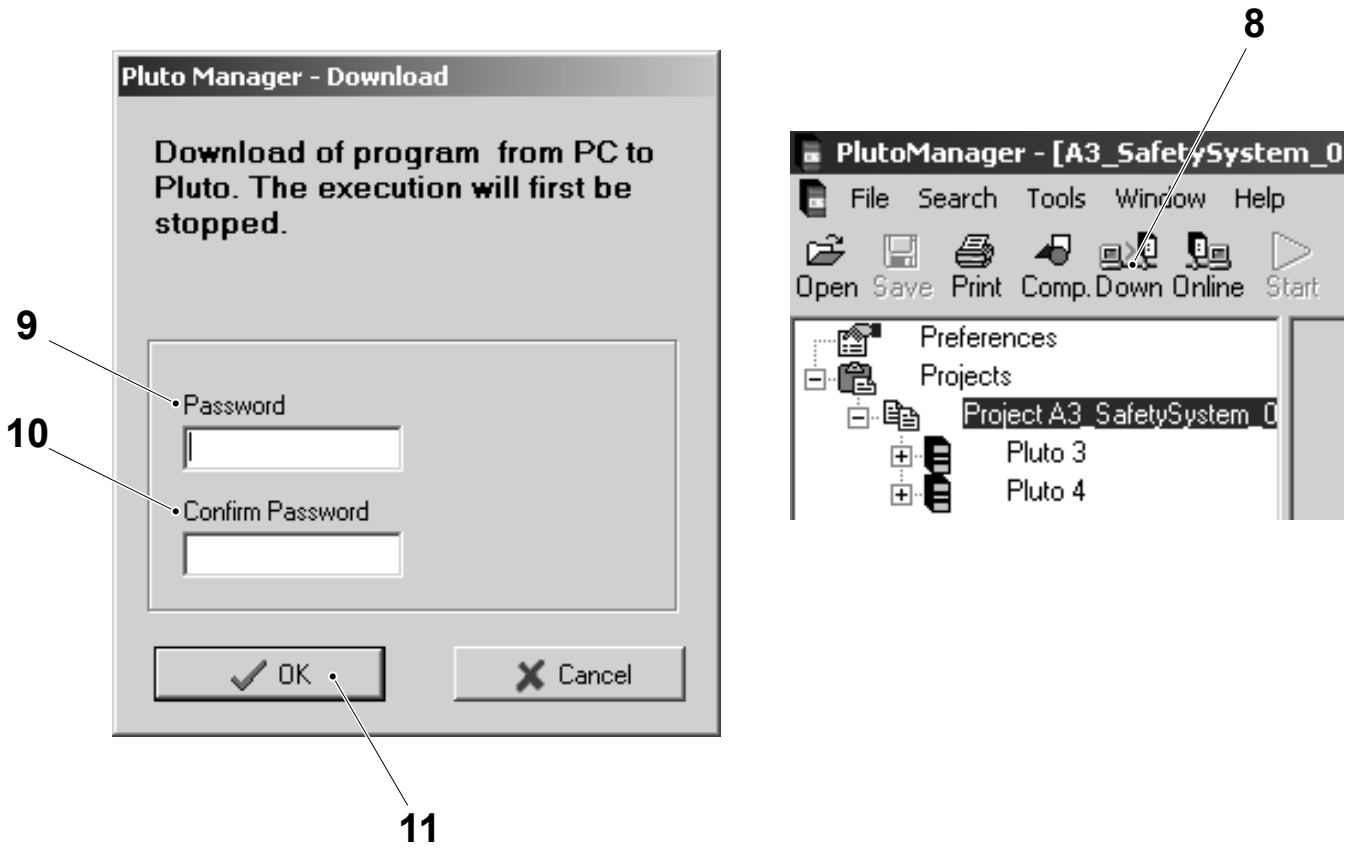

8 Down button
9 Password field
10 Confirm Password field
11 OK button

(Cont'd)

TechPub_2614345_0108 - 0801_3048237_01.fm

(Cont'd)

h) If the Pluto module is assigned with a password, a dialogue box appears asking for the password.

i) Type the password **abc80** in the PASSWORD field (12).

j) Select the OK button (13).

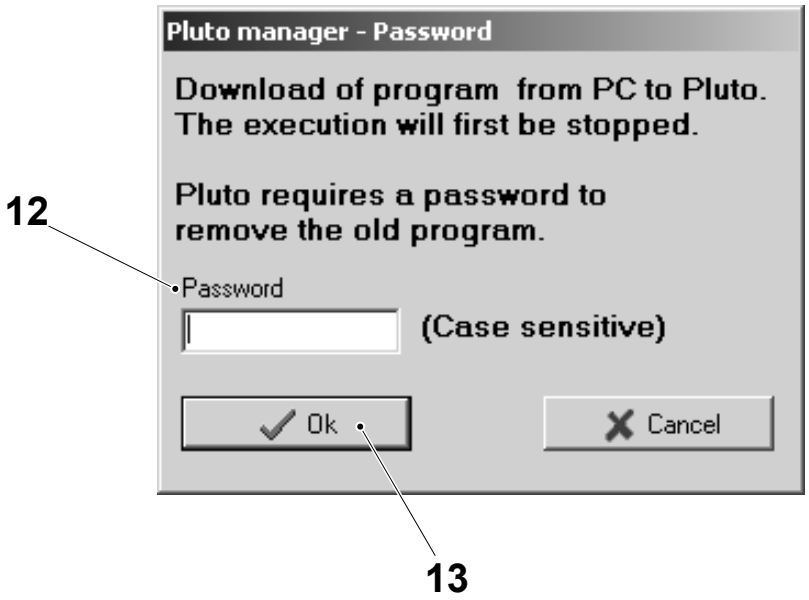

12 Password field
13 OK button

(Cont'd)

TechPub_2614345_0108 - 0801_3048237_01.fm

(Cont'd)

Note! If the fault message COULDN'T ESTABLISH CONNECTION appears there is no connection with the Pluto module. Check the communication cable is correctly connected.

Note! If the fault message Connection time out appears the communication has been interrupted. Check the communication cable is correctly connected.

k) When the download is complete the dialogue box appears, select the YES button (14).

Note! A warning is given if the program project is for several Pluto modules and all modules are not connected to the bus.

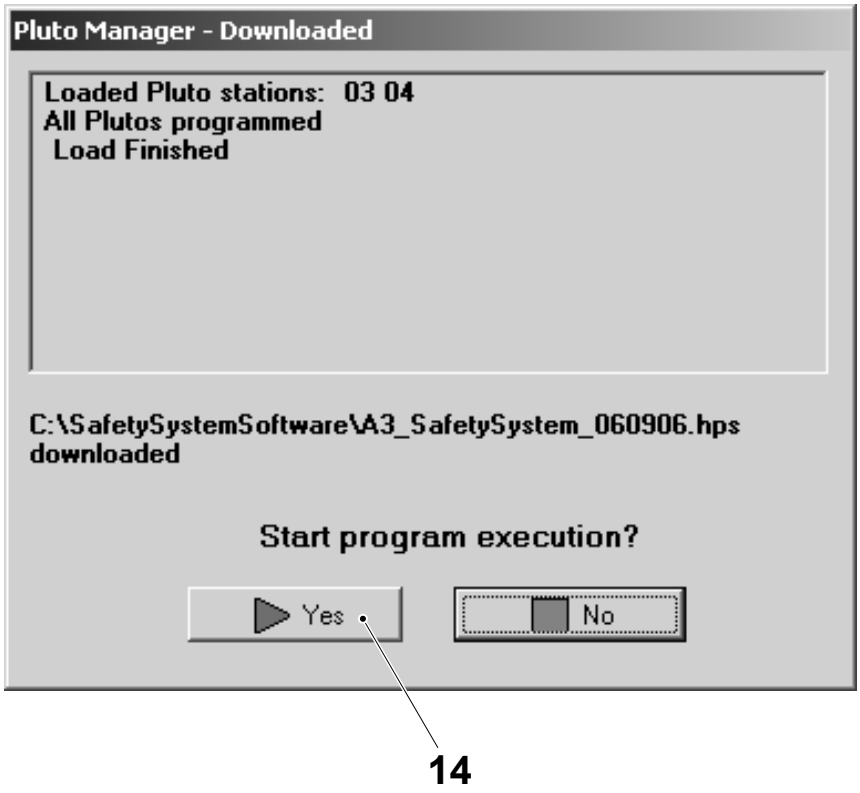

14 Yes button

TechPub_2614345_0108 - 0801_3048237_01.fm

9.4.1-2 Pluto Module - LED Description

Machine Status	Mains Power ON Air OFF Steam ON Water OFF
Special Equipment	PC with Pluto Manager Pluto Communication Cable TP No. 90459-6033
SPC Reference	2840934-0200

Pluto Module F01K5000

LED	Description
I0	Emergency stops input chain
I1	FFU crank on position chain 1
I2	FFU crank on position chain 2
I3	UV lamp lid input chain
I4	Top doors feedback
I5	Pre-applicator emergency stops feedback
I6	Emergency stops feedback
I7	Final folder and jaw system feedback

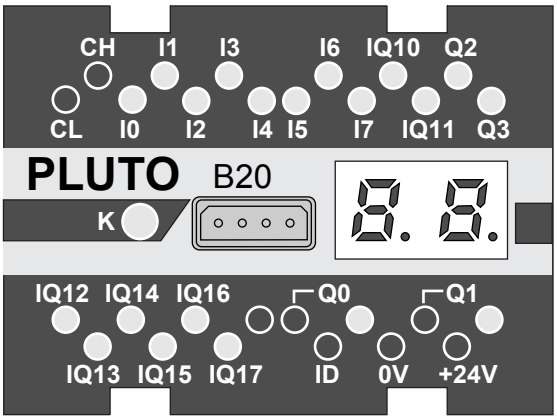

(Cont'd)

TechPub_2614345_0108 - 0801_3048237_01.fm

(Cont'd)

LED	Description
Q0	Safety line top doors
Q1	Safety line pre-applicator service
Q2	Safety line emergency stops
Q3	Safety line jaw system and final folder
IQ10	Output pulse to safety circuits
IQ11	Emergency stop input chain
IQ12	Jaw system and final folder reset
IQ13	Jaw system and final folder input chain
IQ14	ASU magazine doors input chain
IQ15	ASU splice head doors input chain
IQ16	Not used
IQ17	Top doors input chain
ID	Identifier on the CAN bus
0V	0V
+24V	+24V DC (L12)

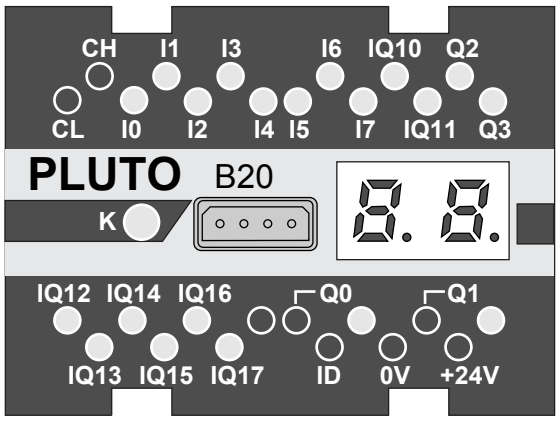

(Cont'd)

TechPub_2614345_0108 - 0801_3048237_01.fm

(Cont'd)

Pluto Module F01K5010

LED	Description
I0	ASU reset
I1	PLC reset
I2	Pre-applicator service input chain
I3	ASU brake feedback
I4	ASU magazine feedback
I5	ASU splice head feedback
I6	Pre-applicator doors feedback
I7	Not used

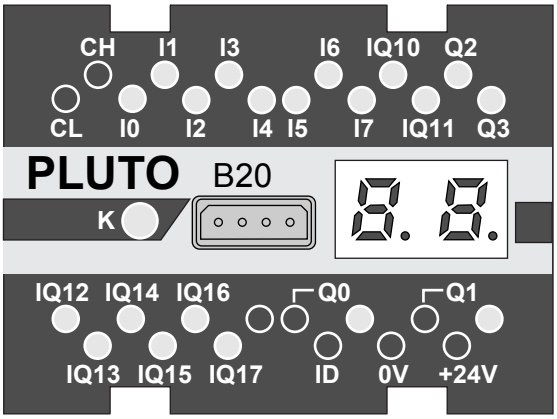

(Cont'd)

TechPub_2614345_0108 - 0801_3048237_01.fm

(Cont'd)

LED	Description
Q0	Safety line ASU magazine
Q1	Safety line ASU splice head
Q2	Safety line pre-applicator
Q3	ASU safety brake
IQ10	Output pulse to safety circuits
IQ11	Pre-applicator doors input chain
IQ12	Service release ASU brakes
IQ13	Not used
IQ14	Emergency stop info signal
IQ15	Not used
IQ16	Safety system OK bit 0
IQ17	Safety system OK bit 1
ID	Identifier on the CAN bus
0V	0V
+24V	+24V DC (L12)

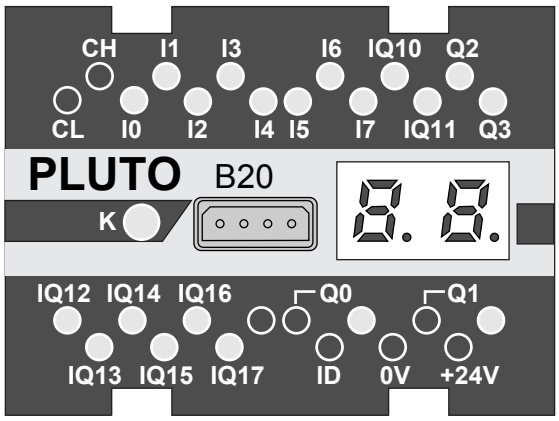

TechPub_2614345_0108 - 0801_3048237_01.fm

9.4.1-3 Pluto Module - Configure in an Existing Application

Machine Status	Mains Power ON Air OFF Steam ON Water OFF
Special Equipment	PC with Pluto Manager Pluto Communication Cable TP No. 90459-6033
SPC Reference	2840934-0200

The safety system comprises of two Pluto modules which are loaded with a common program. The modules check each other to confirm that they contain exactly the same version of the program. With a program mismatch the modules do not accept each others I/O data.

(Cont'd)

TechPub_2614345_0108 - 0801_3048237_01.fm

(Cont'd)

If a new Pluto module belonging to a program project is connected to the bus that is already connected to one or more Pluto modules, two situations may arise depending upon the status of the new Pluto module:

- The new Pluto does not contain a PLC program (error code E20) but it is fitted with the correct IDFIX circuit. When this is the case the new Pluto can be programmed using its self programming function. To do this proceed as follows:
  - Press the K button (1) on the Pluto front panel for two seconds. The display flashes L indicating that the system is ready for self programming.
  - Press the K button (1) again.
  - The program load is started. This is indicated by a steady ‘L’ on the display.

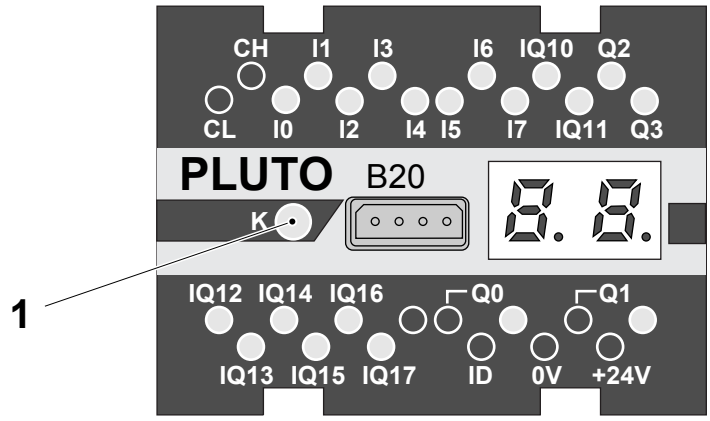

1 K button

(Cont'd)

TechPub_2614345_0108 - 0801_3048237_01.fm

(Cont'd)

- The new Pluto is fitted with correct ID-fix circuit but loaded with wrong version of the program.

  When this is the situation, all Pluto modules of the project will display the error code E27 indicating that the new Pluto module with the incorrect software has been detected. The modules will run the PLC program, but will not accept I/O data from the new Pluto module.

  To correct this situation, download the correct version of the program to any of the modules in the project, all of them will be updated with the same version. To download the program, see 9.4.1-1 Pluto Module - Load Program.

TechPub_2614345_0108 - 0801_3048237_01.fm

9.4.1-4 Pluto Module - Set ID-FIX Address after Replacing an ID-FIX

Machine Status	Mains Power ON Air OFF Steam ON Water OFF
Special Equipment	PC with Pluto Manager Pluto Communication Cable TP No. 90459-6033
SPC Reference	2840934-0200

To enable the PLC to identify a Pluto module, an ID code must be given to the module. This is done by connecting an ID-FIX (1), between the ID terminal (2) and the 0V terminal (3) at the front of the Pluto module (4). The unique code associated with the ID-FIX must then be entered in PLC program.

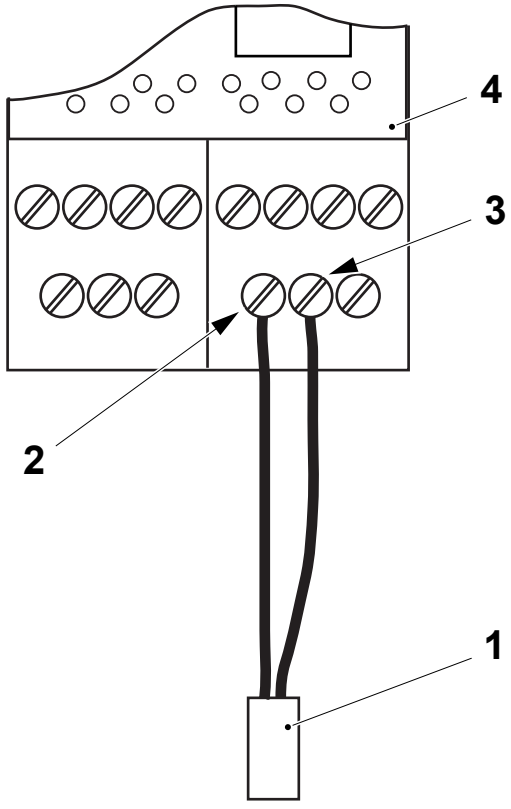

1 ID-FIX
2 ID terminal
3 0V terminal
4 Pluto module

(Cont'd)

TechPub_2614345_0108 - 0801_3048237_01.fm

(Cont'd)

a) Connect the PC (1) to the Pluto module (2).

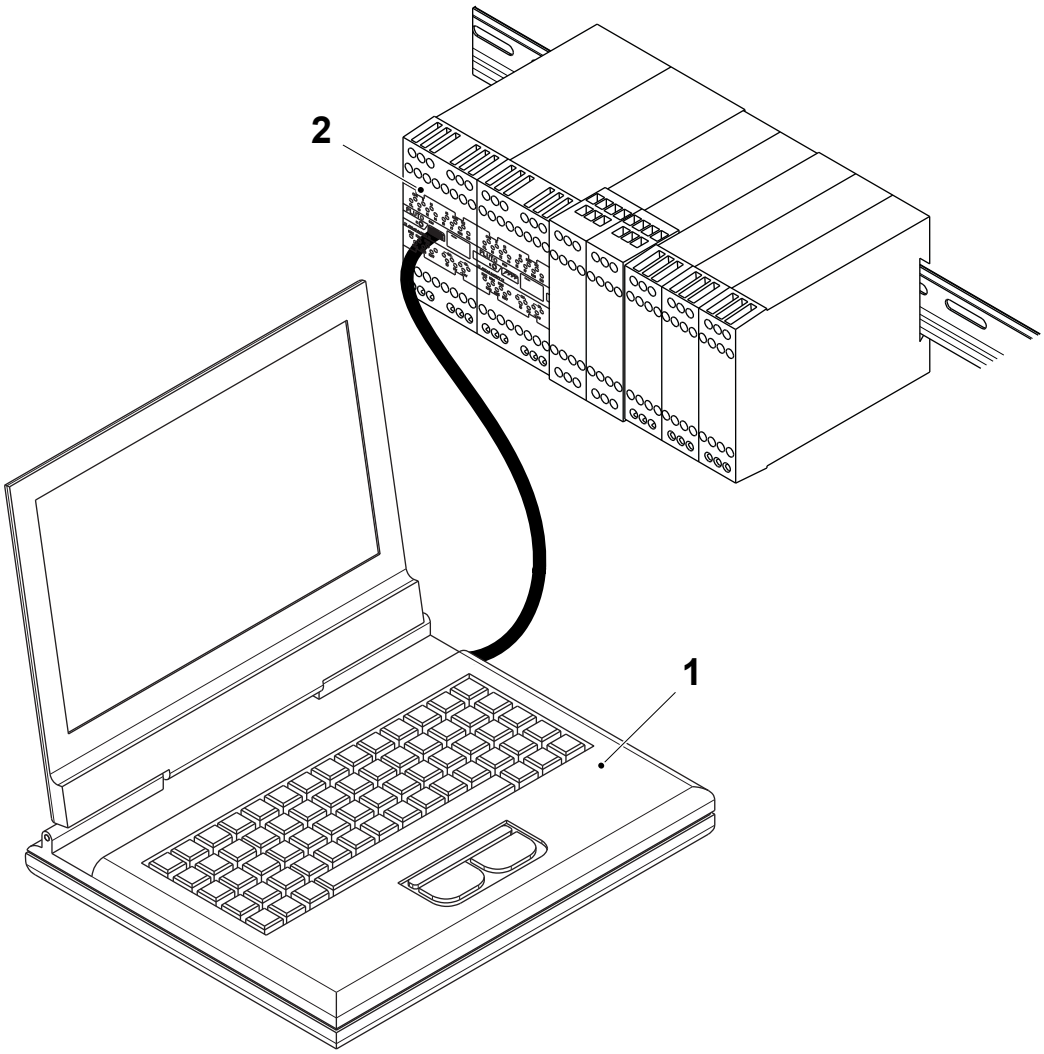

1 PC
2 Pluto module

(Cont'd)

TechPub_2614345_0108 - 0801_3048237_01.fm

(Cont'd)

b) Open the Pluto Manager by double clicking the PLUTO MANAGER icon (3) on the PC desktop.

c) In the Pluto Manager window, select PROJECTS (4) and then select OPEN (5).

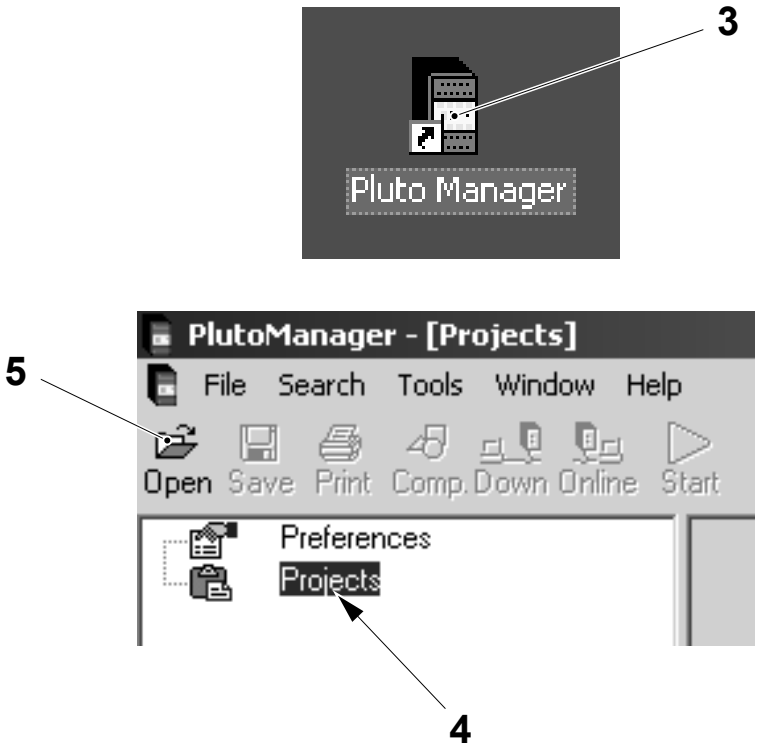

3 Pluto manager icon
4 Projects
5 Open

(Cont'd)

TechPub_2614345_0108 - 0801_3048237_01.fm

(Cont'd)

Note! The project number shown in the illustration is an example.

d) Select the required PROJECT (6) and then select OPEN (7).

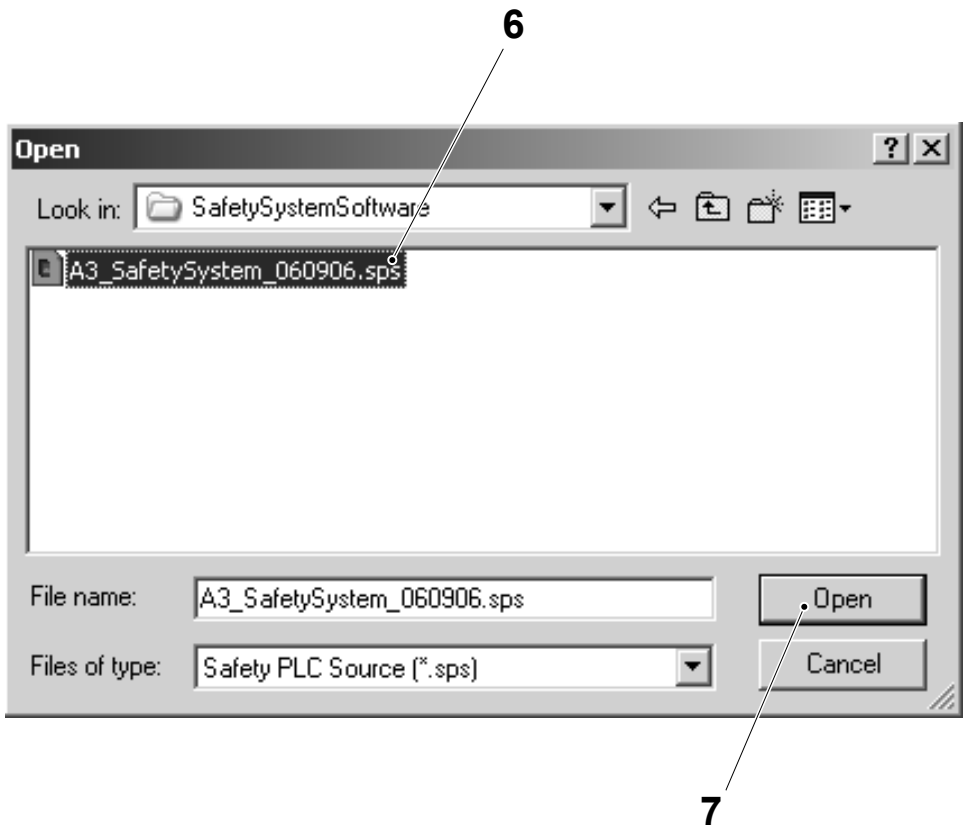

6 Project
7 Open

(Cont'd)

TechPub_2614345_0108 - 0801_3048237_01.fm

(Cont'd)

e) In the window that opens, click on the PLUTO 14 icon (8).

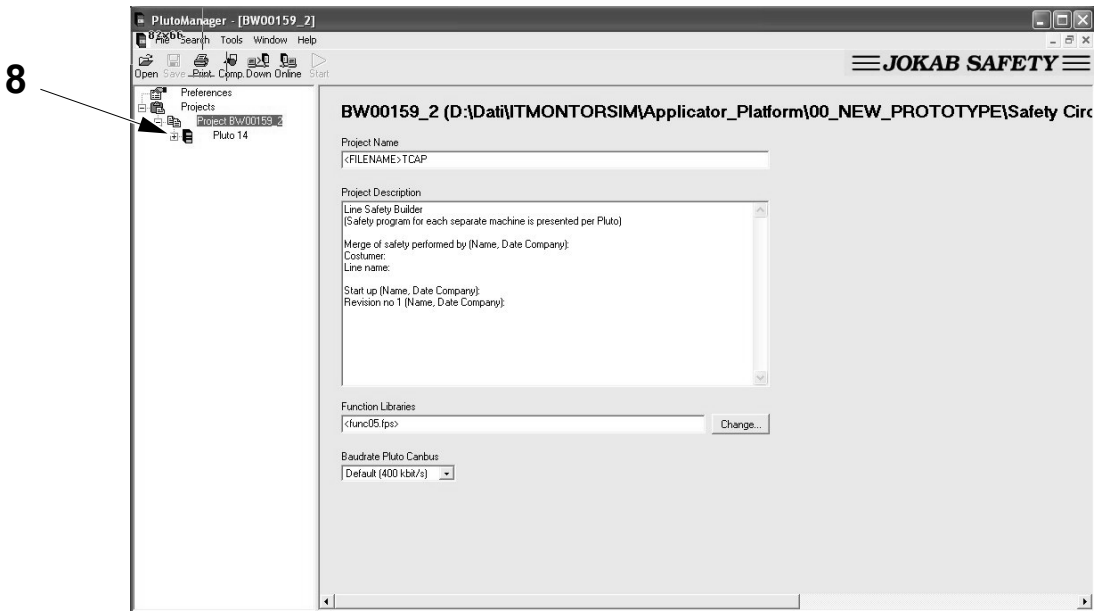

8 PLUTO 14

TechPub_2614345_0108 - 0801_3048237_01.fm

(Cont'd)

(Cont'd)

f) The IDFIX number (14000009F000) appears in the `IDFIX` window (9).

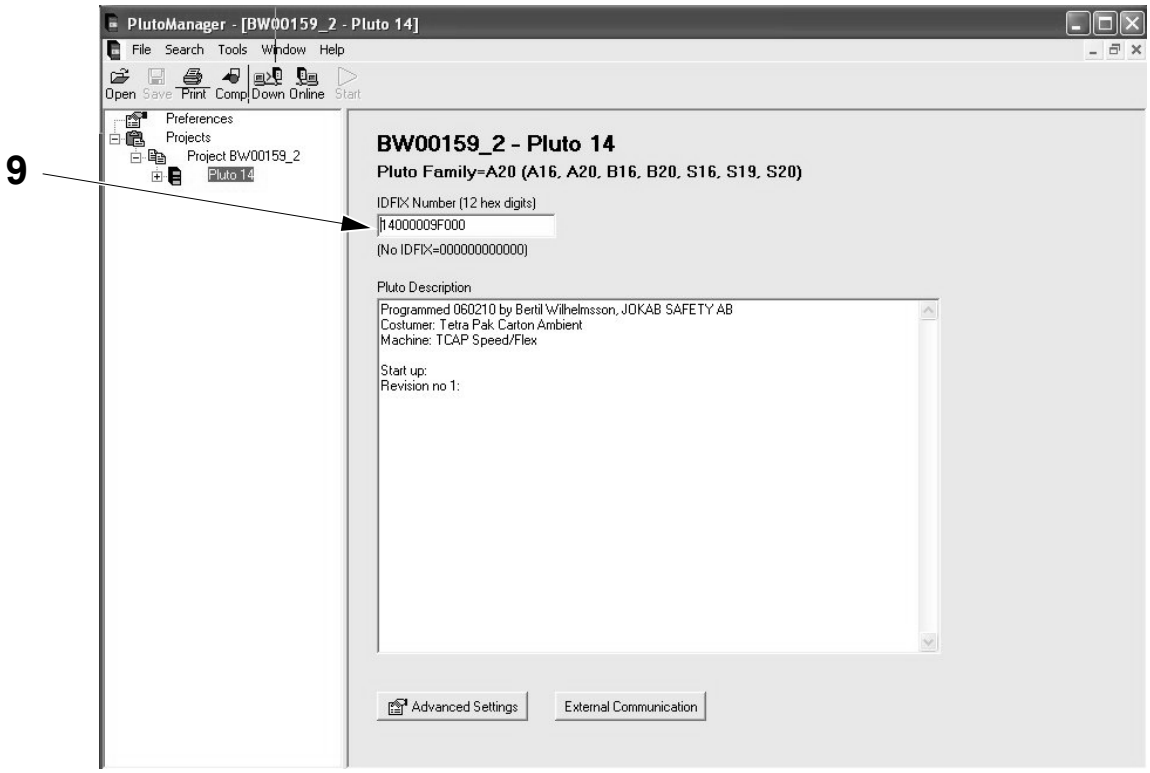

9 IDFIX window

(Cont'd)

TechPub_2614345_0108 - 0801_3048237_01.fm

(Cont'd)

g) Select the TOOLS menu (10) and then select WRITE IDFIX (11).

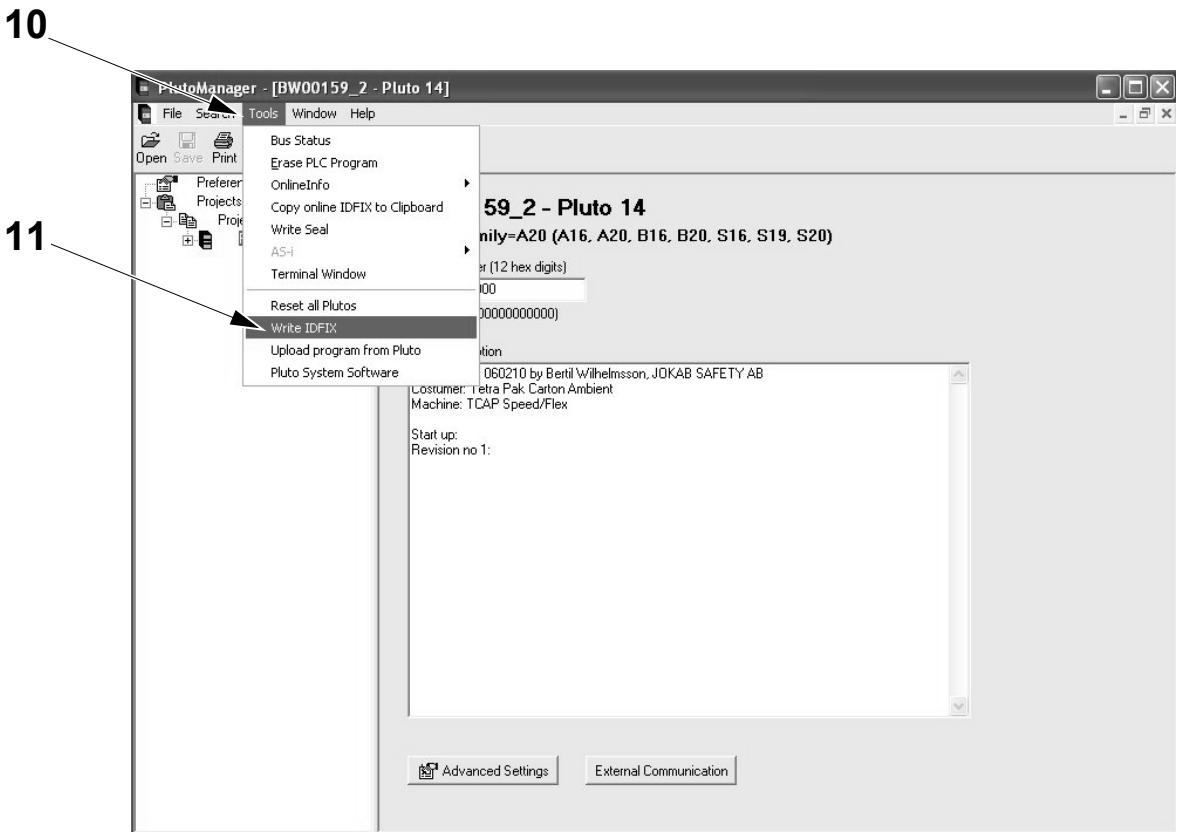

10 Tools menu
11 Write IDFIX

(Cont'd)

TechPub_2614345_0108 - 0801_3048237_01.fm

(Cont'd)

CAUTION
Risk of damage to the equipment.
Do not select the ERASE PROTECT ID check box (12). Doing so will prevent any further IDFIX changes being made. Do not press the SUGGEST UNIQUE ID button (13).

h) Write the IDFIX code, displayed in the IDFIX window (9), in the ID NUMBER field (14) and select WRITE ID CIRCUIT (15).

i) Select CLOSE (16).

Note! The ID-FIX code for the Pluto module is shown below.

Unit	ID number
09F000	14000009F000

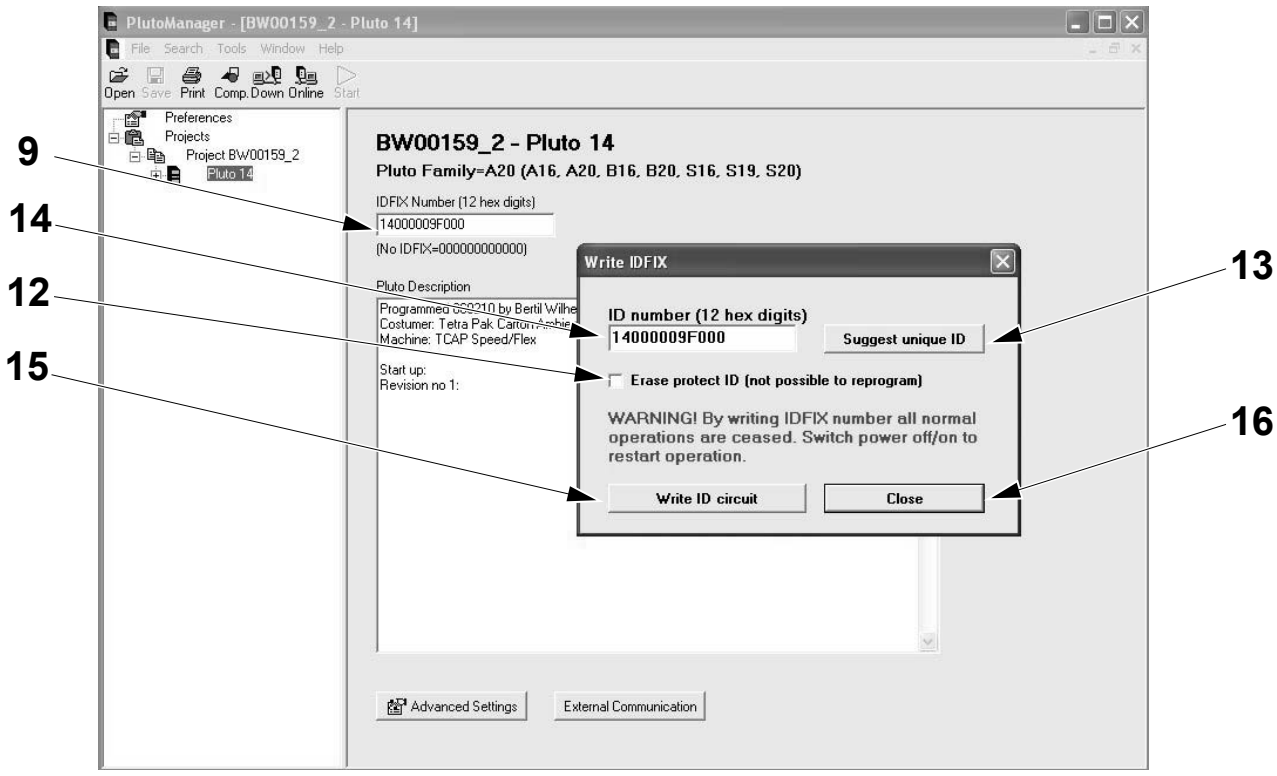

9 IDFIX number
12 ERASE PROTECT ID
13 SUGGEST UNIQUE ID
14 ID NUMBER
15 WRITE ID CIRCUIT
16 CLOSE

TechPub_2614345_0108 - 0801_3048237_01.fm

9.5 Power Supply

SPC Reference	2840947-0200

9.5.1 Frequency Converter

9.5.1-1 Frequency Converter - Change Parameters

Machine Status	Mains Power ON Air OFF Steam ON Water OFF
SPC Reference	2840943-0100

The frequency converter parameter sets are stored in the program loaded in the DeviceNet scanner module. Each time power is applied to a frequency converter and communication is established with the DeviceNet scanner module, the parameter set is written into the frequency converter from the DeviceNet scanner module.

As a consequence, changes to the parameter set should be made via the DeviceNet scanner program. It is not recommended to make manual changes to the parameter set directly on the frequency converter, the following procedure should only be used in cases where the DeviceNet scanner program is not available.

(Cont'd)

TechPub_2614345_0108 - 0801_3048238_01.fm

(Cont'd)

Note! The numbering in the illustration below may not correspond to the location in the electrical cabinet. Check the reference designation in the label above the frequency converters to locate a specific frequency converter.

Frequency Converter	Function
T10T0160 (1)	Drive, paper loop, ASU
T10T0170 (2)	Drive, paper store, ASU magazine
T10T0180 (3)	Drive, strip bobbin
U70T0310 (4)	Drive, feed packaging material (column)
T50T0260 (5)	Drive, external conveyor
U70T0320 (6)	ICU pump
U30T0220 (7)	Hydrogen peroxide pump
T50T0090 (8)	Belt brake
U70T0300 (9)	Sterile air compressor

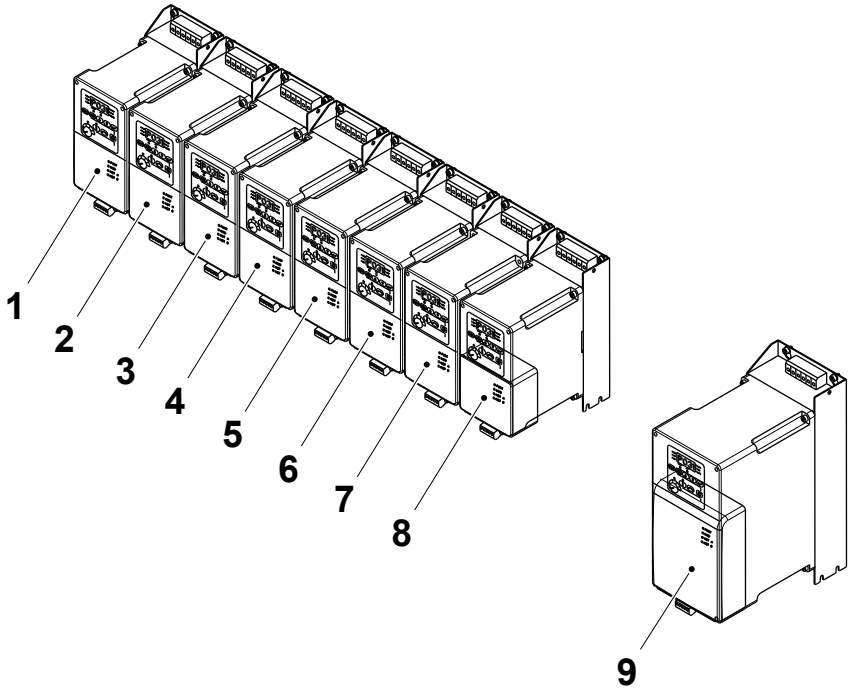

1 Frequency converter ASU loop
2 Frequency converter ASU magazine
3 Frequency converter strip bobbin
4 Frequency converter drive roller
5 Frequency converter external conveyor
6 Frequency converter ICU
7 Frequency converter hydrogen peroxide pump
8 Frequency converter belt brake
9 Frequency converter compressor

(Cont'd)

TechPub_2614345_0108 - 0801_3048238_01.fm

(Cont'd)

Note! Before setting the converter, make sure that the SNK/SRC switch is set to the SRC position.

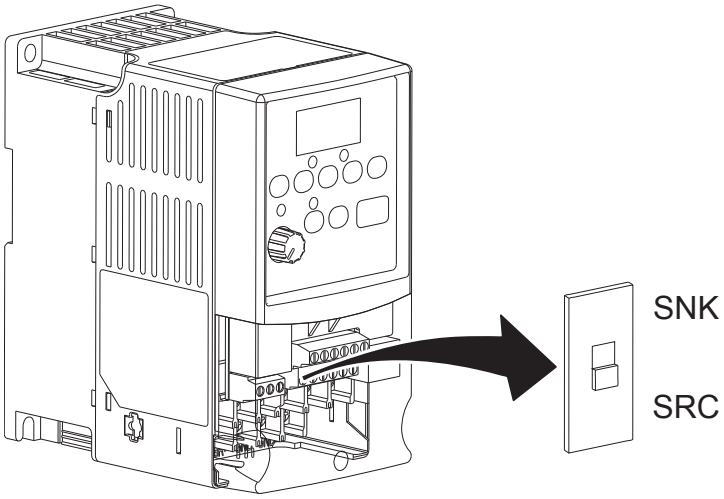

(Cont'd)

TechPub_2614345_0108 - 0801_3048238_01.fm

(Cont'd)

a) Press the ESC button (1) twice. The letter d, P, or A flashes.

b) Press the UP or DOWN button (2) or (3) to scroll through the group menu (d, P or A).

c) Press the ENTER button (4) or the SEL button (5) to enter a group. The digit on the right of the 3 digit parameter, in the example below 031, flashes.

d) Press the UP or DOWN button (2) or (3) to scroll through the parameters that are in the group.

e) Press the ENTER button (4) or the SEL button (5) to view the value of a parameter. To return to the parameter number without editing, press the ESC button (1).

f) To edit a parameter value, press the ENTER button (4) or the SEL button (5) to enter the program mode. The digit on the right flashes and the Program LED (6) turns red when the value can be edited.

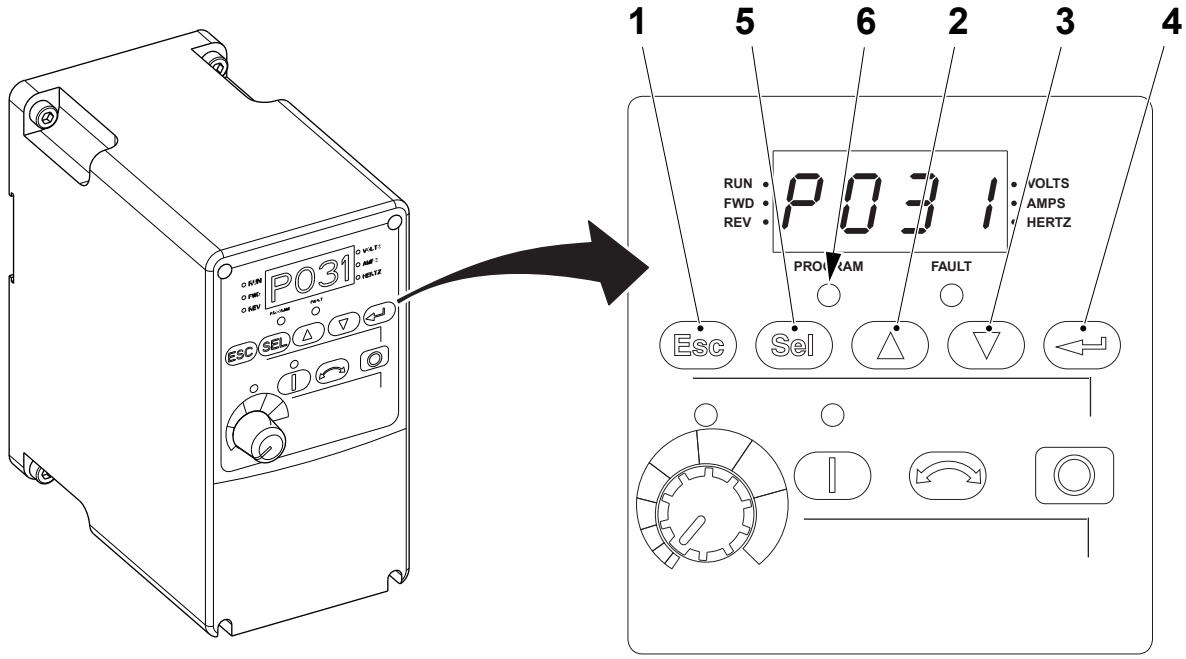

1 ESC button
2 UP button
3 DOWN button
4 ENTER button
5 SEL button
6 Program LED

TechPub_2614345_0108 - 0801_3048238_01.fm

(Cont'd)

(Cont'd)

g) Press the UP or the DOWN button (2) or (3) to change the parameter value. Press the SEL (5) button to move from digit to digit or from bit to bit. When a digit or bit flashes, it can be changed.

h) Press either the:
   - ESC button (1) to cancel a change. The digit or bit stops flashing, the previous is restored and the Program LED turns OFF
   - the ENTER button (4) to save a change. The digit or bit stops flashing and the Program LED turns OFF.

i) Press the ESC button (1) to return to the parameter list.

j) Continue to press ESC button (1) to leave the programming menu. When pressing the ESC button (1) does not change the display, d001 (output frequency) is displayed.

k) Press the ENTER button (4) or the SEL button (5) to enter the group menu.

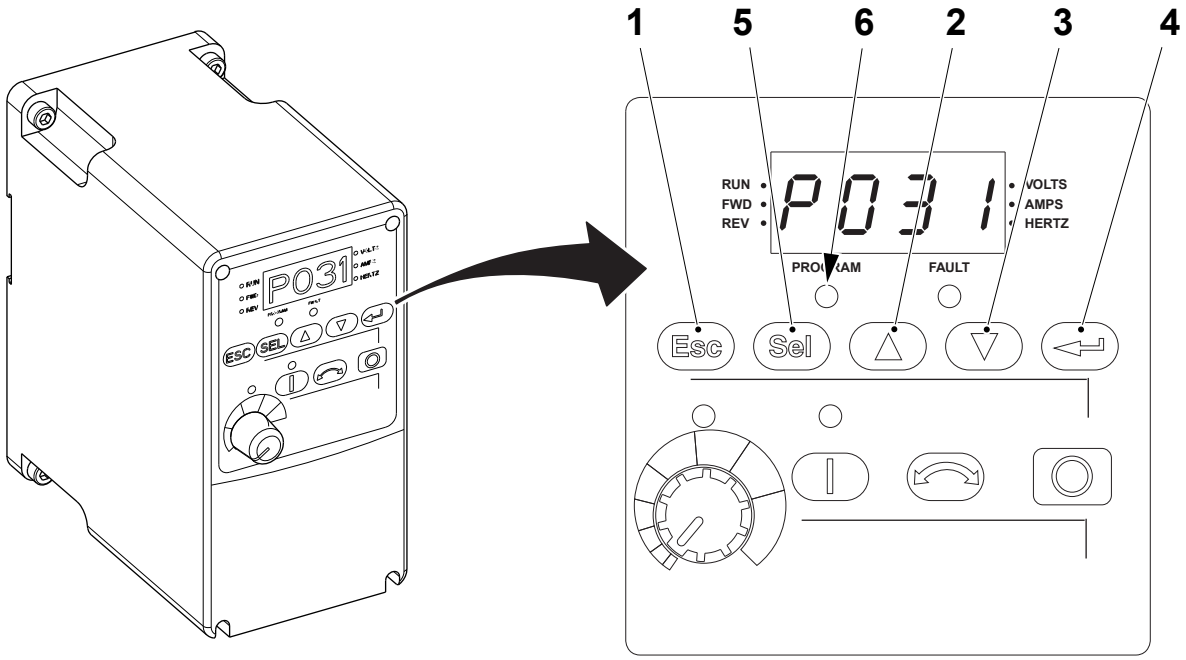

1 ESC button
2 UP button
3 DOWN button
4 ENTER button
5 SEL button
6 Program LED

(Cont'd)

TechPub_2614345_0108 - 0801_3048238_01.fm

(Cont'd)

Customised Inverter Values

Note! For parameters not shown in the table, choose the default value. See the “Rockwell” manual for more details.

Par.	Description	Unit	Default	T10T0160 ASU Loop	T10T0170 ASU Magazine	T10T0180 Strip Bobbin	U70T0310 Drive Roller	T50T0260 Ext.l Conv.	U70T0320 ICU	T50T0090 Belt brake	U30T0220 Perox. Pump	U70T0300 Compressor
P031	Motor NP Volts	V	230*	230	230	230	230	230	400	400	230	400
P032	Motor NP Hertz	Hz	60	50	50	50	50	50	50	87	50	50
P033	Motor OL Current	A	2.3**	2.7	1.4	0.7	2.0	2.4	6.0	2.0	3.0	16
P034	Minimum Freq	Hz	0.0									
P035	Maximum Freq	Hz	60	100	100	100	100	100	60	100	80	60
P036	Start Source		0	2	5	5	5	5	5	5	5	5
P037	Stop Mode		0	4	4	4	4	4	4	4	4	4
P038	Speed Reference		0	5	5	5	5	5	5	5	5	5
P039	Accel Time 1	Sec	10.0	1.0	0.5	0.5	0.0	3.0	3.0	3.0	1.0	5.0
P040	Decel Time 1	Sec	10.0	0.1	0.5	0.1	0.1	3.0	3.0	3.0	1.0	5.0
P041	Reset To Defaults		0									
P125	Torque Perf Mode		1			0	0	0	0	0	0	0

* Default value is 460V for U70T0320, G016 and G017.

** Default values are:

- 4.5 A for U70T0310 and T50T0260
- 4.0 A for U70T0320
- 8.7 A for U70T0330
- 18.0 A for U30T0300

TechPub_2614345_0108 - 0801_3048238_01.fm

9.5.1-2 Frequency Converters - Error Codes

Machine Status	Mains Power ON Air OFF Steam ON Water OFF
SPC Reference	2840943-0100

To clear a fault, press the Stop key, cycle power or set A100 (Fault clear) to 1 or 2.

No.	Fault	Default
F2	Auxiliary Input*	Check remote wiring.
F3	Power Loss	Monitor the incoming AC line for low voltage or line power interruption.
F4	UnderVoltage*	Monitor the incoming AC line for low voltage or line power interruption.
F5	OverVoltage*	Monitor the AC line for high voltage or transient conditions. Bus overvoltage can also be caused by motor regeneration. Extend the decel time or install dynamic brake option.
F6	Motor Stalled*	Increase [Accel Time x] or reduce load so drive output current does not exceed the current set by parameter A089 [Current Limit].
F7	Motor Overload*	An excessive motor load exists. Reduce load so drive output current does not exceed the current set by parameter P033 [Motor OL Current].
F8	Heatsink OvrTmp*	Check for blocked or dirty heat sink fins. Verify that ambient temperature has not exceeded 40ºC (140ºF) for IP 30/NEMA 1/UL Type 1 installations or 50ºC (122ºF) for Open type installations. Check fan.
F12	HW OverCurrent*	Check programming. Check for excess load, improper DC boost setting, DC brake volts set too high or other causes of excess current.
F13	Ground Fault	Check the motor and external wiring to the drive output terminals for a grounded conditions.
F29	Analog Input Loss*	An analog input is configured to fault on signal loss. A signal loss has occurred.

*Auto-Reset/Run type fault. Configure with parameters A092 and A093.

(Cont'd)

TechPub_2614345_0108 - 0801_3048238_01.fm

(Cont'd)

No.	Fault	Default
F33	Auto Rstrt Tries	Correct the cause of the fault and manually clear.
F38	Phase U to Gnd	Check the wiring between the drive and motor. Check motor for grounded phase. Replace drive if fault cannot be cleared.
F39	Phase V to Gnd	
F40	Phase W to Gnd	
F41	Phase UV Short	Check the motor and drive output terminal wiring for a shorter condition. Replace drive if fault cannot be cleared.
F42	Phase UW Short	
F43	Phase VW Short	
F48	Params Defaulted	The drive was commanded to write default values to EEPROM. Clear the fault or cycle power to the drive. Program the drive parameters as needed.
F63	SW OverCurrent*	Check load requirements and A098 [SW Current Trip] setting.
F64	Drive Overload*	Reduce load or extend Accel Time.
F70	Power Unit	Cycle Power. Replace drive if fault cannot be cleared.
F71	Net Loss	The communication network has faulted.
F80	SVC Autotune	The autotune function was either cancelled by the user or failed.
F81	Comm Loss	If adapter was not intentionally disconnected, check wiring to the port. Replace wiring, port expander, adapters or complete drive as required. Check connection. An adapter was intentionally disconnected. Turn off using A105 [Comm Loss Action].
F100	Parameter Checksum	Restore factory defaults
F122	I/O Board Fail	Cycle Power. Replace drive if fault cannot be cleared.

*Auto-Reset/Run type fault. Configure with parameters A092 and A093.

TechPub_2614345_0108 - 0801_3048238_01.fm

9.5.2 Overload Protection

9.5.2-1 Overload Protection - Set

Machine Status	Mains Power OFF Air OFF Steam ON Water OFF
SPC Reference	2840941-0200

Set the current rating of each overload protection according to the fuse panel label located in the door of the electrical cabinet or according to the EM.

TechPub_2614345_0108 - 0802_3048239_01.fm

9.5.2-2 Overload Protection - Set Base Unit(s)

Machine Status	Mains Power OFF Air OFF Steam ON Water OFF
SPC Reference	2840941-0200

Set the distances **A** and **B** on the base unit (1) by means of the screws (2) and (3).

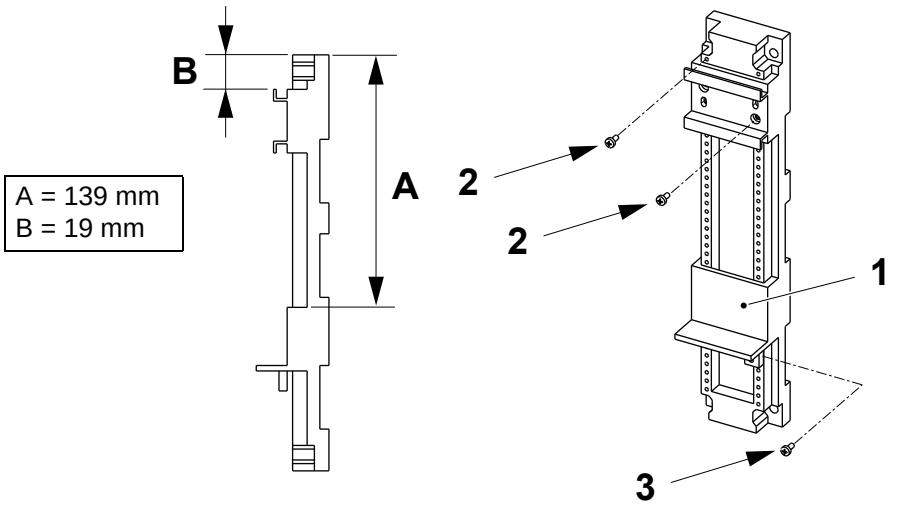

1 Base unit
2 Screw
3 Screw

TechPub_2614345_0108 - 0802_3048239_01.fm

9.5.3 Residual Current Device

9.5.3-1 Residual Current Device - Check

Machine Status	Mains Power ON Air OFF Steam ON Water OFF
SPC Reference	2840934-0100

DANGER

Hazardous voltage.

Can shock, burn or cause death. Change the RCD (1) if it does not trip immediately.

The RCD (1) must always be tested before using the socket outlet (2).

a) Make sure that the switch (3) is in the ON position.

b) Press the TEST button (4).

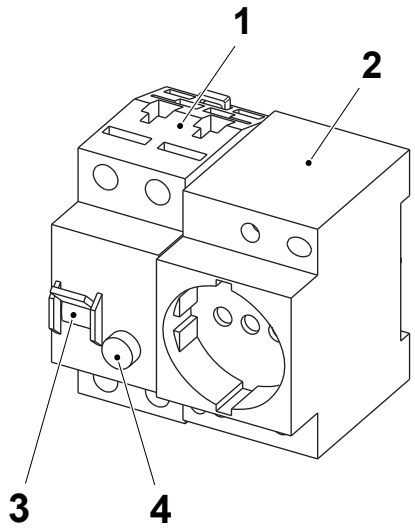

1 RCD (residual current device)
2 Socket outlet
3 Switch
4 Test button

(Cont'd)

TechPub_2614345_0108 - 0801_3048240_01.fm

(Cont'd)

c) The RCD (1) must trip immediately and the switch (3) must jump to the OFF position. If the switch does not jump to the OFF position, change the RCD.

d) Set the switch (3) to the ON position.

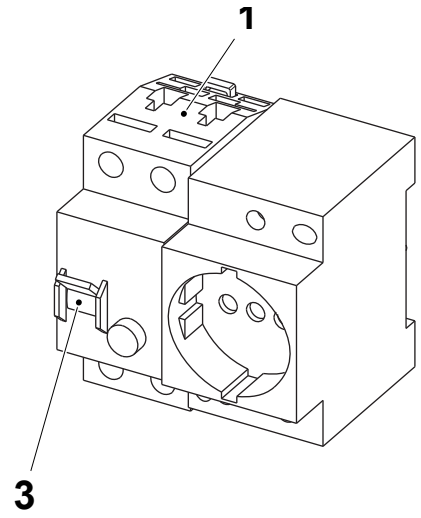

1 RCD (residual current device)
3 Switch

TechPub_2614345_0108 - 0801_3048240_01.fm

9.5.4 Power Failure Relay

9.5.4-1 Power Failure Relay - Set

Machine Status	Mains Power ON Air OFF Steam ON Water OFF
SPC Reference	2840944-0100

a) On the power failure relay (1) set the overvoltage trimmer (2) to 250 V.

b) Set the undervoltage trimmer (3) to 200 V.

c) Set the phase unbalance trimmer (4) to 15%.

d) Set the delay time trimmer (5) to 0.

e) Set the switchover delay (6) to ON.

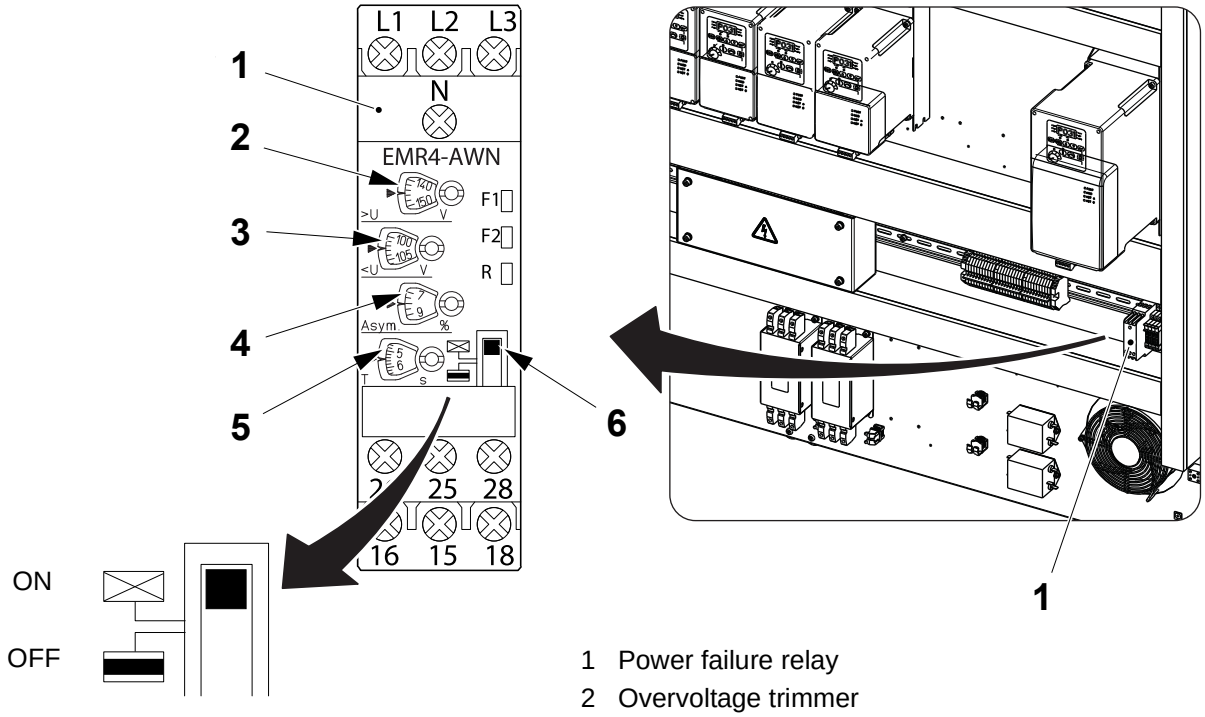

1 Power failure relay
2 Overvoltage trimmer
3 Undervoltage trimmer
4 Phase unbalance trimmer
5 Delay time trimmer
6 Switchover delay

(Cont'd)

TechPub_2614345_0108 - 0801_3048264_01.fm

(Cont'd)

Led Status	Function Indication
LED green: R on	Supply voltage
LED green: R flashes	Output relay energized
LED red: F1 on	Overvoltage
LED red: F2 on	Undervoltage
LED red: F1 on, F2 flashes	Phase failure
LED red: F1, F2 flashing	Phase sequence error

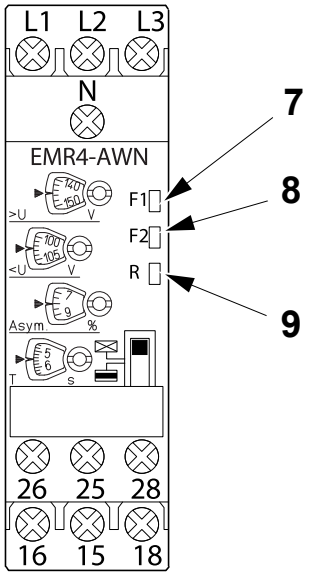

7 Red LED F1
8 Red LED F2
9 Green LED R

TechPub_2614345_0108 - 0801_3048264_01.fm

9.6 HMI and PLMS

SPC Reference	2914244-0100

9.6-1 HMI and PLMS - Description

SPC Reference	2914244-0100

The HMI (Human Machine Interface) is the control software that is graphically represented on the touch screen as an interface for operating and controlling filling machines.

(Cont'd)

TechPub_2614345_0108 - 0801_3048241_01.fm

(Cont'd)

PLMS (Packaging Line Monitoring System) is the data management system for collecting, analysing and monitoring the operational performance of filling machines and packaging lines.

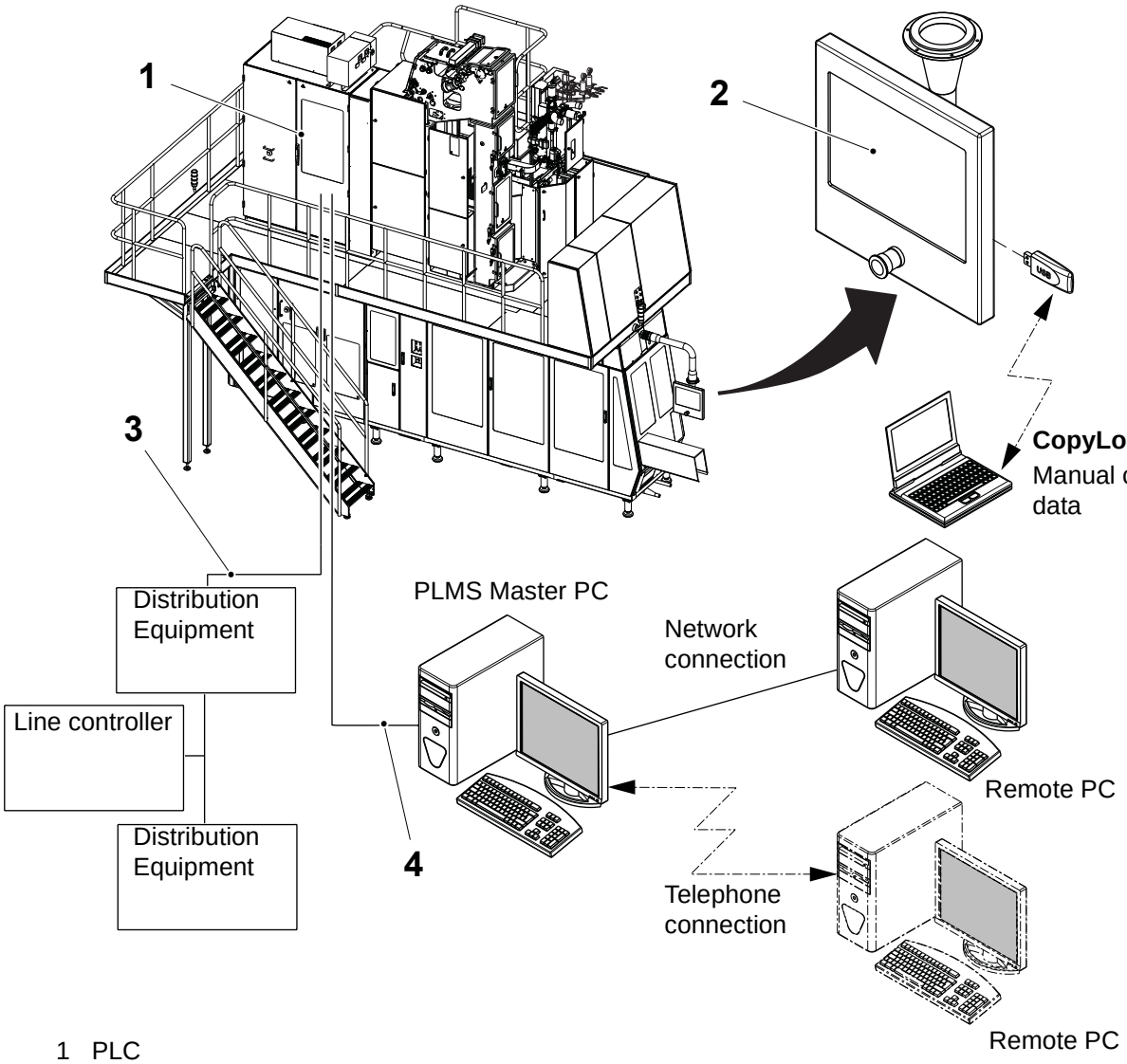

1 PLC
2 Touch screen
3 Line communication
4 External communication

TechPub_2614345_0108 - 0801_3048241_01.fm

9.6-2 HMI and PLMS - Log On Procedure

Machine Status	Mains Power ON Air OFF Steam ON Water OFF
Special Equipment	Keyboard with USB connector
SPC Reference	2914244-0100

When the machine is switched on, the system automatically logs on as an operator. This allows for the daily use of the machine. For some purposes it may be necessary to log off as an operator and log on as an installer.

The installer has higher privileges and is allowed to:

- install software
- change the PLMS configuration
- change the date and time.

(Cont'd)

TechPub_2614345_0108 - 0801_3048241_01.fm

(Cont'd)

a) Remove the plug of a USB port (1) on the control panel (2) and connect a USB keyboard.

b) Press CTRL + ESC and choose `LOG OFF OPERATOR` from the `START` menu (3).

c) Press the `YES` button or the ENTER key.

d) Log on with the following identity:

User name: installer

Password: installer

After logging on as an installer, the `START` menu (3) can be used to perform the necessary tasks.

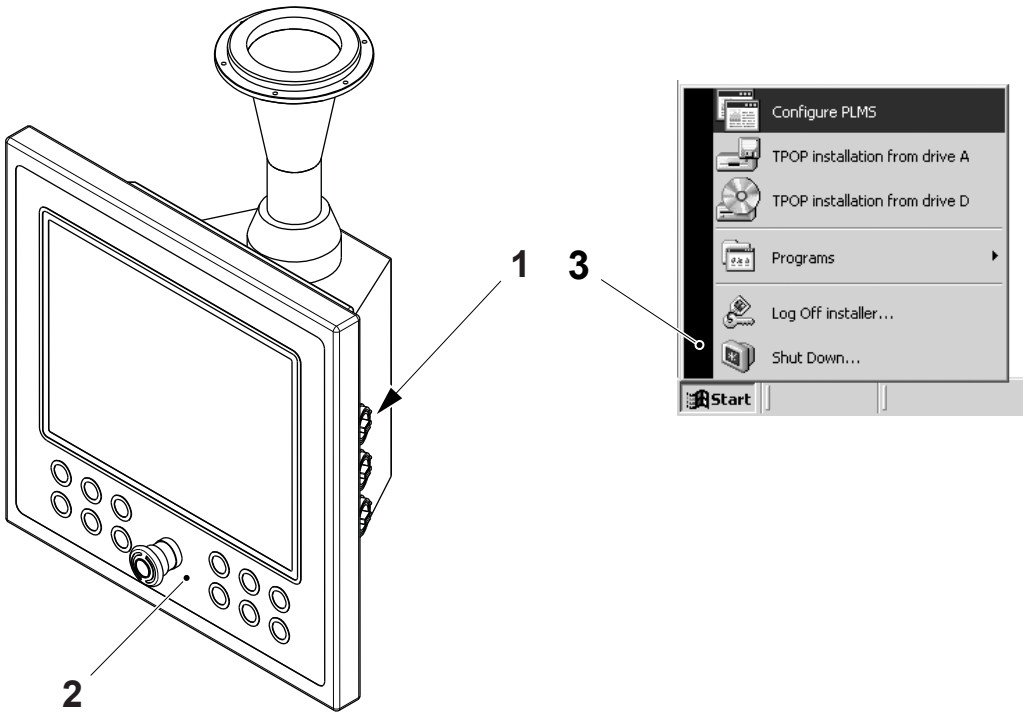

1 USB port
2 Control panel
3 Start-menu

(Cont'd)

TechPub_2614345_0108 - 0801_3048241_01.fm

(Cont'd)

Restart and Log On as an Operator

Note! Logging on as an operator must always be done by a Windows XP SP2 restart.

a) Press CTRL + ESC and choose SHUT DOWN from the START menu (3).

b) Select RESTART from the list and select the OK button or the press ENTER key.

c) Remove the keyboard from the control panel (2) and fit back the plug on the USB port (1).

d) The system is now restarted in normal operating mode.

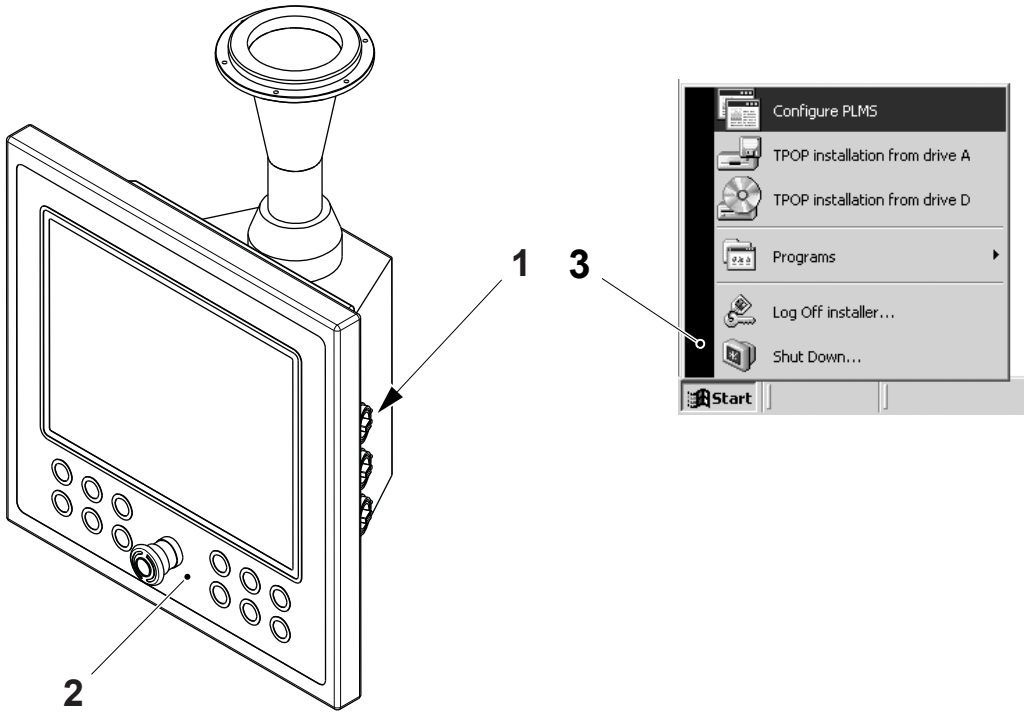

1 USB port
2 Control panel
3 Start-menu

TechPub_2614345_0108 - 0801_3048241_01.fm

9.6-3 HMI and PLMS - Install Software

Machine Status	Mains Power ON Air OFF Steam ON Water OFF
Special Equipment	Keyboard with USB connector
SPC Reference	2914244-0100

Required Material

- TPOP Basic V3.2 DVD
- Software CD.

Installation Order

You must always follow the order below when installing software. If you are only updating one or more programs then jump directly to the specific software sections.

- TPOP Basic V3.2 DVD on page 9-242
- Software CD on page 9-244, including:
  - PLMS Logger
  - PLMS Logger Config
  - TPOP HMI

(Cont'd)

TechPub_2614345_0108 - 0801_3048241_01.fm

(Cont'd)

Connect the Keyboard

Remove the plug of a USB port (1) from the control panel (2) and connect a keyboard (3).

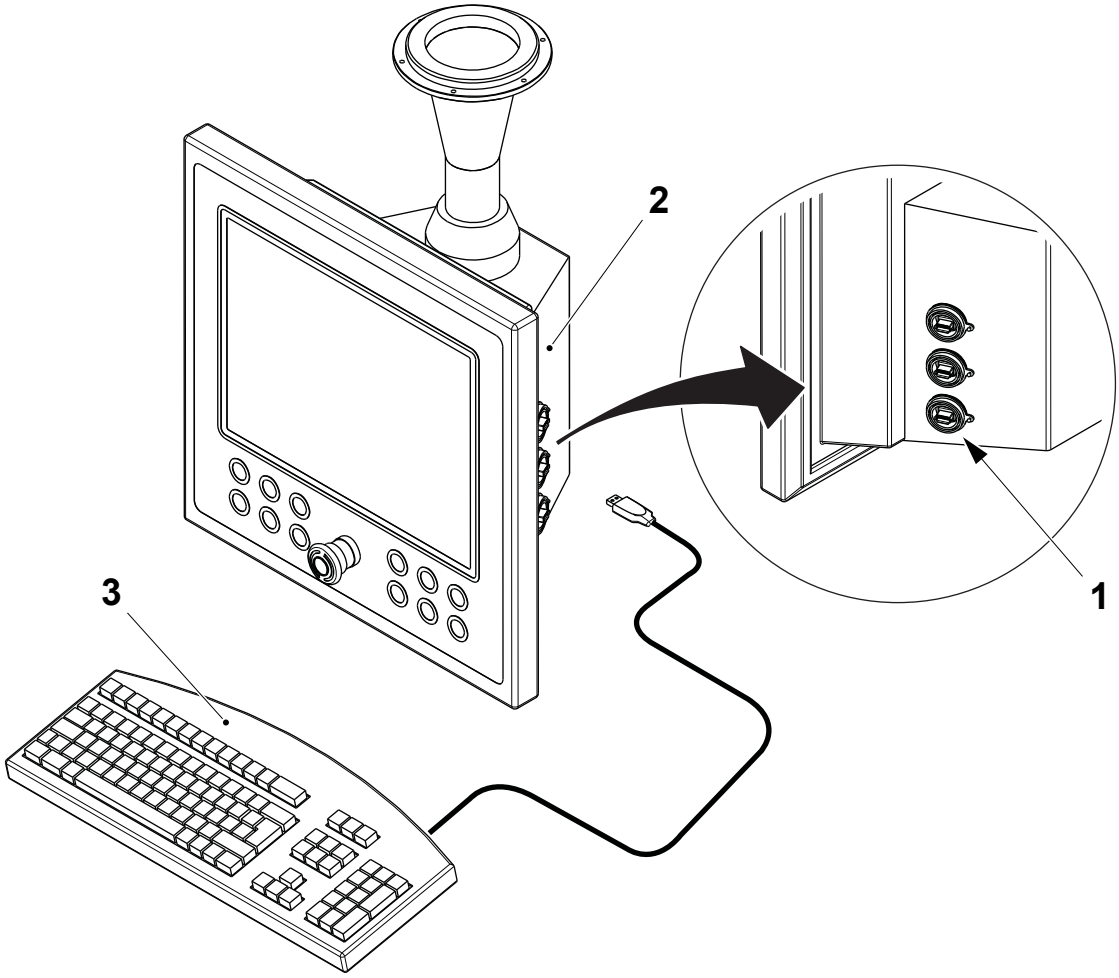

1 USB port
2 Control panel
3 Keyboard

(Cont'd)

TechPub_2614345_0108 - 0801_3048241_01.fm

(Cont'd)

Note! The software must be installed on the TPOP hardware platform B&R APC620 ver. 5P62: TETRAPAK-17 and 5P62: TETRAPAK-30. Check the hardware version on the label found behind the door (1) of the IPC.

TPOP Basic V3.2 DVD

a) Insert the TPOP Basic V 3.2 DVD in the DVD/CD-drive of the Industrial PC (1).

b) Turn the mains power switch on the service unit to the OFF position.

c) Turn the mains power switch on the service unit to the ON position.

d) Press any key when the text `PRESS ANY KEY TO BOOT FROM CD OR DVD...` is displayed on the TPOP.

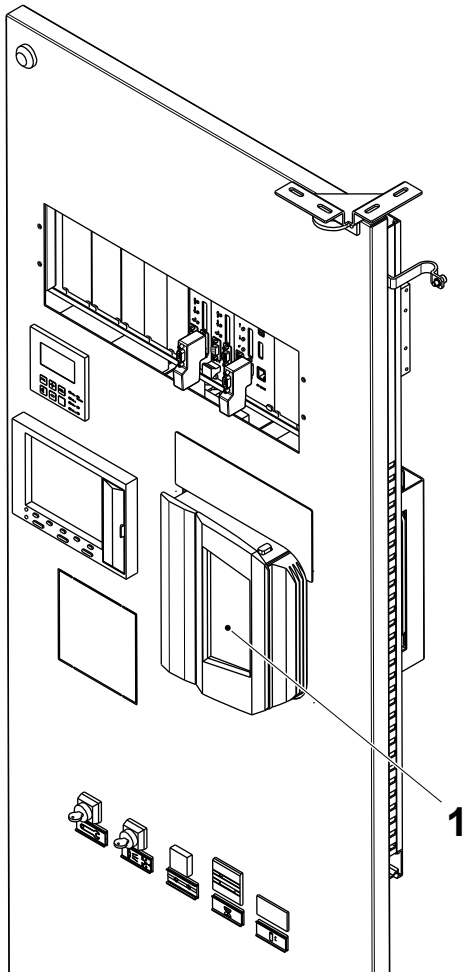

1 Industrial PC (IPC)

(Cont'd)

TechPub_2614345_0108 - 0801_3048241_01.fm

(Cont'd)

e) The Windows XP SP2 and the TPOP Basic software is now loaded and the system is configured. At the end of the installation, the DVD is automatically ejected.

Note! The installation process will take approximately 35 minutes.

f) When prompted, enter the current date and time.

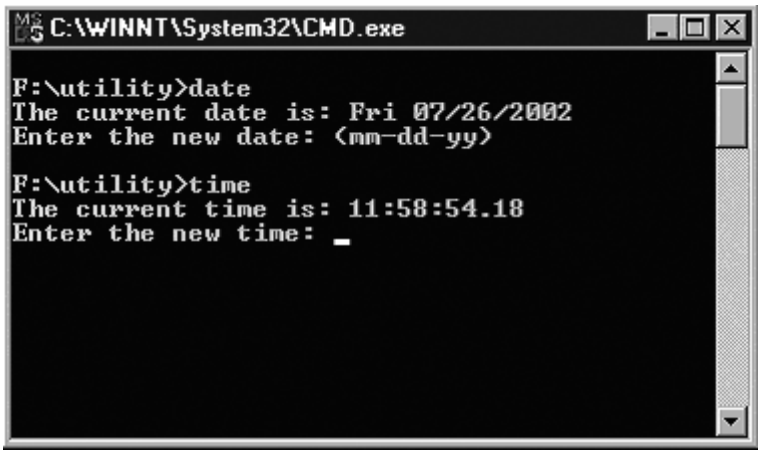

g) Click on the `FINISH` button in the dialogue box.



h) Continue to install the PLMS Logger, HMI, PLMS Config and other software, see the section Software CD on page 9-244.

(Cont'd)

TechPub_2614345_0108 - 0801_3048241_01.fm

(Cont'd)

Software CD

The Software CD includes the installation software for PLMS Logger, TPOP HMI and PLMS Config.

a) Log on as an installer, see 9.6-2 HMI and PLMS - Log On Procedure.

b) Insert the CD marked SOFTW_CD_A3_S into the IPC CD reader.

c) From the `START` menu choose `TPOP INSTALLATION FROM DRIVE D`.

d) The `INSTALLATION SCREEN` (1) appears.

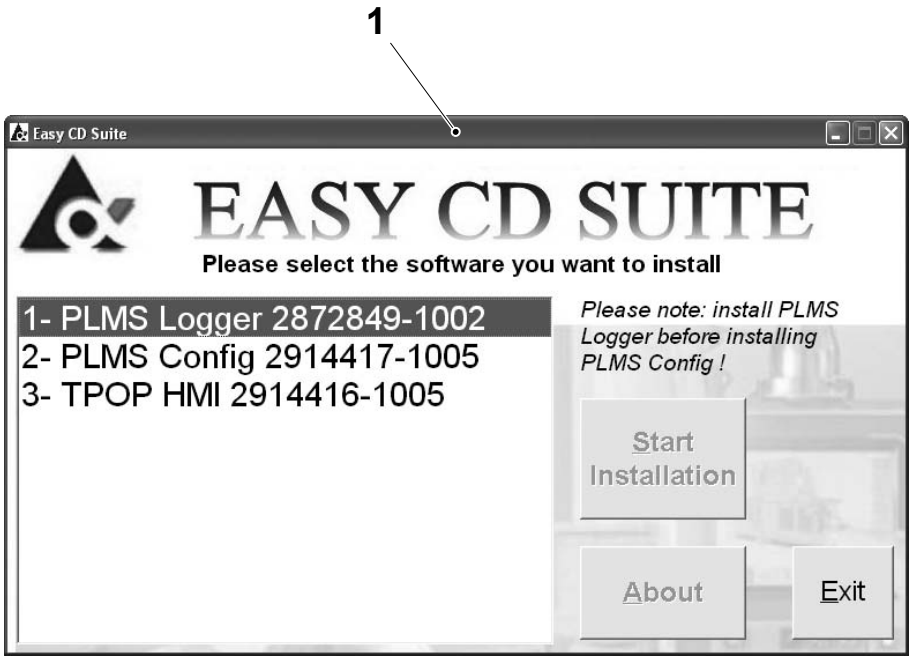

1 Installation screen

(Cont'd)

TechPub_2614345_0108 - 0801_3048241_01.fm

(Cont'd)

Note! If both PLMS Logger and PLMS Config are to be installed, PLMS Logger must always be installed before PLMS Config.

e) Select the software to be installed and touch the `START INSTALLATION` button (2).

f) Follow the instructions on the screen, and when prompted accept the default values.

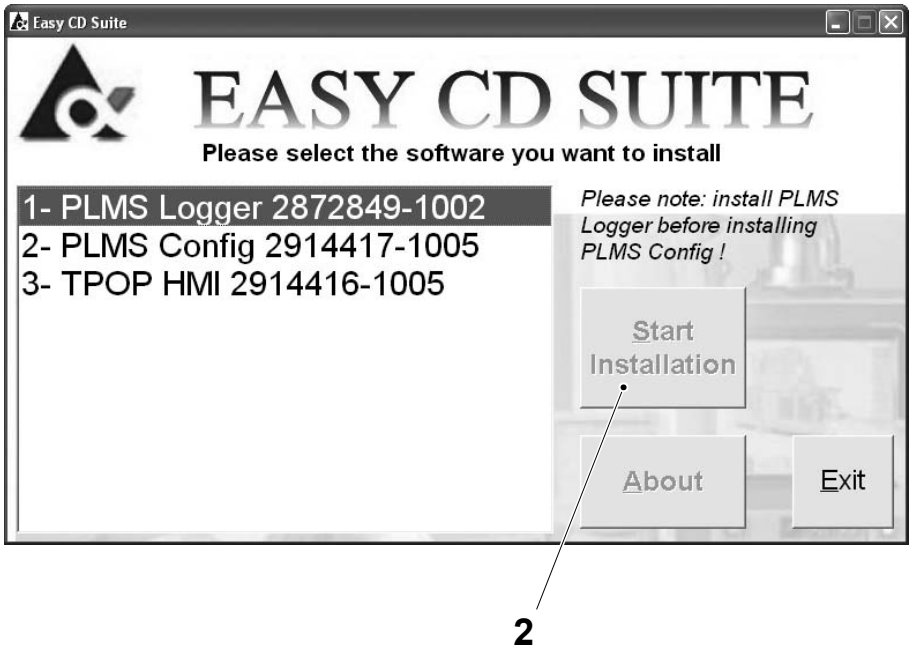

2 Start installation button

(Cont'd)

TechPub_2614345_0108 - 0801_3048241_01.fm

(Cont'd)

g) Repeat the items e) and f) to install more software.

h) Touch the EXIT button (3) when all the necessary software has been installed.

i) Remove the software CD when the installation is finished.

j) From the START menu choose CONFIGURE PLMS.

k) Configure the available options in the PLMS NRG Configurator window, see section 9.6.1 PLMS NRG Configurator for details of the settings that can be made.

l) If all settings have been made, restart and log on as an operator, see 9.6-2 HMI and PLMS - Log On Procedure.

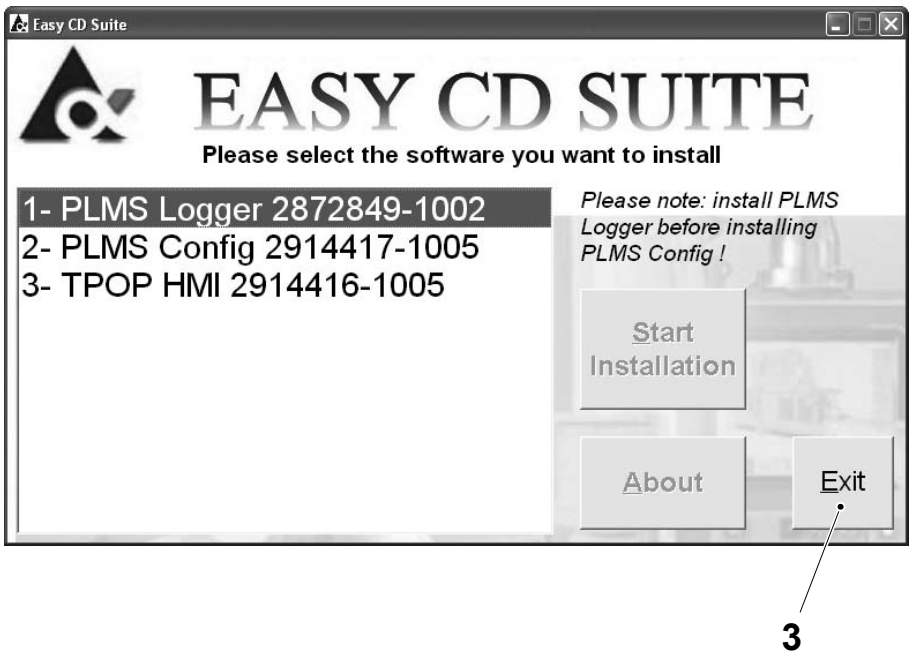

3 Exit button

TechPub_2614345_0108 - 0801_3048241_01.fm

9.6-4 HMI and PLMS - Install DE Config Files

Machine Status	Mains Power ON Air OFF Steam ON Water OFF
Special Equipment	Keyboard with USB connector
SPC Reference	2914244-0100

The CONFIG file of each DE (and Tetra Pak LC30) must be installed on the filling machine IPC. Proceed as follows:

a) Connect a keyboard to a USB port on the control panel and log on as an installer, see 9.6-2 HMI and PLMS - Log On Procedure.

b) Insert the software CD of the DE into the DVD/CD-drive of the IPC.

c) Locate the config file SETUP.EXE and launch it with a double click.

d) The following dialogue box appears. Click on YES (1).

Note! In the dialogue box is displayed the name (2) of the DE which is being installed.



1 Yes button
2 DE name

(Cont'd)

TechPub_2614345_0108 - 0801_3048241_01.fm

(Cont'd)

e) When the installation is completed, a dialogue box appears.

f) Click on OK (3).

g) Repeat the same procedure to install the CONFIG files of all the DEs of the line.

h) When all the DE CONFIG files have been installed, restart and log on as an operator, see 9.6-2 HMI and PLMS - Log On Procedure.

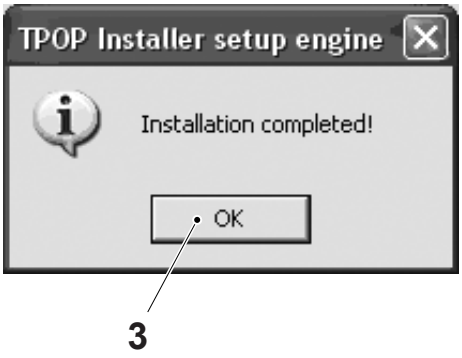

3 OK button

TechPub_2614345_0108 - 0801_3048241_01.fm

9.6.1 PLMS NRG Configurator

Description

PLMS NRG is used to access the PLMS components that can be enabled and configured when logged on as an installer. The illustration shows the PLMS NRG main window (1) and the four PLMS component category buttons:

- `PLMS NRG CONFIGURATOR` button (2)
- `DISTRIBUTION EQUIPMENT SETUP` button (3)
- `OPERATOR SHEET STANDARD SETUP` button (4)
- `HARDWARE AND NETWORK` button (5).

Touch the `EXIT NRG CONFIGURATION` button (6) to save any changes done and exit from the program.

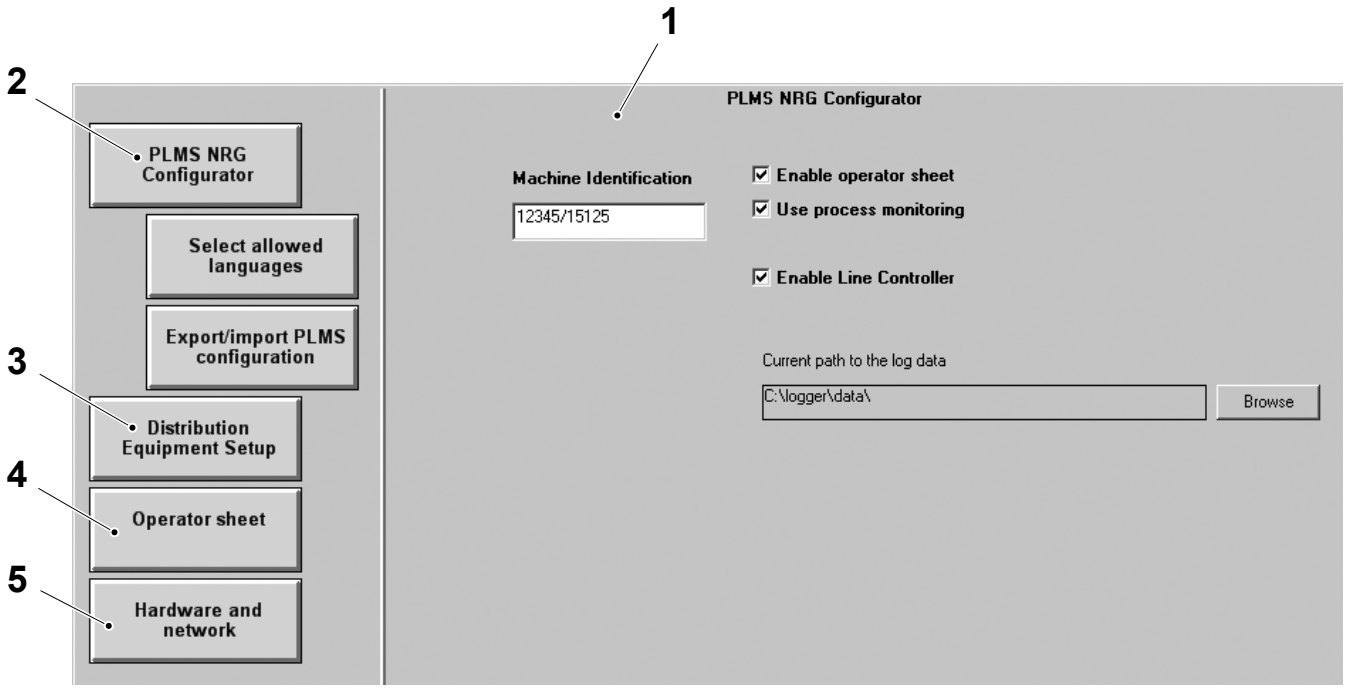



1 PLMS NRG main window
2 PLMS NRG configuration button
3 Distribution equipment setup button
4 Operator sheet standard setup button
5 Hardware and network button
6 Exit NRG configuration button

TechPub_2614345_0108 - 0802_3048242_01.fm

9.6.1-2 PLMS NRG Configurator - Set Machine ID

Machine Status	Mains Power ON Air OFF Steam ON Water OFF
Special Equipment	Keyboard with USB connector

a) Log on as an installer, see 9.6-2 HMI and PLMS - Log On Procedure.

b) From the START menu choose CONFIGURE PLMS.

c) In the PLMS NRG Configurator window, touch the MACHINE IDENTIFICATION field (1) to activate it, then use the keyboard to type the last five digits of the machine number followed by the first five digits.

If the machine identity is set in a previous installation, this serial number will be suggested.

Note! The machine serial number is found on the LH side of the machine on the machine plate.

Restart and log on as an operator, see 9.6-2 HMI and PLMS - Log On Procedure.

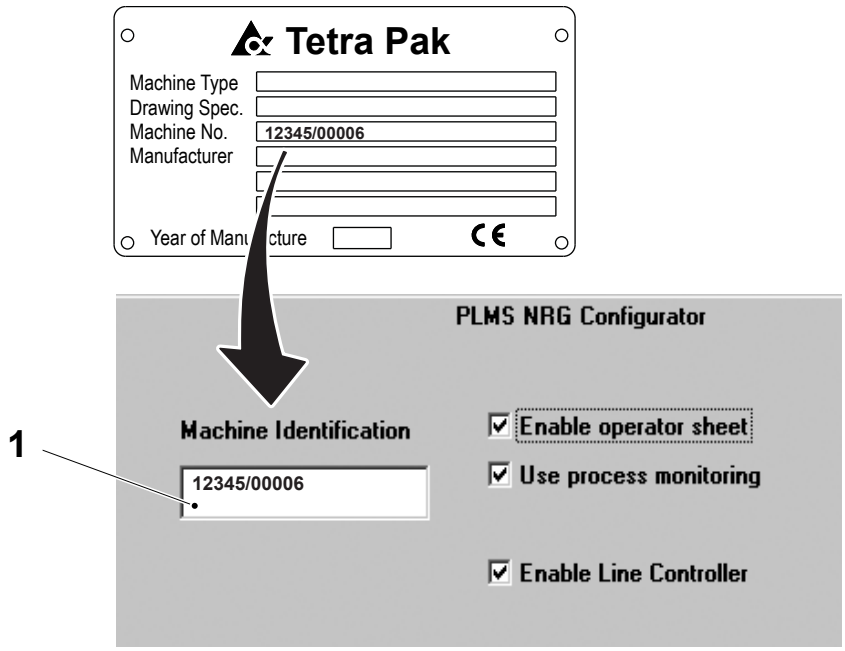

1 Machine identification field

TechPub_2614345_0108 - 0802_3048242_01.fm

9.6.1-3 PLMS NRG Configurator - Select Allowed Languages

Machine Status	Mains Power ON Air OFF Steam ON Water OFF
Special Equipment	Keyboard with USB connector

a) Log on as an installer, see 9.6-2 HMI and PLMS - Log On Procedure.

b) From the START menu choose CONFIGURE PLMS.

c) In the PLMS NRG Configurator window, touch the SELECT ALLOWED LANGUAGES button (1).

d) Choose the required language by selecting the corresponding check box (2). If necessary, touch the CHANGE FLAG button (3) to select an alternative flag icon.

Restart and log on as an operator, see 9.6-2 HMI and PLMS - Log On Procedure.

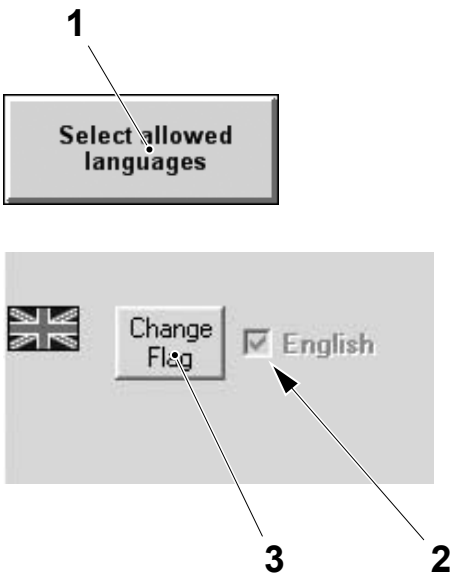

1 Select allowed languages button
2 Check box
3 Change flag button

TechPub_2614345_0108 - 0802_3048242_01.fm

9.6.1-4 PLMS NRG Configurator - Export/Import Configuration

Machine Status	Mains Power ON Air OFF Steam ON Water OFF
Special Equipment	Keyboard with USB connector

This section describes how to import and export the PLMS NRG Configurator setup so that it can be used on several machines without having to repeat the settings on each machine individually.

a) Log on as an installer, see 9.6-2 HMI and PLMS - Log On Procedure.

b) From the START menu choose CONFIGURE PLMS.

c) In the PLMS NRG Configurator window, touch the EXPORT/IMPORT PLMS CONFIGURATION button (1).

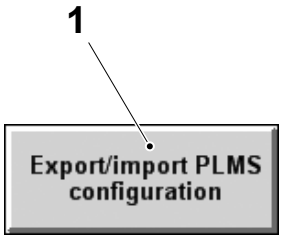

1 Export/import PLMS configuration button

(Cont'd)

TechPub_2614345_0108 - 0802_3048242_01.fm

(Cont'd)

Importing from a USB Key

a) Remove the plug of a USB port (1) in the control panel (2) and insert the USB key.

b) Choose the items to be imported by selecting the check box (3) next to each of the items.

c) Touch the `IMPORT PLMS CONFIGURATION FROM DISKETTE` button (4).

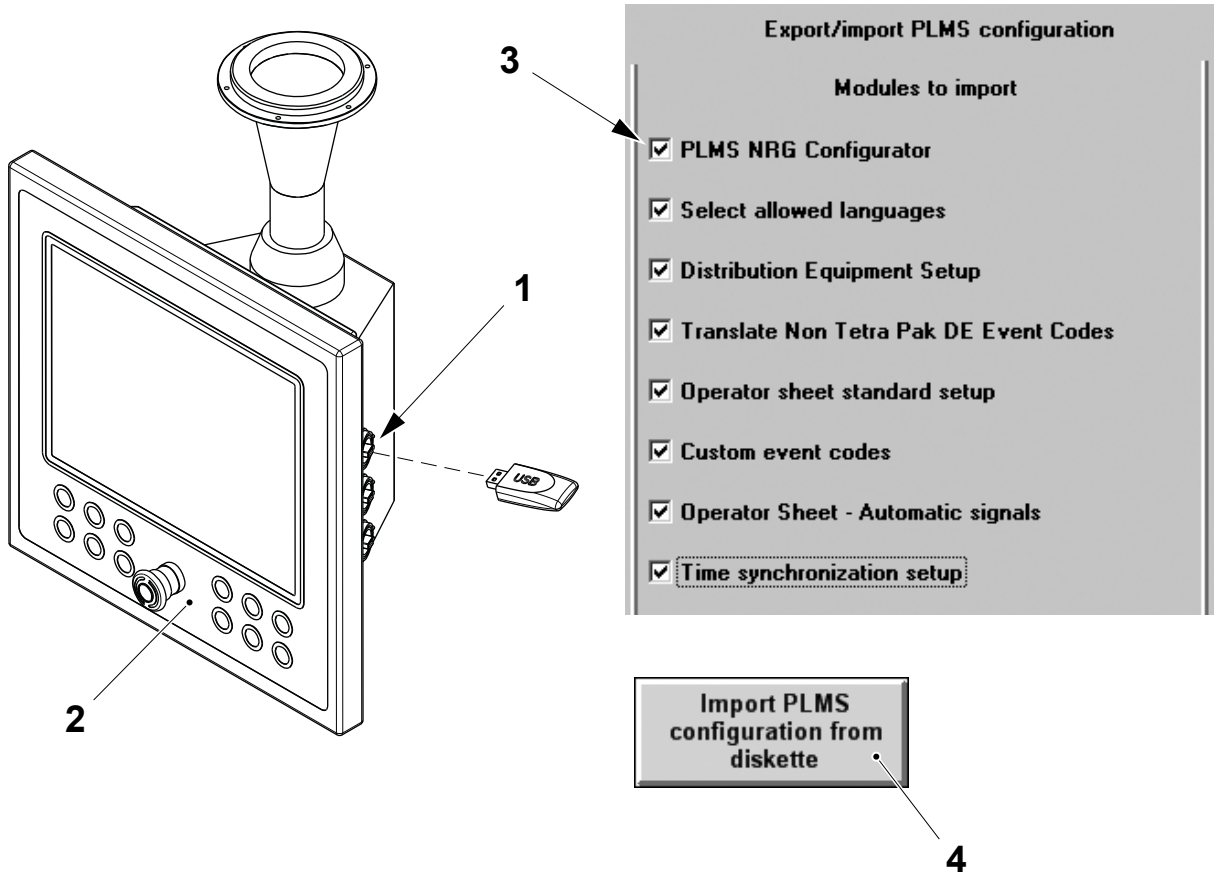

1 USB port
2 Control panel
3 Check box
4 Import PLMS configuration from diskette button

(Cont'd)

TechPub_2614345_0108 - 0802_3048242_01.fm

(Cont'd)

d) When the dialogue box appears, touch the YES button (5) to continue or the NO button (6) to stop the import action.

e) Restart and log on as an operator, see 9.6-2 HMI and PLMS - Log On Procedure.

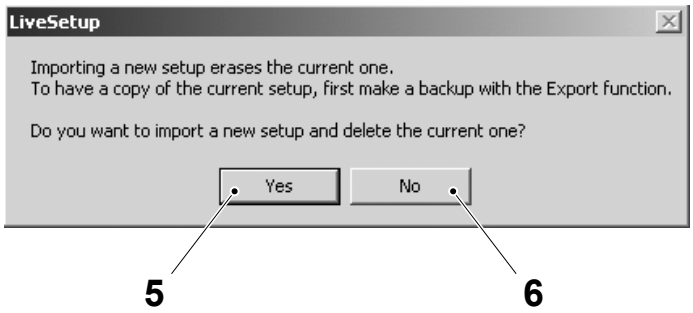

5 Yes button
6 No button

(Cont'd)

TechPub_2614345_0108 - 0802_3048242_01.fm

(Cont'd)

Exporting to a USB Key

a) Remove the plug of a USB port (1) in the control panel (2) and insert the USB key.

b) Choose the items to be exported by selecting the check box (3) next to each of the items.

c) Touch the `EXPORT PLMS CONFIGURATION TO DISKETTE` button (4).

d) Restart and log on as an operator, see 9.6-2 HMI and PLMS - Log On Procedure.

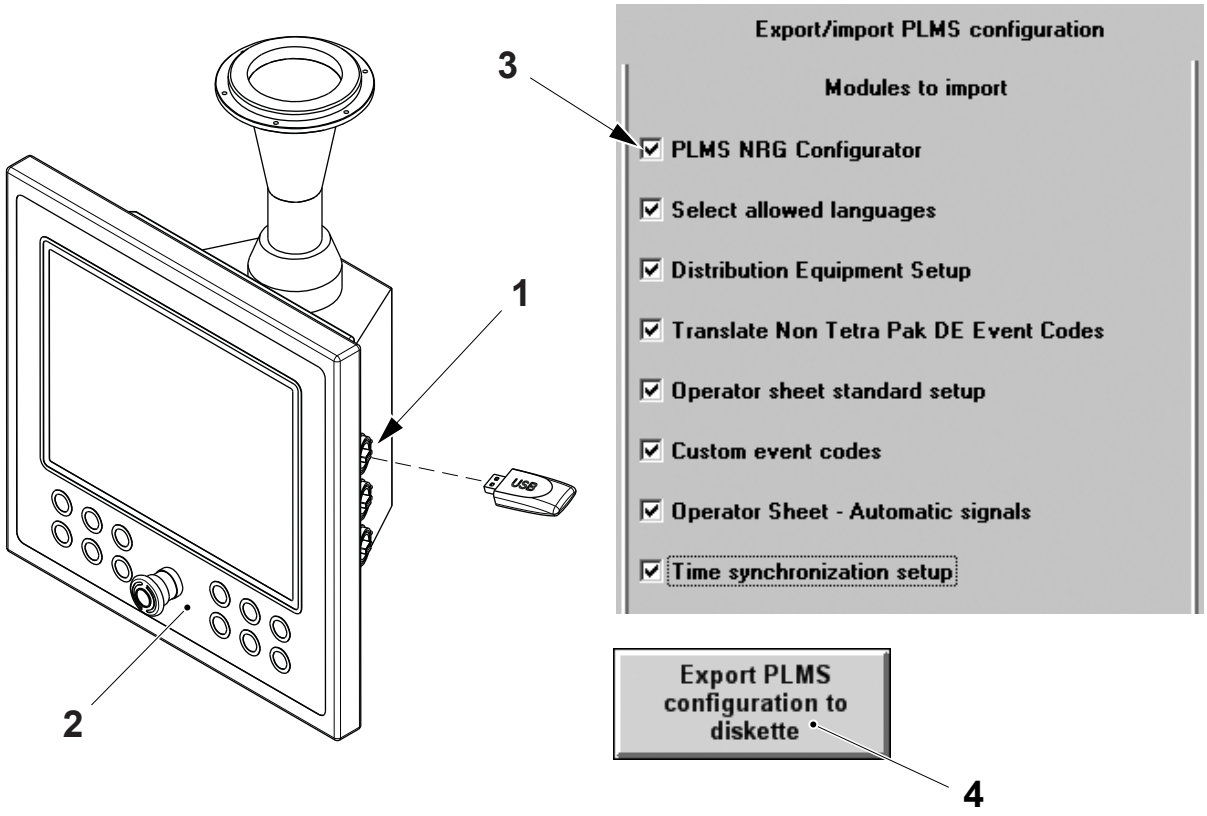

1 USB port
2 Control panel
3 Check box
4 Export PLMS configuration to diskette button

TechPub_2614345_0108 - 0802_3048242_01.fm

9.6.1-5 PLMS NRG Configurator - Translate Non-Tetra Pak DE Event Codes

Machine Status	Mains Power ON Air OFF Steam ON Water OFF
Special Equipment	Keyboard with USB connector

The following describes how to rename non-Tetra Pak event codes to the names of actual equipment that are in the packaging line.

a) Log on as an installer, see 9.6-2 HMI and PLMS - Log On Procedure.

(Cont'd)

TechPub_2614345_0108 - 0802_3048242_01.fm

(Cont'd)

b) From the START menu choose CONFIGURE PLMS.

c) Touch the TRANSLATE NON-TETRA PAK DE EVENT CODES button (1) in the PLMS NRG window.

d) The TRANSLATE NON-TETRA PAK DE EVENT CODES window (2) appears.

e) Use the ARROW buttons (3) to select an event from the LIST box (4).

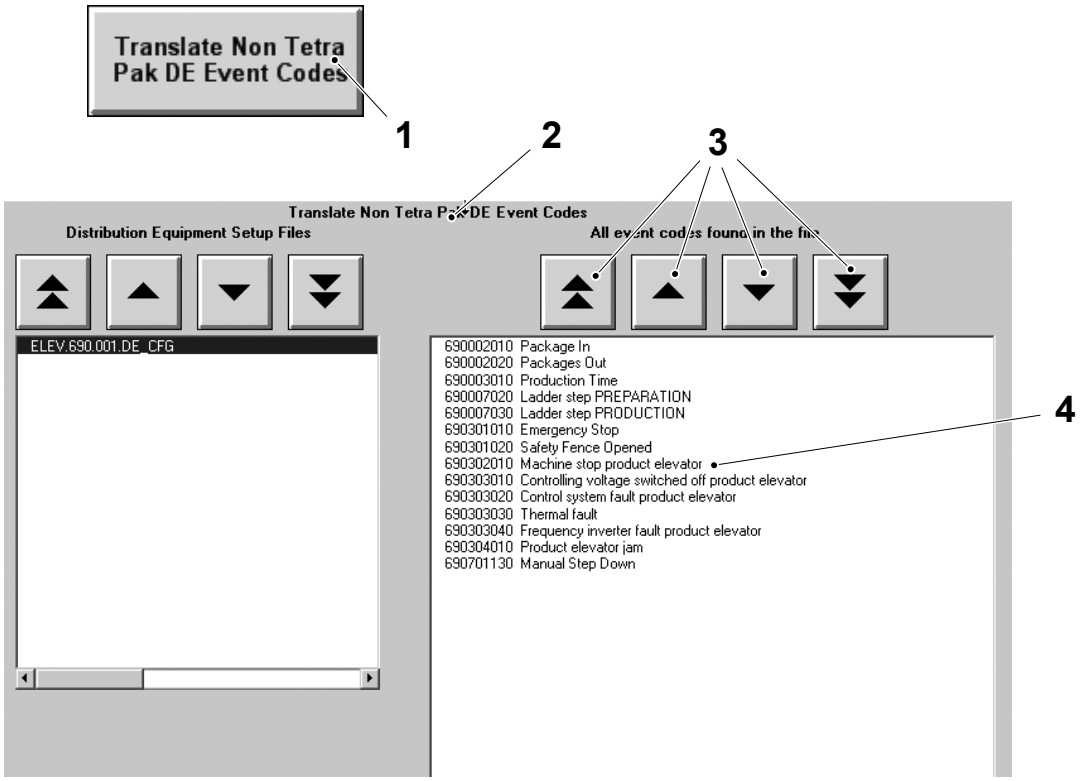

1 Translate non-Tetra Pak DE event codes button
2 Translate non-Tetra Pak DE event codes window
3 Arrow button
4 List box

(Cont'd)

TechPub_2614345_0108 - 0802_3048242_01.fm

(Cont'd)

f) Input the desired text for the event in the EVENT CODE DESCRIPTION box (5) and touch the UPDATE button (6).

g) Touch the SHOW KEYBOARD button (7) to display the on-screen keyboard.

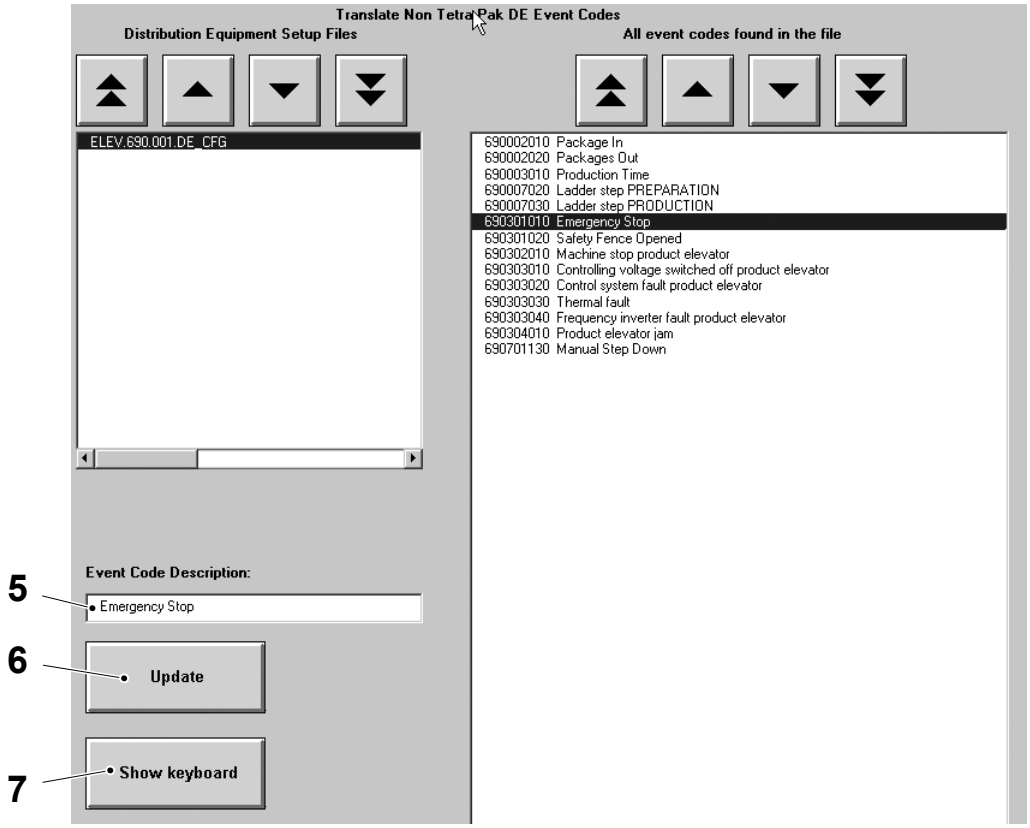

5 Event code description box
6 Update button
7 Show keyboard button

TechPub_2614345_0108 - 0802_3048242_01.fm

9.6.1-6 PLMS NRG Configurator - Distribution Equipment Setup

Machine Status	Mains Power ON Air OFF Steam ON Water OFF
Special Equipment	Keyboard with USB connector

Note! The following procedure is only necessary if the Tetra Pak Line Controller is not to be used in the packaging line configuration.

a) Log on as an installer, see 9.6-2 HMI and PLMS - Log On Procedure.

b) From the START menu choose CONFIGURE PLMS.

c) Touch the DISTRIBUTION EQUIPMENT SETUP button (1) in the PLMS NRG window.

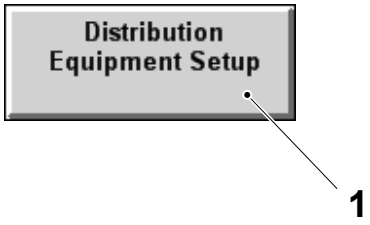

1 Distribution equipment setup button

(Cont'd)

TechPub_2614345_0108 - 0802_3048242_01.fm

(Cont'd)

d) The DISTRIBUTION EQUIPMENT SETUP window (2) appears.

e) If the complete line is equipped with Rockwell and Ethernet check the ENABLE ETHERNET SCANNING box (3). If not uncheck the ENABLE ETHERNET SCANNING box (3), see Manual Line Configuration on page 9-262.

Note! When a multi-switch is used, DE stop reasons can not be automatically assigned to the filling machine conveyor congestion stop. Unchecking the ENABLE CATCH DE box (4) disables automatic the detection of any DE stop.

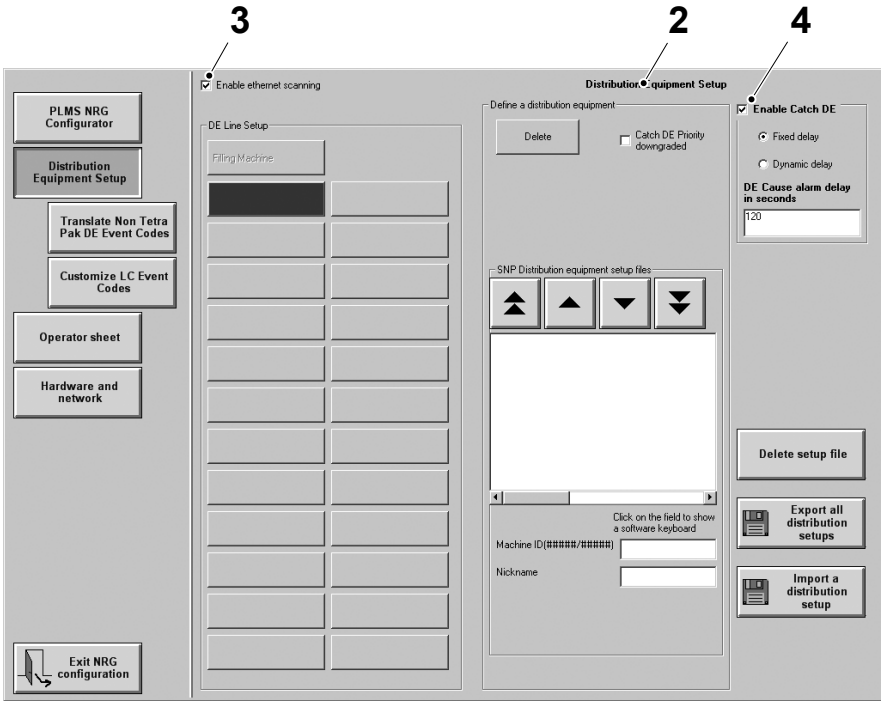

2 Distribution equipment setup window
3 Enable ethernet scanning box
4 Enable catch DE box

(Cont'd)

TechPub_2614345_0108 - 0802_3048242_01.fm

(Cont'd)

The DE CAUSE ALARM DELAY IN SECONDS box (5) has the following meaning in the case:

- FIXED DELAY check box (6) has been selected. Determines how long after an alarm in the distribution equipment is cleared, it will be held responsible for a stop in the filling machine when a conveyor congestion occurs.
- DYNAMIC DELAY check box (7) has been selected. The maximum time in seconds that an alarm in the distribution equipment is cleared must be defined for every single DE in the line, for this amount of time the DE is held responsible for a stop in the filling machine when a conveyor congestion occurs. If selected the see Advanced Manual Line Configuration on page 9-265.

Note! The above check boxes are not available if the ENABLE CATCH DE check box (4) is unchecked.

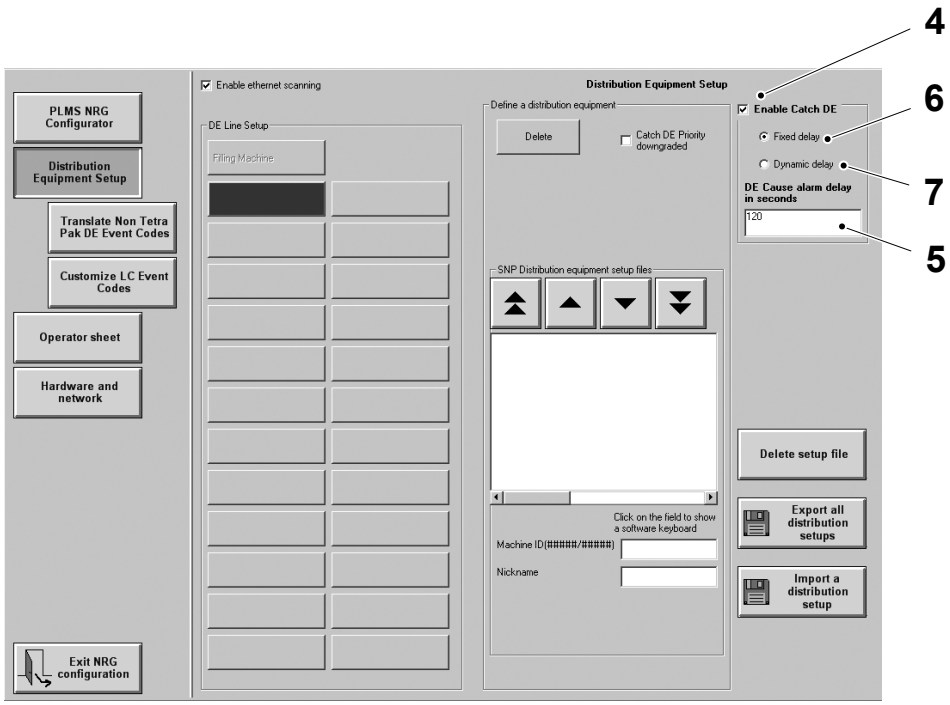

4 Enable catch DE box
5 DE cause alarm delay in seconds box
6 Fixed delay option button
7 Dynamic delay option button

(Cont'd)

TechPub_2614345_0108 - 0802_3048242_01.fm

(Cont'd)

Manual Line Configuration

a) Every DE equipment in the line must be manually configured.

b) Select a POSITION button (1) that represents the position of the chosen DE in the packaging line configuration.

c) Specify the DE TYPE.

– SNP (2): valid for DE equipment equipped with GE Fanuc and SNP Connection. Then select the configuration file from the SNP DE list (3). Input the serial number (4) and the nickname (5).

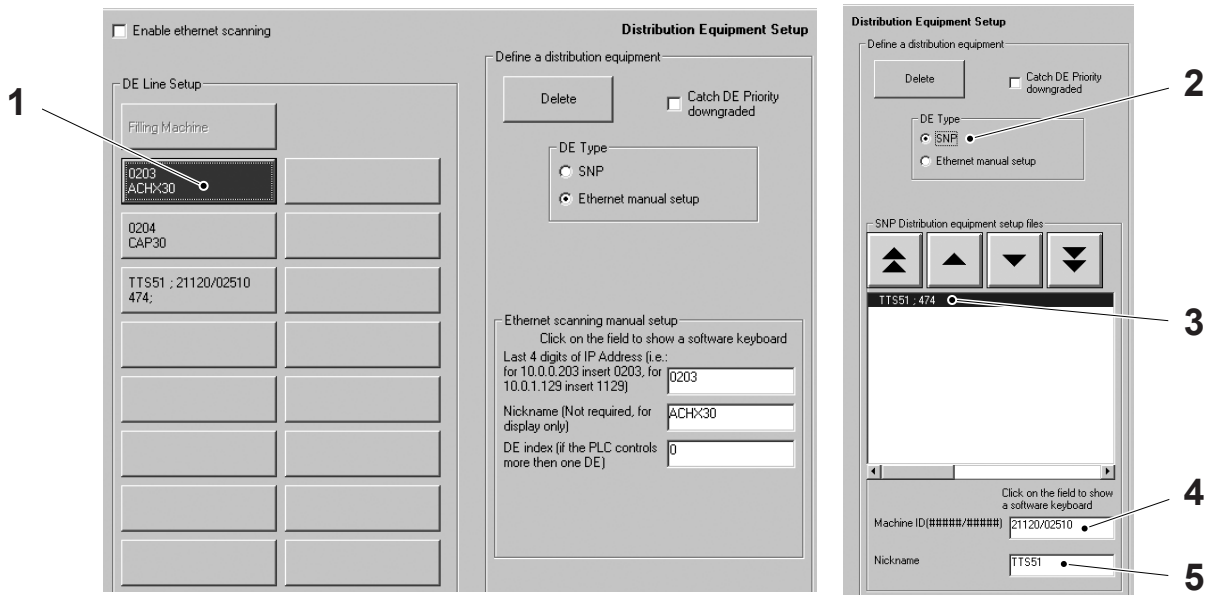

1 Position button
2 SNP option button
3 SNP DE List
4 Serial number
5 Nickname

(Cont'd)

TechPub_2614345_0108 - 0802_3048242_01.fm

(Cont'd)

– ETHERNET MANUAL SETUP (6): valid for DE equipment equipped with Rockwell and Ethernet. Input the last four digits of IP Address (7) and the nickname (8). For special customization only: in case the Rockwell PLC include the PLMS logic to manage several DE equipment, input the Sub DE number (9).

d) Touch the DELETE button (10) to remove the DE from the POSITION button (1).

e) Enable the CATCH DE PRIORITY DOWNGRADED check box (11) to lower the alarm priority of the selected DE.

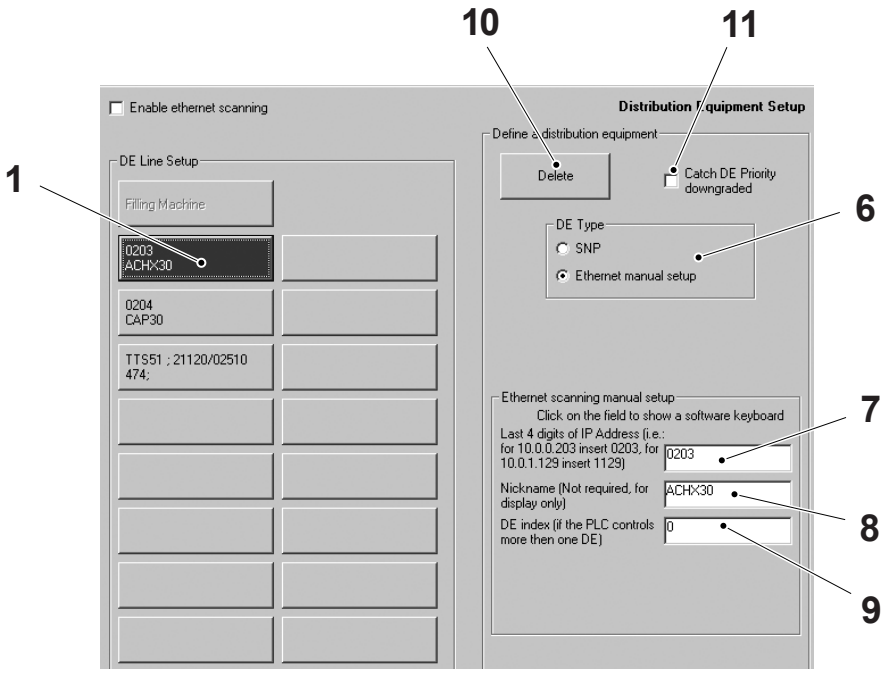

1 Position button
6 Ethernet manual setup
7 IP address
8 Nickname
9 Sub DE number
10 Delete button
11 Catch DE priority downgraded button

(Cont'd)

TechPub_2614345_0108 - 0802_3048242_01.fm

(Cont'd)

f) Touch the DELETE SETUP FILE button (12) to delete a DE configuration.

g) Touch the EXPORT ALL DISTRIBUTION SETUPS button (13) to export a DE configuration.

h) Touch the IMPORT A DISTRIBUTION SETUP button (14) to import a DE configuration.

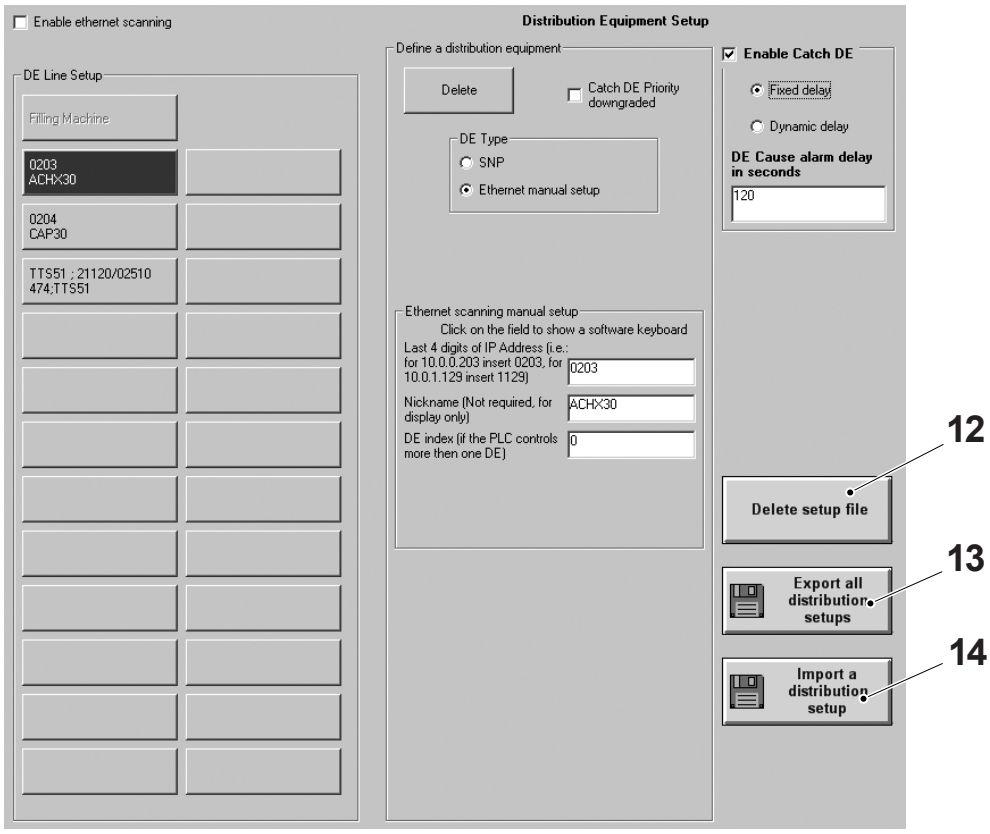

12 Delete setup file button
13 Export all distribution setups button
14 Import a distribution setup button

(Cont'd)

TechPub_2614345_0108 - 0802_3048242_01.fm

(Cont'd)

Advanced Manual Line Configuration

After the Manual Line Configuration is done, if necessary, it is possible to enable the Dynamic Delay to activate the following advanced functions.

- The DE alarm priority box (1) define the priority of the alarms generated by the different DE in the line to identify the most important stop reason of the filling machine.
  Input a value from 0 to 10 where 0 is the highest priority.
- The DE cause alarm delay in seconds (2) define the maximum time that an alarm in the distribution equipment is cleared, for this amount of time the DE is held responsible for a stop in the filling machine when a conveyor congestion occurs.

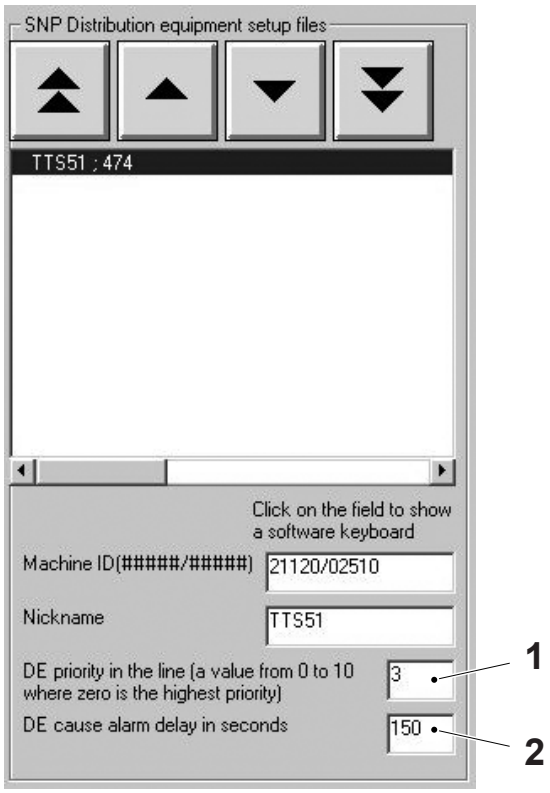

SNP DE Setup window

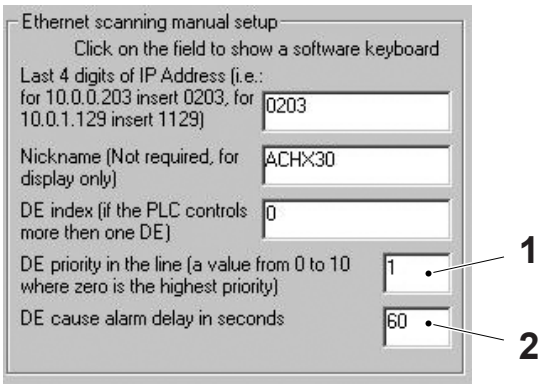

Ethernet Manual Setup window

1 DE alarm priority box
2 DE cause alarm delay in seconds

(Cont'd)

TechPub_2614345_0108 - 0802_3048242_01.fm

(Cont'd)

Customize LC Event Codes

Note! This function has to be used only if the Line Controller is available.

This function allows to rename the alarms description defined in the Line Controller. To proceed follow the instruction below.

a) Select the local language in the LOCAL LANGUAGE drop down list (1).

b) Select the alarm to be changed (2).

c) Input the new alarm description in the ENGLISH TEXT field (3) and in the LOCAL LANGUAGE TEXT field (4).

d) If required touch the EXPORT TO REMOVABLE MEDIA button (5) to create a file LCcustomtrans.xml that can be edited using a text editor on a PC.

e) If required touch the IMPORT FROM REMOVABLE MEDIA button (6) to import an LCcustomtrans.xml file.

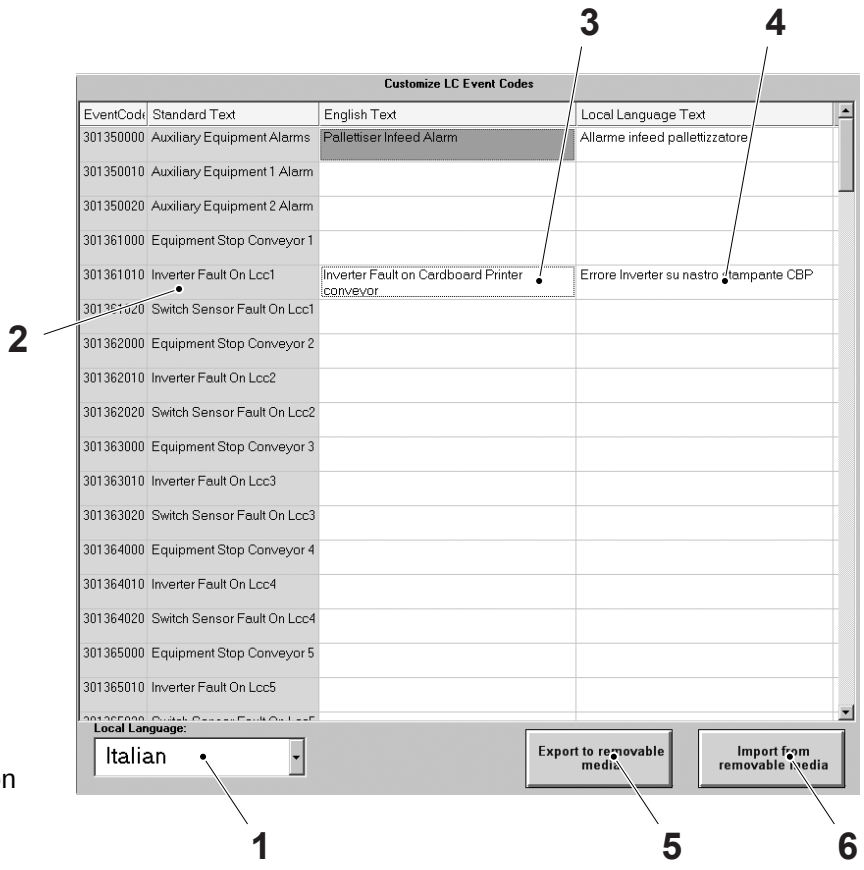

1 Local language list
2 Alarm
3 English text field
4 Language text field
5 Export to removable media button
6 Import from removable media button

TechPub_2614345_0108 - 0802_3048242_01.fm

9.6.1-7 PLMS NRG Configurator - Defragment the IPC Hard Disk

Machine Status	Mains Power ON Air OFF Steam ON Water OFF
Special Equipment	Keyboard with USB connector

If the boot-up sequence for the TPOP takes more time than can normally be expected, there is a possibility that the IPC hard disk requires defragmenting. To start the disk defragmenter perform the following:

a) Log on as an installer, see 9.6-2 HMI and PLMS - Log On Procedure.

(Cont'd)

TechPub_2614345_0108 - 0802_3048242_01.fm

(Cont'd)

b) From the START menu choose CONFIGURE PLMS.
c) Touch the HARDWARE AND NETWORK button (1).
d) Touch the DEFRAGMENT THE HARD DISK button (2).
e) The following WARNING MESSAGE window (3) appears.
f) Select the YES button (4) to start the disk defragmenter.

The disk defragmenter is a system tool of Microsoft Windows, see the disk defragmenter help menu for more details on using the disk defragmenter.

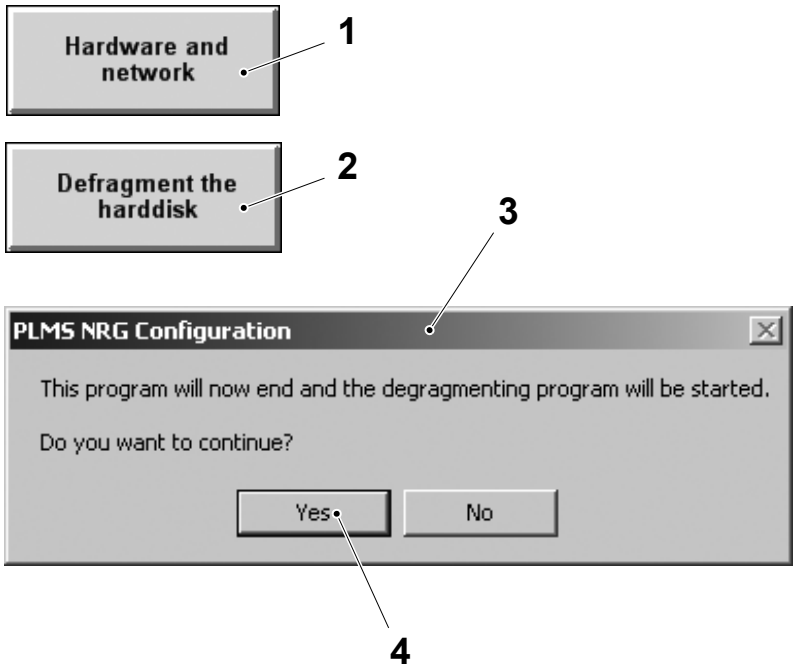

1 Hardware and network button
2 Defragment the hard disk button
3 Warning message window
4 Yes button

TechPub_2614345_0108 - 0802_3048242_01.fm

9.6.1-8 PLMS NRG Configurator - Set Date and Time

Machine Status	Mains Power ON Air OFF Steam ON Water OFF
Special Equipment	Keyboard with USB connector

a) Log on as an installer, see 9.6-2 HMI and PLMS - Log On Procedure.

b) From the START menu choose CONFIGURE PLMS.

c) Touch the HARDWARE AND NETWORK button (1), then touch the CHANGE THE TIME OR DATE button (2) in the PLMS LIVE window.

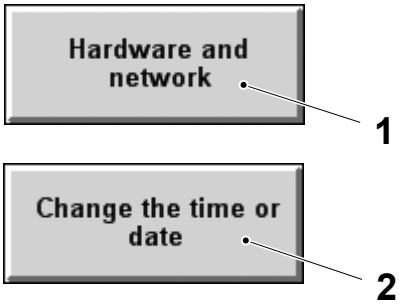

1 Hardware and network
2 Change the time or date button

(Cont'd)

TechPub_2614345_0108 - 0802_3048242_01.fm

(Cont'd)

d) Use the ARROW buttons (3) to change the time in step of one hour, the ARROW buttons (4) to change the time in step of ten minutes, the ARROW buttons (5) to change the time in step of one minute, the ARROW buttons (6) to change the time in step of one second.

e) Touch the OK button (7).

f) If all work with the PLMS is finished, restart and log on as an operator, see 9.6-2 HMI and PLMS - Log On Procedure.

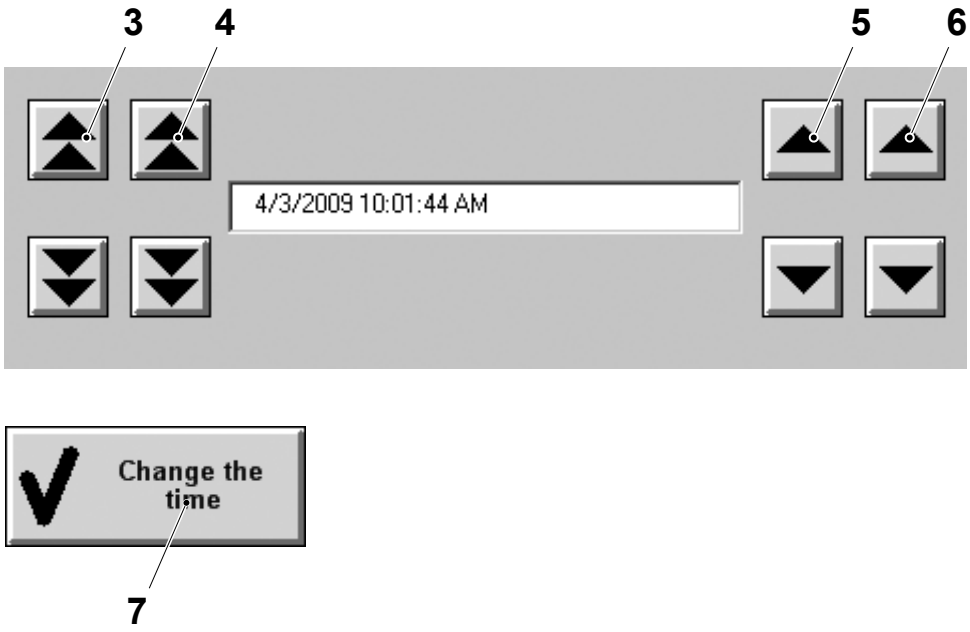

3 Arrow button
4 Arrow button
5 Arrow button
6 Arrow button
7 OK button

(Cont'd)

TechPub_2614345_0108 - 0802_3048242_01.fm

(Cont'd)

g) Touch the TIME SYNCRONIZATION SETUP button (8) to select the time zone and the daylight saving time option. TIME SYNCRONIZATION SETUP window appears.

h) Enable the ATTEMPT TO SYNCRONIZE TIME OVER A NETWORK check box (9) to enable automatic date and time syncronization with the PLMS master PC.

i) Select the country from the list (10) and check the check box (11) if the daylight savings time should be adjusted automatically.

j) If all work with the PLMS is finished, restart and log on as an operator, see 9.6-2 HMI and PLMS - Log On Procedure.

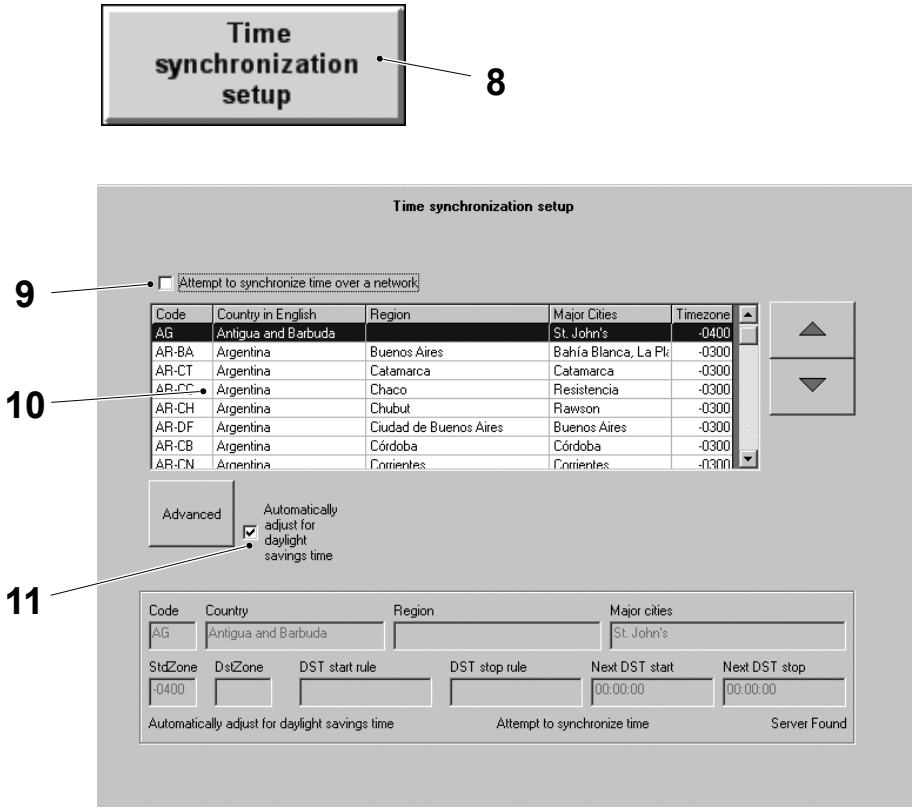

8 Time syncronization setup
9 Check box
10 Country list
11 Checkbox

TechPub_2614345_0108 - 0802_3048242_01.fm

9.6.1-9 PLMS NRG Configurator - Operator Sheet Set Up

Machine Status	Mains Power ON Air OFF Steam ON Water OFF
Special Equipment	Keyboard with USB Connector

a) Log on as an installer, see 9.6-2 HMI and PLMS - Log On Procedure.

b) From the START menu choose CONFIGURE PLMS.

c) In the PLMS NRG Configurator window touch the:

- OPERATOR SHEET STANDARD SETUP button (1) to configure the operator sheet using the list of standard event codes as the source. See Operator Sheet on page 9-274.
- CUSTOM EVENT CODE button (2) to configure the operator sheet with additional event codes that are customer specific. See Custom Event Codes on page 9-276.
- OPERATOR SHEET - AUTOMATIC SIGNALS button (3) to configure the operator sheet pop up windows to contain the correct event codes and to appear at the correct time. The information for each pop up window is stored in a record. See Operator Sheet - Automatic Signals on page 9-278.

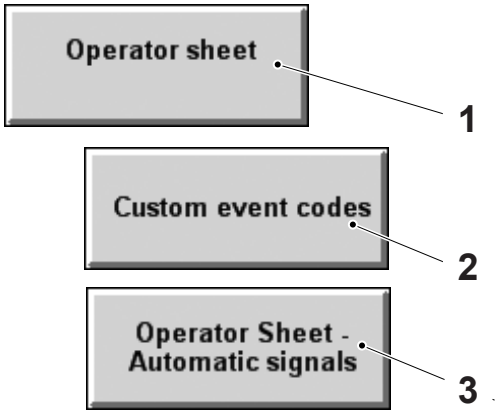

1 Operator sheet standard setup button
2 Custom event code button
3 Operator sheet - automatic signals button

(Cont'd)

TechPub_2614345_0108 - 0802_3048242_01.fm

(Cont'd)

d) If not already done, select the ENABLE OPERATOR SHEET check box (4) in the PLMS NRG Configurator main window.

e) Restart and log on as an operator, see 9.6-2 HMI and PLMS - Log On Procedure.

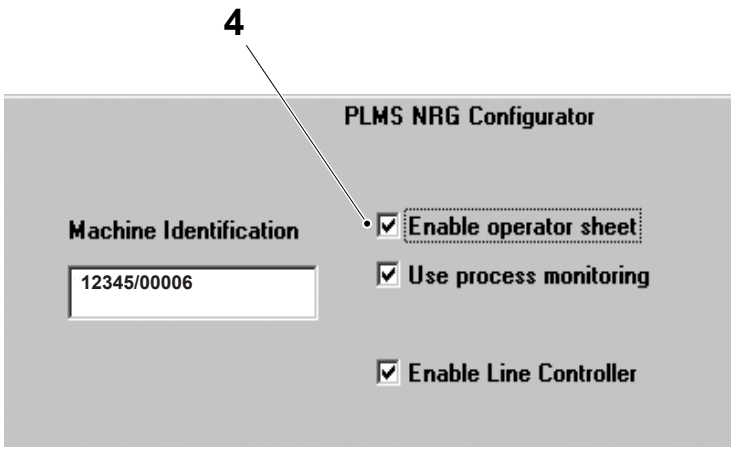

4 Enable operator sheet check box

(Cont'd)

TechPub_2614345_0108 - 0802_3048242_01.fm

(Cont'd)

Operator Sheet

To configure the operator sheet using pre-defined event codes, proceed as follows:

a) Touch the OPERATOR SHEET button, see page 9-272.

b) If necessary modify the PRESENT SETUP list (1):

- use the SCROLLING buttons (2) to scroll the list and to select an item. Touch the DELETE button (3) to delete the selected item.
- if an item is missing from the PRESENT SETUP list (1), select the item in ORIGINAL SETUP AND UNUSED CODES list (4). Use the SCROLL buttons (5) to scroll the list and to select the item. Touch the COPY TO HERE button (6) to move it to the PRESENT SETUP list (1).

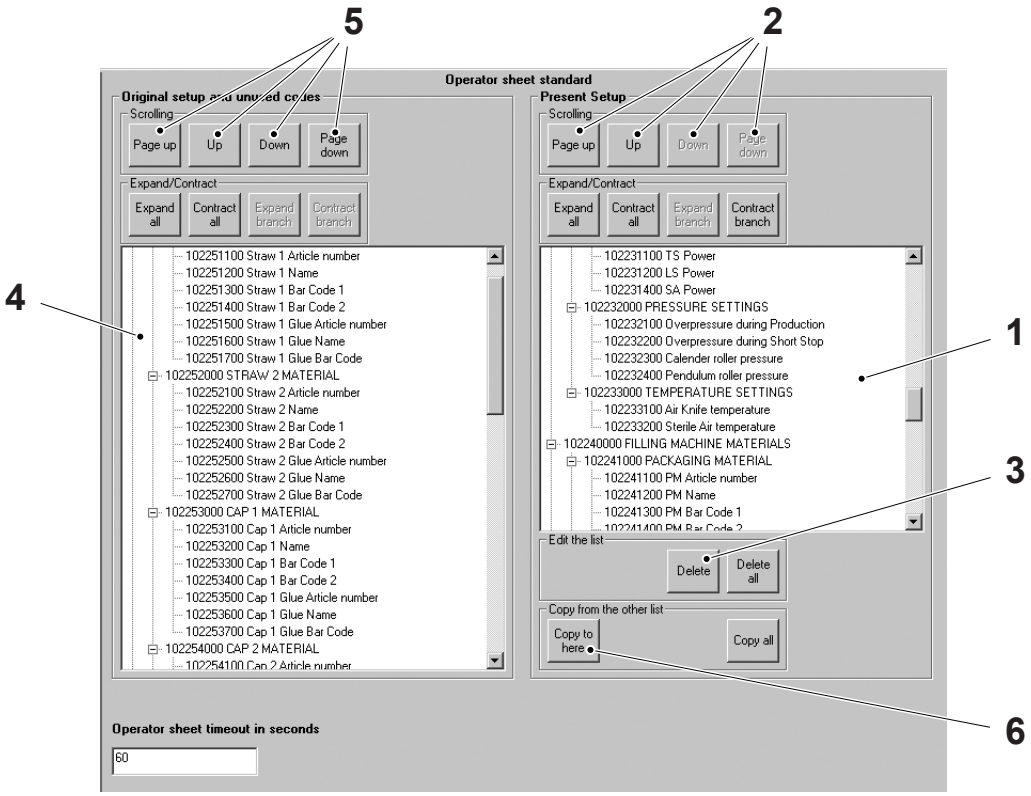

1 Present setup list
2 Scroll button
3 Delete button
4 Available event codes list
5 Scroll button
6 Copy to here button

(Cont'd)

TechPub_2614345_0108 - 0802_3048242_01.fm

(Cont'd)

c) In the OPERATOR SHEET TIME OUT IN SECONDS field (7), set the time of how long inactivity from the operator is tolerated before the TPOP returns to the normal view.

d) If necessary, in the STANDARD VALUE field (8), set a standard value for selected event codes in the PRESENT SETUP list (1), this is an optional input. Save the value with the CHANGE STANDARD VALUE button (9).

e) If the EVENT CODE must or should cause a break in the log for later data analysis, enable the box (10). Normally the box (10) should be disabled.

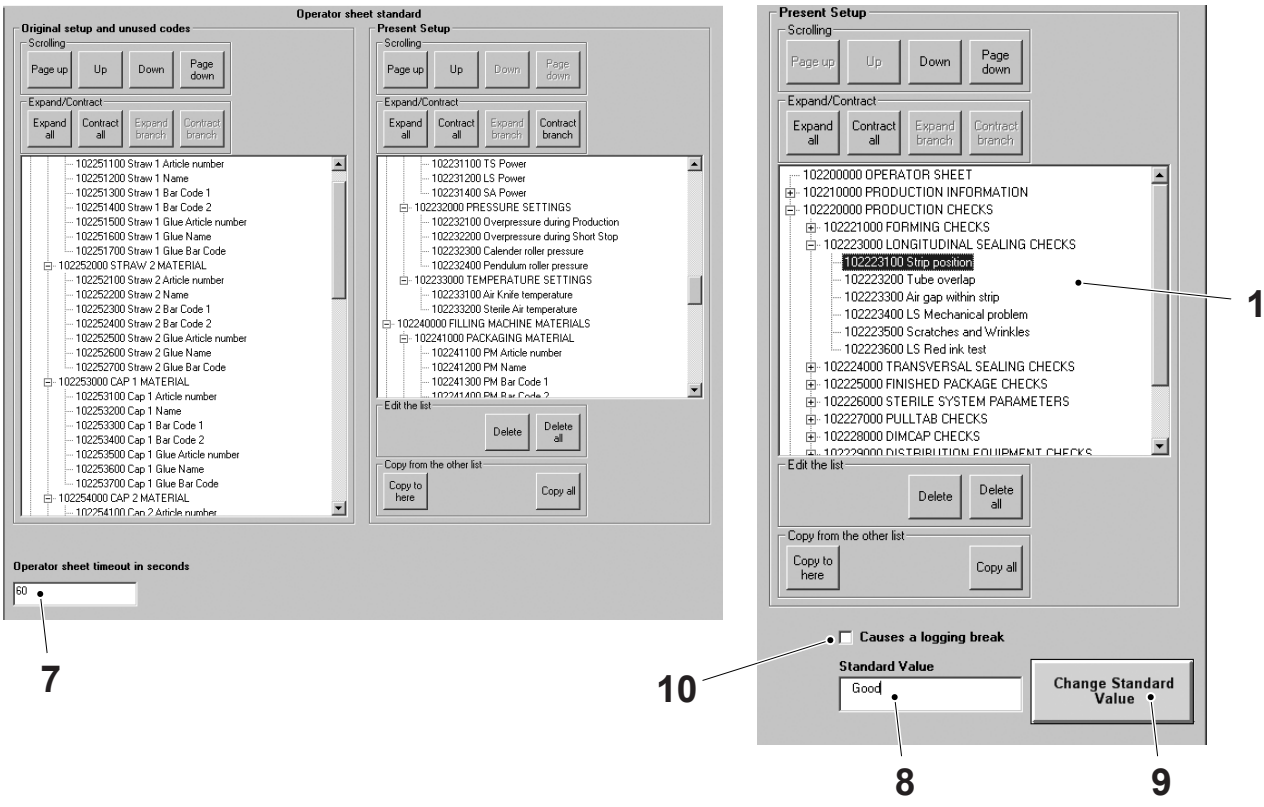

1 Present setup list
7 Operator sheet timout in seconds field
8 Standard value field
9 Change standard value button
10 Box

(Cont'd)

TechPub_2614345_0108 - 0802_3048242_01.fm

(Cont'd)

Custom Event Codes

To configure the operator sheet using customer specific event codes, proceed as follows:

The CUSTOM EVENT CODES list (1) is composed of an EVENT CODE DESCRIPTION, associated to an EVENT CODE between 103 **2800** 00 and 103 **2999** 00. Where 103 stand for the filler type and can not be changed, and 00 is reserved for PLMS and can not be changed.

The CUSTOM EVENT CODES list (1) must be structured in:

- main groups (2) - 2800 or 2900
- sub groups (3) - 2810, 2910 and 2920 in this example
- details (4) - 2811, 2812, 2911, 2912 and 2921 in this example.

Navigate in the CUSTOM EVENT CODES list (1) with the SCROLL buttons (5).

To remove an EVENT CODE from the CUSTOM EVENT CODES list (1), touch the DELETE button (6).

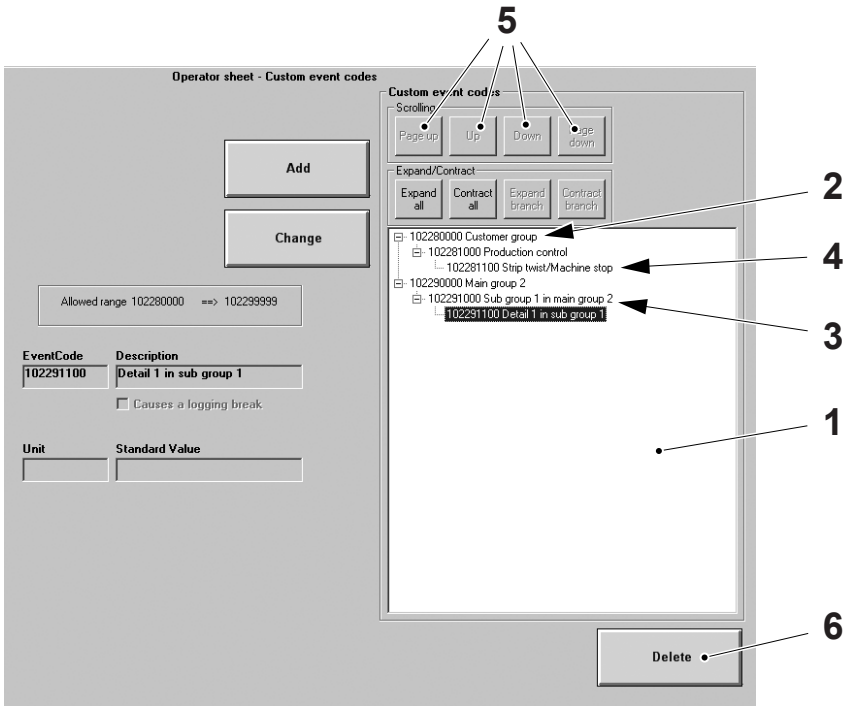

1 Custom event codes list
2 Main group
3 Sub group
4 Detail
5 Scroll button
6 Delete button

(Cont'd)

TechPub_2614345_0108 - 0802_3048242_01.fm

(Cont'd)

To add EVENT CODES to the CUSTOM EVENT CODES list (1), proceed as follows:

a) Touch the ADD button (7).

b) Write the EVENT CODE in the EVENT CODE field (8).

c) Write the EVENT CODE DESCRIPTION in the EVENT CODE DESCRIPTION field (9).

d) If the EVENT CODE must or should cause a break in the log for later data analysis, enable the box (10). Normally the box (10) should be disabled.

e) If necessary, write a value for the STANDARD VALUE field (11) and the UNIT field (12) for this EVENT CODE. This is optional.

f) Touch the OK ADD button (13).

g) Touch the CHANGE button (14) to modify the existing record.

h) Repeat items a) to g) until all EVENT CODES are created.

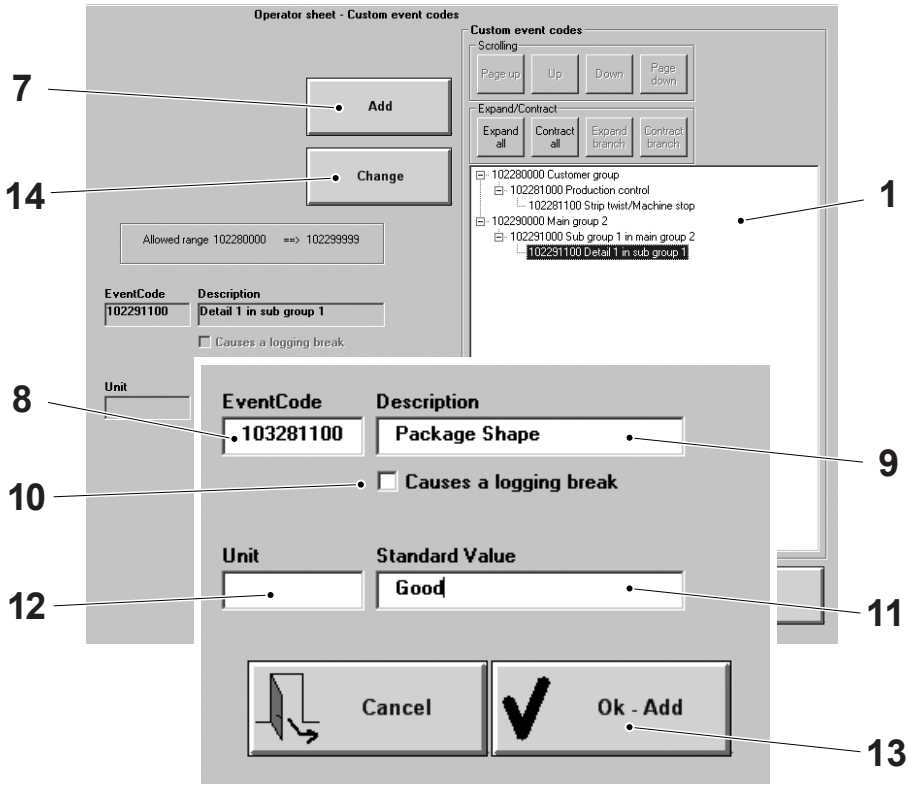

1 Custom event codes list
7 Add button
8 Event code field
9 Event code description field
10 Box
11 Standard value field
12 Unit field
13 Ok Add button
14 Change button

(Cont'd)

TechPub_2614345_0108 - 0802_3048242_01.fm

(Cont'd)

Operator Sheet - Automatic Signals

The information needed to produce the automatic pop up windows is stored in records. To configure these records with either PLC specified event codes or operator triggered event codes, proceed as follows:

a) Touch the AUTOMATIC CUSTOM INPUT SIGNALS button, see page 9-272.

b) Touch the CREATE NEW SHEET button (1) to create a new operator sheet or CREATE A NEW ROW IN THE SELECTED SHEET button (2) to add records in the selected operator sheet.

c) Assign a name to the operator sheets in the TEXT TO SHOW IN TITLE BAR field (3).

d) Assign a delay in seconds to when the operator sheets will appear in the DELAY SHOW SECONDS field (4).

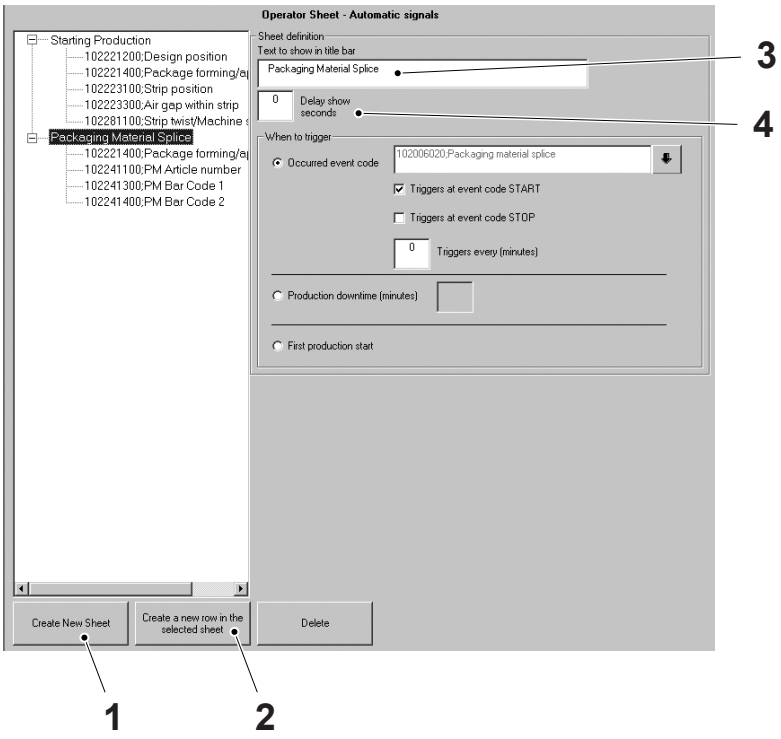

1 Create new sheet button
2 Create a new row in the selected sheet button
3 Text to show in title bar field
4 Delay show seconds field

(Cont'd)

TechPub_2614345_0108 - 0802_3048242_01.fm

(Cont'd)

e) Select how and when this operator sheet (5) should be triggered:

- option one (6) - the operator sheet dialog window will appear when the specified EVENT CODE occurs. Touch the arrow button (8) to select the occurred EVENT CODE from the pre-defined EVENT CODE window (7). Choose when to trigger the EVENT CODE by selecting the check boxes (9). If necessary, set the delay time, in the field (10), before the EVENT CODE can be activated again.
- option two (11) - the operator sheet dialog window will appear after production start but only if the machine has been at production stop for the defined number of minutes - PRODUCTION DOWNTIME (12)
- option three (13) - the operator sheet dialog window will appear when the production starts for the first time.

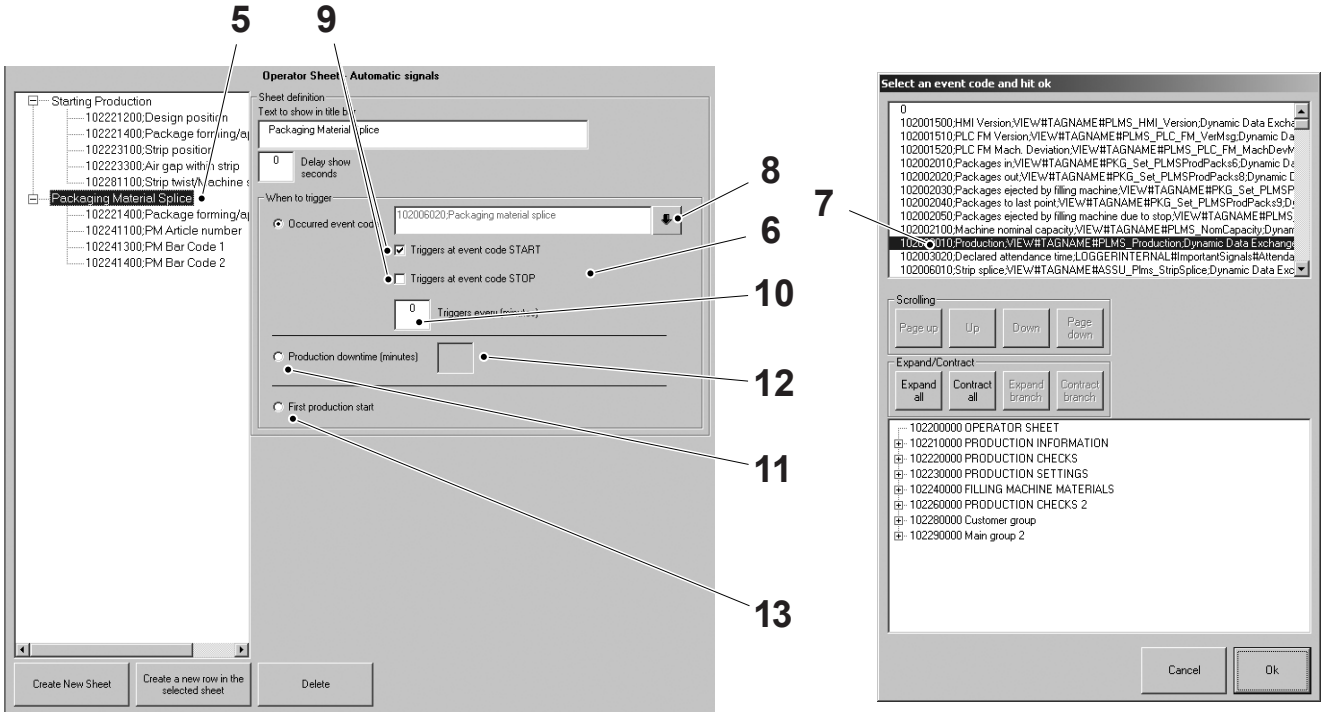

5 Operator sheet
6 Option one
7 Event code window
8 Arrow button
9 Box
10 Field
11 Option two
12 Production downtime
13 Option three

(Cont'd)

TechPub_2614345_0108 - 0802_3048242_01.fm

(Cont'd)

f) To modify an event code (14) select it and press the arrow button (15).

g) Select the required event code from the list (16).

h) Enable the box (17) if the default input is "GOOD" for this EVENT CODE in the operator sheet. If it is not enabled, the operator must write the input for this EVENT CODE each time it occurs.

i) To add an event code (14) press the CREATE A NEW ROW IN THE SELECTED SHEET button (18) and follow the procedure in item g) and h).

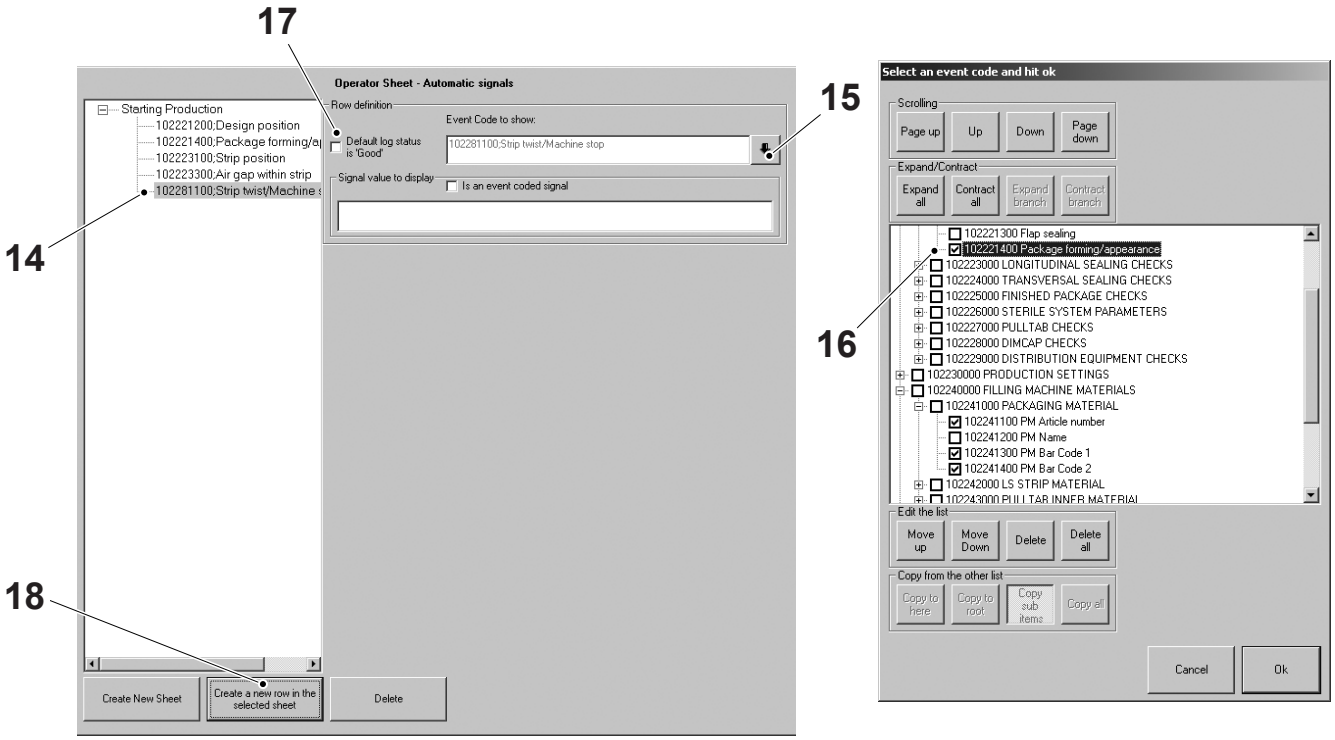

14 Event code
15 Arrow button
16 Event code list
17 Box
18 Create a new row in the selected sheet button

TechPub_2614345_0108 - 0802_3048242_01.fm

9.6.2 PLMS NRG

9.6.2-1 PLMS NRG - Copy Performance and Process Data

Machine Status	Mains Power ON Air OFF Steam ON Water OFF
SPC Reference	2914244-0100

To analyse data collected by the system, the data must first be copied to an office PC. There are two possible methods:

- direct communication between the filling machine and an office PC by means of the external network connection (level 5). See the PLMS Centre User Manual for the communication configuration using the Netcom module
- manual copying by means of a USB key.

This section describes how to manually copy the data only.

The copied data can be analysed in an office PC utilising the PLMS Centre analysis program. For more information, see PLMS Centre User Manual.

It is possible to copy performance data and process data for different kinds of analyse:

- performance data files, to be analysed with the PLMS Centre analysis program using the Performance Analysis module
- process event and parameter data files, to be analysed with the PLMS Centre analysis program using the Process Analysis module

Note! The data files are in the *.xml file format and are compressed into a ***.zip folder** which can be extracted with the program WinZip.

(Cont'd)

TechPub_2614345_0108 - 0801_3048243_01.fm

(Cont'd)

Copy Performance Data Files

a) Remove the plug of a USB port (1) in the control panel (2) and insert a USB memory key into the USB slot.

b) Touch the PLMS SETUP button (3).

c) Touch the COPYLOGGED DATA button (4).

d) Touch the PERFORMANCE DATA button (5).

Note! The PERFORMANCE DATA button (5) is pre-selected by default.

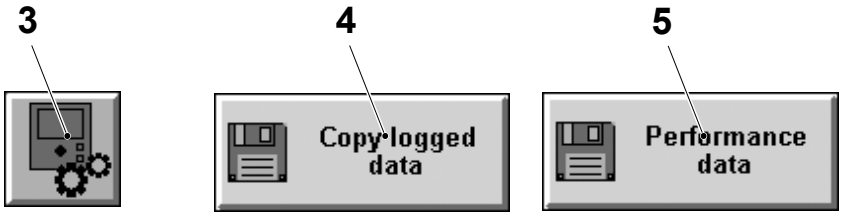

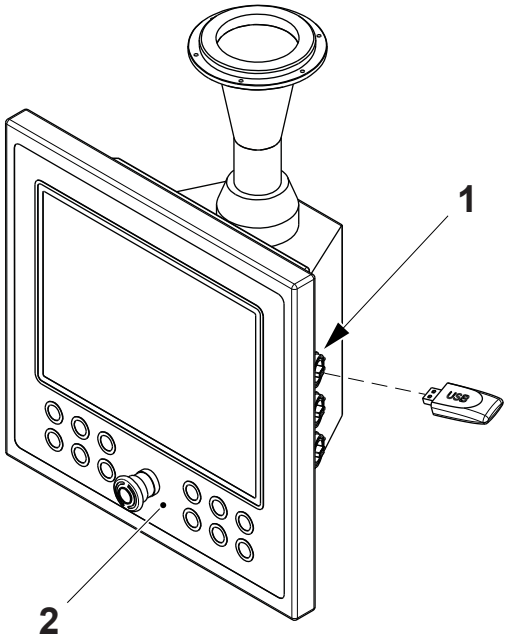

1 USB port
2 Control panel
3 PLMS setup button
4 Copy logged data button
5 Performance data button

(Cont'd)

TechPub_2614345_0108 - 0801_3048243_01.fm

(Cont'd)

Note! The COPYLOG STARTING DATE button (6) is set by default to the last downloading date. The COPYLOG ENDING DATE button (7) is set by default to the date of yesterday. To download the data files from a different period of time follow the procedure Change the Copylog Start/End Date on page 9-288.

e) Touch the OK button (8) to download the performance data files.

Note! Do not press the TPOP RESET button (9) on the control panel during the copying procedure, if flashing! The starting date is automatically updated every time the data log is copied.

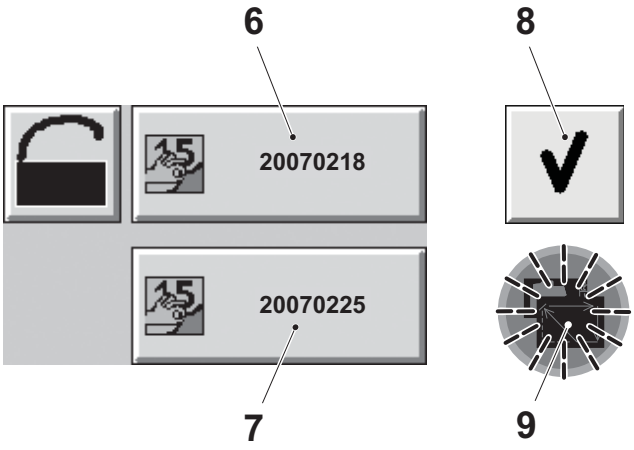

6 Copylog starting date button
7 Copylog ending date button
8 OK button
9 TPOP reset button

(Cont'd)

TechPub_2614345_0108 - 0801_3048243_01.fm

(Cont'd)

Note! If the icon (13) is displayed, read the accompanying help text on the TPOP and perform the necessary action(s).

f) When the download is complete the icon (10) is displayed.

g) If necessary, touch the `EJECT DRIVE` button (11).

h) Touch the `EXIT` button (12).

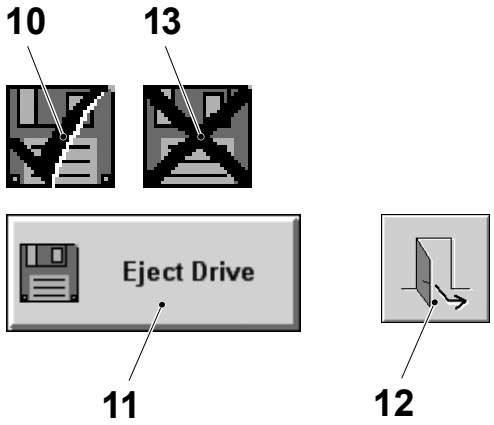

10 Icon
11 Eject drive button
12 Exit button
13 Icon

(Cont'd)

TechPub_2614345_0108 - 0801_3048243_01.fm

(Cont'd)

Copy Process Data Files

a) Remove the plug of a USB port (1) in the control panel (2) and insert a USB memory key into the USB slot.

b) Touch the PLMS SETUP button (3).

c) Touch the COPYLOGGED DATA button (4).

d) Touch the PROCESS DATA button (5).

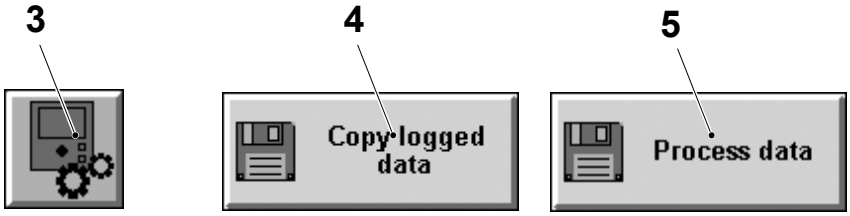

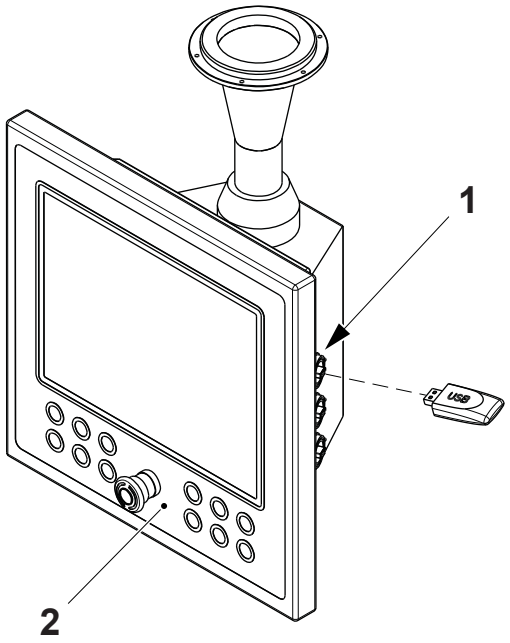

1 Plug
2 Control panel
3 PLMS setup button
4 Copy logged data button
5 Process data button

(Cont'd)

TechPub_2614345_0108 - 0801_3048243_01.fm

(Cont'd)

Note! The COPYLOG STARTING DATE button (6) is set by default to the last downloading date. The COPYLOG ENDING DATE button (7) is set by default to the date of yesterday. To download the data files from a different period of time follow the procedure Change the Copylog Start/End Date on page 9-288.

e) Touch the OK button (8) to download the process data files.

Note! Do not press the TPOP RESET button (9) on the control panel during the copying procedure, if flashing! The starting date is automatically updated every time the data log is copied.

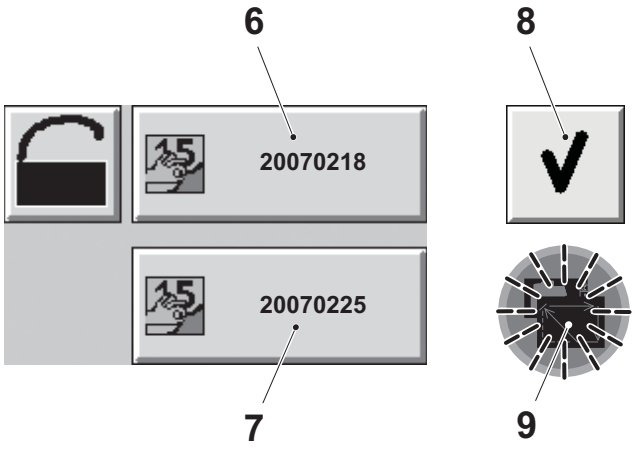

6 Copylog starting date button
7 Copylog ending date button
8 OK button
9 TPOP reset button

(Cont'd)

TechPub_2614345_0108 - 0801_3048243_01.fm

(Cont'd)

Note! If the icon (13) is displayed, read the accompanying help text on the TPOP and perform the necessary action(s).

f) When the download is complete the icon (10) is displayed.

g) If necessary, touch the `EJECT DRIVE` button (11).

h) Touch the `EXIT` button (12).

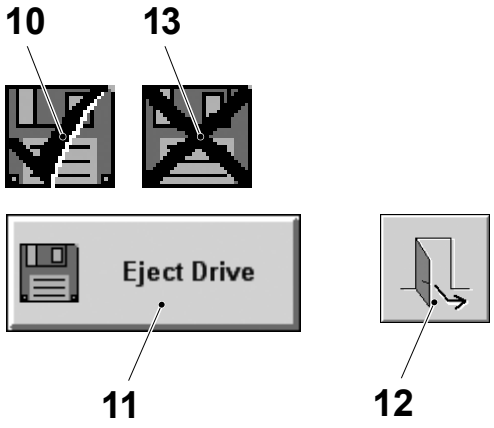

10 Icon
11 Eject drive button
12 Exit button
13 Icon

(Cont'd)

TechPub_2614345_0108 - 0801_3048243_01.fm

(Cont'd)

Change the Copylog Start/End Date

To download the data files from a different period of time follow the instructions below.

a) Touch the LOCK button (1).

b) Touch the COPYLOG STARTING DATE button (2) and select a date from the date selection window (3).

Note! The arrow buttons (4) change the date in step of 10 days, the arrow buttons (5) change the date in step of 1 day.

c) Touch the COPYLOG END DATE button (6) and select a date from the from the date selection window (3).

d) Touch the OK button (7) to download the files.

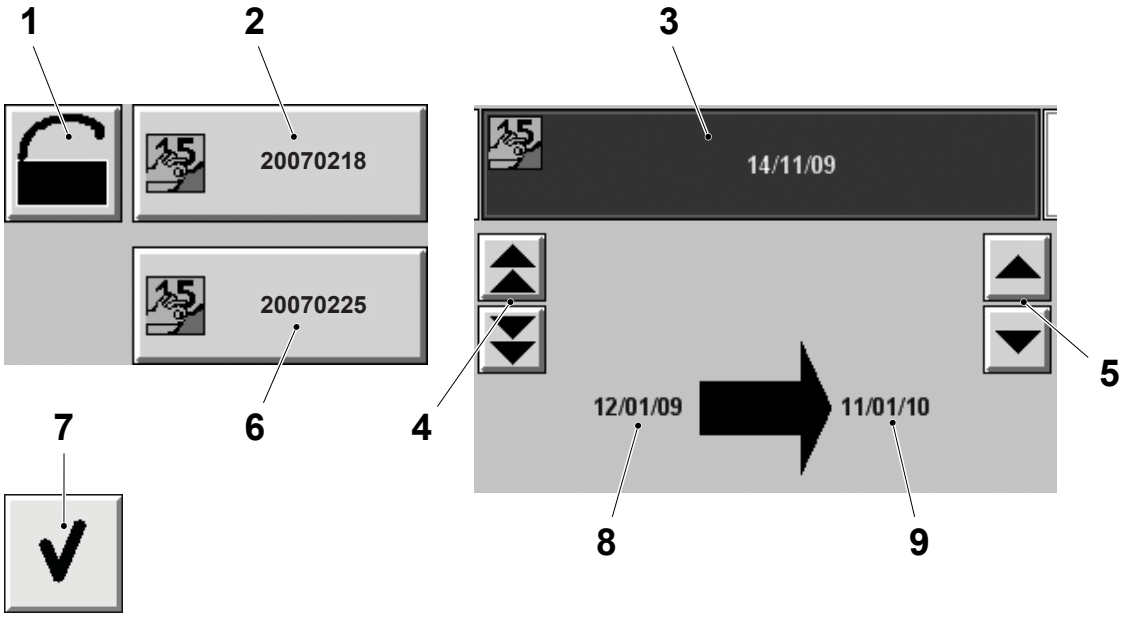

1 Lock button
2 Copy log start date button
3 Selection window
4 Arrow button
5 Arrow button
6 Copy log end date button
7 OK button
8 Earlier date available
9 Latest date available

TechPub_2614345_0108 - 0801_3048243_01.fm

9.6.3 HMI

9.6.3-1 HMI - User Management Description

SPC Reference	2914244-0100

The HMI includes certain sections which have restricted access and are password protected. Access is permitted and defined by the user profile and the password used to log on, see the table below for a description of each of the available user profiles and the corresponding level of access.

Note! The default machine operator has no user log on profile or access to the restricted areas of the HMI.

User Profile	User Name	Password	Access Description
TP service technician	tptechnician	not provided	Access to: - user administration - shifts definition - supervisor reserved settings - TP reserved production control settings and functions - production control settings and functions - TP reserved maintenance control settings and functions - maintenance control settings and functions - create and delete recipes - software installation and configuration - shutdown - diagnostic - full access to the configuration window - alarm management - basic recipe management

(Cont'd)

TechPub_2614345_0108 - 0801_3048244_01.fm

(Cont'd)

User Profile	User Name	Password	Access Description
Supervisor	supervisor	shiftsup	Access to: - user administration - shifts definition - supervisor reserved settings - production control settings and functions - maintenance control settings and functions - create and delete recipes - software installation and configuration - partial access to the configuration window - alarm management - basic recipe management
Service technician	technician	custtech	Access to: - production control settings and functions - maintenance control settings and functions - create and delete recipes - software installation and configuration - partial access to the configuration window - alarm management - basic recipe management
Power operator	pwroperator	expertop	Access to: - power operator reserved production control settings and functions - alarm management - basic recipe management
Operator (default user without log on)	-	-	Access to: - production control settings and functions - alarm management - basic recipe management

TechPub_2614345_0108 - 0801_3048244_01.fm

9.6.3-2 HMI - User Management Log On

SPC Reference	2914244-0100

This procedure describes how to log on to the HMI and to access the restricted password protected sections of the HMI. The level of access permitted is defined by the user profile, see 9.6.3-1 HMI - User Management Description.

Note! After 15 minutes of HMI inactivity the user is automatically logged out.

To log on to the HMI proceed as described below:

a) On the TPOP, touch the SYSTEM SETUP button (1).

b) In the SYSTEM SETUP window, touch the USER MANAGEMENT button (2).

c) Touch the LOG ON button (3) to display the LOG ON window (4).

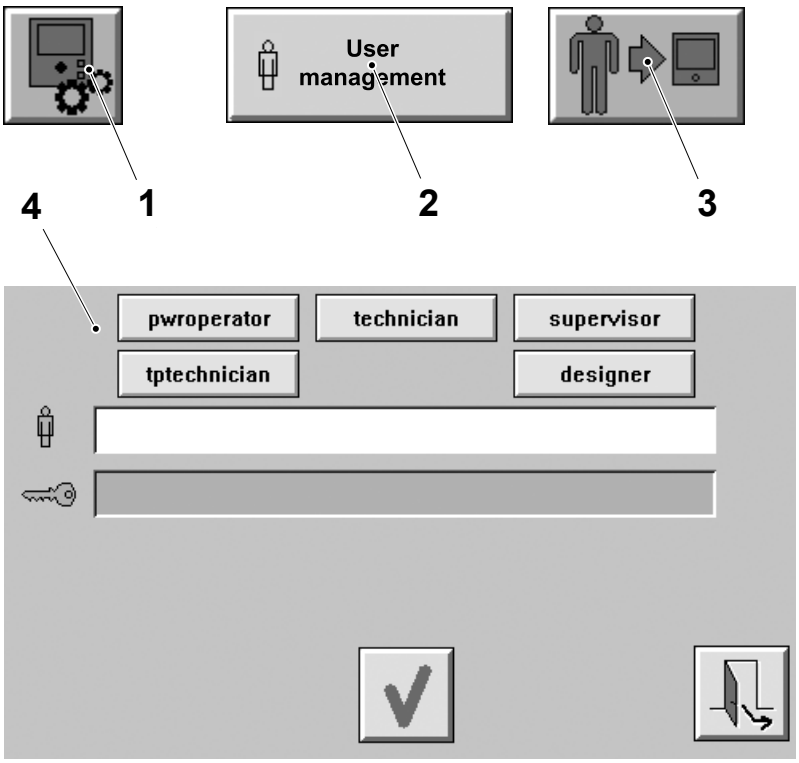

1 System setup button
2 User management button
3 Log on button
4 Log On window

(Cont'd)

TechPub_2614345_0108 - 0801_3048244_01.fm

(Cont'd)

Note! Pwroperator is used as an example in the illustration.

d) Touch the appropriate `USER` button (5) corresponding to your user profile.

e) Touch the `PASSWORD` box (6) to display the keyboard (7).

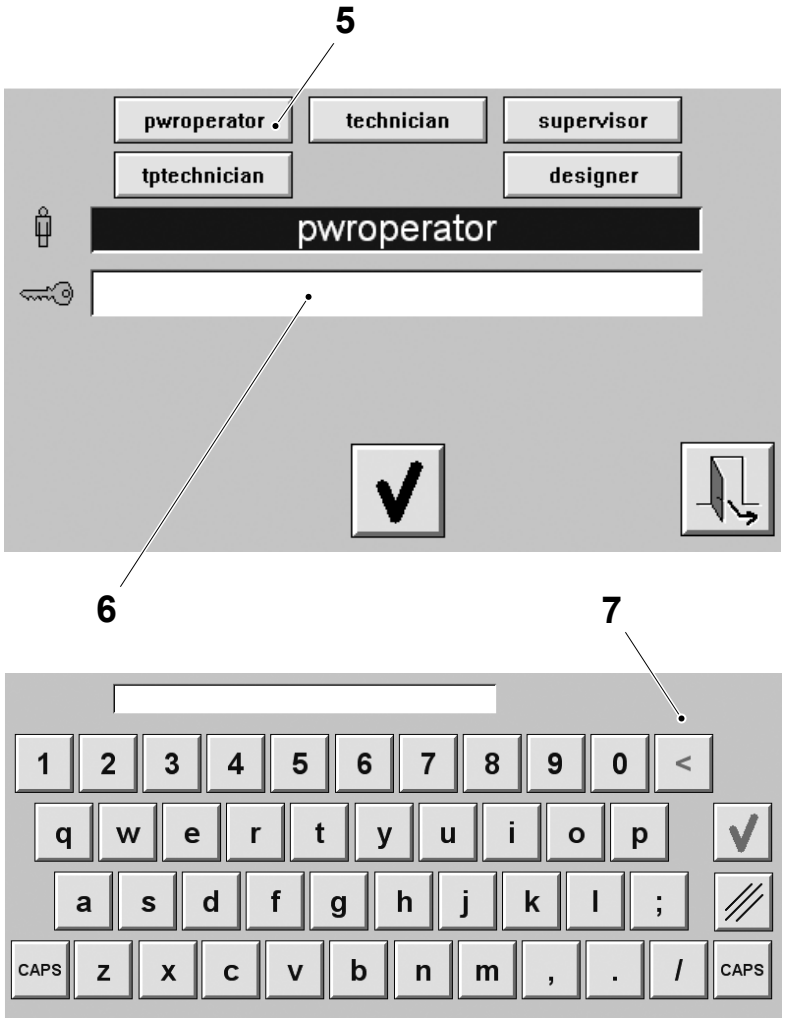

5 User button
6 Password box
7 Keyboard

(Cont'd)

TechPub_2614345_0108 - 0801_3048244_01.fm

(Cont'd)

f) Use the keyboard (7) to enter the password and then touch the OK button (8).

g) Touch the OK button (9) in the LOG ON window (4).

The user is now logged on to the HMI with the corresponding level of access. All changes to the system are recorded along with the user ID information.

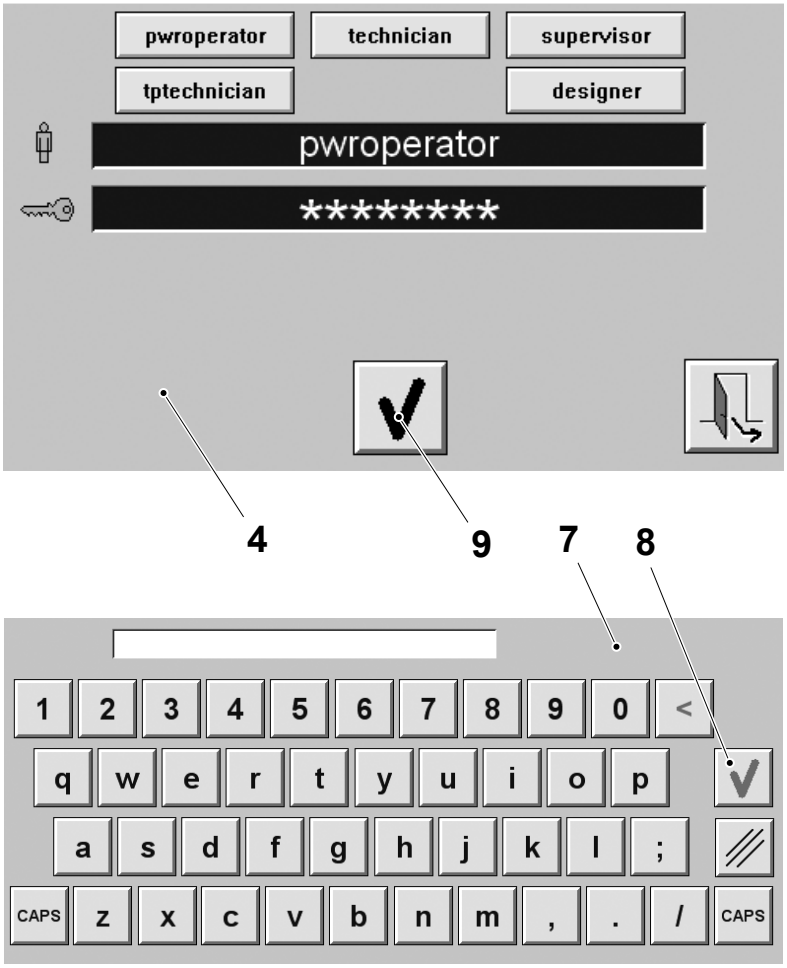

4 Log on window
7 Keyboard
8 OK button
9 OK button

TechPub_2614345_0108 - 0801_3048244_01.fm

9.6.3-3 HMI - User Management Change Password

SPC Reference	2914244-0100

CAUTION
Risk of unplanned machine stoppage.
If the default passwords are changed and subsequently forgotten, the HMI software must be reinstalled before access to the restricted sections of the HMI is restored.

The user with the profile “supervisor” has the authority to set and change the passwords for the user profiles of “technician” and “pwroperator”. To change the password of either the user profiles proceed as follows:

a) Log on to the HMI as the user profile “supervisor”, see 9.6.3-2 HMI - User Management Log On.

b) In the `USER MANAGEMENT` window, touch either the:
   – `ENABLE PWROPERATOR CHANGE PASSWORD` button (1) for the user profile “pwroperator”
   – `ENABLE TECHNICIAN CHANGE PASSWORD` button (2) for the user profile “technician”.

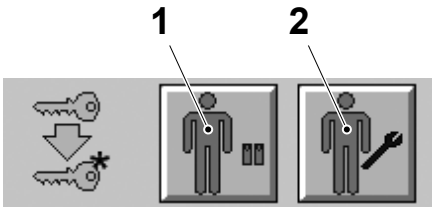

1 Enable pwroperator change password button
2 Enable technician change password button

(Cont'd)

TechPub_2614345_0108 - 0801_3048244_01.fm

(Cont'd)

c) Touch the LOG OFF button (3).

d) Log on to the HMI using the user profile chosen in item b), see 9.6.3-2 HMI - User Management Log On.

e) The CHANGE PASSWORD button (4) is now visible in the USER MANAGEMENT window, touch the CHANGE PASSWORD button (4) to display the CHANGE PASSWORD dialogue box (5).

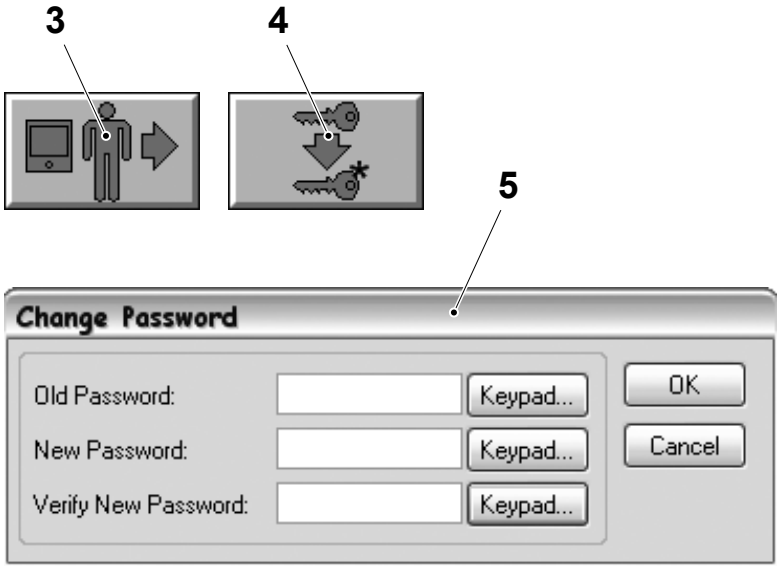

3 Log off button
4 Change password button
5 Change password dialogue box

(Cont'd)

TechPub_2614345_0108 - 0801_3048244_01.fm

(Cont'd)

f) Touch the KEYPAD button (6) to display the keypad (7).

g) Use the keypad to enter the current password then touch the ENTER button (8).

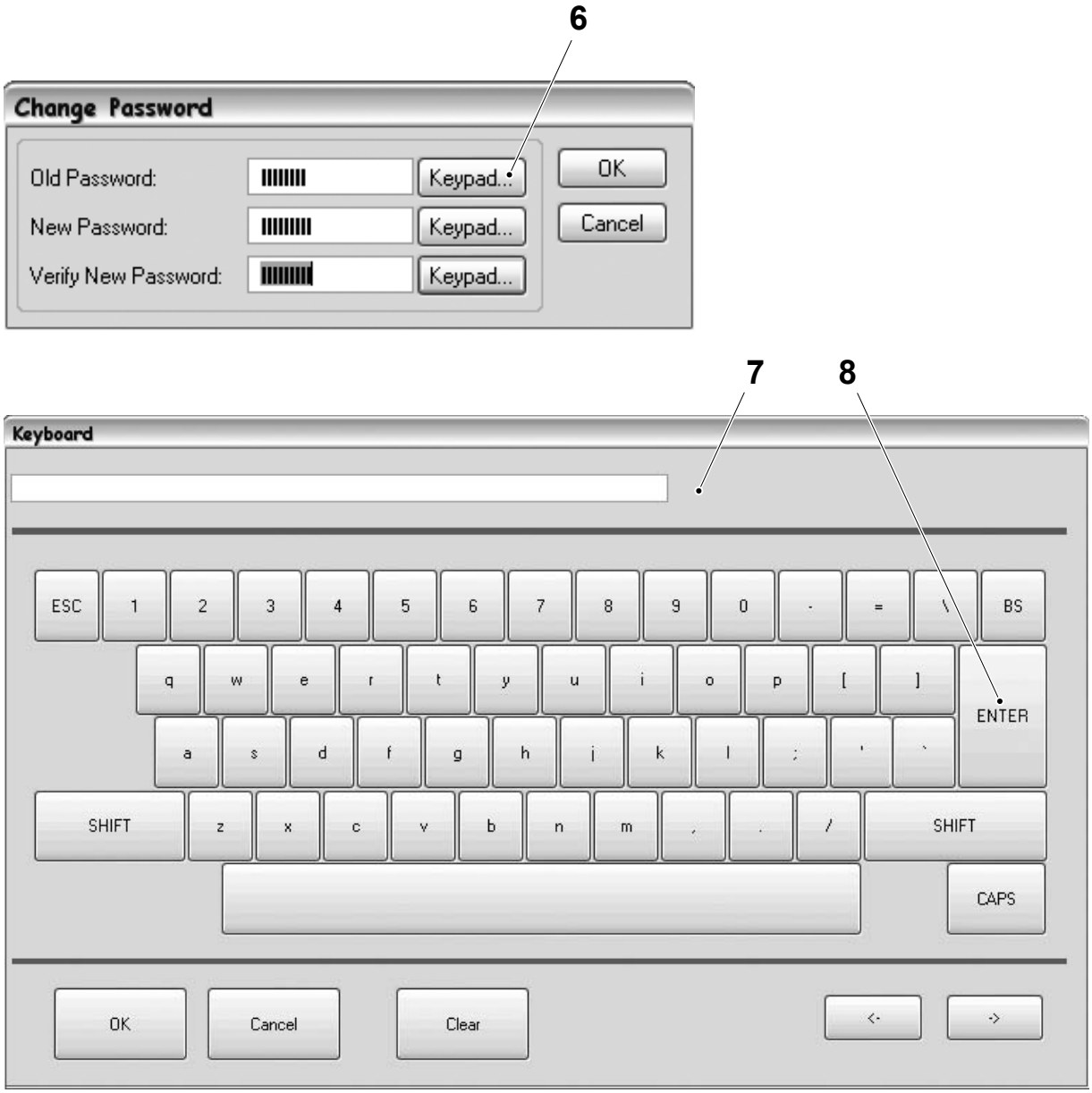

6 Keypad button
7 Keypad
8 Enter button

(Cont'd)

TechPub_2614345_0108 - 0801_3048244_01.fm

(Cont'd)

h) Touch the KEYPAD button (9) to display the keypad (7).

i) Use the keypad to enter the new password then touch the ENTER button (8).

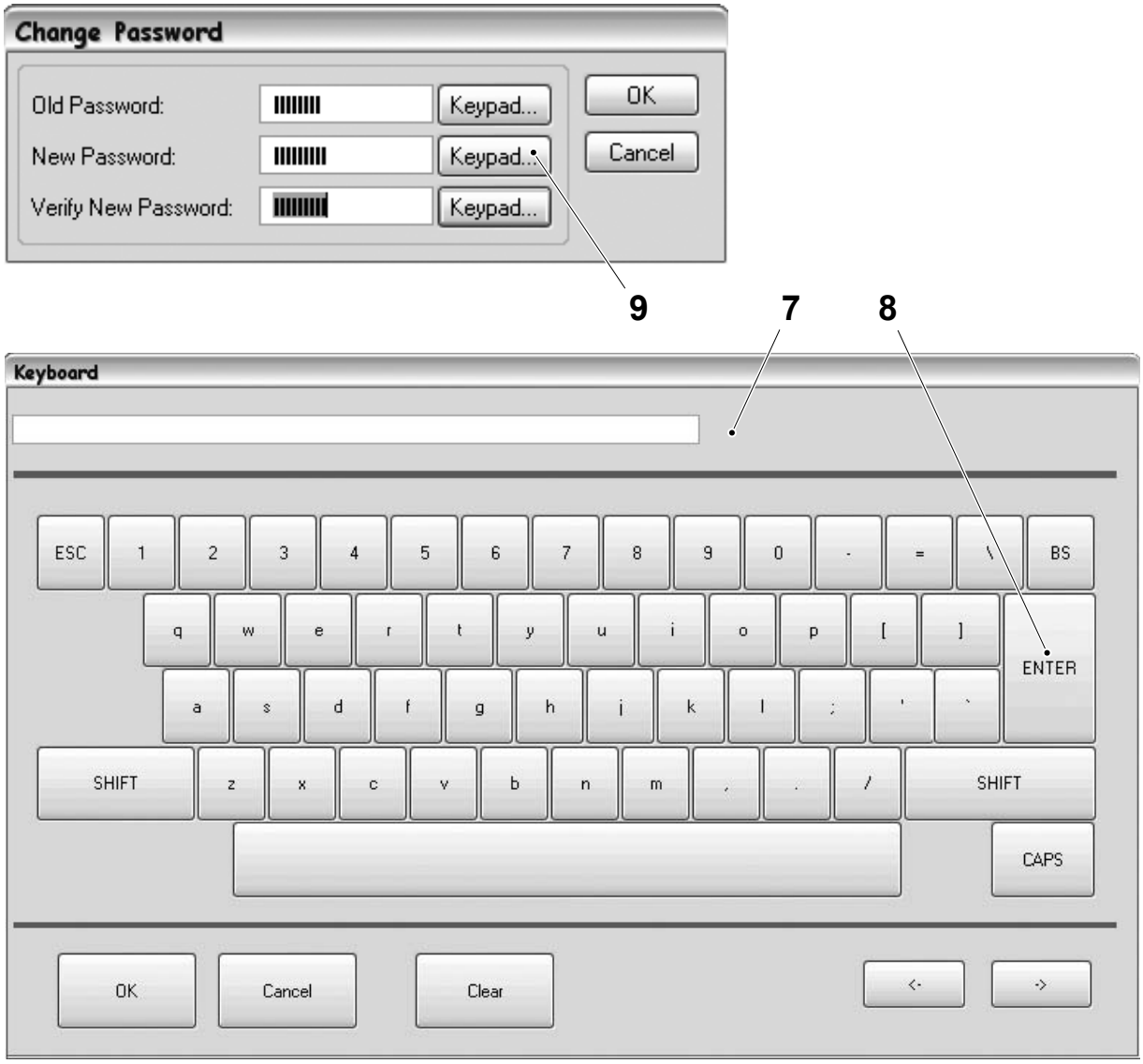

7 Keypad
8 Enter button
9 Keypad button

(Cont'd)

TechPub_2614345_0108 - 0801_3048244_01.fm

(Cont'd)

j) Touch the KEYPAD button (10) to display the keypad (7).

k) Use the keypad to repeat the new password then touch the ENTER button (8).

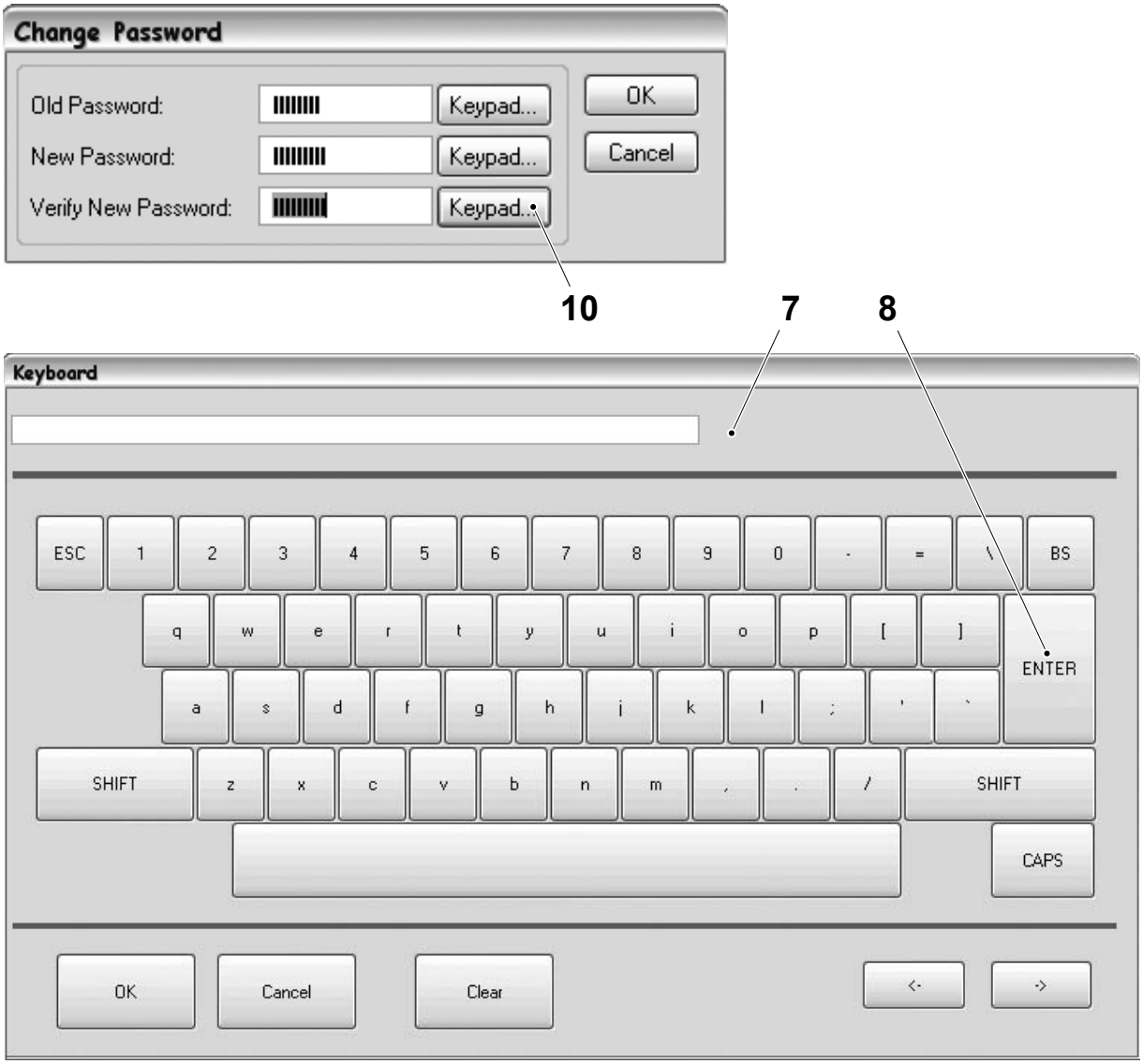

7 Keypad
8 Enter button
10 Keypad button

(Cont'd)

TechPub_2614345_0108 - 0801_3048244_01.fm

(Cont'd)

l) Touch the OK button (11).

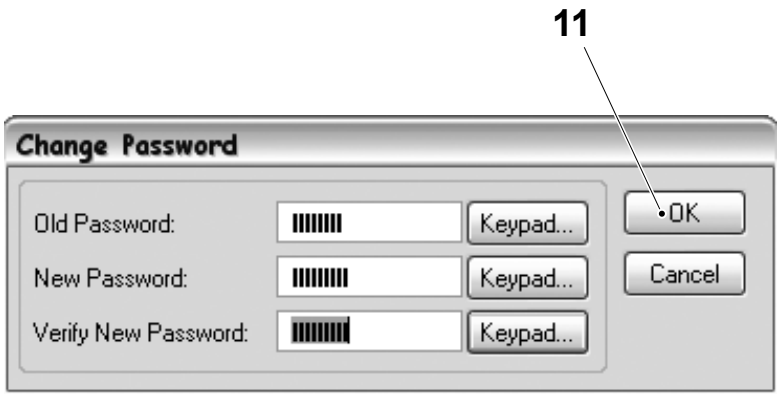

11 OK button

(Cont'd)

TechPub_2614345_0108 - 0801_3048244_01.fm

(Cont'd)

Note! If the ENABLE CHANGE PASSWORD buttons are not deselected by the "supervisor" profile, the CHANGE PASSWORD button remains visible and accessible in the profiles for the "pwroperator" and "technician".

m) Touch the LOG OFF button (3).

n) Log on to the HMI as the user profile "supervisor", see 9.6.3-2 HMI - User Management Log On.

o) In the USER MANAGEMENT window, depending on which button was selected in item b) deselect the:

- ENABLE PWROPERATOR CHANGE PASSWORD button (1) for the user profile "pwroperator"
- ENABLE TECHNICIAN CHANGE PASSWORD button (2) for the user profile "technician".

If necessary repeat the procedure to change the password for the other user profile. The password for the user profile "supervisor" can be changed by logging on as the "supervisor" and selecting the CHANGE PASSWORD button in the USER MANAGEMENT window.

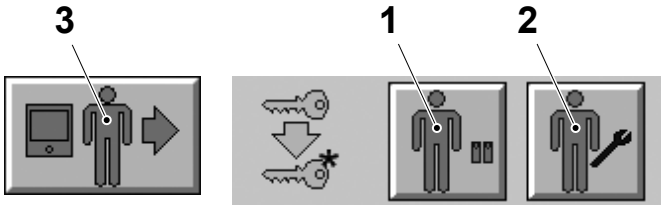

1 Enable pwroperator change password button
2 Enable technician change password button
3 Log off button

TechPub_2614345_0108 - 0801_3048244_01.fm

9.6.4 Traceability

9.6.4-1 Traceability - Configure JEID

Machine Status	Mains Power ON Air OFF Steam ON Water OFF
Special Equipment	PC with USB Port

a) Browse to the CD drive and copy the compressed file `PROGRAMS\EID CONFIGURATION TOOL\3012054-100X` from the software CD to the PC desktop.

b) Create a new folder for the EID configuration tool.

c) Open the file `3012054-0100X` and copy the files `EIDCOM.INI` and `EIDCONFIG.EXE` in the new folder.

d) Connect the USB key to the USB port of the PC (1).

e) Double click on the `EIDCONFIG.EXE` (2) to start the EID configuration tool.

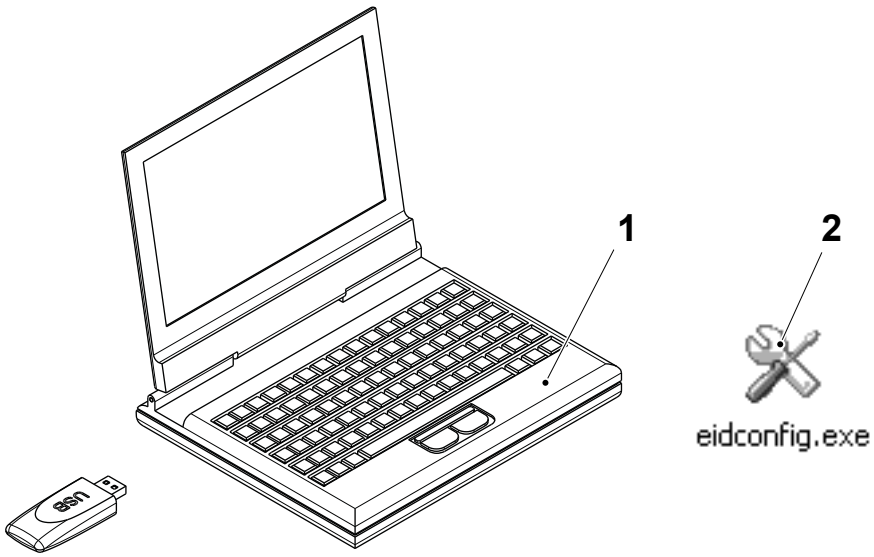

1 PC
2 EID configuration tool

(Cont'd)

TechPub_2614345_0107 - 0801_3048245_01.fm

(Cont'd)

f) Touch the LOAD button (3) to load the configuration from the file TMCC.CSV.

g) Edit the name in the CONFIGURATION DESCRIPTION box (4) with an appropriate name that represents the product and production shift to which the configuration file with be utilized.

h) Select an EVENT MODE type (5):

– SINGLE EVENT MODE; prints two letters on the package to represent an event

– DOUBLE EVENT MODE; prints one letter on the package to represent an event.

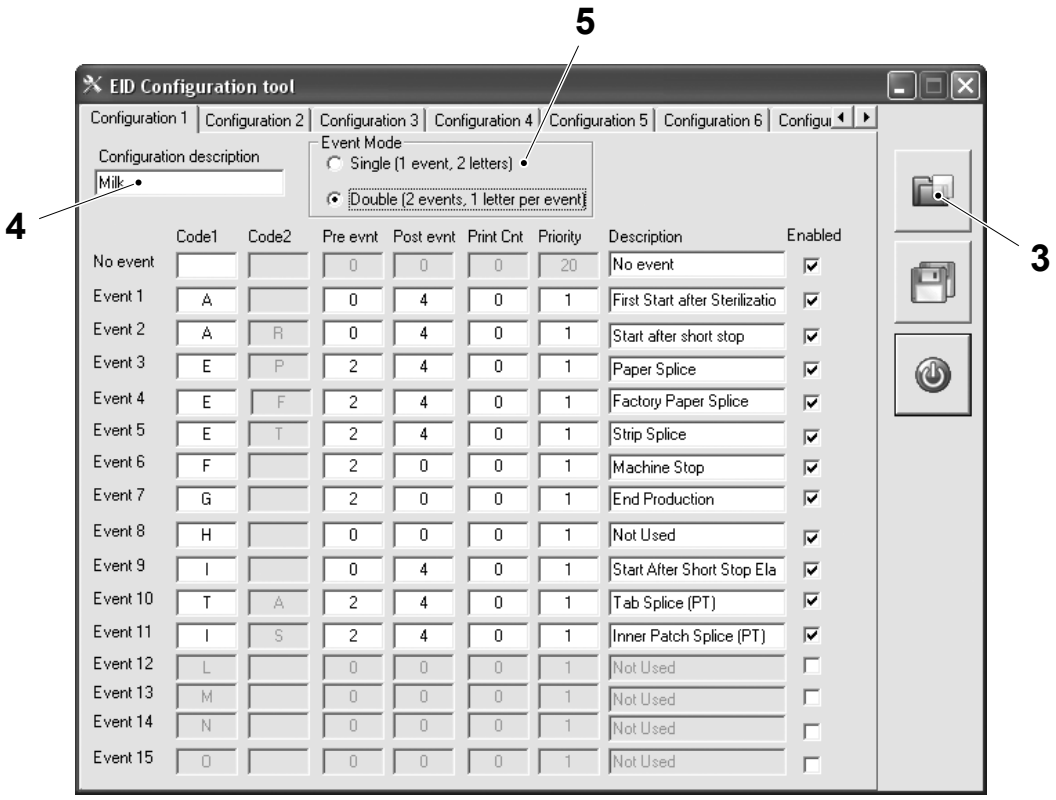

3 Load button
4 Configuration description box
5 Event mode type

(Cont'd)

TechPub_2614345_0107 - 0801_3048245_01.fm

(Cont'd)

Note! Only the eight predefined events can be used. The events can only be enabled or disabled depending on the requirements of the configuration file. Custom events must be created and added to the PLC program.

Note! If double event mode has been chosen only the column `CODE 1` is modifiable.

i) Enter the assigned letters into the `CODE 1` column (6) and `CODE 2` column (7) for the eight predefined events.

j) In the `PRE EVENT` column (8) enter the number of packages to be marked before the event.

k) In the `POST EVENT` column (9) enter the number of packages to be marked after the event.

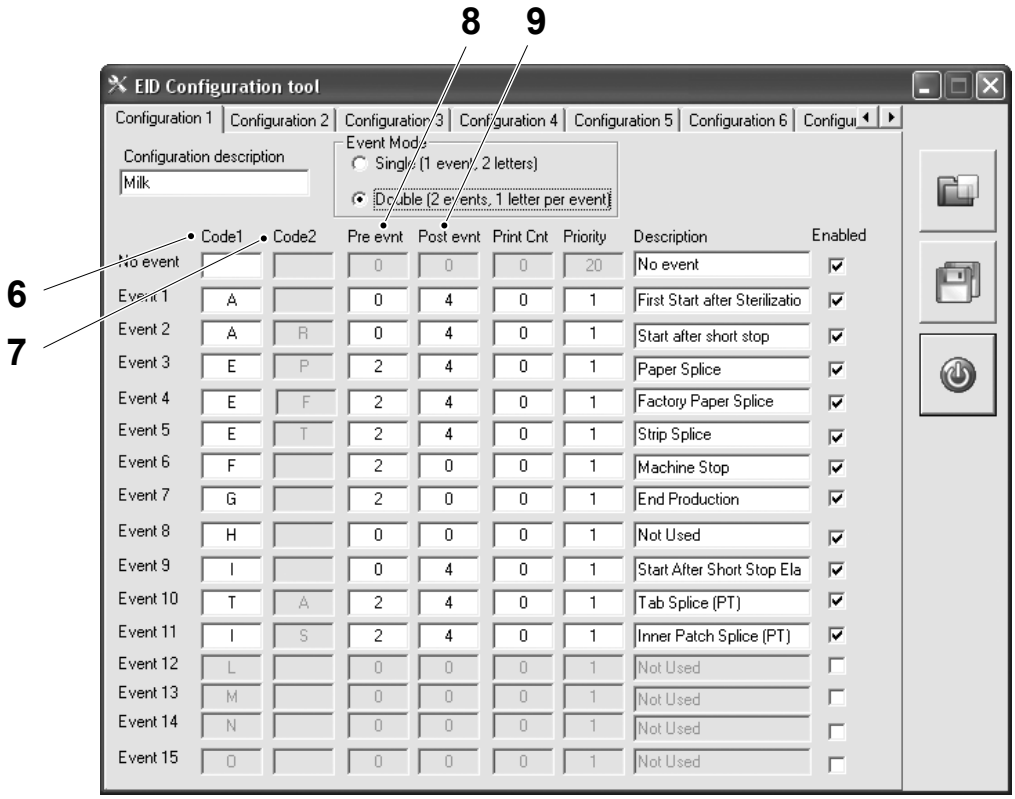

6 Code 1 column
7 Code 2 column
8 Pre event column
9 Post event column

(Cont'd)

TechPub_2614345_0107 - 0801_3048245_01.fm

(Cont'd)

l) In the PRINT CNT column (10) enter the number of packages to be counted after the event. The number can not exceed the total number of packages entered in the POST EVENT column (9).

m) In the PRIORITY column (11) enter the priority of the event, the number one being the highest priority.

n) Select the CONFIGURATION 2 tab (12) and repeat the procedure to create a second product/production configuration file. Continue to create up to a maximum of eight custom configurations.

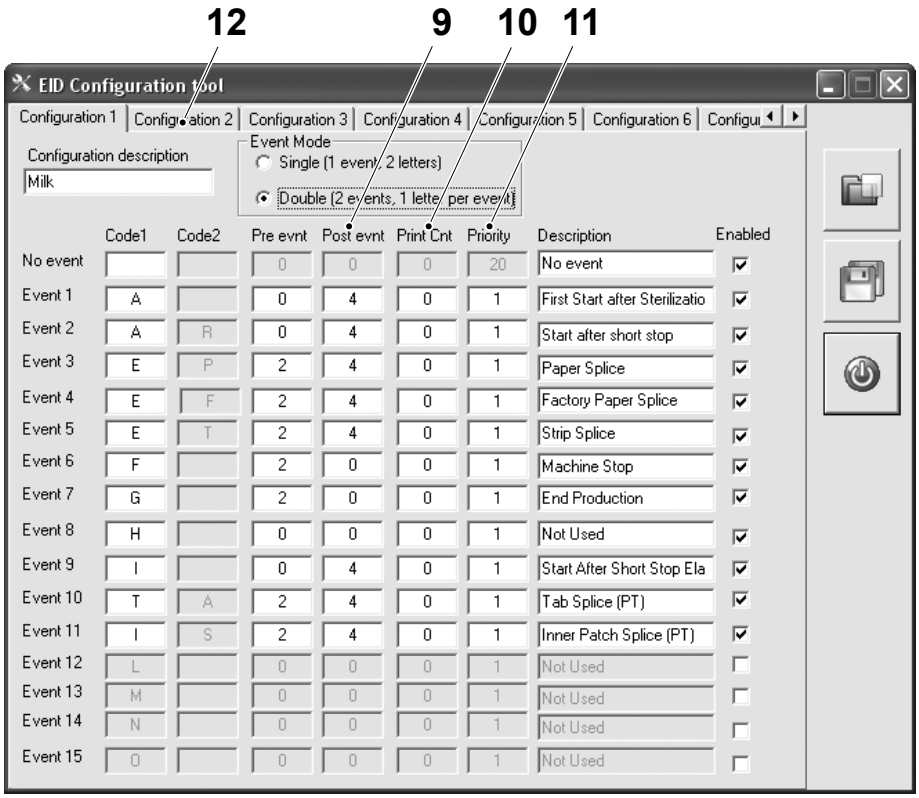

9 Post event column
10 Print cnt column
11 Priority column
12 Configuration tab

(Cont'd)

TechPub_2614345_0107 - 0801_3048245_01.fm

(Cont'd)

o) Select the SAVE button (13) to save the configuration file in a USB key.

p) Save the file with the name TMCC.CSV.

Note! Always save the configuration file with the name TMCC.CSV.

q) Select the CLOSE button (14) to exit from the EID configuration tool.

Note! The event ID configuration is only activated and printed on the packages after it has been loaded into the TMCC card.

r) Load the configuration file into the TMCC card, see 9.8-7 TMCC2 Controller - Load JEID Configuration.

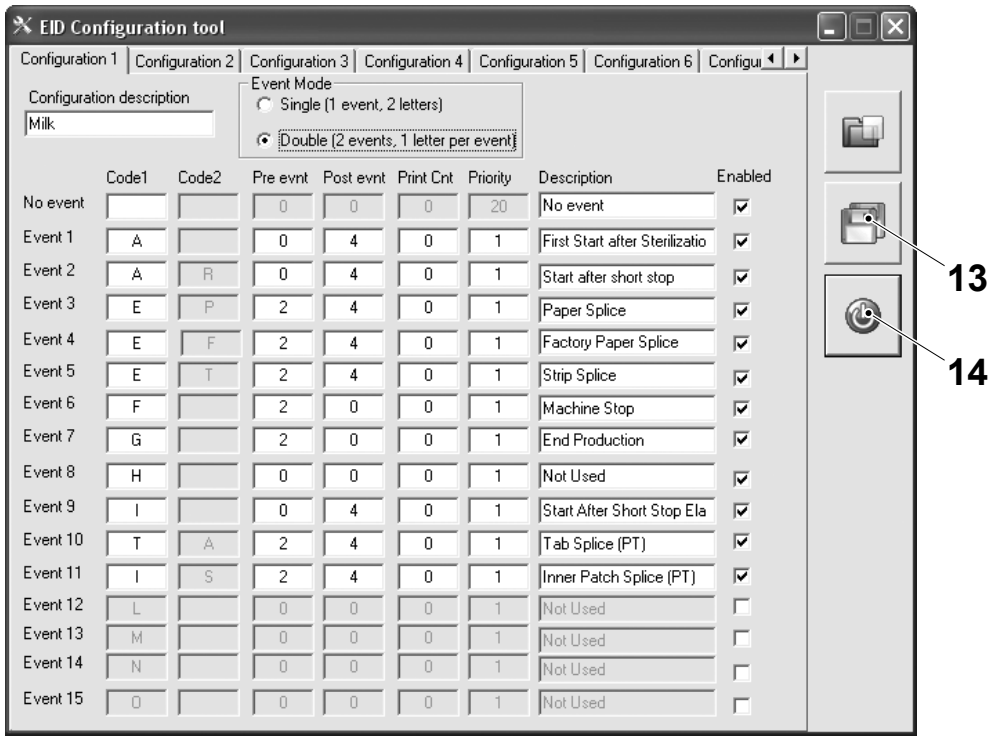

13 Save button
14 Close button

TechPub_2614345_0107 - 0801_3048245_01.fm

9.6.4-2 Traceability - Configure Printer Interface Layout

Machine Status	Mains Power ON Air OFF Steam ON Water OFF
Special Equipment	PC with USB Port

Note! In order to use the TPPLE (Tetra Pak Printer Layout Editor) the screen resolution must be 1024x768.

a) Browse to the CD drive and copy the compressed file `PROGRAMS\TP PRINTER LAYOUT EDITOR\3012052-100X` from the software CD to the PC desktop.

b) Create a new folder for the TPPLE tool.

c) Open the file `3012054-0100X` and copy `TPPLE.EXE` in the new folder.

d) Connect the USB key to the USB port of the PC (1).

e) Double click on the `TPPLE.EXE` (2) to start the TPPLE tool.

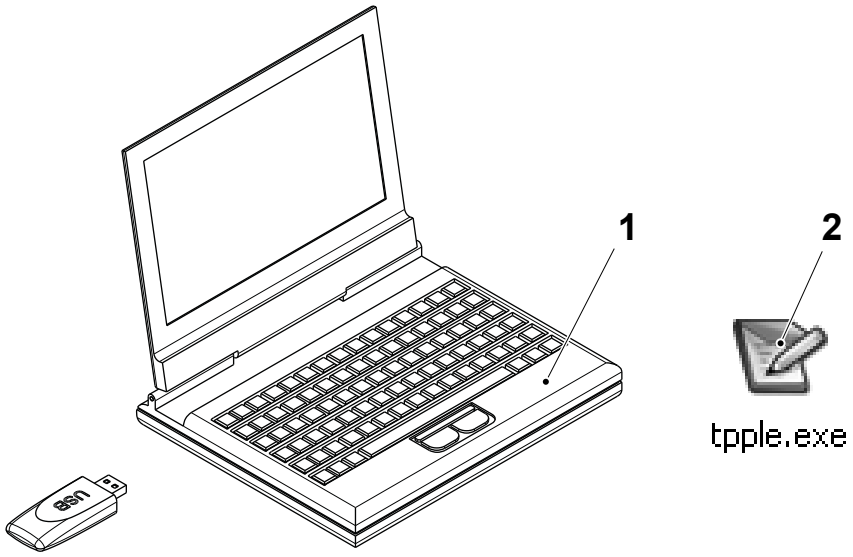

1 PC
2 TPPLE tool

(Cont'd)

TechPub_2614345_0107 - 0801_3048245_01.fm

(Cont'd)

f) From the FILE menu, select NEW (3) to create a new layout or OPEN (4) to edit an existing layout.

g) When creating a new layout file, an empty layout (5) is created. The layout has some default properties that can be changed through the layout property window (6).

Note! Even thought that it is possible to set a font size, it is not possible to change the font size in the printer (Domino A300 series). For the Domino A300 series printers the font size is related to the number of rows, assuming that the distance between the printing head and the print surface is constant.

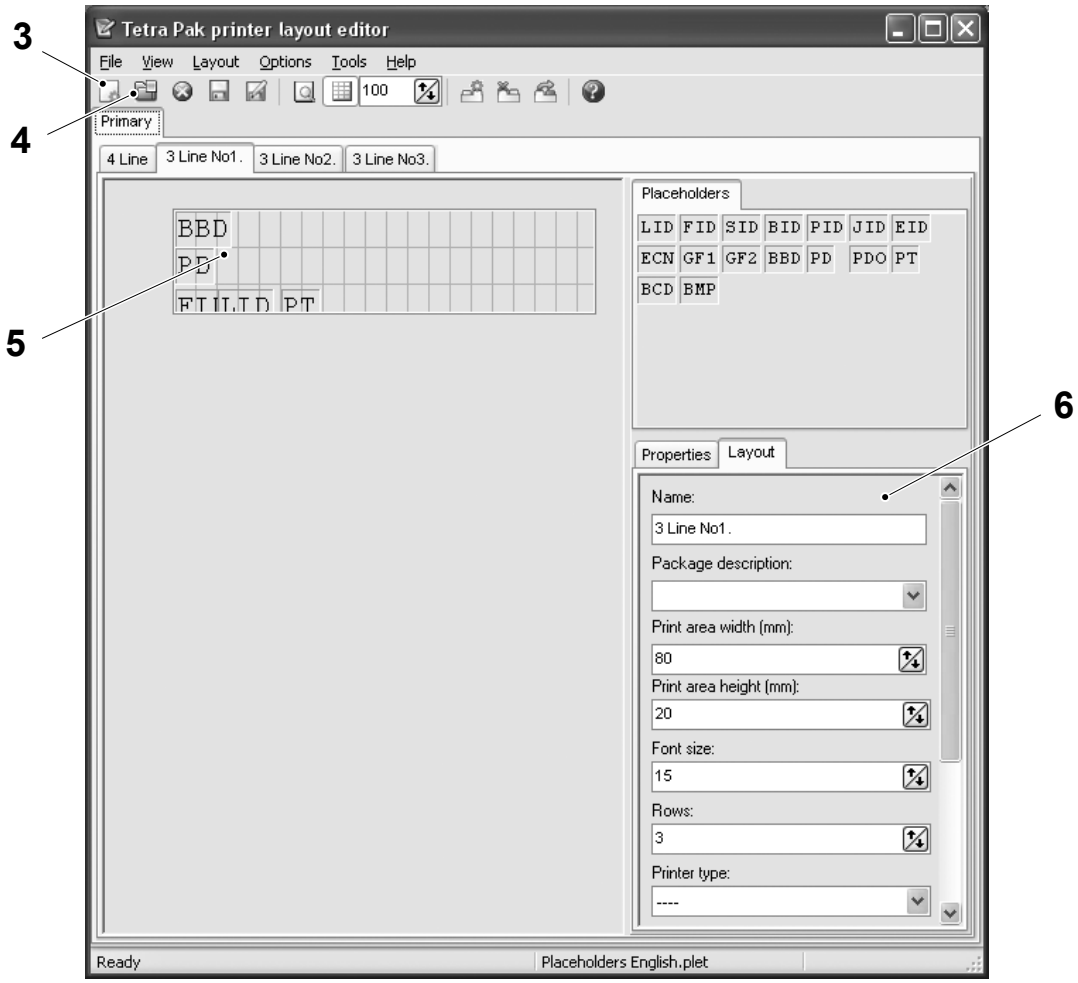

3 New button
4 Open button
5 Empty layout, print area
6 Layout property window

(Cont'd)

TechPub_2614345_0107 - 0801_3048245_01.fm

(Cont'd)

h) To change the layout properties enter the following informations in the layout property window (6):

- NAME: select the name to identify the layout (it will be displayed in the TPOP)
- PRINT AREA WIDTH (MM): select the layout length
- PRINT AREA HEIGHT (MM): select the layout height
- FONT SIZE: select the font dimension so that the placeholder is not higher than the height of the row
- ROWS: select according to the printer capability (3 rows with Domino)

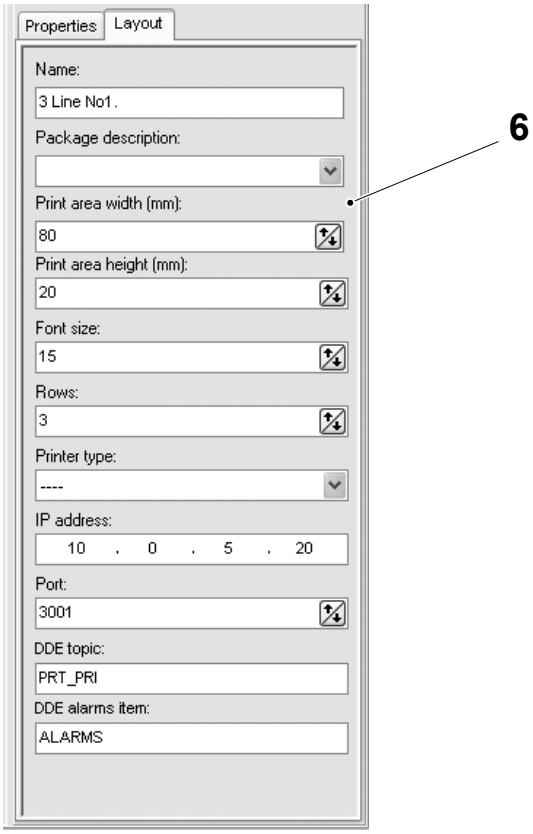

6 Layout property window

(Cont'd)

TechPub_2614345_0107 - 0801_3048245_01.fm

(Cont'd)

- PRINTER TYPE: select the printer installed
- IP ADDRESS: compiled automatically according to the printer selected
- PORT: enter the port number (usually 3001)
- DDE TOPIC: enter the topic (usually prt_pri)
- DDE ALARMS ITEM: enter the DDE alarm group name (usually alarms).

i) To add a placeholder to the print area (7) simply drag and drop it on it. The placeholders are located in the placeholders palette (8). See the list of the placeholders in the next page.

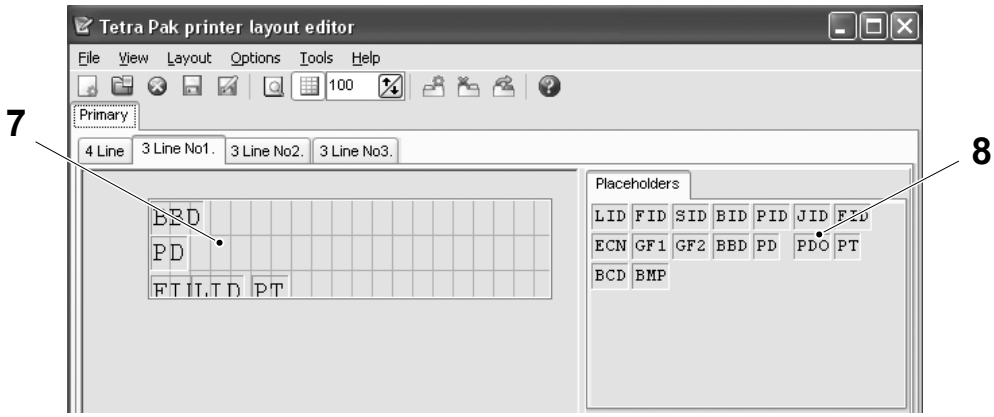

7 Print area
8 Placeholders palette

(Cont'd)

TechPub_2614345_0107 - 0801_3048245_01.fm

(Cont'd)

Complete list of the placeholders.

LID	Line ID, the ID of the filling line connected to the printer
FID	Factory ID, the ID of the factory where the filling line is located
SID	Shift ID, the ID of the shift operating the filling line
BID	Batch ID, the ID of the batch in use
PID	Product ID, the ID of the product in use
JID	Jaw ID, the ID of the jaw that made the package
EID	Event ID, the ID of the event occurred
ECN	Event counter, the package counter related to the EID
GF1	Generic field 1, free text
GF2	Generic field 2, free text
CN1	Counter 1, reserved for future use
CN2	Counter 2, reserved for future use
BBD	Best before date, the expire date of the product
PD	Production date, the production date of the package. Can be different from the actual production date if the offset is used.
PDO	Production date offset, the number of days before or after the actual production date. A negative value will set a PD prior the actual one while a positive value will set a PD after the actual one.
PT	Production time, the production time of the package. Not affected by the offset
BCD	Barcode, various type of barcode (1d and 2d). Note that different kind of barcodes support different kind of characters
BMP	Bitmap, not supported by the Domino A300 series

(Cont'd)

TechPub_2614345_0107 - 0801_3048245_01.fm

(Cont'd)

j) Select the SAVE AS button (9) to save the printer interface layout file in a USB key.

k) Save the file with the name PRIMARY.PLE.

Note! Always save the primary printer interface layout file with the name PRIMARY.PLE.

l) Select the CLOSE button (10) to exit from the TPPLE tool.

m) Load the printer interface layout file into the IPC, see 9.6.4-3 Traceability - Load Printer Interface Layout.

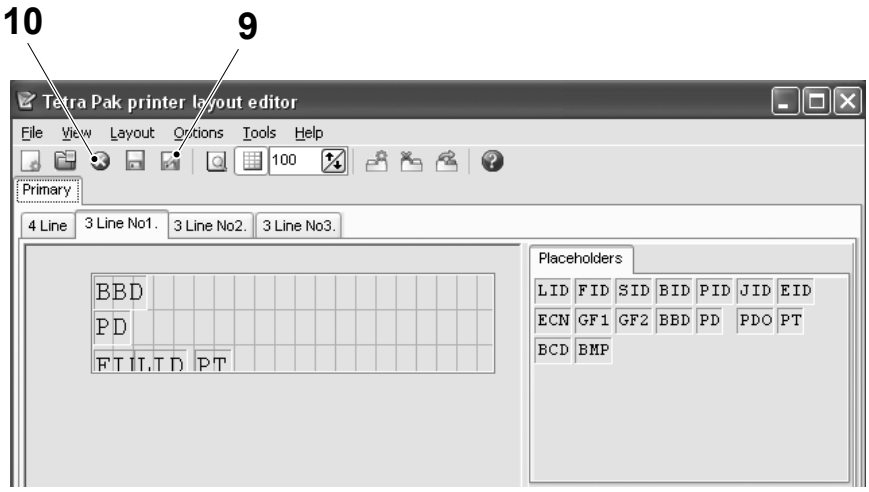

9 Save button
10 Close button

TechPub_2614345_0107 - 0801_3048245_01.fm

9.6.4-3 Traceability - Load Printer Interface Layout

Machine Status	Mains Power ON Air OFF Steam ON Water OFF
Special Equipment	USB key

a) Remove the plug from a USB port (1) on the control panel (2) and connect the USB key containing the file `PRIMARY.PLE`.

b) Touch the `MAINTENANCE CONTROL` button (3) and enter the password required, see 9.6.3-2 HMI - User Management Log On.

c) Touch the `DOWN STREAM` button (4).

d) Touch the `COPY PRINTER INTERFACE LAYOUT FILE` icon (5).

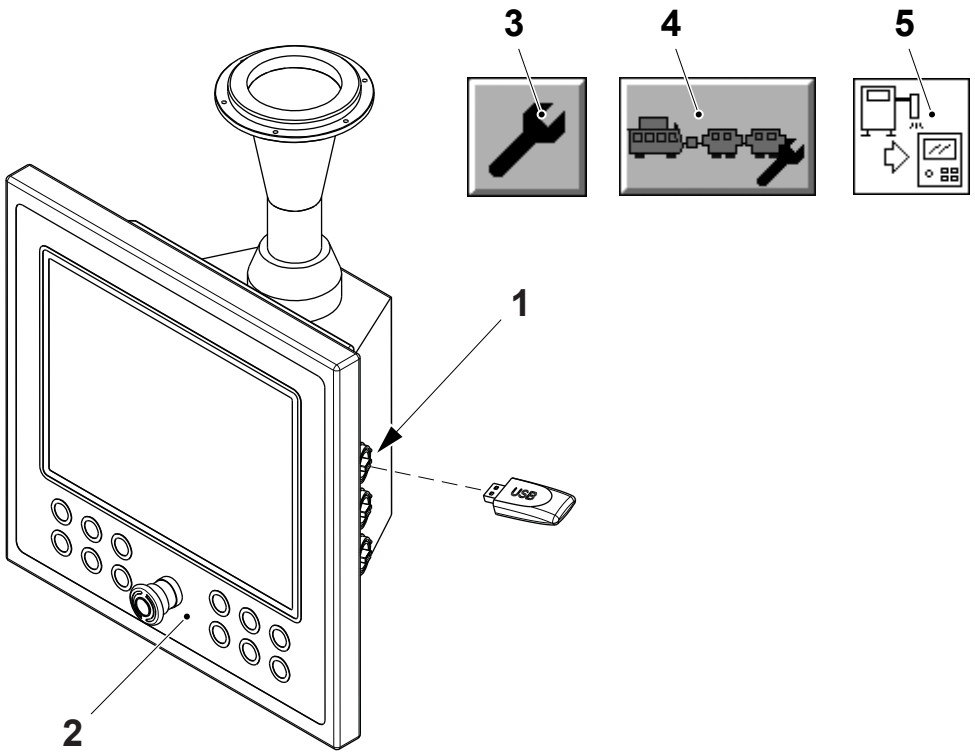

1 USB port
2 Control panel
3 Maintenance control button
4 Down stream button
5 Copy printer interface layout file icon

(Cont'd)

TechPub_2614345_0107 - 0801_3048245_01.fm

(Cont'd)

Note! The COPY FILE TO IPC button (6) is displayed as disabled if the USB has not been inserted, or if the file PRIMARY.PLE is not present, or else if the machine status does not allow to modify the configuration.

e) Touch the COPY FILE TO IPC button (6). The printer interface layout file is copied into the IPC.

f) When the copying operation is completed, touch the RESET button (7).

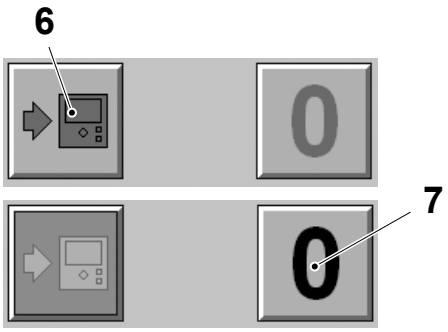

6 Copy file to IPC button
7 Reset button

TechPub_2614345_0107 - 0801_3048245_01.fm

9.7 Control Devices and Sensors

SPC Reference	90458-2580 90459-5187 90459-1615

9.7.1 IPC

SPC Reference	90600-3694

Description

The IPC (Industrial PC) is the core component of the TPOP system and consists of a computer with the TPOP and PLMS software and all the physical connections needed for communicating with the rest of the system.

(Cont'd)

TechPub_2614345_0108 - 0801_3048246_01.fm

(Cont'd)

- COM3 RS232/422/485 port (1)
- SDL/DVI port (2): connects the TPOP to the IPC
- 24V power (3)
- two USB port (4)
- Line Network level 6 (5): used for communication with DE
- Int. network level 7 (6): used for communication with the PLC (connected to the ethernet switch)
- two COM RS232 port (7)
- Ext. network level5 (8): external network

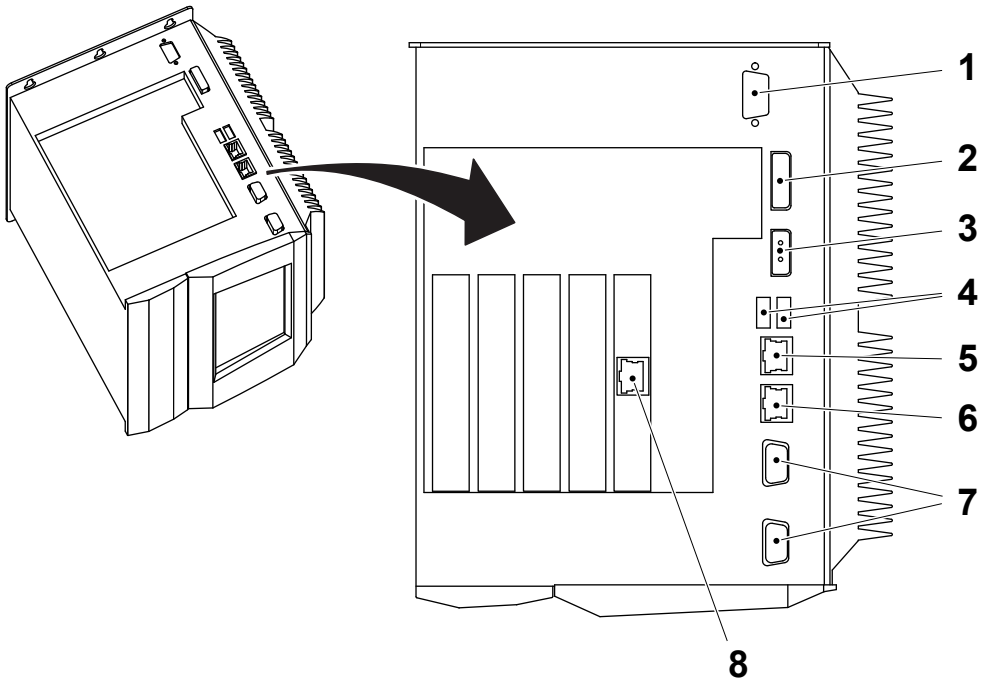

1 RS232/422/485 port
2 SDL/DVI port
3 24V power
4 USB port
5 LVL6
6 LVL7
7 RS232
8 LVL5

(Cont'd)

TechPub_2614345_0108 - 0801_3048246_01.fm

(Cont'd)

- Cover (9)
- CompactFlash1 (10): 4Gb for operating system
- CompactFlash2 (11): 8Gb for logger data
- DVD drive (12)
- PS2 port (13): connects a PS2 mouse or keyboard to the IPC.

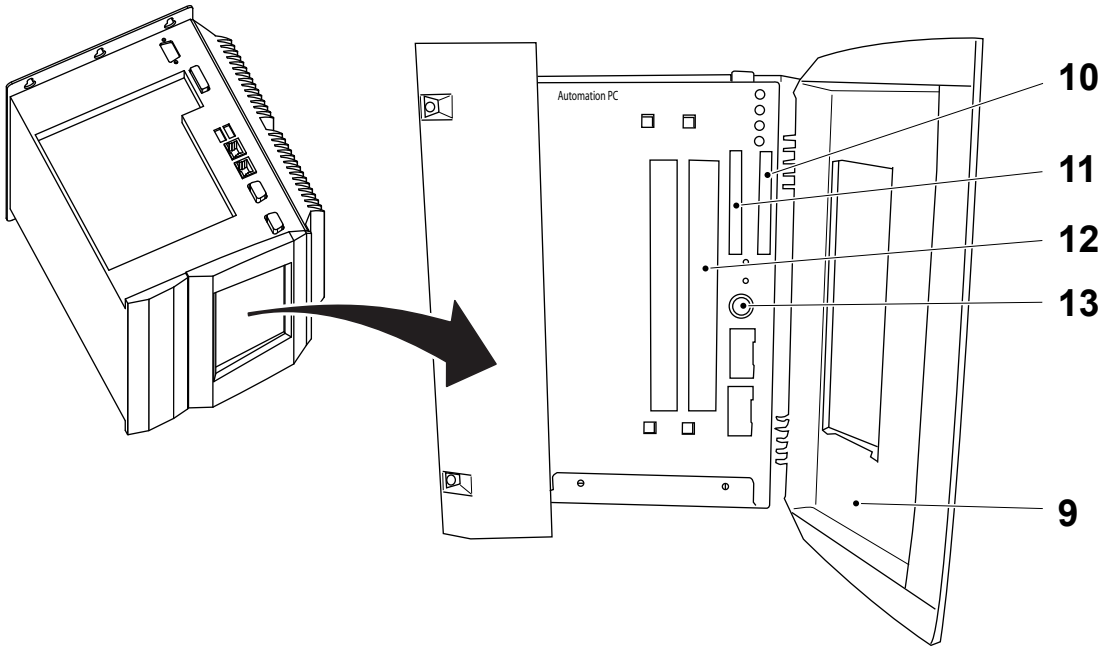

9 Cover
10 CompactFlash1 4Gb
11 CompactFlash2 8Gb
12 DVD drive
13 PS2 port

TechPub_2614345_0108 - 0801_3048246_01.fm

9.7.1-2 IPC - Change CompactFlash Memory Card

Machine Status	Mains Power OFF Air OFF Steam ON Water OFF
SPC Reference	90600-3694

a) Open the door of the electrical cabinet.

b) Open the cover (1) of the IPC (2).

Note! The CompactFlash memory card (3) contains the operating system. In case of replacement, re-install the software, see 9.6-3 HMI and PLMS - Install Software.

c) Press the button on the CompactFlash memory card to be changed (3) or (4) to eject the memory card.

d) Fit the new CompactFlash memory card (3) or (4).

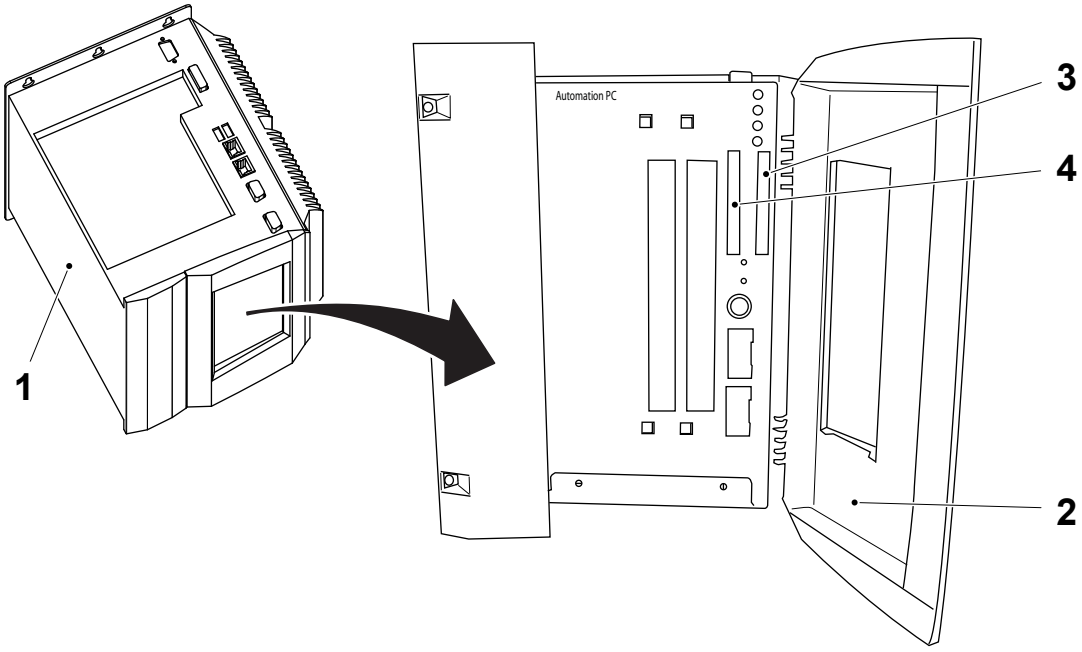

1 Cover
2 IPC
3 CompactFlash memory card
4 CompactFlash memory card

TechPub_2614345_0108 - 0801_3048246_01.fm

9.7.1-3 IPC - Change Battery

Machine Status	Mains Power OFF Air OFF Steam ON Water OFF
SPC Reference	90600-3694

Any BIOS settings that have been made will remain when the battery is changed with the power turned off (the settings are stored in non-volatile EEPROM). The date and time must be reset later because this data is lost when the battery is changed.

WARNING

Hazardous voltage.

Can shock, burn, or cause death. The main power supply connector must be switched off and secured with a lock before starting any work on the IPC.

a) Disconnect the IPC power supply.

b) Touch the housing or earth connection (not the power supply) in order to discharge any electrostatic charge from your body.

c) Remove the black plastic cover (1) from the battery compartment and carefully pull out battery (2) using removal strips (3).

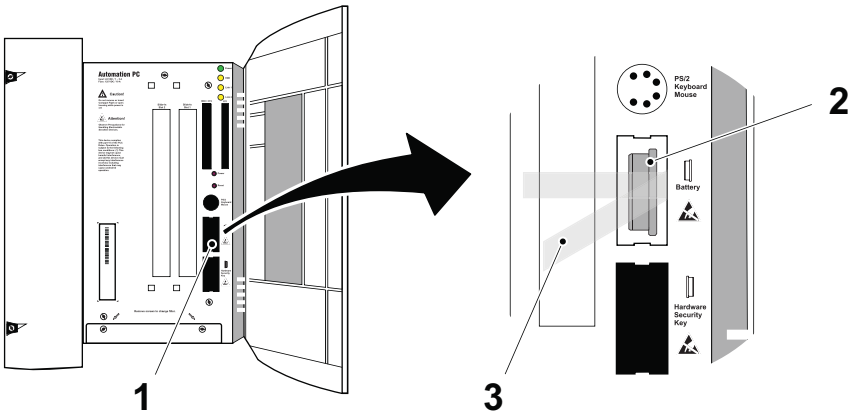

1 Cover
2 Battery
3 Removal strips

(Cont'd)

TechPub_2614345_0108 - 0801_3048246_01.fm

(Cont'd)

d) Insert the new battery with correct polarity. The battery must not be held by its edges. Insulated tweezers may also be used for inserting the battery.

Note! To make the next battery charge easier, make sure the removal strip is in place when inserting the battery.

e) Reconnect the power supply to the IPC by connecting the power cable and pressing the power button.

CAUTION
Hazardous substances.
Lithium batteries are considered hazardous waste. Handle and dispose of used batteries in compliance with local regulations.

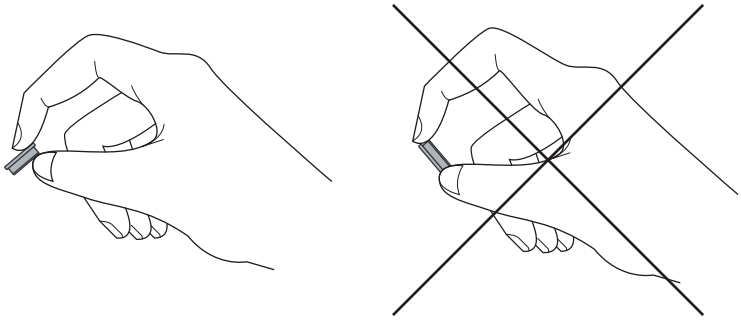

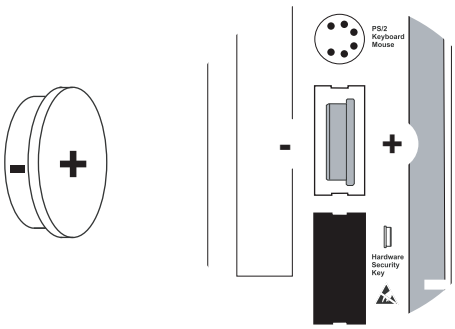

TechPub_2614345_0108 - 0801_3048246_01.fm

9.7.1-4 IPC - Change Fan Kit

Machine Status	Mains Power OFF Air OFF Steam ON Water OFF
SPC Reference	90600-3694

WARNING

Hazardous voltage.

Can shock, burn, or cause death. The main power supply connector must be switched off and secured with a lock before starting any work on the IPC.

a) Disconnect the IPC power supply.

b) Touch the housing or ground connection (not the power supply) in order to discharge any electrostatic charge from your body.

(Cont'd)

TechPub_2614345_0108 - 0801_3048246_01.fm

(Cont'd)

c) Open the orange front cover (3) and remove the seven screws (2).

d) Remove the side cover (1) and the fan filter cover (4)

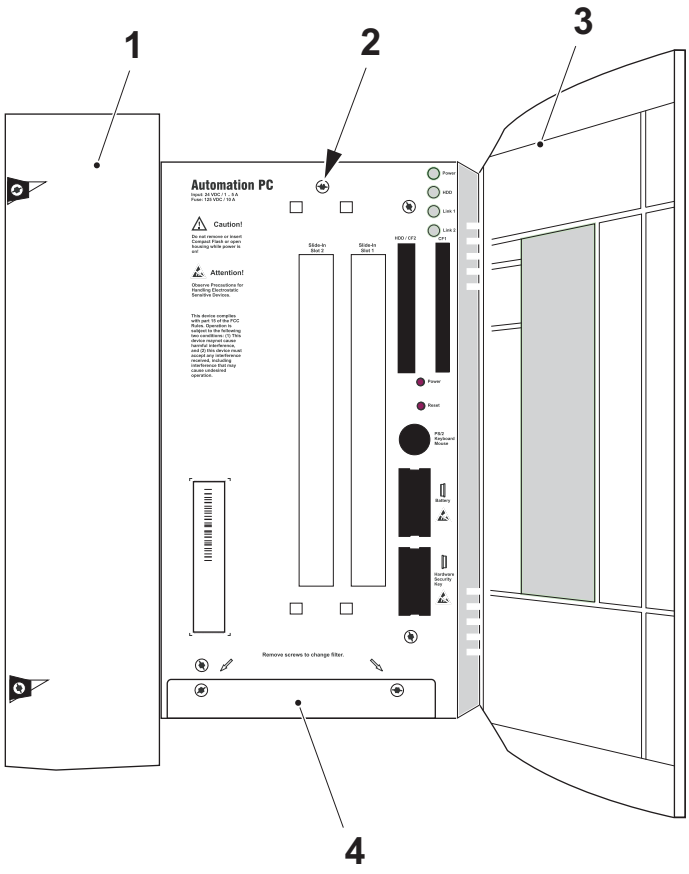

1 Side cover
2 Screw
3 Cover
4 Fan filter cover

(Cont'd)

TechPub_2614345_0108 - 0801_3048246_01.fm

(Cont'd)

e) Remove the securing screw (5) and pull out the EtherNet PCB (6).

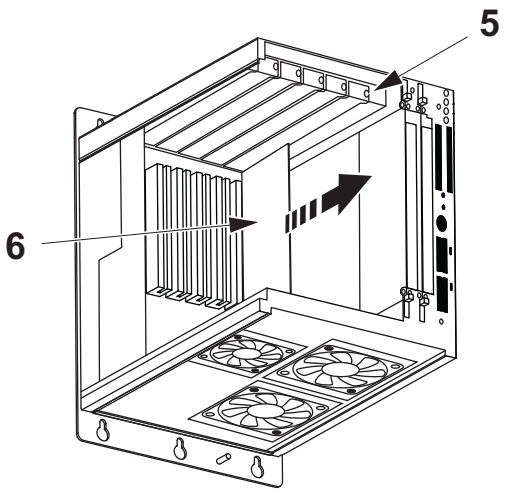

5 Securing screw
6 EtherNet PCB

f) Remove the slide-in cover (7) and CD-ROM drive (8) by releasing the slide-in mechanism (9).

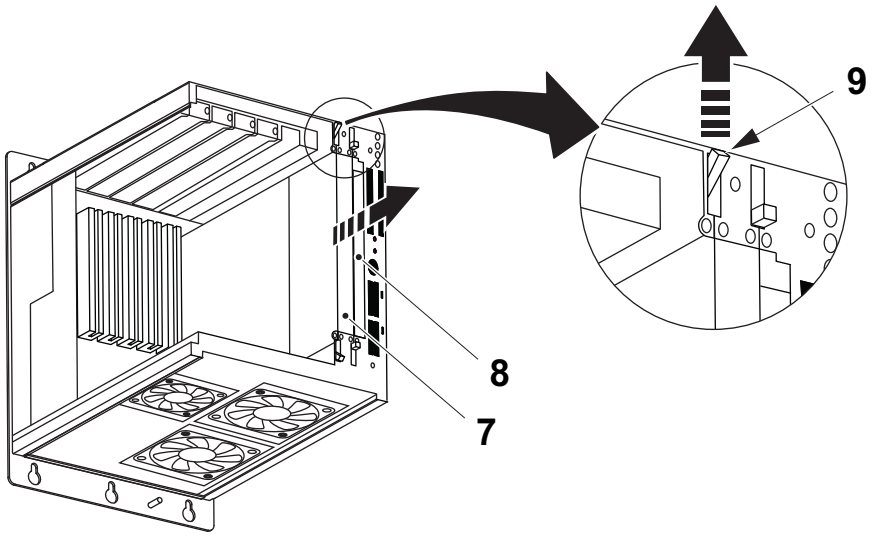

7 Cover
8 CD-ROM drive
9 Slide-in mechanism

(Cont'd)

TechPub_2614345_0108 - 0801_3048246_01.fm

(Cont'd)

g) Disconnect the three fan connection cables (10) from the circuit board.

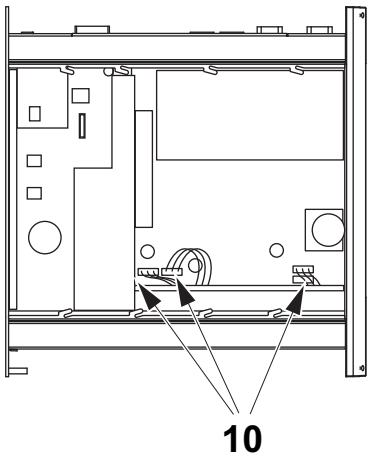

10 Fan connection cable

h) Remove the six screws (11) securing the fans and remove the three fans (12).

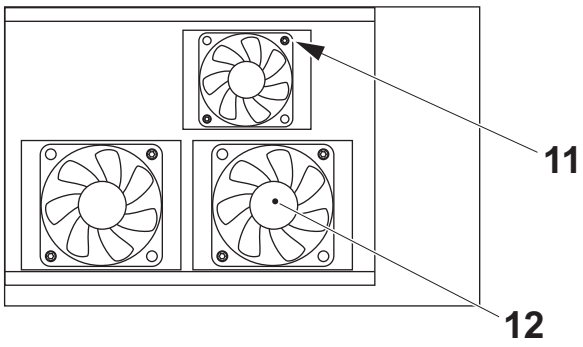

11 Screw
12 Fan

(Cont'd)

TechPub_2614345_0108 - 0801_3048246_01.fm

(Cont'd)

CAUTION

Risk of damage to the equipment.

The fans must be inserted so that the air flows toward the inside of the housing.

i) The arrow (13) indicates the direction of the air flow and the arrow (14) indicate the direction of the fan rotation.

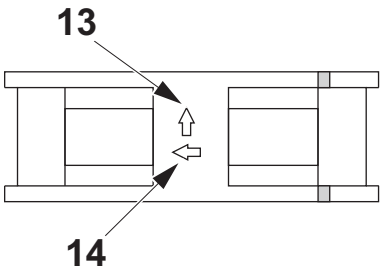

13 Arrow
14 Arrow

j) Align the new fans over the fastening bolts (15).

k) Feed the cables through the openings (18) in the housing into the main board of the IPC box. The fan connector cable for the 40 mm fan (16) must be placed in the cable fasteners (17).

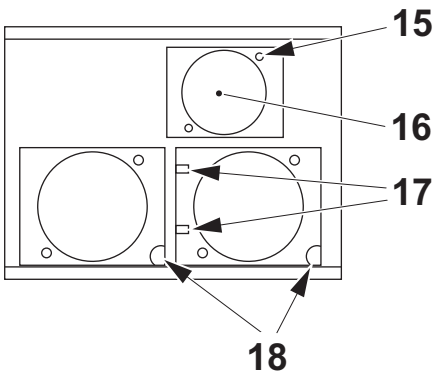

15 Fastening bolt
16 40 mm fan
17 Cable fastener
18 Opening

(Cont'd)

TechPub_2614345_0108 - 0801_3048246_01.fm

(Cont'd)

l) Secure the three fans with the screws (11).

m) Connect the fan connection cables to the circuit board according to the illustration below.

n) Assemble in reverse order.

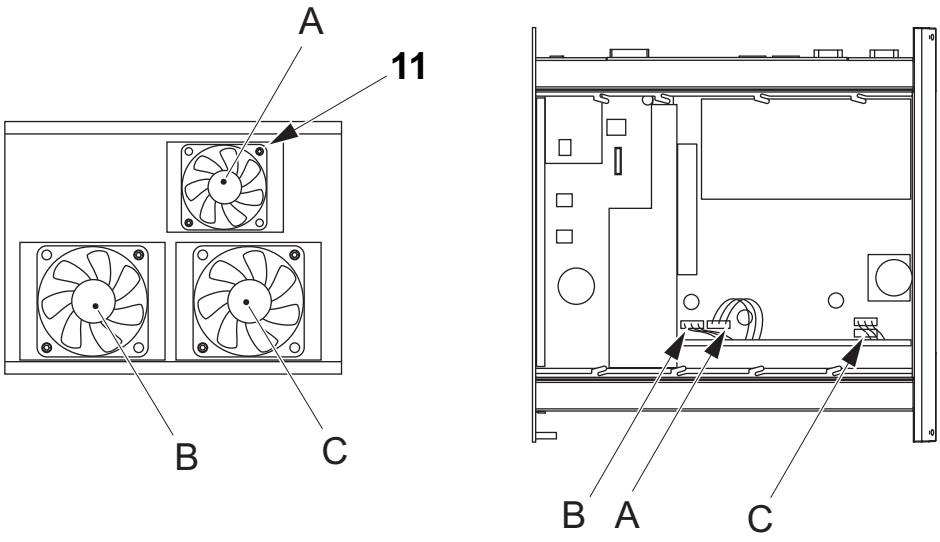

11 Screw

TechPub_2614345_0108 - 0801_3048246_01.fm

9.7.1-5 IPC - Change Fan Filter

Machine Status	Mains Power OFF Air OFF Steam ON Water OFF
SPC Reference	90600-3694

WARNING

Hazardous voltage.

Can shock, burn, or cause death. The main power supply connector must be switched off and secured with a lock before starting any work on the IPC.

Note! Check for contamination at regular intervals.

a) Disconnect the IPC power supply.

b) Touch the housing or ground connection (not the power supply) in order to discharge any electrostatic charge from your body.

(Cont'd)

TechPub_2614345_0108 - 0801_3048246_01.fm

(Cont'd)

c) Open the orange front cover (3) and remove the seven screws (2).

d) Remove the side cover (1) and the fan kit cover (4).

e) Change the dust filter (5) and attach the new filter with the filter clasp (6).

f) Assemble in reverse order.

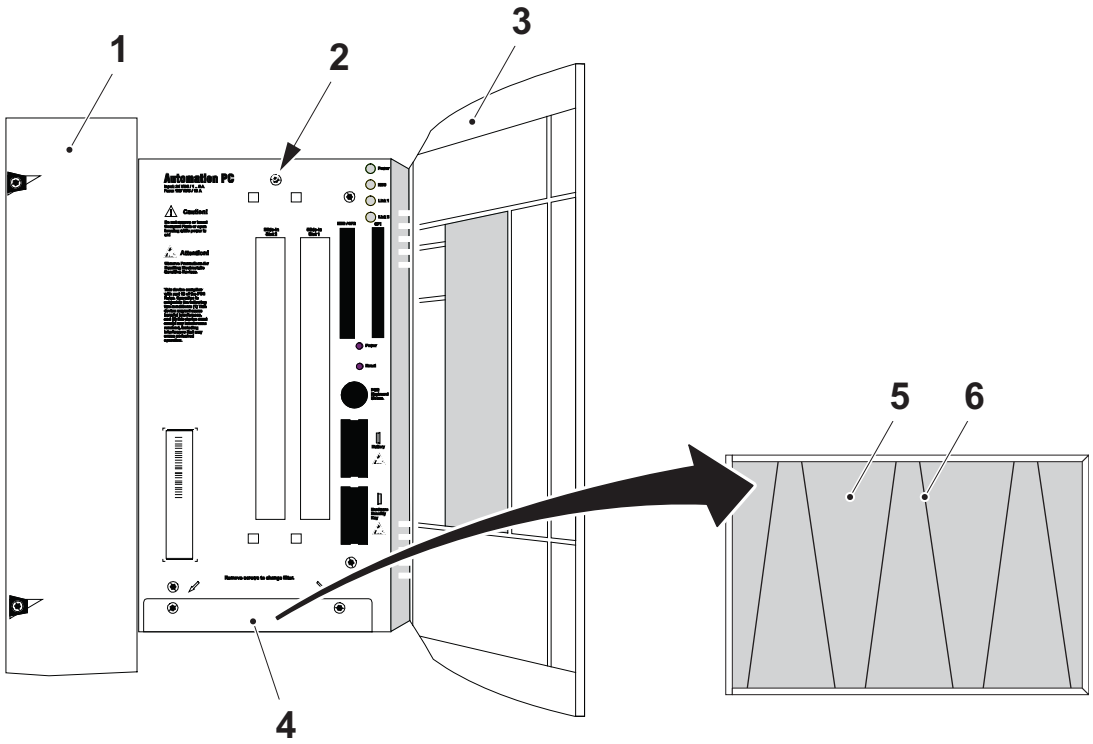

1 Cover
2 Screw
3 Cover
4 Cover
5 Filter
6 Clasp

TechPub_2614345_0108 - 0801_3048246_01.fm

9.7.1-6 IPC - Change DVD ROM

Machine Status	Mains Power OFF Air OFF Steam ON Water OFF
SPC Reference	90600-3694

WARNING

Hazardous voltage.

Can shock, burn, or cause death. The main power supply connector must be switched off and secured with a lock before starting any work on the IPC.

a) Disconnect the IPC power supply.

b) Touch the housing or ground connection (not the power supply) in order to discharge any electrostatic charge from your body.

c) Open the orange front cover (3) and remove the seven screws (2).

d) Remove the side cover (1).

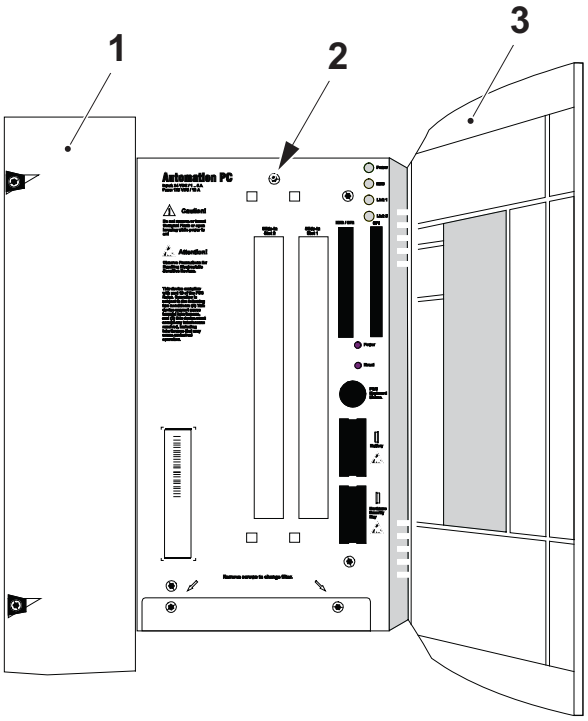

1 Cover
2 Screw
3 Cover

(Cont'd)

TechPub_2614345_0108 - 0801_3048246_01.fm

(Cont'd)

e) Remove the slide-in CD-ROM drive (4) by releasing the slide-in mechanism (5).

f) Assemble in reverse order.

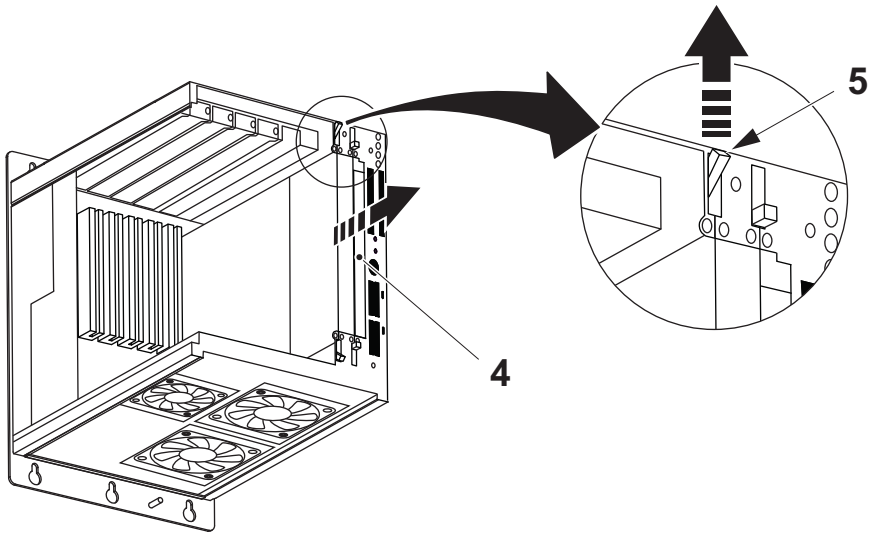

4 CD-ROM drive
5 Slide-in mechanism

TechPub_2614345_0108 - 0801_3048246_01.fm

9.7.2 Level Control

SPC Reference	90459-2742

Description

The level regulator relays (RM4-LA) monitor fluid levels by measuring the change in resistance of immersed and non immersed electrodes. The relay sensitivity must be set according to the conductivity of the fluid.

The level regulator parameters are set using the potentiometer and selectors shown in the illustration below:

a) The selector (1) sets the filling/empty functionality:
   - in the empty function the output relay is activated when the high level electrode is immersed and deactivated when the low level electrode is “dry”
   - in the fill function the output relay is activated when the low level electrode is “dry” and deactivated when the high level electrode is immersed.

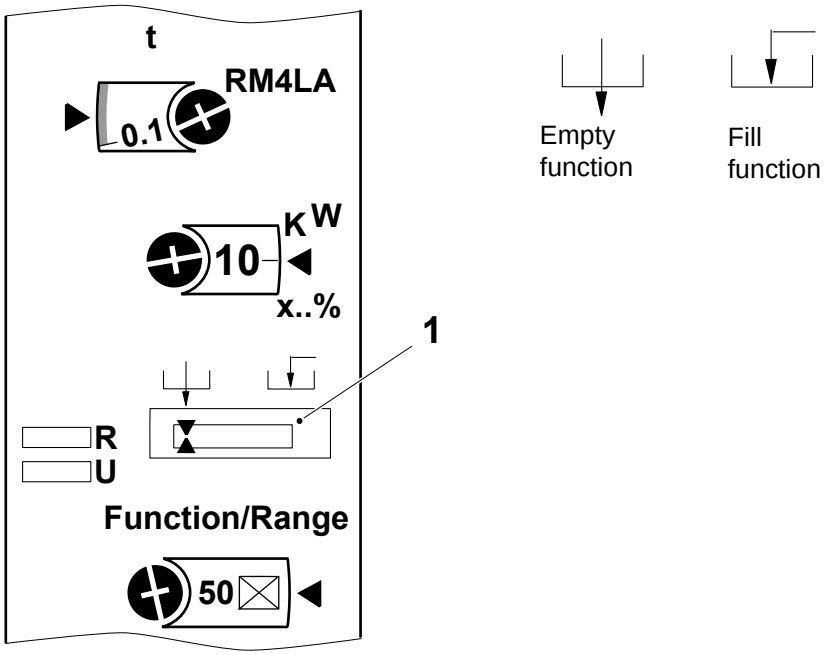

1 Functionality selector

TechPub_2614345_0108 - 0801_3048247_01.fm

(Cont'd)

(Cont'd)

b) The potentiometer (2) gives a fine adjustment of the sensitivity as a percentage (%) of the sensitivity range (6).

c) The potentiometer (3) sets the delay.

d) The selector (6) sets the sensitivity range of the relay and the energisation time delay option.

e) The yellow LED (4) is lit when the relay is CLOSED.

f) The green LED (5) is lit when the power is ON.

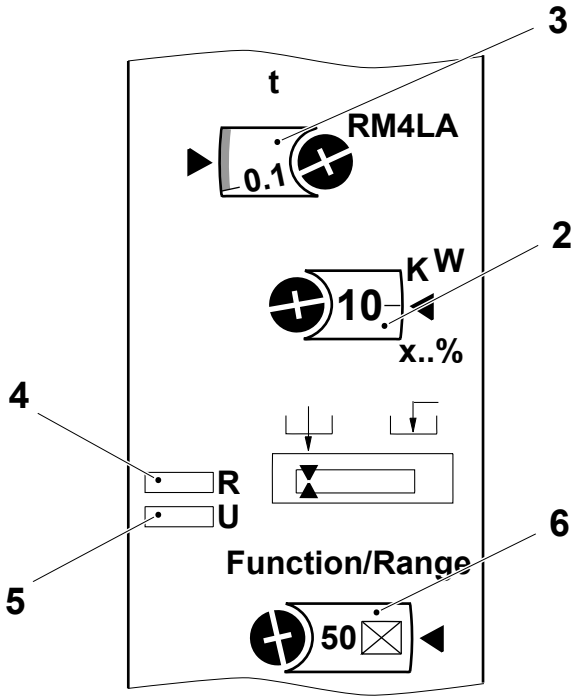

2 Potentiometer
3 Potentiometer
4 Yellow LED
5 Green LED
6 Selector

TechPub_2614345_0108 - 0801_3048247_01.fm

9.7.2-2 Level Control - Set

Machine Status	Mains Power ON Air OFF Steam ON Water OFF
SPC Reference	90459-2742

Set the display functions with a screwdriver, see table below:

Description		Time value (1)	R-value potentiometer (2)	Functionality selector (3)	Function/range selector (4)
Hydrogen peroxide spray tank	U70K3181	0	20	⊔	50 ☒
Regulating valve leakage	U70K1091	0	60	⊔	500 ☒
HI	U70K4061	0	20	⊔	50 ☒

Note! It is recommended that the functionality selector (3) is always set according to the table to avoid problems.

When necessary make fine adjustments by means of the R-value potentiometer (2).

Make sure that the yellow LED is lit when the level is obtained.

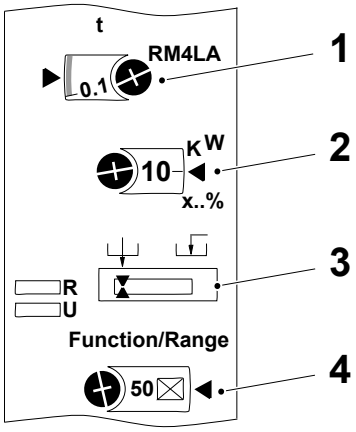

1 Time value
2 R-value potentiometer
3 Functionality selector
4 Function/range selector

TechPub_2614345_0108 - 0801_3048247_01.fm

9.7.3 Conductivity Meter

SPC Reference	90459-5187

Description

Conductivity is calculated by measuring the current flowing through a fluid at a known reference voltage. The signal is converted into digital information and thereafter processed according to temperature and calibration values.

The conductivity meter (1) supplies the PLC with two analogue signals: one conductivity signal and one temperature signal.

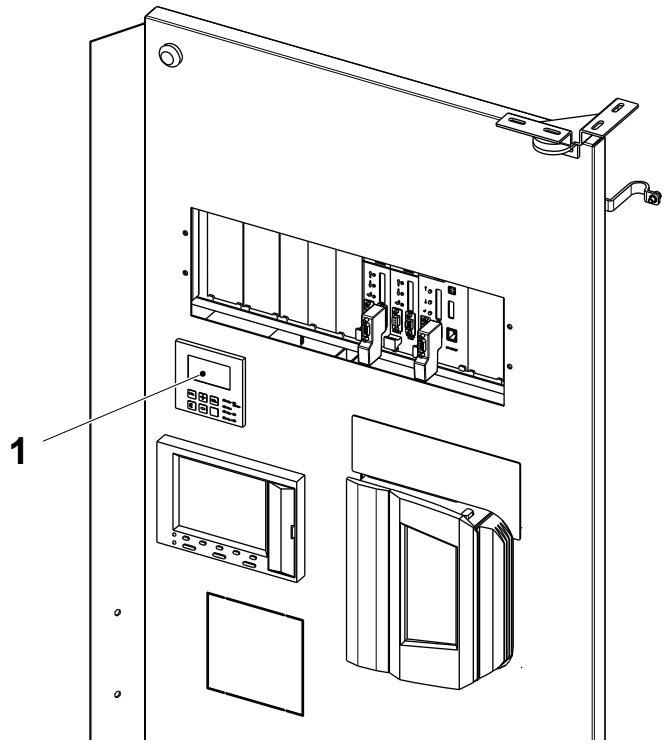

1 Conductivity meter

(Cont'd)

TechPub_2614345_0108 - 0802_3048248_01.fm

(Cont'd)

Conductivity Meter Front Panel

The components of the conductivity meter front panel used to manage the conductivity and temperature of the CIP cleaning fluid include:

- the LC display (1)
- the alarm LED (2)

Note! Pressing the CAL or ENTER button will display a prompt for the access code; 22. Entering 0 or any other number will display the calibration and setup data in read only mode.

- the ENTER button (3). The ENTER button is used to save entered data and to move between the setup parameters within the setup menu groups
- the CAL button (4). The CAL button is used to accept calibration data and to move between the fields of the calibration menu

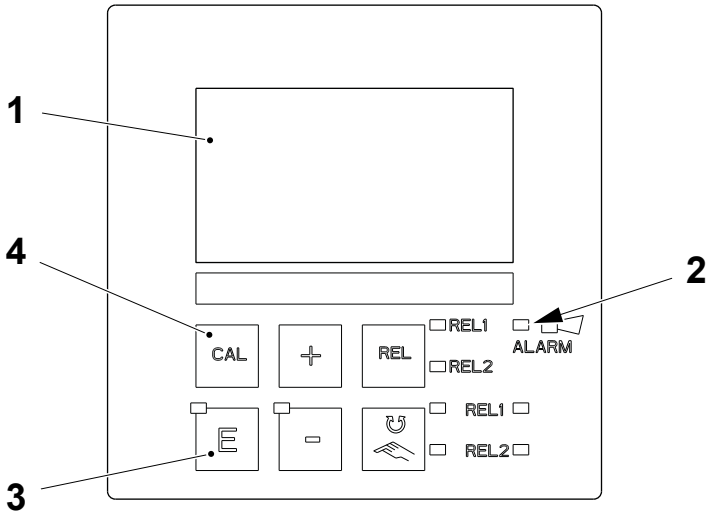

1 LC display
2 Alarm LED
3 Enter button
4 CAL button

(Cont'd)

TechPub_2614345_0108 - 0802_3048248_01.fm

(Cont'd)

- the PLUS and MINUS buttons (5). The PLUS or MINUS buttons are used to select setup menu levels and to input setup parameters and numerical values. Pressing the PLUS button during normal operation changes the LC display mode of the conductivity and temperature. Pressing the MINUS button during normal operation displays the last error code and error message. Pressing the PLUS and MINUS buttons together in the setup mode exits the current level of the setup menu. To lock the front panel buttons press the PLUS and ENTER buttons together for 3 seconds, the code prompt will display "9999". To unlock the front panel buttons press the MINUS and CAL buttons together for 3 seconds, the code prompt will display "0".

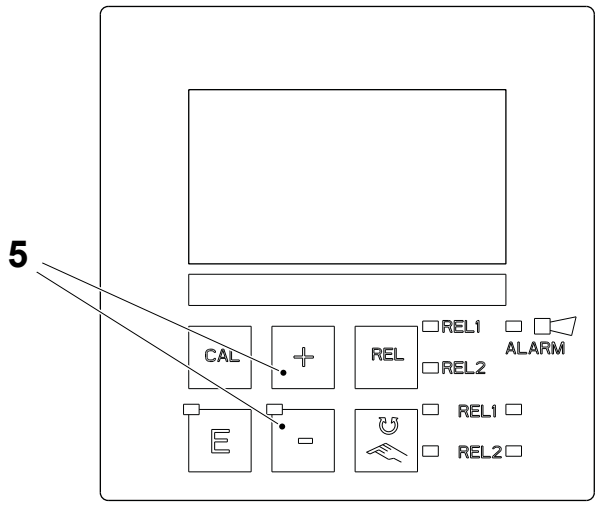

5 Plus/minus button

(Cont'd)

TechPub_2614345_0108 - 0802_3048248_01.fm

(Cont'd)

Conductivity Meter Front Panel LC Display

The LC display shows the measured and configured parameters in the setup, configuration and operational modes of the conductivity meter. The elements within the LC display used in the management of the conductivity and temperature of the CIP cleaning fluid include the following:

- `MEAS` (1), indicates that the conductivity meter is in the normal operational mode
- `CAL` (2), indicates that the conductivity meter is in the calibration mode
- `SETUP` (3), indicates that the conductivity meter is in the setup mode
- `mS/cm` (example) (4), indicates the unit of measurement for the currently displayed value

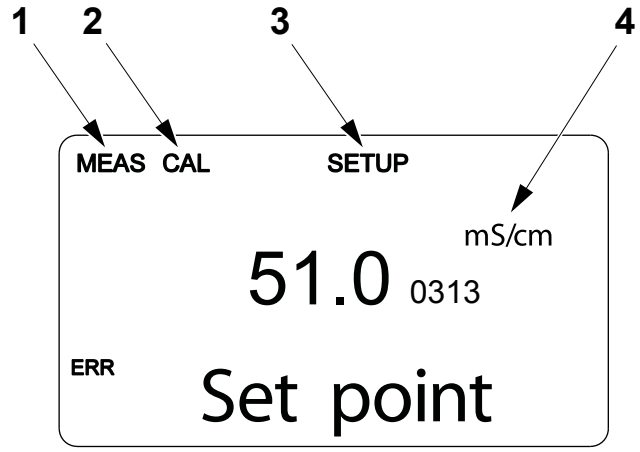

1 MEAS
2 CAL
3 SETUP
4 mS/cm (example)

(Cont'd)

TechPub_2614345_0108 - 0802_3048248_01.fm

(Cont'd)

- `0313` (example) (5), indicates the number of the currently displayed function in the setup and calibration modes.
- `Set Point` (example) (6), in setup or calibration modes this indicates the name of the currently displayed function. In normal operational mode this indicates the secondary measured value (temperature).
- `ERR` (7), indicates that an error has occurred.

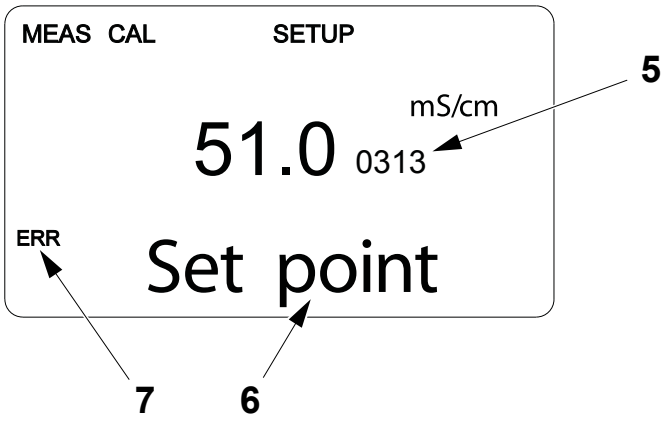

5 0313 (example)
6 Set point (example)
7 ERR

TechPub_2614345_0108 - 0802_3048248_01.fm

9.7.3-1 Conductivity Meter - Identify Conductivity Sensor Cell Constant

Machine Status	Mains Power ON Air OFF Steam ON Water OFF
Special Equipment	Resistor TP No. 3031848-0000
SPC Reference	90459-5187

Remove the conductivity sensor, see 1.6.4-2 Pipe Work - Check Conductivity Sensor.

The cell constant value (k) (1) for the conductivity sensor is indicated on the label (2) attached to the conductivity sensor cable (near to the connection in the electrical cabinet) or on the sensor body.

If the label is defaced, missing or does not include the cell constant value (k), this value can be determined through the procedure described afterwards, see Cell Constant Identification on page 9-339.

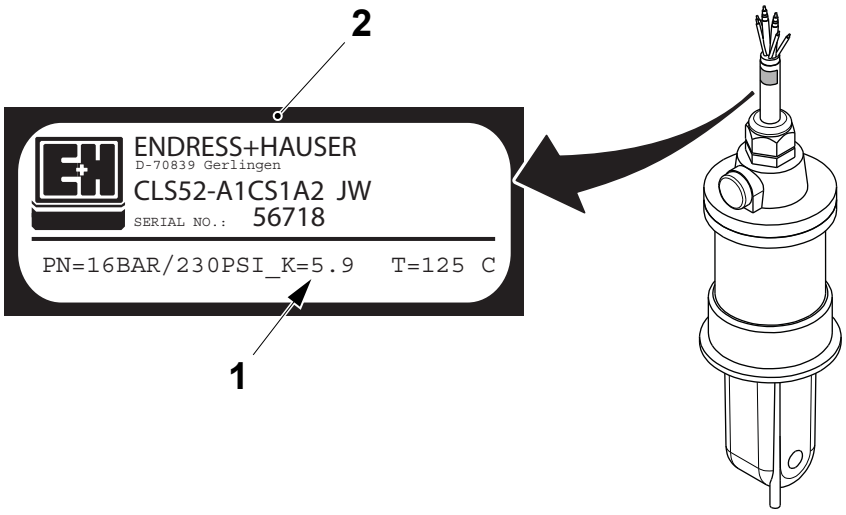

1 Cell constant value (k)
2 Label

(Cont'd)

TechPub_2614345_0108 - 0802_3048248_01.fm

(Cont'd)

Cell Constant Identification

a) Press the ENTER button (1).

b) Press the PLUS button (2) or MINUS button (3) to input `22` in the LC display (4).

c) Press the ENTER button (1) to enter the setup menu level `A SETUP1`.

d) Press the ENTER button (2) until the parameter `A5 CELL CONSTANT`. appears, carefully record the value for the parameter `A5 CELL CONSTANT`.

e) Press the PLUS button (2) or MINUS button (3) to input the value 5.200 1/cm or 6.300 1/cm for the parameter `A5 CELL CONSTANT` and press the ENTER button (2) twice.

f) Press the PLUS button (2) and MINUS button (3) simultaneously to exit the `SETTING MODE` menu.

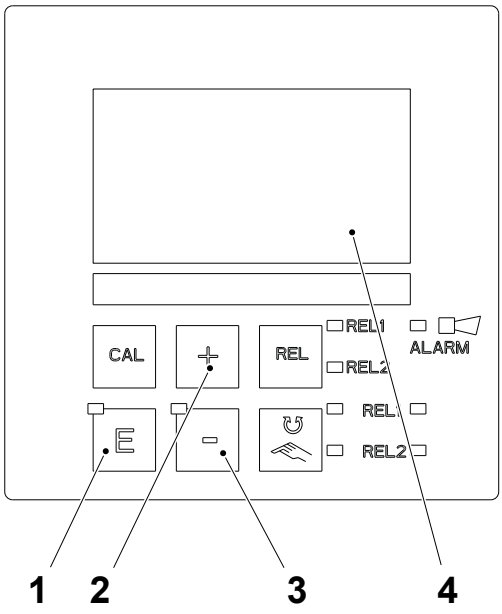

1 Enter button
2 Plus button
3 Minus button
4 LC display

(Cont'd)

TechPub_2614345_0108 - 0802_3048248_01.fm

(Cont'd)

g) Thread the resistor (5) through the conductivity sensor (6) and connect the two ends of the resistor (5) to as indicated in the illustration below.

h) Press repeatedly the PLUS button (2) until the uncompensated conductivity value UNCOMPVAL is displayed.

i) Compare the conductivity value in the display (4) with the values in the table below to determine the cell constant for the conductivity sensor. If the displayed conductivity value is outside of the tolerance of ±2.0 mS/cm, repeat the procedure from item a) entering the alternative value for the parameter A5 CELL CONSTANT.

Note! If the cell constant value can not be determined, change the conductivity sensor, see 9.7.3-6 Conductivity Meter - Change Conductivity Sensor.

j) Perform the setting of the conductivity sensor, see 9.7.3-3 Conductivity Meter - Set.

Input Value for Parameter A5 CELL CONSTANT	Displayed Conductivity Value	Cell Constant [k] 1/cm	Notes
5.200 l/cm	52.0 ±2.0 mS/cm	5.2	
6.300 l/cm	52.0 ±2.0 mS/cm	6.3	

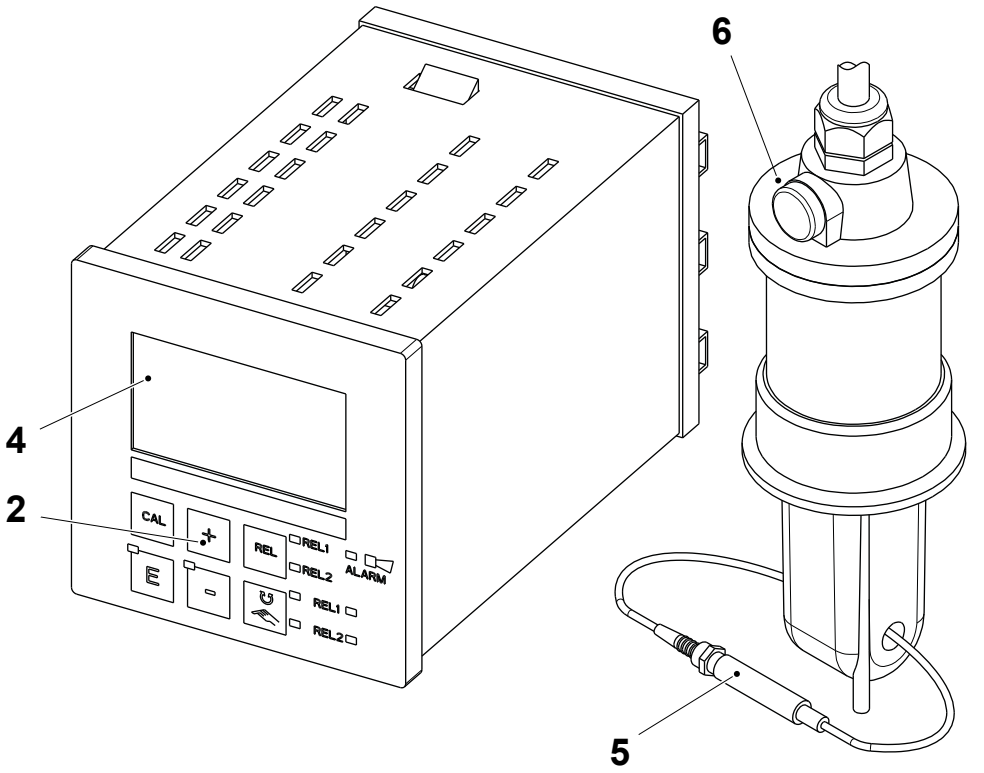

2 Plus button
4 Display
5 Resistor
6 Conductivity sensor

TechPub_2614345_0108 - 0802_3048248_01.fm

9.7.3-2 Conductivity Meter - Check

Machine Status	Mains Power ON Air OFF Steam ON Water OFF
Special Equipment	Resistance TP No. 3031848-0000
SPC Reference	90459-5187

Note! The conductivity sensor must not be in contact with any stainless steel surface during the check procedure. Make sure the conductivity sensor is clean and dry before performing the check procedure.

Before performing the conductivity meter check, first determine the cell constant value (k) for the conductivity sensor, see 9.7.3-1 Conductivity Meter - Identify Conductivity Sensor Cell Constant on page 9-338.

a) Remove the conductivity sensor, see 1.6.4-2 Pipe Work - Check Conductivity Sensor.

(Cont'd)

TechPub_2614345_0108 - 0802_3048248_01.fm

(Cont'd)

b) Press repeatedly the PLUS button (1) until the uncompensated conductivity value `UNCOMPVAL` is displayed.

c) Check the conductivity value in the display (2).If the conductivity value is:

- within the tolerance of 0 ±300 µS/cm, continue with item d)
- outside the tolerance of 0 ±300 µS/cm, perform the calibration of the conductivity meter, see 9.7.3-4 Conductivity Meter - Calibrate and then repeat the check of the conductivity meter.

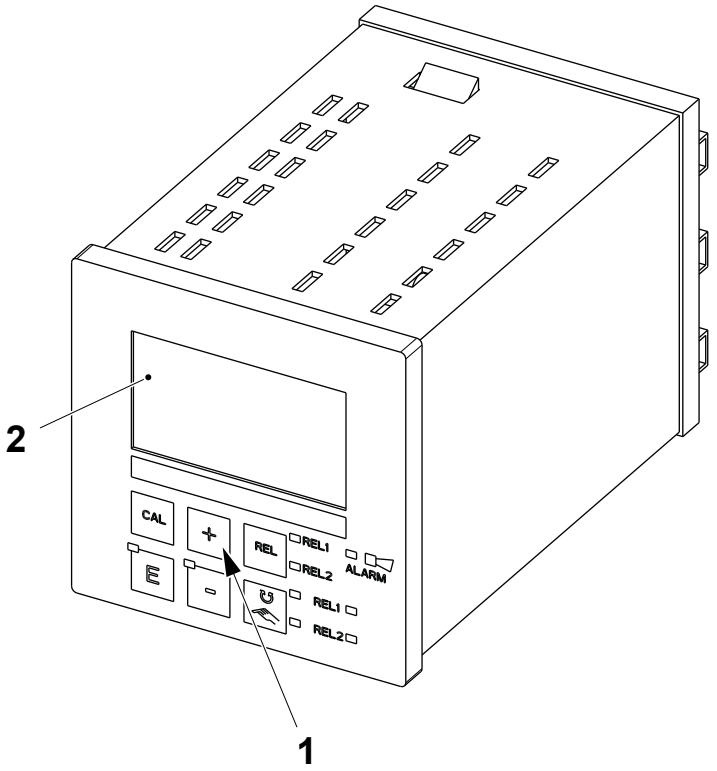

1 Plus button
2 Display

(Cont'd)

TechPub_2614345_0108 - 0802_3048248_01.fm

(Cont'd)

d) Thread the resistor (3) through the conductivity sensor (4) and connect the two ends of the resistor (3) to as indicated in the illustration below.

e) Verify that the conductivity value in the display (2) corresponds to the conductivity value in the table below. If the conductivity value is:
   - within the tolerance of ±2 mS/cm, continue with item f)
   - outside the tolerance of ±2 mS/cm, perform the calibration of the conductivity meter, see 9.7.3-4 Conductivity Meter - Calibrate and then repeat the check of the conductivity meter.

Cell Constant [k] 1/cm	Conductivity Value mS/cm	Note
5.2	52.0	
5.9	59.0	
6.3	52.0	

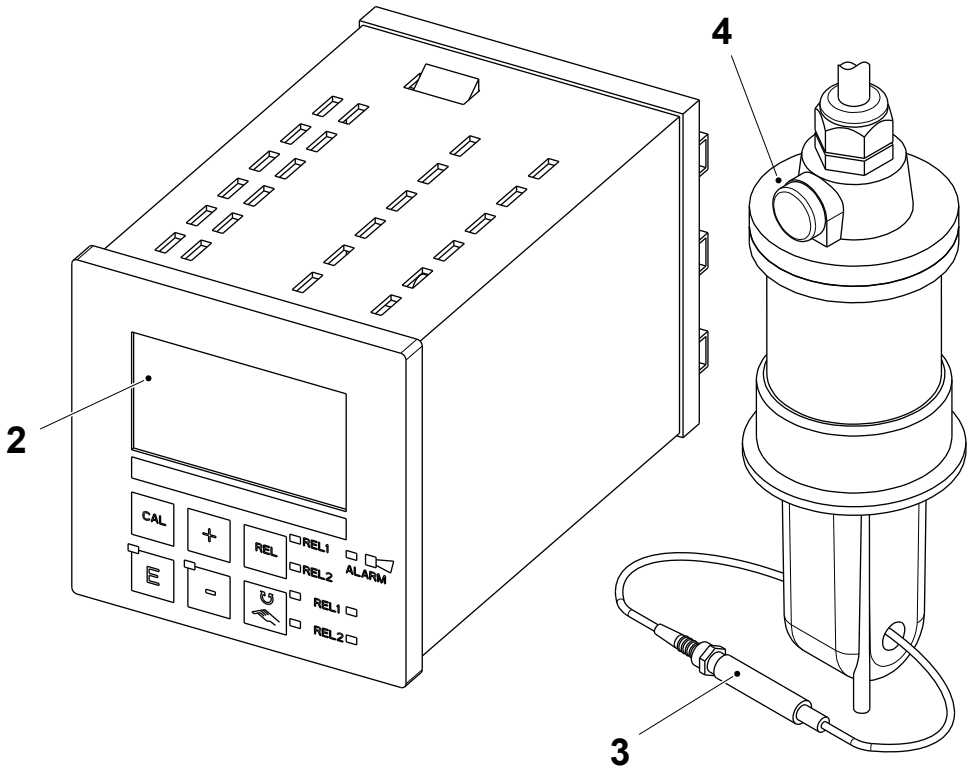

2 Display
3 Resistor
4 Conductivity sensor

(Cont'd)

TechPub_2614345_0108 - 0802_3048248_01.fm

(Cont'd)

f) Press the PLUS button (1) to exit from the uncompensated conductivity value display.

g) Remove the resistor (3).

h) Fit the conductivity sensor (4), see 1.6.4-2 Pipe Work - Check Conductivity Sensor.

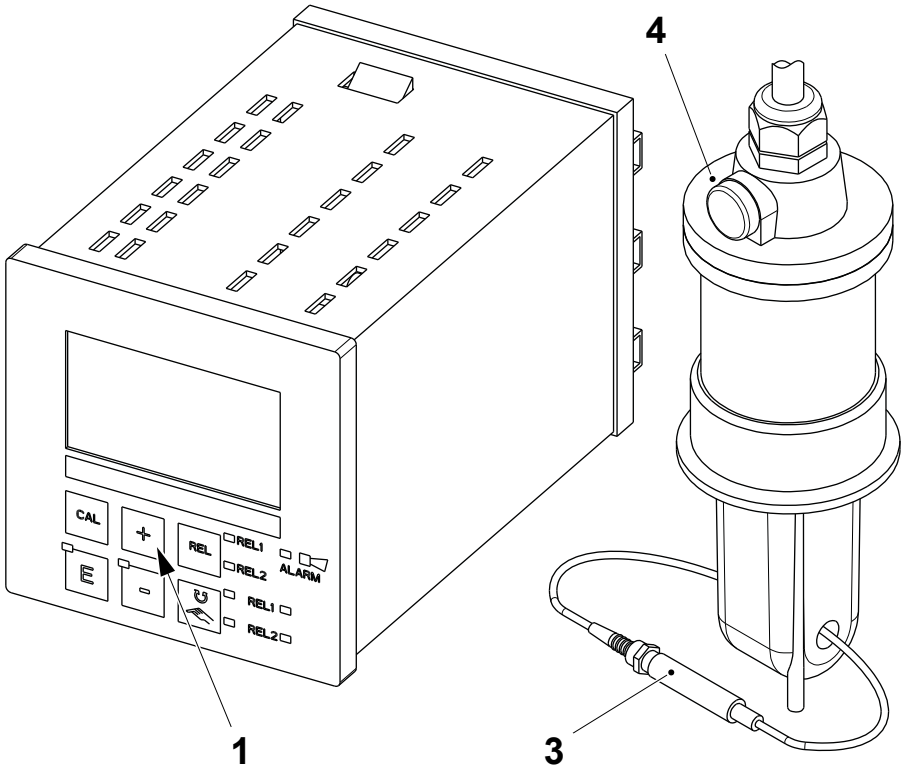

1 Plus button
3 Resistor
4 Conductivity sensor

TechPub_2614345_0108 - 0802_3048248_01.fm

9.7.3-3 Conductivity Meter - Set

Machine Status	Mains Power ON Air OFF Steam ON Water OFF
SPC Reference	90459-5187

Before performing the conductivity meter setting, first determine the cell constant value (k) for the conductivity sensor, see 9.7.3-1 Conductivity Meter - Identify Conductivity Sensor Cell Constant on page 9-338.

a) Press the ENTER button (1).

b) Press the PLUS or MINUS buttons (2) to input 22 in the LC display (3).

c) Press the ENTER button (1) to enter the SETTING MODE menu

d) Set the conductivity meter according to the Setting Table on page 9-346. Use the PLUS or MINUS buttons (2) to select the setup menu levels and to input setup parameters and numerical values. Use the ENTER button to save input data and to move between the setup parameters within the setup menu levels.

TechPub_2614345_0108 - 0802_3048248_01.fm

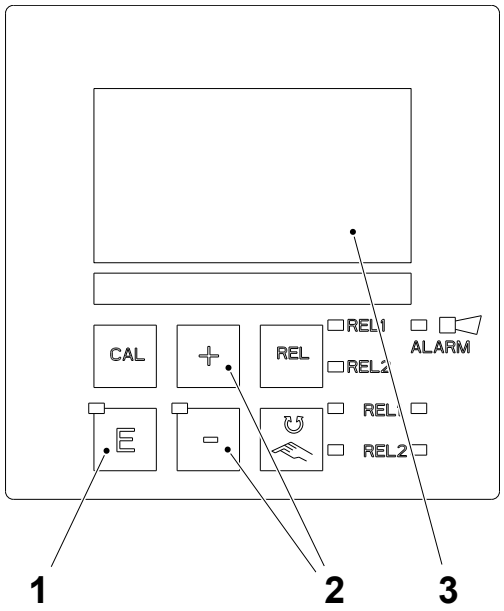

1 Enter button
2 Plus/minus button
3 LC display

(Cont'd)

(Cont'd)

Note! Pressing the PLUS and MINUS buttons together in the setup mode exits the current level of the setup menu.

Note! The label (1) on the conductivity sensor cable or sensor body indicates the value (2) for the parameter A5 (cell constant value).

Setting Table

Setting Mode Menu			
Level	A SETUP 1		
Parameter Code	**Default**	**Input**	**Description**
A1	ind		selects operating mode
A4	auto	mS/cm	selects unit displayed
A5	1.980 1/cm	See value indicated on the sensor cable (near the connection in the electrical cabinet) or on the sensor body	sets cell constant value
A7	1		sets measured value damping

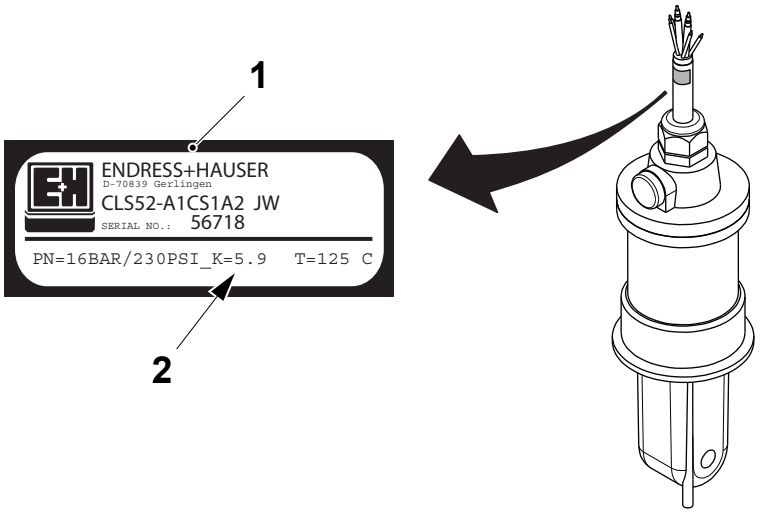

1 Label (example)
2 Value

(Cont'd)

TechPub_2614345_0108 - 0802_3048248_01.fm

(Cont'd)

Note! For OUT 1, make sure that the scale displayed for the parameter 0313 is mS/cm.

Level	B SETUP 2		
Parameter Code	**Default**	**Input**	**Description**
B1	Pt100	Pt1k	selects temperature measurement type
B2	lin		selects temperature compensation type
B3	2.10 %/K	1.80 %/K	sets temperature coefficient
B5	xx.x °C		temperature display of actual value
B6	0.0 °C		sets temperature difference
B7	25.0°C		sets reference temperature
Level	O OUTPUT		
Sub Level	OUT 1		
Parameter Code	**Default**	**Input**	**Description**
O3	lin		selects characteristic
O311	4-20		sets current range
O312	0 µS/cm		sets min. measured value
O313	2000 mS/cm	100.0 mS/cm	sets max. measured value

(Cont'd)

TechPub_2614345_0108 - 0802_3048248_01.fm

(Cont'd)

Note! For OUT 2, make sure that the scale displayed for the parameter 0313 is °C.

Sub Level	OUT 2		
Parameter Code	**Default**	**Input**	**Description**
O2	°C		selects measured variable for 2nd output
O3	lin		selects characteristic
O311	4-20		sets current range
O312	0.0 °C		sets min. measured value
O313	150.0 °C	100.0 °C	sets max. measured value
Level	F ALARM		
Parameter Code	**Default**	**Input**	**Description**
F1	Latch		selects contact type
F2	S		select time unit
F3	0		enter alarm delay
F4	22mA		select error current
F5	1	55	select error code*
F6	yes	no	set alarm contact to be effective
F7	no		set error current to be effective
F9	< R		select return to menu
Level	S SERVICE		
Parameter Code	**Default**	**Input**	**Description**
FUNCTION NOT USED			
Level	E E+H SERV		
Parameter Code	**Default**	**Input**	**Description**
FUNCTION NOT USED			

* If necessary, check that the error codes have been correctly set, see Check Entered Alarm Error Codes on page 9-349.

(Cont'd)

TechPub_2614345_0108 - 0802_3048248_01.fm

(Cont'd)

After setting the conductivity meter perform the calibration procedure, see 9.7.3-4 Conductivity Meter - Calibrate on page 9-351.

Check Entered Alarm Error Codes

To make sure that the alarm error codes have been correctly set, follow this procedure:

a) Press the ENTER button (1).

b) Press the PLUS or MINUS buttons (2) to input `22` in the LC display (3).

c) Press the ENTER button (1) to enter the `SETTING MODE` menu.

d) Use the PLUS or MINUS buttons (2) to select the setup menu level `ALARM` and press the ENTER button (1).

e) Press the ENTER button (2) until the parameter `F5` appears.

f) Use the PLUS or MINUS buttons (2) to select the error code to be checked.

g) Use the ENTER button (1) to check the parameters `F6` and `F7`.

Note! For all the error codes shown in the paragraph 9.7.3-5 Conductivity Meter - Error Codes the parameter `F6` must be set to "`YES`" and the parameter `F7` must be set to "`NO`". Only for the error code `E055` both the parameters `F6` and `F7` must be set to "`NO`", see setting table on page 9-347.

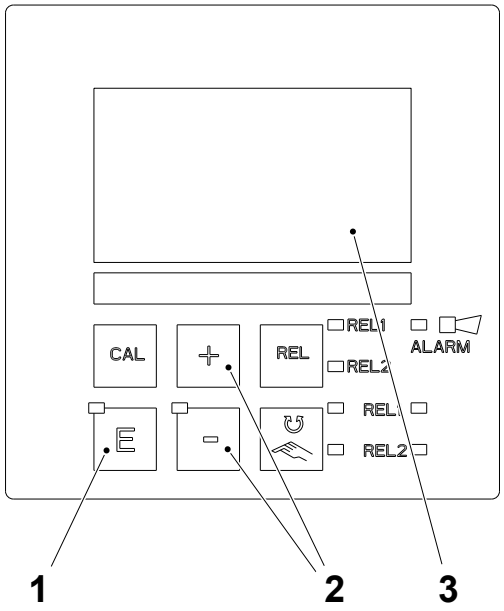

1 Enter button
2 Plus/minus button
3 LC display

(Cont'd)

TechPub_2614345_0108 - 0802_3048248_01.fm

(Cont'd)

h) Press the ENTER button (1) to display the parameter `F9`.

i) Use the PLUS or MINUS buttons (2) to select NEXT and press the ENTER button (1).

j) Repeat the procedure from step f).

k) When the check is finished, select `<R` in the parameter `F9` by the PLUS or MINUS buttons (2).

l) Press the ENTER button (1) to return to the `SETTING MODE` menu.

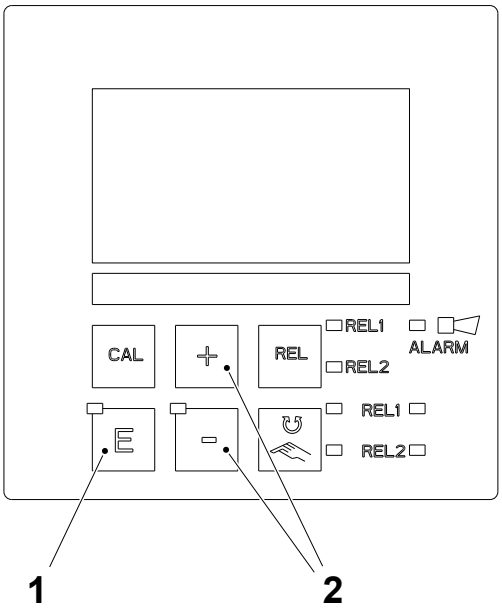

1 Enter button
2 Plus/minus button

TechPub_2614345_0108 - 0802_3048248_01.fm

9.7.3-4 Conductivity Meter - Calibrate

Machine Status	Mains Power ON Air OFF Steam ON Water OFF
Special Equipment	Resistance TP No. 3031848-0000
SPC Reference	90459-5187

Note! If the conductivity sensor or conductivity meter have been changed, the conductivity meter must been set according to 9.7.3-3 Conductivity Meter - Set before performing the calibration procedure.

Note! The conductivity sensor must not be in contact with any stainless steel surface during the calibration procedure.

(Cont'd)

TechPub_2614345_0108 - 0802_3048248_01.fm

(Cont'd)

Air Calibration

Remove the conductivity sensor from the pipe work, see 1.6.4-2 Pipe Work - Check Conductivity Sensor. Make sure the conductivity sensor is clean and dry before performing the calibration procedure.

a) Press the CAL button (1).

b) Press the PLUS or MINUS buttons (2) to input `22` in the LC display (3).

c) Press the CAL button (1) to enter the `CALIBRATION MODE` menu.

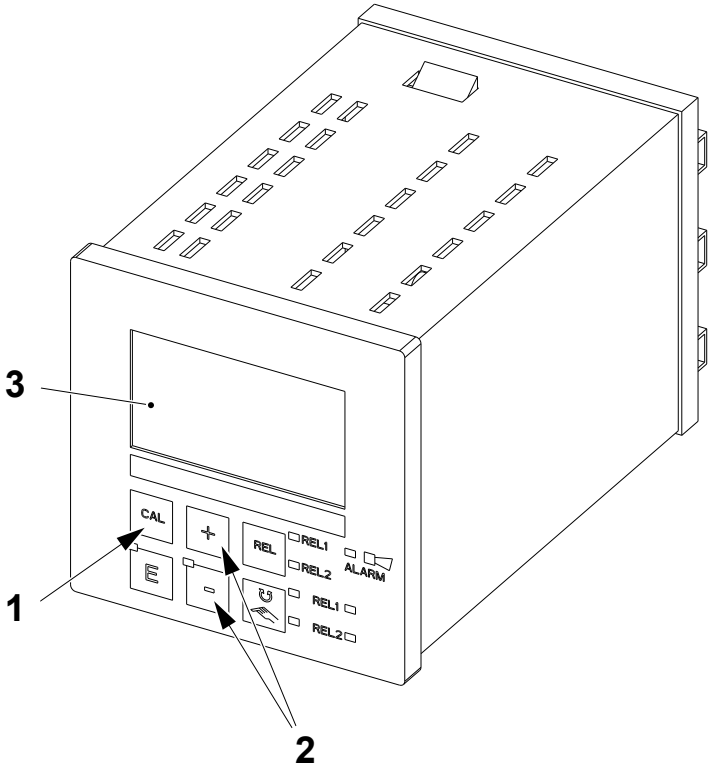

1 CAL button
2 Plus/minus button
3 LC display

(Cont'd)

TechPub_2614345_0108 - 0802_3048248_01.fm

(Cont'd)

d) Perform the calibration through the conductivity meter according to the table below; refer to the functional description in 9.7.3 Conductivity Meter to access the calibration mode menu.

Table for Air Calibration

Calibration Mode Menu			
Level	C CALIBRAT		
Sub Level	AIRS		
Parameter Code	**Default**	**Description**	**Action**
C111	xx µS/cm	starts air calibration	press the CAL button
C112	xxx µS/cm	displays the currently measured value	press the CAL button
C113	o.k.	displays the status of the calibration	press the CAL button
C114	yes	stores the current calibration result	press the CAL button

(Cont'd)

TechPub_2614345_0108 - 0802_3048248_01.fm

(Cont'd)

Cell Calibration

Note! The illustration shows one type of conductivity sensor, follow the same procedure to calibrate all conductivity sensor types.

a) Thread the resistor (1) through the conductivity sensor (2) and connect the two ends of the resistor (1) to as indicated in the illustration below.

b) Press the CAL button (3) on the conductivity meter.

c) Press the PLUS or MINUS buttons (4) to select `22` in the LC display (5).

d) Press the CAL button (3) to enter the `CALIBRATION` mode.

e) Press the CAL button (3) and use the PLUS and MINUS buttons (4) to access the `CELLC` sub menu.

f) Perform the cell calibration according to the Table for Cell Calibration on page 9-355.

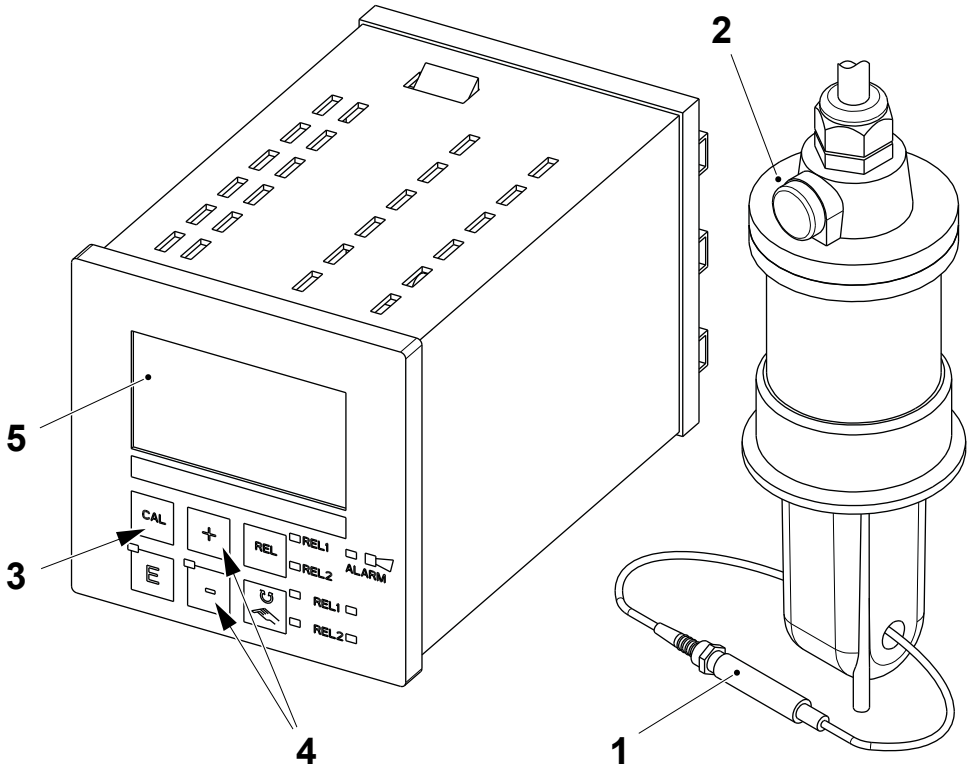

1 Resistor
2 Conductivity sensor
3 CAL button
4 Plus/minus button
5 Display

(Cont'd)

TechPub_2614345_0108 - 0802_3048248_01.fm

(Cont'd)

Table for Cell Calibration

Calibration Mode Menu			
Level	C CALIBRAT		
Sub Level	CELLC		
Parameter Code	**Display**	**Description**	**Action**
C122	xxx %/K	temperature coefficient α	use the PLUS and MINUS buttons to enter 0.00 and then press the CAL button
C123	xxxx mS/cm	conductivity value*	use the PLUS and MINUS buttons to enter the conductivity value* and then press the CAL button
C124	xxxx 1/cm	constant cell value	press the CAL button
C125	O.K	displays status of the calibration	press the CAL button
C126	YES	stores the current calibration	press the CAL button

* First determine the constant cell value, as indicated on the label fitted to the conductivity sensor cable or sensor body (see 9.7.3-1 Conductivity Meter - Identify Conductivity Sensor Cell Constant), then use the table below to select the correct conductivity value to be entered in the PARAMETER C123.

Table for Parameter C123

Cell Constant [k] 1/cm	**Conductivity Value mS/cm (Parameter C123)**
5.2	52.0
5.9	59.0
6.3	52.0

(Cont'd)

TechPub_2614345_0108 - 0802_3048248_01.fm

(Cont'd)

g) Perform the check of the conductivity meter, see 9.7.3-2 Conductivity Meter - Check on page 9-341.

h) Remove the resistor (1).

i) Fit the conductivity sensor (2), see 1.6.4-2 Pipe Work - Check Conductivity Sensor.

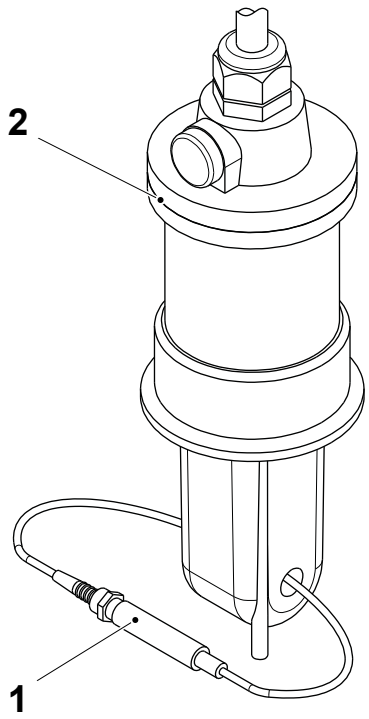

1 Resistor
2 Conductivity sensor

TechPub_2614345_0108 - 0802_3048248_01.fm

9.7.3-5 Conductivity Meter - Error Codes

Machine Status	Mains Power ON Air OFF Steam ON Water OFF
SPC Reference	90459-5187

If an error occurs with the conductivity meter the alarm LED (1) is lit and the letters ERR appear in the display (2). Press the MINUS button (3) to display the error code and message, see the table on the following page for a list of the error codes and corrective actions.

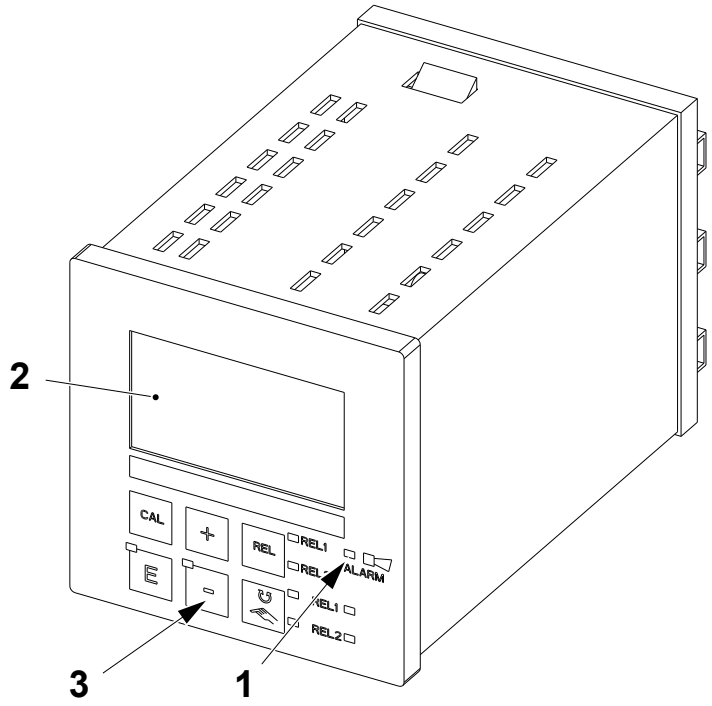

1 Alarm LED
2 Display
3 Minus button

(Cont'd)

TechPub_2614345_0108 - 0802_3048248_01.fm

(Cont'd)

Error Code	Display Message	Action
E001	EEPROM memory error	Switch the conductivity meter OFF and then ON again. If the error continues change the conductivity meter
E002	Instrument not calibrated, calibration data invalid, user data invalid (EEPROM error), instrument software not compatible to hardware (controller)	
E003	Download error	
E004	Transmitter software version not compatible with module hardware version	
E007	Transmitter malfunction, conductivity meter software not compatible with transmitter version	
E008	Sensor or sensor connection faulty	Check the conductivity sensor and conductivity sensor connections
E010	Temperature sensor defective, not connected or short-circuit (measurement continues with 25 °C)	Check the temperature sensor and connections. Check the correct option has been chosen in the setup parameter B1
E025	Limit for Air Set offset exceeded	Make sure the sensor is dry and repeat the air set calibration procedure. If the error continues change the sensor

(Cont'd)

TechPub_2614345_0108 - 0802_3048248_01.fm

(Cont'd)

E036	Calibration range of sensor exceeded	Check the conductivity sensor and connections. Clean the conductivity sensor and perform the calibration procedure
E037	Below calibration range of sensor	
E045	Calibration aborted	Perform the calibration procedure
E049	Calibration range of installation factor exceeded	Check/clean the conductivity sensor and perform the calibration procedure
E050	Below calibration range of installation factor	
E055	Below main parameter measuring range	Immerse sensor in conductive medium or perform the Air Set
E057	Main parameter measuring range exceeded	Check measurement and connections
E059	Below temperature measuring range	
E061	Temperature measuring range exceeded	

(Cont'd)

TechPub_2614345_0108 - 0802_3048248_01.fm

(Cont'd)

Error Code	Display Message	Action
E063	Below current output range 1	Check setup configuration. If this error occurs after the calibration procedure the setup parameter S9 in setup menu level S SERVICE must be set to FACTY to reset the factory values and the setup procedure described in 9.7.3-3 Conductivity Meter - Set must be repeated.
E064	Current output range 1 exceeded	Check measured value and current assignment
E065	Below current output range 2	
E066	Current output range 2 exceeded	
E077	Temperature outside α value table range	Check/clean the conductivity sensor. Check the conductivity meter configuration.
E078	Temperature outside concentration table	
E079	Conductivity outside concentration table	

(Cont'd)

TechPub_2614345_0108 - 0802_3048248_01.fm

(Cont'd)

E154	Below lower alarm threshold for period exceeding alarm delay	Check/clean the conductivity sensor and perform the calibration procedure
E155	Above upper alarm threshold for period exceeding alarm delay	
E156	Actual value below alarm threshold (set point) for longer than the set permissible period	
E157	Actual value exceeds alarm threshold (set point) for longer than the set permissible period	
E162	Dosage stop	Check the settings in the CURRENT INPUT and CHECK function groups.
E171	Flow in main stream to low or zero	Restore flow
E172	Switch-OFF limit for current input exceeded	Check process variables at sending measuring instrument. Change range assignment if necessary
E173	Current input < 4 mA	Check process variables at sending measuring instrument
E174	Current input > 20 mA	Check process variables at sending measuring instrument. Change range assignment if necessary

TechPub_2614345_0108 - 0802_3048248_01.fm

9.7.3-6 Conductivity Meter - Change Conductivity Sensor

Machine Status	Mains Power OFF Air OFF Steam ON Water OFF
SPC Reference	90459-5187

a) Make sure that the Mains Power is OFF.

(Cont'd)

TechPub_2614345_0108 - 0802_3048248_01.fm

(Cont'd)

b) Remove the conductivity sensor (1), see 1.6.4-2 Pipe Work - Check Conductivity Sensor.

c) Remove the clip (2) and disconnect the old conductivity sensor (1) from the conductivity meter (3).

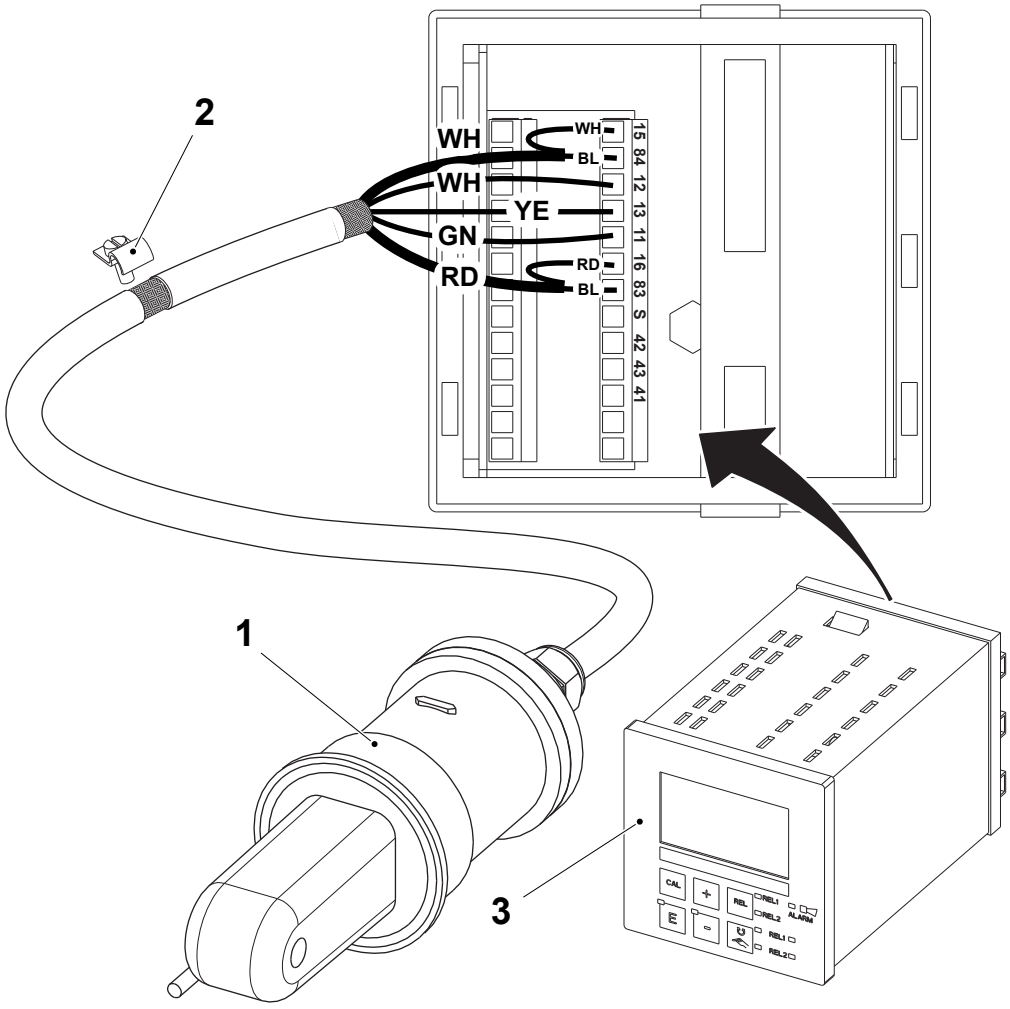

1 Conductivity sensor
2 Clip
3 Conductivity meter

(Cont'd)

TechPub_2614345_0108 - 0802_3048248_01.fm

(Cont'd)

Note! Do not cut the conductivity sensor cable. The label (4) attached to the conductivity sensor cable contains data required for setting and calibration of the sensor.

d) Connect the new conductivity sensor (1) to the conductivity meter (3). For the wiring of the individual connections, see the illustration below.

e) Turn the Mains Power ON.

f) Set the conductivity sensor (1), see 9.7.3-3 Conductivity Meter - Set on page 9-345.

g) Calibrate the conductivity sensor (1), see 9.7.3-4 Conductivity Meter - Calibrate on page 9-351.

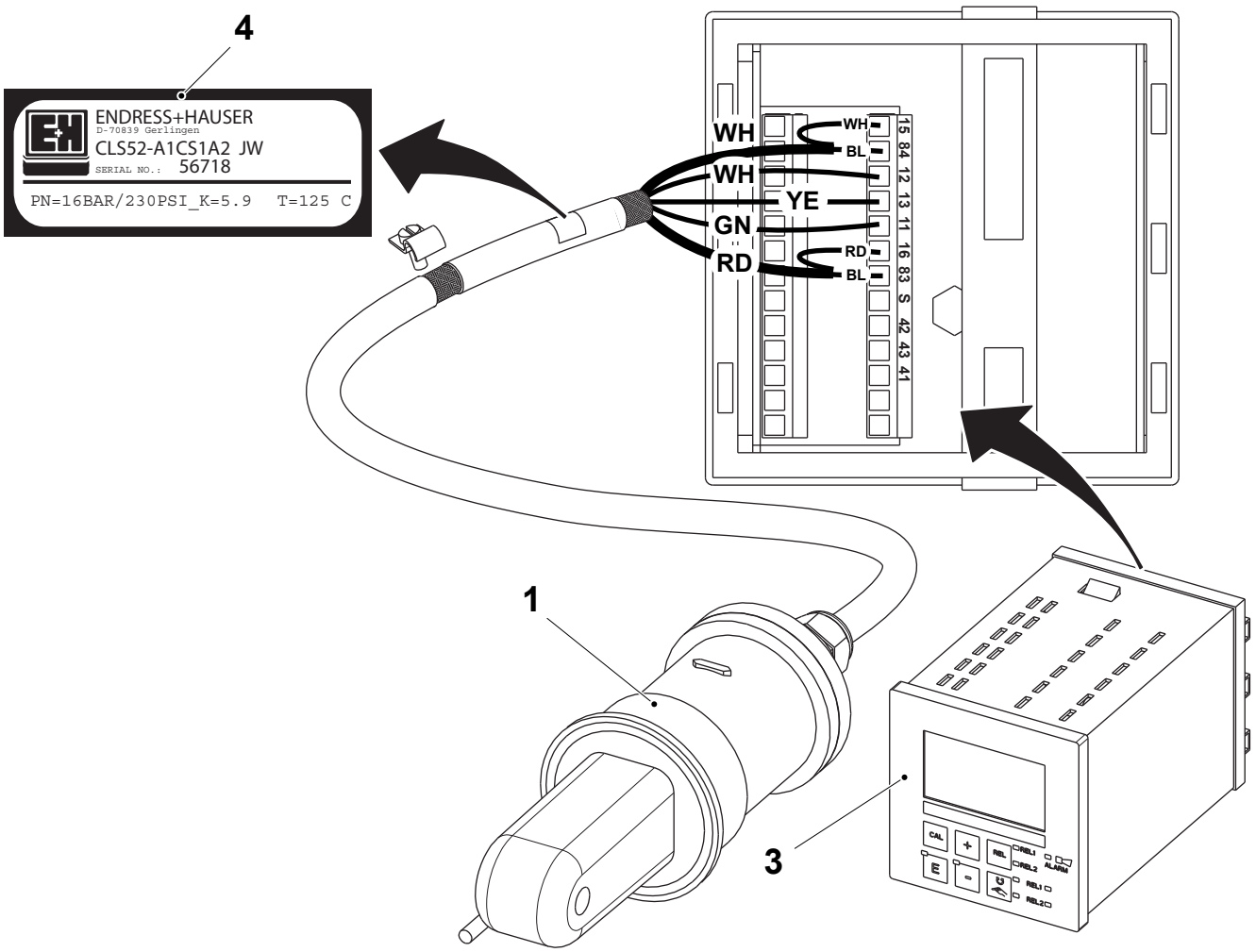

1 Conductivity sensor
3 Conductivity meter
4 Label

TechPub_2614345_0108 - 0802_3048248_01.fm

9.7.3-7 Conductivity Meter - Change Fuse

Machine Status	Mains Power OFF Air OFF Steam ON Water OFF
Consumables	Fuse 3.15 A
SPC Reference	90459-5187

a) Make sure that the Mains Power is OFF.

b) Disconnect the cable connection (1) from the rear of the conductivity meter (2).

c) Remove the end frame (3) from the rear of the conductivity meter (2).

d) Remove the screw (4) and pull out the component frame (5).

e) Remove the lid (6) from the fuse compartment (7) and change the fuse.

f) Assemble in the reverse order.

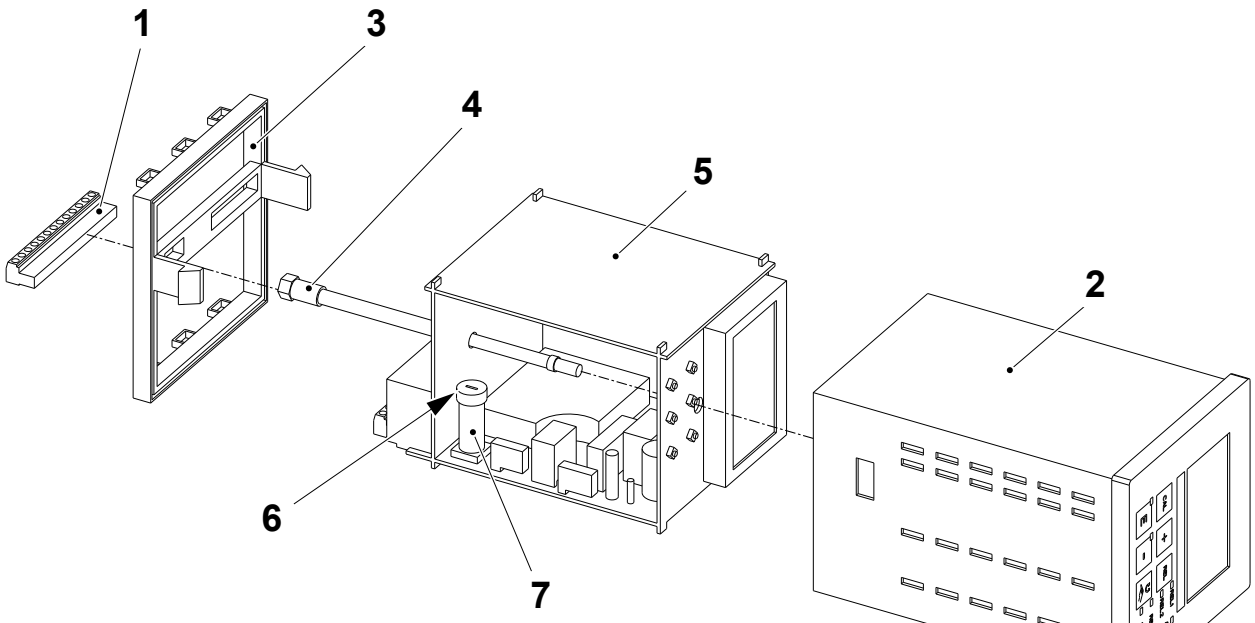

1 Cable connection
2 Conductivity meter
3 End frame
4 Screw
5 Component frame
6 Lid
7 Fuse compartment

TechPub_2614345_0108 - 0802_3048248_01.fm

9.7.4 Recorder

SPC Reference	90459-4033

Description

Analog Parameters

The recorder registers the following analog Production and CIP parameters:

Record type	Channel No.	Type	Colour	Description
Production data	AN1	Analog	Blue	**Hydrogen peroxide temperature** If the temperature of the sterile bath exceeds its upper or lower limit the machine stops. This event is recorded by the digital **Sterile parameter 2**. The sterile bath temperature is measured in °C.
Production data	AN2	Analog	Brown	**Air knife temperature** If the temperature of the air knife exceeds its upper or lower limit during **Production**, the machine stops. This event is recorded by the digital **Sterile parameter 2**. The air knife temperature is measured in °C.
Production data	AN3	Analog	Black	**Air sterilization (incineration) temperature** If the temperature of the incinerated air exceeds its upper or lower limit the machine steps down to **Zero** position. This event is recorded by the digital **Sterile parameter 1**. The temperature of the incinerated air is measured in °C.
Production data	AN4	Analog	Red	**Hydrogen peroxide concentration** If the concentration of the hydrogen peroxide exceeds its upper or lower limit the machine stops. This event is recorded by the digital **Sterile parameter 2**. The peroxide concentration is measured in % p/p.
Production data	AN5	Analog	Purple	**UV Radiation** If the concentration of the UV radiation exceeds its lower limit the machine stops. This event is recorded by the digital **Sterile parameter 2**. The UV radiation value is measured in W/m².

(Cont'd)

TechPub_2614345_0108 - 0802_3048249_01.fm

(Cont'd)

Record type	Channel No.	Type	Colour	Description
Production data	AN6	Analog	Green	**HI air temperature (OE)** If the temperature of the HI air exceeds its upper or lower limit the machine stops. This event is recorded by the digital **Sterile parameter 2**. The HI air temperature is measured in °C.
CIP data	AN7	Analog	Blue	**CIP conductivity** It measures the conductivity of the cleaning liquid during CIP. The signal is sent from the conductivity meter. The conductivity is measured in mS/cm.
CIP data	AN8	Analog	Brown	**CIP Flow rate** It measures the flow of the cleaning liquid during CIP. The signal comes from the flow meter. The flow rate is measured in litres/h.
CIP data	AN9	Analog	Black	**CIP Temperature** It measures the temperature of the cleaning liquid during CIP. The signal comes from the conductivity meter. The CIP temperature is measured in °C.
-	AN10	Analog	-	Not used
-	AN11	Analog	-	Not used
-	AN12	Analog	-	Not used

Digital Parameters

The recorder registers the following digital Production and CIP parameters:

Record type	Channel No.	Type	Colour	Description
Production data	DI1	Digital	Purple	**Sterile parameter 1** It records sterile parameter events that have caused the machine to shutdown. The event is recorded with a pulse from the zero reference lasting for the duration of the event and continuing for a further 5 minutes after the event has ended. After a sterile parameter event, the machine must be re-sterilised. On completion of filling machine sterilisation (drying finished), a pulse is recorded for 30 seconds.

(Cont'd)

TechPub_2614345_0108 - 0802_3048249_01.fm

(Cont'd)

Record type	Channel No.	Type	Colour	Description
Production data	DI2	Digital	Red	**Sterile parameter 2** It records operational parameter events that have caused the machine to stop. The event is recorded with a pulse from the zero reference lasting for the duration of the event and continuing for a further 5 minutes after the event has ended. If a hydrogen peroxide concentration event occurs prior to the start of the **Production** phase, the event is recorded with a pulse from the zero reference lasting for the duration of the event and continuing for a further 30 seconds after the event has ended.
Production data	DI3	Digital	Green	**Main motor operating** It records when the main motor is **On**.
Production data	DI4	Digital	Purple	**Filling machine in production** It records when the filling machine is producing filled packages. This signal also records when the machine is in **Intermediate cleaning** and **Final cleaning**. **Intermediate cleaning** is indicated by a pulse at 1 minute intervals from the zero reference lasting for the duration of the cleaning phase. **Final cleaning** is indicated by a pulse at 2.5 minute intervals from the zero reference lasting for the duration of the cleaning phase.

(Cont'd)

TechPub_2614345_0108 - 0802_3048249_01.fm

(Cont'd)

Note! The analog signal AN6 records data for the HI optional equipment (OE).

The illustration below shows a sample screen shot of the PRODUCTION DATA record.

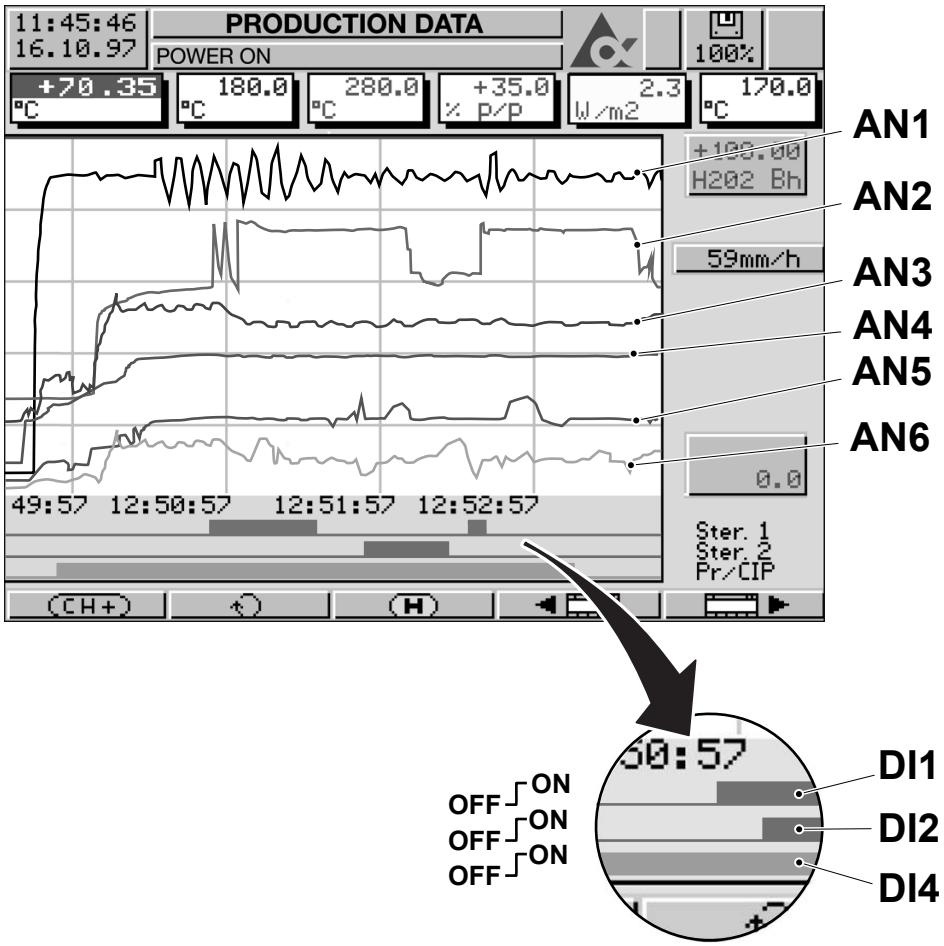

(Cont'd)

TechPub_2614345_0108 - 0802_3048249_01.fm

(Cont'd)

The illustration below shows a sample screen shot of the `CIP DATA` record.

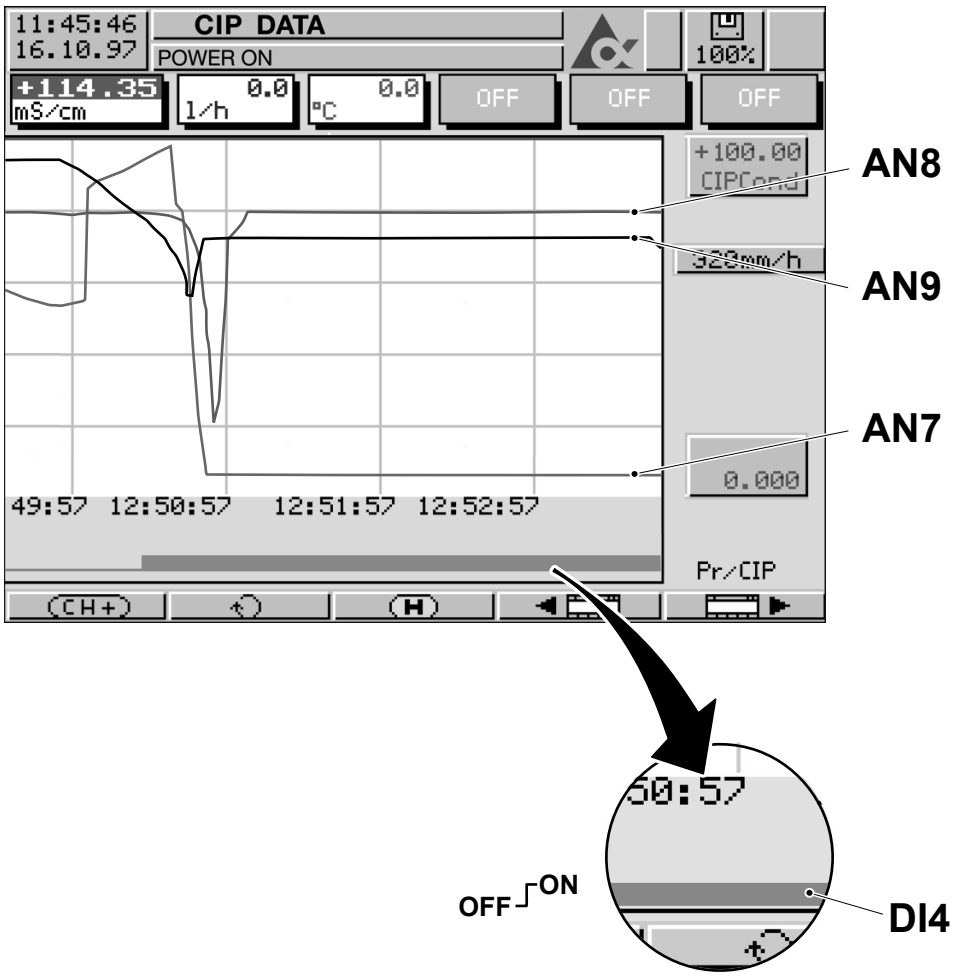

(Cont'd)

TechPub_2614345_0108 - 0802_3048249_01.fm

(Cont'd)

The illustration below shows a sample screen shot of the MAIN MOTOR data record.

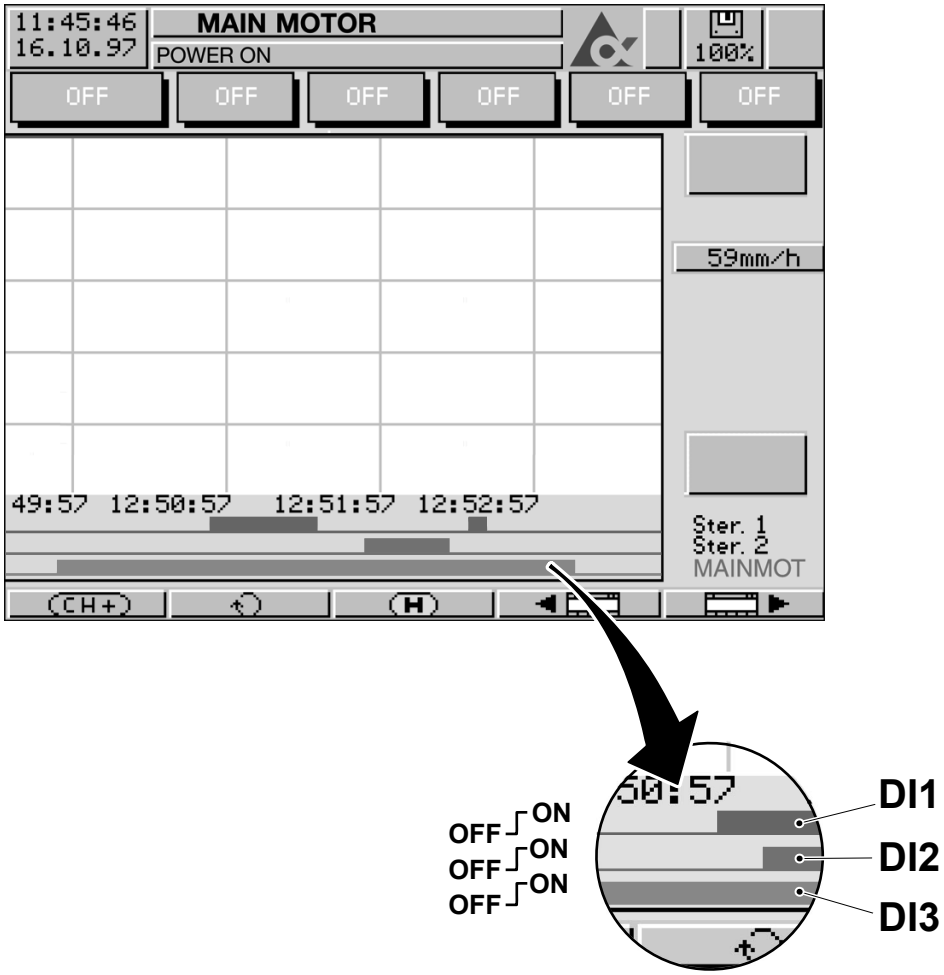

(Cont'd)

TechPub_2614345_0108 - 0802_3048249_01.fm

(Cont'd)

Note! For detailed information, see the manual supplied on the JUMO installation disk.

Power Supply

The power supply to the recorder is always switched ON. The recorder starts to record production data from the PREPARATION phase and continues to record for five minutes after the PRODUCTION ENDED phase has finished. The recorder starts to record CIP data at the start of the cleaning cycle and continues to record for five minutes after the cleaning cycle has finished.

CompactFlash Memory Card

The data is automatically saved in the CompactFlash memory card at regular intervals. If the CompactFlash memory card alarm function is enabled on the PLC program, when 31Mb of the CompactFlash memory is used an alarm is activated on the TPOP and the filling machine performs a SHORT STOP. Eject the CompactFlash memory card and download the recorded data, see 9.7.4-6 Recorder - Change CompactFlash Card.

The Jumo recorder can continue recording data in its internal memory. Erase the data stored on the CompactFlash memory card and fit CompactFlash memory card into the recorder as soon as possible.

Batch Report

Each time the recorder starts to record production data, an incremental batch report is created. The operator has the possibility to input the serial number of the filling machine and information about the current batch. Batch report data is only saved to the CompactFlash memory card if the report END; UPDATE CF C. function is used, see 9.7.4-6 Recorder - Change CompactFlash Card.

(Cont'd)

TechPub_2614345_0108 - 0802_3048249_01.fm

(Cont'd)

Password

Note! For filling machines compliant with the FDA 21 CFR Part 11 regulations for electronic signatures, individual passwords and user rights are assigned to users of the recorder and to users of the PC Evaluation program. If necessary contact the administrator of the recorder for access. For all other filling machines see the standard password configuration below.

The recorder has two standard user ID and password configurations allowing different access rights to the recorder:

- The user ID `MASTER` and the password `9200`. Logon as the `MASTER` to have full access to all the configuration parameters and to all the functions of the CompactFlash memory card.
- The user ID `USER` and the password `0`. Logon as the `USER` allows access to download the recorded data in the CompactFlash memory card without any privileges to access configuration parameters.

PC Evaluation Program (PCA3000)

The recorder is supplied with a software programme for archiving and reviewing the data recorded by the recorder. For detailed information on the PC Evaluation program, see the manual supplied on the JUMO installation disk.

PC Security Management Program

The recorder is supplied with a software programme for the administration of user rights to access the recorder, the use of the PC evaluation software and for the issue of electronic signatures to recorded data. The PC Security management software is utilized for filling machines required to operate in compliance with the FDA 21 CFR Part 11 regulation, see the manual supplied on the JUMO installation disk.

TechPub_2614345_0108 - 0802_3048249_01.fm

9.7.4-2 Recorder - Set Date, Time and Language

Machine Status	Mains Power ON Air OFF Steam ON Water OFF
SPC Reference	90459-4033

Note! For detailed information, see the manual supplied on the JUMO installation disk.

a) Perform the log in as “Master” to access the configuration functions, see 9.7.4-5 Recorder - Log In and Log Off.

b) Press the MENU button (1).

c) Use the ARROW buttons (2) to select the PARAMETER window (3) and press the ENTER button (4).

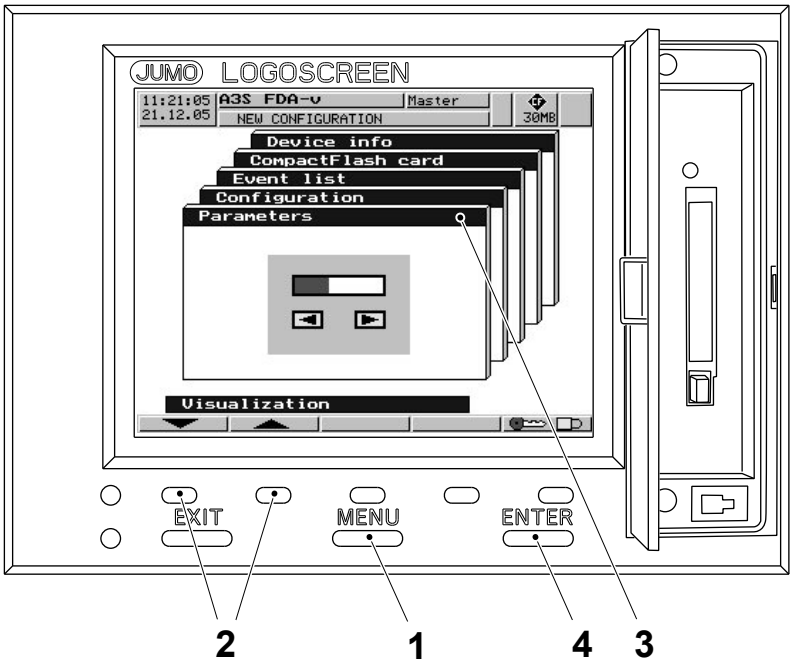

1 Menu button
2 Arrow button
3 Parameter window
4 Enter button

(Cont'd)

TechPub_2614345_0108 - 0802_3048249_01.fm

(Cont'd)

d) Select DATE AND TIME and press the ENTER button (4).

e) In the DATE AND TIME window, select DATE and press the ENTER button (4).

f) Use the ARROW buttons (2) and (5) to set the date and press the ENTER button (4).

g) Repeat the point f) to select and set the time.

h) Press the EXIT button (6) to exit from the PARAMETER window. The record performs an automatic reset.

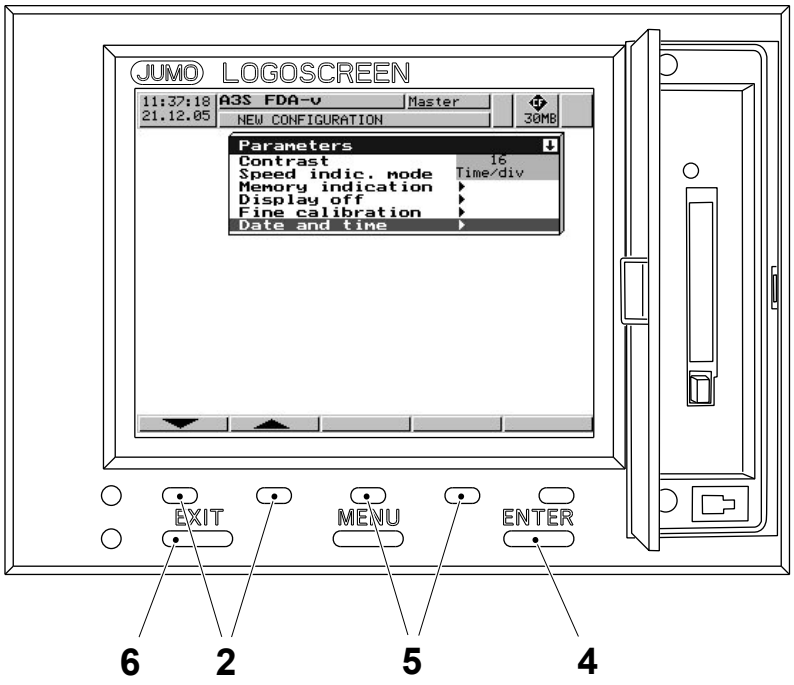

2 Arrow button
4 Enter button
5 Arrow button
6 Exit button

(Cont'd)

TechPub_2614345_0108 - 0802_3048249_01.fm

(Cont'd)

i) Use the ARROW buttons (2) to select the CONFIGURATION window (7) and press the ENTER button (4).

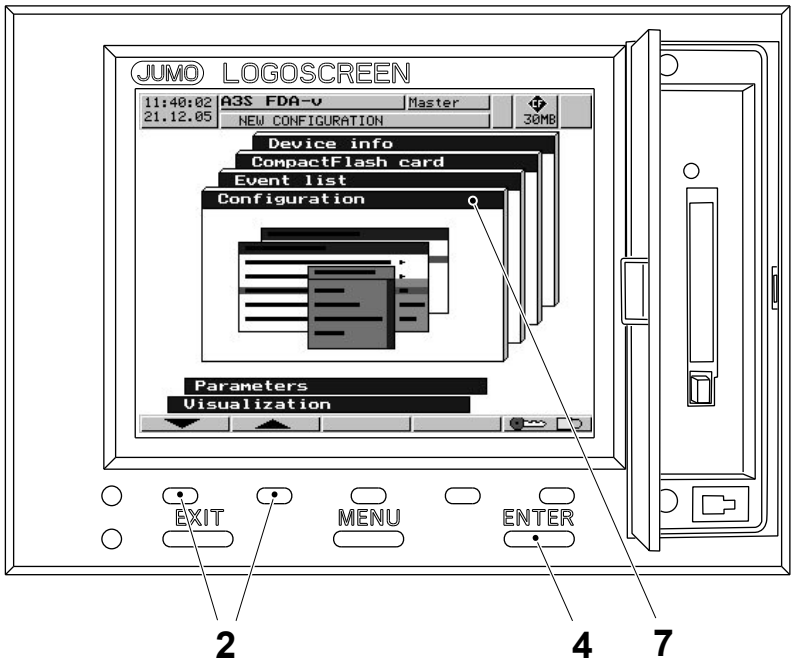

2 Arrow button
4 Enter button
7 Configuration window

(Cont'd)

TechPub_2614345_0108 - 0802_3048249_01.fm

(Cont'd)

j) Select DEVICE DATA and press the ENTER button (4).

k) In the DEVICE DATA window (8) select LANGUAGE and press the ENTER button (4).

l) Use the ARROW buttons (2) to set the desired language and press the ENTER button (4).

m) Press the EXIT button (6) twice to exit from the CONFIGURATION window. The record performs an automatic reset.

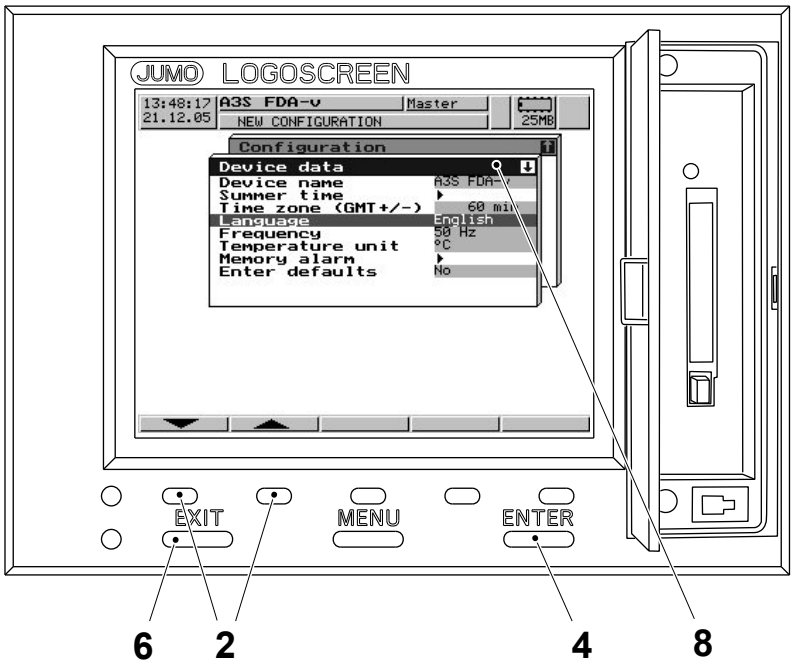

2 Arrow button
4 Enter button
6 Exit button
8 Device data window

TechPub_2614345_0108 - 0802_3048249_01.fm

9.7.4-3 Recorder - Load Configuration Data

Machine Status	Mains Power ON Air OFF Steam ON Water OFF
Special Equipment	PC with CD Drive Communication Cable RS 232-C CompactFlash reader/writer
SPC Reference	90459-4033

Loading via Serial Interface

Note! For detailed information, see the manual supplied on the JUMO installation disk.

a) Connect the serial communication cable supplied with the recorder between the PC (1) and the setup plug (2) on the front of the recorder.

b) Start the Setup Program Logoscreen CF.

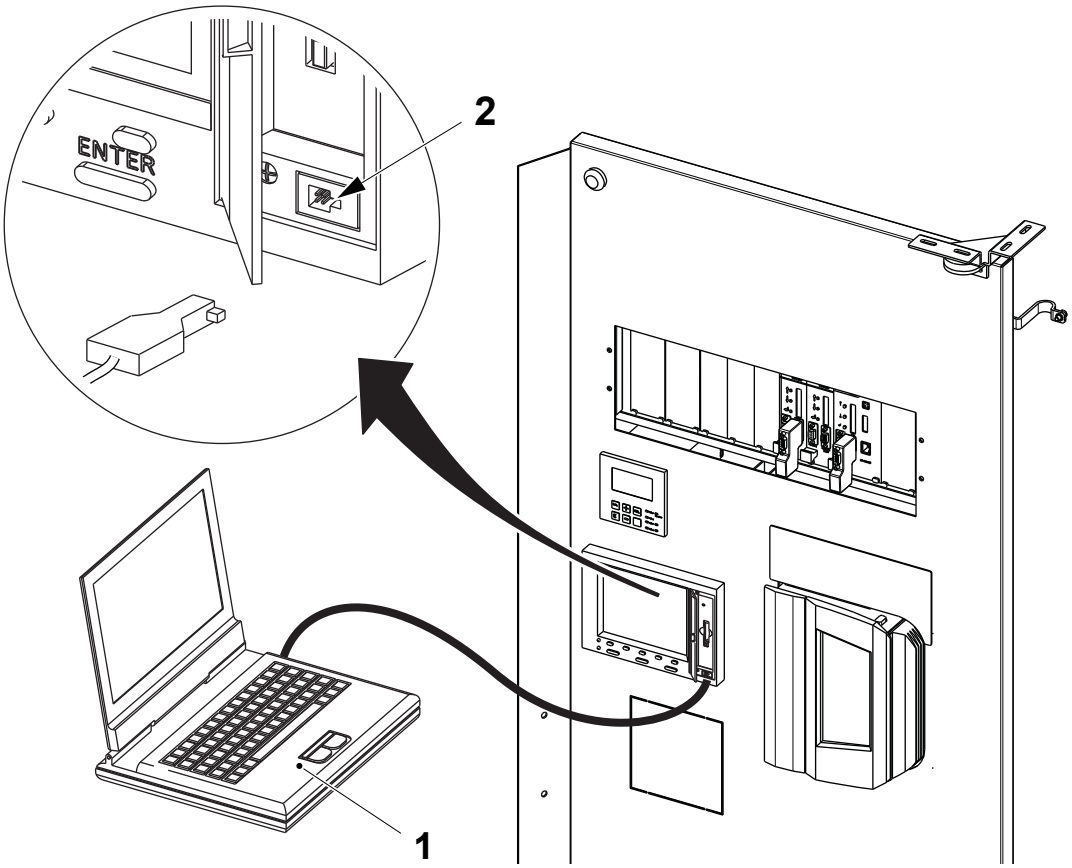

1 Personal Computer (PC)
2 Setup plug

(Cont'd)

TechPub_2614345_0108 - 0802_3048249_01.fm

(Cont'd)

Note! If there has never been any previous communication with a device, the “Assistant for Device Settings” will automatically be started when the first attempt at communication is made.

c) Insert the CD marked SOFTW_CD_A3_S into the PC CD reader.

d) Locate the folder `PROCESS RECORDER` and copy the configuration file to the PC desktop.

e) Establish a connection between the PC and the recorder by clicking on the `ESTABLISH CONNECTION` button (3).

f) Select the recorder in the device list and click the `CONNECTION` button (4).

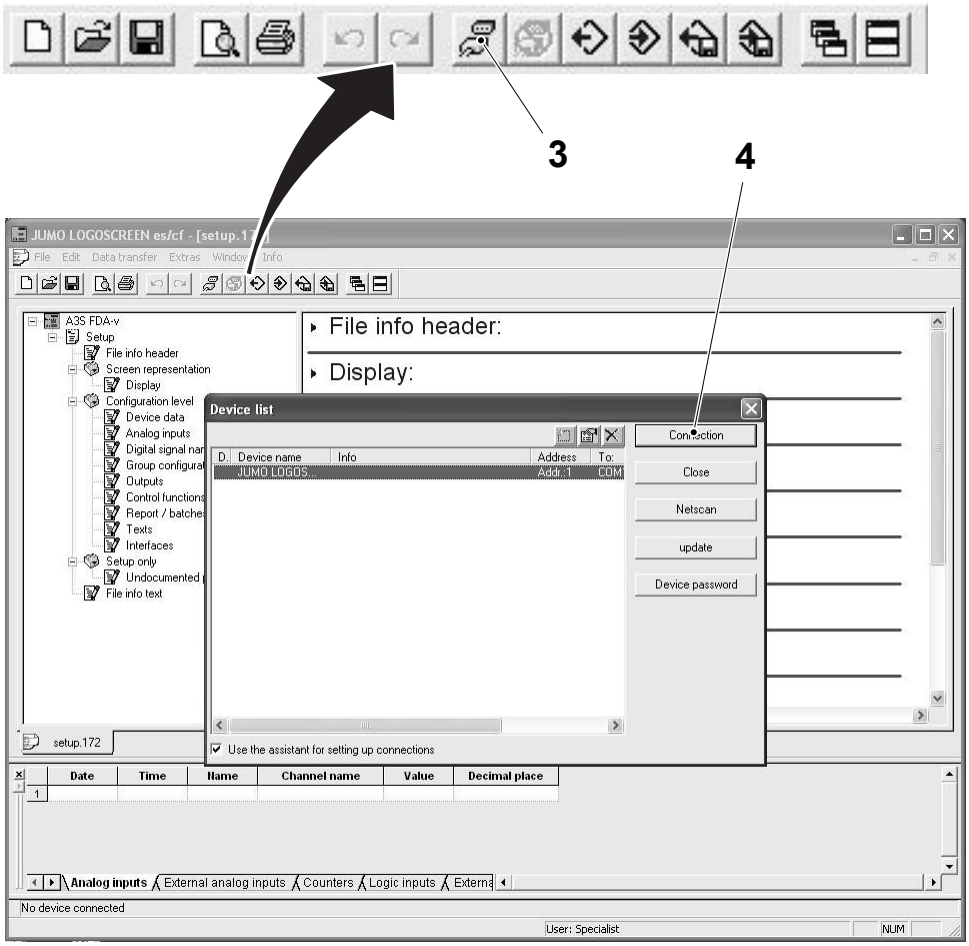

3 Establish connection button
4 Connection button

(Cont'd)

TechPub_2614345_0108 - 0802_3048249_01.fm

(Cont'd)

g) Click on the OPEN button (5) and locate the configuration file and then open the file.

h) Click on the DATA TRANSFER TO DEVICE button (6) to upload the new recorder configuration settings.

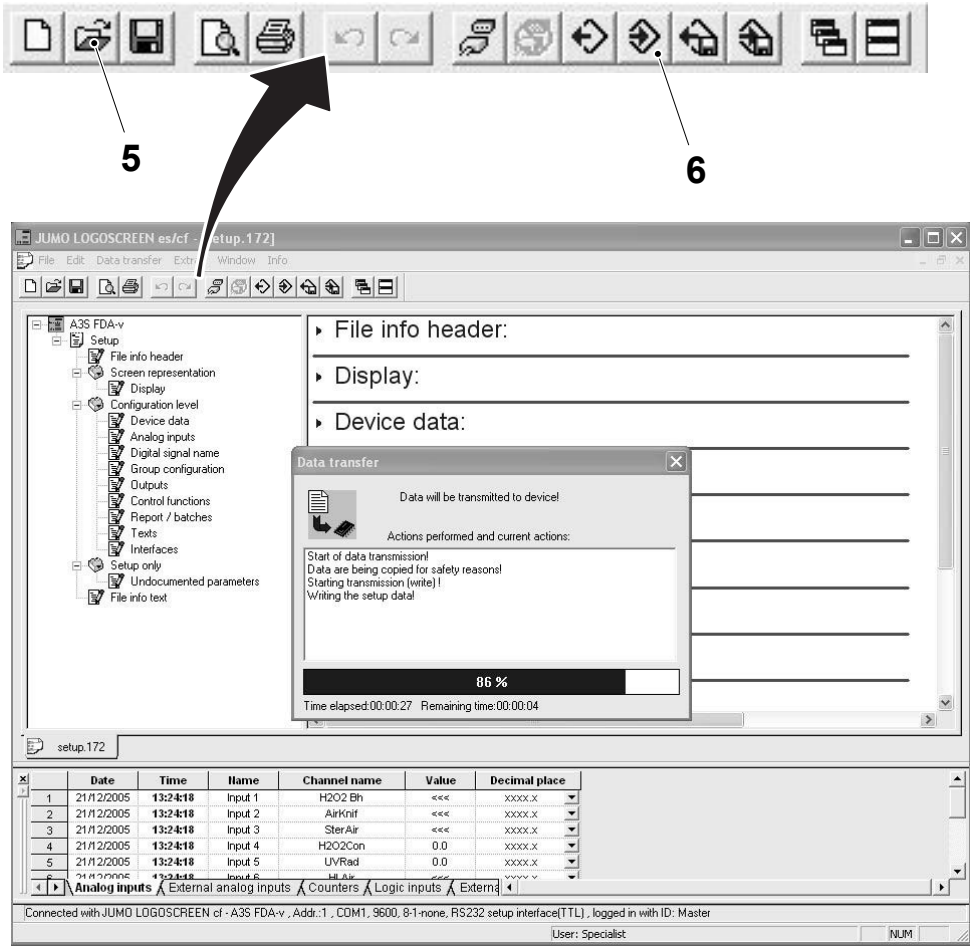

5 Open button

6 Data transfer to device button

(Cont'd)

TechPub_2614345_0108 - 0802_3048249_01.fm

(Cont'd)

i) When the new recorder configuration settings have been uploaded the recorder performs an automatic reset. The name of the new configuration appears on the top of the display.

j) Close the Setup Program Logoscreen CF and disconnect the communication cable.

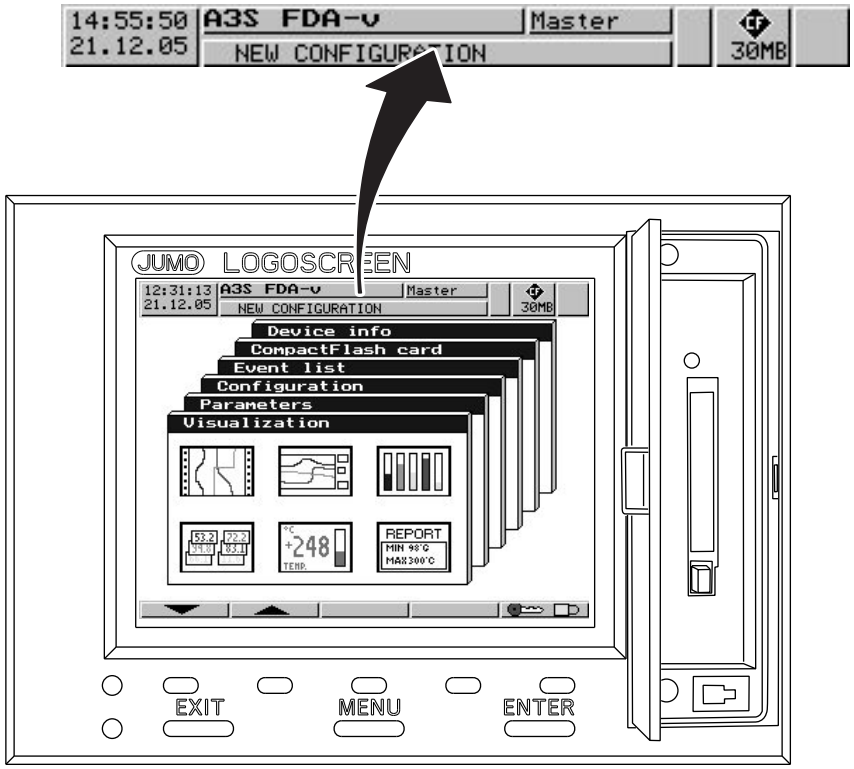

(Cont'd)

TechPub_2614345_0108 - 0802_3048249_01.fm

(Cont'd)

Loading from CompactFlash Card

Note! For detailed information, see the manual supplied on the JUMO installation disk.

a) From the installation CD, copy the configuration files `JUMO RECORDER\xxxxxx-100x\K17201.set` and `K17202.set` into the CompactFlash memory card (using a CompactFlash reader/writer, not supplied).

b) Open the recorder door (1) and insert the CompactFlash memory card with the configuration data into the CompactFlash slot (2).

c) Perform the log in as “Master” to access the CompactFlash Card functions, see 9.7.4-5 Recorder - Log In and Log Off.

d) Press the MENU button (3).

e) Use the ARROW buttons (4) to select the `COMPACTFLASH CARD` window (5) and press the ENTER button (6).

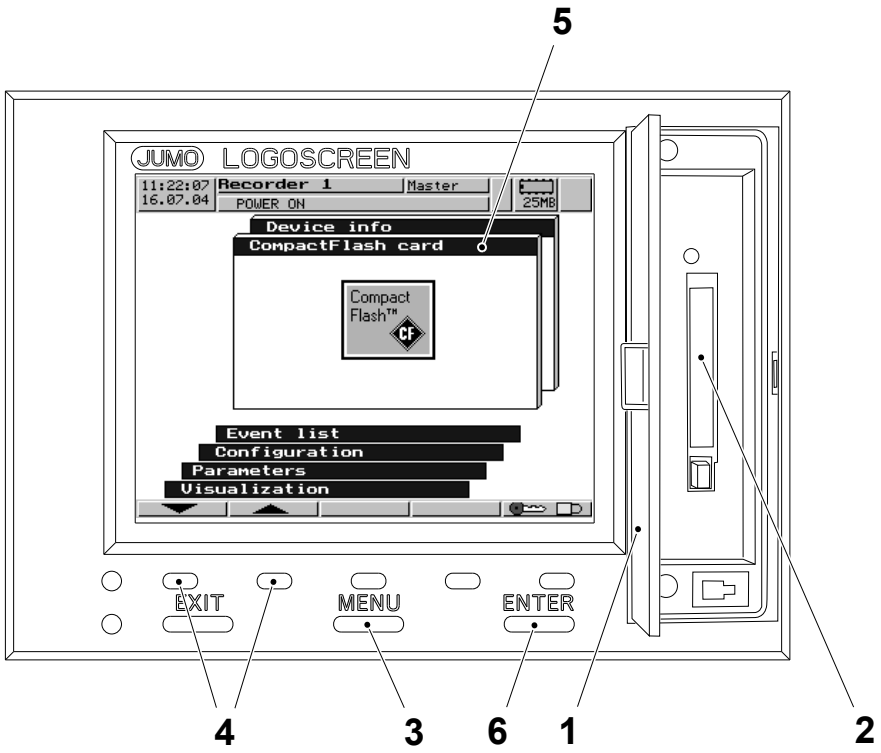

1 Door
2 CompactFlash slot
3 Menu button
4 Arrow button
5 CompactFlash card window
6 Enter button

(Cont'd)

TechPub_2614345_0108 - 0802_3048249_01.fm

(Cont'd)

f) Use the ARROW buttons (4) to select the `CF CARD TO CONFIG DATA` window (7) and press the START button (8).

g) Press the START button (8) to upload the new recorder configuration settings.

h) When the new recorder configuration settings have been uploaded the recorder performs an automatic reset. The name of the new configuration appears on the top of the display.

Note! Do not remove the CompactFlash memory card while the signal LED (9) is ON.

i) Eject the CompactFlash memory card from the CompactFlash slot (2).

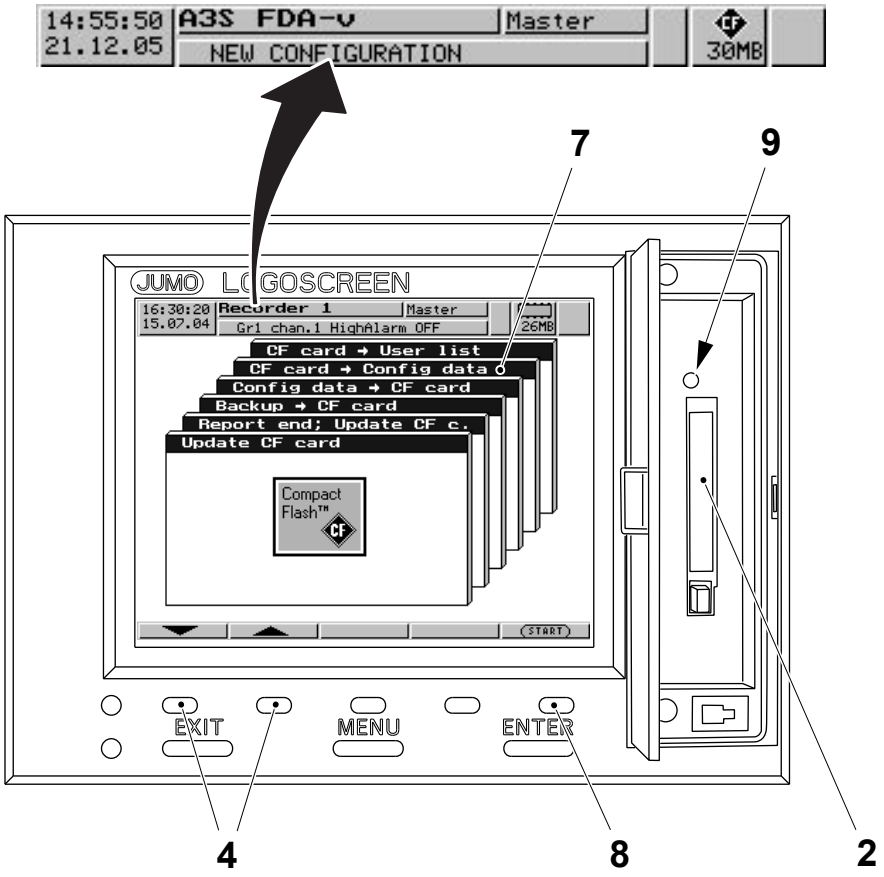

2 CompactFlash slot
4 Arrow button
7 CF card to config data window
8 Start button
9 Signal LED

TechPub_2614345_0108 - 0802_3048249_01.fm

9.7.4-4 Recorder - Calibrate

Machine Status	Mains Power ON Air OFF Steam ON Water OFF
SPC Reference	90459-4033

Note! For detailed information, see the manual supplied on the JUMO installation disk.

It is possible to compensate for false signals received by the recorder, such as systematic errors in the signals sent from thermocouples.

For example, if a thermocouple indicates a temperature value which is consistently 5 °C less than the true temperature at the lower end of its reading range and 10 °C less, at the higher end of its reading range, this can be corrected by the recorder.

(Cont'd)

TechPub_2614345_0108 - 0802_3048249_01.fm

(Cont'd)

To fine calibrate the signals received by the recorder proceed as follows:

a) Perform the log in as “Master” to access the configuration functions, see 9.7.4-5 Recorder - Log In and Log Off.

b) Press the MENU button (1).

c) Use the ARROW buttons (2) to select the PARAMETER window (3) and press the ENTER button (4).

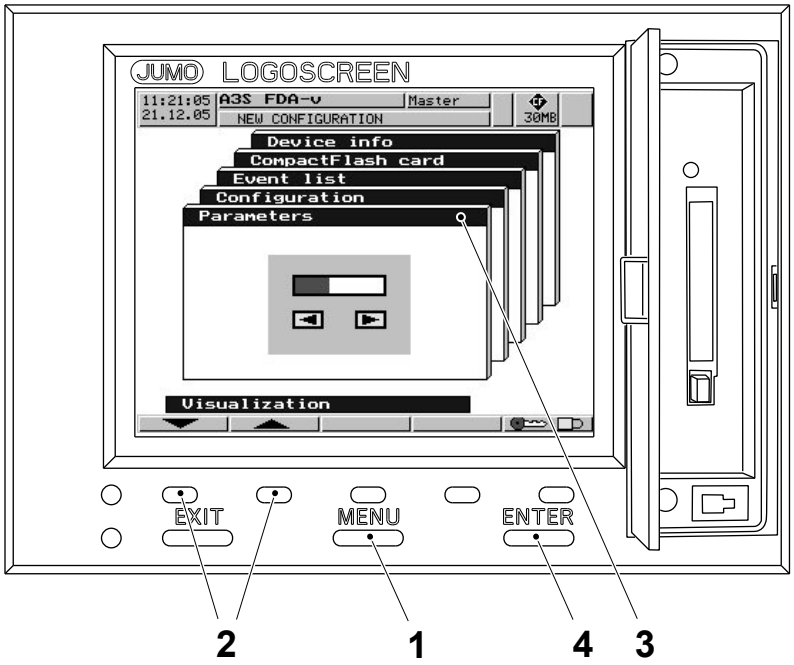

1 Menu button
2 Arrow button
3 Parameter window
4 Enter button

(Cont'd)

TechPub_2614345_0108 - 0802_3048249_01.fm

(Cont'd)

d) Use the ARROW buttons (2) to select FINE CALIBRATION (5) and press the ENTER button (4).

e) In the FINE CALIBRATION window select the desired Analogue input to be corrected (AN1-9) and press the ENTER button (4).

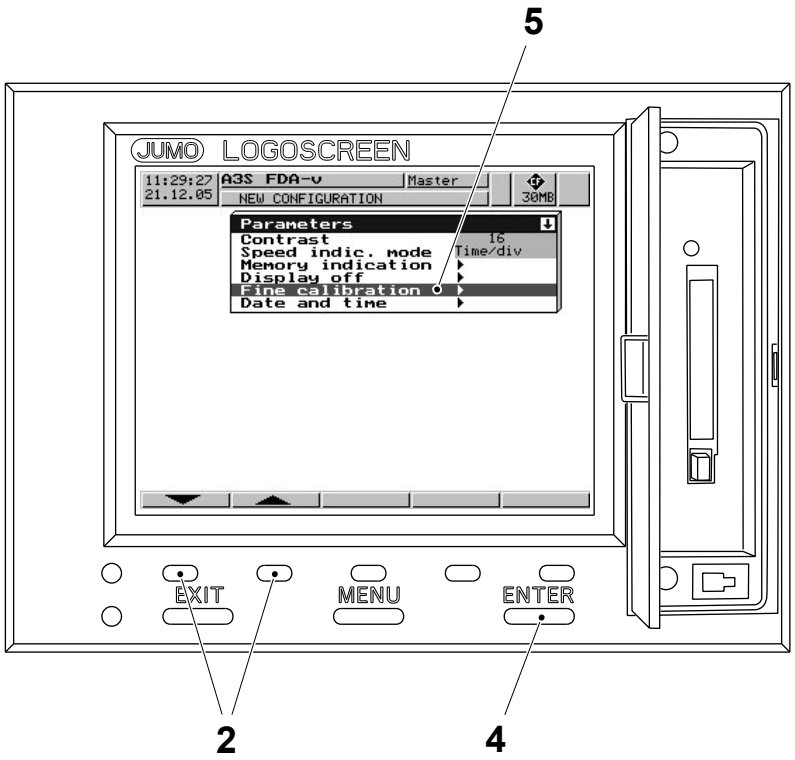

2 Arrow button
4 Enter button
5 Fine calibration

(Cont'd)

TechPub_2614345_0108 - 0802_3048249_01.fm

(Cont'd)

f) Use the ARROW buttons (2) to select ACTUAL START VALUE and press the ENTER button (4).

g) Use the ARROW buttons (2) and (6) to set the ACTUAL START VALUE of the reading range (e.g. 200 °C) and press the ENTER button (4).

h) Use the ARROW buttons (2) to select SET START VALUE and press the ENTER button (4).

i) Use the ARROW buttons (2) and (6) to set the TARGET START VALUE of the range (the true starting value of the signal range received from the thermocouple, e.g. 205 °C) and press the ENTER button (4).

j) Use the ARROW buttons (2) to select ACTUAL END VALUE and press the ENTER button (4).

k) Use the ARROW buttons (2) and (6) to set the ACTUAL END VALUE of the reading range (e.g. 300 °C) and press the ENTER button (4).

l) Use the ARROW buttons (2) and (6) to set the TARGET END VALUE of the range (the true ending value of the signal range received from the thermocouple, e.g. 310 °C) and press the ENTER button (4).

m) Use the ARROW buttons (2) to select ACTUAL START VALUE and press the ENTER button (4).

n) Press the EXIT button (7) twice to exit from the PARAMETER window and automatically reset the recorder.

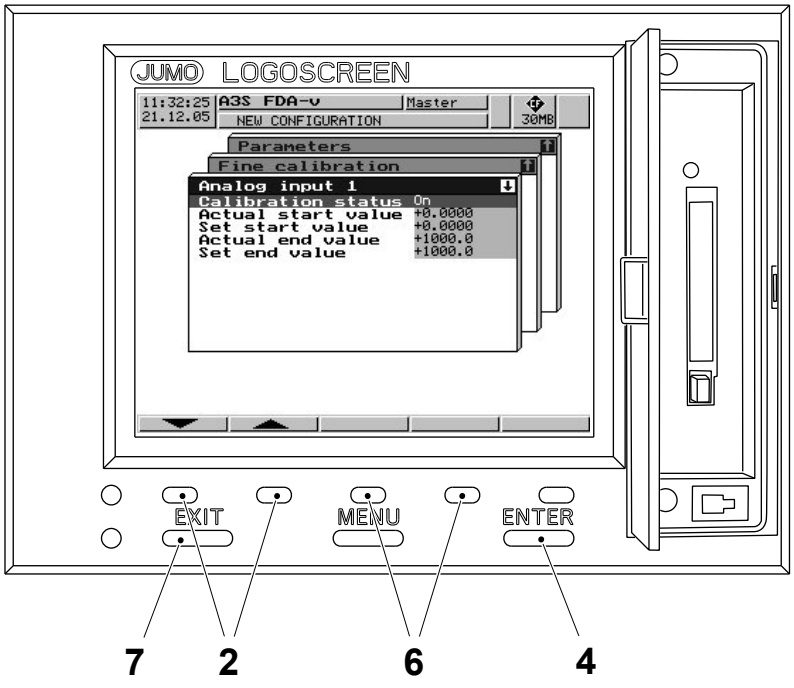

2 Arrow button
4 Enter button
6 Arrow button
7 Exit button

TechPub_2614345_0108 - 0802_3048249_01.fm

9.7.4-5 Recorder - Log In and Log Off

Machine Status	Mains Power ON Air OFF Steam ON Water OFF
SPC Reference	90459-4033

Note! For detailed information, see the manual supplied on the JUMO installation disk.

Log In Procedure

Note! To access the CONFIGURATION menu and the COMPACTFLASH CARD menu, it is necessary to login to the recorder.

a) Press the MENU button (1). The functions CompactFlash card and Configuration are disabled.

b) Press the LOG IN AND LOG OFF button (2).

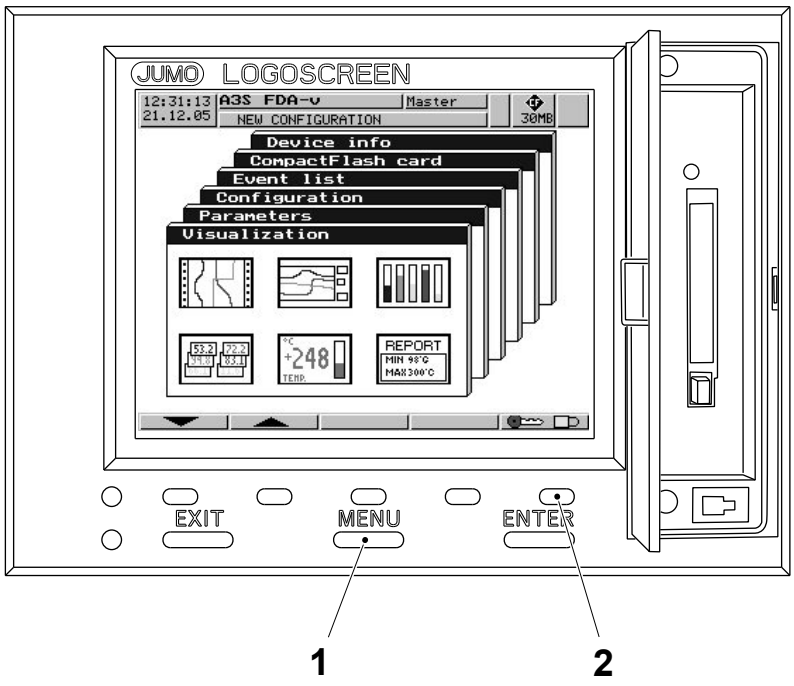

1 Menu button
2 Log in and log off button

(Cont'd)

TechPub_2614345_0108 - 0802_3048249_01.fm

(Cont'd)

c) Use the ARROW button (3) to select the LOG-IN window and press ENTER button (4).

Note! The recorder is delivered by default with an internal user list which comprises two user ID's. The user ID named MASTER allows full access to all the configuration parameters and the password is 9200. The user ID named USER allows the download of the recorded data only and the password is 0.

Note! If the recorder has been configured with individual user ID's, contact the administrator of the equipment for access to the recorder.

d) Select the user name and press ENTER (4).

e) Enter the password and press ENTER button (4). The functions COMPACTFLASH CARD and CONFIGURATION menus are now enabled and the name of the logged-in user appears on the top of the display.

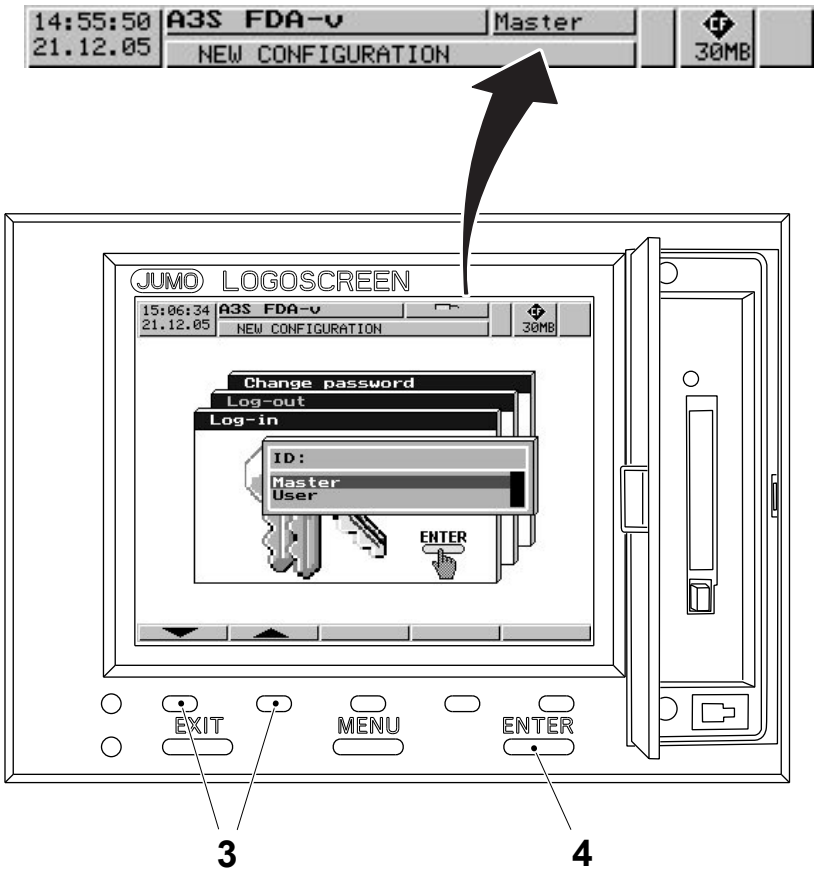

3 Arrow button
4 Enter button

(Cont'd)

TechPub_2614345_0108 - 0802_3048249_01.fm

(Cont'd)

Log Out Procedure

f) Use the ARROW button (3) to select the LOG-OUT window. The user currently logged in is shown on the top of the display.

g) Press the ENTER button (4).

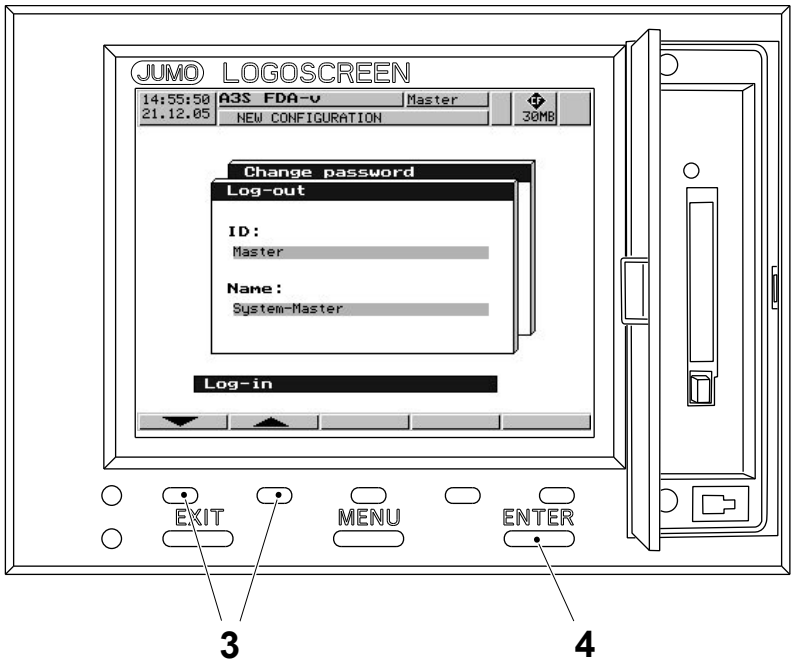

3 Arrow button
4 Enter button

TechPub_2614345_0108 - 0802_3048249_01.fm

9.7.4-6 Recorder - Change CompactFlash Card

Machine Status	Mains Power ON Air OFF Steam ON Water OFF
SPC Reference	90459-4033

Note! For detailed information, see the manual supplied on the JUMO installation disk.

a) Perform the log in to access the CompactFlash Card functions, see 9.7.4-5 Recorder - Log In and Log Off.

b) Press the MENU button (1).

c) Use the ARROW buttons (2) to select the COMPACTFLASH CARD window (3) and press the ENTER button (4).

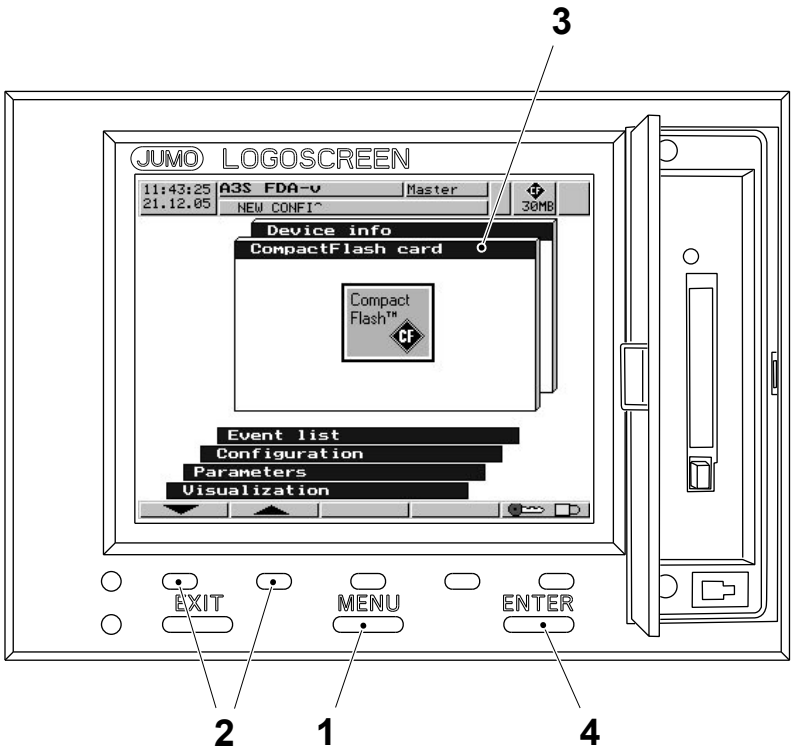

1 Menu button
2 Arrow button
3 CompactFlash card window
4 Enter button

(Cont'd)

TechPub_2614345_0108 - 0802_3048249_01.fm

(Cont'd)

Note! If the batch reports are also to be downloaded to the diskette, select the `REPORT END; UPDATE CF C.` window (5).

d) Use the ARROW buttons (2) to select the `UPDATE CF CARD` window (6) and press the START button (7).

e) Any remaining PRODUCTION and CIP record data is saved to the CompactFlash card. When the operation is completed, open the door (8) and eject the CompactFlash card from the CompactFlash slot (9).

f) Insert the new CompactFlash card into the CompactFlash slot (9) and close the door (8).

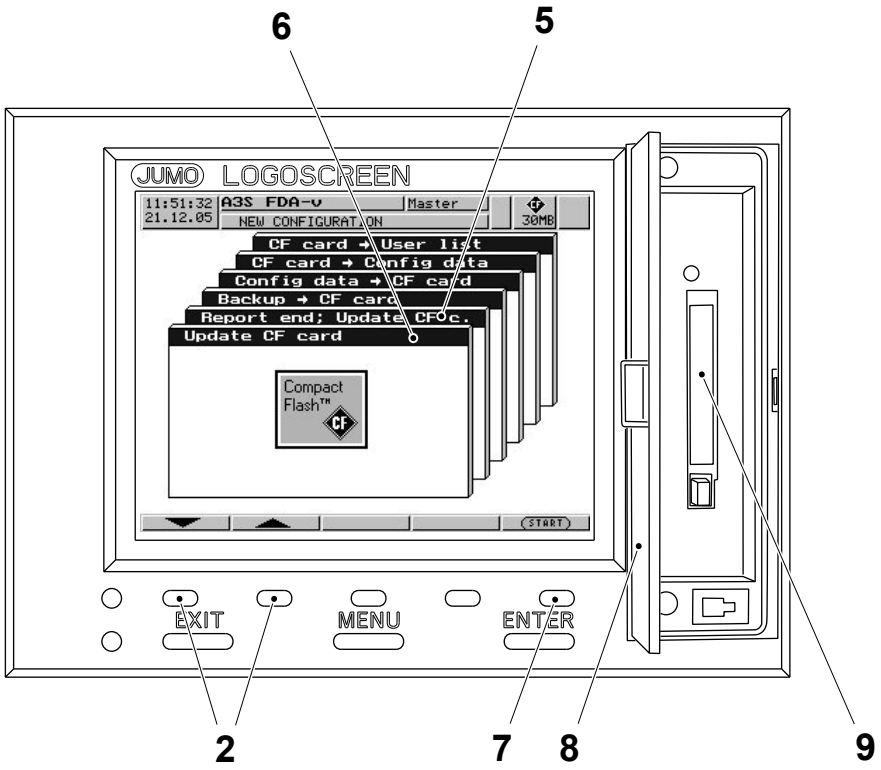

2 Arrow button
5 Report end; update CF card window
6 Update CF card window
7 Start button
8 Door
9 CompactFlash slot

TechPub_2614345_0108 - 0802_3048249_01.fm

9.7.4-7 Recorder - Configure Archived Data for Colour Printing

Machine Status	Mains Power ON Air OFF Steam ON Water OFF
Special Equipment	PC with CompactFlash card reader and JUMO PCA 3000
SPC Reference	90459-4033

Note! For detailed information on the PCA 3000 application, see the manual supplied on the JUMO installation disk.

If there is a requirement to print production data recorded by the Jumo recorder, for an internal quality control process or in order to comply with country legislation, the following procedure must first be performed to correctly print the production data.

(Cont'd)

TechPub_2614345_0108 - 0802_3048249_01.fm

(Cont'd)

a) Download the production data to the CompactFlash card, see 9.7.4-6 Recorder - Change CompactFlash Card.

b) Use a card reader to connect the CompactFlash card to the PC.

c) Open the START menu on the PC and select PROGRAMS, JUMO INSTRUMENTS and then JUMO PCA3000.

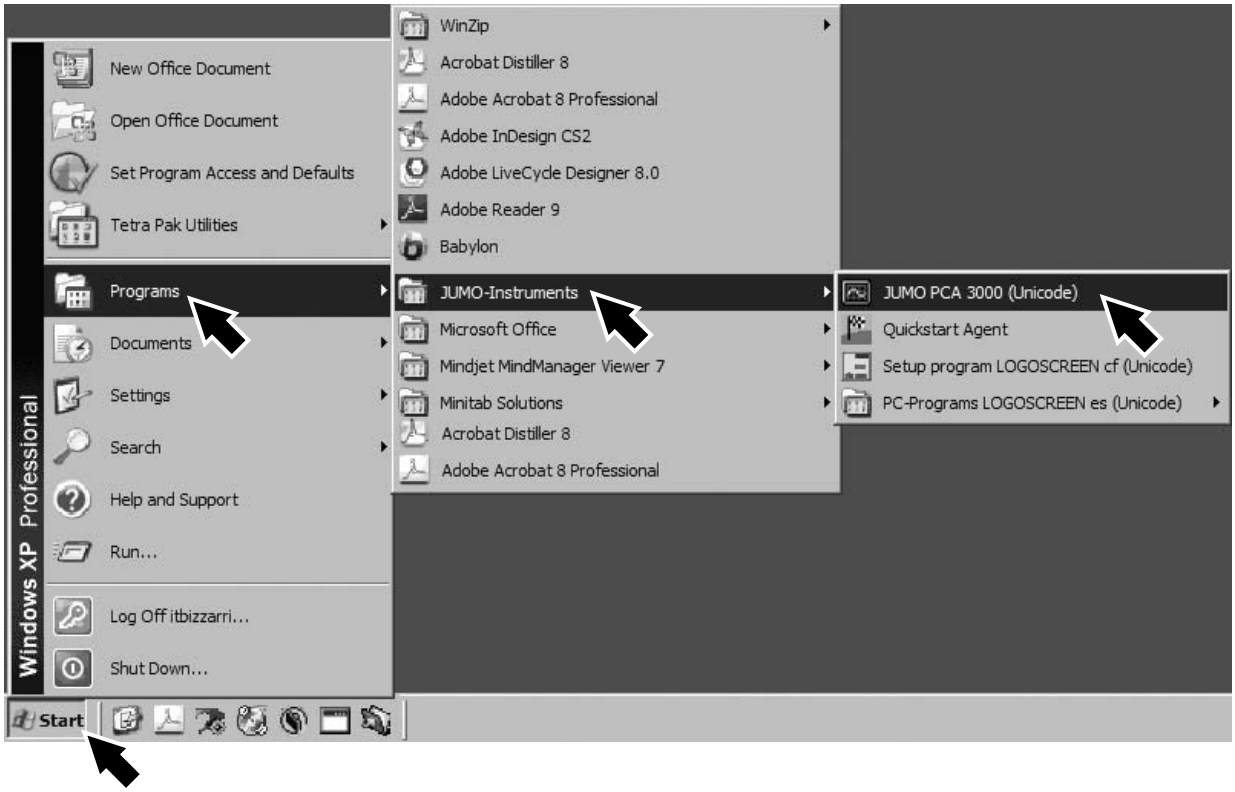

(Cont'd)

TechPub_2614345_0108 - 0802_3048249_01.fm

(Cont'd)

d) Select ARCHIVE and then select READ IN DATA.

e) In the READ IN DATA window, select the BROWSE button.

f) In the BROWSE FOR FOLDER window, browse to the CompactFlash card and select the OK button.

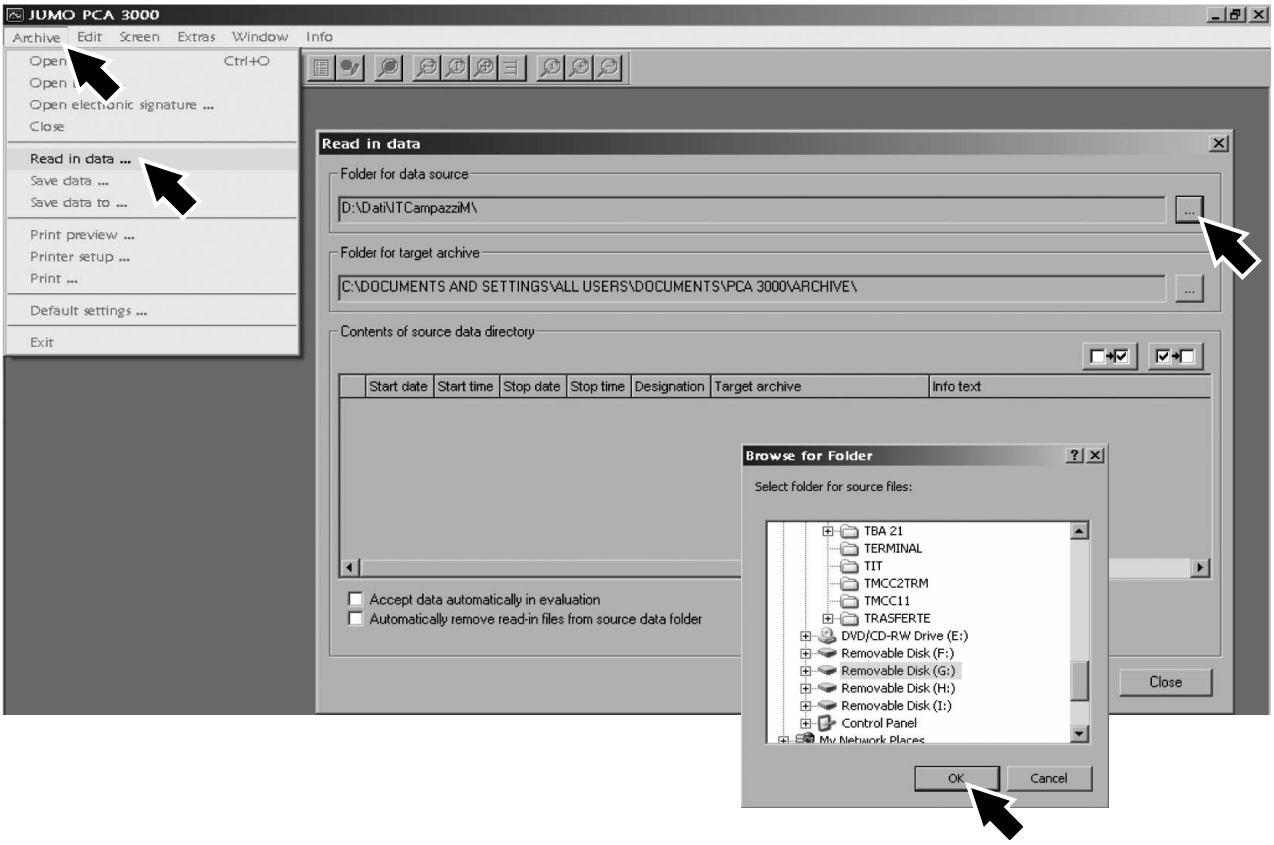

(Cont'd)

TechPub_2614345_0108 - 0802_3048249_01.fm

(Cont'd)

g) Select the check box next to the required data batch and then select the READING button.

h) If this is the first time data has been downloaded for the recorder, the CREATE NEW ARCHIVE window is displayed. Enter a suitable name for the archive and select the OK button.

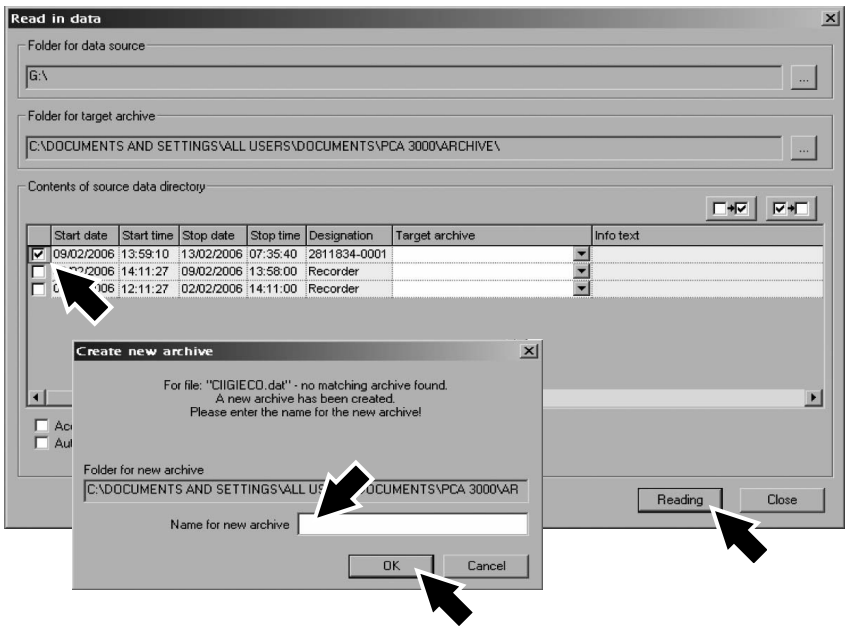

(Cont'd)

TechPub_2614345_0108 - 0802_3048249_01.fm

(Cont'd)

i) When the dialogue window appears with the message DATA HAVE BEEN READ IN SUCCESSFULLY, select the OK button and then select the CLOSE button.

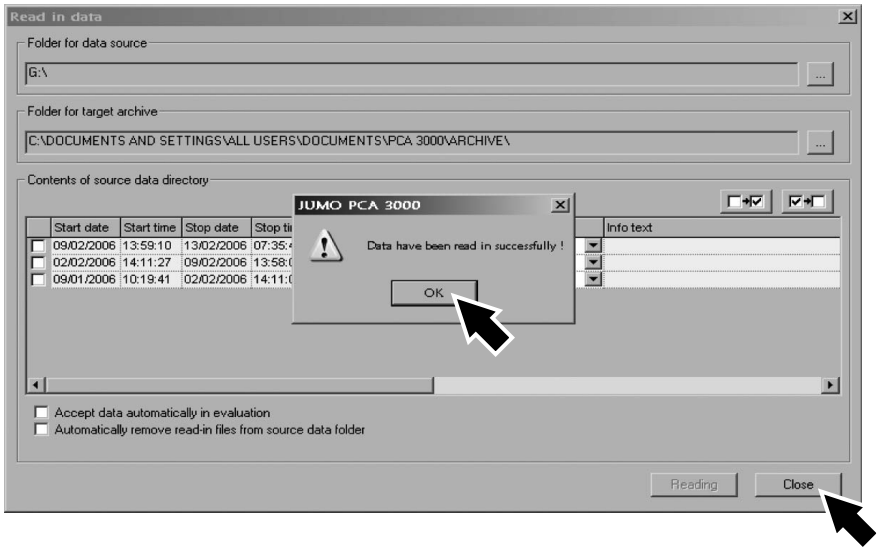

(Cont'd)

TechPub_2614345_0108 - 0802_3048249_01.fm

(Cont'd)

j) Select ARCHIVE and then select OPEN ARCHIVE.

k) In the OPEN ARCHIVE window, select the archive file and then select the OPEN button.

l) The ARCHIVE OVERVIEW window appears, select the production batch and use the arrows to select the time period to print and then select the OPEN button.

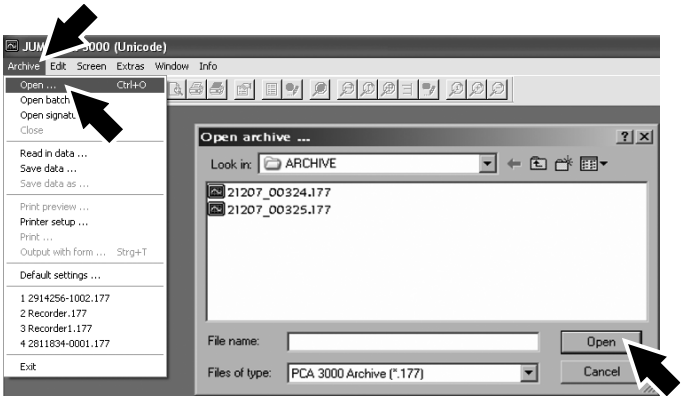

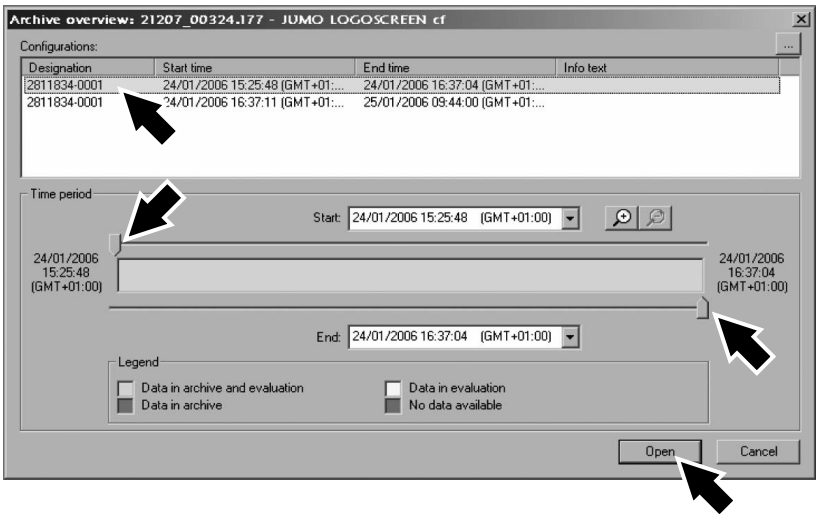

(Cont'd)

TechPub_2614345_0108 - 0802_3048249_01.fm

(Cont'd)

m) The GROUP SELECTION FOR window appears, select PRODUCTION DATA and then select the OPEN button.

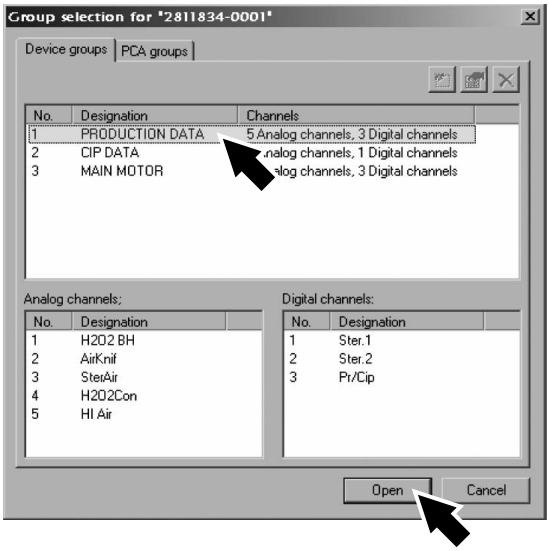

(Cont'd)

TechPub_2614345_0108 - 0802_3048249_01.fm

(Cont'd)

n) A graphic of the selected production batch and time period is displayed. Select the CHANNELS tab and locate the digital input PR/CIP.

o) Select the ARROW button next to the coloured box for the digital input PR/CIP to display the colour palette selection.

p) Select the colour black for the digital input PR/CIP.

The production data can now be printed data according to the desired printing preferences. The colour black for the digital input PR/CIP is memorised by the PCA 3000 application only for the current archive and the procedure must be repeated if production data for other archives will be printed.

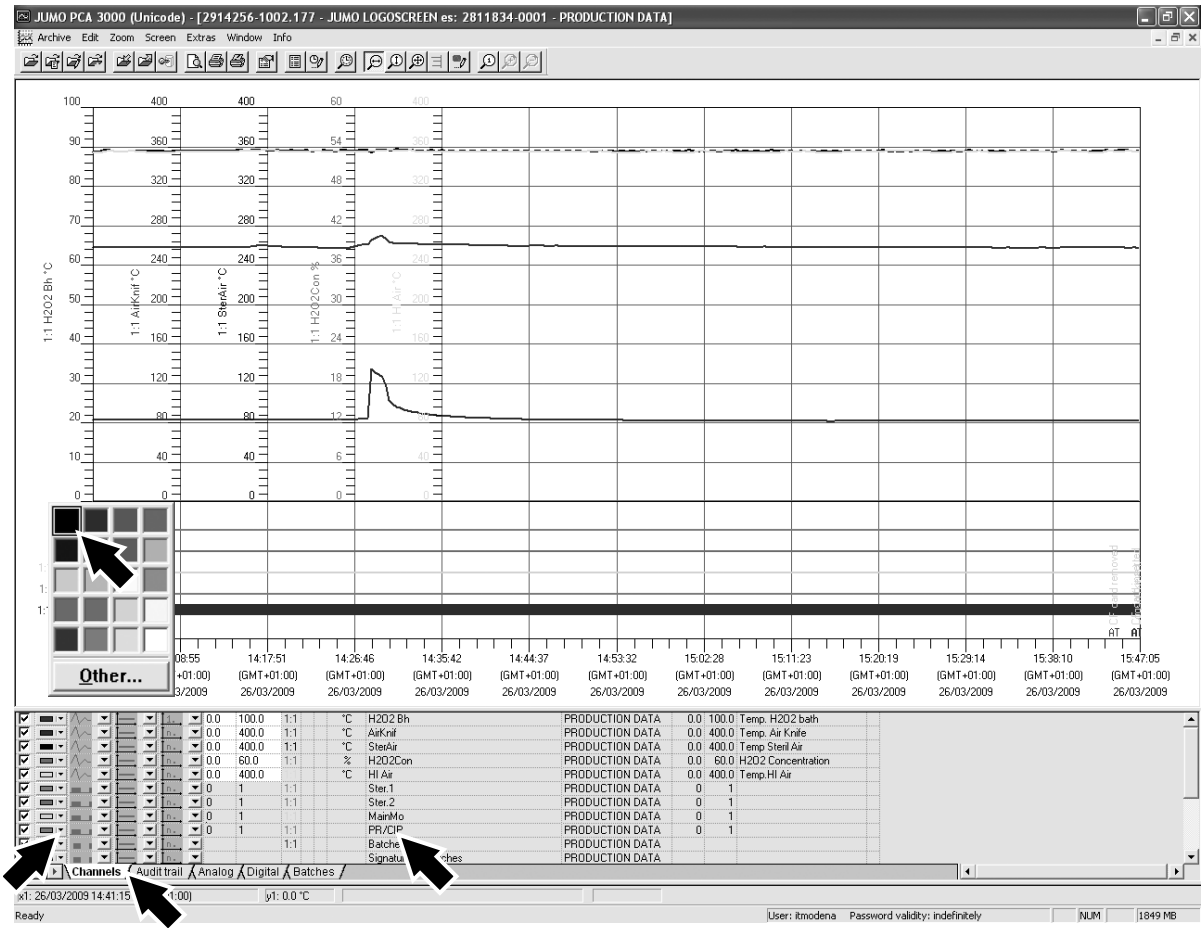

TechPub_2614345_0108 - 0802_3048249_01.fm

9.7.5 Temperature Regulators

9.7.5-1 Temperature Regulators - Calibrate

Machine Status	Mains Power ON Air OFF Steam ON Water OFF
Special Equipment	PC with CD drive Adhesive Label - No. 90194-0113 Micromite II Calibrator - TP No. 90410-0338 Micromite II Thermocouple Cable - TP No. 90326-0308 or FLUKE 714 Calibrator - TP No. 90458-0914 FLUKE 714 Thermocouple Cable - TP No. 90458-0915 Precision Resistor - High Precision Resistor - 1000 ohm, 0.05% ppm/oC 3000 ohm, 0.05% ppm/oC - Calibrated Resistor Decade Box, 0,05% Precision Voltage Source (+100 mV, 1mV resolution - accuracy =3 µV or better)
SPC Reference	648539-0400

Note! Before calibration, make sure that the calibrator has already been set, see 9.7.5.1-1 Calibrator - Set Fluke 714 or 9.7.5.1-2 Calibrator - Set Micromite II.

Note! Energise the module at least 10 minutes before calibration.

Calibration must be performed when a thermocouple module is changed or at least once a year.

(Cont'd)

TechPub_2614345_0108 - 0801_3048251_01.fm

(Cont'd)

Note! To connect to the CPU module using an ethernet communication cable, the PC must first be configured for this type of communication. See 9.1.1-1 Preparation for PLC Communication - Configure PC Network Communications and 9.1.1-2 Preparations for PLC Communication - Configure RSLinx for more details.

a) Connect the ethernet communication cable between a vacant connection port on the ethernet switch (1) and the PC (2).

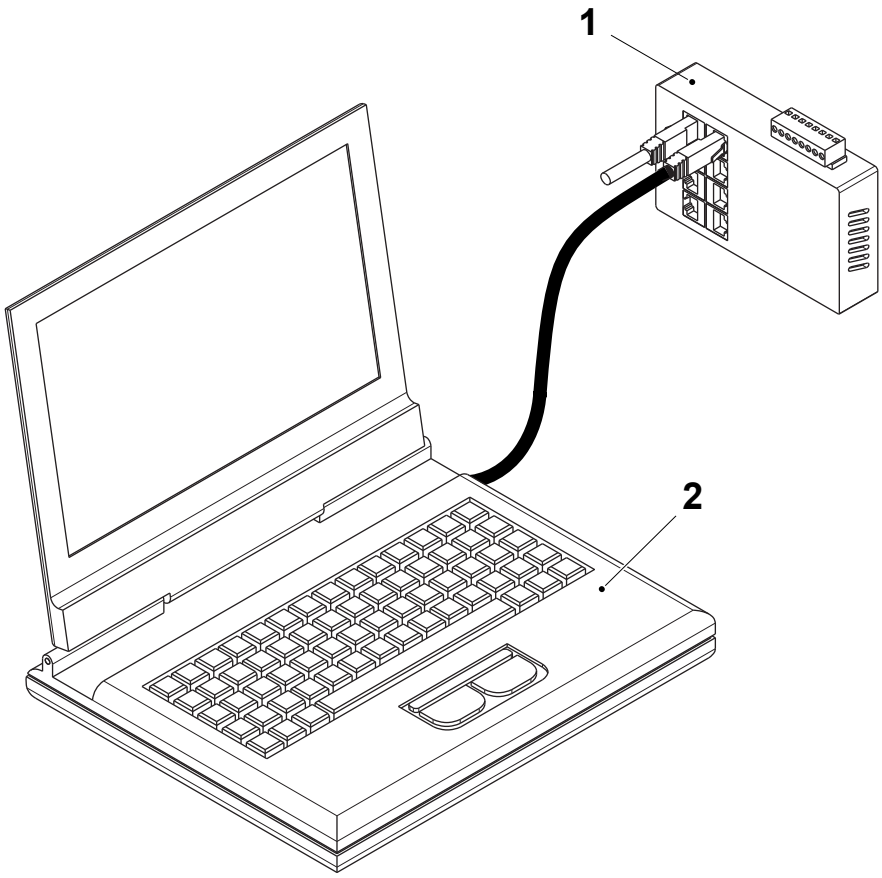

1 Ethernet switch
2 PC

(Cont'd)

TechPub_2614345_0108 - 0801_3048251_01.fm

(Cont'd)

b) Start the RSNetWorx program and select the NETWORK menu (3) and then select ONLINE (4).

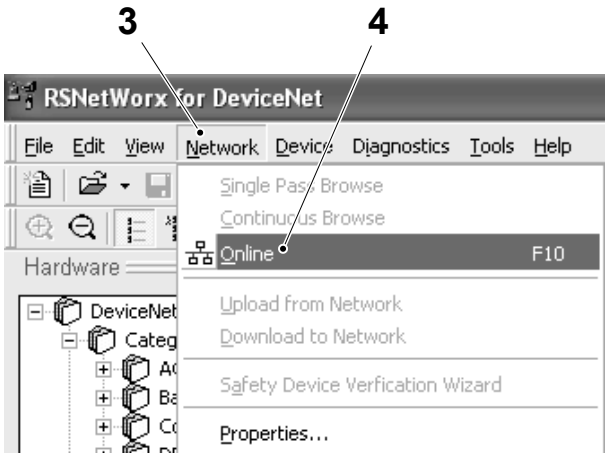

3 Network menu
4 Online

(Cont'd)

TechPub_2614345_0108 - 0801_3048251_01.fm

(Cont'd)

c) Navigate to the required DeviceNet Point I/O adapter and then double click on the icon to display the sub-network.

d) Double click on the DeviceNet thermocouple module (5) to open the PARAMETER window (6).

e) If the EDS EDITOR window (7) appears, select the UPLOAD button (8) to continue.

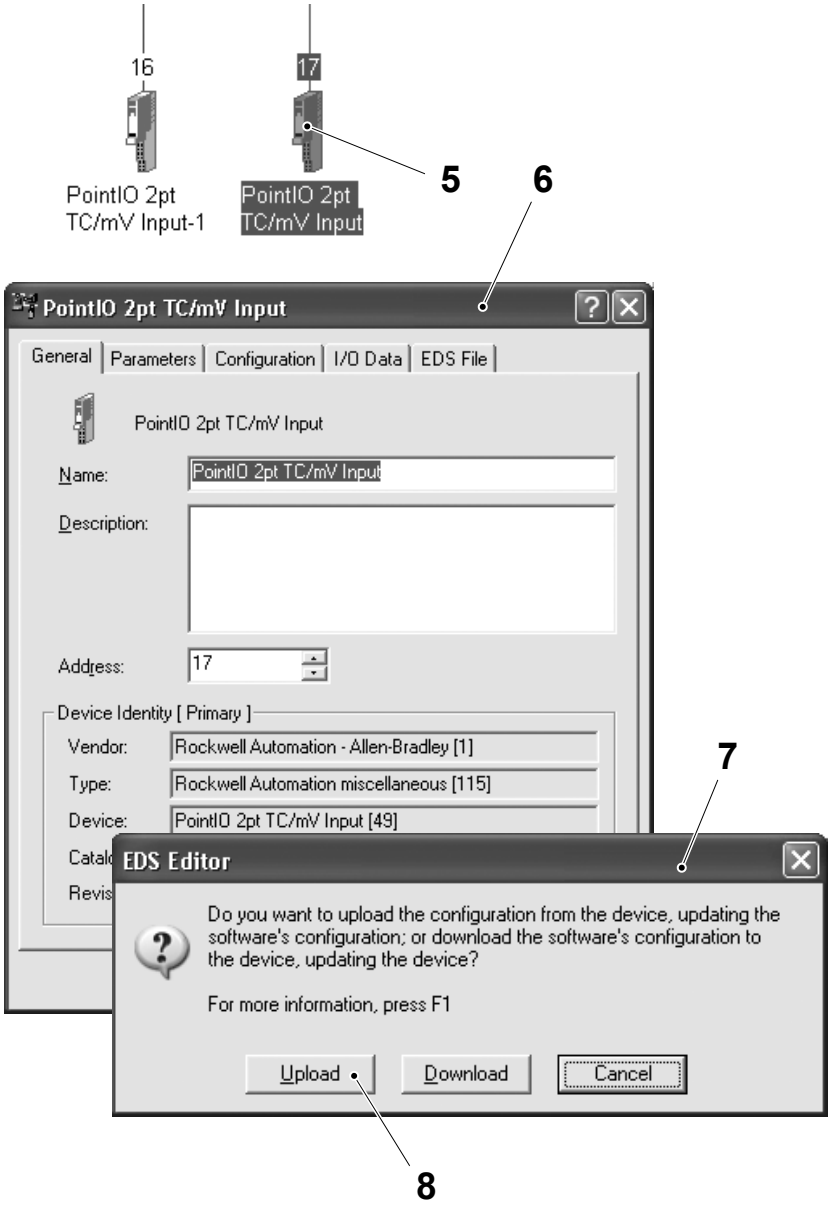

5 DeviceNet thermocouple module
6 Parameter window
7 EDS editor window
8 Upload button

(Cont'd)

TechPub_2614345_0108 - 0801_3048251_01.fm

(Cont'd)

f) From the PARAMETER window check the GROUPS box (9) and select CALIBRATION (10).

Note! The calibration procedure consists of two phases: first the calibration of the Input, see Input (mV) Calibration and after that the calibration of the Cold Junction Compensation, see Cold Junction Compensation (CJC) Calibration.

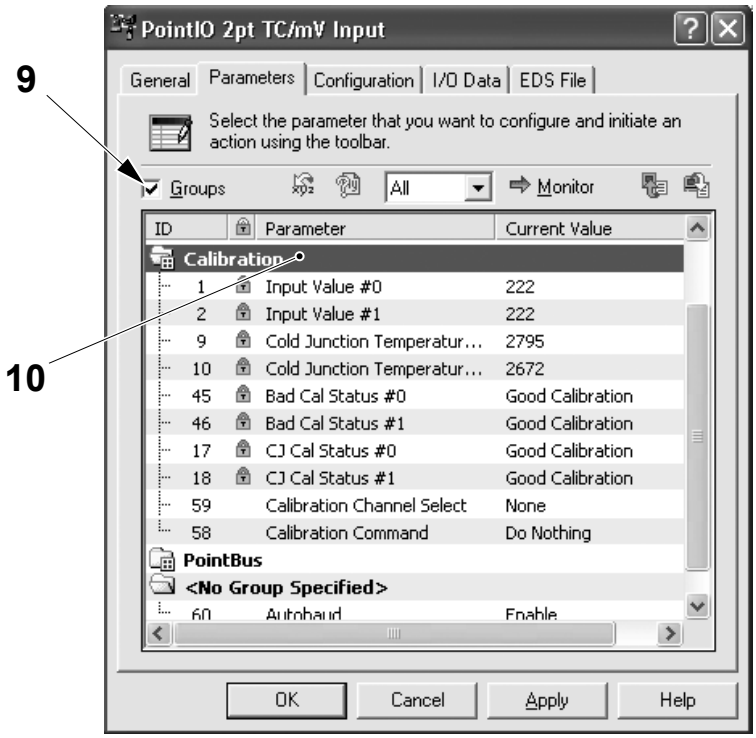

9 Groups box
10 Calibration

(Cont'd)

TechPub_2614345_0108 - 0801_3048251_01.fm

(Cont'd)

Input (mV) Calibration

a) Connect the precision voltage source to the module 1734-RTBCJC (1) by the copper wire, according to the diagram shown below.

Note! It is also possible to connect only one channel in order to calibrate one channel at a time.

Note! Make sure that the module is updated to the firmware Rev. 3.004, see the label (2).

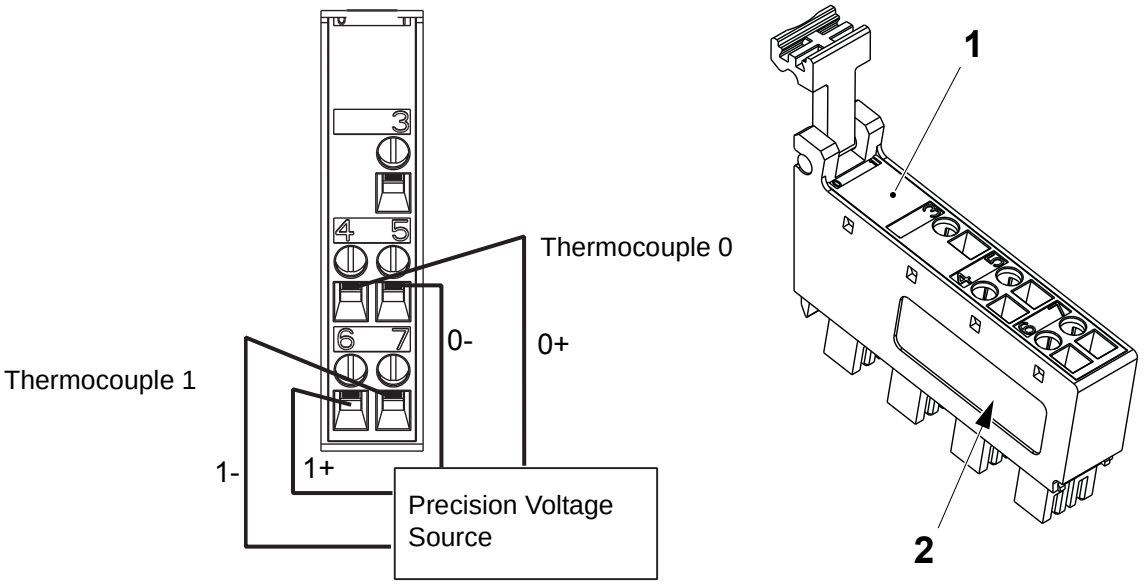

1 Module 1734-RTBCJC
2 Label

(Cont'd)

TechPub_2614345_0108 - 0801_3048251_01.fm

(Cont'd)

b) In the CONFIGURATION dialogue window select the parameter No. 7 THERMOCOUPLE TYPE (4) and select mV from the drop down list (5).

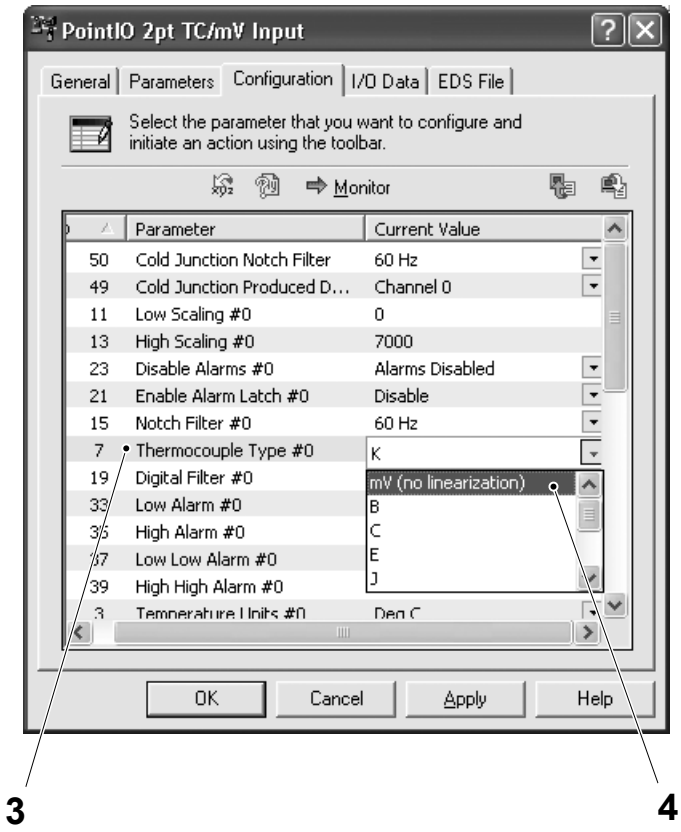

3 Thermocouple type
4 Drop down list

(Cont'd)

TechPub_2614345_0108 - 0801_3048251_01.fm

(Cont'd)

c) Return to the PARAMETER dialogue window and click on the parameter No. 59 CALIBRATION CHANNEL SELECT (5) to enable the CHANNEL SELECTION drop down list (6).

d) Select either INPUT CHANNEL 0 or INPUT CHANNEL 1 (or BOTH CHANNELS) from the CHANNEL SELECTION drop down list (6).

e) Click the DOWNLOAD TO DEVICE icon (7) or the APPLY button (8). The LED status indicators on the input module turn off.

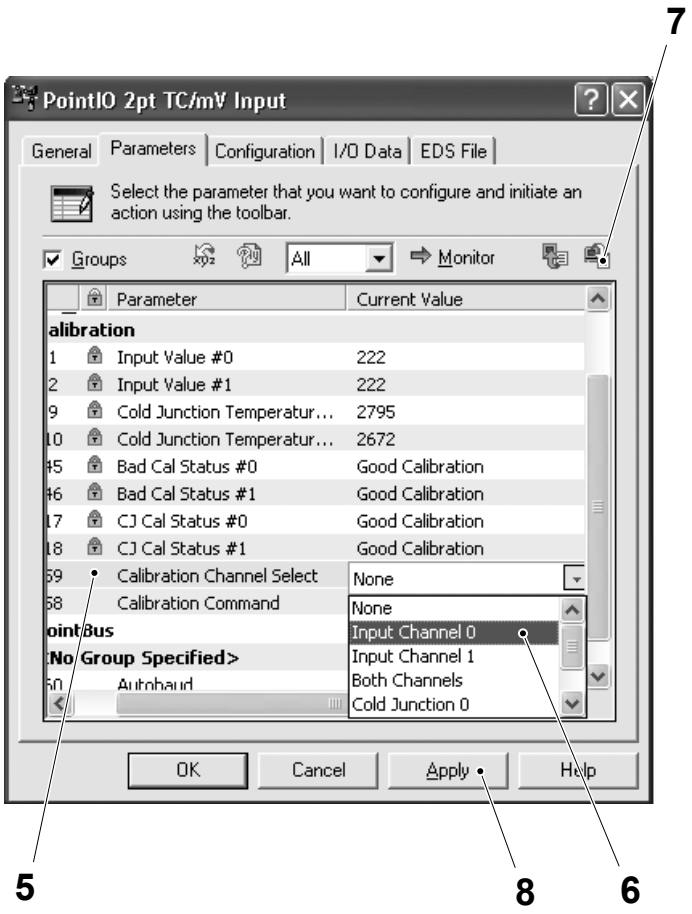

5 Calibration channel select
6 Channel select drop down list
7 Download to device icon
8 Apply button

(Cont'd)

TechPub_2614345_0108 - 0801_3048251_01.fm

(Cont'd)

f) Click on the parameter `No. 58 CALIBRATION COMMAND` (9) and select `BEGIN INPUT CALIBRATION` from the drop down list (10).

g) Click the `DOWNLOAD TO DEVICE` icon (7) or the `APPLY` button (8).

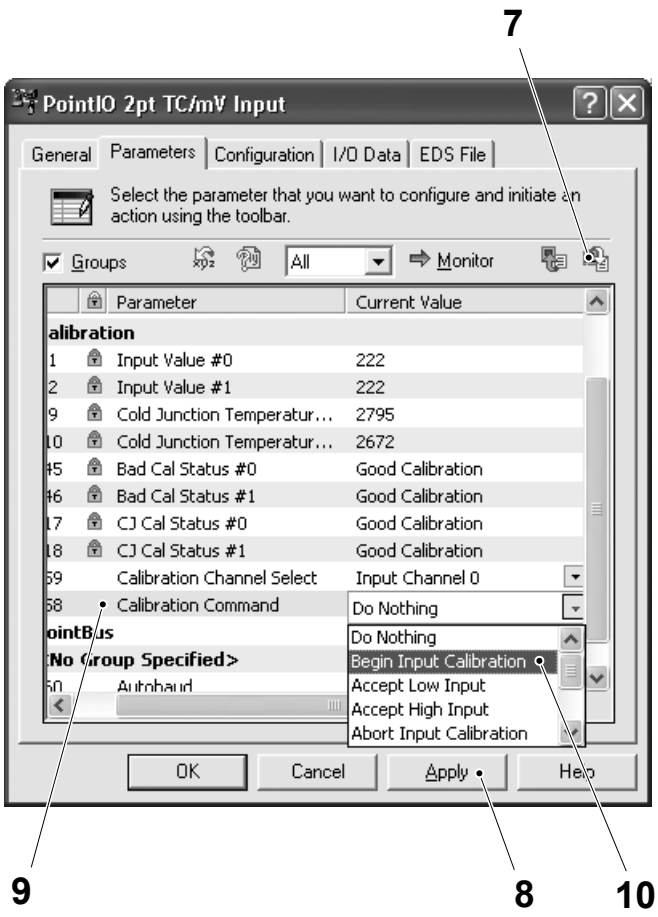

7 Download to device icon
8 Apply button
9 Calibration command
10 Drop down list

(Cont'd)

TechPub_2614345_0108 - 0801_3048251_01.fm

(Cont'd)

h) Use the precision voltage source to apply 0.00 mV to the input module for the channels being calibrated.

i) Select ACCEPT LOW INPUT from the CALIBRATION COMMAND drop down list (10).

j) Click the DOWNLOAD TO DEVICE icon (7) or the APPLY button (8). The LED status indicators for the channels being calibrated blink green.

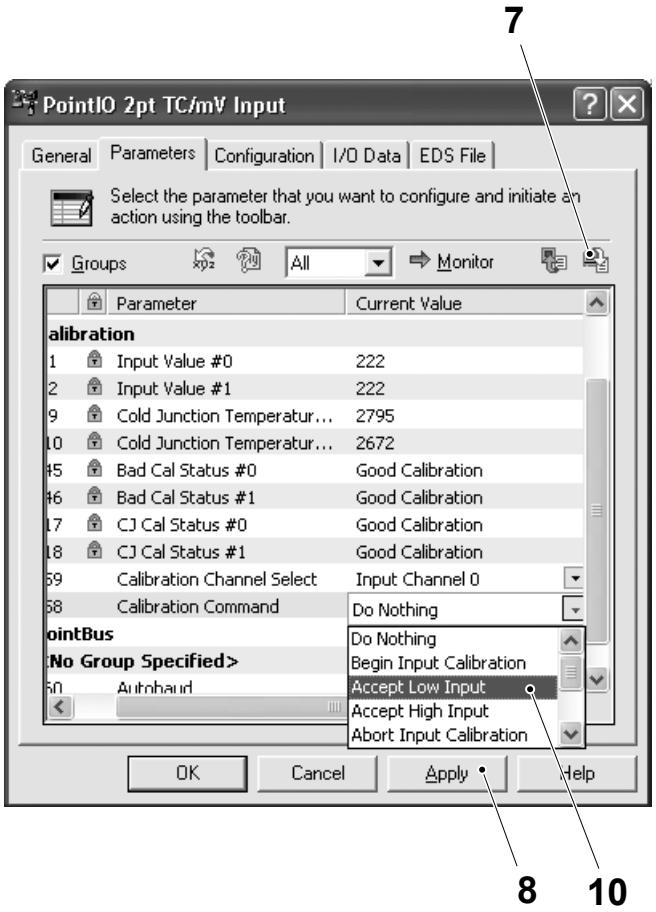

7 Download to device icon
8 Apply button
10 Drop down list

(Cont'd)

TechPub_2614345_0108 - 0801_3048251_01.fm

(Cont'd)

k) Use the precision voltage source to apply 70.0 mV to the input module for the channels being calibrated.

l) Select ACCEPT HIGH INPUT from the CALIBRATION COMMAND drop down list (10).

m) Click the DOWNLOAD TO DEVICE icon (7) or the APPLY button (8).

n) Repeat steps above to calibrate the other channel if has been chosen to calibrate one channel at a time.

o) The calibration is now complete. The LED status indicators on the thermocouple module should be green or flashing red if no load is present.

Note! If an error has occurred during the calibration procedure select ABORT INPUT CALIBRATION from the drop down list (10) to restore the previous calibration values.

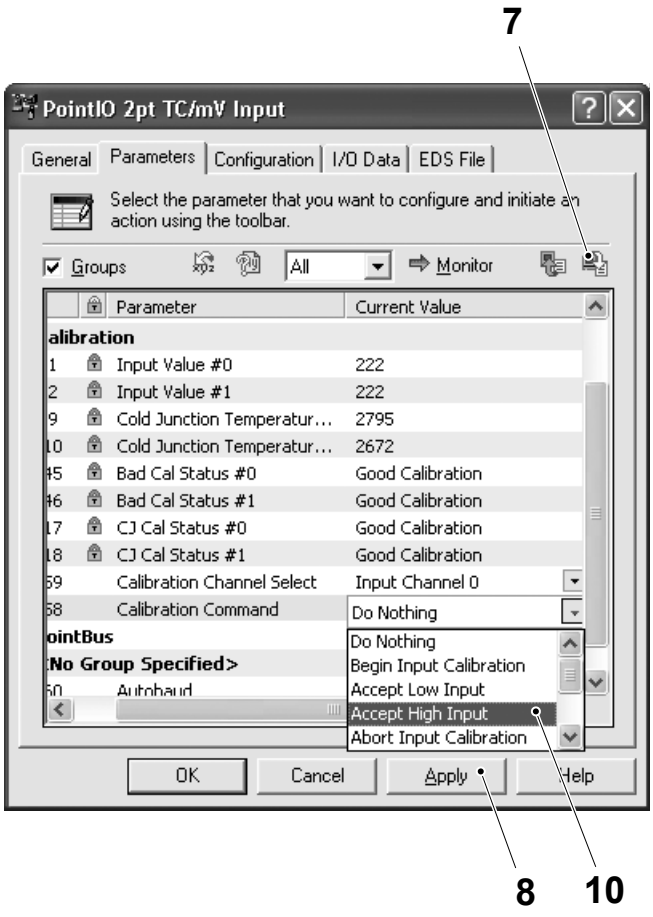

7 Download to device icon
8 Apply button
10 Drop down list

(Cont'd)

TechPub_2614345_0108 - 0801_3048251_01.fm

(Cont'd)

Cold Junction Compensation (CJC) Calibration

a) Connect the precision resistor to the module 1734-RTB (1) according to the diagram shown below.

Note! It is also possible to connect only one channel in order to calibrate one channel at a time.

Note! Make sure that the module is updated to the firmware Rev. 3.004, see the label (2).

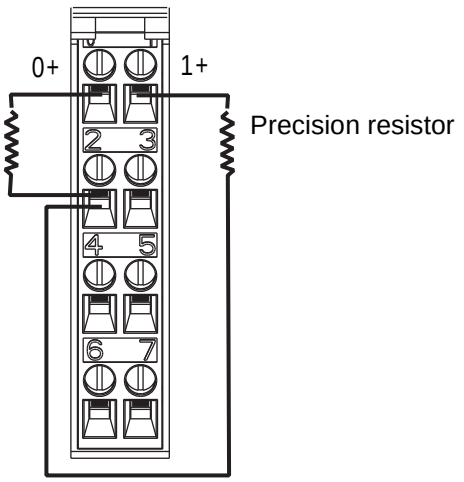

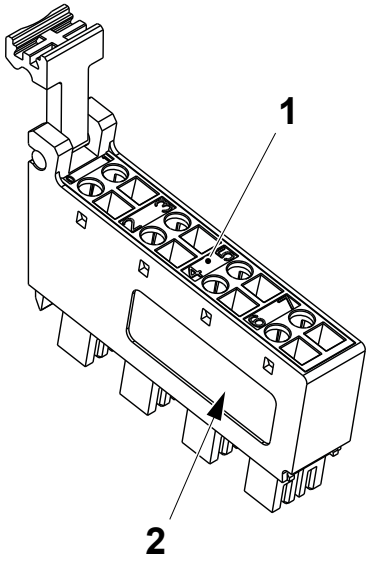

1 Module 1734-RTB
2 Label

(Cont'd)

TechPub_2614345_0108 - 0801_3048251_01.fm

(Cont'd)

b) In the CONFIGURATION dialogue window select the parameter No.7 THERMOCOUPLE TYPE (3) and select K from the drop down list (4).

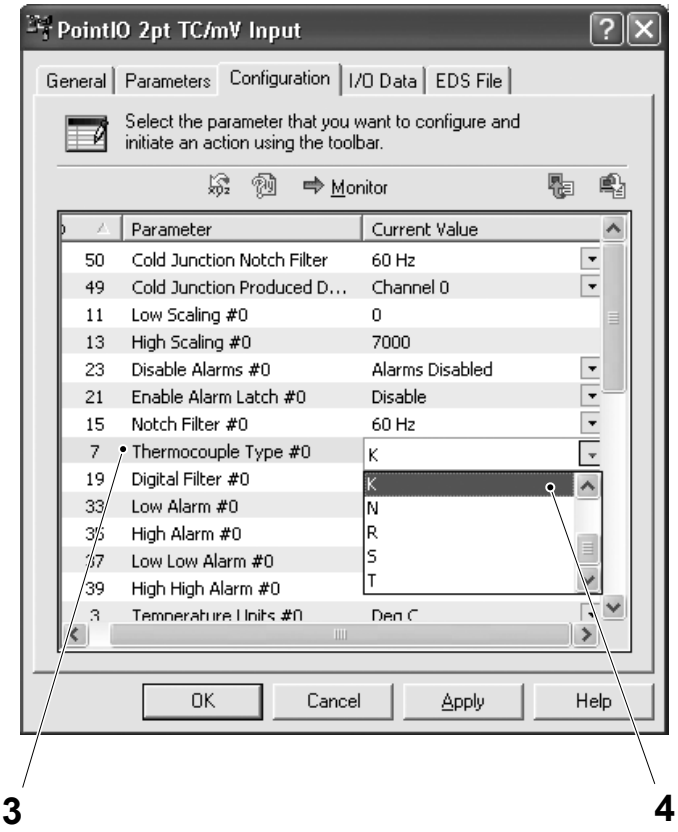

3 Thermocouple type
4 Drop down list

(Cont'd)

TechPub_2614345_0108 - 0801_3048251_01.fm

(Cont'd)

c) Return to the PARAMETER dialogue window and click on the parameter No. 59 CALIBRATION CHANNEL SELECT (5) to enable the CHANNEL SELECTION drop down list (6).

d) Select COLD JUNCTION 0, COLD JUNCTION 1 or BOTH COLD JUNCTIONS at once from the CHANNEL SELECTION drop down list (6).

e) Click the DOWNLOAD TO DEVICE icon (7) or the APPLY button (8).

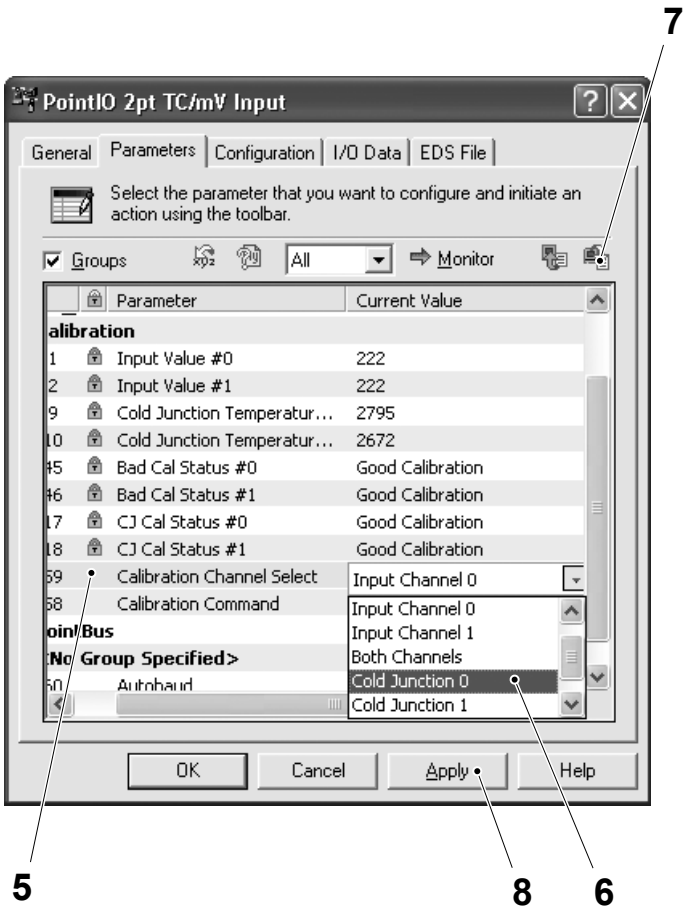

5 Calibration channel select
6 Channel select drop down list
7 Download to device icon
8 Apply button

(Cont'd)

TechPub_2614345_0108 - 0801_3048251_01.fm

(Cont'd)

f) Click on the parameter `No. 58 CALIBRATION COMMAND` (9) and select `BEGIN CJC CALIBRATION` from the drop down list (10).

g) Click the `DOWNLOAD TO DEVICE` icon (7) or the `APPLY` button (8).

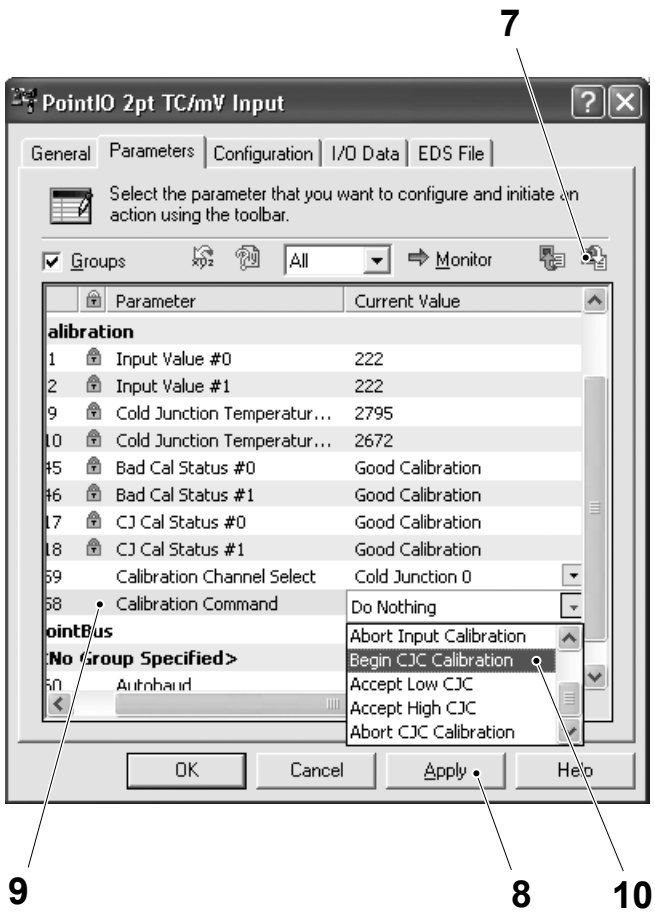

7 Download to device icon
8 Apply button
9 Calibration command
10 Drop down list

(Cont'd)

TechPub_2614345_0108 - 0801_3048251_01.fm

(Cont'd)

h) Use the precision resistor to apply 1000 ohm to the CJC channels being calibrated.

i) Select `ACCEPT LOW CJC` from the `CALIBRATION COMMAND` drop down list (10).

j) Click the `DOWNLOAD TO DEVICE` icon (7) or the `APPLY` button (8).

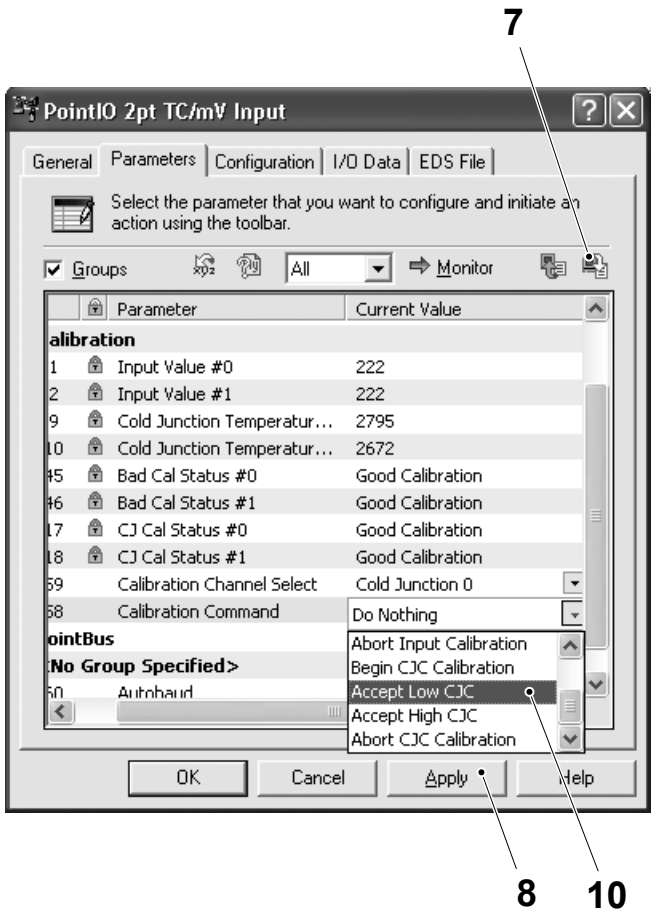

7 Download to device icon
8 Apply button
10 Drop down list

(Cont'd)

TechPub_2614345_0108 - 0801_3048251_01.fm

(Cont'd)

k) Use the precision resistor to apply 3000 ohm to the CJC channels being calibrated.

l) Select ACCEPT HIGH CJC from the CALIBRATION COMMAND drop down list (10).

m) Click the DOWNLOAD TO DEVICE icon (7) or the APPLY button (8).

n) Repeat steps above to calibrate the other channel if has been chosen to calibrate one channel at a time. The calibration is complete when both high and low inputs have been accepted for both channels.

Note! If an error has occurred during the calibration procedure select ABORT CJC CALIBRATION from the drop down list (10) to restore the previous calibration values.

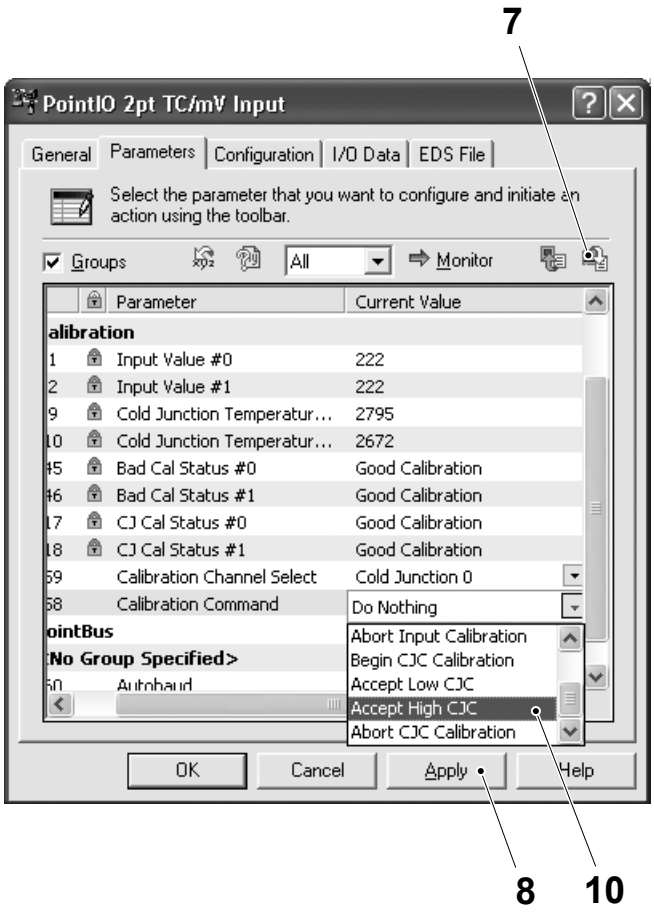

7 Download to device icon
8 Apply button
10 Drop down list

TechPub_2614345_0108 - 0801_3048251_01.fm

9.7.5.1 Calibrator

9.7.5.1-1 Calibrator - Set Fluke 714

Machine Status	Mains Power OFF Air OFF Steam ON Water OFF
Special Equipment	FLUKE 714 Calibrator TP No. 90458-0914

DANGER

Hazardous voltage.
Follow the safety information in the “Instruction Sheet” delivered with the calibrator.

Note! Turn ON the mains power at least 15 minutes before setting.

(Cont'd)

TechPub_2614345_0108 - 0801_3048251_01.fm

(Cont'd)

To Set the mV Output Value

a) Press the ON/OFF button (1) to switch on the calibrator.

b) Press the TC TYPE button (2) to show the indication mV (3) on the display.

c) Connect the calibrator to the thermocouple module through the connector (4) and a type K thermocouple cable.

d) Press the INPUT-OUTPUT button (5) to show OUTPUT (6) on the display.

e) Set the output voltage (7) with the buttons (8) and (9).

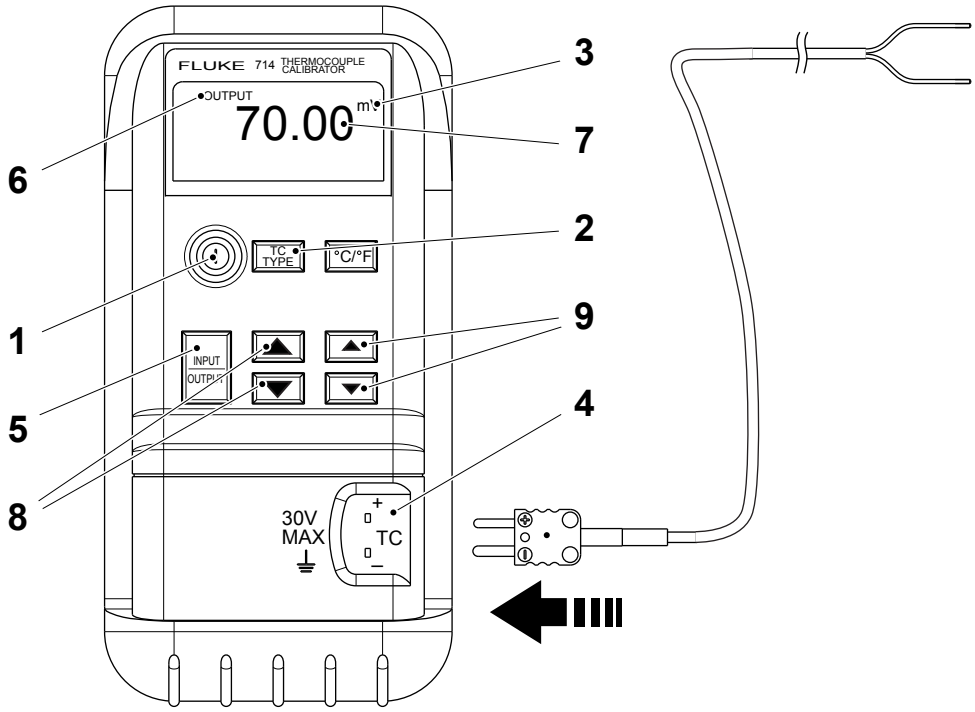

1 ON/OFF button
2 TC TYPE button
3 mV indicator
4 Calibrator connection
5 INPUT-OUTPUT button
6 INPUT-OUTPUT indicator
7 Voltage indicator
8 STEP UP/DOWN buttons 10 mV steps
9 STEP UP/DOWN buttons 0.01 mV steps

(Cont'd)

TechPub_2614345_0108 - 0801_3048251_01.fm

(Cont'd)

To Read a Temperature Value

a) Press the ON/OFF button (1) to switch on the calibrator.

b) Press the button (2) to toggle the indication °C or °F (3) on the display.

c) Press the TC TYPE button (4) to show the thermocouple TYPE K (5).

d) Connect the calibrator to the thermocouple TYPE K through the connector (6) and a type K thermocouple cable.

e) Press the INPUT-OUTPUT button (7) to show INPUT (8) on the display. Actual temperature (9) is shown.

For further information on the calibrator, see the “Instruction Sheet” delivered with the calibrator.

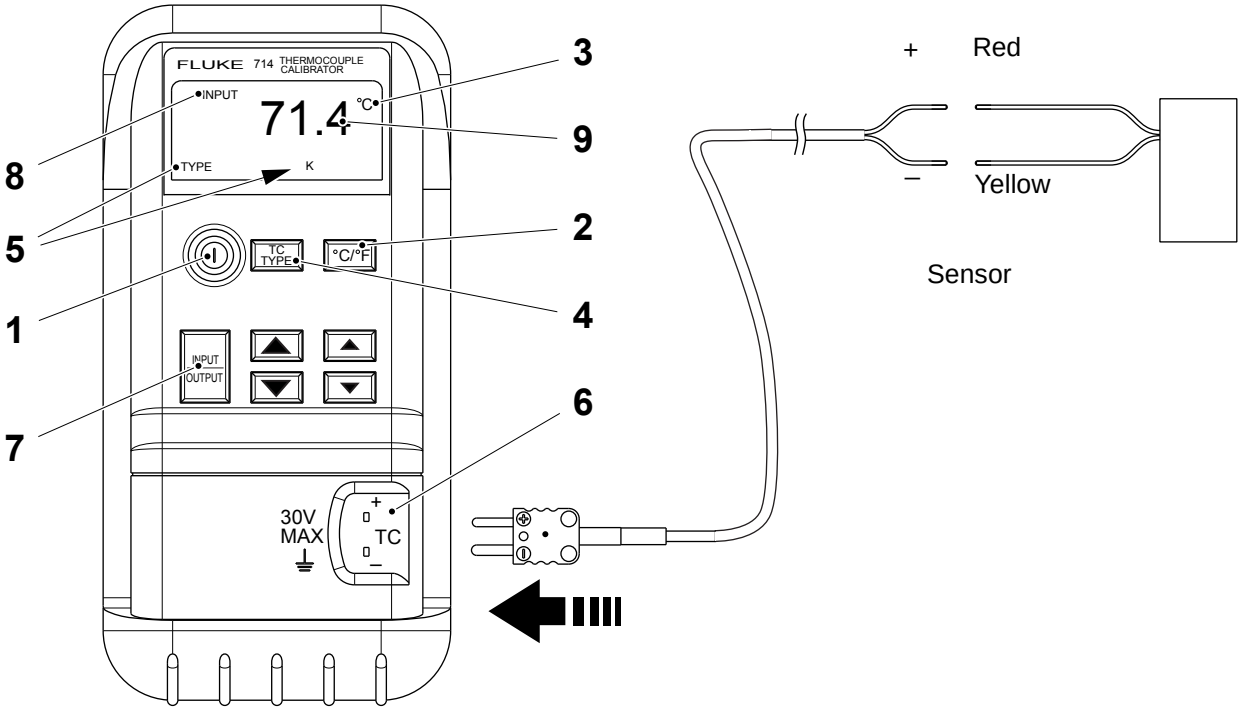

1 ON/OFF button
2 °F or °C button
3 °F or °C indicator
4 TC TYPE button
5 Thermocouple type
6 Calibrator connection
7 INPUT-OUTPUT button
8 INPUT-OUTPUT indicator
9 Temperature indicator

TechPub_2614345_0108 - 0801_3048251_01.fm

9.7.5.1-2 Calibrator - Set Micromite II

Machine Status	Mains Power OFF Air OFF Steam ON Water OFF
Special Equipment	Micromite II Calibrator TP No. 90410-0338

Note! Make sure that the Micromite II is switched OFF before disconnecting the AC-adapter or removing the batteries. Failure to do so will cause the instrument to lose the set-up information.

Note! Turn ON mains power at least 15 minutes before setting.

(Cont'd)

TechPub_2614345_0108 - 0801_3048251_01.fm

(Cont'd)

To Set a mV Output Value

a) Turn ON the mains power.

b) Connect the + input (1) (yellow lead) and the - input (2) (red lead) of the calibrator to the thermocouple module through a type K thermocouple cable.

c) Press the ON/OFF key (3) to switch ON the instrument.

d) Press the SELECT key (4) and the SENSOR key (5).

e) Move the flashing cursor to the right or to the left by pressing the UP (6) or DOWN (7) keys to select the mV option.

f) Press the ENTER key (8) when the cursor is indicating mV.

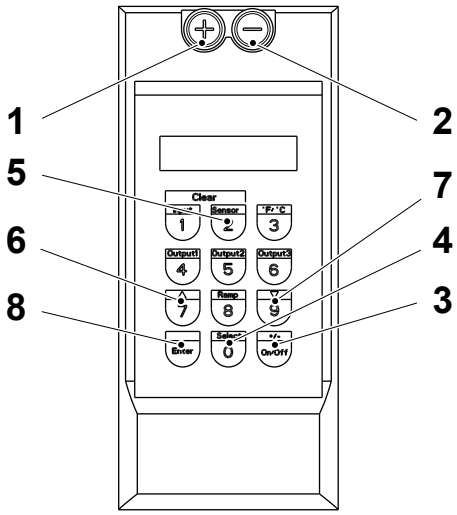

1 Input (+)
2 Input (-)
3 On/Off key
4 Select key
5 Sensor key
6 Up key
7 Down key
8 Enter key

(Cont'd)

TechPub_2614345_0108 - 0801_3048251_01.fm

(Cont'd)

g) Press the SELECT key (4) and the OUTPUT 1 key (9) to set the output voltage.

h) Use the numeric keys to type the voltage value and press the ENTER key (8).

i) To clear an output value, simultaneously press the INPUT key (10) and the SENSOR key (5).

To Read a Temperature Value

a) Turn ON the mains power.

b) Connect the type K thermocouple to the + input (1) (yellow lead) and to the - input (2) (red lead).

c) Press the ON/OFF key (3) to switch ON the instrument.

d) Press the F/C key (11) to select “centigrade”.

e) Press the SELECT key (4) and the SENSOR key (5).

f) Move the flashing cursor to the right or to the left by pressing the UP (6) or DOWN (7) keys to select the thermocouple type.

g) Press the ENTER key (8) when the cursor is indicating TYPE K.

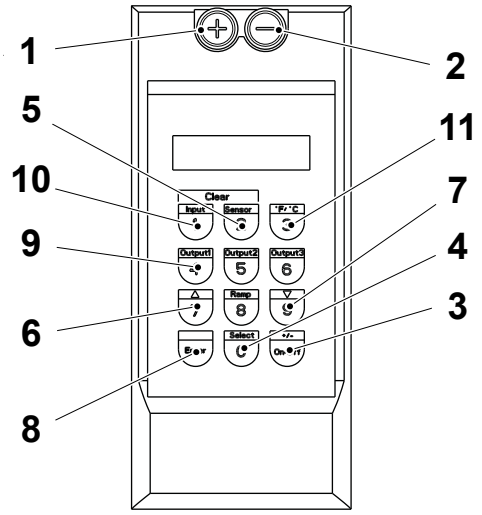

1 Input (+)
2 Input (-)
3 On/Off key
4 Select key
5 Sensor key
6 Up key
7 Down key
8 Enter key
9 Output 1 key
10 Input key
11 F/C key

TechPub_2614345_0108 - 0801_3048251_01.fm

9.7.6 Thermocouples

9.7.6-1 Thermocouples - Check

Machine Status	Mains Power OFF Air OFF Steam ON Water OFF
Special Equipment	Calibration Oven TP No. 90410-0337 Extension Wire TP No. 90410-0309
SPC Reference	90031-0065

Note! This check must be done when a temperature regulator is changed or at least once a year.

(Cont'd)

TechPub_2614345_0108 - 0801_3048252_01.fm

(Cont'd)

a) Turn ON the oven by connecting the mains plug.

b) Press the FUNC key (2) to select the Set-up mode, indicated by a flashing SP on the calibrator display (1).

c) Use the UP (3) or DOWN (4) keys to set the temperature value at 100°C.

Note! Pressing the key once changes the value by 0.1°C. Pressing the key for at least two seconds makes the temperature value change more quickly.

d) Press the FUNC key (2) again to select RUN MODE. The oven is now ready for measuring operations.

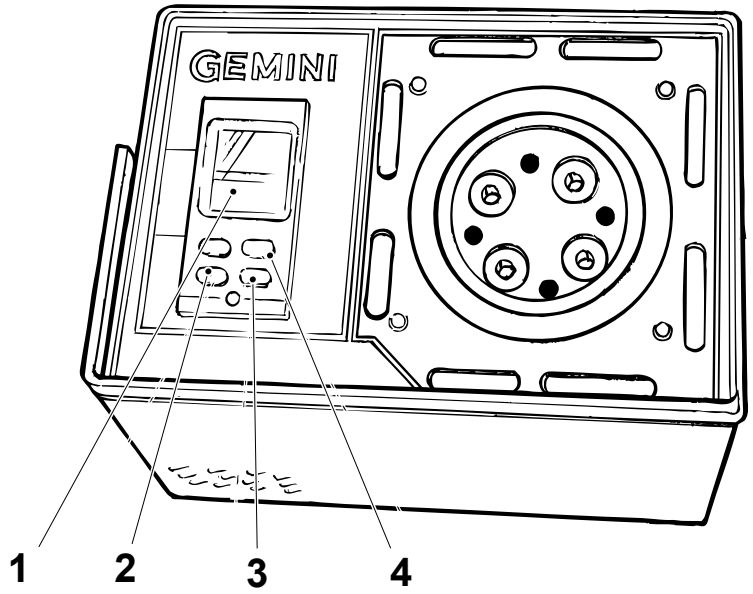

1 Display
2 Func key
3 Up key
4 Down key

(Cont'd)

TechPub_2614345_0108 - 0801_3048252_01.fm

(Cont'd)

e) Detach the machine thermocouple and place it in one of the cavities (5) in the oven.

f) Place the calibrated thermocouple (to be found in the calibration kit) in an adjacent cavity of the oven (6). Make sure that the two thermocouples are inserted to an equal depth in the oven.

Note! Before calibration, be sure that the calibrator already is set, see 9.7.5.1-1 Calibrator - Set Fluke 714.

g) Use the extension wire to connect the calibrator to the thermocouple from the machine. Note the temperature reading on the display.

h) Connect the calibrator to the calibrated thermocouple. Note the temperature reading on the calibrator display.

i) Obtain the correction value for the calibrated thermocouple
   - thermocouple fault plus Micromite II fault (from the Pentronic Calibration Certificate)
   - thermocouple fault plus FLUKE 714 fault.

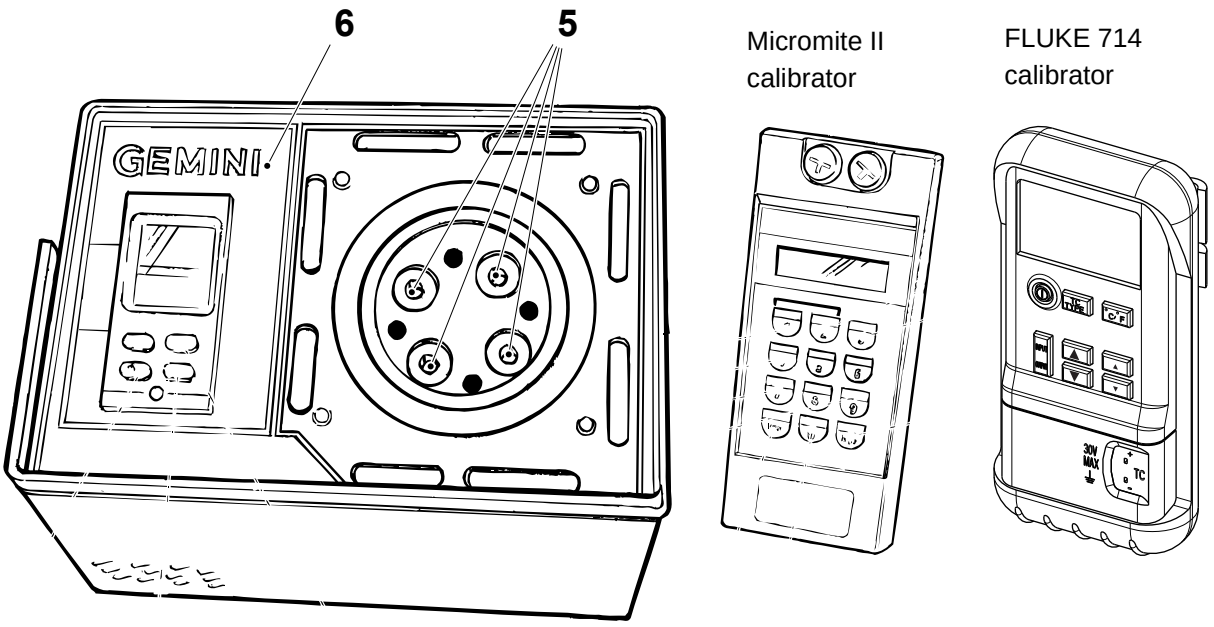

5 Cavity
6 Oven

(Cont'd)

TechPub_2614345_0108 - 0801_3048252_01.fm

(Cont'd)

j) When the value of the machine thermocouple deviates by more than ± 1.1°C from the value of the calibrated thermocouple, change the machine thermocouple.

k) On completion of the measurement, leave the oven on and allow it cool by setting the temperature value to 0. This cools the oven more quickly.

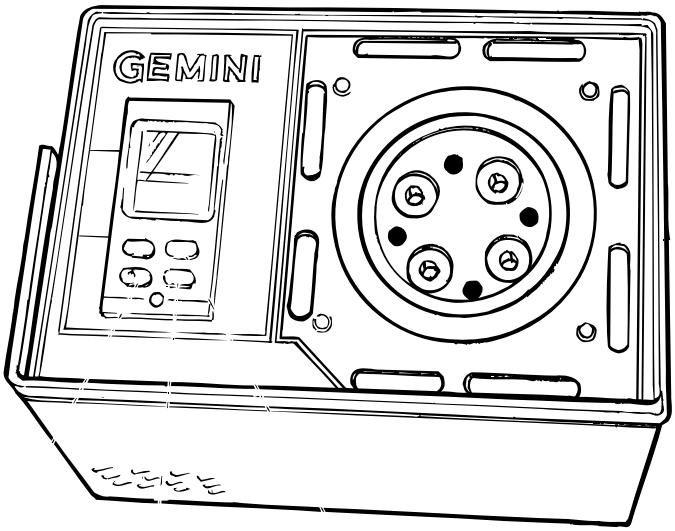

Micromite II calibrator

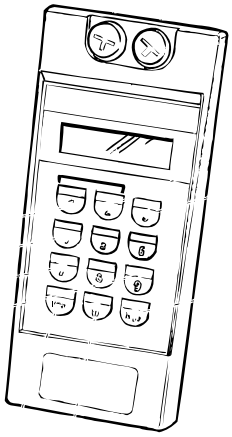

FLUKE 714 calibrator

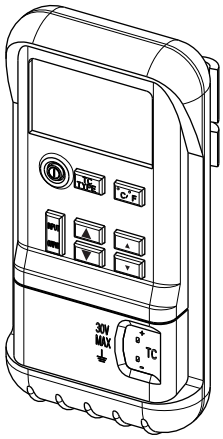

TechPub_2614345_0108 - 0801_3048252_01.fm

9.8 TMCC2 Controller

SPC Reference	2849071-0200

The Tetra Pak Multi-purpose Compact Controllers (TMCC2) in the electrical cabinet are used to control and monitor the packaging material positioning system, the sealing process and the product level.

TMCC2 Card A01K5200 (ASU and DCS Register Detection)

The TMCC2 card A01K5200 is a microprocessor card running the A3PH program that has the following functions:

- reads the ASU and DCS register marks and provides a signal to the PLC for controlling the position of the packaging material
- reads up to four fast input signals (for example, the packaging material splice detector) converting it to a longer pulse readable by the PLC
- implements a DeviceNet communication in order to participate in the machine communication network. The program parameterization and some of the I/O signals (non-time critical) are performed by means of this communication protocol.

(Cont'd)

TechPub_2614345_0108 - 0803_3048253_01.fm

(Cont'd)

Register Mark Program Overview

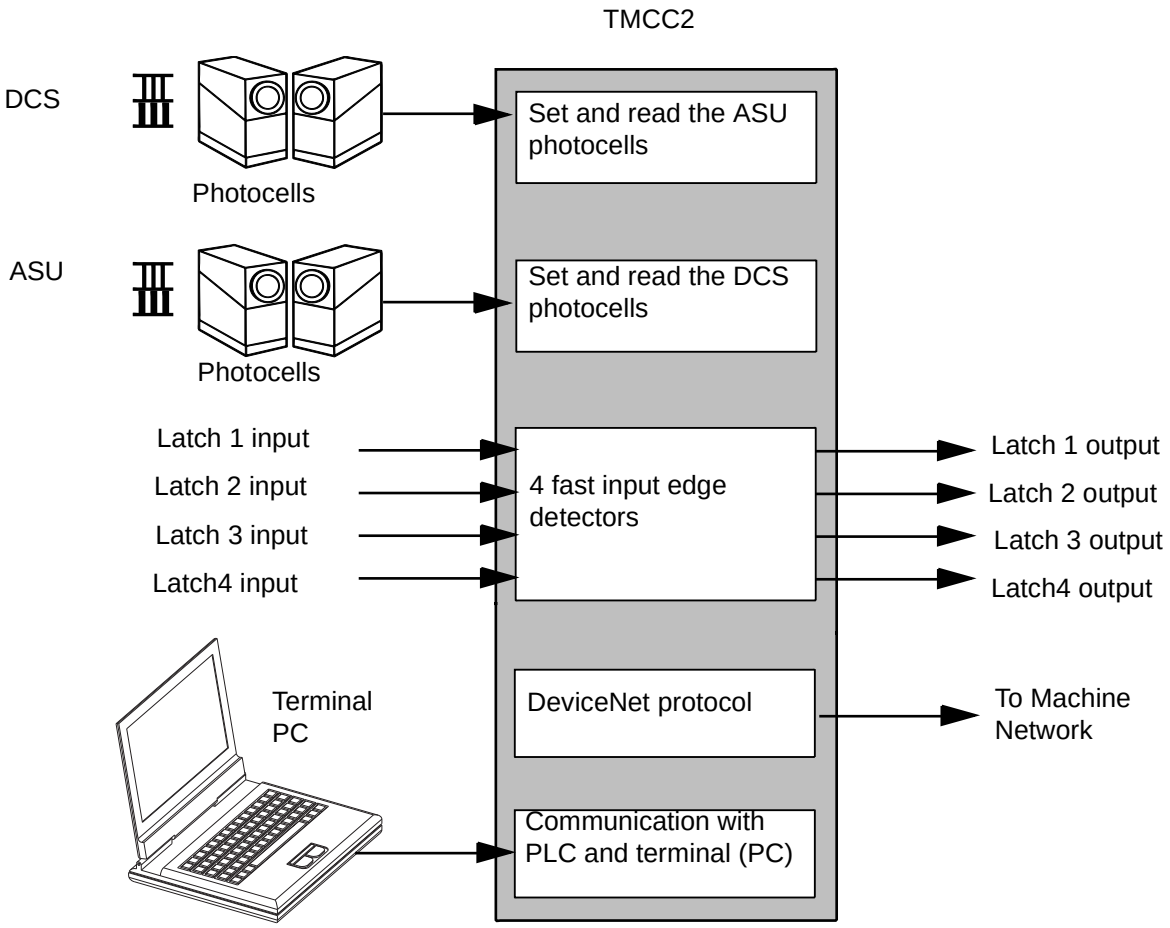

(Cont'd)

TechPub_2614345_0108 - 0803_3048253_01.fm

(Cont'd)

Buttons and Display

The buttons (1) and the display (2) located on the front panel of the TMCC2 card A01K5200 are used to select one of several program functions.

The display (2) is used for the following purposes:

- when the TMCC2 is idle the display (2) shows program information
- when the TMCC2 is working the display (2) is used as LEDs to display the operation of the TMCC2
- when a button (1) is pushed, the display (2) is used to navigate through the program menu structure.

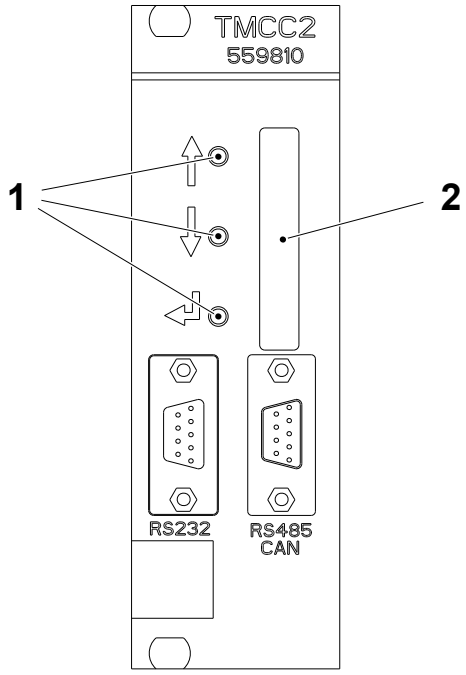

1 Button
2 Display

(Cont'd)

TechPub_2614345_0108 - 0803_3048253_01.fm

(Cont'd)

Note! The error messages are only displayed with the register mark option. When a failure occurs an error message is displayed as follows:

Error Message	Description
ASU 3 Bars Ph. failure	Photocells fault
ASU 4 Bars Ph. failure	Photocells fault
ASU 3 Bars and ASU 4 Bars Ph. failure	Photocells fault
DCS 3 Bars Ph. failure	Photocells fault
DCS 3 Bars and ASU 3 Bars Ph. failure	Photocells fault
DCS 3 Bars and ASU 4 Bars Ph. failure	Photocells fault
DCS 3 Bars, ASU 3 Bars and ASU 4 Bars Ph. failure	Photocells fault
DCS 4 Bars Ph. failure	Photocells fault
DCS 4 Bars and ASU 3 Bars Ph. failure	Photocells fault
DCS 4 Bars and ASU 4 Bars Ph. failure	Photocells fault
DCS 4 Bars, ASU 3 Bars and ASU 4 Bars Ph. failure	Photocells fault
DCS 3 Bars and DCS 4 Bars Ph. failure	Photocells fault
DCS 3 Bars, DCS 4 Bars and ASU 3 Bars Ph. failure	Photocells fault
DCS 3 Bars, DCS 4 Bars and ASU 4 Bars Ph. failure	Photocells fault
All photocells failure	Photocells fault
On Line, but no connections in the unstablished state	DeviceNet communication fault
One or more I/O connections are in Timed-Out state	DeviceNet communication fault
A3PH program incapable of communicating on the network	DeviceNet communication fault
A3PH not On Line	DeviceNet communication fault

(Cont'd)

TechPub_2614345_0108 - 0803_3048253_01.fm

(Cont'd)

LED Display

The display, used as LEDs, provides the following information when the machine is in the normal PRODUCTION mode.

Card A01K5200		
LED	**Function**	**Description**
1	Register mark ASU	ASU register mark signal, the flash is approx. 40 ms
2	Register mark DCS	DCS register mark signal, the flash is approx. 40 ms
3	ASU photocells fault	
4	DCS photocells fault	
5	Not used	
6	Not used	
7	Not used	
8	Not used	

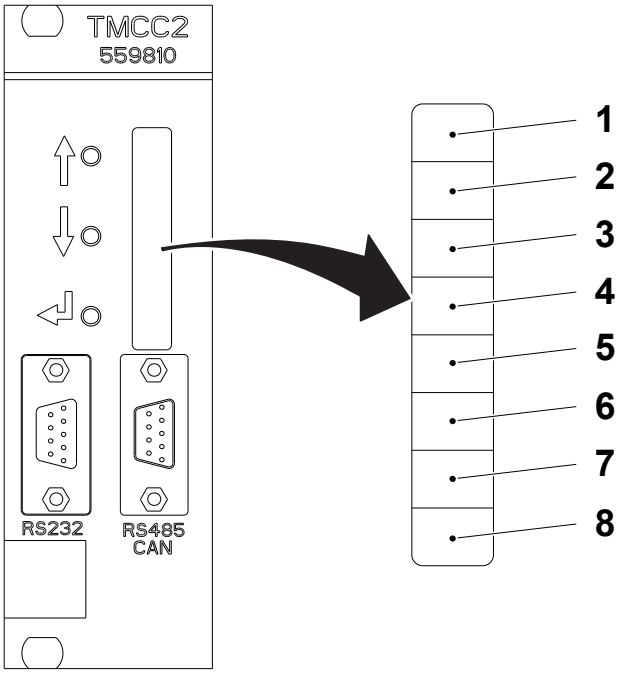

1 Register mark ASU
2 Register mark DCS
3 ASU photocells fault
4 DCS photocells fault
5 Splice detector ASU
6 Splice detector SS
7 Not used
8 Not used

(Cont'd)

TechPub_2614345_0108 - 0803_3048253_01.fm

(Cont'd)

Menu System

Pushing any button on the TMCC2 card A01K5200 enters the first level of the menu. The ARROW buttons are then used to select an item and the ENTER button to access the submenus of that item.

Card A01K5200				
Menu level				
1	2	3	4	Description
SPOT COL				Spot color menu
	GREEN			Select green spot color
	BLUE			Select blue spot color
	RED			Select red spot color
	BACK			Exit from spot color menu
DYN.TH.				Dynamic threshold menu
	PTH=xxh			Change dynamic threshold setting
CALIB.				Manual calibration menu
	USE CAL.			Use manual calibration
	RUN CAL.			Run manual calibration
	BACK			Exit manual calibration menu
ASU PLS				ASU pulse length menu
	PL=xx			Change ASU pulse length
LATCH 1				Latch 1 input menu
	CONFIG			Config. Latch 1 input
		xxxxxxxx		Change Latch 1 configuration
	PLS LEN			Latch 1 pulse length
		PL=xx		Change Latch 1 pulse length
	BACK			Exit from Latch 1 input menu
LATCH 2				Latch 2 input menu
	CONFIG			Config. Latch 2 input
		xxxxxxxx		Change Latch 2 configuration
	PLS LEN			Latch 2 pulse length
		PL=xx		Change Latch 2 pulse length
	BACK			Exit from Latch 2 input menu

(Cont'd)

TechPub_2614345_0108 - 0803_3048253_01.fm

(Cont'd)

Card A01K5200				
Menu level				
1	2	3	4	Description
LATCH 3				Latch 3 input menu
	CONFIG			Config. Latch 3 input
		xxxxxxxx		Change Latch 3 configuration
	PLS LEN			Latch 3 pulse length
		PL=xx		Change Latch 3 pulse length
	BACK			Exit from Latch 3 input menu
LATCH 4				Latch 4 input menu
	CONFIG			Config. Latch 4 input
		xxxxxxxx		Change Latch 4 configuration
	PLS LEN			Latch 4 pulse length
		PL=xx		Change Latch 4 pulse length
	BACK			Exit from Latch 4 input menu
MAC ID				MAC ID menu
	MACID=xx			Change Nod MAC ID
BACK				Exit from menu structure

System Data

A PC can be used to enter commands and parameters in the A3PH program and read data from the TMCC2, see 9.8-6 TMCC2 Controller - Display Report.

(Cont'd)

TechPub_2614345_0108 - 0803_3048253_01.fm

(Cont'd)

TMCC2 Card A01K5210 (Filling System)

The TMCC2 card A01K5210 is a microprocessor card that reads the product flow and the product level inside the paper tube and calculates the output via a double PID-algorithm.

The output value drives the actuator composed by an I/P transducer and a regulating valve. Process specific parameters are sent from the PLC.

Filling Control System Overview

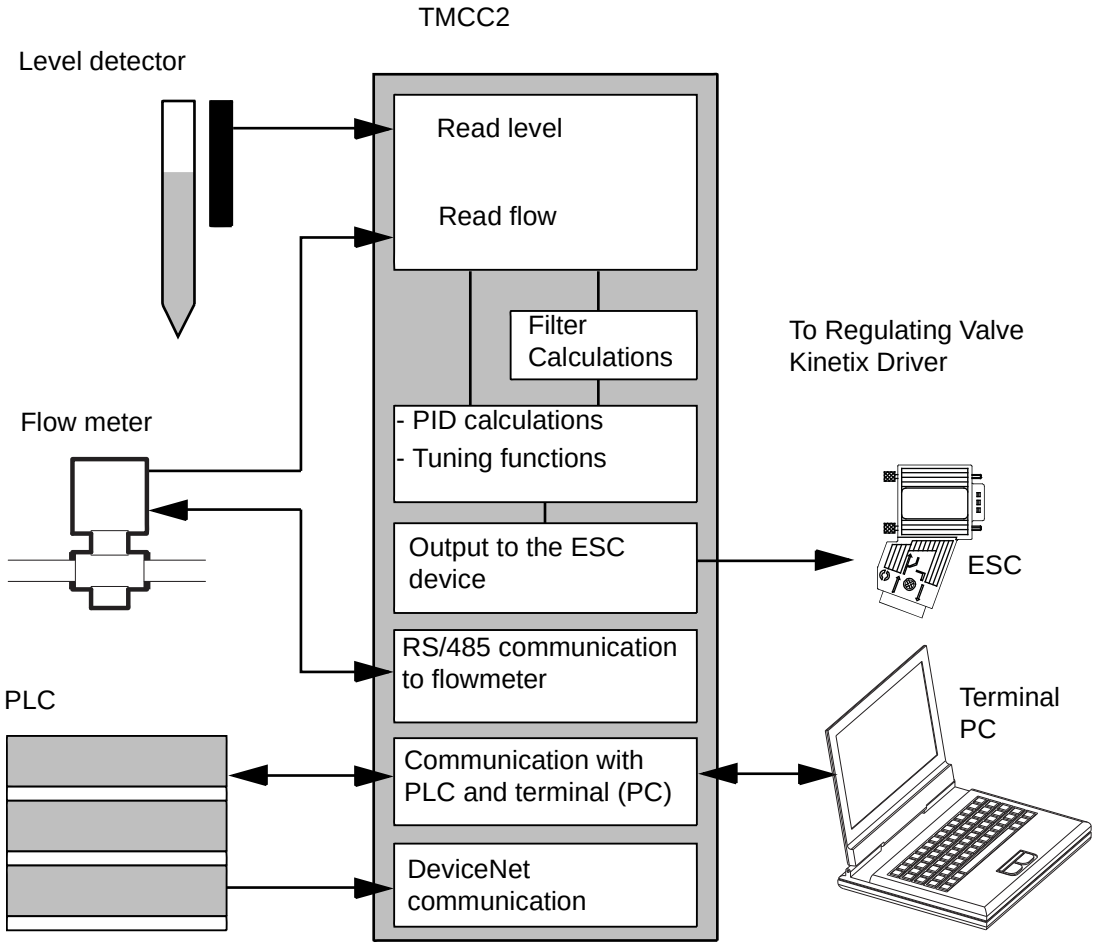

(Cont'd)

TechPub_2614345_0108 - 0803_3048253_01.fm

(Cont'd)

Buttons and Display

The buttons (1) and the display (2) located on the front panel of the TMCC2 card A01K5210 are used to select one of several program functions.

The display (2) is used for the following purposes:

- when the TMCC2 is idle the display (2) shows program information
- when the TMCC2 is working the display (2) is used as LEDs to display the operation of the TMCC2
- when a button (1) is pushed, the display (2) is used to navigate through a menu structure allowing the TMCC2 to be set up.

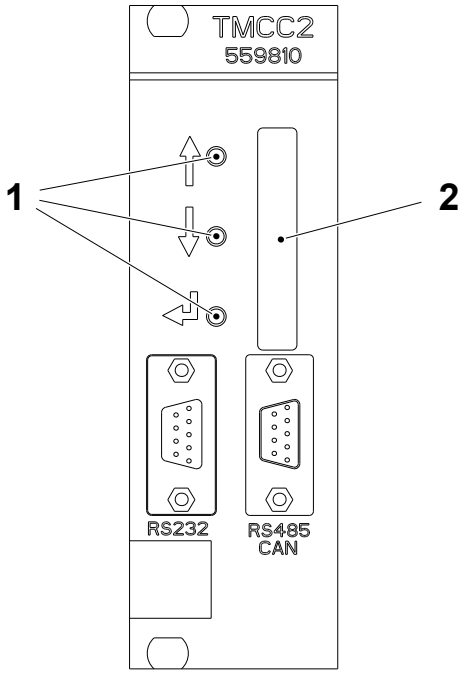

1 Button
2 Display

(Cont'd)

TechPub_2614345_0108 - 0803_3048253_01.fm

(Cont'd)

LED Display

The display, used as LEDs, provides the following information when the machine is in the normal PRODUCTION mode.

Card A01K5210		
LED	**Function**	**Description**
1	Production	Always ON during PRODUCTION.
2	Cleaning	Always ON during CLEANING.
3	Sterilization	Always ON during STERILISATION.
4	Fixed char	“V“
5	Level	*
6	Level	*
7	Level	*
8	Level	*

*) The level is shown on the display by using four display characters. Every character is divided into five rows, making the total number of rows 20. Every row therefore shows 5% of the level.

TechPub_2614345_0108 - 0803_3048253_01.fm

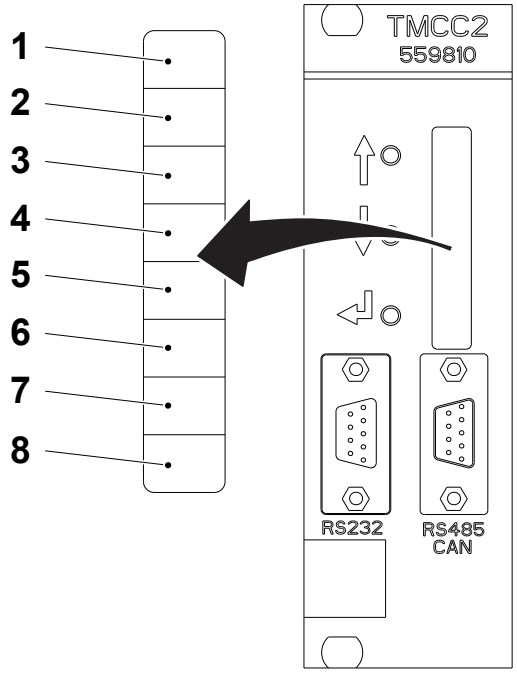

1 Production
2 Cleaning
3 Sterilisation
4 Fixed Char “V“
5 Level
6 Level
7 Level
8 Level

(Cont'd)

(Cont'd)

Menu System

Pushing any button on the TMCC2 card A01K5210 enters the first level of the menu. The ARROW buttons are then used to select an item and the ENTER button to access the submenus of that item.

Card A01K5210				
Menu level				
1	**2**	**3**	**4**	**Description**
MONITOR				Selects what data to monitor
	LEVEL			Monitors the level
	FILT LEV			Monitors the filtered level
	FLOW			Monitors the flow
	OUTPUT			Monitors the output
	BACK			Back to level 1
SETTING				Sets the filling system parameters
	FILL OK			Filling OK window menu
		WIND=±XX%		Sets the filling window*
	FLOW PID			Sets the flow PID
		P CONST		Sets the flow proportional constant value
			P = XX	Sets the P value
		I CONST		Sets the flow integral constant value
			I = XX	Sets the I value
		D CONST		Sets the flow derivative constant value
			D = XX	Sets the D value
		BACK		Back to level 2
	LEV PID			Sets the level PID
		P CONST		Sets the level proportional constant value
			P = XX	Sets the P value
		BACK		Back to level 2
	BACK			Back to level 1

*) This value can be changed by using the up and down arrow keys on the TMCC2 front panel.

(Cont'd)

TechPub_2614345_0108 - 0803_3048253_01.fm

(Cont'd)

Card A01K5210				
Menu level				
1	**2**	**3**	**4**	**Description**
FORCE				Forcing Menu
	OUTPUT			Forces the output value to the I/P transducer
		O=XX		Sets the forced output value
	BACK			Back to level 1
E.PIPE				Empty pipe detection menu
	E.P.DET			Turns ON or OFF the empty pipe detection function
		EPD = XX		Sets the ON or OFF value**
	E.P.TH			Empty pipe detection threshold
		T = XXXX Hz		Sets the empty pipe detection threshold value. Maximum value is 3000Hz
	BACK			Back to level 1
BACK				Exit menu

**) The empty pipe detector by default is set to ON with a threshold value of 3000 Hz, which is the maximum value that can be set. With this threshold value the flowmeter can read flows with a minimum conductivity of 30 to 35 μS/cm.

If water with a lower conductivity is used, the empty pipe detector must be set to OFF. In this way the flowmeter will read flows with a minimum conductivity of 5 μS/cm.

TechPub_2614345_0108 - 0803_3048253_01.fm

(Cont'd)

System Data

A PC can be used to enter commands and parameters in the FCSFA3 program and read data from the TMCC2, see 9.8-6 TMCC2 Controller - Display Report.

(Cont'd)

TechPub_2614345_0108 - 0803_3048253_01.fm

(Cont'd)

TMCC2 card A01K5220 (Sealing Monitoring)

The TMCC2 card A01K5220 is a microprocessor card that monitors the sealing processes.

These processes are Transversal Sealing (TS), Longitudinal Sealing (LS), Strip Application (SA), Pull-Tab application (PT & PT High Speed).

The system detects incorrect sealing conditions and warns the operator. The TMCC2 communicates with the TPIH2500 generator via the CAN bus. Before the CAN communication can be used it must be set up, see 9.9.1-7 IH Equipment - Set CAN Communication.

(Cont'd)

TechPub_2614345_0108 - 0803_3048253_01.fm

(Cont'd)

Monitoring System Overview

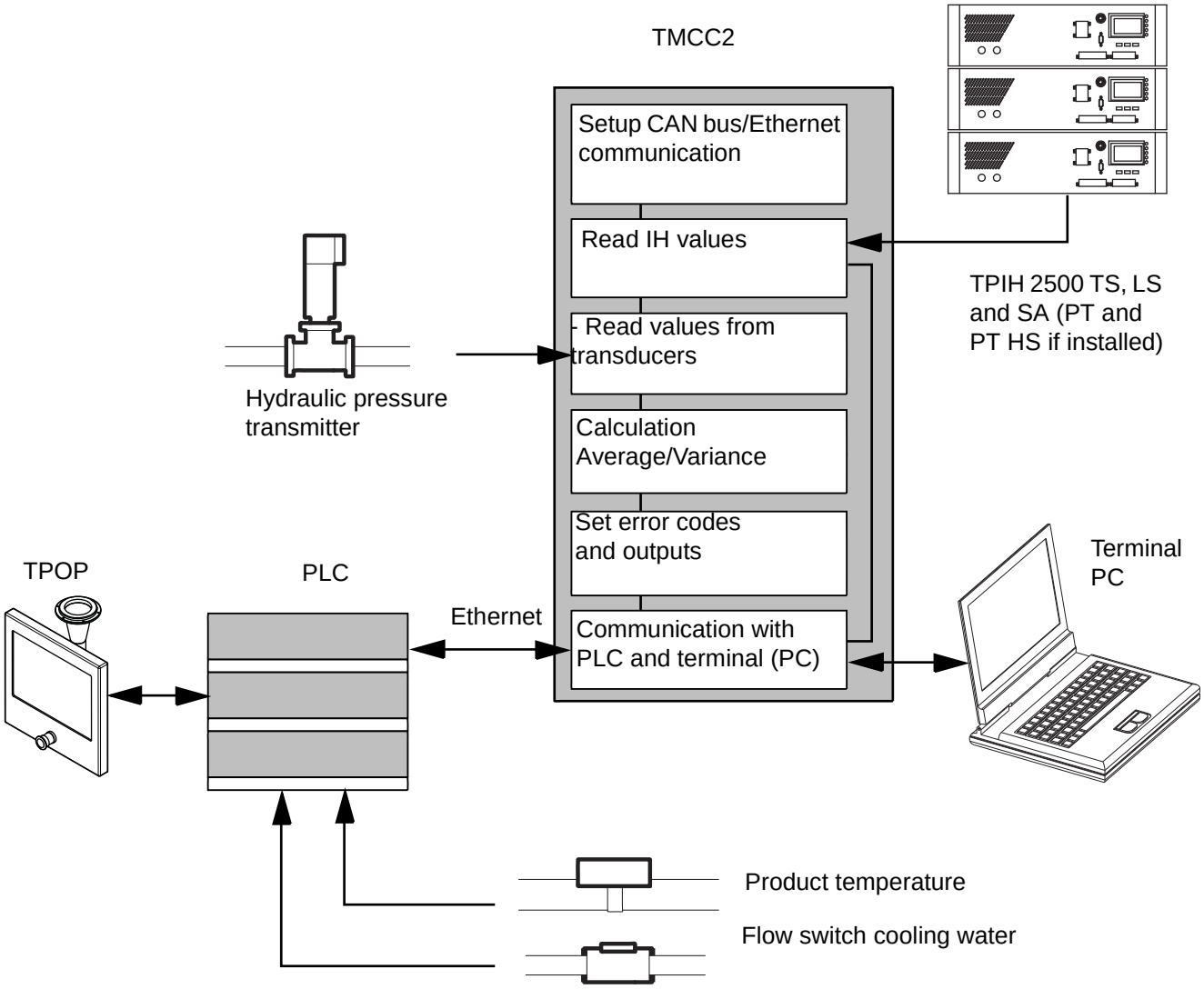

TechPub_2614345_0108 - 0803_3048253_01.fm

(Cont'd)

(Cont'd)

The SM is executed on the TMCC2 board and the parameters acquired are:

- voltage, current and phase angle from the TPIH generators
- power setting and status/errors from the TPIH generators
- product temperature and inductors cooling water flow status (Ethernet IP)
- hydraulic pressure during TS
- status and synchronization signals of the filling machine (Ethernet IP)

Communication between the TMCC2 and the PLC are implemented trough the Ethernet IP connection. Digital outputs of the TMCC2 are available to communicate the error conditions to PLC but normally not used.

Various information regarding the sealing process are available during production and off-line on the TMCCs RS232 port.

System Data

A PC can be used to enter commands and parameters in the SM program and read data from the TMCC2, see 9.8-6 TMCC2 Controller - Display Report.

(Cont'd)

TechPub_2614345_0108 - 0803_3048253_01.fm

(Cont'd)

TMCC2 Card A01K5240 (Splice Detector)

The TMCC2 card A01K5200 is a microprocessor card that has the following functions:

- reads two analog inductive sensors, placed in the SS and SA, in order to detect the packaging material splices.
- implements a DeviceNet communication in order to participate in the machine communication network. The program parameterization and some of the I/O signals (non-time critical) are performed by means of this communication protocol.

Splice Detector Program Overview

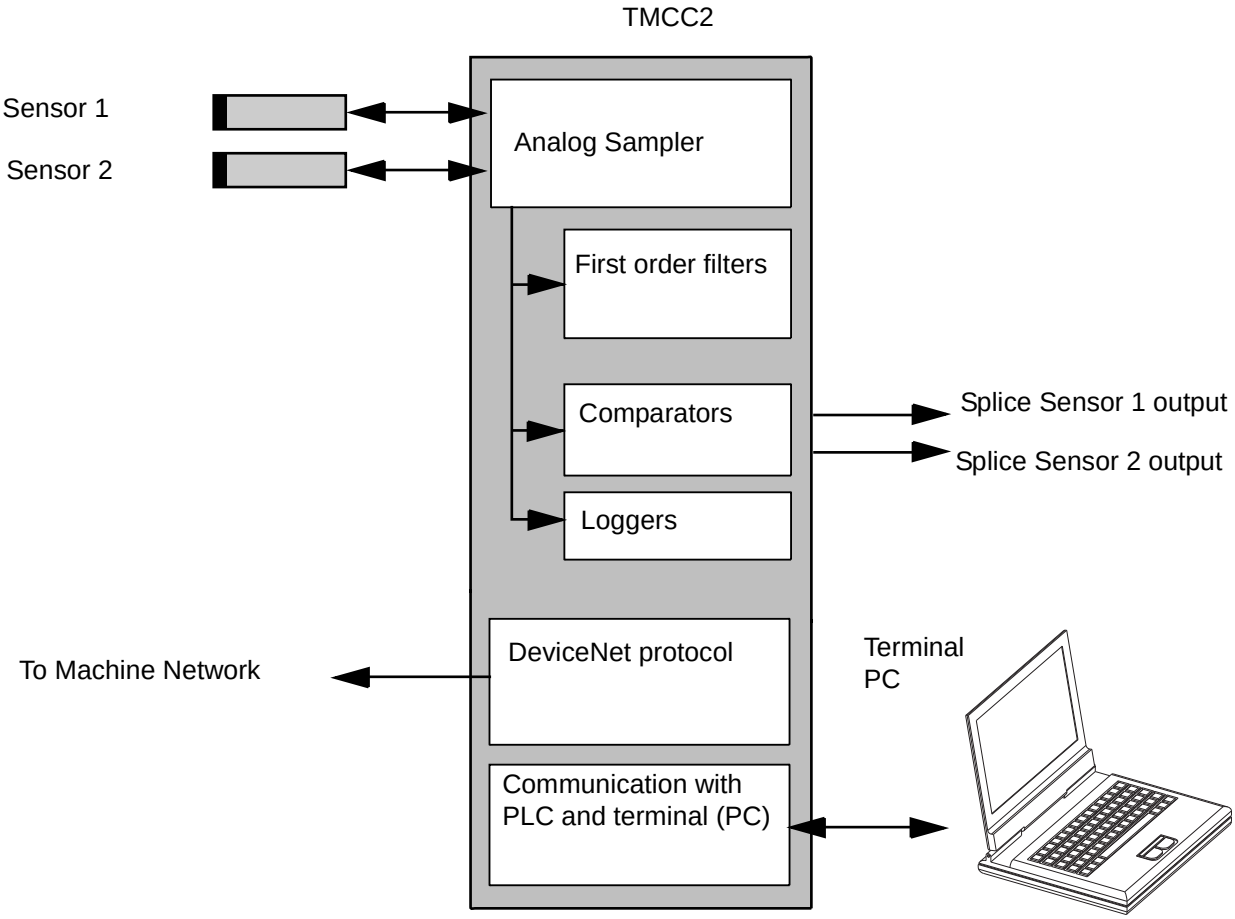

TechPub_2614345_0108 - 0803_3048253_01.fm

(Cont'd)

(Cont'd)

Buttons and Display

The buttons (1) and the display (2) located on the front panel of the TMCC2 card A01K5240 are used to select one of several program functions.

The display (2) is used for the following purposes:

- when the TMCC2 is idle the display (2) shows program information
- when a splice is detected the display (2) shows the following messages for three seconds:

  `*SD 1*` when splice detector 1 have found a paper splice

  `*SD 2*` when splice detector 2 have found a paper splice.
- when a button (1) is pushed, the display (2) is used to navigate through a menu structure allowing the TMCC2 to be set up.

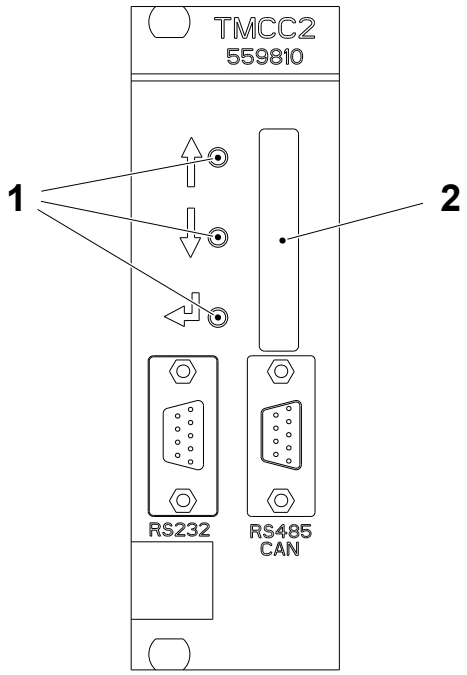

1 Button
2 Display

(Cont'd)

TechPub_2614345_0108 - 0803_3048253_01.fm

(Cont'd)

Menu System

Pushing any button on the TMCC2 card A01K5240 enters the first level of the menu. The ARROW buttons are then used to select an item and the ENTER button to access the submenus of that item.

Card A01K5240				
Menu level				
1	2	3	4	Description
SENSOR 1				Sensor 1 menu
	DYN.TH.			Dynamic threshold
		X.XX V		Valid range is 0.00…9.99 V
	FILTER F			Filter cut-off frequency
		X.XXX Hz		Valid range is 0.005…9.999 Hz
	PULSE			Output pulse length
		XXXXX ms		Valid range is 5…16000 ms
	HOLD OFF			Hold off time
		XXXXX ms		Valid range is 5…16000 ms
	R/F EDGE			Configure the splice detector active edge
		YYYYYYYY		Can be RISING or FALLING
	OUTPUT			Configure the output type
		YYYYYYYY		Can be NORM. L or NORM. H
	BACK			Return from Sensor 1 submenu

(Cont'd)

TechPub_2614345_0108 - 0803_3048253_01.fm

(Cont'd)

Card A01K5240				
Menu level				
1	2	3	4	Description
SENSOR 2				Sensor 2 menu
	DYN.TH.			Dynamic threshold
		X.XX V		Valid range is 0.00…9.99 V
	FILTER F			Filter cut-off frequency
		X.XXX Hz		Valid range is 0.005…9.999 Hz
	PULSE			Output pulse length
		XXXXX ms		Valid range is 5…16000 ms
	HOLD OFF			Hold off time
		XXXXX ms		Valid range is 5…16000 ms
	R/F EDGE			Configure the splice detector active edge
		YYYYYYYY		Can be RISING or FALLING
	OUTPUT			Configure the output type
		YYYYYYYY		Can be NORM. L or NORM. H
	BACK			Return from Sensor 2 submenu
MAC ID				Changes the MAC ID address
	MACID=*XX*			Valid range is 0…63
BACK				Exit from the menu structure

TechPub_2614345_0108 - 0803_3048253_01.fm

System Data

A PC can be used to enter commands and parameters in the A3SD program and read data from the TMCC2, see 9.8-6 TMCC2 Controller - Display Report.

(Cont'd)

(Cont'd)

TMCC2 Card W51K5230 (Jaw and Event Identification)

The TMCC2 card W51K5230 is a microprocessor card that controls the JEID (Jaw and Event Identification) system by the JEID program.

The JEID program encapsulates all functions needed to print on the top of each package the number of the jaw, two event codes and an event counter for traceability purposes. This functionality is useful to correlate a possible production problem to the corresponding machine jaw or event.

JEID Program Overview

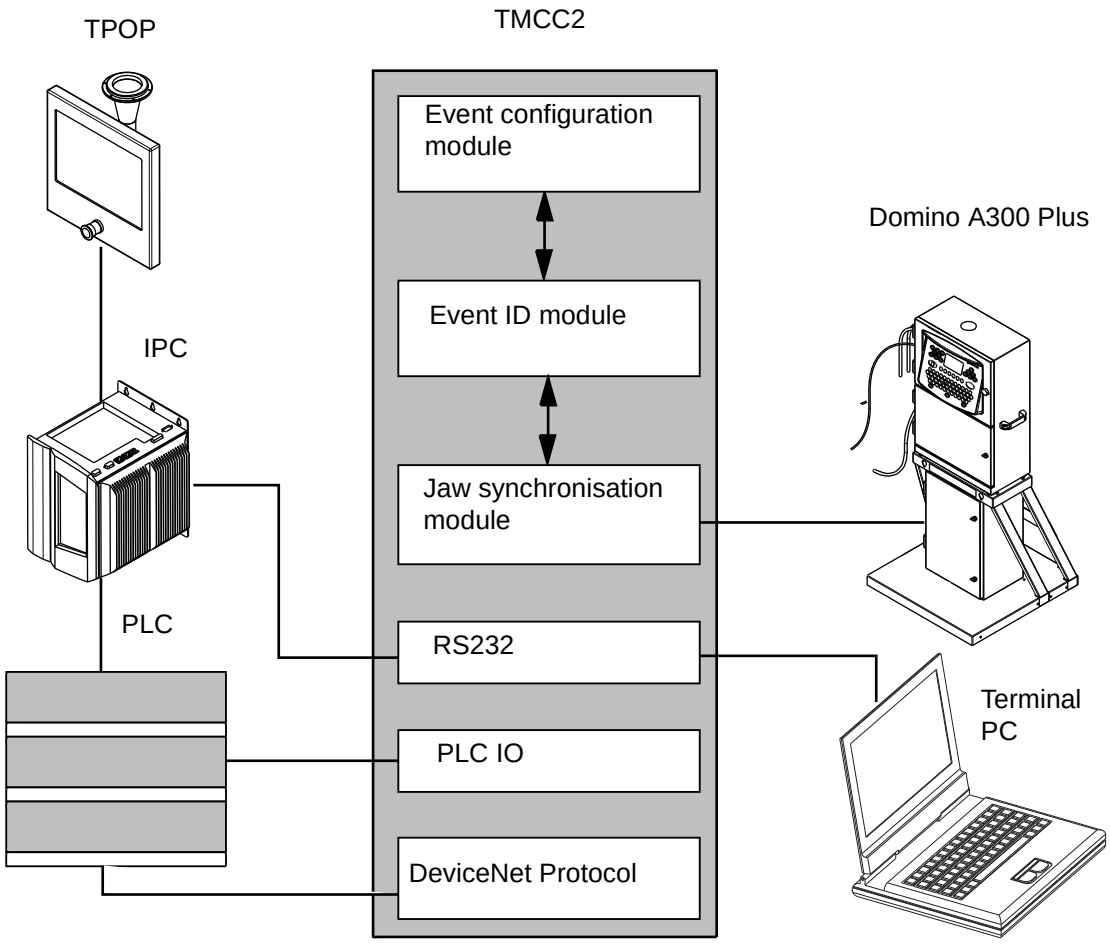

(Cont'd)

TechPub_2614345_0108 - 0803_3048253_01.fm

(Cont'd)

Buttons and Display

The buttons (1) and the display (2) located on the front panel of the TMCC2 card W51K5230 are used to select one of several program functions.

The display (2) is used for the following purposes:

- when the TMCC2 is idle the display (2) shows program information
- when the TMCC2 is working the display (2) is used as LEDs to display the operation of the TMCC2
- when a button (1) is pushed, the display (2) is used to navigate through a menu structure allowing the TMCC2 to be set up.

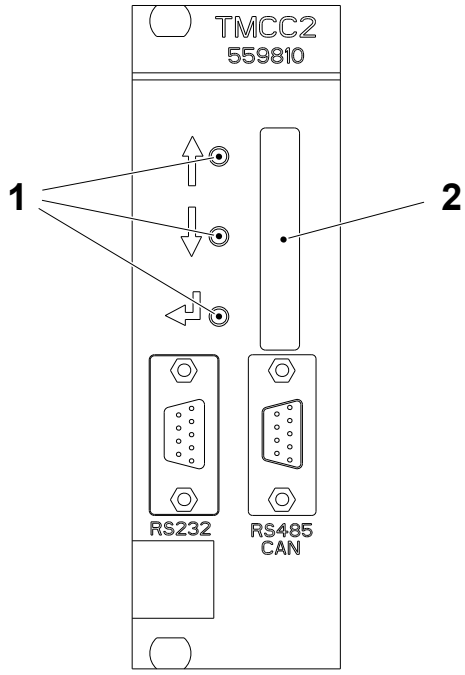

1 Button
2 Display

(Cont'd)

TechPub_2614345_0108 - 0803_3048253_01.fm

(Cont'd)

LED Display

The display, used as LEDs, provides the following information when the machine is in the normal PRODUCTION mode.

Card W51K5230	
LED	**Description**
1	Package produced
2	Package printed
3	Not used
4	Pack produced number
5	
6	Not used
7	Current queue length. If the program is in fault situation ER is displayed
8	

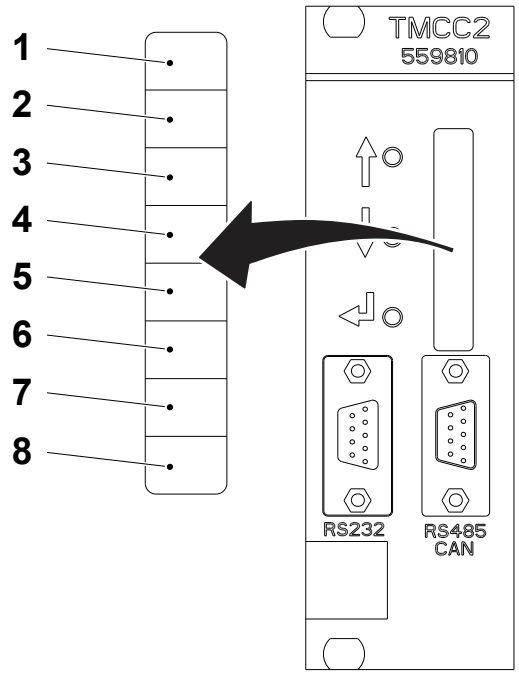

1 Package produced
2 Package printed
3 Not used
4 Pack produced number
5 Pack produced number
6 Not used
7 Current queue length
8 Current queue length

TechPub_2614345_0108 - 0803_3048253_01.fm

(Cont'd)

(Cont'd)

In case of a DeviceNet communication fault, the following alarm messages are shown on the display:

DeviceNet Fault: Incapable to go online	Verify DeviceNet connection and node setting
DeviceNet Fault: Status Off	Verify DeviceNet connection and node setting
DeviceNet Fault: One or more connections are in the timeout state	JEID communication timed out
DeviceNet Fault: No connections in the established state	JEID not in the scanlist

Menu System

Pushing any button on the TMCC2 card W51K5230 enters the first level of the menu. The ARROW buttons are then used to select an item and the ENTER button to access the submenus of that item.

Card W51K5230				
Menu level				
1	**2**	**3**	**4**	**Description**
MAC ID				Changes the MAC ID address
	MACID=*XX*			Valid range is 0…63
BACK				Exit from the menu structure

(Cont'd)

TechPub_2614345_0108 - 0803_3048253_01.fm

(Cont'd)

Basic Program Function

The JEID program is mainly composed by three modules:

- the Jaw Synchronization module
- the Event module
- the Event configuration module.

Jaw Synchronization Module

The Jaw Synchronization module uses the *PackSynch* and `HomeJaw` signals to identify the package created by the jaw system. These packages are inserted into a Jaw System Queue (JSQ) to be tracked up to the drop chute position.

The JSQ length is a volume dependent parameter called Pack Parameter sent by the PLC. If the drop chute is opened (packages wasted), the packages extracted from the JSQ are discarded whilst if the drop chute is closed, the packages extracted from the JSQ are moved to the Final Folder (and conveyor) queue (FFQ). The length of this queue is not fixed, but depends on where the print head is installed on the conveyor.

At every PrinterPhotocell rising edge, the first pack inserted on the FFQ is extracted and used to update the printer data, using the information contained in the queue element.

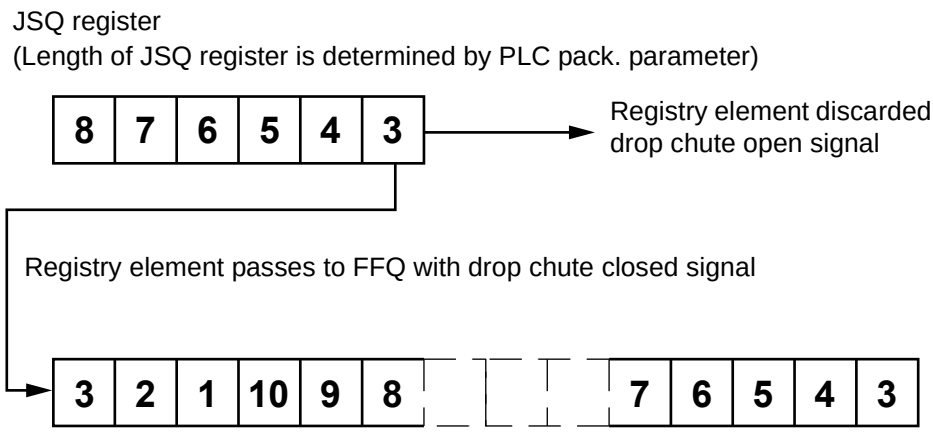

(Cont'd)

TechPub_2614345_0108 - 0803_3048253_01.fm

(Cont'd)

The JEID program can work in three different modes: disabled, manual mode, automatic mode; see 6.1-3 Date Unit - Set JEID Modefor the working mode selection.

Disabled:
when the JEID is disabled neither JawID nor Event ID are printed on the package. The queues are anyhow kept updated; in this way all functionalities can be enabled on fly, while the machine is running.

Manual Mode:
in manual mode, the JEID system does not generate any fault to the PLC. It uses a passive queuing, where the produced packages are placed into the FFQ and are extracted when they have to be printed. If a package is manually removed from the conveyor, the synchronization is lost, until a package dump occurs (for any reason). In fact, only during the package dumping, the JEID is capable to restore the synchronization, based on the fact that the first package, inserted into the FFQ after a dump, will be the first one after a space, in front of the printer photocell.

Automatic Mode:
in automatic mode, the JEID uses a minimum and maximum queue limits (acquired during the synchronization procedure, which requires the operator help) to trim the queue behaviour in case of packages removal from the conveyor. During the package dumping, the JEID verifies if the FFQ length is within minimum and maximum values. When the FFQ length exceeds the minimum and maximum limits, the operator is asked to verify the synchronization by sampling one package; if the synchronization is correct the operator press the `CONFIRM SELECTION` button (1), to confirm that synchronization is restored.



1 Confirm selection button

(Cont'd)

TechPub_2614345_0108 - 0803_3048253_01.fm

(Cont'd)

The following table resumes the main differences between the automatic mode and the manual mode:

Characteristic	**Working mode**	
	Automatic	**Manual**
Operator feedback required	YES	NO
Synchronization alarm can be generated	YES	NO
Independent against conveyor speed variation	NO	YES
Independent against belt brake speed variation	NO	YES
Auto synchronization on packages removal from conveyor	YES	NO
Re-synchronization after every package dump	YES	NO

(Cont'd)

TechPub_2614345_0108 - 0803_3048253_01.fm

(Cont'd)

Event Module

The Event module manages the incoming events by accessing directly to the FFQ.

The events are transferred from the PLC to the JEID application when the packages are at the drop chute position. They are inserted into an event list from the Event module and placed into the FFQ, according to their priority.

The event pre-counters are managed by placing the event codes into the FFQ in advance, compared to the drop chute position. Of course the maximum value of the pre-counter must be less than the queue length.

The reserved space, to print the Event information on the package, is composed by two characters. These two characters can be used to print two events for every package or only one event for every package. In the first case, the event must be associated to a single character coding, whilst in the second case every event could be associated to a double character coding.

The following table resumes the two configuration modes:

Event mode	No. of event per package	No. of letter(s) per event
Single	2	1
Double	1	2

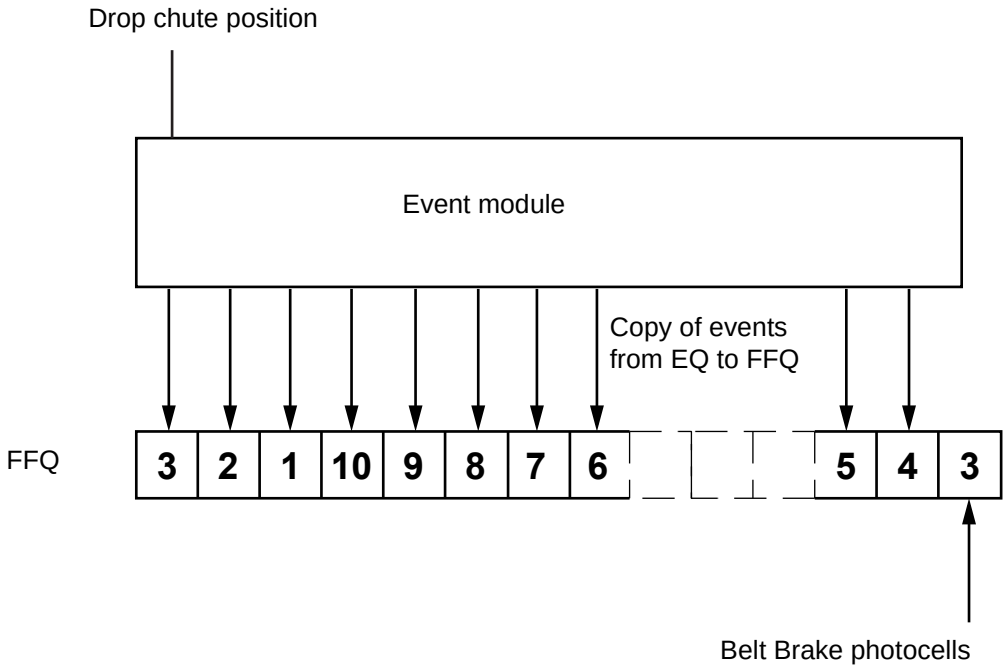

(Cont'd)

TechPub_2614345_0108 - 0803_3048253_01.fm

(Cont'd)

Event Configuration Module

The Event configuration module is composed of all the embedded functions needed to change, save and download the event configuration settings. A total of eight different event configuration sets can be entered into the module.

The event configuration can be entered using an off line tool installed on a PC. This tool generates a file, containing on or more configurations, downloadable to the application.

Softscope Sub Menu

The JEID program implements a logger, called Softscope, which is able to record all changes on all JEID inputs and outputs (both physical IO's and DeviceNet IO's). This feature can be useful for trouble shooting. The I/O signals are collected to form a 16bit *Input word* as shown below:

Input word															
B15	B14	B13	B12	B11	B10	B9	B8	B7	B6	B5	B4	B3	B2	B1	B0
Event 2				Event 1				Spare	Spare	PrinterPhotocells	NormalStop	DropChutePosition	HomeJaw	PackSynch	In Production

In the `STOPPED` state the logger timer is frozen and no signals changes are stored in the memory. The logged data can, in this state, retrieved from the logger memory to be stored in a PC file.

The logger can be started manually or through a trigger function, in order to synchronize the logger start on a particular input signal variation.

In the `ARMED` state, when the *Input Word* matches the trigger configuration, the logger goes into the `ACQUIRING` state.

In the `ACQUIRING` state the logger timer is reset and then incremented every 1ms and the *Input Word* is stored, together with the current timer value, every time its value changes.

System Data

A PC can be used to enter commands and parameters in the JEID program and read data from the TMCC2, see 9.8-6 TMCC2 Controller - Display Report.

TechPub_2614345_0108 - 0803_3048253_01.fm

9.8-2 TMCC2 Controller - Set Communication

Machine Status	PRODUCTION
Special Equipment	RS 232-C Communication Cable AT Compatible PC with CD Drive
SPC Reference	2849071-0200

Note! The following procedure should be used to communicate with a TMCC2 card.

Connect the TMCC2 to a PC with the comminucation cable (1). The connections required are:

PC 9-pin female	**TMCC2 9-pin male**
2	3
3	2
5	5

Note! Do not connect any other pin.

Set up the program to use, for example; Windows Hyper Terminal as follows:

Baud rate	9600
Parity	None
Bits	8
Stop bits	1
Flow control	None

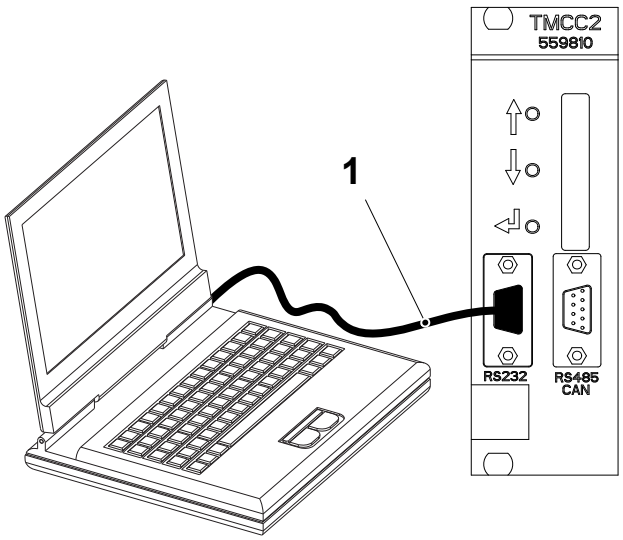

1 Communication cable

(Cont'd)

TechPub_2614345_0108 - 0803_3048253_01.fm

(Cont'd)

Note! Valid for TMCC2 A01K5240 (Jaw and Event ID) only.

The JEID program requires a baud rate of 38400, whilst the firmware still works with a baud rate of 9600. Configure the program as follows:

JEID program RS232 setting		**TMCC2 firmware RS232 setting**	
Baud rate	38400	Baud rate	9600
Parity	None	Parity	None
Bits	8	Bits	8
Stop bits	1	Stop bits	1
Flow control	None	Flow control	None

TechPub_2614345_0108 - 0803_3048253_01.fm

9.8-3 TMCC2 Controller - Load Program

Machine Status	PREPARATION
Special Equipment	RS 232-C Communication Cable AT Compatible PC with CD Drive
SPC Reference	2849071-0200

CAUTION
Risk of damage to the equipment.
Do not swap the TMCC2 cards because they contain different programs!

(Cont'd)

TechPub_2614345_0108 - 0803_3048253_01.fm

(Cont'd)

a) Locate the appropriate TMCC2 card in the electrical cabinet:
   - the card A01K5200 (1) is for the barcode readers in the ASU and DCS
   - the card A01K5210 (2) is for the filling system
   - the card A01K5220 (3) is for the sealing monitoring
   - the card W51K5230 (4) is for the jaw and event identification
   - the card A01K5240 (5) is for the splice detection.

b) Configure a PC to be used as a hyperterminal and connect it to the TMCC2, see 9.8-2 TMCC2 Controller - Set Communication.

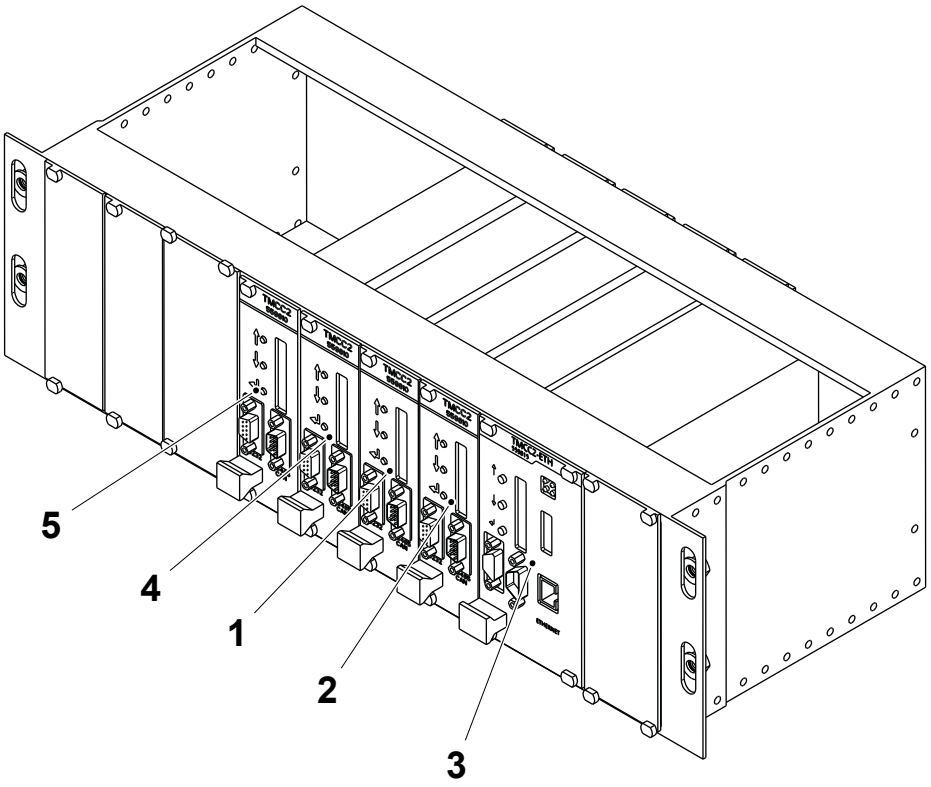

1 Card A01K5200
2 Card A01K5210
3 Card A01K5220
4 Card W51K5230
5 Card A01K5240

(Cont'd)

TechPub_2614345_0108 - 0803_3048253_01.fm

(Cont'd)

c) Connect the communication cable between the PC and the TMCC2 front panel connector.

d) Type `Stop` and press the ENTER key.

e) Insert the CD marked SOFTW_CD_A3_S into the CD drive of the PC.

f) Type `E flash` and press the ENTER key.

g) When the TMCC2 prompt appears ("TMCC2->"), type `D` and press the ENTER key.

h) Select the menu `TRANSFERS` and the menu item `SEND TEXT FILE`.

i) Browse to the software CD and locate the file to be downloaded:
   - for the card A01K5200, locate the file `TMCC A3PH\xxxxxxx.100x.mhx`
   - for the card A01K5210, locate the file `TMCC FCSFA3\xxxxxxx.100x.mhx`
   - for the card A01K5220, locate the file `TMCC SM\xxxxxxx.100x.mhx`
   - for the card W51K5230, locate the file `TMCC JEID\xxxxxxx.100x.mhx`
   - for the card A01K5240, locate the file `TMCC SD\xxxxxxx.100x.mhx`

j) The download progress is displayed with dots on the screen.

k) At the TMCC2 prompt type `Run` and press the ENTER key.

l) Press the S key to verify the downloaded programs status.

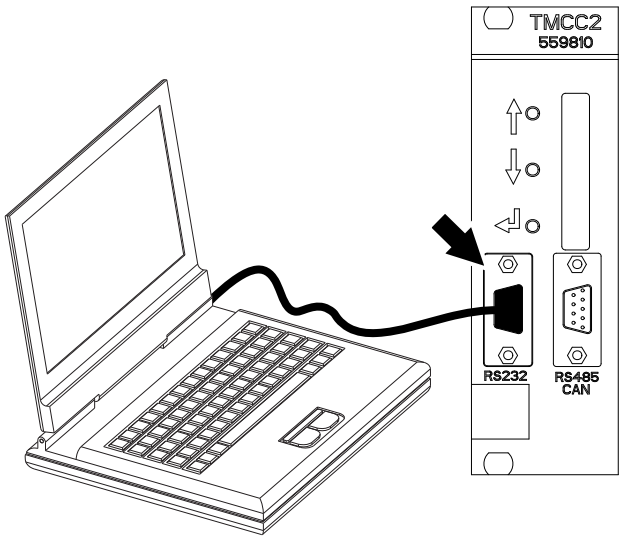

TechPub_2614345_0108 - 0803_3048253_01.fm

9.8-4 TMCC2 Controller - Photocells Manual Setting

Machine Status	Mains Power ON Air OFF Steam ON Water OFF
SPC Reference	2849071-0200

DCS Photocells

If errors occur after the photocell colour and sensitivity setting, set the photocells manually as described below:

a) Press any of the buttons on the TMCC2 card.

b) Use the ARROW buttons to select CONF? Y and press the ENTER key.

c) Use the ARROW buttons to select CALIB. and press the ENTER key.

d) Use the ARROW buttons to select RUN CAL. and press the ENTER key. This sets the photocells to teaching mode.

e) Move the packaging material until the photocell light spot is focused on a white part of the packaging material.

f) Press and hold the TEACH button (1).

g) Move the packaging material until the complete barcode has passed in front of the photocell and then release the TEACH button (1). The cell automatically calibrates itself.

Note! The LED (2) is lit when the photocell light spot is focused on a dark area of the packaging material.

h) Repeat the items e), f) and g) for the other photocell.

i) Use the ARROW buttons to select USE CAL. to send the taught values to all photocells.

j) Exit the menu on the TMCC2.

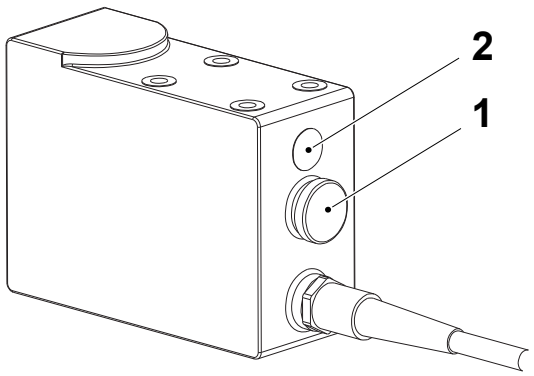

1 Teach button
2 LED

(Cont'd)

TechPub_2614345_0108 - 0803_3048253_01.fm

(Cont'd)

ASU Photocells

If errors occur after the photocell colour setting, set the photocells manually as described below:

a) Press any of the buttons on the TMCC2 card.

b) Use the ARROW buttons to select CONF? Y and press the ENTER button.

c) Use the ARROW buttons to select CALIB. and press the ENTER button.

d) Use the ARROW buttons to select RUN CAL. and press the ENTER button. This sets the photocells to teaching mode.

e) Make sure that the switch (1) is set to the position Q1.

f) Move the packaging material until the photocell spot is focused on a white part of the packaging material.

g) Push and hold the TEACH button (2).

h) Move the packaging material until the complete barcode has passed in front of the photocell and then release the TEACH button (2). The photocell automatically calibrates itself.

Note! The ON LED (3) is lit when power is supplied to the photocell. The Q/ok LED (4) is lit when the photocell spot is focused on a dark area of the packaging material.

i) Repeat the steps from e) *to* h) for the other photocell.

j) Use the ARROW buttons to select USE CAL. and press the ENTER button.

k) Exit the menu on the TMCC2 card.

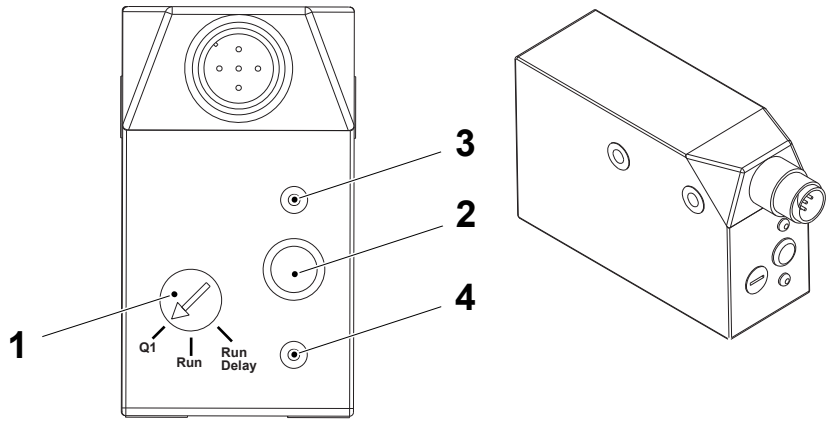

1 Switch
2 Teach button
3 ON LED
4 Q/ok LED

(Cont'd)

TechPub_2614345_0108 - 0803_3048253_01.fm

9.8-5 TMCC2 Controller - Set Filling Window

Machine Status	Mains Power ON Air OFF Steam ON Water OFF
SPC Reference	2849071-0200

TMCC2 A01K5210 (Filling System)

The suggested filling window amplitude is 30%.

a) Press any of the buttons on the TMCC2 A01K5210 (Filling system) card.

b) Use the arrow buttons (1) to select SETTING and press the ENTER button (2).

c) Use the arrow buttons (1) to select FILL OK and press the ENTER button (2).

d) Use the arrow buttons (1) to set a filling window amplitude and store the value by pressing the ENTER button (2).

e) Exit the menu on the TMCC2 A01K5210 (Filling system).

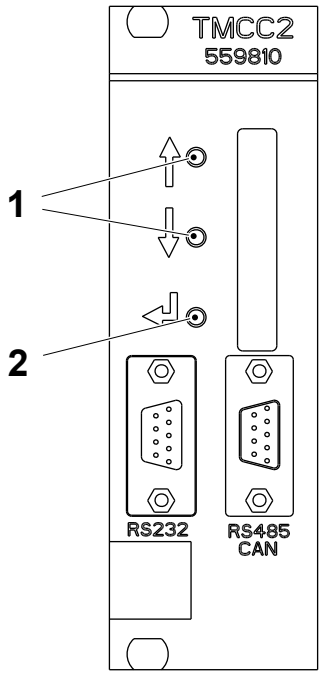

1 Arrow button
2 Enter button

TechPub_2614345_0108 - 0803_3048253_01.fm

9.8-6 TMCC2 Controller - Display Report

Machine Status	PRODUCTION
Special Equipment	TMCC2 Communication Cable AT Compatible PC
SPC Reference	2849071-0200

TMCC2 Card A01K5200 (Photocells Decoder)

Configure Windows Hyper Terminal on the PC and connect the PC to the TMCC2, see 9.8-2 TMCC2 Controller - Set Communication.

Enter the commands and parameters into the A3PH program via the keyboard and execute them by pressing the ENTER key. (The commands and parameters are not replicated on the terminal). The functions described below are available:

H Help Menu: displays the commands available.

L Description of the function of the display on the front panel.

S Shows the program status and if there is a failure of the photocells.

V Shows the program number and version

STOP Stops the A3PH program and enters the firmware. It is used when the application should be upgraded or in case a reset is necessary.

Ax ASU photocells alignment test (x=1 start test; x=0 stop test)

Dx DCS photocells alignment test (x=1 start test; x=0 stop test)

(Cont'd)

TechPub_2614345_0108 - 0803_3048253_01.fm

(Cont'd)

Y Displays a detailed status of the photocells for test and service purposes:

Commands OK:	Total number of commands executed by the photocells
Commands failed:	Total number of commands failed
Barcode decoded:	Total number of barcodes decoded by the TMCC2
Dynamic Threshold:	Photocell threshold
Light Spot:	Colour of the light spot used by the photocells
Output:	Logic of the photocell outputs (Light/Dark switching)
Photoswitch Working Hours	Number of hours that every LED of the photocell has been working
Photocell Software ver. / S.N.:	Software version of the photocell firmware and serial number

PTH=xx Changes the dynamic threshold value of the photocells. The value is a hexadecimal value ranging from 20_{16} to $F2_{16}$ stored in the EEPROM. High dynamic threshold values result in a lower photocell sensitivity.

(Cont'd)

TechPub_2614345_0108 - 0803_3048253_01.fm

(Cont'd)

TMCC2 card A01K5210 (Filling System)

Configure a PC to be used as Windows terminal and connect it to the TMCC2 (FCSFA3F), see 9.8-2 TMCC2 Controller - Set Communication.

Enter the commands and parameters into the FCSFA3 program via the keyboard and execute them by pressing the ENTER key. (The commands and parameters are not replicated on the terminal). The functions described below are available:

H Help Menu: displays the commands available.

S Shows the filling system status.

P <val> Changes the flow PID proportional parameter.

I <val> Changes the flow PID integral parameter.

D <val> Changes the flow PID derivative parameter.

U <val> Changes the level PID proportional parameter.

V <val> Changes the level PID integral parameter.

W <val> Changes the level PID derivative parameter.

M <val> Changes the cleaning PID proportional parameter.

N <val> Changes the cleaning PID integral parameter.

O <val> Changes the cleaning PID derivative parameter.

L <val> Changes the level setpoint. The value introduced is in the range 0-1000 that corresponds to 0-100%. It is restored to 60% at power or after a reset.

T <val> Changes the start up ramp time.

F <val> Force the analogue output value:

val=0 disables forcing

val=1..1000 forced value (0--10V)

(Cont'd)

TechPub_2614345_0108 - 0803_3048253_01.fm

(Cont'd)

R <val> Reporting ON/OFF. This command enables and disables the automatic reporting of the level, filtered level, flow set point, flow measure and output.

val=0 disable reporting

val=1 enable reporting in form of three columns on the screen of the terminal.

B <val> Changes the start flow percentage.

G <val> Changes the virtual level trigger.

Z Displays the flowmeter parameters.

SERVICE Displays the extra service commands help.

VER Displays the program number and version.

STOP Stops the application program and enters the firmware.

The extra service commands are:

FCLEAR restores the default flow meter configuration.

EPIPE <val> ON = Empty pipe detection activated, OFF = Empty pipe detection deactivated.

EPIPETH <val> Sets the empty pipe detection threshold, the default value is 2300 Hz and the maximum threshold is 3000 Hz which corresponds to the minimum conductivity level of the liquid.

(Cont'd)

TechPub_2614345_0108 - 0803_3048253_01.fm

(Cont'd)

TMCC2 Card A01K5220 (Sealing Monitoring)

Configure a PC to be used as Windows terminal and connect it to the TMCC2 (SM), see 9.8-2 TMCC2 Controller - Set Communication.

Enter the commands and parameters into the SM program via the keyboard and execute them by pressing the ENTER key. (The commands and parameters are not replicated on the terminal). The functions described below are available:

H Help Menu: displays the commands available.

A Shows one message over two on LS and SA reporting.

B <val> Set the max. power deviation allowed (20-200 W).

C Shows comments on data output.

D Toggle display report on RS232: ON/OFF.

E Shows last error condition.

J Send the jaw average values.

L Toggles display from TS, LS, SA or PT.

P <val> Set max. phase deviation (4-40 deg.).

R <val> Recall waveform: 0 last, 1 stored. This function could be used to retrieve the last samples of voltage, current and phase angle. The values are given already scaled in the right units (V, A, degree) and could be used to prepare chart and analyse trends.

S Shows the errors list.

T Test method values (average values)

V Force write EEPROM.

W Working mode TPIH 2500

X Configuration and SM status.

Z <val> Set max. Z deviation (2-20 ohm).

(Cont'd)

TechPub_2614345_0108 - 0803_3048253_01.fm

(Cont'd)

For LS and SA, during production the sealing values and the error codes will be sent continuously to the terminal port. Every 100 ms a new message with the sealing values is sent.

For TS, at each sealing pulse a message containing the sealing values is sent to the terminal through the RS232 port.

The fields of the message have the following meaning:

LS and SA	TS
Node Name (LS or SA) Voltage (V) Current (A) Phase angle (degrees) Power delivered (W) Power requested (W) Impedance (ohm) Status (status byte of TPIH 2500) Error code	Sealing time Hydraulic pressure (bar) Product temperature (ºC) Side (0=left, 1=right) Voltage (V) Current (A) Phase angle (degrees) Power delivered (W) Power requested (W) Impedance (ohm) Phase angle during pulse (degrees) Error code

(Cont'd)

TechPub_2614345_0108 - 0803_3048253_01.fm

(Cont'd)

TMCC2 Card A01K5240 (Splice Detection)

Configure Windows Hyper Terminal on the PC and connect the PC to the TMCC2 (SD), see 9.8-2 TMCC2 Controller - Set Communication.

Enter the commands and parameters into the A3SD program via the keyboard and execute them by pressing the ENTER key. (The commands and parameters are not replicated on the terminal). The functions described below are available:

H Help Menu: displays the commands available.

S Shows the parameters status

V Shows the program number and version

R [0/1] R1 Starts the splice detectors data reporting. R0 stops the data reporting.

T1,x Changes splice detector 1 dynamic threshold.

F1,x Changes splice detector 1 filter cut-off frequency.

P1,x Changes splice detector 1 output pulse length.

B1,x Changes splice detector 1 hold off time.

E1 [R/F] Changes splice detector 1 detection edge. R for rising edge and F for falling edge.

O1 [L/H] Changes splice detector 1 output type. L for normally low output (high level pulse) and H for normally high output (low level pulse).

(Cont'd)

TechPub_2614345_0108 - 0803_3048253_01.fm

(Cont'd)

T2,x Changes splice detector 2 dynamic threshold.

F2,x Changes splice detector 2 filter cut-off frequency.

P2,x Changes splice detector 2 output pulse length.

B2,x Changes splice detector 2 hold off time.

E2 [R/F] Changes splice detector 2 detection edge. R for rising edge and F for falling edge.

O2 [L/H] Changes splice detector 2 output type. L for normally low output (high level pulse) and H for normally high output (low level pulse).

LS Shows the status of the logger.

LR Resets logger buffers.

L1,x Start sending the splice detector 1 data to the serial port.

L2,x Start sending the splice detector 2 data to the serial port.

EECLEAR Restores all factory defaults values into the parameters stored into the EEPROM.

STOP Stops the A3SD application program and enters into the firmware.

(Cont'd)

TechPub_2614345_0108 - 0803_3048253_01.fm

(Cont'd)

TMCC2 card W51K5230 (Jaw and Event Identification)

Configure a PC to be used as Windows terminal and connect it to the TMCC2 (JEID), see 9.8-2 TMCC2 Controller - Set Communication.

Enter the commands and parameters into the JEID program via the keyboard and execute them by pressing the RETURN key. (The commands and parameters are not replicated on the PC terminal). The commands described below are available:

H Help Menu: displays the commands available.

CONFIG Enters the event configuration submenu.

S Show the JEID main parameters status.

L Description of the function of the LED display on the front panel.

P <val> Changes the Pack Parameter value.

K <val> Changes the number of links value.

A <val> Changes the Home link number.

R <val> Displays the following reports:

R1 reports on every created pack
R2 reports on every printed pack
R3 reports on both previous events
R4 reports the received event codes
R5 reports events array on every update
R6 reports synchronization info.

HELP Rx Shows the Help on the *Rx* reporting

M <val> Changes the maximum number of packages in the queue.

N<val> Changes the minimum number of packages in the queue.

EECLEAR Clears the EEPROM memory and restores the default values to the JEID program.

SOFTSCOPE Enters the Softscope submenu.

PRINTx Send the 16 bit value (x) to the printer to verify the interface between the JEID program and the printer.

STOP Stops the JEID application from entering into the firmware.

V Shows the program number and version.

(Cont'd)

TechPub_2614345_0108 - 0803_3048253_01.fm

(Cont'd)

Event Configuration Sub Menu

The Event configuration submenu consists of a set of commands, which can be used to modify all event parameters of the JEID application. When entered in this submenu the new prompt is ":" and the commands help is automatically sent:

H Shows the commands help menu.

X Exits the event configuration submenu

V Shows the current event configuration.

Lx loads the stored configuration *x*.

S Saves the changes applied on the current configuration.

P Shows the available print codes.

E, DOUBLE Changes the event module to double event mode

E, SINGLE Shows the current event configuration.

DOWNLOAD Prepares the JEID application to receive the event configuration file via the serial port.

C, ev, ch1, ch2, pr, po, cn, pt
Configures the event **ev** with print code 1 **ch1**, print code 2 **ch2**, pre counter **pr**, post counter **po**, event counter **cn** and priority **pt**.

C, ev, ch, pr, po, cn, pt
Configures the event **ev** with print code 1 **ch**, pre counter **pr**, post counter **po**, event counter **cn** and priority **pt**.

(Cont'd)

TechPub_2614345_0108 - 0803_3048253_01.fm

(Cont'd)

Softscope Sub Menu

The Softscope can act as virtual oscilloscope to measure all I/O signals (physical and/or DeviceNet signals) timings, for trouble shooting purposes.

The Softscope submenu consists of a set of commands used to manage the signal acquisition. When entered in this submenu, the new prompt is ">" and the commands help is automatically sent:

H Shows the commands help menu.

S Shows the Softscope status:

Status The Status is STOPPED when the logger is idle, ACQUIRING when the logger has started to store signals changes and ARMED when is waiting for the trigger before start acquiring the signals changes.

Event Index This is the number of signals changes currently logged.

Time (ms) This is the logger time value.

Event EndIndex This is the number of logs that has been logged during the previous acquisition.

Trigger Mask This is the mask (AND operation with the Input Word) used to select which input signal/s, belonging to the Input Word, are used to trigger the logger start.

Slope This is the edge selection for the trigger function, valid only if the trigger mask is composed by one bit. If the trigger mask is composed by more than one bit, only the Rising Edge should be used.

T<value> Changes the Trigger Mask value. Every bit of this parameter selects one or more input signals among the Input Word bits.

Lx Changes the trigger detection edge; 1 = Rising Edge (default), 0 = Falling edge.

Ax This command arms or disarms the trigger function; 1 = trigger is armed, 0 = trigger is disarmed.

G This command manually starts the logger.

N This command manually stops the logger.

R This command sends to the serial port the logged data.

X This command exits from the Softscope submenu.

TechPub_2614345_0108 - 0803_3048253_01.fm

9.8-7 TMCC2 Controller - Load JEID Configuration

Machine Status	Mains Power ON Air OFF Steam ON Water OFF
SPC Reference	2849071-0200

a) Remove the plug from the USB port (1) on the control panel (2) and connect the USB key containing the file `TMCC.CSV`.

b) Touch the `MAINTENANCE CONTROL` button (3) and enter the password required, see 9.6.3-2 HMI - User Management Log On.

c) Touch the `DOWN STREAM` button (4).

d) Touch the `IMPORT JEID CONFIGURATION FILE` icon (5).

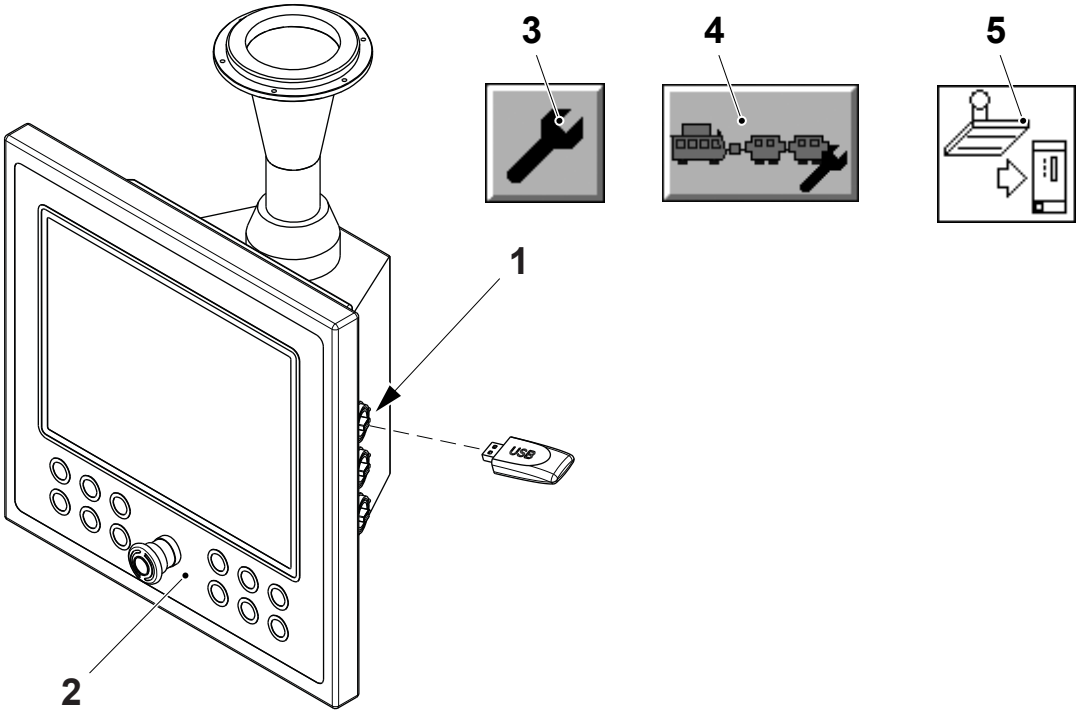

1 USB port
2 Control panel
3 Maintenance control button
4 Down stream button
5 Import JEID configuration file icon

(Cont'd)

TechPub_2614345_0108 - 0803_3048253_01.fm

(Cont'd)

Note! The COPY JAW ID CONFIGURATION FILE TO IPC button (6) is displayed as disabled if the USB has not been inserted, or if the file TMCC.CSV is not present, or else if the machine status does not allow to modify the configuration.

e) Touch the COPY JEID CONFIGURATION FILE TO IPC button (6). The configuration file is copied into the IPC and the DOWNLOAD JEID CONFIGURATION FILE TO TMCC button (7) is enabled.

f) Touch the DOWNLOAD JEID CONFIGURATION FILE TO TMCC button (7). The configuration file is copied into the TMCC2 card W51K5230.

g) When the copying operation is completed, touch the RESET button (8).

h) Remove the USB key.

Note! When the buttons (6) and (7) appear as disabled or when they do not stop to flash it means that the copying operation is failed: touch the reset button (8) and try again.

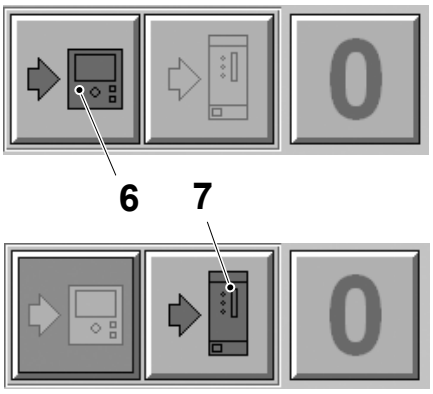

File successfully downloaded

File not downloaded

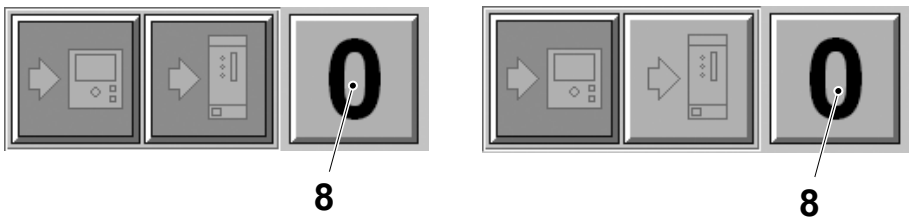

6 Configuration file to IPC button
7 Download JEID configuration file to TMCC
8 Reset button

TechPub_2614345_0108 - 0803_3048253_01.fm

9.8-8 TMCC2 Controller - Upgrade Firmware

Machine Status	PREPARATION
Special Equipment	EtherNet Communication Cable AT Compatible PC with CD Drive
SPC Reference	2849071-0200

The TMCC2 card A01K5220 (1) used for Sealing Monitoring application is equipped with an Anybus EtherNet/IP board; the firmware version of this EtherNet/IP board must be checked and upgraded if necessary in order to avoid communication problems.

a) Locate the TMCC2 card A01K5220 (1) is for the sealing monitoring in the electrical cabinet.

b) Connect the PC EtherNet port to the TMCC2 front panel EtherNet switch.

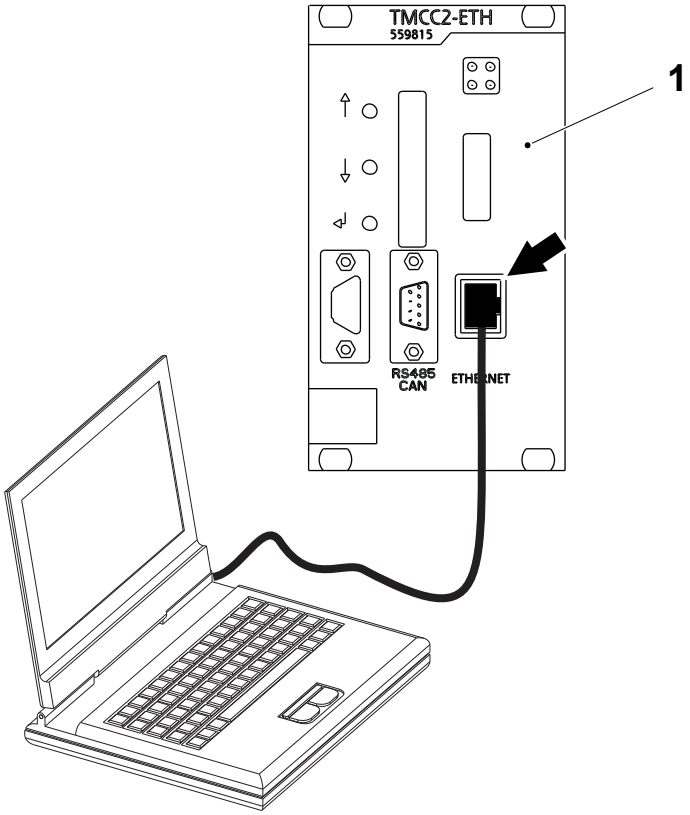

1 Card A01K5220

(Cont'd)

TechPub_2614345_0108 - 0803_3048253_01.fm

(Cont'd)

c) From the START menu open the COMMAND PROMPT window and type **Telnet**.

d) Type **Open 10.255.10.100** to establish the connection to the EtherNet board.

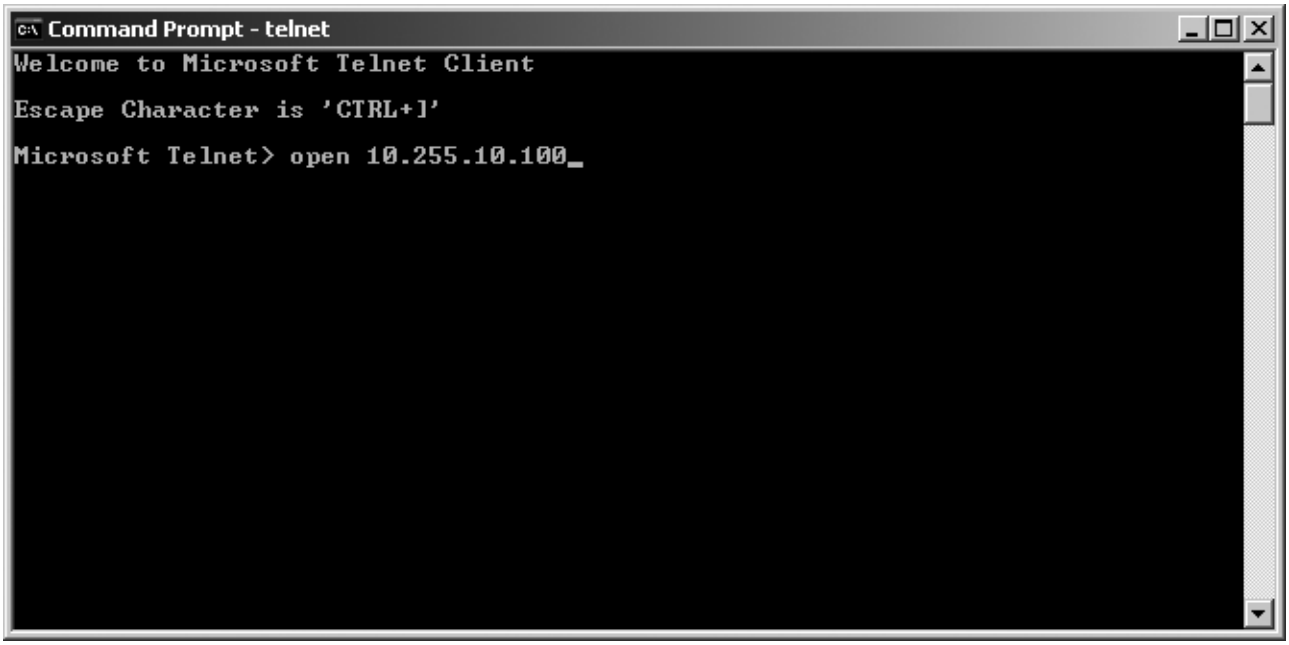

(Cont'd)

TechPub_2614345_0108 - 0803_3048253_01.fm

(Cont'd)

e) When connected type **`version`** to check the firmware version:
   – if the version is 1.35.01 or newer, no action is required;
   – if the version is older than 1.35.01, proceed upgrading the firmware.

f) Type **`quit`** and leave the TELNET application.

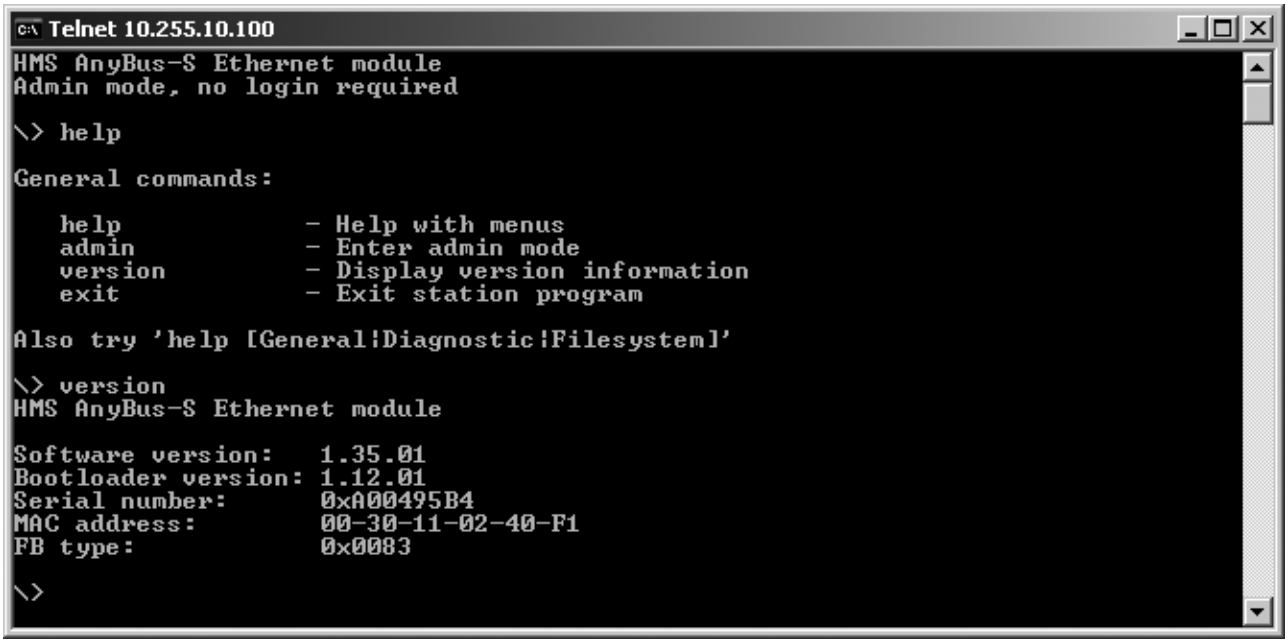

(Cont'd)

TechPub_2614345_0108 - 0803_3048253_01.fm

(Cont'd)

g) Copy the firmware file `APP_ABS_ETN100_DMP_V_1_35_01.HMS` from the software CD to the root directory of the drive `C:\`.

h) In the `COMMAND PROMPT` window, type **`ftp`** (File Transfer Protocol).

i) Type **`Open 10.255.10.100`** to establish the connection to the EtherNet board.

j) When prompted for a user name press `ENTER` key.

k) Type **`send c:\APP_ABS_ETN100_DMP_V_1_35_01.HMS`**.

l) After the file has been transferred, type **`close`** to quit the `FTP` window.

m) Turn off the TMCC2 card; at next power up the firmware upgrade will be automatically executed.

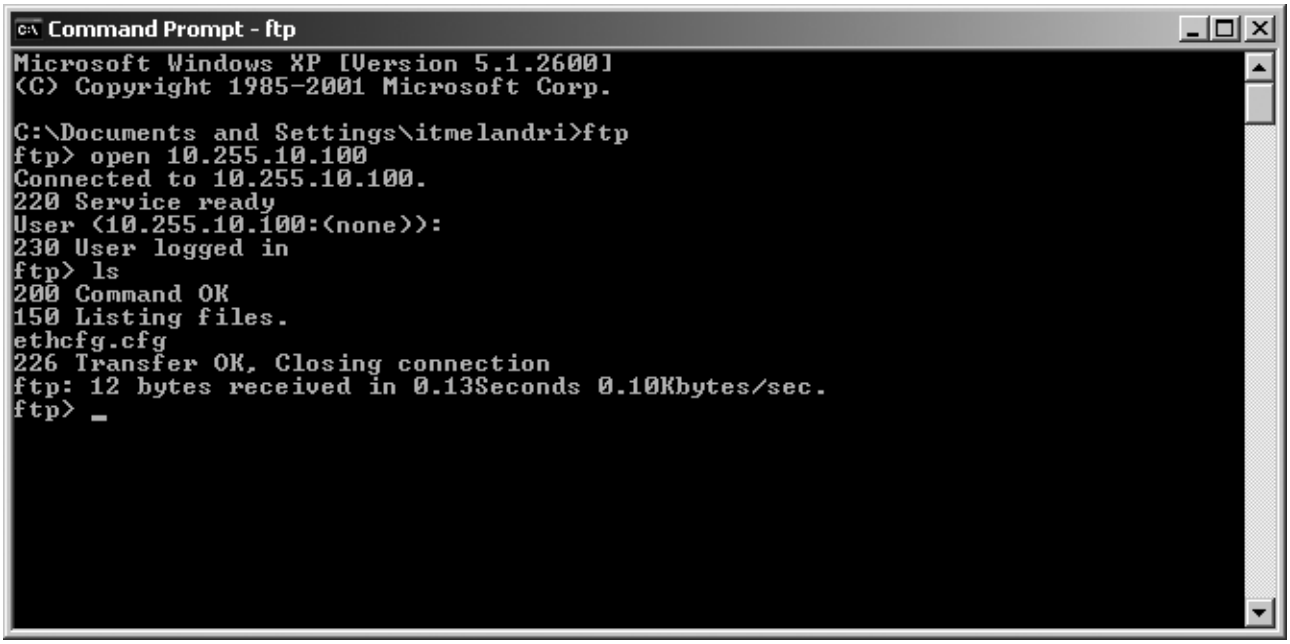

TechPub_2614345_0108 - 0803_3048253_01.fm

9.9 TPIH

SPC Reference	2840935-0200

9.9-1 TPIH Description

The TPIH 2500 generators are used for:

- TS - transversal sealing (T10G9150)
- LS - longitudinal sealing (U70G9160)
- SA - strip applicator (T10G9170).

The pulse duration is controlled by the PLC program. The power level is set via the HMI on the TPOP display. The generator is supplied with 3 phase, 400V AC and 24V DC.

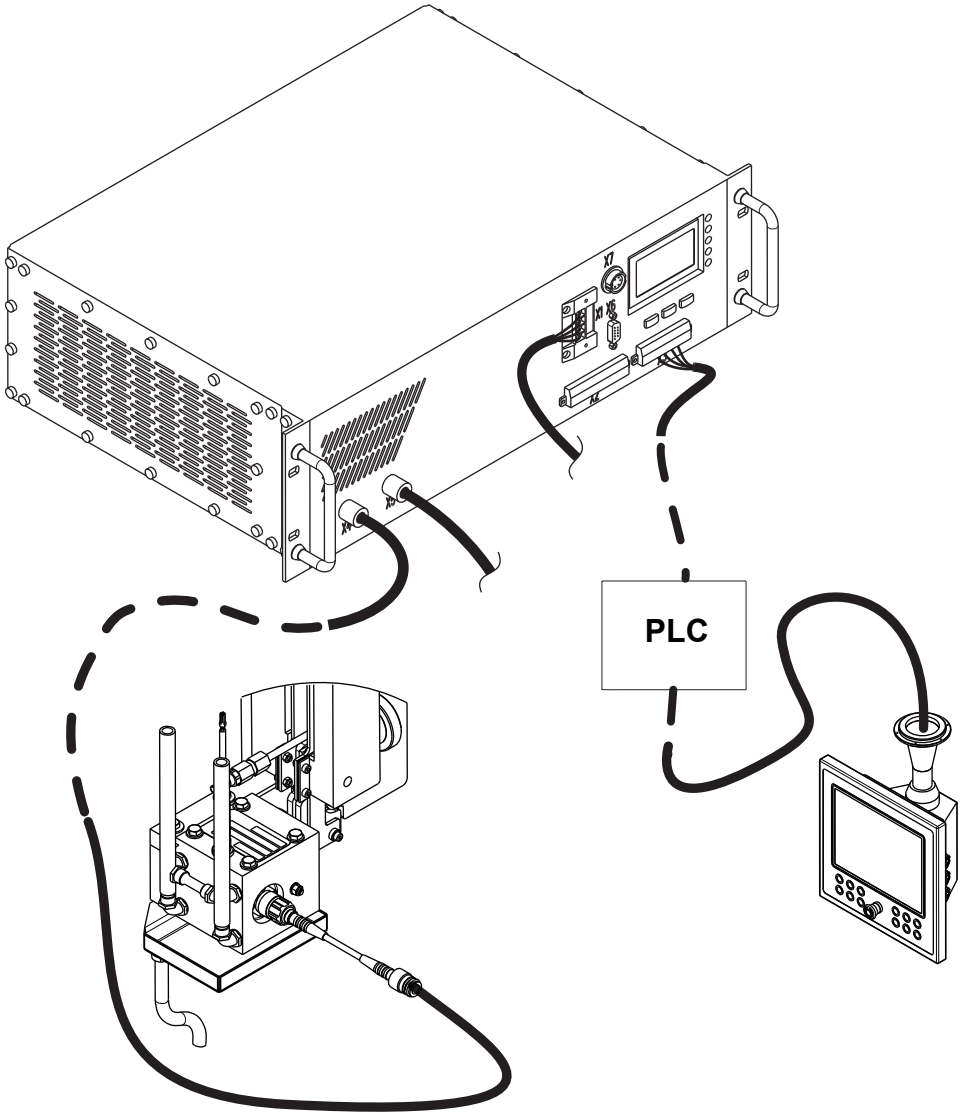

TechPub_2614345_0108 - 0801_3048254_01.fm

(Cont'd)

(Cont'd)

Each TPIH-2500 system normally comprises:

- TPOP (1)
- TPIH 2500 generator (2)
- coaxial cable (3)
- impedance transformer (4).

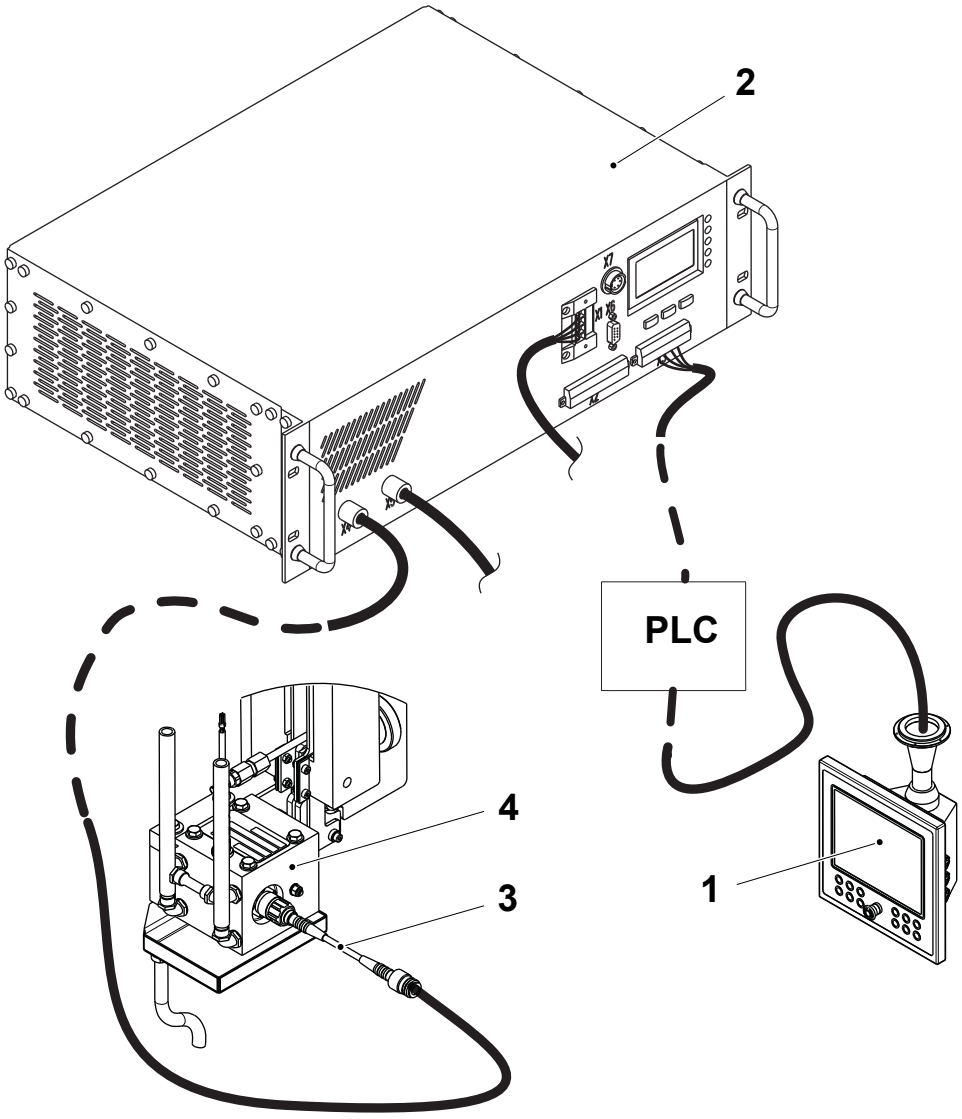

1 TPOP
2 TPIH 2500 generator
3 Coaxial cable
4 Impedance transformer

(Cont'd)

TechPub_2614345_0108 - 0801_3048254_01.fm

(Cont'd)

The TPIH 2500 generator normally comprises:

- output 1 X4 (5)
- output 2 X5 (6)
- serial connection X6 (7)
- 24V connection X3 (8)
- 400V connection X1 (9)
- multi-functional buttons (10)
- status LEDs (11)
- LCD display (12).

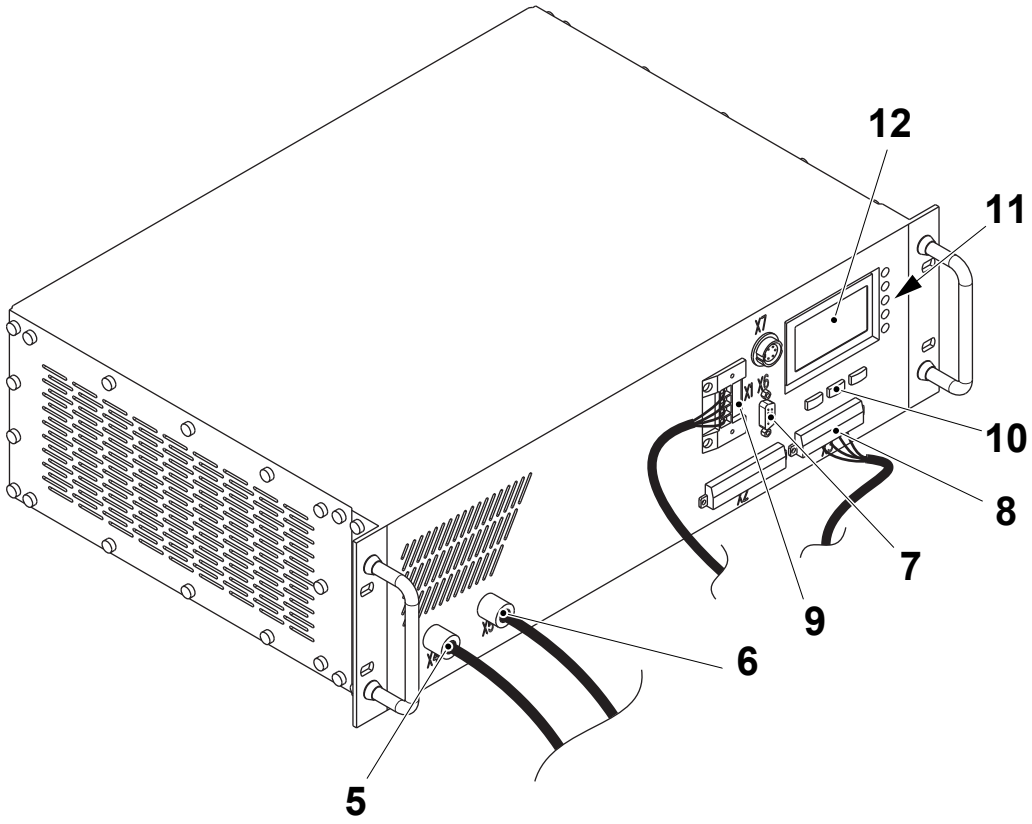

5 Output 1 X4
6 Output 2 X5
7 Serial connection X6
8 24V connection X3
9 400V connection X1
10 Multi functional button
11 Status LED
12 LCD display

(Cont'd)

TechPub_2614345_0108 - 0801_3048254_01.fm

(Cont'd)

DANGER

Hazardous voltage.

When the 400 VAC green LED (2) is OFF there can be still one or two phases present on the connector X1.

LED's Description

LED	Colour	Description
+24 VDC (1)	Green	It is ON when the 24 V supply is present. It is OFF when there is no 24 V.
400 VAC (2)	Green	It is ON when ALL 3-phases are present. It is OFF when AT LEAST one of the 3-phases is missing.
Error (3)	Red	It is ON when one or more errors have occurred. When this is case, the technician can read which errors have occurred on the LCD display. It is OFF when there are no error conditions.
Out 1 (4)	Green	It is ON when the generator is sending power through output 1 It is OFF when output 1 is inactive.
Out 2 (5)	Green	It is ON when the generator is sending power through output 2 It is OFF when output 2 is inactive.

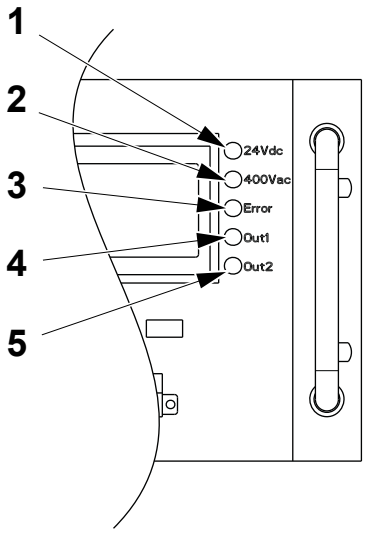

1 +24 VDC LED
2 400 VAC LED
3 Error LED
4 Out 1 LED
5 Out 2 LED

TechPub_2614345_0108 - 0801_3048254_01.fm

9.9.1 IH Equipment

9.9.1-1 IH Equipment - LCD Display

Machine Status	Mains Power ON Air OFF Steam ON Water OFF
SPC Reference	2840935-0200

User Menu

The TPIH 2500 provides the user with an easy way of accessing information and making settings via a menu that appears on the display.

A generic page usually consists of three parts:

- the top row that shows the page title
- the following six rows that show either commands or information
- the bottom row that shows the actions performed by the buttons. The symbol or word above each button explains which action is performed when that button is pressed.

The page on the left has a list of possible commands. The currently selected command is displayed in the reverse mode (white on black).

Pressing the left ARROW button selects the command below the current selection (in this case SEALING VALUES), whereas pressing the right ARROW button selects the command above the current selection.

When the OK button is pressed, the command selected at that moment is executed.

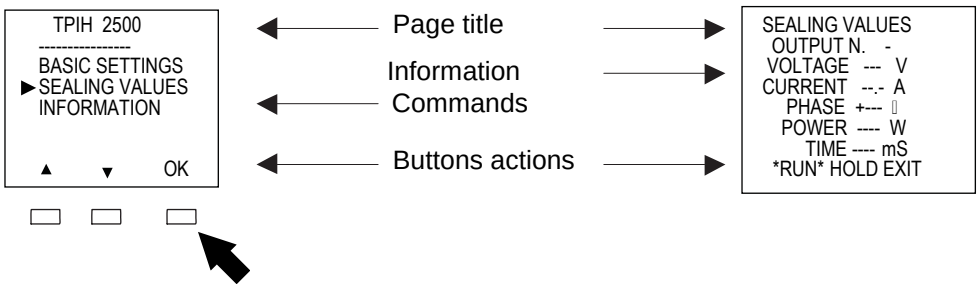

(Cont'd)

TechPub_2614345_0108 - 0801_3048254_01.fm

(Cont'd)

To access the page with the sealing values, do the following:

- on the main page, press the left ARROW button to select the command SEALING VALUES
- then press the OK button to execute the command.

The requested page is shown on the screen.

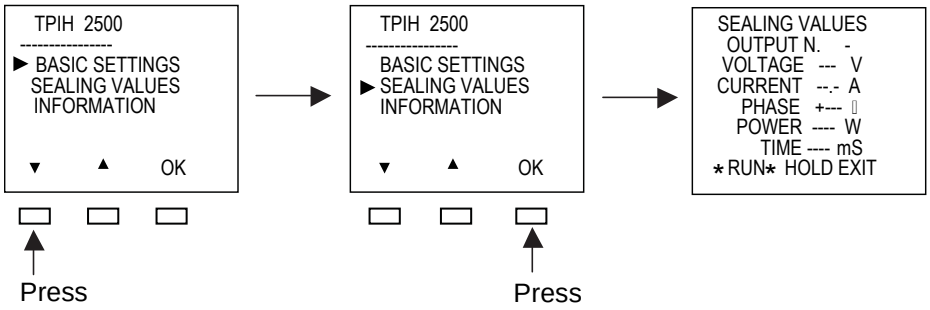

The page SEALING VALUES is an example of a page that shows information instead of commands.

It is always possible to see what the buttons will do by reading the bottom line. Every time a button is pressed the LCD back light turns on and, when no other button is pressed, turns off after approximately 10 seconds.

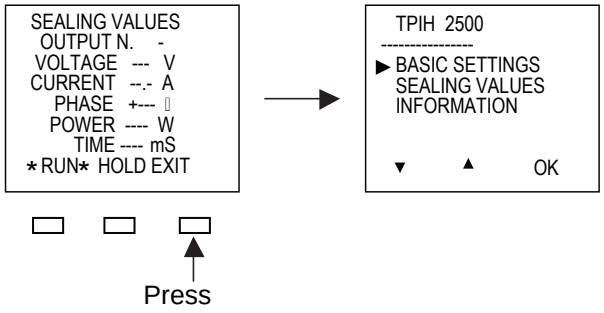

(Cont'd)

TechPub_2614345_0108 - 0801_3048254_01.fm

(Cont'd)

Menu Structure

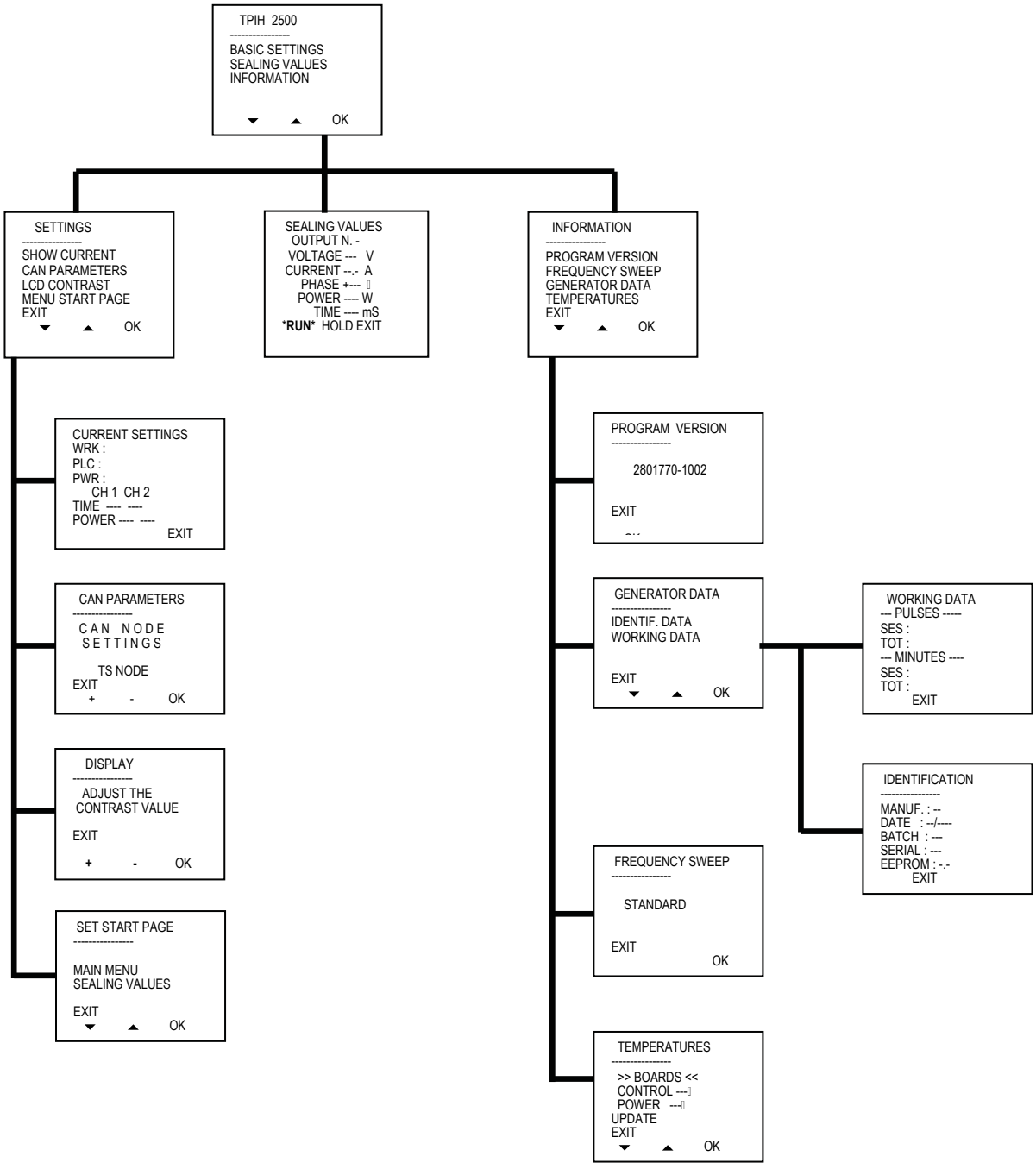

(Cont'd)

TechPub_2614345_0108 - 0801_3048254_01.fm

(Cont'd)

Basic Setting

From this page it is possible to access all basic settings of the generator.

SHOW CURRENT shows the current settings related to working mode, PLC mode and power setting mode.

CAN PARAMETERS allows the user to select the CAN node of the generator for field bus communication.

LCD CONTRAST allows the user to regulate the display contrast to increase the readability.

MENU START PAGE defines which page has to be used as the start page when the generator is powered on. It is possible to choose between the main menu page and the “Sealing Values”.

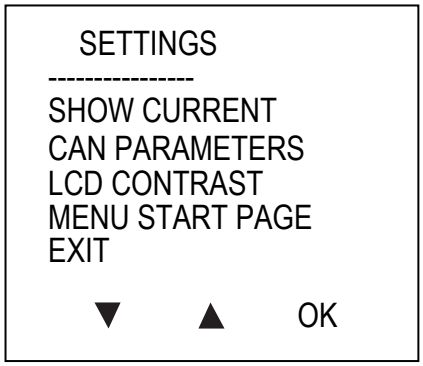

TechPub_2614345_0108 - 0801_3048254_01.fm

9.9.1-2 IH Equipment - Error Handling

Machine Status	PRODUCTION
Special Equipment	Test Instrument TP No. 68462-0101
SPC Reference	2840935-0200

DANGER

Hazardous voltage.
The TPIH generator **must not** be opened. Doing so may cause shock, burns or even death. In case of an accident, immediately call for medical advice.

When the generator is producing power, it controls and monitors many parameters. When an error occurs, it stops the pulse and shows the cause of the error on the LCD display. The red LED on the front panel also turns ON.

An error can be reset by pressing one of the multi-functional buttons.

Power Setting Too Low

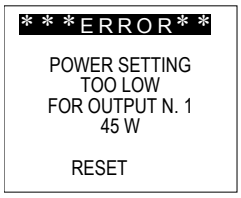

This error occurs when the generator is required to produce less power than the minimum level.

On the display the user can see on which channel the problem has occurred (in this case n. 1). The display also shows what was the power level read by the generator (in this case 45 W that is below the minimum level which is 200 W).

(Cont'd)

TechPub_2614345_0108 - 0801_3048254_01.fm

(Cont'd)

Usually, when this error occurs, the problem is related to the power setting potentiometer of the channel shown in the error message.

It is possible that the potentiometer is not supplied with 10 VDC by the generator on pin 8 of connector X3 or the voltage from the central contact of the potentiometer does not reach pins 1 or 2 (depending on the channel) of connector X3. This means that:

- the generator is faulty and must be replaced, or
- the +10 V DC to the potentiometer is missing, or
- the potentiometer setting is below the minimum value of 100W, or
- the potentiometer is broken (the output voltage from the potentiometer does not follow the movement of the potentiometer slider).

(Cont'd)

TechPub_2614345_0108 - 0801_3048254_01.fm

(Cont'd)

1 or More Phases Are Missing



This error occurs when 1 or more phases are either not present at all or are absent for at least 100 milliseconds (power supply hole).

When this error occurs, check that the connector X1 is plugged correctly into the generator and, when that is the case, check that the fuses for the 400VAC of the generator are OK.

DANGER

Hazardous voltage.
When this error occurs there can be still at least one ACTIVE phase present on the connector X1.

Temperature Too High

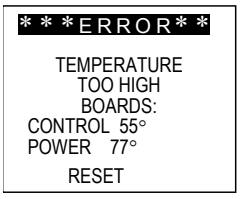

This error occurs when the temperatures inside the generator become too high.

The limits are:

- 60° for the control board
- 70° for the power board.

On the display the user can see the temperature of the two boards. The error can occur when:

- the cooling fan inside the generator is not working
- the ambient temperature is above 50°C.

Change the generator if the fan does not operate.

(Cont'd)

TechPub_2614345_0108 - 0801_3048254_01.fm

(Cont'd)

The Load Impedance Is Too High

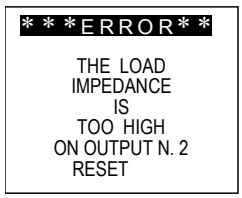

This error occurs when the generator is not able to deliver the required power because the load impedance is too high (tends to be an open circuit).

In this case the suggestion is to check all of the connections from the generator to the inductor looking for bad contacts, loosened connectors or broken cables.

When a single output is used, make sure that the load is connected to the correct output.

When both outputs are used make sure that they have not been swapped by mistake. The error can occur when:

- there is an open circuit in the coaxial cable, a busbar, an inductor or the impedance transformer
- no pressure is applied to the inductor
- the wrong type of impedance transformer is installed
- the wrong type of inductor is installed.

See 9.9.1-3 IH Equipment - Check Function.

(Cont'd)

TechPub_2614345_0108 - 0801_3048254_01.fm

(Cont'd)

The Load Impedance Is Too Low

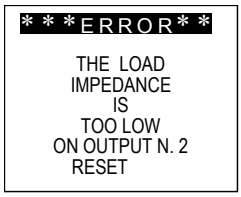

This error occurs when the generator is not able to deliver the required power because the load impedance is too low (tends to be a short circuit).

In this case the suggestion is to check all of the connections from the generator to the inductor looking for a short circuit in the connectors or in the cables. The error can occurs when:

- there is a short circuit in the coaxial cable, a busbar, an inductor or the impedance transformer.

See, 9.9.1-3 IH Equipment - Check Function.

(Cont'd)

TechPub_2614345_0108 - 0801_3048254_01.fm

(Cont'd)

Phase Shift Too Big

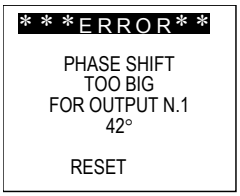

This error occurs when the load has a phase shift >+60° or <-60°.

On the display the user can see on which channel the problem has occurred (in this case n. 1). The display also shows the degree of phase shift read by the generator (in this case 42°).

Typical causes are:

- a damaged inductor
- a damaged transformer
- the incorrect positioning of the inductor with respect to the packaging material.

See, 9.9.1-3 IH Equipment - Check Function.

Over Voltage

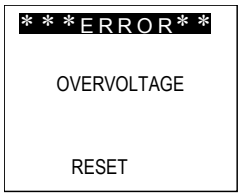

This error occurs when the voltage becomes too high between the two main power stages of the generator.

A possible cause is the failure of the generator.

If the error persists change the TPIH generator.

(Cont'd)

TechPub_2614345_0108 - 0801_3048254_01.fm

(Cont'd)

Error for Power on the Load Too Low

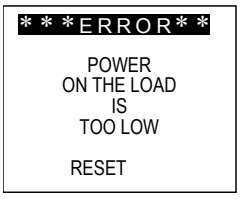

This error occurs when the output power on the load is too low. A possible cause is the failure of the generator.

Not Initialized EPROM



This error occurs when the generator is turned ON there is a failure in the test of EEPROM.

In this case all the default values and parameters are set:

- PLC mode: Driving
- power set: External.

The generator will work in these conditions. When others settings are needed they must be entered from the display or from the PC through the serial communications link.

When the error persists change the TPIH generator.

(Cont'd)

TechPub_2614345_0108 - 0801_3048254_01.fm

(Cont'd)

Watchdog Reset



This error occurs when the generator is reset by itself because of internal problems. When this happens, the generator keeps the previous parameter settings and can continue to work, after it has been reset, provided that the problem no longer exists.

When the error persists change the TPIH generator.

TechPub_2614345_0108 - 0801_3048254_01.fm

9.9.1-3 IH Equipment - Check Function

Machine Status	PRODUCTION
Special Equipment	Test Instrument TP No. 68462-0101
SPC Reference	2840935-0200

When a load error occurs the ERROR LED (1) is ON and the IH generator is unable to transmit the correct pulse due to a faulty load caused by one of the following:

- short circuit in a coaxial cable, busbar inductor or impedance transformer
- open circuit in a coaxial cable, busbar, inductor or impedance transformer
- no pressure applied to the inductor
- wrong type of impedance transformer installed
- wrong type of inductor installed.

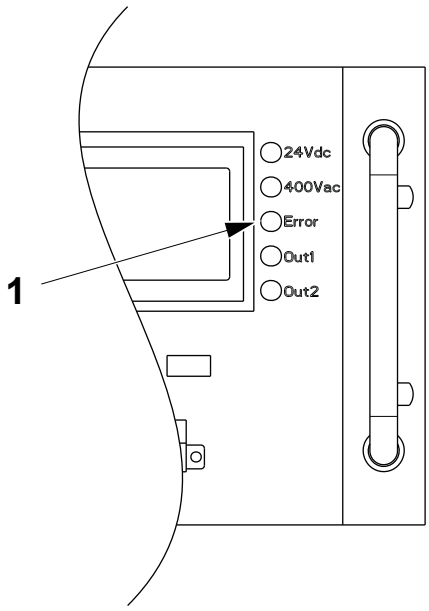

1 Error LED

(Cont'd)

TechPub_2614345_0108 - 0801_3048254_01.fm

(Cont'd)

The origin of load errors maybe located with the aid of the test instrument TP No. 68462-010 (2). To check the IH equipment, proceed as follows:

a) Perform a SHORT STOP.

b) Connect the test instrument (2) between the IH generator (3) and the impedance transformer (4) as indicated in the illustration.

c) Step up the machine to step PRODUCTION.

d) Measure and record the values for the; voltage, current, phase angle and pulse time within the same pulse. Use the switch (5) to select the different parameters.

Note! With a load problem only short pulses are delivered by the generator. During the entire pulse the sample LED (6) is ON, while the pulse LED (7) is OFF.

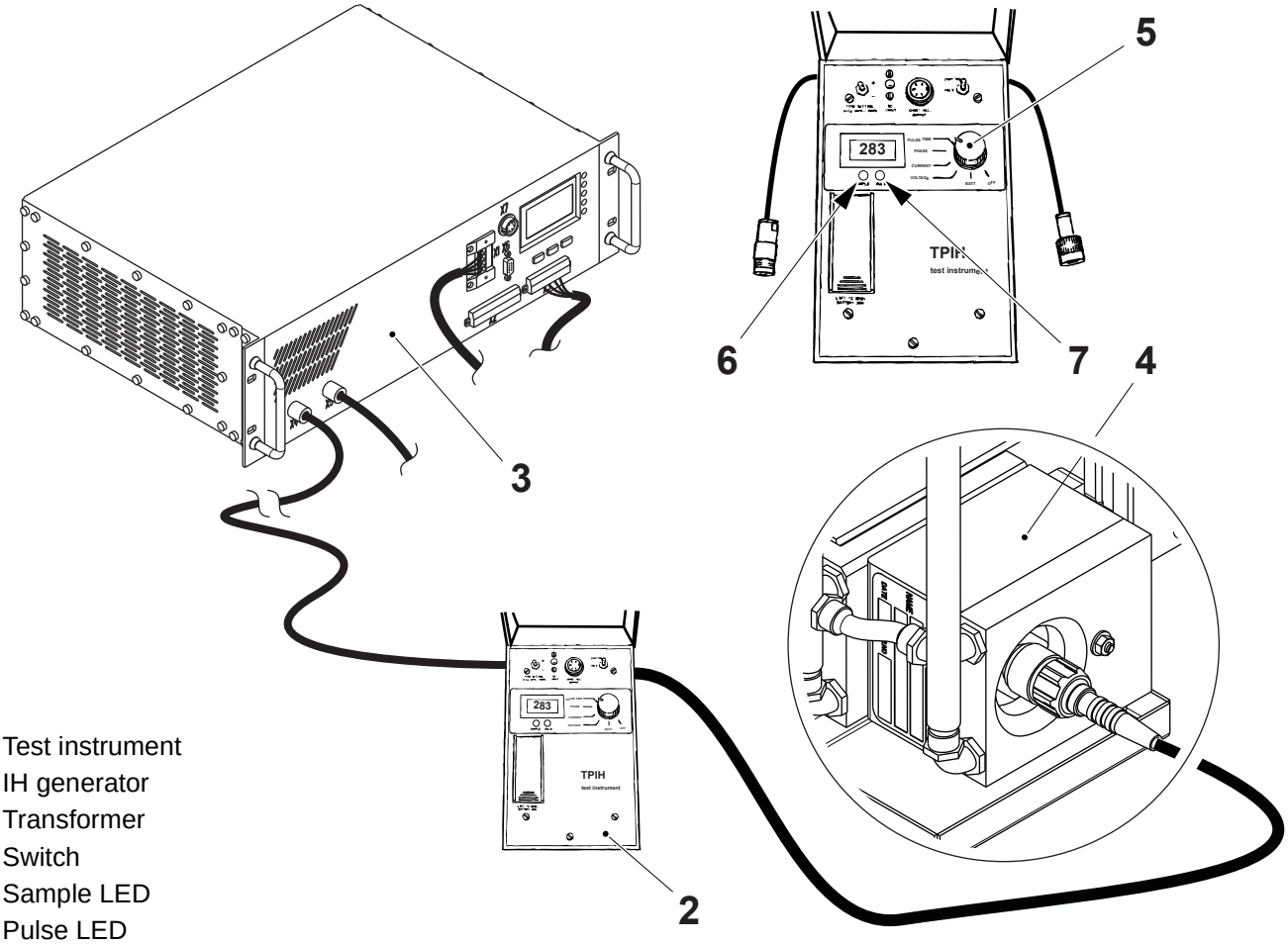

2 Test instrument
3 IH generator
4 Transformer
5 Switch
6 Sample LED
7 Pulse LED

(Cont'd)

TechPub_2614345_0108 - 0801_3048254_01.fm

(Cont'd)

e) Compare the values recorded with values in the table below.

Load examples	Phase angle	Voltage/Current
Optimal load	0°	50 Ω
Normal load	±15°	40 - 65 Ω
Short circuit in the coaxial cable, contacts or primary of the IH transformer	pos (3)	1 - 10 Ω (1)
Open circuit in the coaxial cable, contacts or primary of the IH transformer	neg (3)	200 - 2000 Ω (2)
Short circuit in the inductor, current rail or secondary of the IH transformer	pos	10 - 20 Ω
Open circuit in the inductor, current rail or secondary of the IH transformer	neg	2 - 5 Ω
No packaging material on the inductor	neg	5 - 15 Ω

Note! 1) Greater value = greater distance between the problem and the instrument.

Note! 2) Greater value = shorter distance between the problem and the instrument.

Note! 3) Greater phase difference = greater distance between the problem and the instrument.

f) Repeat the procedure for the other inductors.

(Cont'd)

TechPub_2614345_0108 - 0801_3048254_01.fm

(Cont'd)

Test Instrument TP No. 68462-0101

The TPIH test instrument is used to check the available output power from the IH generator as well as the condition of the coaxial cable, the impedance transformer, the current rail and the inductor. The test instrument is connected in series with the coaxial cable from the generator.

Note! Use the SHORT STOP procedure to prevent the generator from pulsing when the instrument is connected or disconnected.

The instrument can be used for the measurement of the following parameters:

- HF voltage (V)
- HF current (A)
- phase shift voltage/current (degrees)
- pulse duration.

The results of these measurements can be used to calculate the available HF power. The instrument simplifies the work involved when trying to locate the source of a problem.

One 9V battery is used for the instrument and an automatic power-off function is provided to minimize battery consumption. A test outlet is provided for the connection of a printing device such as a Gould recorder.

A print-out showing the HF voltage, the HF current and the phase shift as a function of time can be produced. The instrument kit contains complete operating instructions as well as a printer cable and a battery eliminator (mains adapter).

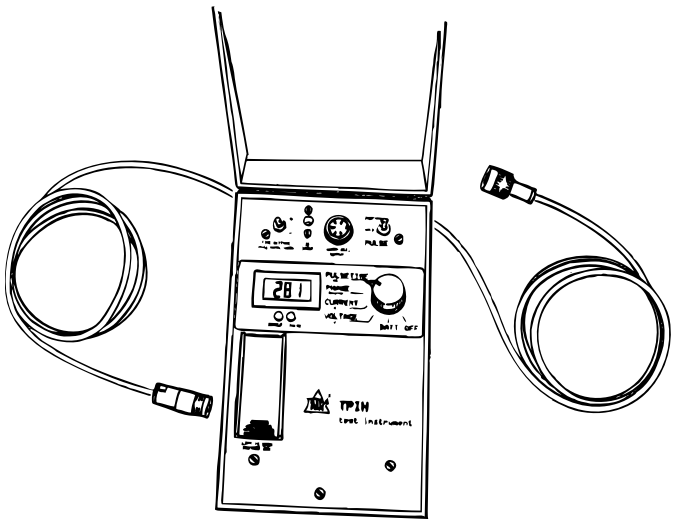

TechPub_2614345_0108 - 0801_3048254_01.fm

9.9.1-4 IH Equipment - Check Cables

Machine Status	Mains Power OFF Air OFF Steam ON Water OFF
SPC Reference	2840935-0200

Check for wear and damage that can affect machine efficiency in the following:

- the coaxial connectors (1), make sure that there is no moisture between the male connector and the female connector
- the rubber gasket (2) in the male connectors, make sure that it seals properly (it should not be possible to turn the male connector easily)
- the coaxial cables (3), make sure that the cables are flexible and that there are no cracks where they bend
- the busbar (4), check the rubber seal and the flat seal. Make sure that there are no signs of damage
- the impedance transformer. Make sure that there is no water/product residue inside the impedance transformer.

Clean or change if necessary.

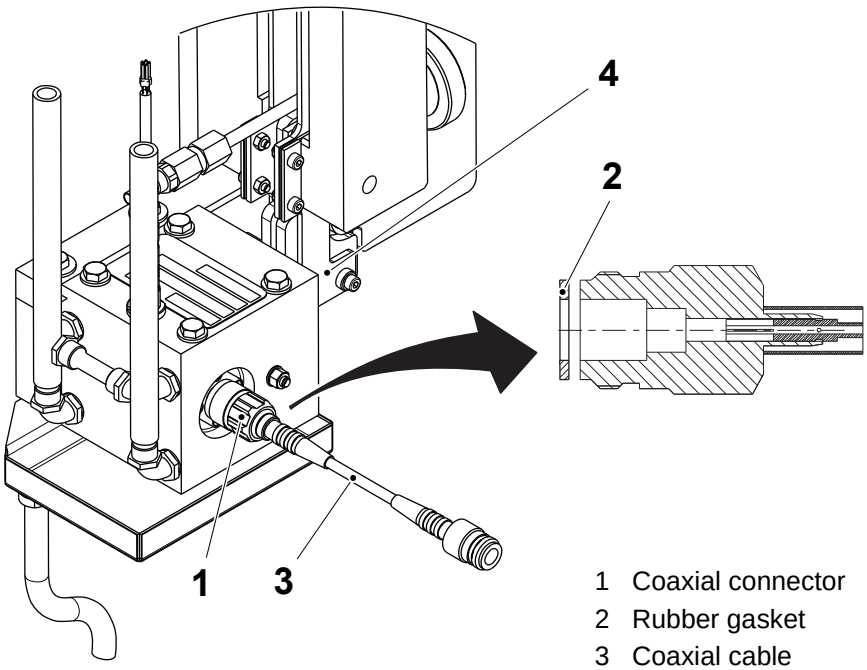

1 Coaxial connector
2 Rubber gasket
3 Coaxial cable
4 Busbar

TechPub_2614345_0108 - 0801_3048254_01.fm

9.9.1-5 IH Equipment - Change Generator

Machine Status	Mains Power OFF Air OFF Steam ON Water OFF
SPC Reference	2840935-0200

DANGER

Hazardous voltage.

Will cause shock, burns or even death. Do not open the generator. Perform the lockout procedure before starting any work.

(Cont'd)

TechPub_2614345_0108 - 0801_3048254_01.fm

(Cont'd)

a) Make sure that the main power switch is OFF and that it has been padlocked.

b) Remove the connectors X1 (1) and X3 (2).

c) Remove the coaxial connector X4 (3). For the generator A500, also remove the coaxial connector X5 (4).

d) Change the generator (5).

e) Assemble in the reverse order.

f) Set the CAN settings, see 9.9.1-7 IH Equipment - Set CAN Communication.

Note! Send the generator (5) to the nearest Tetra Pak service station for cleaning or service.

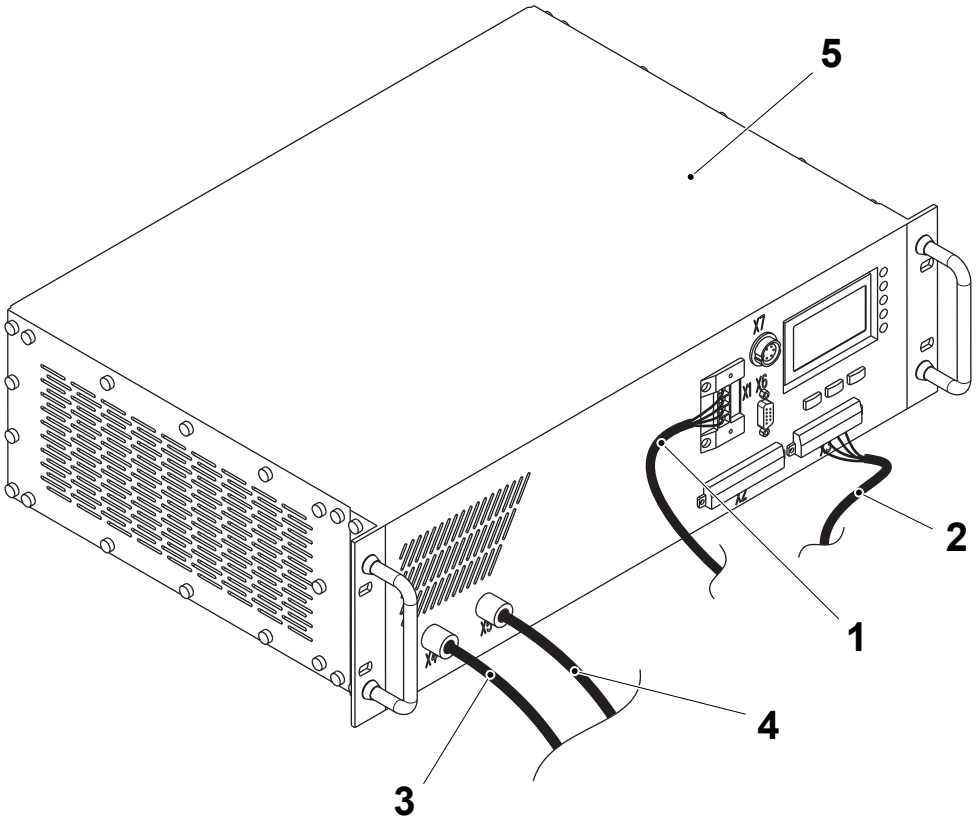

1 Connector X1
2 Connector X3
3 Coaxial connector X4
4 Coaxial connector X5
5 Generator

TechPub_2614345_0108 - 0801_3048254_01.fm

9.9.1-6 IH Equipment - Set Sealing

Machine Status	PRODUCTION
SPC Reference	2840935-0200

The values in the tables are the default values as stored in the machine's PLC program and are provided as a reference only. Local conditions such as packaging material being used in production, the environmental temperature of the filling room and other factors can influence the TS, LS and SA sealing and can result in the need for power adjustment.

The correct power settings can only be determined through evaluating the TS, LS and SA sealings as described in the checks section in the filling machine's Operator Manual.

Transversal Sealing

Package	Default Value (W)	Notes
TBA 200 S	1600	
TBA 250 B	1800	
TBA 125 S	1150	
TBA 250 S - TBA 200 M	1500	
TBA 200 B - TBA 1000 Sq	1650	
TBA 1000 S	1550	
TBA 1000 B	1450	
TBA 500 S	1175 (6000/7000/8000 p/h)	

(Cont'd)

TechPub_2614345_0108 - 0801_3048254_01.fm

(Cont'd)

a) On the TPOP display touch the PRODUCTION CONTROL button (1).
b) Touch the PACKAGE FORMING UNIT button (2).
c) Touch the SEALING POWER icon (3).
d) Change the sealing value (4) with the ARROW buttons (5).
e) Touch the OK button (6).

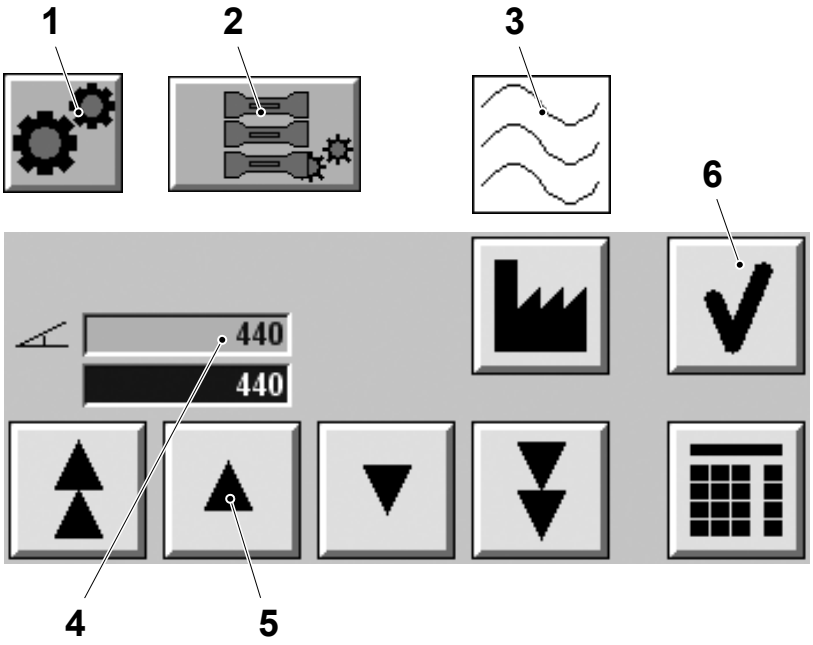

1 Setting system button
2 Jaw system button
3 Sealing power icon
4 Sealing value
5 Arrow button
6 OK button

TechPub_2614345_0108 - 0801_3048254_01.fm

(Cont'd)

Longitudinal Sealing

Note! The values in the table represent machine's running at the nominal speed for the volume indicated and without any speed reduction options enabled.

Package	Default Value (W)	Notes
TBA 200 S	550 (16000 p/h) 650 (20000 p/h) 750 (24000 p/h)	According to the Production Capacity
TBA 250 B	525 (16000 p/h) 600 (20000 p/h) 650(24000 p/h)	According to the Production Capacity
TBA 200 B	475 (16000 p/h) 550 (20000 p/h) 625 (24000 p/h)	According to the Production Capacity
TBA 125 S	300 (16000 p/h) 350 (20000 p/h) 400 (24000 p/h)	According to the Production Capacity
TBA 250 S	575 (16000 p/h) 675 (20000 p/h) 800 (24000 p/h)	According to the Production Capacity
TBA 200 M	575 (16000 p/h) 650 (20000 p/h) 800 (24000 p/h)	According to the Production Capacity
TBA 1000 Sq	750 (9000 p/h) 800 (12000 p/h) 925 (15000 p/h)	According to the Production Capacity
TBA 1000 S	650 (9000 p/h) 800 (12000 p/h) 925 (15000 p/h)	According to the Production Capacity
TBA 1000 B	775 (9000 p/h) 950 (12000 p/h) 1050 (15000 p/h)	According to the Production Capacity
TBA 500 S	275 (6000 p/h) 300 (7000 p/h) 350 (8000 p/h)	

(Cont'd)

TechPub_2614345_0108 - 0801_3048254_01.fm

(Cont'd)

a) On the TPOP display touch the PRODUCTION CONTROL button (1).
b) Touch the TUBE FORMING UNIT button (2).
c) Touch the SEALING POWER icon (3).
d) Touch the PRODUCTION SETTING icon (4).
e) Change the sealing value (5) with the ARROW buttons (6).
f) Touch the OK button (7).

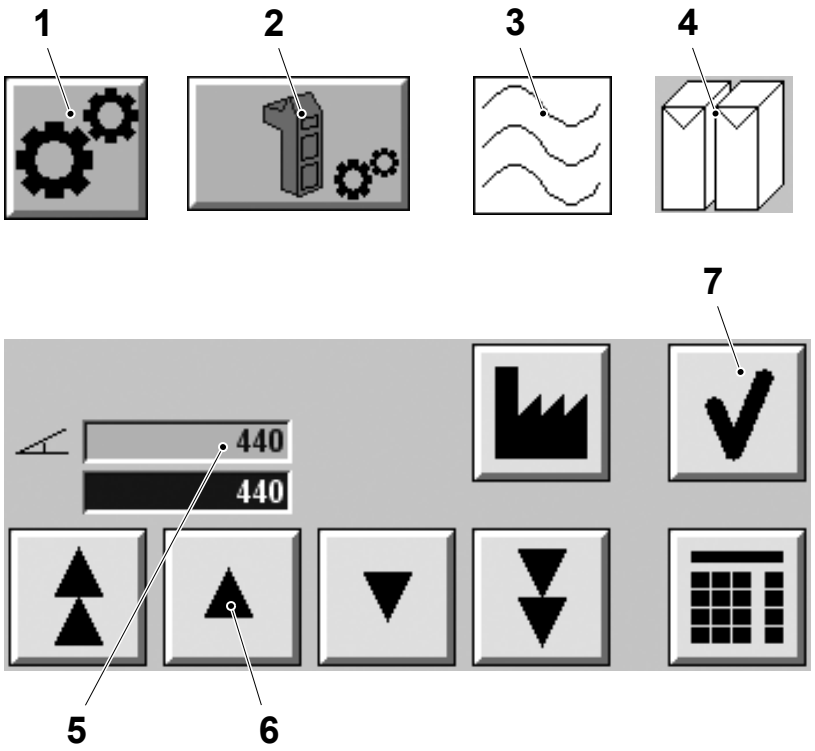

1 Production control button
2 Tube forming unit button
3 Sealing power icon
4 Production setting icon
5 Sealing value
6 Arrow button
7 OK button

(Cont'd)

TechPub_2614345_0108 - 0801_3048254_01.fm

(Cont'd)

Strip Applicator Sealing

Note! The values in the table represent machine's running at the nominal speed for the volume indicated and without any speed reduction options enabled.

Package	Default Value (W)	Notes
TBA 200 S	625 (16000 p/h) 750 (20000 p/h) 825 (24000 p/h)	According to the Production Capacity
TBA 250 B	600 (16000 p/h) 700 (20000 p/h) 800 (24000 p/h)	According to the Production Capacity
TBA 200 B	525 (16000 p/h) 600 (20000 p/h) 700 (24000 p/h)	According to the Production Capacity
TBA 125 S	525 (16000 p/h) 625 (20000 p/h) 675 (24000 p/h)	According to the Production Capacity
TBA 250 S	575 (16000 p/h) 725 (20000 p/h) 825 (24000 p/h)	According to the Production Capacity
TBA 200 M	575 (16000 p/h) 675 (20000 p/h) 825 (24000 p/h)	According to the Production Capacity
TBA 1000 Sq	625 (9000 p/h) 800 (12000 p/h) 950 (15000 p/h)	According to the Production Capacity
TBA 1000 S	600 (9000 p/h) 700 (12000 p/h) 850 (15000 p/h)	According to the Production Capacity
TBA 1000 B	525 (9000 p/h) 650 (12000 p/h) 825 (15000 p/h)	According to the Production Capacity

(Cont'd)

TechPub_2614345_0108 - 0801_3048254_01.fm

(Cont'd)

a) On the TPOP display touch the PRODUCTION CONTROL button (1).
b) Touch the AUTOMATIC STRIP SPLICING UNIT button (2).
c) Touch the SEALING POWER icon (3).
d) Touch the PRODUCTION SETTING icon (4).
e) Change the sealing value (5) with the ARROW buttons (6).
f) Touch the OK button (7).

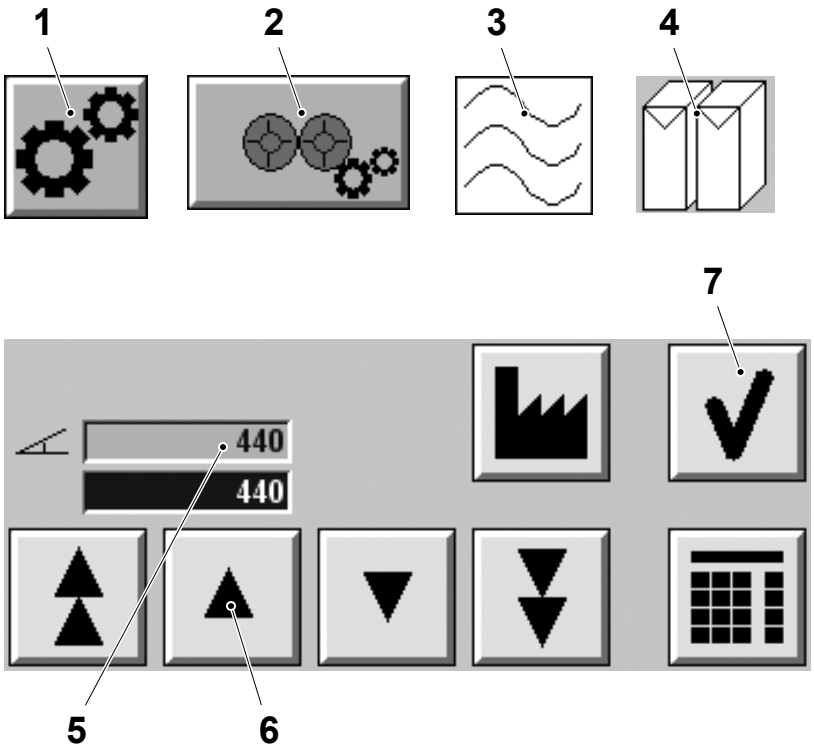

1 Production control button
2 Automatic strip splicing unit button
3 Sealing power icon
4 Production setting icon
5 Sealing value
6 Arrow button
7 OK button

(Cont'd)

TechPub_2614345_0108 - 0801_3048254_01.fm

(Cont'd)

ASU

a) On the TPOP display touch the PRODUCTION CONTROL button (1).
b) Touch the ASU button (2).
c) Touch the SPLICE TEMPERATURE icon (3).
d) Change the sealing value (4) with the ARROW buttons (5).
e) Touch the OK button (6).

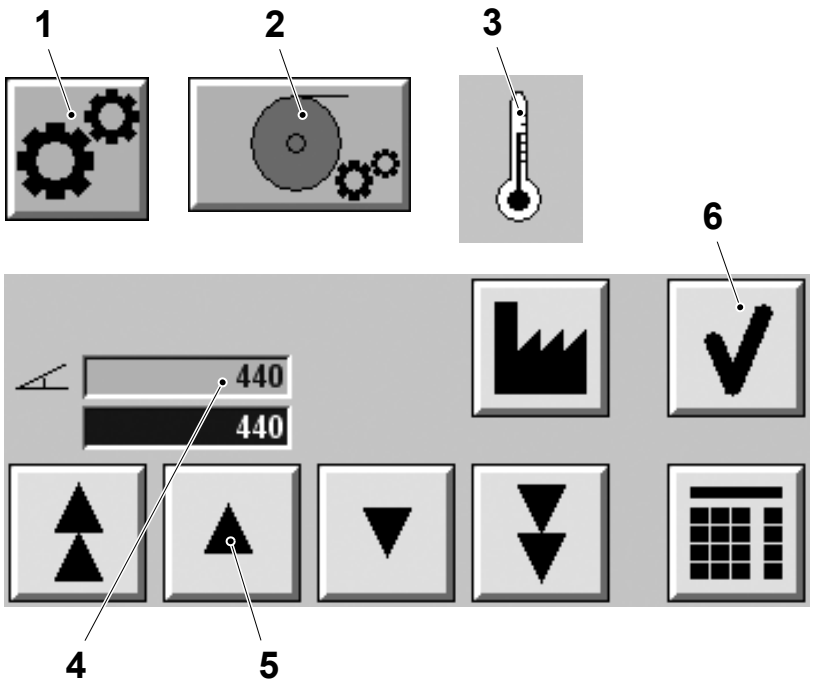

1 Production control button
2 ASU button
3 Splice temperature icon
4 Sealing value
5 Arrow button
6 OK button

TechPub_2614345_0108 - 0801_3048254_01.fm

9.9.1-7 IH Equipment - Set CAN Communication

Machine Status	Mains Power ON Air OFF Steam ON Water OFF
SPC Reference	2840935-0200

The TPIH 2500 generators are connected to a CAN bus together with the TMCC2 card A01K5220. This network is used to monitor the sealing quality. See section 9.8 TMCC2 Controller for details on the sealing monitoring.

Each TPIH 2500 generator should be assigned a unique node name. Recognized node names are: TS, LS, SA, PT, PT HS.

(Cont'd)

TechPub_2614345_0108 - 0801_3048254_01.fm

(Cont'd)

Select the appropriate node name for the generators by means of the TPIH 2500 display keyboard.

a) Use the ARROW buttons (1) to select `BASIC SETTINGS` and press the OK button (2).

b) Select `CAN PARAMETERS` and press the OK button (2).

c) Select the appropriate node name with the PLUS and MINUS buttons (3) and press the OK button (2) to store the selected name.

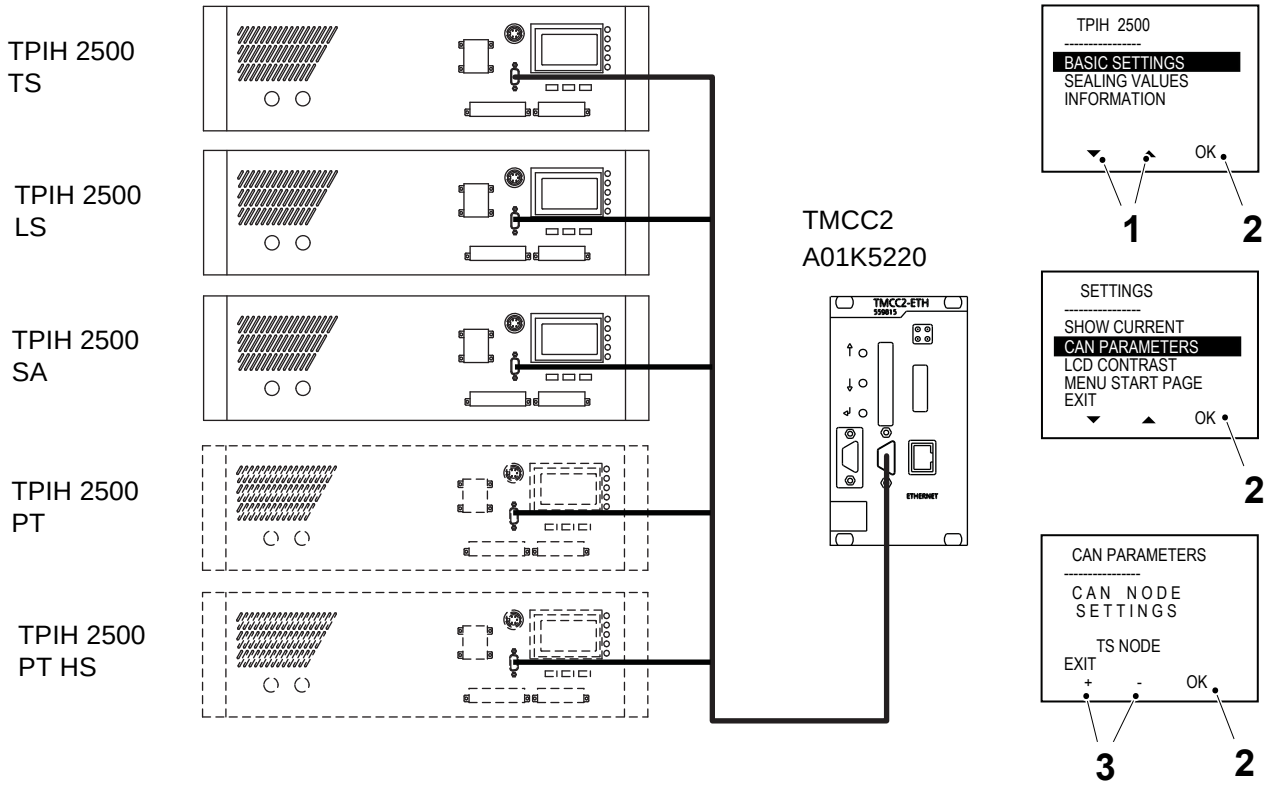

1 Arrow button
2 OK button
3 Plus and minus button

TechPub_2614345_0108 - 0801_3048254_01.fm

9.9.1-8 IH Equipment - Load Firmware

Machine Status	Mains Power ON Steam ON Water OFF Air OFF
Special Equipment	Communication Cable RS 232-C PC with CD Drive
SPC Reference	2840935-0200

CAUTION
Internal memory damage.
Disconnecting the 24V auxiliary voltage during download can damage the internal memory.

CAUTION
Possible CAN BUS error.
Remember to set the CAN BUS node of each TPIH 2500 card after the firmware has been downloaded.

(Cont'd)

TechPub_2614345_0108 - 0801_3048254_01.fm

(Cont'd)

Checking Firmware Version

The latest release of the firmware for the TPIH 2500 is:

– 3018844-1001.128 for TPIH generator TP No. 1499642-0301.

The version of the firmware in the TPIH 2500 can be checked as follows:

- by scrolling through the menus (`MAIN MENU >> INFORMATION >> PROGRAM VERSION`) on the TPIH 2500 with the buttons (1) and reading the firmware version on the display (2), see Menu Structure on page 9-488

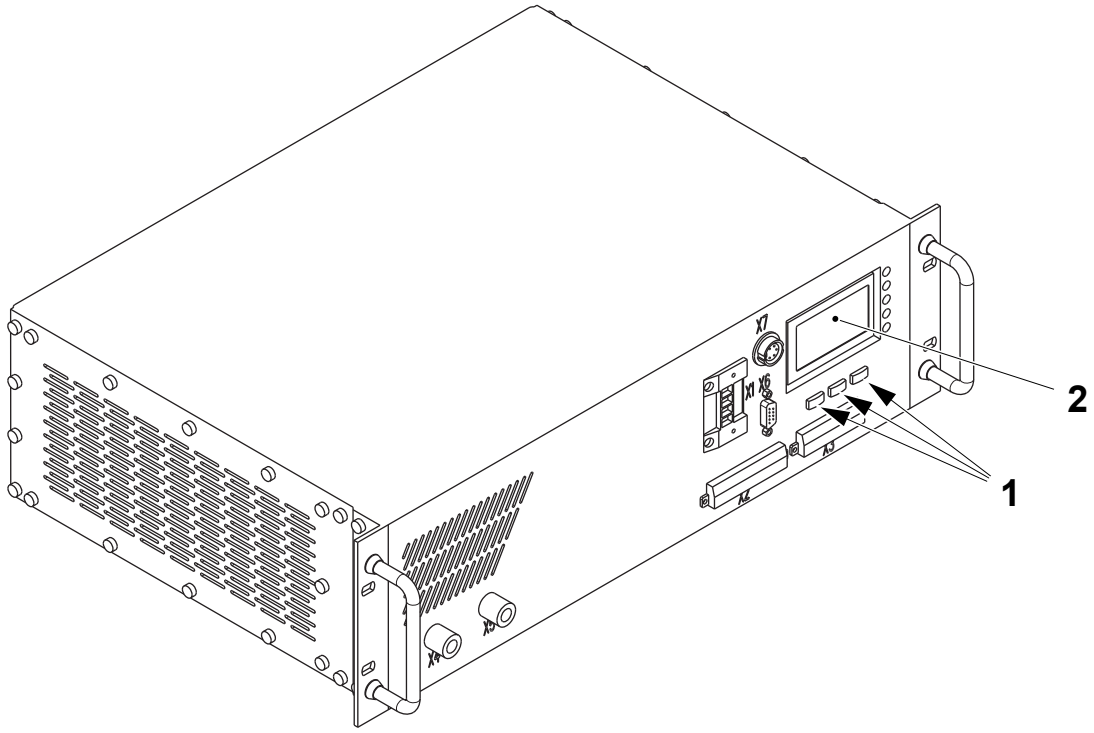

1 Button
2 Display

(Cont'd)

TechPub_2614345_0108 - 0801_3048254_01.fm

(Cont'd)

- by connecting the PC to the serial connection (3) and using the TERMINAL.EXE program as follows:
  - open the configuration `TERMINAL.TRM`
  - from the menu select `FILE` then `OPEN` then select `TERMINAL.TRM`
  - type `H` and the press ENTER.

  The main menu of the terminal program appears with the version of the firmware displayed.

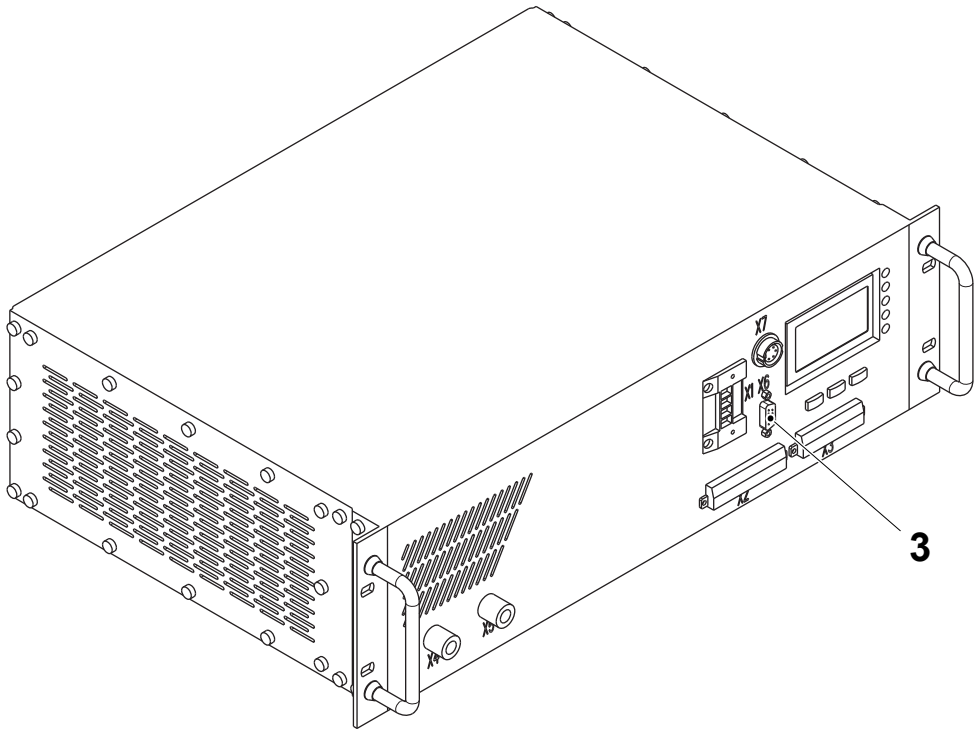

3 Serial connection

TechPub_2614345_0108 - 0801_3048254_01.fm

(Cont'd)

(Cont'd)

Note! Windows Hyper Terminal is not suitable for downloading.

Downloading the Firmware

The firmware can be downloaded using `TERMINAL.EXE` or the `TMCC2TRM.EXE` programs.

Preparation

Before starting to download the firmware:

a) Turn the mains power supply OFF on the service unit.

b) Disconnect the 440 V supply connector (1) from TPIH 2500.

c) Connect the PC to the TPIH 2500 with the serial link (2).

d) Turn the mains power supply ON, this provides the TPIH 2500 with the 24 V DC it needs to download the firmware.

e) Press simultaneously the three buttons (3) under the display (4) on the front panel (Tetra Pak logo will appear).

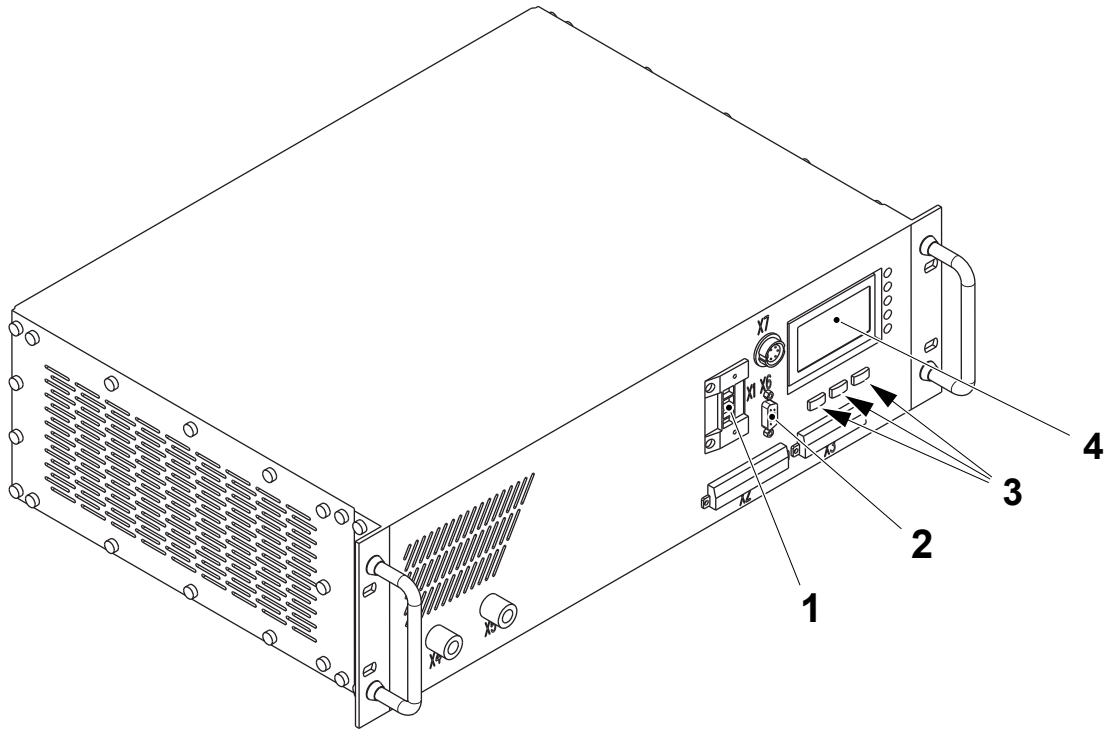

1 Supply connector
2 Serial link
3 Button
4 Display

(Cont'd)

TechPub_2614345_0108 - 0801_3048254_01.fm

(Cont'd)

Using TERMINAL.EXE

a) Start TERMINAL.TRM:
   – from the menu select FILE then OPEN and then select TERMINAL.TRM.

b) Verify the communication:
   – press ENTER., the FIRMWARE prompt must appear.

c) Enable the program mode:
   – press PROGRAM MODE on the terminal window.

d) Erase the memory:
   – press ERASE FLASH on the terminal window
   – wait until DONE appears.

e) Download the firmware:
   – Insert the CD containing the firmware into the CD drive of the PC
   – from the TERMINAL.TRM menu select TRANSFER and then SEND TEXT FILE; select the ALL FILE *.* option from the LIST FILES OF TYPE menu
   – browse the CD and select the file 3018844.XXXX.128 (for TPIH generator TP No. 1499642-0301) in the folder "TPIH", then press OK ("XXXX" represents the firmware version number)
   – wait until the download is finished (5-6 minutes).

f) Restart the generator:
   – enter the digit G and press ENTER to restart the generator.

g) Turn the mains power supply OFF on the service unit.

h) Disconnect the PC from the TPIH 2500.

i) Connect the 440 V supply connector to the TPIH 2500.

(Cont'd)

TechPub_2614345_0108 - 0801_3048254_01.fm

(Cont'd)

Using TMCC2TRM.EXE

a) Start the TMCC2 TRM.

b) Select the SET COMM button (1).

c) Set the baud rate to 9600 and the communication port to Com1.

d) Select the OK button (2).

e) Press ENTER and make sure that the TPIH generator is in the firmware mode.

f) Insert the CD containing the firmware into the CD drive of the PC

g) From the TMCC2 TRM window select the DOWNLOAD button (3).

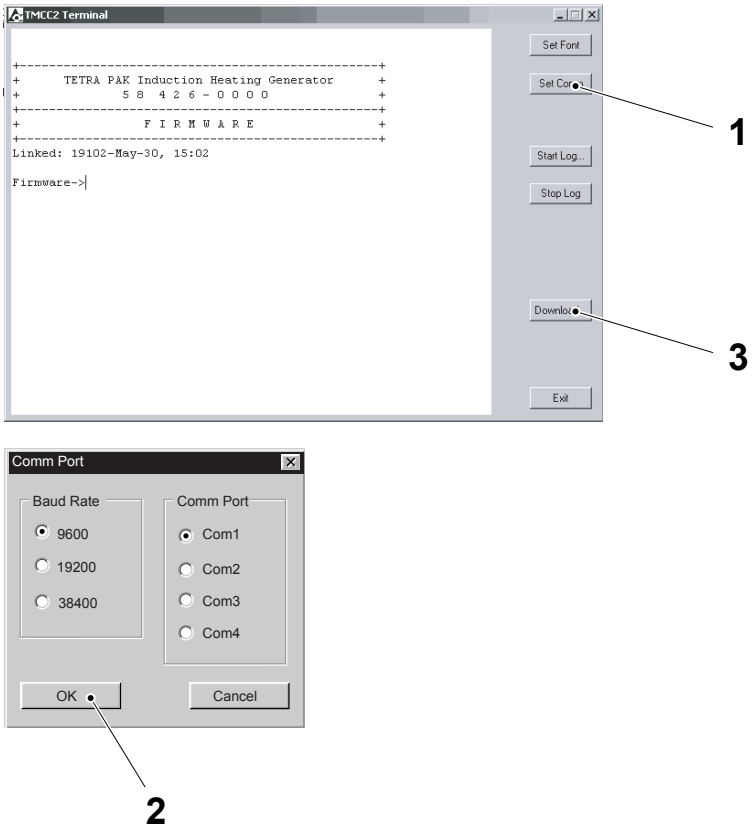

1 Set Comm button
2 OK button
3 Download button

(Cont'd)

TechPub_2614345_0108 - 0801_3048254_01.fm

(Cont'd)

h) Select the BROWSE button (4). Browse to the CD and select the file:
   – 3018844.XXXX.128, for TPIH generator TP No. 1499642-0301
   in the folder "TPIH" and then press OK ("XXX" represents the firmware version number).

i) Select the OPEN button (5).

j) Select the DOWNLOAD button (6) to erase the memory and to download the application.

k) Wait until the download is finished and then select the CLOSE button (7) to close the download window.

l) Enter the digit G and press ENTER to restart the TPIH generator.

m) Turn the mains power OFF on the service unit.

n) Disconnect the PC from the TPIH 2500.

o) Connect the 440 V supply connector to the TPIH 2500.

Note! Downloading the firmware application can affect the contrast regulation of LCD display on front panel. See 9.9.1-9 IH Equipment - Set Display Contrast on page 9-521.



4 Browse button
5 Open button
6 Download button
7 Close button

TechPub_2614345_0108 - 0801_3048254_01.fm

9.9.1-9 IH Equipment - Set Display Contrast

Machine Status	Mains Power ON Steam ON Water OFF Air OFF
Special Equipment	Communication Cable RS 232-C PC with CD Drive
SPC Reference	2840935-0200

a) Connect a PC to the TPIH 2500 serial link connection and start the TERMINAL.EXE program.

b) Press the ENTER key on the PC to display the `HELP` menu and the list of available commands.

Note! "`XXX`" represents a number between 1 to 100. A high number corresponds to a darker display and a low number corresponds to a lighter display. Therefore if the display appears very dark enter a low number, whereas if the display is very light enter a high number.

c) Type "`DC XXX`" where "`XXX`" represents a number between 1 to 100. The recommended initial setting values are:

- 27 for generators with serial number 0317810139 or higher
- 95 for generators with serial number 0317810138 or lower.

TechPub_2614345_0108 - 0801_3048254_01.fm

9.10 Cooling System

SPC Reference	2912647-0100

9.10.1 Cooling Unit

9.10.1-1 Cooling Unit - Clean Filter

Machine Status	Mains Power ON Air ON Steam ON Water ON
SPC Reference	2912647-0100

WARNING

Refrigerant gas.

Cooling media R134A. See the Safety Precautions.

CAUTION

Risk of damage to the equipment.

Only the procedures described may be performed by Tetra Pak or Tetra Pak trained customer technicians. In all other cases contact Tetra Pak.

(Cont'd)

TechPub_2614345_0108 - 0802_3048255_01.fm

(Cont'd)

Note! If there is an accumulation of dirt or dust in the base of the cooling unit use a vacuum cleaner to remove the dirt or dust.

a) Remove the screws (1).

b) Remove the cover (2) and the filter (3).

c) Clean the filter (3) with compressed air.

d) Assemble in the reverse order.

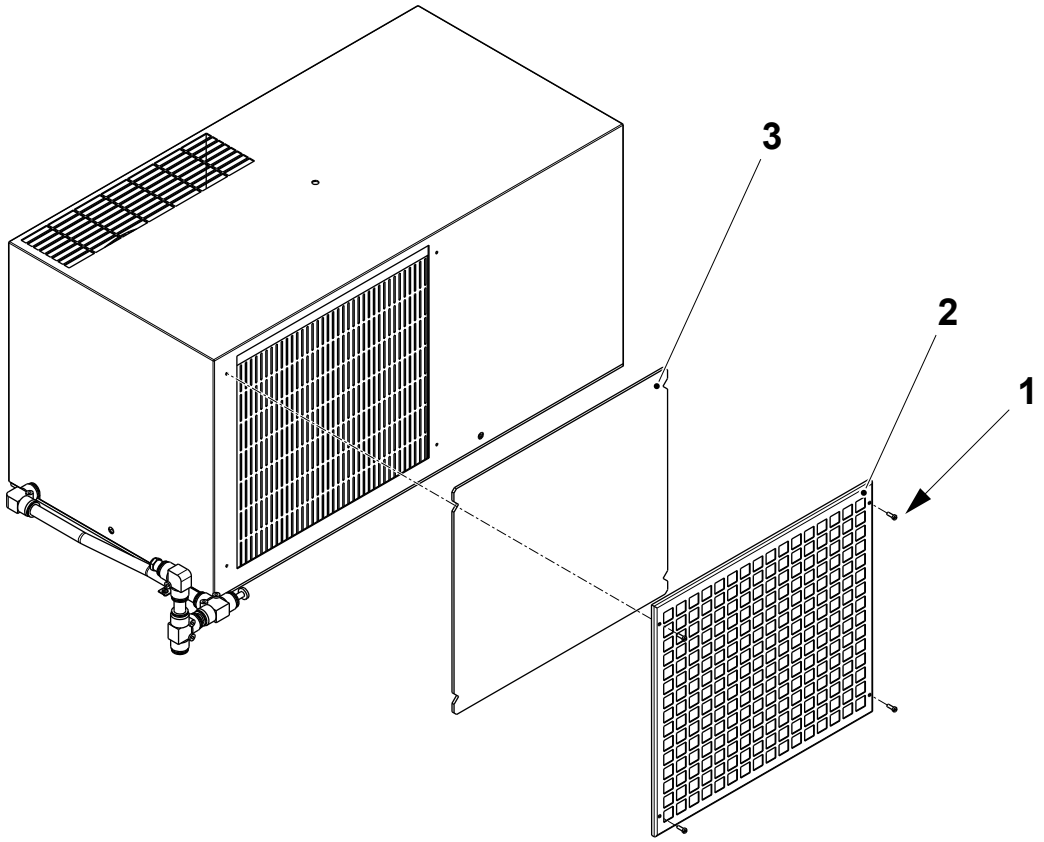

1 Screw
2 Cover
3 Filter

TechPub_2614345_0108 - 0802_3048255_01.fm

9.10.1-2 Cooling Unit - Change Filter

Machine Status	Mains Power OFF Air OFF Steam ON Water OFF
SPC Reference	2912647-0100

WARNING

Refrigerant gas.

Cooling media R134A. See the Safety Precautions.

CAUTION

Risk of damage to the equipment.

Only the procedures described may be performed by Tetra Pak or Tetra Pak trained customer technicians. In all other cases contact Tetra Pak.

(Cont'd)

TechPub_2614345_0108 - 0802_3048255_01.fm

(Cont'd)

Note! If there is an accumulation of dirt or dust in the base of the cooling unit use a vacuum cleaner to remove the dirt or dust.

a) Remove the screws (1).

b) Remove the cover (2) and the filter (3).

c) Change the filter (3).

d) Assemble in the reverse order.

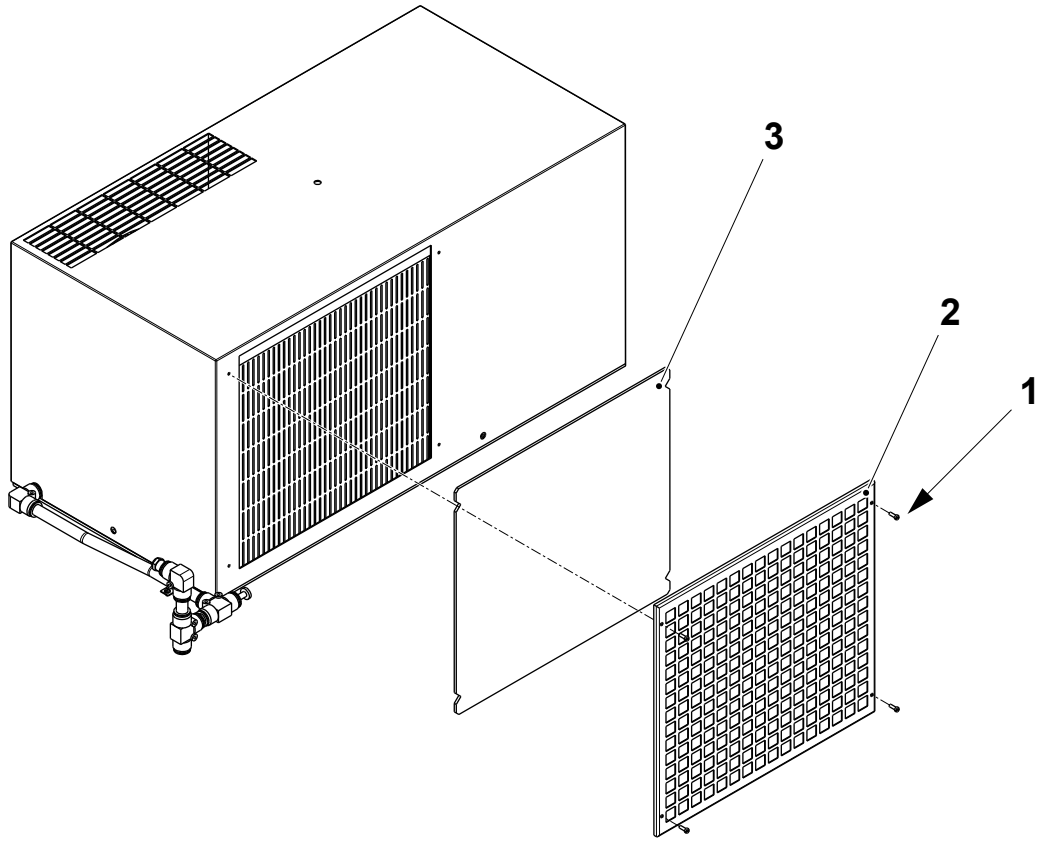

1 Screw
2 Cover
3 Filter

TechPub_2614345_0108 - 0802_3048255_01.fm

9.10.1-3 Cooling Unit - Check

Machine Status	Mains Power OFF Air OFF Steam ON Water OFF
SPC Reference	2912647-0100

DANGER

Hazardous voltage.
Will shock, burn or cause death. Follow the lockout procedure before performing this procedure.

CAUTION
Risk of damage to the equipment.
Only the procedures described may be performed by Tetra Pak or Tetra Pak trained customer technicians. In all other cases contact Tetra Pak.

a) Remove the screws (1) and the cover (2).

b) Clean the condenser unit (3) with compressed air, blow the compressed air through the inner side of the condenser unit (3) through to the outside of the cooling unit.

c) Clean any build up of dirt from the fan blades (4).

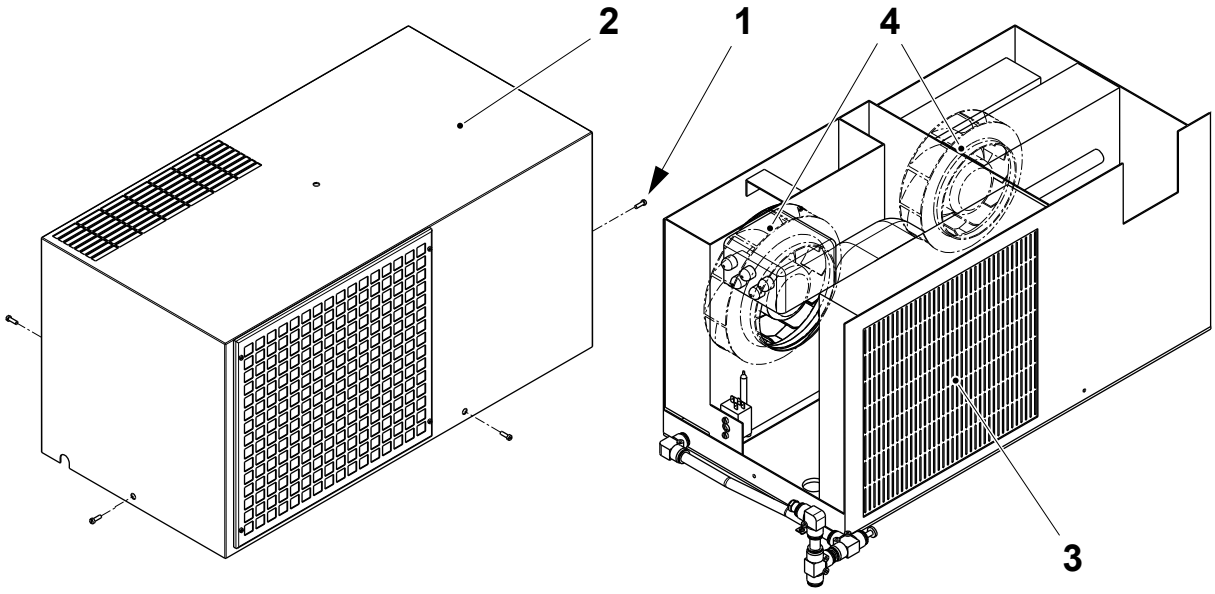

1 Screw
2 Cover
3 Condenser unit
4 Fan blade

(Cont'd)

TechPub_2614345_0108 - 0802_3048255_01.fm

(Cont'd)

d) Check for:

- oil leakages on the copper pipe connections, if oil is leaking from the pipe connections, contact Tetra Pak
- that the compressor (5) is securely fastened to the cooling unit base
- that the fans (6) are securely fixed and there is not excessive radial play. To change the fans, see 9.10.1-4 Cooling Unit - Overhaul.

Note! If there is an accumulation of dirt or dust in the base of the cooling unit use a vacuum cleaner to remove the dirt or dust.

e) Assemble in the reverse order.

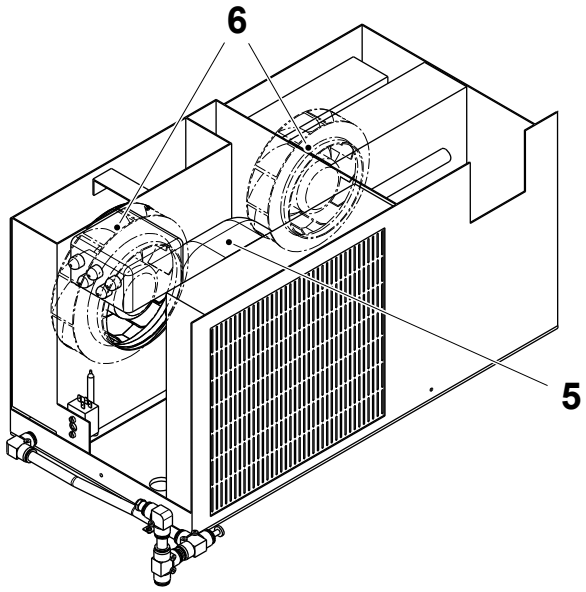

5 Compressor
6 Fan

TechPub_2614345_0108 - 0802_3048255_01.fm

9.10.1-4 Cooling Unit - Overhaul

Machine Status	Mains Power OFF Air OFF Steam ON Water OFF
SPC Reference	2912647-0100

DANGER

Hazardous voltage.
Will shock, burn or cause death. Follow the lockout procedure before performing this procedure.

WARNING

Refrigerant gas.
Cooling media R134A. See the Safety Precautions.

CAUTION

Risk of damage to the equipment.
Only the procedures described may be performed by Tetra Pak or Tetra Pak trained customer technicians. In all other cases contact Tetra Pak.

Note! If the cooling unit is removed from the electrical cabinet it is advisable to fit a new gasket to ensure a sufficient seal between the electrical cabinet and the cooling unit. Apply the self adhesive side of the new gasket to the cooling unit base.

(Cont'd)

TechPub_2614345_0108 - 0802_3048255_01.fm

(Cont'd)

a) Remove the screws (1) and the cover (2).

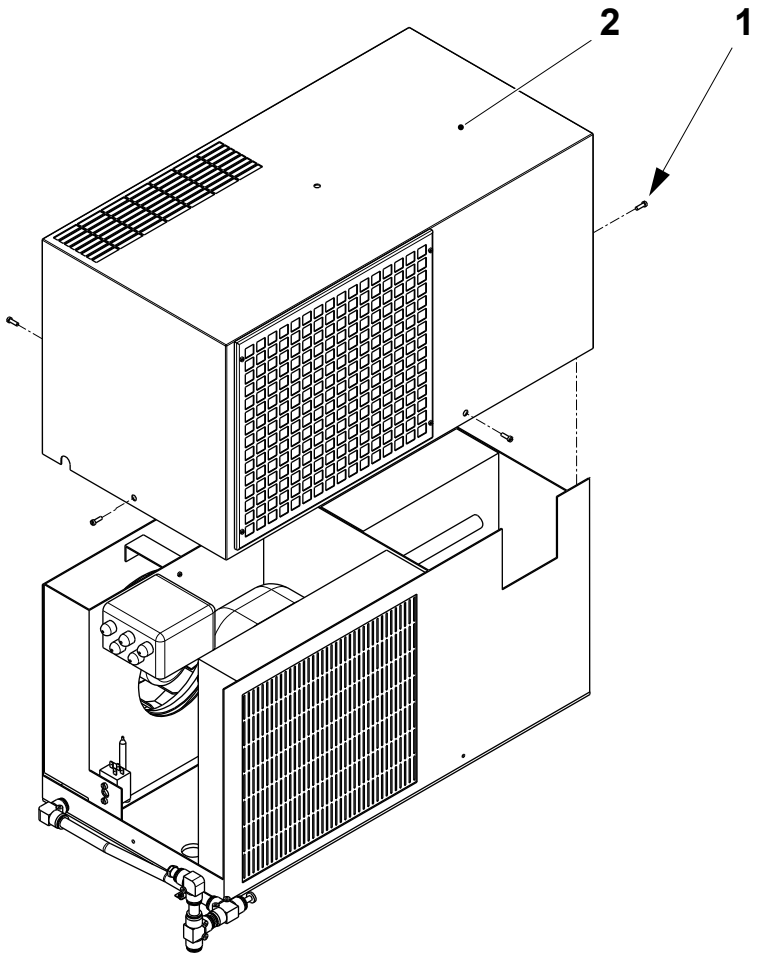

1 Screw
2 Cover

(Cont'd)

TechPub_2614345_0108 - 0802_3048255_01.fm

(Cont'd)

Change the Condenser Fan M002

a) Disconnect the electrical cable W009 (1) from the electrical connection box X1710 (2).

b) Remove the screws (3) and the bracket (4).

c) Remove the screws (5) and the fan (6).

d) Assemble in the reverse order.

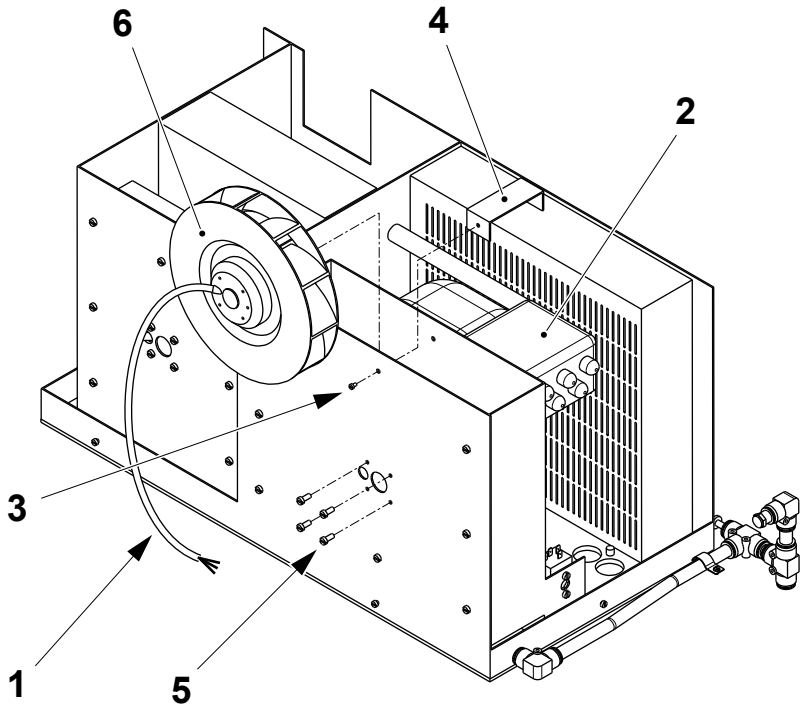

1 Electrical cable
2 Connection box
3 Screw
4 Bracket
5 Screw
6 Fan

(Cont'd)

TechPub_2614345_0108 - 0802_3048255_01.fm

(Cont'd)

CAUTION
Risk of damage to the equipment.
Take care to fit the fan (6) with the correct screws (5), the screws (3) may damage the fan.

Change the Evaporator Fan M032

a) Disconnect the electrical cable W010 (1) from the electrical connection box X1710 (2).

Note! If necessary cut the plastic ties securing the earth cable to the screws (3).

b) Remove the screws (3) and the cover (4).

c) Remove the screws (5) and the fan (6).

d) Assemble in the reverse order.

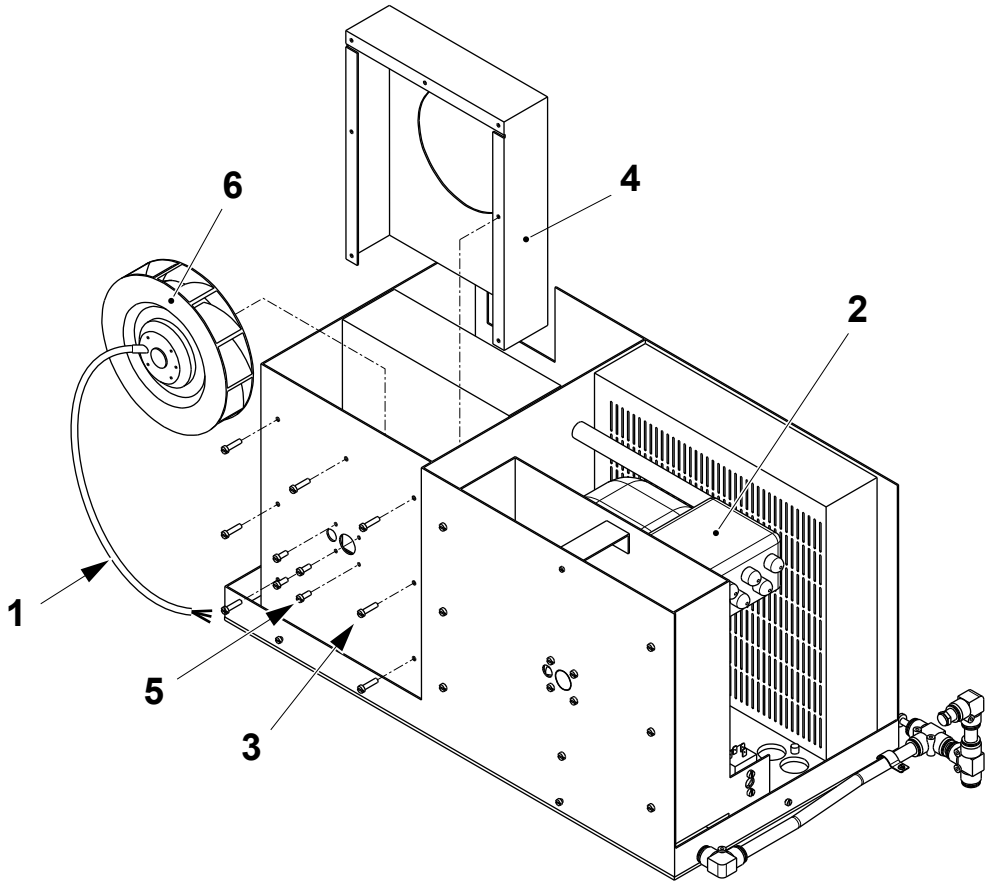

1 Electrical cable
2 Connection box
3 Screw
4 Cover
5 Screw
6 Fan

(Cont'd)

TechPub_2614345_0108 - 0802_3048255_01.fm

(Cont'd)

Change the Anti-freeze Thermostat B006

a) Cut the thermostat tubing (1) where necessary and remove the thermostat tubing (1) from the cooling unit (2).

b) Remove the thermostat sensor (3) from the evaporator unit (4).

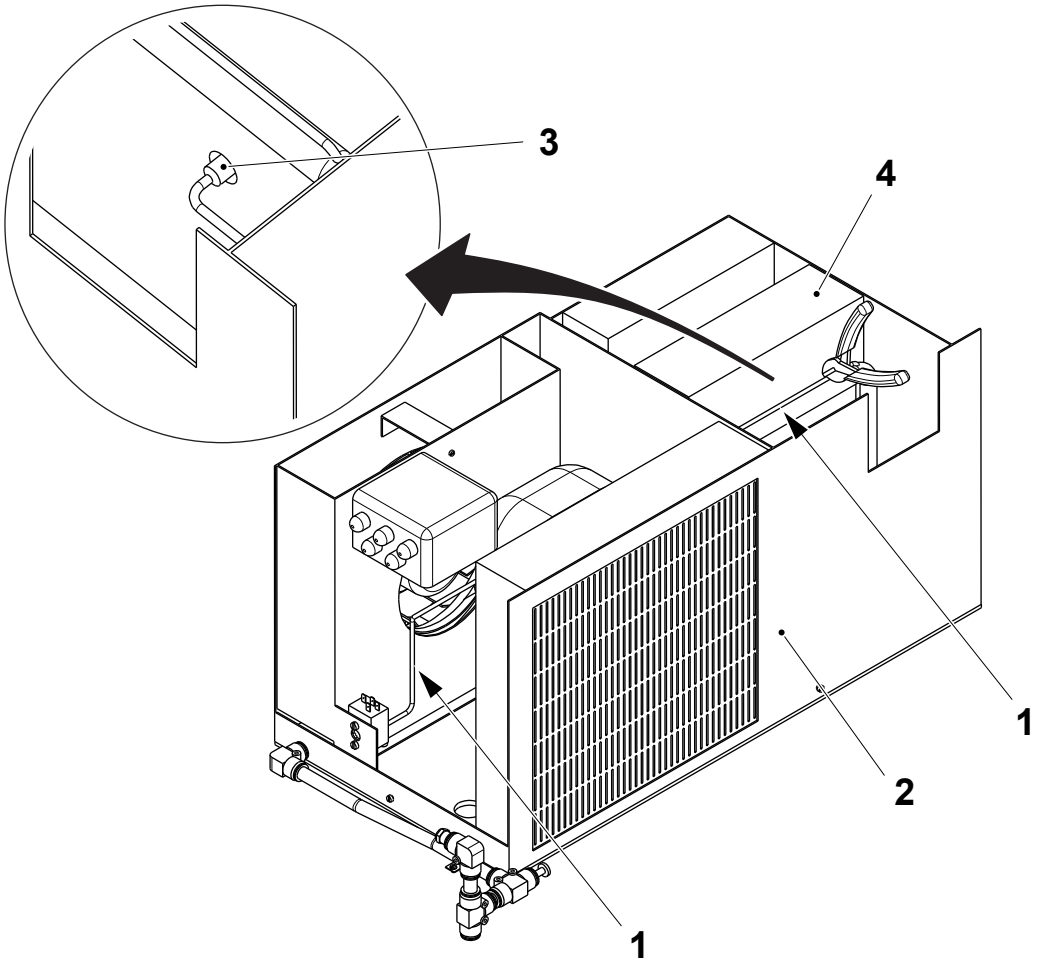

1 Thermostat tube
2 Cooling unit
3 Thermostat sensor
4 Evaporator unit

(Cont'd)

TechPub_2614345_0108 - 0802_3048255_01.fm

(Cont'd)

c) Remove the electrical connections (5) from the thermostat (6).

d) Remove the screws (7) and the thermostat (6).

e) Fit the new thermostat sensor (8) into the evaporator (4).

f) Thread the thermostat tube through the cooling unit following the path of the old thermostat tube.

Note! Secure the thermostat tube where necessary with plastic ties and coil any excess tube around the bracket (9) before fitting the thermostat (6).

Note! If there is an accumulation of dirt or dust in the base of the cooling unit use a vacuum cleaner to remove the dirt or dust.

g) Assemble in the reverse order.

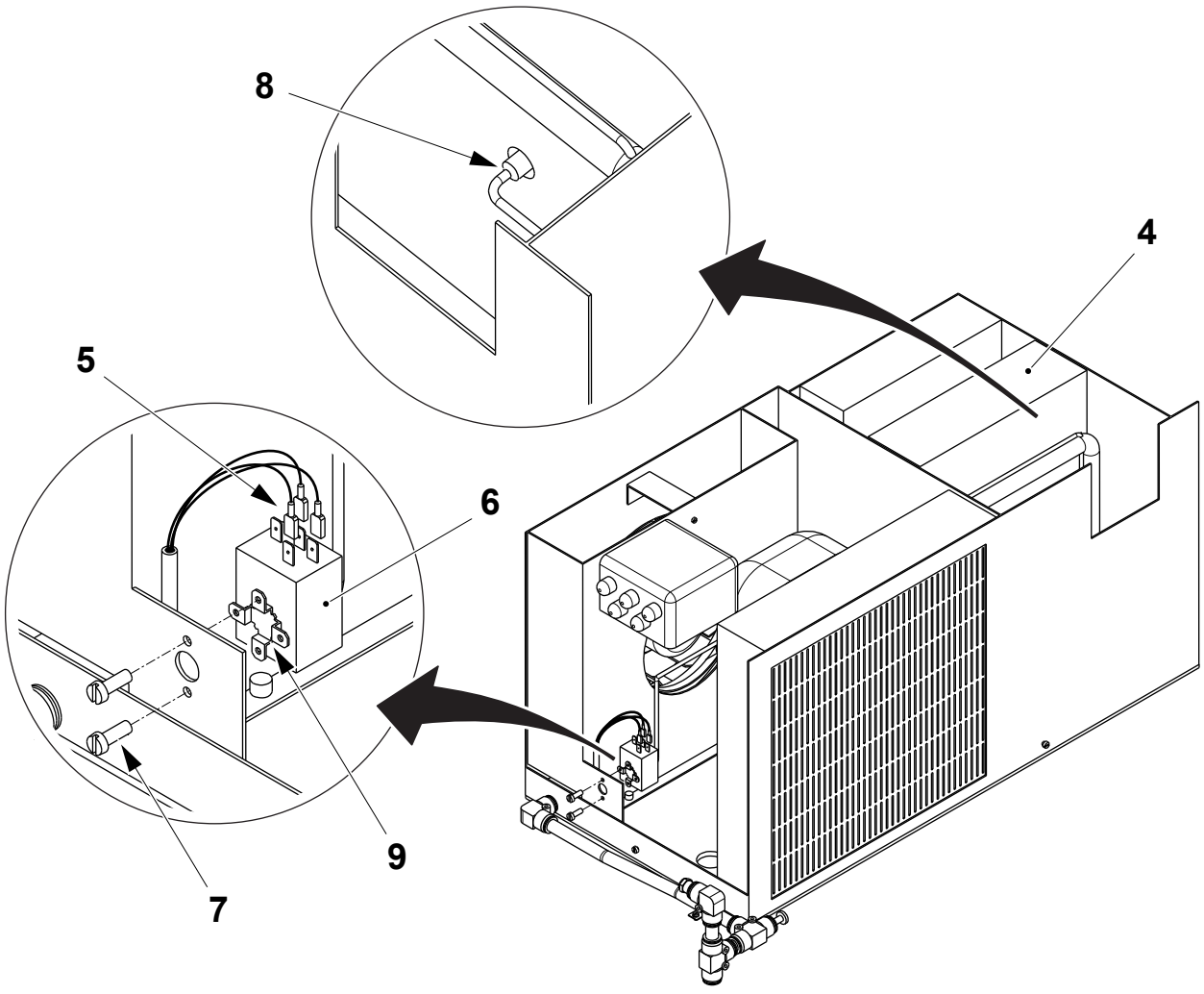

4 Evaporator
5 Electrical connection
6 Thermostat
7 Screw
8 Thermostat sensor
9 Bracket

TechPub_2614345_0108 - 0802_3048255_01.fm

9.10.1-5 Cooling Unit - Troubleshooting

Machine Status	Mains Power ON Air ON Steam ON Water ON
SPC Reference	2912647-0100

CAUTION
Risk of damage to the equipment.
Only the procedures described may be performed by Tetra Pak or Tetra Pak trained customer technicians. In all other cases contact Tetra Pak.

If the cooling unit fails to operate or is operating insufficiently use the table below to determine the possible cause and actions to be taken.

Description	Possible Cause	Action
The cooling unit will not start.	No mains power supply to the cooling unit.	Check the circuit breaker and connections to the mains power supply.
Only the inside fan runs. Practically no electric consumption	The electrical cabinet internal thermostat has tripped or is wrongly set. The freeze thermostat has tripped.	Check the electrical cabinet internal thermostat and if necessary set to 35°C.
Normal operation. Insufficient cooling. High electric consumption	Condenser coil or filter dirty. Faulty condenser fan. Electric panel not properly sealed.	Check coil and air filter. Check the fans. Remove any obstacles. Close the cabinet doors.
The fan runs but the compressor does not run. Low electric consumption	Compressor internal protection has tripped probably due to too many frequent start ups or insufficient refrigerant gas	Contact Tetra Pak.
Normal operation. Low electric consumption and compressor very hot.	Insufficient or complete lack of refrigerant gas.	Contact Tetra Pak.
Compressor never stops.	Check that the thermostat contacts or any switch contacts are not stuck.	Replace the necessary faulty part.
During operation a lot of condensation forms and is drained off.	Cabinet not sealed sufficiently. Cabinet doors open. Holes in cabinet walls.	Improve the cabinet sealing. Close the cabinet doors. Fill any holes in the cabinet.

TechPub_2614345_0108 - 0802_3048255_01.fm

9.11 Signal Exchange

SPC Reference	2576334-0100 2576335-0100

9.11.1 Signal Exchange

9.11.1-1 Signal Exchange - Configuration

Machine Status	Mains Power OFF Air OFF Steam ON Water OFF
SPC Reference	2576334-0100 2576335-0100

For instructions on how to configure the signal exchange, see the Installation Manual.

TechPub_2614345_0108 - 0801_3048256_01.fm

This page intentionally left blank

TechPub_2614345_0108 - 0801_3048256_01.fm

10 General

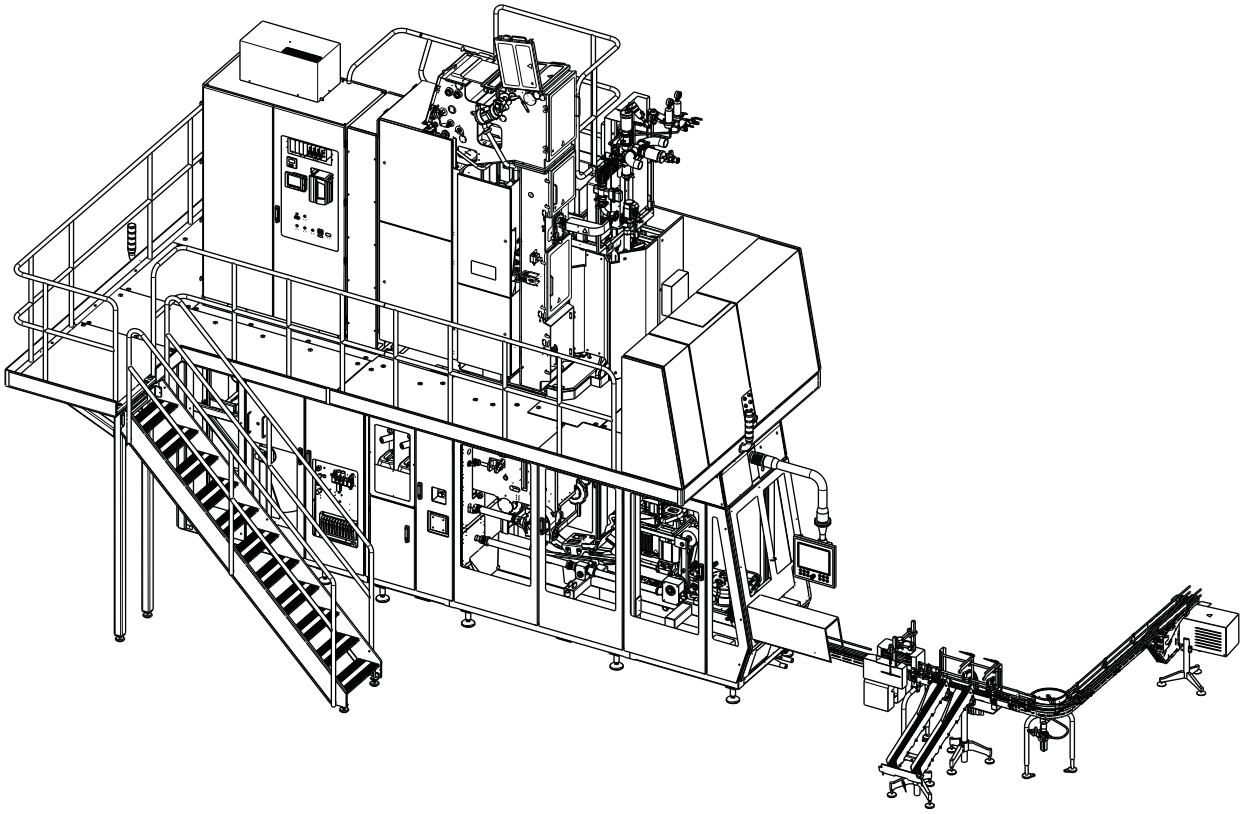

TechPub_2614345_0108 - 0903_3048257_01.fm

General - Description

SPC Reference	648576-0300

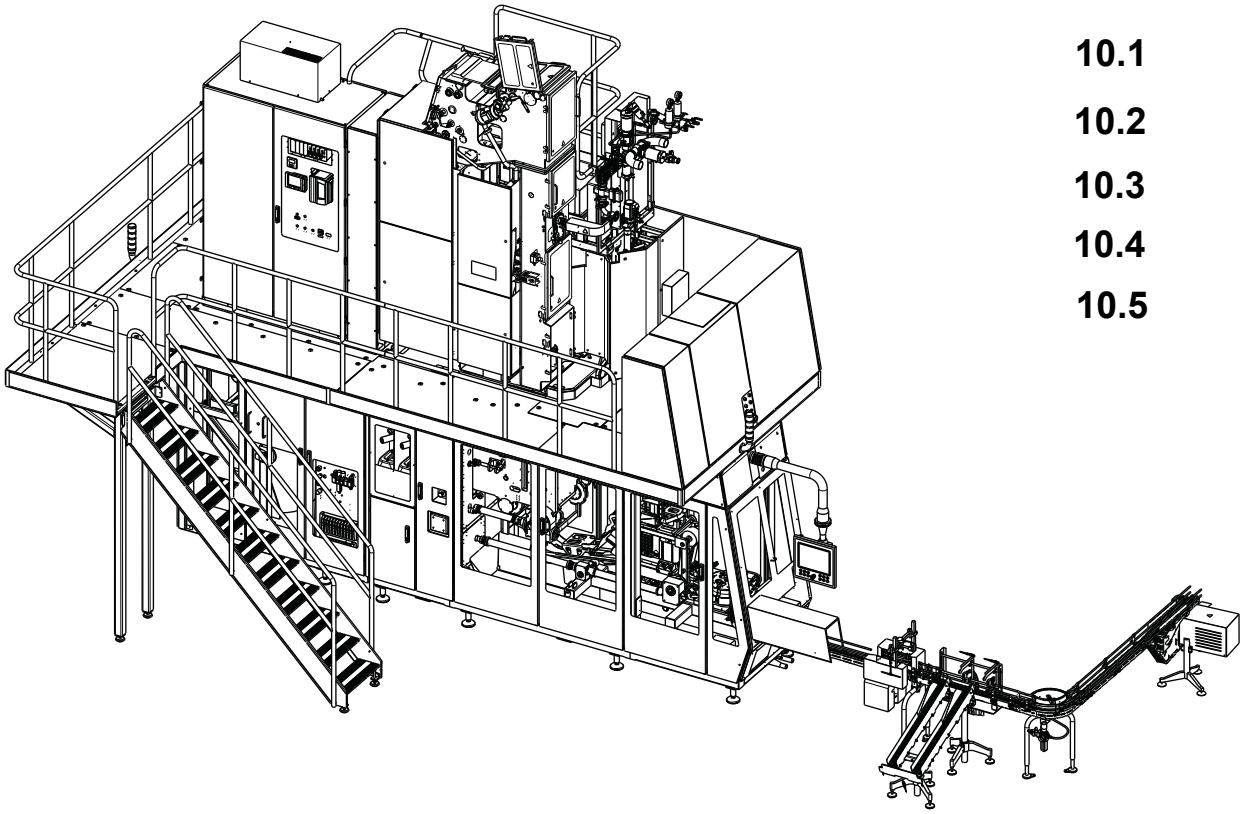

10.1

10.2

10.3

10.4

10.5

10.1 Technical Data
10.2 Templates and Tools
10.3 Consumables
10.4 Safety Functions
10.5 Protective Devices

TechPub_2614345_0108 - 0903_3048257_01.fm

10.1 Technical Data . . . . . 10 - 5

10.1.1 Jaw System Screws Tightening Torque. . . . . 10 - 10

10.2 Templates and Tools . . . . . 10 - 11

10.3 Consumables . . . . . 10 - 20

10.3.1 Lubricants . . . . . 10 - 20

10.3.2 Cleaning Compounds . . . . . 10 - 22

Cleaning Compound Table . . . . . 10 - 23

10.4 Safety Functions . . . . . 10 - 24

10.4-1 Safety Functions - Check . . . . . 10 - 24

10.5 Protective Devices. . . . . 10 - 25

10.5-1 Protective Devices - Check . . . . . 10 - 25

TechPub_2614345_0108 - 0903_3048257_01.fm

This page intentionally left blank

TechPub_2614345_0108 - 0903_3048257_01.fm

10.1 Technical Data

Pressures	**Unit**	**Value**
Top flap sealing	Bar	2.0
Bottom flap sealing	Bar	2.0
Waste conveyor front guard	Bar	1.0
Air-peroxide spray container (U70R3302)	Bar	2.0
Peroxide tank filling	Bar	0.2
Peroxide pump	Bar	0.6
Photocells, design correction, air blast	Bar	0.25 (pre-set)
Pendulum roller	Bar	1.0 to 6.0
Calender roller	Bar	4.0 3.0 (TBA 125 S)
Pendulum counter roller, drying chamber	Bar	2.0 to 2.5
Air nozzle, ASU	Bar	1.0 ±0.5

(Cont'd)

TechPub_2614345_0108 - 0903_3048257_01.fm

(Cont'd)

Pressures		Unit	Value
Cooling water system		Bar	2.0
Sterile air system (water separator)		Bar	0.3
Foaming		Bar	5.0
Cleaning pump		Bar	4.0
Package bottom blowing		Bar	4.0
Water circulation - peroxide (cold machine during start up)		Bar	1.8
Air		Bar	6 - 7
Pilot air		Bar	5 ±0.5
Warm water (red)		Bar	3 to 4.5
Cold water (blue)		Bar	3 to 4.5
Steam (input)			
	Minimum supply pressure	Bar	2.0
	Maximum pressure fluctuation	Bar	± 0.3
	Minimum flow	Kg/h	9.4
Product pressure, permitted variation during PRODUCTION		Bar	1.5 - 2.5 ±0.5
Main air, ASU		Bar	5 to 6
Pilot air, ASU		Bar	4 to 5
Web tension, ASU		Bar	2.0
Jumbo reel brake, ASU		Bar	0.6 to 0.8

(Cont'd)

TechPub_2614345_0108 - 0903_3048257_01.fm

(Cont'd)

Pressure Switches	Unit	Value
Incoming air	Bar	5.5
Incoming cooling water	Bar	1.0 to 2.0
Sterile air	Bar	0.14
Incoming water alarm	Bar	2.0

Induction Heating	Unit	Value
Induction heating, transversal sealing (left / right)		see page 9-505
Induction heating, longitudinal sealing		see page 9-505
Induction heating, strip applicator		see page 9-505

(Cont'd)

TechPub_2614345_0108 - 0903_3048257_01.fm

(Cont'd)

Temperature		Unit	Lower Limit	Process Value	Upper Limit
Heat sterilization		°C	280	280	380
Peroxide bath		°C	81	84	95
Peroxide tank (Production)		°C	-	84	96
Top aseptic chamber		°C	70	78	110
Cooling water (compressor)		°C	-	11 - 15	-
Electrical cabinet		°C	-	30 to 36	48
Flap sealing air nozzles (LH and RH top)		°C	-	see page 5-144	-
Flap sealing air nozzles (LH and RH bottom)		°C	-	see page 5-144	-
Steam, TCSB					
	Sterilization	°C	125	130	200
	Production	°C	105	110	200
	Machine OFF, Preheating, Waiting for first production after sterilization, End of production and Intermediate cleaning	°C	105	110	200
Air superheater		°C	330	360	450
Warm water (red)		°C	NA	20 to 25	NA
Air knife		°C	180	195	250
Superstructure electrical cabinet		°C	-	30 to 44	50
Packaging material splice temperature		°C	-	190	-

Incoming Media	Unit	Value
Electric voltage	V	400 ± 10%
Electric frequency	Hz	50 or 60 ± 2%

(Cont'd)

TechPub_2614345_0108 - 0903_3048257_01.fm

(Cont'd)

Flows	**Unit**	**Value**
Cooling water, TS right	l/min.	2.0
Cooling water, TS left	l/min.	2.0
Cooling water, final folder	l/min.	2.0
Cooling water, deionizing circuit	l/min.	1.5
Cooling water, IH SA	l/min.	1.5
Cooling water, IH LS	l/min.	2.0
TS flushing	l/min.	0.5
FFU flushing	l/min.	0.5

Miscellaneous	**Unit**	**Value**
Hydrogen peroxide	% w/w	35
Noise declaration	dB	see IM

Consumption	**Unit**	**Value**
Hydrogen peroxide (% w/w 35)	l/h	3.0 - 5.0
Detergent, external cleaning	l/cycle	1.2 to 1.8 (alkali)
Acid (50% NHO_3), ICU cleaning	l/cycle	0.45
Alkali (30% NaOH) ICU cleaning	l/cycle	1.0

TechPub_2614345_0108 - 0903_3048257_01.fm

10.1.1 Jaw System Screws Tightening Torque

All the screws in the jaw system, except when differently specified in the instructions, must be tightened according to the following table.

Class	Torque (Nm)							
	M3	**M4**	**M5**	**M6**	**M8**	**M10**	**M12**	**M14**
A4-70	0.9	2.0	4.1	7.0	17	33	57	91
A4-80	1.2	2.7	5.4	9.3	22	44	76	121

Class	Torque (Nm)						
	M16	**M18**	**M20**	**M24**	**M27**	**M30**	**M36**
A4-70	140	195	273	472	682	930	1620
A4-80	187	261	364	629	909	1240	2160

TechPub_2614345_0108 - 0903_3048257_01.fm

10.2 Templates and Tools

Illustration	Description
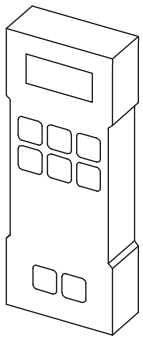	Force Gauge (Optional Accessories) TP No. 90459-1467 **1 Superstructure** 5 Final Folder **8 ASU** 1.5.1-5 Filling Pipe - Set Pressure Roller 5.2.2-3 Swing Frame - Set Belt 5.2.3-6 Chain Support - Set Belt 8.2.2-8 Inductor - Set Pressure Roller 8.4-3 Splicing Device - Set Drive Unit Belt
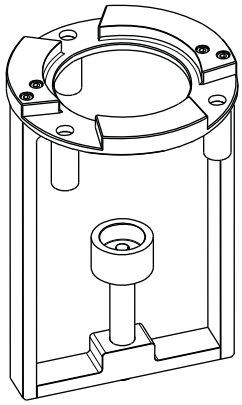	Filing Pipe Alignment Template (Regular Accessories) TP No. 3038999-0100 **1 Superstructure** 1.5.1-4 Filling Pipe - Set Position
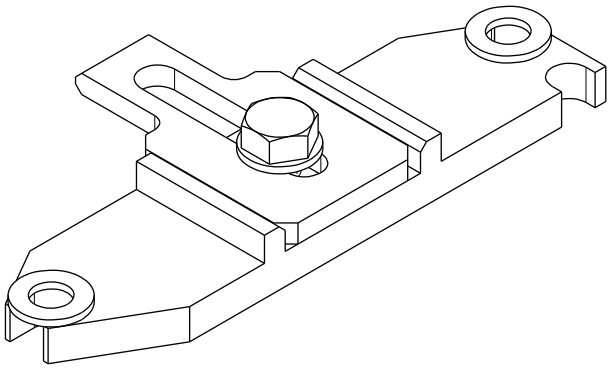	LS Roller Adjustment Template (Regular Accessories) TP No. 2793320-0301 (for TBA 125 S) TP No. 2793320-0302 (for TBA 200 B) TP No. 2793320-0303 (for TBA 250 B) TP No. 2793320-0304 (for TBA 200 M) TP No. 2793320-0305 (for TBA 250 S) TP No. 2793320-0306(for TBA 200 S) TP No. 2793320-0326 (for TBA 1000 B) TP No. 2793320-0327 (for TBA 1000 S) TP No. 2793320-0328 (for TBA 1000 Sq) **1 Superstructure** 1.2.1-2 Lower Forming Ring - Set Position
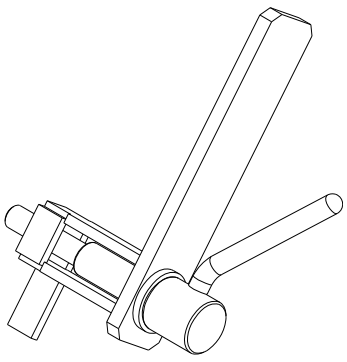	Tool Dismounting (Optional Accessories) TP No. 449969-0100 **1 Superstructure** 1.5.2-1 Product Valve - Remove Cylinders 1.5.2-2 Product Valve - Change Seals and Membranes 1.5.2-3 Product Valve - Change O-Rings

TechPub_2614345_0108 - 0904_3048258_01.fm

Illustration	Description
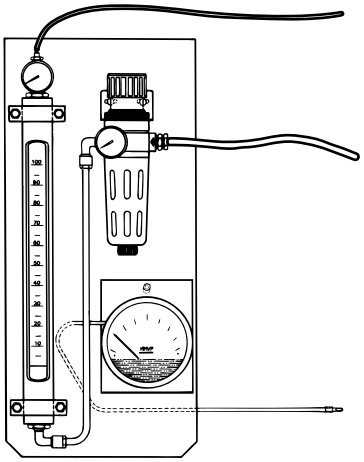	Leak Finding Equipment (Optional Accessories) TP No. 533014-0100 **1 Superstructure** 1.3-2 Drying Chamber - Leakage Detection
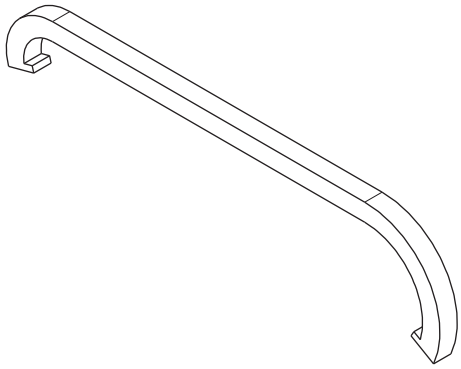	Pipe Wrench (Optional Accessories) TP No. 777200-0101 **1 Superstructure** 1.6.1-1 Flow Switch - Check Gaskets
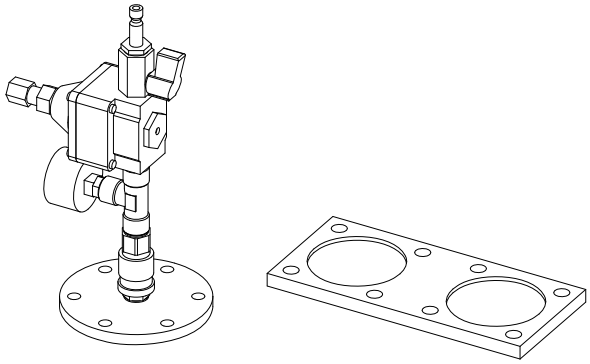	Pressure Test Equipment (Optional Accessories) TP No. 1349738-0100 **1 Superstructure** 1.4.5-2 Air Super Heater - Check Heat Exchanger
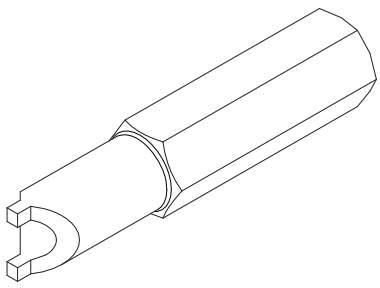	Key (Regular Accessories) TP No.1517064-0000 **1 Superstructure** 1.11.1-2 Irradiation Kit - Overhaul

TechPub_2614345_0108 - 0904_3048258_01.fm

Illustration	Description
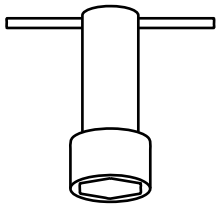	Socket Wrench (Optional Accessories) TP No. 90206-0330 **1 Superstructure** 1.7.1-1 Heating Unit - Change Heating Elements
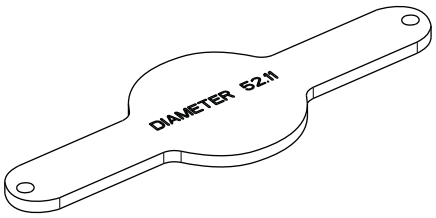	Steering Ring Template (Regular Accessories) TP No. 2878628-1 (for TBA 125 S) TP No. 2878628-2 (for TBA 200 S) TP No. 2878928-3 (for TBA 250 S - TBA 200 M)) TP No. 2878628-4 (for TBA 250 B - TBA 200 B) TP No. 2878628-5 (for TBA 1000 Sq) TP No. 2878628-6 (for TBA 1000 S) TP No. 2878928-7 (for TBA 1000 B) **1 Superstructure** 1.2.7-2 Steering Ring - Set Rollers
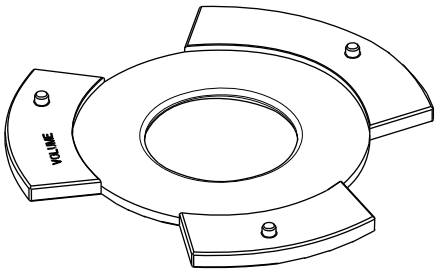	Seal Ring Alignment Tool (Regular Accessories) TP No. 3038998-0100 **1 Superstructure** 1.2.6-3 Seal - Set Position
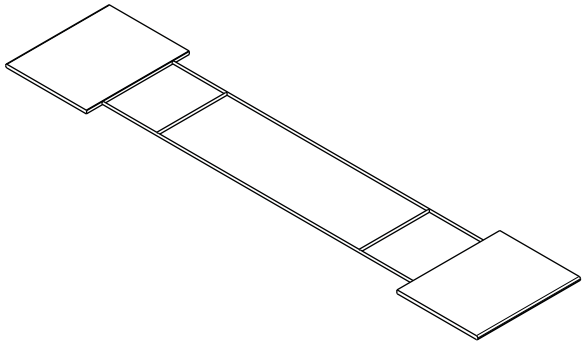	Template (Optional Accessories) TP No. 3122373-0000 **1 Superstructure** 1.7.3-3 Bath - Change Heating Elements

TechPub_2614345_0108 - 0904_3048258_01.fm

Illustration	Description
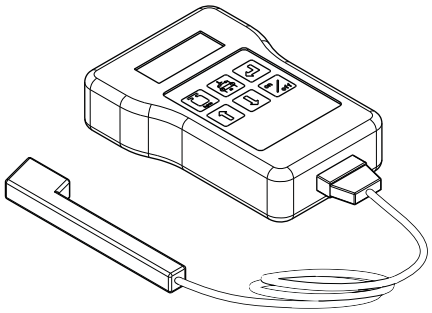	Belt Tension Meter (Optional Accessories) TP No. 90600-3415 **4 Jaw System** **5 Final Folder** **8 ASU** 4.5-1 Design Correction - Set Belt Tension 5.2.2-3 Swing Frame - Set Belt 5.2.3-6 Chain Support - Set Belt 8.6-3 Side Feeder - Check Timing Belt Tension
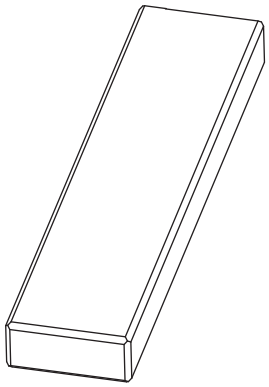	Tool (Regular Accessories) TP No. 2640362-0000 (Portion Packages) TP No. 2656105-0000 (Family Packages) **4 Jaw System** 4.3-1 Drive Unit - Overhaul
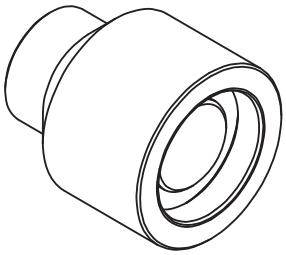	Shaft Removal Tool (Regular Accessories) TP No. 90459-4501 **4 Jaw System** 4.3-1 Drive Unit - Overhaul
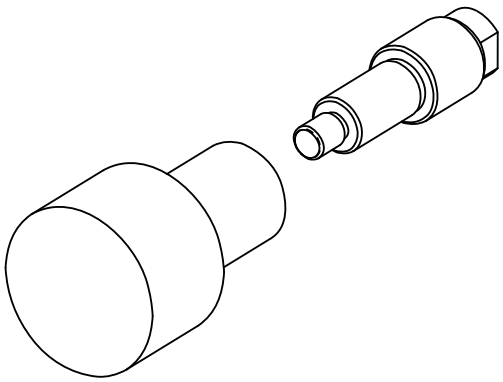	Bushing Tool (Regular Accessories) TP No. 2715353-0000 **4 Jaw System** 4.2-11 Pressure Jaw - Overhaul

TechPub_2614345_0108 - 0904_3048258_01.fm

Illustration	Description
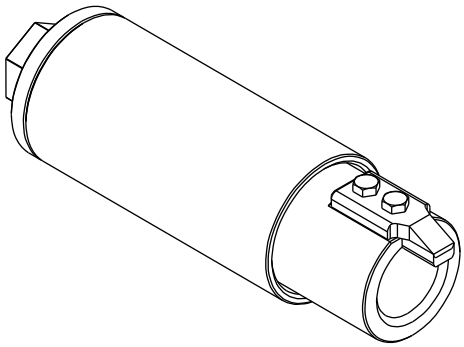	Jaw Bearing Extraction Tool (Regular Accessories) TP No. 1487215-0000 Attachment for sealing jaws, 1499129 (thick) Attachment for pressure jaws, 1499186 (thin) **4 Jaw System** 4.2-11 Pressure Jaw - Overhaul 4.1-12 Sealing Jaw - Overhaul
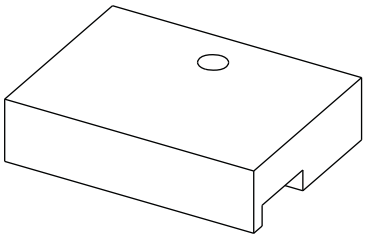	Tool TP No. 3010398-0000 **4 Jaw System** 4-11 Jaw System - Overhaul Cutting Device
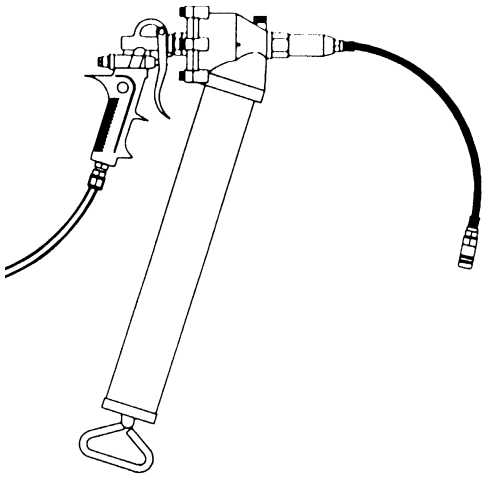	Spray Gun TP No. 1512559-0000 **4 Jaw System**
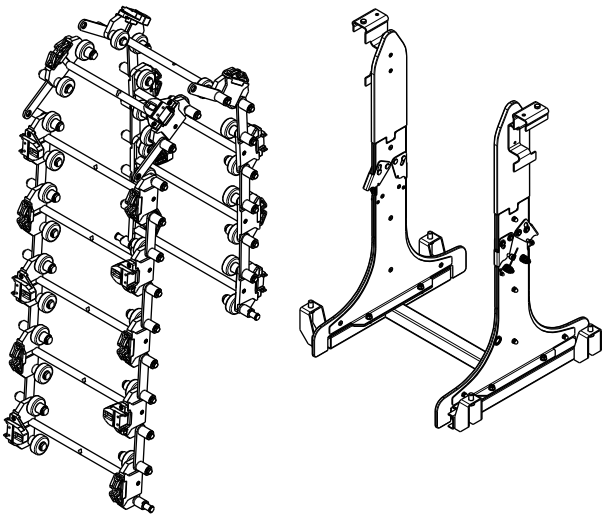	Chain Lift Tool (Optional Accessories) TP No. 2839739-0101 (for TBA 125 S) TP No. 2839739-0102 (for TBA 200 B) TP No. 2839739-0103 (for TBA 200 M) TP No. 2839739-0104 (for TBA 250 B) TP No. 2839739-0105 (for TBA 200 S) TP No. 2839739-0106 (for TBA 250 S) TP No. 2839739-0107 (for TBA 1000 B) TP No. 2839739-0108 (for TBA 1000 S) TP No. 2839739-0109 (for TBA 1000 Sq) **4 Jaw System** 4-7 Jaw System - Remove and Assemble Chains

TechPub_2614345_0108 - 0904_3048258_01.fm

Illustration	Description
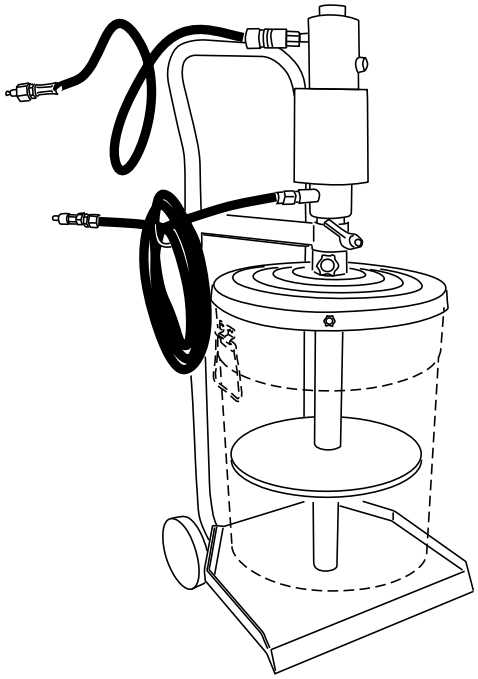	Portable grease pump (Optional Accessories) TP No. 90459-2334 **4 Jaw System**
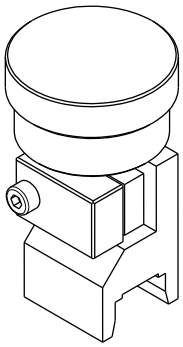	Micrometer Tool (Optional Accessories) TP No. 2908997-0102 (for TBA 125 S) TP No. 2908997-0103 (for TBA 200 B) TP No. 2908997-0104 (for TBA 200 M) TP No. 2908997-0105 (for TBA 200 S) TP No. 2908997-0107 (for TBA 250 B) TP No. 2908997-0108 (for TBA 250 S) TP No. 2908997-0115 (for TBA 1000 B) TP No. 2908997-0116 (for TBA 1000 S) TP No. 2908997-0117 (for TBA 1000 Sq) **4 Jaw System** 4.1-7 Sealing Jaw - Check Inductor
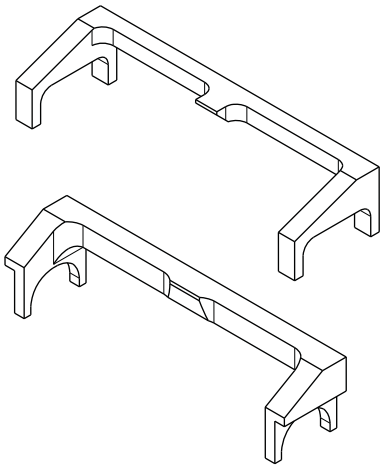	Waste Box Tool (Regular Accessories) TP No. 2954995-0000 (for T-orders: 21215/00001 to 21215/00070) TP No. 3053983-0000 (for T-orders: 21215/00071 and above). **4 Jaw System** 4.7-3 Waste Box - Set Pneumatic Cylinder

TechPub_2614345_0108 - 0904_3048258_01.fm

Illustration	Description
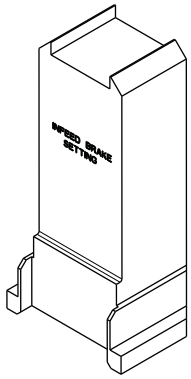	Heat Applicator Template (Regular Accessories) TP No. 2946747-0000 (for TBA 200 S) TP No. 2946748-0000 (for TBA 250 B) TP No. 2946749-0000 (for TBA 200 B) TP No. 2846459-0000 (for TBA 125 S) TP No. 2946750-0000 (for TBA 200 M) TP No. 2946751-0000 (for TBA 250 S) TP No. 2527355-0000 (for TBA 1000 S - TBA 1000 B) TP No. 2553032-0000 (for TBA 1000 Sq) **5 Final Folder** 5.2.5-1 Heating Chamber - Set Flap Sealing Nozzles
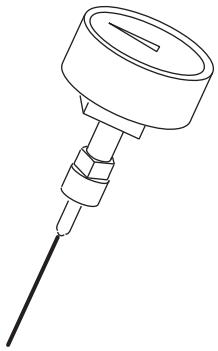	Needle Pressure Gauge (Optional Accessories) TP No. 1478583-0100 **5 Final Folder** 5.2.4-1 Squeezer - Set Position
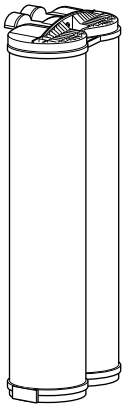	Maintenance Kit (Regular Accessories) TP No. 90600-3267 **7 Service Unit** 7.5.2-4 Sterile Water System - Change Progard Pack
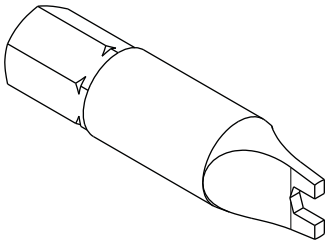	Tool for Snake Eyes M5 Screws (Regular Accessories) TP No. 90600-2975 **8 ASU** 8.10-3 Covering Panel - Change Safety Key

TechPub_2614345_0108 - 0904_3048258_01.fm

Illustration	Description
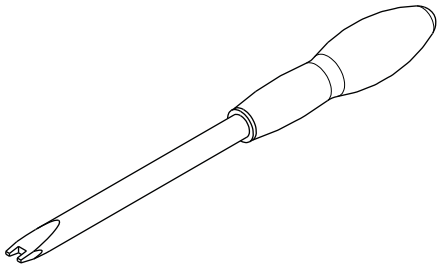	Tool for Special Round Nuts (Regular Accessories) TP No. 2863968-0000 **8 ASU** 8.10-3 Covering Panel - Change Safety Key
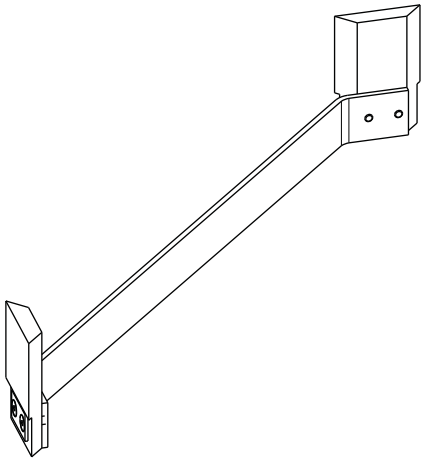	Sealing Plate Cleaning Tool (Regular Accessories) TP No. 2994287-0000 **8 ASU** 8.4.4-1 Heating Unit - Check Sealing Plate
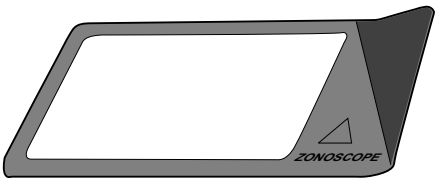	Measuring Instrument (Optional Accessories) TP No. 90243-0203 **9 Electrical Cabinet**
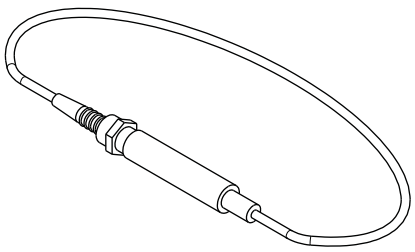	Resistance (Optional Accessories) TP No. 3031848-0000 **9 Electrical Cabinet** 9.7.3-2 Conductivity Meter - Check 9.7.3-4 Conductivity Meter - Calibrate

TechPub_2614345_0108 - 0904_3048258_01.fm

Illustration	Description
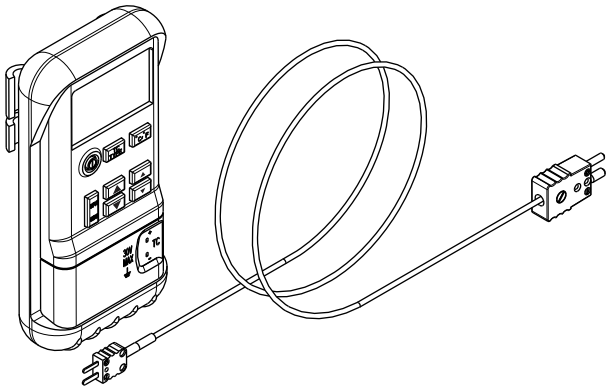	Temperature Calibrator (FLUKE 714) (Optional Accessories) TP No. 90458-0914 Thermocouple Cable Male (Optional Accessories) TP No. 90458-0915 **9 Electrical Cabinet** 9.7.5-1 Temperature Regulators - Calibrate 9.7.5.1-1 Calibrator - Set Fluke 714
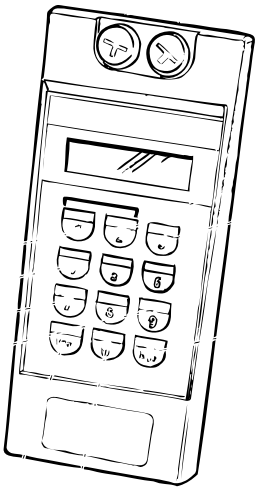 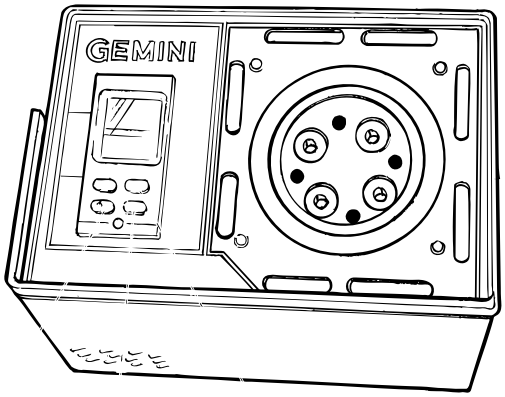	Calibration Equipment (Optional Accessories) TP No. 2559112-0100 Including: Temperature Calibrator (Micromite instrument) TP No. 90410-0338 Extension Wire Male 5m. (temp.controller) TP No. 90326-0308 Extension Wire Female 1m. (oven) TP No. 90326-0309 Label TP No. 90194-0113 Temperature Calibrator Oven (Gemini) TP No. 90410-0337 Calibrated Thermocouple Type K TP No. 90326-0310 **9 Electrical Cabinet** 9.7.5.1-2 Calibrator - Set Micromite II 9.7.6-1 Thermocouples - Check

TechPub_2614345_0108 - 0904_3048258_01.fm

10.3 Consumables

10.3.1 Lubricants

WARNING

Risk of personal injury!

Certain lubricants can cause injury if they come into contact with the eyes, skin, mucous membranes, or clothing. Always follow the manufacturer's instructions for handling chemical products.

The table below lists only a selection of lubricants with their respective designations.

Lubricant specifications may be ordered from:

Tetra Pak GTS AB - Parts Supply Chain, Ruben Rausings gata, SE-221 86 LUND, Sweden

Lubricant Code	**Part No. (used when ordering from Tetra Pak)**	**Supplier**	**Product Designation** (2004-06)
A Motor oil	90296-0028	Shell	Shell Rimula Oil X 10W-30
B Central lubrication oil	90296-0073	Shell	Shell Omala Oil 220
	90296-0072 For use in production plant with start temperature below 5 °C	Shell	Shell Omala Oil 150
C Hydraulic oil	90296-0053	Shell	Shell Tellus Oil T 32
D Mist lubrication oil	90296-0080	Shell	Shell Donax Oil TA
E Compounded cylinder oil	90296-0002	Shell	Shell Valvata Oil J460
F Lithium grease, EP type	90296-0068	Shell	Shell Alvania Grease EP2
H Central lubrication oil	90296-0075 90296-0076	Shell	Shell Omala oil 320
K Circulation oil	90296-0015	Shell	Shell Tellus Oil 100
L Silicone grease	90296-0009		Dow Corning 7
M Lithium grease, EP type	90296-0070	Shell	Shell Alvania Grease EP1
N PTFE grease	90296-0091	PINCO	Teflon Grease

TechPub_2614345_0108 - 0901_3048259_01.fm

Lubricant Code	**Part No. (used when ordering from Tetra Pak)**	**Supplier**	**Product Designation** (2004-06)
P Synthetic compressor oil	90296-0054	Shell	Shell Corena Oil P68
Q Low friction assembly paste	90296-0012	Dow Kluber	Molykote G-N Plus Unimoly Plus
R Synthetic grease	90459-7413 90459-7414	Kluber	Klubersynth UH1 14-1600
S Synthetic hydrocarbon grease	90296-0010	Mecman	435-1
T Synthetic lubricating grease	90459-0340	Shell	Cassida HDS2
U Hydraulic fluid	90459-1310	Shell	Cassida Fluid HF32
V Oil	90296-0104	Molykote	Molykote Foodslip EP Gear Oil 220
W Hydraulic fluid	90458-1427	Shell	Shell Tellus Oil T46
Y Lubrication oil	90458-2735	Mobil	Mobil SHC 634
Z Lubrication oil	90459-1041	Shell	Tivela S460

TechPub_2614345_0108 - 0901_3048259_01.fm

10.3.2 Cleaning Compounds

WARNING

Risk of explosion.

Cleaning with not recommended cleaning agents, for example agents including alcohol, could cause explosion. Use only Tetra Pak recommended cleaning agents when cleaning or disinfecting parts that can come into contact with hydrogen peroxide.

It is strongly recommended, in order to optimize the cleaning efficiency, to use water characterised by the following physicochemical parameters:

- water quality; chlorine free, drinkable water
- pH; between 6 and 8 pH units
- water hardness; between 5 and 10 °f French degrees of hardness (between 3 and 6 German degrees of hardness)
- chlorides; lower than 50 ppm
- silicates; lower than 10 ppm (in order to reduce the formation of solid deposits difficult to be removed)

(Cont'd)

TechPub_2614345_0108 - 0901_3048259_01.fm

(Cont'd)

Cleaning Compound Table

Comparable qualities from other suppliers may be selected in compliance with the technical requirements listed in the table. All cleaning compounds must comply with local legal requirements.

The supplier recommendations for concentration and temperature should be followed. When dosing the products automatically, the concentration should be checked.

Cleaning Type	**TP Code**		**Detergent Type**	**Example** 071119									
				Raw Material				**Formulated Products**					
				Name	**Max Conc w/w**	**Use Conc w/w**	**Use Temp °C**	**Ecolab**	**Use Conc. w/w**	**Use Temp. °C**	**JohnsonDiversey**	**Use Conc. vol/vol**	**Use Temp. °C**
CIP	A	1	Alkali	NaOH	30%	1.50%	80	P3-mip CIP	2.0%	80	VC 13 VC 7	3.0% 4.5%	80
	B	1	Acid	HNO_3	50%	1.00%	60	P3-horolith L31	1.0%	60	VA 5	2.0%	60
External Cleaning (automatic)	C	1	Alkali foam (**)					P3-Topax 12	3.0%	25	VF 9	3.0%	25
		2	Alkali solution (***)					P3-mip FPC	2.0%	55	VK 12	1.0%	55
Manual Cleaning (wiping)	D	1	Alkali					P3-mip FPC	2.0%	25	VK 12	1.0%	25
Manual Disinfection (immersion)	F	1	Low alkali					P3-Topax 99	2.0%	25	VS 1	1.0%	25
		2	Low alkali					P3-Steril	2.0%	25	VT 1	1.0%	25
		3	Acid solution	Peracetic acid solution	15%	200ppm	25	Oxonia Active	0.50 %	25	VT 6	0.10 %	25
Manual Disinfection (spraying)	G	1	Alcoholic solution	Isopropanol			25	Spitaderm	Pure	25	VT 10	pure	25
		2	Alcoholic solution	Ethanol			25	Alcodes	Pure	25			25
		3	Acid solution	Peracetic acid solution	15%	200ppm	25	Oxonia Active	0.50 %	25	VT 6	0.10 %	25
Hand Disinfection	H	1						Manodes	pure	25	H34	pure	25

**To be used on TBA/21, TBA/22, TP A3/Flex, TP A3/Speed, TB/21, TP C3/Flex.

***To be used on TBA/8, TBA/9, TBA/19, TB/8, TB/9, TB/19.

TechPub_2614345_0108 - 0901_3048259_01.fm

10.4 Safety Functions

10.4-1 Safety Functions - Check

Machine Status	PREPARATION

Make sure that the machine can not be inched if:

- any of the doors or covers are open
- any EMERGENCY STOP is pushed
- the crank is in the cranking position.

For the location of safety components, see the sections Safeguards and Emergency Stop in the Safety Precautions chapter.

Make sure that when any EMERGENCY STOP is pushed the machine resets to step ZERO.

Check that the warning sign labels are present and readable. Replace any missing and /or illegible signs, see Locations of Safety Signs in the Safety Precautions chapter.

Also see the Optional Equipment MM's.

TechPub_2614345_0108 - 0901_3048260_01.fm

10.5 Protective Devices

10.5-1 Protective Devices - Check

Machine Status	PREPARATION

The illustration shows where the protective devices are located. Make sure that the protective devices shown below are fitted on the machine.

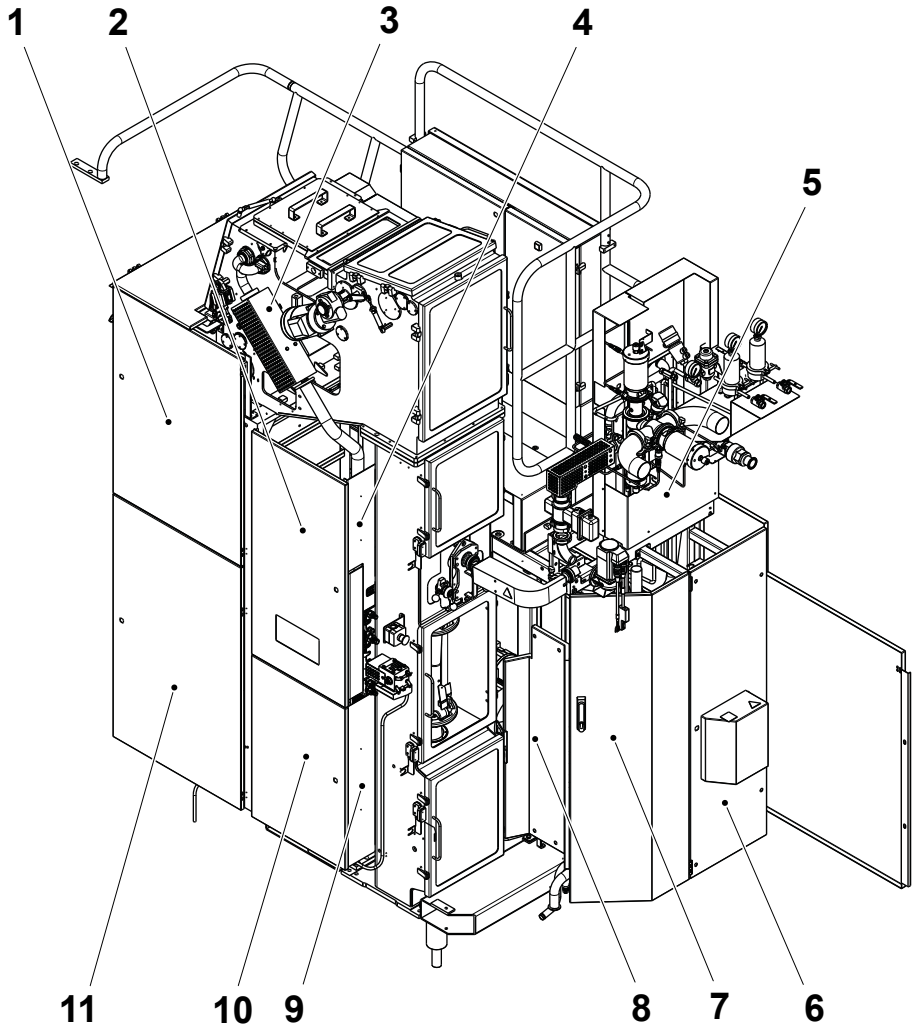

1 Door, upper superstructure LH side
2 Door, pneumatic panel
3 Cover, air knife heater
4 Panel
5 Cover, steam system
6 Cover, ICU
7 Door, cleaning system
8 Cover
9 Panel
10 Door, lower superstructure LH side
11 Door, peroxide heating unit

(Cont'd)

TechPub_2614345_0107 - 0902_3048263_01.fm

(Cont'd)

The illustration shows where the protective devices are located. Make sure that the protective devices shown below are fitted on the machine.

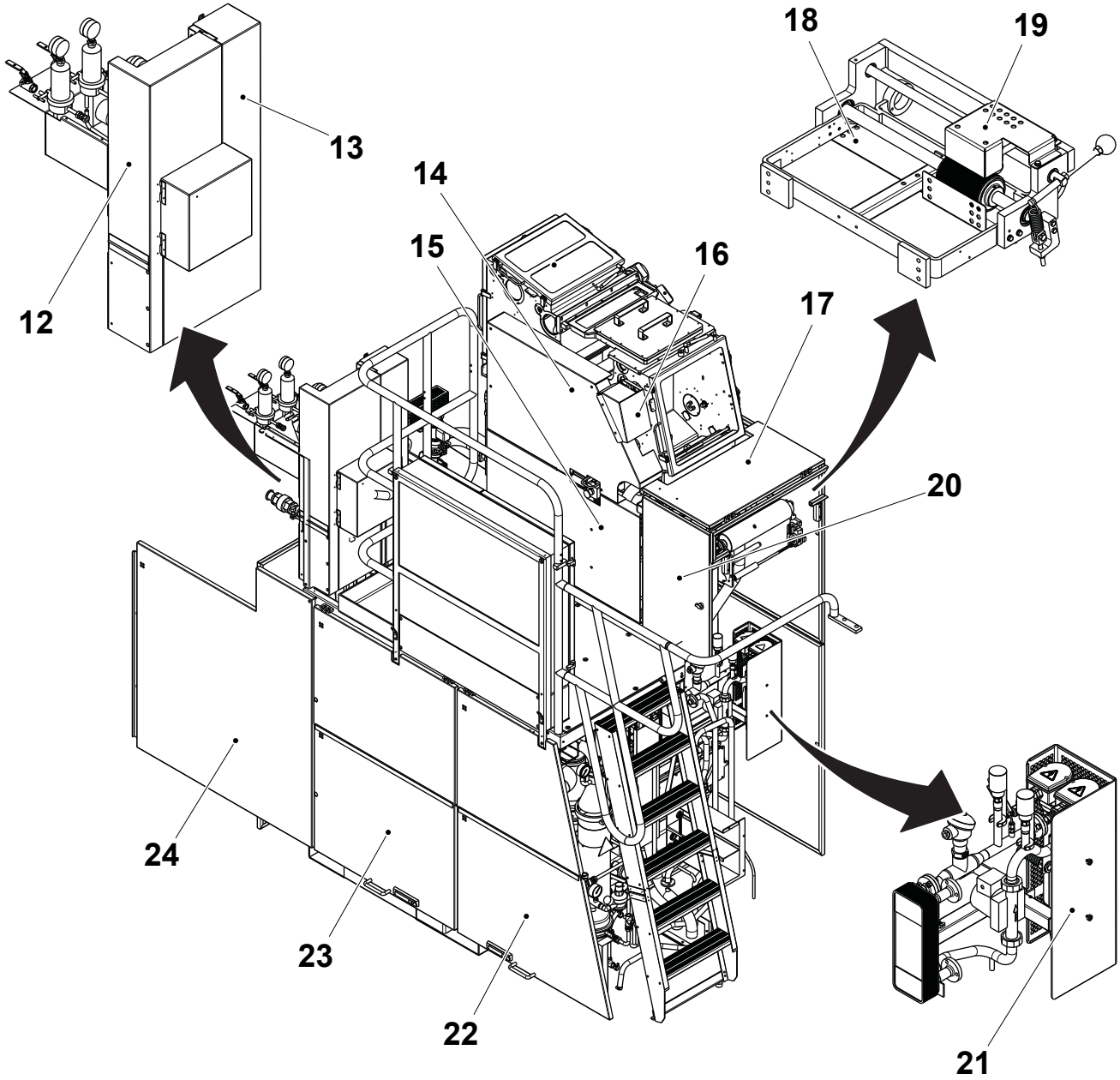

12 Cover, steam system and flow switch
13 Cover, steam system
14 Cover plate, RH side
15 Cover plate, RH side
16 Touch guard
17 Top door
18 Touch guard, tab folding
19 Touch guard, tab folding
20 Door, RH side
21 Protection, heating unit
22 Cover, sterile air system
23 Cover, sterile air system
24 Plate, sterile air system

(Cont'd)

TechPub_2614345_0107 - 0902_3048263_01.fm

(Cont'd)

The illustration shows where the protective devices are located. Make sure that the protective devices shown below are fitted on the machine.

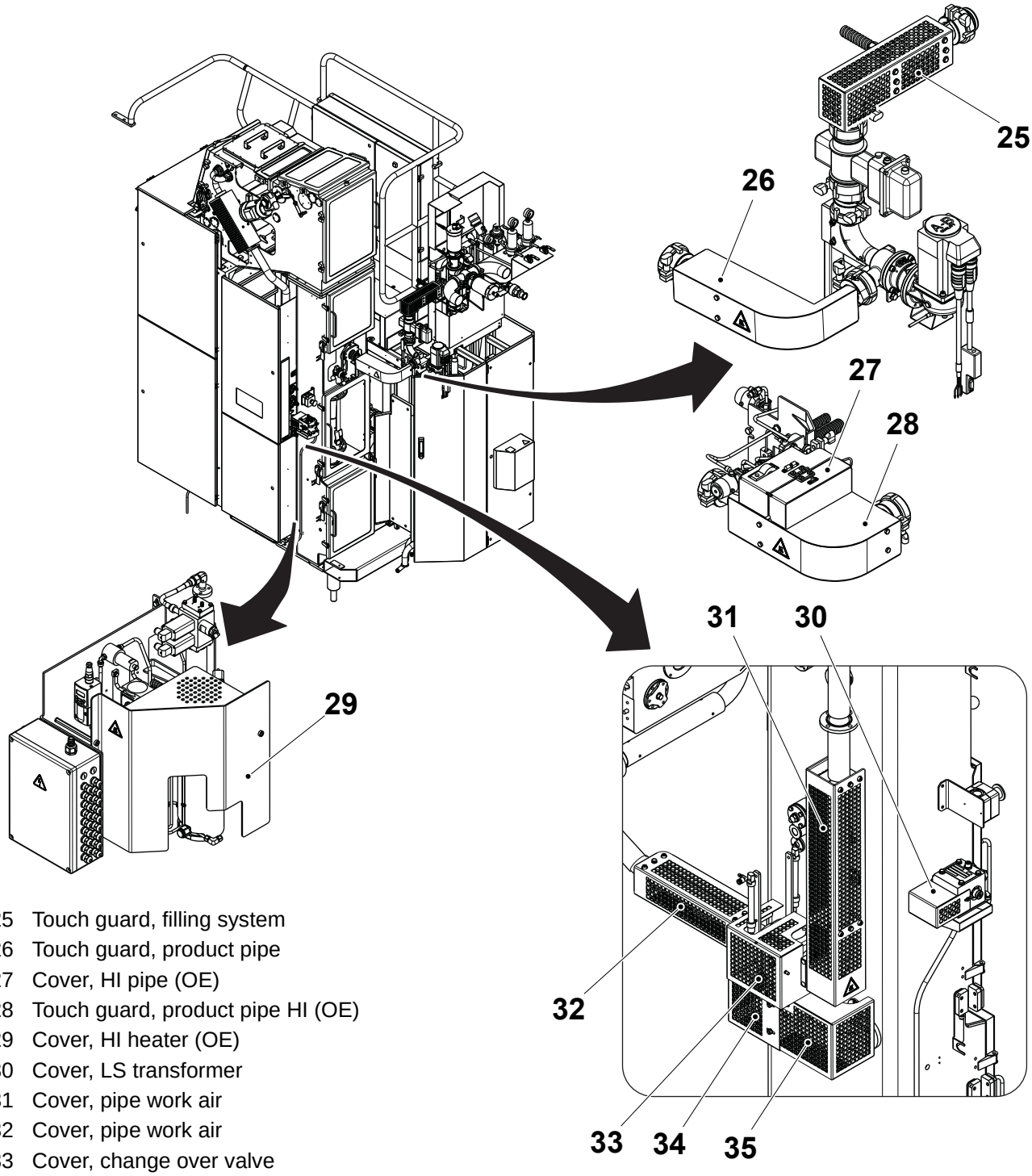

25 Touch guard, filling system
26 Touch guard, product pipe
27 Cover, HI pipe (OE)
28 Touch guard, product pipe HI (OE)
29 Cover, HI heater (OE)
30 Cover, LS transformer
31 Cover, pipe work air
32 Cover, pipe work air
33 Cover, change over valve
34 Cover, pipe work air
35 Cover, pipe work air

(Cont'd)

TechPub_2614345_0107 - 0902_3048263_01.fm

(Cont'd)

The illustration shows where the protective devices are located. Make sure that the protective devices shown below are fitted on the machine.

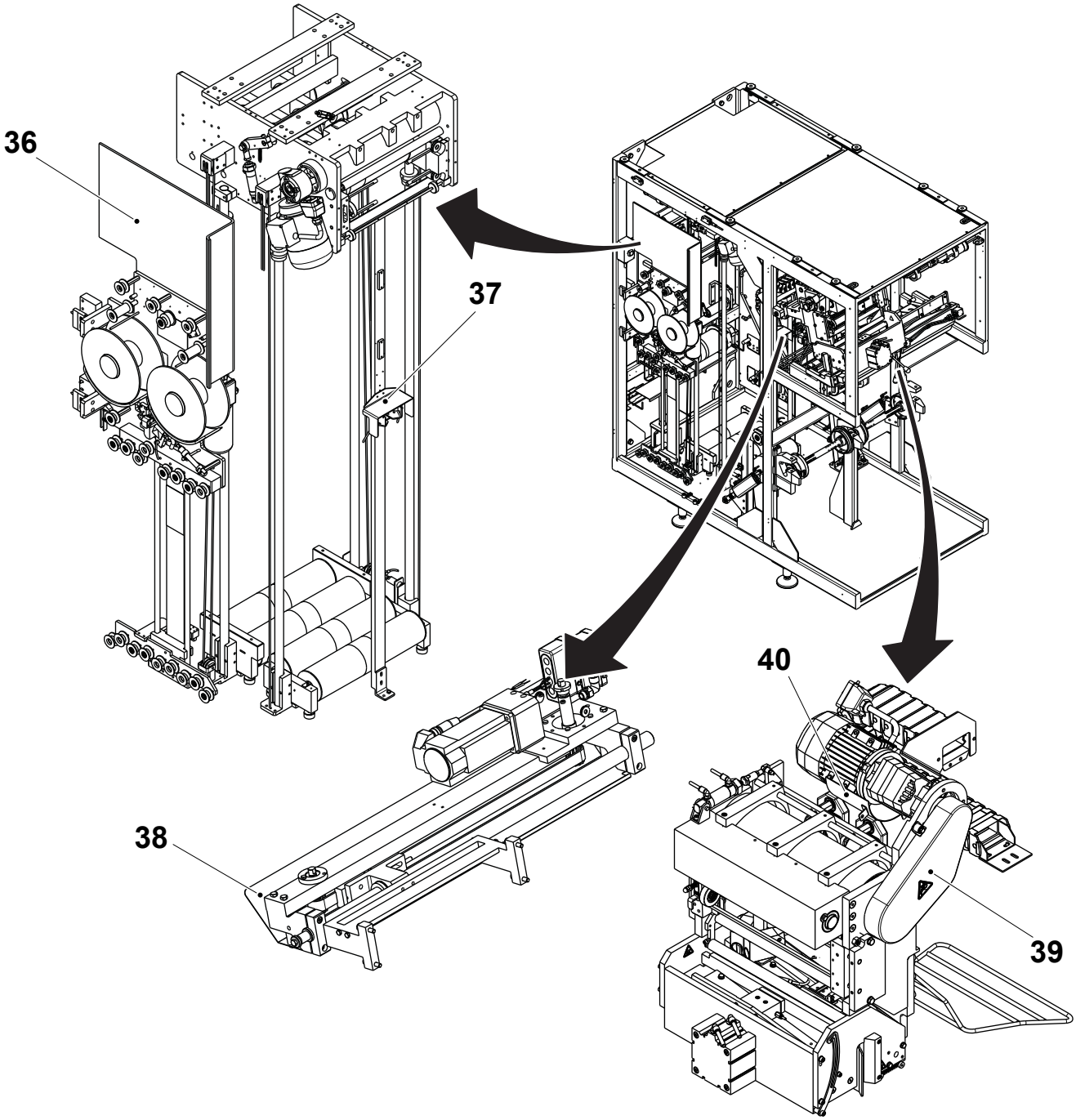

36 Protection, paper magazine
37 Cover, photocell unit
38 Cover, side feeder
39 Cover, drive unit
40 Protection, motor

(Cont'd)

TechPub_2614345_0107 - 0902_3048263_01.fm

(Cont'd)

The illustration shows where the protective devices are located. Make sure that the protective devices shown below are fitted on the machine.

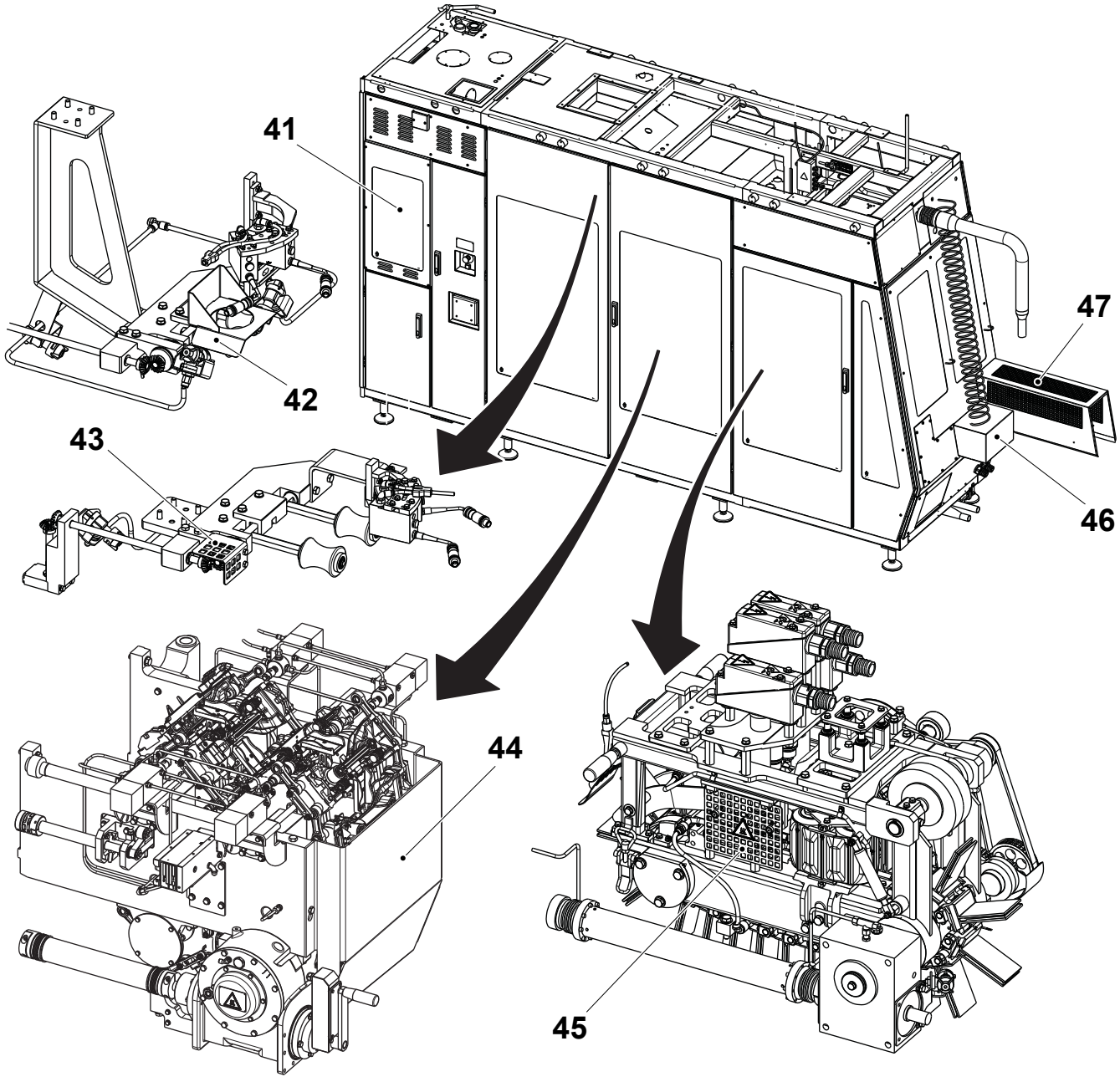

41 Protective cover, chemicals
42 Cover, tube support rollers (Portion Packages)
43 Cover, photocell unit (Family Packages)
44 Protection, jaw system (Portion Packages)
45 Touch guard, flap heaters (on both sides)
46 Cover
47 Tunnel

(Cont'd)

TechPub_2614345_0107 - 0902_3048263_01.fm

(Cont'd)

The illustration shows where the protective devices are located. Make sure that the protective devices shown below are fitted on the machine.

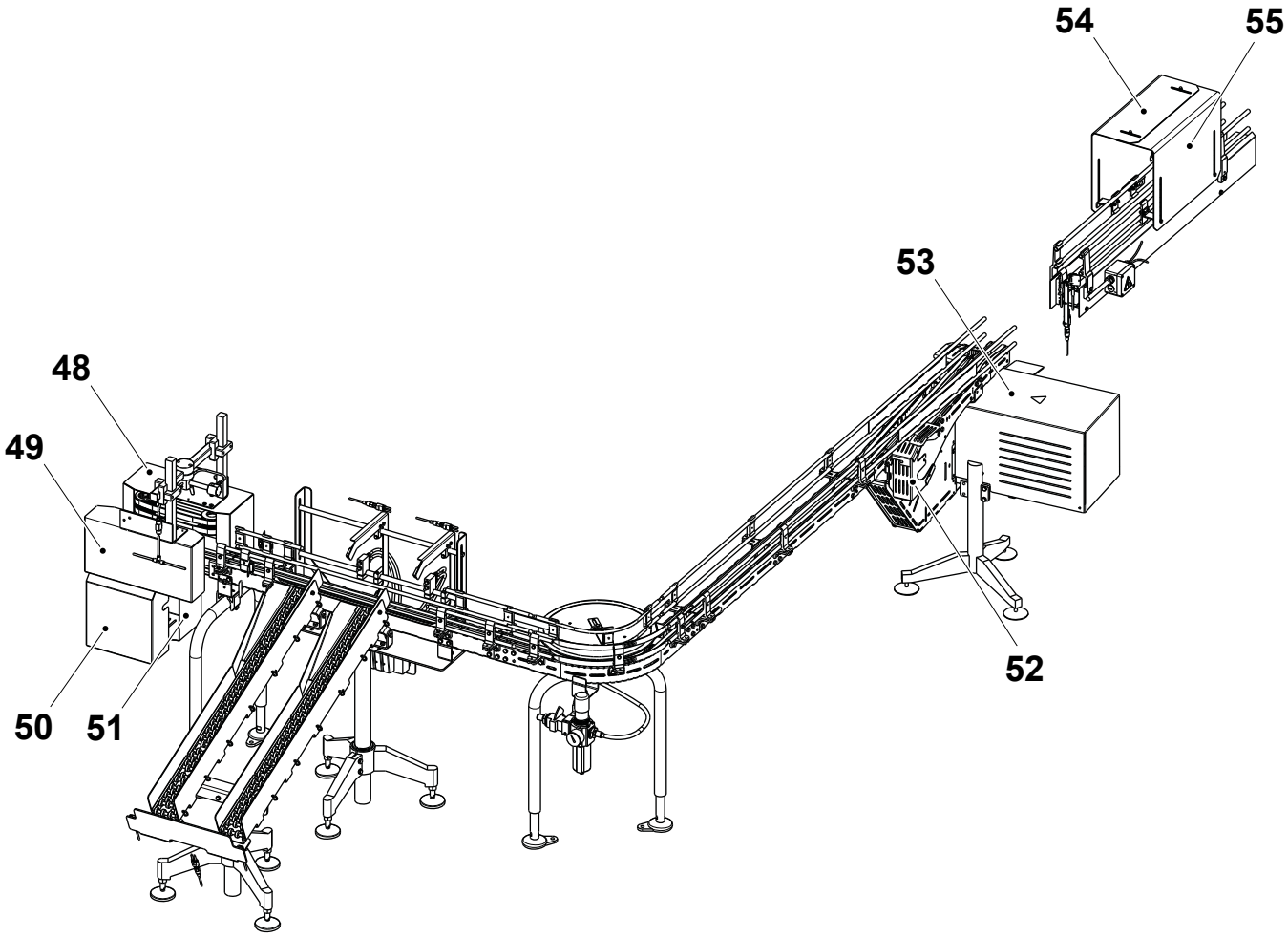

48 Cover, belt brake
49 Cover, belt brake
50 Cover, belt brake
51 Cover, belt brake
52 Protection, drive and end unit
53 Cover, drive and end unit
54 Cover, last point DE
55 Cover, last point DE

TechPub_2614345_0107 - 0902_3048263_01.fm

A

Air Knife - Change Rails . . . . . 1 - 145
Air Knife - Check and Clean . . . . . 1 - 143
Air Knife - Set Proximity Sensor . . . . . 1 - 147
Air Nozzle - Set . . . . . 8 - 55
Air Pipe-Line - Change Gasket and Non Return Valve . . . . . 2 - 22
Air Pipe-Line - Check . . . . . 2 - 19
Air Super Heater - Check . . . . . 1 - 215
Air Super Heater - Check Heat Exchanger . 1 - 217
Air Valve - Overhaul . . . . . 1 - 227
Air Valve - Set . . . . . 1 - 223
Air Valve - Set Proximity Switch . . . . . 1 - 231
ASU - Check Function . . . . . 8 - 11
ASU - Force Manual Splice Out of Design . . . 8 - 19
ASU - Setting Sequence . . . . . 8 - 9

B

Bar Code Scanner - Change Cable . . . . . 2 - 131
Bar Code Scanner - Configure and Test Bar 2 - 122
Bath - Change Heating Elements . . . . . 1 - 412
Bath - Change Roller Bushings . . . . . 1 - 408
Bath - Check Roller . . . . . 1 - 405
Bath - Set Bottom Cover Sensor . . . . . 1 - 422
Bending - Change Roller . . . . . 1 - 167
Bending Roller - Change . . . . . 1 - 119, 1 - 140
Bending Roller - Change Ball Bearings . . . . . 2 - 8
Bending Roller - Change Bearings . . . . . 8 - 69
Bending Roller - Check . . . . . 2 - 7
Bending Roller - Check Paper Guide . . . . . 1 - 437
Bending Roller - Check Proximity Switch . . . 1 - 446
Bending Roller - Check Splice Detector . . . . 1 - 431
Bending Roller - Overhaul . . . . . 1 - 429
Bending Roller - Set Paper Guide Position . 1 - 435
Bending Roller - Set Paper Guide Pressure 1 - 445
Bending Roller - Set Proximity Switch . . . . . 1 - 447
Bending Roller - Set Splice Detector . . . . . 1 - 433
Bending Roller - Set Web Width . . . . . 1 - 443
Bobbin Brake - Set . . . . . 8 - 210
Buffer - Check . . . . . 8 - 82

C

Calender Roller - Change . . . . . 1 - 127
Calender Roller - Change Seals . . . . . 1 - 135
Calender Roller - Check . . . . . 1 - 125
Calender Roller - Set Distance . . . . . 1 - 131
Calender Roller - Set Proximity Switch . . . . . 1 - 133
Calibrator - Set Fluke 714 . . . . . 9 - 418
Calibrator - Set Micromite II . . . . . 9 - 421
Cap Guide - Set Position . . . . . 1 - 174
Chain Support - Change Belt . . . . . 5 - 101
Chain Support - Change Brushes . . . . . 5 - 98
Chain Support - Change Chain Guide . . . . . 5 - 83
Chain Support - Change Fin Guide . . . . . 5 - 106
Chain Support - Change Oil Brush . . . . . 5 - 105
Chain Support - Check Chain Guide . . . . . 5 - 82
Chain Support - Overhaul . . . . . 5 - 85
Chain Support - Set Belt . . . . . 5 - 102
Chemicals - Check . . . . . 2 - 40
Circuit - Change Filter . . . . . 7 - 51
Circuit - Set Conductivity Meter . . . . . 7 - 47
Cleaning Cup - Check Gaskets . . . . . 1 - 347
Cleaning Cup - Set Sensor . . . . . 1 - 348
Cleaning Section - Set . . . . . 1 - 378
Cleaning Section- Change Gaskets . . . . . 1 - 374
Cleaning System - Change Non-Return Valve 2 - 92
Cleaning System - Check Nozzles . . . . . 2 - 76
Compressor Unit - Change Gaskets . . . . . 1 - 193
Compressor Unit - Check . . . . . 7 - 10
Compressor Unit - Check Pressure . . . . . 1 - 191
Compressor Unit - Check Sight Glass . . . . . 7 - 8
Compressor Unit - Clean Impeller . . . . . 1 - 195
Conductivity Meter - Calibrate . . . . . 9 - 351
Conductivity Meter - Change Conductivity Sensor 9 - 362
Conductivity Meter - Change Fuse . . . . . 9 - 365
Conductivity Meter - Check . . . . . 9 - 341
Conductivity Meter - Error Codes . . . . . 9 - 357
Conductivity Meter - Identify Conductivity Sensor Cell Constant . . . . . 9 - 338
Conductivity Meter - Set . . . . . 9 - 345
Connection Box - Change Transformer . . . . . 8 - 29

TechPub_2614345_0108 - MM_3022042_0106IOM.fm

Conveyor - Change Belt . . . . . 5 - 27
Conveyor - Change Roller . . . . . 5 - 49
Conveyor - Check Bearings . . . . . 5 - 33
Conveyor - Overhaul . . . . . 5 - 34
Conveyor - Set Belt . . . . . 5 - 51
Conveyor - Set Brake . . . . . 5 - 44
Conveyor - Set Roller . . . . . 5 - 50
Conveyor Section - Check, Settings and Adjustments . . . . . 6 - 7
Conveyor Section - Disable Line Automation Control . . . . . 6 - 11
Conveyor Section - Set Congestion and Discharge Time . . . . . 6 - 9
Conveyor Section - Set Line Interface Option 6 - 12
Conveyor Section - Set Queue Photocells . . . . 6 - 5
Cooling Unit - Change Filter . . . . . 9 - 524
Cooling Unit - Check . . . . . 9 - 526
Cooling Unit - Clean Filter . . . . . 9 - 522
Cooling Unit - Overhaul . . . . . 9 - 528
Cooling Unit - Troubleshooting . . . . . 9 - 534
Cooling Water System - Check . . . . . 7 - 5
Cooling Water System - Fill . . . . . 7 - 7
Counter Roller - Change . . . . . 8 - 193
Counter Roller - Check . . . . . 8 - 139
Counter Roller - Overhaul . . . . . 8 - 140
Counter Roller - Set Alignment . . . . . 8 - 195
Counter Roller - Set Cylinder . . . . . 8 - 143
Covering Panel - Change Safety Key . . . . . 8 - 209
Covering Panel - Check . . . . . 8 - 206
Covering Panel - Set Safety Switches . . . . . 8 - 208
CPU Module - Change . . . . . 9 - 21
CPU Module - Change Battery . . . . . 9 - 44
CPU Module - Download Program . . . . . 9 - 31
CPU Module - LED Description . . . . . 9 - 42
CPU Module - Load Firmware . . . . . 9 - 27
Crank - Check Chain . . . . . 1 - 137
Curve Wheel - Change Drive Wheel Ball Bearings 5 - 182
Curve Wheel - Overhaul . . . . . 5 - 177
Curve Wheel - Set Counting Photocells . . . . 5 - 175
Cutting Table - Change Pads and Finger . . . . 8 - 84
Cutting Table - Check . . . . . 8 - 83
Cutting Table - Set . . . . . 8 - 86

D

Date Unit - Set Date Unit . . . . . 6 - 14
Date Unit - Set JEID Mode . . . . . 6 - 18
Date Unit- Configure Printer Interface . . . . . 6 - 16
Design Correction - Change Belt . . . . . 4 - 212
Design Correction - Check Belt . . . . . 4 - 211
Design Correction - Overhaul . . . . . 4 - 216
Design Correction - Set . . . . . 4 - 221
Design Correction - Set Belt Tension . . . . . 4 - 208
Design Correction - Set Coupling . . . . . 4 - 214
DeviceNet Compact Block I/O - Change . . . . 9 - 122
DeviceNet Compact Block I/O - Download Program 9 - 126
DeviceNet Compact Block I/O - LED Description 9 - 130
DeviceNet Compact Block I/O - Set Node Address 9 - 125
DeviceNet Point I/O Adapter - Change . . . . . 9 - 98
DeviceNet Point I/O Adapter - Download Program 9 - 103
DeviceNet Point I/O Adapter - LED Description . 9 - 107
DeviceNet Point I/O Adapter - Set Node Address 9 - 102
DeviceNet Point I/O Module - Change . . . . . 9 - 111
DeviceNet Point I/O Module - LED Description . . 9 - 115
DeviceNet PowerFlex Adapter - Change . . . 9 - 132
DeviceNet PowerFlex Adapter - Download Program 9 - 139
DeviceNet PowerFlex Adapter - LED Description 9 - 143
DeviceNet PowerFlex Adapter - Set Node Address and Baud Rate . . . . . 9 - 136
DeviceNet Scanner Module - Change . . . . . 9 - 70
DeviceNet Scanner Module - Download Program 9 - 77
DeviceNet Scanner Module - Error Codes . . . 9 - 83
DeviceNet Scanner Module - LED Description 9 - 81
DeviceNet Scanner Module - Load Firmware . 9 - 76
DeviceNet Scanner Module - Register EDS File(s) 9 - 87
DeviceNet Scanner Module - Set Node Address and Baud Rate . . . . . 9 - 75
Digital I/O Modules - Change . . . . . 9 - 60

TechPub_2614345_0108 - MM_3022042_0106IOM.fm

Digital I/O Modules - LED Description . . . . . 9 - 65
Distributed I/O - Description . . . . . 9 - 68
Doors and Covers - Grease Locking Devices 2 - 95
Doors and Covers - Remove . . . . . 2 - 93
Draining - Change 3-Way Valve Diaphragm 1 - 371
Draining - Check . . . . . 1 - 370
Draining - Set 3-Way Valve Sensor . . . . . 1 - 373
Drive Roller - Change . . . . . 1 - 122
Drive Roller - Check . . . . . 1 - 120
Drive Unit - Jog Volume Adjuster . . . . . 3 - 7
Drive Unit - Overhaul . . . . . 4 - 183
Drive Unit - Servo Motors Commissioning . . . . 3 - 5
Drive Unit - Synchronise Volume Adjuster Motor . 3 - 8
Drying Chamber - Check Aseptic Chamber Overpressure . . . . . 1 - 106
Drying Chamber - Check Rollers . . . . . 1 - 95
Drying Chamber - Leakage Detection . . . . . 1 - 98
Drying Chamber - Set Overpressure . . . . . 1 - 108

E

Edge Roller - Set . . . . . 1 - 47
Edge Roller - Set Lower Edge Roller Clearance . 1 - 53
Electric Equipment - Change Fan . . . . . 2 - 85
Electric Equipment - Check Fan . . . . . 2 - 84
Electrical Connection - Check Busbar and Core . 4 - 224
Electrical Connection - Check Position . . . . 4 - 251
Electrical Connection - Check Transformer . 4 - 231
Electrical Connection - Overhaul . . . . . 4 - 235
Electrical Connection - Set Sensor Sensitivity 7 - 46
Electrical Equipment - Check Pressure Sensor . . 1 - 448
EtherNet/IP Module - Change . . . . . 9 - 46
EtherNet/IP Module - LED Description . . . . . 9 - 58
EtherNet/IP Module - Load Firmware . . . . . 9 - 57
EtherNet/IP Module - Set IP Address . . . . . 9 - 51

F

Filling Pipe - Change Gasket . . . . . 1 - 293
Filling Pipe - Change Locking Pins . . . . . 1 - 286
Filling Pipe - Check . . . . . 1 - 248
Filling Pipe - Check Level Detector Function 1 - 284
Filling Pipe - Fit . . . . . 1 - 255
Filling Pipe - Remove . . . . . 1 - 249
Filling Pipe - Remove Bucket . . . . . 1 - 289
Filling Pipe - Set Level Detector Position . . . 1 - 275
Filling Pipe - Set Position . . . . . 1 - 263
Filling Pipe - Set Pressure Roller . . . . . 1 - 273
Filter - Change Filter Insert . . . . . 7 - 31
Filter - Change Pressure Regulator . . . . . 7 - 28
Filter - Set Pressure Regulator . . . . . 7 - 30
Final Folder Unit - Activate Flap Heaters Air Flow 5 - 21
Final Folder Unit - Change Gearbox Oil . . . . . 5 - 23
Final Folder Unit - Check Coupling . . . . . 5 - 22
Final Folder Unit - Check Nozzles . . . . . 5 - 25
Final Folder Unit - Inch . . . . . 5 - 17
Final Folder Unit - Jog Infeed and Outfeed Unit . 5 - 19
Final Folder Unit - Synchronise . . . . . 5 - 7
Flow Meter - Change Filter . . . . . 7 - 11
Flow Meter - Change Filter Insert . . . . . 7 - 14
Flow Meter - Set Flows . . . . . 7 - 13
Flow Switch - Change Sensor Gasket . . . . . 1 - 346
Flow Switch - Check Gaskets . . . . . 1 - 344
Flow Switch - Set . . . . . 1 - 345
Foaming Unit - Check Connections . . . . . 7 - 16
Foaming Unit - Set Pressures . . . . . 7 - 17
Forming Ring - Set Clearance . . . . . 1 - 45
Forming Section - Change Forming Ring Bushings 1 - 20
Forming Section - Check Forming Rings . . . . 1 - 16
Forming Section - Set Forming Ring Position . 1 - 23
Frame Housing - Change Seal and Gasket . 1 - 112
Frame Housing - Check Seal and Gasket . . . 1 - 110
Frame Housing - Clean Tunnel . . . . . 1 - 113
Frame Housing - Tunnel Overhaul . . . . . 1 - 115
Frequency Converter - Change Parameters . 9 - 221
Frequency Converters - Error Codes . . . . . 9 - 227

TechPub_2614345_0108 - MM_3022042_0106IOM.fm

G

Grease Lubrication System - Change Cylinders . 4 - 273
Grease Lubrication System - Set Sensors . . 4 - 276

H

H2O2 Concentration Meter - Change O-ring . 2 - 65
H2O2 Concentration Meter - Change Pt100 Sensor 2 - 73
H2O2 Concentration Meter - Check Desiccant Cartridge . . . . . 2 - 63
H2O2 Concentration Meter - Check Prism and Led 2 - 74
H2O2 Concentration Meter - Check Pt100 Sensor 2 - 72
H2O2 Concentration Meter - Remove . . . . . 2 - 69
Heat Exchanger Valve - Overhaul . . . . . 1 - 208
Heat Exchanger Valve - Set . . . . . 1 - 212
Heating Chamber - Overhaul . . . . . 5 - 148
Heating Chamber - Set Flap Heater Pressure . . . 5 - 147
Heating Chamber - Set Flap Sealing Nozzles 5 - 138
Heating Chamber - Set Flap Sealing Temperature 5 - 144
Heating Device - Change Plunger . . . . . 8 - 79
Heating Device - Check . . . . . 8 - 74
Heating Device - Set Position . . . . . 8 - 76
Heating Unit - Change Guides . . . . . 8 - 135
Heating Unit - Change Heat Exchanger . . . . 1 - 385
Heating Unit - Change Heating Bar . . . . . 8 - 130
Heating Unit - Change Heating Elements . . 1 - 383
Heating Unit - Change Pneumatic Hose . . . 8 - 137
Heating Unit - Change Venting Valve . . . . . 1 - 390
Heating Unit - Check Pneumatic Hose . . . . . 8 - 138
Heating Unit - Check Pump . . . . . 1 - 389
Heating Unit - Check Sealing Plate . . . . . 8 - 127
Heating Unit - Check Venting Valve Floater . 1 - 394
Heating Unit - Drain U-bend . . . . . 1 - 387
HMI - User Management Change Password 9 - 294
HMI - User Management Description . . . . . 9 - 289
HMI - User Management Log On . . . . . 9 - 291
HMI and PLMS - Description . . . . . 9 - 235
HMI and PLMS - Install DE Config Files . . . . 9 - 247
HMI and PLMS - Install Software . . . . . 9 - 240
HMI and PLMS - Log On Procedure . . . . . 9 - 237
Hub - Change Motor . . . . . 8 - 80
Hub - Set Spring Loaded Screw . . . . . 8 - 81
Hydrogen Peroxide - Check Leakages . . . . . 2 - 9
Hydrogen Peroxide - Check Leaks . . . . . 1 - 381
Hydrogen Peroxide - Check Pump . . . . . 2 - 11
Hydrogen Peroxide - Set Pressure . . . . . 2 - 12

I

ICU - Change Pump Seals . . . . . 1 - 353
ICU - Check Leakages . . . . . 1 - 349
ICU - Check Pump . . . . . 1 - 351
ICU - Sample Cleaning Liquid . . . . . 1 - 364
ICU - Set Pump Shaft . . . . . 1 - 361
IH Equipment - Change Generator . . . . . 9 - 503
IH Equipment - Check Cables . . . . . 9 - 502
IH Equipment - Check Function . . . . . 9 - 498
IH Equipment - Error Handling . . . . . 9 - 490
IH Equipment - LCD Display . . . . . 9 - 486
IH Equipment - Load Firmware . . . . . 9 - 514
IH Equipment - Set CAN Communication . . . 9 - 512
IH Equipment - Set Display Contrast . . . . . 9 - 521
IH Equipment - Set Sealing . . . . . 9 - 505
Inductor - Change Adhesive Tape . . . . . 8 - 50
Inductor - Change Pressure Rollers . . . . . 8 - 47
Inductor - Change Pulley Ball Bearings . . . . . 8 - 54
Inductor - Change Rollers . . . . . 8 - 39
Inductor - Change Transformer . . . . . 8 - 34
Inductor - Check . . . . . 8 - 33
Inductor - Check Pressure Rollers . . . . . 8 - 46
Inductor - Set Position . . . . . 8 - 41
Inductor - Set Pressure Roller . . . . . 8 - 48
Inductor - Set Proximity Switch . . . . . 8 - 49
Inductor - Set Volume . . . . . 8 - 43
Integrated Cleaning Unit - Check Float Function 2 - 51
Integrated Cleaning Unit - Check Floats . . . . . 2 - 46
Integrated Cleaning Unit - Check for Leakage 2 - 42
Integrated Cleaning Unit - Drain . . . . . 2 - 45

TechPub_2614345_0108 - MM_3022042_0106IOM.fm

Integrated Cleaning Unit - Set Proximity Sensor . 2 - 53
IPC - Change Battery . . . . . 9 - 318
IPC - Change CompactFlash Memory Card 9 - 317
IPC - Change DVD ROM . . . . . 9 - 328
IPC - Change Fan Filter . . . . . 9 - 326
IPC - Change Fan Kit . . . . . 9 - 320
Irradiation Kit - Change Film . . . . . 1 - 470
Irradiation Kit - Check . . . . . 1 - 460
Irradiation Kit - Overhaul . . . . . 1 - 461

J

Jaw System - Check Bearing Rollers . . . . . 4 - 98
Jaw System - Check Nozzles . . . . . 4 - 102
Jaw System - Fill Gearbox Oil . . . . . 4 - 95
Jaw System - Inch and Go to Position . . . . . 4 - 8
Jaw System - Jog Jaw Chain . . . . . 4 - 15
Jaw System - Move Drop Chute Position . . . 4 - 18
Jaw System - Overhaul Cutting Device . . . . 4 - 103
Jaw System - Release Brakes . . . . . 4 - 17
Jaw System - Remove and Assemble Chains 4 - 25
Jaw System - Remove Waste Box . . . . . 4 - 19
Jaw System - Synchronise . . . . . 4 - 7

L

Last Point DE - Set Photocells . . . . . 6 - 20
Last Point DE - Set Queue Photocells . . . . . 6 - 21
Level Control - Set . . . . . 9 - 332
Lid - Set Sensor . . . . . 1 - 15
Longitudinal Sealing - Change Rollers . . . . . 1 - 55
Longitudinal Sealing - Check . . . . . 1 - 54
Longitudinal Sealing - Set . . . . . 1 - 56
Longitudinal Sealing - Set VMN Mode . . . . . 1 - 73
Lower Forming Ring - Change Knob . . . . . 1 - 41
Lower Forming Ring - Check Pressure Roller 1 - 39
Lower Forming Ring - Set Clearance . . . . . 1 - 25
Lower Forming Ring - Set Cylinder . . . . . 1 - 37
Lower Forming Ring - Set Overlap . . . . . 1 - 32
Lower Forming Ring - Set Position . . . . . 1 - 27

M

Machine Body - Change Bearing Blocks . . . . . 8 - 21
Machine Body - Check Bearing Blocks . . . . . 8 - 20
Machine Body - Check Bending Roller . . . . . 8 - 22
Machine Body - Overhaul Bending Roller . . . . 8 - 23
Machine Body - Set Alignment . . . . . 8 - 28
Machine Body - Set Photocell Position . . . . . 8 - 25
Machine Body - Set Photocell Sensitivity . . . . 8 - 27
Magazine - Change Pressure Roller Bearings . . 8 - 185
Magazine - Change Ropes . . . . . 8 - 200
Magazine - Check Pressure Roller . . . . . 8 - 184
Magazine - Check Spacer Position . . . . . 8 - 189
Magazine - Set Pressure Roller . . . . . 8 - 187
Magazine, Lower Part - Change Ball Bearings . . 8 - 197
Magazine, Lower Part - Check . . . . . 8 - 196
Magazine, Lower Part - Set Dampers . . . . . 8 - 199
Magazine, Lower Part - Set Locking Devices 8 - 202
Magazine, Lower Part - Set Proximity Switch 8 - 198
Magazine, Upper Part - Change Roller Bearings 8 - 179
Material Holder - Change Ball Bearings . . . . 8 - 150
Material Holder - Change Blade . . . . . 8 - 144
Material Holder - Check Blade Setting . . . . . 8 - 158
Material Holder - Set Cutting Table . . . . . 8 - 153
Material Holder - Set Proximity Sensor . . . . . 8 - 148
Mounting Sheet - Check Rollers . . . . . 8 - 87

O

Outfeed Unit - Change Brush . . . . . 5 - 174
Outfeed Unit - Change Motor . . . . . 5 - 170
Outfeed Unit - Change Rollers . . . . . 5 - 173
Outfeed Unit - Check Carriers . . . . . 5 - 154
Overload Protection - Set . . . . . 9 - 229
Overload Protection - Set Base Unit(s) . . . . . 9 - 230

P

Paper Guide - Change Ball Bearings and Bushings 8 - 109

TechPub_2614345_0108 - MM_3022042_0106IOM.fm

Paper Guide - Change Guide Wheels Ball Bearings 8 - 111
Paper Guide - Check . . . . . 8 - 108, 8 - 190
Paper Guide - Set Position . . . . . 8 - 112, 8 - 191
Paper Guide - Set Spring Tension . . . . . 8 - 114
Paper Slide - Change Rollers . . . . . 8 - 116
Paper Slide - Check . . . . . 8 - 115
Pendulum Counter Roller - Change Rollers . 1 - 171
Pendulum Counter Roller - Set Distance . . . 1 - 170
Pendulum Counter Roller - Set Pressure . . . 1 - 169
Pendulum Counter Roller - Set Roller Position . . 1 - 173
Pendulum Roller - Change Bushings . . . . . 1 - 159
Pendulum Roller - Check . . . . . 1 - 148
Pendulum Roller - Set Cylinder . . . . . 1 - 158
Pendulum Roller - Set I/P Transducer . . . . . 1 - 150
Pendulum Roller - Set Position . . . . . 1 - 154
Peroxide Container - Check . . . . . 2 - 38
Peroxide Pipe - Check . . . . . 2 - 15
Peroxide Pipe - Clean Strainer . . . . . 2 - 17
Peroxide Pump - Change Pump . . . . . 2 - 28
Peroxide Pump - Overhaul Pump . . . . . 2 - 30
Peroxide Pump - Set Impeller Coupling . . . . . 2 - 36
Peroxide Tank - Check . . . . . 2 - 13
Photocell Unit - Adjust Tube Centring . . . . . 3 - 40
Photocell Unit - Change Ball Bearings . . . . . 3 - 43
Photocell Unit - Check . . . . . 3 - 25
Photocell Unit - Check Alignment . . . . . 3 - 38
Photocell Unit - Check Nozzles . . . . . 3 - 42
Photocell Unit - Set . . . . . 3 - 26
Pipe - Change Filter . . . . . 7 - 18
Pipe Work - Check . . . . . 1 - 366
Pipe Work - Check Conductivity Sensor . . . 1 - 368
Pipe Work Air - Check Change Over Valve . 1 - 186
Pipe Work Air - Check Spray Nozzle . . . . . 1 - 178
Pipe Work Air - Clean Spray Nozzle and Balls . . 1 - 182
Pipe Work Air - Overhaul Change Over Valve . . . 1 - 188
Plate - Overhaul . . . . . 3 - 10
PLMS NRG - Copy Performance and Process Data 9 - 281
PLMS NRG Configurator - Defragment the IPC Hard Disk . . . . . 9 - 267
PLMS NRG Configurator - Distribution Equipment Setup . . . . . 9 - 259
PLMS NRG Configurator - Export/Import Configuration . . . . . 9 - 252
PLMS NRG Configurator - Operator Sheet Set Up 9 - 272
PLMS NRG Configurator - Select Allowed Languages . . . . . 9 - 251
PLMS NRG Configurator - Set Date and Time . . 9 - 269
PLMS NRG Configurator - Set Machine ID . . 9 - 250
PLMS NRG Configurator - Translate Non-Tetra Pak DE Event Codes . . . . . 9 - 256
Pluto Module - Configure in an Existing Application 9 - 210
Pluto Module - LED Description . . . . . 9 - 206
Pluto Module - Load Program . . . . . 9 - 199
Pluto Module - Set ID-FIX Address after Replacing an ID-FIX . . . . . 9 - 213
Pneumatic Panel - Change Filters . . . . . 8 - 174
Pneumatic Panel - Check . . . . . 7 - 24
Pneumatic Panel - Clean Filter Insert . . . . . 7 - 27
Pneumatic Panel - Set Jumbo Reel Brake Pressure 8 - 178
Pneumatic Panel - Set Pilot Valve Pressure . 8 - 177
Pneumatic Panel - Set Pressure . . . . . 7 - 26
Pneumatic Panel - Set Pressure Switch . . . . 8 - 172
Pneumatic System - Check . . . . . 1 - 455, 2 - 86
Pneumatic System - Set I/P Transducer . . . . . 2 - 87
Power Failure Relay - Set . . . . . 9 - 233
Power Supply Unit - Change . . . . . 1 - 474
Power Supply Unit - Change UV Cable . . . . . 1 - 490
Power Supply Unit - Check Fuses . . . . . 1 - 484
Power Supply Unit - Troubleshoot . . . . . 1 - 481
Preparation for PLC Communication - Configure PC Network Communications . . . . . 9 - 9
Preparations for PLC Communication - Configure RSLinx . . . . . 9 - 17
Pressure Jaw - Change Cylinders . . . . . 8 - 122
Pressure Jaw - Change Knife . . . . . 4 - 158
Pressure Jaw - Change Mounting Blocks . . . 4 - 162
Pressure Jaw - Change Sealing Dollies . . . . 4 - 160
Pressure Jaw - Change Side Plates . . . . . 4 - 182
Pressure Jaw - Change Volume Flap Rollers 4 - 152

TechPub_2614345_0108 - MM_3022042_0106IOM.fm

Pressure Jaw - Change Volume Flap Springs, Holders and Bushings . . . . . 4 - 147
Pressure Jaw - Check Cam Followers . . . . . 4 - 146
Pressure Jaw - Check Knife and Dolly . . . . . 8 - 117
Pressure Jaw - Check Pressure Bar Springs 4 - 154
Pressure Jaw - Check Volume Flap Dampers . . . 4 - 141
Pressure Jaw - Check Volume Flap Rollers 4 - 145
Pressure Jaw - Check Volume Flap Springs, Holder and Bushings . . . . . 4 - 143
Pressure Jaw - Overhaul . . . . . 4 - 164
Pressure Jaw - Set Jaw Unit Reference Sensor . 4 - 181
Pressure Unit - Check Leaks . . . . . 1 - 398
Pressure Unit - Fill . . . . . 1 - 400
Pressure Unit - Set Pressure . . . . . 1 - 403
Product Lines - Change Flow Meter . . . . . 1 - 319
Product Lines - Change Flow Meter Gaskets 1 - 318
Product Lines - Move Regulating Valve . . . . 1 - 321
Product Lines - Overhaul Regulating Valve . 1 - 311
Product Lines - Product Pipes Assembly . . . 1 - 324
Product Lines - Set Regulating Valve Proximity Switch . . . . . 1 - 317
Product Valve - Change O-Rings . . . . . 1 - 302
Product Valve - Change Seals and Membranes . 1 - 297
Product Valve - Empty Tube . . . . . 1 - 310
Product Valve - Remove Cylinders . . . . . 1 - 294
Product Valve - Set Proximity Switches . . . . 1 - 309
Protective Devices - Check . . . . . 10 - 25
Pump - Change Gaskets . . . . . 7 - 19
Pump Unit - Change Pump . . . . . 2 - 78
Pump Unit - Check . . . . . 2 - 77

R

Recorder - Calibrate . . . . . 9 - 384
Recorder - Change CompactFlash Card . . . 9 - 391
Recorder - Configure Archived Data for Colour Printing . . . . . 9 - 393
Recorder - Load Configuration Data . . . . . 9 - 378
Recorder - Log In and Log Off . . . . . 9 - 388
Recorder - Set Date, Time and Language . . 9 - 374
Reel Trolley - Change Pump Cylinder . . . . . 8 - 216
Reel Trolley - Change Sink Valve . . . . . 8 - 219
Reel Trolley - Check . . . . . 8 - 214
Reel Trolley - Overhaul Lifting Cylinder . . . . 8 - 222
Reel Trolley - Remove Fork Wheel . . . . . 8 - 223
Reel Trolley - Remove Guide Wheel . . . . . 8 - 224
Reel Trolley - Set Brake . . . . . 8 - 225
Reel Trolley - Set Regulating Valve . . . . . 8 - 218
Refilling - Change Filter . . . . . 2 - 57
Refilling - Check . . . . . 2 - 55
Residual Current Device - Check . . . . . 9 - 231
Rollers - Change Bearings . . . . . 8 - 64
Rollers - Check Upper Roller . . . . . 8 - 68

S

Safety Functions - Check . . . . . 10 - 24
Safety System - Check . . . . . 9 - 185
Safety System - Troubleshooting . . . . . 9 - 197
Scrubber - Clean Filters . . . . . 1 - 234
Scrubber - Set Pressure Regulator . . . . . 1 - 233
Seal - Change . . . . . 1 - 77
Seal - Check . . . . . 1 - 76
Seal - Set Position . . . . . 1 - 79
Sealing Jaw - Change Busbar and Ferrite . . 4 - 122
Sealing Jaw - Change Ferrite Holder . . . . . 4 - 126
Sealing Jaw - Change Guides . . . . . 4 - 121
Sealing Jaw - Change Side Plates . . . . . 4 - 140
Sealing Jaw - Check Busbar and Ferrite . . . . 4 - 120
Sealing Jaw - Check Cam Followers . . . . . 4 - 113
Sealing Jaw - Check Flap Folding . . . . . 4 - 114
Sealing Jaw - Check Guides . . . . . 4 - 111
Sealing Jaw - Check Inductor . . . . . 4 - 116
Sealing Jaw - Check Volume Flap Dampers . 4 - 113
Sealing Jaw - Check Volume Flap Rollers . . 4 - 113
Sealing Jaw - Check Volume Flap Springs, Holder and Bushings . . . . . 4 - 113
Sealing Jaw - Overhaul . . . . . 4 - 128
Separator - Change Valve and Valve Seat . . 1 - 203
Separator - Check Pressure Gauge . . . . . 1 - 207
Separator - Clean Filter and Floater . . . . . 1 - 199
Separator - Set Float Unit . . . . . 1 - 205

TechPub_2614345_0108 - MM_3022042_0106iOM.fm

Sercos Module - Change . . . . . 9 - 154
Sercos Module - LED Description . . . . . 9 - 159
Sercos Module - Load Firmware . . . . . 9 - 158
Servo Drive - Change . . . . . 9 - 163
Servo Drive - Error Codes . . . . . 9 - 173
Servo Drive - LED Description . . . . . 9 - 171
Servo Drive - Load Firmware . . . . . 9 - 170
Servo Drive - Set Baud Rate . . . . . 9 - 169
Servo System - Description . . . . . 9 - 149
Side Feeder - Change Timing Belt . . . . . 8 - 162
Side Feeder - Check Timing Belt Tension . . 8 - 164
Side Feeder - Overhaul . . . . . 8 - 166
Side Feeder - Referencing . . . . . 8 - 160
Signal Exchange - Configuration . . . . . 9 - 535
Splice Detector - Check . . . . . 8 - 31
Splice Detector - Set . . . . . 8 - 32
Splicing Device - Change Bearings . . . . . 8 - 103
Splicing Device - Change Photocell . . . . . 8 - 94
Splicing Device - Check Drive Unit . . . . . 8 - 88
Splicing Device - Check Pressure Jaw Position . . 8 - 105
Splicing Device - Drive Unit Overhaul . . . . . 8 - 89
Splicing Device - Move to Maintenance Position . 8 - 102
Splicing Device - Set Air Nozzle . . . . . 8 - 107
Splicing Device - Set Drive Unit Belt . . . . . 8 - 93
Splicing Device - Set Photocell Alignment . . . 8 - 99
Splicing Device - Set Photocell Position . . . . 8 - 96
Splicing Device - Set Photocell Sensitivity . . . 8 - 98
Spray System - Check . . . . . 1 - 423
Spray System - Clean Filter . . . . . 1 - 427
Spray System - Clean Peroxide Filter . . . . . 1 - 424
Spray System - Set Pressure . . . . . 1 - 426
Squee-gee Roller - Change . . . . . 1 - 163
Squeezer - Change Coupling Plates . . . . . 5 - 137
Squeezer - Change Side Belt . . . . . 5 - 116
Squeezer - Change Top Belt . . . . . 5 - 119
Squeezer - Check Side Squeezer Clearances . . . 5 - 129
Squeezer - Check Top Squeezer Bushings . 5 - 134
Squeezer - Set Position . . . . . 5 - 107
Squeezer - Set Top Squeezer Coupling . . . 5 - 136
Squeezer - Side Squeezer Overhaul . . . . . 5 - 120
Squeezer - Top Squeezer Overhaul . . . . . 5 - 123
Station Chain - Change . . . . . 5 - 53
Station Chain - Change Cam . . . . . 5 - 67
Station Chain - Change Pins and Bushings . . 5 - 66
Station Chain - Check Plates . . . . . 5 - 65
Station Chain - Check Sliders . . . . . 5 - 64
Station Chain - Overhaul . . . . . 5 - 60
Station Chain - Turn Shafts . . . . . 5 - 62
Steam System - Change Pressure Regulator 1 - 339
Steam System - Check Membrane . . . . . 1 - 337
Steam System - Clean Filter . . . . . 1 - 332
Steam System - Clean Steam Trap . . . . . 1 - 330
Steam System - Set Pressure Regulator . . . 1 - 341
Steam System - Set Steam Regulator . . . . . 1 - 343
Steering Ring - Change Motor . . . . . 1 - 89
Steering Ring - Correct Tube Position . . . . . 1 - 93
Steering Ring - Manual Control . . . . . 1 - 91
Steering Ring - Overhaul . . . . . 1 - 84
Steering Ring - Reference Motor . . . . . 1 - 90
Steering Ring - Set Rollers . . . . . 1 - 87
Stepper Motor - LED Description . . . . . 9 - 180
Stepper Motor - Set . . . . . 9 - 179
Sterile Air Pipe - Overhaul . . . . . 1 - 240
Sterile Air Pipe - Set Nozzle . . . . . 1 - 237
Sterile Air System - Check for Leaks . . . . . 1 - 176
Sterile Water System - Change Configuration 7 - 44
Sterile Water System - Change Progard Pack 7 - 40
Sterile Water System - Clean Reverse Osmosis Cartridge . . . . . 7 - 38
Sterile Water System - Drain Reservoir . . . . . 7 - 43
Sterile Water System - Set . . . . . 7 - 35
Sterile Water System - Start-Up . . . . . 7 - 32
Strip Guide - Change Guide Wheel Ball Bearing 8 - 63
Strip Guide - Check . . . . . 8 - 58
Strip Guide - Set . . . . . 8 - 59
Strip Magazine - Change Transducer . . . . . 8 - 71
Strip Magazine - Check Rollers . . . . . 8 - 70
Strip Magazine - Set Sensor and Spring . . . . . 8 - 73
Superstructure - Setting Sequence, Type I . . . 1 - 11
Superstructure - Setting Sequence, Type II . . 1 - 12

TechPub_2614345_0108 - MM_3022042_0106IOM.fm

Superstructure - Settings, Type III . . . . . 1 - 12
Support Rail - Check . . . . . 1 - 13
Swing Frame - Change Belt . . . . . 5 - 69
Swing Frame - Change Rollers . . . . . 5 - 81
Swing Frame - Check Pulley . . . . . 5 - 68
Swing Frame - Overhaul . . . . . 5 - 75
Swing Frame - Set Air Nozzle Pressure . . . . 5 - 80
Swing Frame - Set Belt . . . . . 5 - 72

T

Tab Folding - Overhaul . . . . . 1 - 452
Tab Folding - Set Pressure Wheel . . . . . 1 - 451
Tank - Check . . . . . 2 - 24
Tank - Clean . . . . . 2 - 26
Temperature Regulators - Calibrate . . . . . 9 - 401
Thermocouples - Check . . . . . 9 - 424
TMCC2 Controller - Display Report . . . . . 9 - 465
TMCC2 Controller - Load JEID Configuration 9 - 476
TMCC2 Controller - Load Program . . . . . 9 - 459
TMCC2 Controller - Photocells Manual Setting . . 9 - 462
TMCC2 Controller - Set Communication . . . 9 - 457
TMCC2 Controller - Set Filling Window . . . . 9 - 464
TMCC2 Controller - Upgrade Firmware . . . . 9 - 478
TPIH Description . . . . . 9 - 482
TPOP - Change AP Link SDL Receiver . . . . 2 - 112
TPOP - Change Display Backlight . . . . . 2 - 116
TPOP - Change Gateway PCB . . . . . 2 - 114
TPOP - Change Push Button Module . . . . . 2 - 107
TPOP - Open Front Panel . . . . . 2 - 106
Traceability - Configure JEID . . . . . 9 - 301
Traceability - Configure Printer Interface Layout . 9 - 306
Traceability - Load Printer Interface Layout . 9 - 312

U

Upper Forming Ring - Change Knob . . . . . 1 - 44
Upper Forming Ring - Set Clearance . . . . . 1 - 42
UV Lamp- Check Functionality . . . . . 1 - 456

V

Valve - Check . . . . . 1 - 161
Valve Panel - Check Photocell Filters . . . . . 2 - 58
Valve Panel - Set Peroxide Pump Pressure . . 2 - 59
Valve Panel- Change Filter . . . . . 2 - 60
Volume Adjuster - Change Cams . . . . . 4 - 204
Volume Adjuster - Set . . . . . 4 - 202

W

Waste Box - Change Bushings . . . . . 4 - 267
Waste Box - Change Pneumatic Cylinder . . . 4 - 256
Waste Box - Check . . . . . 4 - 255
Waste Box - Check Nozzle . . . . . 4 - 272
Waste Box - Check Pressure Switch . . . . . 4 - 271
Waste Box - Set Pneumatic Cylinder . . . . . 4 - 258
Waste Conveyor - Change Conveyor Belt . . . 2 - 99
Waste Conveyor - Change Coupling . . . . . 2 - 98
Waste Conveyor - Check . . . . . 2 - 96
Waste Conveyor - Set Front Guard Pressure 2 - 103
Waste Conveyor - Tension Conveyor Belt . . 2 - 101
Water Panel - Check Pressure Switch . . . . . 7 - 21
Water Panel - Clean Filters . . . . . 7 - 22

TechPub_2614345_0108 - MM_3022042_0106IOM.fm

TechPub_2614345_0108 - MM_3022042_0106IOM.fm

***Note!** This page is generated **automatically**.*
*using the **variable definitions** made in the **front page** file!*

Tetra Pak A3/Speed
648576-0300
Issue 2011-01 Doc. No. MM-3022042-0106

Tetra Pak A3/Speed 1(3)
648576-0300
Issue 2011-01 Doc. No. MM-3022042-0106

Tetra Pak A3/Speed
648576-0300
Issue 2011-01 Doc. No. MM-3022042-0106

Tetra Pak A3/Speed 2(3)
648576-0300
Issue 2011-01 Doc. No. MM-3022042-0106

Tetra Pak A3/Speed
648576-0300
Issue 2011-01 Doc. No. MM-3022042-0106

Tetra Pak A3/Speed 3(3)
648576-0300
Issue 2011-01 Doc. No. MM-3022042-0106

Tetra Pak A3/Speed
648576-0300
Issue 2011-01 Doc. No. MM-3022042-0106

Tetra Pak A3/Speed 1(3)
648576-0300
Issue 2011-01 Doc. No. MM-3022042-0106

Tetra Pak A3/Speed
648576-0300
Issue 2011-01 Doc. No. MM-3022042-0106

Tetra Pak A3/Speed 2(3)
648576-0300
Issue 2011-01 Doc. No. MM-3022042-0106

Tetra Pak A3/Speed
648576-0300
Issue 2011-01 Doc. No. MM-3022042-0106

Tetra Pak A3/Speed 3(3)
648576-0300
Issue 2011-01 Doc. No. MM-3022042-0106

Tetra Pak A3/Speed 1(2)
648576-0300
Issue 2011-01 Doc. No. MM-3022042-0106

Tetra Pak A3/Speed 1(2)
648576-0300
Issue 2011-01 Doc. No. MM-3022042-0106

Tetra Pak A3/Speed 2(2)
648576-0300
Issue 2011-01 Doc. No. MM-3022042-0106

Tetra Pak A3/Speed 2(2)
648576-0300
Issue 2011-01 Doc. No. MM-3022042-0106

Tetra Pak A3/Speed
648576-0300

Issue 2011-01 Doc. No. MM-3022042-0106

Tetra Pak A3/Speed 1(3)
648576-0300

Issue 2011-01 Doc. No. MM-3022042-0106

Tetra Pak A3/Speed
648576-0300

Issue 2011-01 Doc. No. MM-3022042-0106

Tetra Pak A3/Speed 2(3)
648576-0300

Issue 2011-01 Doc. No. MM-3022042-0106

Tetra Pak A3/Speed 1(2)
648576-0300

Issue 2011-01 Doc. No. MM-3022042-0106

Tetra Pak A3/Speed 3(3)
648576-0300

Issue 2011-01 Doc. No. MM-3022042-0106

Tetra Pak A3/Speed 2(2)
648576-0300

Issue 2011-01 Doc. No. MM-3022042-0106

Tetra Pak A3/Speed 1(3)
648576-0300

Issue 2011-01 Doc. No. MM-3022042-0106

Tetra Pak A3/Speed 1(2)
648576-0300

Issue 2011-01 Doc. No. MM-3022042-0106

Tetra Pak A3/Speed 2(3)
648576-0300

Issue 2011-01 Doc. No. MM-3022042-0106

Tetra Pak A3/Speed 2(2)
648576-0300

Issue 2011-01 Doc. No. MM-3022042-0106

Tetra Pak A3/Speed 3(3)
648576-0300

Issue 2011-01 Doc. No. MM-3022042-0106