SPC

Spare Parts Catalogue

Tetra Pak A3/Speed

648576-0300

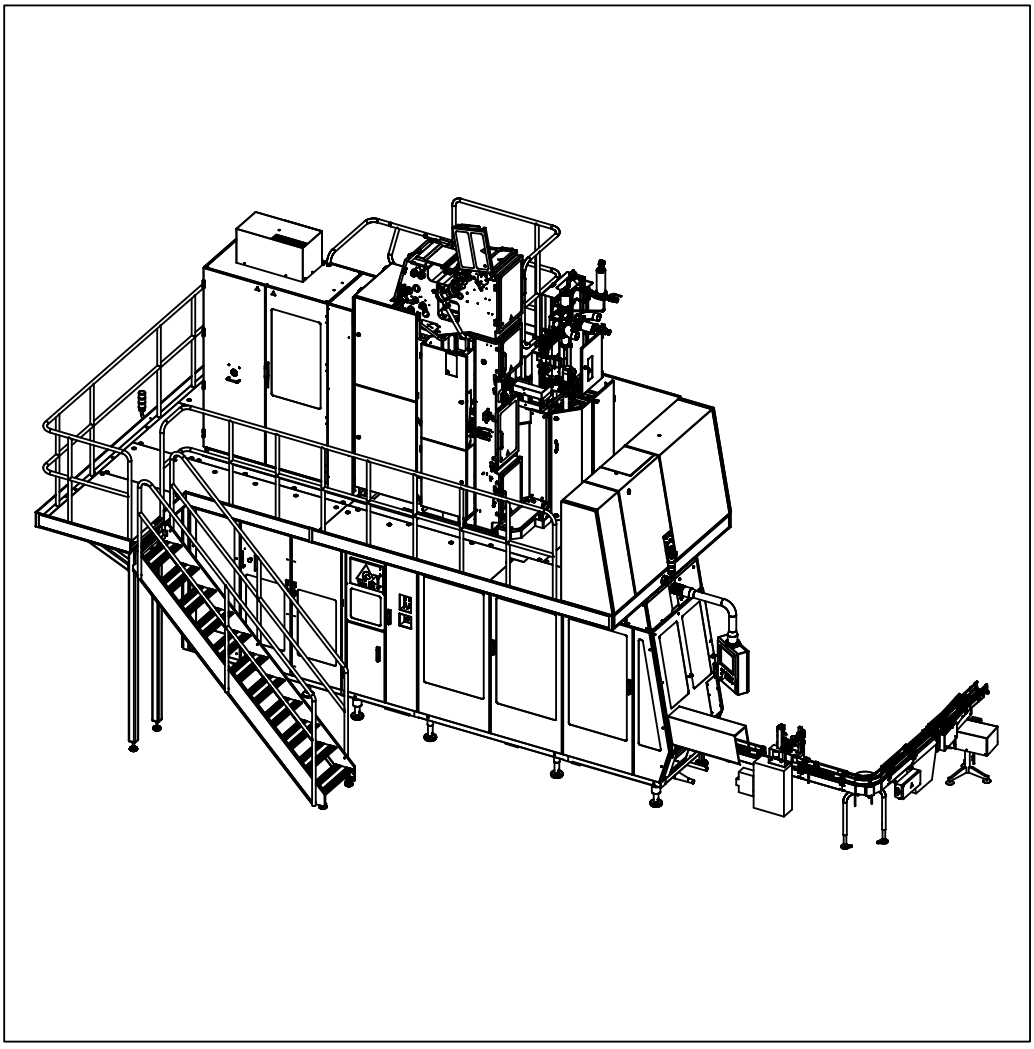

Tetra Pak

Doc. No: SPC-3022041-0108

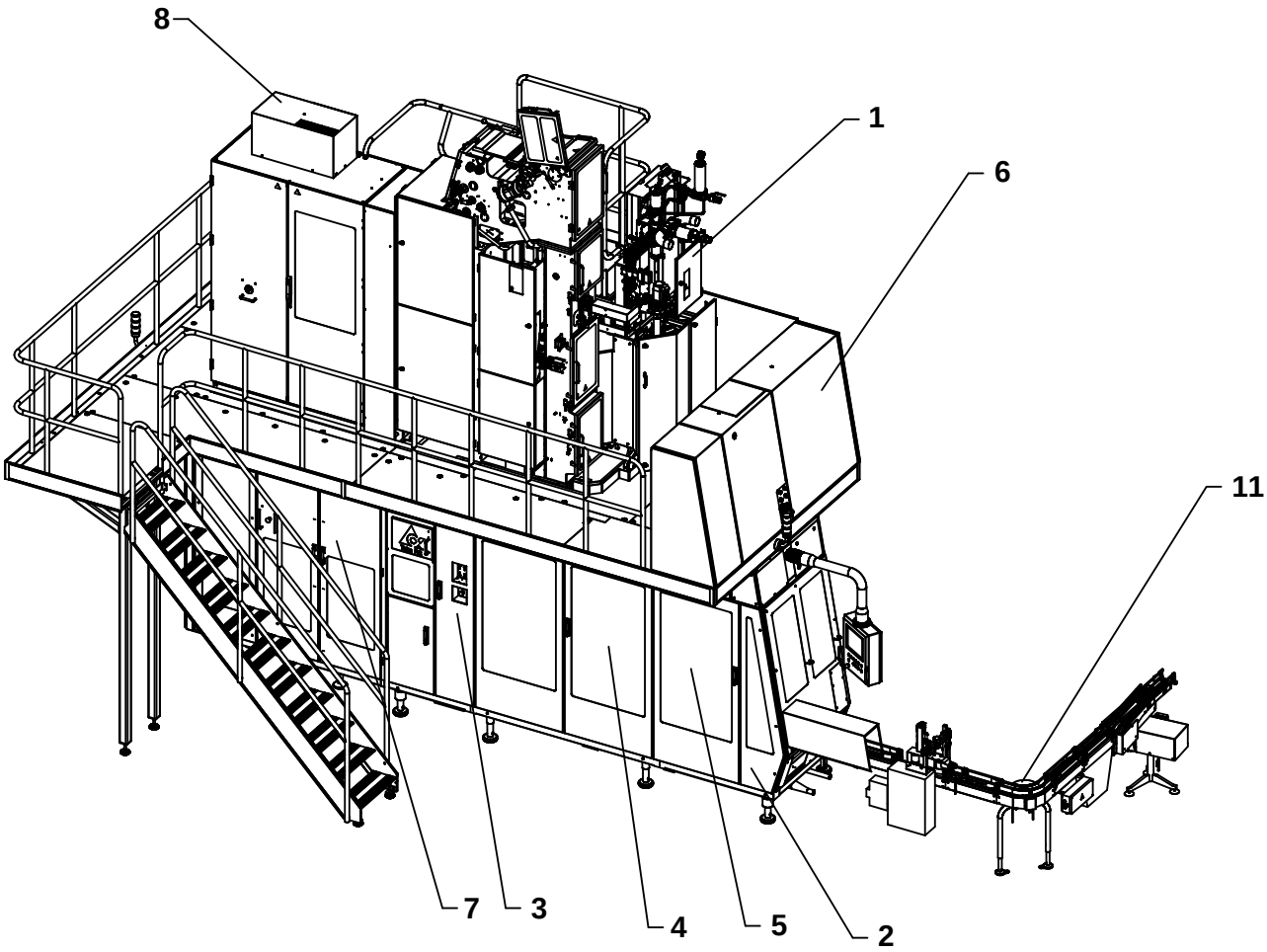

The position numbers in the illustration correspond with the chapter numbers listed on the next page.

Copyright © 2011 Tetra Pak Group

All rights reserved. No part of this document may be reproduced or copied in any form or by any means without written permission from Tetra Pak Packaging Solutions .

Tetra Pak and all Tetra Pak products are trademarks belonging to the Tetra Pak Group.

The content of this manual is in accordance with the design and construction of the machine or equipment at the time of publishing. Tetra Pak reserves the right to introduce design modifications without prior notice.

This document was produced by:

Tetra Pak Packaging Solutions
Via Delfini 1
41123 Modena
ITALY

Additional copies can be ordered from Tetra Pak. When ordering additional copies, always provide the document number.

Doc. No. SPC-3022041-0108

Issue 2011-01

This document is valid for:

Series No/Machine No Sign.

SPC

Spare Parts Catalogue

Tetra Pak A3/Speed
648576-0300

BINDER 1

i Introduction

1 Superstructure

2 Machine Body

3 Drive

4 Jaw System

5 Final Folder

BINDER 2

6 Service Unit

7 Automatic Splicing Unit

8 Electrical Cabinet

9 Regular Accessories

10 Electric Equipment

11 Conveyor Section

12 Optional Accessories

ii Part Number Index

iii Ref. Des. Parts Index

Machine or equipment configurations that this catalogue is valid for are described on the next page.

Doc. No: SPC-3022041-0108

Issue 2011-01

Tetra Pak

Tetra Pak Packaging Solutions

Valid for:

Name	Drawing Specification and Development Step	Additional Information
Tetra Pak A3/Speed 0300	648576-0300	Valid from T-order: 21215/00190

Update Log for Doc. No. SPC-3022041-0108

This table shows all changes made to this catalogue, including installed rebuilding kits, added or removed pages.

Date	Installed Kit	Added Pages (Doc. No.)	Removed Pages	Signature

Date	Installed Kit	Added Pages (Doc. No.)	Removed Pages	Signature

i Introduction

en About the Introduction Chapter
This chapter contains basic information about this catalogue and related Tetra Pak equipment.

bg За уводната глава
Тази глава съдържа основна информация за този каталог и приложимото Tetra Pak оборудване.

cs O kapitole Úvod
Tato kapitola obsahuje základní informace o této příručce a souvisejícím zařízení Tetra Pak.

da Om indledningen
Kapitlet indeholder grundlæggende oplysninger om dette katalog og tilhørende Tetra Pak-udstyr.

de Über das Einleitungskapitel
Diese Kapitel enthält grundlegende Informationen über diesen Katalog und die zugehörige Tetra Pak-Ausrüstung

el Σχετικά με το Κεφάλαιο 'Εισαγωγή'
Αυτό το κεφάλαιο περιέχει βασικές πληροφορίες για τον παρόντα κατάλογο και τον σχετικό εξοπλισμό της Tetra Pak.

es Acerca del capítulo Introducción
Este capítulo contiene información básica sobre este catálogo y el equipo Tetra Pak relacionado.

et Sissejuhatava peatüki kohta
See peatükk sisaldab teavet käesoleva kataloogi ja sellega seonduva Tetra Paki seadme kohta.

fi Tietoja Johdanto-luvusta
Tässä luvussa on perustietoja tästä luettelosta ja Tetra Pak -laitteesta.

fr À propos du chapitre Introduction
Ce chapitre contient les informations de base à propos de ce catalogue et de l'équipement Tetra Pak concerné.

hu A Bevezetés fejezetről
Ez a fejezet alapvető információkat tartalmaz a katalógusról és a hozzá tartozó Tetra Pak berendezésről.

is Um inngangskaflann
Þessi kafli inniheldur grundvallarupplýsingar um þennan vörulista og tengdan Tetra Pak búnað.

it Informazioni sul capitolo Introduzione
Questo capitolo contiene informazioni generali sul presente catalogo e sulla relativa macchina Tetra Pak.

lt Apie įvadinį skyrių
Šiame skyriuje pateikta pagrindinė informacija apie šį katalogą ir su juo susijusią "Tetra Pak" įrangą.

lv Par Ievada nodaļu
Šī nodaļa ietver galveno informāciju par šo katalogu un saistītajām Tetra Pak iekārtām.

nl Over de inleiding
Dit hoofdstuk bevat basisinformatie omtrent deze catalogus en aanverwante Tetra Pak-installatie.

no Om kapitlet Introduksjon
Dette kapitlet inneholder grunnleggende informasjon om denne katalogen og relatert Tetra Pak-utstyr.

pl Informacje na temat rozdziału wprowadzającego
Rozdział wprowadzający zawiera podstawowe informacje dotyczące niniejszego katalogu i związanej z nim maszyny Tetra Pak.

pt Acerca do Capítulo de Introdução
Este capítulo contém informações básicas sobre este catálogo e os equipamentos relacionados da Tetra Pak.

ro Despre capitolul introductiv
Acest capitol conține informații de bază despre acest catalog și despre echipamentul Tetra Pak corelat.

sk O kapitole Úvod
Táto kapitola obsahuje základné informácie o tomto návode a informácie súvisiace so zariadením Tetra Pak.

sl O uvodnem poglavju
To poglavje vsebuje osnovne informacije o tem katalogu in opremi Tetra Pak.

sv Om inledningskapitlet
Det här kapitlet innehåller grundläggande information om katalogen och Tetra Pak-utrustningen.

Introduction

Illustrations . . . . . i - 5
English Text . . . . . i - 7

Увод

Илюстрации . . . . . i - 5
Текст на български език . . . . . i -11

Úvod

Obrázky . . . . . i -5
Český text . . . . . i - 15

Indledning

Illustrationer . . . . . i - 5
Dansk tekst . . . . . i - 19

Einleitung

Abbildungen . . . . . i - 5
Deutscher Text . . . . . i - 23

Εισαγωγή

Εικόνες . . . . . i - 5
Ελληνικό Κείμενο . . . . . i - 27

Introducción

Ilustraciones . . . . . i - 5
Texto en español . . . . . i - 31

Sissejuhatus

Joonised . . . . . i - 5
Eestikeelne tekst . . . . . i - 35

Johdanto

Kuvat . . . . . i - 5
Suomenkielinen teksti . . . . . i - 39

Introduction

Illustrations . . . . . i - 5
Texte français . . . . . i - 43

Bevezetés

Ábrák . . . . . i - 5
Magyar szöveg . . . . . i - 47

Inngangur

Skýringarmyndir . . . . . i - 5
Íslenskur texti . . . . . i - 51

Introduzione

Figure . . . . . i - 5
Testo in italiano . . . . . i - 55

Įvadas

Paveikslėliai . . . . . i - 5
Lietuviškas tekstas . . . . . i - 59

Ievads

Ilustrācijas . . . . . i - 5
Teksts latviešu valodā . . . . . i - 63

Inleiding

Afbeeldingen . . . . . i - 5
Nederlands tekst . . . . . i - 67

Introduksjon

Illustrasjoner . . . . . i - 5
Norsk tekst . . . . . i - 71

Wprowadzenie

Rysunki . . . . . i - 5
Tekst polski . . . . . i - 75

Introdução

Ilustrações . . . . . i - 5
Texto em português . . . . . i - 79

Introducere

Ilustrații . . . . . i - 5
Text în limba română . . . . . i - 83

Úvod

Ilustrácie . . . . . i – 5
Slovenský text . . . . . i - 87

Uvod

Slike . . . . . i - 5
Slovensko besedilo . . . . . i - 91

Inledning

Bilder . . . . . i - 5
Svensk text . . . . . i - 95

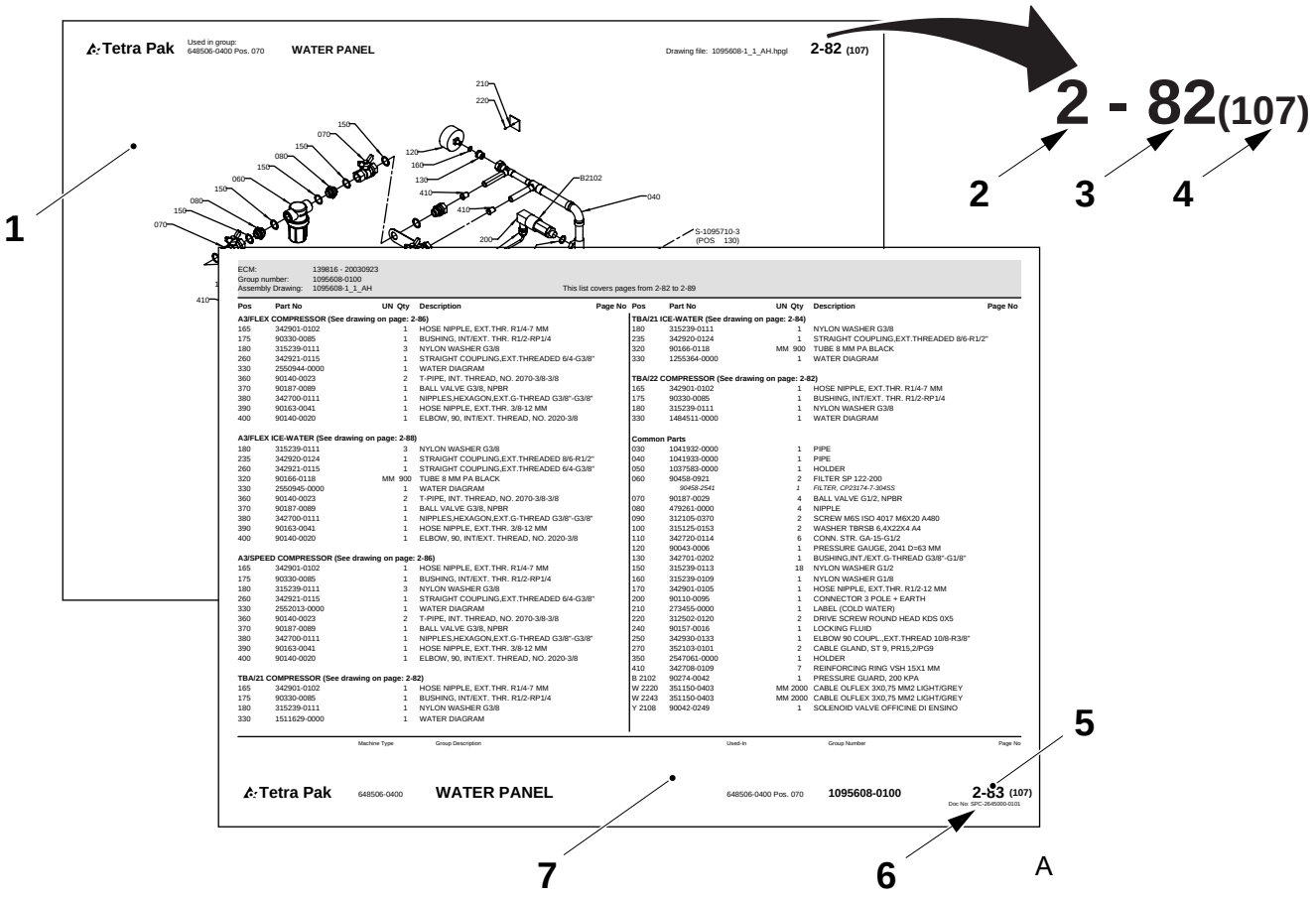
Tetra Pak
Used in group: 648506-0400 Pos. 070
WATER PANEL
Drawing file: 1095608-1_1_AH.hpgl
2-82 (107)
2 - 82(107)
1
2
3
4
5
6
7
A
ECM: 139816 - 20030923
Group number: 1095608-0100
Assembly Drawing: 1095608-1_1_AH
This list covers pages from 2-82 to 2-89
Tetra Pak
648506-0400
WATER PANEL
648506-0400 Pos. 070
1095608-0100
2-83 (107)

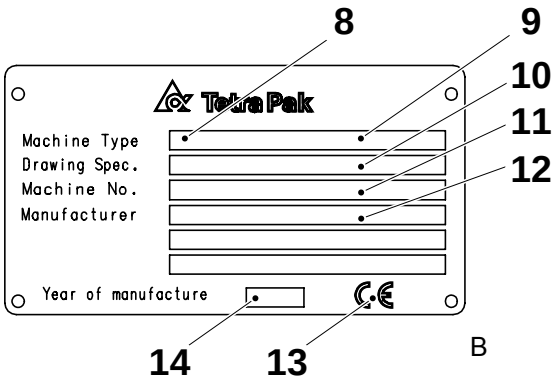
8
9
10
11
12
Tetra Pak
Machine Type
Drawing Spec.
Machine No.
Manufacturer
Year of manufacture
14
13
B

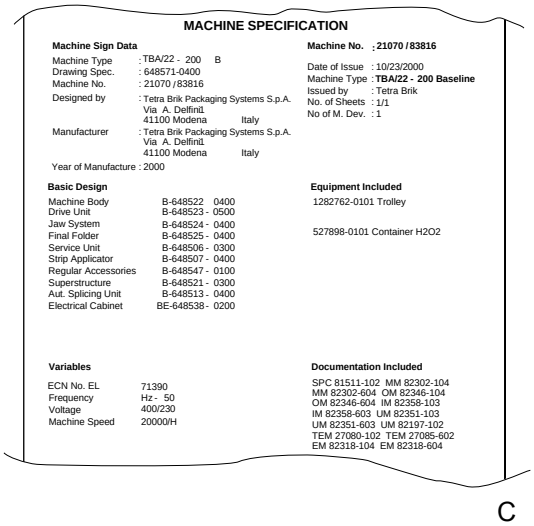
MACHINE SPECIFICATION
Machine Sign Data
Machine Type : TBA/22 - 200 B
Drawing Spec. : 648571-0400
Machine No. : 21070 / 83816
Designed by : Tetra Brik Packaging Systems S.p.A. Via A. Delfini1 41100 Modena Italy
Manufacturer : Tetra Brik Packaging Systems S.p.A. Via A. Delfini1 41100 Modena Italy
Year of Manufacture : 2000
Machine No. ; 21070 / 83816
Date of Issue : 10/23/2000
Machine Type : TBA/22 - 200 Baseline
Issued by : Tetra Brik
No. of Sheets : 1/1
No of M. Dev. : 1
Basic Design
Machine Body B-648522 0400
Drive Unit B-648523 - 0500
Jaw System B-648524 - 0400
Final Folder B-648525 - 0400
Service Unit B-648506 - 0300
Strip Applicator B-648507 - 0400
Regular Accessories B-648547 - 0100
Superstructure B-648521 - 0300
Aut. Splicing Unit B-648513 - 0400
Electrical Cabinet BE-648538 - 0200
Equipment Included
1282762-0101 Trolley
527898-0101 Container H2O2
Variables
ECN No. EL 71390
Frequency Hz - 50
Voltage 400/230
Machine Speed 20000/H
Documentation Included
SPC 81511-102 MM 82302-104
MM 82302-604 OM 82346-104
OM 82346-604 IM 82358-103
IM 82358-603 UM 82351-103
UM 82351-603 UM 82197-102
TEM 27080-102 TEM 27085-602
EM 82318-104 EM 82318-604
C

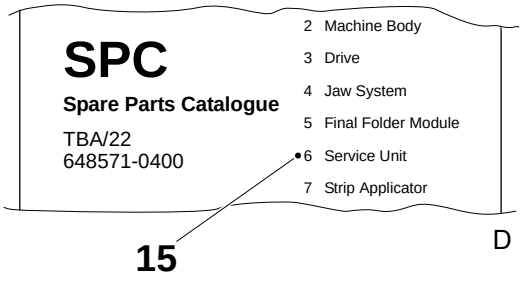
SPC
Spare Parts Catalogue
TBA/22
648571-0400
2 Machine Body
3 Drive
4 Jaw System
5 Final Folder Module
6 Service Unit
7 Strip Applicator
15
D

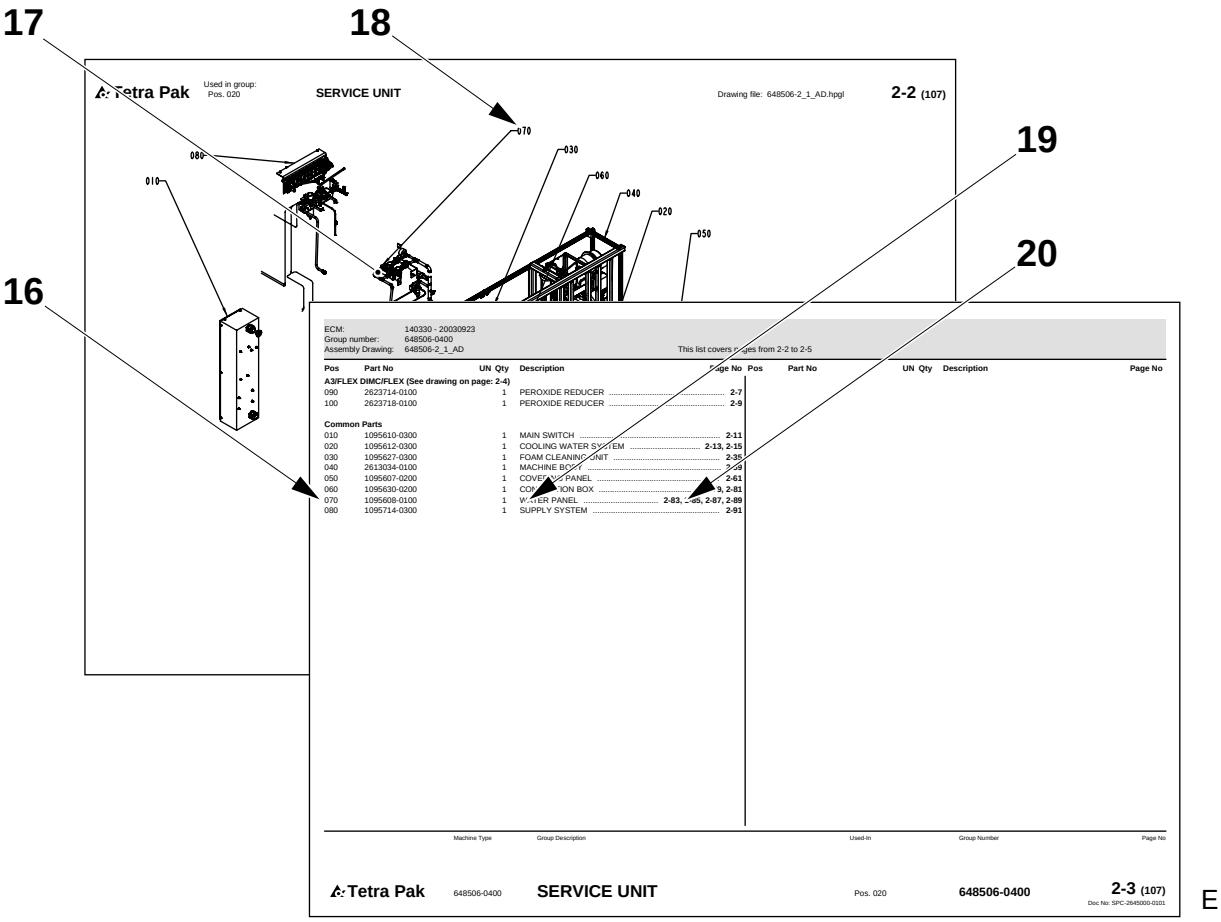
17
18
19
20
16
Tetra Pak
Used in group:
Pos. 020
SERVICE UNIT
Drawing file: 648506-2_1_AD.hpgl
2-2 (107)
070
030
080
060
010
040
020
050
ECM: 140330 - 20030923
Group number: 648506-0400
Assembly Drawing: 648506-2_1_AD
This list covers pages from 2-2 to 2-5
Pos Part No UN Qty Description Page No
A3/FLEX DIMC/FLEX (See drawing on page: 2-4)
090 2623714-0100 1 PEROXIDE REDUCER 2-7
100 2623718-0100 1 PEROXIDE REDUCER 2-9
Common Parts
010 1095610-0300 1 MAIN SWITCH 2-11
020 1095612-0300 1 COOLING WATER SYSTEM 2-13, 2-15
030 1095627-0300 1 FOAM CLEANING UNIT 2-35
040 2613034-0100 1 MACHINE BODY 2-39
050 1095607-0200 1 COVERING PANEL 2-61
060 1095630-0200 1 CONNECTION BOX 2-79, 2-81
070 1095608-0100 1 WATER PANEL 2-83, 2-85, 2-87, 2-89
080 1095714-0300 1 SUPPLY SYSTEM 2-91
Pos Part No UN Qty Description Page No
Machine Type Group Description Used-In Group Number Page No
Tetra Pak 648506-0400 SERVICE UNIT Pos. 020 648506-0400 2-3 (107)
Doc No: SPC-2645000-0101
E

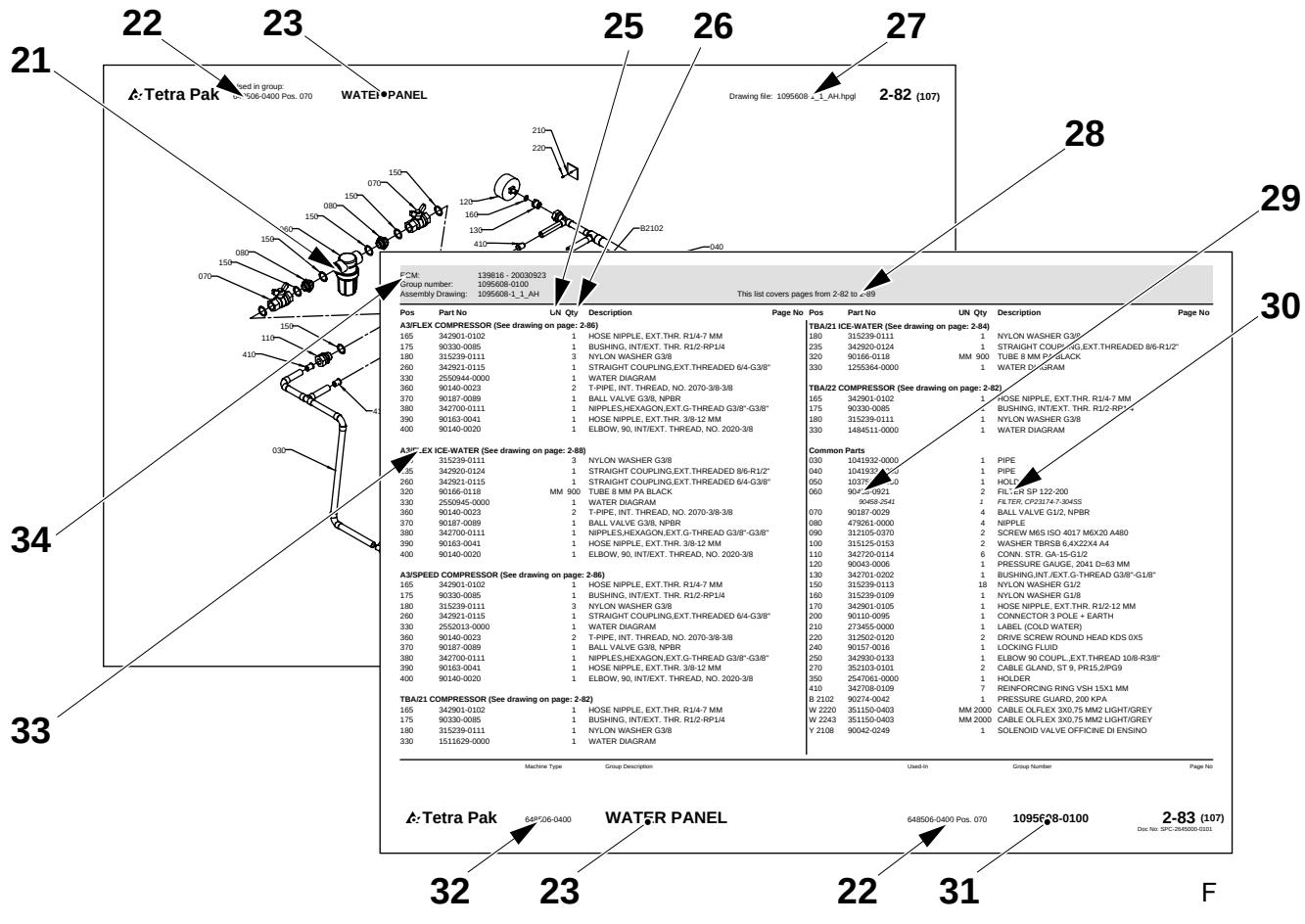
22
23
25
26
27
21
28
29
30
34
33
Tetra Pak
Used in group:
Pos. 070
WATER PANEL
Drawing file: 1095608-1_1_AH.hpgl
2-82 (107)
210
220
150
070
080
150
150
080
150
070
120
160
130
410
B2102
040
030
110
410
ECM: 139816 - 20030923
Group number: 1095608-0100
Assembly Drawing: 1095608-1_1_AH
This list covers pages from 2-82 to 2-89
Pos Part No UN Qty Description Page No
A3/FLEX COMPRESSOR (See drawing on page: 2-86)
165 342901-0102 1 HOSE NIPPLE, EXT.THR. R1/4-7 MM
175 90330-0085 1 BUSHING, INT/EXT. THR. R1/2-RP1/4
180 315239-0111 3 NYLON WASHER G3/8
260 342921-0115 1 STRAIGHT COUPLING,EXT.THREADED 6/4-G3/8"
330 2550944-0000 1 WATER DIAGRAM
360 90140-0023 2 T-PIPE, INT. THREAD, NO. 2070-3/8-3/8
370 90187-0089 1 BALL VALVE G3/8, NPBR
380 342700-0111 1 NIPPLES,HEXAGON,EXT.G-THREAD G3/8"-G3/8"
390 90163-0041 1 HOSE NIPPLE, EXT.THR. 3/8-12 MM
400 90140-0020 1 ELBOW, 90, INT/EXT. THREAD, NO. 2020-3/8
A3/FLEX ICE-WATER (See drawing on page: 2-88)
235 315239-0111 3 NYLON WASHER G3/8
235 342920-0124 1 STRAIGHT COUPLING,EXT.THREADED 8/6-R1/2"
260 342921-0115 1 STRAIGHT COUPLING,EXT.THREADED 6/4-G3/8"
320 90166-0118 MM 900 TUBE 8 MM PA BLACK
330 2550945-0000 1 WATER DIAGRAM
360 90140-0023 2 T-PIPE, INT. THREAD, NO. 2070-3/8-3/8
370 90187-0089 1 BALL VALVE G3/8, NPBR
380 342700-0111 1 NIPPLES,HEXAGON,EXT.G-THREAD G3/8"-G3/8"
390 90163-0041 1 HOSE NIPPLE, EXT.THR. 3/8-12 MM
400 90140-0020 1 ELBOW, 90, INT/EXT. THREAD, NO. 2020-3/8
A3/SPEED COMPRESSOR (See drawing on page: 2-86)
165 342901-0102 1 HOSE NIPPLE, EXT.THR. R1/4-7 MM
175 90330-0085 1 BUSHING, INT/EXT. THR. R1/2-RP1/4
180 315239-0111 3 NYLON WASHER G3/8
260 342921-0115 1 STRAIGHT COUPLING,EXT.THREADED 6/4-G3/8"
330 2552013-0000 1 WATER DIAGRAM
360 90140-0023 2 T-PIPE, INT. THREAD, NO. 2070-3/8-3/8
370 90187-0089 1 BALL VALVE G3/8, NPBR
380 342700-0111 1 NIPPLES,HEXAGON,EXT.G-THREAD G3/8"-G3/8"
390 90163-0041 1 HOSE NIPPLE, EXT.THR. 3/8-12 MM
400 90140-0020 1 ELBOW, 90, INT/EXT. THREAD, NO. 2020-3/8
TBA/21 COMPRESSOR (See drawing on page: 2-82)
165 342901-0102 1 HOSE NIPPLE, EXT.THR. R1/4-7 MM
175 90330-0085 1 BUSHING, INT/EXT. THR. R1/2-RP1/4
180 315239-0111 1 NYLON WASHER G3/8
330 1511629-0000 1 WATER DIAGRAM
TBA/21 ICE-WATER (See drawing on page: 2-84)
180 315239-0111 1 NYLON WASHER G3/8
235 342920-0124 1 STRAIGHT COUPLING,EXT.THREADED 8/6-R1/2"
320 90166-0118 MM 900 TUBE 8 MM PA BLACK
330 1255364-0000 1 WATER DIAGRAM
TBA/22 COMPRESSOR (See drawing on page: 2-82)
165 342901-0102 1 HOSE NIPPLE, EXT.THR. R1/4-7 MM
175 90330-0085 1 BUSHING, INT/EXT. THR. R1/2-RP1/4
180 315239-0111 1 NYLON WASHER G3/8
330 1484511-0000 1 WATER DIAGRAM
Common Parts
030 1041932-0000 1 PIPE
040 1041933-0000 1 PIPE
050 1037[illegible]-0000 1 HOLDER
060 90458-0921 2 FILTER SP 122-200
90458-2541 FILTER, CP23174-7-304SS
070 90187-0029 4 BALL VALVE G1/2, NPBR
080 479261-0000 4 NIPPLE
090 312105-0370 2 SCREW M6S ISO 4017 M6X20 A480
100 315125-0153 2 WASHER TBRSB 6,4X22X4 A4
110 342720-0114 6 CONN. STR. GA-15-G1/2
120 90043-0006 1 PRESSURE GAUGE, 2041 D=63 MM
130 342701-0202 1 BUSHING,INT./EXT.G-THREAD G3/8"-G1/8"
150 315239-0113 18 NYLON WASHER G1/2
160 315239-0109 1 NYLON WASHER G1/8
170 342901-0105 1 HOSE NIPPLE, EXT.THR. R1/2-12 MM
200 90110-0095 1 CONNECTOR 3 POLE + EARTH
210 273455-0000 1 LABEL (COLD WATER)
220 312502-0120 2 DRIVE SCREW ROUND HEAD KDS 0X5
240 90157-0016 1 LOCKING FLUID
250 342930-0133 1 ELBOW 90 COUPL.,EXT.THREAD 10/8-R3/8"
270 352103-0101 2 CABLE GLAND, ST 9, PR15,2/PG9
350 2547061-0000 1 HOLDER
410 342708-0109 7 REINFORCING RING VSH 15X1 MM
B 2102 90274-0042 1 PRESSURE GUARD, 200 KPA
W 2220 351150-0403 MM 2000 CABLE OLFLEX 3X0,75 MM2 LIGHT/GREY
W 2243 351150-0403 MM 2000 CABLE OLFLEX 3X0,75 MM2 LIGHT/GREY
Y 2108 90042-0249 1 SOLENOID VALVE OFFICINE DI ENSINO
Pos Part No UN Qty Description Page No
Machine Type Group Description Used-In Group Number Page No
Tetra Pak 648506-0400 WATER PANEL 648506-0400 Pos. 070 1095608-0100 2-83 (107)
Doc No: SPC-2645000-0101
32 23 22 31
F

Introduction

Manual Information

Tetra Pak recommends reading all delivered manuals carefully. Make sure that the delivered manuals are available to personnel who operate or maintain the equipment.

It is important to keep this catalogue for the lifetime of the equipment and to pass the catalogue on to any subsequent holder or user.

Tetra Pak will not be held responsible for any damage to the equipment caused by not following the instructions given in the manuals that accompany this equipment.

Delivered Manuals

Manuals delivered with this equipment may include

- CM
  The Conversion Manual provides technicians with information on converting the equipment between different production modes.
- EM
  The Electrical Manual provides technicians with information about the equipment's electrical system.
- IM
  The Installation Manual provides technicians with information required to safely install the equipment.
- MM
  The Maintenance Manual provides technicians with information on maintaining the equipment.
- OM
  The Operation Manual manual provides the operator with information on handling and operating the equipment before, during, and after production.
- SPC
  The Spare Parts Catalogue provides the information necessary to order spare parts from Tetra Pak
- TeM
  The Technical Manual
  - provides technicians with information required to safely install the equipment
  - provides technicians with information on maintaining the equipment
  - provides technicians with information about the machine's/ equipment's electrical system
  - provides the information necessary to order spare parts from Tetra Pak.

Page Layout

Refer to the illustration (A) on page i-5: The main pages in a Spare Parts Catalogue consist of an illustration page (1) and a corresponding list page (7). The page number (5) is shown in the header of an illustration page and in the footer of a list page. The document number (6) is shown in the footer of a list page.

Page Numbering

Refer to the illustration (A) on page i-5: A page number (5) has three parts:

- chapter number (2)
- consecutive page number within the chapter (3)
- total number of pages in the chapter (4)

Machine Introduction

Manufacturer

For the manufacturer's name and address, see the second page of this catalogue.

Service

To order spare parts for this machine, or to report problems associated with operating this machine, contact the nearest Tetra Pak office.

Contact the Liaison with other inquiries, comments, or suggestions for improvement regarding the equipment and its documentation.

Identification

CE Classification

This equipment complies with the basic health and safety regulations of the European Economic Area (EEA).

Machine Plate

The illustration (B) on page i-5 shows an example of a machine plate. An illustration of the valid machine plate and its location on the equipment is shown in the Introduction chapter of the manuals delivered with this equipment. The machine plate contains the data listed below, needed when contacting Tetra Pak concerning this specific equipment.

- Machine type (8)
- Volume (9)
- Drawing specifications (10)
- Machine serial number (11)
- Manufacturer (12)
- CE mark (13)
- Year of manufacture (14)

The illustration (C) on page i-5 shows an example of a machine specification. Make sure that the equipment data listed in the front pages of this manual corresponds to the machine plate data and the machine specification.

How to Use This Spare Parts Catalogue

Locate a Spare Part Number

a) Refer to the illustration (D) on page i-5: Go to the chapter number (15) indicated beside the main group that contains the part you want to locate.

Items b) and c) refer to the illustration (E) on page i-6.

b) On the main group illustration, look for the machine subgroup (17) that contains the part or subgroup you are looking for. Note the position number (18) and go to the list page that follows the illustration.

c) Look for the position number/reference designation (16) or the subgroup name (19). Go to the corresponding page number (20) listed in the right-hand column. Tetra Pak has chosen to always use the function oriented structure for reference designation. The prefix indicating function oriented structure (=) is not shown in the reference designation.

Items d) and e) refer to the illustration (F) on page i-6.

d) Locate the part (21) that you are looking for on the subgroup illustration and note the part's position number.

e) The part number (29) and part description (30) are listed beside the position number on the list page.

Information Listed in a Spare Parts Catalogue

The list below refers to the illustration (F) on page i-6. A Spare Parts Catalogue contains the following information about groups, subgroups, and spare parts for the equipment:

- Group structure reference (22). Indicates the next higher group in the equipment list structure.
- Group name (23)
- Unit of measure (25)
- Quantity (26)
- Assembly drawing number (27)
- List page range (28). Included if there are multiple pages in the group illustration or list.
- Part or subgroup number (29)
- Subgroup name or part description (30)
- Group number (31)
- Equipment number (32)
- Group information heading (33). Indicates if the section below the heading is for a specific machine variant or if it is a list of common parts. If a list has more than one variant and each variant has its own assembly drawing, a page reference to the variant's assembly drawing is shown.
- Internal information (34)

Увод

Информация за ръководството

Tetra Pak Ви препоръчва да прочетете внимателно всички доставени ръководства. Проверете дали доставените ръководства са достъпни за служителите, които поддържат или работят с оборудването.

Важно е да запазите този каталог през целия живот на оборудването и да го предадете на трети лица, които ще използват или съхраняват оборудването.

Tetra Pak не може да бъде държана под отговорност за щети върху оборудването, причинени от неспазване на даденте инструкции в ръководствата, които съпровождат оборудването.

Доставени ръководства

Ръководствата, доставени с това оборудване, могат да включват

- CM
  Ръководството за приспособяване осигурява на техническите лица информация за приспособяването на оборудване към различни производствени режими.
- EM
  Електрическото ръководство осигурява на техническите лица информация за електрическата система на оборудването.
- IM
  Ръководството за инсталиране предоставя на техническите лица информацията, която е необходима за безопасно инсталиране на оборудването.
- MM
  Ръководството за поддръжка предоставя на техническите лица информация относно поддържането на оборудването.
- OM
  Ръководството за операции предоставя на операторите информация за това, как да боравят и функционират с оборудването преди, по време на и след производство.
- SPC
  Каталогът с резервни части предоставя необходимата информация за поръчка на резервни части от Tetra Pak
- TeM
  Техническото ръководство
  - предоставя на техническите лица необходимата информация за безопасно инсталиране на оборудването
  - предоставя на техническите лица информация за поддръжка на оборудването
  - предоставя на техническите лица информация за електрическата система на машината/оборудването
  - предоставя необходимата информация за поръчка на резервни части от Tetra Pak.

Формат на страниците

Разгледайте илюстрация (A) на страница i-5: Главните страници в Каталога с резервни части се състоят от страница с илюстрация (1) и прилежаща страница със списък (7). Номерът на страницата (5) е посочен в горната част на страницата с илюстрация и в долната част на страницата със списъка. Номерът на документа (6) е показан в долната част на страницата със списъка.

Номериране на страници

Разгледайте илюстрация (A) на страница i-5: Един номер на страница (5) има три части:

- номер на глава (2)
- последователен номер на страница в една глава (3)
- общ брой страници в главата (4)

Машини Увод

Производител

Вижте втората страница на този каталог, за да проверите името и адреса на производителя.

Обслужване

За да поръчате резервни части за тази машина или да докладвате за проблеми, свързани с работата с тази машина, се свържете с най-близкия офис на Tetra Pak.

Свържете се с отдела за контакти с клиенти за други запитвания, коментари и предложения за подобрение по отношение на оборудването и прилежащата му документация.

Идентификация

Класификация на ЦЕ

Това оборудване отговаря на основните наредби, свързани с опазване на здравето и безопасността на Европейската Икономическа Общност (ЕИО).

Табелка на машина

Илюстрация (B) на страница i-5 показва пример с табелка на машина. В уводната глава на ръководствата, доставени с това оборудване, е показана илюстрация с валидната табелка на машината и нейното положение върху оборудването. Табелката на машината съдържа посочените по-долу данни, които Ви трябват, когато се свързвате с Tetra Pak относно това специфично оборудване.

- Тип машина (8)
- Обем (9)
- Спесификации за чертане (10)
- Сериен номер на машината (11)
- Производител (12)
- CE печат (13)
- Година на производство (14)

Илюстрация (C) на страница i-5 показва пример със спесификация за машина. Проверете дали данните за оборудването, изброени на предните страници в това ръководство отговарят на данните от табелката на машината и на спесификацията на машината.

Как да използвате този Каталог за резервни части

Намерете Номер на резервна част

a) Разгледайте илюстрация (D) на страница i-5: Отидете в глава номер (15) посочена до главната група, която съдържа частта, която искате да намерите.

Артикули b) и c) се отнасят до илюстрация (E) на страница i-6.

b) На главната обща илюстрация вижте подгрупата на машината (17), която съдържа частта или подгрупата, която търсите. Намерете номера на позицията (18) и отворете на страницата със списъка, която е след илюстрацията.

c) Намерете номера на позицията/референцията (16) или името на подгрупата (19). Отворете съответстващия номер на страница (20) в дясната колона. Tetra Pak е избрала да използва винаги функционално-ориентирана структура при обозначаване на референциите. Префиксът, който показва функционално-ориентирана структура (=) не е посочен в обозначаването на референциите.

Артикули d) и e) се отнасят до илюстрация (F) на страница i-6.

d) Намерете частта (21), която търсите в илюстрацията на подгрупата и запомнете номера на частта.

e) Номерът на частта (29) и описанието на частта (30) са изброени до номера на позицията на страницата със списъка.

Изброена информация в Каталога с резервни части

По-долу посоченият списък се отнася до илюстрация (F) на страница i-6. Каталогът с резервни части съдържа следната информация за групи, подгрупи и резервни части за оборудването:

- Референция за структурата (22). Показва следващата по-голяма група в структурата със списъка на оборудването.
- Име на група (23)
- Единица мярка (25)
- Количество (26)
- Номер за монтажен чертеж (27)
- Обхват на страницата със списък (28). Включен, ако има няколко страници в илюстрацията на групата или списъка.
- Номер на част или подгрупа (29)
- Име на подгрупа или описание на част (30)
- Номер на група (31)
- Номер на оборудване (32)
- Референция за информацията за групата (33). Показва дали частта под заглавието е за специфична версия на машината или е списък с общи части. Ако един списък има повече от един вариант и всеки вариант има собствен монтажен чертеж, се показва референцията на страницата към монтажния чертеж на варианта.
- Вътрешна информация (34)

Úvod

Informace o manuálu

Tetra Pak doporučuje, abyste si pozorně přečetli všechny dodané příručky. Přesvědčte se, že dodané manuály jsou k dispozici personálu, který obsluhuje nebo provádí údržbu zařízení.

Je důležité ponechat si tuto příručku po celou dobu životnosti zařízení a předat ho jakémukoliv následujícímu vlastníkovi nebo uživateli.

Tetra Pak nebude odpovídat za žádné škody zařízení, způsobené nedodržováním pokynů uvedených v této příručce.

Dodané příručky

Příručky dodané s tímto zařízením mohou obsahovat

- CM
  Konverzní manuál (CM) poskytuje technikům informace o konverzi zařízení mezi různými výrobními režimy.
- EM
  Elektrický manuál (EM) poskytuje technikům informace o elektrickém systému tohoto zařízení.
- IM
  Instalační manuál (IM) poskytuje technikům informace potřebné k bezpečné instalaci zařízení.
- MM
  Údržbový manuál (MM) poskytuje technikům informace o údržbě tohoto zařízení.
- OM
  Provozní manuál (OM) poskytuje operátorovi informace o manipulaci s tímto zařízením a provozu před, během a po výrobě.
- SPC
  Katalog náhradních dílů (SPC) poskytuje informace potřebné pro objednávání náhradních dílů od společnosti Tetra Pak
- TeM
  Technický manuál
  - poskytuje technikům informace potřebné k bezpečné instalaci tohoto zařízení
  - poskytuje technikům informace o údržbě tohoto zařízení
  - poskytuje technikům informace o elektrickém systému tohoto zařízení
  - poskytuje informace potřebné pro objednávání náhradních dílů od společnosti Tetra Pak

Rozvržení stránky

Viz obrázek (A) na straně i-5: Hlavní strany Katalogu náhradních dílů obsahují stranu s obrázky (1) a odpovídající stranu seznamu (7). Číslo strany (5) je uvedeno v záhlaví strany s obrázky a v zápatí strany seznamu. Číslo dokumentu (6) je uvedeno v zápatí strany seznamu.

Číslování stran

Viz obrázek (A) na straně i-5: Číslo strany (5) sestává ze tří částí:

- číslo kapitoly (2)
- pořadové číslo strany (3) v kapitole
- celkový počet stránek (4) v kapitole

Úvod ke stroji

Výrobce

Název a adresa výrobce je uvedena na druhé straně tohoto katalogu.

Servis

Chcete-li objednat náhradní díly nebo ohlásit problémy související s provozem tohoto stroje, kontaktujte nejbližší kancelář Tetra Pak.

S dalšími dotazy, připomínkami nebo náměty na vylepšení ohledně zařízení a této dokumentace se obracejte na kontaktní osobu.

Identifikace

Klasifikace CE

Toto zařízení splňuje základní zdravotní a bezpečnostní předpisy Evropského hospodářského prostoru (EEA).

Štítek na stroji

Obrázek (B) na straně i-5 znázorňuje příklad štítku na stroji. Obrázek platného štítku na stroji a jeho umístění na zařízení je uveden v příručkách dodaných s tímto strojem v kapitole Úvod. Na štítku jsou uvedeny údaje potřebné při kontaktování společnosti Tetra Pak, týkající se tohoto specifického zařízení.

- Typ stroje (8)
- Objem (9)
- Výkresové specifikace (10)
- Výrobní číslo stroje (11)
- Výrobce (12)
- Označení CE (13)
- Rok výroby (14)

Obrázek (C) na straně i-5 zobrazuje příklad specifikace stroje. Přesvědčte se, že údaje o zařízení uvedená v seznamu na předních stranách tohoto manuálu odpovídají údajům štítku na stroji a specifikaci stroje.

Jak používat tento Katalog náhradních dílů

Vyhledejte číslo náhradního dílu

a) Viz obrázek (D) na straně i-5: Přejděte na číslo kapitoly (15) uvedené vedle hlavní skupiny, která obsahuje hledaný díl.

Položky b) a c) odkazují na obrázek (E) na straně i-6.

b) Na vyobrazení hlavní skupiny vyhledejte strojní podskupinu (17), která obsahuje hledaný díl nebo podskupinu. Poznamenejte si číslo pozice (18) a přejděte na stranu seznamu vyplývající z obrázku.

c) Vyhledejte číslo pozice/označení odkazu (16) nebo název podskupiny (19). Přejděte na odpovídající číslo strany (20) v seznamu v pravém sloupci. Tetra Pak zvolil pro označování odkazu používat vždy uspořádání orientované na funkci. Prefix indikující uspořádání orientované na funkci (=) není uveden v označení odkazu.

Položky d) a e) odkazují na obrázek (F) na straně i-6.

d) Vyhledejte díl (21), který hledáte na vyobrazení podskupiny a poznamenejte si číslo pozice dílu.

e) Číslo dílu (29) a popis dílu (30) jsou uvedeny v seznamu vedle čísla pozice na straně seznamu.

Informace uvedené v seznamu v Katalogu náhradních dílů

Níže uvedený seznam odkazuje na obrázek (F) na straně i-6. Katalog náhradních dílů obsahuje následující informace o skupinách, podskupinách a náhradních dílech pro toto zařízení:

- Odkaz na uspořádání skupiny (22). Indikuje další vyšší skupinu v uspořádání seznamu zařízení.
- Název skupiny (23)
- Měrná jednotka (25)
- Množství (26)
- Číslo montážního výkresu (27)
- Rozsah stran seznamu (28). Včetně toho, zda existuje více stran v obrázku skupiny nebo seznamu.
- Díl nebo číslo podskupiny (29)
- Název podskupiny nebo popis dílu (30)
- Číslo skupiny (31)
- Číslo zařízení (32)
- Záhlaví informace o skupině (33). Indikuje, že oddíl pod záhlavím je pro specifickou variantu stroje nebo jde-li o seznam běžných dílů. Jestliže seznam obsahuje více než jednu variantu a každá varianta má svůj vlastní montážní výkres, pak je uveden odkaz na stranu montážního výkresu této varianty.
- Interní informace (34)

Indledning

Oplysninger om manualen

Tetra Pak anbefaler, at alle leverede manualer læses omhyggeligt. Sørg for, at de udleverede manualer er til rådighed for personale, som arbejder med eller vedligeholder udstyret.

Det er vigtigt at opbevare dette katalog hele udstyrets levetid og give kataloget videre til eventuelt kommende ejere eller brugere.

Tetra Pak kan ikke holdes ansvarlig for eventuel beskadigelse af udstyr, der opstår, fordi instruktionerne i manualerne til dette udstyr ikke følges.

Udleverede manualer

De manualer, der leveres sammen med dette udstyr, kan omfatte

- CM
  Denne konverteringsmanual forsyner teknikere med oplysninger om konvertering af udstyret mellem forskellige produktionstilstande.
- EM
  Denne elektriske manual forsyner teknikere med informationer om udstyrets elektriske system.
- IM
  Denne installationsmanual forsyner teknikere med nødvendig information i forbindelse med sikker installation af udstyret.
- MM
  Denne vedligeholdelsesmanual forsyner teknikere med information om vedligeholdelse af udstyret.
- OM
  Denne betjeningsmanual giver operatøren oplysninger om betjening af udstyret før, under og efter produktion.
- SPC
  Denne reservedelskatalog indeholder oplysninger, der er nødvendig for at bestille reservedele fra Tetra Pak
- TeM
  Den tekniske manual
  – forsyner teknikere med information, der er nødvendig for en sikker installation af udstyret.
  – forsyner teknikere med information om vedligeholdelse af udstyret.
  – forsyner teknikere med information om maskinens/udstyrets elektriske system.
  – indeholder de informationer, der er nødvendige for at kunne bestille reservedele fra Tetra Pak.

Sidelayout

Se illustration (A) på side i-5: Hovedsiderne i et reservedelskatalog består af en illustrationsside (1) og en tilsvarende listeside (7). Sidenummeret (5) vises i sidehovedet på en illlustrationsside og i sidefoden på en listeside. Dokumentnummeret (6) vises i sidefoden på en listeside.

Sidenummerering

Se illustrationen (A) på side i-5: Et sidenummer (5) har tre dele:

- kapitelnummer (2)
- fortløbende sidenummer i kapitlet (3)
- samlet sideantal i kapitlet (4)

Præsentation af maskinen

Producent

Producentens navn og adresse findes på side to i dette katalog.

Service

Kontakt nærmeste Tetra Pak-kontor for at bestille reservedele eller rapportere problemer i forbindelse med betjening af denne maskine.

Henvendelse til vores kontaktperson med andre forespørgsler, kommentarer eller forslag til forbedring angående udstyr og dokumentation.

Identificering

CE-klassificering

Dette udstyr lever op til de grundlæggende regulativer for sundhed og sikkerhed indenfor den Europæiske Økonomiske Samarbejdsområde (EØS).

Maskinskilt

Illustrationen (B) på side i-5 viser et eksempel på et maskinskilt.
En illustration af et gyldigt maskinskilt og dets placering på udstyret er vist i indledningskapitlet i de manualer, der leveres med dette udstyr. Maskinskiltet indeholder nedennævnte data. Disse er nødvendige ved kontakt med Tetra Pak vedrørende dette specifikke udstyr.

- Maskintype (8)
- Volumen (9)
- Tegningsspecifikationer (10)
- Maskinens serienummer (11)
- Producent (12)
- CE-mærke (13)
- Produktionsår (14)

Illustrationen (C) på side i-5 viser et eksempel på en maskinspecifikation. Kontroller, at de udstyrsdata, der er anført på de første sider i denne manual, svarer til maskinskiltsdataene og maskinspecifikationen.

Sådan bruges dette reservedelskatalog.

Find et reservedelsnummer

a) Se illustrationen (D) på side i-5: Gå til kapitelnummeret (15), der er angivet ved siden af hovedgruppen, der indeholder den del, der ønskes fundet.

Punkterne b) og c) refererer til illustrationen (E) på side i-6.

b) I hovedgruppeillustrationen skal man se efter maskinundergruppen (17), som indeholder den del eller undergruppe, der søges. Bemærk placeringsnummeret (18), og gå til listesiden, som følger illustrationen.

c) Se efter placeringsnummeret/henvisningsbetegnelse (16) eller undergruppens navn (19). Gå til det tilsvarende sidenummer (20) angivet i den højre kolonne. Tetra Pak har valgt altid at anvende den funktionsorienterede struktur til henvisningsbetegnelse. Præfikset angiver funktionsorienteret struktur (=) ikke vist i henvisningsbetegnelsen.

Punkterne d) og e) refererer til illustrationen (F) på side i-6.

d) Find den del (21), du søger i undergruppeillustrationen, og notér delens placeringsnummer.

e) Reservedelsnummeret (29) og -beskrivelsen (30) er angivet ved siden af placeringsnummeret på listesiden.

Informationer der er angivet i et reservedelskatalog

Listen nedenfor refererer til illustrationen (F) på side i-6. Et reservedelskatalog indeholder følgende informationer om grupper, undergrupper og reservedele til udstyret:

- Gruppestrukturreference (22). Angiver næste overordnede gruppe i udstyrslistestrukturen.
- Gruppenavn (23)
- Måleenhed (25)
- Antal (26)
- Samletegningsnummer (27)
- Listens sideområde (28). Er angivet, hvis gruppeillustrationen eller -listen inkluderer mange sider.
- Del- eller undergruppenummer (29)
- Undergruppens navn eller delsbeskrivelse (30)
- Gruppenummer (31)
- Udstyrsnummer (32)
- Overskrift for gruppeinformation (33). Angiver, om afsnittet under overskriften er for en specifik maskinvariant, eller om det er en liste over fælles dele. Hvis en liste har mere end én variant, og hver variant har sin egen samletegning, vises en sidereference til variantens samletegning.
- Intern information (34)

Einleitung

Informationen über das Handbuch

Tetra Pak empfiehlt, alle mitgelieferten Handbücher sorgfältig durchzulesen. Stellen Sie sicher, dass die Handbücher dem Personal, das die Ausrüstung betreibt oder wartet, zur Verfügung steht.

Es ist wichtig, dass Sie diesen Katalog für die gesamte Lebensdauer der Ausrüstung vorliegen haben und einem etwaigen Nachbesitzer oder -betreiber übergeben.

Tetra Pak haftet nicht für Schäden an der Ausrüstung, die aufgrund von Nichtbeachtung der Anweisungen aus den Handbüchern, die mit diesem Gerät geliefert werden, entstehen.

Gelieferte Handbücher

Die Handbücher, die mit dieser Ausrüstung geliefert wird, können Folgendes beinhalten

- CM
  Das Umbauhandbuch gibt den Technikern Informationen über den Umbau der Ausrüstung zwischen verschiedenen Produktionsweisen.
- EM
  Das Elektrohandbuch gibt den Technikern Informationen zum Elektrosystem der Ausrüstung.
- IM
  Das Installationshandbuch gibt den Technikern Informationen für die sichere Installation der Ausrüstung.
- MM
  Das Wartungshandbuch gibt den Technikern Informationen für die Wartung der Ausrüstung.
- OM
  Das Betriebshandbuch gibt dem Bediener Informationen über die Bedienung und den Betrieb der Ausrüstung vor, während und nach der Produktion.
- SPC
  Der Ersatzteilkatalog liefert die Informationen, die für die Bestellung von Ersatzteilen bei Tetra Pak erforderlich sind.
- TeM
  Das technische Handbuch
  - gibt den Technikern Informationen für die sichere Installation der Ausrüstung
  - gibt den Technikern Informationen für die Wartung der Ausrüstung
  - gibt den Techniker Informationen zum Elektrosystem der Ausrüstung/der Maschine
  - liefert die Informationen, die für die Bestellung von Ersatzteilen bei Tetra Pak erforderlich sind.

Seitenlayout

Bezugnahme auf Abbildung (A) auf Seite i-5: Die Hauptseiten in einem Ersatzteilkatalog bestehen aus einer Abbildungsseite (1) und einer entsprechenden Listenseite (7). Die Seitennummer (5) wird in der Kopfzeile einer Abbildungsseite und in der Fußzeile einer Listenseite aufgeführt. Die Dokumentennummer (6) wird in der Fußzeile einer Listenseite aufgeführt.

Seitennummerierung

Bezugnahme auf Abbildung (A) auf Seite i-5: Eine Seitennummer (5) besteht aus drei Teilen:

- Kapitelnummer (2)
- Fortlaufende Seitennummer innerhalb des Kapitels (3)
- Gesamtzahl der Seiten im Kapitel (4)

Einführung zur Maschine

Hersteller

Bitte entnehmen Sie den Namen und die Adresse des Herstellers der zweiten Seite dieses Katalogs.

Service

Zur Bestellung von Ersatzteilen für diese Maschine oder um Probleme im Zusammenhang mit dem Betrieb dieser Maschine zu melden, wenden Sie sich bitte an das nächstgelegene Büro von Tetra Pak.

Wenden Sie sich bei anderen Anfragen, Kommentaren oder Verbesserungsvorschlägen mit Bezug auf die Ausrüstung und seine Dokumentation an die Verbindungsstelle.

Identifizierung

CE-Klassifizierung

Diese Ausrüstung erfüllt die wesentlichen Anforderungen des Europäischen Wirtschaftsraum (EWR) für Gesundheitsschutz und die Sicherheit.

Maschinenschild

Die Abbildung (B) auf Seite i-5 zeigt ein Beispiel eines Maschinenschilds. Die Abbildung eines gültigen Maschinenschildes und seine Position auf der Ausrüstung wird im Einleitungskapitel der mit dieser Ausrüstung gelieferten Handbücher gezeigt. Das Maschinenschild enthält die Daten, die erforderlich sind, wenn Sie sich bezüglich dieser speziallen Ausrüstung an Tetra Pak wenden.

- Maschinentyp (8)
- Volumen (9)
- Zeichnungsspezifikationen (10)
- Seriennummer der Maschine (11)
- Hersteller (12)
- CE-Zeichen (13)
- Baujahr (14)

Die Abbildung (C) auf Seite i-5 zeigt ein Beispiel einer Maschinenspezifikation. Stellen Sie sicher, dass die Ausrüstungsdaten, die in den vorderen Seiten dieses Handbuchs aufgelistet sind, mit den Maschinenschilddaten und der Maschinenspezifikation übereinstimmen.

Benutzung dieses Ersatzteilkatalogs

Finden einer Ersatzteilnummer

a) Bezugnahme auf Abbildung (D) auf Seite i-5: Weiter zur Kapitel nummer (15), die neben der Hauptgruppe angegeben ist, die das entsprechende Teil enthält.

Die Positionen b) und c) beziehen sich auf die Abbildung (E) auf Seite i-6.

b) Suchen Sie auf der Hauptgruppenillustration nach der Maschinen-Untergruppe (17), die das gesuchte Teil oder die Untergruppe enthält. Notieren Sie die Positionsnummer (18) und gehen Sie dann zur Listenseite, die der Abbildung folgt.

c) Suchen Sie nach der Positionsnummer/Referenzbezeichnung (16) oder dem Namen der Untergruppe (19). Gehen Sie zur entsprechenden Seitennummer (20), die in der rechten Spalte aufgelistet ist. Tetra Pak hat sich dazu entschieden, stets eine funktionsorientierte Struktur für die Referenzbezeichnung zu verwenden. Die vorangestellte Kennzeichnung, welche die funktionsorientierte Struktur angibt (=), wird in der Referenzbezeichnung nicht angezeigt.

Die Positionen d) und e) beziehen sich auf die Abbildung (F) auf Seite i-6.

d) Finden Sie das gesuchte Teil (21) auf der Abbildung der Untergruppe und notieren Sie die Positionsnummer des Teils.

e) Die Teilenummer (29) und die Teilebeschreibung (30) werden neben der Positionsnummer auf der Listenseite aufgelistet.

In einem Ersatzteilkatalog aufgelistete Informationen

Die folgende Liste bezieht sich auf die Abbildung (F) auf Seite i-6. Ein Ersatzteilkatalog enthält folgende Informationen über Gruppen, Untergruppen und Ersatzteile für die Ausrüstung:

- Gruppenstrukturreferenz (22). Sie gibt die nächst höhere Gruppe in der Ausrüstungslistenstruktur an.
- Gruppenname (23)
- Maßeinheit (25)
- Menge (26)
- Nummer der Zusammenbauzeichnung (27)
- Listenseitenbereich (28). Enthalten, wenn es mehrere Seiten in der Gruppenabbildung oder Liste gibt.
- Teile- oder Untergruppennummer (29)
- Untergruppenname oder Teilebeschreibung (30)
- Gruppennummer (31)
- Ausrüstungsnummer (32)
- Gruppeninformationsüberschrift (33). Gibt an, ob sich der Abschnitt unter der Überschrift auf eine spezifische Maschinenvariante bezieht oder ob es sich um eine Liste der allgemeinen Teile handelt. Wenn eine Liste mehr als eine Variante hat und jede Variante über eine eigene Zusammenbauzeichnung verfügt, wird eine Seitenreferenz zur Zusammenbauzeichnung angezeigt.
- Interne Informationen (34)

Εισαγωγή

Πληροφορίες για το Εγχειρίδιο

Η Tetra Pak σάς συνιστά να διαβάζετε προσεκτικά όλα τα παρεχόμενα εγχειρίδια. Εξασφαλίζετε ότι όλα τα παρεχόμενα εγχειρίδια διατίθενται στο προσωπικό που χειρίζεται ή συντηρεί τον εξοπλισμό.

Είναι σημαντικό να διατηρείτε αυτό τον κατάλογο καθ' όλη τη διάρκεια ζωής του εξοπλισμού καθώς και να παραδίδετε τον κατάλογο στον τυχόν επόμενο ιδιοκτήτη ή χρήστη του εξοπλισμού.

Η Tetra Pak δεν πρόκειται να αναλάβει καμία ευθύνη για οποιαδήποτε ζημιά που μπορεί να προκληθεί στον εξοπλισμό εξαιτίας της μη τήρησης των οδηγιών οι οποίες παρέχονται στα εγχειρίδια που συνοδεύουν αυτό τον εξοπλισμό.

Παρεχόμενα Εγχειρίδια

Στα εγχειρίδια που παρέχονται μαζί μ' αυτό τον εξοπλισμό, μπορεί να περιλαμβάνονται τα εξής:

- CM
  Αυτό το Εγχειρίδιο Μετατροπής παρέχει στους τεχνικούς πληροφορίες για τη μετατροπή του εξοπλισμού μεταξύ των διάφορων λειτουργιών παραγωγής.
- EM
  Αυτό το Ηλεκτρικό Εγχειρίδιο παρέχει στους τεχνικούς πληροφορίες για το ηλεκτρικό σύστημα του εξοπλισμού.
- IM
  Αυτό το Εγχειρίδιο Εγκατάστασης παρέχει στους τεχνικούς τις απαιτούμενες πληροφορίες για την ασφαλή εγκατάσταση του εξοπλισμού.
- MM
  Αυτό το Εγχειρίδιο Συντήρησης παρέχει στους τεχνικούς πληροφορίες για τη συντήρηση του εξοπλισμού.
- OM
  Αυτό το Εγχειρίδιο Χειρισμού παρέχει στο χειριστή πληροφορίες για το χειρισμό και τη λειτουργία του εξοπλισμού πριν, κατά τη διάρκεια και μετά την παραγωγή.
- SPC
  Αυτός ο Κατάλογος Ανταλλακτικών παρέχει τις απαραίτητες πληροφορίες για την παραγγελία ανταλλακτικών από την Tetra Pak.
- TeM
  Το Τεχνικό Εγχειρίδιο
  - παρέχει στους τεχνικούς τις απαιτούμενες πληροφορίες για την ασφαλή εγκατάσταση του εξοπλισμού
  - παρέχει στους τεχνικούς πληροφορίες για τη συντήρηση του εξοπλισμού
  - παρέχει στους τεχνικούς πληροφορίες για το ηλεκτρικό σύστημα του εξοπλισμού/μηχανής
  - παρέχει τις απαραίτητες πληροφορίες για την παραγγελία ανταλλακτικών από την Tetra Pak.

Διάταξη Σελίδων

Ανατρέξτε στην εικόν (A) της σελίδας i-5: Οι κύριες σελίδες ενός Καταλόγου Ανταλλακτικών αποτελούνται από μία εικονογραφημένη σελίδα (1) και από μία αντίστοιχη σελίδα λίστας (7). Ο αριθμός σελίδας (5) εμφανίζεται στην κεφαλίδα μιας εικονογραφημένης σελίδας και στο υποσέλιδο μιας σελίδας λίστας. Ο αριθμός εγγράφου (6) εμφανίζεται στο υποσέλιδο μιας σελίδας λίστας.

Αρίθμηση Σελίδων

Ανατρέξτε στην εικόνα (A) της σελίδας i-5: Ένας αριθμός σελίδας (5) αποτελείται από τα εξής τρία μέρη:

- αριθμός κεφαλαίου (2)
- αύξων αριθμός σελίδας του κεφαλαίου (3)
- συνολικός αριθμός σελίδων του κεφαλαίου (4)

Παρουσίαση Μηχανής

Κατασκευαστής

Για το όνομα και τη διεύθυνση του κατασκευαστή, ανατρέξτε στη δεύτερη σελίδα αυτού του καταλόγου.

Τεχνική Εξυπηρέτηση

Για να παραγγείλετε ανταλλακτικά για τη συγκεκριμένη μηχανή ή για να αναφέρετε προβλήματα που σχετίζονται με τη λειτουργία αυτής της μηχανής, επικοινωνήστε με το πλησιέστερο γραφείο της Tetra Pak.

Εάν έχετε άλλου είδους ερωτήσεις, σχόλια ή προτάσεις βελτίωσης σχετικά με τον εξοπλισμό και την έγγραφη τεκμηρίωσή του, επικοινωνήστε με το Τμήμα Σχέσεων.

Στοιχεία Ταυτότητας

Σήμανση CE

Αυτός ο εξοπλισμός συμμορφώνεται με τους βασικούς κανονισμούς υγείας και ασφάλειας του Ευρωπαϊκού Οικονομικού Χώρου (ΕΟΧ).

Πινακίδα Αναγνώρισης Μηχανής

Η εικόνα (B) της σελίδας i-5 δείχνει ένα παράδειγμα μιας πινακίδας αναγνώρισης μηχανής.
Μια εικόνα που δείχνει την ενδεδειγμένη μορφή και θέση της πινακίδας αναγνώρισης μηχανής στον εξοπλισμό, παρουσιάζεται στο κεφάλαιο 'Εισαγωγή' των εγχειριδίων που παρέχονται μ' αυτόν τον εξοπλισμό.
Η πινακίδα αναγνώρισης μηχανής αναγράφει τα δεδομένα που παρατίθενται στη συνέχεια, τα οποία είναι απαραίτητα όταν επικοινωνείτε με την Tetra Pak για θέματα που αφορούν αυτό το συγκεκριμένο εξοπλισμό.

- Τύπος μηχανής (8)
- Χωρητικότητα (9)
- Στοιχεία σχεδίου (10)
- Αριθμός σειράς μηχανής (11)
- Κατασκευαστής (12)
- Σήμανση CE (13)
- Έτος κατασκευής (14)

Η εικόνα (Γ) της σελίδας i-5 δείχνει ένα παράδειγμα τεχνικών χαρακτηριστικών μηχανής. Βεβαιωθείτε ότι τα δεδομένα εξοπλισμού που παρατίθενται στις πρώτες σελίδες αυτού του εγχειριδίου συμφωνούν με τα δεδομένα της πινακίδας αναγνώρισης μηχανής και των τεχνικών χαρακτηριστικών μηχανής.

Πώς Χρησιμοποιείται Αυτός ο Κατάλογος Ανταλλακτικών

Εύρεση ενός Αριθμού Ανταλλακτικού

a) Ανατρέξτε στην εικόνα (Δ) της σελίδας i-5: Πηγαίνετε στον αριθμό κεφαλαίου (15) που υποδεικνύεται δίπλα από την κύρια ομάδα της μηχανής η οποία περιλαμβάνει το εξάρτημα που θέλετε να βρείτε.

Τα βήματα b) και c) αναφέρονται στην εικόνα (Ε) της σελίδας i-6.

b) Στην εικόνα της κύριας ομάδας μηχανής, αναζητήστε την υποομάδα μηχανής (17) η οποία περιλαμβάνει το εξάρτημα ή την υποομάδα που αναζητάτε. Σημειώστε τον αριθμό θέσης (18) και πηγαίνετε στη σελίδα λίστας που ακολουθεί την εικόνα.

c) Αναζητήστε τον αριθμό θέσης/ονομασία αναφοράς (16) ή το όνομα υποομάδας (19). Πηγαίνετε στον αντίστοιχο αριθμό σελίδας (20) που αναγράφεται στη δεξιά στήλη. Η Tetra Pak έχει επιλέξει να χρησιμοποιεί πάντα δομή ονομασίας αναφοράς με βάση τη λειτουργία. Το πρόθεμα που υποδεικνύει τη δομή με βάση τη λειτουργία (=) δε φαίνεται στο διάγραμμα αναφοράς.

Τα βήματα d) και e) αναφέρονται στην εικόνα (ΣΤ) της σελίδας i-6.

d) Βρείτε το εξάρτημα (21) που αναζητάτε στην εικόνα υποομάδας μηχανής και σημειώστε τον αριθμό θέσης του εξαρτήματος.

e) Ο αριθμός του εξαρτήματος (29) και η περιγραφή του εξαρτήματος (30) παρατίθενται δίπλα στον αριθμό θέσης στη σελίδα λίστας.

Πληροφορίες που Περιέχονται σε έναν Κατάλογο Ανταλλακτικών

Η λίστα που ακολουθεί αναφέρεται στην εικόνα (F) της σελίδας i-6. Ένας Κατάλογος Ανταλλακτικών περιέχει τις παρακάτω πληροφορίες σχετικά με τις ομάδες, τις υποομάδες και τα ανταλλακτικά του εξοπλισμού:

- Αναφορά δομής ομάδας (22). Υποδηλώνει την επόμενη μεγαλύτερη ομάδα στη δομή λίστας του εξοπλισμού.
- Όνομα ομάδας (23)
- Μονάδα μέτρησης (25)
- Ποσότητα (26)
- Αριθμός σχεδίου συγκροτήματος (27)
- Περιοχή σελίδων λίστας (28). Περιλαμβάνεται εφόσον η εικόνα ή η λίστα μιας ομάδας εκτίθεται σε περισσότερες από μία σελίδες.
- Αριθμός εξαρτήματος ή υποομάδας (29)
- Αριθμός υποομάδας ή περιγραφή εξαρτήματος (30)
- Αριθμός ομάδας (31)
- Αριθμός εξοπλισμού (32)
- Επικεφαλίδα πληροφοριών ομάδας (33). Υποδεικνύει εάν η ενότητα κάτω από την επικεφαλίδα αφορά μια συγκεκριμένη παραλλαγή μηχανής ή αποτελεί μια λίστα κοινών εξαρτημάτων. Σε περίπτωση που μια λίστα περιέχει περισσότερες από μία παραλλαγές και κάθε παραλλαγή έχει ξεχωριστό σχέδιο συγκροτήματος, εμφανίζεται μια παραπομπή προς τη σελίδα όπου βρίσκεται το σχέδιο συγκροτήματος της παραλλαγής.
- Εσωτερικές πληροφορίες (34)

Introducción

Información sobre el manual

Tetra Pak recomienda leer atentamente todos los manuales suministrados. Asegúrese de que los manuales están disponibles para el personal que opera o mantiene el equipo.

Es importante conservar este catálogo durante la vida útil del equipo, así como facilitárselo a cualquier propietario o usuario posterior.

Tetra Pak no se responsabilizará de daños en el equipo por no seguir las instrucciones proporcionadas en los manuales que acompañan este equipo.

Manuales entregados

Los manuales entregados con este equipo pueden incluir:

- CM
  El Manual de conversión proporciona a los técnicos información sobre cómo convertir el equipo a diferentes modos de producción.
- EM
  El Manual eléctrico proporciona a los técnicos información sobre el sistema eléctrico del equipo.
- IM
  El Manual de instalación proporciona a los técnicos la información necesaria para instalar el equipo de manera segura.
- MM
  El Manual de mantenimiento proporciona a los técnicos información sobre el mantenimiento del equipo.
- OM
  El Manual de funcionamiento proporciona al operador información sobre el manejo y el funcionamiento del equipo antes, durante y después de la producción.
- SPC
  El Catálogo de recambios proporciona la información necesaria para pedir las piezas de recambio a Tetra Pak.
- TeM
  El Manual técnico
  - proporciona a los técnicos la información necesaria para instalar de manera segura el equipo
  - proporciona a los técnicos información sobre el mantenimiento del equipo
  - proporciona a los técnicos información sobre el sistema eléctrico de la máquina/equipo
  - proporciona la información necesaria para pedir las piezas de recambio a Tetra Pak.

Organización de las páginas

Consultar la ilustración (A) en la página i-5: Las páginas principales en un Catálogo de recambios se componen de una página de ilustración (1) y una página de lista correspondiente (7). El número de la página (5) se muestra en el encabezado de una página de ilustración y en el pie de página de una página de lista. El número del documento (6) se muestra en el pie de página de una página de lista.

Numeración de las páginas

Consulte la ilustración (A) en la página i-5: Un número de página (5) consta de tres partes:

- número de capítulo (2)
- número de página consecutivo dentro del capítulo (3)
- número total de páginas del capítulo (4)

Introducción a la máquina

Fabricante

Para obtener el nombre y la dirección del fabricante, véase la segunda página de este catálogo.

Servicio

Para pedir recambios para esta máquina o informar de problemas asociados con el funcionamiento de la misma, póngase en contacto con la oficina de Tetra Pak más cercana.

Póngase en contacto con el representante para otras consultas, comentarios o consejos sobre mejoras referidos al equipo y su documentación.

Identificación

Clasificación de la CE

Este equipo cumple con la normativa básica sobre salud y seguridad del Espacio Económico Europeo (EEE).

Placa de máquina

La ilustración (B) en la página i-5 muestra un ejemplo de una placa de máquina.
En el capítulo Introducción de los manuales entregados con este equipo, se muestra una ilustración de la placa de máquina válida y su ubicación en el equipo. La placa de máquina contiene los datos que se enumeran a continuación, requeridos al ponerse en contacto con Tetra Pak en relación con este equipo específico.

- Tipo de máquina (8)
- Volumen (9)
- Especificaciones de plano (10)
- Número de serie de la máquina (11)
- Fabricante (12)
- Marca de la CE (13)
- Año de fabricación (14)

La ilustración (C) en la página i-5 muestra un ejemplo de especificación de la máquina. Asegúrese de que los datos de equipo que se enumeran en las páginas de la cubierta de este manual corresponden a los datos de la placa y las especificaciones de la máquina.

Cómo utilizar este Catálogo de recambios

Localizar un número de recambio

a) Consulte la ilustración (D) en la página i-5: Vaya al número de capítulo (15) indicado junto al grupo principal que contiene la pieza que desea localizar.

Los puntos b) y c) hacen referencia a la ilustración (E) en la página i-6.

b) En la ilustración del grupo principal, busque el subgrupo de la máquina (17) que contiene la pieza o el subgrupo que busca. Anote el número de posición (18) y vaya a la página de lista que sigue a la ilustración.

c) Busque el número de posición/denominación de referencia (16) o el nombre del subgrupo (19). Vaya al número de página correspondiente (20) que aparece en la columna de la derecha. Tetra Pak ha elegido utilizar siempre la estructura orientada a la función para la denominación de referencia. El prefijo que indica la estructura orientada a la función (=) no aparece en la denominación de referencia.

Los puntos d) y e) hacen referencia a la ilustración (F) en la página i-6.

d) Localice la pieza (21) que busca en la ilustración del subgrupo y anote el número de posición de la pieza.

e) El número de pieza (29) y la descripción de la misma (30) aparecen junto al número de posición en la página de lista.

Información que contiene un Catálogo de recambios

La lista que aparece a continuación hace referencia a la ilustración (F) en la página i-6. Un Catálogo de recambios contiene la siguiente información sobre grupos, subgrupos y recambios para el equipo:

- Referencia de estructura de grupo (22). Indica el siguiente grupo más alto en la estructura de lista del equipo.
- Nombre del grupo (23)
- Unidad de medida (25)
- Cantidad (26)
- Número de dibujo del conjunto (27)
- Intervalo de página de lista (28). Incluido si hay varias páginas en la ilustración o lista de grupo.
- Número de pieza o subgrupo (29)
- Nombre de subgrupo o descripción de pieza (30)
- Número de grupo (31)
- Número de equipo (32)
- Encabezado de información de grupo (33). Indica si la sección que aparece debajo del encabezado corresponde a una variante específica de la máquina o si es una lista de piezas comunes. Si la lista tiene más de una variante y cada variante tiene su propio dibujo de conjunto, se muestra una referencia de página al dibujo de conjunto de la variante.
- Información interna (34)

Sissejuhatus

Juhendi teave

Tetra Pak soovitab kõik juhendid hoolikalt läbi lugeda. Kontrollige, et juhendid oleksid seadmetega töötavatele ja neid hooldavatele isikutele kättesaadavad.

Kataloog tuleb seadme kasutusaja vältel alles hoida ning järgmisele omanikule või kasutajale edasi anda.

Tetra Pak ei vastuta seadme vigastuste eest, mis on tekkinud seadmega kaasnevate juhendite mittejärgimise tõttu.

Kaasaolevad juhendid

Seadmega kaasasolevad juhendid võivad sisaldada järgmist:

- CM
  Ümberseadistusjuhend annab tehnikutele teavet seadme ümber seadistamise kohta eri tootmisrežiimide korral.
- EM
  Elektrijuhend annab tehnikutele informatsiooni seadme elektrisüsteemi kohta.
- IM
  Paigaldusjuhend annab tehnikutele vajalikku teavet seadme ohutu paigaldamise kohta.
- MM
  Hooldusjuhend annab tehnikutele teavet seadme hoolduse kohta.
- OM
  Kasutusjuhend annab operaatorile teavet seadme käsitsemise ja kasutamise kohta enne tootmist, selle ajal ja pärast seda.
- SPC
  Varuosade kataloog annab vajalikku teavet Tetra Pakilt varuosade tellimiseks
- TeM
  Tehniline juhend
  - annab tehnikutele vajalikku teavet seadme ohutuks paigaldamiseks
  - annab tehnikutele teavet seadme hooldamise kohta
  - annab tehnikutele teavet masina/seadme elektrisüsteemi kohta
  - annab vajalikku teavet Tetra Pakilt varuosade tellimiseks.

Lehekülje kujundus

Vt joonist (A) lk i-5: Varuosade kataloogi põhilehtedeks on jooniste lehekülg (1) ja vastav loeteluleht (7). Lehekülje number (5) on toodud joonistelehe päises ja loetelulehe jaluses. Dokumendi number (6) on toodud loetelulehe jaluses.

Lehekülje nummerdus

Vt joonist (A) lk i-5: Lehekülje number (5) koosneb kolmest osast:

- peatüki number (2)
- järgneva lehekülje number (3) peatükis
- lehekülgede koguarv peatükis (4)

Sissejuhatus masina kohta

Tootja

Tootja nimi ja aadress on toodud kataloogi teisel lehel.

Teenindus

Masina varuosade tellimiseks või masina kasutamisega seonduvate probleemide teatamiseks võtke ühendust lähima Tetra Pak kontoriga.

Seadme ja dokumendiga seonduvate küsimuste, kommentaaride ja parandusettepanekute puhul võtke ühendust ettevõtte esindajaga.

Identifikatsioon

CE klassifikatsioon

Seade on kooskõlas Euroopa Majanduspiirkonna (EEA) tervishoiu- ja ohutusnõuetega.

Masina andmeplaat

Joonisel (B) leheküljel i-5 on kujutatud masina andmeplaati. Masina andmeplaadi joonis ja selle asukoht seadmel on toodud seadmega kaasasoleva juhendi sissejuhatavas peatükis. Masina andmeplaadil on toodud allpool loetletud andmed, mida vajate antud konkreetse seadmega seoses Tetra Paki poole pöördudes.

- Masina tüüp (8)
- Maht (9)
- Joonisspetsifikatsioonid (10)
- Masina seerianumber (11)
- Tootja (12)
- CE tähis (13)
- Tootmisaasta (14)

Joonisel (C) leheküljel i-5 on kujutatud näide masina spetsifikatsioonist. Veenduge, et juhendi esimestel lehekülgedel toodud andmed seadme kohta vastavad masina andmesildil olevatele andmetele ja masina spetsifikatsioonile.

Kuidas varuosade kataloogi kasutada

Leidke varuosa number

a) Vt joonist (D) lk i-5: Leidke peatükk, mille number (15) on toodud selle põhirühma juures, mis sisaldab otsitavat varuosa.

Punktid b) ja c) viitavad joonisele (E) lk i-6.

b) Põhirühma joonisel leidke masina alamrühm (17), mis sisaldab otsitavat osa või alamrühma. Leidke positsiooninumber (18) ja avage joonisele järgnev loeteluleht.

c) Leidke positsiooninumber/viite tähis (16) või alamgrupi nimetus (19). Avage parempoolses veerus loetletud vastav lehekülje number (20). Tetra Pak on valinud viite tähise puhul alatiseks kasutamiseks funktsioonile suunatud struktuuri. Funktsioonile suunatud struktuuri prefiks (=) pole viite tähises näidatud.

Punktid d) ja e) viitavad jooniselerefer (F) lk i-6.

d) Leidke otsitav osa (21) alamrühma joonisel ja seejärel osa positsioonnumber.

e) Osa number (29) ja osa kirjeldus (30) on toodud loetelulehel positsioonnumbri kõrval.

Varuosade kataloogis toodud teave

Allpool toodud loetelui viitab joonisele (F) lk i-6. Varuosade kataloog sisaldab järgmist teavet seadme rühmade, alamrühmade ja varuosade kohta:

- Rühmastruktuuri viide (22). Märgib seadme loetelu struktuuris järgmist kõrgemat rühma.
- Rühma nimetus (23)
- Mõõtühik (25)
- Kogus (26)
- Koostejoonise number (27)
- Loetelu lehekülgede vahemik (28). Kaasatud kui rühma joonised või loetelu on toodud mitmel lehel.
- Osa või alamrühma number (29)
- Alamrühma nimetus või osa kirjeldus (30)
- Rühma number (31)
- Seadme number (32)
- Rühma teabe pealkiri (33). Näitab, kas pealkirja all toodud jaotis on konkreetse masinavariandi kohta või on tegemist tavaliste varuosade loeteluga. Kui loetelus on toodud rohkem kui üks variant ja iga variandi jaoks on oma koostejoonis, esitatakse viide selle variandi koostejoonise leheküljele.
- Siseteave (34)

Johdanto

Tietoja käsikirjasta

Tetra Pak suosittelee kaikkien toimitettavien oppaiden lukemista huolellisesti. Varmista, että toimitetut oppaat ovat laitetta käyttävän tai huoltavan henkilökunnan saatavilla.

Tämä luettelo on säilytettävä laitteen käyttöiän ajan ja toimitettava edelleen mahdolliselle seuraavalle omistajalle tai käyttäjälle.

Tetra Pak ei vastaa laitevaurioista, jotka aiheutuvat laitteen mukana tulevissa oppaissa annettujen ohjeiden noudattamatta jättämisestä.

Toimitettavat ohjeet

Tämän laitteen mukana toimitettaviin ohjeisiin kuuluvat:

- CM
  Muunnoskirjassa on teknikoille tarkoitettuja ohjeita laitteiston muuttamisesta eri tuotantotiloihin.
- EM
  Sähkökirjassa on teknikoille tarkoitettuja tietoja laitteen sähköjärjestelmästä.
- IM
  Asennuskäsikirjassa on teknikoille tarkoitettuja tietoja, jotka tarvitaan laitteen turvallista asentamista varten.
- MM
  Huoltokäsikirjassa on teknikoille tarkoitettuja tietoja tämän laitteen huoltamisesta.
- OM
  Käyttäjän käsikirjassa on käyttäjälle tarkoitettuja tietoja laitteen käsittelystä ja käyttämisestä ennen tuotantoa, tuotannon aikana ja sen jälkeen.
- SPC
  Varaosaluettelossa on tietoja, joita tarvitaan varaosien tilaamiseen Tetra Pakilta.
- TeM
  Tekninen käsikirja
  - sisältää teknikoille tarkoitettuja tietoja, joita tarvitaan laitteen turvallista asentamista varten
  - sisältää teknikoille tarkoitettuja tietoja laitteen huoltamisesta
  - sisältää teknikoille tarkoitettuja tietoja koneen/laitteen sähköjärjestelmästä
  - sisältää tietoja, joita tarvitaan varaosien tilaamiseen Tetra Pakilta.

Sivujen asettelu

Katso kuva (A) sivulla i-5: Varaosaluettelon pääsivut koostuvat kuvasivusta (1) ja sitä vastaavasta luettelosivusta (7). Sivunumero (5) näytetään kuvasivun ylätunnisteessa ja luettelosivun alatunnisteessa. Asiakirjan numero (6) näytetään luettelosivun alatunnisteessa.

Sivunumerointi

Katso kuva (A) sivulla i-5: Sivunumerossa (5) on kolme osaa:

- luvun numero (2)
- perättäinen sivunumero (3) luvun sisällä
- luvun kokonaissivumäärä (4).

Koneen esittely

Valmistaja

Valmistajan nimi ja osoite on ilmoitettu tämän luettelon toisella sivulla.

Huolto

Jos haluat tilata tähän koneeseen varaosia tai jos tämän koneen käytössä ilmenee ongelmia, jotka haluat raportoida, ota yhteyttä lähimpään Tetra Pakin toimistoon.

Jos sinulla on muuta kysyttävää, huomautettavaa tai ehdotuksia ja sen asiakirjoja koskevista parannuksista, ota yhteys yhteyshenkilöön.

Tunnistetiedot

CE-luokitus

Tämä laite vastaa Euroopan talousalueen (ETA) terveyttä ja turvallisuutta koskevia perusvaatimuksia.

Koneen tyyppikilpi

Kuvassa (B) sivulla i-5 on esimerkki koneen tyyppikilvestä. Voimassa olevan tyyppikilven kuva ja sen sijainti koneessa käy ilmi laitteiston mukana tulleiden ohjeiden Johdanto-luvusta. Tyyppikilvessä on tarvitsemasi Tetra Pakin voimassa olevat yhteystiedot, kun on kyseessä tämä nimenomainen laite.

- Konetyyppi (8)
- Tilavuus (9)
- Piirustuserittely (10)
- Koneen sarjanumero (11)
- Valmistaja (12)
- CE-merkki (13)
- Valmistusvuosi (14)

Kuvassa (C) sivulla i-5 on esimerkki koneen erittelystä. Varmista, että tämän ohjeen etusivuilla ilmoitetut laitetiedot vastaavat tyyppikilven ja kone-erittelyn tietoja.

Tämän varaosaluettelon käyttäminen

Etsi varaosan numero

a) Katso kuva (D) sivulla i-5: Siirry lukuun (15), joka on ilmoitettu etsittävän osan pääryhmän vieressä.

Kohdat b) ja c) viittaavat kuvaan (E) sivulla i-6.

b) Etsi pääryhmän kuvasta koneen alaryhmä (17), joka sisältää etsimäsi osan tai alaryhmän. Merkitse muistiin paikkanumero (18) ja siirry luettelosivulle, joka seuraa kuvaa.

c) Etsi paikkanumero (16) tai alaryhmän nimi (19). Siirry vastaavalle sivunumerolle (20), joka on ilmoitettu oikeassa sarakkeessa. Tetra Pak on päättänyt aina noudattaa toimintoperusteista rakennetta viitemerkinnöissä. Viitemerkinnässä ei esitetä toimintoperusteisen rakenteen osoittavaa etuliitettä (=).

Kohdat d) ja e) viittaavat kuvaan (F) sivulla i-6.

d) Hae etsittävä osa (21) alaryhmän kuvasta ja merkitse osan paikkanumero muistiin.

e) Osanumero (29) ja osan kuvaus (30) on annettu paikkanumeron vieressä luettelosivulla.

Varaosaluettelossa olevat tiedot

Alla oleva luettelo viittaa kuvaan (F) sivulla i-6. Varaosaluettelo sisältää seuraavat tiedot ryhmistä, alaryhmistä ja laitteen varaosista:

- Ryhmärakenneviite (22). Osoittaa seuraavaksi ylemmän ryhmän laiteluettelorakenteessa.
- Ryhmän nimi (23)
- Mittayksikkö (25)
- Määrä (26)
- Kokoonpanopiirustuksen numero (27)
- Luettelon sivualue (28). Tämä on mukana, jos ryhmäkuvassa tai luettelossa on useita sivuja.
- Osan tai alaryhmän numero (29)
- Alaryhmän nimi tai osan kuvaus (30)
- Ryhmän numero (31)
- Laitteen numero (32)
- Ryhmätietojen otsikko (33). Osoittaa, koskeeko alla oleva osio tiettyä koneversiota vai onko kyseessä yhteisten osien luettelo. Jos luettelolla on useampi kuin yksi versio ja kullakin versiolla on oma kokoonpanopiirustuksensa, näytetään version kokoonpanopiirustuksen sivuviittaus.
- Sisäiset tiedot (34)

Introduction

Informations sur ce manuel

Tetra Pak recommande de lire attentivement tous les manuels remis. S'assurer que ceux-ci sont accessibles au personnel d'exploitation et de maintenance de l'équipement.

Il est important de conserver ce catalogue pendant la durée de vie de l'équipement et de le transmettre à tout détenteur ou à tout utilisateur ultérieur de l'équipement.

Tetra Pak ne pourra être tenu responsable d'aucun dommage causé à l'équipement suite au non respect des instructions fournies dans les manuels remis avec cet équipement.

Manuels remis

Les manuels remis avec cet équipement peuvent comprendre

- CM
  Le Manuel de Conversion contient les informations destinées aux techniciens pour la conversion de l'équipement en vue des différents modes de production.
- EM
  Le Manuel Electrique fournit aux techniciens des informations sur le système électrique de l'équipement.
- IM
  Le Manuel d'Installation fournit les informations nécessaires aux techniciens pour installer l'équipement en toute sécurité.
- MM
  Le Manuel d'Entretien contient les informations nécessaires aux techniciens pour la maintenance de l'équipement.
- OM
  Le Manuel d'Utilisation fournit à l'opérateur les informations nécessaires à la manutention et à l'exploitation de l'équipement, avant, pendant et après la production.
- SPC
  Le Catalogue des Pièces de Rechange contient les informations permettant de commander des pièces de rechange auprès de Tetra Pak
- TeM
  Le Manuel Technique
  - contient les informations nécessaires aux techniciens pour installer l'équipement en toute sécurité.
  - contient les informations nécessaires aux techniciens pour la maintenance de l'équipement.
  - fournit aux techniciens des informations sur le système électrique de la machine/de l'équipement.
  - fournit les informations permettant de commander des pièces de rechange auprès de Tetra Pak.

Mise en page

Reportez-vous au schéma (A) page i-5 : Dans un catalogue de Pièces de Rechange, les pages principales sont les pages de schémas (1) et les pages de listes correspondantes (7). Le numéro de page (5) est indiqué en en-tête sur une page de schéma et en bas de page sur une page de liste. Le numéro de document (6) est indiqué au bas d'une page de liste.

Numérotation des pages

Reportez-vous au schéma (A) page i-5 : Un numéro de page (5) se compose de trois éléments :

- numéro du chapitre (2)
- numéro de page séquentiel à l'intérieur du chapitre (3)
- nombre total de pages du chapitre (4)

Présentation de la machine

Fabricant

Les nom et adresse du fabricant sont donnés en deuxième page de ce catalogue.

Assistance technique

Pour commander des pièces de rechange pour cette machine ou signaler un problème lié à son fonctionnement, contactez l'agence Tetra Pak la plus proche.

Contactez le responsable de liaison pour tout autre renseignement, commentaire ou suggestion d'amélioration relatifs à l'équipement et à sa documentation.

Identification

Certification CE

Cet équipement est conforme aux réglementations essentielles en matière d'hygiène et de sécurité de l'Espace économique européen (EEE).

Plaque signalétique de la machine

Le schéma (B) de la page i-5 reproduit un exemple de plaque signalétique de la machine.
Le chapitre Introduction des manuels remis avec cet équipement comprend une reproduction de la plaque signalétique valide de la machine et indique son emplacement sur l'équipement. La plaque comporte les caractéristiques indiquées ci-dessous, nécessaires pour prendre contact avec Tetra Pak à propos de cet équipement spécifique.

- Type de la machine (8)
- Volume (9)
- Caractéristiques schéma (10)
- Numéro de série de la machine (11)
- Fabricant (12)
- Marquage CE (13)
- Année de fabrication (14)

Le schéma (C) de la page i-5 reproduit un exemple de plaque signalétique de la machine. Assurez-vous que les données relatives à l'équipement qui se trouvent au début de ce manuel correspondent bien aux données figurant sur la plaque signalétique de la machine et à ses spécifications.

Comment utiliser ce Catalogue des Pièces de Rechange

Trouver un numéro de pièce de rechange

a) Reportez-vous au schéma (D) page i-5 : Allez au numéro de chapitre (15) indiqué à côté du groupe principal contenant la pièce que vous recherchez.

Les éléments b) et c) se rapportent au schéma (E) de la page i-6.

b) Sur le schéma du groupe principal, recherchez le sous-groupe de la machine (17) contenant la pièce ou le sous-groupe que vous recherchez. Notez le numéro de position (18) et reportez-vous à la page de liste suivant le schéma.

c) Recherchez le numéro de position/la désignation de référence (16) ou le nom du sous-groupe (19). Allez au numéro de page correspondant (20) figurant dans la liste de la colonne de droite. Tetra Pak a pris le parti de toujours utiliser la structure de la fonction pour la désignation de la référence. Le préfixe indiquant la structure de la fonction (=) ne figure pas dans la désignation de la référence.

Les éléments d) et e) se rapportent au schéma (F) de la page i-6.

d) Repérez la pièce (21) que vous recherchez dans le schéma du sous-groupe et notez le numéro de position de la pièce.

e) Le numéro de la pièce (29) et sa description (30) figurent à côté du numéro de position sur la page de liste.

Informations données dans un Catalogue de Pièces de Rechange

La liste ci-dessous se rapporte au schéma (F) de la page i-6. Un Catalogue de Pièces de Rechange contient les informations suivantes concernant les groupes, sous-groupes et pièces de rechange de l'équipement :

- Référence de structure de groupe (22). Indique le groupe immédiatement supérieur dans la structure de liste de l'équipement.
- Nom du groupe (23)
- Unité de mesure (25)
- Quantité (26)
- Numéro de plan de montage (27)
- Groupe de pages de liste (28). Indiqué si la liste ou l'illustration du groupe comporte plusieurs pages.
- Numéro de pièce ou de sous-groupe (29)
- Nom du sous-groupe ou description de la pièce (30)
- Numéro de groupe (31)
- Numéro de l'équipement (32)
- Titre information du groupe (33) Indique si la section en-dessous du titre est destinée à une variante spécifique de la machine ou s'il s'agit d'une liste de pièces communes. Si une liste comprend plus d'une variante et que chaque variante a son propre plan de montage, une référence de page est donnée pour le plan de montage de la variante.
- Information interne (34)

Bevezetés

Kézikönyvre vonatkozó információk

A Tetra Pak javasolja, hogy az összes kapott kézikönyvet gondosan olvassa el. Gondoskodjon róla, hogy a kézikönyvek a berendezést üzemeltető és karbantartó személyzet számára elérhetők legyenek.

Fontos, hogy megőrizzék ezt a katalógust a berendezés élettartama alatt, és átadják a következő tulajdonosoknak és felhasználóknak.

A Tetra Pak nem vállal felelősséget a berendezés semmilyen megrongálódása esetén, ha nem követték a berendezéshez tartozó kézikönyvekben leírt utasításokat.

Szállított kézikönyvek

A berendezéssel szállított kézikönyvek az alábbiak lehetnek

- CM
  Az Átállási kézikönyv a műszaki szakemberek számára a berendezés különböző gyártási módjai közötti átállásra vonatkozó információkat tartalmaz.
- EM
  A Villamossági kézikönyv a berendezés elektronikai rendszerére vonatkozó információkat szolgáltat a műszaki szakemberek részére.
- IM
  Az Üzembe helyezési kézikönyv a berendezés biztonságos üzembe helyezésére vonatkozó információkat biztosít a technikai szakemberek részére.
- MM
  A Karbantartási kézikönyv a berendezés karbantartására vonatkozó információkat biztosít a technikai szakemberek részére.
- OM
  Az Üzemeltetési kézikönyv az üzemeltető személyzetnek szolgáltat a berendezés kezelésére és üzemeltetésére, a feldolgozás előtti, közbeni és utáni teendőkre vonatkozó információkat.
- SPC
  A Tartalékalkatrész-katalógus információt biztosít a pótalkatrészek Tetra Pak-tól történő megrendeléséhez.
- TeM
  A Technikai kézikönyv
  – a berendezés biztonságos üzembe helyezésére vonatkozó információkat biztosít a technikai szakemberek részére.
  – a berendezés karbantartására vonatkozó információkat biztosít a technikai szakemberek részére.
  – a gép/berendezés elektromos rendszerére vonatkotó információkat szolgáltat a technikai szakemberek számára.
  – információkat biztosít a pótalkatrészek Tetra Pak-tól történő megrendeléséhez.

Oldalelrendezés

Tekintse meg az i-5 oldalon lévő (A) ábrát: A Tartalékalkatrész-katalógus főoldalai egy rajzoldalból (1) és egy hozzá tartozó listaoldalból (7) állnak. Az oldalszám (5) a rajzoldal fejlécében és a listaoldal láblécében látható. A dokumentum száma (6) a listaoldal láblécében jelenik meg.

Oldalszámozás

Tekintse meg az i-5 oldalon lévő (A) ábrát: Az oldalszám (5) három részből áll:

- fejezetszám (2)
- folyamatos oldalszám (3) a fejezeten belül
- összes oldalszám (4) a fejezeten belül.

Bevezetés

Gyártó

A gyártó neve és címe a katalógus második oldalán található.

Szerviz

A gép valamely pótalkatrészének megrendelése vagy a berendezés működésével kapcsolatos zavarok bejelentése végett forduljon a legközelebbi Tetra Pak képviselethez.

Bármilyen más, a berendezésre illetve a dokumentációra vonatkozó kérdéseivel, megjegyzéseivel vagy javaslataival forduljon területi képviselőjéhez.

Azonosítás

CE besorolás

Ez a berendezés megfelel az Európai Gazdasági Régió (EEA) alapvető egészségügyi és biztonsági előírásainak.

Gépcímke

A(z) i-5 oldalon található (B) ábra a gépcímke egy példáját mutatja be. Egy érvényes gépcímkét és megfelelő elhelyezését ábrázoló rajz látható a berendezéssel szállított kézikönyv Bevezetés fejezetében. A gépcímke azokat az alább felsorolt adatokat tartalmazza, amelyek a Tetra Pak-kal történő, a berendezésre vonatkozó kommunikációhoz szükségesek.

- Géptípus (8)
- Térfogat (9)
- Tervrajzok (10)
- A gép sorozatszáma (11)
- Gyártó (12)
- CE jelzés (13)
- Gyártási év (14)

A(z) i-5 oldalon található (C) ábra a gép műszaki specifikációjának egy példáját mutatja be. Győződjön meg róla, hogy a kézikönyv első lapjain közölt berendezésadatok megegyeznek a gép adattábláján és a gép műszaki leírásában megjelenő információkkal.

A Tartalékalkatrész-katalógus használata

A tartalékalkatrész számának kikeresése

a) Tekintse meg a(z) i-5 oldalon lévő (D) ábrát: Lapozzon a keresett alkatrészt tartalmazó főcsoport mellett feltüntetett (15) számú fejezetre.

A b) és c) elemek az i-6 oldalon található ábrára vonatkoznak.

b) A főcsoport-ábrán keresse meg azt az alcsoportot (17), amelyik a keresett alkatrészt vagy alcsoportot tartalmazza. Jegyezze meg a pozíciószámot (18), majd lapozzon az ábrát követő listaoldalra.

c) Keresse meg a lejegyzett pozíciószámot/hivatkozási megjelölést (16) vagy a keresett alcsoport nevét (19). Lapozzon a jobb oldali oszlopban feltüntetett számú (20) oldalra. A Tetra Pak a hivatkozási jelöléseket mindig funkció-orientált struktúra alapján végzi el. Az előtaggal jelölt funkció-orientált struktúra (=) nem jelenik meg a hivatkozási jelölésben.

A d) és e) elemek az i-6 oldalon található (F) ábrára vonatkoznak.

d) Az alcsoport ábrán keresse meg a kívánt alkatrészt (21), és jegyezze meg az alkatrész pozíciószámát.

e) Az alkatrész száma (29) és leírása (30) a listaoldalon, a pozíciószám mellett látható.

A Tartalékalkatrész-katalógusban megtalálható információk

Az alábbi lista az i-6 oldalon található (F) ábrára vonatkozik.
A Tartalékalkatrész-katalógus a következő, csoportokra, alcsoportokra és pótalkatrészekre vonatkozó adatokat tartalmazza:

- Csoportstruktúra-hivatkozás (22). A berendezés listás struktúrájában közvetlenül az aktuális csoport fölött álló csoportot jelöli.
- Csoportnév (23)
- Mértékegység (25)
- Mennyiség (26)
- Összeszerelési rajzszám (27)
- Lista oldaltartománya (28). Abban az esetben jelenik meg, ha a csoport ábrája vagy listája többoldalas.
- Alkatrész vagy alcsoport száma (29)
- Alcsoport neve vagy alkatrész leírása (30)
- Csoportszám (31)
- Berendezésszám (32)
- Csoportinformáció fejléce (33). Azt mutatja, hogy a fejléc után következő rész egy speciális gépváltozatra vonatkozik vagy az általános pótalkatrészek listája. Ha a listának több változata van, és mindegyikhez saját összeszerelési rajz tartozik, az illető összeszerelési rajz oldalhivatkozása is megjelenik.
- Belső információ (34)

Inngangur

Upplýsingar um handbók

Tetra Pak mælir með því að allar handbækur sem afhentar eru séu lesnar vandlega. Gætið þess að afhentar handbækur séu tiltækar fyrir starfsfólk sem vinnur við eða viðheldur tækjabúnaðinum.

Það er mikilvægt að halda upp á þennan vörulista allan líftíma tækjabúnaðarins og að láta síðari eiganda eða notanda hafa vörulistann.

Ekki er hægt að gera Tetra Pak ábyrgt fyrir neinum skemmdum sem verða á tækjabúnaðinum vegna þess að ekki er farið eftir leiðbeiningunum í þeim handbókum sem fylgja tækjabúnaðinum.

Afhentar handbækur

Handbækur sem afhentar eru með þessum tækjabúnaði geta verið

- CM
  Breytingahandbók, sem veitir tæknimönnum upplýsingar um breytingar á tækjabúnaðinum milli mismunandi framleiðsluhama.
- EM
  Rafmagnshandbók, sem veitir tæknimönnum upplýsingar um rafkerfi tækjabúnaðarins.
- IM
  Uppsetningarhandbók, sem veitir tæknimönnum nauðsynlegar upplýsingar til að setja tækjabúnaðinn upp á öruggan hátt.
- MM
  Viðhaldshandbók, sem eitir tæknimönnum upplýsingar um viðhald tækjabúnaðarins.
- OM
  Notkunarhandbók, sem veitir stjórnandanum upplýsingar um meðhöndlun og notkun tækjabúnaðarins, fyrir, eftir og meðan á framleiðslu stendur.
- SPC
  Varahlutavörulisti, sem veitir nauðsynlegar upplýsingar til pöntunar varahluta frá Tetra Pak.
- TeM
  Tæknihandbók
  - sem veitir tæknimönnum nauðsynlegar upplýsingar til að setja tækjabúnaðinn upp á öruggan hátt
  - sem veitir tæknimönnum upplýsingar um viðhald tækjabúnaðarins
  - sem veitir tæknimönnum upplýsingar um rafkerfi vélarinnar/ tækjabúnaðarins
  - sem veitir nauðsynlegar upplýsingar til pöntunar varahluta frá Tetra Pak.

Umbrot

Sjá skýringarmynd (A) á síðu i-5: Aðalsíðurnar í Varahlutavörulistanum samanstanda af skýringarsíðu (1) og samsvarandi listasíðu (7). Síðunúmerið (5) er sýnt í haus síðunnar með skýringarmyndinni og í fæti listasíðunnar. Skjalnúmerið (6) er sýnt í fæti listasíðunnar.

Númerun síðu

Sjá skýringarmynd (A) á síðu i-5: Síðunúmer (5) er í þremur hlutum:

- kaflanúmer (2)
- samfellt síðunúmer innan kaflans (3)
- heildarfjölda blaðsíðna í kaflanum (4)

Kynning á vél

Framleiðandi

Fyrir nafn og heimilisfang framleiðanda, sjá síðu tvö í þessum vörulista.

Þjónusta

Til að panta varahluti fyrir þessa vél, eða til að tilkynna vandamál sem tengjast notkun þessarar vélar, skal hafa samband við næstu Tetra Pak skrifstofu.

Hafðu samband við Samskiptatengsl með aðrar fyrirspurnir, athugasemdir eða uppástungur varðandi tækjabúnaðinn og fylgiskjöl hans.

Kennsl

CE flokkun

Þessi tækjabúnaður er í samræmi við grundvallar heilbrigðis- og öryggisreglugerðir á Evrópska efnahags svæðinu (EES).

Nafnplata

Skýringarmynd (B) á síðu i-5 sýnir dæmi um nafnplötu.
Skýringarmynd af gildri nafnplötu og staðsetningu hennar á tækjabúnaðinum er sýnd í Inngangskafla handbókanna sem afhentar eru með þessum tækjabúnaði. Á nafnplötunni eru upplýsingarnar sem taldar eru upp hér að neðan, sem þörf er á þegar haft er samband við Tetra Pak varðandi þennan tiltekna tækjabúnað.

- Vélartegund (8)
- Fjöldi (9)
- Teikniupplýsingar (10)
- Raðnúmer vélar (11)
- Framleiðandi (12)
- CE merki (13)
- Framleiðsluár (14)

Skýringarmynd (C) á síðu i-5 sýnir dæmi um tæknilýsingu vélar. Gættu þess að upplýsingar um tækjabúnað sem talinn er upp á fremstu síðum þessarar handbóka samsvari upplýsingum á nafnplötu og tæknilýsingu vélar.

Hvernig nota á þennan Varahlutavörulista

Finndu varahlutarnúmer

a) Sjá skýringarmynd (D) á síðu i-5: Farðu í kaflanúmerið (15) sem gefið er til kynna við hlið aðalflokksins sem inniheldur hlutinn sem þú vilt finna.

Atriði b) og c) vísa til skýringarmyndar (E) á síðu i-6:

b) Á skýringarmynd aðalflokksins skaltu leita að undirflokki (17) vélarinnar, sem inniheldur hlutinn eða undirflokkinn sem þú ert að leita að. Taktu eftir stöðunúmerinu (18) og farðu á listasíðuna sem fylgir skýringarmyndinni.

c) Leitaðu að stöðunúmeri/tilvísunartitli (16) eða heiti undirflokksins (19). Farðu á samsvarandi síðunúmer (20) sem sýnt er í hægri dálkinum. Tetra Pak hefur kosið að nota alltaf sérhæfða skipan fyrir tilvísunartitla. Forskeytið sem gefur til kynna sérhæfða skipan (=) er ekki sýnt í tilvísunartitlinum.

Atriði d) og e) vísa til skýringarmyndar (F) á síðu i-6:

d) Finndu hlutinn (21) sem þú ert að leita að á undirflokksskýringarmyndinni og taktu eftir stöðunúmeri hlutarins.

e) Hlutarnúmerið (29) og lýsing hlutar (30) eru skráð hjá stöðunúmerinu á listasíðunni.

Upplýsingar skráðar í Varahlutavörulista

Listinn að neðan vísar til skýringarmyndar (F) á síðu i-6: Varahlutavörulisti inniheldur eftirfarandi upplýsingar um flokka, undirflokka og varahluti fyrir tækjabúnaðinn:

- Tilvísun flokkaskipunar (22). Gefur til kynna næsta flokk fyrir ofan í listaskipan tækjabúnaðarins.
- Heiti flokks (23)
- Mælieining (25)
- Magn (26)
- Númer samsetningarteikningar (27)
- Röð listasíðu (28). Fylgir með ef það eru margar blaðsíður í skýringarmynd eða lista flokksins.
- Númer hlutar eða undirflokks (29)
- Heiti undirflokks eða lýsing hlutar (30)
- Númer flokks (31)
- Númer tækjabúnaðar (32)
- Fyrirsögn flokkaskipunar (33). Gefur til kynna ef kaflinn fyrir neðan fyrirsögnina er fyrir sérstakt afbrigði vélar eða ef hann er listi yfir algenga hluti. Ef listi er með meira en eitt afbrigði og hvert afbrigði á sína eigin samsetningarteikningu, er sýnd blaðsíðutilvísun til samsetningarteikningar afbrigðisins.
- Innri upplýsingar (34)

Introduzione

Informazioni sul manuale

Tetra Pak consiglia di leggere con attenzione tutti i manuali forniti in dotazione. Assicurarsi che tutti i manuali in dotazione siano disponibili per il personale addetto al funzionamento o alla manutenzione della macchina.

È importante conservare il presente catalogo per tutta la durata della macchina e consegnarlo al successivo proprietario o utilizzatore.

Tetra Pak non sarà da ritenersi responsabile per eventuali danni alla macchina causati dal mancato rispetto delle istruzioni fornite nei manuali che accompagnano questa macchina.

Manuali in dotazione

I manuali consegnati con la presente macchina possono comprendere:

- CM (Manuale di conversione)
  Questo manuale fornisce ai tecnici le informazioni necessarie per la conversione della macchina da una modalità di produzione a un'altra.
- EM (Manuale elettrico)
  Questo manuale fornisce ai tecnici informazioni sull'impianto elettrico della macchina.
- IM (Manuale d'installazione)
  Questo manuale fornisce ai tecnici le informazioni necessarie per installare in sicurezza la macchina.
- MM (Manuale di manutenzione)
  Questo manuale fornisce ai tecnici le informazioni sulla manutenzione della macchina.
- OM (Manuale operativo)
  Questo manuale fornisce all'operatore le informazioni sull'utilizzo e il funzionamento della macchina prima, durante e dopo la produzione.
- SPC (Catalogo dei pezzi di ricambio)
  Questo catalogo fornisce le informazioni necessarie per ordinare i pezzi di ricambio a Tetra Pak.
- TeM (Manuale tecnico)
  Questo manuale:
  - fornisce ai tecnici le informazioni necessarie per installare in sicurezza la macchina
  - fornisce ai tecnici le informazioni sulla manutenzione della macchina
  - fornisce ai tecnici informazioni sull'impianto elettrico della macchina
  - fornisce le informazioni necessarie per ordinare i pezzi di ricambio a Tetra Pak.

Schema delle pagine

Consultare la figura (A) a pagina i-5: Le pagine principali di un Catalogo dei pezzi di ricambio sono costituite da una pagina con la figura (1) e una pagina elenco corrispondente (7). Il numero di pagina (5) è indicato nell'intestazione delle pagine con le figure e nel piè di pagina delle pagine elenco. Il codice del documento (6) è indicato nel piè di pagina delle pagine elenco.

Numerazione delle pagine

Consultare la figura (A) a pagina i-5: Il numero di pagina (5) è suddiviso in tre parti:

- numero del capitolo (2)
- numero progressivo di pagina all'interno del capitolo (3)
- numero totale di pagine nel capitolo (4)

Introduzione alla macchina

Fabbricante

Il nome e l'indirizzo del fabbricante sono riportati sulla seconda pagina del presente catalogo.

Assistenza

Per ordinare i pezzi di ricambio per questa macchina oppure per riferire problemi associati al funzionamento della macchina, contattare l'ufficio Tetra Pak più vicino.

Per tutte le altre richieste, commenti o suggerimenti per eventuali miglioramenti da apportare alla macchina e alla relativa documentazione, contattare il responsabile di collegamento.

Identificazione

Classificazione CE

Questa macchina è conforme alle principali norme sanitarie e di sicurezza dell'Area Economica Europea (EEA).

Targhetta della macchina

La figura (B) a pagina i-5 mostra un esempio di targhetta della macchina. Il capitolo Introduzione di tutti i manuali consegnati con la presente macchina contiene invece la figura della targhetta della macchina valida e la sua posizione sulla macchina. La targhetta riporta i dati elencati qui sotto, che sono necessari per contattare Tetra Pak in relazione a questa macchina specifica.

- Tipo di macchina (8)
- Volume (9)
- Specifiche disegno (10)
- Numero di matricola della macchina (11)
- Fabbricante (12)
- Marchio CE (13)
- Anno di fabbricazione (14)

La figura (C) a pagina i-5 mostra un esempio delle specifiche di una macchina. Verificare che i dati relativi alla macchina elencati nelle pagine iniziali del presente manuale corrispondano ai dati riportati sulla targhetta della macchina e nelle specifiche della macchina.

Come usare questo Catalogo dei pezzi di ricambio

Individuare il numero del pezzo di ricambio

a) Consultare la figura (D) a pagina i-5: andare al numero del capitolo (15) indicato accanto al gruppo principale che contiene il pezzo che si desidera individuare.

I punti b) e c) fanno riferimento alla figura (E) a pagina i-6.

b) Nella figura del gruppo principale, identificare il sottogruppo della macchina (17) che contiene il pezzo o il sottogruppo cercato. Annotare il numero di posizione (18) e andare alla pagina elenco che segue la figura.

c) Identificare il numero di posizione/l'indicazione di riferimento (16) o il nome del sottogruppo (19). Andare al numero di pagina corrispondente (20) indicato nella colonna di destra. Per le indicazioni di riferimento, Tetra Pak ha scelto di usare sempre la struttura "function-oriented". Il prefisso che indica la struttura "function-oriented" (=) non è mostrato nell'indicazione di riferimento.

I punti d) e e) fanno riferimento alla figura (F) a pagina i-6.

d) Individuare il pezzo (21) cercato sulla figura del sottogruppo e annotare il numero di posizione del pezzo.

e) Il numero del pezzo (29) e la descrizione del pezzo (30) sono indicati accanto al numero di posizione sulla pagina elenco.

Informazioni contenute nel Catalogo dei pezzi di ricambio

L'elenco seguente fa riferimento alla figura (F) a pagina i-6. Il Catalogo dei pezzi di ricambio contiene le seguenti informazioni sui gruppi, i sottogruppi e i pezzi di ricambio della macchina:

- Riferimento struttura gruppo (22). Indica il gruppo superiore successivo nella struttura elenco della macchina.
- Nome gruppo (23)
- Unità di misura (25)
- Quantità (26)
- Numero disegno di assemblaggio (27)
- Intervallo delle pagine elenco (28). Questa informazione è presente se la figura o l'elenco relativi al gruppo occupano più di una pagina del manuale.
- Numero pezzo o sottogruppo (29)
- Nome sottogruppo o descrizione pezzo (30)
- Numero gruppo (31)
- Numero macchina (32)
- Intestazione informazioni gruppo (33). Indica se la sezione che segue l'intestazione si riferisce a una variante di macchina specifica oppure se si tratta di un elenco di parti comuni. Se un elenco contiene più di una variante ed esiste un disegno di assemblaggio specifico per ogni variante, viene fornito il riferimento alla pagina in cui è mostrato il disegno di assemblaggio relativo alla variante.
- Informazioni interne (34)

Įvadas

Informacija apie instrukciją

"Tetra Pak" rekomenduoja atidžiai perskaityti visas pateiktas instrukcijas. Pasirūpinkite, kad instrukcijos būtų prieinamos darbuotojams, kurie eksploatuoja arba prižiūri įrangą.

Svarbu šį katalogą išsaugoti visą įrangos tarnavimo laiką ir perduoti jį kitam įrangos savininkui arba naudotojui.

"Tetra Pak" neprisiima atsakomybės už įrangos sugadinimą, jei nesilaikoma nurodymų, pateiktų prie šios įrangos pridedamuose kataloguose.

Pateikiamos instrukcijos

Su šia įranga pateikiamose instrukcijose gali būti

- CM
  Transformacijos instrukcija, suteikianti technikams informaciją apie įrangos transformavimą skirtingiems gamybos režimams.
- EM
  Elektrinės dalies instrukcija, suteikianti technikams informaciją apie įrangos elektros sistemą.
- IM
  Įrengimo instrukcija, suteikianti technikams informaciją, reikalingą norint saugiai sumontuoti įrangą.
- MM
  Techninės priežiūros instrukcija, suteikianti technikams informaciją apie įrangos priežiūrą.
- OM
  Eksploatavimo instrukcijos paskirtis yra suteikti informaciją operatoriui, kaip naudoti ir valdyti įrangą prieš gamybos procesą, jo metu ir po jo.
- SPC
  Atsarginių dalių katalogas, kuriame yra informacija, reikalinga atsarginėms dalims iš "Tetra Pak" užsakyti
- TeM
  Techninė instrukcija
  – suteikia technikams informaciją, reikalingą saugiai sumontuoti įrangą
  – suteikia technikams informaciją apie įrangos priežiūrą
  – suteikia technikams informaciją apie įrangos elektros sistemą
  – suteikia informaciją, reikalingą užsakyti iš "Tetra Pak" atsargines dalis

Puslapių išdėstymas

Žr. paveikslėlį (A) puslapyje i-5. Pagrindiniai atsarginių dalių katalogo puslapiai sudaryti iš paveikslėlio puslapio (1) ir atitinkamo sąrašo puslapio (7). Puslapio numeris (5) nurodomas paveikslėlio puslapio viršuje ir sąrašo puslapio apačioje. Dokumento numeris (6) nurodomas sąrašo puslapio apačioje.

Puslapių numeravimas

Žr. iliustraciją (A) puslapyje i-5. Puslapio numerį (5) sudaro trys dalys:

- skyriaus numeris (2)
- puslapio eilės numeris (3) skyriuje
- bendras puslapių skaičius (4) skyriuje

Įrenginio pristatymas

Gamintojas

Gamintojo pavadinimas ir adresas pateikti antrajame šio katalogo puslapyje.

Aptarnavimas

Jei reikia šiai įrangai užsakyti atsarginių dalių arba pranešti apie jos eksploatavimo nesklandumus, kreipkitės į artimiausią "Tetra Pak" biurą.

Su kitais klausimais, pastabomis ar įrangos ir jos dokumentacijos tobulinimo pasiūlymais kreipkitės į savo kontaktinį asmenį.

Identifikavimas

CE klasifikacija

Šis įrenginys atitinka esminius Europos ekonominės erdvės (EEE) sveikatos ir saugumo reikalavimus.

Vardinė plokštelė

Puslapyje i-5 pateiktame paveikslėlyje (B) parodytas įrangos vardinės plokštelės pavyzdys.
Atitinkamos įrangos vardinė plokštelė ir jos vieta ant įrangos parodoma su šia įranga pateikiamų instrukcijų įvade. Įrangos vardinėje plokštelėje pateikiami žemiau nurodyti duomenys, kurie reikalingi kreipiantis į "Tetra Pak" dėl konkretaus įrenginio.

- Mašinos tipas (8)
- Tomas (9)
- Brėžinių specifikacijos (10)
- Įrangos serijos numeris (11)
- Gamintojas (12)
- CE ženklas (13)
- Pagaminimo metai (14)

Paveikslėlyje (C) puslapyje i-5 parodytas įrangos specifikacijos pavyzdys. Patikrinkite, ar šios instrukcijos pirmuosiuose puslapiuose nurodyti duomenys atitinka duomenis vardinėje plokštelėje ir įrangos specifikaciją.

Kaip naudotis atsarginių dalių katalogu

Atsarginės dalies numerio suradimas

a) Žr. iliustraciją (D) puslapyje i-5. Atsiverskite skyrių (15), nurodytą šalia pagrindinio mazgo, kuriame yra jūsų ieškoma dalis.

Punktai b) ir c) atitinka paveikslėlį (E) puslapyje i-6.

b) Pagrindinio mazgo paveikslėlyje suraskite smulkesnį įrangos mazgą (17), kuriame yra jūsų ieškoma dalis arba mazgas. Pasižiūrėkite pozicijos numerį (18) ir suraskite jį toliau pateiktame sąraše.

c) Suraskite pozicijos numerį/pavadinimą (16) arba smulkesnio mazgo pavadinimą (19). Atsiverskite dešiniajame stulpelyje nurodytą puslapį (20). "Tetra Pak" nusprendė pavadinimuose visada naudoti paskirtį atitinkančią struktūrą. Pavadinimuose nepateikiamas paskirtį atitinkančios struktūros prefiksas (=).

Punktai d) ir e) atitinka paveikslėlį (F) puslapyje i-6.

d) Suraskite ieškomą dalį (21) smulkesnio mazgo paveikslėlyje ir pasižiūrėkite dalies pozicijos numerį.

e) Dalies numeris (29) ir dalies aprašymas (30) sąrašo puslapyje nurodyti šalia pozicijos numerio.

Atsarginių dalių kataloge pateikiama informacija

Žemiau pateiktas sąrašas atitinka paveikslėlį (F) puslapyje i-6. Atsarginių dalių kataloge apie įrangos mazgus, smulkesnius mazgus ir atsargines dalis pateikiama tokia informacija:

- Struktūrinė mazgo nuoroda (22). Nurodo stambesnį mazgą įrangos sąrašo struktūroje.
- Mazgo pavadinimas (23)
- Matavimo vienetai (25)
- Kiekis (26)
- Surinkimo brėžinio numeris (27)
- Sąrašo puslapių intervalas (28) Pateikiamas, jei mazgo paveikslėlis arba sąrašas užima kelis puslapius.
- Dalies arba smulkesnio mazgo numeris (29)
- Smulkesnio mazgo arba dalies aprašymas (30)
- Mazgo numeris (31)
- Įrangos numeris (32)
- Informacijos apie mazgą puslapio antraštė (33). Nurodo, ar po antrašte pateikta informacija yra specifinio įrangos varianto, ar tai paprastų dalių sąrašas. Jei yra daugiau kaip vienas sąrašo variantas ir kiekvienam variantui yra atskiras surinkimo brėžinys, nurodomas puslapis, kuriame pateiktas konkretaus varianto surinkimo brėžinys.
- Vidinė informacija (34)

Ievads

Informācija par rokasgrāmatu

Tetra Pak iesaka rūpīgi izlasīt visas piegādātās rokasgrāmatas. Jānodrošina, lai piegādātas rokasgrāmatas būtu pieejamas personālam, kas apkalpo iekārtas vai veic to apkopi.

Šo katalogu ir nepieciešams saglabāt visu laiku, kamēr iekārtas tiek izmantotas, un nodot katalogu nākamajam īpašniekam vai lietotājam.

Tetra Pak neatbild par jebkuriem iekārtas bojājumiem, kuri rodas līdz ar iekārtu piegādāto instrukciju neievērošanas rezultātā.

Piegādātas rokasgrāmatas

Līdz ar iekārtu var tikt piegādātas šādas rokasgrāmatas

- CM
  Pārslēgšanas rokasgrāmata sniedz tehniķiem informāciju par iekārtas pārslēgšanu dažādos atšķirīgos ražošanas režīmos.
- EM
  Elektriskās instalācijas rokasgrāmata sniedz tehniķiem informāciju par iekārtas elektriskās instalācijas sistēmu.
- IM
  Uzstādīšanas rokasgrāmata sniedz tehniķiem informāciju, kas nepieciešama drošai iekārtas uzstādīšanai.
- MM
  Apkopes rokasgrāmata sniedz tehniķiem informāciju par iekārtas apkopi.
- OM
  Ekspluatācijas rokasgrāmata sniedz apkalpojošajam personālam informāciju par iekārtas apkalpošanu un ekspluatēšanu pirms darba sākuma, darba laikā un pēc darba beigām.
- SPC
  Rezerves daļu katalogs sniedz informāciju, kas nepieciešama, lai pasūtītu rezerves daļas no Tetra Pak
- TeM
  Tehniskā rokasgrāmata
  - sniedz tehniķiem informāciju, kas nepieciešama drošai iekārtas uzstādīšanai
  - sniedz tehniķiem informāciju par iekārtas apkopi
  - sniedz tehniķiem informāciju par mašīnas/iekārtas elektrisko instalāciju
  - sniedz informāciju, kas nepieciešama, lai pasūtītu rezerves daļas no Tetra Pak.

Lappuses izkārtojums

Skatīt ilustrāciju (A) i-5 lappusē: Galvenās lappuses Rezerves daļu katalogā sastāv no ilustrāciju lapas (1) un atbilstīgās saraksta lapas (7). Lappuses numurs (5) ir norādīts ilustrāciju lapas galvenē un saraksta lapas kājenē. Dokumenta numurs (6) ir norādīts saraksta lapas kājenē.

Lappušu numerācija

Skatīt ilustrāciju (A) lappusē i-5: Lappuses numurs (5) sastāv no trim daļām:

- nodaļas numura (2)
- secīga lappuses numura nodaļas ietvaros (3)
- kopējā lappušu skaita nodaļā (3)

Iepazīstināšana ar iekārtu

Ražotājs

Ražotāja nosaukumu un adresi skatīt šī kataloga otrajā lappusē.

Serviss

Lai pasūtītu rezerves daļas šai mašīnai vai lai ziņotu par problēmām saistībā ar šīs mašīnas ekspluatāciju, sazinieties ar tuvāko Tetra Pak pārstāvniecību.

Ja Jums ir citi jautājumi, piezīmes vai ieteikumi par iekārtas un tās dokumentācijas uzlabošanu, tad lūdzam sazināties ar Sakaru biroju.

Identifikācija

EK klasifikācija

Šī iekārta atbilst galvenajām Eiropas Ekonomiskās Zonas (EEA) regulām, kuras attiecas uz veselību un drošību.

Mašīnas tipa plāksnīte

Ilustrācijā (B) i-5 lappusē ir redzams mašīnas tipa plāksnītes paraugs. Aktuālās mašīnas tipa plāksnīte un tās atrašanās vieta uz iekārtas ir parādīta līdz ar šo iekārtu piegādāto rokasgrāmatu Ievada nodaļā. Mašīnas tipa plāksnīte ietver turpmāk uzskaitīto informāciju, kura ir nepieciešama, sazinoties ar Tetra Pak par šo konkrēto iekārtu.

- Mašīnas tips (8)
- Daudzums (9)
- Rasējuma specifikācijas (10)
- Mašīnas sērijas numurs (11)
- Ražotājs (12)
- CE apzīmējums (13)
- Izgatavošanas gads (14)

Ilustrācijā (C) lappusē i-5 ir parādīts mašīnas specifikācijas paraugs. Pārliecinieties, ka šīs rokasgrāmatas titullapās minētā informācija par iekārtu atbilst tai, kas norādīta uz mašīnas tipa plāksnītes un mašīnas specifikācijā.

Rezerves daļu kataloga lietošana

Vajadzīgās rezerves daļas numura atrašana

a) Skatiet ilustrāciju (D) lappusē i-5: Atrodiet nodaļas numuru (15), kas norādīts līdzās galvenajai grupai, kurā ietilpst Jūsu meklētā rezerves daļa.

Pozīcijas b) un c) skatiet ilustrāciju (E) lappusē i-6.

b) Galvenās grupas ilustrācijā atrodiet mašīnas apakšgrupu (17), kurā ietilpst Jūsu meklētā detaļa vai apakšgrupa. Atzīmējiet pozīcijas numuru (18) un pievērsieties saraksta lappusei, kura seko šai ilustrācijai.

c) Sameklējiet atbilstīgo pozīcijas numuru (16) vai apakšgrupas nosaukumu (19). Pievērsieties atbilstīgajam lappuses numuram (20), kas norādīts ailē pa labi. Tetra Pak norādes apzīmēšanai ir izvēlējies vienmēr izmantot uz funkciju orientētu struktūru. Priedēklis, kas norāda uz funkciju orientētu struktūru (=), norādes apzīmējumā nav parādīts.

Pozīcijas d) un e) skatiet ilustrāciju (F) lappusē i-6.

d) Atrodiet vajadzīgo rezerves daļu (21) apakšgrupas ilustrācijā un atzīmējiet šīs detaļas pozīcijas numuru.

e) Šīs detaļas numurs (29) un apraksts (30) atrodas saraksta lapā līdzās pozīcijas numuram.

Rezerves daļu katalogā sniegtā informācija

Šis saraksts attiecas uz ilustrāciju (F) lappusē i-6. Rezerves daļu katalogs satur šādu informāciju par grupām, apakšgrupām un iekārtas rezerves daļām:

- Grupas struktūras norāde (22). Norāda nākamo augstāko grupu iekārtas saraksta struktūrā.
- Grupas nosaukums (23)
- Mērvienība (25)
- Skaits (26)
- Montāžas rasējuma numurs (27)
- Saraksta lappuses zona (28). Tiek izmantota tad, ja grupas ilustrācija vai saraksts ir uz vairākām lappusēm.
- Daļas vai apakšgrupas numurs (29)
- Apakšgrupas nosaukums vai daļas apraksts (30)
- Grupas numurs (31)
- Iekārtas numurs (32)
- Grupas informācijas iedaļas apzīmējums (33). Norāda, vai iedaļa zem šī apzīmējuma attiecas uz noteiktu mašīnas variantu, vai arī tas ir kopējo rezerves daļu saraksts. Ja sarakstam ir vairāk nekā viens variants un katram variantam ir savs montāžas rasējums, tad tiek dota atsauce uz lappusi, kur atrodams katra varianta montāžas rasējums.
- Iekšējā informācija (34)

Inleiding

Informatiehandboek

Tetra Pak adviseert alle meegeleverde handboeken zorgvuldig te lezen. Controleer of het bedienende of onderhoudspersoneel van de machine de beschikking heeft over de meegeleverde handboeken

Het is belangrijk deze catalogus tijdens de levensduur van de machine te bewaren en de catalogus door te geven aan iedere volgende eigenaar of gebruiker.

Tetra Pak stelt zich niet aansprakelijk voor eventuele schade aan de installatie als gevolg van het niet naleven van de instructies die in de meegeleverde handboeken worden gegeven.

Meegeleverde handboeken

De bij deze installatie meegeleverde handboeken omvatten

- CM
  Het conversiehandboek geeft technici informatie met betrekking tot de ombouw van de installatie tussen verschillende productiemodi.
- EM
  Het elektriciteitshandboek informeerttechnici omtrent het elektrischesysteem van de installatie.
- IM
  Het installatiehandboek informeert technici hoe men de installatie op veilige wijze installeert.
- MM
  Het onderhoudshandboek geeft technici informatie over het onderhoud van de installatie.
- OM
  Het bedieningshandboek informeert de operator betreffende het omgaan met en het bedienen van de installatie voor, tijdens en na de productie.
- SPC
  De reserveonderdelencatalogus geeft de nodige informatie omtrent het bestellen van reserveonderdelen bij Tetra Pak
- TeM
  Het technische handboek
  - informeert technici hoe men de installatie op veilige wijze installeert
  - informeert technici omtrent het onderhoud van de installatie
  - informeert technici omtrent het elektrische systeem van de machine/ installatie
  - informeert over welke informatie men nodig heeft om reserveonderdelen bij Tetra Pak te bestellen.

Pagina layout

Zie afbeelding (A) op pagina i-5: De belangrijkste bladzijden van een reserveonderdelencatalogus bestaan uit een bladzijde met afbeeldingen (1) en een bladzijde met een corresponderende lijst (7). Het bladzijde-nummer (5) is te vinden in de kop van een bladzijde met een afbeelding en in de voetnoot van een lijstbladzijde. Het documentennummer (6) is te vinden in de voetnoot van een lijstbladzijde.

Bladzijdenummering

Zie afbeelding (A) op pagina: i-5: Een bladzijdenummer (5) bestaat uit drie delen:

- hoofdstuknummer (2)
- opeenvolgend bladzijdenummer in het hoofdstuk (3)
- totaal aantal bladzijden in het hoofdstuk (4)

Introductie van de machine

Fabrikant

Zie de tweede bladzijde van deze catalogus voor naam en adres van de fabrikant.

Service

Neem voor het bestellen van reserveonderdelen voor deze machine, of om bedieningsproblemen met betrekking tot deze machine te melden, contact op met de dichtstbijzijnde Tetra Pak vestiging.

Neem contact op met de contactpersoon voor verdere informatie, opmerkingen of suggesties ter verbetering van de installatie en de bijbehorende documentatie.

Identificatie

CE-classificatie

Deze installatie voldoet aan de basisvoorschriften voor gezondheid en veiligheid voor het Europese Economische Gebied (EEG).

Machineplaatje

Afbeelding (B) op bladzijde i-5 toont een voorbeeld van een machineplaatje. Een afbeelding van het geldige machineplaatje en de plaatsing ervan worden getoond in de Inleiding van de handboeken, die bij deze installatie worden meegeleverd. Het machineplaatje bevat onderstaande gegevens, die men nodig heeft wanneer men omtrent de desbetreffende installatie contact opneemt met Tetra Pak.

- Machinetype (8)
- Volume (9)
- Specificatietekeningen (10)
- Serienummer van de machine (11)
- Fabrikant (12)
- CE-markering (13)
- Jaar van fabrikage (14)

Afbeelding (C) op pagina i-5 toont een voorbeeld van een machinespecificatie. Controleer of de gegevens betreffende de installatie op de eerste bladzijden van dit handboek overeenkomen met de gegevens op het machineplaatje en de machinespecificatie.

Gebruik van de reserveonderdelencatalogus

Vinden van het bestelnummer van een reserveonderdeel

a) Zie afbeelding (D) op pagina i-5: Ga naar het hoofdstuknummer (15) dat wordt aangeven naast de hoofdgroep waarin zich het door u gezochte onderdeel bevindt.

Items b) en c) verwijzen naar afbeelding (E) op pagina i-6.

b) Op de afbeelding van de hoofdgroep zoekt u de machinesubgroep (17), die het gezochte onderdeel of de gezochte subgroep bevat. Noteer het positienummer (18) en ga naar de lijstbladzijde die op de afbeelding volgt.

c) Zoek naar het positienummer/de referentie (16) of de subgroep-naam (19). Ga naar de corresponderende bladzijde (20) die in de rechterkolom staat vermeld. Tetra Pak heeft voor de benoeming van de referenties gekozen voor de functiegeoriënteerde structuur. De prefixaanduidende functiegeoriënteerde structuur (=) wordt niet in de referentie getoond.

Items d) en e) verwijzen naar afbeelding (F) op pagina i-6.

d) Zoek het gewenste deel (21) op de subgroepafbeelding en noteer het positienummer van het onderdeel.

e) Het bestelnummer (29) en de omschrijving (30) van het onderdeel staan naast het positienummer op de lijstbladzijde.

Informatie die in een reserveonderdelencatalogus wordt gegeven

De onderstaande lijst verwijst naar afbeelding (F) op bladzijde i-6. Een reserveonderdelencatalogus bevat de volgende informatie over groepen, subgroepen en reserveronderdelen voor de installatie:

- Referentie groepstructuur (22). Geeft de volgende hogere groep in de lijststructuur van de installatie aan.
- Groepsnaam (23)
- Meeteenheid (25)
- Hoeveelheid (26)
- Nummer montagetekening (27)
- Lijst bladzijdenreeks (28). Wordt vermeld wanneer er meerdere bladzijden in de groepsafbeelding of -lijst voorkomen.
- Deel- of subgroepnummer (29)
- Subgroepnaam of onderdeelbeschrijving (30)
- Groepsnummer (31)
- Machinenummer (32)
- Titel groepsinformatie (33). Geeft aan of het gedeelte onder de titel voor een specifieke machinesoort is of dat het een lijst met gebruikelijke onderdelen is. Indien een lijst meer dan één type bevat en ieder type zijn eigen montagetekening heeft, wordt een bladzijdereferentie getoond voor de montagetekening van het type.
- Interne informatie (34)

Introduksjon

Informasjon om manualen

Tetra Pak anbefaler at du leser nøye gjennom alle leverte manualer. Sørg for at manualene er tilgjengelige for alle som betjener eller vedlikeholder utstyret.

Det er viktig at du tar vare på denne katalogen under hele levetiden til utstyret og at du gir den videre til eventuelle nye eiere eller brukere.

Tetra Pak vil ikke være ansvarlig for skader på utstyret som oppstår fordi brukeren ikke følger instruksjonene i manualene som følger med utstyret.

Leverte manualer

Manualene som leveres med dette utstyret, kan inkludere

- CM
  Konverteringsmanualen gir teknikere informasjon om hvordan de konverterer utstyret mellom ulike produksjonsmodi.
- EM
  Den elektriske manualen gir teknikere informasjon om utstyrets elektriske system.
- IM
  Installasjonsmanualen gir teknikere informasjon som kreves for å kunne installere utstyret på en sikker måte.
- MM
  Vedlikeholdsmanualen gir teknikere informasjon om vedlikehold av utstyret.
- OM
  Driftsmanualen gir operatøren informasjon om hvordan han håndterer og bruker utstyret før, under og etter produksjon.
- SPC
  Reservedelskatalogen inneholder informasjon som du trenger for å bestille reservedeler fra Tetra Pak
- TeM
  Den tekniske manualen
  – gir teknikere informasjon om sikker installasjon av utstyret
  – gir teknikere informasjon om vedlikehold av utstyret
  – gir teknikere informasjon om maskinens/utstyrets elektriske system
  – inneholder informasjon som du trenger for å bestille reservedeler fra Tetra Pak.

Sideoppsett

Se illustrasjonen (A) på side i-5: Hovedsidene i reservedelskatalogen består av en illustrasjonsside (1) og en korresponderende listeside (7). Sidenummeret (5) vises i topteksten på illustrasjonssiden og i bunnteksten på listesiden. Dokumentnummeret (6) vises i bunnteksten på listesiden.

Sidenummerering

Se illustrasjonen (A) på side i-5: Et sidenummer (5) består av tre deler:

- kapittelnummer (2)
- etterfølgende sidenummer i kapitlet (3)
- det totale antall sider i kapitlet (4)

Introduksjon av maskinen

Produsent

Hvis du ønsker produsentens navn og adresse, kan du se side to i denne katalogen.

Service

Når du skal bestille reservedeler til denne maskinen eller rapportere problemer forbundet med driften av denne maskinen, må du kontakte ditt nærmeste Tetra Pak-kontor.

Når det gjelder andre forespørsler, kommentarer eller forslag til forbedringer av utstyret og dets dokumentasjon, kan du ta kontakt med din kontaktperson.

Identifisering

CE-klassifisering

Dette utstyret er i overensstemmelse med de grunnleggende helse- og sikkerhetsforskriftene i Det europeiske økonomiske samarbeidsområdet (EØS).

Maskinplate

Illustrasjonen (B) på side i-5 viser et eksempel på en maskinplate.
En illustrasjon av en gyldig maskinplate og hvor denne er plassert på utstyret, er vist i introduksjonskapitlet i manualene som følger med dette utstyret. Maskinplaten inneholder nedenstående data, som du trenger når du skal kontakte Tetra Pak angående dette bestemte utstyret.

- Maskintype (8)
- Volum (9)
- Tegningsspesifikasjoner (10)
- Maskin-serienummer (11)
- Produsent (12)
- CE-merke (13)
- Produksjonsår (14)

Illustrasjonen (C) på side i-5 viser et eksempel på en maskinspesifikasjon. Sørg for at utstyrsdataene som står oppført foran i denne manualen, samsvarer med dataene på maskinplaten og maskinspesifikasjonen.

Hvordan bruke denne reservedelskatalogen

Finn et reservedelsnummer

a) Se illustrasjonen (D) på side i-5: Gå til kapittelnummeret (15) som er angitt ved siden av hovedgruppen som inneholder delen du vil finne.

Punkt b) og c) viser til illustrasjonen (E) på side i-6.

b) På hovedgruppeillustrasjonen ser du etter maskinundergruppen (17) som inneholder delen eller undergruppen du ser etter. Merk deg posisjonsnummeret (18), og gå til listesiden som kommer etter illustrasjonen.

c) Se etter posisjonsnummeret/referansebetegnelsen (16) eller undergruppenavnet (19). Gå til det korresponderende sidenummeret (20) som står oppført i høyre kolonne. Tetra Pak har valgt å alltid bruke den funksjonsorienterte inndelingen for referansebetegnelse. Prefiksen som angir funksjonsorientert inndeling (=), er ikke vist i referansebetegnelsen.

Punkt d) og e) viser til illustrasjonen (F) på side i-6.

d) Finn delen (21) du ser etter på undergruppeillustrasjonen, og merk deg delens posisjonsnummer.

e) Delenummeret (29) og delebeskrivelsen (30) finner du ved siden av posisjonsnummeret på listesiden.

Informasjon i en reservedelskatalog

Listen nedenfor viser til illustrasjonen (F) på side i-6. En reservedelskatalog inneholder følgende informasjon om grupper, undergrupper og reservedeler for utstyret:

- Gruppeinndelingsreferanse (22). Angir den neste gruppen opp i inndelingen av utstyrslisten.
- Gruppenavn (23)
- Målenhet (25)
- Antall (26)
- Tegningsnummer (27)
- Listesideområde (28). Inkludert hvis det er flere sider i gruppe-illustrasjonen eller listen.
- Dele- eller undergruppenummer (29)
- Undergruppenavn eller delebeskrivelse (30)
- Gruppenummer (31)
- Utstyrsnummer (32)
- Gruppeinformasjonsoverskrift (33). Angir om avsnittet under overskriften er for en bestemt maskinvariant eller om det er en liste over vanlige deler. Hvis en liste har flere varianter og hver variant har sin egen sammenstillingstegning, vises det en sidereferanse til variantens sammenstillingstegning.
- Intern informasjon (34)

Wprowadzenie

Informacje na temat instrukcji

Firma Tetra Pak zaleca dokładne przeczytanie wszystkich dostarczonych instrukcji. Należy upewnić się, że dostarczone instrukcje są dostępne dla personelu, który obsługuje lub konserwuje maszynę.

Należy przechowywać ten katalog przez cały okres użytkowania maszyny i przekazać go kolejnemu właścicielowi lub użytkownikowi.

Firma Tetra Pak nie będzie ponosić odpowiedzialności za jakiekolwiek uszkodzenia maszyny spowodowane niestosowaniem się do zaleceń zawartych w instrukcjach dostarczonych z maszyną.

Dostarczone instrukcje

W skład dokumentacji dostarczonej z maszyną wchodzą:

- Instrukcja konwersji (CM)
  W tej instrukcji zawarte są informacje dotyczące dostosowania maszyny do różnych trybów produkcji.
- Instrukcja dotycząca wyposażenia elektrycznego (EM)
  W tej instrukcji zawarte są informacje dotyczące układu elektrycznego maszyny.
- Instrukcja instalacji (IM)
  W tej instrukcji zawarte są informacje niezbędne do bezpiecznego zainstalowania maszyny.
- Instrukcja konserwacji (MM)
  W tej instrukcji zawarte są informacje dotyczące konserwacji maszyny.
- Instrukcja obsługi (OM)
  W tej instrukcji zawarte są informacje dotyczące obsługi maszyny przed rozpoczęciem produkcji, w jej trakcie oraz po jej zakończeniu.
- Katalog części zamiennych (SPC)
  W katalogu zawarte są informacje dotyczące zamawiania części zamiennych w firmie Tetra Pak.
- Instrukcja techniczna (TeM)
  Instrukcja techniczna zawiera informacje:
  - dotyczące bezpiecznego instalowania maszyny,
  - dotyczące konserwacji maszyny,
  - dotyczące układu elektrycznego maszyny,
  - dotyczące zamawiania części zamiennych w firmie Tetra Pak.

Układ strony

Patrz rysunek (A) na stronie i-5: Główne strony w Katalogu części zamiennych składają się ze strony zawierającej rysunek (1) i odpowiadającej jej strony zawierającej listę (7). Numer strony (5) znajduje się w nagłówku strony zawierającej rysunek i w stopce strony zawierającej listę. Numer dokumentu (6) znajduje się w stopce strony zawierającej listę.

Numeracja stron

Patrz rysunek (A) na stronie i-5: Numer strony (5) składa się z trzech części:

- numeru rozdziału (2),
- kolejnego numeru strony w rozdziale (3),
- całkowitej liczby stron w rozdziale (4).

Ogólne informacje o maszynie

Producent

Nazwę i adres producenta można znaleźć na drugiej stronie niniejszego katalogu.

Serwis

Aby zamówić części zapasowe do tej maszyny lub zgłosić problemy związane z jej pracą, należy skontaktować się z najbliższym biurem Tetra Pak.

Można kontaktować się także w przypadku innych zapytań, uwag lub sugestii dotyczących udoskonalenia urządzenia i dokumentacji.

Identyfikacja

Klasyfikacja CE

Maszyna spełnia podstawowe wymogi z zakresu bezpieczeństwa i ochrony zdrowia obowiązujące w Europejskiej Strefie Ekonomicznej (EEA).

Tabliczka znamionowa

Na rysunku (B), znajdującym się na stronie i-5, pokazano przykładową tabliczkę znamionową.
Rysunek prawidłowej tabliczki znamionowej oraz jej umiejscowienie na maszynie pokazano w rozdziale Wprowadzenie zawartym w instrukcjach dostarczonych z maszyną. Tabliczka znamionowa zawiera następujące dane potrzebne w przypadku kontaktowania się z firmą Tetra Pak w sprawie dotyczącej danej maszyny:

- typ maszyny (8),
- objętość (9),
- specyfikacje rysunkowe (10),
- numer seryjny maszyny (11),
- nazwę producenta (12),
- oznaczenie CE (13),
- rok produkcji (14).

Na rysunku (C) zamieszczonym na stronie i-5 pokazano przykład specyfikacji maszyny. Należy sprawdzić, czy dane dotyczące maszyny przedstawione na pierwszej stronie tej instrukcji odpowiadają danym zawartym na tabliczce znamionowej maszyny oraz specyfikacji maszyny.

Jak korzystać z niniejszego Katalogu części zamiennych

Należy odnaleźć numer części zamiennej

a) Zapoznaj się z rysunkiem (D) na stronie i-5: przejdź do numeru rozdziału (15) pokazanego obok głównej grupy zawierającej część, którą chcesz odszukać.

Punkty b) i c) odnoszą się do rysunku (E) na stronie i-6.

b) Na rysunku grupy głównej odszukaj podgrupę maszyny (17), która zawiera odpowiednią część lub podgrupę, której szukasz. Zanotuj numer pozycji (18) i przejdź do strony z listą odpowiadającą rysunkowi.

c) Odszukaj numer pozycji/oznaczenie odnośnika (16) lub nazwę podgrupy (19). Przejdź do odpowiedniego numeru strony (20) podanego w kolumnie umieszczonej po prawej stronie. Firma Tetra Pak w przypadku oznaczenia odnośnika korzysta ze struktury ukierunkowanej na funkcję. Przedrostek wskazujący strukturę ukierunkowaną na funkcję (=) nie jest pokazany w oznaczeniu odnośnika.

Punkty d) i e) odnoszą się do rysunku (F) na stronie i-6.

d) Na rysunku podgrupyodszukaj odpowiednią część (21) i zanotuj numer pozycji części.

e) Numer części (29) oraz jej opis (30) podano na stronie zawierającej listę obok numeru pozycji.

Informacje zawarte w Katalogu części zamiennych

Poniższa lista odnosi się do rysunku (F), znajdującego się na stronie i-6. Katalog części zamiennych zawiera następujące informacje o grupach, podgrupach oraz częściach zamiennych maszyny:

- Odnośnik struktury grup (22). Wskazuje następną wyższą grupę zawartą w strukturze listy maszyny.
- Nazwa grupy (23).
- Jednostka miary (25).
- Liczba (26).
- Numer rysunku złożeniowego (27).
- Zakres stron zawierających listę (28). Podany w przypadku występowania wielu stron zawierających rysunek grupy lub listę.
- Numer części lub podgrupy (29).
- Nazwa podgrupy lub opis części (30).
- Numer grupy (31).
- Numer maszyny (32).
- Nagłówek informacyjny grupy (33). Wskazuje, czy sekcja umieszczona pod nagłówkiem dotyczy określonego wariantu maszyny, czy też jest to lista wspólna dla wszystkich wariantów. Jeśli lista występuje w wielu wariantach i dla każdego z nich dostępny jest osobny rysunek złożeniowy, podany jest odnośnik strony do rysunku złożeniowego dla danego wariantu.
- Informacje wewnętrzne (34).

Introdução

Informações sobre o Manual

A Tetra Pak recomenda que leia atentamente todos os manuais incluídos. Certifique-se de que os manuais incluídos estão disponíveis para o pessoal que utiliza ou faz a manutenção do equipamento.

É importante que mantenha este catálogo durante toda a vida útil do equipamento, devendo ainda ser fornecido a quaisquer proprietários e operadores subsequentes do mesmo.

A Tetra Pak não será responsável por quaisquer danos no equipamento provocados pelo não seguimento das instruções fornecidas nos manuais que acompanham este equipamento.

Manuais Fornecidos

Os manuais fornecidos com este equipamento podem incluir

- CM
  O Manual de Conversão (Conversion Manual) fornece aos técnicos informações sobre a conversão do equipamento entre modos de produção diferentes.
- EM
  O Manual Eléctrico (Electrical Manual) fornece aos técnicos informações sobre o sistema eléctrico do equipamento.
- IM
  O Manual de Instalação (Installation Manual) fornece aos técnicos as informações necessárias à instalação do equipamento em segurança.
- MM
  O Manual de Manutenção (Maintenance Manual) fornece aos técnicos informações sobre como realizar a manutenção do equipamento.
- OM
  O Manual de Funcionamento (Operation Manual) fornece ao operador informações sobre o manuseamento e funcionamento do equipamento antes, durante e após a produção.
- SPC
  O Spare Parts Catalogue (Catálogo das Peças Sobressalentes) fornece as informações necessárias para encomendar peças sobressalentes à Tetra Pak
- TeM
  O Manual Técnico (Technical Manual)
  - fornece aos técnicos as informações necessárias à instalação do equipamento em segurança
  - fornece aos técnicos informações sobre a manutenção do equipamento
  - fornece aos técnicos informações sobre o sistema eléctrico da máquina/equipamento
  - fornece as informações necessárias para encomendar peças sobressalentes à Tetra Pak.

Desenho da Página

Consulte a ilustração (A) na página i-5: As páginas principais num Catálogo de Peças Sobressalentes são constituídas por uma página de ilustração (1) e uma página de lista correspondente (7). O número de página (5) é apresentado no cabeçalho de uma página de ilustração e no rodapé de uma página de lista. O número do documento (6) é apresentado no rodapé de uma página de lista.

Numeração das Páginas

Consulte a ilustração (A) na página i-5: Um número de página (5) tem três partes:

- número do capítulo (2)
- número das páginas consecutivas dentro do capítulo (3)
- número de páginas total no capítulo (4)

Introdução da Máquina

Fabricante

Quanto ao nome e endereço do fabricante, consulte a segunda página deste catálogo.

Manutenção

Para encomendar peças sobressalentes para esta máquina ou para apresentar relatórios de problemas associados com o funcionamento desta máquina, contacte os escritórios mais próximos da Tetra Pak.

Contacte a Ligação com outras questões, comentários ou sugestões para melhoria referentes ao equipamento e à sua documentação.

Identificação

Classificação da CE

Este equipamento está em conformidade com as regulamentações básicas da saúde e segurança da Área Económica Europeia (AEE).

Chapa de Identificação da Máquina

A ilustração (B) na página i-5 mostra um exemplo de uma chapa de identificação da máquina.
No capítulo Introdução dos manuais entregues com este equipamento é apresentada uma ilustração da chapa de identificação válida da máquina e a sua localização no equipamento. A chapa de identificação da máquina contém os dados listados em baixo, necessários quando contactar a Tetra Pak em relação a este equipamento específico.

- Tipo de máquina (8)
- Volume (9)
- Especificações do desenho (10)
- Número de série da máquina (11)
- Fabricante (12)
- Marca da CE (13)
- Ano de fabricação (14)

A ilustração (C) na página i-5 mostra um exemplo de uma especificação da máquina. Certifique-se de que os dados do equipamento listados nas primeiras páginas deste manual correspondem aos dados indicados na chapa de identificação da máquina e às especificações da máquina.

Como utilizar este Catálogo de Peças Sobressalentes

Localize o Número da Peça Sobressalente

a) Consulte a ilustração (D) na página i-5: Vá para o número do capítulo (15) indicado no grupo principal que contém a peça que pretende localizar.

Os itens b) e c) referem-se à ilustração (E) na página i-6:

b) Na ilustração do grupo principal, procure o subgrupo da máquina (17) que contém a peça ou o subgrupo que procura. Tome nota do número de posição (18) e vá para a página de lista a seguir à ilustração.

c) Procure o número de posição/designação de referência (16) ou o nome do subgrupo (19). Vá para o número de página correspondente (20) indicado na coluna do lado direito. A Tetra Pak preferiu utilizar sempre a estrutura orientada para a função como designação de referência. O prefixo que inicia a estrutura orientada para a função (=) não está indicada na designação de referência.

Os itens d) e e) referem-se à ilustração (F) na página i-6:

d) Localize a peça (21) que procura na ilustração do subgrupo e tome nota do número de posição da peça.

e) O número de peça (29) e a descrição da peça (30) são apresentados ao lado do número da posição na página de lista.

Informações listadas num Catálogo de Peças Sobressalentes

A lista em baixo refere-se à ilustração (F) na página i-6: Um Catálogo de Peças Sobressalentes contém as seguintes informações sobre grupos, subgrupos e peças sobressalentes para o equipamento:

- Referência da estrutura do grupo (22). Indica o grupo mais elevado seguinte na estrutura da lista do equipamento.
- Nome do grupo (23)
- Unidade de medida (25)
- Quantidade (26)
- Número de série do conjunto (27)
- Intervalo de páginas da lista (28). Incluído se existirem várias páginas na ilustração ou na lista do grupo.
- Número de peça ou subgrupo (29)
- Nome do subgrupo ou descrição da peça (30)
- Número do grupo (31)
- Número do equipamento (32)
- Cabeçalho das informações do grupo (33). Indica se a secção em baixo do cabeçalho é de uma variante específica da máquina ou se é uma lista de peças comuns. Se uma lista tiver mais de uma variante e cada variante tiver o seu próprio desenho de conjunto, é apresentada uma referência de página ao desenho do conjunto da variante.
- Informações internas (34)

Introducere

Informații despre manual

Tetra Pak recomandă citirea cu atenție a tuturor manualelor livrate. Asigurați-vă că manualele livrate sunt puse la îndemâna personalului care exploatează sau întreține echipamentul.

Este important să păstrați acest catalog pe întreaga durată de viață a echipamentului și să transmiteți catalogul deținătorilor sau utilizatorilor ulteriori.

Tetra Pak nu va fi răspunzător pentru niciun defect al echipamentului cauzat prin nerespectarea instrucțiunilor date în manualele care însoțesc acest echipament.

Manuale livrate

Manualele livrate cu acest echipament pot include

- CM
  Manualul de conversie furnizează tehnicienilor informații despre conversia echipamentului între diferite moduri de producție.
- EM
  Manualul electric furnizează tehnicienilor informații despre sistemul electric al echipamentului.
- IM
  Manualul de instalare furnizează tehnicienilor informații necesare pentru instalarea în siguranță a echipamentului.
- MM
  Manualul de întreținere furnizează tehnicienilor informații cu privire la întreținerea echipamentului.
- OM
  Manualul de exploatare pune la dispoziție operatorilor informații despre manevrarea și exploatarea echipamentului înainte, în timpul și după producție.
- SPC
  Catalogul pieselor de schimb furnizează informații necesare pentru comandarea pieselor de schimb de la Tetra Pak.
- TeM
  Manualul tehnic
  – furnizează tehnicienilor informații necesare pentru instalarea în siguranță a echipamentului
  – furnizează tehnicienilor informații necesare cu privire la întreținerea echipamentului
  – furnizează tehnicienilor informații despre sistemul electric al mașinii/echipamentului
  – furnizează informații necesare pentru comandarea pieselor de schimb de la Tetra Pak.

Configurația paginilor

Examinați ilustrația (A) de pe pagina i-5: Paginile principale dintr-un catalog de piese de schimb constau dintr-o pagină de ilustrare (1) și o pagină de liste corespunzătoare (7). Numărul paginii (5) apare în antetul unei pagini de ilustrare și în subsolul unei pagini de liste. Numărul documentului (6) apare în subsolul unei pagini de liste.

Numerotarea paginilor

Examinați ilustrația (A) de la pagina i-5: Un număr de pagină (5) are trei părți:

- numărul capitolului (2)
- numărul paginii consecutive din cadrul capitolului (3)
- număr total de pagini din capitol (4)

Prezentare introductivă a mașinii

Producător

Pentru numele și adresa producătorului, consultați pagina a doua a acestui catalog.

Service

Pentru comandarea pieselor de schimb pentru această mașină sau pentru a raporta problemele asociate cu exploatarea acestei mașini, contactați cel mai apropiat birou Tetra Pak.

Contactați Liaison cu privire la alte întrebări, comentarii sau sugestii legate de îmbunătățirea echipamentului și a documentației acestuia.

Identificare

Clasificare CE

Acest echipament este fabricat în conformitate cu reglementările de bază cu privire la sănătate și siguranță din Zona economică europeană (EEA).

Plăcuța mașinii

Ilustrația (B) de la pagina i-5 arată un exemplu al unei plăcuțe de mașină. O ilustrație a plăcuței valide a mașinii și a poziției acesteia pe echipament este arătată în capitolul introductiv al manualelor livrate împreună cu acest echipament. Plăcuța mașinii conține datele listate mai jos, necesare în cazul în care contactați Tetra Pak în legătură cu acest echipament specific.

- Tip mașină (8)
- Volum (9)
- Specificații de desen (10)
- Număr de serie al mașinii (11)
- Producător (12)
- Marcaj CE (13)
- Anul fabricației (14)

Ilustrația (C) de la pagina i-5 arată un exemplu al unei specificații de mașină. Asigurați-vă că datele specifice echipamentului, listate în paginile din față ale acestui manual, corespund cu datele de pe plăcuța mașinii și cu specificațiile mașinii.

Cum se utilizează acest catalog de piese de schimb

Localizarea unui număr de piesă de schimb

a) Examinați ilustrația (D) de la pagina i-5: Treceți la numărul de capitol (15) indicat lângă grupa principală care conține piesa pe care doriți să o localizați.

Articolele b) și c) se referă la ilustrația (E) de la pagina i-6.

b) Pe ilustrația grupei principale, căutați subgrupa aferentă mașinii (17) care conține piesa sau subgrupa pe care o căutați. Notați numărul poziției (18) și treceți la pagina de liste care urmează după ilustrație.

c) Căutați numărul poziției/marcarea de referință (16) sau numele subgrupei (19). Treceți la numărul de pagină corespunzător (20) listat în coloana din partea dreaptă. Tetra Pak a optat ca întotdeauna să utilizeze structura orientată pe funcție pentru marcarea de referință. Prefixul care indică structura orientată pe funcție (=) nu este arătat în marcarea de referință.

Articolele d) și e) se referă la ilustrația (F) de la pagina i-6.

d) Localizați piesa (21) pe care o căutați pe ilustrația subgrupei și notați numărul de poziție al piesei.

e) Numărul piesei (29) și descrierea piesei (30) sunt listate lângă numărul de poziție de pe pagina de liste.

Informațiile listate într-un catalog de piese de schimb

Lista de mai jos se referă la ilustrația (F) de la pagina i-6. Un catalog de piese de schimb conține următoarele informații despre grupe, subgrupe și piese de schimb pentru echipament:

- Referința despre structura grupelor (22). Indică următoarea grupă superioară din structura de liste a echipamentului.
- Numele grupei (23)
- Unitatea de măsură (25)
- Cantitatea (26)
- Numărul de desen de ansamblu (27)
- Intervalul de pagini de liste (28). Inclus dacă există mai multe pagini în ilustrația sau lista grupei.
- Numărul piesei sau al subgrupei (29)
- Numele subgrupei sau descrierea piesei (30)
- Numărul grupei (31)
- Numărul echipamentului (32)
- Antet cu informații despre grupă (33). Indică dacă secțiunea de sub antet se referă la o anumită variantă de mașină sau este o listă de piese comune. Dacă o listă are mai multe variante și fiecare variantă are propriul său desen de ansamblu, este arătată o referință de pagină pentru desenul de ansamblu al variantei.
- Informații interne (34)

Úvod

Informácie o návode

Spoločnosť Tetra Pak odporúča, starostlivo si prečítať všetky dodané návody. Dbajte, aby pracovníci, obsluhujúci zariadenie alebo zabezpečujúci jeho údržbu, mali vždy dodané návody k dispozícii.

Je dôležité, aby bol tento katalóg k dispozícii počas celého času životnosti zariadenia, a aby sa katalóg dostal aj k jeho prípadnému ďalšiemu držiteľovi alebo používateľovi.

Spoločnosť Tetra Pak nepreberá zodpovednosť za akékoľvek poškodenie zariadenia spôsobené nedodržaním pokynov uvedených v návodoch dodávaných s týmto zariadením.

Dodané návody

S týmto zariadením vám mohli byť dodané nasledujúce návody:

- CM
  Návod na prestavovanie poskytuje technikom informácie o prestavovaní zariadenia do rôznych výrobných režimov.
- EM
  Elektrotechnický návod poskytujetechnikom informácie o elektrickom systéme zariadenia.
- IM
  Návod na inštaláciu poskytuje technikom informácie potrebné na bezpečnú inštaláciu zariadenia.
- MM
  Návod na údržbu poskytujetechnikom informácie o údržbe zariadenia.
- OM
  Návod na obsluhu poskytuje obsluhe informácie o zaobchádzaní a obsluhe zariadenia pred, počas a po prevádzke.
- SPC
  Katalóg náhradných dielcov poskytuje informácie potrebné na objednávanie náhradných dielcov od spoločnosti Tetra Pak
- TeM
  Technický návod
  - poskytuje technikom informácie potrebné na bezpečnú inštaláciu zariadenia
  - poskytuje technikom informácie o údržbe zariadenia
  - poskytuje technikom informácie o elektrickom systéme stroja/ zariadenia
  - poskytuje informácie potrebné na objednávanie náhradných dielcov od spoločnosti Tetra Pak.

Rozloženie strany

Pozri ilustráciu (A) na strane i-5: Hlavné strany Katalógu náhradných dielcov obsahujú stránku s ilustráciami (1) a príslušnú stranu so zoznamom (7). Číslo strany (5) sa uvádza v záhlaví na strane s ilustráciami a v päte strany so zoznamom. Číslo dokumentu (6) sa uvádza v päte strany so zoznamom.

Číslovanie strán

Pozri ilustráciu (A) na strane i-5: Číslo strany (5) má tri časti:

- číslo kapitoly (2)
- poradové číslo strany v rámci kapitoly (3)
- celkový počet strán v kapitole (4)

Základné informácie o stroji

Výrobca

Meno a adresa výrobcu sa uvádza na druhej strane tohto katalógu.

Servis

Pri objednávaní náhradných dielcov pre tento stroj alebo na nahlasovanie problémov súvisiacich s prevádzkou tohto stroja sa obráťte na najbližšie zastúpenie spoločnosti Tetra Pak.

S ostatnými otázkami, pripomienkami a podnetmi na vylepšenie stroja alebo zariadenia a jeho dokumentácie sa obracajte na kontaktnú osobu.

Identifikácia

Klasifikácia CE

Toto zariadenie spĺňa základné predpisy o ochrane zdravia a bezpečnosti Európskeho hospodárskeho priestoru (EEA).

Typový štítok stroja

Na ilustrácii (B) na strane i-5 uvádzame príklad typového štítku. Ilustrácia platného typového štítku stroja a jeho umiestnenia na zariadení sa uvádza v kapitole Úvod v návodoch, dodaných s týmto zariadením. Typový štítok obsahuje dolu údaje uvedené, potrebné pri kontaktoch so spoločnosťou Tetra Pak ohľadom tohto špecifického zariadenia.

- Typ stroja (8)
- Objem (9)
- Údaje o výkrese (10)
- Výrobné číslo stroja (11)
- Výrobca (12)
- Značka CE (13)
- Rok výroby (14)

Ilustrácia (C) na strane i-5 zobrazuje príklad špecifikácie stroja. Presvedčite sa, že údaje zariadenia uvedené na predných stranách tohto návodu zodpovedajú údajom na typovom štítku a v špecifikácii stroja.

Ako sa tento Katalóg náhradných dielcov používa

Vyhľadanie čísla náhradného dielca

a) Pozri ilustráciu (D) na strane i-5: Prejdite na číslo kapitoly (15) uvedené vedľa hlavnej skupiny obsahujúcej dielec, ktorý chcete vyhľadať.

Položky b) a c) odkazujú na ilustráciu (E) na strane i-6.

b) Na ilustrácii hlavnej skupiny hľadajte podskupinu stroja (17), ktorý obsahuje dielec alebo podskupinu, ktorú hľadáte. Poznamenajte si číslo položky (18) a prejdite stranu so zoznamom nasledujúcu po ilustrácii.

c) Vyhľadajte číslo položky/referenčné označenie (16) alebo názov podskupiny (19). Prejdite na príslušné číslo strany (20) uvedené v zozname v pravom stĺpci. Spoločnosť Tetra Pak sa rozhodla vždy používať funkčne zameranú štruktúru na referenčné označovanie. Predčíslie udávajúce funkčne orientovanú štruktúra (=) sa v referenčnom označení nezobrazuje.

Položky d) a e) odkazujú na ilustráciu (F) na strane i-6.

d) Nájdite dielec (21), ktorý hľadáte, na ilustrácii podskupiny a poznamenajte si číslo položky daného dielca.

e) Číslo dielca (29) a popis dielca (30) sa uvádza vedľa čísla položky na stránke so zoznamom.

Informácie uvádzané v Katalógu náhradných dielcov

Dolu uvedený zoznam odkazuje na ilustráciu (F) na strane i-6. Katalóg náhradných dielcov obsahuje nasledujúce informácia o skupinách, podskupinách a náhradných dielcov zariadenia:

- Referenčná štruktúrna skupina (22). Označuje najbližšiu vyššiu skupinu v štruktúre zoznamu zariadenia.
- Názobv skupiny (23)
- Jednotka merania (25)
- Množstvo (26)
- Číslo výkresu celkovej zostavy (27)
- Rozsah strán zoznamu (28). Uvádza sa, ak má ilustrácia alebo zoznam skupiny viac strán.
- Číslo dielca alebo podskupiny (29)
- Názov podskupiny alebo popis dielca (30)
- Číslo skupiny (31)
- Číslo zariadenia (32)
- Záhlavie informácií o skupine (33). Uvádza, či je časť nasledujúca pod záhlavím určená pre špecifický variant stroja, alebo či ide o zoznam spoločných dielcov. Ak má zoznam viac ako jeden variant a každý z variantov má vlastný výkres celkovej zostavy, uvádza sa odkaz na stranu s výkresom zostavy daného variantu.
- Interné informácie (34)

Uvod

Informacije o priročnikih

Tetra Pak priporoča, da natančno preberete vse priložene priročnike. Osebje, ki upravlja in vzdržuje opremo mora imeti dostop do priloženih priročnikov.

Katalog hranite v celotnem času uporabe opreme. V primeru, ko opremo pridobi drug imetnik ali uporabnik, mu obenem izročite tudi katalog.

Podjetje Tetra Pak ne prevzema odgovornosti za poškodbe na opremi, ki nastanejo zaradi neupoštevanja navodil iz priročnikov, ki so priloženi opremi.

Priloženi priročniki

Priročniki, ki so priloženi tej opremi, lahko vključujejo

- Priročnik za zamenjavo (CM)
  V tem priročniku so podatki, ki tehnikom omogočajo izvesti zamenjavo opreme med različnimi načini proizvodnje.
- Elektrotehnični priročnik (EM)
  Priročnik vsebuje podatke za tehnike o električnem sistemu opreme.
- Priročnik za montažo (IM)
  Priročnik vsebuje podatke, ki jih tehniki potrebujejo za varno montažo opreme.
- Priročnik za vzdrževanje (MM)
  Priročnik vsebuje podatke za tehnike o vzdrževanju opreme.
- Priročnik za obratovanje (OM)
  Priročnik je namenjen informiranju za pravilno rokovanje in upravljanje s strojem pred, med in po proizvodnem postopku.
- Katalog nadomestnih delov (SPC)
  Katalog vsebuje potrebne podatke za naročilo nadomestnih delov pri podjetju Tetra Pak.
- Tehnični priročnik (TeM)
  Priročnik
  - vsebuje podatke, ki jih tehniki potrebujejo za varno montažo opreme;
  - vsebuje podatke za tehnike o vzdrževanju opreme;
  - vsebuje podatke za tehnike o električnem sistemu stroja/opreme;
  - vsebuje potrebne podatke za naročilo nadomestnih delov pri podjetju Tetra Pak.

Postavitev strani

Poglejte sliko (A) na strani i-5: Glavne strani v Katalogu nadomestnih delov sestavljata stran s sliko (1) in ustrezna stran s seznamom (7). Številka strani (5) je prikazana na vrhu strani s sliko in na dnu strani s seznamom. Številka dokumenta (6) je prikazana na dnu strani s seznamom.

Številčenje strani

Oglejte si sliko (A) na strani i-5: Številka strani (5) ima tri dele:

- številko poglavja (2);
- zaporedno številko strani v poglavju (3);
- število vseh strani v poglavju (4).

Predstavitev stroja

Proizvajalec

Ime in naslov proizvajalca najdete na drugi strani kataloga.

Servisiranje

Za naročanje nadomestnih delov za stroj ter za sporočanje motenj pri delovanju stroja se obrnite na najbližjo servisno službo podjetja Tetra Pak.

V primeru drugih zahtev, komentarjev, predlogov za izboljšavo opreme ali dokumentacije se obrnite na odgovorno osebo.

Identifikacijska oznaka

CE-klasifikacija

Oprema je izdelana v skladu z osnovnimi zdravstvenimi in varnostnimi predpisi Evropskega gospodarskega prostora (EGS).

Napisna ploščica

Slika (B) na strani i-5 prikazuje primer napisne ploščice.
Sliko veljavne napisne ploščice in njeno mesto na opremi najdete v uvodnem poglavju priloženih priročnikov. Ploščica vsebuje spodaj navedene podatke, ki jih potrebujete, ko se v zvezi z določeno opremo obrnete na podjetje Tetra Pak:

- tip stroja (8);
- prostornino (9);
- specifikacije risbe (10);
- serijsko številko stroja (11);
- proizvajalca (12);
- oznako CE (13);
- leto izdelave (14).

Slika (C) na strani i-5 prikazuje primer specifikacije stroja. Podatki o opremi, navedeni na prvih straneh tega priročnika, se morajo ujemati s podatki o stroju, navedenimi na napisni ploščici in v specifikacijah.

Uporaba Kataloga nadomestnih delov

Iskanje številke nadomestnega dela

a) Oglejte si sliko (D) na strani i-5: Poiščite številko poglavja (15), navedeno poleg glavne skupine, ki vsebuje iskani del.

Točki b) in c) se nanašata na sliko (E) na strani i-6.

b) Na sliki glavne skupine poiščite podskupino stroja (17), ki vsebuje iskani del ali podskupino. Zapomnite si pozicijsko številko (18) in poiščite stran s seznamom, ki pripada sliki.

c) Poiščite pozicijsko številko/referenčno oznako (16) ali ime podskupine (19). Pojdite na stran (20), navedeno v desnem stolpcu. Tetra Pak za referenčno označevanje vedno uporablja funkcijsko strukturo. Predpona, ki označuje funkcijsko strukturo (=), ni prikazana v referenčni oznaki.

Točki d) in e) se nanašata na sliko (F) na strani i-6.

d) Na sliki podskupine poiščite del (21), ki ga iščete, in si zapomnite njegovo pozicijsko številko.

e) Številka (29) in opis dela (30) sta navedena poleg pozicijske številke na strani s seznamom.

Informacije v Katalogu nadomestnih delov

Spodnji seznam se nanaša na sliko (F) na strani i-6. Katalog nadomestnih delov vsebuje naslednje informacije o skupinah, podskupinah in nadomestnih delih za opremo:

- referenco strukture skupine (22); Označuje naslednjo višjo skupino v strukturi seznamov opreme.
- ime skupine (23);
- mersko enoto (25);
- količino (26);
- številko sestavne risbe (27);
- število strani seznama (28); Če je slika ali seznam skupine sestavljen iz več strani.
- številko dela ali podskupine (29);
- ime podskupine ali opis dela (30);
- številko skupine (31);
- številko opreme (32);
- naslov z informacijami o skupini (33). Označuje, ali je razdelek pod naslovom namenjen specifični izvedbi stroja ali gre za seznam skupnih delov. Če ima seznam več izvedb in če ima vsaka od njih svojo sestavno risbo, je ob vsaki izvedbi navedena referenčna stran s sestavno risbo.
- interne informacije (34).

Inledning

Information om manualen

Tetra Pak rekommenderar att alla manualer läses noggrant. Se till att manualerna är tillgängliga för personalen som använder eller underhåller utrustningen.

Det är viktigt att denna katalog behålls under utrustningens livslängd, och att den överlämnas till varje efterföljande innehavare eller användare av utrustningen.

Tetra Pak tar inte ansvar för någon skada på utrustningen som orsakats av att instruktionerna i medföljande manualer inte har följts.

Medföljande manualer

Följande manualer kan levereras tillsammans med utrustningen:

- CM
  Konverteringsmanualen (CM) innehåller information för tekniker om hur man konverterar utrustningen mellan olika produktionslägen.
- EM
  Den elektriska manualen (EM) innehåller information för tekniker om utrustningens elektriska system.
- IM
  Installationsmanualen (IM) innehåller information för tekniker om hur utrustningen installeras på ett säkert sätt.
- MM
  Underhållsmanualen (MM) innehåller information för tekniker om hur utrustningen underhålls.
- OM
  Driftsmanualen (OM) innehåller information för operatören om hur utrustningen ska hanteras före, under och efter produktion.
- SPC
  Reservdelskatalogen (SPC) innehåller den information som behövs för att beställa reservdelar från Tetra Pak.
- TeM
  Den tekniska manualen (TeM)
  - innehåller information för tekniker om hur utrustningen installeras på ett säkert sätt.
  - innehåller information för tekniker om hur utrustningen underhålls.
  - innehåller information för tekniker om maskinens/utrustningens elektriska system.
  - innehåller den information som behövs för att beställa reservdelar från Tetra Pak.

Sidlayout

Se bild (A) på sidan i-5: Huvudsidorna i reservdelskatalogen består av en bildsida (1) och en motsvarande listsida (7). Sidnumret (5) visas i sidhuvudet på bildsidan och i sidfoten på listsidan. Dokumentnumret (6) visas i sidfoten på listsidan.

Sidnumrering

Se bild (A) på sidan i-5: Ett sidnummer (5) består av tre delar:

- kapitlets nummer (2)
- löpande sidnummer inom kapitlet (3)
- totalt sidantal i kapitlet (4)

Introduktion till maskinen

Tillverkare

Tillverkarens namn och adress finns på sidan 2 i katalogen.

Service

För att beställa reservdelar till denna maskin eller för att rapportera problem som uppstått i samband med driften kontaktar du närmaste Tetra Pak-kontor.

Om du har andra frågor, kommentarer eller förslag till förbättringar av utrustningen och dokumentationen vänder du dig till din kontaktperson på Tetra Pak.

Identifiering

CE-märkning

Denna utrustning överensstämmer med den grundläggande hälso- och säkerhetslagstiftningen inom Europeiska ekonomiska samarbetsområdet (EES).

Maskinskylt

Bild (B) på sidan i-5 visar ett exempel på en maskinskylt.
En bild på giltig maskinskylt och dess placering på utrustningen visas i inledningskapitlet som medföljer utrustningen. Skylten innehåller de uppgifter som listas nedan och som behövs vid kontakt med Tetra Pak angående utrustningen.

- Maskintyp (8)
- Volym (9)
- Ritningsspecifikationer (10)
- Maskinnummer (11)
- Tillverkare (12)
- CE-märkning (13)
- Tillverkningsår (14)

Bild (C) på sidan i-5 visar ett exempel på en maskinspecifikation. Kontrollera att informationen om utrustningen som listas på de första sidorna i manualen motsvarar informationen på maskinskylten och i maskinspecifikationen.

Använda reservdelskatalogen

Hitta ett reservdelsnummer

a) Se bild (D) på sidan i-5: Gå till kapitelnumret (15) som står vid sidan om huvudgruppen som innehåller den del du vill hitta.

Punkt b) och c) hänvisar till bild (E) på sidan i-6.

b) På huvudgruppsbilden letar du efter den maskinundergrupp (17) som innehåller delen eller undergruppen du letar efter. Notera positionsnumret (18) och gå till listsidan som anges efter bilden.

c) Leta efter positionsnumret/referensbeteckningen (16) eller undergruppsnamnet (19). Gå till motsvarande sidnummer (20) som listas i den högra kolumnen. Tetra Pak har valt allt alltid använda en funktionsorienterad struktur för referensbeteckningarna. Prefixet för funktionsorienterad struktur (=) visas inte i referensbeteckningen.

Punkt d) och e) hänvisar till bild (F) på sidan i-6.

d) Leta reda på delen (21) i undergruppsbilden och notera delens positionsnummer.

e) Reservdelsnumret (29) och reservdelsbeskrivningen (30) står bredvid positionsnumret på listsidan.

Information i reservdelskatalogen

Listan nedan hänvisar till bild (F) på sidan i-6. Reservdelskatalogen innehåller följande information om grupper, undergrupper och reservdelar för utrustningen:

- Gruppstrukturreferens (22). Anger nästa högre grupp i utrustningslistans struktur.
- Gruppnamn (23)
- Måttenhet (25)
- Kvantitet (26)
- Monteringsritningsnummer (27)
- Listsideintervall (28). Anges om det finns flera sidor i gruppbilden eller grupplistan.
- Reservdels- eller undergruppsnummer (29)
- Undergruppsnamn eller reservdelsbeskrivning (30)
- Gruppnummer (31)
- Utrustningsnummer (32)
- Gruppinformationsrubrik (33). Anger om avsnittet under rubriken gäller en viss maskinvariant eller om det är en lista över allmänna delar. Om en lista har fler än en variant och varje variant har sin egen monteringsritning visas en sidhänvisning till variantens monteringsritning.
- Intern information (34)

SPC
Spare Parts Catalogue

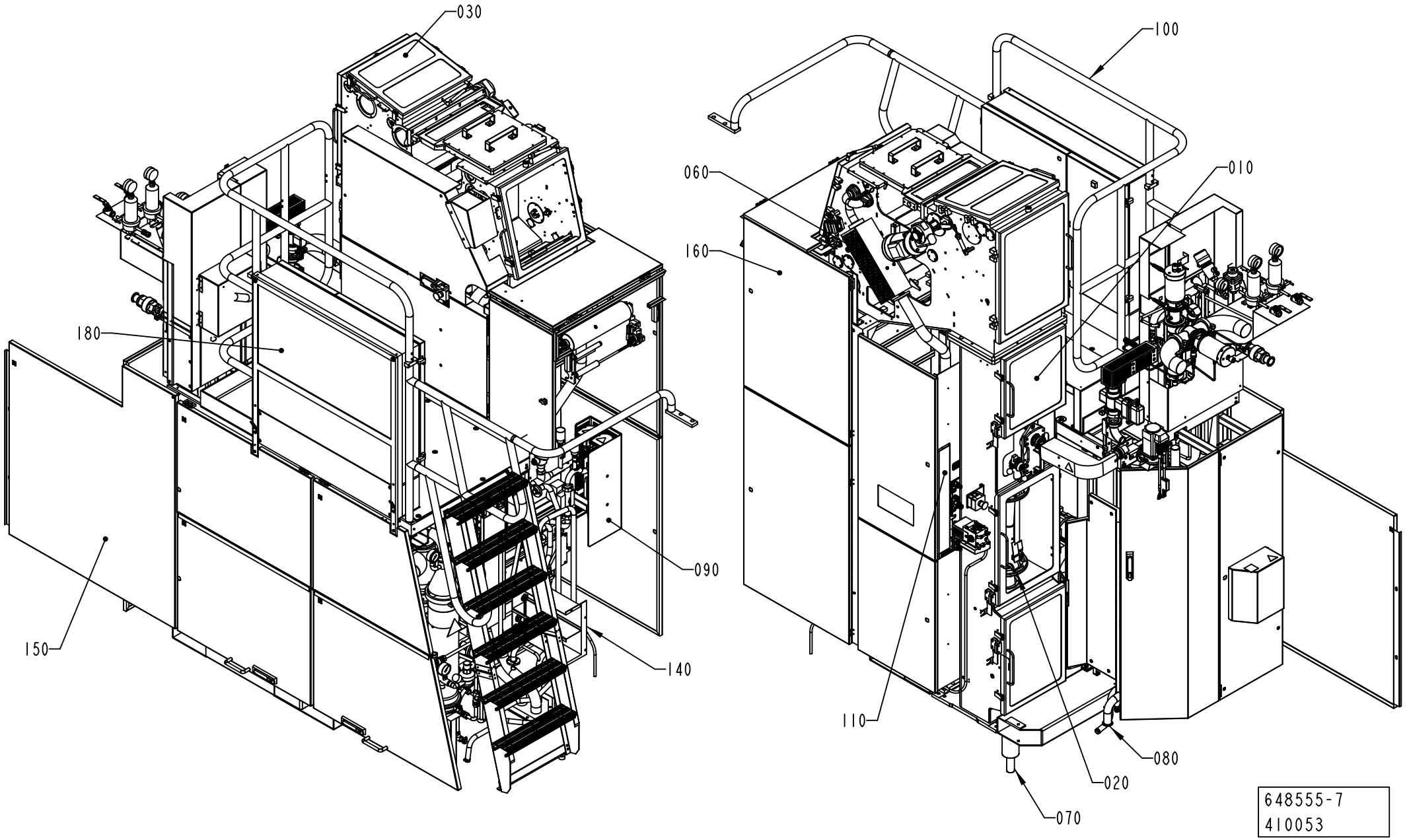
030
180
150
090
140
100
060
160
010
110
080
020
070
648555-7
410053

ECM: 463257 - 20100610
Group number: 648555-0300
Assembly Drawing: 648555-7_1_AA

Pos	Part No	UN	Qty	Description	Page No
A3/SPEED					
030	2788634-0200		1	DRYING CHAMBER	**1-5**
050	2540961-0300		1	UV LAMP	**1-51**
Common Parts					
010	2539440-0400		1	ASEPTIC CHAMBER	**1-59**
020	2544850-0300		1	FORMING SECTION	**1-83**
060	2528076-0300		1	STERILE AIR SYSTEM	**1-163, 1-165**
070	2501290-0500		1	FILLING SYSTEM	**1-193**
080	2512910-0500		1	CLEANING SYSTEM	**1-251**
090	2541680-0300		1	HYDROGEN PEROXIDE	**1-277**
100	1558497-0500		1	FRAME SECTION,UPPER	**1-299**
110	2528079-0400		1	PNEUMATIC SYSTEM	**1-325**
140	2783010-0400		1	CABLE DUCT	**1-345**
150	2533766-0400		1	COVERING PANEL	**1-347**
160	2532909-0500		1	COVERING PANEL	**1-349**
170	2504496-0200		1	TRANSPORT EQUIPMENT	**1-355**
180	2986261-0100		1	CABINET	**1-357**

Pos	Part No	UN	Qty	Description	Page No

Machine Type | Group Description | Used-In | Group Number | Page No

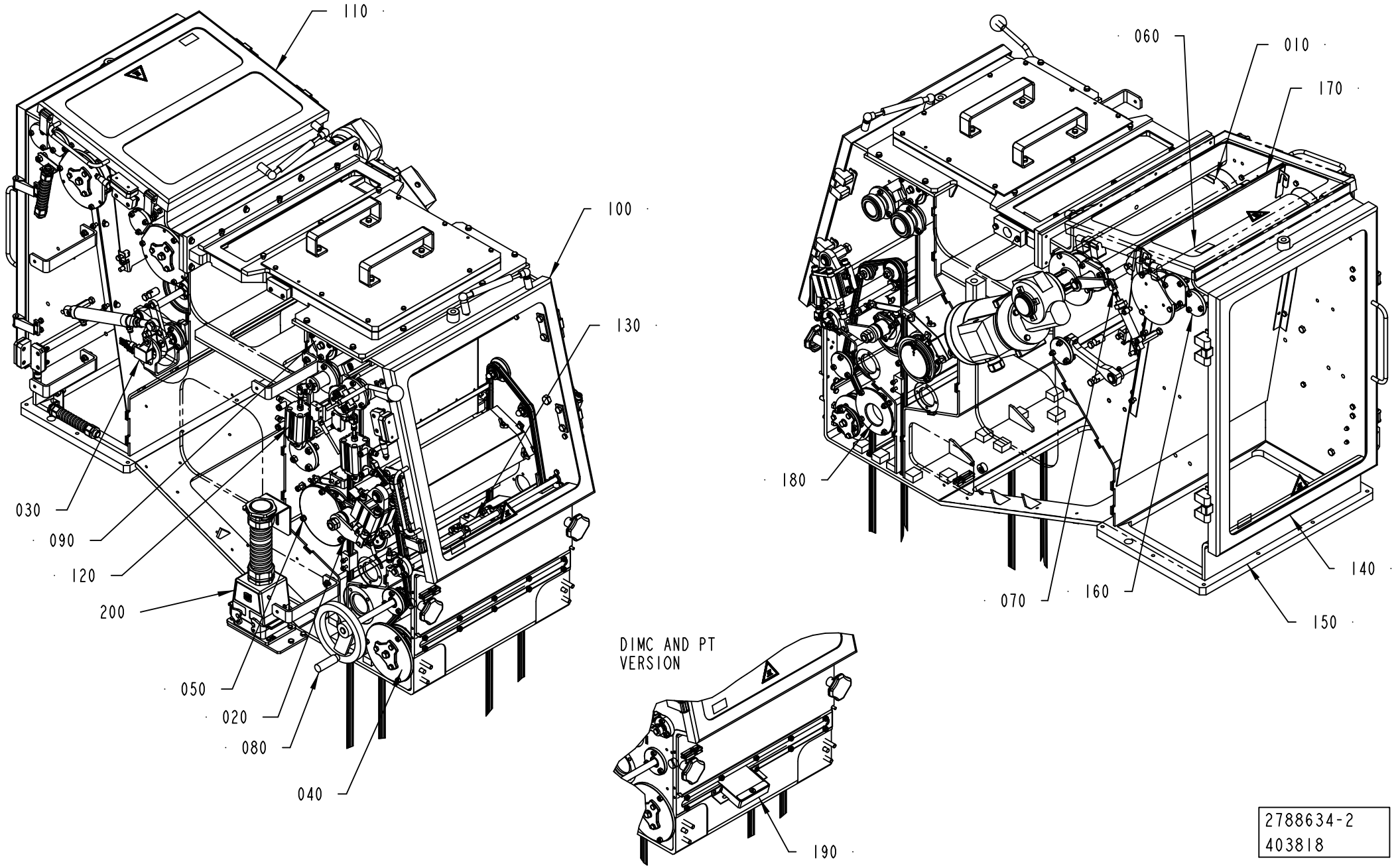

2788634-2
403818

ECM: 404241 - 20091001
Group number: 2788634-0200
Assembly Drawing: 2788634-2_1_AA

Pos	Part No	UN	Qty	Description	Page No
PT/SPEED					
190	1528746-0100		1	GUIDE	**1-7**
Common Parts					
010	3006270-0200		1	DRIVE ROLLER	**1-9**
020	1548892-0300		1	CALENDER ROLLER	**1-11**
030	2539445-0400		1	PENDULUM ROLLER	**1-13**
040	2745337-0200		1	BENDING ROLLER	**1-15**
050	2758064-0200		1	SQUEE-GEE ROLLER	**1-17**
060	2763999-0200		1	BENDING ROLLER	**1-19**
070	2826414-0400		1	COUNTER ROLLER	**1-21**
080	1549573-0200		1	CRANK	**1-23**
090	2751510-0200		1	BENDING ROLLER	**1-25**
100	2783055-0100		1	DOOR	**1-27**
110	2783064-0100		1	DOOR	**1-29**
120	2783069-0100		1	AIR KNIFE	**1-31**
130	2539455-0200		1	VALVE	**1-33**
140	2783074-0100		1	DOOR	**1-35**
150	2783101-0200		1	HOUSING	**1-37, 1-39**
160	2788596-0100		1	PLUG	**1-43**
170	2758052-0100		1	DEFLECTOR	**1-45**
180	2550890-0100		1	VALVE	**1-47**
200	2957447-0100		1	PNEUMATIC COMPONENT	**1-49**

Pos	Part No	UN	Qty	Description	Page No

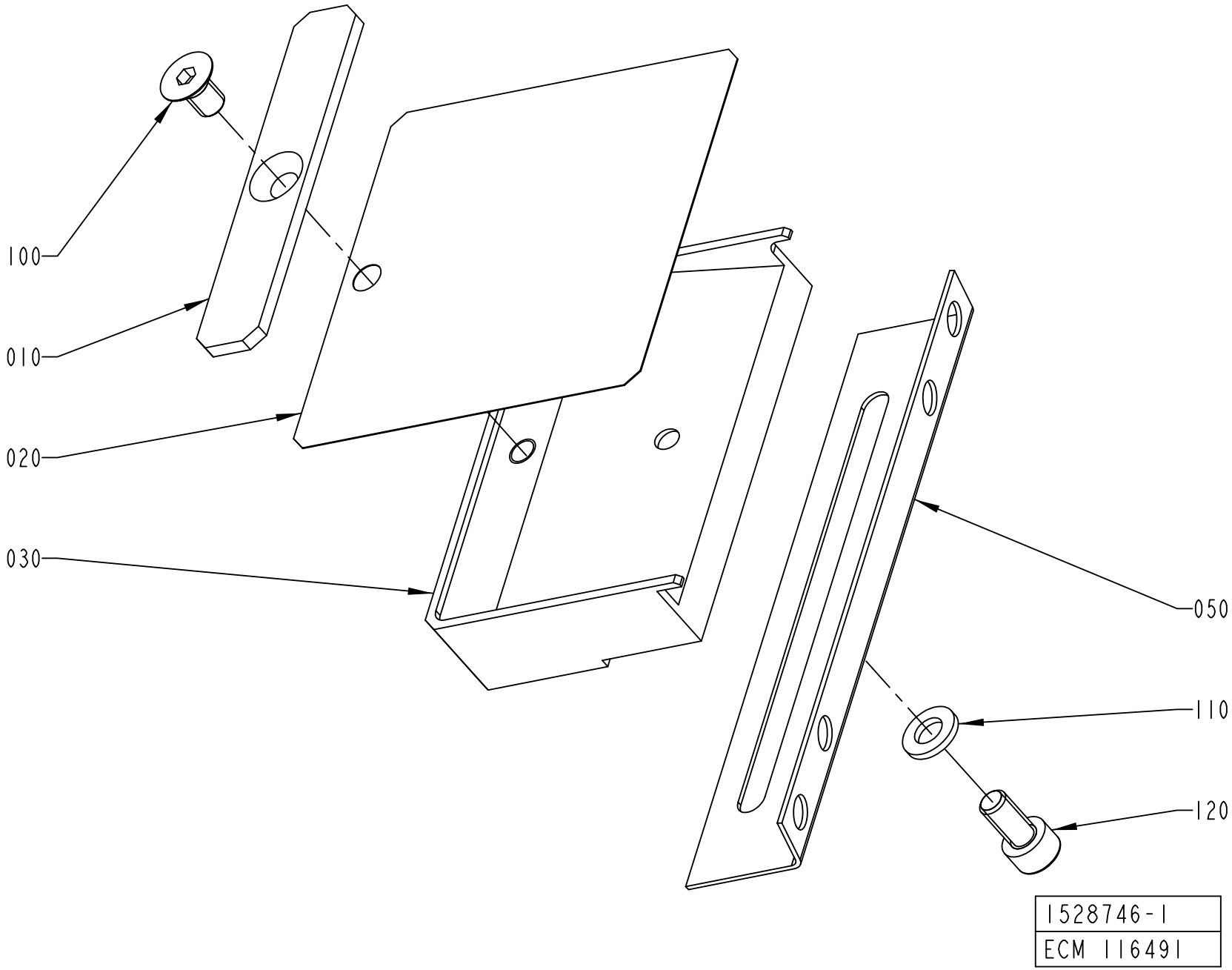
100
010
020
030
050
110
120
1528746-1
ECM 116491

ECM: 326046 - 20080103
Group number: 1528746-0100
Assembly Drawing: 1528746-1_1_AA

Pos	Part No	UN	Qty	Description	Page No
-					
010	1490715-0000		1	DOLLY	
020	1490714-0000		1	GUIDE	
030	1490713-0000		1	SPRING HOLDER	
050	1519799-0000		1	ANGLE BRACKET	
100	312155-0364		1	SCREW DIN 7991 MF6S M6X10 A4 70	
110	315105-0153		1	WASHER BRB 6,4X12 RFR	
120	312115-0366		1	SCREW ISO4762 M6X12 A4 80	

Pos	Part No	UN	Qty	Description	Page No

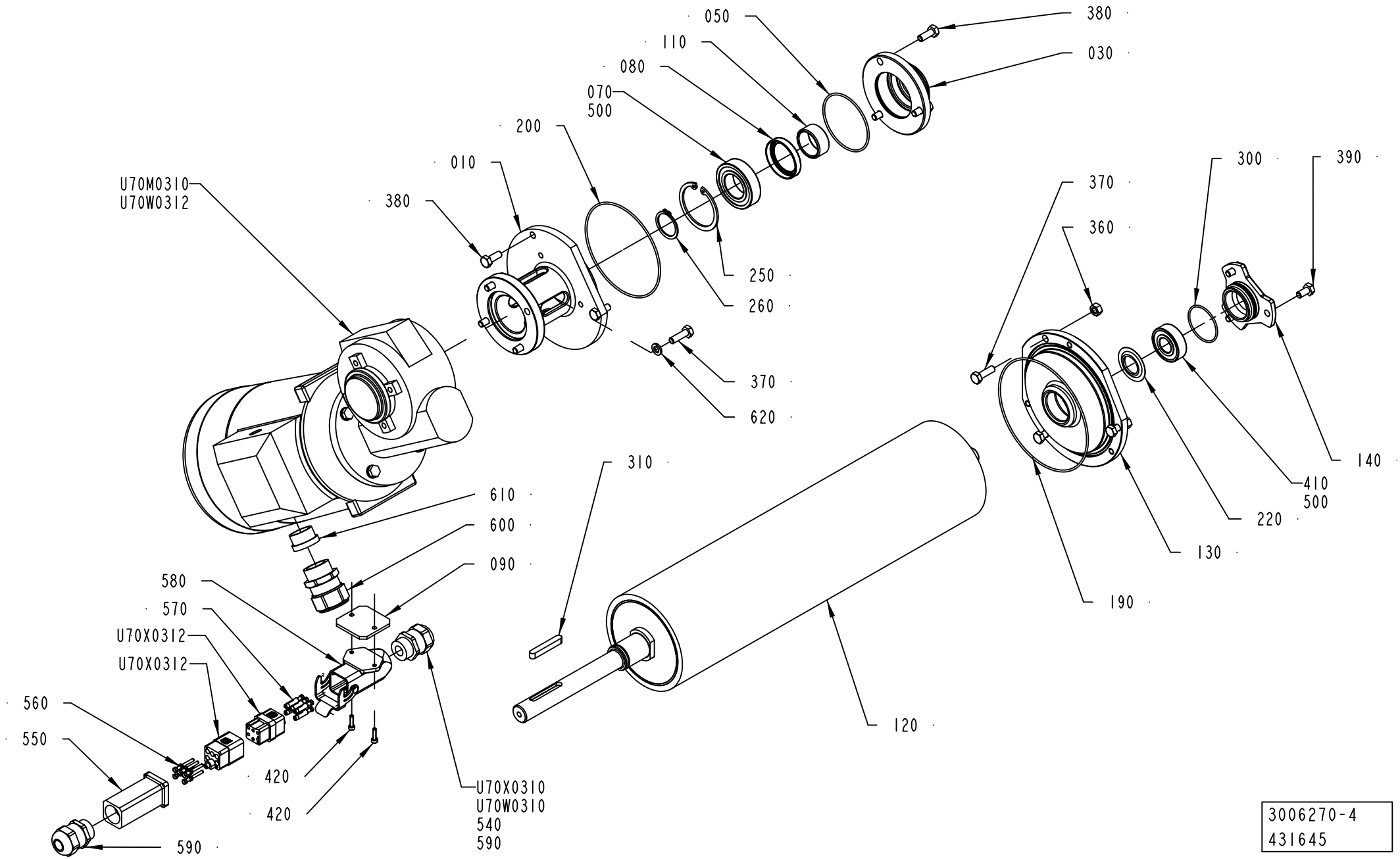

3006270-4
431645

ECM: 438006 - 20100701
Group number: 3006270-0200
Assembly Drawing: 3006270-4_1_AB

Pos	Part No	UN	Qty	Description	Page No
A3/SPEED NODIMC					
010	2783108-0000		1	FLANGE	
030	2783025-0000		1	FLANGE	
050	90459-1189		1	O-RING 56,87X1,78 MM	
090	2957453-0000		1	PLATE	
120	3006271-0000		1	DRIVE ROLLER	
130	3042311-0000		1	FLANGE	
200	315205-0807		1	O-RING 94,97X1,78 MM	
360	312605-0316		3	HEXAGON NUT, M6M M6 A280	
380	312105-0368		6	SCREW M6S ISO 4017 M6X16 A480	
420	312115-0226		2	SCREW ISO4762 M3X12 A4 80	
550	90459-3670		1	HOOD HAN 3A 19 20 003 1440	
560	90459-1644		5	CRIMP PIN MALE 09 33 000 6104	
570	90459-1643		5	CRIMP PIN FEMALE 09 33 000 6204	
580	90600-4835		1	HOUSING 3A SURF MOUNT, 19 20 003 1252	
590	90458-0307		3	CABLE GLAND, M20X1,5, NO.5311 1020	
U70M0310	90459-4499		1	GEARS, WORM MOTOR VF 44P-10+BN71C 0.75KW	
U70W0310	90220-0104	MM	5200	SCR. CABLE 4X1,5MM2	
U70W0312	90220-0104	MM	1800	SCR. CABLE 4X1,5MM2	
U70X0312	90600-4808		1	FEMALE INSERT HAN Q, 09 12 005 3101	
U70X0312	90600-4807		1	MALE INSERT HAN Q 09 12 005 3001	
Common Parts					
070	90214-0165		1	BALL BEARING, 25X47X12 MM	
080	90459-1650		1	SEALING RING, VARILIP 30X40X7 MM	
110	1548751-0000		1	BUSHING	
140	2951058-0000		1	LID	
190	90459-1627		1	O-RING 114,02X1,78 MM	
220	90214-0303		1	SEALING RING, 18,6X35X2 MM	
250	315753-0130		1	RETAINING RING FOR BORE DIN 472 47 SS	
260	315751-0119		1	RETAINING RING FOR SHAFT DIN 471 25 SS	
300	315204-0123		1	O-RING 35,1X1,6 MM	
310	315705-0239		1	PARALLEL KEY W. ROUND ENDS 6X6X40 MM	
370	312105-0370		7	SCREW M6S ISO 4017 M6X20 A480	
390	312105-0366		3	SCREW M6S ISO 4017 M6X12 A480	
410	90458-1704		1	BALL BEARING 15/35X11	
500	90296-0091		1	LUBRICATION GREASE	
540	90459-6632		1	HOOD 6 B TOP ENTRY, 19 30 006 1440	
600	90458-0440		1	GLAND, EXTENDED WITH INSERT, M25X1,5	
610	90089-0003		1	REDUCING SLEEVE, PR22,5/PR18,6	
620	315402-0156		4	LOCK WASHER FBB 6,5	
U70X0310	90110-0052		1	MALE INSERT HAN 6E 09 33 006 2601	

Pos	Part No	UN	Qty	Description	Page No

Machine Type | Group Description | Used-In | Group Number | Page No

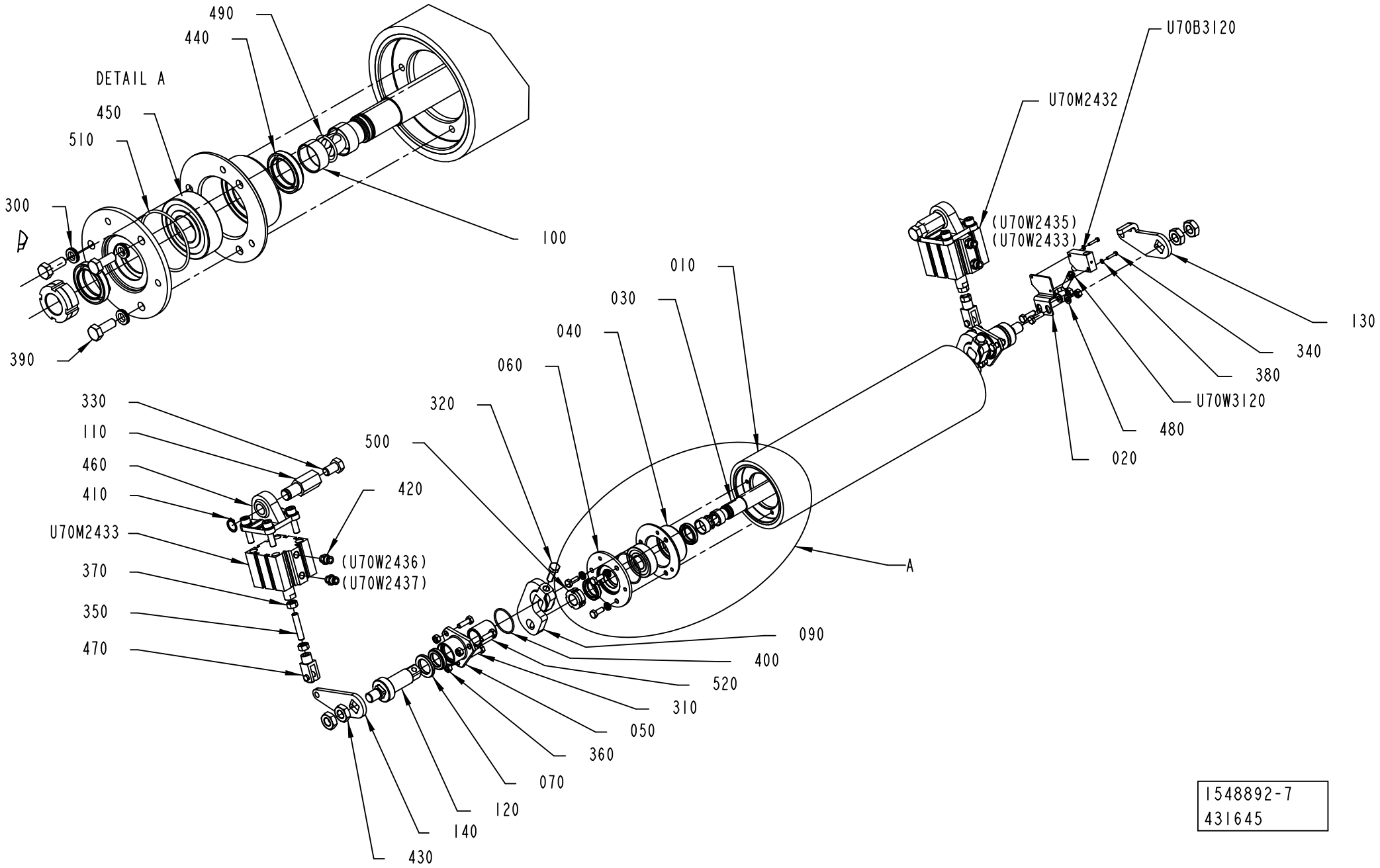
490
440
DETAIL A
450
510
300
B
390
100
U70B3120
U70M2432
(U70W2435)
(U70W2433)
130
340
380
U70W3120
480
020
010
030
040
060
320
500
330
110
460
410
U70M2433
370
350
470
420
(U70W2436)
(U70W2437)
A
090
400
520
310
050
360
070
120
140
430
1548892-7
431645

ECM: 438004 - 20100701
Group number: 1548892-0300
Assembly Drawing: 1548892-7_1_AC

Pos	Part No	UN	Qty	Description	Page No	Pos	Part No	UN	Qty	Description	Page No
-											
010	3004042-0000		1	ROLLER							
020	2946871-0000		1	BRACKET							
030	3004047-0000		1	SHAFT							
040	3004046-0000		2	BEARING HOUSING							
050	3004050-0000		2	FLANGE							
060	3004045-0000		2	LID							
070	3004051-0000		2	WASHER							
090	3004048-0000		2	ARM							
100	3004044-0000		4	BUSHING							
110	2788625-0000		2	SHAFT							
120	3004049-0000		2	SHAFT							
130	2946869-0000		1	PLATE							
140	2788631-0000		1	PLATE							
300	90062-0061		6	LOCK WASHER NORD-LOCK,6,5/10,8, T=2,2							
310	312105-0370		8	SCREW M6S ISO 4017 M6X20 A480							
320	312105-0453		2	SCREW M6S ISO 4017 M8X25 A480							
330	312105-0532		2	SCREW M6S ISO 4017 M12X20 A480							
340	312125-0228		2	SCREW ISO 1207 M3X16 A4							
350	312318-0459		2	SCREW ISO4029 M8X40 A4							
360	312605-0316		8	HEXAGON NUT, M6M M6 A280							
370	312605-0318		2	HEXAGON NUT, M6M M8 A280							
380	315105-0124		2	WASHER BRB 3,2X6 RFR							
390	312105-0368		6	SCREW M6S ISO 4017 M6X16 A480							
400	315205-0716		2	O-RING 34,65X1,78 MM							
410	315751-0113		2	RETAINING RING FOR SHAFT DIN 471 16 SS							
420	342722-0202		4	PIPE COUPLING 1/8" D=6MM							
430	90099-0027		4	HEXAGON NUT, M14, DIN936							
440	90600-6017		6	RADIAL SEAL 21,8X30X6 MM DUST LIP							
450	90600-3852		2	BALL BEARING, 20X47X14 MM							
460	90459-0586		2	SWIVEL FLANGE 50							
470	90459-2590		2	ROD END, CLEVIS WITH AXLE M8							
480	315105-0153		2	WASHER BRB 6,4X12 RFR							
490	315205-0705		2	O-RING 17,17X1,78 MM							
500	90600-3853		2	LOCK NUT MISUMI, HLBS17							
510	315205-0803		2	O-RING 44,17X1,78 MM							
520	90601-2426		2	BUSHING, 22X281X31 MM							
530	90601-3167		1	GREASE, BARRIERTA L55/2 NSF H1, 100G							
U70B3120	90459-2409		1	INDUCTIVE SENSOR IN5230							
U70M2432	90459-7086		1	DOUBLE ACTING, COMPACT, 50-25							
U70M2433	90459-7086		1	DOUBLE ACTING, COMPACT, 50-25							
U70W3120	351301-0100		1	ACTUATOR/SENSOR CABLE PRKMV 3-06/10M							

Machine Type	Group Description	Used-In	Group Number	Page No

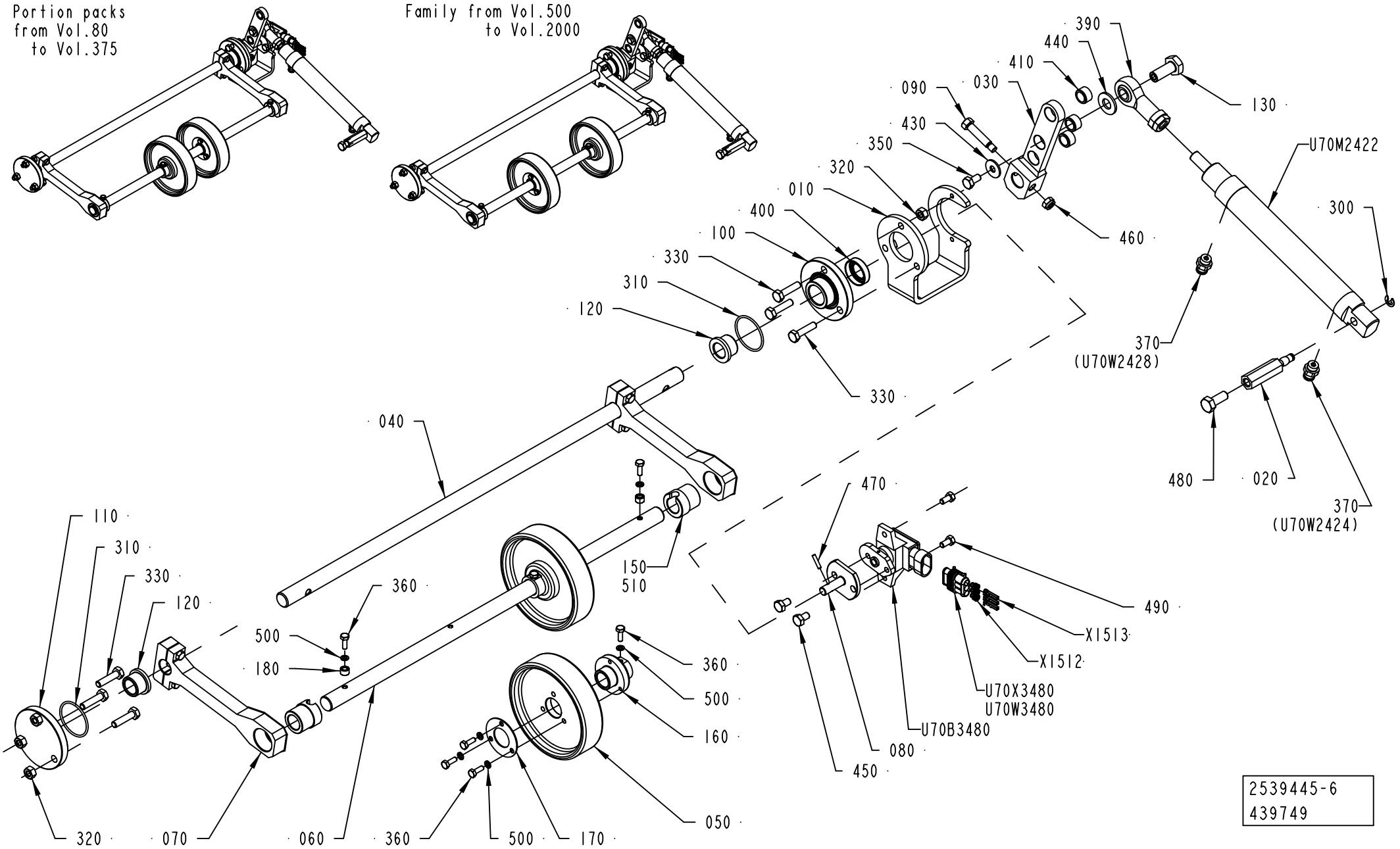
Portion packs
from Vol.80
to Vol.375
Family from Vol.500
to Vol.2000
390
440
410
030
090
430
350
320
010
400
100
330
310
120
130
U70M2422
300
460
370
(U70W2428)
330
040
110
310
330
120
360
500
180
150
510
470
490
X1513
X1512
U70X3480
U70W3480
U70B3480
080
450
480
020
370
(U70W2424)
360
500
160
050
320
070
060
360
500
170
2539445-6
439749

ECM: 441079 - 20100701
Group number: 2539445-0400
Assembly Drawing: 2539445-6_1_AC

Pos	Part No	UN	Qty	Description	Page No
-					
010	2758083-0000		1	SUPPORT	
020	2658077-0000		1	SHAFT	
030	2758082-0000		1	LEVER	
040	2691184-0000		1	SHAFT	
050	2940298-0000		2	WHEEL	
060	2997955-0000		1	SHAFT	
070	2997954-0000		2	LEVER	
080	2691183-0000		1	FLANGED SHAFT	
090	2653607-0000		1	SCREW	
100	1549548-0000		1	FLANGE	
110	1549545-0000		1	FLANGE	
120	1511512-0000		2	BEARING BUSHING	
130	2611009-0000		1	SHAFT	
150	2968253-0000		2	BUSHING	
160	2940301-0000		2	HUB	
170	2940302-0000		2	RING	
180	2968254-0000		2	LOCK WASHER	
300	315755-0107		1	RETAINING RING SHAFT DIN 6799 5 SS	
310	315205-0715		2	O-RING 33,05X1,78 MM	
320	312605-0316		6	HEXAGON NUT, M6M M6 A280	
330	312105-0372		6	SCREW M6S ISO 4017 M6X25 A480	
350	312105-0366		1	SCREW M6S ISO 4017 M6X12 A480	
360	312105-0291		10	SCREW M6S ISO 4017 M4X12 A470	
370	342722-0202		2	PIPE COUPLING 1/8" D=6MM	
390	90459-1018		1	ROD END, BALL JOINT EYE M10X1,25	
400	90091-0429		1	SEALING RING, VARILIP 15X26X7 MM	
410	90459-0805		3	BUSHING, IGLIDUR A200 10X14X8	
430	90005-0060		1	WASHER PLAIN, RBS 6,4/M6)/18,H=1,5	
440	315105-0173		1	WASHER BRB 10,5X22 RFR	
450	312105-0364		2	SCREW M6S ISO 4017 M6X10 A480	
460	312812-0316		1	HEXAGON NUT, NY-LOCK M6 A480	
470	311103-0235		1	PARALLEL PIN ISO 2338 3M6X14 A1	
480	312105-0451		1	SCREW M6S ISO 4017 M8X20 A480	
490	312105-0325		2	SCREW M6S ISO 4017 M5X10 A480	
500	315402-0136		10	LOCK WASHER FBB 4,1	
510	90296-0091		1	LUBRICATION GREASE	
U70B3480	90459-3682		1	ROTARY POSITION SENSOR RPNS090AA1B11A	
U70M2422	90600-0805		1	DOUBLE ACTING, MINI-ISO, CYL. 25-62 MM	
U70W3480	90220-0165	MM	1700	SCR. CABLE 5X0,34MM2	
U70X3480	90459-3709		1	CONNECTOR 3-POLE AMP 282087-1	
X1512	90459-4077		3	WIRE SEAL , AMP 281934	
X1513	90459-4079		3	MINI MIC SRS, AMP 183035-1	

Machine Type	Group Description	Used-In	Group Number	Page No

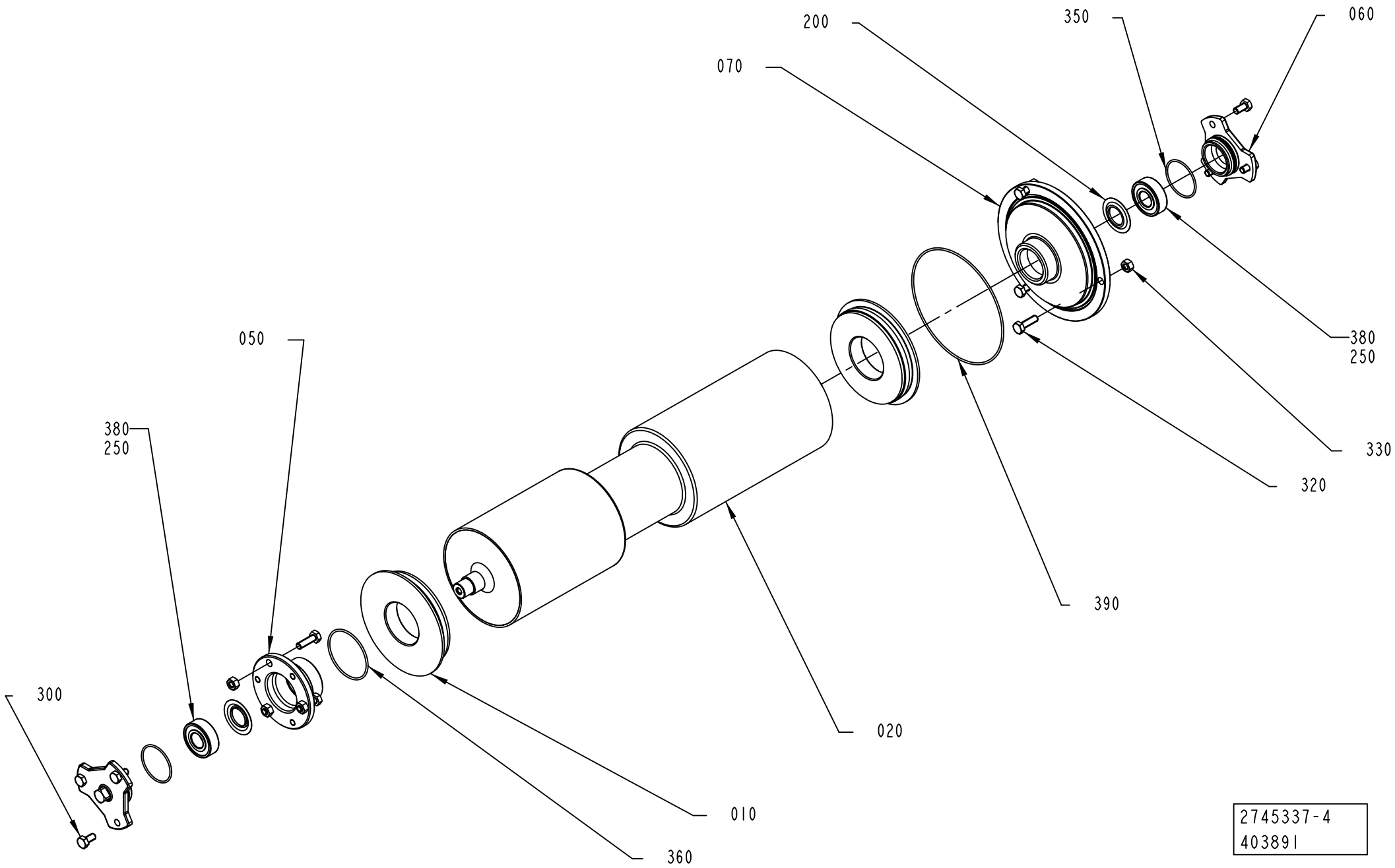
200
350
060
070
380
250
330
320
390
050
380
250
300
020
010
360
2745337-4
403891

ECM: 438002 - 20100701
Group number: 2745337-0200
Assembly Drawing: 2745337-4_1_AA

Pos	Part No	UN	Qty	Description	Page No
TBA 1000S LIGHTCAP 24 (See drawing on page: 1-14)					
010	2725564-0000		2	WHEEL	
020	3043232-0000		1	BENDING ROLLER	
TBA 1000S STDA7, TBA 1000B STDA7 (See drawing on page: 1-14)					
010	1498783-0000		2	WHEEL	
020	3043255-0000		1	BENDING ROLLER	
Common Parts					
050	3042672-0000		1	FLANGE	
060	2951058-0000		2	LID	
070	3042662-0000		1	FLANGE	
200	90214-0303		2	SEALING RING, 18,6X35X2 MM	
250	90296-0091		1	LUBRICATION GREASE	
300	312105-0366		6	SCREW M6S ISO 4017 M6X12 A480	
320	312105-0370		6	SCREW M6S ISO 4017 M6X20 A480	
330	312605-0316		6	HEXAGON NUT, M6M M6 A280	
350	315204-0123		2	O-RING 35,1X1,6 MM	
360	315205-0804		1	O-RING 47,35X1,78 MM	
380	90458-1704		2	BALL BEARING 15/35X11	
390	90459-1627		1	O-RING 114,02X1,78 MM	

Pos	Part No	UN	Qty	Description	Page No

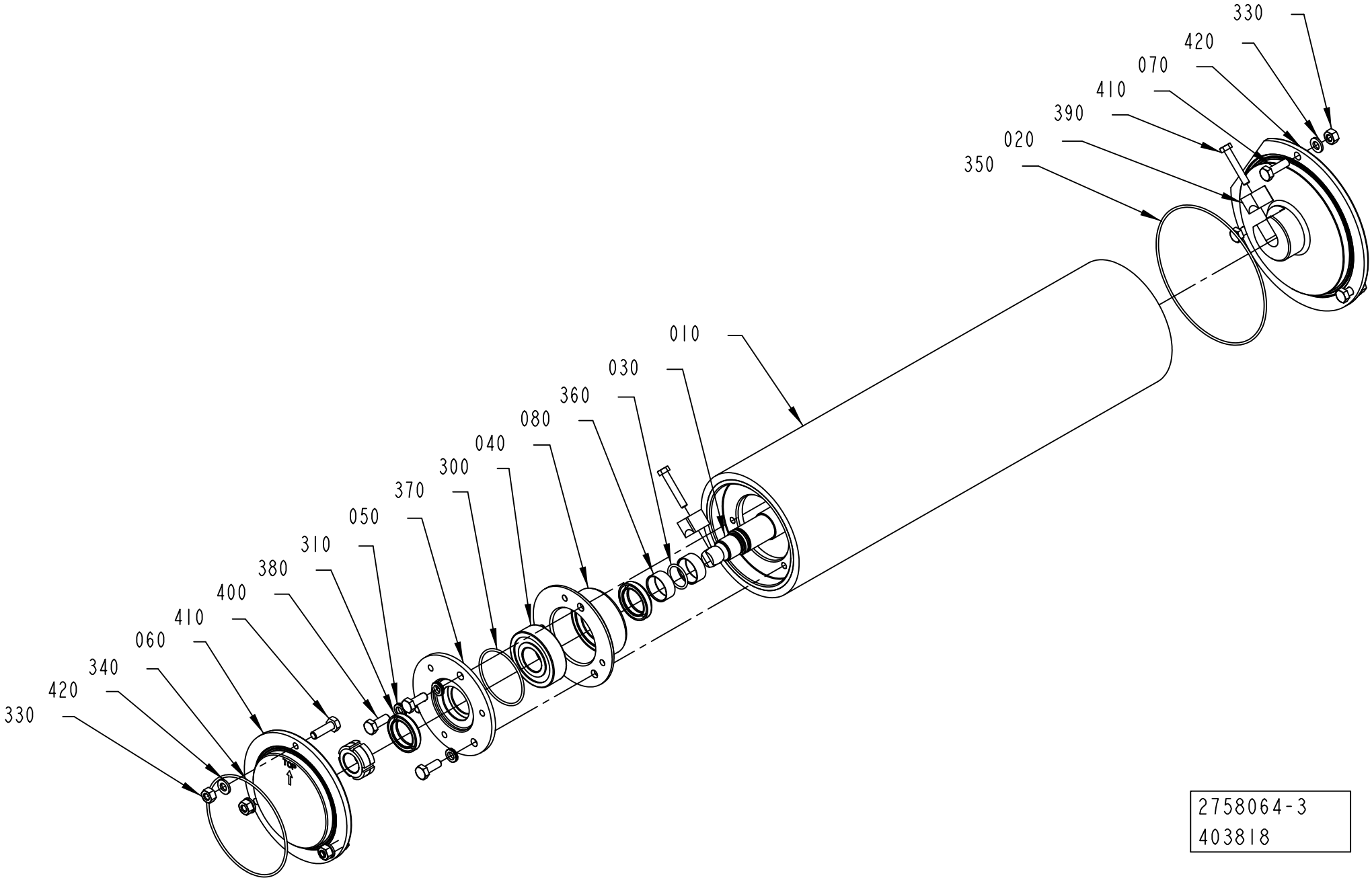

2758064-3
403818

ECM: 404242 - 20091001
Group number: 2758064-0200
Assembly Drawing: 2758064-3_1_AA

Pos	Part No	UN	Qty	Description	Page No
-					
010	3004042-0000		1	ROLLER	
020	2931909-0000		2	CLAMPING PIECE	
030	3004047-0000		1	SHAFT	
040	3004046-0000		2	BEARING HOUSING	
050	3004045-0000		2	LID	
060	3020530-0000		1	FLANGE	
070	3020531-0000		1	FLANGE	
080	3004044-0000		4	BUSHING	
300	90600-3852		2	BALL BEARING, 20X47X14 MM	
310	90062-0061		6	LOCK WASHER NORD-LOCK,6,5/10,8, T=2,2	
320	90600-3853		2	LOCK NUT MISUMI, HLBS17	
330	312605-0316		6	HEXAGON NUT, M6M M6 A280	
340	90242-0270		1	O-RING 82,27X1,78 MM	
350	90459-1627		1	O-RING 114,02X1,78 MM	
360	315205-0705		2	O-RING 17,17X1,78 MM	
370	315205-0803		2	O-RING 44,17X1,78 MM	
380	90600-6017		4	RADIAL SEAL 21,8X30X6 MM DUST LIP	
390	312105-0335		2	SCREW M6S ISO 4014 M5X30 A480	
400	312105-0368		6	SCREW M6S ISO 4017 M6X16 A480	
410	312105-0370		6	SCREW M6S ISO 4017 M6X20 A480	
420	315105-0153		6	WASHER BRB 6,4X12 RFR	
430	90601-3167		1	GREASE, BARRIERTA L55/2 NSF H1, 100G	

Pos	Part No	UN	Qty	Description	Page No

BENDING ROLLER

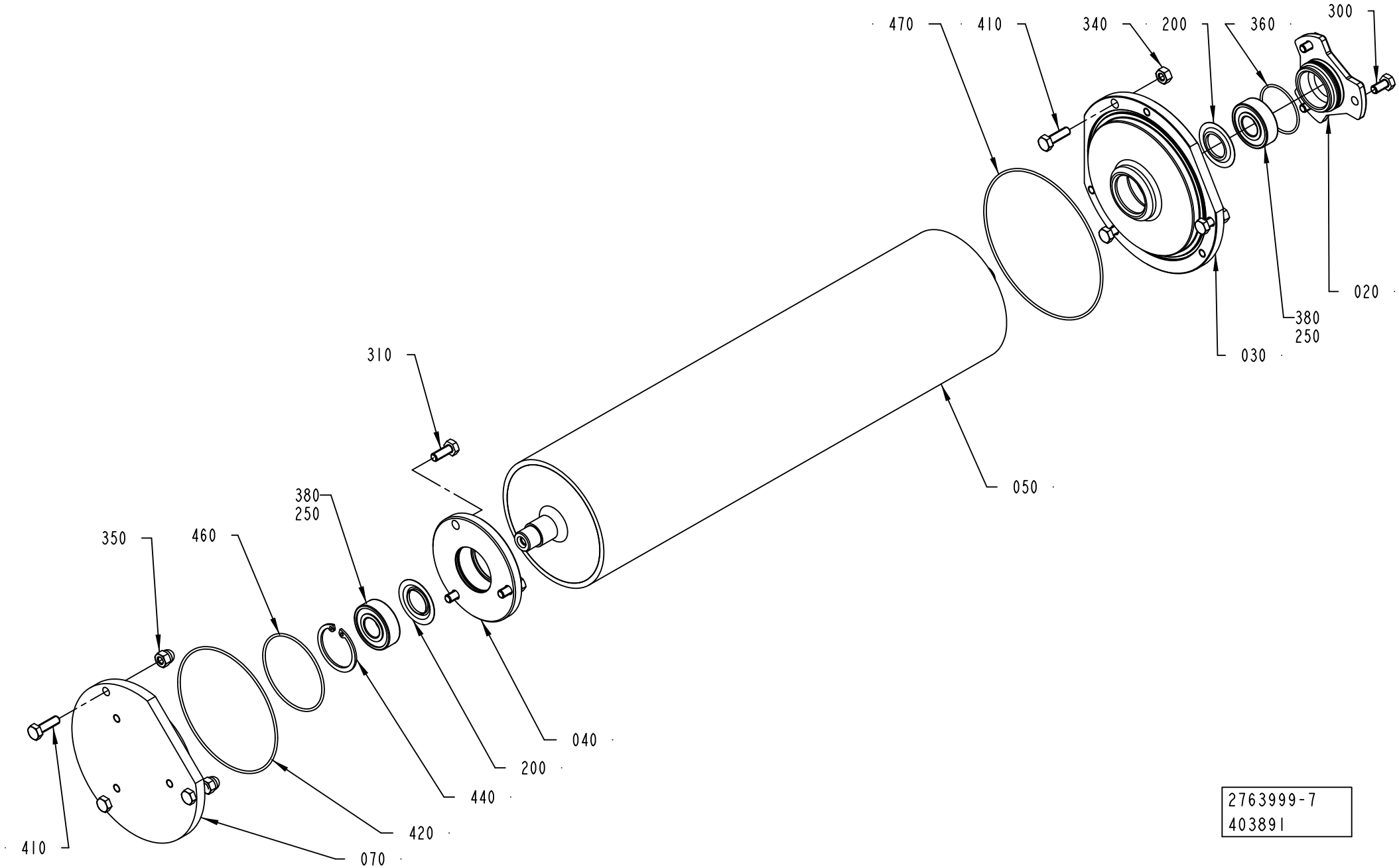

2763999-7
403891

ECM: 450576 - 20101001
Group number: 2763999-0200
Assembly Drawing: 2763999-7_1_AA

Pos	Part No	UN	Qty	Description	Page No
A3/SPEED NODIMC					
020	2951058-0000		1	LID	
030	3042311-0000		1	FLANGE	
040	3042657-0000		1	FLANGE	
050	3042562-0000		1	BENDING ROLLER	
070	2783106-0000		1	FLANGE	
300	312105-0366		3	SCREW M6S ISO 4017 M6X12 A480	
340	312605-0316		3	HEXAGON NUT, M6M M6 A280	
360	315204-0123		1	O-RING 35,1X1,6 MM	
410	312105-0370		6	SCREW M6S ISO 4017 M6X20 A480	
420	315205-0807		1	O-RING 94,97X1,78 MM	
440	315753-0124		1	RETAINING RING FOR BORE DIN 472 35 SS	
460	90459-1189		1	O-RING 56,87X1,78 MM	
470	90459-1627		1	O-RING 114,02X1,78 MM	
Common Parts					
200	90214-0303		2	SEALING RING, 18,6X35X2 MM	
250	90296-0091		1	LUBRICATION GREASE	
310	312105-0368		3	SCREW M6S ISO 4017 M6X16 A480	
350	312705-0316		3	HEX. DOMED CAP MHM-6 M6 A280	
380	90458-1704		2	BALL BEARING 15/35X11	

Pos	Part No	UN	Qty	Description	Page No

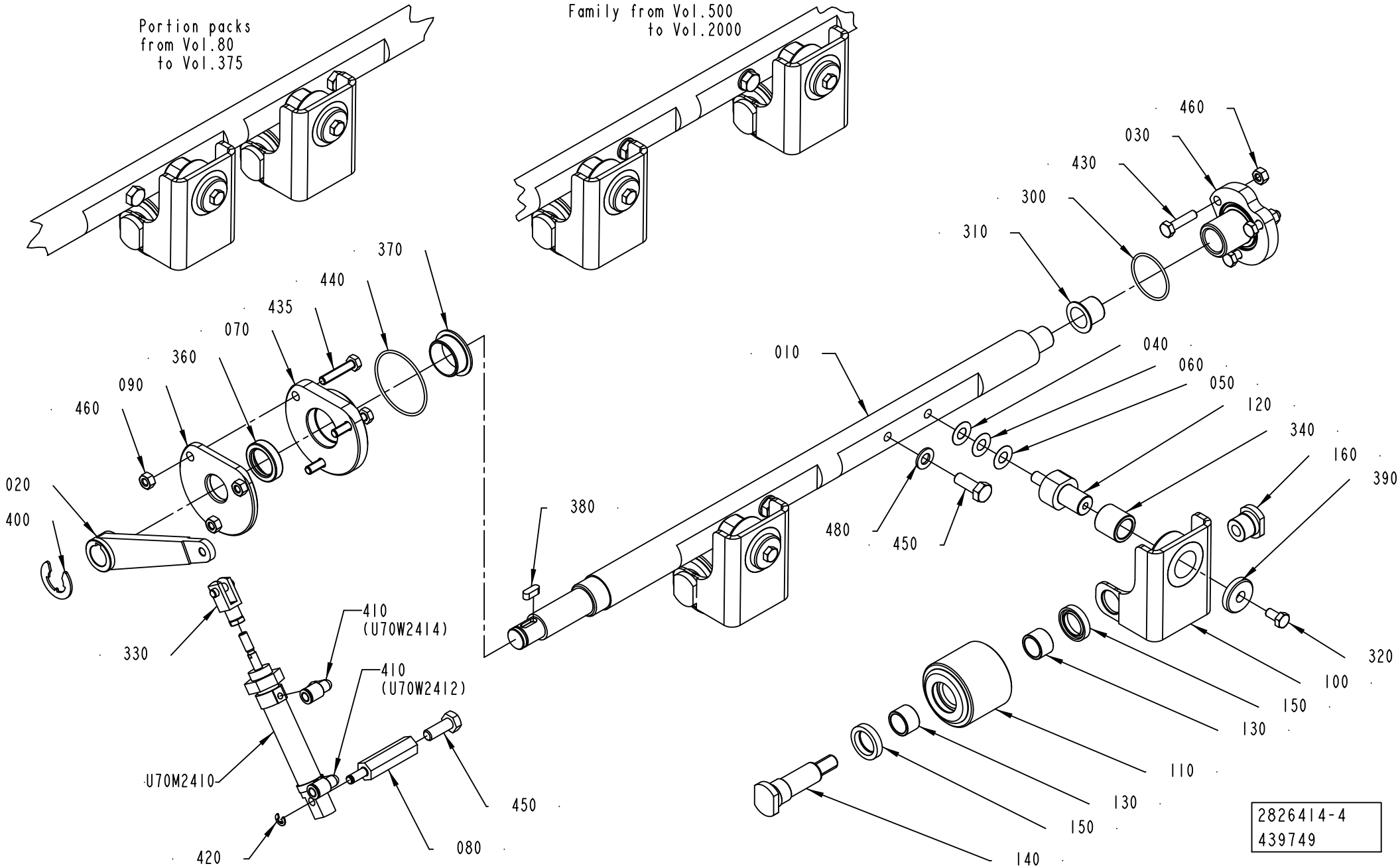
Portion packs
from Vol.80
to Vol.375
Family from Vol.500
to Vol.2000
460
030
430
300
310
370
440
435
070
360
090
460
020
400
010
040
060
050
120
340
160
390
380
480
450
410
(U70W2414)
410
(U70W2412)
330
U70M2410
420
080
450
320
100
150
130
110
130
150
140
2826414-4
439749

ECM: 441080 - 20100701
Group number: 2826414-0400
Assembly Drawing: 2826414-4_1_AD

Pos	Part No	UN	Qty	Description	Page No
-					
010	2783091-0000		1	ROD	
020	2910374-0000		1	LEVER	
030	2878384-0000		1	LID	
040	2033-0008		2	WASHER	
050	2033-0007		2	WASHER	
060	2033-0011		2	WASHER	
070	2878566-0000		1	FLANGE	
080	2783089-0000		1	SHAFT	
090	2878567-0000		1	LID	
100	2923889-0000		2	BRACKET	
110	3013521-0000		2	ROLLER	
120	2974363-0000		2	PIN	
130	90600-8806		4	BUSHING, 15X19X12 MM	
140	2974358-0000		2	SHAFT	
150	90600-5539		4	BEARING SEAL 17X26X5	
160	2910376-0000		2	NUT	
300	315205-0715		1	O-RING 33,05X1,78 MM	
310	321158-0221		1	FLANGE BUSHING, IGLIDUR J 16X18X17	
320	312105-0366		2	SCREW M6S ISO 4017 M6X12 A480	
330	90450-0725		1	ROD END, CLEVIS WITH AXLE M6	
340	90600-3677		2	BUSHING, 15X21X20 MM	
360	90458-0639		1	SEALING RING, VARILIP 20X30X7 MM	
370	90459-1058		1	FLANGE BUSHING, IGLIDUR G 25X28X11,5	
380	315705-0198		1	PARALLEL KEY W. ROUND ENDS 5X5X14 MM	
390	315125-0165		2	WASHER TBRSB 8,4X26X5 A4	
400	315755-0113		1	RETAINING RING SHAFT DIN 6799 15 SS	
410	350002-0002		2	PUSH-IN L-FITTING QSL-F-M5-6	
420	315755-0106		1	RETAINING RING SHAFT DIN 6799 4 SS	
430	312105-0372		3	SCREW M6S ISO 4017 M6X25 A480	
435	312109-0374		3	SCREW M6S ISO 4017 M6X30 A480	
440	315205-0804		1	O-RING 47,35X1,78 MM	
450	312105-0452		3	SCREW M6S ISO 4017 M8X22 A480	
460	312605-0316		6	HEXAGON NUT, M6M M6 A280	
470	90296-0091		1	LUBRICATION GREASE	
480	315105-0165		2	WASHER BRB 8,4X16 RFR	
U70M2410	90457-0871		1	DOUBLE ACTING, MINI-ISO, CYL. 16-25	

Pos	Part No	UN	Qty	Description	Page No

Machine Type	Group Description	Used-In	Group Number	Page No

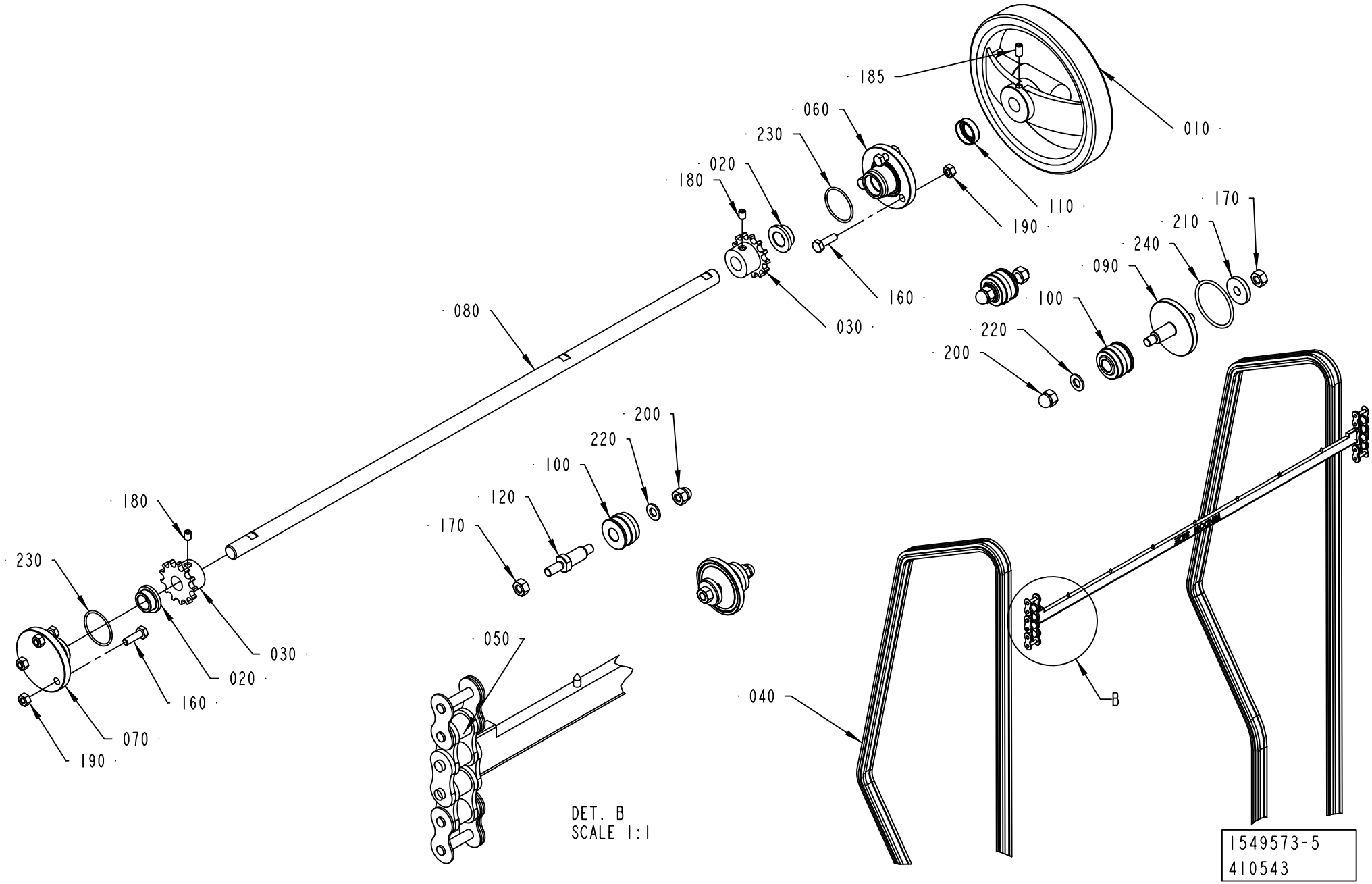
185
010
060
230
020
180
110
190
170
210
240
090
160
100
030
080
220
200
200
220
100
120
170
180
230
030
020
160
070
190
050
040
B
DET. B
SCALE 1:1
1549573-5
410543

ECM: 450573 - 20101001
Group number: 1549573-0200
Assembly Drawing: 1549573-5_1_AD

Pos	Part No	UN	Qty	Description	Page No
A3/SPEED					
040	2957435-0000		2	CHAIN	
090	2874673-0000		2	SHAFT	
100	2874674-0000		4	WHEEL	
120	2874680-0000		2	SHAFT	
170	312605-0318		4	HEXAGON NUT, M6M M8 A280	
200	312705-0318		4	NUT HEX. DOMED CAP MHM-6 M8 A280	
220	315105-0165		4	WASHER BRB 8,4X16 RFR	
Common Parts					
010	3060435-0000		1	SHIFTER HANDLE	
020	279008-0000		2	BUSHING	
030	1038464-0000		2	SPROCKET	
050	3020121-0000		1	CARRIER	
060	1549982-0000		1	FLANGE	
070	1549981-0000		1	FLANGE	
080	1523190-0000		1	SHAFT	
110	90459-1148		1	SEALING RING, VARILIP 14X24X7 MM	
160	312105-0370		6	SCREW M6S ISO 4017 M6X20 A480	
180	312318-0362		2	SCREW ISO4029 M6X8 A4	
185	312318-0366		1	SCREW ISO4029 M6X12 A4	
190	312605-0316		6	HEXAGON NUT, M6M M6 A280	
210	315125-0165		2	WASHER TBRSB 8,4X26X5 A4	
230	315205-0714		2	O-RING 31,47X1,78 MM	
240	315205-0731		2	O-RING 42,52X2,62 MM	

Pos	Part No	UN	Qty	Description	Page No

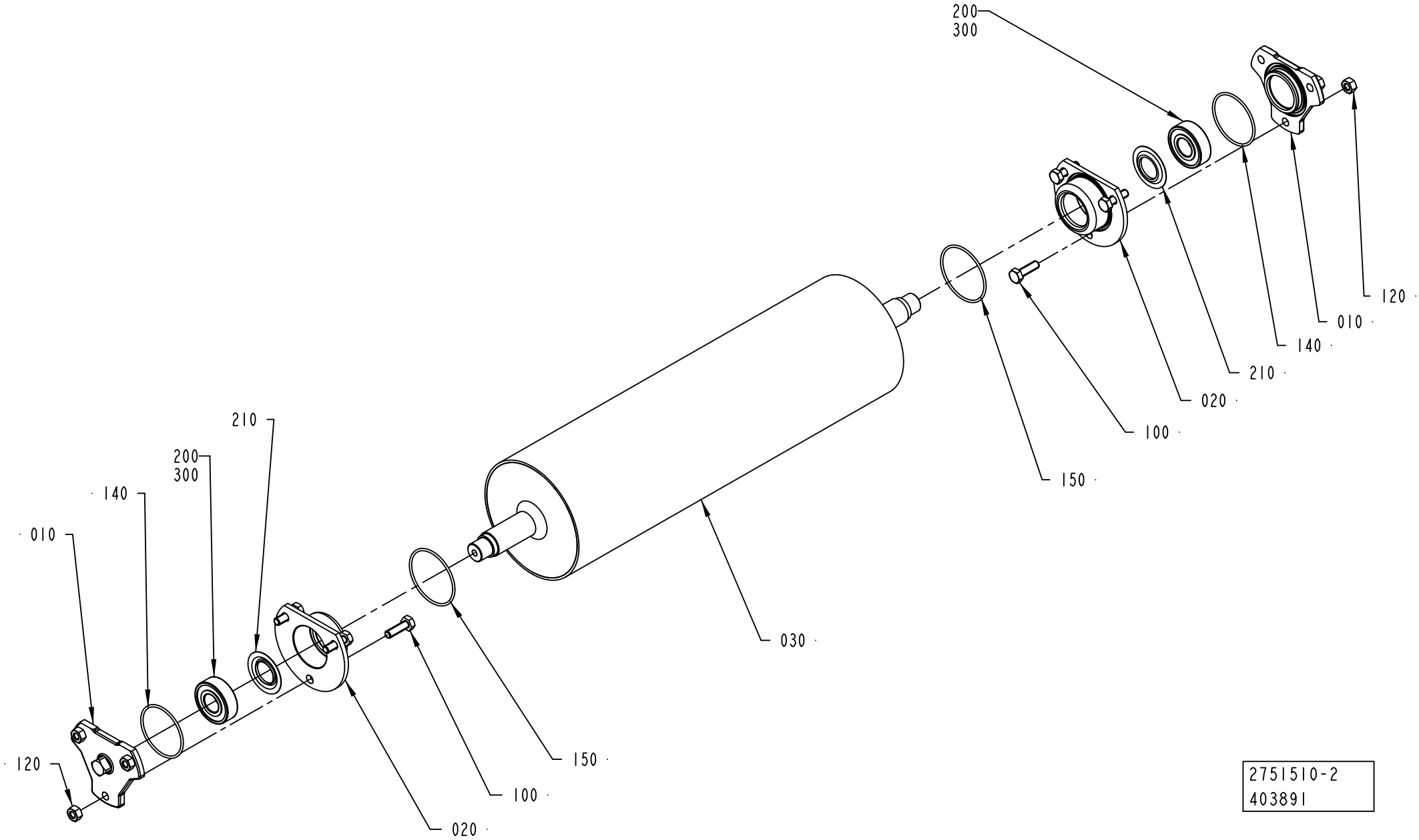
200
300
120
010
140
210
020
100
150
030
210
200
300
140
010
120
150
100
020
2751510-2
403891

ECM: 403891 - 20091001
Group number: 2751510-0200
Assembly Drawing: 2751510-2_1_AA

Pos	Part No	UN	Qty	Description	Page No
-					
010	3042012-0000		2	LID	
020	3041977-0000		2	BEARING SEAT	
030	3042011-0000		1	BENDING ROLLER	
100	312105-0370		6	SCREW M6S ISO 4017 M6X20 A480	
120	312605-0316		6	HEXAGON NUT, M6M M6 A280	
140	315205-0802		2	O-RING 41,00X1,78 MM	
150	315205-0803		2	O-RING 44,17X1,78 MM	
200	90458-1704		2	BALL BEARING 15/35X11	
210	90214-0303		2	SEALING RING, 18,6X35X2 MM	
300	90296-0091		1	LUBRICATION GREASE	

Pos	Part No	UN	Qty	Description	Page No

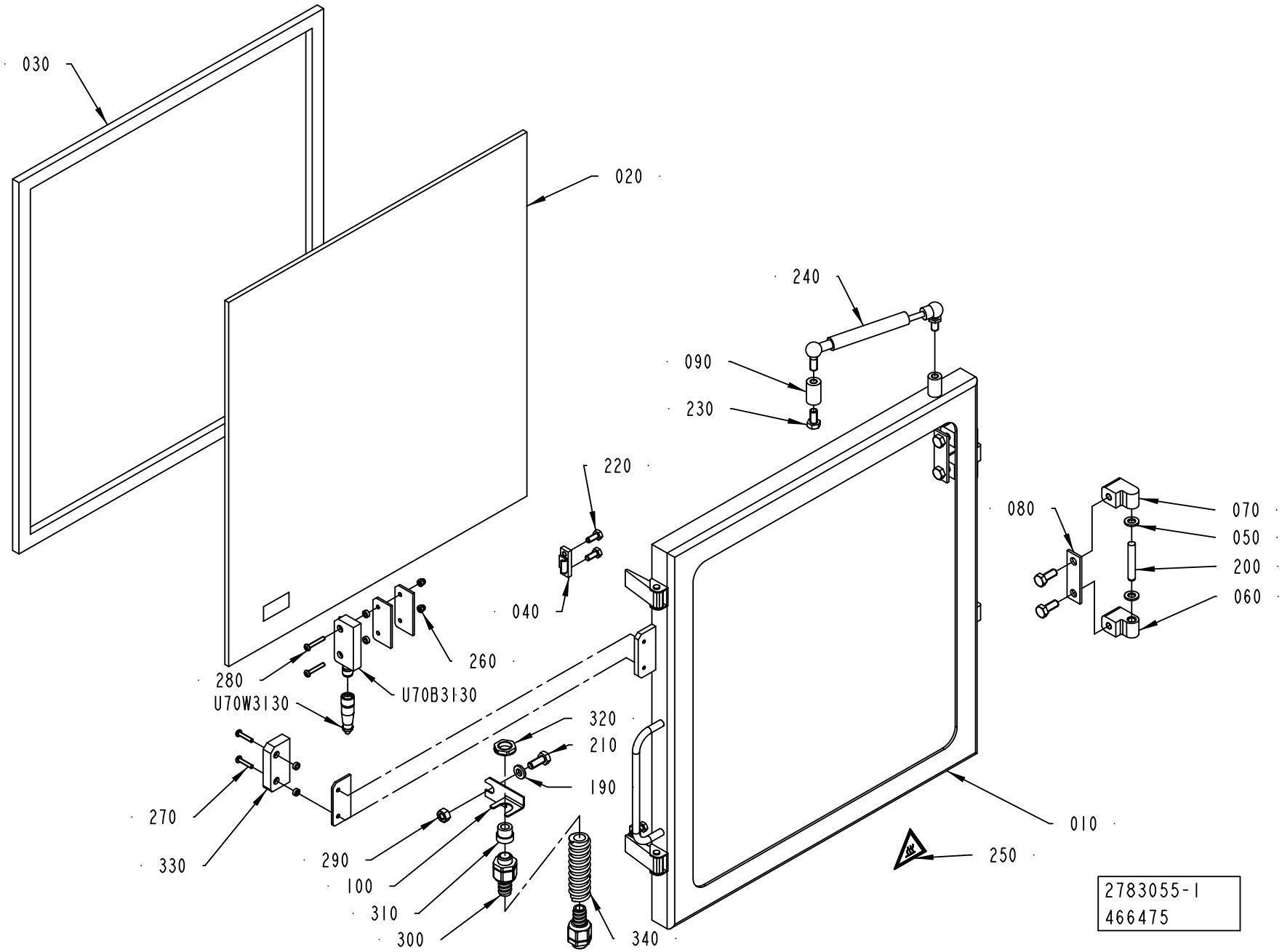
030
020
240
090
230
220
080
070
050
200
060
040
260
280
U70W3130
U70B3130
320
210
190
270
330
290
100
310
300
340
010
250
2783055-1
466475

ECM: 470266 - 20101003
Group number: 2783055-0100
Assembly Drawing: 2783055-1_1_AD

Pos	Part No	UN	Qty	Description	Page No
ANSI					
250	90459-7458		1	WARNING SIGN ANSI (H), HOT SURFACE	
ISO					
250	359705-0007		1	WARNING SIGN ISO, HOT SURFACE	
Common Parts					
010	2783054-0000		1	WINDOW FRAME	
020	2783094-0000		1	GLASS PANE	
030	2783093-0000		1	GASKET	
040	271860-0000		2	CLAMP BLOCK	
050	441739-0000		4	WASHER	
060	1041979-0000		2	HINGE FLANGE	
070	1041978-0000		2	HINGE FLANGE	
080	441737-0000		2	WASHER	
090	1037089-0000		1	SPACER	
100	1036610-0000		1	BRACKET	
190	315115-0165		1	WASHER PLAIN, TBRB 8,4/16 H=3	
200	311103-0413		2	PARALLEL PIN ISO 2338 8M6X50 A1	
210	312105-0451		5	SCREW M6S ISO 4017 M8X20 A480	
220	312105-0368		4	SCREW M6S ISO 4017 M6X16 A480	
230	312105-0449		1	SCREW M6S ISO 4017 M8X16 A480	
240	90347-0039		1	DAMPER	
260	312705-0312		2	NUT HEX. DOMED CAP MHM-6 M4 A280	
270	90459-4164		2	SAFETY SCREW SM4X20, 20-053-42	
280	90459-4165		2	SAFETY SCREW SM4X25, 20-053-43	
290	312605-0318		1	HEXAGON NUT, M6M M8 A280	
300	90458-0427		2	HOSE GLAND W/O INSERT M16 EXTENDED	
310	353249-0009		1	INSERT, SINGLE HOLE, EK 152/9	
320	90458-0322		1	UT, M16X1,5	
330	90458-2794		1	SENSOR, EVA 20-046-00	
340	90152-0050	MM	2200	SPIRAL CONDUIT, 20X13, UL 1313	
U70B3130	90459-4142		1	SENSOR, ADAM M12 20-051-00	
U70W3130	90459-4252		1	CABLE M12-C101, 20-056-10	

Pos	Part No	UN	Qty	Description	Page No

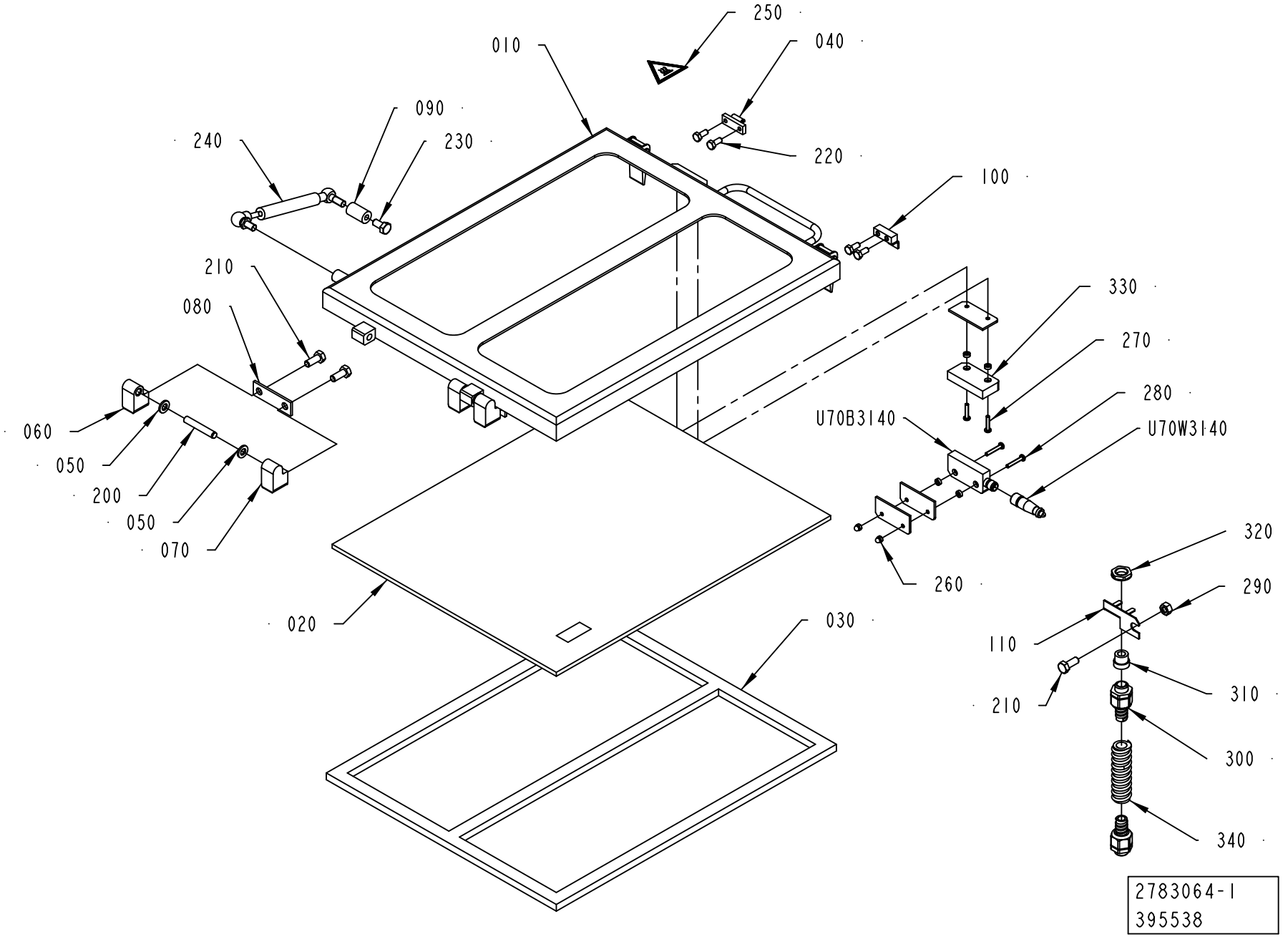
250
010
040
090
240
230
220
100
210
080
330
270
280
U70B3140
U70W3140
060
050
200
050
070
260
320
290
020
030
110
210
310
300
340
2783064-1
395538

ECM: 461403 - 20101002
Group number: 2783064-0100
Assembly Drawing: 2783064-1_1_AC

Pos	Part No	UN	Qty	Description	Page No
ANSI					
250	90459-7458		1	WARNING SIGN ANSI (H), HOT SURFACE	
ISO					
250	359705-0007		1	WARNING SIGN ISO, HOT SURFACE	
Common Parts					
010	2783065-0000		1	WINDOW FRAME	
020	2783067-0000		1	GLASS PANE	
030	2783066-0000		1	GASKET	
040	271860-0000		1	CLAMP BLOCK	
050	441739-0000		4	WASHER	
060	1041979-0000		2	HINGE FLANGE	
070	1041978-0000		2	HINGE FLANGE	
080	441737-0000		2	WASHER	
090	1037089-0000		1	SPACER	
100	2783068-0000		1	CLAMP BLOCK	
110	1036610-0000		1	BRACKET	
200	311103-0413		2	PARALLEL PIN ISO 2338 8M6X50 A1	
210	312105-0451		5	SCREW M6S ISO 4017 M8X20 A480	
220	312105-0368		4	SCREW M6S ISO 4017 M6X16 A480	
230	312105-0449		1	SCREW M6S ISO 4017 M8X16 A480	
240	90347-0039		1	DAMPER	
260	312705-0312		2	NUT HEX. DOMED CAP MHM-6 M4 A280	
270	90459-4164		2	SAFETY SCREW SM4X20, 20-053-42	
280	90459-4165		2	SAFETY SCREW SM4X25, 20-053-43	
290	312605-0318		1	HEXAGON NUT, M6M M8 A280	
300	90458-0427		2	HOSE GLAND W/O INSERT M16 EXTENDED	
310	353249-0009		1	INSERT, SINGLE HOLE, EK 152/9	
320	90458-0322		1	UT, M16X1,5	
330	90458-2794		1	SENSOR, EVA 20-046-00	
340	90152-0050	MM	1800	SPIRAL CONDUIT, 20X13, UL 1313	
U70B3140	90459-4142		1	SENSOR, ADAM M12 20-051-00	
U70W3140	90459-4252		1	CABLE M12-C101, 20-056-10	

Pos	Part No	UN	Qty	Description	Page No

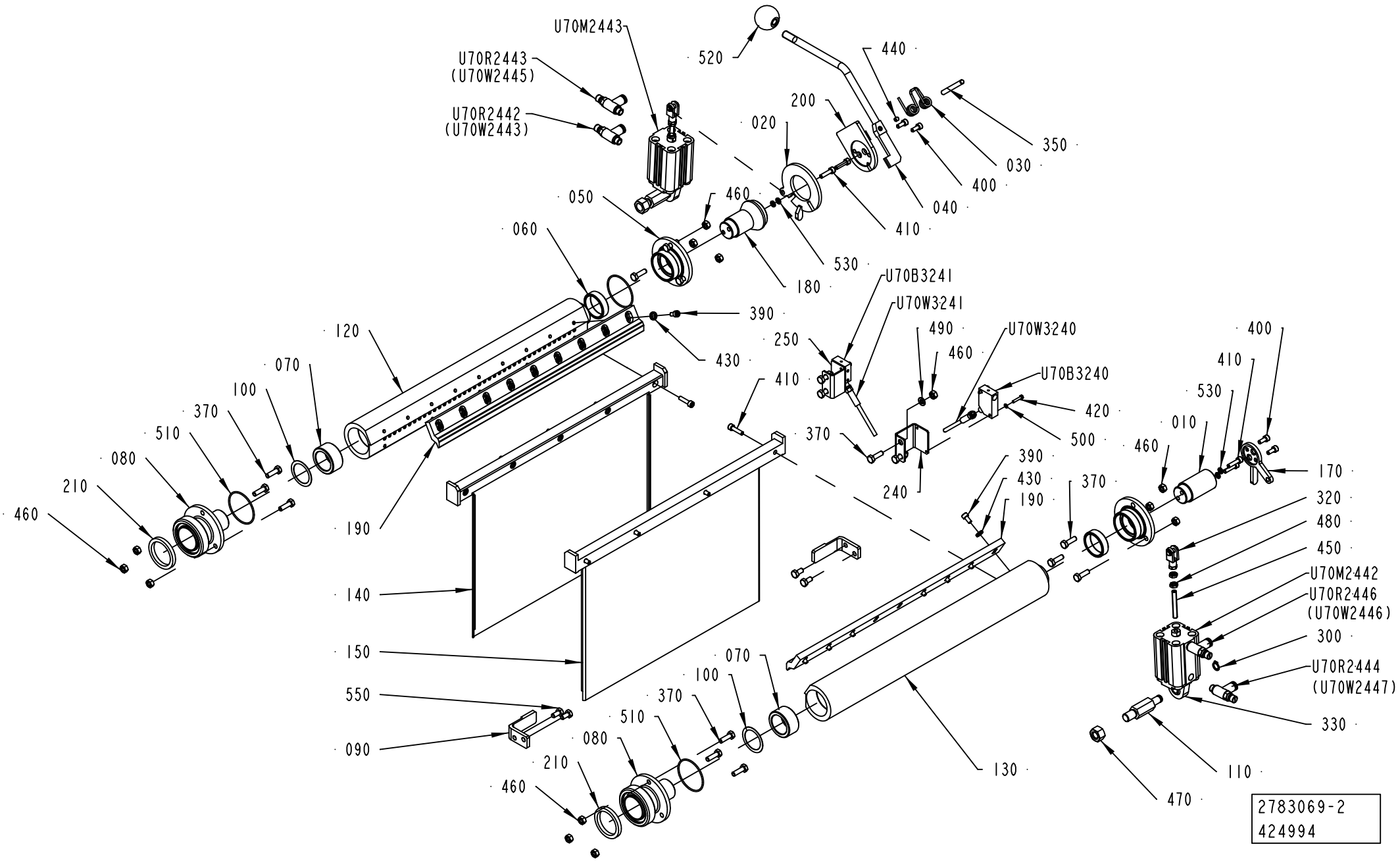
U70M2443
U70R2443
(U70W2445)
U70R2442
(U70W2443)
520
440
200
020
350
030
400
040
410
050
460
060
530
180
U70B3241
U70W3241
390
120
250
490
460
U70W3240
400
410
430
070
100
370
510
080
210
460
410
U70B3240
420
530
010
370
500
460
170
390
430
190
370
240
320
480
450
U70M2442
U70R2446
(U70W2446)
300
U70R2444
(U70W2447)
330
190
140
150
070
100
370
510
080
210
460
550
090
130
110
470
2783069-2
424994

ECM: 429449 - 20100401
Group number: 2783069-0100
Assembly Drawing: 2783069-2_1_AG

Pos	Part No	UN	Qty	Description	Page No
-					
010	2777971-0000		1	SHAFT	
020	2894598-0000		1	ARM	
030	276360-0000		1	SPRING	
040	3050623-0000		1	CATCH LEVER	
050	1519158-0000		2	LID	
060	1519159-0000		2	BUSHING	
070	1519166-0000		2	BUSHING	
080	1532231-0000		2	CONNECTION	
090	2833158-0000		2	BRACKET	
100	2532915-0000		2	WASHER	
110	1498132-0000		2	SHAFT	
120	2679554-0000		1	AIR DISTRIBUTOR	
130	2679555-0000		1	AIR DISTRIBUTOR	
140	2783103-0000		1	AIR GUIDE	
150	2783104-0000		1	AIR GUIDE	
170	2894599-0000		1	ARM	
180	2679560-0000		1	SHAFT	
190	2509681-0000		2	RAIL	
200	2695434-0000		1	HOLDER	
210	12242-0003		2	GASKET 48X38X5,5	
240	2894600-0000		1	SUPPORT	
250	2894601-0000		1	SUPPORT	
300	90141-0016		2	RETAINING RING FOR SHAFT DIN 471 10 SS	
320	90239-0489		2	ROD END, CLEVIS WITH AXLE M6X1,25	
330	90459-2650		2	SWIVEL FLANGE 32	
350	311103-0367		1	PARALLEL PIN ISO 2338 6M6X55 A1	
370	312105-0370		16	SCREW M6S ISO 4017 M6X20 A480	
390	312115-0325		16	SCREW ISO4762 M5X10 A4 80	
400	312115-0327		4	SCREW ISO4762 M5X12 A4 80	
410	312115-0331		13	SCREW ISO4762 M5X20 A4 80	
420	312125-0228		4	SCREW ISO 1207 M3X16 A4	
430	90062-0061		16	LOCK WASHER NORD-LOCK,6,5/10,8, T=2,2	
440	312318-0320		1	SCREW ISO4029 M5X5 A4	
450	90459-1728		2	SCREW ISO4029 M6X45 A4	
460	312605-0316		16	HEXAGON NUT, M6M M6 A280	
470	312605-0322		2	HEXAGON NUT, M6M M12 A280	
480	312625-0316		4	HEXAGON THIN NUT, EN 24035 ML6M M6 A4	
490	315105-0153		4	WASHER BRB 6,4X12 RFR	
500	315105-0124		4	WASHER BRB 3,2X6 RFR	
510	315205-0804		4	O-RING 47,35X1,78 MM	
520	318800-0105		1	HANDLE,SPHERICAL KNOB,INT.THRE.,D.35-M10	
530	315402-0146		4	LOCK WASHER FBB 5,1	
550	312105-0366		4	SCREW M6S ISO 4017 M6X12 A480	
U70B3240	90459-2409		1	INDUCTIVE SENSOR IN5230	
U70B3241	90459-2409		1	INDUCTIVE SENSOR IN5230	
U70M2442	90457-1038		1	DOUBLE ACTING, COMPACT, 32-25	
U70M2443	90457-1038		1	DOUBLE ACTING, COMPACT, 32-25	
U70R2442	90459-3528		1	ONE WAY FLOW CONTROL G1/8", MANUAL	
U70R2443	90459-3528		1	ONE WAY FLOW CONTROL G1/8", MANUAL	
U70R2444	90459-3528		1	ONE WAY FLOW CONTROL G1/8", MANUAL	
U70R2446	90459-3528		1	ONE WAY FLOW CONTROL G1/8", MANUAL	
U70W3240	351301-0100		1	ACTUATOR/SENSOR CABLE PRKMV 3-06/10M	
U70W3241	351301-0100		1	ACTUATOR/SENSOR CABLE PRKMV 3-06/10M	

Machine Type	Group Description	Used-In	Group Number	Page No

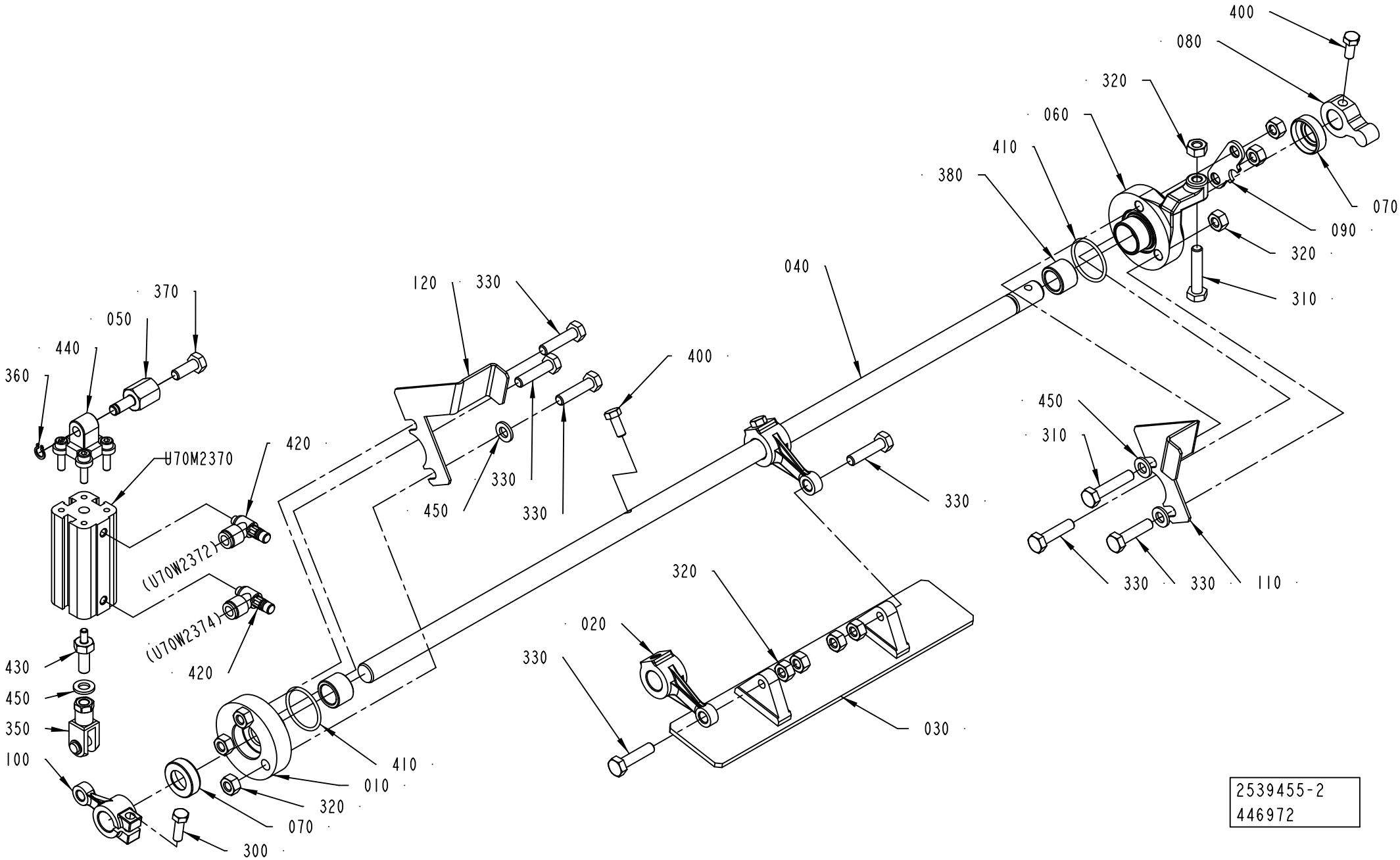
400
080
320
060
410
380
070
090
320
310
040
120
330
370
050
440
360
400
450
310
U70M2370
420
330
330
330
(U70W2372)
(U70W2374)
320
020
330
420
430
450
350
100
410
010
320
070
300
030
330
330
110
2539455-2
446972

ECM: 450708 - 20101001
Group number: 2539455-0200
Assembly Drawing: 2539455-2_1_AE

Pos	Part No	UN	Qty	Description	Page No
A3/SPEED					
040	2745356-0000		1	SHAFT	
110	3060457-0000		1	BRACKET	
120	3060458-0000		1	BRACKET	
310	312109-0374		2	SCREW M6S ISO 4017 M6X30 A480	
330	312105-0372		7	SCREW M6S ISO 4017 M6X25 A480	
Common Parts					
010	2945036-0000		1	FLANGE	
020	2526842-0000		2	LINK	
030	2685303-0000		1	SHUTTER	
050	1523185-0000		1	AXLE PIN	
060	2945037-0000		1	FLANGE	
070	2541661-0000		2	LID	
080	1538163-0000		1	LEVER	
090	2526849-0000		1	PLATE	
100	2526820-0000		1	LINK	
300	312105-0329		1	SCREW M6S ISO 4017 M5X16 A480	
320	312605-0316		11	HEXAGON NUT, M6M M6 A280	
350	90239-0489		1	ROD END, CLEVIS WITH AXLE M6X1,25	
360	315751-0103		1	RETAINING RING FOR SHAFT DIN 471 6X 0.7C	
370	312105-0368		1	SCREW M6S ISO 4017 M6X16 A480	
380	2999045-0000		2	BUSHING	
400	312105-0327		3	SCREW M6S ISO 4017 M5X12 A480	
410	315205-0709		2	O-RING 23,52X1,78 MM	
420	90235-0844		2	THROTTLE CHECK VALVE M5, MANUAL, 6MM	
430	2986276-0000		1	AXLE PIN	
440	90600-3964		1	SWIVEL FLANGE 16	
450	315105-0153		5	WASHER BRB 6,4X12 RFR	
U70M2370	90600-5541		1	DOUBLE ACTING, COMPACT, CYL 16-25	

Pos	Part No	UN	Qty	Description	Page No

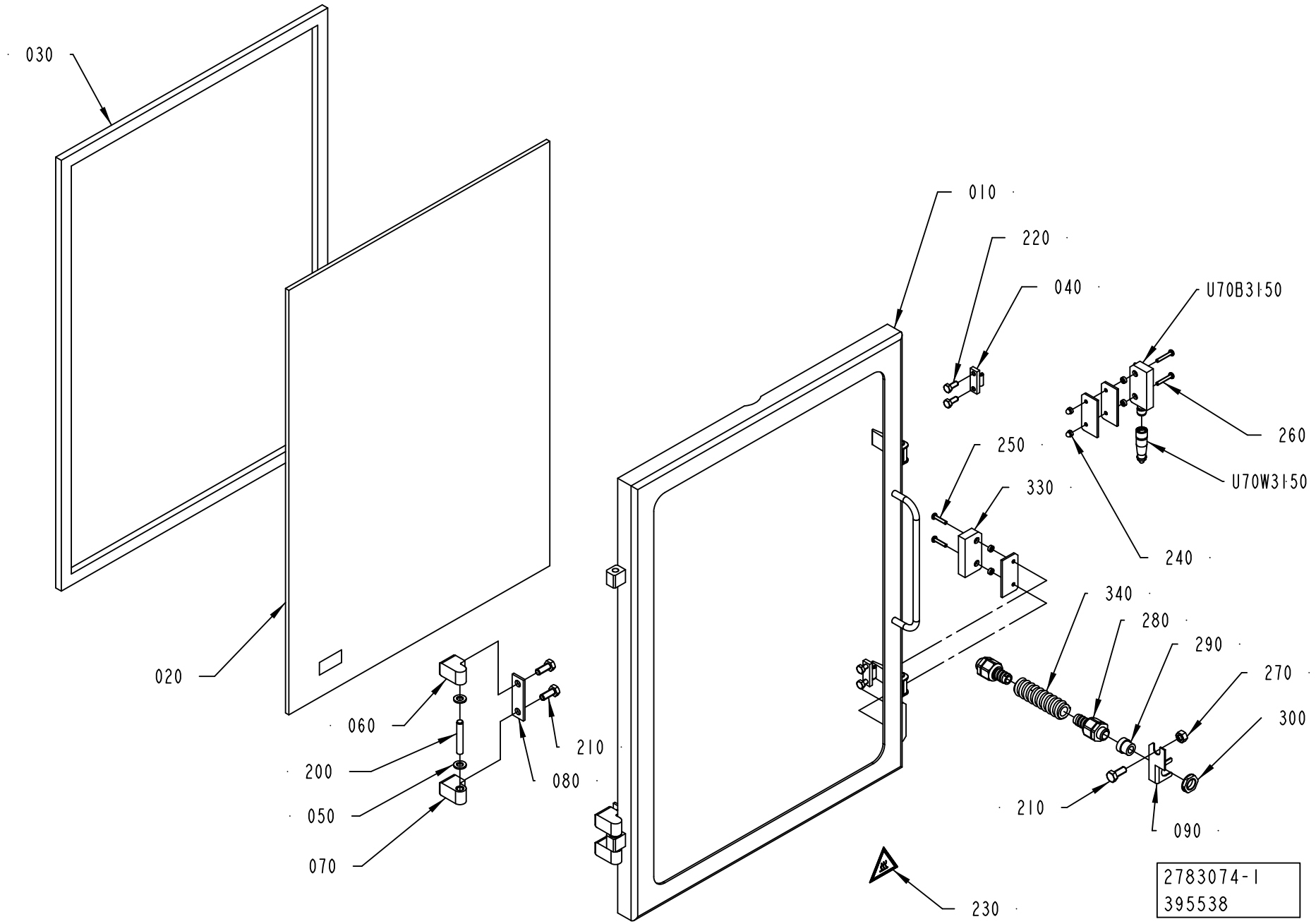
030
020
060
200
050
070
080
210
010
220
040
U70B3150
260
U70W3150
250
330
240
340
280
290
270
300
210
090
230
2783074-1
395538

ECM: 461404 - 20101002
Group number: 2783074-0100
Assembly Drawing: 2783074-1_1_AC

Pos	Part No	UN	Qty	Description	Page No
ANSI					
230	90459-7458		1	WARNING SIGN ANSI (H), HOT SURFACE	
ISO					
230	359705-0007		1	WARNING SIGN ISO, HOT SURFACE	
Common Parts					
010	2783075-0000		1	WINDOW FRAME	
020	2783077-0000		1	GLASS PANE	
030	2783076-0000		1	GASKET	
040	271860-0000		2	CLAMP BLOCK	
050	441739-0000		4	WASHER	
060	1041979-0000		2	HINGE FLANGE	
070	1041978-0000		2	HINGE FLANGE	
080	441737-0000		2	WASHER	
090	1036610-0000		1	BRACKET	
200	311103-0413		2	PARALLEL PIN ISO 2338 8M6X50 A1	
210	312105-0451		5	SCREW M6S ISO 4017 M8X20 A480	
220	312105-0368		4	SCREW M6S ISO 4017 M6X16 A480	
240	312705-0312		2	NUT HEX. DOMED CAP MHM-6 M4 A280	
250	90459-4164		2	SAFETY SCREW SM4X20, 20-053-42	
260	90459-4165		2	SAFETY SCREW SM4X25, 20-053-43	
270	312605-0318		1	HEXAGON NUT, M6M M8 A280	
280	90458-0427		2	HOSE GLAND W/O INSERT M16 EXTENDED	
290	353249-0009		1	INSERT, SINGLE HOLE, EK 152/9	
300	90458-0322		1	UT, M16X1,5	
330	90458-2794		1	SENSOR, EVA 20-046-00	
340	90152-0050	MM	1800	SPIRAL CONDUIT, 20X13, UL 1313	
U70B3150	90459-4142		1	SENSOR, ADAM M12 20-051-00	
U70W3150	90459-4252		1	CABLE M12-C101, 20-056-10	

Pos	Part No	UN	Qty	Description	Page No

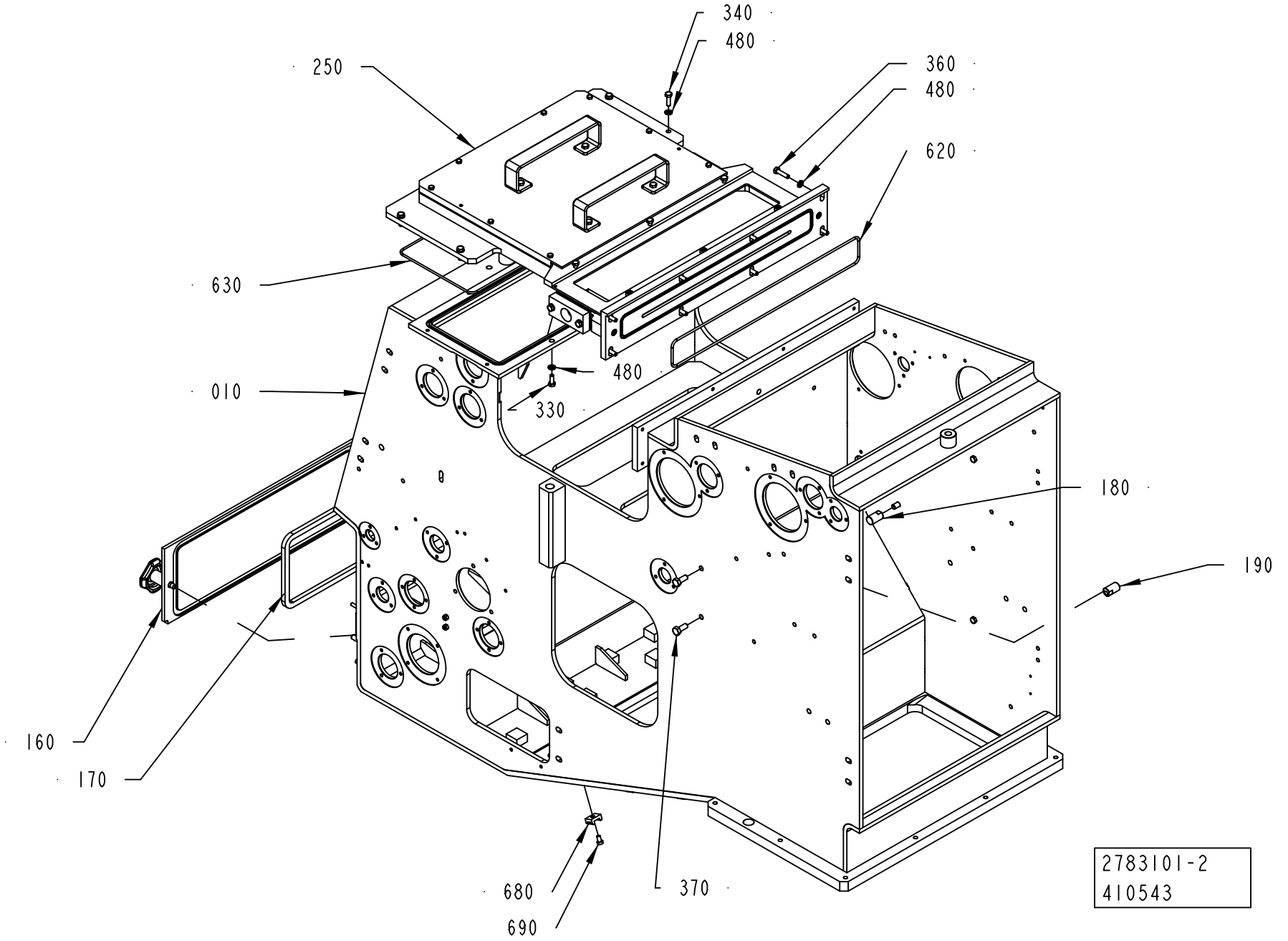
340
480
250
360
480
620
630
480
010
330
180
190
160
170
680
690
370
2783101-2
410543

ECM: 430724 - 20100401
Group number: 2783101-0200
Assembly Drawing: 2783101-2_1_AB

This list covers pages from 1-36 to 1-39

Pos	Part No	UN	Qty	Description	Page No
-					
010	2745314-0000		1	HOUSING	
030	1036475-0000		2	PIN	
040	1499170-0000		1	GASKET	
050	1499171-0000		1	LID	
080	2528133-0000		2	WASHER	
090	2528134-0000		2	GASKET	
110	2531055-0000		1	PLUG	
160	2758067-0000		1	PLATE	
170	2758068-0000		1	GASKET	
180	2758079-0000		2	BLOCK	
190	2758080-0000		2	BLOCK	
210	2894568-0000		2	CHAIN GUIDE	
230	3042378-0000		4	BRACKET	
250	2984701-0100		1	TUNNEL	**1-41**
300	312105-0289		4	SCREW M6S H4X10 A4 70 ISO4017/DIN933	
320	312105-0339		4	SCREW M6S ISO 4014 M5X40 A480	
330	312105-0368		2	SCREW M6S ISO 4017 M6X16 A480	
340	312105-0370		20	SCREW M6S ISO 4017 M6X20 A480	
360	312105-0372		8	SCREW M6S ISO 4017 M6X25 A480	
370	312105-0451		4	SCREW M6S ISO 4017 M8X20 A480	
380	312105-0453		7	SCREW M6S ISO 4017 M8X25 A480	
390	312105-0455		2	SCREW M6S ISO 4017 M8X30 A480	
400	312109-0459		2	SCREW M6S ISO 4017 M8X40 A480	
410	312605-0314		4	HEXAGON NUT, M6M M5 A280	
430	312605-0318		4	HEXAGON NUT, M6M M8 A280	
450	312812-0316		10	HEXAGON NUT, NY-LOCK M6 A480	
470	315105-0136		4	WASHER BRB 4,3X8 RFR	
480	315105-0153		20	WASHER BRB 6,4X12 RFR	
530	315229-0104		1	SQUARE RING, 35,8X42,8X3,7 MM 1"1/2 FD	
570	90051-0045		2	STELLAR KNOB, NO. 8323-257	
590	90258-0031		2	PIN, STRAIGHT SLOTTED SPRING FRP 3X20	
620	90459-6272		1	O-RING 304,39X3,53 MM	
630	90459-6311		1	O-RING 400X3 MM	
660	312105-0362		8	SCREW M6S ISO 4017 M6X8 A480	
670	312605-0316		4	HEXAGON NUT, M6M M6 A280	
680	352113-0204		9	ANCHOR PLATES FOR STRIPS, TYPE TM3S25-M	
690	312125-0364		9	SCREW ISO 1207 M6X10 A4	

Pos	Part No	UN	Qty	Description	Page No

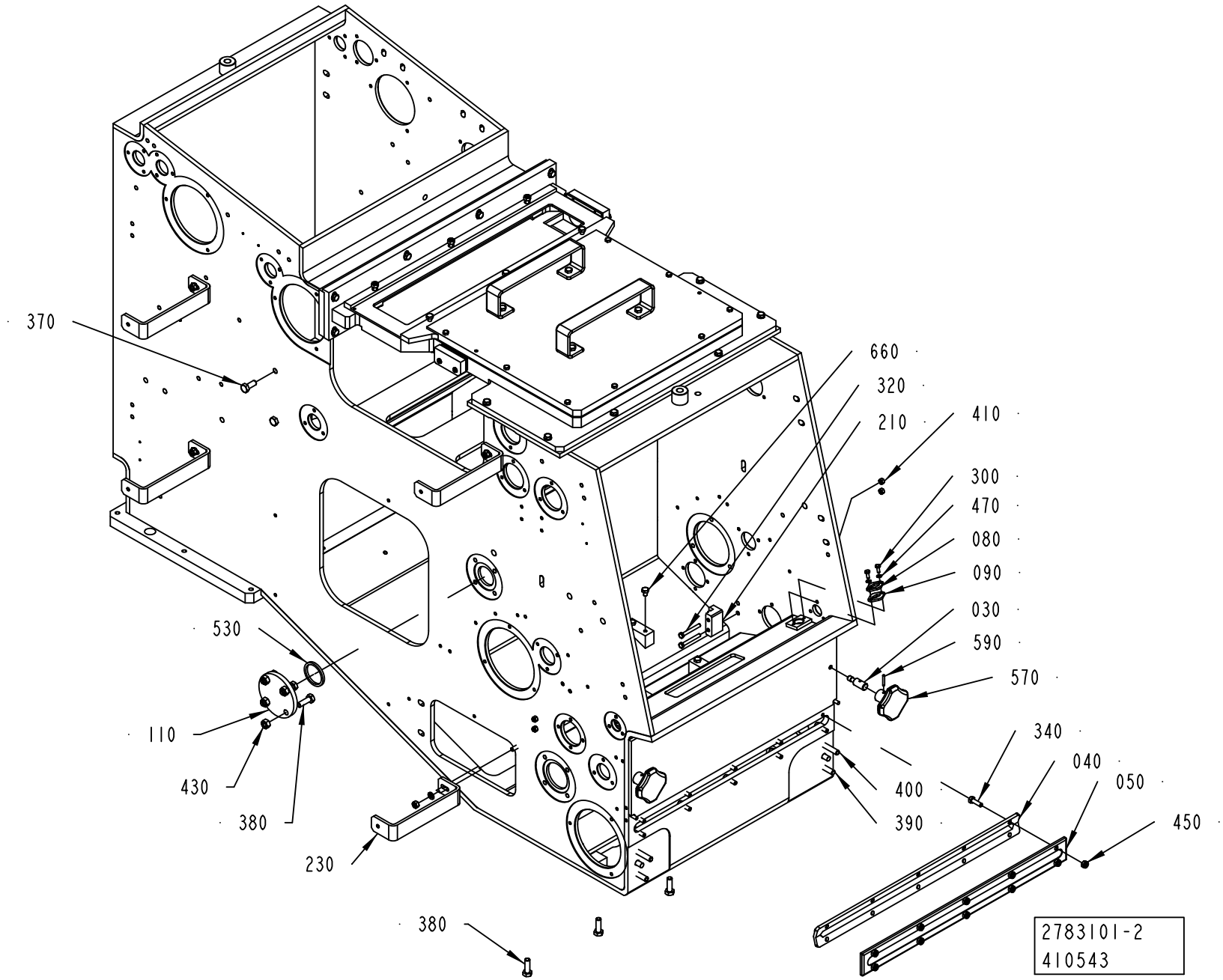
370
660
320
210
410
300
470
080
090
030
590
570
530
110
430
380
230
380
340
040
050
400
390
450
2783101-2
410543

ECM: 430724 - 20100401
Group number: 2783101-0200
Assembly Drawing: 2783101-2_2_AB

This list covers pages from 1-36 to 1-39

Pos	Part No	UN	Qty	Description	Page No
-					
010	2745314-0000		1	HOUSING	
030	1036475-0000		2	PIN	
040	1499170-0000		1	GASKET	
050	1499171-0000		1	LID	
080	2528133-0000		2	WASHER	
090	2528134-0000		2	GASKET	
110	2531055-0000		1	PLUG	
160	2758067-0000		1	PLATE	
170	2758068-0000		1	GASKET	
180	2758079-0000		2	BLOCK	
190	2758080-0000		2	BLOCK	
210	2894568-0000		2	CHAIN GUIDE	
230	3042378-0000		4	BRACKET	
250	2984701-0100		1	TUNNEL	**1-41**
300	312105-0289		4	SCREW M6S H4X10 A4 70 ISO4017/DIN933	
320	312105-0339		4	SCREW M6S ISO 4014 M5X40 A480	
330	312105-0368		2	SCREW M6S ISO 4017 M6X16 A480	
340	312105-0370		20	SCREW M6S ISO 4017 M6X20 A480	
360	312105-0372		8	SCREW M6S ISO 4017 M6X25 A480	
370	312105-0451		4	SCREW M6S ISO 4017 M8X20 A480	
380	312105-0453		7	SCREW M6S ISO 4017 M8X25 A480	
390	312105-0455		2	SCREW M6S ISO 4017 M8X30 A480	
400	312109-0459		2	SCREW M6S ISO 4017 M8X40 A480	
410	312605-0314		4	HEXAGON NUT, M6M M5 A280	
430	312605-0318		4	HEXAGON NUT, M6M M8 A280	
450	312812-0316		10	HEXAGON NUT, NY-LOCK M6 A480	
470	315105-0136		4	WASHER BRB 4,3X8 RFR	
480	315105-0153		20	WASHER BRB 6,4X12 RFR	
530	315229-0104		1	SQUARE RING, 35,8X42,8X3,7 MM 1"1/2 FD	
570	90051-0045		2	STELLAR KNOB, NO. 8323-257	
590	90258-0031		2	PIN, STRAIGHT SLOTTED SPRING FRP 3X20	
620	90459-6272		1	O-RING 304,39X3,53 MM	
630	90459-6311		1	O-RING 400X3 MM	
660	312105-0362		8	SCREW M6S ISO 4017 M6X8 A480	
670	312605-0316		4	HEXAGON NUT, M6M M6 A280	
680	352113-0204		9	ANCHOR PLATES FOR STRIPS, TYPE TM3S25-M	
690	312125-0364		9	SCREW ISO 1207 M6X10 A4	

Pos	Part No	UN	Qty	Description	Page No

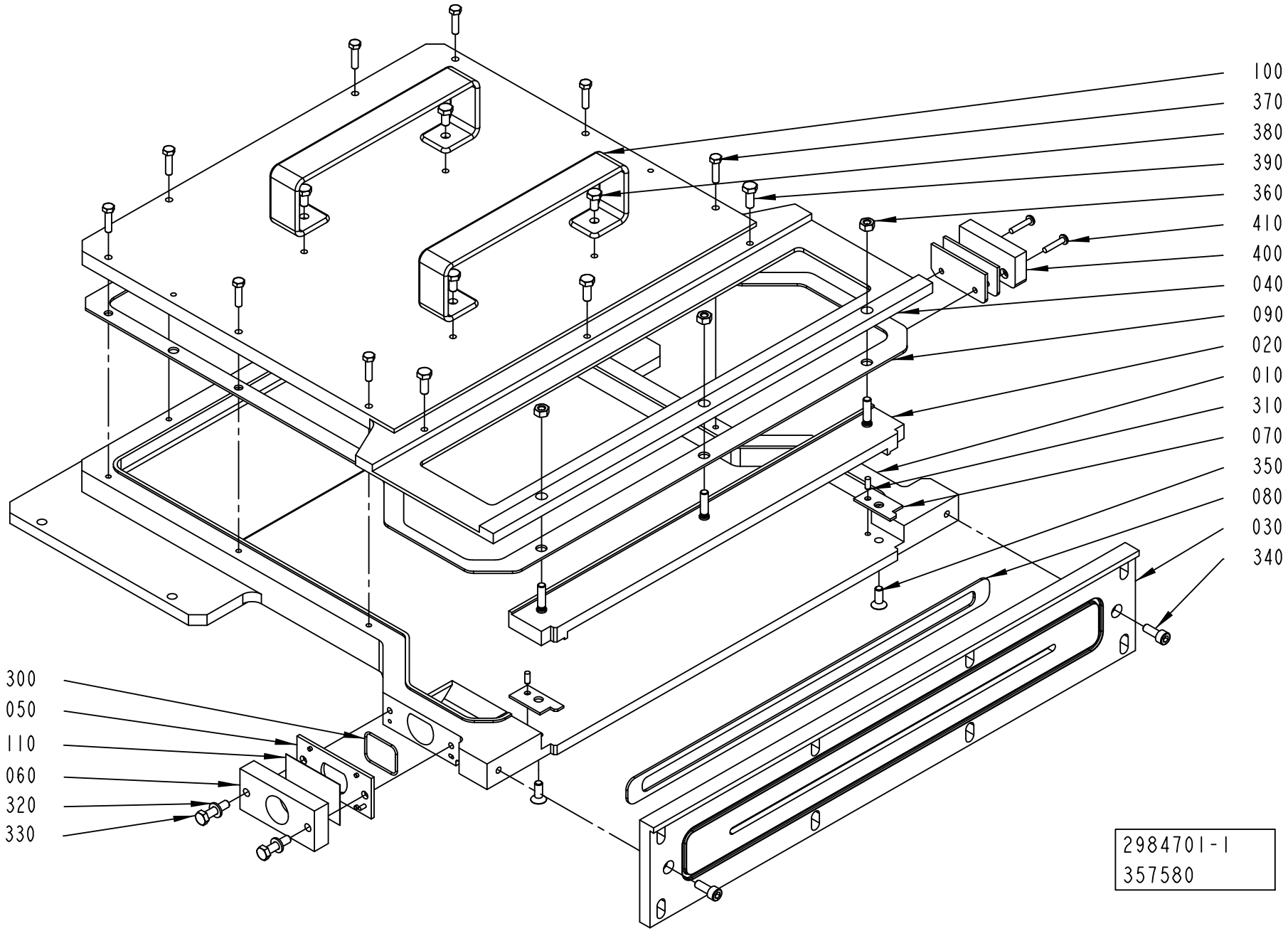
100
370
380
390
360
410
400
040
090
020
010
310
070
350
080
030
340
300
050
110
060
320
330
2984701-1
357580

ECM: 362536 - 20081008
Group number: 2984701-0100
Assembly Drawing: 2984701-1_1_AA

Pos	Part No	UN	Qty	Description	Page No
-					
010	2932054-0000		1	TUNNEL	
020	2936391-0000		1	PLATE	
030	2933183-0000		1	PLATE	
040	2932055-0000		1	LID	
050	2959408-0000		1	PLATE	
060	2745347-0000		1	PLATE	
070	2937891-0000		2	GASKET	
080	2933786-0000		1	GASKET	
090	2933787-0000		1	GASKET	
100	2984702-0000		2	HANDLE	
110	2745352-0000		1	FILM	
300	315204-0123		1	O-RING 35,1X1,6 MM	
310	311103-0267		2	PARALLEL PIN ISO 2338 4M6X10 A1	
320	315105-0153		2	WASHER BRB 6,4X12 RFR	
330	312105-0372		2	SCREW M6S ISO 4017 M6X25 A480	
340	312115-0368		2	SCREW ISO4762 M6X16 A4 80	
350	312155-0368		2	SCREW DIN 7991 MF6S M6X16 A4 70	
360	312605-0316		3	HEXAGON NUT, M6M M6 A280	
370	312105-0331		8	SCREW M6S ISO 4017 M5X20 A480	
380	312105-0366		4	SCREW M6S ISO 4017 M6X12 A480	
390	312105-0368		3	SCREW M6S ISO 4017 M6X16 A480	
400	90458-2794		1	SENSOR, EVA 20-046-00	
410	90459-4164		2	SAFETY SCREW SM4X20, 20-053-42	

Pos	Part No	UN	Qty	Description	Page No

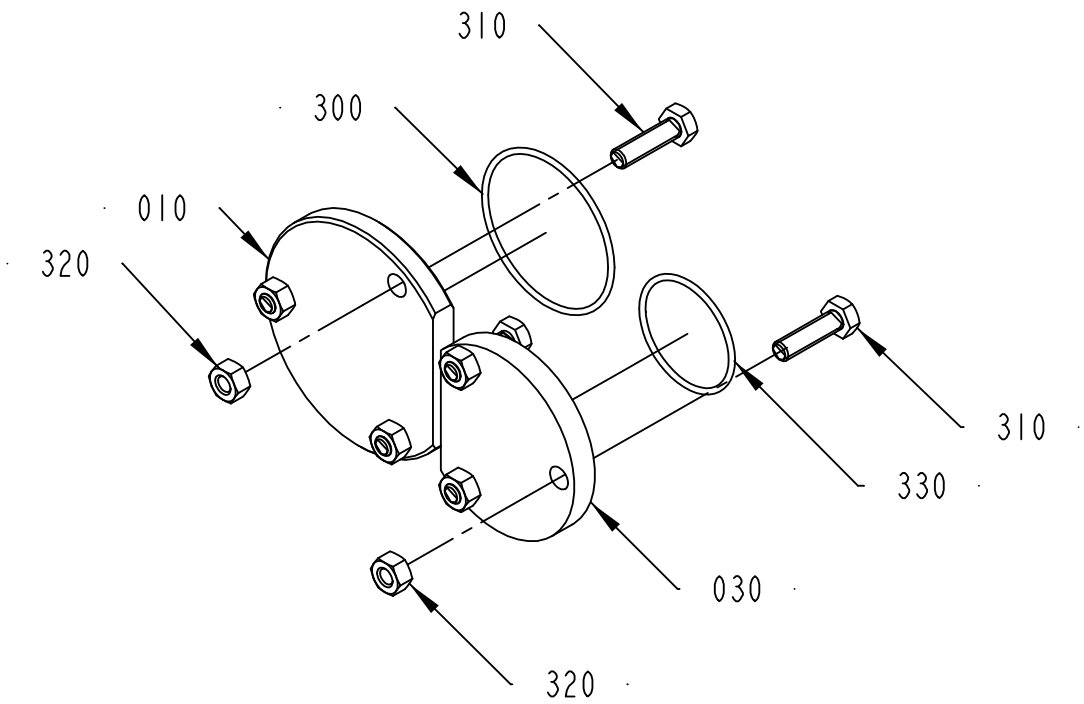

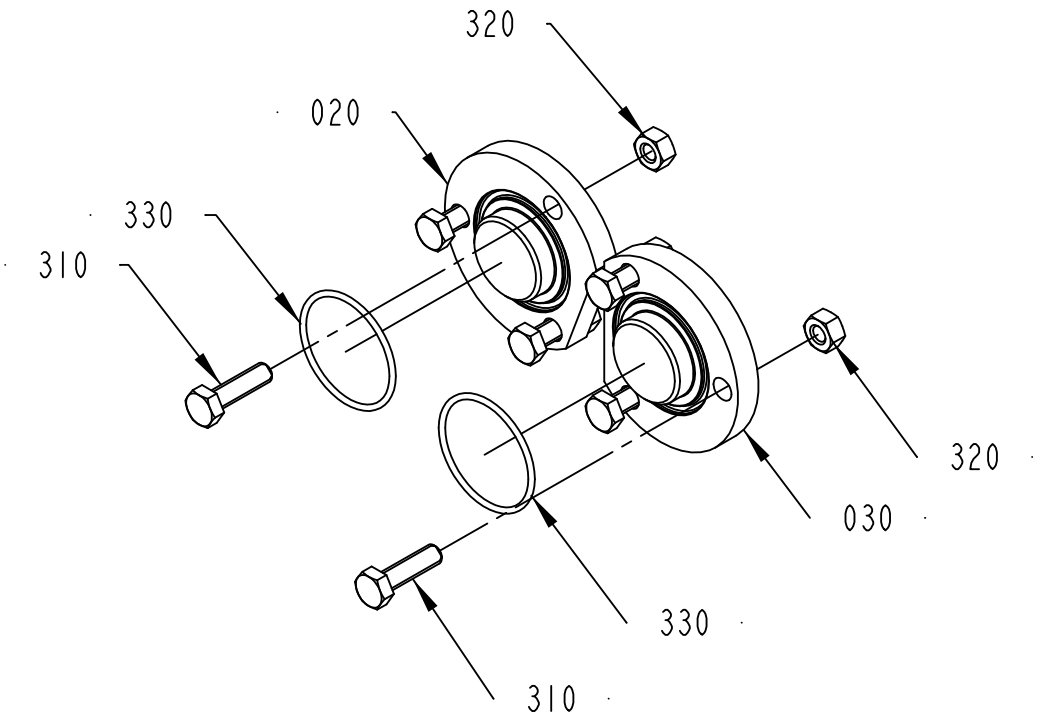

2788596-1
294621

ECM: 294635 - 20070704
Group number: 2788596-0100
Assembly Drawing: 2788596-1_1_AA

Pos	Part No	UN	Qty	Description	Page No
-					
010	2788592-0000		1	PLUG	
020	2788593-0000		1	PLUG	
030	2788594-0000		2	PLUG	
300	315205-0804		1	O-RING 47,35X1,78 MM	
310	312105-0372		12	SCREW M6S ISO 4017 M6X25 A480	
320	312605-0316		12	HEXAGON NUT, M6M M6 A280	
330	315205-0715		3	O-RING 33,05X1,78 MM	

Pos	Part No	UN	Qty	Description	Page No

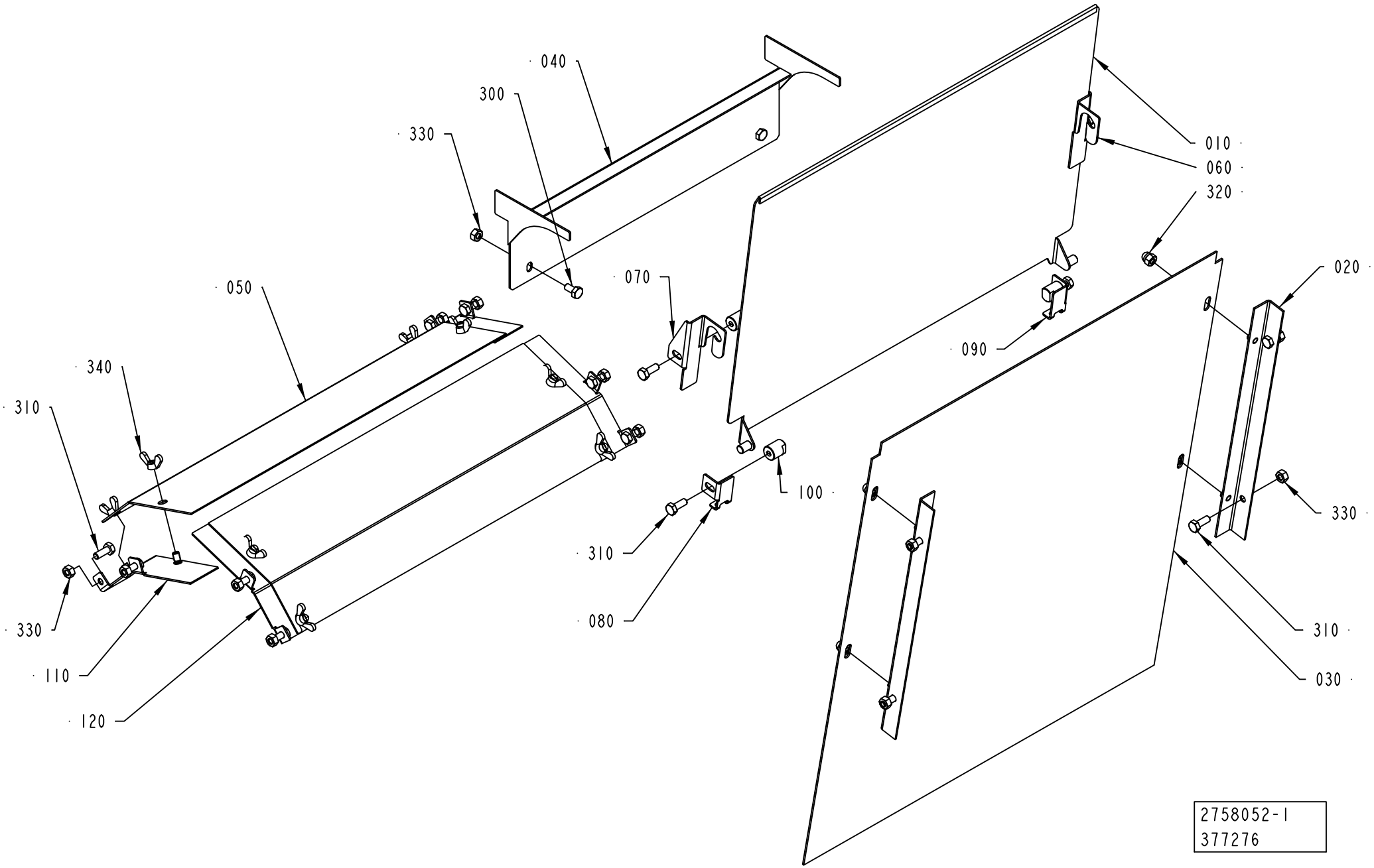
040
300
330
050
340
310
330
110
120
070
310
080
100
010
060
320
090
020
330
310
030
2758052-1
377276

ECM: 379135 - 20090201
Group number: 2758052-0100
Assembly Drawing: 2758052-1_1_AB

Pos	Part No	UN	Qty	Description	Page No
-					
010	2774390-0000		1	PLATE	
020	2758043-0000		2	SUPPORT	
030	2758044-0000		1	PLATE	
040	2758046-0000		1	PLATE	
050	2986297-0000		2	PLATE	
060	2774391-0000		1	SUPPORT	
070	2774392-0000		1	SUPPORT	
080	2774393-0000		1	SUPPORT	
090	2774394-0000		1	SUPPORT	
100	2774395-0000		4	SHAFT	
110	2986293-0000		2	PLATE	
120	2986295-0000		2	PLATE	
300	312105-0366		2	SCREW M6S ISO 4017 M6X12 A480	
310	312105-0368		16	SCREW M6S ISO 4017 M6X16 A480	
320	312705-0316		4	HEX. DOMED CAP MHM-6 M6 A280	
330	312605-0316		14	HEXAGON NUT, M6M M6 A280	
340	312715-0116		8	WING NUT DIN 315 A2 MVM-K M6	

Pos	Part No	UN	Qty	Description	Page No

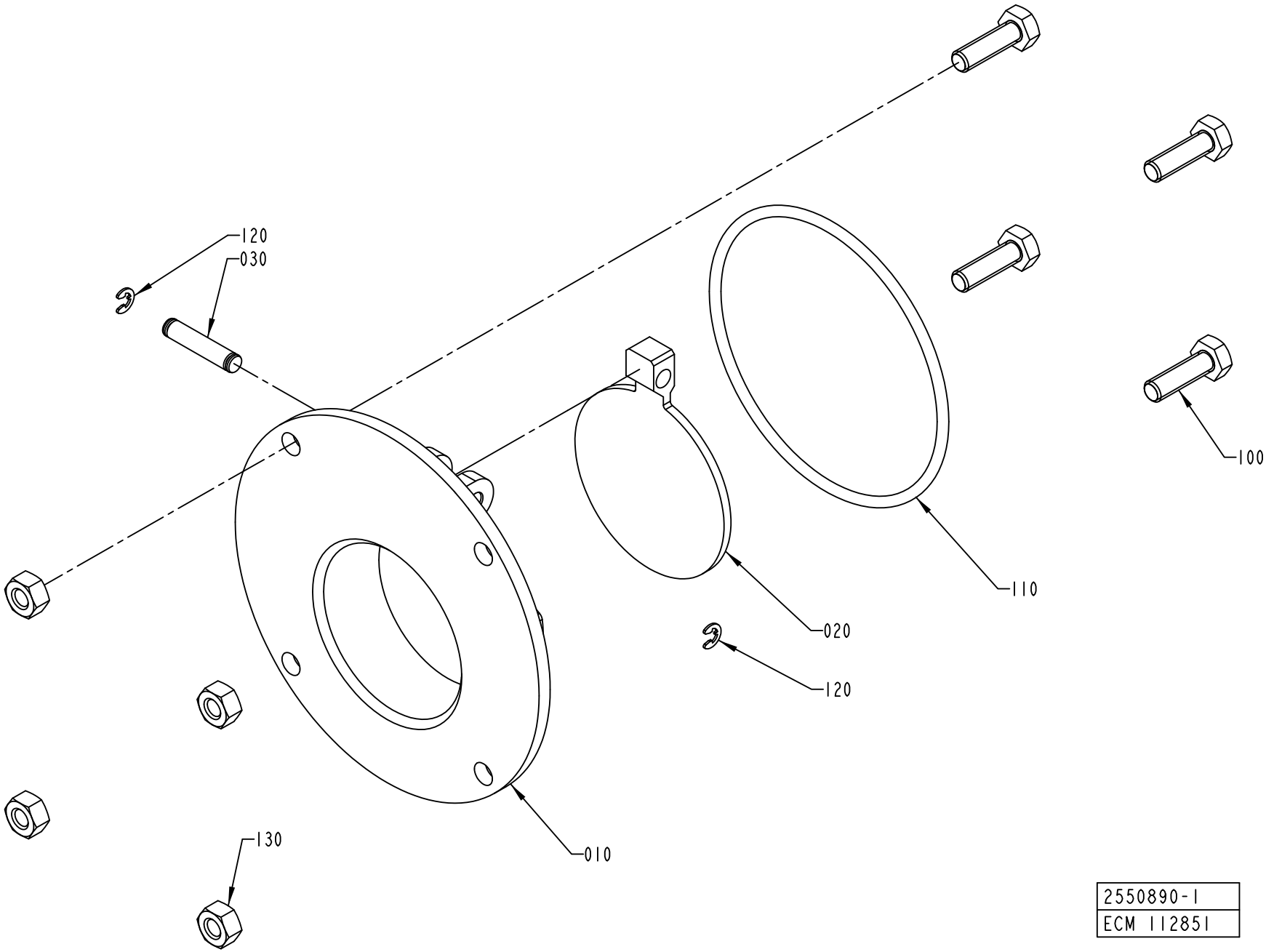

2550890-1
ECM 112851

ECM: 387758 - 20090402
Group number: 2550890-0100
Assembly Drawing: 2550890-1_1_AA

Pos	Part No	UN	Qty	Description	Page No
-					
010	1558417-0000		1	FLANGE	
020	1538494-0000		1	LID	
030	311103-0310		1	PARALLEL PIN ISO 2338 5M6X20 A1	
100	312105-0370		4	SCREW M6S ISO 4017 M6X20 A480	
110	315204-0307		1	O-RING 79,5X3 MM	
130	312605-0316		4	HEXAGON NUT, M6M M6 A280	

Pos	Part No	UN	Qty	Description	Page No

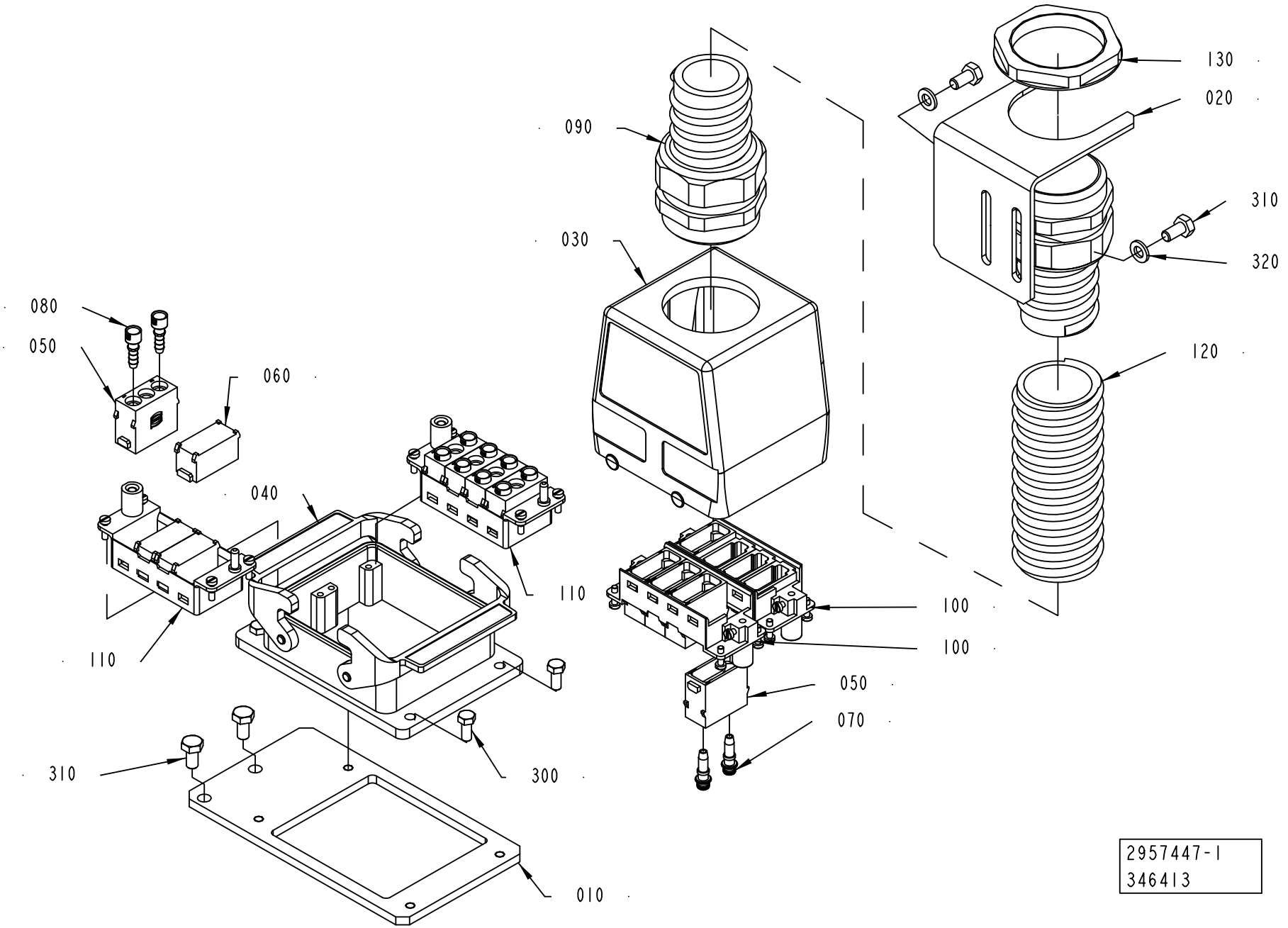
130
020
090
310
030
320
080
050
120
060
040
110
100
100
110
050
070
310
300
010
2957447-1
346413

ECM: 352796 - 20080711
Group number: 2957447-0100
Assembly Drawing: 2957447-1_1_AA

Pos	Part No	UN	Qty	Description	Page No
-					
010	2957427-0000		1	BRACKET	
020	2957428-0000		1	BRACKET	
030	90600-4783		1	HOOD HAN 6 B 19 30 032 0429	
040	90600-4802		1	HOUSING 16B BULKHEAD, 09 30 032 0301	
050	90600-4803		10	HAN PNEUMATIC MOD., 09140034501	
060	90600-4804		6	HAN DUMMY MODULE, 09140009950	
070	90600-4805		10	HAN PNEUMATIC FITTING, 09140006153	
080	90600-4806		10	HAN PNEUMATIC FITTING, 09140006253	
090	90458-0416		2	HOSE GLAND W/O INSERT M50 NORMAL	
100	90459-1655		2	HING. FR. HAN 32B HOODS, 09 14 016 0303	
110	90459-1656		2	HING. FR. HAN 16B HOUSING,09 14 016 0313	
120	90152-0060	MM	110	SPIRAL CONDUIT, 42X35, UL3529	
130	90458-0327		1	NUT, M50X1,5	
300	312105-0327		4	SCREW M6S ISO 4017 M5X12 A480	
310	312105-0366		4	SCREW M6S ISO 4017 M6X12 A480	
320	315105-0153		2	WASHER BRB 6,4X12 RFR	

Pos	Part No	UN	Qty	Description	Page No

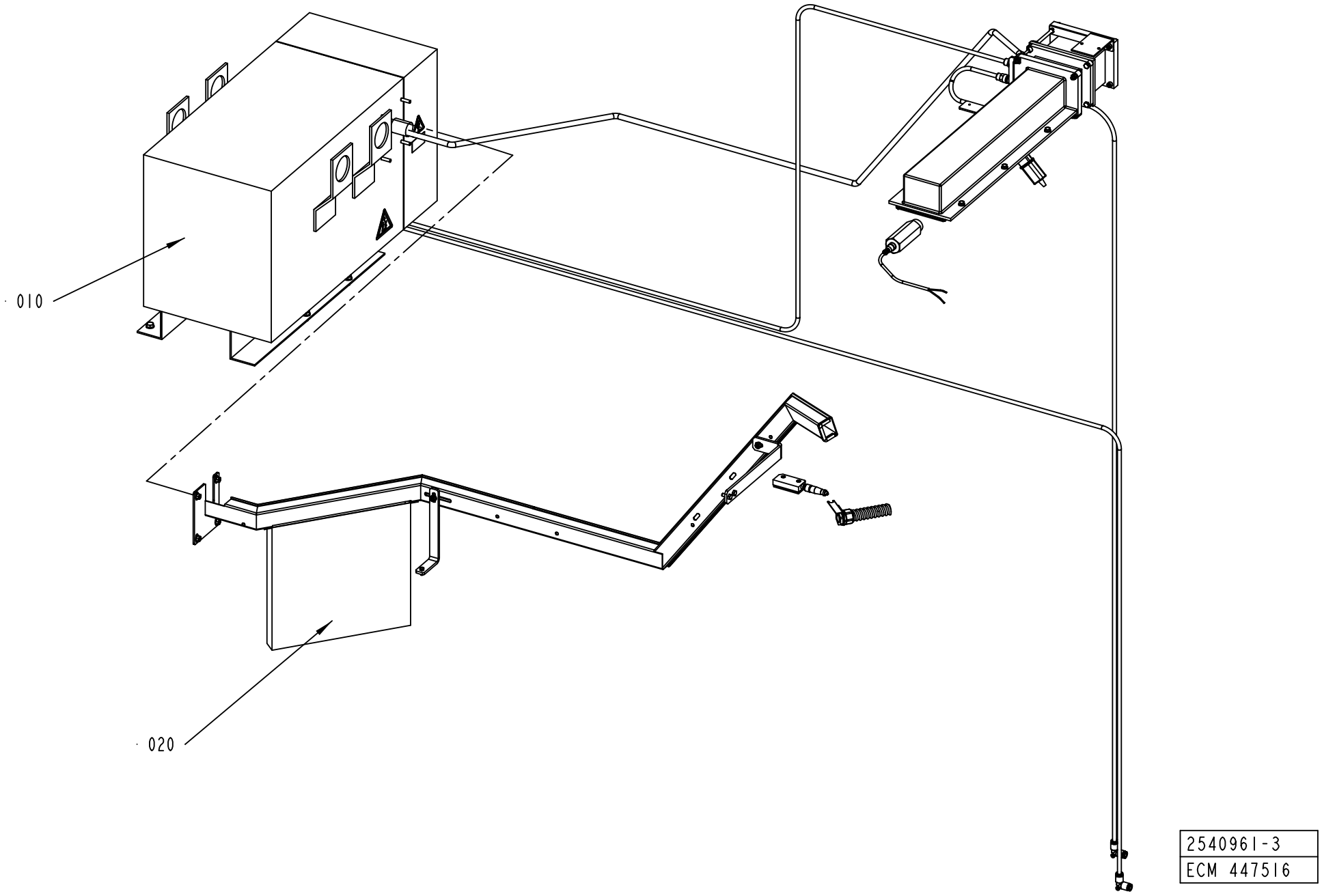
010
020
2540961-3
ECM 447516

ECM: 448651 - 20100610
Group number: 2540961-0300
Assembly Drawing: 2540961-3_1_AA

Pos	Part No	UN	Qty	Description	Page No
-					
010	2510546-0300		1	POWER SUPPLY UNIT	**1-53**
020	3100959-0100		1	CABLE DUCT	**1-57**

Pos	Part No	UN	Qty	Description	Page No

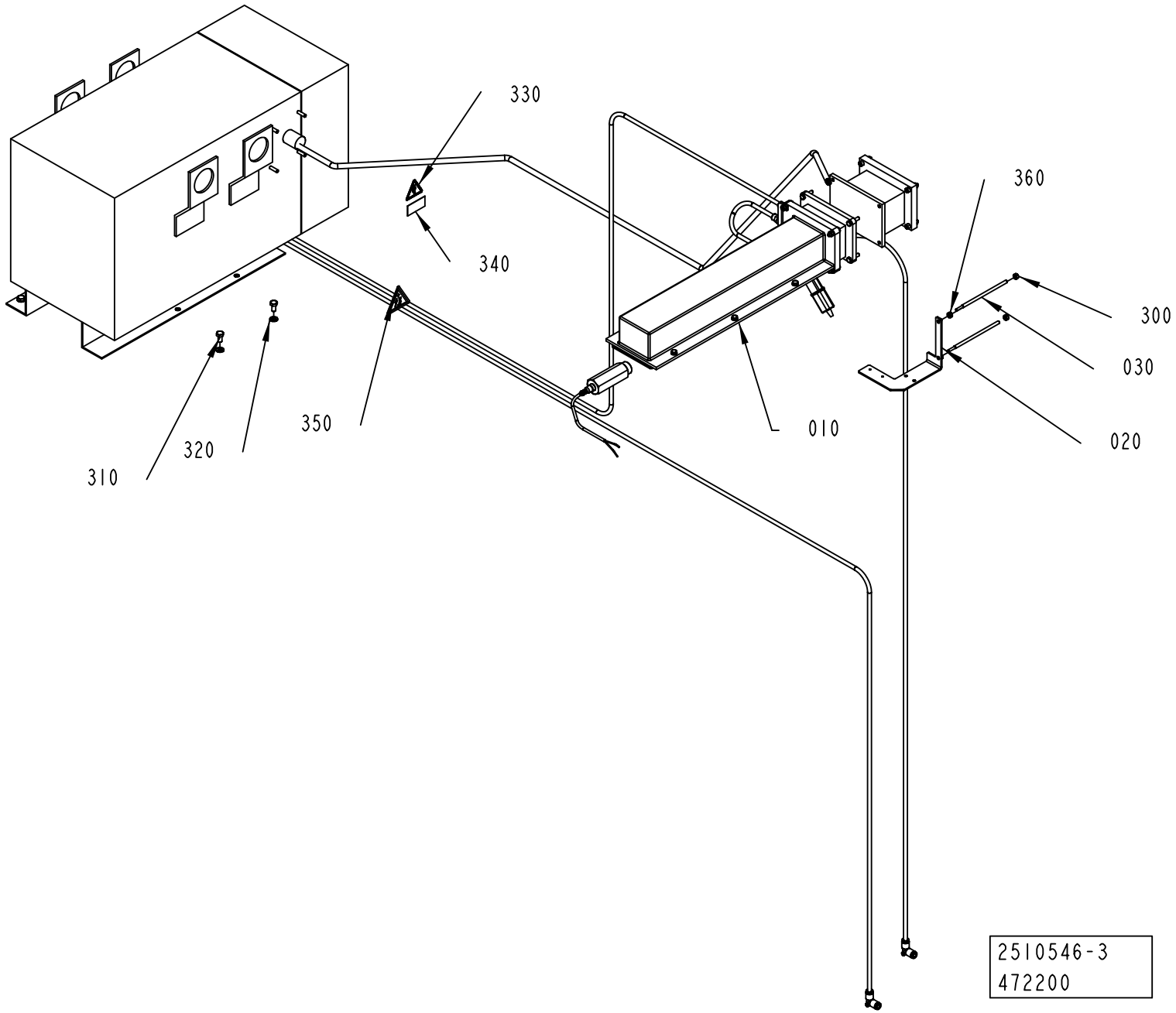
330
340
360
300
030
020
010
350
320
310
2510546-3
472200

ECM: 473448 - 20110101
Group number: 2510546-0300
Assembly Drawing: 2510546-3_1_AB

Pos	Part No	UN	Qty	Description	Page No
ANSI					
320	90459-4698		1	DANGER SIGN ANSI (H), 6 KV	
350	90459-6087		1	DANGER SIGN ANSI (H), HAZARDOUS RESIDUAL	
ISO					
330	359705-0015		1	WARNING SIGN ISO, RISK OF ELECTRIC SHOCK	
340	90459-4697		1	SUPPLEMENTARY SIGN WARNING ISO, 6 KV	
350	90194-0118		1	SIGN, RESIDUAL VOLTAGE, WAIT 5 MIN.	
Common Parts					
010	2539548-0200		1	IRRADIATION KIT	**1-55**
020	2894648-0000		1	PLATE	
030	2894652-0000		2	THREADED ROD	
050	2501557-0000		1	GENERATOR	
	90459-2658		*4*	*SLOTTED ROUND NUT DIN 546 M6*	
	90459-5107		*1*	*ELBOW CONNECTION 14*	
	90459-5838		*1*	*TUBE FUSE, 4A*	
	90459-5840		*3*	*TUBE FUSE, 10A*	
	312115-0372		*4*	*SCREW ISO4762 M6X25 A4 80*	
	2552180-0000		*1*	*HOLDER*	
	3093273-0000		*1*	*UV CABLE*	
300	312605-0316		2	HEXAGON NUT, M6M M6 A280	
310	312105-0449		4	SCREW M6S ISO 4017 M8X16 A480	
320	315105-0165		4	WASHER BRB 8,4X16 RFR	
360	90459-2658		4	SLOTTED ROUND NUT DIN 546 M6	

Pos	Part No	UN	Qty	Description	Page No

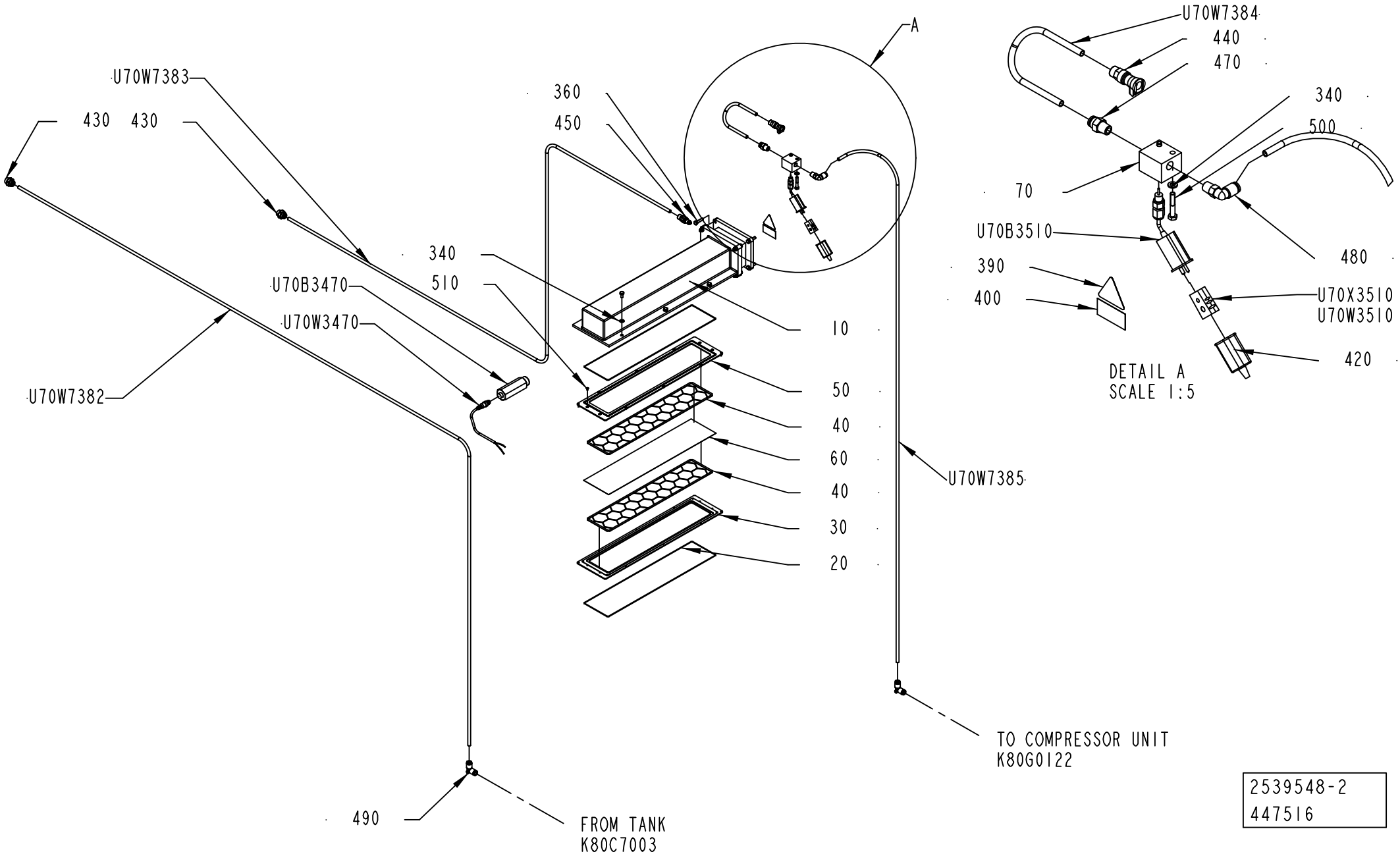

2539548-2
447516

ECM: 461400 - 20101002
Group number: 2539548-0200
Assembly Drawing: 2539548-2_1_AJ

Pos	Part No	UN	Qty	Description	Page No
ANSI					
390	90459-4698		1	DANGER SIGN ANSI (H), 6 KV	
ISO					
390	359705-0015		1	WARNING SIGN ISO, RISK OF ELECTRIC SHOCK	
400	90459-4697		1	SUPPLEMENTARY SIGN WARNING ISO, 6 KV	
Common Parts					
010	2555630-0000		1	LAMP	
010	*90459-4302*		*1*	*EXCIMER LAMP, 510MM 8000 4661*	
020	*90459-4304*		*1*	*CLADDING TUBE, 8000 4663*	
030	*90459-4305*		*2*	*REFLECTOR, 4515 2838*	
040	*90459-4306*		*1*	*LAMP SPACER, 4500 4001*	
050	*90459-4307*		*2*	*O-RING 117X4 MM, 4515 0230*	
060	*90459-4308*		*1*	*O-RING 40X3 MM, 4515 0228*	
070	*90459-4326*		*1*	*O-RING 40X2 MM, 4515 2836*	
080	*90459-4327*		*1*	*O-RING 16X2.5 MM, 4515 0229*	
090	*2962000-0000*		*1*	*PLATE*	
100	*90459-2658*		*4*	*SLOTTED ROUND NUT DIN 546 M6*	
120	*312105-0372*		*4*	*SCREW M6S ISO 4017 M6X25 A480*	
020	2532892-0000		2	GASKET	
030	2532890-0000		1	PLATE	
040	2532893-0000		2	GRID ELEMENT	
050	2532891-0000		1	PLATE	
060	2541655-0000		1	FILM	
070	2894649-0000		1	FITTING PIECE	
340	315105-0153		8	WASHER BRB 6,4X12 RFR	
350	312105-0366		6	SCREW M6S ISO 4017 M6X12 A480	
360	312105-0372		4	SCREW M6S ISO 4017 M6X25 A480	
420	90326-0012		1	PROTECTIVE COVER, T31A4618	
430	90458-1963		2	STRAIGHT COUPLING D=8-G3/8"	
440	90459-0941		1	QUICK COUPLING, PLCD 130-M8	
450	90459-0960		1	QUICK COUPLING, PLCD 200-M8	
470	90600-2651		1	PUSH-IN FITTING KPH08-02	
480	90600-2653		1	PUSH-IN L-FITTING KPL08-02	
490	90600-2654		2	PUSH-IN L-FITTING KPL08-00	
500	312105-0376		2	SCREW M6S ISO 4014 M6X35 A480	
510	312155-0220		10	SCREW DIN 7991 MF6S M3X6 A4 70	
U70B3470	90459-1537		1	UV-SENSOR, UV222 SENSOR	
U70B3510	90326-0057		1	THERMOCOUPLE, CR-AL	
U70W3470	90459-1567		1	CONNECTOR CABLE FOR UVC-SE SENSOR	
U70W3510	90220-0034	MM	7000	THERMOCABLE TEX/SITW-20F-KX 2X0,5MM2	
U70W7382	315300-0006	MM	8200	TUBE, 8 MM PE BLACK	
U70W7383	315300-0006	MM	2500	TUBE, 8 MM PE BLACK	
U70W7384	315300-0006	MM	250	TUBE, 8 MM PE BLACK	
U70W7385	315300-0006	MM	8000	TUBE, 8 MM PE BLACK	
U70X3510	90326-0020		1	PLUG, FEMALE YELLOW CR-AL	

Machine Type | Group Description | Used-In | Group Number | Page No

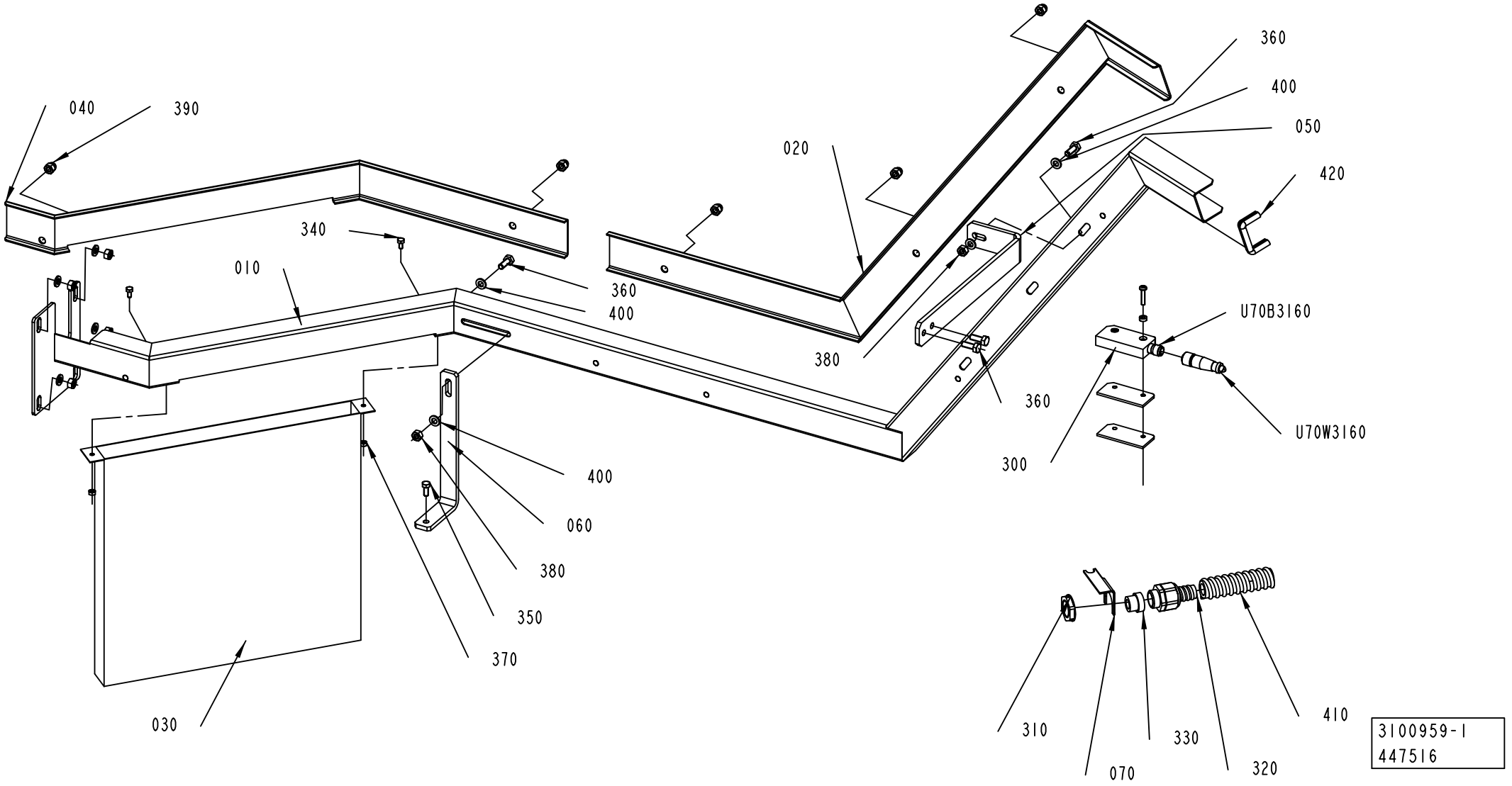
040
390
340
010
360
400
020
360
400
050
420
380
U70B3160
360
U70W3160
300
400
060
380
350
370
030
310
070
330
320
410
3100959-1
447516

ECM: 448653 - 20100610
Group number: 3100959-0100
Assembly Drawing: 3100959-1_1_AA

Pos	Part No	UN	Qty	Description	Page No
-					
010	2995625-0000		1	CABLE DUCT	
020	2793386-0000		1	LID	
030	2826381-0000		1	BOX	
040	2995626-0000		1	LID	
050	2793393-0000		1	BRACKET	
060	2826382-0000		1	BRACKET	
070	1129086-0000		1	BRACKET	
300	90459-4164		2	SAFETY SCREW SM4X20, 20-053-42	
310	90458-0323		1	NUT, M20X1,5	
320	90458-0429		1	HOSE GLAND W/O INSERT M20 EXTENDED	
330	353249-0011		1	INSERT, SINGLE HOLE, EK 153/11	
340	312105-0287		2	SCREW M6S ISO 4017 M4X8 A470	
350	312105-0327		1	SCREW M6S ISO 4017 M5X12 A480	
360	312105-0368		4	SCREW M6S ISO 4017 M6X16 A480	
370	312605-0312		2	HEXAGON NUT, M6M M4 A280	
380	312605-0316		6	HEXAGON NUT, M6M M6 A280	
390	312705-0316		5	HEX. DOMED CAP MHM-6 M6 A280	
400	315105-0153		8	WASHER BRB 6,4X12 RFR	
410	90152-0050	MM	1850	SPIRAL CONDUIT, 20X13, UL 1313	
420	90143-0060	MM	85	EDGE STRIP 9,5X6,3MM BLACK PVC	
U70B3160	90459-4142		1	SENSOR, ADAM M12 20-051-00	
U70W3160	90459-4252		1	CABLE M12-C101, 20-056-10	

Pos	Part No	UN	Qty	Description	Page No

ASEPTIC CHAMBER

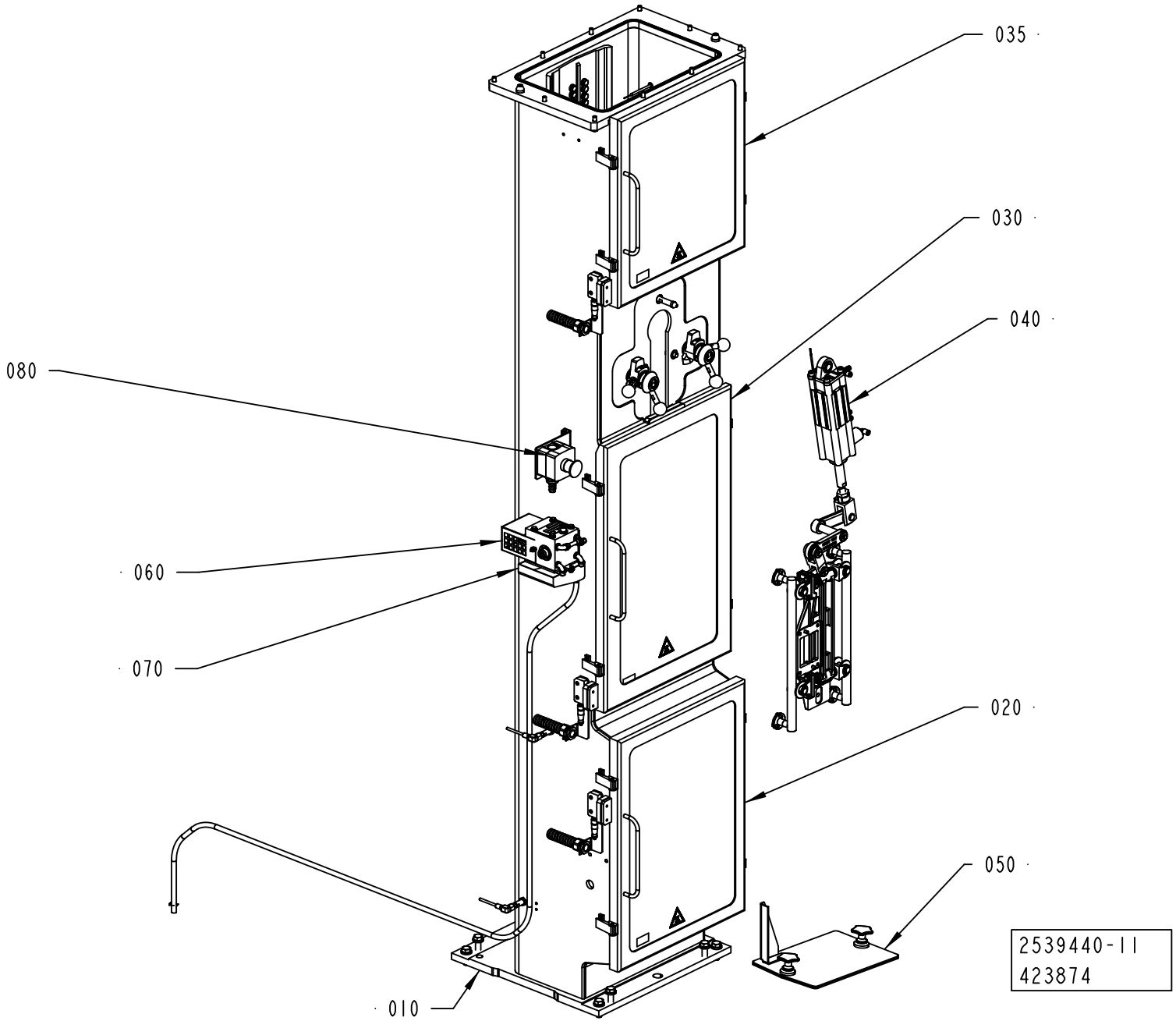

ECM: 426288 - 20100102
Group number: 2539440-0400
Assembly Drawing: 2539440-11_1_AB

Pos	Part No	UN	Qty	Description	Page No
A3/SPEED					
020	1548880-0300		1	DOOR	**1-61**
030	1549549-0400		1	DOOR	**1-63**
035	1524245-0300		1	DOOR	**1-65**
050	2532962-0100		1	LID	**1-67**
Common Parts					
010	1548872-0400		1	PILLAR	**1-69, 1-71**
040	2512930-0300		1	SUPPORT RAIL	**1-73**
060	1548876-0300		1	IH EQUIPMENT	**1-75**
070	2937284-0200		1	DRAINING CONDENSE	**1-79**
080	2528087-0200		1	EMERGENCY STOP	**1-81**

Pos	Part No	UN	Qty	Description	Page No

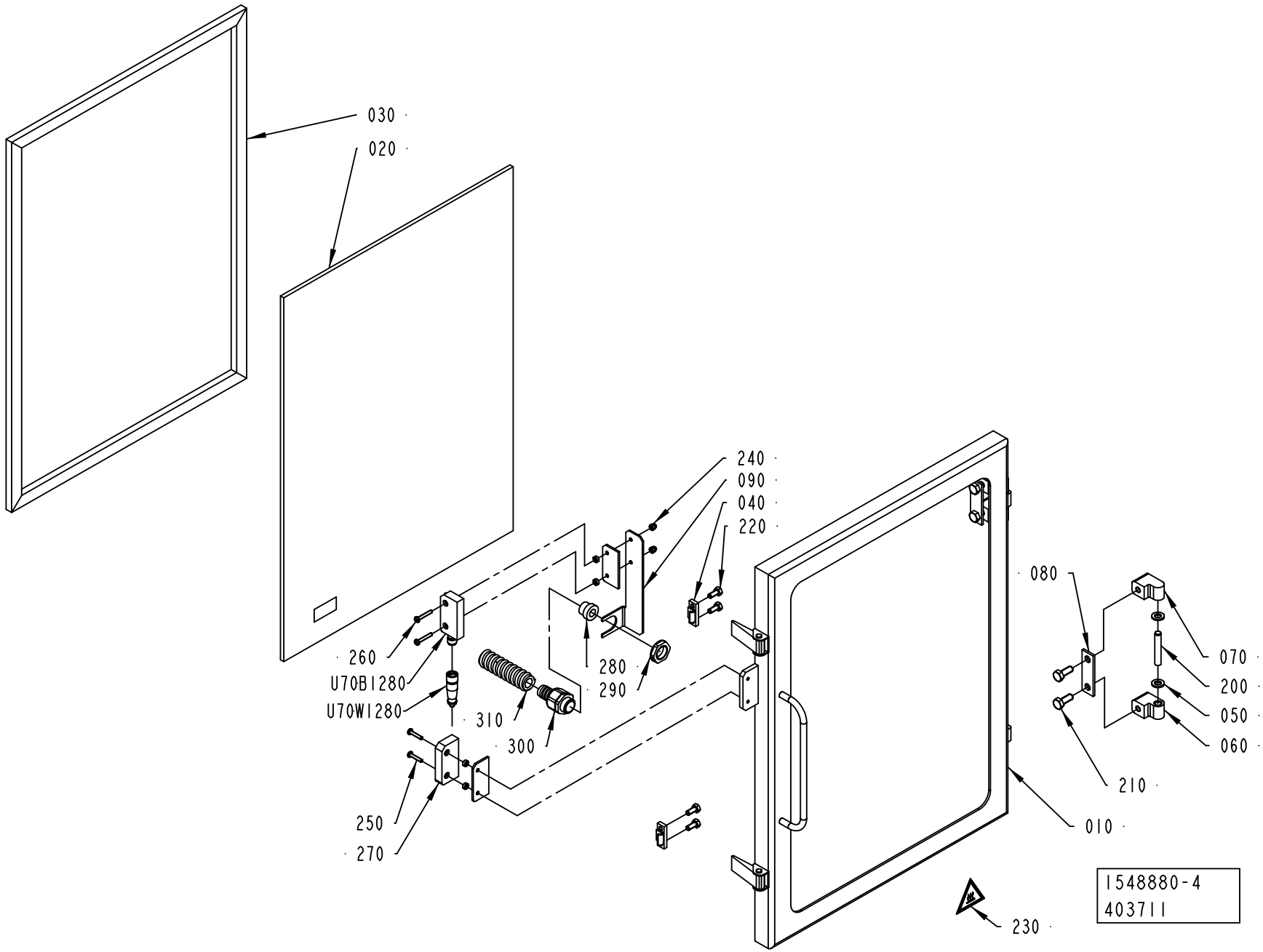
030
020
240
090
040
220
080
070
200
050
060
260
U70B1280
U70W1280
310
300
280
290
210
250
270
010
230
1548880-4
403711

ECM: 461320 - 20101002
Group number: 1548880-0300
Assembly Drawing: 1548880-4_1_AA

Pos	Part No	UN	Qty	Description	Page No
ANSI					
230	90459-7458		1	WARNING SIGN ANSI (H), HOT SURFACE	
ISO					
230	359705-0007		1	WARNING SIGN ISO, HOT SURFACE	
Common Parts					
010	2783050-0000		1	FRAME	
020	2874754-0000		1	GLASS PANE	
030	1548891-0000		1	GASKET	
040	271860-0000		2	CLAMP BLOCK	
050	441739-0000		4	WASHER	
060	1041979-0000		2	HINGE FLANGE	
070	1041978-0000		2	HINGE FLANGE	
080	441737-0000		2	WASHER	
090	3041984-0000		1	PLATE	
200	311103-0413		2	PARALLEL PIN ISO 2338 8M6X50 A1	
210	312105-0451		4	SCREW M6S ISO 4017 M8X20 A480	
220	312105-0368		4	SCREW M6S ISO 4017 M6X16 A480	
240	312705-0312		2	NUT HEX. DOMED CAP MHM-6 M4 A280	
250	90459-4164		2	SAFETY SCREW SM4X20, 20-053-42	
260	90459-4165		2	SAFETY SCREW SM4X25, 20-053-43	
270	90458-2794		1	SENSOR, EVA 20-046-00	
280	353249-0011		1	INSERT, SINGLE HOLE, EK 153/11	
290	90458-0323		1	NUT, M20X1,5	
300	90458-0429		1	HOSE GLAND W/O INSERT M20 EXTENDED	
310	90152-0050	MM	1100	SPIRAL CONDUIT, 20X13, UL 1313	
U70B1280	90459-4142		1	SENSOR, ADAM M12 20-051-00	
U70W1280	90459-4252		1	CABLE M12-C101, 20-056-10	

Pos	Part No	UN	Qty	Description	Page No

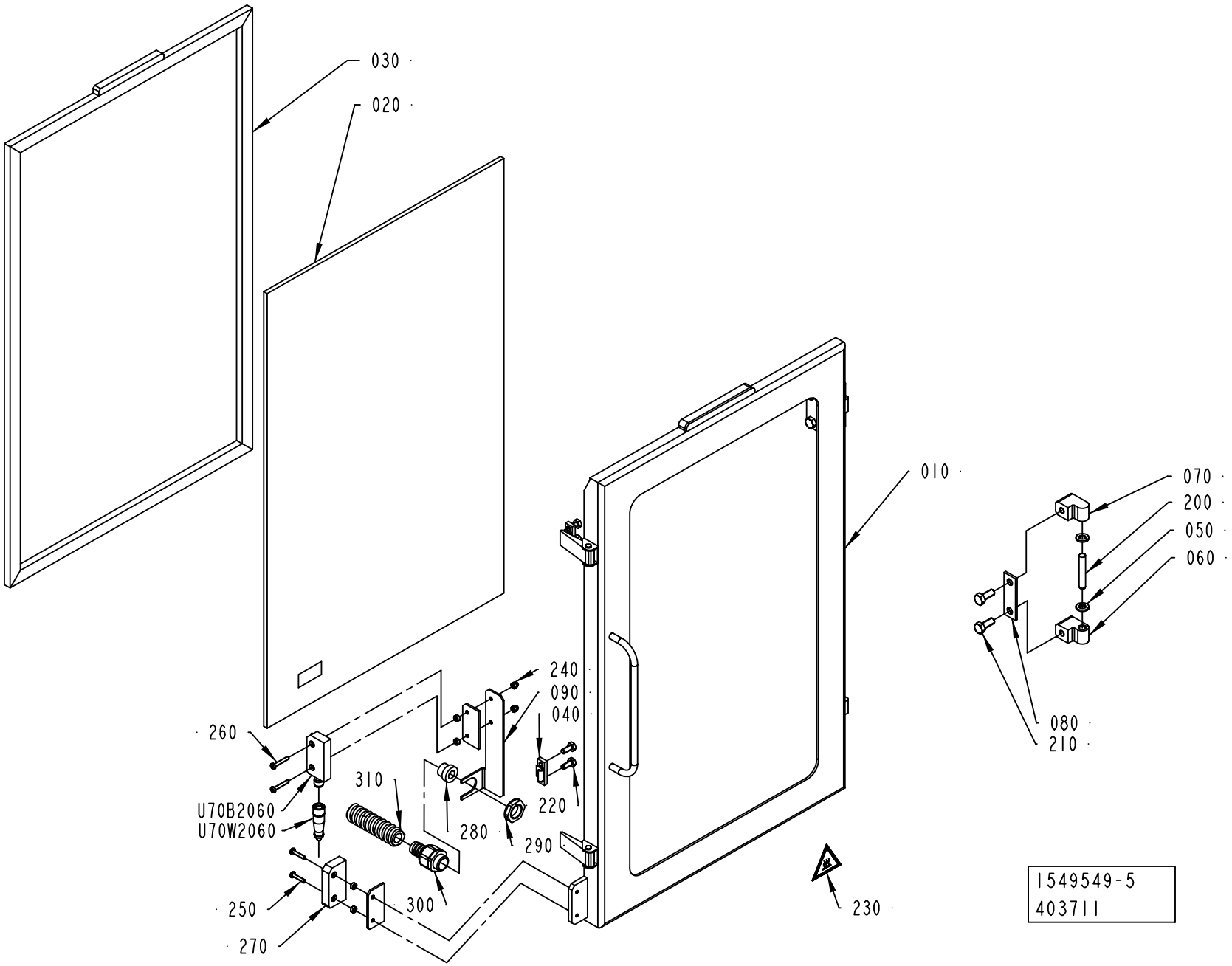
030
020
010
070
200
050
060
080
210
240
090
040
260
310
220
U70B2060
U70W2060
280
290
250
300
270
230
1549549-5
403711

ECM: 461321 - 20101002
Group number: 1549549-0400
Assembly Drawing: 1549549-5_1_AA

Pos	Part No	UN	Qty	Description	Page No
ANSI					
230	90459-7458		1	WARNING SIGN ANSI (H), HOT SURFACE	
ISO					
230	359705-0007		1	WARNING SIGN ISO, HOT SURFACE	
Common Parts					
010	2783053-0000		1	FRAME	
020	2874753-0000		1	GLASS PANE	
030	1549552-0000		1	GASKET	
040	271860-0000		2	CLAMP BLOCK	
050	441739-0000		4	WASHER	
060	1041979-0000		2	HINGE FLANGE	
070	1041978-0000		2	HINGE FLANGE	
080	441737-0000		2	WASHER	
090	3041984-0000		1	PLATE	
200	311103-0413		2	PARALLEL PIN ISO 2338 8M6X50 A1	
210	312105-0451		4	SCREW M6S ISO 4017 M8X20 A480	
220	312105-0368		4	SCREW M6S ISO 4017 M6X16 A480	
240	312705-0312		2	NUT HEX. DOMED CAP MHM-6 M4 A280	
250	90459-4164		2	SAFETY SCREW SM4X20, 20-053-42	
260	90459-4165		2	SAFETY SCREW SM4X25, 20-053-43	
270	90458-2794		1	SENSOR, EVA 20-046-00	
280	353249-0011		1	INSERT, SINGLE HOLE, EK 153/11	
290	90458-0323		1	NUT, M20X1,5	
300	90458-0429		1	HOSE GLAND W/O INSERT M20 EXTENDED	
310	90152-0050	MM	900	SPIRAL CONDUIT, 20X13, UL 1313	
U70B2060	90459-4142		1	SENSOR, ADAM M12 20-051-00	
U70W2060	90459-4252		1	CABLE M12-C101, 20-056-10	

Pos	Part No	UN	Qty	Description	Page No

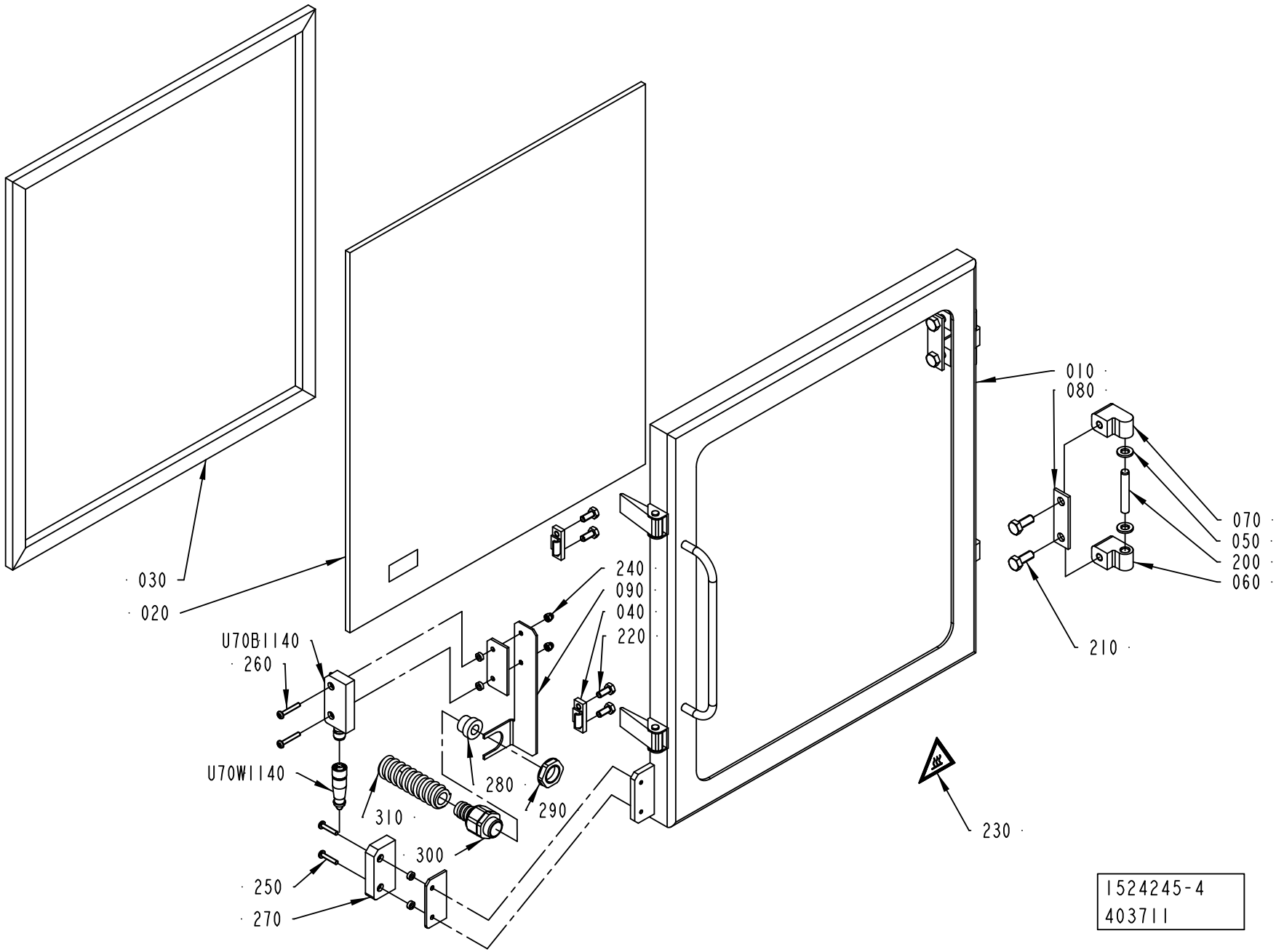
010
080
070
050
200
060
210
030
020
240
090
040
220
U70B1140
260
U70W1140
280
290
310
300
250
270
230
1524245-4
403711

ECM: 461317 - 20101002
Group number: 1524245-0300
Assembly Drawing: 1524245-4_1_AA

Pos	Part No	UN	Qty	Description	Page No
ANSI					
230	90459-7458		1	WARNING SIGN ANSI (H), HOT SURFACE	
ISO					
230	359705-0007		1	WARNING SIGN ISO, HOT SURFACE	
Common Parts					
010	2783049-0000		1	FRAME	
020	2874756-0000		1	GLASS PANE	
030	1549554-0000		1	GASKET	
040	271860-0000		2	CLAMP BLOCK	
050	441739-0000		4	WASHER	
060	1041979-0000		2	HINGE FLANGE	
070	1041978-0000		2	HINGE FLANGE	
080	441737-0000		2	WASHER	
090	3041984-0000		1	PLATE	
200	311103-0413		2	PARALLEL PIN ISO 2338 8M6X50 A1	
210	312105-0451		4	SCREW M6S ISO 4017 M8X20 A480	
220	312105-0368		4	SCREW M6S ISO 4017 M6X16 A480	
240	312705-0312		2	NUT HEX. DOMED CAP MHM-6 M4 A280	
250	90459-4164		2	SAFETY SCREW SM4X20, 20-053-42	
260	90459-4165		2	SAFETY SCREW SM4X25, 20-053-43	
270	90458-2794		1	SENSOR, EVA 20-046-00	
280	353249-0011		1	INSERT, SINGLE HOLE, EK 153/11	
290	90458-0323		1	NUT, M20X1,5	
300	90458-0429		1	HOSE GLAND W/O INSERT M20 EXTENDED	
310	90152-0050	MM	630	SPIRAL CONDUIT, 20X13, UL 1313	
U70B1140	90459-4142		1	SENSOR, ADAM M12 20-051-00	
U70W1140	90459-4252		1	CABLE M12-C101, 20-056-10	

Pos	Part No	UN	Qty	Description	Page No

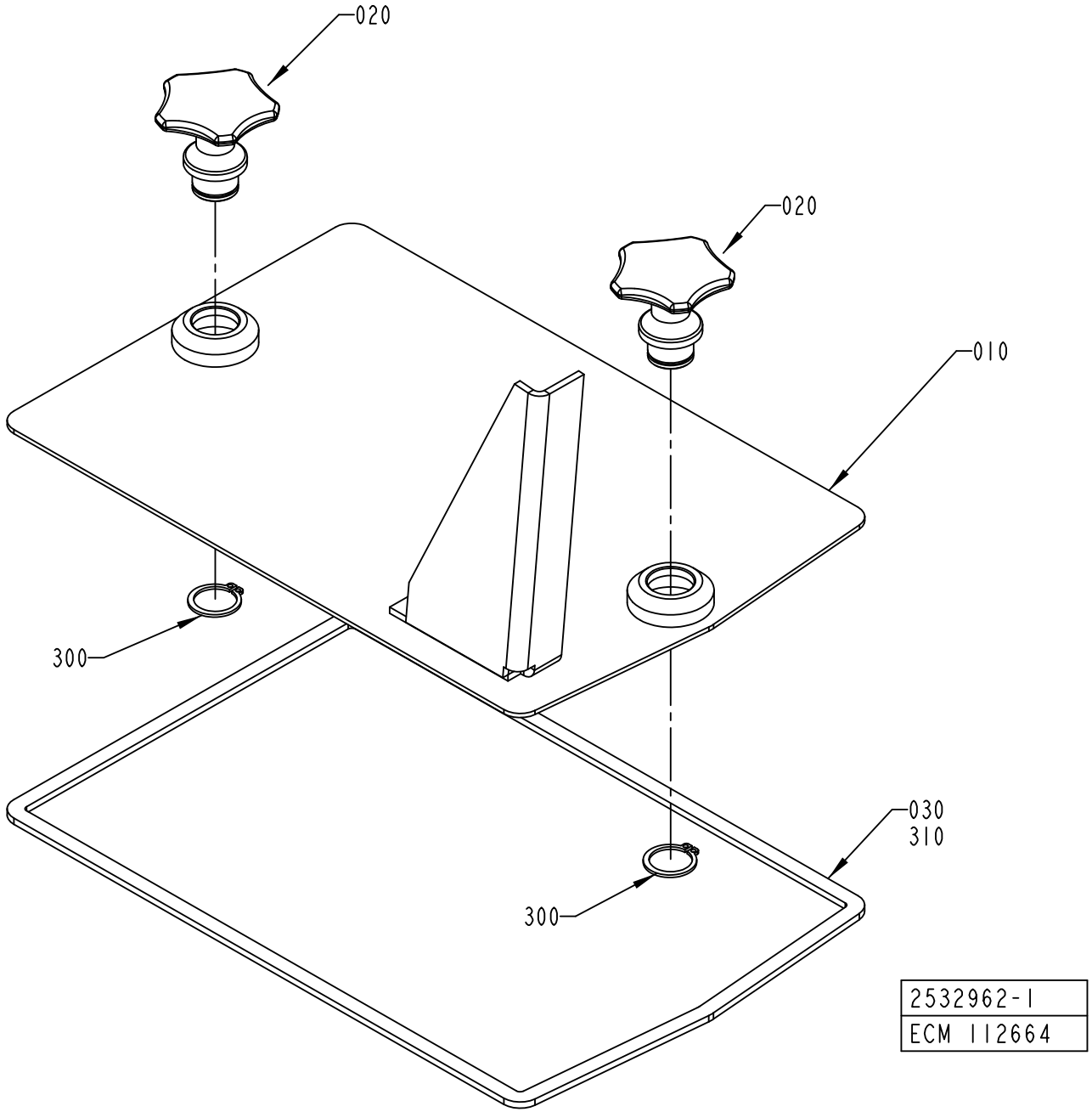
020
020
010
300
030
310
300
2532962-1
ECM 112664

ECM: 188382 - 20041117
Group number: 2532962-0100
Assembly Drawing: 2532962-1_1_AA

Pos	Part No	UN	Qty	Description	Page No
-					
010	2532959-0000		1	PLATE	
020	2532960-0000		2	KNOB	
030	2532961-0000		1	GASKET	
300	315751-0115		2	RETAINING RING FOR SHAFT DIN 471 18 SS	
310	90153-0023		1	ADHESIVE, SILICON 251470 TUB 90CC(UN1993	

Pos	Part No	UN	Qty	Description	Page No

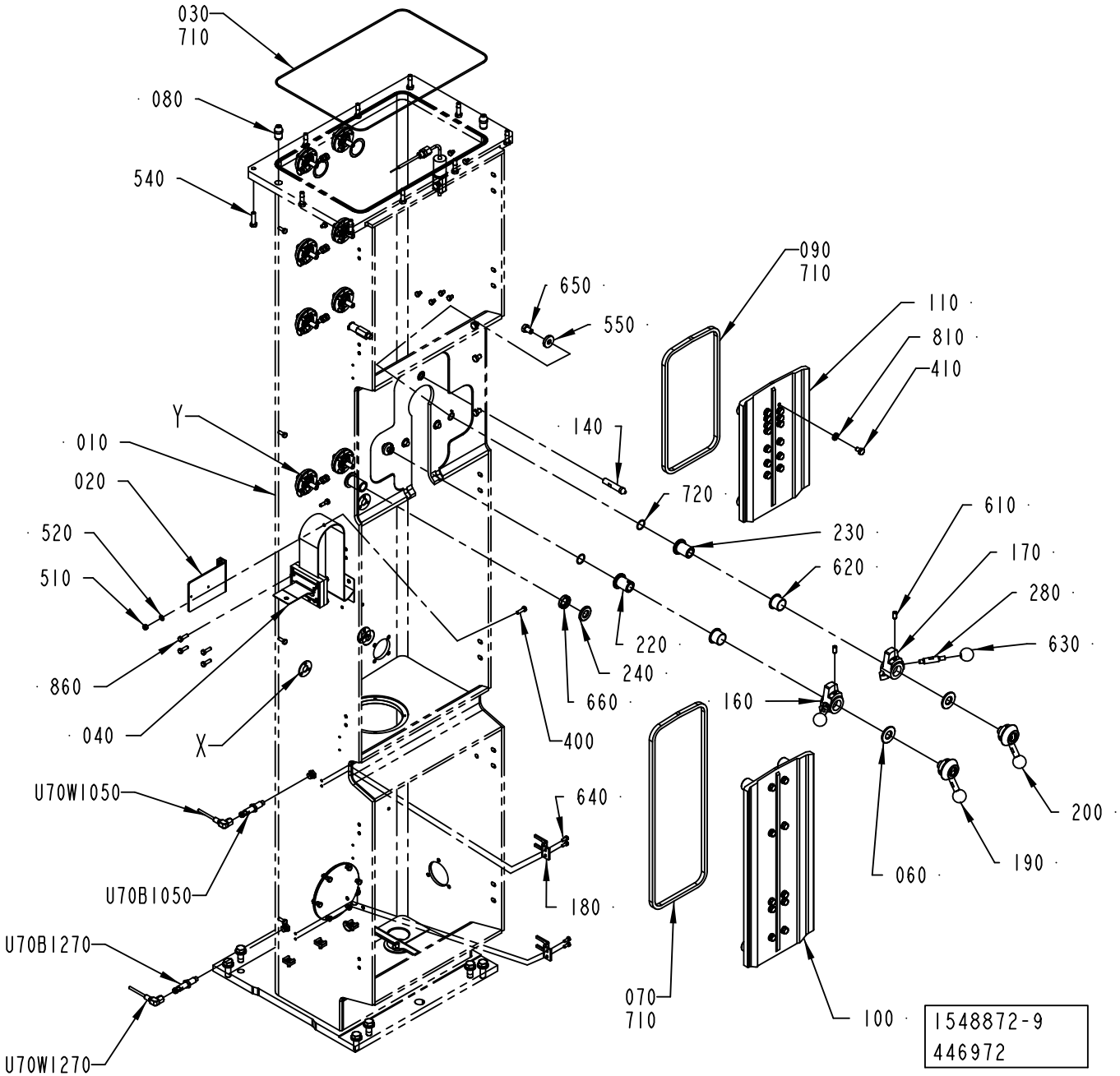
030
710
080
540
650
550
090
710
110
810
410
140
720
230
610
170
280
630
620
Y
010
020
520
510
860
040
X
220
240
660
400
160
200
190
060
640
180
U70W1050
U70B1050
U70B1270
U70W1270
070
710
100
1548872-9
446972

ECM: 450710 - 20101001
Group number: 1548872-0400
Assembly Drawing: 1548872-9_1_AC

This list covers pages from 1-68 to 1-71

Pos	Part No	UN	Qty	Description	Page No
A3/SPEED (See drawing on pages: 1-68, 1-70)					
010	3020309-0000		1	PILLAR	
040	2863175-0000		1	BUSBAR	
090	2709277-0000		1	GASKET	
110	2835473-0000		1	PLATE	
180	2565497-0000		2	PLATE	
370	3037764-0000		1	PLUG	
410	312105-0447		26	SCREW M6S ISO 4017 M8X12 A480	
510	312605-0316		8	HEXAGON NUT, M6M M6 A280	
520	315105-0153		2	WASHER BRB 6,4X12 RFR	
640	312105-0327		4	SCREW M6S ISO 4017 M5X12 A480	
800	312105-0368		4	SCREW M6S ISO 4017 M6X16 A480	
810	315115-0165		24	WASHER PLAIN, TBRB 8,4/16 H=3	
860	312105-0370		6	SCREW M6S ISO 4017 M6X20 A480	
U70B1050	90600-0462		1	INDUCTIVE SWITCH, E2A-M12LN05-M1-B1-TP	
U70B1270	90600-0462		1	INDUCTIVE SWITCH, E2A-M12LN05-M1-B1-TP	
U70W1050	351310-0100		1	ACTUATOR/SENSOR CABLE PRKWT 4-07/10M	
U70W1270	351310-0100		1	ACTUATOR/SENSOR CABLE PRKWT 4-07/10M	
U70W3540	90220-0034	MM	6000	THERMOCABLE TEX/SITW-20F-KX 2X0,5MM2	
Common Parts					
020	2528088-0000		1	HOLDER	
030	90459-1175		1	O-RING 418X3,0 MM	
050	90459-1174		2	O-RING 75,87X2,62 MM	
060	2562677-0000		2	WASHER	
070	2709275-0000		1	GASKET	
080	1519150-0000		2	PIN	
100	2835471-0000		1	PLATE	
120	2544865-0000		1	BUSHING	
140	2506283-0000		1	PIN	
160	2526859-0000		1	CAM	
170	2528068-0000		1	CAM	
190	2528070-0000		1	LOCKING LEVER	
200	2528102-0000		1	LOCKING LEVER	
220	2512769-0000		1	SHAFT	
230	2512768-0000		1	SHAFT	
240	2544866-0000		1	WASHER	
250	2512774-0000		4	SHIM	
260	2547386-0000		1	SHAFT	
270	2533628-0000		1	SUPPORT BLOCK	
280	2526858-0000		2	DOWEL	
290	2533627-0000		1	SUPPORT BLOCK	
300	2709274-0000		8	FLANGE	
310	2709281-0000		16	SHIM	
380	312125-0366		3	SCREW ISO 1207 M6X12 A4	
400	312105-0370		46	SCREW M6S ISO 4017 M6X20 A480	
420	312105-0453		8	SCREW M6S ISO 4017 M8X25 A480	
430	312109-0500		8	SCREW M6S ISO 4017 M10X45 A480	
440	312605-0318		8	HEXAGON NUT, M6M M8 A280	
460	90459-6881		16	SPHERICAL WASHER M10 DIN 6319 C SHAPE	
470	90459-6882		16	CONICAL WASHER M10 DIN 6319 D SHAPE	
480	312105-0536		4	SCREW M6S ISO 4017 M12X30 A480	
490	312105-0538		4	SCREW M6S ISO 4017 M12X35 A480	
530	315115-0178		8	WASHER PLAIN, TBRB 13/24 H=4	
540	312105-0455		10	SCREW M6S ISO 4017 M8X30 A480	
550	315125-0173		2	WASHER TBRSB 10,5X28X6 A4	
590	90326-0012		1	PROTECTIVE COVER, T31A4618	
600	315237-0110		1	WASHER,PL.RND.AL.13,5/18,H=1,5	
610	90287-0112		2	SCREW SPRINGLOAD. SLOTTED HEAD M8X16	
620	90240-0293		2	FLANGE BUSHING, IGLIDUR X 25X28X21	
630	318800-0104		2	HANDLE,SPHERICAL KNOB,INT.THRE.,D.30-M8	
650	312105-0489		2	SCREW M6S ISO 4017 M10X16 A480	
660	90459-0871		1	RING, VARILIP 18X30X7 MM	
680	315751-0113		1	RETAINING RING FOR SHAFT DIN 471 16 SS	
710	90153-0023		1	ADHESIVE, SILICON 251470 TUB 90CC(UN1993	
720	315205-0707		2	O-RING 20,35X1,78 MM	
740	312105-0362		8	SCREW M6S ISO 4017 M6X8 A480	
780	90330-0066		2	PLUG, EXT. G-THREAD, G1/8	
820	352113-0204		3	ANCHOR PLATES FOR STRIPS, TYPE TM3S25-M	
U70B3540	90458-0341		1	THERMOCOUPLE, 5130050-001	
U70X3540	90326-0020		1	PLUG, FEMALE YELLOW CR-AL	

Machine Type | Group Description | Used-In | Group Number | Page No

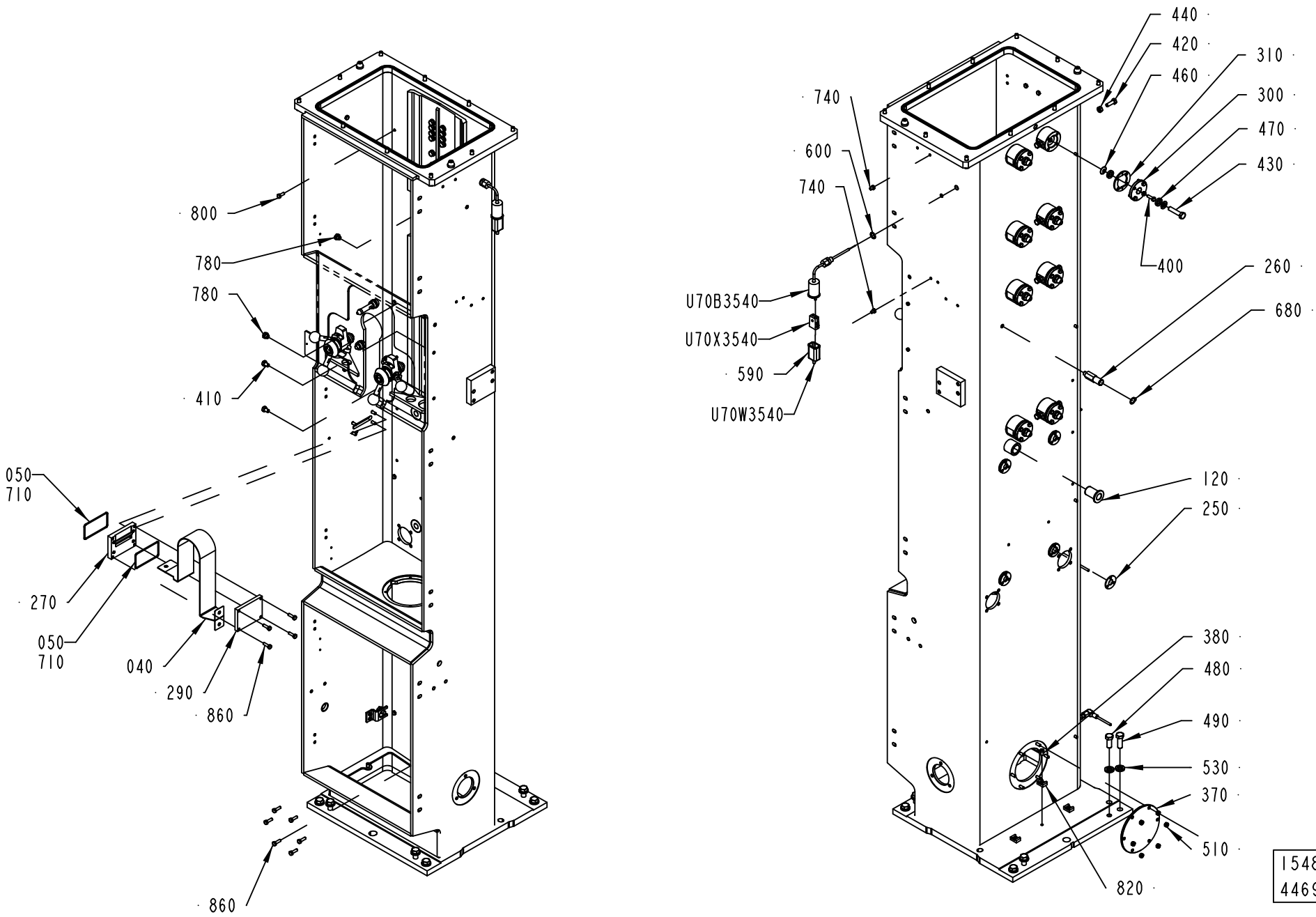
800
780
780
410
050
710
270
050
710
040
290
860
860
440
420
460
740
600
740
U70B3540
U70X3540
590
U70W3540
310
300
470
430
400
260
680
120
250
380
480
490
530
370
510
820
1548872-9
446972

ECM: 450710 - 20101001
Group number: 1548872-0400
Assembly Drawing: 1548872-9_2_AC

This list covers pages from 1-68 to 1-71

Pos	Part No	UN	Qty	Description	Page No
A3/SPEED (See drawing on pages: 1-68, 1-70)					
010	3020309-0000		1	PILLAR	
040	2863175-0000		1	BUSBAR	
090	2709277-0000		1	GASKET	
110	2835473-0000		1	PLATE	
180	2565497-0000		2	PLATE	
370	3037764-0000		1	PLUG	
410	312105-0447		26	SCREW M6S ISO 4017 M8X12 A480	
510	312605-0316		8	HEXAGON NUT, M6M M6 A280	
520	315105-0153		2	WASHER BRB 6,4X12 RFR	
640	312105-0327		4	SCREW M6S ISO 4017 M5X12 A480	
800	312105-0368		4	SCREW M6S ISO 4017 M6X16 A480	
810	315115-0165		24	WASHER PLAIN, TBRB 8,4/16 H=3	
860	312105-0370		6	SCREW M6S ISO 4017 M6X20 A480	
U70B1050	90600-0462		1	INDUCTIVE SWITCH, E2A-M12LN05-M1-B1-TP	
U70B1270	90600-0462		1	INDUCTIVE SWITCH, E2A-M12LN05-M1-B1-TP	
U70W1050	351310-0100		1	ACTUATOR/SENSOR CABLE PRKWT 4-07/10M	
U70W1270	351310-0100		1	ACTUATOR/SENSOR CABLE PRKWT 4-07/10M	
U70W3540	90220-0034	MM	6000	THERMOCABLE TEX/SITW-20F-KX 2X0,5MM2	
Common Parts					
020	2528088-0000		1	HOLDER	
030	90459-1175		1	O-RING 418X3,0 MM	
050	90459-1174		2	O-RING 75,87X2,62 MM	
060	2562677-0000		2	WASHER	
070	2709275-0000		1	GASKET	
080	1519150-0000		2	PIN	
100	2835471-0000		1	PLATE	
120	2544865-0000		1	BUSHING	
140	2506283-0000		1	PIN	
160	2526859-0000		1	CAM	
170	2528068-0000		1	CAM	
190	2528070-0000		1	LOCKING LEVER	
200	2528102-0000		1	LOCKING LEVER	
220	2512769-0000		1	SHAFT	
230	2512768-0000		1	SHAFT	
240	2544866-0000		1	WASHER	
250	2512774-0000		4	SHIM	
260	2547386-0000		1	SHAFT	
270	2533628-0000		1	SUPPORT BLOCK	
280	2526858-0000		2	DOWEL	
290	2533627-0000		1	SUPPORT BLOCK	
300	2709274-0000		8	FLANGE	
310	2709281-0000		16	SHIM	
380	312125-0366		3	SCREW ISO 1207 M6X12 A4	
400	312105-0370		46	SCREW M6S ISO 4017 M6X20 A480	
420	312105-0453		8	SCREW M6S ISO 4017 M8X25 A480	
430	312109-0500		8	SCREW M6S ISO 4017 M10X45 A480	
440	312605-0318		8	HEXAGON NUT, M6M M8 A280	
460	90459-6881		16	SPHERICAL WASHER M10 DIN 6319 C SHAPE	
470	90459-6882		16	CONICAL WASHER M10 DIN 6319 D SHAPE	
480	312105-0536		4	SCREW M6S ISO 4017 M12X30 A480	
490	312105-0538		4	SCREW M6S ISO 4017 M12X35 A480	
530	315115-0178		8	WASHER PLAIN, TBRB 13/24 H=4	
540	312105-0455		10	SCREW M6S ISO 4017 M8X30 A480	
550	315125-0173		2	WASHER TBRSB 10,5X28X6 A4	
590	90326-0012		1	PROTECTIVE COVER, T31A4618	
600	315237-0110		1	WASHER,PL.RND.AL.13,5/18,H=1,5	
610	90287-0112		2	SCREW SPRINGLOAD. SLOTTED HEAD M8X16	
620	90240-0293		2	FLANGE BUSHING, IGLIDUR X 25X28X21	
630	318800-0104		2	HANDLE,SPHERICAL KNOB,INT.THRE.,D.30-M8	
650	312105-0489		2	SCREW M6S ISO 4017 M10X16 A480	
660	90459-0871		1	RING, VARILIP 18X30X7 MM	
680	315751-0113		1	RETAINING RING FOR SHAFT DIN 471 16 SS	
710	90153-0023		1	ADHESIVE, SILICON 251470 TUB 90CC(UN1993	
720	315205-0707		2	O-RING 20,35X1,78 MM	
740	312105-0362		8	SCREW M6S ISO 4017 M6X8 A480	
780	90330-0066		2	PLUG, EXT. G-THREAD, G1/8	
820	352113-0204		3	ANCHOR PLATES FOR STRIPS, TYPE TM3S25-M	
U70B3540	90458-0341		1	THERMOCOUPLE, 5130050-001	
U70X3540	90326-0020		1	PLUG, FEMALE YELLOW CR-AL	

Machine Type | Group Description | Used-In | Group Number | Page No

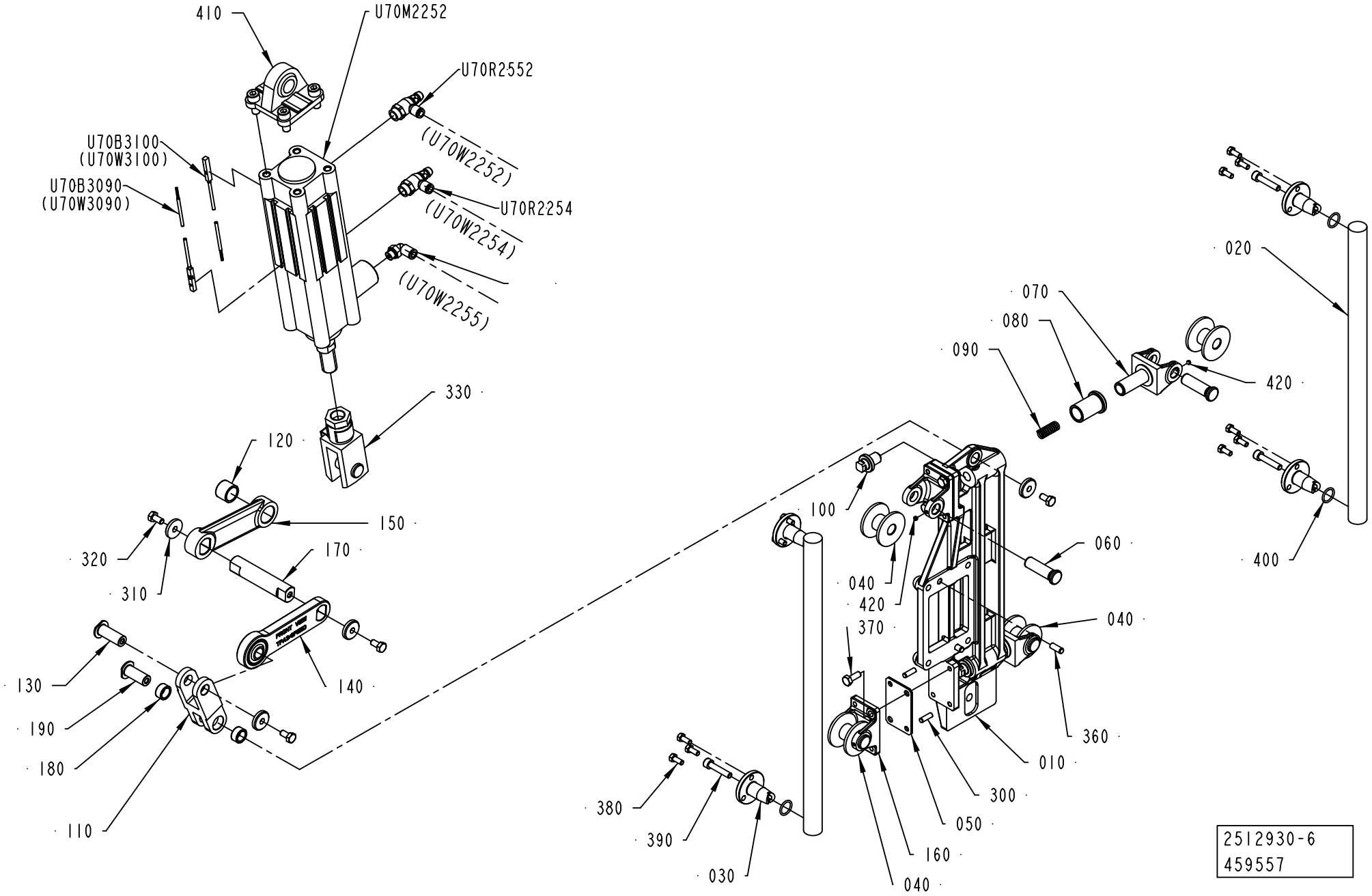
410
U70M2252
U70R2552
(U70W2252)
U70B3100
(U70W3100)
U70B3090
(U70W3090)
U70R2254
(U70W2254)
(U70W2255)
330
120
150
320
170
310
130
140
190
180
110
100
070
080
090
420
020
060
040
420
370
040
400
360
010
300
050
160
040
380
390
030
2512930-6
459557

ECM: 460607 - 20100701
Group number: 2512930-0300
Assembly Drawing: 2512930-6_1_AJ

Pos	Part No	UN	Qty	Description	Page No
A3/SPEED TBA 0125S (See drawing on page: 1-72)					
110	2747551-0000		1	LEVER	
140	2956447-0000		1	LEVER	
330	90239-0323		1	ROD END,CLEVIS WITH AXLE M16X1,5	
A3/SPEED TBA 1000B, A3/SPEED TBA 1000S, A3/SPEED TBA 1000SQ, A3/SPEED TBA 0200S, A3/SPEED TBA 0250B, A3/SPEED TBA 0200B, A3/SPEED TBA 0200M, A3/SPEED TBA 0250S (See drawing on page: 1-72)					
110	2747551-0000		1	LEVER	
140	2715618-0000		1	LEVER	
330	90239-0323		1	ROD END,CLEVIS WITH AXLE M16X1,5	
Common Parts					
010	2547401-0000		1	SUPPORT PLATE	
020	2793359-0000		2	SLIDE BAR	
030	2504523-0000		4	CENTERING	
040	2547403-0000		4	WHEEL	
050	2547419-0000		2	SHIM	
060	2526841-0000		4	SHAFT	
070	2552121-0000		2	BRACKET	
080	2522233-0000		2	BUSHING	
090	2522235-0000		2	COMPRESSION SPRING	
100	2541658-0000		2	SCREW	
120	2506269-0000		1	BUSHING	
130	2709262-0000		1	SHAFT	
150	2506273-0000		1	LEVER	
160	2547402-0000		2	BRACKET	
170	2715601-0000		1	SHAFT	
180	2506291-0000		2	BUSHING	
190	2751466-0000		1	SHAFT	
300	311103-0308		4	PARALLEL PIN ISO 2338 5M6X16 A1	
310	315125-0153		4	WASHER TBRSB 6,4X22X4 A4	
320	312105-0366		4	SCREW M6S ISO 4017 M6X12 A480	
350	350002-0006		1	PUSH-IN L-FITTING QSL-F-G1/8-6	
360	311103-0351		2	PARALLEL PIN ISO 2338 6M6X16 A1	
370	312105-0368		4	SCREW M6S ISO 4017 M6X16 A480	
380	312105-0327		12	SCREW M6S ISO 4017 M5X12 A480	
390	312115-0374		4	SCREW ISO4762 M6X30 A4 80	
400	315205-0703		4	O-RING 14,00X1,78 MM	
410	90459-0586		1	SWIVEL FLANGE 50	
420	90459-1395		4	SCREW HEX.SOCK.SET CONEPT.MS6SS M4X4 A2	
U70B3090	90600-5782		1	PROX. SENSOR, SMT-8M-PS-24V-K8,0-OE	
U70B3100	90600-5782		1	PROX. SENSOR, SMT-8M-PS-24V-K8,0-OE	
U70M2252	90459-0587		1	DOUBLE ACTING, PROFILE, CYL 50-50	
U70R2252	90235-0847		1	THROTTLE CHECK VALVE G1/4", MANUAL,6	
U70R2254	90235-0847		1	THROTTLE CHECK VALVE G1/4", MANUAL,6	

Machine Type | Group Description | Used-In | Group Number | Page No

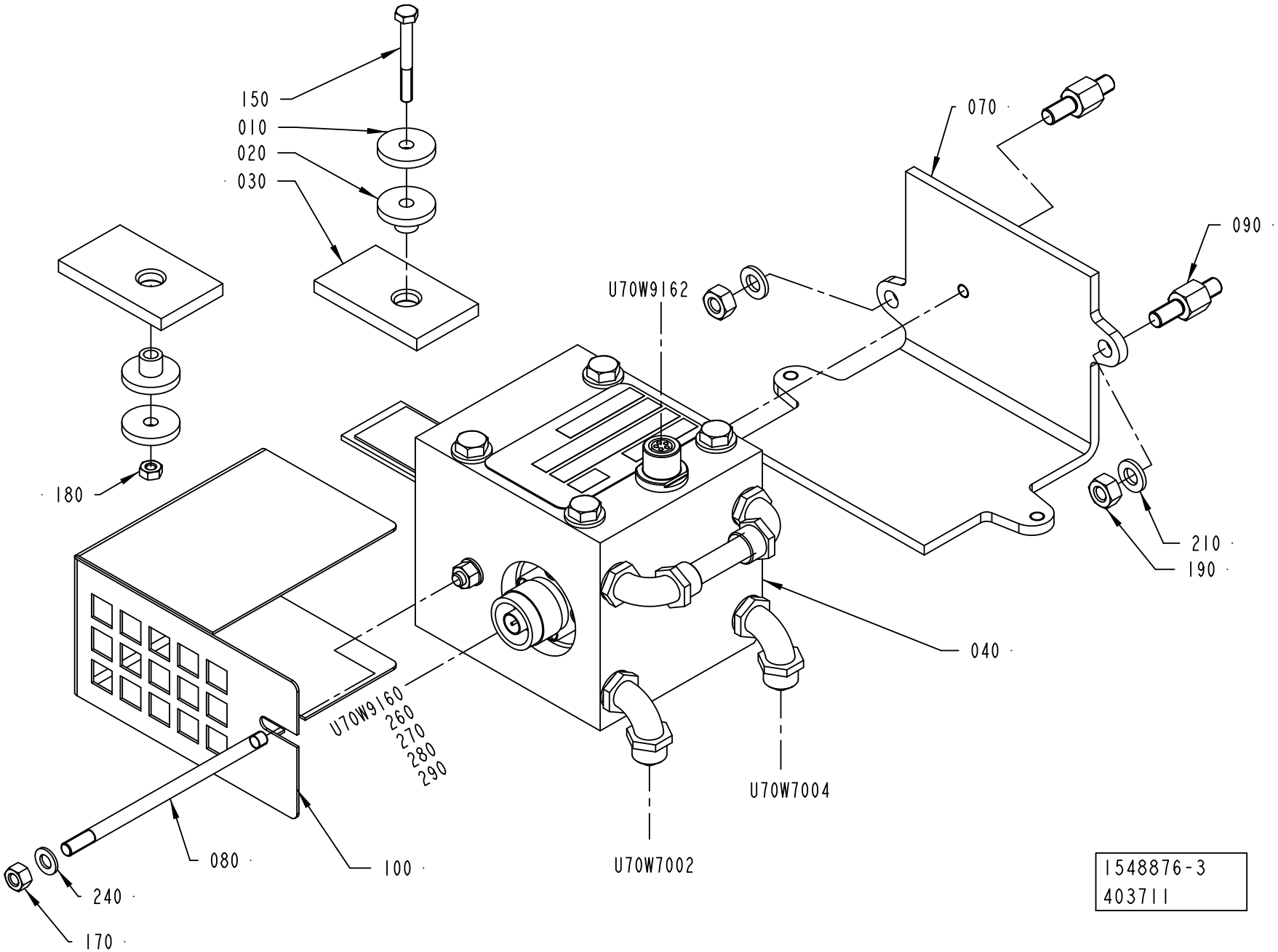
150
010
020
030
070
090
U70W9162
180
210
190
040
U70W9160
260
270
280
290
U70W7004
U70W7002
080
100
240
170
1548876-3
403711

ECM: 450705 - 20101001
Group number: 1548876-0300
Assembly Drawing: 1548876-3_1_AA

Pos	Part No	UN	Qty	Description	Page No
-					
010	263311-0000		2	WASHER	
020	1539174-0000		2	BUSHING	
030	1539175-0000		2	PLATE	
040	2902378-0100		1	TRANSFORMER	**1-77**
070	3037744-0000		1	BRACKET	
080	2559066-0000		1	STUD SCREW	
090	2532979-0000		2	SPACER	
100	3037742-0000		1	COVER	
150	312105-0301		1	SCREW M6S ISO 4017 M4X35 A470	
170	312605-0314		1	HEXAGON NUT, M6M M5 A280	
180	312605-0312		1	HEXAGON NUT, M6M M4 A280	
190	312605-0316		2	HEXAGON NUT, M6M M6 A280	
210	315105-0153		2	WASHER BRB 6,4X12 RFR	
240	315105-0146		1	WASHER BRB 5,3X10 RFR	
250	90157-0037		1	THREAD SEALANT LOCTITE 542	
260	90458-2890		1	CONNECTOR, 21N-50N12N133NE	
270	90458-2892		1	CONNECTOR, 11 N-50-3-31/133 NE	
280	90458-2893		2	SLEEVE, 78 Z-0-3-4	
290	90110-0381		1	COVER, 310601-33 CYR24.4	
U70W7002	90166-0118	MM	4000	TUBE 8 MM PA BLACK	
U70W7004	90166-0118	MM	4500	TUBE 8 MM PA BLACK	
U70W9160	90458-2895	MM	8200	COAXIAL CABLE RG 400/U BROWN	
U70W9162	2957417-0000		1	CABLE	

Pos	Part No	UN	Qty	Description	Page No

Machine Type | Group Description | Used-In | Group Number | Page No

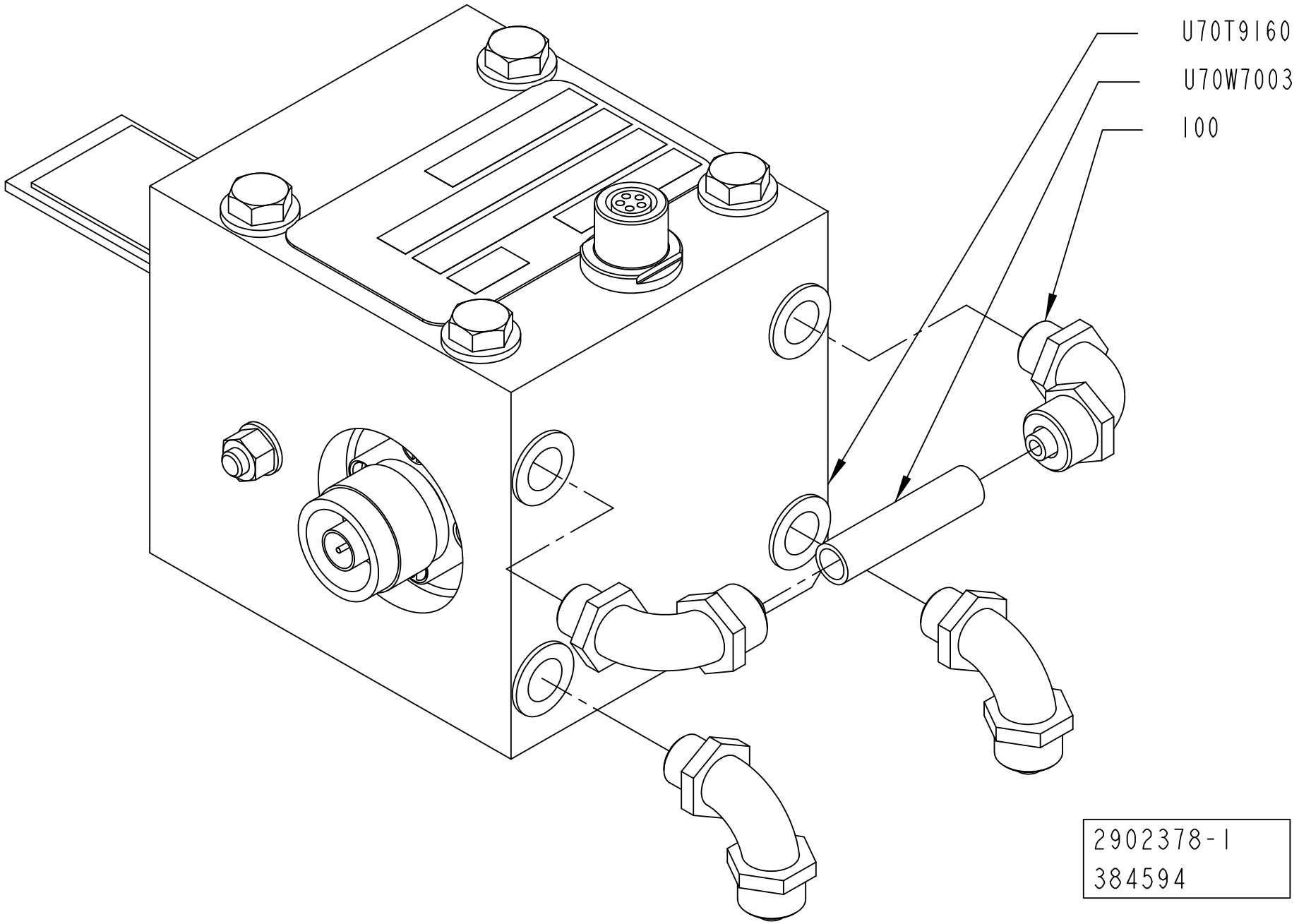
U70T9160
U70W7003
100
2902378-1
384594

ECM: 451585 - 20101001
Group number: 2902378-0100
Assembly Drawing: 2902378-1_1_AA

Pos	Part No	UN	Qty	Description	Page No
A3/SPEED TBA 1000B, A3/SPEED TBA 1000S, A3/SPEED TBA 0250B, A3/SPEED TBA 0200B, A3/SPEED TBA 0125S					
U70T9160	2888970-0524		1	TRANSFORMER VMN	
A3/SPEED TBA 1000SQ, A3/SPEED TBA 0200S, A3/SPEED TBA 0200M, A3/SPEED TBA 0250S					
U70T9160	2888970-0438		1	TRANSFORMER VMN	
Common Parts					
100	342931-0121		4	ELBOW 90 COUPL.,EXT.THREAD 8/6-G1/8"	
U70W7003	90166-0118	MM	50	TUBE 8 MM PA BLACK	

Pos	Part No	UN	Qty	Description	Page No

DRAINING CONDENSE

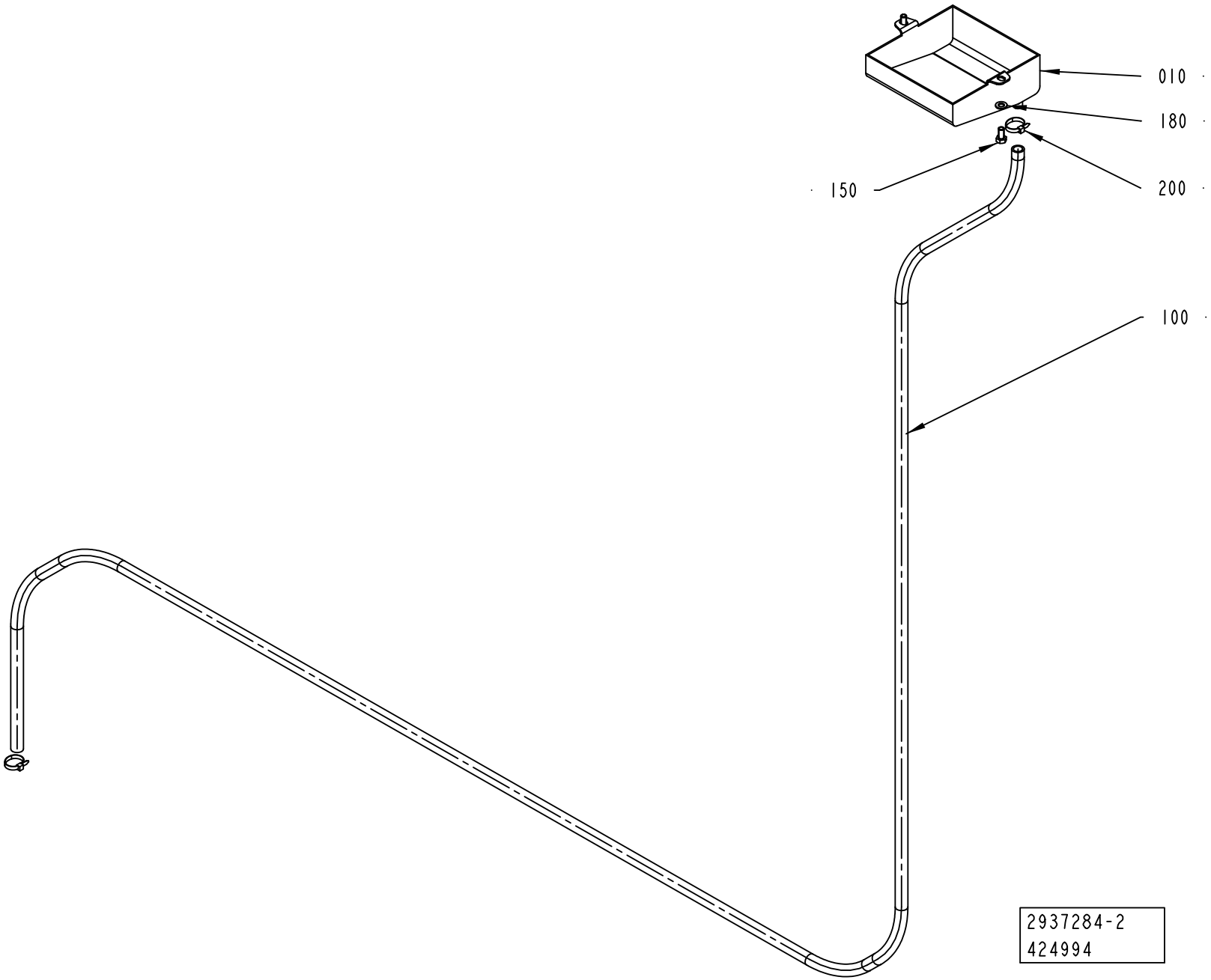

ECM: 429450 - 20100401
Group number: 2937284-0200
Assembly Drawing: 2937284-2_1_AB

Pos	Part No	UN	Qty	Description	Page No
-					
010	3037743-0000		1	PROTECTION	
100	90166-0008	MM	3000	HOSE 7/10 PVC TRANSP.	
150	312105-0325		2	SCREW M6S ISO 4017 M5X10 A480	
180	315105-0146		2	WASHER BRB 5,3X10 RFR	
200	352113-0101		2	CABLE TIE, BLACK 92X2,5 MM	

Pos	Part No	UN	Qty	Description	Page No

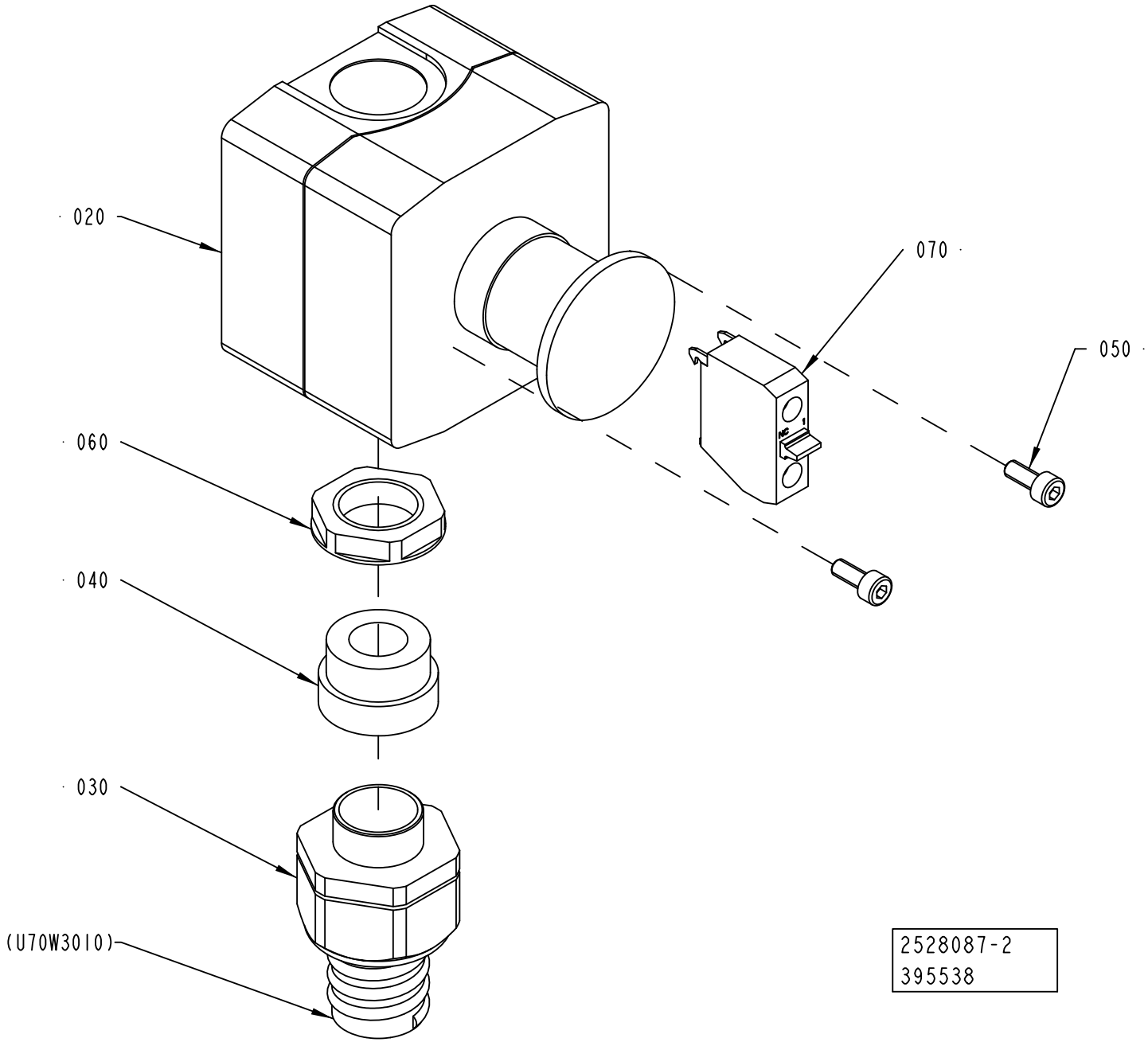
020
070
050
060
040
030
(U70W3010)
2528087-2
395538

ECM: 403938 - 20091001
Group number: 2528087-0200
Assembly Drawing: 2528087-2_1_AB

Pos	Part No	UN	Qty	Description	Page No
-					
020	90459-1130		1	EM. STOP XAL-K178F	
030	90458-0430		1	HOSE GLAND W/O INSERT M20 EXTENDED	
040	353249-0013		1	INSERT, SINGLE HOLE, EK 154/13	
050	312115-0289		2	SCREW ISO4762 M4X10 A4 80	
060	90458-0323		1	NUT, M20X1,5	
070	90600-1949		1	CONTACT BLOCK 1NC, ZEN L1121	
U70W3010	351150-0406	MM	5900	CABLE OLFLEX 7X0,75 MM2 LIGHT/GREY	

Pos	Part No	UN	Qty	Description	Page No

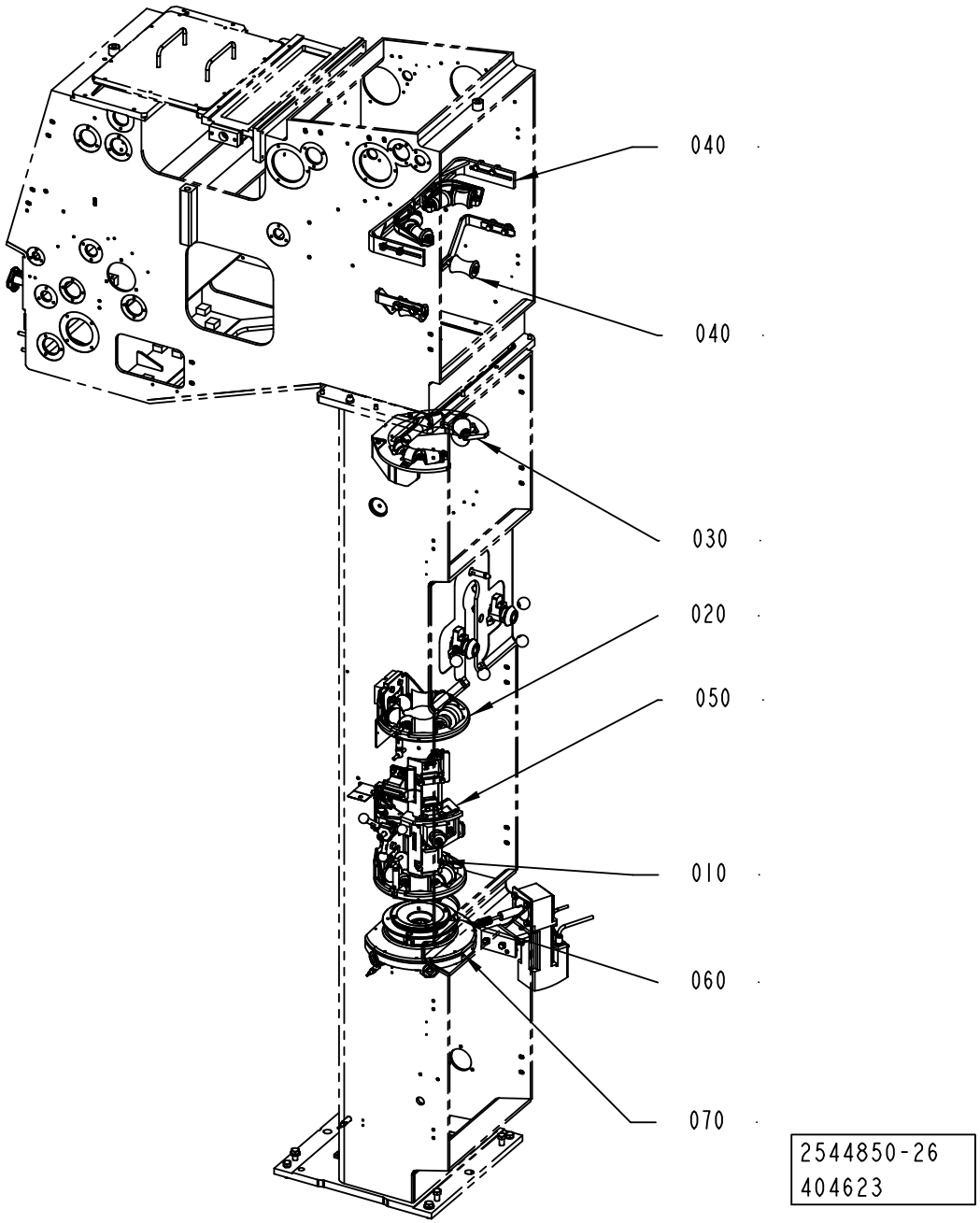
040
040
030
020
050
010
060
070
2544850-26
404623

ECM: 445875 - 20100702
Group number: 2544850-0300
Assembly Drawing: 2544850-26_1_AA

Pos	Part No	UN	Qty	Description	Page No
A3/SPEED					
010	2895150-0250		1	LOWER FORMING RING	**1-85**
020	2912701-0250		1	UPPER FORMING RING	**1-101**
030	2911823-0250		1	FORMING RING	**1-115**
040	2912703-0250		1	EDGE ROLLER	**1-129, 1-131**
060	3020129-0100		1	SEAL	**1-145**
070	2876047-0100		1	STEERING RING	**1-147, 1-149**
080	3093220-0100		1	TRIMMING ROLLER	**1-153**
Common Parts					
050	2657873-0200		1	LONGITUDINAL SEALING	**1-155, 1-157, 1-159**

Pos	Part No	UN	Qty	Description	Page No

LOWER FORMING RING

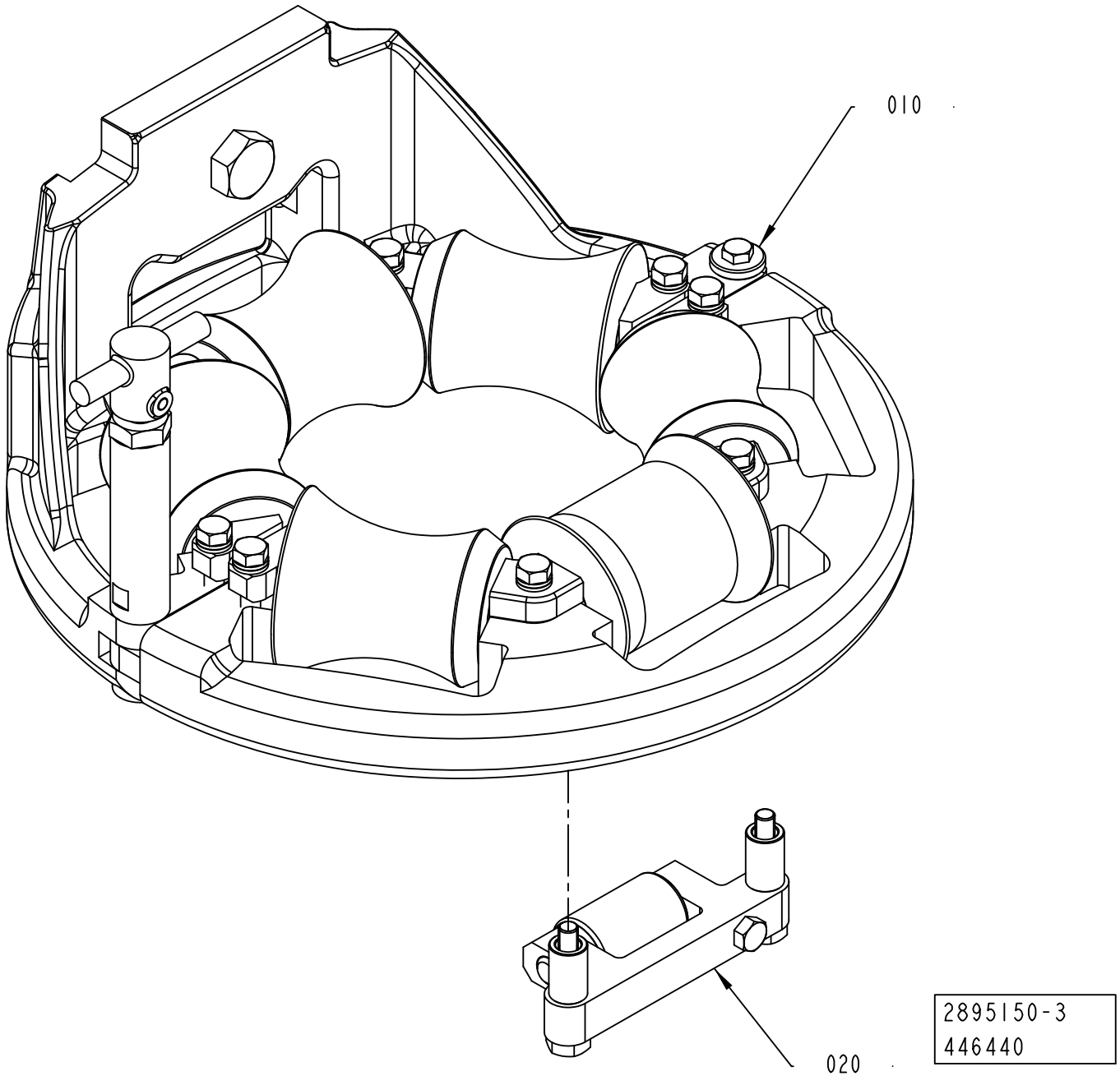

ECM: 474716 - 20101003
Group number: 2895150-0250
Assembly Drawing: 2895150-3_1_AA

Pos	Part No	UN	Qty	Description	Page No
TBA 0125S, TBA 0200M, TBA 0200S, TBA 0250S					
010	2966955-0250		1	LOWER FORMING RING	**1-87, 1-89**
TBA 0200B, TBA 0250B					
010	2912705-0250		1	LOWER FORMING RING	**1-91, 1-93, 1-95, 1-97**
TBA 1000B, TBA 1000SQ, TBA 1000S					
010	2912705-0250		1	LOWER FORMING RING	**1-91, 1-93, 1-95, 1-97**
020	2555627-0350		1	PRESSURE ROLLER	**1-99**

Pos	Part No	UN	Qty	Description	Page No

LOWER FORMING RING

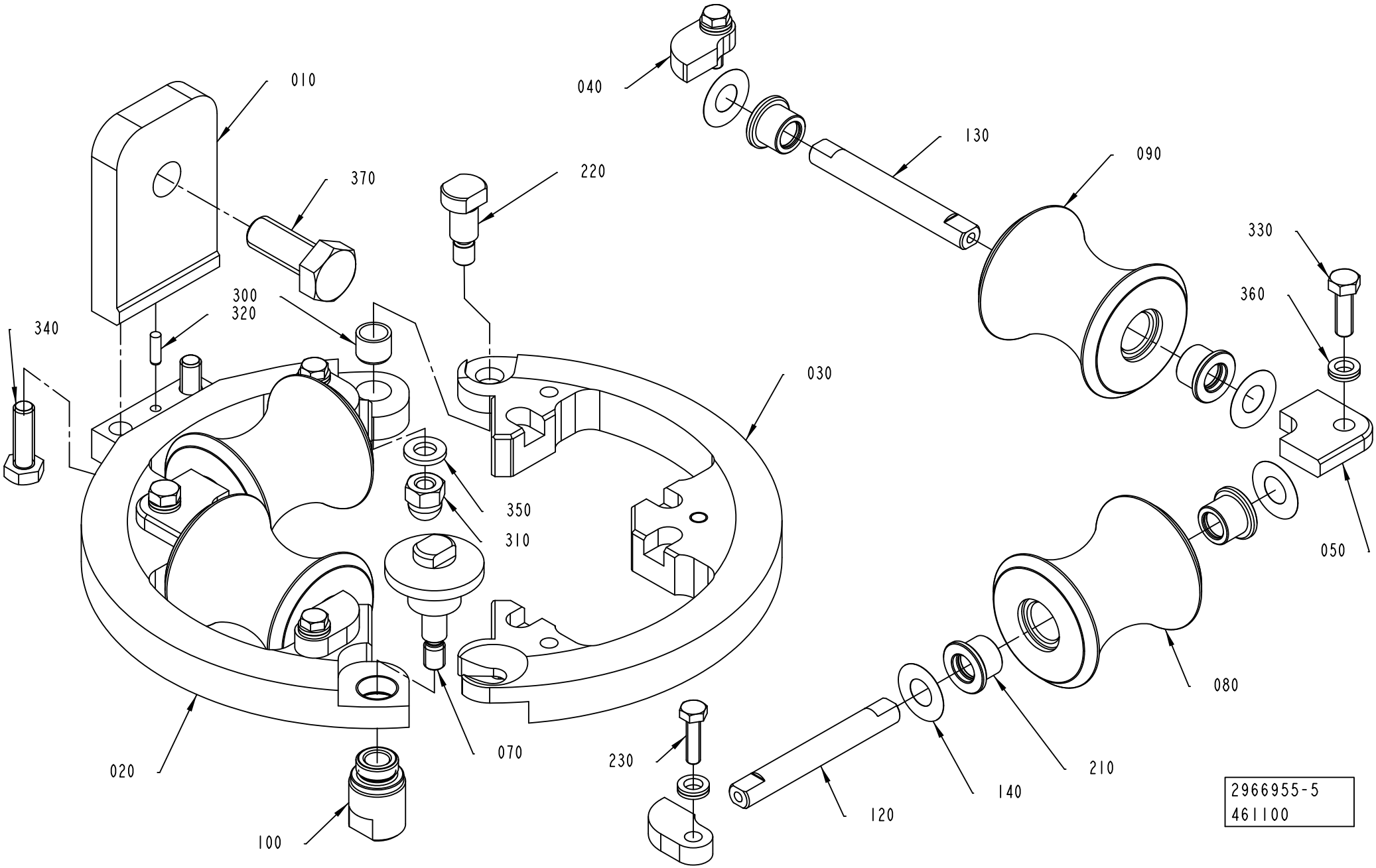

ECM: 474720 - 20101003
Group number: 2966955-0250
Assembly Drawing: 2966955-5_1_AB

This list covers pages from 1-86 to 1-89

Pos	Part No	UN	Qty	Description	Page No
TBA 0125S (See drawing on page: 1-88)					
010	2960361-0000		1	BRACKET	
080	3093267-0000		1	ROLLER	
090	3093266-0001		3	ROLLER	
TBA 0200M, TBA 0250S (See drawing on page: 1-86)					
010	3000908-0000		1	BRACKET	
080	3110855-0000		1	ROLLER	
090	3110856-0001		3	ROLLER	
TBA 0200S (See drawing on page: 1-86)					
010	2960361-0000		1	BRACKET	
080	3116706-0000		1	ROLLER	
090	3106246-0001		3	ROLLER	
Common Parts					
020	2960362-0000		1	FORMING RING	
030	2960363-0000		1	FORMING RING	
040	3093251-0001		4	LOCK PLATE	
050	3093252-0001		2	LOCK PLATE	
070	2966954-0000		1	KNOB	
100	2966953-0000		1	PLUG	
120	3060392-0001		1	SHAFT	
130	3059610-0001		3	SHAFT	
140	2033-0011		8	WASHER	
210	90601-2446		8	FLANGE BUSHING, 8X12X10 MM	
220	90600-4917		1	HINGE FLANGE, SCLBGN8 -12	
230	312105-0293		4	SCREW M6S ISO 4017 M4X16 A470	
300	321136-0100		1	BUSHING, IGLIDUR H370 8X10X8	
310	312705-0316		1	HEX. DOMED CAP MHM-6 M6 A280	
320	311103-0233		1	PARALLEL PIN ISO 2338 3M6X10 A1	
330	312105-0329		2	SCREW M6S ISO 4017 M5X16 A480	
340	312105-0370		2	SCREW M6S ISO 4017 M6X20 A480	
350	315106-0153		1	WASHER ISO 7089-6-200 HV A4	
360	90062-0065		6	LOCK WASHER NORD-LOCK,5,4/9 T=2,2	
370	312105-0493		1	SCREW M6S ISO 4017 M10X25 A480	
480	90600-8108		1	GREASE, OKS 1110 NSF H1, 15G	

Pos	Part No	UN	Qty	Description	Page No

LOWER FORMING RING

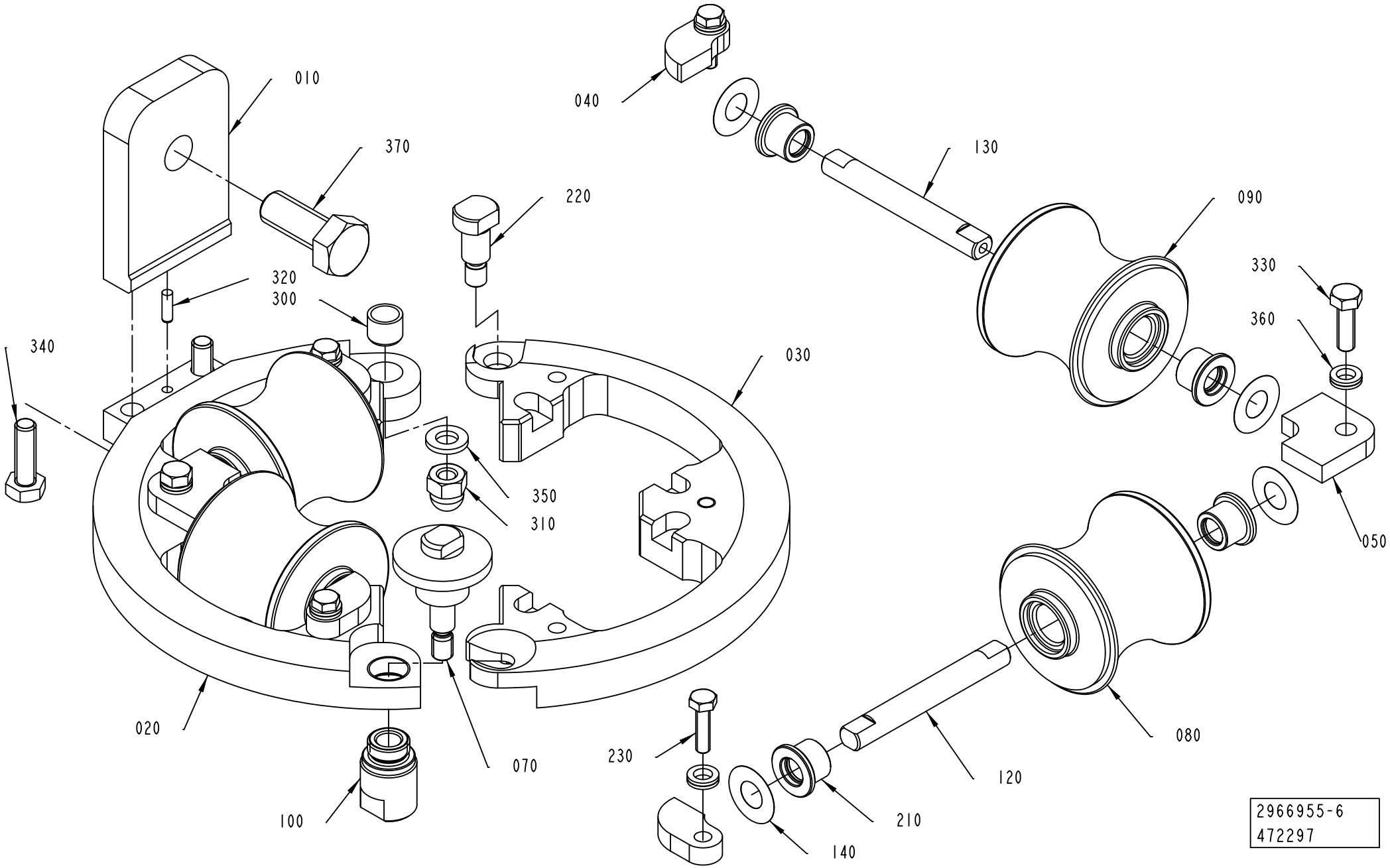

ECM: 474720 - 20101003
Group number: 2966955-0250
Assembly Drawing: 2966955-6_1_AA

This list covers pages from 1-86 to 1-89

Pos	Part No	UN	Qty	Description	Page No
TBA 0125S (See drawing on page: 1-88)					
010	2960361-0000		1	BRACKET	
080	3093267-0000		1	ROLLER	
090	3093266-0001		3	ROLLER	
TBA 0200M, TBA 0250S (See drawing on page: 1-86)					
010	3000908-0000		1	BRACKET	
080	3110855-0000		1	ROLLER	
090	3110856-0001		3	ROLLER	
TBA 0200S (See drawing on page: 1-86)					
010	2960361-0000		1	BRACKET	
080	3116706-0000		1	ROLLER	
090	3106246-0001		3	ROLLER	
Common Parts					
020	2960362-0000		1	FORMING RING	
030	2960363-0000		1	FORMING RING	
040	3093251-0001		4	LOCK PLATE	
050	3093252-0001		2	LOCK PLATE	
070	2966954-0000		1	KNOB	
100	2966953-0000		1	PLUG	
120	3060392-0001		1	SHAFT	
130	3059610-0001		3	SHAFT	
140	2033-0011		8	WASHER	
210	90601-2446		8	FLANGE BUSHING, 8X12X10 MM	
220	90600-4917		1	HINGE FLANGE, SCLBGN8 -12	
230	312105-0293		4	SCREW M6S ISO 4017 M4X16 A470	
300	321136-0100		1	BUSHING, IGLIDUR H370 8X10X8	
310	312705-0316		1	HEX. DOMED CAP MHM-6 M6 A280	
320	311103-0233		1	PARALLEL PIN ISO 2338 3M6X10 A1	
330	312105-0329		2	SCREW M6S ISO 4017 M5X16 A480	
340	312105-0370		2	SCREW M6S ISO 4017 M6X20 A480	
350	315106-0153		1	WASHER ISO 7089-6-200 HV A4	
360	90062-0065		6	LOCK WASHER NORD-LOCK,5,4/9 T=2,2	
370	312105-0493		1	SCREW M6S ISO 4017 M10X25 A480	
480	90600-8108		1	GREASE, OKS 1110 NSF H1, 15G	

Pos	Part No	UN	Qty	Description	Page No

LOWER FORMING RING

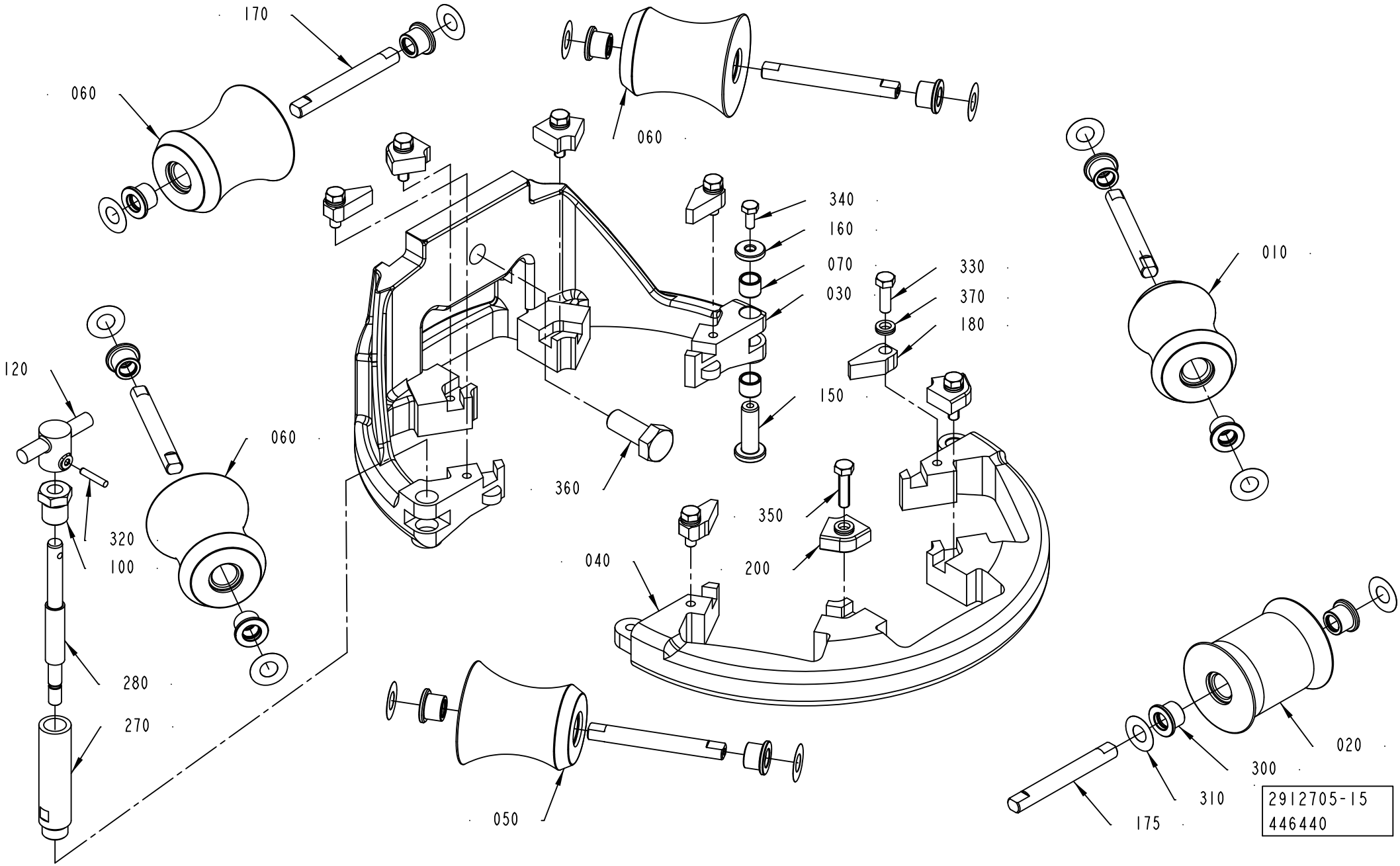

ECM: 474718 - 20101003
Group number: 2912705-0250
Assembly Drawing: 2912705-15_1_AA

This list covers pages from 1-90 to 1-97

Pos	Part No	UN	Qty	Description	Page No
TBA 0200B, TBA 0250B (See drawing on page: 1-92)					
010	751502-0000		2	ROLLER	
015	3093190-0001		3	ROLLER	
020	2921575-0000		1	ROLLER	
030	2736630-0000		1	LOWER FORMING RING	
040	2764024-0000		1	LOWER FORMING RING	
170	3059610-0004		5	SHAFT	
175	3060392-0004		1	SHAFT	
180	3093247-0005		4	LOCK PLATE	
TBA 1000B (See drawing on page: 1-96)					
010	3079095-0001		2	ROLLER	
015	3079094-0001		1	ROLLER	
020	2876664-0000		1	COUNTER ROLLER	
030	2764026-0000		1	LOWER FORMING RING	
040	2700546-0000		1	FRONT RING	
060	1349851-0000		2	ROLL	
170	3059610-0014		5	SHAFT	
175	3060392-0014		1	SHAFT	
180	3093247-0004		4	LOCK PLATE	
TBA 1000S (See drawing on page: 1-94)					
010	567746-0001		5	ROLLER (STANDARD SIZE)	
020	1334856-0000		1	COUNTER ROLLER	
030	2764027-0000		1	LOWER FORMING RING	
040	2721423-0000		1	FORMING RING	
170	3059610-0008		5	SHAFT	
175	3060392-0008		1	SHAFT	
180	3093247-0005		4	LOCK PLATE	
TBA 1000SQ (See drawing on page: 1-90)					
010	2897901-0000		1	ROLLER	
020	2898309-0000		1	ROLLER	
030	2764023-0000		1	LOWER FORMING RING	
040	2736705-0000		1	LOWER FORMING RING	
050	2898310-0000		1	ROLLER	
060	3093194-0001		3	ROLLER	
170	3059610-0008		5	SHAFT	
175	3060392-0008		1	SHAFT	
180	3093247-0004		4	LOCK PLATE	
Common Parts					
070	2526826-0000		2	BUSHING	
100	2731428-0000		1	NUT	
120	2764036-0000		1	KNOB	
150	2526827-0000		1	SHAFT	
160	2526825-0000		1	WASHER	
200	3093246-0004		4	LOCK PLATE	
270	2764032-0000		1	SHAFT	
280	2764033-0000		1	SHAFT	
300	90601-2446		12	FLANGE BUSHING, 8X12X10 MM	
310	2033-0011		12	WASHER	
320	311103-0236		1	PARALLEL PIN ISO 2338 3M6X16 A1	
330	312105-0329		4	SCREW M6S ISO 4017 M5X16 A480	
340	312105-0289		1	SCREW M6S H4X10 A4 70 ISO4017/DIN933	
350	312105-0331		4	SCREW M6S ISO 4017 M5X20 A480	
360	312105-0493		1	SCREW M6S ISO 4017 M10X25 A480	
370	90062-0065		8	LOCK WASHER NORD-LOCK,5,4/9 T=2,2	
480	90600-8108		1	GREASE, OKS 1110 NSF H1, 15G	

Machine Type | Group Description | Used-In | Group Number | Page No

LOWER FORMING RING

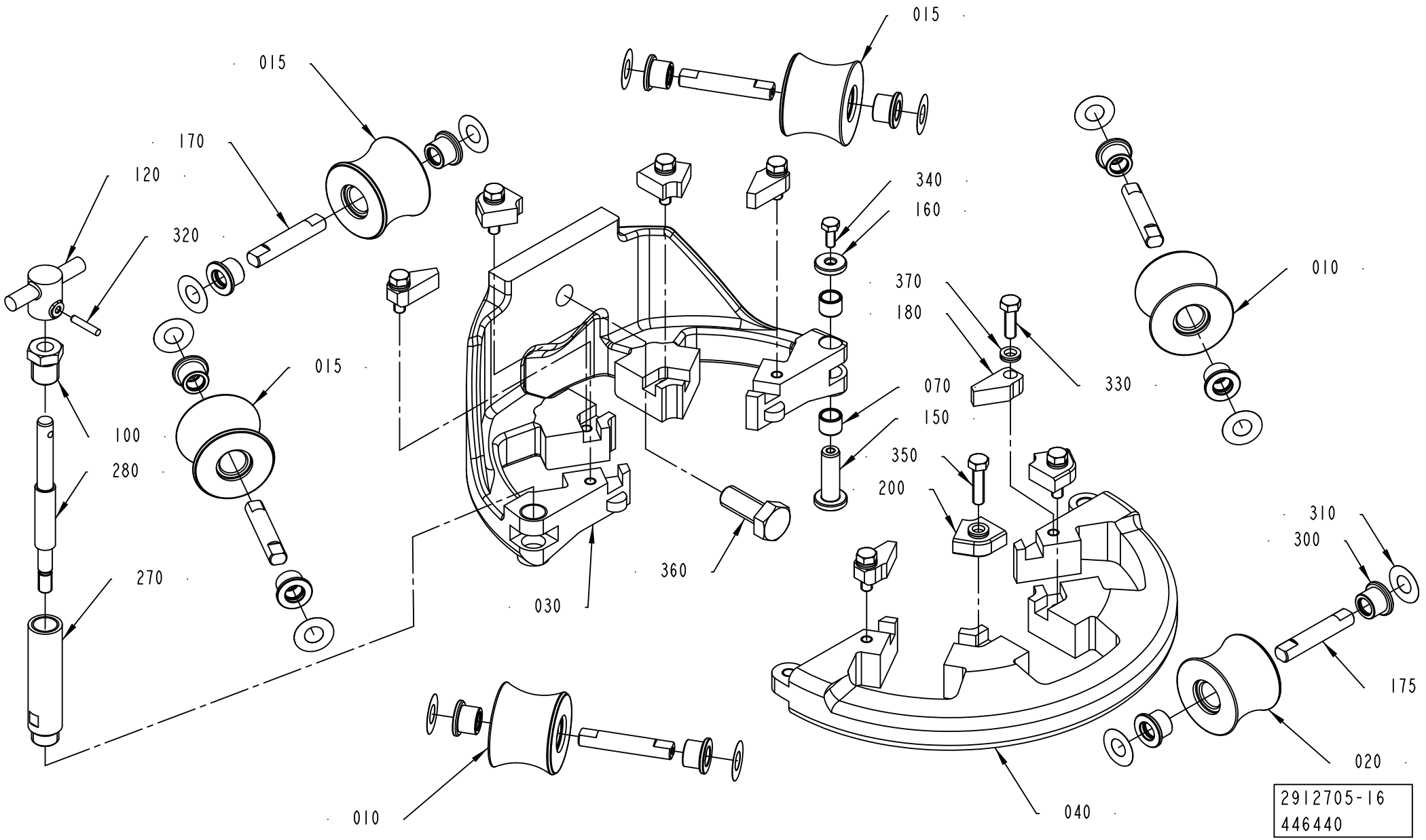

ECM: 474718 - 20101003
Group number: 2912705-0250
Assembly Drawing: 2912705-16_1_AA

This list covers pages from 1-90 to 1-97

Pos	Part No	UN	Qty	Description	Page No
TBA 0200B, TBA 0250B (See drawing on page: 1-92)					
010	751502-0000		2	ROLLER	
015	3093190-0001		3	ROLLER	
020	2921575-0000		1	ROLLER	
030	2736630-0000		1	LOWER FORMING RING	
040	2764024-0000		1	LOWER FORMING RING	
170	3059610-0004		5	SHAFT	
175	3060392-0004		1	SHAFT	
180	3093247-0005		4	LOCK PLATE	
TBA 1000B (See drawing on page: 1-96)					
010	3079095-0001		2	ROLLER	
015	3079094-0001		1	ROLLER	
020	2876664-0000		1	COUNTER ROLLER	
030	2764026-0000		1	LOWER FORMING RING	
040	2700546-0000		1	FRONT RING	
060	1349851-0000		2	ROLL	
170	3059610-0014		5	SHAFT	
175	3060392-0014		1	SHAFT	
180	3093247-0004		4	LOCK PLATE	
TBA 1000S (See drawing on page: 1-94)					
010	567746-0001		5	ROLLER (STANDARD SIZE)	
020	1334856-0000		1	COUNTER ROLLER	
030	2764027-0000		1	LOWER FORMING RING	
040	2721423-0000		1	FORMING RING	
170	3059610-0008		5	SHAFT	
175	3060392-0008		1	SHAFT	
180	3093247-0005		4	LOCK PLATE	
TBA 1000SQ (See drawing on page: 1-90)					
010	2897901-0000		1	ROLLER	
020	2898309-0000		1	ROLLER	
030	2764023-0000		1	LOWER FORMING RING	
040	2736705-0000		1	LOWER FORMING RING	
050	2898310-0000		1	ROLLER	
060	3093194-0001		3	ROLLER	
170	3059610-0008		5	SHAFT	
175	3060392-0008		1	SHAFT	
180	3093247-0004		4	LOCK PLATE	
Common Parts					
070	2526826-0000		2	BUSHING	
100	2731428-0000		1	NUT	
120	2764036-0000		1	KNOB	
150	2526827-0000		1	SHAFT	
160	2526825-0000		1	WASHER	
200	3093246-0004		4	LOCK PLATE	
270	2764032-0000		1	SHAFT	
280	2764033-0000		1	SHAFT	
300	90601-2446		12	FLANGE BUSHING, 8X12X10 MM	
310	2033-0011		12	WASHER	
320	311103-0236		1	PARALLEL PIN ISO 2338 3M6X16 A1	
330	312105-0329		4	SCREW M6S ISO 4017 M5X16 A480	
340	312105-0289		1	SCREW M6S H4X10 A4 70 ISO4017/DIN933	
350	312105-0331		4	SCREW M6S ISO 4017 M5X20 A480	
360	312105-0493		1	SCREW M6S ISO 4017 M10X25 A480	
370	90062-0065		8	LOCK WASHER NORD-LOCK,5,4/9 T=2,2	
480	90600-8108		1	GREASE, OKS 1110 NSF H1, 15G	

Machine Type | Group Description | Used-In | Group Number | Page No

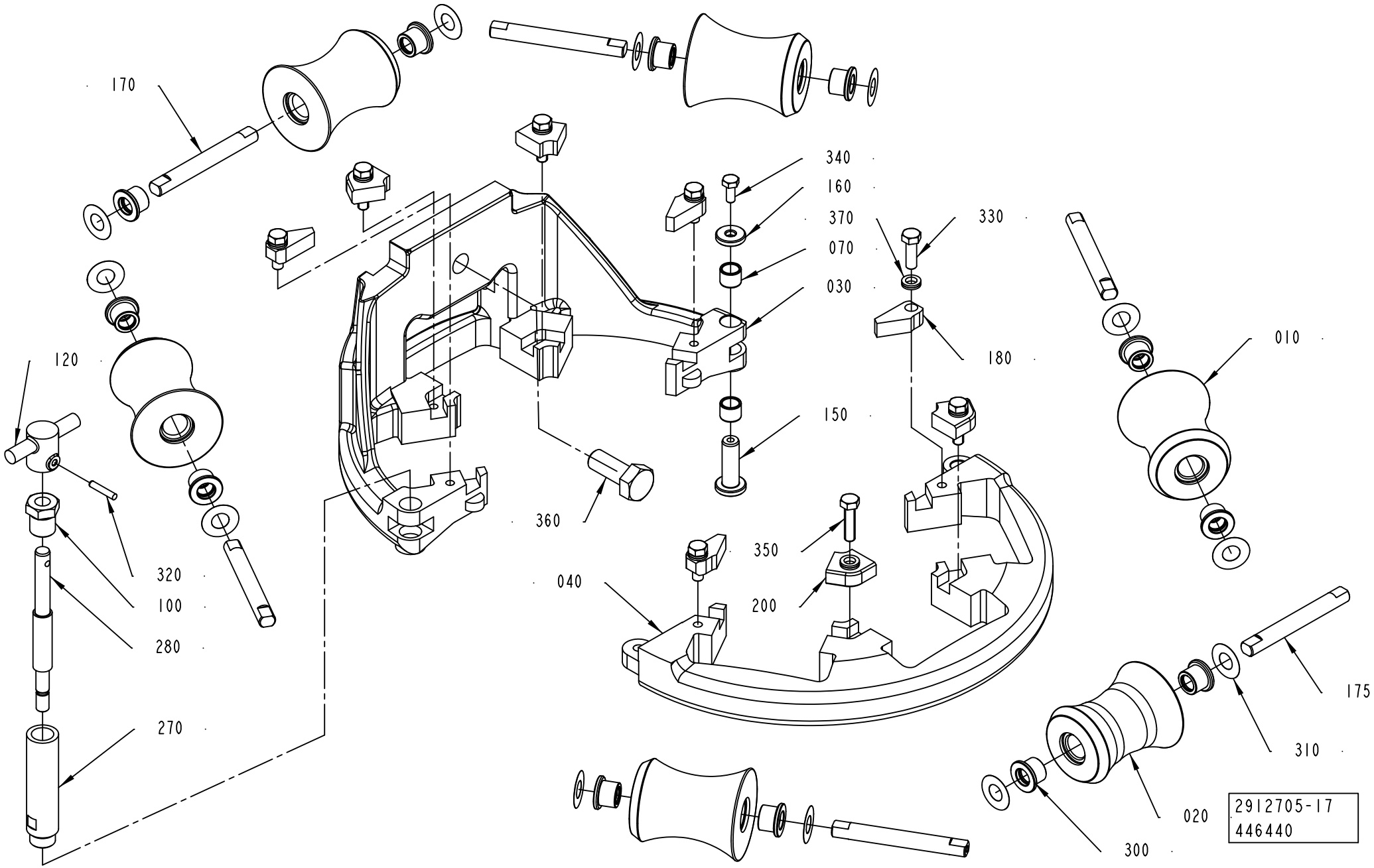
170
340
160
370
070
030
330
180
010
120
150
360
320
100
280
350
040
200
270
175
310
020
300
2912705-17
446440

ECM: 474718 - 20101003
Group number: 2912705-0250
Assembly Drawing: 2912705-17_1_AA

This list covers pages from 1-90 to 1-97

Pos	Part No	UN	Qty	Description	Page No
TBA 0200B, TBA 0250B (See drawing on page: 1-92)					
010	751502-0000		2	ROLLER	
015	3093190-0001		3	ROLLER	
020	2921575-0000		1	ROLLER	
030	2736630-0000		1	LOWER FORMING RING	
040	2764024-0000		1	LOWER FORMING RING	
170	3059610-0004		5	SHAFT	
175	3060392-0004		1	SHAFT	
180	3093247-0005		4	LOCK PLATE	
TBA 1000B (See drawing on page: 1-96)					
010	3079095-0001		2	ROLLER	
015	3079094-0001		1	ROLLER	
020	2876664-0000		1	COUNTER ROLLER	
030	2764026-0000		1	LOWER FORMING RING	
040	2700546-0000		1	FRONT RING	
060	1349851-0000		2	ROLL	
170	3059610-0014		5	SHAFT	
175	3060392-0014		1	SHAFT	
180	3093247-0004		4	LOCK PLATE	
TBA 1000S (See drawing on page: 1-94)					
010	567746-0001		5	ROLLER (STANDARD SIZE)	
020	1334856-0000		1	COUNTER ROLLER	
030	2764027-0000		1	LOWER FORMING RING	
040	2721423-0000		1	FORMING RING	
170	3059610-0008		5	SHAFT	
175	3060392-0008		1	SHAFT	
180	3093247-0005		4	LOCK PLATE	
TBA 1000SQ (See drawing on page: 1-90)					
010	2897901-0000		1	ROLLER	
020	2898309-0000		1	ROLLER	
030	2764023-0000		1	LOWER FORMING RING	
040	2736705-0000		1	LOWER FORMING RING	
050	2898310-0000		1	ROLLER	
060	3093194-0001		3	ROLLER	
170	3059610-0008		5	SHAFT	
175	3060392-0008		1	SHAFT	
180	3093247-0004		4	LOCK PLATE	
Common Parts					
070	2526826-0000		2	BUSHING	
100	2731428-0000		1	NUT	
120	2764036-0000		1	KNOB	
150	2526827-0000		1	SHAFT	
160	2526825-0000		1	WASHER	
200	3093246-0004		4	LOCK PLATE	
270	2764032-0000		1	SHAFT	
280	2764033-0000		1	SHAFT	
300	90601-2446		12	FLANGE BUSHING, 8X12X10 MM	
310	2033-0011		12	WASHER	
320	311103-0236		1	PARALLEL PIN ISO 2338 3M6X16 A1	
330	312105-0329		4	SCREW M6S ISO 4017 M5X16 A480	
340	312105-0289		1	SCREW M6S H4X10 A4 70 ISO4017/DIN933	
350	312105-0331		4	SCREW M6S ISO 4017 M5X20 A480	
360	312105-0493		1	SCREW M6S ISO 4017 M10X25 A480	
370	90062-0065		8	LOCK WASHER NORD-LOCK,5,4/9 T=2,2	
480	90600-8108		1	GREASE, OKS 1110 NSF H1, 15G	

Machine Type | Group Description | Used-In | Group Number | Page No

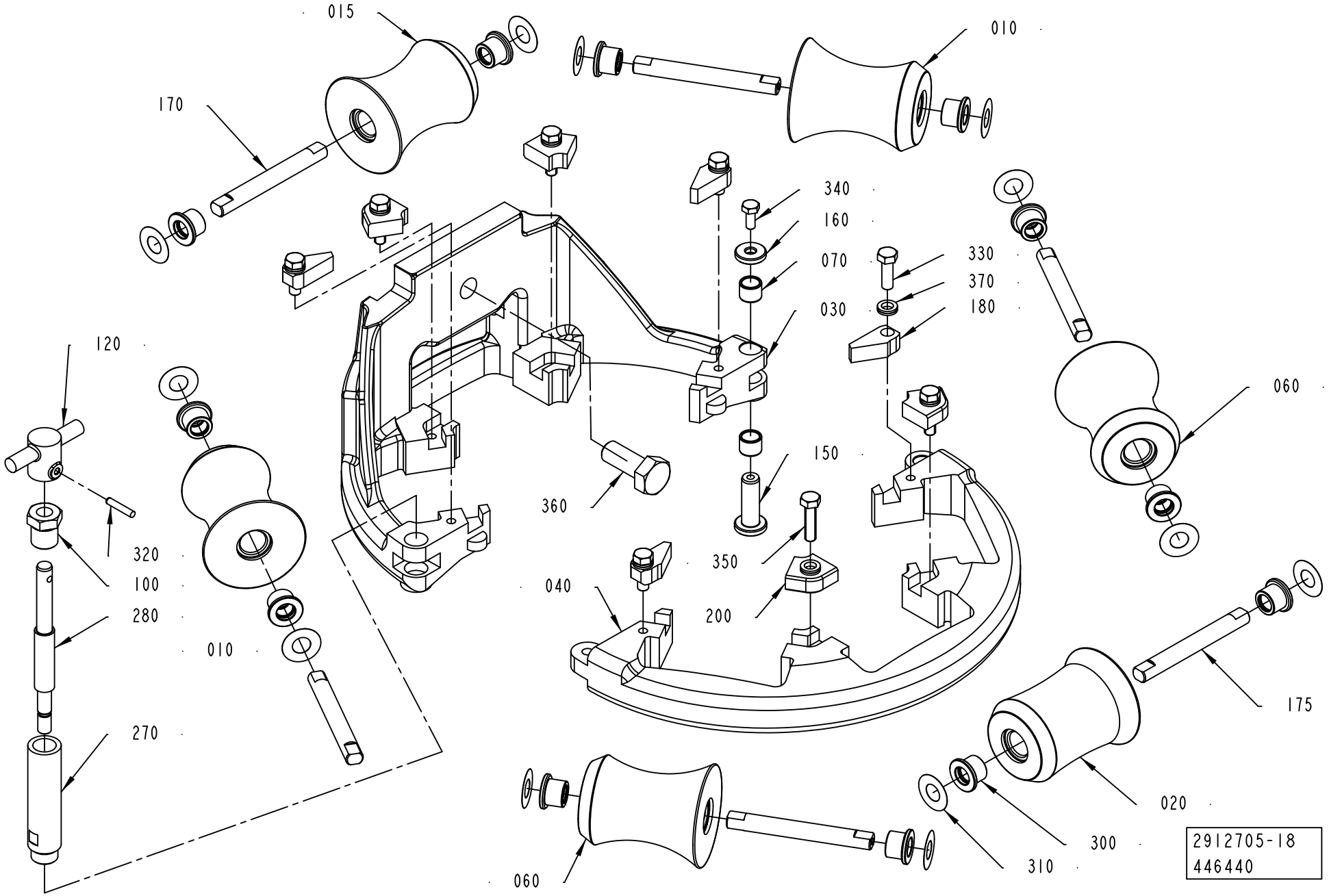
015
010
170
340
160
070
330
370
030
180
120
060
150
360
320
100
280
350
040
200
010
175
270
020
300
310
060
2912705-18
446440

ECM: 474718 - 20101003
Group number: 2912705-0250
Assembly Drawing: 2912705-18_1_AA

This list covers pages from 1-90 to 1-97

Pos	Part No	UN	Qty	Description	Page No
TBA 0200B, TBA 0250B (See drawing on page: 1-92)					
010	751502-0000		2	ROLLER	
015	3093190-0001		3	ROLLER	
020	2921575-0000		1	ROLLER	
030	2736630-0000		1	LOWER FORMING RING	
040	2764024-0000		1	LOWER FORMING RING	
170	3059610-0004		5	SHAFT	
175	3060392-0004		1	SHAFT	
180	3093247-0005		4	LOCK PLATE	
TBA 1000B (See drawing on page: 1-96)					
010	3079095-0001		2	ROLLER	
015	3079094-0001		1	ROLLER	
020	2876664-0000		1	COUNTER ROLLER	
030	2764026-0000		1	LOWER FORMING RING	
040	2700546-0000		1	FRONT RING	
060	1349851-0000		2	ROLL	
170	3059610-0014		5	SHAFT	
175	3060392-0014		1	SHAFT	
180	3093247-0004		4	LOCK PLATE	
TBA 1000S (See drawing on page: 1-94)					
010	567746-0001		5	ROLLER (STANDARD SIZE)	
020	1334856-0000		1	COUNTER ROLLER	
030	2764027-0000		1	LOWER FORMING RING	
040	2721423-0000		1	FORMING RING	
170	3059610-0008		5	SHAFT	
175	3060392-0008		1	SHAFT	
180	3093247-0005		4	LOCK PLATE	
TBA 1000SQ (See drawing on page: 1-90)					
010	2897901-0000		1	ROLLER	
020	2898309-0000		1	ROLLER	
030	2764023-0000		1	LOWER FORMING RING	
040	2736705-0000		1	LOWER FORMING RING	
050	2898310-0000		1	ROLLER	
060	3093194-0001		3	ROLLER	
170	3059610-0008		5	SHAFT	
175	3060392-0008		1	SHAFT	
180	3093247-0004		4	LOCK PLATE	
Common Parts					
070	2526826-0000		2	BUSHING	
100	2731428-0000		1	NUT	
120	2764036-0000		1	KNOB	
150	2526827-0000		1	SHAFT	
160	2526825-0000		1	WASHER	
200	3093246-0004		4	LOCK PLATE	
270	2764032-0000		1	SHAFT	
280	2764033-0000		1	SHAFT	
300	90601-2446		12	FLANGE BUSHING, 8X12X10 MM	
310	2033-0011		12	WASHER	
320	311103-0236		1	PARALLEL PIN ISO 2338 3M6X16 A1	
330	312105-0329		4	SCREW M6S ISO 4017 M5X16 A480	
340	312105-0289		1	SCREW M6S H4X10 A4 70 ISO4017/DIN933	
350	312105-0331		4	SCREW M6S ISO 4017 M5X20 A480	
360	312105-0493		1	SCREW M6S ISO 4017 M10X25 A480	
370	90062-0065		8	LOCK WASHER NORD-LOCK,5,4/9 T=2,2	
480	90600-8108		1	GREASE, OKS 1110 NSF H1, 15G	

Machine Type | Group Description | Used-In | Group Number | Page No

PRESSURE ROLLER

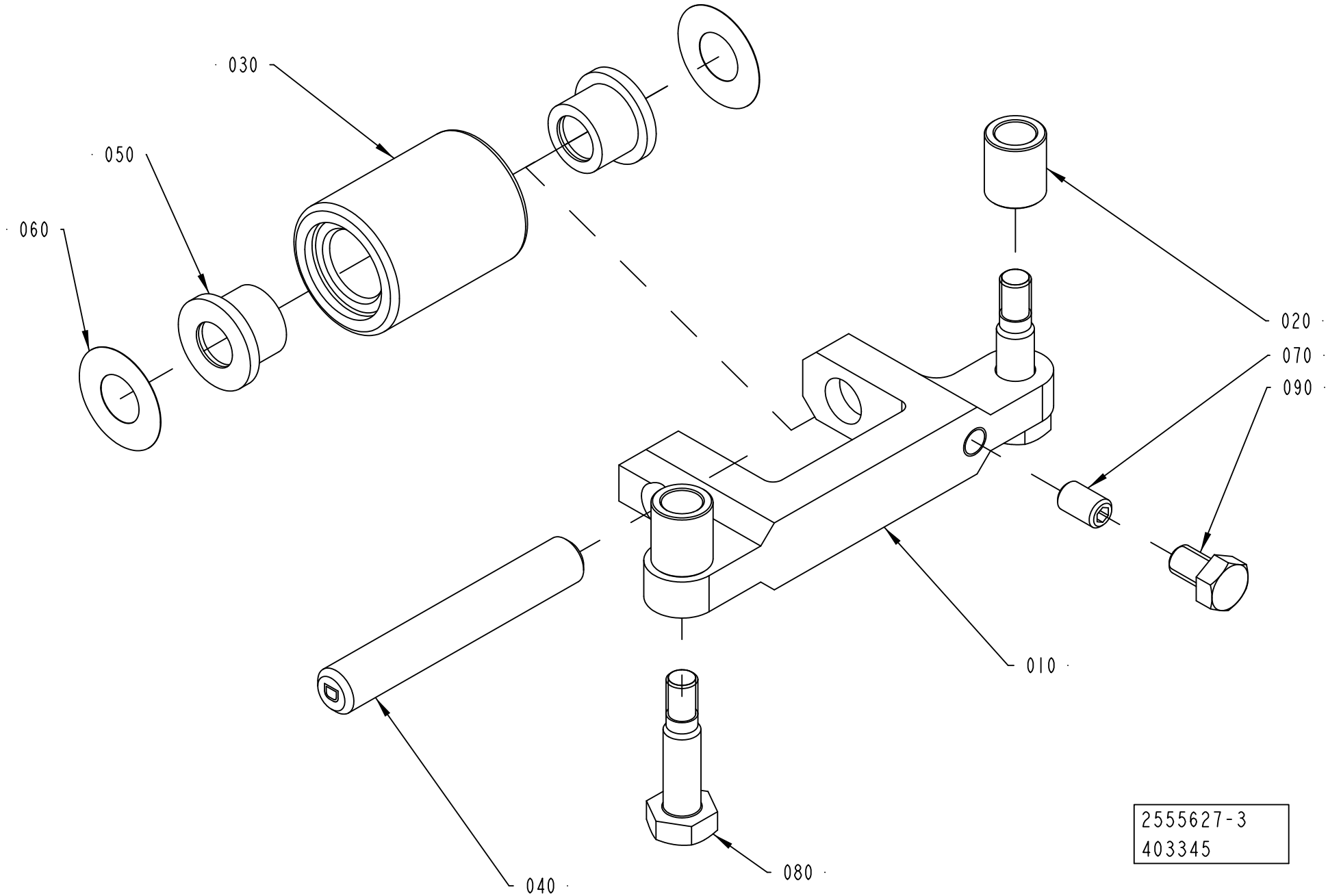

ECM: 446877 - 20100401
Group number: 2555627-0350
Assembly Drawing: 2555627-3_1_AA

Pos	Part No	UN	Qty	Description	Page No
A3/SPEED TBA 1000B					
010	2764009-0000		1	BRACKET	
020	2715649-0013		2	SPACER	
030	2826410-0000		1	ROLLER	
080	2715650-0005		2	SCREW	
A3/SPEED TBA 1000S					
010	2611052-0000		1	BRACKET	
020	2715649-0008		2	SPACER	
030	1538950-0000		1	ROLLER	
080	2715650-0003		2	SCREW	
A3/SPEED TBA 1000SQ					
010	2659361-0000		1	BRACKET	
020	2715649-0013		2	SPACER	
030	2715570-0000		1	ROLLER	
080	2715650-0009		2	SCREW	
Common Parts					
040	3016972-0007		1	SHAFT	
050	90601-2446		2	FLANGE BUSHING, 8X12X10 MM	
060	2033-0011		2	WASHER	
070	312318-0323		1	SCREW ISO4029 M5X8 A4	
090	312105-0323		1	SCREW M6S ISO 4017 M5X8 A480	
480	90600-8108		1	GREASE, OKS 1110 NSF H1, 15G	

Pos	Part No	UN	Qty	Description	Page No

This page is intentionally left blank.

ECM: 474717 - 20101003
Group number: 2912701-0250
Assembly Drawing:

Pos	Part No	UN	Qty	Description	Page No
TBA 0125S, TBA 0200S					
	3013503-0150		1	UPPER FORMING RING	**1-103, 1-105**
TBA 0200M, TBA 0200B, TBA 0250S, TBA 0250B, TBA 1000B, TBA 1000SQ, TBA 1000S					
	2912706-0250		1	UPPER FORMING RING	**1-107, 1-109, 1-111, 1-113**

Pos	Part No	UN	Qty	Description	Page No

UPPER FORMING RING

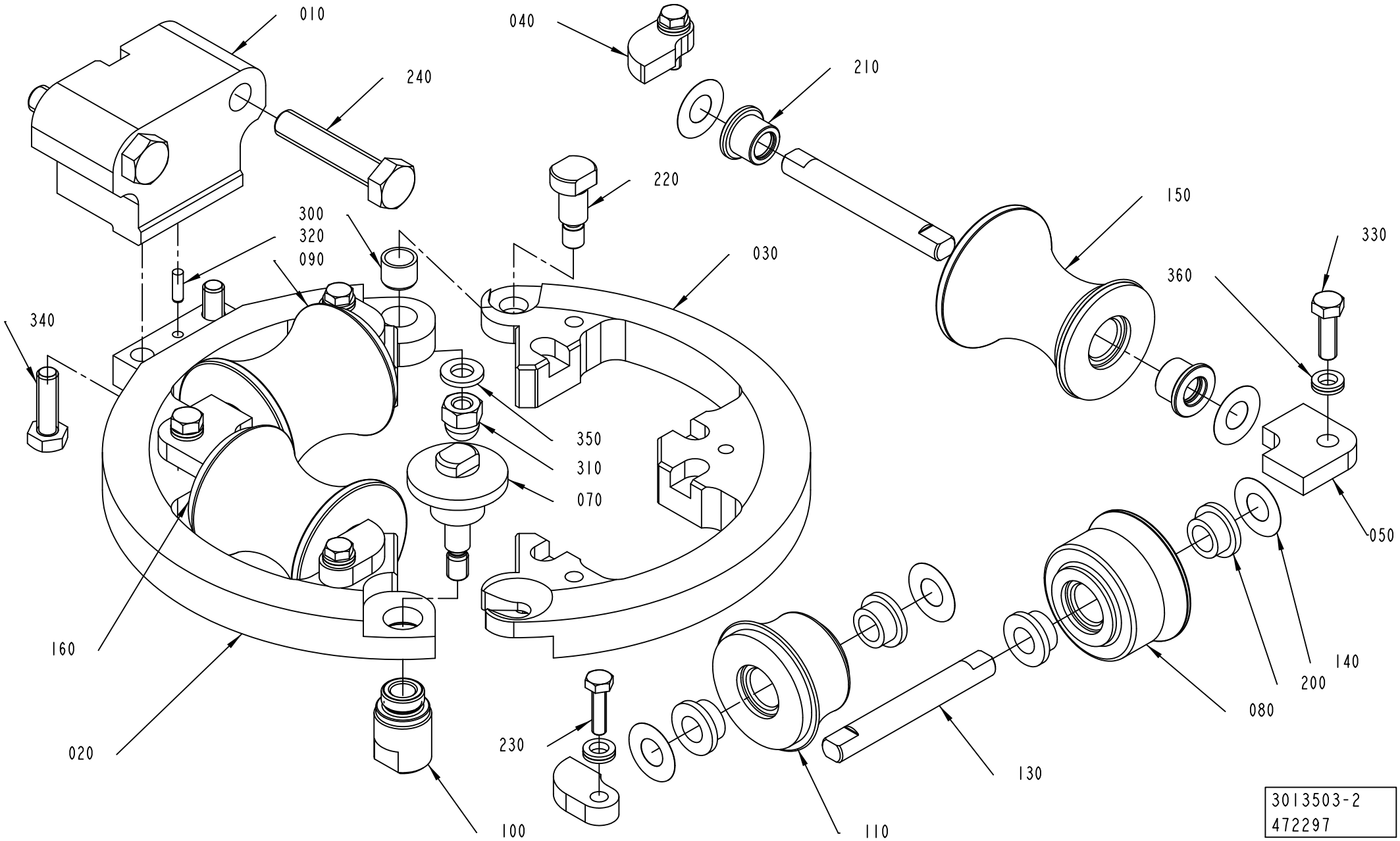

ECM: 474721 - 20101003
Group number: 3013503-0150
Assembly Drawing: 3013503-2_1_AB

This list covers pages from 1-102 to 1-105

Pos	Part No	UN	Qty	Description	Page No
TBA 0125S (See drawing on page: 1-102)					
010	3047450-0000		1	BRACKET	
080	3013507-0000		1	ROLLER	
090	3013505-0000		1	ROLLER	
110	3019211-0000		1	ROLLER	
150	3013506-0000		1	ROLLER	
160	3013508-0000		1	ROLLER	
240	312109-0459		2	SCREW M6S ISO 4017 M8X40 A480	
TBA 0200S (See drawing on page: 1-104)					
010	3106248-0000		1	BRACKET	
080	3106252-0000		1	ROLLER	
090	3106250-0000		1	ROLLER	
110	3129399-0000		1	ROLLER	
150	3106249-0000		2	ROLLER	
240	312109-0457		2	SCREW M6S ISO 4017 M8X35 A480	
370	315105-0165		2	WASHER BRB 8,4X16 RFR	
Common Parts					
020	2960362-0000		1	FORMING RING	
030	2960363-0000		1	FORMING RING	
040	3093251-0001		4	LOCK PLATE	
050	3093252-0001		2	LOCK PLATE	
070	2966954-0000		1	KNOB	
100	2966953-0000		1	PLUG	
130	3059610-0001		4	SHAFT	
140	2033-0011		9	WASHER	
200	3037748-0000		4	FLANGE BUSHING	
210	90601-2446		6	FLANGE BUSHING, 8X12X10 MM	
220	90600-4917		1	HINGE FLANGE, SCLBGN8 -12	
230	312105-0293		4	SCREW M6S ISO 4017 M4X16 A470	
300	321136-0100		1	BUSHING, IGLIDUR H370 8X10X8	
310	312705-0316		1	HEX. DOMED CAP MHM-6 M6 A280	
320	311103-0233		1	PARALLEL PIN ISO 2338 3M6X10 A1	
330	312105-0329		2	SCREW M6S ISO 4017 M5X16 A480	
340	312105-0370		2	SCREW M6S ISO 4017 M6X20 A480	
350	315106-0153		1	WASHER ISO 7089-6-200 HV A4	
360	90062-0065		6	LOCK WASHER NORD-LOCK,5,4/9 T=2,2	
380	90600-8108		1	GREASE, OKS 1110 NSF H1, 15G	

Pos	Part No	UN	Qty	Description	Page No

UPPER FORMING RING

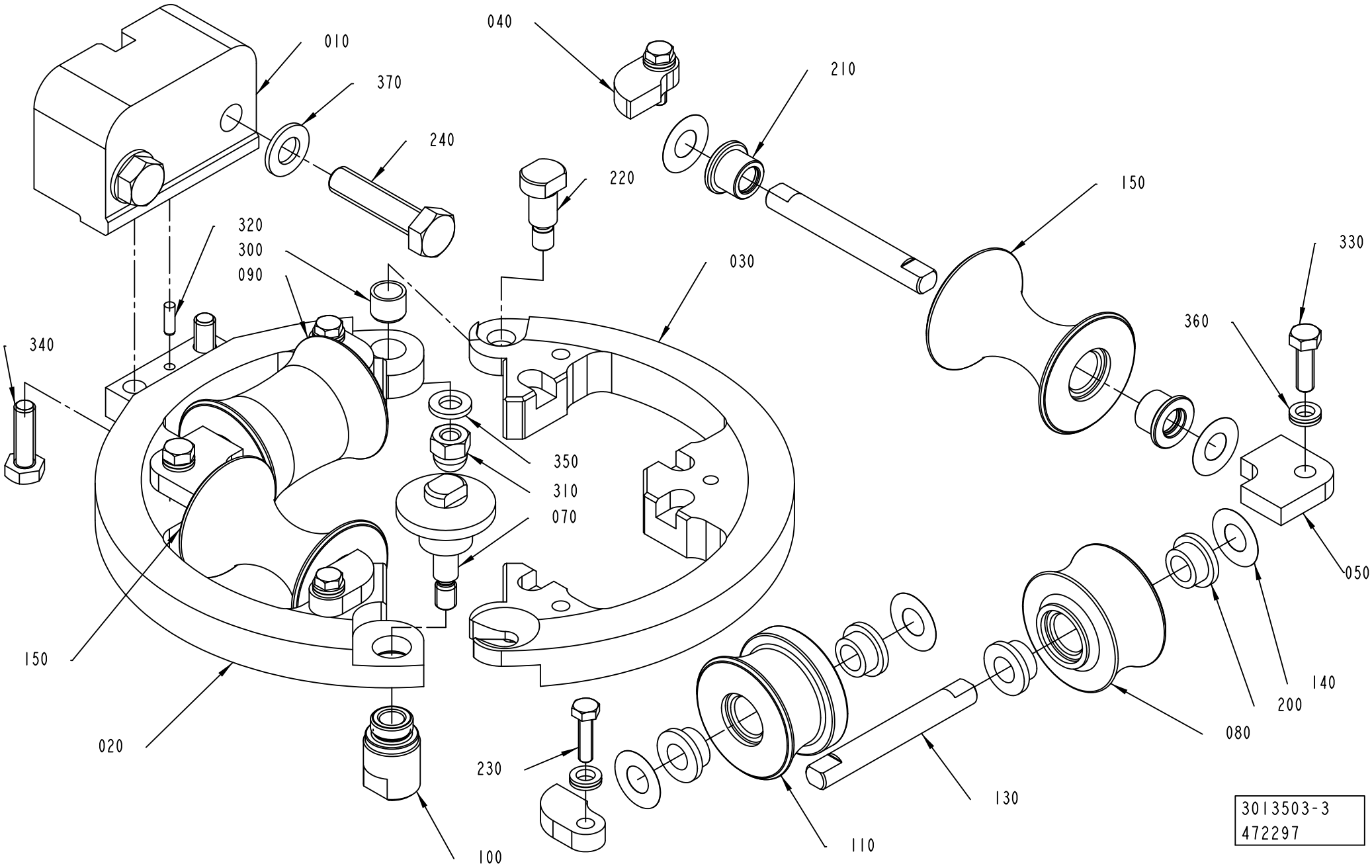

ECM: 474721 - 20101003
Group number: 3013503-0150
Assembly Drawing: 3013503-3_1_AA

This list covers pages from 1-102 to 1-105

Pos	Part No	UN	Qty	Description	Page No
TBA 0125S (See drawing on page: 1-102)					
010	3047450-0000		1	BRACKET	
080	3013507-0000		1	ROLLER	
090	3013505-0000		1	ROLLER	
110	3019211-0000		1	ROLLER	
150	3013506-0000		1	ROLLER	
160	3013508-0000		1	ROLLER	
240	312109-0459		2	SCREW M6S ISO 4017 M8X40 A480	
TBA 0200S (See drawing on page: 1-104)					
010	3106248-0000		1	BRACKET	
080	3106252-0000		1	ROLLER	
090	3106250-0000		1	ROLLER	
110	3129399-0000		1	ROLLER	
150	3106249-0000		2	ROLLER	
240	312109-0457		2	SCREW M6S ISO 4017 M8X35 A480	
370	315105-0165		2	WASHER BRB 8,4X16 RFR	
Common Parts					
020	2960362-0000		1	FORMING RING	
030	2960363-0000		1	FORMING RING	
040	3093251-0001		4	LOCK PLATE	
050	3093252-0001		2	LOCK PLATE	
070	2966954-0000		1	KNOB	
100	2966953-0000		1	PLUG	
130	3059610-0001		4	SHAFT	
140	2033-0011		9	WASHER	
200	3037748-0000		4	FLANGE BUSHING	
210	90601-2446		6	FLANGE BUSHING, 8X12X10 MM	
220	90600-4917		1	HINGE FLANGE, SCLBGN8 -12	
230	312105-0293		4	SCREW M6S ISO 4017 M4X16 A470	
300	321136-0100		1	BUSHING, IGLIDUR H370 8X10X8	
310	312705-0316		1	HEX. DOMED CAP MHM-6 M6 A280	
320	311103-0233		1	PARALLEL PIN ISO 2338 3M6X10 A1	
330	312105-0329		2	SCREW M6S ISO 4017 M5X16 A480	
340	312105-0370		2	SCREW M6S ISO 4017 M6X20 A480	
350	315106-0153		1	WASHER ISO 7089-6-200 HV A4	
360	90062-0065		6	LOCK WASHER NORD-LOCK,5,4/9 T=2,2	
380	90600-8108		1	GREASE, OKS 1110 NSF H1, 15G	

Pos	Part No	UN	Qty	Description	Page No

UPPER FORMING RING

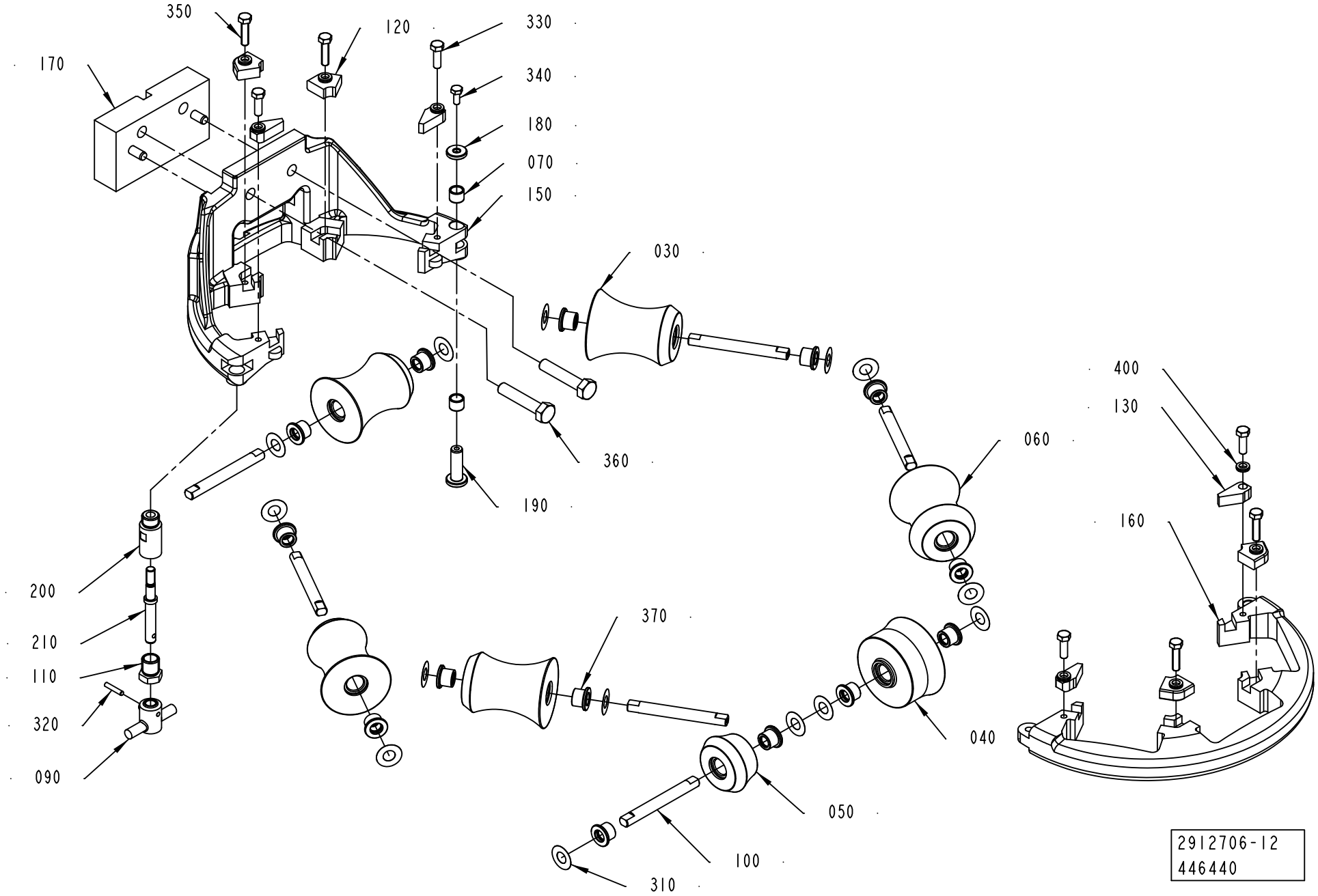

ECM: 474719 - 20101003
Group number: 2912706-0250
Assembly Drawing: 2912706-12_1_AA

This list covers pages from 1-106 to 1-113

Pos	Part No	UN	Qty	Description	Page No
TBA 0200B, TBA 0250B (See drawing on page: 1-108)					
010	2641287-0000		1	ROLLER	
020	2641289-0000		1	ROLLER	
030	2641288-0000		2	ROLLER	
040	2937533-0000		1	ROLLER	
050	2641285-0000		1	ROLLER	
060	2641290-0000		1	ROLLER	
100	3059610-0007		6	SHAFT	
120	3093246-0003		4	LOCK PLATE	
130	3093247-0003		4	LOCK PLATE	
150	2764020-0000		1	UPPER FORMING RING	
160	2736636-0000		1	UPPER FORMING RING	
170	2634987-0000		1	SPACER	
360	312105-0451		2	SCREW M6S ISO 4017 M8X20 A480	
370	90601-2446		14	FLANGE BUSHING, 8X12X10 MM	
380	312115-0451		2	SCREW ISO4762 M8X20 A4 80	
TBA 0200M, TBA 0250S (See drawing on page: 1-108)					
010	2611012-0000		1	ROLLER	
020	2601333-0000		1	ROLLER	
030	2601334-0000		2	ROLLER	
040	2634989-0000		1	ROLLER	
050	2634988-0000		1	ROLLER	
060	2634990-0000		1	ROLLER	
100	3059610-0004		6	SHAFT	
120	3093246-0001		4	LOCK PLATE	
130	3093247-0002		4	LOCK PLATE	
150	2764016-0000		1	UPPER FORMING RING	
160	2736635-0000		1	UPPER FORMING RING	
170	2634987-0000		1	SPACER	
300	3037748-0000		4	FLANGE BUSHING	
360	312105-0451		2	SCREW M6S ISO 4017 M8X20 A480	
370	90601-2446		10	FLANGE BUSHING, 8X12X10 MM	
380	312115-0451		2	SCREW ISO4762 M8X20 A4 80	
TBA 1000B (See drawing on page: 1-110)					
010	2895459-0000		1	ROLLER	
020	2895457-0000		1	ROLLER	
030	2895461-0000		1	ROLLER	
040	2895463-0000		1	ROLLER	
050	2895460-0000		1	ROLLER	
060	2895462-0000		1	ROLLER	
080	2895458-0000		1	ROLLER	
100	3059610-0002		3	SHAFT	
120	3093246-0004		2	LOCK PLATE	
125	3093246-0008		2	LOCK PLATE	
130	3093247-0001		2	LOCK PLATE	
135	3093247-0005		2	LOCK PLATE	
150	2764022-0000		1	UPPER FORMING RING	
160	2736677-0000		1	UPPER FORMING RING	
170	2696412-0000		1	SPACER	
220	3059610-0010		3	SHAFT	
360	312109-0460		2	SCREW M6S ISO 4017 M8X45 A480	
370	90601-2446		14	FLANGE BUSHING, 8X12X10 MM	
390	315115-0165		2	WASHER PLAIN, TBRB 8,4/16 H=3	
TBA 1000S (See drawing on page: 1-112)					
010	2512742-0000		2	ROLLER	
020	2512740-0000		1	ROLLER	
030	2512741-0000		2	ROLLER	
040	2512738-0000		1	ROLLER	
050	2512737-0000		1	ROLLER	
100	3059610-0002		6	SHAFT	
120	3093246-0001		4	LOCK PLATE	
130	3093247-0001		4	LOCK PLATE	
150	2764014-0000		1	UPPER FORMING RING	
160	2736676-0000		1	UPPER FORMING RING	
170	2532914-0000		1	SPACER	
360	312109-0459		2	SCREW M6S ISO 4017 M8X40 A480	
370	90601-2446		14	FLANGE BUSHING, 8X12X10 MM	
TBA 1000SQ (See drawing on page: 1-106)					
030	1548531-0000		4	ROLLER	
040	1548541-0000		1	ROLLER	
050	2532965-0000		1	ROLLER	
060	1548540-0000		1	ROLLER	
100	3059610-0002		6	SHAFT	
120	3093246-0004		4	LOCK PLATE	
130	3093247-0004		4	LOCK PLATE	
150	2764013-0000		1	UPPER FORMING RING	
160	2736697-0000		1	UPPER FORMING RING	
170	2532914-0000		1	SPACER	
360	312109-0459		2	SCREW M6S ISO 4017 M8X40 A480	
370	90601-2446		14	FLANGE BUSHING, 8X12X10 MM	
Common Parts					
070	2526826-0000		2	BUSHING	
090	2764036-0000		1	KNOB	
110	2731428-0000		1	NUT	

Machine Type | Group Description | Used-In | Group Number | Page No

UPPER FORMING RING

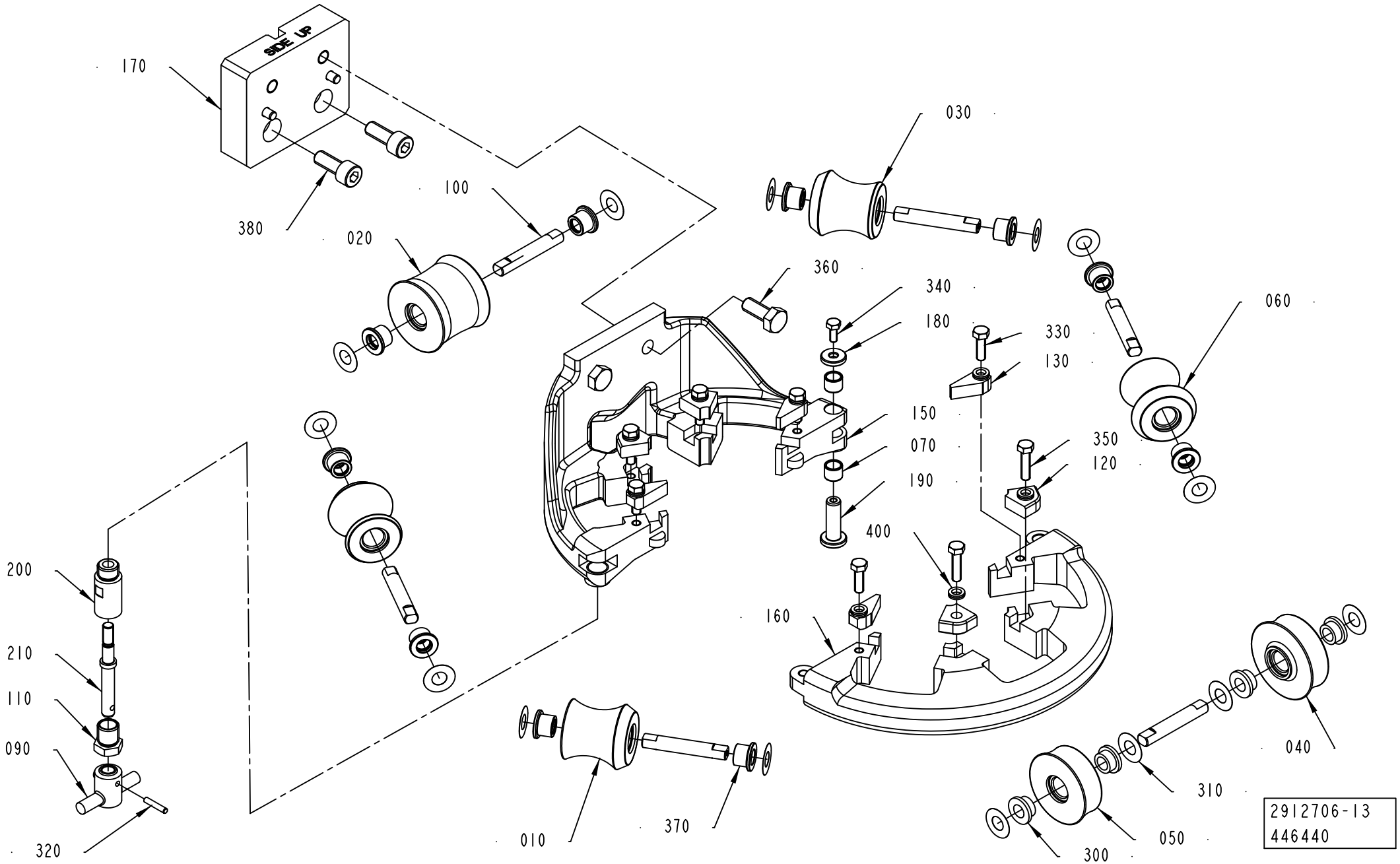

ECM: 474719 - 20101003
Group number: 2912706-0250
Assembly Drawing: 2912706-13_1_AA

This list covers pages from 1-106 to 1-113

Pos	Part No	UN	Qty	Description	Page No
Common Parts (Cont'd)					
180	2526825-0000		1	WASHER	
190	2526827-0000		1	SHAFT	
200	2764034-0000		1	SHAFT	
210	2764035-0000		1	SHAFT	
310	2033-0011		14	WASHER	
320	311103-0236		1	PARALLEL PIN ISO 2338 3M6X16 A1	
330	312105-0329		4	SCREW M6S ISO 4017 M5X16 A480	
340	312105-0289		1	SCREW M6S H4X10 A4 70 ISO4017/DIN933	
350	312105-0331		4	SCREW M6S ISO 4017 M5X20 A480	
400	90062-0065		8	LOCK WASHER NORD-LOCK,5,4/9 T=2,2	
480	90600-8108		1	GREASE, OKS 1110 NSF H1, 15G	

Pos	Part No	UN	Qty	Description	Page No

UPPER FORMING RING

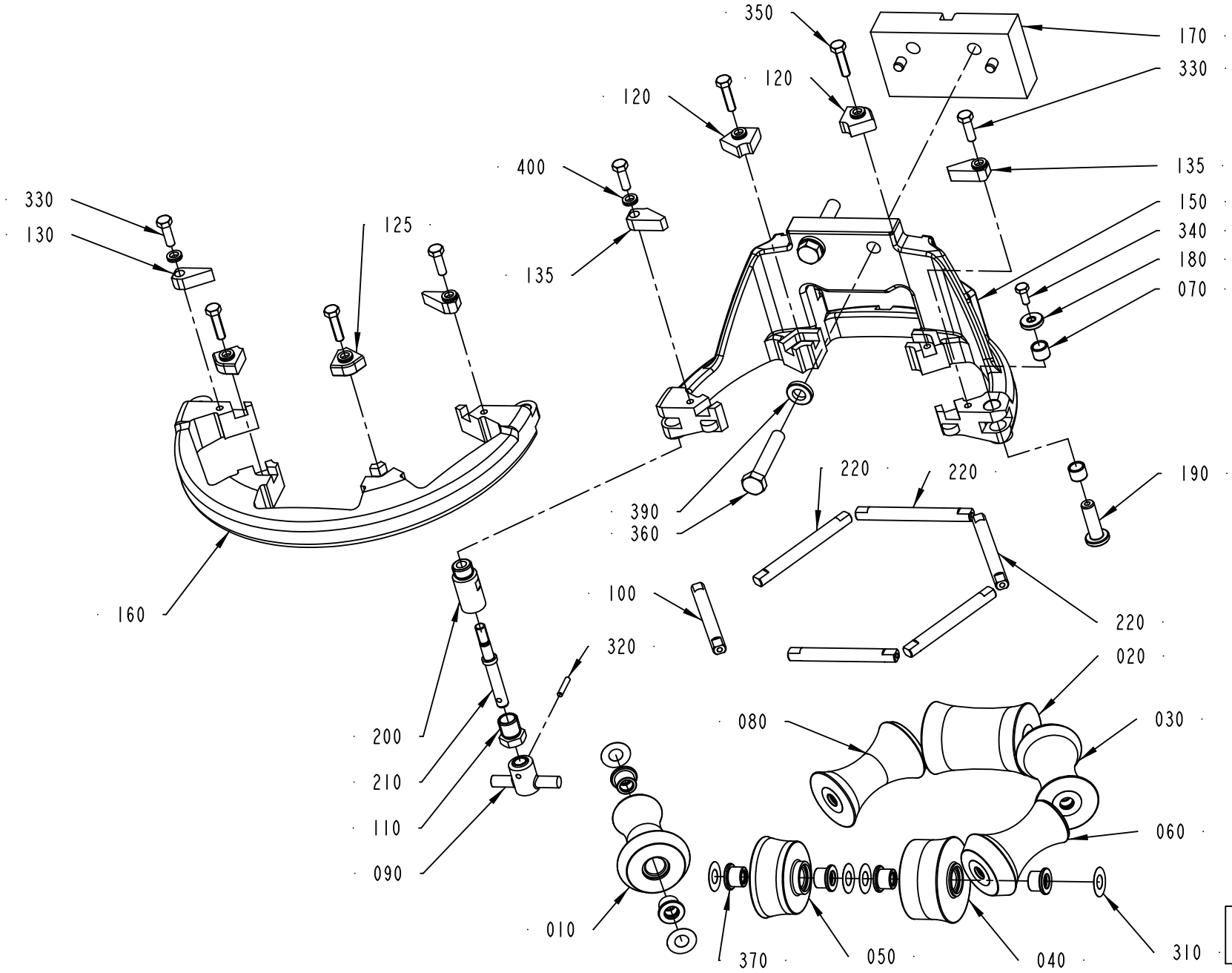

Pos	Part No	UN	Qty	Description	Page No
SEE PREVIOUS LISTS PAGES: 1-107, 1-109.					

Pos	Part No	UN	Qty	Description	Page No

UPPER FORMING RING

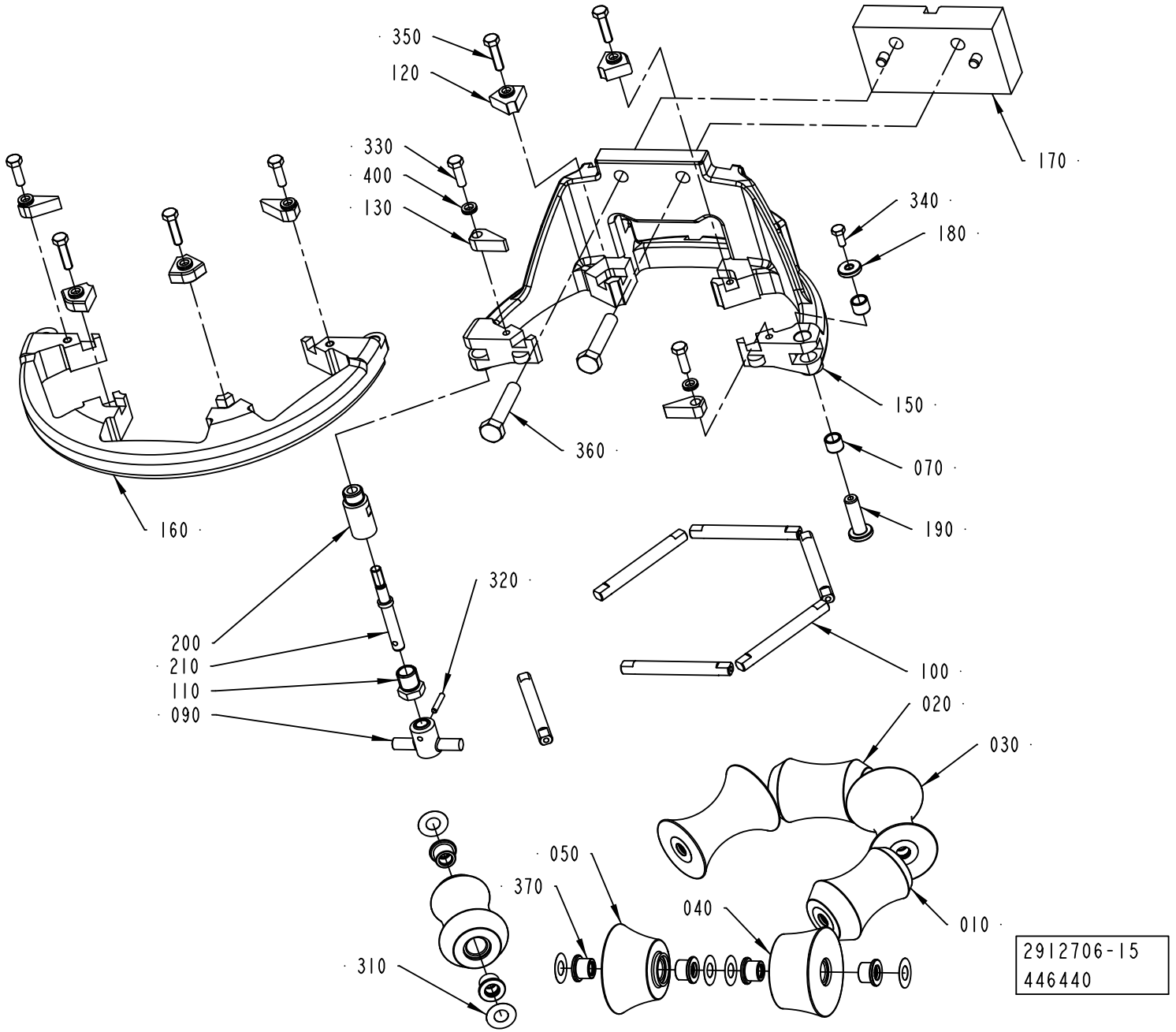

ECM: 474719 - 20101003
Group number: 2912706-0250
Assembly Drawing: 2912706-15_1_AA

This list covers pages from 1-106 to 1-113

Pos	Part No	UN	Qty	Description	Page No
SEE PREVIOUS LISTS PAGES: 1-107, 1-109.					

Pos	Part No	UN	Qty	Description	Page No

This page is intentionally left blank.

ECM: 446873 - 20100401
Group number: 2911823-0250
Assembly Drawing:

Pos	Part No	UN	Qty	Description	Page No
TBA 0125S					
	2835483-0350		1	FORMING RING	**1-117**
TBA 0200M, TBA 0200B, TBA 0200S, TBA 0250S, TBA 0250B					
	2835483-0450		1	FORMING RING	**1-119, 1-121, 1-123**
TBA 1000B, TBA 1000SQ, TBA 1000S					
	2912707-0250		1	FORMING RING	**1-125, 1-127**

Pos	Part No	UN	Qty	Description	Page No

FORMING RING

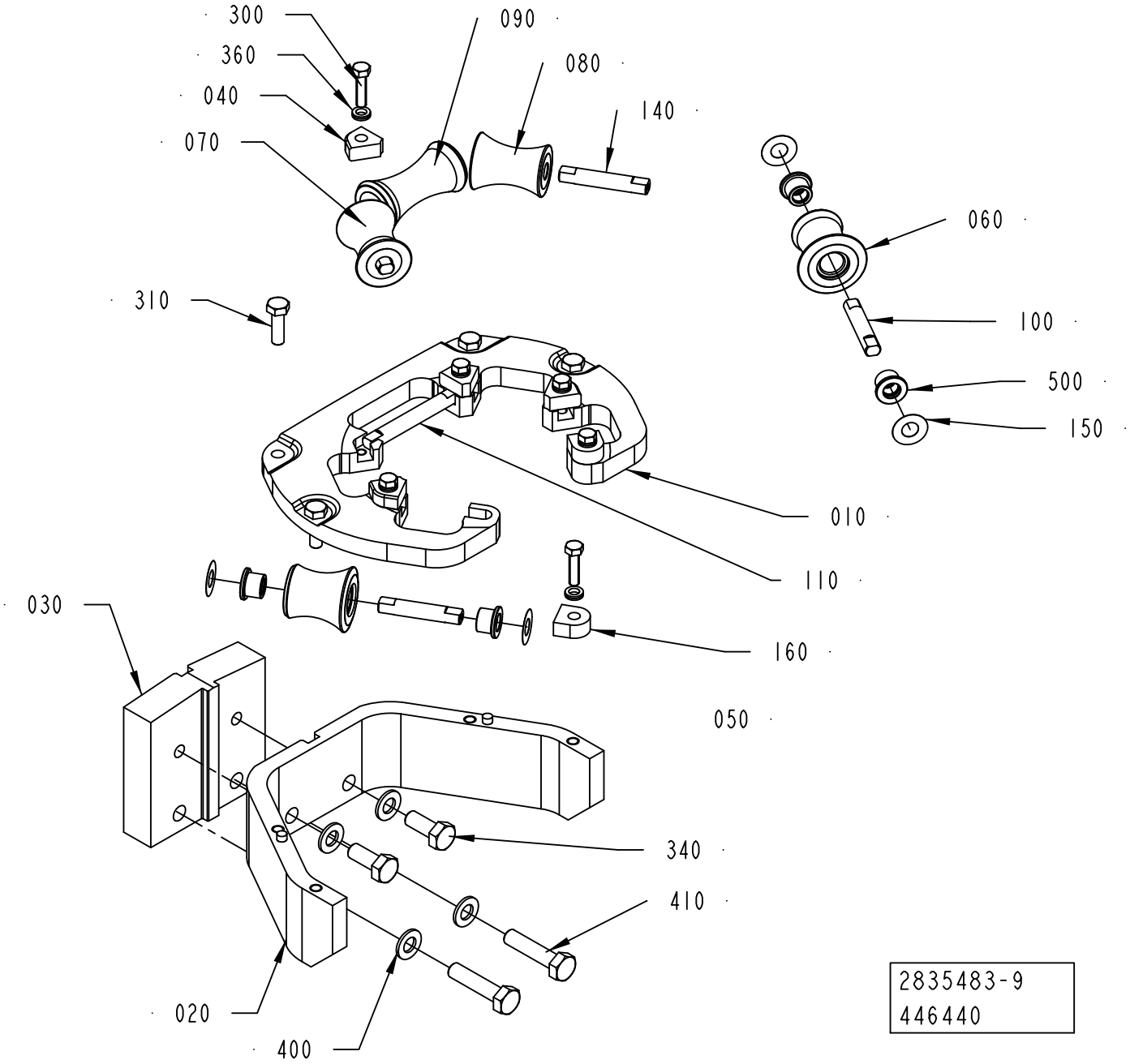

ECM: 446870 - 20100401
Group number: 2835483-0350
Assembly Drawing: 2835483-9_1_AA

Pos	Part No	UN	Qty	Description	Page No
-					
010	3093268-0000		1	PLATE	
020	2919283-0000		1	BRACKET	
030	2851566-0000		1	SPACER	
040	3093246-0009		4	LOCK PLATE	
050	2835486-0000		1	ROLLER	
060	2835487-0000		1	ROLLER	
070	2835488-0000		1	ROLLER	
080	2835489-0000		1	ROLLER	
090	2835490-0000		1	ROLLER	
100	3059610-0005		2	SHAFT	
110	3059610-0001		1	SHAFT	
140	3059610-0013		2	SHAFT	
150	2033-0011		10	WASHER	
160	3093248-0004		2	LOCK PLATE	
300	312105-0331		6	SCREW M6S ISO 4017 M5X20 A480	
310	312105-0370		4	SCREW M6S ISO 4017 M6X20 A480	
340	312105-0451		2	SCREW M6S ISO 4017 M8X20 A480	
360	90062-0065		6	LOCK WASHER NORD-LOCK,5,4/9 T=2,2	
400	315105-0165		4	WASHER BRB 8,4X16 RFR	
410	312105-0457		2	SCREW M6S ISO 4014 M8X35 A480	
480	90600-8108		1	GREASE, OKS 1110 NSF H1, 15G	
500	90601-2446		10	FLANGE BUSHING, 8X12X10 MM	

Pos	Part No	UN	Qty	Description	Page No

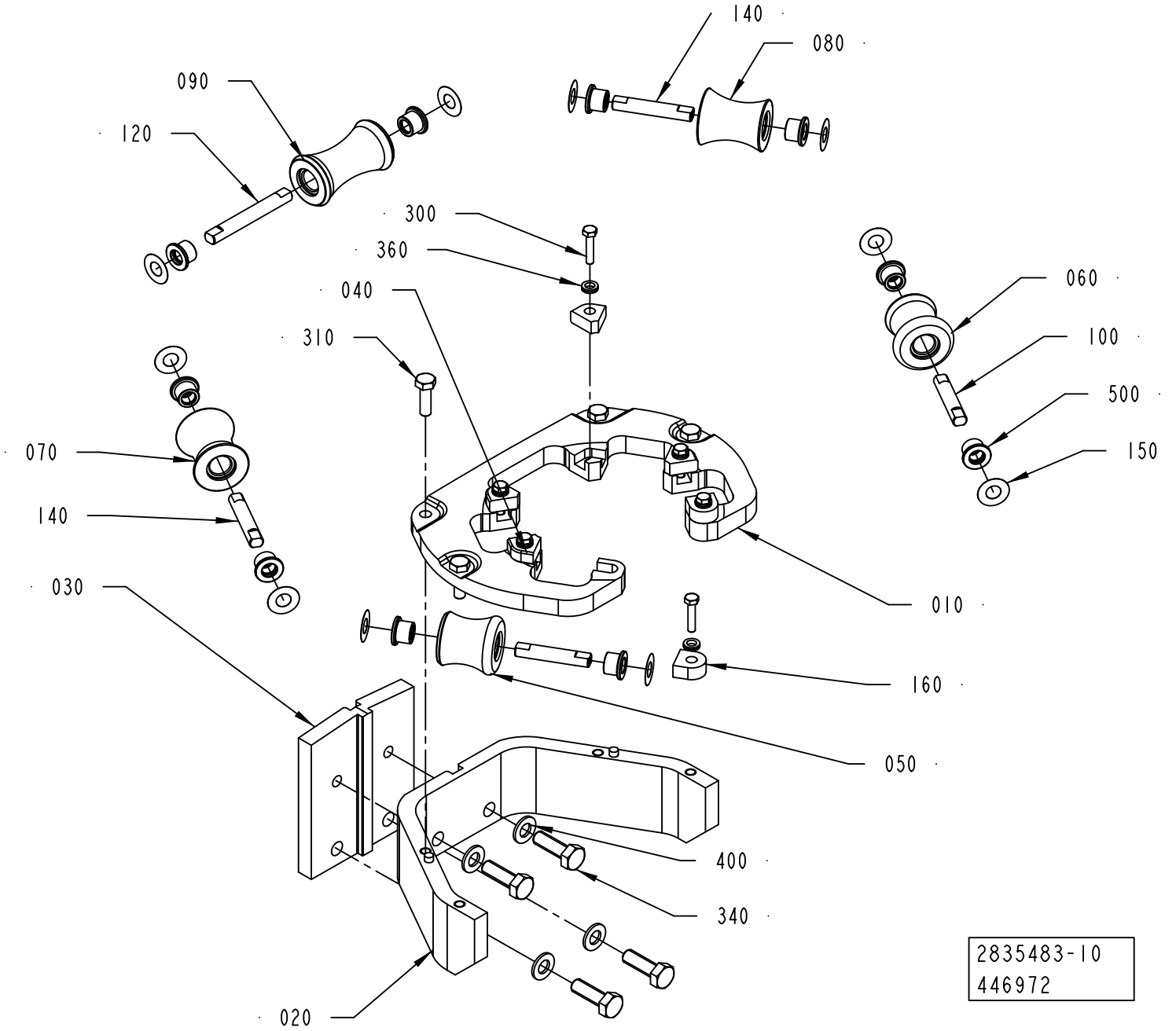
140
080
090
120
300
360
040
310
060
100
500
150
070
140
030
010
160
050
400
340
020
2835483-10
446972

ECM: 450577 - 20101001
Group number: 2835483-0450
Assembly Drawing: 2835483-10_1_AB

This list covers pages from 1-118 to 1-123

Pos	Part No	UN	Qty	Description	Page No
TBA 0200B, TBA 0250B (See drawing on page: 1-120)					
010	2889116-0000		1	PLATE	
040	3093253-0000		2	LOCK PLATE	
045	3093254-0000		2	LOCK PLATE	
050	2889959-0000		2	ROLLER	
060	3037749-0000		2	ROLLER	
070	3037750-0000		1	ROLLER	
100	3059610-0008		2	SHAFT	
110	3059610-0002		2	SHAFT	
130	3059610-0014		1	SHAFT	
160	3093248-0002		2	LOCK PLATE	
340	312105-0453		2	SCREW M6S ISO 4017 M8X25 A480	
400	315105-0165		2	WASHER BRB 8,4X16 RFR	
TBA 0200M, TBA 0250S (See drawing on page: 1-122)					
010	2959054-0000		1	SUPPORT PLATE	
020	2959055-0000		1	SUPPORT	
040	3093254-0000		2	LOCK PLATE	
045	3093253-0000		2	LOCK PLATE	
060	2958111-0000		2	ROLLER	
080	3037755-0000		2	ROLLER	
090	3037756-0000		1	ROLLER	
100	3059610-0008		2	SHAFT	
120	3059610-0002		3	SHAFT	
160	3093248-0002		2	LOCK PLATE	
310	312105-0370		4	SCREW M6S ISO 4017 M6X20 A480	
340	312105-0453		2	SCREW M6S ISO 4017 M8X25 A480	
400	315105-0165		2	WASHER BRB 8,4X16 RFR	
TBA 0200S (See drawing on page: 1-118)					
010	3093268-0000		1	PLATE	
020	2919283-0000		1	BRACKET	
030	2937886-0000		1	SPACER	
040	3093246-0009		4	LOCK PLATE	
050	3079110-0000		1	ROLLER	
060	3079111-0000		1	ROLLER	
070	3037751-0000		1	ROLLER	
080	3037752-0000		1	ROLLER	
090	3037753-0000		1	ROLLER	
100	3059610-0005		2	SHAFT	
120	3059610-0001		1	SHAFT	
140	3059610-0013		2	SHAFT	
160	3093248-0004		2	LOCK PLATE	
310	312105-0370		4	SCREW M6S ISO 4017 M6X20 A480	
340	312105-0453		4	SCREW M6S ISO 4017 M8X25 A480	
400	315105-0165		4	WASHER BRB 8,4X16 RFR	
Common Parts					
150	2033-0011		10	WASHER	
300	312105-0331		6	SCREW M6S ISO 4017 M5X20 A480	
360	90062-0065		6	LOCK WASHER NORD-LOCK,5,4/9 T=2,2	
480	90600-8108		1	GREASE, OKS 1110 NSF H1, 15G	
500	90601-2446		10	FLANGE BUSHING, 8X12X10 MM	

Machine Type | Group Description | Used-In | Group Number | Page No

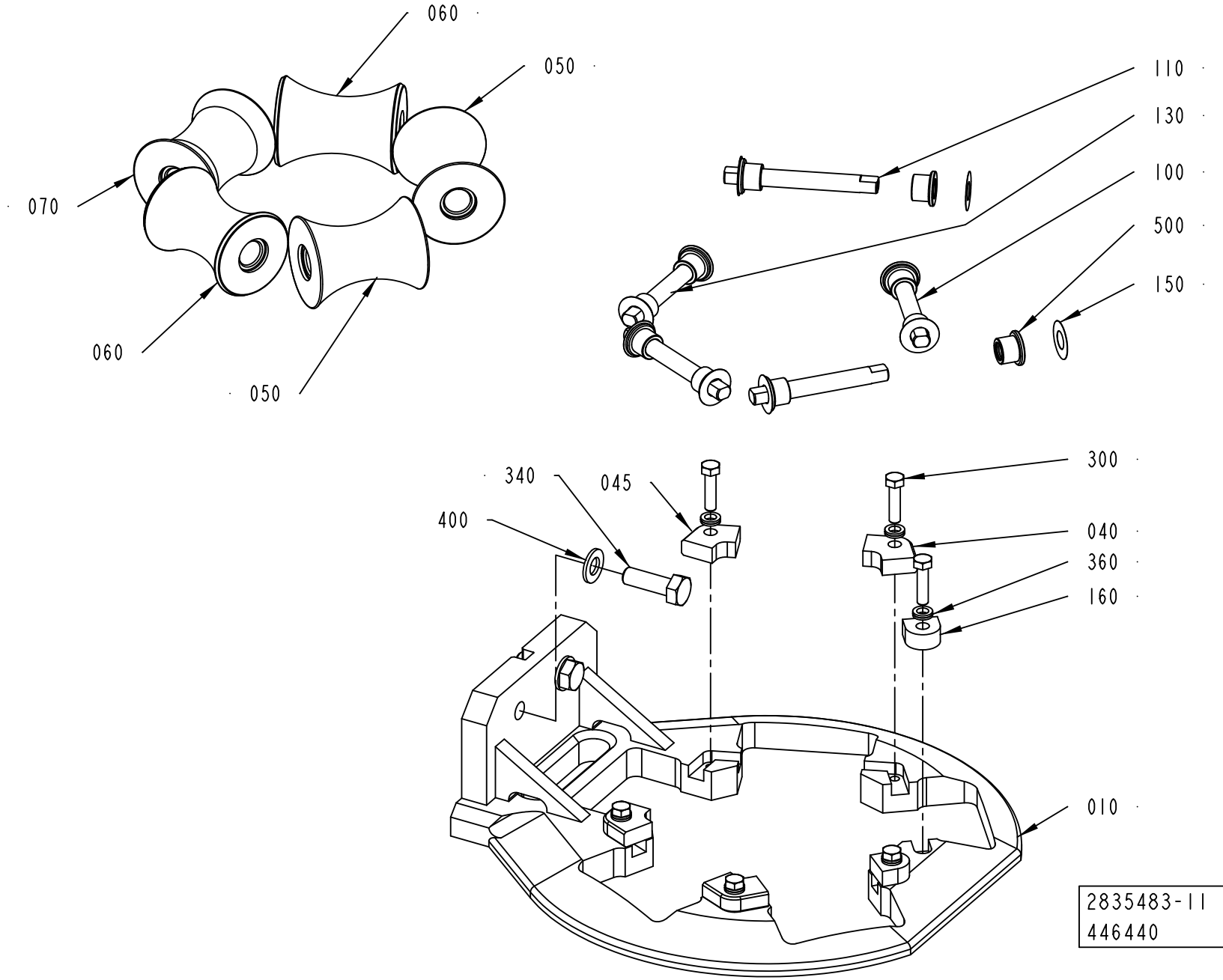
060
050
070
060
050
110
130
100
500
150
340
045
400
300
040
360
160
010
2835483-11
446440

ECM: 450577 - 20101001
Group number: 2835483-0450
Assembly Drawing: 2835483-11_1_AA

This list covers pages from 1-118 to 1-123

Pos	Part No	UN	Qty	Description	Page No
TBA 0200B, TBA 0250B (See drawing on page: 1-120)					
010	2889116-0000		1	PLATE	
040	3093253-0000		2	LOCK PLATE	
045	3093254-0000		2	LOCK PLATE	
050	2889959-0000		2	ROLLER	
060	3037749-0000		2	ROLLER	
070	3037750-0000		1	ROLLER	
100	3059610-0008		2	SHAFT	
110	3059610-0002		2	SHAFT	
130	3059610-0014		1	SHAFT	
160	3093248-0002		2	LOCK PLATE	
340	312105-0453		2	SCREW M6S ISO 4017 M8X25 A480	
400	315105-0165		2	WASHER BRB 8,4X16 RFR	
TBA 0200M, TBA 0250S (See drawing on page: 1-122)					
010	2959054-0000		1	SUPPORT PLATE	
020	2959055-0000		1	SUPPORT	
040	3093254-0000		2	LOCK PLATE	
045	3093253-0000		2	LOCK PLATE	
060	2958111-0000		2	ROLLER	
080	3037755-0000		2	ROLLER	
090	3037756-0000		1	ROLLER	
100	3059610-0008		2	SHAFT	
120	3059610-0002		3	SHAFT	
160	3093248-0002		2	LOCK PLATE	
310	312105-0370		4	SCREW M6S ISO 4017 M6X20 A480	
340	312105-0453		2	SCREW M6S ISO 4017 M8X25 A480	
400	315105-0165		2	WASHER BRB 8,4X16 RFR	
TBA 0200S (See drawing on page: 1-118)					
010	3093268-0000		1	PLATE	
020	2919283-0000		1	BRACKET	
030	2937886-0000		1	SPACER	
040	3093246-0009		4	LOCK PLATE	
050	3079110-0000		1	ROLLER	
060	3079111-0000		1	ROLLER	
070	3037751-0000		1	ROLLER	
080	3037752-0000		1	ROLLER	
090	3037753-0000		1	ROLLER	
100	3059610-0005		2	SHAFT	
120	3059610-0001		1	SHAFT	
140	3059610-0013		2	SHAFT	
160	3093248-0004		2	LOCK PLATE	
310	312105-0370		4	SCREW M6S ISO 4017 M6X20 A480	
340	312105-0453		4	SCREW M6S ISO 4017 M8X25 A480	
400	315105-0165		4	WASHER BRB 8,4X16 RFR	
Common Parts					
150	2033-0011		10	WASHER	
300	312105-0331		6	SCREW M6S ISO 4017 M5X20 A480	
360	90062-0065		6	LOCK WASHER NORD-LOCK,5,4/9 T=2,2	
480	90600-8108		1	GREASE, OKS 1110 NSF H1, 15G	
500	90601-2446		10	FLANGE BUSHING, 8X12X10 MM	

Machine Type | Group Description | Used-In | Group Number | Page No

FORMING RING

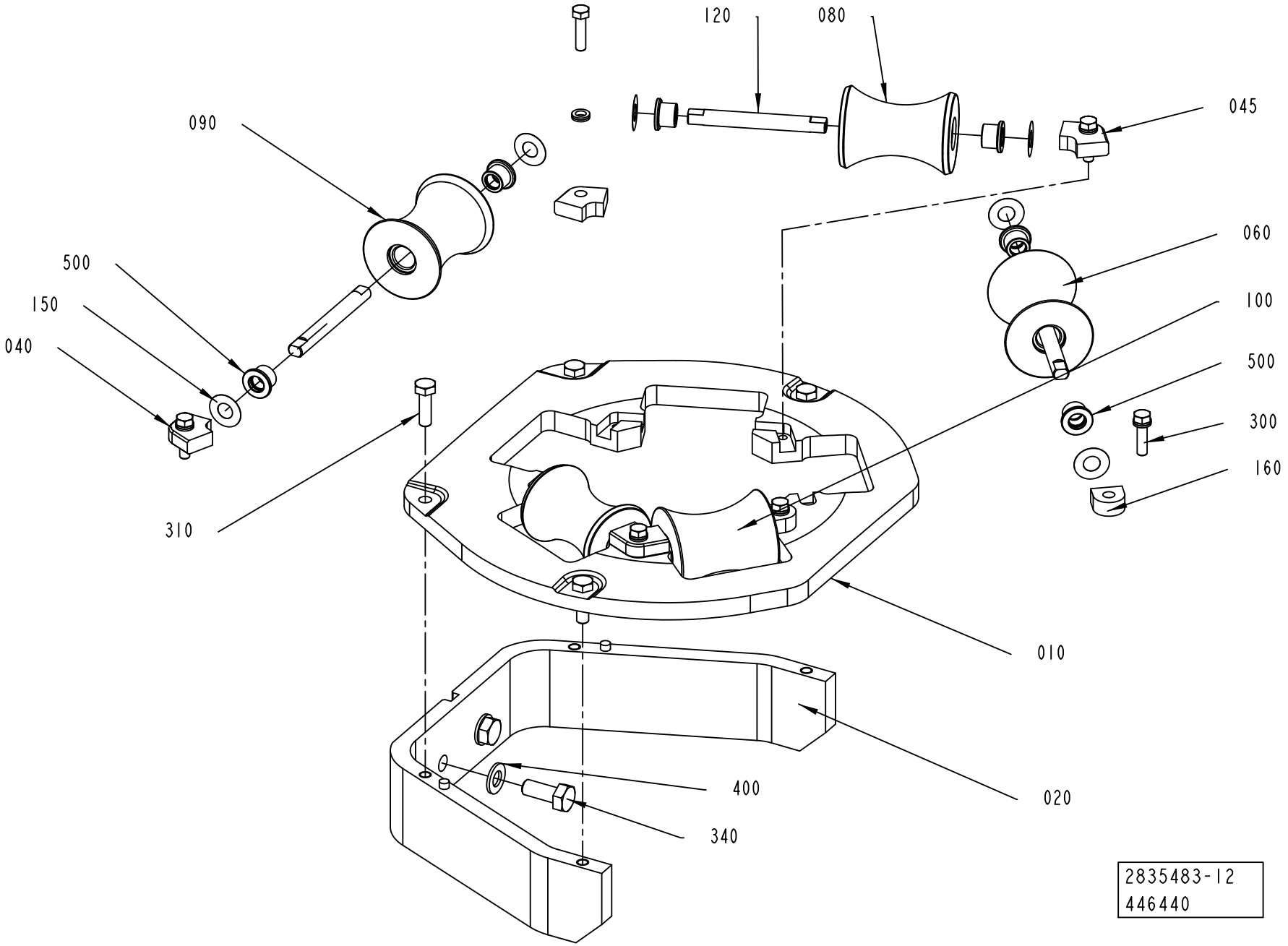

ECM: 450577 - 20101001
Group number: 2835483-0450
Assembly Drawing: 2835483-12_1_AA

This list covers pages from 1-118 to 1-123

Pos	Part No	UN	Qty	Description	Page No
TBA 0200B, TBA 0250B (See drawing on page: 1-120)					
010	2889116-0000		1	PLATE	
040	3093253-0000		2	LOCK PLATE	
045	3093254-0000		2	LOCK PLATE	
050	2889959-0000		2	ROLLER	
060	3037749-0000		2	ROLLER	
070	3037750-0000		1	ROLLER	
100	3059610-0008		2	SHAFT	
110	3059610-0002		2	SHAFT	
130	3059610-0014		1	SHAFT	
160	3093248-0002		2	LOCK PLATE	
340	312105-0453		2	SCREW M6S ISO 4017 M8X25 A480	
400	315105-0165		2	WASHER BRB 8,4X16 RFR	
TBA 0200M, TBA 0250S (See drawing on page: 1-122)					
010	2959054-0000		1	SUPPORT PLATE	
020	2959055-0000		1	SUPPORT	
040	3093254-0000		2	LOCK PLATE	
045	3093253-0000		2	LOCK PLATE	
060	2958111-0000		2	ROLLER	
080	3037755-0000		2	ROLLER	
090	3037756-0000		1	ROLLER	
100	3059610-0008		2	SHAFT	
120	3059610-0002		3	SHAFT	
160	3093248-0002		2	LOCK PLATE	
310	312105-0370		4	SCREW M6S ISO 4017 M6X20 A480	
340	312105-0453		2	SCREW M6S ISO 4017 M8X25 A480	
400	315105-0165		2	WASHER BRB 8,4X16 RFR	
TBA 0200S (See drawing on page: 1-118)					
010	3093268-0000		1	PLATE	
020	2919283-0000		1	BRACKET	
030	2937886-0000		1	SPACER	
040	3093246-0009		4	LOCK PLATE	
050	3079110-0000		1	ROLLER	
060	3079111-0000		1	ROLLER	
070	3037751-0000		1	ROLLER	
080	3037752-0000		1	ROLLER	
090	3037753-0000		1	ROLLER	
100	3059610-0005		2	SHAFT	
120	3059610-0001		1	SHAFT	
140	3059610-0013		2	SHAFT	
160	3093248-0004		2	LOCK PLATE	
310	312105-0370		4	SCREW M6S ISO 4017 M6X20 A480	
340	312105-0453		4	SCREW M6S ISO 4017 M8X25 A480	
400	315105-0165		4	WASHER BRB 8,4X16 RFR	
Common Parts					
150	2033-0011		10	WASHER	
300	312105-0331		6	SCREW M6S ISO 4017 M5X20 A480	
360	90062-0065		6	LOCK WASHER NORD-LOCK,5,4/9 T=2,2	
480	90600-8108		1	GREASE, OKS 1110 NSF H1, 15G	
500	90601-2446		10	FLANGE BUSHING, 8X12X10 MM	

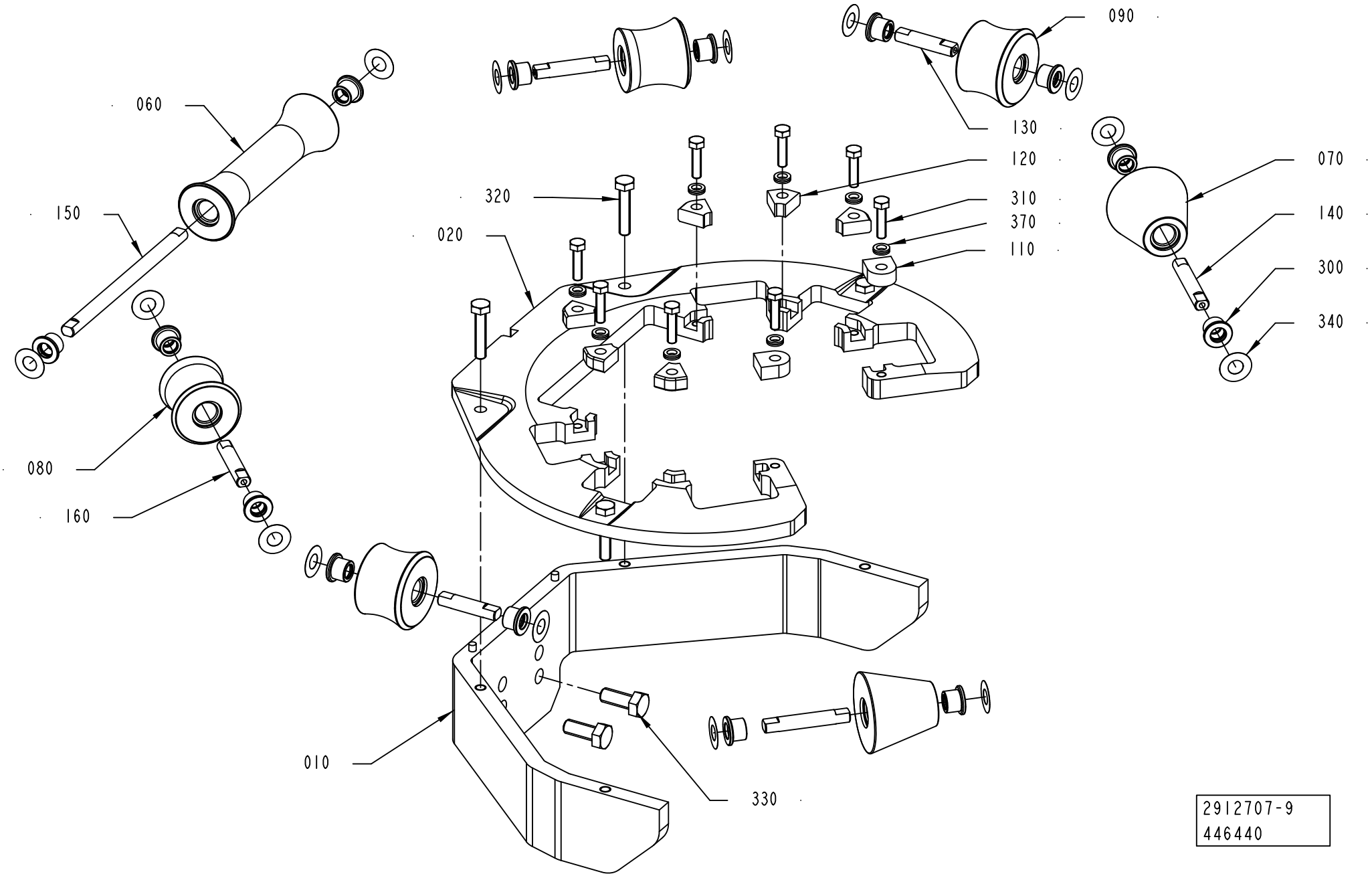
060
150
080
160
010
320
020
090
130
120
310
370
110
330
070
140
300
340
2912707-9
446440

ECM: 446875 - 20100401
Group number: 2912707-0250
Assembly Drawing: 2912707-9_1_AA

This list covers pages from 1-124 to 1-127

Pos	Part No	UN	Qty	Description	Page No
TBA 1000B (See drawing on page: 1-126)					
020	2922025-0000		1	SUPPORT RING	
060	2552187-0000		1	ROLLER	
070	2552206-0000		2	ROLLER	
080	2552188-0000		2	ROLLER	
090	2552205-0000		2	ROLLER	
100	3093249-0001		2	LOCK PLATE	
110	3093248-0004		2	LOCK PLATE	
120	3093246-0008		2	LOCK PLATE	
140	3059610-0004		6	SHAFT	
170	3093246-0002		2	LOCK PLATE	
310	312105-0331		6	SCREW M6S ISO 4017 M5X20 A480	
360	312105-0329		2	SCREW M6S ISO 4017 M5X16 A480	
TBA 1000S (See drawing on page: 1-126)					
020	2922026-0000		1	SUPPORT RING	
060	3020122-0000		1	ROLLER	
070	2766444-0000		2	ROLLER	
080	2512746-0000		2	ROLLER	
090	2512749-0000		2	ROLLER	
100	3093249-0003		2	LOCK PLATE	
110	3093248-0003		2	LOCK PLATE	
120	3093246-0008		2	LOCK PLATE	
140	3059610-0004		6	SHAFT	
170	3093246-0007		2	LOCK PLATE	
310	312105-0331		6	SCREW M6S ISO 4017 M5X20 A480	
360	312105-0329		2	SCREW M6S ISO 4017 M5X16 A480	
TBA 1000SQ (See drawing on page: 1-124)					
020	2916867-0000		1	SUPPORT RING	
060	2634968-0000		1	ROLLER	
070	2896520-0000		2	ROLLER	
080	2634969-0000		2	ROLLER	
090	2634970-0000		2	ROLLER	
110	3093248-0007		2	LOCK PLATE	
120	3093250-0009		6	LOCK PLATE	
130	3059610-0003		2	SHAFT	
140	3059610-0004		2	SHAFT	
160	3059610-0005		2	SHAFT	
310	312105-0331		8	SCREW M6S ISO 4017 M5X20 A480	
Common Parts					
010	2909791-0000		1	SUPPORT	
150	3059610-0006		1	SHAFT	
300	90601-2446		14	FLANGE BUSHING, 8X12X10 MM	
320	312109-0374		4	SCREW M6S ISO 4017 M6X30 A480	
330	312105-0451		2	SCREW M6S ISO 4017 M8X20 A480	
340	2033-0011		14	WASHER	
370	90062-0065		8	LOCK WASHER NORD-LOCK,5,4/9 T=2,2	
480	90600-8108		1	GREASE, OKS 1110 NSF H1, 15G	

Machine Type | Group Description | Used-In | Group Number | Page No

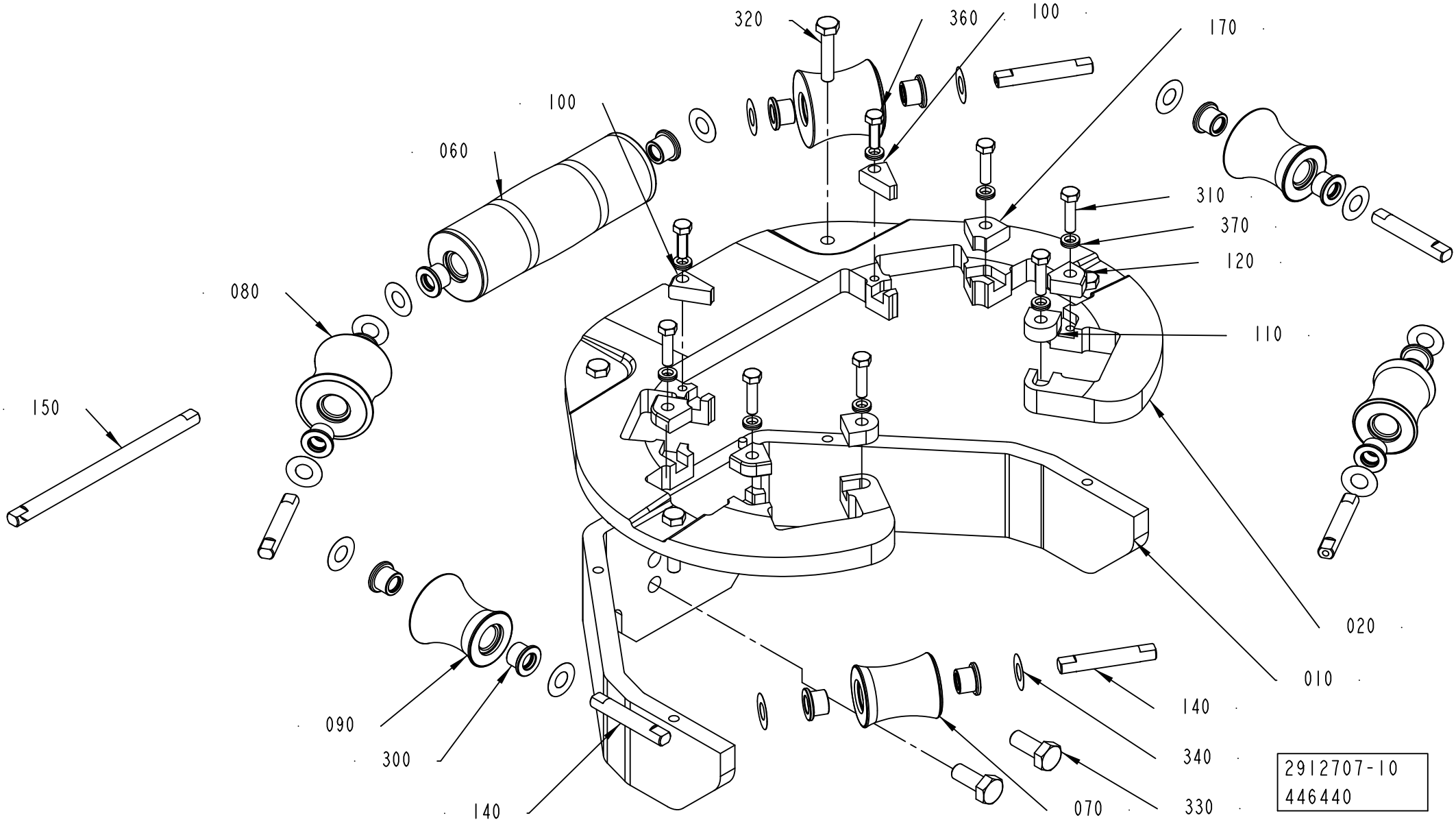
320
360
100
170
100
060
310
370
120
080
110
150
020
010
090
300
140
140
340
070
330
2912707-10
446440

ECM: 446875 - 20100401
Group number: 2912707-0250
Assembly Drawing: 2912707-10_1_AA

This list covers pages from 1-124 to 1-127

Pos	Part No	UN	Qty	Description	Page No
TBA 1000B (See drawing on page: 1-126)					
020	2922025-0000		1	SUPPORT RING	
060	2552187-0000		1	ROLLER	
070	2552206-0000		2	ROLLER	
080	2552188-0000		2	ROLLER	
090	2552205-0000		2	ROLLER	
100	3093249-0001		2	LOCK PLATE	
110	3093248-0004		2	LOCK PLATE	
120	3093246-0008		2	LOCK PLATE	
140	3059610-0004		6	SHAFT	
170	3093246-0002		2	LOCK PLATE	
310	312105-0331		6	SCREW M6S ISO 4017 M5X20 A480	
360	312105-0329		2	SCREW M6S ISO 4017 M5X16 A480	
TBA 1000S (See drawing on page: 1-126)					
020	2922026-0000		1	SUPPORT RING	
060	3020122-0000		1	ROLLER	
070	2766444-0000		2	ROLLER	
080	2512746-0000		2	ROLLER	
090	2512749-0000		2	ROLLER	
100	3093249-0003		2	LOCK PLATE	
110	3093248-0003		2	LOCK PLATE	
120	3093246-0008		2	LOCK PLATE	
140	3059610-0004		6	SHAFT	
170	3093246-0007		2	LOCK PLATE	
310	312105-0331		6	SCREW M6S ISO 4017 M5X20 A480	
360	312105-0329		2	SCREW M6S ISO 4017 M5X16 A480	
TBA 1000SQ (See drawing on page: 1-124)					
020	2916867-0000		1	SUPPORT RING	
060	2634968-0000		1	ROLLER	
070	2896520-0000		2	ROLLER	
080	2634969-0000		2	ROLLER	
090	2634970-0000		2	ROLLER	
110	3093248-0007		2	LOCK PLATE	
120	3093250-0009		6	LOCK PLATE	
130	3059610-0003		2	SHAFT	
140	3059610-0004		2	SHAFT	
160	3059610-0005		2	SHAFT	
310	312105-0331		8	SCREW M6S ISO 4017 M5X20 A480	
Common Parts					
010	2909791-0000		1	SUPPORT	
150	3059610-0006		1	SHAFT	
300	90601-2446		14	FLANGE BUSHING, 8X12X10 MM	
320	312109-0374		4	SCREW M6S ISO 4017 M6X30 A480	
330	312105-0451		2	SCREW M6S ISO 4017 M8X20 A480	
340	2033-0011		14	WASHER	
370	90062-0065		8	LOCK WASHER NORD-LOCK,5,4/9 T=2,2	
480	90600-8108		1	GREASE, OKS 1110 NSF H1, 15G	

Machine Type	Group Description	Used-In	Group Number	Page No

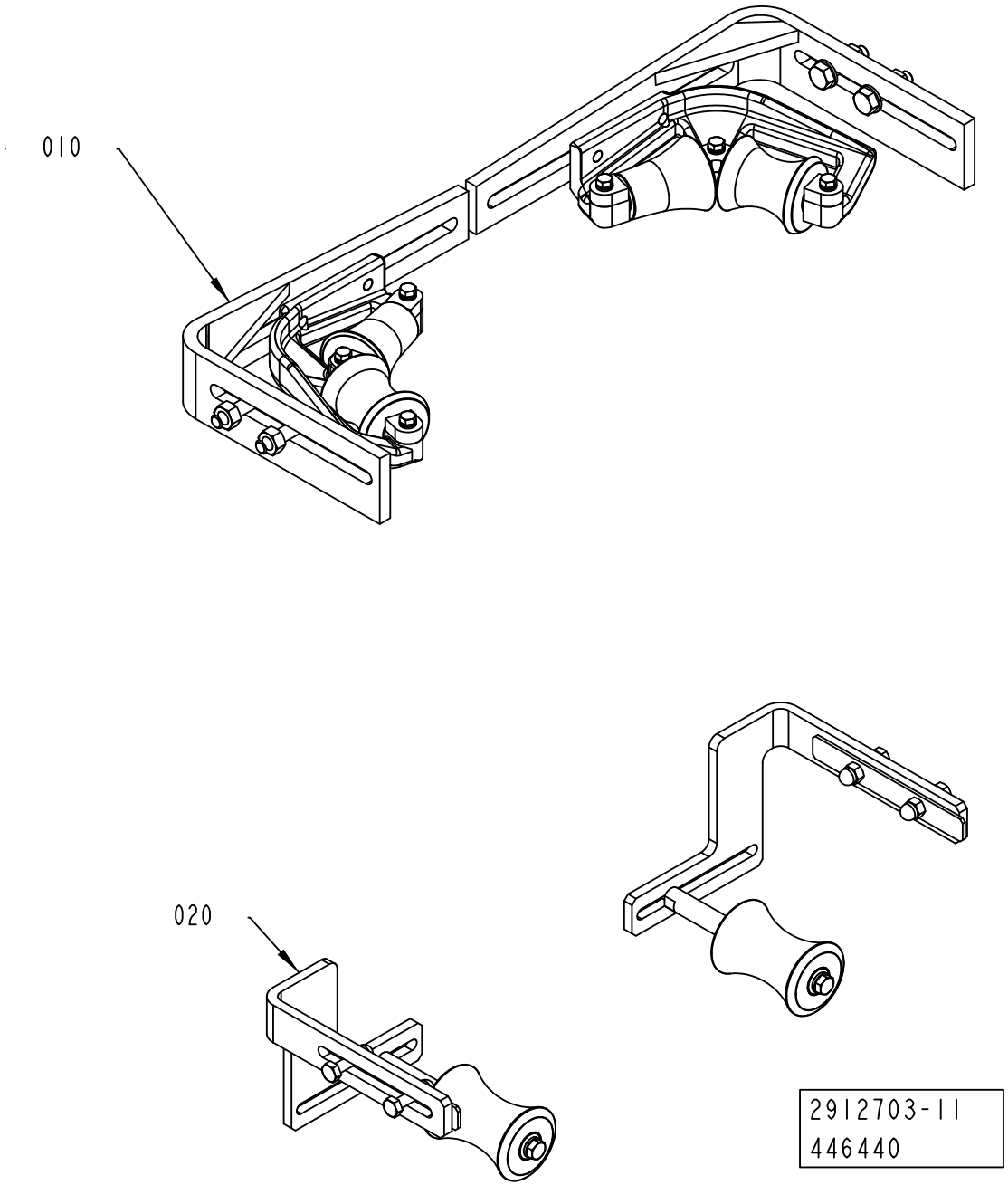
010
020
2912703-11
446440

ECM: 446874 - 20100401
Group number: 2912703-0250
Assembly Drawing: 2912703-11_1_AA

This list covers pages from 1-128 to 1-131

Pos	Part No	UN	Qty	Description	Page No
TBA 0125S (See drawing on page: 1-130)					
010	2547420-0350		1	EDGE ROLLER	**1-133**
030	2891806-0250		1	EDGE ROLLER	**1-135**
TBA 0200M, TBA 0200B, TBA 0200S, TBA 0250S, TBA 0250B (See drawing on page: 1-130)					
010	2919282-0250		1	EDGE ROLLER	**1-137**
030	2674188-0350		1	EDGE ROLLER	**1-139, 1-141**
TBA 1000B, TBA 1000SQ (See drawing on page: 1-128)					
010	2919282-0250		1	EDGE ROLLER	**1-137**
020	2541634-0300		1	EDGE ROLLER	**1-143**
TBA 1000S (See drawing on page: 1-128)					
010	2919282-0250		1	EDGE ROLLER	**1-137**
020	2541634-0300		1	EDGE ROLLER	**1-143**

Pos	Part No	UN	Qty	Description	Page No

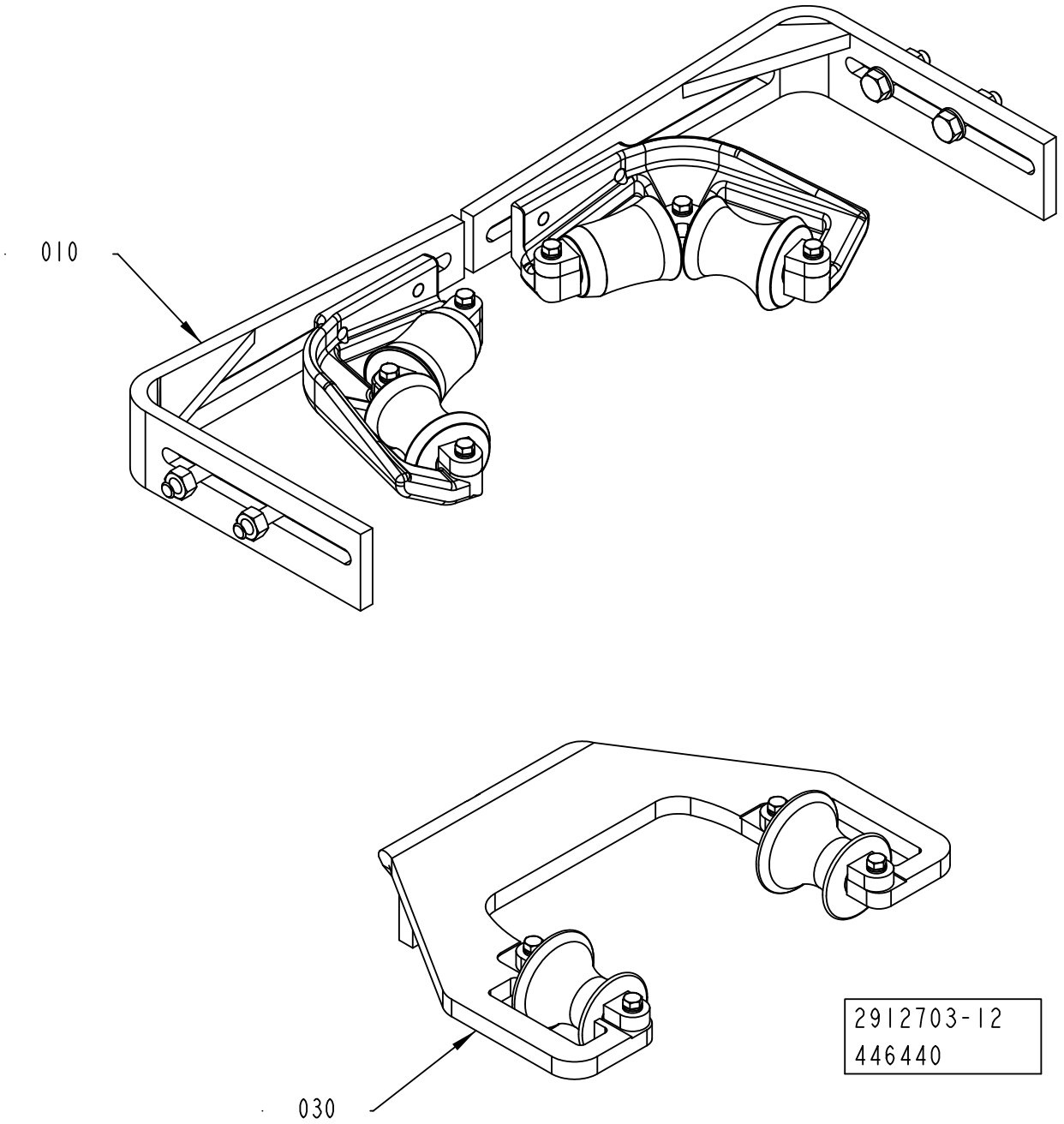
010
030
2912703-12
446440

ECM: 446874 - 20100401
Group number: 2912703-0250
Assembly Drawing: 2912703-12_1_AA

This list covers pages from 1-128 to 1-131

Pos	Part No	UN	Qty	Description	Page No
TBA 0125S (See drawing on page: 1-130)					
010	2547420-0350		1	EDGE ROLLER	**1-133**
030	2891806-0250		1	EDGE ROLLER	**1-135**
TBA 0200M, TBA 0200B, TBA 0200S, TBA 0250S, TBA 0250B (See drawing on page: 1-130)					
010	2919282-0250		1	EDGE ROLLER	**1-137**
030	2674188-0350		1	EDGE ROLLER	**1-139, 1-141**
TBA 1000B, TBA 1000SQ (See drawing on page: 1-128)					
010	2919282-0250		1	EDGE ROLLER	**1-137**
020	2541634-0300		1	EDGE ROLLER	**1-143**
TBA 1000S (See drawing on page: 1-128)					
010	2919282-0250		1	EDGE ROLLER	**1-137**
020	2541634-0300		1	EDGE ROLLER	**1-143**

Pos	Part No	UN	Qty	Description	Page No

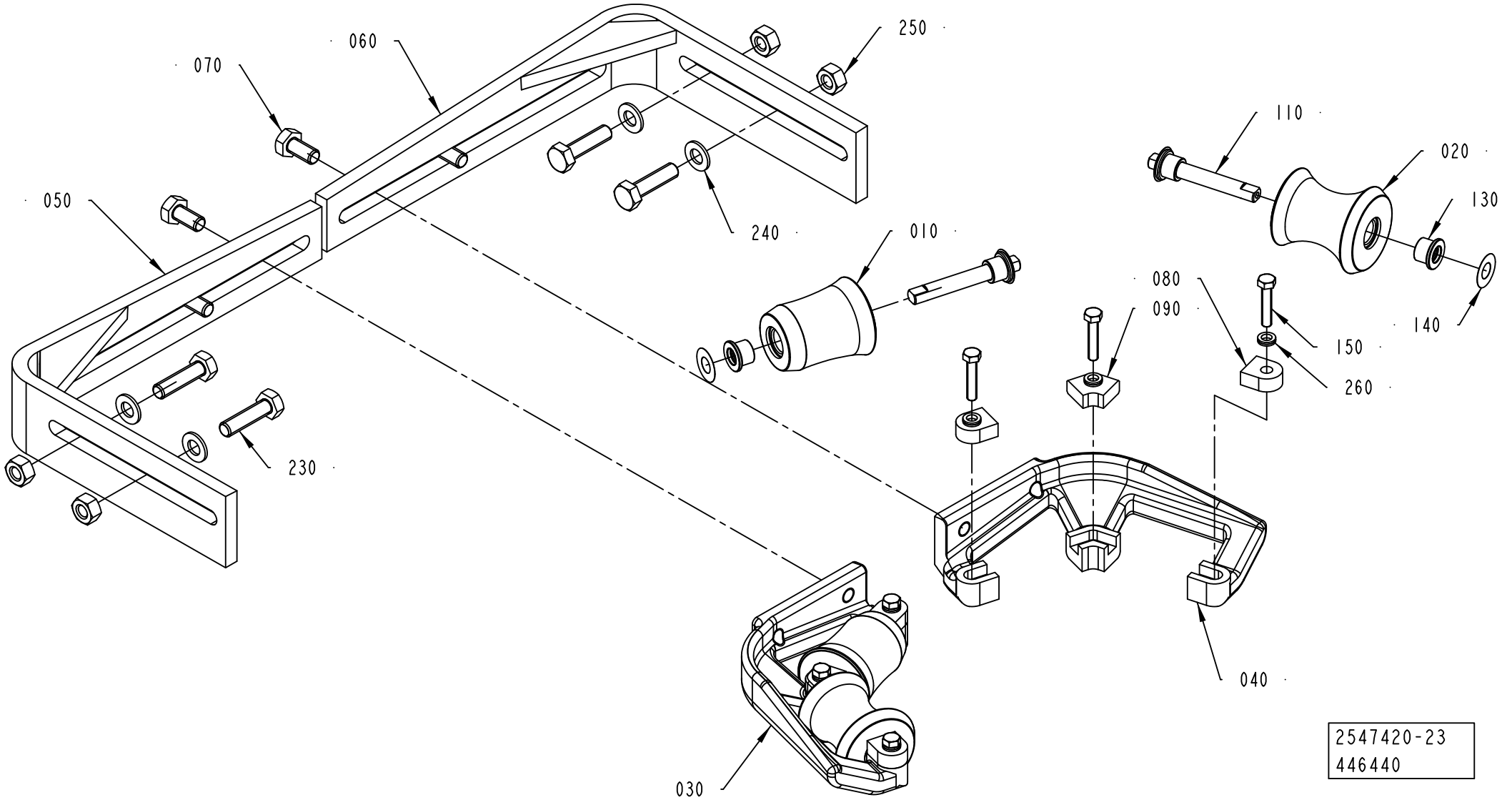
060
070
250
050
240
010
110
020
130
080
090
140
150
260
230
040
030
2547420-23
446440

ECM: 446876 - 20100401
Group number: 2547420-0350
Assembly Drawing: 2547420-23_1_AA

Pos	Part No	UN	Qty	Description	Page No
-					
010	2651790-0000		2	ROLLER	
020	2651789-0000		2	ROLLER	
030	2552140-0000		1	BRACKET	
040	2552141-0000		1	BRACKET	
050	2803221-0000		1	BRACKET	
060	2803220-0000		1	BRACKET	
070	312105-0449		4	SCREW M6S ISO 4017 M8X16 A480	
080	3093248-0008		4	LOCK PLATE	
090	3093246-0006		2	LOCK PLATE	
110	3059610-0001		4	SHAFT	
130	90601-2446		8	FLANGE BUSHING, 8X12X10 MM	
140	2033-0011		8	WASHER	
150	312105-0333		6	SCREW M6S ISO 4017 M5X25 A480	
230	312105-0455		4	SCREW M6S ISO 4017 M8X30 A480	
240	315105-0165		4	WASHER BRB 8,4X16 RFR	
250	312605-0318		4	HEXAGON NUT, M6M M8 A280	
260	90062-0065		6	LOCK WASHER NORD-LOCK,5,4/9 T=2,2	
480	90600-8108		1	GREASE, OKS 1110 NSF H1, 15G	

Pos	Part No	UN	Qty	Description	Page No

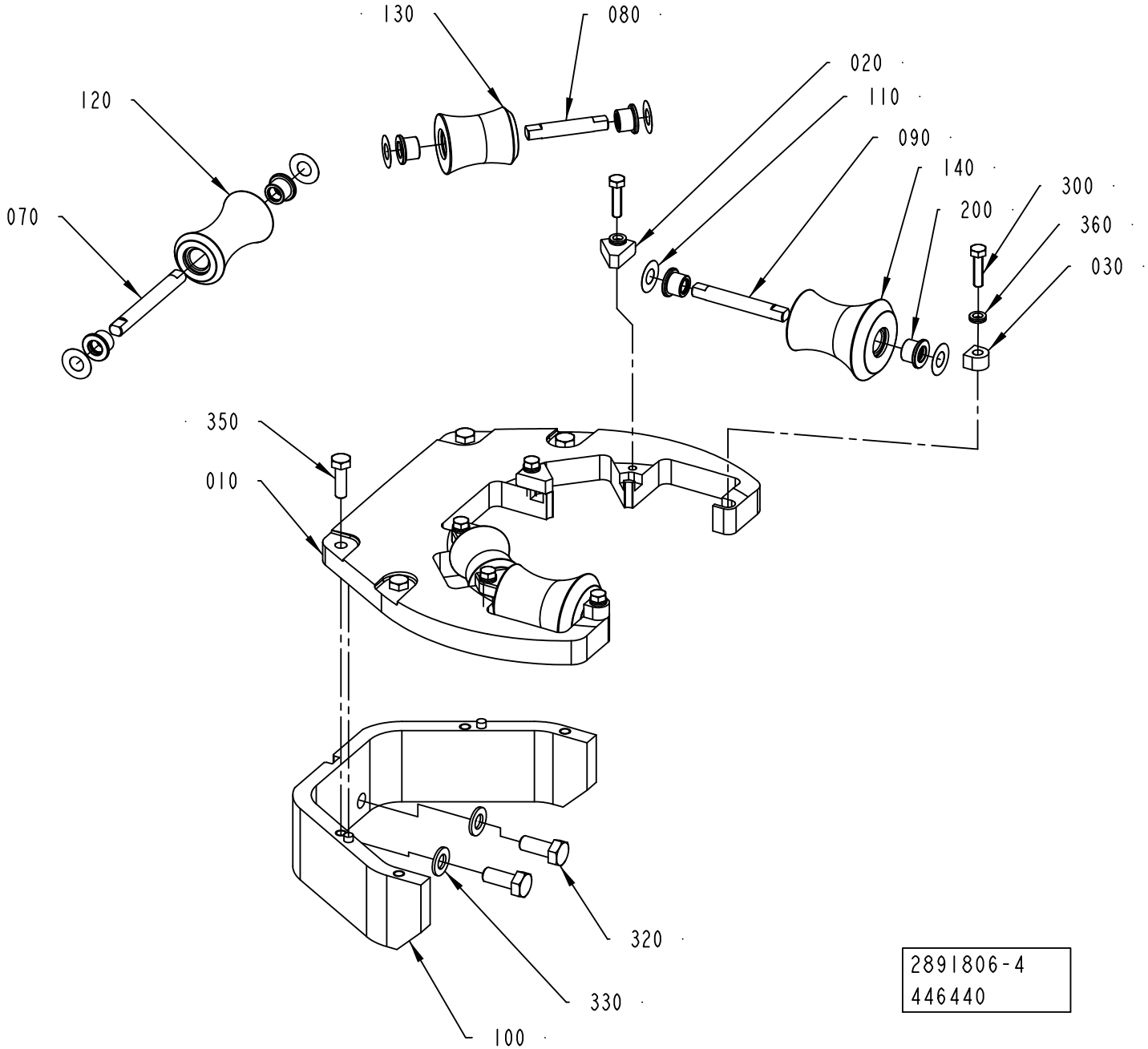
130
080
020
110
120
090
140
300
200
360
070
030
350
010
320
330
100
2891806-4
446440

ECM: 446872 - 20100401
Group number: 2891806-0250
Assembly Drawing: 2891806-4_1_AA

Pos	Part No	UN	Qty	Description	Page No
-					
010	2918680-0000		1	PLATE	
020	3093255-0000		4	PLATE	
030	3093256-0000		2	PLATE	
070	3059610-0002		1	SHAFT	
080	3059610-0013		2	SHAFT	
090	3059610-0017		2	SHAFT	
100	2919283-0000		1	BRACKET	
110	2033-0011		10	WASHER	
120	2891810-0000		1	ROLLER	
130	2891811-0000		2	ROLLER	
140	2891812-0000		2	ROLLER	
200	90601-2446		10	FLANGE BUSHING, 8X12X10 MM	
300	312105-0331		6	SCREW M6S ISO 4017 M5X20 A480	
320	312105-0455		2	SCREW M6S ISO 4017 M8X30 A480	
330	315105-0165		2	WASHER BRB 8,4X16 RFR	
350	312105-0370		4	SCREW M6S ISO 4017 M6X20 A480	
360	90062-0065		6	LOCK WASHER NORD-LOCK,5,4/9 T=2,2	
480	90600-8108		1	GREASE, OKS 1110 NSF H1, 15G	

Pos	Part No	UN	Qty	Description	Page No

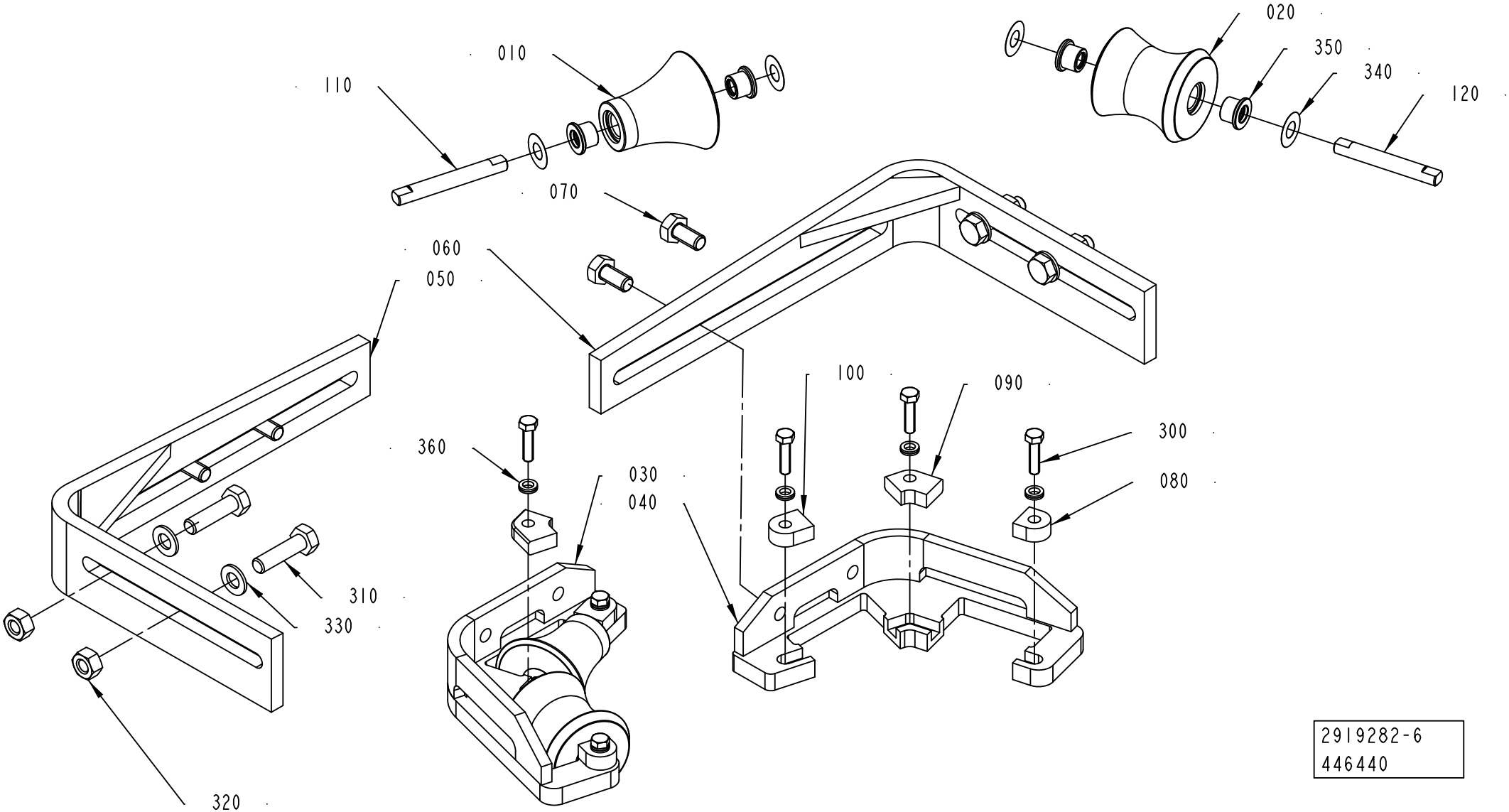
020
350
340
120
010
110
070
060
050
100
090
300
080
360
030
040
310
330
320
2919282-6
446440

ECM: 446881 - 20100401
Group number: 2919282-0250
Assembly Drawing: 2919282-6_1_AA

Pos	Part No	UN	Qty	Description	Page No
TBA 0200M, TBA 0200B, TBA 0200S, TBA 0250S, TBA 0250B					
010	2651790-0000		2	ROLLER	
020	2651789-0000		2	ROLLER	
030	2552140-0000		1	BRACKET	
040	2552141-0000		1	BRACKET	
080	3093248-0008		4	LOCK PLATE	
090	3093246-0006		2	LOCK PLATE	
110	3059610-0001		4	SHAFT	
300	312105-0333		6	SCREW M6S ISO 4017 M5X25 A480	
TBA 1000B					
010	2651790-0000		2	ROLLER	
020	2651789-0000		2	ROLLER	
030	2552140-0000		1	BRACKET	
040	2552141-0000		1	BRACKET	
080	3093248-0008		4	LOCK PLATE	
090	3093246-0006		2	LOCK PLATE	
110	3059610-0001		4	SHAFT	
300	312105-0333		6	SCREW M6S ISO 4017 M5X25 A480	
TBA 1000S					
010	2552144-0000		2	ROLLER	
020	2562664-0000		2	ROLLER	
030	2552140-0000		1	BRACKET	
040	2552141-0000		1	BRACKET	
080	3093248-0008		4	LOCK PLATE	
090	3093246-0006		2	LOCK PLATE	
110	3059610-0001		4	SHAFT	
300	312105-0333		6	SCREW M6S ISO 4017 M5X25 A480	
TBA 1000SQ					
010	3010662-0000		2	ROLLER	
020	3010663-0000		2	ROLLER	
030	2922550-0000		1	BRACKET	
040	2922549-0000		1	BRACKET	
080	3093248-0002		2	LOCK PLATE	
090	3093246-0010		2	LOCK PLATE	
100	3093248-0010		2	LOCK PLATE	
110	3059610-0001		2	SHAFT	
120	3059610-0017		2	SHAFT	
300	312105-0331		6	SCREW M6S ISO 4017 M5X20 A480	
Common Parts					
050	2984133-0000		1	BRACKET	
060	2984132-0000		1	BRACKET	
070	312105-0449		4	SCREW M6S ISO 4017 M8X16 A480	
310	312105-0455		4	SCREW M6S ISO 4017 M8X30 A480	
320	312605-0318		4	HEXAGON NUT, M6M M8 A280	
330	315105-0165		4	WASHER BRB 8,4X16 RFR	
340	2033-0011		8	WASHER	
350	90601-2446		8	FLANGE BUSHING, 8X12X10 MM	
360	90062-0065		6	LOCK WASHER NORD-LOCK,5,4/9 T=2,2	
480	90600-8108		1	GREASE, OKS 1110 NSF H1, 15G	

Machine Type | Group Description | Used-In | Group Number | Page No

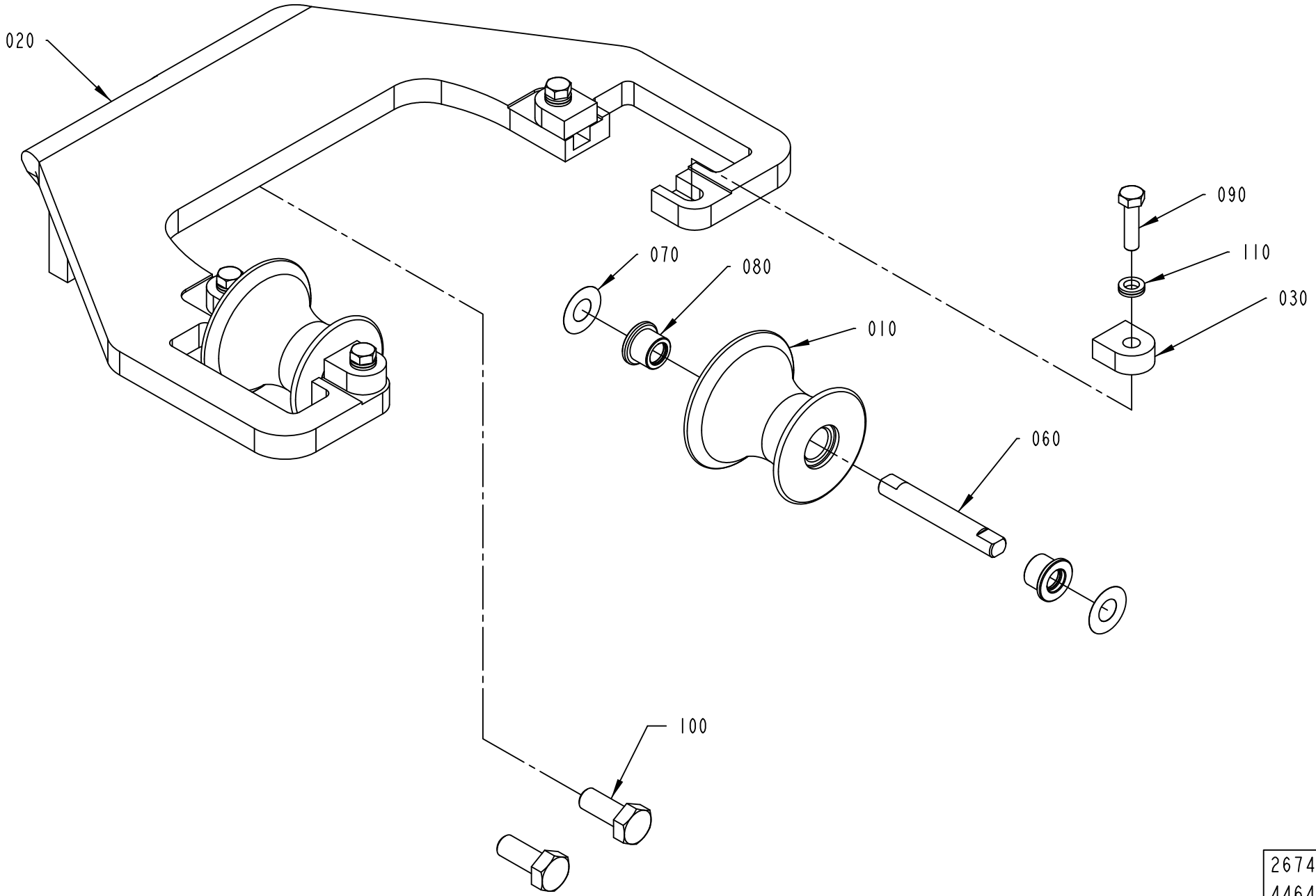

2674188-6
446440

ECM: 446869 - 20100401
Group number: 2674188-0350
Assembly Drawing: 2674188-6_1_AA

This list covers pages from 1-138 to 1-141

Pos	Part No	UN	Qty	Description	Page No
TBA 0200B, TBA 0250B (See drawing on page: 1-138)					
010	2634943-0000		2	ROLLER	
020	2657860-0000		1	BRACKET	
030	3093248-0005		4	LOCK PLATE	
060	3059610-0014		2	SHAFT	
070	2033-0011		4	WASHER	
080	90601-2446		4	FLANGE BUSHING, 8X12X10 MM	
090	312105-0331		4	SCREW M6S ISO 4017 M5X20 A480	
100	312105-0449		2	SCREW M6S ISO 4017 M8X16 A480	
110	90062-0065		4	LOCK WASHER NORD-LOCK,5,4/9 T=2,2	
TBA 0200M, TBA 0250S (See drawing on page: 1-140)					
005	2955005-0000		1	ROLLER	
010	2611040-0000		2	ROLLER	
020	3006215-0000		1	SUPPORT ROLLER	
030	3093248-0009		4	LOCK PLATE	
040	3093248-0003		2	LOCK PLATE	
050	3059610-0017		1	SHAFT	
060	3059610-0012		2	SHAFT	
070	2033-0011		6	WASHER	
080	90601-2446		6	FLANGE BUSHING, 8X12X10 MM	
090	312105-0331		6	SCREW M6S ISO 4017 M5X20 A480	
100	312105-0451		2	SCREW M6S ISO 4017 M8X20 A480	
110	90062-0065		6	LOCK WASHER NORD-LOCK,5,4/9 T=2,2	
TBA 0200S (See drawing on page: 1-138)					
010	2640354-0000		2	ROLLER	
020	2640353-0000		1	BRACKET	
030	3093248-0009		4	LOCK PLATE	
060	3059610-0012		2	SHAFT	
070	2033-0011		4	WASHER	
080	90601-2446		4	FLANGE BUSHING, 8X12X10 MM	
090	312105-0331		4	SCREW M6S ISO 4017 M5X20 A480	
100	312105-0451		2	SCREW M6S ISO 4017 M8X20 A480	
110	90062-0065		4	LOCK WASHER NORD-LOCK,5,4/9 T=2,2	
Common Parts					
480	90600-8108		1	GREASE, OKS 1110 NSF H1, 15G	

Pos	Part No	UN	Qty	Description	Page No

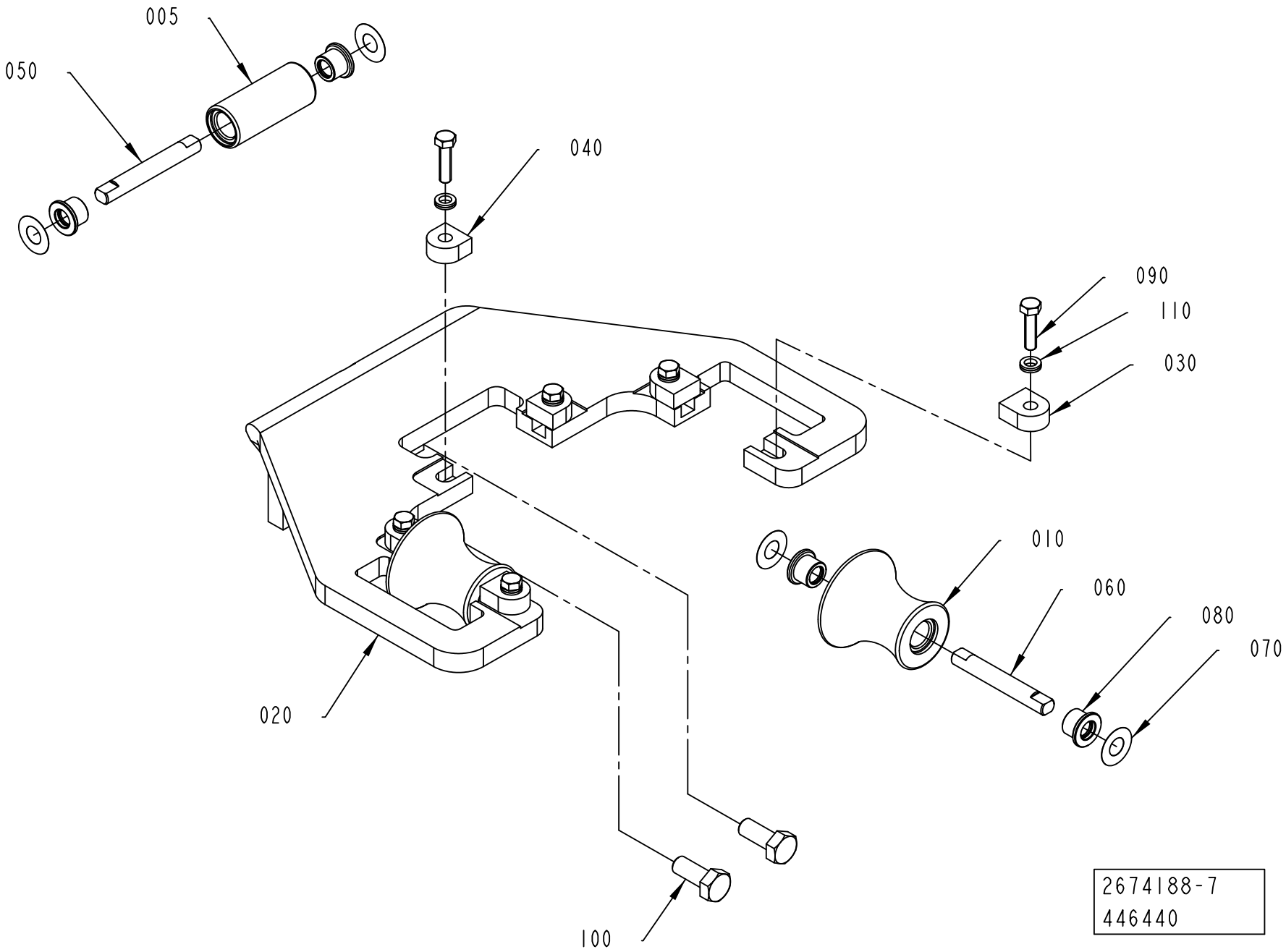
005
050
040
090
110
030
010
060
080
070
020
100
2674188-7
446440

ECM: 446869 - 20100401
Group number: 2674188-0350
Assembly Drawing: 2674188-7_1_AA

This list covers pages from 1-138 to 1-141

Pos	Part No	UN	Qty	Description	Page No
TBA 0200B, TBA 0250B (See drawing on page: 1-138)					
010	2634943-0000		2	ROLLER	
020	2657860-0000		1	BRACKET	
030	3093248-0005		4	LOCK PLATE	
060	3059610-0014		2	SHAFT	
070	2033-0011		4	WASHER	
080	90601-2446		4	FLANGE BUSHING, 8X12X10 MM	
090	312105-0331		4	SCREW M6S ISO 4017 M5X20 A480	
100	312105-0449		2	SCREW M6S ISO 4017 M8X16 A480	
110	90062-0065		4	LOCK WASHER NORD-LOCK,5,4/9 T=2,2	
TBA 0200M, TBA 0250S (See drawing on page: 1-140)					
005	2955005-0000		1	ROLLER	
010	2611040-0000		2	ROLLER	
020	3006215-0000		1	SUPPORT ROLLER	
030	3093248-0009		4	LOCK PLATE	
040	3093248-0003		2	LOCK PLATE	
050	3059610-0017		1	SHAFT	
060	3059610-0012		2	SHAFT	
070	2033-0011		6	WASHER	
080	90601-2446		6	FLANGE BUSHING, 8X12X10 MM	
090	312105-0331		6	SCREW M6S ISO 4017 M5X20 A480	
100	312105-0451		2	SCREW M6S ISO 4017 M8X20 A480	
110	90062-0065		6	LOCK WASHER NORD-LOCK,5,4/9 T=2,2	
TBA 0200S (See drawing on page: 1-138)					
010	2640354-0000		2	ROLLER	
020	2640353-0000		1	BRACKET	
030	3093248-0009		4	LOCK PLATE	
060	3059610-0012		2	SHAFT	
070	2033-0011		4	WASHER	
080	90601-2446		4	FLANGE BUSHING, 8X12X10 MM	
090	312105-0331		4	SCREW M6S ISO 4017 M5X20 A480	
100	312105-0451		2	SCREW M6S ISO 4017 M8X20 A480	
110	90062-0065		4	LOCK WASHER NORD-LOCK,5,4/9 T=2,2	
Common Parts					
480	90600-8108		1	GREASE, OKS 1110 NSF H1, 15G	

Pos	Part No	UN	Qty	Description	Page No

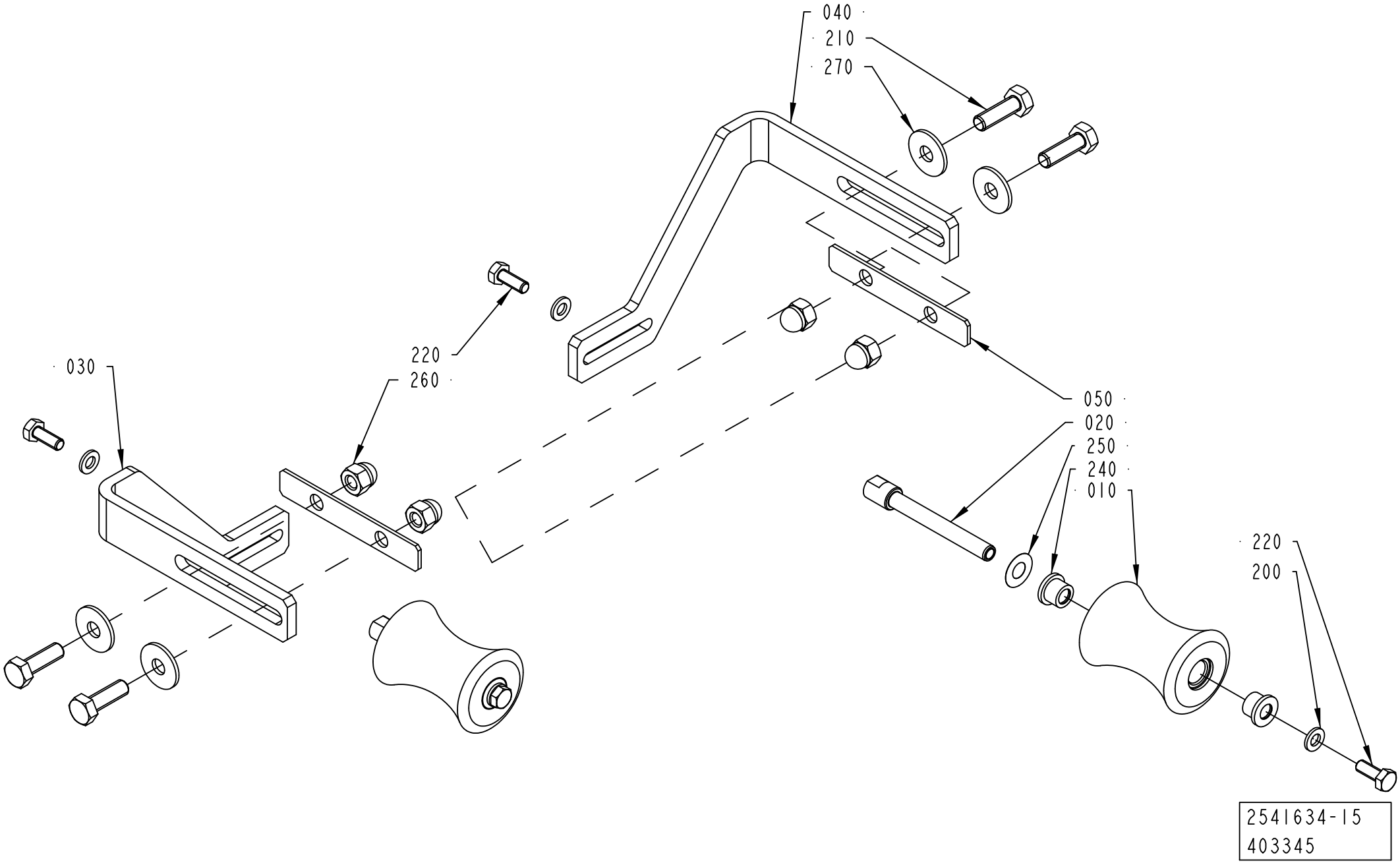
040
210
270
220
260
030
050
020
250
240
010
220
200
2541634-15
403345

ECM: 404490 - 20091001
Group number: 2541634-0300
Assembly Drawing: 2541634-15_1_AA

Pos	Part No	UN	Qty	Description	Page No
A3/SPEED					
010	3020118-0000		2	ROLLER	
020	3020112-0000		2	SHAFT	
030	2696055-0000		1	BRACKET	
040	2696054-0000		1	BRACKET	
050	2696056-0000		2	COVER PLATE	
210	312105-0453		4	SCREW M6S ISO 4017 M8X25 A480	
220	312105-0368		4	SCREW M6S ISO 4017 M6X16 A480	
260	312705-0318		4	NUT HEX. DOMED CAP MHM-6 M8 A280	
270	90005-0116		4	WASHER PLAIN ROUND 8,4(M8)/24, H=2	
Common Parts					
200	315105-0153		4	WASHER BRB 6,4X12 RFR	
240	90601-2446		4	FLANGE BUSHING, 8X12X10 MM	
250	2033-0011		2	WASHER	
480	90600-8108		1	GREASE, OKS 1110 NSF H1, 15G	

Pos	Part No	UN	Qty	Description	Page No

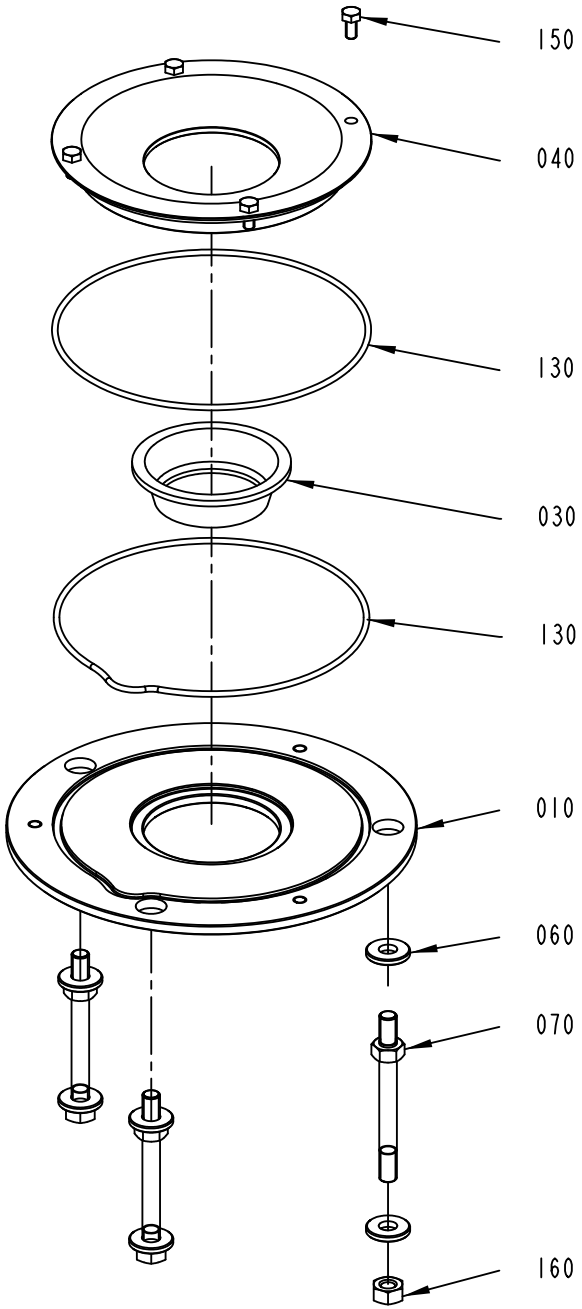

3020129-1
465878

ECM: 474543 - 20110101
Group number: 3020129-0100
Assembly Drawing: 3020129-1_1_AB

Pos	Part No	UN	Qty	Description	Page No
TBA 0125S					
010	3100979-0000		1	PLATE	
030	490900-0000		1	SEALING RING	
040	3100974-0000		1	FLANGE	
TBA 0200B, TBA 0250B					
010	3100980-0000		1	PLATE	
030	273953-0000		1	SEAL	
040	3100975-0000		1	FLANGE	
TBA 0200M, TBA 0250S					
010	3100981-0000		1	PLATE	
030	574336-0000		1	SEAL	
040	3100976-0000		1	FLANGE	
TBA 0200S					
010	3100982-0000		1	PLATE	
030	490901-0000		1	SEAL	
040	3100977-0000		1	FLANGE	
TBA 1000B					
010	3100983-0000		1	PLATE	
030	466042-0000		1	SEAL	
040	3100978-0000		1	FLANGE	
TBA 1000S					
010	3100983-0000		1	PLATE	
030	567743-0000		1	SEAL	
040	3100978-0000		1	FLANGE	
TBA 1000SQ					
010	3100983-0000		1	PLATE	
030	579318-0000		1	SEAL	
040	3100978-0000		1	FLANGE	
Common Parts					
060	2876043-0000		6	WASHER	
070	3037763-0000		3	STUD SCREW	
130	315205-0765		2	O-RING 139,37X2,62 MM	
150	312105-0325		4	SCREW M6S ISO 4017 M5X10 A480	
160	312605-0318		3	HEXAGON NUT, M6M M8 A280	

Pos	Part No	UN	Qty	Description	Page No

Machine Type | Group Description | Used-In | Group Number | Page No

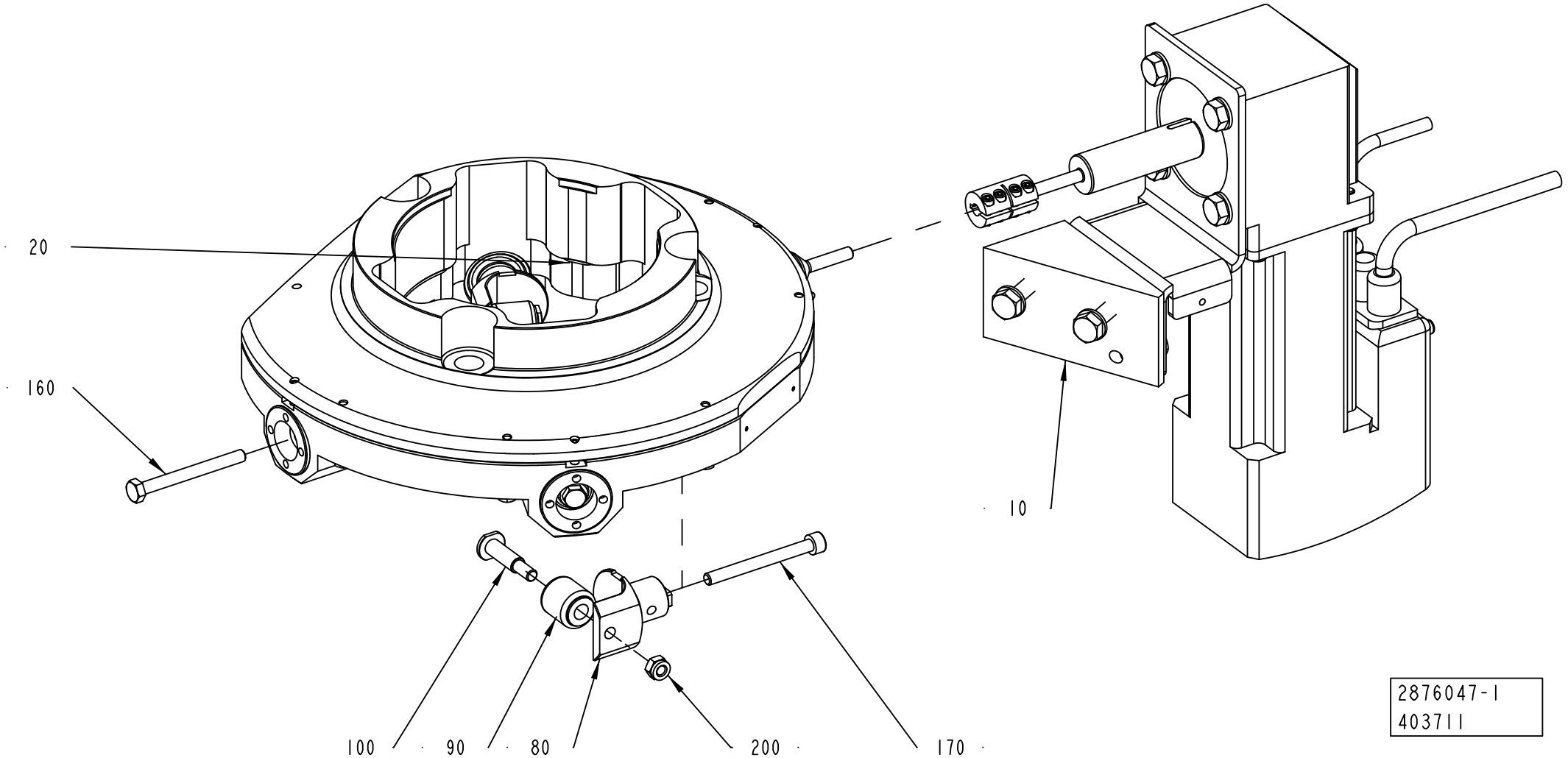
20
160
10
100
90
80
200
170
2876047-1
403711

Pos	Part No	UN	Qty	Description	Page No
TBA 0125S (See drawing on page: 1-146)					
080	2878625-0000		4	BRACKET	
TBA 0250B, TBA 0200B (See drawing on page: 1-146)					
080	2897857-0000		4	BRACKET	
TBA 0250S, TBA 0200M (See drawing on page: 1-146)					
080	2921394-0000		4	BRACKET	
TBA 0200S (See drawing on page: 1-146)					
080	2878626-0000		4	BRACKET	
TBA 1000B (See drawing on page: 1-148)					
080	2878634-0000		4	BRACKET	
TBA 1000S (See drawing on page: 1-148)					
080	2921395-0000		4	BRACKET	
TBA 1000SQ (See drawing on page: 1-148)					
080	2878627-0000		4	BRACKET	
Common Parts					
010	2909509-0100		1	DRIVE	**1-151**
020	2876046-0000		1	STEERING DEVICE	
090	2832867-0000		4	ROLLER	
100	2872065-0000		4	PIN	
160	312105-0382		3	SCREW M6S ISO 4014 M6X60 A480	
170	312115-0382		1	SCREW ISO4762 M6X60 A4 80	
200	312812-0316		4	HEXAGON NUT, NY-LOCK M6 A480	

Pos	Part No	UN	Qty	Description	Page No

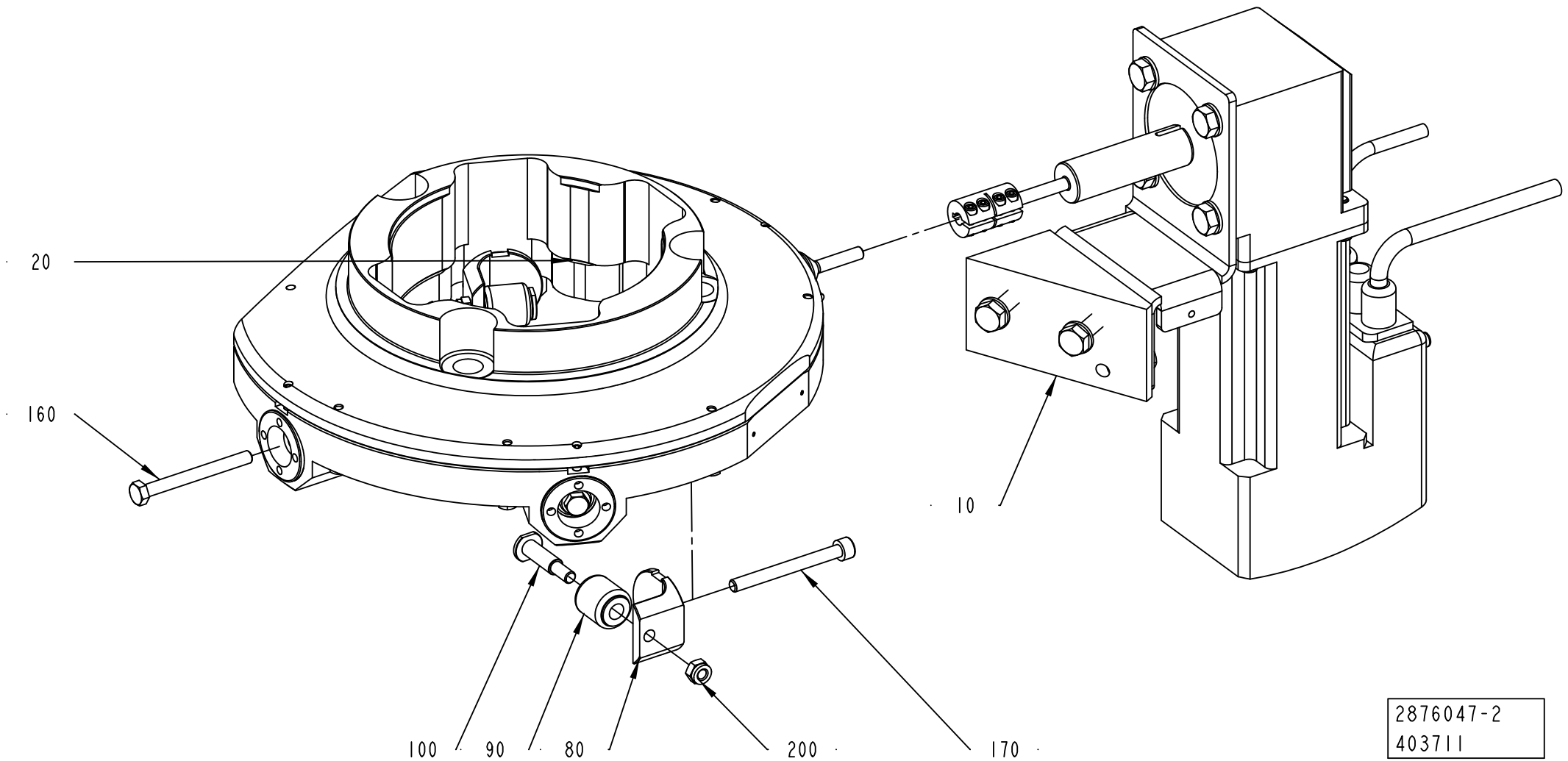
20
160
10
100
90
80
200
170
2876047-2
403711

Pos	Part No	UN	Qty	Description	Page No
TBA 0125S (See drawing on page: 1-146)					
080	2878625-0000		4	BRACKET	
TBA 0250B, TBA 0200B (See drawing on page: 1-146)					
080	2897857-0000		4	BRACKET	
TBA 0250S, TBA 0200M (See drawing on page: 1-146)					
080	2921394-0000		4	BRACKET	
TBA 0200S (See drawing on page: 1-146)					
080	2878626-0000		4	BRACKET	
TBA 1000B (See drawing on page: 1-148)					
080	2878634-0000		4	BRACKET	
TBA 1000S (See drawing on page: 1-148)					
080	2921395-0000		4	BRACKET	
TBA 1000SQ (See drawing on page: 1-148)					
080	2878627-0000		4	BRACKET	
Common Parts					
010	2909509-0100		1	DRIVE	**1-151**
020	2876046-0000		1	STEERING DEVICE	
090	2832867-0000		4	ROLLER	
100	2872065-0000		4	PIN	
160	312105-0382		3	SCREW M6S ISO 4014 M6X60 A480	
170	312115-0382		1	SCREW ISO4762 M6X60 A4 80	
200	312812-0316		4	HEXAGON NUT, NY-LOCK M6 A480	

Pos	Part No	UN	Qty	Description	Page No

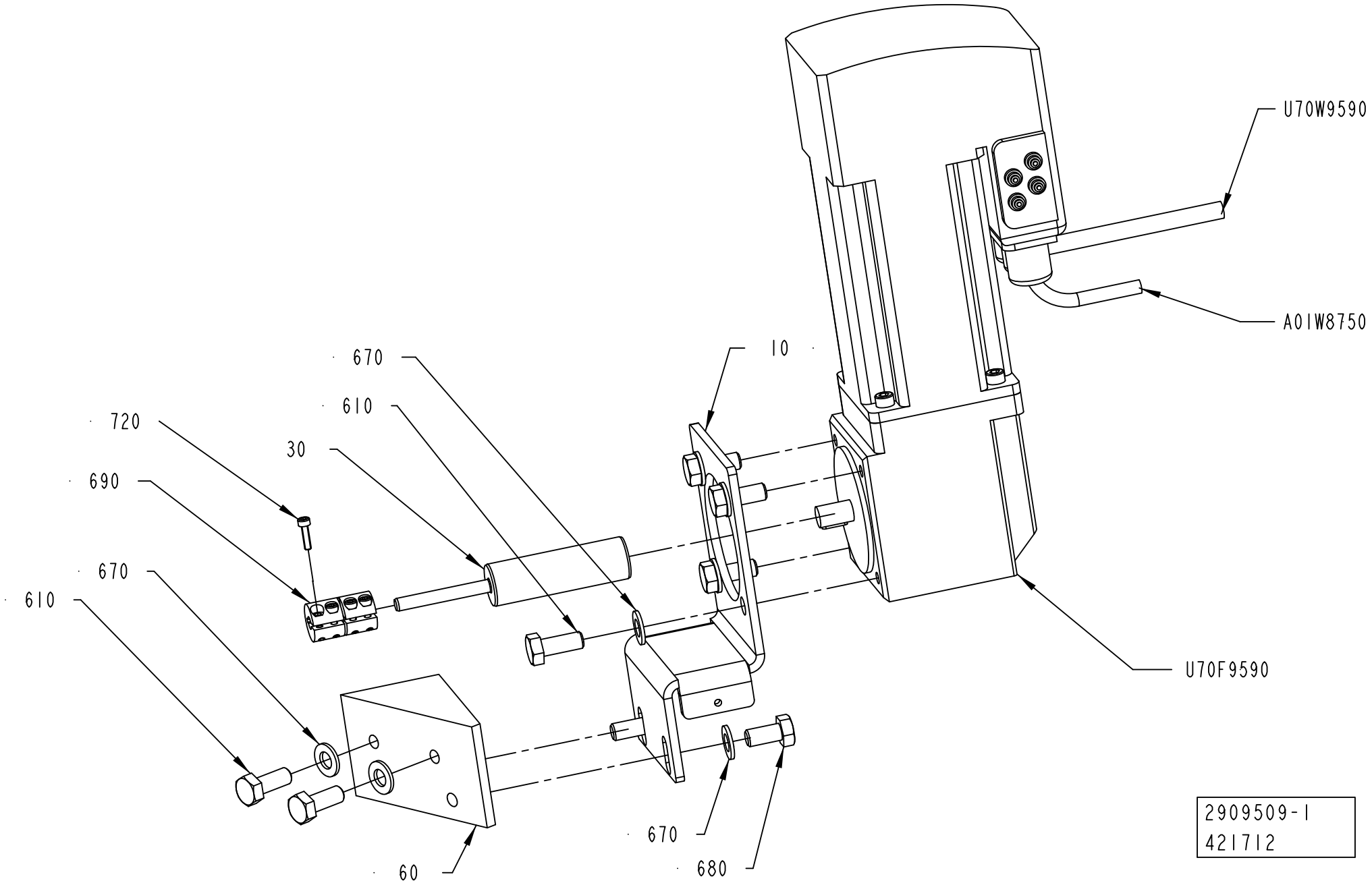
U70W9590
A01W8750
10
670
610
720
30
690
670
610
U70F9590
670
680
60
2909509-1
421712

ECM: 422549 - 20100101
Group number: 2909509-0100
Assembly Drawing: 2909509-1_1_AD

Pos	Part No	UN	Qty	Description	Page No
-					
010	2991213-0000		1	BRACKET	
030	2991211-0000		1	SHAFT	
060	2992991-0000		1	SPACER	
610	312105-0451		7	SCREW M6S ISO 4017 M8X20 A480	
670	315106-0165		7	WASHER ISO 7089-8-200 HV A4	
680	312105-0449		1	SCREW M6S ISO 4017 M8X16 A480	
690	90600-5059		1	TORQUE RIGID COUPLING, 6X6 MM	
720	312115-0226		4	SCREW ISO4762 M3X12 A4 80	
A01W8750	90459-2530	MM	5000	DEVICENET CABLE THIN	
U70F9590	90600-3432		1	STEPPER MOTOR HRA71-D1B09036	
U70W9590	90220-0096	MM	5100	SCR. CABLE 3X1,5MM2	

Pos	Part No	UN	Qty	Description	Page No

This page is intentionally left blank.

ECM: 474722 - 20101003
Group number: 3093220-0100
Assembly Drawing:

Pos	Part No	UN	Qty	Description	Page No
TBA 0125S					
010	3093266-0002		3	ROLLER	
015	3093266-0003		3	ROLLER	
TBA 0200B, TBA 0250B					
010	3093190-0002		3	ROLLER	
015	3093190-0003		3	ROLLER	
TBA 0200M, TBA 0250S					
010	3110856-0002		3	ROLLER	
015	3110856-0003		3	ROLLER	
TBA 0200S					
010	3106246-0002		3	ROLLER	
015	3106246-0003		3	ROLLER	
TBA 1000B					
010	3079094-0002		1	ROLLER	
015	3079094-0003		1	ROLLER	
020	3079095-0002		2	ROLLER	
025	3079095-0003		2	ROLLER	
TBA 1000S					
010	567746-0002		3	TRIMMING ROLLER PLUS	
015	567746-0003		3	TRIMMING ROLLER MINUS	
TBA 1000SQ					
010	3093194-0002		3	ROLLER	
015	3093194-0003		3	ROLLER	

Pos	Part No	UN	Qty	Description	Page No

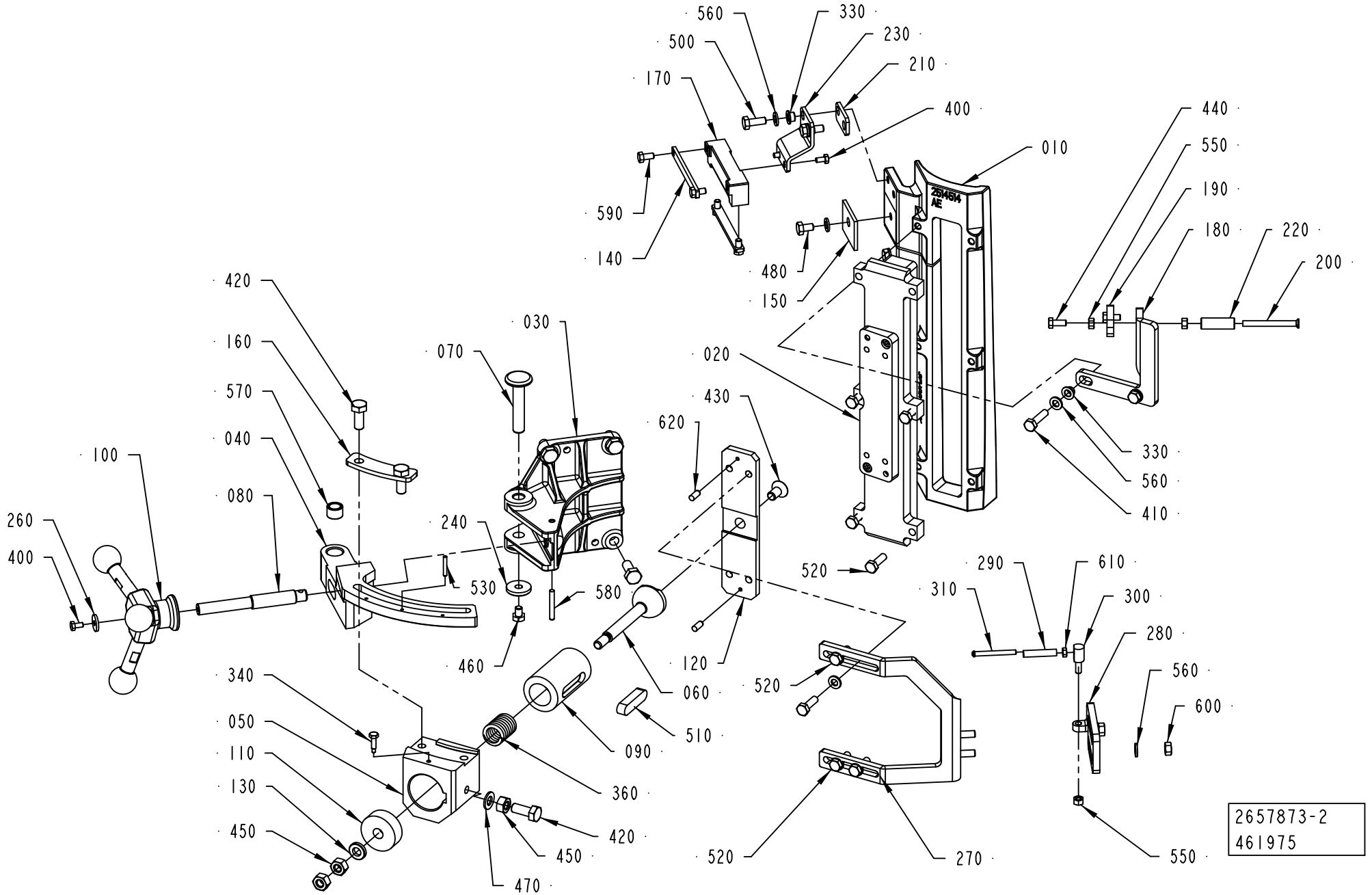
560
330
500
230
210
170
400
010
590
140
480
150
440
550
190
180
220
200
420
160
570
040
100
080
260
400
070
030
240
530
580
460
620
430
020
330
560
410
520
290
610
310
300
280
560
600
340
050
110
130
450
090
360
420
450
470
060
510
120
520
520
270
550
2657873-2
461975

ECM: 474715 - 20101003
Group number: 2657873-0200
Assembly Drawing: 2657873-2_1_AC

This list covers pages from 1-154 to 1-159

Pos	Part No	UN	Qty	Description	Page No
TBA 0125S (See drawing on page: 1-156)					
010	2898917-0000		1	INDUCTOR	
020	2898918-0000		1	INSULATING PLATE	
180	2898990-0000		1	BRACKET	
190	2926461-0000		1	BRACKET	
200	269151-0000		1	SHAFT	
220	2555625-0000		1	ROLL	
240	315125-0153		2	WASHER TBRSB 6,4X22X4 A4	
270	3042533-0000		1	BRACKET	
280	3052683-0000		1	BRACKET	
290	2555616-0000		1	ROLLER	
330	2508292-0000		2	BUSHING	
350	2899153-0000		2	BUSHING	
370	3042534-0000		1	HOLDER	
410	312105-0299		1	SCREW M6S ISO 4017 M4X30 A470	
440	312105-0327		2	SCREW M6S ISO 4017 M5X12 A480	
460	312105-0362		1	SCREW M6S ISO 4017 M6X8 A480	
480	312105-0364		3	SCREW M6S ISO 4017 M6X10 A480	
500	312105-0368		4	SCREW M6S ISO 4017 M6X16 A480	
520	312105-0370		2	SCREW M6S ISO 4017 M6X20 A480	
550	312605-0314		3	HEXAGON NUT, M6M M5 A280	
560	315105-0153		10	WASHER BRB 6,4X12 RFR	
610	312605-0312		1	HEXAGON NUT, M6M M4 A280	
640	315105-0136		4	WASHER BRB 4,3X8 RFR	
650	312105-0295		4	SCREW M6S ISO 4017 M4X20 A470	
670	315115-0153		2	WASHER PLAIN, TBRB 6,4/12 H=3	
TBA 0200B, TBA 0250B (See drawing on page: 1-154)					
010	2917120-0000		1	INDUCTOR	
020	2917121-0000		1	INSULATING PLATE	
180	2917122-0000		1	BRACKET	
190	2547405-0000		1	BRACKET	
200	269151-0000		1	SHAFT	
220	2555625-0000		1	ROLL	
240	315125-0153		1	WASHER TBRSB 6,4X22X4 A4	
270	2982295-0000		1	BRACKET	
280	3042553-0000		1	BRACKET	
290	2555616-0000		1	ROLLER	
330	2508292-0000		4	BUSHING	
410	312105-0372		2	SCREW M6S ISO 4017 M6X25 A480	
440	312105-0327		2	SCREW M6S ISO 4017 M5X12 A480	
460	312105-0362		1	SCREW M6S ISO 4017 M6X8 A480	
480	312105-0364		2	SCREW M6S ISO 4017 M6X10 A480	
500	312105-0368		2	SCREW M6S ISO 4017 M6X16 A480	
520	312105-0370		8	SCREW M6S ISO 4017 M6X20 A480	
550	312605-0314		3	HEXAGON NUT, M6M M5 A280	
560	315105-0153		12	WASHER BRB 6,4X12 RFR	
610	312605-0312		1	HEXAGON NUT, M6M M4 A280	
TBA 0200M, TBA 0250S (See drawing on page: 1-154)					
010	2958418-0000		1	INDUCTOR	
020	2862740-0000		1	INSULATING PLATE	
180	2547404-0000		1	BRACKET	
190	2547405-0000		1	BRACKET	
200	269151-0000		1	SHAFT	
220	2555625-0000		1	ROLL	
240	315125-0153		1	WASHER TBRSB 6,4X22X4 A4	
270	2982295-0000		1	BRACKET	
280	3042553-0000		1	BRACKET	
290	2555616-0000		1	ROLLER	
330	2508292-0000		4	BUSHING	
410	312105-0372		2	SCREW M6S ISO 4017 M6X25 A480	
440	312105-0327		2	SCREW M6S ISO 4017 M5X12 A480	
460	312105-0362		1	SCREW M6S ISO 4017 M6X8 A480	
480	312105-0364		2	SCREW M6S ISO 4017 M6X10 A480	
500	312105-0368		2	SCREW M6S ISO 4017 M6X16 A480	
520	312105-0370		8	SCREW M6S ISO 4017 M6X20 A480	
550	312605-0314		3	HEXAGON NUT, M6M M5 A280	
560	315105-0153		12	WASHER BRB 6,4X12 RFR	
610	312605-0312		1	HEXAGON NUT, M6M M4 A280	
TBA 0200S (See drawing on page: 1-158)					
010	2852457-0000		1	INDUCTOR	
020	2862739-0000		1	INSULATING PLATE	
180	2547404-0000		1	BRACKET	
190	2547405-0000		1	BRACKET	
200	269151-0000		1	SHAFT	
220	2555625-0000		1	ROLL	
240	315125-0153		2	WASHER TBRSB 6,4X22X4 A4	
270	3042533-0000		1	BRACKET	
280	3052683-0000		1	BRACKET	
290	2555616-0000		1	ROLLER	
330	2508292-0000		4	BUSHING	
370	3042534-0000		1	HOLDER	
410	312105-0372		2	SCREW M6S ISO 4017 M6X25 A480	
440	312105-0327		2	SCREW M6S ISO 4017 M5X12 A480	
460	312105-0362		1	SCREW M6S ISO 4017 M6X8 A480	

Machine Type | Group Description | Used-In | Group Number | Page No

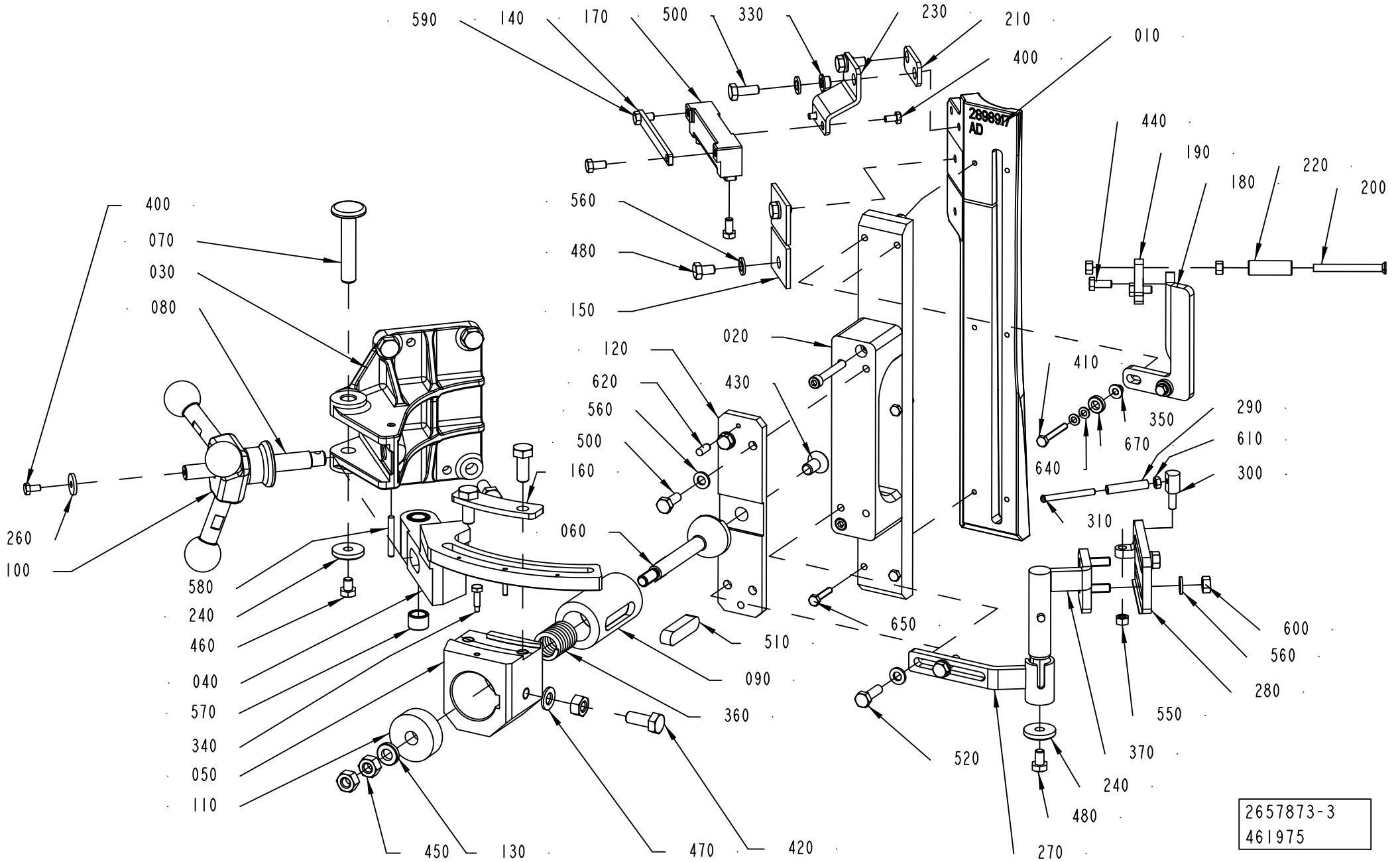
590
140
170
500
330
230
210
010
400
2898917
AD
440
190
180
220
200
400
070
030
080
560
480
150
020
120
620
430
560
500
160
410
350
670
640
290
610
300
310
260
100
060
580
240
460
040
570
340
050
110
510
090
360
650
600
560
280
550
370
240
480
520
270
450
130
470
420
2657873-3
461975

ECM: 474715 - 20101003
Group number: 2657873-0200
Assembly Drawing: 2657873-3_1_AD

This list covers pages from 1-154 to 1-159

Pos	Part No	UN	Qty	Description	Page No
TBA 0200S (Cont'd) (See drawing on page: 1-158)					
480	312105-0364		3	SCREW M6S ISO 4017 M6X10 A480	
500	312105-0368		4	SCREW M6S ISO 4017 M6X16 A480	
520	312105-0370		6	SCREW M6S ISO 4017 M6X20 A480	
550	312605-0314		3	HEXAGON NUT, M6M M5 A280	
560	315105-0153		12	WASHER BRB 6,4X12 RFR	
610	312605-0312		1	HEXAGON NUT, M6M M4 A280	
TBA 1000B (See drawing on page: 1-154)					
010	2514514-0000		1	INDUCTOR	
020	2998017-0000		1	INSULATING PLATE	
180	2547404-0000		1	BRACKET	
190	2547405-0000		1	BRACKET	
200	269151-0000		1	SHAFT	
220	2555625-0000		1	ROLL	
240	315125-0153		1	WASHER TBRSB 6,4X22X4 A4	
270	2982295-0000		1	BRACKET	
280	3042553-0000		1	BRACKET	
290	2555616-0000		1	ROLLER	
330	2508292-0000		4	BUSHING	
410	312105-0372		2	SCREW M6S ISO 4017 M6X25 A480	
440	312105-0327		2	SCREW M6S ISO 4017 M5X12 A480	
460	312105-0362		1	SCREW M6S ISO 4017 M6X8 A480	
480	312105-0364		2	SCREW M6S ISO 4017 M6X10 A480	
500	312105-0368		2	SCREW M6S ISO 4017 M6X16 A480	
520	312105-0370		8	SCREW M6S ISO 4017 M6X20 A480	
550	312605-0314		3	HEXAGON NUT, M6M M5 A280	
560	315105-0153		12	WASHER BRB 6,4X12 RFR	
610	312605-0312		1	HEXAGON NUT, M6M M4 A280	
TBA 1000SQ (See drawing on page: 1-154)					
010	2532925-0000		1	INDUCTOR	
020	2862744-0000		1	INSULATING PLATE	
180	2547404-0000		1	BRACKET	
190	2547405-0000		1	BRACKET	
200	269151-0000		1	SHAFT	
220	2555625-0000		1	ROLL	
240	315125-0153		1	WASHER TBRSB 6,4X22X4 A4	
270	2982295-0000		1	BRACKET	
280	3042553-0000		1	BRACKET	
290	2555616-0000		1	ROLLER	
330	2508292-0000		4	BUSHING	
410	312105-0372		2	SCREW M6S ISO 4017 M6X25 A480	
440	312105-0327		2	SCREW M6S ISO 4017 M5X12 A480	
460	312105-0362		1	SCREW M6S ISO 4017 M6X8 A480	
480	312105-0364		2	SCREW M6S ISO 4017 M6X10 A480	
500	312105-0368		2	SCREW M6S ISO 4017 M6X16 A480	
520	312105-0370		8	SCREW M6S ISO 4017 M6X20 A480	
550	312605-0314		3	HEXAGON NUT, M6M M5 A280	
560	315105-0153		12	WASHER BRB 6,4X12 RFR	
610	312605-0312		1	HEXAGON NUT, M6M M4 A280	
TBA 1000S (See drawing on page: 1-154)					
010	2514522-0000		1	INDUCTOR	
020	2862745-0000		1	INSULATING PLATE	
180	2547404-0000		1	BRACKET	
190	2547405-0000		1	BRACKET	
200	269151-0000		1	SHAFT	
220	2555625-0000		1	ROLL	
240	315125-0153		1	WASHER TBRSB 6,4X22X4 A4	
270	2982295-0000		1	BRACKET	
280	3042553-0000		1	BRACKET	
290	2555616-0000		1	ROLLER	
330	2508292-0000		4	BUSHING	
410	312105-0374		2	SCREW M6S ISO 4014 M6X30 A480	
440	312105-0327		2	SCREW M6S ISO 4017 M5X12 A480	
460	312105-0362		1	SCREW M6S ISO 4017 M6X8 A480	
480	312105-0364		2	SCREW M6S ISO 4017 M6X10 A480	
500	312105-0368		2	SCREW M6S ISO 4017 M6X16 A480	
520	312105-0370		4	SCREW M6S ISO 4017 M6X20 A480	
525	312105-0372		4	SCREW M6S ISO 4017 M6X25 A480	
550	312605-0314		3	HEXAGON NUT, M6M M5 A280	
560	315105-0153		12	WASHER BRB 6,4X12 RFR	
610	312605-0312		1	HEXAGON NUT, M6M M4 A280	
Common Parts					
030	2544897-0000		1	BRACKET	
040	2694714-0000		1	GUIDE	
050	3050604-0000		1	SUPPORT	
060	3047472-0000		1	SHAFT	
070	2547388-0000		1	AXLE PIN	
080	2544898-0000		1	SHAFT	
090	3047470-0000		1	SLIDE	
100	2547376-0200		1	KNOB	**1-161**
110	3047471-0000		1	SLIDE	
120	2640993-0000		1	PLATE	
130	315115-0165		1	WASHER PLAIN, TBRB 8,4/16 H=3	
140	2508309-0000		2	PLATE	

Machine Type | Group Description | Used-In | Group Number | Page No

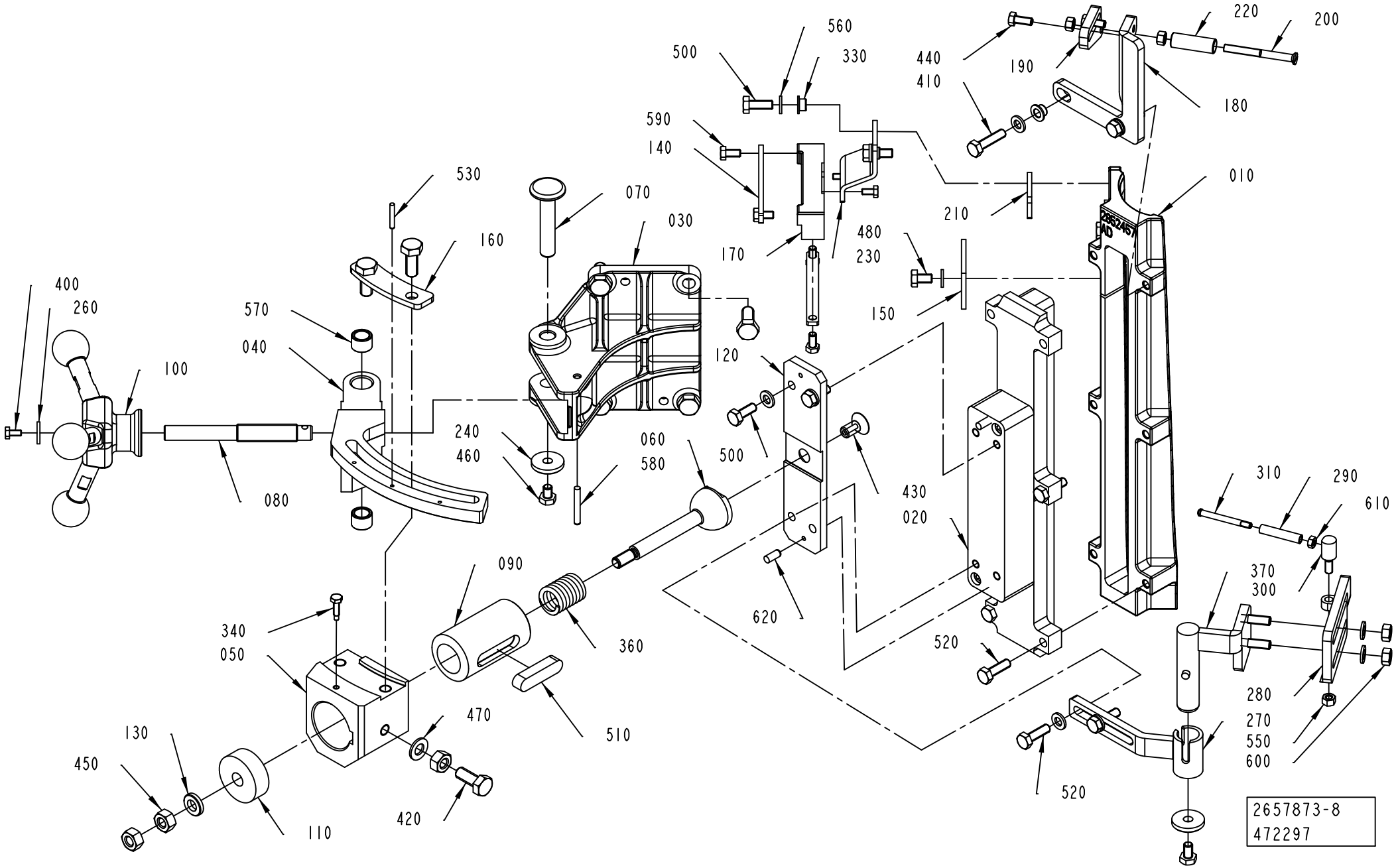

560
500
330
440
410
190
220
200
180
590
140
530
070
030
160
170
480
230
210
010
400
260
570
040
100
120
150
240
460
060
580
500
080
430
020
310
290
610
090
370
300
340
050
360
620
520
470
510
280
270
550
600
130
450
110
420
520
2657873-8
472297

ECM: 474715 - 20101003
Group number: 2657873-0200
Assembly Drawing: 2657873-8_1_AA

This list covers pages from 1-154 to 1-159

Pos	Part No	UN	Qty	Description	Page No
Common Parts (Cont'd)					
150	2508311-0000		2	PLATE	
160	2694716-0000		1	PLATE	
170	2531060-0000		1	BRACKET	
210	2532898-0000		1	BRACKET	
230	2532899-0000		1	BRACKET	
260	2547377-0000		1	WASHER	
300	2555617-0000		1	PIN	
310	2555618-0000		1	SHAFT	
340	2725526-0000		1	SCREW	
360	90600-8306		1	COMP. SPRING 3887, 3X20X40,2	
400	312105-0287		3	SCREW M6S ISO 4017 M4X8 A470	
420	312105-0451		7	SCREW M6S ISO 4017 M8X20 A480	
430	312155-0449		1	SCREW DIN 7991 MF6S M8X16 A4 70	
450	312605-0318		3	HEXAGON NUT, M6M M8 A280	
470	315105-0165		1	WASHER BRB 8,4X16 RFR	
510	315705-0301		1	PARALLEL KEY W. ROUND ENDS 10X8X40 MM	
530	311103-0238		1	PARALLEL PIN ISO 2338 3M6X20 A1	
570	90600-3313		2	BUSHING, 10X14X10 MM	
580	311103-0276		1	PARALLEL PIN ISO 2338 4M6X30 A1	
590	312105-0325		4	SCREW M6S ISO 4017 M5X10 A480	
600	312605-0316		2	HEXAGON NUT, M6M M6 A280	
620	311103-0306		2	PARALLEL PIN ISO 2338 5M6X12 A1	

Pos	Part No	UN	Qty	Description	Page No

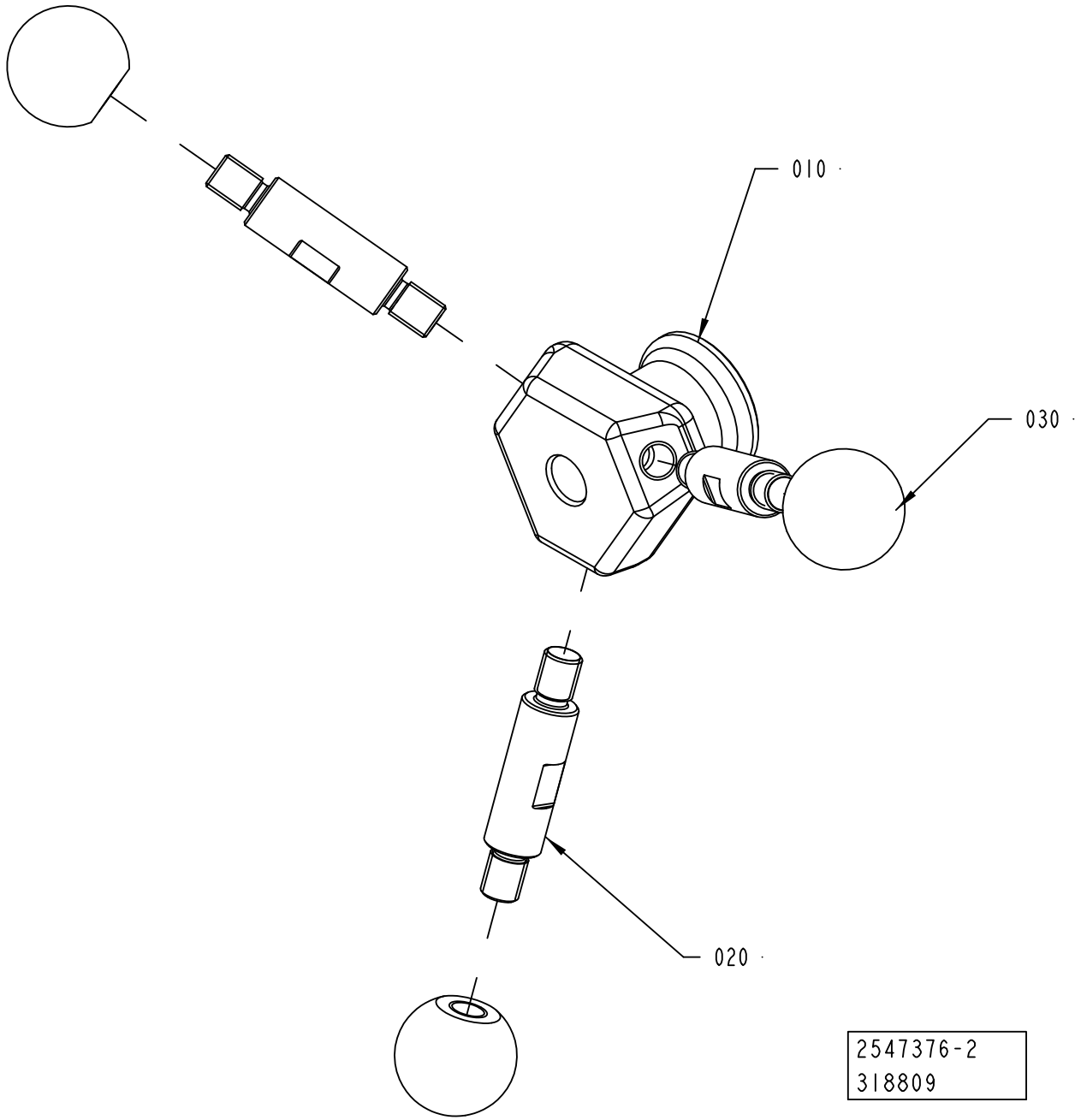
010
030
020
2547376-2
318809

ECM: 318865 - 20070913
Group number: 2547376-0200
Assembly Drawing: 2547376-2_1_AA

Pos	Part No	UN	Qty	Description	Page No
-					
010	2874716-0000		1	BODY	
020	2874715-0000		3	STUD SCREW	
030	2874717-0000		3	KNOB	

Pos	Part No	UN	Qty	Description	Page No

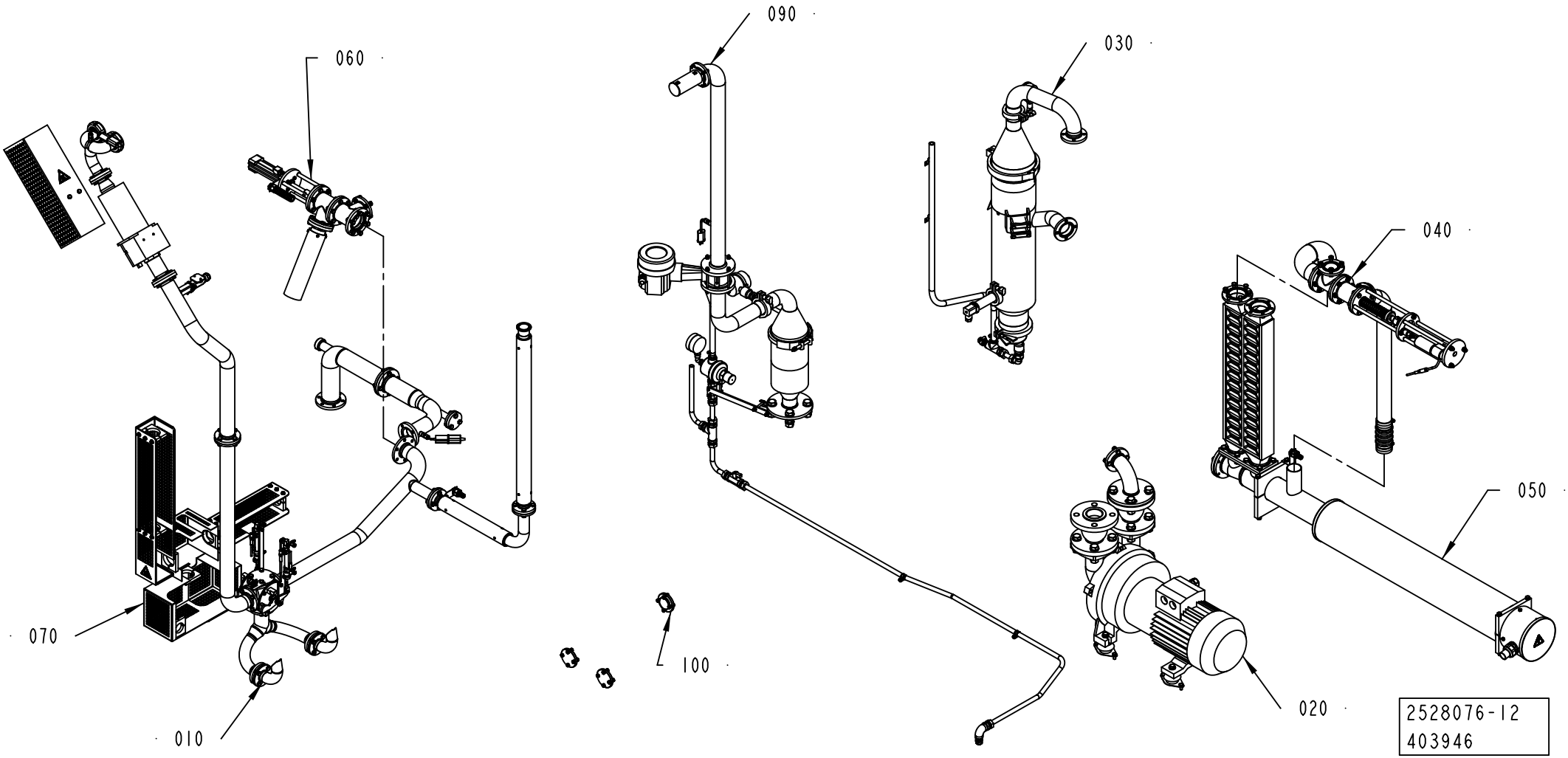
060
090
030
040
050
070
100
020
010
2528076-12
403946

ECM: 441084 - 20100701
Group number: 2528076-0300
Assembly Drawing: 2528076-12_1_AA

This list covers pages from 1-162 to 1-165

Pos	Part No	UN	Qty	Description	Page No
A3/SPEED TBA 1000B NOPT, A3/SPEED TBA 0125S NOPT, A3/SPEED TBA 0200S NOPT, A3/SPEED TBA 0200B NOPT, A3/SPEED TBA 0200M NOPT, A3/SPEED TBA 0250B NOPT, A3/SPEED TBA 0250S NOPT (See drawing on page: 1-162)					
100	2783047-0200		1	STERILE AIR PIPE	**1-167**
A3/SPEED TBA 1000SQ, A3/SPEED TBA 1000S PT/SPEED, A3/SPEED TBA 1000B PT/SPEED, A3/SPEED TBA 0500S PT/SPEED (See drawing on page: 1-164)					
100	2783088-0300		1	STERILE AIR PIPE	**1-169**
110	3021607-0100		1	STERILE AIR PIPE	**1-173**
Common Parts					
010	1558511-0400		1	PIPE WORK-AIR	**1-175**
020	2700059-0300		1	COMPRESSOR UNIT	**1-179**
030	1558769-0400		1	SEPARATOR	**1-181**
040	1532250-0200		1	HEAT EXCHANGER VALVE	**1-183**
050	1499158-0200		1	AIR SUPER-HEATER	**1-185**
060	1538166-0200		1	AIR VALVE	**1-187**
070	2987075-0200		1	COVER	**1-189**
090	1499160-0500		1	SCRUBBER	**1-191**

Pos	Part No	UN	Qty	Description	Page No

STERILE AIR SYSTEM

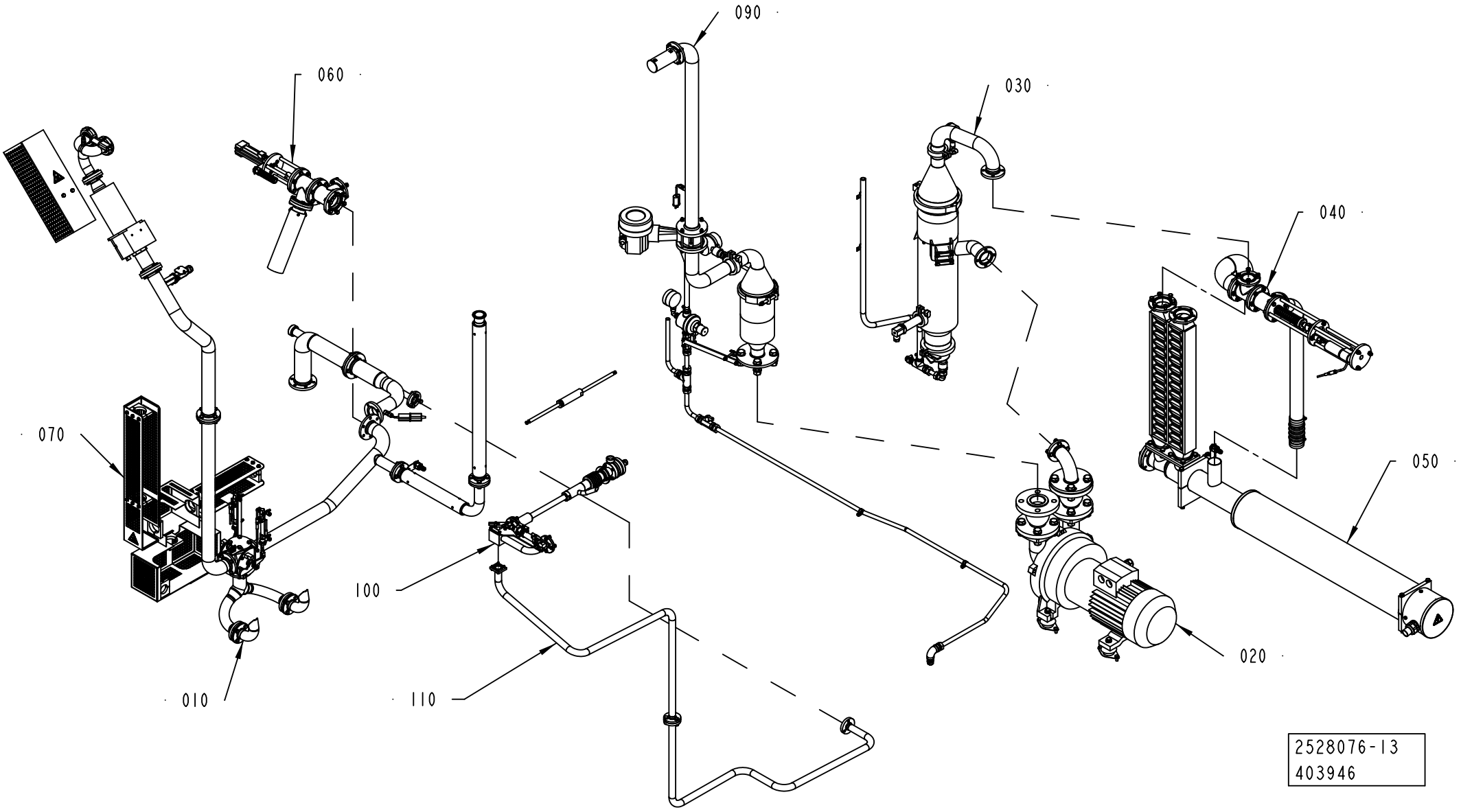

ECM: 441084 - 20100701
Group number: 2528076-0300
Assembly Drawing: 2528076-13_1_AA

This list covers pages from 1-162 to 1-165

Pos	Part No	UN	Qty	Description	Page No
A3/SPEED TBA 1000B NOPT, A3/SPEED TBA 0125S NOPT, A3/SPEED TBA 0200S NOPT, A3/SPEED TBA 0200B NOPT, A3/SPEED TBA 0200M NOPT, A3/SPEED TBA 0250B NOPT, A3/SPEED TBA 0250S NOPT (See drawing on page: 1-162)					
100	2783047-0200		1	STERILE AIR PIPE	**1-167**
A3/SPEED TBA 1000SQ, A3/SPEED TBA 1000S PT/SPEED, A3/SPEED TBA 1000B PT/SPEED, A3/SPEED TBA 0500S PT/SPEED (See drawing on page: 1-164)					
100	2783088-0300		1	STERILE AIR PIPE	**1-169**
110	3021607-0100		1	STERILE AIR PIPE	**1-173**
Common Parts					
010	1558511-0400		1	PIPE WORK-AIR	**1-175**
020	2700059-0300		1	COMPRESSOR UNIT	**1-179**
030	1558769-0400		1	SEPARATOR	**1-181**
040	1532250-0200		1	HEAT EXCHANGER VALVE	**1-183**
050	1499158-0200		1	AIR SUPER-HEATER	**1-185**
060	1538166-0200		1	AIR VALVE	**1-187**
070	2987075-0200		1	COVER	**1-189**
090	1499160-0500		1	SCRUBBER	**1-191**

Pos	Part No	UN	Qty	Description	Page No

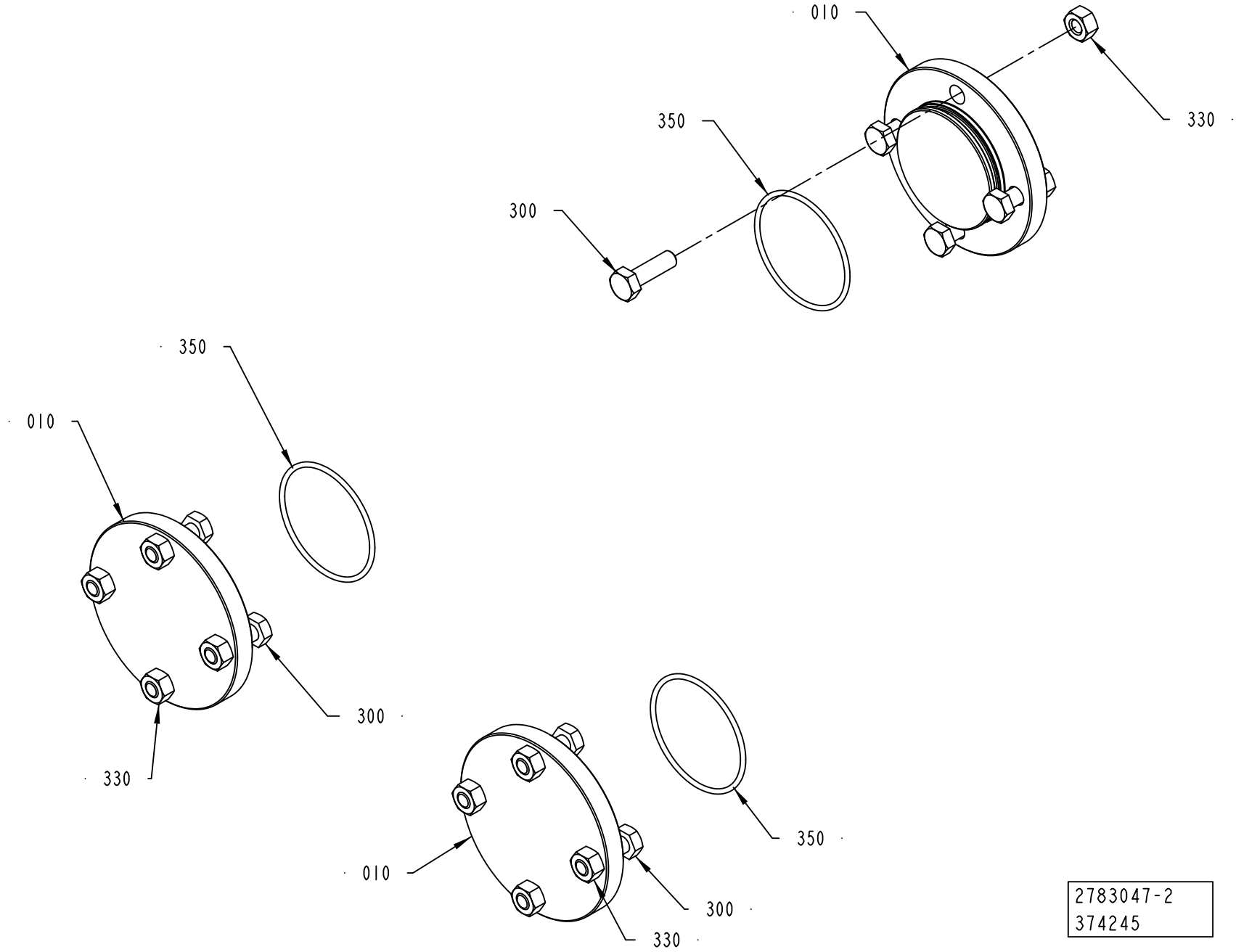

2783047-2
374245

ECM: 397525 - 20091001
Group number: 2783047-0200
Assembly Drawing: 2783047-2_1_AB

Pos	Part No	UN	Qty	Description	Page No
A3/SPEED					
010	2531054-0000		3	PLUG	
300	312105-0370		12	SCREW M6S ISO 4017 M6X20 A480	
Common Parts					
330	312605-0316		12	HEXAGON NUT, M6M M6 A280	
350	315205-0802		3	O-RING 41,00X1,78 MM	

Pos	Part No	UN	Qty	Description	Page No

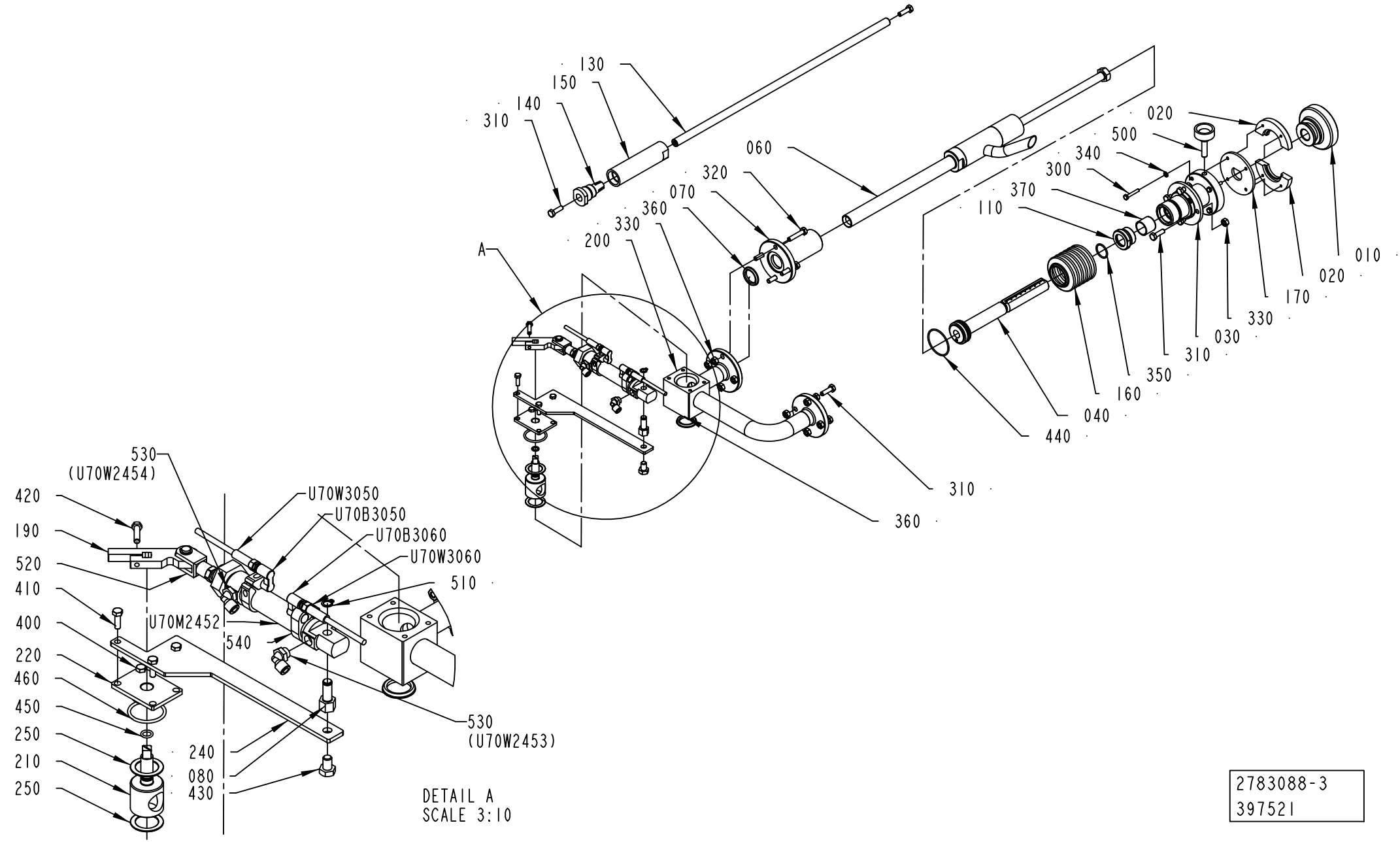

2783088-3
397521

ECM: 437353 - 20100403
Group number: 2783088-0300
Assembly Drawing: 2783088-3_1_AA

Pos	Part No	UN	Qty	Description	Page No
-					
010	2758728-0000		1	HANDLE	
020	2758729-0000		2	CLAMPING LINK	
030	2758730-0000		1	HUB	
040	2758731-0000		1	ADJUSTING SCREW	
060	2902379-0100		1	PIPE	**1-171**
070	2758734-0000		1	HUB	
080	1349762-0000		1	SHAFT	
110	2758739-0000		1	PLUG	
130	2763959-0000		1	SHAFT	
140	2793317-0000		1	PLUG	
150	2793318-0000		1	SLIDE	
160	2763963-0000		1	SLEEVE	
170	2764007-0000		1	SPACER	
190	2523665-0000		1	ARM	
200	2946887-0000		1	BODY	
210	2946888-0000		1	SHUTTER	
220	2946889-0000		1	LID	
240	2946914-0000		1	BRACKET	
250	2946915-0000		2	WASHER	
300	312105-0297		4	SCREW M6S ISO 4017 M4X25 A470	
310	312105-0370		10	SCREW M6S ISO 4017 M6X20 A480	
320	312109-0374		4	SCREW M6S ISO 4017 M6X30 A480	
330	312605-0316		12	HEXAGON NUT, M6M M6 A280	
340	315105-0136		4	WASHER BRB 4,3X8 RFR	
350	315205-0707		1	O-RING 20,35X1,78 MM	
360	315229-0203		2	GASKET 22,1X30,1X3,7 MM 1"	
370	321134-0260		1	BUSHING, IGLIDUR W300 20X23X20	
400	312105-0327		1	SCREW M6S ISO 4017 M5X12 A480	
410	312105-0329		3	SCREW M6S ISO 4017 M5X16 A480	
420	312105-0332		1	SCREW M6S ISO 4017 M5X22 A470	
430	312105-0447		1	SCREW M6S ISO 4017 M8X12 A480	
440	315205-0802		1	O-RING 41,00X1,78 MM	
450	315207-0506		1	O-RING 7,65X1,78 MM	
460	315207-0723		1	O-RING 29,82X2,62 MM	
500	90051-0059		1	KNOB, EXTERNAL THREAD. NO. 8308-1550	
510	90141-0015		1	RETAINING RING FOR SHAFT DIN 471 8 SS	
520	90239-0532		1	ROD END, CLEVIS WITH AXLE M8X1,25	
530	90458-2956		2	ELBOW PIPE JOINT, EXT.THREAD, D=6MM-G1/8	
540	90600-5788		2	SENSOR BRACKET, SMBR-20	
U70B3050	90600-0362		1	PROX. SENSOR, SMTO-4U-PS-S-LED-24	
U70B3060	90600-0362		1	PROX. SENSOR, SMTO-4U-PS-S-LED-24	
U70M2452	90458-2102		1	DOUBLE ACTING, MINI-ISO, CYL. 20-50	
U70W3050	351301-0050		1	ACTUATOR/SENSOR CABLE PRKMV 3-06/5M	
U70W3060	351301-0050		1	ACTUATOR/SENSOR CABLE PRKMV 3-06/5M	

Machine Type | Group Description | Used-In | Group Number | Page No

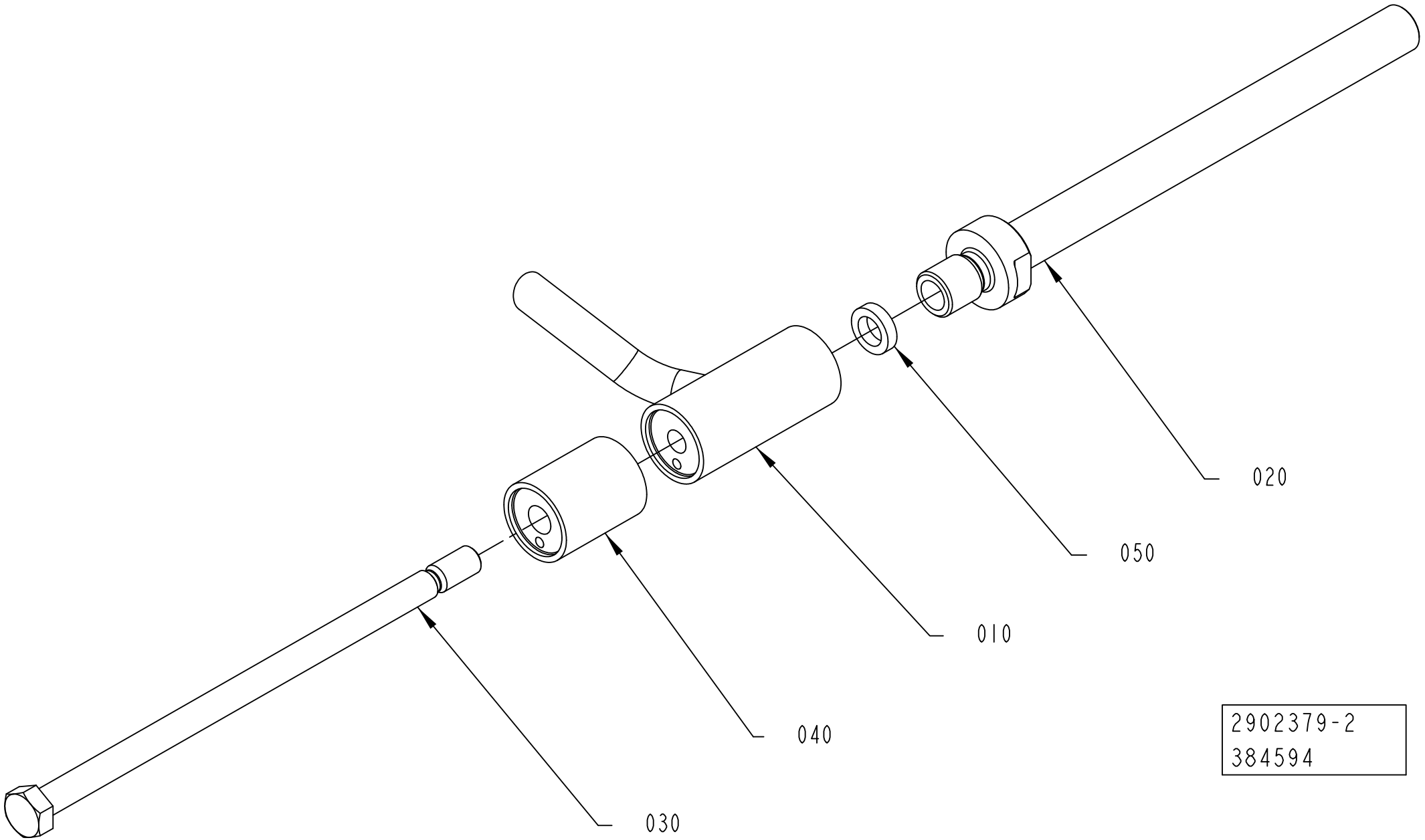
020
050
010
040
030
2902379-2
384594

ECM: 438012 - 20100701
Group number: 2902379-0100
Assembly Drawing: 2902379-2_1_AA

Pos	Part No	UN	Qty	Description	Page No
TBA 1000SQ (See drawing on page: 1-170)					
020	2758733-0003		1	AIR PIPE	
030	2758738-0003		1	SCREW	
040	2758740-0002		1	SPACER	
TBA 1000B PT/SPEED, TBA 1000S PT/SPEED (See drawing on page: 1-170)					
020	2758733-0002		1	AIR PIPE	
030	2758738-0002		1	SCREW	
040	2758740-0001		1	SPACER	
Common Parts					
010	2758732-0000		1	AIR NOZZLE	
050	2758737-0000		1	SEAL	

Pos	Part No	UN	Qty	Description	Page No

STERILE AIR PIPE

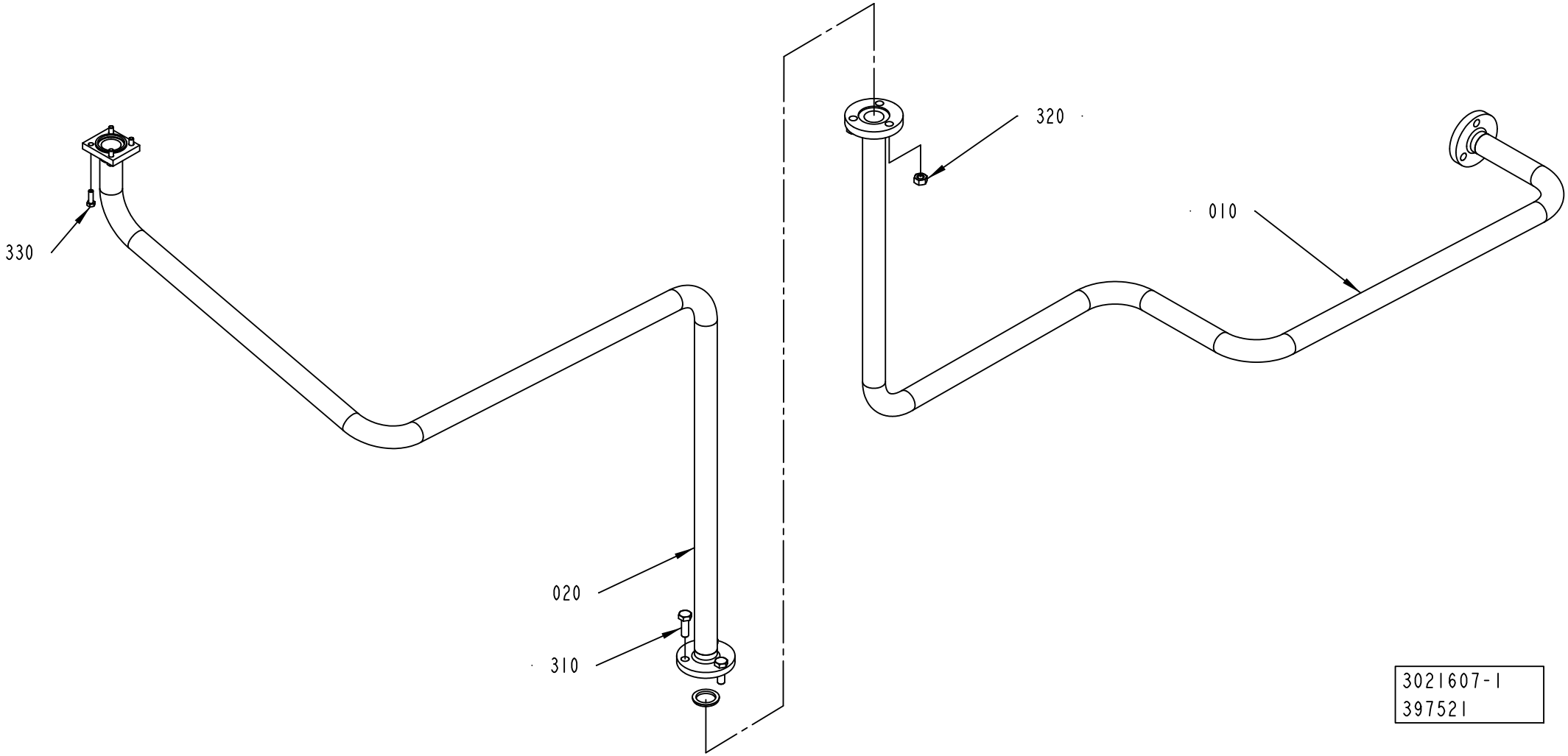

ECM: 397527 - 20091001
Group number: 3021607-0100
Assembly Drawing: 3021607-1_1_AA

Pos	Part No	UN	Qty	Description	Page No
-					
010	2641298-0000		1	PIPE	
020	2946890-0000		1	PIPE	
300	315229-0203		1	GASKET 22,1X30,1X3,7 MM 1"	
310	312105-0453		3	SCREW M6S ISO 4017 M8X25 A480	
320	312605-0318		3	HEXAGON NUT, M6M M8 A280	
330	312105-0329		4	SCREW M6S ISO 4017 M5X16 A480	

Pos	Part No	UN	Qty	Description	Page No

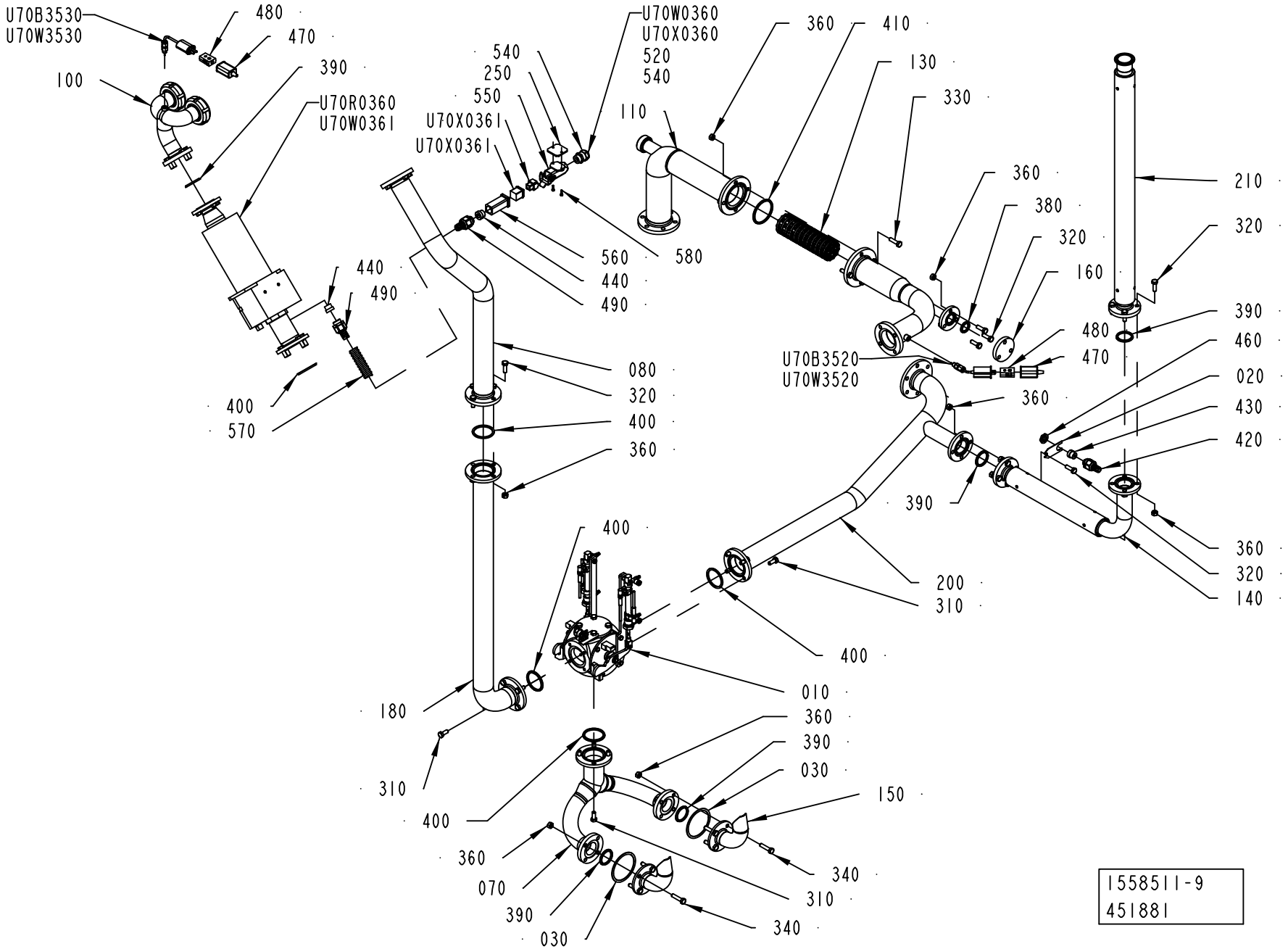
U70B3530
U70W3530
480
470
390
100
U70R0360
U70W0361
440
490
400
570
540
250
550
U70X0361
U70X0361
U70W0360
U70X0360
520
540
110
560
580
440
490
080
320
400
360
360
410
130
330
360
380
320
160
210
320
390
480
460
470
U70B3520
U70W3520
020
360
430
420
390
360
320
140
400
200
310
400
010
180
360
390
030
150
310
400
360
070
390
030
340
310
340
1558511-9
451881

ECM: 460566 - 20101002
Group number: 1558511-0400
Assembly Drawing: 1558511-9_1_AC

Pos	Part No	UN	Qty	Description	Page No
A3/SPEED NODIMC					
080	2783017-0000		1	PIPE	
100	2783016-0000		1	PIPE	
160	2565467-0000		1	FLANGE	
250	2957453-0000		1	PLATE	
320	312105-0453		23	SCREW M6S ISO 4017 M8X25 A480	
360	312605-0318		35	HEXAGON NUT, M6M M8 A280	
400	315229-0205		5	GASKET 47,5X55,5X3,7 MM 2 INCH	
440	353249-0011		2	INSERT, SINGLE HOLE, EK 153/11	
490	90458-0429		2	HOSE GLAND W/O INSERT M20 EXTENDED	
540	90458-0307		2	CABLE GLAND, M20X1,5, NO.5311 1020	
550	90600-4835		1	HOUSING 3A SURF MOUNT, 19 20 003 1252	
560	90459-3670		1	HOOD HAN 3A 19 20 003 1440	
570	90152-0050	MM	1000	SPIRAL CONDUIT, 20X13, UL 1313	
580	312115-0226		2	SCREW ISO4762 M3X12 A4 80	
U70W0360	351150-0413	MM	5100	CABLE OLFLEX 4GX1,5 MM2 LIGHT/GREY	
U70W0361	351120-0264	MM	1300	CABLE ÖLFLEX HEAT 180 SIHF 4X1,5	
U70W3530	90220-0034	MM	8500	THERMOCABLE TEX/SITW-20F-KX 2X0,5MM2	
U70X0361	90459-4718		1	FEMALE INSERT HAN 3 A 09 20 003 2711	
U70X0361	90459-3671		1	MALE INSERT TB 09 20 003 2611	
Common Parts					
010	2550895-0200		1	CHANGE-OVER VALVE	**1-177**
020	1036293-0000		1	HOLDER	
030	1036294-0000		2	GASKET	
070	1538154-0000		1	DRAIN PIPE	
110	1538487-0000		1	PIPE	
130	1549526-0000		1	CONTAINER	
140	1558510-0000		1	PIPE	
150	2829717-0000		2	HORN	
170	2641296-0000		1	PIPE	
180	2783015-0000		1	PIPE	
200	2695997-0000		1	PIPE	
210	2695998-0000		1	PIPE	
310	312105-0451		12	SCREW M6S ISO 4017 M8X20 A480	
330	312105-0455		4	SCREW M6S ISO 4017 M8X30 A480	
340	312109-0457		8	SCREW M6S ISO 4017 M8X35 A480	
380	315229-0203		1	GASKET 22,1X30,1X3,7 MM 1"	
390	315229-0204		5	GASKET 34,8X42,8X3,7 MM 1"1/2	
410	315229-0206		1	GASKET 60,2X68,2X3,7 MM 2"1/2	
420	90458-0427		1	HOSE GLAND W/O INSERT M16 EXTENDED	
430	353249-0008		1	INSERT, SINGLE HOLE, EK 152/7	
460	90458-0322		1	UT, M16X1,5	
470	90326-0012		2	PROTECTIVE COVER, T31A4618	
480	90326-0020		2	PLUG, FEMALE YELLOW CR-AL	
520	90459-6632		1	HOOD 6 B TOP ENTRY, 19 30 006 1440	
U70B3520	90326-0057		1	THERMOCOUPLE, CR-AL	
U70B3530	90326-0089		1	THERMOCOUPLE, 5110-089-000	
U70R0360	3101011-0000		1	HEATER	
U70W3520	90220-0034	MM	4500	THERMOCABLE TEX/SITW-20F-KX 2X0,5MM2	
U70X0360	90110-0052		1	MALE INSERT HAN 6E 09 33 006 2601	

Machine Type | Group Description | Used-In | Group Number | Page No

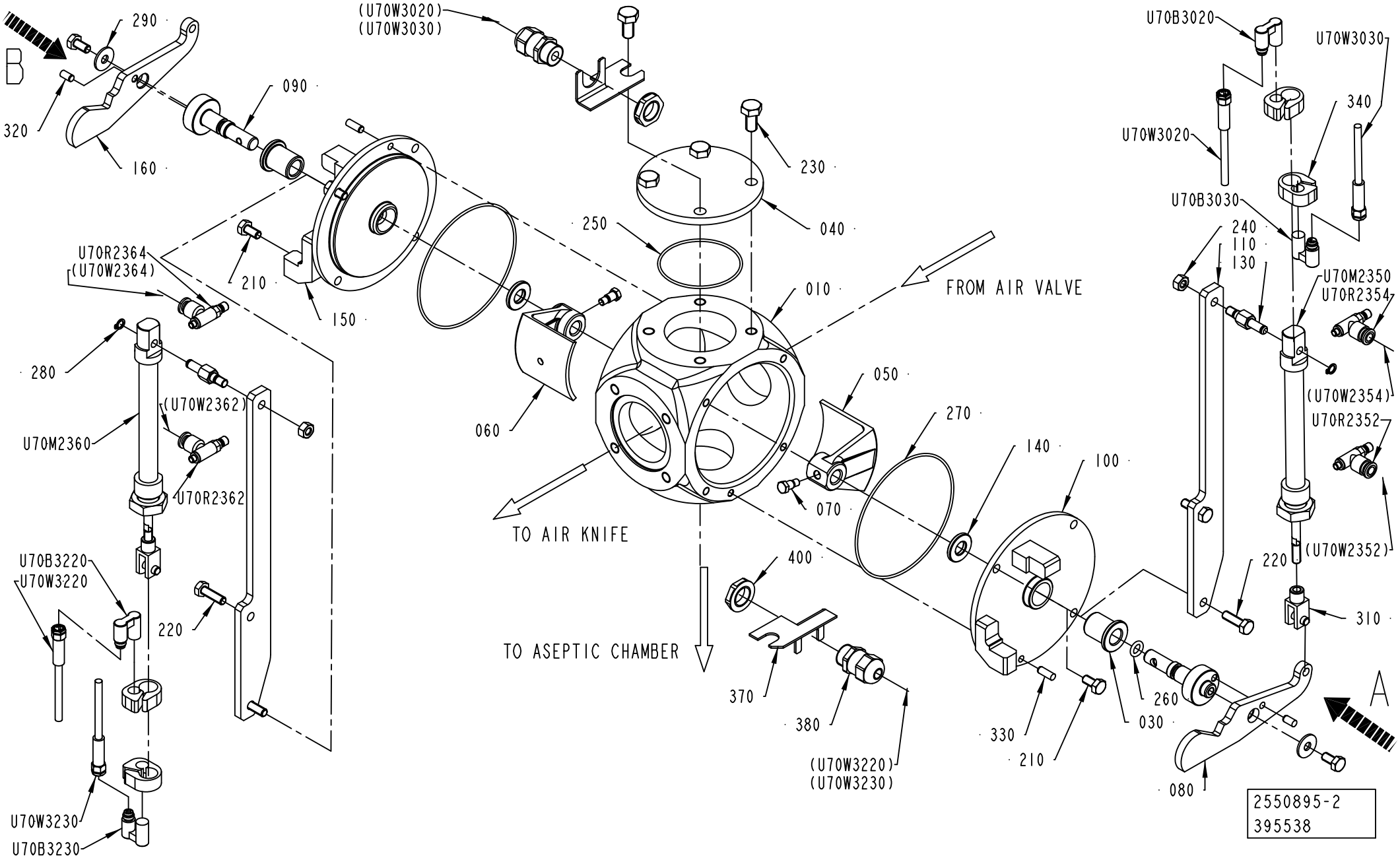
290
B
320
160
090
(U70W3020)
(U70W3030)
230
040
250
010
210
150
U70R2364
(U70W2364)
280
(U70W2362)
U70M2360
U70R2362
U70B3220
U70W3220
220
U70W3230
U70B3230
060
FROM AIR VALVE
TO AIR KNIFE
TO ASEPTIC CHAMBER
050
270
140
100
070
400
370
380
(U70W3220)
(U70W3230)
330
210
260
030
080
A
U70B3020
U70W3030
340
U70W3020
U70B3030
240
110
130
U70M2350
U70R2354
(U70W2354)
U70R2352
(U70W2352)
220
310
2550895-2
395538

ECM: 437207 - 20100403
Group number: 2550895-0200
Assembly Drawing: 2550895-2_1_AE

Pos	Part No	UN	Qty	Description	Page No
A3/SPEED TBA 0125S					
080	2957446-0000		1	LEVER	
100	2957441-0000		1	COVER	
A3/SPEED TBA 1000B, A3/SPEED TBA 1000S, A3/SPEED TBA 1000SQ, A3/SPEED TBA 0200S, A3/SPEED TBA 0250B, A3/SPEED TBA 0200B, A3/SPEED TBA 0200M, A3/SPEED TBA 0250S					
080	2957444-0000		1	LEVER	
100	2957440-0000		1	COVER	
Common Parts					
010	1524236-0000		1	VALVE HOUSING	
030	2883295-0000		2	BUSHING	
040	1539741-0000		1	COVER	
050	2922729-0000		1	SHUTTER	
060	2957437-0000		1	SHUTTER	
070	2922731-0000		2	SHOULDER SCREW	
090	2957445-0000		2	SHAFT	
110	2957436-0000		2	BRACKET	
130	1548742-0000		2	SPACER	
140	2890041-0000		2	WASHER	
150	2957439-0000		1	COVER	
160	2957443-0000		1	LEVER	
210	312105-0366		6	SCREW M6S ISO 4017 M6X12 A480	
220	312105-0370		4	SCREW M6S ISO 4017 M6X20 A480	
230	312105-0449		4	SCREW M6S ISO 4017 M8X16 A480	
240	312605-0316		2	HEXAGON NUT, M6M M6 A280	
250	90459-1189		1	O-RING 56,87X1,78 MM	
260	315204-0206		2	O-RING 7,3X2,4 MM	
270	315205-0807		2	O-RING 94,97X1,78 MM	
280	315751-0103		2	RETAINING RING FOR SHAFT DIN 471 6X 0.7C	
290	90005-0060		2	WASHER PLAIN, RBS 6,4/M6)/18,H=1,5	
310	90450-0725		2	ROD END, CLEVIS WITH AXLE M6	
320	311103-0305		2	PARALLEL PIN ISO 2338 5M6X10 A1	
330	311103-0307		2	PARALLEL PIN ISO 2338 5M6X14 A1	
340	90459-0799		4	SENSOR BRACKET, SMBR-12 FOR CYL 12	
370	1036610-0000		2	BRACKET	
380	90458-0306		2	CABLE GLAND, M16X1,5, NO.5311 1010	
400	90458-0322		2	UT, M16X1,5	
U70B3020	90600-0362		1	PROX. SENSOR, SMTO-4U-PS-S-LED-24	
U70B3030	90600-0362		1	PROX. SENSOR, SMTO-4U-PS-S-LED-24	
U70B3220	90600-0362		1	PROX. SENSOR, SMTO-4U-PS-S-LED-24	
U70B3230	90600-0362		1	PROX. SENSOR, SMTO-4U-PS-S-LED-24	
U70M2350	90459-0713		1	DOUBLE ACTING, MINI-ISO, CYL. 12-80	
U70M2360	90459-0713		1	DOUBLE ACTING, MINI-ISO, CYL. 12-80	
U70R2352	90459-3019		1	THROTTLE CHECK VALVE, M5, MANUAL, 6MM	
U70R2354	90459-3019		1	THROTTLE CHECK VALVE, M5, MANUAL, 6MM	
U70R2362	90459-3019		1	THROTTLE CHECK VALVE, M5, MANUAL, 6MM	
U70R2364	90459-3019		1	THROTTLE CHECK VALVE, M5, MANUAL, 6MM	
U70W3020	351301-0100		1	ACTUATOR/SENSOR CABLE PRKMV 3-06/10M	
U70W3030	351301-0100		1	ACTUATOR/SENSOR CABLE PRKMV 3-06/10M	
U70W3220	351301-0100		1	ACTUATOR/SENSOR CABLE PRKMV 3-06/10M	
U70W3230	351301-0100		1	ACTUATOR/SENSOR CABLE PRKMV 3-06/10M	

Machine Type | Group Description | Used-In | Group Number | Page No

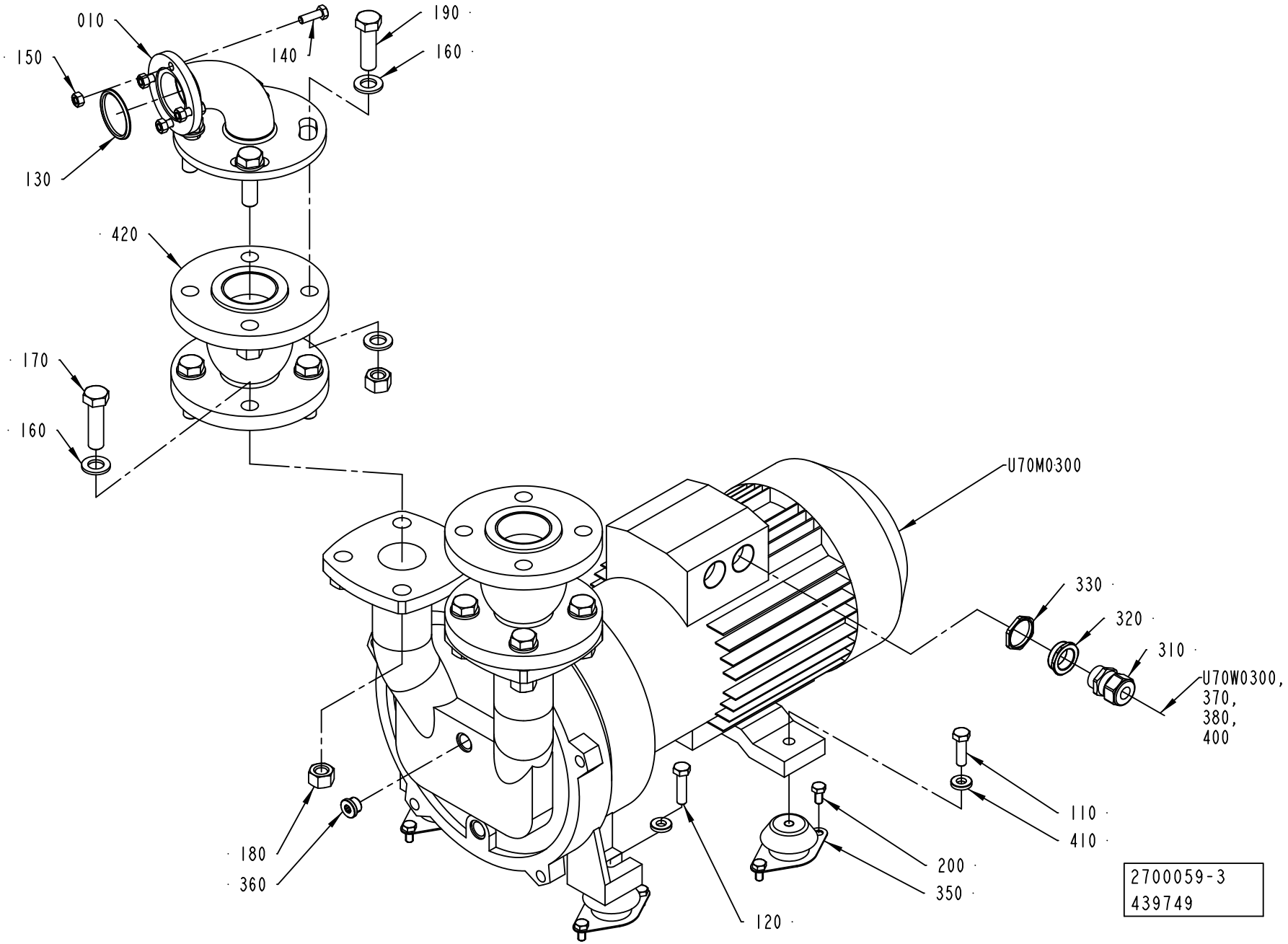
010
150
130
140
190
160
420
170
160
U70M0300
330
320
310
U70W0300,
370,
380,
400
110
410
200
350
180
360
120
2700059-3
439749

ECM: 450579 - 20101001
Group number: 2700059-0300
Assembly Drawing: 2700059-3_1_AC

Pos	Part No	UN	Qty	Description	Page No
-					
010	2957420-0000		1	PIPE	
110	312105-0497		2	SCREW M6S ISO 4017 M10X35 A480	
120	312105-0499		2	SCREW M6S ISO 4014 M10X40 A480	
130	315229-0205		1	GASKET 47,5X55,5X3,7 MM 2 INCH	
140	312105-0453		4	SCREW M6S ISO 4017 M8X25 A480	
150	312605-0318		4	HEXAGON NUT, M6M M8 A280	
160	315105-0186		24	WASHER BRB 17X30 RFR	
170	312105-0632		8	SCREW M6S ISO 4014 M16X60 A480	
180	312605-0324		12	HEXAGON NUT, M6M M16 A280	
190	312105-0631		4	SCREW M6S ISO 4014 M16X55 A480	
200	312105-0449		8	SCREW M6S ISO 4017 M8X16 A480	
310	90458-0440		1	GLAND, EXTENDED WITH INSERT, M25X1,5	
320	90459-4186		1	REDUCER, M32/M25	
330	353250-0032		1	GLAND, LOCK NUT M32X1,5	
350	90347-0144		4	VIBRATION DAMPER, NO. RA 40EM-A	
360	90600-1712		1	PLUG, EXT. THREAD HEX. SOCKET 09190017	
370	90110-0052		1	MALE INSERT HAN 6E 09 33 006 2601	
380	90600-3817		1	HOOD TOP ENTRY, 19 30 006 0446	
400	90458-0308		1	CABLE GLAND, M25X1,5, NO.5311 1030	
410	315115-0173		4	WASHER PLAIN, TBRB 10,5/22 H=4	
420	90600-4741		2	EXPANSION JOINT, TEGUFLEX P DN50 PN10 DI	
U70M0300	90459-6661		1	COMPRESSOR, 2BV5410-8FP02-6S	
	90602-6207		*1*	*SPARE PART, 8692000016000*	
U70W0300	90220-0105	MM	5500	SCR. CABLE 4X2,5MM2	

Pos	Part No	UN	Qty	Description	Page No

Machine Type | Group Description | Used-In | Group Number | Page No

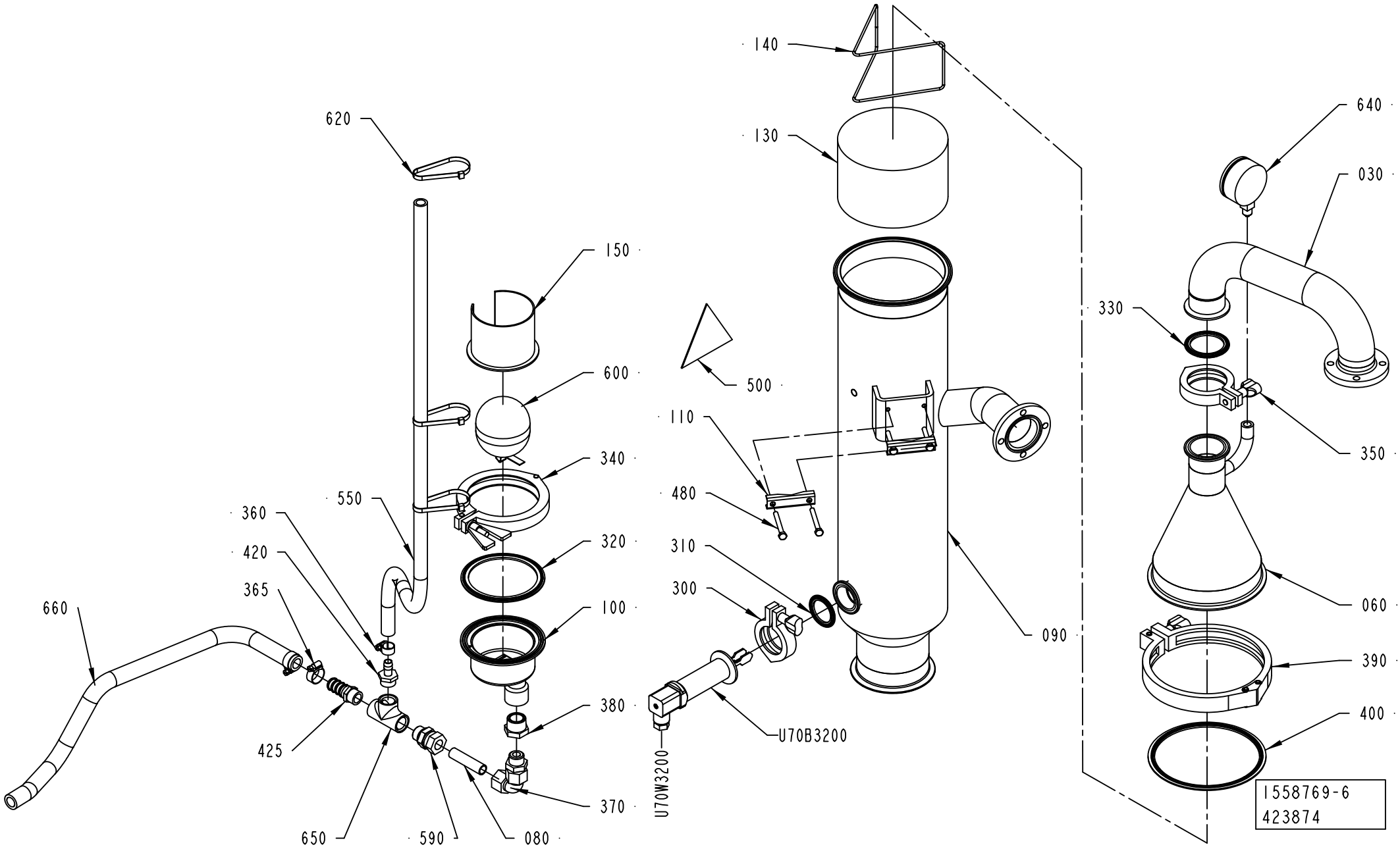
620
150
600
340
550
360
420
365
660
320
100
380
425
650
590
080
370
140
130
500
110
480
310
300
U70B3200
U70W3200
090
640
030
330
350
060
390
400
1558769-6
423874

ECM: 461322 - 20101002
Group number: 1558769-0400
Assembly Drawing: 1558769-6_1_AC

Pos	Part No	UN	Qty	Description	Page No
ANSI					
500	90459-7458		1	WARNING SIGN ANSI (H), HOT SURFACE	
ISO					
500	359705-0008		1	WARNING SIGN ISO, HOT SURFACE	
Common Parts					
030	2685246-0000		1	PIPE	
060	2755071-0000		1	UPPER SECTION	
080	1490963-0000		1	PIPE	
090	2957419-0000		1	INTERMEDIARY SECTION	
100	1038634-0000		1	DRAINING	
110	1036811-0000		2	CLAMP	
130	2709234-0000		1	FILTER	
140	2736680-0000		1	RETAINING RING	
150	568828-0000		1	FLOAT GUARD	
300	342840-0103		1	CLAMPING PIECE DN 1-11/2, GH13LAH112304N	
310	342850-0404		1	GASKET 35,4X49,1X5,2 MM 1"1/2 FDA 3-A	
320	342850-0408		1	GASKET 97X117,7X5,2 MM 4" FDA 3-A	
330	342850-0405		1	GASKET 47,8X62,6X5,2 MM 2" FDA 3-A	
340	90600-0260		1	CLAMPING PIECE, 10503.000.400.14	
350	342840-0105		1	CLAMPING PIECE, GH13LAH2304NO79612011202	
360	342991-0101		1	HOSE CLIP,WORM DRIVE TYPE (11)-17	
365	342991-0102		2	HOSE CLIP,WORM DRIVE TYPE (13)-20	
370	342738-0221		1	ADJUSTABLE ELBOW CONNECTION 15-G1/2	
380	342206-0109		1	BUSHING, TAPERED, INT/EXT. THR NO. R211	
390	90459-4728		1	CLAMPING PIECE 6", C.025 DN 150	
400	342850-0209		1	GASKET 147,57X165,61X5,182 MM 6"	
420	342901-0105		1	HOSE NIPPLE, EXT.THR. G1/2-12 MM	
425	90055-0191		1	HOSE NIPPLE, EXT.THR. R1/2X16 MM	
480	312105-0381		4	SCREW M6S ISO 4014 M6X55 A480	
550	90166-0121	MM	1500	HOSE	
590	90030-0188		1	CONN. STR. GE15LRED71	
600	90360-0305		1	FLOAT, ART NO 10739920	
610	90157-0037		1	THREAD SEALANT LOCTITE 542	
620	352113-0104		3	CABLE TIE, BLACK 300X4,8 MM	
640	90043-0095		1	PRESSURE GAUGE, 2740, D=63 MM, GLYC.	
650	90330-0049		1	T-PIPE, INT. THREAD, R-221R1/2	
660	90166-0087	MM	650	HOSE 15/23 REINF.PVC TRANSP.	
700	90144-0073		1	TREBOFLON-TAPE W=13MM	
U70B3200	90600-2107		1	LEVEL SWITCH, FTL20H-0TCJ2B	
U70W3200	351150-0404	MM	5000	CABLE OLFLEX 4X0,75 MM2 LIGHT/GREY	

Pos	Part No	UN	Qty	Description	Page No

Machine Type | Group Description | Used-In | Group Number | Page No

HEAT EXCHANGER VALVE

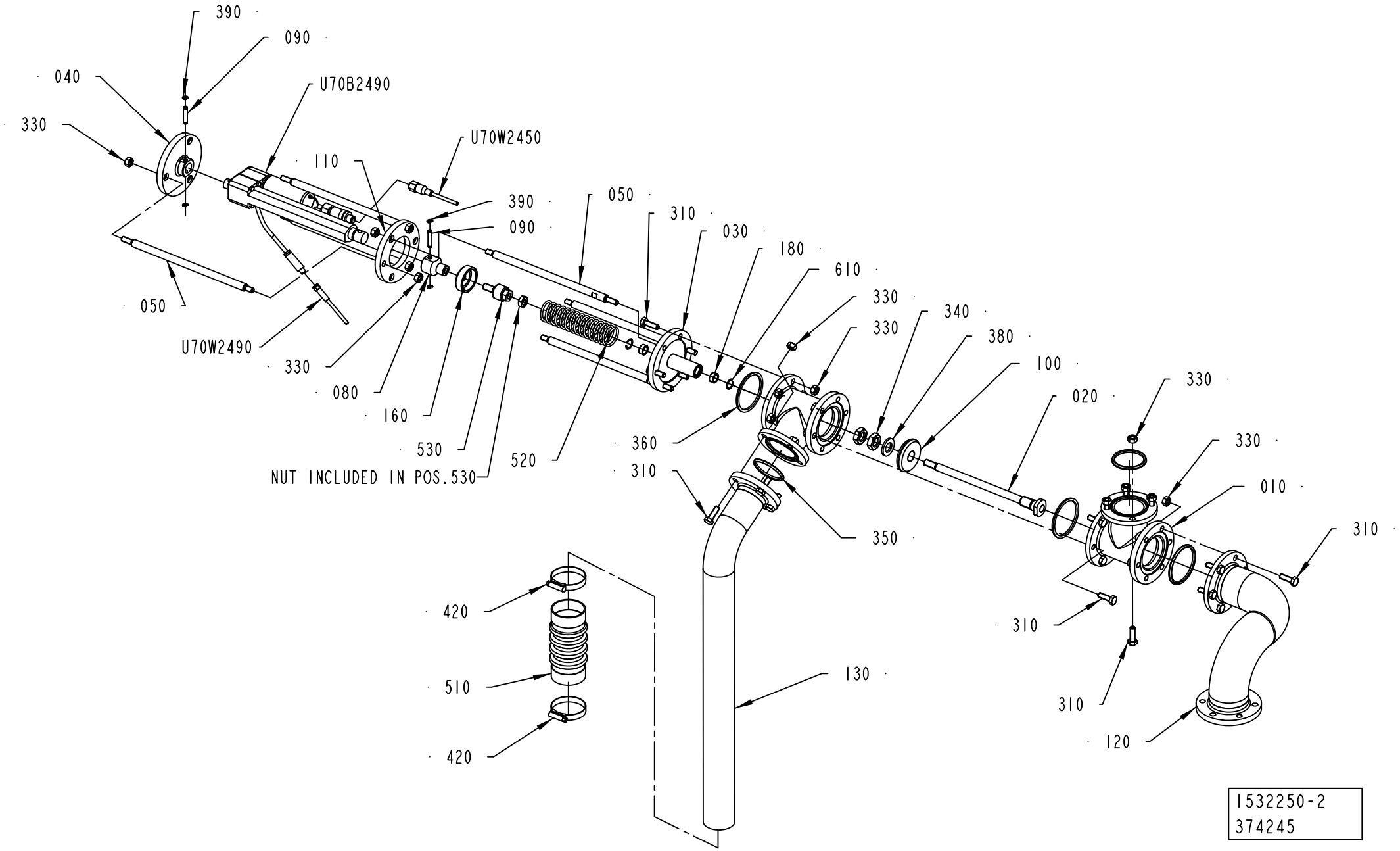

ECM: 424550 - 20091103
Group number: 1532250-0200
Assembly Drawing: 1532250-2_1_AD

Pos	Part No	UN	Qty	Description	Page No
-					
010	1036187-0000		2	T-PIPE	
020	2874732-0000		1	VALVE SPINDLE	
030	2874743-0000		1	SPINDLE GUIDE	
040	2874736-0000		1	BEARING FLANGE	
050	2874734-0000		6	SPACER ROD	
080	2874733-0000		1	JOINT	
090	2720852-0000		2	PIN	
100	2874731-0000		1	SHUTTER	
110	2874735-0000		1	FLANGE	
120	1538157-0000		1	PIPE	
130	1538158-0000		1	PIPE	
160	2874741-0000		1	SPRING COLLAR	
180	532349-0000		2	PLAIN BEARING	
310	312105-0453		23	SCREW M6S ISO 4017 M8X25 A480	
330	312605-0318		35	HEXAGON NUT, M6M M8 A280	
340	312625-0324		2	HEXAGON THIN NUT, EN 24035 ML6M M16 A4	
350	315229-0205		2	GASKET 47,5X55,5X3,7 MM 2 INCH	
360	315229-0206		3	GASKET 60,2X68,2X3,7 MM 2"1/2	
380	315105-0186		1	WASHER BRB 17X30 RFR	
390	315755-0106		4	RETAINING RING SHAFT DIN 6799 4 SS	
400	312631-0321		1	HEX.NUT FINE, EN 24032 M6M M10X1,25 FZB8	
420	342991-0109		2	HOSE CLIP,WORM DRIVE TYPE (44)-56	
510	90342-0022		1	BELLOWS	
520	90459-6255		1	COMP. SPRING 23460, 3,2X35,2X190	
530	90600-2522		1	FLOATING JOINT, JS32-10-125	
610	90141-0022		2	SNAP RING B 16	
U70B2490	90459-4977		1	LINEAR ACTUATOR LA 1 SP - SP36 17A16 - 0	
U70W2450	90600-1984		1	ACTUATOR/SENSOR CABLE PRKT 5/56-10M	
U70W2490	351301-0100		1	ACTUATOR/SENSOR CABLE PRKMV 3-06/10M	

Pos	Part No	UN	Qty	Description	Page No

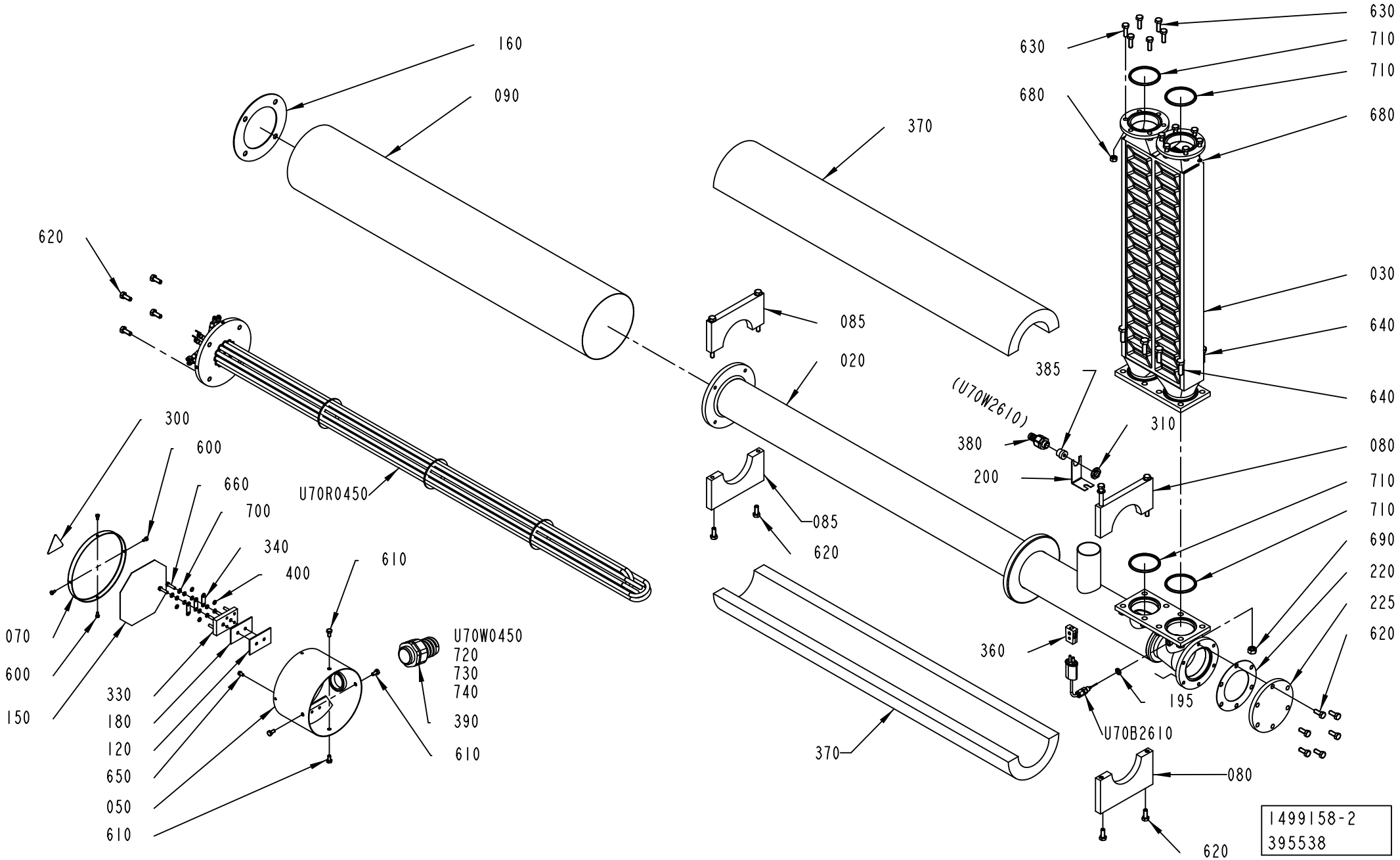
160
090
620
300
600
660
700
340
400
610
U70R0450
070
600
150
330
180
120
650
050
610
U70W0450
720
730
740
390
610
370
085
020
085
620
630
680
370
385
(U70W2610)
380
200
310
630
710
710
680
030
640
640
080
710
710
690
220
225
620
360
195
U70B2610
370
080
620
1499158-2
395538

ECM: 471314 - 20110101
Group number: 1499158-0200
Assembly Drawing: 1499158-2_1_AD

Pos	Part No	UN	Qty	Description	Page No
ANSI					
300	359715-0100		1	WARNING SIGN ANSI (H), ELECTRIC SHOCK	
ISO					
300	359705-0015		1	WARNING SIGN ISO, RISK OF ELECTRIC SHOCK	
Common Parts					
020	1499157-0000		1	HEATING PIPE	
030	2685283-0000		1	HEAT EXCHANGER	
050	3020120-0000		1	CONNECTION	
070	29876-0000		1	COVER	
080	456123-0000		1	SUPPORT	
	315105-0165		*2*	*WASHER BRB 8,4X16 RFR*	
	312105-0471		*2*	*SCREW M6S ISO 4014 M8X100 A480*	
085	1484080-0000		1	SUPPORT	
090	1036372-0000		1	PIPE	
120	30298-0000		1	INSULATION	
150	491305-0000		1	CONN.DIAGRAM AIR SUPERH.	
160	531731-0000		1	GASKET	
180	751009-0000		1	INSULATION	
195	273429-0000		1	WASHER	
200	1036373-0000		1	HOLDER	
220	927454-0000		1	GASKET	
225	1490962-0000		1	LID	
310	90458-0322		1	UT, M16X1,5	
320	90153-0020		1	ADHESIVE, BOSTIK 1782 125ML	
330	90600-5011		1	MOTOR PLINTH, 58142	
340	90195-0029		3	CONN. LINK NO324 FOR -28	
360	90326-0020		1	PLUG, FEMALE YELLOW CR-AL	
370	90411-0005	MM	900	INSULATION 1200MM SERIE 21 89/154X30	
380	90458-0427		1	HOSE GLAND W/O INSERT M16 EXTENDED	
385	353249-0008		1	INSERT, SINGLE HOLE, EK 152/7	
390	90458-0434		1	HOSE GLAND W/O INSERT M40 EXTENDED	
400	315402-0146		12	LOCK WASHER FBB 5,1	
600	312105-0287		4	SCREW M6S ISO 4017 M4X8 A470	
610	312105-0366		4	SCREW M6S ISO 4017 M6X12 A480	
620	312105-0451		14	SCREW M6S ISO 4017 M8X20 A480	
630	312105-0453		12	SCREW M6S ISO 4017 M8X25 A480	
640	312105-0495		8	SCREW M6S ISO 4017 M10X30 A480	
650	312125-0323		1	SCREW ISO 1207 M5X8 A4	
660	312125-0331		2	SCREW ISO 1207 M5X20 A4	
680	312605-0318		12	HEXAGON NUT, M6M M8 A280	
690	312605-0320		8	HEXAGON NUT, M6M M10 A280	
700	315105-0146		2	WASHER BRB 5,3X10 RFR	
710	315229-0206		4	GASKET 60,2X68,2X3,7 MM 2"1/2	
720	90459-6634		1	HOOD 16 B TOP ENTRY, 19 30 016 1421	
730	90458-0308		1	CABLE GLAND, M25X1,5, NO.5311 1030	
740	90110-0054		1	MALE INSERT HAN 6 HSB 09 31 006 2601	
U70B2610	90326-0051		1	THERMOCOUPLE, 12826-33	
U70R0450	90600-2007		1	HEATING ELEM.15KW 3X230/400V,T90600-2007	
U70W0450	351120-0267	MM	5500	CABLE ÖLFLEX HEAT 180 SIHF 4X6	
U70W2610	90220-0034	MM	7000	THERMOCABLE TEX/SITW-20F-KX 2X0,5MM2	

Machine Type | Group Description | Used-In | Group Number | Page No

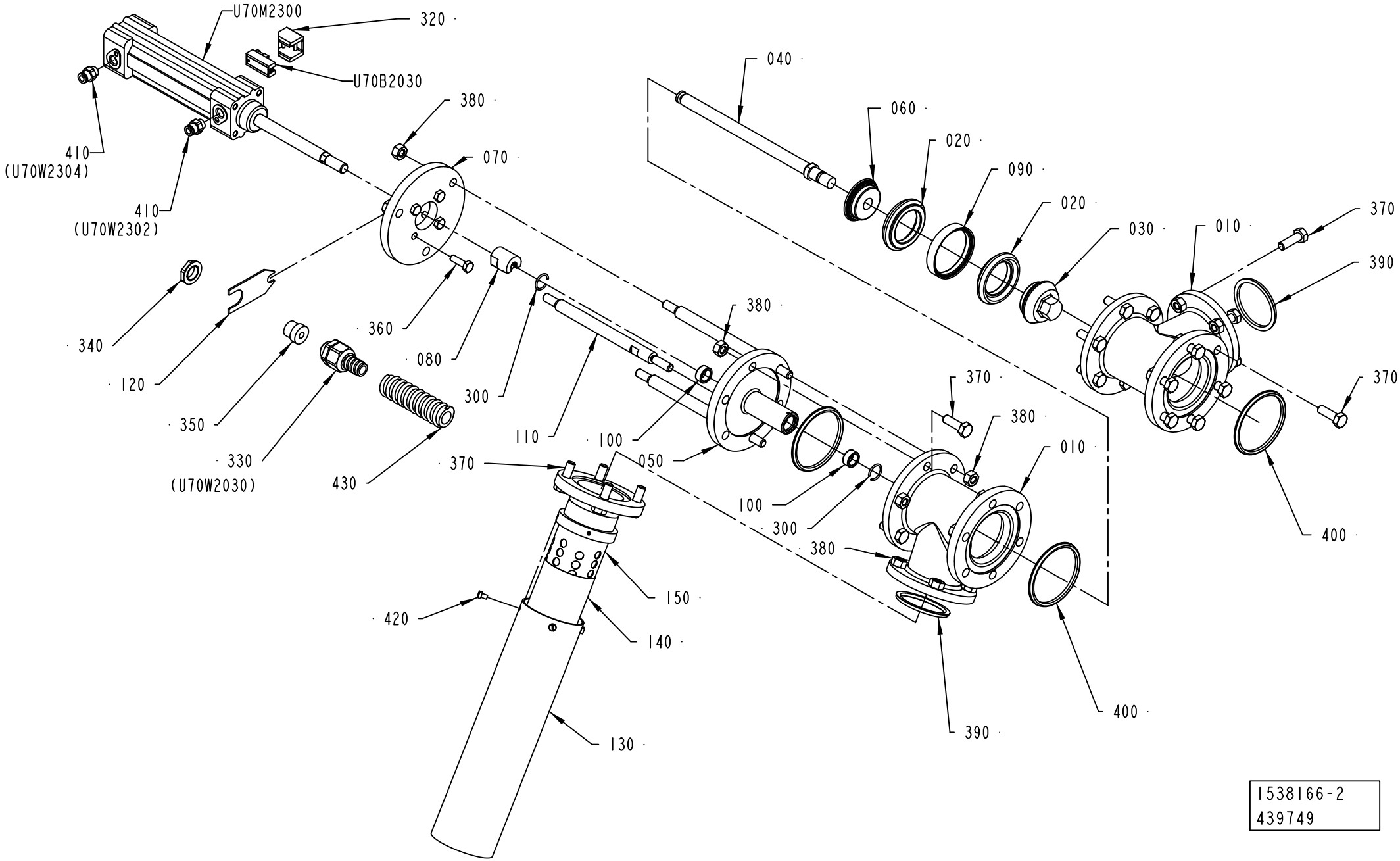
U70M2300
320
U70B2030
380
070
410
(U70W2304)
410
(U70W2302)
040
060
020
090
020
030
010
370
390
340
120
360
080
300
350
330
(U70W2030)
430
110
100
050
380
370
380
010
370
100
300
380
400
150
420
140
130
390
400
1538166-2
439749

ECM: 441076 - 20100701
Group number: 1538166-0200
Assembly Drawing: 1538166-2_1_AD

Pos	Part No	UN	Qty	Description	Page No
-					
010	1036187-0000		2	T-PIPE	
020	530589-0000		2	SEAL RING	
030	2826442-0000		1	VALVE CONE	
040	1036188-0000		1	SHAFT	
050	1036189-0000		1	SPINDEL GUIDE	
060	1036191-0000		1	SEAL HOLDER	
070	1036193-0000		1	CYLINDER BRACKET	
080	441871-0000		1	PENDULUM SUSPENSION	
090	530599-0000		1	RING	
100	532349-0000		2	PLAIN BEARING	
110	1036192-0000		3	SPACER ROD	
120	1036293-0000		1	HOLDER	
130	1511503-0000		1	PIPE	
140	1511755-0000		1	NET	
150	1517482-0000		1	TUBE	
300	90141-0022		2	SNAP RING B 16	
320	90450-0669		1	SENSOR, BRACKET SERIES 168	
330	90458-0427		1	HOSE GLAND W/O INSERT M16 EXTENDED	
340	90458-0322		1	UT, M16X1,5	
350	353249-0008		1	INSERT, SINGLE HOLE, EK 152/7	
360	312105-0370		4	SCREW M6S ISO 4017 M6X20 A480	
370	312105-0453		23	SCREW M6S ISO 4017 M8X25 A480	
380	312605-0318		29	HEXAGON NUT, M6M M8 A280	
390	315229-0205		2	GASKET 47,5X55,5X3,7 MM 2 INCH	
400	315229-0206		3	GASKET 60,2X68,2X3,7 MM 2"1/2	
410	342722-0202		2	PIPE COUPLING 1/8" D=6MM	
420	312125-0285		4	SCREW ISO 1207 M4X6 A4	
430	90152-0050	MM	800	SPIRAL CONDUIT, 20X13, UL 1313	
U70B2030	90457-0047		1	SENSOR 2750-1-5111-1 W.ADAPTER PNP	
U70M2300	90450-0281		1	DOUBLE ACTING,PROF.CYL 32-80	

Pos	Part No	UN	Qty	Description	Page No

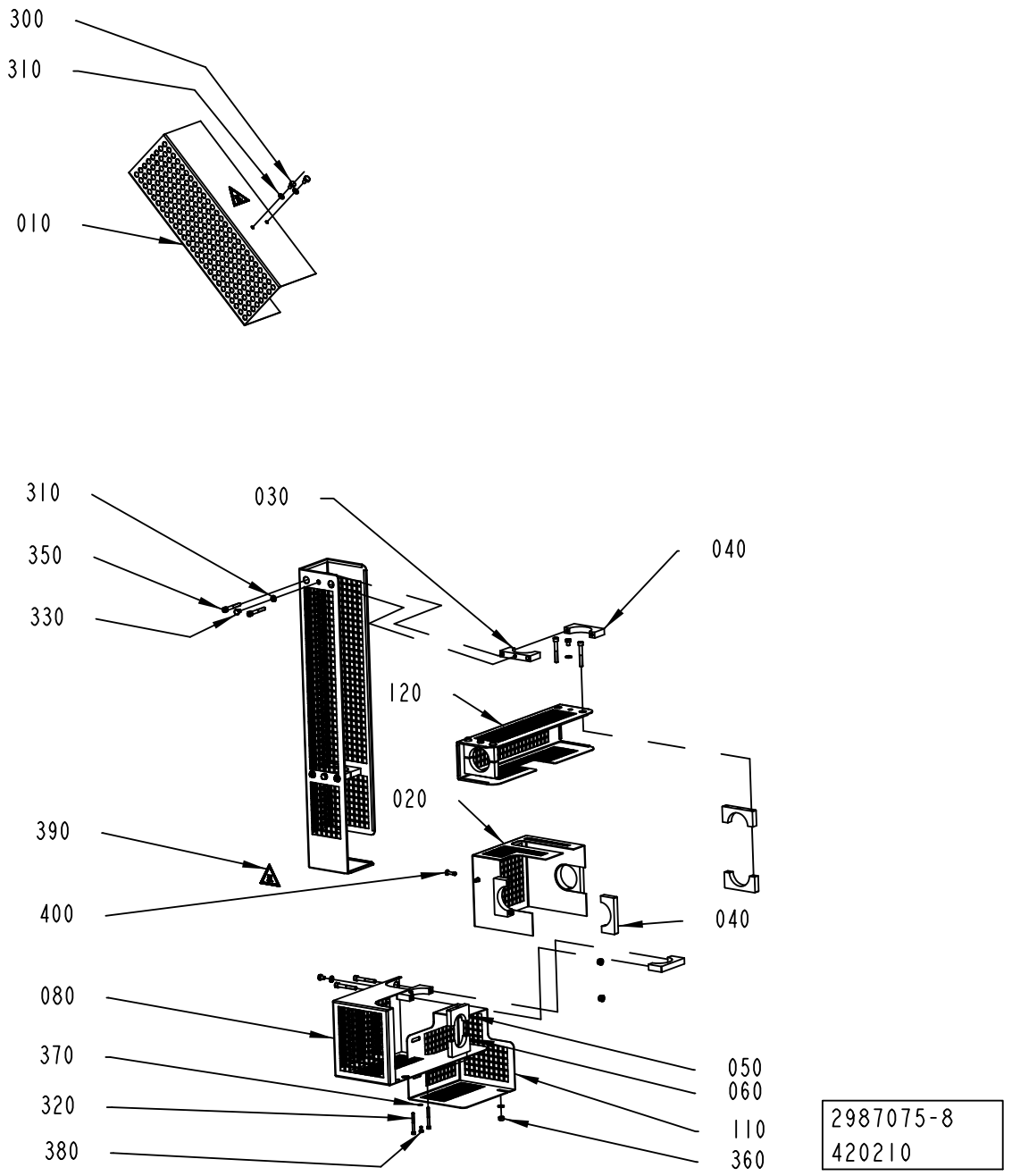
300
310
010
310
030
040
350
330
120
020
390
400
040
080
370
320
380
050
060
110
360
2987075-8
420210

ECM: 461964 - 20101002
Group number: 2987075-0200
Assembly Drawing: 2987075-8_1_AB

Pos	Part No	UN	Qty	Description	Page No
A3/SPEED ANSI (See drawing on page: 1-188)					
030	2994370-0000		5	CLAMP	
040	2994371-0000		7	CLAMP	
110	3050641-0000		1	COVER	
310	315105-0153		9	WASHER BRB 6,4X12 RFR	
330	312105-0362		5	SCREW M6S ISO 4017 M6X8 A480	
360	312605-0316		3	HEXAGON NUT, M6M M6 A280	
390	90459-7458		2	WARNING SIGN ANSI (H), HOT SURFACE	
A3/SPEED ISO (See drawing on page: 1-188)					
030	2994370-0000		5	CLAMP	
040	2994371-0000		7	CLAMP	
110	3050641-0000		1	COVER	
310	315105-0153		9	WASHER BRB 6,4X12 RFR	
330	312105-0362		5	SCREW M6S ISO 4017 M6X8 A480	
360	312605-0316		3	HEXAGON NUT, M6M M6 A280	
390	359705-0007		2	WARNING SIGN ISO, HOT SURFACE	
Common Parts					
010	2829288-0000		1	COVERING PLATE	
020	3037741-0000		1	COVER	
050	2994372-0000		1	CLAMP	
060	2994373-0000		1	CLAMP	
070	3037740-0000		1	COVER	
080	2993130-0000		1	COVER	
120	2993778-0000		1	COVER	
300	90600-0657		2	SCREW UNC 1/4-20 X10	
320	312115-0303		2	SCREW ISO4762 M4X40 A4 80	
350	312115-0379		10	SCREW ISO4762 M6X45 A4 80	
370	315105-0136		1	WASHER BRB 4,3X8 RFR	
380	312105-0287		1	SCREW M6S ISO 4017 M4X8 A470	
400	90601-2466		4	CAPTIVE SCREW M6, GUTBG 6-4-20	

Pos	Part No	UN	Qty	Description	Page No

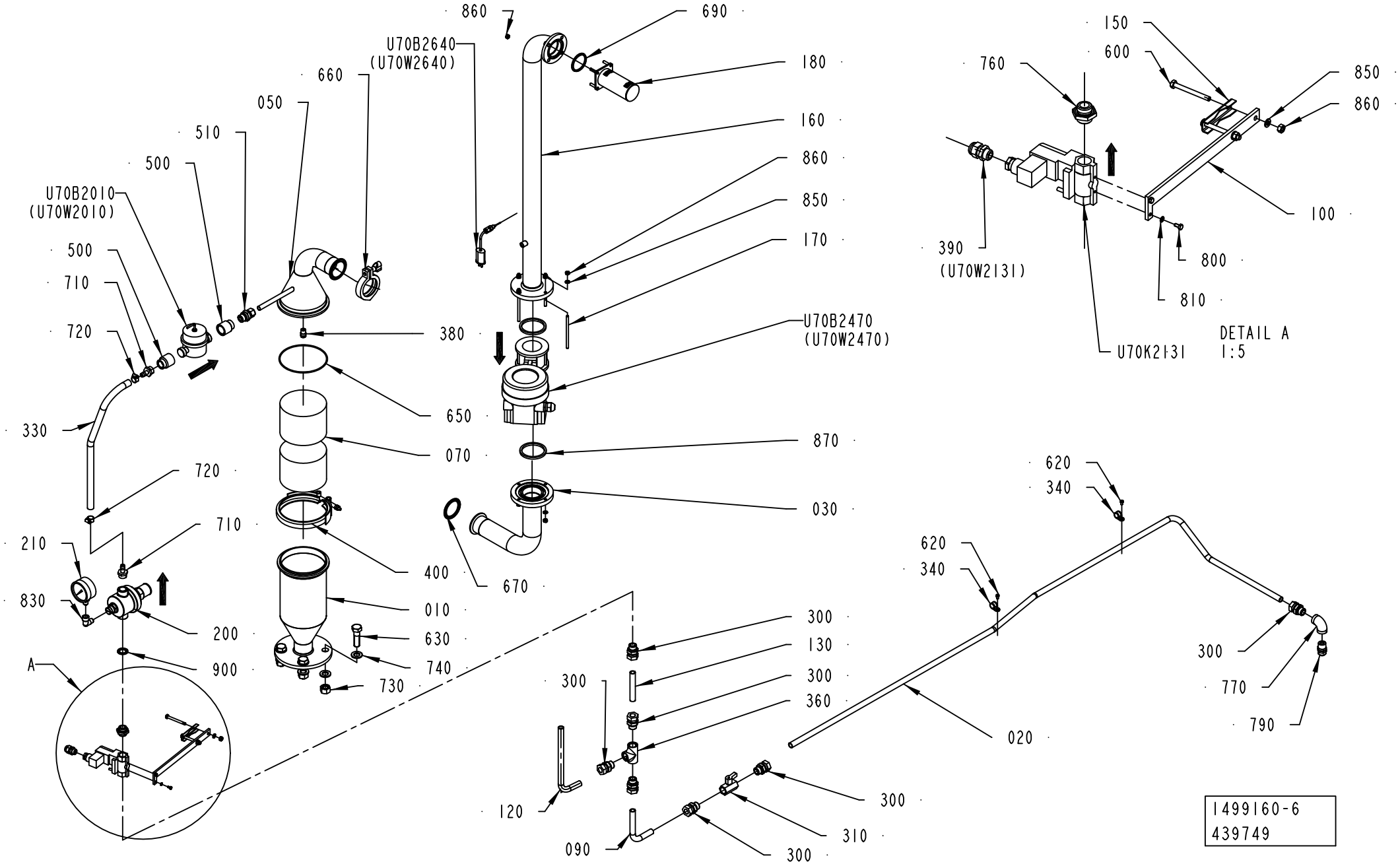
860
690
U70B2640
(U70W2640)
180
660
050
160
510
860
500
850
U70B2010
(U70W2010)
170
500
710
720
380
U70B2470
(U70W2470)
650
330
870
070
720
030
710
210
400
670
830
010
200
630
740
900
730
A
300
130
300
360
300
120
310
090
300
150
600
760
850
860
100
390
(U70W2131)
800
810
U70K2131
DETAIL A
1:5
620
340
620
340
300
770
790
020
1499160-6
439749

ECM: 441082 - 20100701
Group number: 1499160-0500
Assembly Drawing: 1499160-6_1_AC

Pos	Part No	UN	Qty	Description	Page No
-					
010	2957421-0000		1	CONTAINER	
020	2851885-0000		1	PIPE	
030	3021541-0000		1	PIPE	
050	2691501-0000		1	UPPER SECTION	
070	546929-0000		2	FILTER	
090	2519437-0000		1	TUBE	
100	2833224-0000		1	HOLDER	
120	2936350-0000		1	TUBE	
130	2519440-0000		1	TUBE	
150	1036811-0000		1	CLAMP	
160	3021542-0000		1	PIPE	
170	2685350-0000		4	THREADED ROD	
180	2685284-0000		1	FILTER	
200	90459-2804		1	REDUCING VALVE G1/2", 51.04.70	
210	90043-0082		1	PRESSURE GAUGE, 2740, D=63 MM	
300	90030-0188		7	CONN. STR. GE15LRED71	
310	90187-0062		1	BALL VALVE G1/2, NPBR	
330	90166-0121	MM	550	HOSE	
340	90165-0039		2	PIPE CLAMP D=15 MM, GSK15/12	
360	90330-0049		1	T-PIPE, INT. THREAD, R-221R1/2	
380	90459-0106		1	SPRAY NOZZLE 103 DEG B1/4 HH - SS 14W	
390	352103-0101		1	CABLE GLAND, ST 9, PR15,2/PG9	
400	90132-0030		1	SUPORTE MV 87177 KS 580T	
410	90144-0073		1	TREBOFLON-TAPE W=13MM	
420	90157-0037		1	THREAD SEALANT LOCTITE 542	
500	90330-0022		2	SLEEVE, REDUCTION, INT, R-202 3/4X1/2	
510	90458-2006		1	CONN. STR., 12-R1/2	
600	312105-0382		2	SCREW M6S ISO 4014 M6X60 A480	
620	312125-0323		2	SCREW ISO 1207 M5X8 A4	
630	312105-0631		4	SCREW M6S ISO 4014 M16X55 A480	
650	315204-0317		1	O-RING 129,5X3 MM	
660	342840-0105		1	CLAMPING PIECE, GH13LAH2304NO79612011202	
670	342850-0405		1	GASKET 47,8X62,6X5,2 MM 2" FDA 3-A	
690	315229-0205		1	GASKET 47,5X55,5X3,7 MM 2 INCH	
710	342901-0105		2	HOSE NIPPLE, EXT.THR. G1/2-12 MM	
720	342991-0101		2	HOSE CLIP,WORM DRIVE TYPE (11)-17	
730	312605-0324		4	HEXAGON NUT, M6M M16 A280	
740	315105-0186		8	WASHER BRB 17X30 RFR	
760	479261-0000		1	NIPPLE	
770	90330-0020		1	ELBOW, 90 INT. THREAD, R-2221/2	
790	342920-0151		1	STRAIGHT COUPL.,EXT.THREAD.15/12,5-R1/2"	
800	312105-0287		2	SCREW M6S ISO 4017 M4X8 A470	
810	315105-0136		2	WASHER BRB 4,3X8 RFR	
830	90140-0013		1	ELBOW, 90 INT/EXT, 2020-1/4-1/4	
850	315105-0153		8	WASHER BRB 6,4X12 RFR	
860	312605-0316		14	HEXAGON NUT, M6M M6 A280	
870	12242-0004		2	WASHER 73,5X63,5X5,5	
880	315105-0153		2	WASHER BRB 6,4X12 RFR	
900	315211-0111		1	BONDED SEAL SS/NBR90 G1/2	
U70B2010	90243-0245		1	MEASURING INSTRUMENT	
U70B2470	90459-5180		1	FLOW METER, PROWIRL 72W50-SD0BA1AAA0AW	
U70B2640	90326-0051		1	THERMOCOUPLE, 12826-33	
U70K2131	90042-0172		1	SOLENOID VALVE 4023/1005/1032 24VDC	
	90042-0467		*1*	*COIL 24VDC GSR*	
U70W2131	351150-0403	MM	5100	CABLE OLFLEX 3X0,75 MM2 LIGHT/GREY	
U70W2470	351150-0403	MM	3000	CABLE OLFLEX 3X0,75 MM2 LIGHT/GREY	
U70W2640	90220-0034	MM	7200	THERMOCABLE TEX/SITW-20F-KX 2X0,5MM2	

Machine Type	Group Description	Used-In	Group Number	Page No

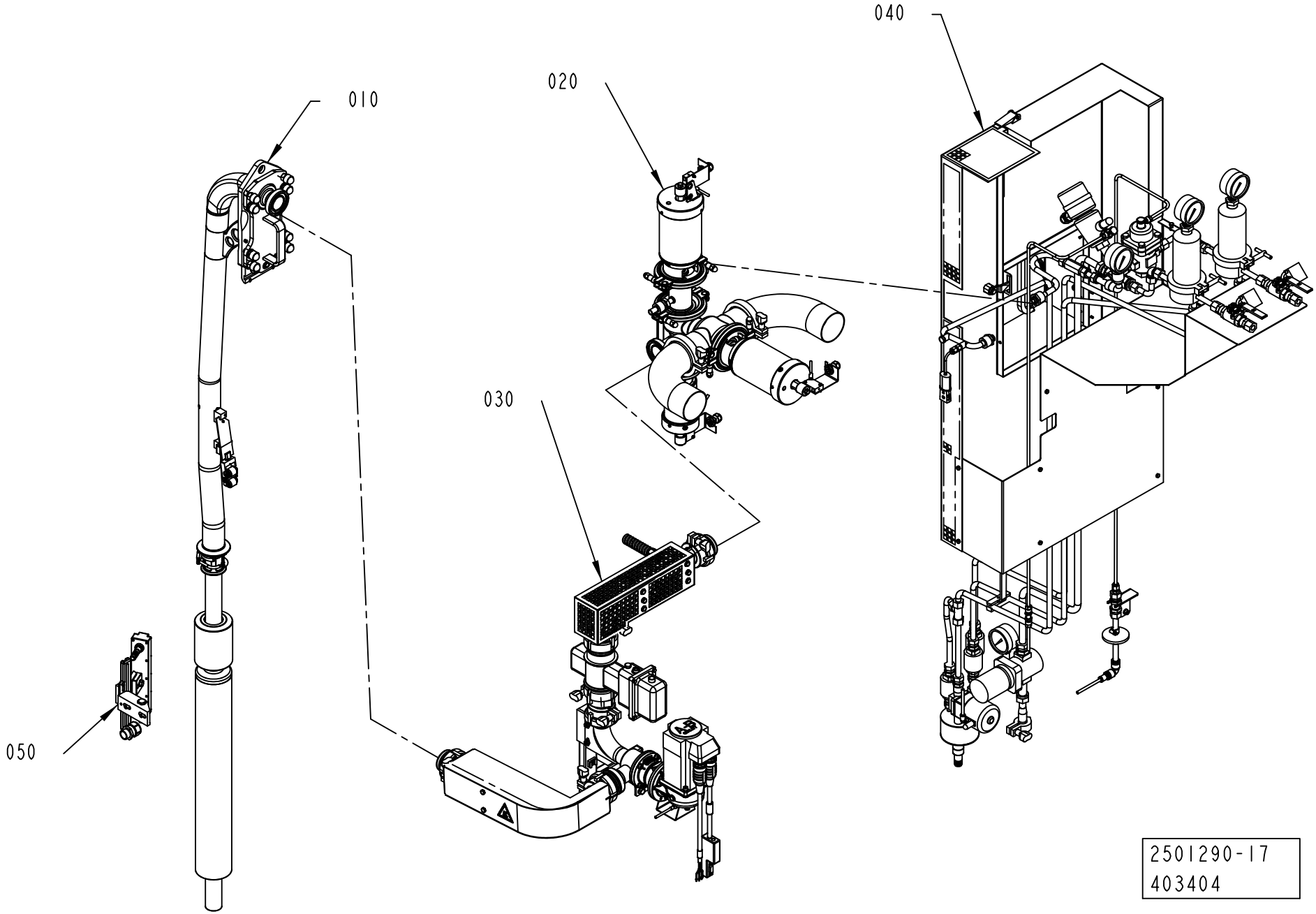
010
020
030
040
050
2501290-17
403404

ECM: 415357 - 20091002
Group number: 2501290-0500
Assembly Drawing: 2501290-17_1_AA

Pos	Part No	UN	Qty	Description	Page No
A3/SPEED HI (See drawing on page: 1-192)					
010	1549160-0300		1	FILLING PIPE	**1-195, 1-197, 1-199**
050	2501305-0300		1	LEVEL CONTROL DEVICE	**1-201**
060	2656910-0400		1	HEAD SPACE BY INJECTION	**1-203**
A3/SPEED NOHI (See drawing on page: 1-192)					
010	1549160-0300		1	FILLING PIPE	**1-195, 1-197, 1-199**
050	2501305-0300		1	LEVEL CONTROL DEVICE	**1-201**
Common Parts					
020	1558494-0400		1	PRODUCT VALVE	**1-215**
030	2507060-0500		1	PRODUCT LINES	**1-229, 1-231**
040	2545651-0600		1	STEAM SYSTEM	**1-241**

Pos	Part No	UN	Qty	Description	Page No

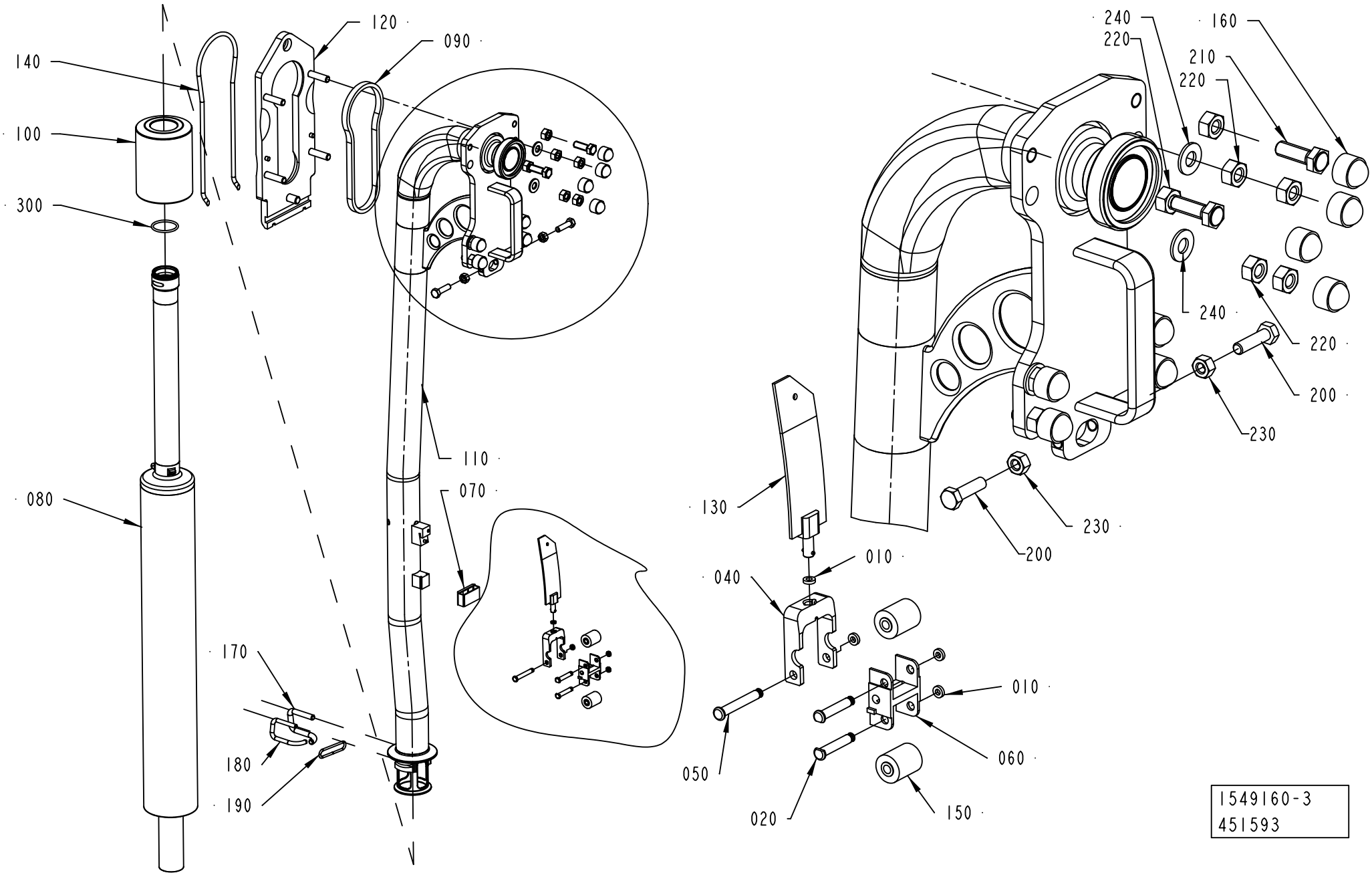
120
090
140
100
300
110
070
080
170
180
190
240
220
160
210
220
240
220
200
230
130
010
040
230
200
010
060
050
020
150
1549160-3
451593

ECM: 452152 - 20101001
Group number: 1549160-0300
Assembly Drawing: 1549160-3_1_AD

This list covers pages from 1-194 to 1-199

Pos	Part No	UN	Qty	Description	Page No
TBA 0125S (See drawing on page: 1-198)					
020	255977-0000		1	SHAFT	
040	255978-0000		1	FORK	
070	295377-0001		1	HOOD	
080	2833135-0000		1	FILLING PIPE	
100	2895151-0000		1	FLOAT	
110	2833100-0000		1	UPPER FILLING PIPE	
130	2826392-0000		1	SPRING	
150	2932253-0000		1	PRESSURE ROLLER (PACK 10)	
180	2833103-0000		1	.STOP PIN	
300	315207-0514		1	O-RING 18,72X2,62 MM	
TBA 0200B (See drawing on page: 1-196)					
020	2529417-0000		1	SHAFT	
040	568583-0000		1	FORK	
070	295377-0001		1	HOOD	
080	2894602-0000		1	FILLING PIPE	
100	2685290-0000		1	FLOAT	
110	2894935-0000		1	UPPER FILLING PIPE	
130	2894222-0000		1	SPRING	
150	2909367-0000		1	PRESSURE ROLLER (PACK 10)	
170	2881564-0000		1	STOP PIN	
180	2895197-0000		1	STOP PIN	
300	315204-0215		1	O-RING 19,2X3 MM	
TBA 0200M (See drawing on page: 1-196)					
020	255977-0000		1	SHAFT	
040	255978-0000		1	FORK	
070	295377-0001		1	HOOD	
080	2894608-0000		1	FILLING PIPE	
100	2754798-0000		1	FLOAT	
110	2894935-0000		1	UPPER FILLING PIPE	
130	2826392-0000		1	SPRING	
150	2932253-0000		1	PRESSURE ROLLER (PACK 10)	
170	2881564-0000		1	STOP PIN	
180	2895197-0000		1	STOP PIN	
300	315204-0215		1	O-RING 19,2X3 MM	
TBA 0200S (See drawing on page: 1-198)					
020	255977-0000		1	SHAFT	
040	255978-0000		1	FORK	
070	295377-0001		1	HOOD	
080	2985489-0000		1	LOWER FILLING TUBE	
100	2837102-0000		1	FLOAT	
110	2985488-0000		1	UPPER FILLING TUBE	
130	2826392-0000		1	SPRING	
150	2932253-0000		1	PRESSURE ROLLER (PACK 10)	
180	2985490-0000		1	PIN	
300	315204-0215		1	O-RING 19,2X3 MM	
TBA 0250B (See drawing on page: 1-196)					
020	2529417-0000		1	SHAFT	
040	568583-0000		1	FORK	
070	295377-0001		1	HOOD	
080	2907816-0000		1	LOWER FILLING TUBE	
100	2685290-0000		1	FLOAT	
110	2894935-0000		1	UPPER FILLING PIPE	
130	2894222-0000		1	SPRING	
150	2909367-0000		1	PRESSURE ROLLER (PACK 10)	
170	2881564-0000		1	STOP PIN	
180	2895197-0000		1	STOP PIN	
300	315204-0215		1	O-RING 19,2X3 MM	
TBA 0250S (See drawing on page: 1-196)					
020	255977-0000		1	SHAFT	
040	255978-0000		1	FORK	
070	295377-0001		1	HOOD	
080	2894607-0000		1	LOWER FILLING TUBE	
100	2754798-0000		1	FLOAT	
110	2894935-0000		1	UPPER FILLING PIPE	
130	2826392-0000		1	SPRING	
150	2932253-0000		1	PRESSURE ROLLER (PACK 10)	
170	2881564-0000		1	STOP PIN	
180	2895197-0000		1	STOP PIN	
300	315204-0215		1	O-RING 19,2X3 MM	
TBA 1000B (See drawing on page: 1-194)					
010	24928-0000		4	LOCKING RUBBER	
020	2638077-0000		2	SHAFT	
040	2846311-0000		1	FORK	
050	1538953-0000		1	SHAFT	
060	2846309-0000		1	BRACKET	
070	2572071-0000		1	HOOD	
080	2878651-0000		1	FILLING PIPE	
100	2826449-0000		1	FLOAT	
110	2805414-0000		1	UPPER FILLING PIPE	
130	2946917-0000		1	SPRING	
150	2932252-0000		2	PRESSURE ROLLER (PACK 10)	
170	2805415-0000		1	STOP PIN	
180	2805416-0000		1	STOP PIN	

Machine Type | Group Description | Used-In | Group Number | Page No

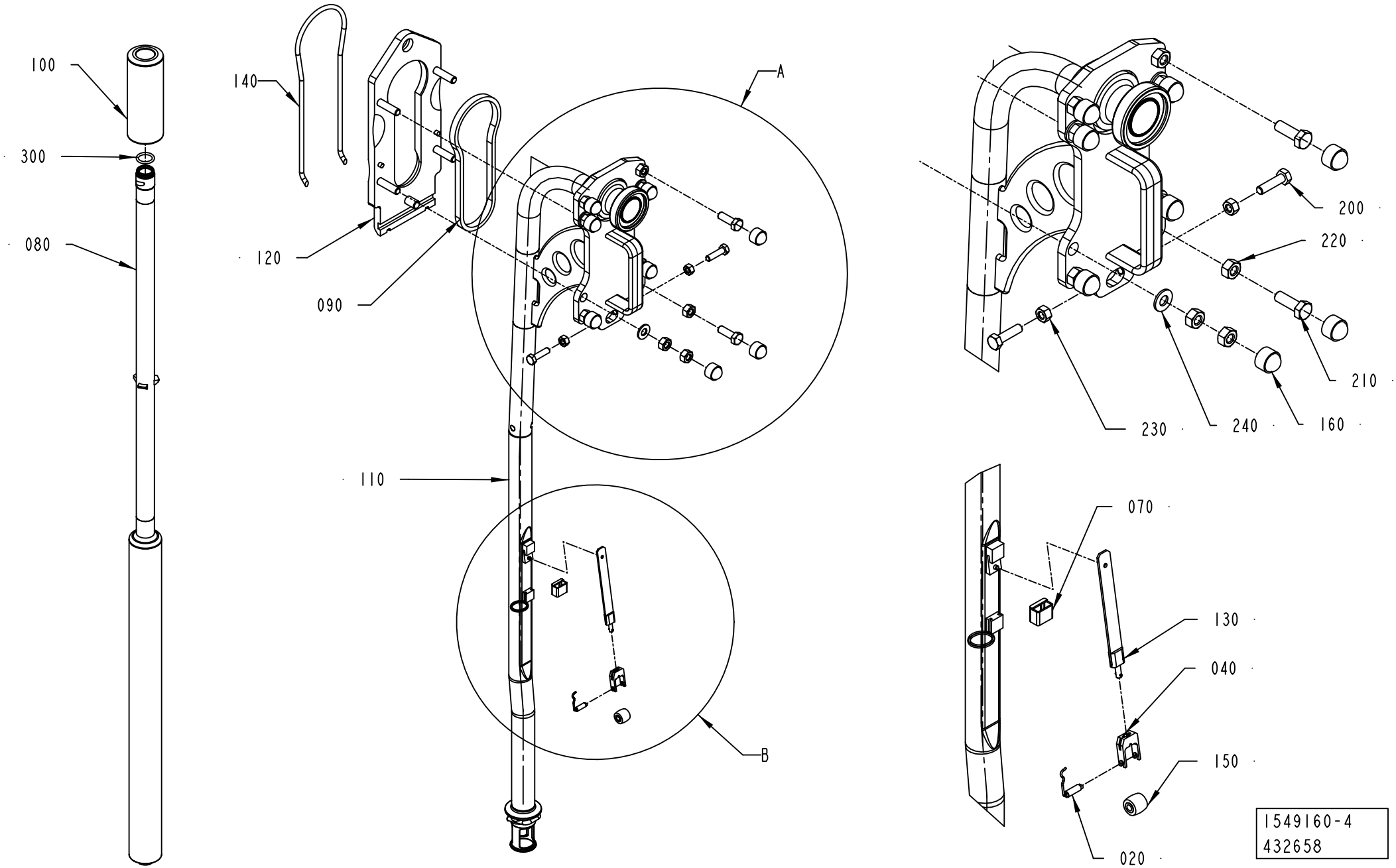
100
300
080
140
120
090
A
110
B
200
220
210
230
240
160
070
130
040
150
020
1549160-4
432658

ECM: 452152 - 20101001
Group number: 1549160-0300
Assembly Drawing: 1549160-4_1_AB

This list covers pages from 1-194 to 1-199

Pos	Part No	UN	Qty	Description	Page No
TBA 1000B (Cont'd) (See drawing on page: 1-194)					
190	2890518-0000		1	RING	
300	90458-1144		1	O-RING 36,2X3 MM	
TBA 1000S (See drawing on page: 1-194)					
010	24928-0000		4	LOCKING RUBBER	
020	499011-0000		2	SHAFT	
040	2659364-0000		1	FORK	
050	2634972-0000		1	SHAFT	
060	2672995-0000		1	BRACKET	
070	2572071-0000		1	HOOD	
080	2934372-0000		1	FILLING PIPE	
100	2826449-0000		1	FLOAT	
110	2805414-0000		1	UPPER FILLING PIPE	
130	2826399-0000		1	SPRING	
150	2909368-0000		2	PRESSURE ROLLER (PACK 10)	
170	2805415-0000		1	STOP PIN	
180	2805416-0000		1	STOP PIN	
190	2890518-0000		1	RING	
300	90458-1144		1	O-RING 36,2X3 MM	
TBA 1000SQ (See drawing on page: 1-194)					
010	24928-0000		4	LOCKING RUBBER	
020	499011-0000		2	SHAFT	
040	2887735-0000		1	FORK	
050	2634972-0000		1	SHAFT	
060	2887736-0000		1	BRACKET	
070	2787568-0000		1	HOOD	
080	2886605-0000		1	FILLING PIPE	
100	2659371-0000		1	FLOAT	
110	2805414-0000		1	UPPER FILLING PIPE	
130	2826398-0000		1	SPRING	
150	2909368-0000		2	PRESSURE ROLLER (PACK 10)	
170	2805415-0000		1	STOP PIN	
180	2805416-0000		1	STOP PIN	
190	2890518-0000		1	RING	
300	90458-1144		1	O-RING 36,2X3 MM	
Common Parts					
090	2507048-0000		1	GASKET	
120	2500082-0000		1	MOUNTING PLATE	
140	2500071-0000		1	O-RING	
160	90459-0729		8	HEXAGONAL PROTECTIVE CAP GPN 1000	
200	312105-0455		2	SCREW M6S ISO 4017 M8X30 A480	
210	312105-0495		4	SCREW M6S ISO 4017 M10X30 A480	
220	312605-0320		12	HEXAGON NUT, M6M M10 A280	
230	312605-0318		2	HEXAGON NUT, M6M M8 A280	
240	315105-0173		4	WASHER BRB 10,5X22 RFR	

Machine Type	Group Description	Used-In	Group Number	Page No

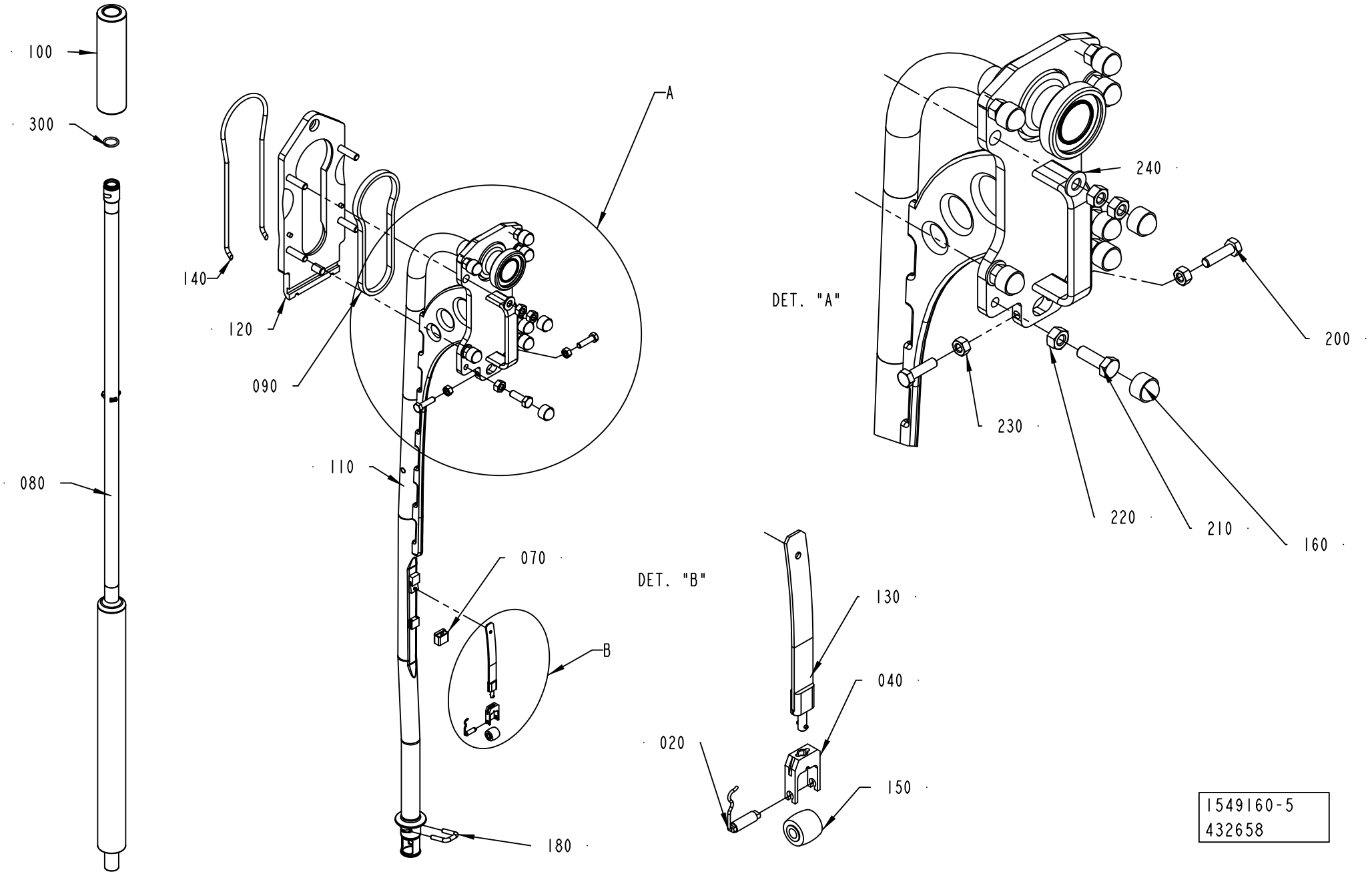

1549160-5
432658

ECM: 452152 - 20101001
Group number: 1549160-0300
Assembly Drawing: 1549160-5_1_AC

This list covers pages from 1-194 to 1-199

Pos	Part No	UN	Qty	Description	Page No
SEE PREVIOUS LISTS PAGES: 1-195, 1-197.					

Pos	Part No	UN	Qty	Description	Page No

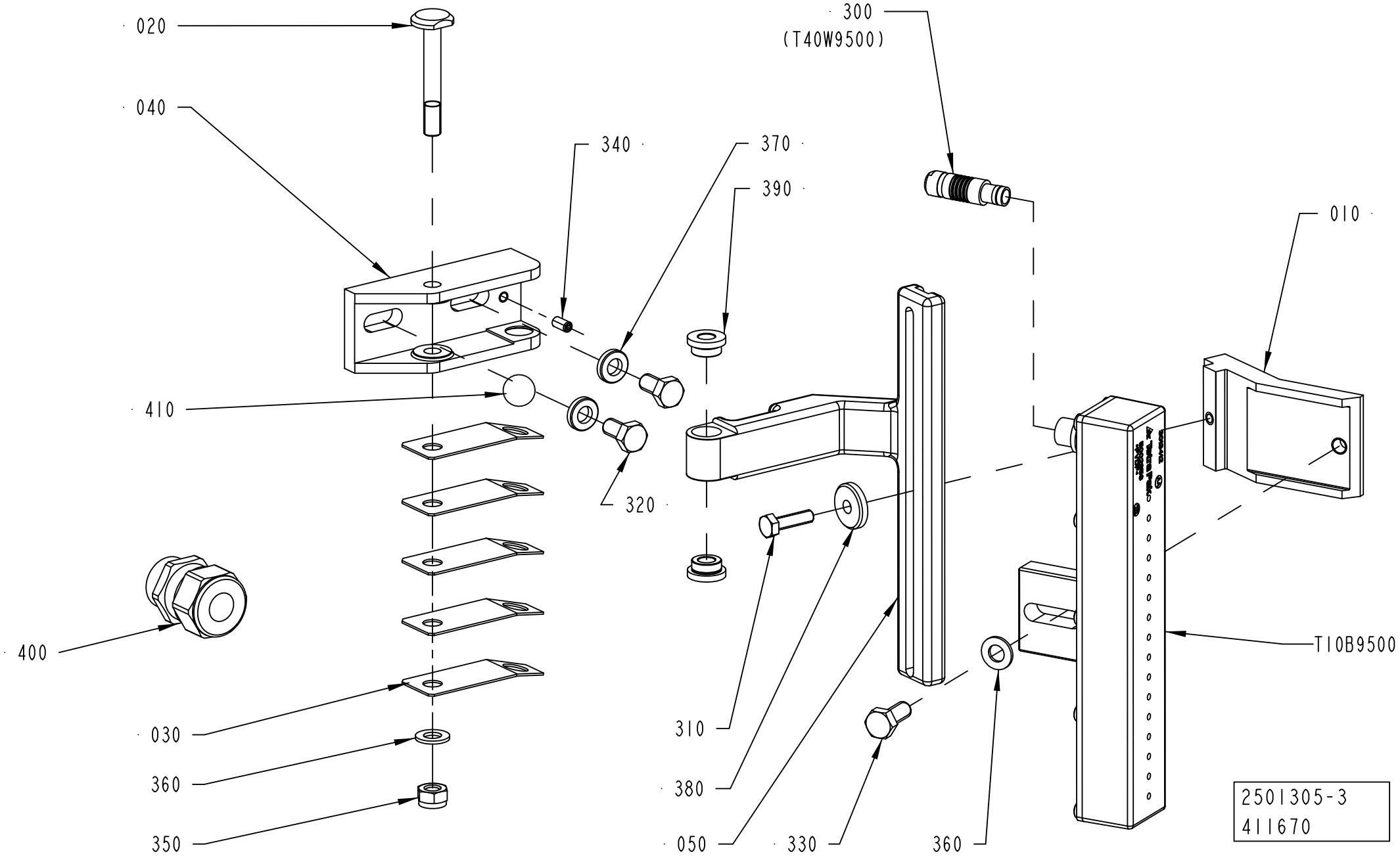
020
040
340
370
390
300
(T40W9500)
010
410
320
400
030
360
350
310
380
050
330
360
T10B9500
2501305-3
411670

ECM: 411673 - 20100101
Group number: 2501305-0300
Assembly Drawing: 2501305-3_1_AE

Pos	Part No	UN	Qty	Description	Page No
TBA 0125S, TBA 0200M, TBA 0200S, TBA 0250S					
010	2874766-0000		1	BRACKET	
TBA 0200B, TBA 0250B, TBA 1000B, TBA 1000SQ, TBA 1000S					
010	1519976-0000		1	BRACKET	
Common Parts					
020	457367-0000		1	SHAFT	
030	457368-0000		5	SPRING	
040	490876-0000		1	BRACKET	
050	751456-0000		1	HOLDER	
300	90459-4705		1	LOCKING PLUG, S 103 A 053-130+ AND 90220	
	90459-4707		*1*	*RECEPTACLE, MOD.DBEE 103 A 053-130*	
310	312105-0372		1	SCREW M6S ISO 4017 M6X25 A480	
320	312105-0449		2	SCREW M6S ISO 4017 M8X16 A480	
330	312105-0451		1	SCREW M6S ISO 4017 M8X20 A480	
340	312318-0325		1	SCREW ISO4029 M5X10 A4	
350	312812-0318		1	HEXAGON NUT, NY-LOCK M8 A480	
360	315105-0165		2	WASHER BRB 8,4X16 RFR	
370	315115-0165		2	WASHER PLAIN, TBRB 8,4/16 H=3	
380	315125-0153		1	WASHER TBRSB 6,4X22X4 A4	
390	321101-0143		2	FLANGE BUSHING, 8/14X8-18X3 MM	
400	90458-0437		1	GLAND, EXTENDED WITH INSERT, M25X1,5	
410	90601-1727		1	STEEL BALL 15MM, RB-15 INOX316	
T10B9500	2968260-0000		1	LEVEL PROBE	

Pos	Part No	UN	Qty	Description	Page No

HEAD SPACE BY INJECTION

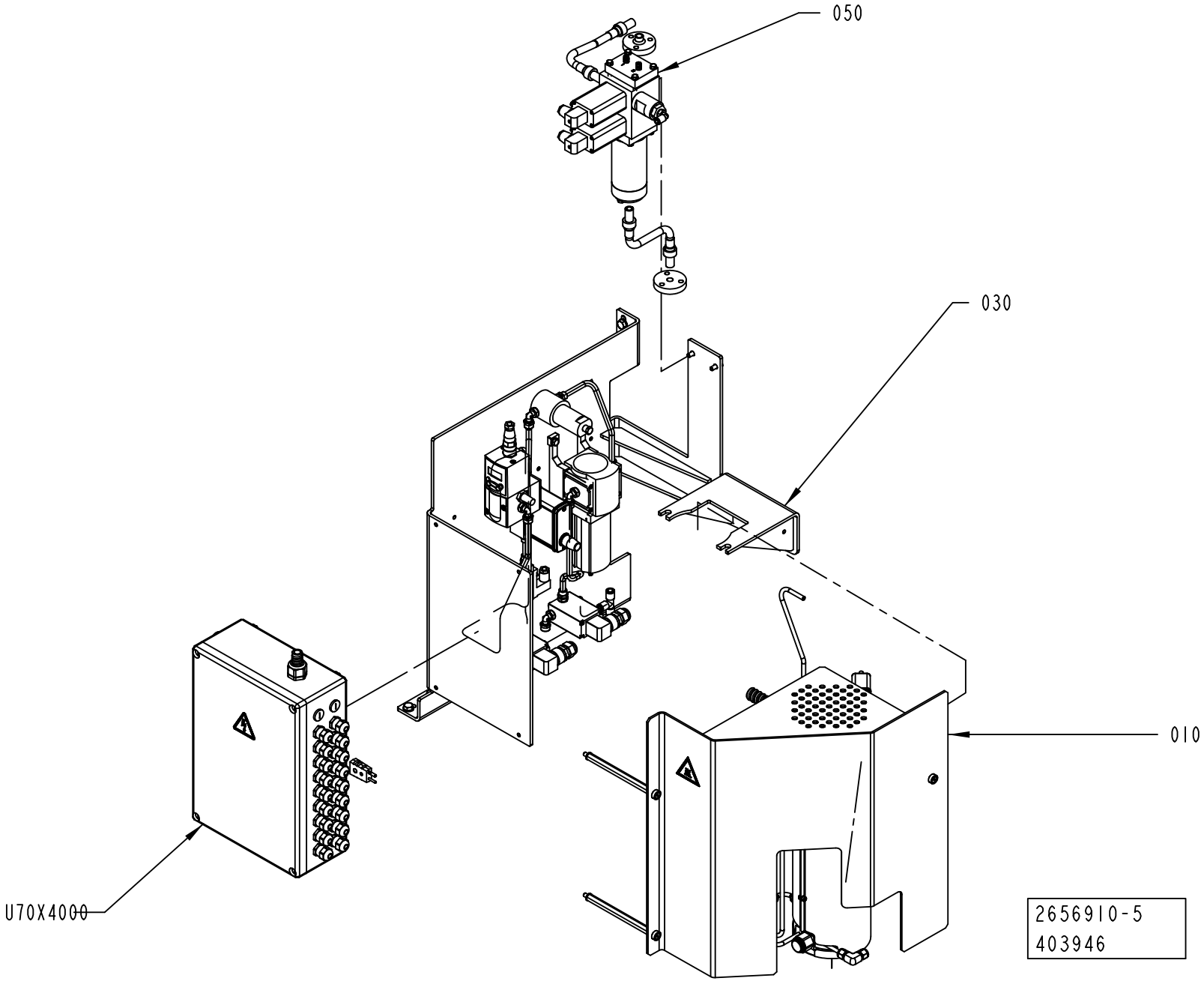

ECM: 415335 - 20100101
Group number: 2656910-0400
Assembly Drawing: 2656910-5_1_AA

Pos	Part No	UN	Qty	Description	Page No
-					
010	2696118-0300		1	HEATER	**1-205**
030	2696120-0200		1	PNEUMATIC PANEL	**1-207**
050	2539458-0200		1	SPRAY TANK	**1-209**
U70X4000	2847233-0100		1	CONNECTION BOX	**1-211**

Pos	Part No	UN	Qty	Description	Page No

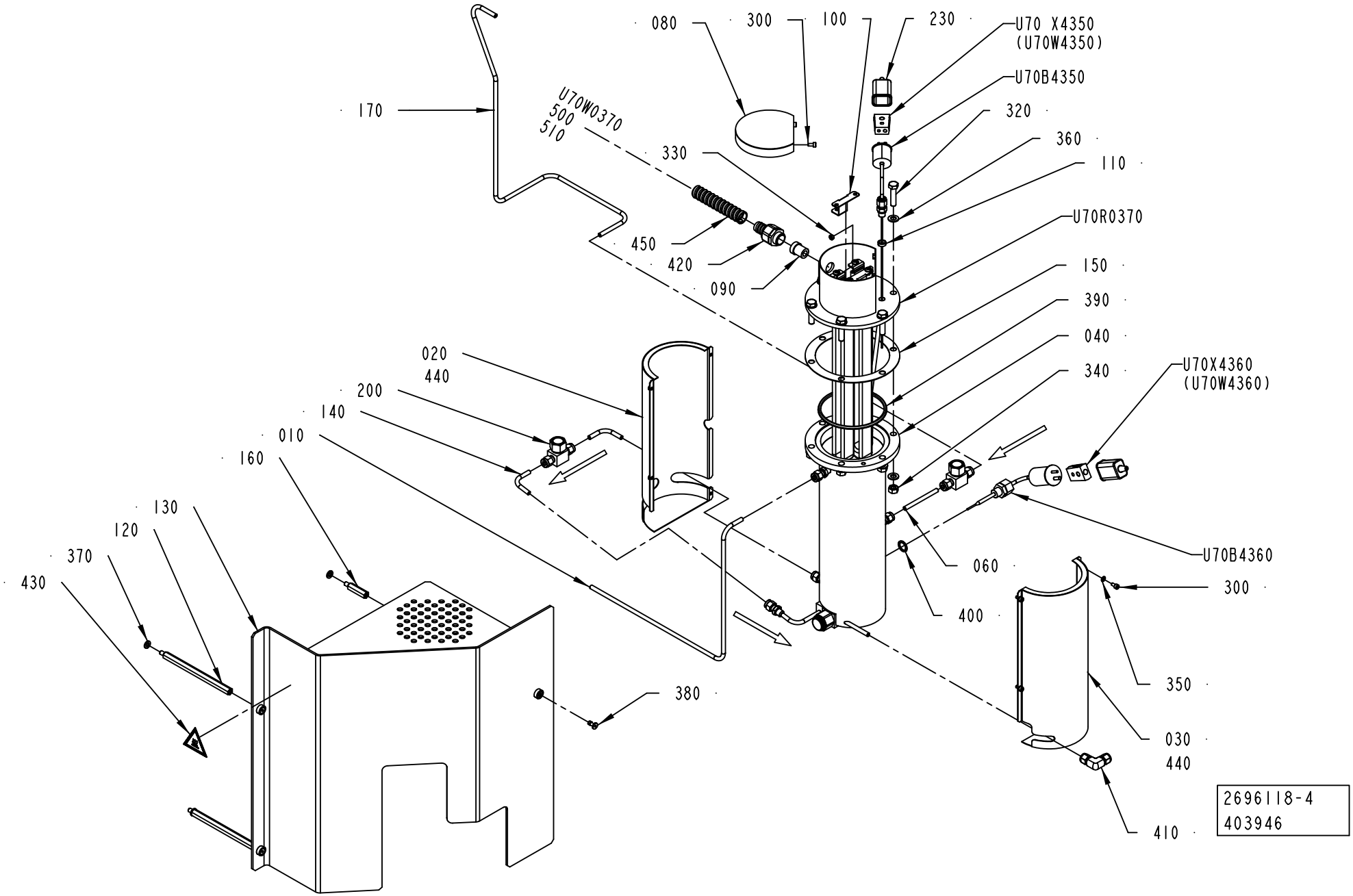
080
300
100
230
U70 X4350
(U70W4350)
U70B4350
320
360
110
U70R0370
150
390
040
340
U70X4360
(U70W4360)
U70B4360
060
400
300
350
030
440
410
170
U70W0370
500
510
330
450
420
090
020
440
200
140
010
160
130
120
370
430
380
2696118-4
403946

ECM: 461401 - 20101002
Group number: 2696118-0300
Assembly Drawing: 2696118-4_1_AA

Pos	Part No	UN	Qty	Description	Page No
ANSI					
430	90459-7458		1	WARNING SIGN ANSI (H), HOT SURFACE	
ISO					
430	359705-0007		1	WARNING SIGN ISO, HOT SURFACE	
Common Parts					
010	2696119-0000		1	PIPE	
020	2685340-0000		1	COVER	
030	2685341-0000		1	COVER	
040	2685314-0000		1	COIL	
U70V4242	*90277-0407*		*1*	*FILTER ELEMENT 60µ, SS-4F-K4-60*	
060	2562307-0000		1	PIPE	
080	2562315-0000		1	PLUG	
090	90600-0976		1	INSERT, SINGLE HOLE, HI.TEMP, EK153I9	
100	2598084-0000		2	PLATE	
110	2598085-0000		1	SPACER	
120	3037723-0000		2	SPACER	
130	3037737-0000		1	COVER	
140	2736707-0000		2	PIPE	
150	2685339-0000		1	GASKET	
160	3037724-0000		1	SPACER	
170	2685346-0000		1	PIPE	
200	90230-0064		2	CHECK VALVE, 6 MM HIGH TEMP.	
230	90326-0012		2	PROTECTIVE COVER, T31A4618	
300	312115-0287		6	SCREW ISO4762 M4X8 A4 80	
320	312109-0457		6	SCREW M6S ISO 4017 M8X35 A480	
330	312605-0312		1	HEXAGON NUT, M6M M4 A280	
340	312605-0318		6	HEXAGON NUT, M6M M8 A280	
350	315105-0136		4	WASHER BRB 4,3X8 RFR	
360	315105-0165		12	WASHER BRB 8,4X16 RFR	
370	315105-0153		3	WASHER BRB 6,4X12 RFR	
380	90601-2046		3	CAPTIVE SCREW M6, GUTBG 6-4-12	
390	315229-0208		1	GASKET 97,4X105,4X3,7 MM 4"	
400	315234-0110		1	WASHER,PL.RND.CU.13,5/18 H=1,5	
410	90459-4511		1	CONN. ELBOW, 6	
420	90458-0429		1	HOSE GLAND W/O INSERT M20 EXTENDED	
440	90411-0001	M	1	INSULATING MAT, WIRED 100 6000X600X30MM	
450	90152-0050	M	0.85	SPIRAL CONDUIT, 20X13, UL 1313	
500	90459-3165	M	1.3	CABLE OLFLON PTFE 1X4,72 MM² BLACK	
510	90459-3154	M	1.3	CABLE OLFLONPTFE 1X4,72 MM² YELLOW-GREEN	
520	90277-0407		1	FILTER ELEMENT 60µ, SS-4F-K4-60	
530	353104-0142		3	CABLE SHOE, RING UNINS., YAV 06 M 5	
U70B4350	90459-2122		1	THERMOCOUPLE, EN-5130060-0001	
U70B4360	90326-0053		1	THERMOCOUPLE, 12826-35	
U70R0370	3020119-0000		1	HEATING ELEMENT	
U70W0370	90459-3165	M	1.3	CABLE OLFLON PTFE 1X4,72 MM² BLACK	
U70X4350	90326-0020		1	PLUG, FEMALE YELLOW CR-AL	
U70X4360	90326-0020		1	PLUG, FEMALE YELLOW CR-AL	

Machine Type Group Description Used-In Group Number Page No

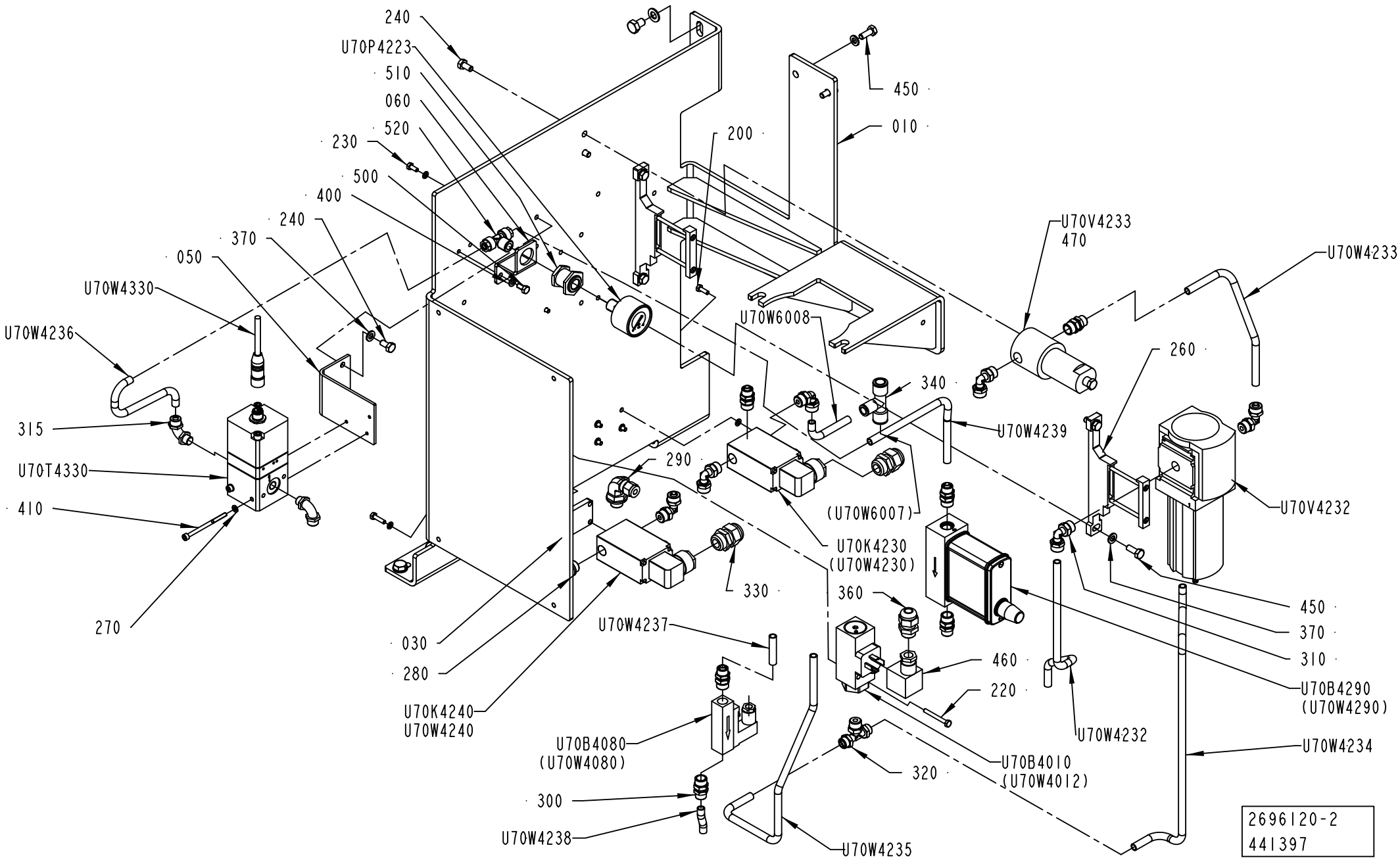
240
U70P4223
510
060
520
230
500
400
240
370
050
U70W4330
U70W4236
315
U70T4330
410
270
030
280
U70K4240
U70W4240
U70B4080
(U70W4080)
300
U70W4238
U70W4235
U70W4237
330
290
U70K4230
(U70W4230)
(U70W6007)
U70W6008
200
450
010
U70V4233
470
U70W4233
260
340
U70W4239
U70V4232
360
460
220
U70W4232
320
U70B4010
(U70W4012)
U70W4234
450
370
310
U70B4290
(U70W4290)
2696120-2
441397

ECM: 446936 - 20100701
Group number: 2696120-0200
Assembly Drawing: 2696120-2_1_AH

Pos	Part No	UN	Qty	Description	Page No
-					
010	2847236-0000		1	BRACKET	
030	2777968-0000		1	SPACER	
050	3060463-0000		1	SUPPORT PLATE	
060	3093222-0000		1	SUPPORT	
200	312105-0291		4	SCREW M6S ISO 4017 M4X12 A470	
220	312105-0301		2	SCREW M6S ISO 4017 M4X35 A470	
230	312105-0289		2	SCREW M6S H4X10 A4 70 ISO4017/DIN933	
240	312105-0366		4	SCREW M6S ISO 4017 M6X12 A480	
260	90459-1858		2	BRACKET, MS6-WP	
270	315105-0136		16	WASHER BRB 4,3X8 RFR	
280	342713-0210		1	PLUG, EXT THREAD HEX SOCKET	
290	90600-0731		1	ADJUSTABLE ELBOW CONNECTION,EXT 6-G1/4	
300	342921-0122		6	STRAIGHT COUPLING,EXT.THREADED 8/6-G1/4"	
310	342931-0122		6	ELBOW 90 COUPL.,EXT.THREAD 8/6-G1/4"	
315	342931-0121		2	ELBOW 90 COUPL.,EXT.THREAD 8/6-G1/8"	
320	342941-0122		1	T-COUPLING,EXT.THREAD 8/6-G1/4"	
330	352103-0106		2	CABLE GLAND, ST 11, PR18,6/PG11	
340	350011-0003		1	PUSH-IN T-FITTING QST-F-10-8	
360	352103-0101		1	CABLE GLAND, ST 9, PR15,2/PG9	
370	315105-0153		8	WASHER BRB 6,4X12 RFR	
400	315105-0146		2	WASHER BRB 5,3X10 RFR	
410	90287-0314		2	SCREW MC6S M4X60 A470	
440	312105-0293		4	SCREW M6S ISO 4017 M4X16 A470	
450	312105-0368		6	SCREW M6S ISO 4017 M6X16 A480	
460	90110-0095		1	CONNECTOR 3 POLE + EARTH	
470	90277-0324		1	FILTER CARTRIDGE 050-11-A	
480	342921-0122		1	STRAIGHT COUPLING,EXT.THREADED 8/6-G1/4"	
490	90166-0013	MM	5000	TUBE 8 MM PA BLUE	
500	312105-0325		2	SCREW M6S ISO 4017 M5X10 A480	
510	90459-2080		1	CONN. BULKHEAD G1/4	
520	342940-0122		1	T-COUPLING,EXT.THREAD 8/6-R1/4"	
U70B4010	90458-2241		1	PRESSURE SWITCH 0,5-10 BAR ADJUSTABLE	
U70B4080	90459-6215		1	FLOW SWITCH BFS-10-N-G1/4-MS-NO-ST	
U70B4290	90600-1154		1	FLOW METER,D-6230-HGB-BB-AV-99-0-N2/IP65	
U70K4230	90042-0171		1	SOLENOID VALVE TYPE 330 3/2 NC	
	90042-0466		*1*	*DIAPHRAGM 330.95.2 VITON*	
U70K4240	90042-0171		1	SOLENOID VALVE TYPE 330 3/2 NC	
	90042-0466		*1*	*DIAPHRAGM 330.95.2 VITON*	
U70P4223	90459-7344		1	PRESSURE GAUGE, MA-40-6-R1/4-EN	
U70T4330	90600-4354		1	PROP. PRESS. REG., VPPE-3-1/8-6-010	
U70V4232	90600-5548		1	FILTER, MS6-LFM-1/4-AUV	
U70V4233	90277-0323		1	FILTER HOUSING / ART.NO 95S6-1/4 S 5430	
U70W4232	315300-0004	MM	300	TUBE, 8 MM PE BLUE	
U70W4233	315300-0004	MM	220	TUBE, 8 MM PE BLUE	
U70W4234	315300-0004	MM	430	TUBE, 8 MM PE BLUE	
U70W4235	315300-0004	MM	390	TUBE, 8 MM PE BLUE	
U70W4236	315300-0004	MM	180	TUBE, 8 MM PE BLUE	
U70W4237	315300-0004	MM	340	TUBE, 8 MM PE BLUE	
U70W4238	315300-0004	MM	240	TUBE, 8 MM PE BLUE	
U70W4239	315300-0004	MM	215	TUBE, 8 MM PE BLUE	
U70W4330	90600-1768		1	ACTUATOR/SENSOR CABLE RKTS 5-298/5M	
U70W6008	90166-0013	MM	800	TUBE 8 MM PA BLUE	

Machine Type	Group Description	Used-In	Group Number	Page No

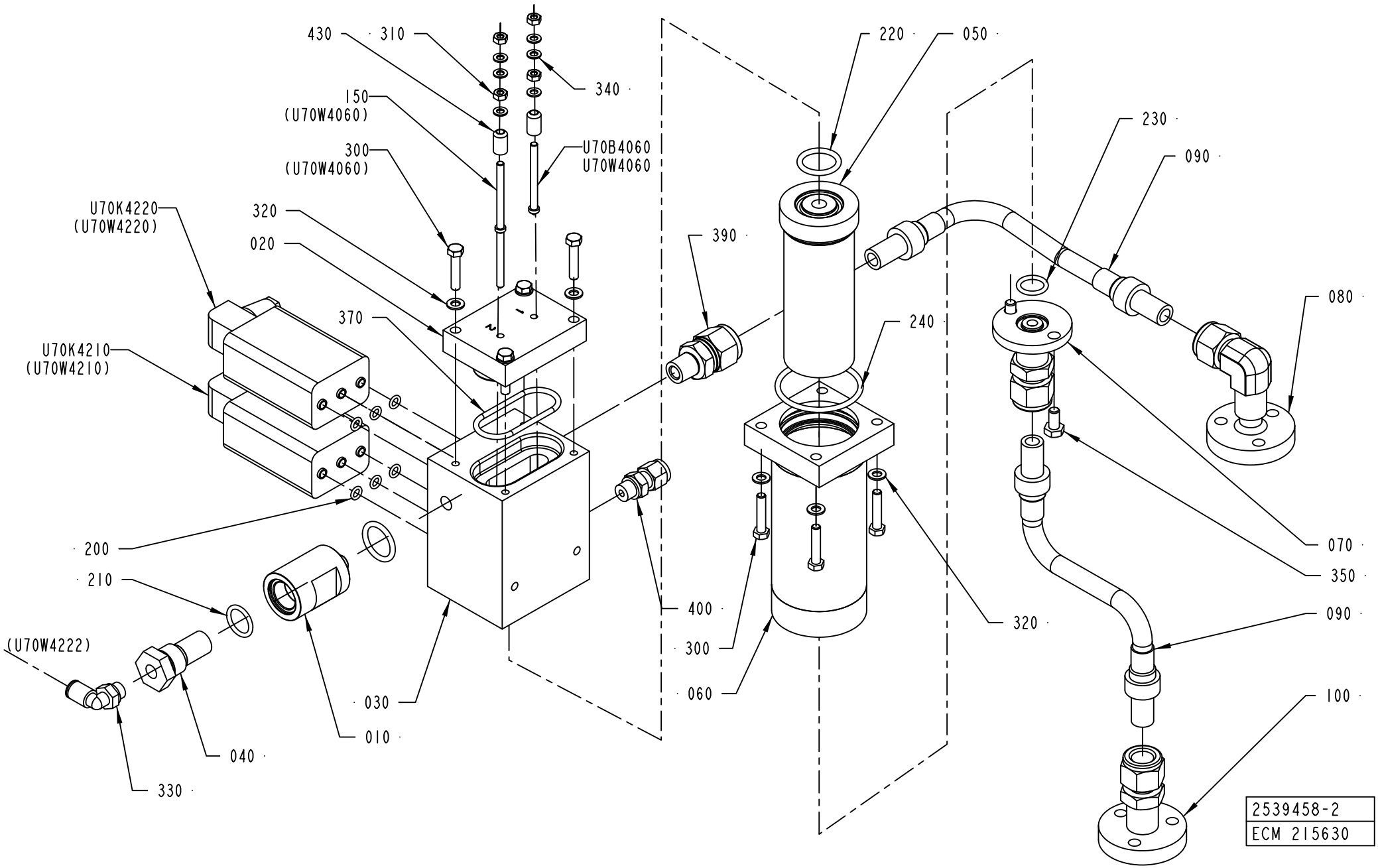
430
310
340
150
(U70W4060)
300
(U70W4060)
U70B4060
U70W4060
U70K4220
(U70W4220)
320
020
370
U70K4210
(U70W4210)
200
210
(U70W4222)
330
040
030
010
390
220
050
230
090
080
240
070
350
400
300
060
320
090
100
2539458-2
ECM 215630

ECM: 348489 - 20090402
Group number: 2539458-0200
Assembly Drawing: 2539458-2_1_AA

Pos	Part No	UN	Qty	Description	Page No
-					
010	1519486-0000		1	FILTER HOUSING	
020	2553167-0000		1	LID	
030	2512939-0000		1	DISTRIBUTOR BLOCK	
040	450833-0000		1	FILTER	
050	554141-0000		1	FILTER	
060	554142-0000		1	FILTER HOUSING	
070	2657865-0000		1	PIPE CONNECTION	
080	2657863-0000		1	PIPE CONNECTION	
090	90459-4151		2	HOSE ASSEMBLY 12,7 X 304,8 MM	
100	2657864-0000		1	PIPE CONNECTION	
150	2672973-0000		1	ELECTRODE	
200	927420-0001		6	O-RING 5.1X1.6 SILICONE	
210	927421-0004		1	O-RING 15.3X2.4 SILICONE	
220	927422-0001		2	2X3 SILICONE	
230	927421-0003		1	O-RING 13.3X2.4 SILICONE	
240	927422-0007		1	O-RING 44.2X3 SILICONE	
300	312105-0333		8	SCREW M6S ISO 4017 M5X25 A480	
310	312605-0312		4	HEXAGON NUT, M6M M4 A280	
320	315105-0146		8	WASHER BRB 5,3X10 RFR	
330	350002-0006		1	PUSH-IN L-FITTING QSL-F-G1/8-6	
340	315105-0136		6	WASHER BRB 4,3X8 RFR	
350	312105-0366		2	SCREW M6S ISO 4017 M6X12 A480	
370	927422-0006		1	O-RING 42.2X3 SILICONE	
390	90459-4148		1	CONN. STR., 1/2"-1/4 ISO 7/1, EXT. THREA	
400	90459-1424		1	CONN. STR., 6-G1/8, EXT. THREAD	
430	2672974-0000		2	BUSHING	
U70B4060	2672972-0000		1	BOLT	
U70K4210	90042-0203		1	SOLENOID VALVE TYPE 331 3/2 NC	
U70K4220	90042-0203		1	SOLENOID VALVE TYPE 331 3/2 NC	
U70W4060	351150-0404	MM	5000	CABLE OLFLEX 4X0,75 MM2 LIGHT/GREY	

Pos	Part No	UN	Qty	Description	Page No

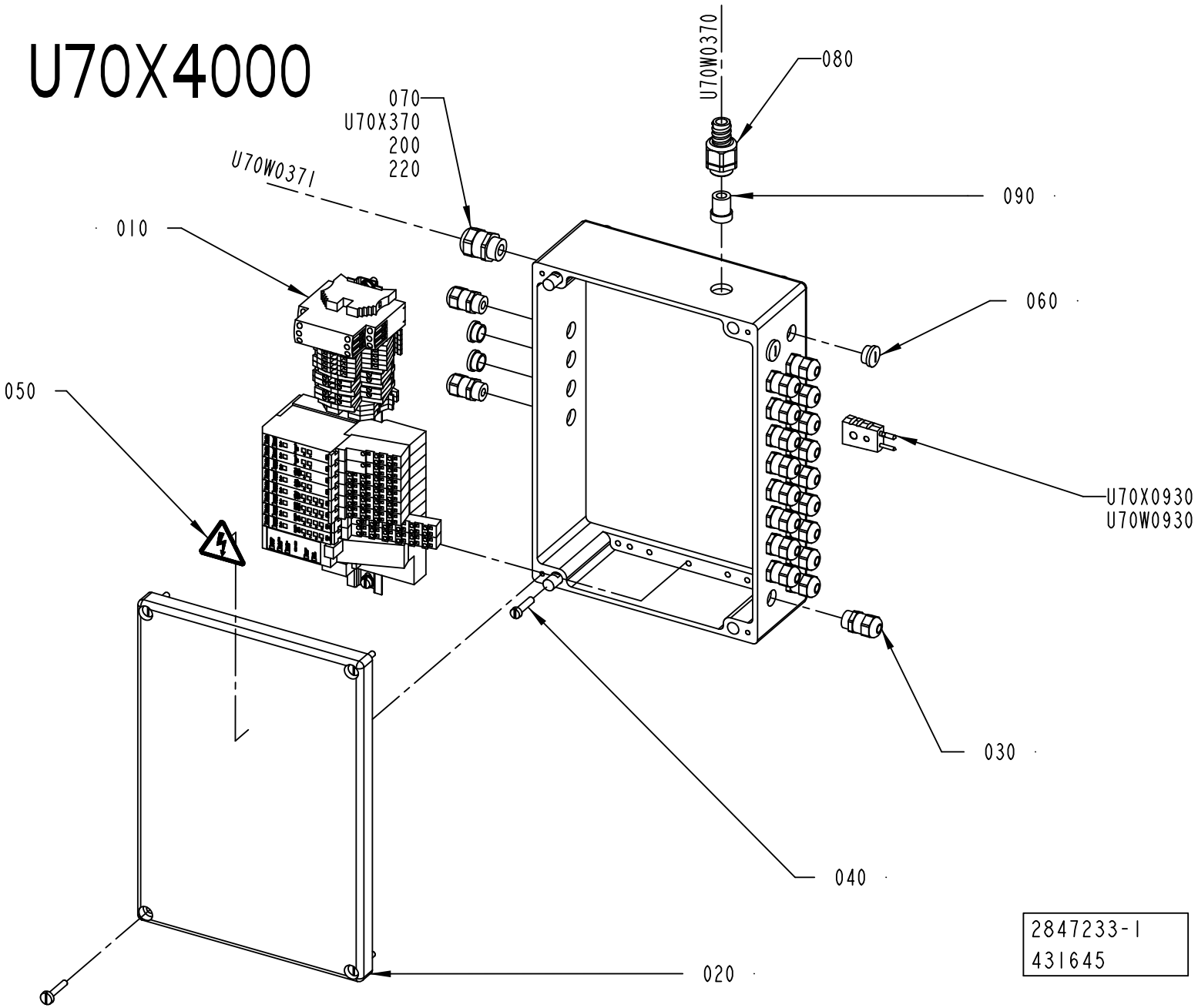
U70X4000
070
U70X370
200
220
U70W0371
U70W0370
080
090
060
010
050
U70X0930
U70W0930
030
040
020
2847233-1
431645

ECM: 461405 - 20101002
Group number: 2847233-0100
Assembly Drawing: 2847233-1_1_AC

Pos	Part No	UN	Qty	Description	Page No
ANSI					
050	359715-0100		1	WARNING SIGN ANSI (H), ELECTRIC SHOCK	
ISO					
050	359705-0015		1	WARNING SIGN ISO, RISK OF ELECTRIC SHOCK	
Common Parts					
010	2851533-0100		1	TERMINAL BLOCK	**1-213**
020	2847234-0000		1	CONNECTION BOX	
030	90458-0306		20	CABLE GLAND, M16X1,5, NO.5311 1010	
040	312122-0372		4	SCREW ISO 1207 M6X25 NI PL BRASS	
060	90458-1307		4	BLIND PLUG CIRCULAR, M16X1,5 514GFK/216	
070	90458-0307		1	CABLE GLAND, M20X1,5, NO.5311 1020	
080	90458-0429		1	HOSE GLAND W/O INSERT M20 EXTENDED	
090	90600-0976		1	INSERT, SINGLE HOLE, HI.TEMP, EK153I9	
200	90458-0307		1	CABLE GLAND, M20X1,5, NO.5311 1020	
220	90459-6632		1	HOOD 6 B TOP ENTRY, 19 30 006 1440	
A01W8740	90459-2530	M	6	DEVICENET CABLE THIN	
U70W0371	351150-0417	MM	6000	CABLE OLFLEX 3X2,5 MM2 LIGHT/GREY	
U70W0930	90220-0034	MM	7000	THERMOCABLE TEX/SITW-20F-KX 2X0,5MM2	
U70W4001	351150-0406	MM	6000	CABLE OLFLEX 7X0,75 MM2 LIGHT/GREY	
U70W4010	351150-0403	MM	2300	CABLE OLFLEX 3X0,75 MM2 LIGHT/GREY	
U70W4060	351150-0404	MM	1400	CABLE OLFLEX 4X0,75 MM2 LIGHT/GREY	
U70W4080	351150-0403	MM	1300	CABLE OLFLEX 3X0,75 MM2 LIGHT/GREY	
U70W4210	351150-0403	MM	1100	CABLE OLFLEX 3X0,75 MM2 LIGHT/GREY	
U70W4220	351150-0403	MM	1200	CABLE OLFLEX 3X0,75 MM2 LIGHT/GREY	
U70W4230	351150-0403	MM	1300	CABLE OLFLEX 3X0,75 MM2 LIGHT/GREY	
U70W4240	351150-0403	MM	2300	CABLE OLFLEX 3X0,75 MM2 LIGHT/GREY	
U70W4290	90220-0165	MM	1300	SCR. CABLE 5X0,34MM2	
U70W4330	90220-0165	MM	1000	SCR. CABLE 5X0,34MM2	
U70W4350	90220-0034	MM	1400	THERMOCABLE TEX/SITW-20F-KX 2X0,5MM2	
U70W4360	90220-0034	MM	2200	THERMOCABLE TEX/SITW-20F-KX 2X0,5MM2	
U70X0370	90110-0052		1	MALE INSERT HAN 6E 09 33 006 2601	
U70X0930	90326-0022		1	PLUG, MALE YELLOW CR-AL	

Pos	Part No	UN	Qty	Description	Page No

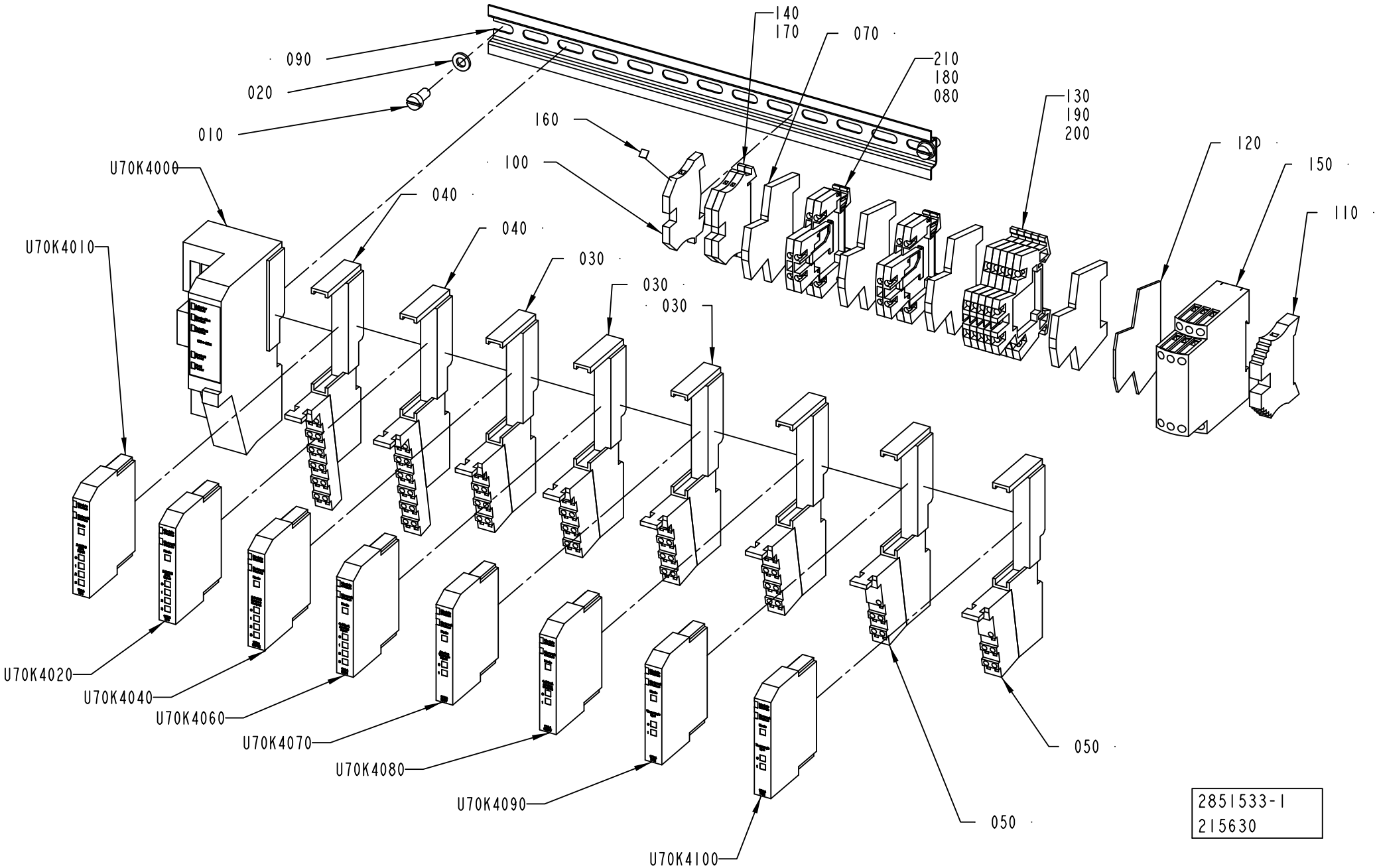
140
170
070
210
180
080
130
190
200
120
150
110
090
020
010
160
100
040
040
030
030
030
U70K4000
U70K4010
U70K4020
U70K4040
U70K4060
U70K4070
U70K4080
U70K4090
U70K4100
050
050
2851533-1
215630

ECM: 317697 - 20070713
Group number: 2851533-0100
Assembly Drawing: 2851533-1_1_AA

Pos	Part No	UN	Qty	Description	Page No
-					
010	312125-0366		2	SCREW ISO 1207 M6X12 A4	
020	315105-0153		2	WASHER BRB 6,4X12 RFR	
030	90459-2526		4	REMOTE I/O BASE MODULE 8 POINTS, 1734-TB	
040	90459-2527		2	REMOTE I/O BASE MODULE 12 POINTS	
050	90459-2528		2	REMOTE I/O BASE MODULE FOR THERMOCOUPLE	
070	353024-0212		4	EARTH TERMINAL WDK 2,5 PE	
080	353034-0030		2	BRIDGE CONNECTOR WQV 2,5/10	
090	2847235-0000		1	RAIL	
100	353024-0204		1	EARTH TERMINAL WPE 2,5	
110	353031-0203		1	END SUPPORT, WEW 35/2	
120	90077-0114		1	END PLATE, WAP/WDK 2,5	
130	90077-0113		5	TERMINAL BLOCK WDK 2.5	
140	353021-0212		2	FEED THROUGH TERMINAL, 10200.0	
150	90459-2742		1	LEVEL CONTROL RELAY, RM4-LA32MW	
160	359011-0819		1	MARKING, EARTH, DEK 5 GW ERDE I.KR.	
170	359011-0807		1	MARKING, DEK 5 FW 1-50	
180	359011-0808		1	MARKING, DEK 5FW 51-100	
190	359011-0809		1	MARKING, DEK 5 FW 101-150	
200	359011-0810		1	MARKING, DEK 5 FW 151-200	
210	90457-0049		4	TERMINAL BLOCK WDK 2.5V, 102230	
U70K4000	90459-2494		1	DEVICENET I/O ADAPTER MODULE, 1734-ADN	
U70K4010	90459-2503		1	DIGITAL INPUT 4 PTS SINK, 1734-IB4	
U70K4020	90459-2503		1	DIGITAL INPUT 4 PTS SINK, 1734-IB4	
U70K4040	90459-2505		1	DIGITAL OUTPUT 4 PTS, 1734-OB4E	
U70K4060	90459-2509		1	REMOTE I/O ANALOG INPUT CURRENT 2 PTS	
U70K4070	90459-2508		1	REMOTE I/O ANALOG INPUT VOLTAGE 2 PTS	
U70K4080	90459-2510		1	ANALOG OUTPUT VOLTAGE MODULE 2 PTS	
U70K4090	90459-2512		1	REMOTE I/O THERMOCOUPLE INPUT 2 PTS	
U70K4100	90459-2512		1	REMOTE I/O THERMOCOUPLE INPUT 2 PTS	

Pos	Part No	UN	Qty	Description	Page No

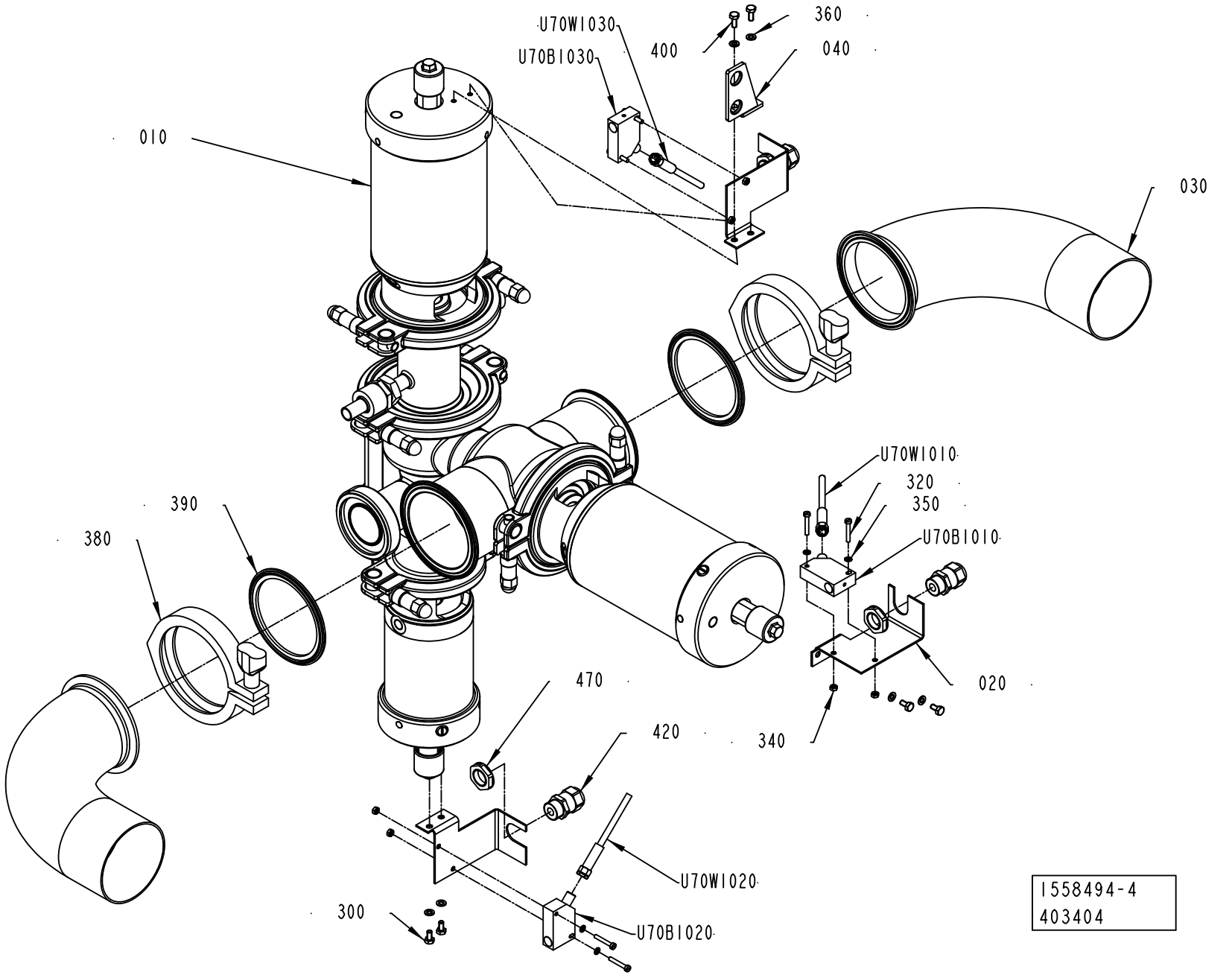
U70W1030
U70B1030
400
360
040
010
030
U70W1010
320
350
U70B1010
390
380
020
340
470
420
U70W1020
300
U70B1020
1558494-4
403404

ECM: 405539 - 20091001
Group number: 1558494-0400
Assembly Drawing: 1558494-4_1_AA

Pos	Part No	UN	Qty	Description	Page No
2"					
030	2833039-0000		2	PIPE	
380	342840-0105		2	CLAMPING PIECE, GH13LAH2304NO79612011202	
390	342850-0305		2	GASKET 47,8X62,6X5,2 MM 2" FDA 3-A	
3"					
030	2826436-0000		2	PIPE	
380	342840-0107		2	CLAMP, 76,2 MM 3-A PCS+PMCS	
390	342850-0307		2	GASKET 72,9X89,6X5,2 MM 3" FDA 3-A	
Common Parts					
010	2547410-0200		1	PRODUCT VALVE	**1-217**
020	1037093-0000		3	SENSOR BRACKET	
040	2559095-0000		1	BRACKET	
300	312105-0287		4	SCREW M6S ISO 4017 M4X8 A470	
320	312125-0230		6	SCREW ISO 1207 M3X20 A4	
340	312605-0310		6	HEXAGON NUT, M6M M3 A280	
350	315105-0124		6	WASHER BRB 3,2X6 RFR	
360	315105-0136		6	WASHER BRB 4,3X8 RFR	
400	312105-0289		2	SCREW M6S H4X10 A4 70 ISO4017/DIN933	
420	90458-0306		3	CABLE GLAND, M16X1,5, NO.5311 1010	
470	90458-0322		3	UT, M16X1,5	
U70B1010	90459-2409		1	INDUCTIVE SENSOR IN5230	
U70B1020	90459-2409		1	INDUCTIVE SENSOR IN5230	
U70B1030	90459-2409		1	INDUCTIVE SENSOR IN5230	
U70W1010	351301-0100		1	ACTUATOR/SENSOR CABLE PRKMV 3-06/10M	
U70W1020	351301-0100		1	ACTUATOR/SENSOR CABLE PRKMV 3-06/10M	
U70W1030	351301-0100		1	ACTUATOR/SENSOR CABLE PRKMV 3-06/10M	

Pos	Part No	UN	Qty	Description	Page No

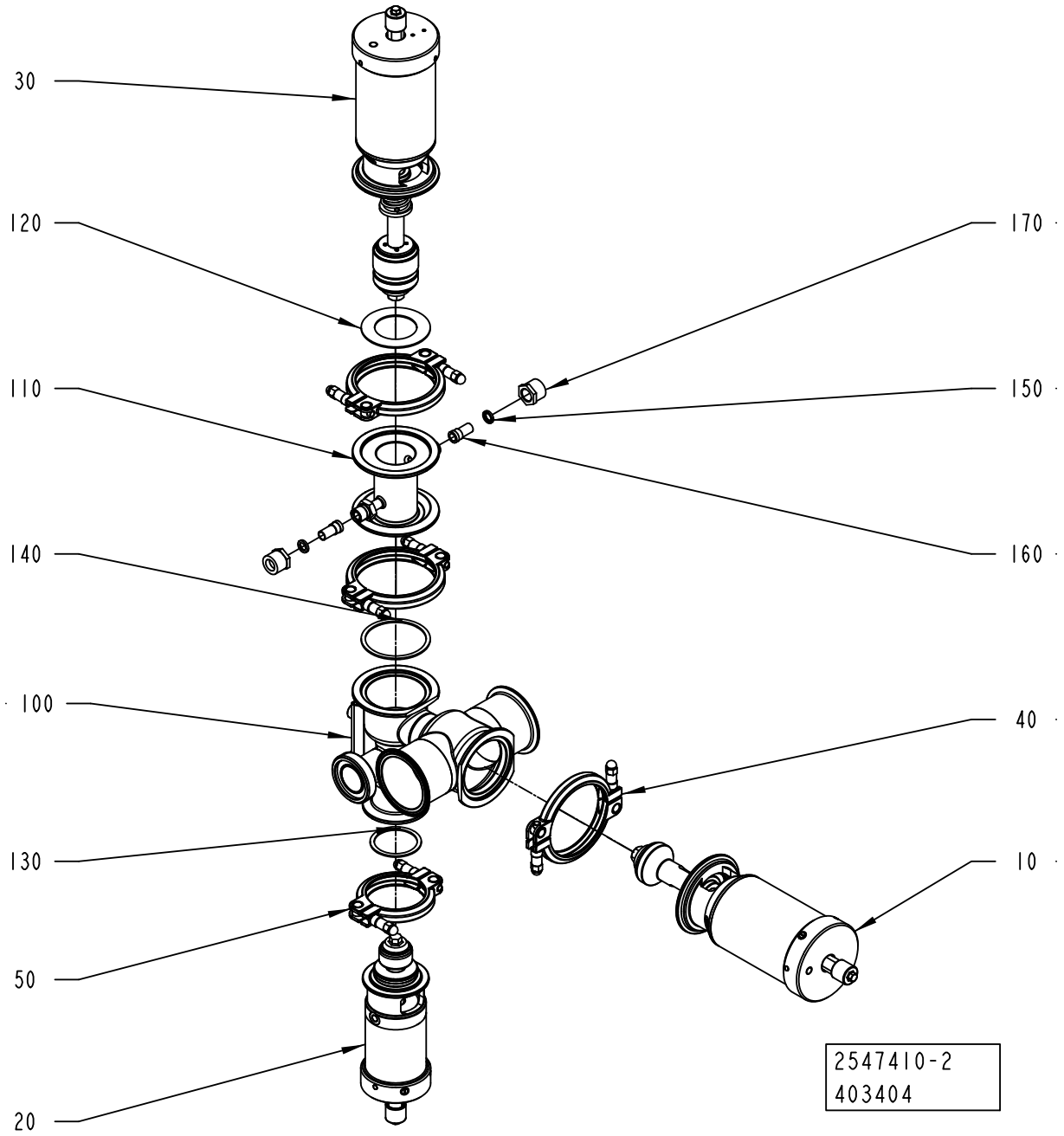
30
120
110
140
100
130
50
20
170
150
160
40
10
2547410-2
403404

ECM: 405541 - 20091001
Group number: 2547410-0200
Assembly Drawing: 2547410-2_1_AA

Pos	Part No	UN	Qty	Description	Page No
2"					
100	3020525-0000		1	BODY	
3"					
100	3020537-0000		1	BODY	
Common Parts					
010	576436-0100		1	A-CYLINDER	**1-219**
020	576438-0100		1	B-CYLINDER	**1-221**
030	576437-0100		1	C-CYLINDER	**1-223**
040	541163-0200		3	CLAMP RING	**1-225**
050	541164-0200		1	CLAMP RING	**1-227**
110	567018-0000		1	STEAM HOUSE	
120	539212-0000		1	GASKET	
130	90207-0365		1	GASKET 53X63X1,8 MM 2,5" FDA 3-A	
140	90207-0363		1	GASKET 75X85X1,8 MM 3" FDA 3-A	
150	90091-0266		2	SEAL RING 10,4X16,3X2,5 MM	
160	90030-0336		2	CONN. STRAIGHT, 316L-12M-BVCO-3	
170	90030-0338		2	NUT, PIPE & CONNECTORS, SS-8-BVCO-4	

Pos	Part No	UN	Qty	Description	Page No

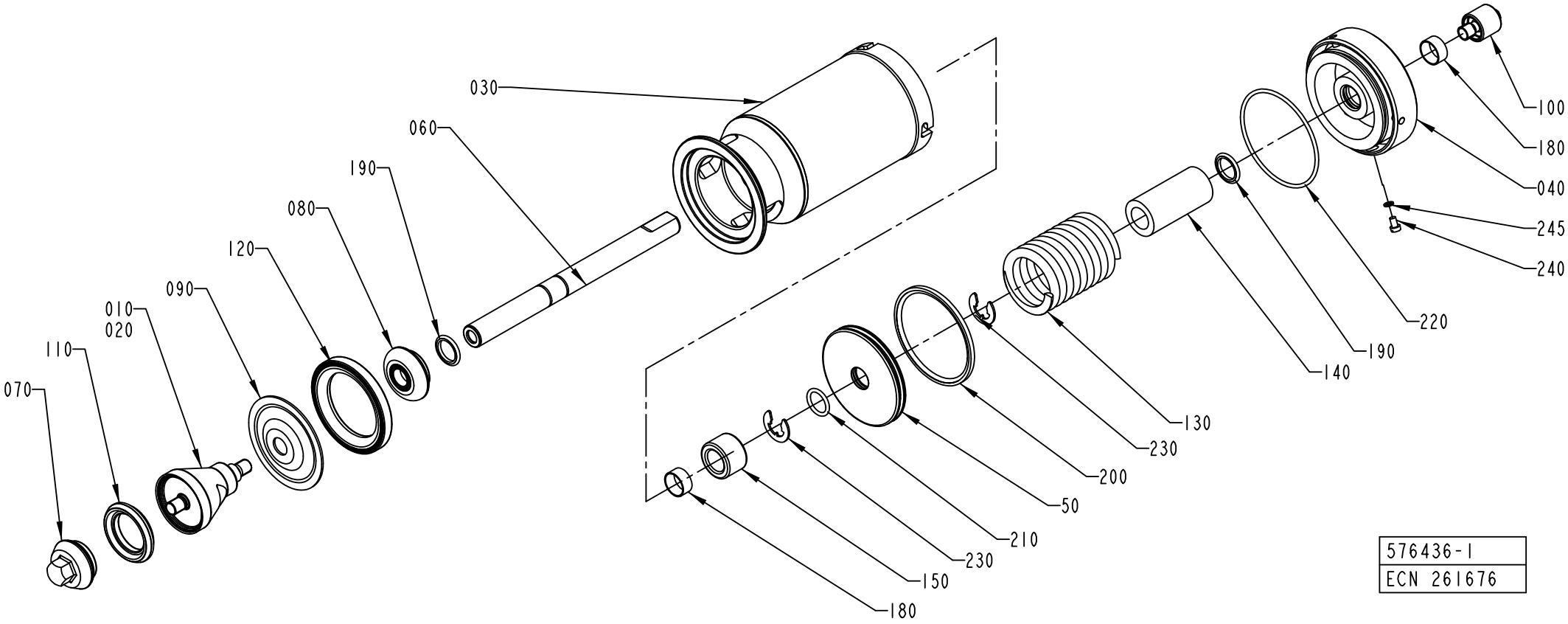
030
060
190
080
120
090
010
020
110
070
100
180
040
245
240
220
190
140
130
230
200
50
210
230
150
180
576436-1
ECN 261676

ECM: 348480 - 20090402
Group number: 576436-0100
Assembly Drawing: 576436-1_1_AC

Pos	Part No	UN	Qty	Description	Page No
2" HVA					
010	2833037-0000		1	SEAL RING	
070	2898203-0000		1	VALVE CONE	
2" NOHVA					
010	2833037-0000		1	SEAL RING	
070	2826442-0000		1	VALVE CONE	
3" NOHVA					
010	530595-0000		1	SEAL RING HOLDER	
070	2826442-0000		1	VALVE CONE	
Common Parts					
030	576439-0000		1	CYLINDER HOUSING	
040	576440-0000		1	END SECTION	
050	576441-0000		1	PISTON	
060	576446-0000		1	PISTON ROD	
080	541166-0000		1	WASHER	
090	533169-0000		1	DIAPHRAGM	
100	553607-0000		1	SLEEVE	
110	2826441-0000		1	SEAL RING	
120	440655-0000		1	RING	
130	440663-0000		1	COMPRESSION SPRING	
140	576448-0000		1	SPACER	
150	576449-0000		1	SPACER	
180	90091-0238		2	WEAR RING 20X22X10 MM	
190	90091-0237		2	ROD SEAL GLYD RING 20X27,5X3 MM	
200	90091-0336		1	PISTON SEAL GLYD RING 79X90X4,2 MM	
210	315204-0215		1	O-RING 19,2X3 MM	
220	315202-0308		1	O-RING 84,5X3 MM	
230	315754-0113		2	RETAINING RING SHAFT DIN 6799 15	
240	312125-0323		1	SCREW ISO 1207 M5X8 A4	
245	315233-0101		1	WASHER CAPTIVE SEALING M5(NEW315239-101)	

Pos	Part No	UN	Qty	Description	Page No

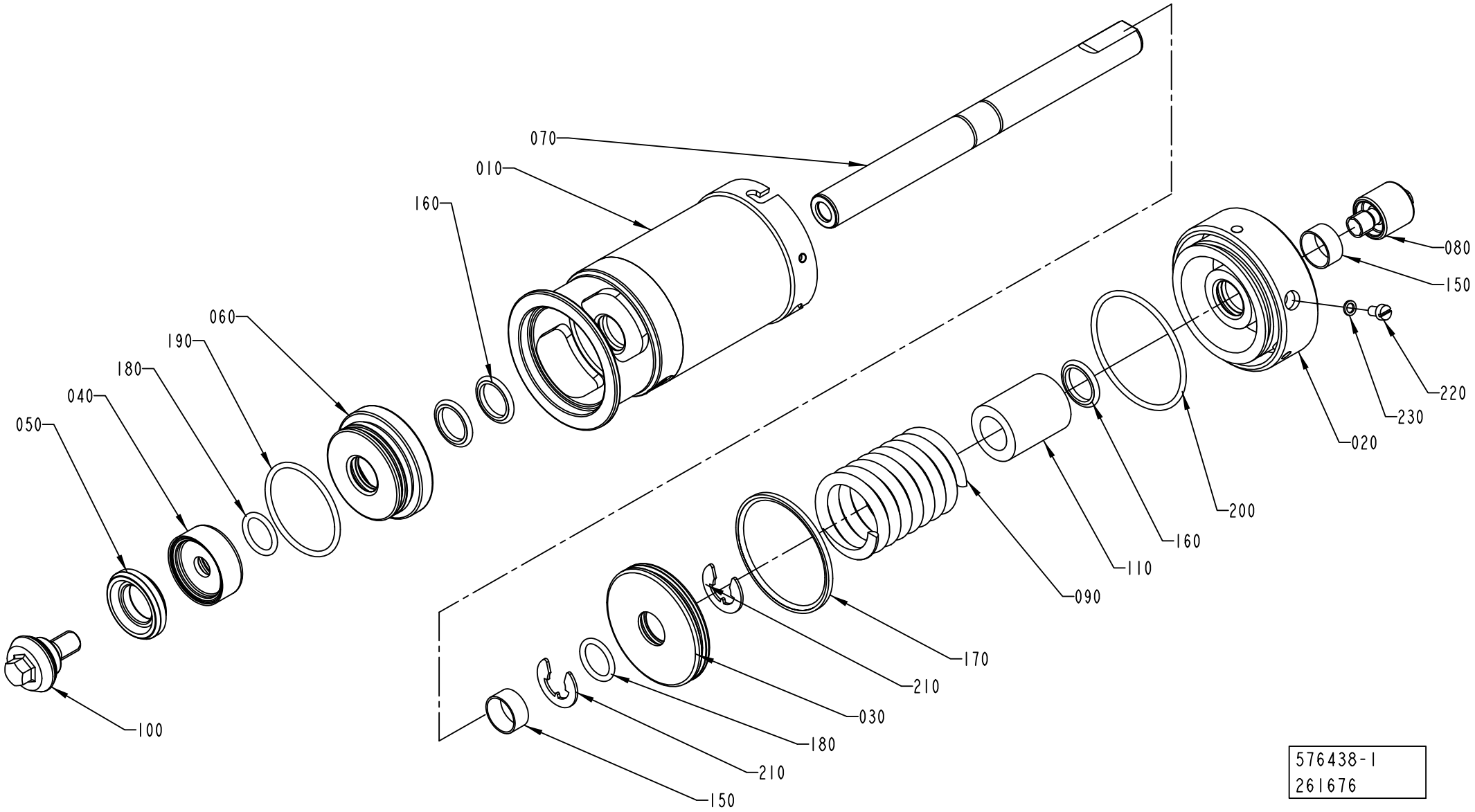
070
010
160
060
190
180
040
050
080
150
220
230
020
200
160
110
090
170
210
030
180
210
150
100
576438-1
261676

ECM: 456625 - 20110101
Group number: 576438-0100
Assembly Drawing: 576438-1_1_AC

Pos	Part No	UN	Qty	Description	Page No
-					
010	576443-0000		1	CYLINDER HOUSING	
020	576444-0000		1	END SECTION	
030	576445-0000		1	PISTON	
040	530587-0000		1	WASHER	
050	2826440-0000		1	SEAL RING	
060	556133-0000		1	SEALING WASHER	
070	576447-0000		1	PISTON ROD	
080	553607-0000		1	SLEEVE	
090	440662-0000		1	COMPRESSION SPRING	
100	2826439-0000		1	VALVE CONE	
110	576451-0000		1	SPACER	
150	90091-0238		2	WEAR RING 20X22X10 MM	
160	90091-0237		3	ROD SEAL GLYD RING 20X27,5X3 MM	
170	90091-0335		1	PISTON SEAL GLYD RING 62,5X70X3,2 MM	
180	90602-2911		2	O-RING 19,2X3 MM FDA, 3-A	
190	90602-2912		1	O-RING 49,5X3 MM FDA, 3-A	
200	315202-0304		1	O-RING 64,5X3 MM	
210	315754-0113		2	RETAINING RING SHAFT DIN 6799 15	
220	312125-0323		1	SCREW ISO 1207 M5X8 A4	
230	315239-0101		1	NYLON WASHER M5, M5RRP	

Pos	Part No	UN	Qty	Description	Page No

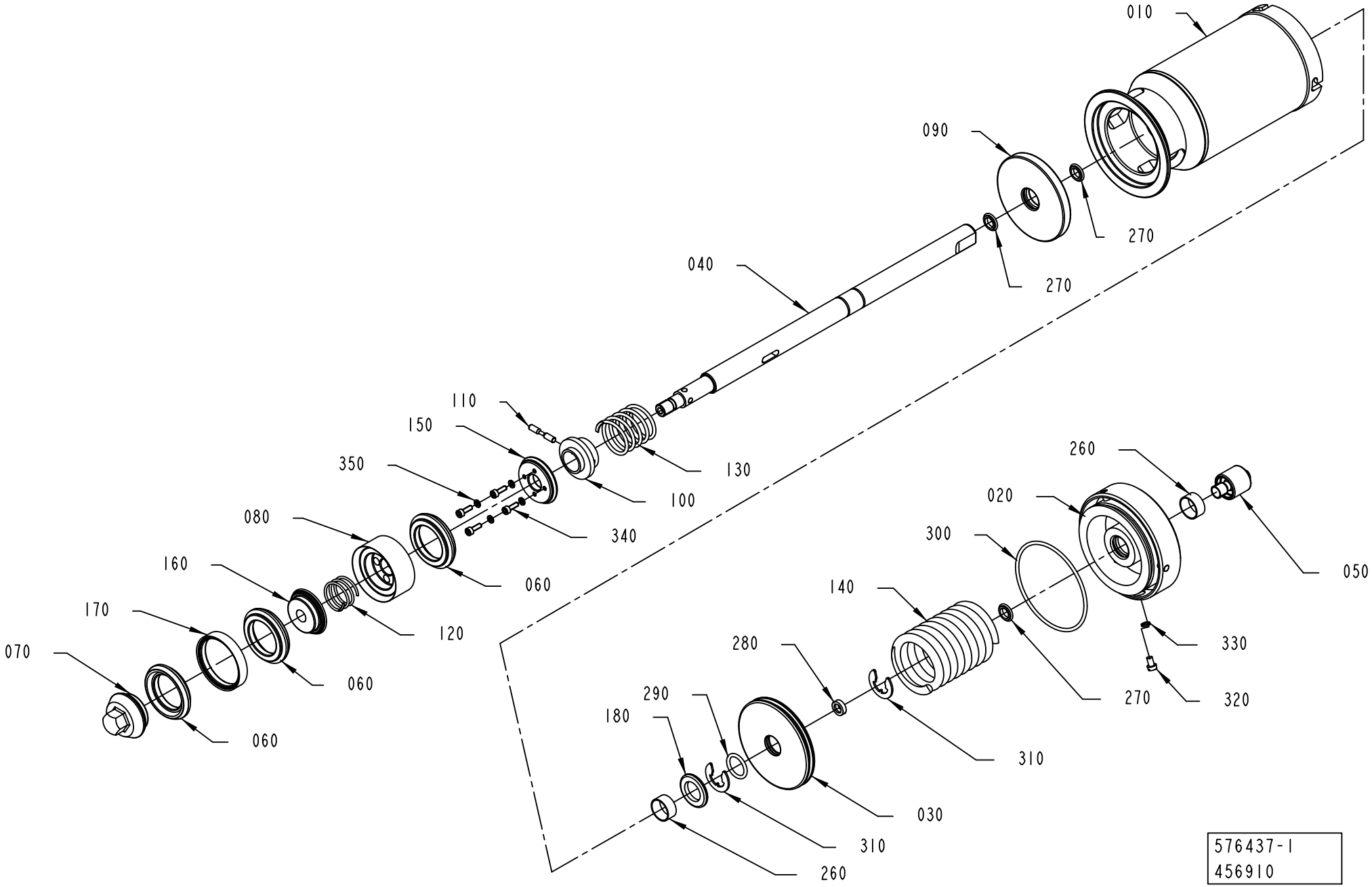
010
090
270
270
040
110
150
350
080
160
170
070
060
060
060
120
130
100
340
260
020
300
140
280
290
180
050
330
320
270
310
030
310
260
576437-1
456910

ECM: 460041 - 20101001
Group number: 576437-0100
Assembly Drawing: 576437-1_1_AD

Pos	Part No	UN	Qty	Description	Page No
-					
010	576439-0000		1	CYLINDER HOUSING	
020	576440-0000		1	END SECTION	
030	576441-0000		1	PISTON	
040	576442-0000		1	PISTON ROD	
050	553607-0000		1	SLEEVE	
060	2826441-0000		3	SEAL RING	
070	2826442-0000		1	VALVE CONE	
080	530591-0000		1	HOLDER	
090	555458-0000		1	SEALING WASHER	
100	3112808-0000		1	WASHER	
110	440659-0000		1	CYLINDRICAL PIN	
120	440660-0000		1	COMPRESSION SPRING	
130	440661-0000		1	COMPRESSION SPRING	
140	440663-0000		1	COMPRESSION SPRING	
150	530597-0000		1	WASHER	
160	530598-0000		1	WASHER	
170	530599-0000		2	RING	
180	576450-0000		1	SPACER	
260	90091-0238		2	WEAR RING 20X22X10 MM	
270	90091-0237		3	ROD SEAL GLYD RING 20X27,5X3 MM	
280	90091-0336		1	PISTON SEAL GLYD RING 79X90X4,2 MM	
290	315204-0215		1	O-RING 19,2X3 MM	
300	315202-0308		1	O-RING 84,5X3 MM	
310	315754-0113		2	RETAINING RING SHAFT DIN 6799 15	
320	312125-0323		1	SCREW ISO 1207 M5X8 A4	
330	315239-0101		1	NYLON WASHER M5, M5RRP	
340	312115-0291		4	SCREW ISO4762 M4X12 A4 80	
350	315402-0136		4	LOCK WASHER FBB 4,1	

Pos	Part No	UN	Qty	Description	Page No

CLAMP RING

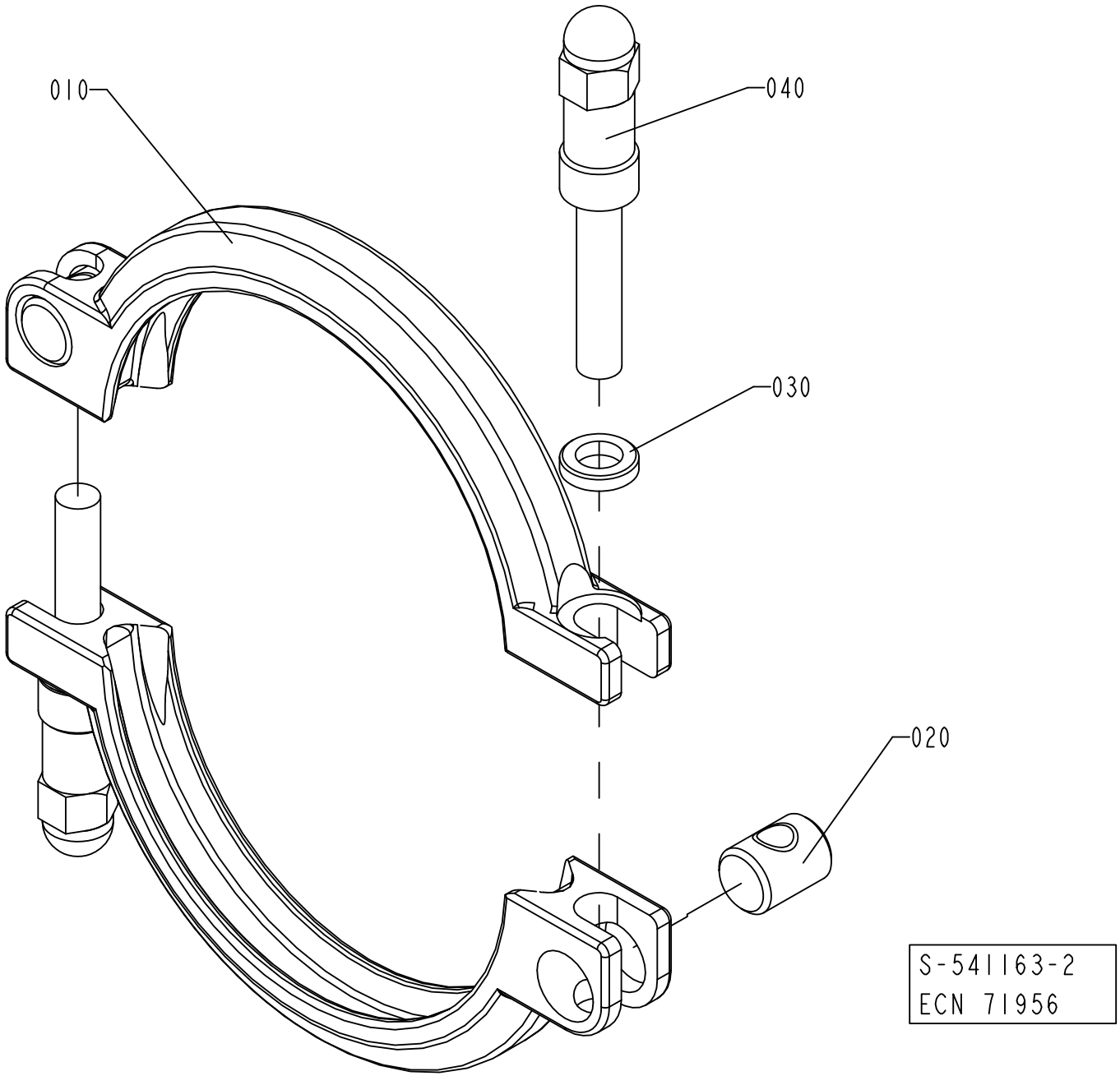

ECM: 343597 - 20080402
Group number: 541163-0200
Assembly Drawing: 541163-2_1_AB

Pos	Part No	UN	Qty	Description	Page No
-					
010	532117-0000		2	CLAMP RING	
020	497748-0000		2	PIN	
030	541165-0000		2	WASHER	
040	554162-0000		2	SCREW	

Pos	Part No	UN	Qty	Description	Page No

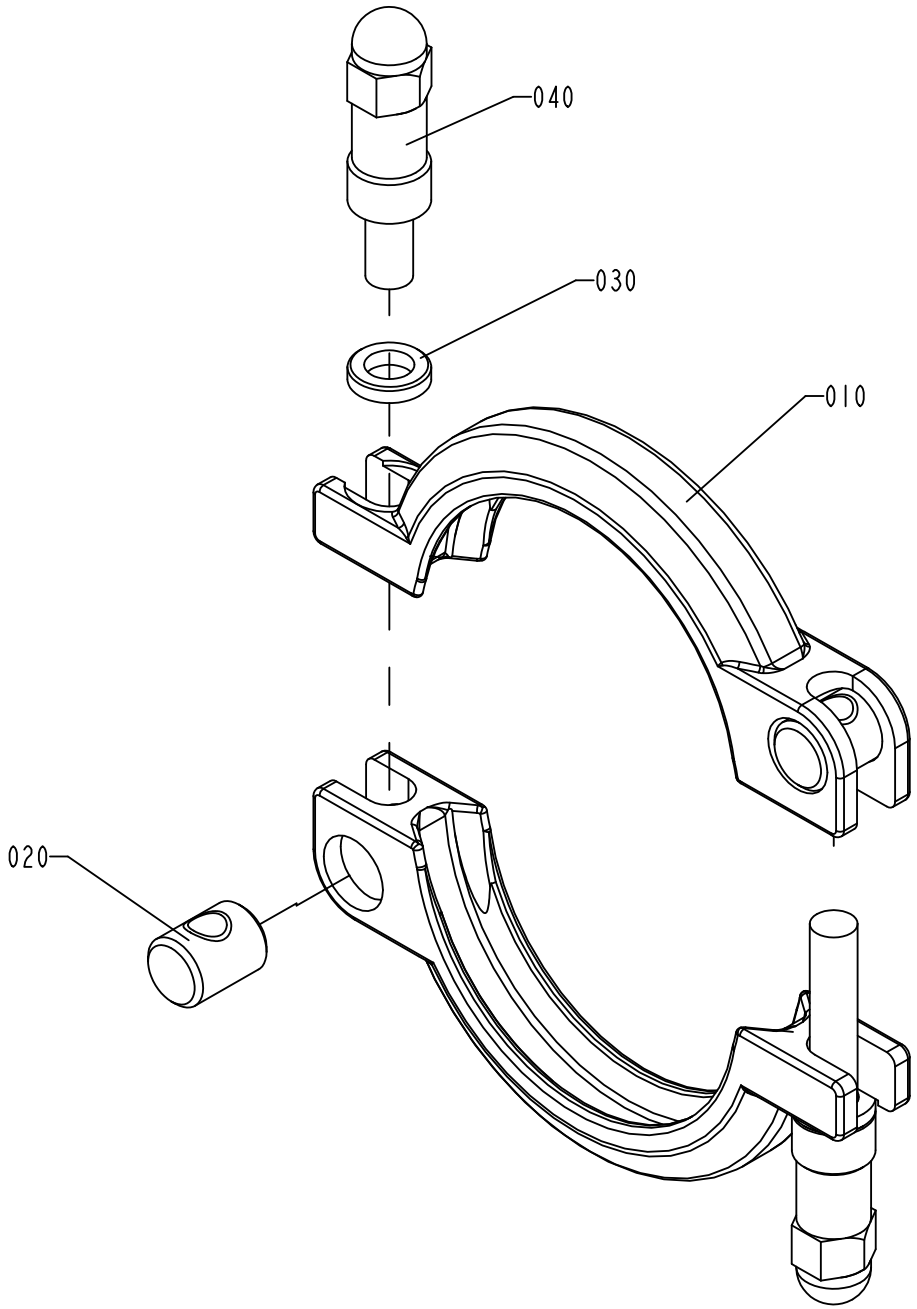

S-541164-2
ECN 71956

ECM: 343598 - 20080402
Group number: 541164-0200
Assembly Drawing: 541164-2_1_AB

Pos	Part No	UN	Qty	Description	Page No
-					
010	532118-0000		2	CLAMP RING	
020	497748-0000		2	PIN	
030	541165-0000		2	WASHER	
040	554162-0000		2	SCREW	

Pos	Part No	UN	Qty	Description	Page No

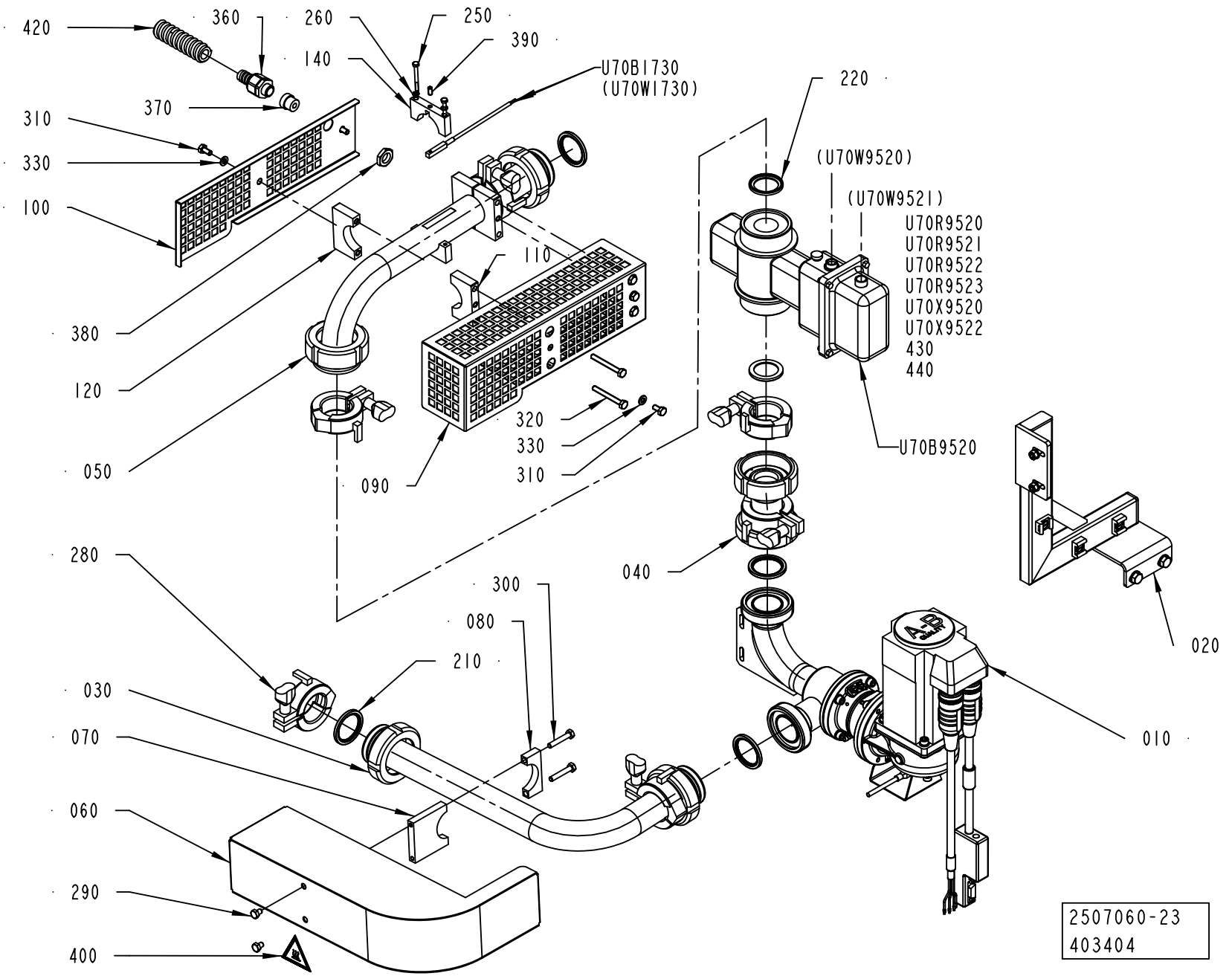
420
360
260
250
390
140
U70B1730
(U70W1730)
220
370
310
330
100
(U70W9520)
(U70W9521)
U70R9520
U70R9521
U70R9522
U70R9523
U70X9520
U70X9522
430
440
110
380
120
050
090
320
330
310
U70B9520
040
280
300
080
210
020
030
070
060
290
400
010
2507060-23
403404

ECM: 461959 - 20101002
Group number: 2507060-0500
Assembly Drawing: 2507060-23_1_AA

This list covers pages from 1-228 to 1-231

Pos	Part No	UN	Qty	Description	Page No
A3/SPEED HI ANSI (See drawing on page: 1-230)					
030	2632642-0400		1	NOZZLE UNIT	**1-233**
050	3041560-0000		1	PIPE	
090	2763976-0000		1	TOUCH GUARD	
100	2763977-0000		1	TOUCH GUARD	
110	2788620-0000		2	CLAMP	
120	2788621-0000		2	CLAMP	
150	2793377-0000		1	PIPE	
160	2793378-0000		1	PIPE	
170	2696117-0000		1	PIPE	
310	312105-0366		4	SCREW M6S ISO 4017 M6X12 A480	
320	312109-0380		4	SCREW M6S ISO 4017 M6X50 A480	
330	315105-0153		4	WASHER BRB 6,4X12 RFR	
400	90459-7458		1	WARNING SIGN ANSI (H), HOT SURFACE	
410	90600-0495		2	O-RING 4X2 MM	
420	90152-0050	MM	4600	SPIRAL CONDUIT, 20X13, UL 1313	
A3/SPEED HI ISO (See drawing on page: 1-230)					
030	2632642-0400		1	NOZZLE UNIT	**1-233**
050	3041560-0000		1	PIPE	
090	2763976-0000		1	TOUCH GUARD	
100	2763977-0000		1	TOUCH GUARD	
110	2788620-0000		2	CLAMP	
120	2788621-0000		2	CLAMP	
150	2793377-0000		1	PIPE	
160	2793378-0000		1	PIPE	
170	2696117-0000		1	PIPE	
310	312105-0366		4	SCREW M6S ISO 4017 M6X12 A480	
320	312109-0380		4	SCREW M6S ISO 4017 M6X50 A480	
330	315105-0153		4	WASHER BRB 6,4X12 RFR	
400	359705-0007		1	WARNING SIGN ISO, HOT SURFACE	
410	90600-0495		2	O-RING 4X2 MM	
420	90152-0050	MM	4600	SPIRAL CONDUIT, 20X13, UL 1313	
A3/SPEED NOHI ANSI (See drawing on page: 1-228)					
030	3041515-0000		1	PIPE	
050	3041560-0000		1	PIPE	
060	2874684-0000		1	TOUCH GUARD	
070	1140480-0000		1	CLAMP	
080	1041988-0000		1	CLAMP	
090	2763976-0000		1	TOUCH GUARD	
100	2763977-0000		1	TOUCH GUARD	
110	2788620-0000		2	CLAMP	
120	2788621-0000		2	CLAMP	
290	312105-0362		2	SCREW M6S ISO 4017 M6X8 A480	
300	312109-0376		2	SCREW M6S ISO 4017 M6X35 A480	
310	312105-0366		4	SCREW M6S ISO 4017 M6X12 A480	
320	312109-0380		4	SCREW M6S ISO 4017 M6X50 A480	
330	315105-0153		4	WASHER BRB 6,4X12 RFR	
400	90459-7458		1	WARNING SIGN ANSI (H), HOT SURFACE	
420	90152-0050	MM	4600	SPIRAL CONDUIT, 20X13, UL 1313	
A3/SPEED NOHI ISO (See drawing on page: 1-228)					
030	3041515-0000		1	PIPE	
050	3041560-0000		1	PIPE	
060	2874684-0000		1	TOUCH GUARD	
070	1140480-0000		1	CLAMP	
080	1041988-0000		1	CLAMP	
090	2763976-0000		1	TOUCH GUARD	
100	2763977-0000		1	TOUCH GUARD	
110	2788620-0000		2	CLAMP	
120	2788621-0000		2	CLAMP	
290	312105-0362		2	SCREW M6S ISO 4017 M6X8 A480	
300	312109-0376		2	SCREW M6S ISO 4017 M6X35 A480	
310	312105-0366		4	SCREW M6S ISO 4017 M6X12 A480	
320	312109-0380		4	SCREW M6S ISO 4017 M6X50 A480	
330	315105-0153		4	WASHER BRB 6,4X12 RFR	
400	359705-0007		1	WARNING SIGN ISO, HOT SURFACE	
420	90152-0050	MM	4600	SPIRAL CONDUIT, 20X13, UL 1313	
Common Parts					
010	2611454-0300		1	REGULATING VALVE	**1-235, 1-237**
020	2726570-0300		1	TUBE HOLDER	**1-239**
040	3040930-0000		1	ECCENTRIC	
140	2799892-0000		1	CLAMP	
210	90217-0348		4	GASKET 35,4X46,8X4 MM	
220	90459-4179		2	GASKET 30,5X42X4 MM FDA	
250	312105-0303		2	SCREW M6S ISO 4017 M4X40 A470	
260	315105-0136		2	WASHER BRB 4,3X8 RFR	
280	2552201-0000		6	LOCKING DEVICE	
360	353243-0001		1	HOSE GLAND W/O INSERT PG9 EXTENDED	
370	353249-0008		1	INSERT, SINGLE HOLE, EK 152/7	
380	90099-0104		1	NUT, PR 15,2 (PG9)	
390	90459-7283		1	SCREW HEX.SOCK.SET CONEPT.MS6SS M5X12 A2	
430	90110-0144		1	COVER D-SUB 9, 8655MH0911LF	
440	90110-0381		1	COVER, 310601-33 CYR24.4	
U70B1730	90600-5783		1	TEMP. SENSOR, 902522/10-386-1003-1-11-90	
U70B9520	90458-0806		1	FLOW METER, COPA-XF DF23-DN32	

Machine Type | Group Description | Used-In | Group Number | Page No

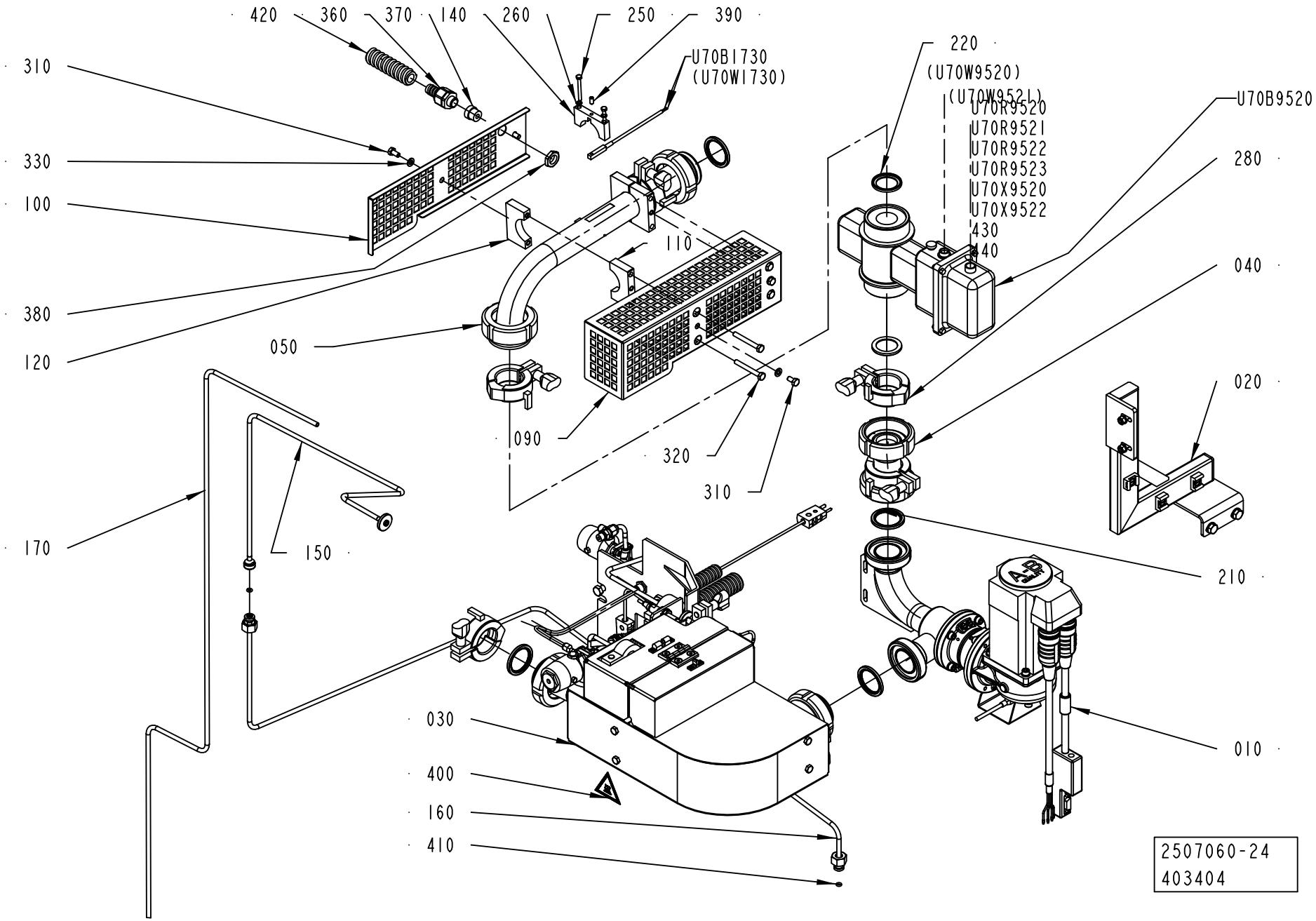
420
360
370
140
260
250
390
310
U70B1730
(U70W1730)
220
(U70W9520)
(U70W952I)
U70R9520
U70R952I
U70R9522
U70R9523
U70X9520
U70X9522
430
440
U70B9520
280
330
100
110
040
380
050
120
020
090
320
310
170
150
210
030
400
160
410
010
2507060-24
403404

ECM: 461959 - 20101002
Group number: 2507060-0500
Assembly Drawing: 2507060-24_1_AA

This list covers pages from 1-228 to 1-231

Pos	Part No	UN	Qty	Description	Page No
Common Parts (Cont'd)					
U70R9520	90121-0132		1	RESISTANCE FIXED, 0,51 KOHM, 0,25 W	
U70R9521	90121-0132		1	RESISTANCE FIXED, 0,51 KOHM, 0,25 W	
U70R9522	90459-1297		1	RESISTANCE FIXED, 120 OHM, 0,25 W	
U70R9523	90459-1297		1	RESISTANCE FIXED, 120 OHM, 0,25 W	
U70W9521	90220-0091	M	10	PAIR TWISTED CABLE 2X2X0,25MM2	
U70X9520	90459-2106		1	CABLE CONNECTOR, C091 31D004 100 2	
U70X9522	90110-0147		1	PLUG D-SUB 9 FEMALE, DE09S064TLF	

Pos	Part No	UN	Qty	Description	Page No

NOZZLE UNIT

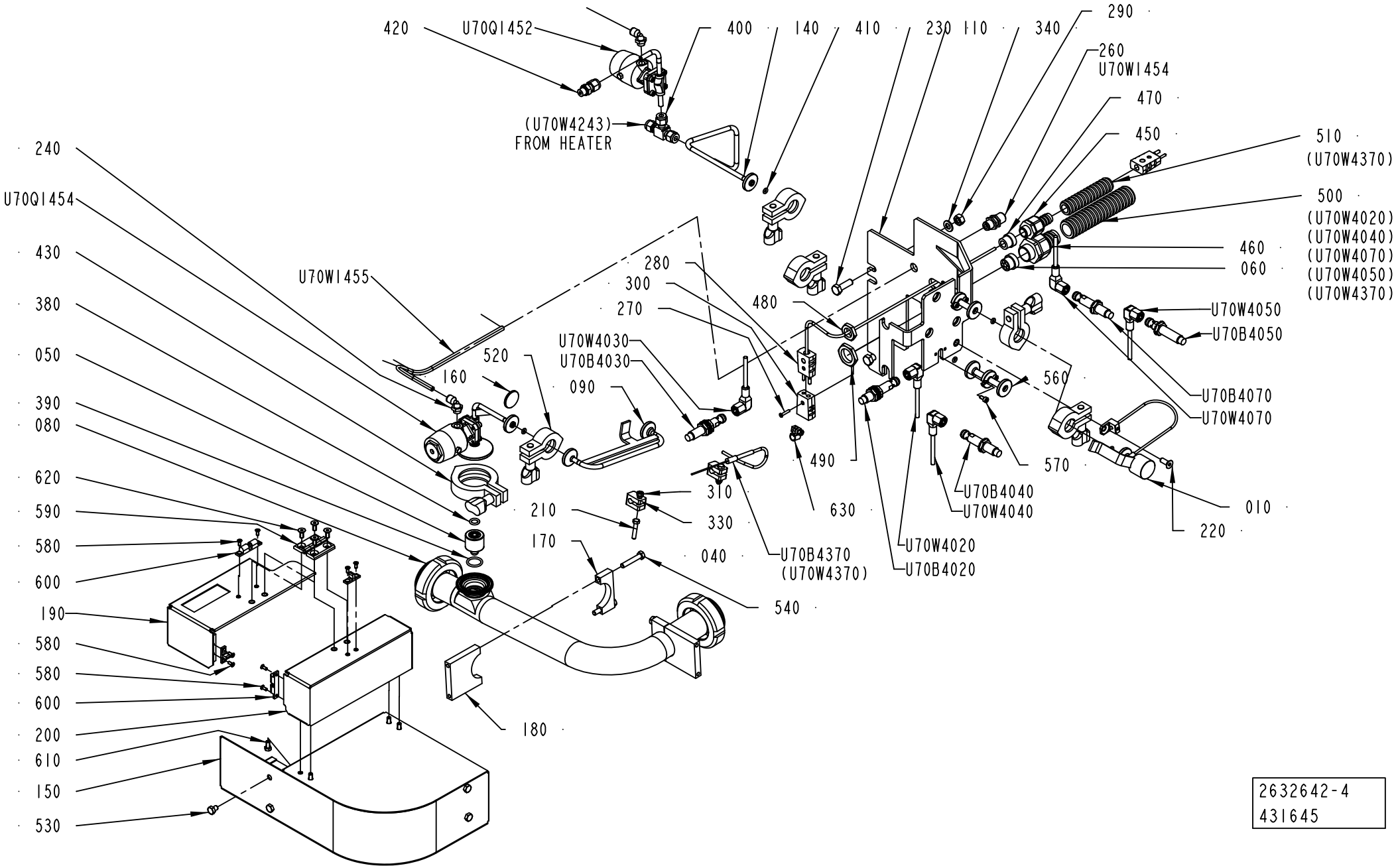

2632642-4
431645

ECM: 438003 - 20100701
Group number: 2632642-0400
Assembly Drawing: 2632642-4_1_AB

Pos	Part No	UN	Qty	Description	Page No
-					
010	2696109-0000		1	PLUG	
040	978440-0000		2	CRAMP	
050	1523154-0003		1	SPRAY NOZZLE	
050	1523154-0004		1	SPRAY NOZZLE	
050	1523154-0005		1	SPRAY NOZZLE	
050	1523154-0006		1	SPRAY NOZZLE	
060	2559051-0000		1	INSERT	
080	3040927-0000		1	PIPE	
090	2715602-0000		1	PIPE	
110	2696106-0000		1	BRACKET	
120	2696112-0000		1	VALVE BODY	
	90600-0500		*1*	*DIAPHRAGM VALVE, 650 4D 0405A10T1 CF02*	
	90600-0491		*1*	*ACTUATOR, 9650-0089-Z-I-OTI*	
	90600-0493		*1*	*DIAPHRAGM 3A, 600-8M-5AD*	
130	2696111-0000		1	VALVE BODY	
	90600-0500		*1*	*DIAPHRAGM VALVE, 650 4D 0405A10T1 CF02*	
	90600-0491		*1*	*ACTUATOR, 9650-0089-Z-I-OTI*	
	90600-0493		*1*	*DIAPHRAGM 3A, 600-8M-5AD*	
140	2696108-0000		1	PIPE	
150	2946918-0000		1	TOUCH GUARD	
160	90600-0614		1	BLANK PLUG, 16AMP-316-1/2"-3/4"-AR	
170	1041988-0000		2	CLAMP	
180	1140480-0000		2	CLAMP	
190	2946892-0000		1	COVER	
200	2946893-0000		1	COVER	
210	312105-0333		2	SCREW M6S ISO 4017 M5X25 A480	
220	312155-0368		1	SCREW DIN 7991 MF6S M6X16 A4 70	
230	312105-0453		2	SCREW M6S ISO 4017 M8X25 A480	
240	90458-2956		2	ELBOW PIPE JOINT, EXT.THREAD, D=6MM-G1/8	
260	342768-0102		1	BULKHEAD CONNECTOR, 6 MM	
270	312145-0228		1	SCREW ISO 2009 MFS M3X16 A4	
280	90326-0022		2	PLUG, MALE YELLOW CR-AL	
290	312605-0318		2	HEXAGON NUT, M6M M8 A280	
300	90326-0020		1	PLUG, FEMALE YELLOW CR-AL	
310	312812-0314		2	HEXAGON NUT, NY-LOCK M5 A480	
330	315105-0146		2	WASHER BRB 5,3X10 RFR	
340	315105-0165		2	WASHER BRB 8,4X16 RFR	
380	315204-0208		1	O-RING 9,3X2,4 MM	
390	315204-0214		1	O-RING 17,3X2,4 MM	
400	90030-0571		1	CONN. T-PIPE SS-6MO-3	
410	90600-0495		5	O-RING 4X2 MM	
420	90459-1424		1	CONN. STR., 6-G1/8, EXT. THREAD	
430	342840-0103		1	CLAMPING PIECE DN 1-11/2, GH13LAH112304N	
450	353243-0001		1	HOSE GLAND W/O INSERT PG9 EXTENDED	
460	353243-0005		1	HOSE GLAND W/O INSERT PG16 EXTENDED	
470	353249-0009		1	INSERT, SINGLE HOLE, EK 152/9	
480	90099-0104		1	NUT, PR 15,2 (PG9)	
490	90099-0110		1	NUT, PR 22,5 (PG16)	
500	90152-0051	MM	1500	SPIRAL CONDUIT, 25X18, UL 1816	
510	90152-0059	MM	1500	SPIRAL CONDUIT, 18X12, UL 1211	
520	342840-0101		5	CLAMP, 12,7 AND 19,1 MM 3-A PCS+PMCS	
530	312105-0362		4	SCREW M6S ISO 4017 M6X8 A480	
540	312109-0376		4	SCREW M6S ISO 4017 M6X35 A480	
560	2847310-0000		2	CONNECTION	
570	312115-0287		4	SCREW ISO4762 M4X8 A4 80	
580	90287-0295		8	SCREW HEX.SOCK.COUNT.MF6S M3X8 A280	
590	90459-0075		1	HINGE, 1056-U30	
600	90600-0276		2	SNAP-IN BALL LOCK, 43X14,5 MM	
610	312105-0325		4	SCREW M6S ISO 4017 M5X10 A480	
620	312155-0327		4	SCREW DIN 7991 MF6S M5X12 A4 70	
630	90132-0021		1	HOSE CLIP 6-10MM	
U70B4020	90600-0462		1	INDUCTIVE SWITCH, E2A-M12LN05-M1-B1-TP	
U70B4030	90600-0462		1	INDUCTIVE SWITCH, E2A-M12LN05-M1-B1-TP	
U70B4040	90600-0462		1	INDUCTIVE SWITCH, E2A-M12LN05-M1-B1-TP	
U70B4050	90600-0462		1	INDUCTIVE SWITCH, E2A-M12LN05-M1-B1-TP	
U70B4070	90600-0462		1	INDUCTIVE SWITCH, E2A-M12LN05-M1-B1-TP	
U70B4370	90326-0060		1	THERMOCOUPLE, CR-AL	
U70W1455	315400-0001	MM	4000	TUBE PUN-H-6X1-BL	
U70W4020	351310-0100		1	ACTUATOR/SENSOR CABLE PRKWT 4-07/10M	
U70W4030	351310-0100		1	ACTUATOR/SENSOR CABLE PRKWT 4-07/10M	
U70W4040	351310-0100		1	ACTUATOR/SENSOR CABLE PRKWT 4-07/10M	
U70W4050	351310-0100		1	ACTUATOR/SENSOR CABLE PRKWT 4-07/10M	
U70W4070	351310-0100		1	ACTUATOR/SENSOR CABLE PRKWT 4-07/10M	
U70W4370	90220-0034	MM	700	THERMOCABLE TEX/SITW-20F-KX 2X0,5MM2	

Machine Type	Group Description	Used-In	Group Number	Page No

REGULATING VALVE

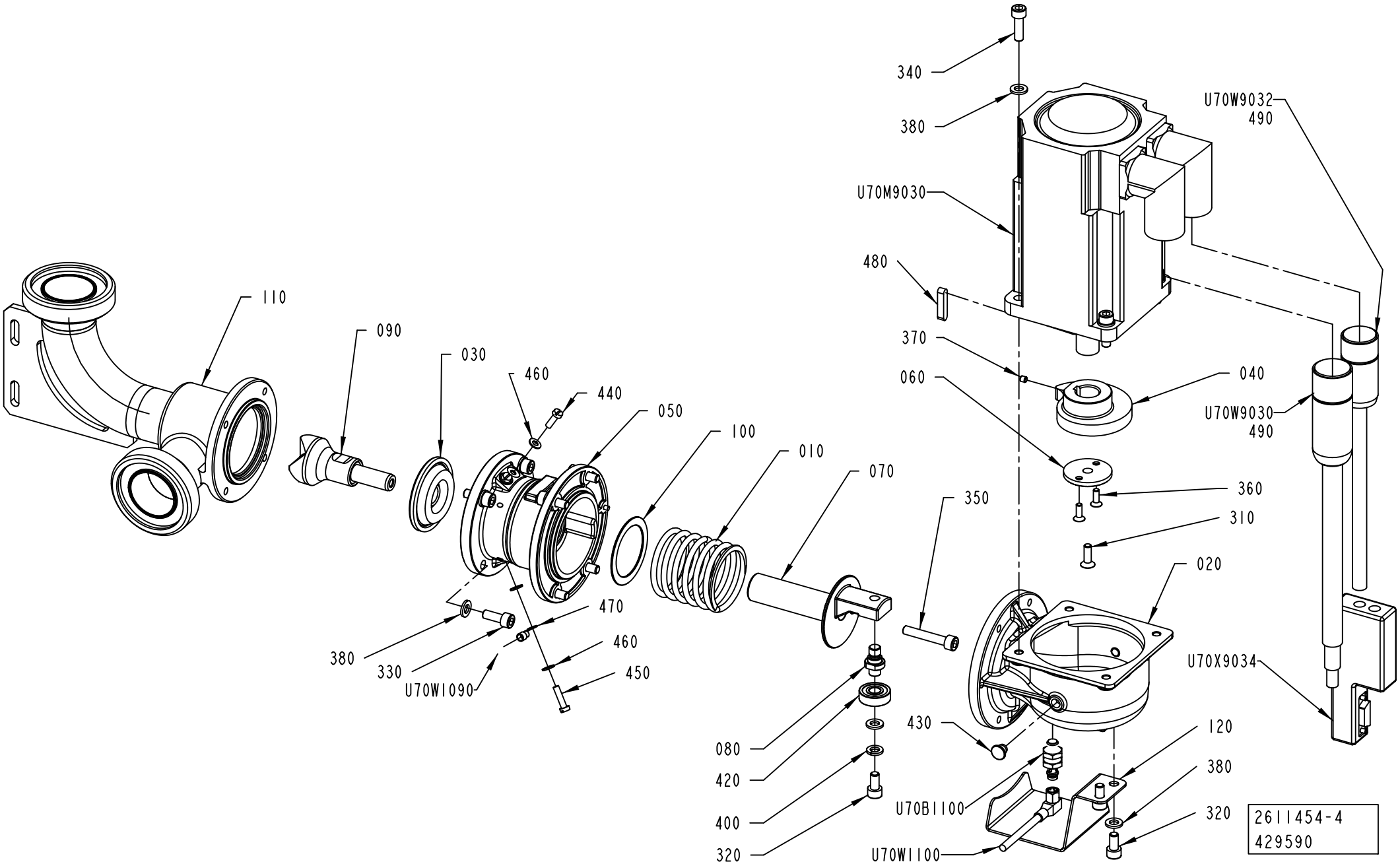

ECM: 451584 - 20101001
Group number: 2611454-0300
Assembly Drawing: 2611454-4_1_AB

This list covers pages from 1-234 to 1-237

Pos	Part No	UN	Qty	Description	Page No
TBA 0125S (See drawing on page: 1-236)					
090	2813784-0000		1	SHUTTER	
110	3041598-0000		1	VALVE BODY	
TBA 0200M, TBA 0200B, TBA 0200S, TBA 0250S, TBA 0250B, TBA 1000B, TBA 1000SQ, TBA 1000S (See drawing on page: 1-234)					
090	2725216-0000		1	SHUTTER	
110	3040928-0000		1	VALVE BODY	
Common Parts					
010	2514546-0000		1	COMPRESSION SPRING	
020	2611106-0000		1	HOUSING	
030	2725145-0000		1	DIAPHRAGM	
040	2611108-0000		1	CAM	
050	2737825-0000		1	VALVE HOUSING	
060	2611110-0000		1	WASHER	
070	2725313-0000		1	SHAFT	
080	2611113-0000		1	SPINDLE	
100	2613975-0000		1	SPRING CUSHION	
120	2826325-0000		1	COVER	
310	312155-0329		1	SCREW DIN 7991 MF6S M5X16 A4 70	
320	312115-0366		3	SCREW ISO4762 M6X12 A4 80	
330	312115-0368		8	SCREW ISO4762 M6X16 A4 80	
340	312115-0370		4	SCREW ISO4762 M6X20 A4 80	
350	312115-0376		1	SCREW ISO4762 M6X35 A4 80	
360	312155-0291		2	SCREW DIN 7991 MF6S M4X12 A4 70	
370	312318-0283		1	SCREW ISO4029 M4X4 A4	
380	315105-0153		15	WASHER BRB 6,4X12 RFR	
400	315402-0156		1	LOCK WASHER FBB 6,5	
420	321302-0298		1	BALL BEARING 8/22X7	
430	90459-3198		2	PLUG, LD-PE Ø 7.2	
440	312125-0291		2	SCREW ISO 1207 M4X12 A4	
450	312125-0293		2	SCREW ISO 1207 M4X16 A4	
460	315106-0136		6	WASHER ISO 7089-4-200 HV A4	
470	353101-0130		2	CABLE SHOE 1,5-2,5MM2 M4 BLUE	
480	315705-0202		1	PARALLEL KEY W ROUND ENDS 5X5X25MM	
490	90110-0381		2	COVER, 310601-33 CYR24.4	
U70B1100	90600-4631		1	PROX.SWITCH IE5412	
U70M9030	90601-0646		1	SERVO MOTOR MPL-B320P-SJ72AA SERIES A	
U70W1090	351150-0403	MM	6000	CABLE OLFLEX 3X0,75 MM2 LIGHT/GREY	
U70W1100	351302-0050		1	ACTUATOR/SENSOR CABLE PRKMWV 3-06/5M	
U70W9030	90600-3293		1	MOTOR PWWER CABLE 2090-XXNPMF-16S09	
U70W9032	90600-3294		1	MOTOR FEEDBACK CABLE 2090-XXNFMF-S09/C	
U70X9034	90459-2551		1	CONNECTOR, MOTOR FEEDBACK 15 PIN MALE	

Machine Type	Group Description	Used-In	Group Number	Page No

REGULATING VALVE

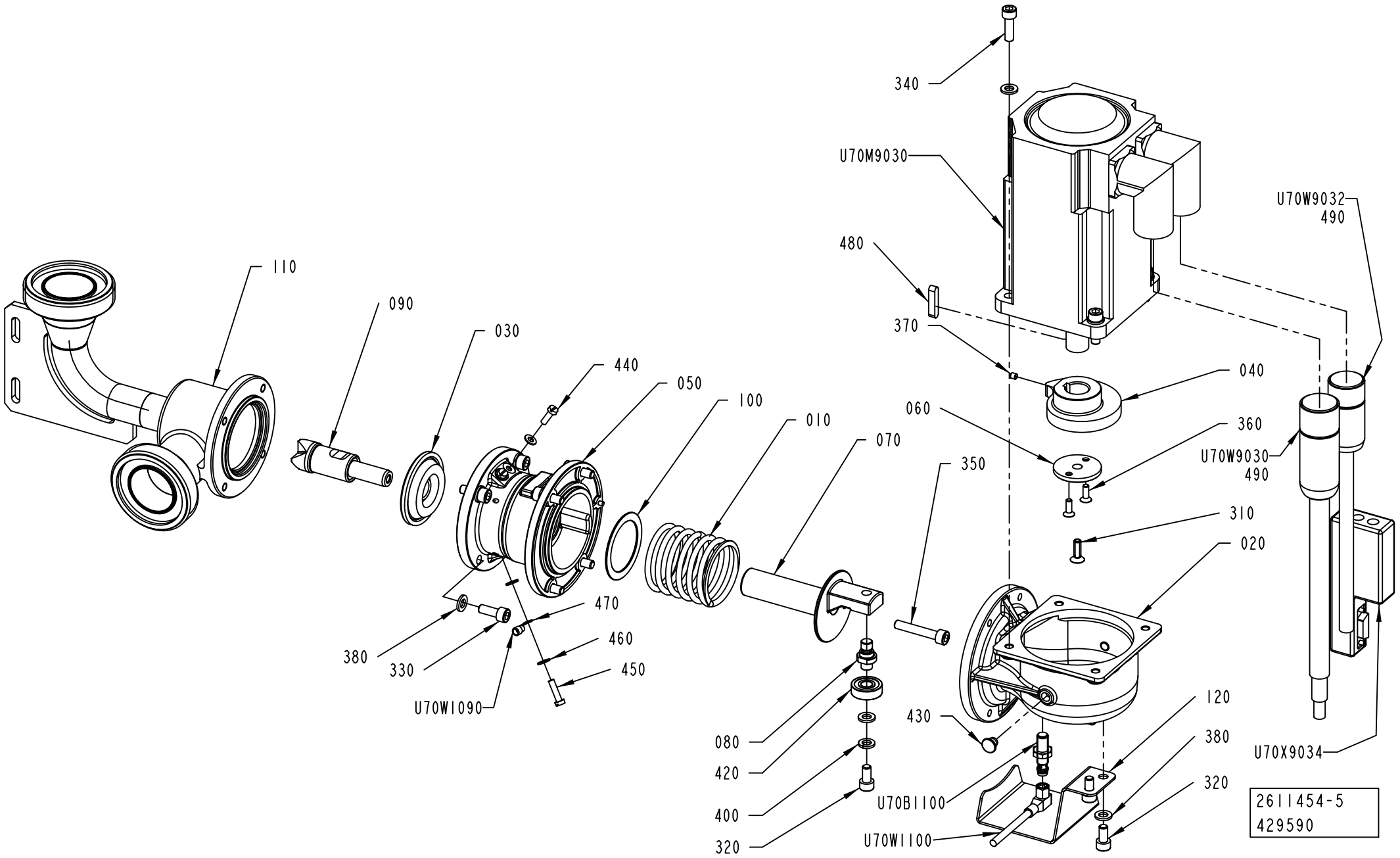

Pos	Part No	UN	Qty	Description	Page No
TBA 0125S (See drawing on page: 1-236)					
090	2813784-0000		1	SHUTTER	
110	3041598-0000		1	VALVE BODY	
TBA 0200M, TBA 0200B, TBA 0200S, TBA 0250S, TBA 0250B, TBA 1000B, TBA 1000SQ, TBA 1000S (See drawing on page: 1-234)					
090	2725216-0000		1	SHUTTER	
110	3040928-0000		1	VALVE BODY	
Common Parts					
010	2514546-0000		1	COMPRESSION SPRING	
020	2611106-0000		1	HOUSING	
030	2725145-0000		1	DIAPHRAGM	
040	2611108-0000		1	CAM	
050	2737825-0000		1	VALVE HOUSING	
060	2611110-0000		1	WASHER	
070	2725313-0000		1	SHAFT	
080	2611113-0000		1	SPINDLE	
100	2613975-0000		1	SPRING CUSHION	
120	2826325-0000		1	COVER	
310	312155-0329		1	SCREW DIN 7991 MF6S M5X16 A4 70	
320	312115-0366		3	SCREW ISO4762 M6X12 A4 80	
330	312115-0368		8	SCREW ISO4762 M6X16 A4 80	
340	312115-0370		4	SCREW ISO4762 M6X20 A4 80	
350	312115-0376		1	SCREW ISO4762 M6X35 A4 80	
360	312155-0291		2	SCREW DIN 7991 MF6S M4X12 A4 70	
370	312318-0283		1	SCREW ISO4029 M4X4 A4	
380	315105-0153		15	WASHER BRB 6,4X12 RFR	
400	315402-0156		1	LOCK WASHER FBB 6,5	
420	321302-0298		1	BALL BEARING 8/22X7	
430	90459-3198		2	PLUG, LD-PE Ø 7.2	
440	312125-0291		2	SCREW ISO 1207 M4X12 A4	
450	312125-0293		2	SCREW ISO 1207 M4X16 A4	
460	315106-0136		6	WASHER ISO 7089-4-200 HV A4	
470	353101-0130		2	CABLE SHOE 1,5-2,5MM2 M4 BLUE	
480	315705-0202		1	PARALLEL KEY W ROUND ENDS 5X5X25MM	
490	90110-0381		2	COVER, 310601-33 CYR24.4	
U70B1100	90600-4631		1	PROX.SWITCH IE5412	
U70M9030	90601-0646		1	SERVO MOTOR MPL-B320P-SJ72AA SERIES A	
U70W1090	351150-0403	MM	6000	CABLE OLFLEX 3X0,75 MM2 LIGHT/GREY	
U70W1100	351302-0050		1	ACTUATOR/SENSOR CABLE PRKMWV 3-06/5M	
U70W9030	90600-3293		1	MOTOR PWWER CABLE 2090-XXNPMF-16S09	
U70W9032	90600-3294		1	MOTOR FEEDBACK CABLE 2090-XXNFMF-S09/C	
U70X9034	90459-2551		1	CONNECTOR, MOTOR FEEDBACK 15 PIN MALE	

Machine Type	Group Description	Used-In	Group Number	Page No

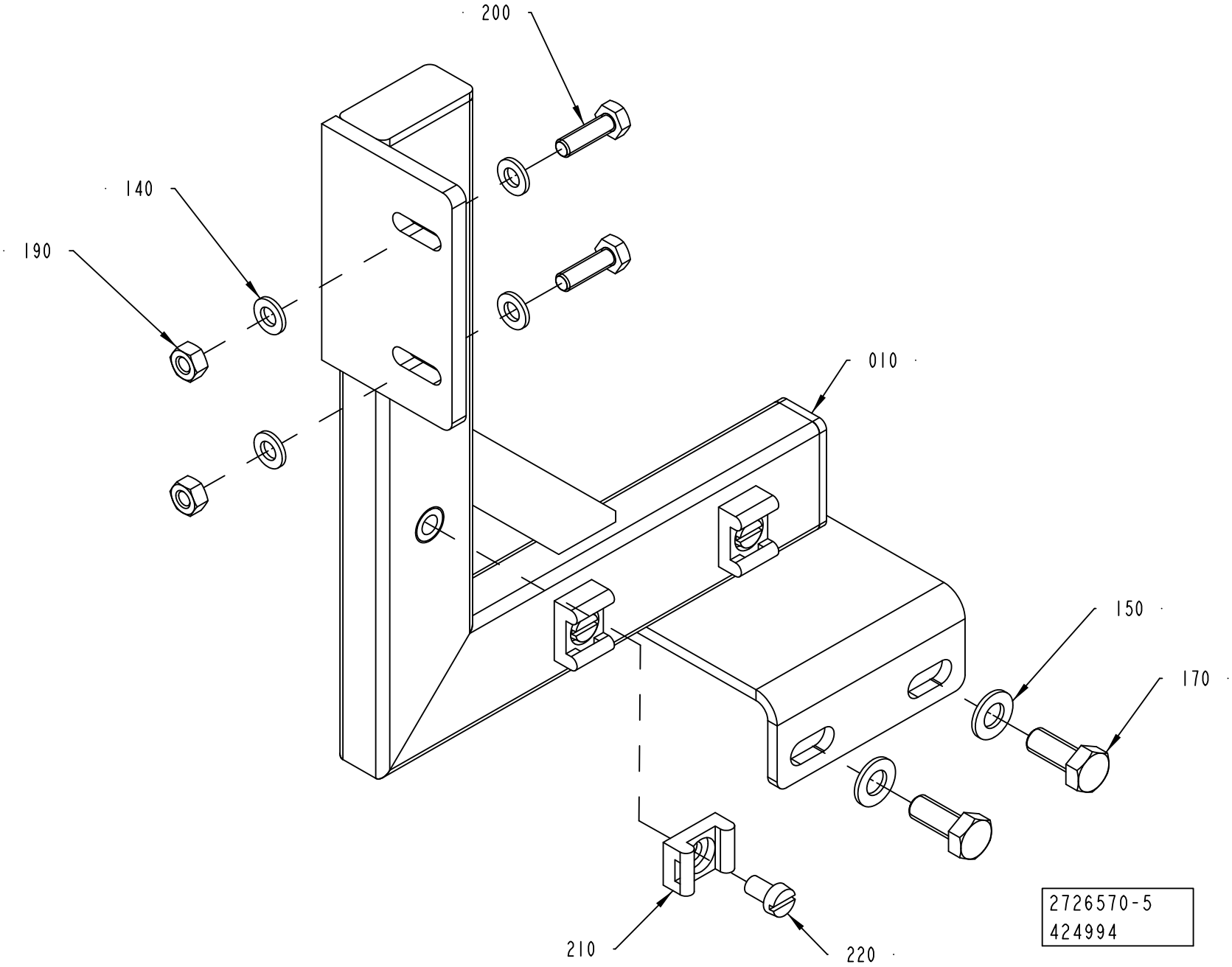
200
140
190
010
150
170
210
220
2726570-5
424994

ECM: 429451 - 20100401
Group number: 2726570-0300
Assembly Drawing: 2726570-5_1_AC

Pos	Part No	UN	Qty	Description	Page No
A3/SPEED					
010	3006238-0000		1	SUPPORT	
Common Parts					
140	315105-0153		4	WASHER BRB 6,4X12 RFR	
150	315105-0165		2	WASHER BRB 8,4X16 RFR	
170	312105-0451		2	SCREW M6S ISO 4017 M8X20 A480	
190	312605-0316		2	HEXAGON NUT, M6M M6 A280	
200	312105-0370		2	SCREW M6S ISO 4017 M6X20 A480	
210	352113-0204		3	ANCHOR PLATES FOR STRIPS, TYPE TM3S25-M	
220	312125-0364		3	SCREW ISO 1207 M6X10 A4	

Pos	Part No	UN	Qty	Description	Page No

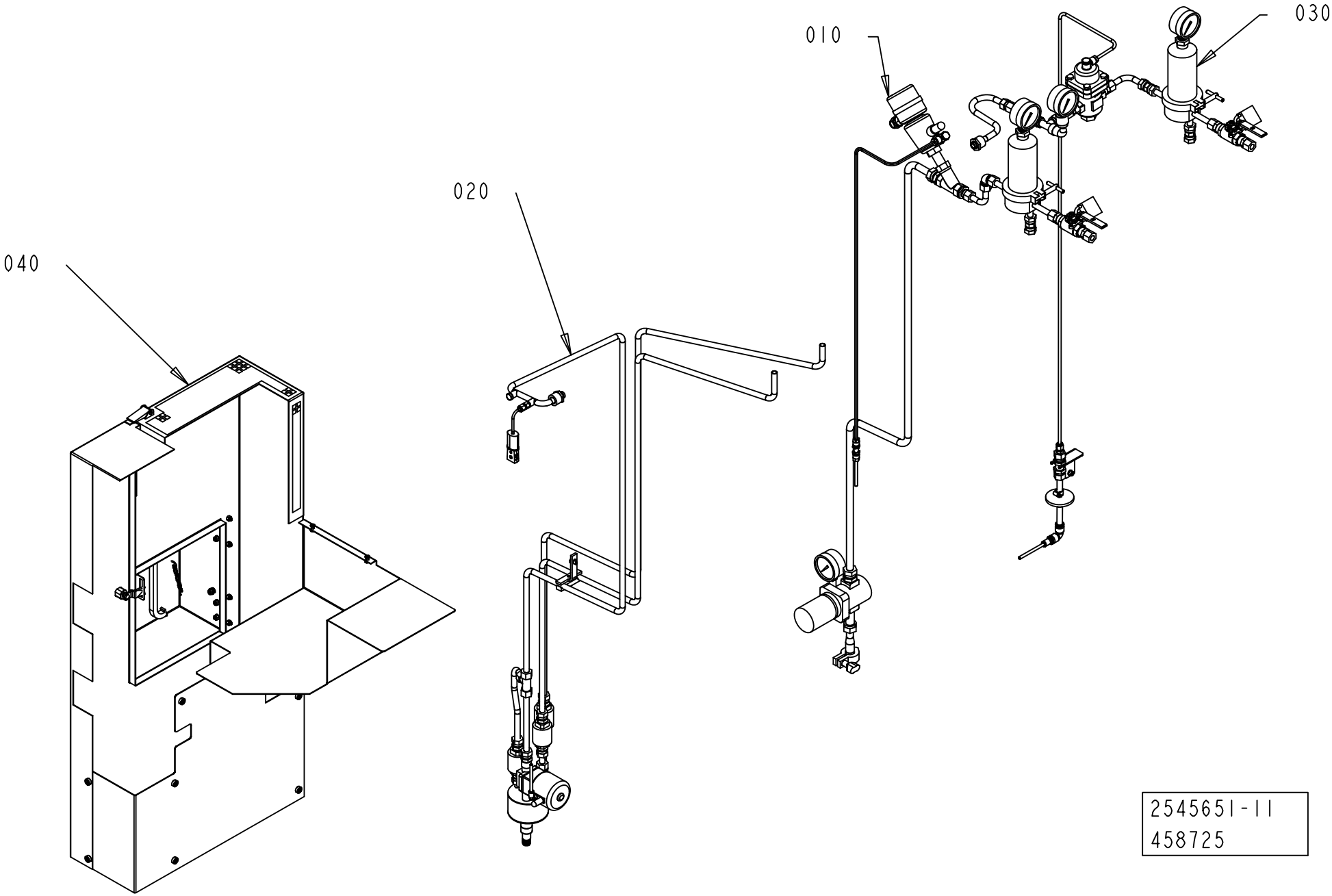
010
020
030
040
2545651-11
458725

ECM: 460621 - 20101001
Group number: 2545651-0600
Assembly Drawing: 2545651-11_1_AC

Pos	Part No	UN	Qty	Description	Page No
-					
010	2874694-0200		1	STEAM PIPE	**1-243**
020	2552215-0700		1	STEAM TRAP	**1-245**
030	2544199-0400		1	STEAM PIPE	**1-247**
040	3115218-0100		1	COVER	**1-249**

Pos	Part No	UN	Qty	Description	Page No

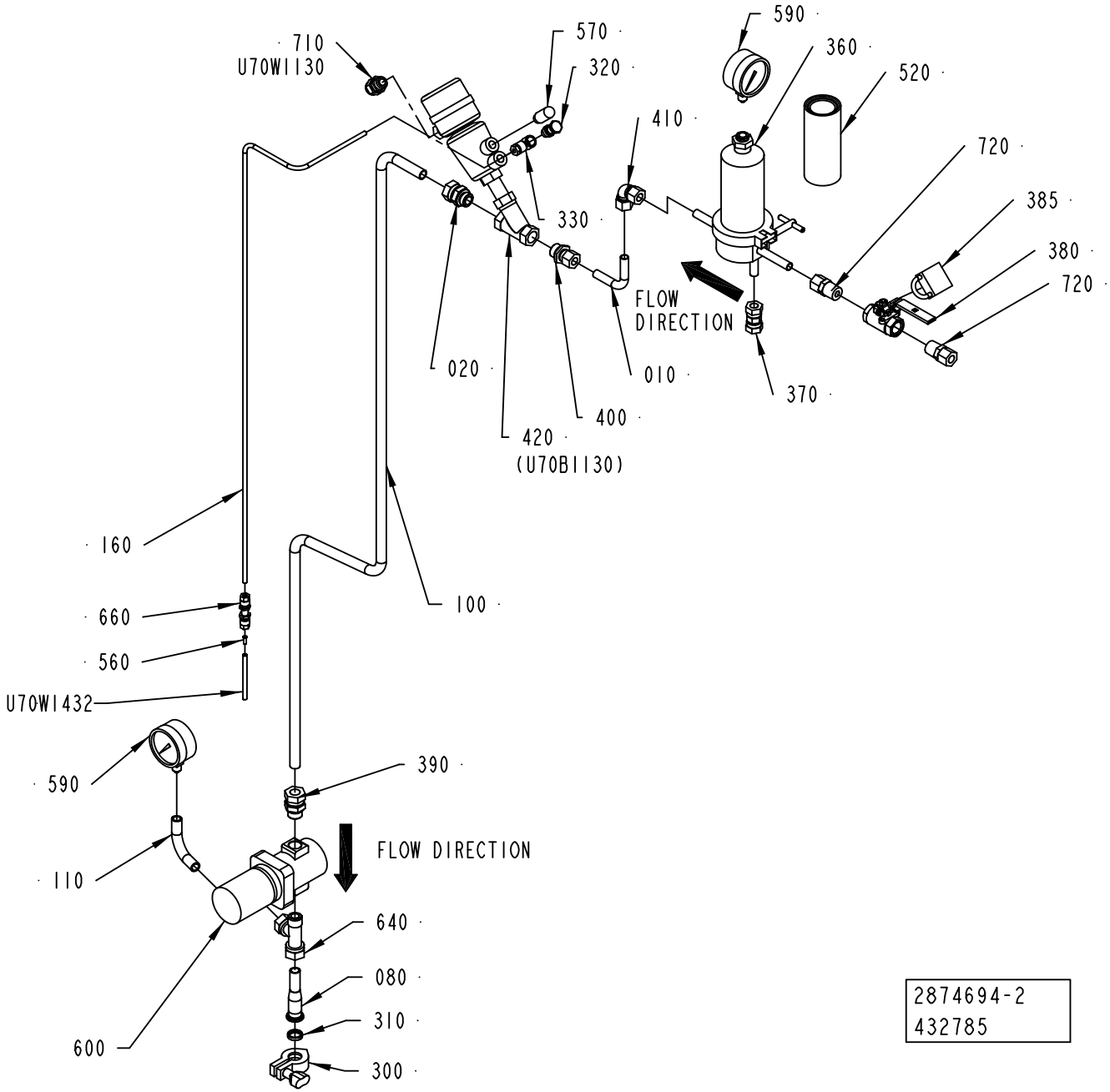

2874694-2
432785

ECM: 432794 - 20100701
Group number: 2874694-0200
Assembly Drawing: 2874694-2_1_AB

Pos	Part No	UN	Qty	Description	Page No
-					
010	2874701-0000		1	PIPE	
020	2522195-0000		1	CONNECTION	
080	2868043-0000		1	PIPE	
100	3050645-0000		1	PIPE	
110	2582590-0000		1	PIPE	
160	3050611-0000		1	PIPE	
300	90600-3559		1	CLAMPING PIECE, 211290	
310	90600-3558		1	GASKET 16,2X21,8X4,45 MM 3/4"	
320	342980-0304		1	BANJO-HOLLOW BOLT COUPL,EXT.THR.01-G1/4	
330	342797-0122		1	BANJO CONN., RINGPIECE 6-1/4	
360	90600-3159		1	FILTER HOUSING, MDS4463G58383	
370	90030-0106		1	PIPE CONNECTION G 12	
380	90600-3701		1	BALL VALVE 1/2NPT	
385	779910-0101		1	PADLOCK, 250/40 W 2 KEYS	
390	90030-0188		1	CONN. STR. GE15LRED71	
400	90030-0109		1	STRAIGHT PIPE CONN. GE12LR1/271	
410	90030-0096		1	ELBOW CONNECTION 12	
420	90459-1235		1	ANGLE SEAT VALVE, N.C. DN13 TYPE 2002	
520	90337-0315		1	FILTER INSERT / MCS 4463	
	90458-2549		*1*	*O-RING 72,69X2,62 MM*	
560	342706-0130		1	STIFFNER SLEEVE FOR HOSE 6X1	
570	90328-0026		1	SILENCER G1/4"	
590	90043-0082		2	PRESSURE GAUGE, 2740, D=63 MM	
600	90601-8470		1	PRESSURE REGULATOR, GD-30S G 1/2	
640	342751-0221		1	PIPE FITTING TEE	
660	90224-0349		1	CONN. BULKHEAD. 1250-6	
710	352103-0106		1	CABLE GLAND, ST 11, PR18,6/PG11	
720	90030-0180		2	CONN. STR. GE12L1/2NPT71	
U70W1130	351150-0404	MM	7500	CABLE OLFLEX 4X0,75 MM2 LIGHT/GREY	
U70W1432	315300-0001	MM	2000	TUBE, 6 MM PE BLUE	

Pos	Part No	UN	Qty	Description	Page No

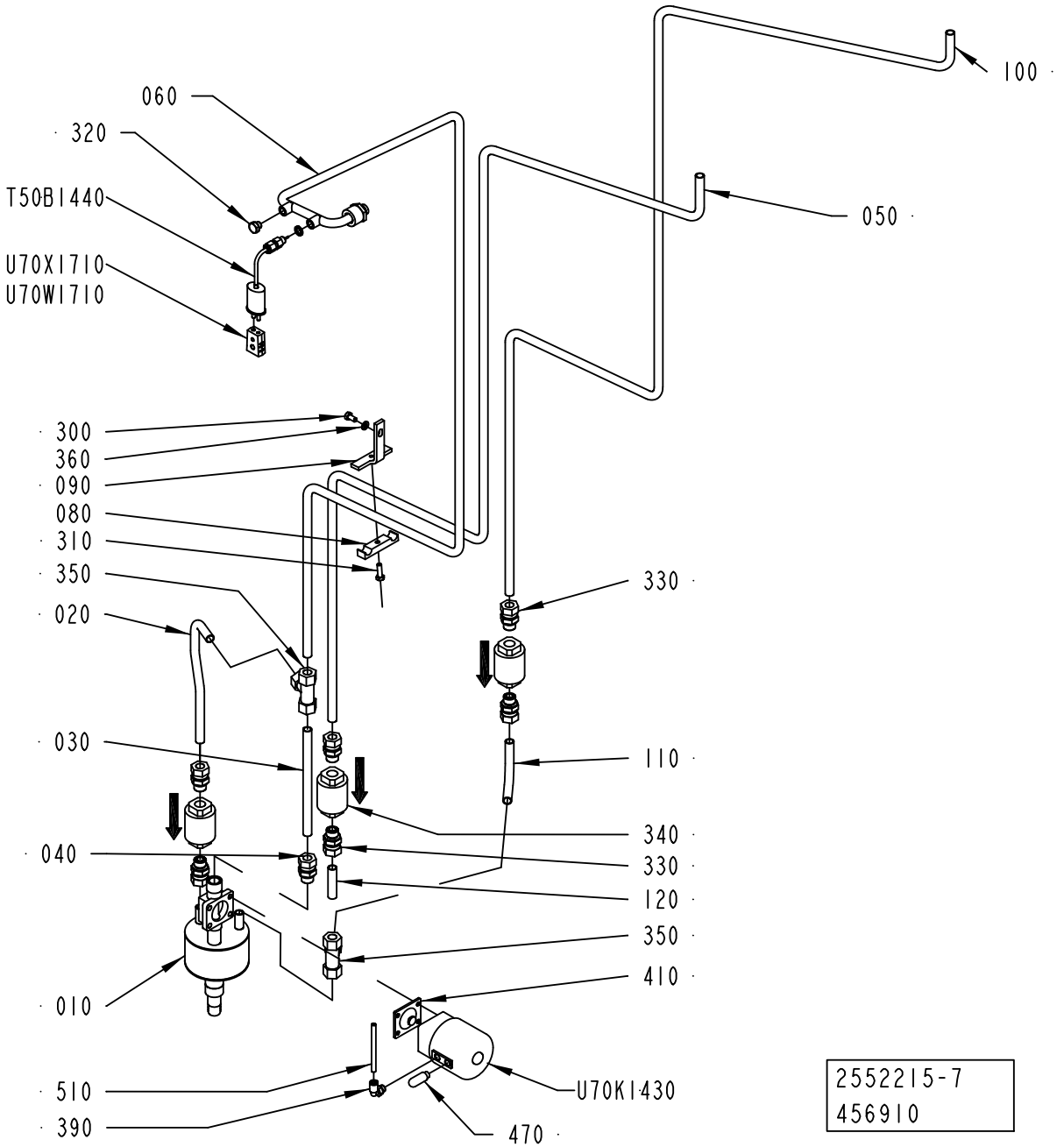
100
060
320
T50B1440
U70X1710
U70W1710
050
300
360
090
080
310
350
020
330
030
110
340
040
330
120
350
410
010
510
390
U70K1430
470
2552215-7
456910

ECM: 456959 - 20101001
Group number: 2552215-0700
Assembly Drawing: 2552215-7_1_AB

Pos	Part No	UN	Qty	Description	Page No
-					
010	2695994-0000		1	ATTACHMENT PIPE	
020	2696037-0000		1	PIPE	
030	2696025-0000		1	PIPE	
040	3075932-0000		1	STRAIGHT CONNECTION	
050	3050642-0000		1	PIPE	
060	3050643-0000		1	PIPE	
080	2517371-0000		1	CLAMP	
090	2867485-0000		1	BRACKET	
100	3050644-0000		1	PIPE	
110	2874701-0000		1	PIPE	
120	2874702-0000		1	PIPE	
300	312105-0366		1	SCREW M6S ISO 4017 M6X12 A480	
310	312105-0370		1	SCREW M6S ISO 4017 M6X20 A480	
320	90330-0066		1	PLUG, EXT. G-THREAD, G1/8	
330	90030-0187		6	CONN. STR. GE12LRED71	
340	90360-0020		3	STEAM TRAP / MK36/51 3/8 INCH	
	90360-0310		*1*	*CAPSULE, FOR STEAM TRAP 90360-20*	
	90360-0309		*1*	*STRAINER, FOR STEAM TRAP 90360-20*	
350	90030-0058		2	CONN. T-PIPE T12L71	
360	315105-0153		1	WASHER BRB 6,4X12 RFR	
390	350002-0006		1	PUSH-IN L-FITTING QSL-F-G1/8-6	
410	90459-5901		1	DIAPHRAGM, 425 EPM SIZE 15	
470	90328-0047		1	SILENCER G1/8"	
510	315400-0001	MM	1000	TUBE PUN-H-6X1-BL	
T50B1440	90326-0089		1	THERMOCOUPLE, 5110-089-000	
U70K1430	90187-0110		1	DIAPHRAGM VALVE DN15, NC WELD CONN.	
U70W1710	90220-0034	MM	7000	THERMOCABLE TEX/SITW-20F-KX 2X0,5MM2	
U70X1710	90326-0020		1	PLUG, FEMALE YELLOW CR-AL	

Pos	Part No	UN	Qty	Description	Page No

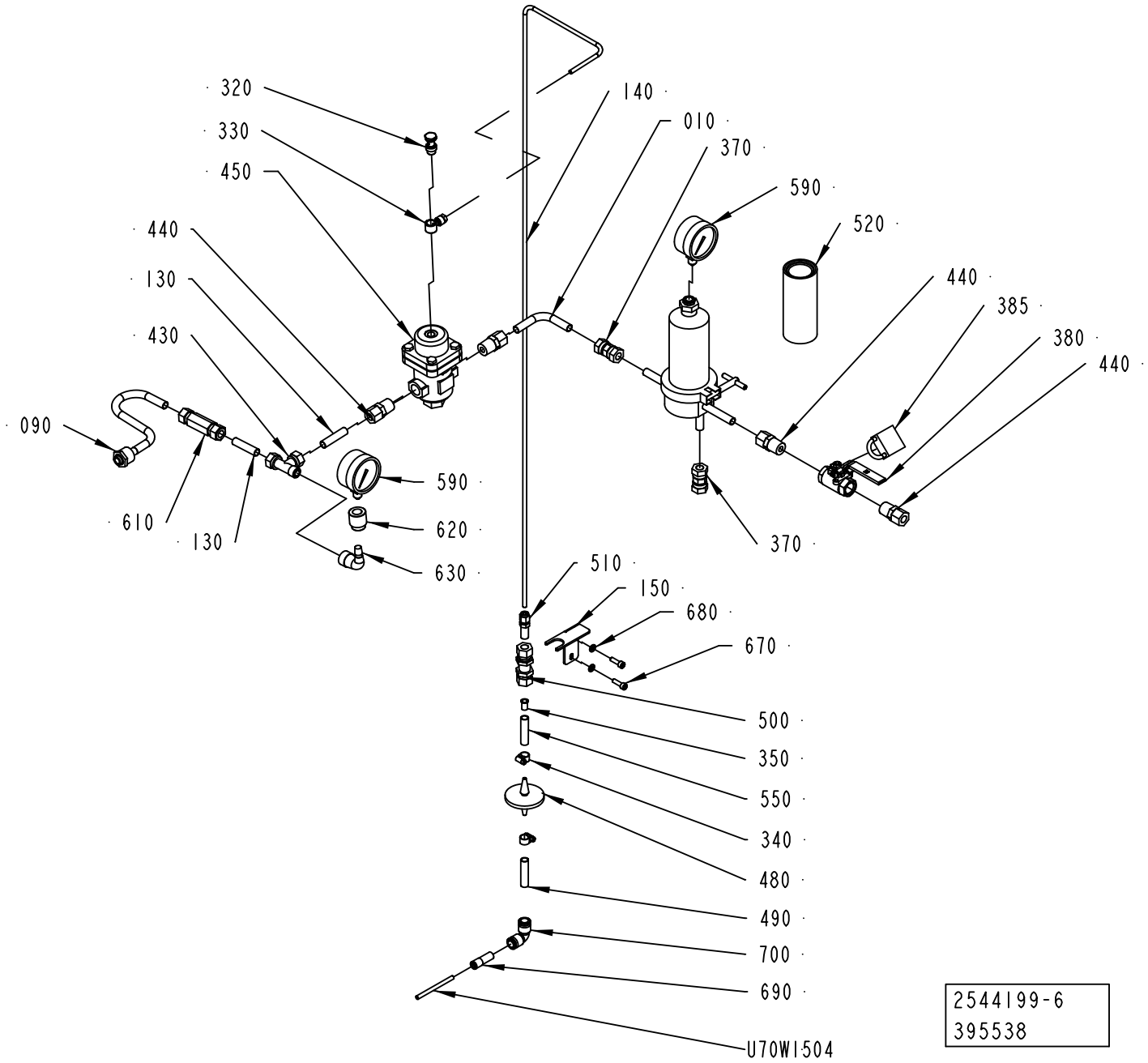
320
330
450
440
130
430
090
610
130
590
620
630
140
010
370
590
520
440
385
380
440
370
510
150
680
670
500
350
550
340
480
490
700
690
U70W1504
2544199-6
395538

ECM: 403827 - 20091001
Group number: 2544199-0400
Assembly Drawing: 2544199-6_1_AD

Pos	Part No	UN	Qty	Description	Page No
-					
010	2874701-0000		1	PIPE	
090	2874700-0000		1	PIPE	
130	2874702-0000		2	PIPE	
140	2874703-0000		1	PIPE	
150	2616298-0000		1	BRACKET	
320	342980-0304		1	BANJO-HOLLOW BOLT COUPL,EXT.THR.01-G1/4	
330	342797-0122		1	BANJO CONN., RINGPIECE 6-1/4	
340	342991-0100		2	HOSE CLIP,WORM DRIVE TYPE (8)-14	
350	342706-0195		1	STIFFNER SLEEVE FOR HOSE 12X1,5	
360	90600-3159		1	FILTER HOUSING, MDS4463G58383	
370	90030-0106		2	PIPE CONNECTION G 12	
380	90600-3701		1	BALL VALVE 1/2NPT	
385	779910-0101		1	PADLOCK, 250/40 W 2 KEYS	
430	342751-0215		1	PIPE FITTING TEE	
440	90030-0180		4	CONN. STR. GE12L1/2NPT71	
450	90458-2264		1	PRESSURE REGULATOR ARC-30-1/2"	
	90458-2655		*1*	*STRAINER FOR ARC-30-1/2"*	
	90458-2654		*1*	*GASKET KIT FOR ARC-30-1/2"*	
	90458-2653		*1*	*BELLOWS AISI 316L FOR ARC-30-1/2"*	
480	90458-2554		1	STERILE GRADE MEMBRANE FILTER 0,2µM	
490	315300-0010	MM	50	TUBE, 12 MM PE BLUE	
500	90030-0030		1	CONN. BULKHEAD SV12L71	
510	90030-0481		1	REDUCER M12TURM6-316	
520	90337-0315		1	FILTER INSERT / MCS 4463	
	90458-2549		*1*	*O-RING 72,69X2,62 MM*	
550	315300-0010	MM	50	TUBE, 12 MM PE BLUE	
590	90043-0082		2	PRESSURE GAUGE, 2740, D=63 MM	
610	90459-4686		1	NON-RETURN VALVE, M12A-C6L-1-EPR-SS	
620	90330-0011		1	SLEEVE, REDUCTION, INT, R-2023/8X1/4	
630	90330-0172		1	ELBOW, 90 INT/EXT, SS-6-SE	
670	312115-0370		2	SCREW ISO4762 M6X20 A4 80	
680	315105-0153		2	WASHER BRB 6,4X12 RFR	
690	350006-0007		1	PUSH-IN FITTING QS-F-12H-6	
700	342735-0109		1	ELBOW PIPE JOINT	
U70W1504	315300-0001	MM	1000	TUBE, 6 MM PE BLUE	

Pos	Part No	UN	Qty	Description	Page No

Machine Type | Group Description | Used-In | Group Number | Page No

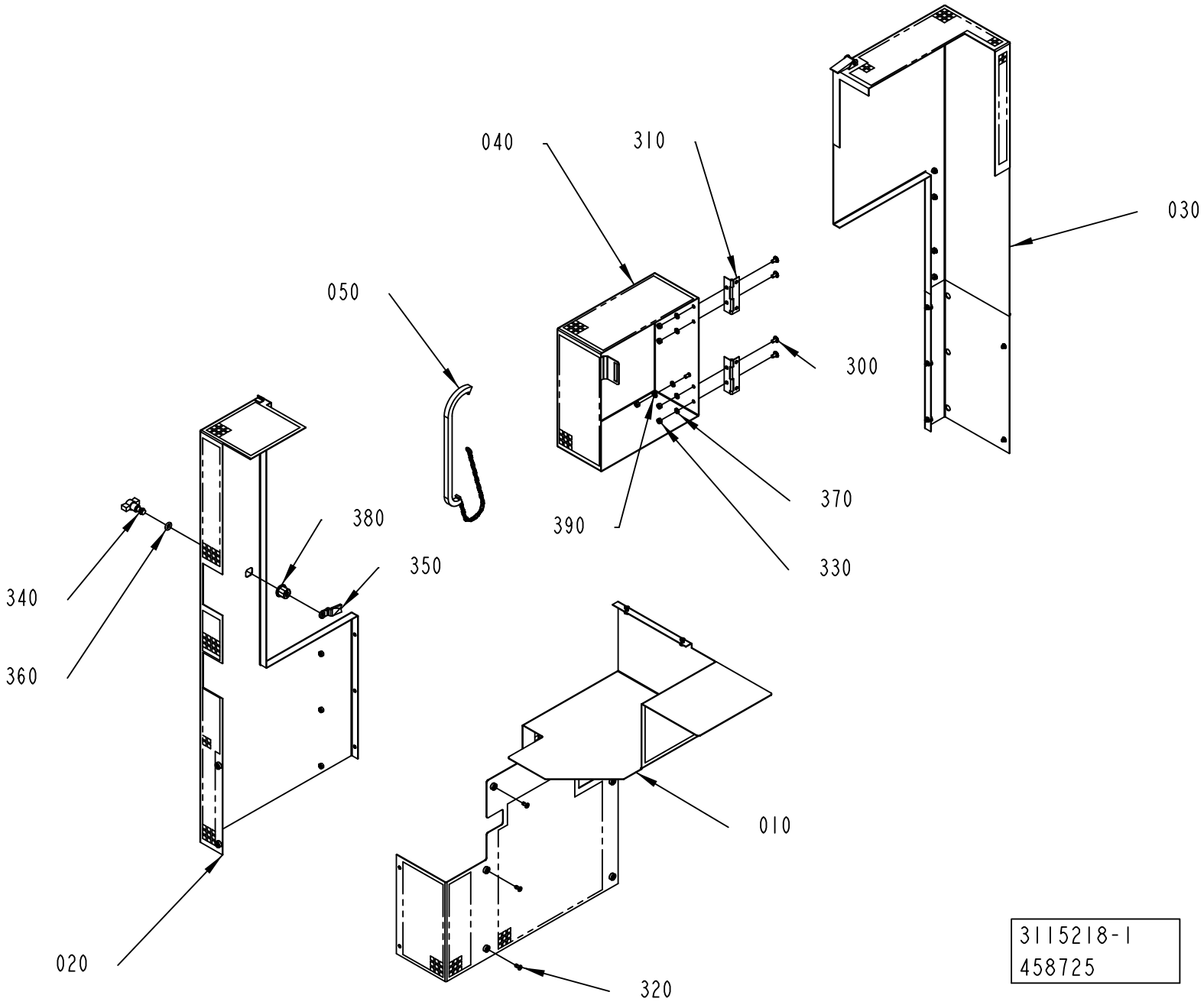
040
310
030
050
300
370
390
330
380
350
340
360
010
020
320
3115218-1
458725

ECM: 460620 - 20101001
Group number: 3115218-0100
Assembly Drawing: 3115218-1_1_AA

Pos	Part No	UN	Qty	Description	Page No
-					
010	3037721-0000		1	COVER	
020	3037722-0000		1	COVER	
030	3113356-0000		1	COVER	
040	3113357-0000		1	COVER	
050	2936335-0000		1	CHAIN	
300	927354-0000		8	SCREW	
310	2711251-0000		2	HINGE	
320	90601-2046		15	CAPTIVE SCREW M6, GUTBG 6-4-12	
330	312605-0316		5	HEXAGON NUT, M6M M6 A280	
340	90237-0337		1	LOCK HANDLE FOR 90237-319	
350	90237-0335		1	LOCKING CATCH	
360	90237-0323		1	LOCK O-RING, 1000-24	
370	315105-0153		6	WASHER BRB 6,4X12 RFR	
380	90237-0319		1	LOCK HOUSING, 1000-U134	

Pos	Part No	UN	Qty	Description	Page No

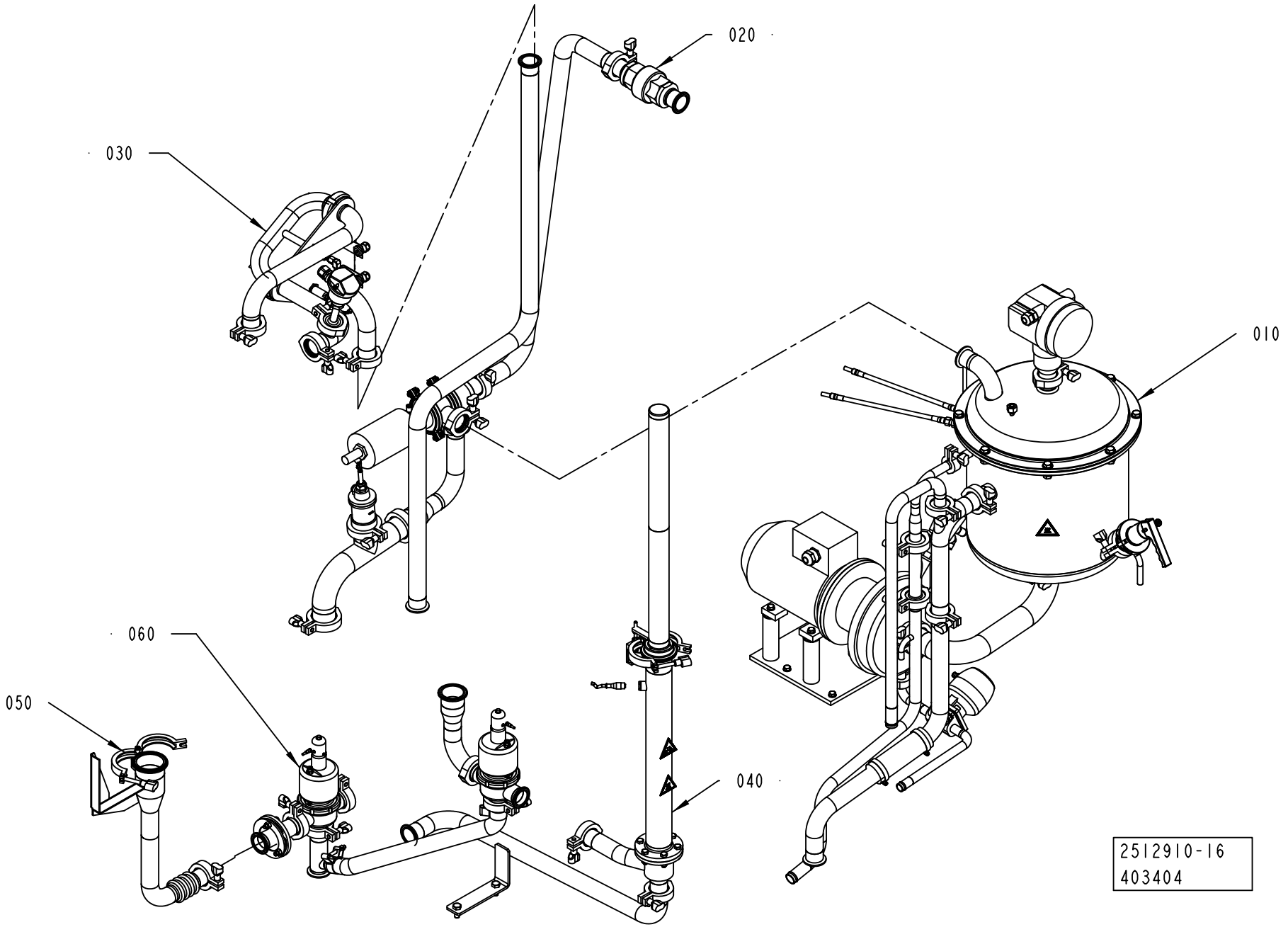
020
030
010
060
050
040
2512910-16
403404

ECM: 404501 - 20091001
Group number: 2512910-0500
Assembly Drawing: 2512910-16_1_AA

Pos	Part No	UN	Qty	Description	Page No
A3/SPEED					
040	2512900-0600		1	CLEANING SECTION	**1-253, 1-255, 1-257**
050	2512938-0200		1	CLEANING CUP	**1-259**
060	2539448-0400		1	DRAINING	**1-261**
Common Parts					
010	2775100-0300		1	INTEGRATED CLEANING UNIT	**1-265**
020	2833350-0200		1	PIPE WORK	**1-273**
030	2539452-0400		1	FLOW SWITCH	**1-275**

Pos	Part No	UN	Qty	Description	Page No

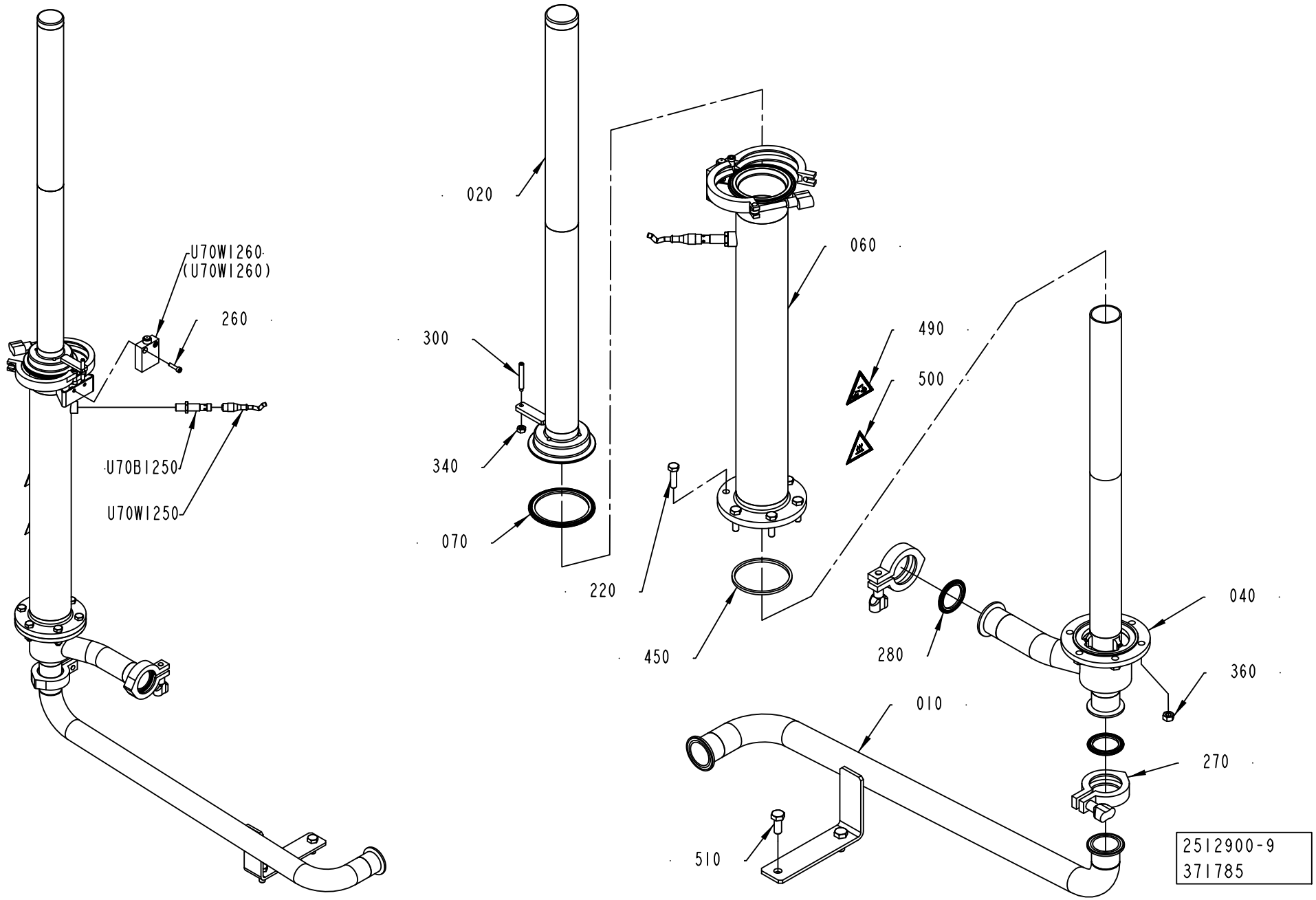
U70WI260
(U70WI260)
260
U70BI250
U70WI250
020
300
340
070
220
450
060
490
500
040
280
360
010
270
510
2512900-9
371785

ECM: 461960 - 20101002
Group number: 2512900-0600
Assembly Drawing: 2512900-9_1_AB

This list covers pages from 1-252 to 1-257

Pos	Part No	UN	Qty	Description	Page No
TBA 1000SQ ANSI (See drawing on page: 1-256)					
010	2696021-0000		1	PIPE	
020	2986289-0000		1	CLEANING PIPE	
030	2659367-0000		1	PIPE	
040	2986294-0000		1	BEARING FLANGE	
050	3021550-0000		1	BRACKET	
060	2986285-0000		1	CLEANING PIPE	
070	342850-0308		1	GASKET 97X117,7X5,2 MM 4" FDA 3-A	
220	312105-0495		6	SCREW M6S ISO 4017 M10X30 A480	
230	312105-0451		2	SCREW M6S ISO 4017 M8X20 A480	
240	312105-0453		2	SCREW M6S ISO 4017 M8X25 A480	
250	312605-0318		2	HEXAGON NUT, M6M M8 A280	
290	90459-1623		1	O-RING 66,4X1,78 MM	
360	312605-0320		6	HEXAGON NUT, M6M M10 A280	
450	315229-0108		1	SQUARE RING, 98,4X105,4X3,7 MM 4" FDA	
490	359725-0105		1	WARNING SIGN ANSI (V), CHEMICAL HAZARD	
500	90459-7458		1	WARNING SIGN ANSI (H), HOT SURFACE	
TBA 1000SQ ISO (See drawing on page: 1-256)					
010	2696021-0000		1	PIPE	
020	2986289-0000		1	CLEANING PIPE	
030	2659367-0000		1	PIPE	
040	2986294-0000		1	BEARING FLANGE	
050	3021550-0000		1	BRACKET	
060	2986285-0000		1	CLEANING PIPE	
070	342850-0308		1	GASKET 97X117,7X5,2 MM 4" FDA 3-A	
220	312105-0495		6	SCREW M6S ISO 4017 M10X30 A480	
230	312105-0451		2	SCREW M6S ISO 4017 M8X20 A480	
240	312105-0453		2	SCREW M6S ISO 4017 M8X25 A480	
250	312605-0318		2	HEXAGON NUT, M6M M8 A280	
290	90459-1623		1	O-RING 66,4X1,78 MM	
360	312605-0320		6	HEXAGON NUT, M6M M10 A280	
450	315229-0108		1	SQUARE RING, 98,4X105,4X3,7 MM 4" FDA	
490	359705-0003		1	WARNING SIGN ISO, DANGEROUS CHEMICALS	
500	359705-0007		1	WARNING SIGN ISO, HOT SURFACE	
TBA 0125S ANSI (See drawing on page: 1-252)					
010	2978352-0000		1	PIPE	
020	2981051-0000		1	CLEANING PIPE	
040	2981056-0000		1	CLEANING PIPE	
060	2981053-0000		1	CLEANING PIPE	
070	342850-0306		1	GASKET 60,3X76,1X5,2 MM 2"1/2 FDA 3-A	
220	312105-0455		6	SCREW M6S ISO 4017 M8X30 A480	
360	312605-0318		6	HEXAGON NUT, M6M M8 A280	
450	315229-0106		1	SQUARE RING, 61,2X68,2X3,7 MM 2"1/2 FDA	
490	359725-0105		1	WARNING SIGN ANSI (V), CHEMICAL HAZARD	
500	90459-7458		1	WARNING SIGN ANSI (H), HOT SURFACE	
TBA 0125S ISO (See drawing on page: 1-252)					
010	2978352-0000		1	PIPE	
020	2981051-0000		1	CLEANING PIPE	
040	2981056-0000		1	CLEANING PIPE	
060	2981053-0000		1	CLEANING PIPE	
070	342850-0306		1	GASKET 60,3X76,1X5,2 MM 2"1/2 FDA 3-A	
220	312105-0455		6	SCREW M6S ISO 4017 M8X30 A480	
360	312605-0318		6	HEXAGON NUT, M6M M8 A280	
450	315229-0106		1	SQUARE RING, 61,2X68,2X3,7 MM 2"1/2 FDA	
490	359705-0003		1	WARNING SIGN ISO, DANGEROUS CHEMICALS	
500	359705-0007		1	WARNING SIGN ISO, HOT SURFACE	
TBA 0200B ANSI (See drawing on page: 1-252)					
010	2978352-0000		1	PIPE	
020	2980998-0000		1	CLEANING PIPE	
040	2981058-0000		1	CLEANING PIPE	
060	2981055-0000		1	CLEANING PIPE	
070	342850-0307		1	GASKET 72,9X89,6X5,2 MM 3" FDA 3-A	
220	312105-0455		6	SCREW M6S ISO 4017 M8X30 A480	
360	312605-0318		6	HEXAGON NUT, M6M M8 A280	
450	315229-0107		1	SQUARE RING, 73,9X80,9X3,7 MM 2"1/2 FDA	
490	359725-0105		1	WARNING SIGN ANSI (V), CHEMICAL HAZARD	
500	90459-7458		1	WARNING SIGN ANSI (H), HOT SURFACE	
TBA 0200B ISO (See drawing on page: 1-252)					
010	2978352-0000		1	PIPE	
020	2980998-0000		1	CLEANING PIPE	
040	2981058-0000		1	CLEANING PIPE	
060	2981055-0000		1	CLEANING PIPE	
070	342850-0307		1	GASKET 72,9X89,6X5,2 MM 3" FDA 3-A	
220	312105-0455		6	SCREW M6S ISO 4017 M8X30 A480	
360	312605-0318		6	HEXAGON NUT, M6M M8 A280	
450	315229-0107		1	SQUARE RING, 73,9X80,9X3,7 MM 2"1/2 FDA	
490	359705-0003		1	WARNING SIGN ISO, DANGEROUS CHEMICALS	
500	359705-0007		1	WARNING SIGN ISO, HOT SURFACE	
TBA 0200M ANSI (See drawing on page: 1-252)					
010	2978352-0000		1	PIPE	
020	2981052-0000		1	CLEANING PIPE	
040	2981057-0000		1	CLEANING PIPE	
060	2977809-0000		1	CLEANING PIPE	
070	342850-0306		1	GASKET 60,3X76,1X5,2 MM 2"1/2 FDA 3-A	

Machine Type | Group Description | Used-In | Group Number | Page No

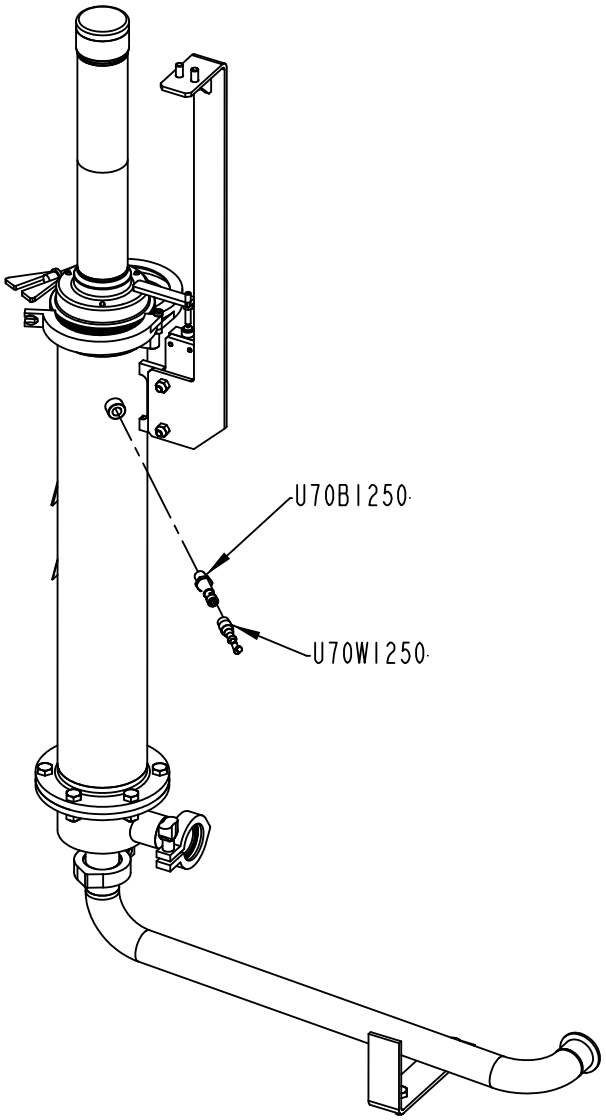
U70BI250
U70WI250

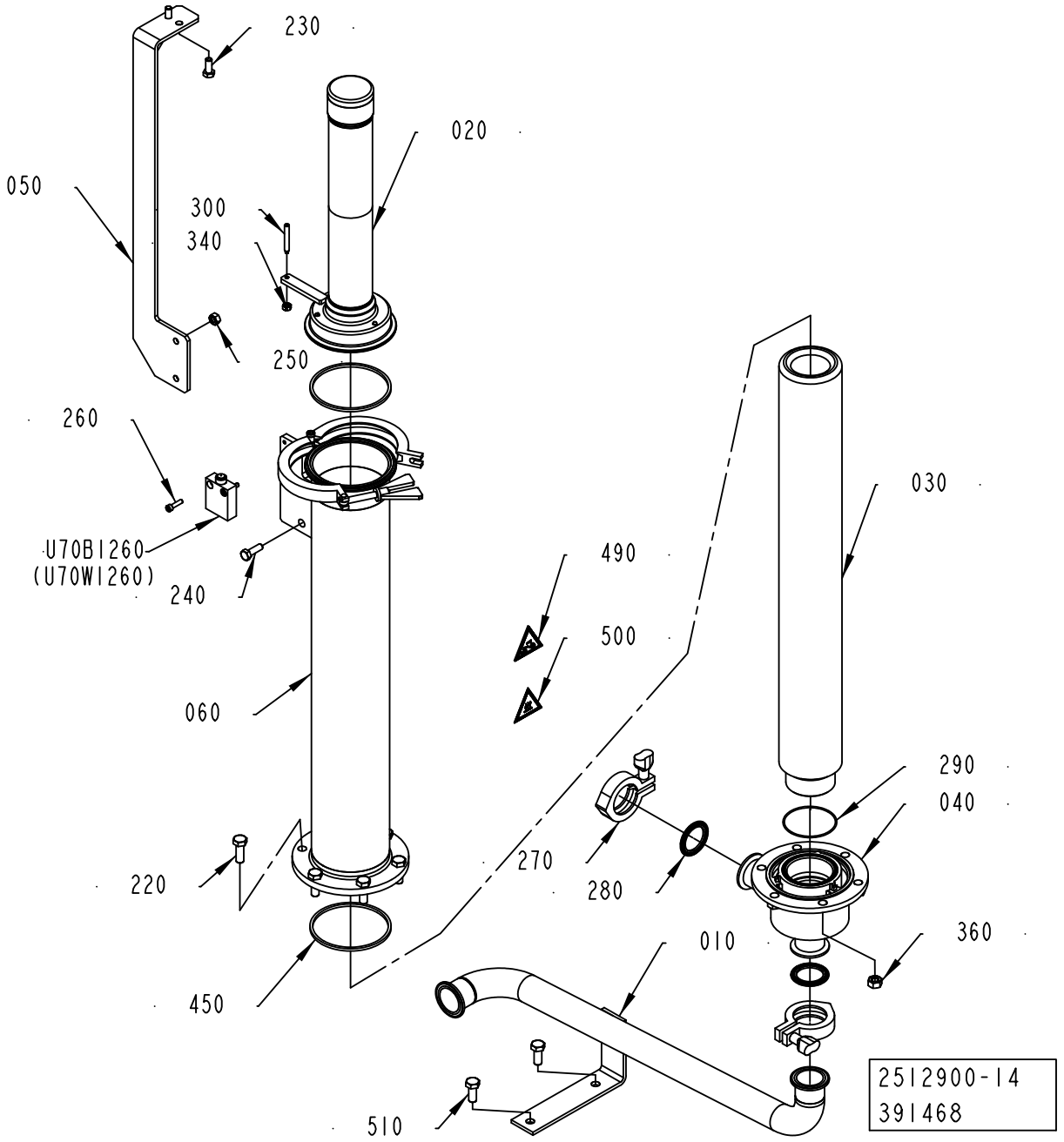
230
020
050
300
340
250
260
U70BI260
(U70WI260)
240
060
220
450
490
500
030
290
040
270
280
010
360
510
2512900-14
391468

Pos	Part No	UN	Qty	Description	Page No
TBA 0200M ANSI (Cont'd) (See drawing on page: 1-252)					
220	312105-0455		6	SCREW M6S ISO 4017 M8X30 A480	
360	312605-0318		6	HEXAGON NUT, M6M M8 A280	
450	315229-0106		1	SQUARE RING, 61,2X68,2X3,7 MM 2"1/2 FDA	
490	359725-0105		1	WARNING SIGN ANSI (V), CHEMICAL HAZARD	
500	90459-7458		1	WARNING SIGN ANSI (H), HOT SURFACE	
TBA 0200M ISO (See drawing on page: 1-252)					
010	2978352-0000		1	PIPE	
020	2981052-0000		1	CLEANING PIPE	
040	2981057-0000		1	CLEANING PIPE	
060	2977809-0000		1	CLEANING PIPE	
070	342850-0306		1	GASKET 60,3X76,1X5,2 MM 2"1/2 FDA 3-A	
220	312105-0455		6	SCREW M6S ISO 4017 M8X30 A480	
360	312605-0318		6	HEXAGON NUT, M6M M8 A280	
450	315229-0106		1	SQUARE RING, 61,2X68,2X3,7 MM 2"1/2 FDA	
490	359705-0003		1	WARNING SIGN ISO, DANGEROUS CHEMICALS	
500	359705-0007		1	WARNING SIGN ISO, HOT SURFACE	
TBA 0200S ANSI (See drawing on page: 1-252)					
010	2978352-0000		1	PIPE	
020	2977808-0000		1	CLEANING PIPE	
040	2978353-0000		1	CLEANING PIPE	
060	2977809-0000		1	CLEANING PIPE	
070	342850-0306		1	GASKET 60,3X76,1X5,2 MM 2"1/2 FDA 3-A	
220	312105-0455		6	SCREW M6S ISO 4017 M8X30 A480	
360	312605-0318		6	HEXAGON NUT, M6M M8 A280	
450	315229-0106		1	SQUARE RING, 61,2X68,2X3,7 MM 2"1/2 FDA	
490	359725-0105		1	WARNING SIGN ANSI (V), CHEMICAL HAZARD	
500	90459-7458		1	WARNING SIGN ANSI (H), HOT SURFACE	
TBA 0200S ISO (See drawing on page: 1-252)					
010	2978352-0000		1	PIPE	
020	2977808-0000		1	CLEANING PIPE	
040	2978353-0000		1	CLEANING PIPE	
060	2977809-0000		1	CLEANING PIPE	
070	342850-0306		1	GASKET 60,3X76,1X5,2 MM 2"1/2 FDA 3-A	
220	312105-0455		6	SCREW M6S ISO 4017 M8X30 A480	
360	312605-0318		6	HEXAGON NUT, M6M M8 A280	
450	315229-0106		1	SQUARE RING, 61,2X68,2X3,7 MM 2"1/2 FDA	
490	359705-0003		1	WARNING SIGN ISO, DANGEROUS CHEMICALS	
500	359705-0007		1	WARNING SIGN ISO, HOT SURFACE	
TBA 0250B ANSI (See drawing on page: 1-252)					
010	2978352-0000		1	PIPE	
020	2980999-0000		1	CLEANING PIPE	
040	2981058-0000		1	CLEANING PIPE	
060	2981055-0000		1	CLEANING PIPE	
070	342850-0307		1	GASKET 72,9X89,6X5,2 MM 3" FDA 3-A	
220	312105-0455		6	SCREW M6S ISO 4017 M8X30 A480	
360	312605-0318		6	HEXAGON NUT, M6M M8 A280	
450	315229-0107		1	SQUARE RING, 73,9X80,9X3,7 MM 2"1/2 FDA	
490	359725-0105		1	WARNING SIGN ANSI (V), CHEMICAL HAZARD	
500	90459-7458		1	WARNING SIGN ANSI (H), HOT SURFACE	
TBA 0250B ISO (See drawing on page: 1-252)					
010	2978352-0000		1	PIPE	
020	2980999-0000		1	CLEANING PIPE	
040	2981058-0000		1	CLEANING PIPE	
060	2981055-0000		1	CLEANING PIPE	
070	342850-0307		1	GASKET 72,9X89,6X5,2 MM 3" FDA 3-A	
220	312105-0455		6	SCREW M6S ISO 4017 M8X30 A480	
360	312605-0318		6	HEXAGON NUT, M6M M8 A280	
450	315229-0107		1	SQUARE RING, 73,9X80,9X3,7 MM 2"1/2 FDA	
490	359705-0003		1	WARNING SIGN ISO, DANGEROUS CHEMICALS	
500	359705-0007		1	WARNING SIGN ISO, HOT SURFACE	
TBA 0250S ANSI (See drawing on page: 1-252)					
010	2978352-0000		1	PIPE	
020	2981000-0000		1	CLEANING PIPE	
040	2981057-0000		1	CLEANING PIPE	
060	2977809-0000		1	CLEANING PIPE	
070	342850-0306		1	GASKET 60,3X76,1X5,2 MM 2"1/2 FDA 3-A	
220	312105-0455		6	SCREW M6S ISO 4017 M8X30 A480	
360	312605-0318		6	HEXAGON NUT, M6M M8 A280	
450	315229-0106		1	SQUARE RING, 61,2X68,2X3,7 MM 2"1/2 FDA	
490	359725-0105		1	WARNING SIGN ANSI (V), CHEMICAL HAZARD	
500	90459-7458		1	WARNING SIGN ANSI (H), HOT SURFACE	
TBA 0250S ISO (See drawing on page: 1-252)					
010	2978352-0000		1	PIPE	
020	2981000-0000		1	CLEANING PIPE	
040	2981057-0000		1	CLEANING PIPE	
060	2977809-0000		1	CLEANING PIPE	
070	342850-0306		1	GASKET 60,3X76,1X5,2 MM 2"1/2 FDA 3-A	
220	312105-0455		6	SCREW M6S ISO 4017 M8X30 A480	
360	312605-0318		6	HEXAGON NUT, M6M M8 A280	
450	315229-0106		1	SQUARE RING, 61,2X68,2X3,7 MM 2"1/2 FDA	
490	359705-0003		1	WARNING SIGN ISO, DANGEROUS CHEMICALS	
500	359705-0007		1	WARNING SIGN ISO, HOT SURFACE	
TBA 1000B ANSI (See drawing on page: 1-254)					

Machine Type | Group Description | Used-In | Group Number | Page No

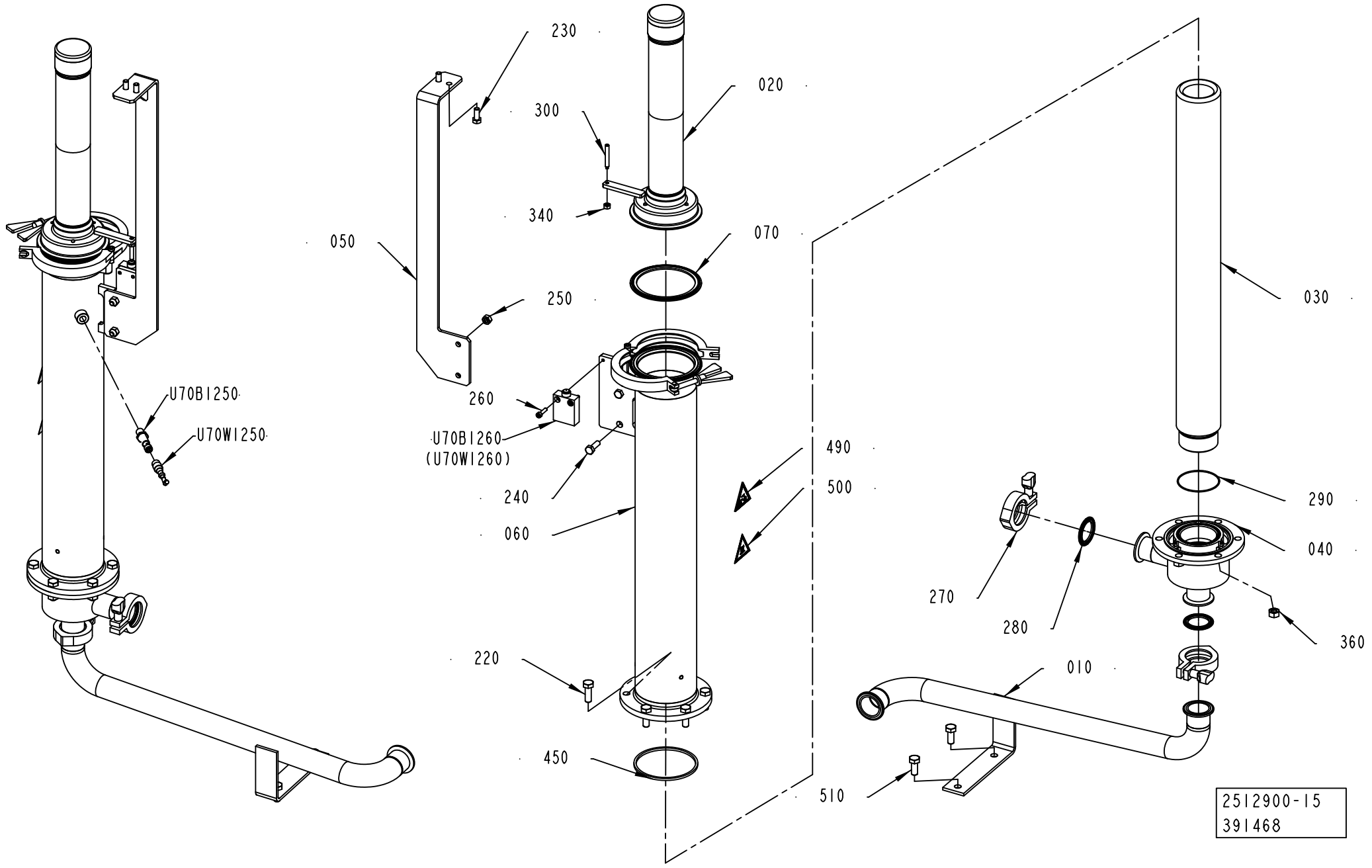
230
020
300
340
070
050
250
030
U70B1250
U70W1250
260
U70B1260
(U70W1260)
490
500
290
240
060
040
270
280
360
220
010
450
510
2512900-15
391468

ECM: 461960 - 20101002
Group number: 2512900-0600
Assembly Drawing: 2512900-15_1_AA

This list covers pages from 1-252 to 1-257

Pos	Part No	UN	Qty	Description	Page No
TBA 1000B ANSI (Cont'd) (See drawing on page: 1-254)					
010	2696021-0000		1	PIPE	
020	2986283-0000		1	CLEANING PIPE	
030	2512915-0000		1	PIPE	
040	2986294-0000		1	BEARING FLANGE	
050	3021550-0000		1	BRACKET	
060	2986286-0000		1	CLEANING PIPE	
220	312105-0495		6	SCREW M6S ISO 4017 M10X30 A480	
230	312105-0451		2	SCREW M6S ISO 4017 M8X20 A480	
240	312105-0453		2	SCREW M6S ISO 4017 M8X25 A480	
250	312605-0318		2	HEXAGON NUT, M6M M8 A280	
290	90459-1623		1	O-RING 66,4X1,78 MM	
360	312605-0320		6	HEXAGON NUT, M6M M10 A280	
450	315229-0108		2	SQUARE RING, 98,4X105,4X3,7 MM 4" FDA	
490	359725-0105		1	WARNING SIGN ANSI (V), CHEMICAL HAZARD	
500	90459-7458		1	WARNING SIGN ANSI (H), HOT SURFACE	
TBA 1000B ISO (See drawing on page: 1-254)					
010	2696021-0000		1	PIPE	
020	2986283-0000		1	CLEANING PIPE	
030	2512915-0000		1	PIPE	
040	2986294-0000		1	BEARING FLANGE	
050	3021550-0000		1	BRACKET	
060	2986286-0000		1	CLEANING PIPE	
220	312105-0495		6	SCREW M6S ISO 4017 M10X30 A480	
230	312105-0451		2	SCREW M6S ISO 4017 M8X20 A480	
240	312105-0453		2	SCREW M6S ISO 4017 M8X25 A480	
250	312605-0318		2	HEXAGON NUT, M6M M8 A280	
290	90459-1623		1	O-RING 66,4X1,78 MM	
360	312605-0320		6	HEXAGON NUT, M6M M10 A280	
450	315229-0108		2	SQUARE RING, 98,4X105,4X3,7 MM 4" FDA	
490	359705-0003		1	WARNING SIGN ISO, DANGEROUS CHEMICALS	
500	359705-0007		1	WARNING SIGN ISO, HOT SURFACE	
TBA 1000S ANSI (See drawing on page: 1-256)					
010	2696021-0000		1	PIPE	
020	2986288-0000		1	CLEANING PIPE	
030	2659367-0000		1	PIPE	
040	2986294-0000		1	BEARING FLANGE	
050	3021550-0000		1	BRACKET	
060	2986284-0000		1	CLEANING PIPE	
070	342850-0308		1	GASKET 97X117,7X5,2 MM 4" FDA 3-A	
220	312105-0495		6	SCREW M6S ISO 4017 M10X30 A480	
230	312105-0451		2	SCREW M6S ISO 4017 M8X20 A480	
240	312105-0453		2	SCREW M6S ISO 4017 M8X25 A480	
250	312605-0318		2	HEXAGON NUT, M6M M8 A280	
290	90459-1623		1	O-RING 66,4X1,78 MM	
360	312605-0320		6	HEXAGON NUT, M6M M10 A280	
450	315229-0108		1	SQUARE RING, 98,4X105,4X3,7 MM 4" FDA	
490	359725-0105		1	WARNING SIGN ANSI (V), CHEMICAL HAZARD	
500	90459-7458		1	WARNING SIGN ANSI (H), HOT SURFACE	
TBA 1000S ISO (See drawing on page: 1-256)					
010	2696021-0000		1	PIPE	
020	2986288-0000		1	CLEANING PIPE	
030	2659367-0000		1	PIPE	
040	2986294-0000		1	BEARING FLANGE	
050	3021550-0000		1	BRACKET	
060	2986284-0000		1	CLEANING PIPE	
070	342850-0308		1	GASKET 97X117,7X5,2 MM 4" FDA 3-A	
220	312105-0495		6	SCREW M6S ISO 4017 M10X30 A480	
230	312105-0451		2	SCREW M6S ISO 4017 M8X20 A480	
240	312105-0453		2	SCREW M6S ISO 4017 M8X25 A480	
250	312605-0318		2	HEXAGON NUT, M6M M8 A280	
290	90459-1623		1	O-RING 66,4X1,78 MM	
360	312605-0320		6	HEXAGON NUT, M6M M10 A280	
450	315229-0108		1	SQUARE RING, 98,4X105,4X3,7 MM 4" FDA	
490	359705-0003		1	WARNING SIGN ISO, DANGEROUS CHEMICALS	
500	359705-0007		1	WARNING SIGN ISO, HOT SURFACE	
Common Parts					
260	312115-0331		2	SCREW ISO4762 M5X20 A4 80	
270	342840-0103		2	CLAMPING PIECE DN 1-11/2, GH13LAH112304N	
280	342850-0304		2	GASKET 35,4X49,1X5,2 1"1/2 FDA, 3-A	
300	312311-0379		1	SCREW ISO4028 M6X45 FZB	
340	312605-0316		1	HEXAGON NUT, M6M M6 A280	
510	312105-0493		2	SCREW M6S ISO 4017 M10X25 A480	
520	90144-0073		1	TREBOFLON-TAPE W=13MM	
U70B1250	90459-0252		1	PROX.SWITCH IX 0208	
U70B1260	90044-0108		1	LIMIT SW. 24 CE1-S6	
U70W1250	90459-3250		1	SENSOR CABLE SICK DOP 1205 G15M	

Machine Type | Group Description | Used-In | Group Number | Page No

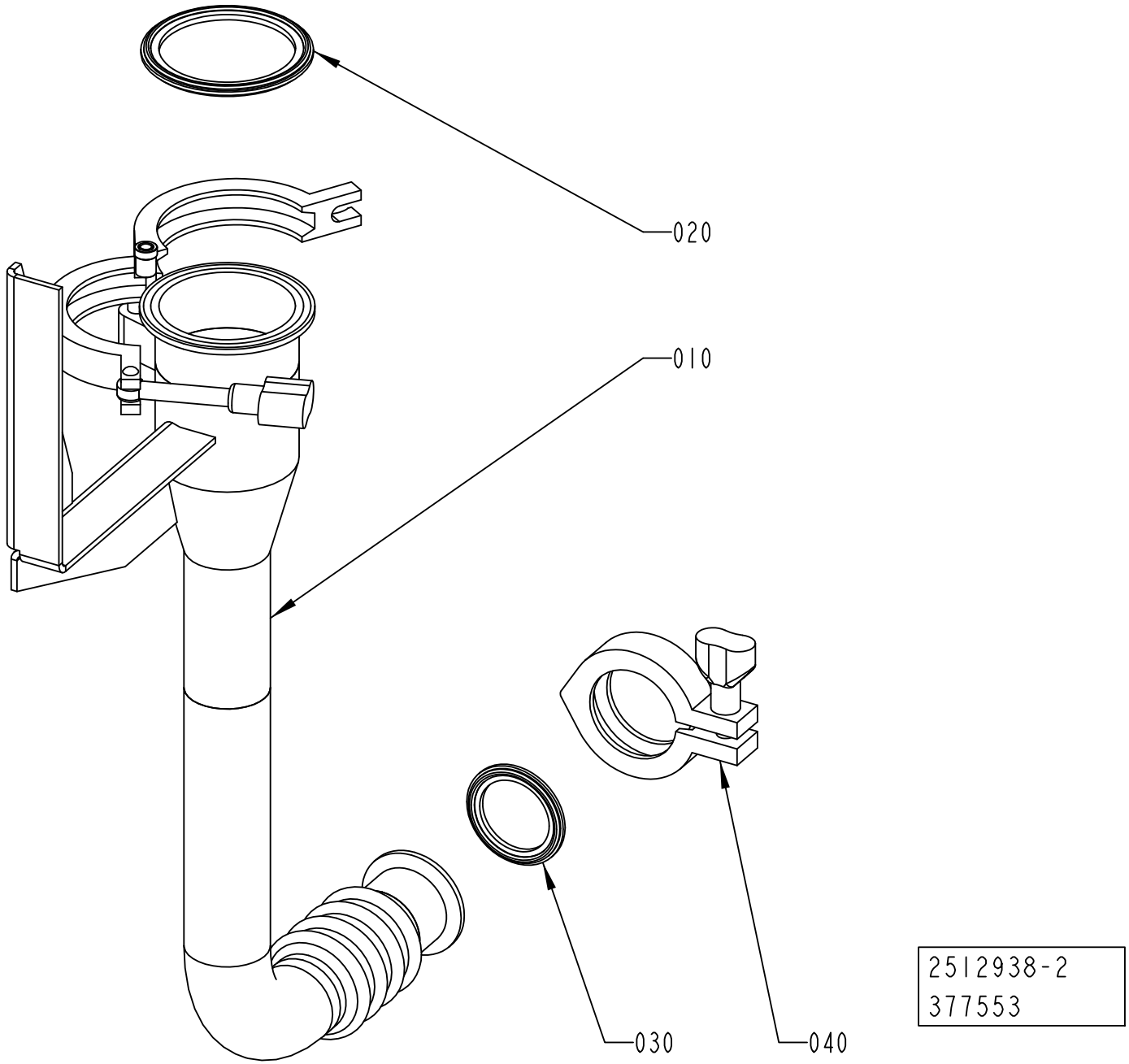
020
010
030
040
2512938-2
377553

ECM: 383814 - 20090403
Group number: 2512938-0200
Assembly Drawing: 2512938-2_1_AA

Pos	Part No	UN	Qty	Description	Page No
TBA 0125S					
010	3007549-0000		1	CLEANING CUP	
020	12242-0002		1	GASKET 40X32X5,5	
TBA 0200M, TBA 0200B, TBA 0200S, TBA 0250S, TBA 0250B					
010	3007547-0000		1	CLEANING CUP	
020	342850-0304		1	GASKET 35,4X49,1X5,2 1"1/2 FDA, 3-A	
TBA 1000B, TBA 1000SQ, TBA 1000S					
010	3007548-0000		1	CLEANING CUP	
020	342850-0306		1	GASKET 60,3X76,1X5,2 MM 2"1/2 FDA 3-A	
Common Parts					
030	342850-0304		1	GASKET 35,4X49,1X5,2 1"1/2 FDA, 3-A	
040	342840-0103		1	CLAMPING PIECE DN 1-11/2, GH13LAH112304N	

Pos	Part No	UN	Qty	Description	Page No

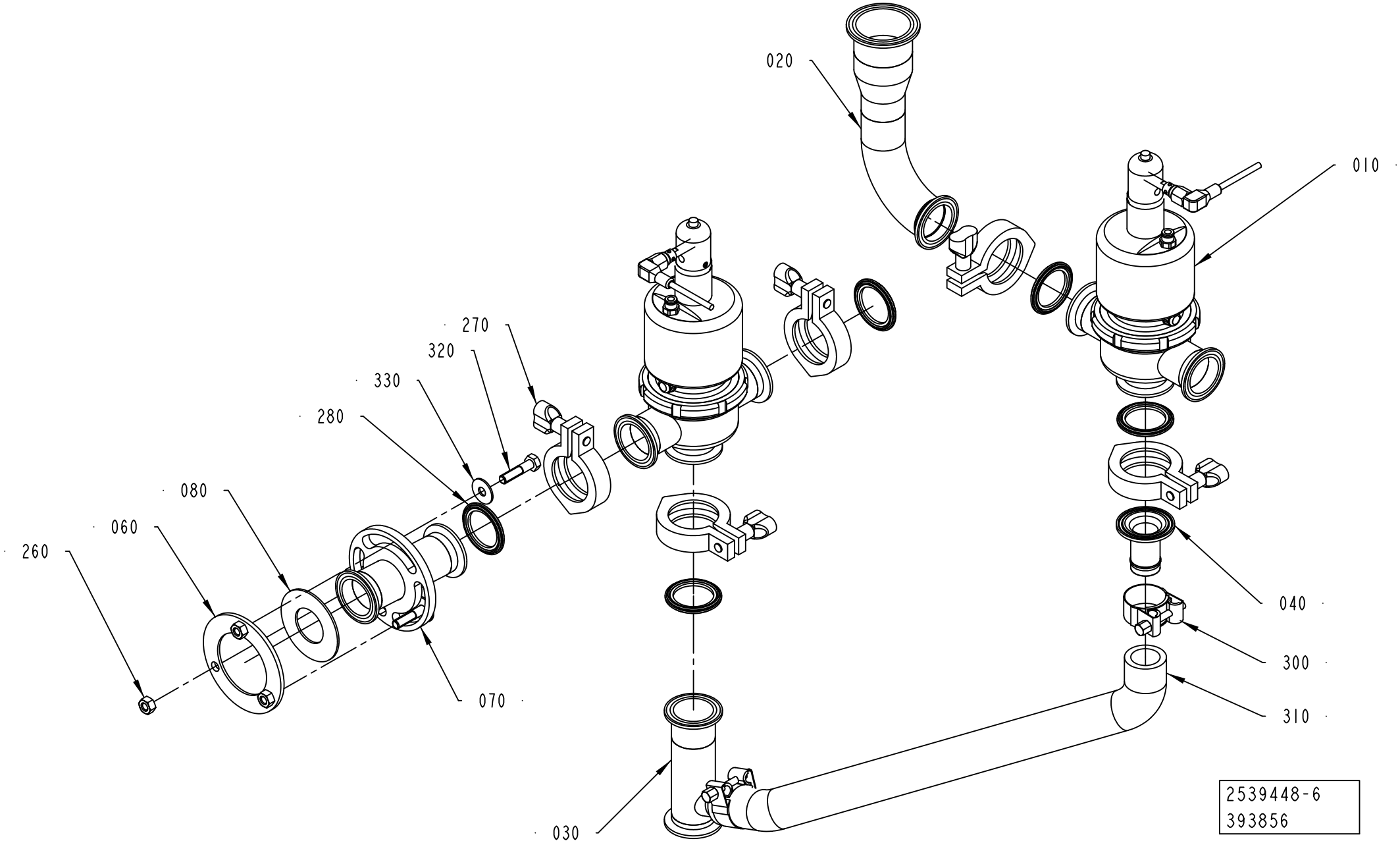
020
010
270
320
330
280
080
060
260
040
300
310
070
030
2539448-6
393856

ECM: 438007 - 20100701
Group number: 2539448-0400
Assembly Drawing: 2539448-6_1_AB

Pos	Part No	UN	Qty	Description	Page No
-					
010	2500088-0300		2	3-WAY VALVE	**1-263**
020	2851878-0000		1	PIPE	
030	2569807-0000		1	PIPE CONNECTION	
040	2851879-0000		1	HOSE CONNECTION	
060	1499127-0000		1	FLANGE	
070	2500075-0000		1	PIPE	
080	2500076-0000		1	GASKET	
260	312605-0318		3	HEXAGON NUT, M6M M8 A280	
270	342840-0103		5	CLAMPING PIECE DN 1-11/2, GH13LAH112304N	
280	342850-0304		5	GASKET 35,4X49,1X5,2 1"1/2 FDA, 3-A	
300	90459-6165		2	HOSE CLIP, 34 -37 MM	
310	90166-0233	MM	530	HOSE	
320	312109-0457		3	SCREW M6S ISO 4017 M8X35 A480	
330	90005-0105		3	WASHER PLAIN ROUND 8,4(M8)/24, H=1,5	

Pos	Part No	UN	Qty	Description	Page No

Machine Type | Group Description | Used-In | Group Number | Page No

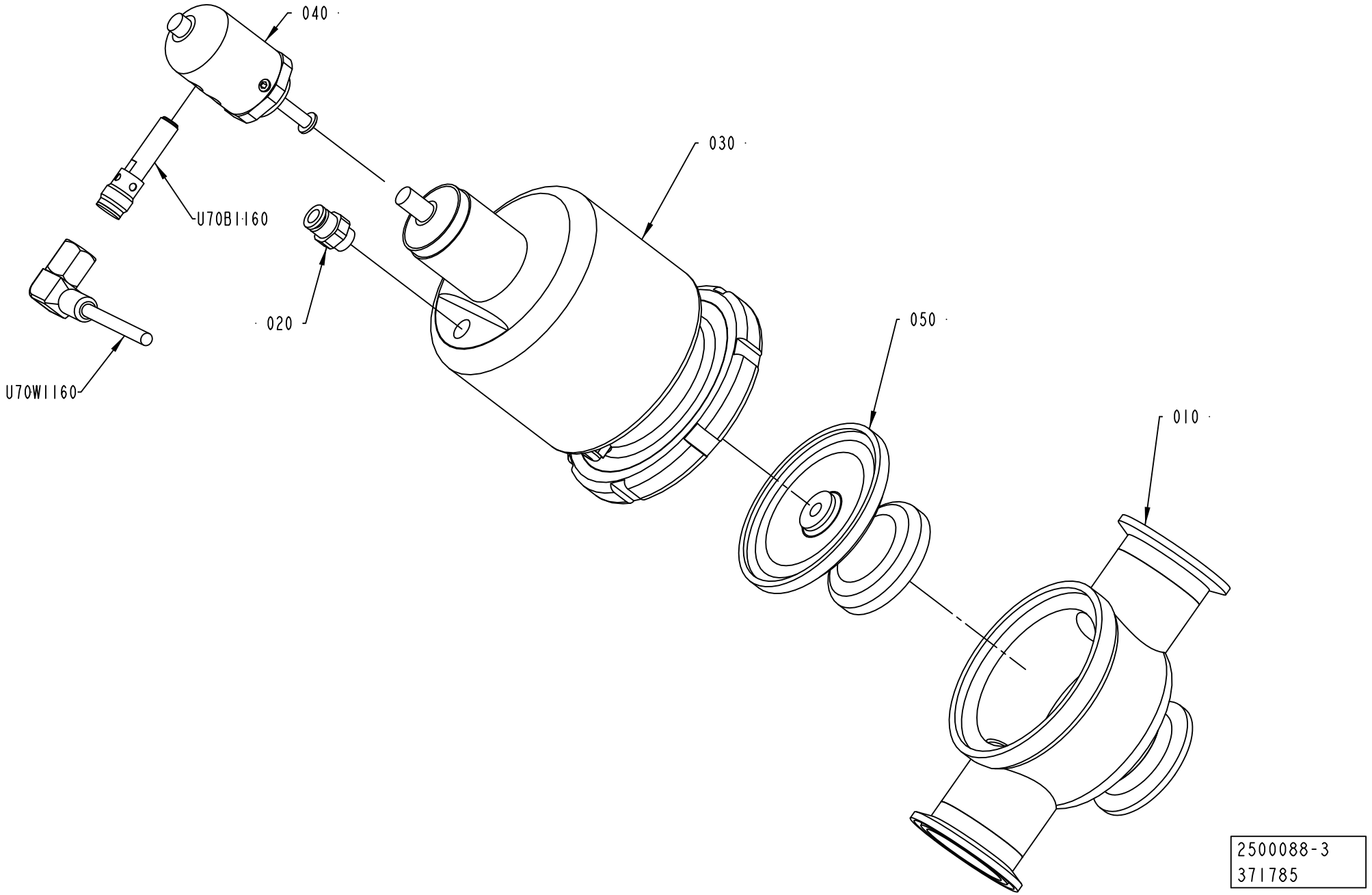
040
030
U70B1160
020
050
U70W1160
010
2500088-3
371785

ECM: 371979 - 20081201
Group number: 2500088-0300
Assembly Drawing: 2500088-3_1_AA

Pos	Part No	UN	Qty	Description	Page No
-					
010	2501292-0000		1	VALVE HOUSING	
020	342722-0202		1	PIPE COUPLING 1/8" D=6MM	
030	90458-1531		1	ACTUATOR, N.O., PA 38/100	
	90458-1534		*1*	*SILENCER N4-23, FOR PA 38/100*	
	90458-1533		*1*	*LOCK RING N7-29, FOR PA 38*	
040	90458-1537		1	HOLDER FOR SENSORS, PA38/PO-TET-PTFE	
050	90458-1541		1	DIAPHRAGM, NA 38/25 PFTE	
	90458-1542		*1*	*SUPPORT FOR NA 38/25 DIAPHRAGM*	
U70B1160	90459-3286		1	INDUCTIVE SWITCH E2A-S08KS02-M1-B1	
U70W1160	351310-0100		1	ACTUATOR/SENSOR CABLE PRKWT 4-07/10M	

Pos	Part No	UN	Qty	Description	Page No

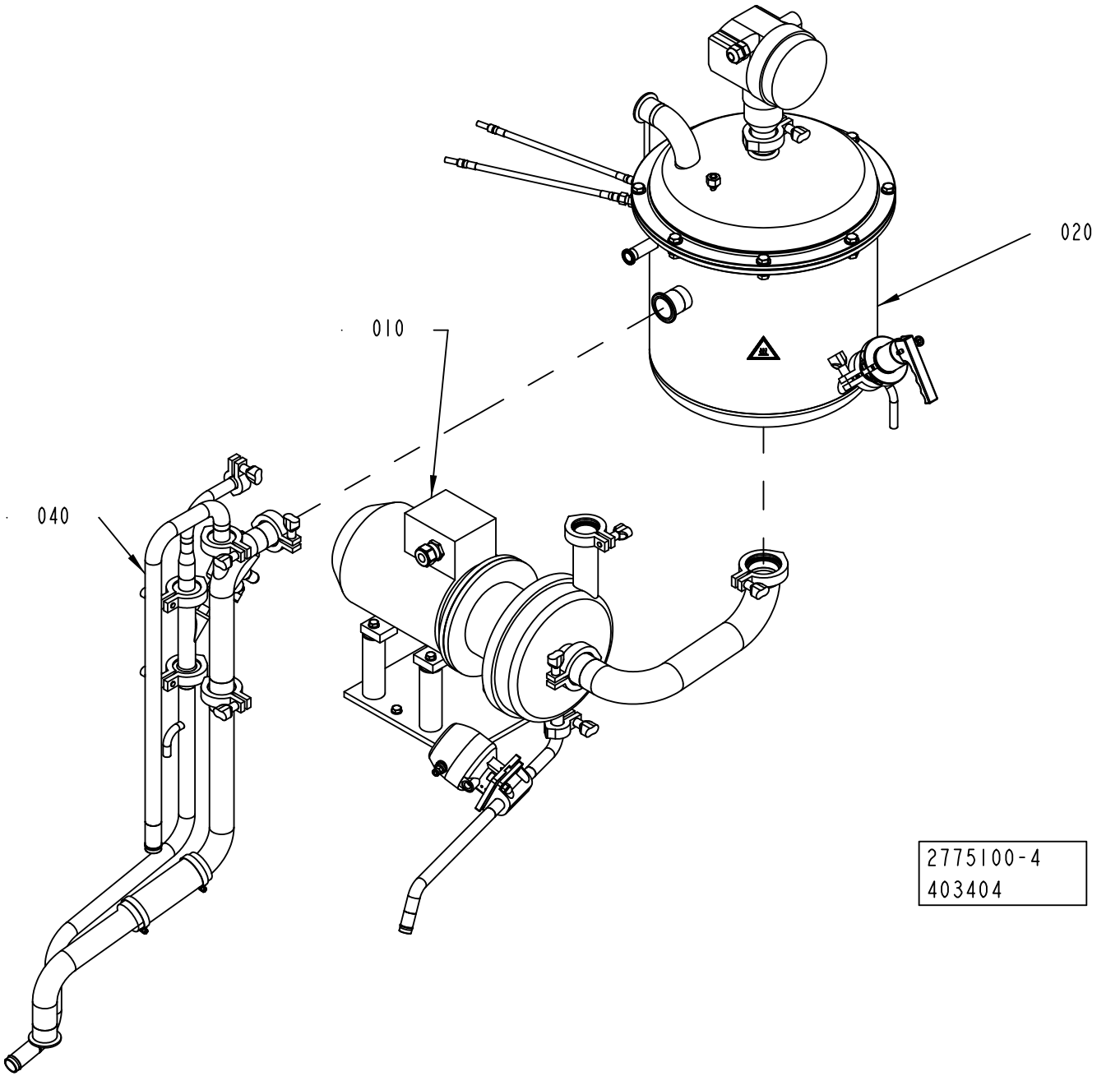
020
010
040
2775100-4
403404

ECM: 404500 - 20091001
Group number: 2775100-0300
Assembly Drawing: 2775100-4_1_AA

Pos	Part No	UN	Qty	Description	Page No
-					
010	2829770-0200		1	CENTRIFUGAL PUMP	**1-267**
020	2837100-0200		1	CLEANING TANK	**1-269**
040	2833354-0300		1	PIPE-LINE	**1-271**

Pos	Part No	UN	Qty	Description	Page No

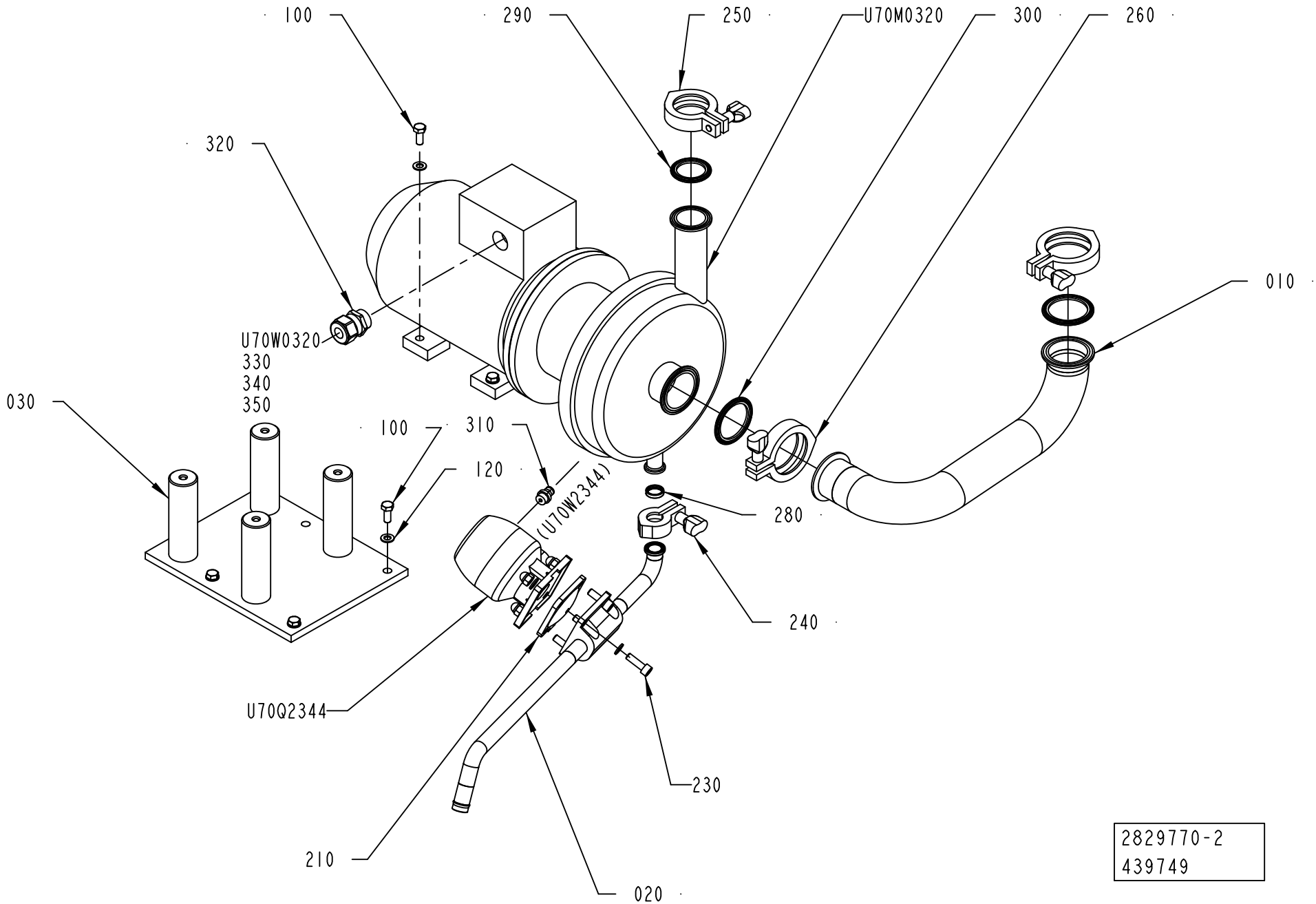
100
290
250
U70M0320
300
260
320
010
U70W0320
330
340
350
030
100
310
120
(U70W2344)
280
240
U70Q2344
230
210
020
2829770-2
439749

ECM: 441077 - 20100701
Group number: 2829770-0200
Assembly Drawing: 2829770-2_1_AC

Pos	Part No	UN	Qty	Description	Page No
A3/SPEED					
020	2851881-0000		1	DRAIN PIPE	
Common Parts					
010	2829769-0000		1	PIPE	
030	2833351-0000		1	SUPPORT	
100	312105-0451		7	SCREW M6S ISO 4017 M8X20 A480	
120	315105-0165		7	WASHER BRB 8,4X16 RFR	
210	342800-1103		1	DIAPHRAGM FDA PTFE/EPDM 5E, SEAT S. 25	
230	342800-1503		1	VALVE ASSEMBLING KIT, SEAT S. 25	
240	90600-3559		1	CLAMPING PIECE, 211290	
250	342840-0103		1	CLAMPING PIECE DN 1-11/2, GH13LAH112304N	
260	342840-0105		2	CLAMPING PIECE, GH13LAH2304NO79612011202	
280	90600-3558		1	GASKET 16,2X21,8X4,45 MM 3/4"	
290	342850-0304		1	GASKET 35,4X49,1X5,2 1"1/2 FDA, 3-A	
300	342850-0305		2	GASKET 47,8X62,6X5,2 MM 2" FDA 3-A	
310	350001-0008		1	PUSH-IN FITTING QS-F-G1/4-6	
320	90458-0440		1	GLAND, EXTENDED WITH INSERT, M25X1,5	
330	90459-6632		1	HOOD 6 B TOP ENTRY, 19 30 006 1440	
340	90110-0052		1	MALE INSERT HAN 6E 09 33 006 2601	
350	90458-0307		1	CABLE GLAND, M20X1,5, NO.5311 1020	
U70M0320	2851886-0000		1	CENTRIFUGAL PUMP	
	90602-7227		*1*	*IMPELLER CLEARENCE TOOL, 9612912801*	
	6-9611 92 2454		*1*	*SERVICE KIT SOLIDC-1 EPDM SSS*	
	6-9612 90 3601		*1*	*TOOL COMPLETE STATIONARY SEAL RING LKH*	
U70Q2344	342800-1303		1	ACTUATOR, SS, N.O. SEAT S. 25	
U70W0320	90220-0104	MM	6300	SCR. CABLE 4X1,5MM2	

Pos	Part No	UN	Qty	Description	Page No

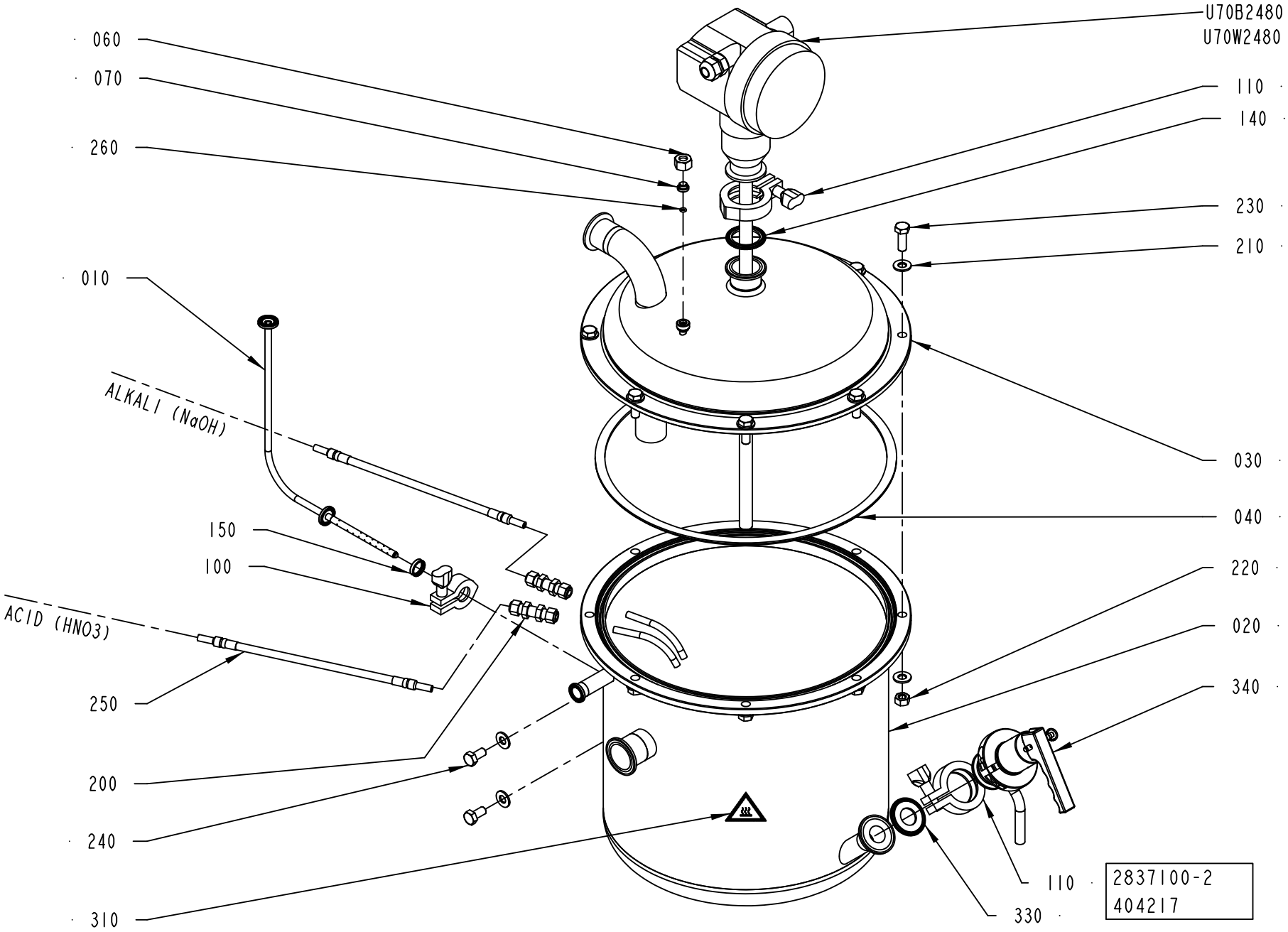
U70B2480
U70W2480
060
070
260
110
140
230
210
010
ALKALI (NaOH)
030
150
040
100
220
ACID (HNO3)
020
340
250
200
240
110
330
310
2837100-2
404217

ECM: 461963 - 20101002
Group number: 2837100-0200
Assembly Drawing: 2837100-2_1_AE

Pos	Part No	UN	Qty	Description	Page No
HI ANSI					
310	90459-7458		1	WARNING SIGN ANSI (H), HOT SURFACE	
HI ISO					
310	359705-0007		1	WARNING SIGN ISO, HOT SURFACE	
NOHI ANSI					
060	2847313-0000		1	NUT	
070	2869175-0000		1	PLUG	
310	90459-7458		1	WARNING SIGN ANSI (H), HOT SURFACE	
NOHI ISO					
060	2847313-0000		1	NUT	
070	2869175-0000		1	PLUG	
310	359705-0007		1	WARNING SIGN ISO, HOT SURFACE	
Common Parts					
010	2895158-0000		1	STEAM PIPE	
020	2799899-0000		1	CLEANING TANK	
030	2829764-0000		1	LID	
040	2829766-0000		1	SEALING	
100	90600-3559		1	CLAMPING PIECE, 211290	
110	342840-0103		2	CLAMPING PIECE DN 1-11/2, GH13LAH112304N	
140	342850-0304		1	GASKET 35,4X49,1X5,2 1"1/2 FDA, 3-A	
150	90600-3558		1	GASKET 16,2X21,8X4,45 MM 3/4"	
200	90030-0485		2	CONN. BULKHEAD BMC8-316	
210	315105-0173		18	WASHER BRB 10,5X22 RFR	
220	312605-0320		8	HEXAGON NUT, M6M M10 A280	
230	312105-0495		8	SCREW M6S ISO 4017 M10X30 A480	
240	312105-0491		2	SCREW M6S ISO 4017 M10X20 A480	
250	90459-4169		2	HOSE ASSEMBLY 919-1D-1D-8-8-5C-3800	
260	90600-0495		1	O-RING 4X2 MM	
330	342850-0303		1	GASKET 22,7X49,1X5,2 MM 1" FDA, 3-A	
340	90601-0926		1	VALVE, 0968.50085	
U70B2480	90600-0821		1	LEVEL PR.,LEVELFLEX-M FMP41C-AKTJKB11A2Y	
U70W2480	90459-4274	MM	5700	SCR. CABLE 2X0,5MM2	

Pos	Part No	UN	Qty	Description	Page No

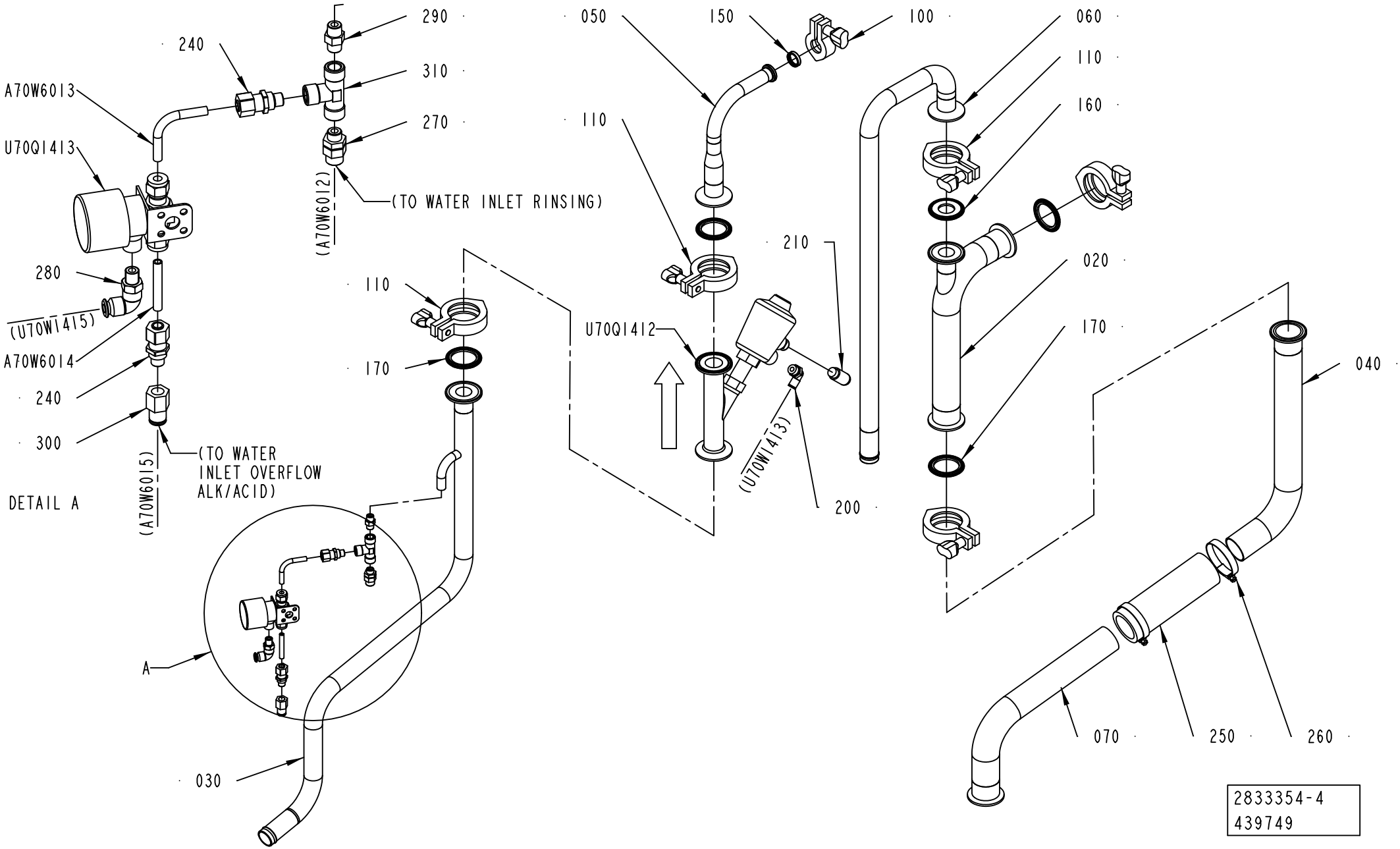
290
240
310
270
A70W6013
U70Q1413
(A70W6012)
(TO WATER INLET RINSING)
280
(U70W1415)
A70W6014
240
300
(A70W6015)
(TO WATER
INLET OVERFLOW
ALK/ACID)
DETAIL A
110
170
A
030
050
150
100
110
210
U70Q1412
(U70W1413)
200
060
110
160
020
170
040
070
250
260
2833354-4
439749

ECM: 441086 - 20100701
Group number: 2833354-0300
Assembly Drawing: 2833354-4_1_AC

Pos	Part No	UN	Qty	Description	Page No
-					
020	2696005-0000		1	PIPE	
030	3037765-0000		1	PIPE-LINE	
040	2890594-0000		1	PIPE	
050	2833345-0000		1	PIPE	
060	2851883-0000		1	PIPE	
070	2890593-0000		1	PIPE	
100	90600-3559		1	CLAMPING PIECE, 211290	
110	342840-0103		5	CLAMPING PIECE DN 1-11/2, GH13LAH112304N	
150	90600-3558		1	GASKET 16,2X21,8X4,45 MM 3/4"	
160	342850-0303		1	GASKET 22,7X49,1X5,2 MM 1" FDA, 3-A	
170	342850-0304		4	GASKET 35,4X49,1X5,2 1"1/2 FDA, 3-A	
200	350002-0008		1	PUSH-IN L-FITTING QSL-F-G1/4-6	
210	90328-0026		1	SILENCER G1/4"	
240	90459-1424		2	CONN. STR., 6-G1/8, EXT. THREAD	
250	90166-0236	MM	150	HOSE, 38/51 REINFORCED RUBBER	
260	342991-0109		2	HOSE CLIP,WORM DRIVE TYPE (44)-56	
270	342921-0121		2	STRAIGHT CPLNG,EXT.THREADED 8/6-G1/8INCH	
280	90055-0158		1	ELBOW PIPE JOINT,EXT.THR,D=6 MM NPT1/8	
290	90330-0032		1	NIPPLES, EXT. THREAD. ISO 7/1 R1/8-R1/8	
300	342923-0113		1	STRAIGHT COUPL.,INT.THREADED 6/4-G1/8"	
310	90140-0015		1	T-PIPE, INT. THREAD, 2003-1/8	
A70W6013	3055165-0000		1	PIPE	
A70W6014	3055164-0000		1	PIPE	
U70Q1412	90459-1241		1	ANGLE SEAT VALVE, TRI-CLAMP, N.C. DN20	
U70Q1413	90602-0970		1	PNEUMATIC NEEDLE VALVE, SS-92S6MM-C-S1	

Pos	Part No	UN	Qty	Description	Page No

Machine Type | Group Description | Used-In | Group Number | Page No

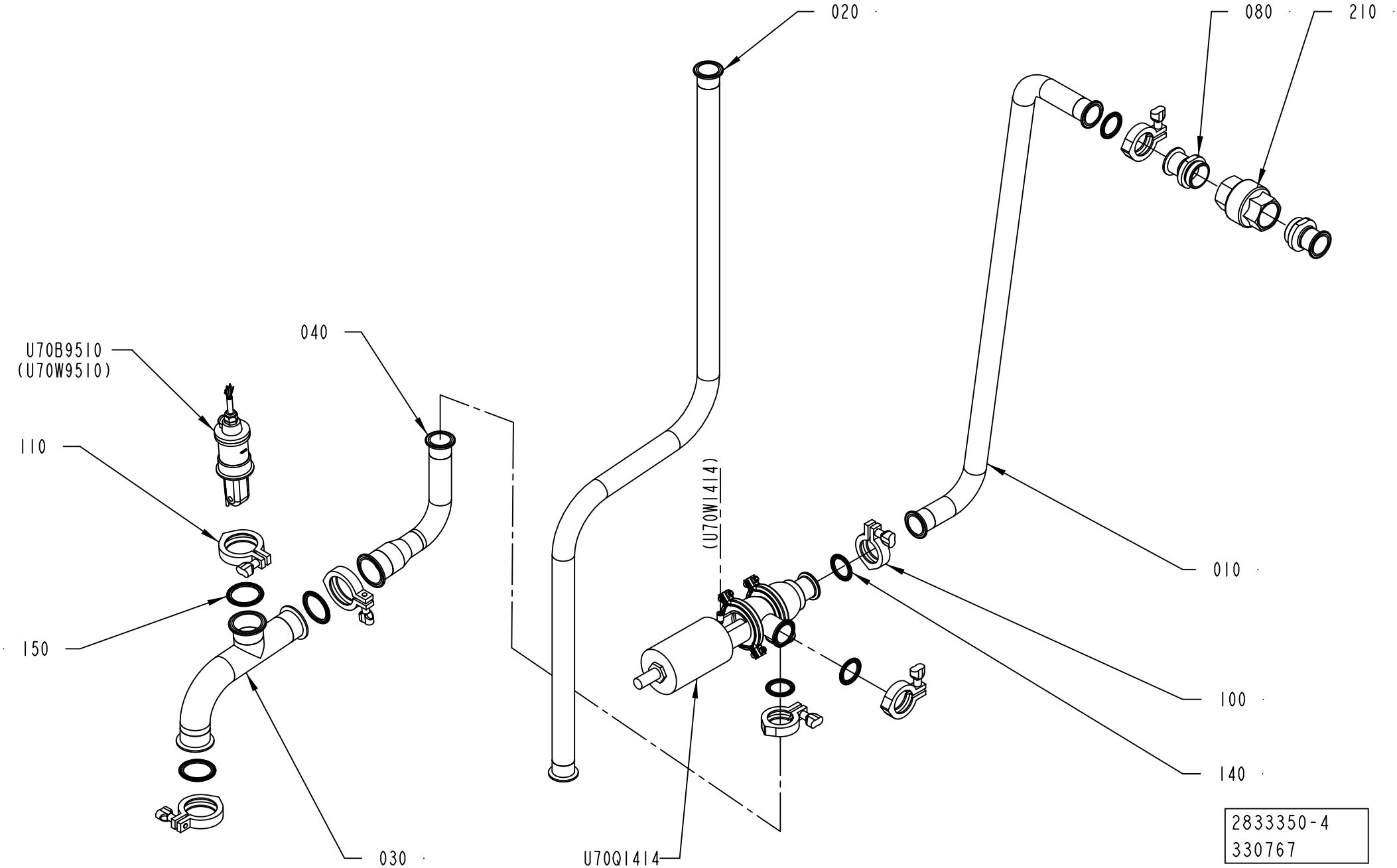
020
080
210
040
U70B9510
(U70W9510)
110
150
030
(U70W1414)
U70Q1414
010
100
140
2833350-4
330767

ECM: 403836 - 20091001
Group number: 2833350-0200
Assembly Drawing: 2833350-4_1_AB

Pos	Part No	UN	Qty	Description	Page No
A3/SPEED					
030	2846563-0000		1	PIPE	
040	2846562-0000		1	PIPE	
Common Parts					
010	2936336-0000		1	PIPE	
020	2829767-0000		1	PIPE	
080	2531083-0000		2	SLEEVE	
100	342840-0103		4	CLAMPING PIECE DN 1-11/2, GH13LAH112304N	
110	342840-0105		3	CLAMPING PIECE, GH13LAH2304NO79612011202	
140	342850-0304		4	GASKET 35,4X49,1X5,2 1"1/2 FDA, 3-A	
150	342850-0305		3	GASKET 47,8X62,6X5,2 MM 2" FDA 3-A	
210	90230-0045		1	NON-RETURN VALVE 1 1/2", 900025A	
	90230-0309		*1*	*GASKET KIT, 4968995*	
U70B9510	90600-3924		1	CONDUCTIVITY SENSOR CLS 54-ACS1022	
U70Q1414	90600-1946		1	VALVE, SEAT, 3A. 9613320304	

Pos	Part No	UN	Qty	Description	Page No

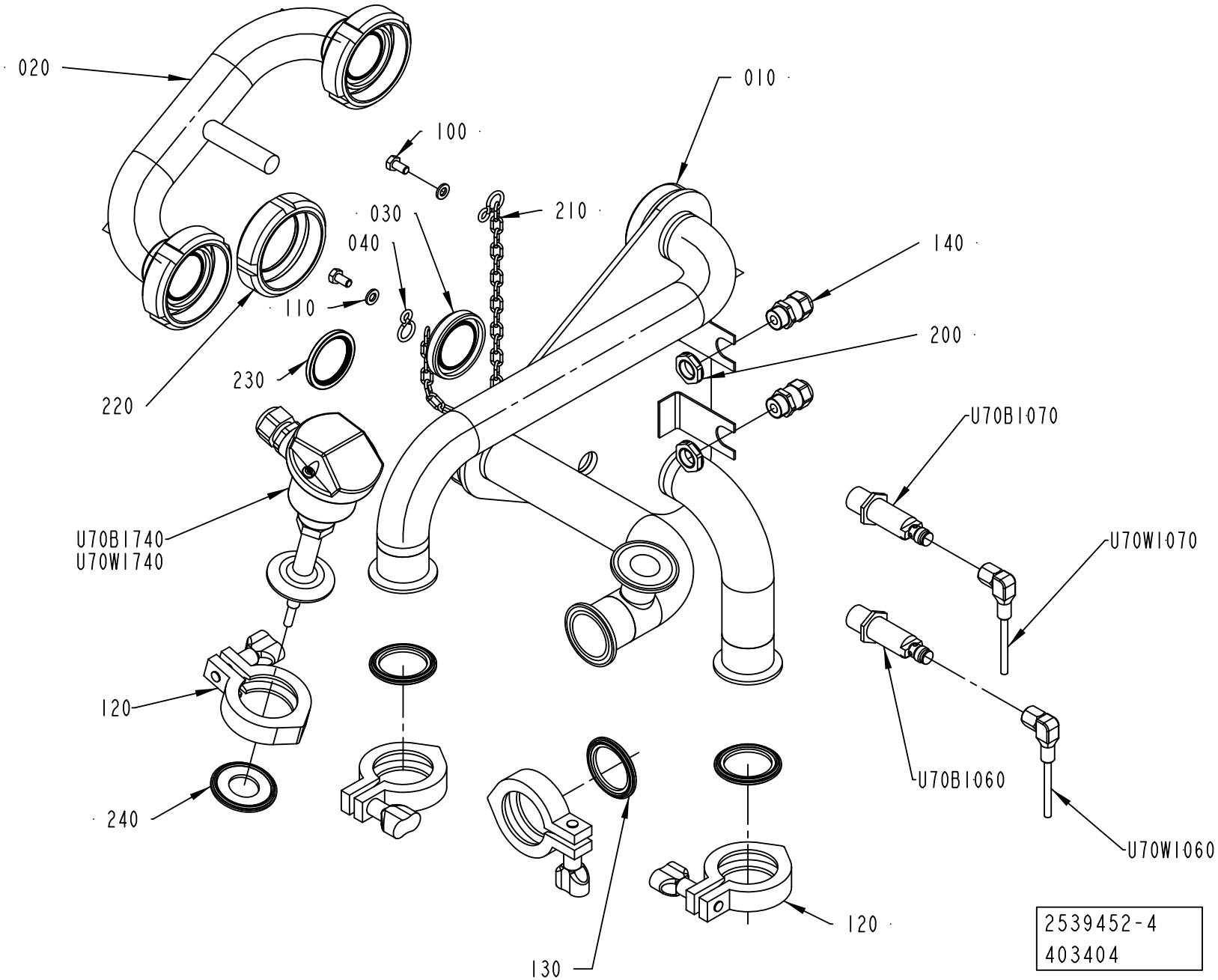
020
010
100
030
210
040
140
110
200
230
220
U70B1070
U70B1740
U70W1740
U70W1070
120
U70B1060
240
U70W1060
130
120
2539452-4
403404

ECM: 450571 - 20101001
Group number: 2539452-0400
Assembly Drawing: 2539452-4_1_AA

Pos	Part No	UN	Qty	Description	Page No
-					
010	3040926-0000		1	PIPE SUPPORT	
020	3022288-0000		1	CONNECTING PIPE	
030	2525338-0000		1	PLUG	
040	209183-0000		2	RING	
100	312105-0366		2	SCREW M6S ISO 4017 M6X12 A480	
110	315105-0153		2	WASHER BRB 6,4X12 RFR	
120	342840-0103		4	CLAMPING PIECE DN 1-11/2, GH13LAH112304N	
130	342850-0304		3	GASKET 35,4X49,1X5,2 1"1/2 FDA, 3-A	
140	90458-0306		2	CABLE GLAND, M16X1,5, NO.5311 1010	
200	90458-0322		2	UT, M16X1,5	
210	90155-0008	MM	500	HANGER CHAIN, 18	
220	3020447-0000		1	LOCKING RING	
230	90217-0348		3	GASKET 35,4X46,8X4 MM	
240	342850-0303		1	GASKET 22,7X49,1X5,2 MM 1" FDA, 3-A	
U70B1060	90459-6393		1	INDUCTIVE SWITCH E2A-M18LS08-M1-B1	
U70B1070	90459-6393		1	INDUCTIVE SWITCH E2A-M18LS08-M1-B1	
U70B1740	90600-4392		1	TEMPERATURE SENSOR, TR45-BF5A1Q3MA0000	
U70W1060	351310-0100		1	ACTUATOR/SENSOR CABLE PRKWT 4-07/10M	
U70W1070	351310-0100		1	ACTUATOR/SENSOR CABLE PRKWT 4-07/10M	
U70W1740	351150-0404	MM	7000	CABLE OLFLEX 4X0,75 MM2 LIGHT/GREY	

Pos	Part No	UN	Qty	Description	Page No

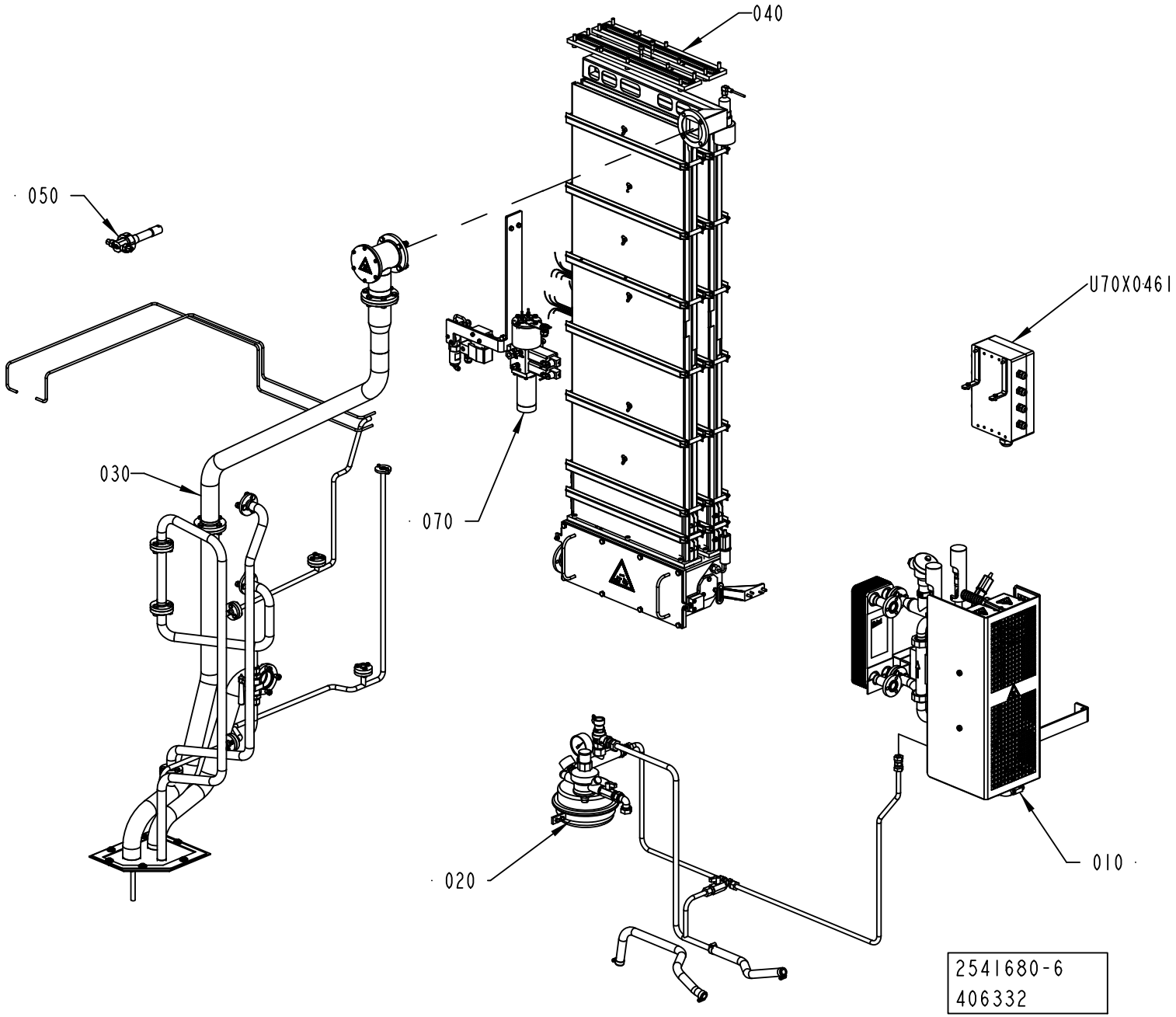
040
050
U70X0461
030
070
020
010
2541680-6
406332

ECM: 406332 - 20091001
Group number: 2541680-0300
Assembly Drawing: 2541680-6_1_AA

Pos	Part No	UN	Qty	Description	Page No
-					
010	1558495-0300		1	HEATING UNIT	**1-279**
020	2531052-0200		1	PRESSURE UNIT	**1-281**
030	2529484-0300		1	PEROXIDE PIPE	**1-283, 1-285**
040	2715556-0300		1	BATH	**1-287, 1-289**
050	2547391-0100		1	NOZZLE	**1-291**
070	2529485-0400		1	SPRAY SYSTEM	**1-293**
U70X0461	1532239-0300		1	CONNECTION BOX	**1-295**

Pos	Part No	UN	Qty	Description	Page No

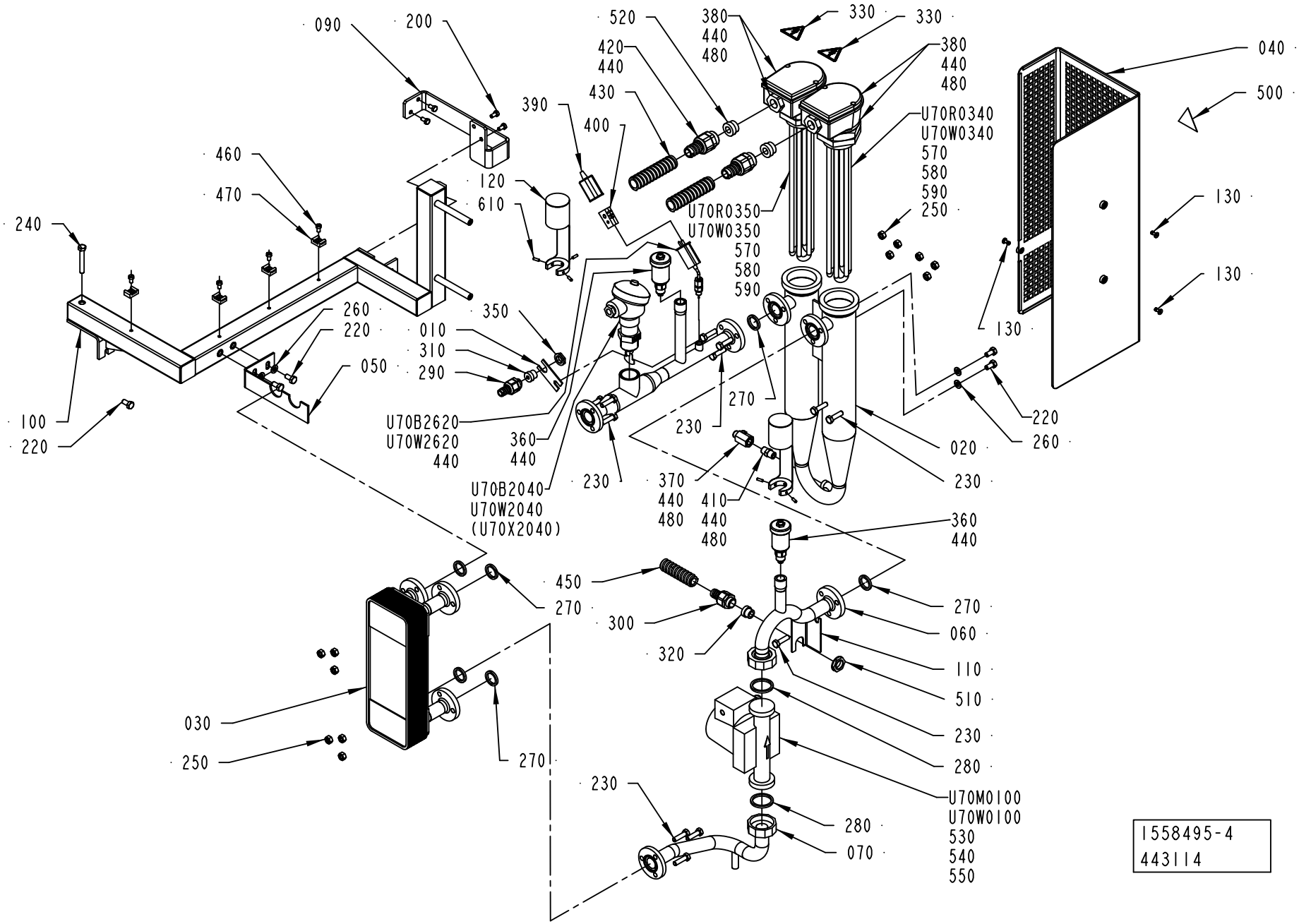
090
200
520
380
440
480
330
330
420
440
430
390
400
380
440
480
040
500
U70R0340
U70W0340
570
580
590
250
460
470
120
610
U70R0350
U70W0350
570
580
590
130
130
240
260
220
010
310
290
350
050
130
100
220
U70B2620
U70W2620
440
360
440
270
230
220
260
020
230
U70B2040
U70W2040
(U70X2040)
230
370
440
480
410
440
480
360
440
450
270
300
320
270
060
110
510
230
280
030
250
270
230
280
070
U70M0100
U70W0100
530
540
550
1558495-4
443114

ECM: 461958 - 20101002
Group number: 1558495-0300
Assembly Drawing: 1558495-4_1_AB

Pos	Part No	UN	Qty	Description	Page No
50HZ ISO					
330	359705-0015		2	WARNING SIGN ISO, RISK OF ELECTRIC SHOCK	
500	359705-0007		1	WARNING SIGN ISO, HOT SURFACE	
U70M0100	90321-0134		1	CIRC. PUMP TCB25-6LV.230 HZ 50	
60HZ ANSI					
330	359715-0100		2	WARNING SIGN ANSI (H), ELECTRIC SHOCK	
500	90459-7458		1	WARNING SIGN ANSI (H), HOT SURFACE	
U70M0100	90321-0135		1	CIRC. PUMP 230V60HZ	
60HZ ISO					
330	359705-0015		2	WARNING SIGN ISO, RISK OF ELECTRIC SHOCK	
500	359705-0007		1	WARNING SIGN ISO, HOT SURFACE	
U70M0100	90321-0135		1	CIRC. PUMP 230V60HZ	
Common Parts					
010	3037745-0000		1	BRACKET	
020	1334507-0000		1	TUBE	
030	1346568-0000		1	HEAT EXCHANGER	
040	3042030-0000		1	PROTECTION	
050	1349608-0000		1	HOLDER	
060	1538049-0000		1	PIPE	
070	1538503-0000		1	PIPE	
080	3020127-0000		1	PIPE	
090	2916427-0000		1	BRACKET	
100	3041997-0000		1	FRAME	
110	3037746-0000		1	BRACKET	
120	2898459-0000		2	PROTECTION	
130	90601-2046		3	CAPTIVE SCREW M6, GUTBG 6-4-12	
200	312105-0366		4	SCREW M6S ISO 4017 M6X12 A480	
220	312105-0449		5	SCREW M6S ISO 4017 M8X16 A480	
230	312105-0455		12	SCREW M6S ISO 4017 M8X30 A480	
240	312105-0462		1	SCREW M6S ISO 4014 M8X55 A480	
250	312605-0318		12	HEXAGON NUT, M6M M8 A280	
260	315105-0165		4	WASHER BRB 8,4X16 RFR	
270	315229-0103		6	SQUARE RING, 23,1X30,1X3,7 MM 1" FDA	
280	315229-0104		2	SQUARE RING, 35,8X42,8X3,7 MM 1"1/2 FD	
290	90458-0427		1	HOSE GLAND W/O INSERT M16 EXTENDED	
300	90458-0429		1	HOSE GLAND W/O INSERT M20 EXTENDED	
310	353249-0008		1	INSERT, SINGLE HOLE, EK 152/7	
320	353249-0011		1	INSERT, SINGLE HOLE, EK 153/11	
350	90458-0322		1	UT, M16X1,5	
360	90600-6015		2	VENTING VALVE, 12003 (+ 11163)	
	315202-0721		*1*	*O-RING 26,64X2,62 MM*	
	90600-6021		*1*	*O-RING 17X2 MM*	
370	90600-0775		1	BALL VALVE G1/4, 406F-1/4"	
380	90206-0326		2	CONNECTION BOX K2 FOR 90206-56 AND -70	
390	90326-0012		1	PROTECTIVE COVER, T31A4618	
400	90326-0020		1	PLUG, FEMALE YELLOW CR-AL	
410	90330-0043		1	NIPPLES, EXT. THREAD. R-207R1/4	
420	90012-0131		2	HOSE GLAND W/O INSERT PG21 NORMAL	
430	90152-0051	M	4	SPIRAL CONDUIT, 25X18, UL 1816	
440	90144-0073		1	TREBOFLON-TAPE W=13MM	
450	90152-0050	M	3.5	SPIRAL CONDUIT, 20X13, UL 1313	
460	312125-0364		4	SCREW ISO 1207 M6X10 A4	
470	352113-0204		4	ANCHOR PLATES FOR STRIPS, TYPE TM3S25-M	
480	90157-0037		1	THREAD SEALANT LOCTITE 542	
510	90458-0323		1	NUT, M20X1,5	
520	353249-0013		2	INSERT, SINGLE HOLE, EK 154/13	
530	90459-3080		1	HOOD HAN-BRID 3A 19 20 003 1443	
540	90459-6821		1	MALE INSERT HAN 4A, 09 20 004 2611	
550	90458-0307		1	CABLE GLAND, M20X1,5, NO.5311 1020	
570	90459-6632		2	HOOD 6 B TOP ENTRY, 19 30 006 1440	
580	90110-0052		2	MALE INSERT HAN 6E 09 33 006 2601	
590	90458-0307		2	CABLE GLAND, M20X1,5, NO.5311 1020	
610	312318-0291		6	SCREW ISO4029 M4X12 A4	
U70B2040	3060467-0000		1	FLOW SWITCH	
U70B2620	90326-0057		1	THERMOCOUPLE, CR-AL	
U70R0340	90206-0070		1	HEATING ELEMENT 6000W 380/220V	
	90206-0326		*1*	*CONNECTION BOX K2 FOR 90206-56 AND -70*	
	90269-0308		*1*	*GASKET 59X68X3 MM*	
U70R0350	90206-0070		1	HEATING ELEMENT 6000W 380/220V	
	90206-0326		*1*	*CONNECTION BOX K2 FOR 90206-56 AND -70*	
	90269-0308		*1*	*GASKET 59X68X3 MM*	
U70W0100	351150-0412	M	4	CABLE OLFLEX 3X1,5 MM2 LIGHT/GREY	
U70W0340	351120-0264	M	5.5	CABLE ÖLFLEX HEAT 180 SIHF 4X1,5	
U70W0350	351120-0264	M	5.5	CABLE ÖLFLEX HEAT 180 SIHF 4X1,5	
U70W2040	351150-0431	M	6	CABLE OLFLEX 2X0,75 MM2 LIGHT/GREY	
U70W2620	90220-0034	M	6	THERMOCABLE TEX/SITW-20F-KX 2X0,5MM2	

Machine Type | Group Description | Used-In | Group Number | Page No

PRESSURE UNIT

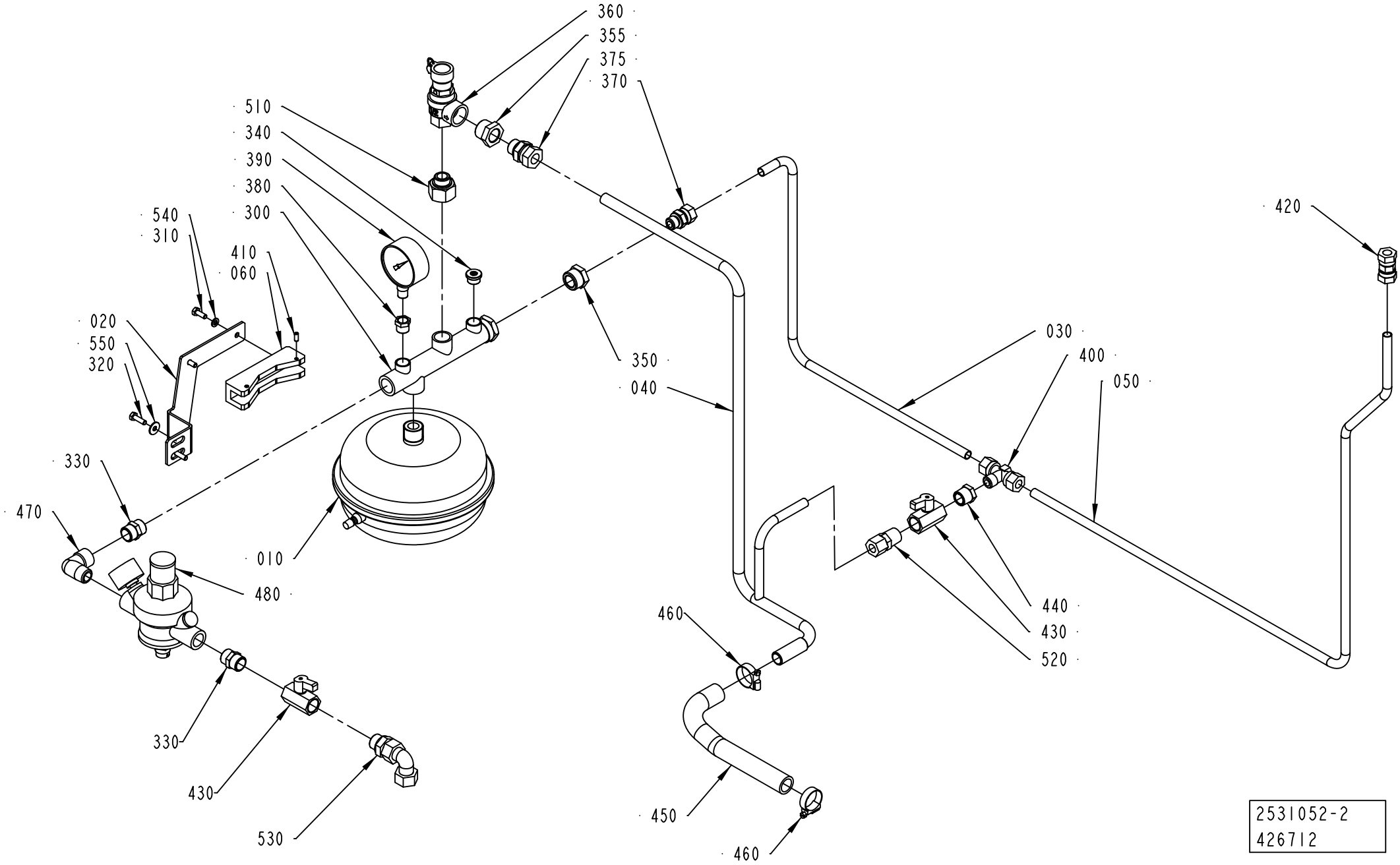

2531052-2
426712

ECM: 445874 - 20100404
Group number: 2531052-0200
Assembly Drawing: 2531052-2_1_AC

Pos	Part No	UN	Qty	Description	Page No
-					
010	90602-3913		1	PRESSURE EXPANSION VESSEL, 13224	
020	3060438-0000		1	BRACKET	
030	1499166-0000		1	PIPE	
040	3060433-0000		1	PIPE	
050	1538502-0000		1	PIPE	
060	3060439-0000		1	CLAMP	
300	90304-0307		1	ATTACHMENT PIPE	
310	312105-0368		2	SCREW M6S ISO 4017 M6X16 A480	
320	312105-0370		2	SCREW M6S ISO 4017 M6X20 A480	
330	342700-0113		2	NIPPLES,HEXAGON,EXT.G-THREAD G1/2"-G1/2"	
340	90600-1712		1	PLUG, EXT. THREAD HEX. SOCKET 09190017	
350	342701-0209		1	BUSHING,INT./EXT.G-THREAD G3/4"-G3/8"	
355	342206-0109		1	BUSHING, TAPERED, INT/EXT. THR NO. R211	
360	90458-0200		1	PEROX. SAFETY VALVE, NO. 527-430 1/2X3/4	
370	90030-0187		1	CONN. STR. GE12LRED71	
375	90030-0188		1	CONN. STR. GE15LRED71	
380	342701-0203		1	BUSHING, INT/EXT. G-THREAD NO. 3/8-1/4	
390	90043-0002		1	PRESSURE GAUGE, 2040 D=63 MM	
400	342741-0209		1	CONN. T-PIPE TE-12-R3/8	
410	312318-0327		2	SCREW ISO4029 M5X12 A4	
420	90030-0106		1	PIPE CONNECTION G 12	
430	90187-0062		2	BALL VALVE G1/2, NPBR	
440	90330-0048		1	BUSHING, INT/EXT. THR. R1/2-RP3/8	
450	90166-0060	MM	550	HOSE 19/26-27 REINF.PVC	
460	342991-0105		2	HOSE CLIP,WORM DRIVE TYPE (22)-32	
470	90140-0012		1	ELBOW, 90 INT/EXT, 2020-1/2-1/2	
480	90458-0201		1	FLUID AUT. FEEDER, ALINOX 1/2 46.04.00	
490	90144-0073	MM	1	TREBOFLON-TAPE W=13MM	
500	90157-0037	ML	1	THREAD SEALANT LOCTITE 542	
510	90458-0751		1	BUSHING,INT./EXT.G-THREAD G3/4"-G1/2"	
520	90030-0180		1	CONN. STR. GE12L1/2NPT71	
530	342738-0221		1	ADJUSTABLE ELBOW CONNECTION 15-G1/2	
540	315105-0153		2	WASHER BRB 6,4X12 RFR	
550	90005-0060		2	WASHER PLAIN, RBS 6,4/M6)/18,H=1,5	

Pos	Part No	UN	Qty	Description	Page No

Machine Type | Group Description | Used-In | Group Number | Page No

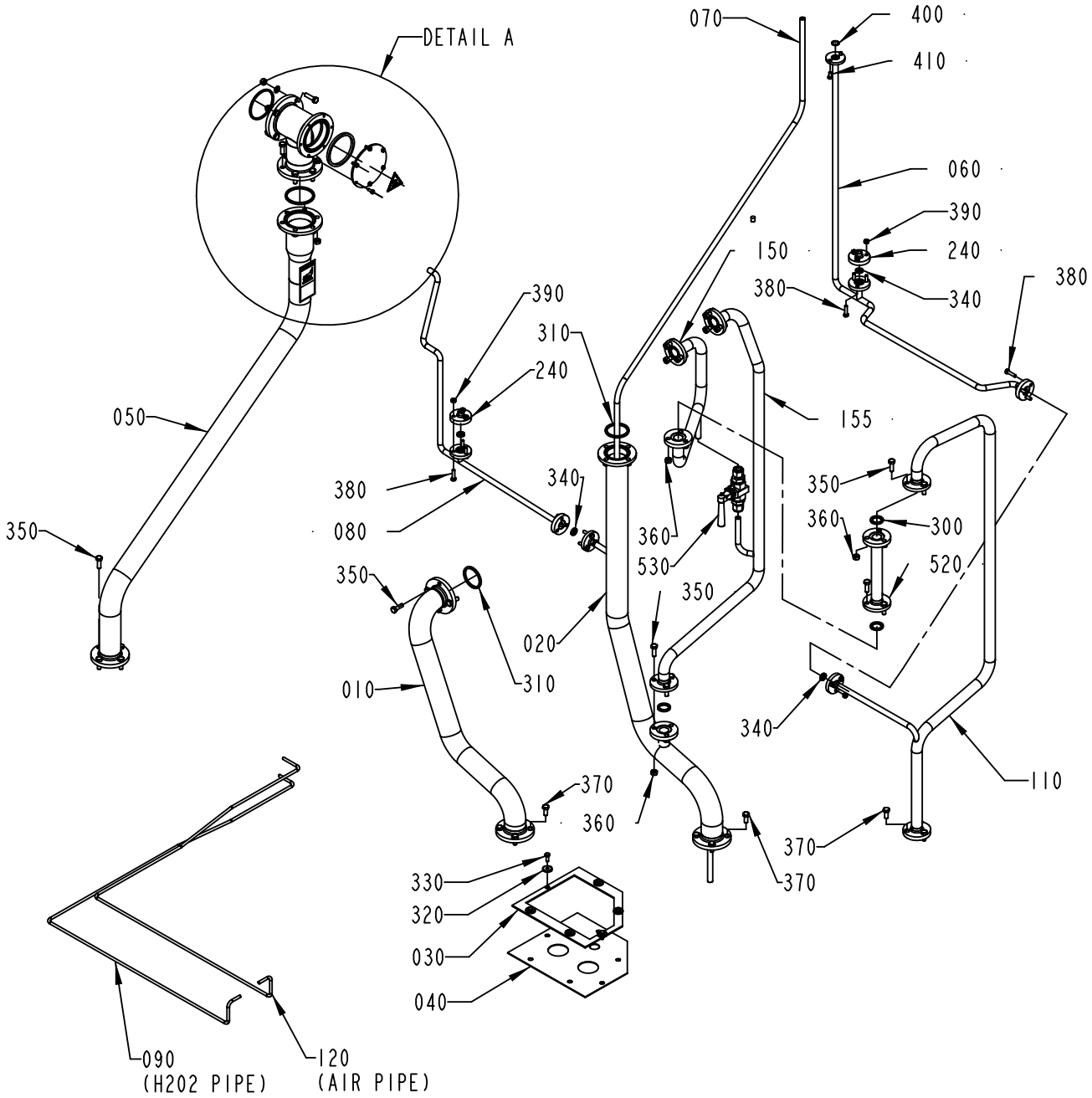

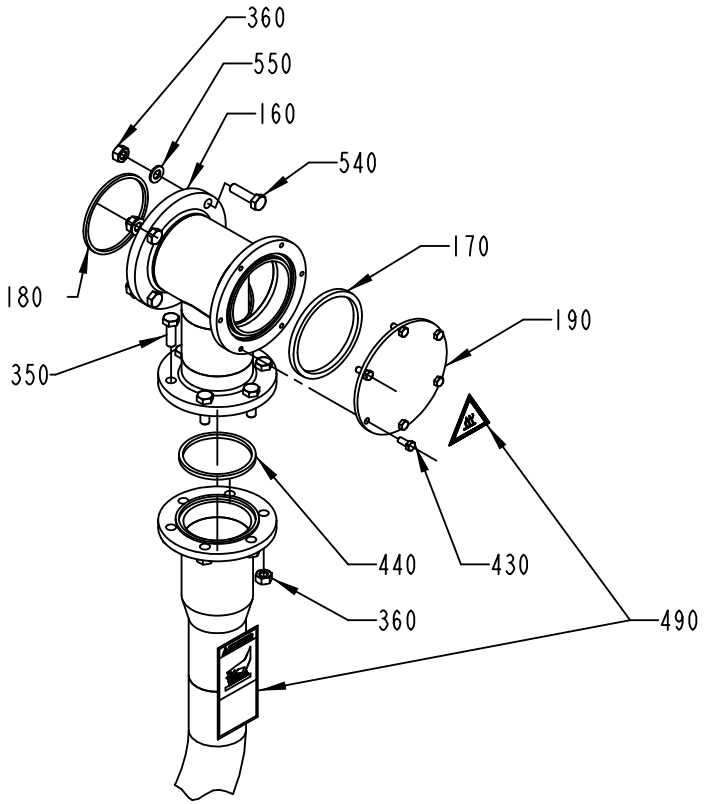

DETAIL A
1:5

2529484-3
461269

ECM: 461406 - 20101002
Group number: 2529484-0300
Assembly Drawing: 2529484-3_1_AD

This list covers pages from 1-282 to 1-285

Pos	Part No	UN	Qty	Description	Page No
DIMC ANSI (See drawing on page: 1-284)					
050	2790901-0000		1	PIPE	
160	2708584-0000		1	CONNECTION PIPE	
490	359725-0117		1	WARNING SIGN ANSI (V), HOT SURFACE	
DIMC ISO (See drawing on page: 1-284)					
050	2790901-0000		1	PIPE	
160	2708584-0000		1	CONNECTION PIPE	
490	359705-0007		1	WARNING SIGN ISO, HOT SURFACE	
NODIMC ANSI (See drawing on page: 1-282)					
050	2974798-0000		1	PIPE	
160	2974799-0000		1	CONNECTION PIPE	
490	359725-0117		1	WARNING SIGN ANSI (V), HOT SURFACE	
NODIMC ISO (See drawing on page: 1-282)					
050	2974798-0000		1	PIPE	
160	2974799-0000		1	CONNECTION PIPE	
490	359705-0007		1	WARNING SIGN ISO, HOT SURFACE	
Common Parts					
010	1558842-0000		1	PIPE	
020	2790902-0000		1	PIPE	
030	1038688-0000		1	HOLDER	
040	1255551-0000		1	SEAL CLOTH	
060	2529073-0000		1	PIPE	
070	2833050-0000		1	PLASTIC HOSE	
080	2790903-0000		1	PIPE	
090	3050614-0000		1	PIPE	
110	2936345-0000		1	PIPE	
120	3050615-0000		1	PIPE	
150	2936346-0000		1	PIPE	
155	2936347-0000		1	PIPE	
170	436781-0000		1	GASKET	
180	1523808-0000		1	GASKET	
190	1558427-0000		1	LID	
240	2564107-0000		2	LID	
300	315229-0103		3	SQUARE RING, 23,1X30,1X3,7 MM 1" FDA	
310	315229-0105		2	SQUARE RING, 48,5X55,5X3,7 MM 2" FDA	
320	315125-0153		6	WASHER TBRSB 6,4X22X4 A4	
330	312105-0368		6	SCREW M6S ISO 4017 M6X16 A480	
340	315229-0101		4	SQUARE RING, 10,4X17,4X3,7 MM 1/2" FDA	
350	312105-0453		29	SCREW M6S ISO 4017 M8X25 A480	
360	312605-0318		33	HEXAGON NUT, M6M M8 A280	
370	312105-0451		11	SCREW M6S ISO 4017 M8X20 A480	
380	312105-0372		12	SCREW M6S ISO 4017 M6X25 A480	
390	312605-0316		12	HEXAGON NUT, M6M M6 A280	
400	927421-0003		1	O-RING 13.3X2.4 SILICONE	
410	312105-0366		2	SCREW M6S ISO 4017 M6X12 A480	
430	312105-0327		6	SCREW M6S ISO 4017 M5X12 A480	
440	315229-0106		1	SQUARE RING, 61,2X68,2X3,7 MM 2"1/2 FDA	
520	2957451-0000		1	PIPE	
530	90459-5179		1	BALL VALVE 12MM, M12A-B8LJ-SSP-ST	
540	312105-0455		4	SCREW M6S ISO 4017 M8X30 A480	
550	315105-0165		4	WASHER BRB 8,4X16 RFR	

Machine Type | Group Description | Used-In | Group Number | Page No

PEROXIDE PIPE

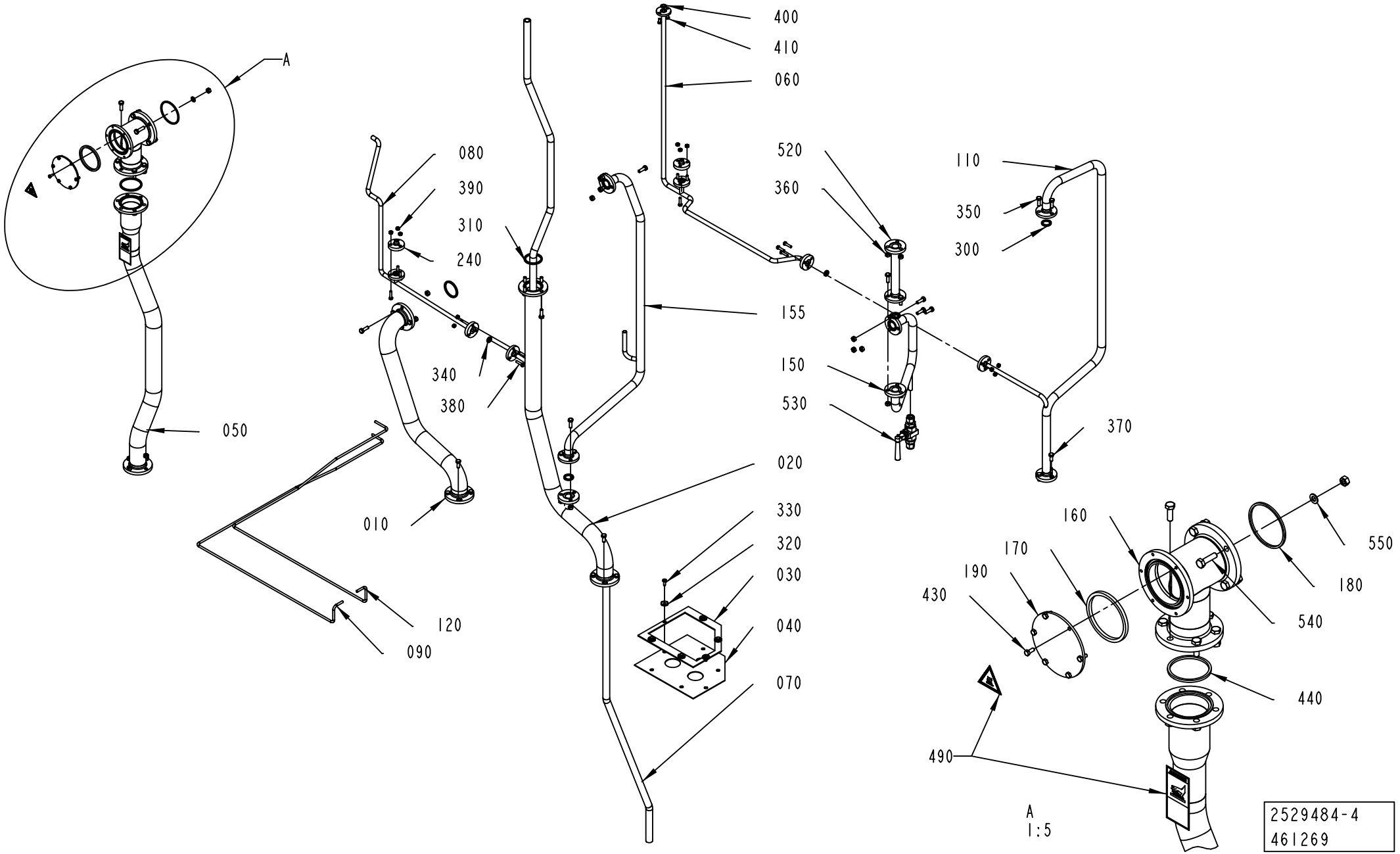

ECM: 461406 - 20101002
Group number: 2529484-0300
Assembly Drawing: 2529484-4_1_AC

This list covers pages from 1-282 to 1-285

Pos	Part No	UN	Qty	Description	Page No
DIMC ANSI (See drawing on page: 1-284)					
050	2790901-0000		1	PIPE	
160	2708584-0000		1	CONNECTION PIPE	
490	359725-0117		1	WARNING SIGN ANSI (V), HOT SURFACE	
DIMC ISO (See drawing on page: 1-284)					
050	2790901-0000		1	PIPE	
160	2708584-0000		1	CONNECTION PIPE	
490	359705-0007		1	WARNING SIGN ISO, HOT SURFACE	
NODIMC ANSI (See drawing on page: 1-282)					
050	2974798-0000		1	PIPE	
160	2974799-0000		1	CONNECTION PIPE	
490	359725-0117		1	WARNING SIGN ANSI (V), HOT SURFACE	
NODIMC ISO (See drawing on page: 1-282)					
050	2974798-0000		1	PIPE	
160	2974799-0000		1	CONNECTION PIPE	
490	359705-0007		1	WARNING SIGN ISO, HOT SURFACE	
Common Parts					
010	1558842-0000		1	PIPE	
020	2790902-0000		1	PIPE	
030	1038688-0000		1	HOLDER	
040	1255551-0000		1	SEAL CLOTH	
060	2529073-0000		1	PIPE	
070	2833050-0000		1	PLASTIC HOSE	
080	2790903-0000		1	PIPE	
090	3050614-0000		1	PIPE	
110	2936345-0000		1	PIPE	
120	3050615-0000		1	PIPE	
150	2936346-0000		1	PIPE	
155	2936347-0000		1	PIPE	
170	436781-0000		1	GASKET	
180	1523808-0000		1	GASKET	
190	1558427-0000		1	LID	
240	2564107-0000		2	LID	
300	315229-0103		3	SQUARE RING, 23,1X30,1X3,7 MM 1" FDA	
310	315229-0105		2	SQUARE RING, 48,5X55,5X3,7 MM 2" FDA	
320	315125-0153		6	WASHER TBRSB 6,4X22X4 A4	
330	312105-0368		6	SCREW M6S ISO 4017 M6X16 A480	
340	315229-0101		4	SQUARE RING, 10,4X17,4X3,7 MM 1/2" FDA	
350	312105-0453		29	SCREW M6S ISO 4017 M8X25 A480	
360	312605-0318		33	HEXAGON NUT, M6M M8 A280	
370	312105-0451		11	SCREW M6S ISO 4017 M8X20 A480	
380	312105-0372		12	SCREW M6S ISO 4017 M6X25 A480	
390	312605-0316		12	HEXAGON NUT, M6M M6 A280	
400	927421-0003		1	O-RING 13.3X2.4 SILICONE	
410	312105-0366		2	SCREW M6S ISO 4017 M6X12 A480	
430	312105-0327		6	SCREW M6S ISO 4017 M5X12 A480	
440	315229-0106		1	SQUARE RING, 61,2X68,2X3,7 MM 2"1/2 FDA	
520	2957451-0000		1	PIPE	
530	90459-5179		1	BALL VALVE 12MM, M12A-B8LJ-SSP-ST	
540	312105-0455		4	SCREW M6S ISO 4017 M8X30 A480	
550	315105-0165		4	WASHER BRB 8,4X16 RFR	

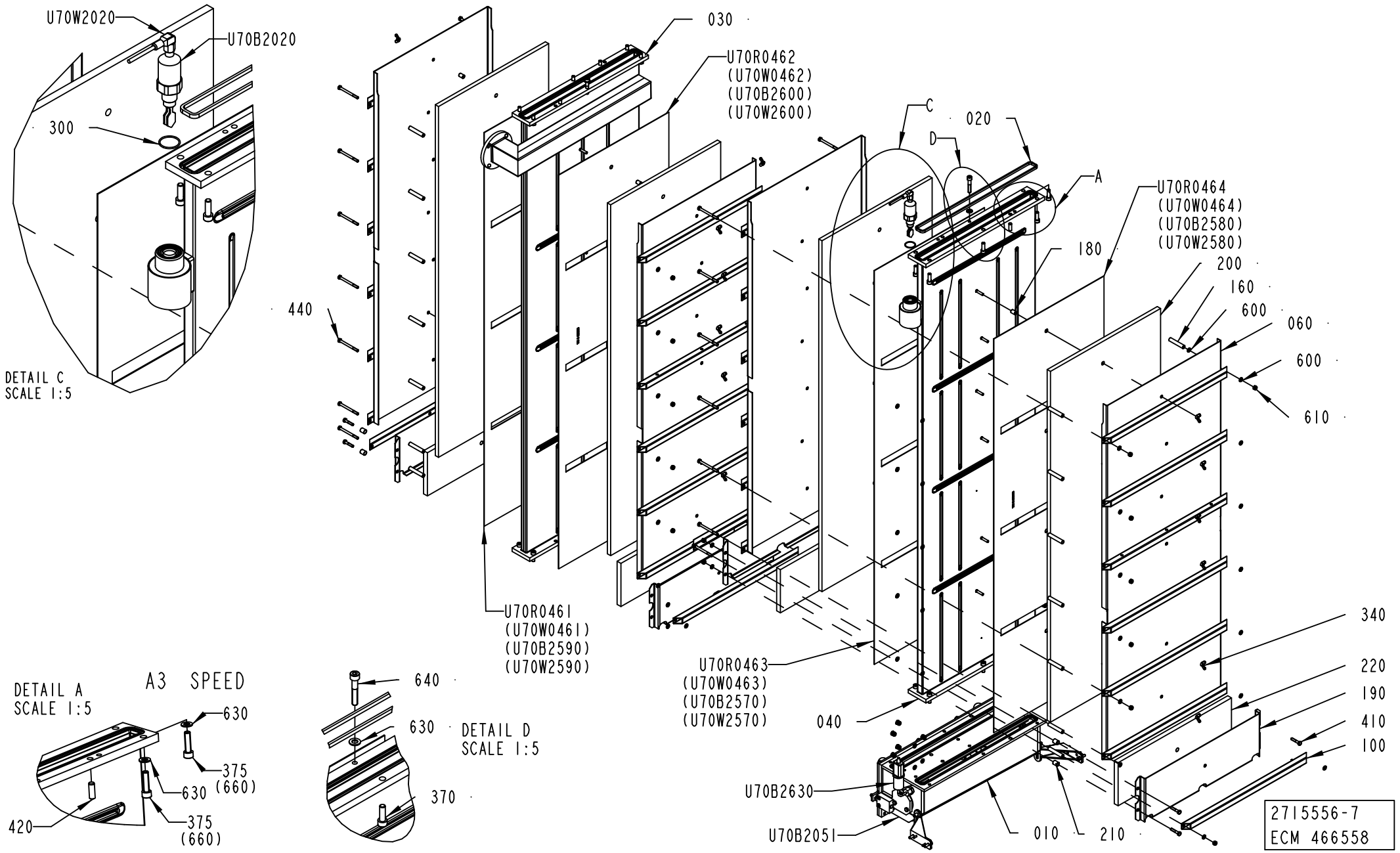
U70W2020
U70B2020
300
DETAIL C
SCALE 1:5
030
U70R0462
(U70W0462)
(U70B2600)
(U70W2600)
C
D
020
A
U70R0464
(U70W0464)
(U70B2580)
(U70W2580)
180
200
160
600
060
600
610
440
U70R0461
(U70W0461)
(U70B2590)
(U70W2590)
340
220
190
410
100
U70R0463
(U70W0463)
(U70B2570)
(U70W2570)
040
U70B2630
U70B2051
010
210
A3 SPEED
DETAIL A
SCALE 1:5
630
375
(660)
630
420
375
(660)
640
630
370
DETAIL D
SCALE 1:5
2715556-7
ECM 466558

ECM: 466560 - 20110101
Group number: 2715556-0300
Assembly Drawing: 2715556-7_1_AA

This list covers pages from 1-286 to 1-289

Pos	Part No	UN	Qty	Description	Page No
A3/SPEED ANSI (See drawing on pages: 1-286, 1-288)					
030	2971938-0000		1	PEROXIDE CHAMBER	
040	2895153-0000		1	PEROXIDE CHAMBER	
060	2914801-0000		4	COVER	
100	2899090-0000		4	SQUARE TUBE	
140	1539727-0000		2	WHEEL	
150	2788624-0000		1	BENDING ROLLER	
180	2895156-0000		24	SPACER	
200	2895155-0000		4	INSULATING MAT	
310	359725-0104		1	WARNING SIGN ANSI (H), CHEMICAL HAZARD	
340	312715-0116		24	WING NUT DIN 315 A2 MVM-K M6	
370	312115-0453		14	SCREW ISO4762 M8X25 A4 80	
375	312115-0455		8	SCREW ISO4762 M8X30 A4 80	
630	315105-0165		10	WASHER BRB 8,4X16 RFR	
660	90600-8108		1	GREASE, OKS 1110 NSF H1, 15G	
U70R0461	2895154-0000		1	RESISTANCE	
U70R0462	2895154-0000		1	RESISTANCE	
U70R0463	2528056-0000		1	RESISTANCE	
U70R0464	2528056-0000		1	RESISTANCE	
A3/SPEED ISO (See drawing on pages: 1-286, 1-288)					
030	2971938-0000		1	PEROXIDE CHAMBER	
040	2895153-0000		1	PEROXIDE CHAMBER	
060	2914801-0000		4	COVER	
100	2899090-0000		4	SQUARE TUBE	
140	1539727-0000		2	WHEEL	
150	2788624-0000		1	BENDING ROLLER	
180	2895156-0000		24	SPACER	
200	2895155-0000		4	INSULATING MAT	
310	359705-0004		1	WARNING SIGN ISO, DANGEROUS CHEMICALS	
340	312715-0116		24	WING NUT DIN 315 A2 MVM-K M6	
370	312115-0453		14	SCREW ISO4762 M8X25 A4 80	
375	312115-0455		8	SCREW ISO4762 M8X30 A4 80	
630	315105-0165		10	WASHER BRB 8,4X16 RFR	
660	90600-8108		1	GREASE, OKS 1110 NSF H1, 15G	
U70R0461	2895154-0000		1	RESISTANCE	
U70R0462	2895154-0000		1	RESISTANCE	
U70R0463	2528056-0000		1	RESISTANCE	
U70R0464	2528056-0000		1	RESISTANCE	
Common Parts					
010	2778562-0000		1	BOTTOM SECTION	
020	1538735-0000		4	GASKET	
050	1528639-0000		1	GASKET	
070	2940246-0000		1	SHAFT	
080	2940248-0000		1	FLANGE	
090	1523805-0000		2	PIN	
110	2528059-0000		2	BRACKET	
120	1539729-0000		2	BRACKET	
130	1538742-0000		1	LID	
160	2899089-0000		28	SPACER	
170	2940247-0000		1	FLANGE	
190	2914802-0000		4	COVER	
210	2914952-0000		8	SPACER	
220	2915909-0000		4	INSULATING MAT	
300	315206-0711		1	O-RING 26,70X1,78 MM	
330	315237-0110		1	WASHER,PL.RND.AL.13,5/18,H=1,5	
350	312605-0316		2	HEXAGON NUT, M6M M6 A280	
360	312105-0453		1	SCREW M6S ISO 4017 M8X25 A480	
380	312105-0370		8	SCREW M6S ISO 4017 M6X20 A480	
390	312115-0329		4	SCREW ISO4762 M5X16 A4 80	
400	312105-0449		8	SCREW M6S ISO 4017 M8X16 A480	
410	312105-0374		8	SCREW M6S ISO 4014 M6X30 A480	
420	311103-1403		8	PARALLEL PIN ISO 2338 8M6X24 A1	
430	311103-0270		4	PARALLEL PIN ISO 2338 4M6X16 A1	
440	312105-0384		28	SCREW M6S ISO 4014 M6X70 A480	
450	90144-0073	MM	1	TREBOFLON-TAPE W=13MM	
470	90326-0020		1	PLUG, FEMALE YELLOW CR-AL	
480	90326-0012		1	PROTECTIVE COVER, T31A4618	
490	315205-0802		2	O-RING 41,00X1,78 MM	
500	90240-0146		2	FLANGE BUSHING, 15X21X20 MM	
510	315204-0110		1	O-RING 12,1X1,6 MM	
560	312115-0370		4	SCREW ISO4762 M6X20 A4 80	
600	315105-0153		144	WASHER BRB 6,4X12 RFR	
610	312812-0316		36	HEXAGON NUT, NY-LOCK M6 A480	
620	315402-0165		1	LOCK WASHER FBB 8,2	
640	312115-0460		2	SCREW ISO4762 M8X45 A4 80	
U70B2020	90600-2862		1	LEVEL SWITCH, LIQUIPHANT FTL20-0025	
U70B2050	90044-0108		1	LIMIT SW. 24 CE1-S6	
U70B2051	90044-0108		1	LIMIT SW. 24 CE1-S6	
U70B2630	90326-0053		1	THERMOCOUPLE, 12826-35	
U70W2020	351310-0100		1	ACTUATOR/SENSOR CABLE PRKWT 4-07/10M	
U70W2630	90220-0034	MM	7500	THERMOCABLE TEX/SITW-20F-KX 2X0,5MM2	

Machine Type	Group Description	Used-In	Group Number	Page No

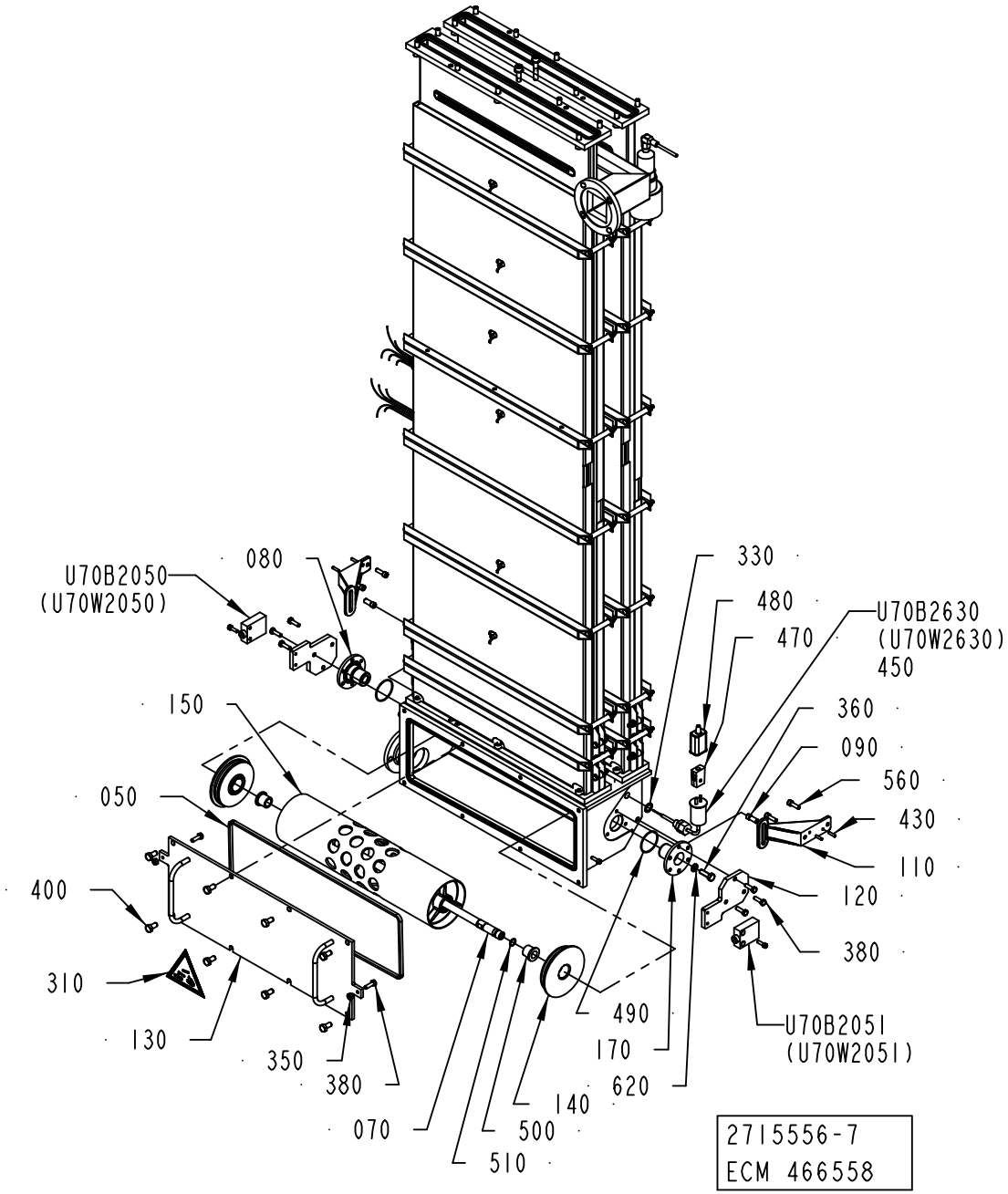
U70B2050
(U70W2050)
080
330
480
470
U70B2630
(U70W2630)
450
360
090
560
430
110
120
380
U70B2051
(U70W2051)
490
170
620
140
500
510
070
380
350
130
310
400
050
150
2715556-7
ECM 466558

ECM: 466560 - 20110101
Group number: 2715556-0300
Assembly Drawing: 2715556-7_2_AA

This list covers pages from 1-286 to 1-289

Pos	Part No	UN	Qty	Description	Page No
A3/SPEED ANSI (See drawing on pages: 1-286, 1-288)					
030	2971938-0000		1	PEROXIDE CHAMBER	
040	2895153-0000		1	PEROXIDE CHAMBER	
060	2914801-0000		4	COVER	
100	2899090-0000		4	SQUARE TUBE	
140	1539727-0000		2	WHEEL	
150	2788624-0000		1	BENDING ROLLER	
180	2895156-0000		24	SPACER	
200	2895155-0000		4	INSULATING MAT	
310	359725-0104		1	WARNING SIGN ANSI (H), CHEMICAL HAZARD	
340	312715-0116		24	WING NUT DIN 315 A2 MVM-K M6	
370	312115-0453		14	SCREW ISO4762 M8X25 A4 80	
375	312115-0455		8	SCREW ISO4762 M8X30 A4 80	
630	315105-0165		10	WASHER BRB 8,4X16 RFR	
660	90600-8108		1	GREASE, OKS 1110 NSF H1, 15G	
U70R0461	2895154-0000		1	RESISTANCE	
U70R0462	2895154-0000		1	RESISTANCE	
U70R0463	2528056-0000		1	RESISTANCE	
U70R0464	2528056-0000		1	RESISTANCE	
A3/SPEED ISO (See drawing on pages: 1-286, 1-288)					
030	2971938-0000		1	PEROXIDE CHAMBER	
040	2895153-0000		1	PEROXIDE CHAMBER	
060	2914801-0000		4	COVER	
100	2899090-0000		4	SQUARE TUBE	
140	1539727-0000		2	WHEEL	
150	2788624-0000		1	BENDING ROLLER	
180	2895156-0000		24	SPACER	
200	2895155-0000		4	INSULATING MAT	
310	359705-0004		1	WARNING SIGN ISO, DANGEROUS CHEMICALS	
340	312715-0116		24	WING NUT DIN 315 A2 MVM-K M6	
370	312115-0453		14	SCREW ISO4762 M8X25 A4 80	
375	312115-0455		8	SCREW ISO4762 M8X30 A4 80	
630	315105-0165		10	WASHER BRB 8,4X16 RFR	
660	90600-8108		1	GREASE, OKS 1110 NSF H1, 15G	
U70R0461	2895154-0000		1	RESISTANCE	
U70R0462	2895154-0000		1	RESISTANCE	
U70R0463	2528056-0000		1	RESISTANCE	
U70R0464	2528056-0000		1	RESISTANCE	
Common Parts					
010	2778562-0000		1	BOTTOM SECTION	
020	1538735-0000		4	GASKET	
050	1528639-0000		1	GASKET	
070	2940246-0000		1	SHAFT	
080	2940248-0000		1	FLANGE	
090	1523805-0000		2	PIN	
110	2528059-0000		2	BRACKET	
120	1539729-0000		2	BRACKET	
130	1538742-0000		1	LID	
160	2899089-0000		28	SPACER	
170	2940247-0000		1	FLANGE	
190	2914802-0000		4	COVER	
210	2914952-0000		8	SPACER	
220	2915909-0000		4	INSULATING MAT	
300	315206-0711		1	O-RING 26,70X1,78 MM	
330	315237-0110		1	WASHER,PL.RND.AL.13,5/18,H=1,5	
350	312605-0316		2	HEXAGON NUT, M6M M6 A280	
360	312105-0453		1	SCREW M6S ISO 4017 M8X25 A480	
380	312105-0370		8	SCREW M6S ISO 4017 M6X20 A480	
390	312115-0329		4	SCREW ISO4762 M5X16 A4 80	
400	312105-0449		8	SCREW M6S ISO 4017 M8X16 A480	
410	312105-0374		8	SCREW M6S ISO 4014 M6X30 A480	
420	311103-1403		8	PARALLEL PIN ISO 2338 8M6X24 A1	
430	311103-0270		4	PARALLEL PIN ISO 2338 4M6X16 A1	
440	312105-0384		28	SCREW M6S ISO 4014 M6X70 A480	
450	90144-0073	MM	1	TREBOFLON-TAPE W=13MM	
470	90326-0020		1	PLUG, FEMALE YELLOW CR-AL	
480	90326-0012		1	PROTECTIVE COVER, T31A4618	
490	315205-0802		2	O-RING 41,00X1,78 MM	
500	90240-0146		2	FLANGE BUSHING, 15X21X20 MM	
510	315204-0110		1	O-RING 12,1X1,6 MM	
560	312115-0370		4	SCREW ISO4762 M6X20 A4 80	
600	315105-0153		144	WASHER BRB 6,4X12 RFR	
610	312812-0316		36	HEXAGON NUT, NY-LOCK M6 A480	
620	315402-0165		1	LOCK WASHER FBB 8,2	
640	312115-0460		2	SCREW ISO4762 M8X45 A4 80	
U70B2020	90600-2862		1	LEVEL SWITCH, LIQUIPHANT FTL20-0025	
U70B2050	90044-0108		1	LIMIT SW. 24 CE1-S6	
U70B2051	90044-0108		1	LIMIT SW. 24 CE1-S6	
U70B2630	90326-0053		1	THERMOCOUPLE, 12826-35	
U70W2020	351310-0100		1	ACTUATOR/SENSOR CABLE PRKWT 4-07/10M	
U70W2630	90220-0034	MM	7500	THERMOCABLE TEX/SITW-20F-KX 2X0,5MM2	

Machine Type	Group Description	Used-In	Group Number	Page No

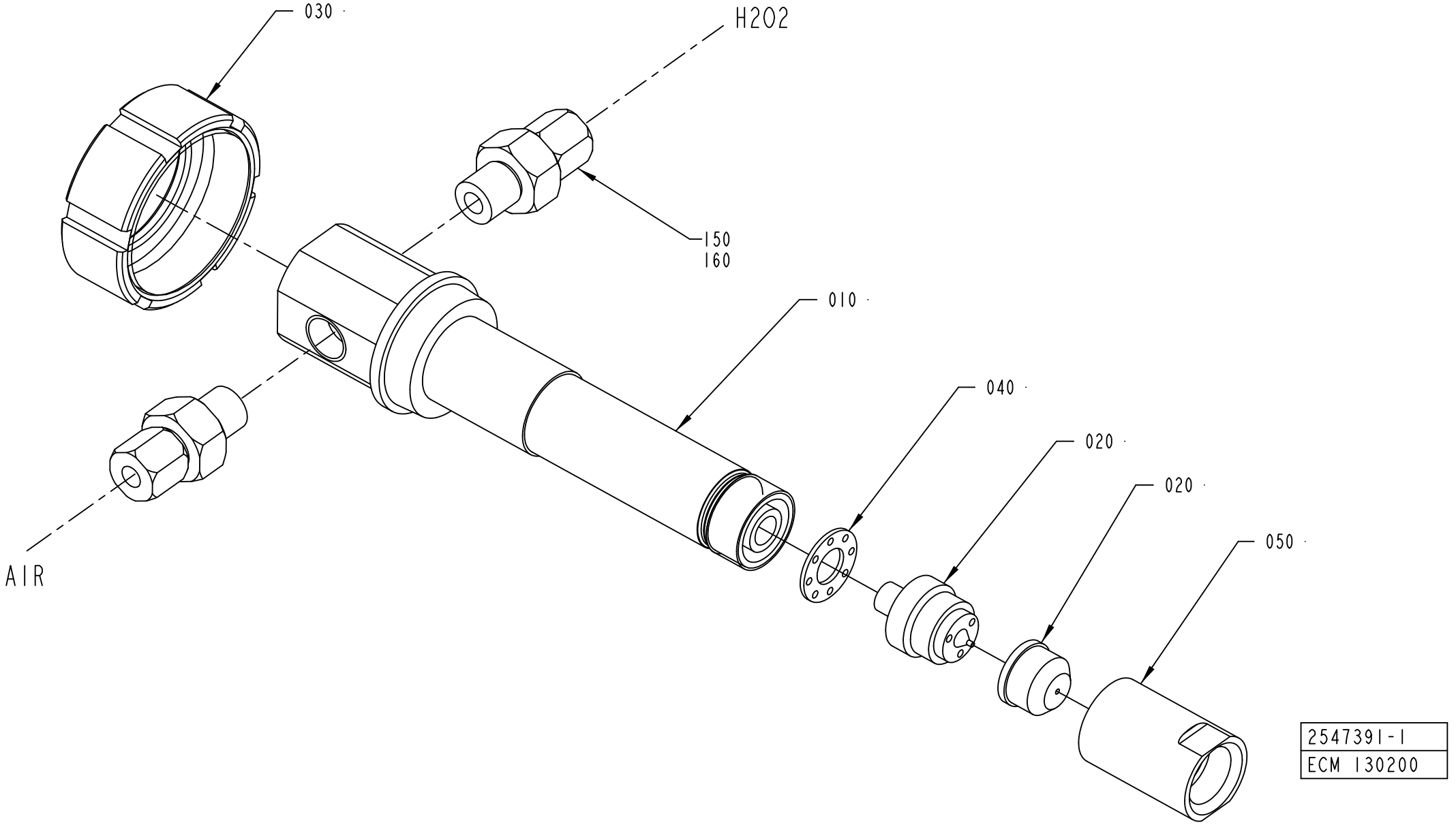
030
H2O2
150
160
010
040
020
020
050
AIR
2547391-1
ECM 130200

ECM: 344003 - 20080402
Group number: 2547391-0100
Assembly Drawing: 2547391-1_1_AB

Pos	Part No	UN	Qty	Description	Page No
-					
010	2563760-0000		1	EXTENSION	
020	2563759-0000		1	SPRAY SYSTEM	
030	1512405-0000		1	NUT	
040	2563762-0000		1	SPACER	
050	2563761-0000		1	NUT	
150	90030-0202		2	CONN. STR., 6-G1/4, EXT. THREAD	
160	90144-0007		1	TAPE	

Pos	Part No	UN	Qty	Description	Page No

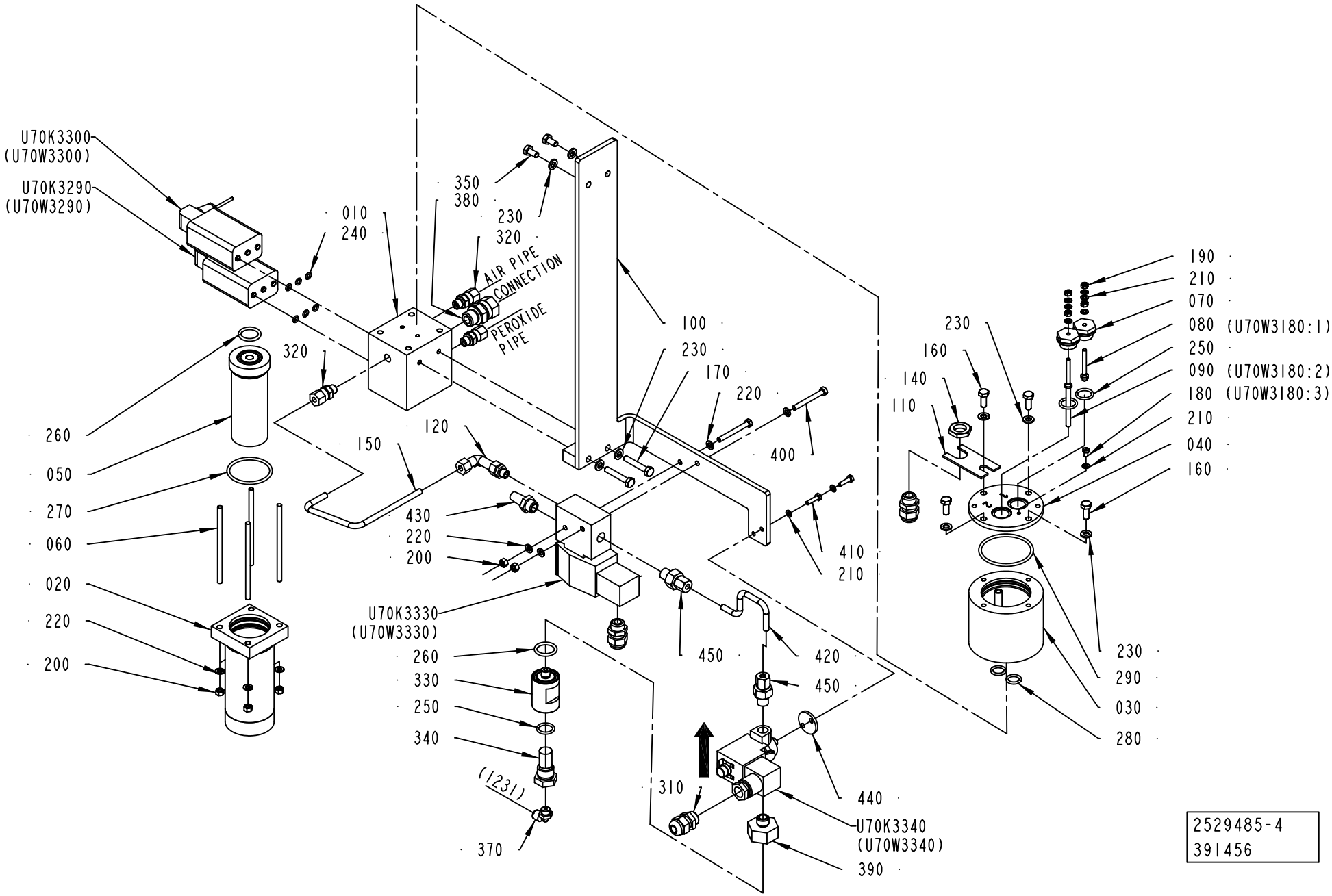
U70K3300
(U70W3300)
U70K3290
(U70W3290)
010
240
350
380
230
320
AIR PIPE
CONNECTION
PEROXIDE
PIPE
320
100
230
170
220
400
120
150
430
220
200
U70K3330
(U70W3330)
260
330
250
340
(1231)
370
310
450
420
450
440
U70K3340
(U70W3340)
390
410
210
260
050
270
060
020
220
200
190
210
070
080 (U70W3180:1)
250
090 (U70W3180:2)
180 (U70W3180:3)
210
040
160
230
160
140
110
230
290
030
280
2529485-4
391456

ECM: 391866 - 20090701
Group number: 2529485-0400
Assembly Drawing: 2529485-4_1_AA

Pos	Part No	UN	Qty	Description	Page No
-					
010	1532223-0000		1	BLOCK	
020	554142-0000		1	FILTER HOUSING	
030	1478170-0000		1	CONTAINER	
040	549267-0000		1	LID	
050	554141-0000		1	FILTER	
060	554585-0000		4	STUD SCREW	
070	2578486-0000		2	BRACKET	
080	2559045-0004		1	ELECTRODE	
090	2559045-0003		1	ELECTRODE	
100	3021554-0000		1	BRACKET	
110	1040970-0000		1	BRACKET	
120	90030-0203		1	ADJUSTABLE ELBOW CONNECTION 6-G1/4	
140	90099-0104		1	NUT, PR 15,2 (PG9)	
150	2763966-0000		1	PIPE	
160	312105-0368		4	SCREW M6S ISO 4017 M6X16 A480	
170	312109-0376		2	SCREW M6S ISO 4017 M6X35 A480	
180	312125-0285		1	SCREW ISO 1207 M4X6 A4	
190	312605-0312		4	HEXAGON NUT, M6M M4 A280	
200	312605-0314		6	HEXAGON NUT, M6M M5 A280	
210	315105-0136		9	WASHER BRB 4,3X8 RFR	
220	315105-0146		8	WASHER BRB 5,3X10 RFR	
230	315105-0153		8	WASHER BRB 6,4X12 RFR	
240	927420-0001		6	O-RING 5.1X1.6 SILICONE	
250	927421-0004		3	O-RING 15.3X2.4 SILICONE	
260	927422-0001		2	2X3 SILICONE	
270	927422-0007		1	O-RING 44.2X3 SILICONE	
280	927421-0002		2	O-RING 12.3X2.4 SILICONE	
290	927422-0009		1	O-RING 54.5X3 SILICONE	
310	352103-0101		3	CABLE GLAND, ST 9, PR15,2/PG9	
320	90030-0184		3	CONN. STR., GE06LRED71	
330	1519486-0000		1	FILTER HOUSING	
340	450833-0000		1	FILTER	
350	312105-0366		2	SCREW M6S ISO 4017 M6X12 A480	
370	90458-2956		1	ELBOW PIPE JOINT, EXT.THREAD, D=6MM-G1/8	
380	90030-0187		1	CONN. STR. GE12LRED71	
390	2763969-0000		1	REDUCER	
400	312105-0340		2	SCREW M6S ISO 4014 M5X45 A480	
410	312105-0293		2	SCREW M6S ISO 4017 M4X16 A470	
420	2763967-0000		1	PIPE	
430	346800-0110		1	SILENCER FILTER R1/4"	
440	2763968-0000		1	SPACER	
450	90030-0202		2	CONN. STR., 6-G1/4, EXT. THREAD	
U70K3290	90042-0203		1	SOLENOID VALVE TYPE 331 3/2 NC	
U70K3330	90459-6975		1	SOLENOID VALVE G1/4, 2401186082702400	
U70K3340	90459-6977		1	SOLENOID VALVE G1/4, V04B286N-B423A	
U70W3180	351150-0404	MM	4900	CABLE OLFLEX 4X0,75 MM2 LIGHT/GREY	
U70W3290	351150-0403	MM	4500	CABLE OLFLEX 3X0,75 MM2 LIGHT/GREY	
U70W3300	351150-0403	MM	4500	CABLE OLFLEX 3X0,75 MM2 LIGHT/GREY	
U70W3330	351150-0403	MM	4200	CABLE OLFLEX 3X0,75 MM2 LIGHT/GREY	
U70W3340	351150-0403	MM	4200	CABLE OLFLEX 3X0,75 MM2 LIGHT/GREY	
Y70K3300	90042-0203		1	SOLENOID VALVE TYPE 331 3/2 NC	

Machine Type	Group Description	Used-In	Group Number	Page No

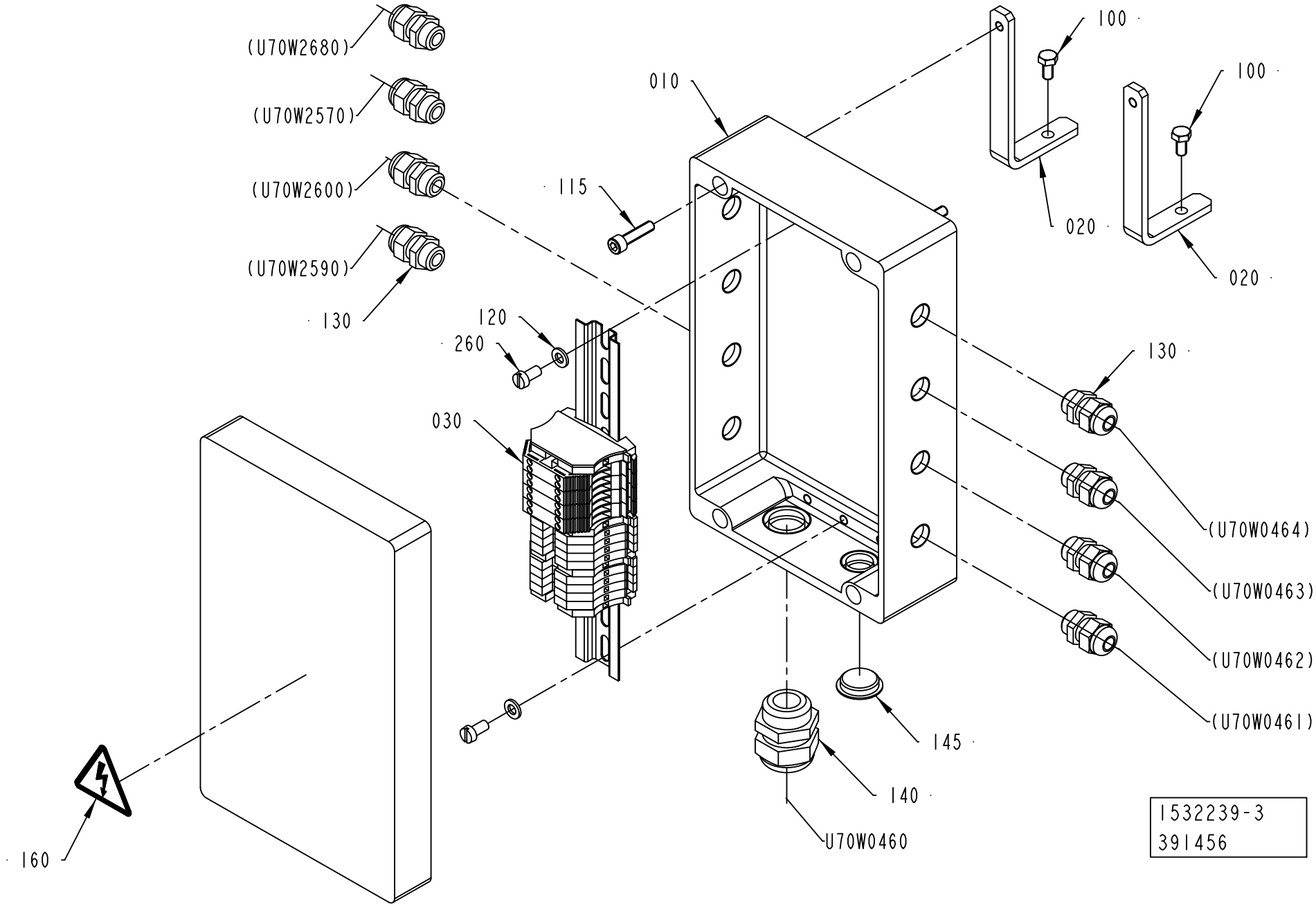
(U70W2680)
(U70W2570)
(U70W2600)
(U70W2590)
130
010
115
100
100
020
020
120
260
030
130
(U70W0464)
(U70W0463)
(U70W0462)
(U70W0461)
145
140
U70W0460
160
1532239-3
391456

ECM: 461318 - 20101002
Group number: 1532239-0300
Assembly Drawing: 1532239-3_1_AA

Pos	Part No	UN	Qty	Description	Page No
ANSI					
160	359715-0100		1	WARNING SIGN ANSI (H), ELECTRIC SHOCK	
ISO					
160	359705-0015		1	WARNING SIGN ISO, RISK OF ELECTRIC SHOCK	
Common Parts					
010	1532236-0000		1	CONNECTION BOX	
020	3021534-0000		2	BRACKET	
030	1532238-0100		1	TERMINAL BLOCK	**1-297**
100	312105-0366		2	SCREW M6S ISO 4017 M6X12 A480	
115	312115-0372		2	SCREW ISO4762 M6X25 A4 80	
120	315105-0153		2	WASHER BRB 6,4X12 RFR	
130	352103-0101		8	CABLE GLAND, ST 9, PR15,2/PG9	
140	352103-0115		1	CABLE GLAND, STR 21, PR28,3/PG21	
145	90002-0004		1	BLANK-OFF PLUG, PR 22,5 SKINDICHT-BLK16	
260	312125-0366		2	SCREW ISO 1207 M6X12 A4	
U70W0460	351150-0433	M	4.5	CABLE OLFLEX 7X4 MM2 LIGHT/GREY	

Pos	Part No	UN	Qty	Description	Page No

TERMINAL BLOCK

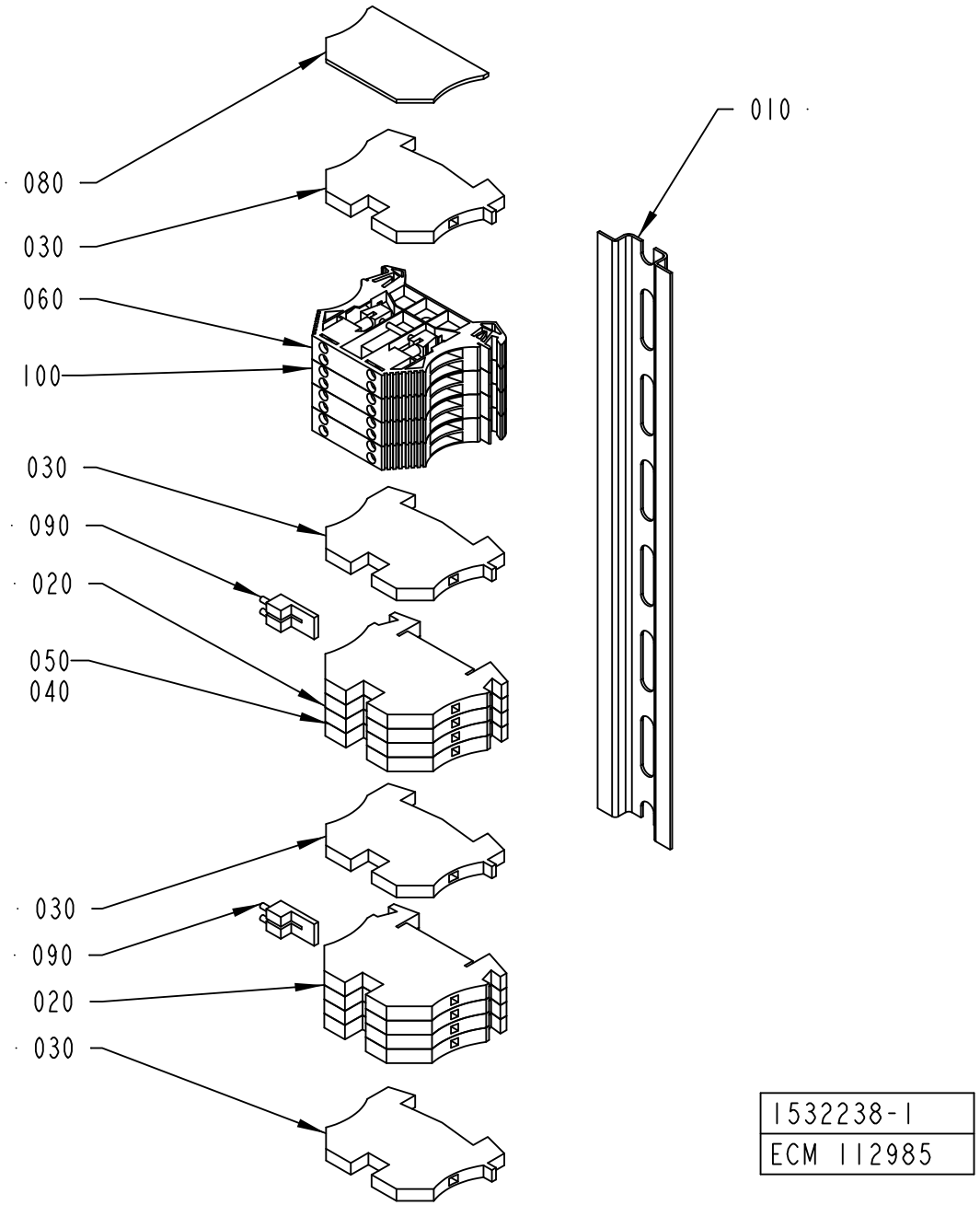

1532238-1
ECM 112985

ECM: 342879 - 20080402
Group number: 1532238-0100
Assembly Drawing: 1532238-1_1_AA

Pos	Part No	UN	Qty	Description	Page No
-					
010	1532237-0000		1	RAIL	
020	353021-0213		8	FEED THROUGH TERMINAL, 10201.0	
030	353024-0204		4	EARTH TERMINAL WPE 2,5	
040	359011-0834		1	MARKING, EARTH, DKE 6 GW ERDE I.KR.	
050	359011-0821		1	MARKING, DEK 6 FW 1-50	
060	90459-1742		4	TERMINAL FEED THROUGH	
080	353032-0004		1	END PLATE WAP 2,5-10 BEIGE	
090	353034-0030		1	BRIDGE CONNECTOR WQV 2,5/10	
100	359011-0823		1	MARKING, DEK 6 FW 101-150	
110	359011-0832		1	MARKING, DEK 6 GW (+)	
120	359011-0833		1	MARKING, DEK 6 GW (-)	

Pos	Part No	UN	Qty	Description	Page No

FRAME SECTION,UPPER

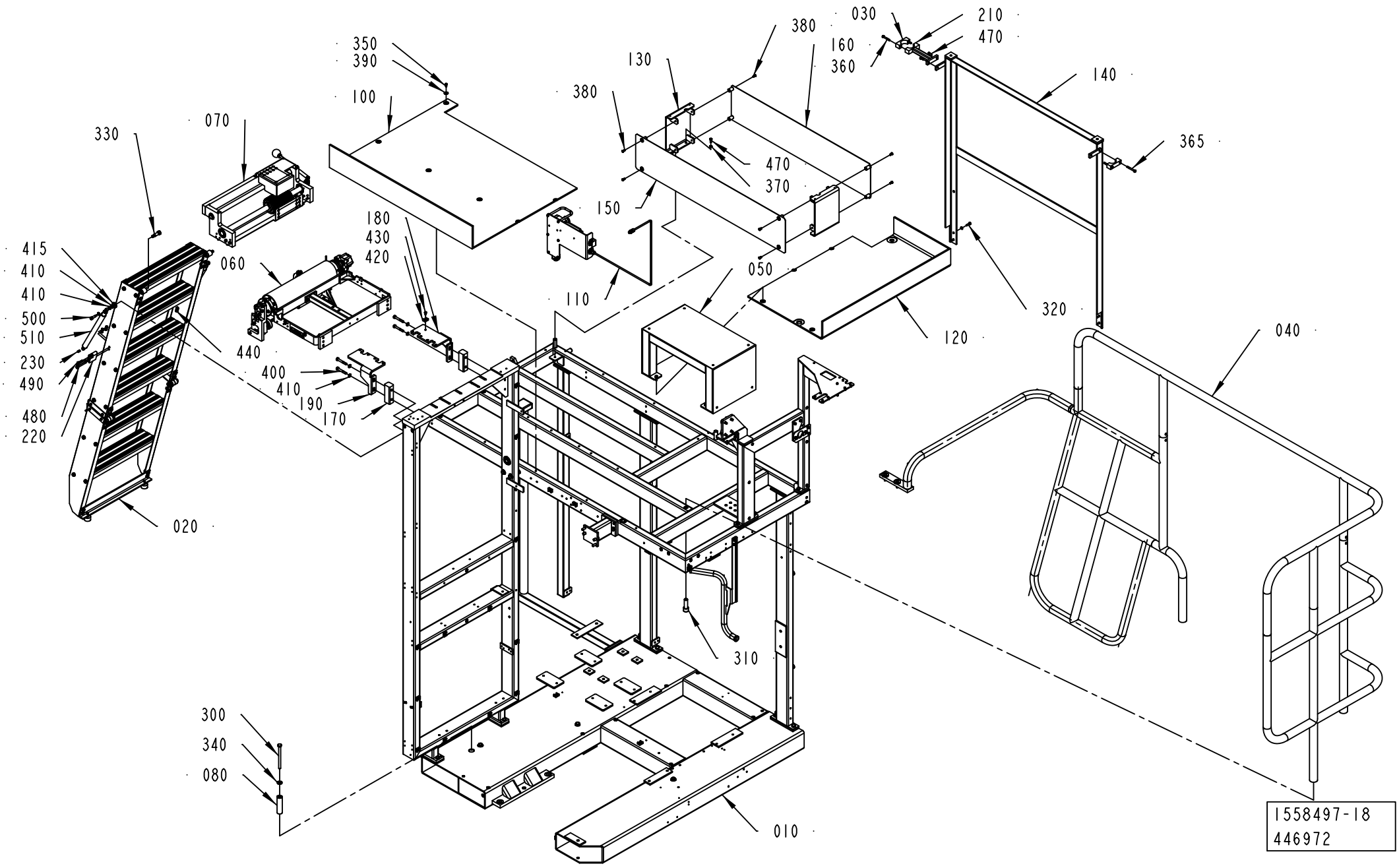

ECM: 450575 - 20101001
Group number: 1558497-0500
Assembly Drawing: 1558497-18_1_AD

Pos	Part No	UN	Qty	Description	Page No
A3/SPEED NOPT (See drawing on page: 1-298)					
050	2530188-0100		1	STEP	**1-301**
170	2894643-0000		2	BRACKET	
180	2763987-0000		1	BRACKET	
190	2894644-0000		1	BRACKET	
350	90458-0072		10	SCREW ISO 7380 S M6X12 A2	
390	90005-0060		10	WASHER PLAIN, RBS 6,4/M6)/18,H=1,5	
400	312105-0462		4	SCREW M6S ISO 4014 M8X55 A480	
410	315105-0165		10	WASHER BRB 8,4X16 RFR	
420	352113-0204		1	ANCHOR PLATES FOR STRIPS, TYPE TM3S25-M	
430	312125-0364		1	SCREW ISO 1207 M6X10 A4	
A3/SPEED PT/SPEED (See drawing on page: 1-298)					
050	2530188-0100		1	STEP	**1-301**
070	2758910-0300		1	TAB FOLDING	**1-303**
170	2894643-0000		2	BRACKET	
180	2763987-0000		1	BRACKET	
190	2894644-0000		1	BRACKET	
350	90458-0072		10	SCREW ISO 7380 S M6X12 A2	
390	90005-0060		10	WASHER PLAIN, RBS 6,4/M6)/18,H=1,5	
400	312105-0462		4	SCREW M6S ISO 4014 M8X55 A480	
410	315105-0165		10	WASHER BRB 8,4X16 RFR	
420	352113-0204		1	ANCHOR PLATES FOR STRIPS, TYPE TM3S25-M	
430	312125-0364		1	SCREW ISO 1207 M6X10 A4	
Common Parts					
010	1549980-0700		1	FRAME	**1-305, 1-307**
020	1095862-0300		1	LADDER	**1-309**
030	735041-0000		2	CONNECTION CLAMP	
040	2529991-0500		1	RAILING	**1-311**
060	2552125-0200		1	BENDING ROLLER	**1-313, 1-315, 1-317**
080	1511504-0000		3	SPACER	
100	3047433-0000		1	CHECKER PLATE	
110	2986260-0100		1	ELECTRICAL EQUIPMENT	**1-323**
120	3021546-0000		1	CHECKER PLATE	
130	3021547-0000		2	BRACKET	
140	2984145-0000		1	FRAME	
150	3041994-0000		1	PLATE	
160	3041995-0000		1	PLATE	
210	3060430-0000		1	BRACKET	
220	3060437-0000		2	BRACKET	
230	1564725-0000		2	SPACER	
300	312105-0517		4	SCREW M6S ISO 4014 M10X130 A480	
310	312115-0630		3	SCREW ISO4762 M16X50 A4 80	
320	312105-0370		4	SCREW M6S ISO 4017 M6X20 A480	
330	312180-0534		2	SCREW ISO7379 H12X25	
340	315115-0173		4	WASHER PLAIN, TBRB 10,5/22 H=4	
360	312105-0378		2	SCREW M6S ISO 4014 M6X40 A480	
365	312105-0380		2	SCREW M6S ISO 4014 M6X50 A480	
370	315105-0153		12	WASHER BRB 6,4X12 RFR	
380	90601-2046		8	CAPTIVE SCREW M6, GUTBG 6-4-12	
415	315125-0165		2	WASHER TBRSB 8,4X26X5 A4	
440	312605-0316		2	HEXAGON NUT, M6M M6 A280	
470	312105-0368		6	SCREW M6S ISO 4017 M6X16 A480	
480	312105-0381		4	SCREW M6S ISO 4014 M6X55 A480	
490	312105-0372		2	SCREW M6S ISO 4017 M6X25 A480	
500	312180-0451		2	SCREW ISO7379 H8X20	
510	90600-0864		2	GAS SPRING G8-19-250-1-583-AU19-AU19-200	

Machine Type | Group Description | Used-In | Group Number | Page No

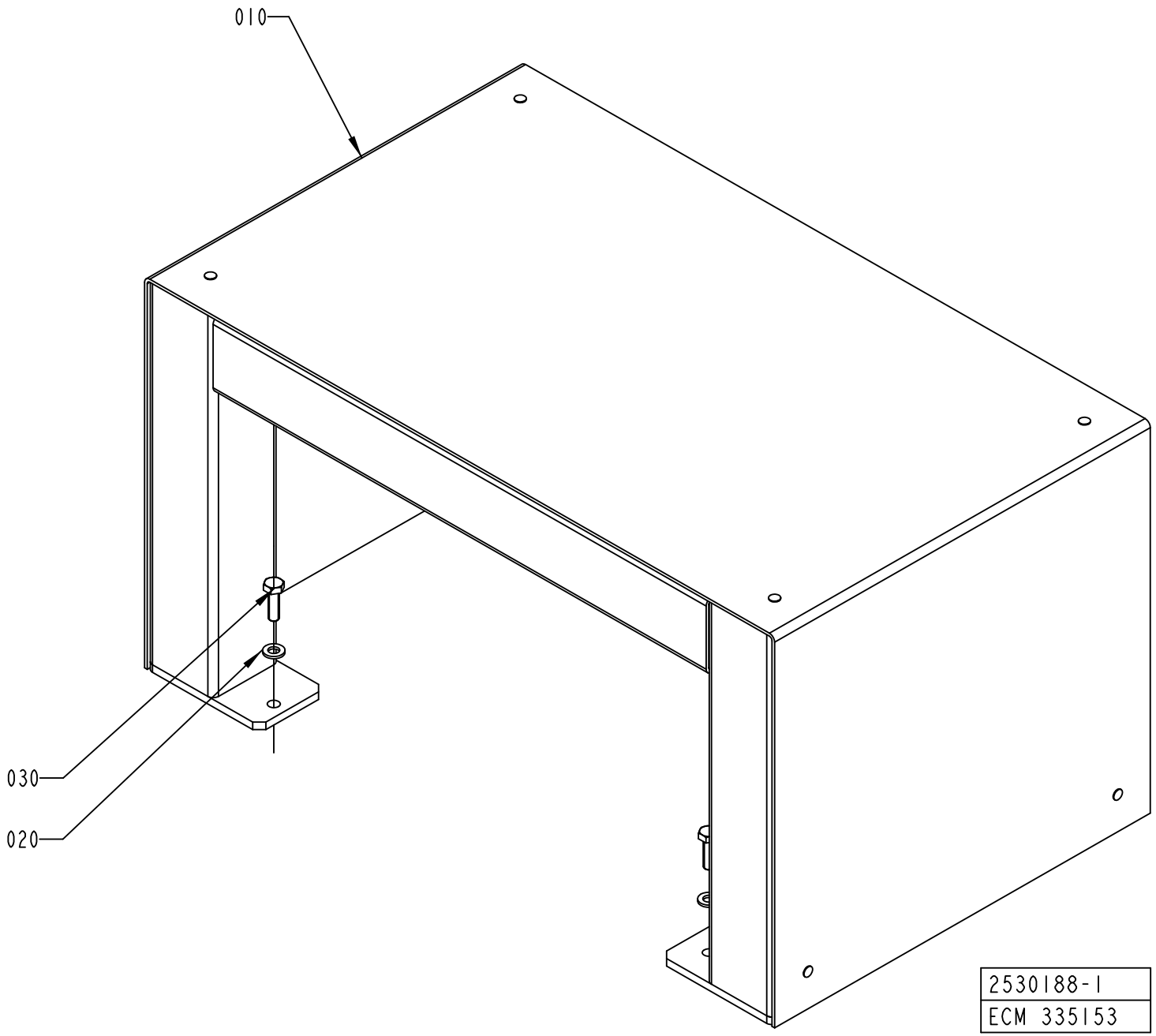
010
030
020
2530188-1
ECM 335153

ECM: 337250 - 20080104
Group number: 2530188-0100
Assembly Drawing: 2530188-1_1_AB

Pos	Part No	UN	Qty	Description	Page No
-					
010	2529925-0000		1	STEP	
020	315105-0153		2	WASHER BRB 6,4X12 RFR	
030	312105-0370		2	SCREW M6S ISO 4017 M6X20 A480	

Pos	Part No	UN	Qty	Description	Page No

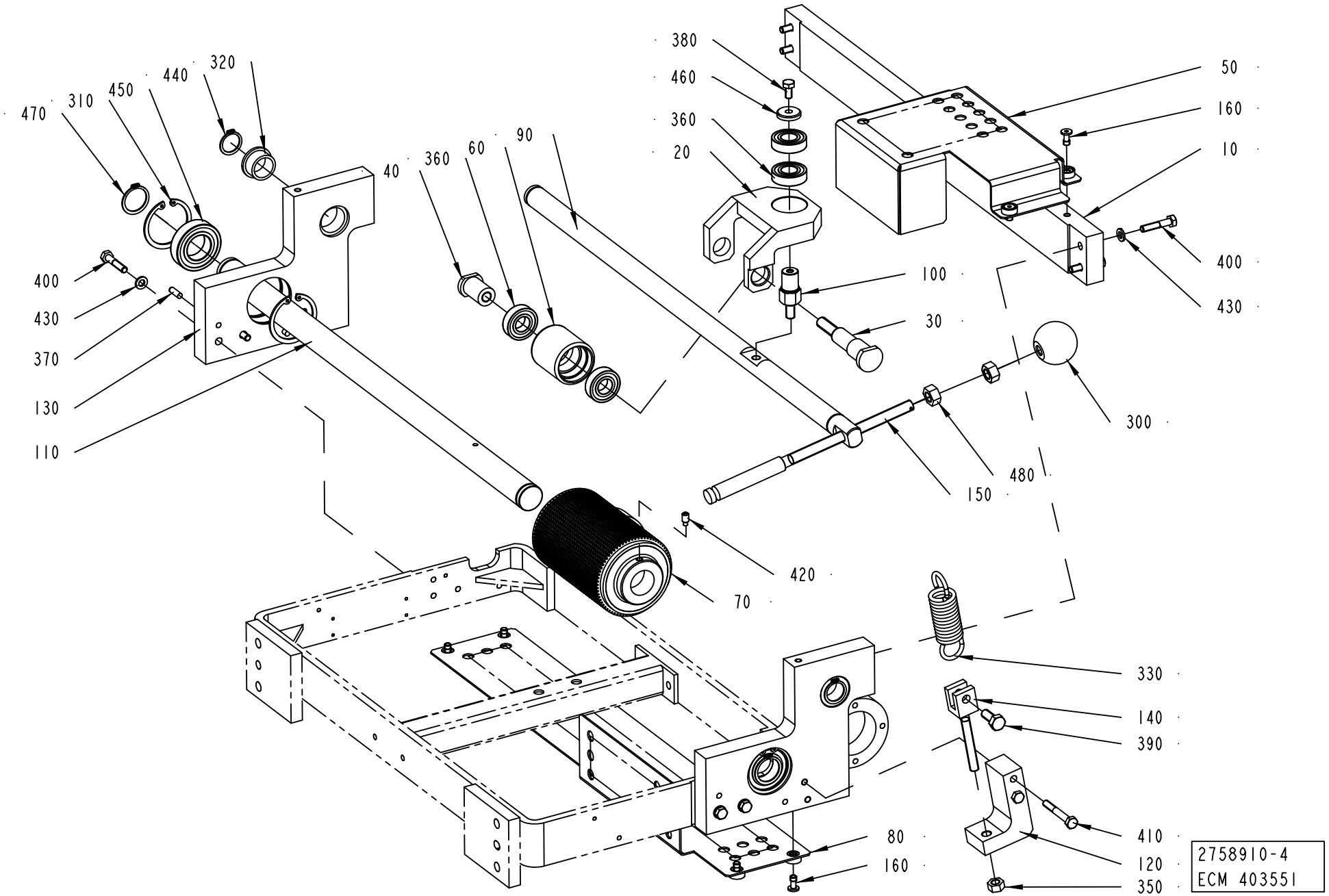
380
460
360
20
50
160
10
400
430
100
30
300
480
150
420
70
330
140
390
410
120
350
80
160
470
310
450
440
320
40
360
60
90
400
430
370
130
110
2758910-4
ECM 403551

ECM: 404237 - 20091001
Group number: 2758910-0300
Assembly Drawing: 2758910-4_1_AA

Pos	Part No	UN	Qty	Description	Page No
A3/SPEED TBA 1000S PT/SPEED					
010	2733502-0000		1	SUPPORT	
050	3041990-0000		1	TOUCH GUARD	
080	3041991-0000		1	TOUCH GUARD	
090	2964635-0000		1	SHAFT	
110	2964628-0000		1	SHAFT	
160	90601-2046		7	CAPTIVE SCREW M6, GUTBG 6-4-12	
A3/SPEED TBA 1000SQ PT/SPEED					
010	2966720-0000		1	SUPPORT	
050	3041985-0000		1	TOUCH GUARD	
080	3041992-0000		1	TOUCH GUARD	
090	2966723-0000		1	SHAFT	
110	2966724-0000		1	SHAFT	
160	90601-2046		6	CAPTIVE SCREW M6, GUTBG 6-4-12	
Common Parts					
020	2964630-0000		1	BRACKET	
030	2964632-0000		1	SHAFT	
040	2964633-0000		1	NUT	
060	2964634-0000		1	ROLLER	
070	2912494-0000		1	ROLLER	
100	2964631-0000		1	PIN	
120	2964637-0000		1	SUPPORT	
130	2964627-0000		2	SUPPORT	
140	2964636-0000		1	FORK	
150	2964629-0000		1	SHAFT	
300	318800-0106		1	HANDLE,SPHERICAL KNOB,INT.THRE,D.40-M10	
310	315753-0130		4	RETAINING RING FOR BORE DIN 472 47 SS	
320	90240-0221		2	FLANGE BUSHING, 20X25X14 MM	
330	90600-4887		1	TENSION SPRING T32940, 3,6X25X89,7	
350	312607-0318		1	HEXAGON NUT, EN 24032 M6M M8 A480	
360	321308-0202		4	BALL BEARING 15/32X9	
370	311103-0308		4	PARALLEL PIN ISO 2338 5M6X16 A1	
380	312105-0366		1	SCREW M6S ISO 4017 M6X12 A480	
390	312105-0451		1	SCREW M6S ISO 4017 M8X20 A480	
400	312105-0374		8	SCREW M6S ISO 4014 M6X30 A480	
410	312105-0379		2	SCREW M6S ISO 4014 M6X45 A480	
420	312311-0366		1	SCREW ISO4028 M6X12 FZB	
430	315105-0153		8	WASHER BRB 6,4X12 RFR	
440	315751-0116		2	RETAINING RING FOR SHAFT DIN 471 20 SS	
450	321308-0205		2	BALL BEARING 25/47X12	
460	315125-0153		1	WASHER TBRSB 6,4X22X4 A4	
470	315751-0119		2	RETAINING RING FOR SHAFT DIN 471 25 SS	
480	312607-0320		2	HEXAGON NUT, EN 24032 M6M M10 A480	

Machine Type	Group Description	Used-In	Group Number	Page No

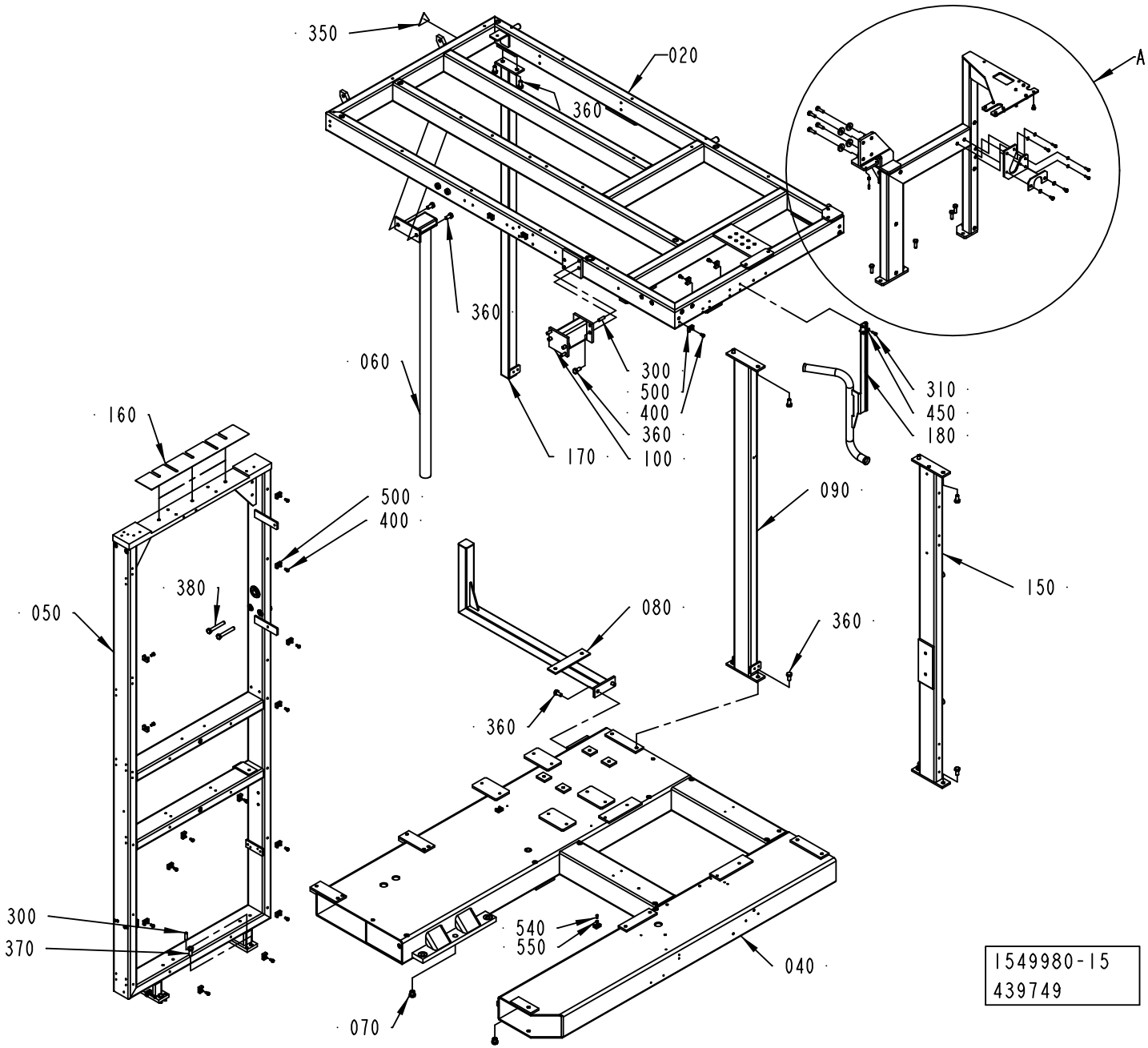
350
020
360
A
360
060
300
500
400
360
100
170
310
450
180
160
500
400
090
150
380
050
080
360
360
300
370
540
550
040
070
1549980-15
439749

ECM: 441089 - 20100701
Group number: 1549980-0700
Assembly Drawing: 1549980-15_1_AC

This list covers pages from 1-304 to 1-307

Pos	Part No	UN	Qty	Description	Page No
ANSI					
350	90458-1557		1	WARNING SIGN ANSI (H), MOVING PART	
ISO					
350	359705-0005		1	WARNING SIGN ISO, MOVING PART	
Common Parts					
010	3037739-0000		1	FRAME	
020	3047434-0000		1	FRAME UPPER	
040	2783096-0000		1	BASE PLATE	
050	3021539-0000		1	FRAME	
060	3021538-0000		1	BRACKET	
070	1490046-0000		2	PIN	
080	1498782-0000		1	TANK BRACKET	
090	3037725-0000		1	BRACKET	
100	1558440-0000		1	BRACKET	
110	2545658-0000		1	PLATE	
120	2696034-0000		1	HOLDER	
150	3037726-0000		1	BRACKET	
160	2894612-0000		1	SHIM	
170	3037728-0000		1	BRACKET	
180	3041993-0000		1	PIPE	
300	311103-0404		6	PARALLEL PIN ISO 2338 8M6X28 A1	
310	312105-0329		6	SCREW M6S ISO 4017 M5X16 A480	
320	312105-0364		2	SCREW M6S ISO 4017 M6X10 A480	
330	90600-0657		8	SCREW UNC 1/4-20 X10	
340	312105-0453		8	SCREW M6S ISO 4017 M8X25 A480	
360	312105-0491		18	SCREW M6S ISO 4017 M10X20 A480	
370	312105-0493		4	SCREW M6S ISO 4017 M10X25 A480	
380	312105-0505		2	SCREW M6S ISO 4014 M10X70 A480	
400	312125-0364		20	SCREW ISO 1207 M6X10 A4	
410	312311-0329		2	SCREW ISO4028 M5X16 FZB	
430	312605-0314		2	HEXAGON NUT, M6M M5 A280	
450	315105-0146		6	WASHER BRB 5,3X10 RFR	
460	315105-0153		2	WASHER BRB 6,4X12 RFR	
480	315125-0165		4	WASHER TBRSB 8,4X26X5 A4	
500	352113-0204		22	ANCHOR PLATES FOR STRIPS, TYPE TM3S25-M	
540	312125-0289		2	SCREW ISO 1207 M4X10 A4	
550	315105-0136		2	WASHER BRB 4,3X8 RFR	

Pos	Part No	UN	Qty	Description	Page No

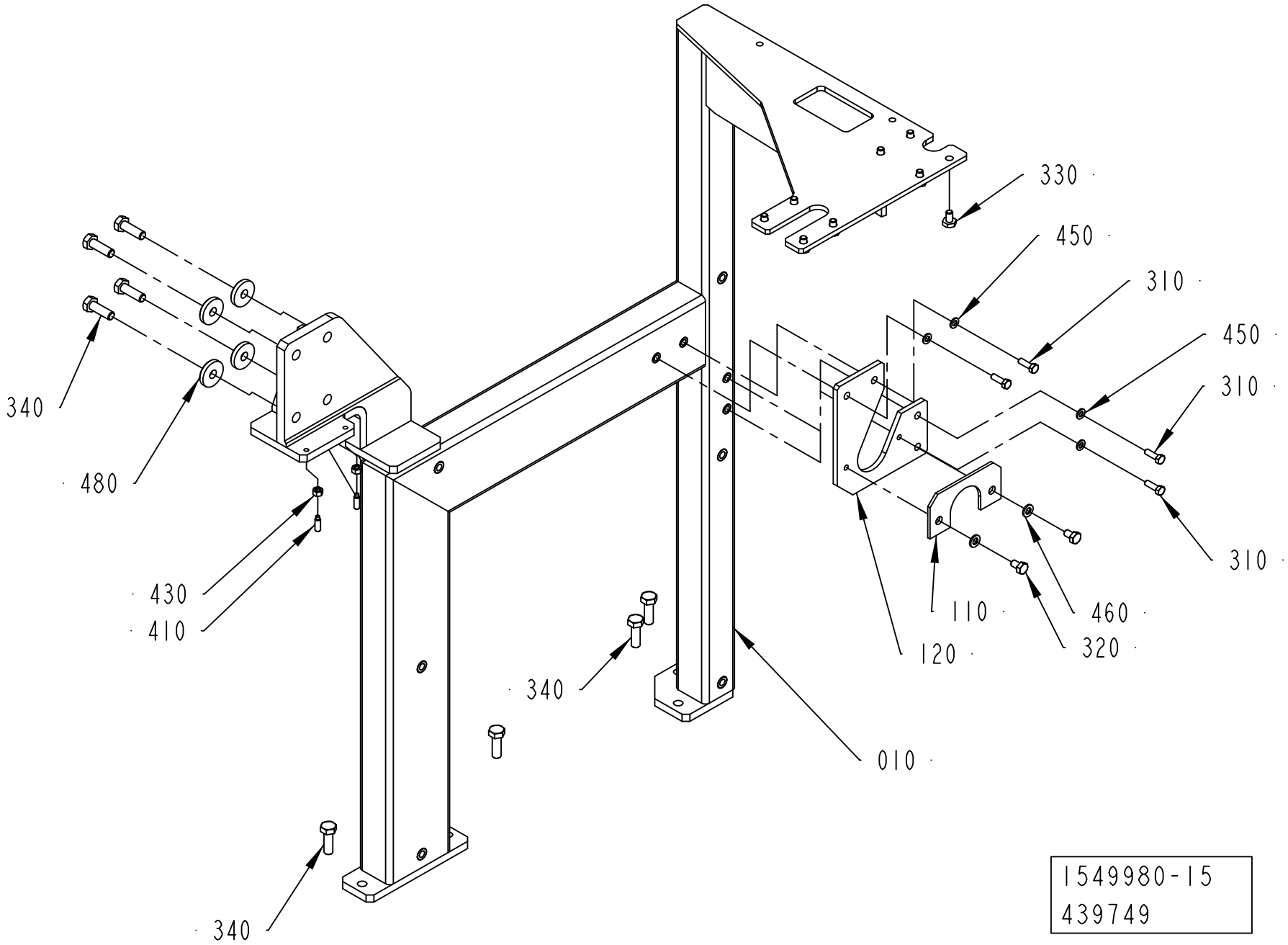
330
450
310
450
310
310
340
480
430
410
340
340
010
110
120
460
320
1549980-15
439749

ECM: 441089 - 20100701
Group number: 1549980-0700
Assembly Drawing: 1549980-15_2_AC

This list covers pages from 1-304 to 1-307

Pos	Part No	UN	Qty	Description	Page No
ANSI					
350	90458-1557		1	WARNING SIGN ANSI (H), MOVING PART	
ISO					
350	359705-0005		1	WARNING SIGN ISO, MOVING PART	
Common Parts					
010	3037739-0000		1	FRAME	
020	3047434-0000		1	FRAME UPPER	
040	2783096-0000		1	BASE PLATE	
050	3021539-0000		1	FRAME	
060	3021538-0000		1	BRACKET	
070	1490046-0000		2	PIN	
080	1498782-0000		1	TANK BRACKET	
090	3037725-0000		1	BRACKET	
100	1558440-0000		1	BRACKET	
110	2545658-0000		1	PLATE	
120	2696034-0000		1	HOLDER	
150	3037726-0000		1	BRACKET	
160	2894612-0000		1	SHIM	
170	3037728-0000		1	BRACKET	
180	3041993-0000		1	PIPE	
300	311103-0404		6	PARALLEL PIN ISO 2338 8M6X28 A1	
310	312105-0329		6	SCREW M6S ISO 4017 M5X16 A480	
320	312105-0364		2	SCREW M6S ISO 4017 M6X10 A480	
330	90600-0657		8	SCREW UNC 1/4-20 X10	
340	312105-0453		8	SCREW M6S ISO 4017 M8X25 A480	
360	312105-0491		18	SCREW M6S ISO 4017 M10X20 A480	
370	312105-0493		4	SCREW M6S ISO 4017 M10X25 A480	
380	312105-0505		2	SCREW M6S ISO 4014 M10X70 A480	
400	312125-0364		20	SCREW ISO 1207 M6X10 A4	
410	312311-0329		2	SCREW ISO4028 M5X16 FZB	
430	312605-0314		2	HEXAGON NUT, M6M M5 A280	
450	315105-0146		6	WASHER BRB 5,3X10 RFR	
460	315105-0153		2	WASHER BRB 6,4X12 RFR	
480	315125-0165		4	WASHER TBRSB 8,4X26X5 A4	
500	352113-0204		22	ANCHOR PLATES FOR STRIPS, TYPE TM3S25-M	
540	312125-0289		2	SCREW ISO 1207 M4X10 A4	
550	315105-0136		2	WASHER BRB 4,3X8 RFR	

Pos	Part No	UN	Qty	Description	Page No

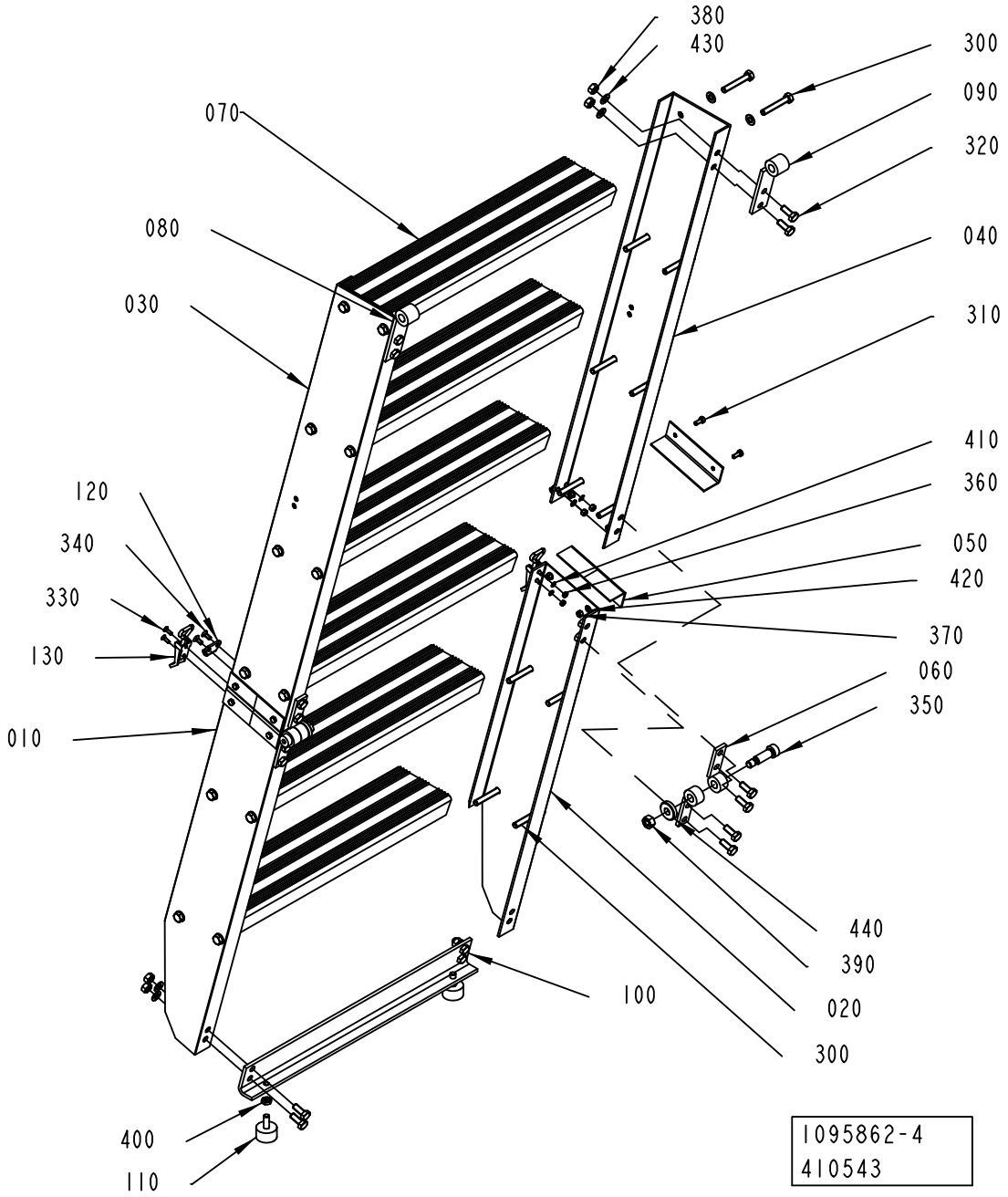
380
430
300
090
320
070
080
040
030
310
410
360
120
340
050
420
330
370
130
060
350
010
440
390
020
100
300
400
110
1095862-4
410543

ECM: 429081 - 20100401
Group number: 1095862-0300
Assembly Drawing: 1095862-4_1_AA

Pos	Part No	UN	Qty	Description	Page No
-					
010	3006254-0000		1	SIDE PIECE	
020	3006252-0000		1	SIDE PIECE	
030	3060431-0000		1	SIDE PIECE	
040	3060436-0000		1	SIDE PIECE	
050	3006255-0000		4	PLATE	
060	3006251-0000		4	HOLDER	
070	3047431-0000		6	STAIR	
080	1036963-0000		1	HOOK HOLDER	
090	1036965-0000		1	HOOK HOLDER	
100	3047432-0000		1	BRACKET	
110	90347-0004		2	VIBRATION DAMPER D=30 TH=M8 H=17 H2=21MM	
120	90237-0063		2	HOOK FOR 90237-62	
130	90600-3824		2	QUICK-LOCK, 701S-C-SS	
300	312104-0461		24	SCREW M6S M8X50H FZB	
310	312105-0327		8	SCREW M6S ISO 4017 M5X12 A480	
320	312105-0451		16	SCREW M6S ISO 4017 M8X20 A480	
330	312155-0291		4	SCREW DIN 7991 MF6S M4X12 A4 70	
340	312155-0327		4	SCREW DIN 7991 MF6S M5X12 A4 70	
350	312180-0536		2	SCREW ISO7379 H12X30	
360	312605-0312		4	HEXAGON NUT, M6M M4 A280	
370	312605-0314		12	HEXAGON NUT, M6M M5 A280	
380	312605-0318		16	HEXAGON NUT, M6M M8 A280	
390	312605-0320		2	HEXAGON NUT, M6M M10 A280	
400	312625-0318		2	HEXAGON THIN NUT, EN 24035 ML6M M8 A4	
410	315105-0136		4	WASHER BRB 4,3X8 RFR	
420	315105-0146		12	WASHER BRB 5,3X10 RFR	
430	315101-0165		40	WASHER PLAIN, BRB, 8,4/16 H=1,5	
440	315125-0173		2	WASHER TBRSB 10,5X28X6 A4	

Pos	Part No	UN	Qty	Description	Page No

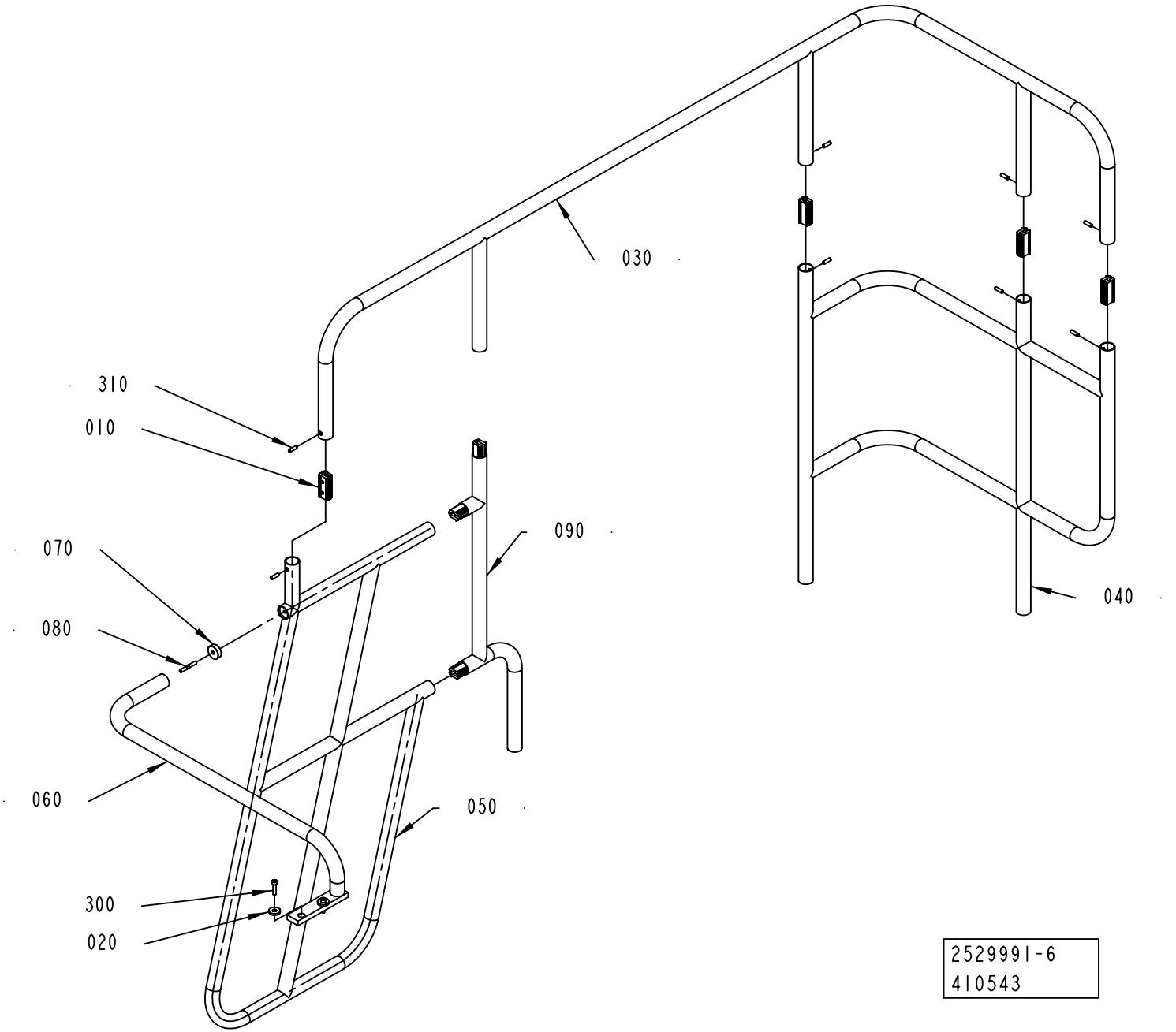
030
310
010
090
070
040
080
060
050
300
020
2529991-6
410543

ECM: 429080 - 20100401
Group number: 2529991-0500
Assembly Drawing: 2529991-6_1_AA

Pos	Part No	UN	Qty	Description	Page No
-					
010	985328-0000		7	CONNECTION	
020	1254410-0000		2	WASHER	
030	3060423-0000		1	RAILING	
040	2984139-0000		1	RAILING	
050	3060424-0000		1	RAILING	
060	2995627-0000		1	RAILING	
070	578640-0000		1	CLAMPING RING	
080	751485-0000		1	SCREW	
090	3060425-0000		1	RAILING	
300	312115-0455		2	SCREW ISO4762 M8X30 A4 80	
310	312318-0453		14	SCREW ISO4029 M8X25 A4	

Pos	Part No	UN	Qty	Description	Page No

BENDING ROLLER

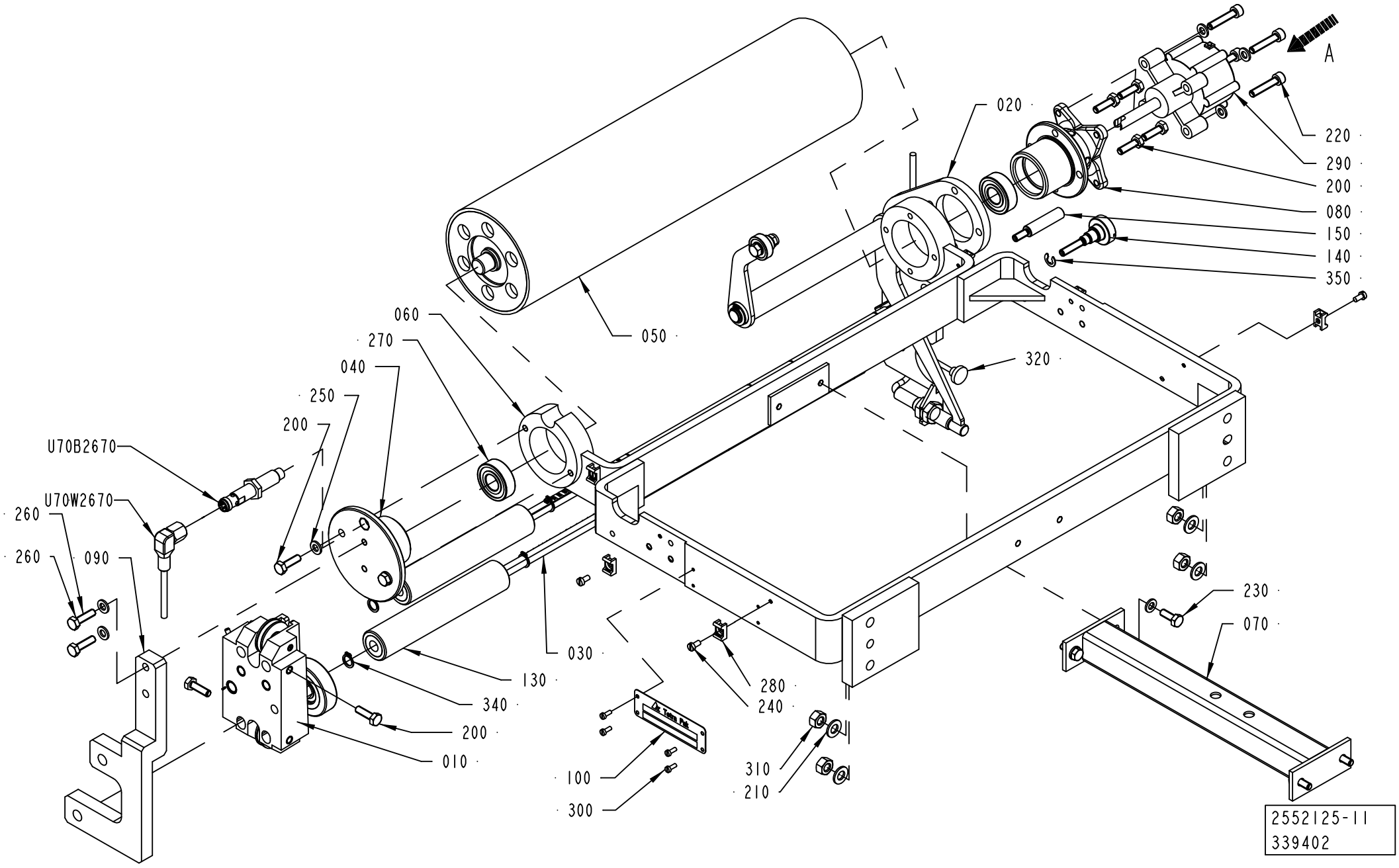

Pos	Part No	UN	Qty	Description	Page No
A3/SPEED TBA 1000B NOPT, A3/SPEED TBA 1000SQ NOPT, A3/SPEED TBA 0125S NOPT, A3/SPEED TBA 0200S NOPT, A3/SPEED TBA 0200B NOPT, A3/SPEED TBA 0200M NOPT, A3/SPEED TBA 0250B NOPT, A3/SPEED TBA 0250S NOPT (See drawing on page: 1-314)					
050	2532911-0000		1	ROLLER	
070	2990353-0000		1	BRACKET	
230	312105-0368		4	SCREW M6S ISO 4017 M6X16 A480	
250	315105-0153		12	WASHER BRB 6,4X12 RFR	
A3/SPEED TBA 1000S PT/SPEED (See drawing on page: 1-312)					
050	2532911-0000		1	ROLLER	
070	2990353-0000		1	BRACKET	
230	312105-0368		4	SCREW M6S ISO 4017 M6X16 A480	
250	315105-0153		12	WASHER BRB 6,4X12 RFR	
A3/SPEED TBA 1000SQ PT/SPEED (See drawing on page: 1-316)					
050	2532911-0000		1	ROLLER	
250	315105-0153		8	WASHER BRB 6,4X12 RFR	
Common Parts					
010	2601483-0100		1	PAPER GUIDE	**1-319**
020	1558356-0300		1	SPLICE DETECTOR	**1-321**
030	2891969-0000		2	ROD	
040	1558352-0000		1	FLANGE	
060	2547425-0000		1	BRACKET	
080	2528110-0000		1	HOUSING	
090	2547568-0000		1	PLATE	
100	979548-0000		1	MACHINE PLATE	
130	2833054-0000		2	ROLLER	
140	2891970-0000		1	KNOB	
150	2891971-0000		1	PLUG	
200	312105-0370		8	SCREW M6S ISO 4017 M6X20 A480	
210	315105-0165		4	WASHER BRB 8,4X16 RFR	
220	312115-0374		4	SCREW ISO4762 M6X30 A4 80	
240	312125-0287		6	SCREW ISO 1207 M4X8 A4	
260	312105-0372		2	SCREW M6S ISO 4017 M6X25 A480	
270	321313-0102		2	BALL BEARING 15/35X11	
280	352113-0205		6	ANCHOR PLATES FOR STRIPS, TYPE TM2S8-C10	
290	90347-0054		1	ROTARY DASHPOT, S-CRD-P277	
300	312125-0222		4	SCREW ISO 1207 M3X8 A4	
310	312605-0318		4	HEXAGON NUT, M6M M8 A280	
320	318860-0103		1	KNOB, ADJUST.HI.EXT.THREAD, NO 8324-3585	
340	90141-0016		4	RETAINING RING FOR SHAFT DIN 471 10 SS	
350	315755-0108		1	RETAINING RING SHAFT DIN 6799 6 SS	
U70B2670	90600-0462		1	INDUCTIVE SWITCH, E2A-M12LN05-M1-B1-TP	
U70W2670	351310-0100		1	ACTUATOR/SENSOR CABLE PRKWT 4-07/10M	

Pos	Part No	UN	Qty	Description	Page No

BENDING ROLLER

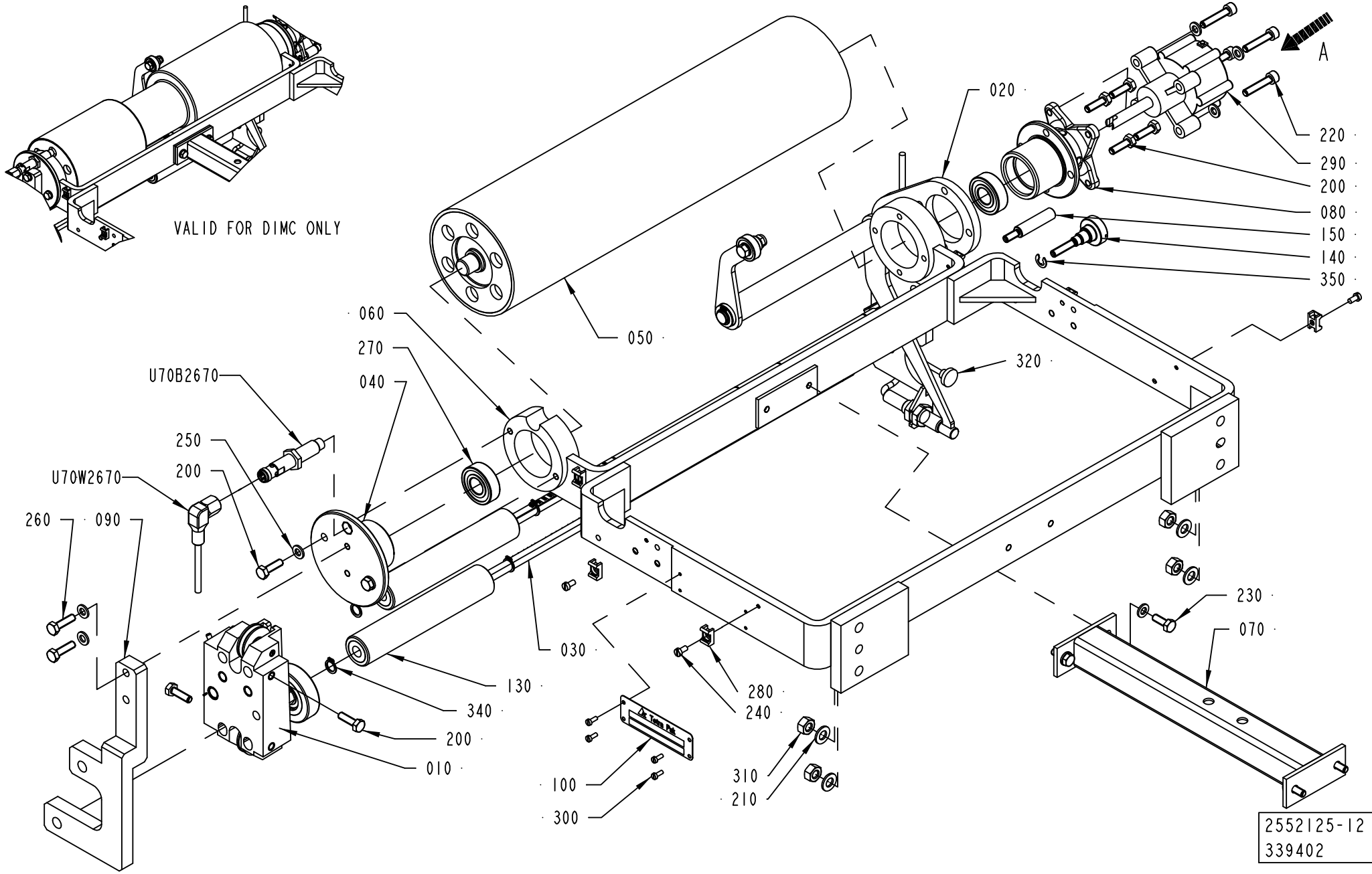

Pos	Part No	UN	Qty	Description	Page No
A3/SPEED TBA 1000B NOPT, A3/SPEED TBA 1000SQ NOPT, A3/SPEED TBA 0125S NOPT, A3/SPEED TBA 0200S NOPT, A3/SPEED TBA 0200B NOPT, A3/SPEED TBA 0200M NOPT, A3/SPEED TBA 0250B NOPT, A3/SPEED TBA 0250S NOPT (See drawing on page: 1-314)					
050	2532911-0000		1	ROLLER	
070	2990353-0000		1	BRACKET	
230	312105-0368		4	SCREW M6S ISO 4017 M6X16 A480	
250	315105-0153		12	WASHER BRB 6,4X12 RFR	
A3/SPEED TBA 1000S PT/SPEED (See drawing on page: 1-312)					
050	2532911-0000		1	ROLLER	
070	2990353-0000		1	BRACKET	
230	312105-0368		4	SCREW M6S ISO 4017 M6X16 A480	
250	315105-0153		12	WASHER BRB 6,4X12 RFR	
A3/SPEED TBA 1000SQ PT/SPEED (See drawing on page: 1-316)					
050	2532911-0000		1	ROLLER	
250	315105-0153		8	WASHER BRB 6,4X12 RFR	
Common Parts					
010	2601483-0100		1	PAPER GUIDE	**1-319**
020	1558356-0300		1	SPLICE DETECTOR	**1-321**
030	2891969-0000		2	ROD	
040	1558352-0000		1	FLANGE	
060	2547425-0000		1	BRACKET	
080	2528110-0000		1	HOUSING	
090	2547568-0000		1	PLATE	
100	979548-0000		1	MACHINE PLATE	
130	2833054-0000		2	ROLLER	
140	2891970-0000		1	KNOB	
150	2891971-0000		1	PLUG	
200	312105-0370		8	SCREW M6S ISO 4017 M6X20 A480	
210	315105-0165		4	WASHER BRB 8,4X16 RFR	
220	312115-0374		4	SCREW ISO4762 M6X30 A4 80	
240	312125-0287		6	SCREW ISO 1207 M4X8 A4	
260	312105-0372		2	SCREW M6S ISO 4017 M6X25 A480	
270	321313-0102		2	BALL BEARING 15/35X11	
280	352113-0205		6	ANCHOR PLATES FOR STRIPS, TYPE TM2S8-C10	
290	90347-0054		1	ROTARY DASHPOT, S-CRD-P277	
300	312125-0222		4	SCREW ISO 1207 M3X8 A4	
310	312605-0318		4	HEXAGON NUT, M6M M8 A280	
320	318860-0103		1	KNOB, ADJUST.HI.EXT.THREAD, NO 8324-3585	
340	90141-0016		4	RETAINING RING FOR SHAFT DIN 471 10 SS	
350	315755-0108		1	RETAINING RING SHAFT DIN 6799 6 SS	
U70B2670	90600-0462		1	INDUCTIVE SWITCH, E2A-M12LN05-M1-B1-TP	
U70W2670	351310-0100		1	ACTUATOR/SENSOR CABLE PRKWT 4-07/10M	

Pos	Part No	UN	Qty	Description	Page No

Machine Type | Group Description | Used-In | Group Number | Page No

BENDING ROLLER

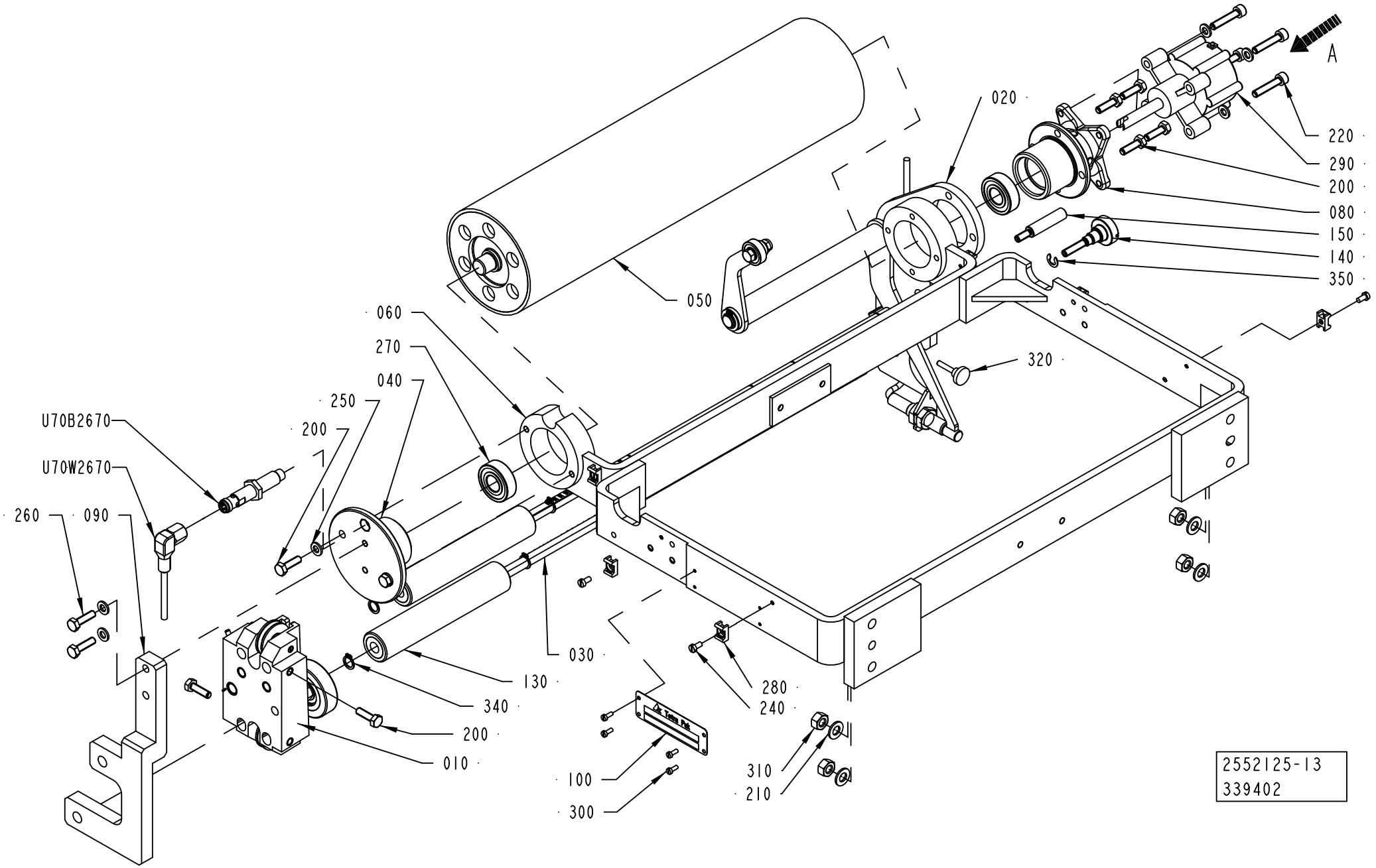

Pos	Part No	UN	Qty	Description	Page No
A3/SPEED TBA 1000B NOPT, A3/SPEED TBA 1000SQ NOPT, A3/SPEED TBA 0125S NOPT, A3/SPEED TBA 0200S NOPT, A3/SPEED TBA 0200B NOPT, A3/SPEED TBA 0200M NOPT, A3/SPEED TBA 0250B NOPT, A3/SPEED TBA 0250S NOPT (See drawing on page: 1-314)					
050	2532911-0000		1	ROLLER	
070	2990353-0000		1	BRACKET	
230	312105-0368		4	SCREW M6S ISO 4017 M6X16 A480	
250	315105-0153		12	WASHER BRB 6,4X12 RFR	
A3/SPEED TBA 1000S PT/SPEED (See drawing on page: 1-312)					
050	2532911-0000		1	ROLLER	
070	2990353-0000		1	BRACKET	
230	312105-0368		4	SCREW M6S ISO 4017 M6X16 A480	
250	315105-0153		12	WASHER BRB 6,4X12 RFR	
A3/SPEED TBA 1000SQ PT/SPEED (See drawing on page: 1-316)					
050	2532911-0000		1	ROLLER	
250	315105-0153		8	WASHER BRB 6,4X12 RFR	
Common Parts					
010	2601483-0100		1	PAPER GUIDE	**1-319**
020	1558356-0300		1	SPLICE DETECTOR	**1-321**
030	2891969-0000		2	ROD	
040	1558352-0000		1	FLANGE	
060	2547425-0000		1	BRACKET	
080	2528110-0000		1	HOUSING	
090	2547568-0000		1	PLATE	
100	979548-0000		1	MACHINE PLATE	
130	2833054-0000		2	ROLLER	
140	2891970-0000		1	KNOB	
150	2891971-0000		1	PLUG	
200	312105-0370		8	SCREW M6S ISO 4017 M6X20 A480	
210	315105-0165		4	WASHER BRB 8,4X16 RFR	
220	312115-0374		4	SCREW ISO4762 M6X30 A4 80	
240	312125-0287		6	SCREW ISO 1207 M4X8 A4	
260	312105-0372		2	SCREW M6S ISO 4017 M6X25 A480	
270	321313-0102		2	BALL BEARING 15/35X11	
280	352113-0205		6	ANCHOR PLATES FOR STRIPS, TYPE TM2S8-C10	
290	90347-0054		1	ROTARY DASHPOT, S-CRD-P277	
300	312125-0222		4	SCREW ISO 1207 M3X8 A4	
310	312605-0318		4	HEXAGON NUT, M6M M8 A280	
320	318860-0103		1	KNOB, ADJUST.HI.EXT.THREAD, NO 8324-3585	
340	90141-0016		4	RETAINING RING FOR SHAFT DIN 471 10 SS	
350	315755-0108		1	RETAINING RING SHAFT DIN 6799 6 SS	
U70B2670	90600-0462		1	INDUCTIVE SWITCH, E2A-M12LN05-M1-B1-TP	
U70W2670	351310-0100		1	ACTUATOR/SENSOR CABLE PRKWT 4-07/10M	

Pos	Part No	UN	Qty	Description	Page No

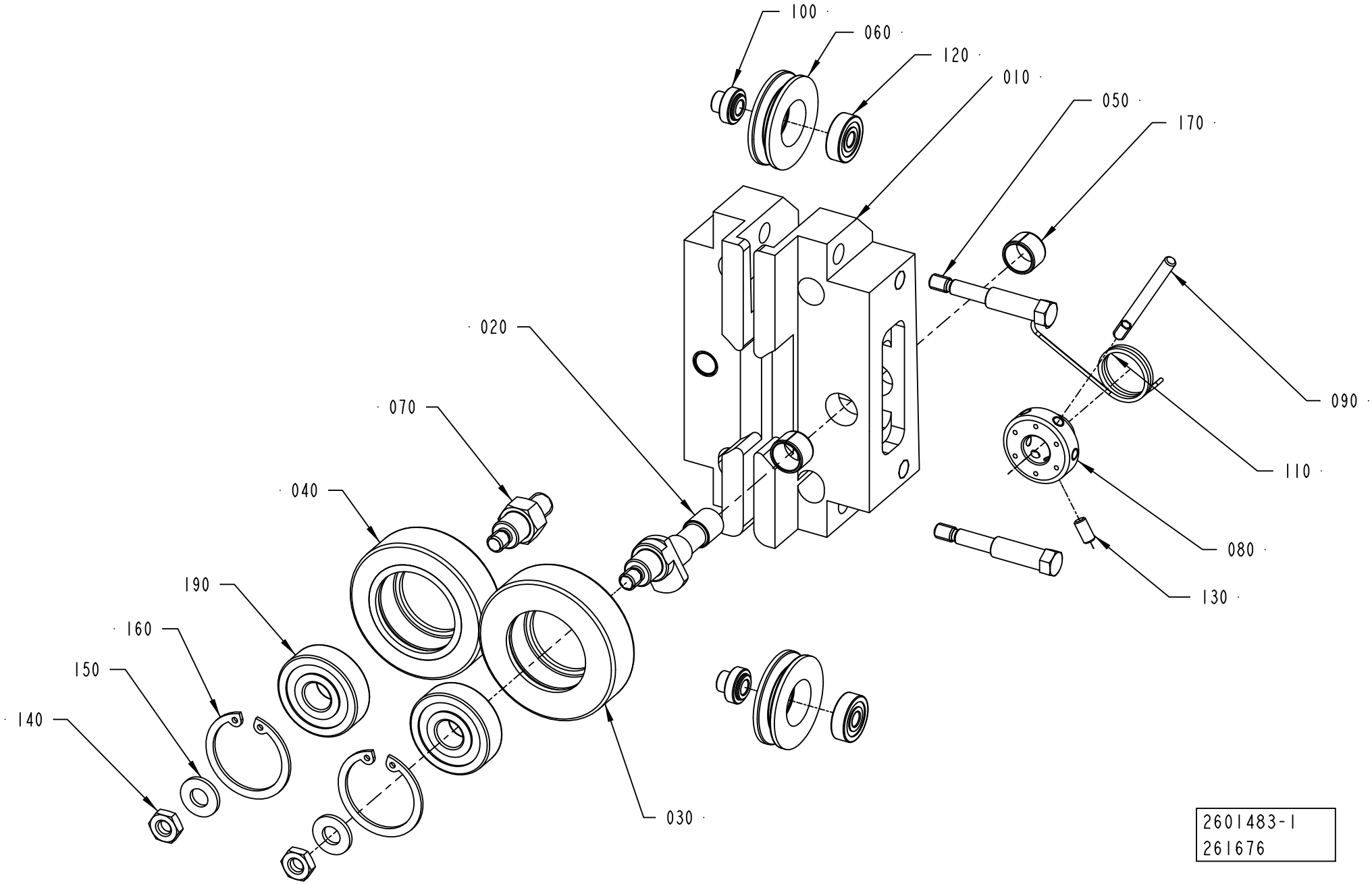
100
060
120
010
050
170
020
070
040
090
110
080
130
190
160
150
140
030
2601483-1
261676

ECM: 437213 - 20100403
Group number: 2601483-0100
Assembly Drawing: 2601483-1_1_AB

Pos	Part No	UN	Qty	Description	Page No
-					
010	2832463-0000		1	SUPPORT	
020	2503436-0000		1	SHAFT	
030	2594126-0000		1	GUIDE ROLLER	
040	1036623-0000		1	GUIDE ROLLER	
050	2533671-0000		2	SCREW	
060	2533673-0000		2	ROLLER	
070	1558254-0000		1	SHAFT	
080	2594125-0000		1	SLEEVE	
090	2503438-0000		1	LEVER	
100	2533672-0000		2	SHAFT	
110	2591782-0000		1	SPRING	
120	90214-0037		2	BALL BEARING 5/16X5	
130	312318-0287		1	SCREW ISO4029 M4X8 A4	
140	312625-0316		2	HEXAGON THIN NUT, EN 24035 ML6M M6 A4	
150	315105-0156		2	WASHER BRB 6,7X14 RFR	
160	315753-0122		2	RETAINING RING FOR BORE DIN 472 30 SS	
170	321141-0138		2	BEARING BUSH W/O FLANGE, 10X12X8 MM	
190	321313-0100		2	BALL BEARING 10/30X9	

Pos	Part No	UN	Qty	Description	Page No

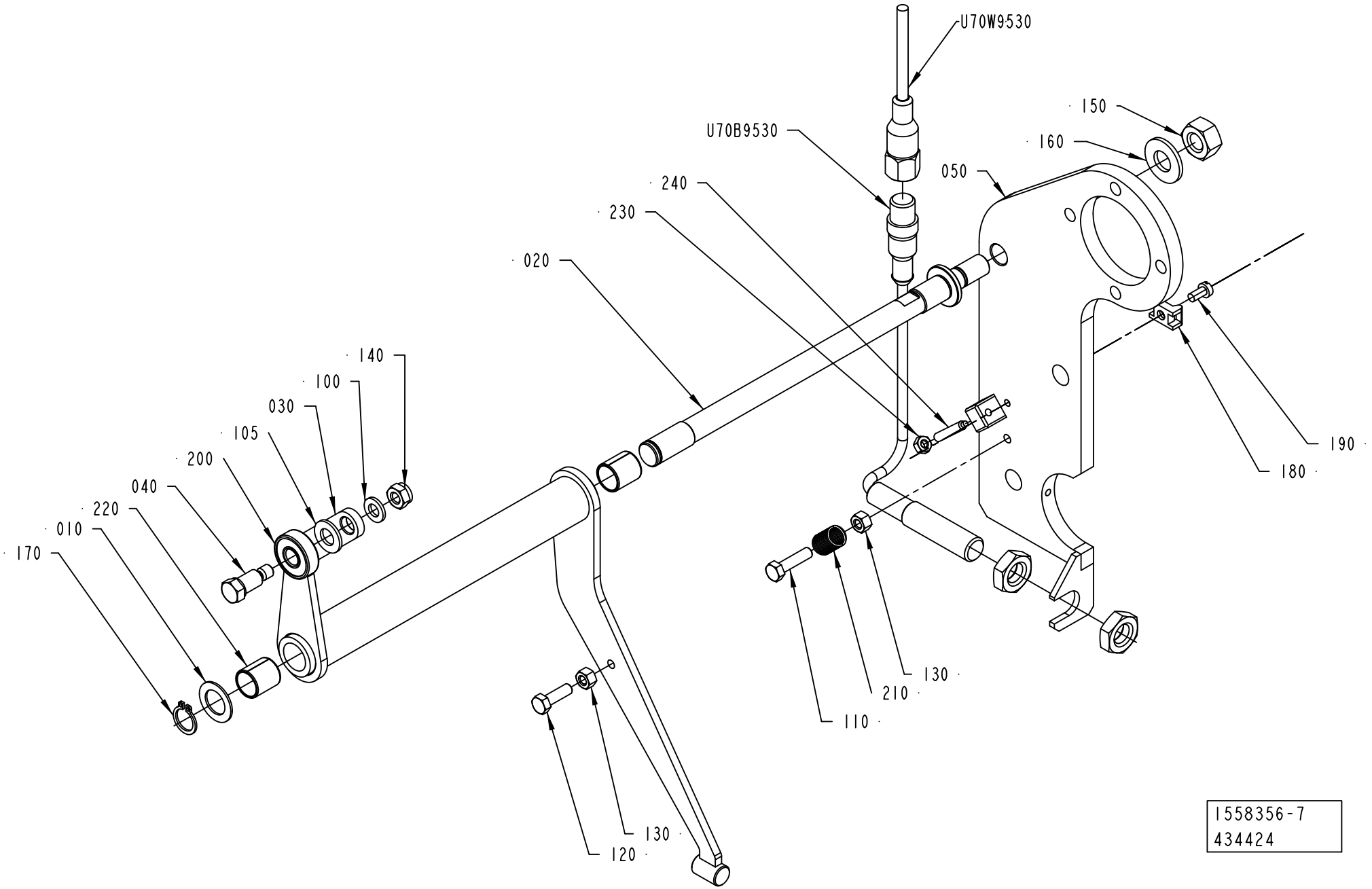
U70W9530
U70B9530
150
160
050
240
230
020
140
100
030
105
200
040
220
010
170
190
180
130
210
110
130
120
1558356-7
434424

ECM: 442228 - 20100701
Group number: 1558356-0300
Assembly Drawing: 1558356-7_1_AD

Pos	Part No	UN	Qty	Description	Page No
-					
010	266737-0000		1	WASHER	
020	3008114-0000		1	SHAFT	
030	2946876-0000		1	BRACKET	
040	2946878-0000		1	SHAFT	
050	2946880-0000		1	PLATE	
100	315105-0153		1	WASHER BRB 6,4X12 RFR	
105	315105-0165		1	WASHER BRB 8,4X16 RFR	
110	312105-0331		1	SCREW M6S ISO 4017 M5X20 A480	
120	312105-0329		1	SCREW M6S ISO 4017 M5X16 A480	
130	312605-0314		2	HEXAGON NUT, M6M M5 A280	
140	312812-0316		1	HEXAGON NUT, NY-LOCK M6 A480	
150	312605-0320		1	HEXAGON NUT, M6M M10 A280	
160	315105-0173		1	WASHER BRB 10,5X22 RFR	
170	315751-0109		1	RETAINING RING FOR SHAFT DIN 471 12 SS	
180	352113-0205		1	ANCHOR PLATES FOR STRIPS, TYPE TM2S8-C10	
190	312125-0287		1	SCREW ISO 1207 M4X8 A4	
200	90459-6335		1	BALL BEARING 8/22X7	
210	90335-0089		1	TENSION SPRING 41490, 0,9X10X23	
220	321141-0183		2	BEARING BUSH W/O FLANGE, 12X14X15 MM	
230	312605-0312		1	HEXAGON NUT, M6M M4 A280	
240	90459-6480		1	SCREW ISO4028 M4X25 SS	
U70B9530	90600-2233		1	INDUCTIVE SENSOR	
U70W9530	351309-0100		1	ACTUATOR/SENSOR CABLE PRKT 4-07/10M	

Pos	Part No	UN	Qty	Description	Page No

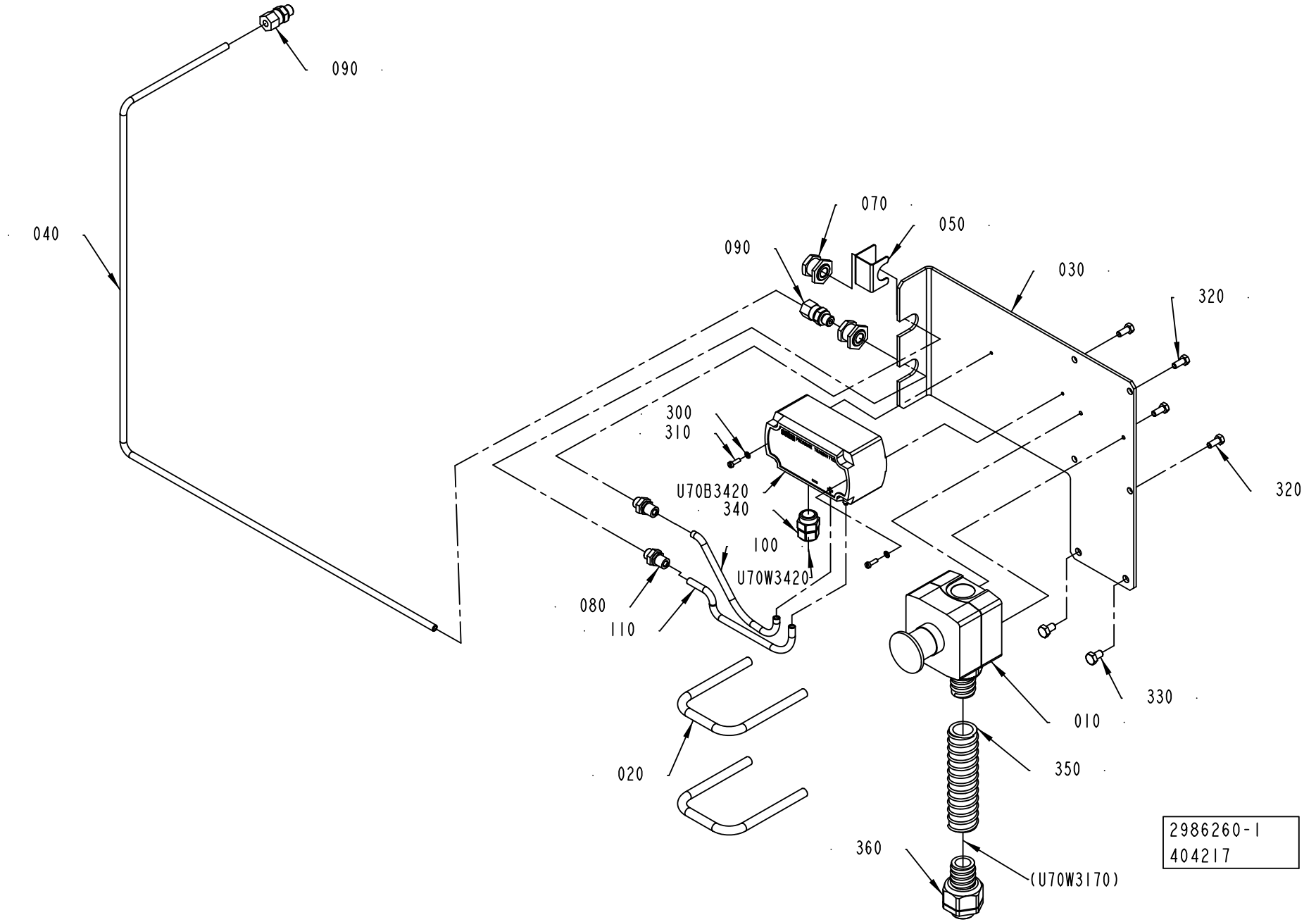
090
040
070
050
090
030
320
300
310
U70B3420
340
100
U70W3420
080
110
320
330
010
020
350
360
(U70W3170)
2986260-1
404217

ECM: 404236 - 20091001
Group number: 2986260-0100
Assembly Drawing: 2986260-1_1_AB

Pos	Part No	UN	Qty	Description	Page No
A3/SPEED					
040	2984153-0000		1	PIPE	
Common Parts					
010	2528087-0200		1	EMERGENCY STOP	**1-81**
020	2984151-0000		2	HANDLE	
030	2984152-0000		1	HOLDER	
050	2877756-0000		1	PROTECTION	
070	342767-0100		2	BULKHEAD LEAD-IN, G1/8	
080	342921-0113		2	STRAIGHT COUPLING,EXT.THREADED 6/4-G1/8"	
090	90030-0184		2	CONN. STR., GE06LRED71	
100	90166-0176	MM	210	RUBBER HOSE	
110	90166-0176	MM	180	RUBBER HOSE	
300	315105-0124		2	WASHER BRB 3,2X6 RFR	
310	312125-0224		2	SCREW ISO 1207 M3X10 A4	
320	312105-0327		4	SCREW M6S ISO 4017 M5X12 A480	
330	312105-0364		2	SCREW M6S ISO 4017 M6X10 A480	
340	90459-7081		1	GLAND, EXTENDED, M16X1,5	
350	90152-0051	MM	1000	SPIRAL CONDUIT, 25X18, UL 1816	
360	90458-0430		1	HOSE GLAND W/O INSERT M20 EXTENDED	
U70B3420	90459-4810		1	PRESS TRANSD (DIFF) 0 - 2000PA, 2681-20C	
U70W3420	90459-4274	MM	6000	SCR. CABLE 2X0,5MM2	

Pos	Part No	UN	Qty	Description	Page No

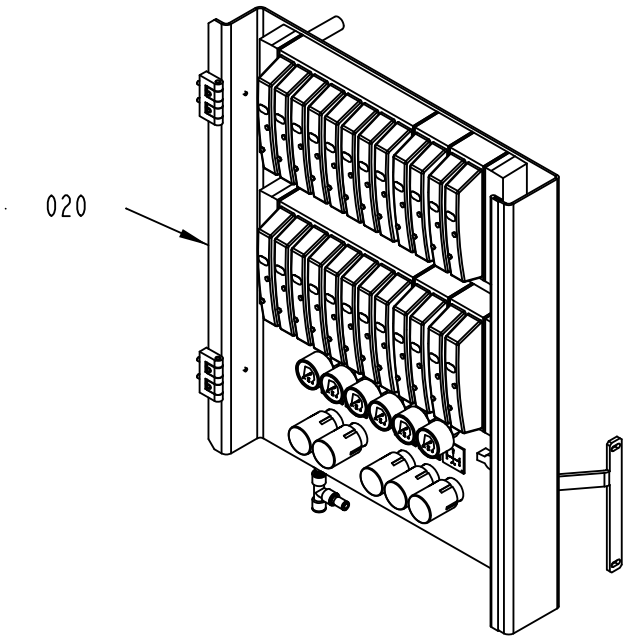

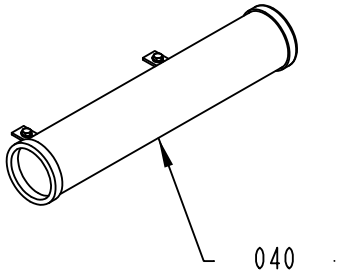

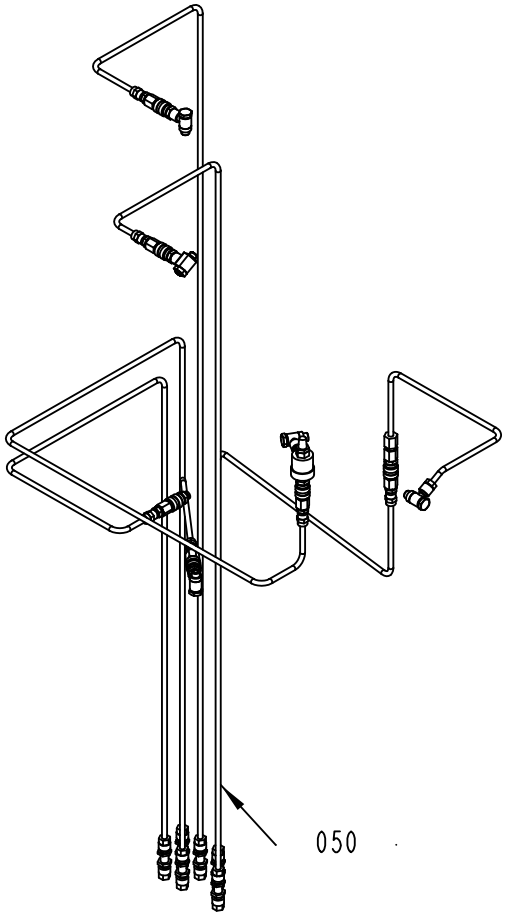

2528079-4
355885

ECM: 391861 - 20090701
Group number: 2528079-0400
Assembly Drawing: 2528079-4_1_AC

Pos	Part No	UN	Qty	Description	Page No
-					
010	2528080-0400		1	HOSE INSTALLATION	**1-327, 1-329**
020	2914523-0100		1	VALVE PANEL	**1-331, 1-333**
040	2528081-0300		1	HOSE HOLDER	**1-341**
050	2957450-0200		1	PNEUMATIC COMPONENT	**1-343**

Pos	Part No	UN	Qty	Description	Page No

This page is intentionally left blank.

ECM: 453357 - 20101001
Group number: 2528080-0400
Assembly Drawing:

This list covers pages from 1-326 to 1-329

Pos	Part No	UN	Qty	Description	Page No
A3/SPEED HI					
050	350013-0003		1	PLUG QSC-8H	
060	350015-0001		7	PUSH-IN Y-CONNECTOR QSY-F-6	
U70W1452	315300-0001	MM	2500	TUBE, 6 MM PE BLUE	
U70W1454	315300-0001	MM	2500	TUBE, 6 MM PE BLUE	
U70W2272	315300-0001	MM	4800	TUBE, 6 MM PE BLUE	
U70W2274	315300-0001	MM	4800	TUBE, 6 MM PE BLUE	
U70W2443	315300-0001	MM	500	TUBE, 6 MM PE BLUE	
U70W2445	315300-0001	MM	500	TUBE, 6 MM PE BLUE	
U70W2446	315300-0001	MM	500	TUBE, 6 MM PE BLUE	
U70W2447	315300-0001	MM	500	TUBE, 6 MM PE BLUE	
U70W2448	315300-0001	MM	150	TUBE, 6 MM PE BLUE	
U70W2449	315300-0001	MM	150	TUBE, 6 MM PE BLUE	
U70W4222	315300-0001	MM	2500	TUBE, 6 MM PE BLUE	
A3/SPEED NOHI					
060	350015-0001		7	PUSH-IN Y-CONNECTOR QSY-F-6	
U70W2272	315300-0001	MM	4800	TUBE, 6 MM PE BLUE	
U70W2274	315300-0001	MM	4800	TUBE, 6 MM PE BLUE	
U70W2443	315300-0001	MM	500	TUBE, 6 MM PE BLUE	
U70W2445	315300-0001	MM	500	TUBE, 6 MM PE BLUE	
U70W2446	315300-0001	MM	500	TUBE, 6 MM PE BLUE	
U70W2447	315300-0001	MM	500	TUBE, 6 MM PE BLUE	
U70W2448	315300-0001	MM	150	TUBE, 6 MM PE BLUE	
U70W2449	315300-0001	MM	150	TUBE, 6 MM PE BLUE	
Common Parts					
010	350005-0004		3	PUSH-IN T-FITTING QST-F-10	
020	350006-0005		2	PUSH-IN FITTING QS-F-10H-6	
030	350006-0006		2	PUSH-IN FITTING QS-F-10H-8	
040	350012-0004		2	SLEEVE QSH-F-10	
070	350013-0002		1	PLUG QSC-6H	
080	350005-0002		3	PUSH-IN T-FITTING QST-F-6	
U70W1412	315300-0001	MM	5000	TUBE, 6 MM PE BLUE	
U70W1413	315300-0001	MM	300	TUBE, 6 MM PE BLUE	
U70W1414	315300-0001	MM	5000	TUBE, 6 MM PE BLUE	
U70W1415	315300-0001	MM	1500	TUBE, 6 MM PE BLUE	
U70W1432	315300-0001	MM	4500	TUBE, 6 MM PE BLUE	
U70W1434	315300-0001	MM	4500	TUBE, 6 MM PE BLUE	
U70W1472	315300-0001	MM	4500	TUBE, 6 MM PE BLUE	
U70W1474	315300-0001	MM	4500	TUBE, 6 MM PE BLUE	
U70W1503	315300-0001	MM	3500	TUBE, 6 MM PE BLUE	
U70W1522	315300-0001	MM	4500	TUBE, 6 MM PE BLUE	
U70W1524	315300-0001	MM	4500	TUBE, 6 MM PE BLUE	
U70W1532	315300-0001	MM	4500	TUBE, 6 MM PE BLUE	
U70W1534	315300-0001	MM	4500	TUBE, 6 MM PE BLUE	
U70W2252	315300-0001	MM	3800	TUBE, 6 MM PE BLUE	
U70W2254	315300-0001	MM	3800	TUBE, 6 MM PE BLUE	
U70W2255	315300-0001	MM	3300	TUBE, 6 MM PE BLUE	
U70W2302	315300-0001	MM	3100	TUBE, 6 MM PE BLUE	
U70W2304	315300-0001	MM	3100	TUBE, 6 MM PE BLUE	
U70W2344	315300-0001	MM	3500	TUBE, 6 MM PE BLUE	
U70W2352	315300-0001	MM	3100	TUBE, 6 MM PE BLUE	
U70W2354	315300-0001	MM	3100	TUBE, 6 MM PE BLUE	
U70W2362	315300-0001	MM	3600	TUBE, 6 MM PE BLUE	
U70W2364	315300-0001	MM	3600	TUBE, 6 MM PE BLUE	
U70W2372	315300-0001	MM	3500	TUBE, 6 MM PE BLUE	
U70W2374	315300-0001	MM	3500	TUBE, 6 MM PE BLUE	
U70W2412	315300-0001	MM	3500	TUBE, 6 MM PE BLUE	
U70W2414	315300-0001	MM	3500	TUBE, 6 MM PE BLUE	
U70W2424	315300-0001	MM	3500	TUBE, 6 MM PE BLUE	
U70W2428	315300-0001	MM	3500	TUBE, 6 MM PE BLUE	
U70W2432	315300-0001	MM	3500	TUBE, 6 MM PE BLUE	
U70W2433	315300-0001	MM	2500	TUBE, 6 MM PE BLUE	
U70W2434	315300-0001	MM	3500	TUBE, 6 MM PE BLUE	
U70W2435	315300-0001	MM	2500	TUBE, 6 MM PE BLUE	
U70W2436	315300-0001	MM	2500	TUBE, 6 MM PE BLUE	
U70W2437	315300-0001	MM	2500	TUBE, 6 MM PE BLUE	
U70W2442	315300-0001	MM	3500	TUBE, 6 MM PE BLUE	
U70W2444	315300-0001	MM	3500	TUBE, 6 MM PE BLUE	
U70W2453	315300-0001	MM	1000	TUBE, 6 MM PE BLUE	
U70W2454	315300-0001	MM	1000	TUBE, 6 MM PE BLUE	
U70W3302	315300-0001	MM	3300	TUBE, 6 MM PE BLUE	
U70W4372	315300-0001	MM	2500	TUBE, 6 MM PE BLUE	
U70W4374	315300-0001	MM	2500	TUBE, 6 MM PE BLUE	
U70W4412	315300-0001	MM	2500	TUBE, 6 MM PE BLUE	
U70W4414	315300-0001	MM	2500	TUBE, 6 MM PE BLUE	
U70W4424	315300-0001	MM	2500	TUBE, 6 MM PE BLUE	
U70W4428	315300-0001	MM	2500	TUBE, 6 MM PE BLUE	
U70W4432	315300-0001	MM	1000	TUBE, 6 MM PE BLUE	
U70W4434	315300-0001	MM	1000	TUBE, 6 MM PE BLUE	
U70W4442	315300-0001	MM	200	TUBE, 6 MM PE BLUE	
U70W4444	315300-0001	MM	200	TUBE, 6 MM PE BLUE	
U70W6005	315300-0007	MM	2000	TUBE, 10 MM PE BLUE	
U70W6006	315300-0001	MM	2000	TUBE, 6 MM PE BLUE	
U70W6007	315300-0007	MM	2000	TUBE, 10 MM PE BLUE	

Machine Type | Group Description | Used-In | Group Number | Page No

This page is intentionally left blank.

Pos	Part No	UN	Qty	Description	Page No	Pos	Part No	UN	Qty	Description	Page No
Common Parts (Cont'd)											
U70W6008	315300-0007	MM	300	TUBE, 10 MM PE BLUE							

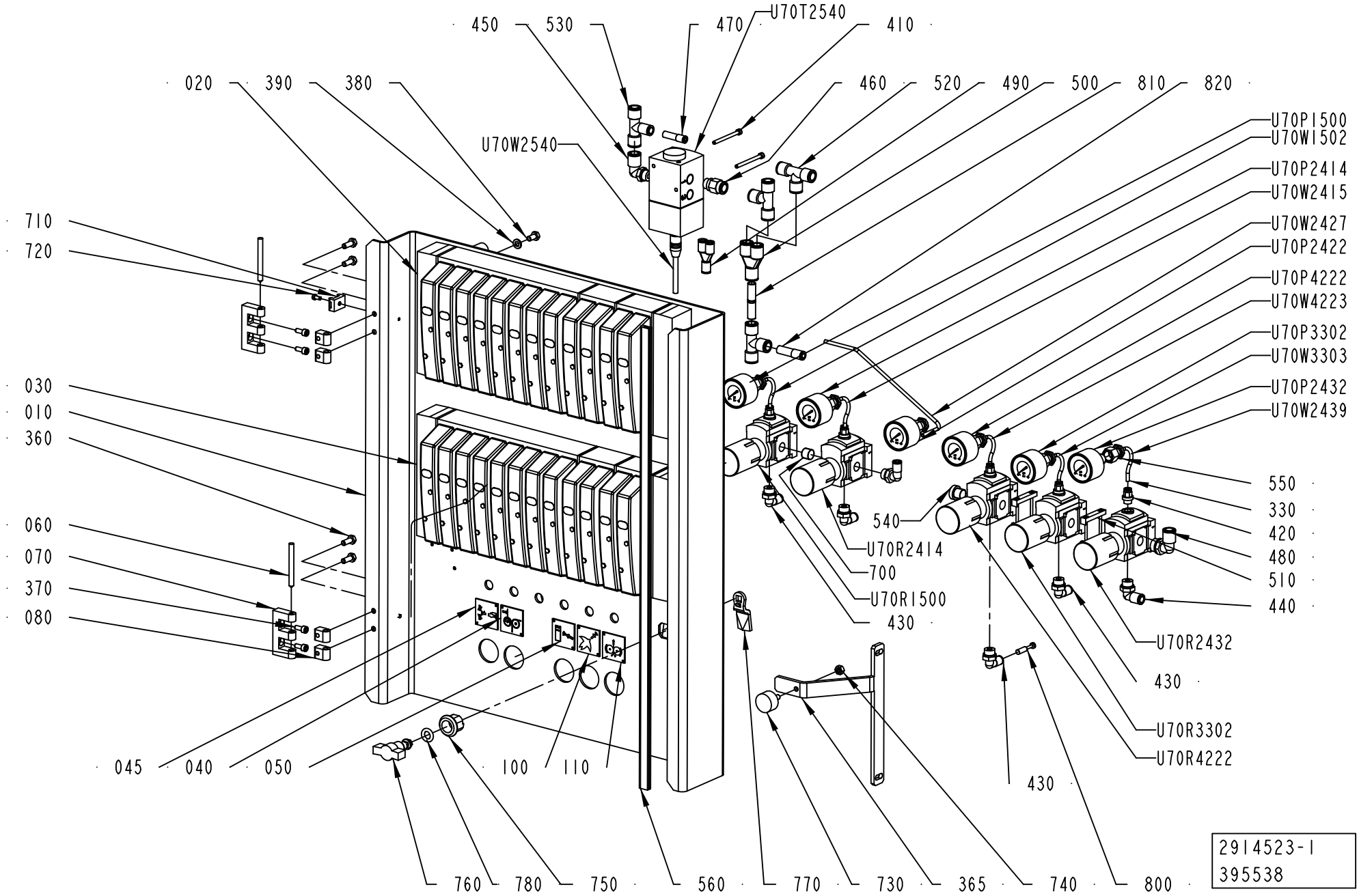
450
530
470
U70T2540
410
020
390
380
460
520
490
500
810
820
U70P1500
U70W1502
U70W2540
U70P2414
U70W2415
710
720
U70W2427
U70P2422
U70P4222
U70W4223
U70P3302
U70W3303
U70P2432
U70W2439
030
010
360
550
330
420
480
510
440
540
U70R2414
700
U70R1500
430
060
070
370
080
U70R2432
430
U70R3302
U70R4222
045
040
050
100
110
430
760
780
750
560
770
730
365
740
800
2914523-1
395538

ECM: 403835 - 20091001
Group number: 2914523-0100
Assembly Drawing: 2914523-1_1_AD

This list covers pages from 1-330 to 1-333

Pos	Part No	UN	Qty	Description	Page No
-					
010	2914526-0000		1	PLATE	
020	2914524-0100		1	VALVE RAMP	**1-335**
030	2914525-0100		1	VALVE RAMP	**1-337, 1-339**
040	1041937-0000		1	SIGN	
045	2634917-0000		1	SIGN	
050	2640822-0000		1	SIGN	
060	988685-0000		2	PIN	
070	1035792-0000		2	E-HINGE	
080	1129770-0000		4	BLOCKING PIECE	
100	273450-0000		1	SIGN, AIR SPRAY	
110	273452-0000		1	SIGN, ROLLING MACHINE FOR FABRICS	
360	312105-0368		4	SCREW M6S ISO 4017 M6X16 A480	
365	2936342-0000		1	STOP PLATE	
370	312115-0327		4	SCREW ISO4762 M5X12 A4 80	
380	312105-0366		8	SCREW M6S ISO 4017 M6X12 A480	
390	315105-0153		8	WASHER BRB 6,4X12 RFR	
410	312115-0305		2	SCREW ISO4762 M4X50 A4 80	
420	350001-0005		5	PUSH-IN FITTING QS-F-G1/8-4	
430	350002-0008		6	PUSH-IN L-FITTING QSL-F-G1/4-6	
440	350002-0009		1	PUSH-IN L-FITTING QSL-F-G1/4-8	
450	350002-0010		1	PUSH-IN L-FITTING QSL-F-G1/4-10	
460	350001-0010		1	PUSH-IN FITTING QS-F-G1/4-10	
470	350006-0002		1	PUSH-IN FITTING QS-F-8H-4	
480	350002-0013		1	PUSH-IN L-FITTING QSL-F-G3/8-10	
490	350015-0001		1	PUSH-IN Y-CONNECTOR QSY-F-6	
500	350015-0005		1	PUSH-IN Y-CONNECTOR QSY-F-10	
510	90459-2248		2	BRACKET, MS4-MV	
520	350005-0004		2	PUSH-IN T-FITTING QST-F-10	
530	350011-0003		1	PUSH-IN T-FITTING QST-F-10-8	
540	90600-1167		1	PLUG, EXT. R-THREAD, R1/4	
550	90600-1168		6	PUSH-IN FITTING QSSF-1/4-4-B	
560	90143-0097	MM	630	SELF GRIPPING GASKET, 1011-24	
700	90600-1169		1	PLUG G1/4, B-1/4-NPT	
710	352113-0203		2	ANCHOR PLATES FOR STRIPS, TYPE TM3S8-M0	
720	312125-0287		2	SCREW ISO 1207 M4X8 A4	
730	90347-0034		1	VIBRATION DAMPER	
740	312605-0316		1	HEXAGON NUT, M6M M6 A280	
750	90237-0319		1	LOCK HOUSING, 1000-U134	
760	90237-0337		1	LOCK HANDLE FOR 90237-319	
770	90237-0335		1	LOCKING CATCH	
780	90237-0323		1	LOCK O-RING, 1000-24	
800	350013-0002		1	PLUG QSC-6H	
810	350012-0004		1	SLEEVE QSH-F-10	
820	350006-0005		1	PUSH-IN FITTING QS-F-10H-6	
U70P1500	90459-7344		1	PRESSURE GAUGE, MA-40-6-R1/4-EN	
U70P2414	90459-7344		1	PRESSURE GAUGE, MA-40-6-R1/4-EN	
U70P2422	90459-7344		1	PRESSURE GAUGE, MA-40-6-R1/4-EN	
U70P2432	90459-7344		1	PRESSURE GAUGE, MA-40-6-R1/4-EN	
U70P3302	90459-7344		1	PRESSURE GAUGE, MA-40-6-R1/4-EN	
U70P4222	90459-7344		1	PRESSURE GAUGE, MA-40-6-R1/4-EN	
U70R1500	90459-4554		1	REGULATOR, MS4-LRB-1/4-D7-A8-AS	
U70R2414	90459-4554		1	REGULATOR, MS4-LRB-1/4-D7-A8-AS	
U70R2432	90459-4554		1	REGULATOR, MS4-LRB-1/4-D7-A8-AS	
U70R3302	90459-4554		1	REGULATOR, MS4-LRB-1/4-D7-A8-AS	
U70R4222	90459-4554		1	REGULATOR, MS4-LRB-1/4-D7-A8-AS	
U70T2540	90458-1092		1	PROPORTIONAL VALVE 0 - 10V/0-6 BAR	
	90458-1262		*1*	*CONNECTOR 131028001 FOR PROP. VALVE*	
U70W1502	315300-0016	MM	70	TUBE 4MPE BLUE	
U70W1504	315300-0001	MM	300	TUBE, 6 MM PE BLUE	
U70W2414	315300-0001	MM	500	TUBE, 6 MM PE BLUE	
U70W2415	315300-0016	MM	70	TUBE 4MPE BLUE	
U70W2425	315300-0007	MM	100	TUBE, 10 MM PE BLUE	
U70W2426	315300-0007	MM	100	TUBE, 10 MM PE BLUE	
U70W2427	315300-0016	MM	250	TUBE 4MPE BLUE	
U70W2438	315300-0004	MM	350	TUBE, 8 MM PE BLUE	
U70W2439	315300-0016	MM	70	TUBE 4MPE BLUE	
U70W2540	90220-0165	MM	6000	SCR. CABLE 5X0,34MM2	
U70W3303	315300-0016	MM	70	TUBE 4MPE BLUE	
U70W4223	315300-0016	MM	70	TUBE 4MPE BLUE	
U70W6103	315300-0007	MM	350	TUBE, 10 MM PE BLUE	
U70W6104	315300-0007	MM	250	TUBE, 10 MM PE BLUE	
U70W6105	315300-0007	MM	150	TUBE, 10 MM PE BLUE	
U70W6106	315300-0007	MM	300	TUBE, 10 MM PE BLUE	
U70W6110	315300-0007	MM	200	TUBE, 10 MM PE BLUE	
U70W6302	315300-0001	MM	250	TUBE, 6 MM PE BLUE	
U70W6303	315300-0001	MM	500	TUBE, 6 MM PE BLUE	

Machine Type	Group Description	Used-In	Group Number	Page No

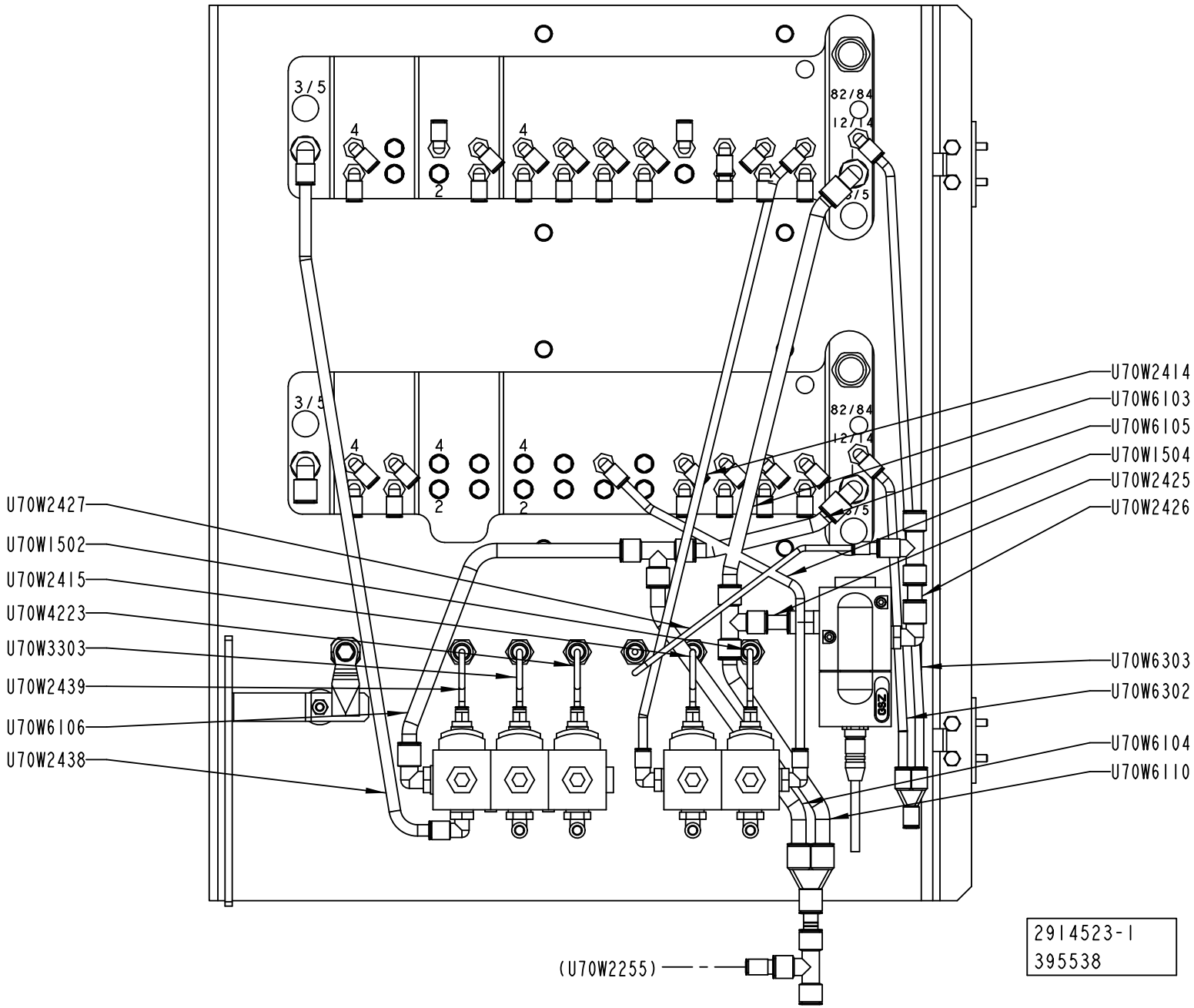
U70W2427
U70W1502
U70W2415
U70W4223
U70W3303
U70W2439
U70W6106
U70W2438
U70W2414
U70W6103
U70W6105
U70W1504
U70W2425
U70W2426
U70W6303
U70W6302
U70W6104
U70W6110
(U70W2255)
3/5
82/84
12/14
4
2
2914523-1
395538

ECM: 403835 - 20091001
Group number: 2914523-0100
Assembly Drawing: 2914523-1_2_AD

This list covers pages from 1-330 to 1-333

Pos	Part No	UN	Qty	Description	Page No
-					
010	2914526-0000		1	PLATE	
020	2914524-0100		1	VALVE RAMP	**1-335**
030	2914525-0100		1	VALVE RAMP	**1-337, 1-339**
040	1041937-0000		1	SIGN	
045	2634917-0000		1	SIGN	
050	2640822-0000		1	SIGN	
060	988685-0000		2	PIN	
070	1035792-0000		2	E-HINGE	
080	1129770-0000		4	BLOCKING PIECE	
100	273450-0000		1	SIGN, AIR SPRAY	
110	273452-0000		1	SIGN, ROLLING MACHINE FOR FABRICS	
360	312105-0368		4	SCREW M6S ISO 4017 M6X16 A480	
365	2936342-0000		1	STOP PLATE	
370	312115-0327		4	SCREW ISO4762 M5X12 A4 80	
380	312105-0366		8	SCREW M6S ISO 4017 M6X12 A480	
390	315105-0153		8	WASHER BRB 6,4X12 RFR	
410	312115-0305		2	SCREW ISO4762 M4X50 A4 80	
420	350001-0005		5	PUSH-IN FITTING QS-F-G1/8-4	
430	350002-0008		6	PUSH-IN L-FITTING QSL-F-G1/4-6	
440	350002-0009		1	PUSH-IN L-FITTING QSL-F-G1/4-8	
450	350002-0010		1	PUSH-IN L-FITTING QSL-F-G1/4-10	
460	350001-0010		1	PUSH-IN FITTING QS-F-G1/4-10	
470	350006-0002		1	PUSH-IN FITTING QS-F-8H-4	
480	350002-0013		1	PUSH-IN L-FITTING QSL-F-G3/8-10	
490	350015-0001		1	PUSH-IN Y-CONNECTOR QSY-F-6	
500	350015-0005		1	PUSH-IN Y-CONNECTOR QSY-F-10	
510	90459-2248		2	BRACKET, MS4-MV	
520	350005-0004		2	PUSH-IN T-FITTING QST-F-10	
530	350011-0003		1	PUSH-IN T-FITTING QST-F-10-8	
540	90600-1167		1	PLUG, EXT. R-THREAD, R1/4	
550	90600-1168		6	PUSH-IN FITTING QSSF-1/4-4-B	
560	90143-0097	MM	630	SELF GRIPPING GASKET, 1011-24	
700	90600-1169		1	PLUG G1/4, B-1/4-NPT	
710	352113-0203		2	ANCHOR PLATES FOR STRIPS, TYPE TM3S8-M0	
720	312125-0287		2	SCREW ISO 1207 M4X8 A4	
730	90347-0034		1	VIBRATION DAMPER	
740	312605-0316		1	HEXAGON NUT, M6M M6 A280	
750	90237-0319		1	LOCK HOUSING, 1000-U134	
760	90237-0337		1	LOCK HANDLE FOR 90237-319	
770	90237-0335		1	LOCKING CATCH	
780	90237-0323		1	LOCK O-RING, 1000-24	
800	350013-0002		1	PLUG QSC-6H	
810	350012-0004		1	SLEEVE QSH-F-10	
820	350006-0005		1	PUSH-IN FITTING QS-F-10H-6	
U70P1500	90459-7344		1	PRESSURE GAUGE, MA-40-6-R1/4-EN	
U70P2414	90459-7344		1	PRESSURE GAUGE, MA-40-6-R1/4-EN	
U70P2422	90459-7344		1	PRESSURE GAUGE, MA-40-6-R1/4-EN	
U70P2432	90459-7344		1	PRESSURE GAUGE, MA-40-6-R1/4-EN	
U70P3302	90459-7344		1	PRESSURE GAUGE, MA-40-6-R1/4-EN	
U70P4222	90459-7344		1	PRESSURE GAUGE, MA-40-6-R1/4-EN	
U70R1500	90459-4554		1	REGULATOR, MS4-LRB-1/4-D7-A8-AS	
U70R2414	90459-4554		1	REGULATOR, MS4-LRB-1/4-D7-A8-AS	
U70R2432	90459-4554		1	REGULATOR, MS4-LRB-1/4-D7-A8-AS	
U70R3302	90459-4554		1	REGULATOR, MS4-LRB-1/4-D7-A8-AS	
U70R4222	90459-4554		1	REGULATOR, MS4-LRB-1/4-D7-A8-AS	
U70T2540	90458-1092		1	PROPORTIONAL VALVE 0 - 10V/0-6 BAR	
	90458-1262		*1*	*CONNECTOR 131028001 FOR PROP. VALVE*	
U70W1502	315300-0016	MM	70	TUBE 4MPE BLUE	
U70W1504	315300-0001	MM	300	TUBE, 6 MM PE BLUE	
U70W2414	315300-0001	MM	500	TUBE, 6 MM PE BLUE	
U70W2415	315300-0016	MM	70	TUBE 4MPE BLUE	
U70W2425	315300-0007	MM	100	TUBE, 10 MM PE BLUE	
U70W2426	315300-0007	MM	100	TUBE, 10 MM PE BLUE	
U70W2427	315300-0016	MM	250	TUBE 4MPE BLUE	
U70W2438	315300-0004	MM	350	TUBE, 8 MM PE BLUE	
U70W2439	315300-0016	MM	70	TUBE 4MPE BLUE	
U70W2540	90220-0165	MM	6000	SCR. CABLE 5X0,34MM2	
U70W3303	315300-0016	MM	70	TUBE 4MPE BLUE	
U70W4223	315300-0016	MM	70	TUBE 4MPE BLUE	
U70W6103	315300-0007	MM	350	TUBE, 10 MM PE BLUE	
U70W6104	315300-0007	MM	250	TUBE, 10 MM PE BLUE	
U70W6105	315300-0007	MM	150	TUBE, 10 MM PE BLUE	
U70W6106	315300-0007	MM	300	TUBE, 10 MM PE BLUE	
U70W6110	315300-0007	MM	200	TUBE, 10 MM PE BLUE	
U70W6302	315300-0001	MM	250	TUBE, 6 MM PE BLUE	
U70W6303	315300-0001	MM	500	TUBE, 6 MM PE BLUE	

Machine Type | Group Description | Used-In | Group Number | Page No

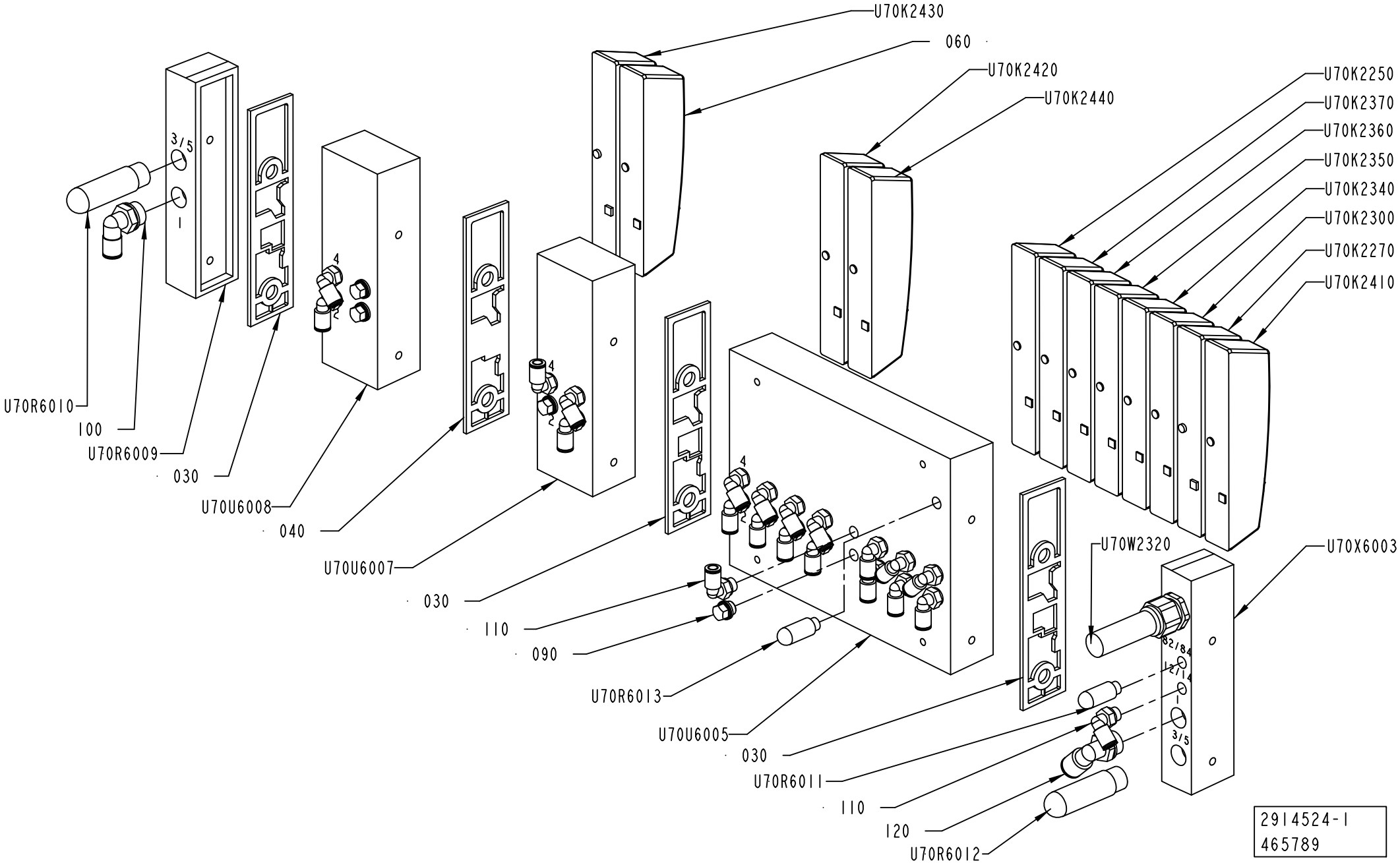
U70K2430
060
U70K2420
U70K2440
U70K2250
U70K2370
U70K2360
U70K2350
U70K2340
U70K2300
U70K2270
U70K2410
U70R6010
100
U70R6009
030
U70U6008
040
U70U6007
030
110
090
U70R6013
U70U6005
030
U70R6011
110
120
U70R6012
U70W2320
U70X6003
3/5
1
4
2
82/84
12/14
1
3/5
2914524-1
465789

ECM: 471601 - 20110101
Group number: 2914524-0100
Assembly Drawing: 2914524-1_1_AB

Pos	Part No	UN	Qty	Description	Page No
A3/SPEED					
090	90459-0698		4	PLUG, EXT. G-THREAD, G1/8	
110	350002-0006		21	PUSH-IN L-FITTING QSL-F-G1/8-6	
Common Parts					
030	90458-1207		3	SEALING, STANDARD	
040	90458-1208		1	SEALING, CHANNEL 1 BLOCKED	
060	90458-1215		1	COVER PLATE FOR EMPTY VALVE POSITION	
100	350002-0012		1	PUSH-IN L-FITTING QSL-F-G3/8-8	
120	350002-0013		1	PUSH-IN L-FITTING QSL-F-G3/8-10	
U70K2250	90458-1194		1	MONOSTABLE VALVE 5/2	
U70K2270	90458-1202		1	VALVES 2X3/2, CLOSED	
U70K2300	90458-1194		1	MONOSTABLE VALVE 5/2	
U70K2340	90458-1194		1	MONOSTABLE VALVE 5/2	
U70K2350	90458-1194		1	MONOSTABLE VALVE 5/2	
U70K2360	90458-1194		1	MONOSTABLE VALVE 5/2	
U70K2370	90458-1194		1	MONOSTABLE VALVE 5/2	
U70K2410	90458-1194		1	MONOSTABLE VALVE 5/2	
U70K2420	90458-1194		1	MONOSTABLE VALVE 5/2	
U70K2430	90458-1202		1	VALVES 2X3/2, CLOSED	
U70K2440	90458-1194		1	MONOSTABLE VALVE 5/2	
U70R6009	90458-1214		1	RIGHT ENDPL EXT. PILOT AIR,CDVI5.0-EPR-S	
U70R6010	90328-0024		1	SILENCER G3/8"	
U70R6011	90328-0047		1	SILENCER G1/8"	
U70R6012	90328-0024		1	SILENCER G3/8"	
U70R6013	90328-0047		1	SILENCER G1/8"	
U70U6005	90458-1205		1	BASIC SUB-BASE 8 VALVES, CDVI5.0-GB8-MP	
U70U6007	90458-1206		1	EXP. SUB-BASE 2 VALVES, CDVI5.0-EB	
U70U6008	90458-1206		1	EXP. SUB-BASE 2 VALVES, CDVI5.0-EB	
U70X6003	90458-1212		1	LEFT ENDPLATE INCL. 10M CABLE	

Pos	Part No	UN	Qty	Description	Page No

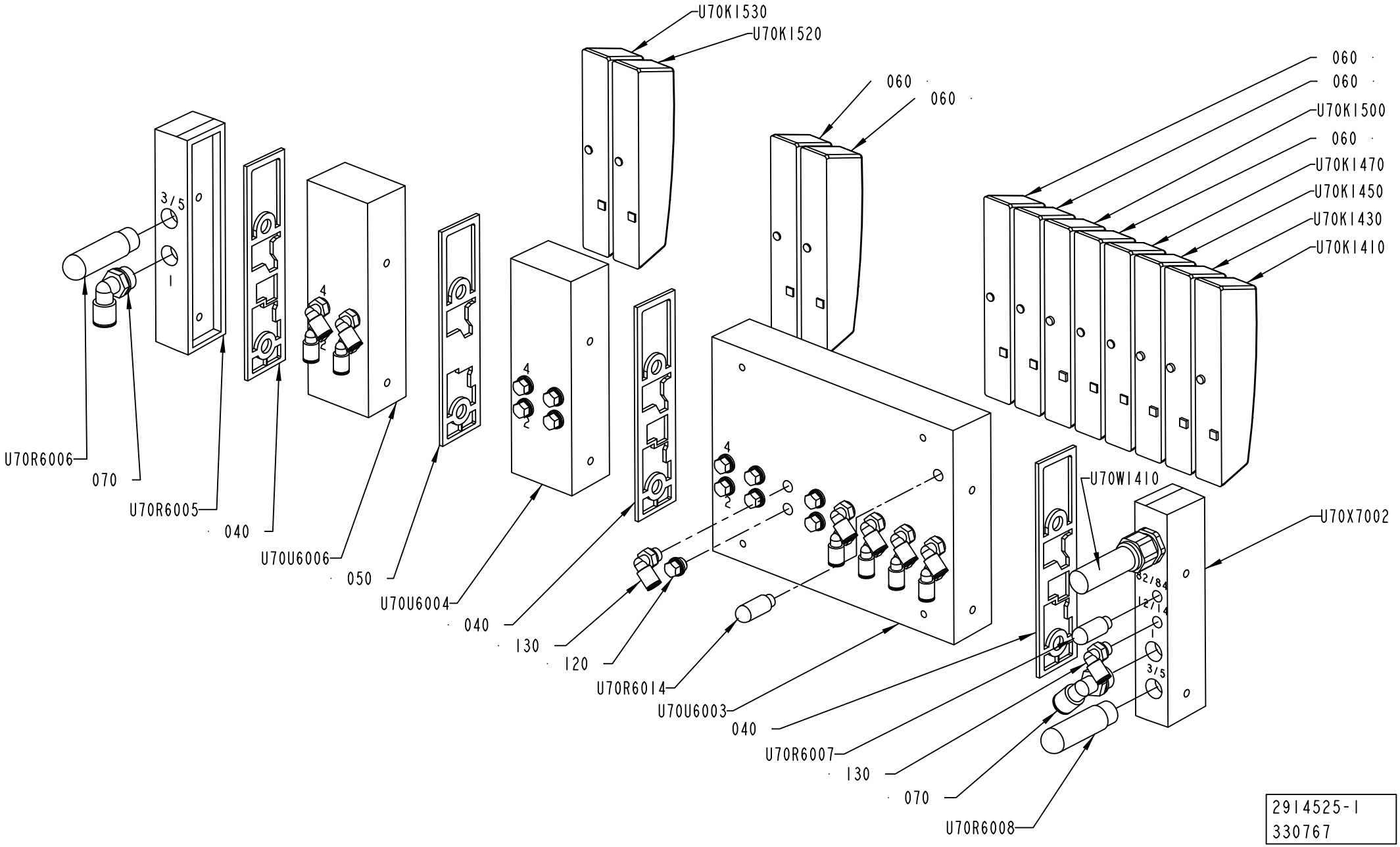
U70K1530
U70K1520
060
060
060
060
U70K1500
060
U70K1470
U70K1450
U70K1430
U70K1410
U70R6006
070
U70R6005
040
U70U6006
050
U70U6004
040
130
120
U70R6014
U70U6003
040
U70R6007
130
070
U70R6008
U70W1410
U70X7002
3/5
1
4
2
82/84
27/14
2914525-1
330767

ECM: 352645 - 20080706
Group number: 2914525-0100
Assembly Drawing: 2914525-1_1_AA

This list covers pages from 1-336 to 1-339

Pos	Part No	UN	Qty	Description	Page No
HI (See drawing on page: 1-336)					
060	90458-1215		5	COVER PLATE FOR EMPTY VALVE POSITION	
120	90459-0698		11	PLUG, EXT. G-THREAD, G1/8	
130	350002-0006		14	PUSH-IN L-FITTING QSL-F-G1/8-6	
U70K1450	90458-1202		1	VALVES 2X3/2, CLOSED	
NOHI (See drawing on page: 1-338)					
060	90458-1215		6	COVER PLATE FOR EMPTY VALVE POSITION	
120	90459-0698		13	PLUG, EXT. G-THREAD, G1/8	
130	350002-0006		12	PUSH-IN L-FITTING QSL-F-G1/8-6	
Common Parts					
040	90458-1207		3	SEALING, STANDARD	
050	90458-1208		1	SEALING, CHANNEL 1 BLOCKED	
070	350002-0013		2	PUSH-IN L-FITTING QSL-F-G3/8-10	
080	350001-0009		1	PUSH-IN FITTING QS-F-G1/4-8	
U70K1410	90458-1202		1	VALVES 2X3/2, CLOSED	
U70K1430	90458-1202		1	VALVES 2X3/2, CLOSED	
U70K1470	90458-1194		1	MONOSTABLE VALVE 5/2	
U70K1500	90458-1202		1	VALVES 2X3/2, CLOSED	
U70K1520	90458-1194		1	MONOSTABLE VALVE 5/2	
U70K1530	90458-1194		1	MONOSTABLE VALVE 5/2	
U70R6002	90328-0047		1	SILENCER G1/8"	
U70R6005	90458-1214		1	RIGHT ENDPL EXT. PILOT AIR,CDVI5.0-EPR-S	
U70R6006	90328-0024		1	SILENCER G3/8"	
U70R6007	90328-0047		1	SILENCER G1/8"	
U70R6008	90328-0024		1	SILENCER G3/8"	
U70R6014	90328-0047		1	SILENCER G1/8"	
U70R7003	90328-0047		1	SILENCER G1/8"	
U70U6003	90458-1205		1	BASIC SUB-BASE 8 VALVES, CDVI5.0-GB8-MP	
U70U6004	90458-1206		1	EXP. SUB-BASE 2 VALVES, CDVI5.0-EB	
U70U6006	90458-1206		1	EXP. SUB-BASE 2 VALVES, CDVI5.0-EB	
U70X6002	90458-1212		1	LEFT ENDPLATE INCL. 10M CABLE	

Pos	Part No	UN	Qty	Description	Page No

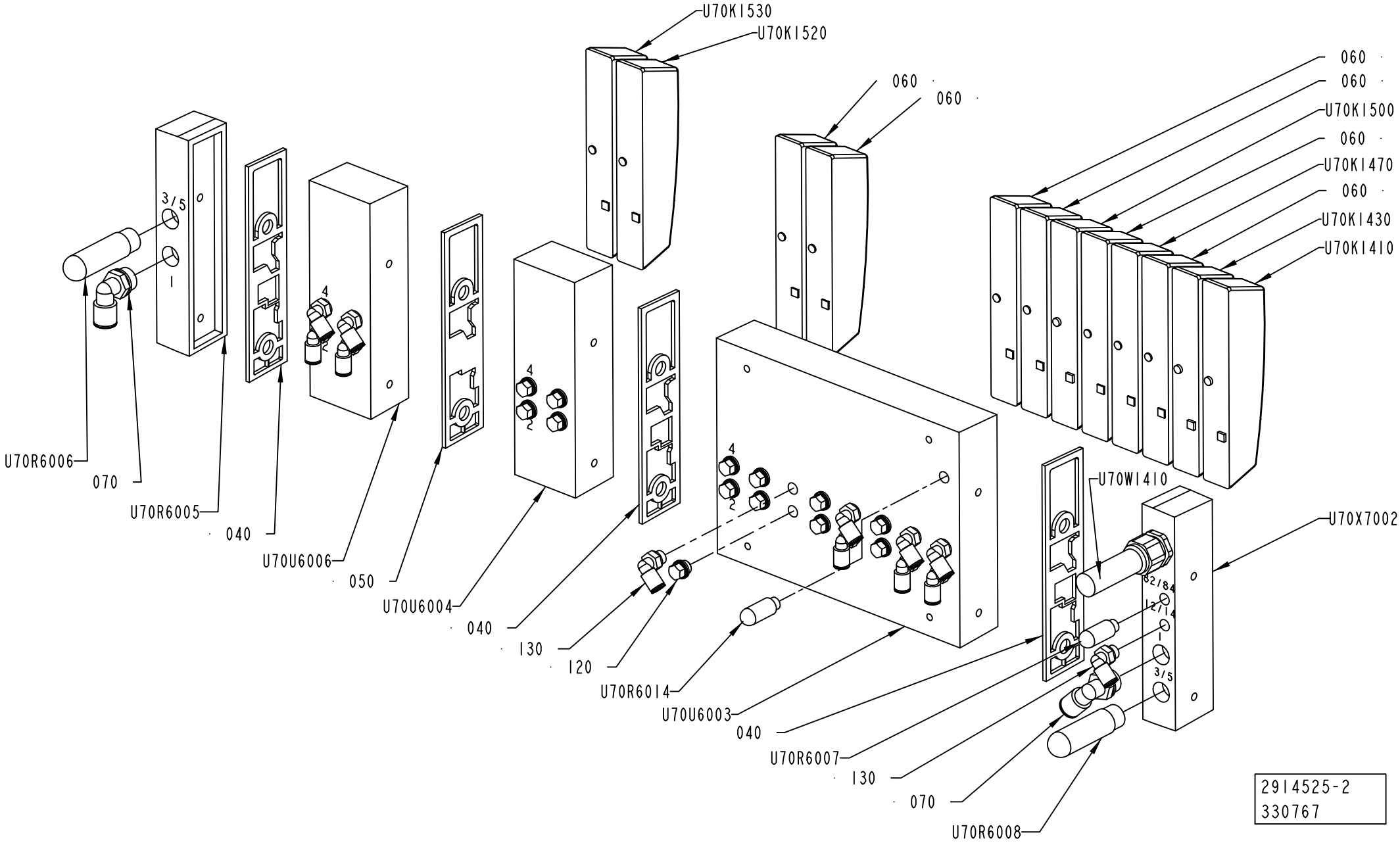
U70K1530
U70K1520
060
060
060
060
U70K1500
060
U70K1470
060
U70K1430
U70K1410
U70R6006
070
U70R6005
040
U70U6006
050
U70U6004
040
130
120
U70R6014
U70U6003
040
U70R6007
130
070
U70R6008
U70W1410
U70X7002
3/5
4
2914525-2
330767

ECM: 352645 - 20080706
Group number: 2914525-0100
Assembly Drawing: 2914525-2_1_AA

This list covers pages from 1-336 to 1-339

Pos	Part No	UN	Qty	Description	Page No
HI (See drawing on page: 1-336)					
060	90458-1215		5	COVER PLATE FOR EMPTY VALVE POSITION	
120	90459-0698		11	PLUG, EXT. G-THREAD, G1/8	
130	350002-0006		14	PUSH-IN L-FITTING QSL-F-G1/8-6	
U70K1450	90458-1202		1	VALVES 2X3/2, CLOSED	
NOHI (See drawing on page: 1-338)					
060	90458-1215		6	COVER PLATE FOR EMPTY VALVE POSITION	
120	90459-0698		13	PLUG, EXT. G-THREAD, G1/8	
130	350002-0006		12	PUSH-IN L-FITTING QSL-F-G1/8-6	
Common Parts					
040	90458-1207		3	SEALING, STANDARD	
050	90458-1208		1	SEALING, CHANNEL 1 BLOCKED	
070	350002-0013		2	PUSH-IN L-FITTING QSL-F-G3/8-10	
080	350001-0009		1	PUSH-IN FITTING QS-F-G1/4-8	
U70K1410	90458-1202		1	VALVES 2X3/2, CLOSED	
U70K1430	90458-1202		1	VALVES 2X3/2, CLOSED	
U70K1470	90458-1194		1	MONOSTABLE VALVE 5/2	
U70K1500	90458-1202		1	VALVES 2X3/2, CLOSED	
U70K1520	90458-1194		1	MONOSTABLE VALVE 5/2	
U70K1530	90458-1194		1	MONOSTABLE VALVE 5/2	
U70R6002	90328-0047		1	SILENCER G1/8"	
U70R6005	90458-1214		1	RIGHT ENDPL EXT. PILOT AIR,CDVI5.0-EPR-S	
U70R6006	90328-0024		1	SILENCER G3/8"	
U70R6007	90328-0047		1	SILENCER G1/8"	
U70R6008	90328-0024		1	SILENCER G3/8"	
U70R6014	90328-0047		1	SILENCER G1/8"	
U70R7003	90328-0047		1	SILENCER G1/8"	
U70U6003	90458-1205		1	BASIC SUB-BASE 8 VALVES, CDVI5.0-GB8-MP	
U70U6004	90458-1206		1	EXP. SUB-BASE 2 VALVES, CDVI5.0-EB	
U70U6006	90458-1206		1	EXP. SUB-BASE 2 VALVES, CDVI5.0-EB	
U70X6002	90458-1212		1	LEFT ENDPLATE INCL. 10M CABLE	

Pos	Part No	UN	Qty	Description	Page No

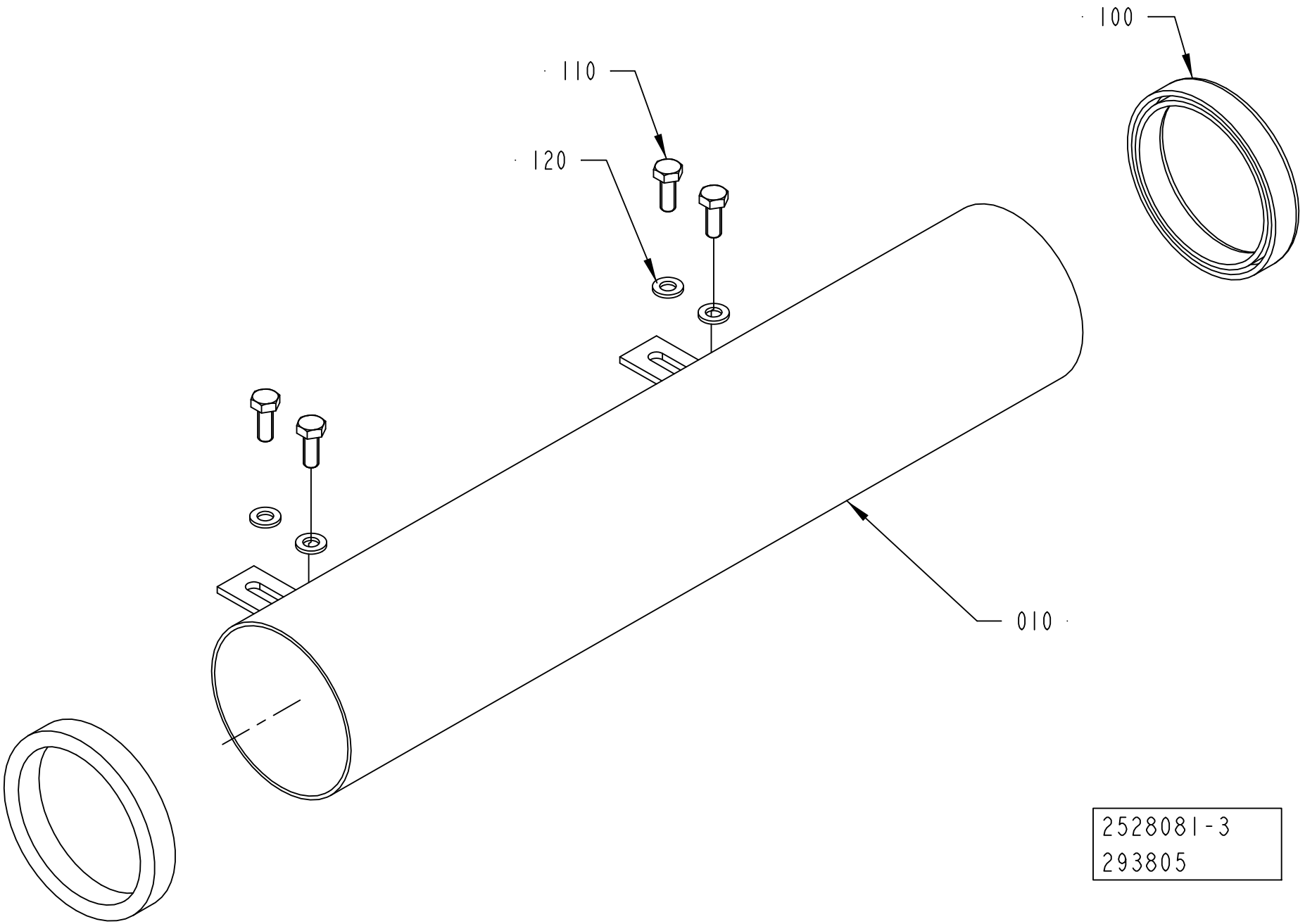

2528081-3
293805

ECM: 294069 - 20070704
Group number: 2528081-0300
Assembly Drawing: 2528081-3_1_AA

Pos	Part No	UN	Qty	Description	Page No
-					
010	2528082-0000		1	PIPE	
100	90143-0097	M	1000	SELF GRIPPING GASKET, 1011-24	
110	312105-0368		4	SCREW M6S ISO 4017 M6X16 A480	
120	315105-0153		4	WASHER BRB 6,4X12 RFR	

Pos	Part No	UN	Qty	Description	Page No

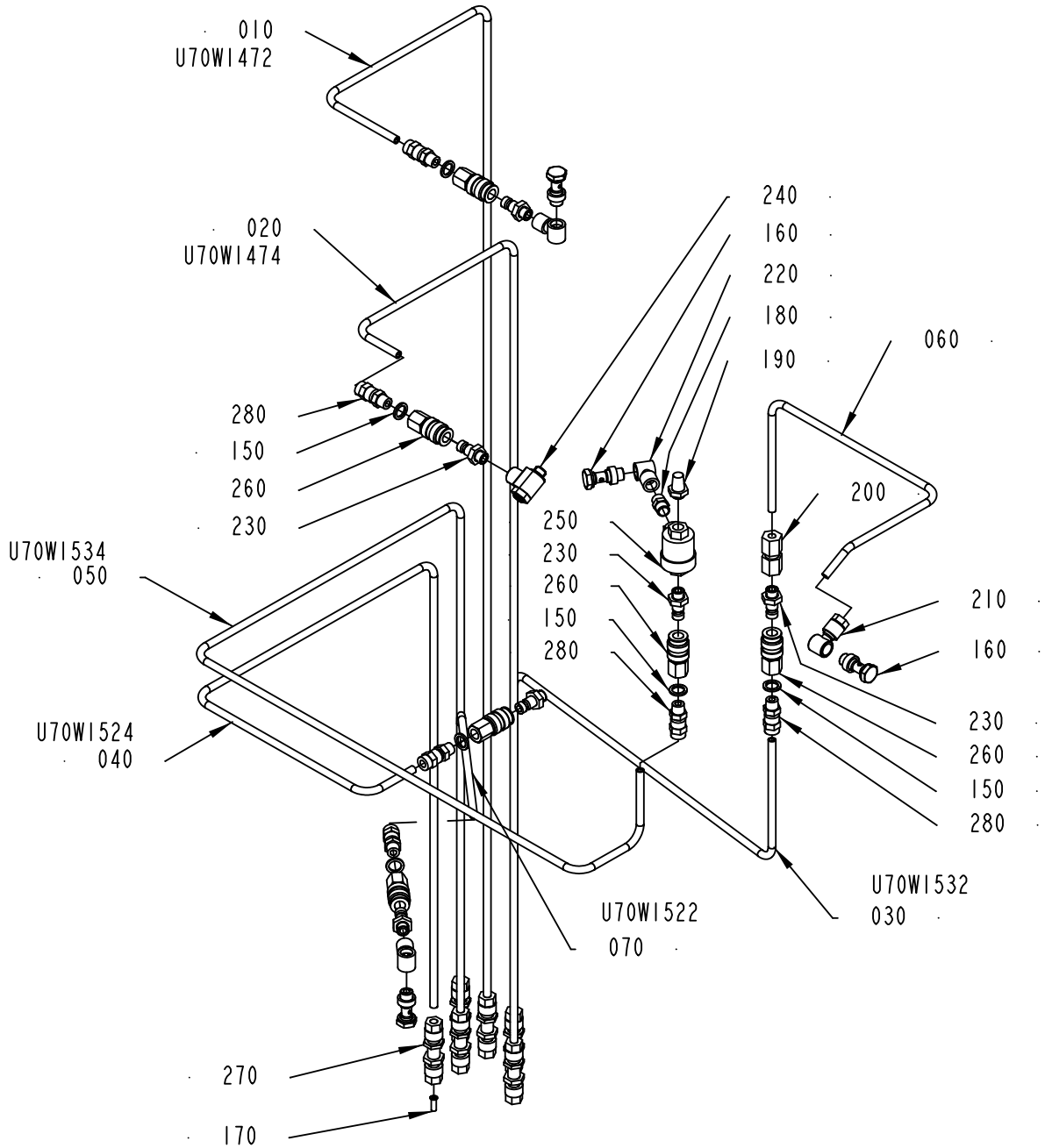

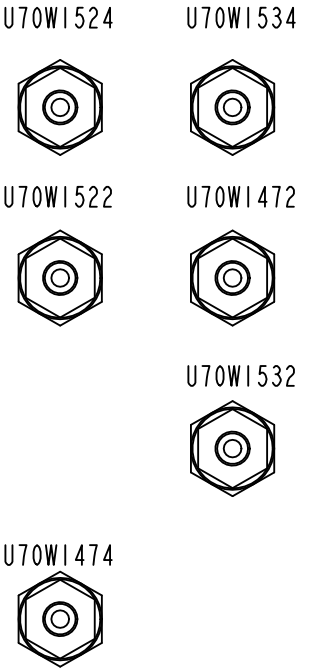

VIEW TOP PLATE
3021537

2957450-2
391468

ECM: 391860 - 20090701
Group number: 2957450-0200
Assembly Drawing: 2957450-2_1_AA

Pos	Part No	UN	Qty	Description	Page No
-					
010	3021556-0000		1	PIPE	
020	3021557-0000		1	PIPE	
030	3021558-0000		1	PIPE	
040	3021559-0000		1	PIPE	
050	3021560-0000		1	PIPE	
060	2894563-0000		1	PIPE	
070	3021561-0000		1	PIPE	
150	315237-0109		6	WASHER,PL.RND.AL.10/14,H=1,5	
160	342980-0303		4	BANJO-HOLLOW BOLT COUPL,EXT.THR.01-G1/8	
170	342706-0130		6	STIFFNER SLEEVE FOR HOSE 6X1	
180	342700-0109		1	NIPPLES,HEXAGON,EXT.G-THREAD G1/8"-G1/8"	
190	346800-0109		1	SILENCER FILTER R1/8"	
200	342724-0102		1	CONN. STR. PIPE GAI06LRCF	
210	342797-0121		1	BANJO CONN., RINGPIECE 6-1/8	
220	90224-0308		3	CONN. BANJO, ART. NO. 2023-1/8-1/8	
230	90163-0057		6	QUICK COUPLING, (M) 5150-1/8	
240	90458-2738		1	THROTTLE CHECK VALVE, GRLA-1/8-B	
250	90235-0259		1	VALVE	
260	90163-0062		6	QUICK COUPLING, (F) 5053-1/8	
270	90224-0349		6	CONN. BULKHEAD. 1250-6	
280	90458-1849		6	CONN. STR., 1050-6-1/8	

Pos	Part No	UN	Qty	Description	Page No

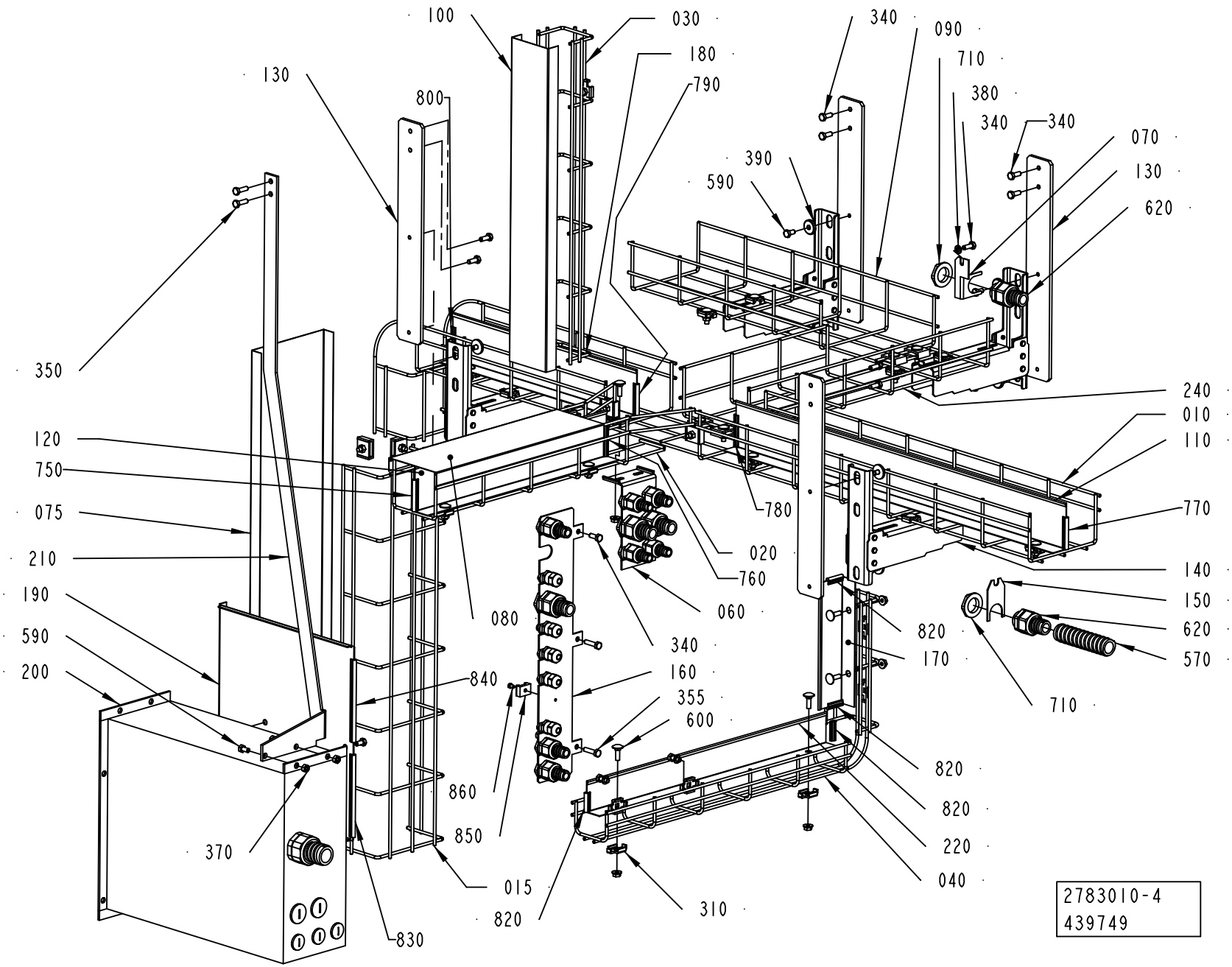
100
030
340
090
180
710
130
790
380
800
340
340
070
390
130
590
620
350
240
010
120
110
750
780
770
075
020
210
760
140
190
060
150
080
820
620
590
340
170
570
200
160
840
355
710
600
820
860
820
850
220
015
040
820
310
370
830
2783010-4
439749

ECM: 450702 - 20101001
Group number: 2783010-0400
Assembly Drawing: 2783010-4_1_AE

Pos	Part No	UN	Qty	Description	Page No
A3/SPEED					
330	90458-0429		5	HOSE GLAND W/O INSERT M20 EXTENDED	
420	353249-0011		5	INSERT, SINGLE HOLE, EK 153/11	
640	90458-0306		5	CABLE GLAND, M16X1,5, NO.5311 1010	
660	90458-1308		3	BLIND PLUG CIRCULAR, M20X1,5 514GFK/220	
700	90458-0322		5	UT, M16X1,5	
Common Parts					
010	3047473-0000		1	CABLE TRENCH	
015	3047474-0000		1	CABLE TRENCH	
020	2867488-0000		1	CABLE DUCT	
030	2986305-0000		1	CABLE DUCT	
040	3021530-0000		1	CABLE DUCT	
060	3021565-0000		1	PLATE	
070	3021568-0000		1	BRACKET	
075	2986307-0000		1	COVER	
080	2986308-0000		1	COVER	
090	3021533-0000		1	CABLE TRENCH	
100	2986309-0000		1	COVER	
110	2867497-0000		1	SEPARATOR	
120	2867498-0000		1	SEPARATOR	
130	3021562-0000		4	BRACKET	
140	2867500-0000		4	BRACKET	
150	3021566-0000		1	HOLDER	
160	3041986-0000		1	PLATE	
170	3021564-0000		1	PLATE	
180	2867496-0000		1	SEPARATOR	
190	2793366-0000		1	LID	
200	2874679-0000		1	CABLE DUCT	
210	3021563-0000		1	BRACKET	
220	2874675-0000		1	SEPARATOR	
240	3021532-0000		1	CABLE TRENCH	
310	90600-1448		28	CLAMP, 6016 82 0	
340	312105-0368		13	SCREW M6S ISO 4017 M6X16 A480	
350	312105-0370		3	SCREW M6S ISO 4017 M6X20 A480	
355	312105-0372		2	SCREW M6S ISO 4017 M6X25 A480	
370	312605-0316		5	HEXAGON NUT, M6M M6 A280	
380	315105-0153		5	WASHER BRB 6,4X12 RFR	
390	315125-0153		8	WASHER TBRSB 6,4X22X4 A4	
400	90458-0323		10	NUT, M20X1,5	
430	353249-0013		3	INSERT, SINGLE HOLE, EK 154/13	
570	90152-0051	MM	1500	SPIRAL CONDUIT, 25X18, UL 1816	
580	90181-0184		10	CABLE TRENCH PARTS	
590	312105-0366		10	SCREW M6S ISO 4017 M6X12 A480	
600	90181-0314		19	CABLE TRENCH PARTS	
610	90458-0413		3	HOSE GLAND W/O INSERT M20 NORMAL	
620	90458-0431		5	HOSE GLAND W/O INSERT M25 EXTENDED	
630	90458-0433		1	HOSE GLAND W/O INSERT M32 EXTENDED	
670	90458-1309		2	BLIND PLUG CIRCULAR, M25X1,5 514GFK/225	
680	353249-0008		3	INSERT, SINGLE HOLE, EK 152/7	
690	353249-0061		1	INSERT, SINGLE HOLE, EK 155/20	
710	90458-0324		7	NUT, M25X1,5	
720	90458-0325		1	NUT, M32X1,5	
740	312105-0366		2	SCREW M6S ISO 4017 M6X12 A480	
750	90143-0060	MM	50	EDGE STRIP 9,5X6,3MM BLACK PVC	
760	90143-0060	MM	50	EDGE STRIP 9,5X6,3MM BLACK PVC	
770	90143-0060	MM	50	EDGE STRIP 9,5X6,3MM BLACK PVC	
780	90143-0060	MM	50	EDGE STRIP 9,5X6,3MM BLACK PVC	
790	90143-0060	MM	50	EDGE STRIP 9,5X6,3MM BLACK PVC	
800	90143-0060	MM	50	EDGE STRIP 9,5X6,3MM BLACK PVC	
810	90143-0060	MM	30	EDGE STRIP 9,5X6,3MM BLACK PVC	
820	90143-0060	MM	30	EDGE STRIP 9,5X6,3MM BLACK PVC	
830	90143-0060	MM	130	EDGE STRIP 9,5X6,3MM BLACK PVC	
840	90143-0060	MM	130	EDGE STRIP 9,5X6,3MM BLACK PVC	
850	352113-0203		1	ANCHOR PLATES FOR STRIPS, TYPE TM3S8-M0	
860	312125-0285		1	SCREW ISO 1207 M4X6 A4	
870	90143-0060	MM	30	EDGE STRIP 9,5X6,3MM BLACK PVC	
880	90143-0060	MM	30	EDGE STRIP 9,5X6,3MM BLACK PVC	

Machine Type Group Description Used-In Group Number Page No

COVERING PANEL

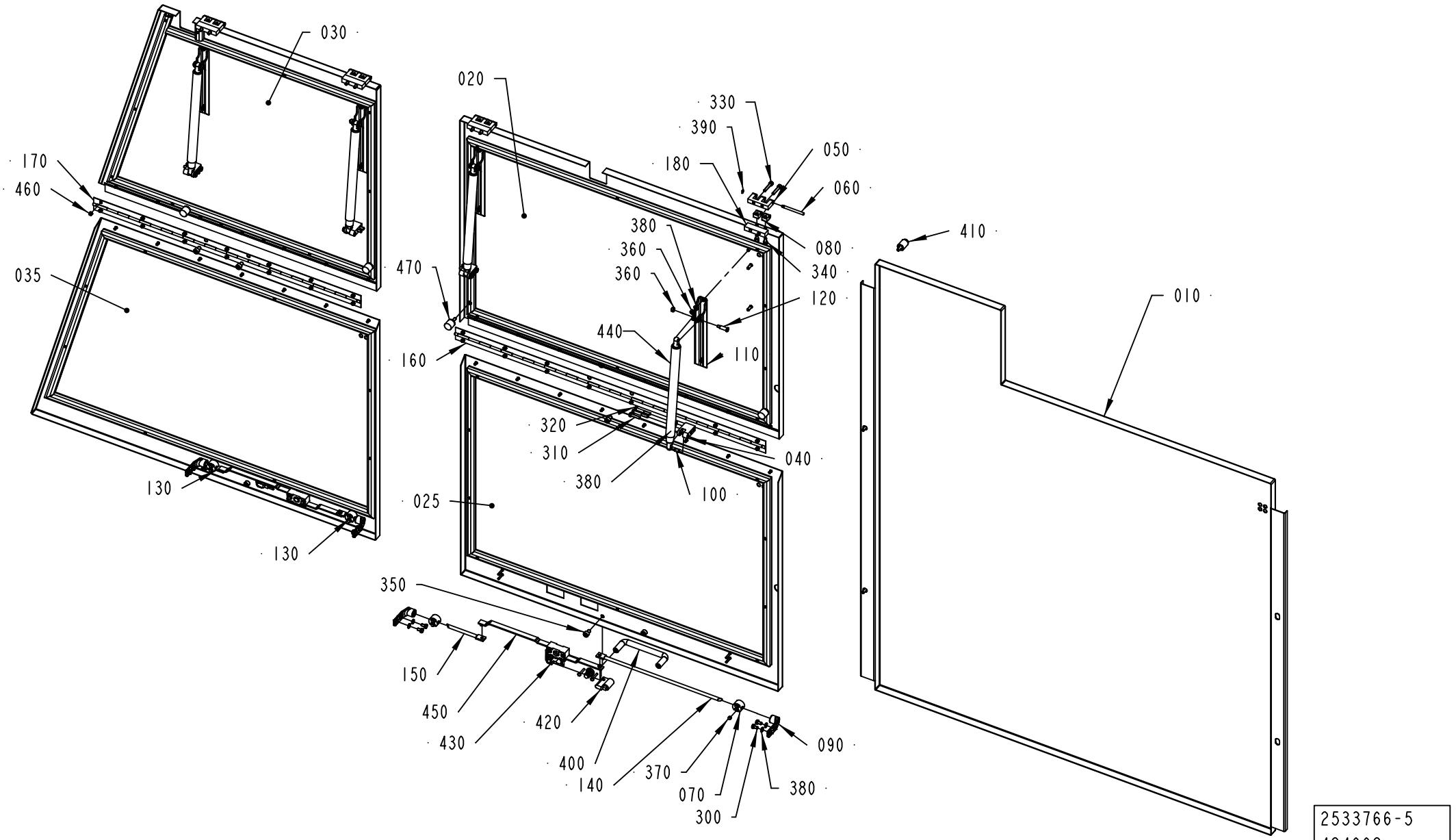

2533766-5
424008

ECM: 450709 - 20101001
Group number: 2533766-0400
Assembly Drawing: 2533766-5_1_AB

Pos	Part No	UN	Qty	Description	Page No
A3/SPEED					
010	3021551-0000		1	COVERING PLATE	
Common Parts					
020	3059605-0000		1	COVER	
025	3059606-0000		1	COVER	
030	3059603-0000		1	COVER	
035	3059604-0000		1	COVER	
040	3037735-0000		4	BRACKET	
050	1035792-0000		4	E-HINGE	
060	1036329-0000		4	PIN	
070	1129274-0000		4	GUIDE LUG	
080	1129770-0000		8	BLOCKING PIECE	
090	1538868-0000		4	BRACKET	
100	1564725-0000		4	SPACER	
110	3050651-0000		4	BRACKET	
120	2787149-0000		4	FITTING BOLT	
130	1036304-0001		2	LOCKING ARM	
140	1036304-0002		1	LOCKING ARM	
150	1036304-0012		1	LOCKING ARM	
160	3050652-0000		1	HINGE	
170	3050653-0000		1	HINGE	
180	3050648-0000		4	PLATE	
300	312105-0364		8	SCREW M6S ISO 4017 M6X10 A480	
310	312105-0372		4	SCREW M6S ISO 4017 M6X25 A480	
320	312105-0378		8	SCREW M6S ISO 4014 M6X40 A480	
330	312115-0374		8	SCREW ISO4762 M6X30 A4 80	
340	312115-0366		8	SCREW ISO4762 M6X12 A4 80	
350	312115-0447		8	SCREW ISO4762 M8X12 A4 80	
360	312605-0316		16	HEXAGON NUT, M6M M6 A280	
370	312705-0312		8	NUT HEX. DOMED CAP MHM-6 M4 A280	
380	315105-0153		32	WASHER BRB 6,4X12 RFR	
390	315755-0106		4	RETAINING RING SHAFT DIN 6799 4 SS	
400	90017-0016		4	HANDLE, NO. 14.4012.02.120	
410	90226-0458		3	MOUNTING SCREW	
420	90237-0129		2	LOCK CYLINDER, 1109-U6	
430	90237-0175		2	TURNING HANDLE, 1125-U185-0A	
440	90458-1444		4	GAS SPRING G8-19-250-1-583-AU19-AU19-500	
450	90600-5083		2	LOCK HOUSING, 1121-SU161-C	
460	312812-0314		30	HEXAGON NUT, NY-LOCK M5 A480	
470	90347-0115		4	RUBBER BUFFER, S20-01339-01	

Pos	Part No	UN	Qty	Description	Page No

COVERING PANEL

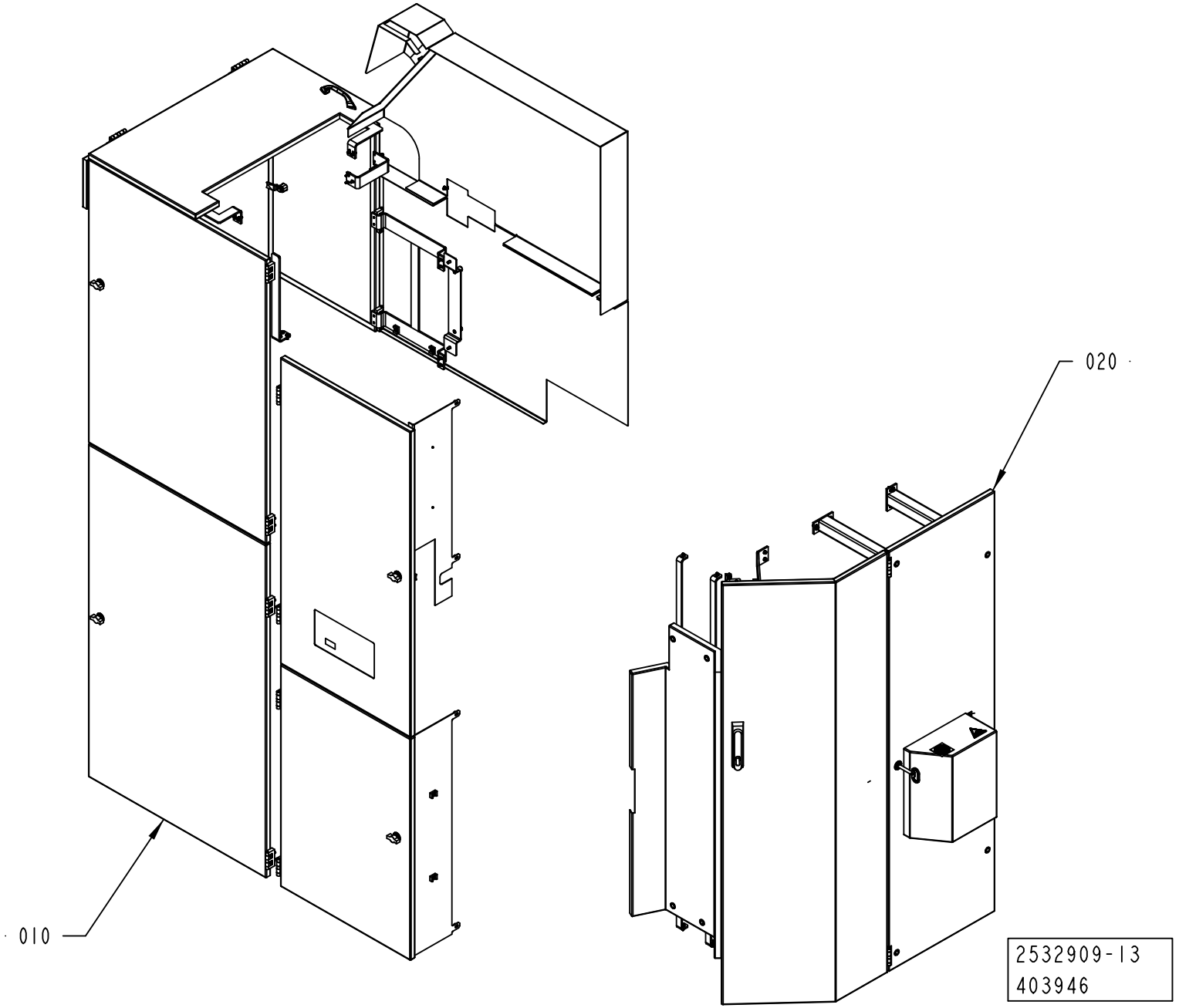

ECM: 404504 - 20091001
Group number: 2532909-0500
Assembly Drawing: 2532909-13_1_AA

Pos	Part No	UN	Qty	Description	Page No
-					
010	2529760-0600		1	COVERING PANEL	**1-351**
020	2545639-0500		1	COVERING PANEL	**1-353**

Pos	Part No	UN	Qty	Description	Page No

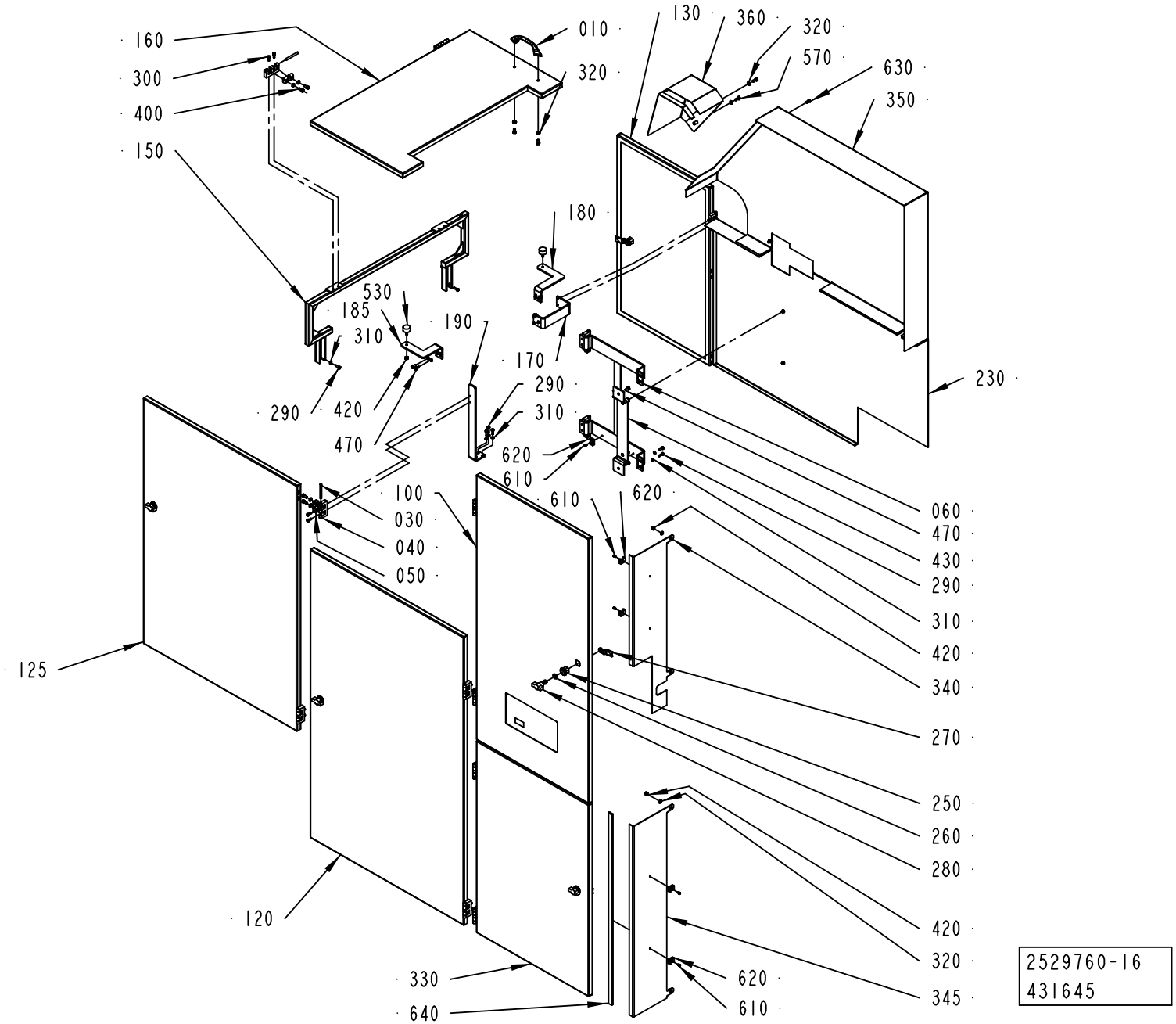
160
300
400
150
010
320
130
360
320
570
630
350
180
530
185
310
190
170
290
420
470
290
310
620
610
230
100
030
040
050
610
620
060
470
430
290
310
420
340
270
250
260
280
420
320
345
125
120
330
640
620
610
2529760-16
431645

ECM: 461965 - 20101002
Group number: 2529760-0600
Assembly Drawing: 2529760-16_1_AC

Pos	Part No	UN	Qty	Description	Page No
A3/SPEED					
120	2711246-0000		1	COVERING PANEL	
125	2793387-0000		1	COVER	
130	3021593-0000		1	COVERING PANEL	
150	2793390-0000		1	FRAME	
160	2793391-0000		1	COVERING PANEL	
180	2826383-0000		1	BRACKET	
185	2826384-0000		1	BRACKET	
230	3041998-0000		1	COVERING PANEL	
290	312105-0329		11	SCREW M6S ISO 4017 M5X16 A480	
300	312115-0327		26	SCREW ISO4762 M5X12 A4 80	
310	315105-0146		14	WASHER BRB 5,3X10 RFR	
320	315105-0153		41	WASHER BRB 6,4X12 RFR	
330	2711241-0000		1	DOOR	
345	2833187-0000		1	PANEL	
350	3041999-0000		1	TOUCH GUARD	
360	2833121-0000		1	TOUCH GUARD	
420	312605-0316		6	HEXAGON NUT, M6M M6 A280	
470	312105-0366		11	SCREW M6S ISO 4017 M6X12 A480	
570	312105-0368		2	SCREW M6S ISO 4017 M6X16 A480	
610	312125-0285		6	SCREW ISO 1207 M4X6 A4	
620	352113-0203		6	ANCHOR PLATES FOR STRIPS, TYPE TM3S8-M0	
630	90601-2046		6	CAPTIVE SCREW M6, GUTBG 6-4-12	
640	90143-0097	MM	850	SELF GRIPPING GASKET, 1011-24	
Common Parts					
010	7309-0000		1	HANDLE	
030	988685-0000		13	PIN	
040	1035792-0000		13	E-HINGE	
050	1129770-0000		26	BLOCKING PIECE	
060	3021591-0000		1	BRACKET	
100	2874746-0000		1	COVERING PANEL	
	2874747-0000		*1*	*GLASS PANE*	
170	2711261-0000		1	BRACKET	
190	2711263-0000		1	BRACKET	
250	90237-0319		5	LOCK HOUSING, 1000-U134	
260	90237-0323		5	LOCK O-RING, 1000-24	
270	90237-0335		5	LOCKING CATCH	
280	90237-0337		5	LOCK HANDLE FOR 90237-319	
340	2833186-0000		1	PANEL	
400	312115-0366		26	SCREW ISO4762 M6X12 A4 80	
430	3041989-0000		1	PLATE	
500	312115-0323		4	SCREW ISO4762 M5X8 A4 80	
530	90347-0034		2	VIBRATION DAMPER	

Machine Type | Group Description | Used-In | Group Number | Page No

COVERING PANEL

Drawing file: 2545639-11_1_AB.hpgl

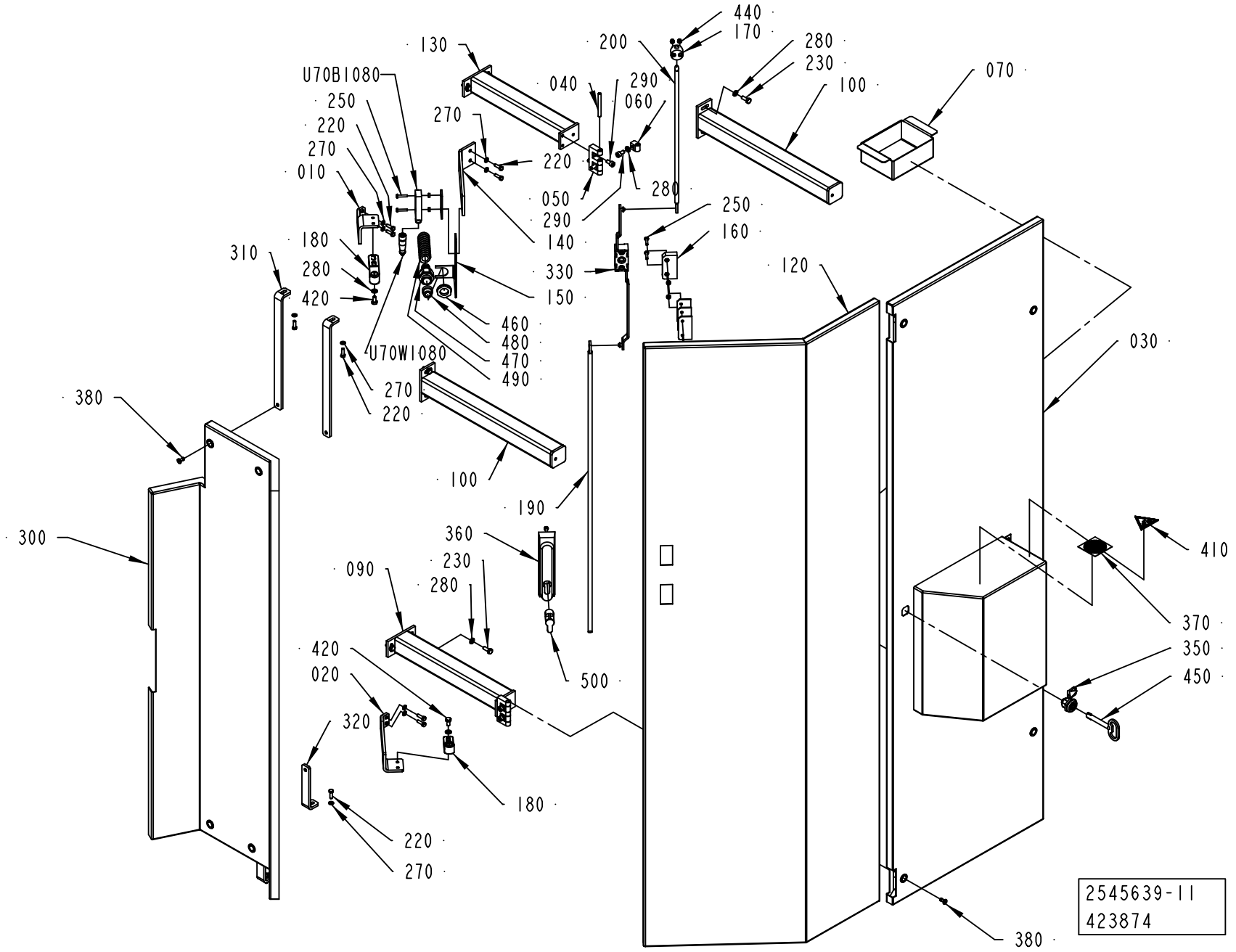

ECM: 461961 - 20101002
Group number: 2545639-0500
Assembly Drawing: 2545639-11_1_AB

Pos	Part No	UN	Qty	Description	Page No
A3/SPEED ANSI (See drawing on page: 1-352)					
010	3021586-0000		1	BRACKET	
120	3021625-0000		1	DOOR	
140	3021626-0000		1	BRACKET	
150	3021628-0000		1	PLATE	
160	90458-2794		1	SENSOR, EVA 20-046-00	
200	3021581-0000		1	LOCKING ARM	
220	312105-0329		10	SCREW M6S ISO 4017 M5X16 A480	
250	90459-4164		4	SAFETY SCREW SM4X20, 20-053-42	
270	315105-0146		10	WASHER BRB 5,3X10 RFR	
300	3041983-0000		1	COVER	
370	90459-2267		1	WARNING SIGN ANSI (H), READ MAINT. MAN.	
410	359725-0105		1	WARNING SIGN ANSI (V), CHEMICAL HAZARD	
460	90458-0323		1	NUT, M20X1,5	
470	90458-0429		1	HOSE GLAND W/O INSERT M20 EXTENDED	
480	353249-0011		1	INSERT, SINGLE HOLE, EK 153/11	
490	90152-0050	MM	1000	SPIRAL CONDUIT, 20X13, UL 1313	
U70B1080	90459-4142		1	SENSOR, ADAM M12 20-051-00	
U70W1080	90459-4252		1	CABLE M12-C101, 20-056-10	
A3/SPEED ISO (See drawing on page: 1-352)					
010	3021586-0000		1	BRACKET	
120	3021625-0000		1	DOOR	
140	3021626-0000		1	BRACKET	
150	3021628-0000		1	PLATE	
160	90458-2794		1	SENSOR, EVA 20-046-00	
200	3021581-0000		1	LOCKING ARM	
220	312105-0329		10	SCREW M6S ISO 4017 M5X16 A480	
250	90459-4164		4	SAFETY SCREW SM4X20, 20-053-42	
270	315105-0146		10	WASHER BRB 5,3X10 RFR	
300	3041983-0000		1	COVER	
370	90459-1738		1	MANDATORY ACTION SIGN ISO, READ MAINTENA	
410	359705-0003		1	WARNING SIGN ISO, DANGEROUS CHEMICALS	
460	90458-0323		1	NUT, M20X1,5	
470	90458-0429		1	HOSE GLAND W/O INSERT M20 EXTENDED	
480	353249-0011		1	INSERT, SINGLE HOLE, EK 153/11	
490	90152-0050	MM	1000	SPIRAL CONDUIT, 20X13, UL 1313	
U70B1080	90459-4142		1	SENSOR, ADAM M12 20-051-00	
U70W1080	90459-4252		1	CABLE M12-C101, 20-056-10	
Common Parts					
020	3021584-0000		1	BRACKET	
030	3037766-0000		1	COVER	
040	988685-0000		2	PIN	
050	1035792-0000		2	E-HINGE	
060	1129770-0000		4	BLOCKING PIECE	
070	3021577-0000		1	TANK	
090	3021580-0000		1	FRAME	
100	3021578-0000		2	FRAME	
130	3021579-0000		1	FRAME	
170	1129274-0000		4	GUIDE LUG	
180	1538868-0000		2	BRACKET	
190	1036304-0014		1	LOCKING ARM	
230	312105-0368		8	SCREW M6S ISO 4017 M6X16 A480	
280	315105-0153		16	WASHER BRB 6,4X12 RFR	
290	312115-0366		8	SCREW ISO4762 M6X12 A4 80	
310	3021575-0000		2	BRACKET	
320	2711240-0000		2	BRACKET	
330	90600-5083		1	LOCK HOUSING, 1121-SU161-C	
350	90459-5622		1	PADLOCK, 1000-U45 1000-U5 1000-26	
360	90237-0175		1	TURNING HANDLE, 1125-U185-0A	
380	90601-2046		8	CAPTIVE SCREW M6, GUTBG 6-4-12	
420	312105-0366		4	SCREW M6S ISO 4017 M6X12 A480	
440	312705-0312		8	NUT HEX. DOMED CAP MHM-6 M4 A280	
450	90459-5623		1	KEY, DOUBLE BIT 1004-05	
500	90237-0128		1	LOCK CYLINDER, 1109-SU125	

Machine Type	Group Description	Used-In	Group Number	Page No

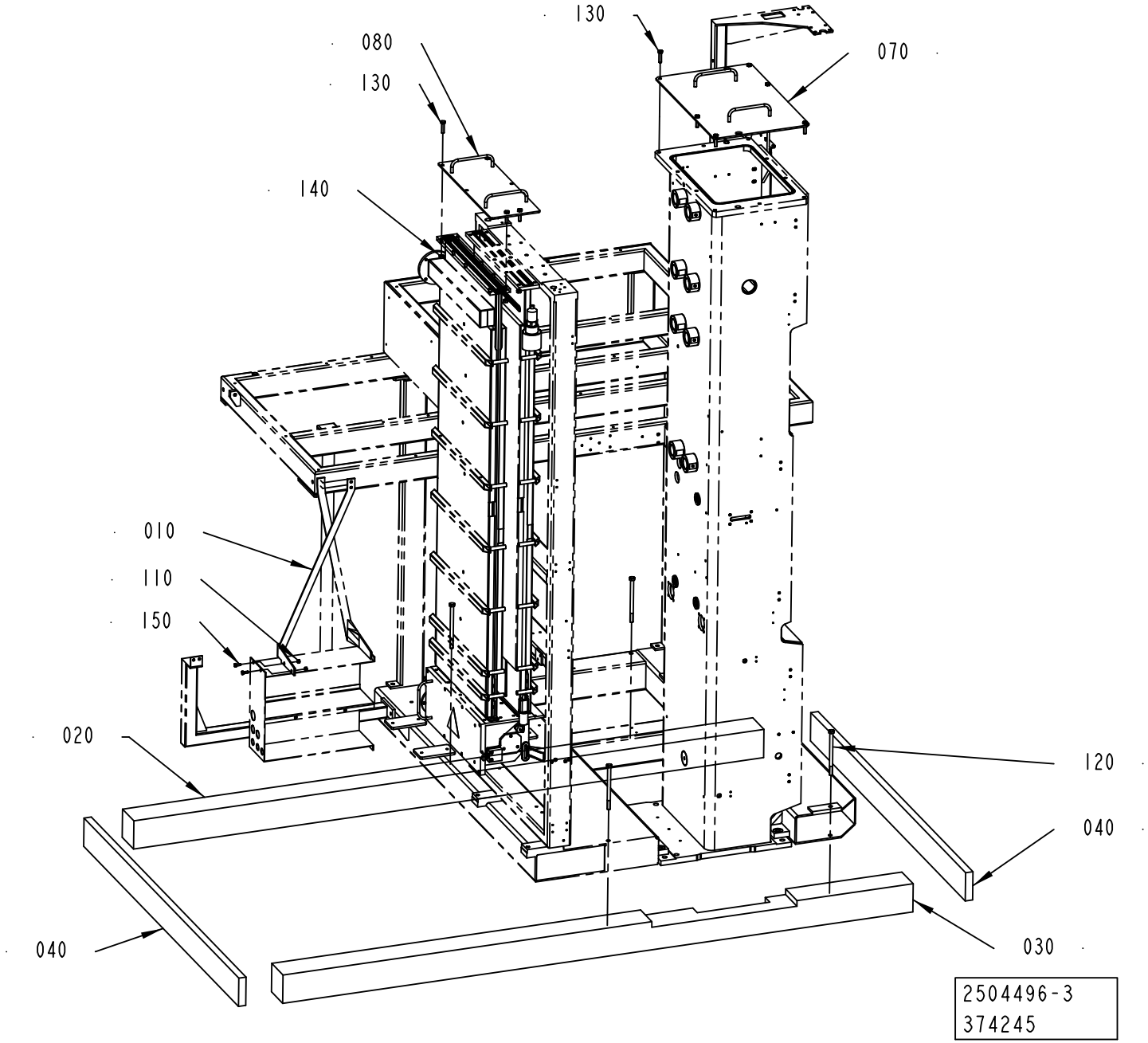
130
080
130
070
140
010
110
150
020
120
040
040
030
2504496-3
374245

ECM: 441345 - 20100701
Group number: 2504496-0200
Assembly Drawing: 2504496-3_1_AD

Pos	Part No	UN	Qty	Description	Page No
A3/SPEED					
070	2788616-0000		1	LID	
080	2788617-0000		1	LID	
130	312109-0457		10	SCREW M6S ISO 4017 M8X35 A480	
140	312605-0318		10	HEXAGON NUT, M6M M8 A280	
Common Parts					
010	3021567-0000		1	BRACKET	
110	312605-0316		2	HEXAGON NUT, M6M M6 A280	
150	312105-0368		2	SCREW M6S ISO 4017 M6X16 A480	

Pos	Part No	UN	Qty	Description	Page No

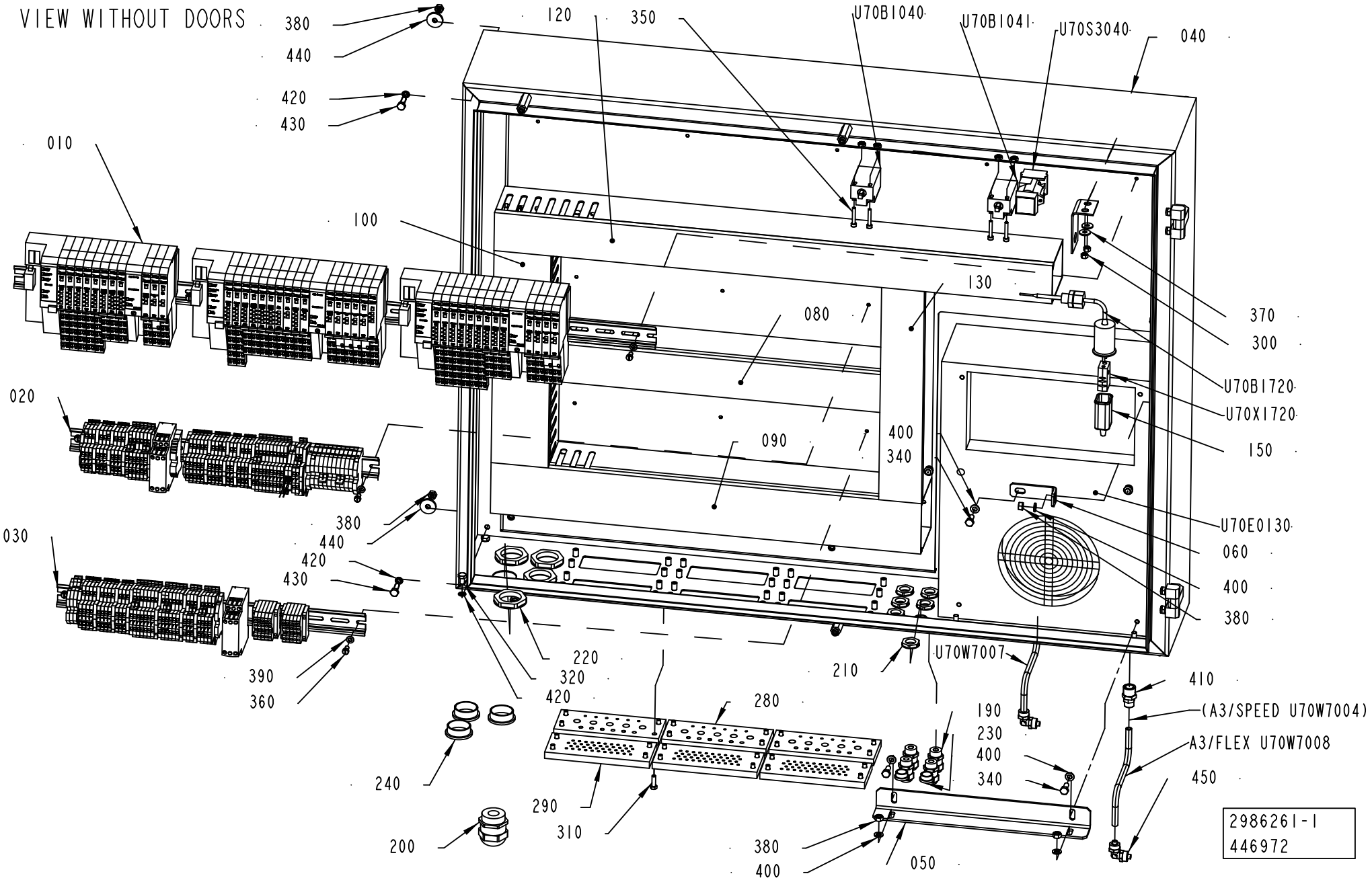
VIEW WITHOUT DOORS
380
440
420
430
010
100
020
030
380
440
420
430
390
360
120
350
U70B1040
U70B1041
U70S3040
040
130
080
090
400
340
370
300
U70B1720
U70X1720
150
U70E0130
060
400
380
220
320
420
210
U70W7007
410
(A3/SPEED U70W7004)
A3/FLEX U70W7008
450
280
190
230
400
340
240
290
310
200
380
400
050
2986261-1
446972

ECM: 450706 - 20101001
Group number: 2986261-0100
Assembly Drawing: 2986261-1_1_AD

Pos	Part No	UN	Qty	Description	Page No
A3/SPEED					
450	342936-0122		1	ELBOW 90 COUPL.,UNION 8/6	
Common Parts					
010	2986262-0100		1	TERMINAL BLOCK	**1-359**
020	2986263-0100		1	TERMINAL BLOCK	**1-361**
030	2986264-0100		1	TERMINAL BLOCK	**1-363**
040	3060445-0000		1	CABINET	
050	2986265-0000		1	BRACKET	
060	2986266-0000		1	BRACKET	
070	1129318-0000		1	BRACKET	
080	90181-0054	MM	464	CABLE DUCT 60X80MM	
090	90181-0055	MM	537	CABLE DUCT 80X80MM	
100	90181-0055	MM	336	CABLE DUCT 80X80MM	
120	90181-0054	MM	755	CABLE DUCT 60X80MM	
130	90181-0054	MM	336	CABLE DUCT 60X80MM	
150	90326-0012		1	PROTECTIVE COVER, T31A4618	
190	90458-0306		4	CABLE GLAND, M16X1,5, NO.5311 1010	
200	90458-0309		1	CABLE GLAND, M32X1,5, NO.5311 1040	
210	90458-0322		6	UT, M16X1,5	
220	90458-0325		4	NUT, M32X1,5	
230	90458-1307		2	BLIND PLUG CIRCULAR, M16X1,5 514GFK/216	
240	90458-1310		3	BLIND PLUG CIRCULAR, M32X1,5 514GFK/232	
280	90600-5464		3	CABLE LEAD-IN, KEL-DPZ 24/17	
290	90600-5465		3	CABLE LEAD-IN, KEL-DPZ 24/42	
300	312605-0314		2	HEXAGON NUT, M6M M5 A280	
310	312105-0329		24	SCREW M6S ISO 4017 M5X16 A480	
320	312105-0364		4	SCREW M6S ISO 4017 M6X10 A480	
340	312105-0368		3	SCREW M6S ISO 4017 M6X16 A480	
350	312115-0297		4	SCREW ISO4762 M4X25 A4 80	
360	312125-0325		41	SCREW ISO 1207 M5X10 A4	
370	90005-0139		2	WASHER PLAIN ROUND 5,2(M5)/15, H=1,6	
380	312605-0316		35	HEXAGON NUT, M6M M6 A280	
390	315105-0146		19	WASHER BRB 5,3X10 RFR	
400	315105-0153		6	WASHER BRB 6,4X12 RFR	
410	342920-0123		2	STRAIGHT COUPLING,EXT.THREADED 8/6-R3/8"	
420	315211-0103		8	BONDED SEAL SS/NBR90 M6	
430	312105-0370		4	SCREW M6S ISO 4017 M6X20 A480	
440	315125-0153		4	WASHER TBRSB 6,4X22X4 A4	
480	90143-0060	MM	400	EDGE STRIP 9,5X6,3MM BLACK PVC	
490	90458-0309		1	CABLE GLAND, M32X1,5, NO.5311 1040	
500	90459-6636		1	HOOD 24 B TOP ENTRY, 19 30 024 0427	
510	90458-0309		1	CABLE GLAND, M32X1,5, NO.5311 1040	
520	90459-3080		1	HOOD HAN-BRID 3A 19 20 003 1443	
530	90458-0307		1	CABLE GLAND, M20X1,5, NO.5311 1020	
A01W8700	351414-0100		5	DEVICENET CONN. CABLE, 0935 361 104/10M	
U70B1040	90044-0192		1	LIMIT SW. SZ2586.000	
U70B1041	90044-0192		1	LIMIT SW. SZ2586.000	
U70B1720	90326-0053		1	THERMOCOUPLE, 12826-35	
U70E0130	90601-0626		1	COOLING UNIT, KWS10	
U70S3040	90064-0084		1	PUSH BUTTON, YELLOW	
U70W0130	351150-0412	MM	6500	CABLE OLFLEX 3X1,5 MM2 LIGHT/GREY	
U70W0580	351150-0425	MM	7200	CABLE OLFLEX 25X0,75 MM2 LIGHT/GREY	
U70W7007	90166-0118	MM	5000	TUBE 8 MM PA BLACK	
U70X0130	90459-6821		1	MALE INSERT HAN 4A, 09 20 004 2611	
U70X0580	90110-0056		1	MALE INSERT HAN 24 E 09 33 024 2601	
U70X1720	90326-0020		1	PLUG, FEMALE YELLOW CR-AL	

Machine Type | Group Description | Used-In | Group Number | Page No

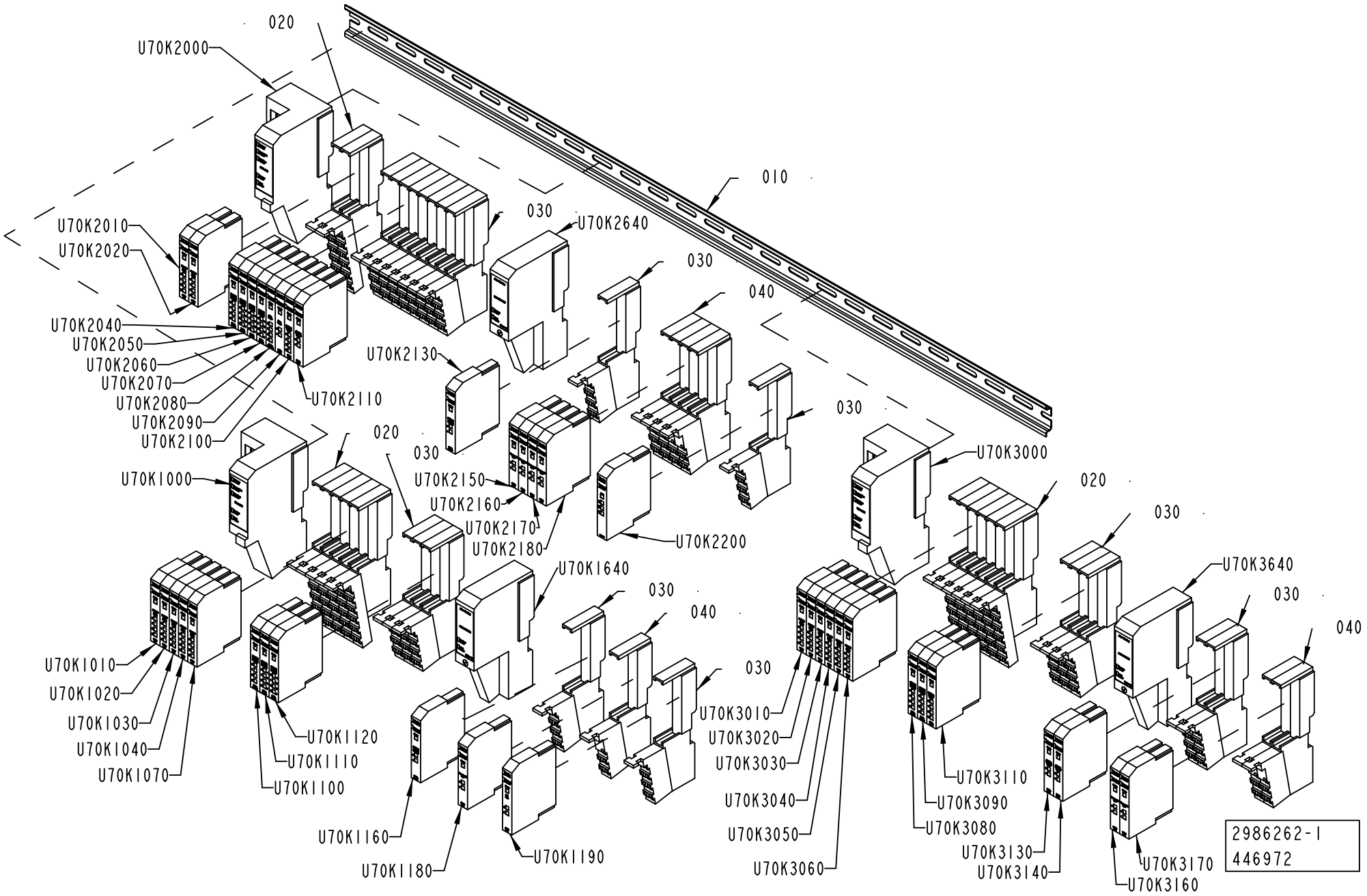
020
U70K2000
010
030
U70K2640
U70K2010
U70K2020
030
040
U70K2040
U70K2050
U70K2060
U70K2070
U70K2080
U70K2090
U70K2100
U70K2110
U70K2130
030
U70K2150
U70K2160
U70K2170
U70K2180
U70K2200
020
030
U70K1000
U70K3000
020
030
U70K3640
030
040
U70K1640
030
040
U70K1010
U70K1020
U70K1030
U70K1040
U70K1070
U70K1120
U70K1110
U70K1100
U70K1160
U70K1180
U70K1190
030
U70K3010
U70K3020
U70K3030
U70K3040
U70K3050
U70K3060
U70K3110
U70K3090
U70K3080
U70K3130
U70K3140
U70K3170
U70K3160
2986262-1
446972

ECM: 450574 - 20101001
Group number: 2986262-0100
Assembly Drawing: 2986262-1_1_AB

Pos	Part No	UN	Qty	Description	Page No
-					
010	2986274-0000		1	RAIL	
020	90459-2527		13	REMOTE I/O BASE MODULE 12 POINTS	
030	90459-2526		20	REMOTE I/O BASE MODULE 8 POINTS, 1734-TB	
040	90459-2528		7	REMOTE I/O BASE MODULE FOR THERMOCOUPLE	
U70K1000	90459-2494		1	DEVICENET I/O ADAPTER MODULE, 1734-ADN	
U70K1010	90459-2503		1	DIGITAL INPUT 4 PTS SINK, 1734-IB4	
U70K1020	90459-2503		1	DIGITAL INPUT 4 PTS SINK, 1734-IB4	
U70K1030	90459-2503		1	DIGITAL INPUT 4 PTS SINK, 1734-IB4	
U70K1040	90459-2503		1	DIGITAL INPUT 4 PTS SINK, 1734-IB4	
U70K1070	90459-2503		1	DIGITAL INPUT 4 PTS SINK, 1734-IB4	
U70K1100	90459-2505		1	DIGITAL OUTPUT 4 PTS, 1734-OB4E	
U70K1110	90459-6560		1	DIGITAL OUTPUT 8 PTS, 1734-OB8E/C	
U70K1120	90459-6560		1	DIGITAL OUTPUT 8 PTS, 1734-OB8E/C	
U70K1160	90459-2510		1	ANALOG OUTPUT VOLTAGE MODULE 2 PTS	
U70K1180	90459-2512		1	REMOTE I/O THERMOCOUPLE INPUT 2 PTS	
U70K1190	90459-4056		1	REMOTE I/O RTD INPUT 2PTS	
U70K1640	90459-2500		1	EXPANSION POWER SUPPLY MODULE	
U70K2000	90459-2494		1	DEVICENET I/O ADAPTER MODULE, 1734-ADN	
U70K2010	90459-2503		1	DIGITAL INPUT 4 PTS SINK, 1734-IB4	
U70K2020	90459-2503		1	DIGITAL INPUT 4 PTS SINK, 1734-IB4	
U70K2040	90459-2505		1	DIGITAL OUTPUT 4 PTS, 1734-OB4E	
U70K2050	90459-6560		1	DIGITAL OUTPUT 8 PTS, 1734-OB8E/C	
U70K2060	90459-6560		1	DIGITAL OUTPUT 8 PTS, 1734-OB8E/C	
U70K2070	90459-6560		1	DIGITAL OUTPUT 8 PTS, 1734-OB8E/C	
U70K2080	90459-5261		1	REMOTE I/O, RELAY OUTP. 4 PTS,1734-OW4/C	
U70K2090	90459-4055		1	REMOTE I/O RELAY OUTPUT 2 PTS	
U70K2100	90459-2509		1	REMOTE I/O ANALOG INPUT CURRENT 2 PTS	
U70K2110	90459-2508		1	REMOTE I/O ANALOG INPUT VOLTAGE 2 PTS	
U70K2130	90459-2510		1	ANALOG OUTPUT VOLTAGE MODULE 2 PTS	
U70K2150	90459-2512		1	REMOTE I/O THERMOCOUPLE INPUT 2 PTS	
U70K2160	90459-2512		1	REMOTE I/O THERMOCOUPLE INPUT 2 PTS	
U70K2170	90459-2512		1	REMOTE I/O THERMOCOUPLE INPUT 2 PTS	
U70K2180	90459-2512		1	REMOTE I/O THERMOCOUPLE INPUT 2 PTS	
U70K2200	90459-6731		1	ENCODER/COUNTER MODULE, 1734-IK SERIES C	
U70K2640	90459-2500		1	EXPANSION POWER SUPPLY MODULE	
U70K3000	90459-2494		1	DEVICENET I/O ADAPTER MODULE, 1734-ADN	
U70K3010	90459-2503		1	DIGITAL INPUT 4 PTS SINK, 1734-IB4	
U70K3020	90459-2503		1	DIGITAL INPUT 4 PTS SINK, 1734-IB4	
U70K3030	90459-2503		1	DIGITAL INPUT 4 PTS SINK, 1734-IB4	
U70K3040	90459-2503		1	DIGITAL INPUT 4 PTS SINK, 1734-IB4	
U70K3050	90459-2503		1	DIGITAL INPUT 4 PTS SINK, 1734-IB4	
U70K3060	90459-2503		1	DIGITAL INPUT 4 PTS SINK, 1734-IB4	
U70K3080	90459-2505		1	DIGITAL OUTPUT 4 PTS, 1734-OB4E	
U70K3090	90459-2505		1	DIGITAL OUTPUT 4 PTS, 1734-OB4E	
U70K3110	90459-2509		1	REMOTE I/O ANALOG INPUT CURRENT 2 PTS	
U70K3130	90459-2508		1	REMOTE I/O ANALOG INPUT VOLTAGE 2 PTS	
U70K3140	90459-2508		1	REMOTE I/O ANALOG INPUT VOLTAGE 2 PTS	
U70K3160	90459-2512		1	REMOTE I/O THERMOCOUPLE INPUT 2 PTS	
U70K3170	90459-2512		1	REMOTE I/O THERMOCOUPLE INPUT 2 PTS	
U70K3640	90459-2500		1	EXPANSION POWER SUPPLY MODULE	

Machine Type	Group Description	Used-In	Group Number	Page No

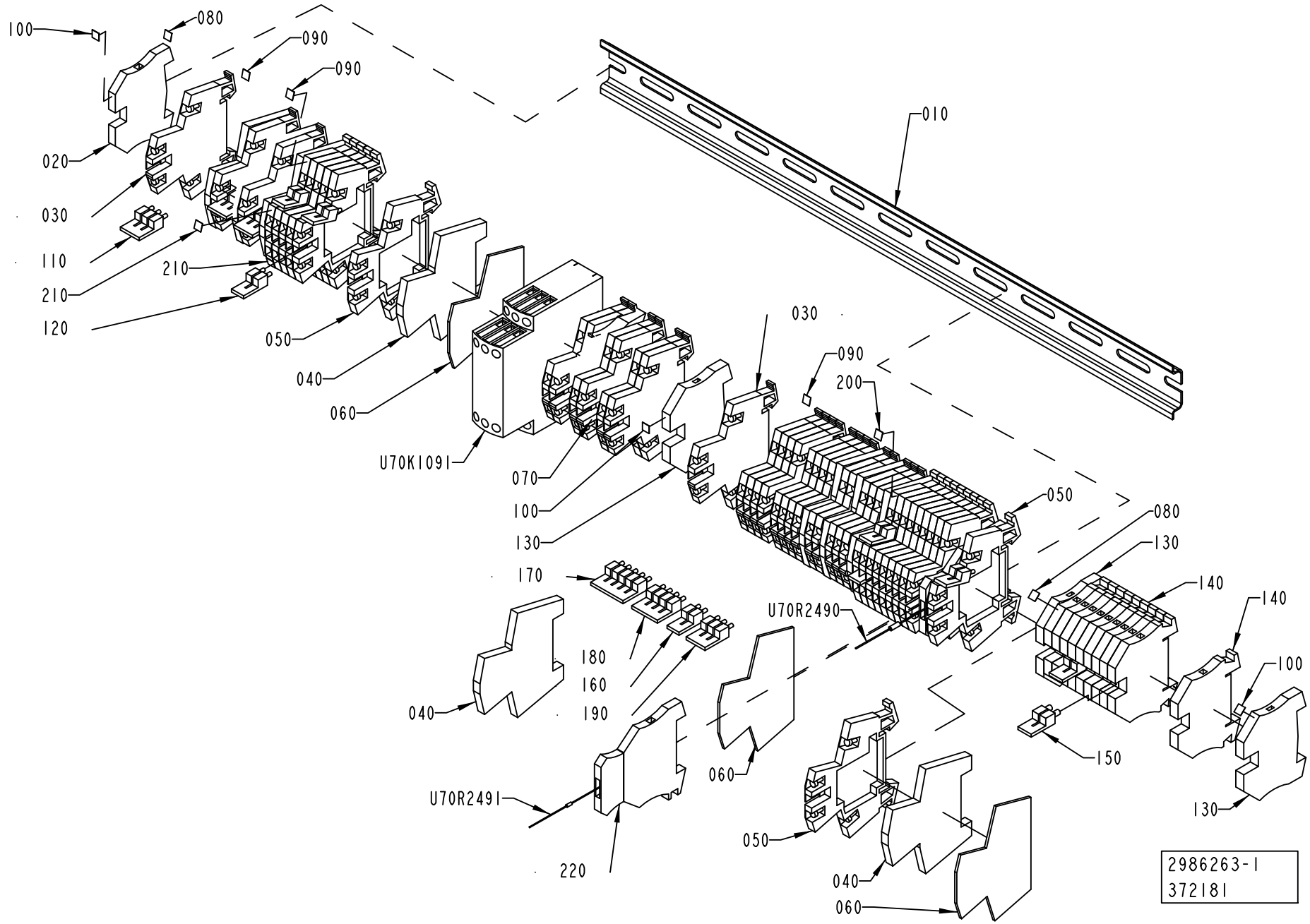
100
080
090
090
020
030
110
210
210
120
010
050
040
060
U70K1091
030
090
200
070
100
130
050
080
130
140
140
100
170
U70R2490
180
160
190
040
150
060
U70R2491
130
050
220
040
060
2986263-1
372181

ECM: 372392 - 20081201
Group number: 2986263-0100
Assembly Drawing: 2986263-1_1_AA

Pos	Part No	UN	Qty	Description	Page No
-					
010	2986275-0000		1	RAIL	
020	353024-0204		1	EARTH TERMINAL WPE 2,5	
030	90459-5253		23	TERMINAL BLOCK WDK 2,5 V	
040	353024-0212		9	EARTH TERMINAL WDK 2,5 PE	
050	90077-0113		17	TERMINAL BLOCK WDK 2.5	
060	90077-0114		3	END PLATE, WAP/WDK 2,5	
070	353031-0203		1	END SUPPORT, WEW 35/2	
080	359011-0807		2	MARKING, DEK 5 FW 1-50	
090	359011-0808		3	MARKING, DEK 5FW 51-100	
100	359011-0819		3	MARKING, EARTH, DEK 5 GW ERDE I.KR.	
110	353034-0030		3	BRIDGE CONNECTOR WQV 2,5/10	
120	353034-0030		3	BRIDGE CONNECTOR WQV 2,5/10	
130	353024-0205		3	EARTH TERMINAL WPE 4	
140	353021-0213		10	FEED THROUGH TERMINAL, 10201.0	
150	90459-0828		2	BRIDGE CONNECTOR WQV 4/2	
160	353034-0030		4	BRIDGE CONNECTOR WQV 2,5/10	
170	353034-0030		1	BRIDGE CONNECTOR WQV 2,5/10	
180	353034-0030		1	BRIDGE CONNECTOR WQV 2,5/10	
190	353034-0030		1	BRIDGE CONNECTOR WQV 2,5/10	
200	359011-0809		2	MARKING, DEK 5 FW 101-150	
210	359011-0810		2	MARKING, DEK 5 FW 151-200	
220	353021-0127		2	TERMINAL DISCONNECTABLE, WTR 2,5+WSD 2,5	
U70K1091	90459-2742		1	LEVEL CONTROL RELAY, RM4-LA32MW	
U70R2490	90121-0127		1	RESISTANCE FIXED, 1,5 KOHM, 0,25 W	
U70R2491	90038-0049		1	DIODE	

Pos	Part No	UN	Qty	Description	Page No

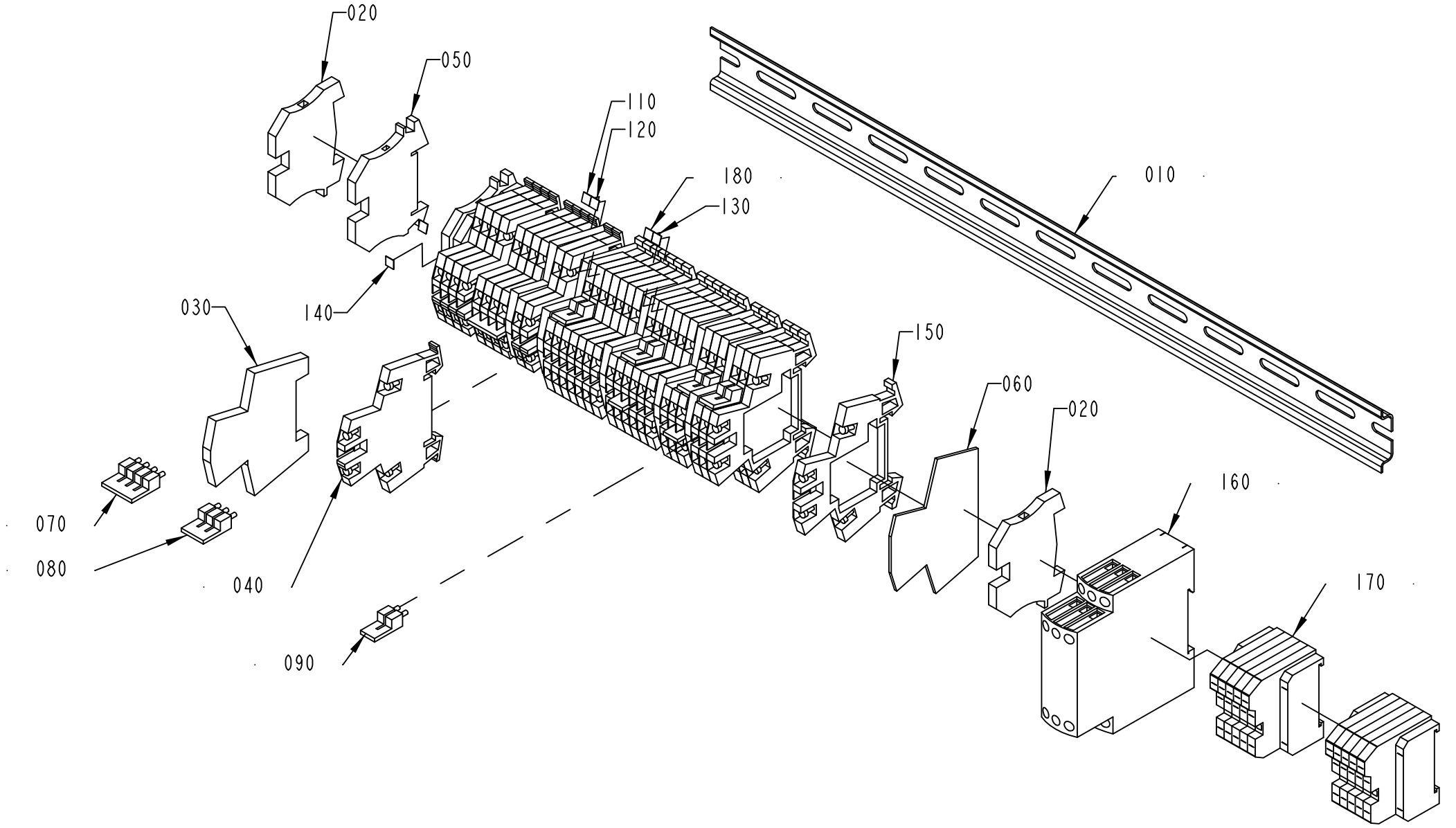
020
050
110
120
180
130
010
140
030
150
060
020
160
070
080
040
170
090
2986264-1
372181

ECM: 372393 - 20081201
Group number: 2986264-0100
Assembly Drawing: 2986264-1_1_AA

Pos	Part No	UN	Qty	Description	Page No
-					
010	2986275-0000		1	RAIL	
020	353024-0204		3	EARTH TERMINAL WPE 2,5	
030	353024-0212		6	EARTH TERMINAL WDK 2,5 PE	
040	90459-5253		11	TERMINAL BLOCK WDK 2,5 V	
050	353021-0212		2	FEED THROUGH TERMINAL, 10200.0	
060	90077-0114		1	END PLATE, WAP/WDK 2,5	
070	353034-0030		2	BRIDGE CONNECTOR WQV 2,5/10	
080	353034-0030		1	BRIDGE CONNECTOR WQV 2,5/10	
090	353034-0030		7	BRIDGE CONNECTOR WQV 2,5/10	
100	359011-0807		1	MARKING, DEK 5 FW 1-50	
110	359011-0809		2	MARKING, DEK 5 FW 101-150	
120	359011-0810		2	MARKING, DEK 5 FW 151-200	
130	359011-0811		2	MARKING, DEK 5 FW 201-250	
140	359011-0819		1	MARKING, EARTH, DEK 5 GW ERDE I.KR.	
150	90077-0113		20	TERMINAL BLOCK WDK 2.5	
160	90459-2742		1	LEVEL CONTROL RELAY, RM4-LA32MW	
170	90459-2519		2	TAP, OPEN STYLE	
180	359011-0812		2	MARKING, DEK 5FW 251-300	

Pos	Part No	UN	Qty	Description	Page No

Tetra Pak

SPC
Spare Parts Catalogue

MACHINE BODY

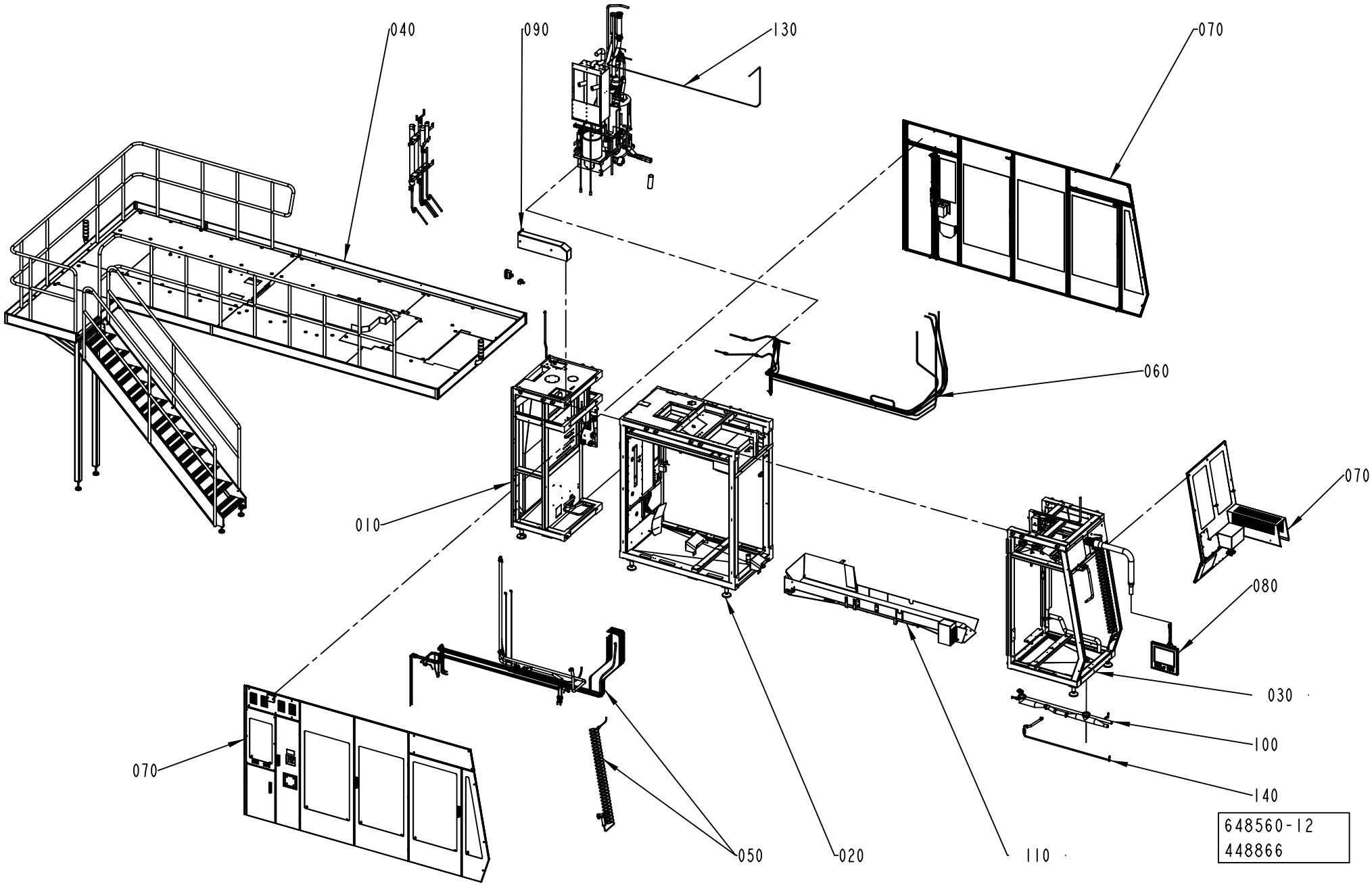

ECM: 454033 - 20101001
Group number: 648560-0300
Assembly Drawing: 648560-12_1_AB

Pos	Part No	UN	Qty	Description	Page No
-					
010	2504779-0300		1	REAR MODULE	**2-5, 2-7**
020	2537854-0300		1	CENTRAL MODULE	**2-37**
030	2504793-0300		1	FRONT MODULE	**2-77**
040	2550139-0200		1	PLATFORM	**2-113, 2-115, 2-117, 2-119**
050	2543590-0300		1	PIPE WORK-WATER	**2-145**
060	2504918-0300		1	PNEUMATIC SYSTEM	**2-155**
070	2504920-0300		1	DOORS AND COVERS	**2-157**
080	2980539-0200		1	TPOP PANEL 15 INCH	**2-223**
090	2539503-0200		1	CABLE DUCT	**2-225**
100	2786750-0200		1	DRAINING	**2-227**
110	2542325-0200		1	WASTE CONVEYOR	**2-229**
130	3109936-0100		1	SUPERSTRUCTURE CHEMICAL UNIT	**2-231**
140	2968215-0100		1	DRAINING	**2-273**

Pos	Part No	UN	Qty	Description	Page No

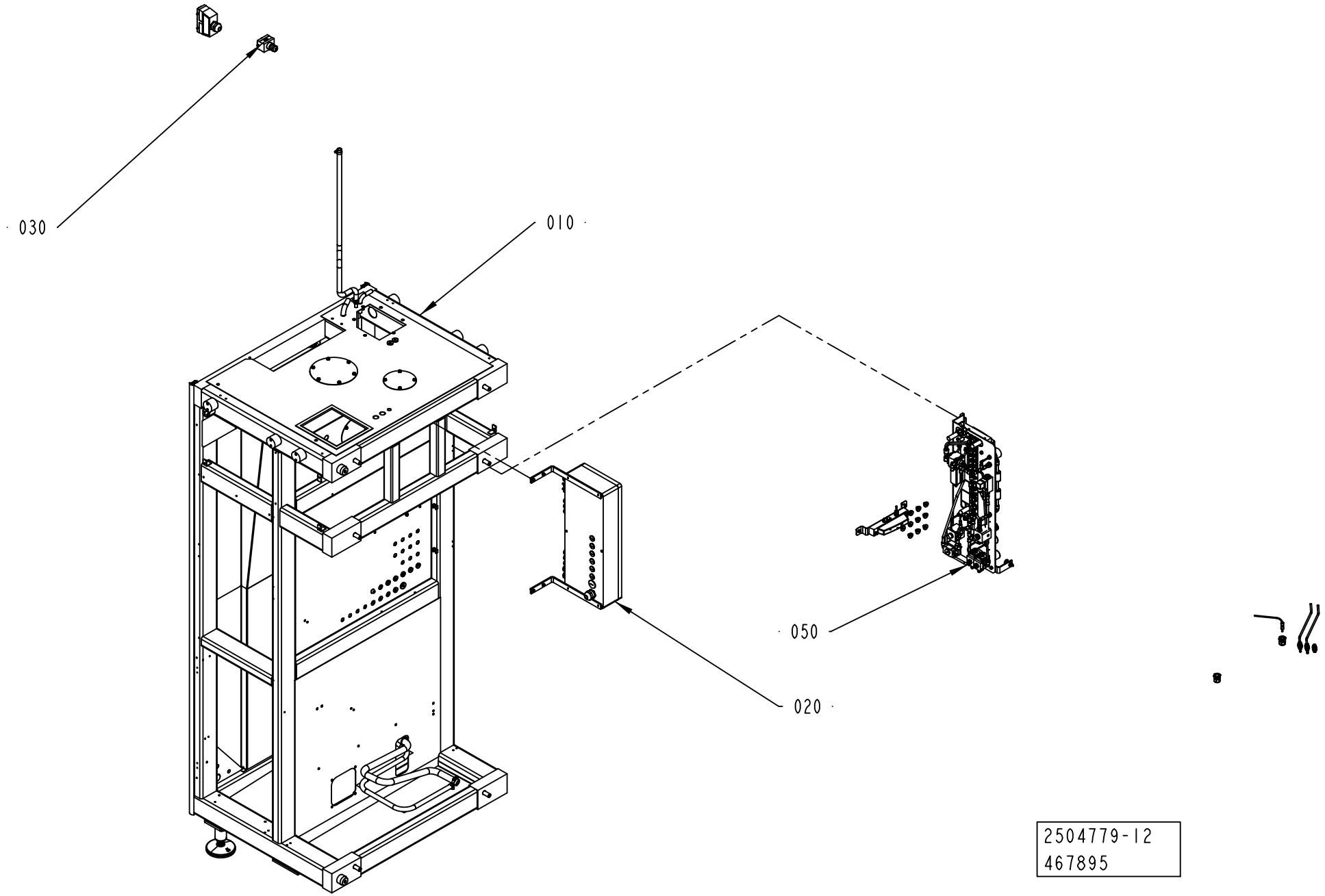
030
010
050
020
2504779-12
467895

ECM: 472333 - 20110101
Group number: 2504779-0300
Assembly Drawing: 2504779-12_1_AC

This list covers pages from 2-4 to 2-7

Pos	Part No	UN	Qty	Description	Page No
-					
010	2504780-0300		1	MACHINE BODY	**2-9**
020	2785239-0100		1	CONNECTION BOX	**2-15**
030	2529499-0300		1	CABLE HARNESS	**2-19**
050	2528457-0300		1	PNEUMATIC SYSTEM	**2-21**

Pos	Part No	UN	Qty	Description	Page No

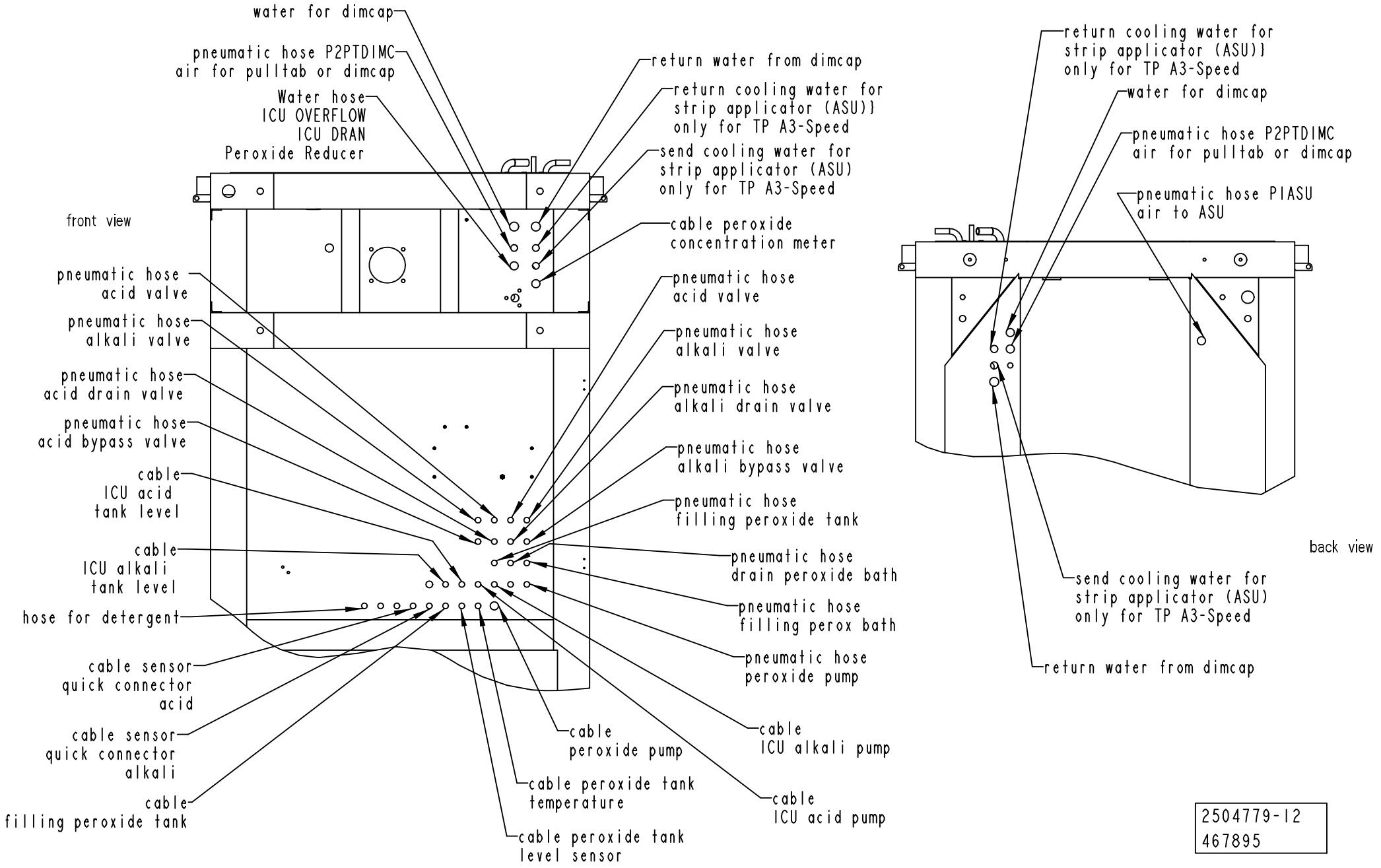

2504779-12
467895

ECM: 472333 - 20110101
Group number: 2504779-0300
Assembly Drawing: 2504779-12_2_AC

This list covers pages from 2-4 to 2-7

Pos	Part No	UN	Qty	Description	Page No
-					
010	2504780-0300		1	MACHINE BODY	**2-9**
020	2785239-0100		1	CONNECTION BOX	**2-15**
030	2529499-0300		1	CABLE HARNESS	**2-19**
050	2528457-0300		1	PNEUMATIC SYSTEM	**2-21**

Pos	Part No	UN	Qty	Description	Page No

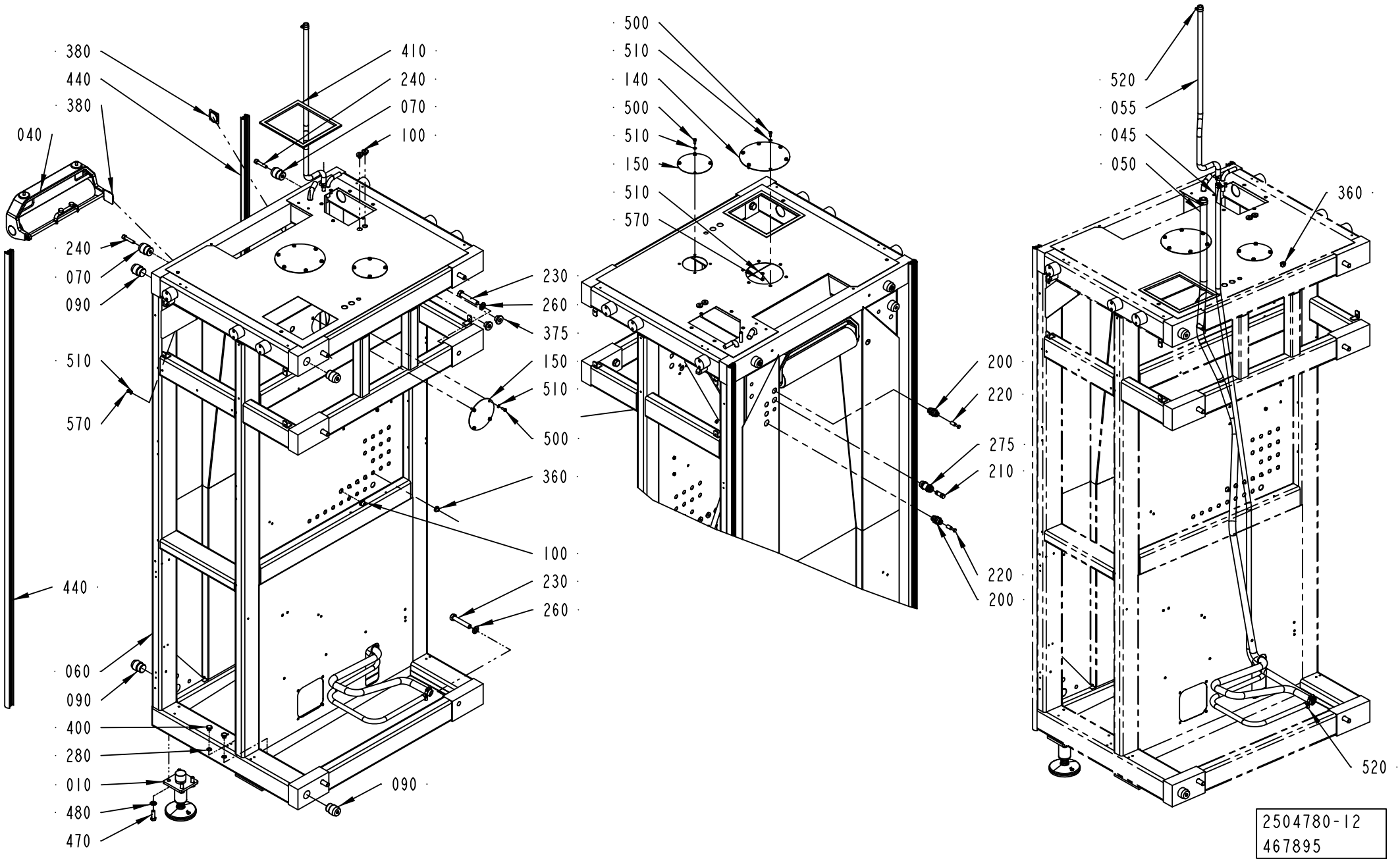
380
440
380
040
240
070
090
510
570
440
060
090
400
280
010
480
470
410
240
070
100
230
260
375
150
510
500
360
100
230
260
090
500
510
140
500
510
150
510
570
200
220
275
210
220
200
520
055
045
050
360
520
2504780-12
467895

ECM: 472334 - 20110101
Group number: 2504780-0300
Assembly Drawing: 2504780-12_1_AE

Pos	Part No	UN	Qty	Description	Page No
-					
010	90600-0725		2	FOOT 32000N, 90600-0725	
040	2504784-0200		1	BENDING ROLLER	**2-11**
045	90166-0121	MM	2800	HOSE	
050	2514204-0100		1	DRAINING	**2-13**
055	90166-0121	MM	2200	HOSE	
060	3039767-0000		1	FRAME	
070	591341-0000		2	PIN	
090	2506636-0000		4	PIN	
100	90015-0023		3	LEAD-IN, TET7-10, E-1458019	
140	3032240-0000		1	LID	
150	3032241-0000		1	LID	
200	350010-0005		2	PUSH-IN BULKHEAD FITTING QSS-F-12	
210	342715-0106		1	BLIND PLUG 14 MM	
220	350013-0005		2	PLUG QSC-12H	
230	312105-0638		6	SCREW M6S ISO 4014 M16X90 A480	
240	312115-0501		2	SCREW ISO4762 M10X50 A4 80	
260	315105-0186		6	WASHER BRB 17X30 RFR	
275	342768-0110		1	BULKHEAD CONNECTOR, 14 MM	
280	315237-0110		2	WASHER,PL.RND.AL.13,5/18,H=1,5	
360	90015-0020		5	LEAD-IN, TET5-7, E-1458016	
375	90015-0022		2	LEAD-IN, TET14-20, E-1458029	
380	90261-0070		2	PLASTIC PLUG SS 0082.31	
400	90330-0026		2	PLUG, EXT. G-THREAD, G1/4	
410	90143-0097	MM	620	SELF GRIPPING GASKET, 1011-24	
440	90459-1009	MM	4500	RUBBER STRIP, 1025088988	
450	342991-0102		4	HOSE CLIP,WORM DRIVE TYPE (13)-20	
470	312105-0538		8	SCREW M6S ISO 4017 M12X35 A480	
480	315105-0178		8	WASHER BRB 13X24 RFR	
500	312105-0368		14	SCREW M6S ISO 4017 M6X16 A480	
510	315105-0153		28	WASHER BRB 6,4X12 RFR	
520	342991-0102		2	HOSE CLIP,WORM DRIVE TYPE (13)-20	
570	312605-0316		14	HEXAGON NUT, M6M M6 A280	

Pos	Part No	UN	Qty	Description	Page No

Machine Type | Group Description | Used-In | Group Number | Page No

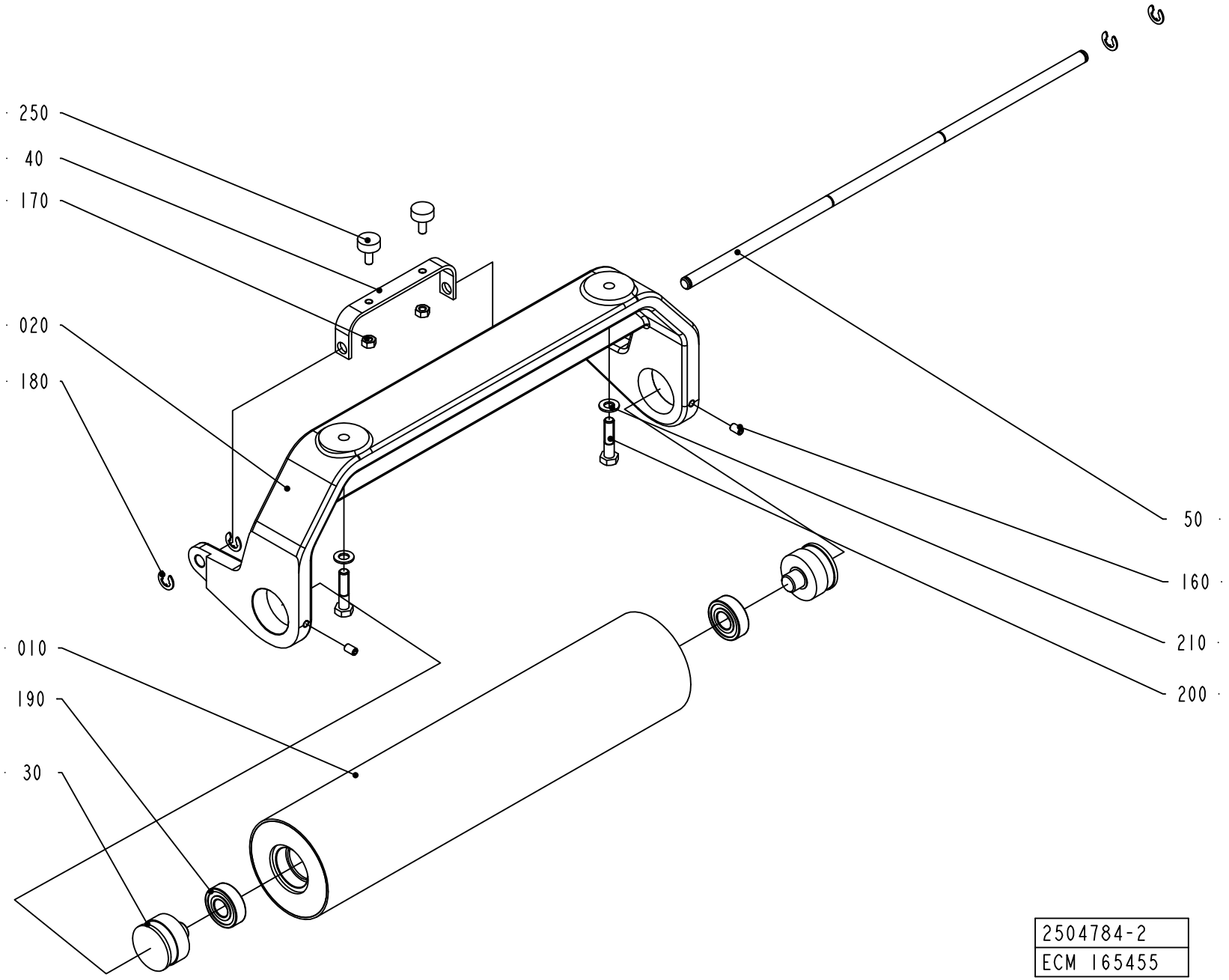
250
40
170
020
180
010
190
30
50
160
210
200
2504784-2
ECM 165455

ECM: 379821 - 20090114
Group number: 2504784-0200
Assembly Drawing: 2504784-2_1_AA

Pos	Part No	UN	Qty	Description	Page No
-					
010	2605877-0000		1	BENDING ROLLER	
020	2605879-0000		1	CANTILEVER	
030	1037012-0000		2	AXLE PIN	
040	1041603-0000		1	BRACKET	
050	2605880-0000		1	SHAFT	
160	312318-0364		2	SCREW ISO4029 M6X10 A4	
170	312605-0316		2	HEXAGON NUT, M6M M6 A280	
180	315755-0801		4	RETAINING RING SHAFT DIN 6799 8 SS	
190	321313-0102		2	BALL BEARING 15/35X11	
200	312105-0457		2	SCREW M6S ISO 4014 M8X35 A480	
210	315105-0165		2	WASHER BRB 8,4X16 RFR	
250	90347-0007		2	VIBRATION DAMPER	

Pos	Part No	UN	Qty	Description	Page No

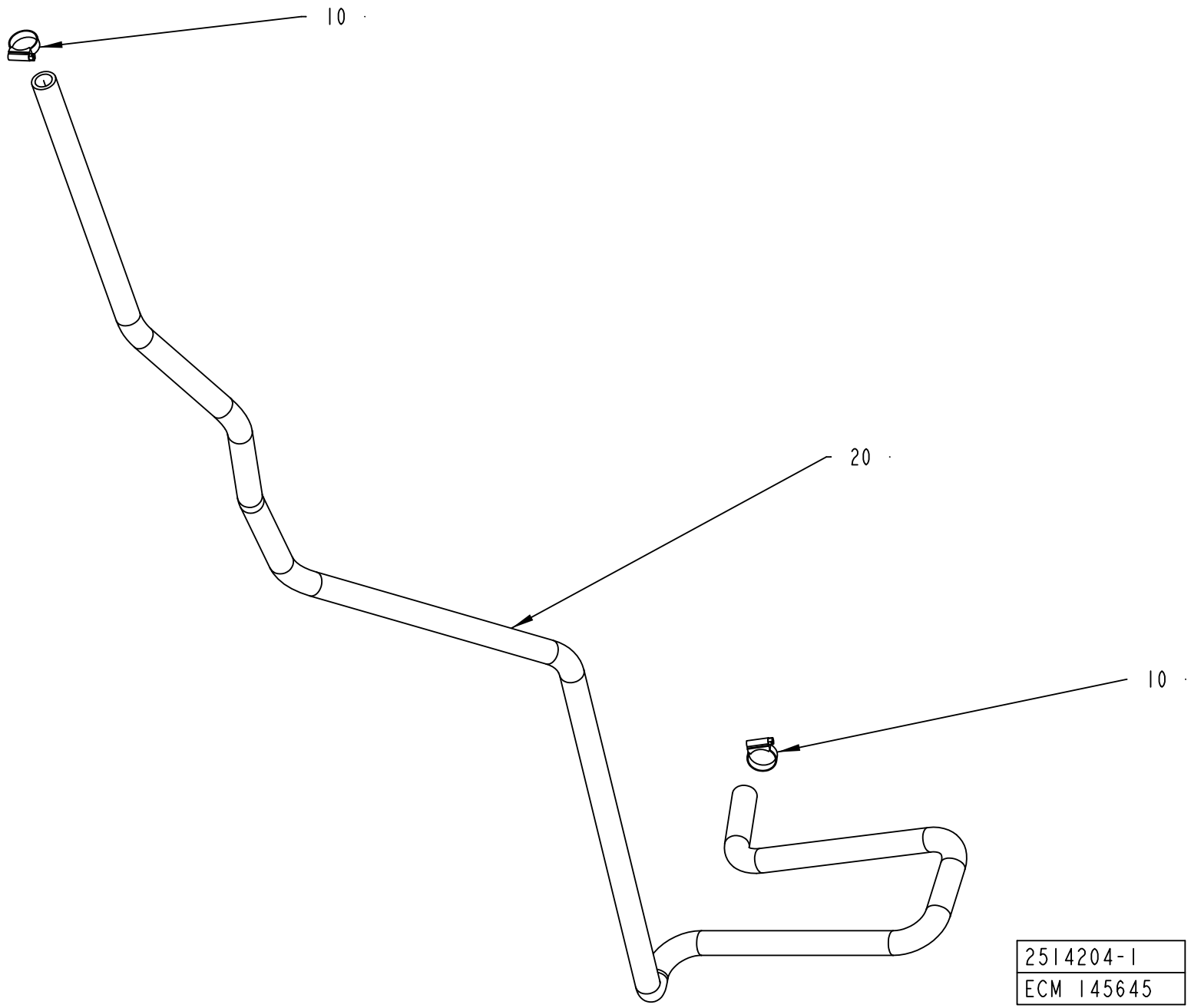
10
20
10
2514204-1
ECM 145645

ECM: 467427 - 20101002
Group number: 2514204-0100
Assembly Drawing: 2514204-1_1_AB

Pos	Part No	UN	Qty	Description	Page No
A3/SPEED					
020	90166-0060	MM	2600	HOSE 19/26-27 REINF.PVC	
Common Parts					
010	342991-0105		2	HOSE CLIP,WORM DRIVE TYPE (22)-32	

Pos	Part No	UN	Qty	Description	Page No

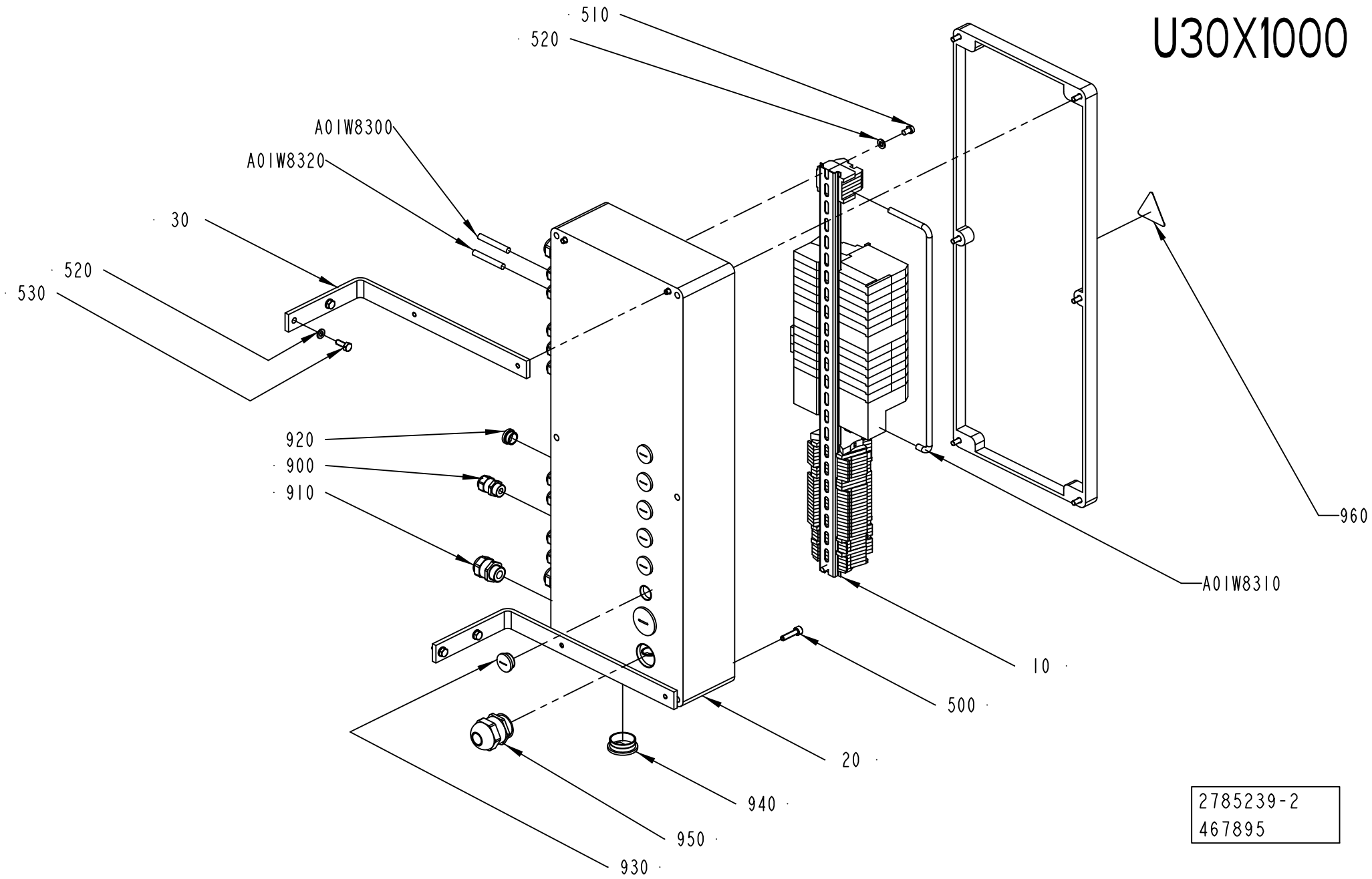
U30X1000
510
520
A01W8300
A01W8320
30
520
530
920
900
910
960
A01W8310
10
500
20
940
950
930
2785239-2
467895

ECM: 472346 - 20110101
Group number: 2785239-0100
Assembly Drawing: 2785239-2_1_AC

Pos	Part No	UN	Qty	Description	Page No
A3/SPEED ANSI (See drawing on page: 2-14)					
900	90458-0306		16	CABLE GLAND, M16X1,5, NO.5311 1010	
920	90458-1307		15	BLIND PLUG CIRCULAR, M16X1,5 514GFK/216	
960	359715-0100		1	WARNING SIGN ANSI (H), ELECTRIC SHOCK	
A3/SPEED ISO (See drawing on page: 2-14)					
900	90458-0306		16	CABLE GLAND, M16X1,5, NO.5311 1010	
920	90458-1307		15	BLIND PLUG CIRCULAR, M16X1,5 514GFK/216	
960	359705-0015		1	WARNING SIGN ISO, RISK OF ELECTRIC SHOCK	
Common Parts					
010	2702944-0100		1	TERMINAL BLOCK	**2-17**
020	2785236-0000		1	CONNECTION BOX	
030	2790687-0000		2	SUPPORT	
500	312115-0372		4	SCREW ISO4762 M6X25 A4 80	
510	312125-0364		2	SCREW ISO 1207 M6X10 A4	
520	315105-0153		6	WASHER BRB 6,4X12 RFR	
530	312105-0368		4	SCREW M6S ISO 4017 M6X16 A480	
910	90458-0307		6	CABLE GLAND, M20X1,5, NO.5311 1020	
930	90458-1308		14	BLIND PLUG CIRCULAR, M20X1,5 514GFK/220	
940	90458-1310		2	BLIND PLUG CIRCULAR, M32X1,5 514GFK/232	
950	90458-0309		1	CABLE GLAND, M32X1,5, NO.5311 1040	
A01W8300	90459-2530	M	6.5	DEVICENET CABLE THIN	
A01W8310	90459-2530	M	0.5	DEVICENET CABLE THIN	
A01W8320	90459-2530	M	4	DEVICENET CABLE THIN	

Pos	Part No	UN	Qty	Description	Page No

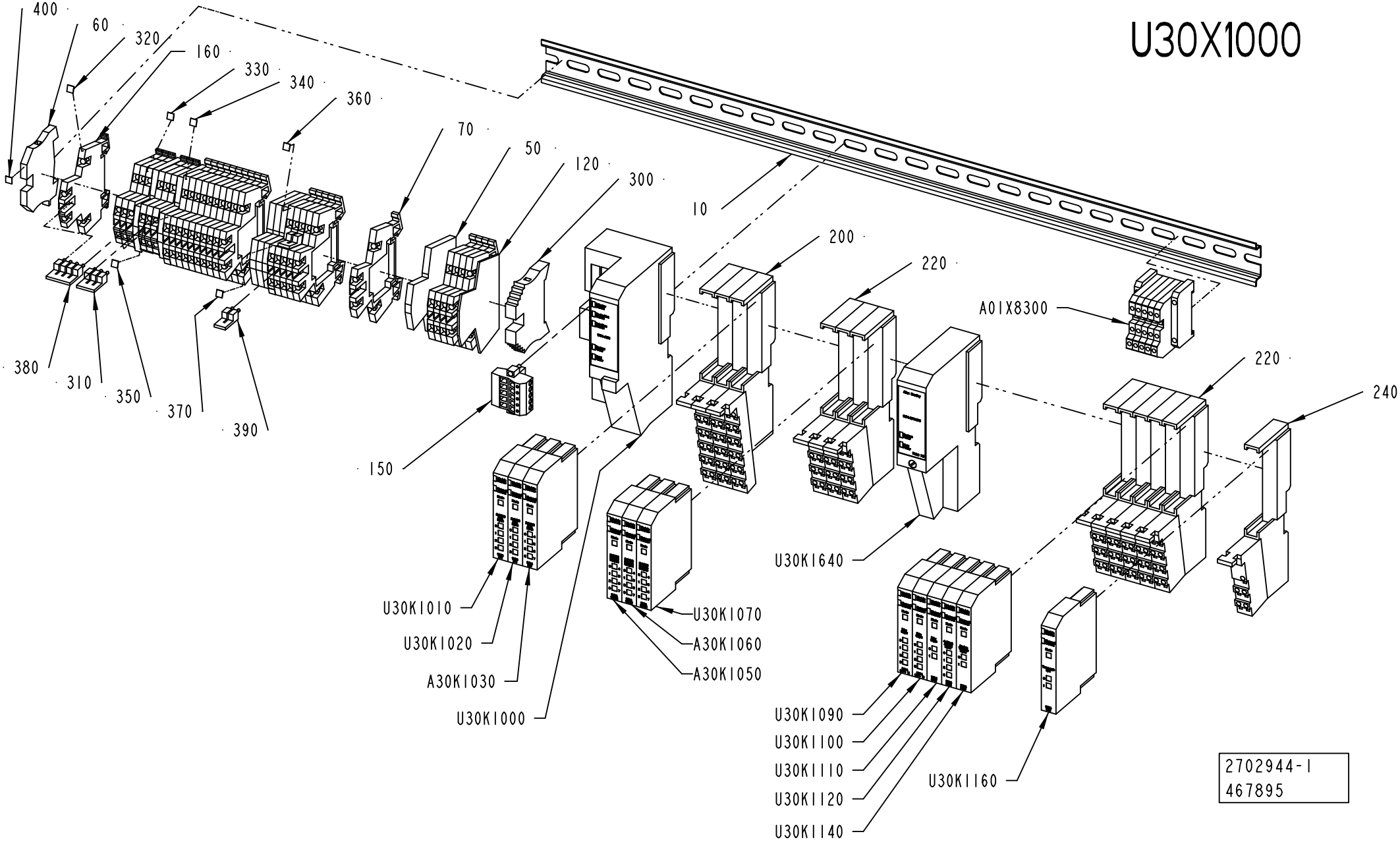
U30X1000
400
60
320
160
330
340
360
70
50
120
300
10
200
220
A01X8300
220
240
380
310
350
370
390
150
U30K1010
U30K1020
A30K1030
U30K1000
U30K1070
A30K1060
A30K1050
U30K1640
U30K1090
U30K1100
U30K1110
U30K1120
U30K1140
U30K1160
2702944-1
467895

ECM: 472344 - 20110101
Group number: 2702944-0100
Assembly Drawing: 2702944-1_1_AC

Pos	Part No	UN	Qty	Description	Page No
-					
010	2696979-0000		1	RAIL	
050	353024-0212		6	EARTH TERMINAL WDK 2,5 PE	
060	353024-0204		1	EARTH TERMINAL WPE 2,5	
070	90077-0113		20	TERMINAL BLOCK WDK 2.5	
120	90077-0114		1	END PLATE, WAP/WDK 2,5	
150	90459-5574		1	CONNECTOR, 1787-PLUG10R	
160	90459-5253		7	TERMINAL BLOCK WDK 2,5 V	
200	90459-2527		3	REMOTE I/O BASE MODULE 12 POINTS	
220	90459-2526		8	REMOTE I/O BASE MODULE 8 POINTS, 1734-TB	
240	90459-2528		1	REMOTE I/O BASE MODULE FOR THERMOCOUPLE	
300	353031-0203		1	END SUPPORT, WEW 35/2	
310	353034-0030		1	BRIDGE CONNECTOR WQV 2,5/10	
320	359011-0807		1	MARKING, DEK 5 FW 1-50	
330	359011-0808		1	MARKING, DEK 5FW 51-100	
340	359011-0809		2	MARKING, DEK 5 FW 101-150	
350	359011-0810		2	MARKING, DEK 5 FW 151-200	
360	359011-0811		2	MARKING, DEK 5 FW 201-250	
370	359011-0812		2	MARKING, DEK 5FW 251-300	
380	353034-0030		1	BRIDGE CONNECTOR WQV 2,5/10	
390	353034-0030		2	BRIDGE CONNECTOR WQV 2,5/10	
400	359011-0819		1	MARKING, EARTH, DEK 5 GW ERDE I.KR.	
A30K1030	90459-6561		1	DIGITAL INPUT 8 PTS SINK, 1734-IB8/C	
A30K1050	90459-6560		1	DIGITAL OUTPUT 8 PTS, 1734-OB8E/C	
A30K1060	90459-6560		1	DIGITAL OUTPUT 8 PTS, 1734-OB8E/C	
A01X8300	90459-2519		1	TAP, OPEN STYLE	
U30K1000	90459-2494		1	DEVICENET I/O ADAPTER MODULE, 1734-ADN	
U30K1010	90459-2503		1	DIGITAL INPUT 4 PTS SINK, 1734-IB4	
U30K1020	90459-2503		1	DIGITAL INPUT 4 PTS SINK, 1734-IB4	
U30K1070	90459-6560		1	DIGITAL OUTPUT 8 PTS, 1734-OB8E/C	
U30K1090	90459-5261		1	REMOTE I/O, RELAY OUTP. 4 PTS,1734-OW4/C	
U30K1100	90459-5261		1	REMOTE I/O, RELAY OUTP. 4 PTS,1734-OW4/C	
U30K1110	90459-4055		1	REMOTE I/O RELAY OUTPUT 2 PTS	
U30K1120	90459-2509		1	REMOTE I/O ANALOG INPUT CURRENT 2 PTS	
U30K1140	90459-2508		1	REMOTE I/O ANALOG INPUT VOLTAGE 2 PTS	
U30K1160	90459-2512		1	REMOTE I/O THERMOCOUPLE INPUT 2 PTS	
U30K1640	90459-2500		1	EXPANSION POWER SUPPLY MODULE	

Pos	Part No	UN	Qty	Description	Page No

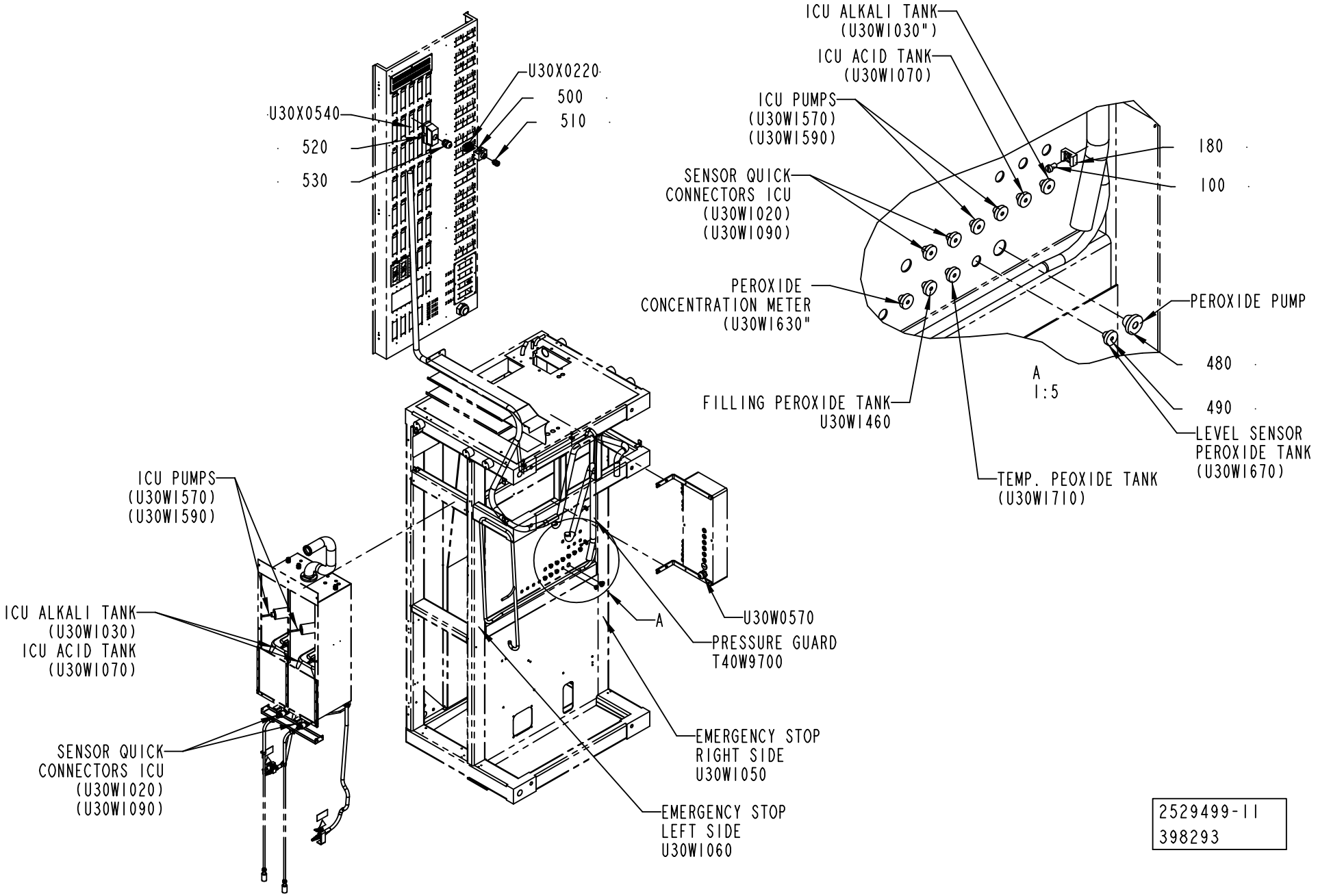

2529499-11
398293

ECM: 408543 - 20091002
Group number: 2529499-0300
Assembly Drawing: 2529499-11_1_AA

Pos	Part No	UN	Qty	Description	Page No
-					
100	312125-0364		12	SCREW ISO 1207 M6X10 A4	
180	352113-0204		12	ANCHOR PLATES FOR STRIPS, TYPE TM3S25-M	
480	90015-0021		1	LEAD-IN, TET10-14, E-1458023	
490	90015-0020		10	LEAD-IN, TET5-7, E-1458016	
500	90459-6632		1	HOOD 6 B TOP ENTRY, 19 30 006 1440	
510	90458-0307		1	CABLE GLAND, M20X1,5, NO.5311 1020	
520	90459-6636		1	HOOD 24 B TOP ENTRY, 19 30 024 0427	
530	90458-0309		1	CABLE GLAND, M32X1,5, NO.5311 1040	
T40W9700	351150-0403	M	4	CABLE OLFLEX 3X0,75 MM2 LIGHT/GREY	
U30W0570	351150-0425	MM	8000	CABLE OLFLEX 25X0,75 MM2 LIGHT/GREY	
U30W1050	351150-0407	MM	5000	CABLE OLFLEX 12X0,75 MM2 LIGHT/GREY	
U30W1060	351150-0407	MM	5000	CABLE OLFLEX 12X0,75 MM2 LIGHT/GREY	
U30X0220	90110-0052		1	MALE INSERT HAN 6E 09 33 006 2601	
U30X0540	90110-0056		1	MALE INSERT HAN 24 E 09 33 024 2601	

Pos	Part No	UN	Qty	Description	Page No

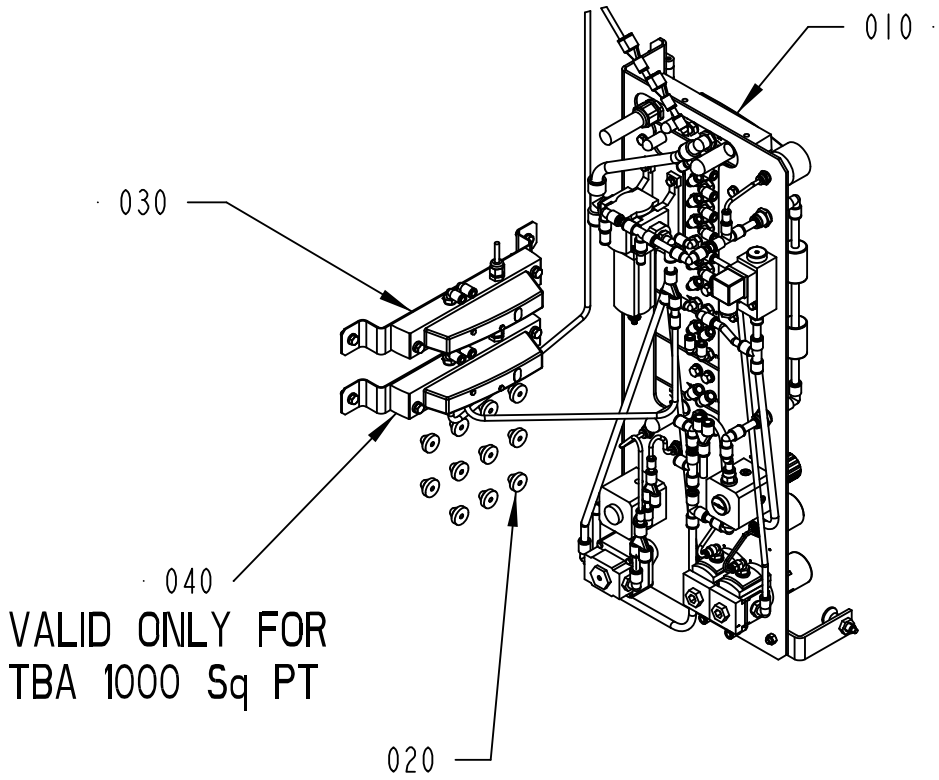

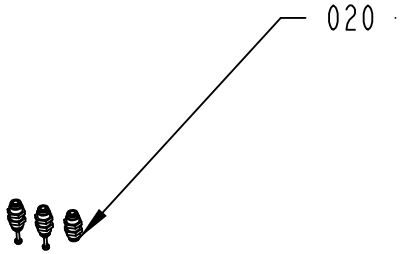

2528457-14
467895

ECM: 472366 - 20110101
Group number: 2528457-0300
Assembly Drawing: 2528457-14_1_AB

Pos	Part No	UN	Qty	Description	Page No
A3/SPEED					
020	2555438-0300		1	HOSE INSTALLATION	**2-23, 2-25**
040	3124259-0100		1	VALVE GROUP	**2-27**
Common Parts					
010	2774463-0200		1	VALVE PANEL	**2-29, 2-31**
030	3044000-0100		1	VALVE GROUP	**2-35**

Pos	Part No	UN	Qty	Description	Page No

HOSE INSTALLATION

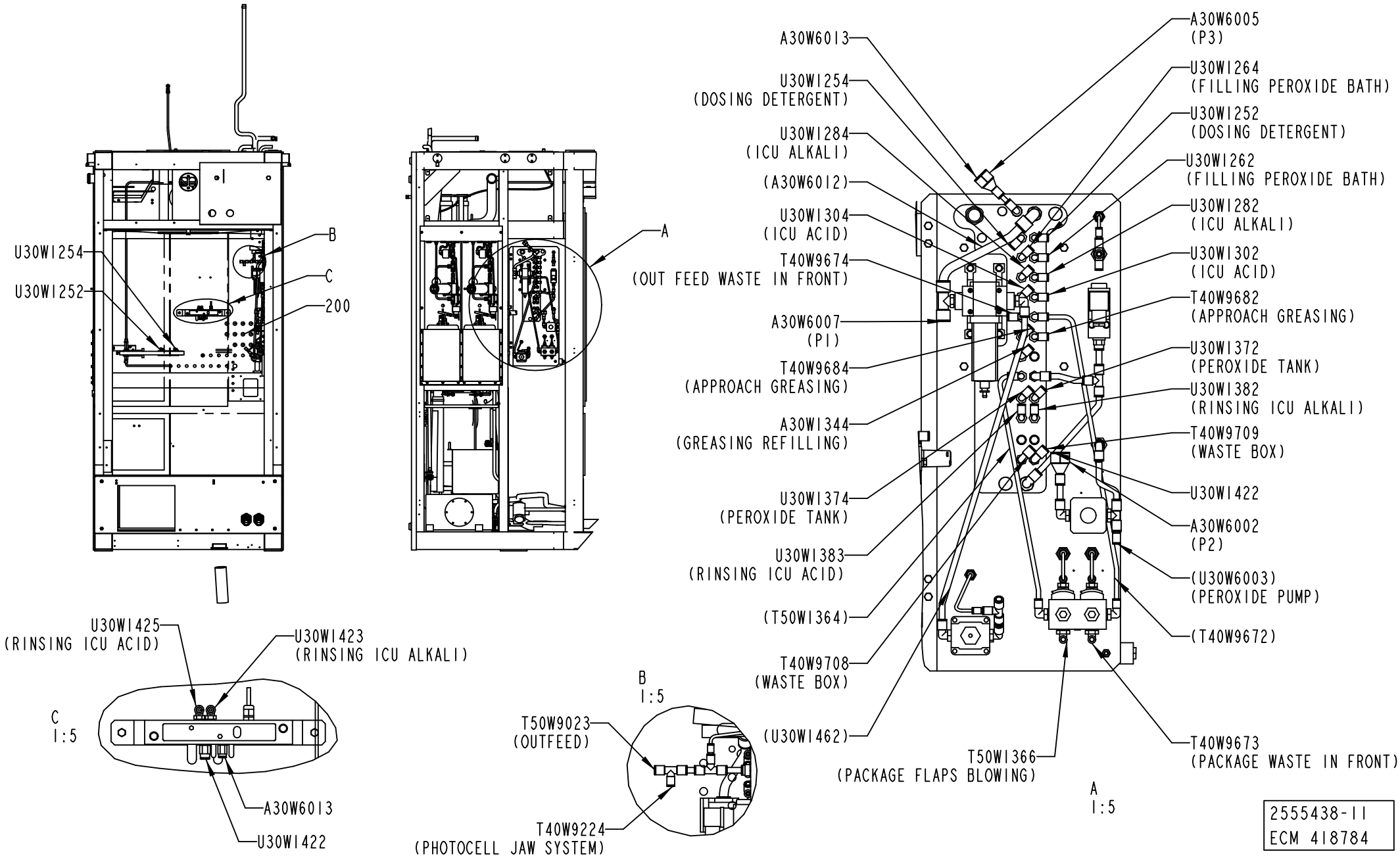

ECM: 467432 - 20101002
Group number: 2555438-0300
Assembly Drawing: 2555438-11_1_AD

This list covers pages from 2-22 to 2-25

Pos	Part No	UN	Qty	Description	Page No
-					
200	90015-0020		11	LEAD-IN, TET5-7, E-1458016	
210	350010-0002		3	PUSH-IN BULKHEAD FITTING QSS-F-6	
220	350013-0002		2	PLUG QSC-6H	
A30W1344	315300-0001	MM	2500	TUBE, 6 MM PE BLUE	
A30W6013	315300-0001	MM	850	TUBE, 6 MM PE BLUE	
T40W9224	315300-0001	MM	4500	TUBE, 6 MM PE BLUE	
T40W9673	315300-0001	MM	7000	TUBE, 6 MM PE BLUE	
T40W9674	315300-0001	MM	7000	TUBE, 6 MM PE BLUE	
T40W9682	315300-0001	MM	2500	TUBE, 6 MM PE BLUE	
T40W9684	315300-0001	MM	2500	TUBE, 6 MM PE BLUE	
T40W9708	315300-0004	MM	1100	TUBE, 8 MM PE BLUE	
T40W9709	315300-0004	MM	1100	TUBE, 8 MM PE BLUE	
T50W1366	315300-0001	MM	2500	TUBE, 6 MM PE BLUE	
T50W1367	315300-0001	MM	1000	TUBE, 6 MM PE BLUE	
T50W9023	315300-0016	MM	6500	TUBE 4MPE BLUE	
U30W1252	315300-0001	MM	2000	TUBE, 6 MM PE BLUE	
U30W1254	315300-0001	MM	2000	TUBE, 6 MM PE BLUE	
U30W1262	315300-0001	MM	2100	TUBE, 6 MM PE BLUE	
U30W1264	315300-0001	MM	2100	TUBE, 6 MM PE BLUE	
U30W1282	315300-0001	MM	2300	TUBE, 6 MM PE BLUE	
U30W1284	315300-0001	MM	2300	TUBE, 6 MM PE BLUE	
U30W1302	315300-0001	MM	2300	TUBE, 6 MM PE BLUE	
U30W1304	315300-0001	MM	2300	TUBE, 6 MM PE BLUE	
U30W1372	315300-0001	MM	2700	TUBE, 6 MM PE BLUE	
U30W1374	315300-0001	MM	2700	TUBE, 6 MM PE BLUE	
U30W1382	315300-0001	MM	2300	TUBE, 6 MM PE BLUE	
U30W1383	315300-0001	MM	2300	TUBE, 6 MM PE BLUE	
U30W1422	315300-0004	MM	1000	TUBE, 8 MM PE BLUE	
U30W1423	315300-0001	MM	2300	TUBE, 6 MM PE BLUE	
U30W1425	315300-0001	MM	2300	TUBE, 6 MM PE BLUE	
U30W1463	315300-0004	MM	2000	TUBE, 8 MM PE BLUE	

Pos	Part No	UN	Qty	Description	Page No

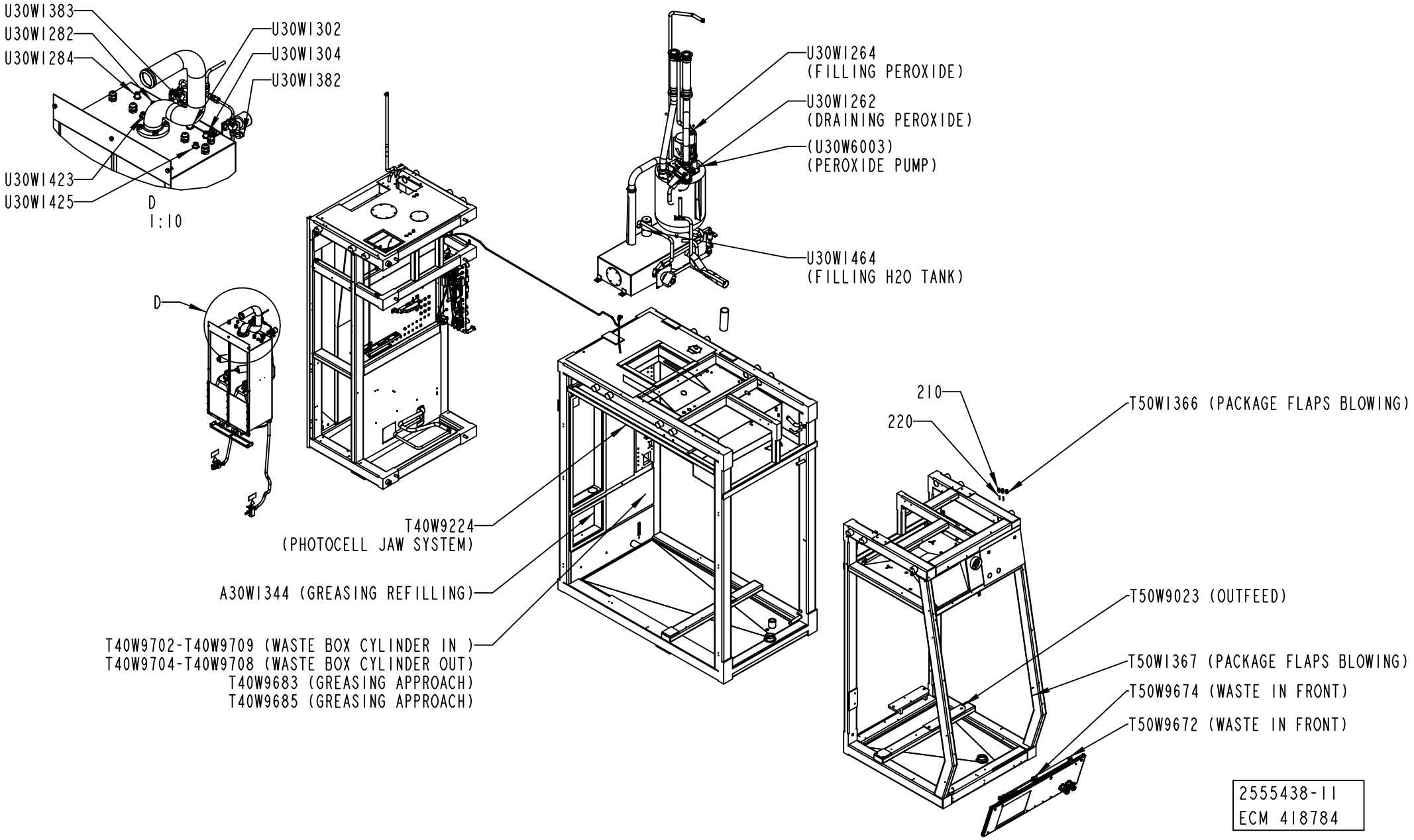
U30W1383
U30W1282
U30W1284
U30W1423
U30W1425
U30W1302
U30W1304
U30W1382
D
1:10
D
U30W1264
(FILLING PEROXIDE)
U30W1262
(DRAINING PEROXIDE)
(U30W6003)
(PEROXIDE PUMP)
U30W1464
(FILLING H2O TANK)
T40W9224
(PHOTOCELL JAW SYSTEM)
A30W1344 (GREASING REFILLING)
T40W9702-T40W9709 (WASTE BOX CYLINDER IN)
T40W9704-T40W9708 (WASTE BOX CYLINDER OUT)
T40W9683 (GREASING APPROACH)
T40W9685 (GREASING APPROACH)
210
220
T50W1366 (PACKAGE FLAPS BLOWING)
T50W9023 (OUTFEED)
T50W1367 (PACKAGE FLAPS BLOWING)
T50W9674 (WASTE IN FRONT)
T50W9672 (WASTE IN FRONT)
2555438-11
ECM 418784

Pos	Part No	UN	Qty	Description	Page No
-					
200	90015-0020		11	LEAD-IN, TET5-7, E-1458016	
210	350010-0002		3	PUSH-IN BULKHEAD FITTING QSS-F-6	
220	350013-0002		2	PLUG QSC-6H	
A30W1344	315300-0001	MM	2500	TUBE, 6 MM PE BLUE	
A30W6013	315300-0001	MM	850	TUBE, 6 MM PE BLUE	
T40W9224	315300-0001	MM	4500	TUBE, 6 MM PE BLUE	
T40W9673	315300-0001	MM	7000	TUBE, 6 MM PE BLUE	
T40W9674	315300-0001	MM	7000	TUBE, 6 MM PE BLUE	
T40W9682	315300-0001	MM	2500	TUBE, 6 MM PE BLUE	
T40W9684	315300-0001	MM	2500	TUBE, 6 MM PE BLUE	
T40W9708	315300-0004	MM	1100	TUBE, 8 MM PE BLUE	
T40W9709	315300-0004	MM	1100	TUBE, 8 MM PE BLUE	
T50W1366	315300-0001	MM	2500	TUBE, 6 MM PE BLUE	
T50W1367	315300-0001	MM	1000	TUBE, 6 MM PE BLUE	
T50W9023	315300-0016	MM	6500	TUBE 4MPE BLUE	
U30W1252	315300-0001	MM	2000	TUBE, 6 MM PE BLUE	
U30W1254	315300-0001	MM	2000	TUBE, 6 MM PE BLUE	
U30W1262	315300-0001	MM	2100	TUBE, 6 MM PE BLUE	
U30W1264	315300-0001	MM	2100	TUBE, 6 MM PE BLUE	
U30W1282	315300-0001	MM	2300	TUBE, 6 MM PE BLUE	
U30W1284	315300-0001	MM	2300	TUBE, 6 MM PE BLUE	
U30W1302	315300-0001	MM	2300	TUBE, 6 MM PE BLUE	
U30W1304	315300-0001	MM	2300	TUBE, 6 MM PE BLUE	
U30W1372	315300-0001	MM	2700	TUBE, 6 MM PE BLUE	
U30W1374	315300-0001	MM	2700	TUBE, 6 MM PE BLUE	
U30W1382	315300-0001	MM	2300	TUBE, 6 MM PE BLUE	
U30W1383	315300-0001	MM	2300	TUBE, 6 MM PE BLUE	
U30W1422	315300-0004	MM	1000	TUBE, 8 MM PE BLUE	
U30W1423	315300-0001	MM	2300	TUBE, 6 MM PE BLUE	
U30W1425	315300-0001	MM	2300	TUBE, 6 MM PE BLUE	
U30W1463	315300-0004	MM	2000	TUBE, 8 MM PE BLUE	

Pos	Part No	UN	Qty	Description	Page No

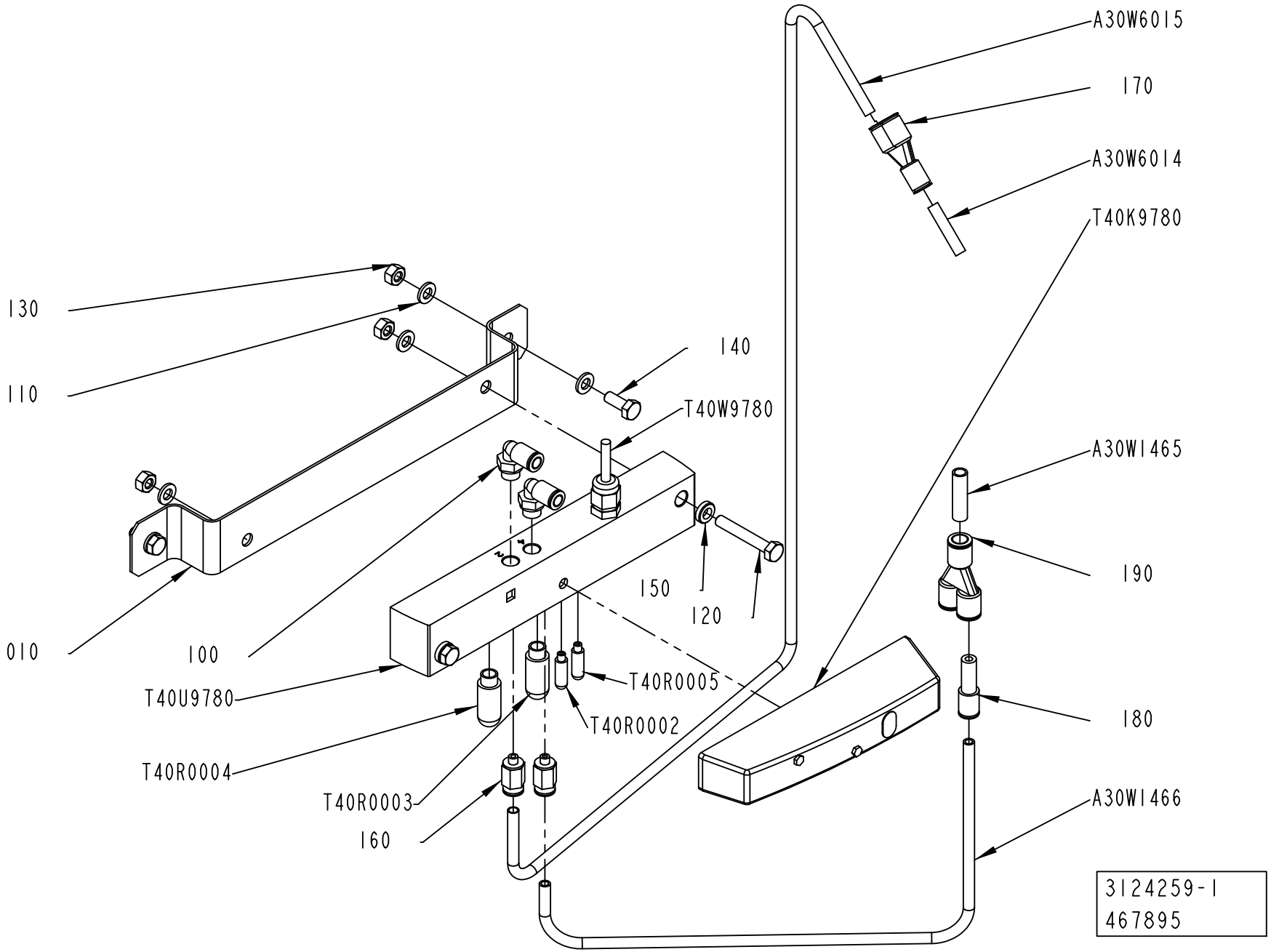
A30W6015
170
A30W6014
T40K9780
130
110
140
T40W9780
A30W1465
190
150
120
010
100
T40R0005
T40U9780
T40R0002
180
T40R0004
T40R0003
160
A30W1466
3124259-1
467895

ECM: 472359 - 20110101
Group number: 3124259-0100
Assembly Drawing: 3124259-1_1_AA

Pos	Part No	UN	Qty	Description	Page No
A3/SPEED TBA 1000SQ PT/SPEED					
010	3044001-0000		1	BRACKET	
100	350002-0006		2	PUSH-IN L-FITTING QSL-F-G1/8-6	
110	315105-0153		6	WASHER BRB 6,4X12 RFR	
120	312105-0378		2	SCREW M6S ISO 4014 M6X40 A480	
130	312605-0316		4	HEXAGON NUT, M6M M6 A280	
140	312105-0368		2	SCREW M6S ISO 4017 M6X16 A480	
150	315115-0153		2	WASHER PLAIN, TBRB 6,4/12 H=3	
160	350001-0002		2	PUSH-IN FITTING QS-F-M5-6	
170	350015-0001		1	PUSH-IN Y-CONNECTOR QSY-F-6	
180	350006-0003		1	PUSH-IN FITTING QS-F-8H-6	
190	350015-0003		1	PUSH-IN Y-CONNECTOR QSY-F-8	
A30W1465	315300-0004	MM	50	TUBE, 8 MM PE BLUE	
A30W1466	315300-0001	MM	800	TUBE, 6 MM PE BLUE	
A30W6014	315300-0001	MM	50	TUBE, 6 MM PE BLUE	
A30W6015	315300-0001	MM	800	TUBE, 6 MM PE BLUE	
T40K9780	90458-1194		1	MONOSTABLE VALVE 5/2	
T40R0002	90328-0029		1	SILENCER M5	
T40R0003	90328-0047		1	SILENCER G1/8"	
T40R0004	90328-0047		1	SILENCER G1/8"	
T40R0005	90328-0029		1	SILENCER M5	
T40U9780	90459-2591		1	SINGLE VALVE SUB-BASE CDSV5.0-AS-1/8	

Pos	Part No	UN	Qty	Description	Page No

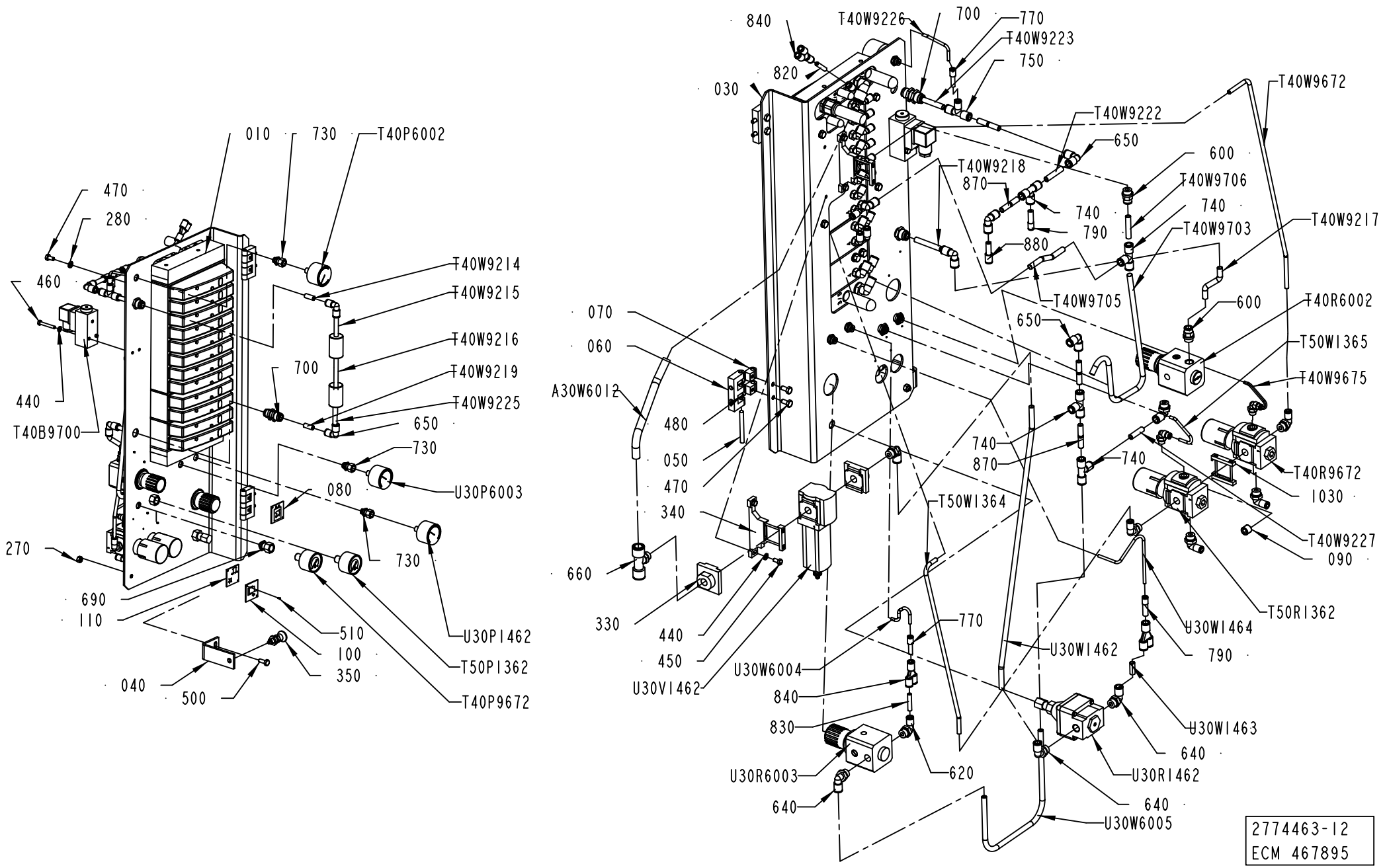
010
730
T40P6002
470
280
460
T40W9214
T40W9215
T40W9216
700
T40W9219
T40W9225
650
440
T40B9700
730
U30P6003
080
270
730
690
110
510
100
350
U30P1462
T50P1362
040
500
T40P9672
840
T40W9226
700
770
T40W9223
750
820
030
T40W9672
T40W9222
650
600
T40W9218
870
T40W9706
740
740
790
T40W9703
T40W9217
880
T40W9705
600
T40R6002
650
070
060
T50W1365
A30W6012
T40W9675
480
740
740
050
870
T40R9672
470
T50W1364
1030
340
T40W9227
090
660
T50R1362
770
U30W1464
330
U30W1462
790
440
450
U30W6004
U30V1462
840
830
U30W1463
640
U30R6003
620
U30R1462
640
640
U30W6005
2774463-12
ECM 467895

ECM: 472345 - 20110101
Group number: 2774463-0200
Assembly Drawing: 2774463-12_1_AD

This list covers pages from 2-28 to 2-31

Pos	Part No	UN	Qty	Description	Page No
A3/SPEED					
030	2774464-0000		1	PANEL	
110	1129370-0000		1	SIGN	
510	312502-0120		6	DRIVE SCREW ROUND HEAD KDS 0X5	
610	350002-0005		2	PUSH-IN L-FITTING QSL-F-G1/8-4	
620	350002-0008		5	PUSH-IN L-FITTING QSL-F-G1/4-6	
650	350004-0003		6	PUSH-IN L-FITTING QSL-F-8	
690	90459-7333		2	PUSH-IN FITTING QSSF-1/4-4-B	
740	350005-0003		4	PUSH-IN T-FITTING QST-F-8	
750	350011-0002		1	PUSH-IN T-FITTING QST-F-8-6	
790	350006-0002		2	PUSH-IN FITTING QS-F-8H-4	
860	90055-0173		1	ELBOW WITH TAILPIECE 8/6 MM	
870	350012-0003		4	SLEEVE QSH-F-8	
880	350006-0003		1	PUSH-IN FITTING QS-F-8H-6	
1030	90459-2248		1	BRACKET, MS4-MV	
T50P1362	90459-7344		1	PRESSURE GAUGE, MA-40-6-R1/4-EN	
T50R1362	90459-4554		1	REGULATOR, MS4-LRB-1/4-D7-A8-AS	
T40W9703	315300-0004	MM	500	TUBE, 8 MM PE BLUE	
T50W1364	315300-0001	MM	100	TUBE, 6 MM PE BLUE	
T50W1365	315300-0016	MM	100	TUBE 4MPE BLUE	
Common Parts					
010	2776368-0200		1	VALVE GROUP	**2-33**
040	2546319-0000		1	HOLDER	
050	988685-0000		2	PIN	
060	1035792-0000		2	E-HINGE	
070	1129770-0000		4	BLOCKING PIECE	
080	978603-0000		1	SIGN	
090	90600-1169		1	PLUG G1/4, B-1/4-NPT	
100	2598025-0000		1	SIGN	
270	312605-0316		1	HEXAGON NUT, M6M M6 A280	
280	315105-0153		4	WASHER BRB 6,4X12 RFR	
330	90459-2246		1	END PLATE, MS4-AGB	
340	90459-2247		2	BRACKET, MS4-WP	
350	90051-0112		1	LOCK KNOB, NO. GN 617 NIK5	
440	315106-0146		6	WASHER ISO 7089-5-200 HV A4	
450	312105-0325		4	SCREW M6S ISO 4017 M5X10 A480	
460	312105-0337		2	SCREW M6S ISO 4014 M5X35 A480	
470	312105-0366		8	SCREW M6S ISO 4017 M6X12 A480	
480	312115-0327		4	SCREW ISO4762 M5X12 A4 80	
500	312105-0368		1	SCREW M6S ISO 4017 M6X16 A480	
600	350001-0009		2	PUSH-IN FITTING QS-F-G1/4-8	
640	350002-0009		5	PUSH-IN L-FITTING QSL-F-G1/4-8	
660	350007-0011		1	PUSH-IN T-FITTING QST-F-G1/4-12	
670	350007-0009		1	PUSH-IN T-FITTING QST-F-G1/4-8	
700	350010-0003		2	PUSH-IN BULKHEAD FITTING QSS-F-8	
730	90459-7332		3	PUSH-IN FITTING QSSF-1/8-4-B	
770	350006-0001		2	PUSH-IN FITTING QS-F-6H-4	
780	350006-0003		1	PUSH-IN FITTING QS-F-8H-6	
810	350015-0003		1	PUSH-IN Y-CONNECTOR QSY-F-8	
820	315300-0001	MM	50	TUBE, 6 MM PE BLUE	
830	315300-0004	MM	50	TUBE, 8 MM PE BLUE	
840	350015-0001		2	PUSH-IN Y-CONNECTOR QSY-F-6	
850	90600-1175		2	ELBOW WITH TAILPIECE 8/8 MM	
A30W6012	315300-0010	MM	200	TUBE, 12 MM PE BLUE	
T40B9700	90274-0103		1	PRESSURE SWITTCH PEV-1/4-B	
T40P6002	90458-2969		1	PRESSURE GAUGE, MAP-40-1-1/8-EN	
T40P9672	90459-7344		1	PRESSURE GAUGE, MA-40-6-R1/4-EN	
T40R6002	90600-3050		1	REGULATOR, SA-235942A	
T40R9672	90459-4554		1	REGULATOR, MS4-LRB-1/4-D7-A8-AS	
T40V6002	90277-0046		1	FILTER / 9933-05-101	
T40V6003	90277-0045		1	FILTER / 9900-05-BK	
T40W9214	315300-0004	MM	100	TUBE, 8 MM PE BLUE	
T40W9215	315300-0004	MM	100	TUBE, 8 MM PE BLUE	
T40W9216	315300-0004	MM	100	TUBE, 8 MM PE BLUE	
T40W9217	315300-0004	MM	100	TUBE, 8 MM PE BLUE	
T40W9218	315300-0004	MM	100	TUBE, 8 MM PE BLUE	
T40W9219	315300-0004	MM	100	TUBE, 8 MM PE BLUE	
T40W9222	315300-0004	MM	100	TUBE, 8 MM PE BLUE	
T40W9223	315300-0004	MM	100	TUBE, 8 MM PE BLUE	
T40W9225	315300-0004	MM	100	TUBE, 8 MM PE BLUE	
T40W9226	315300-0016	MM	100	TUBE 4MPE BLUE	
T40W9227	315300-0016	MM	100	TUBE 4MPE BLUE	
T40W9672	315300-0001	MM	100	TUBE, 6 MM PE BLUE	
T40W9675	315300-0016	MM	100	TUBE 4MPE BLUE	
T40W9705	315300-0004	MM	100	TUBE, 8 MM PE BLUE	
T40W9706	315300-0004	MM	100	TUBE, 8 MM PE BLUE	
U30P1462	90458-2969		1	PRESSURE GAUGE, MAP-40-1-1/8-EN	
U30P6003	90458-2969		1	PRESSURE GAUGE, MAP-40-1-1/8-EN	
U30R1462	90113-0056		1	REGULATOR, 11-818-998	
U30R6003	90458-0254		1	PRECISION PRESSURE REGULATOR,LRP-1/4-0,7	
U30V1462	90459-2338		1	FILTER, MS4-LF-1/4-CRV	
	90459-3818		*1*	*FILTER CARTRIDGE, MS4-LFP-C*	
U30W1462	315300-0004	MM	100	TUBE, 8 MM PE BLUE	
U30W1463	315300-0004	MM	100	TUBE, 8 MM PE BLUE	

Machine Type | Group Description | Used-In | Group Number | Page No

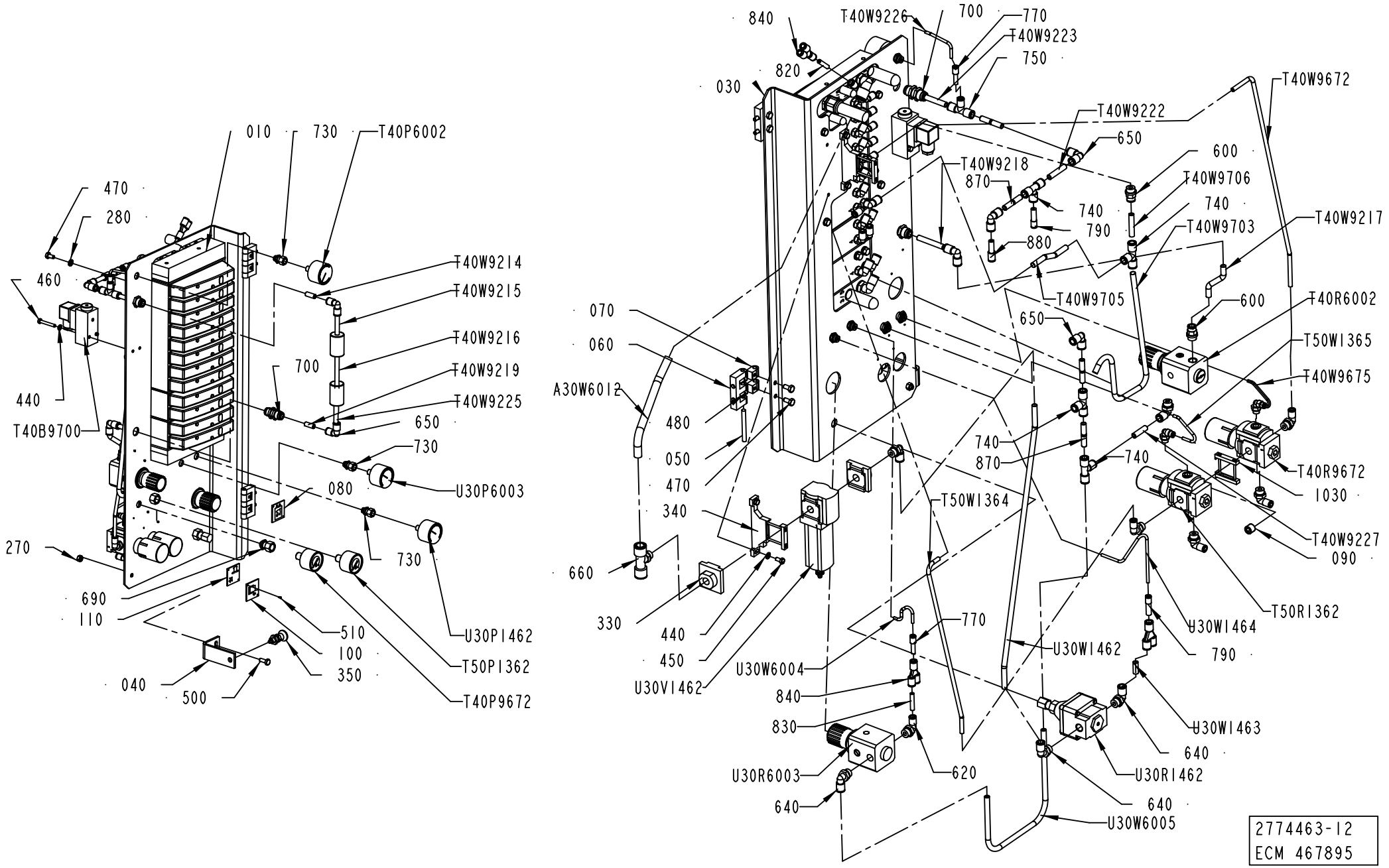
010
730
T40P6002
470
280
460
T40W9214
T40W9215
T40W9216
700
T40W9219
T40W9225
650
440
T40B9700
730
U30P6003
080
270
730
690
110
510
100
350
U30P1462
T50P1362
040
500
T40P9672
840
T40W9226
700
770
T40W9223
750
820
030
T40W9672
T40W9222
650
600
T40W9218
870
T40W9706
740
740
790
T40W9703
T40W9217
880
T40W9705
600
T40R6002
650
070
060
T50W1365
A30W6012
T40W9675
480
740
740
050
870
T40R9672
470
T50W1364
1030
340
T40W9227
090
660
T50R1362
770
U30W1464
330
U30W1462
790
440
450
U30W6004
U30V1462
840
830
U30W1463
640
U30R6003
620
U30R1462
640
640
U30W6005
2774463-12
ECM 467895

Pos	Part No	UN	Qty	Description	Page No
Common Parts (Cont'd)					
U30W1464	315300-0016	MM	150	TUBE 4MPE BLUE	

Pos	Part No	UN	Qty	Description	Page No

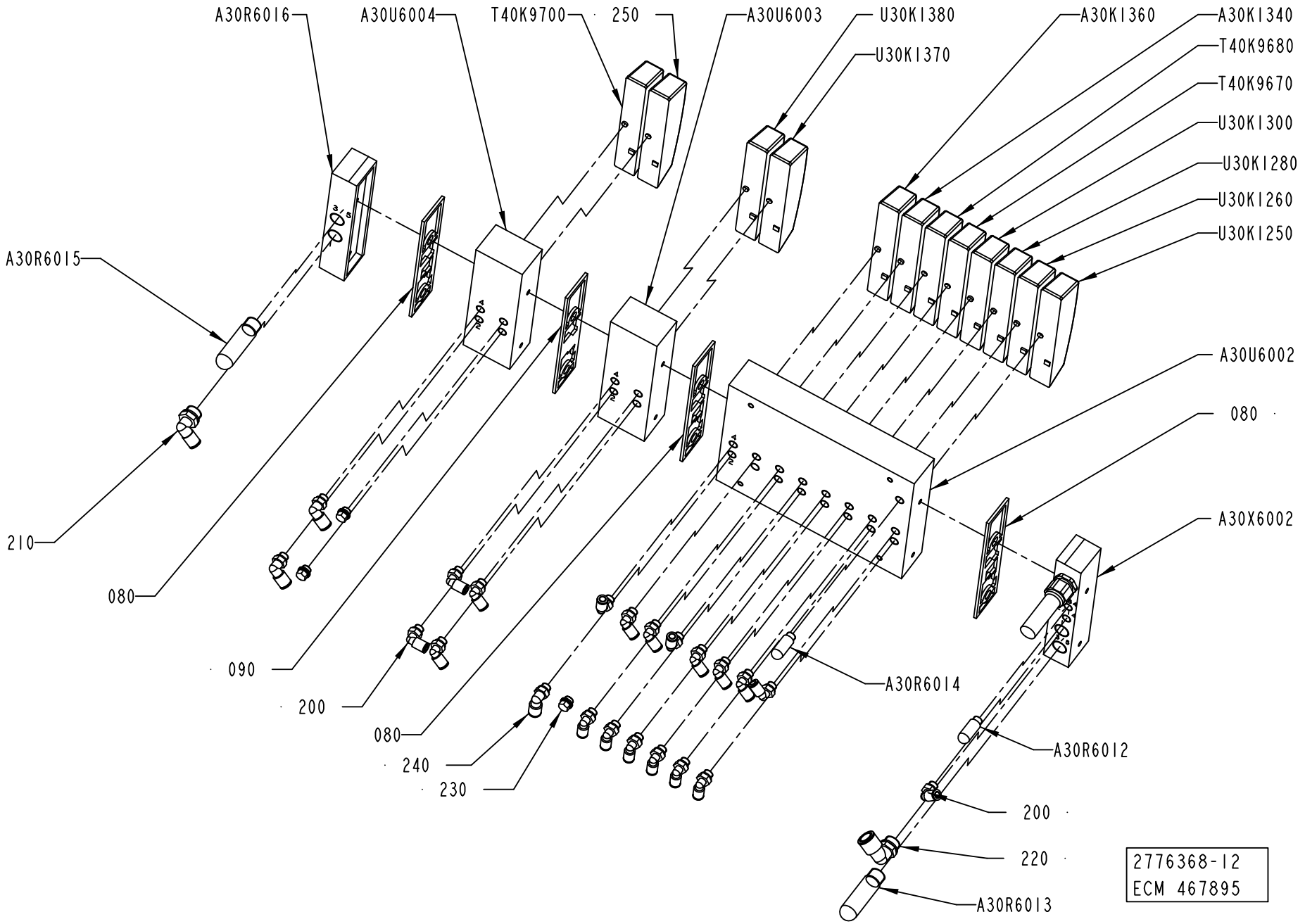
A30R6016
A30U6004
T40K9700
250
A30U6003
U30K1380
U30K1370
A30K1360
A30K1340
T40K9680
T40K9670
U30K1300
U30K1280
U30K1260
U30K1250
A30R6015
A30U6002
080
A30X6002
210
080
090
200
080
240
230
A30R6014
A30R6012
200
220
A30R6013
2776368-12
ECM 467895

ECM: 474361 - 20110101
Group number: 2776368-0200
Assembly Drawing: 2776368-12_1_AB

Pos	Part No	UN	Qty	Description	Page No
A3/SPEED					
200	350002-0006		20	PUSH-IN L-FITTING QSL-F-G1/8-6	
230	90459-0698		3	PLUG, EXT. G-THREAD, G1/8	
240	350002-0007		3	PUSH-IN L-FITTING QSL-F-G1/8-8	
250	90458-1215		1	COVER PLATE FOR EMPTY VALVE POSITION	
A30K1360	90458-1202		1	VALVES 2X3/2, CLOSED	
T40K9680	90458-1194		1	MONOSTABLE VALVE 5/2	
Common Parts					
080	90458-1207		3	SEALING, STANDARD	
090	90458-1208		1	SEALING, CHANNEL 1 BLOCKED	
210	350002-0012		1	PUSH-IN L-FITTING QSL-F-G3/8-8	
220	350002-0014		1	PUSH-IN L-FITTING QSL-F-G3/8-12	
A30K1340	90458-1202		1	VALVES 2X3/2, CLOSED	
A30R6012	90328-0047		1	SILENCER G1/8"	
A30R6013	90328-0024		1	SILENCER G3/8"	
A30R6014	90328-0047		1	SILENCER G1/8"	
A30R6015	90328-0024		1	SILENCER G3/8"	
A30R6016	90458-1213		1	RIGHT ENDPLATE INTERNAL PILOT AIR	
A30U6002	90458-1205		1	BASIC SUB-BASE 8 VALVES, CDVI5.0-GB8-MP	
A30U6003	90458-1206		1	EXP. SUB-BASE 2 VALVES, CDVI5.0-EB	
A30U6004	90458-1206		1	EXP. SUB-BASE 2 VALVES, CDVI5.0-EB	
A30X6002	90458-1212		1	LEFT ENDPLATE INCL. 10M CABLE	
T40K9670	90458-1194		1	MONOSTABLE VALVE 5/2	
T40K9700	90458-1200		1	VALVE OPEN IN MID-POSITION 5/3	
U30K1250	90458-1194		1	MONOSTABLE VALVE 5/2	
U30K1260	90458-1202		1	VALVES 2X3/2, CLOSED	
U30K1280	90458-1202		1	VALVES 2X3/2, CLOSED	
U30K1300	90458-1202		1	VALVES 2X3/2, CLOSED	
U30K1370	90458-1194		1	MONOSTABLE VALVE 5/2	
U30K1380	90458-1202		1	VALVES 2X3/2, CLOSED	

Pos	Part No	UN	Qty	Description	Page No

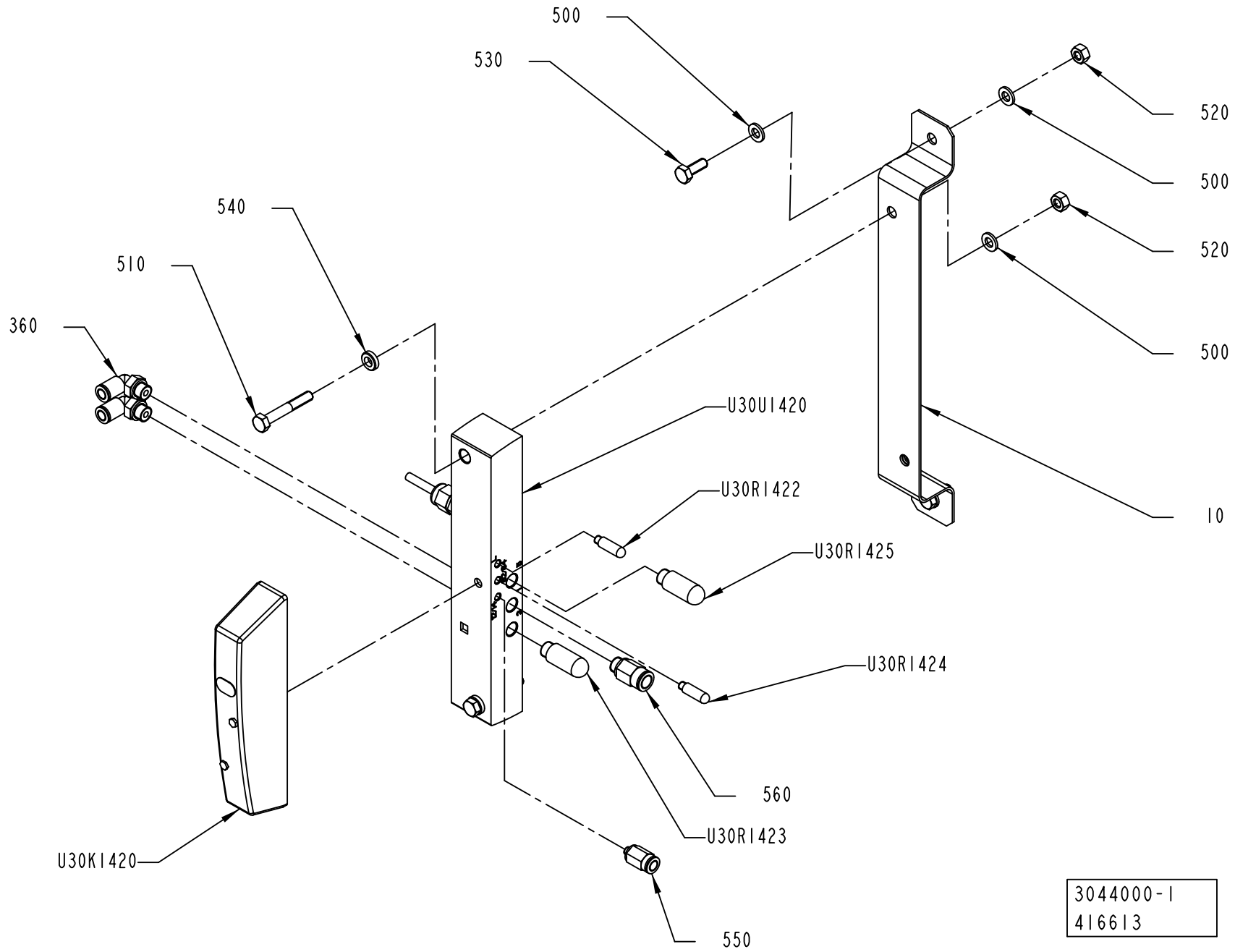
500
530
520
500
520
500
540
510
360
U30U1420
U30R1422
U30R1425
10
U30R1424
560
U30R1423
U30K1420
550
3044000-1
416613

ECM: 420616 - 20091009
Group number: 3044000-0100
Assembly Drawing: 3044000-1_1_AB

Pos	Part No	UN	Qty	Description	Page No
-					
010	3044001-0000		1	BRACKET	
360	350002-0006		2	PUSH-IN L-FITTING QSL-F-G1/8-6	
500	315105-0153		6	WASHER BRB 6,4X12 RFR	
510	312105-0378		2	SCREW M6S ISO 4014 M6X40 A480	
520	312605-0316		4	HEXAGON NUT, M6M M6 A280	
530	312105-0368		2	SCREW M6S ISO 4017 M6X16 A480	
540	315115-0153		2	WASHER PLAIN, TBRB 6,4/12 H=3	
550	350001-0002		1	PUSH-IN FITTING QS-F-M5-6	
560	350001-0007		1	PUSH-IN FITTING QS-F-G1/8-8	
U30K1420	90458-1202		1	VALVES 2X3/2, CLOSED	
U30R1422	90328-0029		1	SILENCER M5	
U30R1423	90328-0047		1	SILENCER G1/8"	
U30R1424	90328-0029		1	SILENCER M5	
U30R1425	90328-0047		1	SILENCER G1/8"	
U30U1420	90459-2591		1	SINGLE VALVE SUB-BASE CDSV5.0-AS-1/8	

Pos	Part No	UN	Qty	Description	Page No

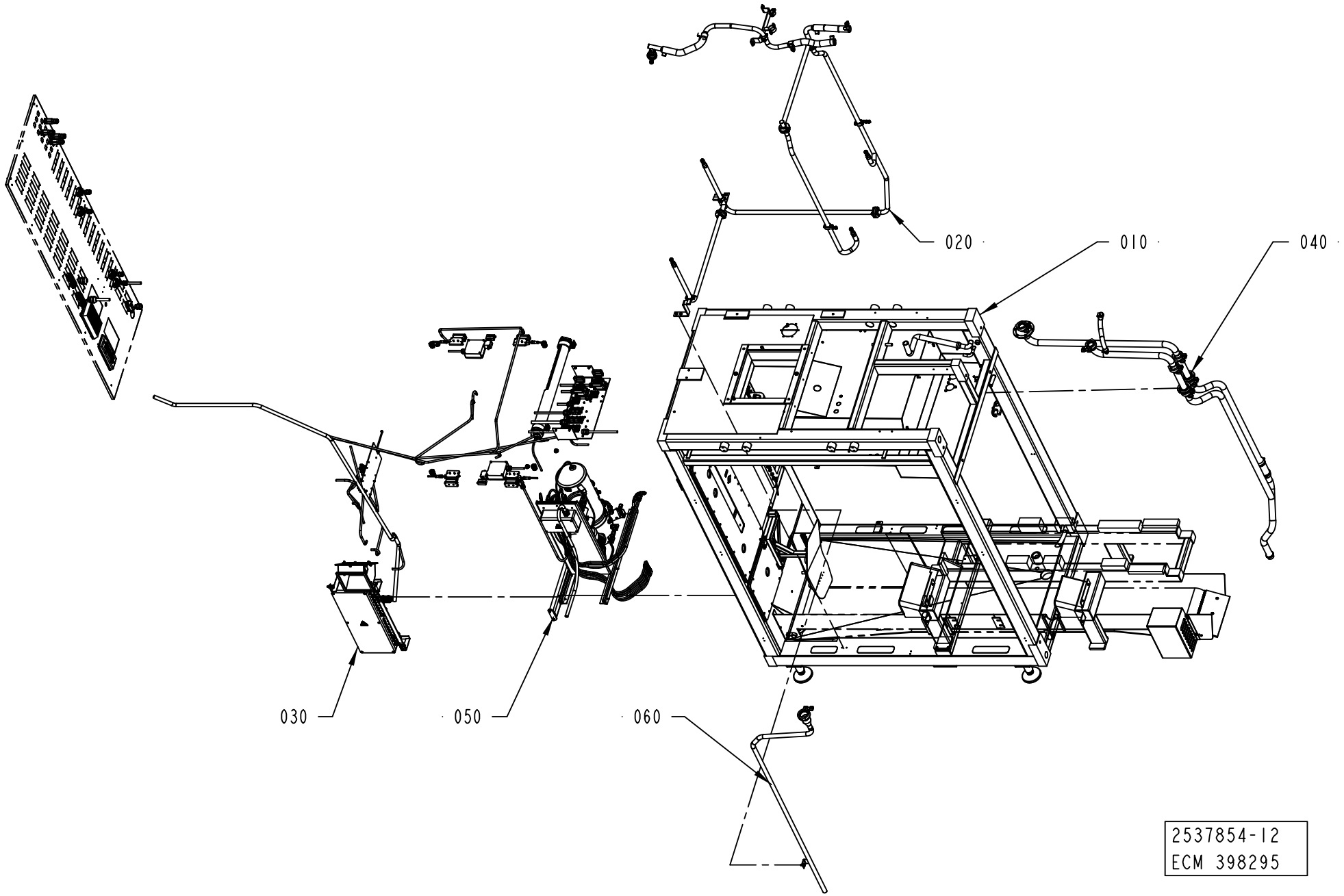
020
010
040
030
050
060
2537854-12
ECM 398295

ECM: 408925 - 20091002
Group number: 2537854-0300
Assembly Drawing: 2537854-12_1_AA

Pos	Part No	UN	Qty	Description	Page No
-					
010	2537855-0300		1	MACHINE BODY	**2-39, 2-41**
020	2537856-0200		1	CLEANING SYSTEM	**2-45**
030	2537857-0300		1	ELECTRIC EQUIPMENT	**2-47**
040	2537858-0200		1	DRAINING	**2-63**
050	2598203-0300		1	PUMP UNIT	**2-67**
060	2556538-0200		1	DRAIN PIPE	**2-75**

Pos	Part No	UN	Qty	Description	Page No

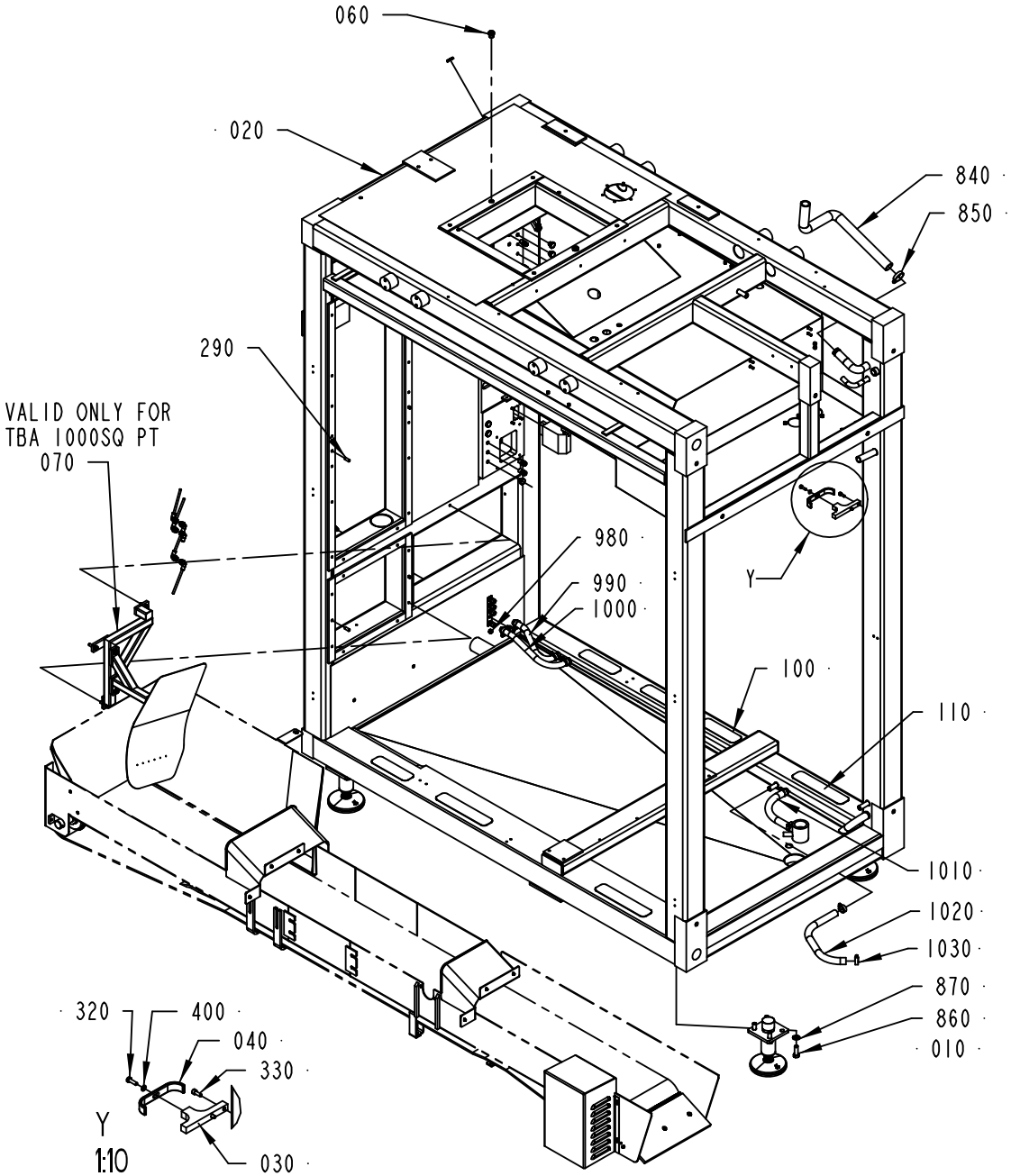

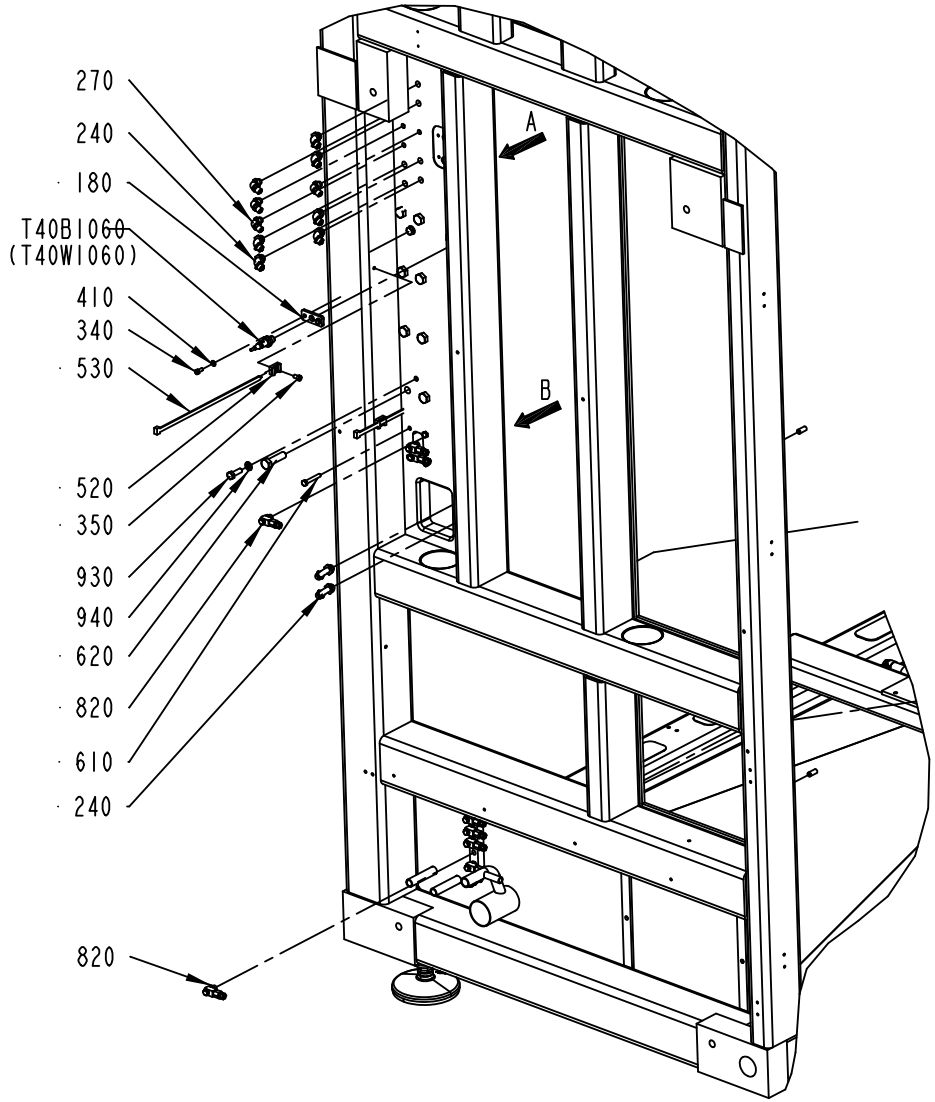

2537855-12
470120

ECM: 472107 - 20110101
Group number: 2537855-0300
Assembly Drawing: 2537855-12_1_AG

This list covers pages from 2-38 to 2-41

Pos	Part No	UN	Qty	Description	Page No
A3/SPEED TBA 1000SQ PT/SPEED					
070	3004391-0100		1	SUPPORT	**2-43**
Common Parts					
010	90600-0725		4	FOOT 32000N, 90600-0725	
020	3043272-0000		1	MACHINE BODY	
030	2510901-0000		1	BRACKET	
040	2537120-0000		1	BRACKET	
060	1490046-0000		2	PIN	
100	1103298-0000		4	NON-SKID	
110	1103300-0000		3	NON-SKID	
180	2948772-0000		1	PLATE	
190	2678297-0000		1	HINGE	
200	2514765-0000		1	SHAFT	
210	2514763-0000		1	PLATE	
220	2678298-0000		2	PIN	
230	2525642-0000		1	DISTRIBUTOR BLOCK	
240	342931-0122		8	ELBOW 90 COUPL.,EXT.THREAD 8/6-G1/4"	
250	342920-0122		6	STRAIGHT COUPLING,EXT.THREADED 8/6-R1/4"	
260	90600-0775		4	BALL VALVE G1/4, 406F-1/4"	
270	342931-0113		4	ELBOW 90 COUPL.,EXT.THREAD 6/4-G1/8"	
280	312309-0536		2	SCREW ISO4026 M12X30 A4	
290	311103-0401		4	PARALLEL PIN ISO 2338 8M6X20 A1	
300	342920-0113		4	STRAIGHT COUPLING,EXT.THREADED 6/4-R1/8"	
320	312105-0370		1	SCREW M6S ISO 4017 M6X20 A480	
330	312115-0368		2	SCREW ISO4762 M6X16 A4 80	
340	312105-0327		2	SCREW M6S ISO 4017 M5X12 A480	
350	312125-0364		4	SCREW ISO 1207 M6X10 A4	
380	311103-0405		2	PARALLEL PIN ISO 2338 8M6X30 A1	
400	315105-0153		1	WASHER BRB 6,4X12 RFR	
410	315105-0146		2	WASHER BRB 5,3X10 RFR	
520	352113-0204		4	ANCHOR PLATES FOR STRIPS, TYPE TM3S25-M	
530	352113-0103		4	CABLE TIE, BLACK 290X7,6 MM	
540	312105-0366		2	SCREW M6S ISO 4017 M6X12 A480	
610	312105-0378		4	SCREW M6S ISO 4014 M6X40 A480	
620	312105-0541		8	SCREW M6S ISO 4014 M12X45 A480	
650	90330-0026		5	PLUG, EXT. G-THREAD, G1/4	
820	90459-0843		8	CONN. BANJO, 6-G1/8	
830	90030-0184		5	CONN. STR., GE06LRED71	
840	90166-0158	MM	1000	HOSE	
850	342991-0103		1	HOSE CLIP,WORM DRIVE TYPE (15)-24	
860	312105-0538		16	SCREW M6S ISO 4017 M12X35 A480	
870	315105-0178		16	WASHER BRB 13X24 RFR	
890	90458-1307		1	BLIND PLUG CIRCULAR, M16X1,5 514GFK/216	
900	90458-0322		1	UT, M16X1,5	
930	312105-0453		2	SCREW M6S ISO 4017 M8X25 A480	
940	315105-0165		2	WASHER BRB 8,4X16 RFR	
950	342920-0114		1	STRAIGHT COUPLING,EXT.THREADED 6/4-R1/4"	
960	342960-0122		3	BULKHEAD COUPLING 8/6	
970	315300-0006	MM	150	TUBE, 8 MM PE BLACK	
980	342960-0112		1	BULKHEAD COUPLING 6/4	
990	90166-0087	MM	260	HOSE 15/23 REINF.PVC TRANSP.	
1000	90166-0087	MM	280	HOSE 15/23 REINF.PVC TRANSP.	
1010	90166-0087	MM	260	HOSE 15/23 REINF.PVC TRANSP.	
1020	90166-0087	MM	350	HOSE 15/23 REINF.PVC TRANSP.	
1030	342991-0103		8	HOSE CLIP,WORM DRIVE TYPE (15)-24	
1040	342936-0122		1	ELBOW 90 COUPL.,UNION 8/6	
T40B1060	90600-0461		1	INDUCTIVE SWITCH, E2A-M12KS02-WP-B1-TP5M	

Machine Type	Group Description	Used-In	Group Number	Page No

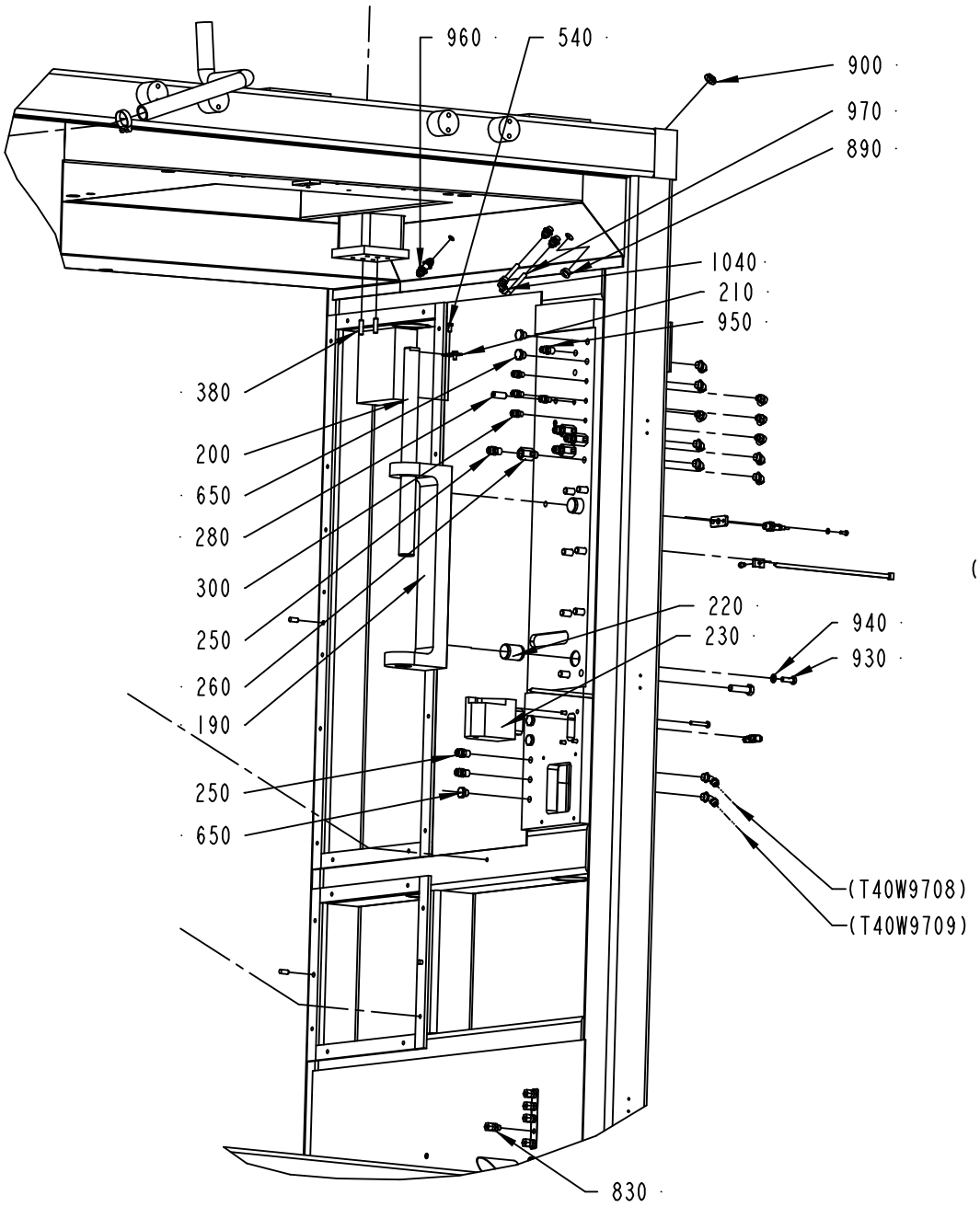

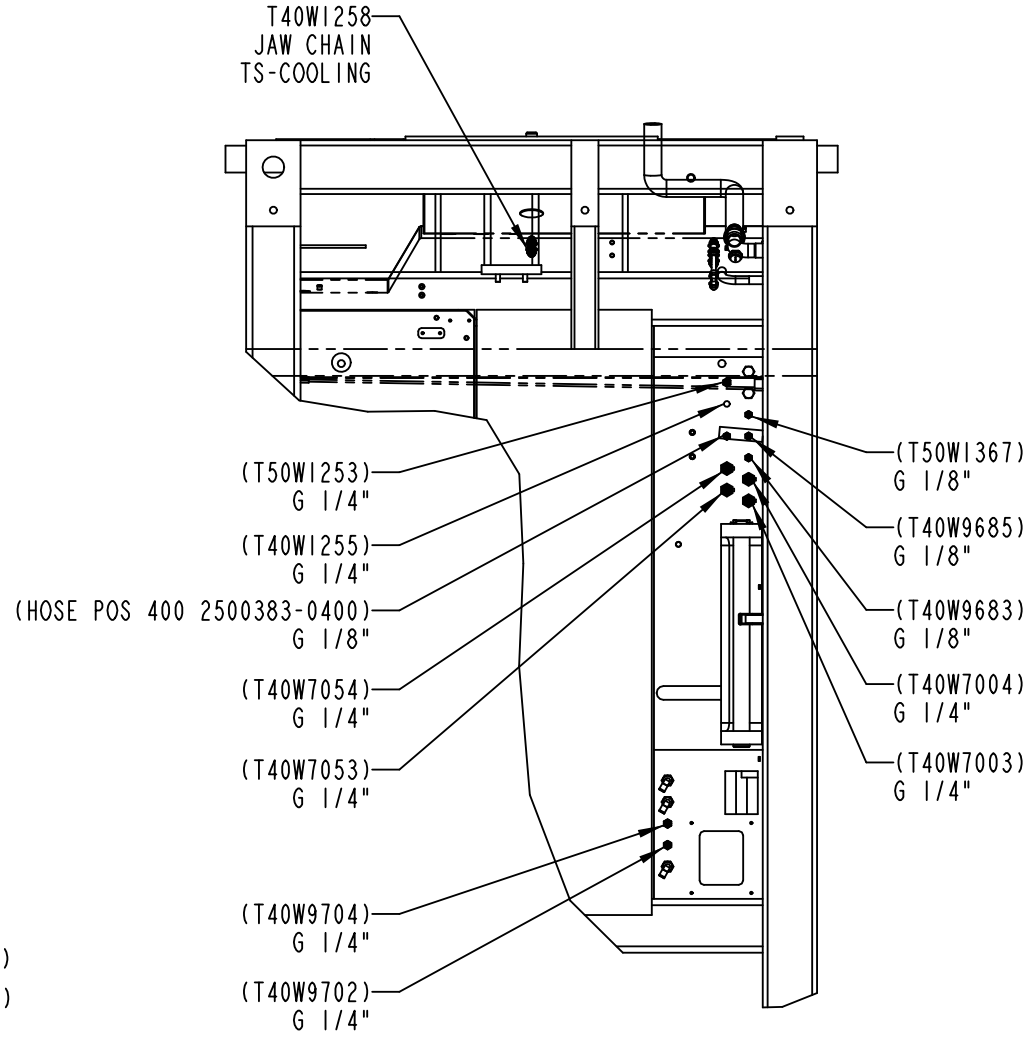

2537855-12
470120

ECM: 472107 - 20110101
Group number: 2537855-0300
Assembly Drawing: 2537855-12_2_AG

This list covers pages from 2-38 to 2-41

Pos	Part No	UN	Qty	Description	Page No
A3/SPEED TBA 1000SQ PT/SPEED					
070	3004391-0100		1	SUPPORT	**2-43**
Common Parts					
010	90600-0725		4	FOOT 32000N, 90600-0725	
020	3043272-0000		1	MACHINE BODY	
030	2510901-0000		1	BRACKET	
040	2537120-0000		1	BRACKET	
060	1490046-0000		2	PIN	
100	1103298-0000		4	NON-SKID	
110	1103300-0000		3	NON-SKID	
180	2948772-0000		1	PLATE	
190	2678297-0000		1	HINGE	
200	2514765-0000		1	SHAFT	
210	2514763-0000		1	PLATE	
220	2678298-0000		2	PIN	
230	2525642-0000		1	DISTRIBUTOR BLOCK	
240	342931-0122		8	ELBOW 90 COUPL.,EXT.THREAD 8/6-G1/4"	
250	342920-0122		6	STRAIGHT COUPLING,EXT.THREADED 8/6-R1/4"	
260	90600-0775		4	BALL VALVE G1/4, 406F-1/4"	
270	342931-0113		4	ELBOW 90 COUPL.,EXT.THREAD 6/4-G1/8"	
280	312309-0536		2	SCREW ISO4026 M12X30 A4	
290	311103-0401		4	PARALLEL PIN ISO 2338 8M6X20 A1	
300	342920-0113		4	STRAIGHT COUPLING,EXT.THREADED 6/4-R1/8"	
320	312105-0370		1	SCREW M6S ISO 4017 M6X20 A480	
330	312115-0368		2	SCREW ISO4762 M6X16 A4 80	
340	312105-0327		2	SCREW M6S ISO 4017 M5X12 A480	
350	312125-0364		4	SCREW ISO 1207 M6X10 A4	
380	311103-0405		2	PARALLEL PIN ISO 2338 8M6X30 A1	
400	315105-0153		1	WASHER BRB 6,4X12 RFR	
410	315105-0146		2	WASHER BRB 5,3X10 RFR	
520	352113-0204		4	ANCHOR PLATES FOR STRIPS, TYPE TM3S25-M	
530	352113-0103		4	CABLE TIE, BLACK 290X7,6 MM	
540	312105-0366		2	SCREW M6S ISO 4017 M6X12 A480	
610	312105-0378		4	SCREW M6S ISO 4014 M6X40 A480	
620	312105-0541		8	SCREW M6S ISO 4014 M12X45 A480	
650	90330-0026		5	PLUG, EXT. G-THREAD, G1/4	
820	90459-0843		8	CONN. BANJO, 6-G1/8	
830	90030-0184		5	CONN. STR., GE06LRED71	
840	90166-0158	MM	1000	HOSE	
850	342991-0103		1	HOSE CLIP,WORM DRIVE TYPE (15)-24	
860	312105-0538		16	SCREW M6S ISO 4017 M12X35 A480	
870	315105-0178		16	WASHER BRB 13X24 RFR	
890	90458-1307		1	BLIND PLUG CIRCULAR, M16X1,5 514GFK/216	
900	90458-0322		1	UT, M16X1,5	
930	312105-0453		2	SCREW M6S ISO 4017 M8X25 A480	
940	315105-0165		2	WASHER BRB 8,4X16 RFR	
950	342920-0114		1	STRAIGHT COUPLING,EXT.THREADED 6/4-R1/4"	
960	342960-0122		3	BULKHEAD COUPLING 8/6	
970	315300-0006	MM	150	TUBE, 8 MM PE BLACK	
980	342960-0112		1	BULKHEAD COUPLING 6/4	
990	90166-0087	MM	260	HOSE 15/23 REINF.PVC TRANSP.	
1000	90166-0087	MM	280	HOSE 15/23 REINF.PVC TRANSP.	
1010	90166-0087	MM	260	HOSE 15/23 REINF.PVC TRANSP.	
1020	90166-0087	MM	350	HOSE 15/23 REINF.PVC TRANSP.	
1030	342991-0103		8	HOSE CLIP,WORM DRIVE TYPE (15)-24	
1040	342936-0122		1	ELBOW 90 COUPL.,UNION 8/6	
T40B1060	90600-0461		1	INDUCTIVE SWITCH, E2A-M12KS02-WP-B1-TP5M	

Machine Type | Group Description | Used-In | Group Number | Page No

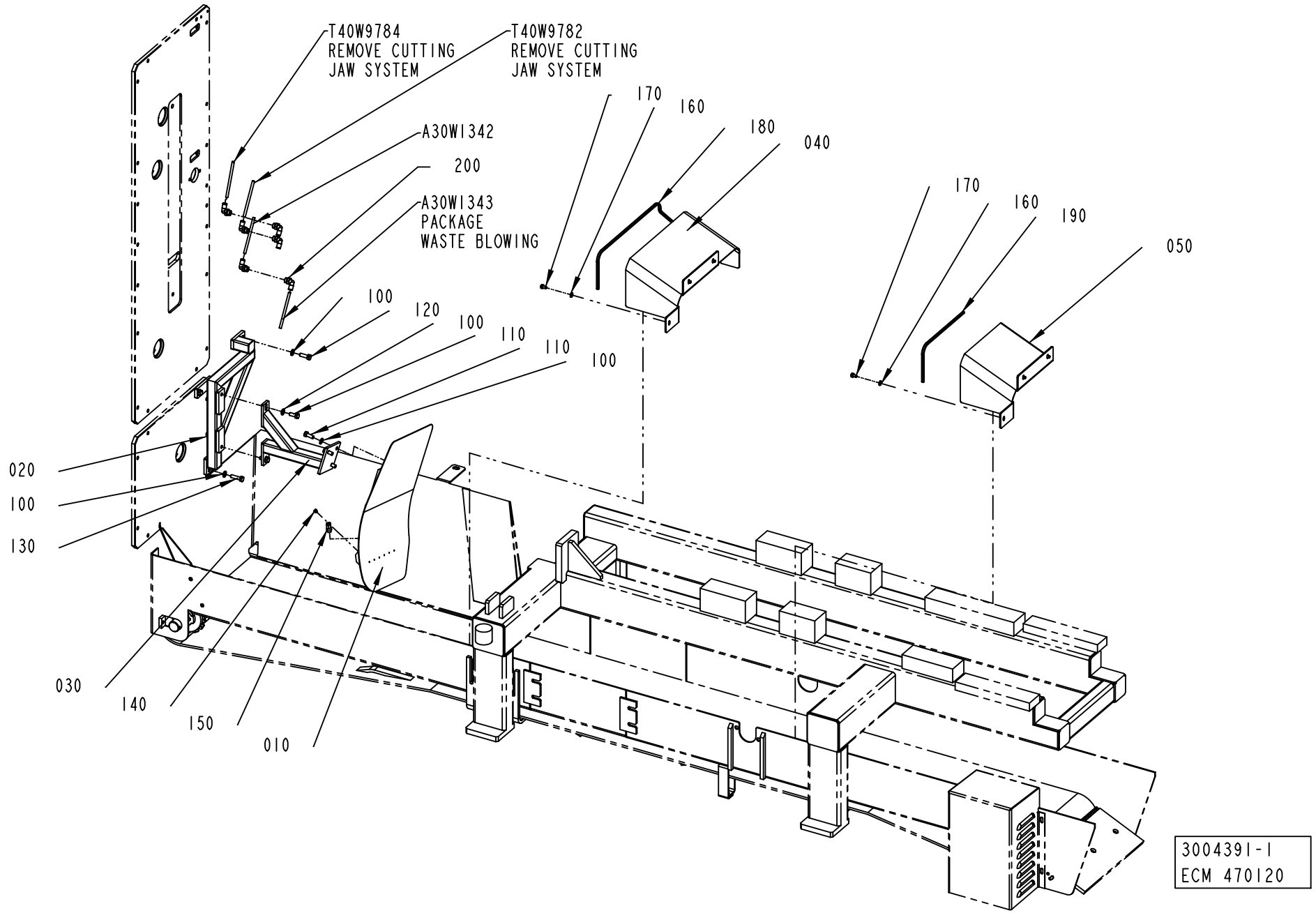
T40W9784
REMOVE CUTTING
JAW SYSTEM
T40W9782
REMOVE CUTTING
JAW SYSTEM
A30W1342
200
A30W1343
PACKAGE
WASTE BLOWING
170
160
180
040
170
160
190
050
100
120
100
110
110
100
020
100
130
030
140
150
010
3004391-1
ECM 470120

ECM: 472110 - 20110101
Group number: 3004391-0100
Assembly Drawing: 3004391-1_1_AB

Pos	Part No	UN	Qty	Description	Page No
-					
010	2997103-0000		1	SLIDE	
020	2997104-0000		1	SUPPORT	
030	2997105-0000		1	BRACKET	
040	3006595-0000		1	SLIDE	
050	3006639-0000		1	SLIDE	
100	315105-0165		8	WASHER BRB 8,4X16 RFR	
110	312105-0451		5	SCREW M6S ISO 4017 M8X20 A480	
120	312105-0453		1	SCREW M6S ISO 4017 M8X25 A480	
130	312105-0455		2	SCREW M6S ISO 4017 M8X30 A480	
140	342713-0208		7	PLUG, EXT. THREAD HEX. SOCKET. BPM05	
150	350001-0006		1	PUSH-IN FITTING QS-F-G1/8-6	
160	315105-0153		6	WASHER BRB 6,4X12 RFR	
170	312105-0364		6	SCREW M6S ISO 4017 M6X10 A480	
180	90143-0060	MM	600	EDGE STRIP 9,5X6,3MM BLACK PVC	
190	90143-0060	MM	400	EDGE STRIP 9,5X6,3MM BLACK PVC	
200	350002-0008		6	PUSH-IN L-FITTING QSL-F-G1/4-6	
A30W1342	315300-0001	MM	1200	TUBE, 6 MM PE BLUE	
A30W1343	315300-0001	MM	1000	TUBE, 6 MM PE BLUE	
T40W9782	315300-0001	MM	1200	TUBE, 6 MM PE BLUE	
T40W9784	315300-0001	MM	1200	TUBE, 6 MM PE BLUE	

Pos	Part No	UN	Qty	Description	Page No

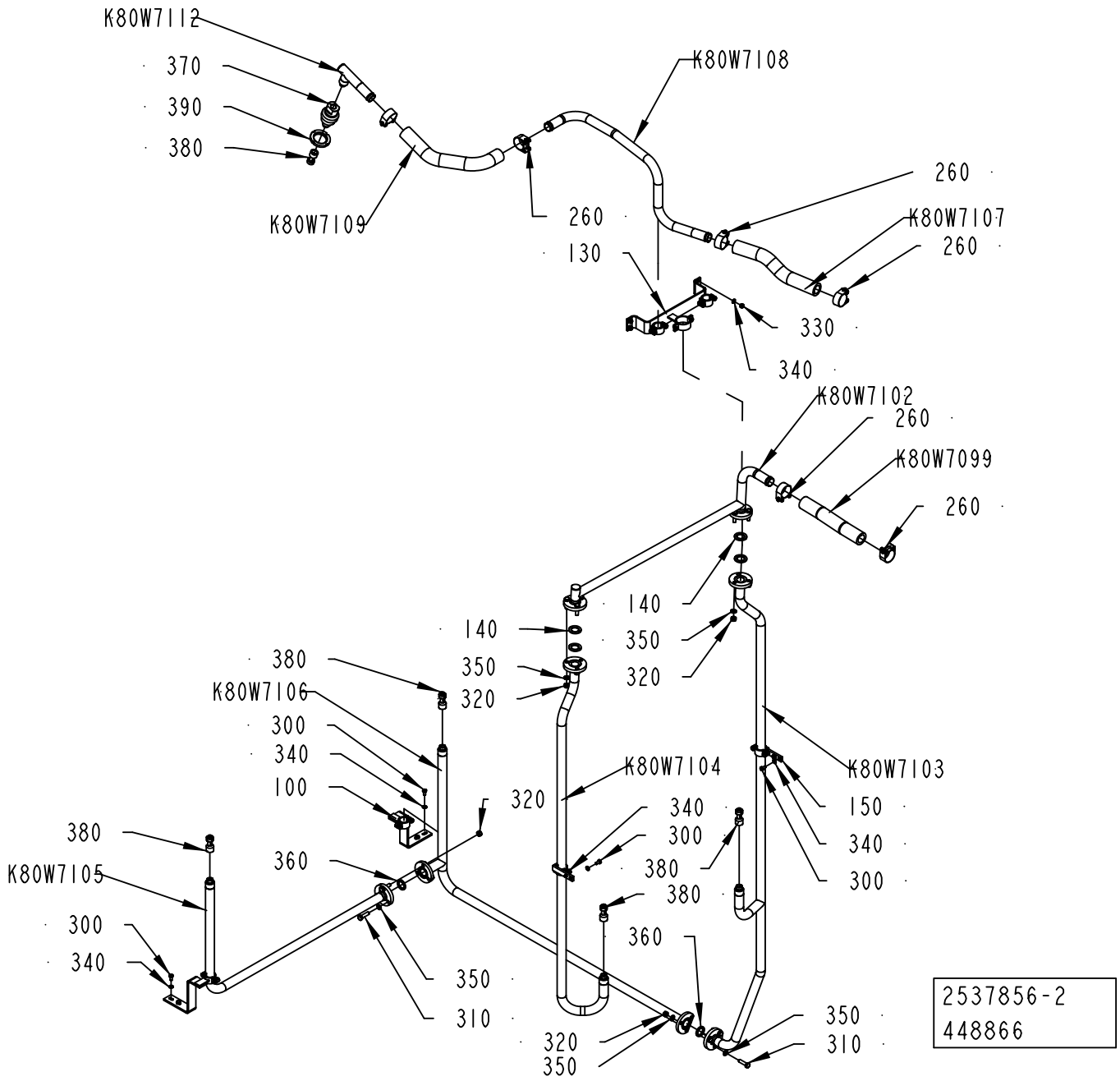
K80W7112
370
390
380
K80W7109
K80W7108
260
260
130
K80W7107
260
330
340
K80W7102
260
K80W7099
260
140
350
320
140
350
380
320
K80W7106
300
340
100
K80W7104
320
K80W7103
150
340
300
340
300
380
380
360
380
K80W7105
300
340
360
350
310
320
350
350
310
2537856-2
448866

ECM: 449656 - 20101001
Group number: 2537856-0200
Assembly Drawing: 2537856-2_1_AB

Pos	Part No	UN	Qty	Description	Page No
-					
100	2534819-0000		2	BRACKET	
130	2536055-0000		1	BRACKET	
140	1037443-0000		4	GASKET	
150	2510904-0000		2	HOLDER	
260	90600-7006		6	HOSE CLIP, 34 - 38 MM	
300	312105-0366		8	SCREW M6S ISO 4017 M6X12 A480	
310	312105-0455		6	SCREW M6S ISO 4017 M8X30 A480	
320	312605-0318		12	HEXAGON NUT, M6M M8 A280	
330	312812-0316		4	HEXAGON NUT, NY-LOCK M6 A480	
340	315105-0153		12	WASHER BRB 6,4X12 RFR	
350	315105-0165		18	WASHER BRB 8,4X16 RFR	
360	315229-0103		2	SQUARE RING, 23,1X30,1X3,7 MM 1" FDA	
370	2870893-0000		1	ADAPTER	
380	90600-2646		5	ROT.SPRAY NOZZLE, 599.186.1Y.AF.00.0	
390	2894048-0000		1	ROUND NUT	
K80W7099	90166-0233	MM	240	HOSE	
K80W7102	2534815-0000		1	PIPE	
K80W7103	2534811-0000		1	PIPE	
K80W7104	2534812-0000		1	PIPE	
K80W7105	2534817-0000		1	PIPE	
K80W7106	2534816-0000		1	PIPE	
K80W7107	90166-0233	MM	300	HOSE	
K80W7108	2897028-0000		1	PIPE	
K80W7109	90166-0233	MM	350	HOSE	
K80W7112	2510833-0000		1	PIPE	

Pos	Part No	UN	Qty	Description	Page No

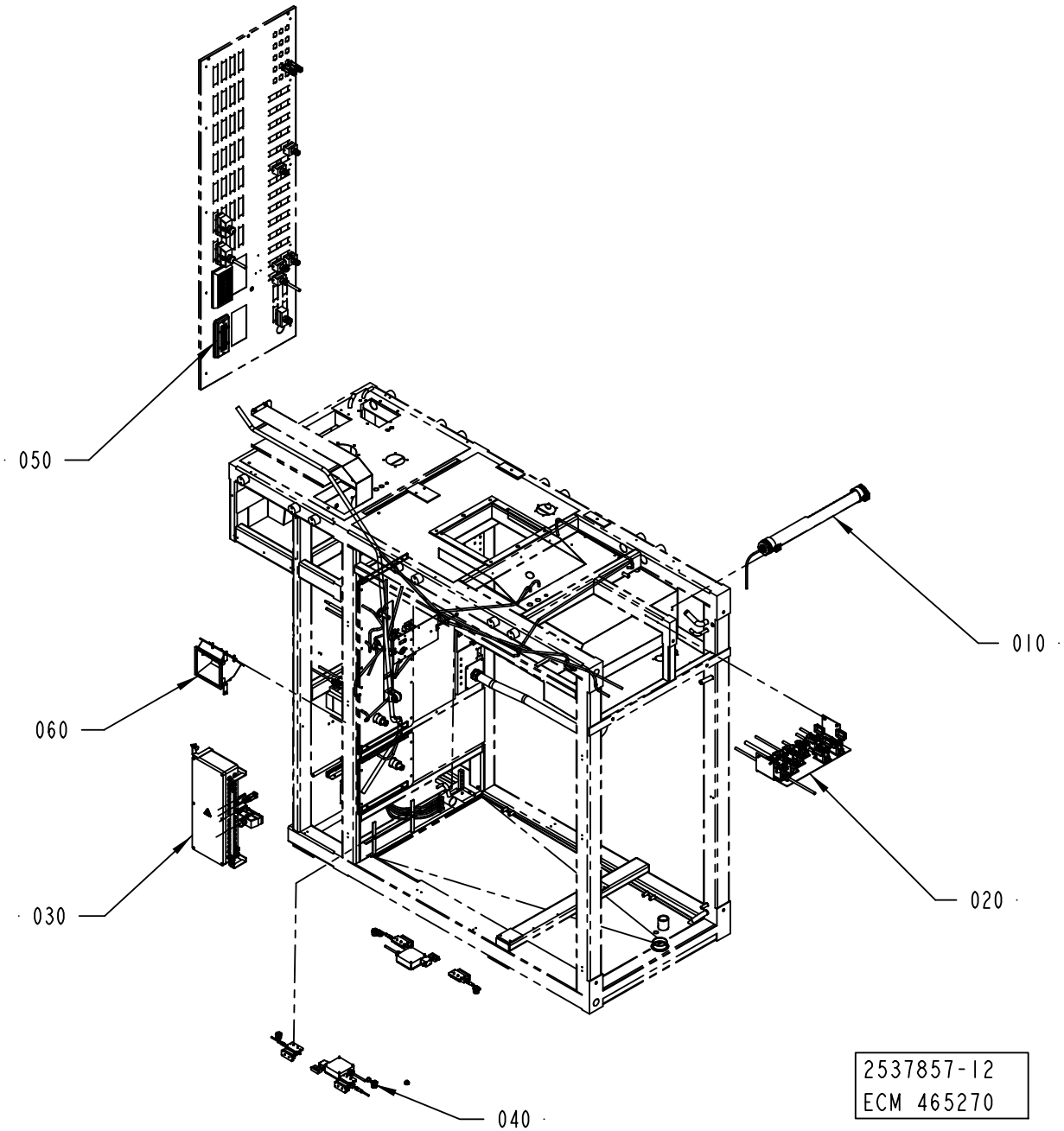
050
010
060
020
030
040
2537857-12
ECM 465270

ECM: 467508 - 20101002
Group number: 2537857-0300
Assembly Drawing: 2537857-12_1_AB

Pos	Part No	UN	Qty	Description	Page No
-					
010	2909295-0100		1	LIGHT FIXTURE	**2-49**
020	2506796-0200		1	CABLE CONNECTION	**2-51**
030	2785243-0200		1	CONNECTION BOX	**2-53**
040	2529117-0400		1	DOOR SAFETY SWITCH	**2-57**
050	2546232-0300		1	CABLE HARNESS	**2-59**
060	2994296-0100		1	REAR MODULE	**2-61**

Pos	Part No	UN	Qty	Description	Page No

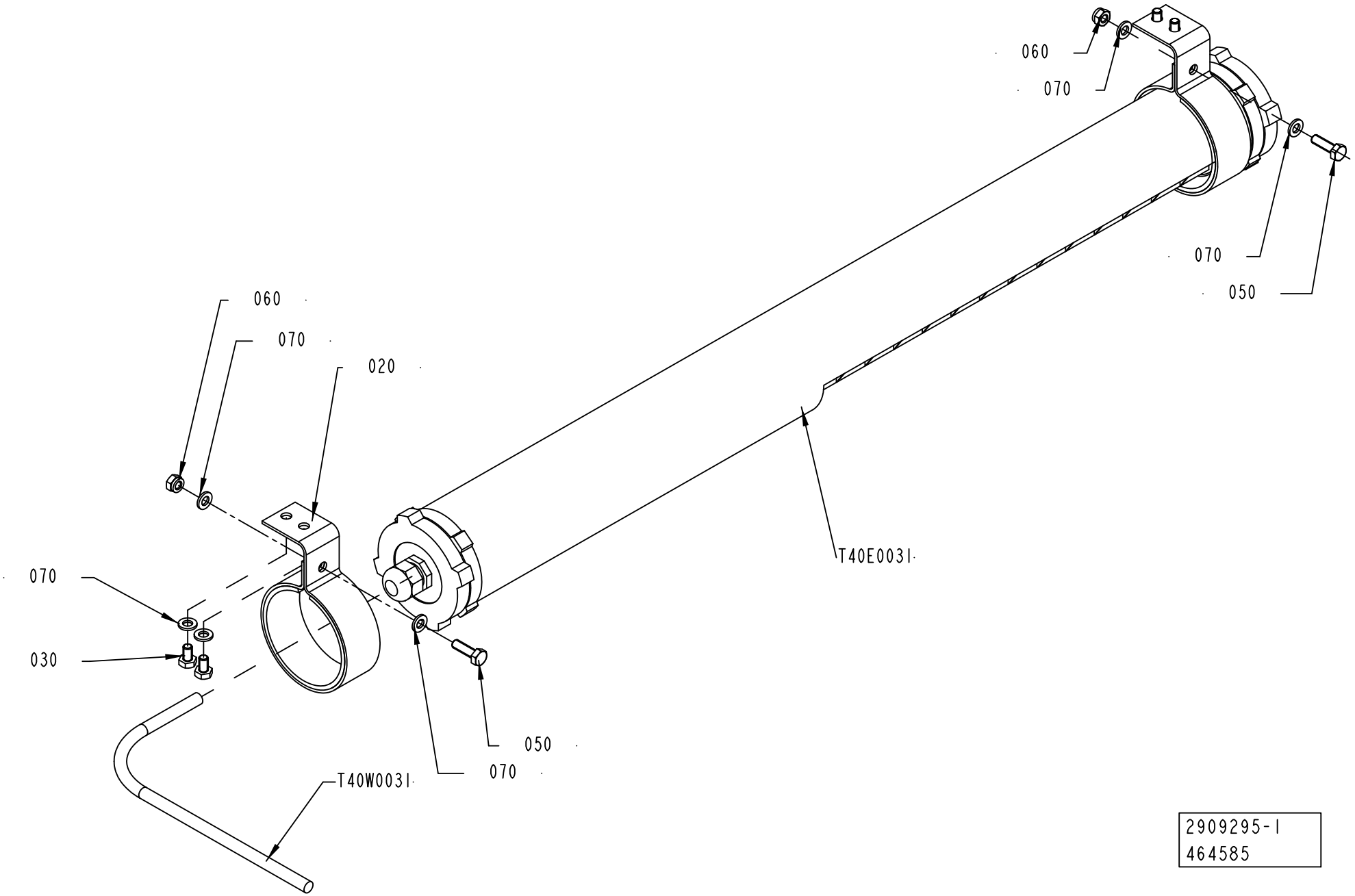

2909295-1
464585

ECM: 467435 - 20101002
Group number: 2909295-0100
Assembly Drawing: 2909295-1_1_AB

Pos	Part No	UN	Qty	Description	Page No
CE					
T40E0031	90459-1000		1	LIGHT FIXTURE, RL 70CV-136/230V 50HZ	
UL, CSA					
T40E0031	3111146-0000		1	LIGHT FIXTURE	
	90459-1001		*1*	*FLUORESCENT TUBE, DULUX L 36W/21-840*	
Common Parts					
020	1140129-0000		2	HOLDER	
030	312105-0364		4	SCREW M6S ISO 4017 M6X10 A480	
050	312105-0370		2	SCREW M6S ISO 4017 M6X20 A480	
060	312812-0316		2	HEXAGON NUT, NY-LOCK M6 A480	
070	315105-0153		8	WASHER BRB 6,4X12 RFR	
T40W0031	351150-0412	MM	6000	CABLE OLFLEX 3X1,5 MM2 LIGHT/GREY	

Pos	Part No	UN	Qty	Description	Page No

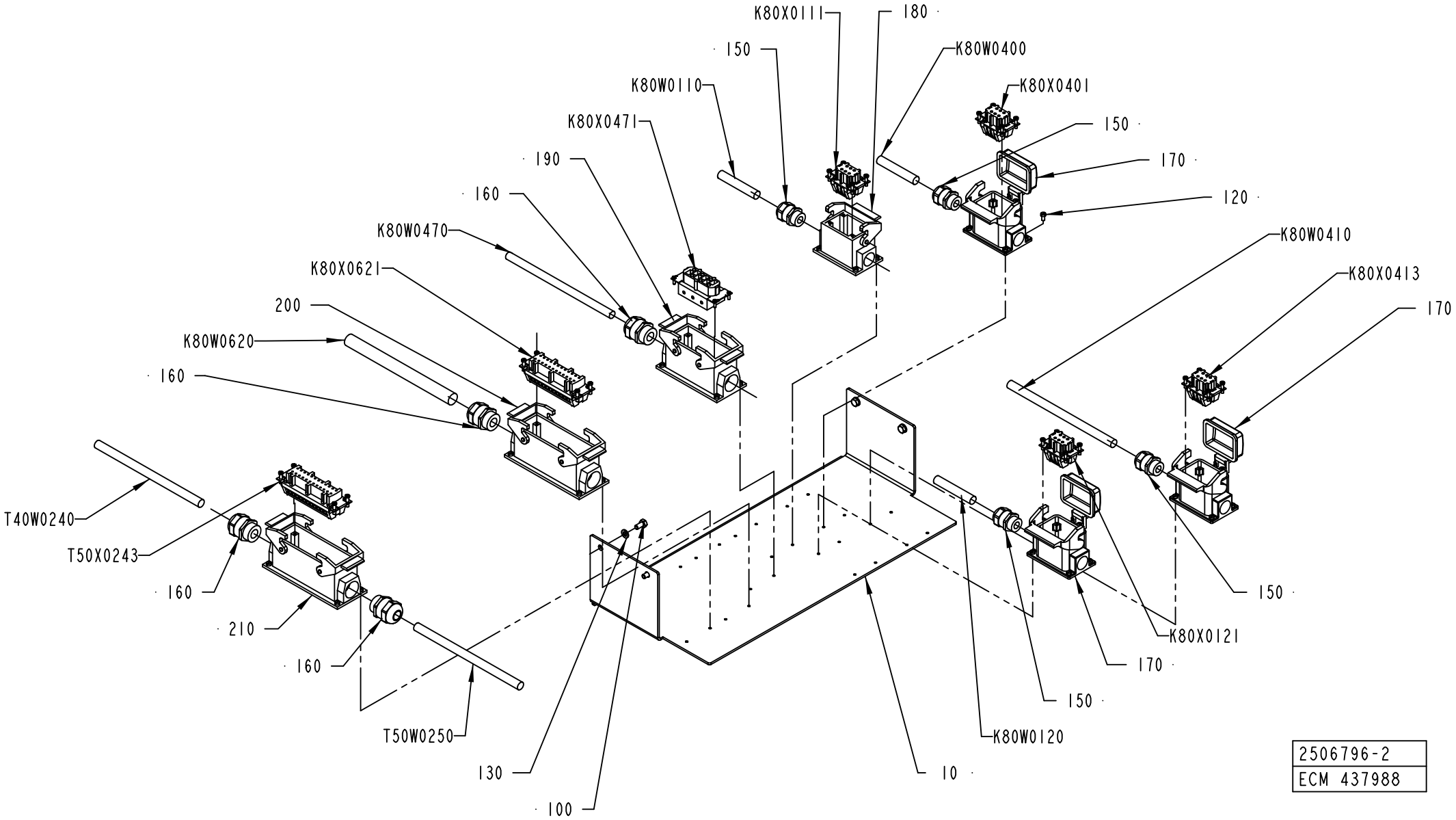
K80X0111
180
150
K80W0400
K80W0110
K80X0401
K80X0471
150
190
170
160
120
K80W0470
K80W0410
K80X0621
K80X0413
200
170
K80W0620
160
T40W0240
T50X0243
150
160
210
K80X0121
160
170
150
T50W0250
K80W0120
130
10
100
2506796-2
ECM 437988

ECM: 437988 - 20100702
Group number: 2506796-0200
Assembly Drawing: 2506796-2_1_AC

Pos	Part No	UN	Qty	Description	Page No
-					
010	2792850-0000		1	CANTILEVER	
100	312105-0366		4	SCREW M6S ISO 4017 M6X12 A480	
120	312125-0287		28	SCREW ISO 1207 M4X8 A4	
130	315105-0153		4	WASHER BRB 6,4X12 RFR	
150	90458-0307		4	CABLE GLAND, M20X1,5, NO.5311 1020	
160	90458-0308		4	CABLE GLAND, M25X1,5, NO.5311 1030	
170	90459-1461		3	HOUSING HAN 6 E 19 30 006 1255	
180	90459-6640		1	HOUSING 6B SURF MOUNT, 19 30 006 1250	
190	90459-6642		1	HOUSING 16B SURF MOUNT, 19 30 016 1231	
200	90459-6643		1	HOUSING 24B SURF MOUNT, 19 30 024 1231	
210	90459-7432		1	HOUSING 24B SURF MOUNT, 19 30 024 1271	
K80W0110	351150-0413	M	7	CABLE OLFLEX 4GX1,5 MM2 LIGHT/GREY	
K80W0120	351150-0413	M	7	CABLE OLFLEX 4GX1,5 MM2 LIGHT/GREY	
K80W0400	351150-0413	M	6.5	CABLE OLFLEX 4GX1,5 MM2 LIGHT/GREY	
K80W0410	351150-0414	M	6.5	CABLE OLFLEX 5X1,5 MM2 LIGHT/GREY	
K80W0470	351150-0166	M	4.5	CABLE OLFLEX 4X4 MM2 LIGHT/GREY	
K80W0620	351150-0425	M	6	CABLE OLFLEX 25X0,75 MM2 LIGHT/GREY	
K80X0111	90110-0053		1	FEMALE INSERT HAN 6 E 09 33 006 2701	
K80X0121	90110-0053		1	FEMALE INSERT HAN 6 E 09 33 006 2701	
K80X0401	90110-0053		1	FEMALE INSERT HAN 6 E 09 33 006 2701	
K80X0413	90110-0053		1	FEMALE INSERT HAN 6 E 09 33 006 2701	
K80X0471	90110-0055		1	FEMALE INSERT HAN 6 HSB 09 31 006 2701	
K80X0621	90110-0057		1	FEMALE INSERT HAN 24 E 09 33 002 4201	
T40W0240	351150-0419	M	6.5	CABLE OLFLEX 5X2,5 MM2 LIGHT/GREY	
T40W0250	351150-0419	M	6.5	CABLE OLFLEX 5X2,5 MM2 LIGHT/GREY	
T50X0243	90110-0057		1	FEMALE INSERT HAN 24 E 09 33 002 4201	

Pos	Part No	UN	Qty	Description	Page No

Machine Type | Group Description | Used-In | Group Number | Page No

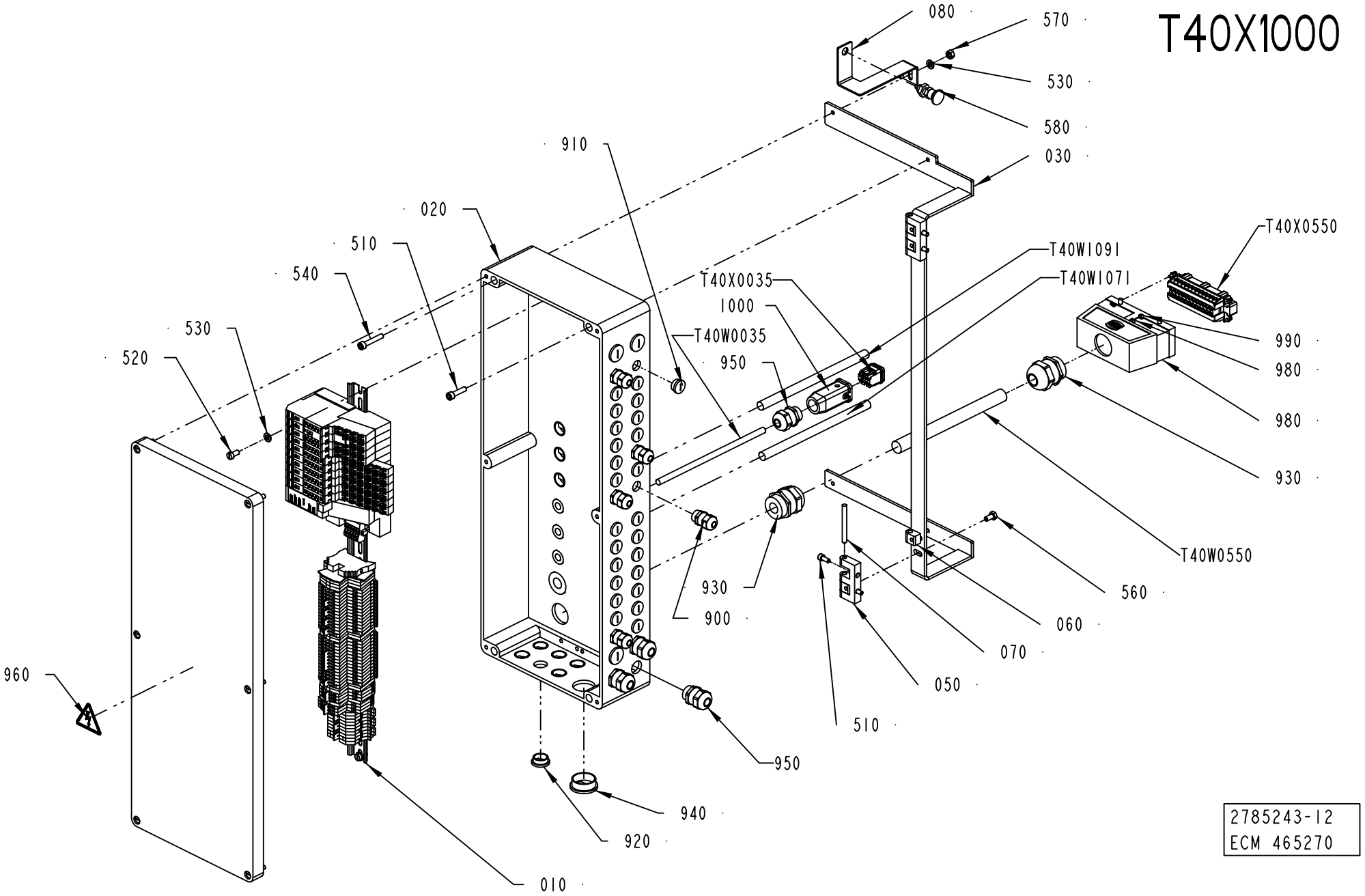
T40X1000
080
570
530
580
030
910
020
510
540
530
520
T40X0035
1000
T40W0035
950
T40W1091
T40W1071
T40X0550
990
980
980
930
T40W0550
560
060
070
050
510
930
900
950
940
920
010
960
2785243-12
ECM 465270

ECM: 467519 - 20101002
Group number: 2785243-0200
Assembly Drawing: 2785243-12_1_AB

Pos	Part No	UN	Qty	Description	Page No
A3/SPEED ANSI (See drawing on page: 2-52)					
030	3122582-0000		1	BRACKET	
050	1035792-0000		2	E-HINGE	
060	1129770-0000		4	BLOCKING PIECE	
070	988685-0000		2	PIN	
080	3123380-0000		1	SUPPORT PLATE	
510	312115-0372		3	SCREW ISO4762 M6X25 A4 80	
530	315105-0153		3	WASHER BRB 6,4X12 RFR	
540	312115-0376		1	SCREW ISO4762 M6X35 A4 80	
550	312115-0327		4	SCREW ISO4762 M5X12 A4 80	
560	312105-0366		4	SCREW M6S ISO 4017 M6X12 A480	
570	312605-0316		1	HEXAGON NUT, M6M M6 A280	
580	90051-0112		1	LOCK KNOB, NO. GN 617 NIK5	
900	90458-0306		5	CABLE GLAND, M16X1,5, NO.5311 1010	
910	90458-1307		25	BLIND PLUG CIRCULAR, M16X1,5 514GFK/216	
920	90458-1308		12	BLIND PLUG CIRCULAR, M20X1,5 514GFK/220	
930	90458-0309		3	CABLE GLAND, M32X1,5, NO.5311 1040	
940	90458-1310		1	BLIND PLUG CIRCULAR, M32X1,5 514GFK/232	
950	90458-0307		7	CABLE GLAND, M20X1,5, NO.5311 1020	
960	359715-0100		1	WARNING SIGN ANSI (H), ELECTRIC SHOCK	
T40W1071	351150-0407	M	3	CABLE OLFLEX 12X0,75 MM2 LIGHT/GREY	
T40W1091	351150-0407	M	3	CABLE OLFLEX 12X0,75 MM2 LIGHT/GREY	
A3/SPEED ISO (See drawing on page: 2-52)					
030	3122582-0000		1	BRACKET	
050	1035792-0000		2	E-HINGE	
060	1129770-0000		4	BLOCKING PIECE	
070	988685-0000		2	PIN	
080	3123380-0000		1	SUPPORT PLATE	
510	312115-0372		3	SCREW ISO4762 M6X25 A4 80	
530	315105-0153		3	WASHER BRB 6,4X12 RFR	
540	312115-0376		1	SCREW ISO4762 M6X35 A4 80	
550	312115-0327		4	SCREW ISO4762 M5X12 A4 80	
560	312105-0366		4	SCREW M6S ISO 4017 M6X12 A480	
570	312605-0316		1	HEXAGON NUT, M6M M6 A280	
580	90051-0112		1	LOCK KNOB, NO. GN 617 NIK5	
900	90458-0306		5	CABLE GLAND, M16X1,5, NO.5311 1010	
910	90458-1307		25	BLIND PLUG CIRCULAR, M16X1,5 514GFK/216	
920	90458-1308		12	BLIND PLUG CIRCULAR, M20X1,5 514GFK/220	
930	90458-0309		3	CABLE GLAND, M32X1,5, NO.5311 1040	
940	90458-1310		1	BLIND PLUG CIRCULAR, M32X1,5 514GFK/232	
950	90458-0307		7	CABLE GLAND, M20X1,5, NO.5311 1020	
960	359705-0015		1	WARNING SIGN ISO, RISK OF ELECTRIC SHOCK	
T40W1071	351150-0407	M	3	CABLE OLFLEX 12X0,75 MM2 LIGHT/GREY	
T40W1091	351150-0407	M	3	CABLE OLFLEX 12X0,75 MM2 LIGHT/GREY	
Common Parts					
010	2701232-0200		1	TERMINAL BLOCK	**2-55**
020	2785236-0000		1	CONNECTION BOX	
520	312125-0366		2	SCREW ISO 1207 M6X12 A4	
970	90459-6636		1	HOOD 24 B TOP ENTRY, 19 30 024 0427	
1000	90459-3080		1	HOOD HAN-BRID 3A 19 20 003 1443	
T40W0035	351150-0412	M	7.5	CABLE OLFLEX 3X1,5 MM2 LIGHT/GREY	
T40W0550	351150-0425	M	6.5	CABLE OLFLEX 25X0,75 MM2 LIGHT/GREY	
T40X0030	90459-6821		1	MALE INSERT HAN 4A, 09 20 004 2611	
T40X0550	90110-0056		1	MALE INSERT HAN 24 E 09 33 024 2601	

Machine Type	Group Description	Used-In	Group Number	Page No

T40X1000

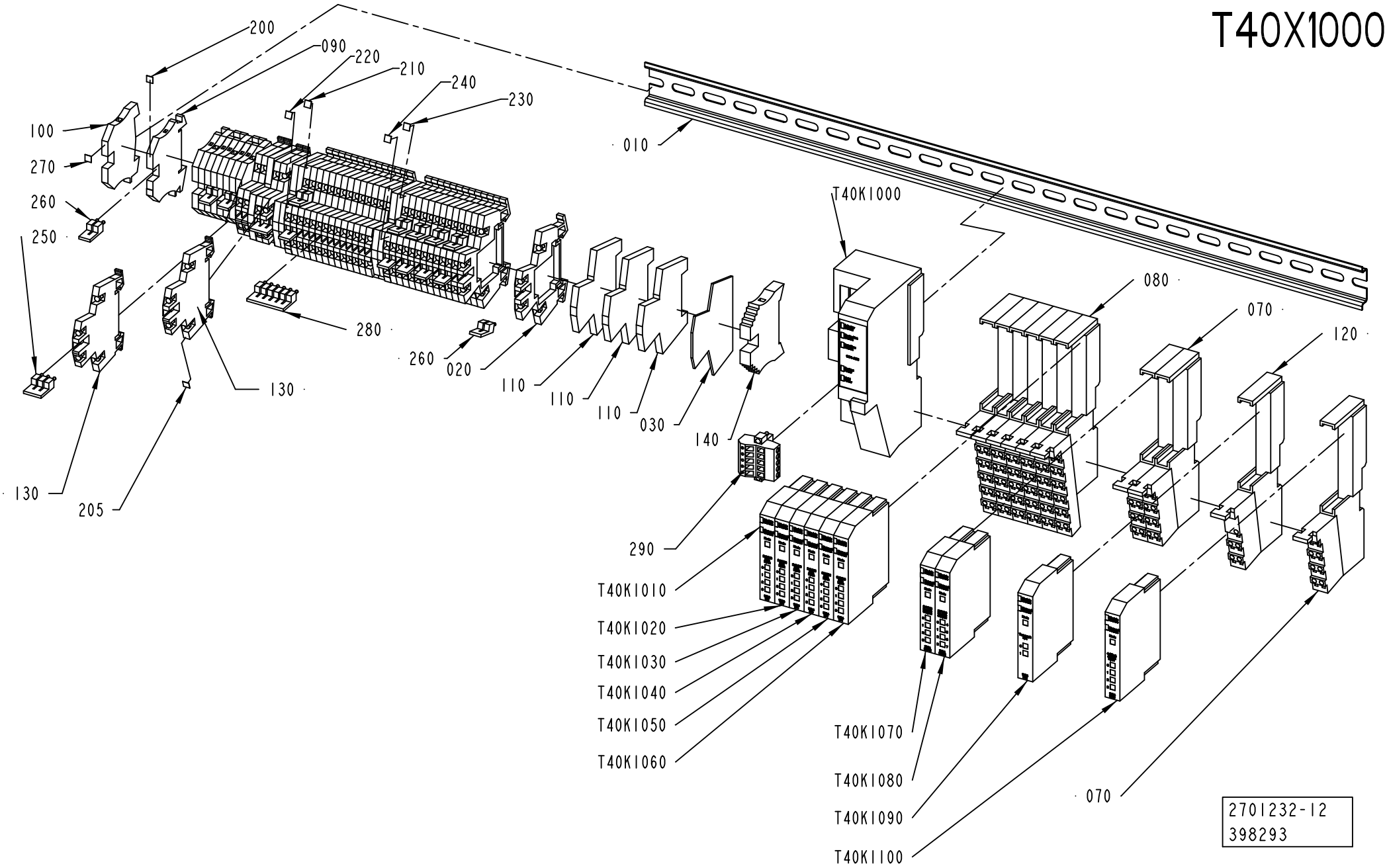
200
090
220
210
240
230
100
270
260
250
010
T40K1000
080
070
120
280
260
020
110
110
110
030
140
130
130
205
290
T40K1010
T40K1020
T40K1030
T40K1040
T40K1050
T40K1060
T40K1070
T40K1080
T40K1090
T40K1100
070
2701232-12
398293

ECM: 398293 - 20100702
Group number: 2701232-0200
Assembly Drawing: 2701232-12_1_AA

Pos	Part No	UN	Qty	Description	Page No
A3/SPEED					
030	90077-0114		1	END PLATE, WAP/WDK 2,5	
090	353021-0212		6	FEED THROUGH TERMINAL, 10200.0	
100	353024-0204		4	EARTH TERMINAL WPE 2,5	
230	359011-0811		2	MARKING, DEK 5 FW 201-250	
260	353034-0030		14	BRIDGE CONNECTOR WQV 2,5/10	
290	90459-5574		1	CONNECTOR, 1787-PLUG10R	
Common Parts					
010	1347878-0000		1	RAIL	
020	90077-0113		28	TERMINAL BLOCK WDK 2.5	
070	90459-2526		3	REMOTE I/O BASE MODULE 8 POINTS, 1734-TB	
080	90459-2527		6	REMOTE I/O BASE MODULE 12 POINTS	
110	353024-0212		8	EARTH TERMINAL WDK 2,5 PE	
120	90459-2528		1	REMOTE I/O BASE MODULE FOR THERMOCOUPLE	
130	90459-5253		6	TERMINAL BLOCK WDK 2,5 V	
140	353031-0203		1	END SUPPORT, WEW 35/2	
200	359011-0807		2	MARKING, DEK 5 FW 1-50	
205	359011-0808		1	MARKING, DEK 5FW 51-100	
210	359011-0809		2	MARKING, DEK 5 FW 101-150	
220	359011-0810		2	MARKING, DEK 5 FW 151-200	
240	359011-0812		2	MARKING, DEK 5FW 251-300	
250	353034-0030		2	BRIDGE CONNECTOR WQV 2,5/10	
270	359011-0819		1	MARKING, EARTH, DEK 5 GW ERDE I.KR.	
280	353034-0030		1	BRIDGE CONNECTOR WQV 2,5/10	
T40K1000	90459-2494		1	DEVICENET I/O ADAPTER MODULE, 1734-ADN	
T40K1010	90459-2503		1	DIGITAL INPUT 4 PTS SINK, 1734-IB4	
T40K1020	90459-2503		1	DIGITAL INPUT 4 PTS SINK, 1734-IB4	
T40K1030	90459-2503		1	DIGITAL INPUT 4 PTS SINK, 1734-IB4	
T40K1040	90459-2503		1	DIGITAL INPUT 4 PTS SINK, 1734-IB4	
T40K1050	90459-2503		1	DIGITAL INPUT 4 PTS SINK, 1734-IB4	
T40K1060	90459-2503		1	DIGITAL INPUT 4 PTS SINK, 1734-IB4	
T40K1070	90459-2505		1	DIGITAL OUTPUT 4 PTS, 1734-OB4E	
T40K1080	90459-6560		1	DIGITAL OUTPUT 8 PTS, 1734-OB8E/C	
T40K1090	90459-2512		1	REMOTE I/O THERMOCOUPLE INPUT 2 PTS	
T40K1100	90459-2509		1	REMOTE I/O ANALOG INPUT CURRENT 2 PTS	

Pos	Part No	UN	Qty	Description	Page No

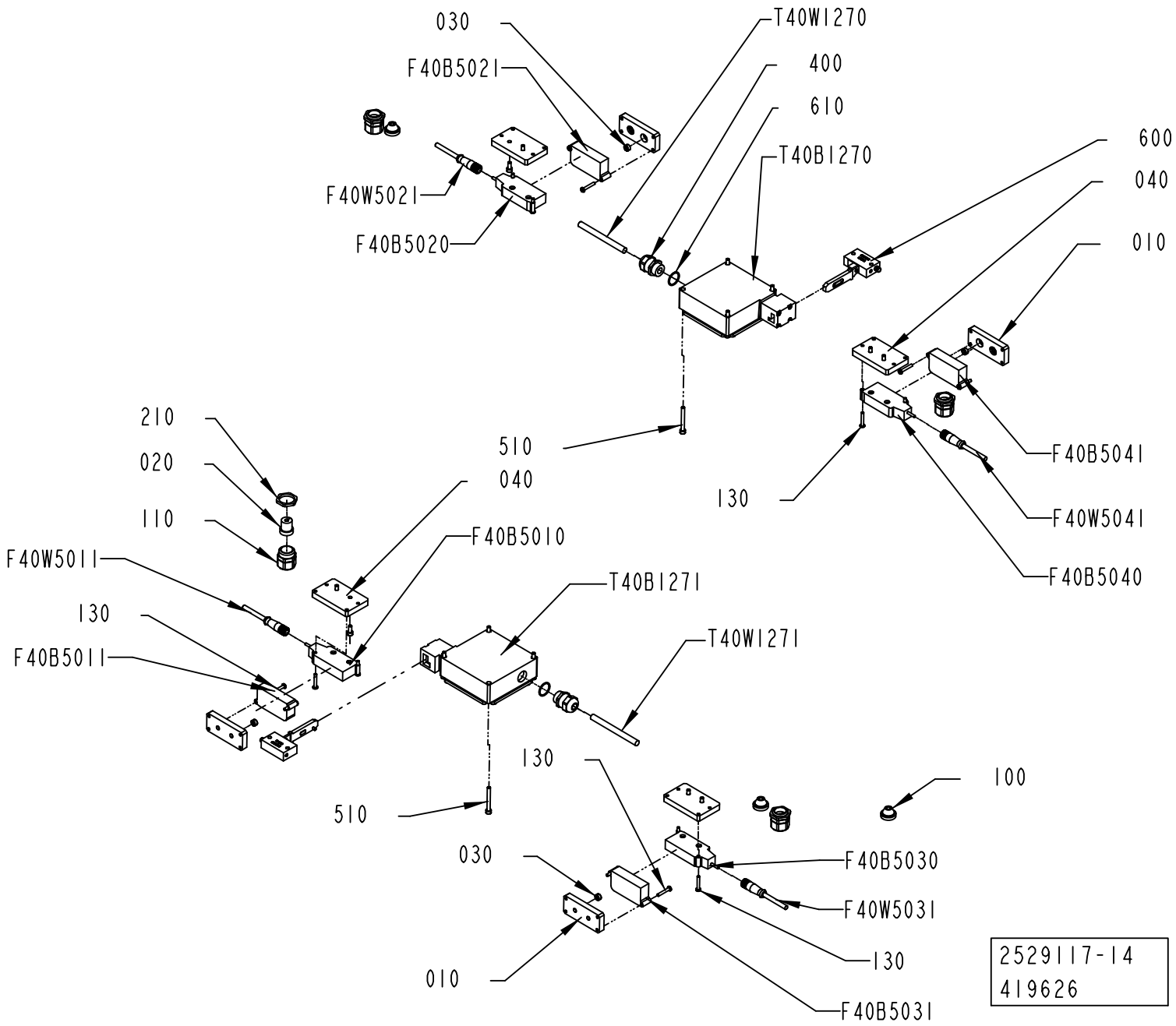
030
F40B5021
T40W1270
400
610
T40B1270
600
040
010
F40W5021
F40B5020
F40B5041
F40W5041
F40B5040
130
210
020
110
F40W5011
F40B5011
040
F40B5010
510
T40B1271
T40W1271
130
510
030
F40B5030
F40W5031
130
F40B5031
010
100
2529117-14
419626

ECM: 419626 - 20100702
Group number: 2529117-0400
Assembly Drawing: 2529117-14_1_AB

Pos	Part No	UN	Qty	Description	Page No
A3/SPEED					
040	3043268-0000		4	PLATE	
100	90015-0023		3	LEAD-IN, TET7-10, E-1458019	
210	353250-0025		4	GLAND, LOCK NUT M25X1,5	
Common Parts					
010	3031346-0000		4	PLATE	
020	3032222-0000		4	INSERT	
030	575034-0000		8	ROUND NUT	
110	90458-0407		4	GLAND W/O INSERT M25 NORMAL	
130	90459-4165		16	SAFETY SCREW SM4X25, 20-053-43	
200	312115-0327		8	SCREW ISO4762 M5X12 A4 80	
400	90458-0307		2	CABLE GLAND, M20X1,5, NO.5311 1020	
510	312115-0340		8	SCREW ISO4762 M5X45 A4 80	
600	90600-5274		2	ACTUATOR SAFETY SWITCH, 103845	
610	315206-0707		2	O-RING 20,35X1,78 MM	
F40B5010	90459-6961		1	SAFETY SENSOR, NON CONT. ADAM-E M12 0,5M	
F40B5011	90459-4089		1	SAFETY SENSOR NON-CONTACT EVA E	
F40B5020	90459-6961		1	SAFETY SENSOR, NON CONT. ADAM-E M12 0,5M	
F40B5021	90459-4089		1	SAFETY SENSOR NON-CONTACT EVA E	
F40B5030	90459-6961		1	SAFETY SENSOR, NON CONT. ADAM-E M12 0,5M	
F40B5031	90459-4089		1	SAFETY SENSOR NON-CONTACT EVA E	
F40B5040	90459-6961		1	SAFETY SENSOR, NON CONT. ADAM-E M12 0,5M	
F40B5041	90459-4089		1	SAFETY SENSOR NON-CONTACT EVA E	
F40W5011	90459-4876		1	FOCUS JUMPER CABLE M12 5P 3M, 20-056-21	
F40W5021	90459-4876		1	FOCUS JUMPER CABLE M12 5P 3M, 20-056-21	
F40W5031	90459-4876		1	FOCUS JUMPER CABLE M12 5P 3M, 20-056-21	
F40W5041	90459-4876		1	FOCUS JUMPER CABLE M12 5P 3M, 20-056-21	
T40B1270	90457-0196		1	LOCKABLE SAFETY GUARD TZ2RE024M-RC1635	
T40B1271	90457-0196		1	LOCKABLE SAFETY GUARD TZ2RE024M-RC1635	
T40W1270	351150-0406	MM	6500	CABLE OLFLEX 7X0,75 MM2 LIGHT/GREY	
T40W1271	351150-0406	MM	7500	CABLE OLFLEX 7X0,75 MM2 LIGHT/GREY	

Pos	Part No	UN	Qty	Description	Page No

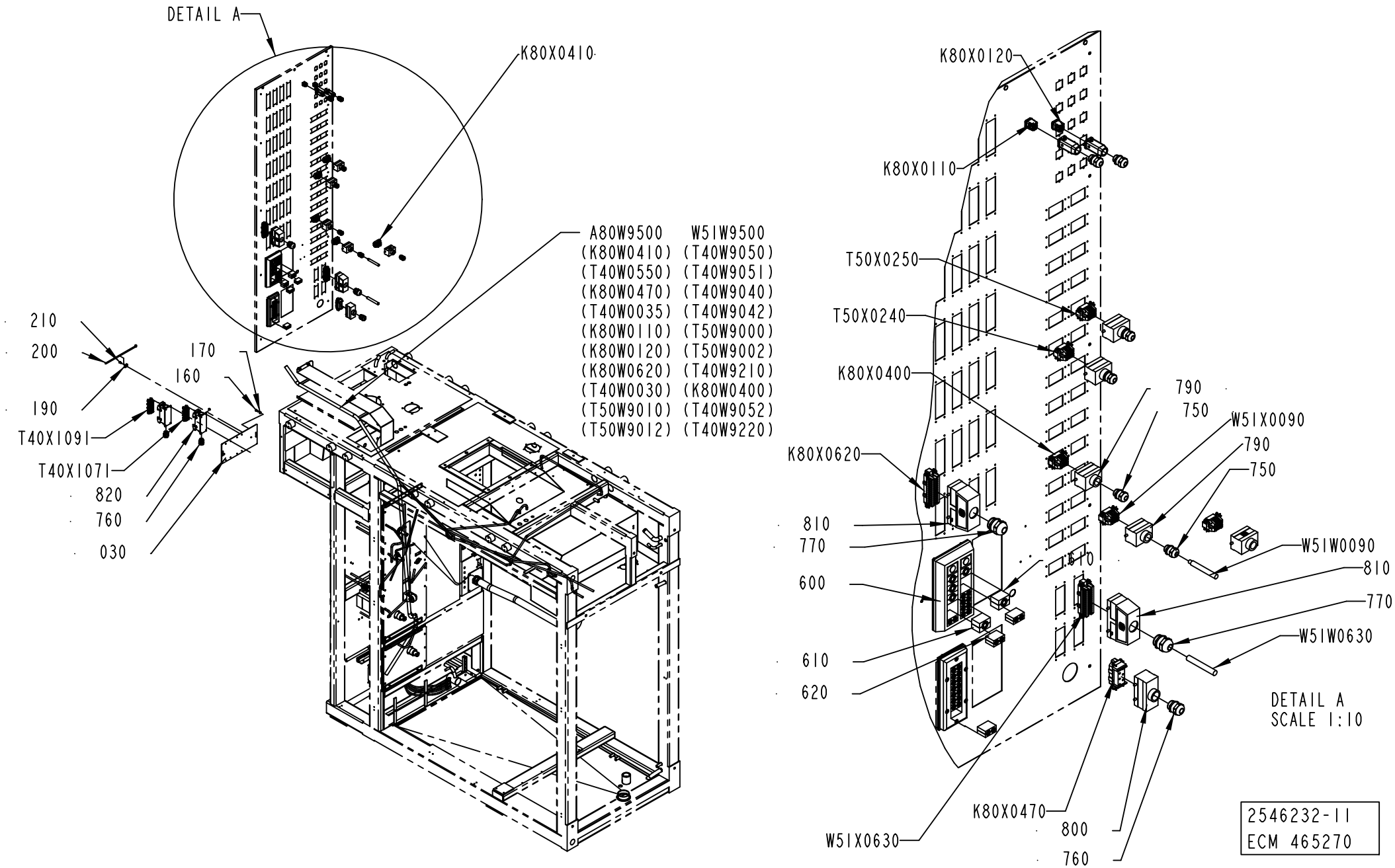
DETAIL A
K80X0410
A80W9500 W51W9500
(K80W0410) (T40W9050)
(T40W0550) (T40W9051)
(K80W0470) (T40W9040)
(T40W0035) (T40W9042)
(K80W0110) (T50W9000)
(K80W0120) (T50W9002)
(K80W0620) (T40W9210)
(T40W0030) (K80W0400)
(T50W9010) (T40W9052)
(T50W9012) (T40W9220)
210
200
190
T40X1091
T40X1071
820
760
030
170
160
K80X0120
K80X0110
T50X0250
T50X0240
K80X0400
K80X0620
810
770
600
610
620
790
750
W51X0090
790
750
W51W0090
810
770
W51W0630
K80X0470
800
760
W51X0630
DETAIL A
SCALE 1:10
2546232-11
ECM 465270

ECM: 467518 - 20101002
Group number: 2546232-0300
Assembly Drawing: 2546232-11_1_AC

Pos	Part No	UN	Qty	Description	Page No
-					
030	2680418-0000		1	PLATE	
150	312105-0287		8	SCREW M6S ISO 4017 M4X8 A470	
160	312105-0368		2	SCREW M6S ISO 4017 M6X16 A480	
170	315105-0153		2	WASHER BRB 6,4X12 RFR	
190	352113-0204		1	ANCHOR PLATES FOR STRIPS, TYPE TM3S25-M	
200	352113-0103		1	CABLE TIE, BLACK 290X7,6 MM	
210	312125-0364		1	SCREW ISO 1207 M6X10 A4	
600	90458-1179		1	FRAME CF 32	
610	90458-1173		6	MULTI DIAMETER MODULE, CM 30W40	
620	90458-1174		15	MULTI DIAMETER MODULE, CM 20W40	
630	90458-2343		1	FRAME CF 16	
750	90458-0307		7	CABLE GLAND, M20X1,5, NO.5311 1020	
760	90458-0308		3	CABLE GLAND, M25X1,5, NO.5311 1030	
770	90458-0309		2	CABLE GLAND, M32X1,5, NO.5311 1040	
780	90459-3080		2	HOOD HAN-BRID 3A 19 20 003 1443	
790	90459-6632		5	HOOD 6 B TOP ENTRY, 19 30 006 1440	
800	90459-6634		1	HOOD 16 B TOP ENTRY, 19 30 016 1421	
810	90459-6636		2	HOOD 24 B TOP ENTRY, 19 30 024 0427	
820	90459-6643		2	HOUSING 24B SURF MOUNT, 19 30 024 1231	
A80W9500	351150-0430	M	8	CABLE OLFLEX 5X35 MM2 LIGHT/GREY	
K80X0110	90459-6821		1	MALE INSERT HAN 4A, 09 20 004 2611	
K80X0120	90459-6821		1	MALE INSERT HAN 4A, 09 20 004 2611	
K80X0400	90110-0052		1	MALE INSERT HAN 6E 09 33 006 2601	
K80X0410	90110-0052		1	MALE INSERT HAN 6E 09 33 006 2601	
K80X0470	90110-0054		1	MALE INSERT HAN 6 HSB 09 31 006 2601	
K80X0620	90110-0056		1	MALE INSERT HAN 24 E 09 33 024 2601	
T40X1071	90110-0057		1	FEMALE INSERT HAN 24 E 09 33 002 4201	
T40X1091	90110-0057		1	FEMALE INSERT HAN 24 E 09 33 002 4201	
T50X0240	90110-0052		1	MALE INSERT HAN 6E 09 33 006 2601	
T50X0250	90110-0052		1	MALE INSERT HAN 6E 09 33 006 2601	
W51W0090	90220-0104	M	17	SCR. CABLE 4X1,5MM2	
W51W0630	351150-0424	M	16	CABLE OLFLEX 18X0,75 MM2 LIGHT/GREY	
W51W9500	90511-8936		1	ETHERNET PATCH CABLE FL CAT6 20M	
W51X0090	90110-0052		1	MALE INSERT HAN 6E 09 33 006 2601	
W51X0630	90110-0056		1	MALE INSERT HAN 24 E 09 33 024 2601	

Pos	Part No	UN	Qty	Description	Page No

Machine Type | Group Description | Used-In | Group Number | Page No

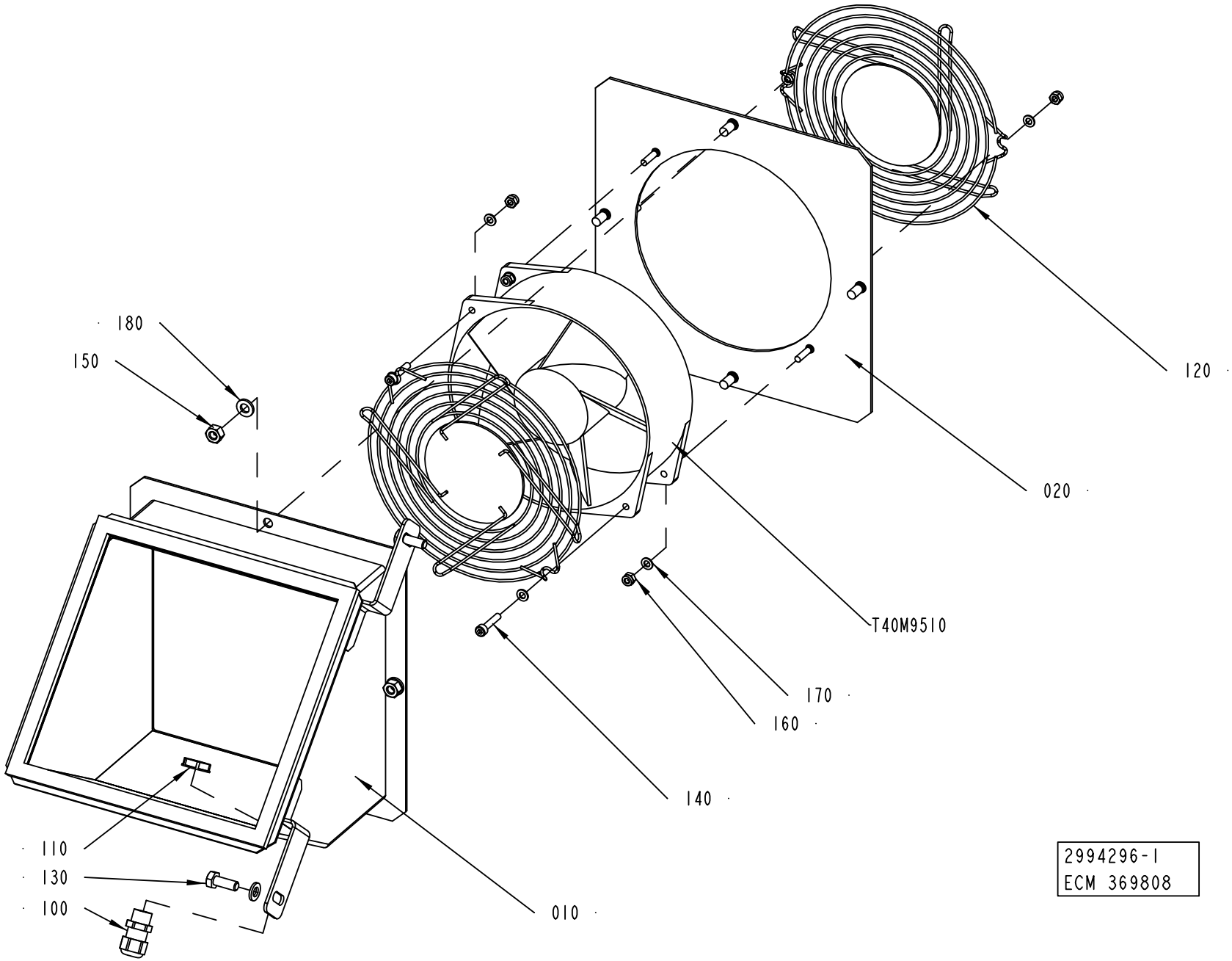
180
150
120
020
T40M9510
170
160
140
110
130
100
010
2994296-1
ECM 369808

ECM: 370724 - 20080930
Group number: 2994296-0100
Assembly Drawing: 2994296-1_1_AA

Pos	Part No	UN	Qty	Description	Page No
-					
010	2994295-0000		1	BOX	
020	2994294-0000		1	PLATE	
100	90458-0313		1	CABLE GLAND, M12X1,5, NO.5311 1100	
110	90458-0321		1	NUT, M12X1,5	
120	90459-1993		2	FINGERGUARD, 101116-03	
130	312105-0368		2	SCREW M6S ISO 4017 M6X16 A480	
140	312115-0295		2	SCREW ISO4762 M4X20 A4 80	
150	312605-0316		4	HEXAGON NUT, M6M M6 A280	
160	312812-0312		6	HEXAGON NUT, NY-LOCK M4 A480	
170	315105-0136		9	WASHER BRB 4,3X8 RFR	
180	315105-0153		6	WASHER BRB 6,4X12 RFR	
T40M9510	90459-2081		1	FAN, 7214N-24VDC-500MA-12W-FAN	

Pos	Part No	UN	Qty	Description	Page No

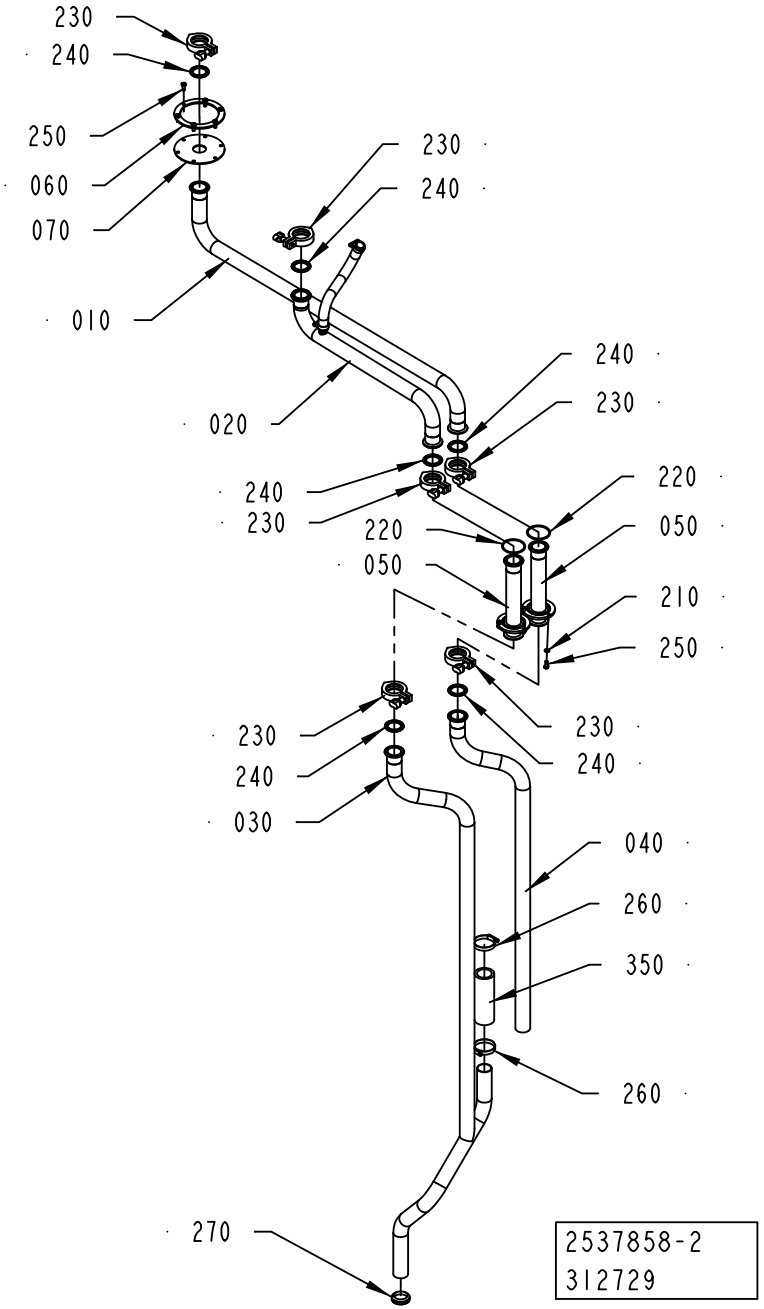
230
240
250
060
070
010
230
240
020
240
230
240
230
220
050
220
050
210
250
230
240
230
240
030
040
260
350
260
270
2537858-2
312729

ECM: 312737 - 20070703
Group number: 2537858-0200
Assembly Drawing: 2537858-2_1_AA

Pos	Part No	UN	Qty	Description	Page No
-					
010	2570369-0000		1	PIPE	
020	2869180-0100		1	DRAIN PIPE	**2-65**
030	2594879-0000		1	PIPE	
040	2594880-0000		1	PIPE	
050	2536056-0000		2	CONNECTION	
060	1498856-0000		1	FLANGE	
070	2570378-0000		1	GASKET	
210	315105-0153		6	WASHER BRB 6,4X12 RFR	
220	315202-0302		2	O-RING 54,5X3 MM	
230	342840-0103		6	CLAMPING PIECE DN 1-11/2, GH13LAH112304N	
240	342850-0304		6	GASKET 35,4X49,1X5,2 1"1/2 FDA, 3-A	
250	312105-0368		12	SCREW M6S ISO 4017 M6X16 A480	
260	342991-0109		2	HOSE CLIP,WORM DRIVE TYPE (44)-56	
270	315220-0183		1	V-RING 36X46X13 MM V-40S	
350	90166-0236	MM	200	HOSE, 38/51 REINFORCED RUBBER	

Pos	Part No	UN	Qty	Description	Page No

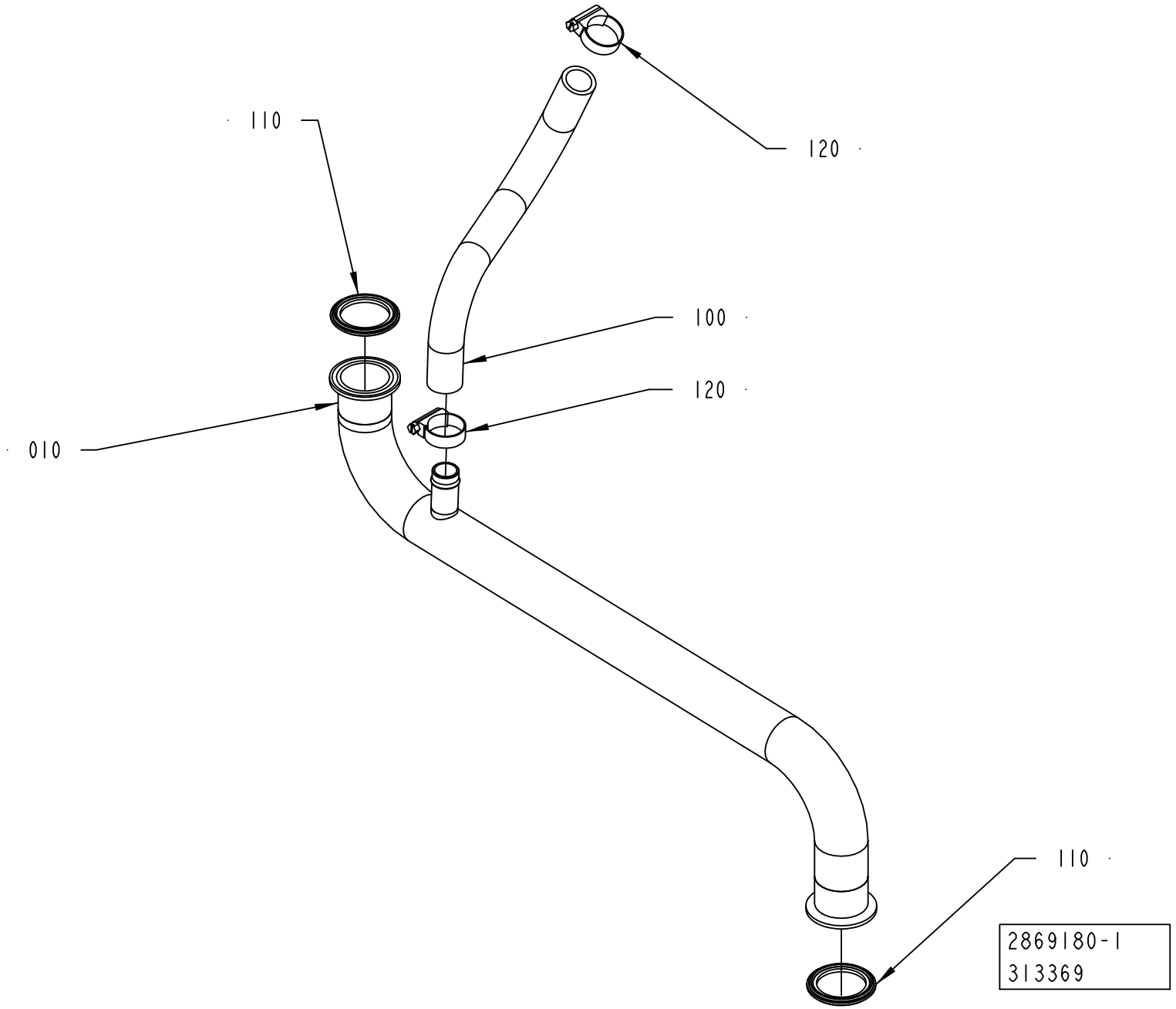
110
120
100
120
010
110
2869180-1
313369

ECM: 313369 - 20070628
Group number: 2869180-0100
Assembly Drawing: 2869180-1_1_AA

Pos	Part No	UN	Qty	Description	Page No
A3/SPEED					
010	2851884-0000		1	PIPE	
Common Parts					
100	90458-2752	MM	500	PLASTIC HOSE, 3/4"X1"	
110	342850-0304		2	GASKET 35,4X49,1X5,2 1"1/2 FDA, 3-A	
120	342991-0104		2	HOSE CLIP,WORM DRIVE TYPE (19)-28	

Pos	Part No	UN	Qty	Description	Page No

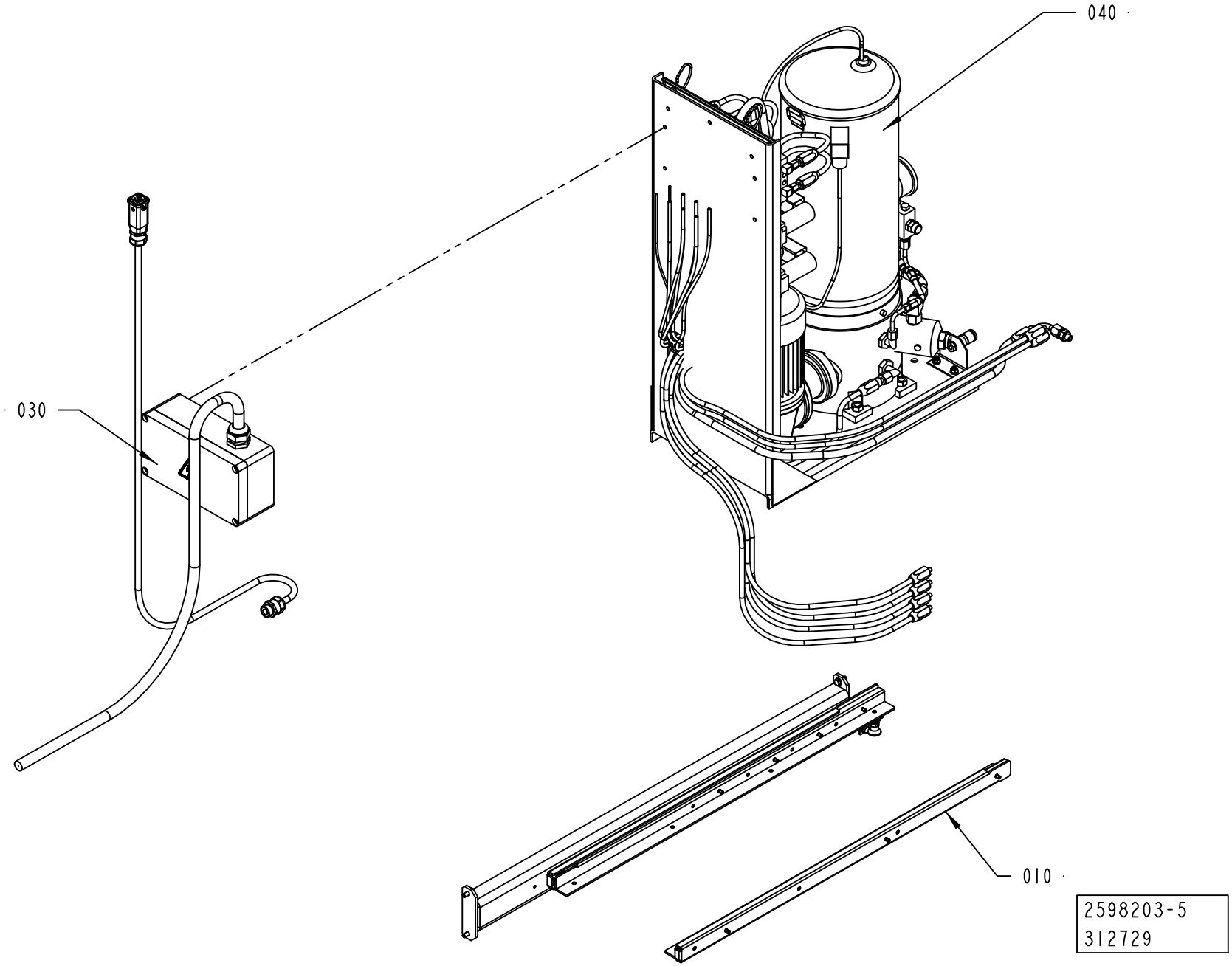
040
030
010
2598203-5
312729

ECM: 415247 - 20091003
Group number: 2598203-0300
Assembly Drawing: 2598203-5_1_AA

Pos	Part No	UN	Qty	Description	Page No
-					
10	2566204-0400		1	SUPPORT	**2-69**
30	2574383-0200		1	ELECTRIC EQUIPMENT	**2-71**
40	2605199-0200		1	PUMP UNIT	**2-73**

Pos	Part No	UN	Qty	Description	Page No

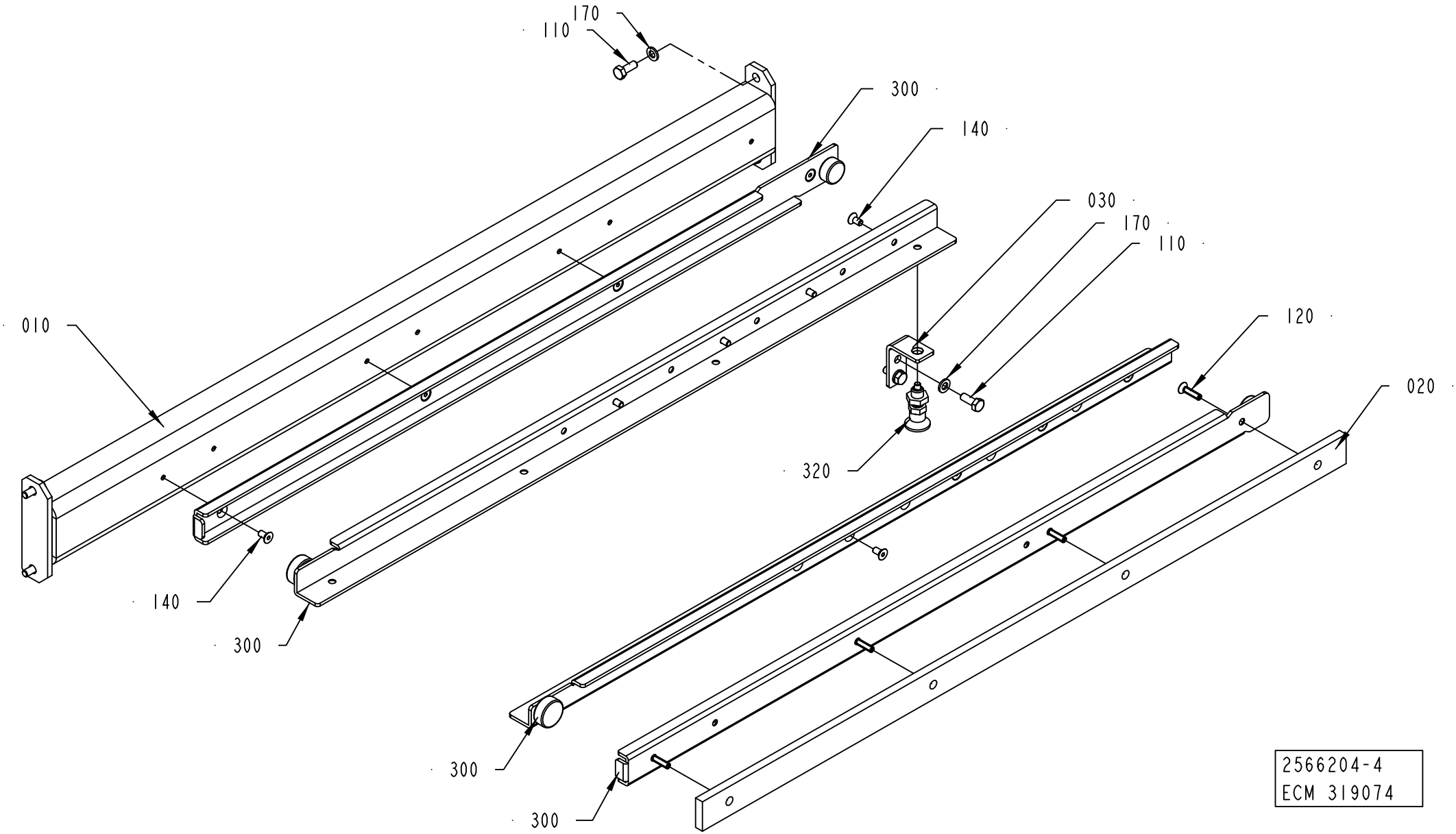
170
110
300
140
030
170
110
120
020
010
320
140
300
300
300
2566204-4
ECM 319074

ECM: 327347 - 20070705
Group number: 2566204-0400
Assembly Drawing: 2566204-4_1_AA

Pos	Part No	UN	Qty	Description	Page No
-					
010	2891537-0000		1	SUPPORT	
020	2819096-0000		1	SUPPORT	
030	2891538-0000		1	BRACKET	
110	312105-0368		6	SCREW M6S ISO 4017 M6X16 A480	
120	312155-0331		4	SCREW DIN 7991 MF6S M5X20 A4 70	
140	312155-0325		12	SCREW DIN 7991 MF6S M5X10 A4 70	
170	315105-0153		6	WASHER BRB 6,4X12 RFR	
300	2819097-0000		1	GUIDE	
320	90051-0112		1	LOCK KNOB, NO. GN 617 NIK5	

Pos	Part No	UN	Qty	Description	Page No

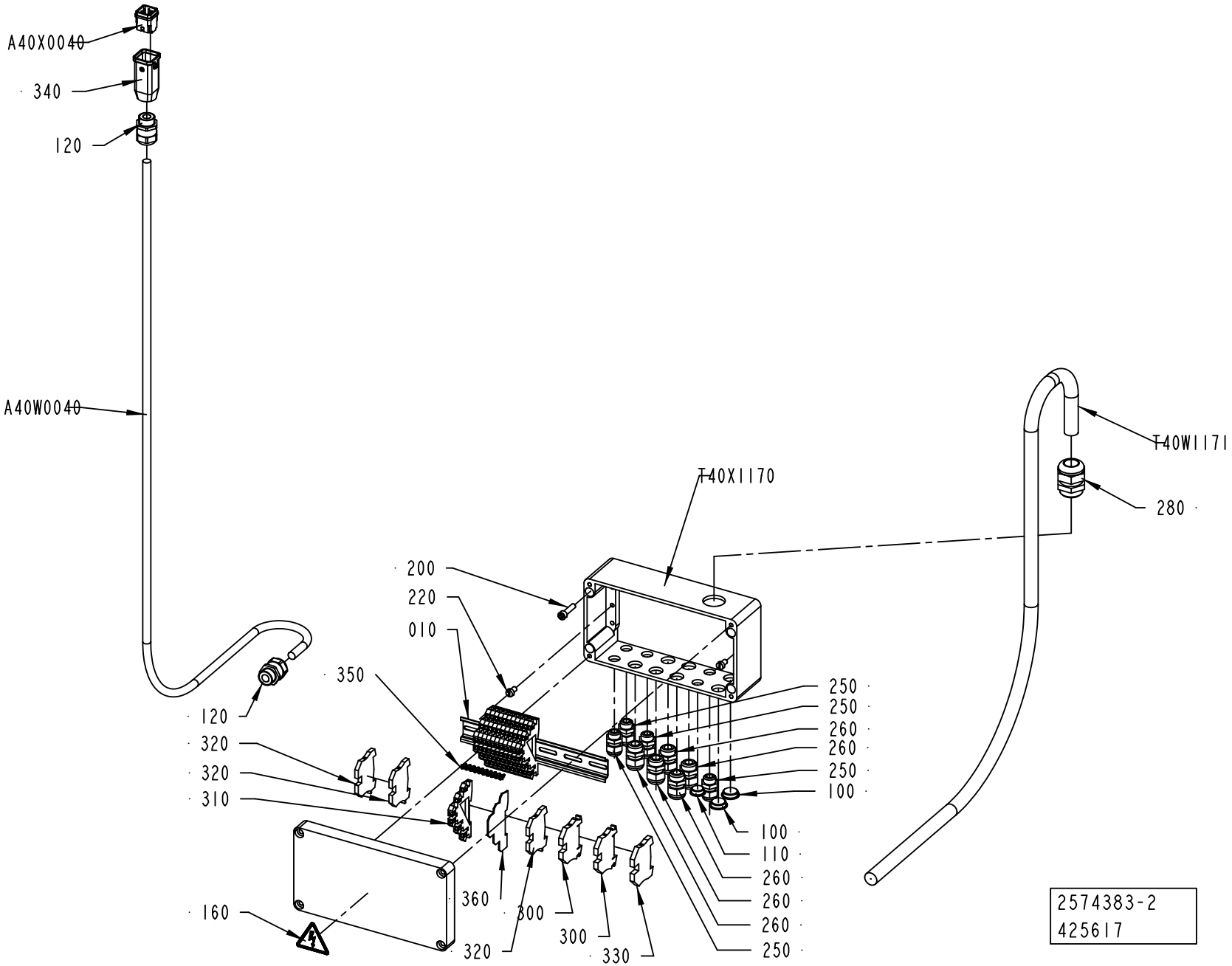
A40X0040
340
120
A40W0040
T40W1171
280
T40X1170
200
220
010
350
120
320
320
310
160
360
320
300
300
330
250
250
260
260
250
100
100
110
260
260
260
250
2574383-2
425617

ECM: 461460 - 20101001
Group number: 2574383-0200
Assembly Drawing: 2574383-2_1_AB

Pos	Part No	UN	Qty	Description	Page No
ANSI					
160	359715-0100		1	WARNING SIGN ANSI (H), ELECTRIC SHOCK	
ISO					
160	359705-0015		1	WARNING SIGN ISO, RISK OF ELECTRIC SHOCK	
Common Parts					
010	2531417-0000		1	RAIL	
100	90002-0009		2	BLANK-OFF PLUG, PR 18.6 SKINDICHT-BLK11	
110	90002-0013		1	BLANK-OFF PLUG, PR 15,2 SKINDICHT-BLK9	
120	90458-0307		2	CABLE GLAND, M20X1,5, NO.5311 1020	
200	312115-0372		8	SCREW ISO4762 M6X25 A4 80	
220	312125-0364		2	SCREW ISO 1207 M6X10 A4	
250	352103-0101		4	CABLE GLAND, ST 9, PR15,2/PG9	
260	352103-0106		5	CABLE GLAND, ST 11, PR18,6/PG11	
280	352103-0116		1	CABLE GLAND, ST 21, PR28,3/PG21	
300	353021-0213		2	FEED THROUGH TERMINAL, 10201.0	
310	353021-0302		12	TERMINALS,TRIPLE-LEVEL, DLD 2,5/35 PA	
320	353024-0204		3	EARTH TERMINAL WPE 2,5	
330	353024-0205		1	EARTH TERMINAL WPE 4	
340	90459-3080		1	HOOD HAN-BRID 3A 19 20 003 1443	
350	353034-0404		4	BRIDGE CONNECTOR Q 10 DLI	
360	353032-0302		1	END PLATE, AP DLD2,5 DB	
A40W0040	351150-0413	M	9	CABLE OLFLEX 4GX1,5 MM2 LIGHT/GREY	
A40X0040	90459-6821		1	MALE INSERT HAN 4A, 09 20 004 2611	
T40W1171	351150-0425	M	3	CABLE OLFLEX 25X0,75 MM2 LIGHT/GREY	
T40X1170	2594415-0000		1	CONNECTION BOX	

Pos	Part No	UN	Qty	Description	Page No

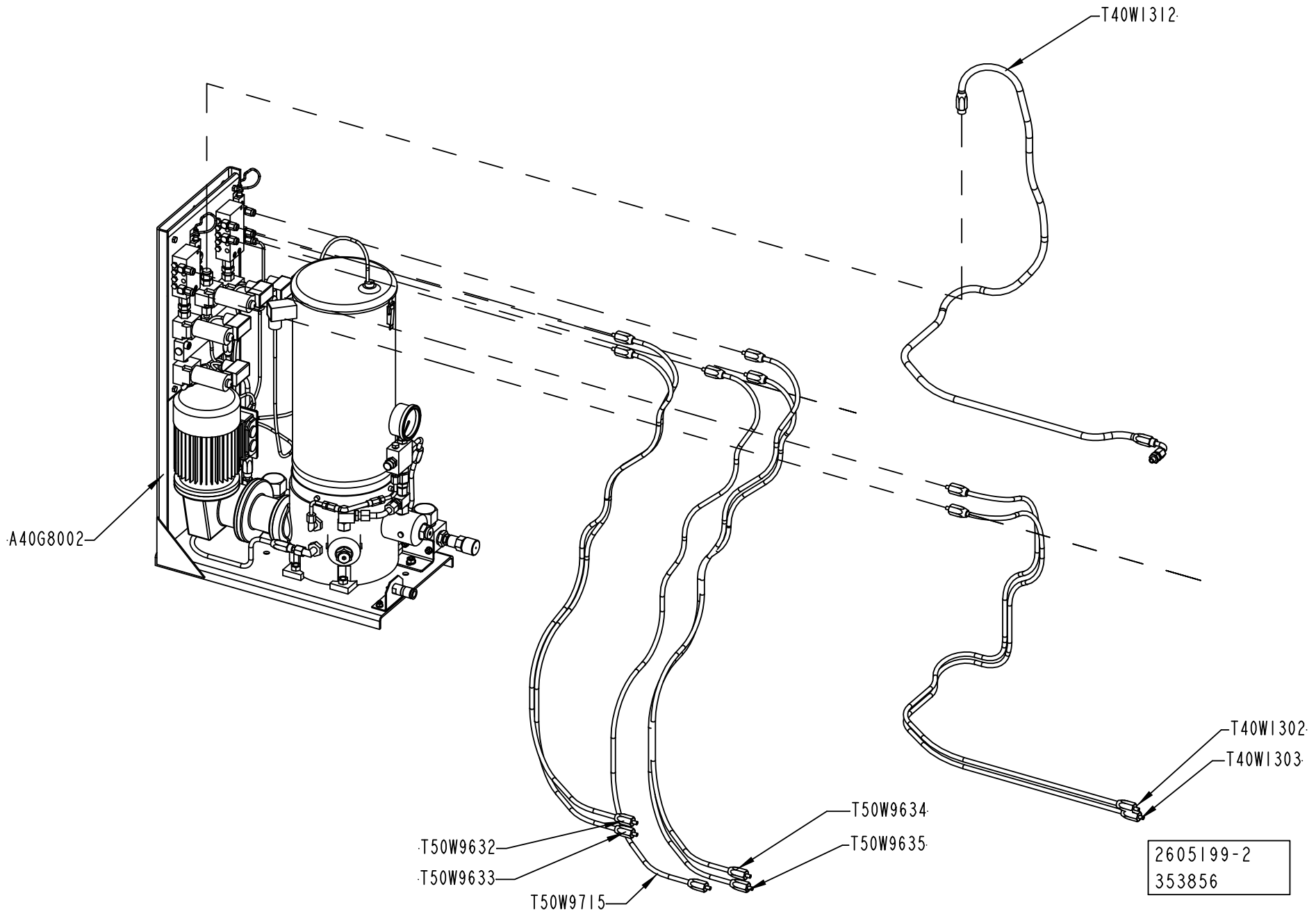
T40W1312
A40G8002
T40W1302
T40W1303
T50W9634
T50W9635
T50W9632
T50W9633
T50W9715
2605199-2
353856

ECM: 356288 - 20080528
Group number: 2605199-0200
Assembly Drawing: 2605199-2_1_AB

Pos	Part No	UN	Qty	Description	Page No
-					
A40G8002	90459-1795		1	LUBRICATION PUMP UNIT 10KG, BK 03173003	
10	*90459-2068*		*2*	*GREASE FILTER 100µM, EL 03530304*	
20	*90459-2147*		*2*	*PUMP PISTON, COD 2152 99 06 50 103*	
30	*90459-2150*		*1*	*DISTRIBUTION BLOCK, BK 06011304*	
40	*90459-2152*		*3*	*SOLENOID VALVE, COD. GR2-0-A24*	
50	*90459-2177*		*1*	*GEARED MOTOR, SK 15 40 VF-63 L/4*	
60	*90459-2186*		*2*	*CAPACITIVE SENSOR, KCN-T18PU/007-K1.5V*	
70	*90601-7090*		*2*	*INDUCTIVE SENSOR IE5419*	
80	*315202-0713*		*2*	*O-RING 29,87X1,78 MM*	
90	*90600-1224*		*1*	*DIRECTIONAL SEATED VALVE, GS2-0-A24*	
100	*90600-3730*		*1*	*GREASE DISPENCER, BK06011505*	
110	*90600-4761*		*1*	*HOSE ASSEMBLY, EL 03600097*	
120	*90600-4767*		*1*	*HYDRAULIC HOSE, EL03600099*	
130	*90600-4769*		*1*	*HYDRAULIC HOSE, EL03600100*	
140	*90600-4770*		*1*	*HYDRAULIC HOSE, EL03600098*	
150	*90601-9850*		*1*	*MAX. PRESSURE VALVE, EV02830002*	
T40W1302	90459-2342		1	HOSE ASSEMBLY, EL 03600102	
T40W1303	90459-2342		1	HOSE ASSEMBLY, EL 03600102	
T40W1312	90459-2343		1	HOSE ASSEMBLY, EL 03600103	
T50W9632	90459-2341		1	HOSE ASSEMBLY, EL 03600101	
T50W9633	90459-2341		1	HOSE ASSEMBLY, EL 03600101	
T50W9634	90459-2341		1	HOSE ASSEMBLY, EL 03600101	
T50W9635	90459-2341		1	HOSE ASSEMBLY, EL 03600101	
T50W9715	90459-2341		1	HOSE ASSEMBLY, EL 03600101	

Pos	Part No	UN	Qty	Description	Page No

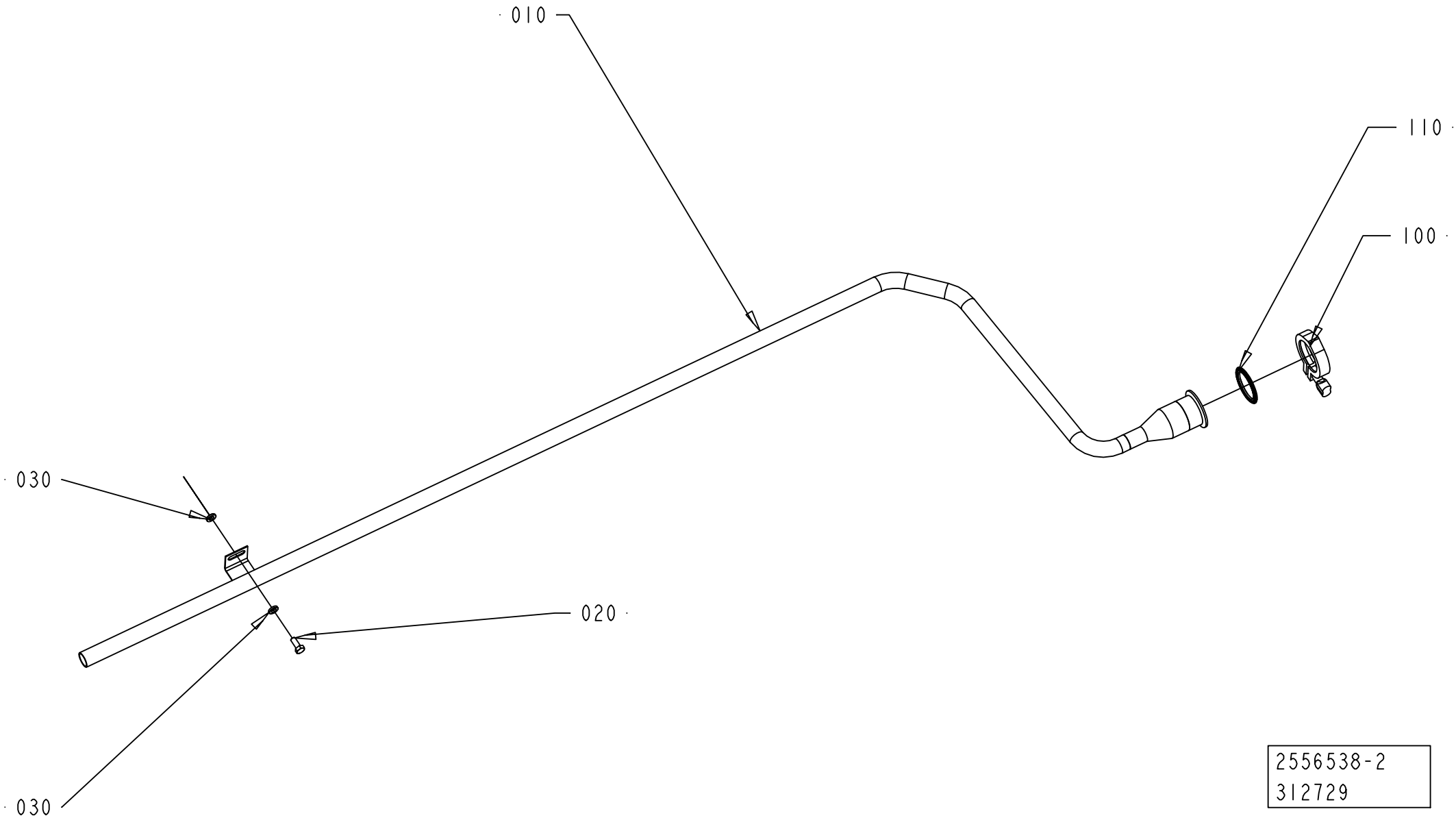
010
110
100
030
020
030
2556538-2
312729

ECM: 312742 - 20070703
Group number: 2556538-0200
Assembly Drawing: 2556538-2_1_AA

Pos	Part No	UN	Qty	Description	Page No
-					
010	2690911-0000		1	DRAIN PIPE	
020	312105-0451		1	SCREW M6S ISO 4017 M8X20 A480	
030	315115-0165		2	WASHER PLAIN, TBRB 8,4/16 H=3	
100	342840-0105		1	CLAMPING PIECE, GH13LAH2304NO79612011202	
110	342850-0305		1	GASKET 47,8X62,6X5,2 MM 2" FDA 3-A	

Pos	Part No	UN	Qty	Description	Page No

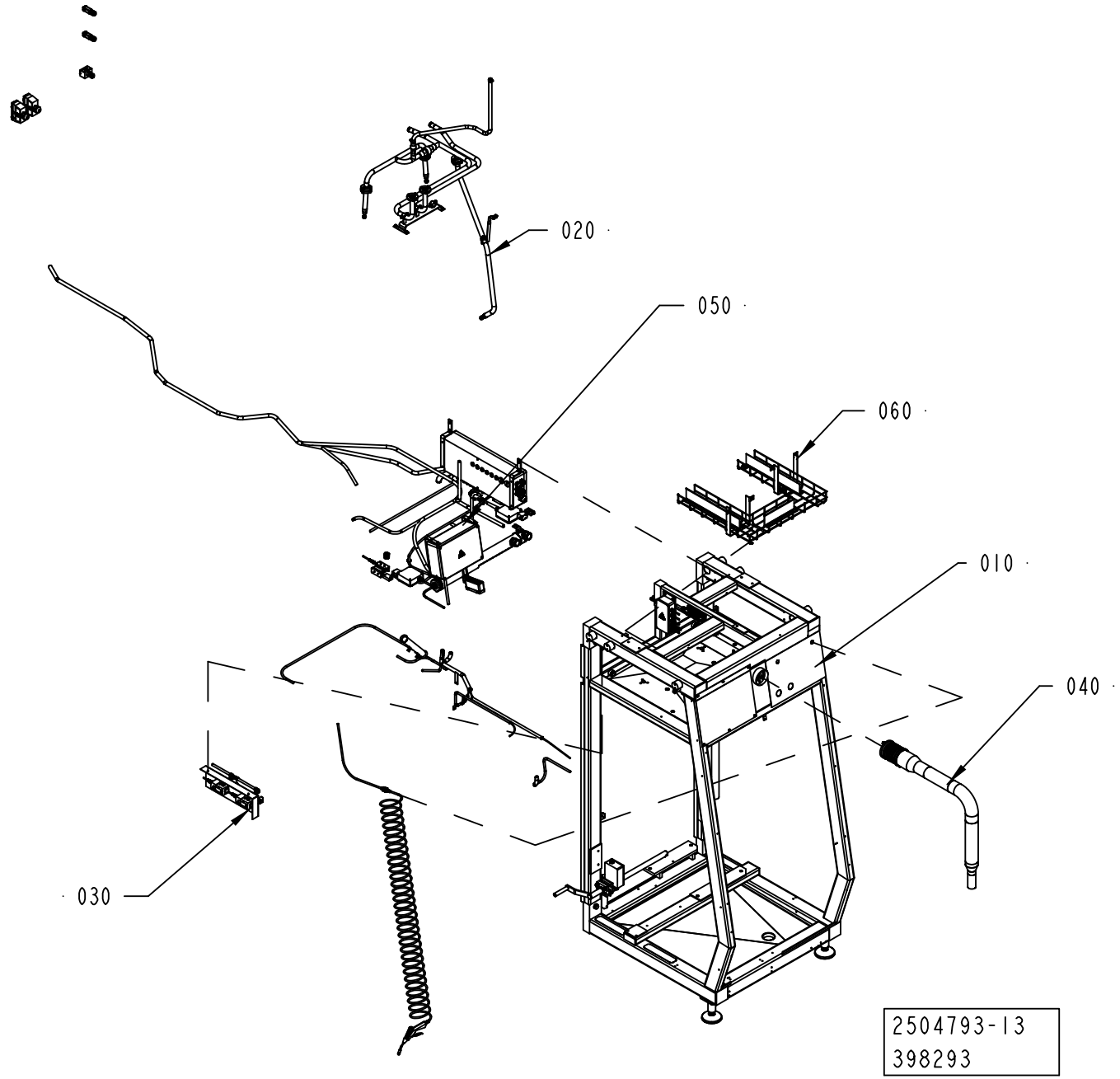
020
050
060
010
040
030
2504793-13
398293

ECM: 433164 - 20100701
Group number: 2504793-0300
Assembly Drawing: 2504793-13_1_AA

Pos	Part No	UN	Qty	Description	Page No
-					
010	2504794-0300		1	MACHINE BODY	**2-79**
020	2504795-0200		1	CLEANING SYSTEM	**2-85**
030	2528044-0300		1	PNEUMATIC SYSTEM	**2-87**
040	3046447-0100		1	PIVOT ARM	**2-93**
050	2527300-0300		1	ELECTRIC EQUIPMENT	**2-95**
060	2813403-0100		1	BASKET	**2-111**

Pos	Part No	UN	Qty	Description	Page No

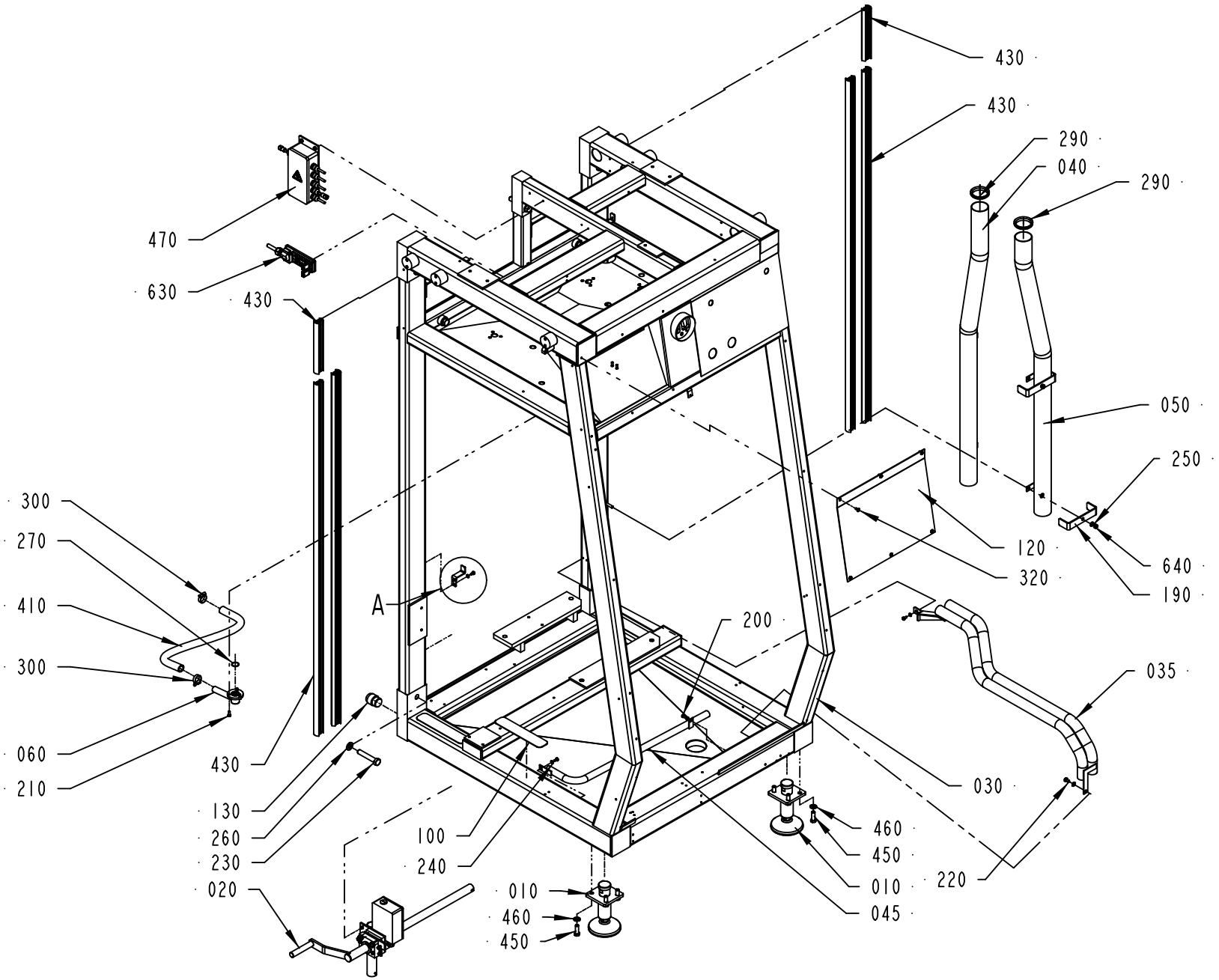

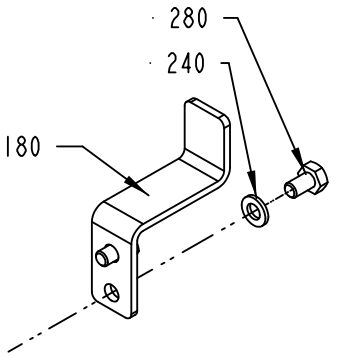

DETAIL A
SCALE 1:2

2504794-13
437988

ECM: 443153 - 20100702
Group number: 2504794-0300
Assembly Drawing: 2504794-13_1_AB

Pos	Part No	UN	Qty	Description	Page No
A3/SPEED					
030	3039769-0000		1	FRAME	
035	3090012-0000		1	PIPE	
040	3090010-0000		1	PIPE	
045	2530303-0000		1	PIPE	
050	3090011-0000		1	PIPE	
120	2510785-0000		1	COVER PLATE	
190	3090013-0000		2	BRACKET	
200	312105-0366		4	SCREW M6S ISO 4017 M6X12 A480	
220	312105-0447		1	SCREW M6S ISO 4017 M8X12 A480	
240	315105-0153		4	WASHER BRB 6,4X12 RFR	
250	315105-0165		3	WASHER BRB 8,4X16 RFR	
290	315220-0216		2	V-RING 58X68X13 MM V-65S	
640	312812-0318		2	HEXAGON NUT, NY-LOCK M8 A480	
Common Parts					
010	90600-0725		2	FOOT 32000N, 90600-0725	
060	2509552-0000		1	DRAINING	
100	1103300-0000		3	NON-SKID	
130	2506636-0000		2	PIN	
210	312105-0368		3	SCREW M6S ISO 4017 M6X16 A480	
230	312105-0638		7	SCREW M6S ISO 4014 M16X90 A480	
260	315105-0186		7	WASHER BRB 17X30 RFR	
270	315202-0709		1	O-RING 23,52X1,78 MM	
300	342991-0105		2	HOSE CLIP,WORM DRIVE TYPE (22)-32	
320	90287-0075		6	SCREW SLOT. PAN HEAD LKCS M6X12	
410	90166-0151	MM	610	HOSE SILICONE, 20/27 MM	
430	90459-1009	MM	7000	RUBBER STRIP, 1025088988	
450	312105-0538		8	SCREW M6S ISO 4017 M12X35 A480	
460	315105-0178		8	WASHER BRB 13X24 RFR	
470	2865480-0100		1	CONNECTION BOX	**2-81**
620	3032800-0100		1	CONNECTION BOX	**2-83**

Pos	Part No	UN	Qty	Description	Page No

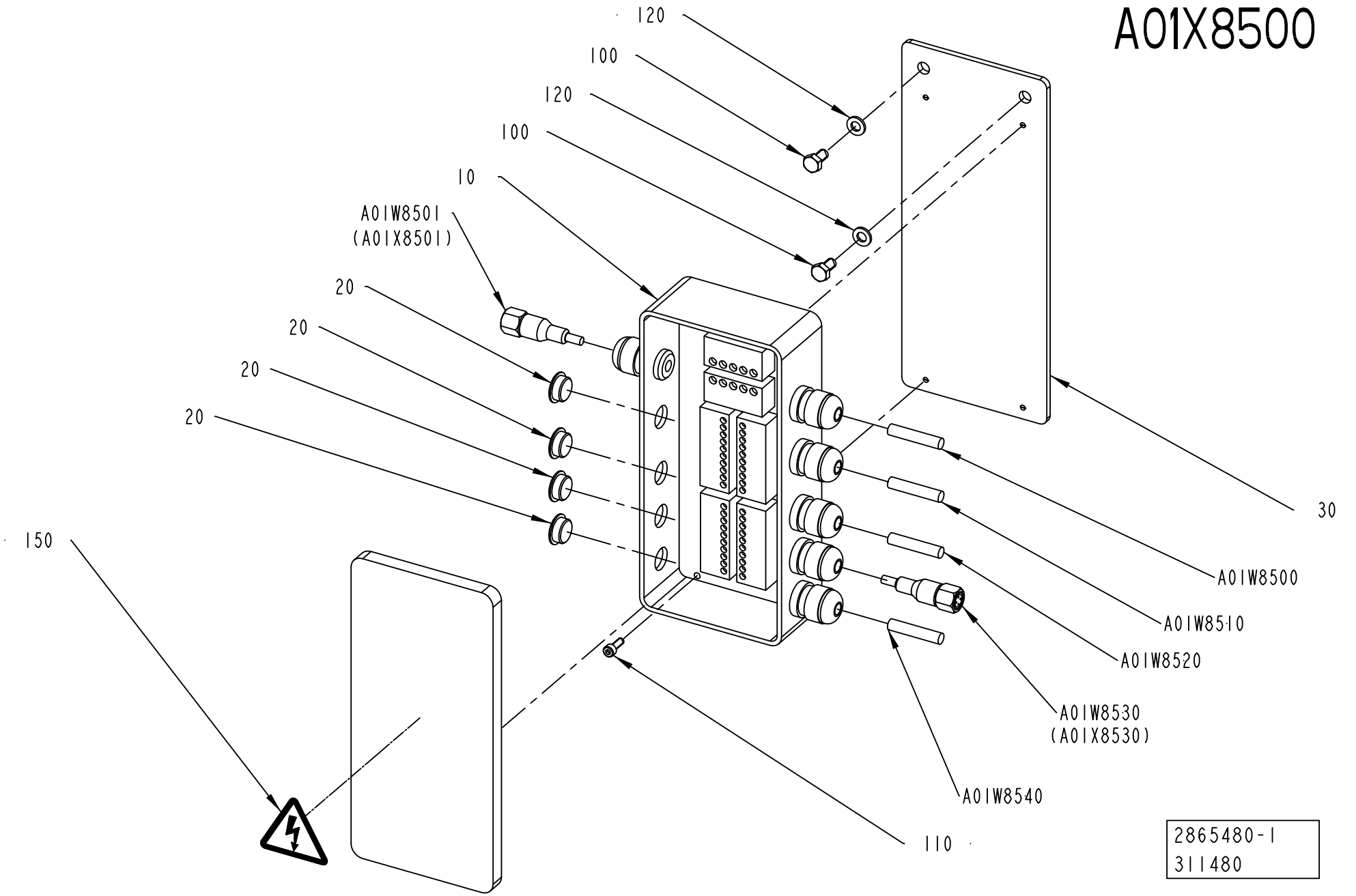
A01X8500
120
100
120
100
10
A01W8501
(A01X8501)
20
20
20
20
150
30
A01W8500
A01W8510
A01W8520
A01W8530
(A01X8530)
A01W8540
110
2865480-1
311480

ECM: 461424 - 20101001
Group number: 2865480-0100
Assembly Drawing: 2865480-1_1_AA

Pos	Part No	UN	Qty	Description	Page No
A3/SPEED ANSI (See drawing on page: 2-80)					
020	90002-0013		4	BLANK-OFF PLUG, PR 15,2 SKINDICHT-BLK9	
150	359715-0101		1	WARNING SIGN ANSI (V), ELECTRIC SHOCK	
A3/SPEED ISO (See drawing on page: 2-80)					
020	90002-0013		4	BLANK-OFF PLUG, PR 15,2 SKINDICHT-BLK9	
150	359705-0015		1	WARNING SIGN ISO, RISK OF ELECTRIC SHOCK	
Common Parts					
010	90459-2517		1	DEVICE BOX 8 PORT THIN CABLE	
030	2814591-0000		1	SUPPORT	
100	312105-0366		2	SCREW M6S ISO 4017 M6X12 A480	
110	312115-0291		4	SCREW ISO4762 M4X12 A4 80	
120	315105-0153		2	WASHER BRB 6,4X12 RFR	
A01W8500	90459-2530	M	5	DEVICENET CABLE THIN	
A01W8501	351415-0050		1	DEVICENET CONN. CABLE, 0935 361 105/5M	
A01W8510	90459-2530	M	2	DEVICENET CABLE THIN	
A01W8520	90459-2530	M	2	DEVICENET CABLE THIN	
A01W8530	351415-0020		1	DEVICENET CONN. CABLE, 0935 361 105/2M	
A01W8540	90459-2530	M	3.5	DEVICENET CABLE THIN	

Pos	Part No	UN	Qty	Description	Page No

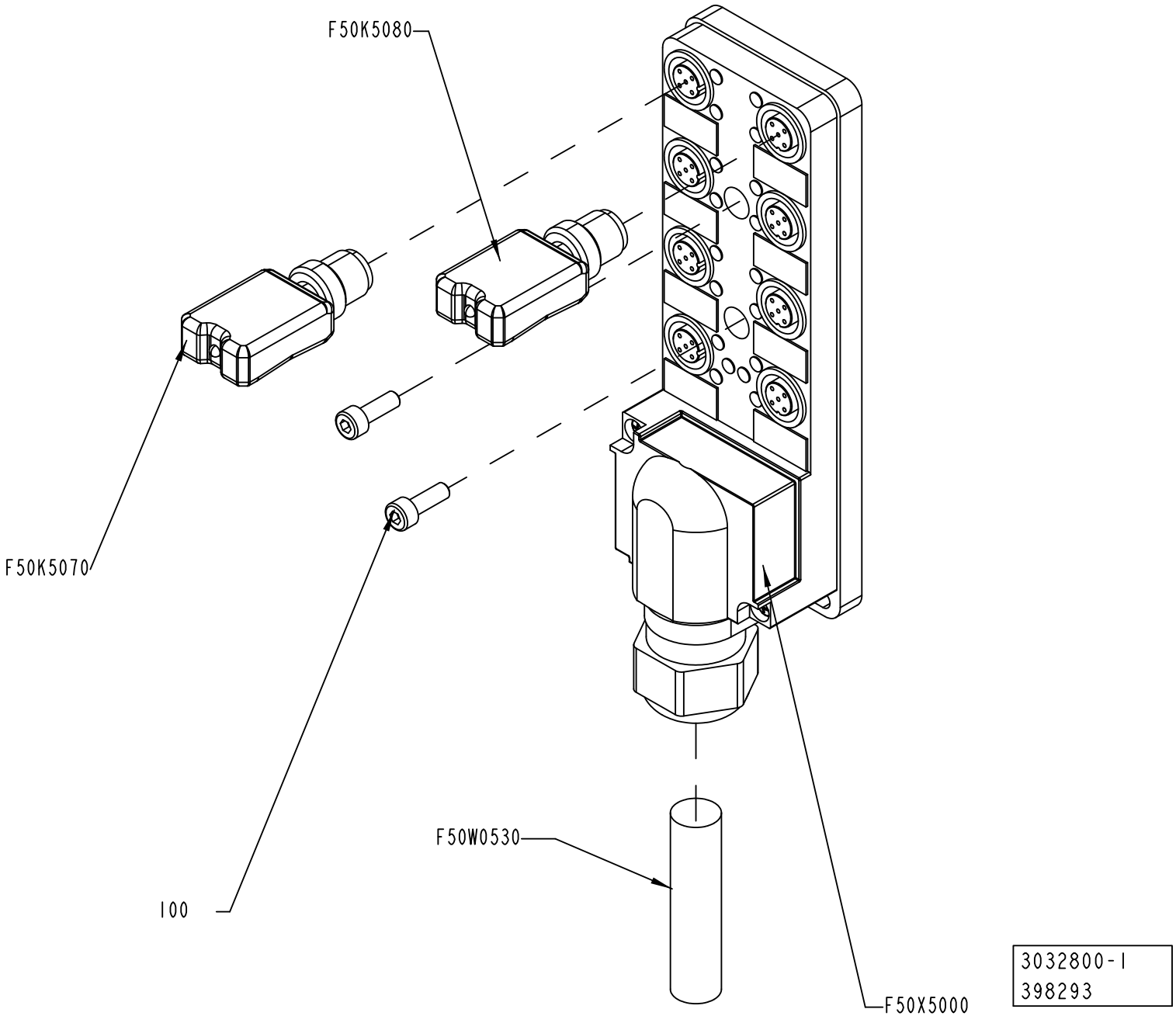
F50K5080
F50K5070
100
F50W0530
F50X5000
3032800-1
398293

ECM: 434125 - 20100702
Group number: 3032800-0100
Assembly Drawing: 3032800-1_1_AA

Pos	Part No	UN	Qty	Description	Page No
A3/SPEED					
F50K5070	90459-5627		1	CONNECTION TINA 1A, 20-054-00	
Common Parts					
100	312115-0291		2	SCREW ISO4762 M4X12 A4 80	
F50K5080	90459-5627		1	CONNECTION TINA 1A, 20-054-00	
F50W0530	90220-0046	M	8	SCR. CABLE 16X0,34MM2 GREEN/YELLOW	
F50X5000	90600-4876		1	CONNECTION BOX TINA 8A , 20-054-05	

Pos	Part No	UN	Qty	Description	Page No

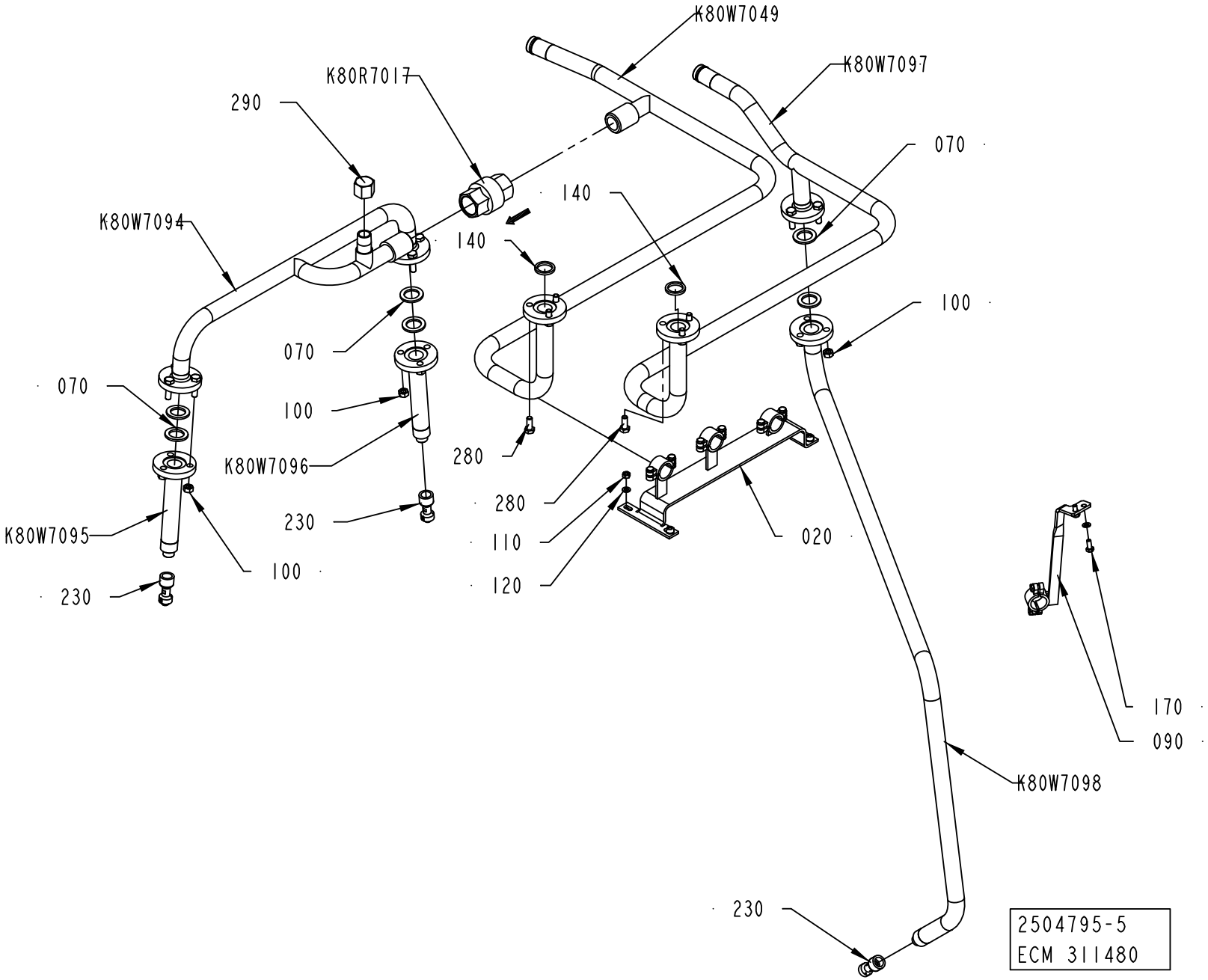
K80W7049
K80W7097
K80R7017
290
070
140
140
K80W7094
070
100
070
K80W7096
280
280
230
K80W7095
110
020
100
120
230
100
170
090
K80W7098
230
2504795-5
ECM 311480

ECM: 467424 - 20101002
Group number: 2504795-0200
Assembly Drawing: 2504795-5_1_AA

Pos	Part No	UN	Qty	Description	Page No
A3/SPEED					
090	2519430-0000		1	BRACKET	
290	90330-0086		1	PLUG, INT. THREAD, NO. R-231-R1/2	
K80W7049	2506922-0000		1	PIPE	
K80W7094	2506925-0000		1	PIPE	
K80W7095	2508425-0000		1	PIPE	
K80W7096	2508425-0000		1	PIPE	
K80W7097	2506923-0000		1	PIPE	
K80W7098	2506924-0000		1	PIPE	
Common Parts					
020	2508426-0000		1	BRACKET	
070	1037443-0000		6	GASKET	
100	312605-0318		9	HEXAGON NUT, M6M M8 A280	
110	312605-0316		4	HEXAGON NUT, M6M M6 A280	
120	315105-0153		6	WASHER BRB 6,4X12 RFR	
140	315229-0103		2	SQUARE RING, 23,1X30,1X3,7 MM 1" FDA	
170	312105-0367		2	SCREW M6S ISO 4017 M6X14 A480	
230	90600-2646		3	ROT.SPRAY NOZZLE, 599.186.1Y.AF.00.0	
280	312105-0451		6	SCREW M6S ISO 4017 M8X20 A480	
K80R7017	90230-0044		1	NON-RETURN VALVE 1"	
	90230-0308		*1*	*SPARE PART KIT, 4968993*	

Pos	Part No	UN	Qty	Description	Page No

Machine Type | Group Description | Used-In | Group Number | Page No

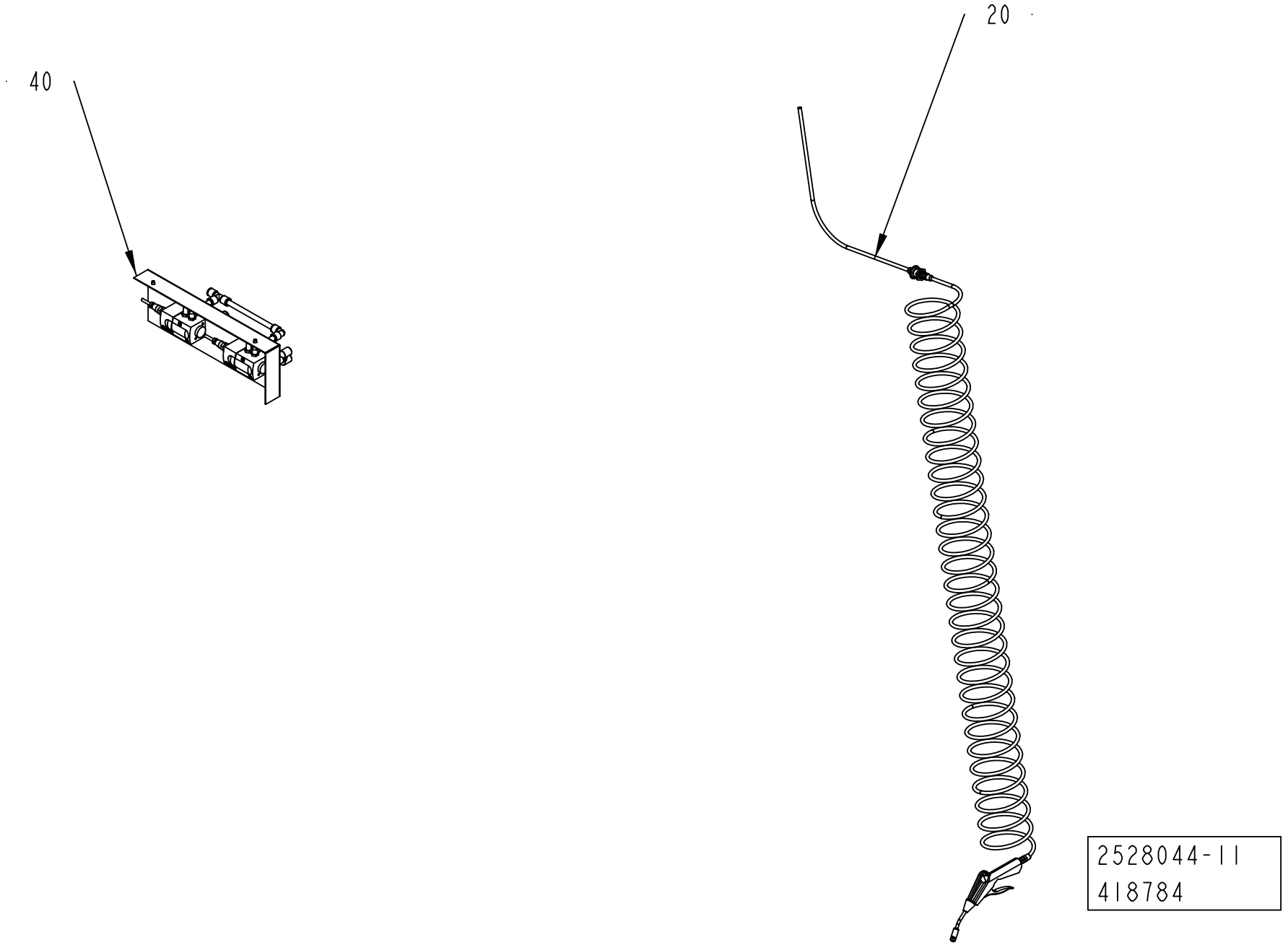
40
20
2528044-11
418784

ECM: 433165 - 20100701
Group number: 2528044-0300
Assembly Drawing: 2528044-11_1_AA

Pos	Part No	UN	Qty	Description	Page No
-					
020	1095682-0300		1	AIR JET GUN	**2-89**
040	2843394-0200		1	TRANSDUCER HEAD	**2-91**

Pos	Part No	UN	Qty	Description	Page No

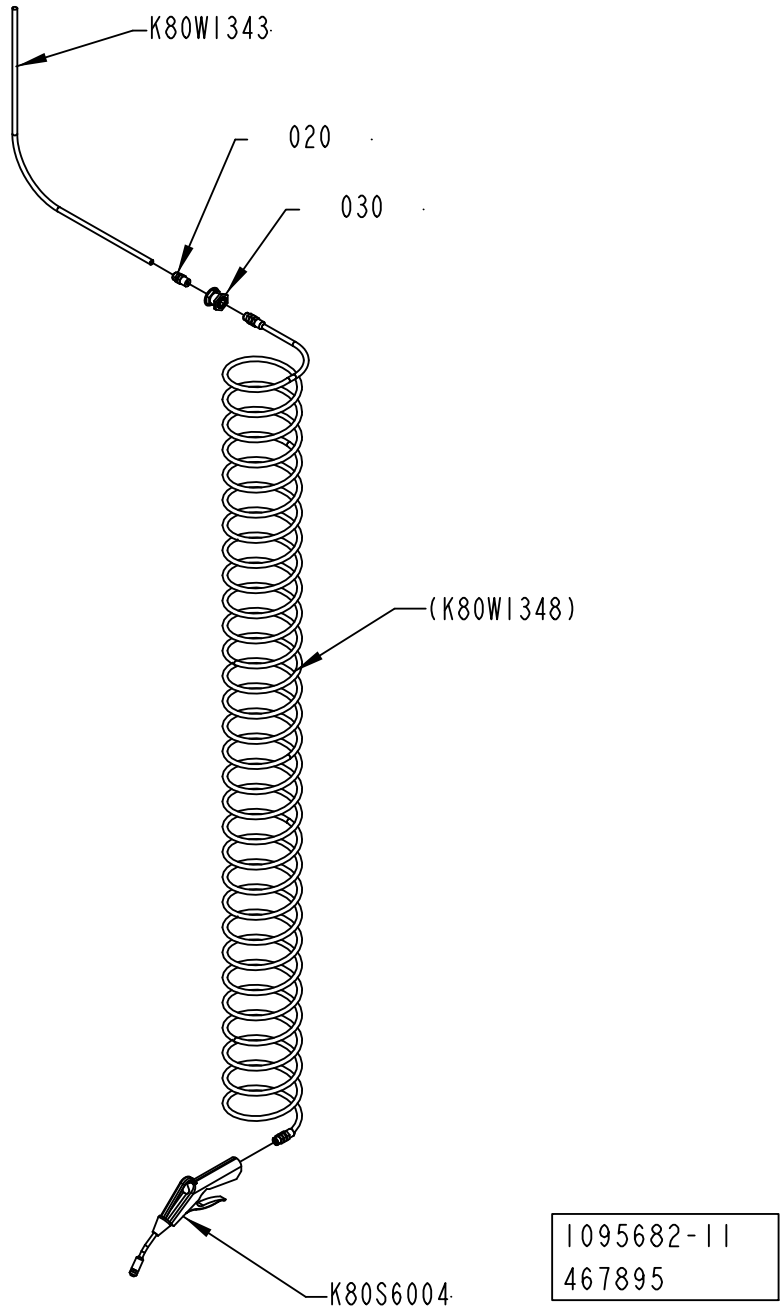
K80WI343
020
030
(K80WI348)
K80S6004
1095682-11
467895

ECM: 472330 - 20110101
Group number: 1095682-0300
Assembly Drawing: 1095682-11_1_AB

Pos	Part No	UN	Qty	Description	Page No
-					
020	342920-0122		1	STRAIGHT COUPLING,EXT.THREADED 8/6-R1/4"	
030	342767-0104		1	BULKHEAD LEAD-IN, G1/4	
K80S6004	90458-1740		1	AIR GUN ASSEMBLY, CEJN 199589668	
K80W1343	315300-0004	MM	1800	TUBE, 8 MM PE BLUE	

Pos	Part No	UN	Qty	Description	Page No

TRANSDUCER HEAD

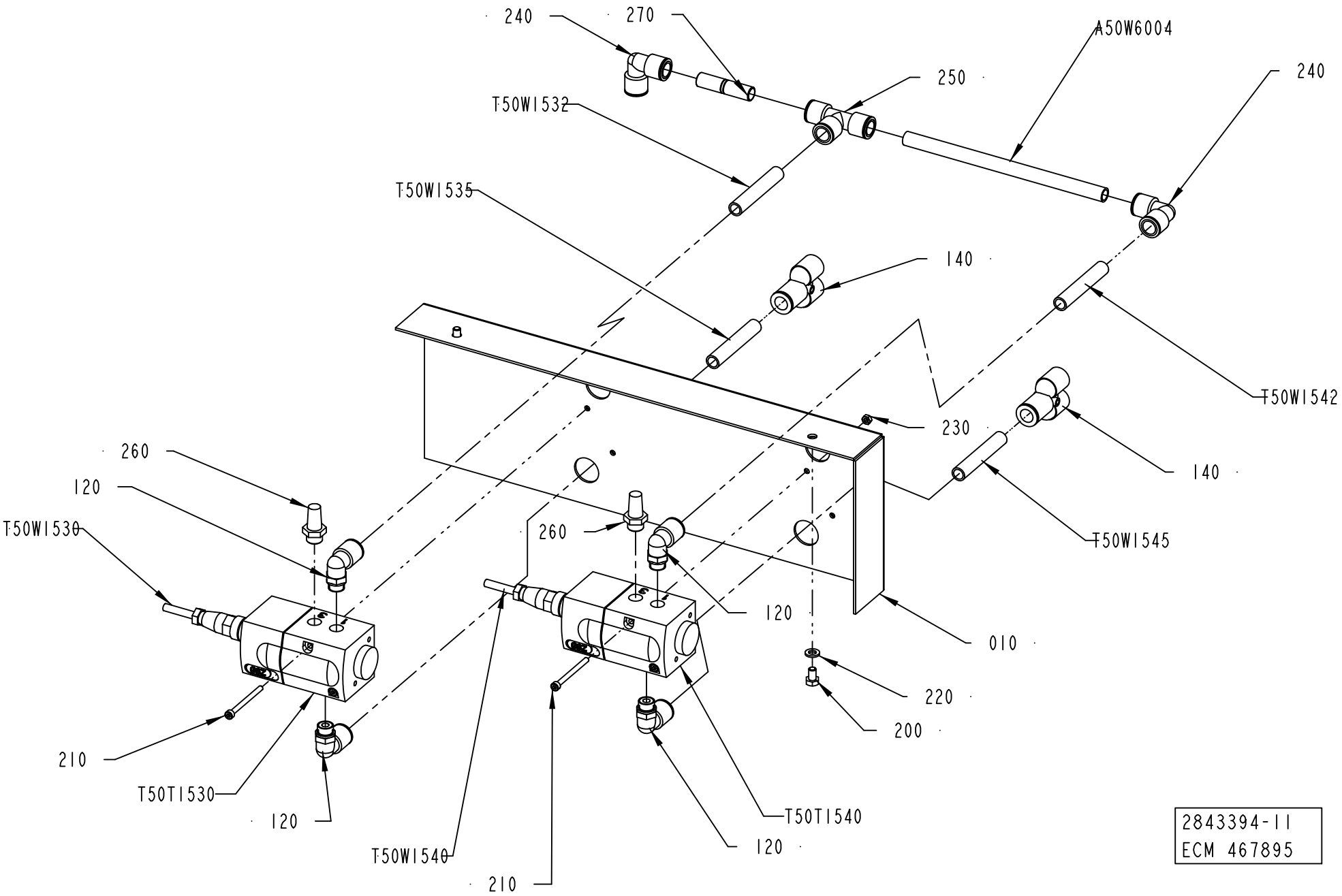

ECM: 472358 - 20110101
Group number: 2843394-0200
Assembly Drawing: 2843394-11_1_AC

Pos	Part No	UN	Qty	Description	Page No
-					
010	2843395-0000		1	MOUNTING SHEET	
120	350002-0011		4	PUSH-IN L-FITTING QSL-F-G1/4-12	
140	90459-6065		2	PUSH-IN Y-CONNECTOR QSY-12-8	
200	312105-0364		2	SCREW M6S ISO 4017 M6X10 A480	
210	312115-0305		4	SCREW ISO4762 M4X50 A4 80	
220	315105-0153		2	WASHER BRB 6,4X12 RFR	
230	312605-0312		4	HEXAGON NUT, M6M M4 A280	
240	350004-0005		2	PUSH-IN L-FITTING QSL-F-12	
250	342748-0109		1	T-CONNECTION 12MM	
260	346800-0110		2	SILENCER FILTER R1/4"	
270	350012-0005		1	SLEEVE QSH-F-12	
A50W6004	315300-0010	MM	190	TUBE, 12 MM PE BLUE	
T50T1530	90458-1092		1	PROPORTIONAL VALVE 0 - 10V/0-6 BAR	
	90458-1262		*1*	*CONNECTOR 131028001 FOR PROP. VALVE*	
T50T1540	90458-1092		1	PROPORTIONAL VALVE 0 - 10V/0-6 BAR	
	90458-1262		*1*	*CONNECTOR 131028001 FOR PROP. VALVE*	
T50W1530	351423-0006	M	15	CABLE UNITRONIC LICY 5X0,34	
T50W1532	315300-0010	MM	100	TUBE, 12 MM PE BLUE	
T50W1535	315300-0010	MM	100	TUBE, 12 MM PE BLUE	
T50W1540	351423-0006	M	15	CABLE UNITRONIC LICY 5X0,34	
T50W1542	315300-0010	MM	100	TUBE, 12 MM PE BLUE	
T50W1545	315300-0010	MM	100	TUBE, 12 MM PE BLUE	

Pos	Part No	UN	Qty	Description	Page No

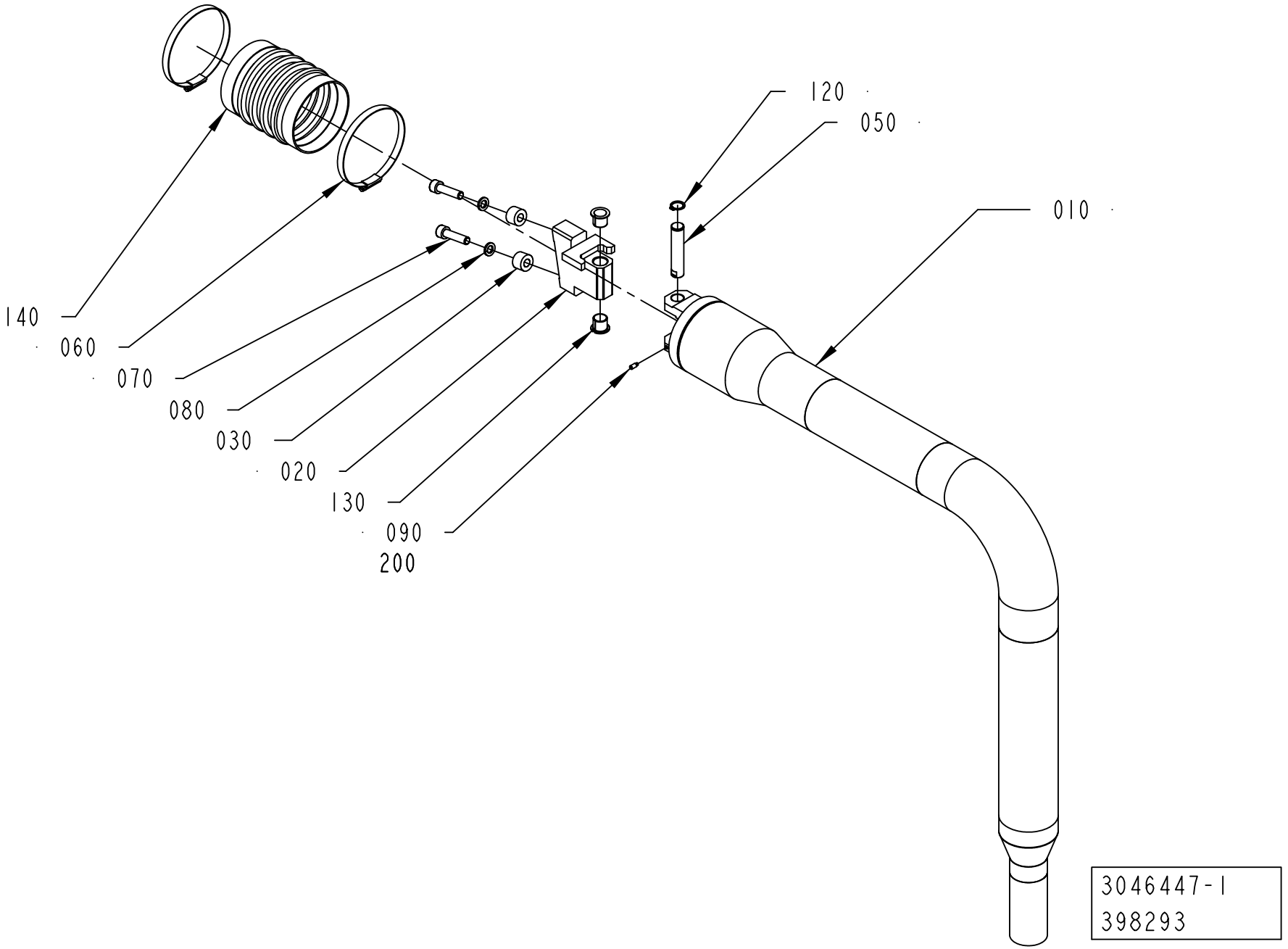
120
050
010
140
060
070
080
030
020
130
090
200
3046447-1
398293

ECM: 408866 - 20091002
Group number: 3046447-0100
Assembly Drawing: 3046447-1_1_AA

Pos	Part No	UN	Qty	Description	Page No
-					
010	3046448-0000		1	PIPE BRACKET	
020	1558975-0000		1	BLOCKING PIECE	
030	1254494-0000		2	SPACER	
050	1558945-0000		1	PIVOT PIN	
060	342991-0114		2	HOSE CLIP,WORM DRIVE TYPE (87)-112	
070	312115-0499		2	SCREW ISO4762 M10X40 A4 80	
080	315402-0173		2	LOCK WASHER FBB 10,2	
090	312311-0327		2	SCREW ISO4028 M5X12 FZB	
120	315751-0113		1	RETAINING RING FOR SHAFT DIN 471 16 SS	
130	321161-0221		2	FLANGE BUSHING, 16X18X17 MM	
140	90342-0024		1	RUBBER BELLOWS, 100X100 MM	
200	90157-0021	KG	1	LOCKING FLUID LOCTITE 270	

Pos	Part No	UN	Qty	Description	Page No

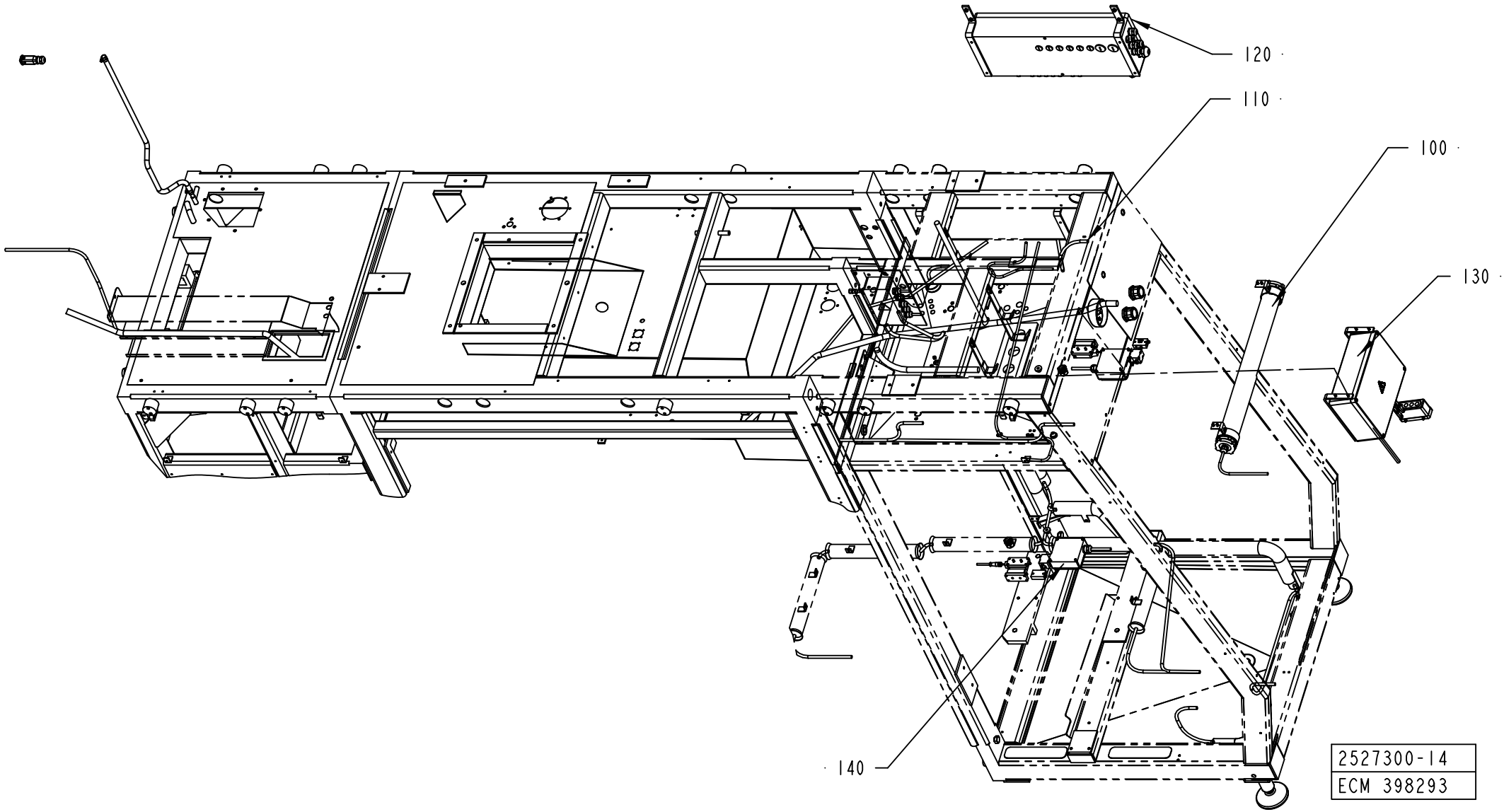
120
110
100
130
140
2527300-14
ECM 398293

ECM: 408748 - 20091002
Group number: 2527300-0300
Assembly Drawing: 2527300-14_1_AA

Pos	Part No	UN	Qty	Description	Page No
A3/SPEED					
110	2556665-0300		1	CABLE HARNESS	**2-97**
Common Parts					
100	2504790-0200		1	LIGHT FIXTURE	**2-99**
120	2785235-0200		1	CONNECTION BOX	**2-101**
130	2785233-0100		1	CONNECTION BOX	**2-105**
140	3043263-0100		1	DOOR SAFETY SWITCH	**2-109**

Pos	Part No	UN	Qty	Description	Page No

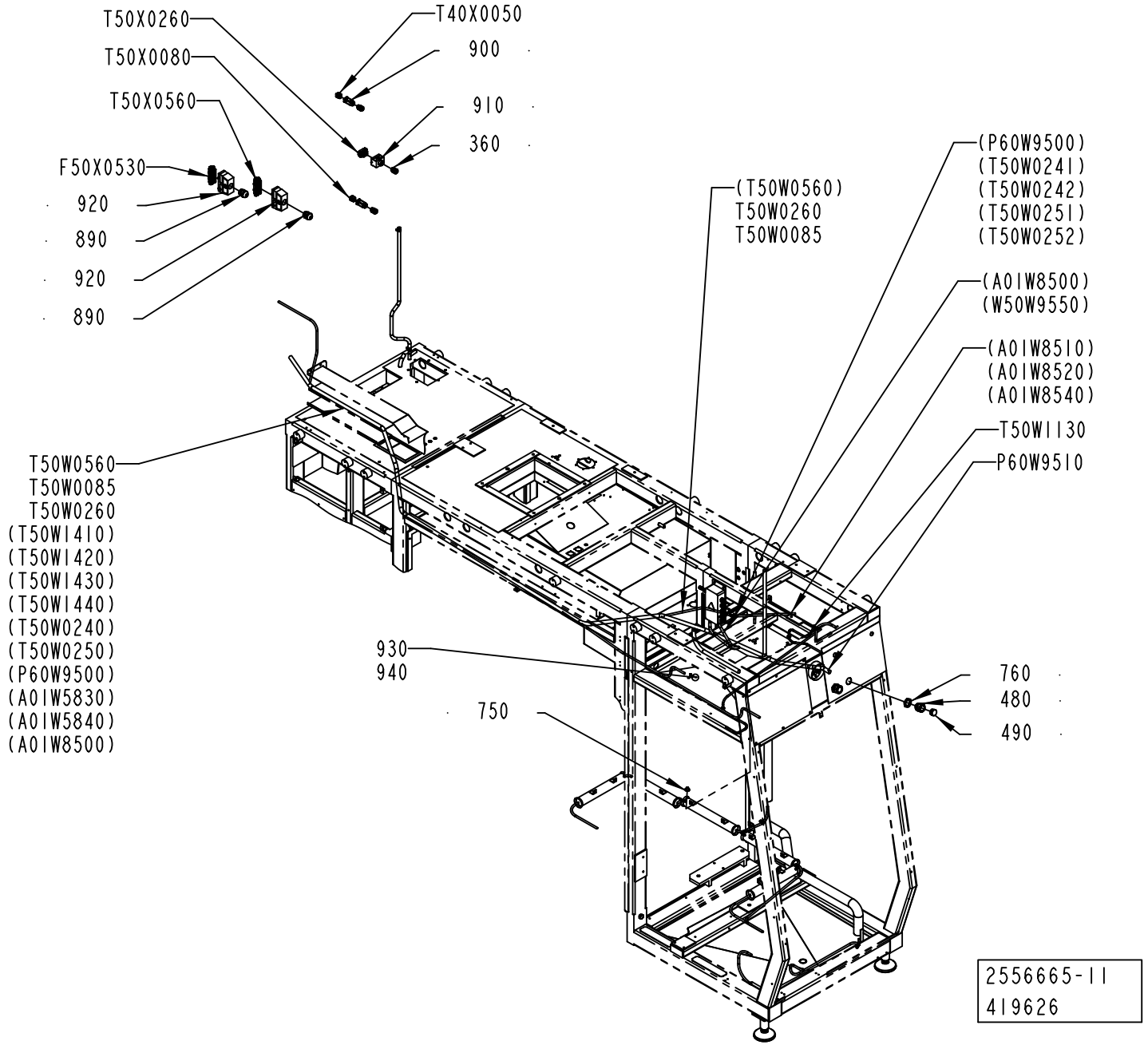
T50X0260
T50X0080
T50X0560
F50X0530
920
890
920
890
T40X0050
900
910
360
(T50W0560)
T50W0260
T50W0085
(P60W9500)
(T50W0241)
(T50W0242)
(T50W0251)
(T50W0252)
(A01W8500)
(W50W9550)
(A01W8510)
(A01W8520)
(A01W8540)
T50W1130
P60W9510
T50W0560
T50W0085
T50W0260
(T50W1410)
(T50W1420)
(T50W1430)
(T50W1440)
(T50W0240)
(T50W0250)
(P60W9500)
(A01W5830)
(A01W5840)
(A01W8500)
930
940
750
760
480
490
2556665-11
419626

ECM: 426438 - 20091010
Group number: 2556665-0300
Assembly Drawing: 2556665-11_1_AB

Pos	Part No	UN	Qty	Description	Page No
-					
360	90458-0307		3	CABLE GLAND, M20X1,5, NO.5311 1020	
480	353240-0006		2	GLAND W/O INSERT PG29 NORMAL	
490	353249-0049		2	INSERT, SOLID, EK155G	
750	90015-0023		1	LEAD-IN, TET7-10, E-1458019	
760	90099-0120		2	NUT, PR 37 (PG29)	
890	90458-0309		2	CABLE GLAND, M32X1,5, NO.5311 1040	
900	90459-3080		2	HOOD HAN-BRID 3A 19 20 003 1443	
910	90459-6632		1	HOOD 6 B TOP ENTRY, 19 30 006 1440	
920	90459-6636		2	HOOD 24 B TOP ENTRY, 19 30 024 0427	
930	90458-1308		2	BLIND PLUG CIRCULAR, M20X1,5 514GFK/220	
940	353250-0025		2	GLAND, LOCK NUT M25X1,5	
F50X0530	90110-0056		1	MALE INSERT HAN 24 E 09 33 024 2601	
P60W9510	351150-0407	M	4	CABLE OLFLEX 12X0,75 MM2 LIGHT/GREY	
T50W0085	351150-0412	M	8.5	CABLE OLFLEX 3X1,5 MM2 LIGHT/GREY	
T50W0260	90220-0104	M	25	SCR. CABLE 4X1,5MM2	
T50W0560	351150-0425	M	7	CABLE OLFLEX 25X0,75 MM2 LIGHT/GREY	
T50W1130	351150-0406	M	4	CABLE OLFLEX 7X0,75 MM2 LIGHT/GREY	
T40X0050	90459-6821		1	MALE INSERT HAN 4A, 09 20 004 2611	
T50X0080	90459-6821		1	MALE INSERT HAN 4A, 09 20 004 2611	
T50X0260	90110-0052		1	MALE INSERT HAN 6E 09 33 006 2601	
T50X0560	90110-0056		1	MALE INSERT HAN 24 E 09 33 024 2601	

Pos	Part No	UN	Qty	Description	Page No

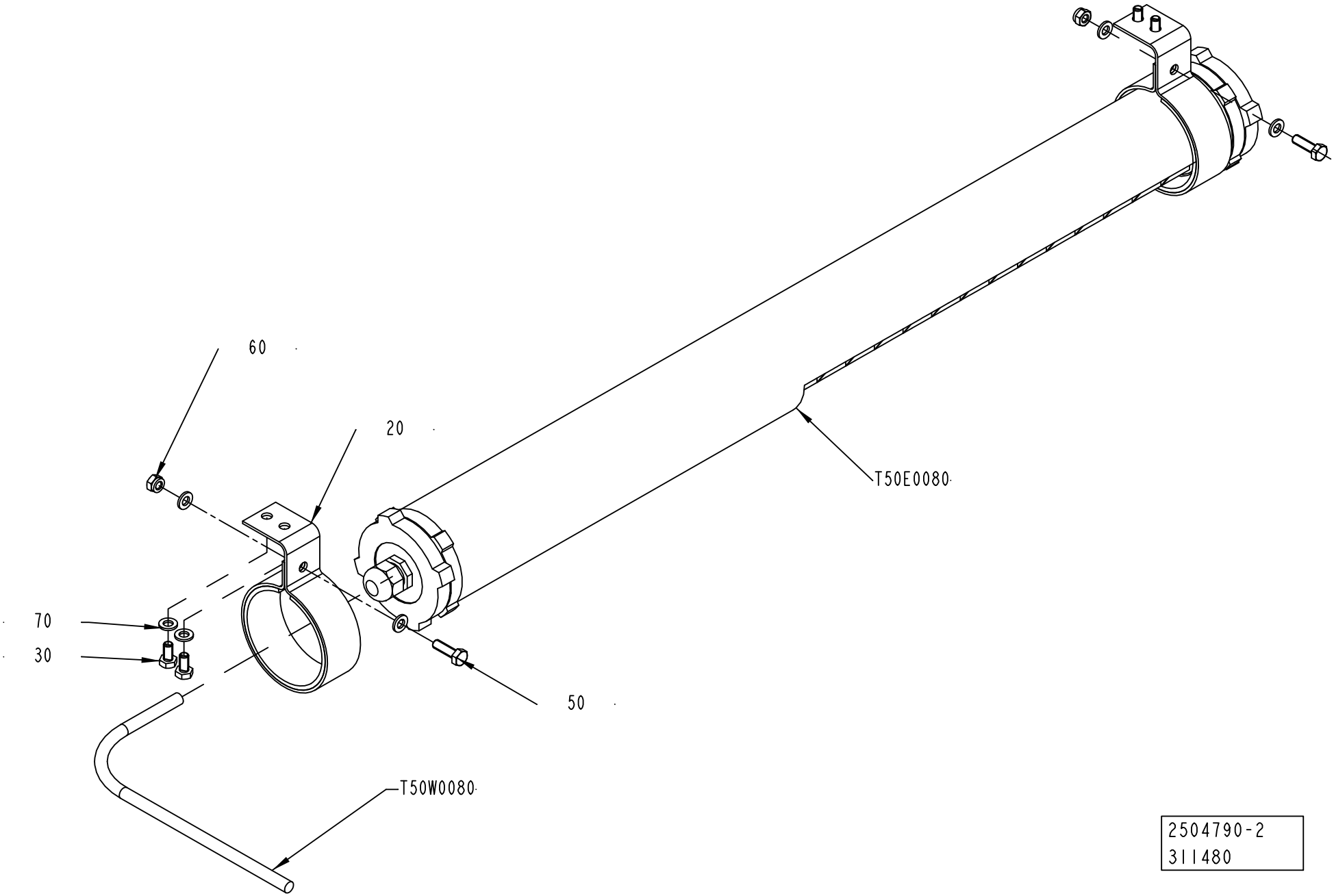
60
20
T50E0080
70
30
50
T50W0080
2504790-2
311480

ECM: 456007 - 20100401
Group number: 2504790-0200
Assembly Drawing: 2504790-2_1_AA

Pos	Part No	UN	Qty	Description	Page No
CE					
T50E0080	90459-1000		1	LIGHT FIXTURE, RL 70CV-136/230V 50HZ	
UL, CSA					
T50E0080	3111146-0000		1	LIGHT FIXTURE	
	90459-1001		*1*	*FLUORESCENT TUBE, DULUX L 36W/21-840*	
Common Parts					
020	1140129-0000		2	HOLDER	
030	312105-0366		4	SCREW M6S ISO 4017 M6X12 A480	
050	312105-0370		2	SCREW M6S ISO 4017 M6X20 A480	
060	312812-0316		2	HEXAGON NUT, NY-LOCK M6 A480	
070	315105-0153		8	WASHER BRB 6,4X12 RFR	
T50W0080	351150-0412	M	5	CABLE OLFLEX 3X1,5 MM2 LIGHT/GREY	

Pos	Part No	UN	Qty	Description	Page No

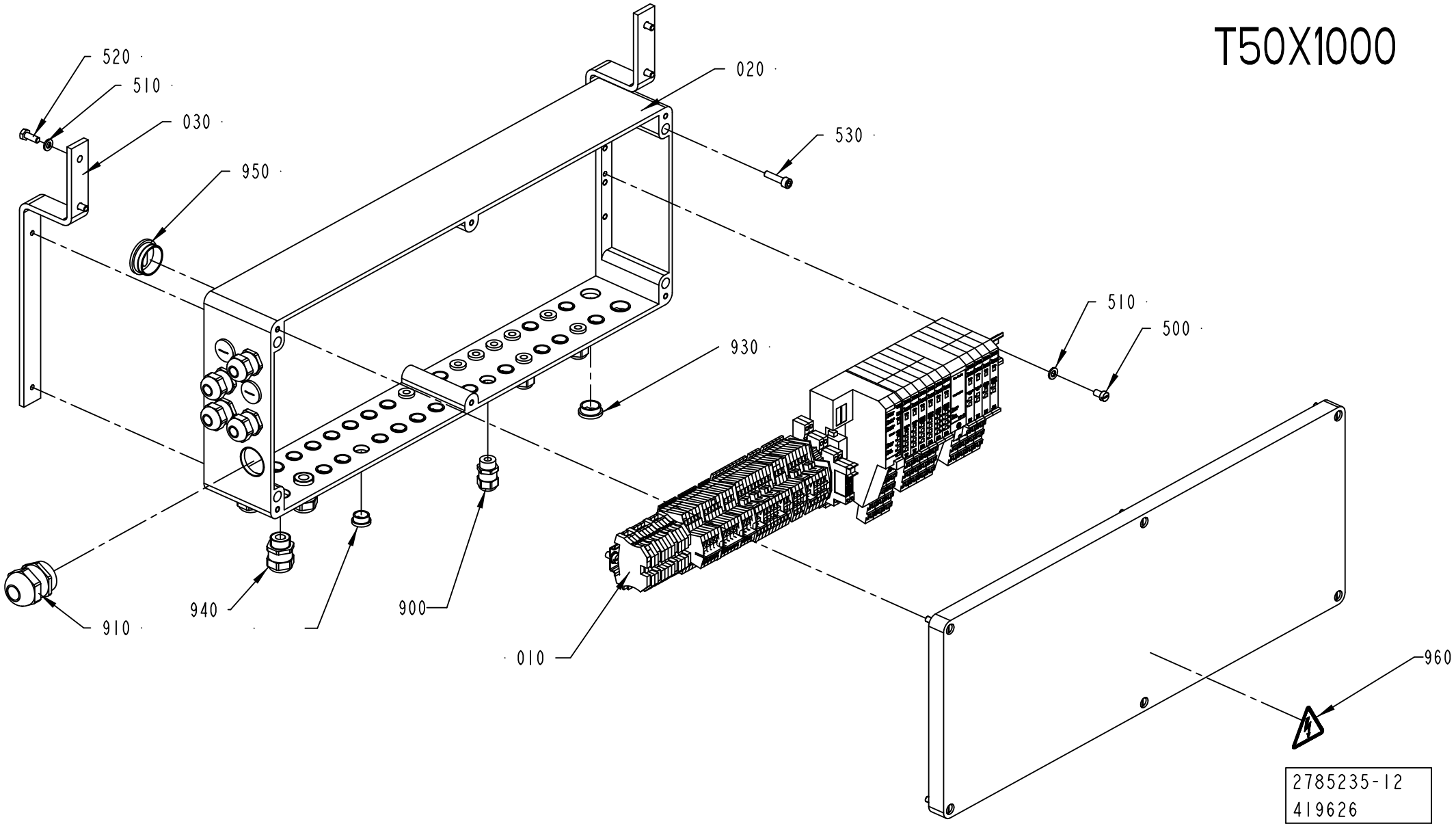
T50X1000
520
510
030
950
020
530
510
500
930
910
940
900
010
960
2785235-12
419626

ECM: 461421 - 20101001
Group number: 2785235-0200
Assembly Drawing: 2785235-12_1_AB

Pos	Part No	UN	Qty	Description	Page No
A3/SPEED ANSI (See drawing on page: 2-100)					
900	90458-0306		9	CABLE GLAND, M16X1,5, NO.5311 1010	
920	90458-1307		21	BLIND PLUG CIRCULAR, M16X1,5 514GFK/216	
930	90458-1308		11	BLIND PLUG CIRCULAR, M20X1,5 514GFK/220	
940	90458-0307		7	CABLE GLAND, M20X1,5, NO.5311 1020	
960	359715-0100		1	WARNING SIGN ANSI (H), ELECTRIC SHOCK	
A3/SPEED ISO (See drawing on page: 2-100)					
900	90458-0306		9	CABLE GLAND, M16X1,5, NO.5311 1010	
920	90458-1307		21	BLIND PLUG CIRCULAR, M16X1,5 514GFK/216	
930	90458-1308		11	BLIND PLUG CIRCULAR, M20X1,5 514GFK/220	
940	90458-0307		7	CABLE GLAND, M20X1,5, NO.5311 1020	
960	359705-0015		1	WARNING SIGN ISO, RISK OF ELECTRIC SHOCK	
Common Parts					
010	2701355-0200		1	TERMINAL BLOCK	**2-103**
020	2785236-0000		1	CONNECTION BOX	
030	2785237-0000		2	SUPPORT	
500	312125-0364		2	SCREW ISO 1207 M6X10 A4	
510	315105-0153		6	WASHER BRB 6,4X12 RFR	
520	312105-0368		4	SCREW M6S ISO 4017 M6X16 A480	
530	312115-0372		4	SCREW ISO4762 M6X25 A4 80	
910	90458-0309		1	CABLE GLAND, M32X1,5, NO.5311 1040	
950	90458-1310		2	BLIND PLUG CIRCULAR, M32X1,5 514GFK/232	

Pos	Part No	UN	Qty	Description	Page No

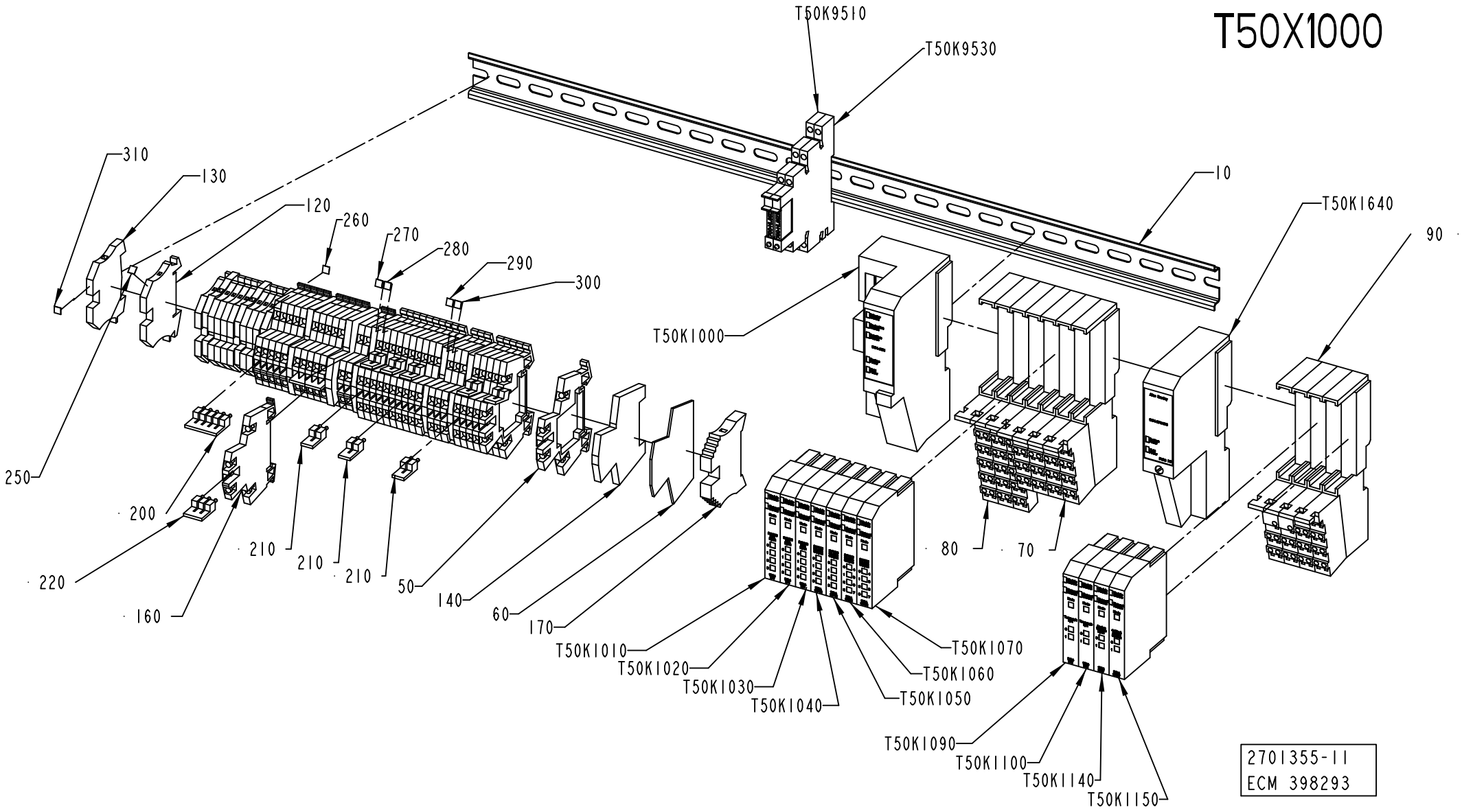
T50X1000
T50K9510
T50K9530
310
130
120
260
270
280
290
300
10
T50K1640
90
T50K1000
250
200
220
160
210
210
210
50
140
60
170
80
70
T50K1010
T50K1020
T50K1030
T50K1040
T50K1050
T50K1060
T50K1070
T50K1090
T50K1100
T50K1140
T50K1150
2701355-11
ECM 398293

ECM: 398293 - 20100702
Group number: 2701355-0200
Assembly Drawing: 2701355-11_1_AA

Pos	Part No	UN	Qty	Description	Page No
-					
010	1347878-0000		1	RAIL	
050	90077-0113		19	TERMINAL BLOCK WDK 2.5	
060	90077-0114		1	END PLATE, WAP/WDK 2,5	
070	90459-2526		6	REMOTE I/O BASE MODULE 8 POINTS, 1734-TB	
080	90459-2527		3	REMOTE I/O BASE MODULE 12 POINTS	
090	90459-2528		2	REMOTE I/O BASE MODULE FOR THERMOCOUPLE	
120	353021-0212		9	FEED THROUGH TERMINAL, 10200.0	
130	353024-0204		4	EARTH TERMINAL WPE 2,5	
140	353024-0212		6	EARTH TERMINAL WDK 2,5 PE	
160	90459-5253		13	TERMINAL BLOCK WDK 2,5 V	
170	353031-0203		1	END SUPPORT, WEW 35/2	
200	353034-0030		2	BRIDGE CONNECTOR WQV 2,5/10	
210	353034-0030		8	BRIDGE CONNECTOR WQV 2,5/10	
220	353034-0030		1	BRIDGE CONNECTOR WQV 2,5/10	
250	359011-0807		2	MARKING, DEK 5 FW 1-50	
260	359011-0808		1	MARKING, DEK 5FW 51-100	
270	359011-0809		2	MARKING, DEK 5 FW 101-150	
280	359011-0810		2	MARKING, DEK 5 FW 151-200	
290	359011-0811		2	MARKING, DEK 5 FW 201-250	
300	359011-0812		2	MARKING, DEK 5FW 251-300	
310	359011-0819		1	MARKING, EARTH, DEK 5 GW ERDE I.KR.	
T50K1000	90459-2494		1	DEVICENET I/O ADAPTER MODULE, 1734-ADN	
T50K1010	90459-2503		1	DIGITAL INPUT 4 PTS SINK, 1734-IB4	
T50K1020	90459-2503		1	DIGITAL INPUT 4 PTS SINK, 1734-IB4	
T50K1030	90459-2503		1	DIGITAL INPUT 4 PTS SINK, 1734-IB4	
T50K1040	90459-2505		1	DIGITAL OUTPUT 4 PTS, 1734-OB4E	
T50K1050	90459-2505		1	DIGITAL OUTPUT 4 PTS, 1734-OB4E	
T50K1060	90459-6560		1	DIGITAL OUTPUT 8 PTS, 1734-OB8E/C	
T50K1070	90459-6560		1	DIGITAL OUTPUT 8 PTS, 1734-OB8E/C	
T50K1090	90459-2512		1	REMOTE I/O THERMOCOUPLE INPUT 2 PTS	
T50K1100	90459-2512		1	REMOTE I/O THERMOCOUPLE INPUT 2 PTS	
T50K1140	90459-2508		1	REMOTE I/O ANALOG INPUT VOLTAGE 2 PTS	
T50K1150	90459-2510		1	ANALOG OUTPUT VOLTAGE MODULE 2 PTS	
T50K1640	90459-2500		1	EXPANSION POWER SUPPLY MODULE	
T50K9510	90600-1618		1	TERMINAL BLOCK RELAY, 700-HLS1Z24	
T50K9530	90600-1618		1	TERMINAL BLOCK RELAY, 700-HLS1Z24	

Pos	Part No	UN	Qty	Description	Page No

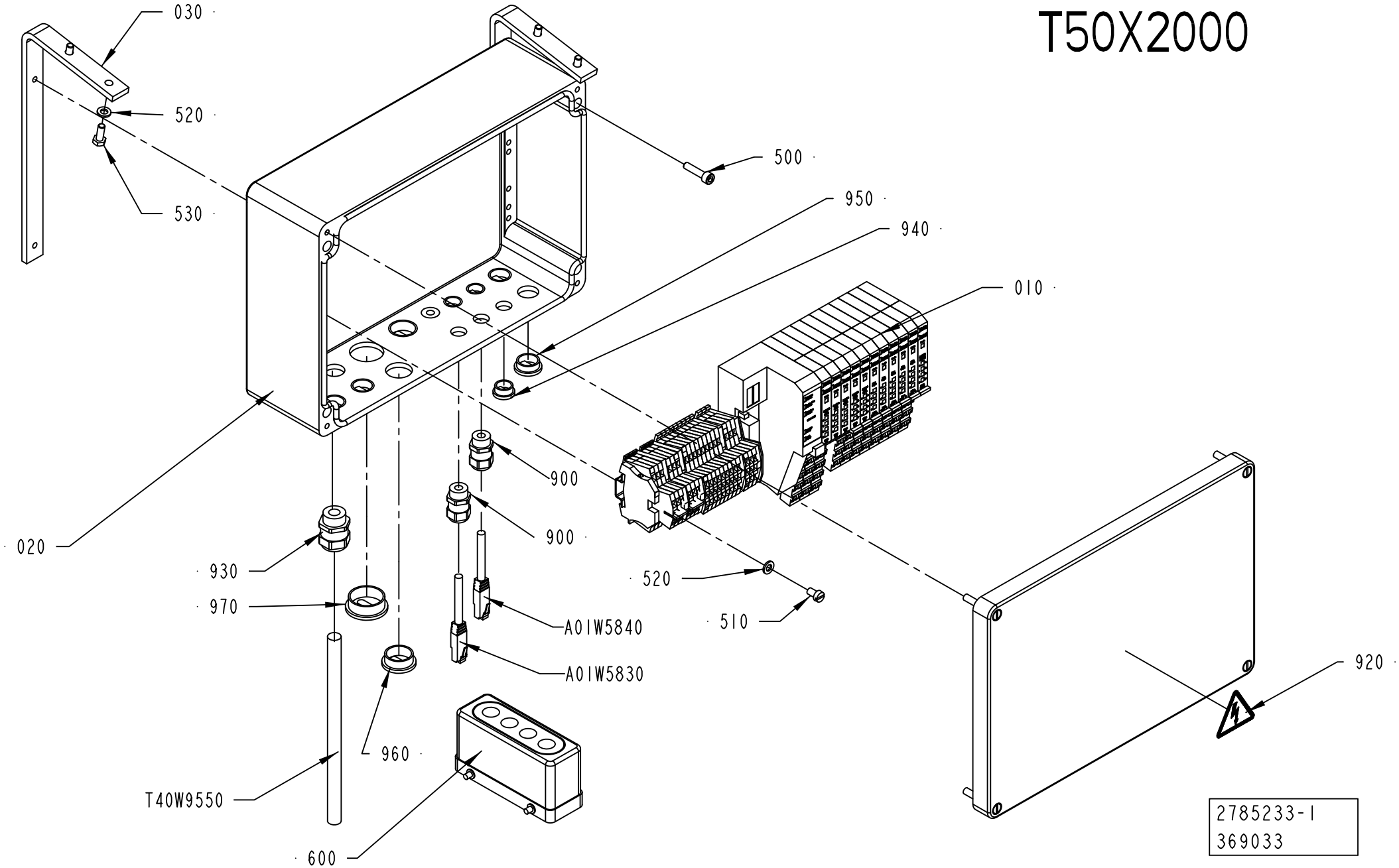
T50X2000
030
520
530
500
950
940
010
020
900
900
930
970
520
510
A01W5840
A01W5830
920
960
T40W9550
600
2785233-1
369033

ECM: 461414 - 20101001
Group number: 2785233-0100
Assembly Drawing: 2785233-1_1_AC

Pos	Part No	UN	Qty	Description	Page No
ANSI					
920	359715-0100		1	WARNING SIGN ANSI (H), ELECTRIC SHOCK	
ISO					
920	359705-0015		1	WARNING SIGN ISO, RISK OF ELECTRIC SHOCK	
Common Parts					
010	2701352-0100		1	TERMINAL BLOCK	**2-107**
020	2785234-0000		1	CONNECTION BOX	
030	2702947-0000		2	HOLDER	
500	312115-0372		4	SCREW ISO4762 M6X25 A4 80	
510	312121-0364		2	SCREW ISO 1207 M6X10 4.8-5.8 Z.PL.	
520	315105-0153		6	WASHER BRB 6,4X12 RFR	
530	312105-0368		4	SCREW M6S ISO 4017 M6X16 A480	
600	90110-0381		1	COVER, 310601-33 CYR24.4	
900	90458-0306		3	CABLE GLAND, M16X1,5, NO.5311 1010	
930	90458-0307		1	CABLE GLAND, M20X1,5, NO.5311 1020	
940	90458-1307		3	BLIND PLUG CIRCULAR, M16X1,5 514GFK/216	
950	90458-1308		5	BLIND PLUG CIRCULAR, M20X1,5 514GFK/220	
960	90458-1309		2	BLIND PLUG CIRCULAR, M25X1,5 514GFK/225	
970	90458-1310		1	BLIND PLUG CIRCULAR, M32X1,5 514GFK/232	
A01W5830	351501-0075		1	ETHERNET PATCH CABLE, FL CAT5 PATCH 7,5	
A01W5840	351501-0075		1	ETHERNET PATCH CABLE, FL CAT5 PATCH 7,5	
T50W9550	351150-0407	M	2.5	CABLE OLFLEX 12X0,75 MM2 LIGHT/GREY	

Pos	Part No	UN	Qty	Description	Page No

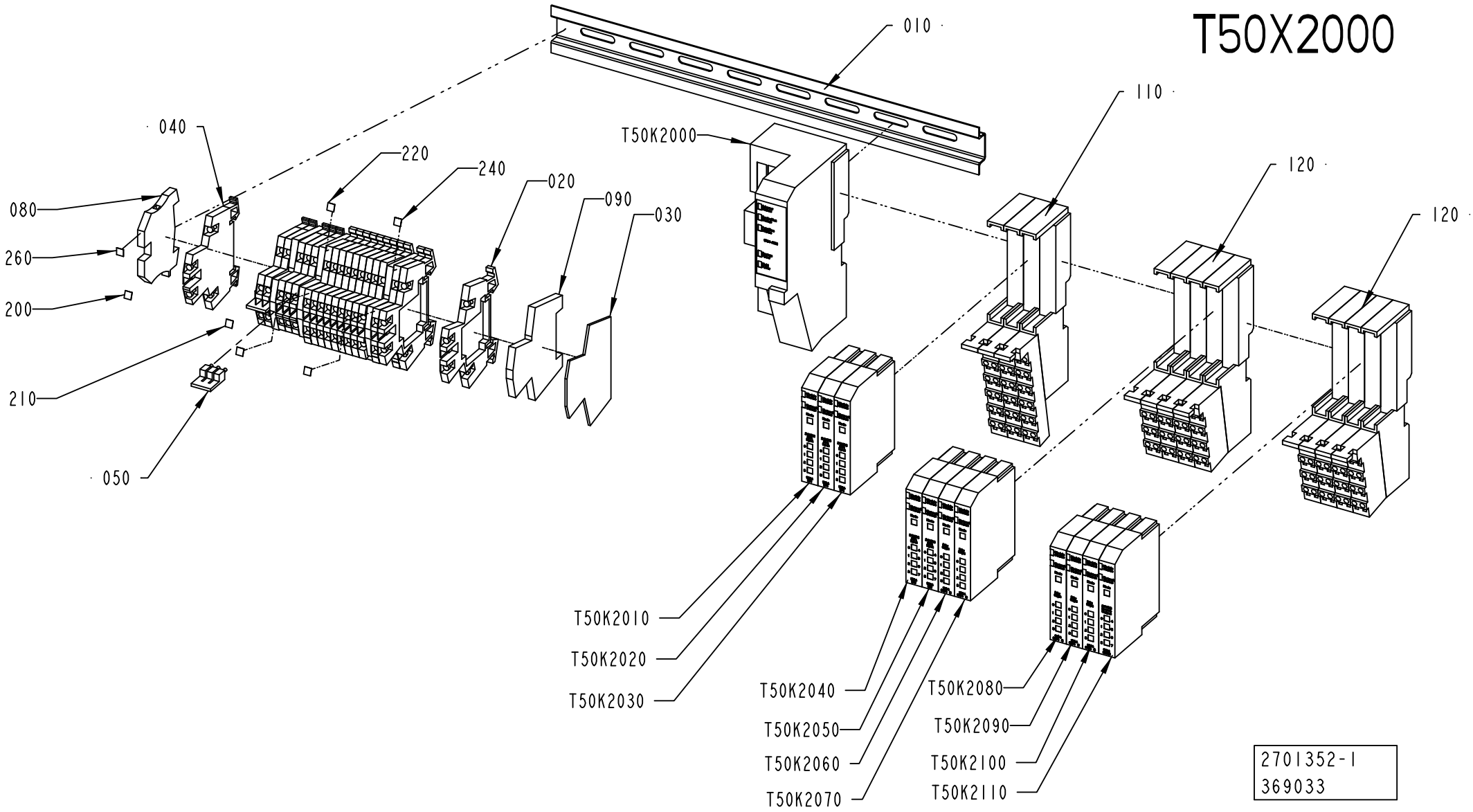
T50X2000
010
040
220
240
020
090
030
080
260
200
210
050
T50K2000
110
120
120
T50K2010
T50K2020
T50K2030
T50K2040
T50K2050
T50K2060
T50K2070
T50K2080
T50K2090
T50K2100
T50K2110
2701352-1
369033

ECM: 375100 - 20081127
Group number: 2701352-0100
Assembly Drawing: 2701352-1_1_AD

Pos	Part No	UN	Qty	Description	Page No
-					
010	353042-0004	MM	315	RAIL TS 35/7,5	
020	90077-0113		12	TERMINAL BLOCK WDK 2.5	
030	90077-0114		1	END PLATE, WAP/WDK 2,5	
040	90459-5253		6	TERMINAL BLOCK WDK 2,5 V	
050	353034-0030		2	BRIDGE CONNECTOR WQV 2,5/10	
060	353031-0203		1	END SUPPORT, WEW 35/2	
080	353024-0204		1	EARTH TERMINAL WPE 2,5	
090	353024-0212		4	EARTH TERMINAL WDK 2,5 PE	
110	90459-2527		3	REMOTE I/O BASE MODULE 12 POINTS	
120	90459-2526		8	REMOTE I/O BASE MODULE 8 POINTS, 1734-TB	
200	359011-0807		1	MARKING, DEK 5 FW 1-50	
210	359011-0808		1	MARKING, DEK 5FW 51-100	
220	359011-0809		2	MARKING, DEK 5 FW 101-150	
230	359011-0810		2	MARKING, DEK 5 FW 151-200	
240	359011-0811		2	MARKING, DEK 5 FW 201-250	
250	359011-0812		2	MARKING, DEK 5FW 251-300	
260	359011-0819		1	MARKING, EARTH, DEK 5 GW ERDE I.KR.	
T50K2000	90459-2494		1	DEVICENET I/O ADAPTER MODULE, 1734-ADN	
T50K2010	90459-2503		1	DIGITAL INPUT 4 PTS SINK, 1734-IB4	
T50K2020	90459-2503		1	DIGITAL INPUT 4 PTS SINK, 1734-IB4	
T50K2030	90459-2503		1	DIGITAL INPUT 4 PTS SINK, 1734-IB4	
T50K2040	90459-6561		1	DIGITAL INPUT 8 PTS SINK, 1734-IB8/C	
T50K2050	90459-6561		1	DIGITAL INPUT 8 PTS SINK, 1734-IB8/C	
T50K2060	90459-5261		1	REMOTE I/O, RELAY OUTP. 4 PTS,1734-OW4/C	
T50K2070	90459-5261		1	REMOTE I/O, RELAY OUTP. 4 PTS,1734-OW4/C	
T50K2080	90459-5261		1	REMOTE I/O, RELAY OUTP. 4 PTS,1734-OW4/C	
T50K2090	90459-5261		1	REMOTE I/O, RELAY OUTP. 4 PTS,1734-OW4/C	
T50K2100	90459-5261		1	REMOTE I/O, RELAY OUTP. 4 PTS,1734-OW4/C	
T50K2110	90459-6560		1	DIGITAL OUTPUT 8 PTS, 1734-OB8E/C	

Pos	Part No	UN	Qty	Description	Page No

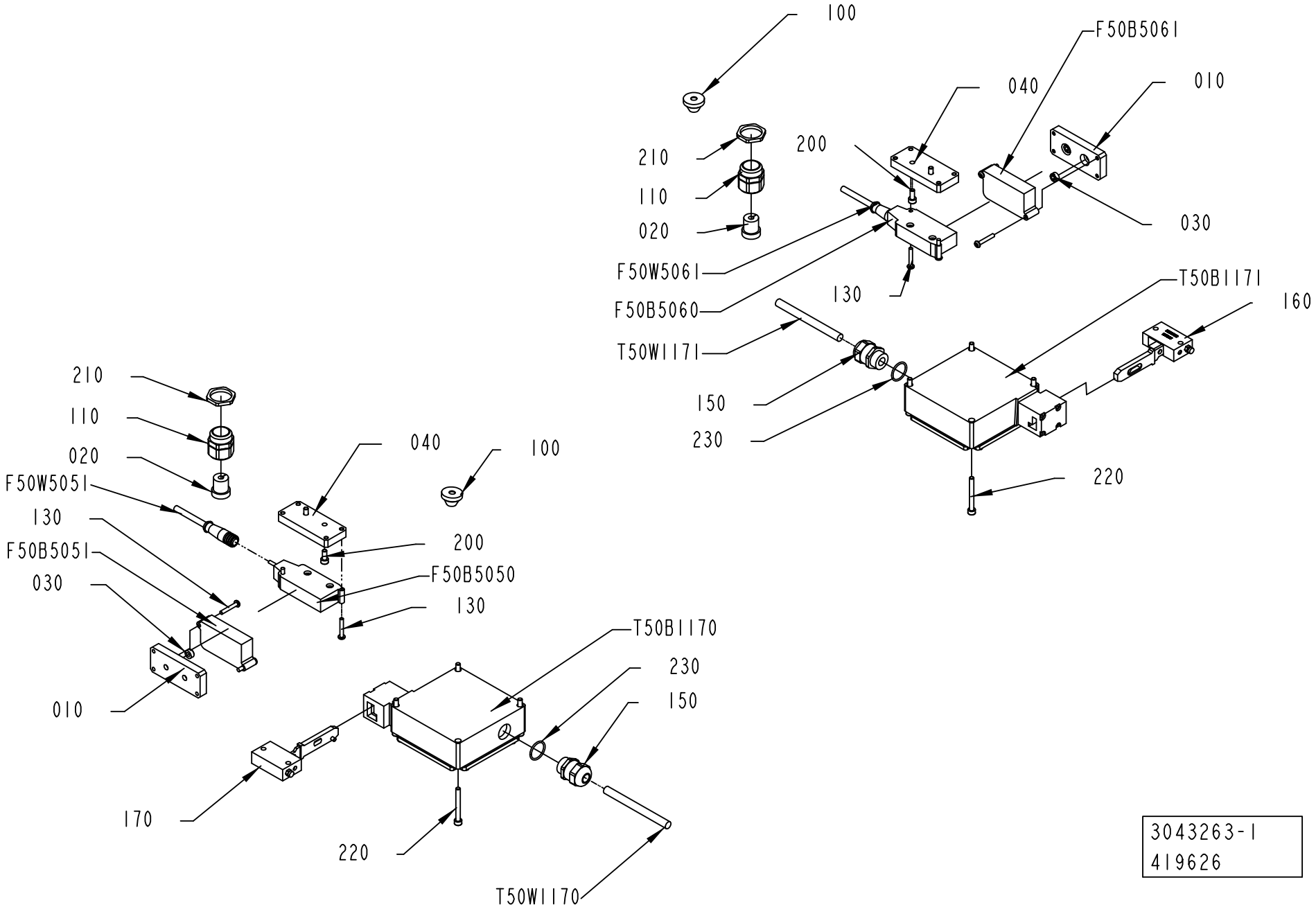

3043263-1
419626

ECM: 434126 - 20100702
Group number: 3043263-0100
Assembly Drawing: 3043263-1_1_AB

Pos	Part No	UN	Qty	Description	Page No
A3/SPEED					
010	3031346-0000		2	PLATE	
030	575034-0000		4	ROUND NUT	
040	3046894-0000		2	SPACER PLATE	
130	90459-4165		8	SAFETY SCREW SM4X25, 20-053-43	
200	312115-0327		4	SCREW ISO4762 M5X12 A4 80	
F50W5061	90459-4876		1	FOCUS JUMPER CABLE M12 5P 3M, 20-056-21	
T50W1170	351150-0406	MM	1500	CABLE OLFLEX 7X0,75 MM2 LIGHT/GREY	
Common Parts					
020	3032222-0000		2	INSERT	
100	90015-0023		2	LEAD-IN, TET7-10, E-1458019	
110	90458-0407		2	GLAND W/O INSERT M25 NORMAL	
150	90458-0307		2	CABLE GLAND, M20X1,5, NO.5311 1020	
160	90600-5274		1	ACTUATOR SAFETY SWITCH, 103845	
170	90600-5275		1	KEY FOR SAF.SW.TZRE024PG RC1635-104068 Z	
210	353250-0025		2	GLAND, LOCK NUT M25X1,5	
220	312115-0340		8	SCREW ISO4762 M5X45 A4 80	
230	315206-0707		2	O-RING 20,35X1,78 MM	
F50B5050	90459-6961		1	SAFETY SENSOR, NON CONT. ADAM-E M12 0,5M	
F50B5051	90459-4089		1	SAFETY SENSOR NON-CONTACT EVA E	
F50B5060	90459-6961		1	SAFETY SENSOR, NON CONT. ADAM-E M12 0,5M	
F50B5061	90459-4089		1	SAFETY SENSOR NON-CONTACT EVA E	
F50W5051	90459-4876		1	FOCUS JUMPER CABLE M12 5P 3M, 20-056-21	
T50B1170	90457-0196		1	LOCKABLE SAFETY GUARD TZ2RE024M-RC1635	
T50B1171	90457-0196		1	LOCKABLE SAFETY GUARD TZ2RE024M-RC1635	
T50W1171	351150-0406	MM	1500	CABLE OLFLEX 7X0,75 MM2 LIGHT/GREY	

Pos	Part No	UN	Qty	Description	Page No

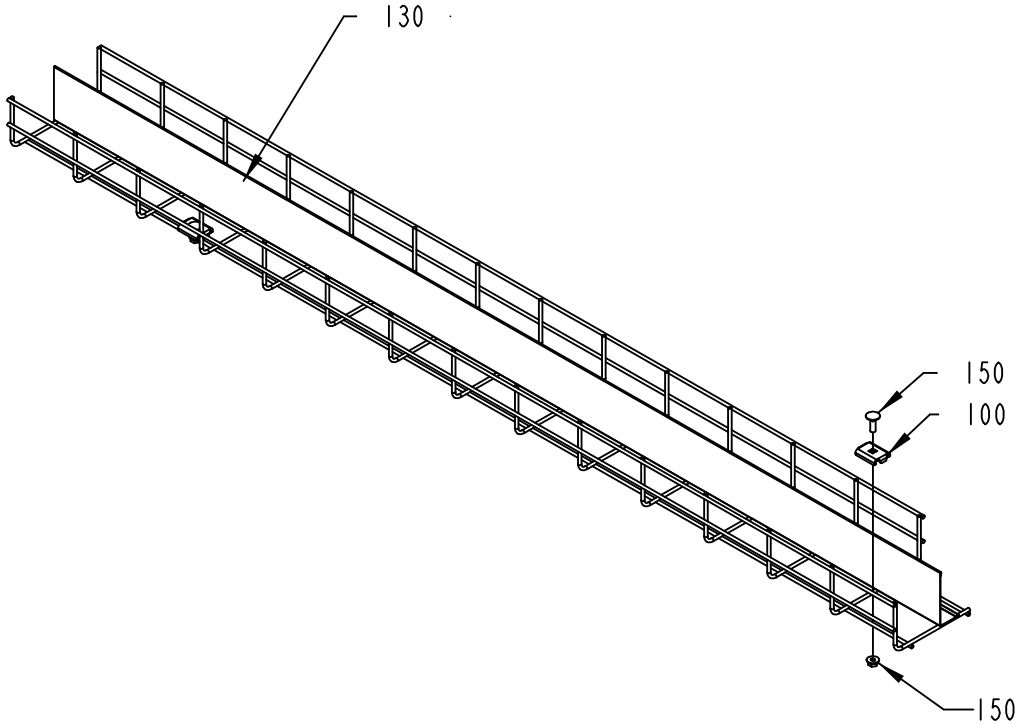
130
150
100
150

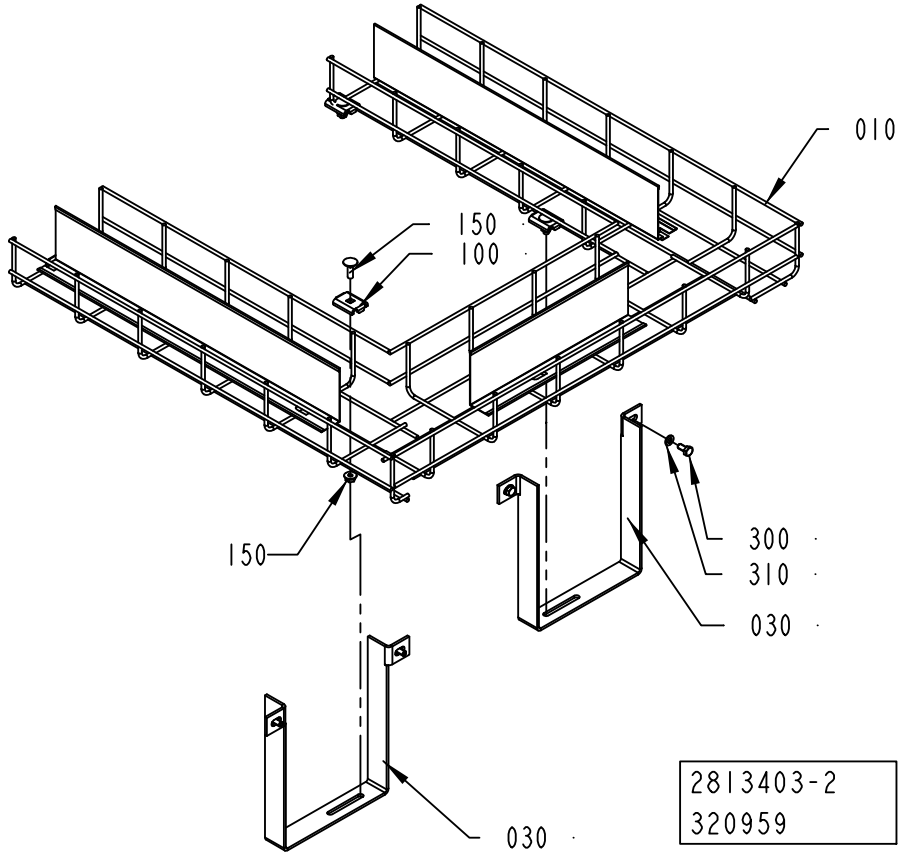
010
150
100
150
300
310
030
030
2813403-2
320959

ECM: 383401 - 20100702
Group number: 2813403-0100
Assembly Drawing: 2813403-2_1_AB

Pos	Part No	UN	Qty	Description	Page No
A3/SPEED					
010	2894521-0000		1	CABLE DUCT	
100	90181-0183		6	CABLE DUCT, FITTING, B2	
130	2933761-0000		1	CABLE DUCT	
150	90181-0314		6	CABLE TRENCH PARTS	
Common Parts					
030	2813668-0000		2	HOLDER	
300	312105-0366		4	SCREW M6S ISO 4017 M6X12 A480	
310	315105-0153		4	WASHER BRB 6,4X12 RFR	

Pos	Part No	UN	Qty	Description	Page No

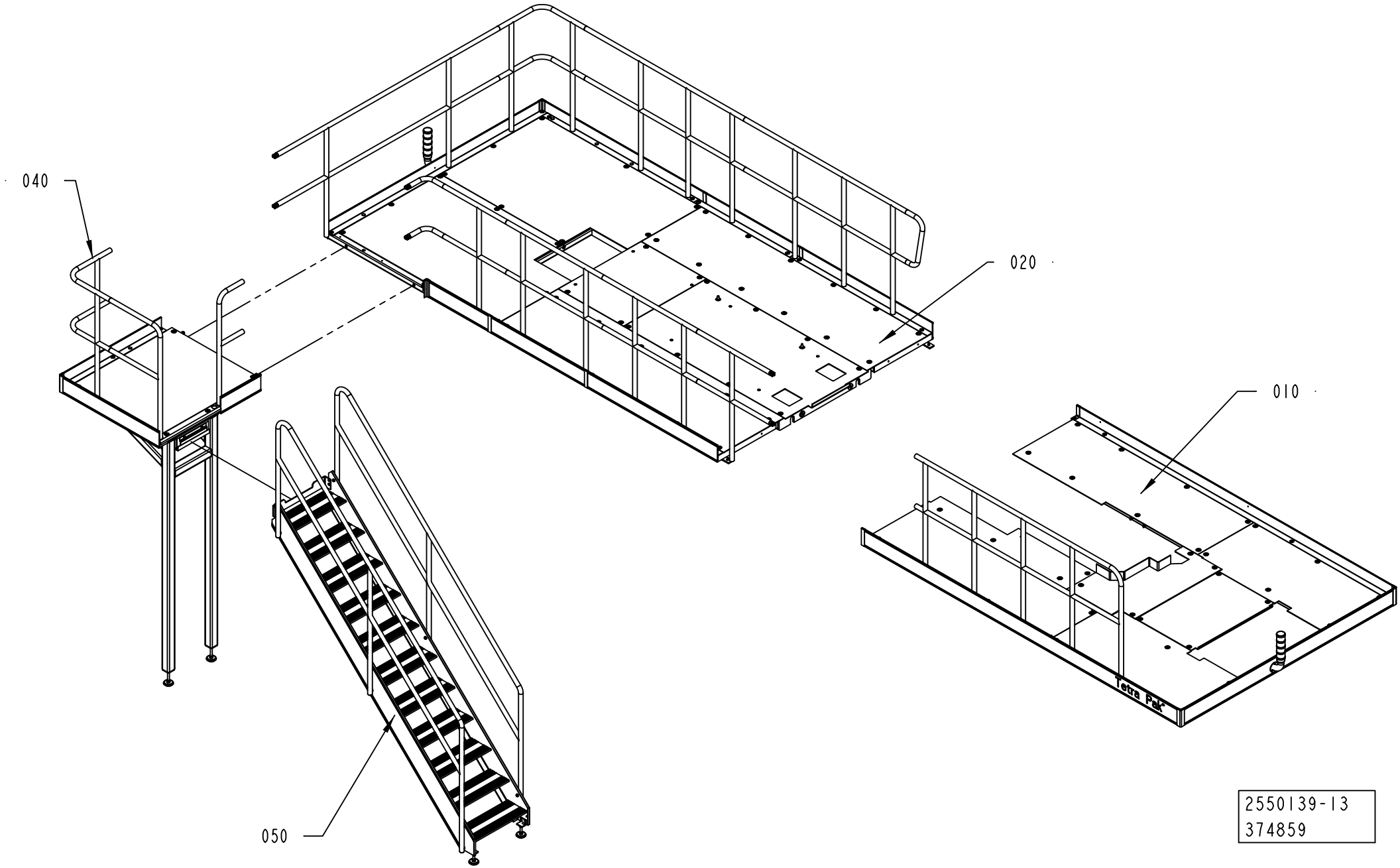
040
020
010
050
Tetra Pak
2550139-13
374859

ECM: 379719 - 20081130
Group number: 2550139-0200
Assembly Drawing: 2550139-13_1_AB

This list covers pages from 2-112 to 2-119

Pos	Part No	UN	Qty	Description	Page No
-					
010	2508369-0300		1	FRONT PLATFORM	**2-121**
020	2550138-0200		1	PLATFORM	**2-125, 2-127, 2-129, 2-131, 2-133, 2-135**
040	2564546-0100		1	LANDING	**2-139, 2-141**
050	1523777-0200		1	STAIR	**2-143**

Pos	Part No	UN	Qty	Description	Page No

Machine Type | Group Description | Used-In | Group Number | Page No

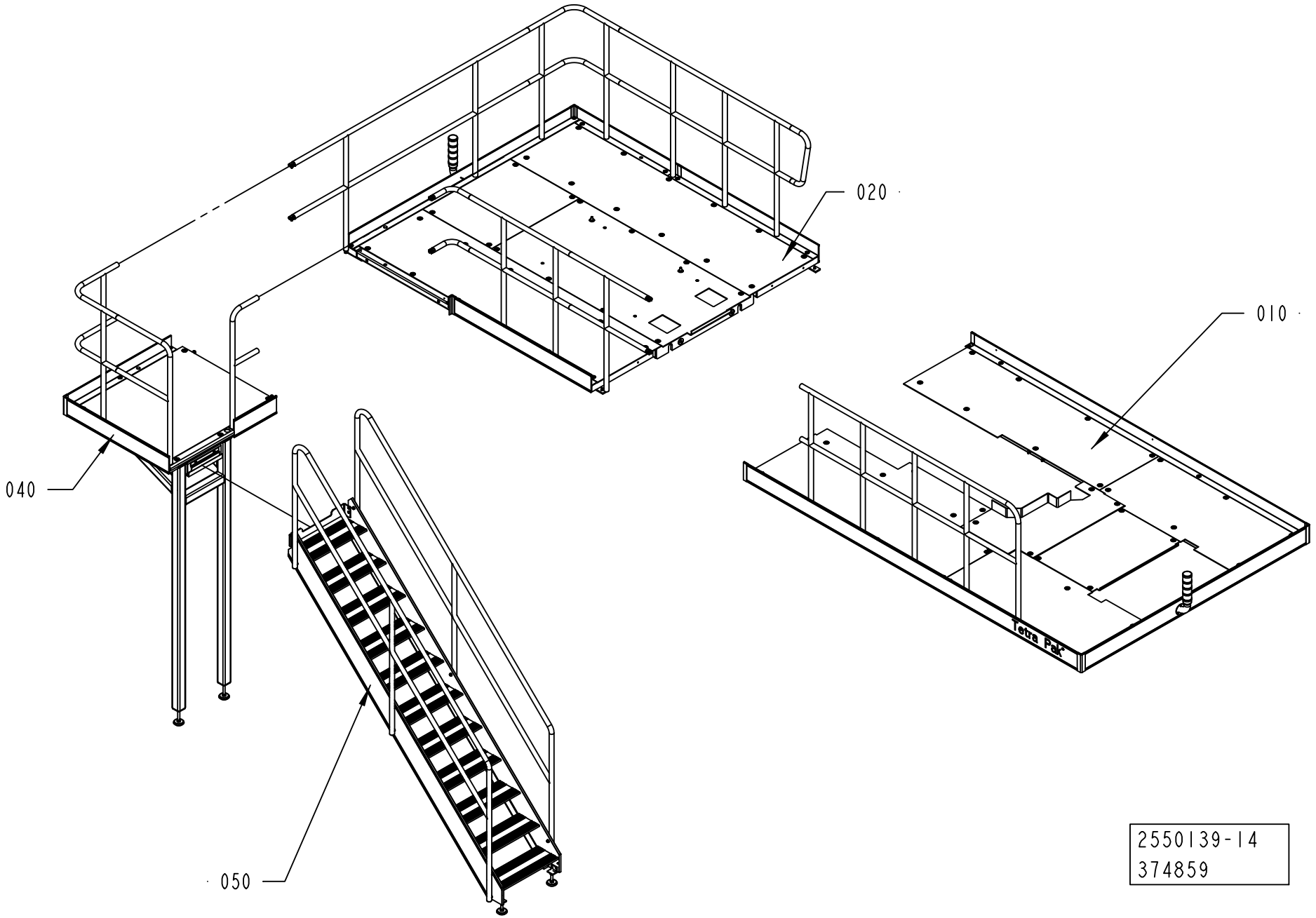
020
010
040
050
Tetra Pak
2550139-14
374859

ECM: 379719 - 20081130
Group number: 2550139-0200
Assembly Drawing: 2550139-14_1_AB

This list covers pages from 2-112 to 2-119

Pos	Part No	UN	Qty	Description	Page No
-					
010	2508369-0300		1	FRONT PLATFORM	**2-121**
020	2550138-0200		1	PLATFORM	**2-125, 2-127, 2-129, 2-131, 2-133, 2-135**
040	2564546-0100		1	LANDING	**2-139, 2-141**
050	1523777-0200		1	STAIR	**2-143**

Pos	Part No	UN	Qty	Description	Page No

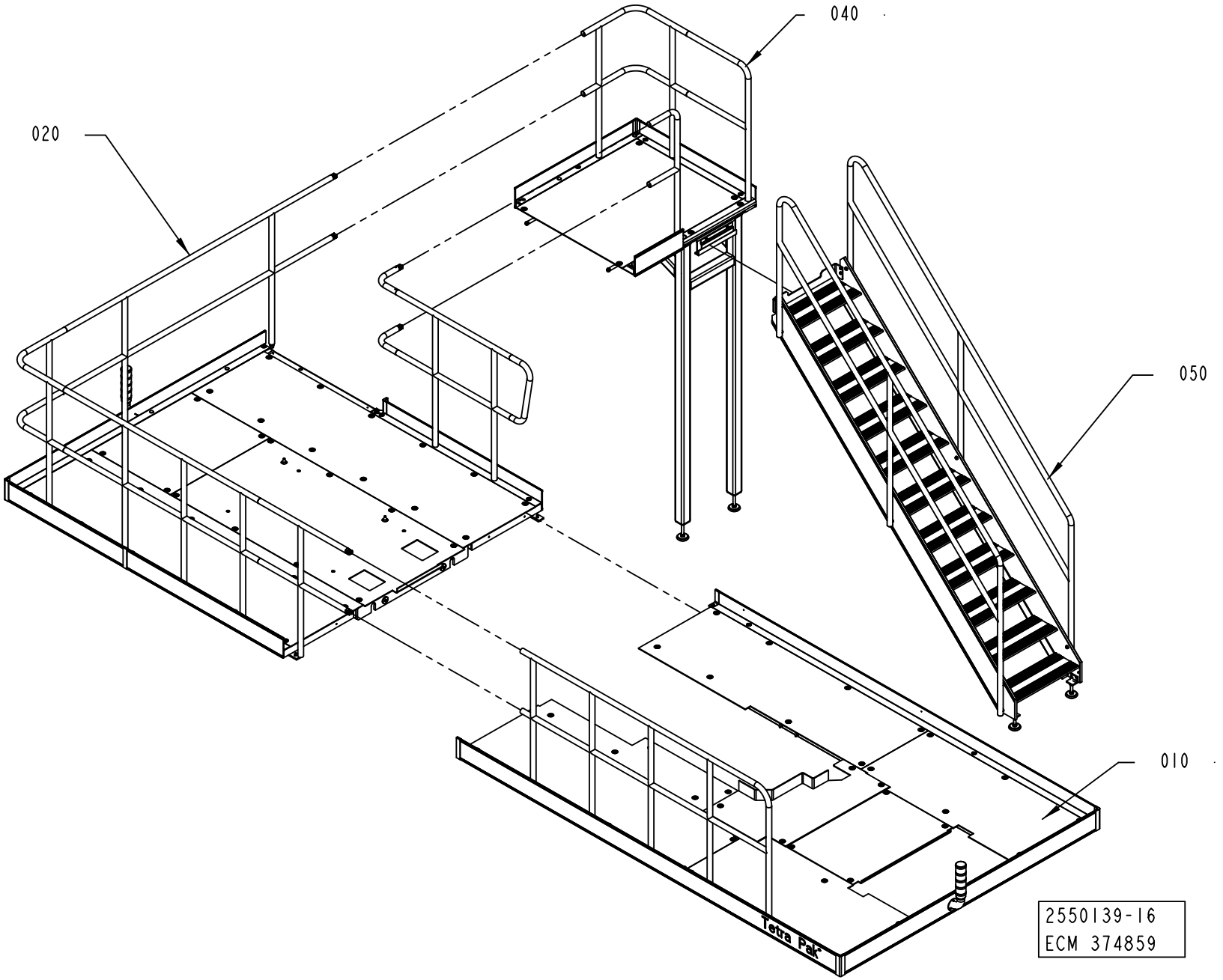
040
020
050
010
Tetra Pak
2550139-16
ECM 374859

ECM: 379719 - 20081130
Group number: 2550139-0200
Assembly Drawing: 2550139-16_1_AB

This list covers pages from 2-112 to 2-119

Pos	Part No	UN	Qty	Description	Page No
-					
010	2508369-0300		1	FRONT PLATFORM	**2-121**
020	2550138-0200		1	PLATFORM	**2-125, 2-127, 2-129, 2-131, 2-133, 2-135**
040	2564546-0100		1	LANDING	**2-139, 2-141**
050	1523777-0200		1	STAIR	**2-143**

Pos	Part No	UN	Qty	Description	Page No

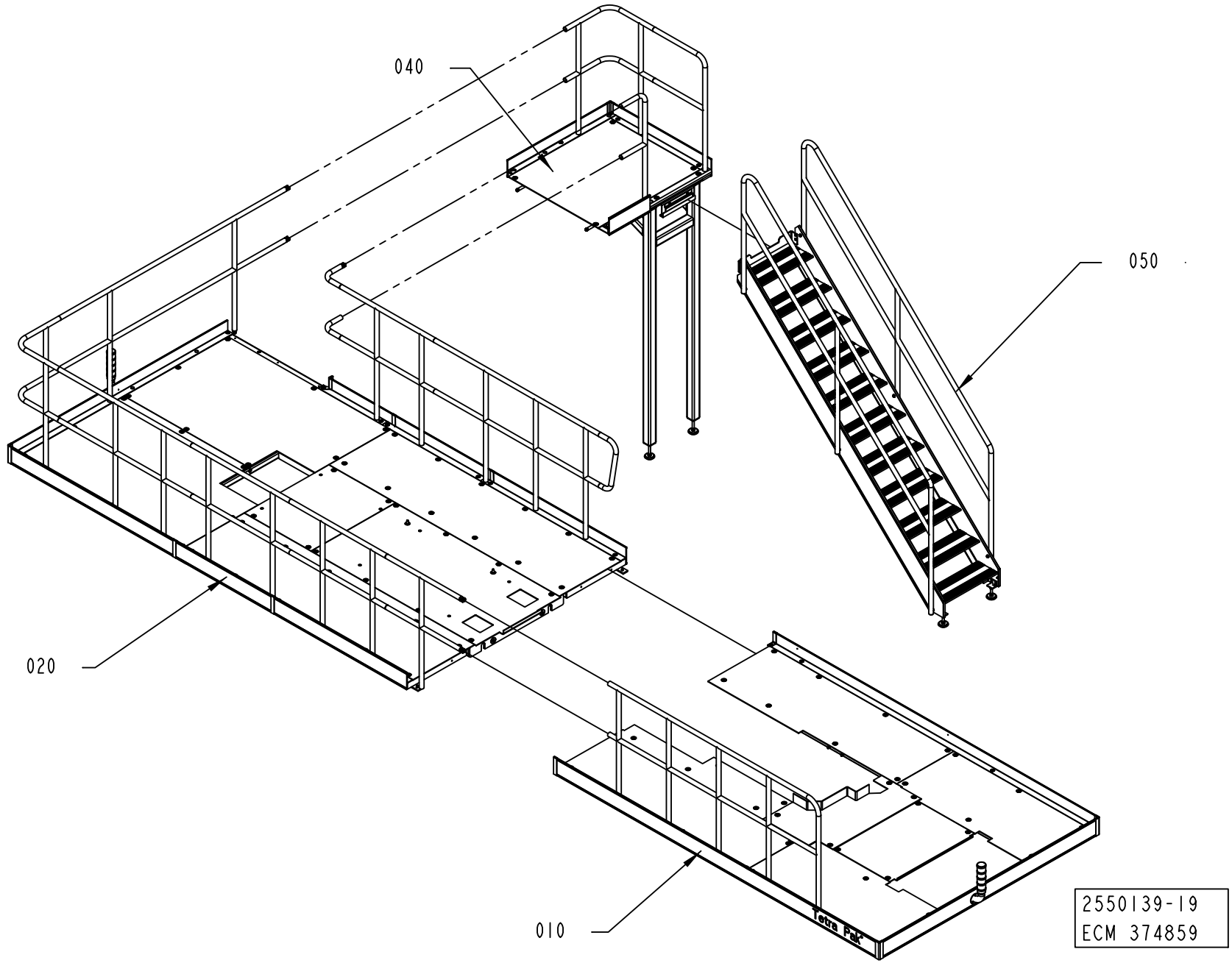
040
050
020
010
Tetra Pak
2550139-19
ECM 374859

ECM: 379719 - 20081130
Group number: 2550139-0200
Assembly Drawing: 2550139-19_1_AB

This list covers pages from 2-112 to 2-119

Pos	Part No	UN	Qty	Description	Page No
-					
010	2508369-0300		1	FRONT PLATFORM	**2-121**
020	2550138-0200		1	PLATFORM	**2-125, 2-127, 2-129, 2-131, 2-133, 2-135**
040	2564546-0100		1	LANDING	**2-139, 2-141**
050	1523777-0200		1	STAIR	**2-143**

Pos	Part No	UN	Qty	Description	Page No

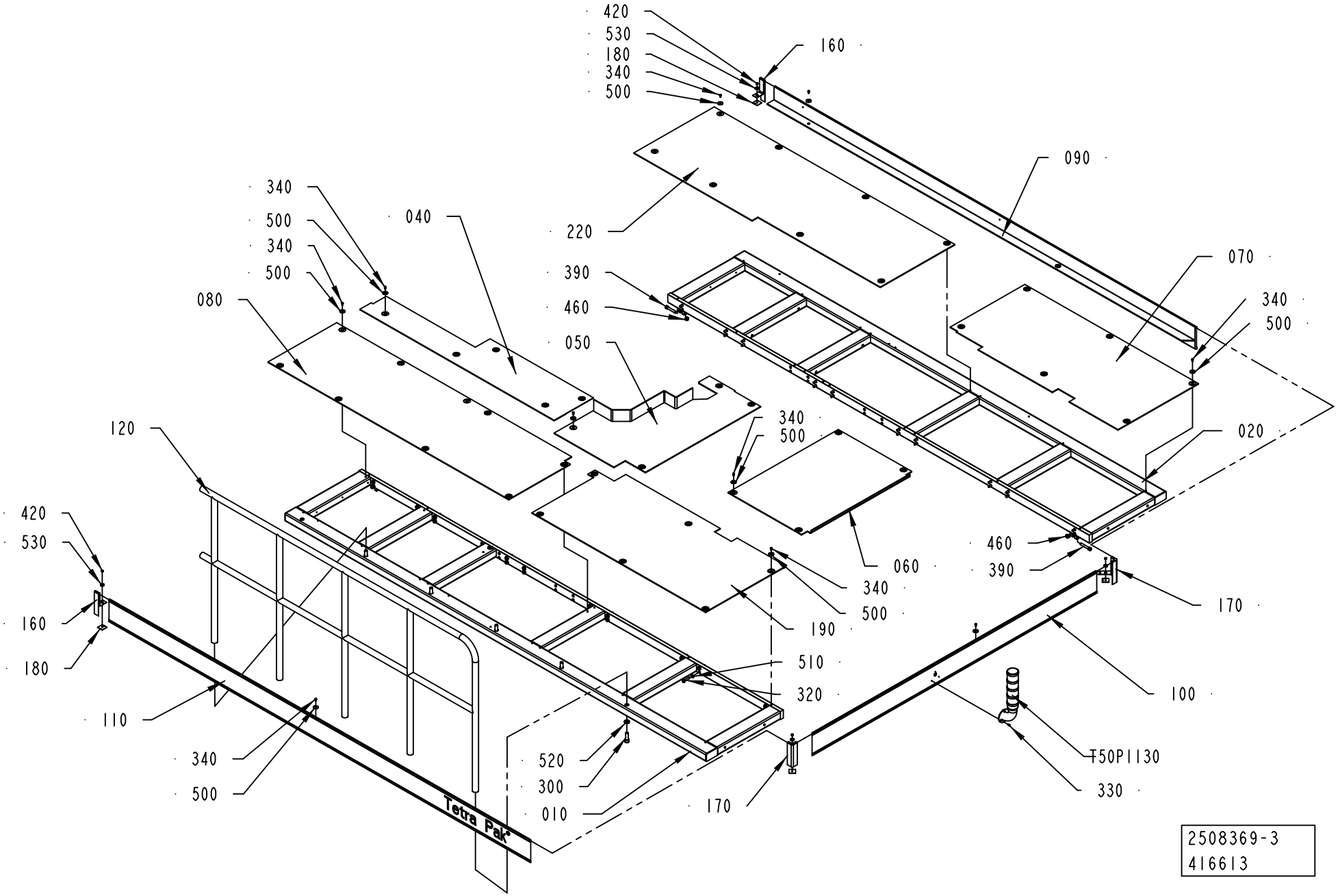
420
530
180
340
500
160
090
340
500
340
500
040
080
220
390
460
050
070
340
500
020
120
340
500
060
420
530
460
390
340
500
160
180
190
170
510
320
110
100
340
500
520
300
010
170
T50P1130
330
Tetra Pak
2508369-3
416613

ECM: 426069 - 20091010
Group number: 2508369-0300
Assembly Drawing: 2508369-3_1_AB

Pos	Part No	UN	Qty	Description	Page No
A3/SPEED					
010	2769620-0000		1	PLATFORM	
020	2769619-0000		1	PLATFORM	
040	2537841-0000		1	CHECKER PLATE	
050	2793298-0000		1	CHECKER PLATE	
060	1254030-0000		1	CHECKER PLATE	
080	2537840-0000		1	CHECKER PLATE	
090	2564568-0000		1	TOE PLATE	
110	2564567-0000		1	TOE PLATE	
120	2537844-0000		1	RAILING	
220	2537839-0000		1	CHECKER PLATE	
300	312111-0630		5	SCREW HEX.SOCK.HD.MC6S-TT 16X50 88 FZB	
340	90458-0072		46	SCREW ISO 7380 S M6X12 A2	
500	90458-0073		46	WASHER 6,4/30, H=1,5	
520	315111-0186		5	WASHER PLAIN, TBRB 17/30 H=6	
Common Parts					
070	2508374-0000		1	CHECKER PLATE	
100	1523784-0000		1	TOE PLATE	
160	1254025-0000		2	STRIP	
170	1254027-0000		2	CORNER STRIP	
180	1254028-0000		4	FASTENING PLATE	
190	2508375-0000		1	CHECKER PLATE	
320	90458-2845		40	SCREW,HEXAGON HEAD M6S ISO 4017 M10X45	
330	312115-0325		3	SCREW ISO4762 M5X10 A4 80	
390	312115-0546		4	SCREW ISO4762 M12X70 A4 80	
420	312605-0316		4	HEXAGON NUT, M6M M6 A280	
460	312812-0322		4	HEXAGON NUT, NY-LOCK M12 A480	
510	315105-0173		40	WASHER BRB 10,5X22 RFR	
530	315125-0153		4	WASHER TBRSB 6,4X22X4 A4	
T50P1130	2540716-0200		1	SIGNAL LAMP	**2-123**

Pos	Part No	UN	Qty	Description	Page No

Machine Type | Group Description | Used-In | Group Number | Page No

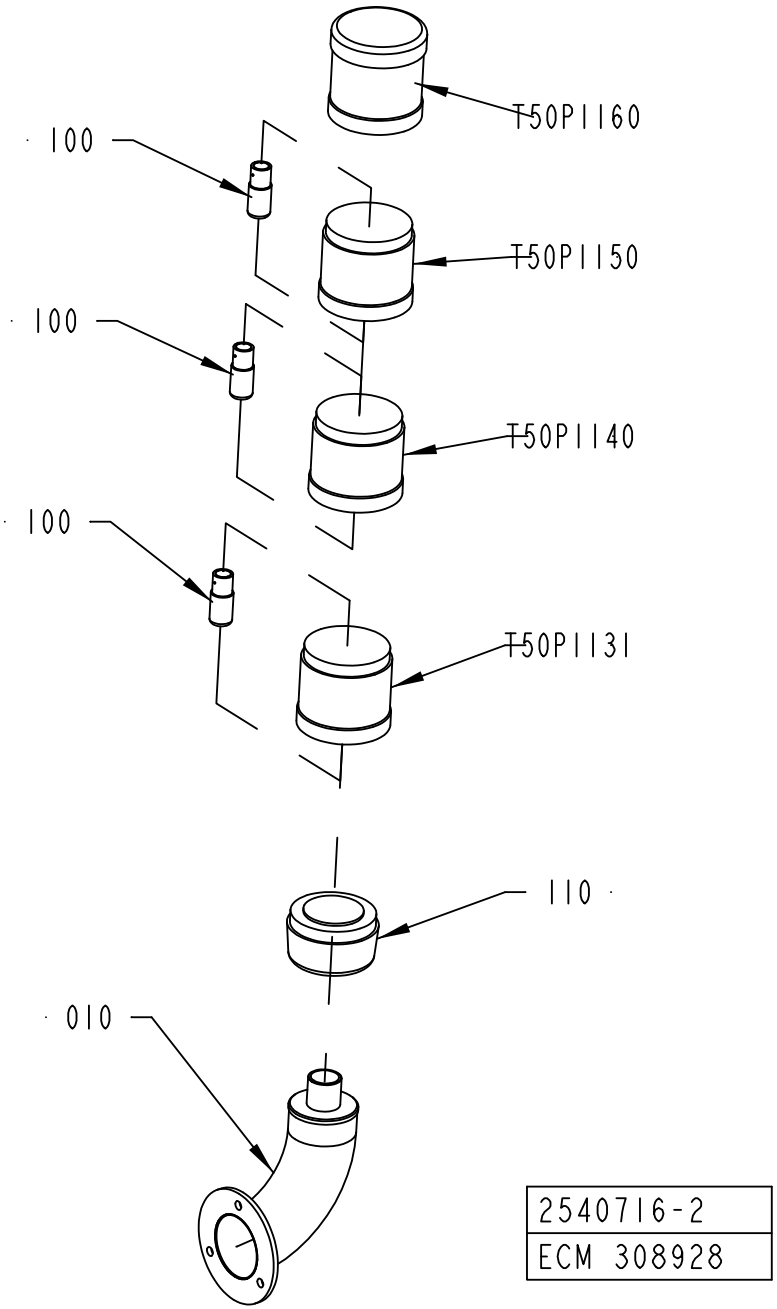
T50P1160
100
T50P1150
100
T50P1140
100
T50P1131
110
010
2540716-2
ECM 308928

ECM: 308928 - 20070627
Group number: 2540716-0200
Assembly Drawing: 2540716-2_1_AA

Pos	Part No	UN	Qty	Description	Page No
-					
010	2540767-0000		1	PIPE	
100	90036-0068		3	BULB 5W 24V, SL-L24 205348	
110	90458-0292		1	TERMINAL ELEMENT, PSD-S CE-TM SCREW/W	
T50P1131	90458-0295		1	LIGHT ELEMENT, BLUE, PSD-S OE BU/W	
T50P1140	90458-0294		1	LIGHT ELEMENT, YELLOW, PSD-S OE YE/W	
T50P1150	90458-0293		1	LIGHT ELEMENT, RED, PSD-S OE RD/W	
T50P1160	90458-0302		1	SIREN ELEMENT, PSD-S AE SM8-5 100DB/1/W	

Pos	Part No	UN	Qty	Description	Page No

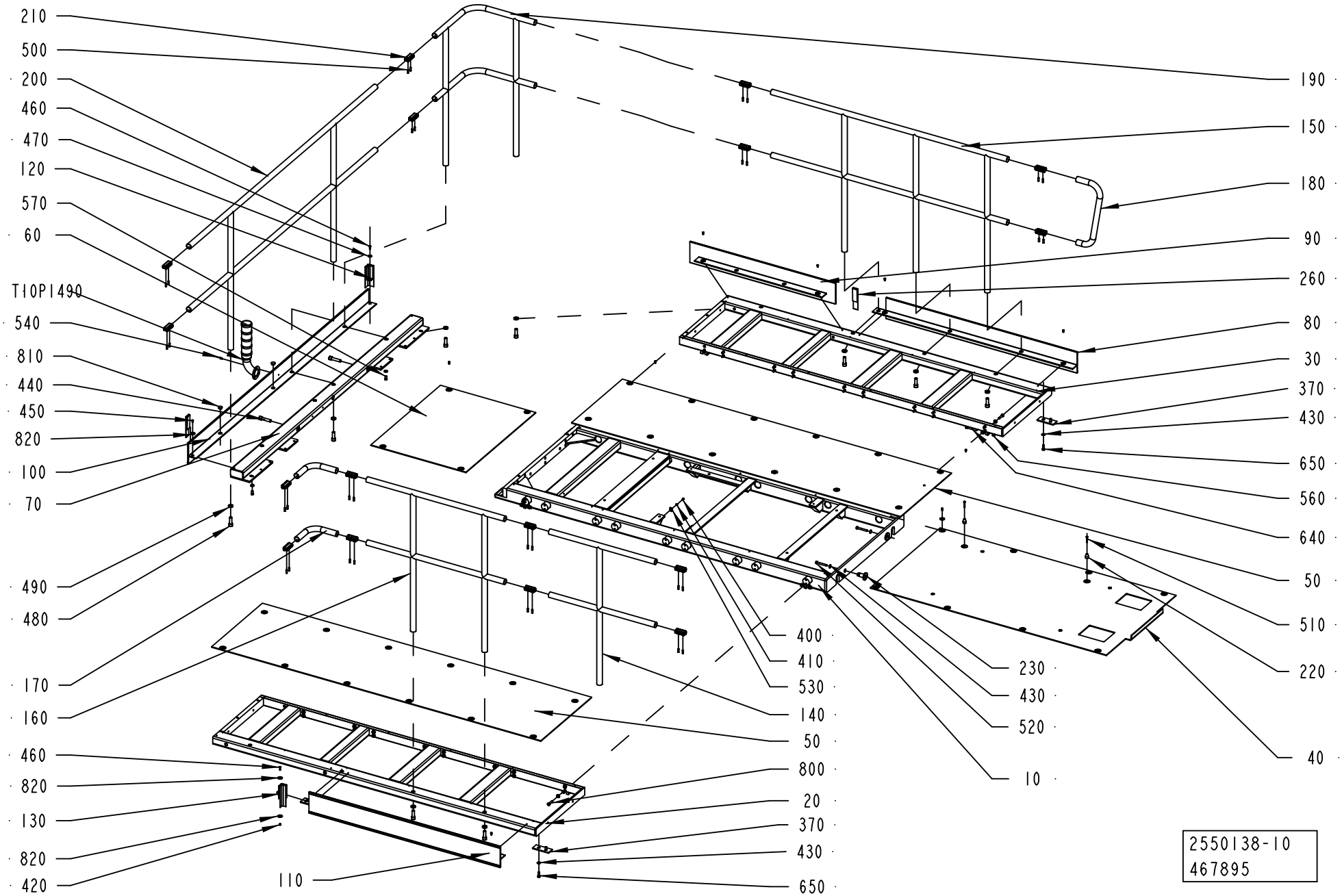
210
500
200
460
470
120
570
60
T10P1490
540
810
440
450
820
100
70
490
480
170
160
460
820
130
820
420
110
190
150
180
90
260
80
30
370
430
650
560
640
50
510
220
40
400
410
530
140
50
800
20
370
430
650
230
430
520
10
2550138-10
467895

ECM: 472341 - 20110101
Group number: 2550138-0200
Assembly Drawing: 2550138-10_1_AC

This list covers pages from 2-124 to 2-135

Pos	Part No	UN	Qty	Description	Page No
A3/SPEED NOPT LEFTSTAIR (See drawing on page: 2-124)					
060	2550145-0000		1	RAILING	
070	1524854-0000		1	BEAM	
090	2550193-0000		1	TOE PLATE	
210	985328-0000		16	CONNECTION	
260	1558947-0000		2	STRIP	
400	312125-0366		4	SCREW ISO 1207 M6X12 A4	
410	315105-0153		4	WASHER BRB 6,4X12 RFR	
420	312812-0316		1	HEXAGON NUT, NY-LOCK M6 A480	
430	315105-0173		40	WASHER BRB 10,5X22 RFR	
440	312115-0634		2	SCREW ISO4762 M16X70 A4 80	
450	90458-0072		43	SCREW ISO 7380 S M6X12 A2	
460	312105-0370		2	SCREW M6S ISO 4017 M6X20 A480	
470	315125-0153		1	WASHER TBRSB 6,4X22X4 A4	
480	312111-0630		9	SCREW HEX.SOCK.HD.MC6S-TT 16X50 88 FZB	
490	315111-0186		9	WASHER PLAIN, TBRB 17/30 H=6	
500	312318-0453		32	SCREW ISO4029 M8X25 A4	
530	352113-0204		4	ANCHOR PLATES FOR STRIPS, TYPE TM3S25-M	
570	312105-0491		2	SCREW M6S ISO 4017 M10X20 A480	
810	90261-0033		2	PLUG, BLIND, PLASTIC GPN300F182	
820	90458-0073		45	WASHER 6,4/30, H=1,5	
A3/SPEED NOPT RIGHTSTAIR (See drawing on page: 2-130)					
060	2550145-0000		1	RAILING	
070	1524854-0000		1	BEAM	
090	2550193-0000		1	TOE PLATE	
210	985328-0000		16	CONNECTION	
260	1558947-0000		2	STRIP	
400	312125-0366		4	SCREW ISO 1207 M6X12 A4	
410	315105-0153		4	WASHER BRB 6,4X12 RFR	
420	312812-0316		1	HEXAGON NUT, NY-LOCK M6 A480	
430	315105-0173		40	WASHER BRB 10,5X22 RFR	
440	312115-0634		2	SCREW ISO4762 M16X70 A4 80	
450	90458-0072		43	SCREW ISO 7380 S M6X12 A2	
460	312105-0370		2	SCREW M6S ISO 4017 M6X20 A480	
470	315125-0153		1	WASHER TBRSB 6,4X22X4 A4	
480	312111-0630		9	SCREW HEX.SOCK.HD.MC6S-TT 16X50 88 FZB	
490	315111-0186		9	WASHER PLAIN, TBRB 17/30 H=6	
500	312318-0453		32	SCREW ISO4029 M8X25 A4	
530	352113-0204		4	ANCHOR PLATES FOR STRIPS, TYPE TM3S25-M	
570	312105-0491		2	SCREW M6S ISO 4017 M10X20 A480	
810	90261-0033		2	PLUG, BLIND, PLASTIC GPN300F182	
820	90458-0073		45	WASHER 6,4/30, H=1,5	

Pos	Part No	UN	Qty	Description	Page No
A3/SPEED PT/SPEED LEFTSTAIR (See drawing on pages: 2-126, 2-128)					
090	2566258-0000		1	TOE PLATE	
210	985328-0000		22	CONNECTION	
260	1558947-0000		4	STRIP	
270	2869125-0000		1	PLATFORM	
280	2869315-0000		1	CHECKER PLATE	
290	2553118-0000		1	TOE PLATE	
300	2553119-0000		1	RAILING	
310	2869191-0000		1	RAILING	
330	2869188-0000		1	TOE PLATE	
350	2553124-0000		2	PIN	
360	2878206-0000		1	CHECKER PLATE	
380	2869189-0000		1	TOE PLATE	
390	2869190-0000		1	RAILING	
395	2869187-0000		1	CHECKER PLATE	
430	315105-0173		42	WASHER BRB 10,5X22 RFR	
450	90458-0072		66	SCREW ISO 7380 S M6X12 A2	
480	312111-0630		12	SCREW HEX.SOCK.HD.MC6S-TT 16X50 88 FZB	
490	315111-0186		12	WASHER PLAIN, TBRB 17/30 H=6	
500	312318-0453		44	SCREW ISO4029 M8X25 A4	
590	312109-0541		4	SCREW M6S ISO 4017 M12X45 A480	
600	312105-0633		14	SCREW M6S ISO 4014 M16X65 A480	
610	312105-0674		4	SCREW M6S ISO 4017 M20X50 A480	
620	312625-0326		4	HEXAGON THIN NUT, EN 24035 ML6M M20 A4	
630	315105-0186		14	WASHER BRB 17X30 RFR	
670	315105-0178		4	WASHER BRB 13X24 RFR	
810	90261-0033		5	PLUG, BLIND, PLASTIC GPN300F182	
820	90458-0073		66	WASHER 6,4/30, H=1,5	
A3/SPEED PT/SPEED RIGHTSTAIR (See drawing on pages: 2-132, 2-134)					
090	2566258-0000		1	TOE PLATE	
210	985328-0000		22	CONNECTION	
260	1558947-0000		4	STRIP	
270	2869125-0000		1	PLATFORM	
280	2869315-0000		1	CHECKER PLATE	
290	2553118-0000		1	TOE PLATE	
300	2553119-0000		1	RAILING	
310	2938295-0000		1	RAILING	
330	2869188-0000		1	TOE PLATE	
360	2878206-0000		1	CHECKER PLATE	
380	2938298-0000		1	TOE PLATE	
390	2938299-0000		1	RAILING	
395	2869187-0000		1	CHECKER PLATE	

Machine Type | Group Description | Used-In | Group Number | Page No

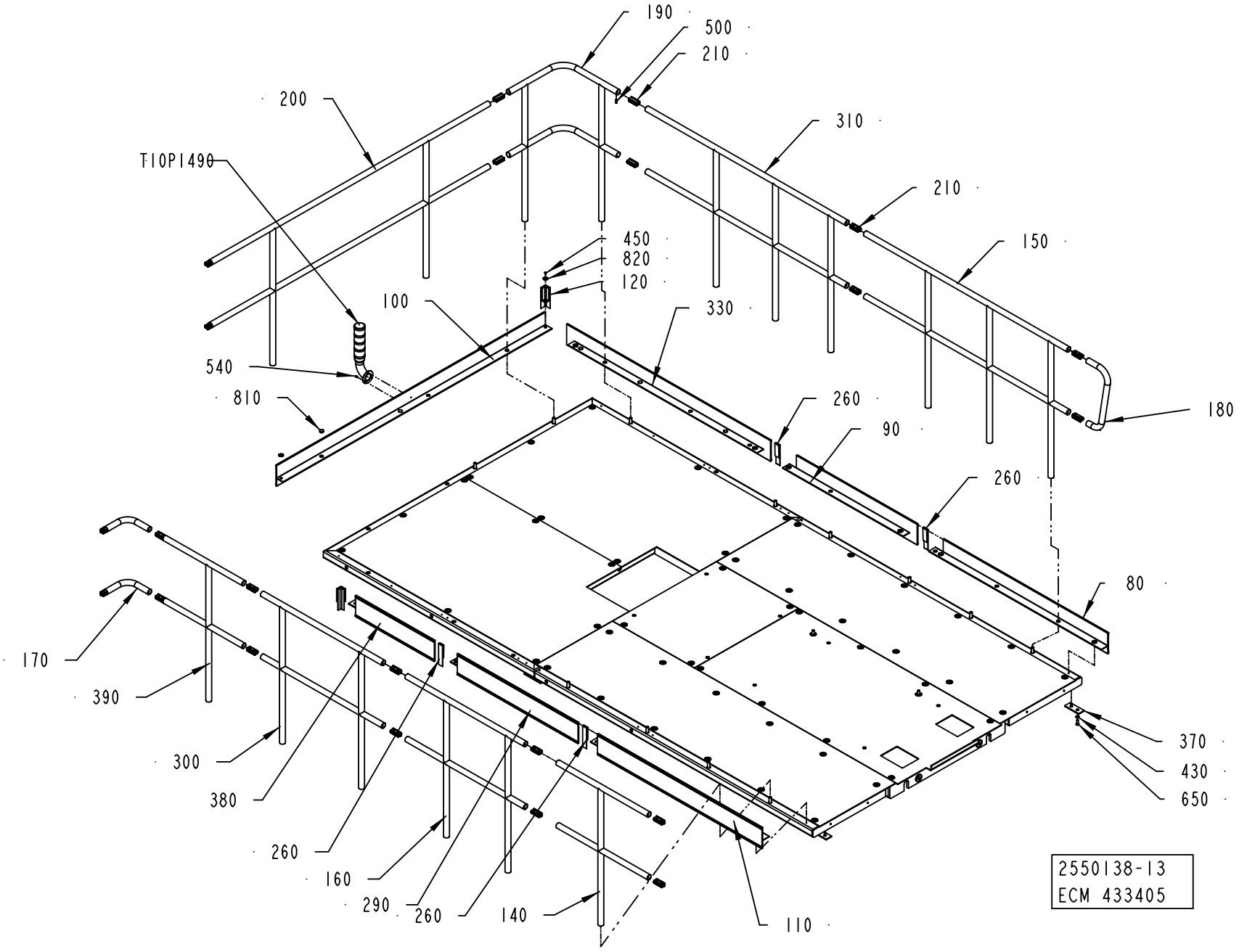
190
500
210
200
310
T10P1490
210
150
450
820
120
100
330
540
810
260
180
90
260
80
170
390
300
380
260
160
290
260
140
110
370
430
650
2550138-13
ECM 433405

Pos	Part No	UN	Qty	Description	Page No
A3/SPEED PT/SPEED RIGHTSTAIR (Cont'd) (See drawing on pages: 2-132, 2-134)					
430	315105-0173		42	WASHER BRB 10,5X22 RFR	
450	90458-0072		66	SCREW ISO 7380 S M6X12 A2	
480	312111-0630		12	SCREW HEX.SOCK.HD.MC6S-TT 16X50 88 FZB	
490	315111-0186		12	WASHER PLAIN, TBRB 17/30 H=6	
500	312318-0453		44	SCREW ISO4029 M8X25 A4	
590	312109-0541		4	SCREW M6S ISO 4017 M12X45 A480	
600	312105-0633		14	SCREW M6S ISO 4014 M16X65 A480	
610	312105-0674		4	SCREW M6S ISO 4017 M20X50 A480	
620	312625-0326		4	HEXAGON THIN NUT, EN 24035 ML6M M20 A4	
630	315105-0186		14	WASHER BRB 17X30 RFR	
810	90261-0033		5	PLUG, BLIND, PLASTIC GPN300F182	
820	90458-0073		66	WASHER 6,4/30, H=1,5	
Common Parts					
010	2878193-0000		1	PLATFORM	
020	2550142-0000		1	PLATFORM	
030	2550143-0000		1	PLATFORM	
040	2795887-0000		1	CHECKER PLATE	
050	2550141-0000		2	CHECKER PLATE	
080	2550192-0000		1	TOE PLATE	
100	1523793-0000		1	TOE PLATE	
110	2550191-0000		1	TOE PLATE	
120	1524167-0000		1	CORNER STRIP	
130	1524168-0000		1	CORNER STRIP	
140	2550146-0000		1	RAILING	
150	2550189-0000		1	RAILING	
160	2550147-0000		1	RAILING	
170	2551951-0000		2	RAILING	
180	1558795-0000		1	RAILING	
190	1010822-0000		1	RAILING	
200	1548211-0000		1	RAILING	
220	1037571-0000		2	GUIDE BUSHING	
230	2599941-0000		2	SPACER	
370	3046891-0000		2	PLATE	
510	312109-0378		2	SCREW M6S ISO 4017 M6X40 A480	
520	312105-0506		2	FITTED BOLT M10X75MM	
540	312115-0325		3	SCREW ISO4762 M5X10 A4 80	
560	312812-0322		4	HEXAGON NUT, NY-LOCK M12 A480	
640	312115-0546		4	SCREW ISO4762 M12X70 A4 80	
650	312105-0495		4	SCREW M6S ISO 4017 M10X30 A480	
800	90458-2845		36	SCREW,HEXAGON HEAD M6S ISO 4017 M10X45	
T10P1490	2903813-0100		1	SIGNAL LAMP	**2-137**

Pos	Part No	UN	Qty	Description	Page No

Machine Type	Group Description	Used-In	Group Number	Page No

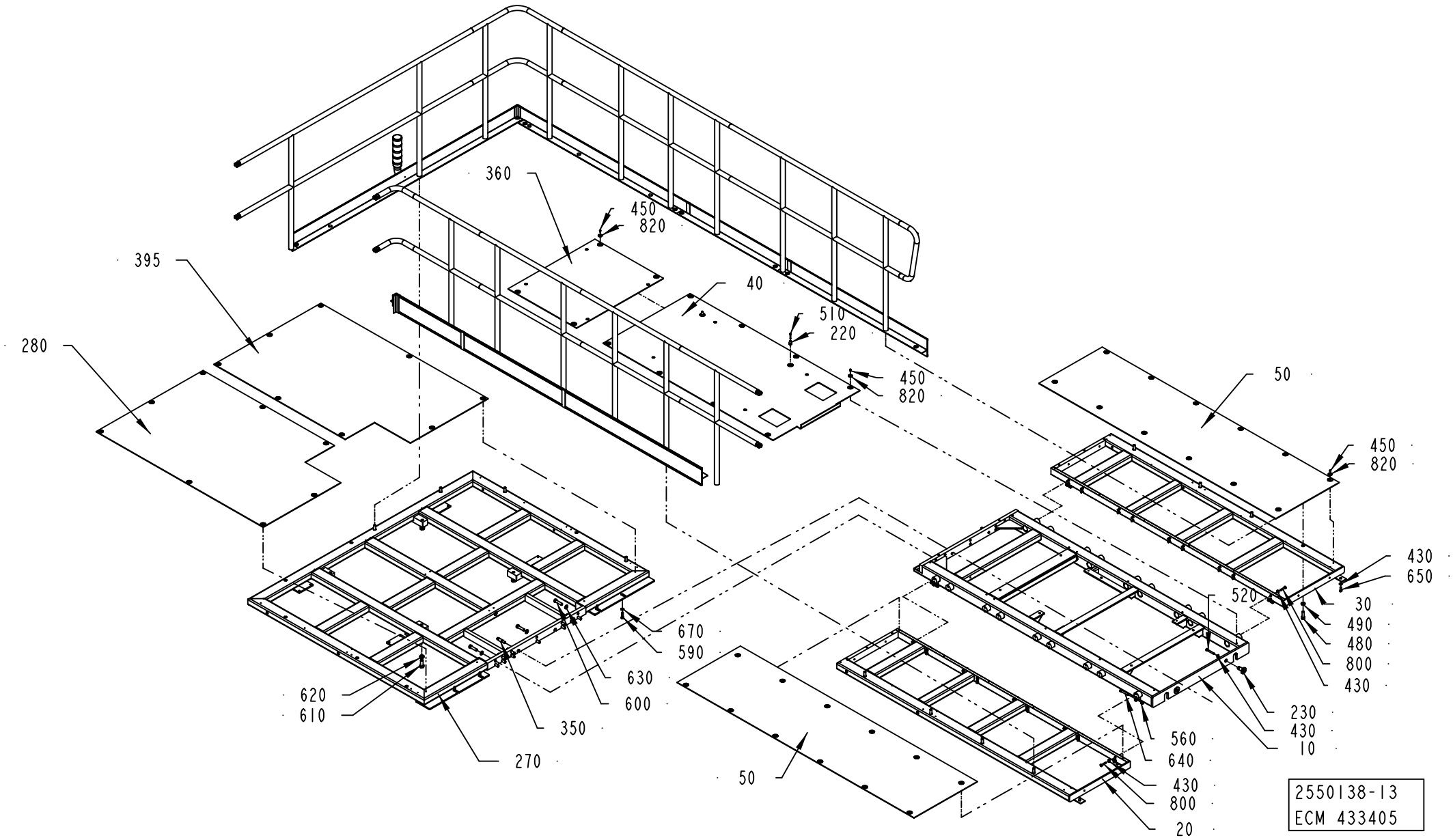
360
450
820
395
40
510
220
280
450
820
50
450
820
430
650
520
30
490
480
800
430
670
590
630
600
620
610
350
270
230
430
10
560
640
430
800
20
50
2550138-13
ECM 433405

Pos	Part No	UN	Qty	Description	Page No
SEE PREVIOUS LISTS PAGES: 2-125, 2-127.					

Pos	Part No	UN	Qty	Description	Page No

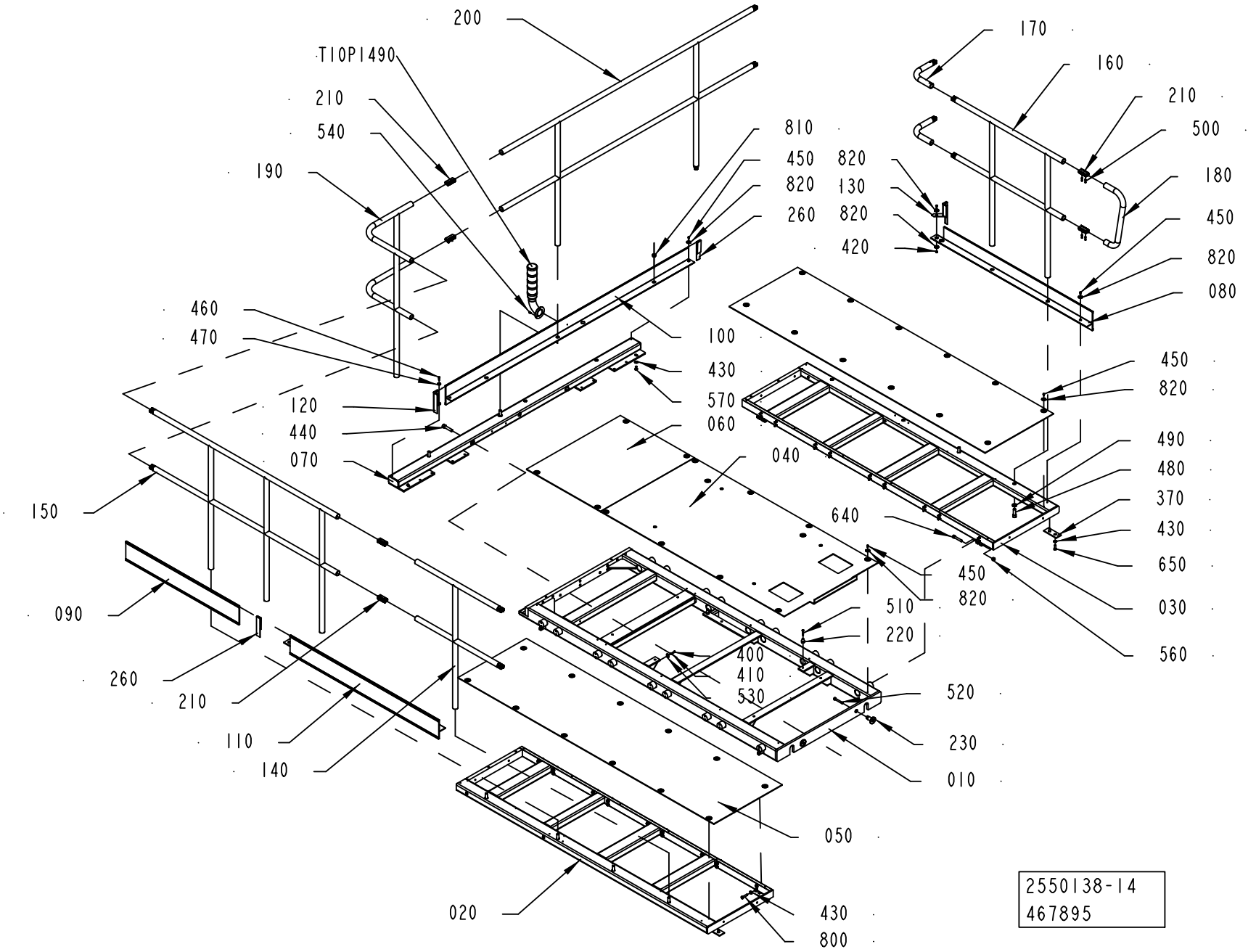
200
T10P1490
210
540
190
460
470
120
440
070
150
090
260
210
110
140
020
810
450 820
820 130
260 820
420
100
430
570
060
040
170
160
210
500
180
450
820
080
450
820
490
480
370
430
650
030
560
640
450
820
510
220
400
410
530
520
230
010
050
430
800
2550138-14
467895

Pos	Part No	UN	Qty	Description	Page No	Pos	Part No	UN	Qty	Description	Page No

SEE PREVIOUS LISTS PAGES: 2-125, 2-127.

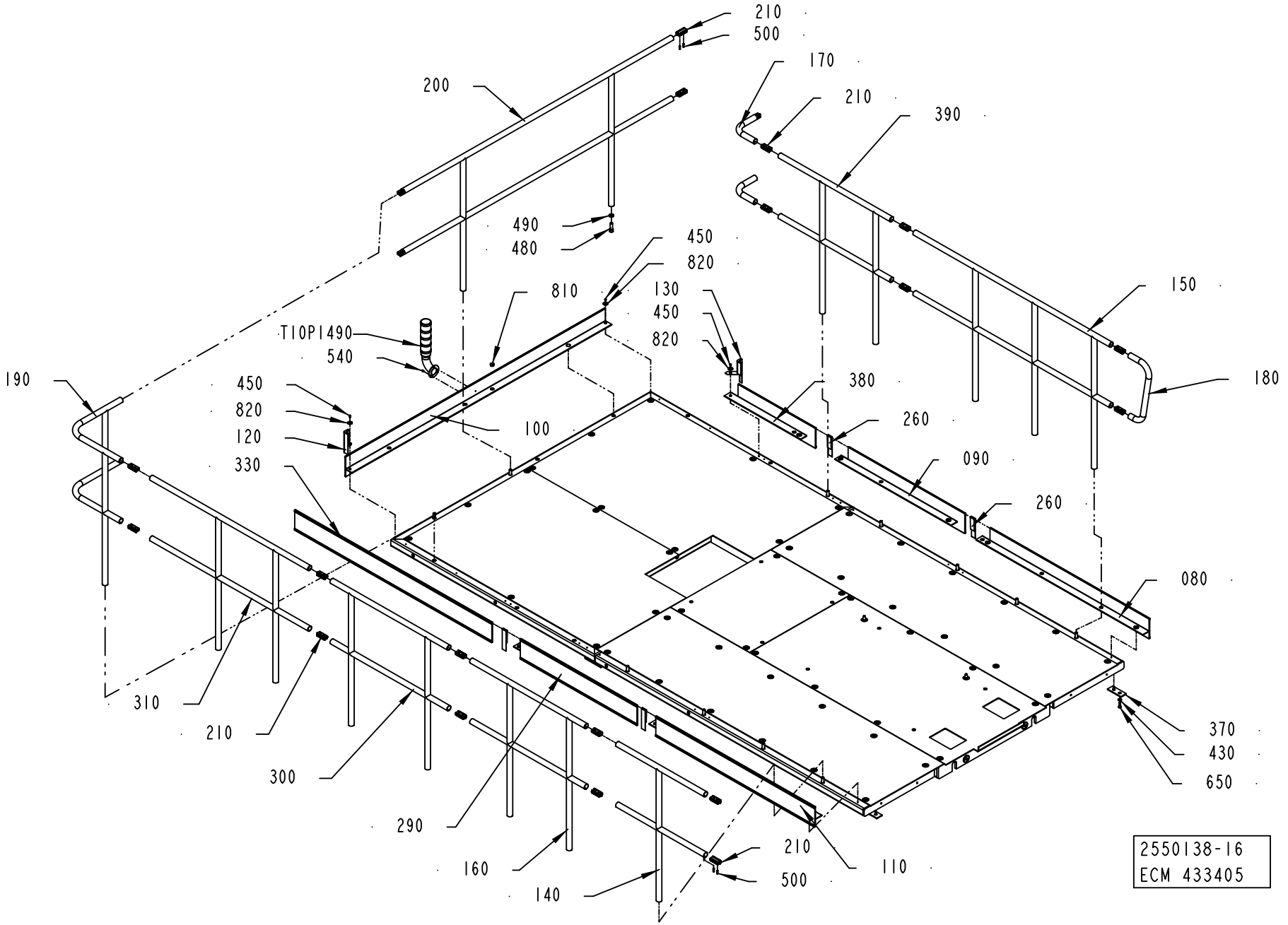
210
500
200
170
210
390
490
480
450
820
810
130
450
820
150
T10P1490
540
190
450
820
120
330
100
380
260
180
090
260
080
310
210
300
290
160
140
210
500
110
370
430
650
2550138-16
ECM 433405

Pos	Part No	UN	Qty	Description	Page No	Pos	Part No	UN	Qty	Description	Page No

SEE PREVIOUS LISTS PAGES: 2-125, 2-127.

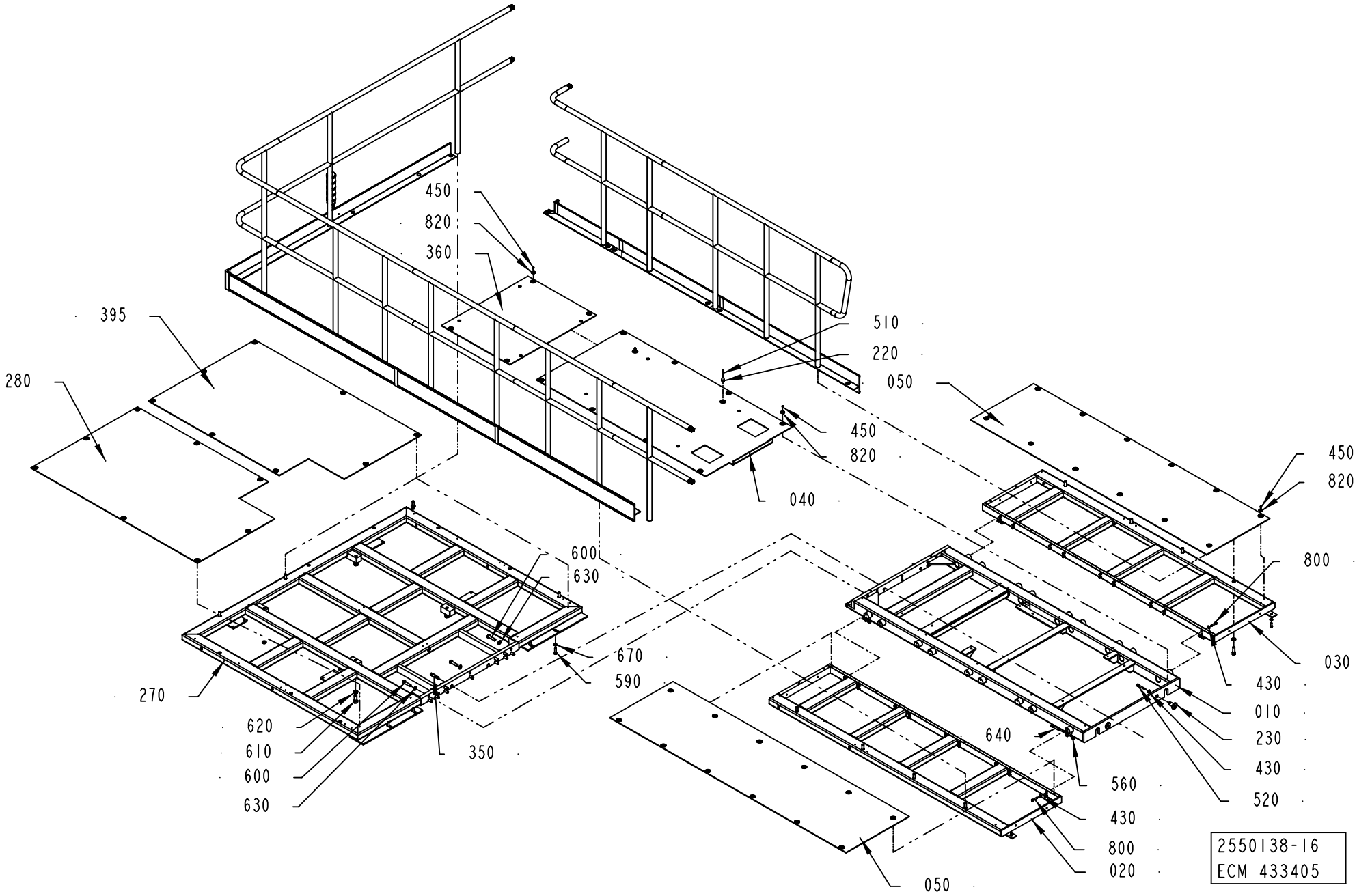
450
820
360
395
280
510
220
050
450
820
040
450
820
800
030
600
630
670
590
270
620
610
600
630
350
640
560
430
800
020
050
430
010
230
430
520
2550138-16
ECM 433405

Pos	Part No	UN	Qty	Description	Page No
SEE PREVIOUS LISTS PAGES: 2-125, 2-127.					

Pos	Part No	UN	Qty	Description	Page No

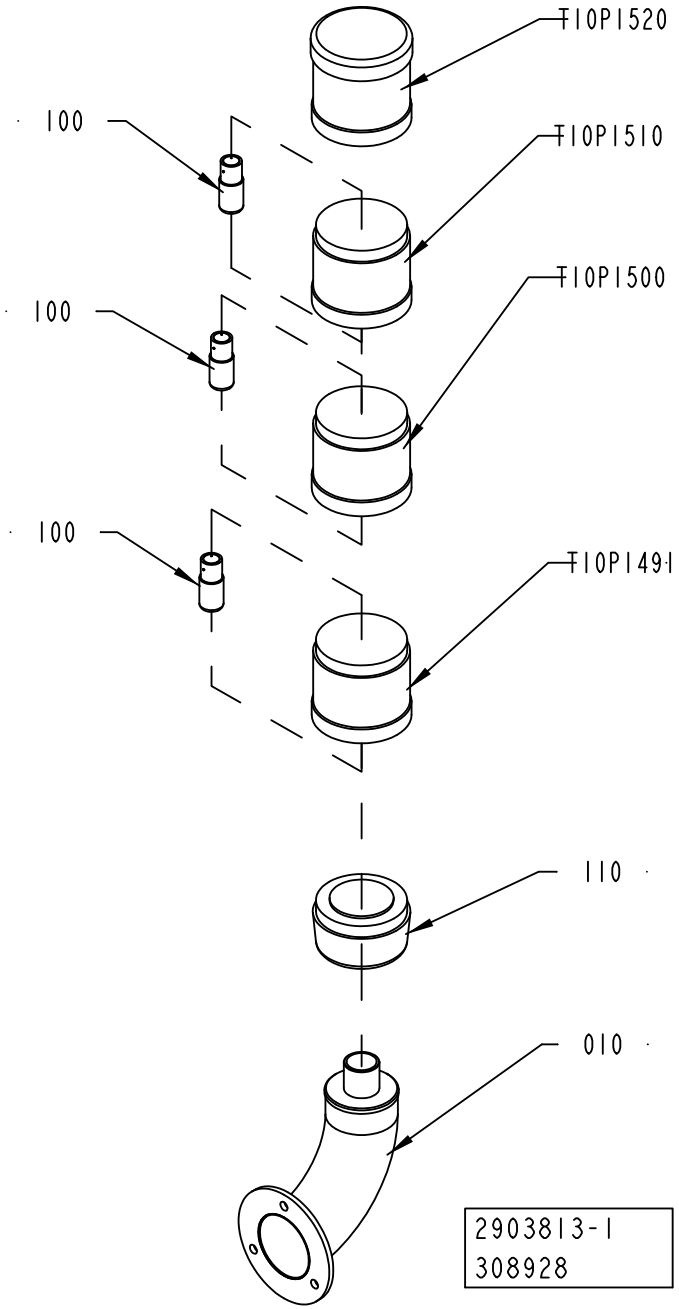
T10P1520
100
T10P1510
T10P1500
100
100
T10P1491
110
010
2903813-1
308928

ECM: 313574 - 20070627
Group number: 2903813-0100
Assembly Drawing: 2903813-1_1_AA

Pos	Part No	UN	Qty	Description	Page No
-					
010	2540767-0000		1	PIPE	
100	90036-0068		3	BULB 5W 24V, SL-L24 205348	
110	90458-0292		1	TERMINAL ELEMENT, PSD-S CE-TM SCREW/W	
T50P1131	90458-0295		1	LIGHT ELEMENT, BLUE, PSD-S OE BU/W	
T50P1140	90458-0294		1	LIGHT ELEMENT, YELLOW, PSD-S OE YE/W	
T50P1150	90458-0293		1	LIGHT ELEMENT, RED, PSD-S OE RD/W	
T50P1160	90458-0302		1	SIREN ELEMENT, PSD-S AE SM8-5 100DB/1/W	

Pos	Part No	UN	Qty	Description	Page No

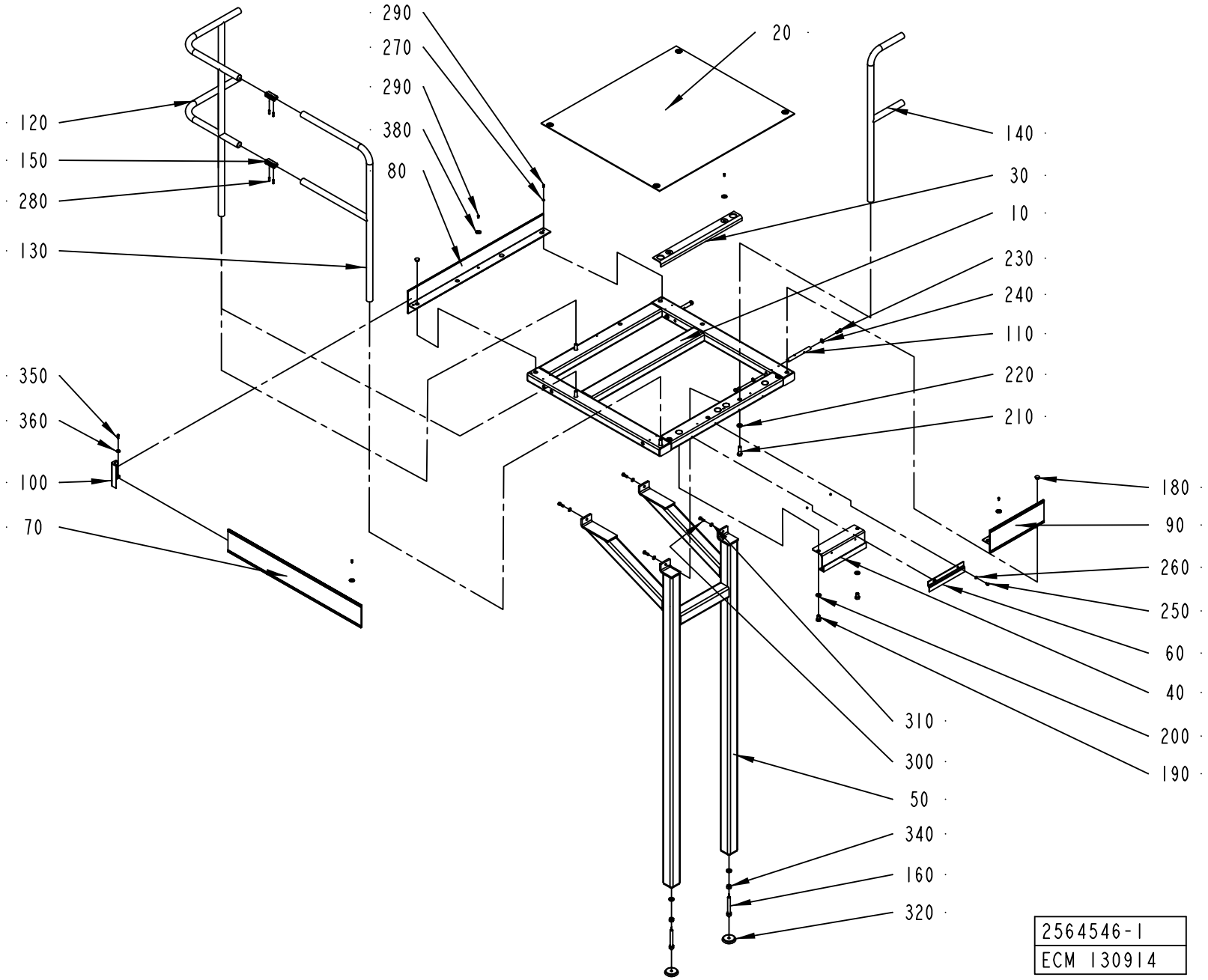
290
270
290
380
80
20
120
150
280
130
140
30
10
230
240
110
220
210
350
360
100
70
180
90
260
250
60
40
200
190
310
300
50
340
160
320
2564546-1
ECM 130914

Pos	Part No	UN	Qty	Description	Page No
LEFTSTAIR (See drawing on page: 2-138)					
070	1524177-0000		1	TOE PLATE	
RIGHTSTAIR (See drawing on page: 2-140)					
070	1524180-0000		1	TOE PLATE	
Common Parts					
010	1524171-0000		1	FRAME	
020	1524172-0000		1	CHECKER PLATE	
030	1524173-0000		1	CHECKER PLATE	
040	1524174-0000		1	HOOK	
050	1524175-0000		1	LEG	
060	1524176-0000		1	CLAMP	
080	2564545-0000		1	PLATE	
090	1524179-0000		1	TOE PLATE	
100	1524167-0000		1	CORNER STRIP	
110	1524181-0000		2	PIN	
120	1010822-0000		1	RAILING	
130	1524182-0000		1	RAILING	
140	1524864-0000		1	RAILING	
150	985328-0000		2	CONNECTION	
160	1524185-0000		2	EXTENSION PIECE	
180	90261-0033		3	PLUG, BLIND, PLASTIC GPN300F182	
190	312105-0622		2	SCREW M6S ISO 4017 M16X25 A480	
200	315105-0186		2	WASHER BRB 17X30 RFR	
210	312111-0630		4	SCREW HEX.SOCK.HD.MC6S-TT 16X50 88 FZB	
220	315111-0186		6	WASHER PLAIN, TBRB 17/30 H=6	
230	312105-0536		4	SCREW M6S ISO 4017 M12X30 A480	
240	315105-0178		4	WASHER BRB 13X24 RFR	
250	312105-0447		2	SCREW M6S ISO 4017 M8X12 A480	
260	315101-0165		2	WASHER PLAIN, BRB, 8,4/16 H=1,5	
270	315101-0153		1	WASHER PLAIN, BRB, 6,4/12 H=1,5	
280	312318-0453		4	SCREW ISO4029 M8X25 A4	
290	90458-0072		12	SCREW ISO 7380 S M6X12 A2	
300	312105-0495		4	SCREW M6S ISO 4017 M10X30 A480	
310	315105-0173		4	WASHER BRB 10,5X22 RFR	
320	90347-0009		2	FLOOR PLATE, NO 1256730	
340	312605-0324		2	HEXAGON NUT, M6M M16 A280	
350	312105-0370		1	SCREW M6S ISO 4017 M6X20 A480	
360	315125-0153		1	WASHER TBRSB 6,4X22X4 A4	
380	90458-0073		11	WASHER 6,4/30, H=1,5	

Pos	Part No	UN	Qty	Description	Page No

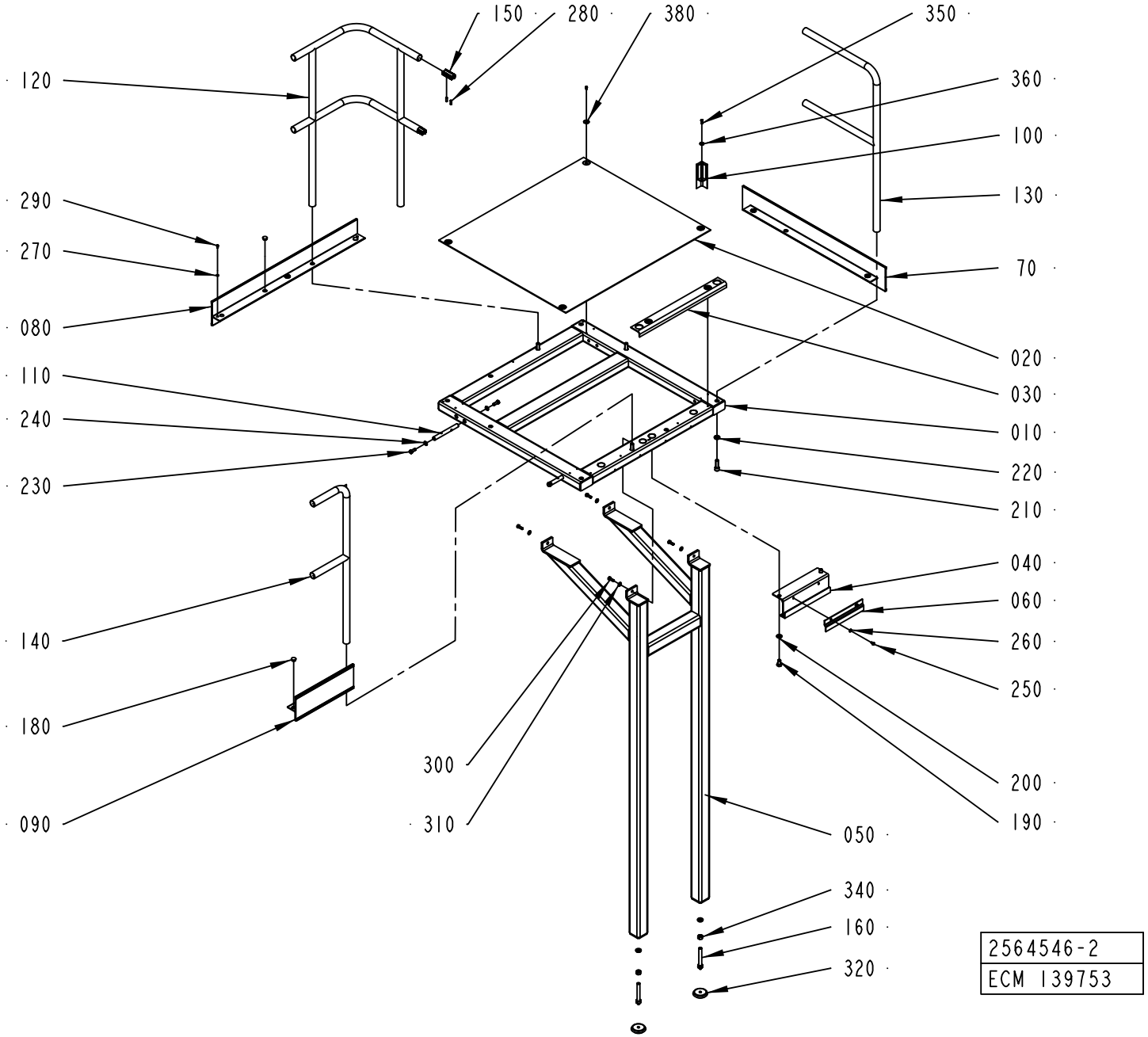
150
280
380
350
120
360
100
290
130
270
70
080
020
110
030
240
010
230
220
210
040
140
060
260
250
180
300
200
310
190
090
050
340
160
320
2564546-2
ECM 139753

ECM: 189874 - 20041104
Group number: 2564546-0100
Assembly Drawing: 2564546-2_1_AA

This list covers pages from 2-138 to 2-141

Pos	Part No	UN	Qty	Description	Page No
LEFTSTAIR (See drawing on page: 2-138)					
070	1524177-0000		1	TOE PLATE	
RIGHTSTAIR (See drawing on page: 2-140)					
070	1524180-0000		1	TOE PLATE	
Common Parts					
010	1524171-0000		1	FRAME	
020	1524172-0000		1	CHECKER PLATE	
030	1524173-0000		1	CHECKER PLATE	
040	1524174-0000		1	HOOK	
050	1524175-0000		1	LEG	
060	1524176-0000		1	CLAMP	
080	2564545-0000		1	PLATE	
090	1524179-0000		1	TOE PLATE	
100	1524167-0000		1	CORNER STRIP	
110	1524181-0000		2	PIN	
120	1010822-0000		1	RAILING	
130	1524182-0000		1	RAILING	
140	1524864-0000		1	RAILING	
150	985328-0000		2	CONNECTION	
160	1524185-0000		2	EXTENSION PIECE	
180	90261-0033		3	PLUG, BLIND, PLASTIC GPN300F182	
190	312105-0622		2	SCREW M6S ISO 4017 M16X25 A480	
200	315105-0186		2	WASHER BRB 17X30 RFR	
210	312111-0630		4	SCREW HEX.SOCK.HD.MC6S-TT 16X50 88 FZB	
220	315111-0186		6	WASHER PLAIN, TBRB 17/30 H=6	
230	312105-0536		4	SCREW M6S ISO 4017 M12X30 A480	
240	315105-0178		4	WASHER BRB 13X24 RFR	
250	312105-0447		2	SCREW M6S ISO 4017 M8X12 A480	
260	315101-0165		2	WASHER PLAIN, BRB, 8,4/16 H=1,5	
270	315101-0153		1	WASHER PLAIN, BRB, 6,4/12 H=1,5	
280	312318-0453		4	SCREW ISO4029 M8X25 A4	
290	90458-0072		12	SCREW ISO 7380 S M6X12 A2	
300	312105-0495		4	SCREW M6S ISO 4017 M10X30 A480	
310	315105-0173		4	WASHER BRB 10,5X22 RFR	
320	90347-0009		2	FLOOR PLATE, NO 1256730	
340	312605-0324		2	HEXAGON NUT, M6M M16 A280	
350	312105-0370		1	SCREW M6S ISO 4017 M6X20 A480	
360	315125-0153		1	WASHER TBRSB 6,4X22X4 A4	
380	90458-0073		11	WASHER 6,4/30, H=1,5	

Pos	Part No	UN	Qty	Description	Page No

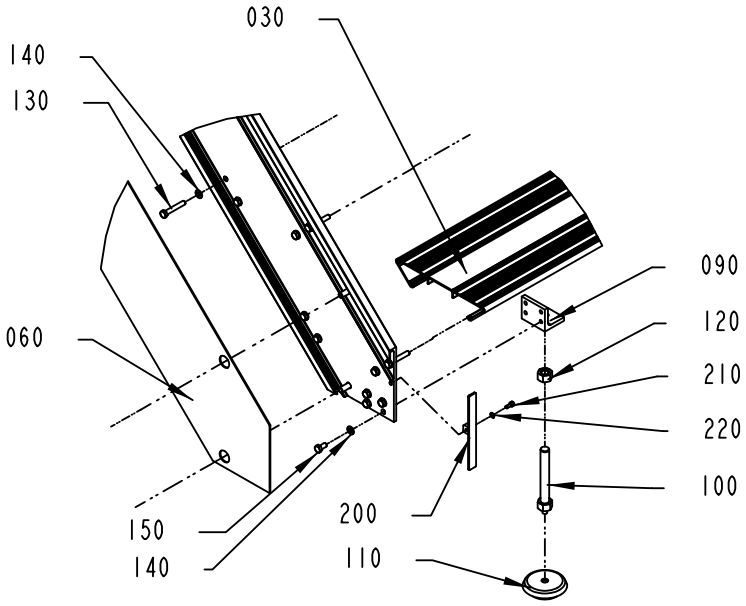

DETAIL A
SCALE 1:10

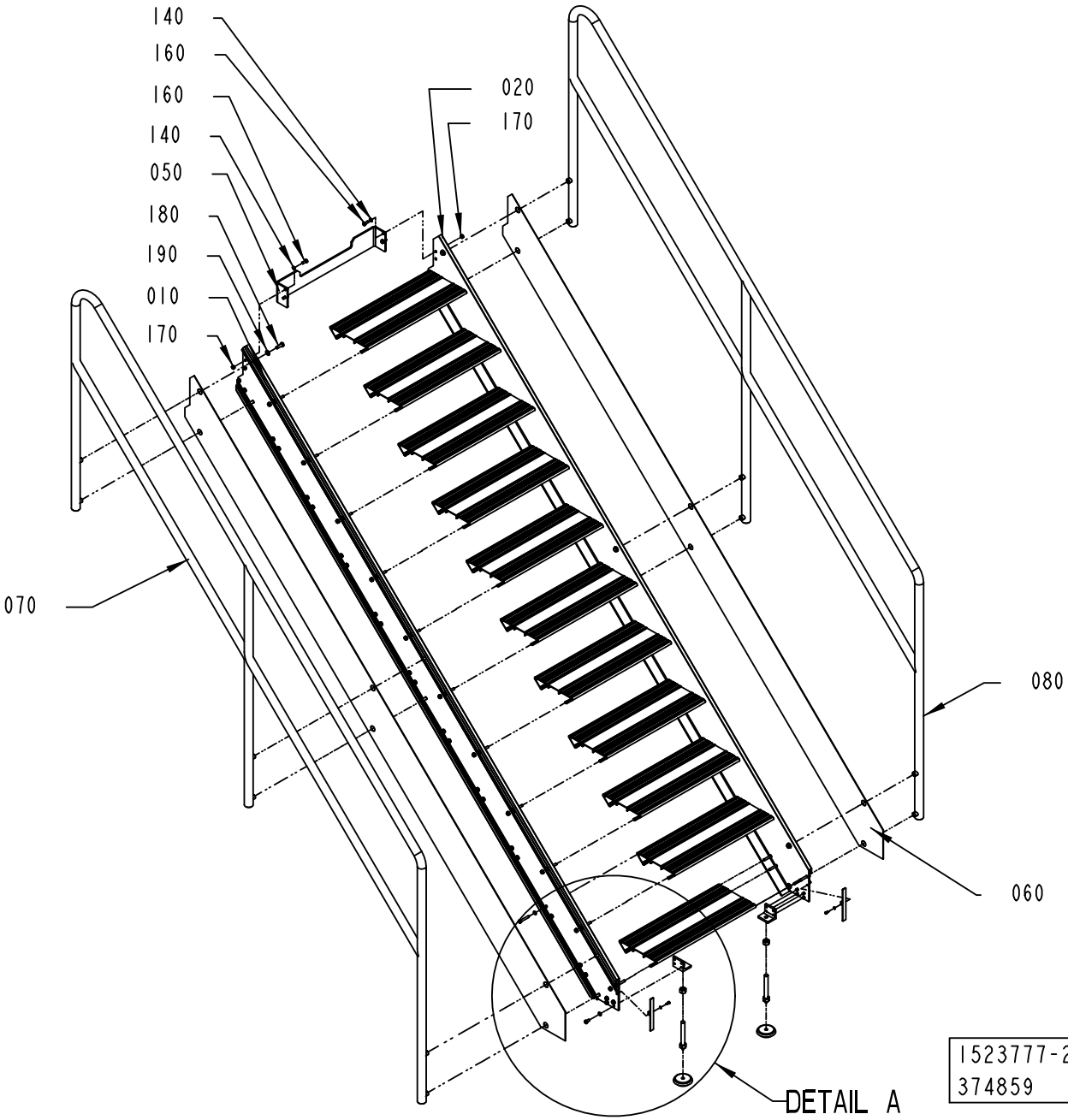

1523777-2
374859

ECM: 376420 - 20100702
Group number: 1523777-0200
Assembly Drawing: 1523777-2_1_AA

Pos	Part No	UN	Qty	Description	Page No
-					
010	1524186-0000		1	PROFILE	
020	1524187-0000		1	PROFILE	
030	1524188-0000		11	STAIR	
050	2990953-0000		1	BRACKET	
060	1524191-0000		2	RIM	
070	1524192-0000		1	RAILING	
080	1524193-0000		1	RAILING	
090	1037391-0000		2	CANTILEVER	
100	1524185-0000		2	EXTENSION PIECE	
110	90347-0009		2	FLOOR PLATE, NO 1256730	
120	312605-0324		2	HEXAGON NUT, M6M M16 A280	
130	312104-0461		88	SCREW M6S M8X50H FZB	
140	315105-0165		100	WASHER BRB 8,4X16 RFR	
150	312105-0449		8	SCREW M6S ISO 4017 M8X16 A480	
160	312105-0451		4	SCREW M6S ISO 4017 M8X20 A480	
170	312605-0318		4	HEXAGON NUT, M6M M8 A280	
180	312105-0495		12	SCREW M6S ISO 4017 M10X30 A480	
190	315105-0173		12	WASHER BRB 10,5X22 RFR	
200	1558946-0000		2	PLUG	
210	312115-0327		2	SCREW ISO4762 M5X12 A4 80	
220	315105-0146		2	WASHER BRB 5,3X10 RFR	

Pos	Part No	UN	Qty	Description	Page No

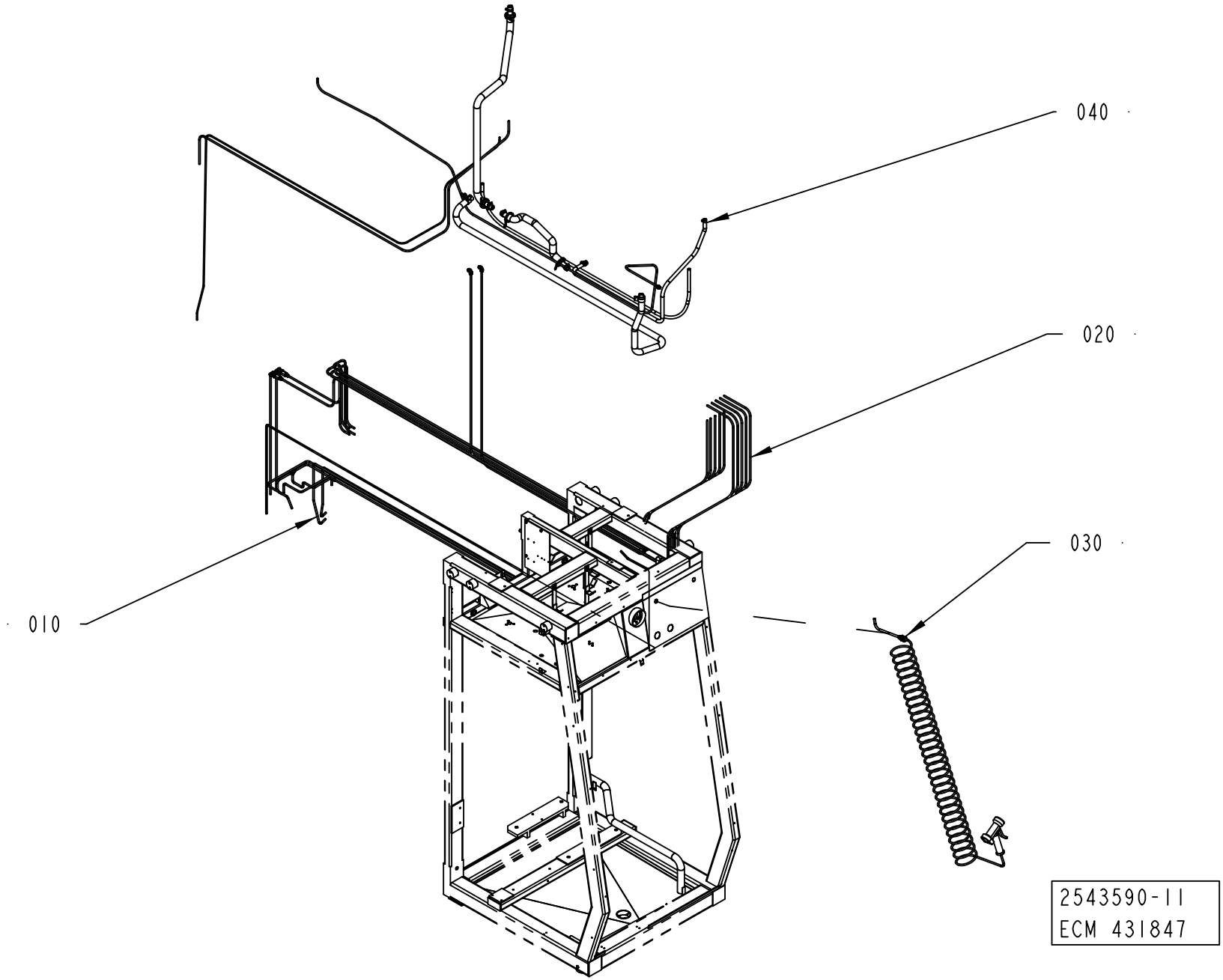
040
020
030
010
2543590-11
ECM 431847

ECM: 433216 - 20100701
Group number: 2543590-0300
Assembly Drawing: 2543590-11_1_AA

Pos	Part No	UN	Qty	Description	Page No
-					
010	2543589-0400		1	PIPE WORK-WATER	**2-147**
020	2543591-0300		1	COOLING PIPE	**2-149**
030	1095681-0300		1	SPRAY GUN	**2-151**
040	2544245-0300		1	PIPE WORK	**2-153**

Pos	Part No	UN	Qty	Description	Page No

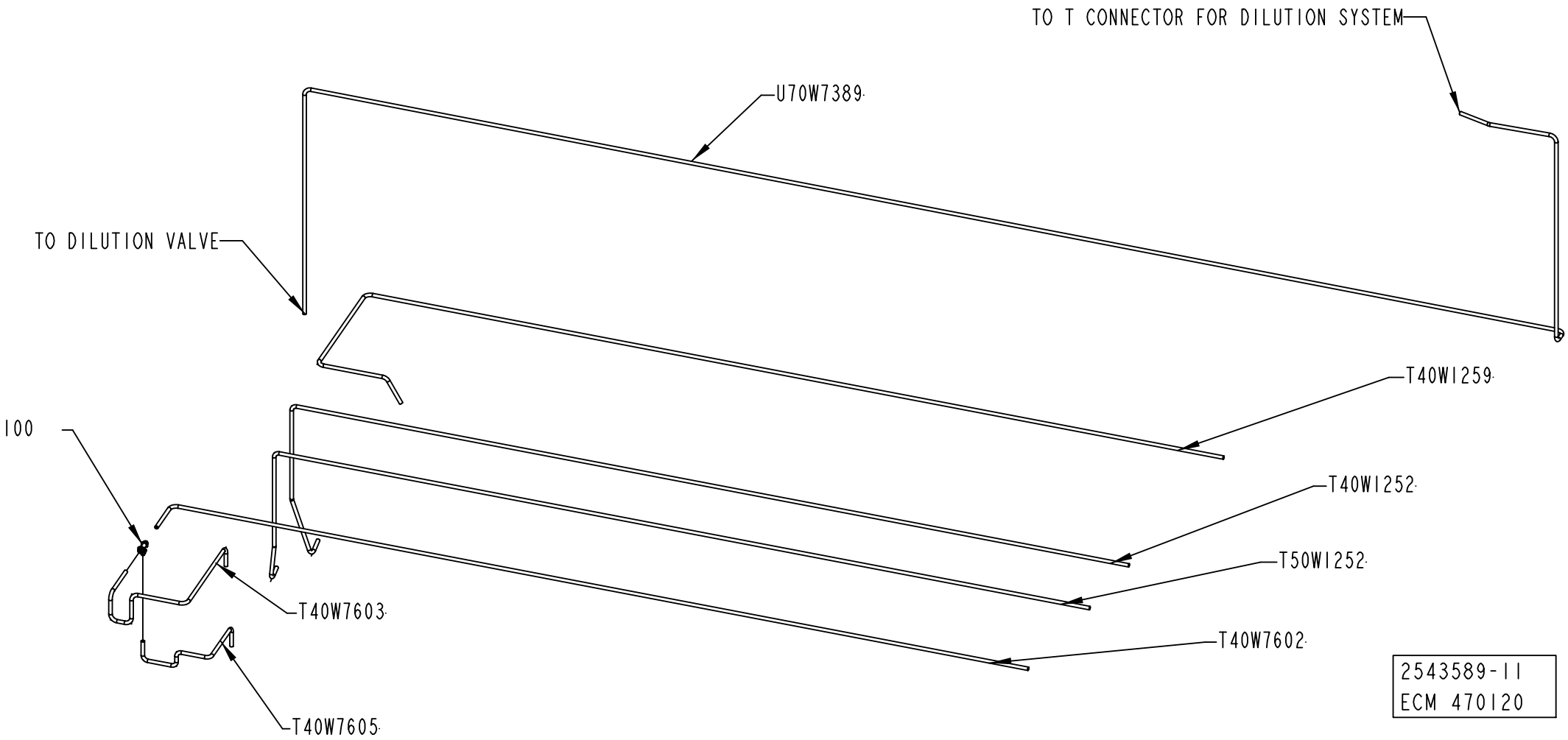
TO T CONNECTOR FOR DILUTION SYSTEM
U70W7389
TO DILUTION VALVE
T40W1259
100
T40W1252
T50W1252
T40W7603
T40W7602
T40W7605
2543589-11
ECM 470120

ECM: 472108 - 20110101
Group number: 2543589-0400
Assembly Drawing: 2543589-11_1_AB

Pos	Part No	UN	Qty	Description	Page No
-					
100	342946-0122		1	T-COUPLING,UNION 8/6	
T40W1252	315300-0006	MM	3700	TUBE, 8 MM PE BLACK	
T40W1259	315300-0006	MM	3500	TUBE, 8 MM PE BLACK	
T40W7602	315300-0006	MM	3000	TUBE, 8 MM PE BLACK	
T40W7603	315300-0006	MM	1000	TUBE, 8 MM PE BLACK	
T40W7605	315300-0006	MM	800	TUBE, 8 MM PE BLACK	
T50W1252	315300-0006	MM	3700	TUBE, 8 MM PE BLACK	
U70W7389	315300-0006	M	7	TUBE, 8 MM PE BLACK	

Pos	Part No	UN	Qty	Description	Page No

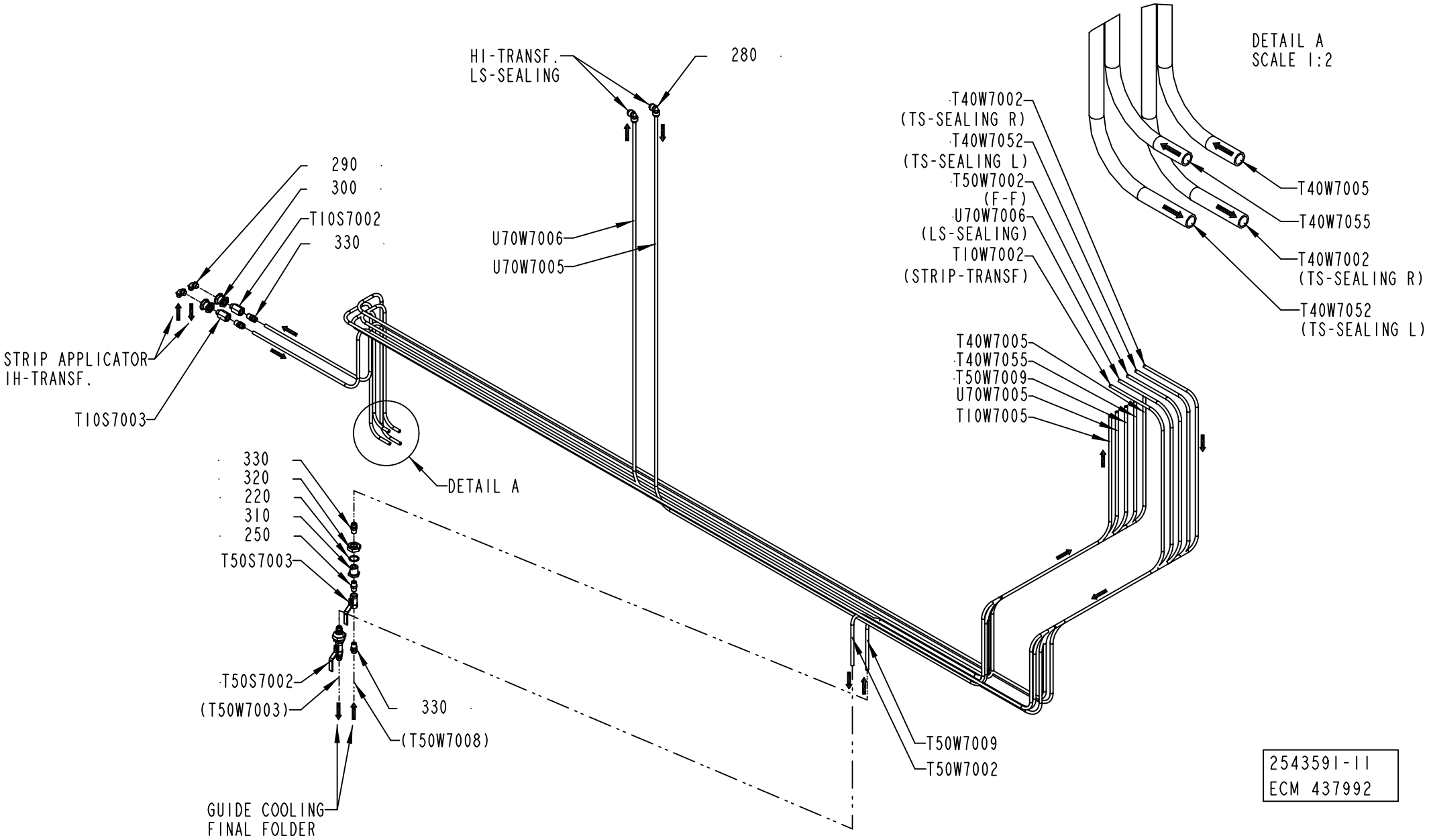

2543591-11
ECM 437992

ECM: 467517 - 20101002
Group number: 2543591-0300
Assembly Drawing: 2543591-11_1_AB

Pos	Part No	UN	Qty	Description	Page No
-					
220	315239-0113		2	NYLON WASHER G1/2, 1/2RRP	
250	90330-0043		2	NIPPLES, EXT. THREAD. R-207R1/4	
280	90055-0269		2	ELBOW PIPE JOINT 8X8 MM	
290	342722-0205		2	STRAIGHT COUPLING D=8-G1/4"	
300	342767-0104		2	BULKHEAD LEAD-IN, G1/4	
310	3122813-0000		2	HEXAGON NIPPLE	
320	90330-0093		2	NUT, HEXAGON, G1/2	
330	342920-0122		6	STRAIGHT COUPLING,EXT.THREADED 8/6-R1/4"	
T10S7002	90600-0775		1	BALL VALVE G1/4, 406F-1/4"	
T10S7003	90600-0775		1	BALL VALVE G1/4, 406F-1/4"	
T50S7002	90600-1986		1	BALL VALVE RP1/4	
T50S7003	90600-1986		1	BALL VALVE RP1/4	
T10W7002	315300-0006	MM	5500	TUBE, 8 MM PE BLACK	
T10W7005	315300-0006	MM	4600	TUBE, 8 MM PE BLACK	
T40W7002	315300-0006	MM	4900	TUBE, 8 MM PE BLACK	
T40W7005	315300-0006	MM	4200	TUBE, 8 MM PE BLACK	
T40W7052	315300-0006	MM	4900	TUBE, 8 MM PE BLACK	
T40W7055	315300-0006	MM	4200	TUBE, 8 MM PE BLACK	
T50W7002	315300-0006	MM	4600	TUBE, 8 MM PE BLACK	
T50W7009	315300-0006	MM	4000	TUBE, 8 MM PE BLACK	
U70W7005	315300-0006	MM	4500	TUBE, 8 MM PE BLACK	
U70W7006	315300-0006	MM	4500	TUBE, 8 MM PE BLACK	

Pos	Part No	UN	Qty	Description	Page No

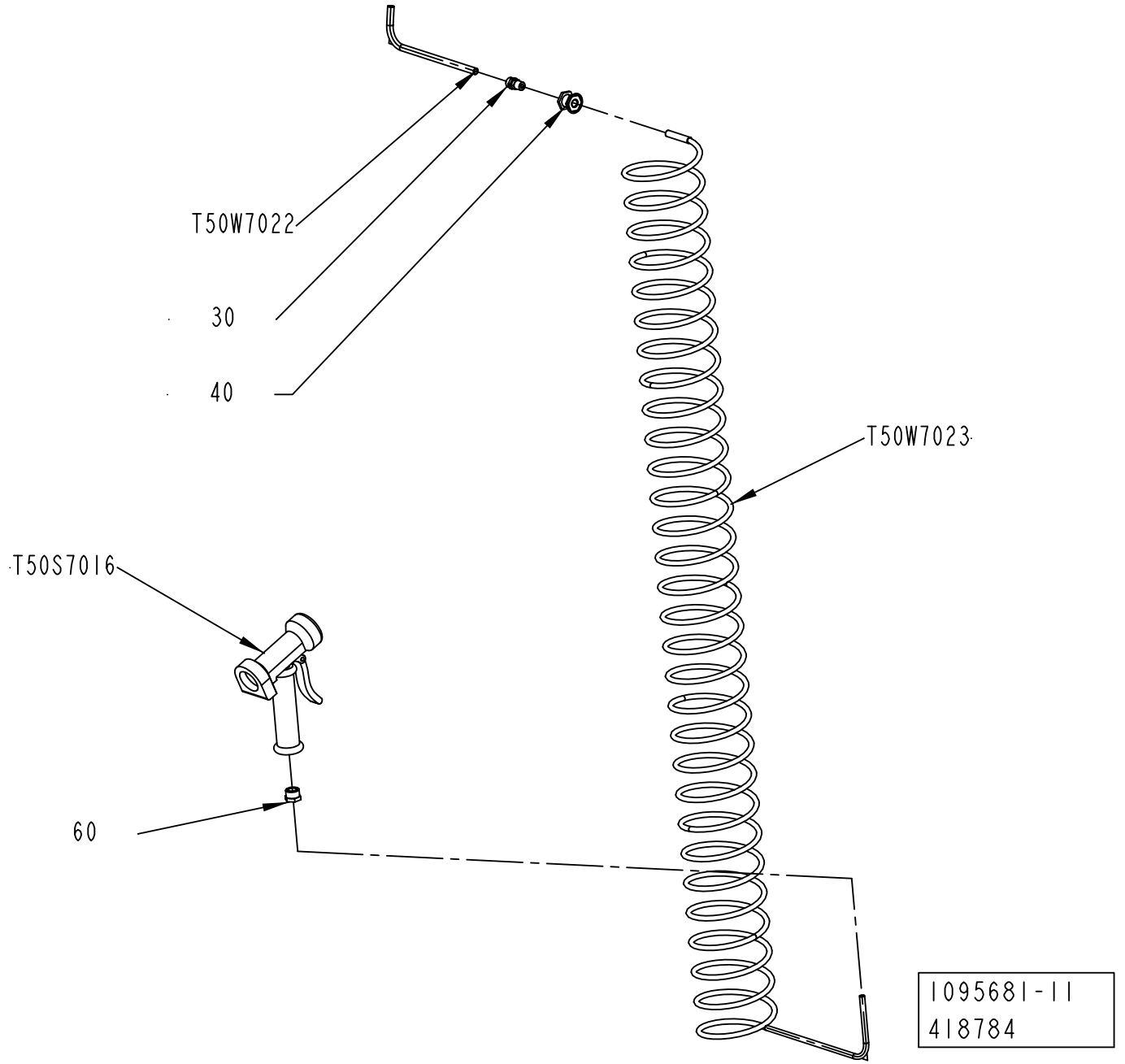
T50W7022
30
40
T50W7023
T50S7016
60
1095681-11
418784

ECM: 472329 - 20110101
Group number: 1095681-0300
Assembly Drawing: 1095681-11_1_AA

Pos	Part No	UN	Qty	Description	Page No
-					
030	342920-0132		1	STRAIGHT COUPL.,EXT.THREADED 10/8-R1/4"	
040	342767-0104		1	BULKHEAD LEAD-IN, G1/4	
060	342701-0205		1	BUSHING,INT./EXT.G-THREAD G1/2"-G1/4"	
T50S7016	90426-0003		1	HAND SHOWER, 361100	
T50W7022	90166-0135	MM	1600	TUBE 10 MM PA BLACK	
T50W7023	90152-0017		1	HOSE (SPIRAL)	

Pos	Part No	UN	Qty	Description	Page No

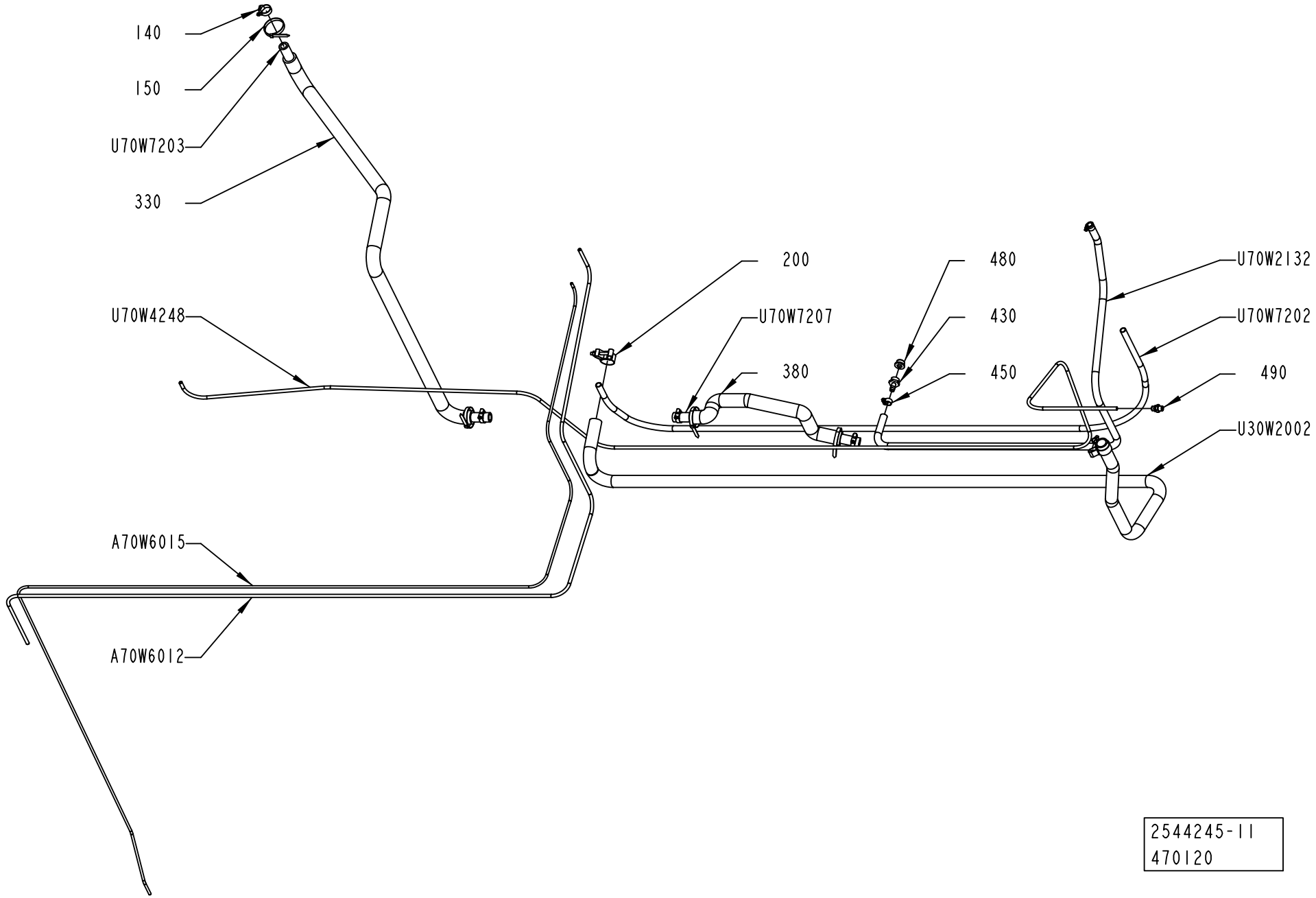
140
150
U70W7203
330
U70W4248
A70W6015
A70W6012
200
U70W7207
380
480
430
450
U70W2132
U70W7202
490
U30W2002
2544245-11
470120

ECM: 472109 - 20110101
Group number: 2544245-0300
Assembly Drawing: 2544245-11_1_AB

Pos	Part No	UN	Qty	Description	Page No
-					
140	342991-0104		4	HOSE CLIP,WORM DRIVE TYPE (19)-28	
150	352113-0104		4	CABLE TIE, BLACK 300X4,8 MM	
200	90459-2366		2	HOSE CLIP, 32 - 35 MM	
330	90411-0020	MM	2000	PIPE INSULATION, ARMAFLEX D-25	
380	90411-0020	MM	700	PIPE INSULATION, ARMAFLEX D-25	
430	342901-0105		1	HOSE NIPPLE, EXT.THR. G1/2-12 MM	
450	342991-0101		2	HOSE CLIP,WORM DRIVE TYPE (11)-17	
480	342713-0213		1	PLUG, EXT THREAD HEX SOCKET 8638-00-120	
490	342921-0122		1	STRAIGHT COUPLING,EXT.THREADED 8/6-G1/4"	
A70W6012	315300-0006	MM	6000	TUBE, 8 MM PE BLACK	
A70W6015	90459-0221	MM	4000	TUBE, 6 MM PE BLACK	
U30W2002	90166-0049	MM	2500	HOSE PVC 25/33-34	
U70W2132	90166-0121	MM	1800	HOSE	
U70W4248	315300-0004	MM	5000	TUBE, 8 MM PE BLUE	
U70W7202	90166-0110	MM	3000	TUBE 15 MM PA,TRANSP.	
U70W7203	90166-0260	MM	2000	HOSE	
U70W7207	90166-0260	MM	700	HOSE	

Pos	Part No	UN	Qty	Description	Page No

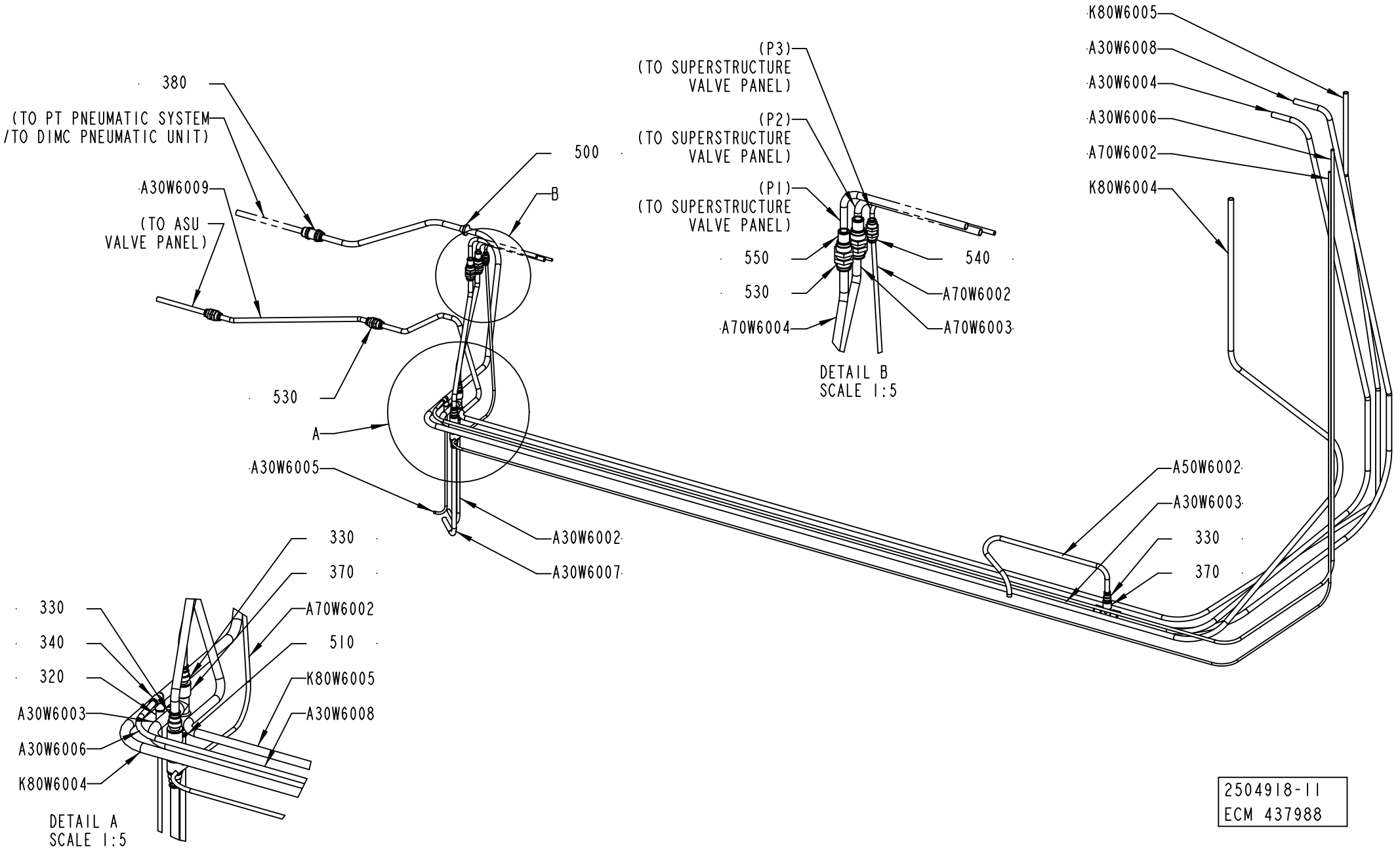

2504918-11
ECM 437988

ECM: 467425 - 20101002
Group number: 2504918-0300
Assembly Drawing: 2504918-11_1_AB

Pos	Part No	UN	Qty	Description	Page No
-					
320	350006-0003		1	PUSH-IN FITTING QS-F-8H-6	
330	342716-0211		5	REDUCER 12-14	
340	350004-0003		1	PUSH-IN L-FITTING QSL-F-8	
350	350004-0005		1	PUSH-IN L-FITTING QSL-F-12	
360	342735-0110		2	ELBOW PIPE	
370	342748-0110		3	T-CONNECTION 14MM	
380	342768-0110		3	BULKHEAD CONNECTOR, 14 MM	
500	90015-0021		1	LEAD-IN, TET10-14, E-1458023	
510	90055-0129		1	REDUCER 8-14	
520	90157-0034	L	1	THREAD SEALANT LOCTITE 572 50 ML	
530	350010-0005		4	PUSH-IN BULKHEAD FITTING QSS-F-12	
540	350010-0002		1	PUSH-IN BULKHEAD FITTING QSS-F-6	
550	350006-0009		2	PUSH-IN FITTING QS-F-12H-10	
A30W6002	315300-0004	MM	1500	TUBE, 8 MM PE BLUE	
A30W6003	90166-0196	MM	2600	TUBE 14MM PA BLUE	
A30W6004	90166-0196	MM	3500	TUBE 14MM PA BLUE	
A30W6005	315300-0001	MM	2200	TUBE, 6 MM PE BLUE	
A30W6006	315300-0004	MM	4800	TUBE, 8 MM PE BLUE	
A30W6007	315300-0010	MM	1500	TUBE, 12 MM PE BLUE	
A30W6008	90166-0196	MM	5000	TUBE 14MM PA BLUE	
A30W6009	315300-0010	MM	510	TUBE, 12 MM PE BLUE	
A50W6002	315300-0010	MM	350	TUBE, 12 MM PE BLUE	
A70W6002	315300-0001	MM	5500	TUBE, 6 MM PE BLUE	
A70W6003	315300-0010	MM	370	TUBE, 12 MM PE BLUE	
A70W6004	315300-0010	MM	370	TUBE, 12 MM PE BLUE	
K80W6004	90166-0196	MM	6200	TUBE 14MM PA BLUE	
K80W6005	315300-0010	MM	5400	TUBE, 12 MM PE BLUE	

Pos	Part No	UN	Qty	Description	Page No

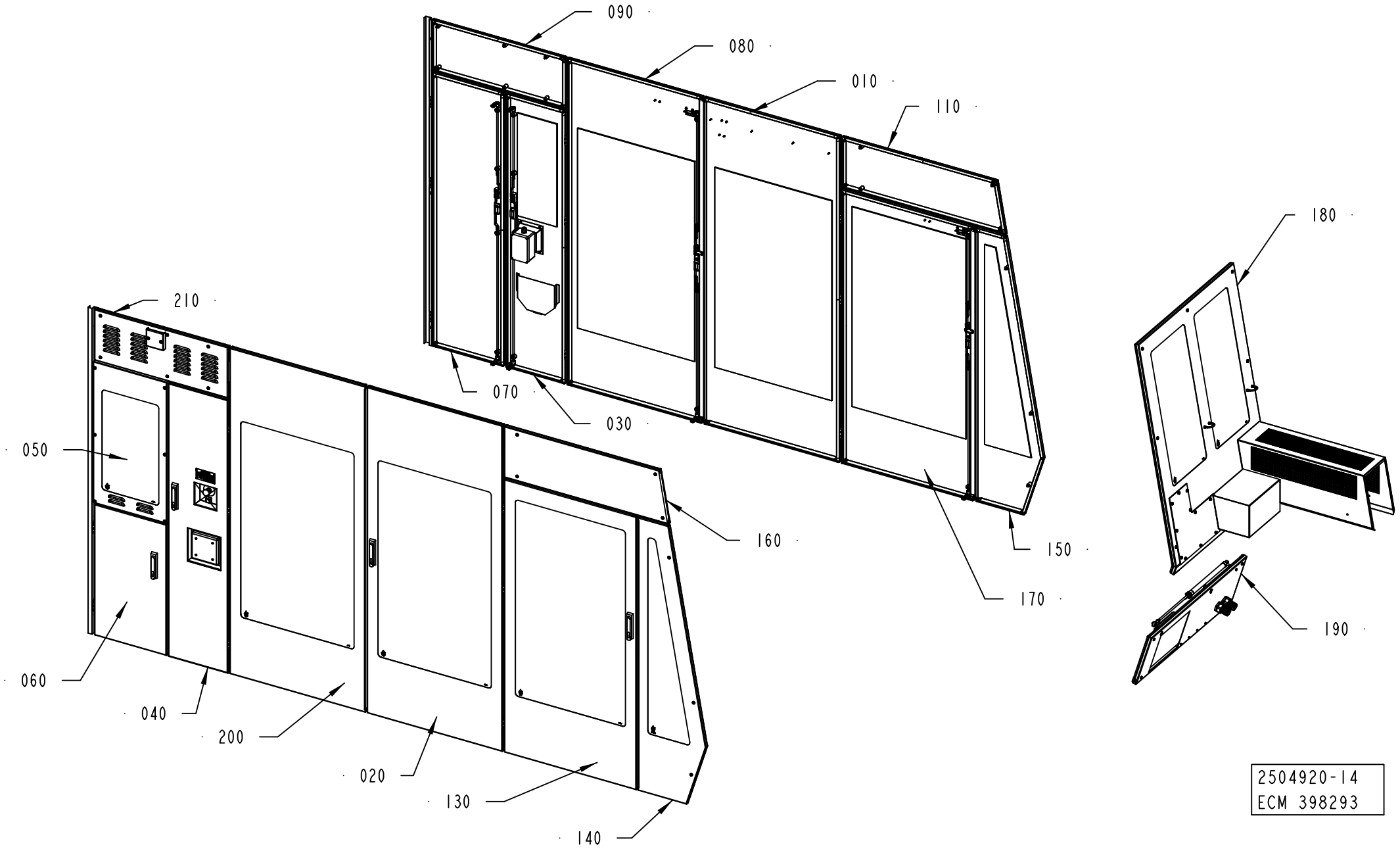
090
080
010
110
180
210
070
030
050
160
150
170
190
060
040
200
020
130
140
2504920-14
ECM 398293

ECM: 467496 - 20101002
Group number: 2504920-0300
Assembly Drawing: 2504920-14_1_AA

Pos	Part No	UN	Qty	Description	Page No
A3/SPEED TBA 0200S, A3/SPEED TBA 0125S, A3/SPEED TBA 0200M, A3/SPEED TBA 0250S (See drawing on page: 2-156)					
010	2541689-0300		1	DOOR	**2-159**
020	2541693-0300		1	DOOR	**2-161**
080	2541696-0300		1	DOOR	**2-163**
090	2541686-0200		1	COVER	**2-165**
110	2508165-0100		1	COVER	**2-167**
140	2508177-0100		1	DOOR	**2-169**
150	2508181-0100		1	DOOR	**2-171**
160	2848495-0100		1	COVER	**2-173**
170	2530080-0300		1	DOOR	**2-175**
180	2512830-0400		1	FRONT COVER	**2-177**
190	2510347-0300		1	FRONT GUARD	**2-183**
200	2541699-0300		1	DOOR	**2-185**
A3/SPEED TBA 1000B, A3/SPEED TBA 1000S, A3/SPEED TBA 1000SQ, A3/SPEED TBA 0250B, A3/SPEED TBA 0200B (See drawing on page: 2-156)					
010	2541689-0300		1	DOOR	**2-159**
020	2541693-0300		1	DOOR	**2-161**
080	2541696-0300		1	DOOR	**2-163**
090	2541686-0200		1	COVER	**2-165**
110	2508165-0100		1	COVER	**2-167**
140	2508177-0100		1	DOOR	**2-169**
150	2508181-0100		1	DOOR	**2-171**
160	2848495-0100		1	COVER	**2-173**
170	2530080-0300		1	DOOR	**2-175**
180	2512830-0250		1	FRONT COVER	**2-187, 2-189, 2-191**
190	2510347-0300		1	FRONT GUARD	**2-183**
200	2541699-0300		1	DOOR	**2-185**
Common Parts					
030	2508138-0300		1	DOOR	**2-205**
040	2541703-0300		1	DOOR	**2-209**
050	3023519-0100		1	PROTECTIVE COVER	**2-213**
060	2508149-0300		1	DOOR	**2-215**
070	2529597-0200		1	DOOR	**2-217**
130	2508175-0300		1	DOOR	**2-219**
210	2544333-0200		1	DOOR	**2-221**

Pos	Part No	UN	Qty	Description	Page No

Machine Type | Group Description | Used-In | Group Number | Page No

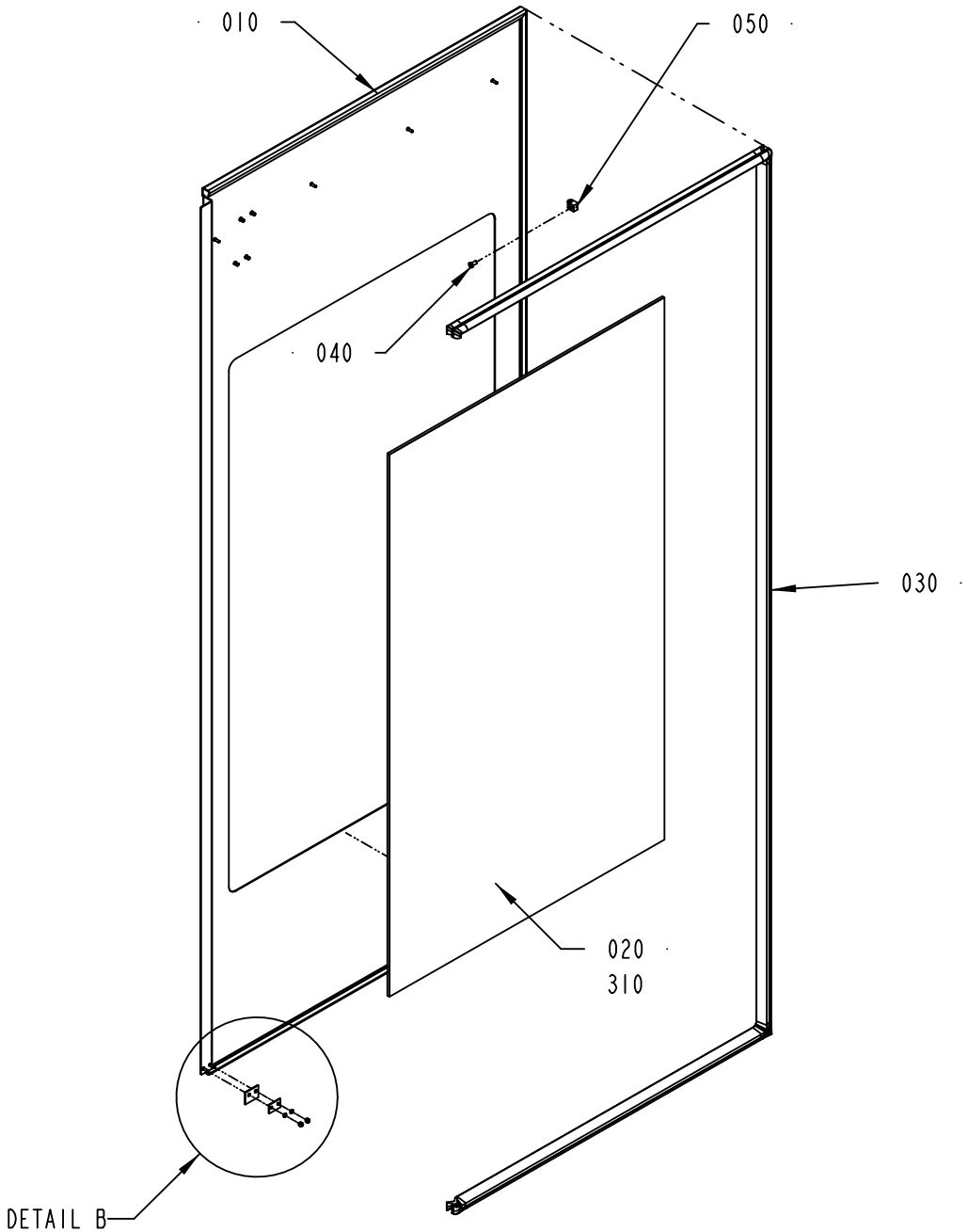

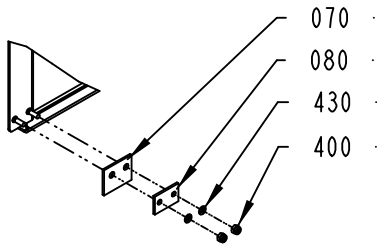

DETAIL B
SCALE 1:5

2541689-12
398293

ECM: 408732 - 20091002
Group number: 2541689-0300
Assembly Drawing: 2541689-12_1_AA

Pos	Part No	UN	Qty	Description	Page No
-					
010	3043269-0000		1	DOOR	
020	2541691-0000		1	GLASS PANE	
030	2541692-0000		1	RUBBER SEAL	
040	1129767-0000		3	SCREW	
050	1129770-0000		3	BLOCKING PIECE	
070	1129325-0000		1	SEALING FLANGE	
080	1129324-0000		1	WASHER	
310	90157-0041	L	1	SEALING COMPOUND, RHODORSEAL 5651	
400	312812-0312		2	HEXAGON NUT, NY-LOCK M4 A480	
430	315105-0136		2	WASHER BRB 4,3X8 RFR	

Pos	Part No	UN	Qty	Description	Page No

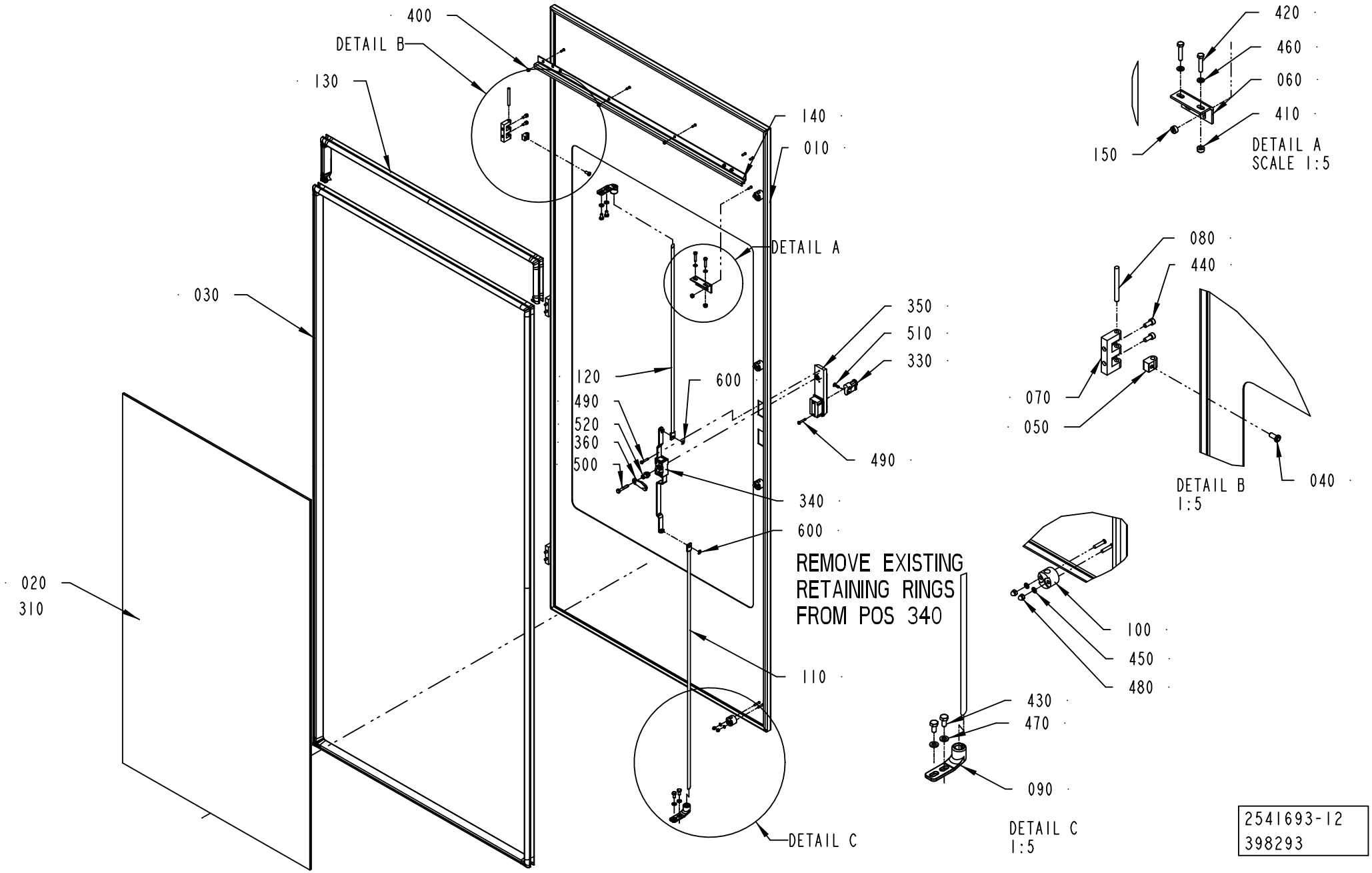
400
DETAIL B
130
140
010
DETAIL A
030
350
510
330
120
600
490
520
360
500
490
340
600
020
310
REMOVE EXISTING
RETAINING RINGS
FROM POS 340
110
DETAIL C
420
460
060
410
150
DETAIL A
SCALE 1:5
080
440
070
050
040
DETAIL B
1:5
100
450
480
430
470
090
DETAIL C
1:5
2541693-12
398293

ECM: 466424 - 20100730
Group number: 2541693-0300
Assembly Drawing: 2541693-12_1_AA

Pos	Part No	UN	Qty	Description	Page No
-					
010	3043270-0000		1	DOOR	
020	2541691-0000		1	GLASS PANE	
030	2541695-0000		1	RUBBER SEAL	
040	1129767-0000		3	SCREW	
050	1129770-0000		3	BLOCKING PIECE	
060	1346885-0000		1	SUPPORT	
070	1035792-0000		3	E-HINGE	
080	988685-0000		3	PIN	
090	1538868-0000		2	BRACKET	
100	1129274-0000		4	GUIDE LUG	
110	2508133-0000		1	LOCKING ARM	
120	2541698-0000		1	LOCKING ARM	
130	2543325-0000		1	RUBBER SEAL	
140	2543327-0000		1	PROFILE	
150	1539391-0000		2	ROUND NUT	
310	90157-0041	L	1	SEALING COMPOUND, RHODORSEAL 5651	
330	90237-0128		1	LOCK CYLINDER, 1109-SU125	
340	90600-0477		1	LOCK HOUSING, 1121-U139	
350	90600-5084		1	LEVER MECHANISM, 1125-SU404	
360	90600-4542		1	LOCK CAM, 1000-227-01	
400	312812-0312		5	HEXAGON NUT, NY-LOCK M4 A480	
410	575034-0000		2	ROUND NUT	
420	312105-0333		2	SCREW M6S ISO 4017 M5X25 A480	
430	312105-0366		4	SCREW M6S ISO 4017 M6X12 A480	
440	312115-0327		6	SCREW ISO4762 M5X12 A4 80	
450	315105-0136		8	WASHER BRB 4,3X8 RFR	
460	315105-0146		2	WASHER BRB 5,3X10 RFR	
470	315105-0153		4	WASHER BRB 6,4X12 RFR	
480	312705-0312		8	NUT HEX. DOMED CAP MHM-6 M4 A280	
490	312504-0348		4	TAPPING SCREW ISO 7049-A2-ST4,2X25-C-Z	
500	312105-0376		1	SCREW M6S ISO 4014 M6X35 A480	
510	312155-0329		1	SCREW DIN 7991 MF6S M5X16 A4 70	
520	90600-8406		1	SPACER, 1000-S1455-SK	
600	315755-0107		2	RETAINING RING SHAFT DIN 6799 5 SS	

Pos	Part No	UN	Qty	Description	Page No

Machine Type | Group Description | Used-In | Group Number | Page No

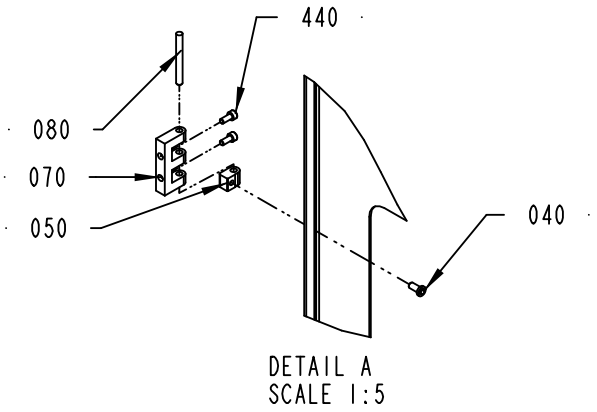

DETAIL A
SCALE 1:5

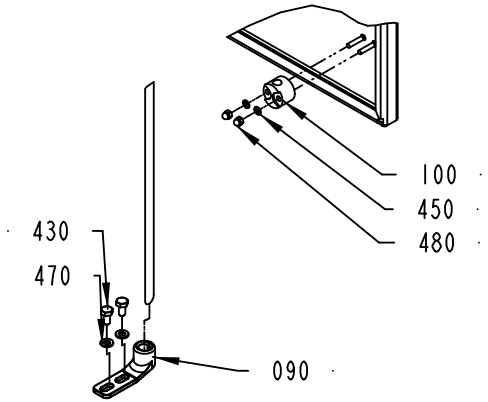

DETAIL B
SCALE 1:5

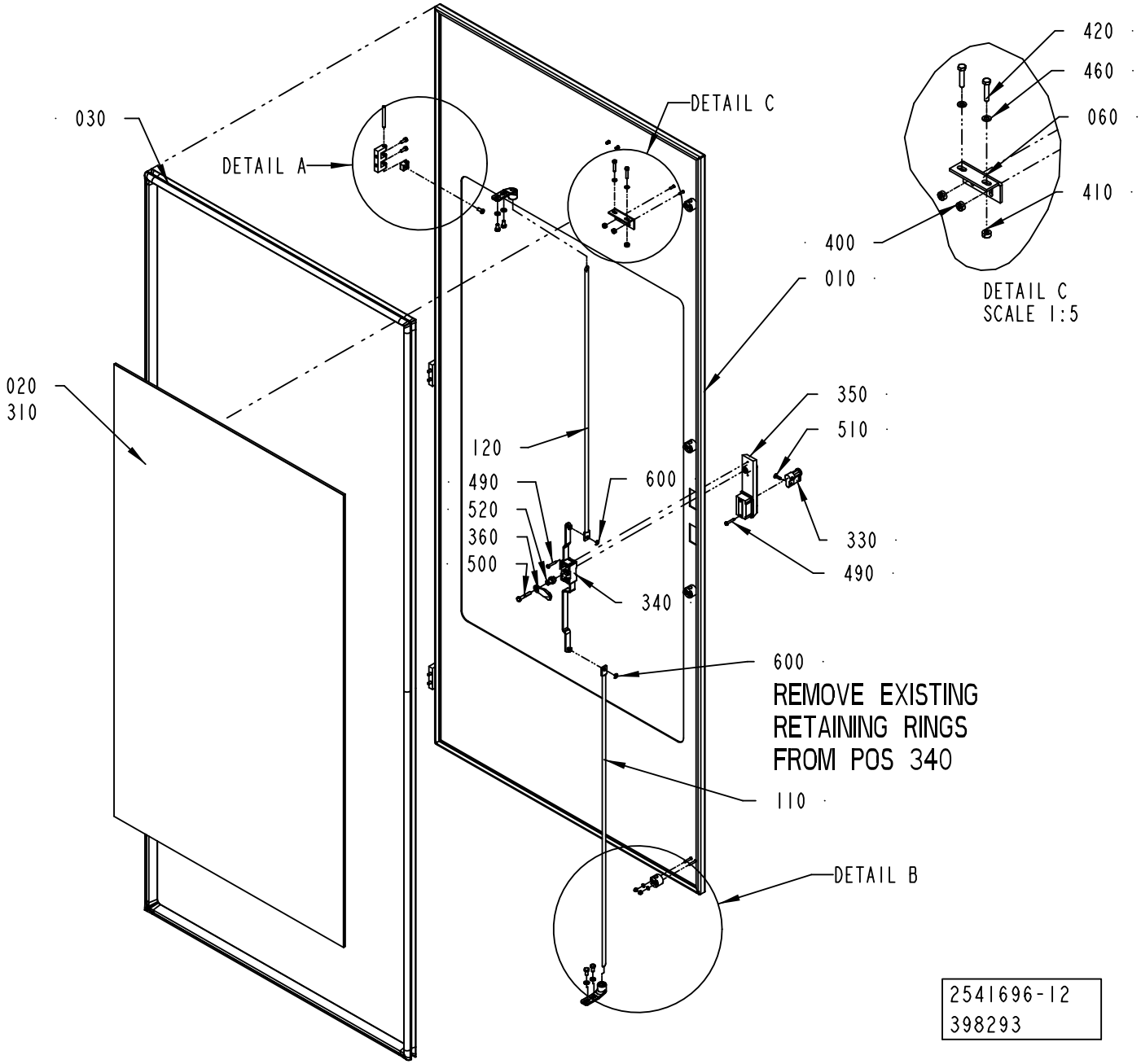

DETAIL C
SCALE 1:5

2541696-12
398293

ECM: 466425 - 20100730
Group number: 2541696-0300
Assembly Drawing: 2541696-12_1_AA

Pos	Part No	UN	Qty	Description	Page No
-					
010	3043271-0000		1	DOOR	
020	2541691-0000		1	GLASS PANE	
030	2543326-0000		1	RUBBER SEAL	
040	1129767-0000		3	SCREW	
050	1129770-0000		3	BLOCKING PIECE	
060	1346885-0000		1	SUPPORT	
070	1035792-0000		3	E-HINGE	
080	988685-0000		3	PIN	
090	1538868-0000		2	BRACKET	
100	1129274-0000		4	GUIDE LUG	
110	2508133-0000		1	LOCKING ARM	
120	2541697-0000		1	LOCKING ARM	
310	90157-0041	L	1	SEALING COMPOUND, RHODORSEAL 5651	
330	90237-0128		1	LOCK CYLINDER, 1109-SU125	
340	90600-0477		1	LOCK HOUSING, 1121-U139	
350	90600-5084		1	LEVER MECHANISM, 1125-SU404	
360	90600-4542		1	LOCK CAM, 1000-227-01	
400	1539391-0000		2	ROUND NUT	
410	575034-0000		2	ROUND NUT	
420	312105-0333		2	SCREW M6S ISO 4017 M5X25 A480	
430	312105-0366		4	SCREW M6S ISO 4017 M6X12 A480	
440	312115-0327		6	SCREW ISO4762 M5X12 A4 80	
450	315105-0136		8	WASHER BRB 4,3X8 RFR	
460	315105-0146		2	WASHER BRB 5,3X10 RFR	
470	315105-0153		4	WASHER BRB 6,4X12 RFR	
480	312705-0312		8	NUT HEX. DOMED CAP MHM-6 M4 A280	
490	312504-0348		4	TAPPING SCREW ISO 7049-A2-ST4,2X25-C-Z	
500	312105-0376		1	SCREW M6S ISO 4014 M6X35 A480	
510	312155-0329		1	SCREW DIN 7991 MF6S M5X16 A4 70	
520	90600-8406		1	SPACER, 1000-S1455-SK	
600	315755-0107		2	RETAINING RING SHAFT DIN 6799 5 SS	

Pos	Part No	UN	Qty	Description	Page No

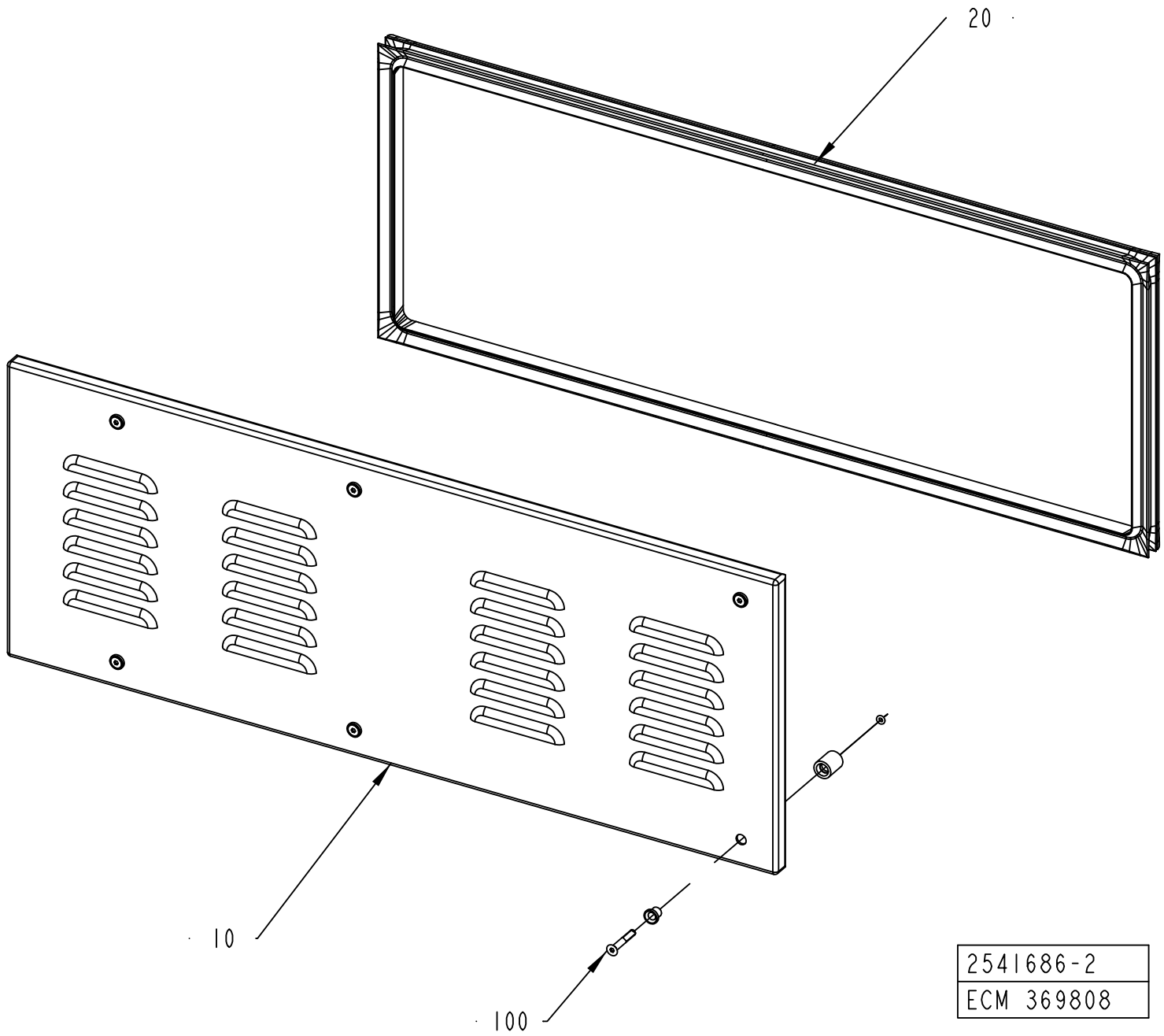

2541686-2
ECM 369808

ECM: 370721 - 20080930
Group number: 2541686-0200
Assembly Drawing: 2541686-2_1_AA

Pos	Part No	UN	Qty	Description	Page No
-					
010	2998047-0000		1	COVER	
020	2541688-0000		1	RUBBER SEAL	
100	90226-0458		6	MOUNTING SCREW	

Pos	Part No	UN	Qty	Description	Page No

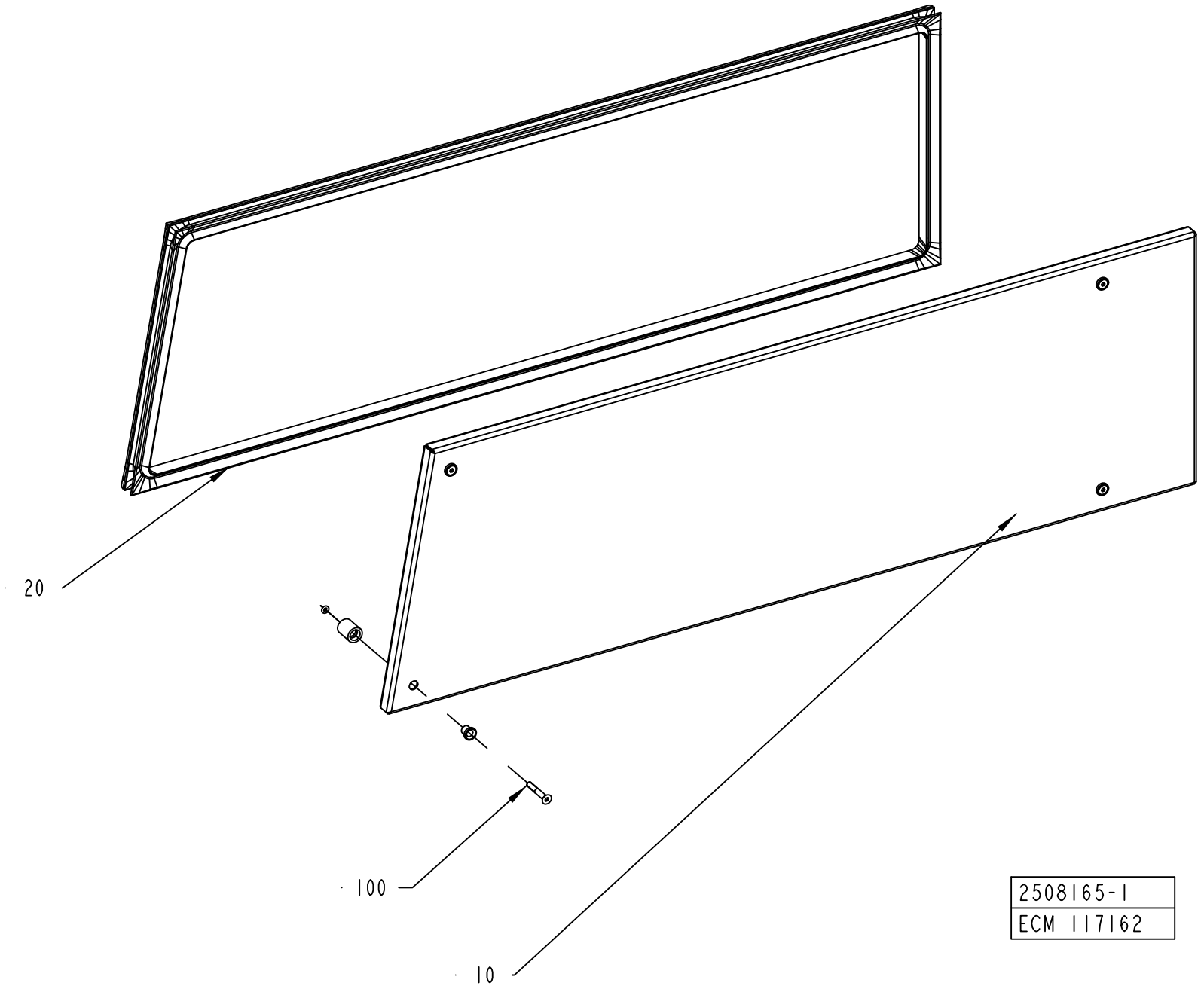
20
100
10
2508165-1
ECM 117162

ECM: 189919 - 20041104
Group number: 2508165-0100
Assembly Drawing: 2508165-1_1_AA

Pos	Part No	UN	Qty	Description	Page No
-					
010	2508166-0000		1	COVER	
020	2508167-0000		1	RUBBER SEAL	
100	90226-0458		4	MOUNTING SCREW	

Pos	Part No	UN	Qty	Description	Page No

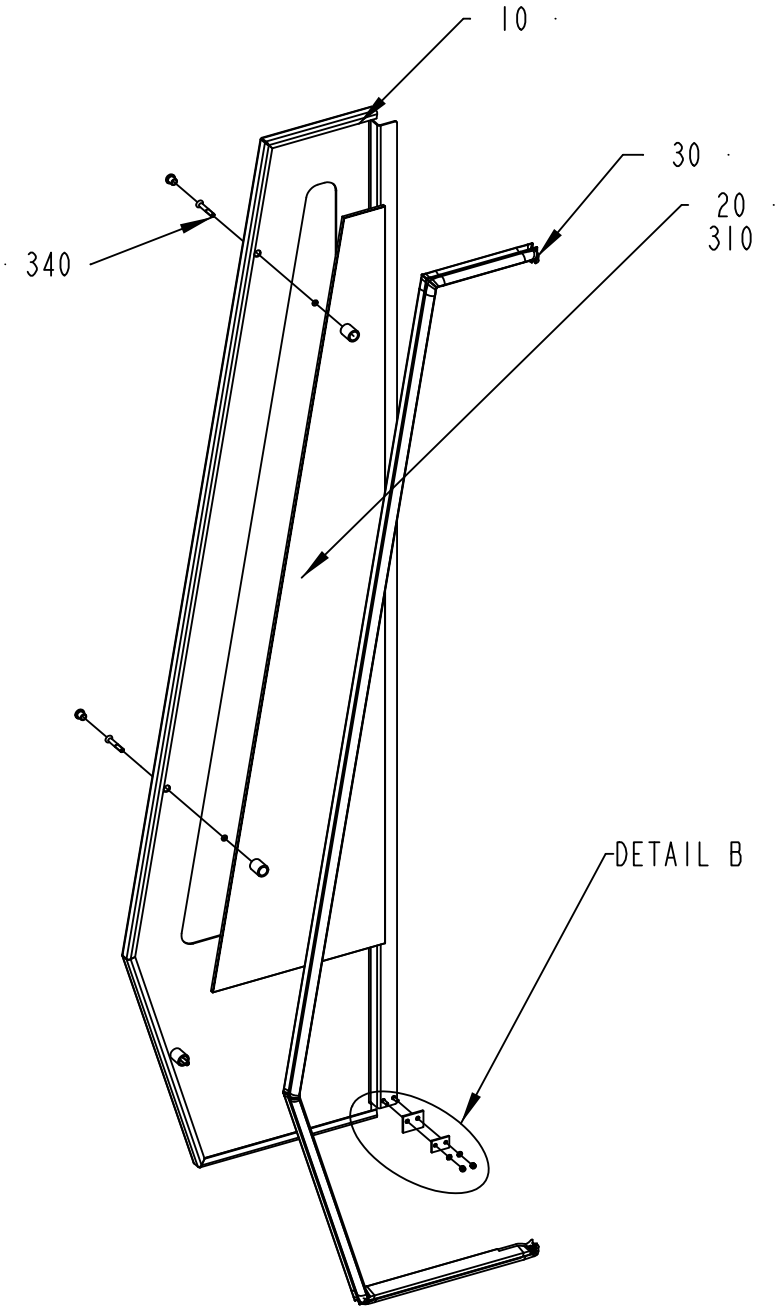

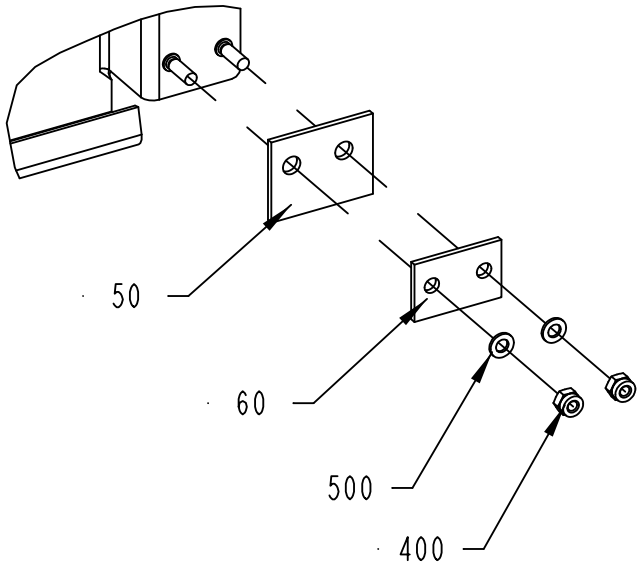

DETAIL B
1:2

2508177-1
313511

ECM: 339759 - 20080402
Group number: 2508177-0100
Assembly Drawing: 2508177-1_1_AC

Pos	Part No	UN	Qty	Description	Page No
A3/SPEED					
010	2508178-0000		1	DOOR	
020	2508180-0001		1	GLASS PANE	
030	2508179-0000		1	RUBBER SEAL	
Common Parts					
050	1129325-0000		1	SEALING FLANGE	
060	1129324-0000		1	WASHER	
310	90157-0041		1	SEALING COMPOUND, RHODORSEAL 5651	
340	90226-0458		3	MOUNTING SCREW	
400	312812-0312		2	HEXAGON NUT, NY-LOCK M4 A480	
500	315105-0136		2	WASHER BRB 4,3X8 RFR	

Pos	Part No	UN	Qty	Description	Page No

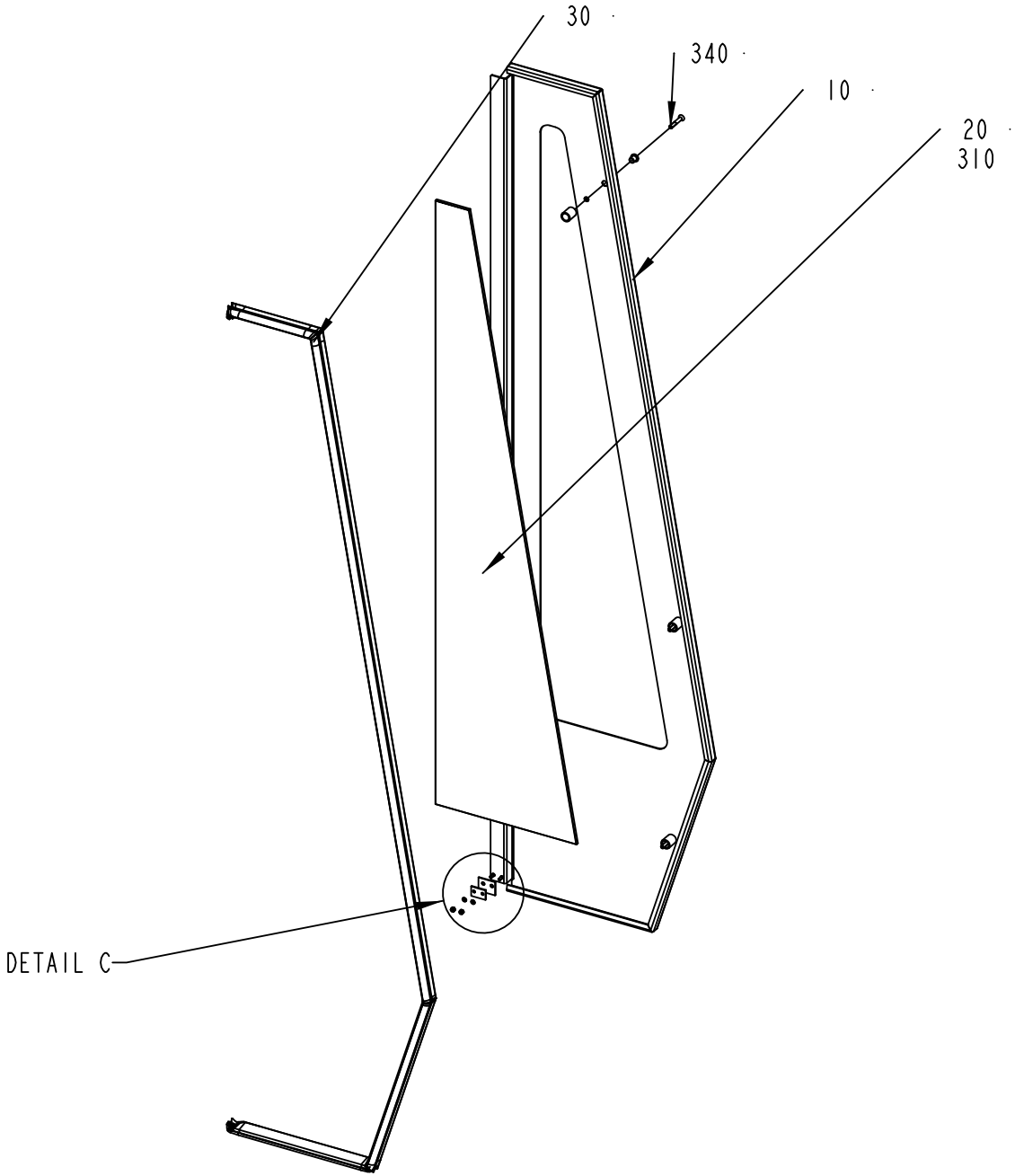

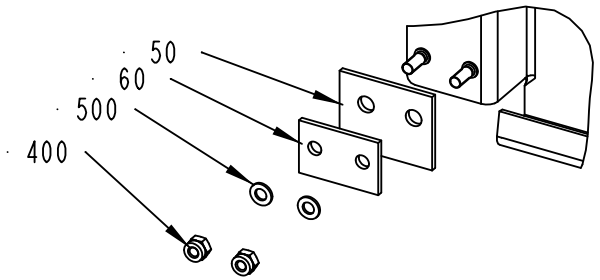

DETAIL C
1:2

2508181-1
313511

ECM: 339761 - 20080402
Group number: 2508181-0100
Assembly Drawing: 2508181-1_1_AC

Pos	Part No	UN	Qty	Description	Page No
A3/SPEED					
010	2508182-0000		1	DOOR	
020	2508180-0002		1	GLASS PANE	
030	2508183-0000		1	RUBBER SEAL	
Common Parts					
050	1129325-0000		1	SEALING FLANGE	
060	1129324-0000		1	WASHER	
310	90157-0041		1	SEALING COMPOUND, RHODORSEAL 5651	
340	90226-0458		3	MOUNTING SCREW	
400	312812-0312		2	HEXAGON NUT, NY-LOCK M4 A480	
500	315105-0136		2	WASHER BRB 4,3X8 RFR	

Pos	Part No	UN	Qty	Description	Page No

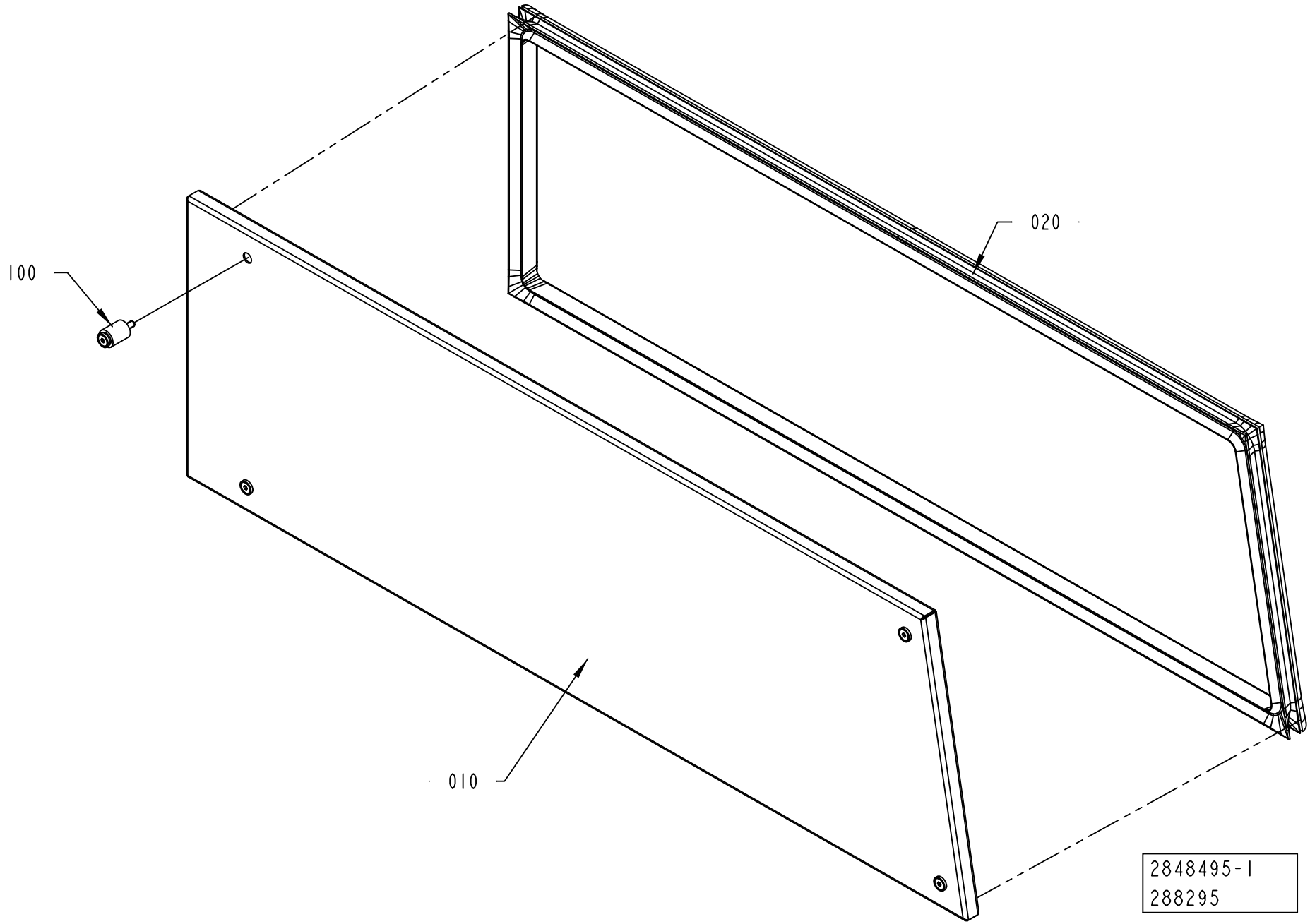
100
020
010
2848495-1
288295

ECM: 288299 - 20070628
Group number: 2848495-0100
Assembly Drawing: 2848495-1_1_AA

Pos	Part No	UN	Qty	Description	Page No
-					
010	2848494-0000		1	COVER	
020	2760964-0000		1	RUBBER SEAL	
100	90226-0458		4	MOUNTING SCREW	

Pos	Part No	UN	Qty	Description	Page No

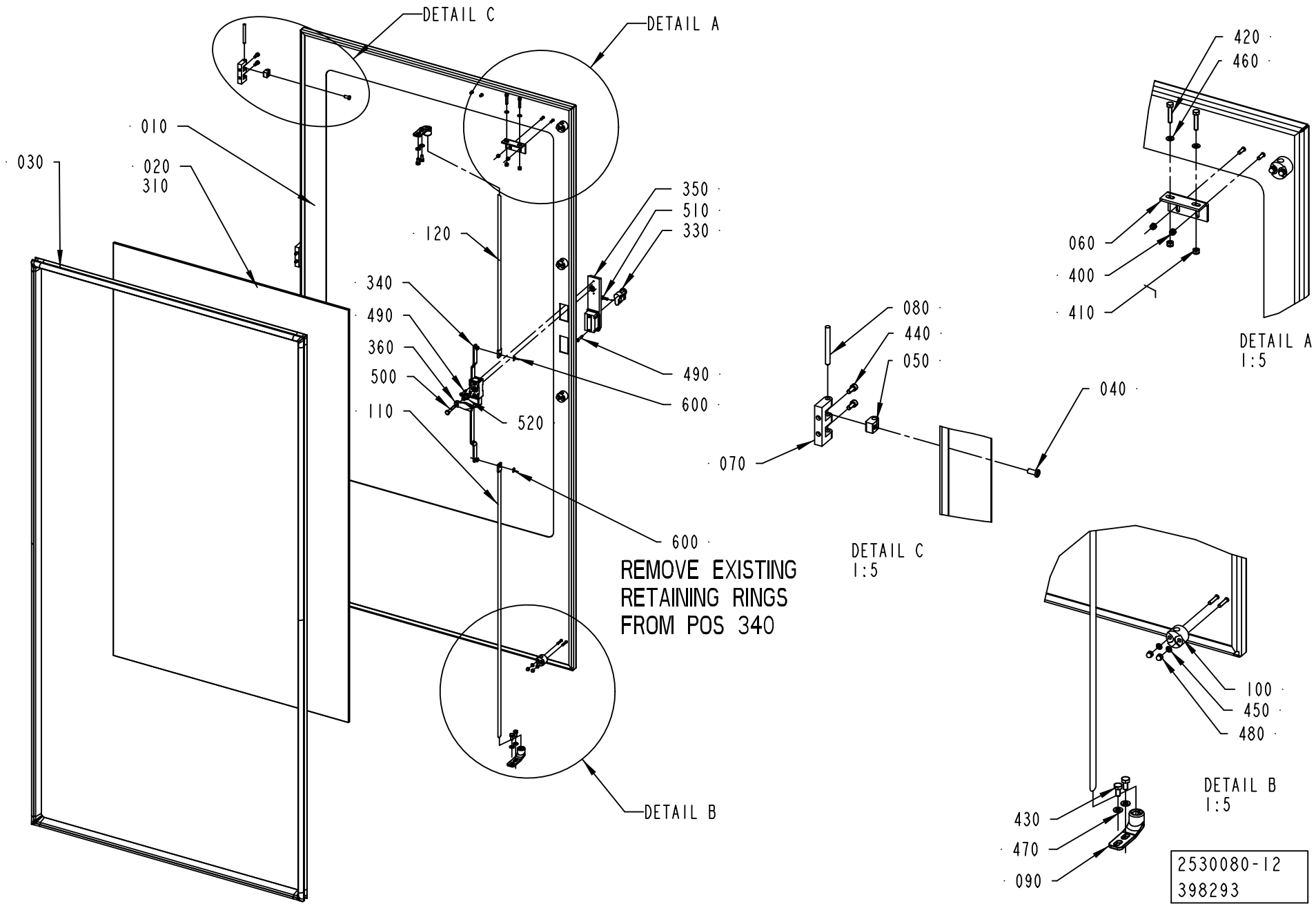
DETAIL C
DETAIL A
010
020
310
030
120
350
510
330
340
490
360
500
110
490
600
520
600
REMOVE EXISTING
RETAINING RINGS
FROM POS 340
DETAIL B
420
460
060
400
410
DETAIL A
1:5
080
440
050
040
070
DETAIL C
1:5
100
450
480
DETAIL B
1:5
430
470
090
2530080-12
398293

ECM: 466423 - 20100730
Group number: 2530080-0300
Assembly Drawing: 2530080-12_1_AA

Pos	Part No	UN	Qty	Description	Page No
-					
010	3039763-0000		1	DOOR	
020	2527640-0000		1	GLASS PANE	
030	2527639-0000		1	RUBBER SEAL	
040	1129767-0000		3	SCREW	
050	1129770-0000		3	BLOCKING PIECE	
060	1346885-0000		1	SUPPORT	
070	1035792-0000		3	E-HINGE	
080	988685-0000		3	PIN	
090	1538868-0000		2	BRACKET	
100	1129274-0000		4	GUIDE LUG	
110	2508133-0000		1	LOCKING ARM	
120	2508134-0000		1	LOCKING ARM	
310	90157-0041	L	1	SEALING COMPOUND, RHODORSEAL 5651	
330	90237-0128		1	LOCK CYLINDER, 1109-SU125	
340	90600-0477		1	LOCK HOUSING, 1121-U139	
350	90600-5084		1	LEVER MECHANISM, 1125-SU404	
360	90600-4542		1	LOCK CAM, 1000-227-01	
400	1539391-0000		2	ROUND NUT	
410	575034-0000		2	ROUND NUT	
420	312105-0333		2	SCREW M6S ISO 4017 M5X25 A480	
430	312105-0366		4	SCREW M6S ISO 4017 M6X12 A480	
440	312115-0327		6	SCREW ISO4762 M5X12 A4 80	
450	315105-0136		8	WASHER BRB 4,3X8 RFR	
460	315105-0146		2	WASHER BRB 5,3X10 RFR	
470	315105-0153		4	WASHER BRB 6,4X12 RFR	
480	312705-0312		8	NUT HEX. DOMED CAP MHM-6 M4 A280	
490	312504-0348		4	TAPPING SCREW ISO 7049-A2-ST4,2X25-C-Z	
500	312105-0376		1	SCREW M6S ISO 4014 M6X35 A480	
510	312155-0329		1	SCREW DIN 7991 MF6S M5X16 A4 70	
520	90600-8406		1	SPACER, 1000-S1455-SK	
600	315755-0107		2	RETAINING RING SHAFT DIN 6799 5 SS	

Pos	Part No	UN	Qty	Description	Page No

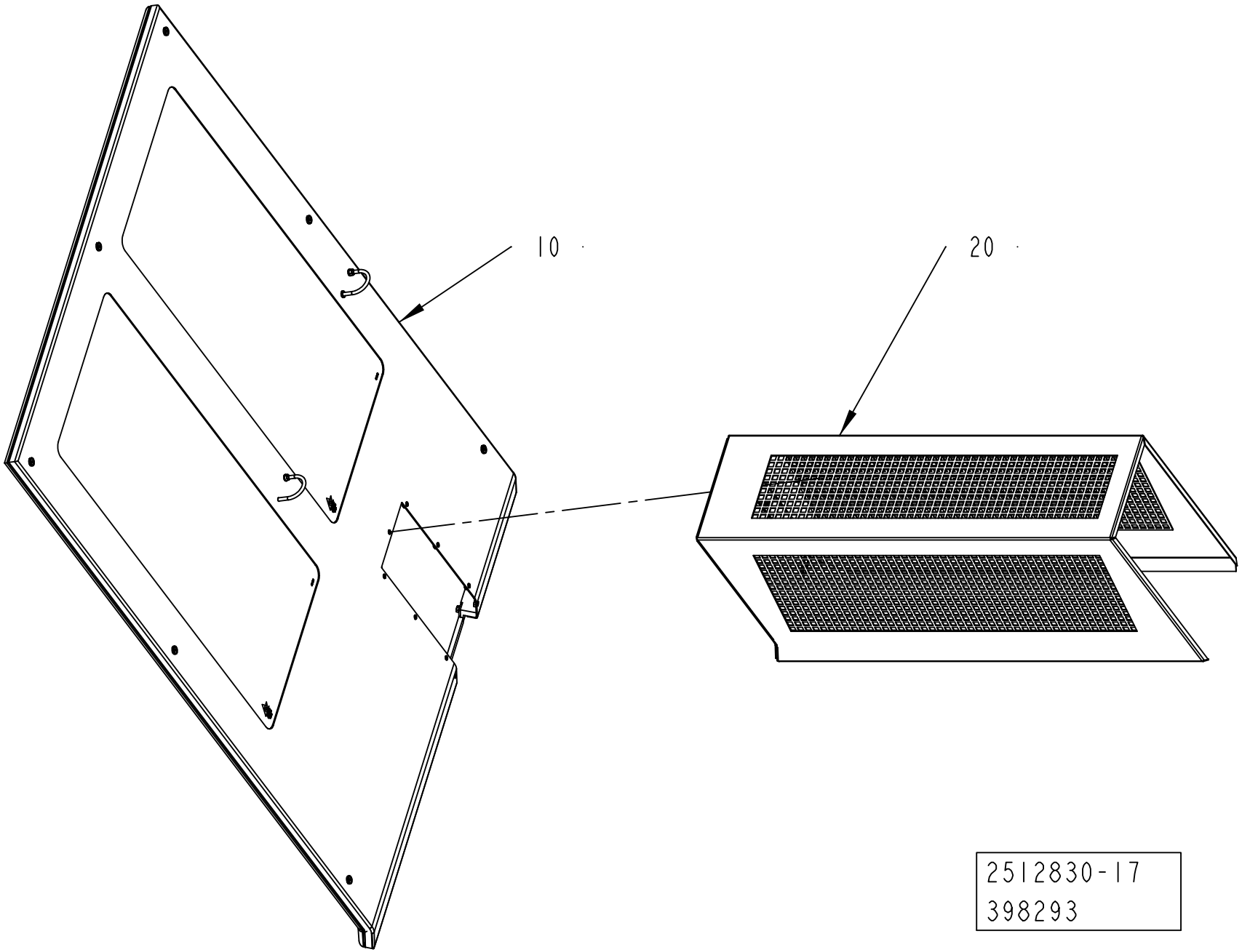
10
20
2512830-17
398293

ECM: 408549 - 20091002
Group number: 2512830-0400
Assembly Drawing: 2512830-17_1_AA

Pos	Part No	UN	Qty	Description	Page No
-					
010	2517062-0400		1	FRONT COVER	**2-179**
020	2998771-0200		1	TUNNEL	**2-181**

Pos	Part No	UN	Qty	Description	Page No

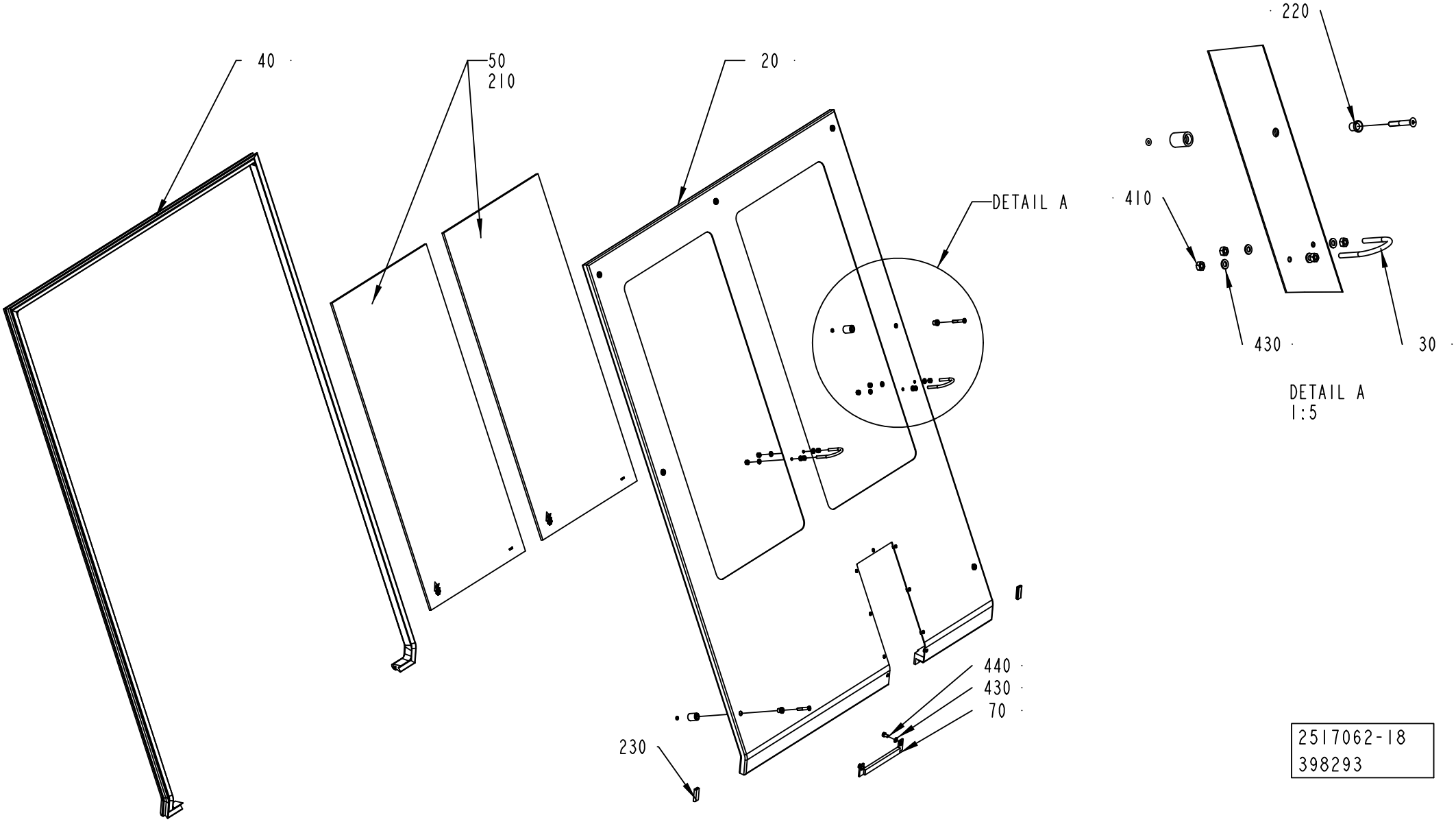
40
50
210
20
DETAIL A
230
440
430
70
220
410
430
30
DETAIL A
1:5
2517062-18
398293

ECM: 408730 - 20091002
Group number: 2517062-0400
Assembly Drawing: 2517062-18_1_AA

Pos	Part No	UN	Qty	Description	Page No
-					
020	3040874-0000		1	FRONT COVER	
030	531616-0000		2	HOLDER	
040	2514831-0000		1	SEALING STRIP	
050	2514832-0000		2	GLASS PANE	
070	2982776-0000		1	PLATE	
210	90157-0041	L	1	SEALING COMPOUND, RHODORSEAL 5651	
220	90226-0458		7	MOUNTING SCREW	
230	90143-0097	MM	70	SELF GRIPPING GASKET, 1011-24	
400	312105-0368		6	SCREW M6S ISO 4017 M6X16 A480	
410	312605-0316		8	HEXAGON NUT, M6M M6 A280	
420	312705-0316		6	HEX. DOMED CAP MHM-6 M6 A280	
430	315105-0153		10	WASHER BRB 6,4X12 RFR	
440	312105-0364		2	SCREW M6S ISO 4017 M6X10 A480	

Pos	Part No	UN	Qty	Description	Page No

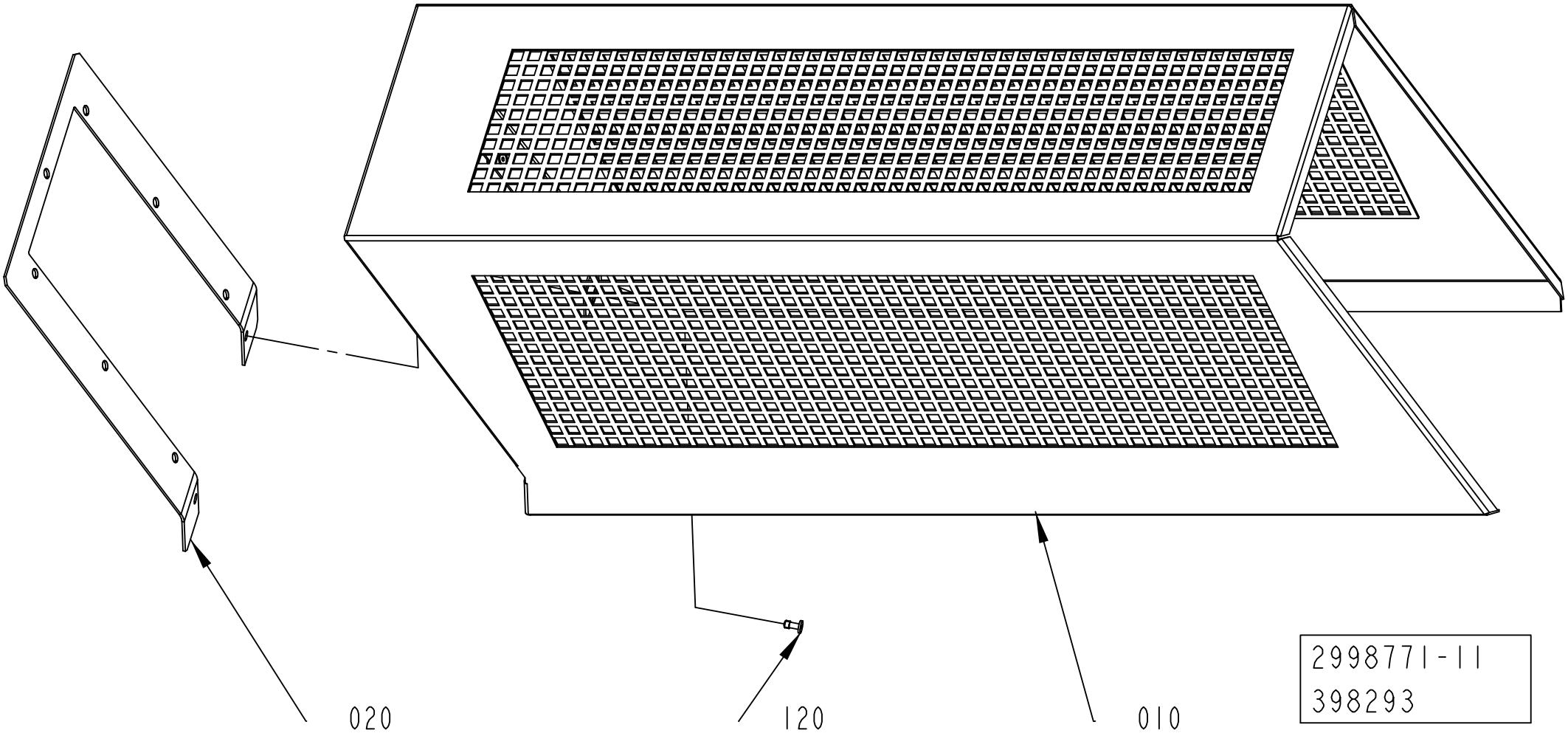
020
120
010
2998771-11
398293

ECM: 408744 - 20091002
Group number: 2998771-0200
Assembly Drawing: 2998771-11_1_AA

Pos	Part No	UN	Qty	Description	Page No
-					
010	3040873-0000		1	TUNNEL	
020	2982778-0000		1	GASKET	
200	90601-2046		9	CAPTIVE SCREW M6, GUTBG 6-4-12	

Pos	Part No	UN	Qty	Description	Page No

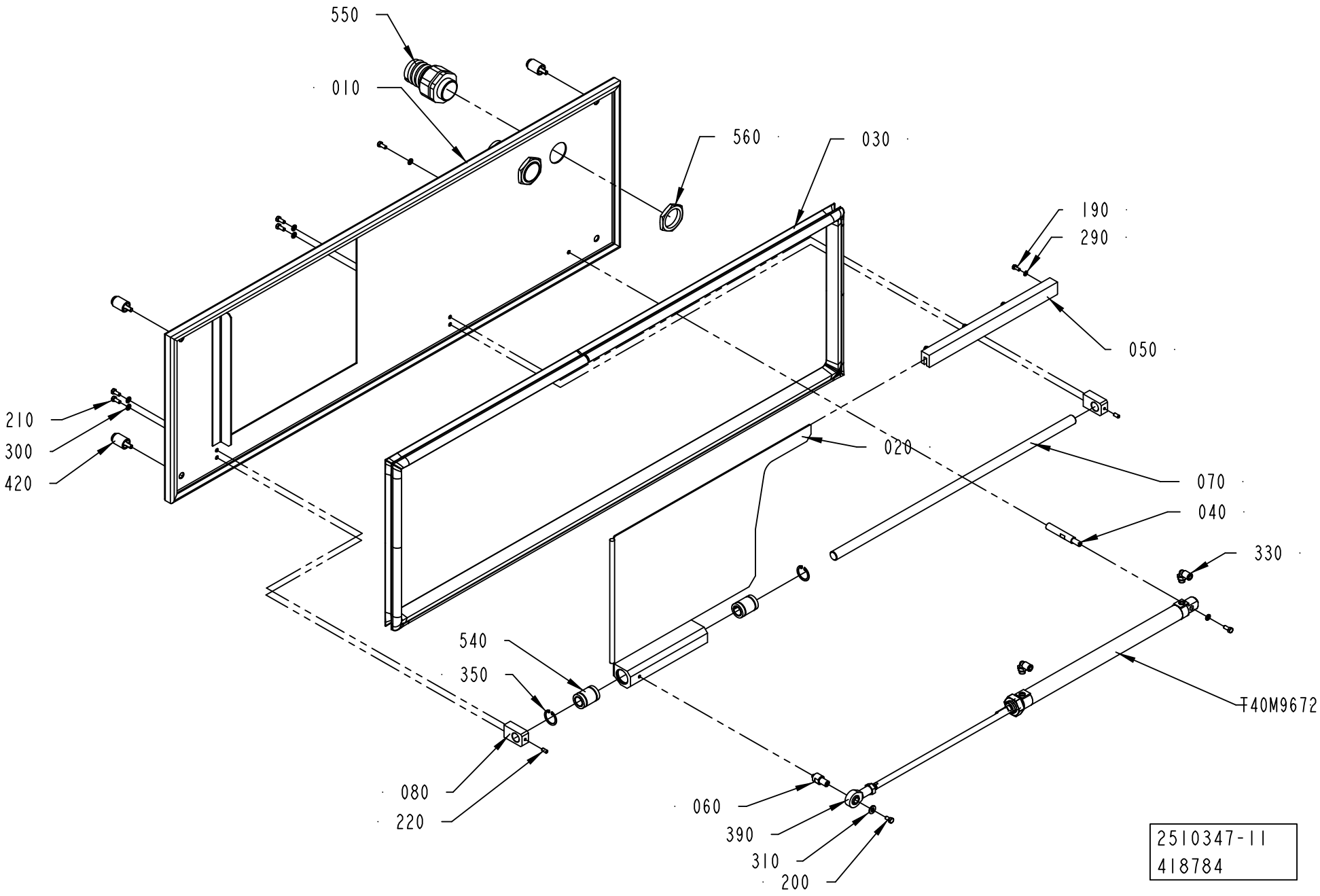
550
010
560
030
190
290
050
210
300
420
020
070
040
330
540
350
T40M9672
080
220
060
390
310
200
2510347-11
418784

ECM: 433162 - 20100701
Group number: 2510347-0300
Assembly Drawing: 2510347-11_1_AA

Pos	Part No	UN	Qty	Description	Page No
-					
010	2510348-0000		1	COVER	
020	2510352-0000		1	DOOR	
030	2510349-0000		1	SEALING STRIP	
040	2510355-0000		1	SHAFT	
050	2510353-0000		1	GUIDE	
060	2510354-0000		1	PIN	
070	2510351-0000		1	SHAFT	
080	2510350-0000		2	SUPPORT	
190	312105-0289		4	SCREW M6S H4X10 A4 70 ISO4017/DIN933	
200	312105-0325		1	SCREW M6S ISO 4017 M5X10 A480	
210	312105-0327		6	SCREW M6S ISO 4017 M5X12 A480	
220	312318-0325		2	SCREW ISO4029 M5X10 A4	
290	315105-0136		4	WASHER BRB 4,3X8 RFR	
300	315105-0146		6	WASHER BRB 5,3X10 RFR	
310	315105-0156		1	WASHER BRB 6,7X14 RFR	
330	350002-0006		2	PUSH-IN L-FITTING QSL-F-G1/8-6	
350	90458-0506		2	RETAINING RING FOR BORE DIN 472 26 SS	
390	90115-0134		1	ROD END, ID=10 MM, M10X1,25	
420	90226-0458		4	MOUNTING SCREW	
540	90459-3347		2	BEARING HOUSING, RJUM-01-16	
550	353243-0008		2	HOSE GLAND W/O INSERT PG29 EXTENDED	
560	90099-0120		2	NUT, PR 37 (PG29)	
T40M9672	90459-0401		1	DOUBLE ACTING, MINI-ISO, CYL. 25-320	

Pos	Part No	UN	Qty	Description	Page No

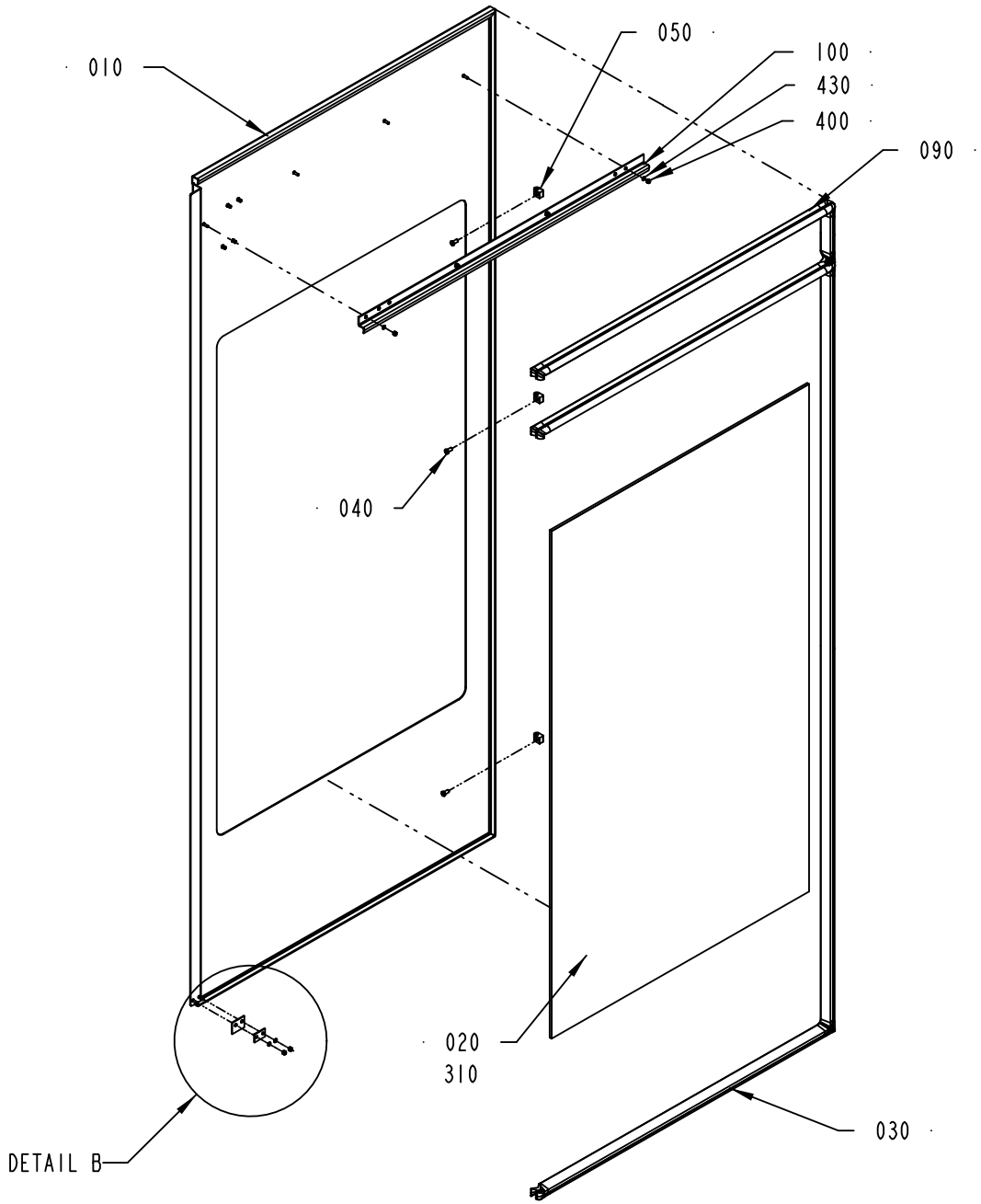

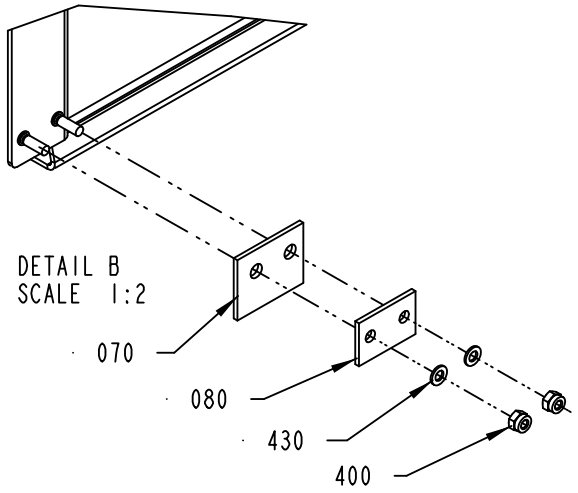

2541699-13
398293

ECM: 408735 - 20091002
Group number: 2541699-0300
Assembly Drawing: 2541699-13_1_AA

Pos	Part No	UN	Qty	Description	Page No
-					
010	3043269-0000		1	DOOR	
020	2541691-0000		1	GLASS PANE	
030	2541700-0000		1	RUBBER SEAL	
040	1129767-0000		3	SCREW	
050	1129770-0000		3	BLOCKING PIECE	
060	1346885-0000		1	SUPPORT	
070	1129325-0000		1	SEALING FLANGE	
080	1129324-0000		1	WASHER	
090	2541701-0000		1	RUBBER SEAL	
100	2543327-0000		1	PROFILE	
110	1539391-0000		2	ROUND NUT	
310	90157-0041	L	1	SEALING COMPOUND, RHODORSEAL 5651	
400	312812-0312		6	HEXAGON NUT, NY-LOCK M4 A480	
410	575034-0000		2	ROUND NUT	
420	312105-0333		2	SCREW M6S ISO 4017 M5X25 A480	
430	315105-0136		6	WASHER BRB 4,3X8 RFR	
440	315105-0146		2	WASHER BRB 5,3X10 RFR	

Pos	Part No	UN	Qty	Description	Page No

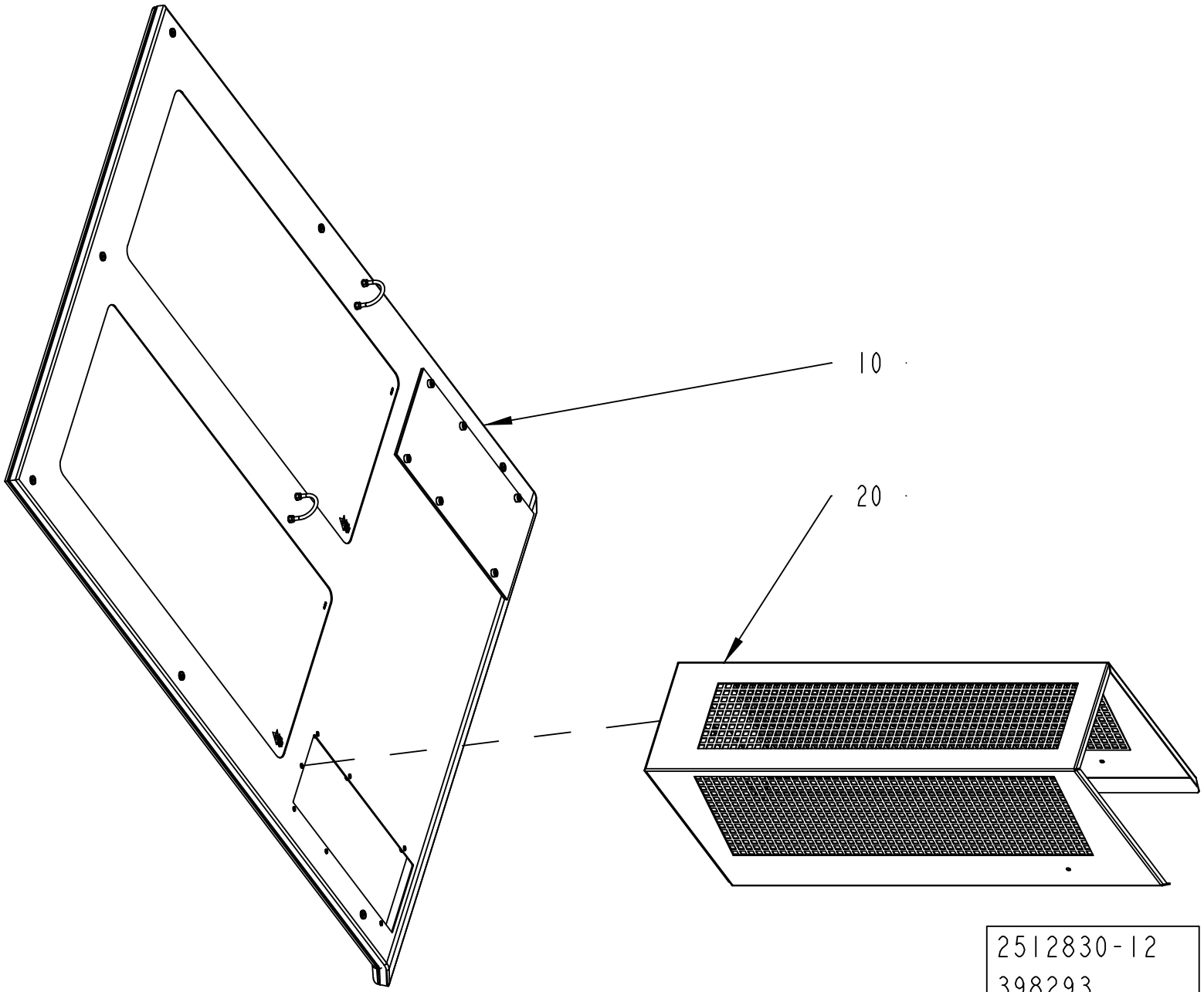
10
20
2512830-12
398293

ECM: 448857 - 20101001
Group number: 2512830-0250
Assembly Drawing: 2512830-12_1_AA

This list covers pages from 2-186 to 2-191

Pos	Part No	UN	Qty	Description	Page No
A3/SPEED TBA 0250B, A3/SPEED TBA 0200B (See drawing on page: 2-186)					
020	1095738-0400		1	PROTECTIVE COVER	**2-193**
A3/SPEED TBA 1000B, A3/SPEED TBA 1000S (See drawing on page: 2-190)					
020	2603658-0300		1	TUNNEL	**2-195, 2-197**
A3/SPEED TBA 1000SQ (See drawing on page: 2-188)					
020	2603658-0300		1	TUNNEL	**2-195, 2-197**
Common Parts					
010	2517062-0250		1	FRONT COVER	**2-199, 2-201, 2-203**

Pos	Part No	UN	Qty	Description	Page No

FRONT COVER

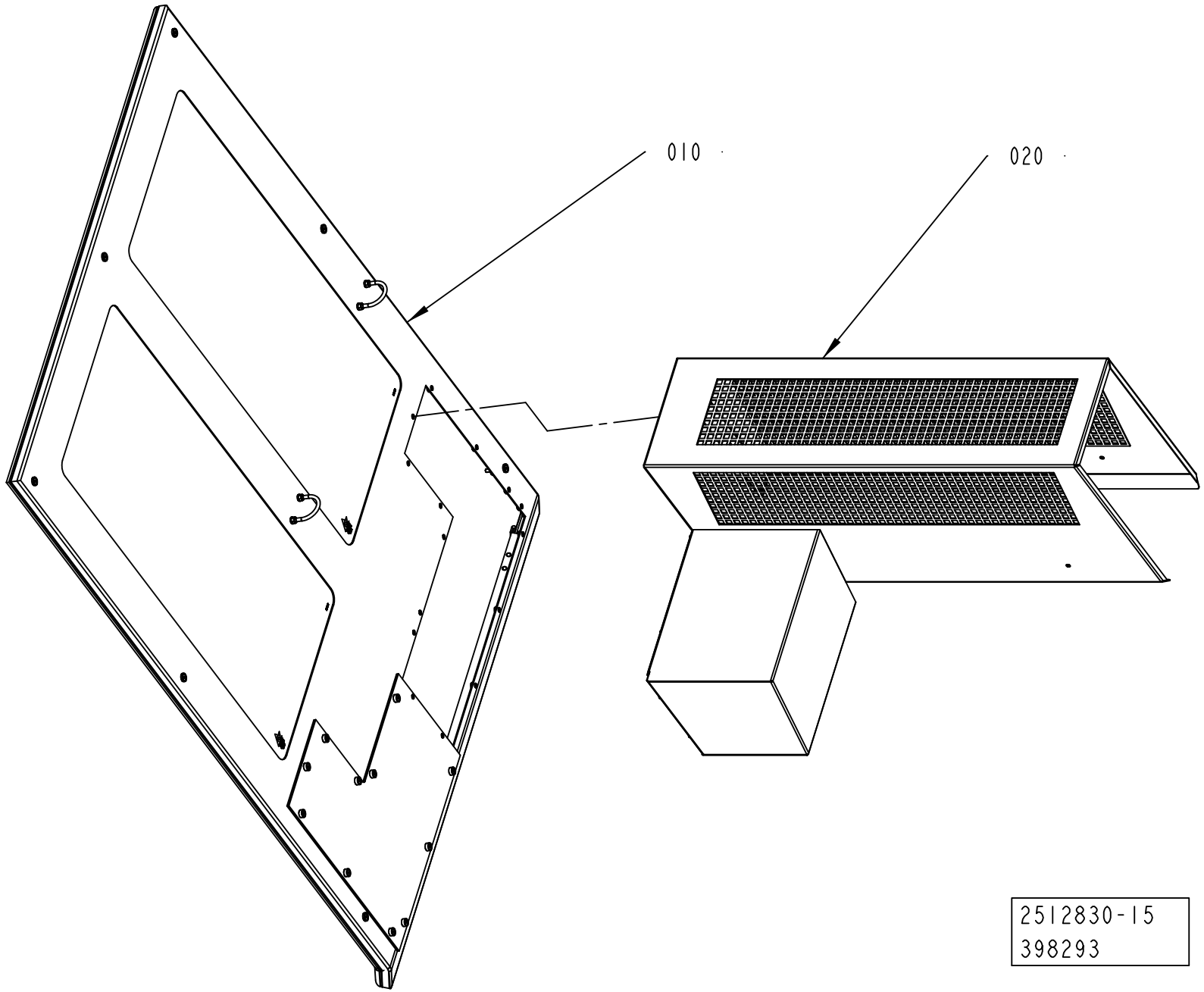

ECM: 448857 - 20101001
Group number: 2512830-0250
Assembly Drawing: 2512830-15_1_AA

This list covers pages from 2-186 to 2-191

Pos	Part No	UN	Qty	Description	Page No
A3/SPEED TBA 0250B, A3/SPEED TBA 0200B (See drawing on page: 2-186)					
020	1095738-0400		1	PROTECTIVE COVER	**2-193**
A3/SPEED TBA 1000B, A3/SPEED TBA 1000S (See drawing on page: 2-190)					
020	2603658-0300		1	TUNNEL	**2-195, 2-197**
A3/SPEED TBA 1000SQ (See drawing on page: 2-188)					
020	2603658-0300		1	TUNNEL	**2-195, 2-197**
Common Parts					
010	2517062-0250		1	FRONT COVER	**2-199, 2-201, 2-203**

Pos	Part No	UN	Qty	Description	Page No

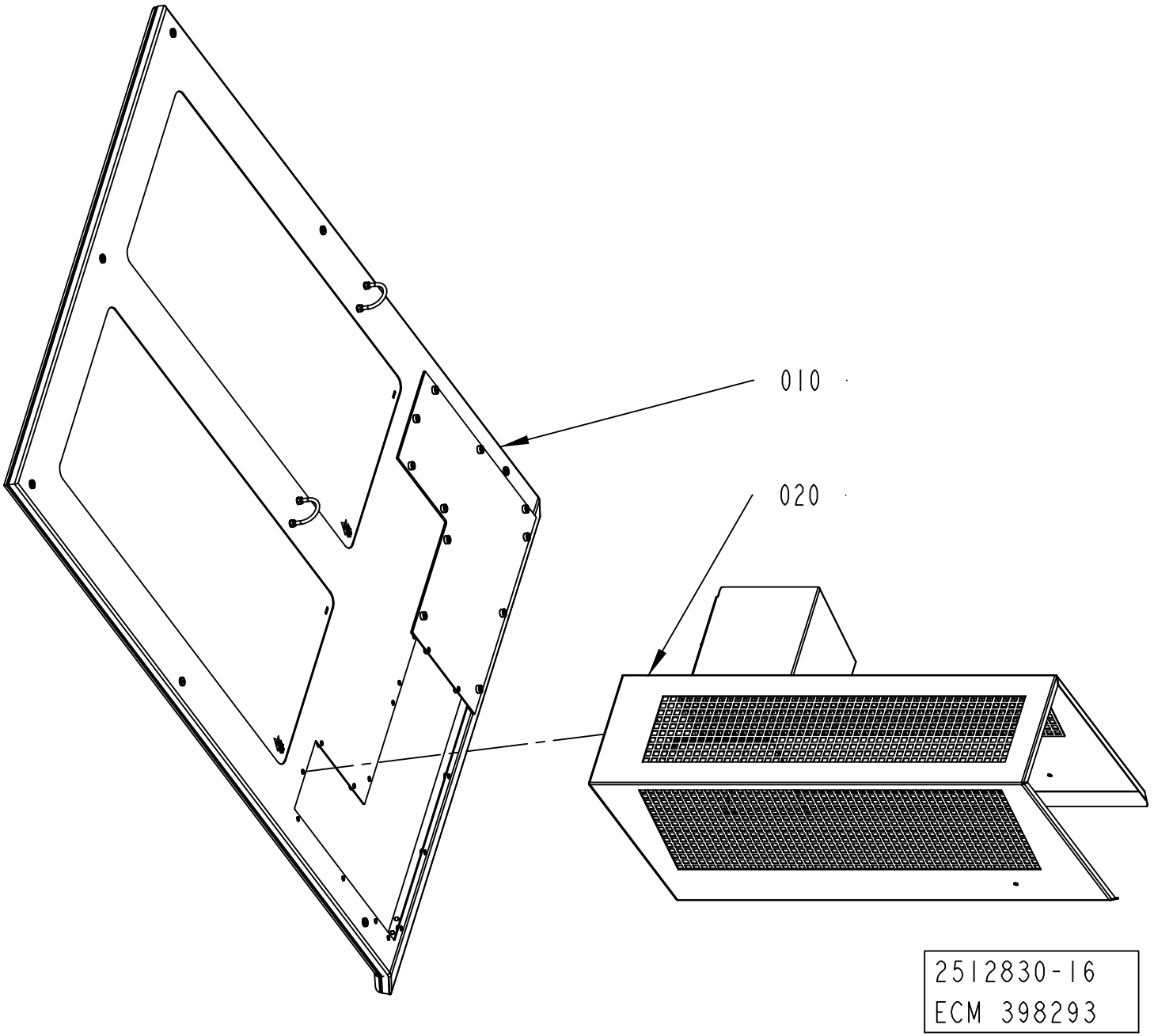
010
020
2512830-16
ECM 398293

ECM: 448857 - 20101001
Group number: 2512830-0250
Assembly Drawing: 2512830-16_1_AA

This list covers pages from 2-186 to 2-191

Pos	Part No	UN	Qty	Description	Page No
A3/SPEED TBA 0250B, A3/SPEED TBA 0200B (See drawing on page: 2-186)					
020	1095738-0400		1	PROTECTIVE COVER	**2-193**
A3/SPEED TBA 1000B, A3/SPEED TBA 1000S (See drawing on page: 2-190)					
020	2603658-0300		1	TUNNEL	**2-195, 2-197**
A3/SPEED TBA 1000SQ (See drawing on page: 2-188)					
020	2603658-0300		1	TUNNEL	**2-195, 2-197**
Common Parts					
010	2517062-0250		1	FRONT COVER	**2-199, 2-201, 2-203**

Pos	Part No	UN	Qty	Description	Page No

PROTECTIVE COVER

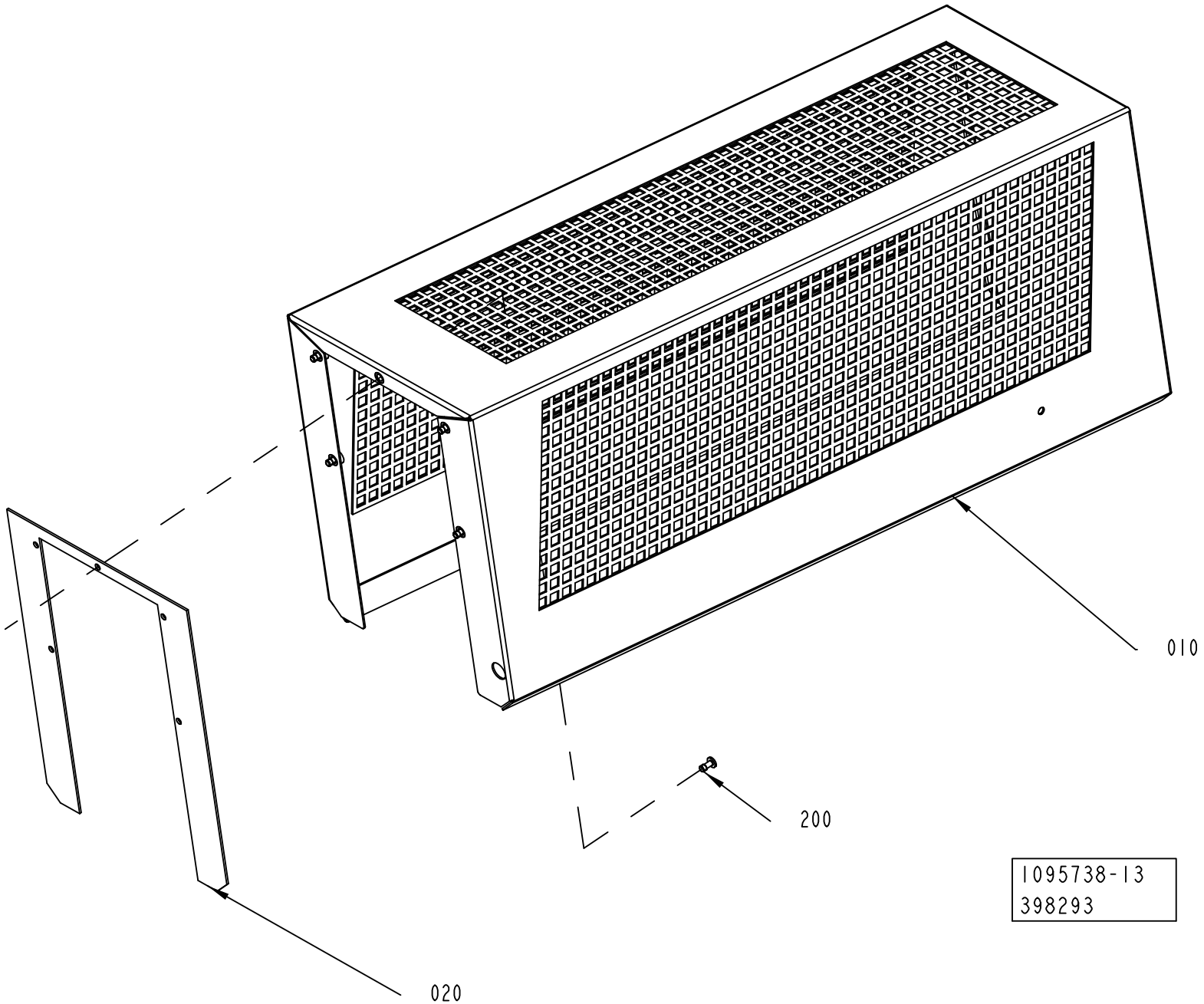

ECM: 406475 - 20091002
Group number: 1095738-0400
Assembly Drawing: 1095738-13_1_AA

Pos	Part No	UN	Qty	Description	Page No
-					
010	3042036-0000		1	TUNNEL	
020	1296290-0000		1	GASKET	
200	90601-2046		5	CAPTIVE SCREW M6, GUTBG 6-4-12	

Pos	Part No	UN	Qty	Description	Page No

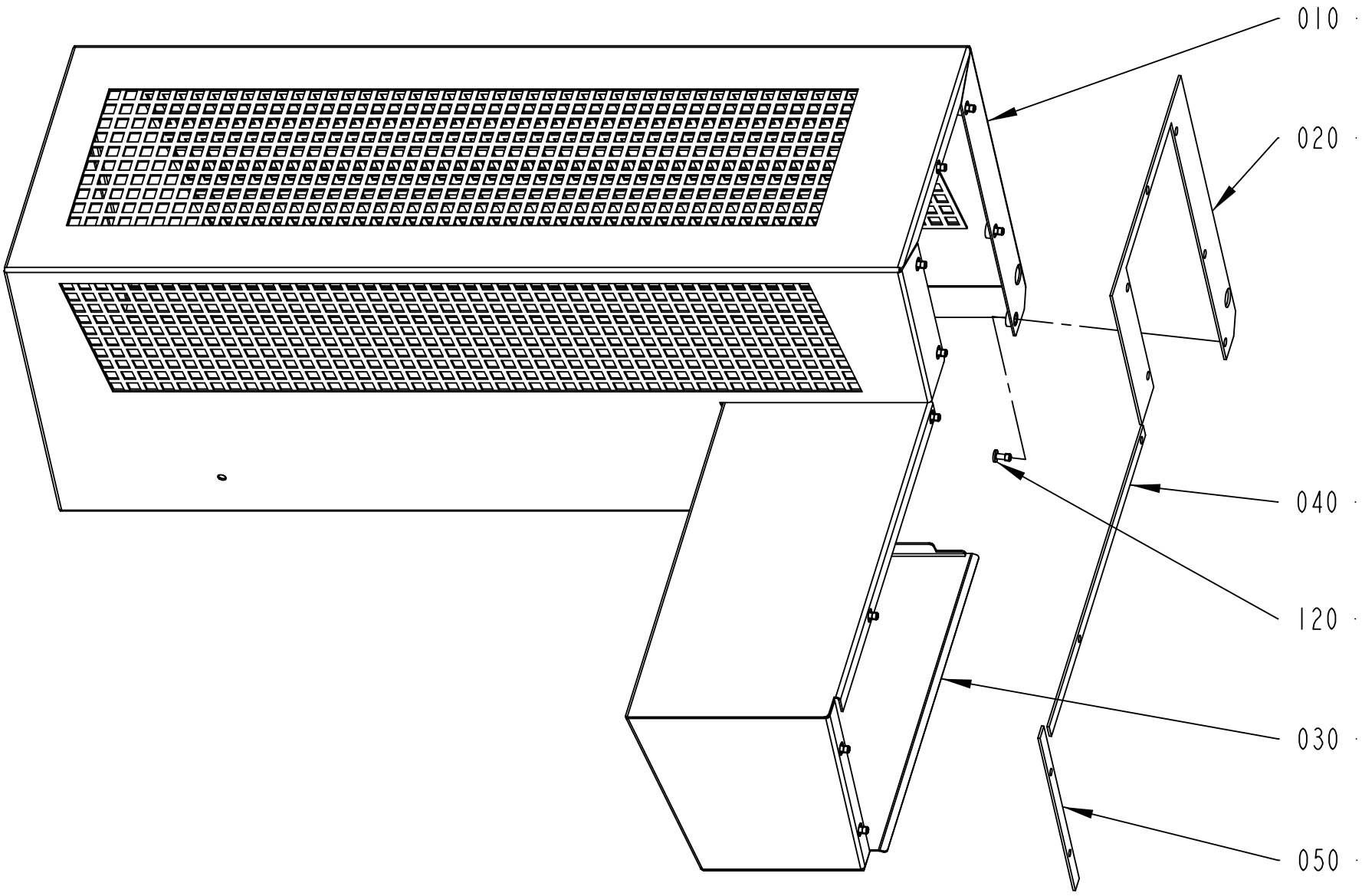
010
020
040
120
030
050
2603658-13
398293

ECM: 448858 - 20101001
Group number: 2603658-0300
Assembly Drawing: 2603658-13_1_AA

This list covers pages from 2-194 to 2-197

Pos	Part No	UN	Qty	Description	Page No
A3/SPEED TBA 1000B, A3/SPEED TBA 1000S (See drawing on page: 2-194)					
010	3042035-0000		1	TUNNEL	
030	3042034-0000		1	COVER	
A3/SPEED TBA 1000SQ (See drawing on page: 2-196)					
010	3040871-0000		1	TUNNEL	
030	3040875-0000		1	COVER	
Common Parts					
020	2811435-0000		1	GASKET	
040	2811436-0000		1	GASKET	
050	2812669-0000		1	GASKET	
120	90601-2046		10	CAPTIVE SCREW M6, GUTBG 6-4-12	

Pos	Part No	UN	Qty	Description	Page No

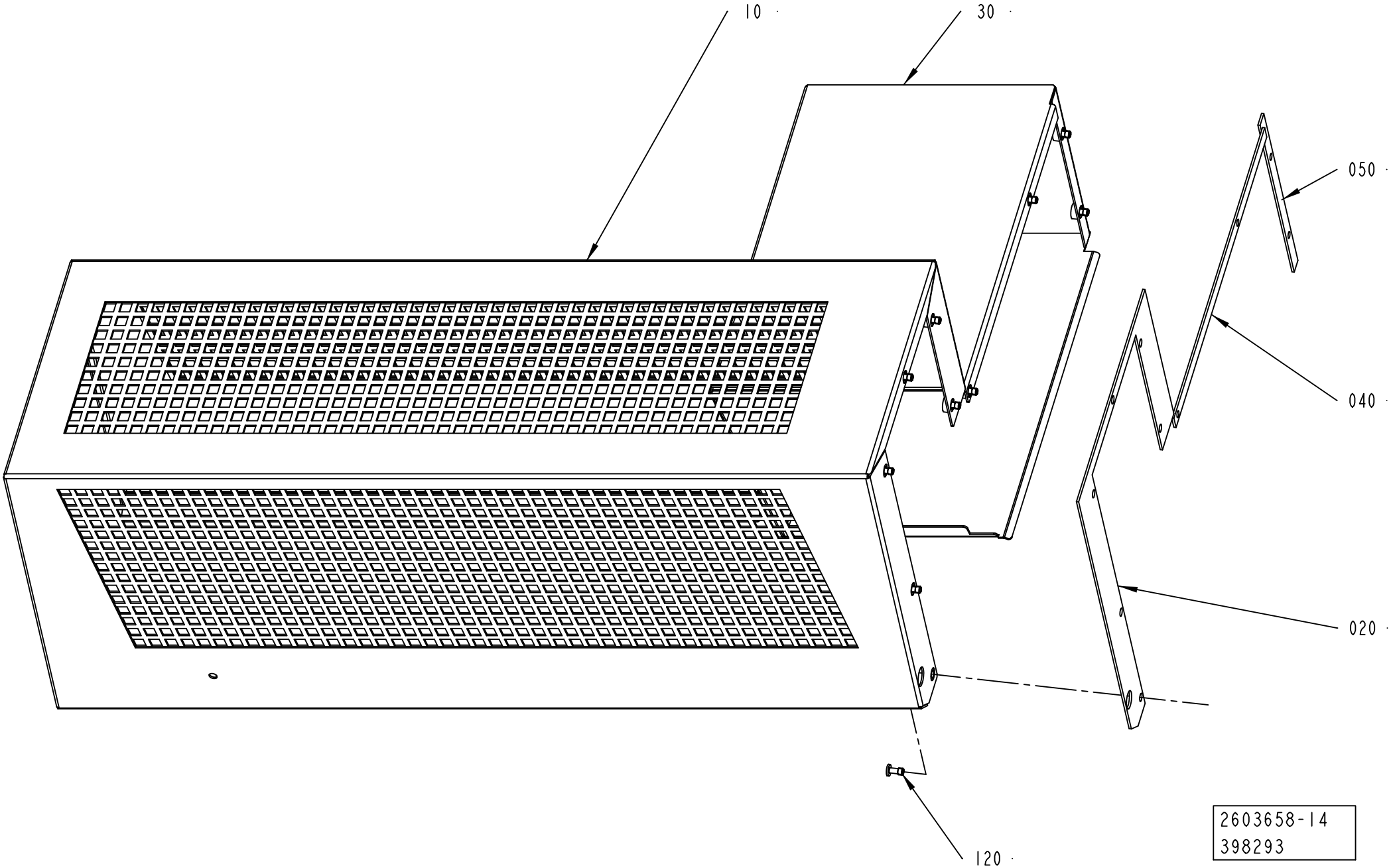
10
30
050
040
020
120
2603658-14
398293

ECM: 448858 - 20101001
Group number: 2603658-0300
Assembly Drawing: 2603658-14_1_AA

This list covers pages from 2-194 to 2-197

Pos	Part No	UN	Qty	Description	Page No
A3/SPEED TBA 1000B, A3/SPEED TBA 1000S (See drawing on page: 2-194)					
010	3042035-0000		1	TUNNEL	
030	3042034-0000		1	COVER	
A3/SPEED TBA 1000SQ (See drawing on page: 2-196)					
010	3040871-0000		1	TUNNEL	
030	3040875-0000		1	COVER	
Common Parts					
020	2811435-0000		1	GASKET	
040	2811436-0000		1	GASKET	
050	2812669-0000		1	GASKET	
120	90601-2046		10	CAPTIVE SCREW M6, GUTBG 6-4-12	

Pos	Part No	UN	Qty	Description	Page No

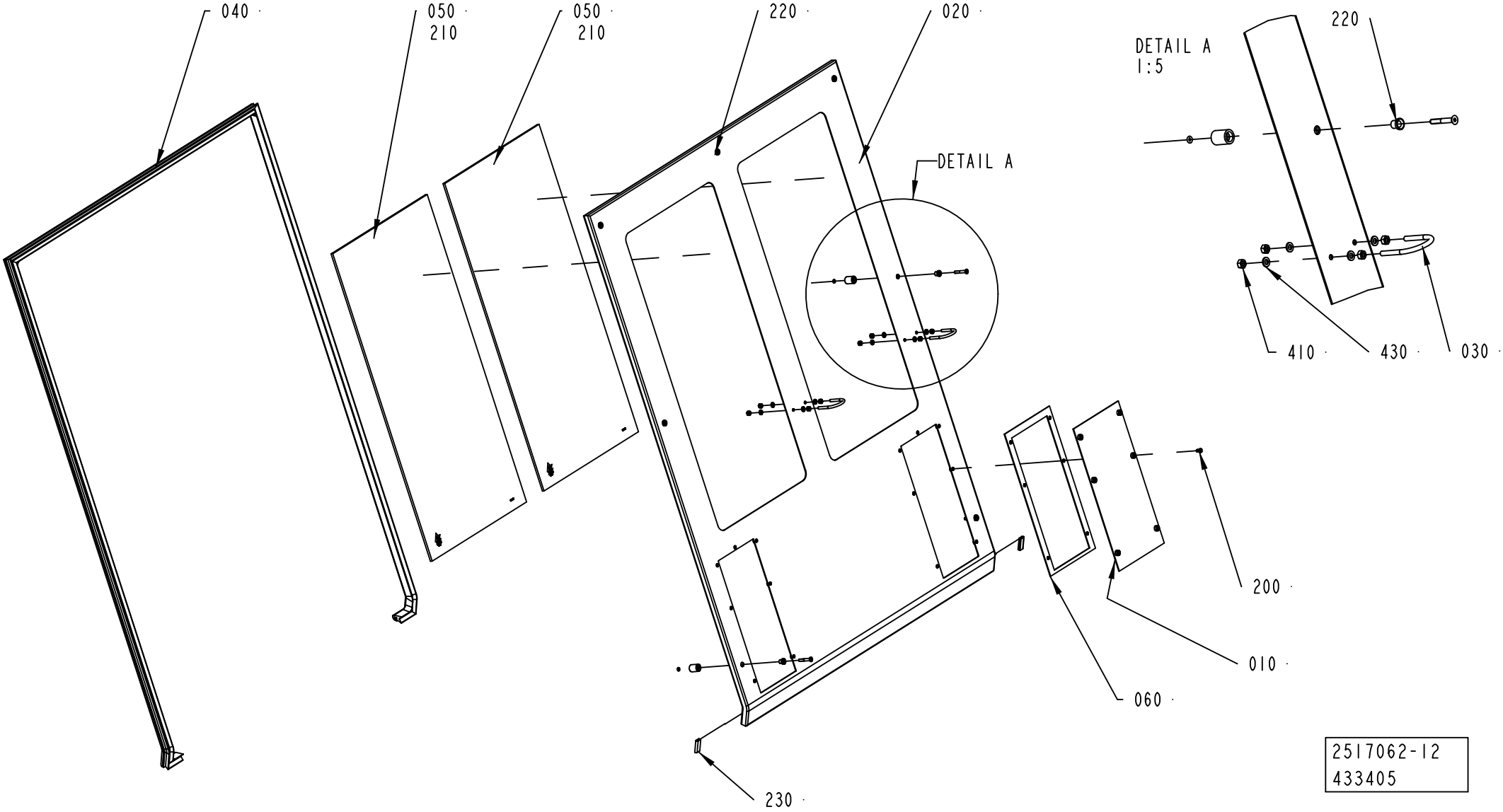
040
050
210
050
210
220
020
DETAIL A
DETAIL A
1:5
220
410
430
030
200
010
060
230
2517062-12
433405

ECM: 448859 - 20101001
Group number: 2517062-0250
Assembly Drawing: 2517062-12_1_AB

This list covers pages from 2-198 to 2-203

Pos	Part No	UN	Qty	Description	Page No
A3/SPEED TBA 0250B, A3/SPEED TBA 0200B (See drawing on page: 2-198)					
010	3042037-0000		1	LID	
020	3042038-0000		1	FRONT COVER	
060	3112809-0000		1	GASKET	
200	90601-2046		6	CAPTIVE SCREW M6, GUTBG 6-4-12	
A3/SPEED TBA 1000B, A3/SPEED TBA 1000S (See drawing on page: 2-202)					
010	3042033-0000		1	LID	
020	3040877-0000		1	FRONT COVER	
060	2809809-0000		1	GASKET	
200	90601-2046		11	CAPTIVE SCREW M6, GUTBG 6-4-12	
A3/SPEED TBA 1000SQ (See drawing on page: 2-200)					
010	3040876-0000		1	LID	
020	3040877-0000		1	FRONT COVER	
060	2809809-0000		1	GASKET	
200	90601-2046		11	CAPTIVE SCREW M6, GUTBG 6-4-12	
Common Parts					
030	531616-0000		2	HOLDER	
040	2514831-0000		1	SEALING STRIP	
050	2514832-0000		2	GLASS PANE	
210	90157-0041	L	1	SEALING COMPOUND, RHODORSEAL 5651	
220	90226-0458		7	MOUNTING SCREW	
230	90143-0097	MM	70	SELF GRIPPING GASKET, 1011-24	
410	312605-0316		8	HEXAGON NUT, M6M M6 A280	
430	315105-0153		8	WASHER BRB 6,4X12 RFR	

Pos	Part No	UN	Qty	Description	Page No

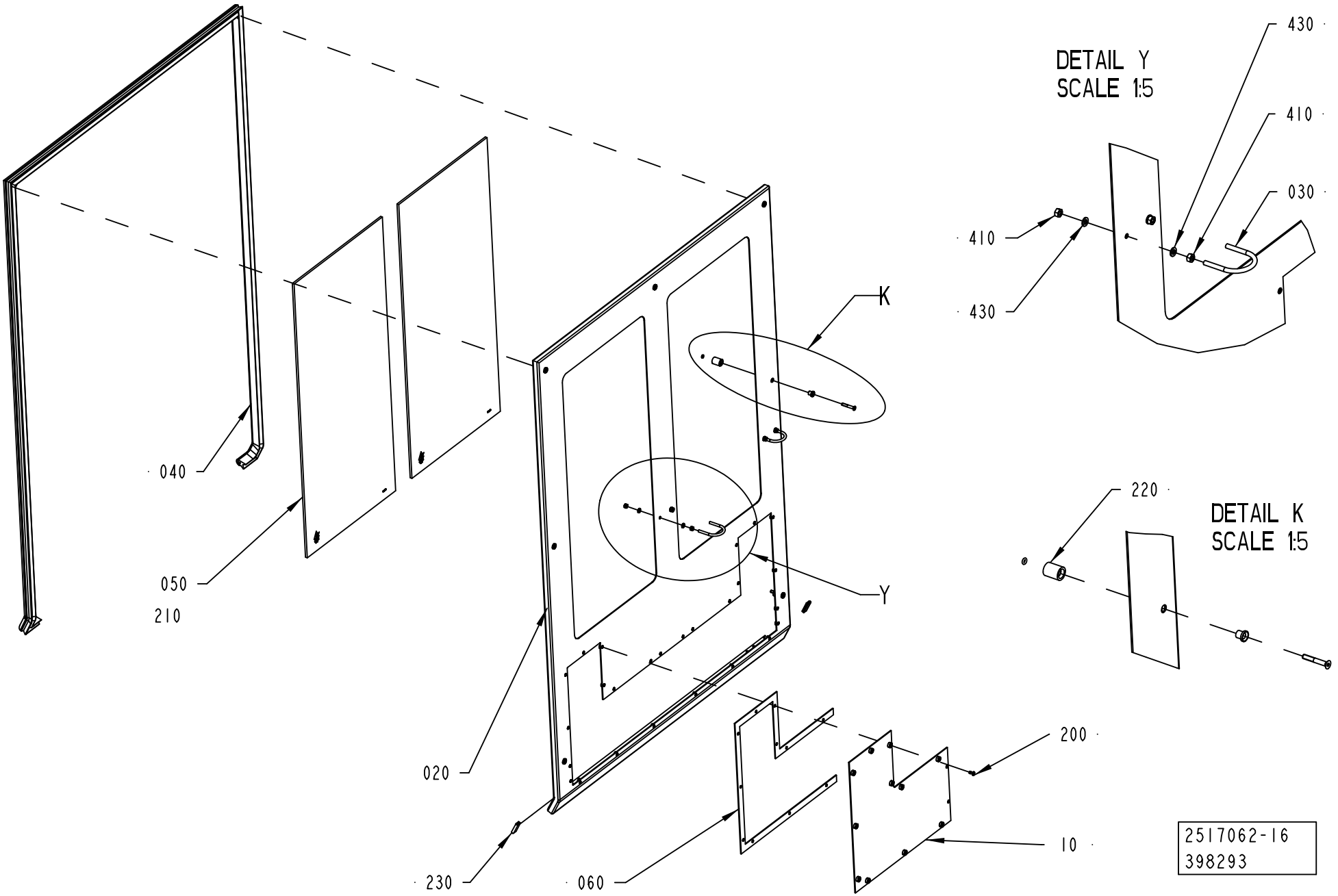
040
050
210
020
230
060
K
Y
200
10
DETAIL Y
SCALE 1:5
430
410
030
410
430
220
DETAIL K
SCALE 1:5
2517062-16
398293

ECM: 448859 - 20101001
Group number: 2517062-0250
Assembly Drawing: 2517062-16_1_AA

This list covers pages from 2-198 to 2-203

Pos	Part No	UN	Qty	Description	Page No
A3/SPEED TBA 0250B, A3/SPEED TBA 0200B (See drawing on page: 2-198)					
010	3042037-0000		1	LID	
020	3042038-0000		1	FRONT COVER	
060	3112809-0000		1	GASKET	
200	90601-2046		6	CAPTIVE SCREW M6, GUTBG 6-4-12	
A3/SPEED TBA 1000B, A3/SPEED TBA 1000S (See drawing on page: 2-202)					
010	3042033-0000		1	LID	
020	3040877-0000		1	FRONT COVER	
060	2809809-0000		1	GASKET	
200	90601-2046		11	CAPTIVE SCREW M6, GUTBG 6-4-12	
A3/SPEED TBA 1000SQ (See drawing on page: 2-200)					
010	3040876-0000		1	LID	
020	3040877-0000		1	FRONT COVER	
060	2809809-0000		1	GASKET	
200	90601-2046		11	CAPTIVE SCREW M6, GUTBG 6-4-12	
Common Parts					
030	531616-0000		2	HOLDER	
040	2514831-0000		1	SEALING STRIP	
050	2514832-0000		2	GLASS PANE	
210	90157-0041	L	1	SEALING COMPOUND, RHODORSEAL 5651	
220	90226-0458		7	MOUNTING SCREW	
230	90143-0097	MM	70	SELF GRIPPING GASKET, 1011-24	
410	312605-0316		8	HEXAGON NUT, M6M M6 A280	
430	315105-0153		8	WASHER BRB 6,4X12 RFR	

Pos	Part No	UN	Qty	Description	Page No

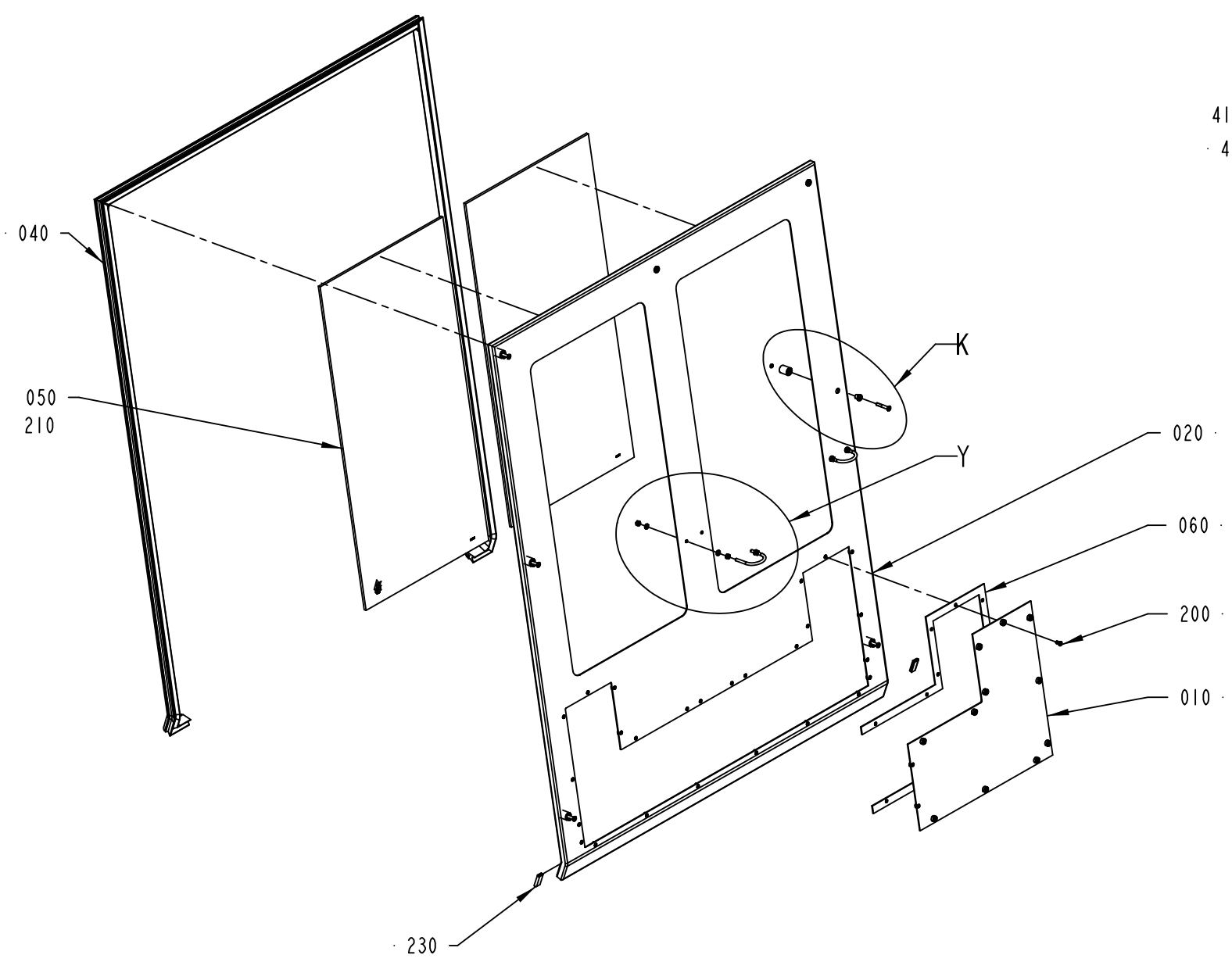

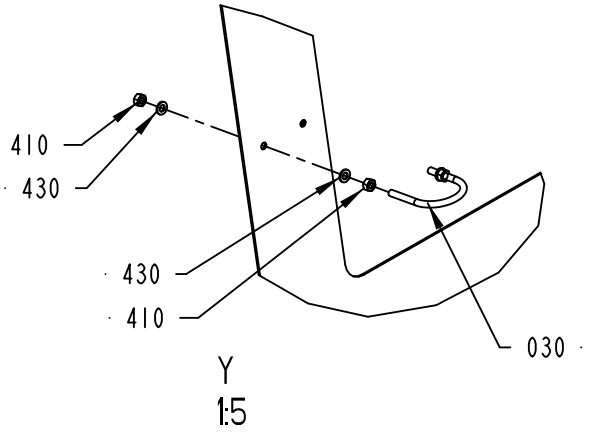

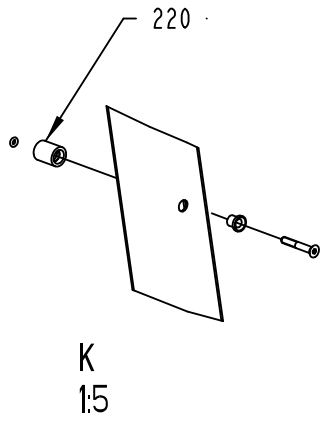

2517062-17
398293

ECM: 448859 - 20101001
Group number: 2517062-0250
Assembly Drawing: 2517062-17_1_AA

This list covers pages from 2-198 to 2-203

Pos	Part No	UN	Qty	Description	Page No
A3/SPEED TBA 0250B, A3/SPEED TBA 0200B (See drawing on page: 2-198)					
010	3042037-0000		1	LID	
020	3042038-0000		1	FRONT COVER	
060	3112809-0000		1	GASKET	
200	90601-2046		6	CAPTIVE SCREW M6, GUTBG 6-4-12	
A3/SPEED TBA 1000B, A3/SPEED TBA 1000S (See drawing on page: 2-202)					
010	3042033-0000		1	LID	
020	3040877-0000		1	FRONT COVER	
060	2809809-0000		1	GASKET	
200	90601-2046		11	CAPTIVE SCREW M6, GUTBG 6-4-12	
A3/SPEED TBA 1000SQ (See drawing on page: 2-200)					
010	3040876-0000		1	LID	
020	3040877-0000		1	FRONT COVER	
060	2809809-0000		1	GASKET	
200	90601-2046		11	CAPTIVE SCREW M6, GUTBG 6-4-12	
Common Parts					
030	531616-0000		2	HOLDER	
040	2514831-0000		1	SEALING STRIP	
050	2514832-0000		2	GLASS PANE	
210	90157-0041	L	1	SEALING COMPOUND, RHODORSEAL 5651	
220	90226-0458		7	MOUNTING SCREW	
230	90143-0097	MM	70	SELF GRIPPING GASKET, 1011-24	
410	312605-0316		8	HEXAGON NUT, M6M M6 A280	
430	315105-0153		8	WASHER BRB 6,4X12 RFR	

Pos	Part No	UN	Qty	Description	Page No

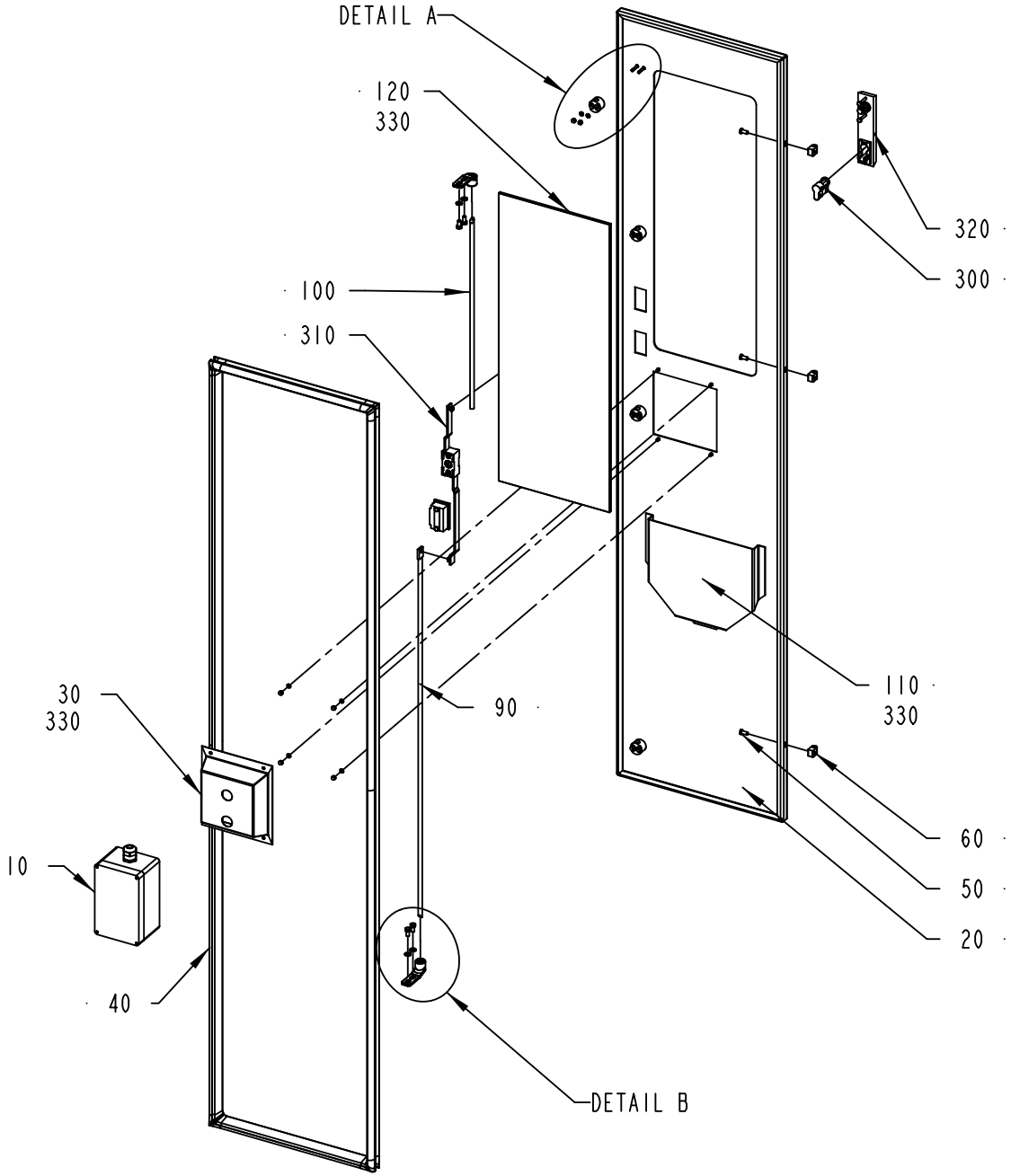

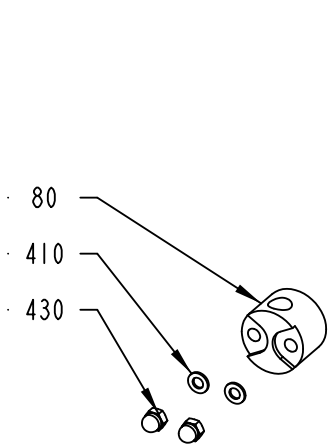

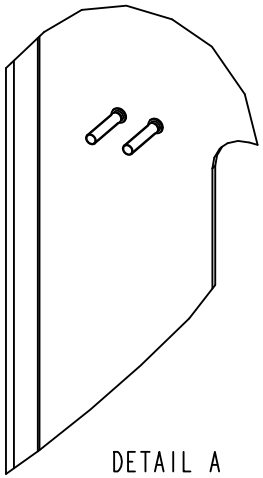

DETAIL A
1:2

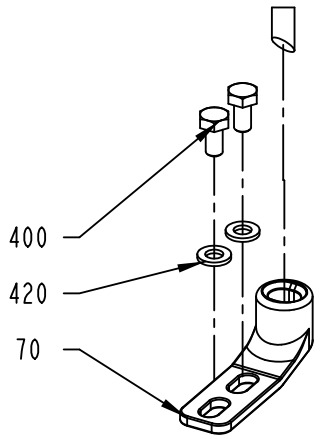

DETAIL B
1:2

2508138-12
398293

ECM: 408546 - 20091002
Group number: 2508138-0300
Assembly Drawing: 2508138-12_1_AA

Pos	Part No	UN	Qty	Description	Page No
-					
010	2593851-0300		1	EMERGENCY STOP	**2-207**
020	2847388-0000		1	DOOR	
030	3032795-0000		1	COVER	
040	2508186-0000		1	RUBBER SEAL	
050	1129767-0000		3	SCREW	
060	1129770-0000		3	BLOCKING PIECE	
070	1538868-0000		2	BRACKET	
080	1129274-0000		4	GUIDE LUG	
090	2508133-0000		1	LOCKING ARM	
100	2508140-0000		1	LOCKING ARM	
110	1129275-0000		1	BOX FOR DIAGRAM	
120	2847387-0000		1	GLASS PANE	
300	90237-0128		1	LOCK CYLINDER, 1109-SU125	
310	90237-0153		1	LOCK HOUSING, 1121-U26-0B	
320	90237-0176		1	TURNING HANDLE, 1125-U190-A	
330	90157-0041	L	1	SEALING COMPOUND, RHODORSEAL 5651	
400	312105-0366		4	SCREW M6S ISO 4017 M6X12 A480	
410	315105-0136		12	WASHER BRB 4,3X8 RFR	
420	315105-0153		4	WASHER BRB 6,4X12 RFR	
430	312705-0312		12	NUT HEX. DOMED CAP MHM-6 M4 A280	

Pos	Part No	UN	Qty	Description	Page No

Machine Type | Group Description | Used-In | Group Number | Page No

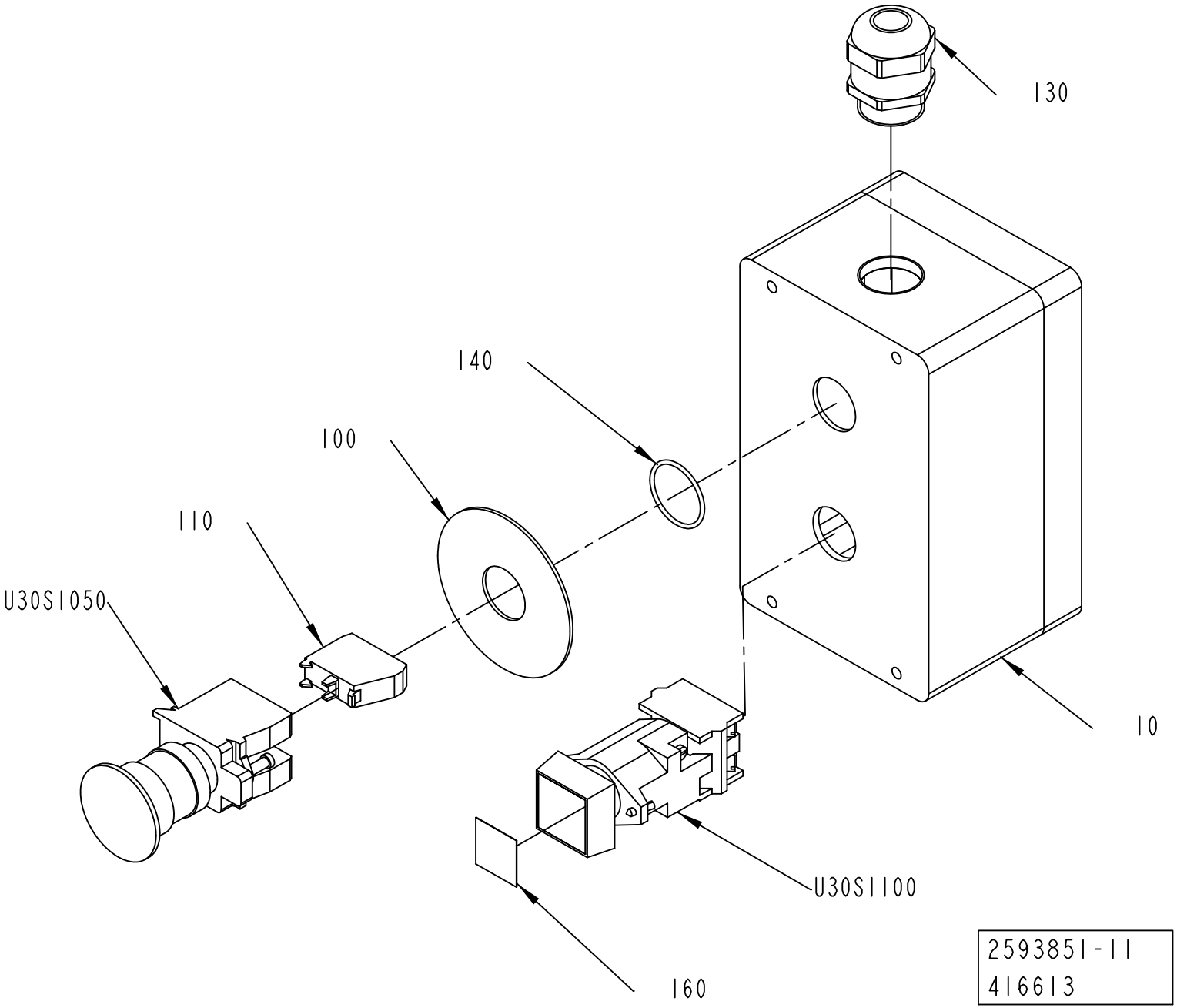
130
140
100
110
U30S1050
10
U30S1100
160
2593851-11
416613

ECM: 416613 - 20100702
Group number: 2593851-0300
Assembly Drawing: 2593851-11_1_AB

Pos	Part No	UN	Qty	Description	Page No
-					
010	3030256-0000		1	PUSH BUTTON BOX	
100	486826-0001		1	SIGN "EMERGENCY STOP"	
110	90459-1917		1	CONTACT BLOCK ZBE-102 NC	
130	90458-0316		1	CABLE GLAND, M25X1,5, NO.5311 1130	
140	315202-0119		1	O-RING 25,1X1,6 MM	
160	359301-0504		1	BUTTON SIGN, RESET	
U30S1050	90458-1651		1	EMERGENCY STOP, ZB4-BS-844 ZB4-BZ-104	
U30S1100	90064-0098		1	PUSH BUTTON, CLEAR	

Pos	Part No	UN	Qty	Description	Page No

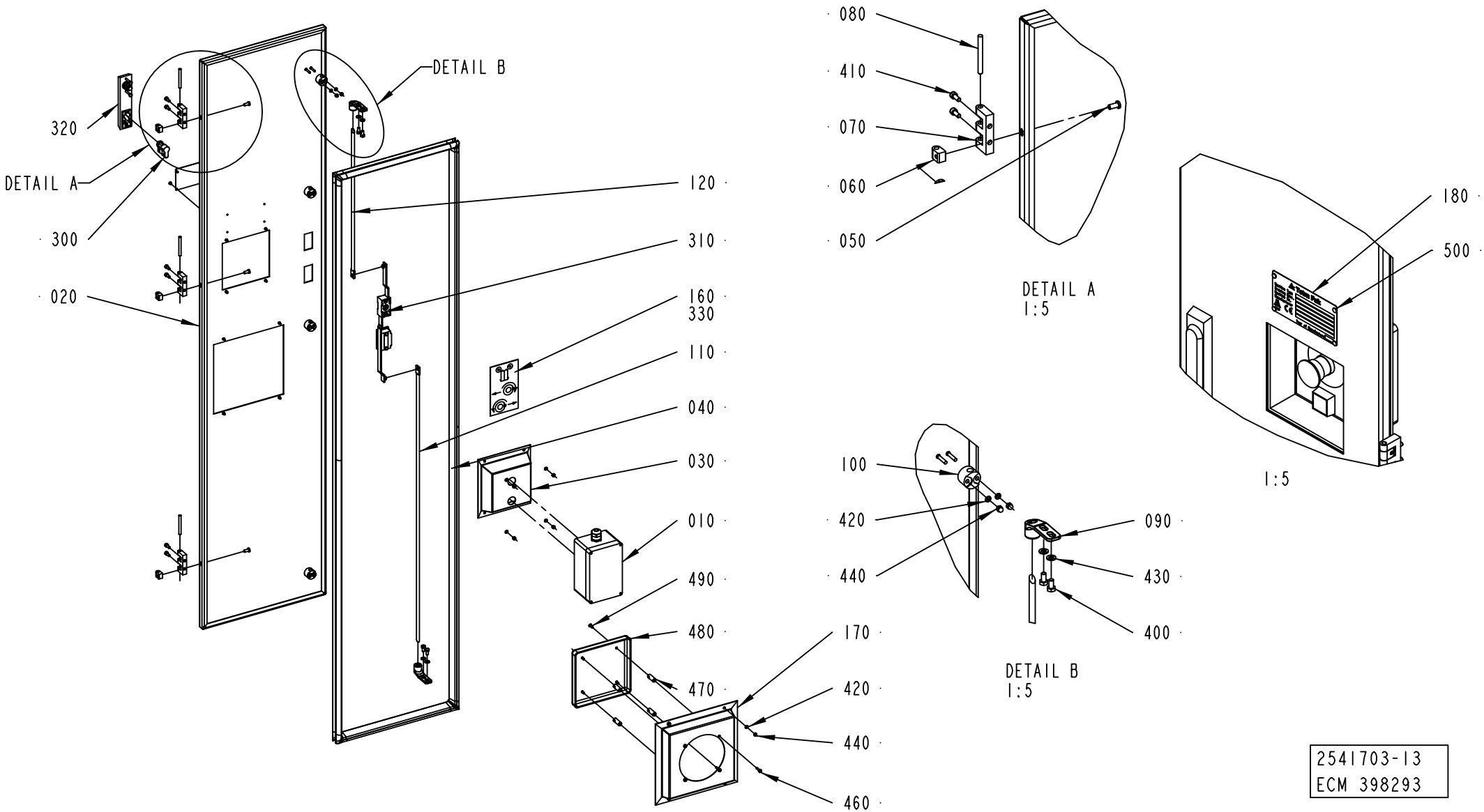

2541703-13
ECM 398293

ECM: 398293 - 20100702
Group number: 2541703-0300
Assembly Drawing: 2541703-13_1_AA

Pos	Part No	UN	Qty	Description	Page No
A3/SPEED					
020	3042042-0000		1	DOOR	
160	2790043-0000		1	SIGN	
170	2993841-0000		1	COVER	
330	90153-0043	KG	1	ADHESIVE, LOCTITE 495 20G	
460	312105-0293		4	SCREW M6S ISO 4017 M4X16 A470	
470	599753-0000		4	SPACER	
480	599752-0000		1	COVER	
490	312155-0291		4	SCREW DIN 7991 MF6S M4X12 A4 70	
Common Parts					
010	2902078-0200		1	EMERGENCY STOP	**2-211**
030	3032795-0000		1	COVER	
040	2508186-0000		1	RUBBER SEAL	
050	1129767-0000		3	SCREW	
060	1129770-0000		3	BLOCKING PIECE	
070	1035792-0000		3	E-HINGE	
080	988685-0000		3	PIN	
090	1538868-0000		2	BRACKET	
100	1129274-0000		4	GUIDE LUG	
110	2508133-0000		1	LOCKING ARM	
120	2508140-0000		1	LOCKING ARM	
180	2968251-0000		1	MACHINE SIGN	
300	90237-0128		1	LOCK CYLINDER, 1109-SU125	
310	90237-0153		1	LOCK HOUSING, 1121-U26-0B	
320	90237-0176		1	TURNING HANDLE, 1125-U190-A	
400	312105-0366		4	SCREW M6S ISO 4017 M6X12 A480	
410	312115-0327		6	SCREW ISO4762 M5X12 A4 80	
420	315105-0136		16	WASHER BRB 4,3X8 RFR	
430	315105-0153		4	WASHER BRB 6,4X12 RFR	
440	312705-0312		16	NUT HEX. DOMED CAP MHM-6 M4 A280	
500	311521-0142		4	RIVET, BLANK 3,2X6	

Pos	Part No	UN	Qty	Description	Page No

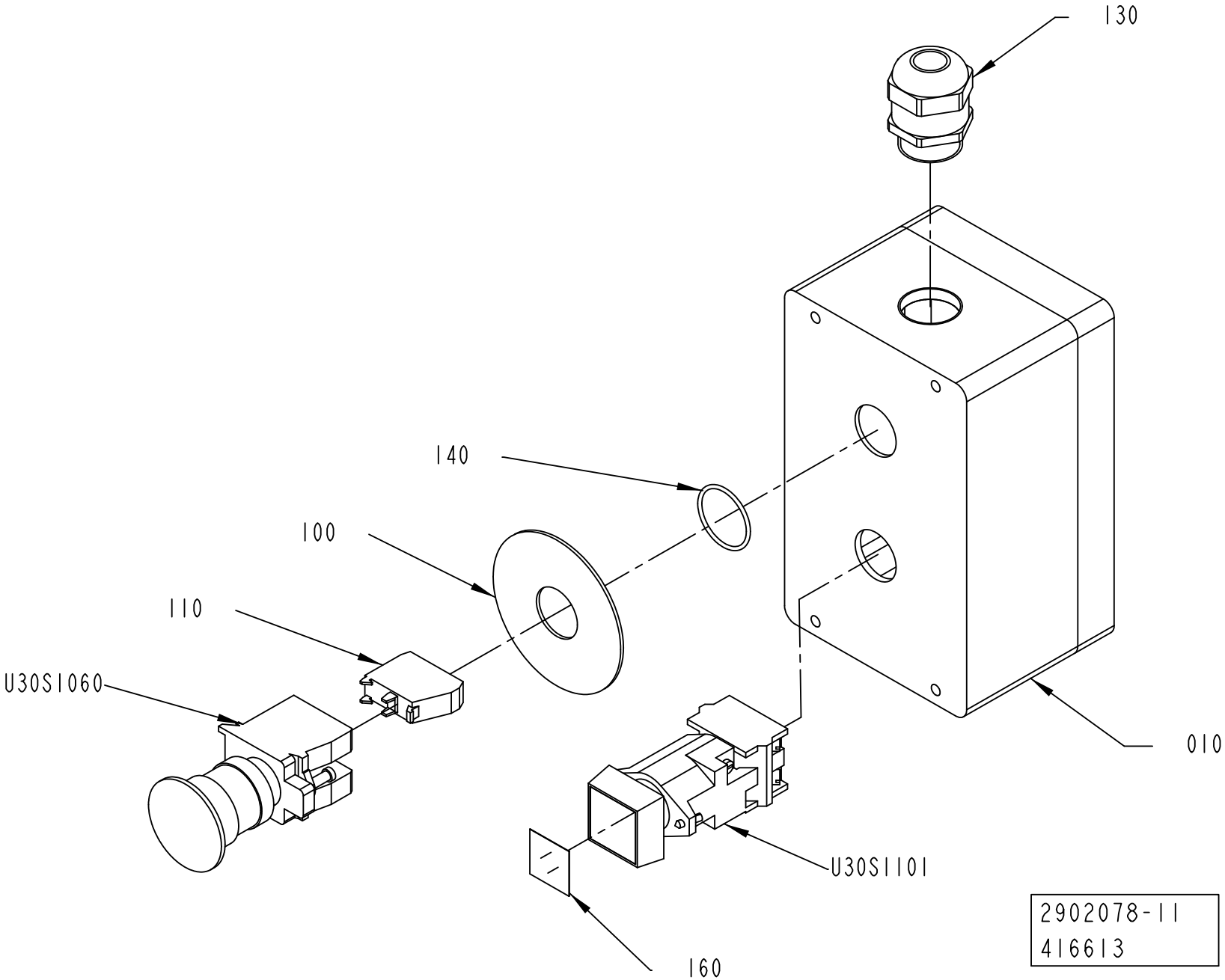
130
140
100
110
U30S1060
010
U30S1101
160
2902078-11
416613

ECM: 416613 - 20100702
Group number: 2902078-0200
Assembly Drawing: 2902078-11_1_AB

Pos	Part No	UN	Qty	Description	Page No
-					
010	3030256-0000		1	PUSH BUTTON BOX	
100	486826-0001		1	SIGN "EMERGENCY STOP"	
110	90459-1917		1	CONTACT BLOCK ZBE-102 NC	
130	90458-0316		1	CABLE GLAND, M25X1,5, NO.5311 1130	
140	315202-0119		1	O-RING 25,1X1,6 MM	
160	359301-0504		1	BUTTON SIGN, RESET	
U30S1060	90458-1651		1	EMERGENCY STOP, ZB4-BS-844 ZB4-BZ-104	
U30S1101	90064-0098		1	PUSH BUTTON, CLEAR	

Pos	Part No	UN	Qty	Description	Page No

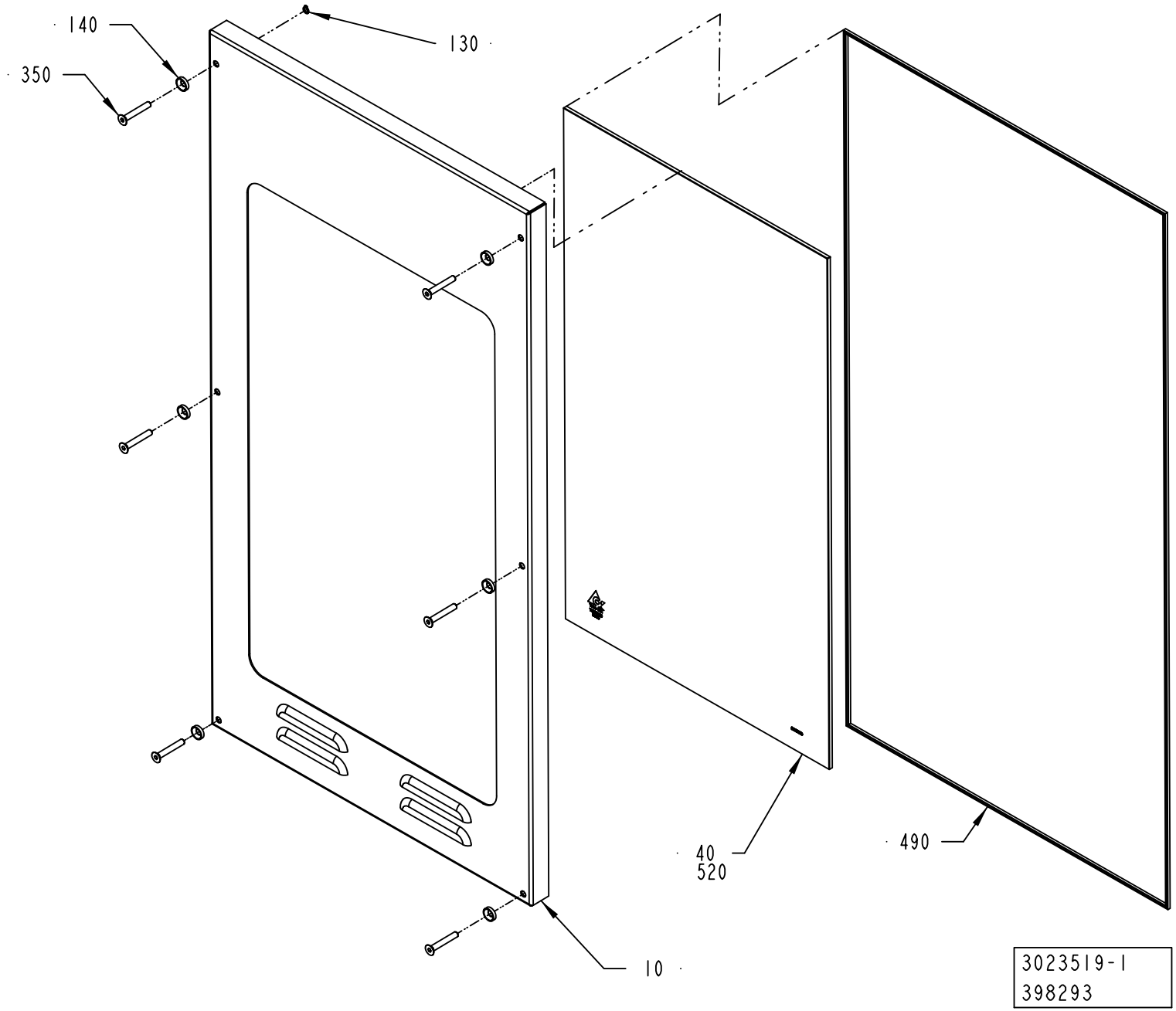
140
130
350
40
520
490
10
3023519-1
398293

ECM: 434124 - 20100702
Group number: 3023519-0100
Assembly Drawing: 3023519-1_1_AA

Pos	Part No	UN	Qty	Description	Page No
-					
010	3023520-0000		1	PROTECTION	
040	3023525-0000		1	GLASS PANE	
130	315751-0103		6	RETAINING RING FOR SHAFT DIN 471 6X 0.7C	
140	1317228-0000		6	WASHER	
350	312155-0378		6	SCREW DIN 7991 MF6S M6X40 A4 70	
490	90143-0054	M	2.8	STRIP	
520	90157-0041	L	1	SEALING COMPOUND, RHODORSEAL 5651	

Pos	Part No	UN	Qty	Description	Page No

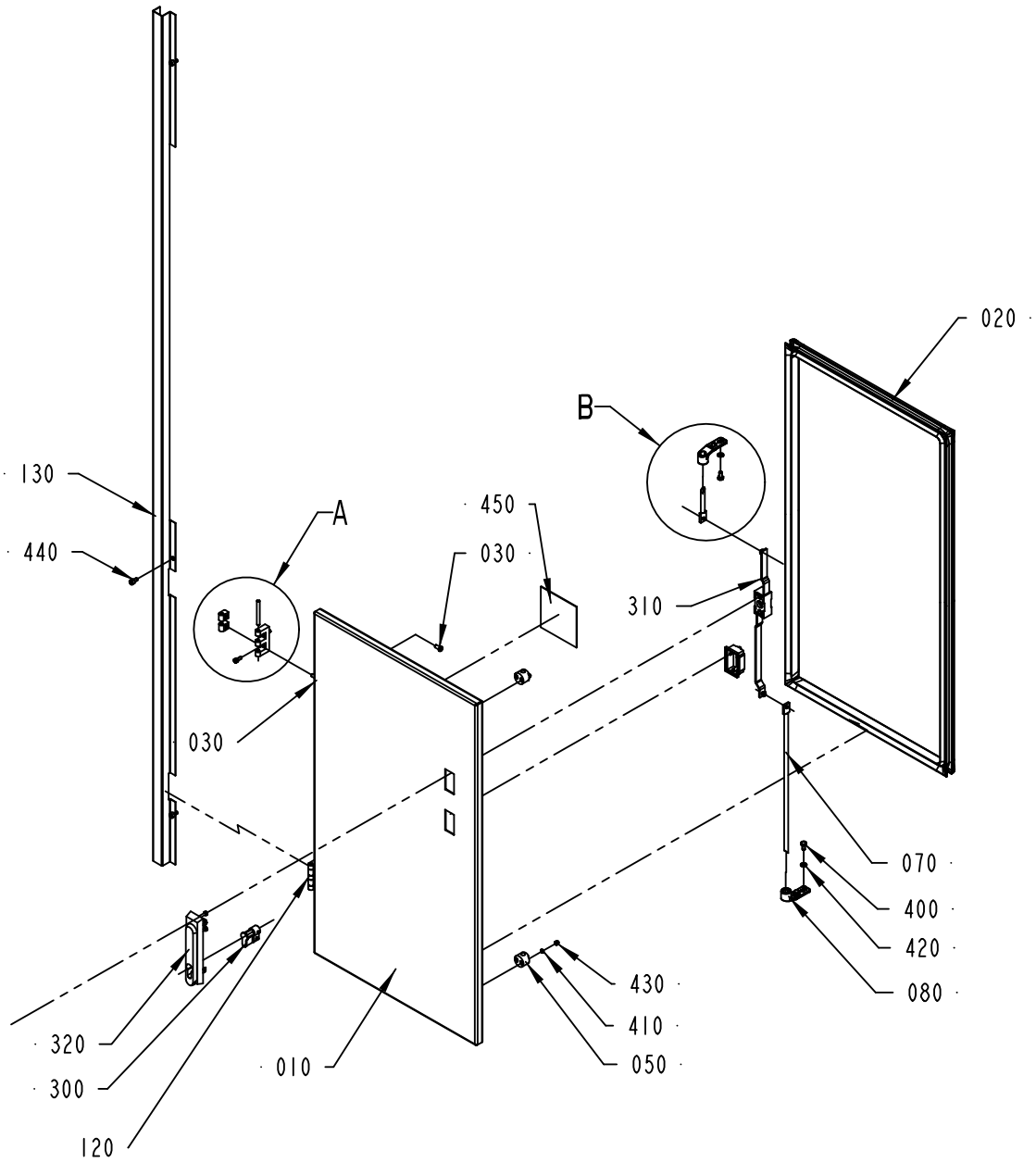

DETAIL A
SCALE 1:2

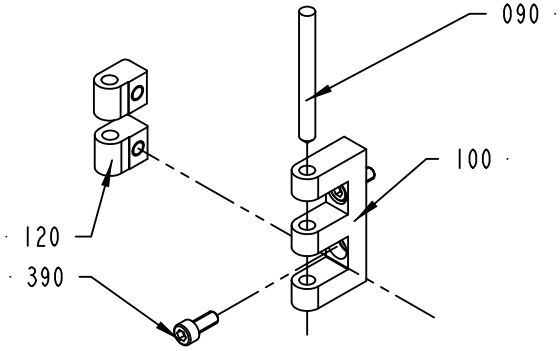

DETAIL B
SCALE 1:2

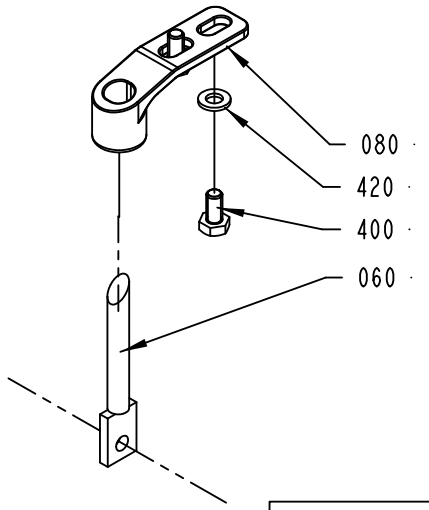

2508149-11
398293

ECM: 467448 - 20101002
Group number: 2508149-0300
Assembly Drawing: 2508149-11_1_AA

Pos	Part No	UN	Qty	Description	Page No
A3/SPEED PT/SPEED ANSI					
130	2726296-0000		1	COVER STRIP	
450	90459-1927		1	WARNING SIGN ANSI (H), EYE PROTECTION	
A3/SPEED NOPT ANSI					
130	2728140-0000		1	COVER STRIP	
450	90459-1927		1	WARNING SIGN ANSI (H), EYE PROTECTION	
A3/SPEED PT/SPEED ISO					
130	2726296-0000		1	COVER STRIP	
450	359605-0002		1	MANDATORY SIGN ISO, EYE PROTECTION	
A3/SPEED NOPT ISO					
130	2728140-0000		1	COVER STRIP	
450	359605-0002		1	MANDATORY SIGN ISO, EYE PROTECTION	
Common Parts					
010	2508150-0000		1	DOOR	
020	2508151-0000		1	RUBBER SEAL	
030	1129767-0000		2	SCREW	
040	1129770-0000		2	BLOCKING PIECE	
050	1129274-0000		3	GUIDE LUG	
060	2508147-0000		1	LOCKING ARM	
070	2508152-0000		1	LOCKING ARM	
080	1538868-0000		2	BRACKET	
090	988685-0000		2	PIN	
100	1035792-0000		2	E-HINGE	
110	1129767-0000		2	SCREW	
120	1129770-0000		2	BLOCKING PIECE	
300	90237-0128		1	LOCK CYLINDER, 1109-SU125	
310	90237-0153		1	LOCK HOUSING, 1121-U26-0B	
320	90237-0176		1	TURNING HANDLE, 1125-U190-A	
390	312115-0327		4	SCREW ISO4762 M5X12 A4 80	
400	312105-0366		4	SCREW M6S ISO 4017 M6X12 A480	
410	315105-0136		6	WASHER BRB 4,3X8 RFR	
420	315105-0153		4	WASHER BRB 6,4X12 RFR	
430	312705-0312		6	NUT HEX. DOMED CAP MHM-6 M4 A280	
440	312115-0362		3	SCREW ISO4762 M6X8 A4 80	

Pos	Part No	UN	Qty	Description	Page No

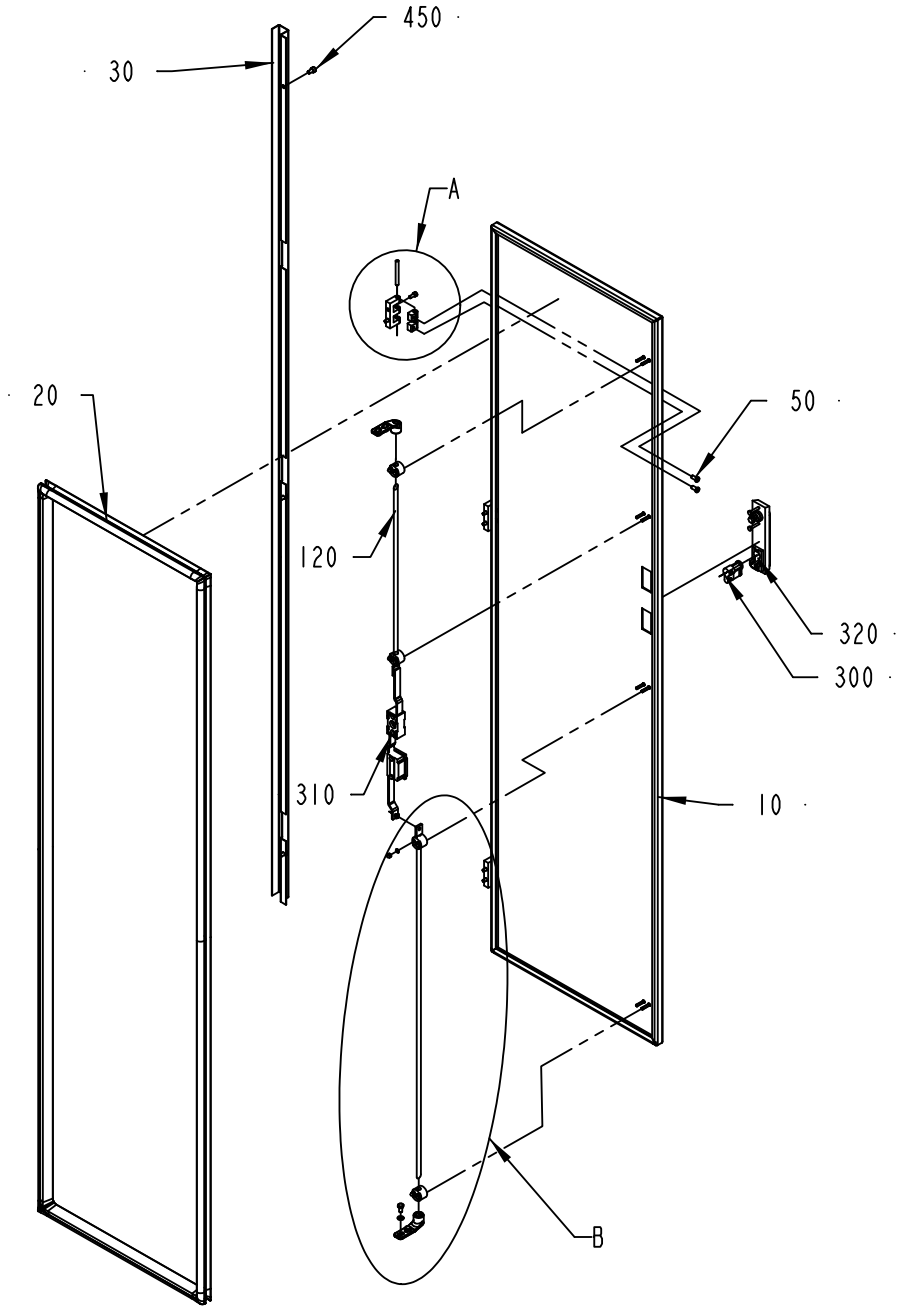

DETAIL A
SCALE 1:2

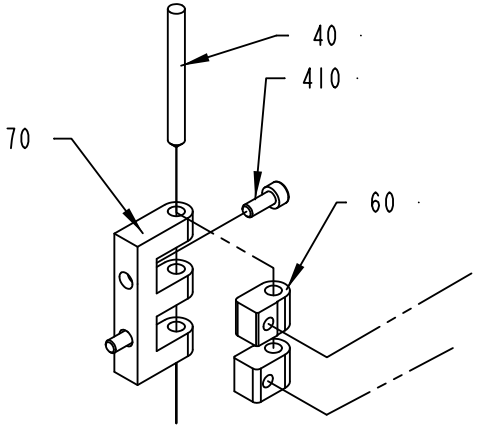

DETAIL B
SCALE 1:5

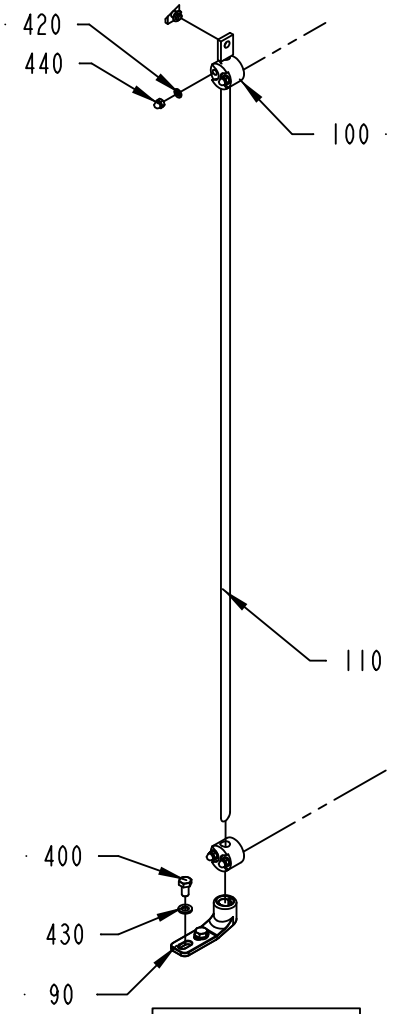

2529597-2
184089

ECM: 399868 - 20090522
Group number: 2529597-0200
Assembly Drawing: 2529597-2_1_AA

Pos	Part No	UN	Qty	Description	Page No
A3/SPEED PT/SPEED					
030	2726295-0000		1	COVER STRIP	
A3/SPEED NOPT					
030	2728139-0000		1	COVER STRIP	
Common Parts					
010	2529598-0000		1	DOOR	
020	2529599-0000		1	RUBBER SEAL	
040	988685-0000		3	PIN	
050	1129767-0000		6	SCREW	
060	1129770-0000		6	BLOCKING PIECE	
070	1035792-0000		3	E-HINGE	
090	1538868-0000		2	BRACKET	
100	1129274-0000		4	GUIDE LUG	
110	2508133-0000		1	LOCKING ARM	
120	2508140-0000		1	LOCKING ARM	
300	90237-0128		1	LOCK CYLINDER, 1109-SU125	
310	90237-0153		1	LOCK HOUSING, 1121-U26-0B	
320	90237-0176		1	TURNING HANDLE, 1125-U190-A	
400	312115-0327		4	SCREW ISO4762 M5X12 A4 80	
410	312105-0366		6	SCREW M6S ISO 4017 M6X12 A480	
420	315105-0136		8	WASHER BRB 4,3X8 RFR	
430	315105-0153		4	WASHER BRB 6,4X12 RFR	
440	312705-0312		8	NUT HEX. DOMED CAP MHM-6 M4 A280	
450	312115-0362		3	SCREW ISO4762 M6X8 A4 80	

Pos	Part No	UN	Qty	Description	Page No

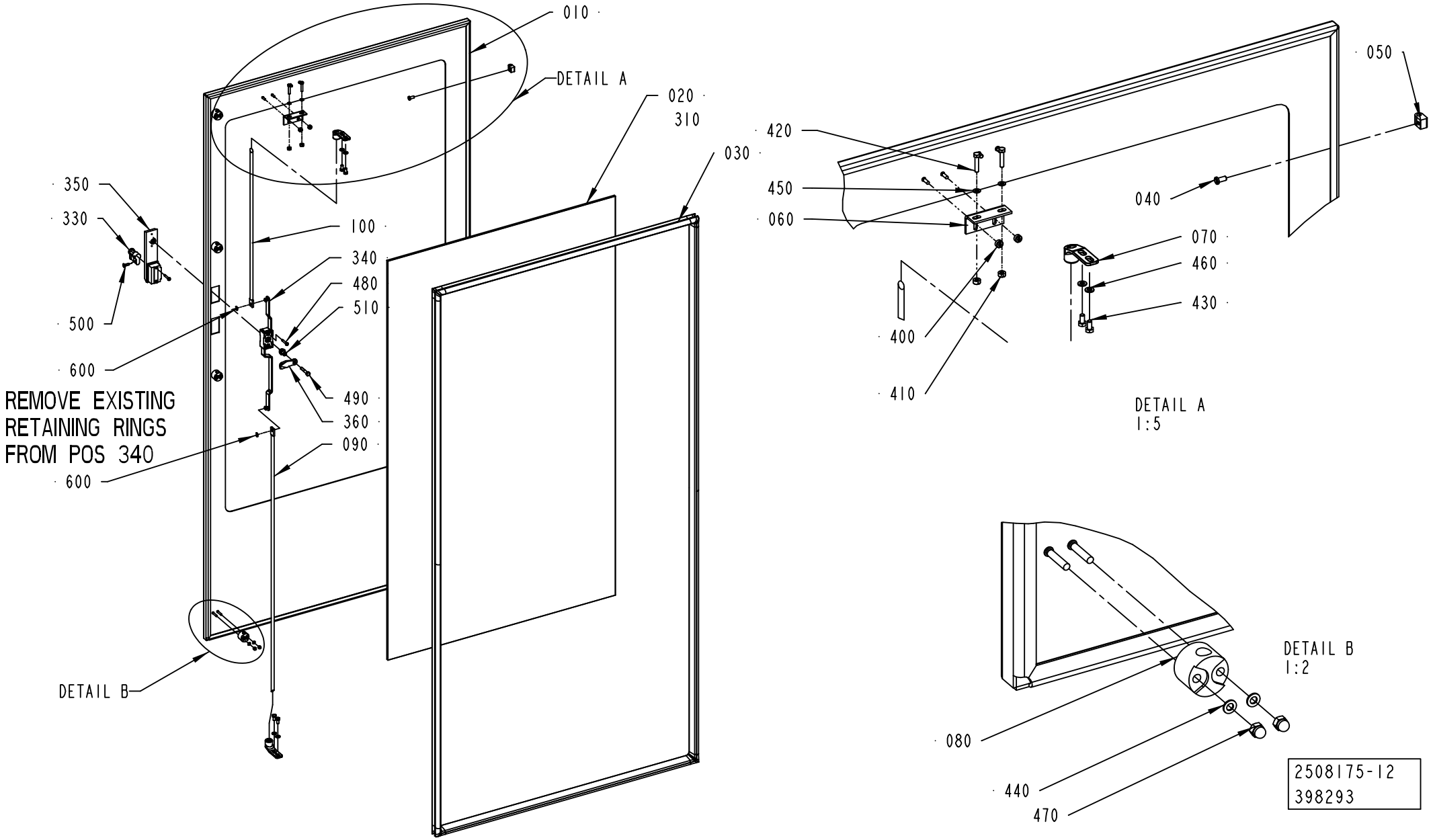
010
DETAIL A
020
310
030
350
330
100
340
480
510
500
600
490
360
090
600
REMOVE EXISTING
RETAINING RINGS
FROM POS 340
DETAIL B
420
450
060
050
040
070
460
430
400
410
DETAIL A
1:5
DETAIL B
1:2
080
440
470
2508175-12
398293

ECM: 466422 - 20100730
Group number: 2508175-0300
Assembly Drawing: 2508175-12_1_AA

Pos	Part No	UN	Qty	Description	Page No
-					
010	3039761-0000		1	DOOR	
020	2527640-0000		1	GLASS PANE	
030	2527639-0000		1	RUBBER SEAL	
040	1129767-0000		3	SCREW	
050	1129770-0000		3	BLOCKING PIECE	
060	1346885-0000		1	SUPPORT	
070	1538868-0000		2	BRACKET	
080	1129274-0000		4	GUIDE LUG	
090	2508133-0000		1	LOCKING ARM	
100	2508134-0000		1	LOCKING ARM	
310	90157-0041	L	1	SEALING COMPOUND, RHODORSEAL 5651	
330	90237-0128		1	LOCK CYLINDER, 1109-SU125	
340	90600-0477		1	LOCK HOUSING, 1121-U139	
350	90600-5084		1	LEVER MECHANISM, 1125-SU404	
360	90600-4542		1	LOCK CAM, 1000-227-01	
400	1539391-0000		2	ROUND NUT	
410	575034-0000		2	ROUND NUT	
420	312105-0333		2	SCREW M6S ISO 4017 M5X25 A480	
430	312105-0366		4	SCREW M6S ISO 4017 M6X12 A480	
440	315105-0136		8	WASHER BRB 4,3X8 RFR	
450	315105-0146		2	WASHER BRB 5,3X10 RFR	
460	315105-0153		4	WASHER BRB 6,4X12 RFR	
470	312705-0312		8	NUT HEX. DOMED CAP MHM-6 M4 A280	
480	312504-0348		4	TAPPING SCREW ISO 7049-A2-ST4,2X25-C-Z	
490	312105-0376		1	SCREW M6S ISO 4014 M6X35 A480	
500	312155-0329		1	SCREW DIN 7991 MF6S M5X16 A4 70	
510	90600-8406		1	SPACER, 1000-S1455-SK	
600	315755-0107		2	RETAINING RING SHAFT DIN 6799 5 SS	

Pos	Part No	UN	Qty	Description	Page No

Machine Type | Group Description | Used-In | Group Number | Page No

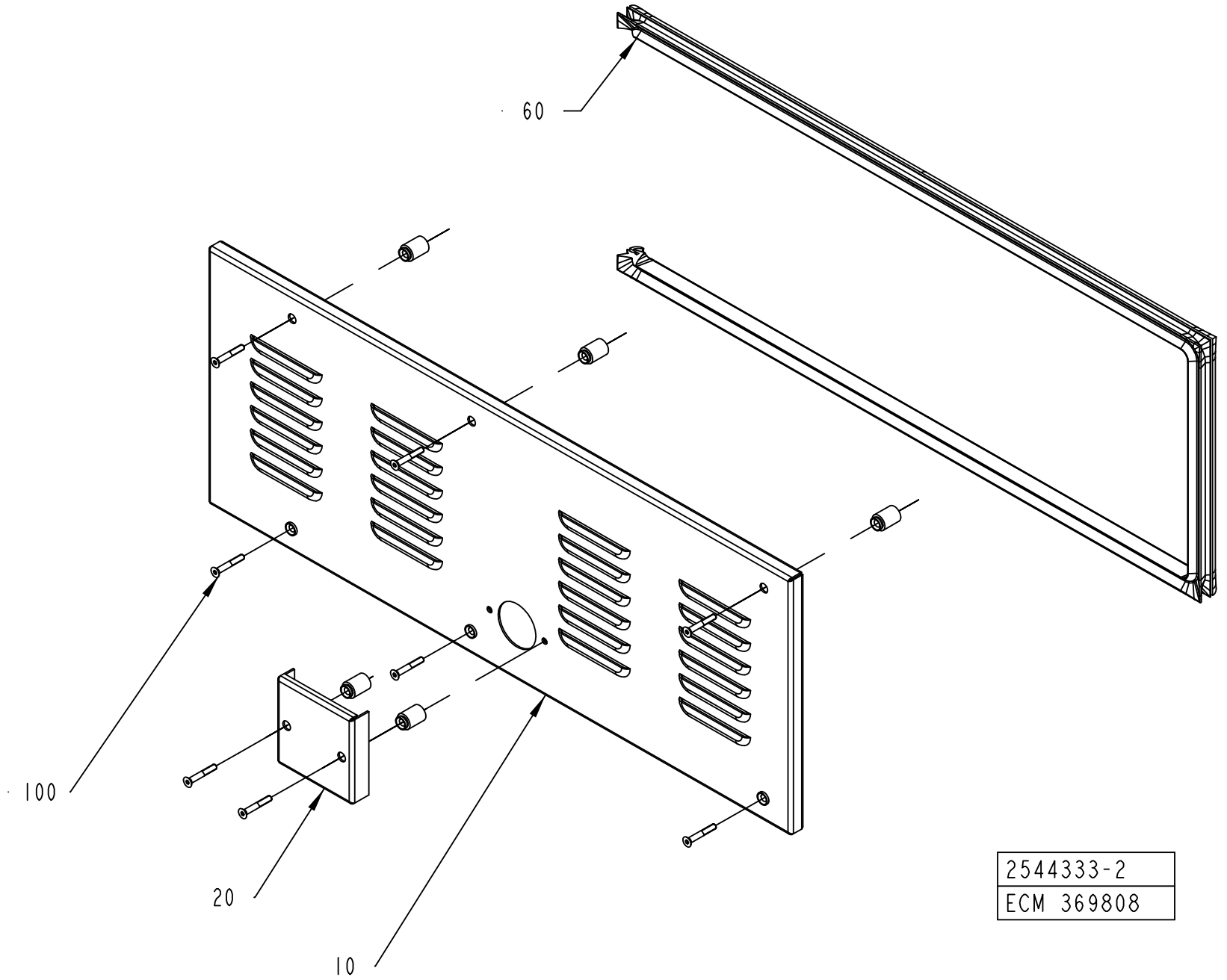
60
100
20
10
2544333-2
ECM 369808

ECM: 379563 - 20100702
Group number: 2544333-0200
Assembly Drawing: 2544333-2_1_AA

Pos	Part No	UN	Qty	Description	Page No
A3/SPEED					
010	2993872-0000		1	COVER	
Common Parts					
020	2544332-0000		1	PROTECTION	
060	2508161-0000		1	RUBBER SEAL	
100	90226-0458		8	MOUNTING SCREW	

Pos	Part No	UN	Qty	Description	Page No

TPOP PANEL 15 INCH

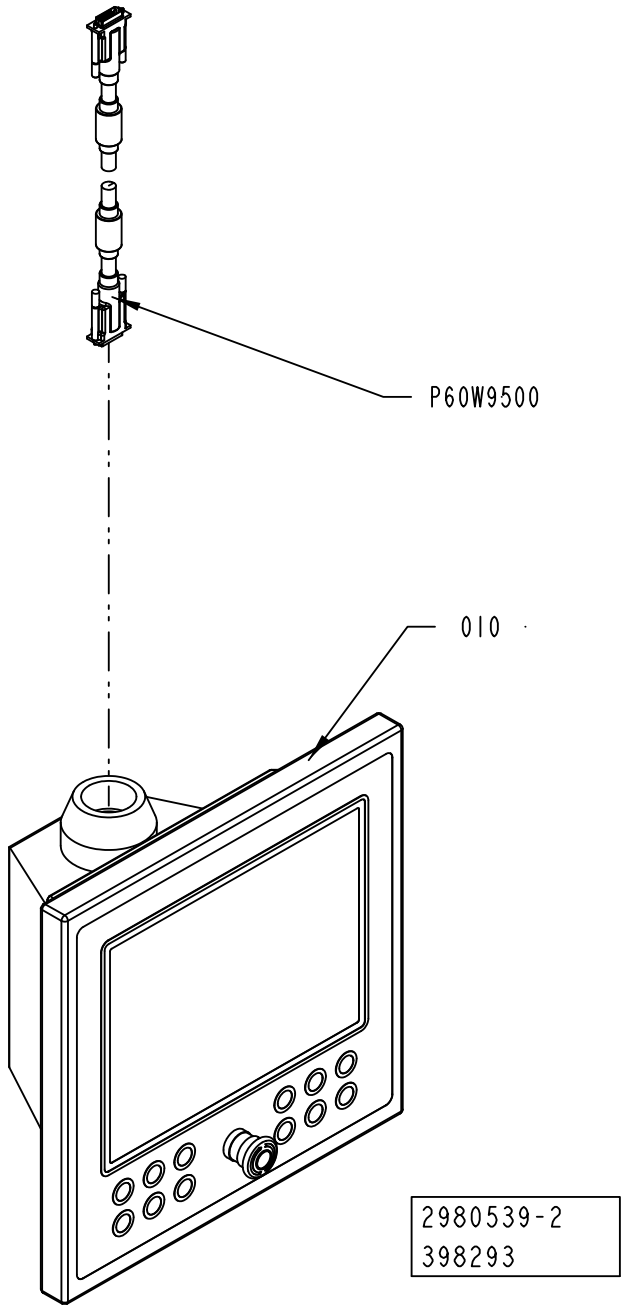

ECM: 398293 - 20100702
Group number: 2980539-0200
Assembly Drawing: 2980539-2_1_AA

Pos	Part No	UN	Qty	Description	Page No
-					
010	90600-5002		1	OPERATOR PANEL, 5AP920_1505-K42-C0	
	90458-1150		*1*	*CABLE GLAND, RG M63/4*	
	90600-4778		*1*	*USB CABLE SET, 5A9000.54*	
	90600-4787		*1*	*USB CABLE SET, 5A9000.55*	
	90600-4980		*1*	*AP LINK SDL RECEIVER, 5DLSDL.1000-00*	
	90600-4981		*1*	*DEVICENET & ETHERN./IP MOD., 5E9000.44*	
	90600-4982		*1*	*PUSH BUTTON PCB, 4E0011.01-K17*	
	90600-5000		*1*	*INTERNAL PANEL CABLE SET, 5A9000.57*	
	90600-5003		*1*	*PANEL FRONT, 5AP920.1505-K64*	
	2872847-0000		*1*	*LABEL*	
P60W9500	90600-3697		1	SDL FLEX CABLE 10M, 5CASDL.0100-03	

Pos	Part No	UN	Qty	Description	Page No

CABLE DUCT

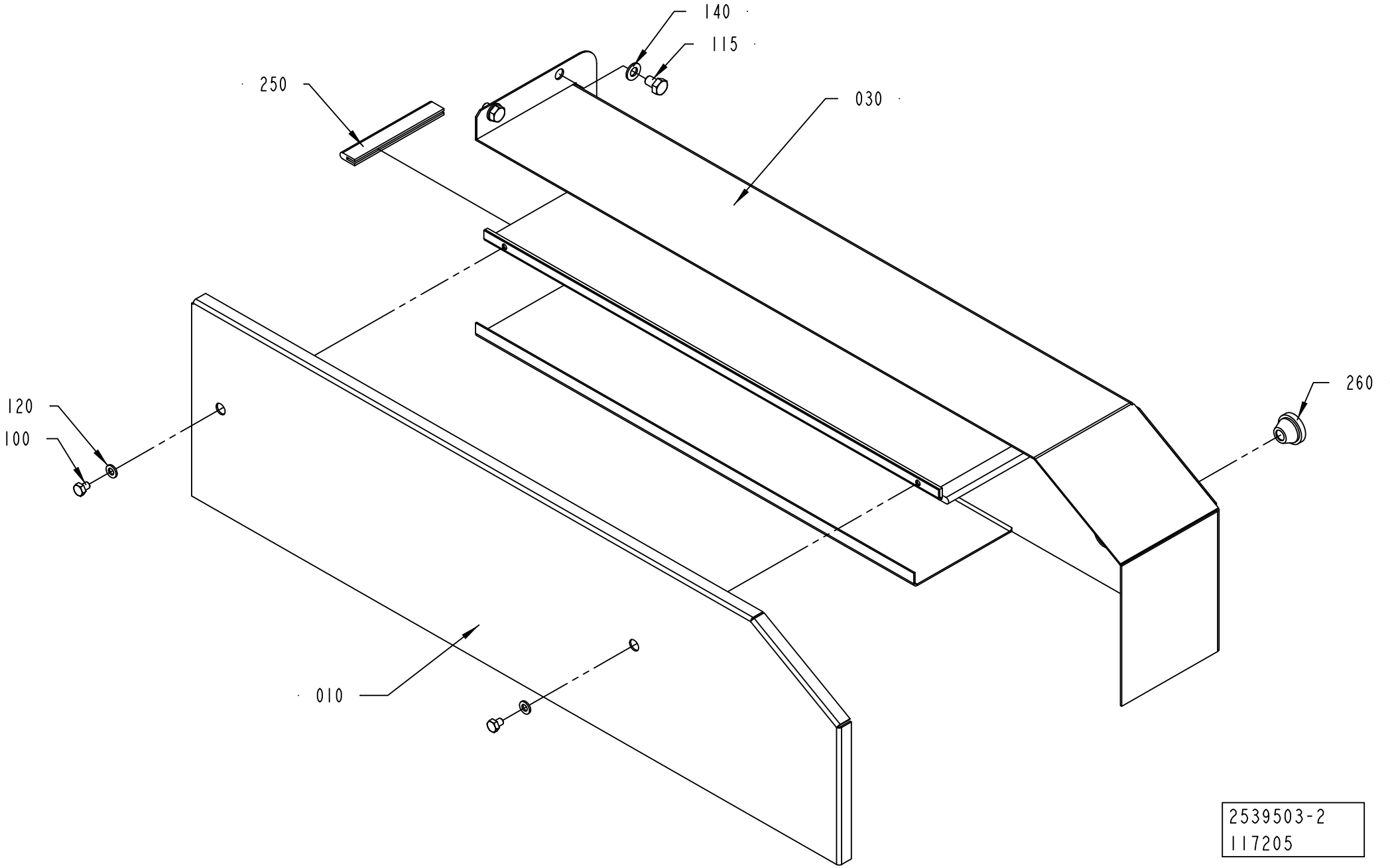

ECM: 313124 - 20070628
Group number: 2539503-0200
Assembly Drawing: 2539503-2_1_AA

Pos	Part No	UN	Qty	Description	Page No
-					
010	2539505-0000		1	LID	
030	2901592-0000		1	CABLE DUCT	
100	312105-0362		2	SCREW M6S ISO 4017 M6X8 A480	
115	312105-0447		4	SCREW M6S ISO 4017 M8X12 A480	
120	315105-0153		2	WASHER BRB 6,4X12 RFR	
140	315105-0165		4	WASHER BRB 8,4X16 RFR	
250	90143-0097	MM	500	SELF GRIPPING GASKET, 1011-24	
260	90015-0021		1	LEAD-IN, TET10-14, E-1458023	

Pos	Part No	UN	Qty	Description	Page No

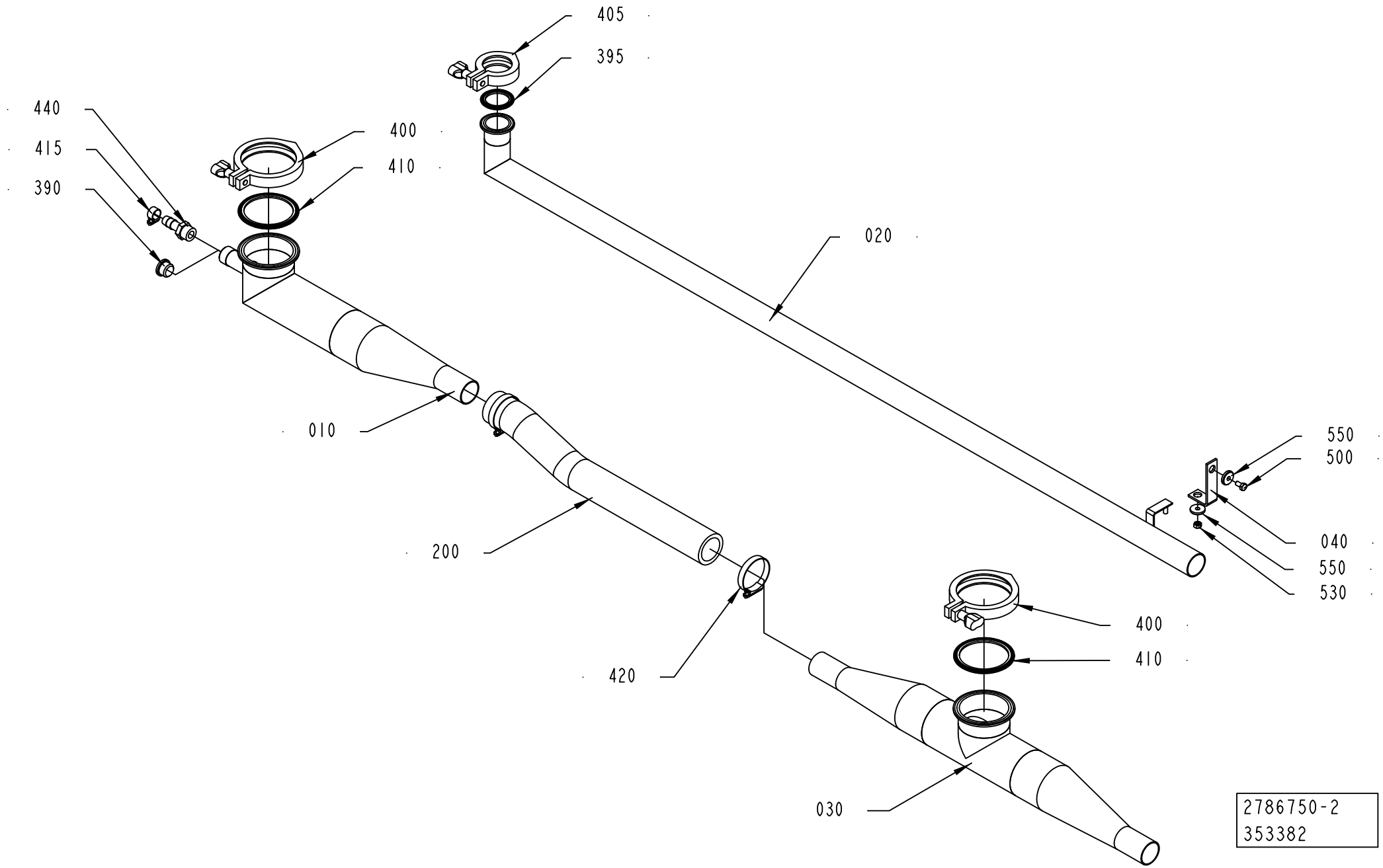
405
395
440
415
390
400
410
020
010
200
550
500
040
550
530
400
410
420
030
2786750-2
353382

ECM: 366512 - 20081027
Group number: 2786750-0200
Assembly Drawing: 2786750-2_1_AA

Pos	Part No	UN	Qty	Description	Page No
A3/SPEED					
020	2786753-0000		1	PIPE	
200	90166-0236	MM	725	HOSE, 38/51 REINFORCED RUBBER	
Common Parts					
010	2786751-0000		1	PIPE	
030	2948764-0000		1	PIPE	
040	2786754-0000		1	BRACKET	
390	342713-0213		1	PLUG, EXT THREAD HEX SOCKET 8638-00-120	
395	342850-0304		1	GASKET 35,4X49,1X5,2 1"1/2 FDA, 3-A	
400	342840-0107		2	CLAMP, 76,2 MM 3-A PCS+PMCS	
405	342840-0103		1	CLAMPING PIECE DN 1-11/2, GH13LAH112304N	
410	342850-0107		2	GASKET 72,9X89,6X5,2 MM 3" FDA 3-A	
415	342991-0101		1	HOSE CLIP,WORM DRIVE TYPE (11)-17	
420	342991-0109		2	HOSE CLIP,WORM DRIVE TYPE (44)-56	
440	90055-0033		1	HOSE NIPPLE, EXT.THR. R1/2-13 MM	
500	312105-0366		1	SCREW M6S ISO 4017 M6X12 A480	
530	312605-0316		1	HEXAGON NUT, M6M M6 A280	
550	315125-0153		2	WASHER TBRSB 6,4X22X4 A4	

Pos	Part No	UN	Qty	Description	Page No

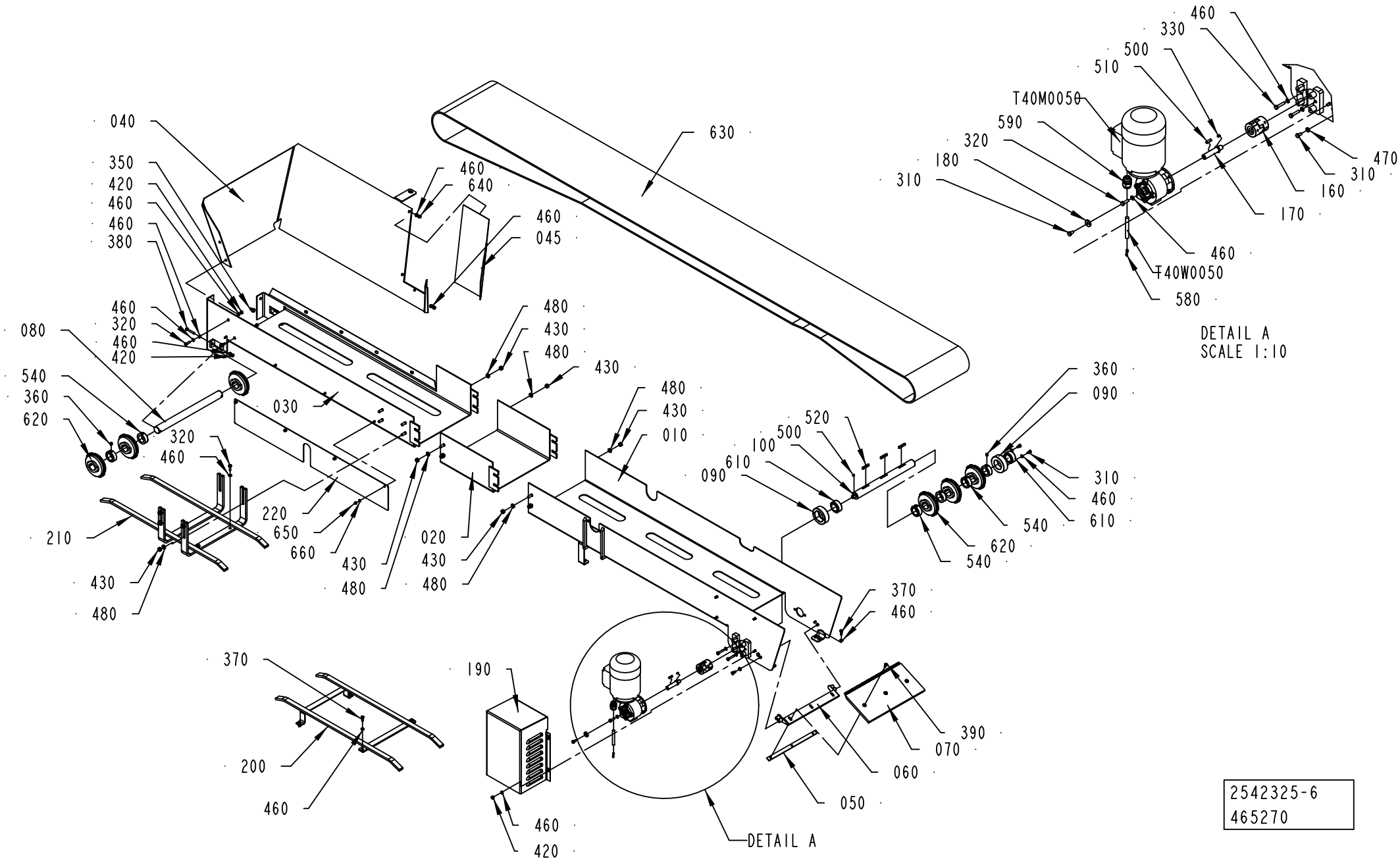
040
350
420
460
460
380
630
460
640
460
045
460
320
460
420
080
480
430
480
430
540
360
620
030
480
430
010
320
460
520
500
100
610
090
360
090
310
460
610
540
620
540
220
650
660
430
480
020
430
480
210
430
480
370
460
370
200
460
190
460
420
DETAIL A
390
070
060
050
460
330
500
510
T40M0050
590
320
180
310
470
310
160
170
460
T40W0050
580
DETAIL A
SCALE 1:10
2542325-6
465270

ECM: 467516 - 20101002
Group number: 2542325-0200
Assembly Drawing: 2542325-6_1_AC

Pos	Part No	UN	Qty	Description	Page No
-					
010	2540817-0000		1	CHUTE	
020	2540820-0000		1	CHUTE	
030	2901595-0000		1	CHUTE	
040	2897660-0000		1	SPLASH PLATE	
045	2886539-0000		1	PLATE	
050	1129253-0000		1	FASTENING PLATE	
060	1296845-0000		1	BRACKET	
070	2508192-0000		1	GUARD PLATE	
080	1037562-0000		1	SHAFT	
090	1348386-0000		2	BEARING HOUSING	
100	2508196-0000		1	DRIVE SHAFT	
160	90600-4782		1	FLEXIBLE COUPLING, 12X12 MM	
170	2508200-0000		1	SHAFT	
180	2529670-0000		1	WASHER	
190	2529579-0000		1	COVER	
200	2540818-0000		1	BRACKET	
210	2540819-0000		1	BRACKET	
220	2901594-0000		1	COVER PLATE	
310	312105-0366		7	SCREW M6S ISO 4017 M6X12 A480	
320	312105-0370		8	SCREW M6S ISO 4017 M6X20 A480	
330	312105-0374		2	SCREW M6S ISO 4014 M6X30 A480	
350	312105-0447		2	SCREW M6S ISO 4017 M8X12 A480	
360	312318-0443		6	SCREW ISO4029 M8X8 A4	
370	312105-0368		8	SCREW M6S ISO 4017 M6X16 A480	
380	312105-0378		2	SCREW M6S ISO 4014 M6X40 A480	
390	312155-0368		3	SCREW DIN 7991 MF6S M6X16 A4 70	
420	312605-0316		12	HEXAGON NUT, M6M M6 A280	
430	312605-0318		16	HEXAGON NUT, M6M M8 A280	
460	315105-0153		39	WASHER BRB 6,4X12 RFR	
470	315115-0153		2	WASHER PLAIN, TBRB 6,4/12 H=3	
480	315115-0165		16	WASHER PLAIN, TBRB 8,4/16 H=3	
500	315705-0164		2	PARALLEL KEY W. ROUND ENDS 4X4X8 MM	
510	315705-0201		1	PARALLEL KEY W. ROUND ENDS 5X5X20 MM	
520	315705-0238		3	PARALL KEY W. ROUND ENDS 6X6X36 MM	
540	315741-0222		6	RETAINING RING DIN 705 A4 30	
580	353101-0130		1	CABLE SHOE 1,5-2,5MM2 M4 BLUE	
590	352103-0106		1	CABLE GLAND, ST 11, PR18,6/PG11	
610	90240-0315		2	SPHER. BEARING, 30X47X22 PLASTIC MM	
620	90344-0073		6	TOOTHED WHEEL	
630	2540821-0000		1	CONVEYOR CHAIN	
640	312812-0316		3	HEXAGON NUT, NY-LOCK M6 A480	
650	312705-0314		4	NUT HEX. DOMED CAP MHM-6 M5 A280	
660	315105-0146		4	WASHER BRB 5,3X10 RFR	
T40M0050	90459-1147		1	GEARS, WORM MOTOR VF30 F1-10 P63 B14 V6	
T40W0050	351150-0413	M	14	CABLE OLFLEX 4GX1,5 MM2 LIGHT/GREY	

Machine Type | Group Description | Used-In | Group Number | Page No

SUPERSTRUCTURE CHEMICAL UNIT

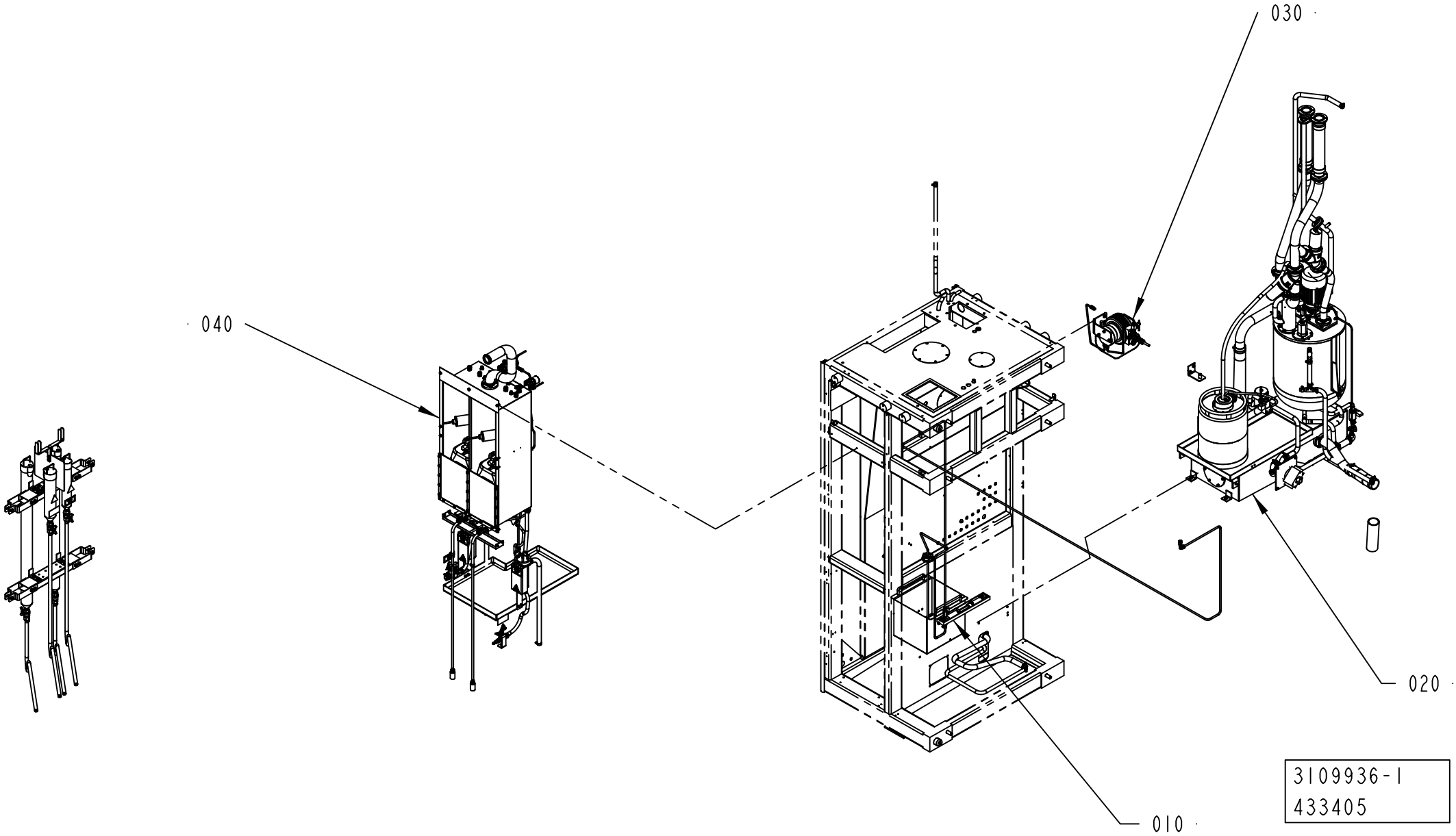

ECM: 456365 - 20101001
Group number: 3109936-0100
Assembly Drawing: 3109936-1_1_AA

Pos	Part No	UN	Qty	Description	Page No
-					
010	2504782-0300		1	CHEMICALS	**2-233**
020	2504781-0300		1	HYDROGEN PEROXIDE	**2-235**
030	2519574-0200		1	HYDROGEN PEROXIDE	**2-255**
040	3038080-0200		1	INTEGRATED CLEANING UNIT	**2-257**

Pos	Part No	UN	Qty	Description	Page No

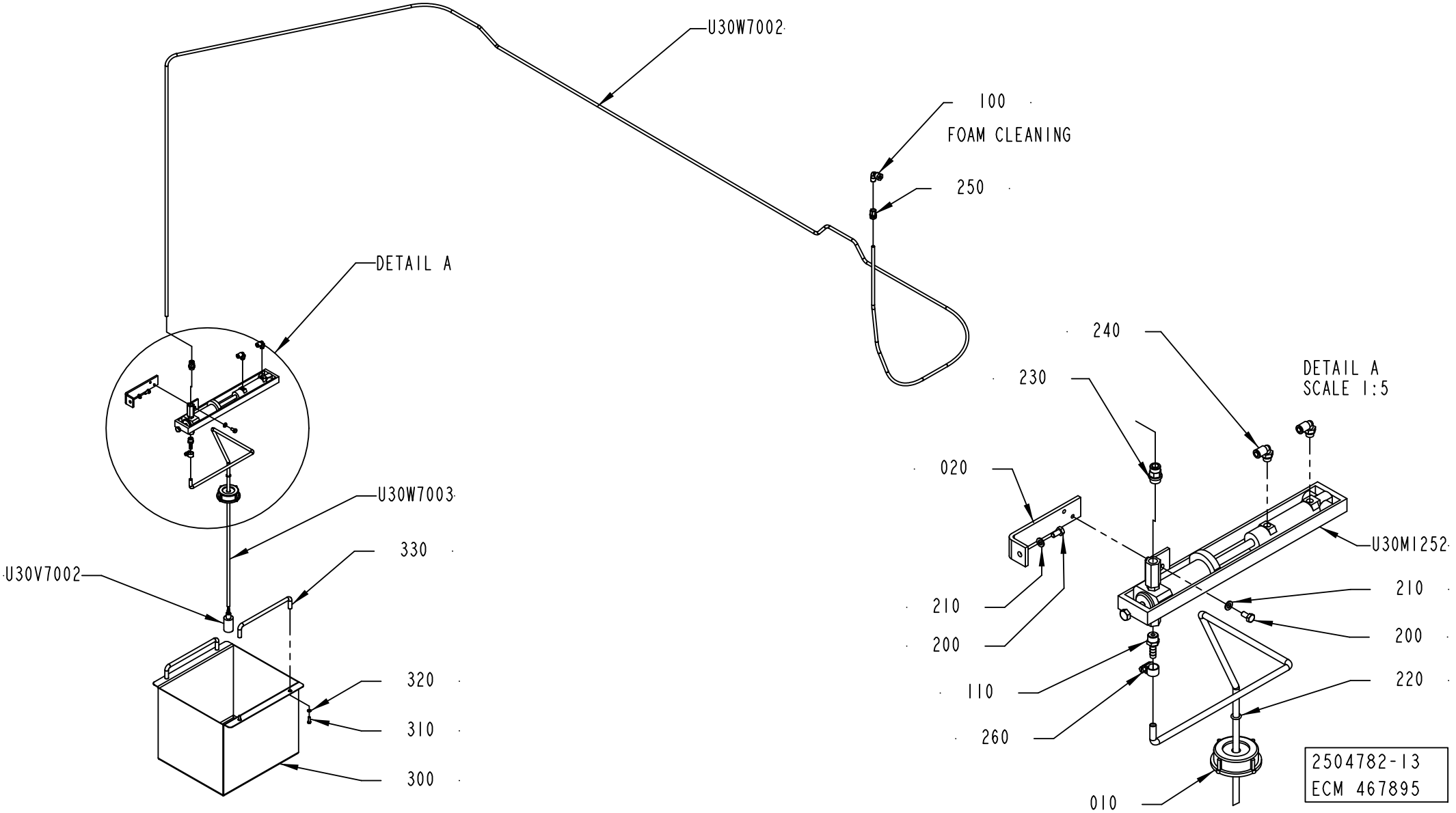
U30W7002
100
FOAM CLEANING
250
DETAIL A
U30W7003
330
U30V7002
320
310
300
240
230
DETAIL A
SCALE 1:5
020
U30M1252
210
210
200
200
110
220
260
010
2504782-13
ECM 467895

ECM: 472335 - 20110101
Group number: 2504782-0300
Assembly Drawing: 2504782-13_1_AC

Pos	Part No	UN	Qty	Description	Page No
A3/SPEED					
020	2927552-0000		1	BRACKET	
200	312105-0366		3	SCREW M6S ISO 4017 M6X12 A480	
210	315105-0153		3	WASHER BRB 6,4X12 RFR	
Common Parts					
010	1129432-0000		1	LID	
100	90030-0071		1	CONN. ELBOW, WE08LR71	
110	90055-0132		1	HOSE NIPPLE, EXT.THR. R1/4X7,8 MM	
220	315204-0207		1	O-RING 8,3X2,4 MM	
230	350001-0009		1	PUSH-IN FITTING QS-F-G1/4-8	
240	350002-0006		2	PUSH-IN L-FITTING QSL-F-G1/8-6	
250	342923-0122		1	STRAIGHT COUPL.,INT.THREADED 8/6-G1/4"	
260	342991-0100		1	HOSE CLIP,WORM DRIVE TYPE (8)-14	
300	3031045-0000		1	TANK	
310	312105-0329		4	SCREW M6S ISO 4017 M5X16 A480	
320	315105-0146		4	WASHER BRB 5,3X10 RFR	
330	90600-2670		2	HANDLE, GN 425-10-200-NI	
U30M1252	90321-0128		1	CHEM. PUMP 081778	
U30V7002	90415-0052		1	FILTER ART NO 12565 C-340-6E FOTVENTI EP	
U30W7002	315300-0006	MM	5700	TUBE, 8 MM PE BLACK	
U30W7003	90166-0008	MM	1750	HOSE 7/10 PVC TRANSP.	

Pos	Part No	UN	Qty	Description	Page No

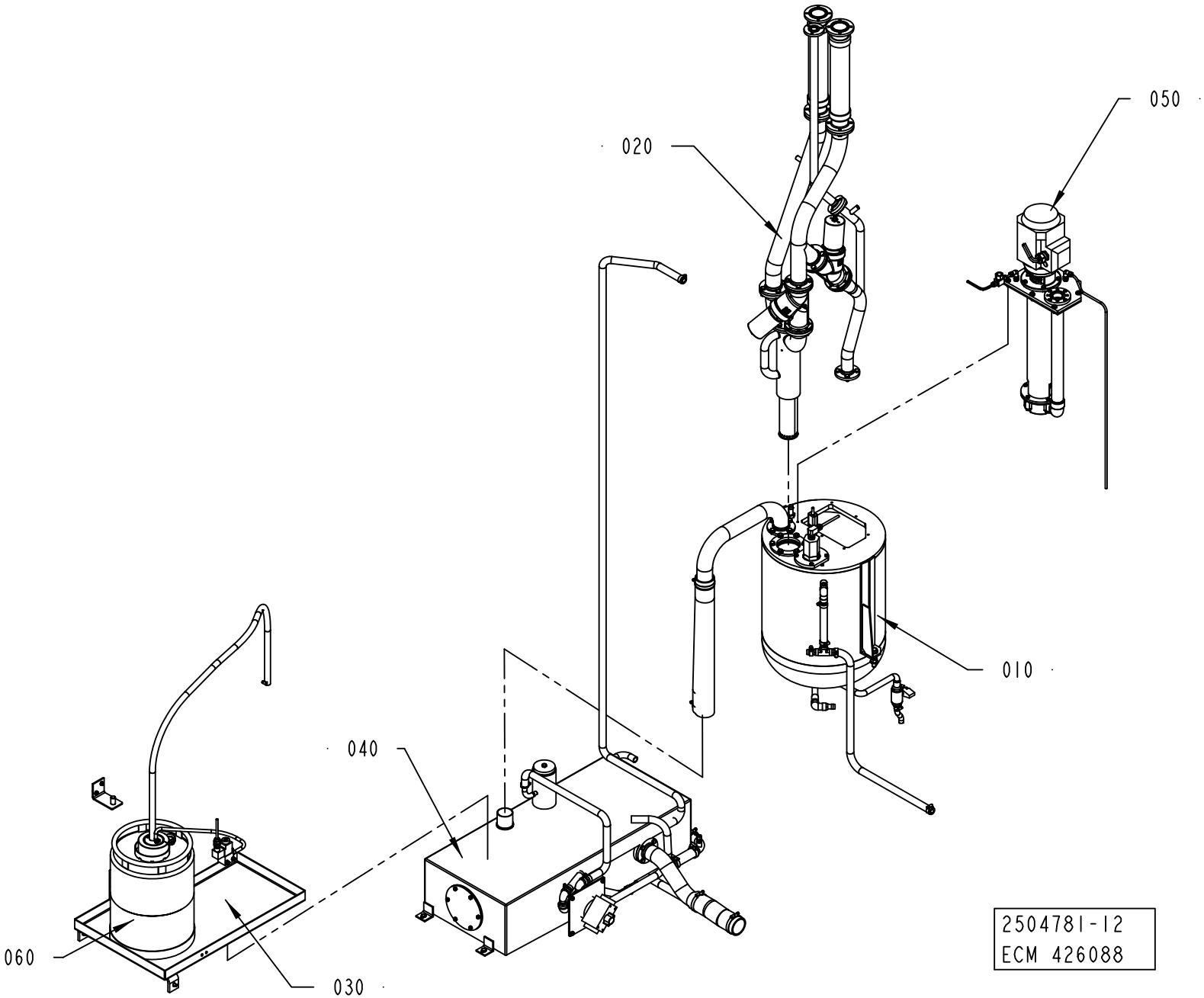
020
050
010
040
060
030
2504781-12
ECM 426088

ECM: 433175 - 20100701
Group number: 2504781-0300
Assembly Drawing: 2504781-12_1_AA

Pos	Part No	UN	Qty	Description	Page No
-					
010	1282894-0300		1	PEROXIDE TANK	**2-237**
020	1282895-0300		1	PEROXIDE PIPE	**2-241**
030	2506637-0300		1	AIR PIPE-LINE	**2-243**
040	1282896-0200		1	TANK	**2-245**
050	996388-0800		1	PEROXIDE PUMP	**2-251**
060	527898-0100		1	CONTAINER H2O2	**2-253, 12-29**

Pos	Part No	UN	Qty	Description	Page No

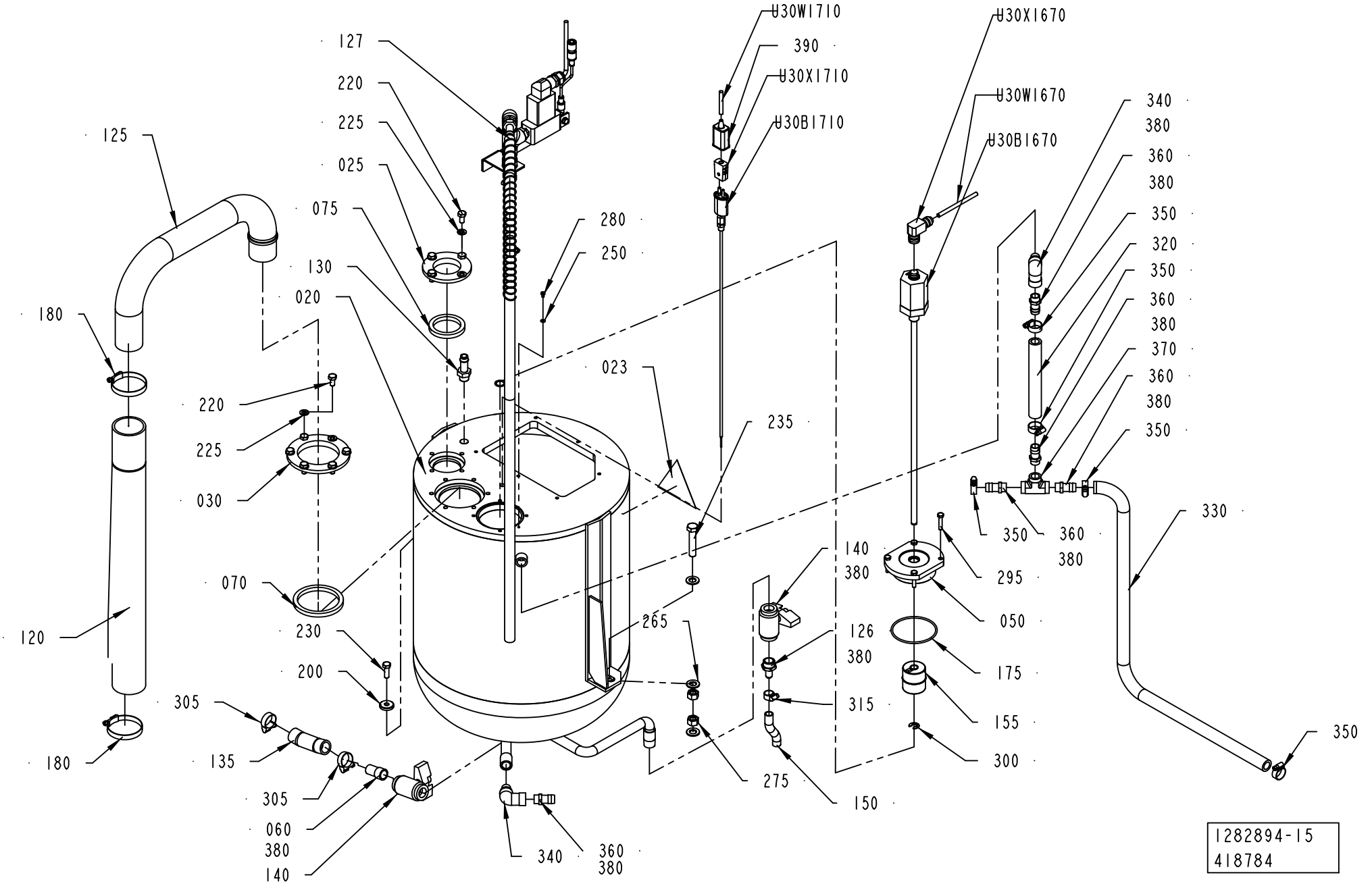

1282894-15
418784

ECM: 468959 - 20101001
Group number: 1282894-0300
Assembly Drawing: 1282894-15_1_AA

Pos	Part No	UN	Qty	Description	Page No
A3/SPEED ANSI (See drawing on page: 2-236)					
023	359725-0105		1	WARNING SIGN ANSI (V), CHEMICAL HAZARD	
127	2623721-0300		1	PEROXIDE REDUCER	**2-239**
A3/SPEED ISO (See drawing on page: 2-236)					
023	359705-0004		1	WARNING SIGN ISO, DANGEROUS CHEMICALS	
127	2623721-0300		1	PEROXIDE REDUCER	**2-239**
Common Parts					
020	2862301-0000		1	PEROXIDE TANK	
025	1040840-0000		1	FLANGE	
030	1040841-0000		1	FLANGE	
050	1558327-0000		1	LID	
060	1037102-0000		1	SPACER PIPE	
070	1040852-0000		1	SEALING RING	
075	1040853-0000		1	SEALING RING	
120	1282899-0000		1	HOSE	
125	1282891-0000		1	PIPE	
126	1282906-0000		1	NIPPLE	
130	90055-0051		1	HOSE NIPPLE, EXT.THR. R3/8X13 MM	
135	90166-0151	MM	140	HOSE SILICONE, 20/27 MM	
140	90187-0059		2	BALL VALVE FOR HYDR.PER. G1/2 3MM HOLE	
150	90166-0138	MM	85	HOSE	
155	90458-2358		1	FLOAT, BTL2-S-4414-4Z	
175	927422-0016		1	O-RING 79.5X3 SILICONE	
180	342991-0110		2	HOSE CLIP,WORM DRIVE TYPE (50)-65	
200	315125-0165		1	WASHER TBRSB 8,4X26X5 A4	
220	312105-0449		10	SCREW M6S ISO 4017 M8X16 A480	
225	315105-0165		10	WASHER BRB 8,4X16 RFR	
230	312105-0453		1	SCREW M6S ISO 4017 M8X25 A480	
235	312109-0544		1	SCREW M6S ISO 4017 M12X60 A480	
250	315105-0136		1	WASHER BRB 4,3X8 RFR	
265	315105-0178		3	WASHER BRB 13X24 RFR	
275	312605-0322		2	HEXAGON NUT, M6M M12 A280	
280	312125-0285		1	SCREW ISO 1207 M4X6 A4	
295	312109-0374		4	SCREW M6S ISO 4017 M6X30 A480	
300	315755-0110		1	RETAINING RING SHAFT DIN 6799 9 SS	
305	342991-0104		2	HOSE CLIP,WORM DRIVE TYPE (19)-28	
315	342991-0101		1	HOSE CLIP,WORM DRIVE TYPE (11)-17	
320	90166-0087	MM	170	HOSE 15/23 REINF.PVC TRANSP.	
330	90166-0087	MM	950	HOSE 15/23 REINF.PVC TRANSP.	
340	90330-0172		2	ELBOW, 90 INT/EXT, SS-6-SE	
350	342991-0103		5	HOSE CLIP,WORM DRIVE TYPE (15)-24	
360	342901-0106		5	HOSE NIPPLE, EXT.THR. G3/8-17 MM	
370	90330-0144		1	T-PIPE, INT. THREAD, 3/8MMO-SS	
380	90144-0073	MM	1	TREBOFLON-TAPE W=13MM	
390	90326-0012		1	PROTECTIVE COVER, T31A4618	
U30B1670	90459-0951		1	TRANSDUCER, BTL7-A110-M0400-B-S32	
U30B1710	1347704-0000		1	THERMOCOUPLE	
	90326-0306		*1*	*GLAND FITTING 9041-45-KS-KR.1/8" D=4,5MM*	
	1040890-0000		*1*	*THERMOCOUPLE*	
U30W1670	90220-0072	MM	2000	SCR. CABLE 4X0,34MM2	
U30W1710	90220-0034	MM	7500	THERMOCABLE TEX/SITW-20F-KX 2X0,5MM2	
U30X1670	90458-1595		1	CONNECTION, BKS-S 33M-00	
U30X1710	90326-0020		1	PLUG, FEMALE YELLOW CR-AL	

Machine Type | Group Description | Used-In | Group Number | Page No

PEROXIDE REDUCER

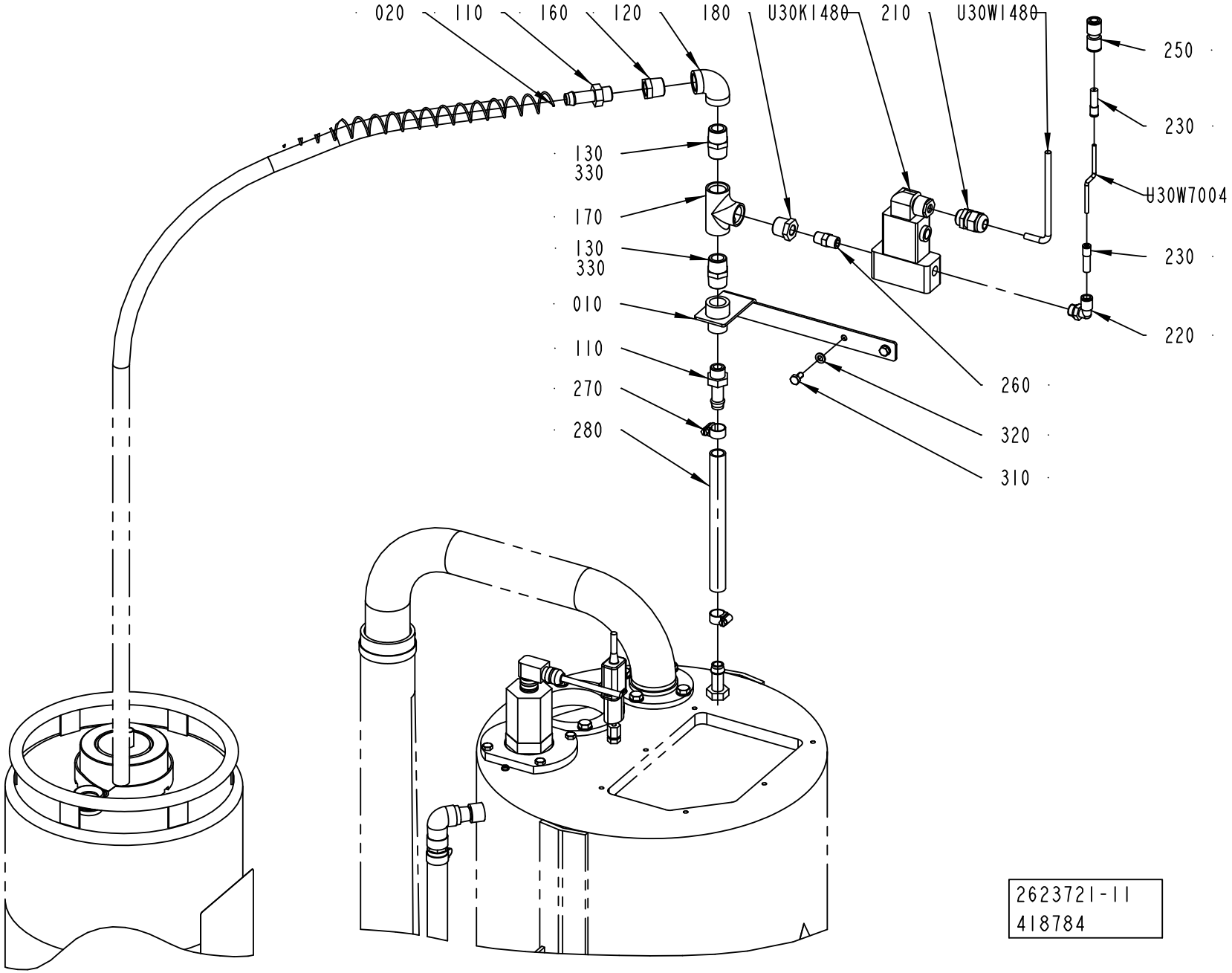

ECM: 472343 - 20110101
Group number: 2623721-0300
Assembly Drawing: 2623721-11_1_AA

Pos	Part No	UN	Qty	Description	Page No
A3/SPEED					
230	350006-0002		2	PUSH-IN FITTING QS-F-8H-4	
250	350009-0003		1	PUSH-IN FITTING QS-F-8	
U30W7004	315300-0018	MM	100	TUBE, 4 MM PE BLACK	
Common Parts					
010	3004052-0000		1	SUPPORT	
020	3020651-0000		1	HOLDER	
110	90055-0051		2	HOSE NIPPLE, EXT.THR. R3/8X13 MM	
120	90330-0020		1	ELBOW, 90 INT. THREAD, R-2221/2	
130	90330-0021		2	NIPPLES, EXT. THREAD. R-207R1/2	
160	90330-0048		1	BUSHING, INT/EXT. THR. R1/2-RP3/8	
170	90330-0049		1	T-PIPE, INT. THREAD, R-221R1/2	
180	90330-0085		1	BUSHING, INT/EXT. THR. R1/2-RP1/4	
210	352103-0106		1	CABLE GLAND, ST 11, PR18,6/PG11	
220	350002-0009		1	PUSH-IN L-FITTING QSL-F-G1/4-8	
260	90330-0043		1	NIPPLES, EXT. THREAD. R-207R1/4	
270	342991-0101		2	HOSE CLIP,WORM DRIVE TYPE (11)-17	
280	90166-0161	MM	230	HOSE	
310	312105-0366		2	SCREW M6S ISO 4017 M6X12 A480	
320	315105-0153		2	WASHER BRB 6,4X12 RFR	
330	90144-0073	MM	1	TREBOFLON-TAPE W=13MM	
U30K1480	90042-0170		1	SOLENOID VALVE TYPE 121 2/2 NC	
U30W1480	351150-0403	MM	3500	CABLE OLFLEX 3X0,75 MM2 LIGHT/GREY	

Pos	Part No	UN	Qty	Description	Page No

PEROXIDE PIPE

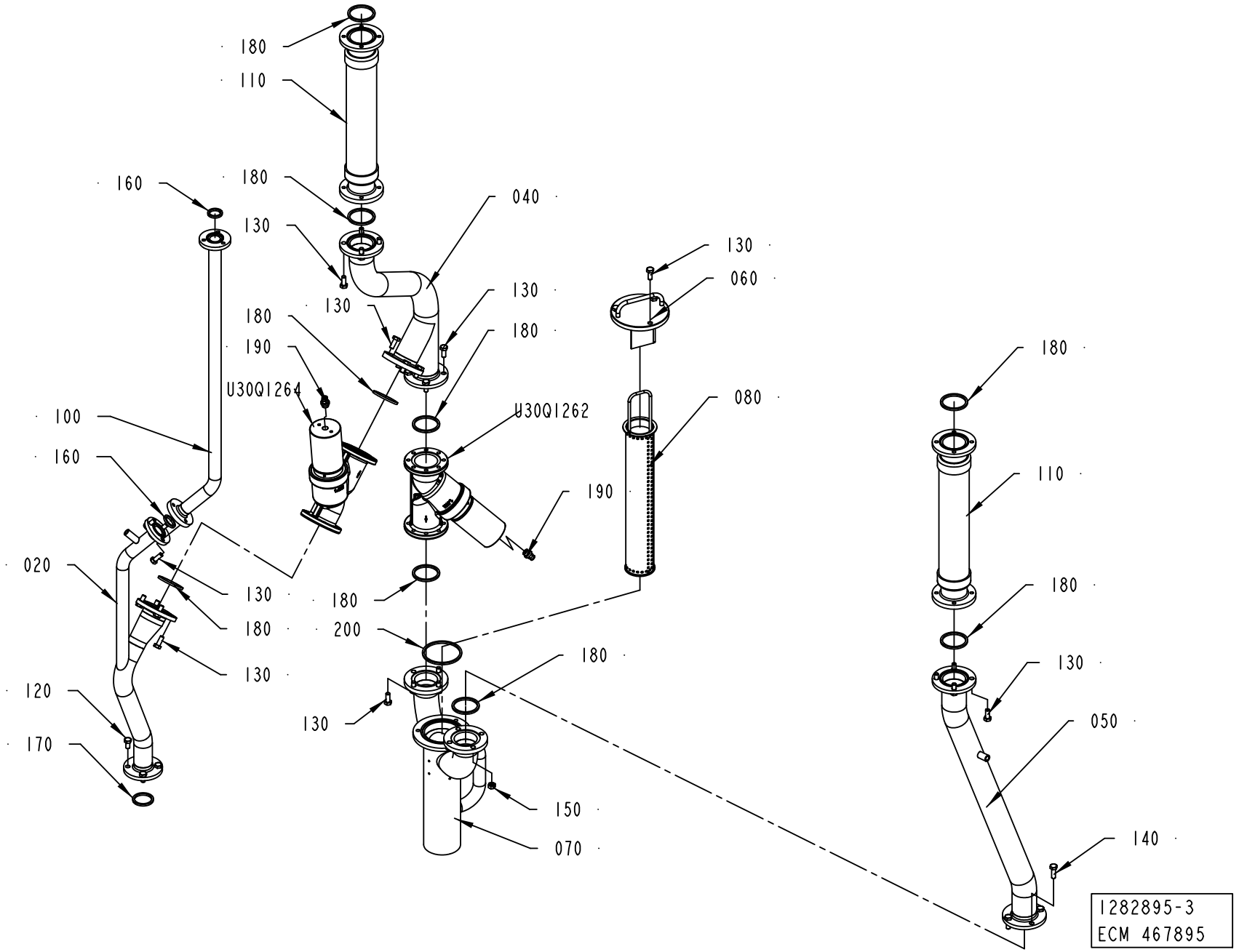

ECM: 472331 - 20110101
Group number: 1282895-0300
Assembly Drawing: 1282895-3_1_AD

Pos	Part No	UN	Qty	Description	Page No
-					
020	2519554-0000		1	PIPE	
040	1282876-0000		1	PIPE	
050	2519555-0000		1	PIPE	
060	1348530-0000		1	LID	
070	1282879-0000		1	CONNECTING PIPE	
080	1348529-0000		1	STRAINER	
100	1282901-0000		1	PIPE	
110	2598689-0000		2	HOSE	
120	312105-0449		4	SCREW M6S ISO 4017 M8X16 A480	
130	312105-0451		30	SCREW M6S ISO 4017 M8X20 A480	
140	312105-0453		4	SCREW M6S ISO 4017 M8X25 A480	
150	312605-0318		4	HEXAGON NUT, M6M M8 A280	
160	315229-0103		2	SQUARE RING, 23,1X30,1X3,7 MM 1" FDA	
170	315229-0104		1	SQUARE RING, 35,8X42,8X3,7 MM 1"1/2 FD	
180	315229-0105		9	SQUARE RING, 48,5X55,5X3,7 MM 2" FDA	
190	350001-0008		2	PUSH-IN FITTING QS-F-G1/4-6	
200	315229-0107		1	SQUARE RING, 73,9X80,9X3,7 MM 2"1/2 FDA	
U30Q1262	90459-5177		1	ANGLE SEAT VALVE W. FLANGES, N.O.8498668	
U30Q1264	90459-5178		1	ANGLE SEAT VALVE W. FLANGES, N.O.8498669	

Pos	Part No	UN	Qty	Description	Page No

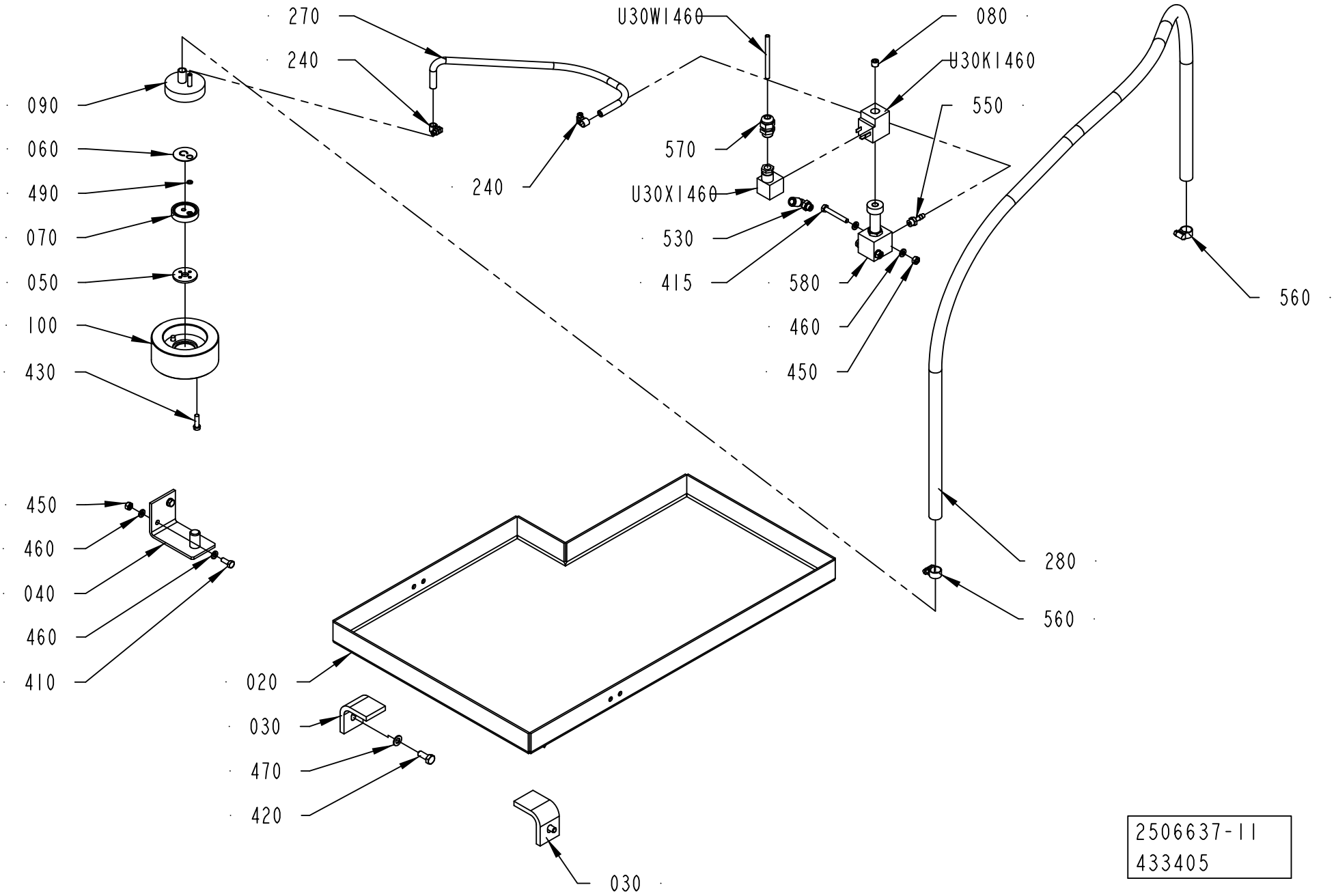
270
240
240
090
060
490
070
050
100
430
U30W1460
570
U30X1460
530
415
080
U30K1460
550
580
460
450
560
280
560
450
460
040
460
410
020
030
470
420
030
2506637-11
433405

ECM: 454032 - 20101001
Group number: 2506637-0300
Assembly Drawing: 2506637-11_1_AB

Pos	Part No	UN	Qty	Description	Page No
-					
020	1490950-0000		1	SPLASH PLATE	
030	1037539-0000		2	BRACKET	
040	1317784-0000		1	BRACKET	
050	273981-0000		1	GASKET	
060	527912-0000		1	NON-RETURN VALVE	
070	530551-0000		1	WASHER	
080	563285-0000		1	BLIND PLUG	
090	1129328-0000		1	ATTACHMENT	
100	1317226-0000		1	WEIGHT	
240	90132-0021		2	HOSE CLIP 6-10MM	
270	90166-0101	MM	700	HOSE, SILICONE, 60 SHORE, 6/10 MM	
280	90166-0161	MM	1600	HOSE	
410	312105-0368		2	SCREW M6S ISO 4017 M6X16 A480	
415	312105-0379		2	SCREW M6S ISO 4014 M6X45 A480	
420	312105-0451		2	SCREW M6S ISO 4017 M8X20 A480	
430	312125-0370		2	SCREW ISO 1207 M6X20 A4	
450	312605-0316		4	HEXAGON NUT, M6M M6 A280	
460	315105-0153		8	WASHER BRB 6,4X12 RFR	
470	315105-0165		2	WASHER BRB 8,4X16 RFR	
490	315204-0103		1	O-RING 5,1X1,6 MM	
530	350002-0007		1	PUSH-IN L-FITTING QSL-F-G1/8-8	
550	342901-0101		1	HOSE NIPPLE, EXT.THR. G1/8-7 MM	
560	342991-0101		2	HOSE CLIP,WORM DRIVE TYPE (11)-17	
570	352103-0101		1	CABLE GLAND, ST 9, PR15,2/PG9	
580	90042-0206		1	SOLENOID VALVE G1/8, 444-111-000-1	
U30K1460	90042-0487		1	COIL, 04983-197-18	
U30W1460	351150-0403	MM	2300	CABLE OLFLEX 3X0,75 MM2 LIGHT/GREY	
U30X1460	90110-0095		1	CONNECTOR 3 POLE + EARTH	

Pos	Part No	UN	Qty	Description	Page No

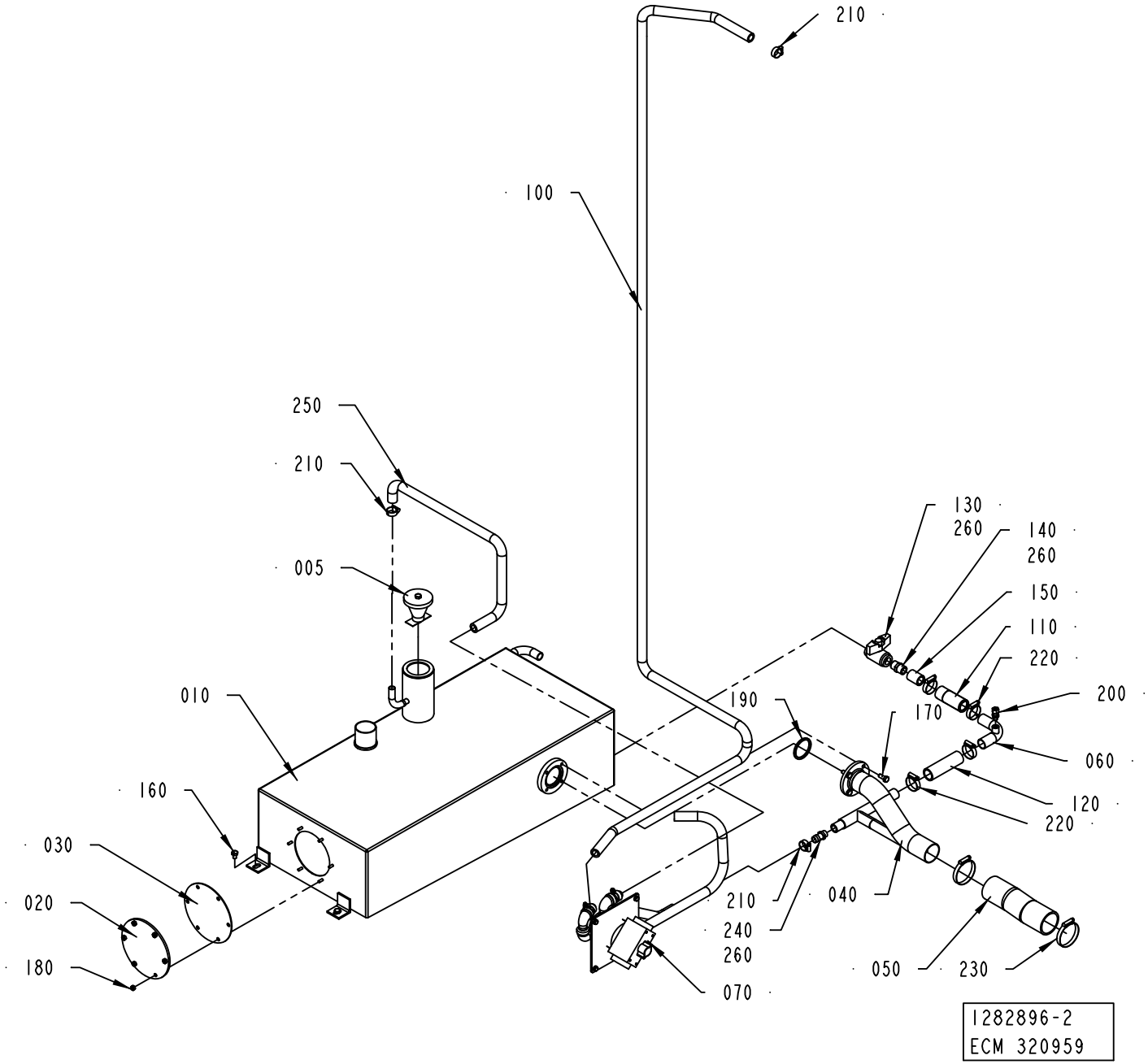
210
100
250
210
005
010
160
030
020
180
130
260
140
260
150
110
220
200
190
170
060
120
220
210
240
260
070
040
050
230
1282896-2
ECM 320959

ECM: 327307 - 20080102
Group number: 1282896-0200
Assembly Drawing: 1282896-2_1_AB

Pos	Part No	UN	Qty	Description	Page No
-					
005	566196-0100		1	LID WITH WEIGHT	**2-247**
010	1282892-0000		1	TANK	
020	1040807-0000		1	LID	
030	1040808-0000		1	GASKET	
040	2806963-0000		1	PIPE	
050	1282898-0000		1	HOSE	
060	2574421-0000		1	PIPE	
070	2877593-0100		1	VALVE	**2-249**
100	90166-0087	MM	3700	HOSE 15/23 REINF.PVC TRANSP.	
110	90166-0158	MM	85	HOSE	
120	90166-0158	MM	105	HOSE	
130	90187-0059		1	BALL VALVE FOR HYDR.PER. G1/2 3MM HOLE	
140	90330-0021		1	NIPPLES, EXT. THREAD. R-207R1/2	
150	90330-0054		1	SLEEVE, INT. THREAD, NO. R-201R1/2	
160	312105-0447		4	SCREW M6S ISO 4017 M8X12 A480	
170	312105-0451		4	SCREW M6S ISO 4017 M8X20 A480	
180	312605-0316		6	HEXAGON NUT, M6M M6 A280	
190	315229-0105		1	SQUARE RING, 48,5X55,5X3,7 MM 2" FDA	
200	90030-0184		1	CONN. STR., GE06LRED71	
210	342991-0103		3	HOSE CLIP,WORM DRIVE TYPE (15)-24	
220	342991-0106		4	HOSE CLIP,WORM DRIVE TYPE (26)-38	
230	342991-0110		2	HOSE CLIP,WORM DRIVE TYPE (50)-65	
240	342901-0106		1	HOSE NIPPLE, EXT.THR. G3/8-17 MM	
250	90166-0087	MM	750	HOSE 15/23 REINF.PVC TRANSP.	
260	90144-0073		1	TREBOFLON-TAPE W=13MM	

Pos	Part No	UN	Qty	Description	Page No

Machine Type | Group Description | Used-In | Group Number | Page No

LID WITH WEIGHT

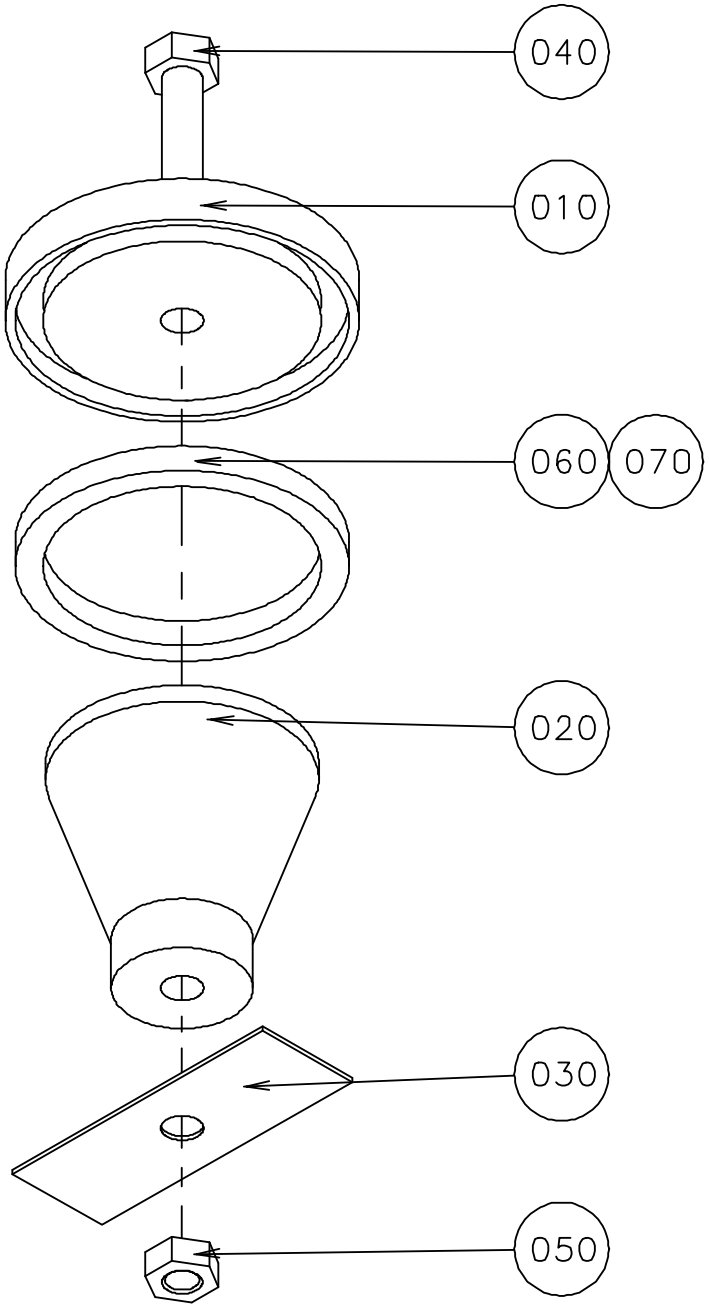

S-566196-1
ECN 70662

ECM: 385019 - 20090128
Group number: 566196-0100
Assembly Drawing: 566196-1_1_AA

Pos	Part No	UN	Qty	Description	Page No
-					
010	566195-0000		1	LID	
020	566194-0000		1	WEIGHT	
030	566171-0000		1	CUP SPRING	
040	312105-0466		1	SCREW M6S ISO 4014 M8X75 A480	
050	312605-0318		1	HEXAGON NUT, M6M M8 A280	
060	90143-0020	MM	190	STRIP	
070	90153-0023		1	ADHESIVE, SILICON 251470 TUB 90CC(UN1993	

Pos	Part No	UN	Qty	Description	Page No

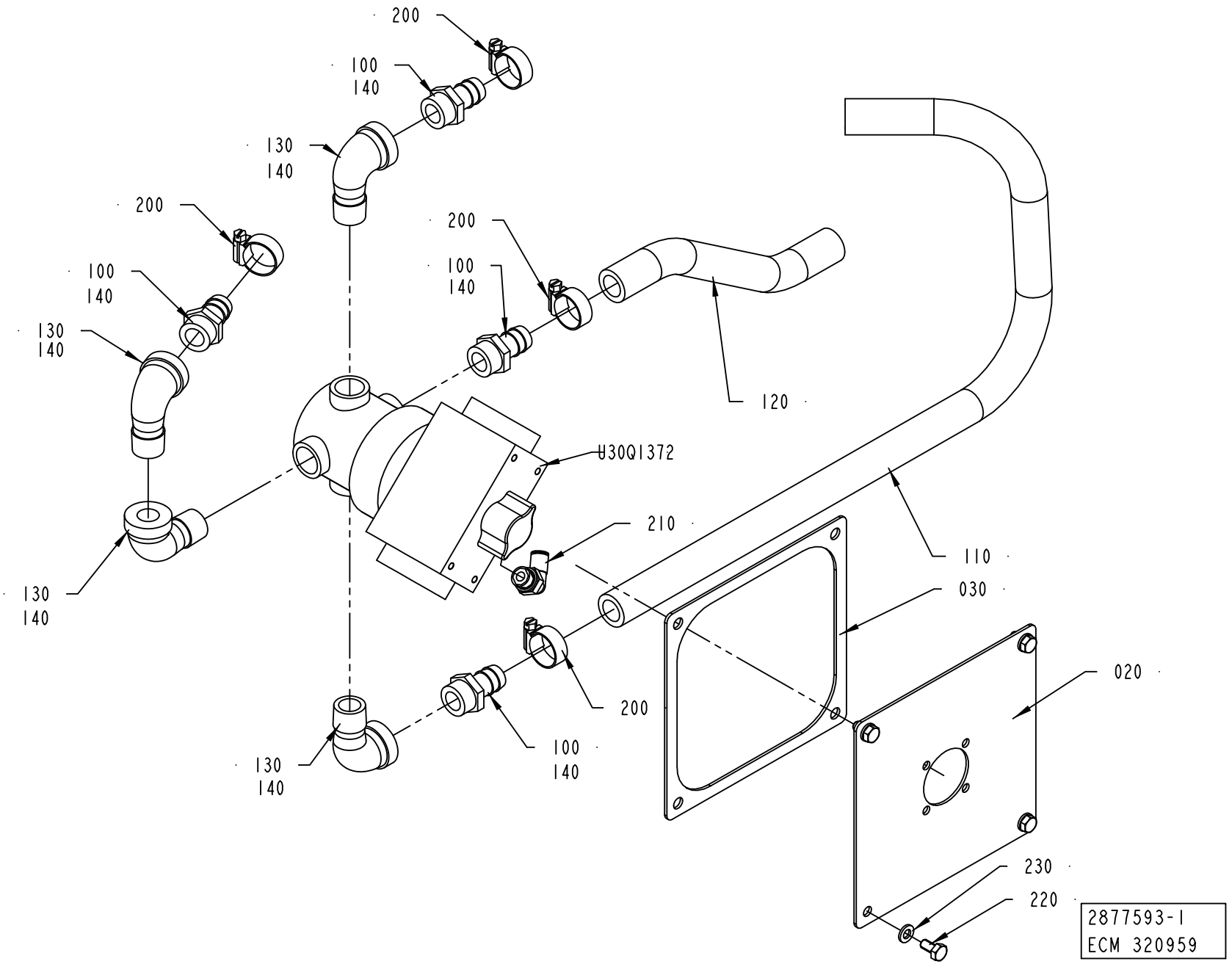
200
100
140
130
140
200
100
140
130
140
130
140
200
100
140
120
U30Q1372
210
110
030
020
200
100
140
130
140
230
220
2877593-1
ECM 320959

ECM: 471419 - 20110101
Group number: 2877593-0100
Assembly Drawing: 2877593-1_1_AB

Pos	Part No	UN	Qty	Description	Page No
-					
020	2879073-0000		1	PLATE	
030	2879536-0000		1	GASKET	
100	90163-0039		4	HOSE NIPPLE EXT.THR. G1/2-17 MM	
110	90166-0087	MM	600	HOSE 15/23 REINF.PVC TRANSP.	
120	90166-0087	MM	250	HOSE 15/23 REINF.PVC TRANSP.	
130	90330-0171		4	ELBOW, 90 INT/EXT, 1/2NPT	
140	90144-0073		1	TREBOFLON-TAPE W=13MM	
200	342991-0103		4	HOSE CLIP,WORM DRIVE TYPE (15)-24	
210	350002-0008		2	PUSH-IN L-FITTING QSL-F-G1/4-6	
220	312105-0366		4	SCREW M6S ISO 4017 M6X12 A480	
230	315105-0153		4	WASHER BRB 6,4X12 RFR	
U30Q1372	90603-1413		1	VALVE 4-WAY H2O2, 424-PP-ALL-RA4	

Pos	Part No	UN	Qty	Description	Page No

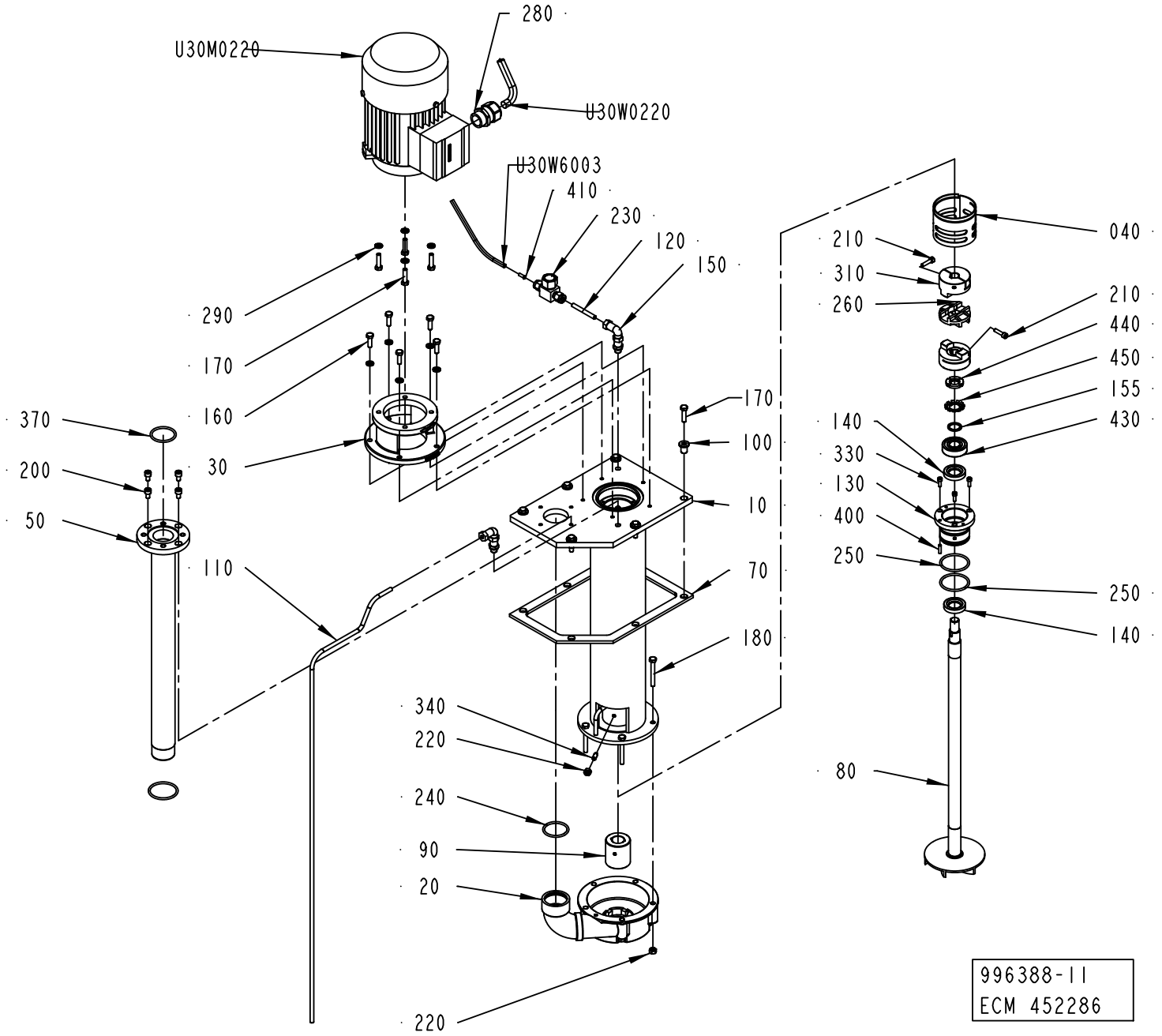
280
U30M0220
U30W0220
U30W6003
410
230
120
150
290
170
160
30
370
200
50
110
170
100
10
70
180
340
220
240
90
20
220
040
210
310
260
210
440
450
155
430
140
330
130
400
250
250
140
80
996388-11
ECM 452286

ECM: 471681 - 20110101
Group number: 996388-0800
Assembly Drawing: 996388-11_1_AB

Pos	Part No	UN	Qty	Description	Page No
-					
010	2734101-0000		1	EXTENSION PIPE	
020	2529412-0000		1	PUMP HOUSING	
030	751395-0000		1	FLANGE	
040	3051900-0000		1	COVER	
050	1040796-0000		1	PIPE	
070	1255557-0000		1	GASKET	
080	2931192-0000		1	IMPELLER WHEEL	
090	2734102-0000		1	BUSHING	
100	2564342-0000		6	SPACER	
110	2564561-0000		1	PIPE	
120	2564978-0000		1	PIPE	
130	2734104-0000		1	BUSHING	
140	90091-0412		2	SEALING RING, VARILIP 20X35X7 MM	
150	90030-0171		2	ADJUSTABLE ELBOW CONNECTION 6-G1/8	
155	2744234-0000		1	SPACER	
160	312105-0370		5	SCREW M6S ISO 4017 M6X20 A480	
170	312105-0372		10	SCREW M6S ISO 4017 M6X25 A480	
180	312109-0380		5	SCREW M6S ISO 4017 M6X50 A480	
200	312115-0364		4	SCREW ISO4762 M6X10 A4 80	
210	312115-0331		2	SCREW ISO4762 M5X20 A4 80	
220	312605-0316		7	HEXAGON NUT, M6M M6 A280	
230	90230-0064		1	CHECK VALVE, 6 MM HIGH TEMP.	
240	927422-0005		1	O-RING 36.2X3 SILICONE	
250	927422-0006		3	O-RING 42.2X3 SILICONE	
260	90458-0274		1	DISC FOR COUPLING, HUCO 236.50T	
280	90458-0440		1	GLAND, EXTENDED WITH INSERT, M25X1,5	
290	315105-0153		9	WASHER BRB 6,4X12 RFR	
310	90459-1536		2	FLEXIBLE COUPLING DISC, 14 MM	
330	312115-0291		3	SCREW ISO4762 M4X12 A4 80	
340	90287-0159		2	SCREW, SOCK.SET DOGPOINT M6X16	
370	315204-0222		1	O-RING 36,2X3 MM	
400	311103-0270		1	PARALLEL PIN ISO 2338 4M6X16 A1	
410	342706-0130		1	STIFFNER SLEEVE FOR HOSE 6X1	
430	321313-0103		1	BALL BEARING 17/40X12	
440	312805-0103		1	NUT ROUND WITH SLOTS M17X1 FE	
450	315410-0103		1	LOCK WASHER MB 3 D=17 H=1	
U30M0220	90602-9317		1	MOTOR 1LA9073-2KA12	
U30W0220	351422-0203	M	7	CABLE ÖLFLEX 150CY QUATTRO 4X1,5	
U30W6003	315300-0002		1	TUBE, 6 MM PE TRANSPARENT	

Pos	Part No	UN	Qty	Description	Page No

Machine Type | Group Description | Used-In | Group Number | Page No

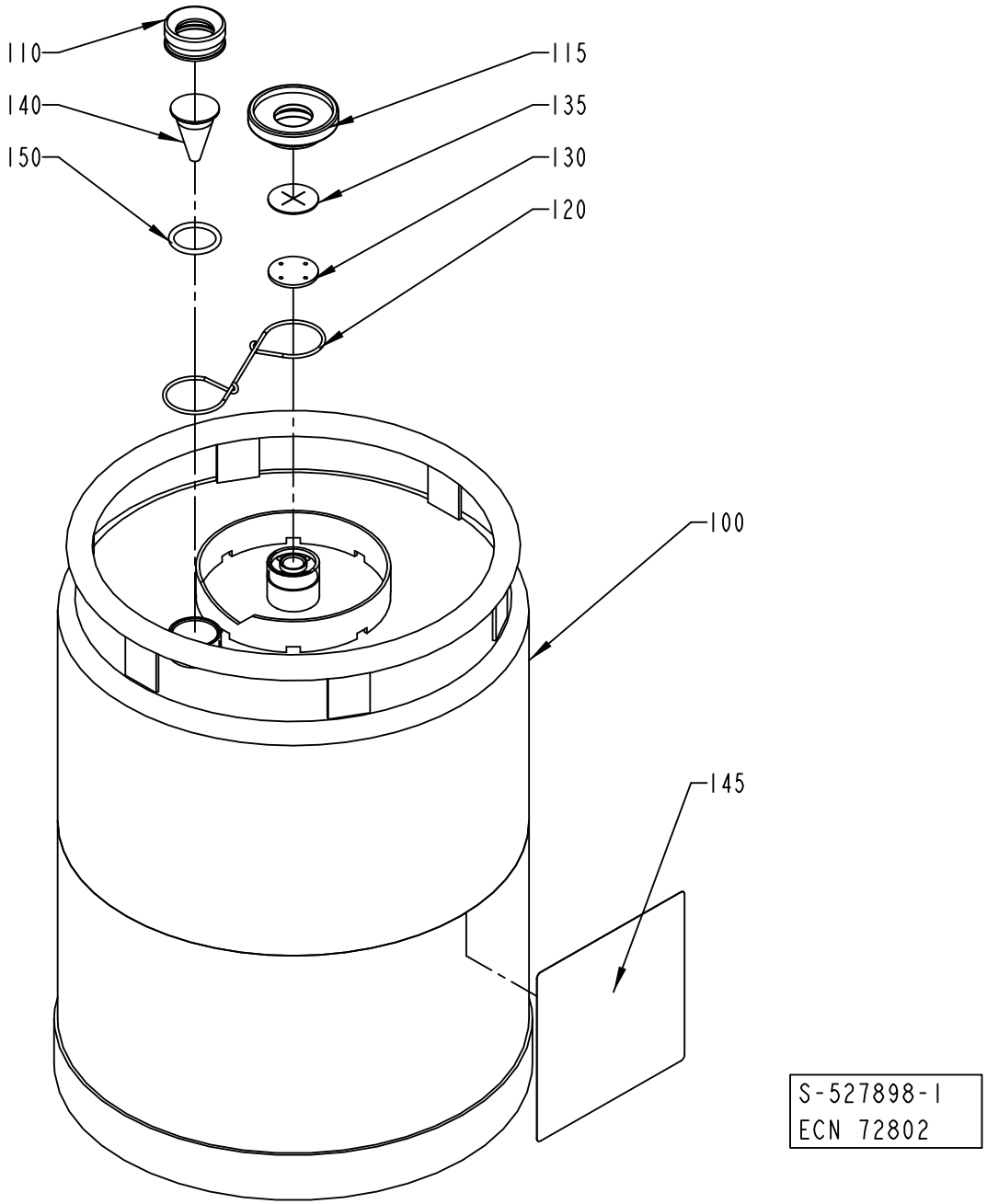
110
140
150
115
135
130
120
100
145
S-527898-I
ECN 72802

ECM: 224840 - 20050831
Group number: 527898-0100
Assembly Drawing: 527898-1_1_AB

Pos	Part No	UN	Qty	Description	Page No
-					
100	561427-0000		1	CONTAINER	
110	273977-0000		1	NUT	
115	273996-0000		1	NUT	
120	273980-0000		1	SPRING	
130	565250-0000		1	WASHER	
135	565251-0000		1	VALVE	
140	273978-0000		1	LEVEL GLAS	
145	532655-0000		1	CAUTION SIGN	
150	927422-0003		1	O.RING 24.2X3 SILICONE	

Pos	Part No	UN	Qty	Description	Page No

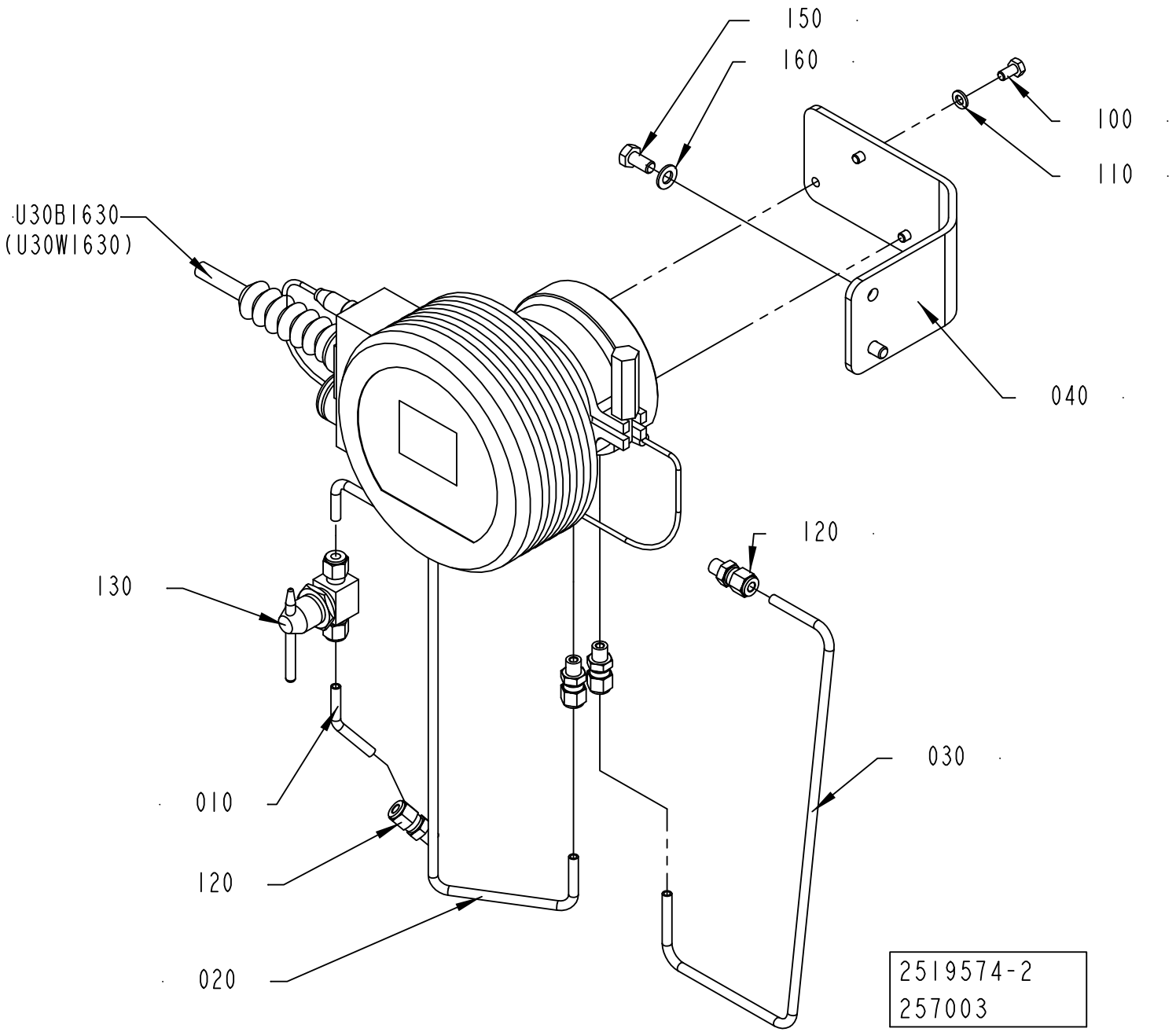
150
160
100
110
U30B1630
(U30W1630)
040
120
130
030
010
120
020
2519574-2
257003

ECM: 314493 - 20070628
Group number: 2519574-0200
Assembly Drawing: 2519574-2_1_AA

Pos	Part No	UN	Qty	Description	Page No
-					
010	2501378-0000		1	PIPE	
020	2531500-0000		1	PIPE	
030	2531501-0000		1	PIPE	
040	2519556-0000		1	BRACKET	
100	312105-0366		3	SCREW M6S ISO 4017 M6X12 A480	
110	315105-0153		3	WASHER BRB 6,4X12 RFR	
120	90458-1477		4	CONNECTOR 6-1/8 NPT, EXT. TAPERED	
130	90458-1478		1	BALL VALVE SS-43GS6MM-SH	
150	312105-0449		2	SCREW M6S ISO 4017 M8X16 A480	
160	315105-0153		2	WASHER BRB 6,4X12 RFR	
U30B1630	90458-1977		1	REFRACTOMETER SET DA15FC15A DFTP A	
	90458-1892		*1*	*GASKET A0539066 73X90,5X2 MM*	
	90458-1893		*1*	*CARTRIDGE A0111004*	
	90458-1940		*1*	*CLAMP A0515170 3" AISI 304*	
	90458-1941		*1*	*O-RING A0701180 10,82X1,78 MM*	
	90458-1943		*1*	*O-RING A0701145 53,65X2,62 MM*	
	90458-1950		*1*	*PROBE A0803021 IPT100 1/8" GAS TRIC-B*	
	90458-1976		*1*	*CABLE A0804273*	
	90458-1979		*1*	*BELLOWS A0710020*	
	90458-1980		*1*	*REFRACTOMETER DA16FC16B*	
	90458-2269		*1*	*DEFLECTOR A0808137*	

Pos	Part No	UN	Qty	Description	Page No

Machine Type	Group Description	Used-In	Group Number	Page No

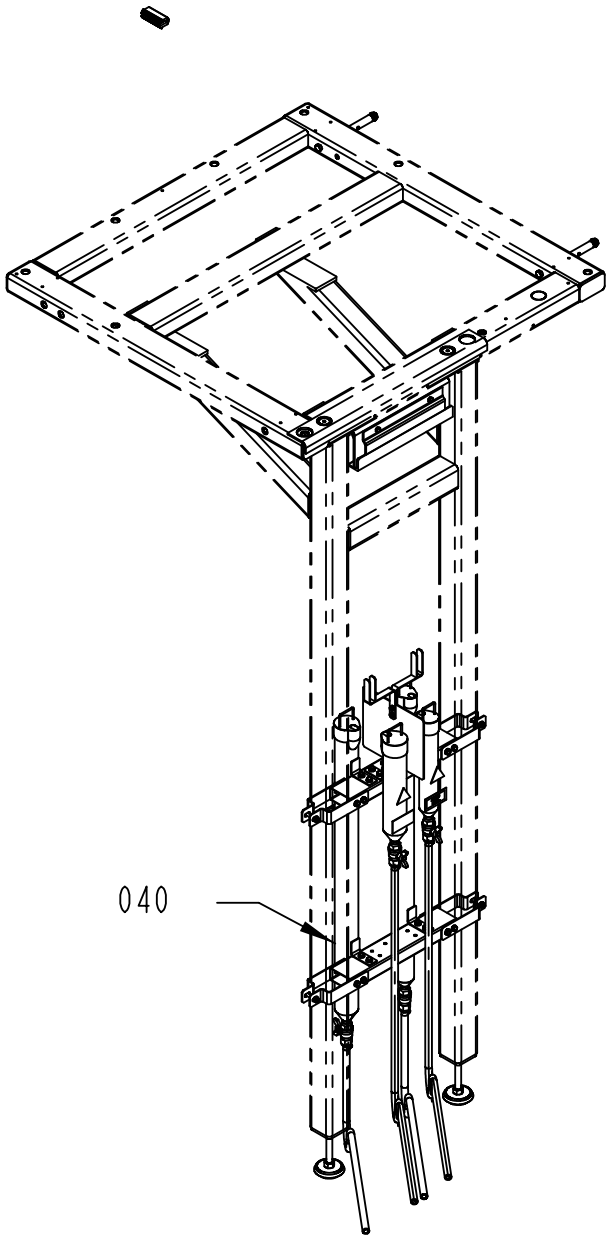
040

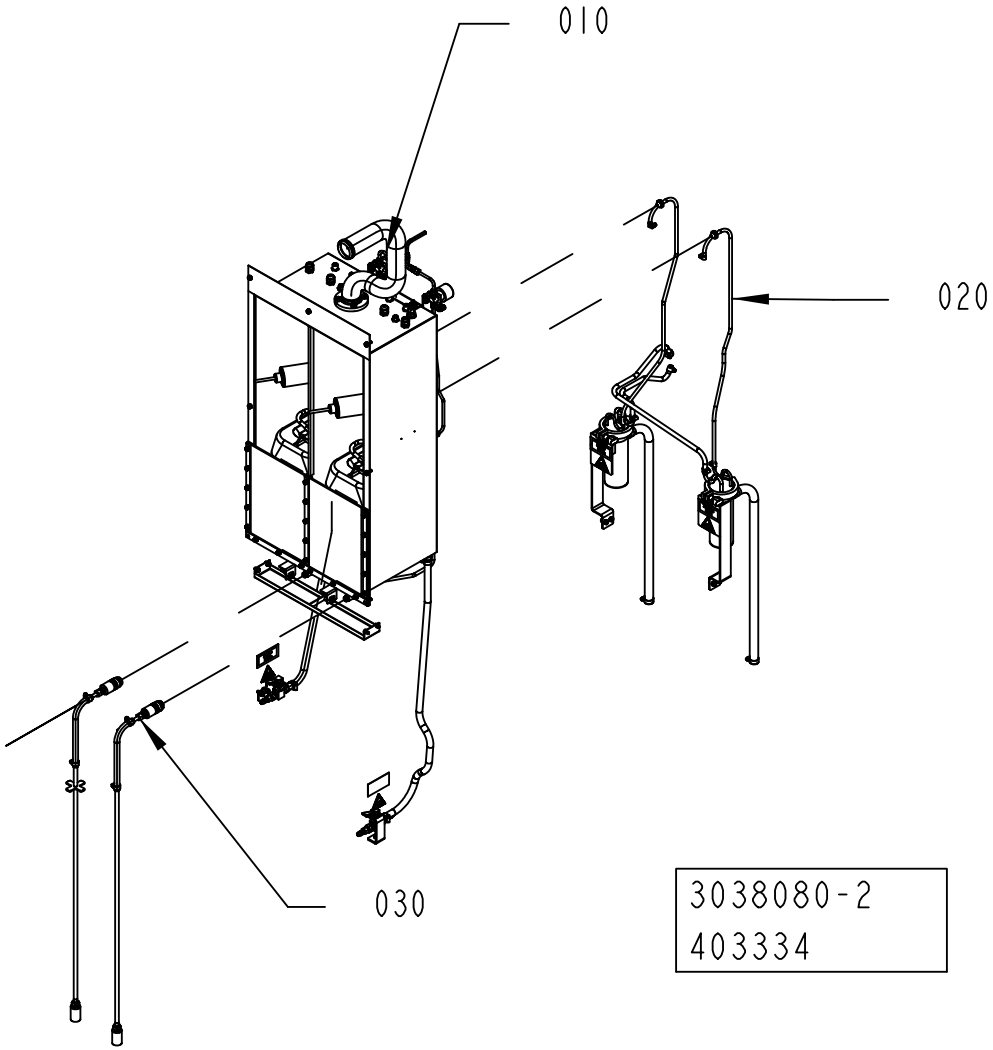
010
020
030
3038080-2
403334

ECM: 406996 - 20091001
Group number: 3038080-0200
Assembly Drawing: 3038080-2_1_AA

Pos	Part No	UN	Qty	Description	Page No
-					
010	2544326-0300		1	INTEGRATED CLEANING UNIT	**2-259, 2-261, 2-263**
020	3016357-0100		1	OVER FLOW	**2-267**
030	3038079-0100		1	REFILLING	**2-269**
040	3019127-0100		1	STORAGE	**2-271**

Pos	Part No	UN	Qty	Description	Page No

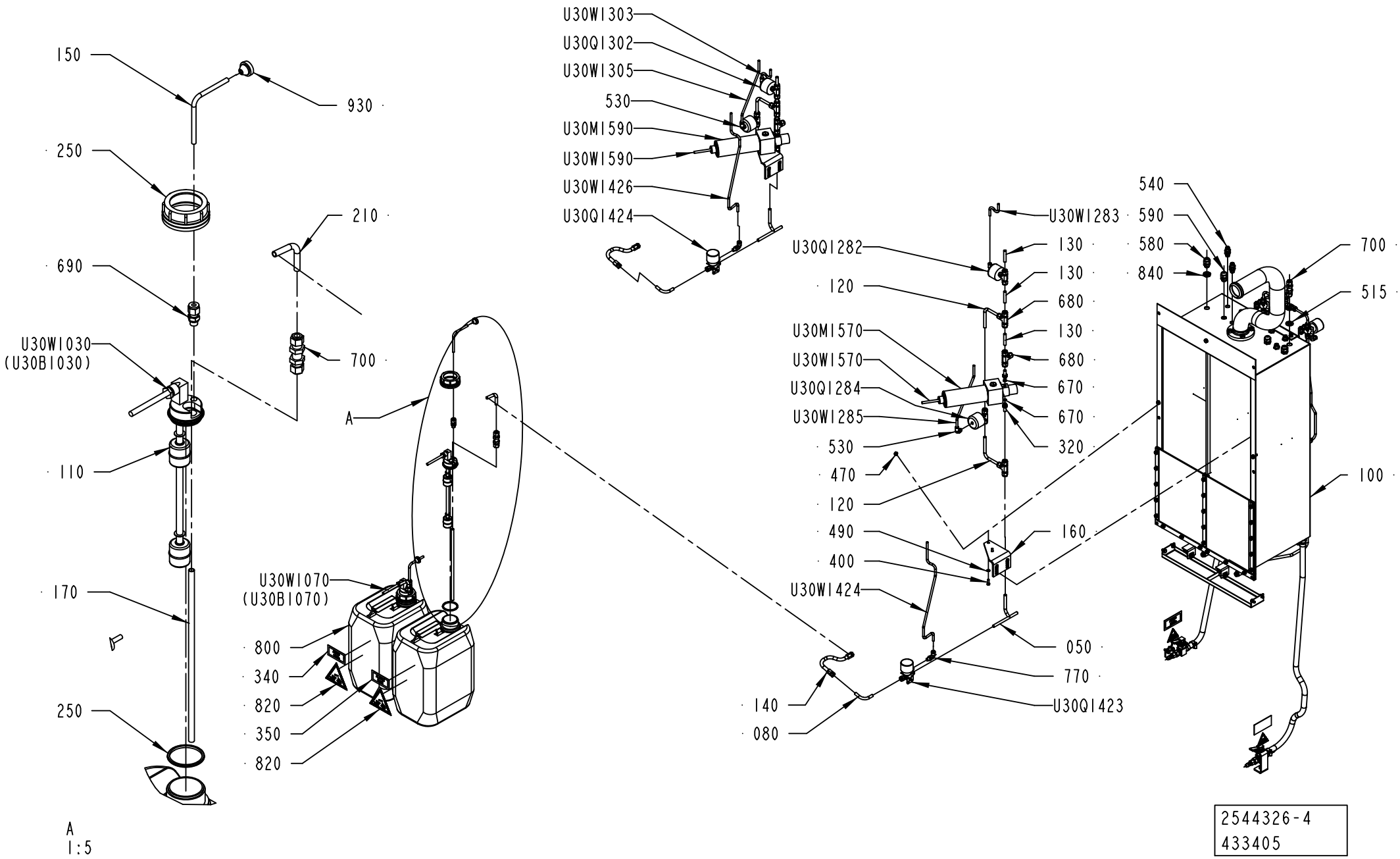
150
930
250
210
690
700
U30W1030
(U30B1030)
110
170
250
A
1:5
A
U30W1070
(U30B1070)
800
340
820
350
820
U30W1303
U30Q1302
U30W1305
530
U30M1590
U30W1590
U30W1426
U30Q1424
U30W1283
U30Q1282
130
120
130
680
U30M1570
130
U30W1570
680
U30Q1284
670
U30W1285
670
530
320
470
120
490
160
400
U30W1424
050
770
U30Q1423
140
080
540
590
580
840
700
515
100
2544326-4
433405

ECM: 454026 - 20101001
Group number: 2544326-0300
Assembly Drawing: 2544326-4_1_AC

This list covers pages from 2-258 to 2-263

Pos	Part No	UN	Qty	Description	Page No
ANSI					
810	359725-0104		2	WARNING SIGN ANSI (H), CHEMICAL HAZARD	
820	359725-0104		2	WARNING SIGN ANSI (H), CHEMICAL HAZARD	
ISO					
810	359705-0003		2	WARNING SIGN ISO, DANGEROUS CHEMICALS	
820	359705-0004		2	WARNING SIGN ISO, DANGEROUS CHEMICALS	
Common Parts					
030	2995620-0000		2	PIPE	
040	2995623-0000		2	PIPE	
050	3014801-0000		2	PIPE	
060	3018673-0000		1	SUPPORT	
080	2995619-0000		2	PIPE	
100	3038081-0000		1	BOX	
110	2544312-0000		2	FLOAT	
120	2544313-0000		4	PIPE	
130	2544314-0000		6	PIPE	
140	2559977-0000		2	HOSE	
150	3046895-0000		2	PIPE	
160	2559976-0000		2	BRACKET	
170	2544318-0000		2	PIPE	
190	2608104-0000		1	BRACKET	
200	2544321-0000		1	COVER	
210	2559978-0000		2	PIPE	
230	2544324-0000		1	PIPE	
240	2544325-0000		1	GASKET	
250	2544330-0000		2	PLUG	
260	2813203-0000		1	PIPE	
320	2559461-0000		4	SPACER	
330	2608103-0000		1	BRACKET	
340	2566211-0000		2	LABEL	
350	2566212-0000		2	LABEL	
360	2566209-0000		3	PLATE	
370	2566210-0000		1	PLATE	
380	2813204-0000		1	TANK	
390	2846319-0000		1	PIPE	
400	312105-0329		4	SCREW M6S ISO 4017 M5X16 A480	
410	312105-0289		8	SCREW M6S H4X10 A4 70 ISO4017/DIN933	
420	312105-0368		6	SCREW M6S ISO 4017 M6X16 A480	
440	312605-0312		8	HEXAGON NUT, M6M M4 A280	
450	315105-0136		8	WASHER BRB 4,3X8 RFR	
460	312105-0451		4	SCREW M6S ISO 4017 M8X20 A480	
470	312605-0316		27	HEXAGON NUT, M6M M6 A280	
480	312605-0318		4	HEXAGON NUT, M6M M8 A280	
490	315105-0146		4	WASHER BRB 5,3X10 RFR	
500	315105-0153		37	WASHER BRB 6,4X12 RFR	
510	315105-0165		4	WASHER BRB 8,4X16 RFR	
515	315105-0178		4	WASHER BRB 13X24 RFR	
520	315220-0198		1	V-RING 45X55X13 MM V-50S	
530	350002-0006		4	PUSH-IN L-FITTING QSL-F-G1/8-6	
540	350010-0002		6	PUSH-IN BULKHEAD FITTING QSS-F-6	
560	342991-0102		4	HOSE CLIP,WORM DRIVE TYPE (13)-20	
580	352103-0101		2	CABLE GLAND, ST 9, PR15,2/PG9	
590	352103-0100		2	CABLE GLAND, STR 9, PR15,2/PG9	
600	90140-0015		1	T-PIPE, INT. THREAD, 2003-1/8	
610	342921-0121		1	STRAIGHT CPLNG,EXT.THREADED 8/6-G1/8INCH	
630	90166-0198	MM	700	RUBBER HOSE	
640	90166-0198	MM	950	RUBBER HOSE	
670	315206-0506		4	O-RING 7,65X1,78 MM	
680	90459-1425		6	CONN. T-PIPE 8	
690	90459-1424		4	CONN. STR., 6-G1/8, EXT. THREAD	
700	90030-0485		4	CONN. BULKHEAD BMC8-316	
710	90459-2615		4	HOSE NIPPLE SS-6-HC-A-601	
740	90459-1430		1	QUICK-RELEASE COUPLING, SS-QTM2-D-8M0-K4	
760	90459-1427		1	QUICK-RELEASE COUPLING, SS-QTM2-D-8M0-K2	
770	90055-0158		4	ELBOW PIPE JOINT,EXT.THR,D=6 MM NPT1/8	
800	90459-0462		2	CANISTER LY 500-10	
830	90055-0051		2	HOSE NIPPLE, EXT.THR. R3/8X13 MM	
840	90099-0104		6	NUT, PR 15,2 (PG9)	
850	90144-0073	MM	1	TREBOFLON-TAPE W=13MM	
860	90600-5900		2	CONN. BULKHEAD. SS-8MO-61-6M	
880	90143-0097	M	495	SELF GRIPPING GASKET, 1011-24	
890	90459-2609		2	BALL VALVE 3/8", 6A-V6LQ-SI-SSP-ALH	
900	312105-0364		8	SCREW M6S ISO 4017 M6X10 A480	
920	90015-0023		2	LEAD-IN, TET7-10, E-1458019	
930	90015-0020		2	LEAD-IN, TET5-7, E-1458016	
U30B1020	90600-0473		1	INDUCTIVE SWITCH E2A-S08KS01-WP-B1-TP 5M	
U30B1090	90600-0473		1	INDUCTIVE SWITCH E2A-S08KS01-WP-B1-TP 5M	
U30M1570	927244-0100		1	PUMP	**2-265**
U30M1590	927244-0100		1	PUMP	**2-265**
U30Q1282	90458-2333		1	VALVE, M8A-V4LQ-KZ-11AO-SS PNEUM. OPER.	
U30Q1284	90458-2333		1	VALVE, M8A-V4LQ-KZ-11AO-SS PNEUM. OPER.	
U30Q1302	90458-2333		1	VALVE, M8A-V4LQ-KZ-11AO-SS PNEUM. OPER.	
U30Q1304	90458-2333		1	VALVE, M8A-V4LQ-KZ-11AO-SS PNEUM. OPER.	
U30Q1382	90602-0970		1	PNEUMATIC NEEDLE VALVE, SS-92S6MM-C-S1	

Machine Type | Group Description | Used-In | Group Number | Page No

INTEGRATED CLEANING UNIT

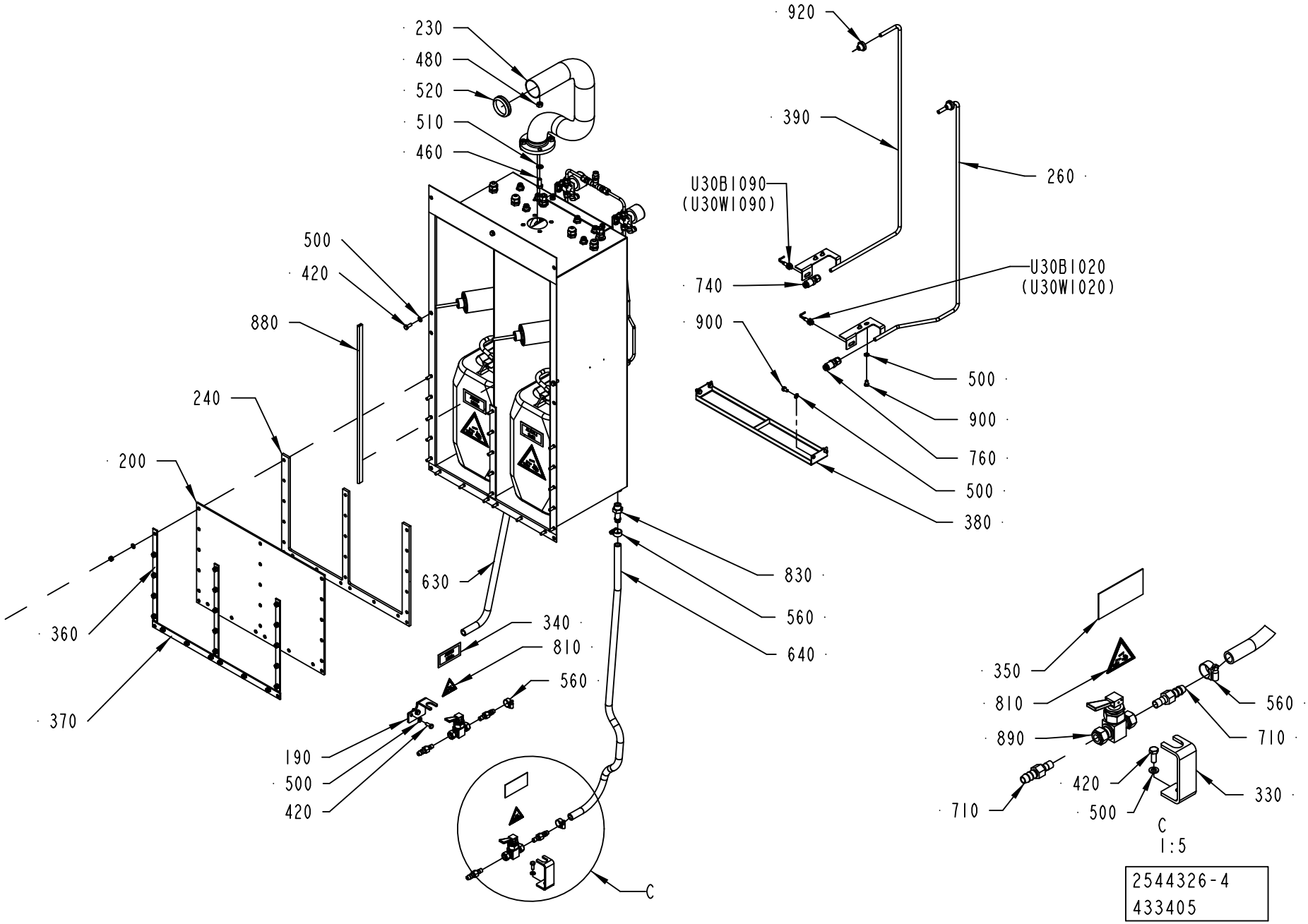

2544326-4
433405

Pos	Part No	UN	Qty	Description	Page No
Common Parts (Cont'd)					
U30Q1383	90602-0970		1	PNEUMATIC NEEDLE VALVE, SS-92S6MM-C-S1	
U30Q1423	90600-5901		1	NEEDLE VALVE FOR 8 MM,SS-92S8MM-0-SI	
U30Q1424	90600-5901		1	NEEDLE VALVE FOR 8 MM,SS-92S8MM-0-SI	
U30W1030	351150-0404	MM	5000	CABLE OLFLEX 4X0,75 MM2 LIGHT/GREY	
U30W1070	351150-0404	MM	5500	CABLE OLFLEX 4X0,75 MM2 LIGHT/GREY	
U30W1283	315300-0001	MM	210	TUBE, 6 MM PE BLUE	
U30W1285	315300-0001	MM	300	TUBE, 6 MM PE BLUE	
U30W1303	315300-0001	MM	210	TUBE, 6 MM PE BLUE	
U30W1305	315300-0001	MM	300	TUBE, 6 MM PE BLUE	
U30W1424	315300-0001	MM	450	TUBE, 6 MM PE BLUE	
U30W1426	315300-0001	MM	450	TUBE, 6 MM PE BLUE	
U30W1570	351150-0403	MM	5000	CABLE OLFLEX 3X0,75 MM2 LIGHT/GREY	
U30W1590	351150-0403	MM	5000	CABLE OLFLEX 3X0,75 MM2 LIGHT/GREY	

Pos	Part No	UN	Qty	Description	Page No

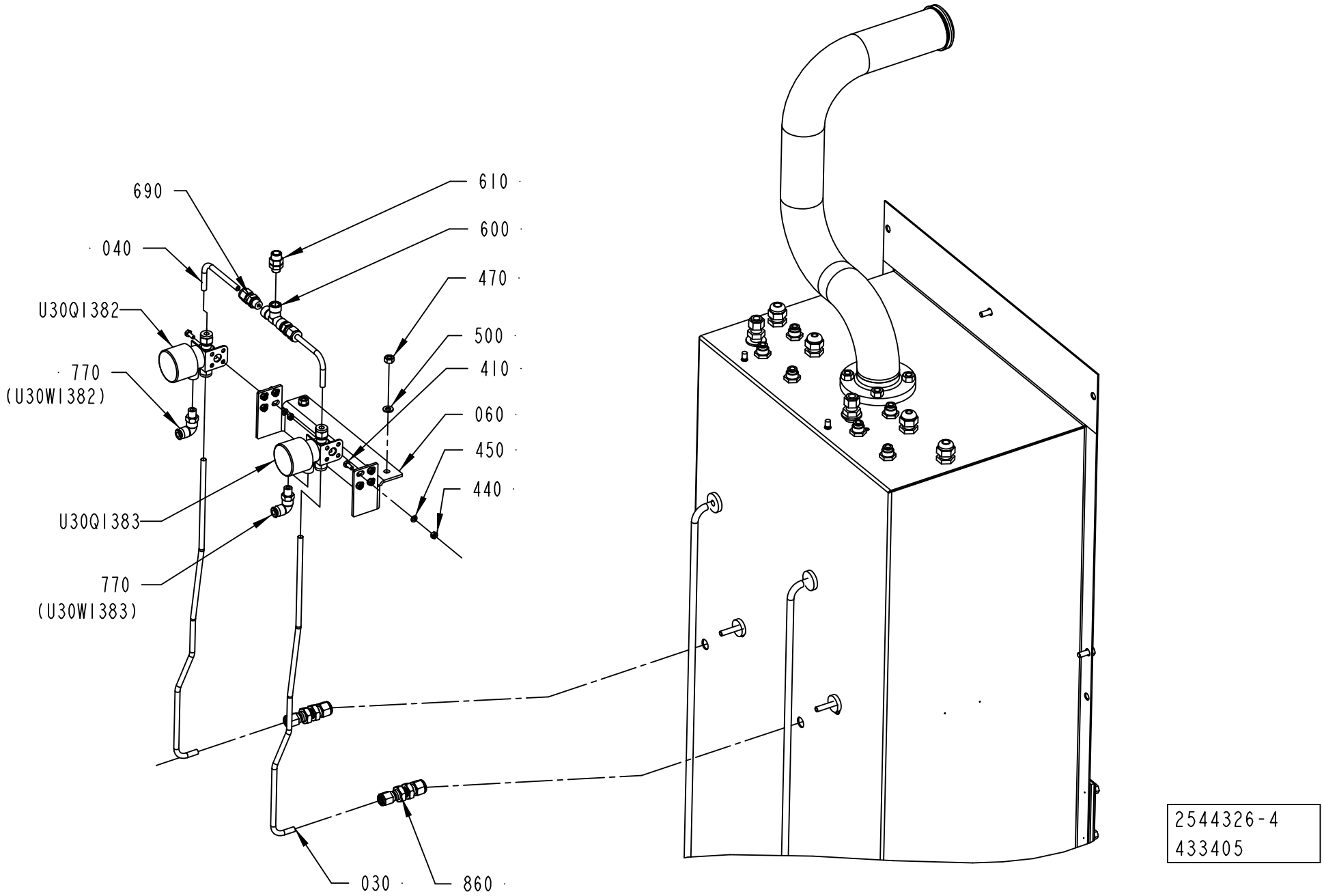
690
040
U30QI382
770
(U30WI382)
U30QI383
770
(U30WI383)
610
600
470
500
410
060
450
440
030
860
2544326-4
433405

Pos	Part No	UN	Qty	Description	Page No
SEE PREVIOUS LISTS PAGES: 2-259, 2-261.					

Pos	Part No	UN	Qty	Description	Page No

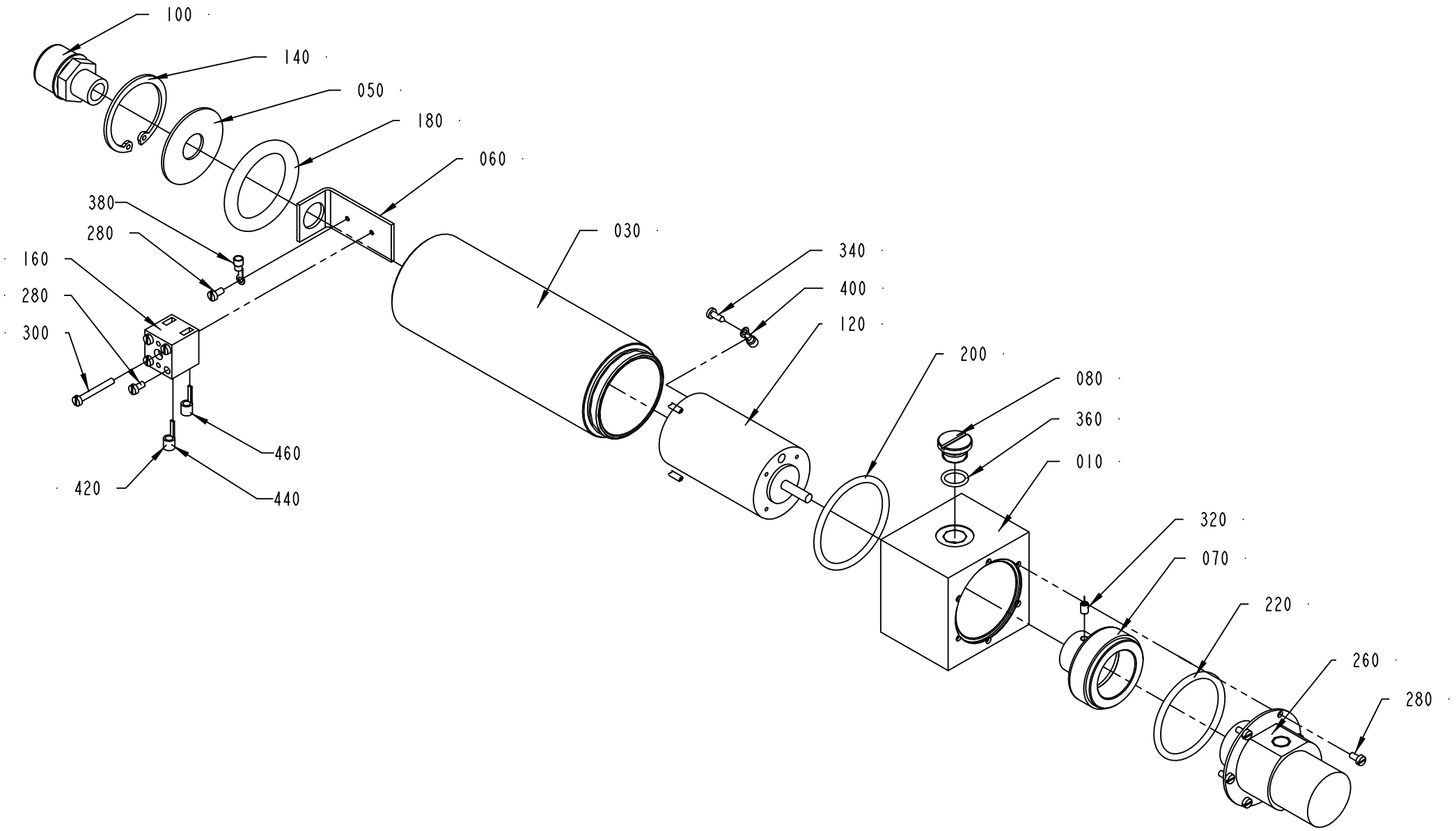

927244-1
ECN 313511

ECM: 436772 - 20100702
Group number: 927244-0100
Assembly Drawing: 927244-1_1_AB

Pos	Part No	UN	Qty	Description	Page No
-					
010	927339-0000		1	ADAPTER	
030	927342-0000		1	CYLINDER	
050	927340-0000		1	DISC	
060	927341-0000		1	HOLDER	
070	927362-0000		1	MAGNET	
080	927363-0000		1	PLUG	
100	90012-0063		1	CABLE GLAND PR 15,2	
120	90045-0162		1	MOTOR 4G42X25	
140	90141-0020		1	RETAINING RING FOR BORE DIN 472 42 SS	
160	90195-0020		1	TERMINAL BLOCK, BK 2CRN; 0624720000	
180	90242-0222		1	O-RING 45,36X3,53 MM	
200	90242-0223		1	O-RING 47,35X1,78 MM	
220	90242-0224		1	O-RING 44,17X1,78 MM	
260	90321-0102		1	PUMP, MG209XD0TT10000	
	90600-3200		*1*	*REPAIR KIT FOR MG209XTS37, KGMG209T0*	
280	312125-0220		11	SCREW ISO 1207 M3X6 A4	
300	312125-0232		1	SCREW ISO 1207 M3X25 A4	
320	312318-0285		1	SCREW ISO4029 M4X6 A4	
340	312503-0225		1	TAPPING SCREW ISO 7049-ST2,9X9,5-C-Z	
360	315202-0701		1	O-RING 10,82X1,78 MM	
380	351162-0102	MM	300	WIRE AWM 1X0,75 MM2 YELLOW-GREEN	
400	353101-0118		2	CABLE SHOE 0,5-1,5MM2 M3 RED	
420	353105-0117		2	PIN CABLE SHOE 0,75-1,5MM2 RED A1519SR	
440	359000-0101		1	WIRE MARKING, YELLOW, PY01/3"1"	
460	359000-0102		1	WIRE MARKING, YELLOW, PY01/3"2"	

Pos	Part No	UN	Qty	Description	Page No

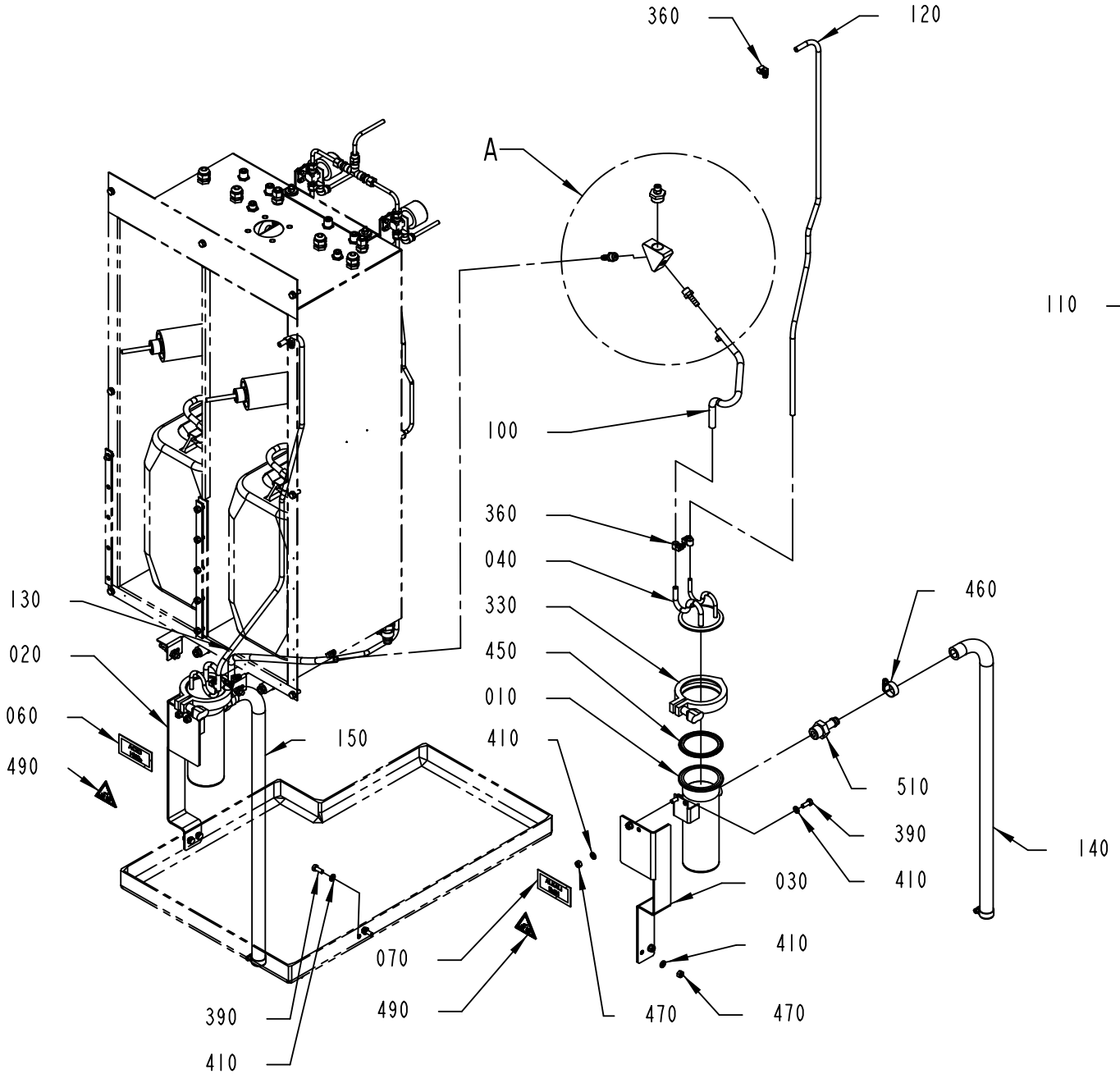

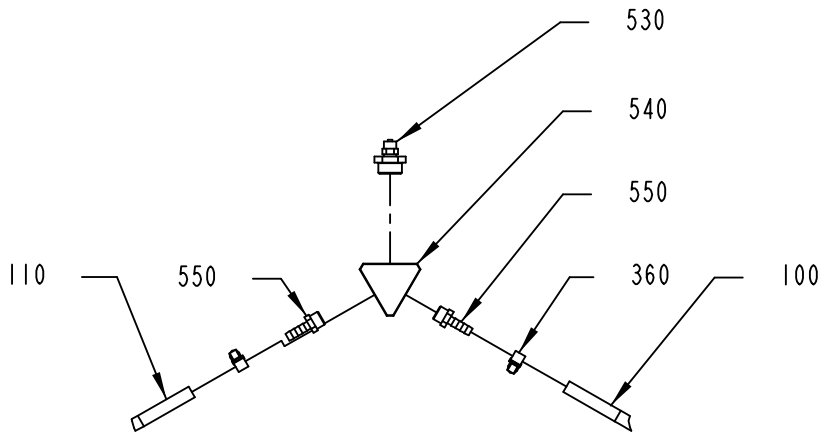

DETAIL A
SCALE 1:5

3016357-1
425165

ECM: 461417 - 20101001
Group number: 3016357-0100
Assembly Drawing: 3016357-1_1_AB

Pos	Part No	UN	Qty	Description	Page No
ANSI					
490	359725-0105		2	WARNING SIGN ANSI (V), CHEMICAL HAZARD	
ISO					
490	359705-0003		2	WARNING SIGN ISO, DANGEROUS CHEMICALS	
Common Parts					
010	3016234-0000		2	TANK	
020	3031525-0000		1	BRACKET	
030	3031046-0000		1	BRACKET	
040	3019552-0000		2	LID	
060	2566211-0000		1	LABEL	
070	2566212-0000		1	LABEL	
100	90459-1126	M	1	PLASTIC HOSE PVC TRANSPARENT, 8X11MM	
110	90459-1126	M	1.3	PLASTIC HOSE PVC TRANSPARENT, 8X11MM	
120	90166-0101	M	1	HOSE, SILICONE, 60 SHORE, 6/10 MM	
130	90166-0101	M	1	HOSE, SILICONE, 60 SHORE, 6/10 MM	
140	90166-0087	M	1.5	HOSE 15/23 REINF.PVC TRANSP.	
150	90166-0087	M	1.3	HOSE 15/23 REINF.PVC TRANSP.	
330	342840-0106		2	CLAMP, 63,5 MM 3-A PCS+PMCS	
360	90132-0021		8	HOSE CLIP 6-10MM	
390	312105-0368		8	SCREW M6S ISO 4017 M6X16 A480	
410	315105-0153		16	WASHER BRB 6,4X12 RFR	
450	342850-0206		2	GASKET 60,3X76,1X5,2 MM 21/2" FDA 3-A	
460	342991-0103		4	HOSE CLIP,WORM DRIVE TYPE (15)-24	
470	312605-0316		8	HEXAGON NUT, M6M M6 A280	
510	90055-0071		2	HOSE NIPPLE, EXT.THR. R1/2X13 MM	
520	90144-0073	MM	1	TREBOFLON-TAPE W=13MM	
530	342921-0116		1	STRAIGHT COUPLING,EXT.THREADED 6/4-G1/2"	
540	3019553-0000		1	CONNECTION	
550	90055-0132		2	HOSE NIPPLE, EXT.THR. R1/4X7,8 MM	

Pos	Part No	UN	Qty	Description	Page No

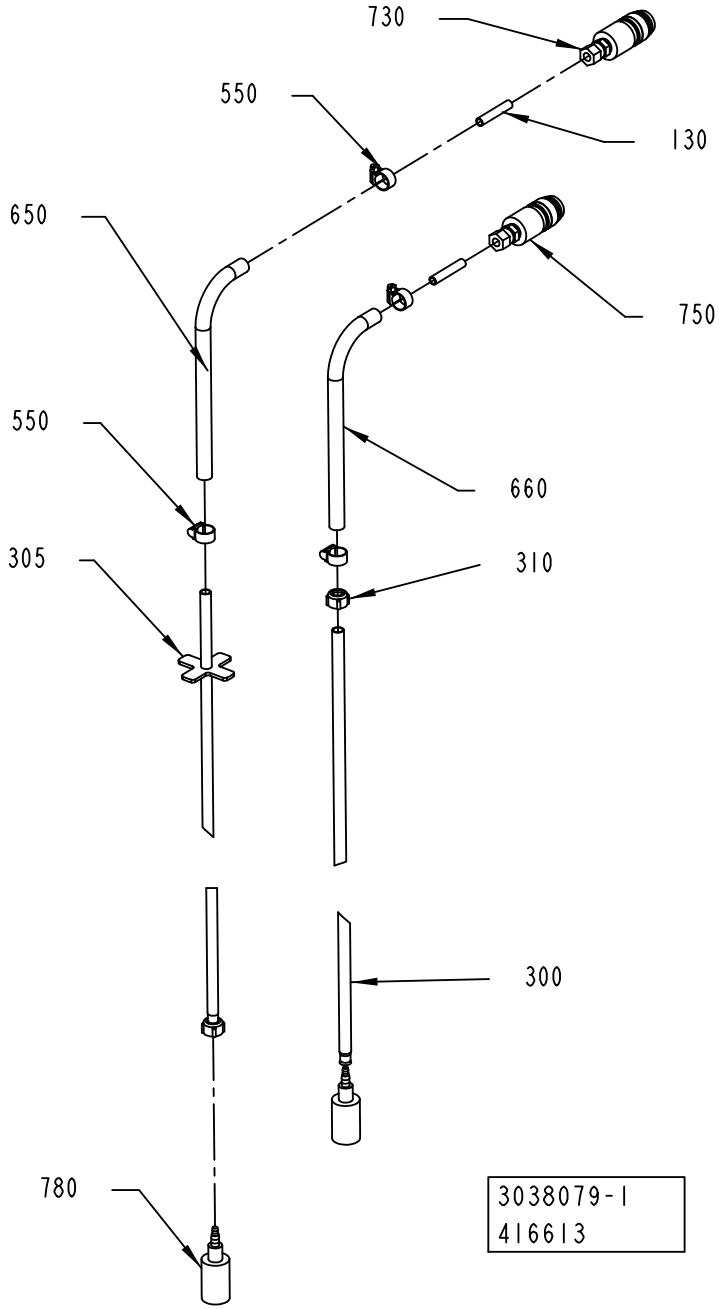
730
550
130
650
750
550
660
305
310
300
780
3038079-1
416613

ECM: 419142 - 20091009
Group number: 3038079-0100
Assembly Drawing: 3038079-1_1_AB

Pos	Part No	UN	Qty	Description	Page No
-					
130	2544314-0000		2	PIPE	
300	927262-0000		1	PIPE	
305	3019835-0000		1	PIPE	
310	928025-0000		1	PLUG	
550	342991-0101		4	HOSE CLIP,WORM DRIVE TYPE (11)-17	
650	90166-0225	M	680	HOSE	
660	90166-0225	M	680	HOSE	
730	90163-0172		1	QUICK-RELEASE COUPLING SS-QTM2A-B-8M0-K4	
750	90163-0141		1	QUICK-RELEASE COUPLING SS-QTM2A-B-8M0-K2	
780	90415-0052		2	FILTER ART NO 12565 C-340-6E FOTVENTI EP	
850	90144-0073	MM	1	TREBOFLON-TAPE W=13MM	

Pos	Part No	UN	Qty	Description	Page No

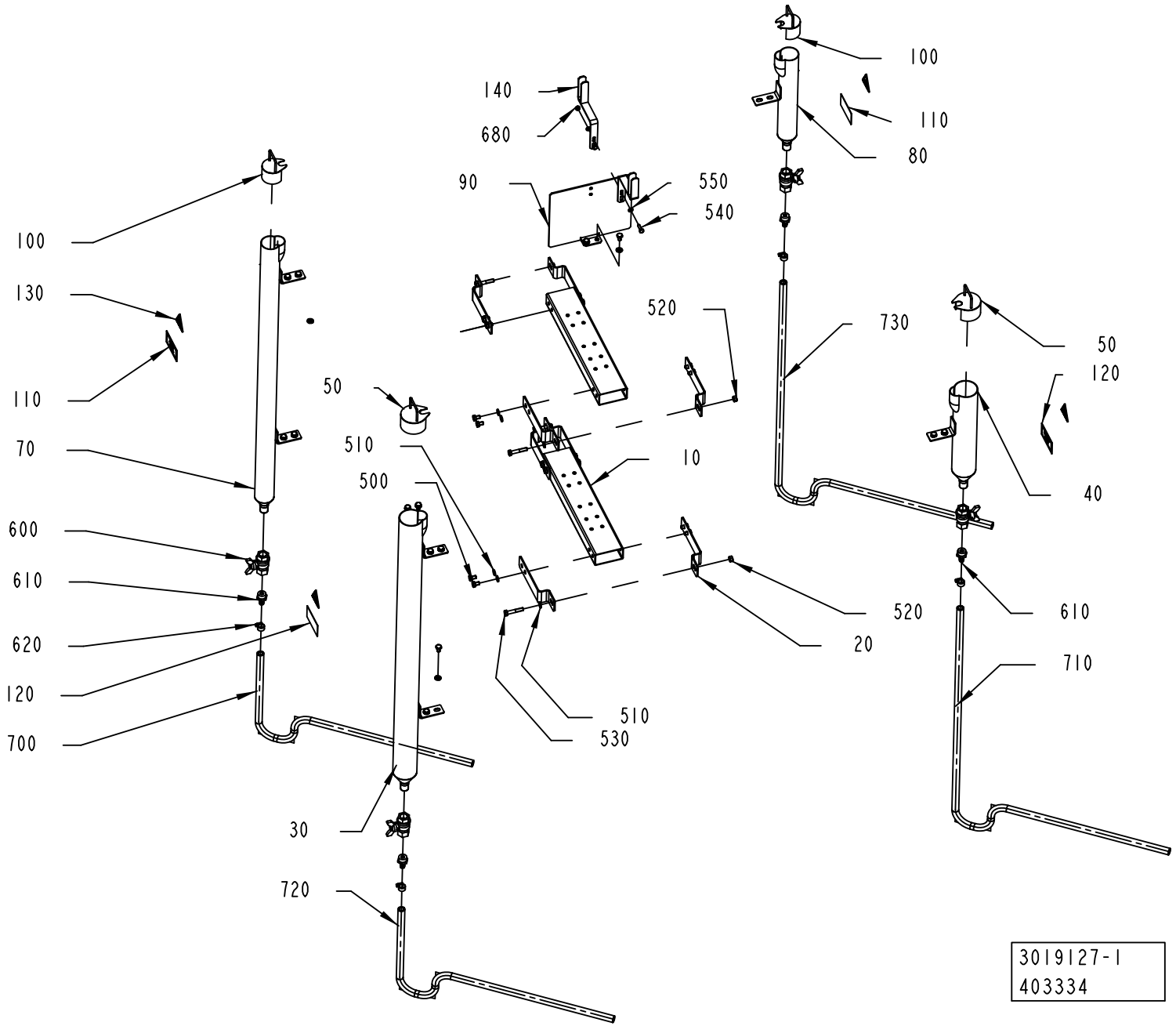
100
110
80
140
680
90
550
540
100
130
110
70
600
610
620
120
700
520
730
50
120
40
50
510
500
10
520
20
610
710
510
530
30
720
3019127-1
403334

ECM: 461418 - 20101001
Group number: 3019127-0100
Assembly Drawing: 3019127-1_1_AA

Pos	Part No	UN	Qty	Description	Page No
ANSI					
130	359725-0105		4	WARNING SIGN ANSI (V), CHEMICAL HAZARD	
ISO					
130	359705-0003		4	WARNING SIGN ISO, DANGEROUS CHEMICALS	
Common Parts					
010	3019128-0000		2	BRACKET	
020	3019129-0000		8	BRACKET	
030	3019130-0000		1	CONTAINER	
040	3019131-0000		1	CONTAINER	
050	3019132-0000		2	LID	
070	3019724-0000		1	CONTAINER	
080	3019725-0000		1	CONTAINER	
090	3019727-0000		1	PLATE	
100	3019726-0000		2	LID	
110	2566211-0000		2	LABEL	
120	2566212-0000		2	LABEL	
140	3039305-0000		2	BRACKET	
500	312105-0447		30	SCREW M6S ISO 4017 M8X12 A480	
510	315105-0165		34	WASHER BRB 8,4X16 RFR	
520	312605-0318		4	HEXAGON NUT, M6M M8 A280	
530	312105-0460		4	SCREW M6S ISO 4014 M8X45 A480	
540	312105-0370		2	SCREW M6S ISO 4017 M6X20 A480	
550	315105-0153		4	WASHER BRB 6,4X12 RFR	
600	90187-0029		4	BALL VALVE G1/2, NPBR	
610	342901-0105		4	HOSE NIPPLE, EXT.THR. G1/2-12 MM	
620	342991-0101		4	HOSE CLIP,WORM DRIVE TYPE (11)-17	
680	312605-0316		2	HEXAGON NUT, M6M M6 A280	
700	90166-0121	M	5	HOSE	
710	90166-0121	M	5	HOSE	
720	90166-0121	M	5	HOSE	
730	90166-0121	M	5	HOSE	
800	90144-0073		1	TREBOFLON-TAPE W=13MM	

Pos	Part No	UN	Qty	Description	Page No

Machine Type | Group Description | Used-In | Group Number | Page No

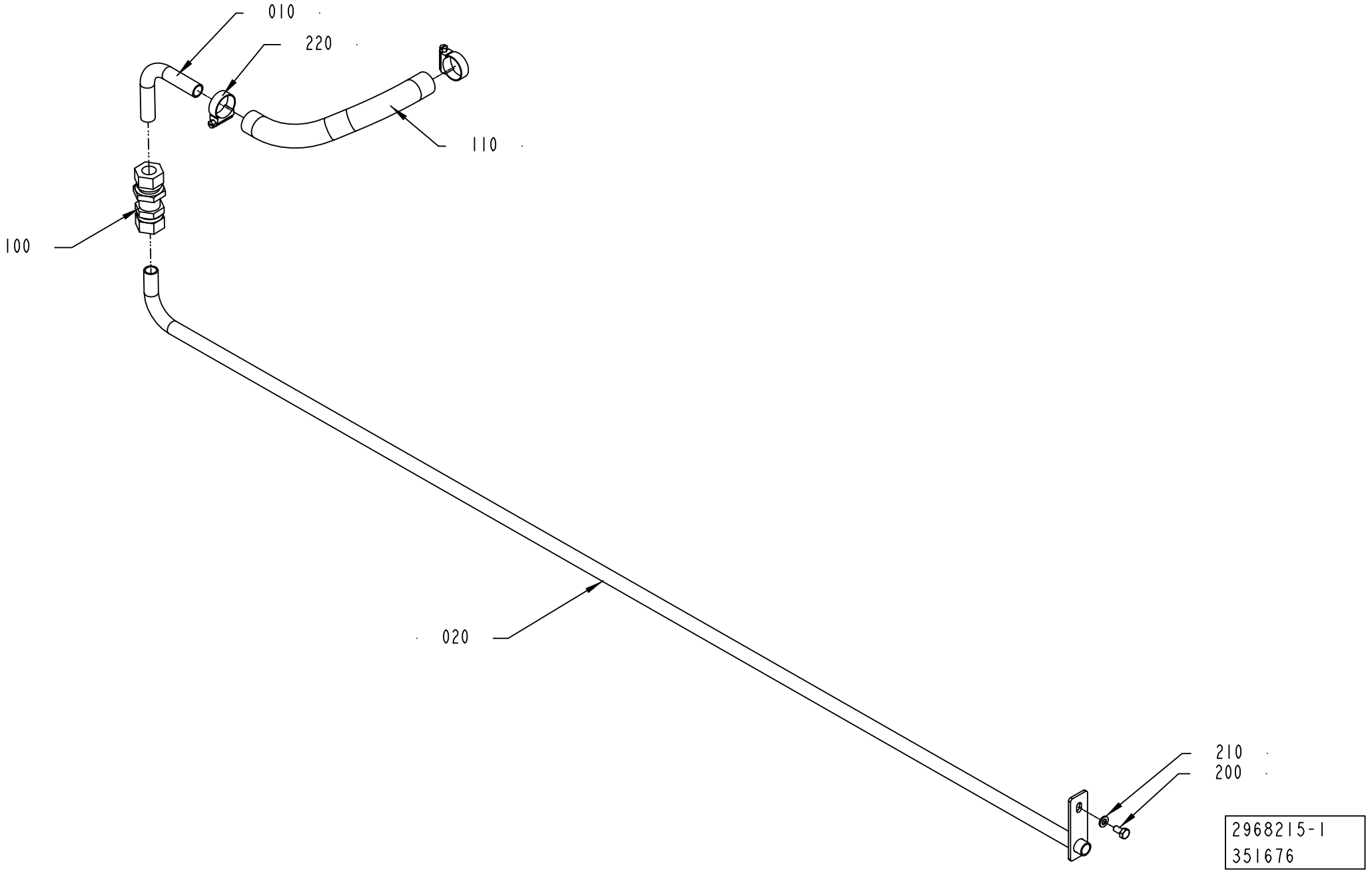
010
220
110
100
020
210
200
2968215-1
351676

ECM: 368773 - 20081027
Group number: 2968215-0100
Assembly Drawing: 2968215-1_1_AA

Pos	Part No	UN	Qty	Description	Page No
A3/SPEED					
020	2968217-0000		1	DRAIN PIPE	
Common Parts					
010	2968216-0000		1	PIPE	
100	90030-0159		1	CONN. BULKHEAD SV15L71	
110	90166-0260	MM	300	HOSE	
200	312105-0366		1	SCREW M6S ISO 4017 M6X12 A480	
210	315105-0153		1	WASHER BRB 6,4X12 RFR	
220	342991-0104		2	HOSE CLIP,WORM DRIVE TYPE (19)-28	

Pos	Part No	UN	Qty	Description	Page No

Tetra Pak

SPC
Spare Parts Catalogue

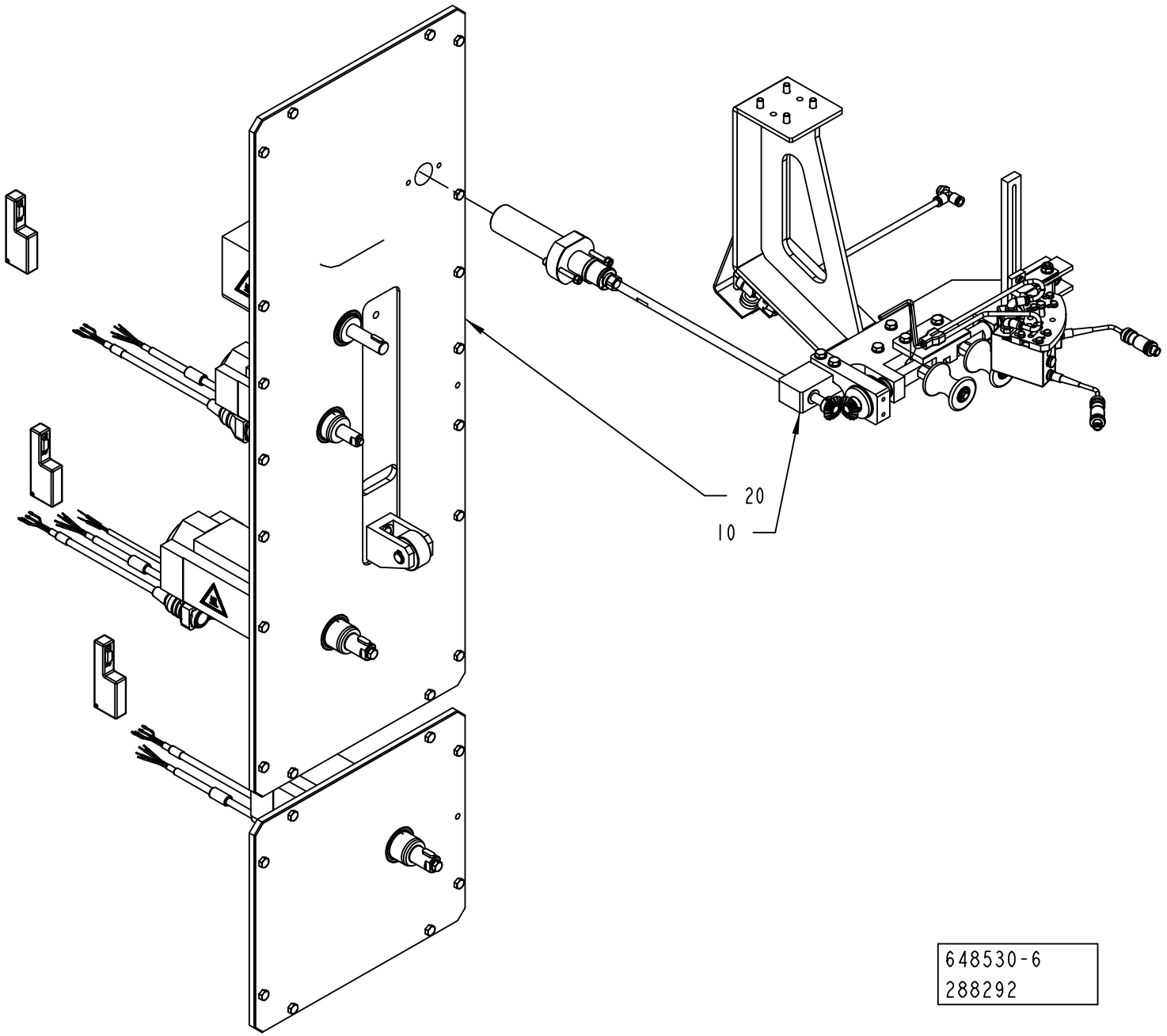
20
10
648530-6
288292

ECM: 445187 - 20100701
Group number: 648530-0400
Assembly Drawing: 648530-6_1_AA

Pos	Part No	UN	Qty	Description	Page No
-					
010	2522142-0300		1	PHOTOCELL UNIT	**3-5, 3-7, 3-9, 3-11, 3-13, 3-15**
020	2501251-0300		1	PLATE	**3-17, 3-19, 3-21, 3-23, 3-25**

Pos	Part No	UN	Qty	Description	Page No

PHOTOCELL UNIT

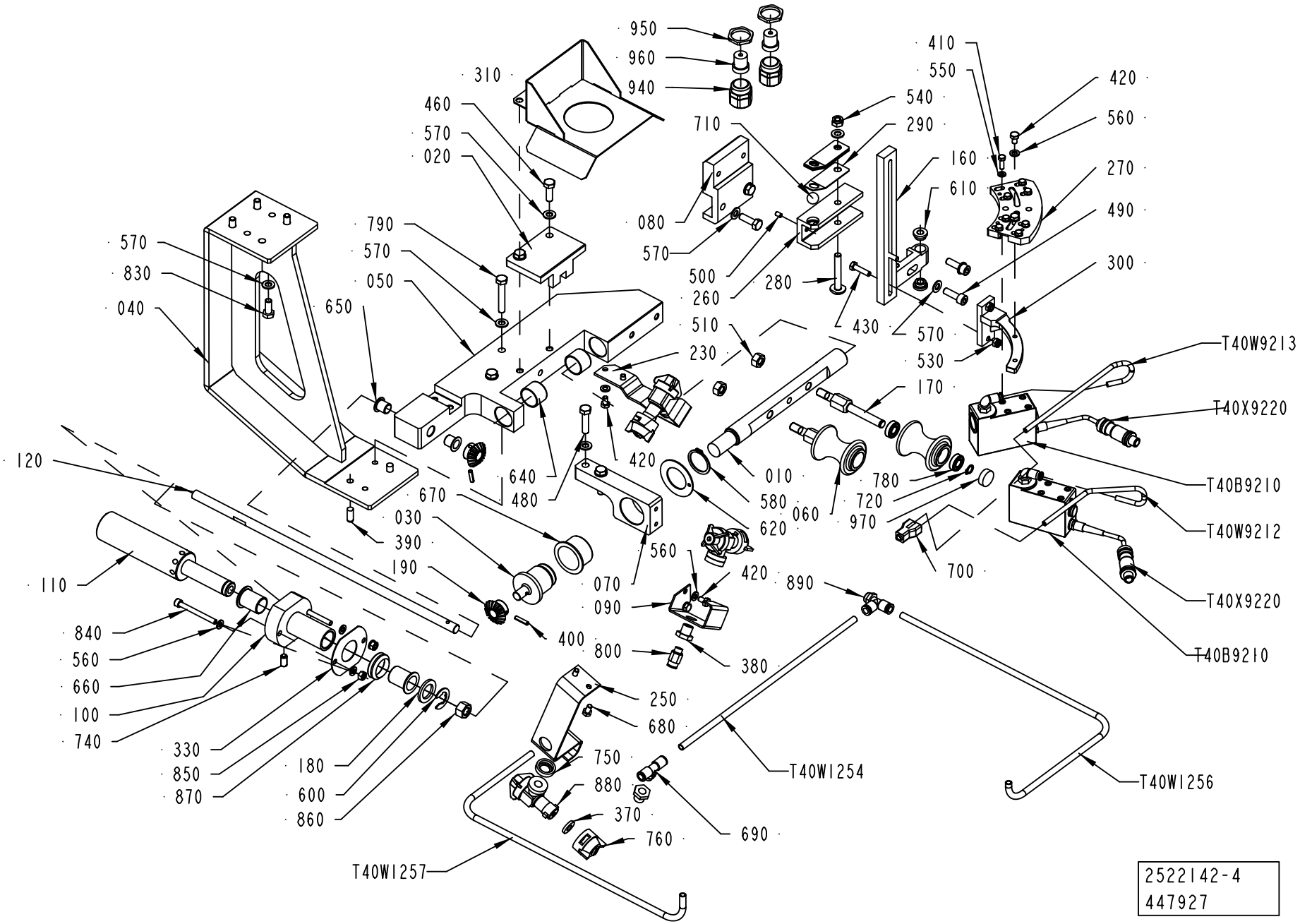

ECM: 467958 - 20110101
Group number: 2522142-0300
Assembly Drawing: 2522142-4_1_AE

This list covers pages from 3-4 to 3-15

Pos	Part No	UN	Qty	Description	Page No
TBA 0125S (See drawing on page: 3-4)					
010	2844795-0000		1	SHAFT	
020	2678307-0000		1	GUIDE	
040	2686524-0000		1	BRACKET	
060	3095686-0000		2	ROLLER	
080	2678309-0000		1	PLATE	
090	2938243-0000		1	HOLDER	
100	2504433-0000		1	BEARING HOUSING	
110	2504434-0000		1	KNOB	
120	2678303-0000		1	SHAFT	
160	2839875-0000		1	HOLDER	
170	3095689-0000		2	SHAFT	
190	2681617-0000		2	GEAR WHEEL	
230	2938245-0000		1	HOLDER	
250	2951174-0000		1	SUPPORT	
270	2889858-0000		1	FASTENING PLATE	
300	2839811-0000		1	CANTILEVER	
310	3095682-0000		1	COVER	
330	2506264-0000		1	GASKET	
370	90005-0094		3	GASKET C 19438-EPR	
380	532413-0000		3	REDUCING NIPPLE	
400	311112-0256		2	SPRING PIN, ISO 8752 4X20-C	
420	312105-0364		6	SCREW M6S ISO 4017 M6X10 A480	
430	312105-0372		2	SCREW M6S ISO 4017 M6X25 A480	
460	312105-0453		4	SCREW M6S ISO 4017 M8X25 A480	
490	312115-0453		2	SCREW ISO4762 M8X25 A4 80	
560	315105-0153		10	WASHER BRB 6,4X12 RFR	
570	315105-0165		15	WASHER BRB 8,4X16 RFR	
650	321156-0188		2	FLANGE BUSHING, IGLIDUR H370 12X14X15	
690	350007-0007		1	PUSH-IN T-FITTING QST-F-G1/8-8	
750	532414-0000		3	WASHER	
760	534310-0001		3	NOZZLE	
800	350001-0007		2	PUSH-IN FITTING QS-F-G1/8-8	
830	312105-0451		4	SCREW M6S ISO 4017 M8X20 A480	
840	312115-0382		2	SCREW ISO4762 M6X60 A4 80	
850	312605-0316		2	HEXAGON NUT, M6M M6 A280	
860	312605-0322		1	HEXAGON NUT, M6M M12 A280	
870	315220-0167		1	V-RING 27X35X10,5 MM V-30S	
880	90230-0027		3	NON-RETURN VALVE QJ 8355-1/4"	
	90230-0301		*1*	*DIAPHRAGM*	
	90230-0300		*1*	*STRAINER*	
T40W1256	90166-0133	MM	1000	TUBE 8 MM PA,TRANSP. (1 PACK=50 M)	
T40W1257	90166-0133	MM	1000	TUBE 8 MM PA,TRANSP. (1 PACK=50 M)	
TBA 0200B (See drawing on page: 3-4)					
010	2686525-0000		1	SHAFT	
020	2678307-0000		1	GUIDE	
040	2686524-0000		1	BRACKET	
060	3095684-0000		2	ROLLER	
080	2678309-0000		1	PLATE	
090	2938243-0000		1	HOLDER	
100	2504433-0000		1	BEARING HOUSING	
110	2504434-0000		1	KNOB	
120	2678303-0000		1	SHAFT	
160	2839875-0000		1	HOLDER	
170	3095689-0000		2	SHAFT	
190	2681617-0000		2	GEAR WHEEL	
230	2938245-0000		1	HOLDER	
250	2951174-0000		1	SUPPORT	
270	978735-0000		1	FASTENING PLATE	
300	2686519-0000		1	CANTILEVER	
310	3123974-0000		1	COVER	
330	2506264-0000		1	GASKET	
370	90005-0094		3	GASKET C 19438-EPR	
380	532413-0000		3	REDUCING NIPPLE	
400	311112-0256		2	SPRING PIN, ISO 8752 4X20-C	
420	312105-0364		6	SCREW M6S ISO 4017 M6X10 A480	
430	312105-0372		2	SCREW M6S ISO 4017 M6X25 A480	
460	312105-0453		4	SCREW M6S ISO 4017 M8X25 A480	
490	312115-0453		2	SCREW ISO4762 M8X25 A4 80	
560	315105-0153		10	WASHER BRB 6,4X12 RFR	
570	315105-0165		15	WASHER BRB 8,4X16 RFR	
650	321156-0188		2	FLANGE BUSHING, IGLIDUR H370 12X14X15	
690	350007-0007		1	PUSH-IN T-FITTING QST-F-G1/8-8	
750	532414-0000		3	WASHER	
760	534310-0001		3	NOZZLE	
800	350001-0007		2	PUSH-IN FITTING QS-F-G1/8-8	
830	312105-0451		4	SCREW M6S ISO 4017 M8X20 A480	
840	312115-0382		2	SCREW ISO4762 M6X60 A4 80	
850	312605-0316		2	HEXAGON NUT, M6M M6 A280	
860	312605-0322		1	HEXAGON NUT, M6M M12 A280	
870	315220-0167		1	V-RING 27X35X10,5 MM V-30S	
880	90230-0027		3	NON-RETURN VALVE QJ 8355-1/4"	
	90230-0301		*1*	*DIAPHRAGM*	
	90230-0300		*1*	*STRAINER*	

Machine Type | Group Description | Used-In | Group Number | Page No

PHOTOCELL UNIT

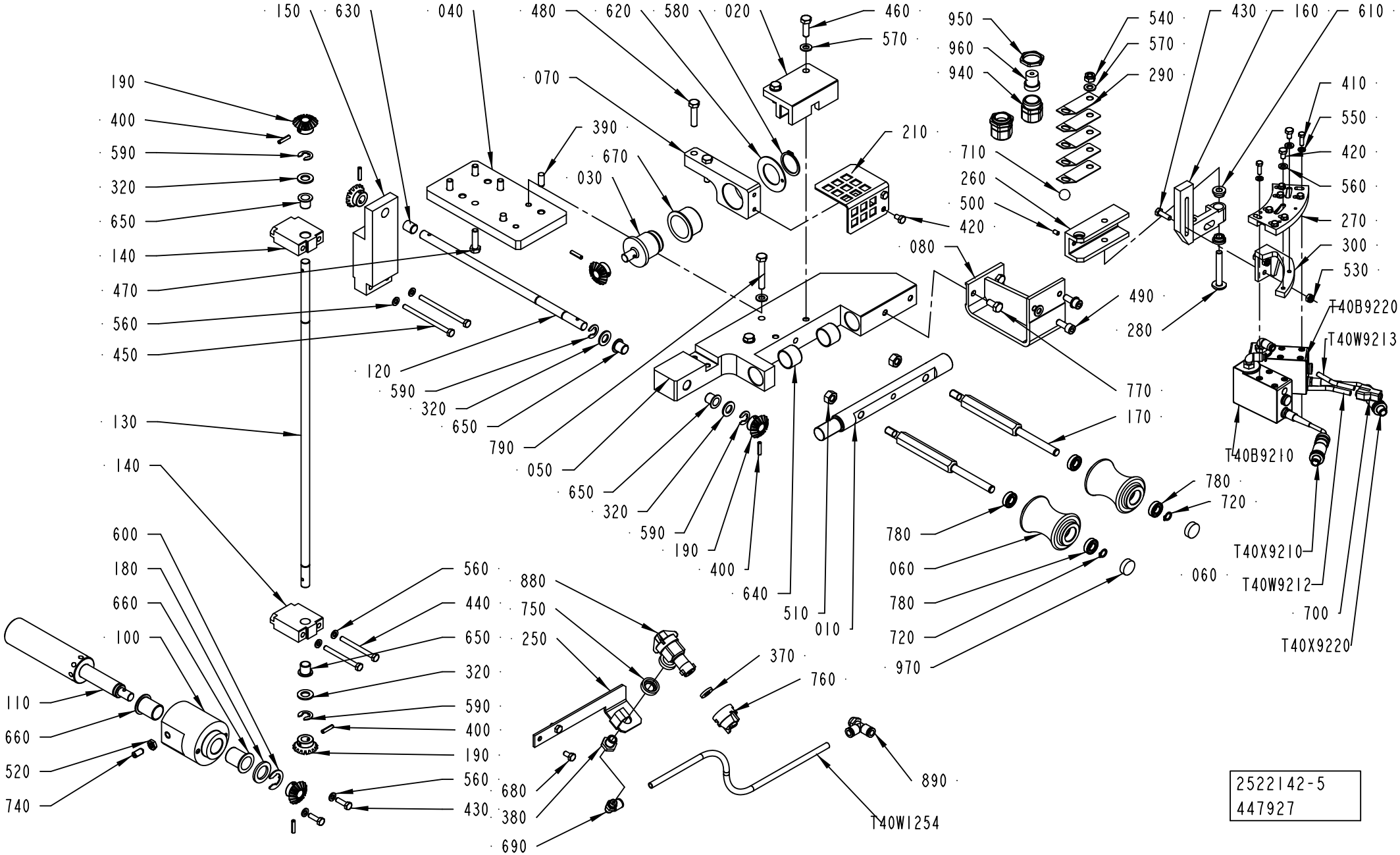

2522142-5
447927

ECM: 467958 - 20110101
Group number: 2522142-0300
Assembly Drawing: 2522142-5_1_AE

This list covers pages from 3-4 to 3-15

Pos	Part No	UN	Qty	Description	Page No
TBA 0200B (Cont'd) (See drawing on page: 3-4)					
T40W1256	90166-0133	MM	1000	TUBE 8 MM PA,TRANSP. (1 PACK=50 M)	
T40W1257	90166-0133	MM	1000	TUBE 8 MM PA,TRANSP. (1 PACK=50 M)	
TBA 0200M (See drawing on page: 3-4)					
010	2686535-0000		1	SHAFT	
020	2678307-0000		1	GUIDE	
040	2919408-0000		1	BRACKET	
060	3095685-0000		2	LLER	
080	2678309-0000		1	PLATE	
090	2938243-0000		1	HOLDER	
100	2504433-0000		1	BEARING HOUSING	
110	2504434-0000		1	KNOB	
120	2678303-0000		1	SHAFT	
160	2839875-0000		1	HOLDER	
170	3095689-0000		2	SHAFT	
190	2681617-0000		2	GEAR WHEEL	
230	2938245-0000		1	HOLDER	
250	2951174-0000		1	SUPPORT	
270	491880-0000		1	FASTENING PLATE	
300	2678305-0000		1	CANTILEVER	
310	3123973-0000		1	COVER	
330	2506264-0000		1	GASKET	
370	90005-0094		3	GASKET C 19438-EPR	
380	532413-0000		3	REDUCING NIPPLE	
400	311112-0256		2	SPRING PIN, ISO 8752 4X20-C	
420	312105-0364		6	SCREW M6S ISO 4017 M6X10 A480	
430	312105-0372		2	SCREW M6S ISO 4017 M6X25 A480	
460	312105-0453		4	SCREW M6S ISO 4017 M8X25 A480	
490	312115-0453		2	SCREW ISO4762 M8X25 A4 80	
560	315105-0153		10	WASHER BRB 6,4X12 RFR	
570	315105-0165		15	WASHER BRB 8,4X16 RFR	
650	321156-0188		2	FLANGE BUSHING, IGLIDUR H370 12X14X15	
690	350007-0007		1	PUSH-IN T-FITTING QST-F-G1/8-8	
750	532414-0000		3	WASHER	
760	534310-0001		3	NOZZLE	
800	350001-0007		2	PUSH-IN FITTING QS-F-G1/8-8	
830	312105-0451		4	SCREW M6S ISO 4017 M8X20 A480	
840	312115-0382		2	SCREW ISO4762 M6X60 A4 80	
850	312605-0316		2	HEXAGON NUT, M6M M6 A280	
860	312605-0322		1	HEXAGON NUT, M6M M12 A280	
870	315220-0167		1	V-RING 27X35X10,5 MM V-30S	
880	90230-0027		3	NON-RETURN VALVE QJ 8355-1/4"	
	90230-0301		*1*	*DIAPHRAGM*	
	90230-0300		*1*	*STRAINER*	
T40W1256	90166-0133	MM	1000	TUBE 8 MM PA,TRANSP. (1 PACK=50 M)	
T40W1257	90166-0133	MM	1000	TUBE 8 MM PA,TRANSP. (1 PACK=50 M)	
TBA 0200S (See drawing on page: 3-4)					
010	2678308-0000		1	SHAFT	
020	2678307-0000		1	GUIDE	
040	2678304-0000		1	BRACKET	
060	3048564-0000		2	ROLLER	
080	2678309-0000		1	PLATE	
090	2938243-0000		1	HOLDER	
100	2504433-0000		1	BEARING HOUSING	
110	2504434-0000		1	KNOB	
120	2678303-0000		1	SHAFT	
160	2839875-0000		1	HOLDER	
170	3095689-0000		2	SHAFT	
190	2681617-0000		2	GEAR WHEEL	
230	2938245-0000		1	HOLDER	
250	2951174-0000		1	SUPPORT	
270	491880-0000		1	FASTENING PLATE	
300	2678305-0000		1	CANTILEVER	
310	3066259-0000		1	COVER	
330	2506264-0000		1	GASKET	
370	90005-0094		3	GASKET C 19438-EPR	
380	532413-0000		3	REDUCING NIPPLE	
400	311112-0256		2	SPRING PIN, ISO 8752 4X20-C	
420	312105-0364		6	SCREW M6S ISO 4017 M6X10 A480	
430	312105-0372		2	SCREW M6S ISO 4017 M6X25 A480	
460	312105-0453		4	SCREW M6S ISO 4017 M8X25 A480	
490	312115-0453		2	SCREW ISO4762 M8X25 A4 80	
560	315105-0153		10	WASHER BRB 6,4X12 RFR	
570	315105-0165		15	WASHER BRB 8,4X16 RFR	
650	321156-0188		2	FLANGE BUSHING, IGLIDUR H370 12X14X15	
690	350007-0007		1	PUSH-IN T-FITTING QST-F-G1/8-8	
750	532414-0000		3	WASHER	
760	534310-0001		3	NOZZLE	
800	350001-0007		2	PUSH-IN FITTING QS-F-G1/8-8	
830	312105-0451		4	SCREW M6S ISO 4017 M8X20 A480	
840	312115-0382		2	SCREW ISO4762 M6X60 A4 80	
850	312605-0316		2	HEXAGON NUT, M6M M6 A280	
860	312605-0322		1	HEXAGON NUT, M6M M12 A280	
870	315220-0167		1	V-RING 27X35X10,5 MM V-30S	

Machine Type | Group Description | Used-In | Group Number | Page No

PHOTOCELL UNIT

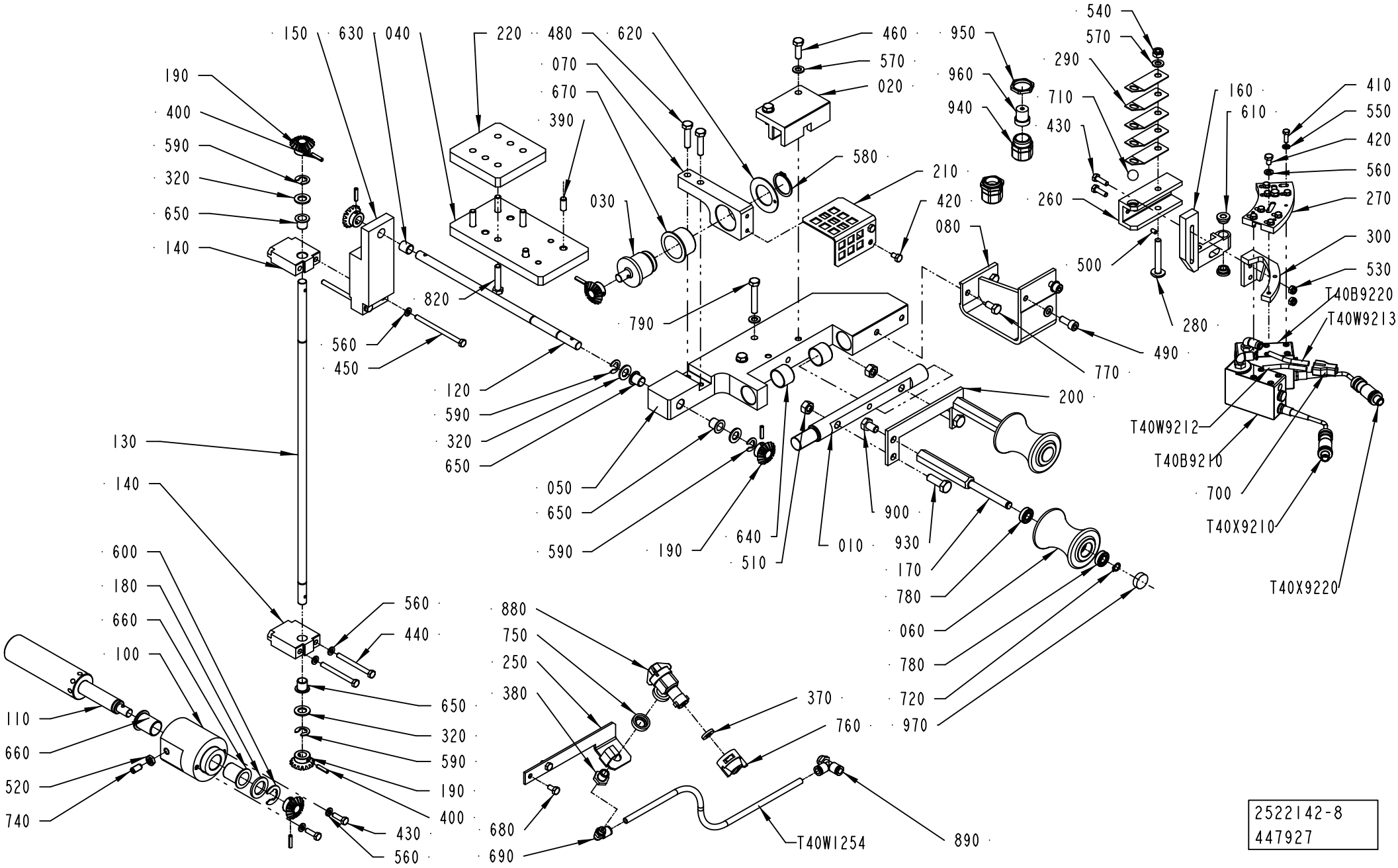

2522142-8
447927

ECM: 467958 - 20110101
Group number: 2522142-0300
Assembly Drawing: 2522142-8_1_AE

This list covers pages from 3-4 to 3-15

Pos	Part No	UN	Qty	Description	Page No
TBA 0200S (Cont'd) (See drawing on page: 3-4)					
880	90230-0027		3	NON-RETURN VALVE QJ 8355-1/4"	
	90230-0301		*1*	*DIAPHRAGM*	
	90230-0300		*1*	*STRAINER*	
T40W1256	90166-0133	MM	1000	TUBE 8 MM PA,TRANSP. (1 PACK=50 M)	
T40W1257	90166-0133	MM	1000	TUBE 8 MM PA,TRANSP. (1 PACK=50 M)	
TBA 0250B (See drawing on page: 3-4)					
010	2686525-0000		1	SHAFT	
020	2678307-0000		1	GUIDE	
040	2686527-0000		1	BRACKET	
060	3095684-0000		2	ROLLER	
080	2678309-0000		1	PLATE	
090	2938243-0000		1	HOLDER	
100	2504433-0000		1	BEARING HOUSING	
110	2504434-0000		1	KNOB	
120	2678303-0000		1	SHAFT	
160	2839875-0000		1	HOLDER	
170	3095689-0000		2	SHAFT	
190	2681617-0000		2	GEAR WHEEL	
230	2938245-0000		1	HOLDER	
250	2951174-0000		1	SUPPORT	
270	978735-0000		1	FASTENING PLATE	
300	2686519-0000		1	CANTILEVER	
310	3123974-0000		1	COVER	
330	2506264-0000		1	GASKET	
370	90005-0094		3	GASKET C 19438-EPR	
380	532413-0000		3	REDUCING NIPPLE	
400	311112-0256		2	SPRING PIN, ISO 8752 4X20-C	
420	312105-0364		6	SCREW M6S ISO 4017 M6X10 A480	
430	312105-0372		2	SCREW M6S ISO 4017 M6X25 A480	
460	312105-0453		4	SCREW M6S ISO 4017 M8X25 A480	
490	312115-0453		2	SCREW ISO4762 M8X25 A4 80	
560	315105-0153		10	WASHER BRB 6,4X12 RFR	
570	315105-0165		15	WASHER BRB 8,4X16 RFR	
650	321156-0188		2	FLANGE BUSHING, IGLIDUR H370 12X14X15	
690	350007-0007		1	PUSH-IN T-FITTING QST-F-G1/8-8	
750	532414-0000		3	WASHER	
760	534310-0001		3	NOZZLE	
800	350001-0007		2	PUSH-IN FITTING QS-F-G1/8-8	
830	312105-0451		4	SCREW M6S ISO 4017 M8X20 A480	
840	312115-0382		2	SCREW ISO4762 M6X60 A4 80	
850	312605-0316		2	HEXAGON NUT, M6M M6 A280	
860	312605-0322		1	HEXAGON NUT, M6M M12 A280	
870	315220-0167		1	V-RING 27X35X10,5 MM V-30S	
880	90230-0027		3	NON-RETURN VALVE QJ 8355-1/4"	
	90230-0301		*1*	*DIAPHRAGM*	
	90230-0300		*1*	*STRAINER*	
T40W1256	90166-0133	MM	1000	TUBE 8 MM PA,TRANSP. (1 PACK=50 M)	
T40W1257	90166-0133	MM	1000	TUBE 8 MM PA,TRANSP. (1 PACK=50 M)	
TBA 0250S (See drawing on page: 3-4)					
010	2686535-0000		1	SHAFT	
020	2678307-0000		1	GUIDE	
040	2686542-0000		1	BRACKET	
060	3095685-0000		2	LLER	
080	2678309-0000		1	PLATE	
090	2938243-0000		1	HOLDER	
100	2504433-0000		1	BEARING HOUSING	
110	2504434-0000		1	KNOB	
120	2678303-0000		1	SHAFT	
160	2839875-0000		1	HOLDER	
170	3095689-0000		2	SHAFT	
190	2681617-0000		2	GEAR WHEEL	
230	2938245-0000		1	HOLDER	
250	2951174-0000		1	SUPPORT	
270	491880-0000		1	FASTENING PLATE	
300	2678305-0000		1	CANTILEVER	
310	3123973-0000		1	COVER	
330	2506264-0000		1	GASKET	
370	90005-0094		3	GASKET C 19438-EPR	
380	532413-0000		3	REDUCING NIPPLE	
400	311112-0256		2	SPRING PIN, ISO 8752 4X20-C	
420	312105-0364		6	SCREW M6S ISO 4017 M6X10 A480	
430	312105-0372		2	SCREW M6S ISO 4017 M6X25 A480	
460	312105-0453		4	SCREW M6S ISO 4017 M8X25 A480	
490	312115-0453		2	SCREW ISO4762 M8X25 A4 80	
560	315105-0153		10	WASHER BRB 6,4X12 RFR	
570	315105-0165		15	WASHER BRB 8,4X16 RFR	
650	321156-0188		2	FLANGE BUSHING, IGLIDUR H370 12X14X15	
690	350007-0007		1	PUSH-IN T-FITTING QST-F-G1/8-8	
750	532414-0000		3	WASHER	
760	534310-0001		3	NOZZLE	
800	350001-0007		2	PUSH-IN FITTING QS-F-G1/8-8	
830	312105-0451		4	SCREW M6S ISO 4017 M8X20 A480	
840	312115-0382		2	SCREW ISO4762 M6X60 A4 80	

Machine Type | Group Description | Used-In | Group Number | Page No

See previous drawings pages: 3-4, 3-6, 3-8.

ECM: 467958 - 20110101
Group number: 2522142-0300
Assembly Drawing: 2522142-8_1_AE

This list covers pages from 3-4 to 3-15

Pos	Part No	UN	Qty	Description	Page No
TBA 0250S (Cont'd) (See drawing on page: 3-4)					
850	312605-0316		2	HEXAGON NUT, M6M M6 A280	
860	312605-0322		1	HEXAGON NUT, M6M M12 A280	
870	315220-0167		1	V-RING 27X35X10,5 MM V-30S	
880	90230-0027		3	NON-RETURN VALVE QJ 8355-1/4"	
	90230-0301		*1*	*DIAPHRAGM*	
	90230-0300		*1*	*STRAINER*	
T40W1256	90166-0133	MM	1000	TUBE 8 MM PA,TRANSP. (1 PACK=50 M)	
T40W1257	90166-0133	MM	1000	TUBE 8 MM PA,TRANSP. (1 PACK=50 M)	
TBA 1000B (See drawing on page: 3-6)					
010	2514540-0000		1	SHAFT	
020	2514541-0000		1	SPACER	
040	2760360-0000		1	BRACKET	
060	3095690-0000		2	ROLLER	
080	2959902-0000		1	HOLDER	
100	2533662-0000		1	HOLDER	
110	2533663-0000		1	KNOB	
120	2958105-0000		1	SHAFT	
130	2574520-0000		1	SHAFT	
140	2533721-0000		2	BRACKET	
150	2574521-0000		1	BRACKET	
160	2533723-0000		1	HOLDER	
170	3095688-0000		2	SHAFT	
190	2681617-0000		6	GEAR WHEEL	
210	2958126-0000		1	COVER	
250	2936355-0000		1	BRACKET	
270	457364-0000		1	PLATE RIGHT	
300	457361-0000		1	CANTILEVER	
320	1064420-0000		4	WASHER	
370	90005-0094		1	GASKET C 19438-EPR	
380	532413-0000		1	REDUCING NIPPLE	
400	311112-0256		6	SPRING PIN, ISO 8752 4X20-C	
420	312105-0364		4	SCREW M6S ISO 4017 M6X10 A480	
430	312105-0370		4	SCREW M6S ISO 4017 M6X20 A480	
440	312105-0383		2	SCREW M6S ISO 4014 M6X65 A480	
450	312105-0388		2	SCREW M6S ISO 4014 M6X90 A480	
460	312105-0453		2	SCREW M6S ISO 4017 M8X25 A480	
470	312105-0449		4	SCREW M6S ISO 4017 M8X16 A480	
490	312115-0451		2	SCREW ISO4762 M8X20 A4 80	
520	312625-0318		1	HEXAGON THIN NUT, EN 24035 ML6M M8 A4	
560	315105-0153		8	WASHER BRB 6,4X12 RFR	
570	315105-0165		7	WASHER BRB 8,4X16 RFR	
590	315755-0111		4	RETAINING RING SHAFT DIN 6799 10 SS	
630	321136-0183		1	BUSHING, IGLIDUR H370 12X14X15	
650	321156-0188		4	FLANGE BUSHING, IGLIDUR H370 12X14X15	
690	350002-0007		1	PUSH-IN L-FITTING QSL-F-G1/8-8	
750	532414-0000		1	WASHER	
760	534310-0001		1	NOZZLE	
770	312105-0449		2	SCREW M6S ISO 4017 M8X16 A480	
880	90230-0027		1	NON-RETURN VALVE QJ 8355-1/4"	
	90230-0301		*1*	*DIAPHRAGM*	
	90230-0300		*1*	*STRAINER*	
TBA 1000S (See drawing on page: 3-8)					
010	2514540-0000		1	SHAFT	
020	2514541-0000		1	SPACER	
040	2958104-0000		1	PLATE	
060	3095691-0000		2	ROLLER	
080	2959902-0000		1	HOLDER	
100	2533662-0000		1	HOLDER	
110	2533663-0000		1	KNOB	
120	2958105-0000		1	SHAFT	
130	2574520-0000		1	SHAFT	
140	2533721-0000		2	BRACKET	
150	2574521-0000		1	BRACKET	
160	2533723-0000		1	HOLDER	
170	3108121-0000		2	SHAFT	
190	2681617-0000		6	GEAR WHEEL	
200	2707531-0000		1	SUPPORT	
210	2958126-0000		1	COVER	
220	2760364-0000		1	PLATE	
250	2936355-0000		1	BRACKET	
270	457364-0000		1	PLATE RIGHT	
300	544343-0000		1	CANTILEVER	
320	1064420-0000		4	WASHER	
370	90005-0094		1	GASKET C 19438-EPR	
380	532413-0000		1	REDUCING NIPPLE	
400	311112-0256		6	SPRING PIN, ISO 8752 4X20-C	
420	312105-0364		4	SCREW M6S ISO 4017 M6X10 A480	
430	312105-0370		4	SCREW M6S ISO 4017 M6X20 A480	
440	312105-0383		2	SCREW M6S ISO 4014 M6X65 A480	
450	312105-0388		2	SCREW M6S ISO 4014 M6X90 A480	
460	312105-0453		2	SCREW M6S ISO 4017 M8X25 A480	
490	312115-0451		2	SCREW ISO4762 M8X20 A4 80	
520	312625-0318		1	HEXAGON THIN NUT, EN 24035 ML6M M8 A4	

Machine Type | Group Description | Used-In | Group Number | Page No

See previous drawings pages: 3-4, 3-6, 3-8.

Pos	Part No	UN	Qty	Description	Page No
TBA 1000S (Cont'd) (See drawing on page: 3-8)					
560	315105-0153		8	WASHER BRB 6,4X12 RFR	
570	315105-0165		7	WASHER BRB 8,4X16 RFR	
590	315755-0111		4	RETAINING RING SHAFT DIN 6799 10 SS	
630	321136-0183		1	BUSHING, IGLIDUR H370 12X14X15	
650	321156-0188		4	FLANGE BUSHING, IGLIDUR H370 12X14X15	
690	350002-0007		1	PUSH-IN L-FITTING QSL-F-G1/8-8	
750	532414-0000		1	WASHER	
760	534310-0001		1	NOZZLE	
770	312105-0449		2	SCREW M6S ISO 4017 M8X16 A480	
820	312105-0459		4	SCREW M6S ISO 4014 M8X40 A480	
880	90230-0027		1	NON-RETURN VALVE QJ 8355-1/4"	
	90230-0301		*1*	*DIAPHRAGM*	
	90230-0300		*1*	*STRAINER*	
900	312105-0489		2	SCREW M6S ISO 4017 M10X16 A480	
930	312105-0495		2	SCREW M6S ISO 4017 M10X30 A480	
TBA 1000SQ (See drawing on page: 3-6)					
010	2514540-0000		1	SHAFT	
020	2514541-0000		1	SPACER	
040	2958104-0000		1	PLATE	
060	3095687-0000		2	ROLLER	
080	2959846-0000		1	HOLDER	
100	2533662-0000		1	HOLDER	
110	2533663-0000		1	KNOB	
120	2958105-0000		1	SHAFT	
130	2574520-0000		1	SHAFT	
140	2533721-0000		2	BRACKET	
150	2574521-0000		1	BRACKET	
160	2533723-0000		1	HOLDER	
170	3095688-0000		2	SHAFT	
190	2681617-0000		6	GEAR WHEEL	
210	2958126-0000		1	COVER	
250	2936355-0000		1	BRACKET	
270	457364-0000		1	PLATE RIGHT	
300	544343-0000		1	CANTILEVER	
320	1064420-0000		4	WASHER	
370	90005-0094		1	GASKET C 19438-EPR	
380	532413-0000		1	REDUCING NIPPLE	
400	311112-0256		6	SPRING PIN, ISO 8752 4X20-C	
420	312105-0364		4	SCREW M6S ISO 4017 M6X10 A480	
430	312105-0370		4	SCREW M6S ISO 4017 M6X20 A480	
440	312105-0383		2	SCREW M6S ISO 4014 M6X65 A480	
450	312105-0388		2	SCREW M6S ISO 4014 M6X90 A480	
460	312105-0453		2	SCREW M6S ISO 4017 M8X25 A480	
470	312105-0455		4	SCREW M6S ISO 4017 M8X30 A480	
490	312115-0451		2	SCREW ISO4762 M8X20 A4 80	
520	312625-0318		1	HEXAGON THIN NUT, EN 24035 ML6M M8 A4	
560	315105-0153		8	WASHER BRB 6,4X12 RFR	
570	315105-0165		7	WASHER BRB 8,4X16 RFR	
590	315755-0111		4	RETAINING RING SHAFT DIN 6799 10 SS	
630	321136-0183		1	BUSHING, IGLIDUR H370 12X14X15	
650	321156-0188		4	FLANGE BUSHING, IGLIDUR H370 12X14X15	
690	350002-0007		1	PUSH-IN L-FITTING QSL-F-G1/8-8	
750	532414-0000		1	WASHER	
760	534310-0001		1	NOZZLE	
770	312105-0449		2	SCREW M6S ISO 4017 M8X16 A480	
880	90230-0027		1	NON-RETURN VALVE QJ 8355-1/4"	
	90230-0301		*1*	*DIAPHRAGM*	
	90230-0300		*1*	*STRAINER*	
Common Parts					
030	2514542-0000		1	BUSHING	
050	2574517-0000		1	HOLDER	
070	2574519-0000		1	HOLDER	
180	2506263-0000		1	WASHER	
260	457359-0000		1	BRACKET	
280	457367-0000		1	SHAFT	
290	457368-0000		5	SPRING	
390	311103-0401		2	PARALLEL PIN ISO 2338 8M6X20 A1	
410	312105-0329		8	SCREW M6S ISO 4017 M5X16 A480	
480	312105-0457		2	SCREW M6S ISO 4014 M8X35 A480	
500	312318-0323		1	SCREW ISO4029 M5X8 A4	
510	312605-0320		2	HEXAGON NUT, M6M M10 A280	
530	312812-0316		2	HEXAGON NUT, NY-LOCK M6 A480	
540	312812-0318		1	HEXAGON NUT, NY-LOCK M8 A480	
550	315105-0146		8	WASHER BRB 5,3X10 RFR	
580	315751-0123		1	RETAINING RING FOR SHAFT DIN 471 32 SS	
600	315755-0113		1	RETAINING RING SHAFT DIN 6799 15 SS	
610	321101-0143		2	FLANGE BUSHING, 8/14X8-18X3 MM	
620	321131-0350		1	THRUST WASHER, 32X43X1,5 MM	
640	321136-0295		2	BUSHING, IGLIDUR H370 25X28X20	
660	321156-0270		2	FLANGE BUSHING, IGLIDUR H370 20X23X30	
670	321156-0371		1	FLANGE BUSHING, IGLIDUR H370 35X39X26	
680	312105-0366		2	SCREW M6S ISO 4017 M6X12 A480	
700	90055-0100		1	Y-CONNECTION, 6-6	

Machine Type | Group Description | Used-In | Group Number | Page No

See previous drawings pages: 3-4, 3-6, 3-8.

Pos	Part No	UN	Qty	Description	Page No
Common Parts (Cont'd)					
710	321390-0145		1	STEEL BALL 15MM, RB-15 RS	
720	90141-0016		2	RETAINING RING FOR SHAFT DIN 471 10 SS	
740	90287-0112		1	SCREW SPRINGLOAD. SLOTTED HEAD M8X16	
780	90214-0036		4	BALL BEARING 10/22X6	
790	312105-0461		2	SCREW M6S ISO 4014 M8X50 A480	
890	342772-0122		1	ELBOW FITTING, 8 - G1/4	
940	90458-0407		2	GLAND W/O INSERT M25 NORMAL	
950	353250-0025		2	GLAND, LOCK NUT M25X1,5	
960	2897947-0000		2	INSERT	
970	90600-1068		2	SEAL COVER 22X7 MM	
T40B9210	90458-0601		1	CONTRAST SCANNER, KT15W-P2110S01	
	342732-0102		*1*	*ELBOW PIPE JOINT, EXT.THREAD, D=6MM-G1/8*	
T40B9220	90458-0601		1	CONTRAST SCANNER, KT15W-P2110S01	
	342732-0102		*1*	*ELBOW PIPE JOINT, EXT.THREAD, D=6MM-G1/8*	
T40W1254	90166-0133	MM	650	TUBE 8 MM PA,TRANSP. (1 PACK=50 M)	
T40W9212	90166-0081	MM	100	TUBE 6 MM PA BLUE	
T40W9213	90166-0081	MM	100	TUBE 6 MM PA BLUE	
T40X9210	90459-6387		1	CONNECTOR 5-POL M12, RSCS 5/9	
T40X9220	90459-6387		1	CONNECTOR 5-POL M12, RSCS 5/9	

Pos	Part No	UN	Qty	Description	Page No

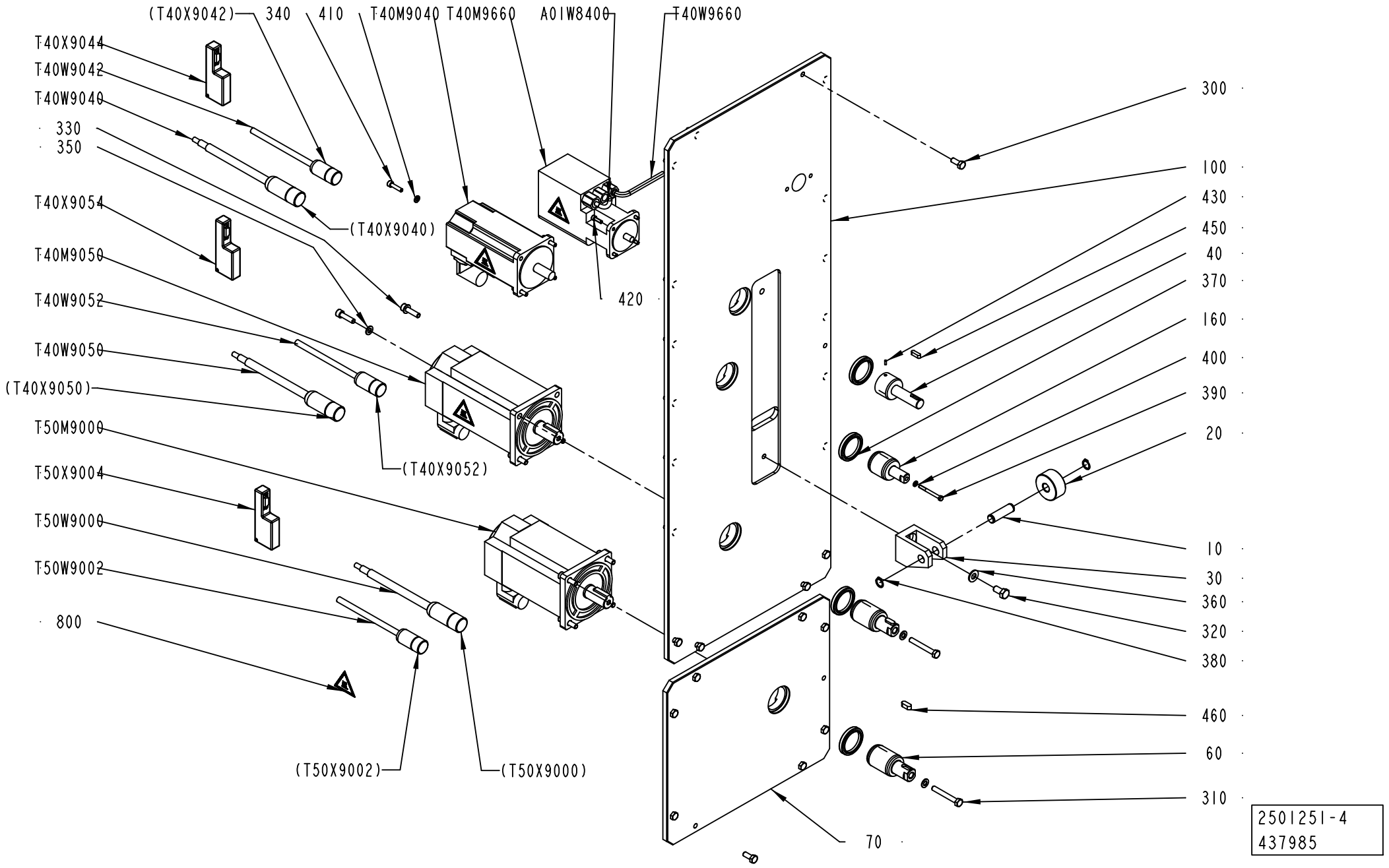
(T40X9042)
340
410
T40M9040
T40M9660
A01W8400
T40W9660
T40X9044
T40W9042
T40W9040
330
350
T40X9054
T40M9050
T40W9052
T40W9050
(T40X9050)
T50M9000
T50X9004
T50W9000
T50W9002
800
(T40X9040)
420
(T40X9052)
(T50X9002)
(T50X9000)
300
100
430
450
40
370
160
400
390
20
10
30
360
320
380
460
60
310
70
2501251-4
437985

ECM: 467957 - 20110101
Group number: 2501251-0300
Assembly Drawing: 2501251-4_1_AC

This list covers pages from 3-16 to 3-25

Pos	Part No	UN	Qty	Description	Page No
TBA 0125S ANSI, TBA 0200B ANSI (See drawing on page: 3-16)					
060	2707851-0000		2	SHAFT	
070	2707849-0000		1	PLATE	
100	2686516-0000		1	PLATE	
160	2707865-0000		1	SHAFT	
310	312105-0463		2	SCREW M6S ISO 4014 M8X60 A480	
330	312115-0455		8	SCREW ISO4762 M8X30 A4 80	
340	312115-0372		4	SCREW ISO4762 M6X25 A4 80	
350	315105-0165		10	WASHER BRB 8,4X16 RFR	
360	315105-0173		1	WASHER BRB 10,5X22 RFR	
390	312105-0341		1	SCREW M6S ISO 4014 M5X50 A480	
400	315105-0146		5	WASHER BRB 5,3X10 RFR	
410	315105-0153		4	WASHER BRB 6,4X12 RFR	
460	315705-0263		2	PARALLEL KEY W. ROUND ENDS 8X7X20 MM	
800	90459-7458		4	WARNING SIGN ANSI (H), HOT SURFACE	
T40M9040	90601-5151		1	SERVO MOTOR MPL-B330P-SJ72AA SERIES A	
T40M9050	90601-6070		1	SERVO MOTOR MPL-B4540F-MJ74AA SERIES A	
T50M9000	90601-6030		1	SERVO MOTOR MPL-B4540F-MJ72AA SERIES A	
T40W9050	90600-3293		1	MOTOR PWWER CABLE 2090-XXNPMF-16S09	
T50W9000	90600-3293		1	MOTOR PWWER CABLE 2090-XXNPMF-16S09	
TBA 0200B ISO, TBA 0125S ISO (See drawing on page: 3-16)					
060	2707851-0000		2	SHAFT	
070	2707849-0000		1	PLATE	
100	2686516-0000		1	PLATE	
160	2707865-0000		1	SHAFT	
310	312105-0463		2	SCREW M6S ISO 4014 M8X60 A480	
330	312115-0455		8	SCREW ISO4762 M8X30 A4 80	
340	312115-0372		4	SCREW ISO4762 M6X25 A4 80	
350	315105-0165		10	WASHER BRB 8,4X16 RFR	
360	315105-0173		1	WASHER BRB 10,5X22 RFR	
390	312105-0341		1	SCREW M6S ISO 4014 M5X50 A480	
400	315105-0146		5	WASHER BRB 5,3X10 RFR	
410	315105-0153		4	WASHER BRB 6,4X12 RFR	
460	315705-0263		2	PARALLEL KEY W. ROUND ENDS 8X7X20 MM	
800	359705-0007		4	WARNING SIGN ISO, HOT SURFACE	
T40M9040	90601-5151		1	SERVO MOTOR MPL-B330P-SJ72AA SERIES A	
T40M9050	90601-6070		1	SERVO MOTOR MPL-B4540F-MJ74AA SERIES A	
T50M9000	90601-6030		1	SERVO MOTOR MPL-B4540F-MJ72AA SERIES A	
T40W9050	90600-3293		1	MOTOR PWWER CABLE 2090-XXNPMF-16S09	
T50W9000	90600-3293		1	MOTOR PWWER CABLE 2090-XXNPMF-16S09	
TBA 0200M ANSI (See drawing on page: 3-16)					
060	2707851-0000		2	SHAFT	
070	2707849-0000		1	PLATE	
100	2707850-0000		1	PLATE	
070	2707849-0000		1	PLATE	
100	2919409-0000		1	PLATE	
160	2707865-0000		1	SHAFT	
310	312105-0463		2	SCREW M6S ISO 4014 M8X60 A480	
330	312115-0455		8	SCREW ISO4762 M8X30 A4 80	
340	312115-0372		4	SCREW ISO4762 M6X25 A4 80	
350	315105-0165		10	WASHER BRB 8,4X16 RFR	
360	315105-0173		1	WASHER BRB 10,5X22 RFR	
390	312105-0341		1	SCREW M6S ISO 4014 M5X50 A480	
400	315105-0146		5	WASHER BRB 5,3X10 RFR	
410	315105-0153		4	WASHER BRB 6,4X12 RFR	
460	315705-0263		2	PARALLEL KEY W. ROUND ENDS 8X7X20 MM	
800	90459-7458		4	WARNING SIGN ANSI (H), HOT SURFACE	
T40M9040	90601-5151		1	SERVO MOTOR MPL-B330P-SJ72AA SERIES A	
T40M9050	90601-6070		1	SERVO MOTOR MPL-B4540F-MJ74AA SERIES A	
T50M9000	90601-6030		1	SERVO MOTOR MPL-B4540F-MJ72AA SERIES A	
T40W9050	90600-3293		1	MOTOR PWWER CABLE 2090-XXNPMF-16S09	
T50W9000	90600-3293		1	MOTOR PWWER CABLE 2090-XXNPMF-16S09	
TBA 0200M ISO (See drawing on page: 3-16)					
060	2707851-0000		2	SHAFT	
070	2707849-0000		1	PLATE	
100	2919409-0000		1	PLATE	
160	2707865-0000		1	SHAFT	
310	312105-0463		2	SCREW M6S ISO 4014 M8X60 A480	
330	312115-0455		8	SCREW ISO4762 M8X30 A4 80	
340	312115-0372		4	SCREW ISO4762 M6X25 A4 80	
350	315105-0165		10	WASHER BRB 8,4X16 RFR	
360	315105-0173		1	WASHER BRB 10,5X22 RFR	
390	312105-0341		1	SCREW M6S ISO 4014 M5X50 A480	
400	315105-0146		5	WASHER BRB 5,3X10 RFR	
410	315105-0153		4	WASHER BRB 6,4X12 RFR	
460	315705-0263		2	PARALLEL KEY W. ROUND ENDS 8X7X20 MM	
800	359705-0007		4	WARNING SIGN ISO, HOT SURFACE	
T40M9040	90601-5151		1	SERVO MOTOR MPL-B330P-SJ72AA SERIES A	
T40M9050	90601-6070		1	SERVO MOTOR MPL-B4540F-MJ74AA SERIES A	
T50M9000	90601-6030		1	SERVO MOTOR MPL-B4540F-MJ72AA SERIES A	
T40W9050	90600-3293		1	MOTOR PWWER CABLE 2090-XXNPMF-16S09	
T50W9000	90600-3293		1	MOTOR PWWER CABLE 2090-XXNPMF-16S09	
TBA 0200S ANSI (See drawing on page: 3-16)					
060	2707851-0000		2	SHAFT	
070	2707849-0000		1	PLATE	
100	2707850-0000		1	PLATE	

Machine Type | Group Description | Used-In | Group Number | Page No

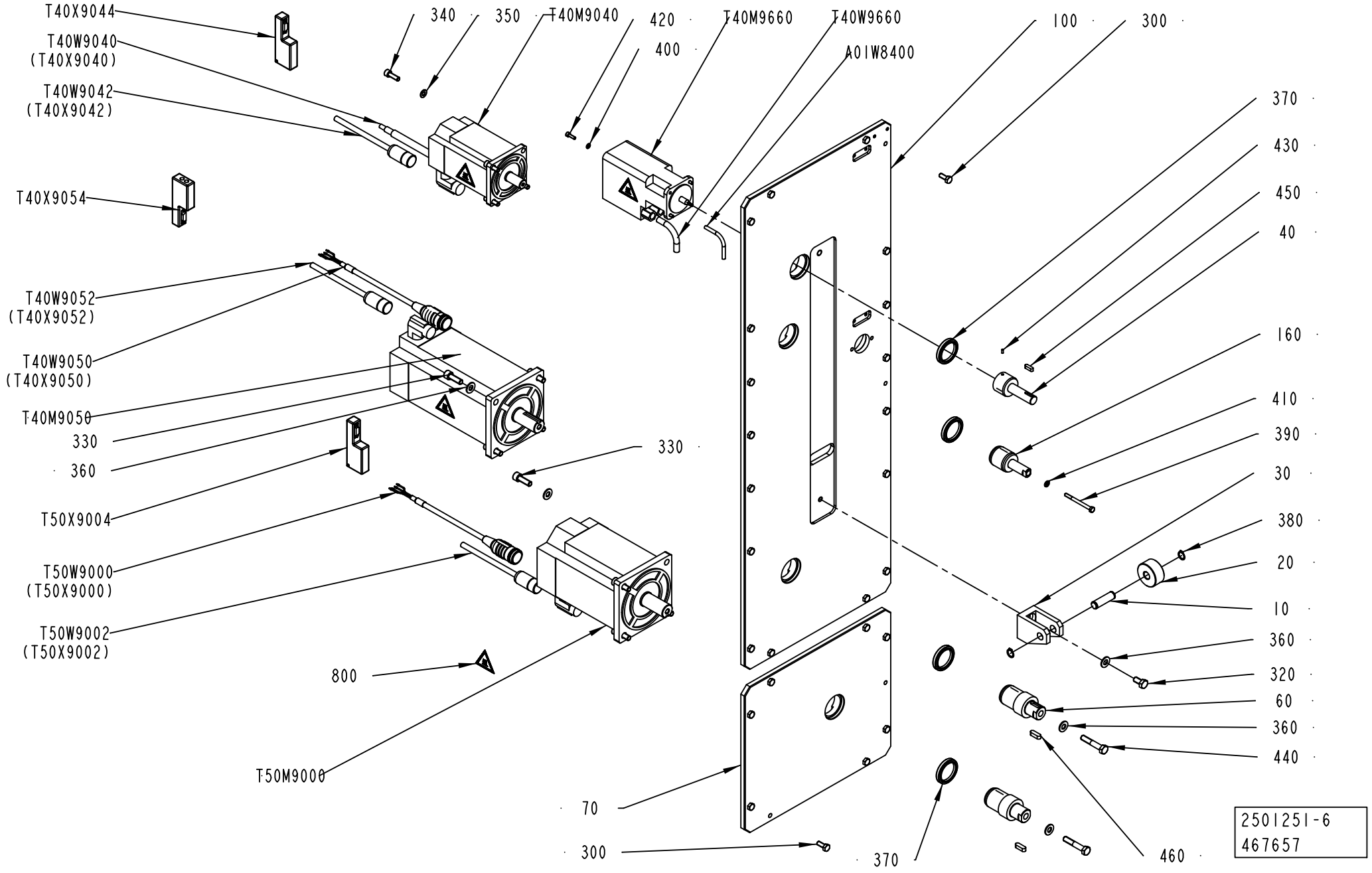
T40X9044
T40W9040
(T40X9040)
T40W9042
(T40X9042)
T40X9054
T40W9052
(T40X9052)
T40W9050
(T40X9050)
T40M9050
330
360
T50X9004
T50W9000
(T50X9000)
T50W9002
(T50X9002)
800
T50M9000
340
350
T40M9040
420
400
T40M9660
T40W9660
A01W8400
100
300
370
430
450
40
160
410
390
30
330
380
20
10
360
320
60
360
440
70
300
370
460
2501251-6
467657

ECM: 467957 - 20110101
Group number: 2501251-0300
Assembly Drawing: 2501251-6_1_AD

This list covers pages from 3-16 to 3-25

Pos	Part No	UN	Qty	Description	Page No
TBA 0200S ANSI (Cont'd) (See drawing on page: 3-16)					
160	2707865-0000		1	SHAFT	
310	312105-0463		2	SCREW M6S ISO 4014 M8X60 A480	
330	312115-0455		8	SCREW ISO4762 M8X30 A4 80	
340	312115-0372		4	SCREW ISO4762 M6X25 A4 80	
350	315105-0165		10	WASHER BRB 8,4X16 RFR	
360	315105-0173		1	WASHER BRB 10,5X22 RFR	
390	312105-0341		1	SCREW M6S ISO 4014 M5X50 A480	
400	315105-0146		5	WASHER BRB 5,3X10 RFR	
410	315105-0153		4	WASHER BRB 6,4X12 RFR	
460	315705-0263		2	PARALLEL KEY W. ROUND ENDS 8X7X20 MM	
800	90459-7458		4	WARNING SIGN ANSI (H), HOT SURFACE	
T40M9040	90601-5151		1	SERVO MOTOR MPL-B330P-SJ72AA SERIES A	
T40M9050	90601-6070		1	SERVO MOTOR MPL-B4540F-MJ74AA SERIES A	
T50M9000	90601-6030		1	SERVO MOTOR MPL-B4540F-MJ72AA SERIES A	
T40W9050	90600-3293		1	MOTOR PWWER CABLE 2090-XXNPMF-16S09	
T50W9000	90600-3293		1	MOTOR PWWER CABLE 2090-XXNPMF-16S09	
TBA 0200S ISO (See drawing on page: 3-16)					
060	2707851-0000		2	SHAFT	
070	2707849-0000		1	PLATE	
100	2707850-0000		1	PLATE	
160	2707865-0000		1	SHAFT	
310	312105-0463		2	SCREW M6S ISO 4014 M8X60 A480	
330	312115-0455		8	SCREW ISO4762 M8X30 A4 80	
340	312115-0372		4	SCREW ISO4762 M6X25 A4 80	
350	315105-0165		10	WASHER BRB 8,4X16 RFR	
360	315105-0173		1	WASHER BRB 10,5X22 RFR	
390	312105-0341		1	SCREW M6S ISO 4014 M5X50 A480	
400	315105-0146		5	WASHER BRB 5,3X10 RFR	
410	315105-0153		4	WASHER BRB 6,4X12 RFR	
460	315705-0263		2	PARALLEL KEY W. ROUND ENDS 8X7X20 MM	
800	359705-0007		4	WARNING SIGN ISO, HOT SURFACE	
T40M9040	90601-5151		1	SERVO MOTOR MPL-B330P-SJ72AA SERIES A	
T40M9050	90601-6070		1	SERVO MOTOR MPL-B4540F-MJ74AA SERIES A	
T50M9000	90601-6030		1	SERVO MOTOR MPL-B4540F-MJ72AA SERIES A	
T40W9050	90600-3293		1	MOTOR PWWER CABLE 2090-XXNPMF-16S09	
T50W9000	90600-3293		1	MOTOR PWWER CABLE 2090-XXNPMF-16S09	
TBA 0250B ANSI (See drawing on page: 3-16)					
060	2707851-0000		2	SHAFT	
070	2707849-0000		1	PLATE	
100	2686520-0000		1	PLATE	
160	2707865-0000		1	SHAFT	
310	312105-0463		2	SCREW M6S ISO 4014 M8X60 A480	
330	312115-0455		8	SCREW ISO4762 M8X30 A4 80	
340	312115-0372		4	SCREW ISO4762 M6X25 A4 80	
350	315105-0165		10	WASHER BRB 8,4X16 RFR	
360	315105-0173		1	WASHER BRB 10,5X22 RFR	
390	312105-0341		1	SCREW M6S ISO 4014 M5X50 A480	
400	315105-0146		5	WASHER BRB 5,3X10 RFR	
410	315105-0153		4	WASHER BRB 6,4X12 RFR	
460	315705-0263		2	PARALLEL KEY W. ROUND ENDS 8X7X20 MM	
800	90459-7458		4	WARNING SIGN ANSI (H), HOT SURFACE	
T40M9040	90601-5151		1	SERVO MOTOR MPL-B330P-SJ72AA SERIES A	
T40M9050	90601-6070		1	SERVO MOTOR MPL-B4540F-MJ74AA SERIES A	
T50M9000	90601-6030		1	SERVO MOTOR MPL-B4540F-MJ72AA SERIES A	
T40W9050	90600-3293		1	MOTOR PWWER CABLE 2090-XXNPMF-16S09	
T50W9000	90600-3293		1	MOTOR PWWER CABLE 2090-XXNPMF-16S09	
TBA 0250B ISO (See drawing on page: 3-16)					
060	2707851-0000		2	SHAFT	
070	2707849-0000		1	PLATE	
100	2686520-0000		1	PLATE	
160	2707865-0000		1	SHAFT	
310	312105-0463		2	SCREW M6S ISO 4014 M8X60 A480	
330	312115-0455		8	SCREW ISO4762 M8X30 A4 80	
340	312115-0372		4	SCREW ISO4762 M6X25 A4 80	
350	315105-0165		10	WASHER BRB 8,4X16 RFR	
360	315105-0173		1	WASHER BRB 10,5X22 RFR	
390	312105-0341		1	SCREW M6S ISO 4014 M5X50 A480	
400	315105-0146		5	WASHER BRB 5,3X10 RFR	
410	315105-0153		4	WASHER BRB 6,4X12 RFR	
460	315705-0263		2	PARALLEL KEY W. ROUND ENDS 8X7X20 MM	
800	359705-0007		4	WARNING SIGN ISO, HOT SURFACE	
T40M9040	90601-5151		1	SERVO MOTOR MPL-B330P-SJ72AA SERIES A	
T40M9050	90601-6070		1	SERVO MOTOR MPL-B4540F-MJ74AA SERIES A	
T50M9000	90601-6030		1	SERVO MOTOR MPL-B4540F-MJ72AA SERIES A	
T40W9050	90600-3293		1	MOTOR PWWER CABLE 2090-XXNPMF-16S09	
T50W9000	90600-3293		1	MOTOR PWWER CABLE 2090-XXNPMF-16S09	
TBA 0250S ANSI (See drawing on page: 3-16)					
060	2707851-0000		2	SHAFT	
070	2707849-0000		1	PLATE	
100	2686543-0000		1	PLATE	
160	2707865-0000		1	SHAFT	
310	312105-0463		2	SCREW M6S ISO 4014 M8X60 A480	
330	312115-0455		8	SCREW ISO4762 M8X30 A4 80	

Machine Type | Group Description | Used-In | Group Number | Page No

See previous drawings pages: 3-16, 3-18.

Pos	Part No	UN	Qty	Description	Page No
TBA 0250S ANSI (Cont'd) (See drawing on page: 3-16)					
340	312115-0372		4	SCREW ISO4762 M6X25 A4 80	
350	315105-0165		10	WASHER BRB 8,4X16 RFR	
360	315105-0173		1	WASHER BRB 10,5X22 RFR	
390	312105-0341		1	SCREW M6S ISO 4014 M5X50 A480	
400	315105-0146		5	WASHER BRB 5,3X10 RFR	
410	315105-0153		4	WASHER BRB 6,4X12 RFR	
460	315705-0263		2	PARALLEL KEY W. ROUND ENDS 8X7X20 MM	
800	90459-7458		4	WARNING SIGN ANSI (H), HOT SURFACE	
T40M9040	90601-5151		1	SERVO MOTOR MPL-B330P-SJ72AA SERIES A	
T40M9050	90601-6070		1	SERVO MOTOR MPL-B4540F-MJ74AA SERIES A	
T50M9000	90601-6030		1	SERVO MOTOR MPL-B4540F-MJ72AA SERIES A	
T40W9050	90600-3293		1	MOTOR PWWER CABLE 2090-XXNPMF-16S09	
T50W9000	90600-3293		1	MOTOR PWWER CABLE 2090-XXNPMF-16S09	
TBA 0250S ISO (See drawing on page: 3-16)					
060	2707851-0000		2	SHAFT	
070	2707849-0000		1	PLATE	
100	2686543-0000		1	PLATE	
160	2707865-0000		1	SHAFT	
310	312105-0463		2	SCREW M6S ISO 4014 M8X60 A480	
330	312115-0455		8	SCREW ISO4762 M8X30 A4 80	
340	312115-0372		4	SCREW ISO4762 M6X25 A4 80	
350	315105-0165		10	WASHER BRB 8,4X16 RFR	
360	315105-0173		1	WASHER BRB 10,5X22 RFR	
390	312105-0341		1	SCREW M6S ISO 4014 M5X50 A480	
400	315105-0146		5	WASHER BRB 5,3X10 RFR	
410	315105-0153		4	WASHER BRB 6,4X12 RFR	
460	315705-0263		2	PARALLEL KEY W. ROUND ENDS 8X7X20 MM	
800	359705-0007		4	WARNING SIGN ISO, HOT SURFACE	
T40M9040	90601-5151		1	SERVO MOTOR MPL-B330P-SJ72AA SERIES A	
T40M9050	90601-6070		1	SERVO MOTOR MPL-B4540F-MJ74AA SERIES A	
T50M9000	90601-6030		1	SERVO MOTOR MPL-B4540F-MJ72AA SERIES A	
T40W9050	90600-3293		1	MOTOR PWWER CABLE 2090-XXNPMF-16S09	
T50W9000	90600-3293		1	MOTOR PWWER CABLE 2090-XXNPMF-16S09	
TBA 1000B ANSI (See drawing on page: 3-18)					
060	2782480-0000		2	SHAFT	
070	2760362-0000		1	PLATE	
100	2760363-0000		1	PLATE	
160	2783837-0000		1	SHAFT	
330	312115-0495		8	SCREW ISO4762 M10X30 A4 80	
340	312115-0453		4	SCREW ISO4762 M8X25 A4 80	
350	315105-0165		4	WASHER BRB 8,4X16 RFR	
360	315105-0173		11	WASHER BRB 10,5X22 RFR	
390	312105-0384		1	SCREW M6S ISO 4014 M6X70 A480	
400	315105-0146		4	WASHER BRB 5,3X10 RFR	
410	315105-0153		1	WASHER BRB 6,4X12 RFR	
440	312105-0502		2	SCREW M6S ISO 4014 M10X55 A480	
460	315705-0265		2	PARALLEL KEY W. ROUND ENDS 8X7X25 MM	
800	90459-7458		4	WARNING SIGN ANSI (H), HOT SURFACE	
T40M9040	90601-5870		1	SERVO MOTOR MPL-B430P-SJ72AA SERIES A	
T40M9050	90602-7487		1	SERVO MOTOR MPL-B540D-MJ74AA SERIES A	
T50M9000	90601-6170		1	SERVO MOTOR MPL-B540D-MJ72AA SERIES A	
T40W9050	90600-5655		1	MOTOR POWER CABLE 2090-XXNPMF-14S09/A	
T50W9000	90600-5655		1	MOTOR POWER CABLE 2090-XXNPMF-14S09/A	
TBA 1000B ISO (See drawing on page: 3-18)					
060	2782480-0000		2	SHAFT	
070	2760362-0000		1	PLATE	
100	2760363-0000		1	PLATE	
160	2783837-0000		1	SHAFT	
330	312115-0495		8	SCREW ISO4762 M10X30 A4 80	
340	312115-0453		4	SCREW ISO4762 M8X25 A4 80	
350	315105-0165		4	WASHER BRB 8,4X16 RFR	
360	315105-0173		11	WASHER BRB 10,5X22 RFR	
390	312105-0384		1	SCREW M6S ISO 4014 M6X70 A480	
400	315105-0146		4	WASHER BRB 5,3X10 RFR	
410	315105-0153		1	WASHER BRB 6,4X12 RFR	
440	312105-0502		2	SCREW M6S ISO 4014 M10X55 A480	
460	315705-0265		2	PARALLEL KEY W. ROUND ENDS 8X7X25 MM	
800	359705-0007		4	WARNING SIGN ISO, HOT SURFACE	
T40M9040	90601-5870		1	SERVO MOTOR MPL-B430P-SJ72AA SERIES A	
T40M9050	90602-7487		1	SERVO MOTOR MPL-B540D-MJ74AA SERIES A	
T50M9000	90601-6170		1	SERVO MOTOR MPL-B540D-MJ72AA SERIES A	
T40W9050	90600-5655		1	MOTOR POWER CABLE 2090-XXNPMF-14S09/A	
T50W9000	90600-5655		1	MOTOR POWER CABLE 2090-XXNPMF-14S09/A	
TBA 1000S ANSI (See drawing on page: 3-18)					
060	2782480-0000		2	SHAFT	
070	2760354-0000		1	PLATE	
100	2760355-0000		1	PLATE	
160	2783837-0000		1	SHAFT	
330	312115-0495		8	SCREW ISO4762 M10X30 A4 80	
340	312115-0453		4	SCREW ISO4762 M8X25 A4 80	
350	315105-0165		4	WASHER BRB 8,4X16 RFR	
360	315105-0173		11	WASHER BRB 10,5X22 RFR	
390	312105-0384		1	SCREW M6S ISO 4014 M6X70 A480	

See previous drawings pages: 3-16, 3-18.

ECM: 467957 - 20110101
Group number: 2501251-0300
Assembly Drawing: 2501251-6_1_AD

This list covers pages from 3-16 to 3-25

Pos	Part No	UN	Qty	Description	Page No
TBA 1000S ANSI (Cont'd) (See drawing on page: 3-18)					
400	315105-0146		4	WASHER BRB 5,3X10 RFR	
410	315105-0153		1	WASHER BRB 6,4X12 RFR	
440	312105-0502		2	SCREW M6S ISO 4014 M10X55 A480	
460	315705-0265		2	PARALLEL KEY W. ROUND ENDS 8X7X25 MM	
800	90459-7458		4	WARNING SIGN ANSI (H), HOT SURFACE	
T40M9040	90601-5870		1	SERVO MOTOR MPL-B430P-SJ72AA SERIES A	
T40M9050	90602-7487		1	SERVO MOTOR MPL-B540D-MJ74AA SERIES A	
T50M9000	90601-6170		1	SERVO MOTOR MPL-B540D-MJ72AA SERIES A	
T40W9050	90600-5655		1	MOTOR POWER CABLE 2090-XXNPMF-14S09/A	
T50W9000	90600-5655		1	MOTOR POWER CABLE 2090-XXNPMF-14S09/A	
TBA 1000S ISO (See drawing on page: 3-18)					
060	2782480-0000		2	SHAFT	
070	2760354-0000		1	PLATE	
100	2760355-0000		1	PLATE	
160	2783837-0000		1	SHAFT	
330	312115-0495		8	SCREW ISO4762 M10X30 A4 80	
340	312115-0453		4	SCREW ISO4762 M8X25 A4 80	
350	315105-0165		4	WASHER BRB 8,4X16 RFR	
360	315105-0173		11	WASHER BRB 10,5X22 RFR	
390	312105-0384		1	SCREW M6S ISO 4014 M6X70 A480	
400	315105-0146		4	WASHER BRB 5,3X10 RFR	
410	315105-0153		1	WASHER BRB 6,4X12 RFR	
440	312105-0502		2	SCREW M6S ISO 4014 M10X55 A480	
460	315705-0265		2	PARALLEL KEY W. ROUND ENDS 8X7X25 MM	
800	359705-0007		4	WARNING SIGN ISO, HOT SURFACE	
T40M9040	90601-5870		1	SERVO MOTOR MPL-B430P-SJ72AA SERIES A	
T40M9050	90602-7487		1	SERVO MOTOR MPL-B540D-MJ74AA SERIES A	
T50M9000	90601-6170		1	SERVO MOTOR MPL-B540D-MJ72AA SERIES A	
T40W9050	90600-5655		1	MOTOR POWER CABLE 2090-XXNPMF-14S09/A	
T50W9000	90600-5655		1	MOTOR POWER CABLE 2090-XXNPMF-14S09/A	
TBA 1000SQ ANSI (See drawing on page: 3-18)					
060	2782480-0000		2	SHAFT	
070	2760354-0000		1	PLATE	
100	2760356-0000		1	PLATE	
160	2783837-0000		1	SHAFT	
330	312115-0495		8	SCREW ISO4762 M10X30 A4 80	
340	312115-0453		4	SCREW ISO4762 M8X25 A4 80	
350	315105-0165		4	WASHER BRB 8,4X16 RFR	
360	315105-0173		11	WASHER BRB 10,5X22 RFR	
390	312105-0384		1	SCREW M6S ISO 4014 M6X70 A480	
400	315105-0146		4	WASHER BRB 5,3X10 RFR	
410	315105-0153		1	WASHER BRB 6,4X12 RFR	
440	312105-0502		2	SCREW M6S ISO 4014 M10X55 A480	
460	315705-0265		2	PARALLEL KEY W. ROUND ENDS 8X7X25 MM	
800	90459-7458		4	WARNING SIGN ANSI (H), HOT SURFACE	
T40M9040	90601-5870		1	SERVO MOTOR MPL-B430P-SJ72AA SERIES A	
T40M9050	90602-7487		1	SERVO MOTOR MPL-B540D-MJ74AA SERIES A	
T50M9000	90601-6170		1	SERVO MOTOR MPL-B540D-MJ72AA SERIES A	
T40W9050	90600-5655		1	MOTOR POWER CABLE 2090-XXNPMF-14S09/A	
T50W9000	90600-5655		1	MOTOR POWER CABLE 2090-XXNPMF-14S09/A	
TBA 1000SQ ISO (See drawing on page: 3-18)					
060	2782480-0000		2	SHAFT	
070	2760354-0000		1	PLATE	
100	2760356-0000		1	PLATE	
160	2783837-0000		1	SHAFT	
330	312115-0495		8	SCREW ISO4762 M10X30 A4 80	
340	312115-0453		4	SCREW ISO4762 M8X25 A4 80	
350	315105-0165		4	WASHER BRB 8,4X16 RFR	
360	315105-0173		11	WASHER BRB 10,5X22 RFR	
390	312105-0384		1	SCREW M6S ISO 4014 M6X70 A480	
400	315105-0146		4	WASHER BRB 5,3X10 RFR	
410	315105-0153		1	WASHER BRB 6,4X12 RFR	
440	312105-0502		2	SCREW M6S ISO 4014 M10X55 A480	
460	315705-0265		2	PARALLEL KEY W. ROUND ENDS 8X7X25 MM	
800	359705-0007		4	WARNING SIGN ISO, HOT SURFACE	
T40M9040	90601-5870		1	SERVO MOTOR MPL-B430P-SJ72AA SERIES A	
T40M9050	90602-7487		1	SERVO MOTOR MPL-B540D-MJ74AA SERIES A	
T50M9000	90601-6170		1	SERVO MOTOR MPL-B540D-MJ72AA SERIES A	
T40W9050	90600-5655		1	MOTOR POWER CABLE 2090-XXNPMF-14S09/A	
T50W9000	90600-5655		1	MOTOR POWER CABLE 2090-XXNPMF-14S09/A	
Common Parts					
010	1041216-0000		1	SHAFT	
020	1140865-0000		1	ROLL	
030	1140866-0000		1	BRACKET	
040	2912143-0000		1	SHAFT	
300	312105-0451		26	SCREW M6S ISO 4017 M8X20 A480	
320	312105-0491		1	SCREW M6S ISO 4017 M10X20 A480	
370	90091-0449		4	SEALING RING, VARILIP 40X52X7 MM	
380	315751-0112		2	RETAINING RING FOR SHAFT DIN 471 15 SS	
420	312115-0329		4	SCREW ISO4762 M5X16 A4 80	
430	312318-0222		1	SCREW ISO4029 M3X8 A4	
450	315705-0232		1	PARALLEL KEY W. ROUND ENDS 6X6X20 MM	
A01W8400	90459-2530	M	2	DEVICENET CABLE THIN	

Machine Type | Group Description | Used-In | Group Number | Page No

See previous drawings pages: 3-16, 3-18.

Pos	Part No	UN	Qty	Description	Page No
Common Parts (Cont'd)					
T40M9660	90459-7195		1	STEPPER MOTOR HRA71-DLB04075	
T40W9040	90600-3293		1	MOTOR PWWER CABLE 2090-XXNPMF-16S09	
T40W9042	90600-3294		1	MOTOR FEEDBACK CABLE 2090-XXNFMF-S09/C	
T40W9052	90600-3294		1	MOTOR FEEDBACK CABLE 2090-XXNFMF-S09/C	
T40W9660	351422-0202	M	3	CABLE ÖLFLEX 150CY QUATTRO 3X1,5	
T50W9002	90600-3294		1	MOTOR FEEDBACK CABLE 2090-XXNFMF-S09/C	
T40X9044	90459-2551		1	CONNECTOR, MOTOR FEEDBACK 15 PIN MALE	
T40X9054	90459-2551		1	CONNECTOR, MOTOR FEEDBACK 15 PIN MALE	
T50X9004	90459-2551		1	CONNECTOR, MOTOR FEEDBACK 15 PIN MALE	

Pos	Part No	UN	Qty	Description	Page No

Tetra Pak

SPC
Spare Parts Catalogue

JAW SYSTEM

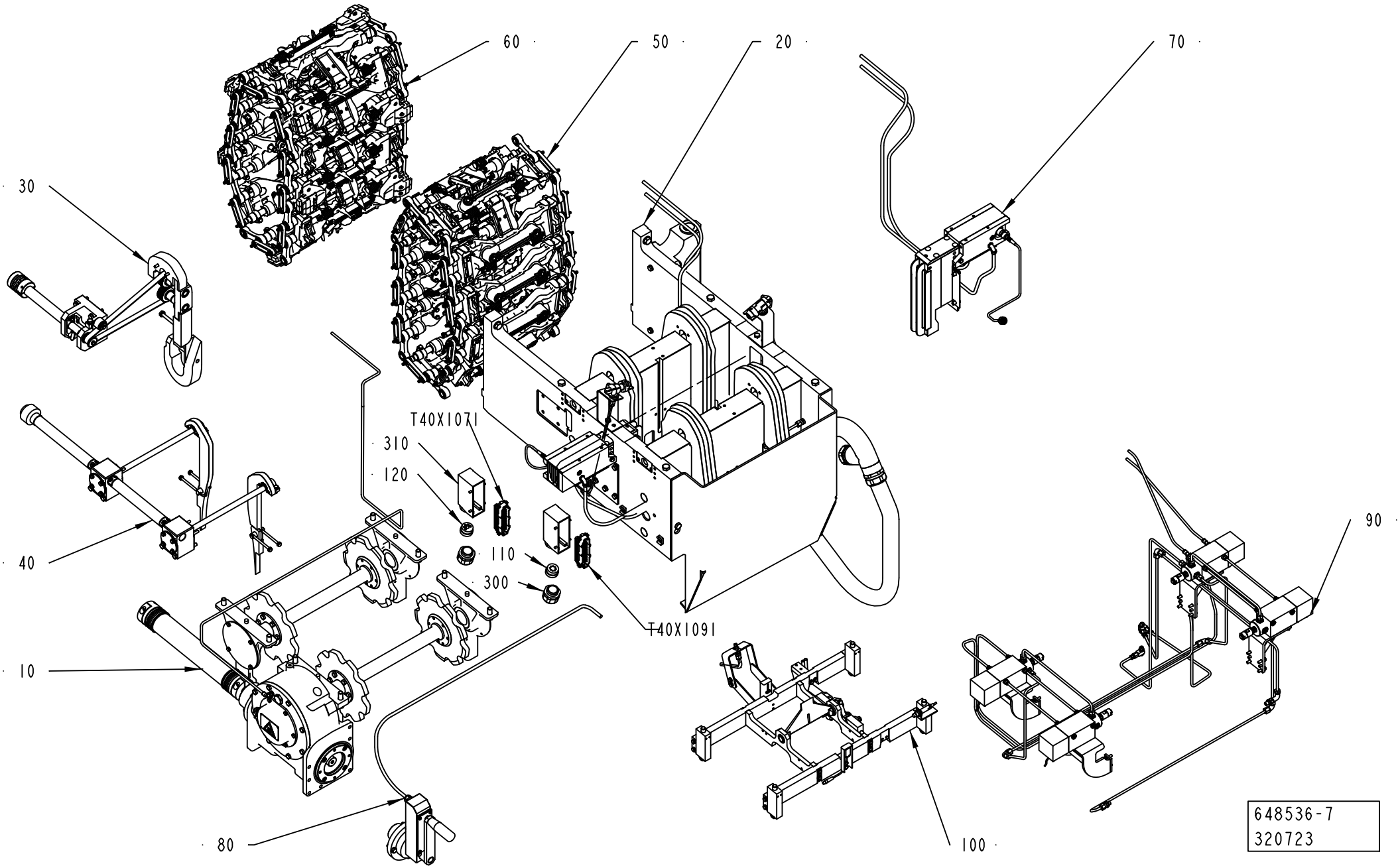
60
50
20
70
30
T40X107I
310
120
40
110
300
T40X109I
90
10
80
100
648536-7
320723

ECM: 379922 - 20081223
Group number: 648536-0400
Assembly Drawing: 648536-7_1_AB

Pos	Part No	UN	Qty	Description	Page No
-					
010	2500383-0400		1	DRIVE UNIT	**4-5, 4-7**
020	2500384-0200		1	FRAME	**4-9, 4-11, 4-13, 4-15, 4-17, 4-19**
030	2500385-0200		1	DESIGN CORRECTION	**4-27, 4-29, 4-31**
040	2500386-0200		1	VOLUME ADJUSTER	**4-33, 4-35**
050	2770644-0100		1	CHAIN	**4-37**
060	2770645-0100		1	CHAIN	**4-69**
070	2691475-0100		1	ELECTRICAL CONNECTION	**4-91, 4-93**
080	2556362-0400		1	HAND CRANK	**4-95, 4-97**
090	2639006-0200		1	GREASE LUBRICATION SYST	**4-99, 4-101, 4-103, 4-105, 4-107**
100	2811727-0100		1	WASTE BOX	**4-109, 4-111, 4-113, 4-115**
110	2595005-0000		1	INSERT	
120	2787592-0000		1	INSERT	
300	90458-0423		2	GLAND W/O INSERT M32X1,5 EXTENDED	
310	90459-6631		2	HOOD 24 B SIDE ENTRY, 19 30 024 1522	
T40X1071	90110-0056		1	MALE INSERT HAN 24 E 09 33 024 2601	
T40X1091	90110-0056		1	MALE INSERT HAN 24 E 09 33 024 2601	

Pos	Part No	UN	Qty	Description	Page No

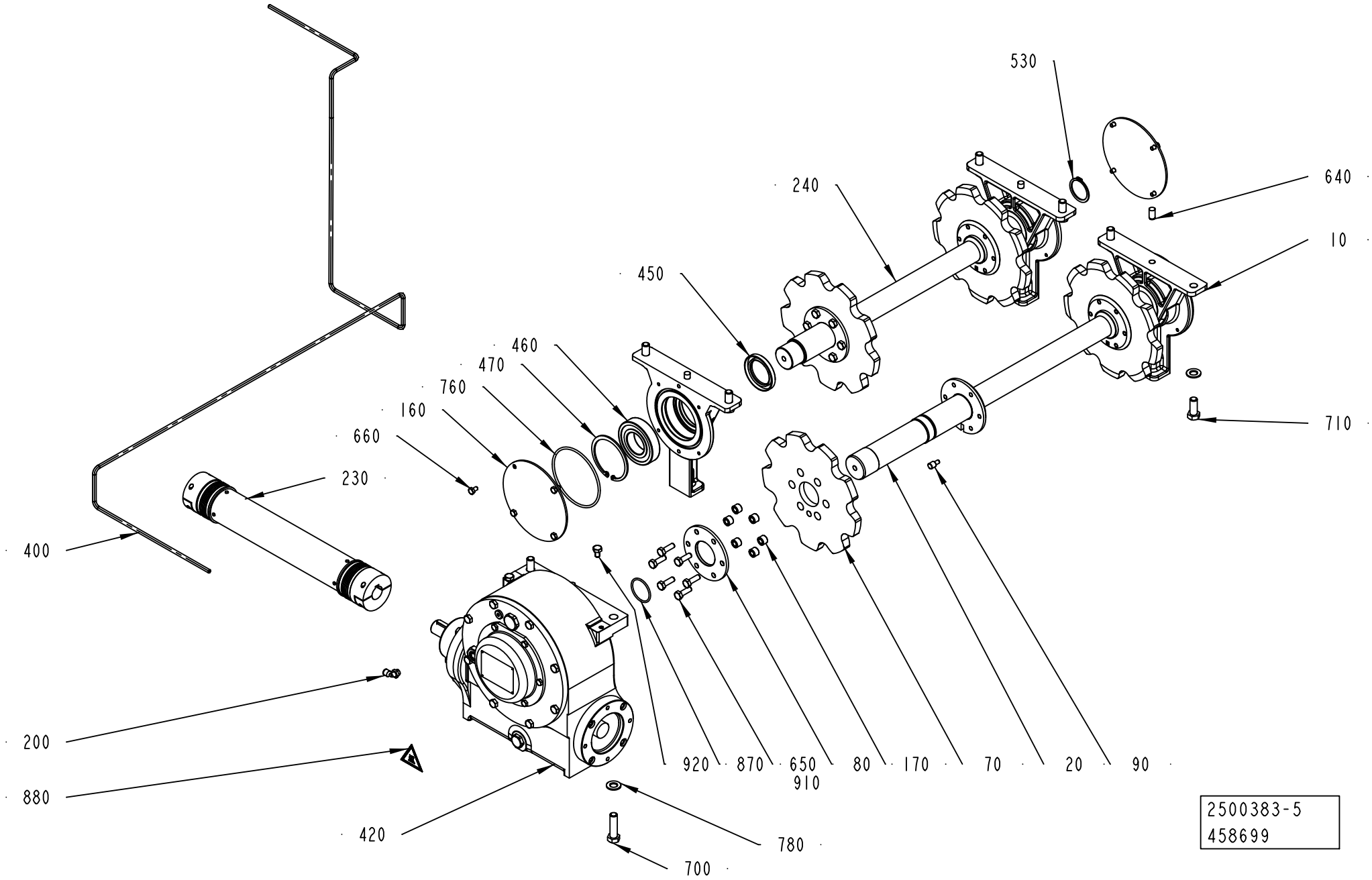
530
240
640
10
450
460
470
760
160
660
230
400
710
200
880
420
780
700
920
870
650
910
80
170
70
20
90
2500383-5
458699

ECM: 460428 - 20101001
Group number: 2500383-0400
Assembly Drawing: 2500383-5_1_AB

This list covers pages from 4-4 to 4-7

Pos	Part No	UN	Qty	Description	Page No
TBA 0125S ANSI, TBA 0200B ANSI					
020	2787590-0000		1	SHAFT	
070	2644108-0000		4	WHEEL	
080	2641243-0000		4	FLANGE	
090	2641241-0000		4	PIN	
170	2633447-0000		24	BUSHING	
230	90600-0858		1	INTERMEDIARY SHAFT, ZAE/60/398/24H7KEYWA	
240	2679565-0000		1	SHAFT	
650	312105-0453		24	SCREW M6S ISO 4017 M8X25 A480	
880	90459-7458		1	WARNING SIGN ANSI (H), HOT SURFACE	
TBA 0200B ISO, TBA 0125S ISO					
020	2787590-0000		1	SHAFT	
070	2644108-0000		4	WHEEL	
080	2641243-0000		4	FLANGE	
090	2641241-0000		4	PIN	
170	2633447-0000		24	BUSHING	
230	90600-0858		1	INTERMEDIARY SHAFT, ZAE/60/398/24H7KEYWA	
240	2679565-0000		1	SHAFT	
650	312105-0453		24	SCREW M6S ISO 4017 M8X25 A480	
880	359705-0007		1	WARNING SIGN ISO, HOT SURFACE	
TBA 0200M ANSI, TBA 0250B ANSI					
020	2787590-0000		1	SHAFT	
070	2644109-0000		4	WHEEL	
080	2641243-0000		4	FLANGE	
090	2641241-0000		4	PIN	
170	2633447-0000		24	BUSHING	
230	90600-0682		1	INTERMEDIARY SHAFT, ZAE/60/414/24H7KEYWA	
240	2679565-0000		1	SHAFT	
650	312105-0453		24	SCREW M6S ISO 4017 M8X25 A480	
880	90459-7458		1	WARNING SIGN ANSI (H), HOT SURFACE	
TBA 0200M ISO, TBA 0250B ISO					
020	2787590-0000		1	SHAFT	
070	2644109-0000		4	WHEEL	
080	2641243-0000		4	FLANGE	
090	2641241-0000		4	PIN	
170	2633447-0000		24	BUSHING	
230	90600-0682		1	INTERMEDIARY SHAFT, ZAE/60/414/24H7KEYWA	
240	2679565-0000		1	SHAFT	
650	312105-0453		24	SCREW M6S ISO 4017 M8X25 A480	
880	359705-0007		1	WARNING SIGN ISO, HOT SURFACE	
TBA 0200S ANSI					
020	2787590-0000		1	SHAFT	
070	2644110-0000		4	WHEEL	
080	2641243-0000		4	FLANGE	
090	2641241-0000		4	PIN	
170	2633447-0000		24	BUSHING	
230	90459-6956		1	INTERMEDIARY SHAFT, ZAE/60/423/24H7KEYWA	
240	2679565-0000		1	SHAFT	
650	312105-0453		24	SCREW M6S ISO 4017 M8X25 A480	
880	90459-7458		1	WARNING SIGN ANSI (H), HOT SURFACE	
TBA 0200S ISO					
020	2787590-0000		1	SHAFT	
070	2644110-0000		4	WHEEL	
080	2641243-0000		4	FLANGE	
090	2641241-0000		4	PIN	
170	2633447-0000		24	BUSHING	
230	90459-6956		1	INTERMEDIARY SHAFT, ZAE/60/423/24H7KEYWA	
240	2679565-0000		1	SHAFT	
650	312105-0453		24	SCREW M6S ISO 4017 M8X25 A480	
880	359705-0007		1	WARNING SIGN ISO, HOT SURFACE	
TBA 0250S ANSI					
020	2787590-0000		1	SHAFT	
070	2644111-0000		4	WHEEL	
080	2641243-0000		4	FLANGE	
090	2641241-0000		4	PIN	
170	2633447-0000		24	BUSHING	
230	90600-3278		1	INTERMEDIARY SHAFT, ZAE/60/432/24H7KEYWA	
240	2679565-0000		1	SHAFT	
650	312105-0453		24	SCREW M6S ISO 4017 M8X25 A480	
880	90459-7458		1	WARNING SIGN ANSI (H), HOT SURFACE	
TBA 0250S ISO					
020	2787590-0000		1	SHAFT	
070	2644111-0000		4	WHEEL	
080	2641243-0000		4	FLANGE	
090	2641241-0000		4	PIN	
170	2633447-0000		24	BUSHING	
230	90600-3278		1	INTERMEDIARY SHAFT, ZAE/60/432/24H7KEYWA	
240	2679565-0000		1	SHAFT	
650	312105-0453		24	SCREW M6S ISO 4017 M8X25 A480	
880	359705-0007		1	WARNING SIGN ISO, HOT SURFACE	
TBA 1000B ANSI					
020	2782481-0000		1	SHAFT	
070	2701831-0000		4	WHEEL	
080	2701832-0000		4	RING	

Machine Type | Group Description | Used-In | Group Number | Page No

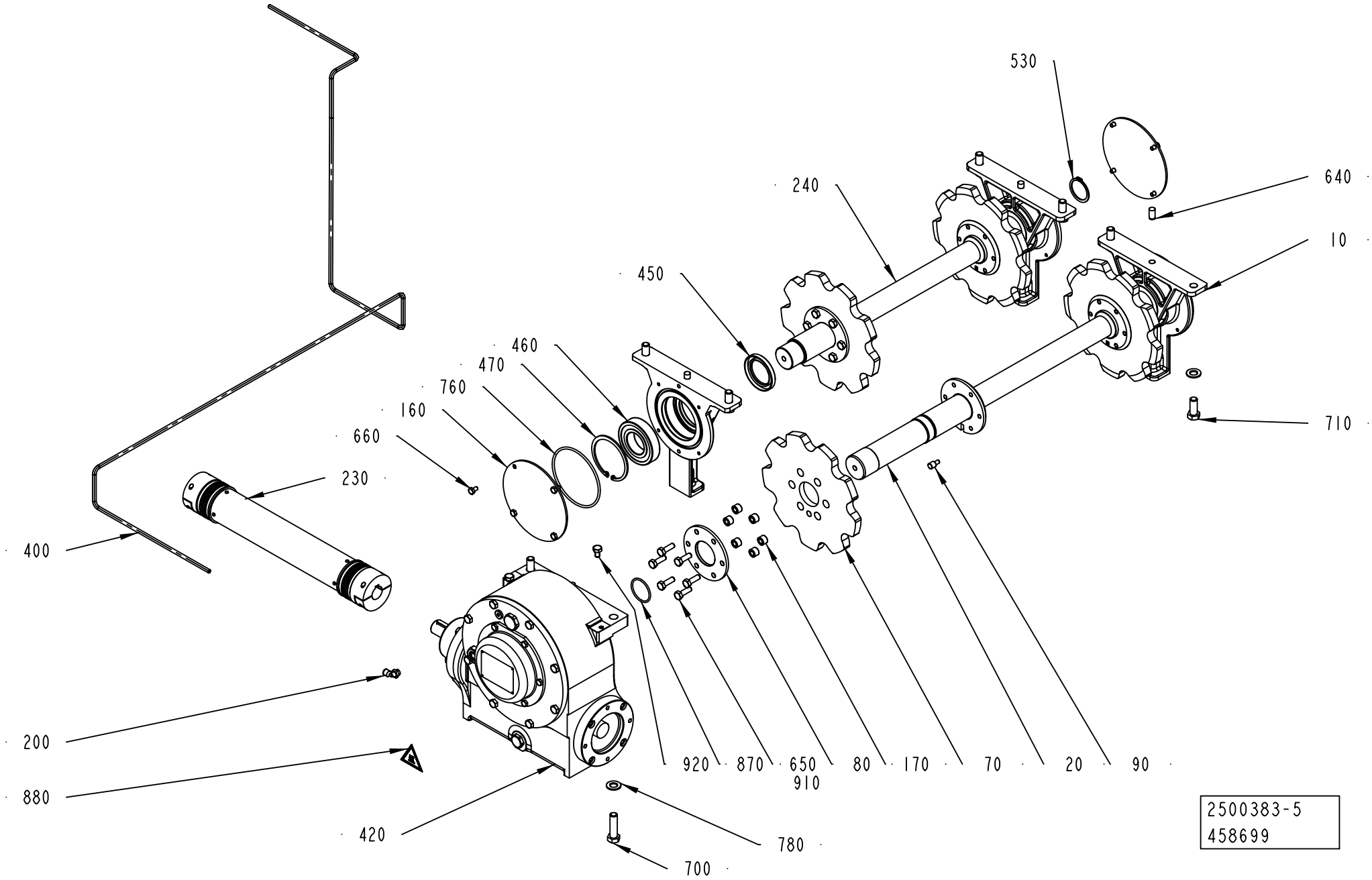
530
240
640
10
450
460
470
760
160
660
230
710
400
200
880
420
780
700
920
870
650
910
80
170
70
20
90
2500383-5
458699

ECM: 460428 - 20101001
Group number: 2500383-0400
Assembly Drawing: 2500383-5_1_AB

This list covers pages from 4-4 to 4-7

Pos	Part No	UN	Qty	Description	Page No
TBA 1000B ANSI (Cont'd)					
090	2702372-0000		4	PIN	
170	2702361-0000		24	SPACER	
230	90600-2644		1	INTERMEDIARY SHAFT, ZAE/60/460/24H7 KEYW	
240	2813815-0000		1	SHAFT	
650	312105-0460		24	SCREW M6S ISO 4014 M8X45 A480	
880	90459-7458		1	WARNING SIGN ANSI (H), HOT SURFACE	
TBA 1000B ISO					
020	2782481-0000		1	SHAFT	
070	2701831-0000		4	WHEEL	
080	2701832-0000		4	RING	
090	2702372-0000		4	PIN	
170	2702361-0000		24	SPACER	
230	90600-2644		1	INTERMEDIARY SHAFT, ZAE/60/460/24H7 KEYW	
240	2813815-0000		1	SHAFT	
650	312105-0460		24	SCREW M6S ISO 4014 M8X45 A480	
880	359705-0007		1	WARNING SIGN ISO, HOT SURFACE	
TBA 1000S ANSI					
020	2782481-0000		1	SHAFT	
070	2725728-0000		4	WHEEL	
080	2701832-0000		4	RING	
090	2702372-0000		4	PIN	
170	2702361-0000		24	SPACER	
230	90600-0537		1	INTERMEDIARY SHAFT, ZAE/60/480/28H7KEYWA	
240	2813815-0000		1	SHAFT	
650	312105-0460		24	SCREW M6S ISO 4014 M8X45 A480	
880	90459-7458		1	WARNING SIGN ANSI (H), HOT SURFACE	
TBA 1000S ISO					
020	2782481-0000		1	SHAFT	
070	2725728-0000		4	WHEEL	
080	2701832-0000		4	RING	
090	2702372-0000		4	PIN	
170	2702361-0000		24	SPACER	
230	90600-0537		1	INTERMEDIARY SHAFT, ZAE/60/480/28H7KEYWA	
240	2813815-0000		1	SHAFT	
650	312105-0460		24	SCREW M6S ISO 4014 M8X45 A480	
880	359705-0007		1	WARNING SIGN ISO, HOT SURFACE	
TBA 1000SQ ANSI					
020	2782481-0000		1	SHAFT	
070	2739087-0000		4	WHEEL	
080	2701832-0000		4	RING	
090	2702372-0000		4	PIN	
170	2702361-0000		24	SPACER	
230	90600-0537		1	INTERMEDIARY SHAFT, ZAE/60/480/28H7KEYWA	
240	2813815-0000		1	SHAFT	
650	312105-0460		24	SCREW M6S ISO 4014 M8X45 A480	
880	90459-7458		1	WARNING SIGN ANSI (H), HOT SURFACE	
TBA 1000SQ ISO					
020	2782481-0000		1	SHAFT	
070	2739087-0000		4	WHEEL	
080	2701832-0000		4	RING	
090	2702372-0000		4	PIN	
170	2702361-0000		24	SPACER	
230	90600-0537		1	INTERMEDIARY SHAFT, ZAE/60/480/28H7KEYWA	
240	2813815-0000		1	SHAFT	
650	312105-0460		24	SCREW M6S ISO 4014 M8X45 A480	
880	359705-0007		1	WARNING SIGN ISO, HOT SURFACE	
Common Parts					
010	2605704-0000		3	PLATE	
160	2605710-0000		3	DISC	
200	90458-2956		1	ELBOW PIPE JOINT, EXT.THREAD, D=6MM-G1/8	
400	90166-0081	MM	1800	TUBE 6 MM PA BLUE	
420	90459-1216		1	WORM GEAR 10.756.268	
	90600-4573		*1*	*SEAL RING, 35 62 7 FKM BASIL 85.303.563*	
	90600-4276		*2*	*SEAL RING, GP 60-90-8 FKM*	
	90600-4275		*1*	*SEAL RING, GP 30-62-7 FKM*	
450	90091-0298		3	RADIAL SEAL 45X65X8 MM DUST LIP	
460	90214-0236		3	BALL BEARING 40/80X18	
470	90458-0181		3	RETAINING RING FOR BORE DIN 472 80 SS	
530	315751-0127		1	10RETAINING RING FOR SHAFT DIN 471 40 SS	
640	311103-0454		4	PARALLEL PIN ISO 2338 10M6X20 A1	
660	312105-0364		12	SCREW M6S ISO 4017 M6X10 A480	
700	312105-0541		2	SCREW M6S ISO 4014 M12X45 A480	
710	312105-0536		6	SCREW M6S ISO 4017 M12X30 A480	
760	315202-0621		3	O-RING 104,37X3,53 MM	
780	315105-0178		8	WASHER BRB 13X24 RFR	
870	315202-0729		1	O-RING 39,34X2,62 MM	
910	90157-0016	ML	1	THREAD LOCKING, LOCTITE 242 50 ML	
920	312105-0447		2	SCREW M6S ISO 4017 M8X12 A480	

Machine Type | Group Description | Used-In | Group Number | Page No

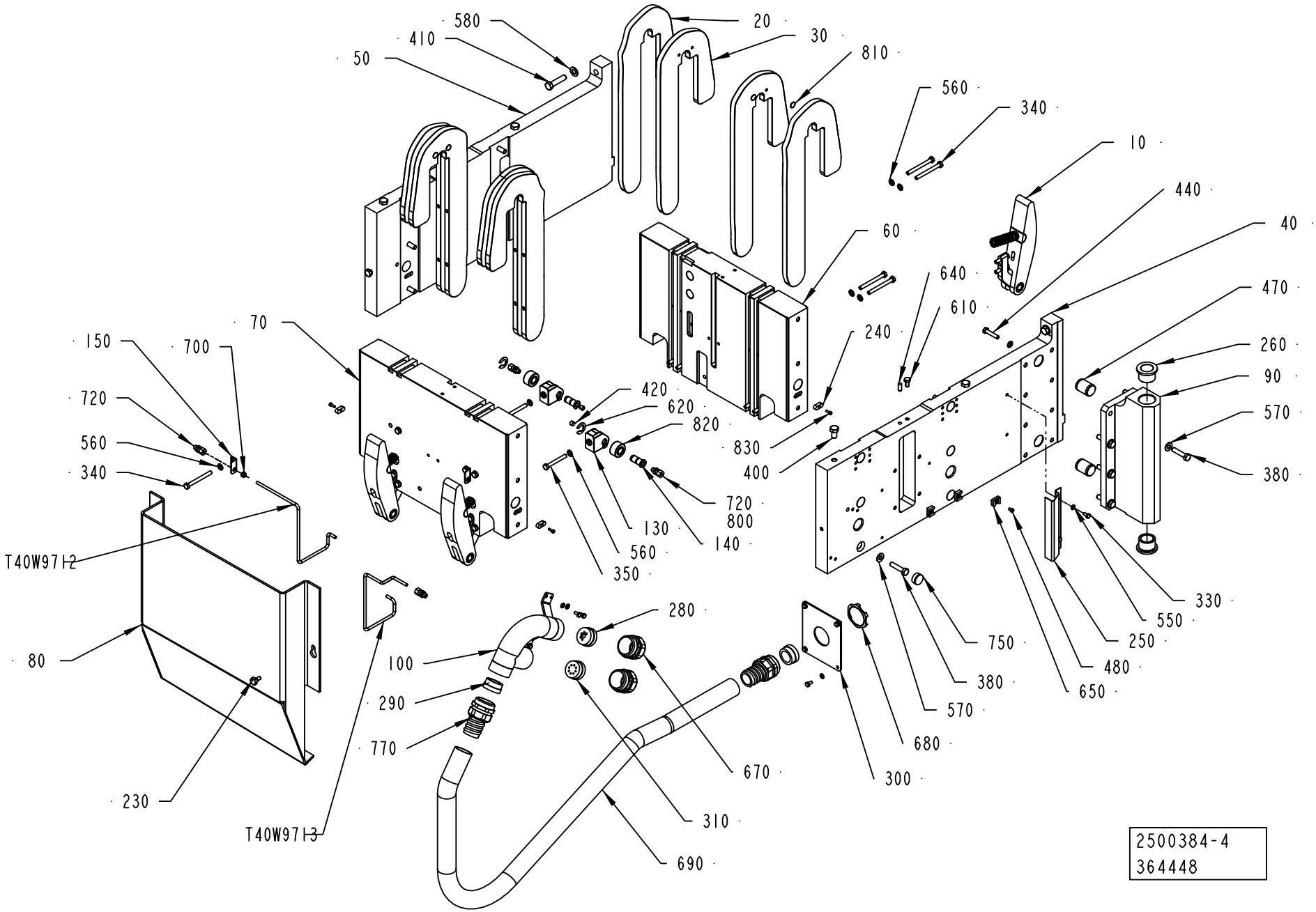
580
410
50
20
30
810
560
340
10
440
40
60
640
610
470
240
260
90
570
380
70
150
700
720
560
340
420
620
820
830
400
720
800
130
140
560
350
T40W971-2
80
230
T40W971-3
280
100
290
770
670
310
690
680
300
750
380
570
650
480
250
550
330
2500384-4
364448

ECM: 460429 - 20101001
Group number: 2500384-0200
Assembly Drawing: 2500384-4_1_AD

This list covers pages from 4-8 to 4-19

Pos	Part No	UN	Qty	Description	Page No
TBA 0125S (See drawing on page: 4-8)					
020	2916429-0000		4	CAM	
030	2916428-0000		4	CAM	
040	2686517-0000		1	PLATE	
050	2686518-0000		1	PLATE	
060	2760372-0000		1	PLATE	
070	2760373-0000		1	PLATE	
080	2523618-0000		1	PROTECTION	
090	2678302-0000		1	HINGE	
130	1524267-0000		2	HOLDER	
140	1524260-0000		2	SHAFT	
150	1524752-0000		2	BRACKET	
230	1282995-0000		2	SCREW	
250	2569972-0000		1	CABLE PROTECTION	
280	2556606-0000		1	INSERT	
330	312105-0366		10	SCREW M6S ISO 4017 M6X12 A480	
340	312105-0465		14	SCREW M6S ISO 4014 M8X70 A480	
350	312105-0457		4	SCREW M6S ISO 4014 M8X35 A480	
380	312105-0500		19	SCREW M6S ISO 4014 M10X45 A480	
410	312105-0542		2	SCREW M6S ISO 4014 M12X50 A480	
420	90087-0010		2	PLUG, EXT. THREAD, HEX. SOCKET NR. M10-	
480	312125-0323		9	SCREW ISO 1207 M5X8 A4	
550	315105-0153		10	WASHER BRB 6,4X12 RFR	
560	315105-0165		20	WASHER BRB 8,4X16 RFR	
570	315105-0173		19	WASHER BRB 10,5X22 RFR	
620	315755-0112		2	RETAINING RING SHAFT DIN 6799 12 SS	
650	352113-0204		9	ANCHOR PLATES FOR STRIPS, TYPE TM3S25-M	
690	90152-0060	MM	1250	SPIRAL CONDUIT, 42X35, UL3529	
700	90015-0027		2	LEAD-IN, BUSHING 6MM, 107-020	
720	90030-0184		4	CONN. STR., GE06LRED71	
750	90458-2419		9	PLUG GPN 300 V 233	
800	90459-0246		1	GREASE, KLüBERSYNTH UH1, ONLY IN BOM	
	90459-7414		*1*	*GREASE, KLüBERSYNTH UH1 14-1600, 25 KG*	
	90459-7413		*1*	*GREASE, KLüBERSYNTH UH1 14-1600, 1 KG*	
820	90083-0055		2	ROLLER BEARING, 15X35X19 MM	
T40W9712	1512600-0000		1	PIPE	
T40W9713	1512601-0000		1	PIPE	
TBA 0200B (See drawing on page: 4-8)					
020	1511397-0000		4	CAM	
030	1511396-0000		4	CAM	
040	2686517-0000		1	PLATE	
050	2686518-0000		1	PLATE	
060	2760372-0000		1	PLATE	
070	2760373-0000		1	PLATE	
080	2523618-0000		1	PROTECTION	
090	2678302-0000		1	HINGE	
130	1524267-0000		2	HOLDER	
140	1524260-0000		2	SHAFT	
150	1524752-0000		2	BRACKET	
230	1282995-0000		2	SCREW	
250	2569972-0000		1	CABLE PROTECTION	
280	2556606-0000		1	INSERT	
330	312105-0366		10	SCREW M6S ISO 4017 M6X12 A480	
340	312105-0465		14	SCREW M6S ISO 4014 M8X70 A480	
350	312105-0457		4	SCREW M6S ISO 4014 M8X35 A480	
380	312105-0500		19	SCREW M6S ISO 4014 M10X45 A480	
410	312105-0542		2	SCREW M6S ISO 4014 M12X50 A480	
420	90087-0010		2	PLUG, EXT. THREAD, HEX. SOCKET NR. M10-	
480	312125-0323		9	SCREW ISO 1207 M5X8 A4	
550	315105-0153		10	WASHER BRB 6,4X12 RFR	
560	315105-0165		20	WASHER BRB 8,4X16 RFR	
570	315105-0173		19	WASHER BRB 10,5X22 RFR	
620	315755-0112		2	RETAINING RING SHAFT DIN 6799 12 SS	
650	352113-0204		9	ANCHOR PLATES FOR STRIPS, TYPE TM3S25-M	
690	90152-0060	MM	1250	SPIRAL CONDUIT, 42X35, UL3529	
700	90015-0027		2	LEAD-IN, BUSHING 6MM, 107-020	
720	90030-0184		4	CONN. STR., GE06LRED71	
750	90458-2419		9	PLUG GPN 300 V 233	
800	90459-0246		1	GREASE, KLüBERSYNTH UH1, ONLY IN BOM	
	90459-7414		*1*	*GREASE, KLüBERSYNTH UH1 14-1600, 25 KG*	
	90459-7413		*1*	*GREASE, KLüBERSYNTH UH1 14-1600, 1 KG*	
820	90083-0055		2	ROLLER BEARING, 15X35X19 MM	
T40W9712	1512600-0000		1	PIPE	
T40W9713	1512601-0000		1	PIPE	
TBA 0200M (See drawing on page: 4-8)					
020	2792625-0000		4	CAM	
030	2792626-0000		4	CAM	
040	2686521-0000		1	PLATE	
050	2686522-0000		1	PLATE	
060	2760366-0000		1	PLATE	
070	2760367-0000		1	PLATE	
080	2511245-0000		1	PROTECTION	
090	2678302-0000		1	HINGE	
130	1524267-0000		2	HOLDER	

Machine Type | Group Description | Used-In | Group Number | Page No

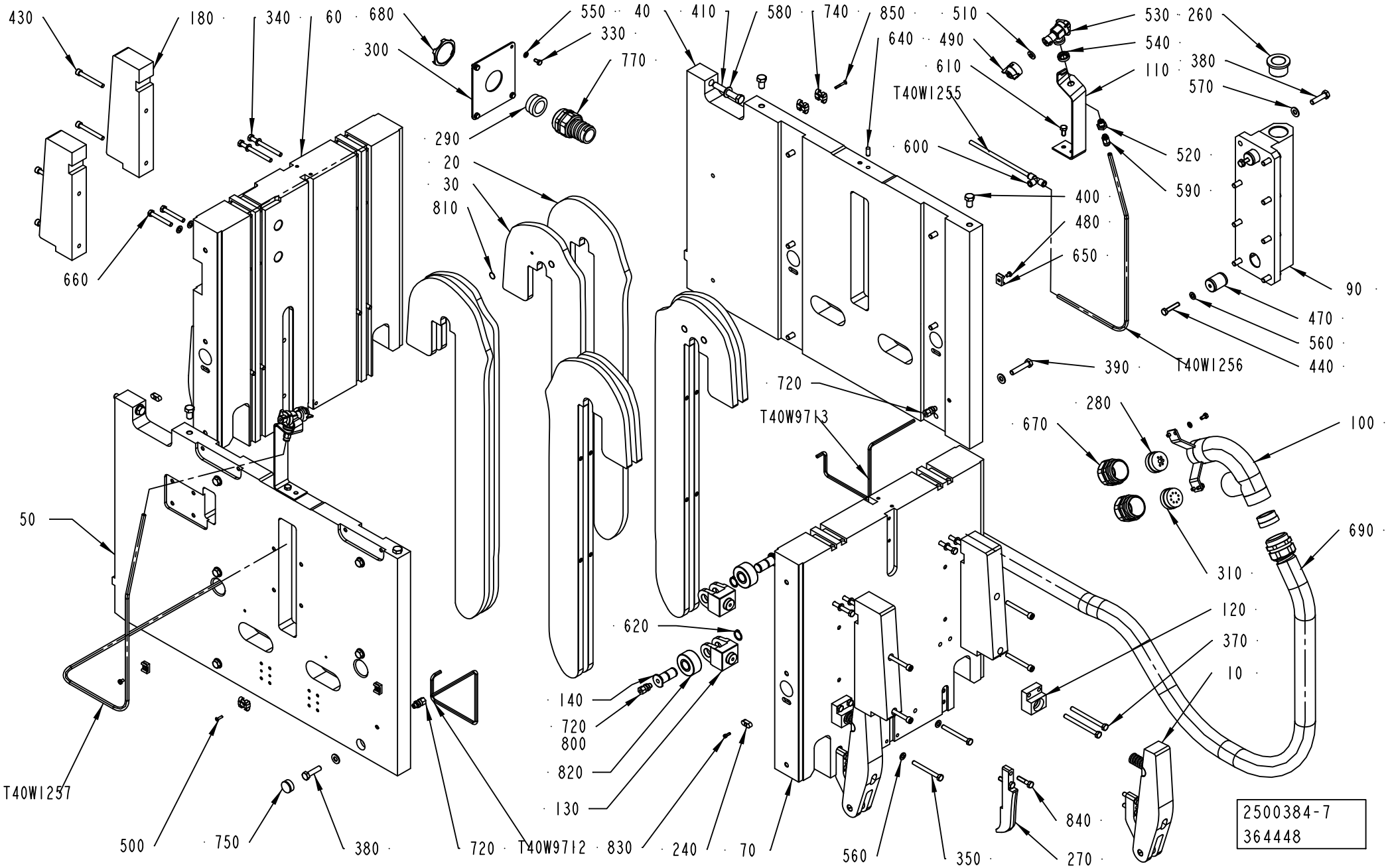
430
180
340
60
680
300
550
40
330
770
410
580
740
850
640
490
610
T40W1255
510
530
260
540
110
380
570
600
520
590
400
480
650
90
470
560
440
390
T40W1256
290
20
30
810
660
720
T40W9713
280
670
100
690
310
120
370
10
50
620
140
720
800
820
130
T40W1257
500
750
380
720
T40W9712
830
240
70
560
350
840
270
2500384-7
364448

ECM: 460429 - 20101001
Group number: 2500384-0200
Assembly Drawing: 2500384-7_1_AB

This list covers pages from 4-8 to 4-19

Pos	Part No	UN	Qty	Description	Page No
TBA 0200M (Cont'd) (See drawing on page: 4-8)					
140	1524260-0000		2	SHAFT	
150	1524752-0000		2	BRACKET	
230	1282995-0000		2	SCREW	
250	2569972-0000		1	CABLE PROTECTION	
280	2556606-0000		1	INSERT	
330	312105-0366		10	SCREW M6S ISO 4017 M6X12 A480	
340	312105-0467		16	SCREW M6S ISO 4014 M8X80 A480	
350	312105-0462		2	SCREW M6S ISO 4014 M8X55 A480	
380	312105-0500		20	SCREW M6S ISO 4014 M10X45 A480	
410	312105-0542		2	SCREW M6S ISO 4014 M12X50 A480	
420	90087-0010		2	PLUG, EXT. THREAD, HEX. SOCKET NR. M10-	
480	312125-0323		9	SCREW ISO 1207 M5X8 A4	
550	315105-0153		10	WASHER BRB 6,4X12 RFR	
560	315105-0165		12	WASHER BRB 8,4X16 RFR	
570	315105-0173		20	WASHER BRB 10,5X22 RFR	
620	315755-0112		2	RETAINING RING SHAFT DIN 6799 12 SS	
650	352113-0204		9	ANCHOR PLATES FOR STRIPS, TYPE TM3S25-M	
690	90152-0060	MM	1250	SPIRAL CONDUIT, 42X35, UL3529	
700	90015-0027		2	LEAD-IN, BUSHING 6MM, 107-020	
720	90030-0184		4	CONN. STR., GE06LRED71	
750	90458-2419		10	PLUG GPN 300 V 233	
800	90459-0246		1	GREASE, KLüBERSYNTH UH1, ONLY IN BOM	
	90459-7414		*1*	*GREASE, KLüBERSYNTH UH1 14-1600, 25 KG*	
	90459-7413		*1*	*GREASE, KLüBERSYNTH UH1 14-1600, 1 KG*	
820	90083-0055		2	ROLLER BEARING, 15X35X19 MM	
T40W9712	1524763-0000		1	PIPE	
T40W9713	1524764-0000		1	PIPE	
TBA 0200S (See drawing on page: 4-8)					
020	1499604-0000		4	CAM	
030	1499603-0000		4	CAM	
040	2678293-0000		1	PLATE	
050	2678294-0000		1	PLATE	
060	2760370-0000		1	PLATE	
070	2760371-0000		1	PLATE	
080	2502406-0000		1	PROTECTION	
090	2678302-0000		1	HINGE	
130	1524267-0000		2	HOLDER	
140	1524260-0000		2	SHAFT	
150	1524752-0000		2	BRACKET	
230	1282995-0000		2	SCREW	
250	2569972-0000		1	CABLE PROTECTION	
280	2556606-0000		1	INSERT	
330	312105-0366		10	SCREW M6S ISO 4017 M6X12 A480	
340	312105-0467		16	SCREW M6S ISO 4014 M8X80 A480	
350	312105-0464		2	SCREW M6S ISO 4014 M8X65 A480	
380	312105-0500		20	SCREW M6S ISO 4014 M10X45 A480	
410	312105-0542		2	SCREW M6S ISO 4014 M12X50 A480	
420	90087-0010		2	PLUG, EXT. THREAD, HEX. SOCKET NR. M10-	
480	312125-0323		9	SCREW ISO 1207 M5X8 A4	
550	315105-0153		10	WASHER BRB 6,4X12 RFR	
560	315105-0165		20	WASHER BRB 8,4X16 RFR	
570	315105-0173		20	WASHER BRB 10,5X22 RFR	
620	315755-0112		2	RETAINING RING SHAFT DIN 6799 12 SS	
650	352113-0204		9	ANCHOR PLATES FOR STRIPS, TYPE TM3S25-M	
690	90152-0060	MM	1250	SPIRAL CONDUIT, 42X35, UL3529	
700	90015-0027		2	LEAD-IN, BUSHING 6MM, 107-020	
720	90030-0184		4	CONN. STR., GE06LRED71	
750	90458-2419		10	PLUG GPN 300 V 233	
800	90459-0246		1	GREASE, KLüBERSYNTH UH1, ONLY IN BOM	
	90459-7414		*1*	*GREASE, KLüBERSYNTH UH1 14-1600, 25 KG*	
	90459-7413		*1*	*GREASE, KLüBERSYNTH UH1 14-1600, 1 KG*	
820	90083-0055		2	ROLLER BEARING, 15X35X19 MM	
T40W9712	2502415-0000		1	PIPE	
T40W9713	2508408-0000		1	PIPE	
TBA 0250B (See drawing on page: 4-8)					
020	1140287-0000		4	CAM	
030	1140288-0000		4	CAM	
040	2686521-0000		1	PLATE	
050	2686522-0000		1	PLATE	
060	2760366-0000		1	PLATE	
070	2760367-0000		1	PLATE	
080	2511245-0000		1	PROTECTION	
090	2678302-0000		1	HINGE	
130	1524267-0000		2	HOLDER	
140	1524260-0000		2	SHAFT	
150	1524752-0000		2	BRACKET	
230	1282995-0000		2	SCREW	
250	2569972-0000		1	CABLE PROTECTION	
280	2556606-0000		1	INSERT	
330	312105-0366		10	SCREW M6S ISO 4017 M6X12 A480	
340	312105-0467		16	SCREW M6S ISO 4014 M8X80 A480	
350	312105-0462		2	SCREW M6S ISO 4014 M8X55 A480	
380	312105-0500		20	SCREW M6S ISO 4014 M10X45 A480	

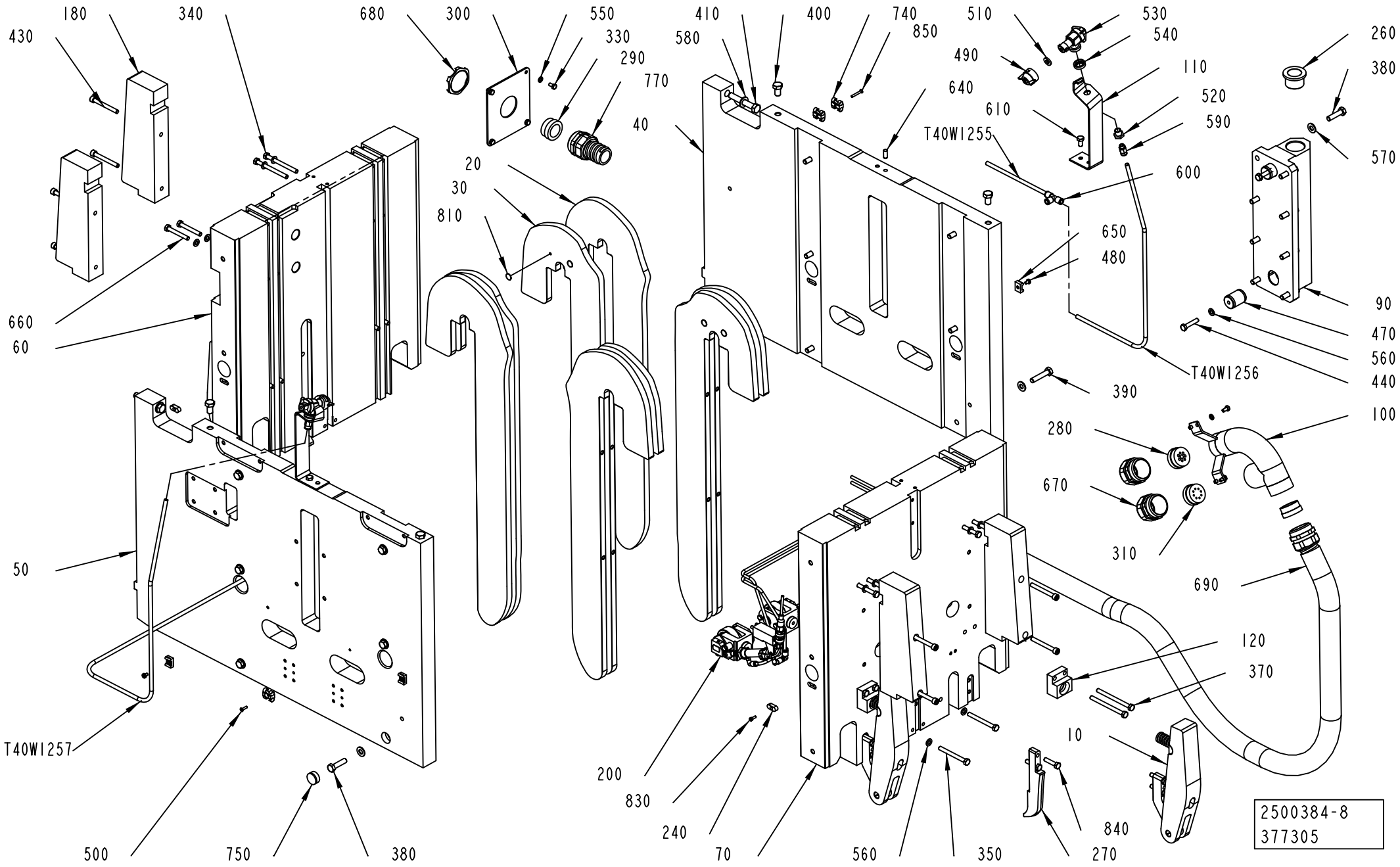
180
340
680
300
550
330
290
770
40
410
400
740
850
510
530
540
490
110
640
520
610
590
T40W1255
600
650
480
260
380
570
90
470
560
440
T40W1256
390
100
280
670
310
690
120
370
10
840
270
350
560
70
240
830
200
500
750
380
50
T40W1257
660
60
430
20
30
810
580
2500384-8
377305

ECM: 460429 - 20101001
Group number: 2500384-0200
Assembly Drawing: 2500384-8_1_AA

This list covers pages from 4-8 to 4-19

Pos	Part No	UN	Qty	Description	Page No
TBA 0250B (Cont'd) (See drawing on page: 4-8)					
410	312105-0542		2	SCREW M6S ISO 4014 M12X50 A480	
420	90087-0010		2	PLUG, EXT. THREAD, HEX. SOCKET NR. M10-	
480	312125-0323		9	SCREW ISO 1207 M5X8 A4	
550	315105-0153		10	WASHER BRB 6,4X12 RFR	
560	315105-0165		12	WASHER BRB 8,4X16 RFR	
570	315105-0173		20	WASHER BRB 10,5X22 RFR	
620	315755-0112		2	RETAINING RING SHAFT DIN 6799 12 SS	
650	352113-0204		9	ANCHOR PLATES FOR STRIPS, TYPE TM3S25-M	
690	90152-0060	MM	1250	SPIRAL CONDUIT, 42X35, UL3529	
700	90015-0027		2	LEAD-IN, BUSHING 6MM, 107-020	
720	90030-0184		4	CONN. STR., GE06LRED71	
750	90458-2419		10	PLUG GPN 300 V 233	
800	90459-0246		1	GREASE, KLüBERSYNTH UH1, ONLY IN BOM	
	90459-7414		*1*	*GREASE, KLüBERSYNTH UH1 14-1600, 25 KG*	
	90459-7413		*1*	*GREASE, KLüBERSYNTH UH1 14-1600, 1 KG*	
820	90083-0055		2	ROLLER BEARING, 15X35X19 MM	
T40W9712	1524763-0000		1	PIPE	
T40W9713	1524764-0000		1	PIPE	
TBA 0250S (See drawing on page: 4-8)					
020	1498578-0000		4	CURVE	
030	1498579-0000		4	CURVE	
040	2686544-0000		1	PLATE	
050	2686545-0000		1	PLATE	
060	2760374-0000		1	PLATE	
070	2760375-0000		1	PLATE	
080	1498591-0000		1	PROTECTION	
090	2678302-0000		1	HINGE	
130	1524267-0000		2	HOLDER	
140	1524260-0000		2	SHAFT	
150	1524752-0000		2	BRACKET	
230	1282995-0000		2	SCREW	
250	2569972-0000		1	CABLE PROTECTION	
280	2556606-0000		1	INSERT	
330	312105-0366		10	SCREW M6S ISO 4017 M6X12 A480	
340	312105-0467		16	SCREW M6S ISO 4014 M8X80 A480	
350	312105-0465		2	SCREW M6S ISO 4014 M8X70 A480	
380	312105-0500		20	SCREW M6S ISO 4014 M10X45 A480	
410	312105-0542		2	SCREW M6S ISO 4014 M12X50 A480	
420	90087-0010		2	PLUG, EXT. THREAD, HEX. SOCKET NR. M10-	
480	312125-0323		9	SCREW ISO 1207 M5X8 A4	
550	315105-0153		10	WASHER BRB 6,4X12 RFR	
560	315105-0165		20	WASHER BRB 8,4X16 RFR	
570	315105-0173		20	WASHER BRB 10,5X22 RFR	
620	315755-0112		2	RETAINING RING SHAFT DIN 6799 12 SS	
650	352113-0204		9	ANCHOR PLATES FOR STRIPS, TYPE TM3S25-M	
690	90152-0060	MM	1250	SPIRAL CONDUIT, 42X35, UL3529	
700	90015-0027		2	LEAD-IN, BUSHING 6MM, 107-020	
720	90030-0184		4	CONN. STR., GE06LRED71	
750	90458-2419		10	PLUG GPN 300 V 233	
800	90459-0246		1	GREASE, KLüBERSYNTH UH1, ONLY IN BOM	
	90459-7414		*1*	*GREASE, KLüBERSYNTH UH1 14-1600, 25 KG*	
	90459-7413		*1*	*GREASE, KLüBERSYNTH UH1 14-1600, 1 KG*	
820	90083-0055		2	ROLLER BEARING, 15X35X19 MM	
T40W9712	1512616-0000		1	PIPE	
T40W9713	1512617-0000		1	PIPE	
TBA 1000B (See drawing on page: 4-10)					
020	2500406-0000		4	CURVE	
030	2500407-0000		4	CURVE	
040	2782508-0000		1	PLATE	
050	2782511-0000		1	PLATE	
060	2782509-0000		1	PLATE	
070	2782510-0000		1	PLATE	
090	2782476-0000		1	BLOCK	
110	2890875-0000		2	SUPPORT	
120	2895466-0000		4	SPRING HOLDER	
130	1558057-0000		2	HOLDER	
140	2521083-0000		2	SHAFT	
180	2899003-0000		4	CAM	
280	2556606-0000		1	INSERT	
330	312105-0366		8	SCREW M6S ISO 4017 M6X12 A480	
340	312105-0469		6	SCREW M6S ISO 4014 M8X90 A480	
350	312105-0464		2	SCREW M6S ISO 4014 M8X65 A480	
370	312105-0469		8	SCREW M6S ISO 4014 M8X90 A480	
380	312105-0499		9	SCREW M6S ISO 4014 M10X40 A480	
390	312105-0501		11	SCREW M6S ISO 4014 M10X50 A480	
410	312105-0547		2	SCREW M6S ISO 4014 M12X75 A480	
430	312115-0465		8	SCREW ISO4762 M8X70 A4 80	
480	312125-0323		3	SCREW ISO 1207 M5X8 A4	
490	534310-0001		2	NOZZLE	
500	312155-0293		1	SCREW DIN 7991 MF6S M4X16 A4 70	
510	90005-0094		2	GASKET C 19438-EPR	
520	532413-0000		2	REDUCING NIPPLE	
530	90230-0027		2	NON-RETURN VALVE QJ 8355-1/4"	

See previous drawings pages: 4-8, 4-10, 4-12.

ECM: 460429 - 20101001
Group number: 2500384-0200
Assembly Drawing: 2500384-8_1_AA

This list covers pages from 4-8 to 4-19

Pos	Part No	UN	Qty	Description	Page No
TBA 1000B (Cont'd) (See drawing on page: 4-10)					
540	532414-0000		2	WASHER	
550	315105-0153		8	WASHER BRB 6,4X12 RFR	
560	315105-0165		12	WASHER BRB 8,4X16 RFR	
570	315105-0173		20	WASHER BRB 10,5X22 RFR	
590	350001-0007		2	PUSH-IN FITTING QS-F-G1/8-8	
600	350005-0003		1	PUSH-IN T-FITTING QST-F-8	
620	315751-0116		2	RETAINING RING FOR SHAFT DIN 471 20 SS	
650	352113-0204		3	ANCHOR PLATES FOR STRIPS, TYPE TM3S25-M	
660	312105-0463		2	SCREW M6S ISO 4014 M8X60 A480	
690	90152-0060	M	1500	SPIRAL CONDUIT, 42X35, UL3529	
720	90030-0184		4	CONN. STR., GE06LRED71	
740	90165-0076		5	T-CLIP T8 FOR TUBE D=8 - 9 MM	
750	90458-2419		1	PLUG GPN 300 V 233	
800	90459-0246		1	GREASE, KLüBERSYNTH UH1, ONLY IN BOM	
	90459-7414		*1*	*GREASE, KLüBERSYNTH UH1 14-1600, 25 KG*	
	90459-7413		*1*	*GREASE, KLüBERSYNTH UH1 14-1600, 1 KG*	
820	90459-0125		2	CYL.ROLLER BEARING, 20X52X25 MM	
850	312155-0299		2	SCREW DIN 7991 MF6S M4X30 A4 70	
T40W1255	90166-0133	MM	1000	TUBE 8 MM PA,TRANSP. (1 PACK=50 M)	
T40W1256	90166-0133	MM	1000	TUBE 8 MM PA,TRANSP. (1 PACK=50 M)	
T40W1257	90166-0133	MM	1400	TUBE 8 MM PA,TRANSP. (1 PACK=50 M)	
T40W9712	2782505-0000		1	PIPE	
T40W9713	2782506-0000		1	PIPE	
TBA 1000S (See drawing on page: 4-10)					
020	2524346-0000		4	CAM	
030	2524347-0000		4	CAM	
040	2782521-0000		1	PLATE	
050	2782522-0000		1	PLATE	
060	2782523-0000		1	PLATE	
070	2782524-0000		1	PLATE	
090	2782476-0000		1	BLOCK	
110	2890875-0000		2	SUPPORT	
120	2574505-0000		4	SPRING HOLDER	
130	1558057-0000		2	HOLDER	
140	2521083-0000		2	SHAFT	
180	2912503-0000		4	CAM	
280	2556606-0000		1	INSERT	
330	312105-0366		8	SCREW M6S ISO 4017 M6X12 A480	
340	312105-0469		6	SCREW M6S ISO 4014 M8X90 A480	
350	312105-0467		2	SCREW M6S ISO 4014 M8X80 A480	
370	312105-0471		8	SCREW M6S ISO 4014 M8X100 A480	
380	312105-0499		10	SCREW M6S ISO 4014 M10X40 A480	
390	312105-0501		10	SCREW M6S ISO 4014 M10X50 A480	
410	312105-0547		2	SCREW M6S ISO 4014 M12X75 A480	
430	312115-0465		8	SCREW ISO4762 M8X70 A4 80	
480	312125-0323		3	SCREW ISO 1207 M5X8 A4	
490	534310-0001		2	NOZZLE	
500	312155-0293		1	SCREW DIN 7991 MF6S M4X16 A4 70	
510	90005-0094		2	GASKET C 19438-EPR	
520	532413-0000		2	REDUCING NIPPLE	
530	90230-0027		2	NON-RETURN VALVE QJ 8355-1/4"	
	90230-0301		*1*	*DIAPHRAGM*	
	90230-0300		*1*	*STRAINER*	
540	532414-0000		2	WASHER	
550	315105-0153		8	WASHER BRB 6,4X12 RFR	
560	315105-0165		12	WASHER BRB 8,4X16 RFR	
570	315105-0173		20	WASHER BRB 10,5X22 RFR	
590	350001-0007		2	PUSH-IN FITTING QS-F-G1/8-8	
600	350005-0003		1	PUSH-IN T-FITTING QST-F-8	
620	315751-0116		2	RETAINING RING FOR SHAFT DIN 471 20 SS	
650	352113-0204		3	ANCHOR PLATES FOR STRIPS, TYPE TM3S25-M	
660	312105-0463		2	SCREW M6S ISO 4014 M8X60 A480	
690	90152-0060	M	1500	SPIRAL CONDUIT, 42X35, UL3529	
720	90030-0184		4	CONN. STR., GE06LRED71	
740	90165-0076		5	T-CLIP T8 FOR TUBE D=8 - 9 MM	
750	90458-2419		2	PLUG GPN 300 V 233	
800	90459-0246		1	GREASE, KLüBERSYNTH UH1, ONLY IN BOM	
	90459-7414		*1*	*GREASE, KLüBERSYNTH UH1 14-1600, 25 KG*	
	90459-7413		*1*	*GREASE, KLüBERSYNTH UH1 14-1600, 1 KG*	
820	90459-0125		2	CYL.ROLLER BEARING, 20X52X25 MM	
850	312155-0299		2	SCREW DIN 7991 MF6S M4X30 A4 70	
T40W1255	90166-0133	MM	1000	TUBE 8 MM PA,TRANSP. (1 PACK=50 M)	
T40W1256	90166-0133	MM	1000	TUBE 8 MM PA,TRANSP. (1 PACK=50 M)	
T40W1257	90166-0133	MM	1400	TUBE 8 MM PA,TRANSP. (1 PACK=50 M)	
T40W9712	2782518-0000		1	PIPE	
T40W9713	2782519-0000		1	PIPE	
TBA 1000SQ NOPT (See drawing on page: 4-10)					
020	2559017-0000		4	CAM	
030	2559018-0000		4	CAM	
040	2782472-0000		1	PLATE	
050	2782473-0000		1	PLATE	
060	2782474-0000		1	PLATE	
070	2782475-0000		1	PLATE	

Machine Type | Group Description | Used-In | Group Number | Page No

See previous drawings pages: 4-8, 4-10, 4-12.

ECM: 460429 - 20101001
Group number: 2500384-0200
Assembly Drawing: 2500384-8_1_AA

This list covers pages from 4-8 to 4-19

Pos	Part No	UN	Qty	Description	Page No
TBA 1000SQ NOPT (Cont'd) (See drawing on page: 4-10)					
090	2782476-0000		1	BLOCK	
110	2890875-0000		2	SUPPORT	
120	2574505-0000		4	SPRING HOLDER	
130	1558057-0000		2	HOLDER	
140	2521083-0000		2	SHAFT	
180	2559025-0000		4	CAM	
270	2783223-0000		2	CAM	
280	2556606-0000		1	INSERT	
330	312105-0366		8	SCREW M6S ISO 4017 M6X12 A480	
340	312105-0469		6	SCREW M6S ISO 4014 M8X90 A480	
350	312105-0467		2	SCREW M6S ISO 4014 M8X80 A480	
370	312105-0471		8	SCREW M6S ISO 4014 M8X100 A480	
380	312105-0499		9	SCREW M6S ISO 4014 M10X40 A480	
390	312105-0501		11	SCREW M6S ISO 4014 M10X50 A480	
410	312105-0547		2	SCREW M6S ISO 4014 M12X75 A480	
430	312115-0465		8	SCREW ISO4762 M8X70 A4 80	
480	312125-0323		3	SCREW ISO 1207 M5X8 A4	
490	534310-0001		2	NOZZLE	
500	312155-0293		1	SCREW DIN 7991 MF6S M4X16 A4 70	
510	90005-0094		2	GASKET C 19438-EPR	
520	532413-0000		2	REDUCING NIPPLE	
530	90230-0027		2	NON-RETURN VALVE QJ 8355-1/4"	
	90230-0301		*1*	*DIAPHRAGM*	
	90230-0300		*1*	*STRAINER*	
540	532414-0000		2	WASHER	
550	315105-0153		8	WASHER BRB 6,4X12 RFR	
560	315105-0165		12	WASHER BRB 8,4X16 RFR	
570	315105-0173		20	WASHER BRB 10,5X22 RFR	
590	350001-0007		2	PUSH-IN FITTING QS-F-G1/8-8	
600	350005-0003		1	PUSH-IN T-FITTING QST-F-8	
620	315751-0116		2	RETAINING RING FOR SHAFT DIN 471 20 SS	
650	352113-0204		3	ANCHOR PLATES FOR STRIPS, TYPE TM3S25-M	
660	312105-0463		2	SCREW M6S ISO 4014 M8X60 A480	
690	90152-0060	M	1500	SPIRAL CONDUIT, 42X35, UL3529	
720	90030-0184		4	CONN. STR., GE06LRED71	
740	90165-0076		5	T-CLIP T8 FOR TUBE D=8 - 9 MM	
750	90458-2419		1	PLUG GPN 300 V 233	
800	90459-0246		1	GREASE, KLüBERSYNTH UH1, ONLY IN BOM	
	90459-7414		*1*	*GREASE, KLüBERSYNTH UH1 14-1600, 25 KG*	
	90459-7413		*1*	*GREASE, KLüBERSYNTH UH1 14-1600, 1 KG*	
820	90459-0125		2	CYL.ROLLER BEARING, 20X52X25 MM	
840	312105-0457		4	SCREW M6S ISO 4014 M8X35 A480	
850	312155-0299		2	SCREW DIN 7991 MF6S M4X30 A4 70	
T40W1255	90166-0133	MM	1000	TUBE 8 MM PA,TRANSP. (1 PACK=50 M)	
T40W1256	90166-0133	MM	1000	TUBE 8 MM PA,TRANSP. (1 PACK=50 M)	
T40W1257	90166-0133	MM	1400	TUBE 8 MM PA,TRANSP. (1 PACK=50 M)	
T40W9712	2782478-0000		1	PIPE	
T40W9713	2782479-0000		1	PIPE	
TBA 1000SQ PT/SPEED (See drawing on page: 4-12)					
020	2559017-0000		4	CAM	
030	2559018-0000		4	CAM	
040	2782472-0000		1	PLATE	
050	2782473-0000		1	PLATE	
060	2782474-0000		1	PLATE	
070	2782475-0000		1	PLATE	
090	2782476-0000		1	BLOCK	
110	2890875-0000		2	SUPPORT	
120	2574505-0000		4	SPRING HOLDER	
180	2559025-0000		4	CAM	
200	2964422-0100		1	CUTTING DEVICE	**4-21**
270	2783223-0000		2	CAM	
280	3010276-0000		1	INSERT	
330	312105-0366		8	SCREW M6S ISO 4017 M6X12 A480	
340	312105-0469		6	SCREW M6S ISO 4014 M8X90 A480	
350	312105-0467		2	SCREW M6S ISO 4014 M8X80 A480	
370	312105-0471		8	SCREW M6S ISO 4014 M8X100 A480	
380	312105-0499		9	SCREW M6S ISO 4014 M10X40 A480	
390	312105-0501		11	SCREW M6S ISO 4014 M10X50 A480	
410	312105-0547		2	SCREW M6S ISO 4014 M12X75 A480	
430	312115-0465		8	SCREW ISO4762 M8X70 A4 80	
480	312125-0323		3	SCREW ISO 1207 M5X8 A4	
490	534310-0001		2	NOZZLE	
500	312155-0293		1	SCREW DIN 7991 MF6S M4X16 A4 70	
510	90005-0094		2	GASKET C 19438-EPR	
520	532413-0000		2	REDUCING NIPPLE	
530	90230-0027		2	NON-RETURN VALVE QJ 8355-1/4"	
	90230-0301		*1*	*DIAPHRAGM*	
	90230-0300		*1*	*STRAINER*	
540	532414-0000		2	WASHER	
550	315105-0153		8	WASHER BRB 6,4X12 RFR	
560	315105-0165		12	WASHER BRB 8,4X16 RFR	
570	315105-0173		20	WASHER BRB 10,5X22 RFR	
590	350001-0007		2	PUSH-IN FITTING QS-F-G1/8-8	

Machine Type | Group Description | Used-In | Group Number | Page No

See previous drawings pages: 4-8, 4-10, 4-12.

Pos	Part No	UN	Qty	Description	Page No
TBA 1000SQ PT/SPEED (Cont'd) (See drawing on page: 4-12)					
600	350005-0003		1	PUSH-IN T-FITTING QST-F-8	
650	352113-0204		3	ANCHOR PLATES FOR STRIPS, TYPE TM3S25-M	
660	312105-0463		2	SCREW M6S ISO 4014 M8X60 A480	
690	90152-0060	M	1500	SPIRAL CONDUIT, 42X35, UL3529	
740	90165-0076		5	T-CLIP T8 FOR TUBE D=8 - 9 MM	
750	90458-2419		1	PLUG GPN 300 V 233	
840	312105-0457		4	SCREW M6S ISO 4014 M8X35 A480	
850	312155-0299		2	SCREW DIN 7991 MF6S M4X30 A4 70	
T40W1255	90166-0133	MM	1000	TUBE 8 MM PA,TRANSP. (1 PACK=50 M)	
T40W1256	90166-0133	MM	1000	TUBE 8 MM PA,TRANSP. (1 PACK=50 M)	
T40W1257	90166-0133	MM	1400	TUBE 8 MM PA,TRANSP. (1 PACK=50 M)	
Common Parts					
010	2500402-0200		4	CHAIN TENSIONER	**4-23, 4-25**
100	2787591-0000		1	HOUSING	
240	2760369-0000		4	KEY	
260	321101-0273		2	FLANGE BUSHING, 30/40X30-50X5 MM	
290	2531413-0000		2	INSERT	
300	2811492-0000		1	PLATE	
310	2594979-0000		1	INSERT	
400	312105-0532		4	SCREW M6S ISO 4017 M12X20 A480	
440	312109-0459		2	SCREW M6S ISO 4017 M8X40 A480	
470	2678298-0000		2	PIN	
580	315105-0178		2	WASHER BRB 13X24 RFR	
610	312105-0449		2	SCREW M6S ISO 4017 M8X16 A480	
640	311103-0401		2	PARALLEL PIN ISO 2338 8M6X20 A1	
670	90458-0411		2	GLAND W/O INSERT M50 NORMAL	
680	90458-0465		1	GLAND, LOCK NUT, M50X1,5	
770	90458-0416		2	HOSE GLAND W/O INSERT M50 NORMAL	
810	90458-0289		14	PLUG,GPN 340-SW-5 MM	
830	312115-0291		4	SCREW ISO4762 M4X12 A4 80	

Pos	Part No	UN	Qty	Description	Page No

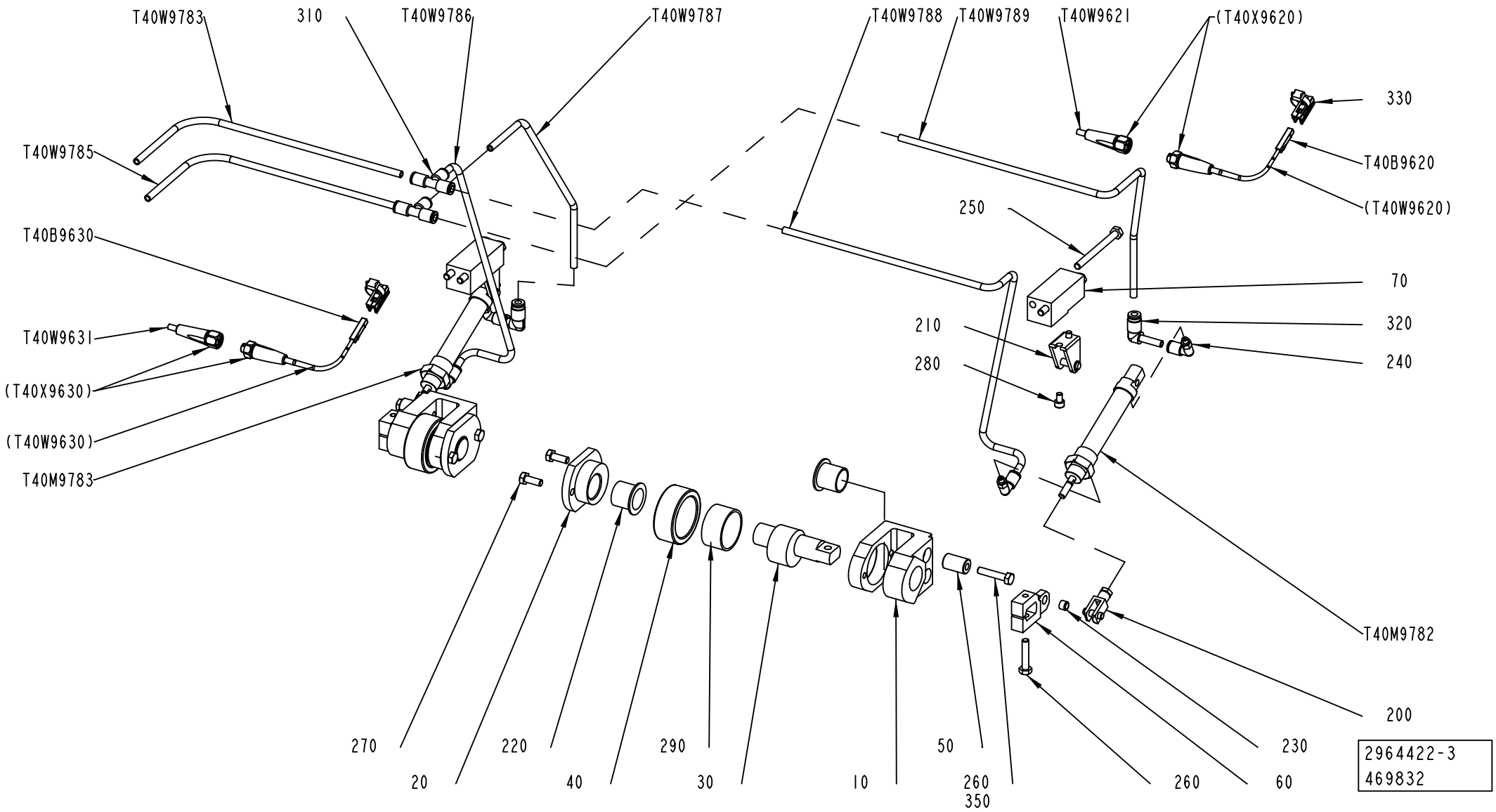
T40W9783
310
T40W9786
T40W9787
T40W9788
T40W9789
T40W9621
(T40X9620)
330
T40B9620
(T40W9620)
T40W9785
250
T40B9630
70
T40W9631
210
320
280
240
(T40X9630)
(T40W9630)
T40M9783
T40M9782
200
270
220
290
50
230
20
40
30
10
260
60
350
260
2964422-3
469832

ECM: 472316 - 20110101
Group number: 2964422-0100
Assembly Drawing: 2964422-3_1_AB

Pos	Part No	UN	Qty	Description	Page No
-					
010	2971499-0000		2	HOLDER	
020	2966211-0000		2	FLANGE	
030	2966209-0000		2	SHAFT	
040	2769575-0000		2	ROLLER	
050	2966928-0000		2	BUSHING	
060	2971500-0000		2	LEVER	
070	2971501-0000		2	HOLDER	
200	90450-0725		2	ROD END, CLEVIS WITH AXLE M6	
210	90239-0486		2	REAR, CLEVIS, MINI-ISO 16	
220	90600-5996		4	FLANGE BUSHING, IGLIDUR Z 20X23X21,5	
230	321135-0060		2	BUSHING, IGLIDUR X 6X8X6	
240	350002-0002		4	PUSH-IN L-FITTING QSL-F-M5-6	
250	312105-0384		4	SCREW M6S ISO 4014 M6X70 A480	
260	312105-0374		4	SCREW M6S ISO 4014 M6X30 A480	
270	312105-0368		4	SCREW M6S ISO 4017 M6X16 A480	
280	312115-0323		4	SCREW ISO4762 M5X8 A4 80	
290	90600-5995		2	BUSHING, 35X39X20 MM	
310	350005-0002		2	PUSH-IN T-FITTING QST-F-6	
320	90055-0222		2	ELBOW WITH TAILPIECE 6/6 MM	
330	90603-1353		2	SENSOR BRACKET E11975	
350	90157-0021	KG	1	LOCKING FLUID LOCTITE 270	
T40B9620	5985309-7004		1	CYLINDER SENSOR, 0.3M CABLE W.M12-CONN.	
T40B9630	5985309-7004		1	CYLINDER SENSOR, 0.3M CABLE W.M12-CONN.	
T40M9782	90600-3045		1	DOUBLE ACTING, MINI-ISO, CYL. 16-40	
T40M9783	90600-3045		1	DOUBLE ACTING, MINI-ISO, CYL. 16-40	
T40W9621	90510-5710		1	SENSOR CABLE 10M, 1XM12 STRAIGHT	
T40W9631	90510-5710		1	SENSOR CABLE 10M, 1XM12 STRAIGHT	
T40W9783	90166-0081	MM	1500	TUBE 6 MM PA BLUE	
T40W9785	90166-0081	MM	1500	TUBE 6 MM PA BLUE	
T40W9786	90166-0081	MM	380	TUBE 6 MM PA BLUE	
T40W9787	90166-0081	MM	350	TUBE 6 MM PA BLUE	
T40W9788	90166-0081	MM	600	TUBE 6 MM PA BLUE	
T40W9789	90166-0081	MM	560	TUBE 6 MM PA BLUE	

Pos	Part No	UN	Qty	Description	Page No

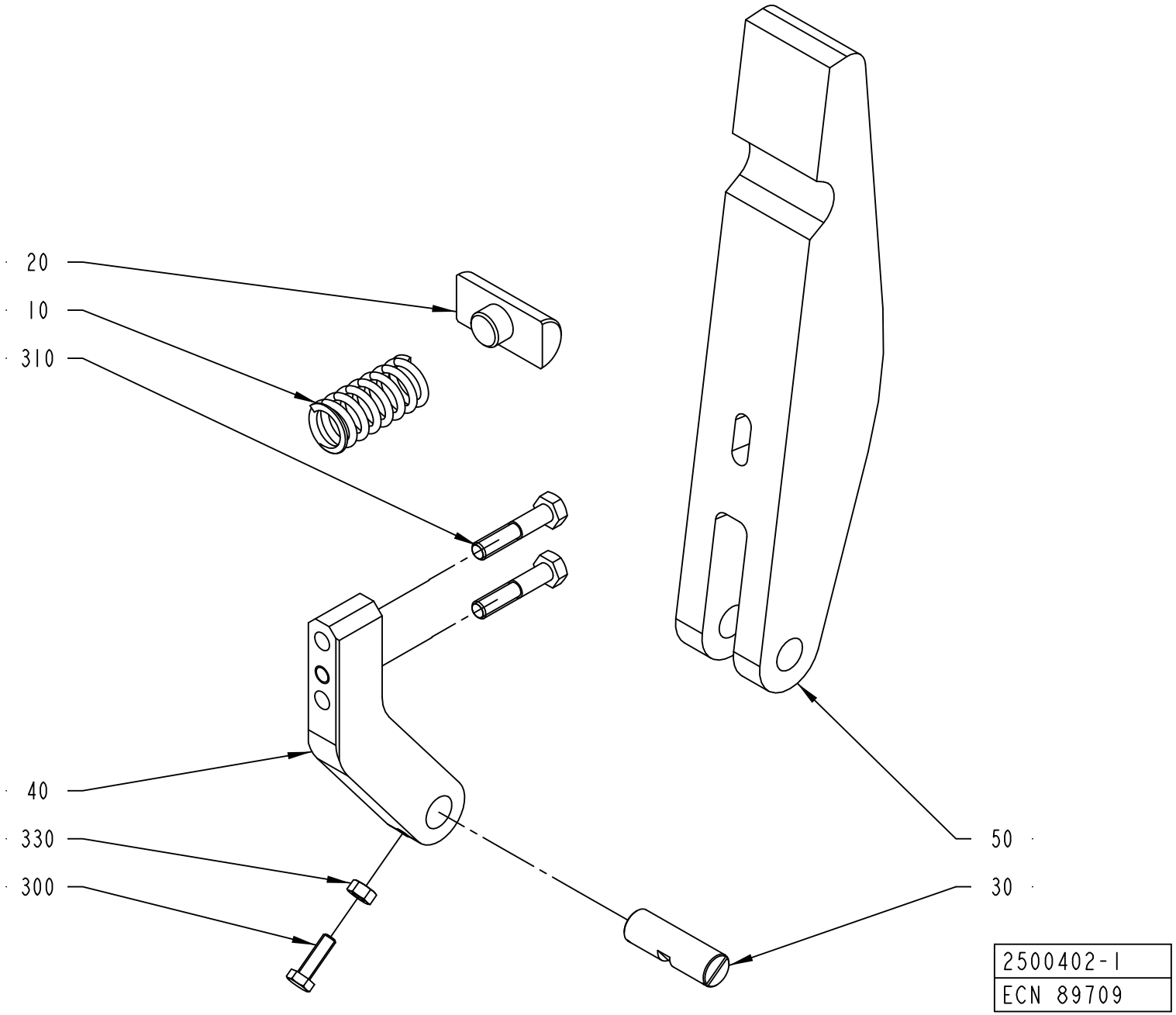
20
10
310
40
330
300
50
30
2500402-1
ECN 89709

ECM: 460441 - 20101001
Group number: 2500402-0200
Assembly Drawing: 2500402-1_1_AA

This list covers pages from 4-22 to 4-25

Pos	Part No	UN	Qty	Description	Page No
TBA 0125S, TBA 0200B (See drawing on page: 4-24)					
010	90600-5905		1	COMP. SPRING D23060, 2,5X22,5X81,5	
030	1498279-0000		1	SHAFT	
040	1349367-0000		1	BRACKET	
050	1487219-0000		1	CURVE	
310	312105-0455		2	SCREW M6S ISO 4017 M8X30 A480	
340	315751-0112		2	RETAINING RING FOR SHAFT DIN 471 15 SS	
TBA 0200M, TBA 0250B (See drawing on page: 4-24)					
010	90600-5905		1	COMP. SPRING D23060, 2,5X22,5X81,5	
030	1498279-0000		1	SHAFT	
040	1140872-0000		1	BRACKET	
050	1498278-0000		1	CAM	
340	315751-0112		2	RETAINING RING FOR SHAFT DIN 471 15 SS	
TBA 0200S (See drawing on page: 4-24)					
010	90600-5905		1	COMP. SPRING D23060, 2,5X22,5X81,5	
030	1498279-0000		1	SHAFT	
040	1512365-0000		1	BRACKET	
050	1499602-0000		1	CAM	
310	312105-0457		2	SCREW M6S ISO 4014 M8X35 A480	
340	315751-0112		2	RETAINING RING FOR SHAFT DIN 471 15 SS	
TBA 0250S (See drawing on page: 4-24)					
010	90600-5905		1	COMP. SPRING D23060, 2,5X22,5X81,5	
030	1498279-0000		1	SHAFT	
040	1498592-0000		1	BRACKET	
050	1498593-0000		1	CURVE	
310	312105-0457		2	SCREW M6S ISO 4014 M8X35 A480	
340	315751-0112		2	RETAINING RING FOR SHAFT DIN 471 15 SS	
TBA 1000B (See drawing on page: 4-22)					
010	90600-5906		1	COMP. SPRING D 23340, 3,2X23,2X49,5	
030	2574506-0000		1	SHAFT	
040	2500404-0000		1	BRACKET	
050	2899002-0000		1	CAM	
300	312105-0370		1	SCREW M6S ISO 4017 M6X20 A480	
310	312105-0459		2	SCREW M6S ISO 4014 M8X40 A480	
330	312605-0316		1	HEXAGON NUT, M6M M6 A280	
TBA 1000S (See drawing on page: 4-22)					
010	90600-5906		1	COMP. SPRING D 23340, 3,2X23,2X49,5	
030	2574506-0000		1	SHAFT	
040	2500404-0000		1	BRACKET	
050	2912502-0000		1	CAM	
300	312105-0370		1	SCREW M6S ISO 4017 M6X20 A480	
310	312105-0459		2	SCREW M6S ISO 4014 M8X40 A480	
330	312605-0316		1	HEXAGON NUT, M6M M6 A280	
TBA 1000SQ (See drawing on page: 4-22)					
010	90600-5906		1	COMP. SPRING D 23340, 3,2X23,2X49,5	
030	2574506-0000		1	SHAFT	
040	2500404-0000		1	BRACKET	
050	2559026-0000		1	CAM	
300	312105-0370		1	SCREW M6S ISO 4017 M6X20 A480	
310	312105-0459		2	SCREW M6S ISO 4014 M8X40 A480	
330	312605-0316		1	HEXAGON NUT, M6M M6 A280	
Common Parts					
020	1041215-0000		1	BLOCKING PIECE	

CHAIN TENSIONER

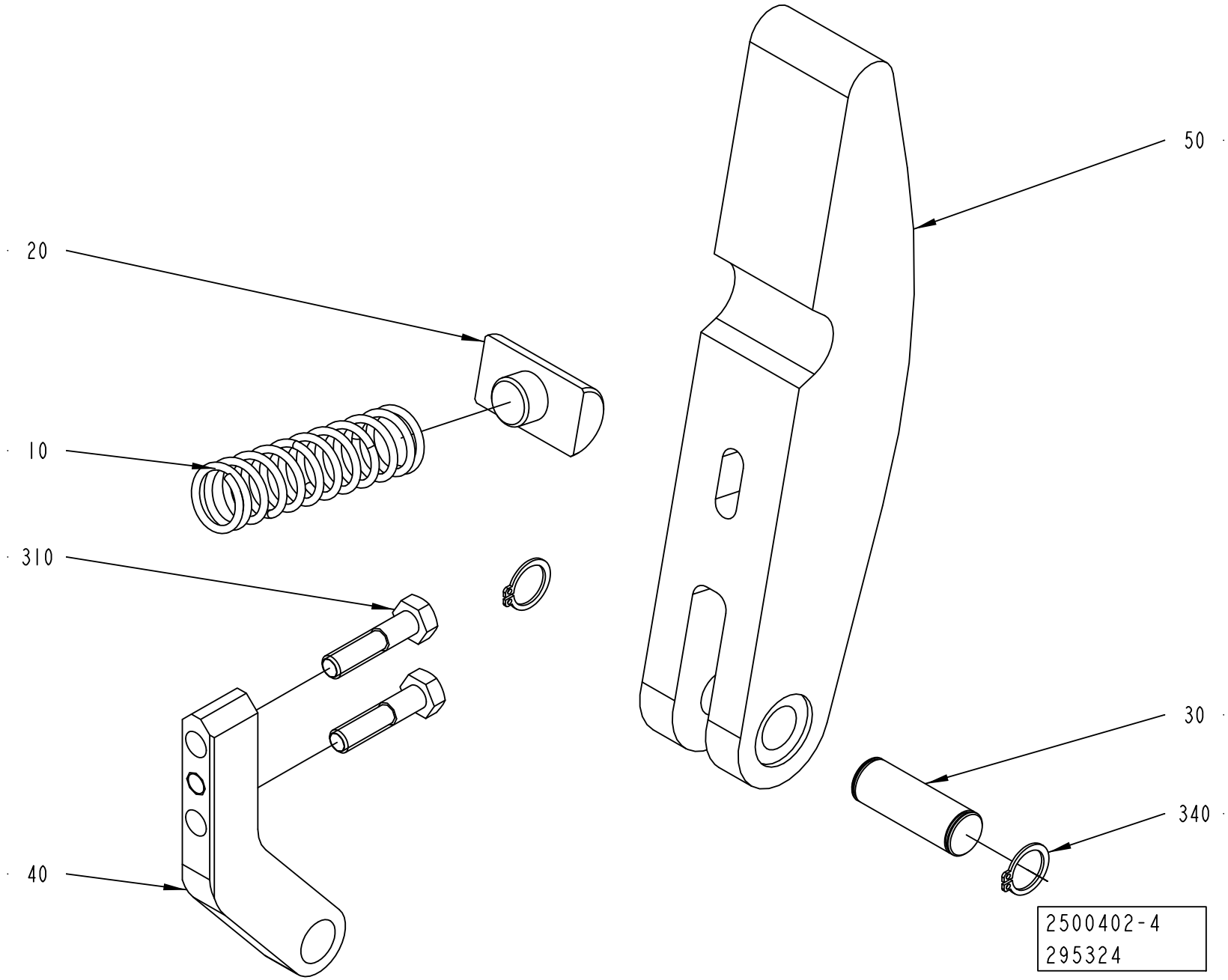

ECM: 460441 - 20101001
Group number: 2500402-0200
Assembly Drawing: 2500402-4_1_AA

This list covers pages from 4-22 to 4-25

Pos	Part No	UN	Qty	Description	Page No
TBA 0125S, TBA 0200B (See drawing on page: 4-24)					
010	90600-5905		1	COMP. SPRING D23060, 2,5X22,5X81,5	
030	1498279-0000		1	SHAFT	
040	1349367-0000		1	BRACKET	
050	1487219-0000		1	CURVE	
310	312105-0455		2	SCREW M6S ISO 4017 M8X30 A480	
340	315751-0112		2	RETAINING RING FOR SHAFT DIN 471 15 SS	
TBA 0200M, TBA 0250B (See drawing on page: 4-24)					
010	90600-5905		1	COMP. SPRING D23060, 2,5X22,5X81,5	
030	1498279-0000		1	SHAFT	
040	1140872-0000		1	BRACKET	
050	1498278-0000		1	CAM	
340	315751-0112		2	RETAINING RING FOR SHAFT DIN 471 15 SS	
TBA 0200S (See drawing on page: 4-24)					
010	90600-5905		1	COMP. SPRING D23060, 2,5X22,5X81,5	
030	1498279-0000		1	SHAFT	
040	1512365-0000		1	BRACKET	
050	1499602-0000		1	CAM	
310	312105-0457		2	SCREW M6S ISO 4014 M8X35 A480	
340	315751-0112		2	RETAINING RING FOR SHAFT DIN 471 15 SS	
TBA 0250S (See drawing on page: 4-24)					
010	90600-5905		1	COMP. SPRING D23060, 2,5X22,5X81,5	
030	1498279-0000		1	SHAFT	
040	1498592-0000		1	BRACKET	
050	1498593-0000		1	CURVE	
310	312105-0457		2	SCREW M6S ISO 4014 M8X35 A480	
340	315751-0112		2	RETAINING RING FOR SHAFT DIN 471 15 SS	
TBA 1000B (See drawing on page: 4-22)					
010	90600-5906		1	COMP. SPRING D 23340, 3,2X23,2X49,5	
030	2574506-0000		1	SHAFT	
040	2500404-0000		1	BRACKET	
050	2899002-0000		1	CAM	
300	312105-0370		1	SCREW M6S ISO 4017 M6X20 A480	
310	312105-0459		2	SCREW M6S ISO 4014 M8X40 A480	
330	312605-0316		1	HEXAGON NUT, M6M M6 A280	
TBA 1000S (See drawing on page: 4-22)					
010	90600-5906		1	COMP. SPRING D 23340, 3,2X23,2X49,5	
030	2574506-0000		1	SHAFT	
040	2500404-0000		1	BRACKET	
050	2912502-0000		1	CAM	
300	312105-0370		1	SCREW M6S ISO 4017 M6X20 A480	
310	312105-0459		2	SCREW M6S ISO 4014 M8X40 A480	
330	312605-0316		1	HEXAGON NUT, M6M M6 A280	
TBA 1000SQ (See drawing on page: 4-22)					
010	90600-5906		1	COMP. SPRING D 23340, 3,2X23,2X49,5	
030	2574506-0000		1	SHAFT	
040	2500404-0000		1	BRACKET	
050	2559026-0000		1	CAM	
300	312105-0370		1	SCREW M6S ISO 4017 M6X20 A480	
310	312105-0459		2	SCREW M6S ISO 4014 M8X40 A480	
330	312605-0316		1	HEXAGON NUT, M6M M6 A280	
Common Parts					
020	1041215-0000		1	BLOCKING PIECE	

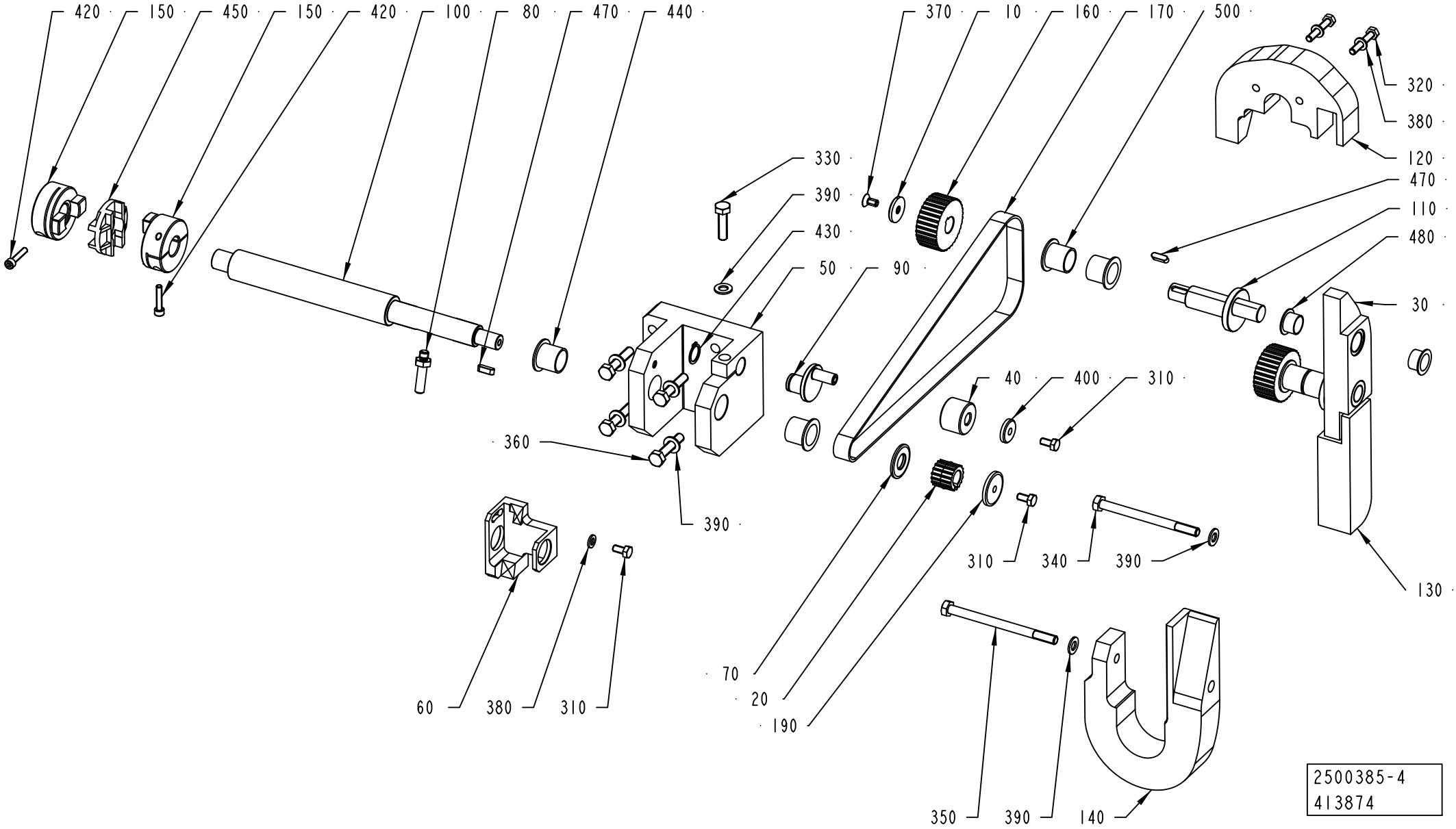
420
150
450
150
420
100
80
470
440
370
10
160
170
500
320
380
120
330
390
430
50
90
470
110
480
30
40
400
310
360
390
310
340
390
130
60
380
310
70
20
190
350
390
140
2500385-4
413874

ECM: 460427 - 20101001
Group number: 2500385-0200
Assembly Drawing: 2500385-4_1_AC

This list covers pages from 4-26 to 4-31

Pos	Part No	UN	Qty	Description	Page No
TBA 0125S (See drawing on page: 4-26)					
010	1041549-0000		2	0,012WASHER	
020	2595691-0000		1	PULLEY	
030	2839281-0000		1	CAM	
040	1140845-0000		1	ROLLER	
070	2595689-0000		1	WASHER	
090	1519814-0000		1	ECCENTRIC SHAFT	
100	2760377-0000		1	SHAFT	
110	2760379-0000		2	ECCENTRIC SHAFT	
120	2838989-0000		1	CAM	
130	2839322-0000		1	CAM	
140	2839378-0000		1	CAM	
160	1539376-0000		2	PULLEY	
170	1548798-0000		1	TIMING BELT	
310	312105-0366		3	SCREW M6S ISO 4017 M6X12 A480	
320	312115-0378		2	SCREW ISO4762 M6X40 A4 80	
340	312105-0462		1	SCREW M6S ISO 4014 M8X55 A480	
350	312105-0466		1	SCREW M6S ISO 4014 M8X75 A480	
370	312155-0366		2	SCREW DIN 7991 MF6S M6X12 A4 70	
390	315105-0165		7	WASHER BRB 8,4X16 RFR	
470	90458-0548		3	PARALLEL KEY W. ROUND ENDS 5X5X16 MM	
480	90240-0325		2	FLANGE BUSHING, IGLIDUR X 16X18X12	
500	90459-1186		4	FLANGE BUSHING, IGLIDUR X 20X23X11	
TBA 0200B (See drawing on page: 4-26)					
010	1041549-0000		2	0,012WASHER	
020	2595691-0000		1	PULLEY	
030	1349375-0000		1	CURVE	
040	1140845-0000		1	ROLLER	
070	2595689-0000		1	WASHER	
090	1519814-0000		1	ECCENTRIC SHAFT	
100	2760377-0000		1	SHAFT	
110	2760379-0000		2	ECCENTRIC SHAFT	
120	1349380-0000		1	CURVE	
130	1349379-0000		1	CURVE	
140	1349377-0000		1	CURVE	
160	1539376-0000		2	PULLEY	
170	1548798-0000		1	TIMING BELT	
310	312105-0366		3	SCREW M6S ISO 4017 M6X12 A480	
320	312115-0376		2	SCREW ISO4762 M6X35 A4 80	
340	312105-0462		1	SCREW M6S ISO 4014 M8X55 A480	
350	312105-0466		1	SCREW M6S ISO 4014 M8X75 A480	
370	312155-0366		2	SCREW DIN 7991 MF6S M6X12 A4 70	
390	315105-0165		7	WASHER BRB 8,4X16 RFR	
470	90458-0548		3	PARALLEL KEY W. ROUND ENDS 5X5X16 MM	
480	90240-0325		2	FLANGE BUSHING, IGLIDUR X 16X18X12	
500	90459-1186		4	FLANGE BUSHING, IGLIDUR X 20X23X11	
TBA 0200M (See drawing on page: 4-26)					
010	1041549-0000		2	0,012WASHER	
020	2595691-0000		1	PULLEY	
030	1484826-0000		1	CURVE	
040	1140845-0000		1	ROLLER	
070	2595689-0000		1	WASHER	
090	1519814-0000		1	ECCENTRIC SHAFT	
100	2760378-0000		1	SHAFT	
110	1548768-0000		2	ECCENTRIC SHAFT	
120	1484337-0000		1	CURVE	
130	2525678-0000		1	CURVE	
140	1484336-0000		1	CURVE	
160	1539376-0000		2	PULLEY	
170	1548798-0000		1	TIMING BELT	
310	312105-0366		3	SCREW M6S ISO 4017 M6X12 A480	
320	312109-0376		2	SCREW M6S ISO 4017 M6X35 A480	
340	312105-0467		1	SCREW M6S ISO 4014 M8X80 A480	
350	312105-0471		1	SCREW M6S ISO 4014 M8X100 A480	
370	312155-0366		2	SCREW DIN 7991 MF6S M6X12 A4 70	
390	315105-0165		7	WASHER BRB 8,4X16 RFR	
470	90458-0548		3	PARALLEL KEY W. ROUND ENDS 5X5X16 MM	
480	321155-0221		2	FLANGE BUSHING, IGLIDUR X 16X18X17	
500	90240-0265		4	FLANGE BUSHING, IGLIDUR X 20X23X21	
TBA 0200S (See drawing on page: 4-26)					
010	1041549-0000		2	0,012WASHER	
020	2595691-0000		1	PULLEY	
030	1512366-0000		1	CURVE	
040	1140845-0000		1	ROLLER	
070	2595689-0000		1	WASHER	
090	1519814-0000		1	ECCENTRIC SHAFT	
100	2678300-0000		1	SHAFT	
110	1512368-0000		2	ECCENTRIC SHAFT	
120	1512651-0000		1	CURVE	
130	1512367-0000		1	CURVE	
140	2782133-0000		1	CAM	
160	1539376-0000		2	PULLEY	
170	1548798-0000		1	TIMING BELT	
310	312105-0366		3	SCREW M6S ISO 4017 M6X12 A480	

Machine Type | Group Description | Used-In | Group Number | Page No

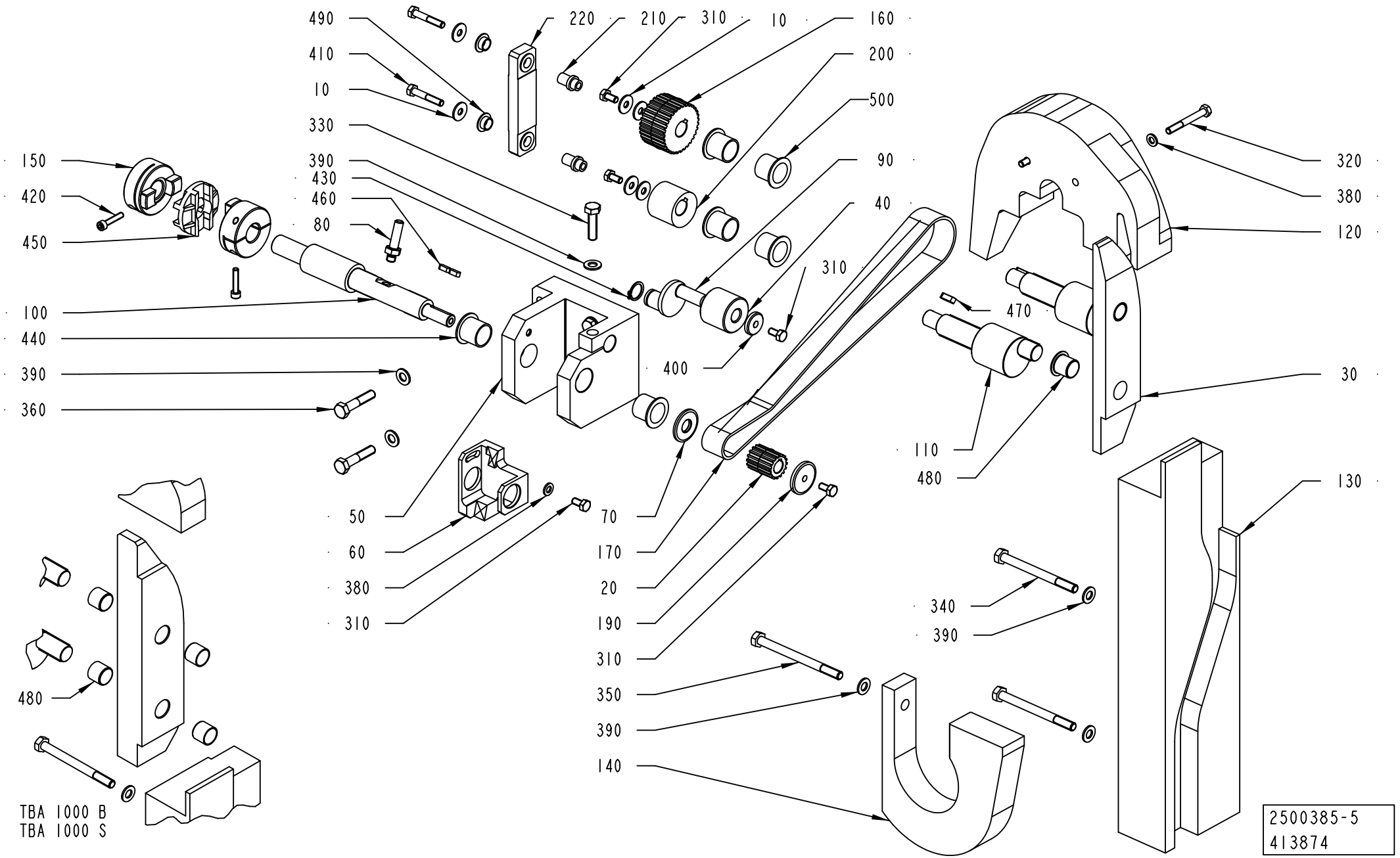
490
410
10
330
390
430
460
80
220
210
310
10
160
200
500
90
40
310
400
150
420
450
100
440
390
360
50
60
380
310
70
170
20
190
310
350
390
140
320
380
120
30
470
110
480
130
340
390
480
TBA 1000 B
TBA 1000 S
2500385-5
413874

Pos	Part No	UN	Qty	Description	Page No
TBA 0200S (Cont'd) (See drawing on page: 4-26)					
320	312109-0376		2	SCREW M6S ISO 4017 M6X35 A480	
340	312105-0467		1	SCREW M6S ISO 4014 M8X80 A480	
350	312105-0471		1	SCREW M6S ISO 4014 M8X100 A480	
370	312155-0366		2	SCREW DIN 7991 MF6S M6X12 A4 70	
390	315105-0165		7	WASHER BRB 8,4X16 RFR	
470	90458-0548		3	PARALLEL KEY W. ROUND ENDS 5X5X16 MM	
480	90240-0325		4	FLANGE BUSHING, IGLIDUR X 16X18X12	
500	90240-0265		4	FLANGE BUSHING, IGLIDUR X 20X23X21	
TBA 0250B (See drawing on page: 4-26)					
010	1041549-0000		2	0,012WASHER	
020	2595691-0000		1	PULLEY	
030	1350718-0000		1	CURVE	
040	1140845-0000		1	ROLLER	
070	2595689-0000		1	WASHER	
090	1519814-0000		1	ECCENTRIC SHAFT	
100	2760378-0000		1	SHAFT	
110	1140846-0000		2	ECCENTRIC SHAFT	
120	1260950-0000		1	CURVE	
130	2998934-0000		1	CURVE	
140	2998933-0000		1	CURVE	
160	1539376-0000		2	PULLEY	
170	1548798-0000		1	TIMING BELT	
310	312105-0366		3	SCREW M6S ISO 4017 M6X12 A480	
320	312109-0376		2	SCREW M6S ISO 4017 M6X35 A480	
340	312105-0467		1	SCREW M6S ISO 4014 M8X80 A480	
350	312105-0471		1	SCREW M6S ISO 4014 M8X100 A480	
370	312155-0366		2	SCREW DIN 7991 MF6S M6X12 A4 70	
390	315105-0165		7	WASHER BRB 8,4X16 RFR	
470	90458-0548		3	PARALLEL KEY W. ROUND ENDS 5X5X16 MM	
480	90240-0325		2	FLANGE BUSHING, IGLIDUR X 16X18X12	
500	90240-0265		4	FLANGE BUSHING, IGLIDUR X 20X23X21	
TBA 0250S (See drawing on page: 4-26)					
010	1041549-0000		2	0,012WASHER	
020	2595691-0000		1	PULLEY	
030	1548805-0000		1	CURVE	
040	1140845-0000		1	ROLLER	
070	2595689-0000		1	WASHER	
090	1519814-0000		1	ECCENTRIC SHAFT	
100	2678300-0000		1	SHAFT	
110	1548806-0000		2	ECCENTRIC SHAFT	
120	1548804-0000		1	CURVE	
130	1548807-0000		1	CURVE	
140	1548808-0000		1	CURVE	
160	1539376-0000		2	PULLEY	
170	1548798-0000		1	TIMING BELT	
310	312105-0366		3	SCREW M6S ISO 4017 M6X12 A480	
320	312109-0376		2	SCREW M6S ISO 4017 M6X35 A480	
340	312105-0467		1	SCREW M6S ISO 4014 M8X80 A480	
350	312105-0475		1	SCREW M6S ISO 4014 M8X120 A480	
370	312155-0366		2	SCREW DIN 7991 MF6S M6X12 A4 70	
390	315105-0165		7	WASHER BRB 8,4X16 RFR	
470	90458-0548		3	PARALLEL KEY W. ROUND ENDS 5X5X16 MM	
480	321155-0221		2	FLANGE BUSHING, IGLIDUR X 16X18X17	
500	90240-0265		4	FLANGE BUSHING, IGLIDUR X 20X23X21	
TBA 1000B (See drawing on page: 4-28)					
010	90005-0060		6	WASHER PLAIN, RBS 6,4/M6)/18,H=1,5	
020	3062298-0000		1	PULLEY	
030	2508430-0000		1	CURVE	
040	2833318-0000		1	ROLLER	
070	2833314-0000		1	WASHER	
090	2833317-0000		1	ECCENTRIC SHAFT	
100	2894933-0000		1	SHAFT	
110	1532311-0000		2	ECCENTRIC SHAFT	
120	2893993-0000		1	CAM	
130	3001985-0000		1	CAM	
140	3001986-0000		1	CAM	
160	3062297-0000		1	PULLEY	
170	90602-3310		1	TIMING BELT 25AT5/725 PU	
200	2833241-0000		1	ARM	
210	2833242-0000		2	SHAFT	
220	2833243-0000		1	LINK	
310	312105-0366		5	SCREW M6S ISO 4017 M6X12 A480	
320	312105-0374		2	SCREW M6S ISO 4014 M6X30 A480	
340	312105-0469		2	SCREW M6S ISO 4014 M8X90 A480	
350	312105-0471		1	SCREW M6S ISO 4014 M8X100 A480	
390	315105-0165		8	WASHER BRB 8,4X16 RFR	
410	312105-0376		2	SCREW M6S ISO 4014 M6X35 A480	
460	315705-0166		2	PARAPARALLEL KEY W. ROUND ENDS 4X4X12 MM	
470	90458-0548		2	PARALLEL KEY W. ROUND ENDS 5X5X16 MM	
480	321135-0219		4	BUSHING, IGLIDUR X 16X18X15	
490	90240-0289		4	FLANGE BUSHING, IGLIDUR X 10X12X6	
500	90240-0265		4	FLANGE BUSHING, IGLIDUR X 20X23X21	
TBA 1000S (See drawing on page: 4-28)					

Machine Type	Group Description	Used-In	Group Number	Page No

See previous drawings pages: 4-26, 4-28.

Pos	Part No	UN	Qty	Description	Page No
TBA 1000S (Cont'd) (See drawing on page: 4-28)					
010	90005-0060		6	WASHER PLAIN, RBS 6,4/M6)/18,H=1,5	
020	3062298-0000		1	PULLEY	
030	2917444-0000		1	CAM	
040	2833318-0000		1	ROLLER	
070	2833314-0000		1	WASHER	
090	2833317-0000		1	ECCENTRIC SHAFT	
100	2833267-0000		1	SHAFT	
110	2632809-0000		2	ECCENTRIC SHAFT	
120	2912148-0000		1	CAM	
130	2632808-0000		1	CAM	
140	2531484-0000		1	CAM	
160	3062297-0000		1	PULLEY	
170	90602-3310		1	TIMING BELT 25AT5/725 PU	
200	2833241-0000		1	ARM	
210	2833242-0000		2	SHAFT	
220	2833243-0000		1	LINK	
310	312105-0366		5	SCREW M6S ISO 4017 M6X12 A480	
320	312105-0376		2	SCREW M6S ISO 4014 M6X35 A480	
340	312105-0469		2	SCREW M6S ISO 4014 M8X90 A480	
350	312105-0471		1	SCREW M6S ISO 4014 M8X100 A480	
390	315105-0165		8	WASHER BRB 8,4X16 RFR	
410	312105-0376		2	SCREW M6S ISO 4014 M6X35 A480	
460	315705-0166		2	PARAPARALLEL KEY W. ROUND ENDS 4X4X12 MM	
470	90458-0548		2	PARALLEL KEY W. ROUND ENDS 5X5X16 MM	
480	321135-0219		4	BUSHING, IGLIDUR X 16X18X15	
490	90240-0289		4	FLANGE BUSHING, IGLIDUR X 10X12X6	
500	90240-0265		4	FLANGE BUSHING, IGLIDUR X 20X23X21	
TBA 1000SQ (See drawing on page: 4-28)					
010	90005-0060		6	WASHER PLAIN, RBS 6,4/M6)/18,H=1,5	
020	3062298-0000		1	PULLEY	
030	2814659-0000		1	CAM	
040	2833318-0000		1	ROLLER	
070	2833314-0000		1	WASHER	
090	2833317-0000		1	ECCENTRIC SHAFT	
100	2833267-0000		1	SHAFT	
110	2559032-0000		2	ECCENTRIC SHAFT	
120	2814838-0000		1	CAM	
130	2559035-0000		1	CAM	
140	2531484-0000		1	CAM	
160	3062297-0000		1	PULLEY	
170	90602-3310		1	TIMING BELT 25AT5/725 PU	
200	2833241-0000		1	ARM	
210	2833242-0000		2	SHAFT	
220	2833243-0000		1	LINK	
310	312105-0366		5	SCREW M6S ISO 4017 M6X12 A480	
320	312105-0380		2	SCREW M6S ISO 4014 M6X50 A480	
340	312105-0469		2	SCREW M6S ISO 4014 M8X90 A480	
350	312105-0471		1	SCREW M6S ISO 4014 M8X100 A480	
390	315105-0165		8	WASHER BRB 8,4X16 RFR	
410	312105-0376		2	SCREW M6S ISO 4014 M6X35 A480	
460	315705-0166		2	PARAPARALLEL KEY W. ROUND ENDS 4X4X12 MM	
470	90458-0548		2	PARALLEL KEY W. ROUND ENDS 5X5X16 MM	
480	321155-0221		2	FLANGE BUSHING, IGLIDUR X 16X18X17	
490	90240-0289		4	FLANGE BUSHING, IGLIDUR X 10X12X6	
500	90240-0265		4	FLANGE BUSHING, IGLIDUR X 20X23X21	
Common Parts					
050	2782131-0000		1	SUPPORT	
060	2782132-0000		1	ADJUSTER	
080	1519813-0000		1	SHAFT	
150	1538302-0000		2	HUB	
190	2595690-0000		1	WASHER	
330	312105-0455		1	SCREW M6S ISO 4017 M8X30 A480	
360	312105-0459		4	SCREW M6S ISO 4014 M8X40 A480	
380	315105-0153		3	WASHER BRB 6,4X12 RFR	
400	315125-0153		1	WASHER TBRSB 6,4X22X4 A4	
420	312115-0333		2	SCREW ISO4762 M5X25 A4 80	
430	315751-0113		1	RETAINING RING FOR SHAFT DIN 471 16 SS	
440	90240-0265		2	FLANGE BUSHING, IGLIDUR X 20X23X21	
450	90458-0274		1	DISC FOR COUPLING, HUCO 236.50T	

VOLUME ADJUSTER

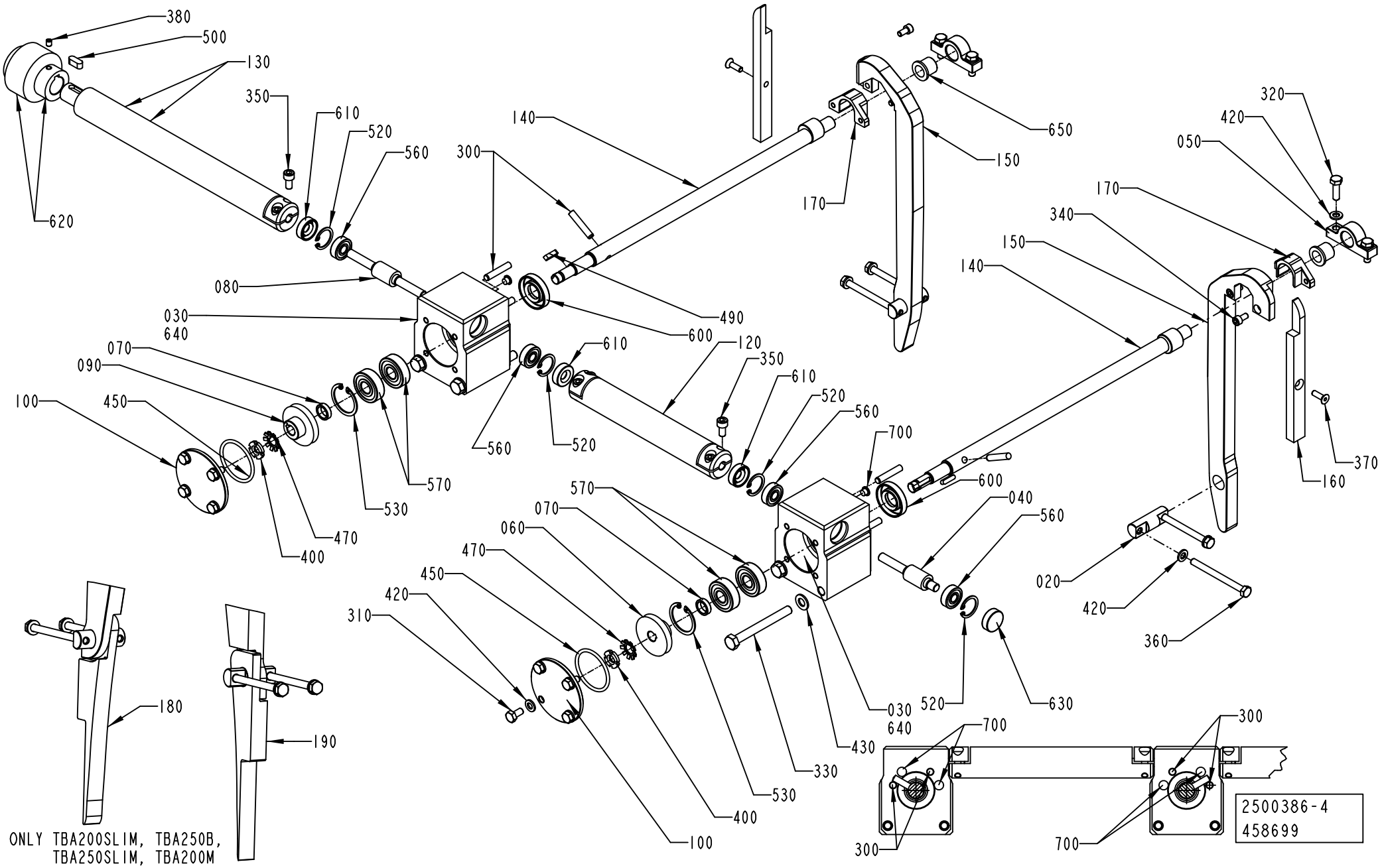

ECM: 472456 - 20110101
Group number: 2500386-0200
Assembly Drawing: 2500386-4_1_AD

This list covers pages from 4-32 to 4-35

Pos	Part No	UN	Qty	Description	Page No
TBA 0125S (See drawing on page: 4-32)					
120	1349386-0000		1	SHAFT	
130	2686512-0000		1	SHAFT	
140	1260148-0000		2	ECCENTRIC SHAFT	
150	2859746-0000		2	VOLUME CAM	
160	2845576-0000		2	GUIDE	
170	1348287-0000		2	GUIDE	
340	312115-0325		4	SCREW ISO4762 M5X10 A4 80	
360	312105-0384		4	SCREW M6S ISO 4014 M6X70 A480	
370	312155-0329		2	SCREW DIN 7991 MF6S M5X16 A4 70	
TBA 0200B (See drawing on page: 4-32)					
120	1349386-0000		1	SHAFT	
130	2686512-0000		1	SHAFT	
140	1260148-0000		2	ECCENTRIC SHAFT	
150	1512599-0000		2	VOLUME CAM	
160	1512598-0000		2	GUIDE	
170	1348287-0000		2	GUIDE	
340	312115-0325		4	SCREW ISO4762 M5X10 A4 80	
360	312105-0384		4	SCREW M6S ISO 4014 M6X70 A480	
370	312155-0329		2	SCREW DIN 7991 MF6S M5X16 A4 70	
TBA 0200M (See drawing on page: 4-32)					
120	1260050-0000		1	SHAFT	
130	2686532-0000		1	SHAFT	
140	1260148-0000		2	ECCENTRIC SHAFT	
150	2915911-0000		2	VOLUME CAM	
170	1348287-0000		2	GUIDE	
180	2915912-0000		1	CAM	
190	2915913-0000		1	CAM	
340	312115-0325		4	SCREW ISO4762 M5X10 A4 80	
360	312105-0386		4	SCREW M6S ISO 4014 M6X80 A480	
TBA 0200S (See drawing on page: 4-32)					
120	1512652-0000		1	SHAFT	
130	2678299-0000		1	SHAFT	
140	1260148-0000		2	ECCENTRIC SHAFT	
150	3120674-0000		2	VOLUME CAM	
170	1348287-0000		2	GUIDE	
180	3120673-0000		1	CAM	
190	3120675-0000		1	CAM	
340	312115-0325		4	SCREW ISO4762 M5X10 A4 80	
360	312105-0386		4	SCREW M6S ISO 4014 M6X80 A480	
TBA 0250B (See drawing on page: 4-32)					
120	1260050-0000		1	SHAFT	
130	2686532-0000		1	SHAFT	
140	1260148-0000		2	ECCENTRIC SHAFT	
150	2909143-0000		2	VOLUME CAM	
170	1348287-0000		2	GUIDE	
180	2912004-0000		1	CAM	
190	2909144-0000		1	CAM	
340	312115-0325		4	SCREW ISO4762 M5X10 A4 80	
360	312105-0386		4	SCREW M6S ISO 4014 M6X80 A480	
TBA 0250S (See drawing on page: 4-32)					
120	1498601-0000		1	SHAFT	
130	2686546-0000		1	SHAFT	
140	1260148-0000		2	ECCENTRIC SHAFT	
150	2925286-0000		2	VOLUME CAM	
170	1348287-0000		2	GUIDE	
180	2925287-0000		1	CAM	
190	2925288-0000		1	CAM	
340	312115-0325		4	SCREW ISO4762 M5X10 A4 80	
360	312105-0386		4	SCREW M6S ISO 4014 M6X80 A480	
TBA 1000B (See drawing on page: 4-32)					
120	1348817-0000		1	SHAFT	
130	1348818-0000		1	SHAFT	
140	2922486-0000		2	SHAFT	
150	2899960-0000		2	CAM	
360	312105-0388		4	SCREW M6S ISO 4014 M6X90 A480	
TBA 1000S (See drawing on page: 4-34)					
120	2514273-0000		1	SHAFT	
130	2514320-0000		1	SHAFT	
140	2922486-0000		2	SHAFT	
150	2603633-0000		2	CAM	
160	2960424-0000		2	CAM	
200	2927689-0000		2	PLATE	
360	312105-0388		4	SCREW M6S ISO 4014 M6X90 A480	
370	312115-0370		4	SCREW ISO4762 M6X20 A4 80	
390	312105-0449		4	SCREW M6S ISO 4017 M8X16 A480	
TBA 1000SQ (See drawing on page: 4-34)					
120	2514273-0000		1	SHAFT	
130	2514320-0000		1	SHAFT	
140	2922486-0000		2	SHAFT	
150	2559027-0000		2	CAM	
160	2960291-0000		2	CAM	
200	2927689-0000		2	PLATE	
360	312105-0388		4	SCREW M6S ISO 4014 M6X90 A480	

VOLUME ADJUSTER

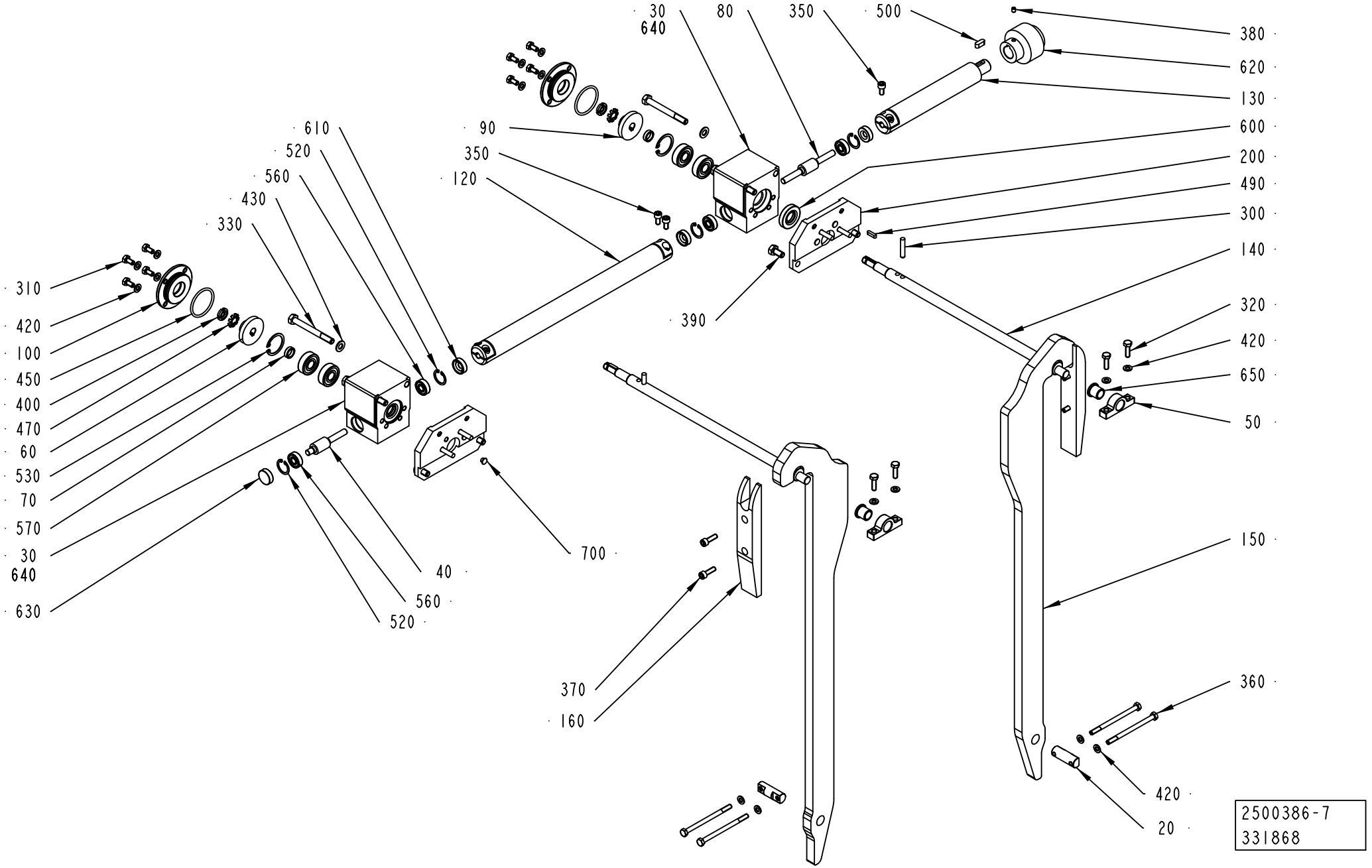

Pos	Part No	UN	Qty	Description	Page No
TBA 1000SQ (Cont'd) (See drawing on page: 4-34)					
370	312115-0370		4	SCREW ISO4762 M6X20 A4 80	
390	312105-0449		4	SCREW M6S ISO 4017 M8X16 A480	
Common Parts					
020	1548810-0000		2	PIVOT PIN	
030	1260051-0000		2	HOUSING	
040	1260149-0000		1	WORM SCREW	
050	1260151-0000		2	BRACKET	
060	1260152-0000		1	WORM WHEEL	
070	1260153-0000		2	SPACER	
080	1260154-0000		1	WORM SCREW	
090	1260169-0000		1	WORM WHEEL	
100	1260177-0000		2	COVER	
300	311103-0358		6	PARALLEL PIN ISO 2338 6M6X32 A1	
310	312105-0366		8	SCREW M6S ISO 4017 M6X12 A480	
320	312105-0370		4	SCREW M6S ISO 4017 M6X20 A480	
330	312105-0466		4	SCREW M6S ISO 4014 M8X75 A480	
350	312115-0366		6	SCREW ISO4762 M6X12 A4 80	
380	312318-0321		2	SCREW ISO4029 M5X6 A4	
400	312805-0100		2	NUT ROUND WITH SLOTS M10X0,75 FE	
420	315105-0153		16	WASHER BRB 6,4X12 RFR	
430	315105-0165		4	WASHER BRB 8,4X16 RFR	
450	315202-0223		2	O-RING 39,2X3 MM	
470	315410-0100		2	LOCK WASHER MB 0 D=10 H=1	
490	315701-0168		2	PARALLEL KEY W. ROUND ENDS 4X4X16 MM	
500	315705-0230		1	PARALLEL KEY W. ROUND ENDS 6X6X16 MM	
520	315753-0117		4	RETAINING RING FOR BORE DIN 472 22 SS	
530	315753-0123		2	RETAINING RING FOR BORE DIN 472 32 SS	
560	321302-0298		4	BALL BEARING 8/22X7	
570	321313-0101		4	BALL BEARING 12/32X10	
600	90091-0430		2	RADIAL SEAL 15X35X7 MM DUST LIP	
610	90091-0431		3	RADIAL SEAL 8X22X7 MM	
620	2582019-0000		1	SHAFT COUPLING	
630	90355-0369		1	COVER PLUG, 22X19X7 MM	
640	90296-0070		1	SHELL ALVANIA GREASE EP 1	
650	90458-1404		2	FLANGE BUSHING, 12X16X16 MM	
700	90261-0071		4	PLUG, BLIND, PLASTIC, NO. GPN500B58	

Pos	Part No	UN	Qty	Description	Page No

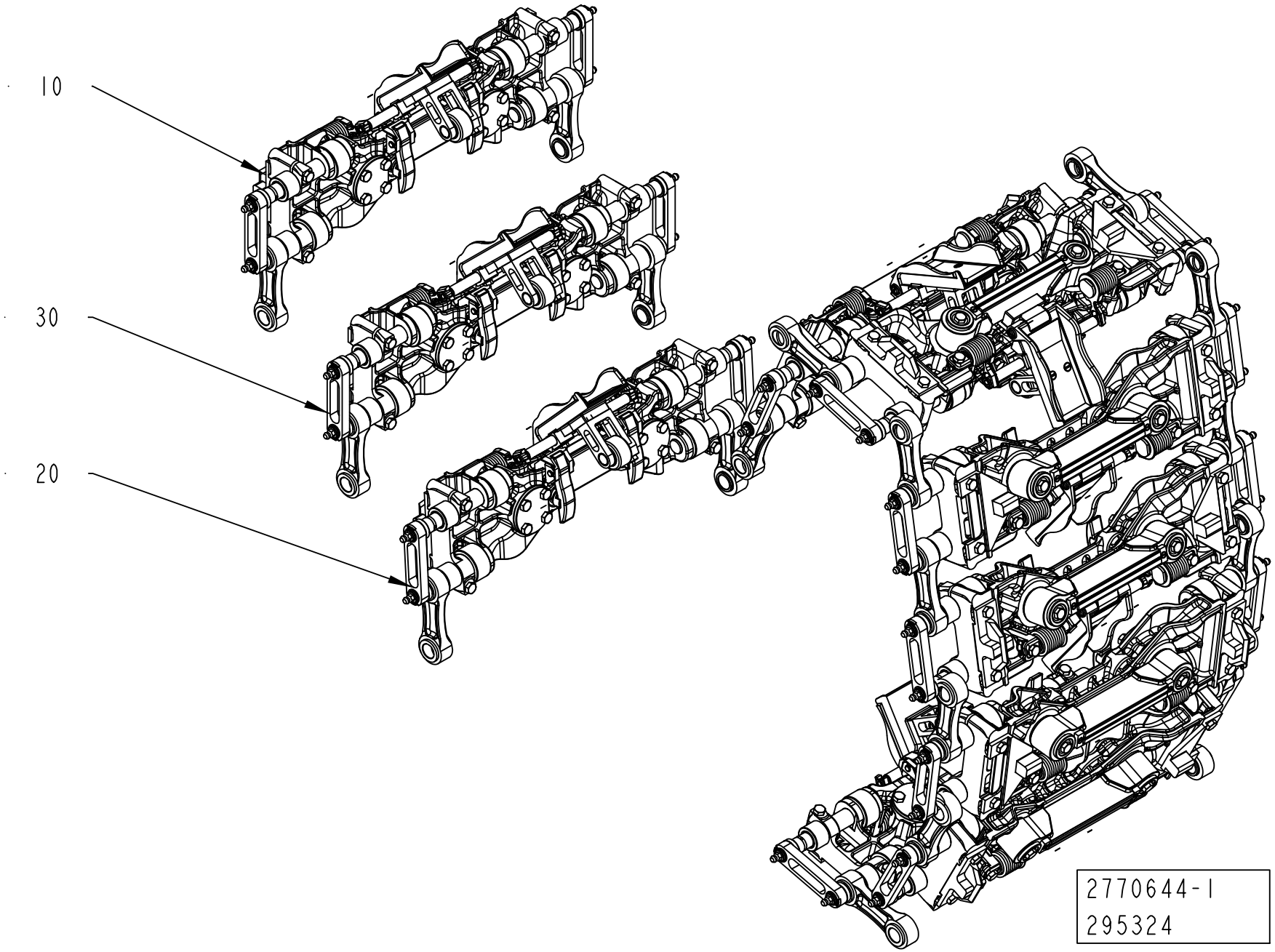
10
30
20
2770644-1
295324

ECM: 373864 - 20081130
Group number: 2770644-0100
Assembly Drawing: 2770644-1_1_AA

Pos	Part No	UN	Qty	Description	Page No
TBA 0125S					
010	2529791-0400		1	PRESSURE JAW	**4-39, 4-41, 4-43**
020	2529792-0400		4	PRESSURE JAW	**4-45, 4-47, 4-49**
030	2529793-0400		5	PRESSURE JAW	**4-51, 4-53, 4-55**
TBA 0200B					
010	2529791-0400		1	PRESSURE JAW	**4-39, 4-41, 4-43**
020	2529792-0400		4	PRESSURE JAW	**4-45, 4-47, 4-49**
030	2529793-0400		5	PRESSURE JAW	**4-51, 4-53, 4-55**
TBA 0200M					
010	2529791-0400		1	PRESSURE JAW	**4-39, 4-41, 4-43**
020	2529792-0400		4	PRESSURE JAW	**4-45, 4-47, 4-49**
030	2529793-0400		5	PRESSURE JAW	**4-51, 4-53, 4-55**
TBA 0200S					
010	2529791-0400		1	PRESSURE JAW	**4-39, 4-41, 4-43**
020	2529792-0400		4	PRESSURE JAW	**4-45, 4-47, 4-49**
030	2529793-0400		5	PRESSURE JAW	**4-51, 4-53, 4-55**
TBA 0250B					
010	2529791-0400		1	PRESSURE JAW	**4-39, 4-41, 4-43**
020	2529792-0400		4	PRESSURE JAW	**4-45, 4-47, 4-49**
030	2529793-0400		5	PRESSURE JAW	**4-51, 4-53, 4-55**
TBA 0250S					
010	2529791-0400		1	PRESSURE JAW	**4-39, 4-41, 4-43**
020	2529792-0400		4	PRESSURE JAW	**4-45, 4-47, 4-49**
030	2529793-0400		5	PRESSURE JAW	**4-51, 4-53, 4-55**
TBA 1000B					
010	2500391-0300		1	PRESSURE JAW	**4-57, 4-59**
020	2500389-0300		4	PRESSURE JAW	**4-61, 4-63**
030	2500390-0300		5	PRESSURE JAW	**4-65, 4-67**
TBA 1000S					
010	2500391-0300		1	PRESSURE JAW	**4-57, 4-59**
020	2500389-0300		4	PRESSURE JAW	**4-61, 4-63**
030	2500390-0300		5	PRESSURE JAW	**4-65, 4-67**
TBA 1000SQ					
010	2500391-0300		1	PRESSURE JAW	**4-57, 4-59**
020	2500389-0300		4	PRESSURE JAW	**4-61, 4-63**
030	2500390-0300		5	PRESSURE JAW	**4-65, 4-67**

Pos	Part No	UN	Qty	Description	Page No

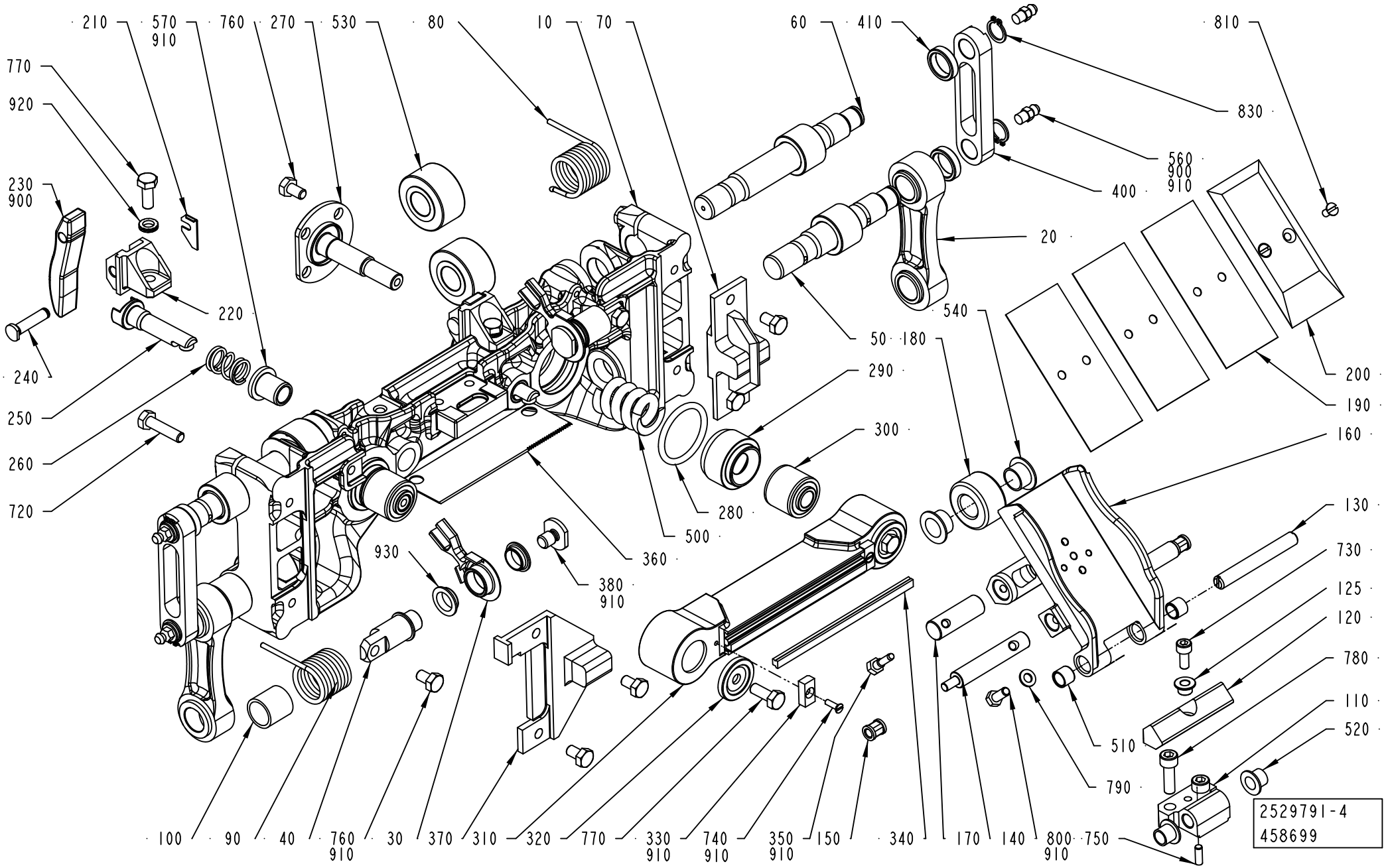
210
570
910
760
270
530
80
10
70
60
410
810
770
920
830
560
900
910
400
230
900
20
220
540
50
180
240
290
200
190
250
300
160
260
720
280
500
130
930
360
730
380
910
125
120
780
110
520
510
790
100
90
40
760
910
30
370
310
320
770
330
910
740
910
350
910
150
340
170
140
800
910
750
2529791-4
458699

ECM: 460434 - 20101001
Group number: 2529791-0400
Assembly Drawing: 2529791-4_1_AC

This list covers pages from 4-38 to 4-43

Pos	Part No	UN	Qty	Description	Page No
TBA 0125S					
010	2835892-0000		1	PRESSURE JAW	
020	2611128-0000		2	LINK	
	2611910-0000		*1*	*LINK*	
	1195204-0000		*2*	*BUSHING*	
110	1538134-0000		1	BRACKET	
130	1538135-0000		1	SHAFT	
160	2835542-0000		1	VOLUME FLAP	
	2835543-0000		*1*	*VOLUME FLAP*	
	2611445-0000		*1*	*BRACKET*	
	315105-0146		*1*	*WASHER BRB 5,3X10 RFR*	
	312105-0327		*1*	*SCREW M6S ISO 4017 M5X12 A480*	
	311103-0268		*2*	*PARALLEL PIN ISO 2338 4M6X12 A1*	
	90157-0016	*ML*	*1*	*THREAD LOCKING, LOCTITE 242 50 ML*	
190	2835922-0000		4	VOLUME SHIM	
200	2835921-0000		1	VOLUME BULGE	
270	2846452-0000		2	SHAFT	
310	2889894-0000		1	PRESSURE RAIL	
340	2949862-0004		2	DOLLY	
400	2681388-0000		2	LINK	
TBA 0200B					
010	2695417-0000		1	PRESSURE JAW	
020	2611128-0000		2	LINK	
	2611910-0000		*1*	*LINK*	
	1195204-0000		*2*	*BUSHING*	
110	1512605-0000		1	BRACKET	
130	1512604-0000		1	SHAFT	
160	2611446-0000		1	VOLUME FLAP	
	2638064-0000		*1*	*VOLUME FLAP*	
	2611445-0000		*1*	*BRACKET*	
	315105-0146		*1*	*WASHER BRB 5,3X10 RFR*	
	312105-0327		*1*	*SCREW M6S ISO 4017 M5X12 A480*	
	311103-0268		*2*	*PARALLEL PIN ISO 2338 4M6X12 A1*	
	90157-0016		*1*	*THREAD LOCKING, LOCTITE 242 50 ML*	
190	1498609-0000		3	VOLUME SHIM	
200	1498608-0000		1	VOLUME BULGE	
270	2588014-0000		2	SHAFT	
310	1558062-0000		1	PRESSURE RAIL	
340	1520564-0003		2	DOLLY	
400	2681388-0000		2	LINK	
TBA 0200M					
010	2695418-0000		1	PRESSURE JAW	
020	2611417-0000		2	LINK	
	1195204-0000		*2*	*BUSHING*	
	2611416-0000		*1*	*LINK*	
110	1512607-0000		1	BRACKET	
130	1512608-0000		1	SHAFT	
160	2611447-0000		1	VOLUME FLAP	
	2638065-0000		*1*	*VOLUME FLAP*	
	2611445-0000		*1*	*BRACKET*	
	315105-0146		*1*	*WASHER BRB 5,3X10 RFR*	
	312105-0327		*1*	*SCREW M6S ISO 4017 M5X12 A480*	
	311103-0268		*2*	*PARALLEL PIN ISO 2338 4M6X12 A1*	
	90157-0016		*1*	*THREAD LOCKING, LOCTITE 242 50 ML*	
190	1498604-0000		3	VOLUME SHIM	
200	2988511-0000		1	VOLUME BULGE	
270	2588014-0000		2	SHAFT	
310	1558062-0000		1	PRESSURE RAIL	
340	1520564-0003		2	DOLLY	
400	2691641-0000		2	LINK	
TBA 0200S					
010	2695422-0000		1	PRESSURE JAW	
020	2633465-0000		2	LINK	
	1195204-0000		*2*	*BUSHING*	
	2633464-0000		*1*	*LINK*	
110	1538134-0000		1	BRACKET	
130	1538135-0000		1	SHAFT	
160	2611448-0000		1	VOLUME FLAP	
	2638066-0000		*1*	*VOLUME FLAP*	
	2611445-0000		*1*	*BRACKET*	
	315105-0146		*1*	*WASHER BRB 5,3X10 RFR*	
	312105-0327		*1*	*SCREW M6S ISO 4017 M5X12 A480*	
	311103-0268		*2*	*PARALLEL PIN ISO 2338 4M6X12 A1*	
	90157-0016		*1*	*THREAD LOCKING, LOCTITE 242 50 ML*	
190	272991-0000		3	VOLUME SHIM	
200	272990-0000		1	VOLUME BULGE	
270	2588014-0000		2	SHAFT	
310	1558062-0000		1	PRESSURE RAIL	
340	1520564-0003		2	DOLLY	
400	2693207-0000		2	LINK	
TBA 0250B					
010	2695416-0000		1	PRESSURE JAW	
020	2611417-0000		2	LINK	
	1195204-0000		*2*	*BUSHING*	

Machine Type | Group Description | Used-In | Group Number | Page No

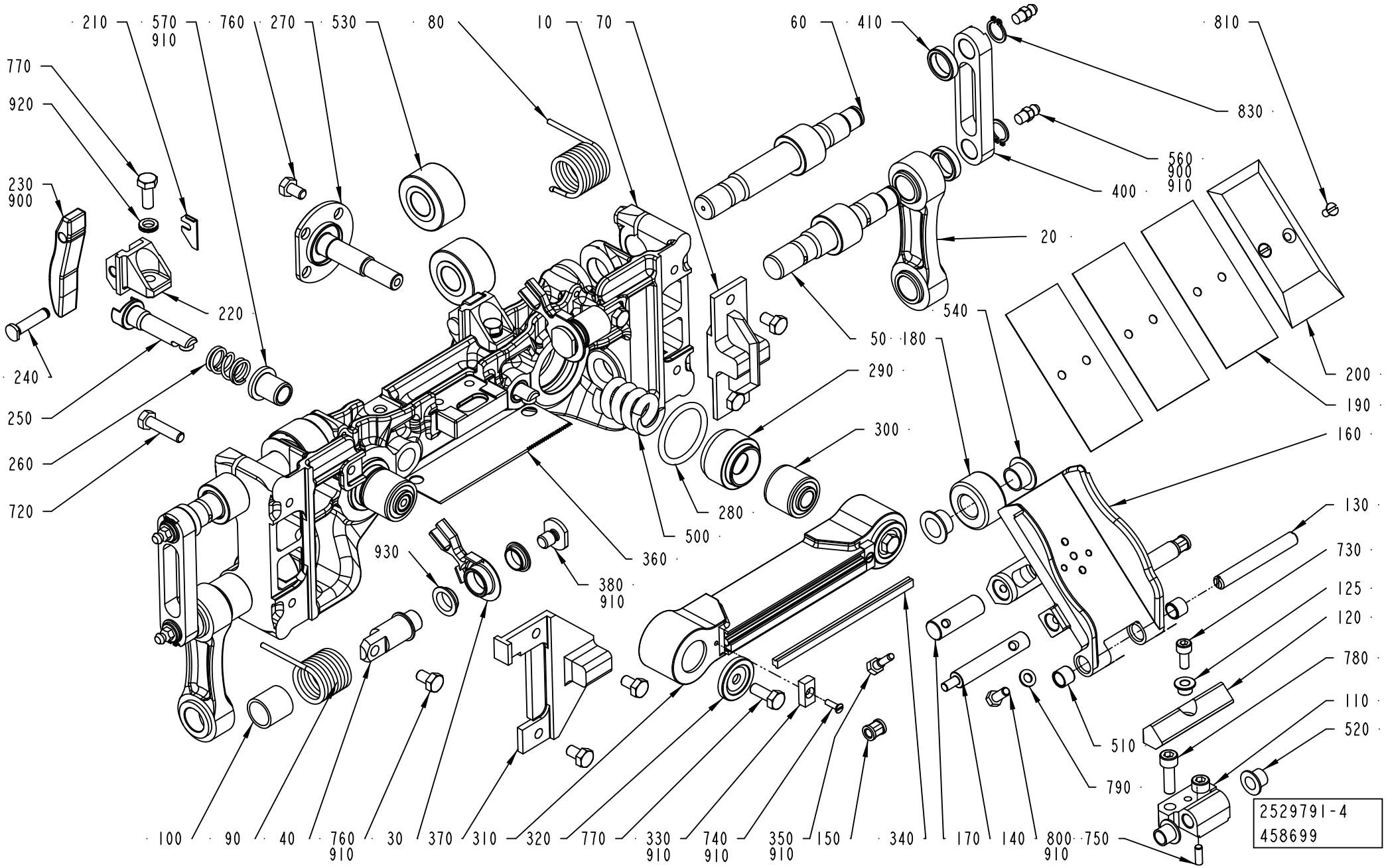
210
570
910
760
270
530
80
10
70
60
410
810
770
920
830
560
900
910
400
230
900
20
220
540
50
180
240
290
200
190
250
300
160
260
720
280
500
130
930
360
730
380
910
125
120
780
110
520
510
790
100
90
40
760
910
30
370
310
320
770
330
910
740
910
350
910
150
340
170
140
800
910
750
2529791-4
458699

ECM: 460434 - 20101001
Group number: 2529791-0400
Assembly Drawing: 2529791-4_1_AC

This list covers pages from 4-38 to 4-43

Pos	Part No	UN	Qty	Description	Page No
TBA 0250B (Cont'd)					
110	1512605-0000		1	BRACKET	
130	1512604-0000		1	SHAFT	
160	2611449-0000		1	VOLUME FLAP	
	2638067-0000		*1*	*VOLUME FLAP*	
	2611445-0000		*1*	*BRACKET*	
	315105-0146		*1*	*WASHER BRB 5,3X10 RFR*	
	312105-0327		*1*	*SCREW M6S ISO 4017 M5X12 A480*	
	311103-0268		*2*	*PARALLEL PIN ISO 2338 4M6X12 A1*	
	90157-0016		*1*	*THREAD LOCKING, LOCTITE 242 50 ML*	
190	2890874-0000		4	VOLUME SHIM	
200	2890873-0000		1	VOLUME BULGE	
270	2588014-0000		2	SHAFT	
310	1558062-0000		1	PRESSURE RAIL	
340	1520564-0003		2	DOLLY	
400	2691641-0000		2	LINK	
TBA 0250S					
010	2695423-0000		1	PRESSURE JAW	
020	2611398-0000		2	LINK	
	1195204-0000		*2*	*BUSHING*	
	2611394-0000		*1*	*LINK*	
110	1512607-0000		1	BRACKET	
130	1512608-0000		1	SHAFT	
160	2611450-0000		1	VOLUME FLAP	
	2638068-0000		*1*	*VOLUME FLAP*	
	2611445-0000		*1*	*BRACKET*	
	315105-0146		*1*	*WASHER BRB 5,3X10 RFR*	
	312105-0327		*1*	*SCREW M6S ISO 4017 M5X12 A480*	
	311103-0268		*2*	*PARALLEL PIN ISO 2338 4M6X12 A1*	
	90157-0016		*1*	*THREAD LOCKING, LOCTITE 242 50 ML*	
190	574366-0000		3	VOLUME SHIM	
200	574367-0000		1	VOLUME BULGE	
270	2588014-0000		2	SHAFT	
310	1558062-0000		1	PRESSURE RAIL	
340	1520564-0003		2	DOLLY	
400	2693208-0000		2	LINK	
Common Parts					
030	2812441-0000		2	LEVER	
040	2812438-0000		2	SHAFT	
050	2694884-0000		2	SHAFT	
060	2694885-0000		2	SHAFT	
070	1523980-0000		1	MOUNTING BLOCK	
080	2812451-0000		1	SPRING	
090	2812440-0000		1	SPRING	
100	2812439-0000		2	BUSHING	
120	2834201-0000		1	DAMPER	
125	2835130-0000		1	SPACER	
140	2812443-0000		2	SHAFT	
150	2812444-0000		2	BUSHING	
170	1548766-0000		1	SHAFT	
180	1140479-0000		1	ROLLER	
210	2691667-0000		2	PLATE	
220	2858820-0000		2	HOLDER	
230	3023657-0000		2	CAM	
240	1517291-0000		2	SHAFT	
250	2693209-0000		2	SHAFT	
260	2693210-0000		2	SPRING	
280	315206-0523		2	O-RING 31,34X3,53 MM	
290	2588015-0000		2	SLEEVE	
300	1512590-0000		2	RUBBER BUSHING	
320	1549601-0000		2	WASHER	
330	1140233-0000		2	WASHER	
350	491230-0000		1	GRUB SCREW(LI - CHINE)	
360	1517289-0000		1	KNIFE	
370	2770014-0000		1	MOUNTING BLOCK	
380	2812442-0000		2	WASHER	
410	2691417-0000		4	SPACER	
500	2690208-0000		2	SPRING	
510	90458-0353		2	BUSHING, IGLIDUR X 8X10X8	
520	90240-0260		2	FLANGE BUSHING, IGLIDUR X 8X10X9	
530	90083-0055		4	ROLLER BEARING, 15X35X19 MM	
540	90240-0261		2	FLANGE BUSHING, IGLIDUR X 12X14X9	
560	90286-0013		4	GREASE NIPPLE STRAIGHT, H1 M6X1 2346	
570	2691818-0000		2	BUSHING	
720	312105-0372		4	SCREW M6S ISO 4017 M6X25 A480	
730	312115-0327		1	SCREW ISO4762 M5X12 A4 80	
740	312145-0224		2	SCREW ISO 2009 MFS M3X10 A4	
750	311103-0268		1	PARALLEL PIN ISO 2338 4M6X12 A1	
760	312105-0364		14	SCREW M6S ISO 4017 M6X10 A480	
770	312105-0368		4	SCREW M6S ISO 4017 M6X16 A480	
780	312115-0370		2	SCREW ISO4762 M6X20 A4 80	
790	315105-0146		2	WASHER BRB 5,3X10 RFR	
800	312105-0327		2	SCREW M6S ISO 4017 M5X12 A480	
810	312145-0287		2	SCREW ISO 2009 MFS M4X8 A4	

Machine Type | Group Description | Used-In | Group Number | Page No

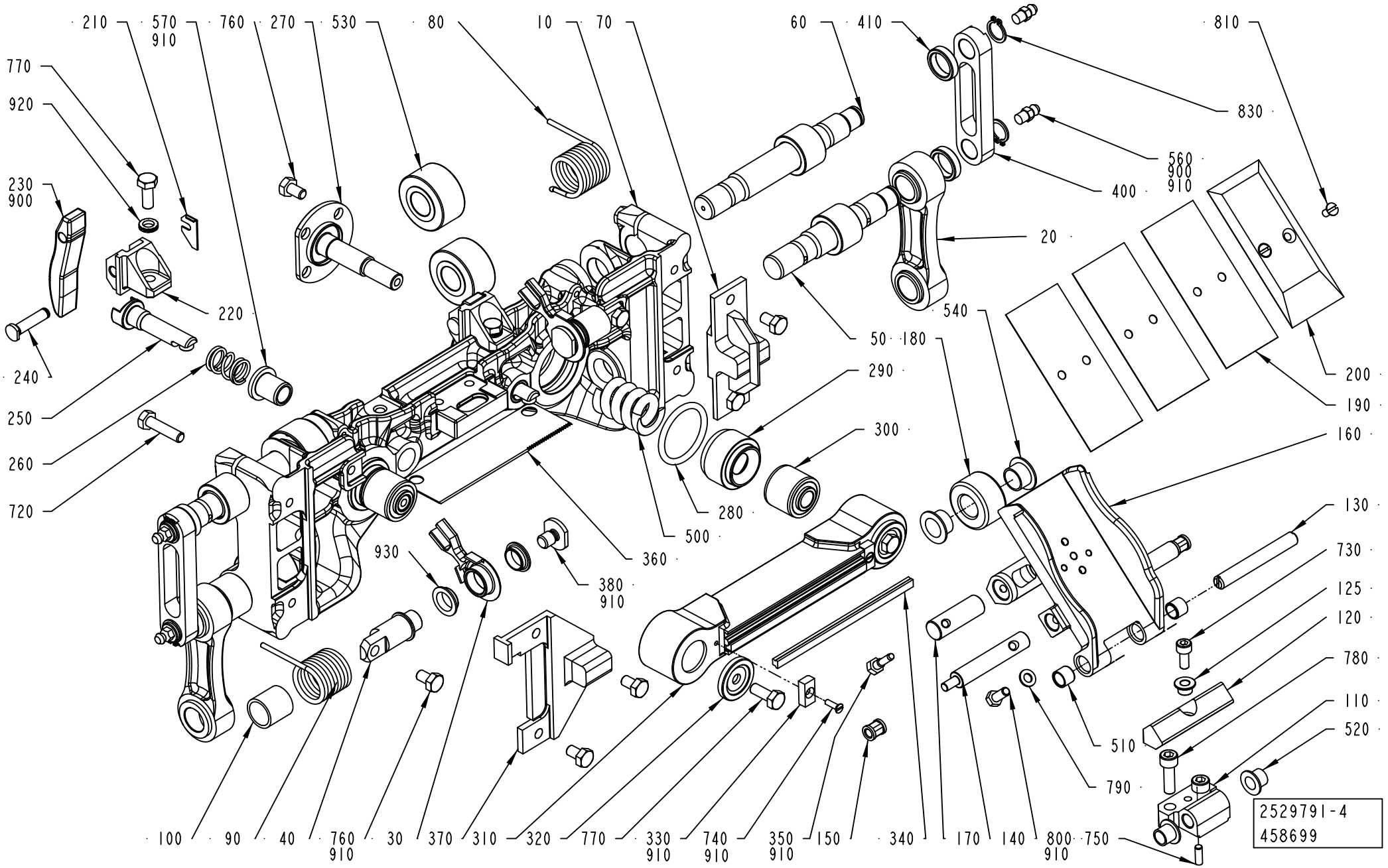
210
570
910
760
270
530
80
10
70
60
410
810
770
920
830
560
900
910
400
230
900
20
220
540
50
180
240
290
200
190
250
300
160
260
720
280
500
130
930
360
730
380
910
125
120
780
110
520
510
790
100
90
40
760
910
30
370
310
320
770
330
910
740
910
350
910
150
340
170
140
800
910
750
2529791-4
458699

Pos	Part No	UN	Qty	Description	Page No
Common Parts (Cont'd)					
830	315751-0109		4	RETAINING RING FOR SHAFT DIN 471 12 SS	
900	90459-0246	KG	1	GREASE, KLüBERSYNTH UH1, ONLY IN BOM	
	90459-7414		*1*	*GREASE, KLüBERSYNTH UH1 14-1600, 25 KG*	
	90459-7413		*1*	*GREASE, KLüBERSYNTH UH1 14-1600, 1 KG*	
910	90157-0021		1	LOCKING FLUID LOCTITE 270	
920	90062-0061		2	LOCK WASHER NORD-LOCK,6,5/10,8, T=2,2	
930	90600-0590		4	FLANGE BUSHING, IGLIDUR J 12X14X4,5	

Pos	Part No	UN	Qty	Description	Page No

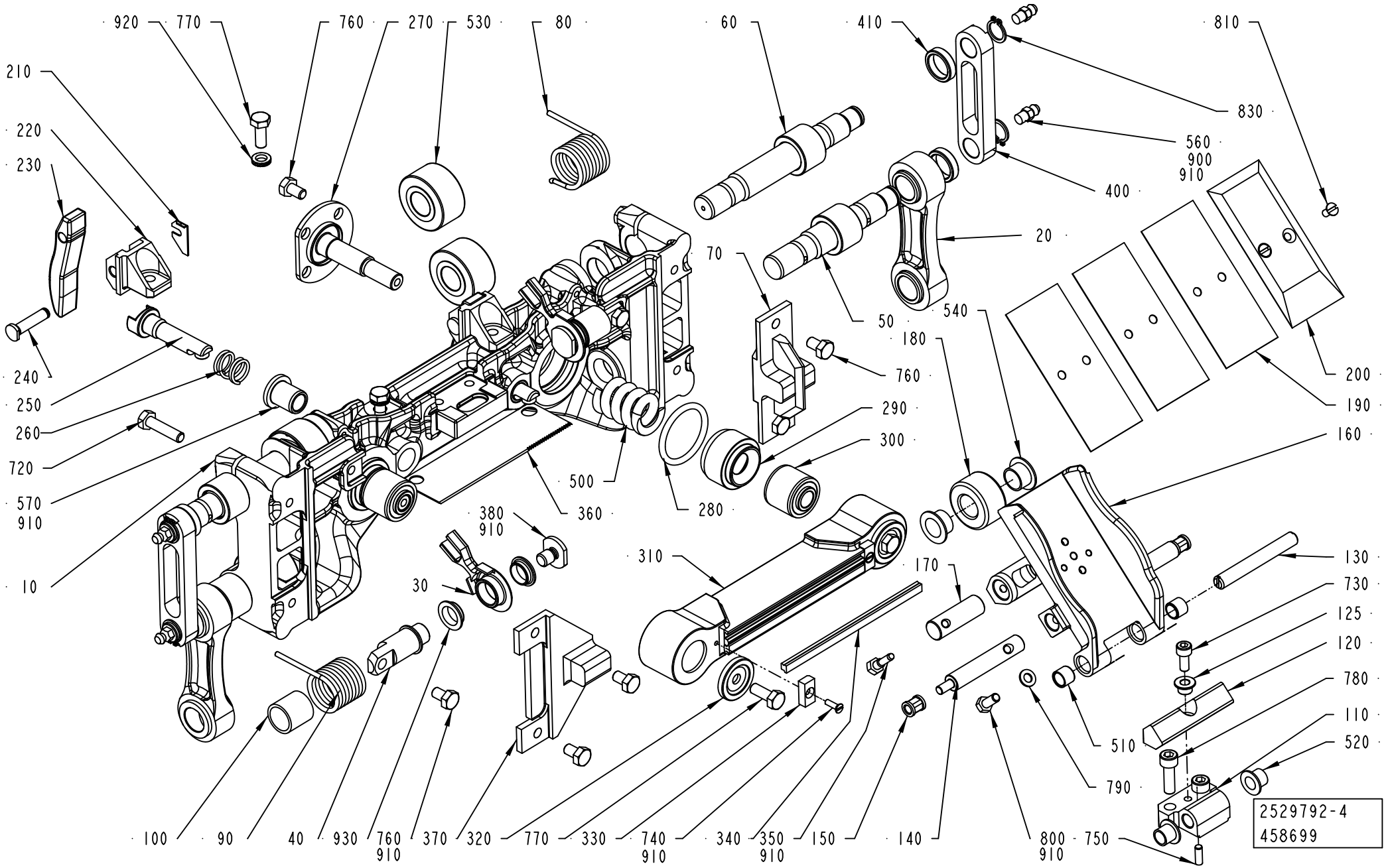
920
770
760
270
530
80
60
410
810
210
220
230
830
560
900
910
400
20
70
50
540
180
760
290
300
200
190
160
240
250
260
720
570
910
10
500
360
280
380
910
30
310
170
130
730
125
120
780
110
520
510
790
100
90
40
930
760
910
370
320
770
330
740
910
340
350
910
150
140
800
910
750
2529792-4
458699

ECM: 460435 - 20101001
Group number: 2529792-0400
Assembly Drawing: 2529792-4_1_AC

This list covers pages from 4-44 to 4-49

Pos	Part No	UN	Qty	Description	Page No
TBA 0125S					
010	2835892-0000		1	PRESSURE JAW	
020	2611128-0000		2	LINK	
	2611910-0000		*1*	*LINK*	
	1195204-0000		*2*	*BUSHING*	
110	1538134-0000		1	BRACKET	
130	1538135-0000		1	SHAFT	
160	2835542-0000		1	VOLUME FLAP	
	2835543-0000		*1*	*VOLUME FLAP*	
	2611445-0000		*1*	*BRACKET*	
	315105-0146		*1*	*WASHER BRB 5,3X10 RFR*	
	312105-0327		*1*	*SCREW M6S ISO 4017 M5X12 A480*	
	311103-0268		*2*	*PARALLEL PIN ISO 2338 4M6X12 A1*	
	90157-0016	*ML*	*1*	*THREAD LOCKING, LOCTITE 242 50 ML*	
190	2835922-0000		4	VOLUME SHIM	
200	2835921-0000		1	VOLUME BULGE	
270	2846452-0000		2	SHAFT	
310	2889894-0000		1	PRESSURE RAIL	
340	2949862-0004		2	DOLLY	
400	2681388-0000		2	LINK	
TBA 0200B					
010	2695417-0000		1	PRESSURE JAW	
020	2611128-0000		2	LINK	
	2611910-0000		*1*	*LINK*	
	1195204-0000		*2*	*BUSHING*	
110	1512605-0000		1	BRACKET	
130	1512604-0000		1	SHAFT	
160	2611446-0000		1	VOLUME FLAP	
	2638064-0000		*1*	*VOLUME FLAP*	
	2611445-0000		*1*	*BRACKET*	
	315105-0146		*1*	*WASHER BRB 5,3X10 RFR*	
	312105-0327		*1*	*SCREW M6S ISO 4017 M5X12 A480*	
	311103-0268		*2*	*PARALLEL PIN ISO 2338 4M6X12 A1*	
	90157-0016		*1*	*THREAD LOCKING, LOCTITE 242 50 ML*	
190	1498609-0000		3	VOLUME SHIM	
200	1498608-0000		1	VOLUME BULGE	
270	2588014-0000		2	SHAFT	
310	1558062-0000		1	PRESSURE RAIL	
340	1520564-0003		2	DOLLY	
400	2681388-0000		2	LINK	
TBA 0200M					
010	2695418-0000		1	PRESSURE JAW	
020	2611417-0000		2	LINK	
	1195204-0000		*2*	*BUSHING*	
	2611416-0000		*1*	*LINK*	
110	1512607-0000		1	BRACKET	
130	1512608-0000		1	SHAFT	
160	2611447-0000		1	VOLUME FLAP	
	2638065-0000		*1*	*VOLUME FLAP*	
	2611445-0000		*1*	*BRACKET*	
	315105-0146		*1*	*WASHER BRB 5,3X10 RFR*	
	312105-0327		*1*	*SCREW M6S ISO 4017 M5X12 A480*	
	311103-0268		*2*	*PARALLEL PIN ISO 2338 4M6X12 A1*	
	90157-0016		*1*	*THREAD LOCKING, LOCTITE 242 50 ML*	
190	1498604-0000		3	VOLUME SHIM	
200	2988511-0000		1	VOLUME BULGE	
270	2588014-0000		2	SHAFT	
310	1558062-0000		1	PRESSURE RAIL	
340	1520564-0003		2	DOLLY	
400	2691641-0000		2	LINK	
TBA 0200S					
010	2695422-0000		1	PRESSURE JAW	
020	2633465-0000		2	LINK	
	1195204-0000		*2*	*BUSHING*	
	2633464-0000		*1*	*LINK*	
110	1538134-0000		1	BRACKET	
130	1538135-0000		1	SHAFT	
160	2611448-0000		1	VOLUME FLAP	
	2638066-0000		*1*	*VOLUME FLAP*	
	2611445-0000		*1*	*BRACKET*	
	315105-0146		*1*	*WASHER BRB 5,3X10 RFR*	
	312105-0327		*1*	*SCREW M6S ISO 4017 M5X12 A480*	
	311103-0268		*2*	*PARALLEL PIN ISO 2338 4M6X12 A1*	
	90157-0016		*1*	*THREAD LOCKING, LOCTITE 242 50 ML*	
190	272991-0000		3	VOLUME SHIM	
200	272990-0000		1	VOLUME BULGE	
270	2588014-0000		2	SHAFT	
310	1558062-0000		1	PRESSURE RAIL	
340	1520564-0003		2	DOLLY	
400	2693207-0000		2	LINK	
TBA 0250B					
010	2695416-0000		1	PRESSURE JAW	
020	2611417-0000		2	LINK	
	1195204-0000		*2*	*BUSHING*	

Machine Type | Group Description | Used-In | Group Number | Page No

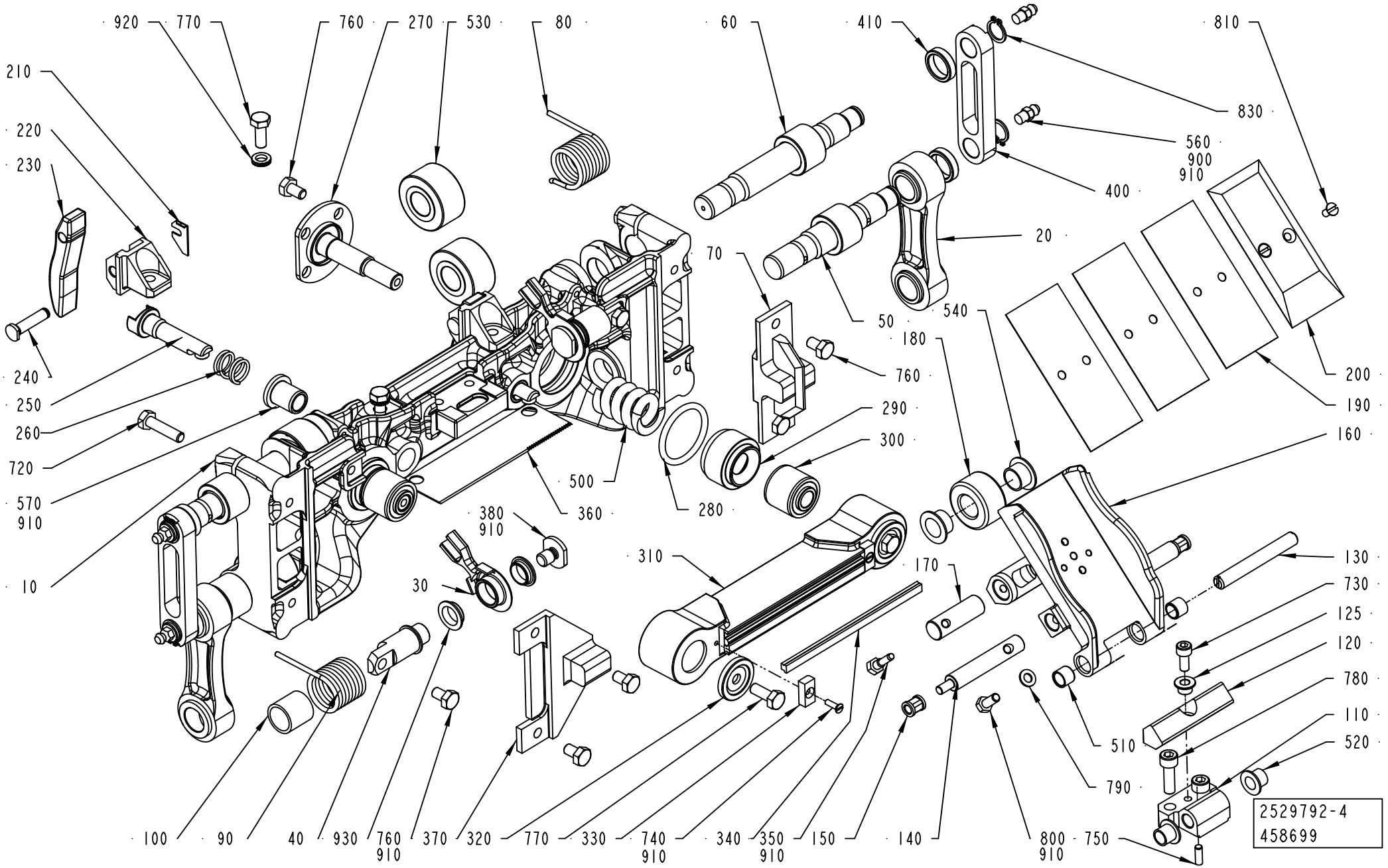
920
770
760
270
530
80
60
410
810
210
220
230
830
560
900
910
400
20
70
50
540
180
760
290
300
200
190
160
240
250
260
720
570
910
10
500
360
280
380
910
30
310
170
130
730
125
120
780
110
520
510
790
100
90
40
930
760
910
370
320
770
330
740
910
340
350
910
150
140
800
910
750
2529792-4
458699

ECM: 460435 - 20101001
Group number: 2529792-0400
Assembly Drawing: 2529792-4_1_AC

This list covers pages from 4-44 to 4-49

Pos	Part No	UN	Qty	Description	Page No
TBA 0250B (Cont'd)					
110	1512605-0000		1	BRACKET	
130	1512604-0000		1	SHAFT	
160	2611449-0000		1	VOLUME FLAP	
	2638067-0000		*1*	*VOLUME FLAP*	
	2611445-0000		*1*	*BRACKET*	
	315105-0146		*1*	*WASHER BRB 5,3X10 RFR*	
	312105-0327		*1*	*SCREW M6S ISO 4017 M5X12 A480*	
	311103-0268		*2*	*PARALLEL PIN ISO 2338 4M6X12 A1*	
	90157-0016		*1*	*THREAD LOCKING, LOCTITE 242 50 ML*	
190	2890874-0000		4	VOLUME SHIM	
200	2890873-0000		1	VOLUME BULGE	
270	2588014-0000		2	SHAFT	
310	1558062-0000		1	PRESSURE RAIL	
340	1520564-0003		2	DOLLY	
400	2691641-0000		2	LINK	
TBA 0250S					
010	2695423-0000		1	PRESSURE JAW	
020	2611398-0000		2	LINK	
	1195204-0000		*2*	*BUSHING*	
	2611394-0000		*1*	*LINK*	
110	1512607-0000		1	BRACKET	
130	1512608-0000		1	SHAFT	
160	2611450-0000		1	VOLUME FLAP	
	2638068-0000		*1*	*VOLUME FLAP*	
	2611445-0000		*1*	*BRACKET*	
	315105-0146		*1*	*WASHER BRB 5,3X10 RFR*	
	312105-0327		*1*	*SCREW M6S ISO 4017 M5X12 A480*	
	311103-0268		*2*	*PARALLEL PIN ISO 2338 4M6X12 A1*	
	90157-0016		*1*	*THREAD LOCKING, LOCTITE 242 50 ML*	
190	574366-0000		3	VOLUME SHIM	
200	574367-0000		1	VOLUME BULGE	
270	2588014-0000		2	SHAFT	
310	1558062-0000		1	PRESSURE RAIL	
340	1520564-0003		2	DOLLY	
400	2693208-0000		2	LINK	
Common Parts					
030	2812441-0000		2	LEVER	
040	2812438-0000		2	SHAFT	
050	2694884-0000		2	SHAFT	
060	2694885-0000		2	SHAFT	
070	1523980-0000		1	MOUNTING BLOCK	
080	2812451-0000		1	SPRING	
090	2812440-0000		1	SPRING	
100	2812439-0000		2	BUSHING	
120	2834201-0000		1	DAMPER	
125	2835130-0000		1	SPACER	
140	2812443-0000		2	SHAFT	
150	2812444-0000		2	BUSHING	
170	1548766-0000		1	SHAFT	
180	1140479-0000		1	ROLLER	
210	2691667-0000		2	PLATE	
220	2858820-0000		2	HOLDER	
230	3023657-0000		2	CAM	
240	1517291-0000		2	SHAFT	
250	2693209-0000		2	SHAFT	
260	2693210-0000		2	SPRING	
280	315206-0523		2	O-RING 31,34X3,53 MM	
290	2588015-0000		2	SLEEVE	
300	1512590-0000		2	RUBBER BUSHING	
320	1549601-0000		2	WASHER	
330	1140233-0000		2	WASHER	
350	491230-0000		1	GRUB SCREW(LI - CHINE)	
360	1517289-0000		1	KNIFE	
370	2769875-0000		1	MOUNTING BLOCK	
380	2812442-0000		2	WASHER	
410	2691417-0000		4	SPACER	
500	2690208-0000		2	SPRING	
510	90458-0353		2	BUSHING, IGLIDUR X 8X10X8	
520	90240-0260		2	FLANGE BUSHING, IGLIDUR X 8X10X9	
530	90083-0055		4	ROLLER BEARING, 15X35X19 MM	
540	90240-0261		2	FLANGE BUSHING, IGLIDUR X 12X14X9	
560	90286-0013		4	GREASE NIPPLE STRAIGHT, H1 M6X1 2346	
570	2691818-0000		2	BUSHING	
720	312105-0372		4	SCREW M6S ISO 4017 M6X25 A480	
730	312115-0327		1	SCREW ISO4762 M5X12 A4 80	
740	312145-0224		2	SCREW ISO 2009 MFS M3X10 A4	
750	311103-0268		1	PARALLEL PIN ISO 2338 4M6X12 A1	
760	312105-0364		14	SCREW M6S ISO 4017 M6X10 A480	
770	312105-0368		4	SCREW M6S ISO 4017 M6X16 A480	
780	312115-0370		2	SCREW ISO4762 M6X20 A4 80	
790	315105-0146		2	WASHER BRB 5,3X10 RFR	
800	312105-0327		2	SCREW M6S ISO 4017 M5X12 A480	
810	312145-0287		2	SCREW ISO 2009 MFS M4X8 A4	

Machine Type | Group Description | Used-In | Group Number | Page No

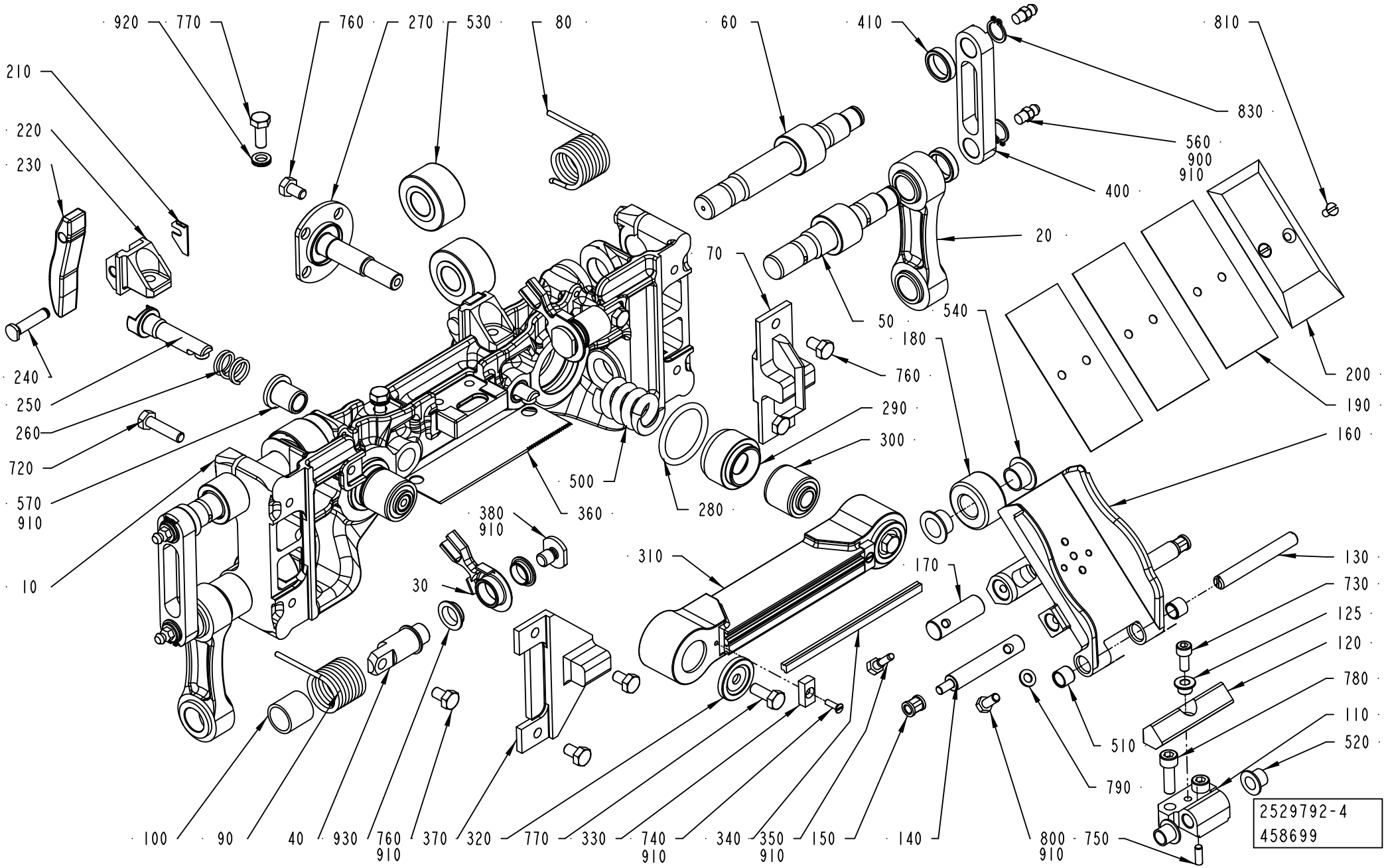
920
770
760
270
530
80
60
410
810
210
220
230
830
560
900
910
400
20
70
50
540
180
760
290
300
200
190
160
240
250
260
720
570
910
10
500
360
280
380
910
30
310
170
130
730
125
120
780
110
520
510
790
100
90
40
930
760
910
370
320
770
330
740
910
340
350
910
150
140
800
910
750
2529792-4
458699

Pos	Part No	UN	Qty	Description	Page No
Common Parts (Cont'd)					
830	315751-0109		4	RETAINING RING FOR SHAFT DIN 471 12 SS	
900	90459-0246	KG	1	GREASE, KLüBERSYNTH UH1, ONLY IN BOM	
	90459-7414		*1*	*GREASE, KLüBERSYNTH UH1 14-1600, 25 KG*	
	90459-7413		*1*	*GREASE, KLüBERSYNTH UH1 14-1600, 1 KG*	
910	90157-0021		1	LOCKING FLUID LOCTITE 270	
920	90062-0061		2	LOCK WASHER NORD-LOCK,6,5/10,8, T=2,2	
930	90600-0590		4	FLANGE BUSHING, IGLIDUR J 12X14X4,5	

Pos	Part No	UN	Qty	Description	Page No

PRESSURE JAW

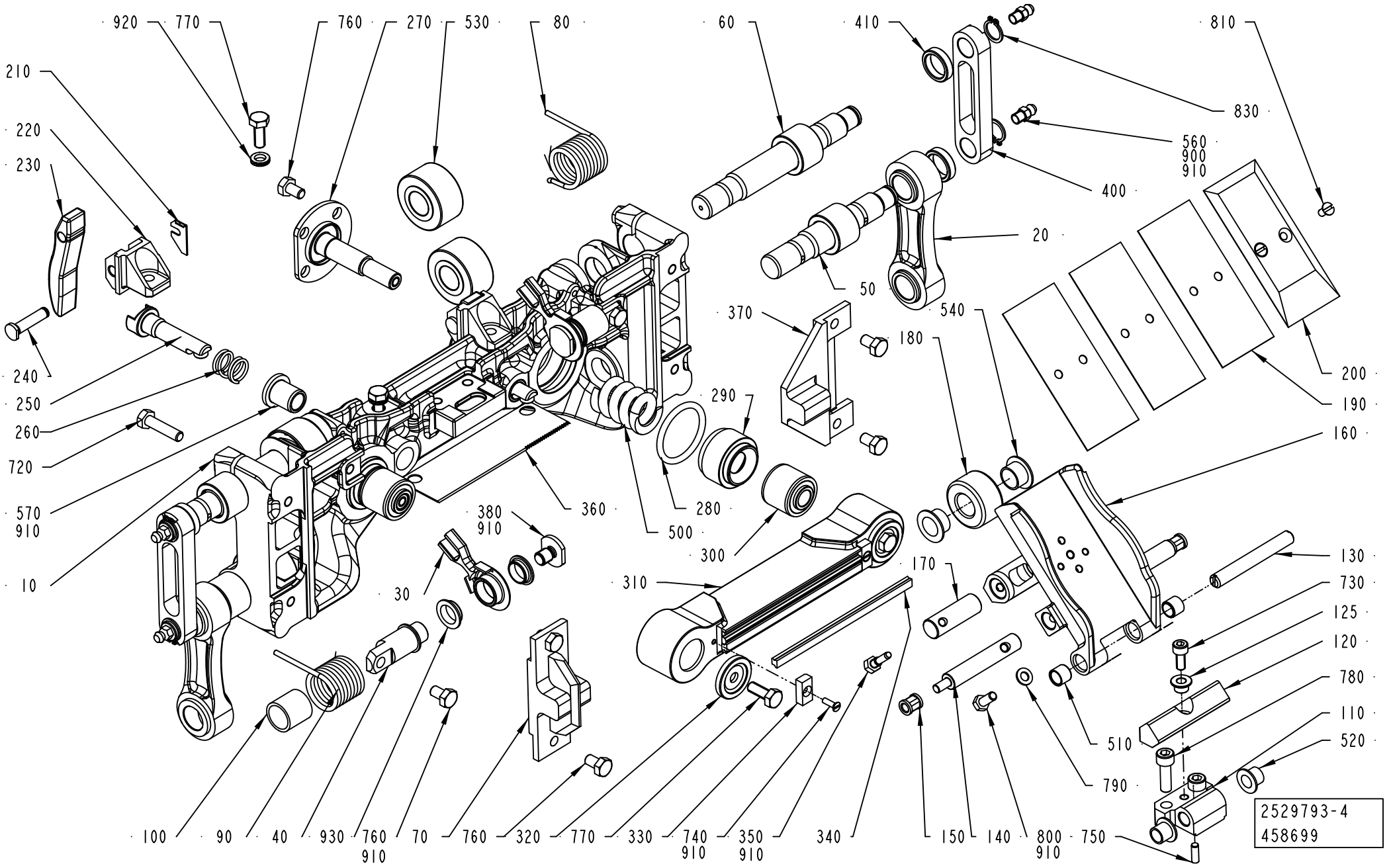

ECM: 460436 - 20101001
Group number: 2529793-0400
Assembly Drawing: 2529793-4_1_AC

This list covers pages from 4-50 to 4-55

Pos	Part No	UN	Qty	Description	Page No
TBA 0125S					
010	2835892-0000		1	PRESSURE JAW	
020	2611128-0000		2	LINK	
	2611910-0000		*1*	*LINK*	
	1195204-0000		*2*	*BUSHING*	
110	1538134-0000		1	BRACKET	
130	1538135-0000		1	SHAFT	
160	2835542-0000		1	VOLUME FLAP	
	2835543-0000		*1*	*VOLUME FLAP*	
	2611445-0000		*1*	*BRACKET*	
	315105-0146		*1*	*WASHER BRB 5,3X10 RFR*	
	312105-0327		*1*	*SCREW M6S ISO 4017 M5X12 A480*	
	311103-0268		*2*	*PARALLEL PIN ISO 2338 4M6X12 A1*	
	90157-0016	*ML*	*1*	*THREAD LOCKING, LOCTITE 242 50 ML*	
190	2835922-0000		4	VOLUME SHIM	
200	2835921-0000		1	VOLUME BULGE	
270	2846452-0000		2	SHAFT	
310	2889894-0000		1	PRESSURE RAIL	
340	2949862-0004		2	DOLLY	
400	2681388-0000		2	LINK	
TBA 0200B					
010	2695417-0000		1	PRESSURE JAW	
020	2611128-0000		2	LINK	
	2611910-0000		*1*	*LINK*	
	1195204-0000		*2*	*BUSHING*	
110	1512605-0000		1	BRACKET	
130	1512604-0000		1	SHAFT	
160	2611446-0000		1	VOLUME FLAP	
	2638064-0000		*1*	*VOLUME FLAP*	
	2611445-0000		*1*	*BRACKET*	
	315105-0146		*1*	*WASHER BRB 5,3X10 RFR*	
	312105-0327		*1*	*SCREW M6S ISO 4017 M5X12 A480*	
	311103-0268		*2*	*PARALLEL PIN ISO 2338 4M6X12 A1*	
	90157-0016		*1*	*THREAD LOCKING, LOCTITE 242 50 ML*	
190	1498609-0000		3	VOLUME SHIM	
200	1498608-0000		1	VOLUME BULGE	
270	2588014-0000		2	SHAFT	
310	1558062-0000		1	PRESSURE RAIL	
340	1520564-0003		2	DOLLY	
400	2681388-0000		2	LINK	
TBA 0200M					
010	2695418-0000		1	PRESSURE JAW	
020	2611417-0000		2	LINK	
	1195204-0000		*2*	*BUSHING*	
	2611416-0000		*1*	*LINK*	
110	1512607-0000		1	BRACKET	
130	1512608-0000		1	SHAFT	
160	2611447-0000		1	VOLUME FLAP	
	2638065-0000		*1*	*VOLUME FLAP*	
	2611445-0000		*1*	*BRACKET*	
	315105-0146		*1*	*WASHER BRB 5,3X10 RFR*	
	312105-0327		*1*	*SCREW M6S ISO 4017 M5X12 A480*	
	311103-0268		*2*	*PARALLEL PIN ISO 2338 4M6X12 A1*	
	90157-0016		*1*	*THREAD LOCKING, LOCTITE 242 50 ML*	
190	1498604-0000		3	VOLUME SHIM	
200	2988511-0000		1	VOLUME BULGE	
270	2588014-0000		2	SHAFT	
310	1558062-0000		1	PRESSURE RAIL	
340	1520564-0003		2	DOLLY	
400	2691641-0000		2	LINK	
TBA 0200S					
010	2695422-0000		1	PRESSURE JAW	
020	2633465-0000		2	LINK	
	1195204-0000		*2*	*BUSHING*	
	2633464-0000		*1*	*LINK*	
110	1538134-0000		1	BRACKET	
130	1538135-0000		1	SHAFT	
160	2611448-0000		1	VOLUME FLAP	
	2638066-0000		*1*	*VOLUME FLAP*	
	2611445-0000		*1*	*BRACKET*	
	315105-0146		*1*	*WASHER BRB 5,3X10 RFR*	
	312105-0327		*1*	*SCREW M6S ISO 4017 M5X12 A480*	
	311103-0268		*2*	*PARALLEL PIN ISO 2338 4M6X12 A1*	
	90157-0016		*1*	*THREAD LOCKING, LOCTITE 242 50 ML*	
190	272991-0000		3	VOLUME SHIM	
200	272990-0000		1	VOLUME BULGE	
270	2588014-0000		2	SHAFT	
310	1558062-0000		1	PRESSURE RAIL	
340	1520564-0003		2	DOLLY	
400	2693207-0000		2	LINK	
TBA 0250B					
010	2695416-0000		1	PRESSURE JAW	
020	2611417-0000		2	LINK	
	1195204-0000		*2*	*BUSHING*	

Machine Type | Group Description | Used-In | Group Number | Page No

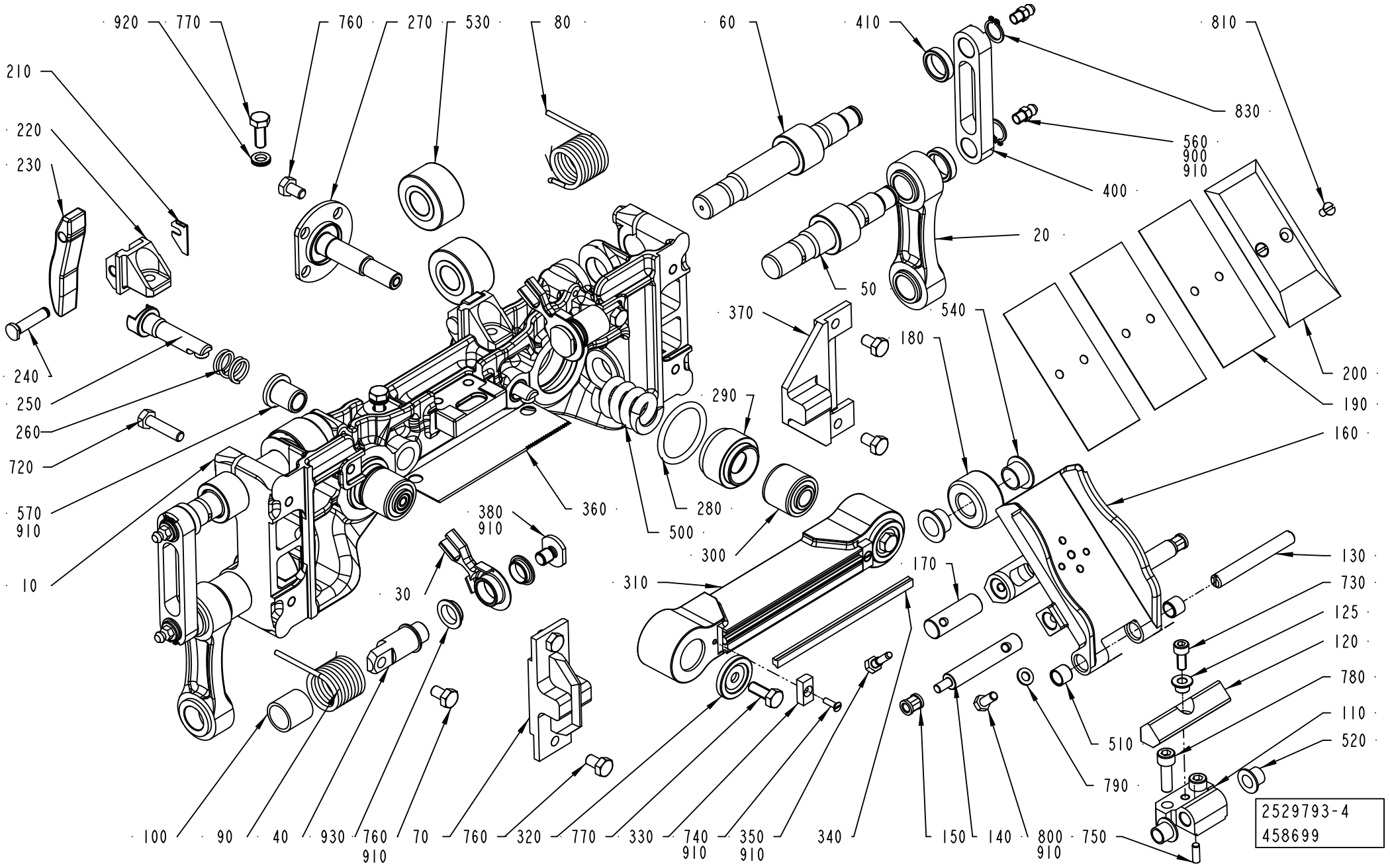
920
770
760
270
530
80
60
410
810
210
220
230
830
560
900
910
400
20
50
370
540
180
200
190
160
240
250
260
720
570
910
10
290
280
500
360
380
910
300
30
310
170
130
730
125
120
780
110
520
510
790
100
90
40
930
760
910
70
760
320
770
330
740
910
350
910
340
150
140
800
910
750
2529793-4
458699

ECM: 460436 - 20101001
Group number: 2529793-0400
Assembly Drawing: 2529793-4_1_AC

This list covers pages from 4-50 to 4-55

Pos	Part No	UN	Qty	Description	Page No
TBA 0250B (Cont'd)					
110	1512605-0000		1	BRACKET	
130	1512604-0000		1	SHAFT	
160	2611449-0000		1	VOLUME FLAP	
	2638067-0000		*1*	*VOLUME FLAP*	
	2611445-0000		*1*	*BRACKET*	
	315105-0146		*1*	*WASHER BRB 5,3X10 RFR*	
	312105-0327		*1*	*SCREW M6S ISO 4017 M5X12 A480*	
	311103-0268		*2*	*PARALLEL PIN ISO 2338 4M6X12 A1*	
	90157-0016		*1*	*THREAD LOCKING, LOCTITE 242 50 ML*	
190	2890874-0000		4	VOLUME SHIM	
200	2890873-0000		1	VOLUME BULGE	
270	2588014-0000		2	SHAFT	
310	1558062-0000		1	PRESSURE RAIL	
340	1520564-0003		2	DOLLY	
400	2691641-0000		2	LINK	
TBA 0250S					
010	2695423-0000		1	PRESSURE JAW	
020	2611398-0000		2	LINK	
	1195204-0000		*2*	*BUSHING*	
	2611394-0000		*1*	*LINK*	
110	1512607-0000		1	BRACKET	
130	1512608-0000		1	SHAFT	
160	2611450-0000		1	VOLUME FLAP	
	2638068-0000		*1*	*VOLUME FLAP*	
	2611445-0000		*1*	*BRACKET*	
	315105-0146		*1*	*WASHER BRB 5,3X10 RFR*	
	312105-0327		*1*	*SCREW M6S ISO 4017 M5X12 A480*	
	311103-0268		*2*	*PARALLEL PIN ISO 2338 4M6X12 A1*	
	90157-0016		*1*	*THREAD LOCKING, LOCTITE 242 50 ML*	
190	574366-0000		3	VOLUME SHIM	
200	574367-0000		1	VOLUME BULGE	
270	2588014-0000		2	SHAFT	
310	1558062-0000		1	PRESSURE RAIL	
340	1520564-0003		2	DOLLY	
400	2693208-0000		2	LINK	
Common Parts					
030	2812441-0000		2	LEVER	
040	2812438-0000		2	SHAFT	
050	2694884-0000		2	SHAFT	
060	2694885-0000		2	SHAFT	
070	1523980-0000		1	MOUNTING BLOCK	
080	2812451-0000		1	SPRING	
090	2812440-0000		1	SPRING	
100	2812439-0000		2	BUSHING	
120	2834201-0000		1	DAMPER	
125	2835130-0000		1	SPACER	
140	2812443-0000		2	SHAFT	
150	2812444-0000		2	BUSHING	
170	1548766-0000		1	SHAFT	
180	1140479-0000		1	ROLLER	
210	2691667-0000		2	PLATE	
220	2858820-0000		2	HOLDER	
230	3023657-0000		2	CAM	
240	1517291-0000		2	SHAFT	
250	2693209-0000		2	SHAFT	
260	2693210-0000		2	SPRING	
280	315206-0523		2	O-RING 31,34X3,53 MM	
290	2588015-0000		2	SLEEVE	
300	1512590-0000		2	RUBBER BUSHING	
320	1549601-0000		2	WASHER	
330	1140233-0000		2	WASHER	
350	491230-0000		1	GRUB SCREW(LI - CHINE)	
360	1517289-0000		1	KNIFE	
370	2769875-0000		1	MOUNTING BLOCK	
380	2812442-0000		2	WASHER	
410	2691417-0000		4	SPACER	
500	2690208-0000		2	SPRING	
510	90458-0353		2	BUSHING, IGLIDUR X 8X10X8	
520	90240-0260		2	FLANGE BUSHING, IGLIDUR X 8X10X9	
530	90083-0055		4	ROLLER BEARING, 15X35X19 MM	
540	90240-0261		2	FLANGE BUSHING, IGLIDUR X 12X14X9	
560	90286-0013		4	GREASE NIPPLE STRAIGHT, H1 M6X1 2346	
570	2691818-0000		2	BUSHING	
720	312105-0372		4	SCREW M6S ISO 4017 M6X25 A480	
730	312115-0327		1	SCREW ISO4762 M5X12 A4 80	
740	312145-0224		2	SCREW ISO 2009 MFS M3X10 A4	
750	311103-0268		1	PARALLEL PIN ISO 2338 4M6X12 A1	
760	312105-0364		14	SCREW M6S ISO 4017 M6X10 A480	
770	312105-0368		4	SCREW M6S ISO 4017 M6X16 A480	
780	312115-0370		2	SCREW ISO4762 M6X20 A4 80	
790	315105-0146		2	WASHER BRB 5,3X10 RFR	
800	312105-0327		2	SCREW M6S ISO 4017 M5X12 A480	
810	312145-0287		2	SCREW ISO 2009 MFS M4X8 A4	

Machine Type | Group Description | Used-In | Group Number | Page No

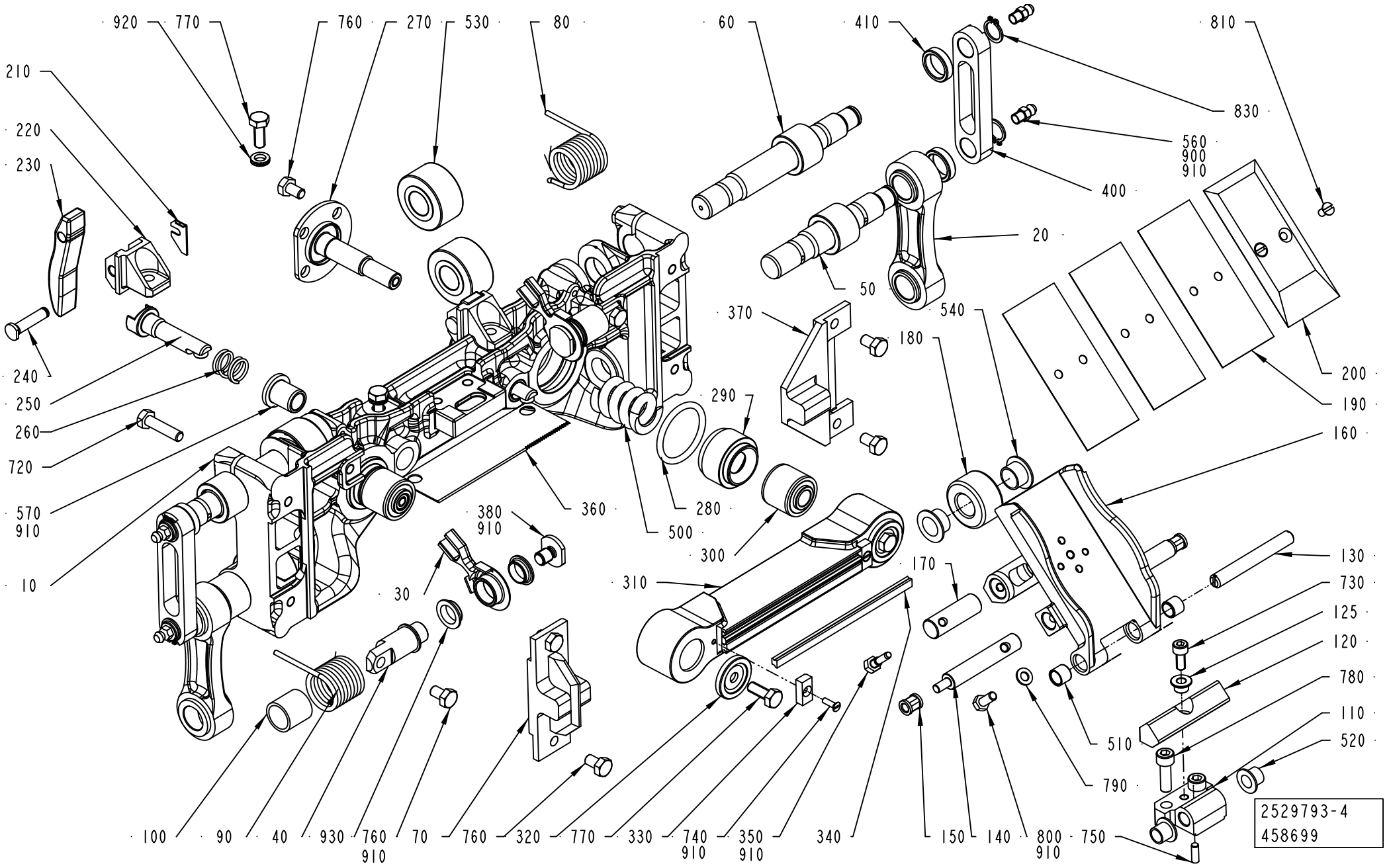
920
770
760
270
530
80
60
410
810
210
220
230
830
560
900
910
400
20
50
370
540
180
200
190
160
240
250
260
720
570
910
10
290
280
500
360
380
910
300
30
310
170
130
730
125
120
780
110
520
510
790
100
90
40
930
760
910
70
760
320
770
330
740
910
350
910
340
150
140
800
910
750
2529793-4
458699

Pos	Part No	UN	Qty	Description	Page No
Common Parts (Cont'd)					
830	315751-0109		4	RETAINING RING FOR SHAFT DIN 471 12 SS	
900	90459-0246	KG	1	GREASE, KLüBERSYNTH UH1, ONLY IN BOM	
	90459-7414		*1*	*GREASE, KLüBERSYNTH UH1 14-1600, 25 KG*	
	90459-7413		*1*	*GREASE, KLüBERSYNTH UH1 14-1600, 1 KG*	
910	90157-0021		1	LOCKING FLUID LOCTITE 270	
920	90062-0061		2	LOCK WASHER NORD-LOCK,6,5/10,8, T=2,2	
930	90600-0590		4	FLANGE BUSHING, IGLIDUR J 12X14X4,5	

Pos	Part No	UN	Qty	Description	Page No

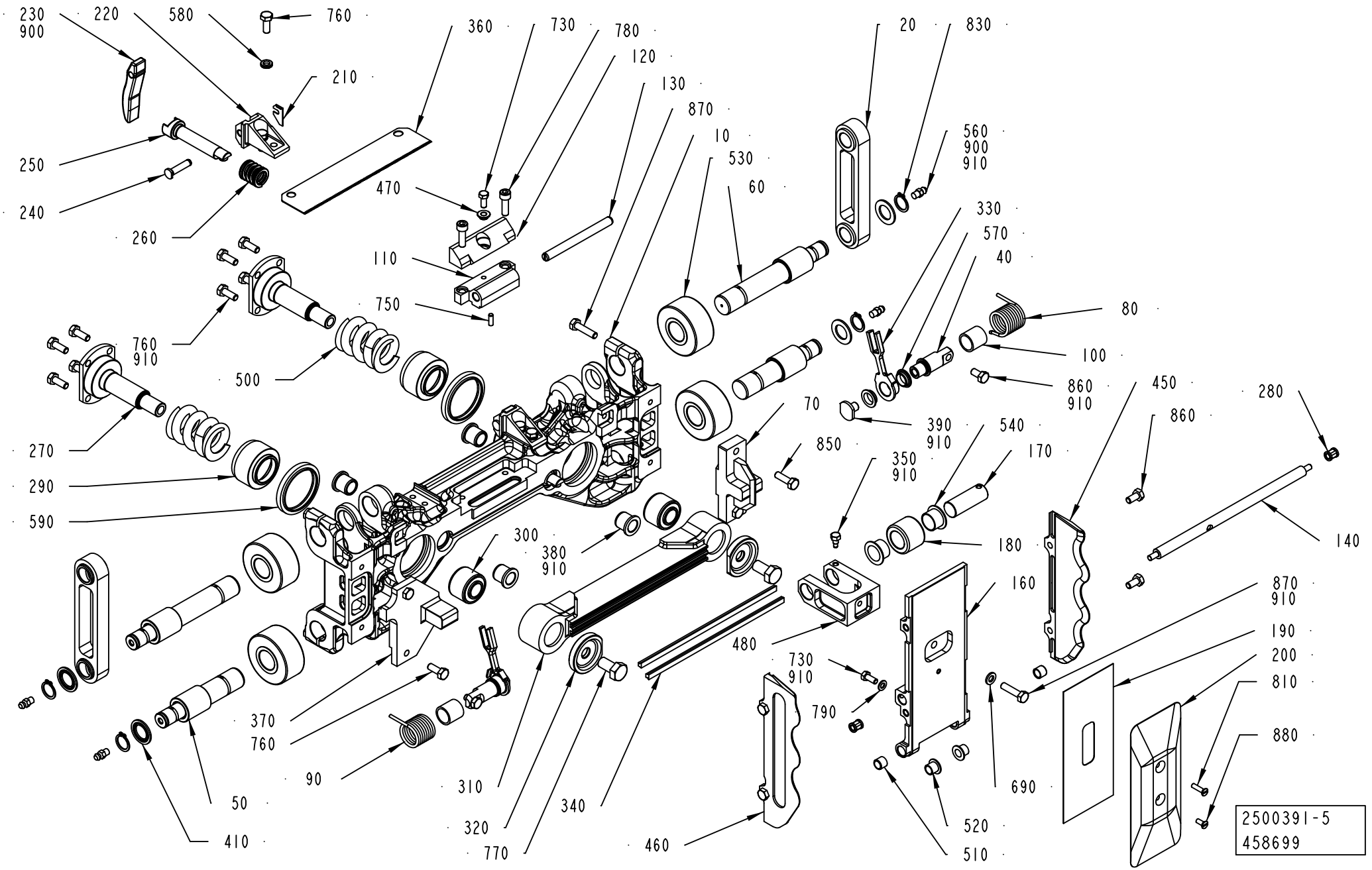
230
900
220
580
760
210
250
240
260
360
730
780
120
130
870
10
530
60
470
110
750
760
910
500
270
290
590
300
380
910
370
760
90
50
410
310
320
770
340
460
20
830
560
900
910
330
570
40
80
100
860
910
450
860
280
140
70
390
910
850
350
910
540
170
180
160
480
730
910
790
870
910
190
200
810
880
690
520
510
2500391-5
458699

ECM: 460433 - 20101001
Group number: 2500391-0300
Assembly Drawing: 2500391-5_1_AC

This list covers pages from 4-56 to 4-59

Pos	Part No	UN	Qty	Description	Page No
TBA 1000B					
010	2811487-0000		1	LINK	
020	1348116-0000		2	LINK	
	1348117-0000		*1*	*LINK*	
	1195204-0000		*2*	*BUSHING*	
080	2835899-0000		1	SPRING	
090	2835877-0000		1	SPRING	
110	1532438-0000		1	BRACKET	
120	2572196-0000		1	DAMPER	
130	2500395-0000		1	SHAFT	
140	2835879-0000		1	SHAFT	
160	2782496-0000		1	VOLUME FLAP	
190	1539374-0000		2	VOLUME SHIM	
200	1532500-0000		1	VOLUME BULGE	
450	2897843-0000		1	VOLUME FLAP	
460	2897844-0000		1	VOLUME FLAP	
880	312145-0289		2	SCREW ISO 2009 MFS M4X10 A4	
TBA 1000S					
010	2811488-0000		1	PRESSURE JAW	
020	2511238-0000		2	LINK	
	2511237-0000		*1*	*LINK*	
	1195204-0000		*2*	*BUSHING*	
080	2835899-0000		1	SPRING	
090	2835877-0000		1	SPRING	
110	2511401-0000		1	BRACKET	
120	2574514-0000		1	DAMPER	
130	2500395-0000		1	SHAFT	
140	2835879-0000		1	SHAFT	
160	2782497-0000		1	VOLUME FLAP	
190	2511635-0000		2	VOLUME SHIM	
200	2951177-0000		1	VOLUME BULGE	
450	2847955-0000		1	VOLUME FLAP	
460	2847956-0000		1	VOLUME FLAP	
880	312145-0289		2	SCREW ISO 2009 MFS M4X10 A4	
TBA 1000SQ					
010	2811486-0000		1	PRESSURE JAW	
020	2523629-0000		2	LINK	
	1195204-0000		*2*	*BUSHING*	
	2523630-0000		*1*	*LINK*	
080	2854562-0000		1	SPRING	
090	2854561-0000		1	SPRING	
110	2511401-0000		1	BRACKET	
120	2679859-0000		1	DAMPER	
130	2529959-0000		1	SHAFT	
140	2847951-0000		1	SHAFT	
160	2825382-0000		1	VOLUME FLAP	
190	1487627-0000		2	VOLUME SHIM	
200	2953218-0000		1	VOLUME BULGE	
450	2783488-0000		1	VOLUME FLAP	
460	2783487-0000		1	VOLUME FLAP	
810	312145-0293		1	SCREW ISO 2009 MFS M4X16 A4	
880	312145-0289		1	SCREW ISO 2009 MFS M4X10 A4	
Common Parts					
040	2835876-0000		2	SHAFT	
050	2811737-0000		2	SHAFT	
060	2811771-0000		2	SHAFT	
070	2802786-0000		1	GUIDE	
100	2812439-0000		2	BUSHING	
170	2570526-0000		1	SHAFT	
180	2570527-0000		1	ROLLER	
210	2691667-0000		2	PLATE	
220	2844228-0000		2	HOLDER	
230	3023657-0000		2	CAM	
240	1517291-0000		2	SHAFT	
250	2506521-0000		2	SHAFT	
260	2502413-0000		2	SPRING	
270	2559031-0000		2	SHAFT	
280	2812444-0000		2	BUSHING	
290	1348165-0000		2	SLEEVE	
300	2530290-0000		2	RUBBER BUSHING	
310	1523369-0000		1	PRESSURE RAIL	
320	2529982-0000		2	WASHER	
330	2835878-0000		2	LEVER	
340	1110390-0000		2	DOLLY	
350	2570528-0000		1	GRUB SCREW	
360	2774347-0000		1	KNIFE	
370	2794723-0000		1	MOUNTING BLOCK	
380	2812157-0000		4	BUSHING	
390	2812442-0000		2	WASHER	
410	1548817-0000		4	WASHER	
470	2572197-0000		1	SPACER	
480	2779678-0000		1	BRACKET	
500	90458-1935		2	COMP. SPRING 49235, 8,2X37,3X51	
510	90458-0353		2	BUSHING, IGLIDUR X 8X10X8	

Machine Type | Group Description | Used-In | Group Number | Page No

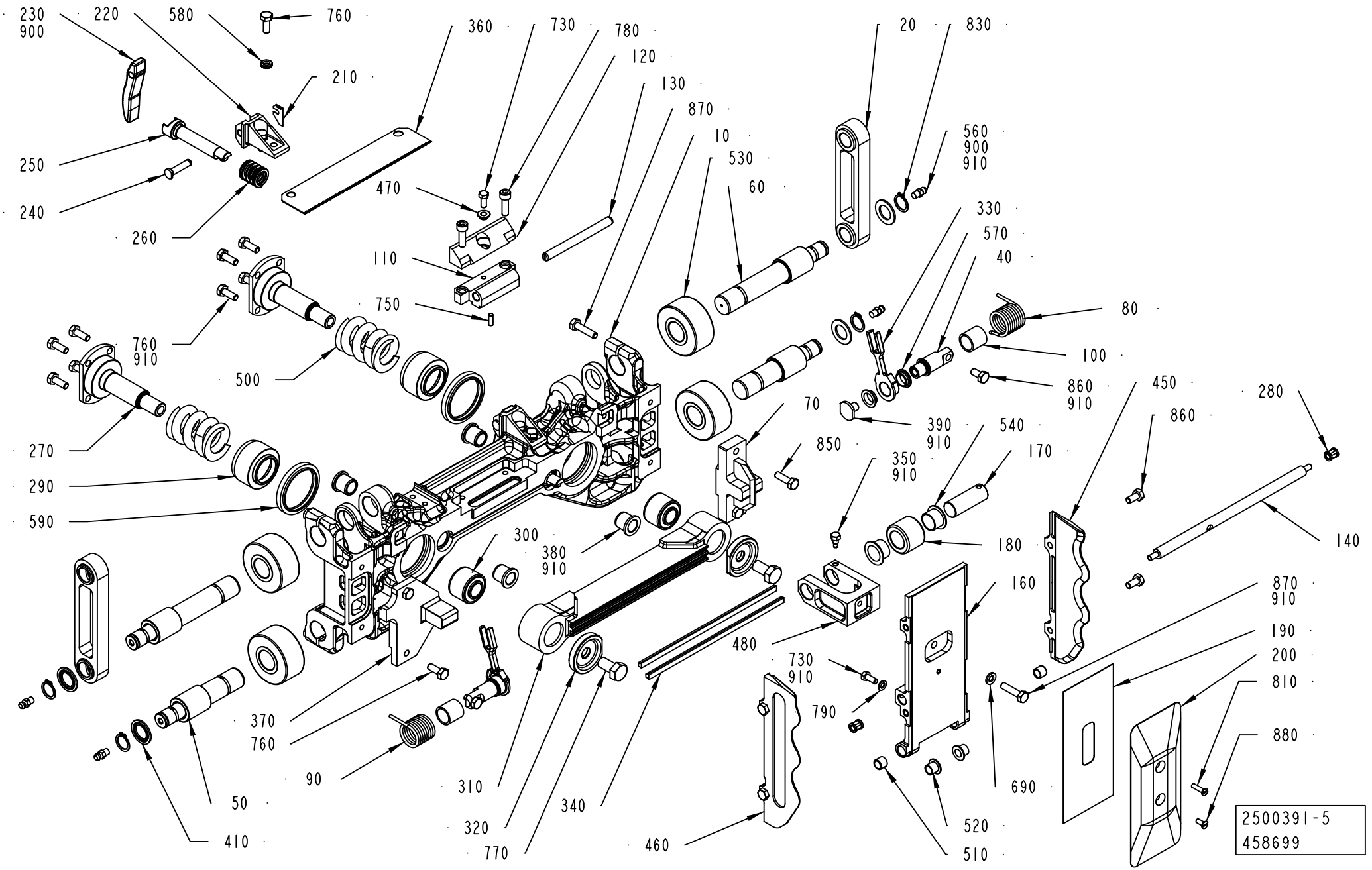
230
900
220
580
760
210
250
240
260
360
730
780
120
130
870
10
530
60
470
110
750
760
910
500
270
290
590
300
380
910
370
760
90
50
410
310
320
770
340
460
20
830
560
900
910
330
570
40
80
100
860
910
450
860
280
140
70
390
910
850
350
910
540
170
180
160
480
730
910
790
870
910
190
200
810
880
690
520
510
2500391-5
458699

Pos	Part No	UN	Qty	Description	Page No
Common Parts (Cont'd)					
520	90240-0260		2	FLANGE BUSHING, IGLIDUR X 8X10X9	
530	90459-0125		4	CYL.ROLLER BEARING, 20X52X25 MM	
540	90600-4717		2	FLANGE BUSHING, IGLIDUR Z 16X18X12	
560	90286-0013		4	GREASE NIPPLE STRAIGHT, H1 M6X1 2346	
570	90600-0590		4	FLANGE BUSHING, IGLIDUR J 12X14X4,5	
580	90062-0061		4	LOCK WASHER NORD-LOCK,6,5/10,8, T=2,2	
590	90459-1562		2	SCRAPER, 42X52X5 MM	
690	315105-0153		1	WASHER BRB 6,4X12 RFR	
730	312105-0327		2	SCREW M6S ISO 4017 M5X12 A480	
750	311103-0268		1	PARALLEL PIN ISO 2338 4M6X12 A1	
760	312105-0368		14	SCREW M6S ISO 4017 M6X16 A480	
770	312105-0491		2	SCREW M6S ISO 4017 M10X20 A480	
780	312115-0370		2	SCREW ISO4762 M6X20 A4 80	
790	315105-0146		1	WASHER BRB 5,3X10 RFR	
830	315751-0112		4	RETAINING RING FOR SHAFT DIN 471 15 SS	
850	312105-0370		2	SCREW M6S ISO 4017 M6X20 A480	
860	312105-0366		6	SCREW M6S ISO 4017 M6X12 A480	
870	312105-0372		5	SCREW M6S ISO 4017 M6X25 A480	
900	90459-0246	KG	1	GREASE, KLüBERSYNTH UH1, ONLY IN BOM	
	90459-7414		*1*	*GREASE, KLüBERSYNTH UH1 14-1600, 25 KG*	
	90459-7413		*1*	*GREASE, KLüBERSYNTH UH1 14-1600, 1 KG*	
910	90157-0021		1	LOCKING FLUID LOCTITE 270	

Pos	Part No	UN	Qty	Description	Page No

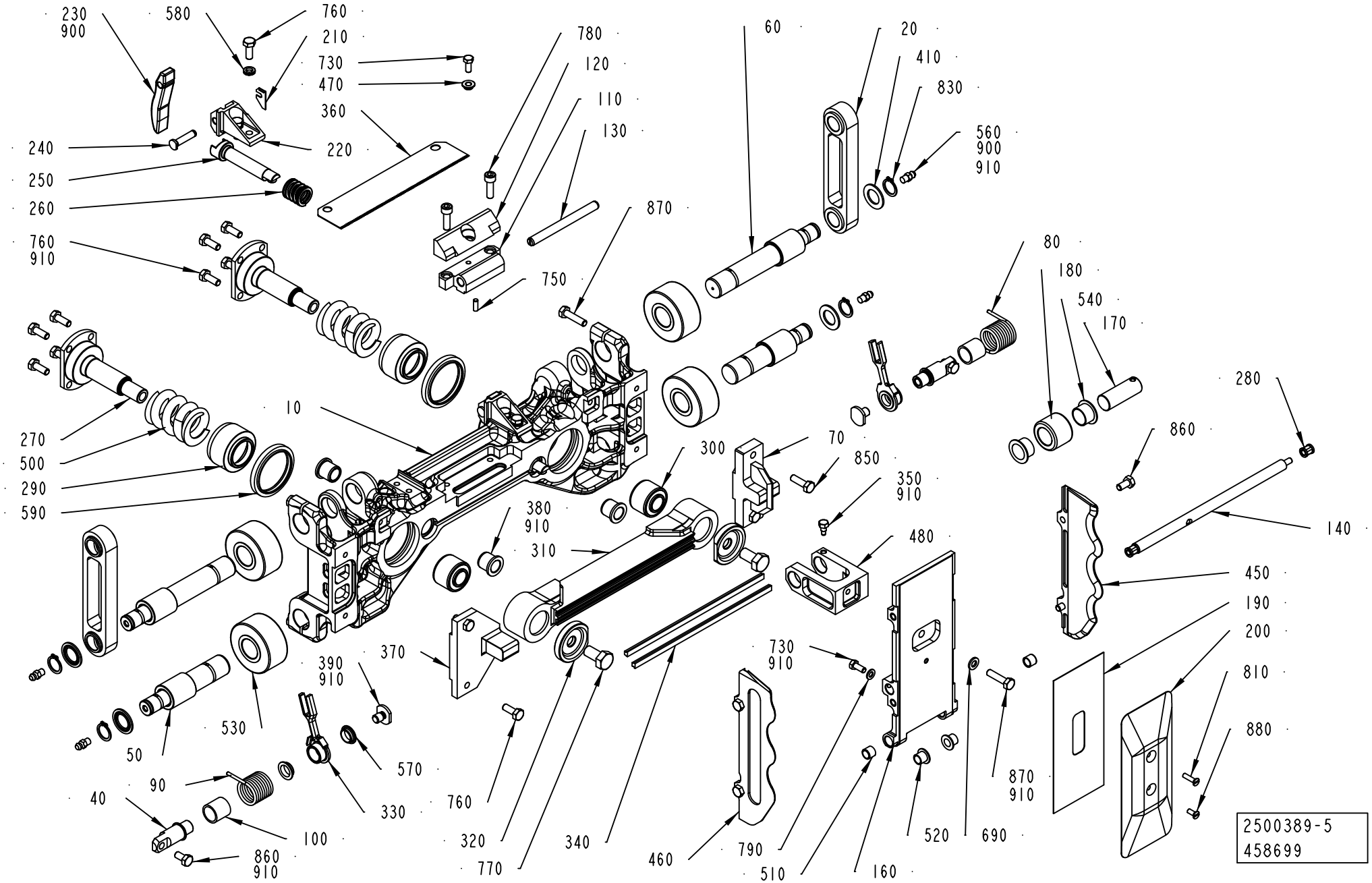
230
900
580
760
210
730
470
360
220
240
250
260
760
910
780
120
110
130
750
870
60
20
410
830
560
900
910
80
180
540
170
280
860
140
10
270
500
290
590
300
70
850
350
910
480
380
910
310
450
190
200
810
880
730
910
390
910
370
530
50
90
40
100
860
910
570
330
760
320
770
340
460
790
510
160
520
690
870
910
2500389-5
458699

ECM: 460431 - 20101001
Group number: 2500389-0300
Assembly Drawing: 2500389-5_1_AC

This list covers pages from 4-60 to 4-63

Pos	Part No	UN	Qty	Description	Page No
TBA 1000B					
010	2811487-0000		1	LINK	
020	1348116-0000		2	LINK	
	1348117-0000		*1*	*LINK*	
	1195204-0000		*2*	*BUSHING*	
080	2835899-0000		1	SPRING	
090	2835877-0000		1	SPRING	
110	1532438-0000		1	BRACKET	
120	2572196-0000		1	DAMPER	
130	2500395-0000		1	SHAFT	
140	2835879-0000		1	SHAFT	
160	2782496-0000		1	VOLUME FLAP	
190	1539374-0000		2	VOLUME SHIM	
200	1532500-0000		1	VOLUME BULGE	
450	2897843-0000		1	VOLUME FLAP	
460	2897844-0000		1	VOLUME FLAP	
880	312145-0289		2	SCREW ISO 2009 MFS M4X10 A4	
TBA 1000S					
010	2811488-0000		1	PRESSURE JAW	
020	2511238-0000		2	LINK	
	2511237-0000		*1*	*LINK*	
	1195204-0000		*2*	*BUSHING*	
080	2835899-0000		1	SPRING	
090	2835877-0000		1	SPRING	
110	2511401-0000		1	BRACKET	
120	2574514-0000		1	DAMPER	
130	2500395-0000		1	SHAFT	
140	2835879-0000		1	SHAFT	
160	2782497-0000		1	VOLUME FLAP	
190	2511635-0000		2	VOLUME SHIM	
200	2951177-0000		1	VOLUME BULGE	
450	2847955-0000		1	VOLUME FLAP	
460	2847956-0000		1	VOLUME FLAP	
880	312145-0289		2	SCREW ISO 2009 MFS M4X10 A4	
TBA 1000SQ					
010	2811486-0000		1	PRESSURE JAW	
020	2523629-0000		2	LINK	
	1195204-0000		*2*	*BUSHING*	
	2523630-0000		*1*	*LINK*	
080	2854562-0000		1	SPRING	
090	2854561-0000		1	SPRING	
110	2511401-0000		1	BRACKET	
120	2679859-0000		1	DAMPER	
130	2529959-0000		1	SHAFT	
140	2847951-0000		1	SHAFT	
160	2825382-0000		1	VOLUME FLAP	
190	1487627-0000		2	VOLUME SHIM	
200	2953218-0000		1	VOLUME BULGE	
450	2783488-0000		1	VOLUME FLAP	
460	2783487-0000		1	VOLUME FLAP	
810	312145-0293		1	SCREW ISO 2009 MFS M4X16 A4	
880	312145-0289		1	SCREW ISO 2009 MFS M4X10 A4	
Common Parts					
040	2835876-0000		2	SHAFT	
050	2811737-0000		2	SHAFT	
060	2811771-0000		2	SHAFT	
070	2802786-0000		1	GUIDE	
100	2812439-0000		2	BUSHING	
170	2570526-0000		1	SHAFT	
180	2570527-0000		1	ROLLER	
210	2691667-0000		2	PLATE	
220	2844228-0000		2	HOLDER	
230	3023657-0000		2	CAM	
240	1517291-0000		2	SHAFT	
250	2506521-0000		2	SHAFT	
260	2502413-0000		2	SPRING	
270	2559031-0000		2	SHAFT	
280	2812444-0000		2	BUSHING	
290	1348165-0000		2	SLEEVE	
300	2530290-0000		2	RUBBER BUSHING	
310	1523369-0000		1	PRESSURE RAIL	
320	2529982-0000		2	WASHER	
330	2835878-0000		2	LEVER	
340	1110390-0000		2	DOLLY	
350	2570528-0000		1	GRUB SCREW	
360	2774347-0000		1	KNIFE	
370	2794722-0000		1	MOUNTING BLOCK	
380	2812157-0000		4	BUSHING	
390	2812442-0000		2	WASHER	
410	1548817-0000		4	WASHER	
470	2572197-0000		1	SPACER	
480	2779678-0000		1	BRACKET	
500	90458-1935		2	COMP. SPRING 49235, 8,2X37,3X51	
510	90458-0353		2	BUSHING, IGLIDUR X 8X10X8	

Machine Type | Group Description | Used-In | Group Number | Page No

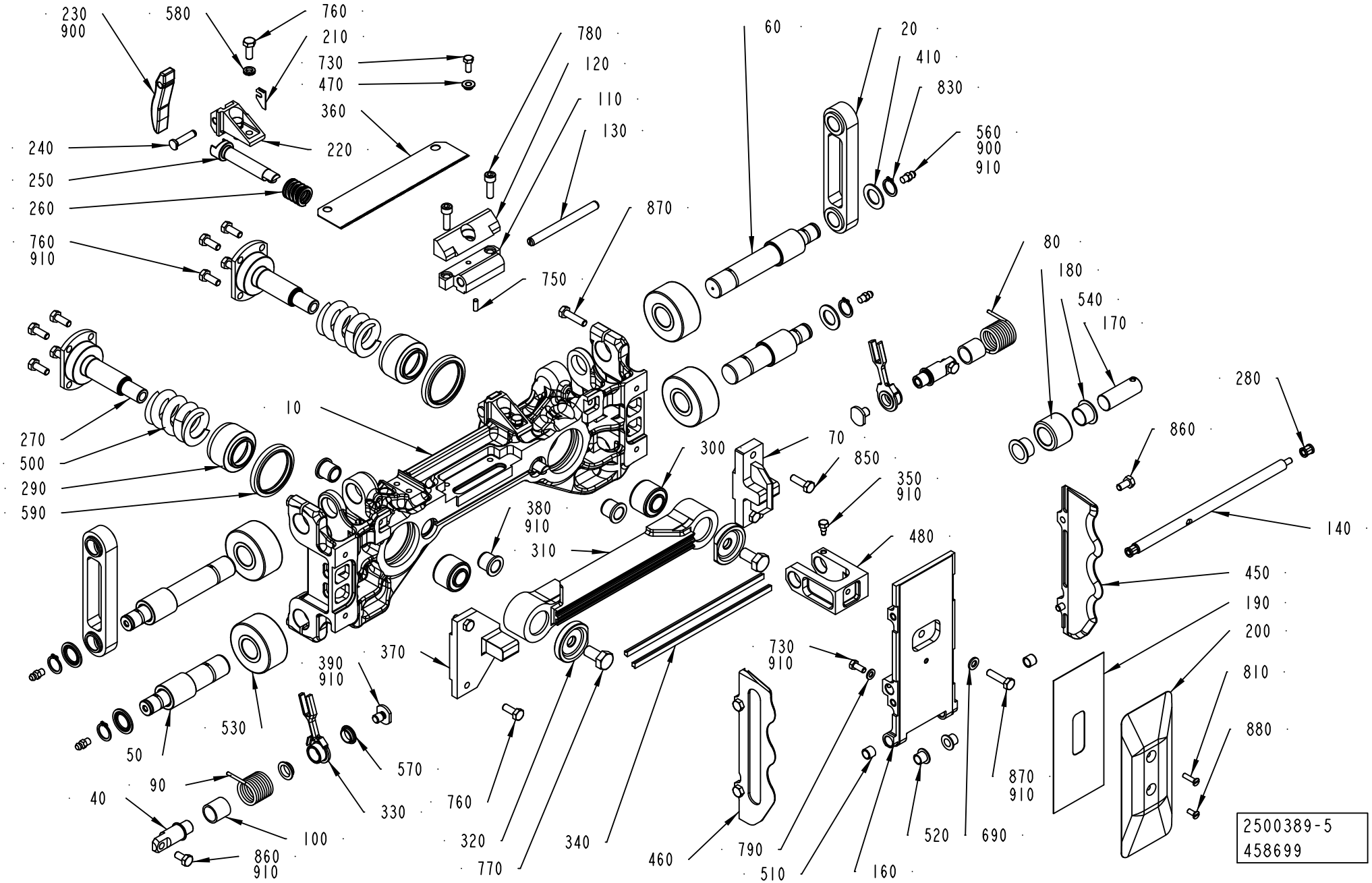
230
900
580
760
210
730
470
360
220
240
250
260
760
910
780
120
110
130
750
870
60
20
410
830
560
900
910
80
180
540
170
280
860
140
450
190
200
810
880
10
270
500
290
590
300
70
850
350
910
480
380
910
310
390
910
370
530
50
90
40
100
860
910
570
330
760
320
770
340
460
730
910
790
510
160
520
690
870
910
2500389-5
458699

Pos	Part No	UN	Qty	Description	Page No
Common Parts (Cont'd)					
520	90240-0260		2	FLANGE BUSHING, IGLIDUR X 8X10X9	
530	90459-0125		4	CYL.ROLLER BEARING, 20X52X25 MM	
540	90600-4717		2	FLANGE BUSHING, IGLIDUR Z 16X18X12	
560	90286-0013		4	GREASE NIPPLE STRAIGHT, H1 M6X1 2346	
570	90600-0590		4	FLANGE BUSHING, IGLIDUR J 12X14X4,5	
580	90062-0061		4	LOCK WASHER NORD-LOCK,6,5/10,8, T=2,2	
590	90459-1562		2	SCRAPER, 42X52X5 MM	
690	315105-0153		1	WASHER BRB 6,4X12 RFR	
730	312105-0327		2	SCREW M6S ISO 4017 M5X12 A480	
750	311103-0268		1	PARALLEL PIN ISO 2338 4M6X12 A1	
760	312105-0368		14	SCREW M6S ISO 4017 M6X16 A480	
770	312105-0491		2	SCREW M6S ISO 4017 M10X20 A480	
780	312115-0370		2	SCREW ISO4762 M6X20 A4 80	
790	315105-0146		1	WASHER BRB 5,3X10 RFR	
830	315751-0112		4	RETAINING RING FOR SHAFT DIN 471 15 SS	
850	312105-0370		2	SCREW M6S ISO 4017 M6X20 A480	
860	312105-0366		6	SCREW M6S ISO 4017 M6X12 A480	
870	312105-0372		5	SCREW M6S ISO 4017 M6X25 A480	
900	90459-0246	KG	1	GREASE, KLüBERSYNTH UH1, ONLY IN BOM	
	90459-7414		*1*	*GREASE, KLüBERSYNTH UH1 14-1600, 25 KG*	
	90459-7413		*1*	*GREASE, KLüBERSYNTH UH1 14-1600, 1 KG*	
910	90157-0021		1	LOCKING FLUID LOCTITE 270	

Pos	Part No	UN	Qty	Description	Page No

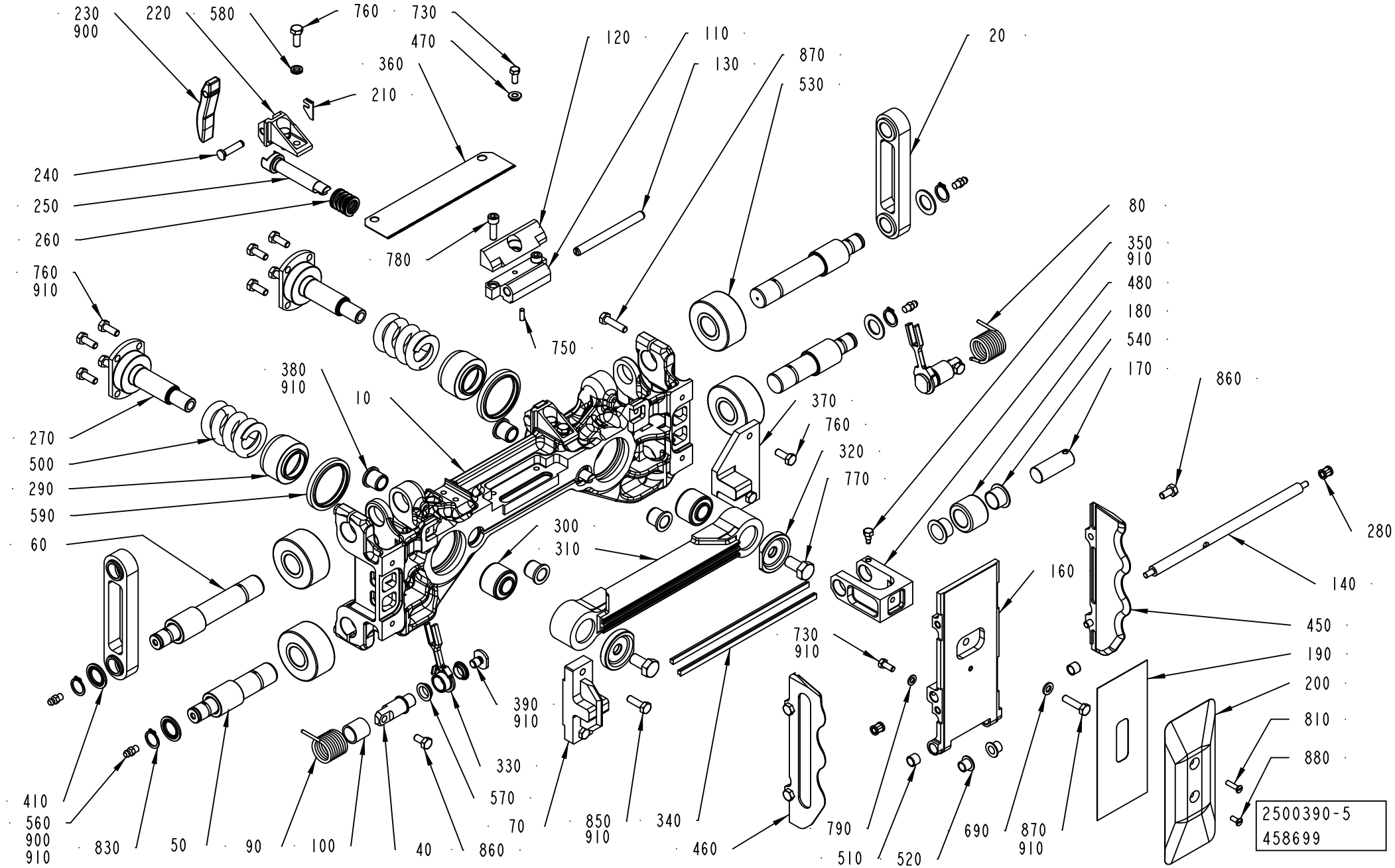
230
900
220
580
760
730
470
360
210
120
110
130
870
530
20
240
250
260
760
910
780
750
80
350
910
480
180
540
170
860
380
910
10
370
760
320
770
270
500
290
590
60
300
310
280
140
160
450
190
200
810
880
730
910
390
910
330
570
70
850
910
340
460
790
510
520
690
870
910
410
560
900
910
830
50
90
100
40
860
2500390-5
458699

ECM: 460432 - 20101001
Group number: 2500390-0300
Assembly Drawing: 2500390-5_1_AC

This list covers pages from 4-64 to 4-67

Pos	Part No	UN	Qty	Description	Page No
TBA 1000B					
010	2811487-0000		1	LINK	
020	1348116-0000		2	LINK	
	1348117-0000		*1*	*LINK*	
	1195204-0000		*2*	*BUSHING*	
080	2835899-0000		1	SPRING	
090	2835877-0000		1	SPRING	
110	1532438-0000		1	BRACKET	
120	2572196-0000		1	DAMPER	
130	2500395-0000		1	SHAFT	
140	2835879-0000		1	SHAFT	
160	2782496-0000		1	VOLUME FLAP	
190	1539374-0000		2	VOLUME SHIM	
200	1532500-0000		1	VOLUME BULGE	
450	2897843-0000		1	VOLUME FLAP	
460	2897844-0000		1	VOLUME FLAP	
880	312145-0289		2	SCREW ISO 2009 MFS M4X10 A4	
TBA 1000S					
010	2811488-0000		1	PRESSURE JAW	
020	2511238-0000		2	LINK	
	2511237-0000		*1*	*LINK*	
	1195204-0000		*2*	*BUSHING*	
080	2835899-0000		1	SPRING	
090	2835877-0000		1	SPRING	
110	2511401-0000		1	BRACKET	
120	2574514-0000		1	DAMPER	
130	2500395-0000		1	SHAFT	
140	2835879-0000		1	SHAFT	
160	2782497-0000		1	VOLUME FLAP	
190	2511635-0000		2	VOLUME SHIM	
200	2951177-0000		1	VOLUME BULGE	
450	2847955-0000		1	VOLUME FLAP	
460	2847956-0000		1	VOLUME FLAP	
880	312145-0289		2	SCREW ISO 2009 MFS M4X10 A4	
TBA 1000SQ					
010	2811486-0000		1	PRESSURE JAW	
020	2523629-0000		2	LINK	
	1195204-0000		*2*	*BUSHING*	
	2523630-0000		*1*	*LINK*	
080	2854562-0000		1	SPRING	
090	2854561-0000		1	SPRING	
110	2511401-0000		1	BRACKET	
120	2679859-0000		1	DAMPER	
130	2529959-0000		1	SHAFT	
140	2847951-0000		1	SHAFT	
160	2825382-0000		1	VOLUME FLAP	
190	1487627-0000		2	VOLUME SHIM	
200	2953218-0000		1	VOLUME BULGE	
450	2783488-0000		1	VOLUME FLAP	
460	2783487-0000		1	VOLUME FLAP	
810	312145-0293		1	SCREW ISO 2009 MFS M4X16 A4	
880	312145-0289		1	SCREW ISO 2009 MFS M4X10 A4	
Common Parts					
040	2835876-0000		2	SHAFT	
050	2811737-0000		2	SHAFT	
060	2811771-0000		2	SHAFT	
070	2802786-0000		1	GUIDE	
100	2812439-0000		2	BUSHING	
170	2570526-0000		1	SHAFT	
180	2570527-0000		1	ROLLER	
210	2691667-0000		2	PLATE	
220	2844228-0000		2	HOLDER	
230	3023657-0000		2	CAM	
240	1517291-0000		2	SHAFT	
250	2506521-0000		2	SHAFT	
260	2502413-0000		2	SPRING	
270	2559031-0000		2	SHAFT	
280	2812444-0000		2	BUSHING	
290	1348165-0000		2	SLEEVE	
300	2530290-0000		2	RUBBER BUSHING	
310	1523369-0000		1	PRESSURE RAIL	
320	2529982-0000		2	WASHER	
330	2835878-0000		2	LEVER	
340	1110390-0000		2	DOLLY	
350	2570528-0000		1	GRUB SCREW	
360	2774347-0000		1	KNIFE	
370	2794722-0000		1	MOUNTING BLOCK	
380	2812157-0000		4	BUSHING	
390	2812442-0000		2	WASHER	
410	1548817-0000		4	WASHER	
470	2572197-0000		1	SPACER	
480	2779678-0000		1	BRACKET	
500	90458-1935		2	COMP. SPRING 49235, 8,2X37,3X51	
510	90458-0353		2	BUSHING, IGLIDUR X 8X10X8	

Machine Type | Group Description | Used-In | Group Number | Page No

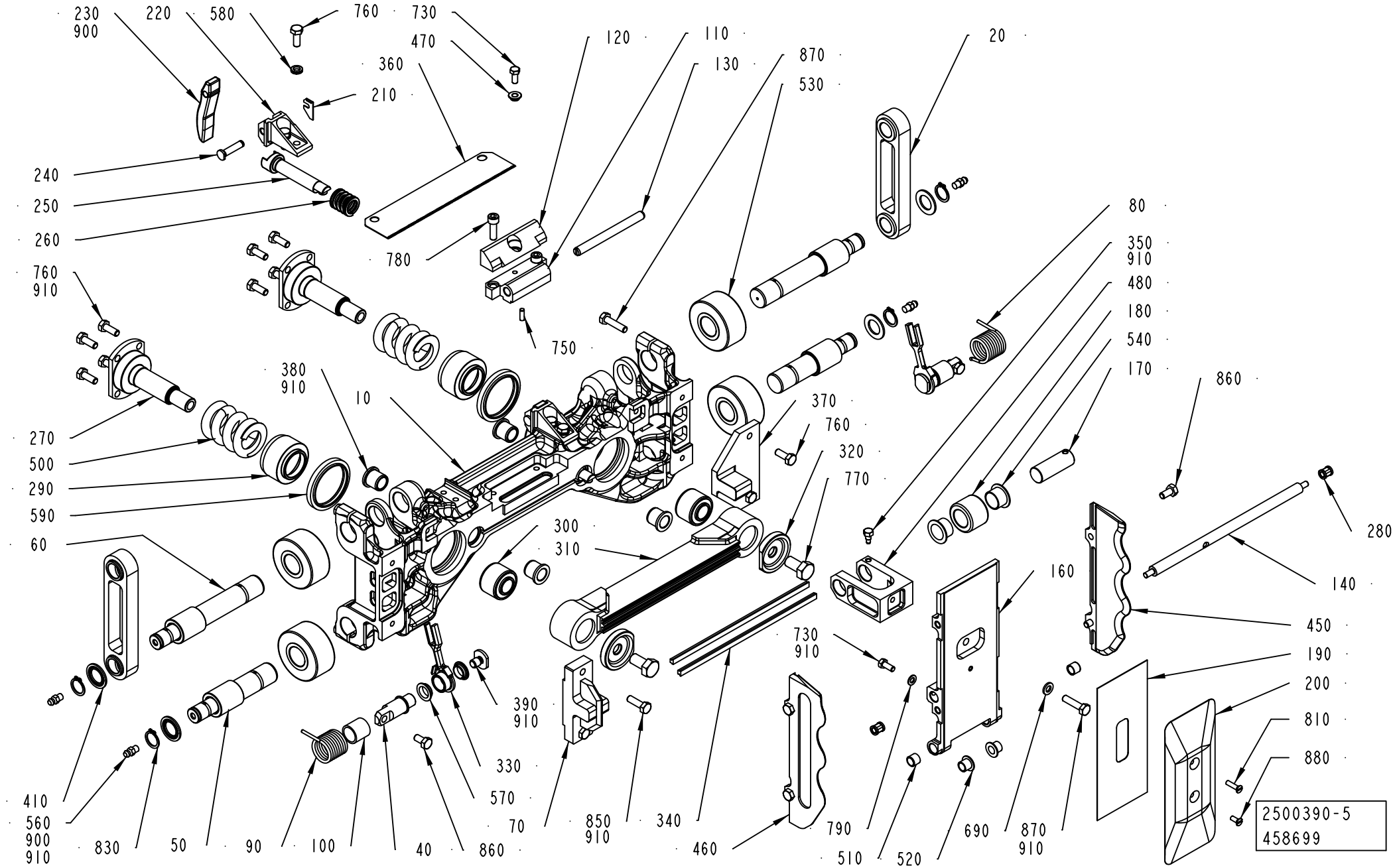
230
900
220
580
760
730
470
360
210
120
110
130
870
530
20
240
250
260
780
760
910
750
80
350
910
480
180
540
170
860
380
910
10
370
760
320
770
270
500
290
590
60
300
310
280
140
160
450
190
200
810
880
730
910
390
910
330
570
70
850
910
340
460
790
510
520
690
870
910
410
560
900
910
830
50
90
100
40
860
2500390-5
458699

Pos	Part No	UN	Qty	Description	Page No
Common Parts (Cont'd)					
520	90240-0260		2	FLANGE BUSHING, IGLIDUR X 8X10X9	
530	90459-0125		4	CYL.ROLLER BEARING, 20X52X25 MM	
540	90600-4717		2	FLANGE BUSHING, IGLIDUR Z 16X18X12	
560	90286-0013		4	GREASE NIPPLE STRAIGHT, H1 M6X1 2346	
570	90600-0590		4	FLANGE BUSHING, IGLIDUR J 12X14X4,5	
580	90062-0061		4	LOCK WASHER NORD-LOCK,6,5/10,8, T=2,2	
590	90459-1562		2	SCRAPER, 42X52X5 MM	
690	315105-0153		1	WASHER BRB 6,4X12 RFR	
730	312105-0327		2	SCREW M6S ISO 4017 M5X12 A480	
750	311103-0268		1	PARALLEL PIN ISO 2338 4M6X12 A1	
760	312105-0368		14	SCREW M6S ISO 4017 M6X16 A480	
770	312105-0491		2	SCREW M6S ISO 4017 M10X20 A480	
780	312115-0370		2	SCREW ISO4762 M6X20 A4 80	
790	315105-0146		1	WASHER BRB 5,3X10 RFR	
830	315751-0112		4	RETAINING RING FOR SHAFT DIN 471 15 SS	
850	312105-0370		2	SCREW M6S ISO 4017 M6X20 A480	
860	312105-0366		6	SCREW M6S ISO 4017 M6X12 A480	
870	312105-0372		5	SCREW M6S ISO 4017 M6X25 A480	
900	90459-0246	KG	1	GREASE, KLüBERSYNTH UH1, ONLY IN BOM	
	90459-7414		*1*	*GREASE, KLüBERSYNTH UH1 14-1600, 25 KG*	
	90459-7413		*1*	*GREASE, KLüBERSYNTH UH1 14-1600, 1 KG*	
910	90157-0021		1	LOCKING FLUID LOCTITE 270	

Pos	Part No	UN	Qty	Description	Page No

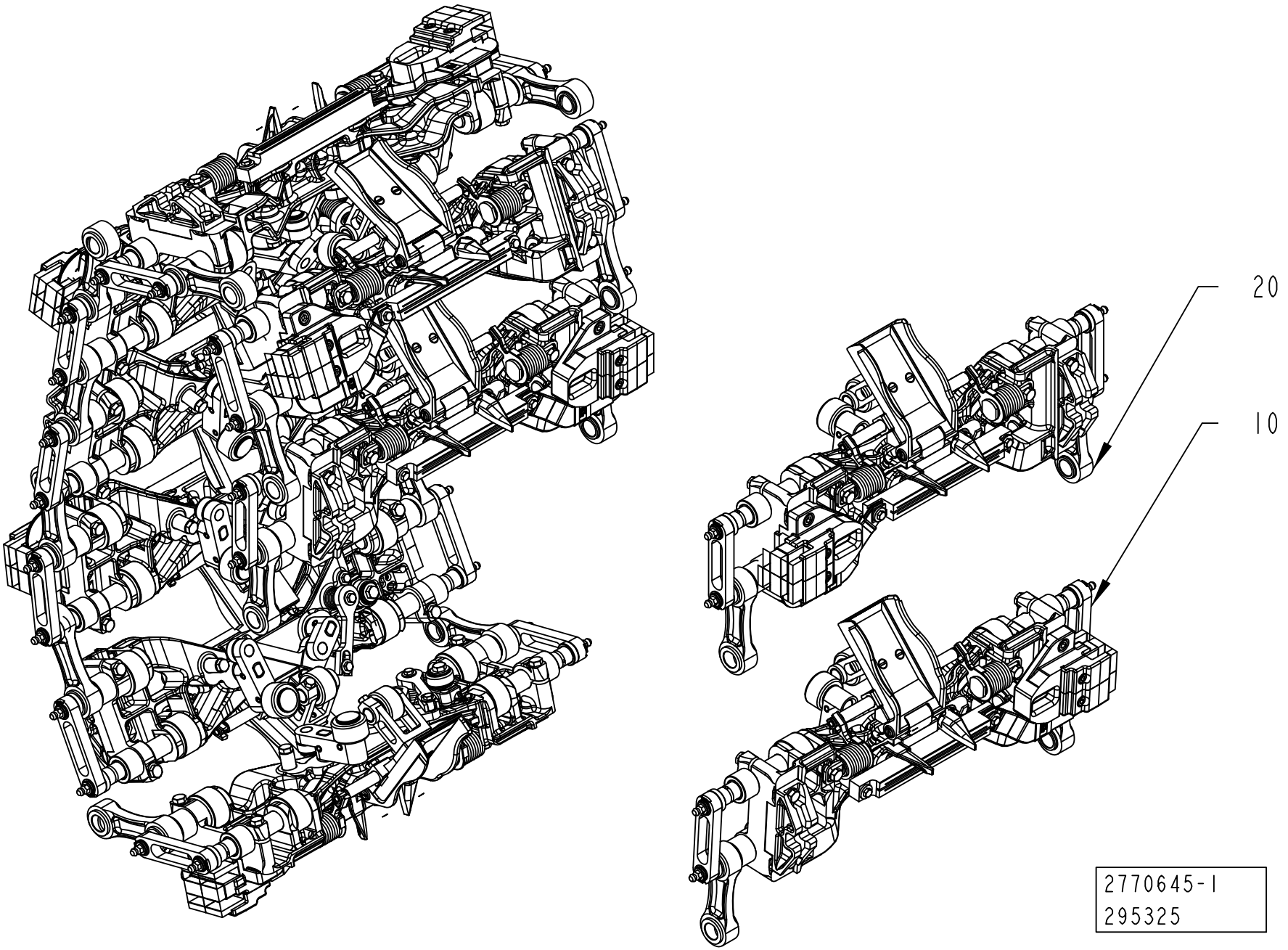
20
10
2770645-1
295325

ECM: 373865 - 20081130
Group number: 2770645-0100
Assembly Drawing: 2770645-1_1_AA

Pos	Part No	UN	Qty	Description	Page No
TBA 0125S					
010	2529794-0400		5	SEALING JAW	**4-71, 4-73, 4-75**
020	2529795-0400		5	SEALING JAW	**4-77, 4-79, 4-81**
TBA 0200B					
010	2529794-0400		5	SEALING JAW	**4-71, 4-73, 4-75**
020	2529795-0400		5	SEALING JAW	**4-77, 4-79, 4-81**
TBA 0200M					
010	2529794-0400		5	SEALING JAW	**4-71, 4-73, 4-75**
020	2529795-0400		5	SEALING JAW	**4-77, 4-79, 4-81**
TBA 0200S					
010	2529794-0400		5	SEALING JAW	**4-71, 4-73, 4-75**
020	2529795-0400		5	SEALING JAW	**4-77, 4-79, 4-81**
TBA 0250B					
010	2529794-0400		5	SEALING JAW	**4-71, 4-73, 4-75**
020	2529795-0400		5	SEALING JAW	**4-77, 4-79, 4-81**
TBA 0250S					
010	2529794-0400		5	SEALING JAW	**4-71, 4-73, 4-75**
020	2529795-0400		5	SEALING JAW	**4-77, 4-79, 4-81**
TBA 1000B					
010	2500387-0300		5	SEALING JAW	**4-83, 4-85**
020	2500388-0300		5	SEALING JAW	**4-87, 4-89**
TBA 1000S					
010	2500387-0300		5	SEALING JAW	**4-83, 4-85**
020	2500388-0300		5	SEALING JAW	**4-87, 4-89**
TBA 1000SQ					
010	2500387-0300		5	SEALING JAW	**4-83, 4-85**
020	2500388-0300		5	SEALING JAW	**4-87, 4-89**

Pos	Part No	UN	Qty	Description	Page No

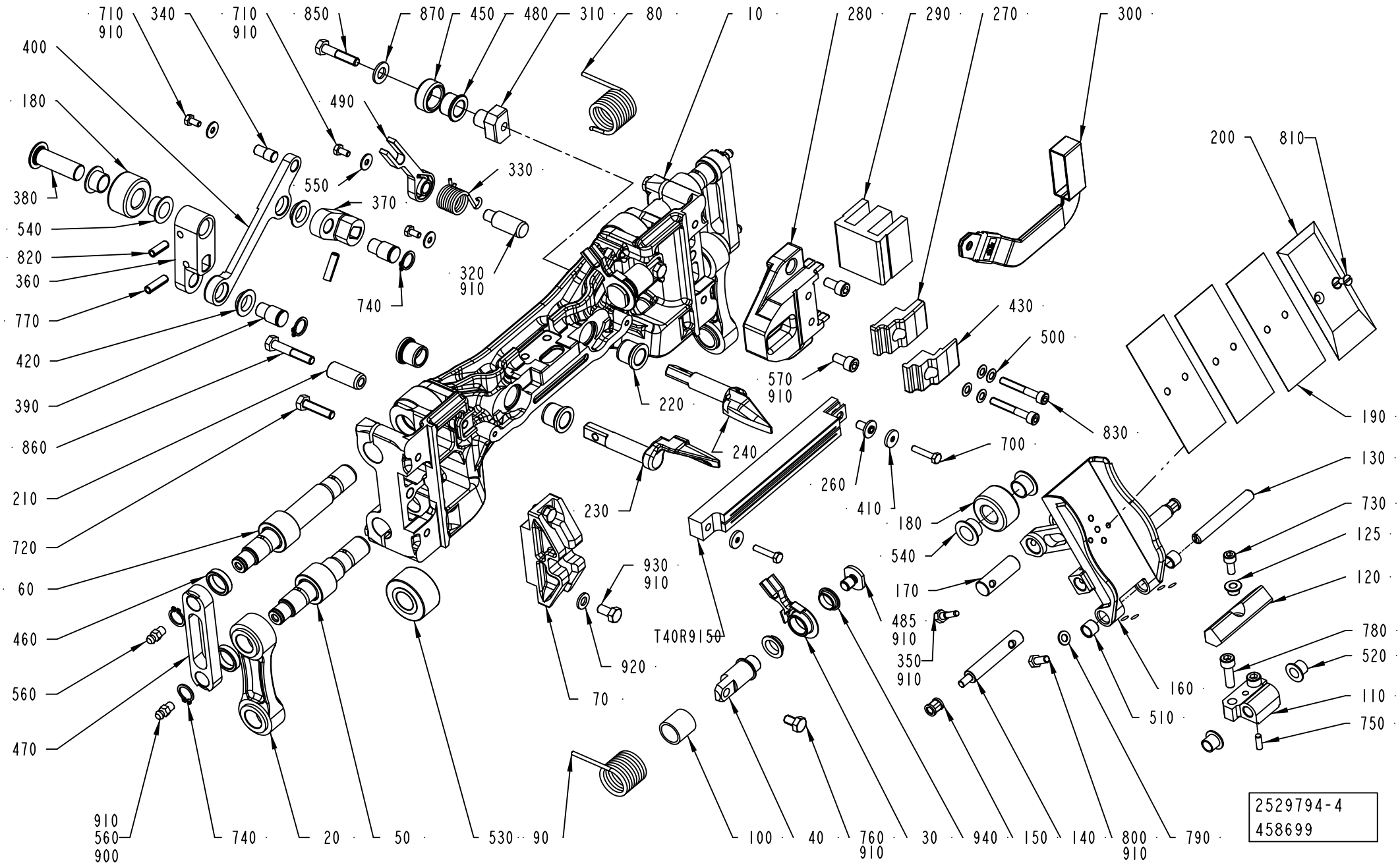
710
910
340
710
910
850
870
450
480
310
80
10
280
290
270
300
400
180
490
330
380
550
370
540
820
360
740
320
910
770
420
390
860
210
720
60
460
560
470
910
560
900
740
20
50
530
90
220
240
230
930
910
920
70
T40R9150
570
910
430
500
830
700
260
410
180
540
170
485
910
350
910
100
40
760
910
30
940
150
140
800
910
790
200
810
190
130
730
125
120
780
520
110
750
160
510
2529794-4
458699

ECM: 478110 - 20110101
Group number: 2529794-0400
Assembly Drawing: 2529794-4_1_AF

This list covers pages from 4-70 to 4-75

Pos	Part No	UN	Qty	Description	Page No
TBA 0125S					
010	2836235-0000		1	SEALING JAW	
020	2611128-0000		2	LINK	
	2611910-0000		*1*	*LINK*	
	1195204-0000		*2*	*BUSHING*	
110	1538134-0000		1	BRACKET	
130	1538135-0000		1	SHAFT	
160	2835542-0000		1	VOLUME FLAP	
	2835543-0000		*1*	*VOLUME FLAP*	
	2611445-0000		*1*	*BRACKET*	
	315105-0146		*1*	*WASHER BRB 5,3X10 RFR*	
	312105-0327		*1*	*SCREW M6S ISO 4017 M5X12 A480*	
	311103-0268		*2*	*PARALLEL PIN ISO 2338 4M6X12 A1*	
	90157-0016	*ML*	*1*	*THREAD LOCKING, LOCTITE 242 50 ML*	
190	2835922-0000		4	VOLUME SHIM	
200	2835921-0000		1	VOLUME BULGE	
210	2846722-0000		1	BUSHING	
230	3133492-0000		1	FOLDING FLAP	
240	3133491-0000		1	FOLDING FLAP	
360	2846723-0000		1	ARM	
370	2846725-0000		1	ARM	
400	2846724-0000		1	LINK ARM	
470	2681388-0000		2	LINK	
490	2812447-0000		1	LEVER	
770	311112-0258		2	SPRING PIN, ISO 8752 4X24-C	
820	311112-0308		1	SPRING PIN, ISO 8752 5X20-C	
860	312105-0374		1	SCREW M6S ISO 4014 M6X30 A480	
T40R9150	2894324-0000		1	INDUCTOR	
TBA 0200B					
010	2695420-0000		1	SEALING JAW	
020	2611128-0000		2	LINK	
	2611910-0000		*1*	*LINK*	
	1195204-0000		*2*	*BUSHING*	
110	1512605-0000		1	BRACKET	
130	1512604-0000		1	SHAFT	
160	2611446-0000		1	VOLUME FLAP	
	2638064-0000		*1*	*VOLUME FLAP*	
	2611445-0000		*1*	*BRACKET*	
	315105-0146		*1*	*WASHER BRB 5,3X10 RFR*	
	312105-0327		*1*	*SCREW M6S ISO 4017 M5X12 A480*	
	311103-0268		*2*	*PARALLEL PIN ISO 2338 4M6X12 A1*	
	90157-0016		*1*	*THREAD LOCKING, LOCTITE 242 50 ML*	
190	1498609-0000		3	VOLUME SHIM	
200	1498608-0000		1	VOLUME BULGE	
230	2778709-0000		1	FOLDING FLAP	
240	2778710-0000		1	FOLDING FLAP	
360	2629312-0000		1	ARM	
370	2500376-0000		1	ARM	
400	2500377-0000		1	LINK ARM	
470	2681388-0000		2	LINK	
490	2812447-0000		1	LEVER	
770	311112-0308		2	SPRING PIN, ISO 8752 5X20-C	
820	311112-0306		1	SPRING PIN, ISO 8752 5X16-C	
T40R9150	1533002-0000		1	INDUCTOR	
TBA 0200M					
010	2695421-0000		1	SEALING JAW	
020	2611417-0000		2	LINK	
	1195204-0000		*2*	*BUSHING*	
	2611416-0000		*1*	*LINK*	
110	1512607-0000		1	BRACKET	
130	1512608-0000		1	SHAFT	
160	2611447-0000		1	VOLUME FLAP	
	2638065-0000		*1*	*VOLUME FLAP*	
	2611445-0000		*1*	*BRACKET*	
	315105-0146		*1*	*WASHER BRB 5,3X10 RFR*	
	312105-0327		*1*	*SCREW M6S ISO 4017 M5X12 A480*	
	311103-0268		*2*	*PARALLEL PIN ISO 2338 4M6X12 A1*	
	90157-0016		*1*	*THREAD LOCKING, LOCTITE 242 50 ML*	
190	1498604-0000		3	VOLUME SHIM	
200	2988511-0000		1	VOLUME BULGE	
210	2511246-0000		1	BUSHING	
230	2778715-0000		1	FOLDING FLAP	
240	2778716-0000		1	FOLDING FLAP	
360	2629310-0000		1	ARM	
370	1478959-0000		1	ARM	
400	1478960-0000		1	LINK ARM	
470	2691641-0000		2	LINK	
490	2844198-0000		1	LEVER	
770	311112-0308		2	SPRING PIN, ISO 8752 5X20-C	
820	311112-0306		1	SPRING PIN, ISO 8752 5X16-C	
860	312105-0376		1	SCREW M6S ISO 4014 M6X35 A480	
T40R9150	1520166-0000		1	INDUCTOR	
TBA 0200S					
010	2695424-0000		1	SEALING JAW	

Machine Type | Group Description | Used-In | Group Number | Page No

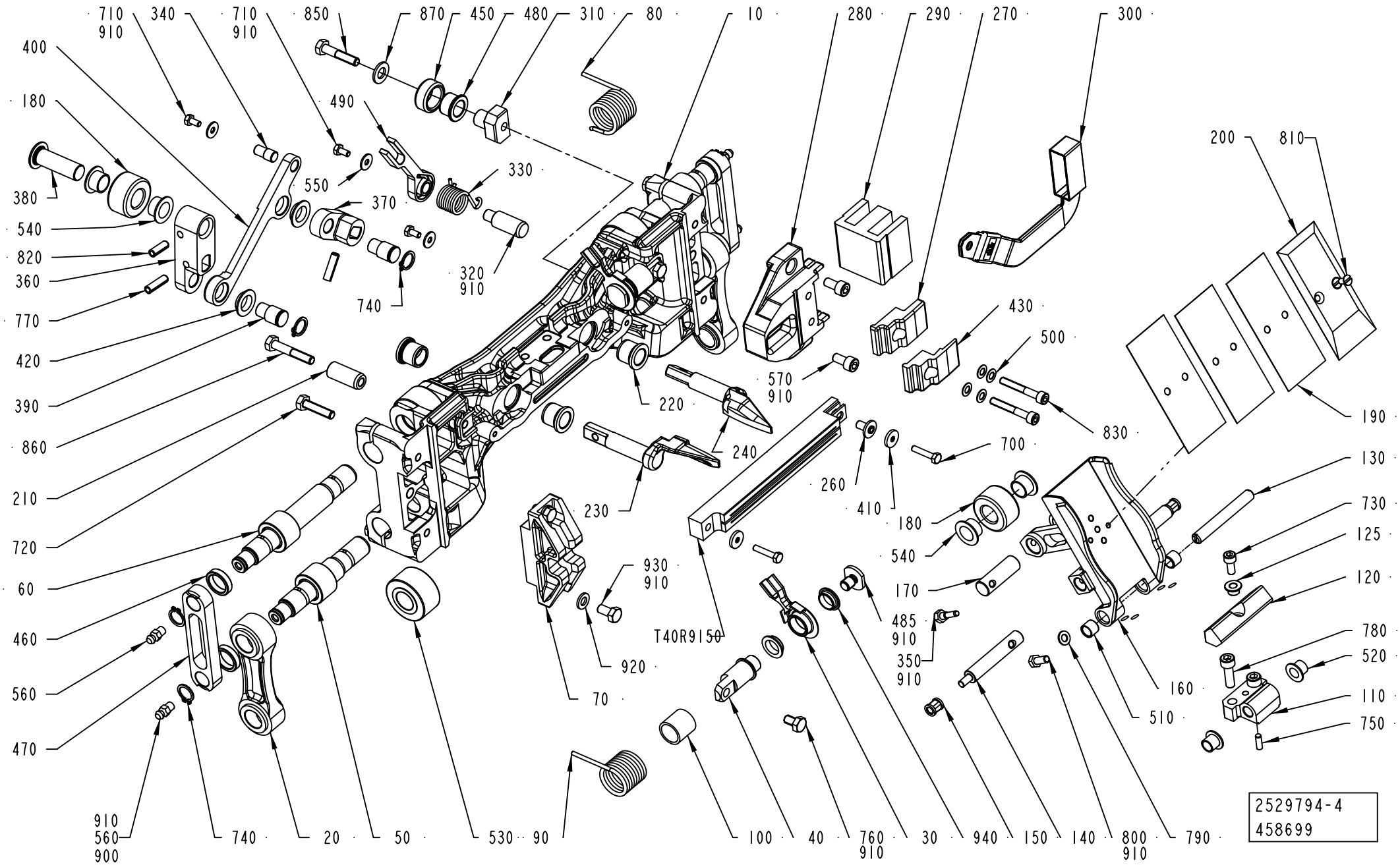
710
910
340
710
910
850
870
450
480
310
80
10
280
290
270
300
400
180
490
330
380
550
370
540
820
360
740
320
910
770
420
390
860
210
720
60
460
560
470
910
560
900
740
20
50
530
90
220
240
230
930
910
920
70
T40R9150
570
910
430
500
830
700
260
410
180
540
170
485
910
350
910
100
40
760
910
30
940
150
140
800
910
790
200
810
190
130
730
125
120
780
520
110
750
160
510
2529794-4
458699

ECM: 478110 - 20110101
Group number: 2529794-0400
Assembly Drawing: 2529794-4_1_AF

This list covers pages from 4-70 to 4-75

Pos	Part No	UN	Qty	Description	Page No
TBA 0200S (Cont'd)					
020	2633465-0000		2	LINK	
	1195204-0000		*2*	*BUSHING*	
	2633464-0000		*1*	*LINK*	
110	1538134-0000		1	BRACKET	
130	1538135-0000		1	SHAFT	
160	2611448-0000		1	VOLUME FLAP	
	2638066-0000		*1*	*VOLUME FLAP*	
	2611445-0000		*1*	*BRACKET*	
	315105-0146		*1*	*WASHER BRB 5,3X10 RFR*	
	312105-0327		*1*	*SCREW M6S ISO 4017 M5X12 A480*	
	311103-0268		*2*	*PARALLEL PIN ISO 2338 4M6X12 A1*	
	90157-0016		*1*	*THREAD LOCKING, LOCTITE 242 50 ML*	
190	272991-0000		3	VOLUME SHIM	
200	272990-0000		1	VOLUME BULGE	
210	2511246-0000		1	BUSHING	
230	2778714-0000		1	FOLDING FLAP	
240	2778713-0000		1	FOLDING FLAP	
360	2629311-0000		1	ARM	
370	1478959-0000		1	ARM	
400	2509551-0000		1	LINK ARM	
470	2693207-0000		2	LINK	
490	2844198-0000		1	LEVER	
770	311112-0308		2	SPRING PIN, ISO 8752 5X20-C	
820	311112-0306		1	SPRING PIN, ISO 8752 5X16-C	
860	312105-0376		1	SCREW M6S ISO 4014 M6X35 A480	
T40R9150	1533000-0000		1	INDUCTOR	
TBA 0250B					
010	2695419-0000		1	SEALING JAW	
020	2611417-0000		2	LINK	
	1195204-0000		*2*	*BUSHING*	
	2611416-0000		*1*	*LINK*	
110	1512605-0000		1	BRACKET	
130	1512604-0000		1	SHAFT	
160	2611449-0000		1	VOLUME FLAP	
	2638067-0000		*1*	*VOLUME FLAP*	
	2611445-0000		*1*	*BRACKET*	
	315105-0146		*1*	*WASHER BRB 5,3X10 RFR*	
	312105-0327		*1*	*SCREW M6S ISO 4017 M5X12 A480*	
	311103-0268		*2*	*PARALLEL PIN ISO 2338 4M6X12 A1*	
	90157-0016		*1*	*THREAD LOCKING, LOCTITE 242 50 ML*	
190	2890874-0000		4	VOLUME SHIM	
200	2890873-0000		1	VOLUME BULGE	
230	2778711-0000		1	FOLDING FLAP	
240	2778712-0000		1	FOLDING FLAP	
360	2629312-0000		1	ARM	
370	2500376-0000		1	ARM	
400	2500377-0000		1	LINK ARM	
470	2691641-0000		2	LINK	
490	2812447-0000		1	LEVER	
770	311112-0308		2	SPRING PIN, ISO 8752 5X20-C	
820	311112-0306		1	SPRING PIN, ISO 8752 5X16-C	
T40R9150	1533002-0000		1	INDUCTOR	
TBA 0250S					
010	2695425-0000		1	SEALING JAW	
020	2611398-0000		2	LINK	
	1195204-0000		*2*	*BUSHING*	
	2611394-0000		*1*	*LINK*	
110	1512607-0000		1	BRACKET	
130	1512608-0000		1	SHAFT	
160	2611450-0000		1	VOLUME FLAP	
	2638068-0000		*1*	*VOLUME FLAP*	
	2611445-0000		*1*	*BRACKET*	
	315105-0146		*1*	*WASHER BRB 5,3X10 RFR*	
	312105-0327		*1*	*SCREW M6S ISO 4017 M5X12 A480*	
	311103-0268		*2*	*PARALLEL PIN ISO 2338 4M6X12 A1*	
	90157-0016		*1*	*THREAD LOCKING, LOCTITE 242 50 ML*	
190	574366-0000		3	VOLUME SHIM	
200	574367-0000		1	VOLUME BULGE	
210	2511246-0000		1	BUSHING	
230	2778715-0000		1	FOLDING FLAP	
240	2778716-0000		1	FOLDING FLAP	
360	2629310-0000		1	ARM	
370	1478959-0000		1	ARM	
400	1478960-0000		1	LINK ARM	
470	2693208-0000		2	LINK	
490	2844198-0000		1	LEVER	
770	311112-0308		2	SPRING PIN, ISO 8752 5X20-C	
820	311112-0306		1	SPRING PIN, ISO 8752 5X16-C	
860	312105-0376		1	SCREW M6S ISO 4014 M6X35 A480	
T40R9150	1520166-0000		1	INDUCTOR	
Common Parts					
030	2812441-0000		2	LEVER	
040	2812438-0000		2	SHAFT	

Machine Type | Group Description | Used-In | Group Number | Page No

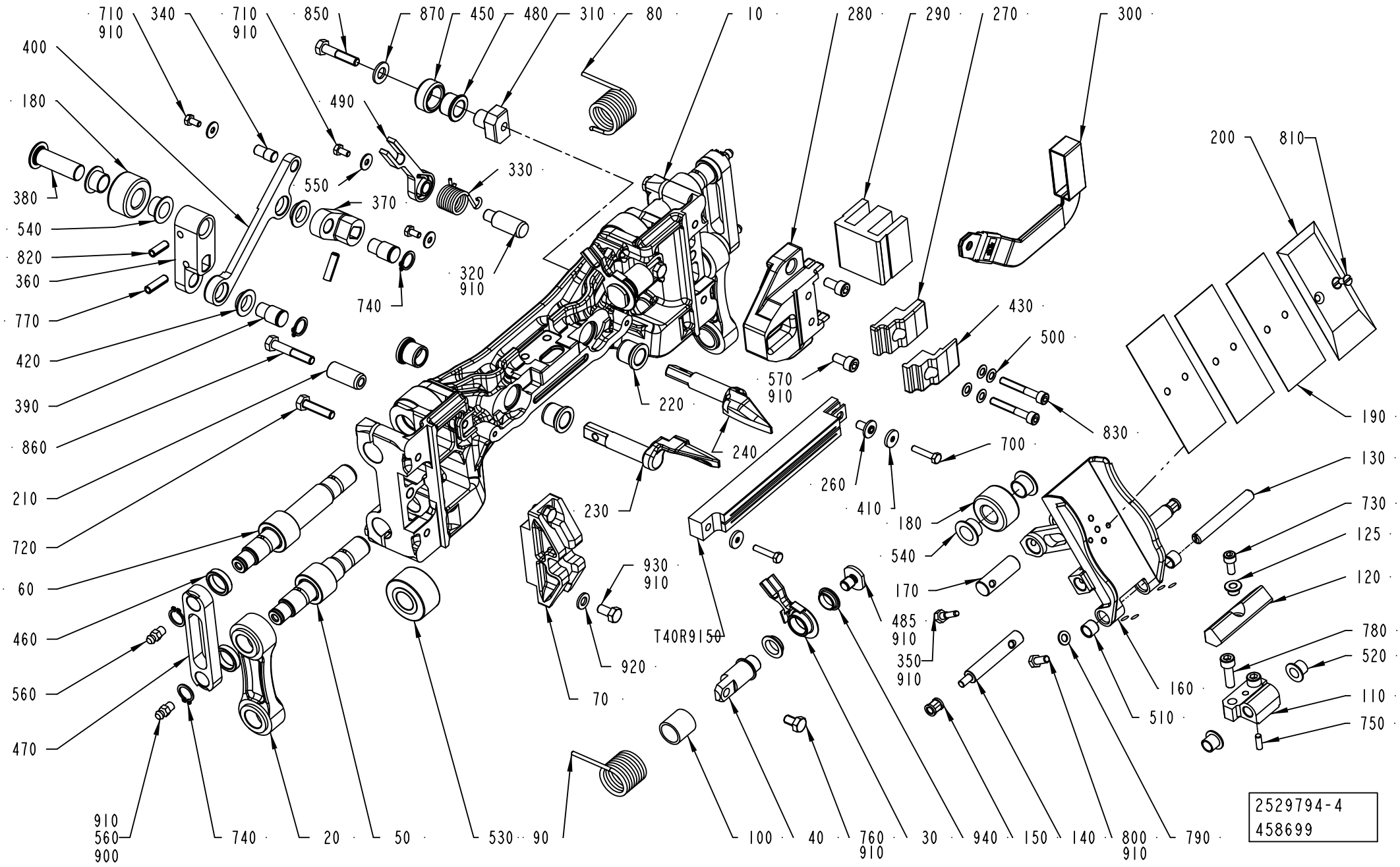
710
910
340
710
910
850
870
450
480
310
80
10
280
290
270
300
400
180
490
330
380
550
370
540
820
360
320
910
740
770
420
390
860
210
720
60
460
560
470
910
560
900
740
20
50
530
90
220
240
230
930
910
920
70
T40R9150
570
910
430
500
830
700
260
410
180
540
170
485
910
350
910
100
40
760
910
30
940
150
140
800
910
790
200
810
190
130
730
125
120
780
520
110
750
160
510
2529794-4
458699

Pos	Part No	UN	Qty	Description	Page No
Common Parts (Cont'd)					
050	2694884-0000		2	SHAFT	
060	2694885-0000		2	SHAFT	
070	2791610-0000		1	GUIDE	
080	2812451-0000		1	SPRING	
090	2812440-0000		1	SPRING	
100	2812439-0000		2	BUSHING	
120	2834201-0000		1	DAMPER	
125	2835130-0000		1	SPACER	
140	2812443-0000		2	SHAFT	
150	2812444-0000		2	BUSHING	
170	1548766-0000		1	SHAFT	
180	1140479-0000		2	ROLLER	
220	1140437-0000		4	BUSHING	
260	32544-0000		1	INSULATION NUT	
270	2791036-0000		1	BRACKET	
280	2791035-0000		1	BRACKET	
290	2967078-0000		1	CORE	
300	2663932-0000		1	BUSBAR	
310	2707860-0000		1	SUPPORT	
320	2812445-0000		1	PIN	
330	2812446-0000		1	SPRING	
340	1549123-0000		1	PIVOT PIN	
350	491230-0000		1	GRUB SCREW(LI - CHINE)	
380	2629313-0000		1	SHAFT	
390	1140488-0000		2	SHAFT	
410	1349399-0000		2	WASHER	
420	1549122-0000		4	FLANGE BEARING	
430	2791091-0000		1	BRACKET	
450	2707861-0000		1	ROLLER	
460	2691417-0000		4	SPACER	
480	90600-2788		1	FLANGE BUSHING, 10X16X12 MM	
485	2812442-0000		2	WASHER	
500	90600-2446		4	DISC SPRING, CONICAL 10X5,2X0,7 MM	
510	90458-0353		2	BUSHING, IGLIDUR X 8X10X8	
520	90240-0260		2	FLANGE BUSHING, IGLIDUR X 8X10X9	
530	90083-0055		4	ROLLER BEARING, 15X35X19 MM	
540	90240-0261		4	FLANGE BUSHING, IGLIDUR X 12X14X9	
550	90005-0082		3	WASHER PLAIN ROUND 4,3(M4)/12,H=1	
560	90286-0013		4	GREASE NIPPLE STRAIGHT, H1 M6X1 2346	
570	312115-0366		2	SCREW ISO4762 M6X12 A4 80	
700	312105-0295		2	SCREW M6S ISO 4017 M4X20 A470	
710	312105-0287		3	SCREW M6S ISO 4017 M4X8 A470	
720	312105-0372		4	SCREW M6S ISO 4017 M6X25 A480	
730	312115-0327		1	SCREW ISO4762 M5X12 A4 80	
740	315751-0109		6	RETAINING RING FOR SHAFT DIN 471 12 SS	
750	311103-0268		1	PARALLEL PIN ISO 2338 4M6X12 A1	
760	312105-0364		2	SCREW M6S ISO 4017 M6X10 A480	
780	312115-0370		2	SCREW ISO4762 M6X20 A4 80	
790	315105-0146		2	WASHER BRB 5,3X10 RFR	
800	312105-0327		2	SCREW M6S ISO 4017 M5X12 A480	
810	312145-0287		2	SCREW ISO 2009 MFS M4X8 A4	
830	312115-0337		2	SCREW ISO4762 M5X35 A4 80	
850	312105-0374		1	SCREW M6S ISO 4014 M6X30 A480	
870	90005-0060		1	WASHER PLAIN, RBS 6,4/M6)/18,H=1,5	
900	90459-0246		1	GREASE, KLüBERSYNTH UH1, ONLY IN BOM	
	90459-7414		*1*	*GREASE, KLüBERSYNTH UH1 14-1600, 25 KG*	
	90459-7413		*1*	*GREASE, KLüBERSYNTH UH1 14-1600, 1 KG*	
910	90157-0021	KG	1	LOCKING FLUID LOCTITE 270	
920	315105-0153		2	WASHER BRB 6,4X12 RFR	
930	312105-0366		2	SCREW M6S ISO 4017 M6X12 A480	
940	90600-0590		4	FLANGE BUSHING, IGLIDUR J 12X14X4,5	

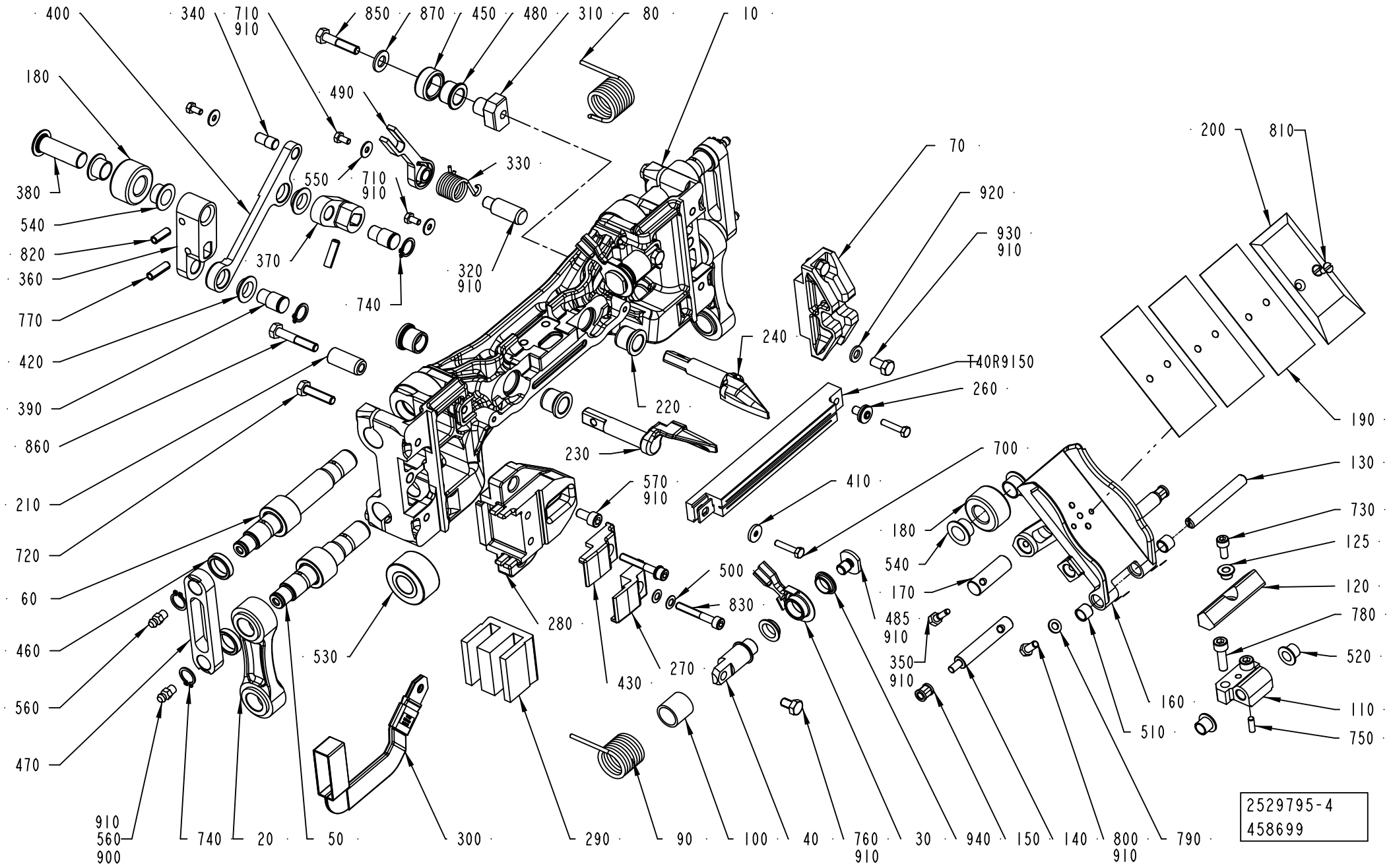
400
340
710
910
850
870
450
480
310
80
10
180
490
330
380
550
710
910
540
820
360
370
320
910
740
770
420
390
860
210
720
60
460
560
470
910
560
900
740
20
50
300
290
90
100
40
760
910
30
940
150
140
800
910
790
510
160
70
920
930
910
240
T40R9150
260
220
230
570
910
410
700
180
540
170
485
910
350
910
500
830
280
270
430
530
200
810
190
130
730
125
120
780
520
110
750
2529795-4
458699

ECM: 478111 - 20110101
Group number: 2529795-0400
Assembly Drawing: 2529795-4_1_AF

This list covers pages from 4-76 to 4-81

Pos	Part No	UN	Qty	Description	Page No
TBA 0125S					
010	2836235-0000		1	SEALING JAW	
020	2611128-0000		2	LINK	
	2611910-0000		*1*	*LINK*	
	1195204-0000		*2*	*BUSHING*	
110	1538134-0000		1	BRACKET	
130	1538135-0000		1	SHAFT	
160	2835542-0000		1	VOLUME FLAP	
	2835543-0000		*1*	*VOLUME FLAP*	
	2611445-0000		*1*	*BRACKET*	
	315105-0146		*1*	*WASHER BRB 5,3X10 RFR*	
	312105-0327		*1*	*SCREW M6S ISO 4017 M5X12 A480*	
	311103-0268		*2*	*PARALLEL PIN ISO 2338 4M6X12 A1*	
	90157-0016	*ML*	*1*	*THREAD LOCKING, LOCTITE 242 50 ML*	
190	2835922-0000		4	VOLUME SHIM	
200	2835921-0000		1	VOLUME BULGE	
210	2846722-0000		1	BUSHING	
230	3133492-0000		1	FOLDING FLAP	
240	3133491-0000		1	FOLDING FLAP	
360	2846723-0000		1	ARM	
370	2846725-0000		1	ARM	
400	2846724-0000		1	LINK ARM	
470	2681388-0000		2	LINK	
490	2812447-0000		1	LEVER	
770	311112-0258		2	SPRING PIN, ISO 8752 4X24-C	
820	311112-0308		1	SPRING PIN, ISO 8752 5X20-C	
860	312105-0374		1	SCREW M6S ISO 4014 M6X30 A480	
T40R9150	2894324-0000		1	INDUCTOR	
TBA 0200B					
010	2695420-0000		1	SEALING JAW	
020	2611128-0000		2	LINK	
	2611910-0000		*1*	*LINK*	
	1195204-0000		*2*	*BUSHING*	
110	1512605-0000		1	BRACKET	
130	1512604-0000		1	SHAFT	
160	2611446-0000		1	VOLUME FLAP	
	2638064-0000		*1*	*VOLUME FLAP*	
	2611445-0000		*1*	*BRACKET*	
	315105-0146		*1*	*WASHER BRB 5,3X10 RFR*	
	312105-0327		*1*	*SCREW M6S ISO 4017 M5X12 A480*	
	311103-0268		*2*	*PARALLEL PIN ISO 2338 4M6X12 A1*	
	90157-0016		*1*	*THREAD LOCKING, LOCTITE 242 50 ML*	
190	1498609-0000		3	VOLUME SHIM	
200	1498608-0000		1	VOLUME BULGE	
230	2778709-0000		1	FOLDING FLAP	
240	2778710-0000		1	FOLDING FLAP	
360	2629312-0000		1	ARM	
370	2500376-0000		1	ARM	
400	2500377-0000		1	LINK ARM	
470	2681388-0000		2	LINK	
490	2812447-0000		1	LEVER	
770	311112-0308		2	SPRING PIN, ISO 8752 5X20-C	
820	311112-0306		1	SPRING PIN, ISO 8752 5X16-C	
T40R9150	1533002-0000		1	INDUCTOR	
TBA 0200M					
010	2695421-0000		1	SEALING JAW	
020	2611417-0000		2	LINK	
	1195204-0000		*2*	*BUSHING*	
	2611416-0000		*1*	*LINK*	
110	1512607-0000		1	BRACKET	
130	1512608-0000		1	SHAFT	
160	2611447-0000		1	VOLUME FLAP	
	2638065-0000		*1*	*VOLUME FLAP*	
	2611445-0000		*1*	*BRACKET*	
	315105-0146		*1*	*WASHER BRB 5,3X10 RFR*	
	312105-0327		*1*	*SCREW M6S ISO 4017 M5X12 A480*	
	311103-0268		*2*	*PARALLEL PIN ISO 2338 4M6X12 A1*	
	90157-0016		*1*	*THREAD LOCKING, LOCTITE 242 50 ML*	
190	1498604-0000		3	VOLUME SHIM	
200	2988511-0000		1	VOLUME BULGE	
210	2511246-0000		1	BUSHING	
230	2778715-0000		1	FOLDING FLAP	
240	2778716-0000		1	FOLDING FLAP	
360	2629310-0000		1	ARM	
370	1478959-0000		1	ARM	
400	1478960-0000		1	LINK ARM	
470	2691641-0000		2	LINK	
490	2844198-0000		1	LEVER	
770	311112-0308		2	SPRING PIN, ISO 8752 5X20-C	
820	311112-0306		1	SPRING PIN, ISO 8752 5X16-C	
860	312105-0376		1	SCREW M6S ISO 4014 M6X35 A480	
T40R9150	1520166-0000		1	INDUCTOR	
TBA 0200S					
010	2695424-0000		1	SEALING JAW	

Machine Type | Group Description | Used-In | Group Number | Page No

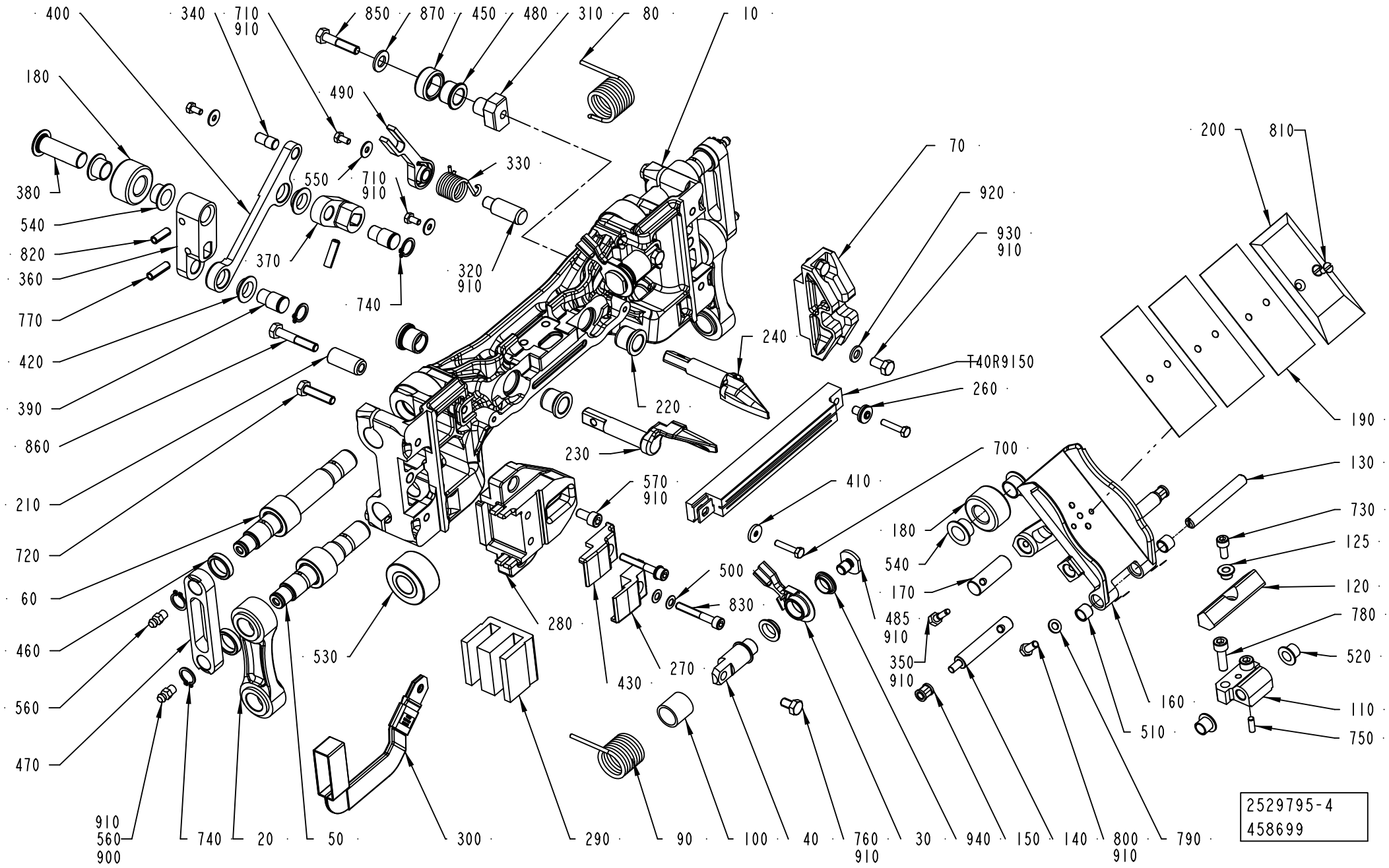
400
340
710
910
850
870
450
480
310
80
10
180
490
330
380
550
710
910
540
820
360
370
320
910
740
770
420
390
860
210
720
60
460
560
470
70
920
930
910
240
T40R9150
260
220
230
570
910
410
700
180
540
170
485
910
350
910
500
830
280
530
430
270
200
810
190
130
730
125
120
780
520
110
750
160
510
910
560
900
740
20
50
300
290
90
100
40
760
910
30
940
150
140
800
910
790
2529795-4
458699

ECM: 478111 - 20110101
Group number: 2529795-0400
Assembly Drawing: 2529795-4_1_AF

This list covers pages from 4-76 to 4-81

Pos	Part No	UN	Qty	Description	Page No
TBA 0200S (Cont'd)					
020	2633465-0000		2	LINK	
	1195204-0000		*2*	*BUSHING*	
	2633464-0000		*1*	*LINK*	
110	1538134-0000		1	BRACKET	
130	1538135-0000		1	SHAFT	
160	2611448-0000		1	VOLUME FLAP	
	2638066-0000		*1*	*VOLUME FLAP*	
	2611445-0000		*1*	*BRACKET*	
	315105-0146		*1*	*WASHER BRB 5,3X10 RFR*	
	312105-0327		*1*	*SCREW M6S ISO 4017 M5X12 A480*	
	311103-0268		*2*	*PARALLEL PIN ISO 2338 4M6X12 A1*	
	90157-0016		*1*	*THREAD LOCKING, LOCTITE 242 50 ML*	
190	272991-0000		3	VOLUME SHIM	
200	272990-0000		1	VOLUME BULGE	
210	2511246-0000		1	BUSHING	
230	2778714-0000		1	FOLDING FLAP	
240	2778713-0000		1	FOLDING FLAP	
360	2629311-0000		1	ARM	
370	1478959-0000		1	ARM	
400	2509551-0000		1	LINK ARM	
470	2693207-0000		2	LINK	
490	2844198-0000		1	LEVER	
770	311112-0308		2	SPRING PIN, ISO 8752 5X20-C	
820	311112-0306		1	SPRING PIN, ISO 8752 5X16-C	
860	312105-0376		1	SCREW M6S ISO 4014 M6X35 A480	
T40R9150	1533000-0000		1	INDUCTOR	
TBA 0250B					
010	2695419-0000		1	SEALING JAW	
020	2611417-0000		2	LINK	
	1195204-0000		*2*	*BUSHING*	
	2611416-0000		*1*	*LINK*	
110	1512605-0000		1	BRACKET	
130	1512604-0000		1	SHAFT	
160	2611449-0000		1	VOLUME FLAP	
	2638067-0000		*1*	*VOLUME FLAP*	
	2611445-0000		*1*	*BRACKET*	
	315105-0146		*1*	*WASHER BRB 5,3X10 RFR*	
	312105-0327		*1*	*SCREW M6S ISO 4017 M5X12 A480*	
	311103-0268		*2*	*PARALLEL PIN ISO 2338 4M6X12 A1*	
	90157-0016		*1*	*THREAD LOCKING, LOCTITE 242 50 ML*	
190	2890874-0000		4	VOLUME SHIM	
200	2890873-0000		1	VOLUME BULGE	
230	2778711-0000		1	FOLDING FLAP	
240	2778712-0000		1	FOLDING FLAP	
360	2629312-0000		1	ARM	
370	2500376-0000		1	ARM	
400	2500377-0000		1	LINK ARM	
470	2691641-0000		2	LINK	
490	2812447-0000		1	LEVER	
770	311112-0308		2	SPRING PIN, ISO 8752 5X20-C	
820	311112-0306		1	SPRING PIN, ISO 8752 5X16-C	
T40R9150	1533002-0000		1	INDUCTOR	
TBA 0250S					
010	2695425-0000		1	SEALING JAW	
020	2611398-0000		2	LINK	
	1195204-0000		*2*	*BUSHING*	
	2611394-0000		*1*	*LINK*	
110	1512607-0000		1	BRACKET	
130	1512608-0000		1	SHAFT	
160	2611450-0000		1	VOLUME FLAP	
	2638068-0000		*1*	*VOLUME FLAP*	
	2611445-0000		*1*	*BRACKET*	
	315105-0146		*1*	*WASHER BRB 5,3X10 RFR*	
	312105-0327		*1*	*SCREW M6S ISO 4017 M5X12 A480*	
	311103-0268		*2*	*PARALLEL PIN ISO 2338 4M6X12 A1*	
	90157-0016		*1*	*THREAD LOCKING, LOCTITE 242 50 ML*	
190	574366-0000		3	VOLUME SHIM	
200	574367-0000		1	VOLUME BULGE	
210	2511246-0000		1	BUSHING	
230	2778715-0000		1	FOLDING FLAP	
240	2778716-0000		1	FOLDING FLAP	
360	2629310-0000		1	ARM	
370	1478959-0000		1	ARM	
400	1478960-0000		1	LINK ARM	
470	2693208-0000		2	LINK	
490	2844198-0000		1	LEVER	
770	311112-0308		2	SPRING PIN, ISO 8752 5X20-C	
820	311112-0306		1	SPRING PIN, ISO 8752 5X16-C	
860	312105-0376		1	SCREW M6S ISO 4014 M6X35 A480	
T40R9150	1520166-0000		1	INDUCTOR	
Common Parts					
030	2812441-0000		2	LEVER	
040	2812438-0000		2	SHAFT	

Machine Type | Group Description | Used-In | Group Number | Page No

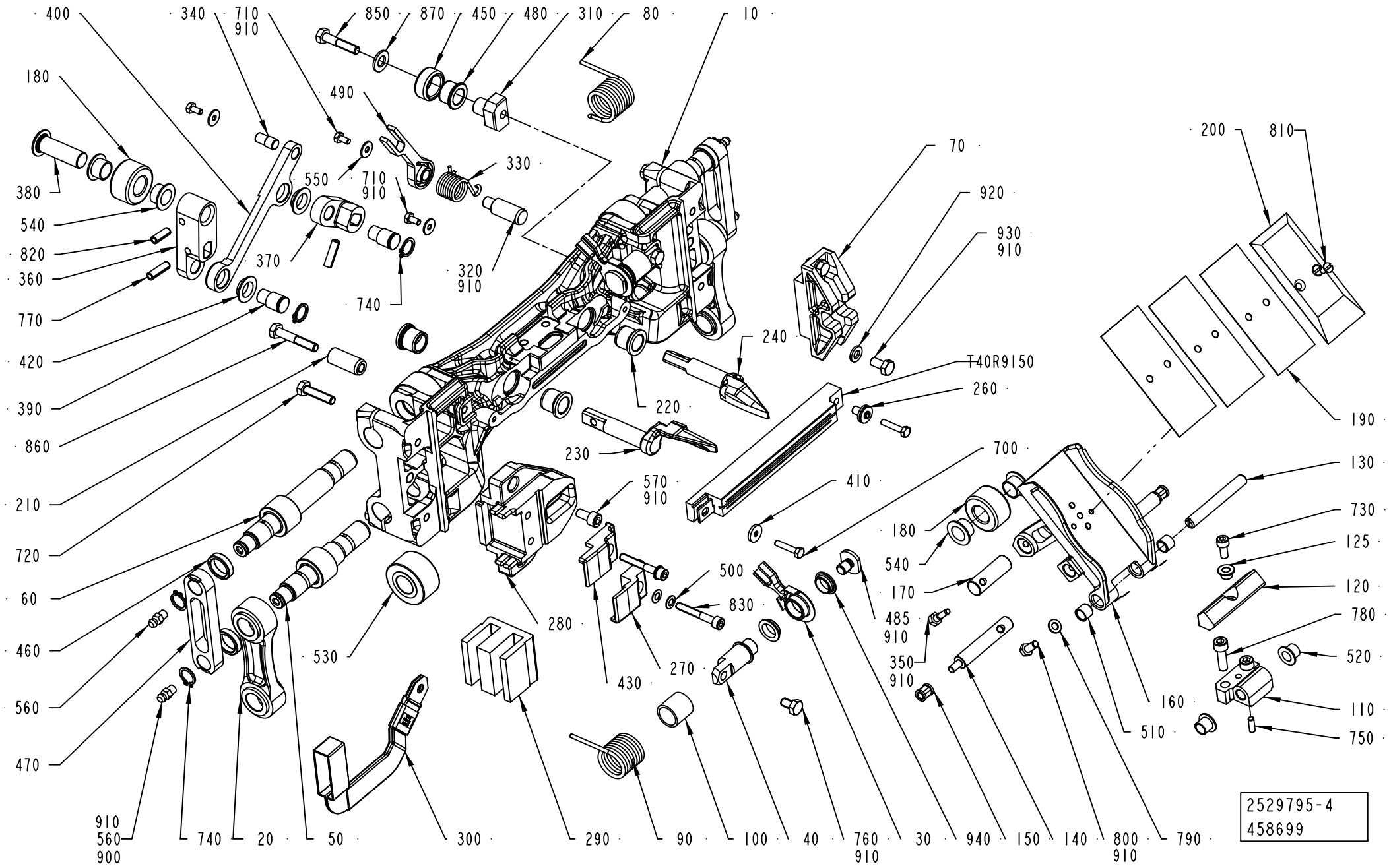
400
340
710
910
850
870
450
480
310
80
10
180
490
330
550
710
910
380
540
820
360
370
320
910
740
770
420
390
860
210
720
60
460
560
470
910
560
900
740
20
50
300
290
90
100
40
760
910
30
940
150
140
800
910
790
510
160
70
920
930
910
240
T40R9150
260
220
230
570
910
280
530
430
270
500
830
410
700
180
540
170
485
910
350
910
200
810
190
130
730
125
120
780
520
110
750
2529795-4
458699

ECM: 478111 - 20110101
Group number: 2529795-0400
Assembly Drawing: 2529795-4_1_AF

This list covers pages from 4-76 to 4-81

Pos	Part No	UN	Qty	Description	Page No
Common Parts (Cont'd)					
050	2694884-0000		2	SHAFT	
060	2694885-0000		2	SHAFT	
070	2791610-0000		1	GUIDE	
080	2812451-0000		1	SPRING	
090	2812440-0000		1	SPRING	
100	2812439-0000		2	BUSHING	
120	2834201-0000		1	DAMPER	
125	2835130-0000		1	SPACER	
140	2812443-0000		2	SHAFT	
150	2812444-0000		2	BUSHING	
170	1548766-0000		1	SHAFT	
180	1140479-0000		2	ROLLER	
220	1140437-0000		4	BUSHING	
260	32544-0000		1	INSULATION NUT	
270	2791036-0000		1	BRACKET	
280	2791035-0000		1	BRACKET	
290	2967078-0000		1	CORE	
300	2663933-0000		1	BUSBAR	
310	2707860-0000		1	SUPPORT	
320	2812445-0000		1	PIN	
330	2812446-0000		1	SPRING	
340	1549123-0000		1	PIVOT PIN	
350	491230-0000		1	GRUB SCREW(LI - CHINE)	
380	2629313-0000		1	SHAFT	
390	1140488-0000		2	SHAFT	
410	1349399-0000		2	WASHER	
420	1549122-0000		4	FLANGE BEARING	
430	2791091-0000		1	BRACKET	
450	2707861-0000		1	ROLLER	
460	2691417-0000		4	SPACER	
480	90600-2788		1	FLANGE BUSHING, 10X16X12 MM	
485	2812442-0000		2	WASHER	
500	90600-2446		4	DISC SPRING, CONICAL 10X5,2X0,7 MM	
510	90458-0353		2	BUSHING, IGLIDUR X 8X10X8	
520	90240-0260		2	FLANGE BUSHING, IGLIDUR X 8X10X9	
530	90083-0055		4	ROLLER BEARING, 15X35X19 MM	
540	90240-0261		4	FLANGE BUSHING, IGLIDUR X 12X14X9	
550	90005-0082		3	WASHER PLAIN ROUND 4,3(M4)/12,H=1	
560	90286-0013		4	GREASE NIPPLE STRAIGHT, H1 M6X1 2346	
570	312115-0366		2	SCREW ISO4762 M6X12 A4 80	
700	312105-0295		2	SCREW M6S ISO 4017 M4X20 A470	
710	312105-0287		3	SCREW M6S ISO 4017 M4X8 A470	
720	312105-0372		4	SCREW M6S ISO 4017 M6X25 A480	
730	312115-0327		1	SCREW ISO4762 M5X12 A4 80	
740	315751-0109		6	RETAINING RING FOR SHAFT DIN 471 12 SS	
750	311103-0268		1	PARALLEL PIN ISO 2338 4M6X12 A1	
760	312105-0364		2	SCREW M6S ISO 4017 M6X10 A480	
780	312115-0370		2	SCREW ISO4762 M6X20 A4 80	
790	315105-0146		2	WASHER BRB 5,3X10 RFR	
800	312105-0327		2	SCREW M6S ISO 4017 M5X12 A480	
810	312145-0287		2	SCREW ISO 2009 MFS M4X8 A4	
830	312115-0337		2	SCREW ISO4762 M5X35 A4 80	
850	312105-0374		1	SCREW M6S ISO 4014 M6X30 A480	
870	90005-0060		1	WASHER PLAIN, RBS 6,4/M6)/18,H=1,5	
900	90459-0246		1	GREASE, KLüBERSYNTH UH1, ONLY IN BOM	
	90459-7414		*1*	*GREASE, KLüBERSYNTH UH1 14-1600, 25 KG*	
	90459-7413		*1*	*GREASE, KLüBERSYNTH UH1 14-1600, 1 KG*	
910	90157-0021	KG	1	LOCKING FLUID LOCTITE 270	
920	315105-0153		2	WASHER BRB 6,4X12 RFR	
930	312105-0366		2	SCREW M6S ISO 4017 M6X12 A480	
940	90600-0590		4	FLANGE BUSHING, IGLIDUR J 12X14X4,5	

Machine Type | Group Description | Used-In | Group Number | Page No

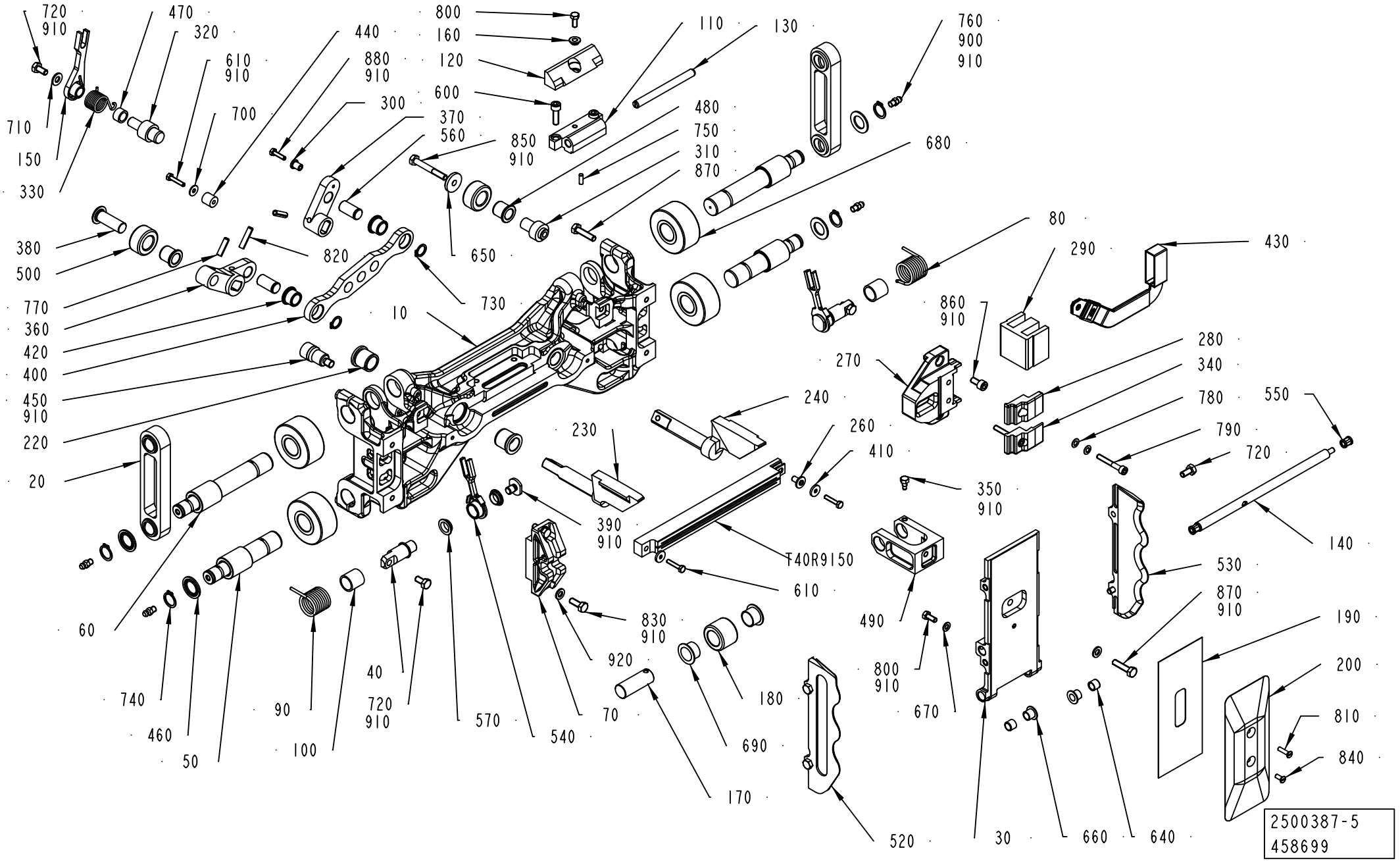
720
910
470
320
610
910
440
880
910
800
160
120
600
300
370
560
850
910
110
130
760
900
910
480
750
310
870
680
710
150
330
700
380
500
770
360
420
400
450
910
220
20
820
650
730
10
80
290
430
860
910
270
280
340
780
550
790
720
240
260
410
350
910
230
390
910
T40R9150
610
140
530
870
910
190
200
810
840
490
800
910
670
830
910
920
180
690
170
520
30
660
640
60
740
460
50
90
100
40
720
910
570
540
70
2500387-5
458699

ECM: 460437 - 20101001
Group number: 2500387-0300
Assembly Drawing: 2500387-5_1_AD

This list covers pages from 4-82 to 4-85

Pos	Part No	UN	Qty	Description	Page No
TBA 1000B					
010	2811490-0000		1	SEALING JAW	
020	1348116-0000		2	LINK	
	1348117-0000		*1*	*LINK*	
	1195204-0000		*2*	*BUSHING*	
030	2782496-0000		1	VOLUME FLAP	
080	2835899-0000		1	SPRING	
090	2835877-0000		1	SPRING	
110	1532438-0000		1	BRACKET	
120	2572196-0000		1	DAMPER	
130	2500395-0000		1	SHAFT	
140	2835879-0000		1	SHAFT	
150	2847959-0000		1	LEVER	
190	1539374-0000		2	VOLUME SHIM	
200	1532500-0000		1	VOLUME BULGE	
230	2974599-0000		1	FOLDING FLAP	
240	2974610-0000		1	FOLDING FLAP	
300	2651291-0000		1	BUSHING	
360	2671628-0000		1	ARM	
370	2782513-0000		1	LINK ARM	
400	2782512-0000		1	LINK ARM	
520	2897844-0000		1	VOLUME FLAP	
530	2897843-0000		1	VOLUME FLAP	
840	312145-0289		2	SCREW ISO 2009 MFS M4X10 A4	
T40R9150	1520092-0000		1	INDUCTOR	
TBA 1000S					
010	2811491-0000		1	SEALING JAW	
020	2511238-0000		2	LINK	
	2511237-0000		*1*	*LINK*	
	1195204-0000		*2*	*BUSHING*	
030	2782497-0000		1	VOLUME FLAP	
080	2835899-0000		1	SPRING	
090	2835877-0000		1	SPRING	
110	2511401-0000		1	BRACKET	
120	2574514-0000		1	DAMPER	
130	2500395-0000		1	SHAFT	
140	2835879-0000		1	SHAFT	
150	2847959-0000		1	LEVER	
190	2511635-0000		2	VOLUME SHIM	
200	2951177-0000		1	VOLUME BULGE	
230	2919414-0000		1	FOLDING FLAP	
240	2919415-0000		1	FOLDING FLAP	
300	2847958-0000		1	PIN	
360	2671628-0000		1	ARM	
370	2671627-0000		1	ARM	
400	2520433-0000		1	LINK ARM	
520	2847956-0000		1	VOLUME FLAP	
530	2847955-0000		1	VOLUME FLAP	
840	312145-0289		2	SCREW ISO 2009 MFS M4X10 A4	
T40R9150	1533015-0000		1	INDUCTOR	
TBA 1000SQ					
010	2811489-0000		1	SEALING JAW	
020	2523629-0000		2	LINK	
	1195204-0000		*2*	*BUSHING*	
	2523630-0000		*1*	*LINK*	
030	2825382-0000		1	VOLUME FLAP	
080	2854562-0000		1	SPRING	
090	2854561-0000		1	SPRING	
110	2511401-0000		1	BRACKET	
120	2679859-0000		1	DAMPER	
130	2529959-0000		1	SHAFT	
140	2847951-0000		1	SHAFT	
150	2836236-0000		1	LEVER	
190	1487627-0000		1	VOLUME SHIM	
200	2953218-0000		1	VOLUME BULGE	
230	2725419-0000		1	FOLDING FLAP	
240	2725420-0000		1	FOLDING FLAP	
300	2651291-0000		1	BUSHING	
360	2529961-0000		1	ARM	
370	2529962-0000		1	ARM	
400	2529963-0000		1	LINK ARM	
520	2783487-0000		1	VOLUME FLAP	
530	2783488-0000		1	VOLUME FLAP	
810	312145-0293		1	SCREW ISO 2009 MFS M4X16 A4	
840	312145-0289		1	SCREW ISO 2009 MFS M4X10 A4	
T40R9150	1566851-0000		1	INDUCTOR	
Common Parts					
040	2835876-0000		2	SHAFT	
050	2811737-0000		2	SHAFT	
060	2811771-0000		2	SHAFT	
070	2791610-0000		1	GUIDE	
100	2812439-0000		2	BUSHING	
160	2572197-0000		1	SPACER	
170	2570526-0000		1	SHAFT	

Machine Type | Group Description | Used-In | Group Number | Page No

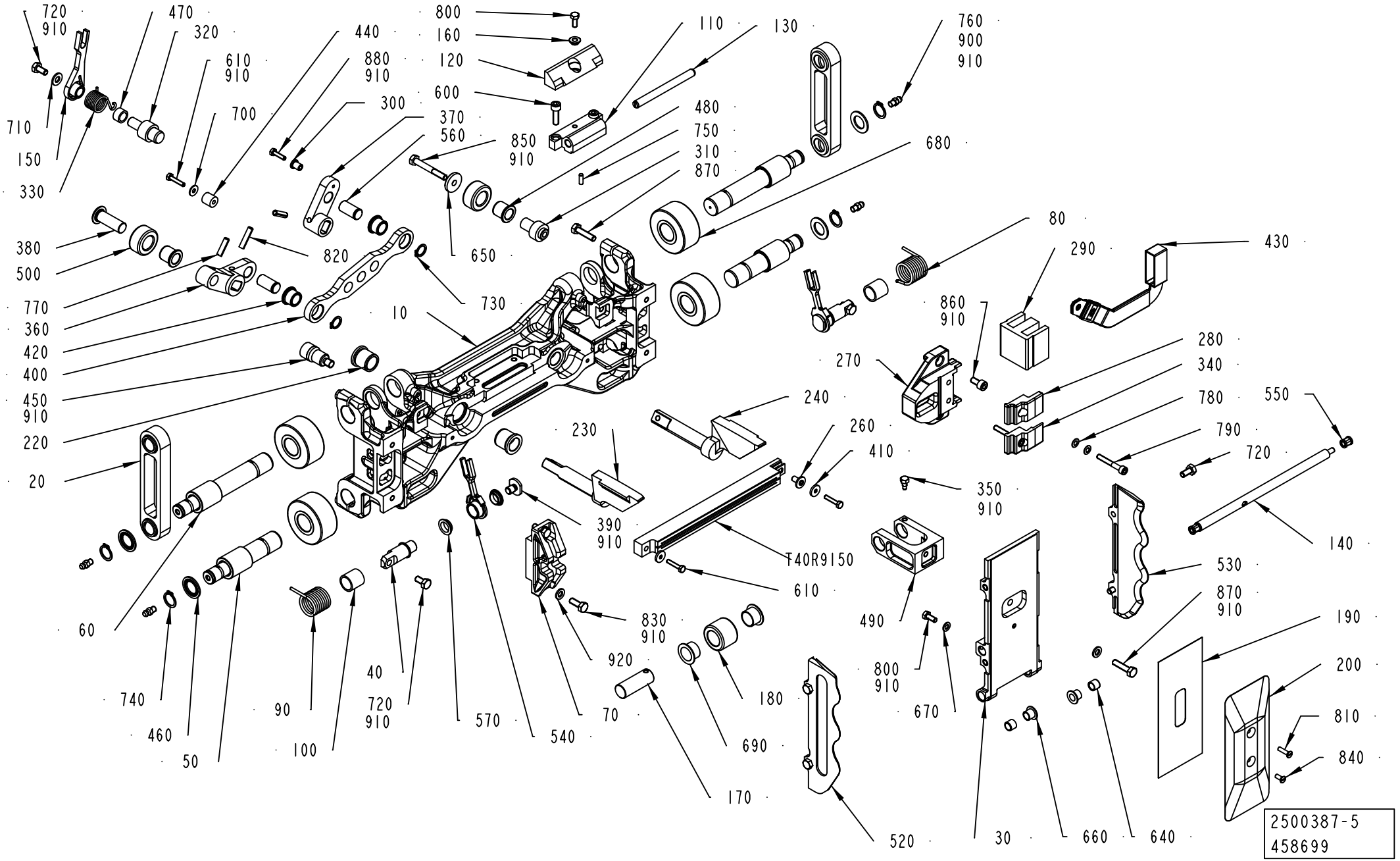
720
910
470
320
610
910
440
880
910
800
160
120
600
300
370
560
850
910
110
130
760
900
910
480
750
310
870
680
710
150
330
700
380
500
770
360
420
400
450
910
220
20
820
650
730
10
80
290
430
860
910
270
280
340
780
550
790
720
240
260
410
350
910
230
390
910
T40R9150
610
140
530
870
910
190
200
810
840
490
800
910
670
830
910
920
180
690
170
520
30
660
640
60
740
460
50
90
100
40
720
910
570
540
70
2500387-5
458699

ECM: 460437 - 20101001
Group number: 2500387-0300
Assembly Drawing: 2500387-5_1_AD

This list covers pages from 4-82 to 4-85

Pos	Part No	UN	Qty	Description	Page No
Common Parts (Cont'd)					
180	2570527-0000		1	ROLLER	
220	1195204-0000		4	BUSHING	
260	32544-0000		1	INSULATION NUT	
270	2791035-0000		1	BRACKET	
280	2791036-0000		1	BRACKET	
290	2967078-0000		1	CORE	
310	2961385-0000		1	AXLE PIN	
320	2529976-0000		1	PIN	
330	2836237-0000		1	SPRING	
340	2791091-0000		1	BRACKET	
350	2570528-0000		1	GRUB SCREW	
380	2961386-0000		1	SHAFT	
390	2812442-0000		2	WASHER	
410	1349399-0000		2	WASHER	
420	90600-2788		2	FLANGE BUSHING, 10X16X12 MM	
430	2782495-0000		1	BUSBAR	
440	2529977-0000		1	SPACER	
450	2961258-0000		1	SHAFT	
460	1548817-0000		4	WASHER	
470	2868082-0000		1	BUSHING	
480	2961374-0000		2	BUSHING	
490	2779678-0000		1	BRACKET	
500	2501246-0000		2	ROLLER	
540	2835878-0000		2	LEVER	
550	2812444-0000		2	BUSHING	
560	2524621-0000		2	PIN	
570	90600-0590		4	FLANGE BUSHING, IGLIDUR J 12X14X4,5	
600	312115-0370		2	SCREW ISO4762 M6X20 A4 80	
610	312105-0295		3	SCREW M6S ISO 4017 M4X20 A470	
640	90458-0353		2	BUSHING, IGLIDUR X 8X10X8	
650	315125-0153		1	WASHER TBRSB 6,4X22X4 A4	
660	90240-0260		2	FLANGE BUSHING, IGLIDUR X 8X10X9	
670	315105-0146		1	WASHER BRB 5,3X10 RFR	
680	90459-0125		4	CYL.ROLLER BEARING, 20X52X25 MM	
690	90600-4717		2	FLANGE BUSHING, IGLIDUR Z 16X18X12	
700	90005-0082		1	WASHER PLAIN ROUND 4,3(M4)/12,H=1	
710	315105-0156		1	WASHER BRB 6,7X14 RFR	
720	312105-0366		7	SCREW M6S ISO 4017 M6X12 A480	
730	315751-0109		2	RETAINING RING FOR SHAFT DIN 471 12 SS	
740	315751-0112		4	RETAINING RING FOR SHAFT DIN 471 15 SS	
750	311103-0268		1	PARALLEL PIN ISO 2338 4M6X12 A1	
760	90286-0013		4	GREASE NIPPLE STRAIGHT, H1 M6X1 2346	
770	311112-0308		1	SPRING PIN, ISO 8752 5X20-C	
780	90600-2446		4	DISC SPRING, CONICAL 10X5,2X0,7 MM	
790	312115-0337		2	SCREW ISO4762 M5X35 A4 80	
800	312105-0327		2	SCREW M6S ISO 4017 M5X12 A480	
820	311112-0310		2	SPRING PIN, ISO 8752 5X24-C	
830	312105-0368		2	SCREW M6S ISO 4017 M6X16 A480	
850	312105-0379		1	SCREW M6S ISO 4014 M6X45 A480	
860	312115-0366		2	SCREW ISO4762 M6X12 A4 80	
870	312105-0372		5	SCREW M6S ISO 4017 M6X25 A480	
880	312105-0293		1	SCREW M6S ISO 4017 M4X16 A470	
900	90459-0246		1	GREASE, KLüBERSYNTH UH1, ONLY IN BOM	
	90459-7414		*1*	*GREASE, KLüBERSYNTH UH1 14-1600, 25 KG*	
	90459-7413		*1*	*GREASE, KLüBERSYNTH UH1 14-1600, 1 KG*	
910	90157-0021		1	LOCKING FLUID LOCTITE 270	
920	315105-0153		3	WASHER BRB 6,4X12 RFR	

Machine Type | Group Description | Used-In | Group Number | Page No

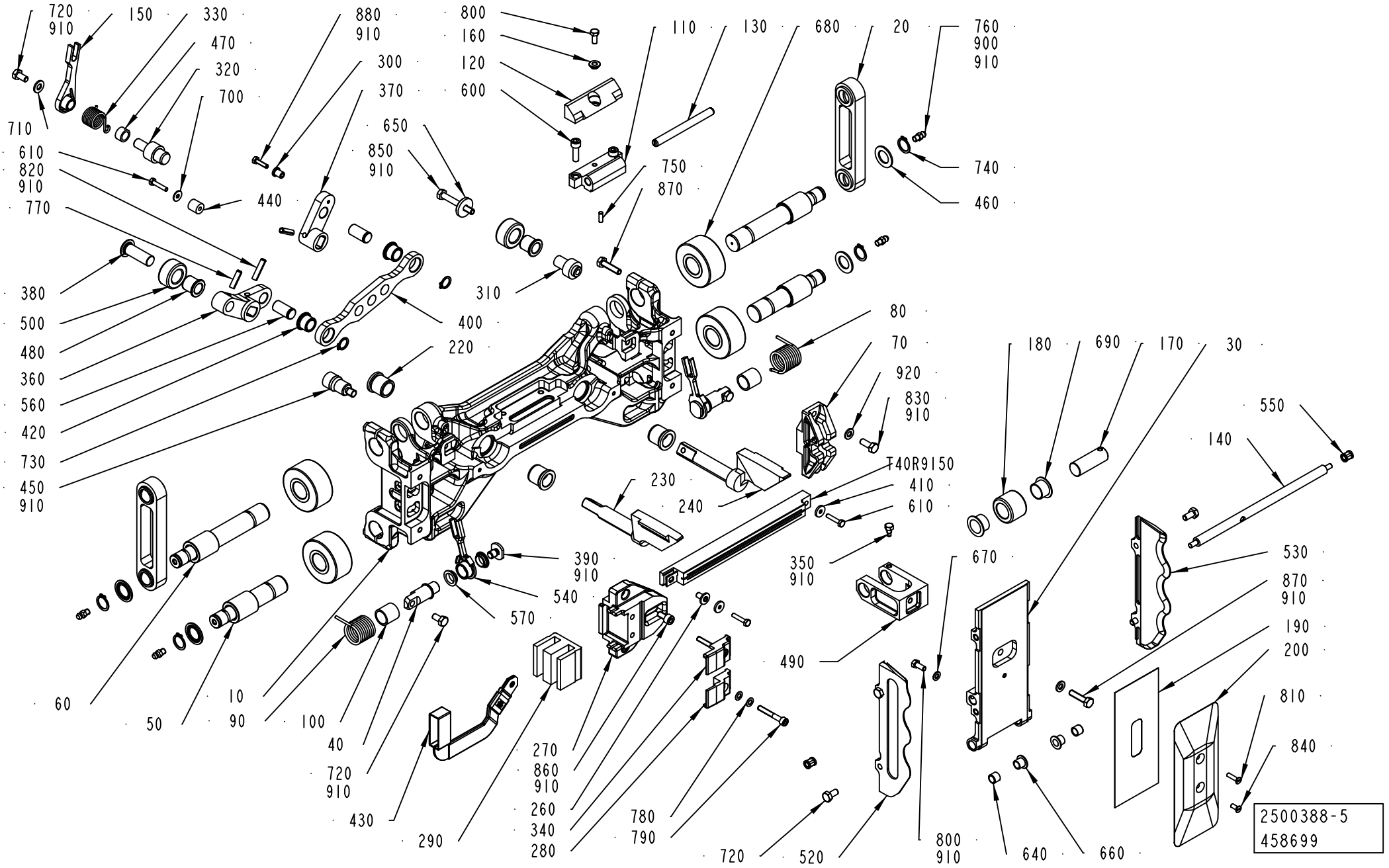
720
910
150
330
470
320
700
710
610
820
910
770
880
910
300
370
650
850
910
440
800
160
120
600
110
130
680
20
760
900
910
740
460
750
870
380
500
480
360
560
420
730
450
910
310
400
220
80
70
920
830
910
T40R9150
410
610
230
240
180
690
170
30
550
140
530
870
910
190
200
810
840
350
910
670
490
390
910
540
570
60
50
10
90
100
40
720
910
430
290
270
860
910
260
340
280
780
790
720
520
800
910
640
660
2500388-5
458699

ECM: 460438 - 20101001
Group number: 2500388-0300
Assembly Drawing: 2500388-5_1_AD

This list covers pages from 4-86 to 4-89

Pos	Part No	UN	Qty	Description	Page No
TBA 1000B					
010	2811490-0000		1	SEALING JAW	
020	1348116-0000		2	LINK	
	1348117-0000		*1*	*LINK*	
	1195204-0000		*2*	*BUSHING*	
030	2782496-0000		1	VOLUME FLAP	
080	2835899-0000		1	SPRING	
090	2835877-0000		1	SPRING	
110	1532438-0000		1	BRACKET	
120	2572196-0000		1	DAMPER	
130	2500395-0000		1	SHAFT	
140	2835879-0000		1	SHAFT	
150	2847959-0000		1	LEVER	
190	1539374-0000		2	VOLUME SHIM	
200	1532500-0000		1	VOLUME BULGE	
230	2974599-0000		1	FOLDING FLAP	
240	2974610-0000		1	FOLDING FLAP	
300	2651291-0000		1	BUSHING	
360	2671628-0000		1	ARM	
370	2782513-0000		1	LINK ARM	
400	2782512-0000		1	LINK ARM	
520	2897844-0000		1	VOLUME FLAP	
530	2897843-0000		1	VOLUME FLAP	
840	312145-0289		2	SCREW ISO 2009 MFS M4X10 A4	
T40R9150	1520092-0000		1	INDUCTOR	
TBA 1000S					
010	2811491-0000		1	SEALING JAW	
020	2511238-0000		2	LINK	
	2511237-0000		*1*	*LINK*	
	1195204-0000		*2*	*BUSHING*	
030	2782497-0000		1	VOLUME FLAP	
080	2835899-0000		1	SPRING	
090	2835877-0000		1	SPRING	
110	2511401-0000		1	BRACKET	
120	2574514-0000		1	DAMPER	
130	2500395-0000		1	SHAFT	
140	2835879-0000		1	SHAFT	
150	2847959-0000		1	LEVER	
190	2511635-0000		2	VOLUME SHIM	
200	2951177-0000		1	VOLUME BULGE	
230	2919414-0000		1	FOLDING FLAP	
240	2919415-0000		1	FOLDING FLAP	
300	2847958-0000		1	PIN	
360	2671628-0000		1	ARM	
370	2671627-0000		1	ARM	
400	2520433-0000		1	LINK ARM	
520	2847956-0000		1	VOLUME FLAP	
530	2847955-0000		1	VOLUME FLAP	
840	312145-0289		2	SCREW ISO 2009 MFS M4X10 A4	
T40R9150	1533015-0000		1	INDUCTOR	
TBA 1000SQ					
010	2811489-0000		1	SEALING JAW	
020	2523629-0000		2	LINK	
	1195204-0000		*2*	*BUSHING*	
	2523630-0000		*1*	*LINK*	
030	2825382-0000		1	VOLUME FLAP	
080	2854562-0000		1	SPRING	
090	2854561-0000		1	SPRING	
110	2511401-0000		1	BRACKET	
120	2679859-0000		1	DAMPER	
130	2529959-0000		1	SHAFT	
140	2847951-0000		1	SHAFT	
150	2836236-0000		1	LEVER	
190	1487627-0000		1	VOLUME SHIM	
200	2953218-0000		1	VOLUME BULGE	
230	2725419-0000		1	FOLDING FLAP	
240	2725420-0000		1	FOLDING FLAP	
300	2651291-0000		1	BUSHING	
360	2529961-0000		1	ARM	
370	2529962-0000		1	ARM	
400	2529963-0000		1	LINK ARM	
520	2783487-0000		1	VOLUME FLAP	
530	2783488-0000		1	VOLUME FLAP	
810	312145-0293		1	SCREW ISO 2009 MFS M4X16 A4	
840	312145-0289		1	SCREW ISO 2009 MFS M4X10 A4	
T40R9150	1566851-0000		1	INDUCTOR	
Common Parts					
040	2835876-0000		2	SHAFT	
050	2811737-0000		2	SHAFT	
060	2811771-0000		2	SHAFT	
070	2791610-0000		1	GUIDE	
100	2812439-0000		2	BUSHING	
160	2572197-0000		1	SPACER	
170	2570526-0000		1	SHAFT	

Machine Type | Group Description | Used-In | Group Number | Page No

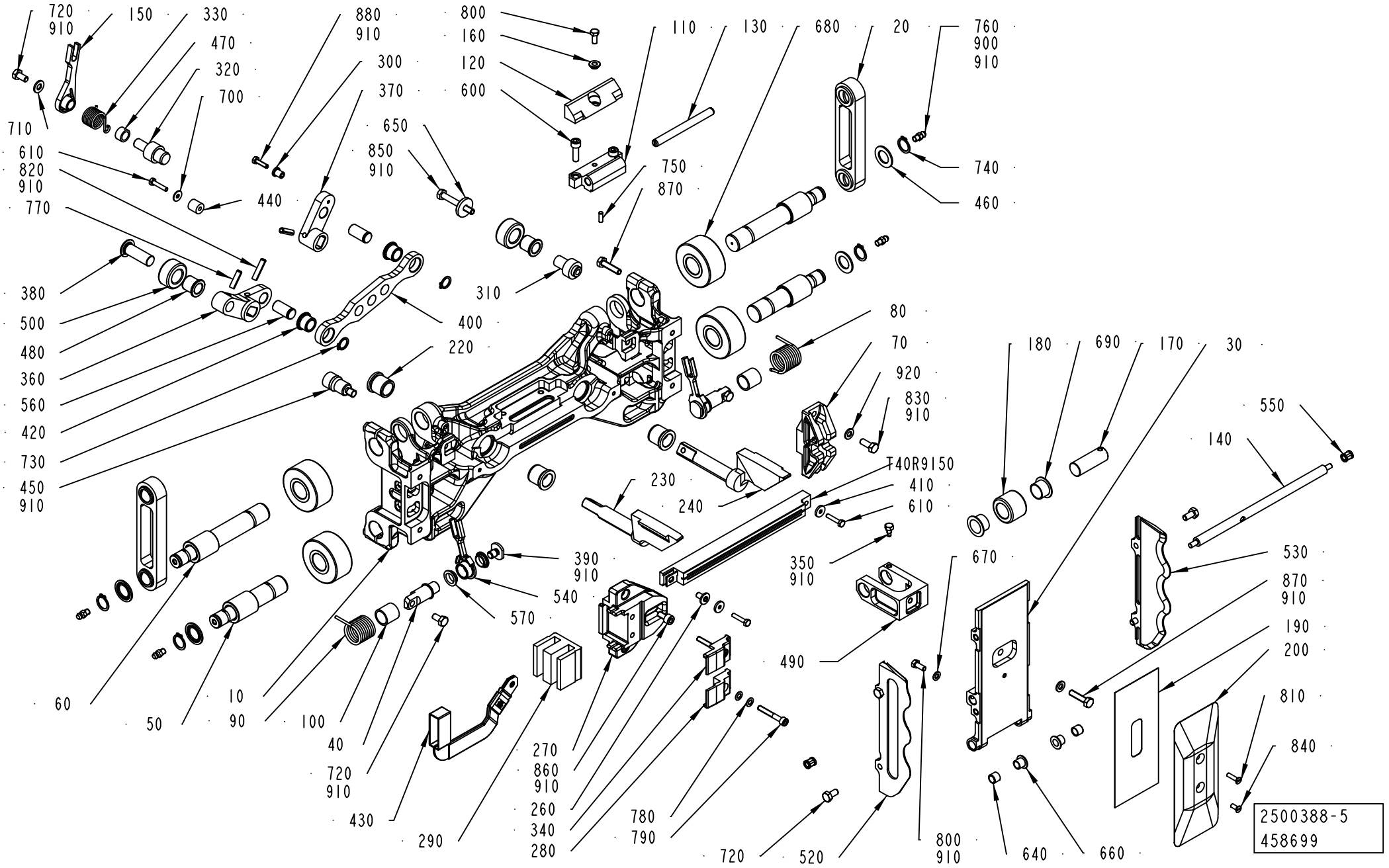
720
910
150
330
470
320
700
710
610
820
910
770
880
910
300
370
650
850
910
440
800
160
120
600
110
130
680
20
760
900
910
740
460
750
870
380
500
480
360
560
420
730
450
910
310
400
220
80
70
920
830
910
T40R9150
410
610
230
240
180
690
170
30
550
140
530
870
910
190
200
810
840
350
910
670
490
390
910
540
570
60
50
10
90
100
40
720
910
430
290
270
860
910
260
340
280
780
790
720
520
800
910
640
660
2500388-5
458699

Pos	Part No	UN	Qty	Description	Page No
Common Parts (Cont'd)					
180	2570527-0000		1	ROLLER	
220	1195204-0000		4	BUSHING	
260	32544-0000		1	INSULATION NUT	
270	2791035-0000		1	BRACKET	
280	2791036-0000		1	BRACKET	
290	2967078-0000		1	CORE	
310	2961385-0000		1	AXLE PIN	
320	2529976-0000		1	PIN	
330	2836237-0000		1	SPRING	
340	2791091-0000		1	BRACKET	
350	2570528-0000		1	GRUB SCREW	
380	2961386-0000		1	SHAFT	
390	2812442-0000		2	WASHER	
410	1349399-0000		2	WASHER	
420	90600-2788		2	FLANGE BUSHING, 10X16X12 MM	
430	2782494-0000		1	BUSBAR	
440	2529977-0000		1	SPACER	
450	2961258-0000		1	SHAFT	
460	1548817-0000		4	WASHER	
470	2868082-0000		1	BUSHING	
480	2961374-0000		2	BUSHING	
490	2779678-0000		1	BRACKET	
500	2501246-0000		2	ROLLER	
540	2835878-0000		2	LEVER	
550	2812444-0000		2	BUSHING	
560	2524621-0000		2	PIN	
570	90600-0590		4	FLANGE BUSHING, IGLIDUR J 12X14X4,5	
600	312115-0370		2	SCREW ISO4762 M6X20 A4 80	
610	312105-0295		3	SCREW M6S ISO 4017 M4X20 A470	
640	90458-0353		2	BUSHING, IGLIDUR X 8X10X8	
650	315125-0153		1	WASHER TBRSB 6,4X22X4 A4	
660	90240-0260		2	FLANGE BUSHING, IGLIDUR X 8X10X9	
670	315105-0146		1	WASHER BRB 5,3X10 RFR	
680	90459-0125		4	CYL.ROLLER BEARING, 20X52X25 MM	
690	90600-4717		2	FLANGE BUSHING, IGLIDUR Z 16X18X12	
700	90005-0082		1	WASHER PLAIN ROUND 4,3(M4)/12,H=1	
710	315105-0156		1	WASHER BRB 6,7X14 RFR	
720	312105-0366		7	SCREW M6S ISO 4017 M6X12 A480	
730	315751-0109		2	RETAINING RING FOR SHAFT DIN 471 12 SS	
740	315751-0112		4	RETAINING RING FOR SHAFT DIN 471 15 SS	
750	311103-0268		1	PARALLEL PIN ISO 2338 4M6X12 A1	
760	90286-0013		4	GREASE NIPPLE STRAIGHT, H1 M6X1 2346	
770	311112-0308		1	SPRING PIN, ISO 8752 5X20-C	
780	90600-2446		4	DISC SPRING, CONICAL 10X5,2X0,7 MM	
790	312115-0337		2	SCREW ISO4762 M5X35 A4 80	
800	312105-0327		2	SCREW M6S ISO 4017 M5X12 A480	
820	311112-0310		2	SPRING PIN, ISO 8752 5X24-C	
830	312105-0368		2	SCREW M6S ISO 4017 M6X16 A480	
850	312105-0379		1	SCREW M6S ISO 4014 M6X45 A480	
860	312115-0366		2	SCREW ISO4762 M6X12 A4 80	
870	312105-0372		5	SCREW M6S ISO 4017 M6X25 A480	
880	312105-0293		1	SCREW M6S ISO 4017 M4X16 A470	
900	90459-0246		1	GREASE, KLüBERSYNTH UH1, ONLY IN BOM	
	90459-7414		*1*	*GREASE, KLüBERSYNTH UH1 14-1600, 25 KG*	
	90459-7413		*1*	*GREASE, KLüBERSYNTH UH1 14-1600, 1 KG*	
910	90157-0021		1	LOCKING FLUID LOCTITE 270	
920	315105-0153		3	WASHER BRB 6,4X12 RFR	

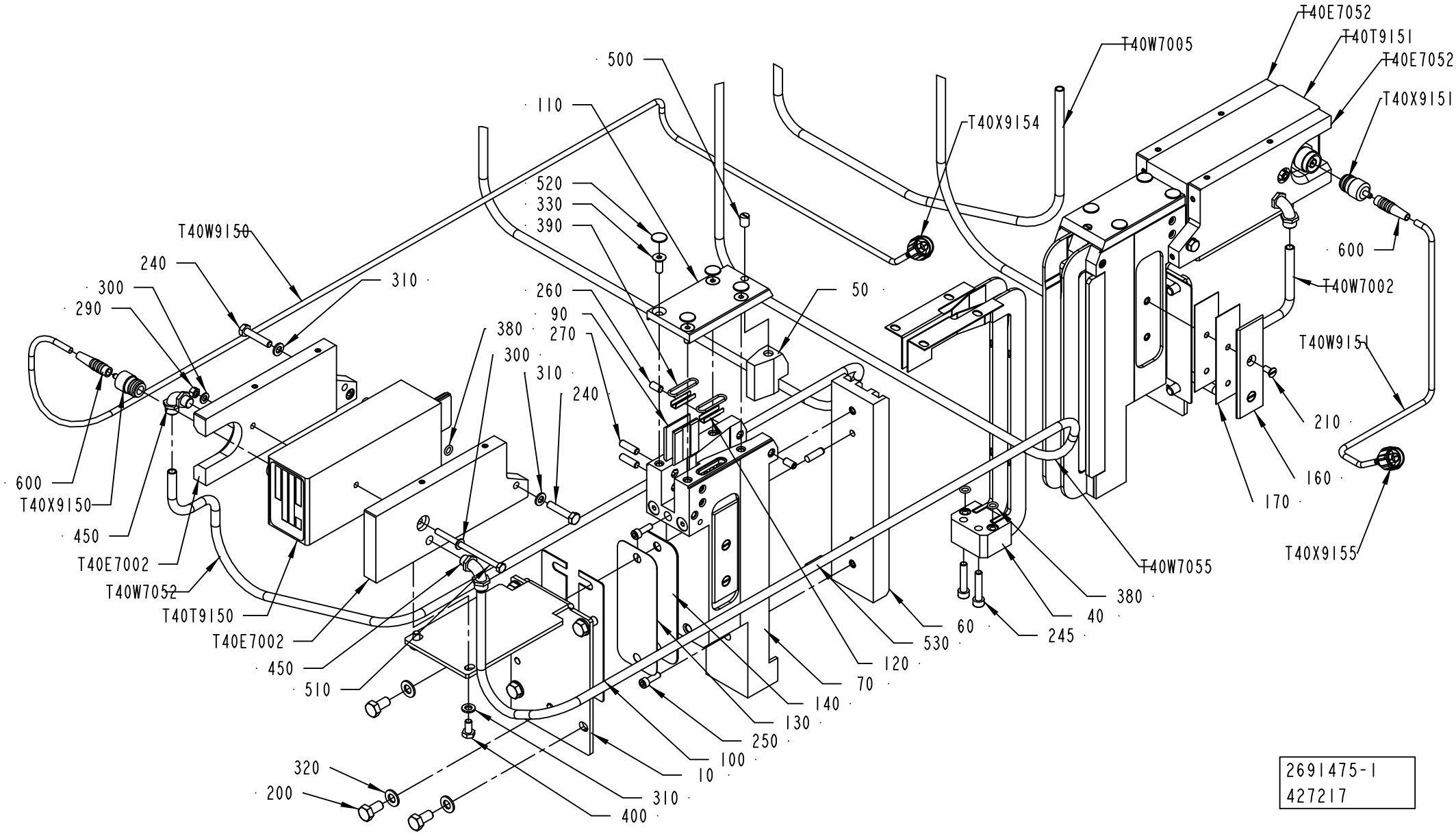
T40E7052
T40T9151
T40E7052
T40W7005
T40X9151
500
110
T40X9154
520
330
390
T40W9150
240
300
290
310
260
90
270
380
300
310
240
50
600
T40W7002
T40W9151
210
160
170
600
T40X9150
450
T40E7002
T40W7052
T40T9150
T40E7002
450
510
T40W7055
T40X9155
380
40
245
60
530
120
70
140
130
250
100
10
310
400
320
200
2691475-1
427217

ECM: 430768 - 20100401
Group number: 2691475-0100
Assembly Drawing: 2691475-1_1_AE

This list covers pages from 4-90 to 4-93

Pos	Part No	UN	Qty	Description	Page No
TBA 0125S (See drawing on page: 4-90)					
010	2663934-0000		2	BRACKET	
040	2616169-0000		2	BUSBAR	
060	2616172-0000		2	CORE	
070	2616173-0000		2	BRACKET	
100	2663948-0000		8	SHIM	
130	2701242-0000		2	SHIM	
140	2882176-0000		6	SHIM	
200	312105-0449		12	SCREW M6S ISO 4017 M8X16 A480	
310	315105-0153		8	WASHER BRB 6,4X12 RFR	
400	312105-0366		4	SCREW M6S ISO 4017 M6X12 A480	
T40T9150	2691490-0103		1	TRANSFORMER	
T40T9151	2691490-0103		1	TRANSFORMER	
T40W7002	90166-0118	M	1.6	TUBE 8 MM PA BLACK	
T40W7005	90166-0118	M	1.6	TUBE 8 MM PA BLACK	
T40W7052	90166-0118	M	2.7	TUBE 8 MM PA BLACK	
T40W7055	90166-0118	M	2.7	TUBE 8 MM PA BLACK	
TBA 0200B (See drawing on page: 4-90)					
010	2663934-0000		2	BRACKET	
040	2616169-0000		2	BUSBAR	
060	2616172-0000		2	CORE	
070	2616173-0000		2	BRACKET	
100	2663948-0000		8	SHIM	
130	2701242-0000		2	SHIM	
140	2882176-0000		6	SHIM	
200	312105-0449		12	SCREW M6S ISO 4017 M8X16 A480	
310	315105-0153		8	WASHER BRB 6,4X12 RFR	
400	312105-0366		4	SCREW M6S ISO 4017 M6X12 A480	
T40T9150	2691490-0104		1	TRANSFORMER	
T40T9151	2691490-0104		1	TRANSFORMER	
T40W7002	90166-0118	M	1.6	TUBE 8 MM PA BLACK	
T40W7005	90166-0118	M	1.6	TUBE 8 MM PA BLACK	
T40W7052	90166-0118	M	2.7	TUBE 8 MM PA BLACK	
T40W7055	90166-0118	M	2.7	TUBE 8 MM PA BLACK	
TBA 0200M, TBA 0250S (See drawing on page: 4-90)					
010	2691471-0000		2	BRACKET	
040	2691472-0000		2	BUSBAR	
060	2663940-0000		2	CORE	
070	2691473-0000		2	BRACKET	
100	2691474-0000		8	SHIM	
130	2701241-0000		2	SHIM	
140	2882175-0000		6	SHIM	
200	312105-0449		12	SCREW M6S ISO 4017 M8X16 A480	
310	315105-0153		8	WASHER BRB 6,4X12 RFR	
400	312105-0366		4	SCREW M6S ISO 4017 M6X12 A480	
T40T9150	2691490-0107		1	TRANSFORMER	
T40T9151	2691490-0107		1	TRANSFORMER	
T40W7002	90166-0118	M	1.6	TUBE 8 MM PA BLACK	
T40W7005	90166-0118	M	1.6	TUBE 8 MM PA BLACK	
T40W7052	90166-0118	M	2.7	TUBE 8 MM PA BLACK	
T40W7055	90166-0118	M	2.7	TUBE 8 MM PA BLACK	
TBA 0200S (See drawing on page: 4-90)					
010	2691471-0000		2	BRACKET	
040	2691472-0000		2	BUSBAR	
060	2663940-0000		2	CORE	
070	2691473-0000		2	BRACKET	
100	2691474-0000		8	SHIM	
130	2701241-0000		2	SHIM	
140	2882175-0000		6	SHIM	
200	312105-0449		12	SCREW M6S ISO 4017 M8X16 A480	
310	315105-0153		8	WASHER BRB 6,4X12 RFR	
400	312105-0366		4	SCREW M6S ISO 4017 M6X12 A480	
T40T9150	2691490-0101		1	TRANSFORMER	
T40T9151	2691490-0101		1	TRANSFORMER	
T40W7002	90166-0118	M	1.6	TUBE 8 MM PA BLACK	
T40W7005	90166-0118	M	1.6	TUBE 8 MM PA BLACK	
T40W7052	90166-0118	M	2.7	TUBE 8 MM PA BLACK	
T40W7055	90166-0118	M	2.7	TUBE 8 MM PA BLACK	
TBA 0250B (See drawing on page: 4-90)					
010	2691471-0000		2	BRACKET	
040	2691472-0000		2	BUSBAR	
060	2663940-0000		2	CORE	
070	2691473-0000		2	BRACKET	
100	2691474-0000		8	SHIM	
130	2701241-0000		2	SHIM	
140	2882175-0000		6	SHIM	
200	312105-0449		12	SCREW M6S ISO 4017 M8X16 A480	
310	315105-0153		8	WASHER BRB 6,4X12 RFR	
400	312105-0366		4	SCREW M6S ISO 4017 M6X12 A480	
T40T9150	2691490-0102		1	TRANSFORMER	
T40T9151	2691490-0102		1	TRANSFORMER	
T40W7002	90166-0118	M	1.6	TUBE 8 MM PA BLACK	
T40W7005	90166-0118	M	1.6	TUBE 8 MM PA BLACK	
T40W7052	90166-0118	M	2.7	TUBE 8 MM PA BLACK	

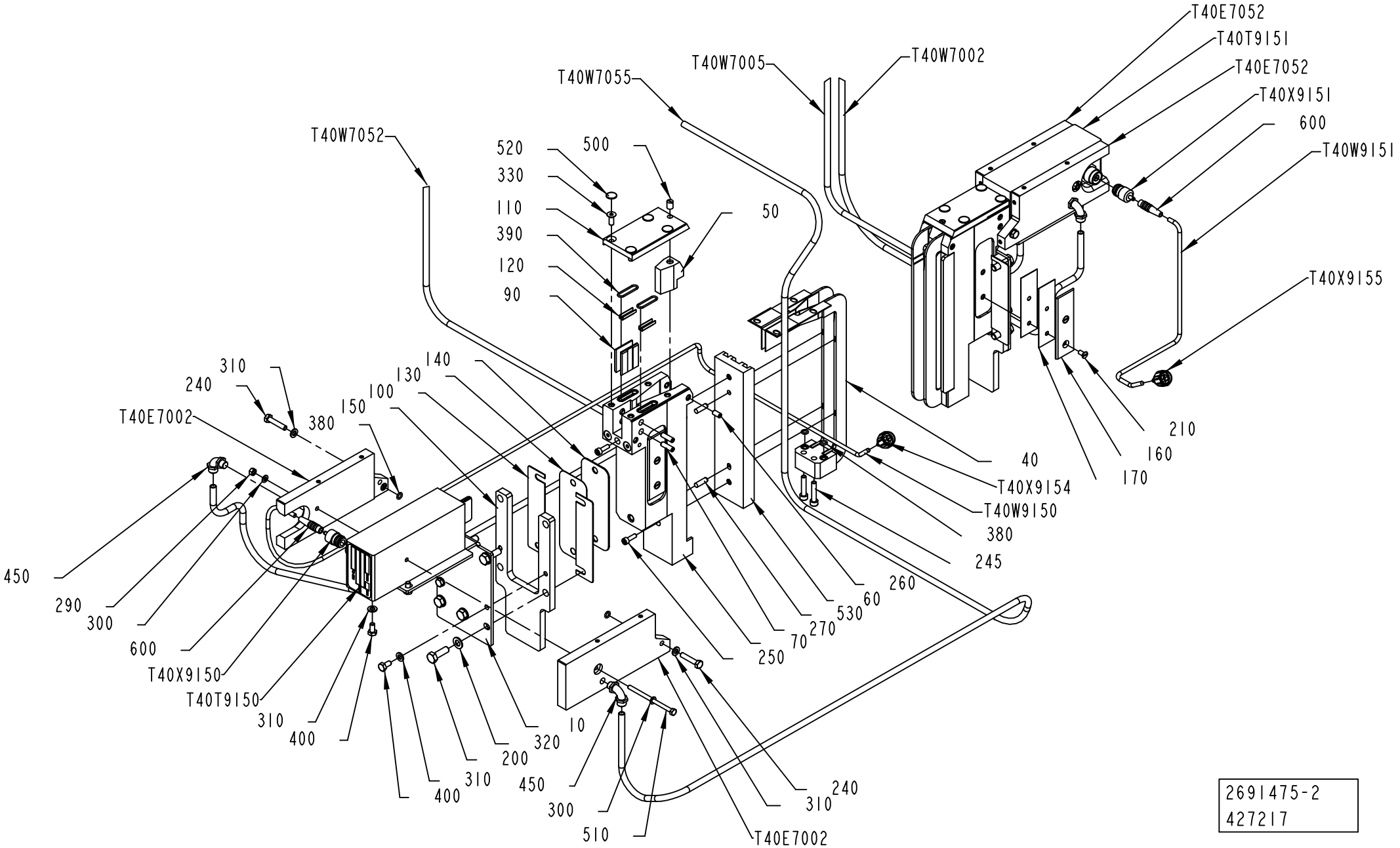
T40E7052
T40T9151
T40E7052
T40X9151
600
T40W9151
T40X9155
T40W7005
T40W7002
T40W7055
T40W7052
520
500
330
110
390
120
90
50
310
240
T40E7002
380
150
100
130
140
210
160
170
40
T40X9154
T40W9150
380
245
260
60
530
270
70
250
450
290
300
600
T40X9150
T40T9150
310
400
10
320
200
310
400
450
300
510
T40E7002
310
240
2691475-2
427217

ECM: 430768 - 20100401
Group number: 2691475-0100
Assembly Drawing: 2691475-2_1_AC

This list covers pages from 4-90 to 4-93

Pos	Part No	UN	Qty	Description	Page No
TBA 0250B (Cont'd) (See drawing on page: 4-90)					
T40W7055	90166-0118	M	2.7	TUBE 8 MM PA BLACK	
TBA 1000B, TBA 1000S (See drawing on page: 4-92)					
010	2691471-0000		2	BRACKET	
040	2691472-0000		2	BUSBAR	
060	2663940-0000		2	CORE	
070	2691473-0000		2	BRACKET	
100	2691474-0000		8	SHIM	
130	2701241-0000		2	SHIM	
140	2882175-0000		6	SHIM	
150	2854194-0000		2	SPACER	
200	312105-0453		12	SCREW M6S ISO 4017 M8X25 A480	
310	315105-0153		12	WASHER BRB 6,4X12 RFR	
400	312105-0366		8	SCREW M6S ISO 4017 M6X12 A480	
T40T9150	2691490-0105		1	TRANSFORMER	
T40T9151	2691490-0105		1	TRANSFORMER	
T40W7002	90166-0118	M	1	TUBE 8 MM PA BLACK	
T40W7005	90166-0118	M	1	TUBE 8 MM PA BLACK	
T40W7052	90166-0118	M	1.9	TUBE 8 MM PA BLACK	
T40W7055	90166-0118	M	1.8	TUBE 8 MM PA BLACK	
TBA 1000SQ (See drawing on page: 4-92)					
010	2691471-0000		2	BRACKET	
040	2691472-0000		2	BUSBAR	
060	2663940-0000		2	CORE	
070	2691473-0000		2	BRACKET	
100	2691474-0000		8	SHIM	
130	2701241-0000		2	SHIM	
140	2882175-0000		6	SHIM	
150	2854194-0000		2	SPACER	
200	312105-0453		12	SCREW M6S ISO 4017 M8X25 A480	
310	315105-0153		12	WASHER BRB 6,4X12 RFR	
400	312105-0366		8	SCREW M6S ISO 4017 M6X12 A480	
T40T9150	2691490-0106		1	TRANSFORMER	
T40T9151	2691490-0106		1	TRANSFORMER	
T40W7002	90166-0118	M	1	TUBE 8 MM PA BLACK	
T40W7005	90166-0118	M	1	TUBE 8 MM PA BLACK	
T40W7052	90166-0118	M	1.9	TUBE 8 MM PA BLACK	
T40W7055	90166-0118	M	1.8	TUBE 8 MM PA BLACK	
Common Parts					
050	2663935-0000		2	SPACER	
090	2663936-0000		4	WASHER	
110	2701240-0000		2	PLATE	
120	2701244-0000		4	PLATE	
160	3056256-0000		4	SHIM	
170	3056305-0000		12	SHIM	
210	312145-0325		8	SCREW ISO 2009 MFS M5X10 A4	
240	312105-0374		4	SCREW M6S ISO 4014 M6X30 A480	
245	312115-0374		4	SCREW ISO4762 M6X30 A4 80	
250	312115-0329		4	SCREW ISO4762 M5X16 A4 80	
260	312318-0366		12	SCREW ISO4029 M6X12 A4	
270	312318-0370		8	SCREW ISO4029 M6X20 A4	
290	312605-0314		2	HEXAGON NUT, M6M M5 A280	
300	315105-0146		4	WASHER BRB 5,3X10 RFR	
320	315105-0165		12	WASHER BRB 8,4X16 RFR	
330	312115-0368		8	SCREW ISO4762 M6X16 A4 80	
380	315202-0505		8	O-RING 6,07X1,78 MM	
390	315202-0708		4	O-RING 21,95X1,78 MM	
450	342931-0121		4	ELBOW 90 COUPL.,EXT.THREAD 8/6-G1/8"	
500	90458-0873		2	STOP SCREW,M8X10	
510	90458-1614		2	SCREW M6S ISO 4014 M5X80 A480	
520	90600-4683		8	COVER, GPN 340 SW4	
530	311103-0353		4	PARALLEL PIN ISO 2338 6M6X20 A1	
600	90458-2893		2	SLEEVE, 78 Z-0-3-4	
T40E7002	2616168-0000		1	COOLING PLATE	
T40E7002	2616167-0000		1	COOLING PLATE	
T40E7052	2616167-0000		1	COOLING PLATE	
T40E7052	2616168-0000		1	COOLING PLATE	
T40W9150	90458-2895	M	12	COAXIAL CABLE RG 400/U BROWN	
T40W9151	90458-2895	M	12	COAXIAL CABLE RG 400/U BROWN	
T40X9150	90458-2890		1	CONNECTOR, 21N-50N12N133NE	
T40X9151	90458-2890		1	CONNECTOR, 21N-50N12N133NE	
T40X9154	90458-2892		1	CONNECTOR, 11 N-50-3-31/133 NE	
T40X9155	90458-2892		1	CONNECTOR, 11 N-50-3-31/133 NE	

Machine Type | Group Description | Used-In | Group Number | Page No

HAND CRANK

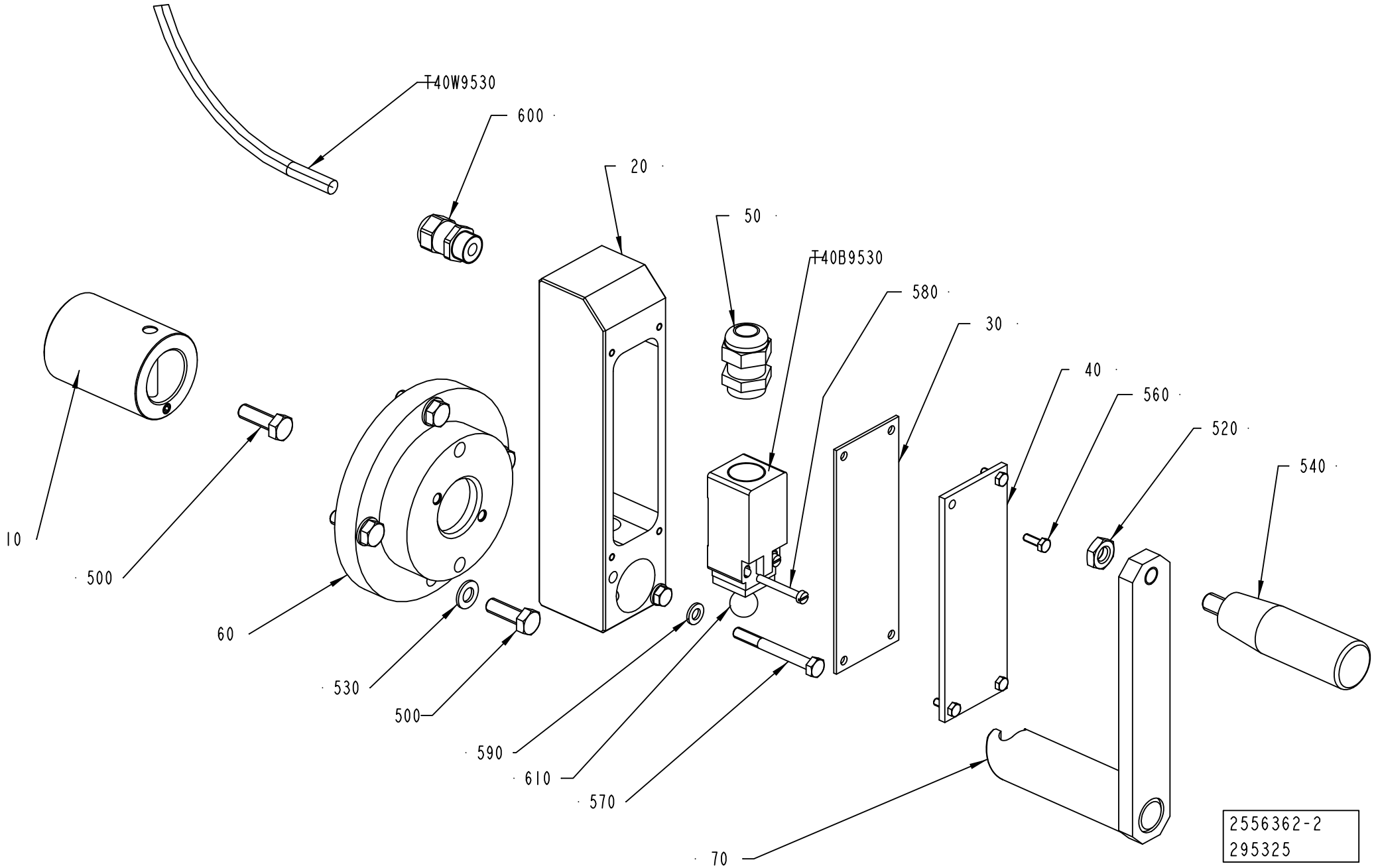
T40W9530
600
20
50
T40B9530
580
30
40
560
520
540
10
500
60
530
500
590
610
570
70
2556362-2
295325

Pos	Part No	UN	Qty	Description	Page No
TBA 0125S, TBA 0200M, TBA 0200B, TBA 0200S, TBA 0250S, TBA 0250B (See drawing on page: 4-94)					
010	2531489-0000		1	SLEEVE	
	312318-0362		*1*	*SCREW ISO4029 M6X8 A4*	
	311102-0413		*1*	*PARALLEL PIN ISO 2338 8M6X50 ST*	
060	2656248-0000		1	SUPPORT	
070	2787593-0000		1	CRANK	
500	312105-0453		5	SCREW M6S ISO 4017 M8X25 A480	
530	315105-0165		4	WASHER BRB 8,4X16 RFR	
TBA 1000B, TBA 1000SQ, TBA 1000S (See drawing on page: 4-96)					
010	2681391-0000		1	GEAR WHEEL	
060	2681390-0000		1	SUPPORT	
070	2826481-0000		1	CRANK	
080	2681392-0000		1	GEAR WHEEL	
090	2826482-0000		1	CRANK	
500	312105-0455		4	SCREW M6S ISO 4017 M8X30 A480	
510	312105-0461		1	SCREW M6S ISO 4014 M8X50 A480	
530	315105-0165		5	WASHER BRB 8,4X16 RFR	
550	312115-0447		1	SCREW ISO4762 M8X12 A4 80	
620	312318-0285		1	SCREW ISO4029 M4X6 A4	
630	315705-0166		1	PARAPARALLEL KEY W. ROUND ENDS 4X4X12 MM	
640	90240-0261		1	FLANGE BUSHING, IGLIDUR X 12X14X9	
650	90240-0290		1	BUSHING, IGLIDUR X 30X34X30	
Common Parts					
020	2787594-0000		1	HOLDER	
030	1348635-0000		1	RUBBER SEAL	
040	1348663-0000		1	PLATE	
050	1349020-0000		1	GLAND FITTING	
520	312625-0320		1	HEXAGON THIN NUT, EN 24035 ML6M M10 A4	
540	90051-0127		1	HANDLE, NO. .601/90+X-M10-INOX	
560	312105-0291		4	SCREW M6S ISO 4017 M4X12 A470	
570	312105-0381		2	SCREW M6S ISO 4014 M6X55 A480	
580	312125-0299		2	SCREW ISO 1207 M4X30 A4	
590	315105-0153		2	WASHER BRB 6,4X12 RFR	
600	90458-0306		1	CABLE GLAND, M16X1,5, NO.5311 1010	
610	321390-0145		1	STEEL BALL 15MM, RB-15 RS	
T40B9530	1144653-0000		1	SWITCH	
T40W9530	351150-0405	M	4.5	CABLE OLFLEX 5X0,75 MM2 LIGHT/GREY	

Pos	Part No	UN	Qty	Description	Page No

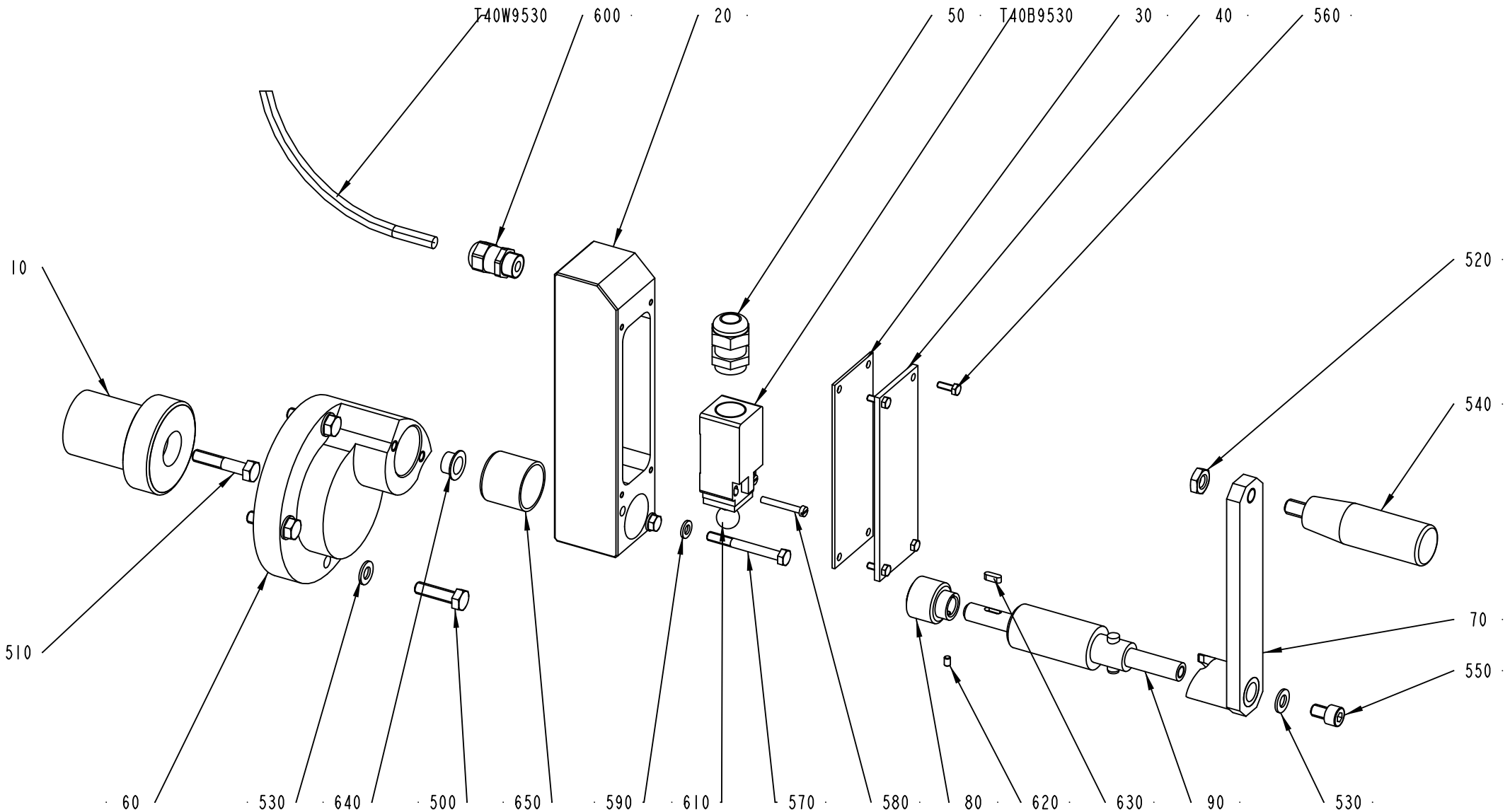
T40W9530
600
20
50
T40B9530
30
40
560
10
520
540
510
70
550
60
530
640
500
650
590
610
570
580
80
620
630
90
530

ECM: 460430 - 20101001
Group number: 2556362-0400
Assembly Drawing: 2556362-4_1_AA

This list covers pages from 4-94 to 4-97

Pos	Part No	UN	Qty	Description	Page No
TBA 0125S, TBA 0200M, TBA 0200B, TBA 0200S, TBA 0250S, TBA 0250B (See drawing on page: 4-94)					
010	2531489-0000		1	SLEEVE	
	312318-0362		*1*	*SCREW ISO4029 M6X8 A4*	
	311102-0413		*1*	*PARALLEL PIN ISO 2338 8M6X50 ST*	
060	2656248-0000		1	SUPPORT	
070	2787593-0000		1	CRANK	
500	312105-0453		5	SCREW M6S ISO 4017 M8X25 A480	
530	315105-0165		4	WASHER BRB 8,4X16 RFR	
TBA 1000B, TBA 1000SQ, TBA 1000S (See drawing on page: 4-96)					
010	2681391-0000		1	GEAR WHEEL	
060	2681390-0000		1	SUPPORT	
070	2826481-0000		1	CRANK	
080	2681392-0000		1	GEAR WHEEL	
090	2826482-0000		1	CRANK	
500	312105-0455		4	SCREW M6S ISO 4017 M8X30 A480	
510	312105-0461		1	SCREW M6S ISO 4014 M8X50 A480	
530	315105-0165		5	WASHER BRB 8,4X16 RFR	
550	312115-0447		1	SCREW ISO4762 M8X12 A4 80	
620	312318-0285		1	SCREW ISO4029 M4X6 A4	
630	315705-0166		1	PARAPARALLEL KEY W. ROUND ENDS 4X4X12 MM	
640	90240-0261		1	FLANGE BUSHING, IGLIDUR X 12X14X9	
650	90240-0290		1	BUSHING, IGLIDUR X 30X34X30	
Common Parts					
020	2787594-0000		1	HOLDER	
030	1348635-0000		1	RUBBER SEAL	
040	1348663-0000		1	PLATE	
050	1349020-0000		1	GLAND FITTING	
520	312625-0320		1	HEXAGON THIN NUT, EN 24035 ML6M M10 A4	
540	90051-0127		1	HANDLE, NO. .601/90+X-M10-INOX	
560	312105-0291		4	SCREW M6S ISO 4017 M4X12 A470	
570	312105-0381		2	SCREW M6S ISO 4014 M6X55 A480	
580	312125-0299		2	SCREW ISO 1207 M4X30 A4	
590	315105-0153		2	WASHER BRB 6,4X12 RFR	
600	90458-0306		1	CABLE GLAND, M16X1,5, NO.5311 1010	
610	321390-0145		1	STEEL BALL 15MM, RB-15 RS	
T40B9530	1144653-0000		1	SWITCH	
T40W9530	351150-0405	M	4.5	CABLE OLFLEX 5X0,75 MM2 LIGHT/GREY	

Pos	Part No	UN	Qty	Description	Page No

Machine Type | Group Description | Used-In | Group Number | Page No

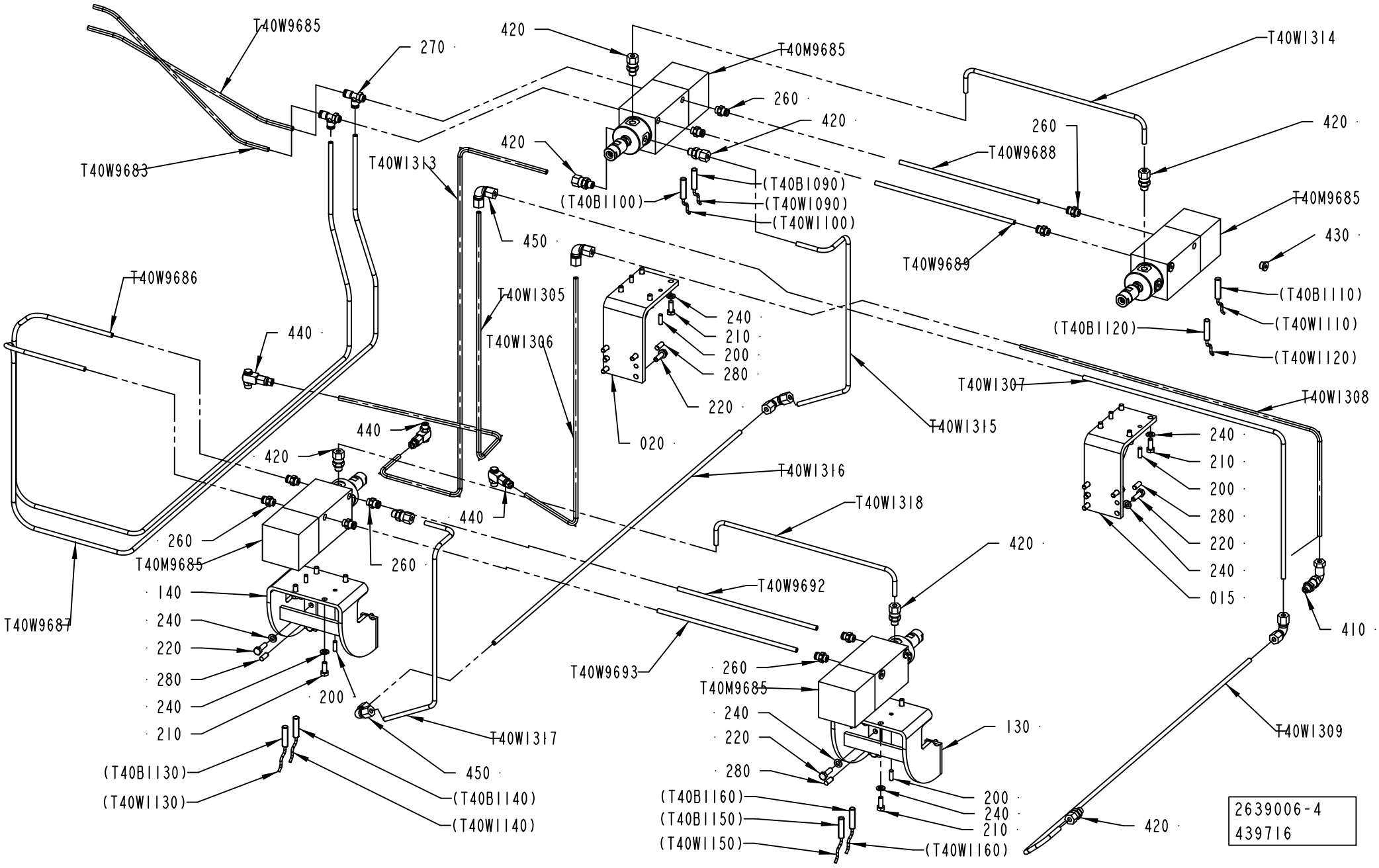
T40W9685
270
420
T40M9685
260
420
T40W1314
T40W9683
T40W1313
420
260
420
T40W9688
(T40B1090)
(T40B1100)
(T40W1090)
(T40W1100)
T40M9685
450
430
T40W9689
T40W9686
T40W1305
240
210
200
280
220
(T40B1110)
(T40W1110)
(T40B1120)
(T40W1120)
440
T40W1306
T40W1307
T40W1308
T40W1315
020
440
420
T40W1316
240
210
200
280
220
240
015
T40W1318
260
T40M9685
260
440
420
T40W9687
T40W9692
140
240
220
280
240
210
200
T40W9693
260
T40M9685
240
220
280
130
410
T40W1317
T40W1309
450
(T40B1130)
(T40W1130)
(T40B1140)
(T40W1140)
(T40B1160)
(T40B1150)
(T40W1150)
200
240
210
(T40W1160)
420
2639006-4
439716

ECM: 441742 - 20100701
Group number: 2639006-0200
Assembly Drawing: 2639006-4_1_AC

This list covers pages from 4-98 to 4-107

Pos	Part No	UN	Qty	Description	Page No
TBA 0125S, TBA 0200B (See drawing on page: 4-100)					
020	2565291-0000		2	BRACKET	
140	2564898-0000		2	BRACKET	
150	2564589-0000		2	EXTENSION PIPE	
200	311103-0308		8	PARALLEL PIN ISO 2338 5M6X16 A1	
220	312105-0370		14	SCREW M6S ISO 4017 M6X20 A480	
240	315105-0153		30	WASHER BRB 6,4X12 RFR	
260	342722-0202		10	PIPE COUPLING 1/8" D=6MM	
270	342772-0113		2	ELBOW FITTING, 6 - G1/8	
280	311103-0351		8	PARALLEL PIN ISO 2338 6M6X16 A1	
410	90030-0171		2	ADJUSTABLE ELBOW CONNECTION 6-G1/8	
420	90030-0184		7	CONN. STR., GE06LRED71	
430	342713-0209		13	PLUG, EXT THREAD HEX SOCKET 8638-00-180	
440	90459-0843		3	CONN. BANJO, 6-G1/8	
450	342737-0204		5	ELBOW CONNECTION 6, W06L71	
T40W1305	2686513-0000		1	PIPE	
T40W1306	2686515-0000		1	PIPE	
T40W1307	2565549-0000		1	PIPE	
T40W1308	2565552-0000		1	PIPE	
T40W1309	2565551-0000		1	PIPE	
T40W1313	2686514-0000		1	PIPE	
T40W1314	2535665-0000		1	PIPE	
T40W1315	2653662-0000		1	PIPE	
T40W1316	2541983-0000		1	PIPE	
T40W1317	2653662-0000		1	PIPE	
T40W1318	2535665-0000		1	PIPE	
T40W9683	90166-0081	MM	500	TUBE 6 MM PA BLUE	
T40W9685	90166-0081	MM	500	TUBE 6 MM PA BLUE	
T40W9686	90166-0081	MM	1400	TUBE 6 MM PA BLUE	
T40W9687	90166-0081	MM	1400	TUBE 6 MM PA BLUE	
T40W9688	90166-0081	MM	160	TUBE 6 MM PA BLUE	
T40W9689	90166-0081	MM	160	TUBE 6 MM PA BLUE	
T40W9692	90166-0081	MM	160	TUBE 6 MM PA BLUE	
T40W9693	90166-0081	MM	160	TUBE 6 MM PA BLUE	
TBA 0200M (See drawing on page: 4-102)					
015	2580000-0000		1	BRACKET	
020	2580102-0000		1	BRACKET	
130	2580001-0000		1	BRACKET	
140	2580104-0000		1	BRACKET	
150	2564589-0000		2	EXTENSION PIPE	
200	311103-0308		8	PARALLEL PIN ISO 2338 5M6X16 A1	
220	312105-0370		16	SCREW M6S ISO 4017 M6X20 A480	
240	315105-0153		32	WASHER BRB 6,4X12 RFR	
260	342722-0202		10	PIPE COUPLING 1/8" D=6MM	
270	342772-0113		2	ELBOW FITTING, 6 - G1/8	
280	311103-0351		8	PARALLEL PIN ISO 2338 6M6X16 A1	
410	90030-0171		1	ADJUSTABLE ELBOW CONNECTION 6-G1/8	
420	90030-0184		8	CONN. STR., GE06LRED71	
430	342713-0209		13	PLUG, EXT THREAD HEX SOCKET 8638-00-180	
440	90459-0843		3	CONN. BANJO, 6-G1/8	
450	342737-0204		5	ELBOW CONNECTION 6, W06L71	
T40W1305	2686539-0000		1	PIPE	
T40W1306	2686537-0000		1	PIPE	
T40W1307	2578772-0000		1	PIPE	
T40W1308	2578773-0000		1	PIPE	
T40W1309	2544916-0000		1	PIPE	
T40W1313	2686538-0000		1	PIPE	
T40W1314	2580103-0000		1	PIPE	
T40W1315	2544913-0000		1	PIPE	
T40W1316	2578782-0000		1	PIPE	
T40W1317	2544918-0000		1	PIPE	
T40W1318	2580103-0000		1	PIPE	
T40W9683	90166-0081	MM	500	TUBE 6 MM PA BLUE	
T40W9685	90166-0081	MM	500	TUBE 6 MM PA BLUE	
T40W9686	90166-0081	MM	1800	TUBE 6 MM PA BLUE	
T40W9687	90166-0081	MM	1800	TUBE 6 MM PA BLUE	
T40W9688	90166-0081	MM	240	TUBE 6 MM PA BLUE	
T40W9689	90166-0081	MM	240	TUBE 6 MM PA BLUE	
T40W9692	90166-0081	MM	240	TUBE 6 MM PA BLUE	
T40W9693	90166-0081	MM	240	TUBE 6 MM PA BLUE	
TBA 0200S (See drawing on page: 4-98)					
015	2575105-0000		1	BRACKET	
020	2642679-0000		1	BRACKET	
130	2578482-0000		1	BRACKET	
140	2578483-0000		1	BRACKET	
200	311103-0308		8	PARALLEL PIN ISO 2338 5M6X16 A1	
220	312105-0370		16	SCREW M6S ISO 4017 M6X20 A480	
240	315105-0153		32	WASHER BRB 6,4X12 RFR	
260	342722-0202		10	PIPE COUPLING 1/8" D=6MM	
270	342772-0113		2	ELBOW FITTING, 6 - G1/8	
280	311103-0351		8	PARALLEL PIN ISO 2338 6M6X16 A1	
410	90030-0171		1	ADJUSTABLE ELBOW CONNECTION 6-G1/8	
420	90030-0184		8	CONN. STR., GE06LRED71	
430	342713-0209		13	PLUG, EXT THREAD HEX SOCKET 8638-00-180	

Machine Type | Group Description | Used-In | Group Number | Page No

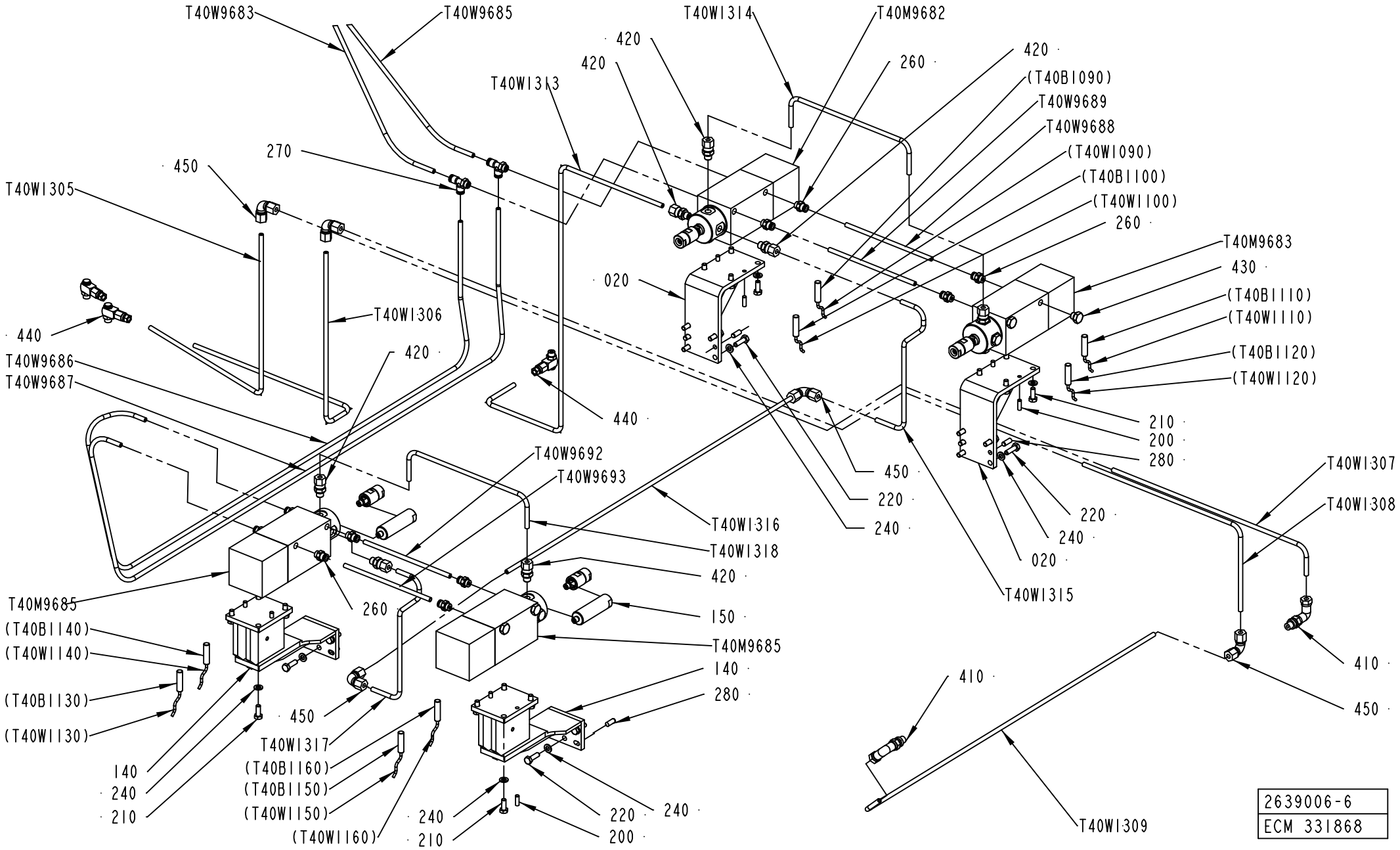
T40W9683
T40W9685
T40W1314
T40M9682
420
420
260
420
T40W1313
(T40B1090)
T40W9689
T40W9688
(T40W1090)
(T40B1100)
(T40W1100)
260
270
450
T40W1305
020
T40M9683
430
(T40B1110)
(T40W1110)
(T40B1120)
(T40W1120)
440
T40W1306
420
T40W9686
T40W9687
440
210
200
280
T40W1307
T40W1308
T40W9692
T40W9693
450
220
240
T40W1316
T40W1318
420
T40M9685
260
150
T40M9685
(T40B1140)
(T40W1140)
140
280
(T40B1130)
(T40W1130)
450
T40W1317
(T40B1160)
(T40B1150)
(T40W1150)
(T40W1160)
140
240
210
240
210
220
240
200
410
410
450
T40W1309
2639006-6
ECM 331868

Pos	Part No	UN	Qty	Description	Page No
TBA 0200S (Cont'd) (See drawing on page: 4-98)					
440	90459-0843		3	CONN. BANJO, 6-G1/8	
450	342737-0204		5	ELBOW CONNECTION 6, W06L71	
T40W1305	2676409-0000		1	PIPE	
T40W1306	2678312-0000		1	PIPE	
T40W1307	2579908-0000		1	PIPE	
T40W1308	2579910-0000		1	PIPE	
T40W1309	2579985-0000		1	PIPE	
T40W1313	2678311-0000		1	PIPE	
T40W1314	2579829-0000		1	PIPE	
T40W1315	2581995-0000		1	PIPE	
T40W1316	2544926-0000		1	PIPE	
T40W1317	2579921-0000		1	PIPE	
T40W1318	2579829-0000		1	PIPE	
T40W9683	90166-0081	MM	500	TUBE 6 MM PA BLUE	
T40W9685	90166-0081	MM	500	TUBE 6 MM PA BLUE	
T40W9686	90166-0081	MM	1800	TUBE 6 MM PA BLUE	
T40W9687	90166-0081	MM	1800	TUBE 6 MM PA BLUE	
T40W9688	90166-0081	MM	240	TUBE 6 MM PA BLUE	
T40W9689	90166-0081	MM	240	TUBE 6 MM PA BLUE	
T40W9692	90166-0081	MM	240	TUBE 6 MM PA BLUE	
T40W9693	90166-0081	MM	240	TUBE 6 MM PA BLUE	
TBA 0250B (See drawing on page: 4-102)					
015	2579689-0000		1	BRACKET	
020	2579689-0000		1	BRACKET	
130	2574072-0000		1	BRACKET	
140	2574072-0000		1	BRACKET	
150	2564589-0000		2	EXTENSION PIPE	
200	311103-0308		8	PARALLEL PIN ISO 2338 5M6X16 A1	
220	312105-0370		16	SCREW M6S ISO 4017 M6X20 A480	
240	315105-0153		32	WASHER BRB 6,4X12 RFR	
260	342722-0202		10	PIPE COUPLING 1/8" D=6MM	
270	342772-0113		2	ELBOW FITTING, 6 - G1/8	
280	311103-0351		8	PARALLEL PIN ISO 2338 6M6X16 A1	
410	90030-0171		1	ADJUSTABLE ELBOW CONNECTION 6-G1/8	
420	90030-0184		8	CONN. STR., GE06LRED71	
430	342713-0209		13	PLUG, EXT THREAD HEX SOCKET 8638-00-180	
440	90459-0843		3	CONN. BANJO, 6-G1/8	
450	342737-0204		5	ELBOW CONNECTION 6, W06L71	
T40W1305	2686530-0000		1	PIPE	
T40W1306	2686528-0000		1	PIPE	
T40W1307	2578772-0000		1	PIPE	
T40W1308	2578773-0000		1	PIPE	
T40W1309	2544916-0000		1	PIPE	
T40W1313	2686529-0000		1	PIPE	
T40W1314	2544915-0000		1	PIPE	
T40W1315	2544913-0000		1	PIPE	
T40W1316	2578782-0000		1	PIPE	
T40W1317	2544918-0000		1	PIPE	
T40W1318	2544915-0000		1	PIPE	
T40W9683	90166-0081	MM	500	TUBE 6 MM PA BLUE	
T40W9685	90166-0081	MM	500	TUBE 6 MM PA BLUE	
T40W9686	90166-0081	MM	1800	TUBE 6 MM PA BLUE	
T40W9687	90166-0081	MM	1800	TUBE 6 MM PA BLUE	
T40W9688	90166-0081	MM	240	TUBE 6 MM PA BLUE	
T40W9689	90166-0081	MM	240	TUBE 6 MM PA BLUE	
T40W9692	90166-0081	MM	240	TUBE 6 MM PA BLUE	
T40W9693	90166-0081	MM	240	TUBE 6 MM PA BLUE	
TBA 0250S (See drawing on page: 4-98)					
015	2529042-0000		1	BRACKET	
020	2529042-0000		1	BRACKET	
130	2608195-0000		1	BRACKET	
140	2575419-0000		1	BRACKET	
200	311103-0308		8	PARALLEL PIN ISO 2338 5M6X16 A1	
220	312105-0370		16	SCREW M6S ISO 4017 M6X20 A480	
240	315105-0153		32	WASHER BRB 6,4X12 RFR	
260	342722-0202		10	PIPE COUPLING 1/8" D=6MM	
270	342772-0113		2	ELBOW FITTING, 6 - G1/8	
280	311103-0351		8	PARALLEL PIN ISO 2338 6M6X16 A1	
410	90030-0171		1	ADJUSTABLE ELBOW CONNECTION 6-G1/8	
420	90030-0184		8	CONN. STR., GE06LRED71	
430	342713-0209		13	PLUG, EXT THREAD HEX SOCKET 8638-00-180	
440	90459-0843		3	CONN. BANJO, 6-G1/8	
450	342737-0204		5	ELBOW CONNECTION 6, W06L71	
T40W1305	2912145-0000		1	PIPE	
T40W1306	2686541-0000		1	PIPE	
T40W1307	2575522-0000		1	PIPE	
T40W1308	2912146-0000		1	PIPE	
T40W1309	2545262-0000		1	PIPE	
T40W1313	2686540-0000		1	PIPE	
T40W1314	2529043-0000		1	PIPE	
T40W1315	2575629-0000		1	PIPE	
T40W1316	2544926-0000		1	PIPE	
T40W1317	2575521-0000		1	PIPE	

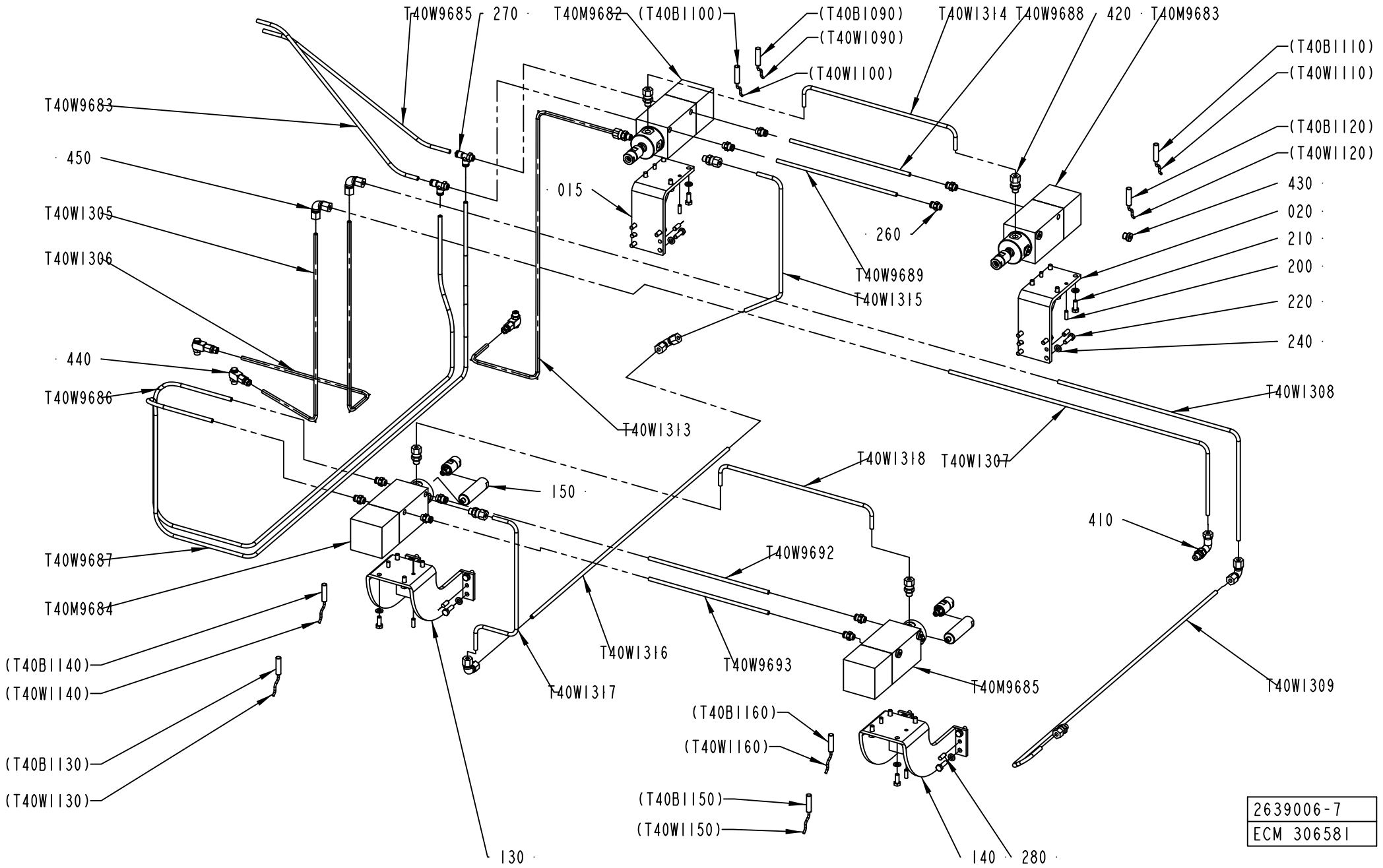
T40W9685
270
T40M9682
(T40B1100)
(T40B1090)
(T40W1090)
(T40W1100)
T40W1314
T40W9688
420
T40M9683
(T40B1110)
(T40W1110)
(T40B1120)
(T40W1120)
430
020
210
200
220
240
T40W9683
450
T40W1305
T40W1306
015
260
T40W9689
T40W1315
440
T40W9686
T40W1313
T40W1308
T40W1318
T40W1307
150
410
T40W9692
T40W9687
T40M9684
(T40B1140)
(T40W1140)
T40W1316
T40W9693
T40M9685
T40W1309
T40W1317
(T40B1160)
(T40W1160)
(T40B1130)
(T40W1130)
(T40B1150)
(T40W1150)
130
140
280
2639006-7
ECM 306581

Pos	Part No	UN	Qty	Description	Page No
TBA 0250S (Cont'd) (See drawing on page: 4-98)					
T40W1318	2529043-0000		1	PIPE	
T40W9683	90166-0081	MM	500	TUBE 6 MM PA BLUE	
T40W9685	90166-0081	MM	500	TUBE 6 MM PA BLUE	
T40W9686	90166-0081	MM	1800	TUBE 6 MM PA BLUE	
T40W9687	90166-0081	MM	1800	TUBE 6 MM PA BLUE	
T40W9688	90166-0081	MM	260	TUBE 6 MM PA BLUE	
T40W9689	90166-0081	MM	260	TUBE 6 MM PA BLUE	
T40W9692	90166-0081	MM	260	TUBE 6 MM PA BLUE	
T40W9693	90166-0081	MM	260	TUBE 6 MM PA BLUE	
TBA 1000B (See drawing on page: 4-104)					
020	2639007-0000		4	BRACKET	
200	311103-0308		16	PARALLEL PIN ISO 2338 5M6X16 A1	
220	312105-0370		16	SCREW M6S ISO 4017 M6X20 A480	
240	315105-0153		32	WASHER BRB 6,4X12 RFR	
250	90055-0229		2	T- WITH TAILPIECE 6 MM	
270	342772-0113		4	ELBOW FITTING, 6 - G1/8	
400	90030-0075		2	PIPE CONNECTION G 6	
410	90030-0171		4	ADJUSTABLE ELBOW CONNECTION 6-G1/8	
420	90030-0184		5	CONN. STR., GE06LRED71	
430	342713-0209		17	PLUG, EXT THREAD HEX SOCKET 8638-00-180	
440	90459-0843		3	CONN. BANJO, 6-G1/8	
450	90458-2956		4	ELBOW PIPE JOINT, EXT.THREAD, D=6MM-G1/8	
T40W1305	2782504-0000		1	PIPE	
T40W1307	2895439-0000		1	PIPE	
T40W1308	2782503-0000		1	PIPE	
T40W1313	2782501-0000		1	PIPE	
T40W1314	2639009-0000		1	PIPE	
T40W1316	2782502-0000		1	PIPE	
T40W1317	2525649-0000		1	PIPE	
T40W1318	2639009-0000		1	PIPE	
T40W9683	90166-0081	MM	850	TUBE 6 MM PA BLUE	
T40W9685	90166-0081	MM	850	TUBE 6 MM PA BLUE	
T40W9686	90166-0081	MM	1100	TUBE 6 MM PA BLUE	
T40W9687	90166-0081	MM	1100	TUBE 6 MM PA BLUE	
T40W9688	90166-0081	MM	400	TUBE 6 MM PA BLUE	
T40W9689	90166-0081	MM	400	TUBE 6 MM PA BLUE	
T40W9692	90166-0081	MM	400	TUBE 6 MM PA BLUE	
T40W9693	90166-0081	MM	400	TUBE 6 MM PA BLUE	
TBA 1000S (See drawing on page: 4-104)					
020	2639007-0000		4	BRACKET	
200	311103-0308		16	PARALLEL PIN ISO 2338 5M6X16 A1	
220	312105-0370		16	SCREW M6S ISO 4017 M6X20 A480	
240	315105-0153		32	WASHER BRB 6,4X12 RFR	
250	90055-0229		2	T- WITH TAILPIECE 6 MM	
270	342772-0113		4	ELBOW FITTING, 6 - G1/8	
400	90030-0075		2	PIPE CONNECTION G 6	
410	90030-0171		4	ADJUSTABLE ELBOW CONNECTION 6-G1/8	
420	90030-0184		5	CONN. STR., GE06LRED71	
430	342713-0209		17	PLUG, EXT THREAD HEX SOCKET 8638-00-180	
440	90459-0843		3	CONN. BANJO, 6-G1/8	
450	90458-2956		4	ELBOW PIPE JOINT, EXT.THREAD, D=6MM-G1/8	
T40W1305	2782488-0000		1	PIPE	
T40W1307	2574513-0000		1	PIPE	
T40W1308	2782487-0000		1	PIPE	
T40W1313	2782485-0000		1	PIPE	
T40W1314	2639009-0000		1	PIPE	
T40W1316	2782486-0000		1	PIPE	
T40W1317	2659374-0000		1	PIPE	
T40W1318	2639009-0000		1	PIPE	
T40W9683	90166-0081	MM	850	TUBE 6 MM PA BLUE	
T40W9685	90166-0081	MM	850	TUBE 6 MM PA BLUE	
T40W9686	90166-0081	MM	1100	TUBE 6 MM PA BLUE	
T40W9687	90166-0081	MM	1100	TUBE 6 MM PA BLUE	
T40W9688	90166-0081	MM	400	TUBE 6 MM PA BLUE	
T40W9689	90166-0081	MM	400	TUBE 6 MM PA BLUE	
T40W9692	90166-0081	MM	400	TUBE 6 MM PA BLUE	
T40W9693	90166-0081	MM	400	TUBE 6 MM PA BLUE	
TBA 1000SQ NOPT (See drawing on page: 4-104)					
020	2639007-0000		4	BRACKET	
200	311103-0308		16	PARALLEL PIN ISO 2338 5M6X16 A1	
220	312105-0370		16	SCREW M6S ISO 4017 M6X20 A480	
240	315105-0153		32	WASHER BRB 6,4X12 RFR	
250	90055-0229		2	T- WITH TAILPIECE 6 MM	
270	342772-0113		4	ELBOW FITTING, 6 - G1/8	
400	90030-0075		2	PIPE CONNECTION G 6	
410	90030-0171		4	ADJUSTABLE ELBOW CONNECTION 6-G1/8	
420	90030-0184		5	CONN. STR., GE06LRED71	
430	342713-0209		17	PLUG, EXT THREAD HEX SOCKET 8638-00-180	
440	90459-0843		3	CONN. BANJO, 6-G1/8	
450	90458-2956		4	ELBOW PIPE JOINT, EXT.THREAD, D=6MM-G1/8	
T40W1305	2782488-0000		1	PIPE	
T40W1307	2574513-0000		1	PIPE	
T40W1308	2782487-0000		1	PIPE	

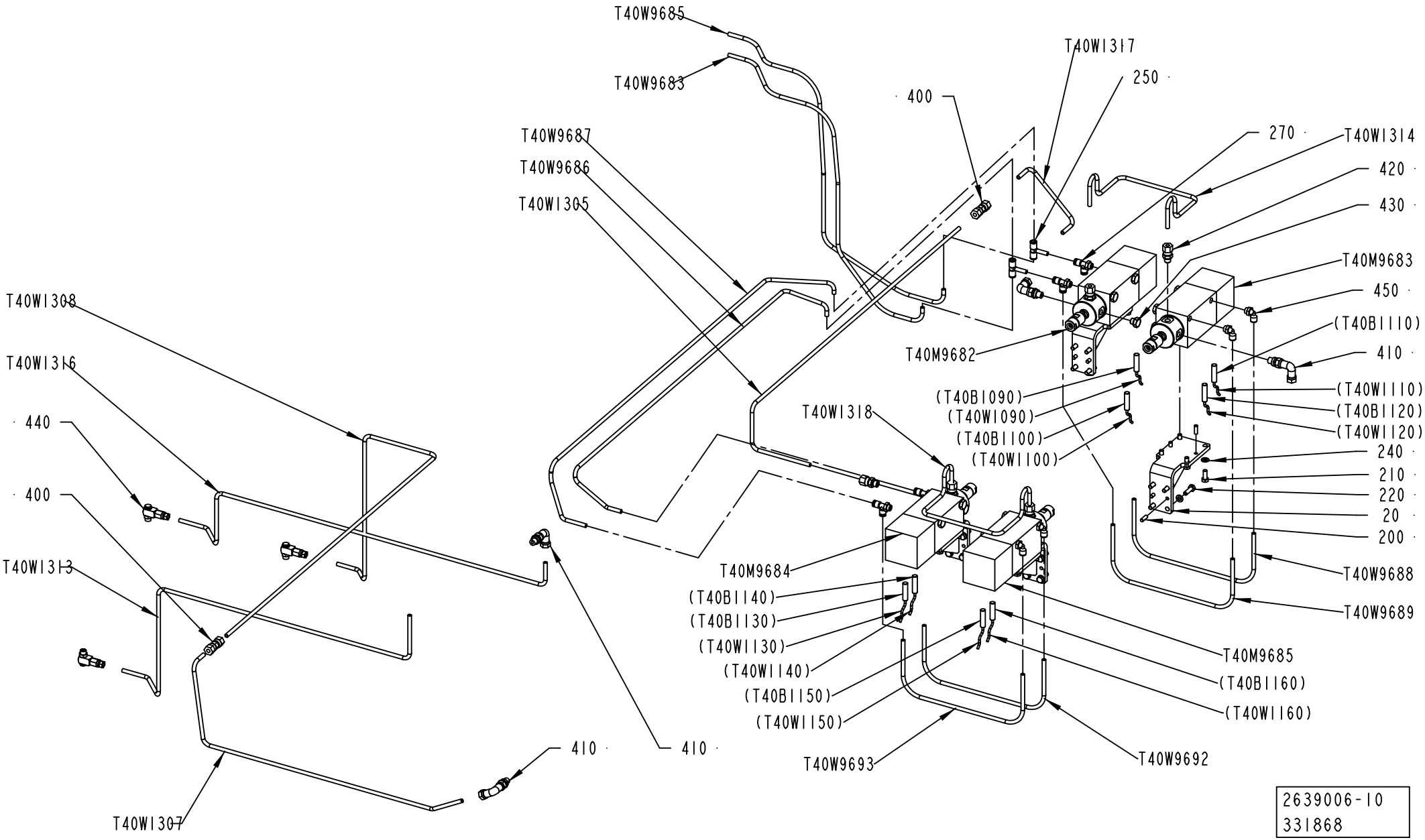
T40W9685
T40W9683
T40W9687
T40W9686
T40W1305
T40W1308
T40W1316
440
400
T40W1313
T40W1307
410
410
T40W1317
250
400
270
T40W1314
420
430
T40M9683
450
(T40B1110)
410
T40M9682
(T40B1090)
(T40W1090)
(T40B1100)
(T40W1100)
T40W1318
(T40W1110)
(T40B1120)
(T40W1120)
240
210
220
20
200
T40W9688
T40W9689
T40M9684
(T40B1140)
(T40B1130)
(T40W1130)
(T40W1140)
(T40B1150)
(T40W1150)
T40W9693
T40M9685
(T40B1160)
(T40W1160)
T40W9692
2639006-10
331868

Pos	Part No	UN	Qty	Description	Page No
TBA 1000SQ NOPT (Cont'd) (See drawing on page: 4-104)					
T40W1313	2782485-0000		1	PIPE	
T40W1314	2639009-0000		1	PIPE	
T40W1316	2782486-0000		1	PIPE	
T40W1317	2659374-0000		1	PIPE	
T40W1318	2639009-0000		1	PIPE	
T40W9683	90166-0081	MM	850	TUBE 6 MM PA BLUE	
T40W9685	90166-0081	MM	850	TUBE 6 MM PA BLUE	
T40W9686	90166-0081	MM	1100	TUBE 6 MM PA BLUE	
T40W9687	90166-0081	MM	1100	TUBE 6 MM PA BLUE	
T40W9688	90166-0081	MM	400	TUBE 6 MM PA BLUE	
T40W9689	90166-0081	MM	400	TUBE 6 MM PA BLUE	
T40W9692	90166-0081	MM	400	TUBE 6 MM PA BLUE	
T40W9693	90166-0081	MM	400	TUBE 6 MM PA BLUE	
TBA 1000SQ PT/SPEED (See drawing on page: 4-106)					
020	2639007-0000		4	BRACKET	
200	311103-0308		16	PARALLEL PIN ISO 2338 5M6X16 A1	
220	312105-0370		16	SCREW M6S ISO 4017 M6X20 A480	
240	315105-0153		32	WASHER BRB 6,4X12 RFR	
250	90055-0229		2	T- WITH TAILPIECE 6 MM	
270	342772-0113		4	ELBOW FITTING, 6 - G1/8	
400	90030-0075		1	PIPE CONNECTION G 6	
410	90030-0171		2	ADJUSTABLE ELBOW CONNECTION 6-G1/8	
420	90030-0184		5	CONN. STR., GE06LRED71	
430	342713-0209		19	PLUG, EXT THREAD HEX SOCKET 8638-00-180	
440	90459-0843		1	CONN. BANJO, 6-G1/8	
450	90458-2956		4	ELBOW PIPE JOINT, EXT.THREAD, D=6MM-G1/8	
T40W1305	2782488-0000		1	PIPE	
T40W1313	2782485-0000		1	PIPE	
T40W1314	2639009-0000		1	PIPE	
T40W1317	2659374-0000		1	PIPE	
T40W1318	2639009-0000		1	PIPE	
T40W9683	90166-0081	MM	850	TUBE 6 MM PA BLUE	
T40W9685	90166-0081	MM	850	TUBE 6 MM PA BLUE	
T40W9686	90166-0081	MM	1100	TUBE 6 MM PA BLUE	
T40W9687	90166-0081	MM	1100	TUBE 6 MM PA BLUE	
T40W9688	90166-0081	MM	400	TUBE 6 MM PA BLUE	
T40W9689	90166-0081	MM	400	TUBE 6 MM PA BLUE	
T40W9692	90166-0081	MM	400	TUBE 6 MM PA BLUE	
T40W9693	90166-0081	MM	400	TUBE 6 MM PA BLUE	
Common Parts					
210	312105-0368		16	SCREW M6S ISO 4017 M6X16 A480	

Pos	Part No	UN	Qty	Description	Page No
T40M9682	90459-1255		1	PUMP CYLINDER, 4415 000 00	
10	*90459-1471*		*1*	*LUBRICATION HEAD, 4415 051 00*	
20	*90601-7090*		*2*	*INDUCTIVE SENSOR IE5419*	
T40M9683	90459-1255		1	PUMP CYLINDER, 4415 000 00	
10	*90459-1471*		*1*	*LUBRICATION HEAD, 4415 051 00*	
20	*90601-7090*		*2*	*INDUCTIVE SENSOR IE5419*	
T40M9684	90459-1255		1	PUMP CYLINDER, 4415 000 00	
10	*90459-1471*		*1*	*LUBRICATION HEAD, 4415 051 00*	
20	*90601-7090*		*2*	*INDUCTIVE SENSOR IE5419*	
T40M9685	90459-1255		1	PUMP CYLINDER, 4415 000 00	
10	*90459-1471*		*1*	*LUBRICATION HEAD, 4415 051 00*	
20	*90601-7090*		*2*	*INDUCTIVE SENSOR IE5419*	

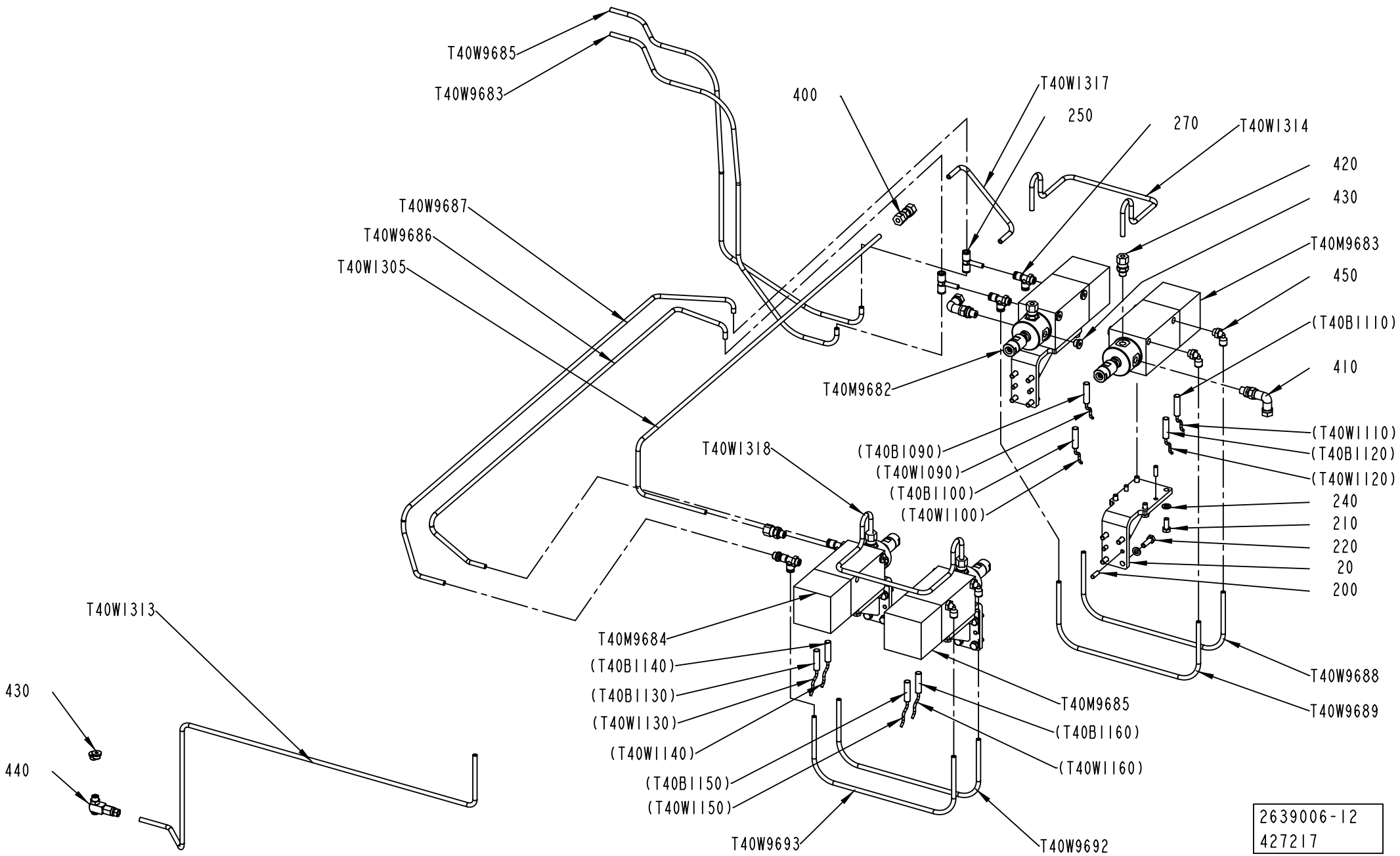
T40W9685
T40W9683
400
T40W1317
250
270
T40W1314
420
430
T40W9687
T40W9686
T40W1305
T40M9683
450
(T40B1110)
410
T40M9682
(T40W1110)
(T40B1120)
(T40W1120)
T40W1318
(T40B1090)
(T40W1090)
(T40B1100)
(T40W1100)
240
210
220
20
200
T40W1313
T40M9684
(T40B1140)
(T40B1130)
(T40W1130)
(T40W1140)
(T40B1150)
(T40W1150)
T40M9685
(T40B1160)
(T40W1160)
T40W9688
T40W9689
430
440
T40W9693
T40W9692
2639006-12
427217

Pos	Part No	UN	Qty	Description	Page No

SEE PREVIOUS LISTS PAGES: 4-99, 4-101, 4-103, 4-105.

Pos	Part No	UN	Qty	Description	Page No

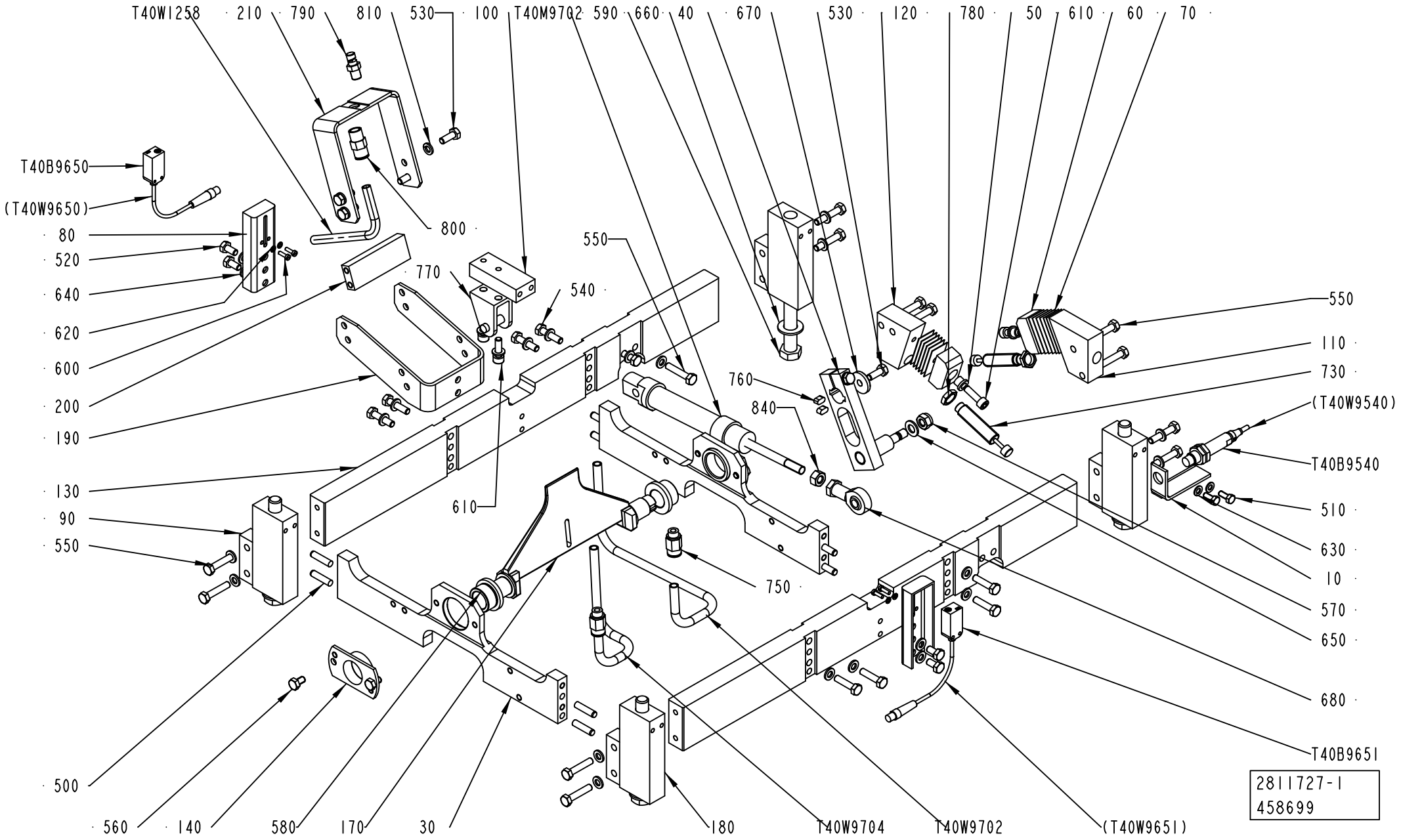
T40W1258
210
790
810
530
100
T40M9702
590
660
40
670
530
120
780
50
610
60
70
T40B9650
(T40W9650)
80
520
640
620
600
200
190
800
770
540
550
760
840
550
110
730
(T40W9540)
T40B9540
510
630
10
570
650
680
T40B9651
130
90
550
610
750
500
560
140
580
170
30
180
T40W9704
T40W9702
(T40W9651)
2811727-1
458699

ECM: 460469 - 20101001
Group number: 2811727-0100
Assembly Drawing: 2811727-1_1_AJ

This list covers pages from 4-108 to 4-115

Pos	Part No	UN	Qty	Description	Page No
TBA 0125S (See drawing on page: 4-108)					
010	2864895-0000		1	SUPPORT	
030	3052653-0000		2	PLATE	
040	2855060-0000		1	BRACKET	
090	2858069-0000		2	SUPPORT	
100	2864896-0000		1	PLATE	
110	2855061-0000		1	PLATE	
120	2855062-0000		1	PLATE	
130	2834016-0000		2	SUPPORT	
140	3051420-0000		2	FLANGE	
170	2818309-0000		1	PLATE	
180	2857894-0000		2	SUPPORT	
190	2905162-0000		1	SUPPORT	
510	312105-0327		2	SCREW M6S ISO 4017 M5X12 A480	
520	312105-0366		4	SCREW M6S ISO 4017 M6X12 A480	
540	312105-0372		9	SCREW M6S ISO 4017 M6X25 A480	
550	312105-0374		14	SCREW M6S ISO 4014 M6X30 A480	
570	312812-0318		1	HEXAGON NUT, NY-LOCK M8 A480	
580	321101-0223		2	FLANGE BUSHING, 18/25X16-32X4 MM	
590	312105-0550		4	SCREW M6S ISO 4014 M12X90 A480	
630	315105-0146		2	WASHER BRB 5,3X10 RFR	
640	315105-0153		25	WASHER BRB 6,4X12 RFR	
650	315105-0165		1	WASHER BRB 8,4X16 RFR	
660	315105-0178		4	WASHER BRB 13X24 RFR	
680	90115-0139		1	ROD END, ID=8 MM, M8X1,25	
730	90600-2811		2	SCHOCK ABSORBER, PM 15 MF - 1B	
760	315705-0196		2	PARALLEL KEY W.ROUND ENDS 5X5X10	
770	90459-4932		1	REAR CLEVIS FOOT MOUNTING, CRLBN-20/25	
780	90600-2812		2	HEXAGON NUT, M12X1, JN M12X1.0 PRO 15 MF	
840	312605-0318		1	HEXAGON NUT, M6M M8 A280	
T40M9702	90458-2102		1	DOUBLE ACTING, MINI-ISO, CYL. 20-50	
T40W9702	90166-0013	MM	650	TUBE 8 MM PA BLUE	
T40W9704	90166-0013	MM	650	TUBE 8 MM PA BLUE	
TBA 0200B (See drawing on page: 4-108)					
010	2864885-0000		1	SUPPORT	
030	3052653-0000		2	PLATE	
040	2855060-0000		1	BRACKET	
090	2858069-0000		2	SUPPORT	
100	2864896-0000		1	PLATE	
110	2855061-0000		1	PLATE	
120	2855062-0000		1	PLATE	
130	2834016-0000		2	SUPPORT	
140	3051420-0000		2	FLANGE	
170	2818309-0000		1	PLATE	
180	2857894-0000		2	SUPPORT	
190	2905162-0000		1	SUPPORT	
510	312105-0327		2	SCREW M6S ISO 4017 M5X12 A480	
520	312105-0366		4	SCREW M6S ISO 4017 M6X12 A480	
540	312105-0372		9	SCREW M6S ISO 4017 M6X25 A480	
550	312105-0374		14	SCREW M6S ISO 4014 M6X30 A480	
570	312812-0318		1	HEXAGON NUT, NY-LOCK M8 A480	
580	321101-0223		2	FLANGE BUSHING, 18/25X16-32X4 MM	
590	312105-0552		4	SCREW M6S ISO 4014 M12X100 A480	
630	315105-0146		2	WASHER BRB 5,3X10 RFR	
640	315105-0153		25	WASHER BRB 6,4X12 RFR	
650	315105-0165		1	WASHER BRB 8,4X16 RFR	
660	315105-0178		4	WASHER BRB 13X24 RFR	
680	90115-0139		1	ROD END, ID=8 MM, M8X1,25	
730	90600-2811		2	SCHOCK ABSORBER, PM 15 MF - 1B	
760	315705-0196		2	PARALLEL KEY W.ROUND ENDS 5X5X10	
770	90459-4932		1	REAR CLEVIS FOOT MOUNTING, CRLBN-20/25	
780	90600-2812		2	HEXAGON NUT, M12X1, JN M12X1.0 PRO 15 MF	
840	312605-0318		1	HEXAGON NUT, M6M M8 A280	
T40M9702	90458-2102		1	DOUBLE ACTING, MINI-ISO, CYL. 20-50	
T40W9702	90166-0013	MM	650	TUBE 8 MM PA BLUE	
T40W9704	90166-0013	MM	650	TUBE 8 MM PA BLUE	
TBA 0200M, TBA 0250B (See drawing on page: 4-108)					
010	2864886-0000		1	SUPPORT	
030	3052653-0000		2	PLATE	
040	2855060-0000		1	BRACKET	
090	2864888-0000		2	SUPPORT	
100	2864896-0000		1	PLATE	
110	2855061-0000		1	PLATE	
120	2855062-0000		1	PLATE	
130	2834016-0000		2	SUPPORT	
140	3051420-0000		2	FLANGE	
170	2818309-0000		1	PLATE	
180	2864889-0000		2	SUPPORT	
190	2905162-0000		1	SUPPORT	
510	312105-0327		2	SCREW M6S ISO 4017 M5X12 A480	
520	312105-0366		4	SCREW M6S ISO 4017 M6X12 A480	
540	312105-0372		9	SCREW M6S ISO 4017 M6X25 A480	
550	312105-0374		14	SCREW M6S ISO 4014 M6X30 A480	
570	312812-0318		1	HEXAGON NUT, NY-LOCK M8 A480	

Machine Type | Group Description | Used-In | Group Number | Page No

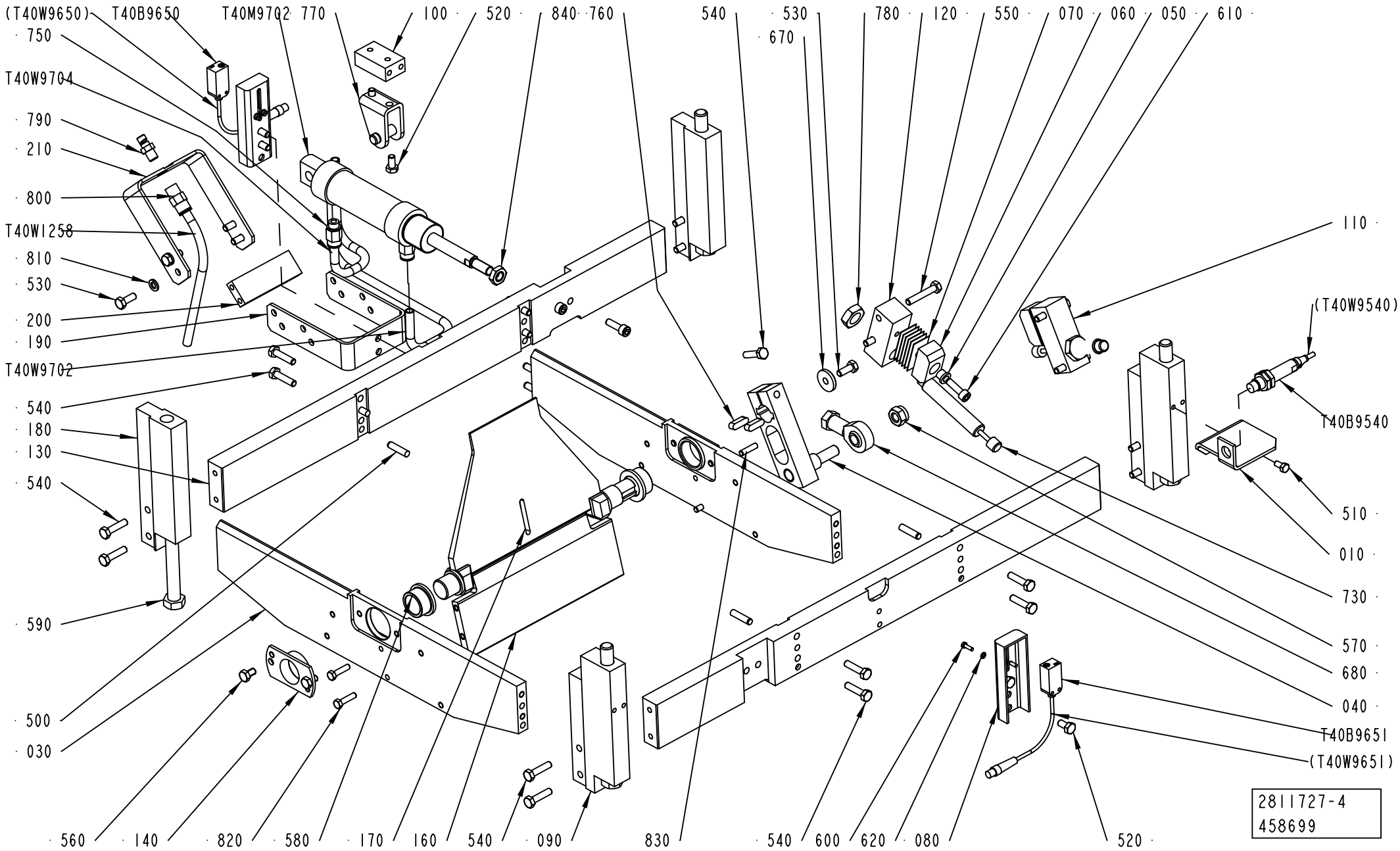
(T40W9650)
T40B9650
T40M9702
770
100
520
840
760
540
530
670
780
120
550
070
060
050
610
750
T40W9704
790
210
800
T40W1258
810
530
200
190
T40W9702
540
180
130
540
590
500
030
110
(T40W9540)
T40B9540
510
010
730
570
680
040
T40B9651
(T40W9651)
560
140
820
580
170
160
540
090
830
540
600
620
080
520
2811727-4
458699

ECM: 460469 - 20101001
Group number: 2811727-0100
Assembly Drawing: 2811727-4_1_AF

This list covers pages from 4-108 to 4-115

Pos	Part No	UN	Qty	Description	Page No
TBA 0200M, TBA 0250B (Cont'd) (See drawing on page: 4-108)					
580	321101-0223		2	FLANGE BUSHING, 18/25X16-32X4 MM	
590	312105-0552		4	SCREW M6S ISO 4014 M12X100 A480	
630	315105-0146		2	WASHER BRB 5,3X10 RFR	
640	315105-0153		25	WASHER BRB 6,4X12 RFR	
650	315105-0165		1	WASHER BRB 8,4X16 RFR	
660	315105-0178		4	WASHER BRB 13X24 RFR	
680	90115-0139		1	ROD END, ID=8 MM, M8X1,25	
730	90600-2811		2	SCHOCK ABSORBER, PM 15 MF - 1B	
760	315705-0196		2	PARALLEL KEY W.ROUND ENDS 5X5X10	
770	90459-4932		1	REAR CLEVIS FOOT MOUNTING, CRLBN-20/25	
780	90600-2812		2	HEXAGON NUT, M12X1, JN M12X1.0 PRO 15 MF	
840	312605-0318		1	HEXAGON NUT, M6M M8 A280	
T40M9702	90458-2102		1	DOUBLE ACTING, MINI-ISO, CYL. 20-50	
T40W9702	90166-0013	MM	650	TUBE 8 MM PA BLUE	
T40W9704	90166-0013	MM	650	TUBE 8 MM PA BLUE	
TBA 0200S (See drawing on page: 4-108)					
010	2707858-0000		1	SUPPORT	
030	3051421-0000		2	PLATE	
040	2855060-0000		1	BRACKET	
090	2817096-0000		4	SUPPORT	
100	2864896-0000		1	PLATE	
110	2855061-0000		1	PLATE	
120	2855062-0000		1	PLATE	
130	2834016-0000		2	SUPPORT	
140	3051420-0000		2	FLANGE	
170	2818309-0000		1	PLATE	
190	2905162-0000		1	SUPPORT	
510	312105-0327		2	SCREW M6S ISO 4017 M5X12 A480	
520	312105-0366		4	SCREW M6S ISO 4017 M6X12 A480	
540	312105-0372		9	SCREW M6S ISO 4017 M6X25 A480	
550	312105-0374		14	SCREW M6S ISO 4014 M6X30 A480	
570	312812-0318		1	HEXAGON NUT, NY-LOCK M8 A480	
580	321101-0223		2	FLANGE BUSHING, 18/25X16-32X4 MM	
590	312105-0554		4	SCREW M6S ISO 4014 M12X110 A480	
630	315105-0146		2	WASHER BRB 5,3X10 RFR	
640	315105-0153		25	WASHER BRB 6,4X12 RFR	
650	315105-0165		1	WASHER BRB 8,4X16 RFR	
660	315105-0178		4	WASHER BRB 13X24 RFR	
680	90115-0139		1	ROD END, ID=8 MM, M8X1,25	
730	90600-2811		2	SCHOCK ABSORBER, PM 15 MF - 1B	
760	315705-0196		2	PARALLEL KEY W.ROUND ENDS 5X5X10	
770	90459-4932		1	REAR CLEVIS FOOT MOUNTING, CRLBN-20/25	
780	90600-2812		2	HEXAGON NUT, M12X1, JN M12X1.0 PRO 15 MF	
840	312605-0318		1	HEXAGON NUT, M6M M8 A280	
T40M9702	90458-2102		1	DOUBLE ACTING, MINI-ISO, CYL. 20-50	
T40W9702	90166-0013	MM	650	TUBE 8 MM PA BLUE	
T40W9704	90166-0013	MM	650	TUBE 8 MM PA BLUE	
TBA 0250S (See drawing on page: 4-108)					
010	2912147-0000		1	SUPPORT	
030	3051421-0000		2	PLATE	
040	2855060-0000		1	BRACKET	
090	3066269-0000		2	SUPPORT	
100	2864896-0000		1	PLATE	
110	2855061-0000		1	PLATE	
120	2855062-0000		1	PLATE	
130	2834016-0000		2	SUPPORT	
140	3051420-0000		2	FLANGE	
170	2818309-0000		1	PLATE	
180	3066270-0000		2	SUPPORT	
190	2905162-0000		1	SUPPORT	
510	312105-0327		2	SCREW M6S ISO 4017 M5X12 A480	
520	312105-0366		4	SCREW M6S ISO 4017 M6X12 A480	
540	312105-0372		9	SCREW M6S ISO 4017 M6X25 A480	
550	312105-0374		14	SCREW M6S ISO 4014 M6X30 A480	
570	312812-0318		1	HEXAGON NUT, NY-LOCK M8 A480	
580	321101-0223		2	FLANGE BUSHING, 18/25X16-32X4 MM	
590	312105-0554		4	SCREW M6S ISO 4014 M12X110 A480	
630	315105-0146		2	WASHER BRB 5,3X10 RFR	
640	315105-0153		25	WASHER BRB 6,4X12 RFR	
650	315105-0165		1	WASHER BRB 8,4X16 RFR	
660	315105-0178		4	WASHER BRB 13X24 RFR	
680	90115-0139		1	ROD END, ID=8 MM, M8X1,25	
730	90600-2811		2	SCHOCK ABSORBER, PM 15 MF - 1B	
760	315705-0196		2	PARALLEL KEY W.ROUND ENDS 5X5X10	
770	90459-4932		1	REAR CLEVIS FOOT MOUNTING, CRLBN-20/25	
780	90600-2812		2	HEXAGON NUT, M12X1, JN M12X1.0 PRO 15 MF	
840	312605-0318		1	HEXAGON NUT, M6M M8 A280	
T40M9702	90458-2102		1	DOUBLE ACTING, MINI-ISO, CYL. 20-50	
T40W9702	90166-0013	MM	650	TUBE 8 MM PA BLUE	
T40W9704	90166-0013	MM	650	TUBE 8 MM PA BLUE	
TBA 1000B (See drawing on page: 4-110)					
010	2899546-0000		1	SUPPORT	
030	3024533-0000		2	PLATE	

Machine Type | Group Description | Used-In | Group Number | Page No

See previous drawings pages: 4-108, 4-110.

ECM: 460469 - 20101001
Group number: 2811727-0100
Assembly Drawing: 2811727-4_1_AF

This list covers pages from 4-108 to 4-115

Pos	Part No	UN	Qty	Description	Page No
TBA 1000B (Cont'd) (See drawing on page: 4-110)					
040	2877163-0000		1	LEVER	
090	2899497-0000		2	SUPPORT	
100	2877388-0000		1	PLATE	
110	2879788-0000		1	PLATE	
120	2879789-0000		1	PLATE	
130	2876901-0000		2	SUPPORT	
140	3024536-0000		2	FLANGE	
160	2934201-0000		1	PLATE	
170	2876668-0000		1	PLATE	
180	2899496-0000		2	SUPPORT	
190	2911831-0000		1	SUPPORT	
510	312105-0325		2	SCREW M6S ISO 4017 M5X10 A480	
520	312105-0366		6	SCREW M6S ISO 4017 M6X12 A480	
540	312105-0372		17	SCREW M6S ISO 4017 M6X25 A480	
550	312105-0376		4	SCREW M6S ISO 4014 M6X35 A480	
570	312812-0320		1	HEXAGON NUT, NY-LOCK M10 A480	
580	321111-0302		2	FLANGE BUSHING, 20/26X15-32X3 MM	
590	90287-0328		4	SCREW M6S M12X160 A280	
680	90115-0134		1	ROD END, ID=10 MM, M10X1,25	
730	90459-0383		2	SCHOCK ABSORBER, PM 25 MC -1SB -NM	
760	315705-0232		2	PARALLEL KEY W. ROUND ENDS 6X6X20 MM	
770	90459-5949		1	REAR CLEVIS FOOT MOUNTING, CRLBN-32	
780	90459-0459		2	NUT HEX. M14X1,5 SS	
820	312105-0331		2	SCREW M6S ISO 4017 M5X20 A480	
830	311103-0310		2	PARALLEL PIN ISO 2338 5M6X20 A1	
840	312632-0320		1	HEX.TH.NUT FINE,EN24035 ML6M M10X1,25 A4	
T40M9702	90600-5531		1	DOUBLE ACTING, MINI-ISO, CYL. 32-50	
T40W9702	90166-0013	MM	700	TUBE 8 MM PA BLUE	
T40W9704	90166-0013	MM	700	TUBE 8 MM PA BLUE	
TBA 1000S (See drawing on page: 4-110)					
010	2878395-0000		1	SUPPORT	
030	3024533-0000		2	PLATE	
040	2877163-0000		1	LEVER	
090	2879247-0000		2	SUPPORT	
100	2877388-0000		1	PLATE	
110	2879788-0000		1	PLATE	
120	2879789-0000		1	PLATE	
130	2876901-0000		2	SUPPORT	
140	3024536-0000		2	FLANGE	
160	2934201-0000		1	PLATE	
170	2876668-0000		1	PLATE	
180	2879246-0000		2	SUPPORT	
190	2911831-0000		1	SUPPORT	
510	312105-0325		2	SCREW M6S ISO 4017 M5X10 A480	
520	312105-0366		6	SCREW M6S ISO 4017 M6X12 A480	
540	312105-0372		17	SCREW M6S ISO 4017 M6X25 A480	
550	312105-0376		4	SCREW M6S ISO 4014 M6X35 A480	
570	312812-0320		1	HEXAGON NUT, NY-LOCK M10 A480	
580	321111-0302		2	FLANGE BUSHING, 20/26X15-32X3 MM	
590	312105-0560		4	SCREW M6S ISO 4014 M12X150 A280	
680	90115-0134		1	ROD END, ID=10 MM, M10X1,25	
730	90459-0383		2	SCHOCK ABSORBER, PM 25 MC -1SB -NM	
760	315705-0232		2	PARALLEL KEY W. ROUND ENDS 6X6X20 MM	
770	90459-5949		1	REAR CLEVIS FOOT MOUNTING, CRLBN-32	
780	90459-0459		2	NUT HEX. M14X1,5 SS	
820	312105-0331		2	SCREW M6S ISO 4017 M5X20 A480	
830	311103-0310		2	PARALLEL PIN ISO 2338 5M6X20 A1	
840	312632-0320		1	HEX.TH.NUT FINE,EN24035 ML6M M10X1,25 A4	
T40M9702	90600-5531		1	DOUBLE ACTING, MINI-ISO, CYL. 32-50	
T40W9702	90166-0013	MM	700	TUBE 8 MM PA BLUE	
T40W9704	90166-0013	MM	700	TUBE 8 MM PA BLUE	
TBA 1000SQ (See drawing on page: 4-110)					
010	2878395-0000		1	SUPPORT	
030	3024533-0000		2	PLATE	
040	2877163-0000		1	LEVER	
090	2877147-0000		2	SUPPORT	
100	2877388-0000		1	PLATE	
110	2879788-0000		1	PLATE	
120	2879789-0000		1	PLATE	
130	2876901-0000		2	SUPPORT	
140	3024536-0000		2	FLANGE	
160	2934201-0000		1	PLATE	
170	2876668-0000		1	PLATE	
180	2878258-0000		2	PLATE	
190	2911831-0000		1	SUPPORT	
510	312105-0325		2	SCREW M6S ISO 4017 M5X10 A480	
520	312105-0366		6	SCREW M6S ISO 4017 M6X12 A480	
540	312105-0372		17	SCREW M6S ISO 4017 M6X25 A480	
550	312105-0376		4	SCREW M6S ISO 4014 M6X35 A480	
570	312812-0320		1	HEXAGON NUT, NY-LOCK M10 A480	
580	321111-0302		2	FLANGE BUSHING, 20/26X15-32X3 MM	
590	312105-0560		4	SCREW M6S ISO 4014 M12X150 A280	
680	90115-0134		1	ROD END, ID=10 MM, M10X1,25	

See previous drawings pages: 4-108, 4-110.

Pos	Part No	UN	Qty	Description	Page No
TBA 1000SQ (Cont'd) (See drawing on page: 4-110)					
730	90459-0383		2	SCHOCK ABSORBER, PM 25 MC -1SB -NM	
760	315705-0232		2	PARALLEL KEY W. ROUND ENDS 6X6X20 MM	
770	90459-5949		1	REAR CLEVIS FOOT MOUNTING, CRLBN-32	
780	90459-0459		2	NUT HEX. M14X1,5 SS	
820	312105-0331		2	SCREW M6S ISO 4017 M5X20 A480	
830	311103-0310		2	PARALLEL PIN ISO 2338 5M6X20 A1	
840	312632-0320		1	HEX.TH.NUT FINE,EN24035 ML6M M10X1,25 A4	
T40M9702	90600-5531		1	DOUBLE ACTING, MINI-ISO, CYL. 32-50	
T40W9702	90166-0013	MM	700	TUBE 8 MM PA BLUE	
T40W9704	90166-0013	MM	700	TUBE 8 MM PA BLUE	
Common Parts					
050	2755379-0000		2	BUSHING	
060	2755377-0000		2	LOCK COMPONENT	
070	2755378-0000		16	SHIM	
080	2811736-0000		2	HOLDER	
200	2890627-0000		1	BAR	
210	2890626-0000		1	SUPPORT	
500	311103-1355		8	PARALLEL PIN ISO 2338 6M6X24 A1	
530	312105-0368		5	SCREW M6S ISO 4017 M6X16 A480	
560	312105-0364		4	SCREW M6S ISO 4017 M6X10 A480	
600	312125-0224		4	SCREW ISO 1207 M3X10 A4	
610	312115-0370		4	SCREW ISO4762 M6X20 A4 80	
620	315105-0124		4	WASHER BRB 3,2X6 RFR	
670	315125-0153		1	WASHER TBRSB 6,4X22X4 A4	
750	350001-0007		2	PUSH-IN FITTING QS-F-G1/8-8	
790	90600-2896		1	SPRAY NOZZLE 125 DEG B1/8 K - SS ,75	
800	350008-0005		1	PUSH-IN FITTING QSF-F-G1/8-8	
810	315402-0156		4	LOCK WASHER FBB 6,5	
T40B9540	90600-0463		1	INDUCTIVE SWITCH,E2A-M12LN05-WP-B1-TP 5M	
T40B9650	90459-7365		1	PHOTOCELL WE4-3P1430 F20	
T40B9651	90459-7364		1	PHOTOCELL WS4-3D1430 F20	
T40W1258	90166-0133	MM	2000	TUBE 8 MM PA,TRANSP. (1 PACK=50 M)	

Pos	Part No	UN	Qty	Description	Page No

Tetra Pak

SPC
Spare Parts Catalogue

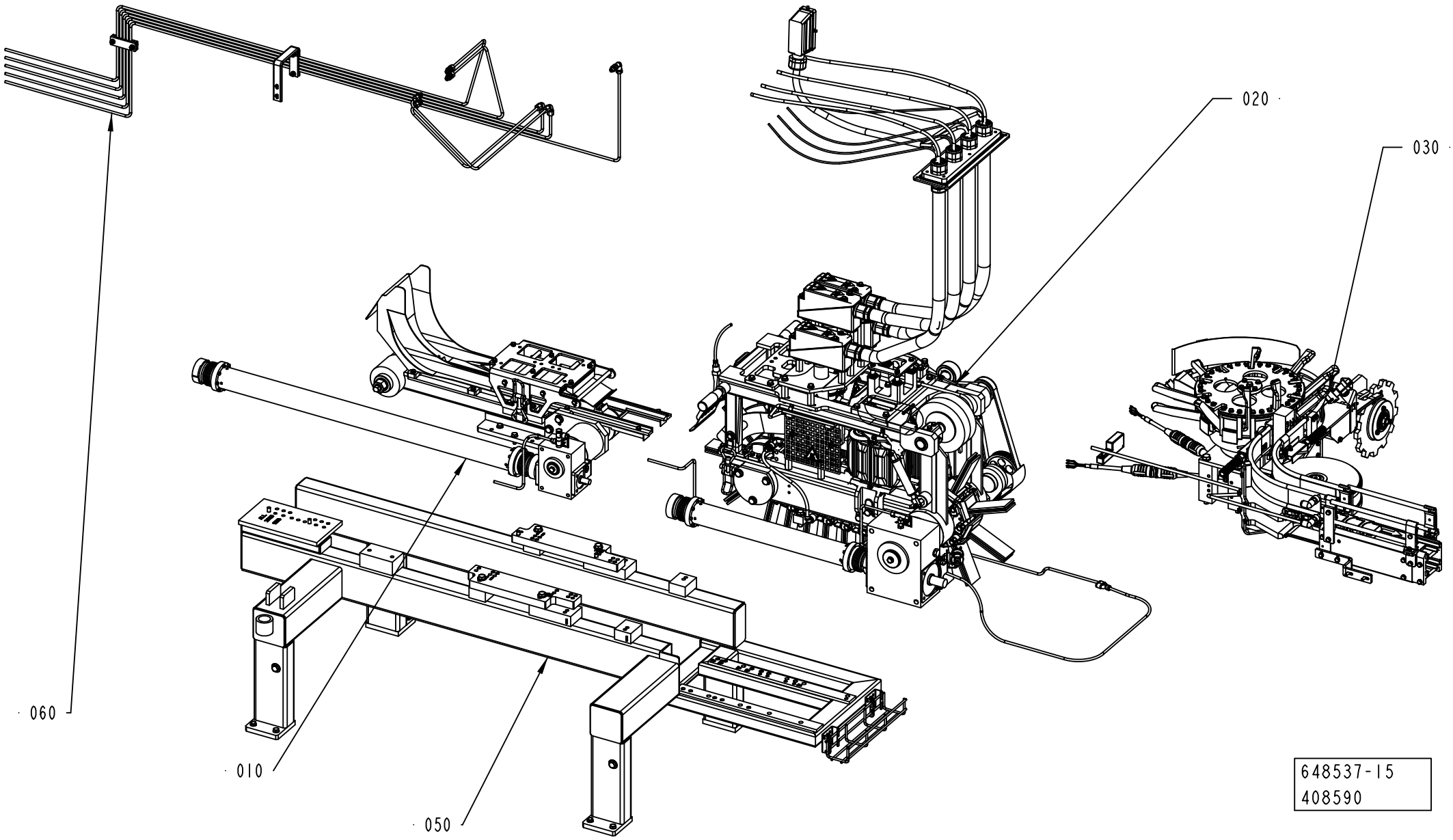
020
030
060
010
050
648537-15
408590

ECM: 437112 - 20100701
Group number: 648537-0500
Assembly Drawing: 648537-15_1_AA

This list covers pages from 5-2 to 5-7

Pos	Part No	UN	Qty	Description	Page No
TBA 0125S (See drawing on page: 5-4)					
030	2914617-0100		1	DISCHARGE DEVICE	**5-9**
TBA 0200B (See drawing on page: 5-2)					
030	1346816-0400		1	DISCHARGE DEVICE	**5-27, 5-29, 5-31**
TBA 0200M (See drawing on page: 5-4)					
030	2914617-0100		1	DISCHARGE DEVICE	**5-9**
TBA 0200S (See drawing on page: 5-4)					
030	2914617-0100		1	DISCHARGE DEVICE	**5-9**
TBA 0250B (See drawing on page: 5-2)					
030	1346816-0400		1	DISCHARGE DEVICE	**5-27, 5-29, 5-31**
TBA 0250S (See drawing on page: 5-4)					
030	2914617-0100		1	DISCHARGE DEVICE	**5-9**
TBA 1000B (See drawing on page: 5-6)					
030	1346816-0400		1	DISCHARGE DEVICE	**5-27, 5-29, 5-31**
TBA 1000S (See drawing on page: 5-6)					
030	1346816-0400		1	DISCHARGE DEVICE	**5-27, 5-29, 5-31**
TBA 1000SQ (See drawing on page: 5-6)					
030	1346816-0400		1	DISCHARGE DEVICE	**5-27, 5-29, 5-31**
Common Parts					
010	1346814-0400		1	CONVEYOR	**5-93, 5-95, 5-97, 5-99, 5-101, 5-103, 5-105, 5-107, 5-109, 5-111, 5-113**
020	1346815-0500		1	FINAL FOLDER	**5-125**
050	2536040-0300		1	FRAME	**5-231, 5-233, 5-235**
060	2545668-0200		1	GREASE LUBRICATION SYST	**5-237, 5-239**

Pos	Part No	UN	Qty	Description	Page No

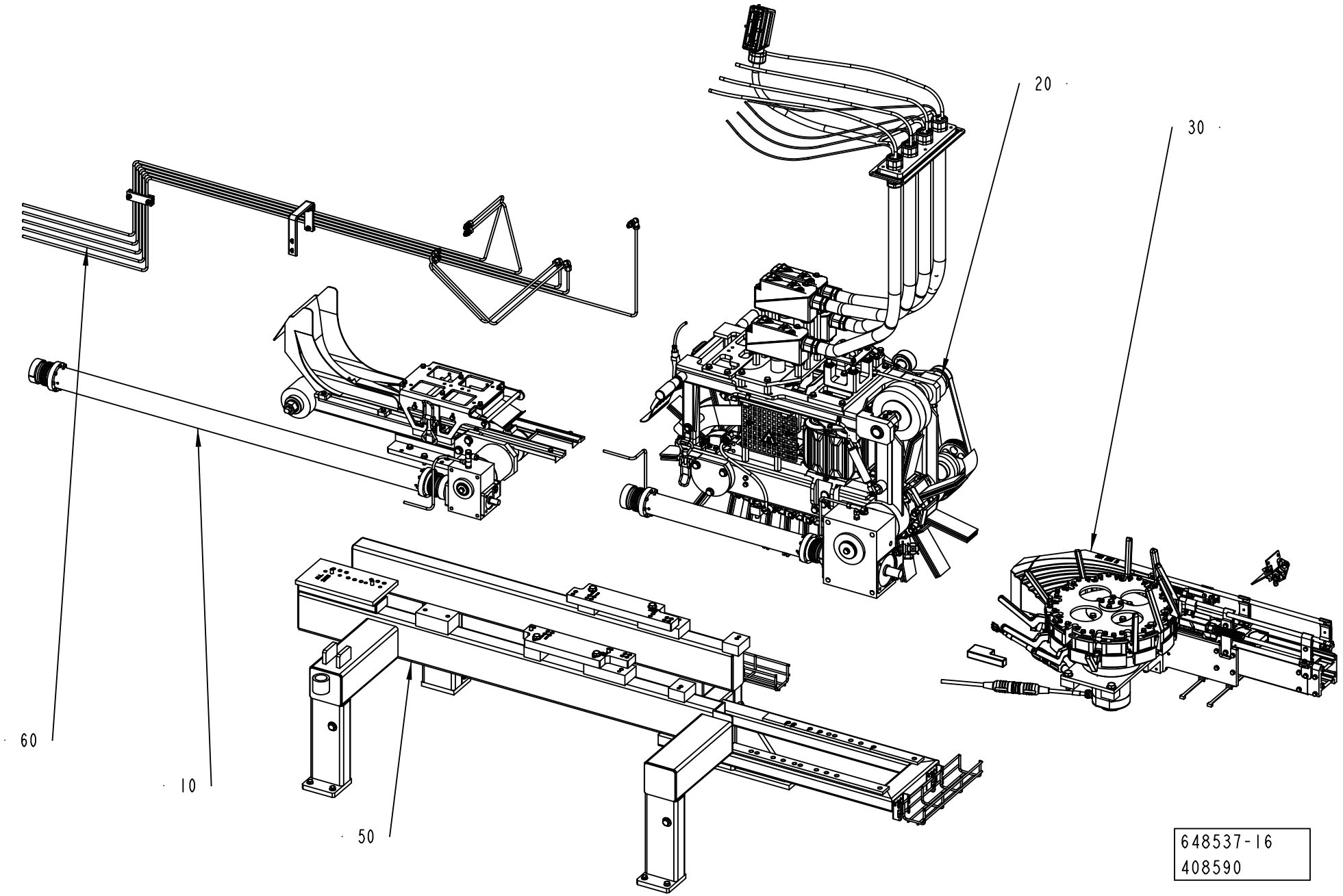
20
30
60
10
50
648537-16
408590

ECM: 437112 - 20100701
Group number: 648537-0500
Assembly Drawing: 648537-16_1_AA

This list covers pages from 5-2 to 5-7

Pos	Part No	UN	Qty	Description	Page No
TBA 0125S (See drawing on page: 5-4)					
030	2914617-0100		1	DISCHARGE DEVICE	**5-9**
TBA 0200B (See drawing on page: 5-2)					
030	1346816-0400		1	DISCHARGE DEVICE	**5-27, 5-29, 5-31**
TBA 0200M (See drawing on page: 5-4)					
030	2914617-0100		1	DISCHARGE DEVICE	**5-9**
TBA 0200S (See drawing on page: 5-4)					
030	2914617-0100		1	DISCHARGE DEVICE	**5-9**
TBA 0250B (See drawing on page: 5-2)					
030	1346816-0400		1	DISCHARGE DEVICE	**5-27, 5-29, 5-31**
TBA 0250S (See drawing on page: 5-4)					
030	2914617-0100		1	DISCHARGE DEVICE	**5-9**
TBA 1000B (See drawing on page: 5-6)					
030	1346816-0400		1	DISCHARGE DEVICE	**5-27, 5-29, 5-31**
TBA 1000S (See drawing on page: 5-6)					
030	1346816-0400		1	DISCHARGE DEVICE	**5-27, 5-29, 5-31**
TBA 1000SQ (See drawing on page: 5-6)					
030	1346816-0400		1	DISCHARGE DEVICE	**5-27, 5-29, 5-31**
Common Parts					
010	1346814-0400		1	CONVEYOR	**5-93, 5-95, 5-97, 5-99, 5-101, 5-103, 5-105, 5-107, 5-109, 5-111, 5-113**
020	1346815-0500		1	FINAL FOLDER	**5-125**
050	2536040-0300		1	FRAME	**5-231, 5-233, 5-235**
060	2545668-0200		1	GREASE LUBRICATION SYST	**5-237, 5-239**

Pos	Part No	UN	Qty	Description	Page No

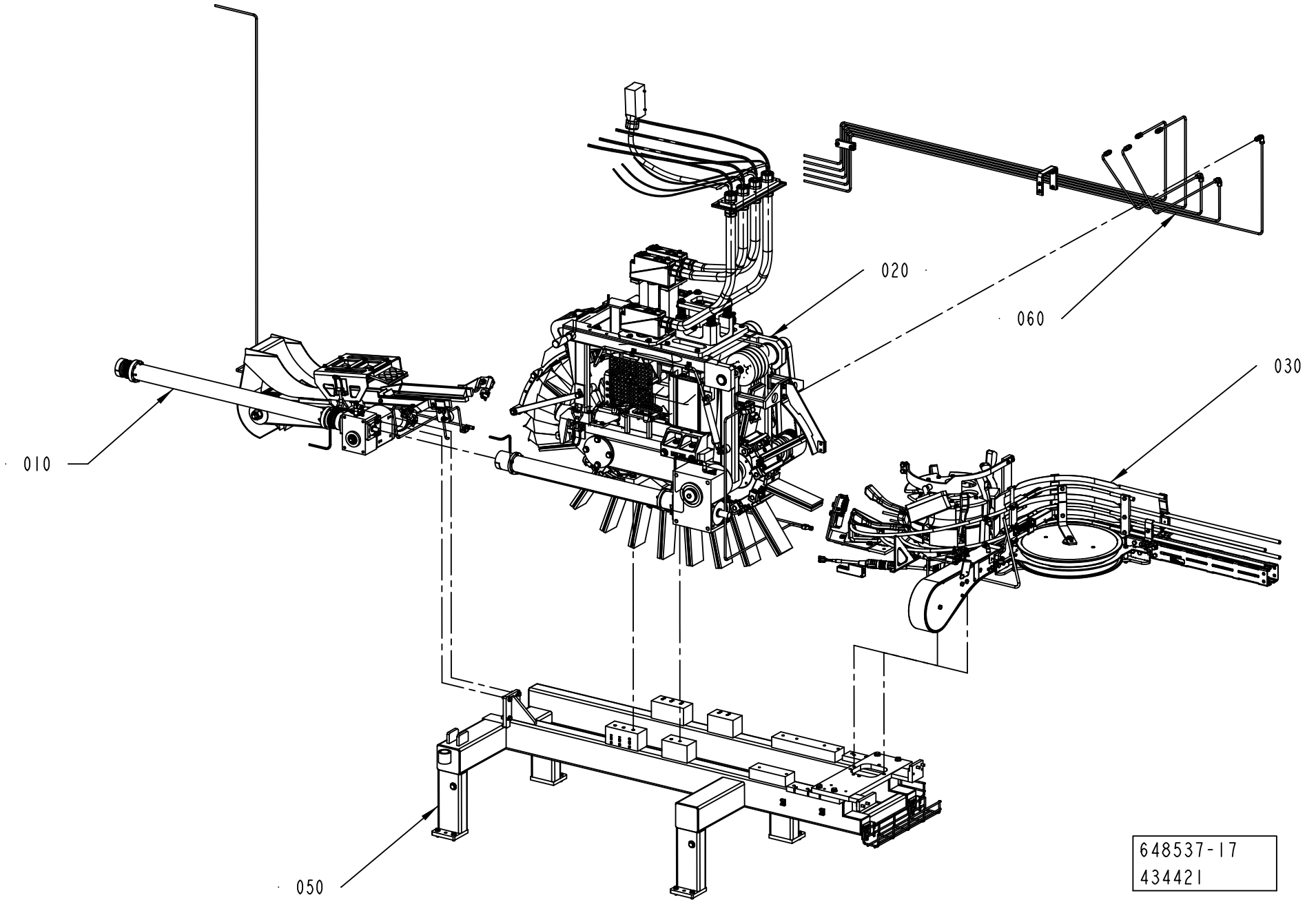
010
020
030
050
060
648537-17
434421

ECM: 437112 - 20100701
Group number: 648537-0500
Assembly Drawing: 648537-17_1_AB

This list covers pages from 5-2 to 5-7

Pos	Part No	UN	Qty	Description	Page No
TBA 0125S (See drawing on page: 5-4)					
030	2914617-0100		1	DISCHARGE DEVICE	**5-9**
TBA 0200B (See drawing on page: 5-2)					
030	1346816-0400		1	DISCHARGE DEVICE	**5-27, 5-29, 5-31**
TBA 0200M (See drawing on page: 5-4)					
030	2914617-0100		1	DISCHARGE DEVICE	**5-9**
TBA 0200S (See drawing on page: 5-4)					
030	2914617-0100		1	DISCHARGE DEVICE	**5-9**
TBA 0250B (See drawing on page: 5-2)					
030	1346816-0400		1	DISCHARGE DEVICE	**5-27, 5-29, 5-31**
TBA 0250S (See drawing on page: 5-4)					
030	2914617-0100		1	DISCHARGE DEVICE	**5-9**
TBA 1000B (See drawing on page: 5-6)					
030	1346816-0400		1	DISCHARGE DEVICE	**5-27, 5-29, 5-31**
TBA 1000S (See drawing on page: 5-6)					
030	1346816-0400		1	DISCHARGE DEVICE	**5-27, 5-29, 5-31**
TBA 1000SQ (See drawing on page: 5-6)					
030	1346816-0400		1	DISCHARGE DEVICE	**5-27, 5-29, 5-31**
Common Parts					
010	1346814-0400		1	CONVEYOR	**5-93, 5-95, 5-97, 5-99, 5-101, 5-103, 5-105, 5-107, 5-109, 5-111, 5-113**
020	1346815-0500		1	FINAL FOLDER	**5-125**
050	2536040-0300		1	FRAME	**5-231, 5-233, 5-235**
060	2545668-0200		1	GREASE LUBRICATION SYST	**5-237, 5-239**

Pos	Part No	UN	Qty	Description	Page No

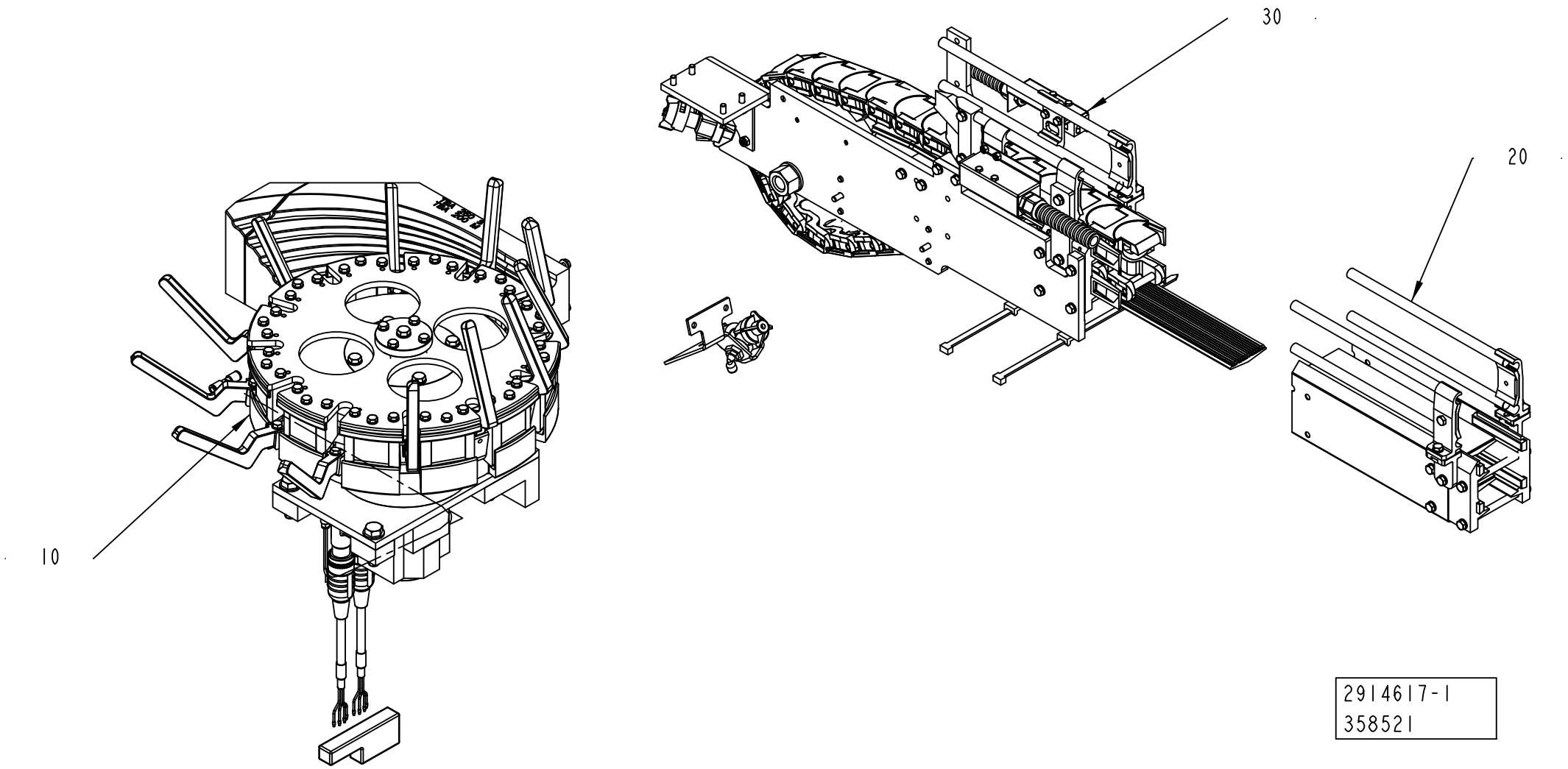
30
20
10
2914617-1
358521

ECM: 429476 - 20100401
Group number: 2914617-0100
Assembly Drawing: 2914617-1_1_AA

Pos	Part No	UN	Qty	Description	Page No
-					
010	2914620-0100		1	OUTFEEDER	**5-11**
020	2589855-0100		1	STRAIGHT CONVEYOR	**5-17**
030	2914621-0100		1	CURVE WHEEL	**5-25**

Pos	Part No	UN	Qty	Description	Page No

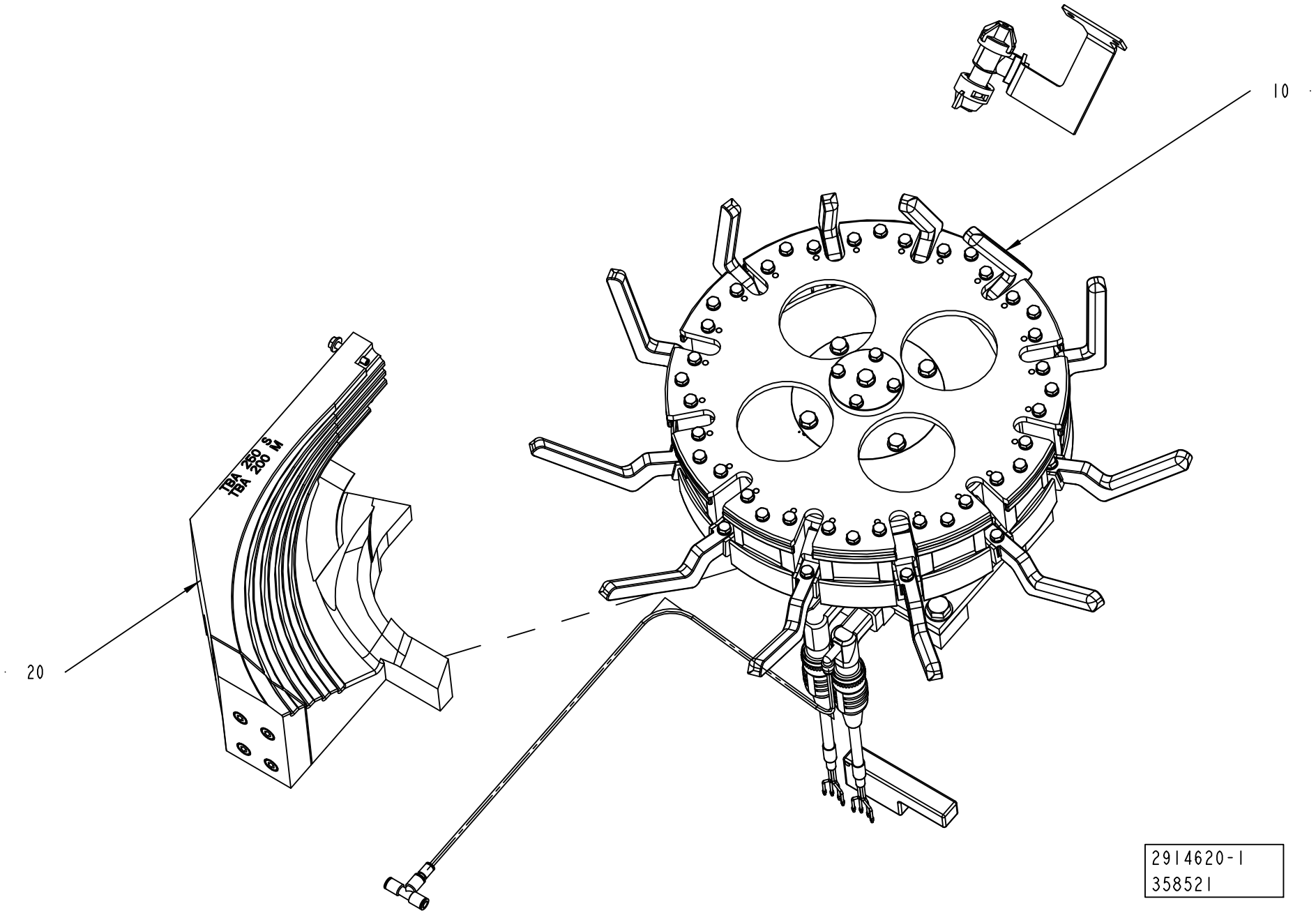
10
20
TBA 260 S
TBA 200 M
2914620-1
358521

ECM: 429477 - 20100401
Group number: 2914620-0100
Assembly Drawing: 2914620-1_1_AA

Pos	Part No	UN	Qty	Description	Page No
-					
010	2914622-0100		1	OUTFEEDER	**5-13**
020	2914623-0100		1	RAIL	**5-15**

Pos	Part No	UN	Qty	Description	Page No

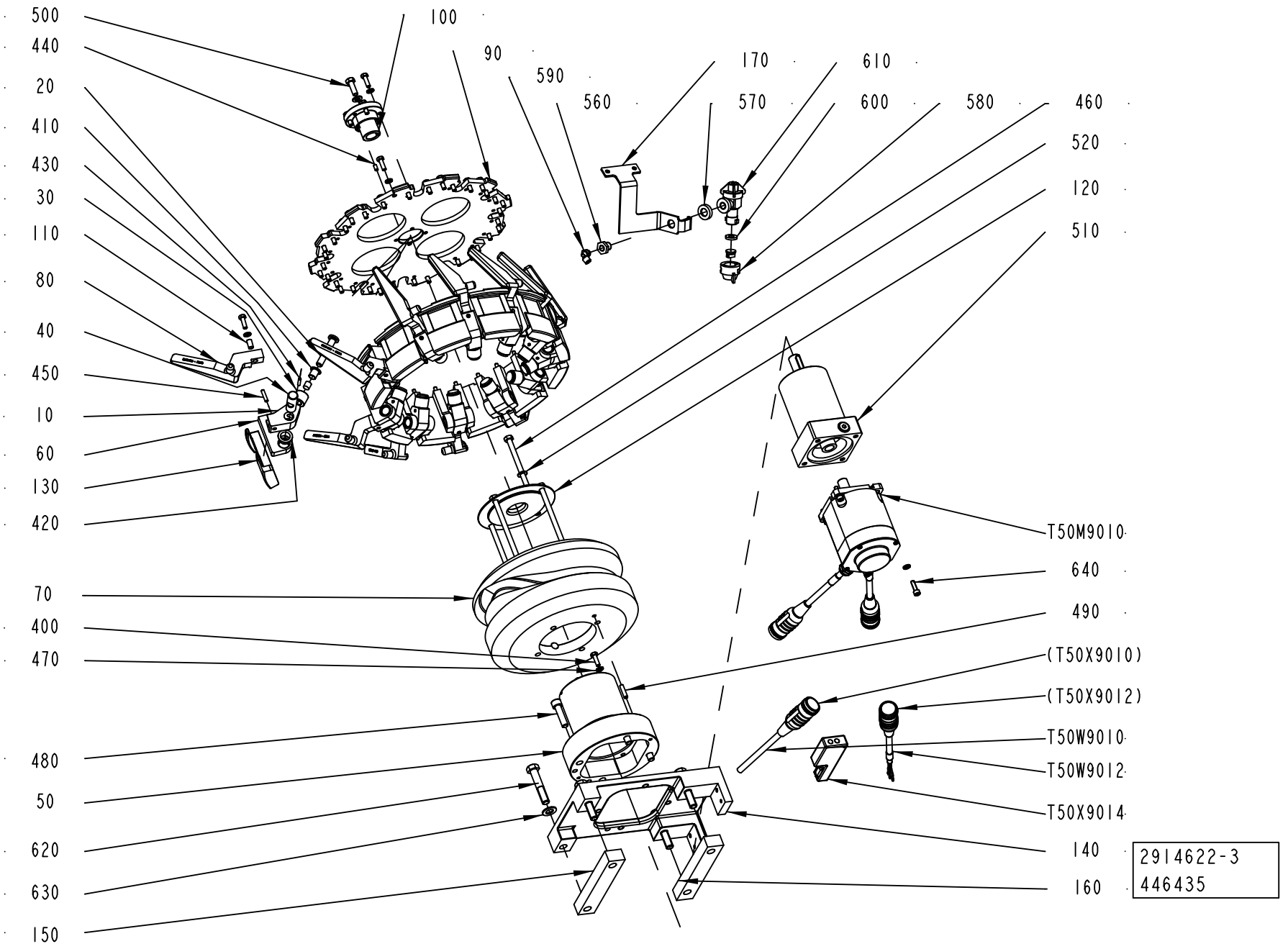
500
440
20
410
430
30
110
80
40
450
10
60
130
420
70
400
470
480
50
620
630
150
100
90
590
560
170
570
610
600
580
460
520
120
510
T50M9010
640
490
(T50X9010)
(T50X9012)
T50W9010
T50W9012
T50X9014
140
160
2914622-3
446435

ECM: 462917 - 20101002
Group number: 2914622-0100
Assembly Drawing: 2914622-3_1_AD

Pos	Part No	UN	Qty	Description	Page No
A3/SPEED TBA 0125S					
080	2983064-0000		12	CARRIER	
150	2983065-0000		1	ADJUSTING SHIM	
160	2983066-0000		1	ADJUSTING SHIM	
620	312105-0550		4	SCREW M6S ISO 4014 M12X90 A480	
A3/SPEED TBA 0200M					
080	2972198-0000		12	CARRIER	
150	2963321-0000		1	ADJUSTING SHIM	
160	2963323-0000		1	ADJUSTING SHIM	
620	312105-0545		4	SCREW M6S ISO 4014 M12X65 A480	
A3/SPEED TBA 0200S					
080	3010493-0000		12	CARRIER	
150	2963321-0000		1	ADJUSTING SHIM	
160	2963323-0000		1	ADJUSTING SHIM	
620	312105-0545		4	SCREW M6S ISO 4014 M12X65 A480	
A3/SPEED TBA 0250S					
080	3116632-0000		12	CARRIER	
620	312105-0541		4	SCREW M6S ISO 4014 M12X45 A480	
Common Parts					
010	2914590-0000		12	CARRIER	
020	1260068-0000		12	SHAFT	
030	1538306-0000		12	ROLLER	
040	1260070-0000		12	SHAFT	
050	2776852-0000		1	SUPPORT	
060	2910611-0000		24	BRACKET	
070	2910608-0000		1	CAM	
090	3010494-0000		1	PLATE	
100	2776853-0000		1	SHAFT	
110	2963330-0000		12	SPACER	
120	2806369-0000		1	SUPPORT	
130	2991560-0000		12	GUIDE	
140	2963322-0000		1	SUPPORT	
170	2933679-0000		1	SUPPORT	
400	312105-0370		60	SCREW M6S ISO 4017 M6X20 A480	
410	321156-0145		12	FLANGE BUSHING, IGLIDUR H370 10X12X15	
420	90240-0332		24	FLANGE BUSHING, IGLIDUR G 16X18X12	
430	311103-0272		12	PARALLEL PIN ISO 2338 4M6X20 A1	
440	311103-0305		1	PARALLEL PIN ISO 2338 5M6X10 A1	
450	311103-0311		24	PARALLEL PIN ISO 2338 5M6X22 A1	
460	312105-0477		4	SCREW M6S ISO 4014 M8X130 A480	
470	315105-0153		60	WASHER BRB 6,4X12 RFR	
480	312115-0499		4	SCREW ISO4762 M10X40 A4 80	
490	311103-0355		1	PARALLEL PIN ISO 2338 6M6X25 A1	
500	312105-0453		1	SCREW M6S ISO 4017 M8X25 A480	
510	90459-7115		1	GEARS, PLANETARY MP 080-2-50-15'-16-40-8	
520	315105-0165		5	WASHER BRB 8,4X16 RFR	
540	350006-0001		1	PUSH-IN FITTING QS-F-6H-4	
550	350005-0002		1	PUSH-IN T-FITTING QST-F-6	
560	532413-0000		1	REDUCING NIPPLE	
570	532414-0000		1	WASHER	
580	534310-0001		1	NOZZLE	
590	90458-2956		1	ELBOW PIPE JOINT, EXT.THREAD, D=6MM-G1/8	
600	90005-0094		1	GASKET C 19438-EPR	
610	90230-0027		1	NON-RETURN VALVE QJ 8355-1/4"	
	90230-0301		*1*	*DIAPHRAGM*	
	90230-0300		*1*	*STRAINER*	
630	315105-0178		4	WASHER BRB 13X24 RFR	
640	312115-0370		4	SCREW ISO4762 M6X20 A4 80	
T50M9010	90600-7846		1	SERVO MOTOR MPS-B310P-M-X183, ESM	
T50W9010	90600-7866		1	MOTOR FEEDBACK CABLE 2090-XXNFMF-S07/C	
T50W9012	90600-7867		1	MOTOR POWER CABLE 2090-XXNPMF-16S07/A	
T50W9023	315400-0016	MM	1000	TUBE PUN-H-4X0,75-BL	
T50X9014	90459-2551		1	CONNECTOR, MOTOR FEEDBACK 15 PIN MALE	

Machine Type Group Description Used-In Group Number Page No

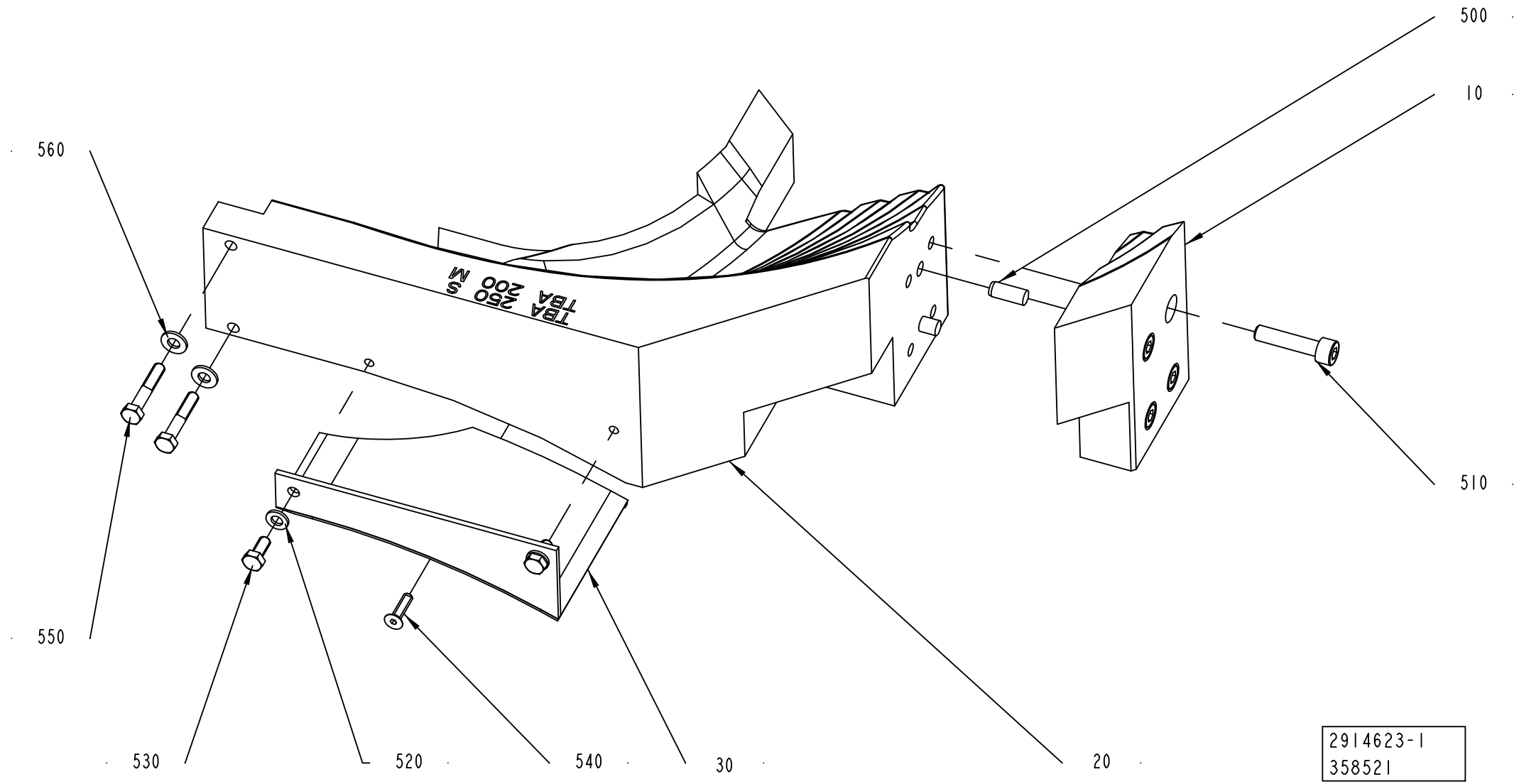
500
10
560
TBA 250 S
TBA 200 M
510
550
530
520
540
30
20
2914623-1
358521

ECM: 429479 - 20100401
Group number: 2914623-0100
Assembly Drawing: 2914623-1_1_AA

Pos	Part No	UN	Qty	Description	Page No
A3/SPEED TBA 0125S					
020	2983063-0000		1	GUIDE	
030	2958096-0000		1	SLIDE	
550	312105-0378		2	SCREW M6S ISO 4014 M6X40 A480	
A3/SPEED TBA 0200M					
020	2972199-0000		1	GUIDE	
030	2958096-0000		1	SLIDE	
550	312105-0376		2	SCREW M6S ISO 4014 M6X35 A480	
A3/SPEED TBA 0200S					
020	2963328-0000		1	GUIDE	
030	3024156-0000		1	SLIDE	
550	312105-0376		2	SCREW M6S ISO 4014 M6X35 A480	
A3/SPEED TBA 0250S					
010	2963324-0000		1	GUIDE	
020	2972199-0000		1	GUIDE	
030	2958096-0000		1	SLIDE	
500	311103-0401		2	PARALLEL PIN ISO 2338 8M6X20 A1	
510	312115-0457		4	SCREW ISO4762 M8X35 A4 80	
550	312105-0376		2	SCREW M6S ISO 4014 M6X35 A480	
Common Parts					
520	315105-0153		2	WASHER BRB 6,4X12 RFR	
530	312105-0367		2	SCREW M6S ISO 4017 M6X14 A480	
540	312155-0331		1	SCREW DIN 7991 MF6S M5X20 A4 70	
560	315105-0156		2	WASHER BRB 6,7X14 RFR	

Pos	Part No	UN	Qty	Description	Page No

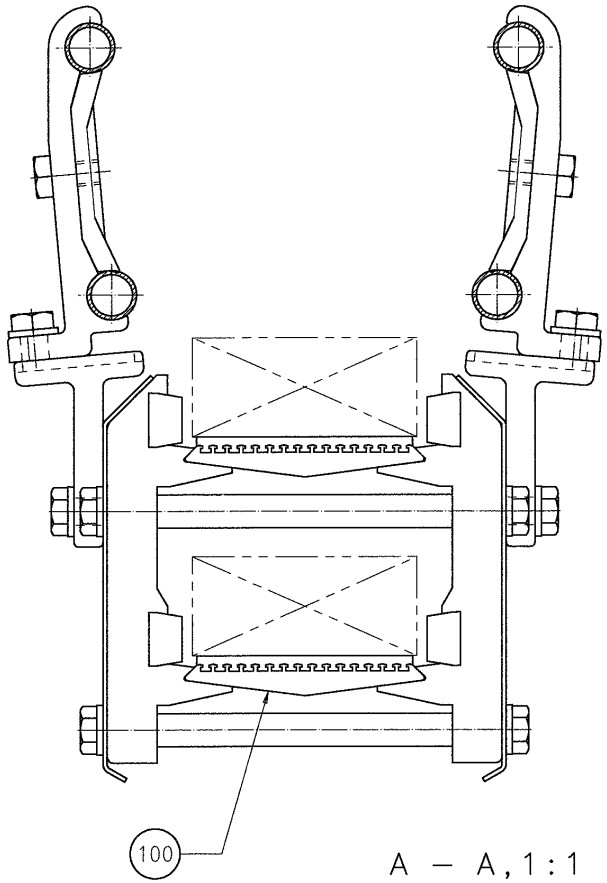

A – A, 1:1

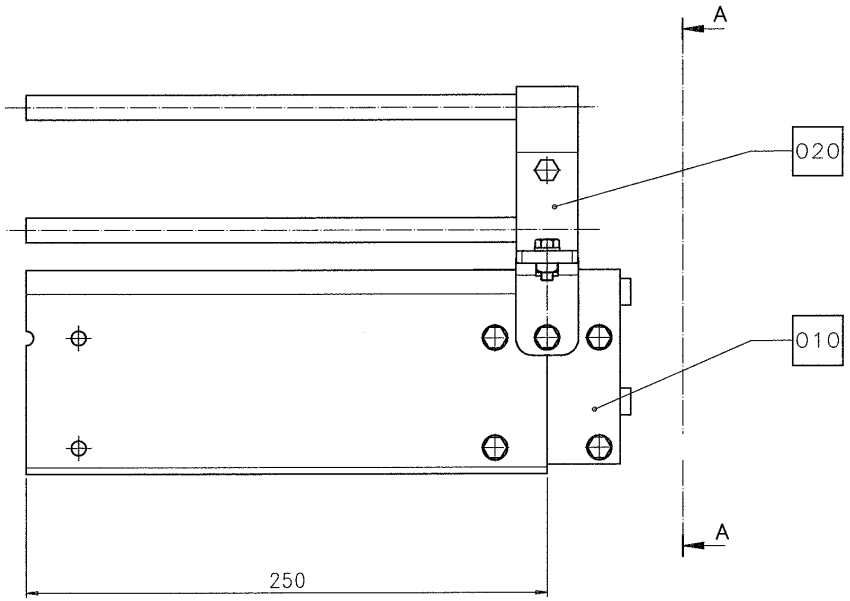

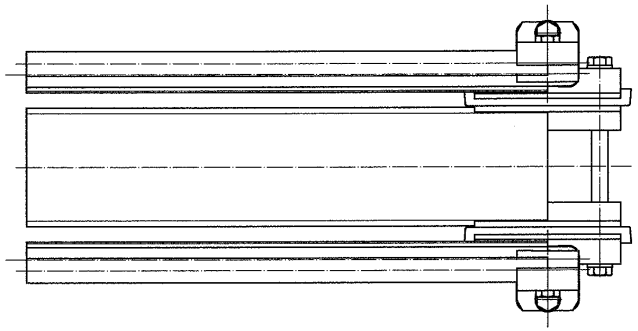

ECM: 393868 - 20090701
Group number: 2589855-0100
Assembly Drawing: 597382-1_1_AA

Pos	Part No	UN	Qty	Description	Page No
-					
010	1344063-0100		1	CONV.BODY,STRAIGHT	**5-19**
020	2589978-0100		2	HOLDER	**5-21**
050	1359951-0100		1	PACKING DESCRIPTION	**5-23**
100	1086870-0000		1	SIGN	
150	312105-0370		2	SCREW M6S ISO 4017 M6X20 A480	
200	315105-0153		2	WASHER BRB 6,4X12 RFR	

Pos	Part No	UN	Qty	Description	Page No

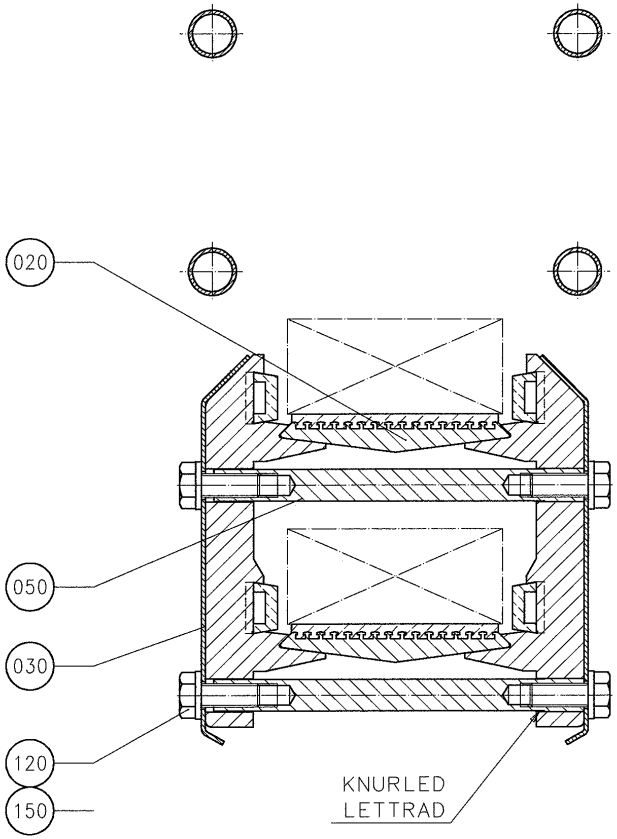

A – A, 1:1

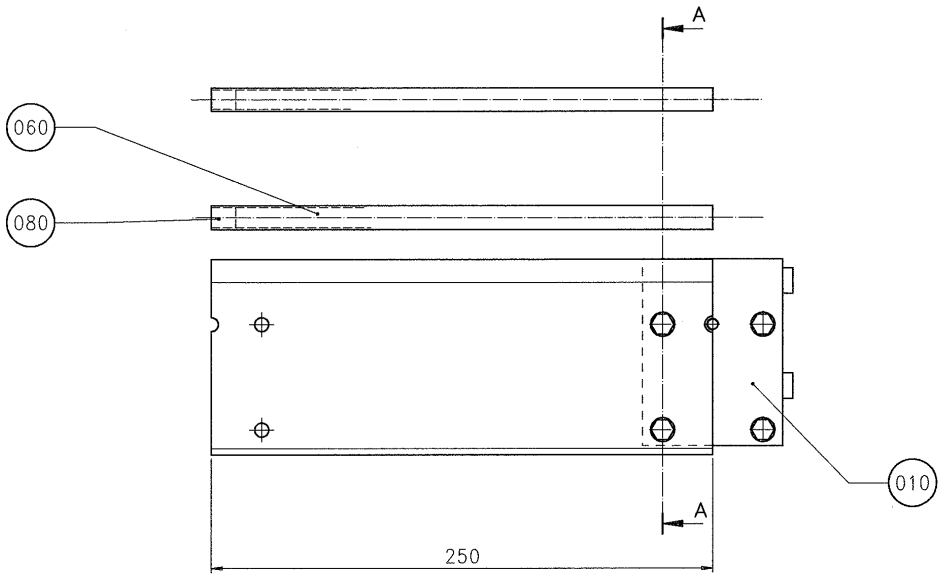

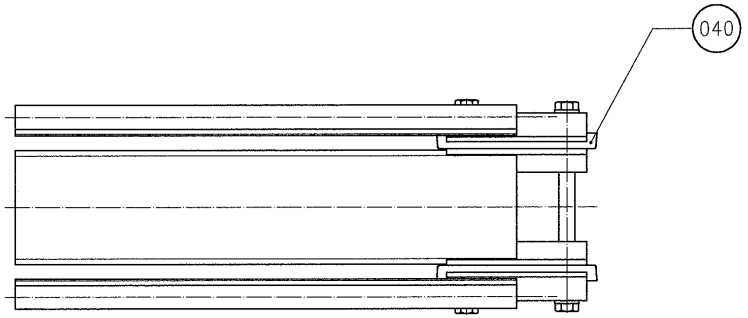

ECM: 372428 - 20081013
Group number: 1344063-0100
Assembly Drawing: 1344063-1_1_AA

Pos	Part No	UN	Qty	Description	Page No
-					
010	457696-0001		2	JOINT PIECE	
020	464071-0010		2	RAIL	
030	466072-0006		2	COVER PLATE	
040	466074-0002		4	SLIDER	
050	476220-0000		4	SPACER	
060	476221-0009		4	PIPE	
080	484701-0000		8	SHUTTER	
120	312105-0368		8	SCREW M6S ISO 4017 M6X16 A480	
150	315105-0153		8	WASHER BRB 6,4X12 RFR	

Pos	Part No	UN	Qty	Description	Page No

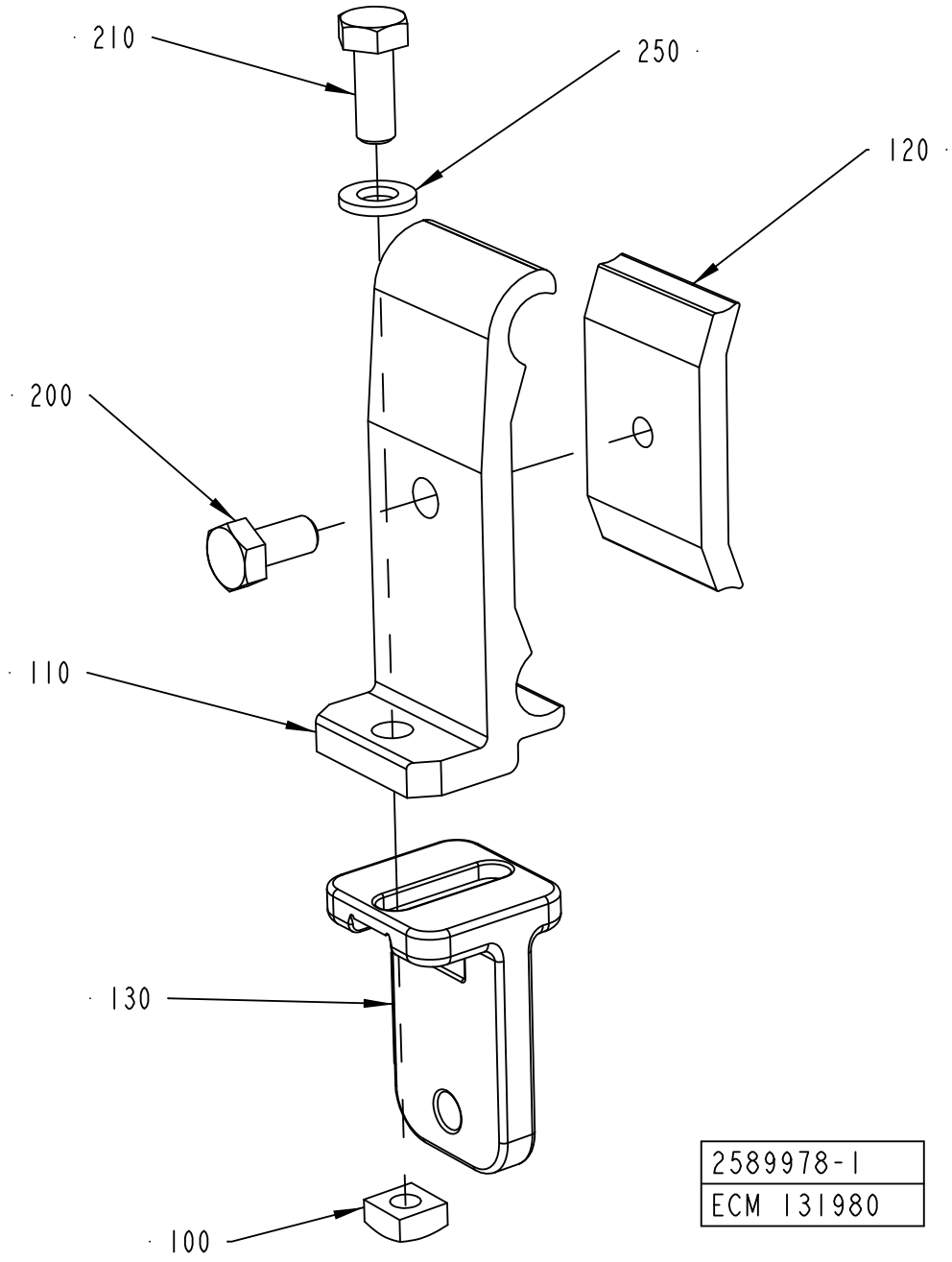
210
250
120
200
110
130
100
2589978-1
ECM 131980

ECM: 294040 - 20070111
Group number: 2589978-0100
Assembly Drawing: 2589978-1_1_AA

Pos	Part No	UN	Qty	Description	Page No
-					
100	1359565-0000		1	NUT	
110	1366726-0000		1	HOLDER	
120	1366727-0000		1	CLAMP	
130	2561394-0000		1	RAIL HOLDER	
200	312105-0366		1	SCREW M6S ISO 4017 M6X12 A480	
210	312105-0368		1	SCREW M6S ISO 4017 M6X16 A480	
250	315105-0153		1	WASHER BRB 6,4X12 RFR	

Pos	Part No	UN	Qty	Description	Page No

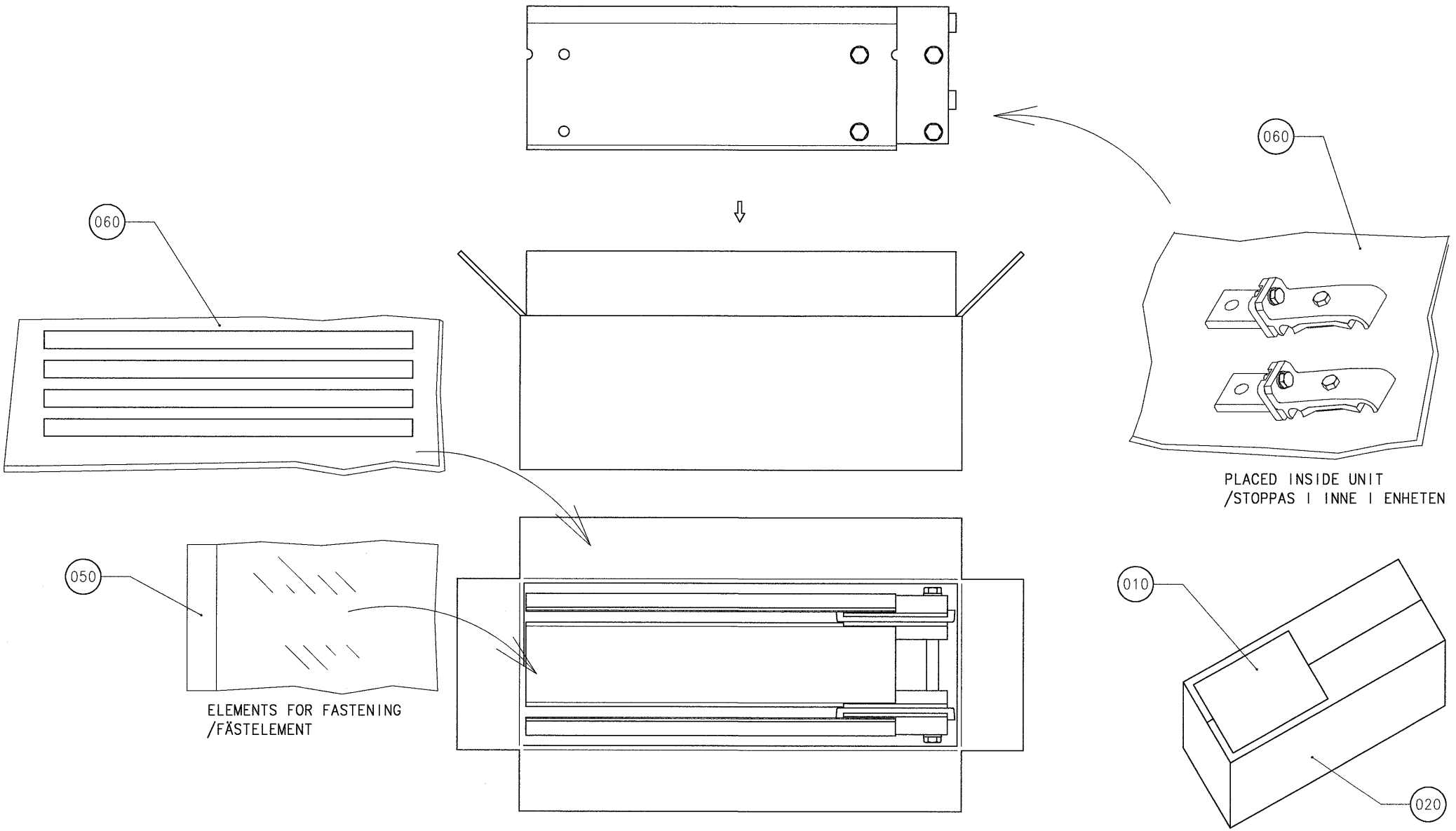
060
060
PLACED INSIDE UNIT
/STOPPAS I INNE I ENHETEN
050
ELEMENTS FOR FASTENING
/FÄSTELEMENT
010
020

ECM: 372429 - 20081013
Group number: 1359951-0100
Assembly Drawing: 1359951-1_1_AA

Pos	Part No	UN	Qty	Description	Page No
-					
010	1086871-0000		1	LABEL TAPE	
020	1359952-0000		1	CORRUGATED CARDBOARD BOX	
050	90003-0019		1	BAG	
060	90003-0474		1	PACKING	

Pos	Part No	UN	Qty	Description	Page No

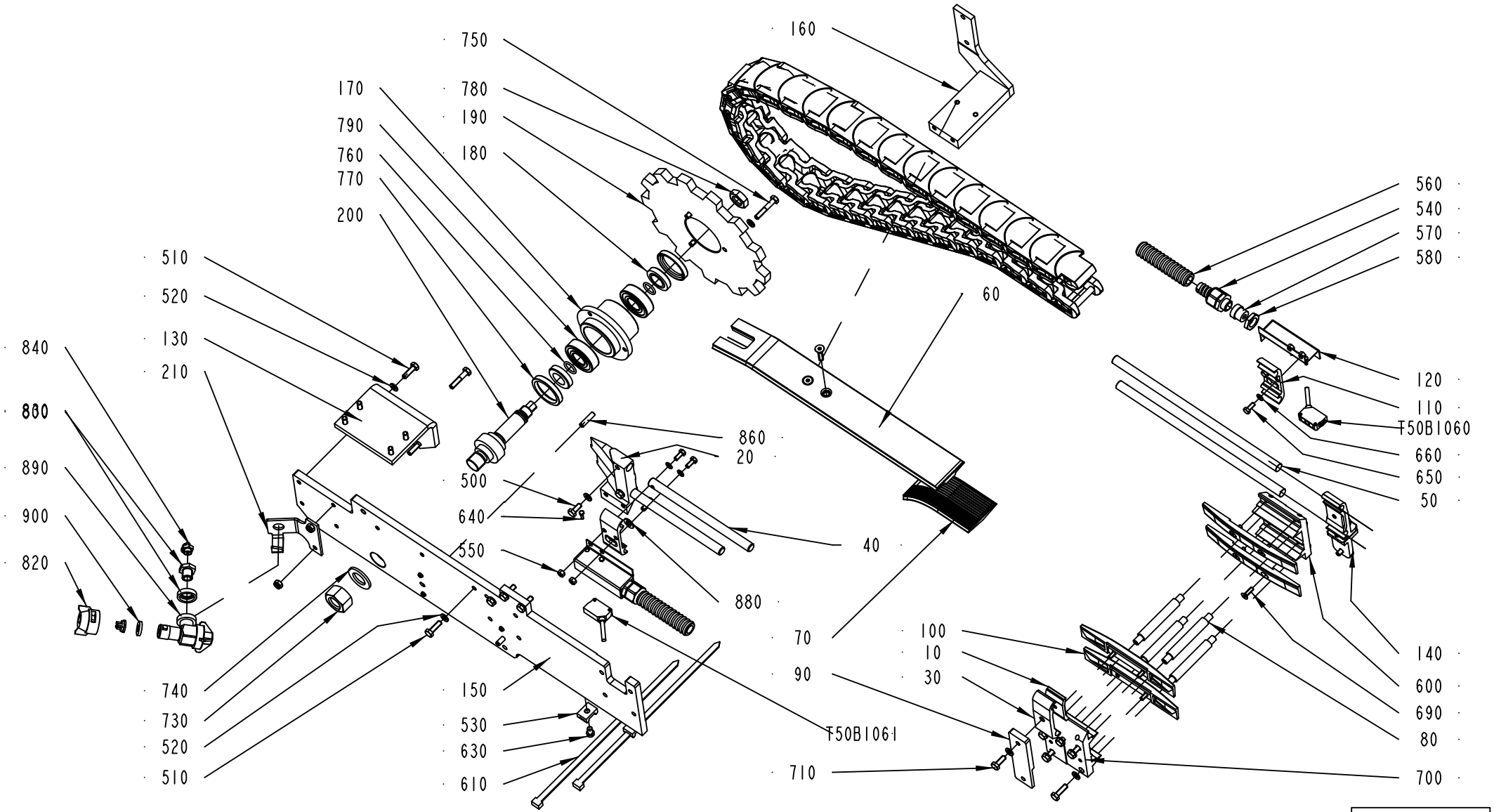
160
750
780
190
180
170
790
760
770
200
510
520
130
210
840
860
890
900
820
60
560
540
570
580
120
110
T50B1060
660
650
50
860
20
500
640
550
40
880
70
90
T50B1061
710
100
10
30
140
600
690
80
700
740
730
520
510
150
530
630
610
2914621-2
394459

ECM: 429480 - 20100401
Group number: 2914621-0100
Assembly Drawing: 2914621-2_1_AB

Pos	Part No	UN	Qty	Description	Page No
A3/SPEED TBA 0125S					
060	2914597-0000		1	RAIL	
A3/SPEED TBA 0200M					
060	2914597-0000		1	RAIL	
A3/SPEED TBA 0200S					
060	3024155-0000		1	RAIL	
A3/SPEED TBA 0250S					
060	2914597-0000		1	RAIL	
Common Parts					
010	1366727-0000		1	CLAMP	
020	2902503-0000		1	GUIDE	
030	1366750-0000		1	HOLDER	
040	2914598-0000		2	GUIDE	
050	2963334-0000		2	PIPE	
070	2902504-0000		1	RAIL	
080	1347900-0000		4	SPACER	
090	2877391-0000		1	SUPPORT	
100	486867-0000		4	EDGE GUIDE	
110	1517188-0000		2	BRACKET	
120	3003537-0000		2	HOLDER	
130	2958086-0000		1	SUPPORT	
140	2589978-0100		1	HOLDER	**5-21**
150	2963327-0000		1	PLATE	
160	2963333-0000		1	SUPPORT	
170	1348241-0000		1	HOSE CLAMP	
180	1348243-0000		2	SPACER	
190	2914595-0000		1	DRIVE WHEEL	
200	2963326-0000		1	SHAFT	
210	2983086-0000		1	HOLDER	
500	312105-0376		2	SCREW M6S ISO 4014 M6X35 A480	
510	312105-0370		14	SCREW M6S ISO 4017 M6X20 A480	
520	315105-0153		28	WASHER BRB 6,4X12 RFR	
530	352113-0204		2	ANCHOR PLATES FOR STRIPS, TYPE TM3S25-M	
540	353243-0001		2	HOSE GLAND W/O INSERT PG9 EXTENDED	
550	312605-0314		4	HEXAGON NUT, M6M M5 A280	
560	90152-0059	M	2	SPIRAL CONDUIT, 18X12, UL 1211	
570	353249-0008		2	INSERT, SINGLE HOLE, EK 152/7	
580	90099-0104		2	NUT, PR 15,2 (PG9)	
600	486918-0001		1	JOINT PIECE	
610	352113-0104		2	CABLE TIE, BLACK 300X4,8 MM	
620	312155-0372		2	SCREW DIN 7991 MF6S M6X25 A4 70	
630	312125-0364		2	SCREW ISO 1207 M6X10 A4	
640	90287-0175		4	SCREW M6S M3X12 A480	
650	312105-0327		4	SCREW M6S ISO 4017 M5X12 A480	
660	315105-0146		4	WASHER BRB 5,3X10 RFR	
690	312155-0329		7	SCREW DIN 7991 MF6S M5X16 A4 70	
700	486918-0002		1	JOINT PIECE	
710	312105-0368		7	SCREW M6S ISO 4017 M6X16 A480	
720	315106-0153		4	WASHER ISO 7089-6-200 HV A4	
730	312605-0326		1	HEXAGON NUT, M6M M20 A280	
740	315105-0192		1	WASHER BRB 21X36 RFR	
750	312105-0376		3	SCREW M6S ISO 4014 M6X35 A480	
760	315202-0213		2	O-RING 15,3X2,4 MM	
770	315221-0175		2	RADIAL SEAL 35X47X7 MM	
780	90099-0131		1	NUT HEX. M16X2 SS	
790	90214-0232		2	BALL BEARING 20/47X14	
800	532413-0000		1	REDUCING NIPPLE	
820	534310-0001		1	NOZZLE	
830	532414-0000		1	WASHER	
840	90458-2956		1	ELBOW PIPE JOINT, EXT.THREAD, D=6MM-G1/8	
850	312812-0316		2	HEXAGON NUT, NY-LOCK M6 A480	
860	311103-0355		2	PARALLEL PIN ISO 2338 6M6X25 A1	
870	312105-0374		2	SCREW M6S ISO 4014 M6X30 A480	
880	315105-0165		4	WASHER BRB 8,4X16 RFR	
890	90230-0027		1	NON-RETURN VALVE QJ 8355-1/4"	
	90230-0301		*1*	*DIAPHRAGM*	
	90230-0300		*1*	*STRAINER*	
900	90005-0094		1	GASKET C 19438-EPR	
T50B1060	90600-7828		1	PHOTOCELL E3ZM-T81-D 5M	
T50B1061	90600-7827		1	PHOTOCELL E3ZM-T81-L 5M	

Machine Type	Group Description	Used-In	Group Number	Page No

DISCHARGE DEVICE

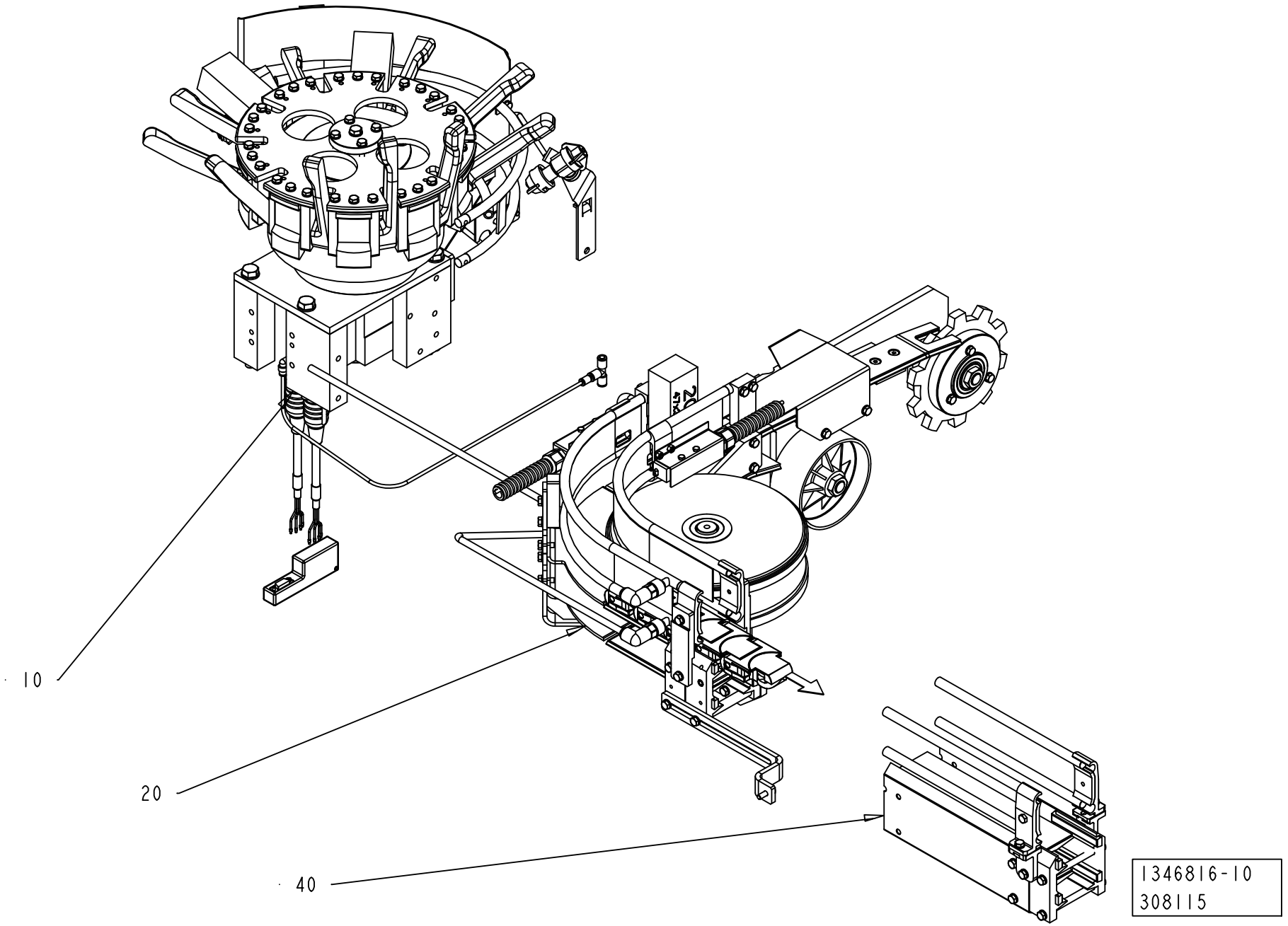

Pos	Part No	UN	Qty	Description	Page No
TBA 0200B (See drawing on page: 5-26)					
020	2877411-0100		1	CURVE WHEEL	**5-33, 5-35**
040	2589855-0100		1	STRAIGHT CONVEYOR	**5-17**
TBA 0250B (See drawing on page: 5-26)					
020	2877411-0100		1	CURVE WHEEL	**5-33, 5-35**
040	2589855-0100		1	STRAIGHT CONVEYOR	**5-17**
TBA 1000B (See drawing on page: 5-28)					
020	2696142-0100		1	CURVE WHEEL	**5-37, 5-39**
030	2687780-0200		1	END UNIT	**5-55, 5-57**
040	2763600-0102		1	STRAIGHT CONVEYOR L=500MM.	**5-63, 11-183**
TBA 1000S (See drawing on page: 5-28)					
020	2696142-0100		1	CURVE WHEEL	**5-37, 5-39**
030	2687780-0200		1	END UNIT	**5-55, 5-57**
040	2763600-0102		1	STRAIGHT CONVEYOR L=500MM.	**5-63, 11-183**
TBA 1000SQ (See drawing on page: 5-30)					
020	2696142-0100		1	CURVE WHEEL	**5-37, 5-39**
030	2687780-0200		1	END UNIT	**5-55, 5-57**
040	2763600-0102		1	STRAIGHT CONVEYOR L=500MM.	**5-63, 11-183**
Common Parts					
010	1349502-0400		1	INFEEDER	**5-83, 5-85, 5-87, 5-89, 5-91**

Pos	Part No	UN	Qty	Description	Page No

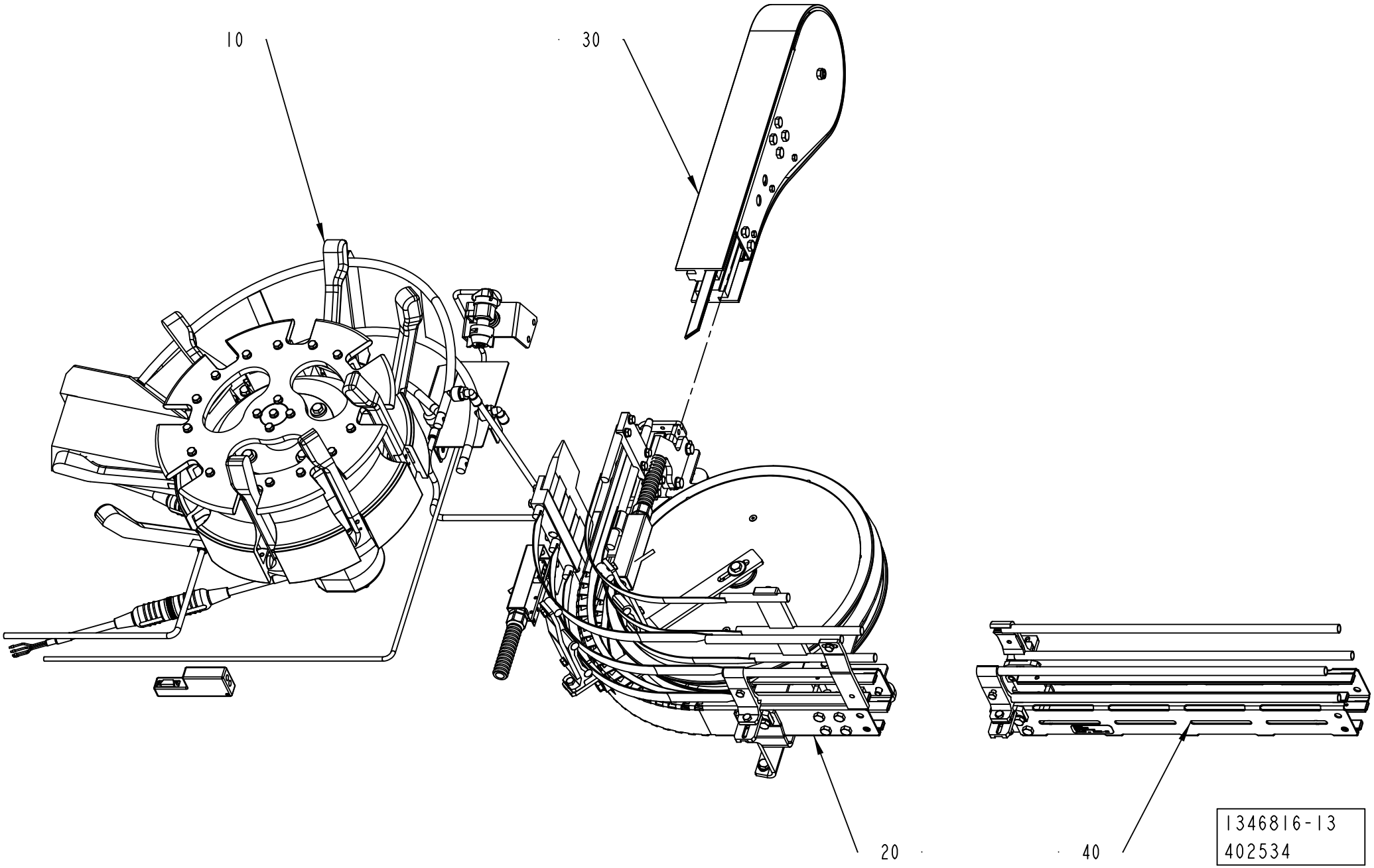
10
30
20
40
1346816-13
402534

Pos	Part No	UN	Qty	Description	Page No
TBA 0200B (See drawing on page: 5-26)					
020	2877411-0100		1	CURVE WHEEL	**5-33, 5-35**
040	2589855-0100		1	STRAIGHT CONVEYOR	**5-17**
TBA 0250B (See drawing on page: 5-26)					
020	2877411-0100		1	CURVE WHEEL	**5-33, 5-35**
040	2589855-0100		1	STRAIGHT CONVEYOR	**5-17**
TBA 1000B (See drawing on page: 5-28)					
020	2696142-0100		1	CURVE WHEEL	**5-37, 5-39**
030	2687780-0200		1	END UNIT	**5-55, 5-57**
040	2763600-0102		1	STRAIGHT CONVEYOR L=500MM.	**5-63, 11-183**
TBA 1000S (See drawing on page: 5-28)					
020	2696142-0100		1	CURVE WHEEL	**5-37, 5-39**
030	2687780-0200		1	END UNIT	**5-55, 5-57**
040	2763600-0102		1	STRAIGHT CONVEYOR L=500MM.	**5-63, 11-183**
TBA 1000SQ (See drawing on page: 5-30)					
020	2696142-0100		1	CURVE WHEEL	**5-37, 5-39**
030	2687780-0200		1	END UNIT	**5-55, 5-57**
040	2763600-0102		1	STRAIGHT CONVEYOR L=500MM.	**5-63, 11-183**
Common Parts					
010	1349502-0400		1	INFEEDER	**5-83, 5-85, 5-87, 5-89, 5-91**

Pos	Part No	UN	Qty	Description	Page No

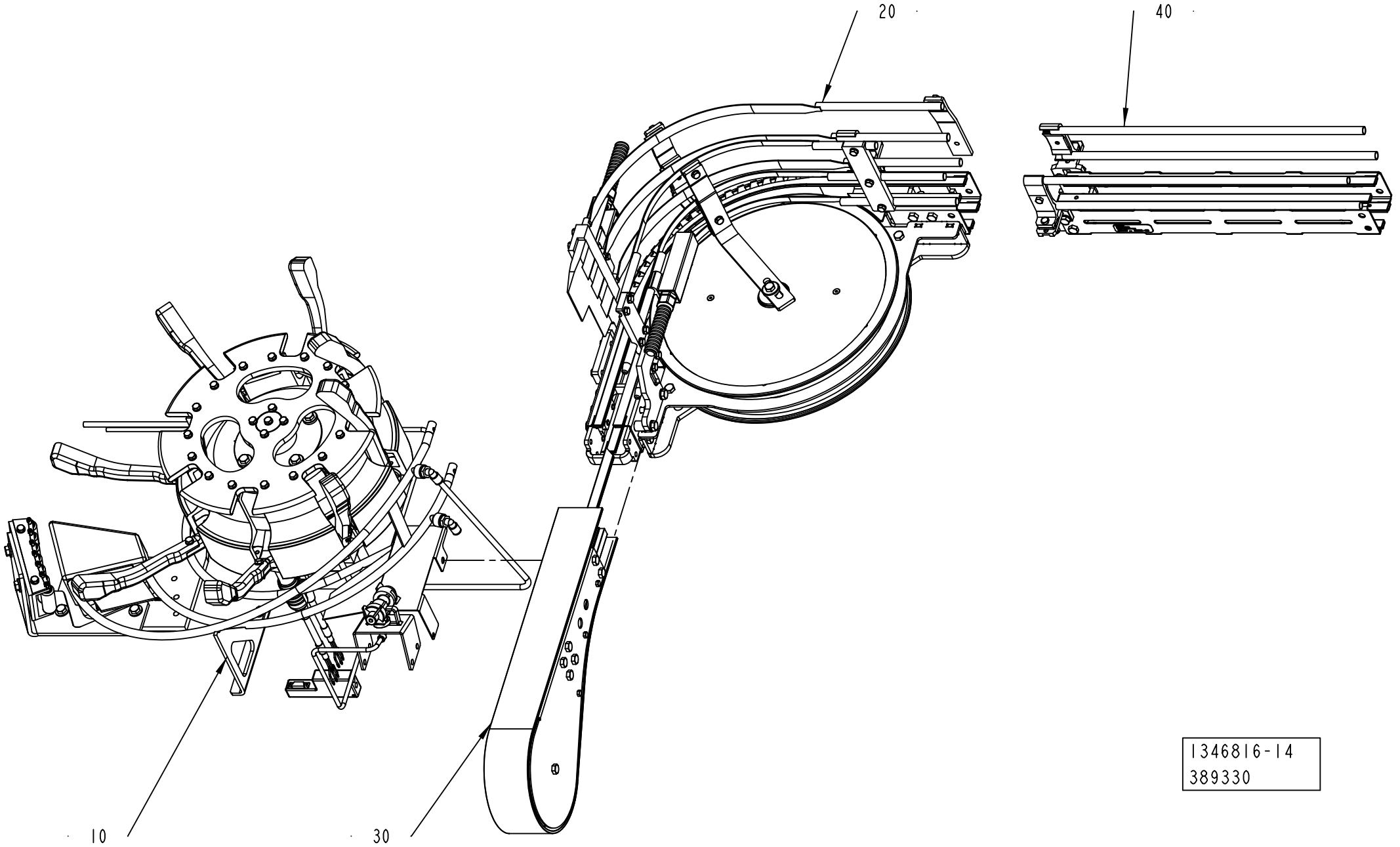
20
40
10
30
1346816-14
389330

ECM: 429475 - 20100401
Group number: 1346816-0400
Assembly Drawing: 1346816-14_1_AC

This list covers pages from 5-26 to 5-31

Pos	Part No	UN	Qty	Description	Page No
TBA 0200B (See drawing on page: 5-26)					
020	2877411-0100		1	CURVE WHEEL	**5-33, 5-35**
040	2589855-0100		1	STRAIGHT CONVEYOR	**5-17**
TBA 0250B (See drawing on page: 5-26)					
020	2877411-0100		1	CURVE WHEEL	**5-33, 5-35**
040	2589855-0100		1	STRAIGHT CONVEYOR	**5-17**
TBA 1000B (See drawing on page: 5-28)					
020	2696142-0100		1	CURVE WHEEL	**5-37, 5-39**
030	2687780-0200		1	END UNIT	**5-55, 5-57**
040	2763600-0102		1	STRAIGHT CONVEYOR L=500MM.	**5-63, 11-183**
TBA 1000S (See drawing on page: 5-28)					
020	2696142-0100		1	CURVE WHEEL	**5-37, 5-39**
030	2687780-0200		1	END UNIT	**5-55, 5-57**
040	2763600-0102		1	STRAIGHT CONVEYOR L=500MM.	**5-63, 11-183**
TBA 1000SQ (See drawing on page: 5-30)					
020	2696142-0100		1	CURVE WHEEL	**5-37, 5-39**
030	2687780-0200		1	END UNIT	**5-55, 5-57**
040	2763600-0102		1	STRAIGHT CONVEYOR L=500MM.	**5-63, 11-183**
Common Parts					
010	1349502-0400		1	INFEEDER	**5-83, 5-85, 5-87, 5-89, 5-91**

Pos	Part No	UN	Qty	Description	Page No

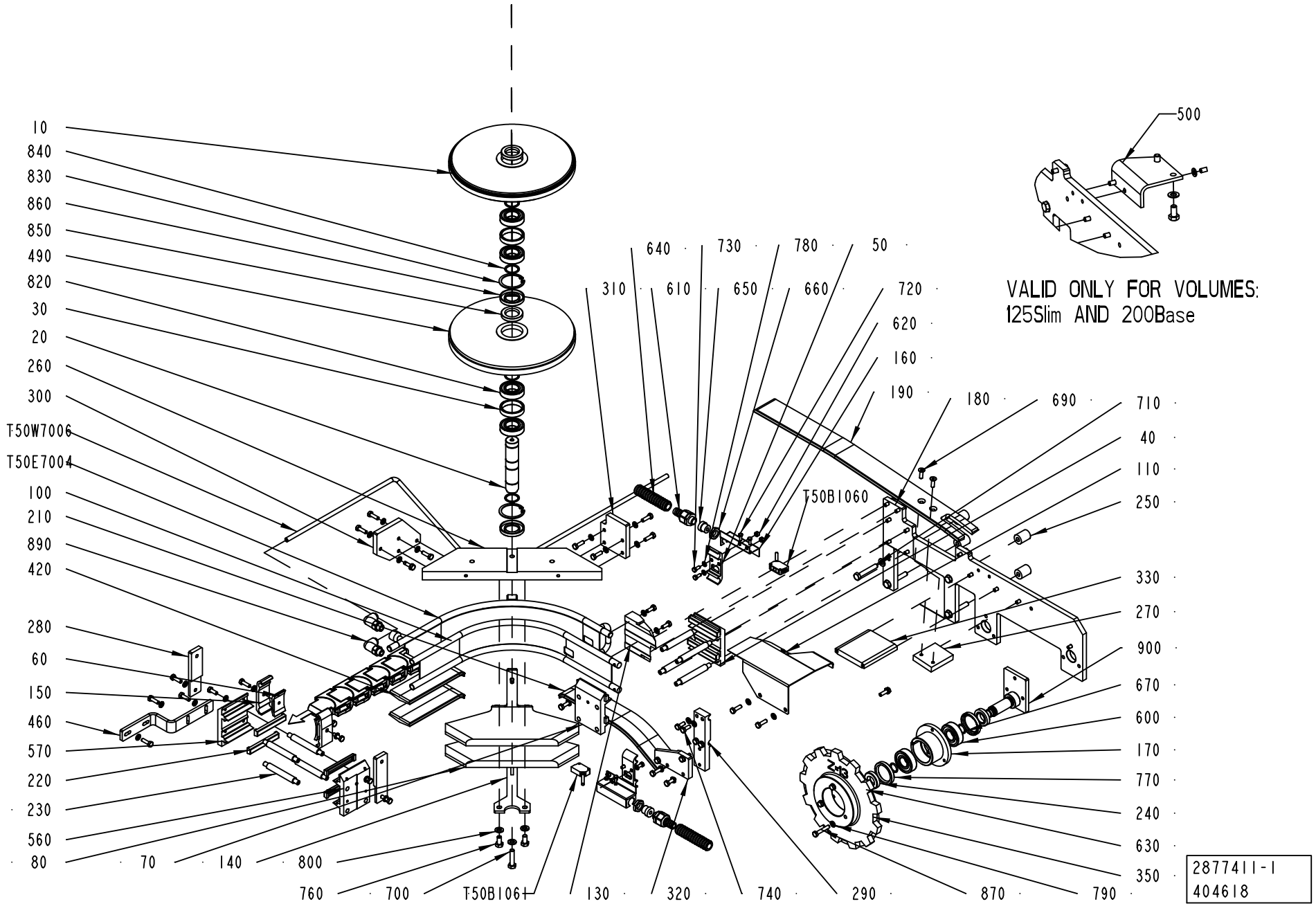
10
840
830
860
850
490
820
30
20
260
300
T50W7006
T50E7004
100
210
890
420
280
60
150
460
570
220
230
560
80
70
140
800
760
700
T50B1061
130
320
740
290
870
790
350
630
240
770
170
600
670
900
270
330
250
110
40
710
690
180
190
160
620
720
50
780
730
640
310
610
650
660
T50B1060
500
VALID ONLY FOR VOLUMES:
125Slim AND 200Base
2877411-1
404618

ECM: 426132 - 20091116
Group number: 2877411-0100
Assembly Drawing: 2877411-1_1_AE

This list covers pages from 5-32 to 5-35

Pos	Part No	UN	Qty	Description	Page No
TBA 0125S					
110	2877437-0000		1	GUIDE	
460	2917483-0000		1	SUPPORT	
500	2910604-0000		1	SUPPORT	
740	312105-0368		15	SCREW M6S ISO 4017 M6X16 A480	
750	312105-0370		33	SCREW M6S ISO 4017 M6X20 A480	
760	312105-0449		4	SCREW M6S ISO 4017 M8X16 A480	
790	315105-0153		50	WASHER BRB 6,4X12 RFR	
800	315105-0165		9	WASHER BRB 8,4X16 RFR	
TBA 0200B					
110	2877437-0000		1	GUIDE	
460	2917482-0000		1	SUPPORT	
500	2910604-0000		1	SUPPORT	
740	312105-0368		15	SCREW M6S ISO 4017 M6X16 A480	
750	312105-0370		35	SCREW M6S ISO 4017 M6X20 A480	
760	312105-0449		4	SCREW M6S ISO 4017 M8X16 A480	
790	315105-0153		50	WASHER BRB 6,4X12 RFR	
800	315105-0165		9	WASHER BRB 8,4X16 RFR	
TBA 0200S					
110	2877413-0000		1	GUIDE	
290	2877392-0000		1	SUPPORT	
320	2877397-0000		1	SUPPORT	
460	2917479-0000		1	SUPPORT	
740	312105-0368		14	SCREW M6S ISO 4017 M6X16 A480	
750	312105-0370		39	SCREW M6S ISO 4017 M6X20 A480	
760	312105-0449		2	SCREW M6S ISO 4017 M8X16 A480	
790	315105-0153		58	WASHER BRB 6,4X12 RFR	
800	315105-0165		7	WASHER BRB 8,4X16 RFR	
TBA 0250B					
110	2877413-0000		1	GUIDE	
290	2877392-0000		1	SUPPORT	
320	2892567-0000		1	SUPPORT	
460	2917480-0000		1	SUPPORT	
740	312105-0368		14	SCREW M6S ISO 4017 M6X16 A480	
750	312105-0370		39	SCREW M6S ISO 4017 M6X20 A480	
760	312105-0449		2	SCREW M6S ISO 4017 M8X16 A480	
790	315105-0153		58	WASHER BRB 6,4X12 RFR	
800	315105-0165		7	WASHER BRB 8,4X16 RFR	
Common Parts					
010	2872770-0000		1	CURVE WHEEL	
020	2872772-0000		1	SHAFT	
030	2872773-0000		2	SPACER	
040	1348750-0000		1	BRACKET	
050	1517188-0000		2	BRACKET	
060	1366727-0000		2	CLAMP	
070	457696-0001		1	JOINT PIECE	
080	2891632-0000		2	SUPPORT	
100	2877390-0000		1	GUIDE	
130	2919175-0000		1	GUIDE	
140	2891633-0000		1	SUPPORT	
150	1366750-0000		2	HOLDER	
160	3003537-0000		2	HOLDER	
170	1348241-0000		1	HOSE CLAMP	
180	2872768-0000		1	PLATE	
190	2891635-0000		1	RAIL	
210	2891634-0000		1	RAIL	
220	466074-0002		8	SLIDER	
230	1347900-0000		8	SPACER	
240	1348243-0000		2	SPACER	
250	2771120-0000		4	SPACER	
260	2872774-0000		1	SUPPORT	
270	2872777-0000		1	SUPPORT	
280	2877391-0000		2	SUPPORT	
300	2877395-0000		1	SUPPORT	
310	2877396-0000		1	SUPPORT	
330	2877398-0000		1	SUPPORT	
350	2891637-0000		1	DRIVE WHEEL	
420	2891631-0000		2	RAIL	
490	2877402-0000		1	CURVE WHEEL	
560	486918-0001		1	JOINT PIECE	
570	486918-0002		1	JOINT PIECE	
600	90214-0232		2	BALL BEARING 20/47X14	
610	353243-0001		2	HOSE GLAND W/O INSERT PG9 EXTENDED	
620	312605-0314		4	HEXAGON NUT, M6M M5 A280	
630	90099-0131		1	NUT HEX. M16X2 SS	
640	90152-0059	MM	1000	SPIRAL CONDUIT, 18X12, UL 1211	
650	353249-0008		2	INSERT, SINGLE HOLE, EK 152/7	
660	90099-0104		2	NUT, PR 15,2 (PG9)	
670	315202-0213		2	O-RING 15,3X2,4 MM	
690	312155-0370		2	SCREW DIN 7991 MF6S M6X20 A4 70	
700	312105-0457		1	SCREW M6S ISO 4014 M8X35 A480	
710	312105-0461		4	SCREW M6S ISO 4014 M8X50 A480	
720	90287-0175		4	SCREW M6S M3X12 A480	
730	312105-0327		4	SCREW M6S ISO 4017 M5X12 A480	

Machine Type | Group Description | Used-In | Group Number | Page No

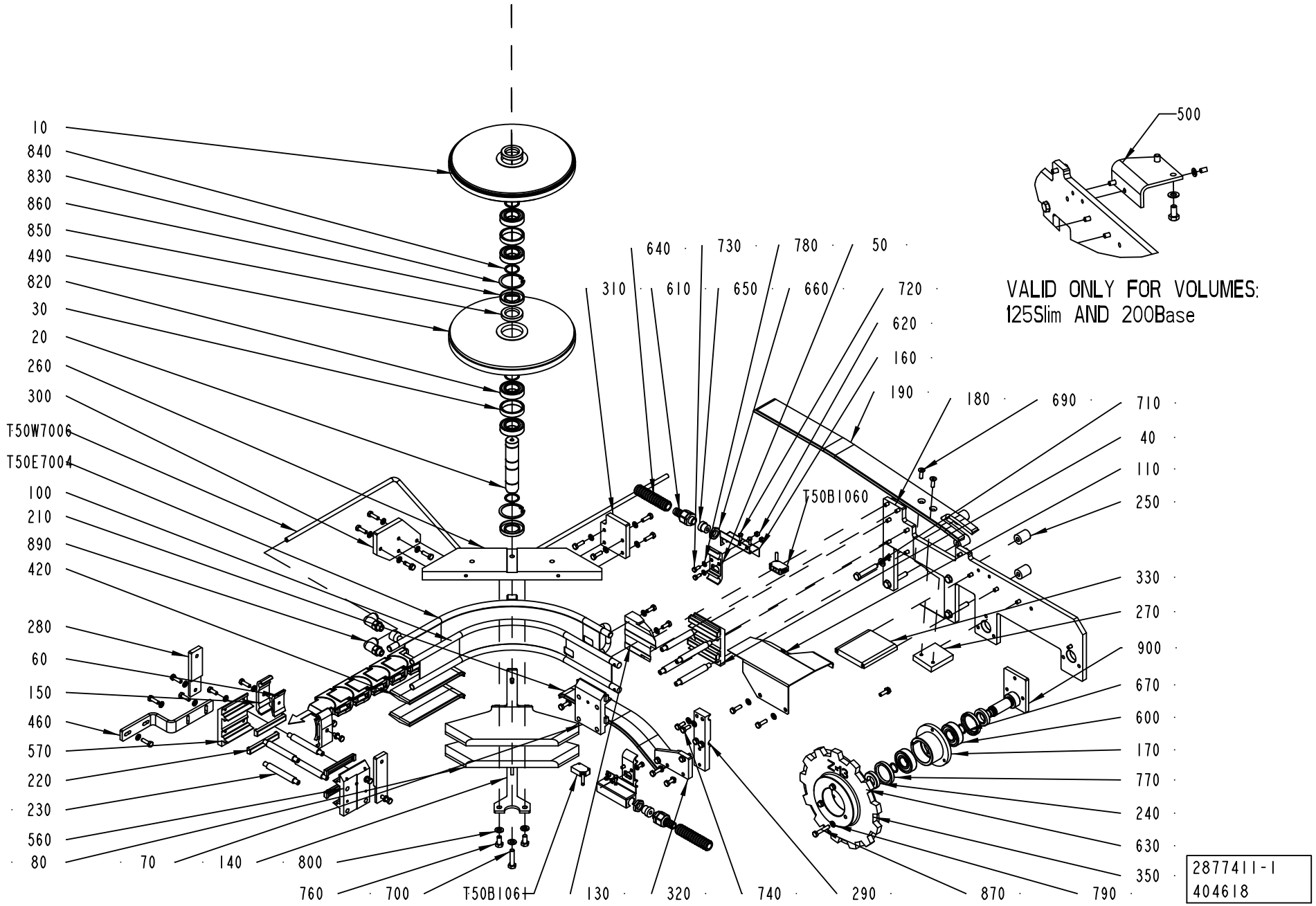
10
840
830
860
850
490
820
30
20
260
300
T50W7006
T50E7004
100
210
890
420
280
60
150
460
570
220
230
560
80
70
140
800
760
700
T50B1061
130
320
740
290
870
790
350
630
240
770
170
600
670
900
270
330
250
110
40
710
690
180
190
160
620
720
660
650
610
310
640
730
780
50
T50B1060
500
VALID ONLY FOR VOLUMES:
125Slim AND 200Base
2877411-1
404618

Pos	Part No	UN	Qty	Description	Page No
Common Parts (Cont'd)					
770	315221-0175		2	RADIAL SEAL 35X47X7 MM	
780	315105-0146		4	WASHER BRB 5,3X10 RFR	
820	90600-0140		4	BALL BEARING 25/47X12	
830	315753-0130		2	RETAINING RING FOR BORE DIN 472 47 SS	
840	315751-0119		4	RETAINING RING FOR SHAFT DIN 471 25 SS	
850	315221-0158		2	RADIAL SEAL 25X42X7 MM	
860	315221-0159		2	RADIAL SEAL 25X47X7 MM	
870	312105-0376		3	SCREW M6S ISO 4014 M6X35 A480	
890	90055-0267		2	ELBOW PIPE JOINT,EXT.THREAD,D=8 MM G1/4	
900	2891636-0000		1	SUPPORT	
T50B1060	90600-7828		1	PHOTOCELL E3ZM-T81-D 5M	
T50B1061	90600-7827		1	PHOTOCELL E3ZM-T81-L 5M	
T50E7004	2872781-0000		1	GUIDE	
T50W7006	90166-0118	MM	1000	TUBE 8 MM PA BLACK	

Pos	Part No	UN	Qty	Description	Page No

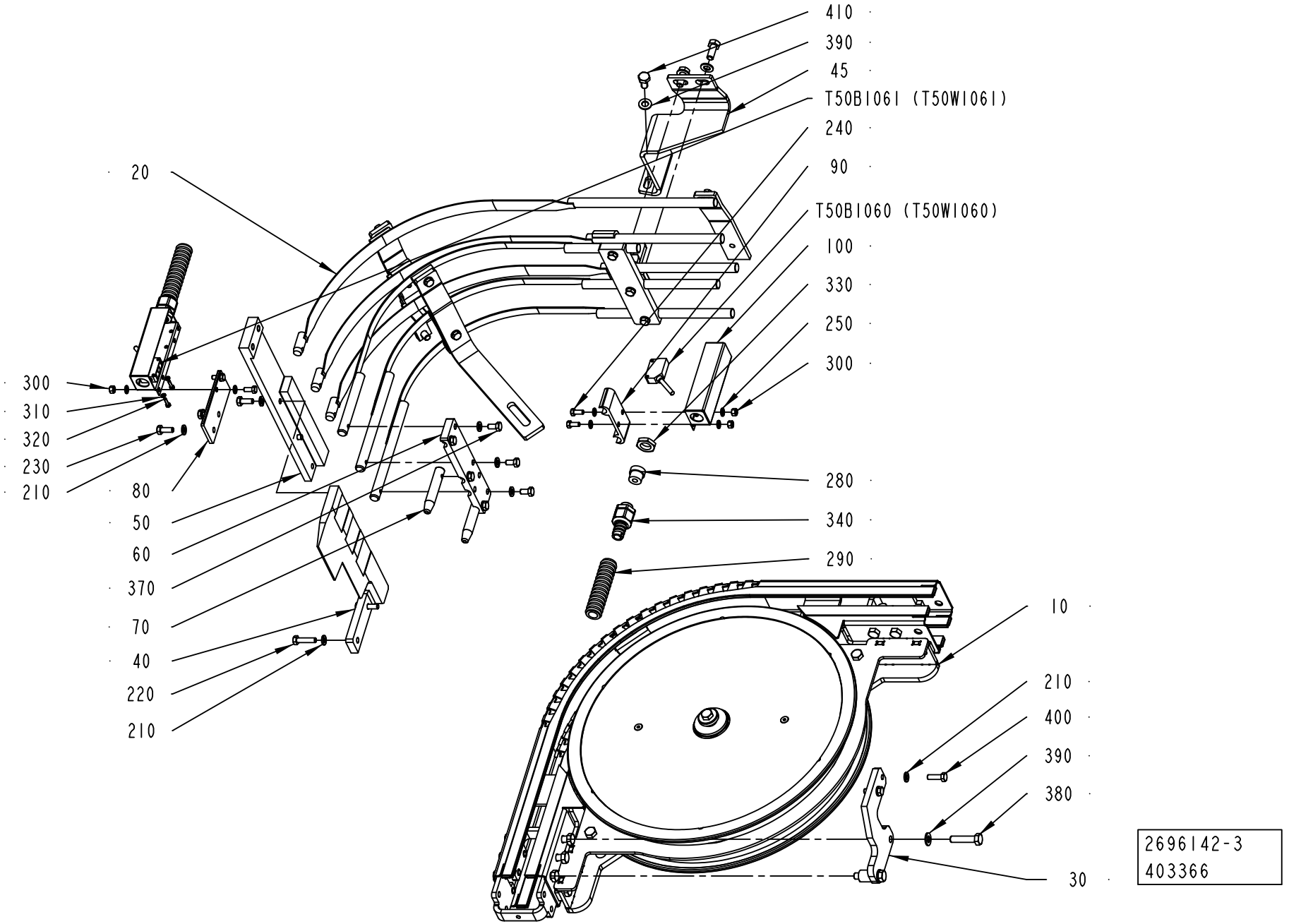
410
390
45
T50B1061 (T50W1061)
240
90
T50B1060 (T50W1060)
100
330
250
300
20
300
310
320
230
210
80
50
60
370
70
40
220
210
280
340
290
10
210
400
390
380
30
2696142-3
403366

ECM: 437120 - 20100701
Group number: 2696142-0100
Assembly Drawing: 2696142-3_1_AD

This list covers pages from 5-36 to 5-39

Pos	Part No	UN	Qty	Description	Page No
TBA 1000B (See drawing on page: 5-38)					
030	3008117-0000		1	SUPPORT	
040	2866953-0000		1	GUIDE	
045	3047643-0000		1	SUPPORT	
050	2937386-0000		1	PLATE	
060	3008116-0000		1	PLATE	
070	2694667-0000		3	PIN	
230	312105-0368		5	SCREW M6S ISO 4017 M6X16 A480	
380	312105-0460		2	SCREW M6S ISO 4014 M8X45 A480	
TBA 1000S (See drawing on page: 5-38)					
030	2957815-0000		1	SUPPORT	
040	2866953-0000		1	GUIDE	
045	2957827-0000		1	SUPPORT	
050	2937386-0000		1	PLATE	
060	2808595-0000		1	PLATE	
070	2694667-0000		2	PIN	
230	312105-0368		6	SCREW M6S ISO 4017 M6X16 A480	
380	312105-0455		2	SCREW M6S ISO 4017 M8X30 A480	
TBA 1000SQ (See drawing on page: 5-36)					
030	2966898-0000		1	SUPPORT	
040	2866601-0000		1	GUIDE	
045	2957826-0000		1	SUPPORT	
050	2713123-0000		1	PLATE	
060	2808595-0000		1	PLATE	
070	2694667-0000		2	PIN	
230	312105-0368		6	SCREW M6S ISO 4017 M6X16 A480	
380	312105-0457		2	SCREW M6S ISO 4014 M8X35 A480	
Common Parts					
010	1550698-0200		1	WHEEL CURVE 90 DEGREES	**5-41**
020	2695962-0200		1	RAILING KIT	**5-43, 5-45, 5-47, 5-49**
080	2884389-0000		1	PLATE	
090	1020637-0000		1	HOLDER	
100	2884377-0000		2	PLATE	
210	315105-0153		16	WASHER BRB 6,4X12 RFR	
220	312105-0372		2	SCREW M6S ISO 4017 M6X25 A480	
240	312105-0327		4	SCREW M6S ISO 4017 M5X12 A480	
250	315105-0146		8	WASHER BRB 5,3X10 RFR	
280	353249-0008		2	INSERT, SINGLE HOLE, EK 152/7	
290	90152-0059	M	2	SPIRAL CONDUIT, 18X12, UL 1211	
300	312605-0314		4	HEXAGON NUT, M6M M5 A280	
310	315105-0124		4	WASHER BRB 3,2X6 RFR	
320	90287-0175		4	SCREW M6S M3X12 A480	
330	90099-0104		2	NUT, PR 15,2 (PG9)	
340	353243-0001		2	HOSE GLAND W/O INSERT PG9 EXTENDED	
370	312105-0366		6	SCREW M6S ISO 4017 M6X12 A480	
390	315105-0165		4	WASHER BRB 8,4X16 RFR	
400	312105-0370		2	SCREW M6S ISO 4017 M6X20 A480	
410	312105-0449		2	SCREW M6S ISO 4017 M8X16 A480	
T50B1060	90600-7828		1	PHOTOCELL E3ZM-T81-D 5M	
T50B1061	90600-7827		1	PHOTOCELL E3ZM-T81-L 5M	

Machine Type | Group Description | Used-In | Group Number | Page No

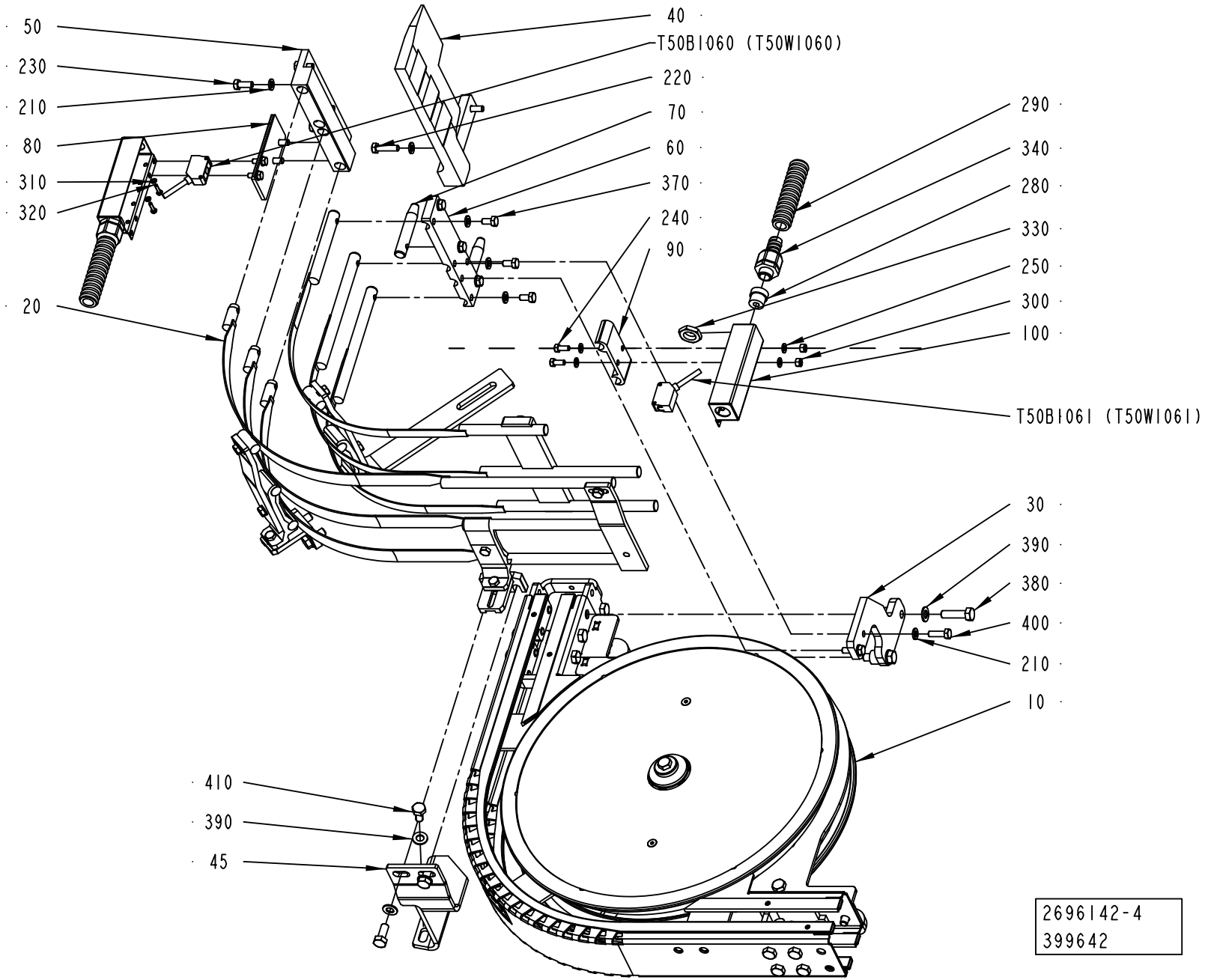
50
230
210
80
310
320
20
40
T50B1060 (T50W1060)
220
70
60
370
240
90
290
340
280
330
250
300
100
T50B1061 (T50W1061)
30
390
380
400
210
10
410
390
45
2696142-4
399642

ECM: 437120 - 20100701
Group number: 2696142-0100
Assembly Drawing: 2696142-4_1_AC

This list covers pages from 5-36 to 5-39

Pos	Part No	UN	Qty	Description	Page No
TBA 1000B (See drawing on page: 5-38)					
030	3008117-0000		1	SUPPORT	
040	2866953-0000		1	GUIDE	
045	3047643-0000		1	SUPPORT	
050	2937386-0000		1	PLATE	
060	3008116-0000		1	PLATE	
070	2694667-0000		3	PIN	
230	312105-0368		5	SCREW M6S ISO 4017 M6X16 A480	
380	312105-0460		2	SCREW M6S ISO 4014 M8X45 A480	
TBA 1000S (See drawing on page: 5-38)					
030	2957815-0000		1	SUPPORT	
040	2866953-0000		1	GUIDE	
045	2957827-0000		1	SUPPORT	
050	2937386-0000		1	PLATE	
060	2808595-0000		1	PLATE	
070	2694667-0000		2	PIN	
230	312105-0368		6	SCREW M6S ISO 4017 M6X16 A480	
380	312105-0455		2	SCREW M6S ISO 4017 M8X30 A480	
TBA 1000SQ (See drawing on page: 5-36)					
030	2966898-0000		1	SUPPORT	
040	2866601-0000		1	GUIDE	
045	2957826-0000		1	SUPPORT	
050	2713123-0000		1	PLATE	
060	2808595-0000		1	PLATE	
070	2694667-0000		2	PIN	
230	312105-0368		6	SCREW M6S ISO 4017 M6X16 A480	
380	312105-0457		2	SCREW M6S ISO 4014 M8X35 A480	
Common Parts					
010	1550698-0200		1	WHEEL CURVE 90 DEGREES	**5-41**
020	2695962-0200		1	RAILING KIT	**5-43, 5-45, 5-47, 5-49**
080	2884389-0000		1	PLATE	
090	1020637-0000		1	HOLDER	
100	2884377-0000		2	PLATE	
210	315105-0153		16	WASHER BRB 6,4X12 RFR	
220	312105-0372		2	SCREW M6S ISO 4017 M6X25 A480	
240	312105-0327		4	SCREW M6S ISO 4017 M5X12 A480	
250	315105-0146		8	WASHER BRB 5,3X10 RFR	
280	353249-0008		2	INSERT, SINGLE HOLE, EK 152/7	
290	90152-0059	M	2	SPIRAL CONDUIT, 18X12, UL 1211	
300	312605-0314		4	HEXAGON NUT, M6M M5 A280	
310	315105-0124		4	WASHER BRB 3,2X6 RFR	
320	90287-0175		4	SCREW M6S M3X12 A480	
330	90099-0104		2	NUT, PR 15,2 (PG9)	
340	353243-0001		2	HOSE GLAND W/O INSERT PG9 EXTENDED	
370	312105-0366		6	SCREW M6S ISO 4017 M6X12 A480	
390	315105-0165		4	WASHER BRB 8,4X16 RFR	
400	312105-0370		2	SCREW M6S ISO 4017 M6X20 A480	
410	312105-0449		2	SCREW M6S ISO 4017 M8X16 A480	
T50B1060	90600-7828		1	PHOTOCELL E3ZM-T81-D 5M	
T50B1061	90600-7827		1	PHOTOCELL E3ZM-T81-L 5M	

Machine Type | Group Description | Used-In | Group Number | Page No

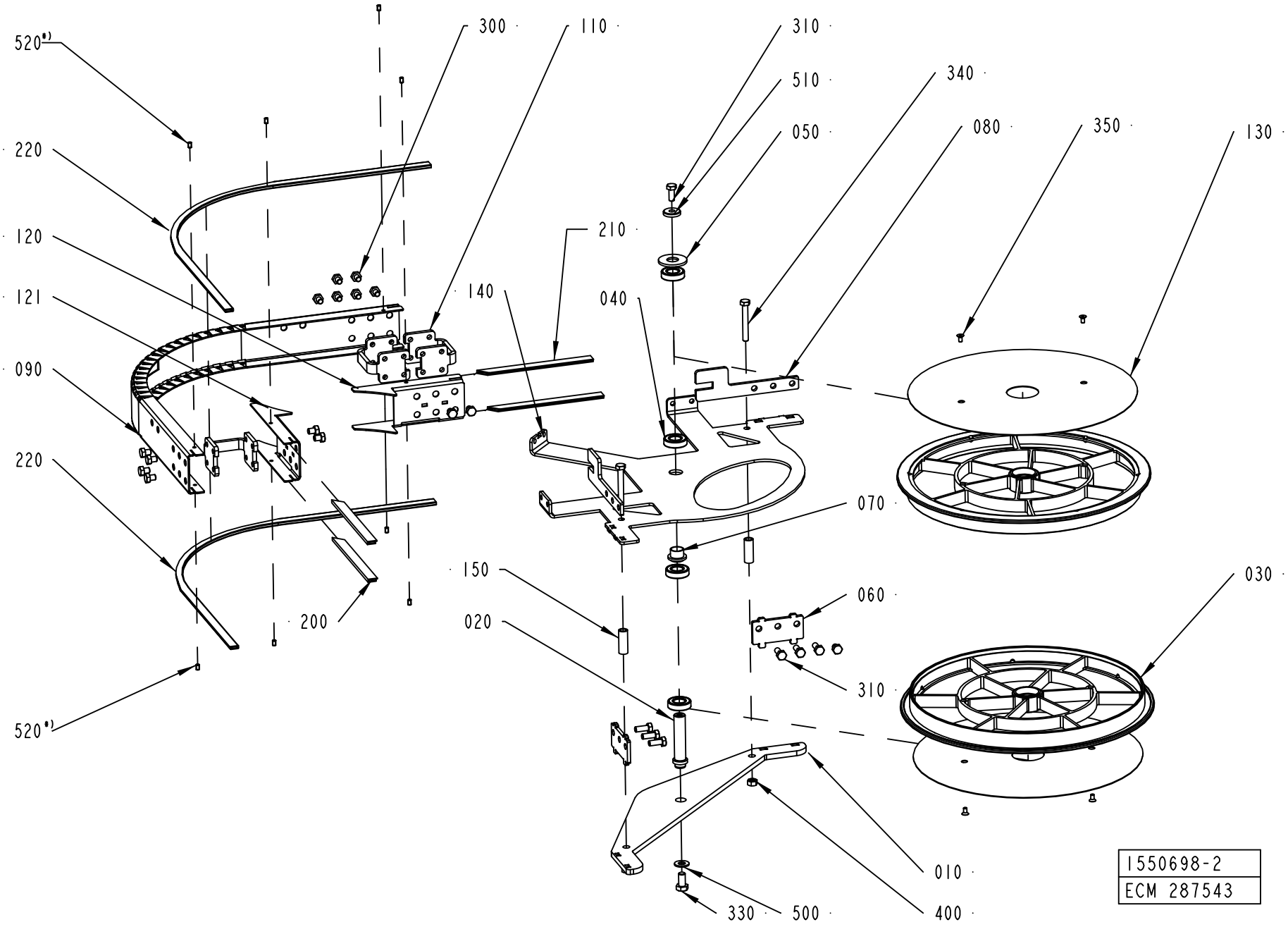
520*)
220
120
121
090
220
520*)
300
110
310
510
050
340
080
350
130
210
140
040
070
150
020
200
060
310
030
010
400
330
500
1550698-2
ECM 287543

ECM: 383372 - 20090115
Group number: 1550698-0200
Assembly Drawing: 1550698-2_1_AF

Pos	Part No	UN	Qty	Description	Page No
-					
010	1550667-0000		1	BOTTOM PANEL	
020	1550689-0000		1	SHAFT	
030	2656655-0000		2	WHEEL	
040	1550348-0001		4	BALL BEARING 17/35X10	
050	1550693-0000		1	WASHER	
060	2561257-0000		2	SPACER	
070	1550690-0000		1	SLEEVE	
080	2561603-0000		2	SPACER	
090	1550669-0000		1	SIDE PLATE	
110	2561206-0000		3	SPACER	
120	1550687-0001		1	SIDE PLATE	
121	1550687-0002		1	SIDE PLATE	
130	2561232-0000		2	COVER	
140	1550668-0000		1	BRACKET	
150	1550626-0005		2	SPACER	
200	1550595-1801		2	SLIDING STRIP	
210	1550595-1802		2	SLIDING STRIP	
220	2699584-0830		2	SLIDING STRIP	
300	90459-4735		15	SCREW M6S ISO 4017 M8X10 A480	
310	312105-0451		7	SCREW M6S ISO 4017 M8X20 A480	
330	312105-0491		1	SCREW M6S ISO 4017 M10X20 A480	
340	312105-0463		2	SCREW M6S ISO 4014 M8X60 A480	
350	312155-0325		4	SCREW DIN 7991 MF6S M5X10 A4 70	
400	312605-0318		2	HEXAGON NUT, M6M M8 A280	
500	315105-0173		1	WASHER BRB 10,5X22 RFR	
510	315125-0165		1	WASHER TBRSB 8,4X26X5 A4	
520	90459-7293		8	SET SCREW DIN 551M5X8 PA66	

Pos	Part No	UN	Qty	Description	Page No

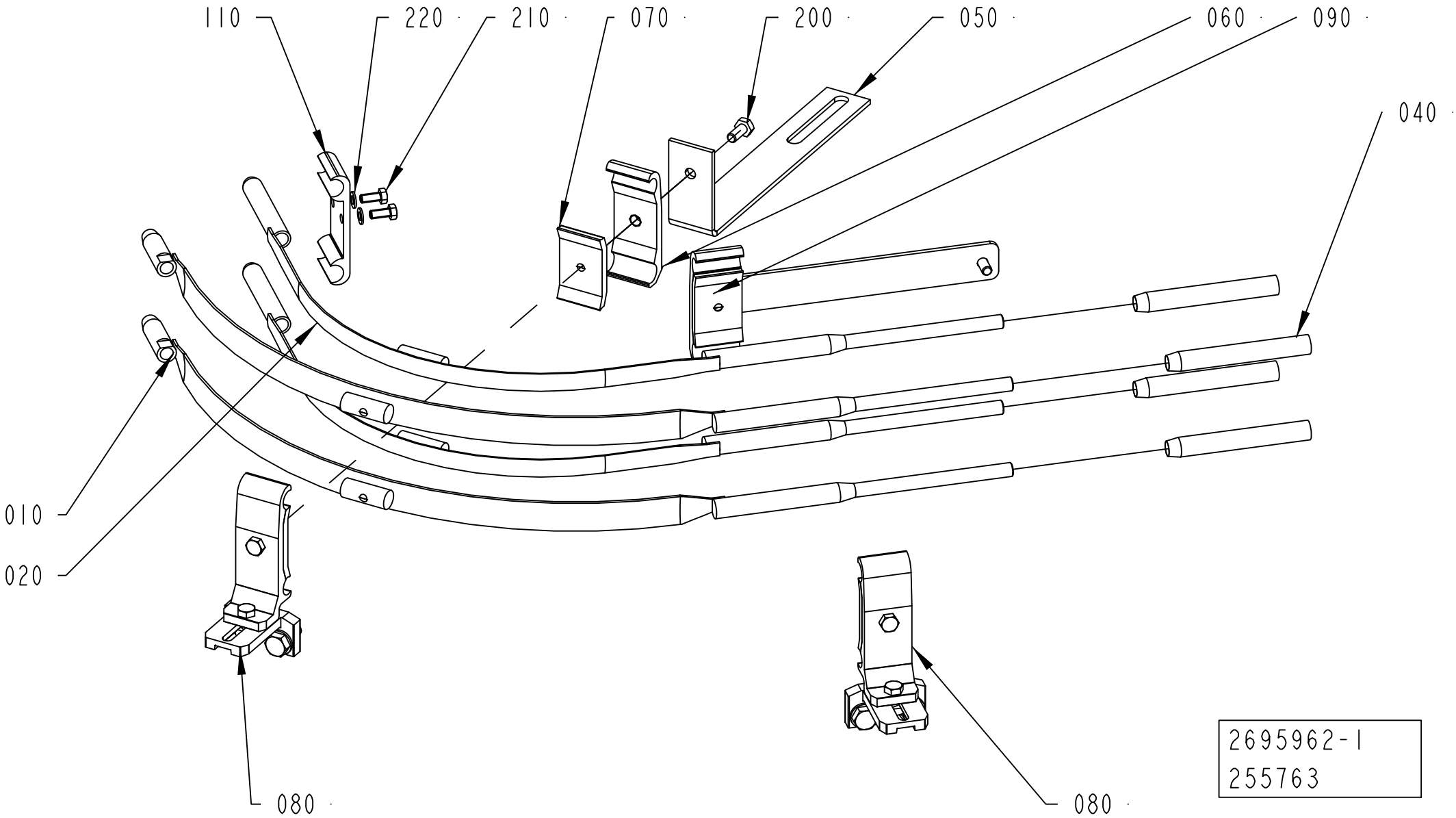
110
220
210
070
200
050
060
090
040
010
020
080
080
2695962-1
255763

ECM: 440616 - 20100701
Group number: 2695962-0200
Assembly Drawing: 2695962-1_1_AB

This list covers pages from 5-42 to 5-49

Pos	Part No	UN	Qty	Description	Page No
TBA 0200M, TBA 0200B, TBA 0200S, TBA 0250S, TBA 0250B (See drawing on page: 5-42)					
010	2695963-0000		2	ARCH	
020	2696485-0000		2	ARCH	
040	1550665-0000		4	PIPE	
050	1550666-0000		1	HOLDER	
090	2561602-0100		1	RAIL HOLDER KIT	**5-51, 11-165**
100	1020637-0000		1	HOLDER	
200	312105-0368		1	SCREW M6S ISO 4017 M6X16 A480	
210	312105-0327		2	SCREW M6S ISO 4017 M5X12 A480	
220	315105-0146		2	WASHER BRB 5,3X10 RFR	
TBA 1000B (See drawing on page: 5-48)					
010	2807274-0000		2	ARCH	
020	2807275-0000		2	ARCH	
050	1550666-0000		1	HOLDER	
120	3094833-0000		1	HOLDER	
200	312105-0367		1	SCREW M6S ISO 4017 M6X14 A480	
TBA 1000S (See drawing on page: 5-46)					
010	2807274-0000		2	ARCH	
020	2807275-0000		2	ARCH	
030	2808597-0000		1	ARCH	
050	2801967-0000		1	BRACKET	
110	2694666-0000		1	SUPPORT	
130	2803141-0000		2	BRACKET	
140	2808806-0000		1	ARCH	
200	312105-0367		3	SCREW M6S ISO 4017 M6X14 A480	
210	312105-0370		1	SCREW M6S ISO 4017 M6X20 A480	
220	315105-0153		7	WASHER BRB 6,4X12 RFR	
230	312105-0366		3	SCREW M6S ISO 4017 M6X12 A480	
TBA 1000SQ (See drawing on page: 5-44)					
010	2807274-0000		2	ARCH	
020	2807275-0000		2	ARCH	
030	2808597-0000		1	ARCH	
050	2801967-0000		1	BRACKET	
110	2694666-0000		1	SUPPORT	
130	2803141-0000		2	BRACKET	
140	2808806-0000		1	ARCH	
200	312105-0367		3	SCREW M6S ISO 4017 M6X14 A480	
210	312105-0370		1	SCREW M6S ISO 4017 M6X20 A480	
220	315105-0153		7	WASHER BRB 6,4X12 RFR	
230	312105-0366		3	SCREW M6S ISO 4017 M6X12 A480	
Common Parts					
060	1366750-0000		1	HOLDER	
070	1366727-0000		1	CLAMP	
080	1550743-0100		2	RAIL HOLDER	**5-53**

Machine Type | Group Description | Used-In | Group Number | Page No

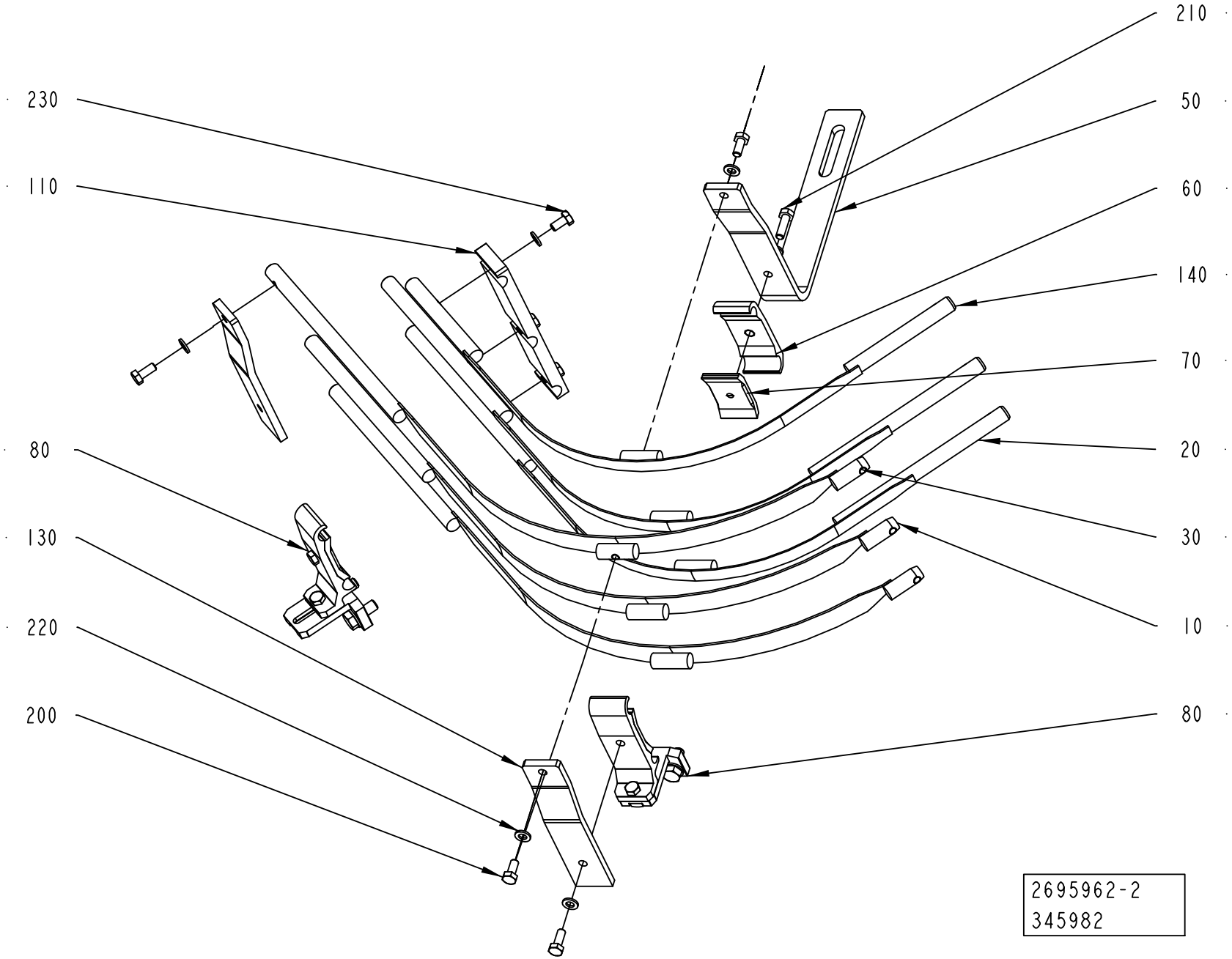
210
230
50
110
60
140
70
80
20
130
30
220
10
200
80
2695962-2
345982

ECM: 440616 - 20100701
Group number: 2695962-0200
Assembly Drawing: 2695962-2_1_AA

This list covers pages from 5-42 to 5-49

Pos	Part No	UN	Qty	Description	Page No
TBA 0200M, TBA 0200B, TBA 0200S, TBA 0250S, TBA 0250B (See drawing on page: 5-42)					
010	2695963-0000		2	ARCH	
020	2696485-0000		2	ARCH	
040	1550665-0000		4	PIPE	
050	1550666-0000		1	HOLDER	
090	2561602-0100		1	RAIL HOLDER KIT	**5-51, 11-165**
100	1020637-0000		1	HOLDER	
200	312105-0368		1	SCREW M6S ISO 4017 M6X16 A480	
210	312105-0327		2	SCREW M6S ISO 4017 M5X12 A480	
220	315105-0146		2	WASHER BRB 5,3X10 RFR	
TBA 1000B (See drawing on page: 5-48)					
010	2807274-0000		2	ARCH	
020	2807275-0000		2	ARCH	
050	1550666-0000		1	HOLDER	
120	3094833-0000		1	HOLDER	
200	312105-0367		1	SCREW M6S ISO 4017 M6X14 A480	
TBA 1000S (See drawing on page: 5-46)					
010	2807274-0000		2	ARCH	
020	2807275-0000		2	ARCH	
030	2808597-0000		1	ARCH	
050	2801967-0000		1	BRACKET	
110	2694666-0000		1	SUPPORT	
130	2803141-0000		2	BRACKET	
140	2808806-0000		1	ARCH	
200	312105-0367		3	SCREW M6S ISO 4017 M6X14 A480	
210	312105-0370		1	SCREW M6S ISO 4017 M6X20 A480	
220	315105-0153		7	WASHER BRB 6,4X12 RFR	
230	312105-0366		3	SCREW M6S ISO 4017 M6X12 A480	
TBA 1000SQ (See drawing on page: 5-44)					
010	2807274-0000		2	ARCH	
020	2807275-0000		2	ARCH	
030	2808597-0000		1	ARCH	
050	2801967-0000		1	BRACKET	
110	2694666-0000		1	SUPPORT	
130	2803141-0000		2	BRACKET	
140	2808806-0000		1	ARCH	
200	312105-0367		3	SCREW M6S ISO 4017 M6X14 A480	
210	312105-0370		1	SCREW M6S ISO 4017 M6X20 A480	
220	315105-0153		7	WASHER BRB 6,4X12 RFR	
230	312105-0366		3	SCREW M6S ISO 4017 M6X12 A480	
Common Parts					
060	1366750-0000		1	HOLDER	
070	1366727-0000		1	CLAMP	
080	1550743-0100		2	RAIL HOLDER	**5-53**

Machine Type | Group Description | Used-In | Group Number | Page No

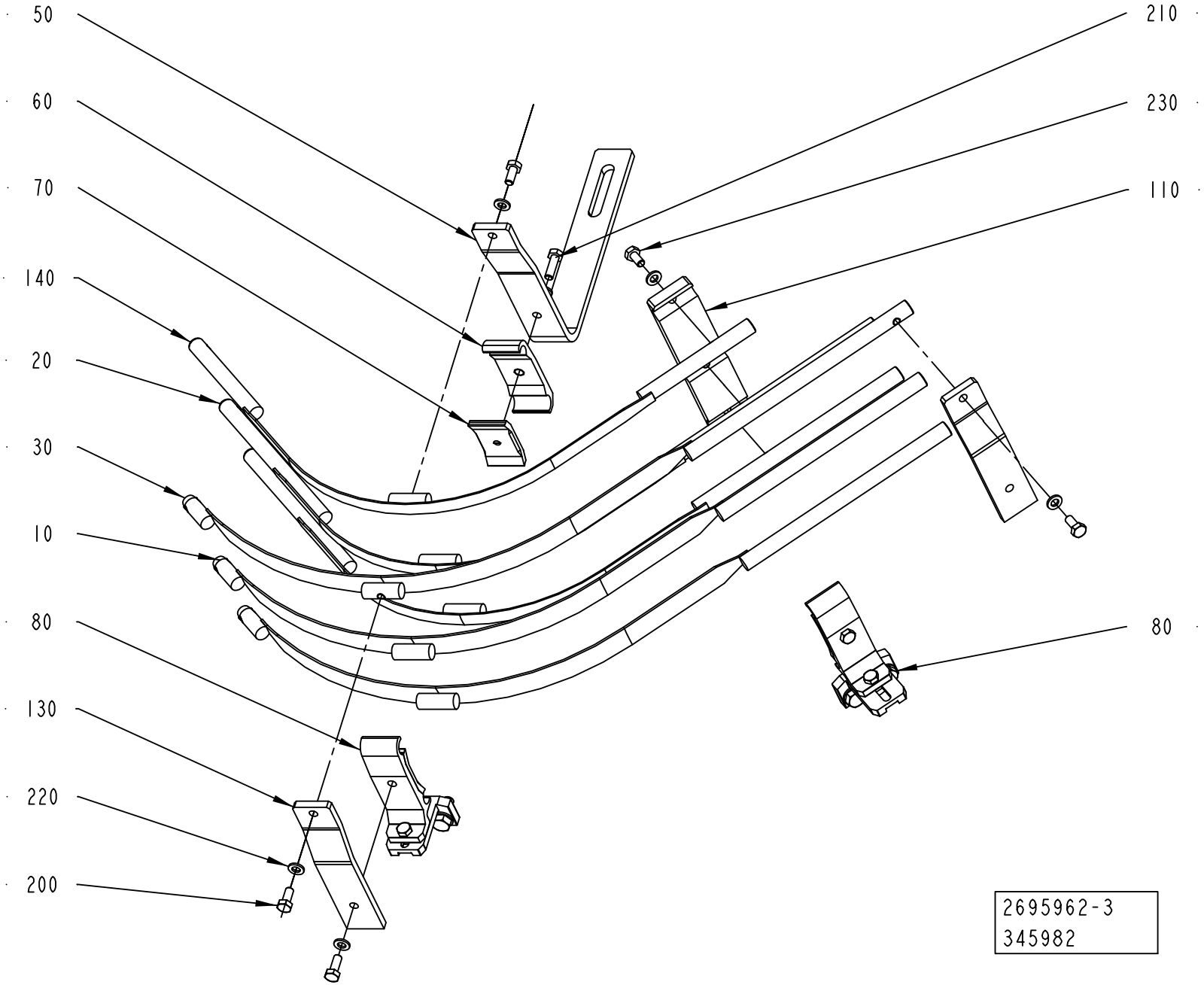
50
60
70
140
20
30
10
80
130
220
200
210
230
110
80
2695962-3
345982

ECM: 440616 - 20100701
Group number: 2695962-0200
Assembly Drawing: 2695962-3_1_AA

This list covers pages from 5-42 to 5-49

Pos	Part No	UN	Qty	Description	Page No
TBA 0200M, TBA 0200B, TBA 0200S, TBA 0250S, TBA 0250B (See drawing on page: 5-42)					
010	2695963-0000		2	ARCH	
020	2696485-0000		2	ARCH	
040	1550665-0000		4	PIPE	
050	1550666-0000		1	HOLDER	
090	2561602-0100		1	RAIL HOLDER KIT	**5-51, 11-165**
100	1020637-0000		1	HOLDER	
200	312105-0368		1	SCREW M6S ISO 4017 M6X16 A480	
210	312105-0327		2	SCREW M6S ISO 4017 M5X12 A480	
220	315105-0146		2	WASHER BRB 5,3X10 RFR	
TBA 1000B (See drawing on page: 5-48)					
010	2807274-0000		2	ARCH	
020	2807275-0000		2	ARCH	
050	1550666-0000		1	HOLDER	
120	3094833-0000		1	HOLDER	
200	312105-0367		1	SCREW M6S ISO 4017 M6X14 A480	
TBA 1000S (See drawing on page: 5-46)					
010	2807274-0000		2	ARCH	
020	2807275-0000		2	ARCH	
030	2808597-0000		1	ARCH	
050	2801967-0000		1	BRACKET	
110	2694666-0000		1	SUPPORT	
130	2803141-0000		2	BRACKET	
140	2808806-0000		1	ARCH	
200	312105-0367		3	SCREW M6S ISO 4017 M6X14 A480	
210	312105-0370		1	SCREW M6S ISO 4017 M6X20 A480	
220	315105-0153		7	WASHER BRB 6,4X12 RFR	
230	312105-0366		3	SCREW M6S ISO 4017 M6X12 A480	
TBA 1000SQ (See drawing on page: 5-44)					
010	2807274-0000		2	ARCH	
020	2807275-0000		2	ARCH	
030	2808597-0000		1	ARCH	
050	2801967-0000		1	BRACKET	
110	2694666-0000		1	SUPPORT	
130	2803141-0000		2	BRACKET	
140	2808806-0000		1	ARCH	
200	312105-0367		3	SCREW M6S ISO 4017 M6X14 A480	
210	312105-0370		1	SCREW M6S ISO 4017 M6X20 A480	
220	315105-0153		7	WASHER BRB 6,4X12 RFR	
230	312105-0366		3	SCREW M6S ISO 4017 M6X12 A480	
Common Parts					
060	1366750-0000		1	HOLDER	
070	1366727-0000		1	CLAMP	
080	1550743-0100		2	RAIL HOLDER	**5-53**

Machine Type | Group Description | Used-In | Group Number | Page No

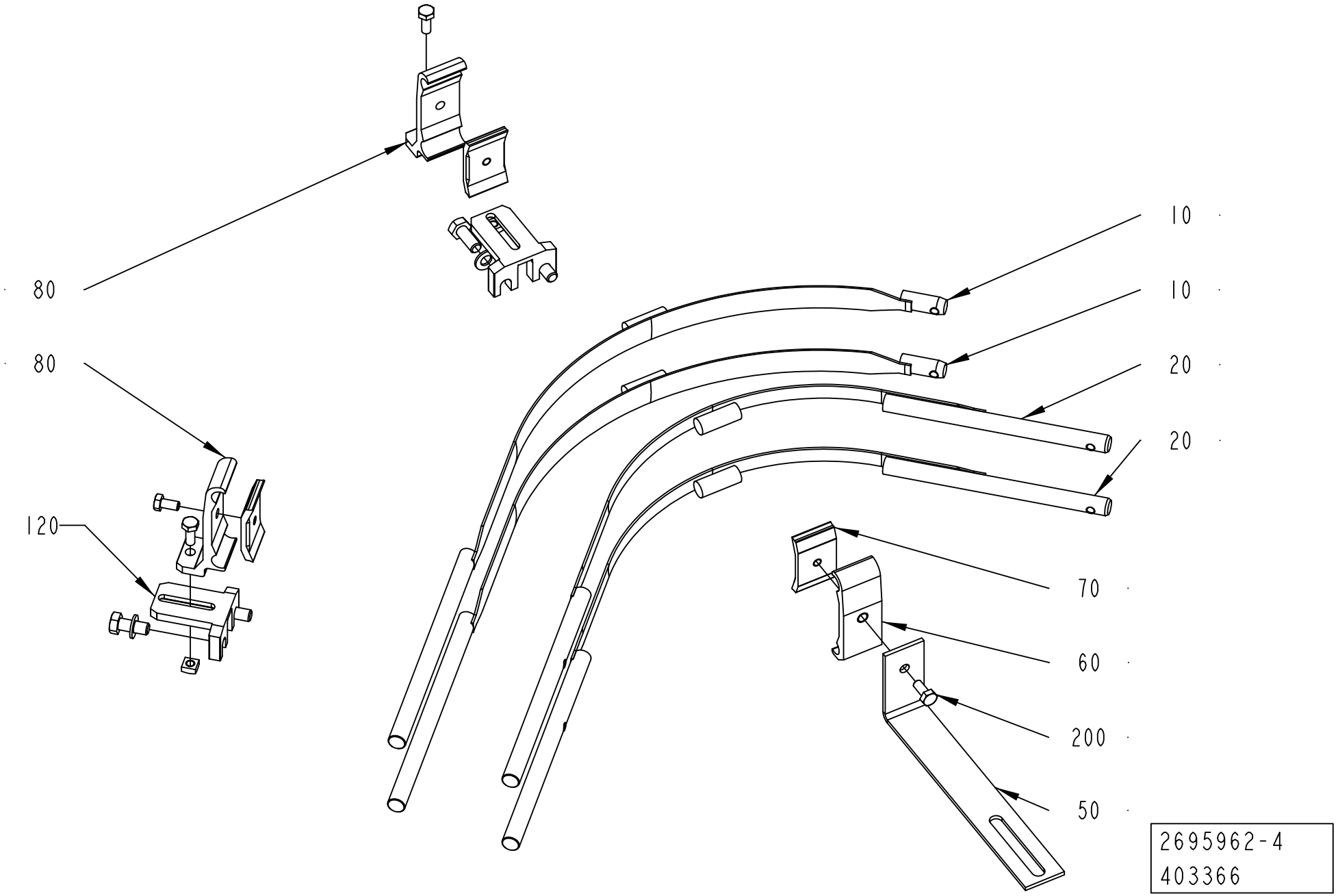
80
80
120
10
10
20
20
70
60
200
50
2695962-4
403366

ECM: 440616 - 20100701
Group number: 2695962-0200
Assembly Drawing: 2695962-4_1_AB

This list covers pages from 5-42 to 5-49

Pos	Part No	UN	Qty	Description	Page No
TBA 0200M, TBA 0200B, TBA 0200S, TBA 0250S, TBA 0250B (See drawing on page: 5-42)					
010	2695963-0000		2	ARCH	
020	2696485-0000		2	ARCH	
040	1550665-0000		4	PIPE	
050	1550666-0000		1	HOLDER	
090	2561602-0100		1	RAIL HOLDER KIT	**5-51, 11-165**
100	1020637-0000		1	HOLDER	
200	312105-0368		1	SCREW M6S ISO 4017 M6X16 A480	
210	312105-0327		2	SCREW M6S ISO 4017 M5X12 A480	
220	315105-0146		2	WASHER BRB 5,3X10 RFR	
TBA 1000B (See drawing on page: 5-48)					
010	2807274-0000		2	ARCH	
020	2807275-0000		2	ARCH	
050	1550666-0000		1	HOLDER	
120	3094833-0000		1	HOLDER	
200	312105-0367		1	SCREW M6S ISO 4017 M6X14 A480	
TBA 1000S (See drawing on page: 5-46)					
010	2807274-0000		2	ARCH	
020	2807275-0000		2	ARCH	
030	2808597-0000		1	ARCH	
050	2801967-0000		1	BRACKET	
110	2694666-0000		1	SUPPORT	
130	2803141-0000		2	BRACKET	
140	2808806-0000		1	ARCH	
200	312105-0367		3	SCREW M6S ISO 4017 M6X14 A480	
210	312105-0370		1	SCREW M6S ISO 4017 M6X20 A480	
220	315105-0153		7	WASHER BRB 6,4X12 RFR	
230	312105-0366		3	SCREW M6S ISO 4017 M6X12 A480	
TBA 1000SQ (See drawing on page: 5-44)					
010	2807274-0000		2	ARCH	
020	2807275-0000		2	ARCH	
030	2808597-0000		1	ARCH	
050	2801967-0000		1	BRACKET	
110	2694666-0000		1	SUPPORT	
130	2803141-0000		2	BRACKET	
140	2808806-0000		1	ARCH	
200	312105-0367		3	SCREW M6S ISO 4017 M6X14 A480	
210	312105-0370		1	SCREW M6S ISO 4017 M6X20 A480	
220	315105-0153		7	WASHER BRB 6,4X12 RFR	
230	312105-0366		3	SCREW M6S ISO 4017 M6X12 A480	
Common Parts					
060	1366750-0000		1	HOLDER	
070	1366727-0000		1	CLAMP	
080	1550743-0100		2	RAIL HOLDER	**5-53**

Machine Type | Group Description | Used-In | Group Number | Page No

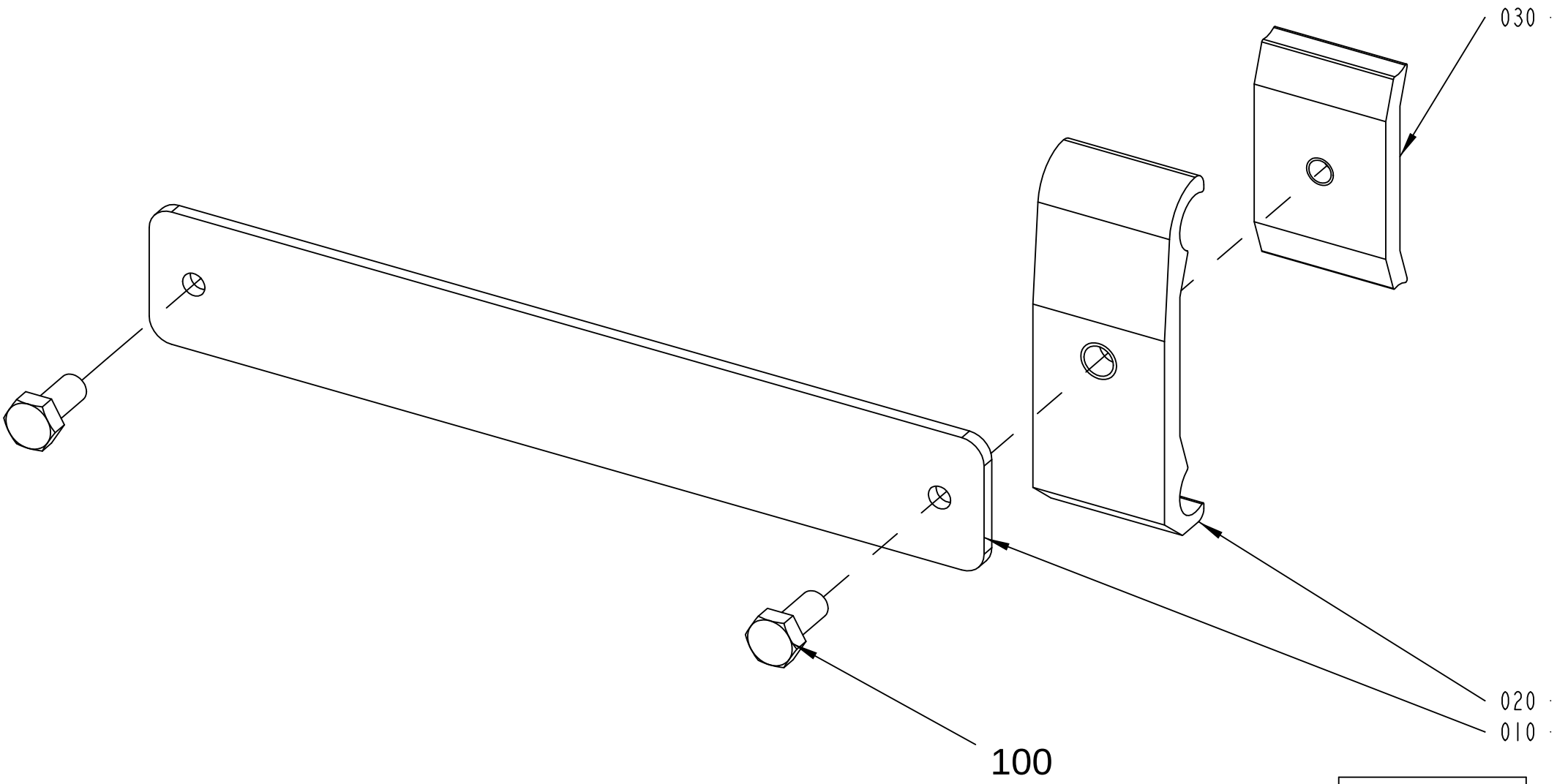

2561602-1
ECM 153837

ECM: 255321 - 20060302
Group number: 2561602-0100
Assembly Drawing: 2561602-1_1_AB

Pos	Part No	UN	Qty	Description	Page No
-					
010	2561596-0000		1	RAIL HOLDER KIT	
020	1366750-0000		1	HOLDER	
030	1366727-0000		1	CLAMP	
100	312105-0367		2	SCREW M6S ISO 4017 M6X14 A480	

Pos	Part No	UN	Qty	Description	Page No

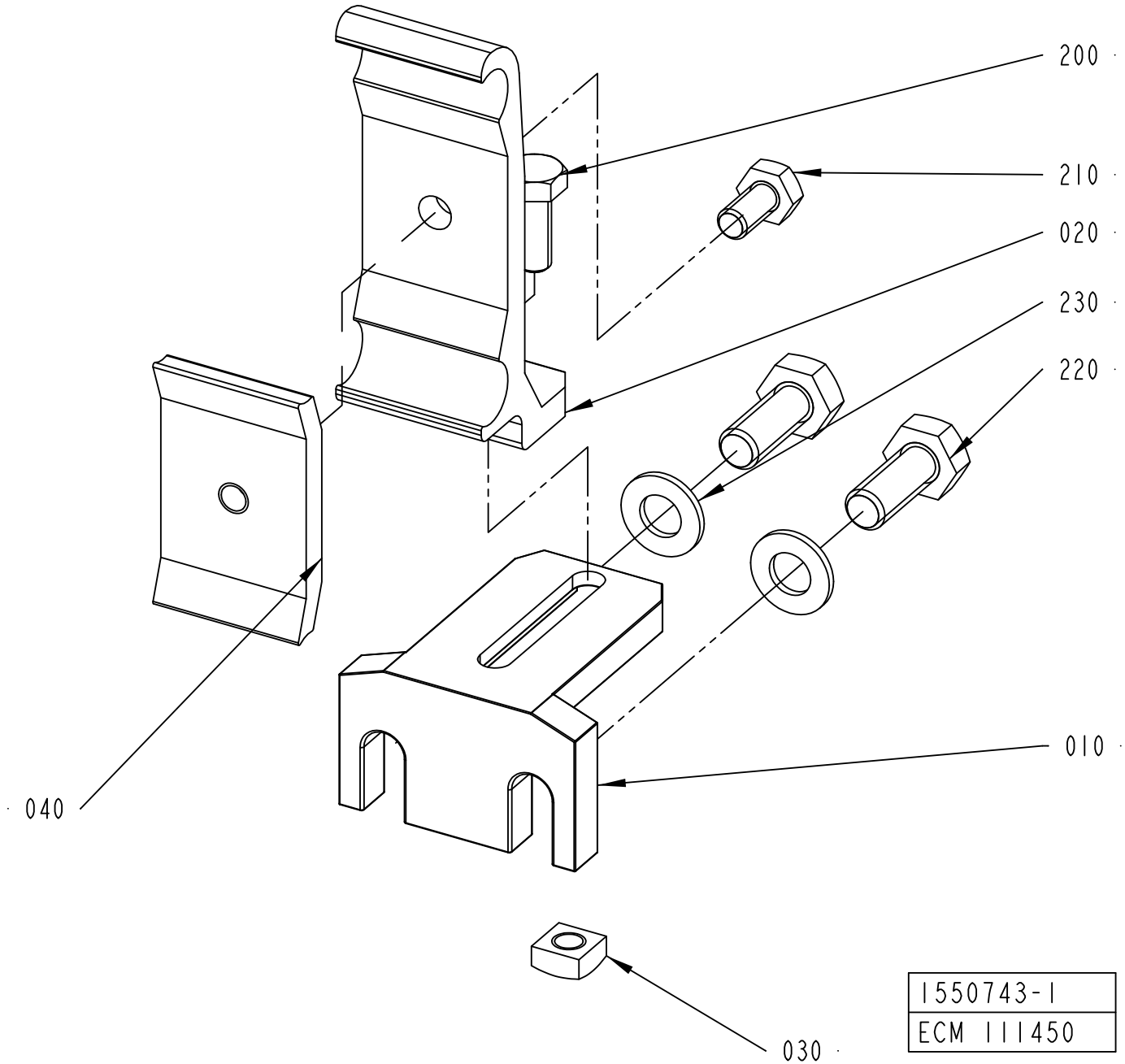
200
210
020
230
220
040
010
030
1550743-1
ECM 111450

ECM: 129860 - 20031113
Group number: 1550743-0100
Assembly Drawing: 1550743-1_1_AB

Pos	Part No	UN	Qty	Description	Page No
-					
010	1550772-0000		1	HOLDER	
020	1550773-0000		1	RAIL HOLDER	
030	1359565-0000		1	NUT	
040	1366727-0000		1	CLAMP	
200	312105-0368		1	SCREW M6S ISO 4017 M6X16 A480	
210	312105-0366		1	SCREW M6S ISO 4017 M6X12 A480	
220	312105-0451		2	SCREW M6S ISO 4017 M8X20 A480	
230	315105-0165		2	WASHER BRB 8,4X16 RFR	

Pos	Part No	UN	Qty	Description	Page No

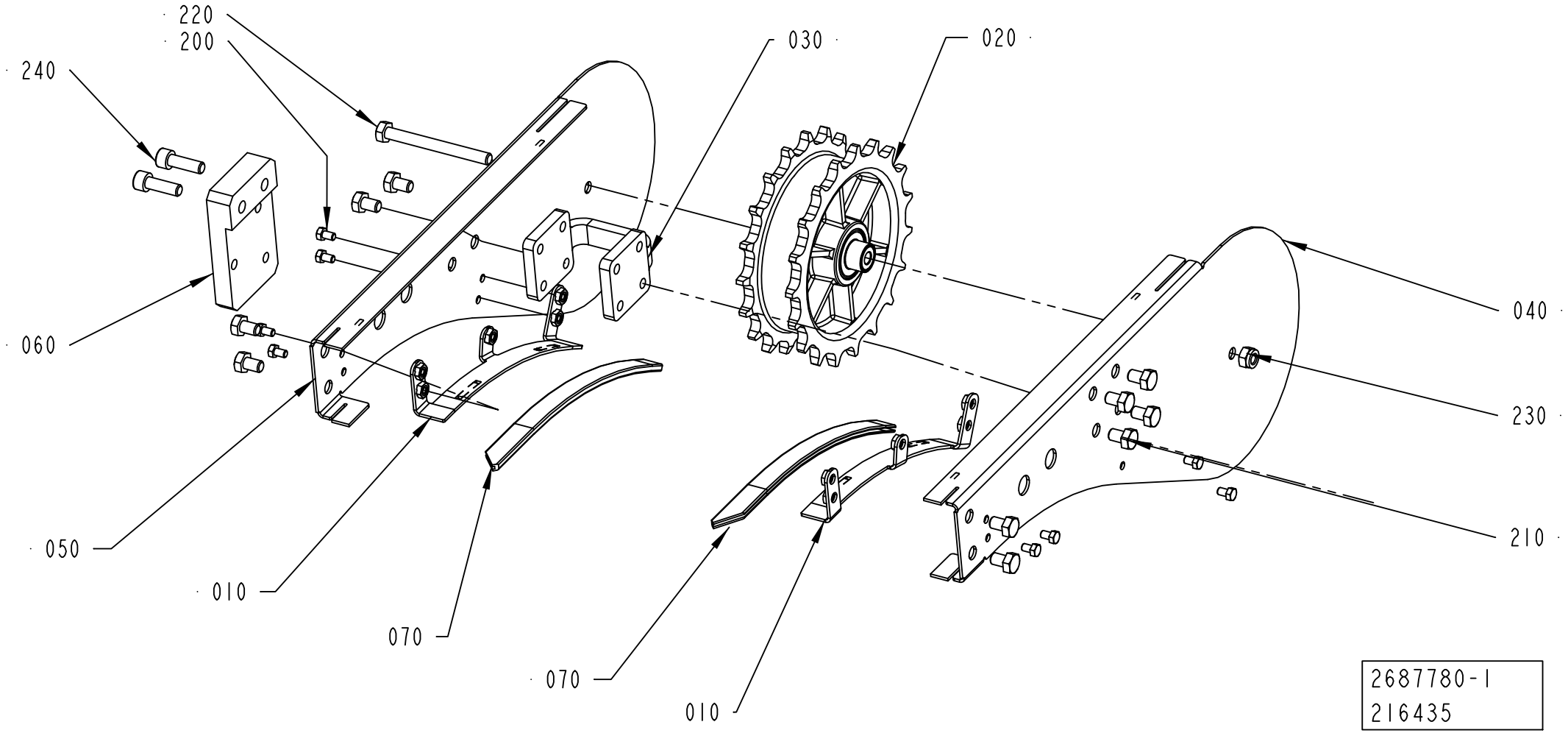
220
200
240
030
020
040
060
230
050
210
010
070
070
010
2687780-1
216435

Pos	Part No	UN	Qty	Description	Page No
TBA 0200M, TBA 0200B, TBA 0200S, TBA 0250S, TBA 0250B (See drawing on page: 5-54)					
060	2687776-0000		1	SUPPORT	
080	2589960-3220		2	SLIDING STRIP	
240	312115-0453		2	SCREW ISO4762 M8X25 A4 80	
TBA 1000B, TBA 1000S (See drawing on page: 5-56)					
080	2589960-3220		1	SLIDING STRIP	
090	2589960-5102		1	SLIDING STRIP	
TBA 1000SQ (See drawing on page: 5-56)					
080	2589960-3220		1	SLIDING STRIP	
090	2589960-5102		1	SLIDING STRIP	
Common Parts					
010	2687772-0000		2	SIDE PLATE	
020	2561244-0200		1	DRIVE WHEEL	**5-59, 5-61, 11-37, 11-39**
030	2561206-0000		1	SPACER	
040	2687773-0000		1	SIDE PLATE	
050	2687774-0000		1	SIDE PLATE	
070	2589960-2120		2	SLIDING STRIP	
200	312105-0323		6	SCREW M6S ISO 4017 M5X8 A480	
210	312105-0447		10	SCREW M6S ISO 4017 M8X12 A480	
220	312105-0467		1	SCREW M6S ISO 4014 M8X80 A480	
230	312812-0318		1	HEXAGON NUT, NY-LOCK M8 A480	

Pos	Part No	UN	Qty	Description	Page No

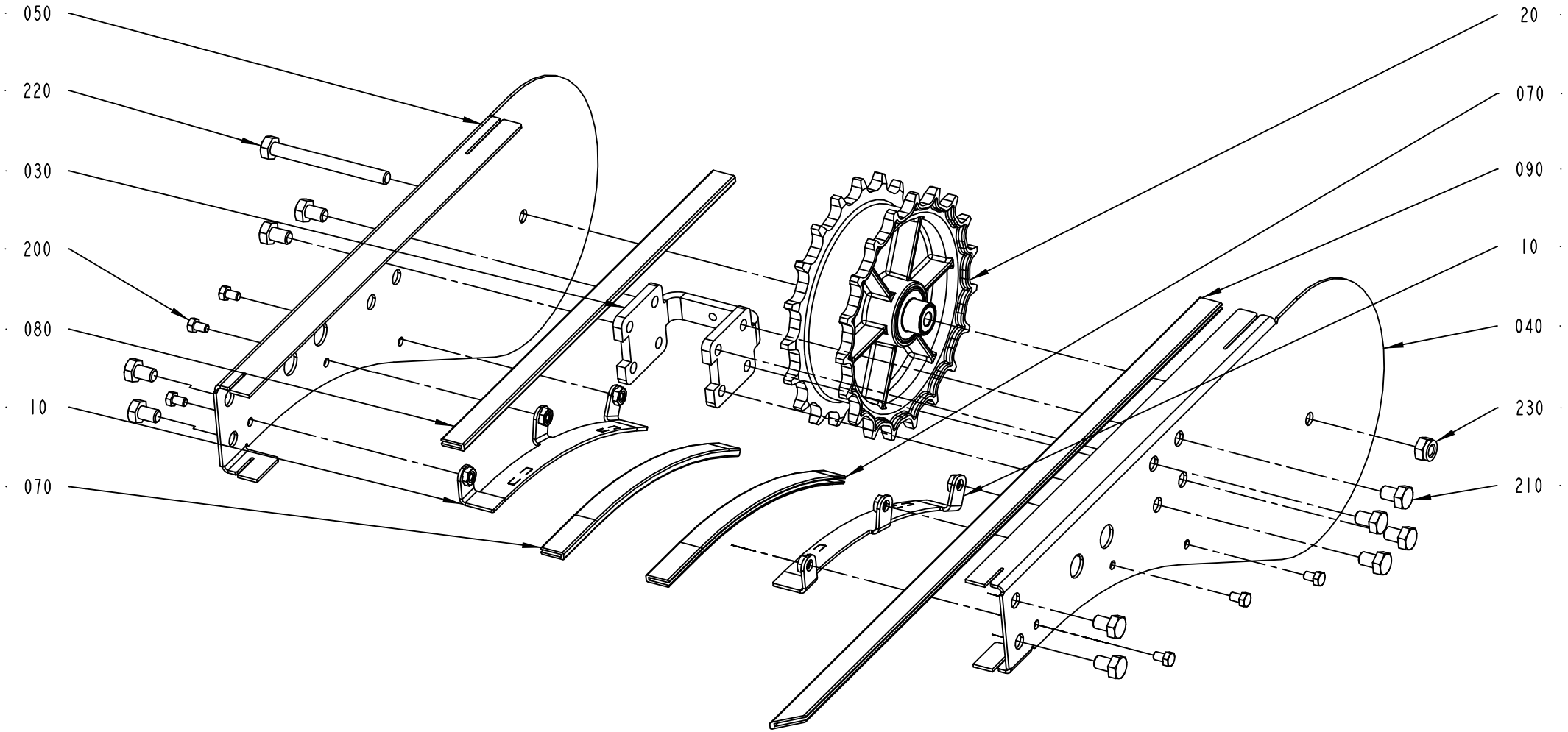
050
220
030
200
080
10
070
20
070
090
10
040
230
210

Pos	Part No	UN	Qty	Description	Page No
TBA 0200M, TBA 0200B, TBA 0200S, TBA 0250S, TBA 0250B (See drawing on page: 5-54)					
060	2687776-0000		1	SUPPORT	
080	2589960-3220		2	SLIDING STRIP	
240	312115-0453		2	SCREW ISO4762 M8X25 A4 80	
TBA 1000B, TBA 1000S (See drawing on page: 5-56)					
080	2589960-3220		1	SLIDING STRIP	
090	2589960-5102		1	SLIDING STRIP	
TBA 1000SQ (See drawing on page: 5-56)					
080	2589960-3220		1	SLIDING STRIP	
090	2589960-5102		1	SLIDING STRIP	
Common Parts					
010	2687772-0000		2	SIDE PLATE	
020	2561244-0200		1	DRIVE WHEEL	**5-59, 5-61, 11-37, 11-39**
030	2561206-0000		1	SPACER	
040	2687773-0000		1	SIDE PLATE	
050	2687774-0000		1	SIDE PLATE	
070	2589960-2120		2	SLIDING STRIP	
200	312105-0323		6	SCREW M6S ISO 4017 M5X8 A480	
210	312105-0447		10	SCREW M6S ISO 4017 M8X12 A480	
220	312105-0467		1	SCREW M6S ISO 4014 M8X80 A480	
230	312812-0318		1	HEXAGON NUT, NY-LOCK M8 A480	

Pos	Part No	UN	Qty	Description	Page No

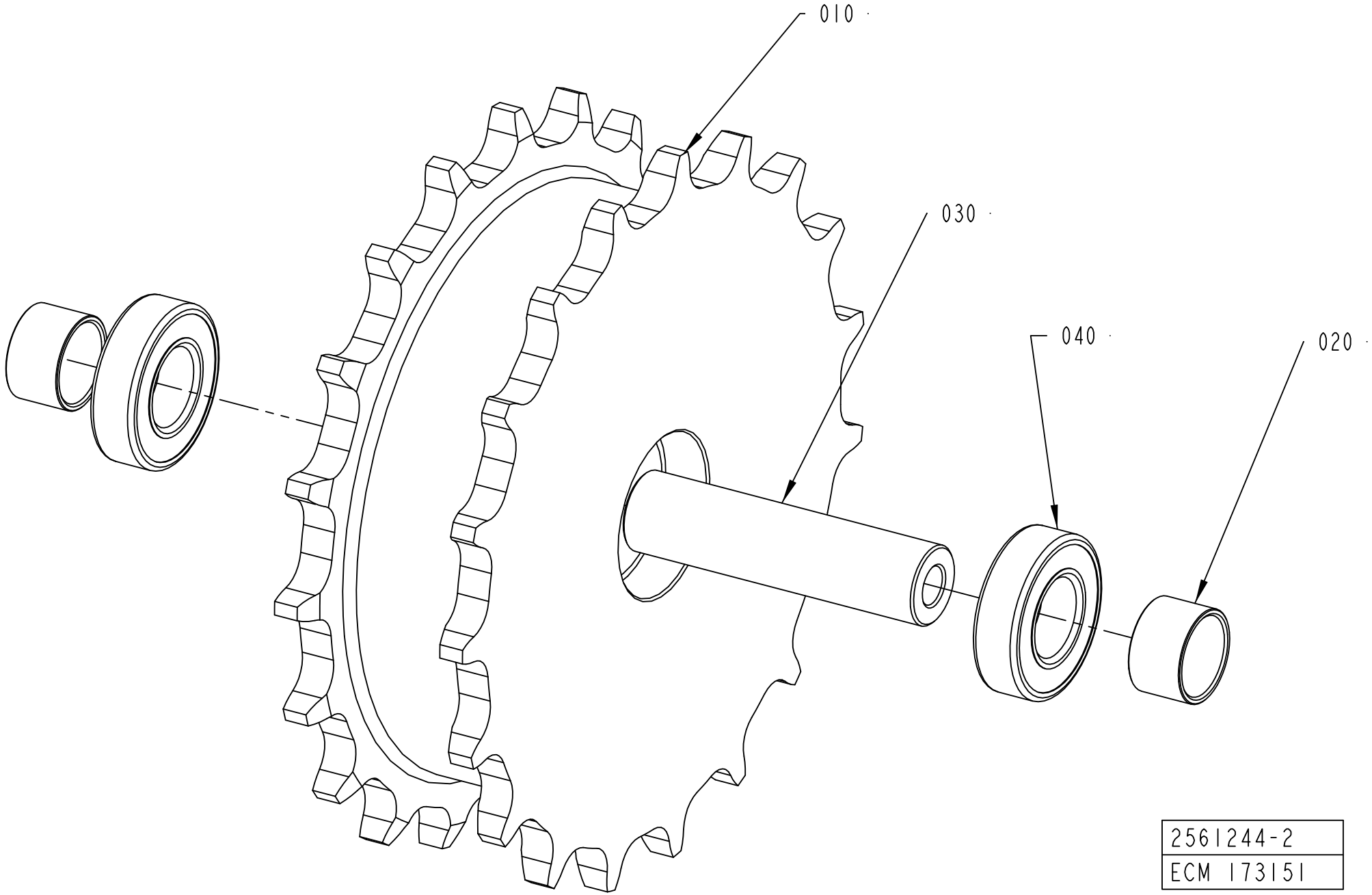
010
030
040
020
2561244-2
ECM 173151

ECM: 426050 - 20100112
Group number: 2561244-0200
Assembly Drawing: 2561244-2_1_AA

This list covers pages from 5-58 to 5-61

Pos	Part No	UN	Qty	Description	Page No
-					
010	2656672-0000		1	SPROCKET	
020	2656673-0000		2	SPACER	
030	2561267-0000		1	SHAFT	
040	1550348-0001		2	BALL BEARING 17/35X10	
040	90458-2172		2	BALL BEARING 17/35X10	

Pos	Part No	UN	Qty	Description	Page No

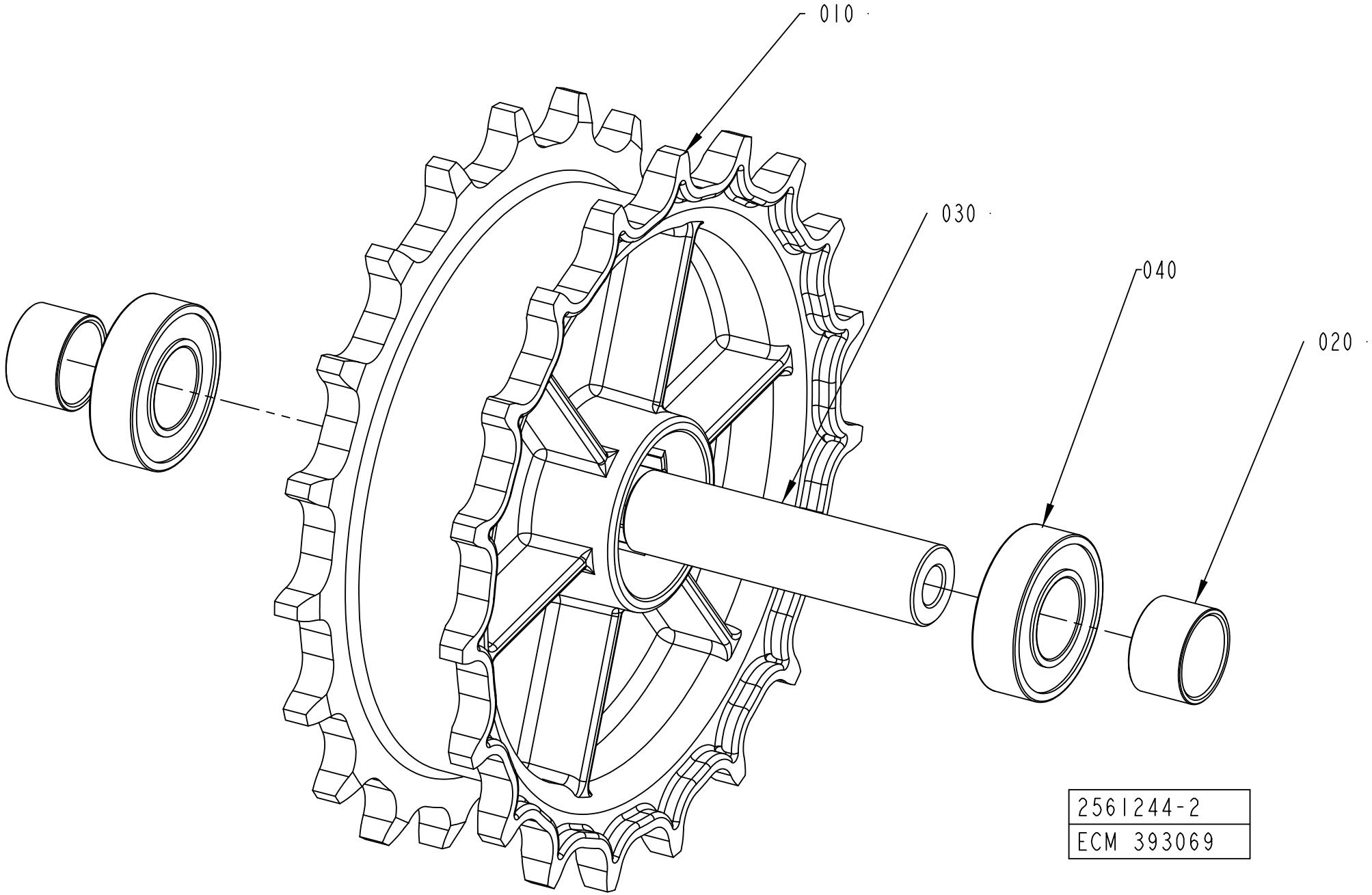
010
030
040
020
2561244-2
ECM 393069

ECM: 426050 - 20100112
Group number: 2561244-0200
Assembly Drawing: 2561244-2_1_AB

This list covers pages from 5-58 to 5-61

Pos	Part No	UN	Qty	Description	Page No
-					
010	2656672-0000		1	SPROCKET	
020	2656673-0000		2	SPACER	
030	2561267-0000		1	SHAFT	
040	1550348-0001		2	BALL BEARING 17/35X10	
040	90458-2172		2	BALL BEARING 17/35X10	

Pos	Part No	UN	Qty	Description	Page No

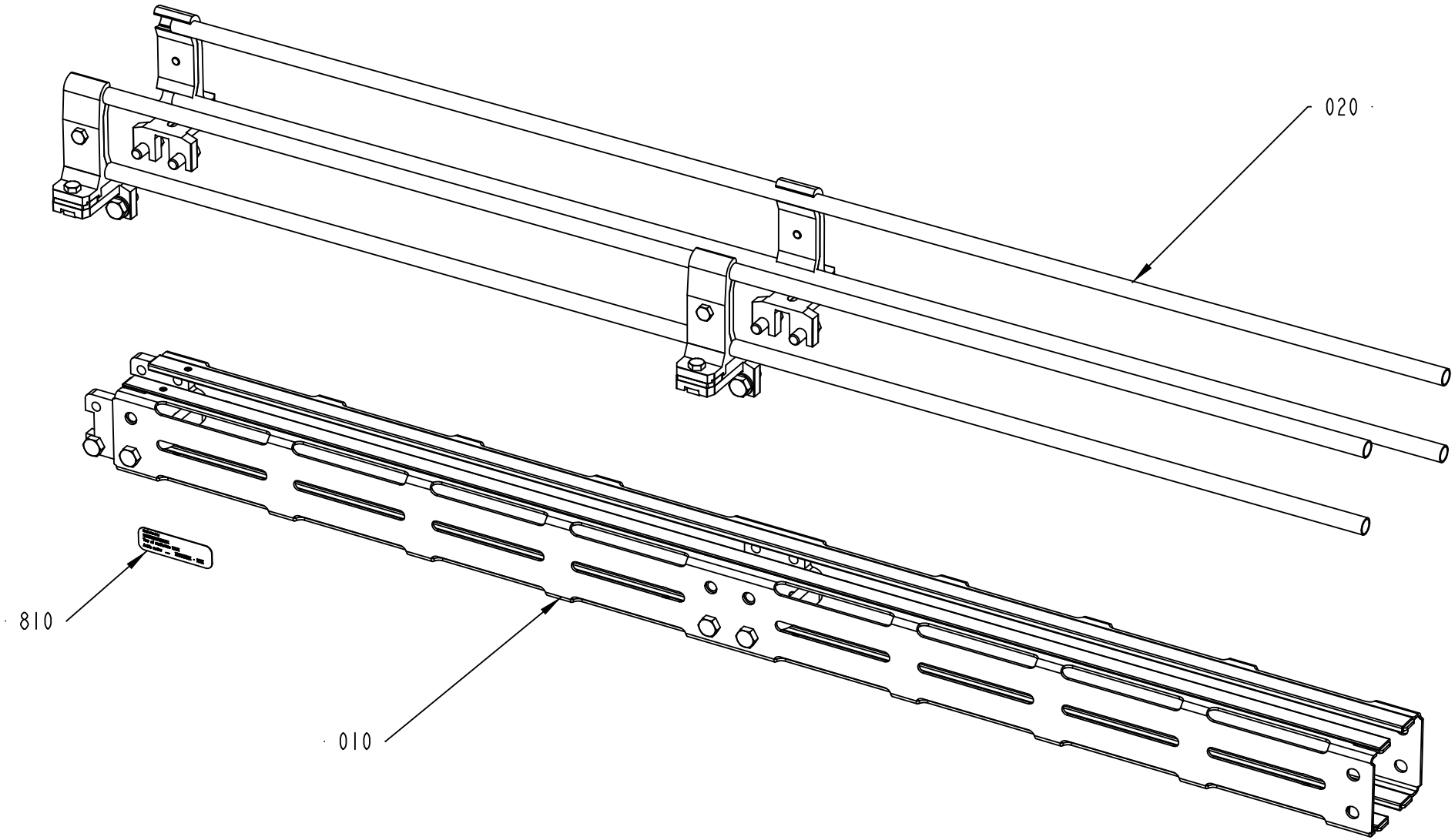

2763600-1
ECM 263821

ECM: 263821 -
Group number: 2763600-0102
Assembly Drawing: 2763600-1_1_AA

Pos	Part No	UN	Qty	Description	Page No
PC025-075 L0500					
820	2590221-0100		1	PACKING DESCRIPTION	**5-65, 5-67, 11-185, 11-187**
L 0500					
010	2763616-0102		1	CONVEYOR BODY	**5-69, 11-189**
020	2561274-0102		1	RAILING	**5-71, 11-191**
820	2590221-0100		1	PACKING DESCRIPTION	**5-65, 5-67, 11-185, 11-187**
PC040-100 L0500 (See drawing on pages: 5-62, 11-182, 11-202)					
020	2561274-0100		1	RAILING	**5-75, 11-193**
820	2590221-0100		1	PACKING DESCRIPTION	**5-65, 5-67, 11-185, 11-187**
Common Parts					
010	2763616-0103		1	CONVEYOR BODY	**5-77, 11-195**
010	2763616-0100		1	CONVEYOR BODY	**5-79, 11-197**
020	2561274-0103		1	RAILING	**5-81, 11-199**
810	1086870-0000		1	SIGN	

Pos	Part No	UN	Qty	Description	Page No

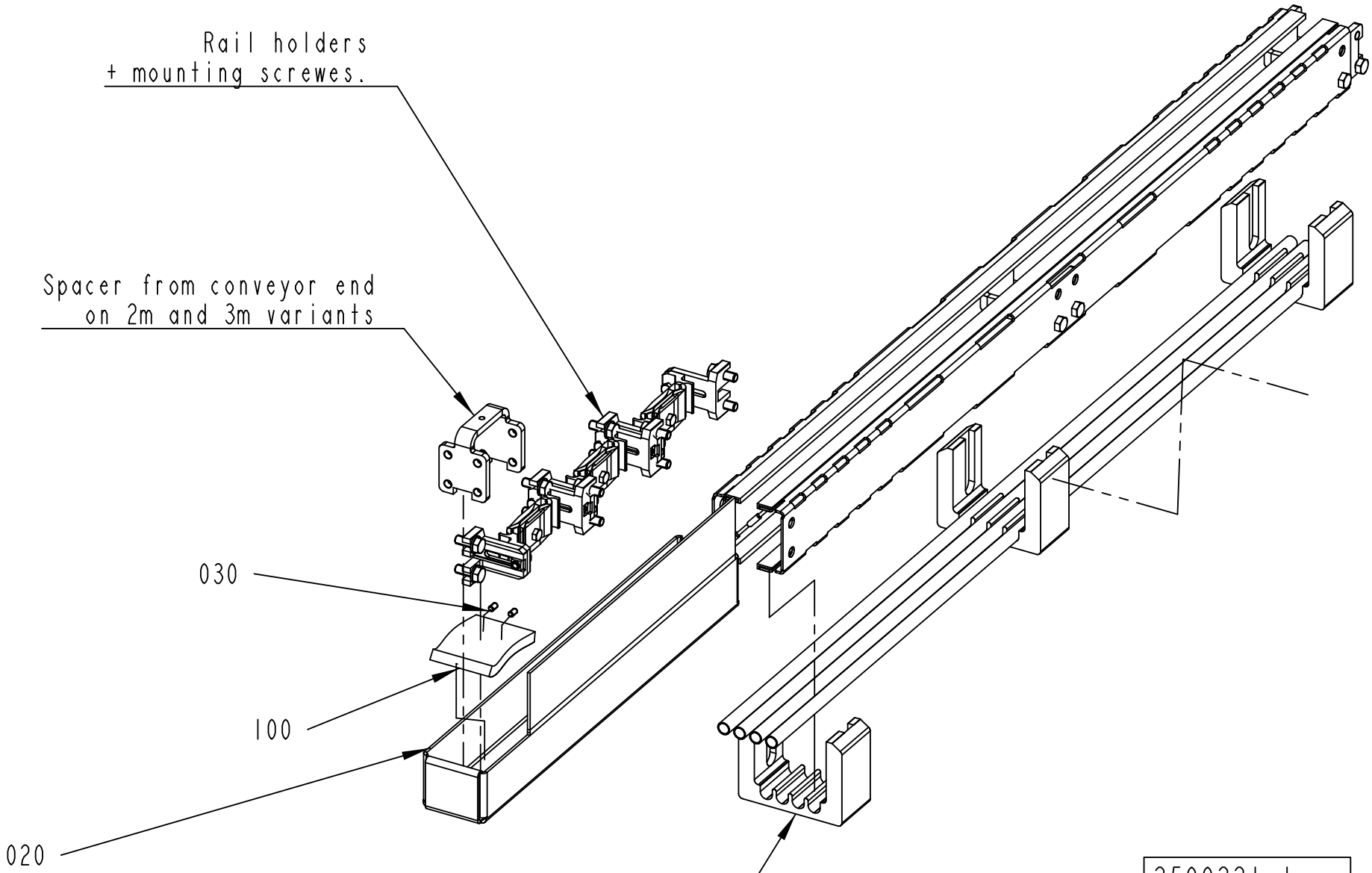

One or two boxes in each conveyor.
If two boxes, one in each end.
Including one spacer if two boxes (2m &3m).

2590221-1
439204

ECM: 450148 - 20100603
Group number: 2590221-0100
Assembly Drawing: 2590221-1_1_AG

This list covers pages from 5-64 to 5-67

Pos	Part No	UN	Qty	Description	Page No
L 0500					
010	2590222-0000		2	SPACER	
020	2590226-0000		1	CORRUGATED CARDBOARD BOX	
Common Parts					
030	90459-7293		2	SET SCREW DIN 551M5X8 PA66	
100	90003-0019		1	BAG	
100	90003-0018		1	BAG	

Pos	Part No	UN	Qty	Description	Page No

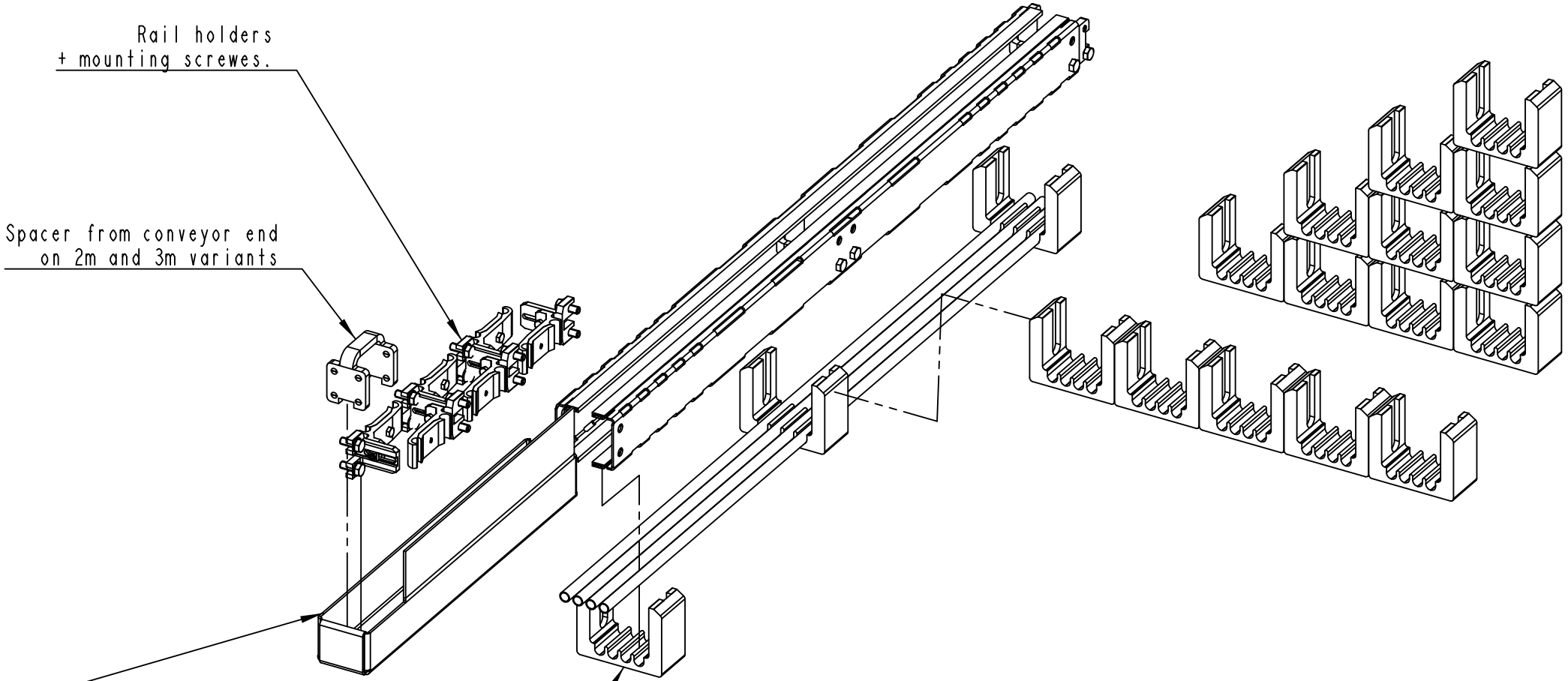

One or two boxes in each conveyor.
If two boxes, one in each end.
Including one spacer if two boxes (2m &3m).

2590221-1
243234

ECM: 450148 - 20100603
Group number: 2590221-0100
Assembly Drawing: 2590221-1_1_AF

This list covers pages from 5-64 to 5-67

Pos	Part No	UN	Qty	Description	Page No
L 0500					
010	2590222-0000		2	SPACER	
020	2590226-0000		1	CORRUGATED CARDBOARD BOX	
Common Parts					
030	90459-7293		2	SET SCREW DIN 551M5X8 PA66	
100	90003-0019		1	BAG	
100	90003-0018		1	BAG	

Pos	Part No	UN	Qty	Description	Page No

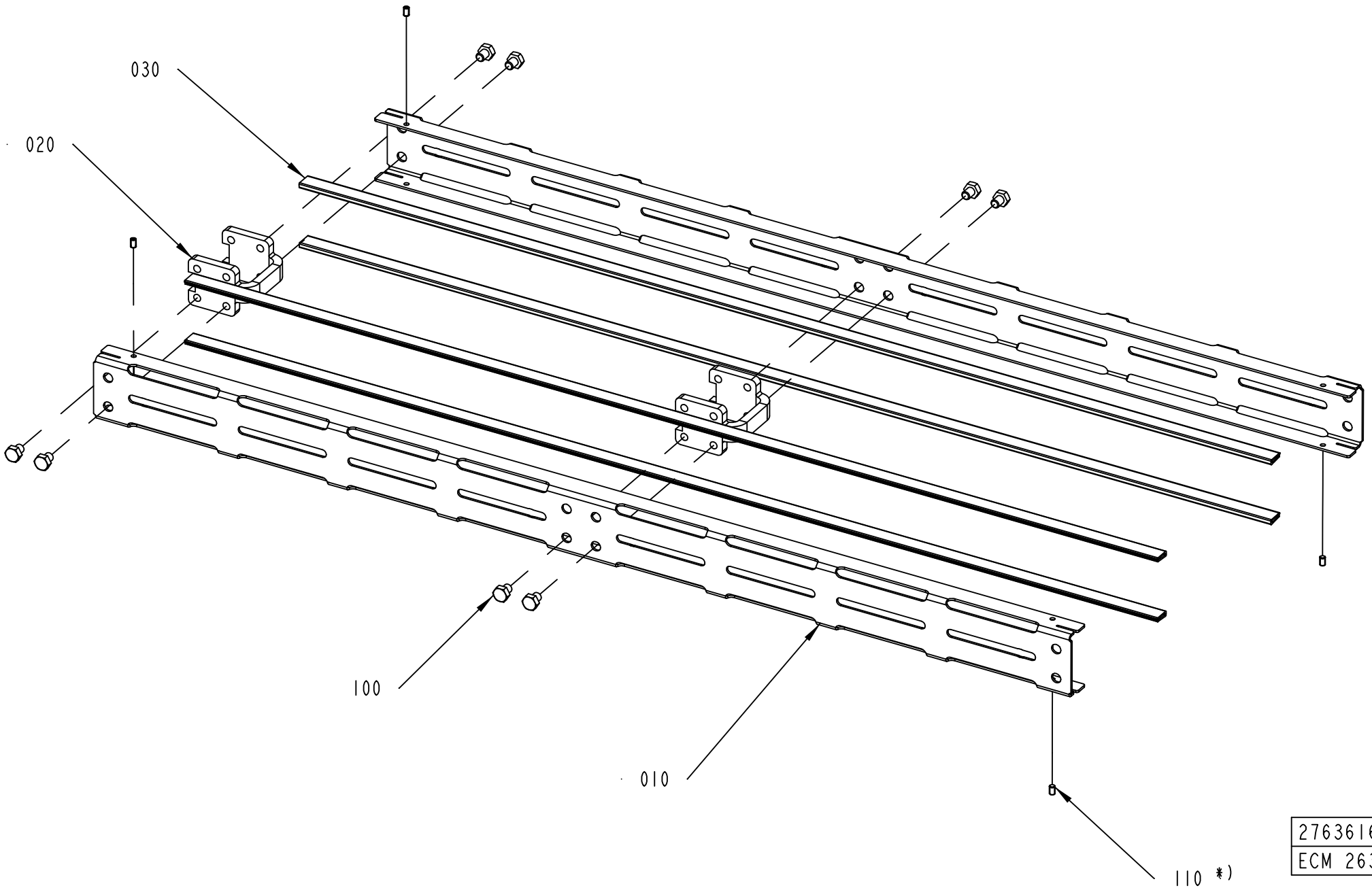
030
020
100
010
110 *)
2763616-1
ECM 263821

ECM: 263821 -
Group number: 2763616-0102
Assembly Drawing: 2763616-1_1_AA

Pos	Part No	UN	Qty	Description	Page No
L 0500					
010	2763617-0002		2	SIDE PLATE	
020	2561206-0000		1	SPACER	
030	1550595-4960		4	SLIDING STRIP	
100	90459-4735		4	SCREW M6S ISO 4017 M8X10 A480	
Common Parts					
010	2763617-0003		2	SIDE PLATE	
020	2561206-0000		2	SPACER	
030	1550595-9960		4	SLIDING STRIP	
100	90459-4735		8	SCREW M6S ISO 4017 M8X10 A480	
110	90459-7293		6	SET SCREW DIN 551M5X8 PA66	

Pos	Part No	UN	Qty	Description	Page No

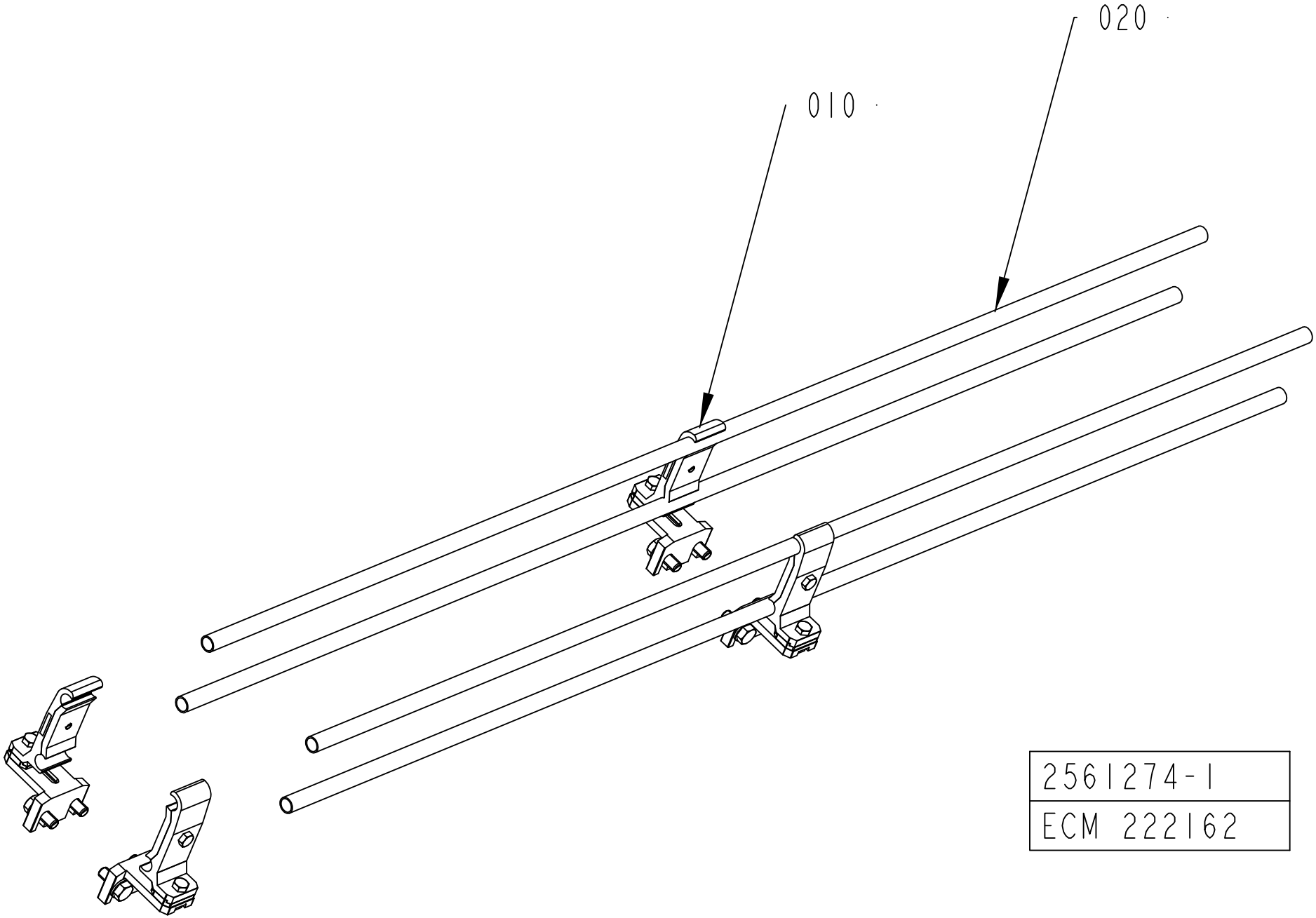
020
010
2561274-1
ECM 222162

ECM: 222162 -
Group number: 2561274-0102
Assembly Drawing: 2561274-1_1_AB

Pos	Part No	UN	Qty	Description	Page No
L 0500					
010	1550743-0200		2	RAIL HOLDER	**5-73, 11-31**
020	476221-0002		4	PIPE	
Common Parts					
010	1550743-0200		4	RAIL HOLDER	**5-73, 11-31**
020	476221-0003		4	PIPE	
020	476221-0004		4	PIPE	
020	476221-0005		4	PIPE	

Pos	Part No	UN	Qty	Description	Page No

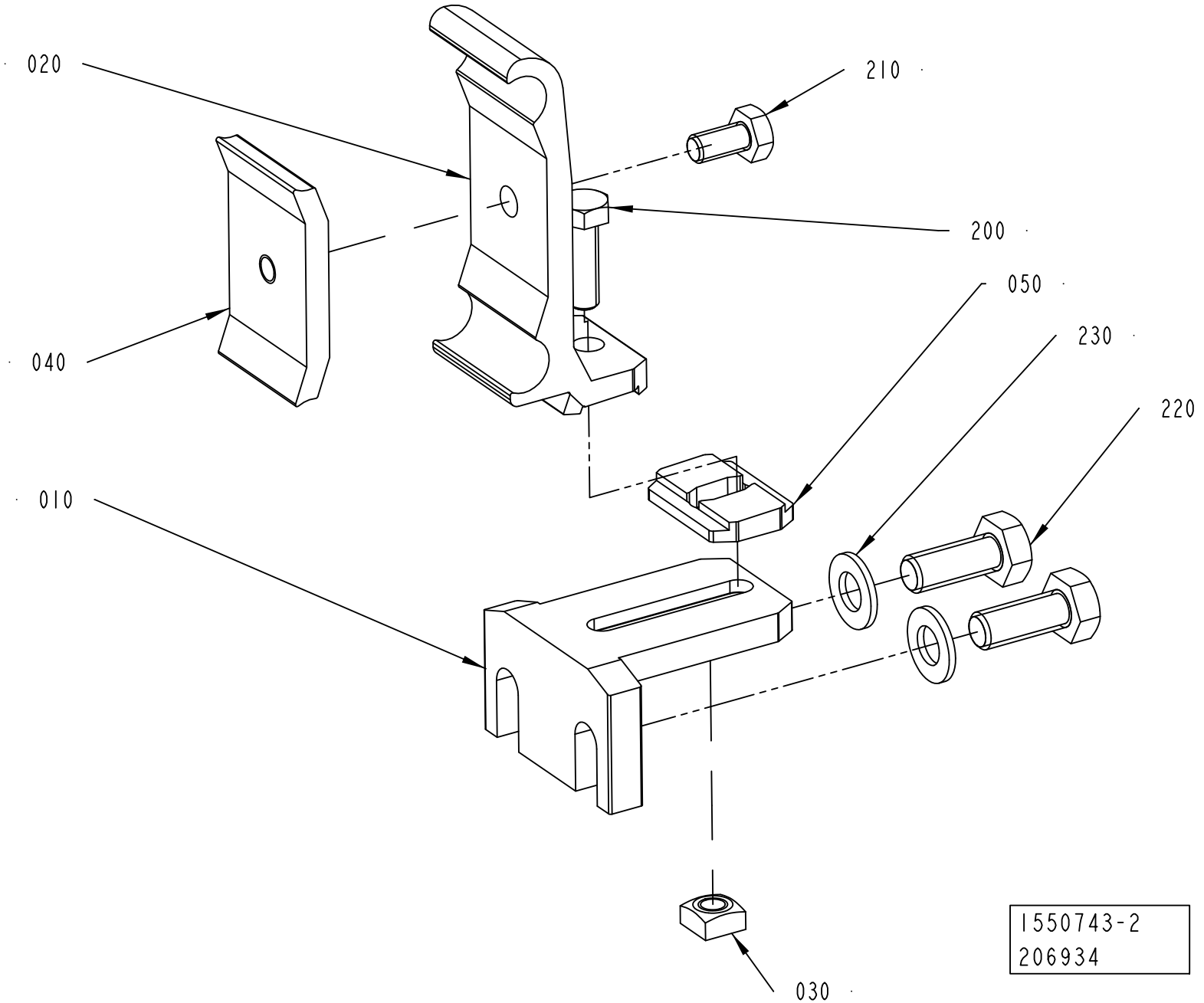
020
210
200
050
230
220
040
010
030
1550743-2
206934

ECM: 429045 - 20091201
Group number: 1550743-0200
Assembly Drawing: 1550743-2_1_AA

Pos	Part No	UN	Qty	Description	Page No
-					
010	1550772-0000		1	HOLDER	
020	2699437-0000		1	RAIL HOLDER	
030	1359565-0000		1	NUT	
040	1366727-0000		1	CLAMP	
050	2699436-0000		1	SPACER	
200	312105-0370		1	SCREW M6S ISO 4017 M6X20 A480	
210	312105-0366		1	SCREW M6S ISO 4017 M6X12 A480	
220	312105-0451		2	SCREW M6S ISO 4017 M8X20 A480	
230	315105-0165		2	WASHER BRB 8,4X16 RFR	

Pos	Part No	UN	Qty	Description	Page No

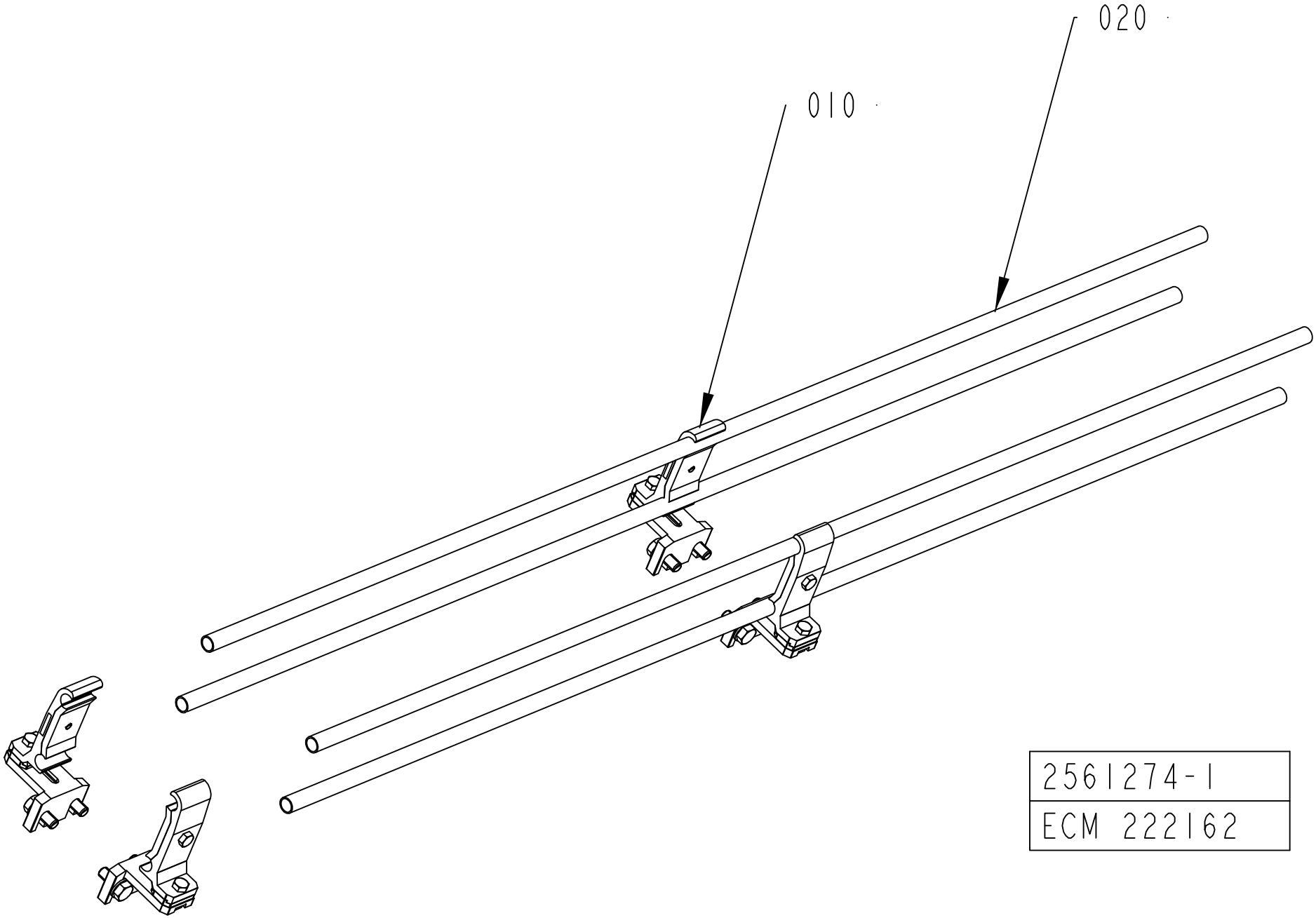
020
010
2561274-1
ECM 222162

ECM: 228025 - 20051222
Group number: 2561274-0100
Assembly Drawing: 2561274-1_1_AB

Pos	Part No	UN	Qty	Description	Page No
L 0500					
010	1550743-0200		2	RAIL HOLDER	**5-73, 11-31**
020	476221-0002		4	PIPE	

Pos	Part No	UN	Qty	Description	Page No

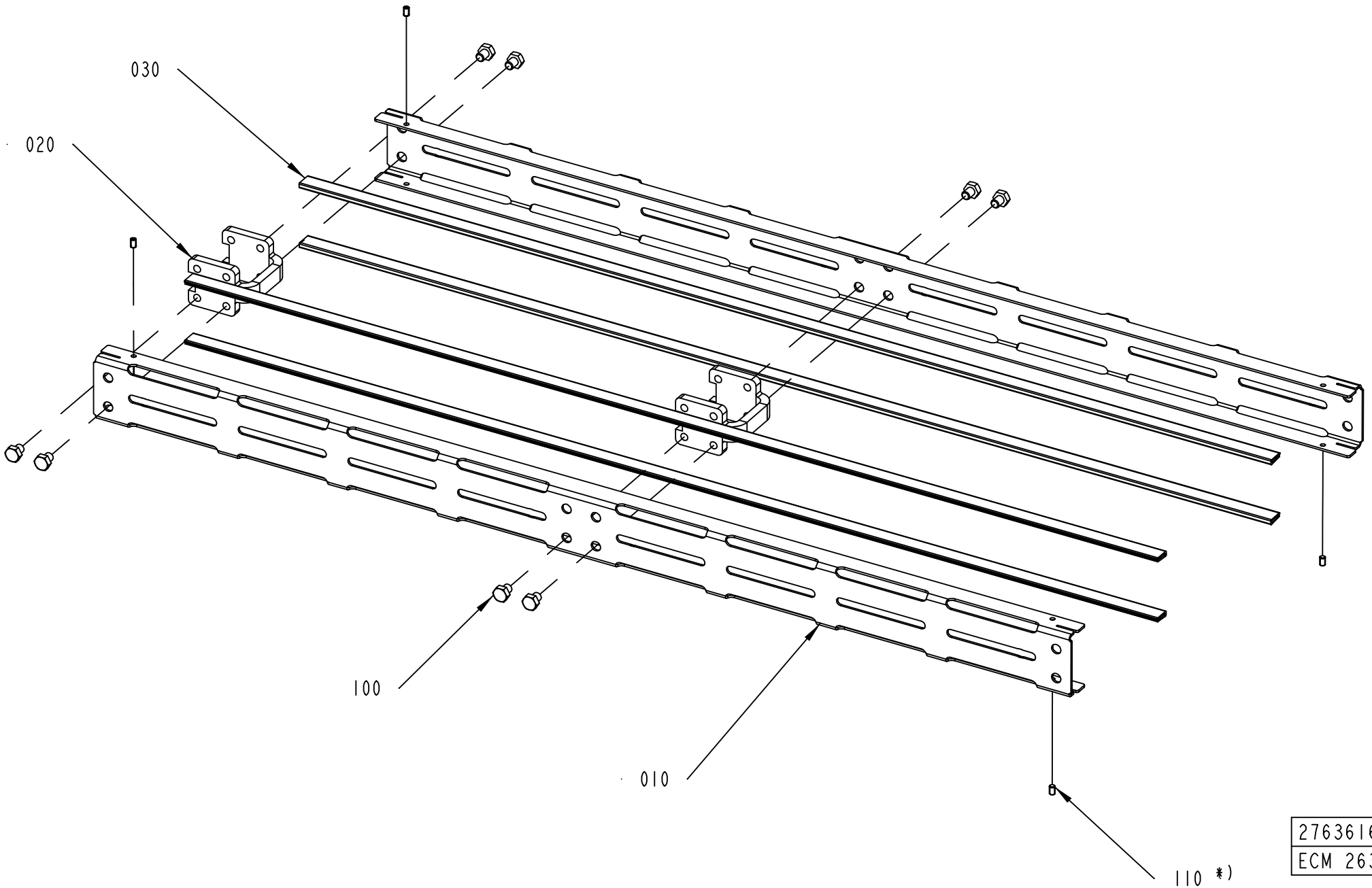
030
020
100
010
110 *)
2763616-1
ECM 263821

ECM: 263821 -
Group number: 2763616-0103
Assembly Drawing: 2763616-1_1_AA

Pos	Part No	UN	Qty	Description	Page No
-					
010	2763617-0002		2	SIDE PLATE	
020	2561206-0000		1	SPACER	
030	1550595-4960		4	SLIDING STRIP	
100	90459-4735		4	SCREW M6S ISO 4017 M8X10 A480	
110	90459-7293		6	SET SCREW DIN 551M5X8 PA66	

Pos	Part No	UN	Qty	Description	Page No

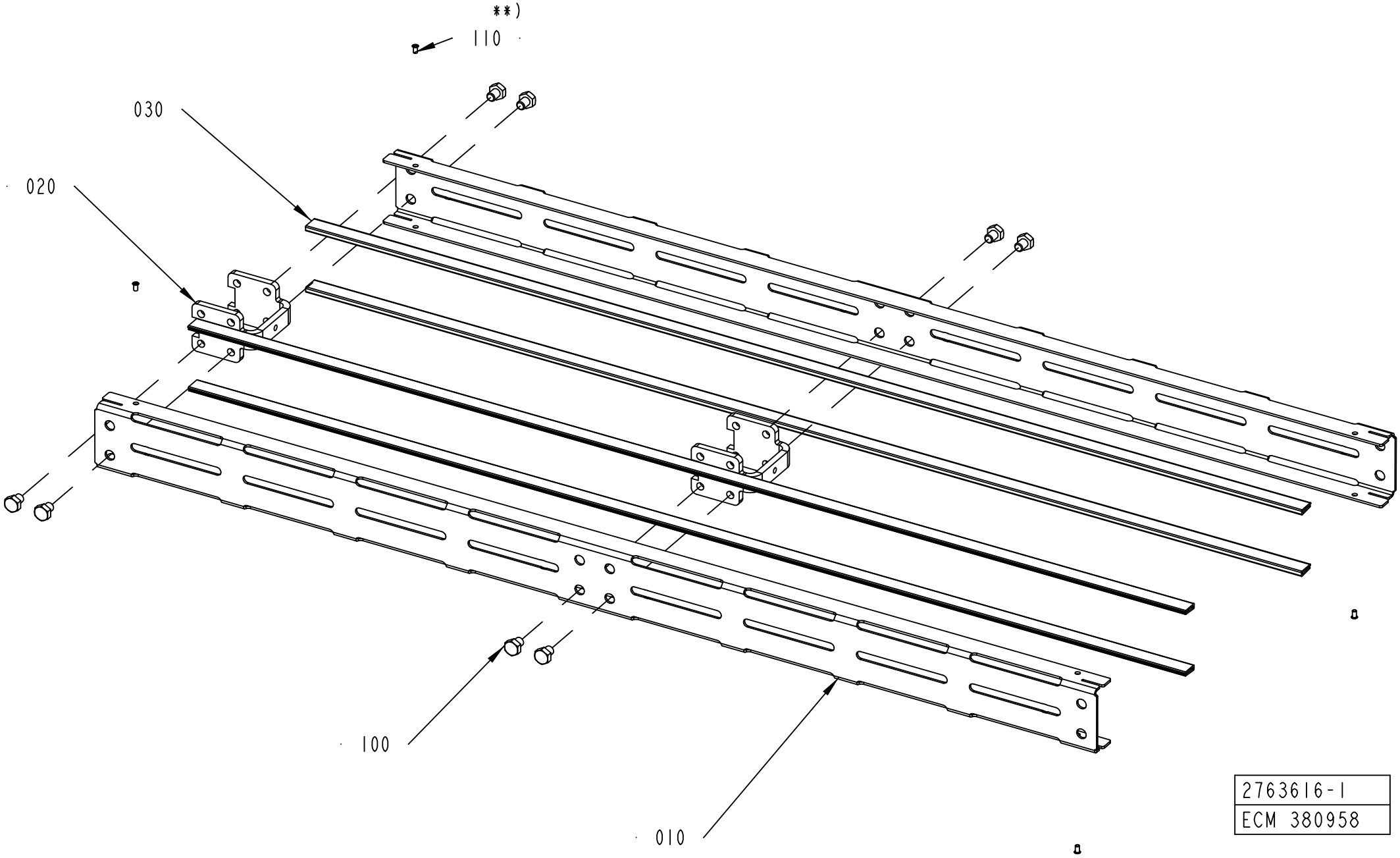
**)
110
030
020
100
010
2763616-1
ECM 380958

ECM: 450147 - 20100603
Group number: 2763616-0100
Assembly Drawing: 2763616-1_1_AB

Pos	Part No	UN	Qty	Description	Page No
L 0500					
010	2763617-0002		2	SIDE PLATE	
020	2561206-0000		1	SPACER	
030	1550595-4960		4	SLIDING STRIP	
100	90459-4735		4	SCREW M6S ISO 4017 M8X10 A480	
Common Parts					
110	90600-6183		4	TUBULAR RIVET 3,5X6,2	

Pos	Part No	UN	Qty	Description	Page No

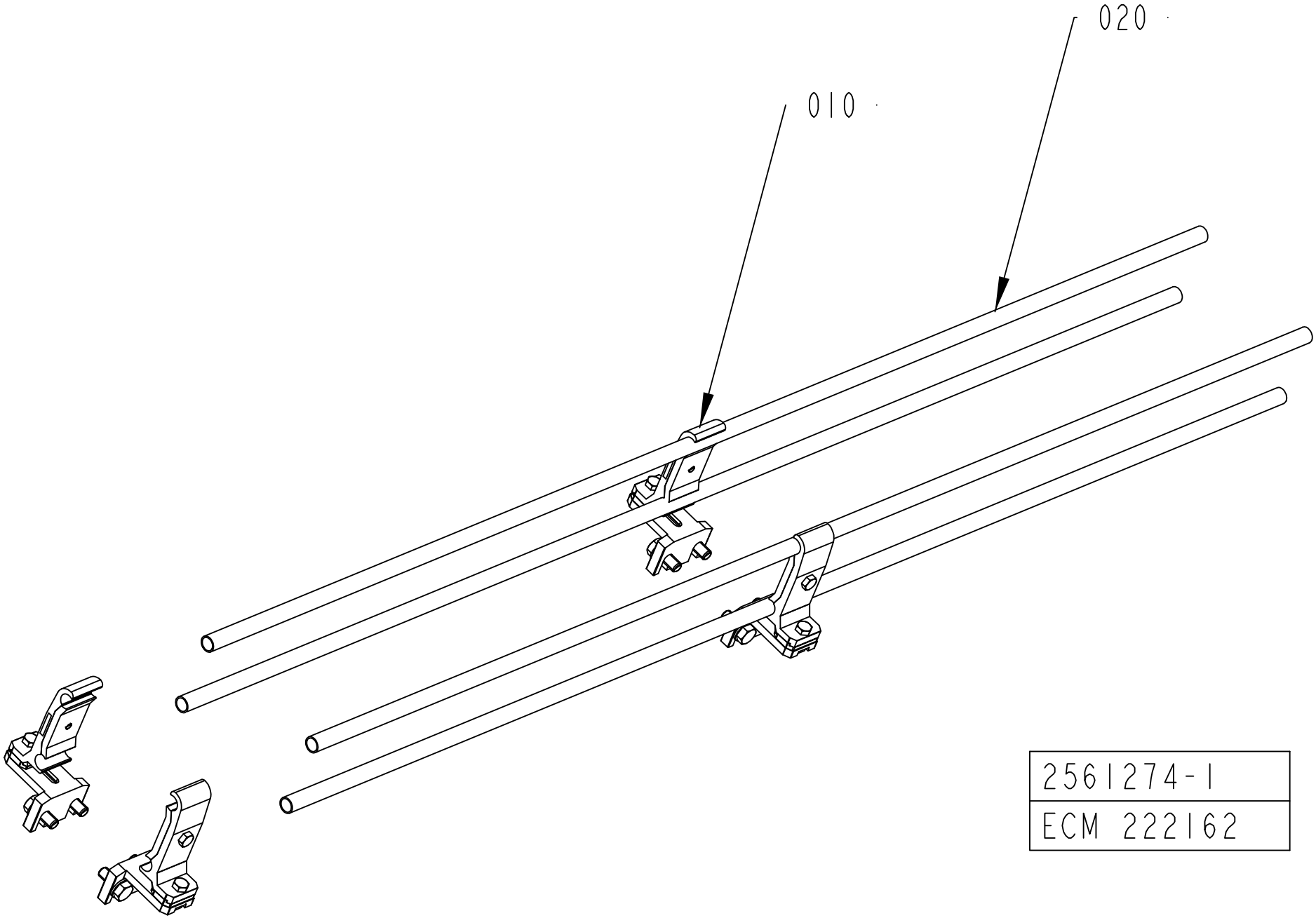
020
010
2561274-1
ECM 222162

ECM: 222162 -
Group number: 2561274-0103
Assembly Drawing: 2561274-1_1_AB

Pos	Part No	UN	Qty	Description	Page No
-					
010	1550743-0200		2	RAIL HOLDER	**5-73, 11-31**
020	476221-0002		4	PIPE	
020	476221-0004		4	PIPE	
020	476221-0005		4	PIPE	
020	476221-0009		4	PIPE	

Pos	Part No	UN	Qty	Description	Page No

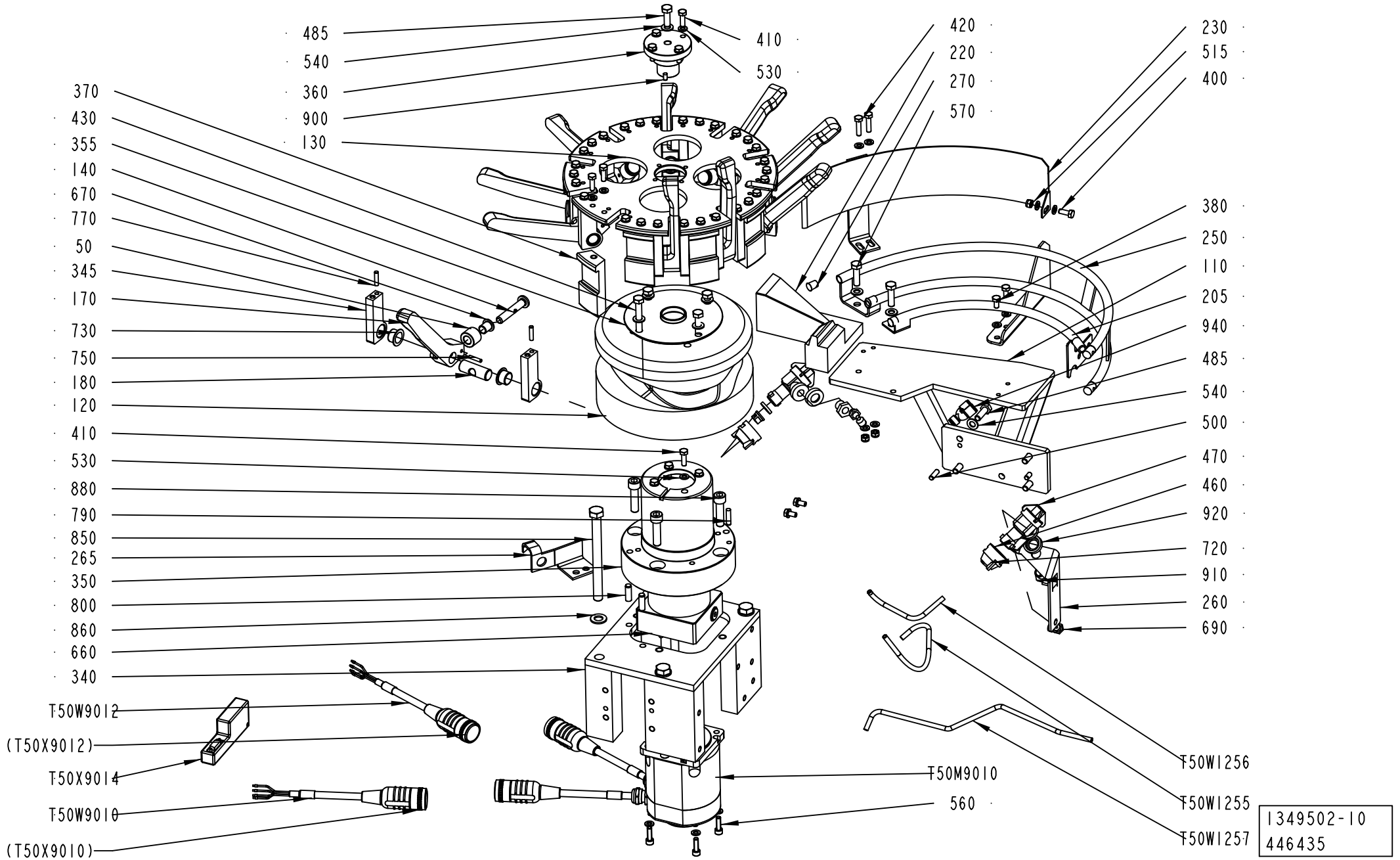
485
540
360
900
130
410
530
420
220
270
570
230
515
400
370
430
355
140
670
770
50
345
170
730
750
180
120
410
530
880
790
850
265
350
800
860
660
340
380
250
110
205
940
485
540
500
470
460
920
720
910
260
690
T50W9012
(T50X9012)
T50X9014
T50W9010
(T50X9010)
T50M9010
560
T50W1256
T50W1255
T50W1257
1349502-10
446435

ECM: 450972 - 20100702
Group number: 1349502-0400
Assembly Drawing: 1349502-10_1_AF

This list covers pages from 5-82 to 5-91

Pos	Part No	UN	Qty	Description	Page No
TBA 0125S (See drawing on page: 5-84)					
040	1549972-0000		2	FOOT	
050	1538306-0000		10	ROLLER	
060	1549971-0000		1	FASTENING PLATE	
110	2755376-0000		1	SUPPORT	
120	2846491-0000		1	CAM	
130	2877410-0000		1	DRUM	
140	1260068-0000		10	SHAFT	
170	2877430-0000		10	CARRIER	
180	1260070-0000		10	SHAFT	
260	2933679-0000		1	SUPPORT	
265	2872403-0000		1	SUPPORT	
330	2877436-0000		1	SLIDER	
340	2776851-0000		1	SUPPORT	
345	2806613-0000		20	BRACKET	
355	2806369-0000		1	SUPPORT	
360	2776853-0000		1	SHAFT	
370	2919176-0000		10	GUIDE	
400	312105-0368		15	SCREW M6S ISO 4017 M6X16 A480	
410	312105-0370		74	SCREW M6S ISO 4017 M6X20 A480	
430	312105-0477		4	SCREW M6S ISO 4014 M8X130 A480	
460	534310-0001		2	NOZZLE	
470	90230-0027		2	NON-RETURN VALVE QJ 8355-1/4"	
	90230-0301		*1*	*DIAPHRAGM*	
	90230-0300		*1*	*STRAINER*	
480	312115-0455		2	SCREW ISO4762 M8X30 A4 80	
485	312105-0453		5	SCREW M6S ISO 4017 M8X25 A480	
500	311103-0353		2	PARALLEL PIN ISO 2338 6M6X20 A1	
515	312812-0316		3	HEXAGON NUT, NY-LOCK M6 A480	
530	315105-0153		98	WASHER BRB 6,4X12 RFR	
540	315105-0165		19	WASHER BRB 8,4X16 RFR	
560	312115-0370		4	SCREW ISO4762 M6X20 A4 80	
580	312105-0449		5	SCREW M6S ISO 4017 M8X16 A480	
590	312105-0372		2	SCREW M6S ISO 4017 M6X25 A480	
670	321156-0145		10	FLANGE BUSHING, IGLIDUR H370 10X12X15	
690	90458-2956		2	ELBOW PIPE JOINT, EXT.THREAD, D=6MM-G1/8	
720	90005-0094		2	GASKET C 19438-EPR	
730	90240-0332		20	FLANGE BUSHING, IGLIDUR G 16X18X12	
750	311103-0272		10	PARALLEL PIN ISO 2338 4M6X20 A1	
770	311103-0311		20	PARALLEL PIN ISO 2338 5M6X22 A1	
790	311103-0355		1	PARALLEL PIN ISO 2338 6M6X25 A1	
800	311103-1403		2	PARALLEL PIN ISO 2338 8M6X24 A1	
850	312101-0559		4	SCREW M6S M12X140 FZB	
860	315105-0178		4	WASHER BRB 13X24 RFR	
900	311103-0305		1	PARALLEL PIN ISO 2338 5M6X10 A1	
910	532413-0000		2	REDUCING NIPPLE	
920	532414-0000		2	WASHER	
940	90055-0257		1	PUSH-IN Y-CONNECTOR QSY-6	
T50W1255	90166-0132	MM	500	TUBE 6 MM PA,TRANSP.	
T50W1256	90166-0132	MM	500	TUBE 6 MM PA,TRANSP.	
T50W1257	90166-0132	MM	500	TUBE 6 MM PA,TRANSP.	
TBA 0200B (See drawing on page: 5-84)					
040	1549972-0000		2	FOOT	
050	1538306-0000		10	ROLLER	
060	1549971-0000		1	FASTENING PLATE	
110	2755376-0000		1	SUPPORT	
120	2846491-0000		1	CAM	
130	2877410-0000		1	DRUM	
140	1260068-0000		10	SHAFT	
170	2877430-0000		10	CARRIER	
180	1260070-0000		10	SHAFT	
260	2933679-0000		1	SUPPORT	
265	2872403-0000		1	SUPPORT	
330	2881030-0000		1	SLIDER	
340	2776851-0000		1	SUPPORT	
345	2806613-0000		20	BRACKET	
355	2806369-0000		1	SUPPORT	
360	2776853-0000		1	SHAFT	
370	2919176-0000		10	GUIDE	
410	312105-0370		41	SCREW M6S ISO 4017 M6X20 A480	
430	312105-0477		4	SCREW M6S ISO 4014 M8X130 A480	
460	534310-0001		2	NOZZLE	
470	90230-0027		2	NON-RETURN VALVE QJ 8355-1/4"	
	90230-0301		*1*	*DIAPHRAGM*	
	90230-0300		*1*	*STRAINER*	
480	312115-0455		2	SCREW ISO4762 M8X30 A4 80	
485	312105-0453		5	SCREW M6S ISO 4017 M8X25 A480	
500	311103-0353		2	PARALLEL PIN ISO 2338 6M6X20 A1	
515	312812-0316		3	HEXAGON NUT, NY-LOCK M6 A480	
530	315105-0153		48	WASHER BRB 6,4X12 RFR	
540	315105-0165		10	WASHER BRB 8,4X16 RFR	
560	312115-0370		4	SCREW ISO4762 M6X20 A4 80	
580	312105-0449		1	SCREW M6S ISO 4017 M8X16 A480	
590	312105-0372		2	SCREW M6S ISO 4017 M6X25 A480	

Machine Type | Group Description | Used-In | Group Number | Page No

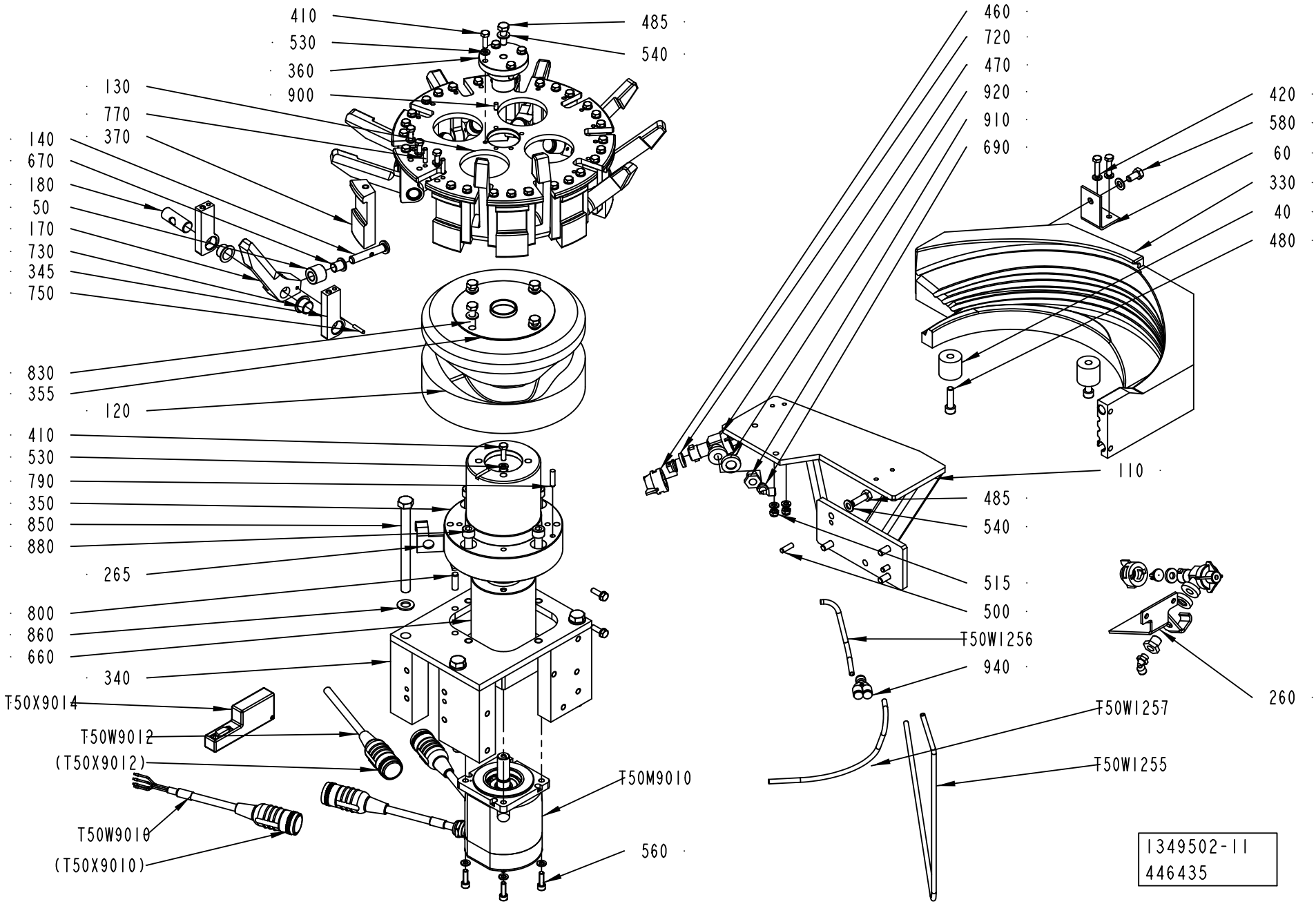
410
530
360
900
485
540
130
770
370
140
670
180
50
170
730
345
750
830
355
120
410
530
790
350
850
880
265
800
860
660
340
T50X9014
T50W9012
(T50X9012)
T50W9010
(T50X9010)
T50M9010
560
460
720
470
920
910
690
420
580
60
330
40
480
110
485
540
515
500
T50W1256
940
T50W1257
T50W1255
260
1349502-11
446435

Pos	Part No	UN	Qty	Description	Page No
TBA 0200B (Cont'd) (See drawing on page: 5-84)					
670	321156-0145		10	FLANGE BUSHING, IGLIDUR H370 10X12X15	
690	90458-2956		2	ELBOW PIPE JOINT, EXT.THREAD, D=6MM-G1/8	
720	90005-0094		2	GASKET C 19438-EPR	
730	90240-0332		20	FLANGE BUSHING, IGLIDUR G 16X18X12	
750	311103-0272		10	PARALLEL PIN ISO 2338 4M6X20 A1	
770	311103-0311		20	PARALLEL PIN ISO 2338 5M6X22 A1	
790	311103-0355		1	PARALLEL PIN ISO 2338 6M6X25 A1	
800	311103-1403		2	PARALLEL PIN ISO 2338 8M6X24 A1	
850	312101-0559		4	SCREW M6S M12X140 FZB	
860	315105-0178		4	WASHER BRB 13X24 RFR	
900	311103-0305		1	PARALLEL PIN ISO 2338 5M6X10 A1	
910	532413-0000		2	REDUCING NIPPLE	
920	532414-0000		2	WASHER	
940	90055-0257		1	PUSH-IN Y-CONNECTOR QSY-6	
T50W1255	90166-0132	MM	500	TUBE 6 MM PA,TRANSP.	
T50W1256	90166-0132	MM	500	TUBE 6 MM PA,TRANSP.	
T50W1257	90166-0132	MM	500	TUBE 6 MM PA,TRANSP.	
TBA 0200S (See drawing on page: 5-82)					
050	1538306-0000		10	ROLLER	
110	2755376-0000		1	SUPPORT	
120	2846491-0000		1	CAM	
130	2877410-0000		1	DRUM	
140	1260068-0000		10	SHAFT	
170	2846487-0000		10	CARRIER	
180	1260070-0000		10	SHAFT	
205	2877415-0000		1	GUIDE	
220	2872748-0000		1	SLIDER	
230	2514140-0000		1	GUIDE	
250	2877401-0000		1	RAIL	
260	2809791-0000		1	SUPPORT	
265	2872403-0000		1	SUPPORT	
270	484701-0000		3	SHUTTER	
340	2776851-0000		1	SUPPORT	
345	2806613-0000		20	BRACKET	
355	2806369-0000		1	SUPPORT	
360	2776853-0000		1	SHAFT	
370	2919176-0000		10	GUIDE	
380	312105-0366		2	SCREW M6S ISO 4017 M6X12 A480	
400	312105-0368		1	SCREW M6S ISO 4017 M6X16 A480	
410	312105-0370		45	SCREW M6S ISO 4017 M6X20 A480	
430	312105-0477		4	SCREW M6S ISO 4014 M8X130 A480	
460	534310-0001		2	NOZZLE	
470	90230-0027		2	NON-RETURN VALVE QJ 8355-1/4"	
	90230-0301		*1*	*DIAPHRAGM*	
	90230-0300		*1*	*STRAINER*	
485	312105-0453		5	SCREW M6S ISO 4017 M8X25 A480	
500	311103-0353		2	PARALLEL PIN ISO 2338 6M6X20 A1	
515	312812-0316		3	HEXAGON NUT, NY-LOCK M6 A480	
530	315105-0153		58	WASHER BRB 6,4X12 RFR	
540	315105-0165		14	WASHER BRB 8,4X16 RFR	
560	312115-0370		4	SCREW ISO4762 M6X20 A4 80	
570	312105-0455		2	SCREW M6S ISO 4017 M8X30 A480	
590	312105-0372		2	SCREW M6S ISO 4017 M6X25 A480	
670	321156-0145		10	FLANGE BUSHING, IGLIDUR H370 10X12X15	
690	90458-2956		2	ELBOW PIPE JOINT, EXT.THREAD, D=6MM-G1/8	
720	90005-0094		2	GASKET C 19438-EPR	
730	90240-0332		20	FLANGE BUSHING, IGLIDUR G 16X18X12	
750	311103-0272		10	PARALLEL PIN ISO 2338 4M6X20 A1	
770	311103-0311		20	PARALLEL PIN ISO 2338 5M6X22 A1	
790	311103-0355		1	PARALLEL PIN ISO 2338 6M6X25 A1	
800	311103-1403		4	PARALLEL PIN ISO 2338 8M6X24 A1	
850	312101-0559		4	SCREW M6S M12X140 FZB	
860	315105-0178		4	WASHER BRB 13X24 RFR	
900	311103-0305		1	PARALLEL PIN ISO 2338 5M6X10 A1	
910	532413-0000		2	REDUCING NIPPLE	
920	532414-0000		2	WASHER	
940	90055-0257		1	PUSH-IN Y-CONNECTOR QSY-6	
T50W1255	90166-0132	MM	500	TUBE 6 MM PA,TRANSP.	
T50W1256	90166-0132	MM	500	TUBE 6 MM PA,TRANSP.	
T50W1257	90166-0132	MM	500	TUBE 6 MM PA,TRANSP.	
TBA 0250B (See drawing on page: 5-82)					
050	1538306-0000		10	ROLLER	
110	2755376-0000		1	SUPPORT	
120	2846491-0000		1	CAM	
130	2877410-0000		1	DRUM	
140	1260068-0000		10	SHAFT	
170	2872401-0000		10	CARRIER	
180	1260070-0000		10	SHAFT	
205	2877415-0000		1	GUIDE	
220	2877127-0000		1	BRACKET	
230	2506711-0000		1	GUIDE	
250	2877401-0000		1	RAIL	
260	2809791-0000		1	SUPPORT	

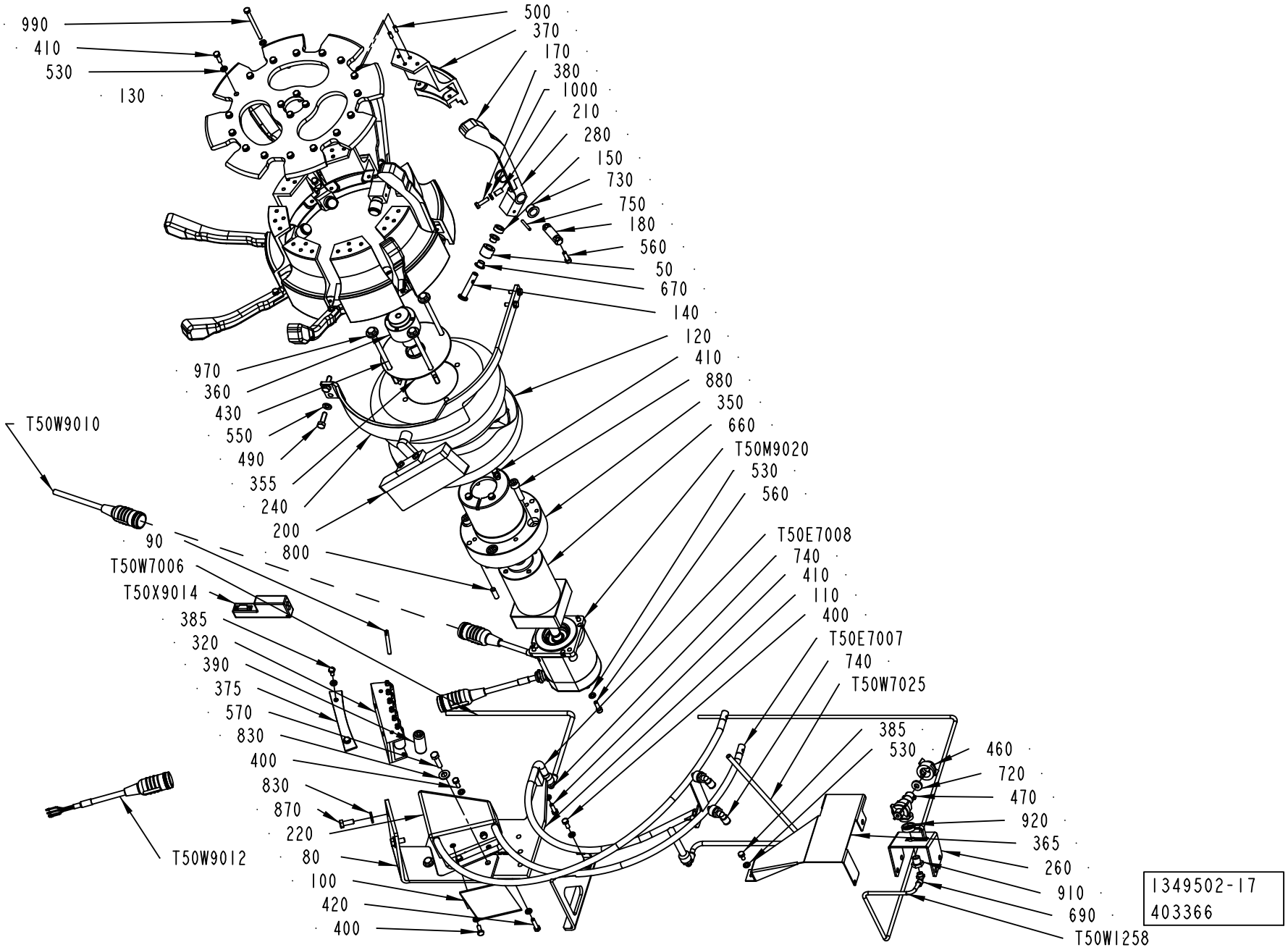
990
410
530
130
500
370
170
380
1000
210
280
150
730
750
180
560
50
670
140
120
410
880
350
660
T50M9020
530
560
T50E7008
740
410
110
400
T50E7007
740
T50W7025
385
530
460
720
470
920
365
260
910
690
T50W1258
970
360
430
550
490
355
240
200
800
T50W9010
90
T50W7006
T50X9014
385
320
390
375
570
830
400
830
870
220
80
100
420
400
T50W9012
1349502-17
403366

Pos	Part No	UN	Qty	Description	Page No
TBA 0250B (Cont'd) (See drawing on page: 5-82)					
265	2872403-0000		1	SUPPORT	
270	484701-0000		3	SHUTTER	
340	2776851-0000		1	SUPPORT	
345	2806613-0000		20	BRACKET	
355	2806369-0000		1	SUPPORT	
360	2776853-0000		1	SHAFT	
370	2919176-0000		10	GUIDE	
380	312105-0366		2	SCREW M6S ISO 4017 M6X12 A480	
400	312105-0368		1	SCREW M6S ISO 4017 M6X16 A480	
410	312105-0370		45	SCREW M6S ISO 4017 M6X20 A480	
430	312105-0477		4	SCREW M6S ISO 4014 M8X130 A480	
460	534310-0001		2	NOZZLE	
470	90230-0027		2	NON-RETURN VALVE QJ 8355-1/4"	
	90230-0301		*1*	*DIAPHRAGM*	
	90230-0300		*1*	*STRAINER*	
485	312105-0453		5	SCREW M6S ISO 4017 M8X25 A480	
500	311103-0353		2	PARALLEL PIN ISO 2338 6M6X20 A1	
515	312812-0316		3	HEXAGON NUT, NY-LOCK M6 A480	
530	315105-0153		58	WASHER BRB 6,4X12 RFR	
540	315105-0165		14	WASHER BRB 8,4X16 RFR	
560	312115-0370		4	SCREW ISO4762 M6X20 A4 80	
570	312105-0455		2	SCREW M6S ISO 4017 M8X30 A480	
590	312105-0372		2	SCREW M6S ISO 4017 M6X25 A480	
670	321156-0145		10	FLANGE BUSHING, IGLIDUR H370 10X12X15	
690	90458-2956		2	ELBOW PIPE JOINT, EXT.THREAD, D=6MM-G1/8	
720	90005-0094		2	GASKET C 19438-EPR	
730	90240-0332		20	FLANGE BUSHING, IGLIDUR G 16X18X12	
750	311103-0272		10	PARALLEL PIN ISO 2338 4M6X20 A1	
770	311103-0311		20	PARALLEL PIN ISO 2338 5M6X22 A1	
790	311103-0355		1	PARALLEL PIN ISO 2338 6M6X25 A1	
800	311103-1403		4	PARALLEL PIN ISO 2338 8M6X24 A1	
850	312101-0559		4	SCREW M6S M12X140 FZB	
860	315105-0178		4	WASHER BRB 13X24 RFR	
900	311103-0305		1	PARALLEL PIN ISO 2338 5M6X10 A1	
910	532413-0000		2	REDUCING NIPPLE	
920	532414-0000		2	WASHER	
940	90055-0257		1	PUSH-IN Y-CONNECTOR QSY-6	
T50W1255	90166-0132	MM	500	TUBE 6 MM PA,TRANSP.	
T50W1256	90166-0132	MM	500	TUBE 6 MM PA,TRANSP.	
T50W1257	90166-0132	MM	500	TUBE 6 MM PA,TRANSP.	
TBA 1000B (See drawing on page: 5-88)					
050	1538306-0000		8	ROLLER	
100	2890565-0000		1	GUIDE	
110	2668094-0000		1	PLATE	
120	2957837-0000		1	CAM	
130	2845302-0000		1	DRUM	
140	1487087-0000		8	SHAFT	
150	2512983-0000		8	SPACER	
170	2957835-0000		8	CARRIER	
180	1487091-0000		8	SHAFT	
210	2941046-0000		8	BUSHING	
220	3007827-0000		1	PLATE	
260	2986315-0000		1	BRACKET	
280	2941045-0000		8	LEVER	
355	2869539-0000		1	SUPPORT	
360	2864913-0000		1	SHAFT	
365	2970921-0000		1	GUIDE	
370	2845571-0000		8	BRACKET	
380	312105-0371		8	SCREW M6S ISO 4017 M6X22 A480	
400	312105-0368		3	SCREW M6S ISO 4017 M6X16 A480	
410	312105-0370		25	SCREW M6S ISO 4017 M6X20 A480	
430	2898819-0000		4	SCREW	
460	534310-0001		1	NOZZLE	
470	90230-0027		1	NON-RETURN VALVE QJ 8355-1/4"	
	90230-0301		*1*	*DIAPHRAGM*	
	90230-0300		*1*	*STRAINER*	
500	311103-0307		16	PARALLEL PIN ISO 2338 5M6X14 A1	
530	315105-0153		37	WASHER BRB 6,4X12 RFR	
540	315105-0165		2	WASHER BRB 8,4X16 RFR	
560	312115-0370		20	SCREW ISO4762 M6X20 A4 80	
570	312105-0455		2	SCREW M6S ISO 4017 M8X30 A480	
610	90144-0073	MM	1	TREBOFLON-TAPE W=13MM	
670	321155-0139		16	FLANGE BUSHING, IGLIDUR X 10X12X9	
690	90458-2956		1	ELBOW PIPE JOINT, EXT.THREAD, D=6MM-G1/8	
720	90005-0094		1	GASKET C 19438-EPR	
730	90240-0263		16	FLANGE BUSHING, IGLIDUR X 15X17X12	
740	350002-0009		4	PUSH-IN L-FITTING QSL-F-G1/4-8	
750	311103-0276		8	PARALLEL PIN ISO 2338 4M6X30 A1	
800	311103-1403		2	PARALLEL PIN ISO 2338 8M6X24 A1	
910	532413-0000		1	REDUCING NIPPLE	
920	532414-0000		1	WASHER	
970	315115-0173		4	WASHER PLAIN, TBRB 10,5/22 H=4	
980	312115-0368		2	SCREW ISO4762 M6X16 A4 80	

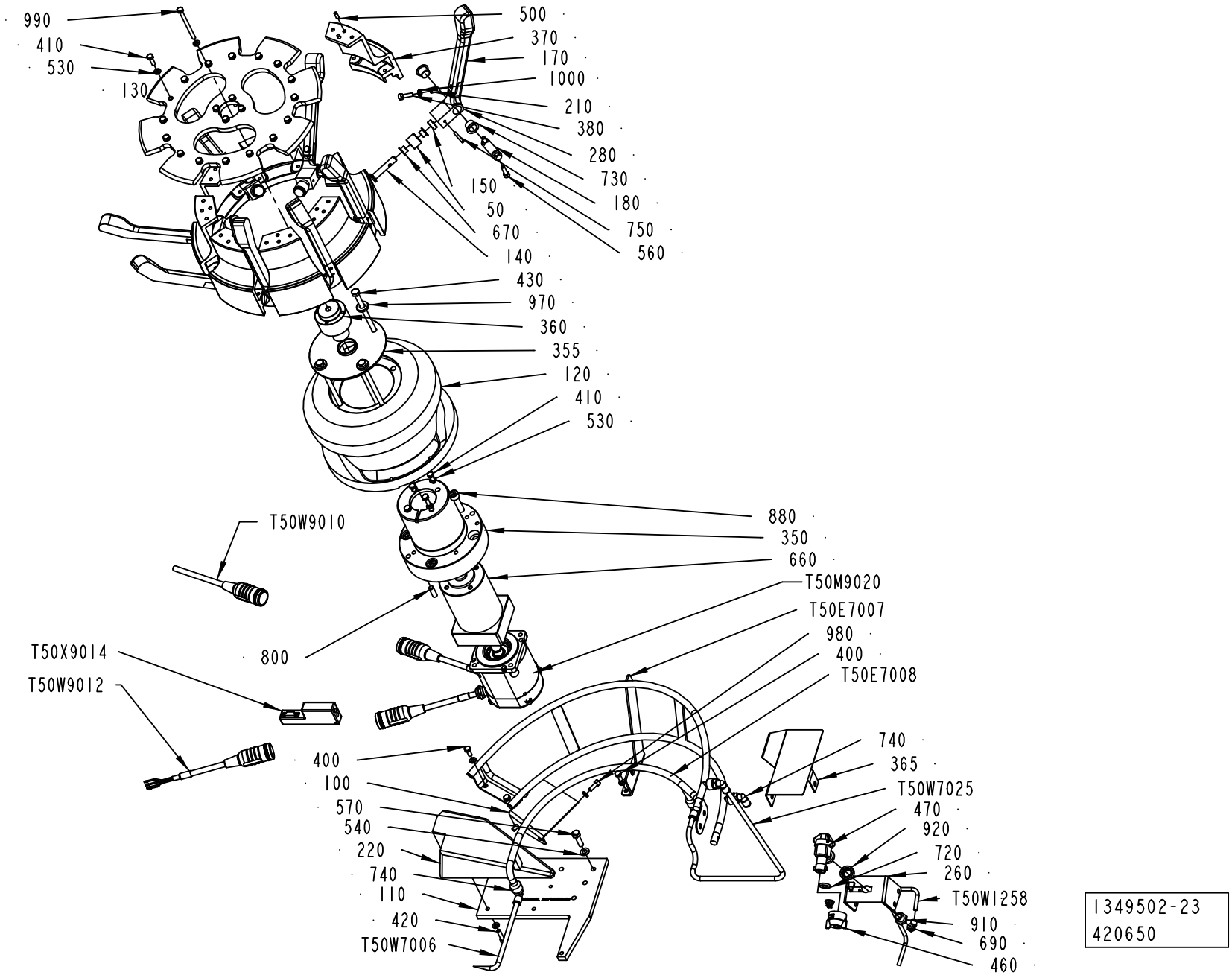
990
410
530
130
500
370
170
1000
210
380
280
730
180
750
560
150
50
670
140
430
970
360
355
120
410
530
T50W9010
880
350
660
T50M9020
T50E7007
980
400
T50E7008
800
T50X9014
T50W9012
400
100
570
540
220
740
110
420
T50W7006
740
365
T50W7025
470
920
720
260
T50W1258
910
690
460
1349502-23
420650

Pos	Part No	UN	Qty	Description	Page No
TBA 1000B (Cont'd) (See drawing on page: 5-88)					
990	312105-0386		1	SCREW M6S ISO 4014 M6X80 A480	
1000	90062-0061		8	LOCK WASHER NORD-LOCK,6,5/10,8, T=2,2	
T50E7007	3007838-0000		1	RAIL	
T50E7008	2970920-0000		1	GUIDE	
T50W1258	90166-0132	MM	800	TUBE 6 MM PA,TRANSP.	
T50W7006	90166-0118	MM	3200	TUBE 8 MM PA BLACK	
T50W7025	90166-0118	MM	600	TUBE 8 MM PA BLACK	
TBA 1000S (See drawing on page: 5-88)					
050	1538306-0000		8	ROLLER	
100	2870076-0000		1	GUIDE	
110	2816113-0000		1	PLATE	
120	2910633-0000		1	CAM	
130	2845302-0000		1	DRUM	
140	1487087-0000		8	SHAFT	
150	2512983-0000		8	SPACER	
170	2941044-0000		8	CARRIER	
180	1487091-0000		8	SHAFT	
210	2941046-0000		8	BUSHING	
220	2951098-0000		1	PLATE	
260	2986315-0000		1	BRACKET	
280	2941045-0000		8	LEVER	
355	2869539-0000		1	SUPPORT	
360	2864913-0000		1	SHAFT	
365	2968906-0000		1	GUIDE	
370	2845571-0000		8	BRACKET	
380	312105-0366		10	SCREW M6S ISO 4017 M6X12 A480	
400	312105-0368		4	SCREW M6S ISO 4017 M6X16 A480	
410	312105-0370		24	SCREW M6S ISO 4017 M6X20 A480	
430	2898819-0000		4	SCREW	
460	534310-0001		1	NOZZLE	
470	90230-0027		1	NON-RETURN VALVE QJ 8355-1/4"	
	90230-0301		*1*	*DIAPHRAGM*	
	90230-0300		*1*	*STRAINER*	
500	311103-0307		16	PARALLEL PIN ISO 2338 5M6X14 A1	
530	315105-0153		37	WASHER BRB 6,4X12 RFR	
540	315105-0165		2	WASHER BRB 8,4X16 RFR	
560	312115-0370		20	SCREW ISO4762 M6X20 A4 80	
570	312105-0455		2	SCREW M6S ISO 4017 M8X30 A480	
610	90144-0073	MM	1	TREBOFLON-TAPE W=13MM	
670	321155-0139		16	FLANGE BUSHING, IGLIDUR X 10X12X9	
690	90458-2956		1	ELBOW PIPE JOINT, EXT.THREAD, D=6MM-G1/8	
720	90005-0094		1	GASKET C 19438-EPR	
730	90240-0263		16	FLANGE BUSHING, IGLIDUR X 15X17X12	
740	350002-0009		4	PUSH-IN L-FITTING QSL-F-G1/4-8	
750	311103-0276		8	PARALLEL PIN ISO 2338 4M6X30 A1	
800	311103-1403		2	PARALLEL PIN ISO 2338 8M6X24 A1	
910	532413-0000		1	REDUCING NIPPLE	
920	532414-0000		1	WASHER	
970	315115-0173		4	WASHER PLAIN, TBRB 10,5/22 H=4	
980	312115-0368		2	SCREW ISO4762 M6X16 A4 80	
990	312105-0386		1	SCREW M6S ISO 4014 M6X80 A480	
1000	90062-0061		8	LOCK WASHER NORD-LOCK,6,5/10,8, T=2,2	
T50E7007	2864356-0000		1	GUIDE	
T50E7008	2968905-0000		1	GUIDE	
T50W1258	90166-0132	MM	800	TUBE 6 MM PA,TRANSP.	
T50W7006	90166-0118	MM	3200	TUBE 8 MM PA BLACK	
T50W7025	90166-0118	MM	600	TUBE 8 MM PA BLACK	
TBA 1000SQ (See drawing on page: 5-86)					
050	1538306-0000		8	ROLLER	
080	2922007-0000		1	BRACKET	
090	2922153-0000		7	SHAFT	
100	2771539-0000		1	GUIDE	
110	2816113-0000		1	PLATE	
120	2957856-0000		1	CAM	
130	2845302-0000		1	DRUM	
140	1487087-0000		8	SHAFT	
150	2512983-0000		8	SPACER	
170	2963256-0000		8	CARRIER	
180	1487091-0000		8	SHAFT	
200	1347077-0000		1	BRUSH	
210	2941046-0000		8	BUSHING	
220	2921948-0000		1	PLATE	
240	2787745-0000		1	SUPPORT	
260	2986315-0000		1	BRACKET	
280	2963255-0000		8	CARRIER	
320	3016391-0000		1	BRACKET	
355	2806369-0000		1	SUPPORT	
360	2864913-0000		1	SHAFT	
365	3059145-0000		1	PLATE	
370	2845571-0000		8	BRACKET	
375	2963768-0000		1	PLATE	
380	312105-0371		8	SCREW M6S ISO 4017 M6X22 A480	
385	312105-0366		3	SCREW M6S ISO 4017 M6X12 A480	

Machine Type | Group Description | Used-In | Group Number | Page No

See previous drawings pages: 5-82, 5-84, 5-86, 5-88.

Pos	Part No	UN	Qty	Description	Page No
TBA 1000SQ (Cont'd) (See drawing on page: 5-86)					
390	2959053-0000		7	ROLLER	
400	312105-0368		6	SCREW M6S ISO 4017 M6X16 A480	
410	312105-0370		29	SCREW M6S ISO 4017 M6X20 A480	
430	2898819-0000		4	SCREW	
460	534310-0001		1	NOZZLE	
470	90230-0027		1	NON-RETURN VALVE QJ 8355-1/4"	
	90230-0301		*1*	*DIAPHRAGM*	
	90230-0300		*1*	*STRAINER*	
490	312105-0453		2	SCREW M6S ISO 4017 M8X25 A480	
500	311103-0307		16	PARALLEL PIN ISO 2338 5M6X14 A1	
530	315105-0153		45	WASHER BRB 6,4X12 RFR	
550	315105-0165		2	WASHER BRB 8,4X16 RFR	
560	312115-0370		20	SCREW ISO4762 M6X20 A4 80	
570	312105-0455		2	SCREW M6S ISO 4017 M8X30 A480	
610	90144-0073	MM	1	TREBOFLON-TAPE W=13MM	
670	321155-0139		16	FLANGE BUSHING, IGLIDUR X 10X12X9	
690	90458-2956		1	ELBOW PIPE JOINT, EXT.THREAD, D=6MM-G1/8	
720	90005-0094		1	GASKET C 19438-EPR	
730	90240-0263		16	FLANGE BUSHING, IGLIDUR X 15X17X12	
740	350002-0009		4	PUSH-IN L-FITTING QSL-F-G1/4-8	
750	311103-0276		8	PARALLEL PIN ISO 2338 4M6X30 A1	
800	311103-1403		2	PARALLEL PIN ISO 2338 8M6X24 A1	
830	315106-0173		4	WASHER ISO 7089-10-200 HV A4	
870	312105-0451		2	SCREW M6S ISO 4017 M8X20 A480	
910	532413-0000		1	REDUCING NIPPLE	
920	532414-0000		1	WASHER	
970	315115-0173		4	WASHER PLAIN, TBRB 10,5/22 H=4	
990	312105-0386		1	SCREW M6S ISO 4014 M6X80 A480	
1000	90062-0061		8	LOCK WASHER NORD-LOCK,6,5/10,8, T=2,2	
T50E7007	2966899-0000		1	GUIDE	
T50E7008	2953151-0000		1	GUIDE	
T50W1258	90166-0132	MM	1050	TUBE 6 MM PA,TRANSP.	
T50W7006	90166-0118	MM	3200	TUBE 8 MM PA BLACK	
T50W7025	90166-0118	MM	600	TUBE 8 MM PA BLACK	
Common Parts					
350	2776852-0000		1	SUPPORT	
420	312105-0372		2	SCREW M6S ISO 4017 M6X25 A480	
660	90459-7115		1	GEARS, PLANETARY MP 080-2-50-15'-16-40-8	
820	90296-0068	G	1	SHELL ALVANIA GREASE EP 2	
880	312115-0499		4	SCREW ISO4762 M10X40 A4 80	
T50M9010	90600-7846		1	SERVO MOTOR MPS-B310P-M-X183, ESM	
T50W9010	90600-7866		1	MOTOR FEEDBACK CABLE 2090-XXNFMF-S07/C	
T50W9012	90600-7867		1	MOTOR POWER CABLE 2090-XXNPMF-16S07/A	
T50X9014	90459-2551		1	CONNECTOR, MOTOR FEEDBACK 15 PIN MALE	

Machine Type | Group Description | Used-In | Group Number | Page No

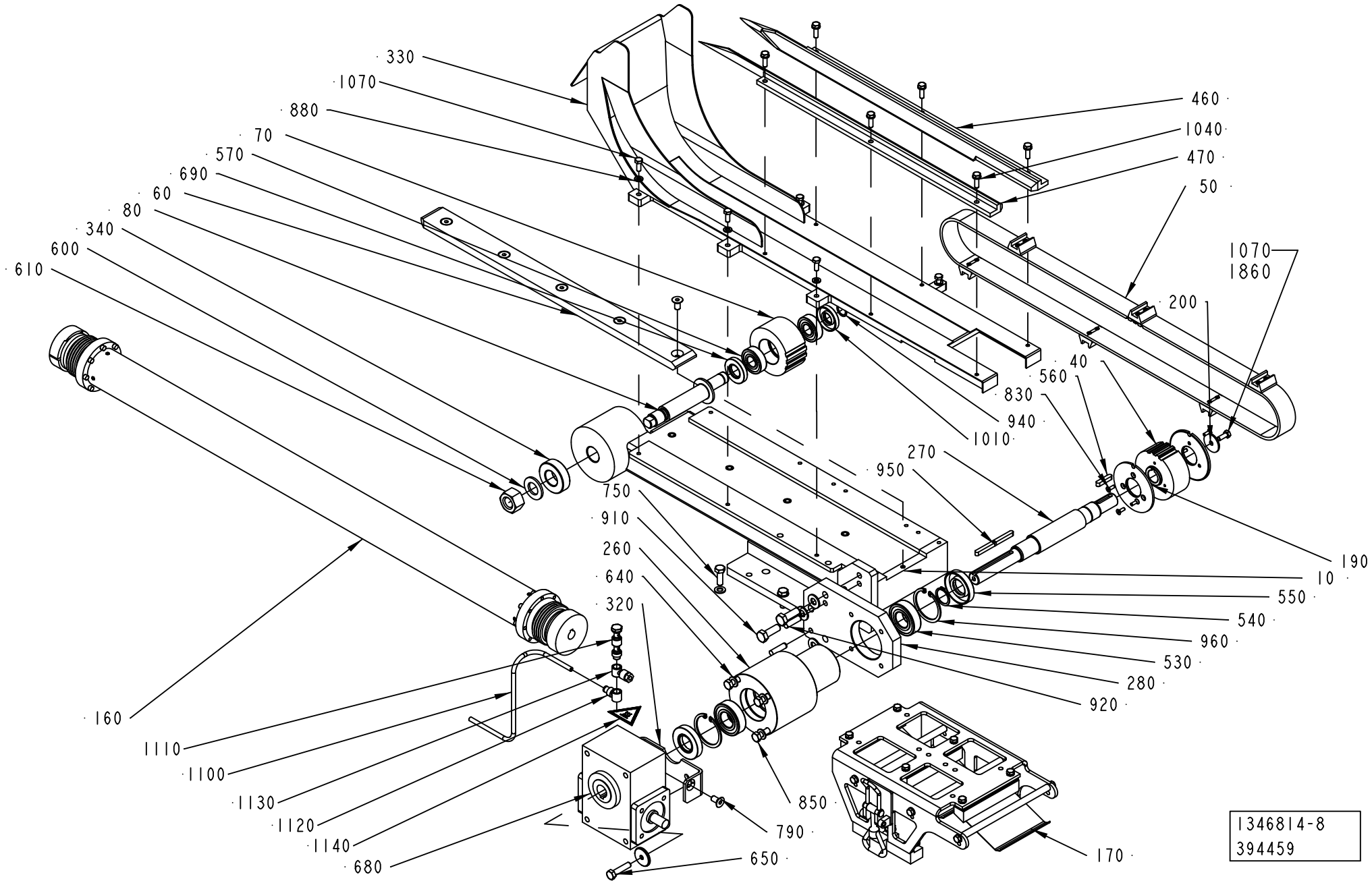
330
1070
880
70
570
690
60
80
340
600
610
460
1040
470
50
1070
1860
200
40
560
830
940
1010
270
950
750
910
260
640
320
190
10
550
540
960
530
280
920
160
1110
1100
1130
1120
1140
680
850
790
650
170
1346814-8
394459

ECM: 473532 - 20101003
Group number: 1346814-0400
Assembly Drawing: 1346814-8_1_AC

This list covers pages from 5-92 to 5-113

Pos	Part No	UN	Qty	Description	Page No
A3/SPEED TBA 1000SQ ANSI (See drawing on page: 5-96)					
010	2783817-0000		1	FRAME	
040	2783822-0000		1	PULLEY	
050	2527365-0000		1	BELT	
060	2527359-0000		1	GUIDE	
070	2783823-0000		1	PULLEY	
080	1484308-0000		1	SHAFT	
160	90600-0644		1	INTERMEDIARY SHAFT, ZA/60/973/28H7 KEYWA	
	90600-5382		*1*	*HUB, ZA/60/14H7 KEYWAY/XX*	
	90600-5408		*1*	*HUB, ZA/60/28H7 KEYWAY/XX*	
190	2783821-0000		2	FLANGE	
200	315125-0173		1	WASHER TBRSB 10,5X28X6 A4	
210	1144597-0000		1	SPACER	
220	2774490-0000		1	FLANGE	
260	2783815-0000		1	SUPPORT	
270	2810969-0000		1	SHAFT	
320	2783816-0000		1	HOLDER	
325	534310-0001		2	NOZZLE	
330	3117685-0000		1	CHUTE	
335	532414-0000		2	WASHER	
345	532413-0000		2	REDUCING NIPPLE	
355	3044252-0000		2	SUPPORT	
460	2737497-0000		1	SLIDE	
470	2737498-0000		1	SLIDE	
500	2850928-0000		1	PLATE	
505	311103-1403		1	PARALLEL PIN ISO 2338 8M6X24 A1	
510	2850929-0000		1	SCREW	
520	2851387-0000		1	PRESSURE ROLLER	
550	315221-0160		2	RADIAL SEAL 25X52X7 MM	
560	315705-0239		2	PARALLEL KEY W. ROUND ENDS 6X6X40 MM	
630	315125-0165		1	WASHER TBRSB 8,4X26X5 A4	
640	315105-0165		1	WASHER BRB 8,4X16 RFR	
645	315105-0173		2	WASHER BRB 10,5X22 RFR	
650	312105-0451		1	SCREW M6S ISO 4017 M8X20 A480	
690	90091-0404		1	RADIAL SEAL 22X40X7 MM DUST LIP	
720	315125-0153		1	WASHER TBRSB 6,4X22X4 A4	
730	312105-0368		3	SCREW M6S ISO 4017 M6X16 A480	
735	312109-0374		2	SCREW M6S ISO 4017 M6X30 A480	
740	315202-0734		1	O-RING 47,29X2,62 MM	
790	312155-0449		4	SCREW DIN 7991 MF6S M8X16 A4 70	
830	312155-0368		6	SCREW DIN 7991 MF6S M6X16 A4 70	
880	315105-0153		9	WASHER BRB 6,4X12 RFR	
910	312105-0495		2	SCREW M6S ISO 4017 M10X30 A480	
920	311103-0401		2	PARALLEL PIN ISO 2338 8M6X20 A1	
950	315705-0240		1	PARALLEL KEY W. ROUND ENDS 6X6X45 MM	
1040	312155-0372		4	SCREW DIN 7991 MF6S M6X25 A4 70	
1070	312105-0368		5	SCREW M6S ISO 4017 M6X16 A480	
1080	312105-0491		1	SCREW M6S ISO 4017 M10X20 A480	
1140	359725-0116		1	WARNING SIGN ANSI (H), HOT SURFACE	
1150	90230-0027		2	NON-RETURN VALVE QJ 8355-1/4"	
	90230-0301		*1*	*DIAPHRAGM*	
	90230-0300		*1*	*STRAINER*	
1160	90005-0094		2	GASKET C 19438-EPR	
1170	90055-0257		1	PUSH-IN Y-CONNECTOR QSY-6	
1180	90055-0229		1	T- WITH TAILPIECE 6 MM	
1230	90240-0261		2	FLANGE BUSHING, IGLIDUR X 12X14X9	
1240	312812-0318		1	HEXAGON NUT, NY-LOCK M8 A480	
1250	315751-0109		1	RETAINING RING FOR SHAFT DIN 471 12 SS	
1260	90458-2956		2	ELBOW PIPE JOINT, EXT.THREAD, D=6MM-G1/8	
1850	312155-0376		3	SCREW DIN 7991 MF6S M6X35 A4 70	
T50W1253	90166-0132	M	2.35	TUBE 6 MM PA,TRANSP.	
T50W1254	90166-0132	MM	700	TUBE 6 MM PA,TRANSP.	
T50W1256	90166-0132	MM	800	TUBE 6 MM PA,TRANSP.	
A3/SPEED TBA 1000SQ ISO (See drawing on page: 5-96)					
010	2783817-0000		1	FRAME	
040	2783822-0000		1	PULLEY	
050	2527365-0000		1	BELT	
060	2527359-0000		1	GUIDE	
070	2783823-0000		1	PULLEY	
080	1484308-0000		1	SHAFT	
160	90600-0644		1	INTERMEDIARY SHAFT, ZA/60/973/28H7 KEYWA	
	90600-5382		*1*	*HUB, ZA/60/14H7 KEYWAY/XX*	
	90600-5408		*1*	*HUB, ZA/60/28H7 KEYWAY/XX*	
190	2783821-0000		2	FLANGE	
200	315125-0173		1	WASHER TBRSB 10,5X28X6 A4	
210	1144597-0000		1	SPACER	
220	2774490-0000		1	FLANGE	
260	2783815-0000		1	SUPPORT	
270	2810969-0000		1	SHAFT	
320	2783816-0000		1	HOLDER	
325	534310-0001		2	NOZZLE	
330	3117685-0000		1	CHUTE	
335	532414-0000		2	WASHER	
345	532413-0000		2	REDUCING NIPPLE	

Machine Type | Group Description | Used-In | Group Number | Page No

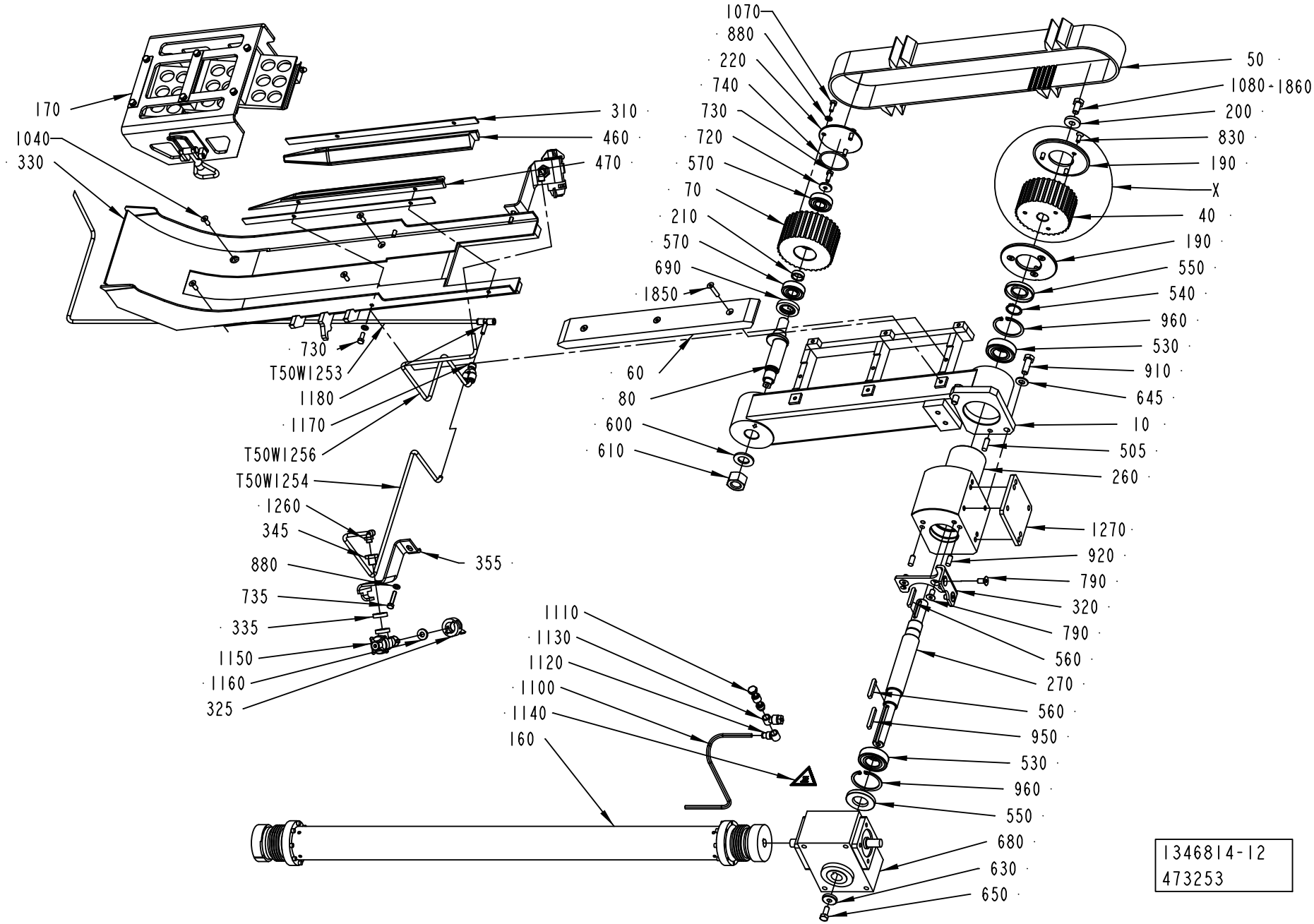
1070
880
220
740
730
720
570
70
210
570
690
1850
60
80
600
610
50
1080-1860
200
830
190
X
40
190
550
540
960
530
910
645
10
505
260
1270
920
790
320
790
560
270
560
950
530
960
550
680
630
650
170
1040
330
310
460
470
730
T50W1253
1180
1170
T50W1256
T50W1254
1260
345
355
880
735
335
1150
1160
325
1110
1130
1120
1100
1140
160
1346814-12
473253

ECM: 473532 - 20101003
Group number: 1346814-0400
Assembly Drawing: 1346814-12_1_AF

This list covers pages from 5-92 to 5-113

Pos	Part No	UN	Qty	Description	Page No
A3/SPEED TBA 1000SQ ISO (Cont'd) (See drawing on page: 5-96)					
355	3044252-0000		2	SUPPORT	
460	2737497-0000		1	SLIDE	
470	2737498-0000		1	SLIDE	
500	2850928-0000		1	PLATE	
505	311103-1403		1	PARALLEL PIN ISO 2338 8M6X24 A1	
510	2850929-0000		1	SCREW	
520	2851387-0000		1	PRESSURE ROLLER	
550	315221-0160		2	RADIAL SEAL 25X52X7 MM	
560	315705-0239		2	PARALLEL KEY W. ROUND ENDS 6X6X40 MM	
630	315125-0165		1	WASHER TBRSB 8,4X26X5 A4	
640	315105-0165		1	WASHER BRB 8,4X16 RFR	
645	315105-0173		2	WASHER BRB 10,5X22 RFR	
650	312105-0451		1	SCREW M6S ISO 4017 M8X20 A480	
690	90091-0404		1	RADIAL SEAL 22X40X7 MM DUST LIP	
720	315125-0153		1	WASHER TBRSB 6,4X22X4 A4	
730	312105-0368		3	SCREW M6S ISO 4017 M6X16 A480	
735	312109-0374		2	SCREW M6S ISO 4017 M6X30 A480	
740	315202-0734		1	O-RING 47,29X2,62 MM	
790	312155-0449		4	SCREW DIN 7991 MF6S M8X16 A4 70	
830	312155-0368		6	SCREW DIN 7991 MF6S M6X16 A4 70	
880	315105-0153		9	WASHER BRB 6,4X12 RFR	
910	312105-0495		2	SCREW M6S ISO 4017 M10X30 A480	
920	311103-0401		2	PARALLEL PIN ISO 2338 8M6X20 A1	
950	315705-0240		1	PARALLEL KEY W. ROUND ENDS 6X6X45 MM	
1040	312155-0372		4	SCREW DIN 7991 MF6S M6X25 A4 70	
1070	312105-0368		5	SCREW M6S ISO 4017 M6X16 A480	
1080	312105-0491		1	SCREW M6S ISO 4017 M10X20 A480	
1140	359710-0001		1	WARNING SIGN ISO, HOT SURFACE	
1150	90230-0027		2	NON-RETURN VALVE QJ 8355-1/4"	
	90230-0301		*1*	*DIAPHRAGM*	
	90230-0300		*1*	*STRAINER*	
1160	90005-0094		2	GASKET C 19438-EPR	
1170	90055-0257		1	PUSH-IN Y-CONNECTOR QSY-6	
1180	90055-0229		1	T- WITH TAILPIECE 6 MM	
1230	90240-0261		2	FLANGE BUSHING, IGLIDUR X 12X14X9	
1240	312812-0318		1	HEXAGON NUT, NY-LOCK M8 A480	
1250	315751-0109		1	RETAINING RING FOR SHAFT DIN 471 12 SS	
1260	90458-2956		2	ELBOW PIPE JOINT, EXT.THREAD, D=6MM-G1/8	
1850	312155-0376		3	SCREW DIN 7991 MF6S M6X35 A4 70	
T50W1253	90166-0132	M	2.35	TUBE 6 MM PA,TRANSP.	
T50W1254	90166-0132	MM	700	TUBE 6 MM PA,TRANSP.	
T50W1256	90166-0132	MM	800	TUBE 6 MM PA,TRANSP.	
A3/SPEED TBA 0125S ANSI (See drawing on page: 5-98)					
010	2835110-0000		1	FRAME	
020	2877426-0000		1	PLATE	
030	2877427-0000		1	PLATE	
040	2730006-0000		1	PULLEY	
050	3015748-0000		1	BELT	
	312115-0287		*16*	*SCREW ISO4762 M4X8 A4 80*	
	2971282-0000		*8*	*CARRIER*	
	3003533-0000		*8*	*NUT PLATE*	
	3015747-0000		*1*	*TIMING BELT*	
060	2877422-0000		1	GUIDE	
070	2877423-0000		1	PULLEY	
080	1260128-0000		1	SHAFT	
160	90600-5387		1	INTERMEDIARY SHAFT, ZA/60/1287/24H7/14H7	
	90600-5382		*1*	*HUB, ZA/60/14H7 KEYWAY/XX*	
	90600-5383		*1*	*HUB, ZA/60/24H7/XX*	
190	2731700-0000		2	FLANGE	
200	1260167-0000		2	WASHER	
260	2779651-0000		1	FRAME	
270	2806294-0000		1	SHAFT	
280	2848774-0000		1	PLATE	
320	2616157-0000		1	BRACKET	
330	2877425-0000		1	CHUTE	
340	2506714-0000		1	WASHER	
460	2877418-0000		1	GUIDE	
470	2877419-0000		1	GUIDE	
550	90091-0438		2	RADIAL SEAL 25X52X10 MM DUST LIP	
560	315705-0236		1	PARALLEL KEY W. ROUND ENDS 6X6X30 MM	
640	315105-0165		4	WASHER BRB 8,4X16 RFR	
645	315105-0173		8	WASHER BRB 10,5X22 RFR	
650	312109-0457		1	SCREW M6S ISO 4017 M8X35 A480	
690	90091-0436		1	RADIAL SEAL 20X40X7 MM DUST LIP	
790	312155-0449		9	SCREW DIN 7991 MF6S M8X16 A4 70	
830	312155-0291		6	SCREW DIN 7991 MF6S M4X12 A4 70	
850	312105-0471		4	SCREW M6S ISO 4014 M8X100 A480	
880	315105-0153		14	WASHER BRB 6,4X12 RFR	
910	312105-0495		3	SCREW M6S ISO 4017 M10X30 A480	
920	311103-0405		2	PARALLEL PIN ISO 2338 8M6X30 A1	
940	90141-0017		1	RETAINING RING FOR SHAFT DIN 471 17 SS	
950	315705-0239		2	PARALLEL KEY W. ROUND ENDS 6X6X40 MM	
1010	90091-0437		1	RADIAL SEAL 17X40X7 MM DUST LIP	

Machine Type | Group Description | Used-In | Group Number | Page No

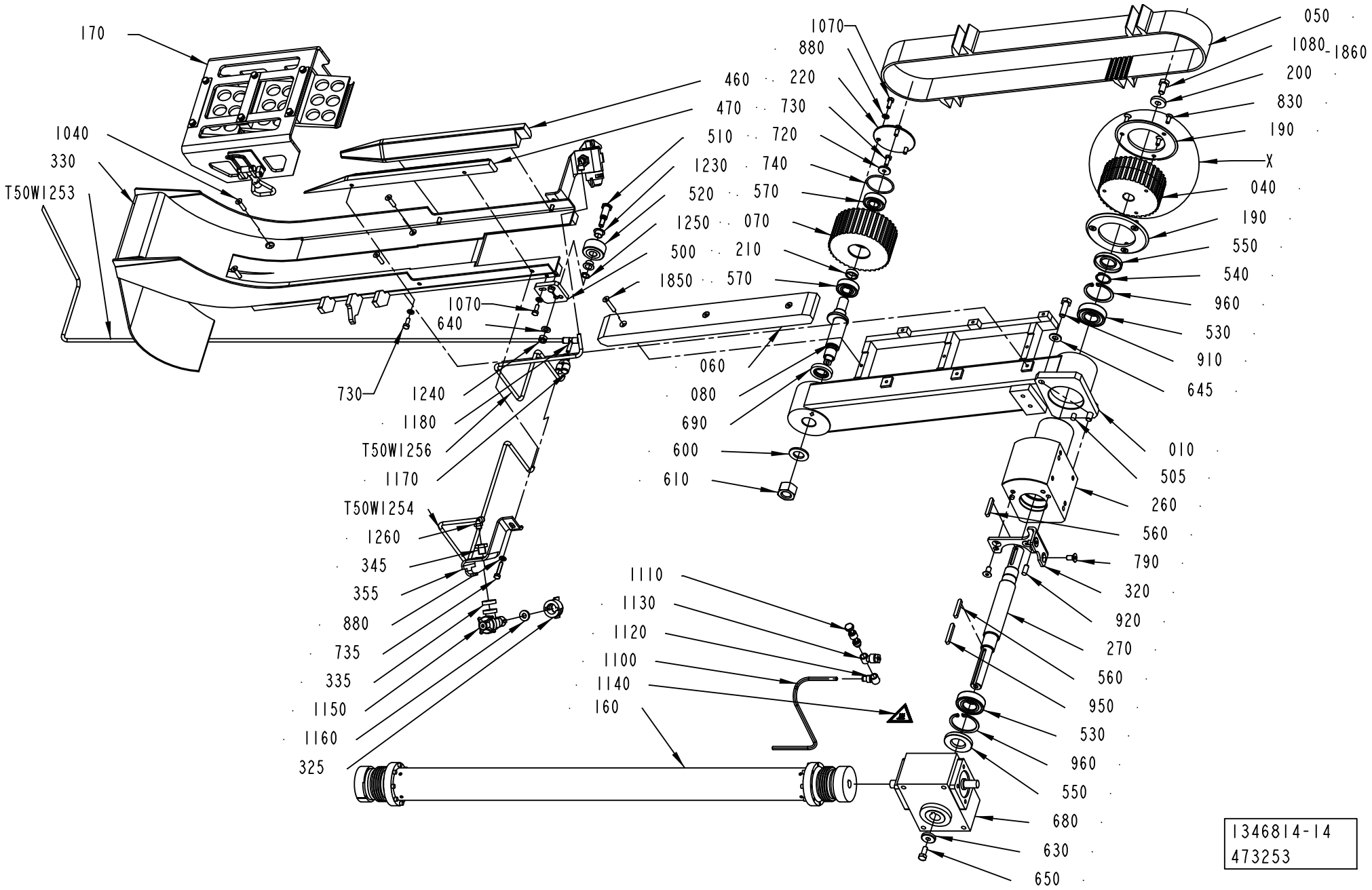
170
1040
330
T50W1253
1070
640
730
1240
1180
T50W1256
1170
T50W1254
1260
345
355
880
735
335
1150
1160
325
460
470
510
1230
520
1250
500
1850
220
730
720
740
570
070
210
570
060
080
690
600
610
1110
1130
1120
1100
1140
160
1070
880
050
1080
1860
200
830
190
X
040
190
550
540
960
530
910
645
010
505
260
560
790
320
920
270
560
950
530
960
550
680
630
650
1346814-14
473253

ECM: 473532 - 20101003
Group number: 1346814-0400
Assembly Drawing: 1346814-14_1_AF

This list covers pages from 5-92 to 5-113

Pos	Part No	UN	Qty	Description	Page No
A3/SPEED TBA 0125S ANSI (Cont'd) (See drawing on page: 5-98)					
1040	312105-0370		6	SCREW M6S ISO 4017 M6X20 A480	
1070	312105-0368		9	SCREW M6S ISO 4017 M6X16 A480	
1140	359725-0116		1	WARNING SIGN ANSI (H), HOT SURFACE	
A3/SPEED TBA 0125S ISO (See drawing on page: 5-98)					
010	2835110-0000		1	FRAME	
020	2877426-0000		1	PLATE	
030	2877427-0000		1	PLATE	
040	2730006-0000		1	PULLEY	
050	3015748-0000		1	BELT	
	312115-0287		*16*	*SCREW ISO4762 M4X8 A4 80*	
	2971282-0000		*8*	*CARRIER*	
	3003533-0000		*8*	*NUT PLATE*	
	3015747-0000		*1*	*TIMING BELT*	
060	2877422-0000		1	GUIDE	
070	2877423-0000		1	PULLEY	
080	1260128-0000		1	SHAFT	
160	90600-5387		1	INTERMEDIARY SHAFT, ZA/60/1287/24H7/14H7	
	90600-5382		*1*	*HUB, ZA/60/14H7 KEYWAY/XX*	
	90600-5383		*1*	*HUB, ZA/60/24H7/XX*	
190	2731700-0000		2	FLANGE	
200	1260167-0000		2	WASHER	
260	2779651-0000		1	FRAME	
270	2806294-0000		1	SHAFT	
280	2848774-0000		1	PLATE	
320	2616157-0000		1	BRACKET	
330	2877425-0000		1	CHUTE	
340	2506714-0000		1	WASHER	
460	2877418-0000		1	GUIDE	
470	2877419-0000		1	GUIDE	
550	90091-0438		2	RADIAL SEAL 25X52X10 MM DUST LIP	
560	315705-0236		1	PARALLEL KEY W. ROUND ENDS 6X6X30 MM	
640	315105-0165		4	WASHER BRB 8,4X16 RFR	
645	315105-0173		8	WASHER BRB 10,5X22 RFR	
650	312109-0457		1	SCREW M6S ISO 4017 M8X35 A480	
690	90091-0436		1	RADIAL SEAL 20X40X7 MM DUST LIP	
790	312155-0449		9	SCREW DIN 7991 MF6S M8X16 A4 70	
830	312155-0291		6	SCREW DIN 7991 MF6S M4X12 A4 70	
850	312105-0471		4	SCREW M6S ISO 4014 M8X100 A480	
880	315105-0153		14	WASHER BRB 6,4X12 RFR	
910	312105-0495		3	SCREW M6S ISO 4017 M10X30 A480	
920	311103-0405		2	PARALLEL PIN ISO 2338 8M6X30 A1	
940	90141-0017		1	RETAINING RING FOR SHAFT DIN 471 17 SS	
950	315705-0239		2	PARALLEL KEY W. ROUND ENDS 6X6X40 MM	
1010	90091-0437		1	RADIAL SEAL 17X40X7 MM DUST LIP	
1040	312105-0370		6	SCREW M6S ISO 4017 M6X20 A480	
1070	312105-0368		9	SCREW M6S ISO 4017 M6X16 A480	
1140	359710-0001		1	WARNING SIGN ISO, HOT SURFACE	
A3/SPEED TBA 0200B ANSI (See drawing on page: 5-92)					
010	2693915-0000		1	FRAME	
040	2730006-0000		1	PULLEY	
050	3003535-0000		1	BELT	
	3003534-0000		*1*	*TIMING BELT*	
	3003533-0000		*6*	*NUT PLATE*	
	2971282-0000		*6*	*CARRIER*	
	312115-0287		*12*	*SCREW ISO4762 M4X8 A4 80*	
060	2693914-0000		1	GUIDE	
070	2877423-0000		1	PULLEY	
080	1260128-0000		1	SHAFT	
160	90600-5391		1	INTERMEDIARY SHAFT, ZA/60/1047/24H7/14H7	
	90600-5382		*1*	*HUB, ZA/60/14H7 KEYWAY/XX*	
	90600-5383		*1*	*HUB, ZA/60/24H7/XX*	
190	2731700-0000		2	FLANGE	
200	1260167-0000		2	WASHER	
260	2779651-0000		1	FRAME	
270	2806294-0000		1	SHAFT	
280	2848774-0000		1	PLATE	
320	2616157-0000		1	BRACKET	
330	2879367-0000		1	CHUTE	
340	2506714-0000		1	WASHER	
460	2879368-0000		1	GUIDE	
470	2879369-0000		1	GUIDE	
550	90091-0438		2	RADIAL SEAL 25X52X10 MM DUST LIP	
560	315705-0236		1	PARALLEL KEY W. ROUND ENDS 6X6X30 MM	
640	315105-0165		5	WASHER BRB 8,4X16 RFR	
645	315105-0173		3	WASHER BRB 10,5X22 RFR	
650	312109-0457		1	SCREW M6S ISO 4017 M8X35 A480	
690	90091-0436		1	RADIAL SEAL 20X40X7 MM DUST LIP	
790	312155-0449		5	SCREW DIN 7991 MF6S M8X16 A4 70	
830	312155-0291		6	SCREW DIN 7991 MF6S M4X12 A4 70	
850	312105-0471		4	SCREW M6S ISO 4014 M8X100 A480	
880	315105-0153		16	WASHER BRB 6,4X12 RFR	
910	312105-0495		3	SCREW M6S ISO 4017 M10X30 A480	
920	311103-0405		2	PARALLEL PIN ISO 2338 8M6X30 A1	

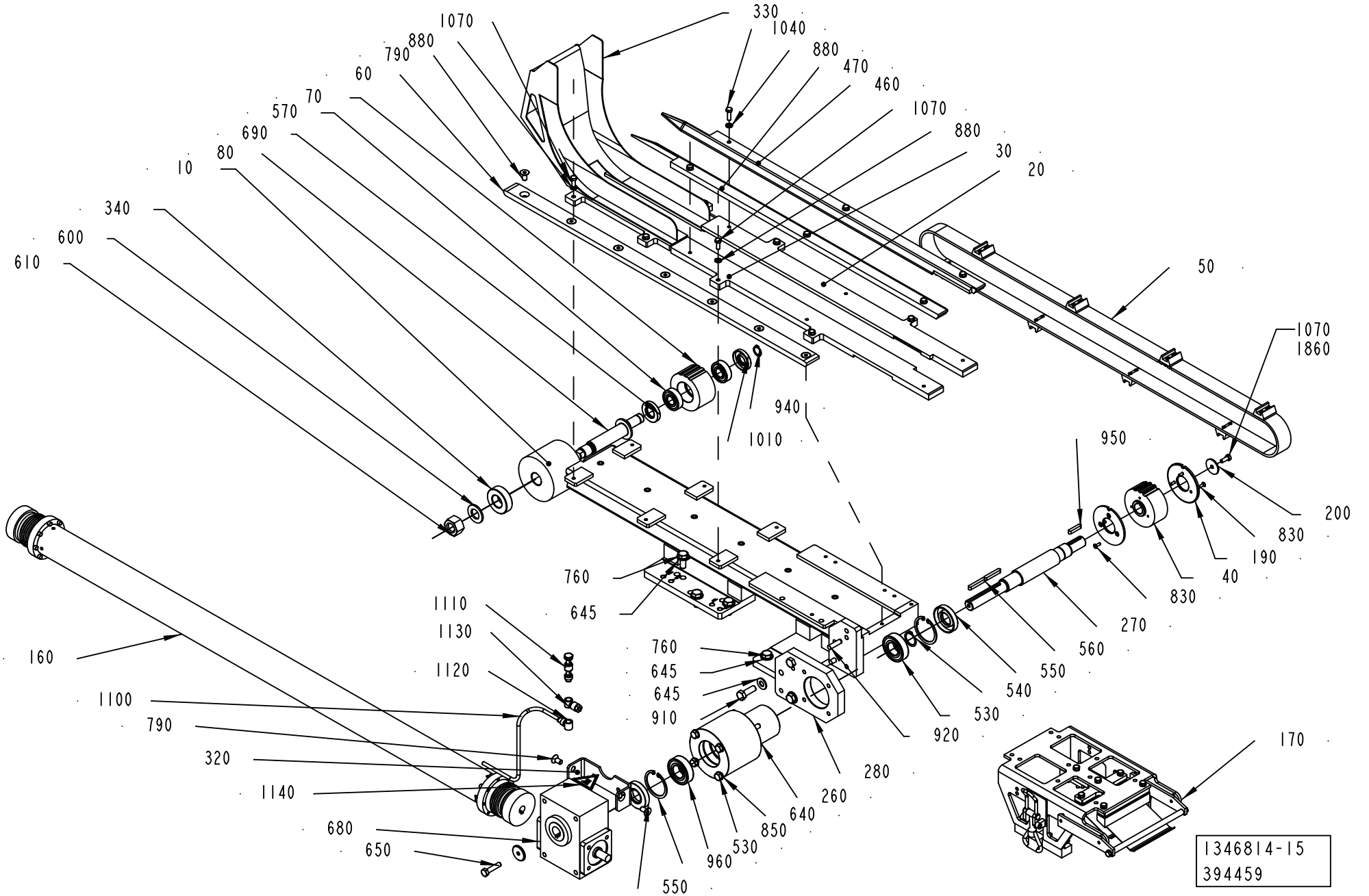
1070
880
790
60
70
570
690
80
10
340
600
610
330
1040
880
470
460
1070
880
30
20
50
1070
1860
940
1010
950
200
830
190
40
830
270
560
550
540
530
920
280
260
640
850
530
960
550
760
645
1110
1130
1120
160
1100
790
320
1140
680
650
760
645
645
910
170
1346814-15
394459

ECM: 473532 - 20101003
Group number: 1346814-0400
Assembly Drawing: 1346814-15_1_AB

This list covers pages from 5-92 to 5-113

Pos	Part No	UN	Qty	Description	Page No
A3/SPEED TBA 0200B ANSI (Cont'd) (See drawing on page: 5-92)					
940	90141-0017		1	RETAINING RING FOR SHAFT DIN 471 17 SS	
950	315705-0239		2	PARALLEL KEY W. ROUND ENDS 6X6X40 MM	
1010	90091-0437		1	RADIAL SEAL 17X40X7 MM DUST LIP	
1040	312105-0370		6	SCREW M6S ISO 4017 M6X20 A480	
1070	312105-0368		7	SCREW M6S ISO 4017 M6X16 A480	
1140	359725-0116		1	WARNING SIGN ANSI (H), HOT SURFACE	
A3/SPEED TBA 0200B ISO (See drawing on page: 5-92)					
010	2693915-0000		1	FRAME	
040	2730006-0000		1	PULLEY	
050	3003535-0000		1	BELT	
	3003534-0000		*1*	*TIMING BELT*	
	3003533-0000		*6*	*NUT PLATE*	
	2971282-0000		*6*	*CARRIER*	
	312115-0287		*12*	*SCREW ISO4762 M4X8 A4 80*	
060	2693914-0000		1	GUIDE	
070	2877423-0000		1	PULLEY	
080	1260128-0000		1	SHAFT	
160	90600-5391		1	INTERMEDIARY SHAFT, ZA/60/1047/24H7/14H7	
	90600-5382		*1*	*HUB, ZA/60/14H7 KEYWAY/XX*	
	90600-5383		*1*	*HUB, ZA/60/24H7/XX*	
190	2731700-0000		2	FLANGE	
200	1260167-0000		2	WASHER	
260	2779651-0000		1	FRAME	
270	2806294-0000		1	SHAFT	
280	2848774-0000		1	PLATE	
320	2616157-0000		1	BRACKET	
330	2879367-0000		1	CHUTE	
340	2506714-0000		1	WASHER	
460	2879368-0000		1	GUIDE	
470	2879369-0000		1	GUIDE	
550	90091-0438		2	RADIAL SEAL 25X52X10 MM DUST LIP	
560	315705-0236		1	PARALLEL KEY W. ROUND ENDS 6X6X30 MM	
640	315105-0165		5	WASHER BRB 8,4X16 RFR	
645	315105-0173		3	WASHER BRB 10,5X22 RFR	
650	312109-0457		1	SCREW M6S ISO 4017 M8X35 A480	
690	90091-0436		1	RADIAL SEAL 20X40X7 MM DUST LIP	
790	312155-0449		5	SCREW DIN 7991 MF6S M8X16 A4 70	
830	312155-0291		6	SCREW DIN 7991 MF6S M4X12 A4 70	
850	312105-0471		4	SCREW M6S ISO 4014 M8X100 A480	
880	315105-0153		16	WASHER BRB 6,4X12 RFR	
910	312105-0495		3	SCREW M6S ISO 4017 M10X30 A480	
920	311103-0405		2	PARALLEL PIN ISO 2338 8M6X30 A1	
940	90141-0017		1	RETAINING RING FOR SHAFT DIN 471 17 SS	
950	315705-0239		2	PARALLEL KEY W. ROUND ENDS 6X6X40 MM	
1010	90091-0437		1	RADIAL SEAL 17X40X7 MM DUST LIP	
1040	312105-0370		6	SCREW M6S ISO 4017 M6X20 A480	
1070	312105-0368		7	SCREW M6S ISO 4017 M6X16 A480	
1140	359710-0001		1	WARNING SIGN ISO, HOT SURFACE	
A3/SPEED TBA 0200M ANSI (See drawing on page: 5-92)					
010	2693915-0000		1	FRAME	
040	2730006-0000		1	PULLEY	
050	3003535-0000		1	BELT	
	3003534-0000		*1*	*TIMING BELT*	
	3003533-0000		*6*	*NUT PLATE*	
	2971282-0000		*6*	*CARRIER*	
	312115-0287		*12*	*SCREW ISO4762 M4X8 A4 80*	
060	2693914-0000		1	GUIDE	
070	2877423-0000		1	PULLEY	
080	1260128-0000		1	SHAFT	
160	90600-5390		1	INTERMEDIARY SHAFT, ZA/60/1027/24H7/14H7	
	90600-5382		*1*	*HUB, ZA/60/14H7 KEYWAY/XX*	
	90600-5383		*1*	*HUB, ZA/60/24H7/XX*	
190	2731700-0000		2	FLANGE	
200	1260167-0000		2	WASHER	
260	2779651-0000		1	FRAME	
270	2806294-0000		1	SHAFT	
280	2848774-0000		1	PLATE	
320	2616157-0000		1	BRACKET	
330	2879370-0000		1	CHUTE	
340	2506714-0000		1	WASHER	
460	2879371-0000		1	GUIDE	
470	2879372-0000		1	GUIDE	
550	90091-0438		2	RADIAL SEAL 25X52X10 MM DUST LIP	
560	315705-0236		1	PARALLEL KEY W. ROUND ENDS 6X6X30 MM	
640	315105-0165		7	WASHER BRB 8,4X16 RFR	
645	315105-0173		3	WASHER BRB 10,5X22 RFR	
650	312109-0457		1	SCREW M6S ISO 4017 M8X35 A480	
690	90091-0436		1	RADIAL SEAL 20X40X7 MM DUST LIP	
790	312155-0449		7	SCREW DIN 7991 MF6S M8X16 A4 70	
830	312155-0291		6	SCREW DIN 7991 MF6S M4X12 A4 70	
910	312105-0495		3	SCREW M6S ISO 4017 M10X30 A480	
920	311103-0405		2	PARALLEL PIN ISO 2338 8M6X30 A1	
940	90141-0017		1	RETAINING RING FOR SHAFT DIN 471 17 SS	

Machine Type | Group Description | Used-In | Group Number | Page No

See previous drawings pages: 5-92, 5-94, 5-96, 5-98.

ECM: 473532 - 20101003
Group number: 1346814-0400
Assembly Drawing: 1346814-15_1_AB

This list covers pages from 5-92 to 5-113

Pos	Part No	UN	Qty	Description	Page No
A3/SPEED TBA 0200M ANSI (Cont'd) (See drawing on page: 5-92)					
950	315705-0239		2	PARALLEL KEY W. ROUND ENDS 6X6X40 MM	
1010	90091-0437		1	RADIAL SEAL 17X40X7 MM DUST LIP	
1040	312105-0370		6	SCREW M6S ISO 4017 M6X20 A480	
1070	312105-0368		7	SCREW M6S ISO 4017 M6X16 A480	
1140	359725-0116		1	WARNING SIGN ANSI (H), HOT SURFACE	
A3/SPEED TBA 0200M ISO (See drawing on page: 5-92)					
010	2693915-0000		1	FRAME	
040	2730006-0000		1	PULLEY	
050	3003535-0000		1	BELT	
	3003534-0000		*1*	*TIMING BELT*	
	3003533-0000		*6*	*NUT PLATE*	
	2971282-0000		*6*	*CARRIER*	
	312115-0287		*12*	*SCREW ISO4762 M4X8 A4 80*	
060	2693914-0000		1	GUIDE	
070	2877423-0000		1	PULLEY	
080	1260128-0000		1	SHAFT	
160	90600-5390		1	INTERMEDIARY SHAFT, ZA/60/1027/24H7/14H7	
	90600-5382		*1*	*HUB, ZA/60/14H7 KEYWAY/XX*	
	90600-5383		*1*	*HUB, ZA/60/24H7/XX*	
190	2731700-0000		2	FLANGE	
200	1260167-0000		2	WASHER	
260	2779651-0000		1	FRAME	
270	2806294-0000		1	SHAFT	
280	2848774-0000		1	PLATE	
320	2616157-0000		1	BRACKET	
330	2879370-0000		1	CHUTE	
340	2506714-0000		1	WASHER	
460	2879371-0000		1	GUIDE	
470	2879372-0000		1	GUIDE	
550	90091-0438		2	RADIAL SEAL 25X52X10 MM DUST LIP	
560	315705-0236		1	PARALLEL KEY W. ROUND ENDS 6X6X30 MM	
640	315105-0165		7	WASHER BRB 8,4X16 RFR	
645	315105-0173		3	WASHER BRB 10,5X22 RFR	
650	312109-0457		1	SCREW M6S ISO 4017 M8X35 A480	
690	90091-0436		1	RADIAL SEAL 20X40X7 MM DUST LIP	
790	312155-0449		7	SCREW DIN 7991 MF6S M8X16 A4 70	
830	312155-0291		6	SCREW DIN 7991 MF6S M4X12 A4 70	
910	312105-0495		3	SCREW M6S ISO 4017 M10X30 A480	
920	311103-0405		2	PARALLEL PIN ISO 2338 8M6X30 A1	
940	90141-0017		1	RETAINING RING FOR SHAFT DIN 471 17 SS	
950	315705-0239		2	PARALLEL KEY W. ROUND ENDS 6X6X40 MM	
1010	90091-0437		1	RADIAL SEAL 17X40X7 MM DUST LIP	
1040	312105-0370		6	SCREW M6S ISO 4017 M6X20 A480	
1070	312105-0368		7	SCREW M6S ISO 4017 M6X16 A480	
1140	359710-0001		1	WARNING SIGN ISO, HOT SURFACE	
A3/SPEED TBA 0200S ANSI (See drawing on page: 5-92)					
010	2693915-0000		1	FRAME	
040	2730007-0000		1	PULLEY	
050	3003532-0000		1	BELT	
	312115-0287		*12*	*SCREW ISO4762 M4X8 A4 80*	
	2971282-0000		*6*	*CARRIER*	
	3003531-0000		*1*	*TIMING BELT*	
	3003533-0000		*6*	*NUT PLATE*	
060	2693914-0000		1	GUIDE	
070	2892566-0000		1	PULLEY	
080	1260128-0000		1	SHAFT	
160	90600-5389		1	INTERMEDIARY SHAFT, ZA/60/1052/24H7/14H7	
	90600-5383		*1*	*HUB, ZA/60/24H7/XX*	
	90600-5382		*1*	*HUB, ZA/60/14H7 KEYWAY/XX*	
190	2731702-0000		2	FLANGE	
200	1260167-0000		2	WASHER	
260	2779651-0000		1	FRAME	
270	2806294-0000		1	SHAFT	
280	2731815-0000		1	PLATE	
320	2616157-0000		1	BRACKET	
330	2877130-0000		1	CHUTE	
340	2506714-0000		1	WASHER	
460	2877131-0000		1	GUIDE	
470	2877132-0000		1	GUIDE	
550	90091-0438		2	RADIAL SEAL 25X52X10 MM DUST LIP	
560	315705-0236		1	PARALLEL KEY W. ROUND ENDS 6X6X30 MM	
640	315105-0165		5	WASHER BRB 8,4X16 RFR	
645	315105-0173		3	WASHER BRB 10,5X22 RFR	
650	312109-0457		1	SCREW M6S ISO 4017 M8X35 A480	
690	90091-0436		1	RADIAL SEAL 20X40X7 MM DUST LIP	
790	312155-0449		5	SCREW DIN 7991 MF6S M8X16 A4 70	
830	312155-0291		6	SCREW DIN 7991 MF6S M4X12 A4 70	
850	312105-0471		4	SCREW M6S ISO 4014 M8X100 A480	
880	315105-0153		16	WASHER BRB 6,4X12 RFR	
910	312105-0495		3	SCREW M6S ISO 4017 M10X30 A480	
920	311103-0405		2	PARALLEL PIN ISO 2338 8M6X30 A1	
940	90141-0017		1	RETAINING RING FOR SHAFT DIN 471 17 SS	
950	315705-0239		2	PARALLEL KEY W. ROUND ENDS 6X6X40 MM	

Machine Type | Group Description | Used-In | Group Number | Page No

See previous drawings pages: 5-92, 5-94, 5-96, 5-98.

ECM: 473532 - 20101003
Group number: 1346814-0400
Assembly Drawing: 1346814-15_1_AB

This list covers pages from 5-92 to 5-113

Pos	Part No	UN	Qty	Description	Page No
A3/SPEED TBA 0200S ANSI (Cont'd) (See drawing on page: 5-92)					
1010	90091-0437		1	RADIAL SEAL 17X40X7 MM DUST LIP	
1040	312105-0370		6	SCREW M6S ISO 4017 M6X20 A480	
1070	312105-0368		7	SCREW M6S ISO 4017 M6X16 A480	
1140	359725-0116		1	WARNING SIGN ANSI (H), HOT SURFACE	
A3/SPEED TBA 0200S ISO (See drawing on page: 5-92)					
010	2693915-0000		1	FRAME	
040	2730007-0000		1	PULLEY	
050	3003532-0000		1	BELT	
	312115-0287		*12*	*SCREW ISO4762 M4X8 A4 80*	
	2971282-0000		*6*	*CARRIER*	
	3003531-0000		*1*	*TIMING BELT*	
	3003533-0000		*6*	*NUT PLATE*	
060	2693914-0000		1	GUIDE	
070	2892566-0000		1	PULLEY	
080	1260128-0000		1	SHAFT	
160	90600-5389		1	INTERMEDIARY SHAFT, ZA/60/1052/24H7/14H7	
	90600-5383		*1*	*HUB, ZA/60/24H7/XX*	
	90600-5382		*1*	*HUB, ZA/60/14H7 KEYWAY/XX*	
190	2731702-0000		2	FLANGE	
200	1260167-0000		2	WASHER	
260	2779651-0000		1	FRAME	
270	2806294-0000		1	SHAFT	
280	2731815-0000		1	PLATE	
320	2616157-0000		1	BRACKET	
330	2877130-0000		1	CHUTE	
340	2506714-0000		1	WASHER	
460	2877131-0000		1	GUIDE	
470	2877132-0000		1	GUIDE	
550	90091-0438		2	RADIAL SEAL 25X52X10 MM DUST LIP	
560	315705-0236		1	PARALLEL KEY W. ROUND ENDS 6X6X30 MM	
640	315105-0165		5	WASHER BRB 8,4X16 RFR	
645	315105-0173		3	WASHER BRB 10,5X22 RFR	
650	312109-0457		1	SCREW M6S ISO 4017 M8X35 A480	
690	90091-0436		1	RADIAL SEAL 20X40X7 MM DUST LIP	
790	312155-0449		5	SCREW DIN 7991 MF6S M8X16 A4 70	
830	312155-0291		6	SCREW DIN 7991 MF6S M4X12 A4 70	
850	312105-0471		4	SCREW M6S ISO 4014 M8X100 A480	
880	315105-0153		16	WASHER BRB 6,4X12 RFR	
910	312105-0495		3	SCREW M6S ISO 4017 M10X30 A480	
920	311103-0405		2	PARALLEL PIN ISO 2338 8M6X30 A1	
940	90141-0017		1	RETAINING RING FOR SHAFT DIN 471 17 SS	

Pos	Part No	UN	Qty	Description	Page No
950	315705-0239		2	PARALLEL KEY W. ROUND ENDS 6X6X40 MM	
1010	90091-0437		1	RADIAL SEAL 17X40X7 MM DUST LIP	
1040	312105-0370		6	SCREW M6S ISO 4017 M6X20 A480	
1070	312105-0368		7	SCREW M6S ISO 4017 M6X16 A480	
1140	359710-0001		1	WARNING SIGN ISO, HOT SURFACE	
A3/SPEED TBA 0250B ANSI (See drawing on page: 5-92)					
010	2693915-0000		1	FRAME	
040	2730006-0000		1	PULLEY	
050	3003535-0000		1	BELT	
	3003534-0000		*1*	*TIMING BELT*	
	3003533-0000		*6*	*NUT PLATE*	
	2971282-0000		*6*	*CARRIER*	
	312115-0287		*12*	*SCREW ISO4762 M4X8 A4 80*	
060	2693914-0000		1	GUIDE	
070	2877423-0000		1	PULLEY	
080	1260128-0000		1	SHAFT	
160	90600-5390		1	INTERMEDIARY SHAFT, ZA/60/1027/24H7/14H7	
	90600-5382		*1*	*HUB, ZA/60/14H7 KEYWAY/XX*	
	90600-5383		*1*	*HUB, ZA/60/24H7/XX*	
190	2731700-0000		2	FLANGE	
200	1260167-0000		2	WASHER	
260	2779651-0000		1	FRAME	
270	2806294-0000		1	SHAFT	
280	2848774-0000		1	PLATE	
320	2616157-0000		1	BRACKET	
330	2877133-0000		1	CHUTE	
340	2506714-0000		1	WASHER	
460	2877134-0000		1	GUIDE	
470	2877135-0000		1	GUIDE	
550	90091-0438		2	RADIAL SEAL 25X52X10 MM DUST LIP	
560	315705-0236		1	PARALLEL KEY W. ROUND ENDS 6X6X30 MM	
640	315105-0165		5	WASHER BRB 8,4X16 RFR	
645	315105-0173		3	WASHER BRB 10,5X22 RFR	
650	312109-0457		1	SCREW M6S ISO 4017 M8X35 A480	
690	90091-0436		1	RADIAL SEAL 20X40X7 MM DUST LIP	
790	312155-0449		5	SCREW DIN 7991 MF6S M8X16 A4 70	
830	312155-0291		6	SCREW DIN 7991 MF6S M4X12 A4 70	
850	312105-0471		4	SCREW M6S ISO 4014 M8X100 A480	
880	315105-0153		16	WASHER BRB 6,4X12 RFR	
910	312105-0495		3	SCREW M6S ISO 4017 M10X30 A480	
920	311103-0405		2	PARALLEL PIN ISO 2338 8M6X30 A1	
940	90141-0017		1	RETAINING RING FOR SHAFT DIN 471 17 SS	

See previous drawings pages: 5-92, 5-94, 5-96, 5-98.

ECM: 473532 - 20101003
Group number: 1346814-0400
Assembly Drawing: 1346814-15_1_AB

This list covers pages from 5-92 to 5-113

Pos	Part No	UN	Qty	Description	Page No
A3/SPEED TBA 0250B ANSI (Cont'd) (See drawing on page: 5-92)					
950	315705-0239		2	PARALLEL KEY W. ROUND ENDS 6X6X40 MM	
1010	90091-0437		1	RADIAL SEAL 17X40X7 MM DUST LIP	
1040	312105-0370		6	SCREW M6S ISO 4017 M6X20 A480	
1070	312105-0368		7	SCREW M6S ISO 4017 M6X16 A480	
1140	359725-0116		1	WARNING SIGN ANSI (H), HOT SURFACE	
A3/SPEED TBA 0250B ISO (See drawing on page: 5-92)					
010	2693915-0000		1	FRAME	
040	2730006-0000		1	PULLEY	
050	3003535-0000		1	BELT	
	3003534-0000		*1*	*TIMING BELT*	
	3003533-0000		*6*	*NUT PLATE*	
	2971282-0000		*6*	*CARRIER*	
	312115-0287		*12*	*SCREW ISO4762 M4X8 A4 80*	
060	2693914-0000		1	GUIDE	
070	2877423-0000		1	PULLEY	
080	1260128-0000		1	SHAFT	
160	90600-5390		1	INTERMEDIARY SHAFT, ZA/60/1027/24H7/14H7	
	90600-5382		*1*	*HUB, ZA/60/14H7 KEYWAY/XX*	
	90600-5383		*1*	*HUB, ZA/60/24H7/XX*	
190	2731700-0000		2	FLANGE	
200	1260167-0000		2	WASHER	
260	2779651-0000		1	FRAME	
270	2806294-0000		1	SHAFT	
280	2848774-0000		1	PLATE	
320	2616157-0000		1	BRACKET	
330	2877133-0000		1	CHUTE	
340	2506714-0000		1	WASHER	
460	2877134-0000		1	GUIDE	
470	2877135-0000		1	GUIDE	
550	90091-0438		2	RADIAL SEAL 25X52X10 MM DUST LIP	
560	315705-0236		1	PARALLEL KEY W. ROUND ENDS 6X6X30 MM	
640	315105-0165		5	WASHER BRB 8,4X16 RFR	
645	315105-0173		3	WASHER BRB 10,5X22 RFR	
650	312109-0457		1	SCREW M6S ISO 4017 M8X35 A480	
690	90091-0436		1	RADIAL SEAL 20X40X7 MM DUST LIP	
790	312155-0449		5	SCREW DIN 7991 MF6S M8X16 A4 70	
830	312155-0291		6	SCREW DIN 7991 MF6S M4X12 A4 70	
850	312105-0471		4	SCREW M6S ISO 4014 M8X100 A480	
880	315105-0153		16	WASHER BRB 6,4X12 RFR	
910	312105-0495		3	SCREW M6S ISO 4017 M10X30 A480	
920	311103-0405		2	PARALLEL PIN ISO 2338 8M6X30 A1	
940	90141-0017		1	RETAINING RING FOR SHAFT DIN 471 17 SS	
950	315705-0239		2	PARALLEL KEY W. ROUND ENDS 6X6X40 MM	
1010	90091-0437		1	RADIAL SEAL 17X40X7 MM DUST LIP	
1040	312105-0370		6	SCREW M6S ISO 4017 M6X20 A480	
1070	312105-0368		7	SCREW M6S ISO 4017 M6X16 A480	
1140	359710-0001		1	WARNING SIGN ISO, HOT SURFACE	
A3/SPEED TBA 0250S ANSI (See drawing on page: 5-92)					
010	2693915-0000		1	FRAME	
040	2730007-0000		1	PULLEY	
050	3003532-0000		1	BELT	
	312115-0287		*12*	*SCREW ISO4762 M4X8 A4 80*	
	2971282-0000		*6*	*CARRIER*	
	3003531-0000		*1*	*TIMING BELT*	
	3003533-0000		*6*	*NUT PLATE*	
060	2693914-0000		1	GUIDE	
070	2892566-0000		1	PULLEY	
080	1260128-0000		1	SHAFT	
160	90600-5391		1	INTERMEDIARY SHAFT, ZA/60/1047/24H7/14H7	
	90600-5382		*1*	*HUB, ZA/60/14H7 KEYWAY/XX*	
	90600-5383		*1*	*HUB, ZA/60/24H7/XX*	
190	2731702-0000		2	FLANGE	
200	1260167-0000		2	WASHER	
260	2779651-0000		1	FRAME	
270	2806294-0000		1	SHAFT	
280	2731815-0000		1	PLATE	
320	2616157-0000		1	BRACKET	
330	3051342-0000		1	CHUTE	
340	2506714-0000		1	WASHER	
460	2879374-0000		1	GUIDE	
470	2879375-0000		1	GUIDE	
550	90091-0438		2	RADIAL SEAL 25X52X10 MM DUST LIP	
560	315705-0236		1	PARALLEL KEY W. ROUND ENDS 6X6X30 MM	
640	315105-0165		5	WASHER BRB 8,4X16 RFR	
645	315105-0173		3	WASHER BRB 10,5X22 RFR	
650	312109-0457		1	SCREW M6S ISO 4017 M8X35 A480	
690	90091-0436		1	RADIAL SEAL 20X40X7 MM DUST LIP	
790	312155-0449		5	SCREW DIN 7991 MF6S M8X16 A4 70	
830	312155-0291		6	SCREW DIN 7991 MF6S M4X12 A4 70	
850	312105-0471		4	SCREW M6S ISO 4014 M8X100 A480	
880	315105-0153		16	WASHER BRB 6,4X12 RFR	
910	312105-0495		3	SCREW M6S ISO 4017 M10X30 A480	
920	311103-0405		2	PARALLEL PIN ISO 2338 8M6X30 A1	

Machine Type | Group Description | Used-In | Group Number | Page No

See previous drawings pages: 5-92, 5-94, 5-96, 5-98.

ECM: 473532 - 20101003
Group number: 1346814-0400
Assembly Drawing: 1346814-15_1_AB

This list covers pages from 5-92 to 5-113

Pos	Part No	UN	Qty	Description	Page No
A3/SPEED TBA 0250S ANSI (Cont'd) (See drawing on page: 5-92)					
940	90141-0017		1	RETAINING RING FOR SHAFT DIN 471 17 SS	
950	315705-0239		2	PARALLEL KEY W. ROUND ENDS 6X6X40 MM	
1010	90091-0437		1	RADIAL SEAL 17X40X7 MM DUST LIP	
1040	312105-0370		6	SCREW M6S ISO 4017 M6X20 A480	
1070	312105-0368		7	SCREW M6S ISO 4017 M6X16 A480	
1140	359725-0116		1	WARNING SIGN ANSI (H), HOT SURFACE	
A3/SPEED TBA 0250S ISO (See drawing on page: 5-92)					
010	2693915-0000		1	FRAME	
040	2730007-0000		1	PULLEY	
050	3003532-0000		1	BELT	
	312115-0287		*12*	*SCREW ISO4762 M4X8 A4 80*	
	2971282-0000		*6*	*CARRIER*	
	3003531-0000		*1*	*TIMING BELT*	
	3003533-0000		*6*	*NUT PLATE*	
060	2693914-0000		1	GUIDE	
070	2892566-0000		1	PULLEY	
080	1260128-0000		1	SHAFT	
160	90600-5391		1	INTERMEDIARY SHAFT, ZA/60/1047/24H7/14H7	
	90600-5382		*1*	*HUB, ZA/60/14H7 KEYWAY/XX*	
	90600-5383		*1*	*HUB, ZA/60/24H7/XX*	
190	2731702-0000		2	FLANGE	
200	1260167-0000		2	WASHER	
260	2779651-0000		1	FRAME	
270	2806294-0000		1	SHAFT	
280	2731815-0000		1	PLATE	
320	2616157-0000		1	BRACKET	
330	3051342-0000		1	CHUTE	
340	2506714-0000		1	WASHER	
460	2879374-0000		1	GUIDE	
470	2879375-0000		1	GUIDE	
550	90091-0438		2	RADIAL SEAL 25X52X10 MM DUST LIP	
560	315705-0236		1	PARALLEL KEY W. ROUND ENDS 6X6X30 MM	
640	315105-0165		5	WASHER BRB 8,4X16 RFR	
645	315105-0173		3	WASHER BRB 10,5X22 RFR	
650	312109-0457		1	SCREW M6S ISO 4017 M8X35 A480	
690	90091-0436		1	RADIAL SEAL 20X40X7 MM DUST LIP	
790	312155-0449		5	SCREW DIN 7991 MF6S M8X16 A4 70	
830	312155-0291		6	SCREW DIN 7991 MF6S M4X12 A4 70	
850	312105-0471		4	SCREW M6S ISO 4014 M8X100 A480	
880	315105-0153		16	WASHER BRB 6,4X12 RFR	
910	312105-0495		3	SCREW M6S ISO 4017 M10X30 A480	
920	311103-0405		2	PARALLEL PIN ISO 2338 8M6X30 A1	
940	90141-0017		1	RETAINING RING FOR SHAFT DIN 471 17 SS	
950	315705-0239		2	PARALLEL KEY W. ROUND ENDS 6X6X40 MM	
1010	90091-0437		1	RADIAL SEAL 17X40X7 MM DUST LIP	
1040	312105-0370		6	SCREW M6S ISO 4017 M6X20 A480	
1070	312105-0368		7	SCREW M6S ISO 4017 M6X16 A480	
1140	359710-0001		1	WARNING SIGN ISO, HOT SURFACE	
A3/SPEED TBA 1000B ANSI (See drawing on page: 5-94)					
010	2783818-0000		1	FRAME	
040	2783820-0000		1	PULLEY	
050	1484319-0000		1	BELT	
060	1484306-0000		1	GUIDE	
070	2784674-0000		1	PULLEY	
080	1484308-0000		1	SHAFT	
160	90600-0644		1	INTERMEDIARY SHAFT, ZA/60/973/28H7 KEYWA	
	90600-5382		*1*	*HUB, ZA/60/14H7 KEYWAY/XX*	
	90600-5408		*1*	*HUB, ZA/60/28H7 KEYWAY/XX*	
190	2783819-0000		2	FLANGE	
200	315125-0173		1	WASHER TBRSB 10,5X28X6 A4	
210	1144597-0000		1	SPACER	
220	2774490-0000		1	FLANGE	
260	2783815-0000		1	SUPPORT	
270	2810969-0000		1	SHAFT	
310	2839326-0000		2	PLATE	
320	2783816-0000		1	HOLDER	
325	534310-0001		2	NOZZLE	
330	2812721-0000		1	CONVEYOR	
335	532414-0000		2	WASHER	
345	532413-0000		2	REDUCING NIPPLE	
355	3044252-0000		2	SUPPORT	
460	2771518-0000		1	SLIDE	
470	2771519-0000		1	SLIDE	
505	311103-1403		1	PARALLEL PIN ISO 2338 8M6X24 A1	
550	315221-0160		2	RADIAL SEAL 25X52X7 MM	
560	315705-0239		2	PARALLEL KEY W. ROUND ENDS 6X6X40 MM	
630	315125-0165		1	WASHER TBRSB 8,4X26X5 A4	
645	315105-0173		2	WASHER BRB 10,5X22 RFR	
650	312105-0451		1	SCREW M6S ISO 4017 M8X20 A480	
690	90091-0404		1	RADIAL SEAL 22X40X7 MM DUST LIP	
720	315125-0153		1	WASHER TBRSB 6,4X22X4 A4	
730	312105-0368		3	SCREW M6S ISO 4017 M6X16 A480	
735	312109-0374		2	SCREW M6S ISO 4017 M6X30 A480	

See previous drawings pages: 5-92, 5-94, 5-96, 5-98.

ECM: 473532 - 20101003
Group number: 1346814-0400
Assembly Drawing: 1346814-15_1_AB

This list covers pages from 5-92 to 5-113

Pos	Part No	UN	Qty	Description	Page No
A3/SPEED TBA 1000B ANSI (Cont'd) (See drawing on page: 5-94)					
740	315202-0734		1	O-RING 47,29X2,62 MM	
790	312155-0449		4	SCREW DIN 7991 MF6S M8X16 A4 70	
830	312155-0368		6	SCREW DIN 7991 MF6S M6X16 A4 70	
880	315105-0153		7	WASHER BRB 6,4X12 RFR	
910	312105-0495		2	SCREW M6S ISO 4017 M10X30 A480	
920	311103-0401		2	PARALLEL PIN ISO 2338 8M6X20 A1	
950	315705-0240		1	PARALLEL KEY W. ROUND ENDS 6X6X45 MM	
1040	312155-0368		4	SCREW DIN 7991 MF6S M6X16 A4 70	
1070	312105-0368		3	SCREW M6S ISO 4017 M6X16 A480	
1080	312105-0491		1	SCREW M6S ISO 4017 M10X20 A480	
1140	359725-0116		1	WARNING SIGN ANSI (H), HOT SURFACE	
1150	90230-0027		2	NON-RETURN VALVE QJ 8355-1/4"	
	90230-0301		*1*	*DIAPHRAGM*	
	90230-0300		*1*	*STRAINER*	
1160	90005-0094		2	GASKET C 19438-EPR	
1170	90055-0257		1	PUSH-IN Y-CONNECTOR QSY-6	
1180	90055-0229		1	T- WITH TAILPIECE 6 MM	
1260	90458-2956		2	ELBOW PIPE JOINT, EXT.THREAD, D=6MM-G1/8	
1270	2798501-0000		1	SPACER	
1850	312155-0374		3	SCREW DIN 7991 MF6S M6X30 A4 70	
T50W1253	90166-0132	M	2.35	TUBE 6 MM PA,TRANSP.	
T50W1254	90166-0132	MM	700	TUBE 6 MM PA,TRANSP.	
T50W1256	90166-0132	MM	800	TUBE 6 MM PA,TRANSP.	
A3/SPEED TBA 1000B ISO (See drawing on page: 5-94)					
010	2783818-0000		1	FRAME	
040	2783820-0000		1	PULLEY	
050	1484319-0000		1	BELT	
060	1484306-0000		1	GUIDE	
070	2784674-0000		1	PULLEY	
080	1484308-0000		1	SHAFT	
160	90600-0644		1	INTERMEDIARY SHAFT, ZA/60/973/28H7 KEYWA	
	90600-5382		*1*	*HUB, ZA/60/14H7 KEYWAY/XX*	
	90600-5408		*1*	*HUB, ZA/60/28H7 KEYWAY/XX*	
190	2783819-0000		2	FLANGE	
200	315125-0173		1	WASHER TBRSB 10,5X28X6 A4	
210	1144597-0000		1	SPACER	
220	2774490-0000		1	FLANGE	
260	2783815-0000		1	SUPPORT	
270	2810969-0000		1	SHAFT	
310	2839326-0000		2	PLATE	
320	2783816-0000		1	HOLDER	
325	534310-0001		2	NOZZLE	
330	2812721-0000		1	CONVEYOR	
335	532414-0000		2	WASHER	
345	532413-0000		2	REDUCING NIPPLE	
355	3044252-0000		2	SUPPORT	
460	2771518-0000		1	SLIDE	
470	2771519-0000		1	SLIDE	
505	311103-1403		1	PARALLEL PIN ISO 2338 8M6X24 A1	
550	315221-0160		2	RADIAL SEAL 25X52X7 MM	
560	315705-0239		2	PARALLEL KEY W. ROUND ENDS 6X6X40 MM	
630	315125-0165		1	WASHER TBRSB 8,4X26X5 A4	
645	315105-0173		2	WASHER BRB 10,5X22 RFR	
650	312105-0451		1	SCREW M6S ISO 4017 M8X20 A480	
690	90091-0404		1	RADIAL SEAL 22X40X7 MM DUST LIP	
720	315125-0153		1	WASHER TBRSB 6,4X22X4 A4	
730	312105-0368		3	SCREW M6S ISO 4017 M6X16 A480	
735	312109-0374		2	SCREW M6S ISO 4017 M6X30 A480	
740	315202-0734		1	O-RING 47,29X2,62 MM	
790	312155-0449		4	SCREW DIN 7991 MF6S M8X16 A4 70	
830	312155-0368		6	SCREW DIN 7991 MF6S M6X16 A4 70	
880	315105-0153		7	WASHER BRB 6,4X12 RFR	
910	312105-0495		2	SCREW M6S ISO 4017 M10X30 A480	
920	311103-0401		2	PARALLEL PIN ISO 2338 8M6X20 A1	
950	315705-0240		1	PARALLEL KEY W. ROUND ENDS 6X6X45 MM	
1040	312155-0368		4	SCREW DIN 7991 MF6S M6X16 A4 70	
1070	312105-0368		3	SCREW M6S ISO 4017 M6X16 A480	
1080	312105-0491		1	SCREW M6S ISO 4017 M10X20 A480	
1140	359710-0001		1	WARNING SIGN ISO, HOT SURFACE	
1150	90230-0027		2	NON-RETURN VALVE QJ 8355-1/4"	
	90230-0301		*1*	*DIAPHRAGM*	
	90230-0300		*1*	*STRAINER*	
1160	90005-0094		2	GASKET C 19438-EPR	
1170	90055-0257		1	PUSH-IN Y-CONNECTOR QSY-6	
1180	90055-0229		1	T- WITH TAILPIECE 6 MM	
1260	90458-2956		2	ELBOW PIPE JOINT, EXT.THREAD, D=6MM-G1/8	
1270	2798501-0000		1	SPACER	
1850	312155-0374		3	SCREW DIN 7991 MF6S M6X30 A4 70	
T50W1253	90166-0132	M	2.35	TUBE 6 MM PA,TRANSP.	
T50W1254	90166-0132	MM	700	TUBE 6 MM PA,TRANSP.	
T50W1256	90166-0132	MM	800	TUBE 6 MM PA,TRANSP.	
A3/SPEED TBA 1000S ANSI (See drawing on page: 5-94)					
010	2783818-0000		1	FRAME	

Machine Type | Group Description | Used-In | Group Number | Page No

See previous drawings pages: 5-92, 5-94, 5-96, 5-98.

ECM: 473532 - 20101003
Group number: 1346814-0400
Assembly Drawing: 1346814-15_1_AB

This list covers pages from 5-92 to 5-113

Pos	Part No	UN	Qty	Description	Page No
A3/SPEED TBA 1000S ANSI (Cont'd) (See drawing on page: 5-94)					
040	2783820-0000		1	PULLEY	
050	1484319-0000		1	BELT	
060	1484306-0000		1	GUIDE	
070	2784674-0000		1	PULLEY	
080	1484308-0000		1	SHAFT	
160	90600-0644		1	INTERMEDIARY SHAFT, ZA/60/973/28H7 KEYWA	
	90600-5382		*1*	*HUB, ZA/60/14H7 KEYWAY/XX*	
	90600-5408		*1*	*HUB, ZA/60/28H7 KEYWAY/XX*	
190	2783819-0000		2	FLANGE	
200	315125-0173		1	WASHER TBRSB 10,5X28X6 A4	
210	1144597-0000		1	SPACER	
220	2774490-0000		1	FLANGE	
260	2783815-0000		1	SUPPORT	
270	2810969-0000		1	SHAFT	
320	2783816-0000		1	HOLDER	
325	534310-0001		2	NOZZLE	
330	3069074-0000		1	CHUTE	
335	532414-0000		2	WASHER	
345	532413-0000		2	REDUCING NIPPLE	
355	3044252-0000		2	SUPPORT	
460	2771518-0000		1	SLIDE	
470	2771519-0000		1	SLIDE	
505	311103-1403		1	PARALLEL PIN ISO 2338 8M6X24 A1	
550	315221-0160		2	RADIAL SEAL 25X52X7 MM	
560	315705-0239		2	PARALLEL KEY W. ROUND ENDS 6X6X40 MM	
630	315125-0165		1	WASHER TBRSB 8,4X26X5 A4	
645	315105-0173		2	WASHER BRB 10,5X22 RFR	
650	312105-0451		1	SCREW M6S ISO 4017 M8X20 A480	
690	90091-0404		1	RADIAL SEAL 22X40X7 MM DUST LIP	
720	315125-0153		1	WASHER TBRSB 6,4X22X4 A4	
730	312105-0368		3	SCREW M6S ISO 4017 M6X16 A480	
735	312109-0374		2	SCREW M6S ISO 4017 M6X30 A480	
740	315202-0734		1	O-RING 47,29X2,62 MM	
790	312155-0449		4	SCREW DIN 7991 MF6S M8X16 A4 70	
830	312155-0368		6	SCREW DIN 7991 MF6S M6X16 A4 70	
880	315105-0153		7	WASHER BRB 6,4X12 RFR	
910	312105-0495		2	SCREW M6S ISO 4017 M10X30 A480	
920	311103-0401		2	PARALLEL PIN ISO 2338 8M6X20 A1	
950	315705-0240		1	PARALLEL KEY W. ROUND ENDS 6X6X45 MM	
1040	312155-0368		4	SCREW DIN 7991 MF6S M6X16 A4 70	
1070	312105-0368		3	SCREW M6S ISO 4017 M6X16 A480	
1080	312105-0491		1	SCREW M6S ISO 4017 M10X20 A480	
1140	359725-0116		1	WARNING SIGN ANSI (H), HOT SURFACE	
1150	90230-0027		2	NON-RETURN VALVE QJ 8355-1/4"	
	90230-0301		*1*	*DIAPHRAGM*	
	90230-0300		*1*	*STRAINER*	
1160	90005-0094		2	GASKET C 19438-EPR	
1170	90055-0257		1	PUSH-IN Y-CONNECTOR QSY-6	
1180	90055-0229		1	T- WITH TAILPIECE 6 MM	
1260	90458-2956		2	ELBOW PIPE JOINT, EXT.THREAD, D=6MM-G1/8	
1850	312155-0374		3	SCREW DIN 7991 MF6S M6X30 A4 70	
T50W1253	90166-0132	M	2.35	TUBE 6 MM PA,TRANSP.	
T50W1254	90166-0132	MM	700	TUBE 6 MM PA,TRANSP.	
T50W1256	90166-0132	MM	800	TUBE 6 MM PA,TRANSP.	
A3/SPEED TBA 1000S ISO (See drawing on page: 5-94)					
010	2783818-0000		1	FRAME	
040	2783820-0000		1	PULLEY	
050	1484319-0000		1	BELT	
060	1484306-0000		1	GUIDE	
070	2784674-0000		1	PULLEY	
080	1484308-0000		1	SHAFT	
160	90600-0644		1	INTERMEDIARY SHAFT, ZA/60/973/28H7 KEYWA	
	90600-5382		*1*	*HUB, ZA/60/14H7 KEYWAY/XX*	
	90600-5408		*1*	*HUB, ZA/60/28H7 KEYWAY/XX*	
190	2783819-0000		2	FLANGE	
200	315125-0173		1	WASHER TBRSB 10,5X28X6 A4	
210	1144597-0000		1	SPACER	
220	2774490-0000		1	FLANGE	
260	2783815-0000		1	SUPPORT	
270	2810969-0000		1	SHAFT	
320	2783816-0000		1	HOLDER	
325	534310-0001		2	NOZZLE	
330	3069074-0000		1	CHUTE	
335	532414-0000		2	WASHER	
345	532413-0000		2	REDUCING NIPPLE	
355	3044252-0000		2	SUPPORT	
460	2771518-0000		1	SLIDE	
470	2771519-0000		1	SLIDE	
505	311103-1403		1	PARALLEL PIN ISO 2338 8M6X24 A1	
550	315221-0160		2	RADIAL SEAL 25X52X7 MM	
560	315705-0239		2	PARALLEL KEY W. ROUND ENDS 6X6X40 MM	
630	315125-0165		1	WASHER TBRSB 8,4X26X5 A4	
645	315105-0173		2	WASHER BRB 10,5X22 RFR	

Machine Type | Group Description | Used-In | Group Number | Page No

See previous drawings pages: 5-92, 5-94, 5-96, 5-98.

ECM: 473532 - 20101003
Group number: 1346814-0400
Assembly Drawing: 1346814-15_1_AB

This list covers pages from 5-92 to 5-113

Pos	Part No	UN	Qty	Description	Page No
A3/SPEED TBA 1000S ISO (Cont'd) (See drawing on page: 5-94)					
650	312105-0451		1	SCREW M6S ISO 4017 M8X20 A480	
690	90091-0404		1	RADIAL SEAL 22X40X7 MM DUST LIP	
720	315125-0153		1	WASHER TBRSB 6,4X22X4 A4	
730	312105-0368		3	SCREW M6S ISO 4017 M6X16 A480	
735	312109-0374		2	SCREW M6S ISO 4017 M6X30 A480	
740	315202-0734		1	O-RING 47,29X2,62 MM	
790	312155-0449		4	SCREW DIN 7991 MF6S M8X16 A4 70	
830	312155-0368		6	SCREW DIN 7991 MF6S M6X16 A4 70	
880	315105-0153		7	WASHER BRB 6,4X12 RFR	
910	312105-0495		2	SCREW M6S ISO 4017 M10X30 A480	
920	311103-0401		2	PARALLEL PIN ISO 2338 8M6X20 A1	
950	315705-0240		1	PARALLEL KEY W. ROUND ENDS 6X6X45 MM	
1040	312155-0368		4	SCREW DIN 7991 MF6S M6X16 A4 70	
1070	312105-0368		3	SCREW M6S ISO 4017 M6X16 A480	
1080	312105-0491		1	SCREW M6S ISO 4017 M10X20 A480	
1140	359710-0001		1	WARNING SIGN ISO, HOT SURFACE	
1150	90230-0027		2	NON-RETURN VALVE QJ 8355-1/4"	
	90230-0301		*1*	*DIAPHRAGM*	
	90230-0300		*1*	*STRAINER*	
1160	90005-0094		2	GASKET C 19438-EPR	
1170	90055-0257		1	PUSH-IN Y-CONNECTOR QSY-6	
1180	90055-0229		1	T- WITH TAILPIECE 6 MM	
1260	90458-2956		2	ELBOW PIPE JOINT, EXT.THREAD, D=6MM-G1/8	
1850	312155-0374		3	SCREW DIN 7991 MF6S M6X30 A4 70	
T50W1253	90166-0132	M	2.35	TUBE 6 MM PA,TRANSP.	
T50W1254	90166-0132	MM	700	TUBE 6 MM PA,TRANSP.	
T50W1256	90166-0132	MM	800	TUBE 6 MM PA,TRANSP.	
Common Parts					
170	2753158-0100		1	BRAKE **5-115, 5-117, 5-119, 5-121, 5-123**	
530	90214-0096		2	BALL BEARING, 25X52X15 MM	
540	315751-0119		1	RETAINING RING FOR SHAFT DIN 471 25 SS	
570	90214-0189		2	BALL BEARING, 17X40X12 MM	
600	315105-0191		1	WASHER BRB 20X36 RFR	
610	312605-0326		1	HEXAGON NUT, M6M M20 A280	
680	90056-0170		1	WORM GEAR BS 40 AL-TT 3,5:1 RH	
960	315753-0132		2	RETAINING RING FOR BORE DIN 472 52 SS	
1050	90296-0068		1	SHELL ALVANIA GREASE EP 2	
1100	90166-0081	M	4	TUBE 6 MM PA BLUE	
1110	342980-0313		1	BANJO-HOLLOW BOLT COUPL,EXT.THR.02-G1/8	
1120	342981-0113		1	BANJO CONNEC,RING,FOR PLAST.TUBE 6-G1/8"	
1130	342797-0121		1	BANJO CONN., RINGPIECE 6-1/8	
1860	90157-0016	ML	1	THREAD LOCKING, LOCTITE 242 50 ML	

Machine Type | Group Description | Used-In | Group Number | Page No

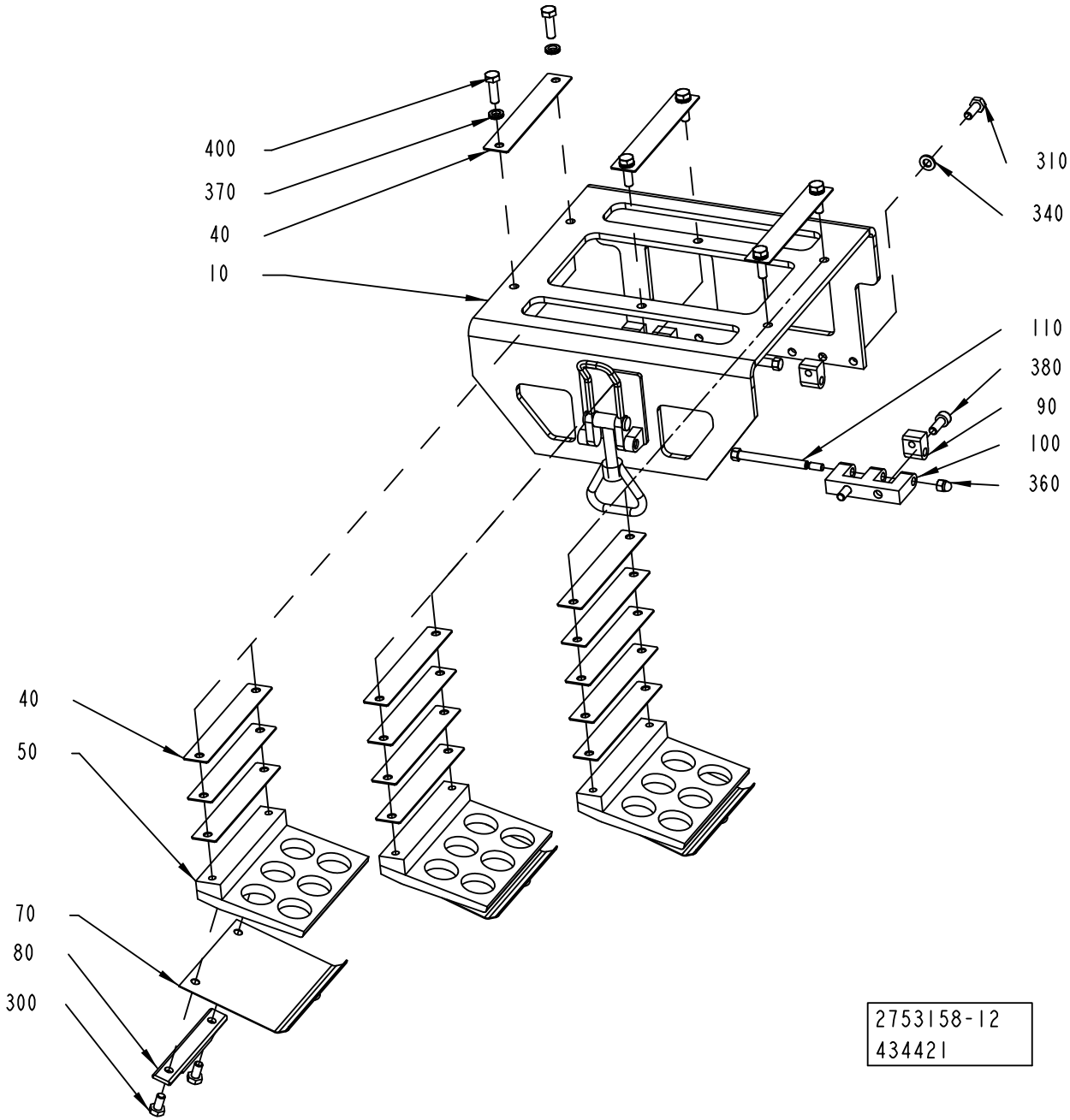
400
370
40
10
310
340
110
380
90
100
360
40
50
70
80
300
2753158-12
434421

ECM: 467653 - 20101002
Group number: 2753158-0100
Assembly Drawing: 2753158-12_1_AA

This list covers pages from 5-114 to 5-123

Pos	Part No	UN	Qty	Description	Page No
A3/SPEED TBA 0125S (See drawing on page: 5-122)					
010	3092511-0000		1	BRACKET	
040	2832218-0000		5	PLATE	
050	3092510-0000		2	HOLDER	
070	2790190-0000		2	SPRING	
080	3092513-0000		2	PLATE	
090	1129770-0000		4	BLOCKING PIECE	
100	2835397-0000		2	HINGE	
120	2835252-0000		1	SUPPORT	
150	3092512-0000		1	SPACER	
310	312105-0368		8	SCREW M6S ISO 4017 M6X16 A480	
320	312105-0372		6	SCREW M6S ISO 4017 M6X25 A480	
330	312105-0453		3	SCREW M6S ISO 4017 M8X25 A480	
340	315105-0153		8	WASHER BRB 6,4X12 RFR	
350	315105-0165		3	WASHER BRB 8,4X16 RFR	
370	90062-0061		5	LOCK WASHER NORD-LOCK,6,5/10,8, T=2,2	
390	312105-0366		1	SCREW M6S ISO 4017 M6X12 A480	
400	312105-0370		2	SCREW M6S ISO 4017 M6X20 A480	
A3/SPEED TBA 0200B (See drawing on page: 5-120)					
010	3092511-0000		1	BRACKET	
040	2832218-0000		1	PLATE	
050	3092510-0000		3	HOLDER	
070	2790190-0000		3	SPRING	
080	3092513-0000		3	PLATE	
090	1129770-0000		4	BLOCKING PIECE	
100	2835397-0000		2	HINGE	
120	2835252-0000		1	SUPPORT	
310	312105-0368		16	SCREW M6S ISO 4017 M6X16 A480	
320	312105-0372		4	SCREW M6S ISO 4017 M6X25 A480	
330	312105-0453		3	SCREW M6S ISO 4017 M8X25 A480	
340	315105-0153		8	WASHER BRB 6,4X12 RFR	
350	315105-0165		3	WASHER BRB 8,4X16 RFR	
370	90062-0061		6	LOCK WASHER NORD-LOCK,6,5/10,8, T=2,2	
A3/SPEED TBA 0200M (See drawing on page: 5-120)					
010	3092511-0000		1	BRACKET	
040	2832218-0000		12	PLATE	
050	3092510-0000		3	HOLDER	
070	2790190-0000		3	SPRING	
080	3092513-0000		3	PLATE	
090	1129770-0000		4	BLOCKING PIECE	
100	2835397-0000		2	HINGE	
120	2835252-0000		1	SUPPORT	
310	312105-0368		16	SCREW M6S ISO 4017 M6X16 A480	
320	312105-0372		4	SCREW M6S ISO 4017 M6X25 A480	
330	312105-0453		3	SCREW M6S ISO 4017 M8X25 A480	
340	315105-0153		8	WASHER BRB 6,4X12 RFR	
350	315105-0165		3	WASHER BRB 8,4X16 RFR	
370	90062-0061		6	LOCK WASHER NORD-LOCK,6,5/10,8, T=2,2	
A3/SPEED TBA 0200S (See drawing on page: 5-120)					
010	3092511-0000		1	BRACKET	
040	2832218-0000		12	PLATE	
050	3092510-0000		3	HOLDER	
070	2790190-0000		3	SPRING	
080	3092513-0000		3	PLATE	
090	1129770-0000		4	BLOCKING PIECE	
100	2835397-0000		2	HINGE	
120	2835252-0000		1	SUPPORT	
310	312105-0368		16	SCREW M6S ISO 4017 M6X16 A480	
320	312105-0372		4	SCREW M6S ISO 4017 M6X25 A480	
330	312105-0453		3	SCREW M6S ISO 4017 M8X25 A480	
340	315105-0153		8	WASHER BRB 6,4X12 RFR	
350	315105-0165		3	WASHER BRB 8,4X16 RFR	
370	90062-0061		6	LOCK WASHER NORD-LOCK,6,5/10,8, T=2,2	
A3/SPEED TBA 0250B (See drawing on page: 5-120)					
010	3092511-0000		1	BRACKET	
040	2832218-0000		9	PLATE	
050	3092510-0000		3	HOLDER	
070	2790190-0000		3	SPRING	
080	3092513-0000		3	PLATE	
090	1129770-0000		4	BLOCKING PIECE	
100	2835397-0000		2	HINGE	
120	2835252-0000		1	SUPPORT	
310	312105-0368		16	SCREW M6S ISO 4017 M6X16 A480	
320	312105-0372		4	SCREW M6S ISO 4017 M6X25 A480	
330	312105-0453		3	SCREW M6S ISO 4017 M8X25 A480	
340	315105-0153		8	WASHER BRB 6,4X12 RFR	
350	315105-0165		3	WASHER BRB 8,4X16 RFR	
370	90062-0061		6	LOCK WASHER NORD-LOCK,6,5/10,8, T=2,2	
A3/SPEED TBA 0250S (See drawing on page: 5-120)					
010	3092511-0000		1	BRACKET	
040	2832218-0000		12	PLATE	
050	3092510-0000		3	HOLDER	
070	2790190-0000		3	SPRING	
080	3092513-0000		3	PLATE	

Machine Type	Group Description	Used-In	Group Number	Page No

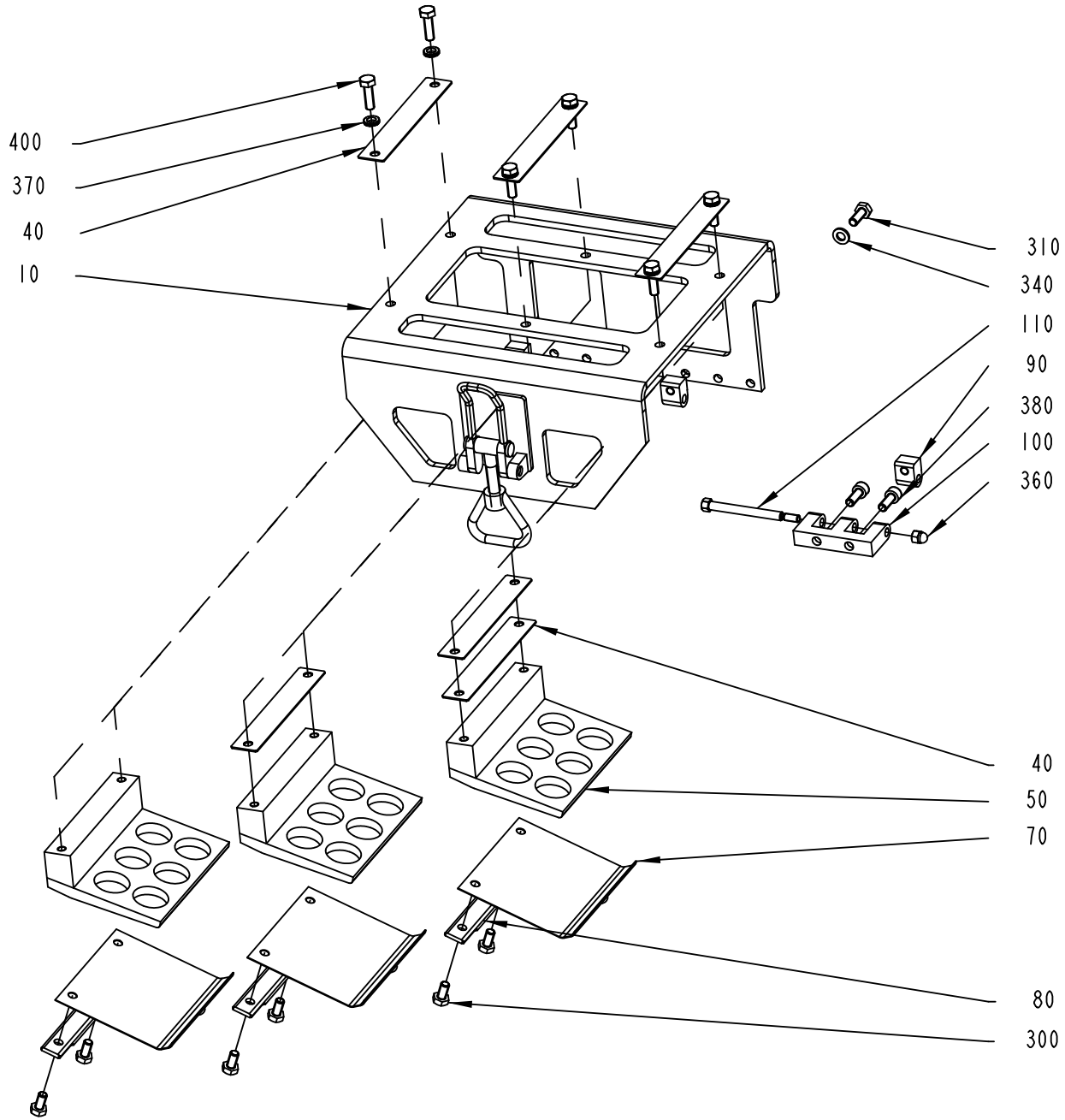
400
370
40
10
310
340
110
90
380
100
360
40
50
70
80
300
2753158-13
434421

ECM: 467653 - 20101002
Group number: 2753158-0100
Assembly Drawing: 2753158-13_1_AA

This list covers pages from 5-114 to 5-123

Pos	Part No	UN	Qty	Description	Page No
A3/SPEED TBA 0250S (Cont'd) (See drawing on page: 5-120)					
090	1129770-0000		4	BLOCKING PIECE	
100	2835397-0000		2	HINGE	
120	2835252-0000		1	SUPPORT	
310	312105-0368		16	SCREW M6S ISO 4017 M6X16 A480	
320	312105-0372		4	SCREW M6S ISO 4017 M6X25 A480	
330	312105-0453		3	SCREW M6S ISO 4017 M8X25 A480	
340	315105-0153		8	WASHER BRB 6,4X12 RFR	
350	315105-0165		3	WASHER BRB 8,4X16 RFR	
370	90062-0061		6	LOCK WASHER NORD-LOCK,6,5/10,8, T=2,2	
A3/SPEED TBA 1000B (See drawing on page: 5-118)					
010	3091185-0000		1	BRACKET	
040	2832218-0000		15	PLATE	
050	3091042-0000		3	HOLDER	
070	2790190-0000		3	SPRING	
080	3044257-0000		3	PLATE	
090	1129770-0000		3	BLOCKING PIECE	
100	1035792-0000		2	E-HINGE	
300	312105-0366		6	SCREW M6S ISO 4017 M6X12 A480	
310	312105-0368		3	SCREW M6S ISO 4017 M6X16 A480	
340	315105-0153		3	WASHER BRB 6,4X12 RFR	
370	90062-0061		6	LOCK WASHER NORD-LOCK,6,5/10,8, T=2,2	
380	312115-0368		4	SCREW ISO4762 M6X16 A4 80	
400	312105-0370		6	SCREW M6S ISO 4017 M6X20 A480	
A3/SPEED TBA 1000S (See drawing on page: 5-116)					
010	3091185-0000		1	BRACKET	
040	2832218-0000		6	PLATE	
050	3091043-0000		3	HOLDER	
070	2790190-0000		3	SPRING	
080	3044257-0000		3	PLATE	
090	1129770-0000		3	BLOCKING PIECE	
100	1035792-0000		2	E-HINGE	
300	312105-0366		6	SCREW M6S ISO 4017 M6X12 A480	
310	312105-0368		3	SCREW M6S ISO 4017 M6X16 A480	
340	315105-0153		3	WASHER BRB 6,4X12 RFR	
370	90062-0061		6	LOCK WASHER NORD-LOCK,6,5/10,8, T=2,2	
380	312115-0368		4	SCREW ISO4762 M6X16 A4 80	
400	312105-0370		6	SCREW M6S ISO 4017 M6X20 A480	
A3/SPEED TBA 1000SQ (See drawing on page: 5-114)					
010	3091185-0000		1	BRACKET	
040	2832218-0000		15	PLATE	
050	3044254-0000		3	HOLDER	
070	2790190-0000		3	SPRING	
080	3044257-0000		3	PLATE	
090	1129770-0000		4	BLOCKING PIECE	
100	1035792-0000		2	E-HINGE	
300	312105-0366		6	SCREW M6S ISO 4017 M6X12 A480	
310	312105-0368		4	SCREW M6S ISO 4017 M6X16 A480	
340	315105-0153		4	WASHER BRB 6,4X12 RFR	
370	90062-0061		6	LOCK WASHER NORD-LOCK,6,5/10,8, T=2,2	
380	312115-0368		4	SCREW ISO4762 M6X16 A4 80	
400	312105-0370		6	SCREW M6S ISO 4017 M6X20 A480	
Common Parts					
110	2829639-0000		2	SHAFT	
360	312705-0314		2	NUT HEX. DOMED CAP MHM-6 M5 A280	

Machine Type | Group Description | Used-In | Group Number | Page No

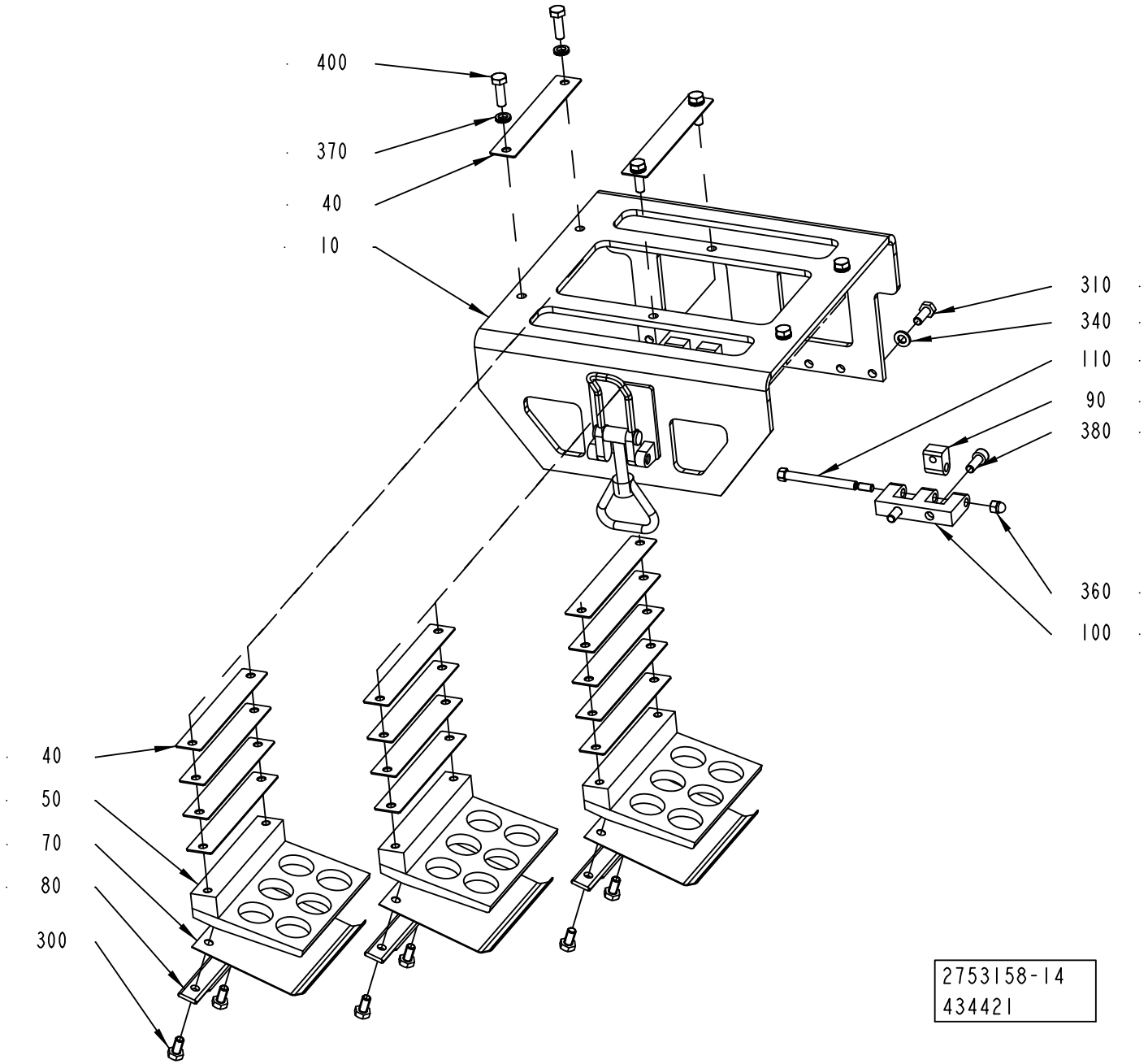
400
370
40
10
310
340
110
90
380
360
100
40
50
70
80
300
2753158-14
434421

Pos	Part No	UN	Qty	Description	Page No
SEE PREVIOUS LISTS PAGES: 5-115, 5-117.					

Pos	Part No	UN	Qty	Description	Page No

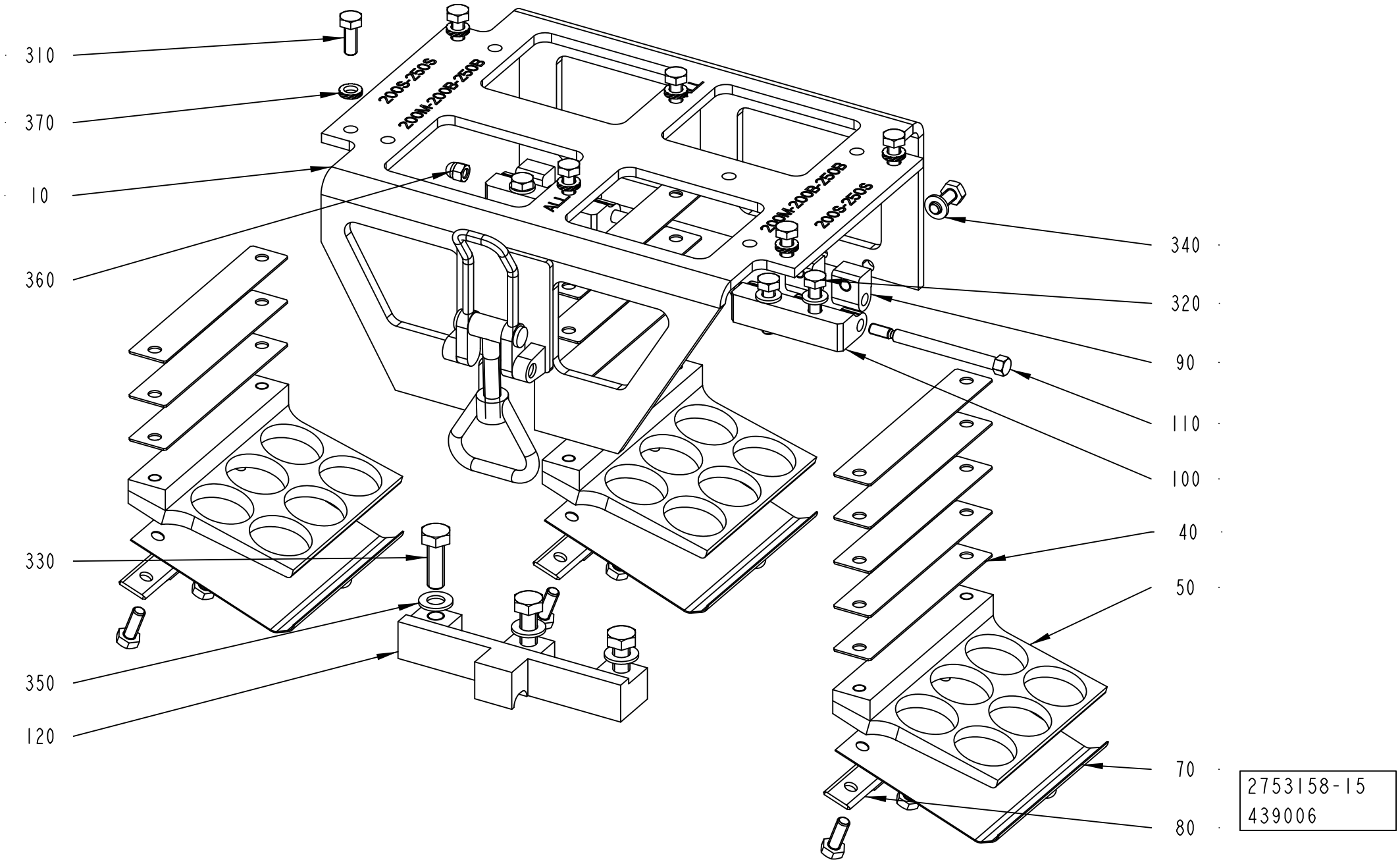
310
370
10
360
330
350
120
340
320
90
110
100
40
50
70
80
200S-250S
200M-200B-250B
ALL
200M-200B-250B
200S-250S
2753158-15
439006

ECM: 467653 - 20101002
Group number: 2753158-0100
Assembly Drawing: 2753158-15_1_AA

This list covers pages from 5-114 to 5-123

Pos	Part No	UN	Qty	Description	Page No
SEE PREVIOUS LISTS PAGES: 5-115, 5-117.					

Pos	Part No	UN	Qty	Description	Page No

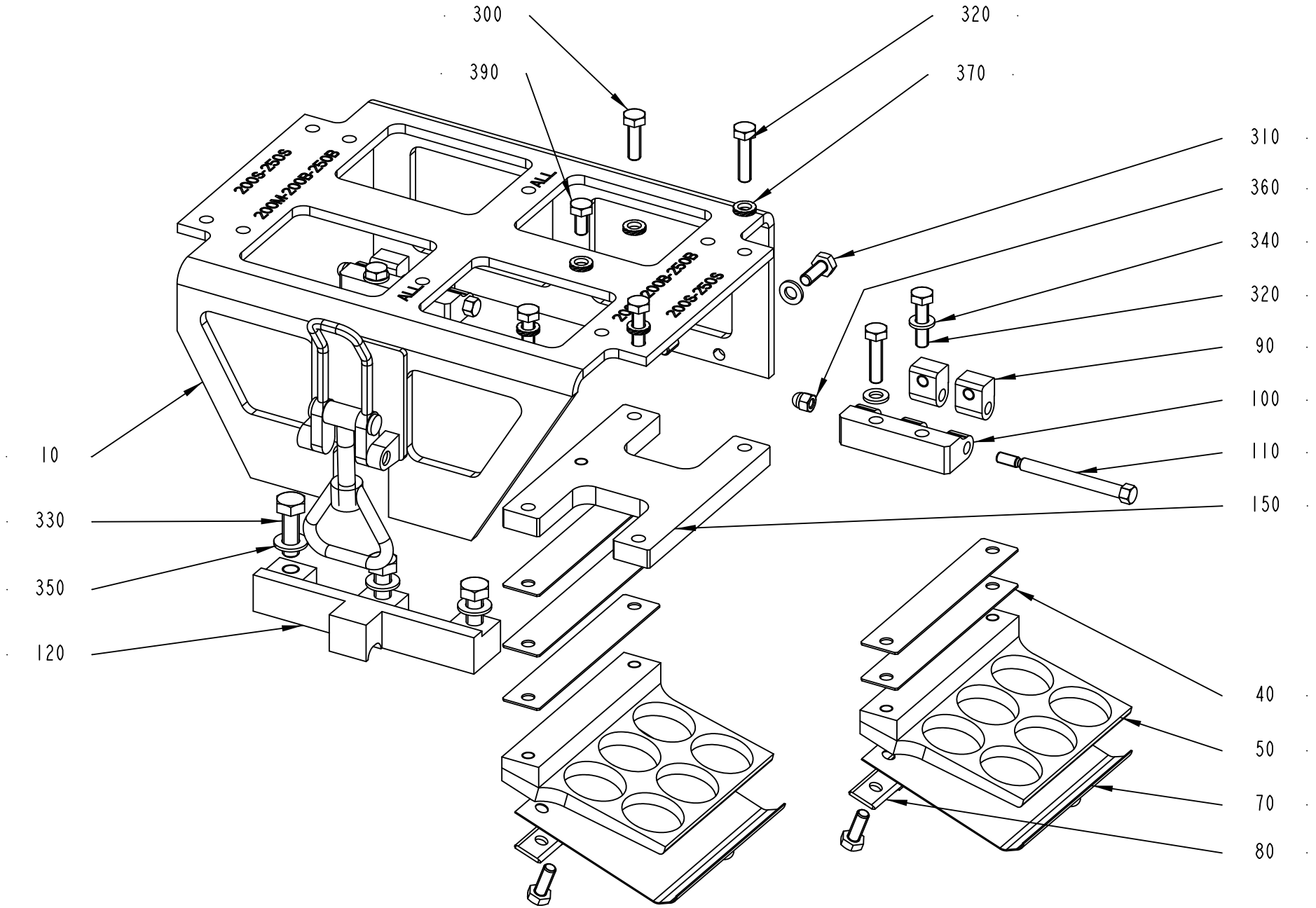
300
390
320
370
310
360
340
320
90
100
110
150
10
330
350
120
40
50
70
80
200S-250S
200M-200B-250B
ALL
ALL
200M-200B-250B
200S-250S
2753158-16
439006

Pos	Part No	UN	Qty	Description	Page No
SEE PREVIOUS LISTS PAGES: 5-115, 5-117.					

Pos	Part No	UN	Qty	Description	Page No

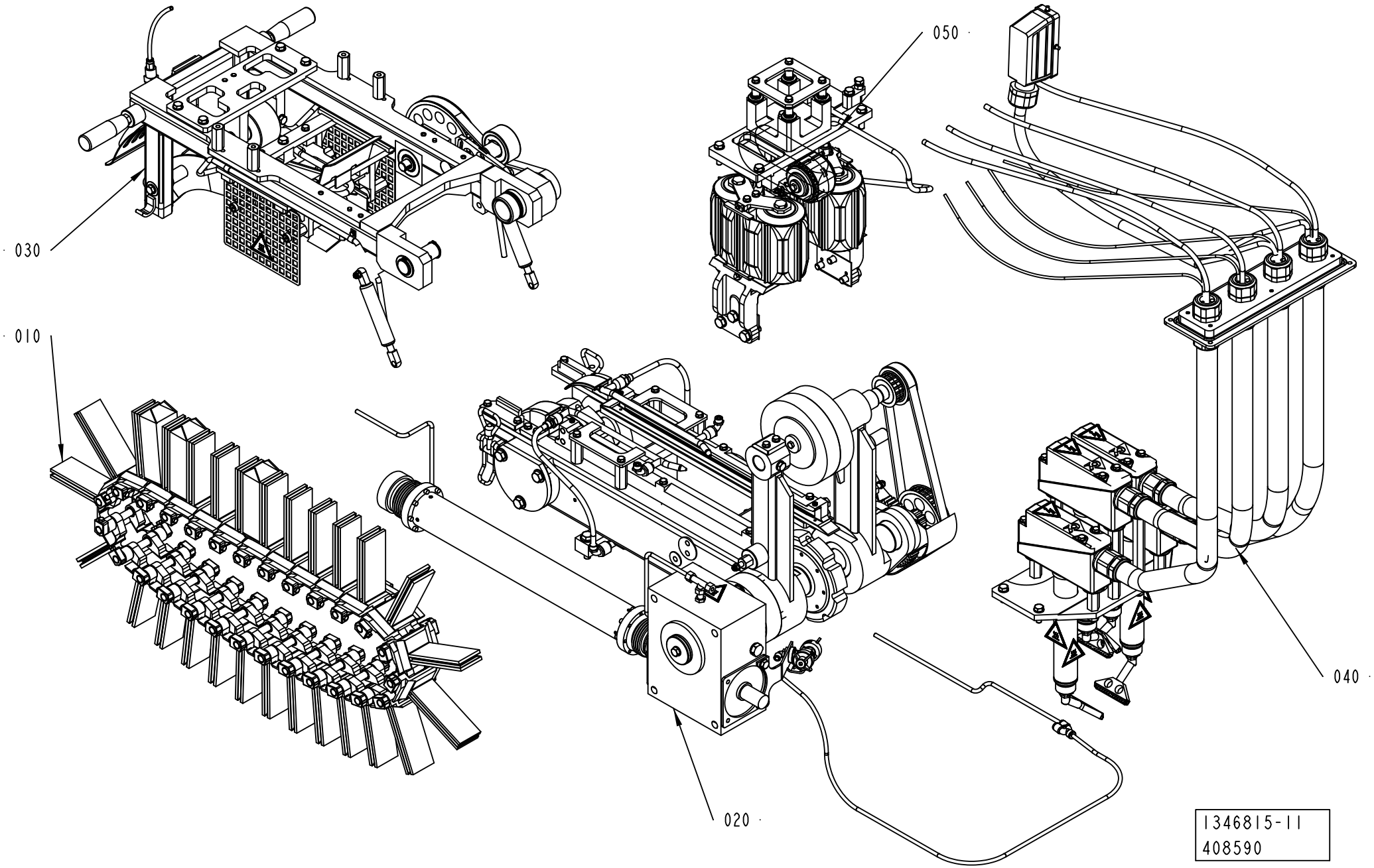
030
050
010
020
040
1346815-11
408590

ECM: 410077 - 20091001
Group number: 1346815-0500
Assembly Drawing: 1346815-11_1_AA

Pos	Part No	UN	Qty	Description	Page No
-					
10	2531774-0200		1	STATION CHAIN	**5-127, 5-129, 5-131**
20	1349498-0400		1	CHAIN SUPPORT	**5-133, 5-135, 5-137, 5-139, 5-141, 5-143, 5-145, 5-147 5-149, 5-151, 5-153, 5-155, 5-157, 5-159, 5-161, 5-163, 5-165, 5-167 5-169, 5-171**
30	1349500-0500		1	SWING FRAME	**5-173, 5-175, 5-177, 5-179, 5-181, 5-183, 5-185, 5-187 5-189, 5-191, 5-193, 5-195, 5-197, 5-199, 5-201, 5-203**
40	2867510-0100		1	HEATING CHAMBER	**5-205, 5-207, 5-209, 5-211**
50	1549868-0300		1	SQUEEZER	**5-217, 5-219, 5-221, 5-223, 5-225, 5-227, 5-229**

Pos	Part No	UN	Qty	Description	Page No

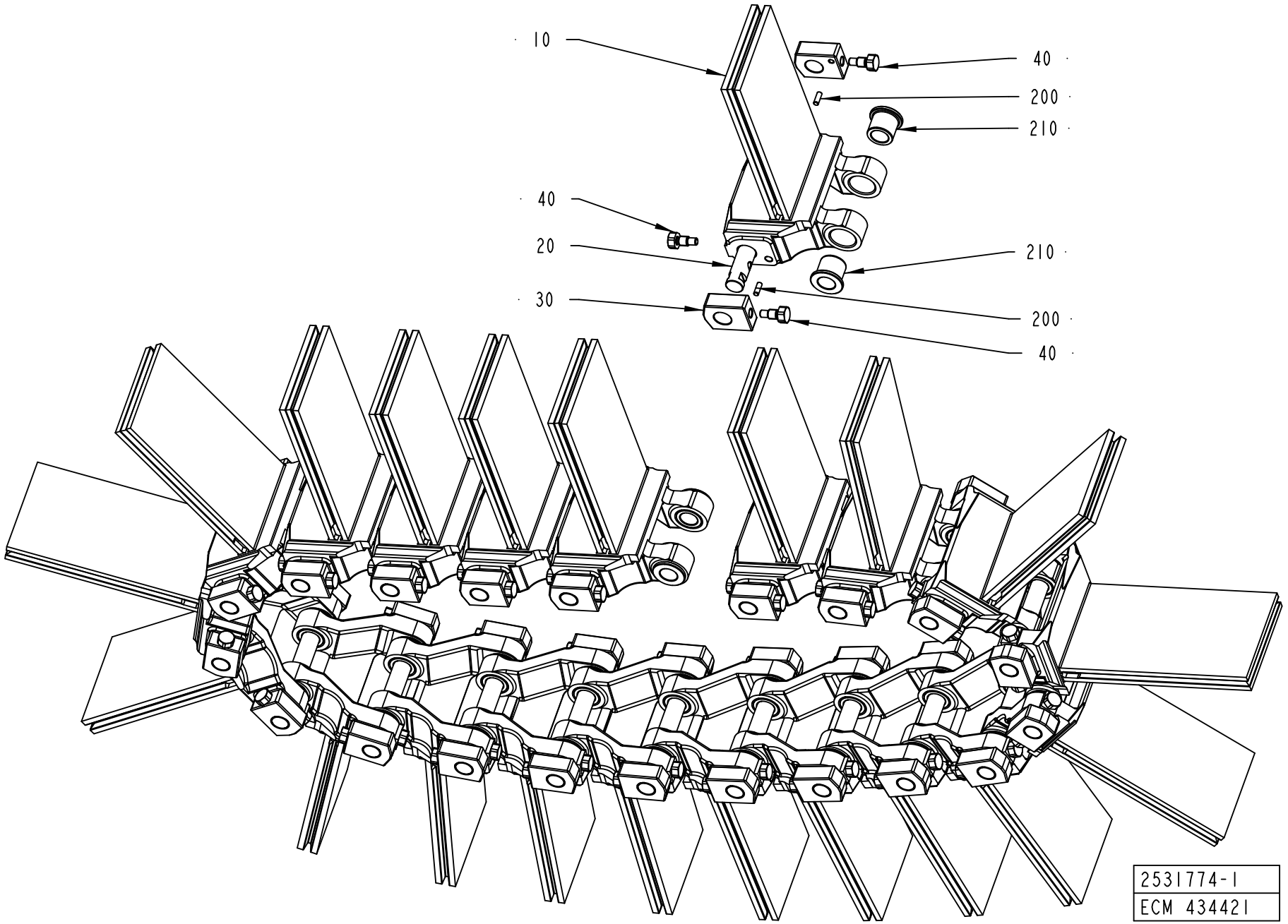
10
40
200
210
40
20
210
30
200
40
2531774-1
ECM 434421

ECM: 474075 - 20101003
Group number: 2531774-0200
Assembly Drawing: 2531774-1_1_AC

This list covers pages from 5-126 to 5-131

Pos	Part No	UN	Qty	Description	Page No
TBA 0125S (See drawing on page: 5-128)					
010	2835096-0000		27	CARTON STATION	
020	1517717-0000		27	SHAFT	
030	2868080-0000		54	SLIDER - SEE PN. 1517719-0000 FOR STOCK	
040	1517718-0000		54	SCREW	
050	2564953-0000		27	GRUB SCREW	
210	90458-1404		54	FLANGE BUSHING, 12X16X16 MM	
TBA 0200B (See drawing on page: 5-128)					
010	2760025-0000		27	CARTON STATION	
020	1517717-0000		27	SHAFT	
030	2868080-0000		54	SLIDER - SEE PN. 1517719-0000 FOR STOCK	
040	1517718-0000		54	SCREW	
050	2564953-0000		27	GRUB SCREW	
210	90458-1404		54	FLANGE BUSHING, 12X16X16 MM	
TBA 0200M (See drawing on page: 5-128)					
010	2760027-0000		27	CARTON STATION	
020	1517717-0000		27	SHAFT	
030	2868080-0000		54	SLIDER - SEE PN. 1517719-0000 FOR STOCK	
040	1517718-0000		54	SCREW	
050	2564953-0000		27	GRUB SCREW	
210	90458-1404		54	FLANGE BUSHING, 12X16X16 MM	
TBA 0200S (See drawing on page: 5-128)					
010	2760028-0000		27	CARTON STATION	
020	1517717-0000		27	SHAFT	
030	2868080-0000		54	SLIDER - SEE PN. 1517719-0000 FOR STOCK	
040	1517718-0000		54	SCREW	
050	2564953-0000		27	GRUB SCREW	
210	90458-1404		54	FLANGE BUSHING, 12X16X16 MM	
TBA 0250B (See drawing on page: 5-128)					
010	2760026-0000		27	CARTON STATION	
020	1517717-0000		27	SHAFT	
030	2868080-0000		54	SLIDER - SEE PN. 1517719-0000 FOR STOCK	
040	1517718-0000		54	SCREW	
050	2564953-0000		27	GRUB SCREW	
210	90458-1404		54	FLANGE BUSHING, 12X16X16 MM	
TBA 0250S (See drawing on page: 5-128)					
010	2760029-0000		27	CARTON STATION	
020	1517717-0000		27	SHAFT	
030	2868080-0000		54	SLIDER - SEE PN. 1517719-0000 FOR STOCK	
040	1517718-0000		54	SCREW	
050	2564953-0000		27	GRUB SCREW	
210	90458-1404		54	FLANGE BUSHING, 12X16X16 MM	
TBA 1000B (See drawing on page: 5-126)					
010	2531775-0000		21	CARTON STATION	
020	2531780-0000		21	SHAFT	
030	2751632-0000		42	SLIDER	
040	2531781-0000		63	SCREW	
200	311103-0268		42	PARALLEL PIN ISO 2338 4M6X12 A1	
210	90459-0128		42	FLANGE BUSHING 15X2	
TBA 1000S (See drawing on page: 5-126)					
010	2634558-0000		21	STATION CHAIN	
020	2531780-0000		21	SHAFT	
030	2751632-0000		42	SLIDER	
040	2531781-0000		63	SCREW	
200	311103-0268		42	PARALLEL PIN ISO 2338 4M6X12 A1	
210	90459-0128		42	FLANGE BUSHING 15X2	
TBA 1000SQ (See drawing on page: 5-130)					
010	2994595-0000		19	CARTON STATION	
020	2531780-0000		19	SHAFT	
030	2751632-0000		38	SLIDER	
040	2531781-0000		57	SCREW	
060	3010566-0000		19	PLATE	
070	2958038-0000		38	SUPPORT	
080	3010571-0000		19	CAM	
200	311103-0268		114	PARALLEL PIN ISO 2338 4M6X12 A1	
210	90459-0128		38	FLANGE BUSHING 15X2	
230	311103-0352		38	PARALLEL PIN ISO 2338 6M6X18 A1	
240	312105-0368		38	SCREW M6S ISO 4017 M6X16 A480	
250	321155-0062		38	FLANGE BUSHING, IGLIDUR X 6X8X8	
270	312155-0366		19	SCREW DIN 7991 MF6S M6X12 A4 70	
Common Parts					
220	90602-4847		1	THREAD LOCKING, LOCTITE 243 50 ML	

Machine Type	Group Description	Used-In	Group Number	Page No

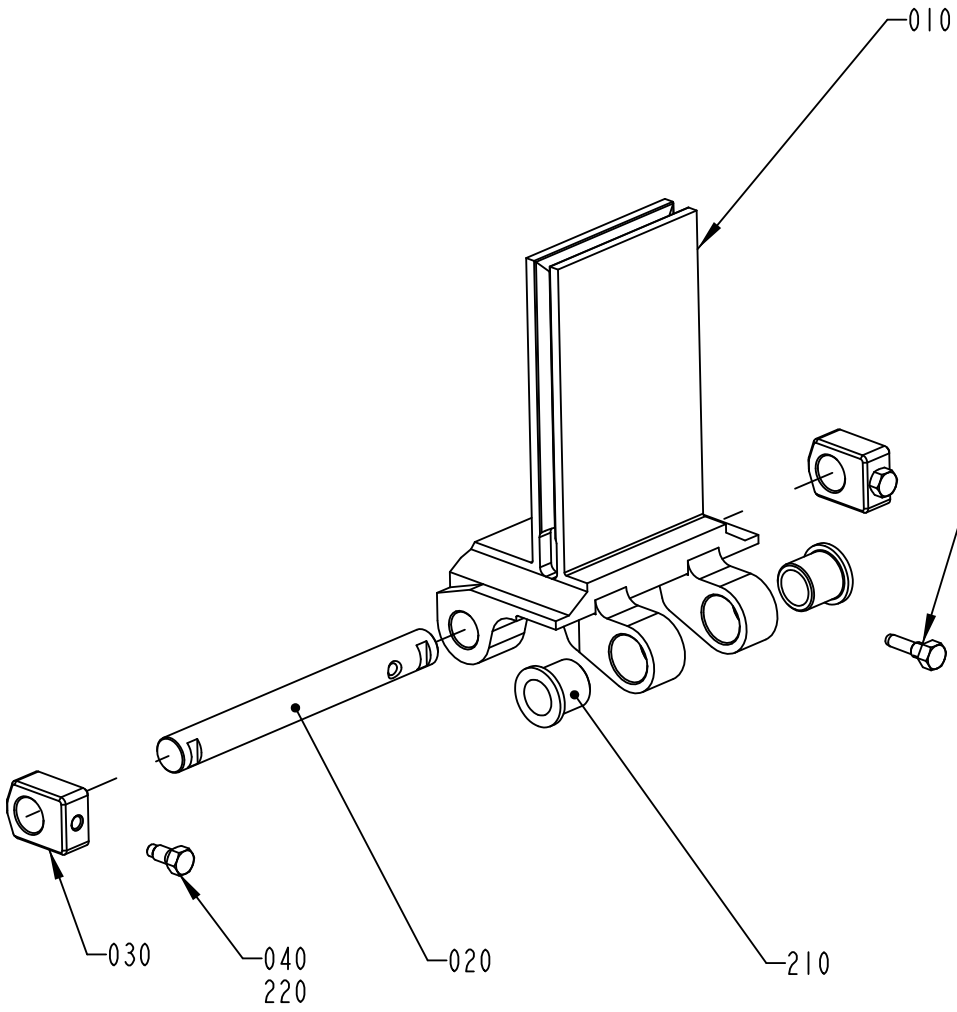

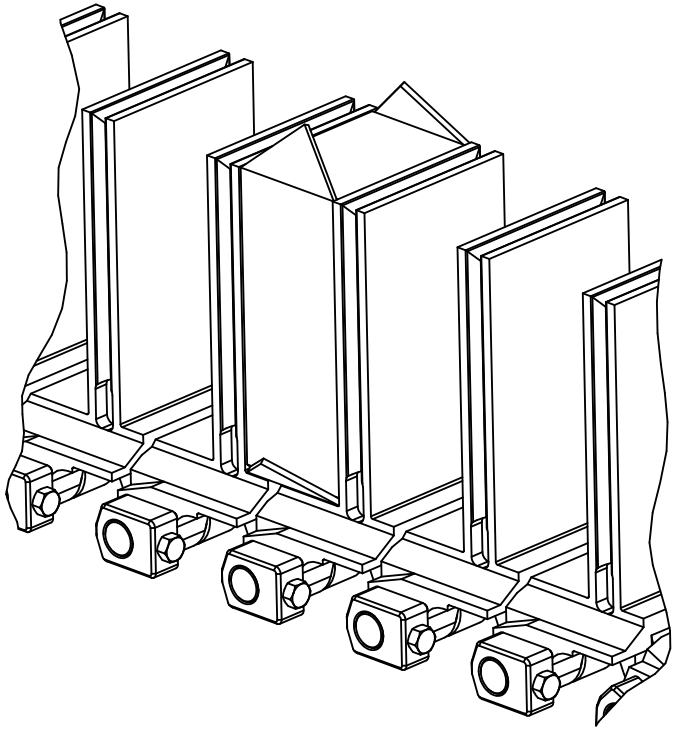

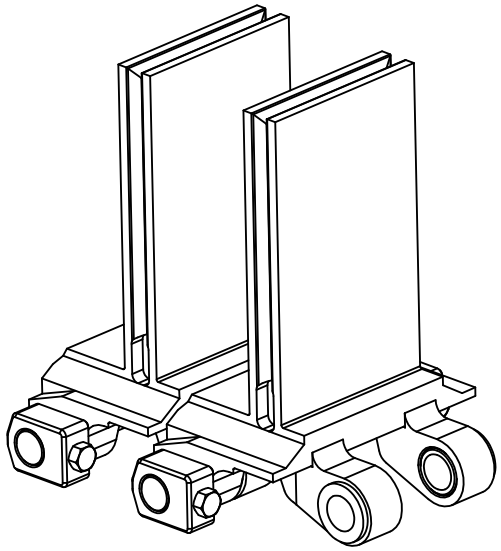

2531774-6
473253

ECM: 474075 - 20101003
Group number: 2531774-0200
Assembly Drawing: 2531774-6_1_AB

This list covers pages from 5-126 to 5-131

Pos	Part No	UN	Qty	Description	Page No
TBA 0125S (See drawing on page: 5-128)					
010	2835096-0000		27	CARTON STATION	
020	1517717-0000		27	SHAFT	
030	2868080-0000		54	SLIDER - SEE PN. 1517719-0000 FOR STOCK	
040	1517718-0000		54	SCREW	
050	2564953-0000		27	GRUB SCREW	
210	90458-1404		54	FLANGE BUSHING, 12X16X16 MM	
TBA 0200B (See drawing on page: 5-128)					
010	2760025-0000		27	CARTON STATION	
020	1517717-0000		27	SHAFT	
030	2868080-0000		54	SLIDER - SEE PN. 1517719-0000 FOR STOCK	
040	1517718-0000		54	SCREW	
050	2564953-0000		27	GRUB SCREW	
210	90458-1404		54	FLANGE BUSHING, 12X16X16 MM	
TBA 0200M (See drawing on page: 5-128)					
010	2760027-0000		27	CARTON STATION	
020	1517717-0000		27	SHAFT	
030	2868080-0000		54	SLIDER - SEE PN. 1517719-0000 FOR STOCK	
040	1517718-0000		54	SCREW	
050	2564953-0000		27	GRUB SCREW	
210	90458-1404		54	FLANGE BUSHING, 12X16X16 MM	
TBA 0200S (See drawing on page: 5-128)					
010	2760028-0000		27	CARTON STATION	
020	1517717-0000		27	SHAFT	
030	2868080-0000		54	SLIDER - SEE PN. 1517719-0000 FOR STOCK	
040	1517718-0000		54	SCREW	
050	2564953-0000		27	GRUB SCREW	
210	90458-1404		54	FLANGE BUSHING, 12X16X16 MM	
TBA 0250B (See drawing on page: 5-128)					
010	2760026-0000		27	CARTON STATION	
020	1517717-0000		27	SHAFT	
030	2868080-0000		54	SLIDER - SEE PN. 1517719-0000 FOR STOCK	
040	1517718-0000		54	SCREW	
050	2564953-0000		27	GRUB SCREW	
210	90458-1404		54	FLANGE BUSHING, 12X16X16 MM	
TBA 0250S (See drawing on page: 5-128)					
010	2760029-0000		27	CARTON STATION	
020	1517717-0000		27	SHAFT	
030	2868080-0000		54	SLIDER - SEE PN. 1517719-0000 FOR STOCK	
040	1517718-0000		54	SCREW	
050	2564953-0000		27	GRUB SCREW	
210	90458-1404		54	FLANGE BUSHING, 12X16X16 MM	
TBA 1000B (See drawing on page: 5-126)					
010	2531775-0000		21	CARTON STATION	
020	2531780-0000		21	SHAFT	
030	2751632-0000		42	SLIDER	
040	2531781-0000		63	SCREW	
200	311103-0268		42	PARALLEL PIN ISO 2338 4M6X12 A1	
210	90459-0128		42	FLANGE BUSHING 15X2	
TBA 1000S (See drawing on page: 5-126)					
010	2634558-0000		21	STATION CHAIN	
020	2531780-0000		21	SHAFT	
030	2751632-0000		42	SLIDER	
040	2531781-0000		63	SCREW	
200	311103-0268		42	PARALLEL PIN ISO 2338 4M6X12 A1	
210	90459-0128		42	FLANGE BUSHING 15X2	
TBA 1000SQ (See drawing on page: 5-130)					
010	2994595-0000		19	CARTON STATION	
020	2531780-0000		19	SHAFT	
030	2751632-0000		38	SLIDER	
040	2531781-0000		57	SCREW	
060	3010566-0000		19	PLATE	
070	2958038-0000		38	SUPPORT	
080	3010571-0000		19	CAM	
200	311103-0268		114	PARALLEL PIN ISO 2338 4M6X12 A1	
210	90459-0128		38	FLANGE BUSHING 15X2	
230	311103-0352		38	PARALLEL PIN ISO 2338 6M6X18 A1	
240	312105-0368		38	SCREW M6S ISO 4017 M6X16 A480	
250	321155-0062		38	FLANGE BUSHING, IGLIDUR X 6X8X8	
270	312155-0366		19	SCREW DIN 7991 MF6S M6X12 A4 70	
Common Parts					
220	90602-4847		1	THREAD LOCKING, LOCTITE 243 50 ML	

Machine Type	Group Description	Used-In	Group Number	Page No

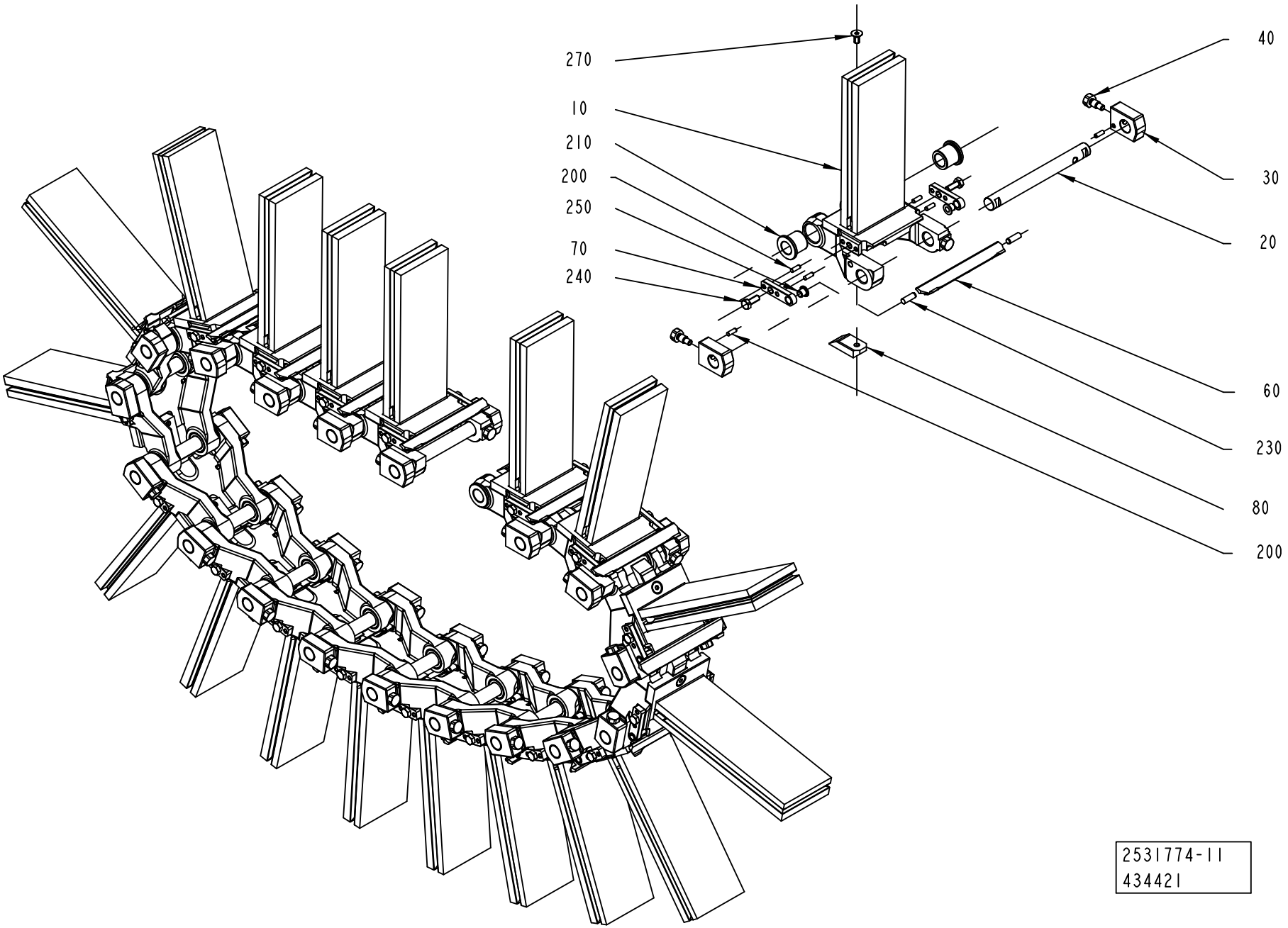
270
10
210
200
250
70
240
40
30
20
60
230
80
200
2531774-11
434421

ECM: 474075 - 20101003
Group number: 2531774-0200
Assembly Drawing: 2531774-11_1_AA

This list covers pages from 5-126 to 5-131

Pos	Part No	UN	Qty	Description	Page No
TBA 0125S (See drawing on page: 5-128)					
010	2835096-0000		27	CARTON STATION	
020	1517717-0000		27	SHAFT	
030	2868080-0000		54	SLIDER - SEE PN. 1517719-0000 FOR STOCK	
040	1517718-0000		54	SCREW	
050	2564953-0000		27	GRUB SCREW	
210	90458-1404		54	FLANGE BUSHING, 12X16X16 MM	
TBA 0200B (See drawing on page: 5-128)					
010	2760025-0000		27	CARTON STATION	
020	1517717-0000		27	SHAFT	
030	2868080-0000		54	SLIDER - SEE PN. 1517719-0000 FOR STOCK	
040	1517718-0000		54	SCREW	
050	2564953-0000		27	GRUB SCREW	
210	90458-1404		54	FLANGE BUSHING, 12X16X16 MM	
TBA 0200M (See drawing on page: 5-128)					
010	2760027-0000		27	CARTON STATION	
020	1517717-0000		27	SHAFT	
030	2868080-0000		54	SLIDER - SEE PN. 1517719-0000 FOR STOCK	
040	1517718-0000		54	SCREW	
050	2564953-0000		27	GRUB SCREW	
210	90458-1404		54	FLANGE BUSHING, 12X16X16 MM	
TBA 0200S (See drawing on page: 5-128)					
010	2760028-0000		27	CARTON STATION	
020	1517717-0000		27	SHAFT	
030	2868080-0000		54	SLIDER - SEE PN. 1517719-0000 FOR STOCK	
040	1517718-0000		54	SCREW	
050	2564953-0000		27	GRUB SCREW	
210	90458-1404		54	FLANGE BUSHING, 12X16X16 MM	
TBA 0250B (See drawing on page: 5-128)					
010	2760026-0000		27	CARTON STATION	
020	1517717-0000		27	SHAFT	
030	2868080-0000		54	SLIDER - SEE PN. 1517719-0000 FOR STOCK	
040	1517718-0000		54	SCREW	
050	2564953-0000		27	GRUB SCREW	
210	90458-1404		54	FLANGE BUSHING, 12X16X16 MM	
TBA 0250S (See drawing on page: 5-128)					
010	2760029-0000		27	CARTON STATION	
020	1517717-0000		27	SHAFT	
030	2868080-0000		54	SLIDER - SEE PN. 1517719-0000 FOR STOCK	
040	1517718-0000		54	SCREW	
050	2564953-0000		27	GRUB SCREW	
210	90458-1404		54	FLANGE BUSHING, 12X16X16 MM	
TBA 1000B (See drawing on page: 5-126)					
010	2531775-0000		21	CARTON STATION	
020	2531780-0000		21	SHAFT	
030	2751632-0000		42	SLIDER	
040	2531781-0000		63	SCREW	
200	311103-0268		42	PARALLEL PIN ISO 2338 4M6X12 A1	
210	90459-0128		42	FLANGE BUSHING 15X2	
TBA 1000S (See drawing on page: 5-126)					
010	2634558-0000		21	STATION CHAIN	
020	2531780-0000		21	SHAFT	
030	2751632-0000		42	SLIDER	
040	2531781-0000		63	SCREW	
200	311103-0268		42	PARALLEL PIN ISO 2338 4M6X12 A1	
210	90459-0128		42	FLANGE BUSHING 15X2	
TBA 1000SQ (See drawing on page: 5-130)					
010	2994595-0000		19	CARTON STATION	
020	2531780-0000		19	SHAFT	
030	2751632-0000		38	SLIDER	
040	2531781-0000		57	SCREW	
060	3010566-0000		19	PLATE	
070	2958038-0000		38	SUPPORT	
080	3010571-0000		19	CAM	
200	311103-0268		114	PARALLEL PIN ISO 2338 4M6X12 A1	
210	90459-0128		38	FLANGE BUSHING 15X2	
230	311103-0352		38	PARALLEL PIN ISO 2338 6M6X18 A1	
240	312105-0368		38	SCREW M6S ISO 4017 M6X16 A480	
250	321155-0062		38	FLANGE BUSHING, IGLIDUR X 6X8X8	
270	312155-0366		19	SCREW DIN 7991 MF6S M6X12 A4 70	
Common Parts					
220	90602-4847		1	THREAD LOCKING, LOCTITE 243 50 ML	

Machine Type	Group Description	Used-In	Group Number	Page No

CHAIN SUPPORT

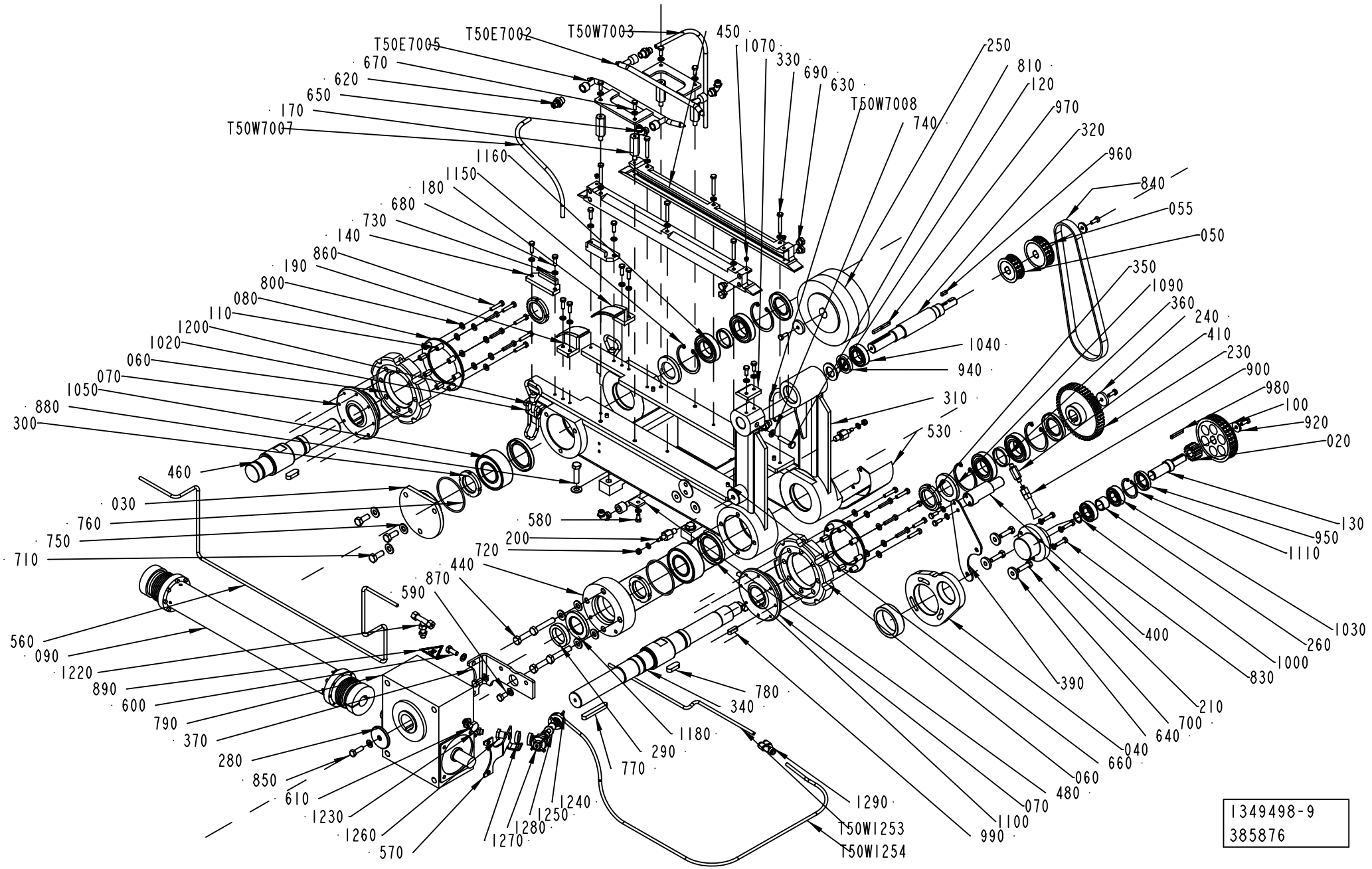

ECM: 461621 - 20101001
Group number: 1349498-0400
Assembly Drawing: 1349498-9_1_AC

This list covers pages from 5-132 to 5-171

Pos	Part No	UN	Qty	Description	Page No
TBA 1000SQ ANSI (See drawing on pages: 5-138, 5-140)					
010	2529093-0000		1	SPACER	
030	1487883-0000		1	FLANGE	
040	2529095-0000		1	PLATE	
050	2541821-0000		1	PULLEY	
060	2641926-0000		2	SPROCKET	
070	1487887-0000		2	FLANGE	
080	1487888-0000		2	FLANGE	
090	2558890-0000		1	JOINT	
	90600-5382		*1*	*HUB, ZA/60/14H7 KEYWAY/XX*	
	90600-5383		*1*	*HUB, ZA/60/24H7/XX*	
100	2558899-0000		1	PULLEY	
110	1487891-0000		16	SPACER	
120	2520196-0000		1	WASHER	
130	2531787-0000		1	SHAFT	
140	3044246-0000		1	SUPPORT	
145	3044248-0000		1	SUPPORT	
150	2668088-0000		1	SUPPORT	
160	2737480-0000		1	GUIDE	
170	1498081-0000		4	SPACER	
180	2662191-0000		1	SUPPORT	
190	2662186-0000		1	SUPPORT	
200	1498084-0000		2	PIN	
210	2531789-0000		1	FLANGE	
220	1498087-0000		1	SPACER	
240	2541828-0000		1	WASHER	
250	2958891-0000		4	BRUSH	
255	2958890-0000		4	HUB	
260	2531788-0000		1	SPACER	
270	3025660-0000		1	CAM	
310	2553047-0000		1	FRAME	
320	2541822-0000		1	SHAFT	
330	1549873-0000		1	PLATE	
340	2531792-0000		1	SHAFT	
350	1512823-0000		3	NUT	
360	1549875-0000		1	SPACER	
370	2781165-0000		1	HOLDER	
400	2920989-0000		1	CONNECTION	
420	2810975-0000		1	RAIL	
430	2810980-0000		1	BRACKET	
440	2781164-0000		1	SUPPORT	
450	2751630-0000		1	GUIDE	
460	2511346-0000		1	SHAFT	
470	2511347-0000		1	PLUG	
490	2810982-0000		1	SHAFT	
500	2835095-0000		2	BUSHING	
530	3022253-0000		1	PLATE	
540	2751631-0000		1	GUIDE	
550	2558891-0000		1	TUBE	
600	312105-0451		4	SCREW M6S ISO 4017 M8X20 A480	
650	90055-0267		4	ELBOW PIPE JOINT,EXT.THREAD,D=8 MM G1/4	
670	312105-0368		4	SCREW M6S ISO 4017 M6X16 A480	
680	312105-0370		14	SCREW M6S ISO 4017 M6X20 A480	
690	312105-0383		6	SCREW M6S ISO 4014 M6X65 A480	
700	312105-0455		4	SCREW M6S ISO 4017 M8X30 A480	
710	312105-0493		8	SCREW M6S ISO 4017 M10X25 A480	
730	315105-0153		30	WASHER BRB 6,4X12 RFR	
740	315105-0165		27	WASHER BRB 8,4X16 RFR	
750	315105-0173		16	WASHER BRB 10,5X22 RFR	
760	315204-0306		3	O-RING 74,5X3 MM	
780	315705-0332		2	PARALLEL KEY W. ROUND ENDS 12X8X40 MM	
790	90056-0163		1	WORM GEAR BS 71-F-TT 28:1 LH	
810	312105-0449		12	SCREW M6S ISO 4017 M8X16 A480	
840	90459-1915		1	TIMING BELT 25AT10/980 PU	
860	312105-0459		16	SCREW M6S ISO 4014 M8X40 A480	
870	312105-0503		4	SCREW M6S ISO 4014 M10X60 A480	
890	359725-0116		1	WARNING SIGN ANSI (H), HOT SURFACE	
940	90459-4585		1	RADIAL SEAL 25X52X7 MM DUST LIP	
960	315705-0234		2	PARALLEL KEY W. ROUND ENDS 6X6X25 MM	
970	315705-0202		3	PARALLEL KEY W ROUND ENDS 5X5X25MM	
980	315701-0201		2	PARALLEL KEY W. ROUND ENDS 5X5X20 MM	
1000	315751-0119		1	RETAINING RING FOR SHAFT DIN 471 25 SS	
1010	315202-0219		1	O-RING 29,2X3 MM	
1020	311103-0401		2	PARALLEL PIN ISO 2338 8M6X20 A1	
1030	90459-0384		3	BALL BEARING 25/62X17 SOLID OIL	
1070	90458-1382		2	PLUG, M5X3.5 SMC - MS-5P	
1090	90091-0439		3	RADIAL SEAL 35X62X7 MM DUST LIP	
1150	90458-0048		5	RETAINING RING FOR BORE DIN 472 62 SS	
1180	90458-1387		2	RADIAL SEAL 38X62X7 MM DUST LIP	
1300	312105-0381		4	SCREW M6S ISO 4014 M6X55 A480	
1310	311112-0316		1	SPRING PIN, ISO 8752 5X40-C	
1320	90141-0015		1	RETAINING RING FOR SHAFT DIN 471 8 SS	
1330	2837650-0000		1	SPRING	
1340	3025659-0000		1	CAM	

Machine Type | Group Description | Used-In | Group Number | Page No

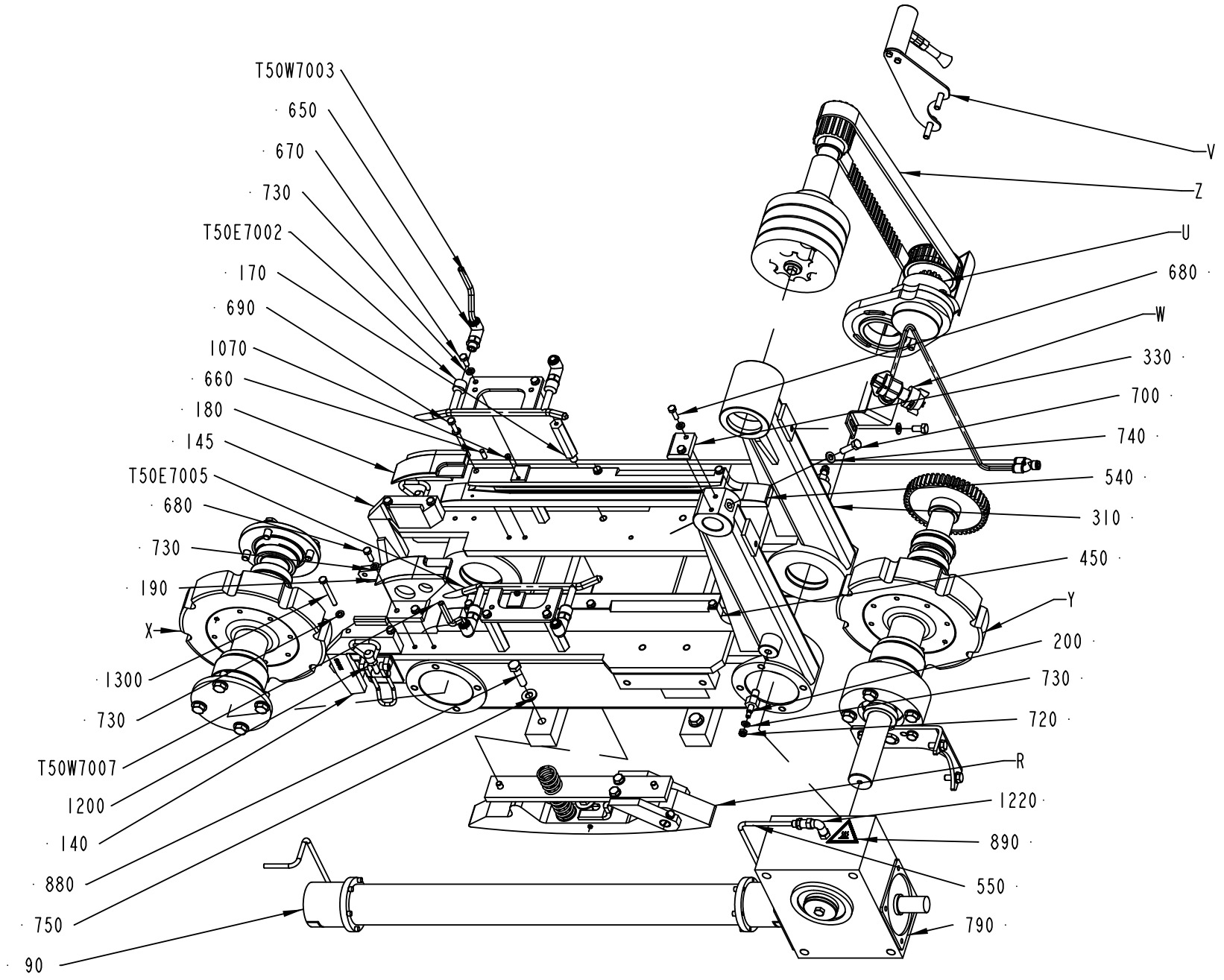
T50W7003
650
670
730
T50E7002
170
690
1070
660
180
145
T50E7005
680
730
190
X
1300
730
T50W7007
1200
140
880
750
90
V
Z
U
680
W
330
700
740
540
310
450
Y
200
730
720
R
1220
890
550
790

ECM: 461621 - 20101001
Group number: 1349498-0400
Assembly Drawing: 1349498-14_1_AE

This list covers pages from 5-132 to 5-171

Pos	Part No	UN	Qty	Description	Page No
TBA 1000SQ ANSI (Cont'd) (See drawing on pages: 5-138, 5-140)					
1350	2810981-0000		1	SHAFT	
1360	3051207-0000		1	SUPPORT	
1370	312105-0323		2	SCREW M6S ISO 4017 M5X8 A480	
1390	312318-0451		2	GRUB SCREW ISO4029 M8X20 A4	
1400	2837597-0000		1	NUT	
1410	90240-0263		2	FLANGE BUSHING, IGLIDUR X 15X17X12	
T50E7002	3010602-0000		1	GUIDE	
T50E7005	3025652-0000		1	GUIDE	
T50W1257	90166-0132	MM	1500	TUBE 6 MM PA,TRANSP.	
T50W1259	90166-0132	MM	1900	TUBE 6 MM PA,TRANSP.	
T50W7007	90166-0118	MM	1800	TUBE 8 MM PA BLACK	
TBA 1000SQ ISO (See drawing on pages: 5-138, 5-140)					
010	2529093-0000		1	SPACER	
030	1487883-0000		1	FLANGE	
040	2529095-0000		1	PLATE	
050	2541821-0000		1	PULLEY	
060	2641926-0000		2	SPROCKET	
070	1487887-0000		2	FLANGE	
080	1487888-0000		2	FLANGE	
090	2558890-0000		1	JOINT	
	90600-5382		*1*	*HUB, ZA/60/14H7 KEYWAY/XX*	
	90600-5383		*1*	*HUB, ZA/60/24H7/XX*	
100	2558899-0000		1	PULLEY	
110	1487891-0000		16	SPACER	
120	2520196-0000		1	WASHER	
130	2531787-0000		1	SHAFT	
140	3044246-0000		1	SUPPORT	
145	3044248-0000		1	SUPPORT	
150	2668088-0000		1	SUPPORT	
160	2737480-0000		1	GUIDE	
170	1498081-0000		4	SPACER	
180	2662191-0000		1	SUPPORT	
190	2662186-0000		1	SUPPORT	
200	1498084-0000		2	PIN	
210	2531789-0000		1	FLANGE	
220	1498087-0000		1	SPACER	
240	2541828-0000		1	WASHER	
250	2958891-0000		4	BRUSH	
255	2958890-0000		4	HUB	
260	2531788-0000		1	SPACER	
270	3025660-0000		1	CAM	
310	2553047-0000		1	FRAME	
320	2541822-0000		1	SHAFT	
330	1549873-0000		1	PLATE	
340	2531792-0000		1	SHAFT	
350	1512823-0000		3	NUT	
360	1549875-0000		1	SPACER	
370	2781165-0000		1	HOLDER	
400	2920989-0000		1	CONNECTION	
420	2810975-0000		1	RAIL	
430	2810980-0000		1	BRACKET	
440	2781164-0000		1	SUPPORT	
450	2751630-0000		1	GUIDE	
460	2511346-0000		1	SHAFT	
470	2511347-0000		1	PLUG	
490	2810982-0000		1	SHAFT	
500	2835095-0000		2	BUSHING	
530	3022253-0000		1	PLATE	
540	2751631-0000		1	GUIDE	
550	2558891-0000		1	TUBE	
600	312105-0451		4	SCREW M6S ISO 4017 M8X20 A480	
650	90055-0267		4	ELBOW PIPE JOINT,EXT.THREAD,D=8 MM G1/4	
670	312105-0368		4	SCREW M6S ISO 4017 M6X16 A480	
690	312105-0383		6	SCREW M6S ISO 4014 M6X65 A480	
700	312105-0455		4	SCREW M6S ISO 4017 M8X30 A480	
710	312105-0493		8	SCREW M6S ISO 4017 M10X25 A480	
730	315105-0153		30	WASHER BRB 6,4X12 RFR	
740	315105-0165		27	WASHER BRB 8,4X16 RFR	
750	315105-0173		16	WASHER BRB 10,5X22 RFR	
760	315204-0306		3	O-RING 74,5X3 MM	
780	315705-0332		2	PARALLEL KEY W. ROUND ENDS 12X8X40 MM	
790	90056-0163		1	WORM GEAR BS 71-F-TT 28:1 LH	
810	312105-0449		12	SCREW M6S ISO 4017 M8X16 A480	
840	90459-1915		1	TIMING BELT 25AT10/980 PU	
860	312105-0459		16	SCREW M6S ISO 4014 M8X40 A480	
870	312105-0503		4	SCREW M6S ISO 4014 M10X60 A480	
890	359710-0001		1	WARNING SIGN ISO, HOT SURFACE	
940	90459-4585		1	RADIAL SEAL 25X52X7 MM DUST LIP	
960	315705-0234		2	PARALLEL KEY W. ROUND ENDS 6X6X25 MM	
970	315705-0202		3	PARALLEL KEY W ROUND ENDS 5X5X25MM	
980	315701-0201		2	PARALLEL KEY W. ROUND ENDS 5X5X20 MM	
1000	315751-0119		1	RETAINING RING FOR SHAFT DIN 471 25 SS	
1010	315202-0219		1	O-RING 29,2X3 MM	

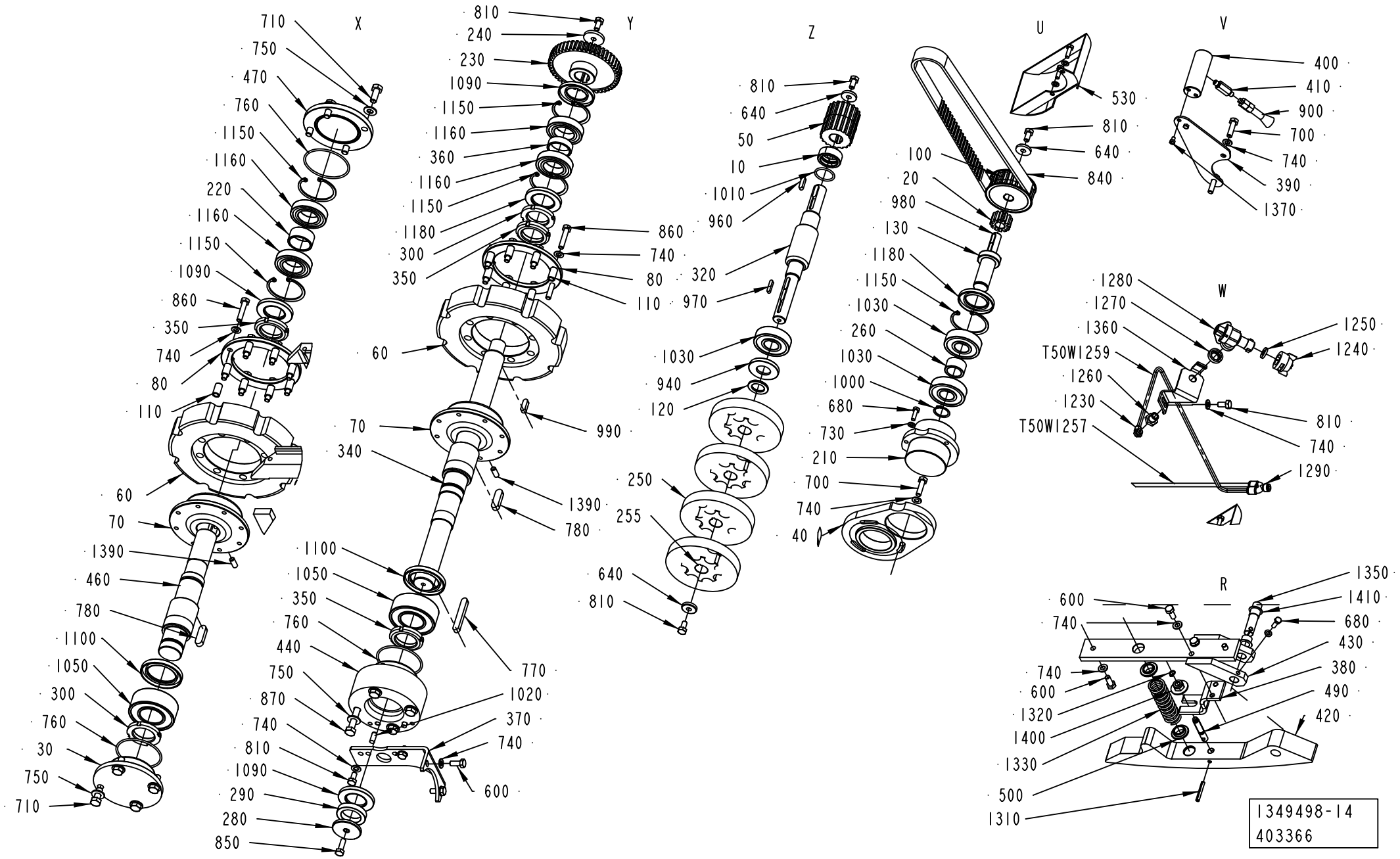
X
710
750
470
760
1150
1160
220
1160
1150
1090
860
350
740
80
110
60
70
1390
460
780
1100
1050
300
760
30
750
710
Y
810
240
230
1090
1150
1160
360
1160
1150
1180
300
350
860
740
80
110
60
70
340
990
1390
780
1100
1050
350
760
440
750
870
740
810
1090
290
280
850
770
1020
370
740
600
Z
810
640
50
10
1010
960
320
970
1030
940
120
250
255
640
810
U
530
810
640
840
100
20
980
130
1180
1150
1030
260
1030
1000
680
730
210
700
740
40
V
400
410
900
700
740
390
1370
W
1280
1270
1360
T50W1259
1260
1230
T50W1257
1250
1240
810
740
1290
R
600
740
740
600
1320
1400
1330
500
1310
1350
1410
680
430
380
490
420
1349498-14
403366

ECM: 461621 - 20101001
Group number: 1349498-0400
Assembly Drawing: 1349498-14_2_AE

This list covers pages from 5-132 to 5-171

Pos	Part No	UN	Qty	Description	Page No
TBA 1000SQ ISO (Cont'd) (See drawing on pages: 5-138, 5-140)					
1020	311103-0401		2	PARALLEL PIN ISO 2338 8M6X20 A1	
1030	90459-0384		3	BALL BEARING 25/62X17 SOLID OIL	
1070	90458-1382		2	PLUG, M5X3.5 SMC - MS-5P	
1090	90091-0439		3	RADIAL SEAL 35X62X7 MM DUST LIP	
1150	90458-0048		5	RETAINING RING FOR BORE DIN 472 62 SS	
1180	90458-1387		2	RADIAL SEAL 38X62X7 MM DUST LIP	
1300	312105-0381		4	SCREW M6S ISO 4014 M6X55 A480	
1310	311112-0316		1	SPRING PIN, ISO 8752 5X40-C	
1320	90141-0015		1	RETAINING RING FOR SHAFT DIN 471 8 SS	
1330	2837650-0000		1	SPRING	
1340	3025659-0000		1	CAM	
1350	2810981-0000		1	SHAFT	
1360	3051207-0000		1	SUPPORT	
1370	312105-0323		2	SCREW M6S ISO 4017 M5X8 A480	
1390	312318-0451		2	GRUB SCREW ISO4029 M8X20 A4	
1400	2837597-0000		1	NUT	
1410	90240-0263		2	FLANGE BUSHING, IGLIDUR X 15X17X12	
T50E7002	3010602-0000		1	GUIDE	
T50E7005	3025652-0000		1	GUIDE	
T50W1257	90166-0132	MM	1500	TUBE 6 MM PA,TRANSP.	
T50W1259	90166-0132	MM	1900	TUBE 6 MM PA,TRANSP.	
T50W7007	90166-0118	MM	1800	TUBE 8 MM PA BLACK	
TBA 0125S ANSI (See drawing on page: 5-132)					
030	1517727-0000		1	FLANGE	
040	2738144-0000		1	PLATE	
050	2738145-0000		1	PULLEY	
055	2738147-0000		1	PULLEY	
060	2877429-0000		2	SPROCKET	
070	1517721-0000		2	FLANGE	
080	1517722-0000		2	FLANGE	
090	90600-5388		1	INTERMEDIARY SHAFT, ZA/60/603/24H7/14H7	
	90600-5382		*1*	*HUB, ZA/60/14H7 KEYWAY/XX*	
	90600-5383		*1*	*HUB, ZA/60/24H7/XX*	
100	2738146-0000		1	PULLEY	
110	1517723-0000		16	SPACER	
120	315105-0195		1	WASHER BRB 23X40 RFR	
130	2770501-0000		1	SHAFT	
140	1498078-0000		2	PLATE	
170	1517732-0000		4	SPACER	
180	2846480-0000		1	GUIDE	
190	2846479-0000		1	GUIDE	
200	1524520-0000		2	PIN	
210	1524526-0000		1	FLANGE	
240	1524529-0000		2	WASHER	
250	2501231-0000		2	BRUSH	
260	1524532-0000		1	SPACER	
320	2897886-0000		1	SHAFT	
330	1519443-0000		1	PLATE	
340	1548021-0000		1	SHAFT	
350	1512823-0000		2	NUT	
360	1517724-0000		2	SPACER	
370	2955003-0000		1	HOLDER	
400	2931744-0000		1	CONNECTION	
440	2779652-0000		1	SUPPORT	
450	2868081-0000		2	GUIDE	
460	1548022-0000		1	SHAFT	
480	1548013-0000		1	PIPE	
530	3015745-0000		1	PLATE	
560	2697053-0000		1	PIPE	
570	2872404-0000		1	SUPPORT	
580	312105-0366		2	SCREW M6S ISO 4017 M6X12 A480	
590	312105-0449		2	SCREW M6S ISO 4017 M8X16 A480	
600	312105-0451		4	SCREW M6S ISO 4017 M8X20 A480	
610	90458-0270		1	VENTING DEVICETCDF 1/8G ELESA 58669	
620	342921-0122		3	STRAIGHT COUPLING,EXT.THREADED 8/6-G1/4"	
630	90330-0066		4	PLUG, EXT. G-THREAD, G1/8	
650	342931-0122		3	ELBOW 90 COUPL.,EXT.THREAD 8/6-G1/4"	
670	312105-0368		12	SCREW M6S ISO 4017 M6X16 A480	
680	312105-0370		8	SCREW M6S ISO 4017 M6X20 A480	
690	312105-0379		6	SCREW M6S ISO 4014 M6X45 A480	
700	312105-0455		3	SCREW M6S ISO 4017 M8X30 A480	
710	312105-0493		3	SCREW M6S ISO 4017 M10X25 A480	
730	315105-0153		29	WASHER BRB 6,4X12 RFR	
740	315105-0165		8	WASHER BRB 8,4X16 RFR	
750	315105-0173		11	WASHER BRB 10,5X22 RFR	
760	315204-0306		2	O-RING 74,5X3 MM	
780	315705-0330		2	PARALLEL KEY W. ROUND ENDS 12X8X32 MM	
790	90056-0164		1	WORM GEAR BS 71-F-TT 28:1 RH	
800	315105-0156		16	WASHER BRB 6,7X14 RFR	
810	312105-0457		1	SCREW M6S ISO 4014 M8X35 A480	
830	312105-0372		3	SCREW M6S ISO 4017 M6X25 A480	
840	90600-2814		1	TIMING BELT 16AT10/660 PU	
860	312105-0374		16	SCREW M6S ISO 4014 M6X30 A480	

Machine Type | Group Description | Used-In | Group Number | Page No

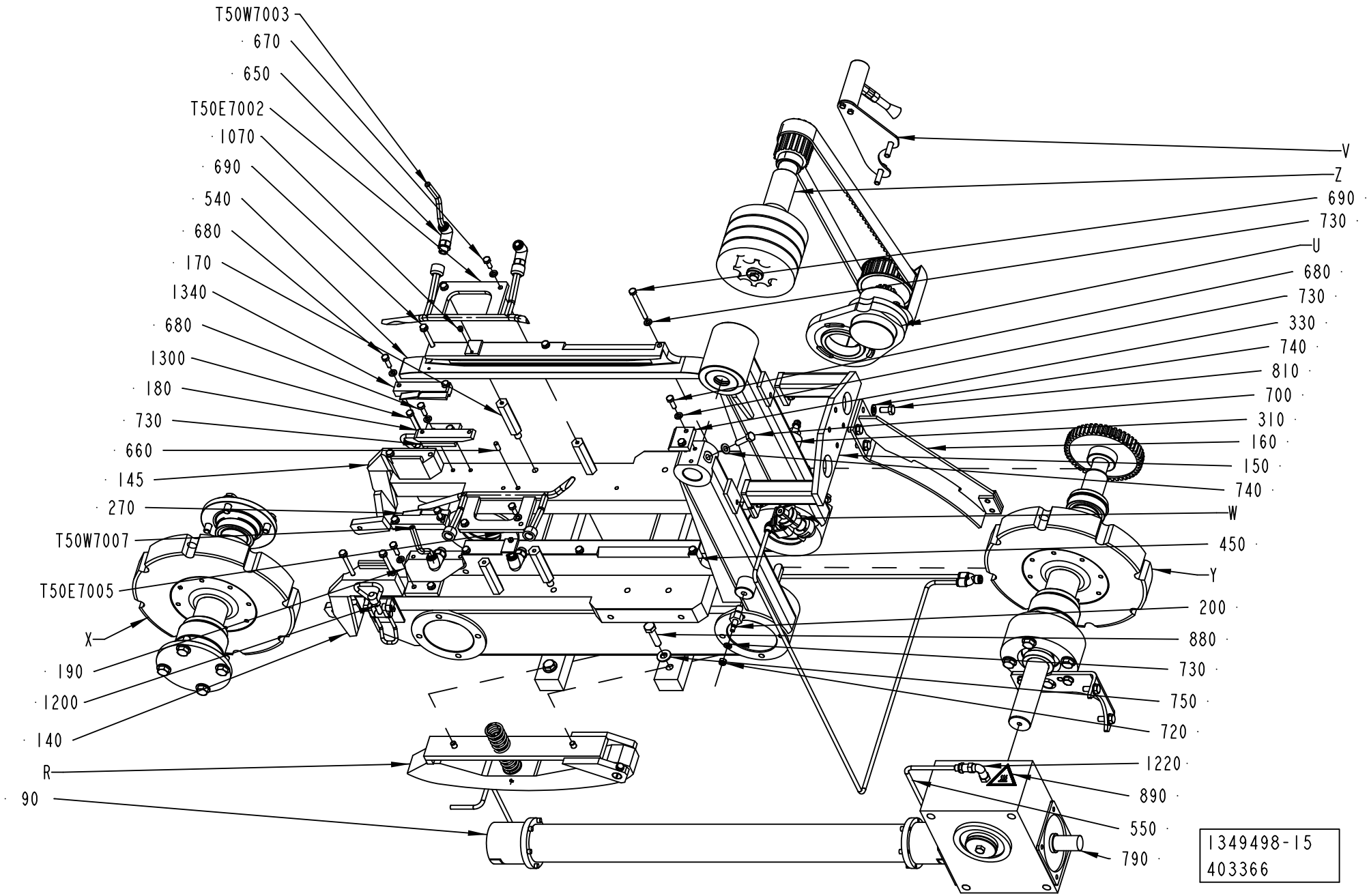
T50W7003
670
650
T50E7002
1070
690
540
680
170
1340
680
1300
180
730
660
145
270
T50W7007
T50E7005
X
190
1200
140
R
90
V
Z
690
730
U
680
730
330
740
810
700
310
160
150
740
W
450
Y
200
880
730
750
720
1220
890
550
790
1349498-15
403366

ECM: 461621 - 20101001
Group number: 1349498-0400
Assembly Drawing: 1349498-15_1_AE

This list covers pages from 5-132 to 5-171

Pos	Part No	UN	Qty	Description	Page No
TBA 0125S ANSI (Cont'd) (See drawing on page: 5-132)					
870	312105-0502		4	SCREW M6S ISO 4014 M10X55 A480	
880	312105-0499		4	SCREW M6S ISO 4014 M10X40 A480	
890	359725-0116		1	WARNING SIGN ANSI (H), HOT SURFACE	
920	315125-0153		2	WASHER TBRSB 6,4X22X4 A4	
940	90091-0406		1	RADIAL SEAL 25X40X7 MM DUST LIP	
950	90091-0322		1	RADIAL SEAL 25X42X7 MM DUST LIP	
960	315701-0199		2	PARALLEL KEY W. ROUND ENDS 5X5X16 MM	
970	315705-0202		2	PARALLEL KEY W ROUND ENDS 5X5X25MM	
980	90458-2242		1	PARALLEL KEY W. ROUND ENDS 5X5X35 MM	
1000	315751-0116		1	RETAINING RING FOR SHAFT DIN 471 20 SS	
1030	90214-0225		2	BALL BEAR. 20/42X12 SOLID OIL	
1040	90214-0165		1	BALL BEARING, 25X47X12 MM	
1070	90458-1382		4	PLUG, M5X3.5 SMC - MS-5P	
1080	90062-0061		1	LOCK WASHER NORD-LOCK,6,5/10,8, T=2,2	
1090	90091-0439		4	RADIAL SEAL 35X62X7 MM DUST LIP	
1110	90141-0020		1	RETAINING RING FOR BORE DIN 472 42 SS	
1150	90458-0048		4	RETAINING RING FOR BORE DIN 472 62 SS	
1180	90458-1387		1	RADIAL SEAL 38X62X7 MM DUST LIP	
T50E7002	2910602-0000		1	GUIDE	
T50E7005	2910601-0000		1	GUIDE	
T50W1253	90166-0132	MM	4500	TUBE 6 MM PA,TRANSP.	
T50W1254	90166-0132	MM	1500	TUBE 6 MM PA,TRANSP.	
T50W7007	90166-0118	MM	450	TUBE 8 MM PA BLACK	
T50W7008	90166-0266	MM	3500	TUBE 6 MM PA BLACK	
TBA 0125S ISO (See drawing on page: 5-132)					
030	1517727-0000		1	FLANGE	
040	2738144-0000		1	PLATE	
050	2738145-0000		1	PULLEY	
055	2738147-0000		1	PULLEY	
060	2877429-0000		2	SPROCKET	
070	1517721-0000		2	FLANGE	
080	1517722-0000		2	FLANGE	
090	90600-5388		1	INTERMEDIARY SHAFT, ZA/60/603/24H7/14H7	
	90600-5382		*1*	*HUB, ZA/60/14H7 KEYWAY/XX*	
	90600-5383		*1*	*HUB, ZA/60/24H7/XX*	
100	2738146-0000		1	PULLEY	
110	1517723-0000		16	SPACER	
120	315105-0195		1	WASHER BRB 23X40 RFR	
130	2770501-0000		1	SHAFT	
140	1498078-0000		2	PLATE	
170	1517732-0000		4	SPACER	
180	2846480-0000		1	GUIDE	
190	2846479-0000		1	GUIDE	
200	1524520-0000		2	PIN	
210	1524526-0000		1	FLANGE	
240	1524529-0000		2	WASHER	
250	2501231-0000		2	BRUSH	
260	1524532-0000		1	SPACER	
310	2813719-0000		1	FRAME	
320	2897886-0000		1	SHAFT	
330	1519443-0000		1	PLATE	
340	1548021-0000		1	SHAFT	
350	1512823-0000		2	NUT	
360	1517724-0000		2	SPACER	
370	2955003-0000		1	HOLDER	
400	2931744-0000		1	CONNECTION	
440	2779652-0000		1	SUPPORT	
450	2868081-0000		2	GUIDE	
460	1548022-0000		1	SHAFT	
480	1548013-0000		1	PIPE	
530	3015745-0000		1	PLATE	
560	2697053-0000		1	PIPE	
570	2872404-0000		1	SUPPORT	
580	312105-0366		2	SCREW M6S ISO 4017 M6X12 A480	
590	312105-0449		2	SCREW M6S ISO 4017 M8X16 A480	
600	312105-0451		4	SCREW M6S ISO 4017 M8X20 A480	
610	90458-0270		1	VENTING DEVICETCDF 1/8G ELESA 58669	
620	342921-0122		3	STRAIGHT COUPLING,EXT.THREADED 8/6-G1/4"	
630	90330-0066		4	PLUG, EXT. G-THREAD, G1/8	
650	342931-0122		3	ELBOW 90 COUPL.,EXT.THREAD 8/6-G1/4"	
670	312105-0368		12	SCREW M6S ISO 4017 M6X16 A480	
680	312105-0370		8	SCREW M6S ISO 4017 M6X20 A480	
690	312105-0379		6	SCREW M6S ISO 4014 M6X45 A480	
700	312105-0455		3	SCREW M6S ISO 4017 M8X30 A480	
710	312105-0493		3	SCREW M6S ISO 4017 M10X25 A480	
730	315105-0153		29	WASHER BRB 6,4X12 RFR	
740	315105-0165		8	WASHER BRB 8,4X16 RFR	
750	315105-0173		11	WASHER BRB 10,5X22 RFR	
760	315204-0306		2	O-RING 74,5X3 MM	
780	315705-0330		2	PARALLEL KEY W. ROUND ENDS 12X8X32 MM	
790	90056-0164		1	WORM GEAR BS 71-F-TT 28:1 RH	
800	315105-0156		16	WASHER BRB 6,7X14 RFR	
810	312105-0457		1	SCREW M6S ISO 4014 M8X35 A480	

Machine Type | Group Description | Used-In | Group Number | Page No

CHAIN SUPPORT

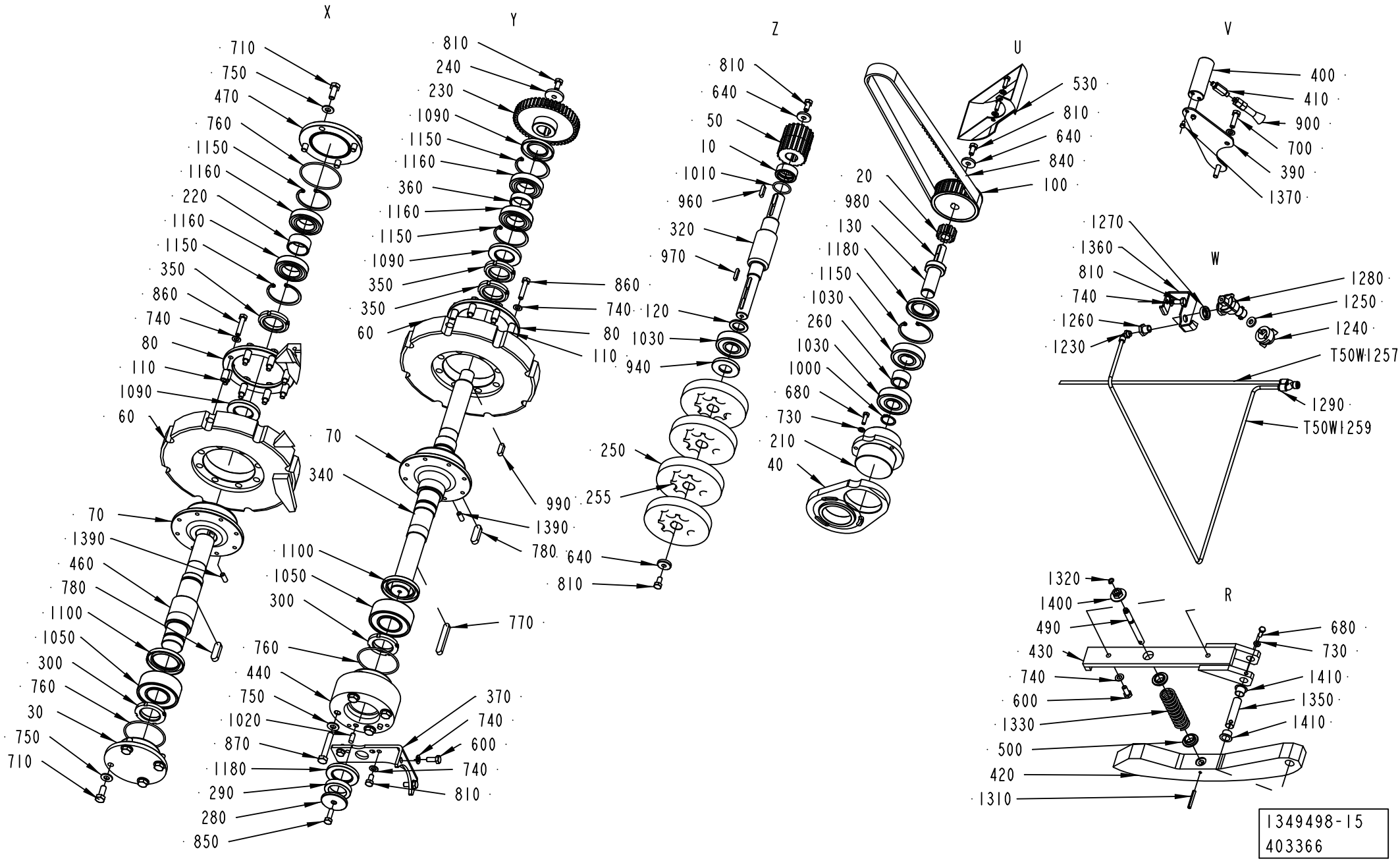

1349498-15
403366

ECM: 461621 - 20101001
Group number: 1349498-0400
Assembly Drawing: 1349498-15_2_AE

This list covers pages from 5-132 to 5-171

Pos	Part No	UN	Qty	Description	Page No
TBA 0125S ISO (Cont'd) (See drawing on page: 5-132)					
830	312105-0372		3	SCREW M6S ISO 4017 M6X25 A480	
840	90600-2814		1	TIMING BELT 16AT10/660 PU	
860	312105-0374		16	SCREW M6S ISO 4014 M6X30 A480	
870	312105-0502		4	SCREW M6S ISO 4014 M10X55 A480	
880	312105-0499		4	SCREW M6S ISO 4014 M10X40 A480	
890	359710-0001		1	WARNING SIGN ISO, HOT SURFACE	
920	315125-0153		2	WASHER TBRSB 6,4X22X4 A4	
940	90091-0406		1	RADIAL SEAL 25X40X7 MM DUST LIP	
950	90091-0322		1	RADIAL SEAL 25X42X7 MM DUST LIP	
960	315701-0199		2	PARALLEL KEY W. ROUND ENDS 5X5X16 MM	
970	315705-0202		2	PARALLEL KEY W ROUND ENDS 5X5X25MM	
980	90458-2242		1	PARALLEL KEY W. ROUND ENDS 5X5X35 MM	
1000	315751-0116		1	RETAINING RING FOR SHAFT DIN 471 20 SS	
1030	90214-0225		2	BALL BEAR. 20/42X12 SOLID OIL	
1040	90214-0165		1	BALL BEARING, 25X47X12 MM	
1070	90458-1382		4	PLUG, M5X3.5 SMC - MS-5P	
1080	90062-0061		1	LOCK WASHER NORD-LOCK,6,5/10,8, T=2,2	
1090	90091-0439		4	RADIAL SEAL 35X62X7 MM DUST LIP	
1110	90141-0020		1	RETAINING RING FOR BORE DIN 472 42 SS	
1150	90458-0048		4	RETAINING RING FOR BORE DIN 472 62 SS	
1180	90458-1387		1	RADIAL SEAL 38X62X7 MM DUST LIP	
T50E7002	2910602-0000		1	GUIDE	
T50E7005	2910601-0000		1	GUIDE	
T50W1253	90166-0132	MM	4500	TUBE 6 MM PA,TRANSP.	
T50W1254	90166-0132	MM	1500	TUBE 6 MM PA,TRANSP.	
T50W7007	90166-0118	MM	450	TUBE 8 MM PA BLACK	
T50W7008	90166-0266	MM	3500	TUBE 6 MM PA BLACK	
TBA 0200B ANSI (See drawing on page: 5-132)					
030	1517727-0000		1	FLANGE	
040	2738144-0000		1	PLATE	
050	2738145-0000		1	PULLEY	
055	2738147-0000		1	PULLEY	
060	2877429-0000		2	SPROCKET	
070	1517721-0000		2	FLANGE	
080	1517722-0000		2	FLANGE	
090	90600-5393		1	INTERMEDIARY SHAFT, ZA/60/583/24H7/14H7	
	90600-5382		*1*	*HUB, ZA/60/14H7 KEYWAY/XX*	
	90600-5383		*1*	*HUB, ZA/60/24H7/XX*	
100	2738146-0000		1	PULLEY	
110	1517723-0000		16	SPACER	
120	315105-0195		1	WASHER BRB 23X40 RFR	
130	2770501-0000		1	SHAFT	
140	1498078-0000		2	PLATE	
170	1517732-0000		4	SPACER	
180	1517736-0000		1	GUIDE	
190	1517737-0000		1	GUIDE	
200	1524520-0000		2	PIN	
210	1524526-0000		1	FLANGE	
240	1524529-0000		2	WASHER	
250	2501231-0000		2	BRUSH	
260	1524532-0000		1	SPACER	
310	2813719-0000		1	FRAME	
320	2897886-0000		1	SHAFT	
330	1519443-0000		1	PLATE	
340	1548021-0000		1	SHAFT	
350	1512823-0000		2	NUT	
360	1517724-0000		2	SPACER	
370	2955003-0000		1	HOLDER	
400	2931744-0000		1	CONNECTION	
440	2779652-0000		1	SUPPORT	
450	2868081-0000		2	GUIDE	
460	1548022-0000		1	SHAFT	
480	1548013-0000		1	PIPE	
530	3015745-0000		1	PLATE	
560	2697053-0000		1	PIPE	
570	2872404-0000		1	SUPPORT	
580	312105-0366		2	SCREW M6S ISO 4017 M6X12 A480	
590	312105-0449		2	SCREW M6S ISO 4017 M8X16 A480	
600	312105-0451		4	SCREW M6S ISO 4017 M8X20 A480	
610	90458-0270		1	VENTING DEVICETCDF 1/8G ELESA 58669	
620	342921-0122		3	STRAIGHT COUPLING,EXT.THREADED 8/6-G1/4"	
630	90330-0066		4	PLUG, EXT. G-THREAD, G1/8	
650	342931-0122		3	ELBOW 90 COUPL.,EXT.THREAD 8/6-G1/4"	
670	312105-0368		12	SCREW M6S ISO 4017 M6X16 A480	
680	312105-0370		8	SCREW M6S ISO 4017 M6X20 A480	
690	312105-0379		6	SCREW M6S ISO 4014 M6X45 A480	
700	312105-0455		3	SCREW M6S ISO 4017 M8X30 A480	
710	312105-0493		3	SCREW M6S ISO 4017 M10X25 A480	
730	315105-0153		29	WASHER BRB 6,4X12 RFR	
740	315105-0165		8	WASHER BRB 8,4X16 RFR	
750	315105-0173		11	WASHER BRB 10,5X22 RFR	
760	315204-0306		2	O-RING 74,5X3 MM	
780	315705-0330		2	PARALLEL KEY W. ROUND ENDS 12X8X32 MM	

Machine Type | Group Description | Used-In | Group Number | Page No

See previous drawings pages: 5-132, 5-134, 5-136, 5-138, 5-140.

Pos	Part No	UN	Qty	Description	Page No
TBA 0200B ANSI (Cont'd) (See drawing on page: 5-132)					
790	90056-0164		1	WORM GEAR BS 71-F-TT 28:1 RH	
800	315105-0156		16	WASHER BRB 6,7X14 RFR	
810	312105-0457		1	SCREW M6S ISO 4014 M8X35 A480	
830	312105-0372		3	SCREW M6S ISO 4017 M6X25 A480	
840	90600-2814		1	TIMING BELT 16AT10/660 PU	
860	312105-0374		16	SCREW M6S ISO 4014 M6X30 A480	
870	312105-0502		4	SCREW M6S ISO 4014 M10X55 A480	
880	312105-0499		4	SCREW M6S ISO 4014 M10X40 A480	
890	359725-0116		1	WARNING SIGN ANSI (H), HOT SURFACE	
920	315125-0153		2	WASHER TBRSB 6,4X22X4 A4	
940	90091-0406		1	RADIAL SEAL 25X40X7 MM DUST LIP	
950	90091-0322		1	RADIAL SEAL 25X42X7 MM DUST LIP	
960	315701-0199		2	PARALLEL KEY W. ROUND ENDS 5X5X16 MM	
970	315705-0202		2	PARALLEL KEY W ROUND ENDS 5X5X25MM	
980	90458-2242		1	PARALLEL KEY W. ROUND ENDS 5X5X35 MM	
1000	315751-0116		1	RETAINING RING FOR SHAFT DIN 471 20 SS	
1030	90214-0225		2	BALL BEAR. 20/42X12 SOLID OIL	
1040	90214-0165		1	BALL BEARING, 25X47X12 MM	
1070	90458-1382		4	PLUG, M5X3.5 SMC - MS-5P	
1080	90062-0061		1	LOCK WASHER NORD-LOCK,6,5/10,8, T=2,2	
1090	90091-0439		4	RADIAL SEAL 35X62X7 MM DUST LIP	
1110	90141-0020		1	RETAINING RING FOR BORE DIN 472 42 SS	
1150	90458-0048		4	RETAINING RING FOR BORE DIN 472 62 SS	
1180	90458-1387		1	RADIAL SEAL 38X62X7 MM DUST LIP	
T50E7002	2872398-0000		1	GUIDE	
T50E7005	2872397-0000		1	GUIDE	
T50W1253	90166-0132	MM	4500	TUBE 6 MM PA,TRANSP.	
T50W1254	90166-0132	MM	1500	TUBE 6 MM PA,TRANSP.	
T50W7007	90166-0118	MM	450	TUBE 8 MM PA BLACK	
T50W7008	90166-0266	MM	3500	TUBE 6 MM PA BLACK	
TBA 0200B ISO (See drawing on page: 5-132)					
030	1517727-0000		1	FLANGE	
040	2738144-0000		1	PLATE	
050	2738145-0000		1	PULLEY	
055	2738147-0000		1	PULLEY	
060	2877429-0000		2	SPROCKET	
070	1517721-0000		2	FLANGE	
080	1517722-0000		2	FLANGE	
090	90600-5393		1	INTERMEDIARY SHAFT, ZA/60/583/24H7/14H7	
	90600-5382		*1*	*HUB, ZA/60/14H7 KEYWAY/XX*	
	90600-5383		*1*	*HUB, ZA/60/24H7/XX*	
100	2738146-0000		1	PULLEY	
110	1517723-0000		16	SPACER	
120	315105-0195		1	WASHER BRB 23X40 RFR	
130	2770501-0000		1	SHAFT	
140	1498078-0000		2	PLATE	
170	1517732-0000		4	SPACER	
180	1517736-0000		1	GUIDE	
190	1517737-0000		1	GUIDE	
200	1524520-0000		2	PIN	
210	1524526-0000		1	FLANGE	
240	1524529-0000		2	WASHER	
250	2501231-0000		2	BRUSH	
260	1524532-0000		1	SPACER	
320	2897886-0000		1	SHAFT	
330	1519443-0000		1	PLATE	
340	1548021-0000		1	SHAFT	
350	1512823-0000		2	NUT	
360	1517724-0000		2	SPACER	
370	2955003-0000		1	HOLDER	
400	2931744-0000		1	CONNECTION	
440	2779652-0000		1	SUPPORT	
450	2868081-0000		2	GUIDE	
460	1548022-0000		1	SHAFT	
480	1548013-0000		1	PIPE	
530	3015745-0000		1	PLATE	
560	2697053-0000		1	PIPE	
570	2872404-0000		1	SUPPORT	
580	312105-0366		2	SCREW M6S ISO 4017 M6X12 A480	
590	312105-0449		2	SCREW M6S ISO 4017 M8X16 A480	
600	312105-0451		4	SCREW M6S ISO 4017 M8X20 A480	
610	90458-0270		1	VENTING DEVICETCDF 1/8G ELESA 58669	
620	342921-0122		3	STRAIGHT COUPLING,EXT.THREADED 8/6-G1/4"	
630	90330-0066		4	PLUG, EXT. G-THREAD, G1/8	
650	342931-0122		3	ELBOW 90 COUPL.,EXT.THREAD 8/6-G1/4"	
670	312105-0368		12	SCREW M6S ISO 4017 M6X16 A480	
680	312105-0370		8	SCREW M6S ISO 4017 M6X20 A480	
690	312105-0379		6	SCREW M6S ISO 4014 M6X45 A480	
700	312105-0455		3	SCREW M6S ISO 4017 M8X30 A480	
710	312105-0493		3	SCREW M6S ISO 4017 M10X25 A480	
730	315105-0153		29	WASHER BRB 6,4X12 RFR	
740	315105-0165		8	WASHER BRB 8,4X16 RFR	
750	315105-0173		11	WASHER BRB 10,5X22 RFR	

Machine Type | Group Description | Used-In | Group Number | Page No

See previous drawings pages: 5-132, 5-134, 5-136, 5-138, 5-140.

ECM: 461621 - 20101001
Group number: 1349498-0400
Assembly Drawing: 1349498-15_2_AE

This list covers pages from 5-132 to 5-171

Pos	Part No	UN	Qty	Description	Page No
TBA 0200B ISO (Cont'd) (See drawing on page: 5-132)					
760	315204-0306		2	O-RING 74,5X3 MM	
780	315705-0330		2	PARALLEL KEY W. ROUND ENDS 12X8X32 MM	
790	90056-0164		1	WORM GEAR BS 71-F-TT 28:1 RH	
800	315105-0156		16	WASHER BRB 6,7X14 RFR	
810	312105-0457		1	SCREW M6S ISO 4014 M8X35 A480	
830	312105-0372		3	SCREW M6S ISO 4017 M6X25 A480	
840	90600-2814		1	TIMING BELT 16AT10/660 PU	
860	312105-0374		16	SCREW M6S ISO 4014 M6X30 A480	
870	312105-0502		4	SCREW M6S ISO 4014 M10X55 A480	
880	312105-0499		4	SCREW M6S ISO 4014 M10X40 A480	
890	359710-0001		1	WARNING SIGN ISO, HOT SURFACE	
920	315125-0153		2	WASHER TBRSB 6,4X22X4 A4	
940	90091-0406		1	RADIAL SEAL 25X40X7 MM DUST LIP	
950	90091-0322		1	RADIAL SEAL 25X42X7 MM DUST LIP	
960	315701-0199		2	PARALLEL KEY W. ROUND ENDS 5X5X16 MM	
970	315705-0202		2	PARALLEL KEY W ROUND ENDS 5X5X25MM	
980	90458-2242		1	PARALLEL KEY W. ROUND ENDS 5X5X35 MM	
1000	315751-0116		1	RETAINING RING FOR SHAFT DIN 471 20 SS	
1030	90214-0225		2	BALL BEAR. 20/42X12 SOLID OIL	
1040	90214-0165		1	BALL BEARING, 25X47X12 MM	
1070	90458-1382		4	PLUG, M5X3.5 SMC - MS-5P	
1080	90062-0061		1	LOCK WASHER NORD-LOCK,6,5/10,8, T=2,2	
1090	90091-0439		4	RADIAL SEAL 35X62X7 MM DUST LIP	
1110	90141-0020		1	RETAINING RING FOR BORE DIN 472 42 SS	
1150	90458-0048		4	RETAINING RING FOR BORE DIN 472 62 SS	
1180	90458-1387		1	RADIAL SEAL 38X62X7 MM DUST LIP	
T50E7002	2872398-0000		1	GUIDE	
T50E7005	2872397-0000		1	GUIDE	
T50W1253	90166-0132	MM	4500	TUBE 6 MM PA,TRANSP.	
T50W1254	90166-0132	MM	1500	TUBE 6 MM PA,TRANSP.	
T50W7007	90166-0118	MM	450	TUBE 8 MM PA BLACK	
T50W7008	90166-0266	MM	3500	TUBE 6 MM PA BLACK	
TBA 0200M ANSI (See drawing on page: 5-132)					
030	1517727-0000		1	FLANGE	
040	2738144-0000		1	PLATE	
050	2738145-0000		1	PULLEY	
055	2738147-0000		1	PULLEY	
060	2877429-0000		2	SPROCKET	
070	1517721-0000		2	FLANGE	
080	1517722-0000		2	FLANGE	
090	90600-5394		1	INTERMEDIARY SHAFT, ZA/60/607/24H7/14H7	
	90600-5383		*1*	*HUB, ZA/60/24H7/XX*	
	90600-5382		*1*	*HUB, ZA/60/14H7 KEYWAY/XX*	
100	2738146-0000		1	PULLEY	
110	1517723-0000		16	SPACER	
120	315105-0195		1	WASHER BRB 23X40 RFR	
130	2770501-0000		1	SHAFT	
140	1498078-0000		2	PLATE	
170	1517732-0000		4	SPACER	
180	1548012-0000		1	GUIDE	
190	1548011-0000		1	GUIDE	
200	1524520-0000		2	PIN	
210	1524526-0000		1	FLANGE	
240	1524529-0000		2	WASHER	
250	2501231-0000		2	BRUSH	
260	1524532-0000		1	SPACER	
310	2813720-0000		1	FRAME	
320	2897886-0000		1	SHAFT	
330	1519443-0000		1	PLATE	
340	1548021-0000		1	SHAFT	
350	1512823-0000		2	NUT	
360	1517724-0000		2	SPACER	
370	2955003-0000		1	HOLDER	
400	2931744-0000		1	CONNECTION	
440	2779652-0000		1	SUPPORT	
450	2868081-0000		2	GUIDE	
460	1548022-0000		1	SHAFT	
480	1548013-0000		1	PIPE	
530	3015745-0000		1	PLATE	
560	2697053-0000		1	PIPE	
570	2872404-0000		1	SUPPORT	
580	312105-0366		2	SCREW M6S ISO 4017 M6X12 A480	
590	312105-0449		2	SCREW M6S ISO 4017 M8X16 A480	
600	312105-0451		4	SCREW M6S ISO 4017 M8X20 A480	
610	90458-0270		1	VENTING DEVICETCDF 1/8G ELESA 58669	
620	342921-0122		3	STRAIGHT COUPLING,EXT.THREADED 8/6-G1/4"	
630	90330-0066		4	PLUG, EXT. G-THREAD, G1/8	
650	342931-0122		3	ELBOW 90 COUPL.,EXT.THREAD 8/6-G1/4"	
670	312105-0368		12	SCREW M6S ISO 4017 M6X16 A480	
680	312105-0370		8	SCREW M6S ISO 4017 M6X20 A480	
690	312105-0379		6	SCREW M6S ISO 4014 M6X45 A480	
700	312105-0455		3	SCREW M6S ISO 4017 M8X30 A480	
710	312105-0493		3	SCREW M6S ISO 4017 M10X25 A480	

Machine Type | Group Description | Used-In | Group Number | Page No

See previous drawings pages: 5-132, 5-134, 5-136, 5-138, 5-140.

ECM: 461621 - 20101001
Group number: 1349498-0400
Assembly Drawing: 1349498-15_2_AE

This list covers pages from 5-132 to 5-171

Pos	Part No	UN	Qty	Description	Page No
TBA 0200M ANSI (Cont'd) (See drawing on page: 5-132)					
730	315105-0153		29	WASHER BRB 6,4X12 RFR	
740	315105-0165		8	WASHER BRB 8,4X16 RFR	
750	315105-0173		11	WASHER BRB 10,5X22 RFR	
760	315204-0306		2	O-RING 74,5X3 MM	
780	315705-0330		2	PARALLEL KEY W. ROUND ENDS 12X8X32 MM	
790	90056-0164		1	WORM GEAR BS 71-F-TT 28:1 RH	
800	315105-0156		16	WASHER BRB 6,7X14 RFR	
810	312105-0457		1	SCREW M6S ISO 4014 M8X35 A480	
830	312105-0372		3	SCREW M6S ISO 4017 M6X25 A480	
840	90600-2813		1	TIMING BELT 16AT10/730 PU	
860	312105-0374		16	SCREW M6S ISO 4014 M6X30 A480	
870	312105-0502		4	SCREW M6S ISO 4014 M10X55 A480	
880	312105-0499		4	SCREW M6S ISO 4014 M10X40 A480	
890	359725-0116		1	WARNING SIGN ANSI (H), HOT SURFACE	
920	315125-0153		2	WASHER TBRSB 6,4X22X4 A4	
940	90091-0406		1	RADIAL SEAL 25X40X7 MM DUST LIP	
950	90091-0322		1	RADIAL SEAL 25X42X7 MM DUST LIP	
960	315701-0199		2	PARALLEL KEY W. ROUND ENDS 5X5X16 MM	
970	315705-0202		2	PARALLEL KEY W ROUND ENDS 5X5X25MM	
980	90458-2242		1	PARALLEL KEY W. ROUND ENDS 5X5X35 MM	
1000	315751-0116		1	RETAINING RING FOR SHAFT DIN 471 20 SS	
1030	90214-0225		2	BALL BEAR. 20/42X12 SOLID OIL	
1040	90214-0165		1	BALL BEARING, 25X47X12 MM	
1070	90458-1382		4	PLUG, M5X3.5 SMC - MS-5P	
1080	90062-0061		1	LOCK WASHER NORD-LOCK,6,5/10,8, T=2,2	
1090	90091-0439		4	RADIAL SEAL 35X62X7 MM DUST LIP	
1110	90141-0020		1	RETAINING RING FOR BORE DIN 472 42 SS	
1150	90458-0048		4	RETAINING RING FOR BORE DIN 472 62 SS	
1180	90458-1387		1	RADIAL SEAL 38X62X7 MM DUST LIP	
T50E7002	2872406-0000		1	GUIDE	
T50E7005	2872405-0000		1	GUIDE	
T50W1253	90166-0132	MM	4500	TUBE 6 MM PA,TRANSP.	
T50W1254	90166-0132	MM	1500	TUBE 6 MM PA,TRANSP.	
T50W7007	90166-0118	MM	450	TUBE 8 MM PA BLACK	
T50W7008	90166-0266	MM	3500	TUBE 6 MM PA BLACK	
TBA 0200M ISO (See drawing on page: 5-132)					
030	1517727-0000		1	FLANGE	
040	2738144-0000		1	PLATE	
050	2738145-0000		1	PULLEY	
055	2738147-0000		1	PULLEY	
060	2877429-0000		2	SPROCKET	
070	1517721-0000		2	FLANGE	
080	1517722-0000		2	FLANGE	
090	90600-5394		1	INTERMEDIARY SHAFT, ZA/60/607/24H7/14H7	
	90600-5383		*1*	*HUB, ZA/60/24H7/XX*	
	90600-5382		*1*	*HUB, ZA/60/14H7 KEYWAY/XX*	
100	2738146-0000		1	PULLEY	
110	1517723-0000		16	SPACER	
120	315105-0195		1	WASHER BRB 23X40 RFR	
130	2770501-0000		1	SHAFT	
140	1498078-0000		2	PLATE	
170	1517732-0000		4	SPACER	
180	1548012-0000		1	GUIDE	
190	1548011-0000		1	GUIDE	
200	1524520-0000		2	PIN	
210	1524526-0000		1	FLANGE	
240	1524529-0000		2	WASHER	
250	2501231-0000		2	BRUSH	
260	1524532-0000		1	SPACER	
310	2813720-0000		1	FRAME	
320	2897886-0000		1	SHAFT	
330	1519443-0000		1	PLATE	
340	1548021-0000		1	SHAFT	
350	1512823-0000		2	NUT	
360	1517724-0000		2	SPACER	
370	2955003-0000		1	HOLDER	
400	2931744-0000		1	CONNECTION	
440	2779652-0000		1	SUPPORT	
450	2868081-0000		2	GUIDE	
460	1548022-0000		1	SHAFT	
480	1548013-0000		1	PIPE	
530	3015745-0000		1	PLATE	
560	2697053-0000		1	PIPE	
570	2872404-0000		1	SUPPORT	
580	312105-0366		2	SCREW M6S ISO 4017 M6X12 A480	
590	312105-0449		2	SCREW M6S ISO 4017 M8X16 A480	
600	312105-0451		4	SCREW M6S ISO 4017 M8X20 A480	
610	90458-0270		1	VENTING DEVICETCDF 1/8G ELESA 58669	
620	342921-0122		3	STRAIGHT COUPLING,EXT.THREADED 8/6-G1/4"	
630	90330-0066		4	PLUG, EXT. G-THREAD, G1/8	
650	342931-0122		3	ELBOW 90 COUPL.,EXT.THREAD 8/6-G1/4"	
670	312105-0368		12	SCREW M6S ISO 4017 M6X16 A480	
680	312105-0370		8	SCREW M6S ISO 4017 M6X20 A480	

Machine Type | Group Description | Used-In | Group Number | Page No

See previous drawings pages: 5-132, 5-134, 5-136, 5-138, 5-140.

ECM: 461621 - 20101001
Group number: 1349498-0400
Assembly Drawing: 1349498-15_2_AE

This list covers pages from 5-132 to 5-171

Pos	Part No	UN	Qty	Description	Page No
TBA 0200M ISO (Cont'd) (See drawing on page: 5-132)					
690	312105-0379		6	SCREW M6S ISO 4014 M6X45 A480	
700	312105-0455		3	SCREW M6S ISO 4017 M8X30 A480	
710	312105-0493		3	SCREW M6S ISO 4017 M10X25 A480	
730	315105-0153		29	WASHER BRB 6,4X12 RFR	
740	315105-0165		8	WASHER BRB 8,4X16 RFR	
750	315105-0173		11	WASHER BRB 10,5X22 RFR	
760	315204-0306		2	O-RING 74,5X3 MM	
780	315705-0330		2	PARALLEL KEY W. ROUND ENDS 12X8X32 MM	
790	90056-0164		1	WORM GEAR BS 71-F-TT 28:1 RH	
800	315105-0156		16	WASHER BRB 6,7X14 RFR	
810	312105-0457		1	SCREW M6S ISO 4014 M8X35 A480	
830	312105-0372		3	SCREW M6S ISO 4017 M6X25 A480	
840	90600-2813		1	TIMING BELT 16AT10/730 PU	
860	312105-0374		16	SCREW M6S ISO 4014 M6X30 A480	
870	312105-0502		4	SCREW M6S ISO 4014 M10X55 A480	
880	312105-0499		4	SCREW M6S ISO 4014 M10X40 A480	
890	359710-0001		1	WARNING SIGN ISO, HOT SURFACE	
920	315125-0153		2	WASHER TBRSB 6,4X22X4 A4	
940	90091-0406		1	RADIAL SEAL 25X40X7 MM DUST LIP	
950	90091-0322		1	RADIAL SEAL 25X42X7 MM DUST LIP	
960	315701-0199		2	PARALLEL KEY W. ROUND ENDS 5X5X16 MM	
970	315705-0202		2	PARALLEL KEY W ROUND ENDS 5X5X25MM	
980	90458-2242		1	PARALLEL KEY W. ROUND ENDS 5X5X35 MM	
1000	315751-0116		1	RETAINING RING FOR SHAFT DIN 471 20 SS	
1030	90214-0225		2	BALL BEAR. 20/42X12 SOLID OIL	
1040	90214-0165		1	BALL BEARING, 25X47X12 MM	
1070	90458-1382		4	PLUG, M5X3.5 SMC - MS-5P	
1080	90062-0061		1	LOCK WASHER NORD-LOCK,6,5/10,8, T=2,2	
1090	90091-0439		4	RADIAL SEAL 35X62X7 MM DUST LIP	
1110	90141-0020		1	RETAINING RING FOR BORE DIN 472 42 SS	
1150	90458-0048		4	RETAINING RING FOR BORE DIN 472 62 SS	
1180	90458-1387		1	RADIAL SEAL 38X62X7 MM DUST LIP	
T50E7002	2872406-0000		1	GUIDE	
T50E7005	2872405-0000		1	GUIDE	
T50W1253	90166-0132	MM	4500	TUBE 6 MM PA,TRANSP.	
T50W1254	90166-0132	MM	1500	TUBE 6 MM PA,TRANSP.	
T50W7007	90166-0118	MM	450	TUBE 8 MM PA BLACK	
T50W7008	90166-0266	MM	3500	TUBE 6 MM PA BLACK	
TBA 0200S ANSI (See drawing on page: 5-132)					
030	1517727-0000		1	FLANGE	
040	2738144-0000		1	PLATE	
050	2738145-0000		1	PULLEY	
055	2738147-0000		1	PULLEY	
060	2877429-0000		2	SPROCKET	
070	1517721-0000		2	FLANGE	
080	1517722-0000		2	FLANGE	
090	90600-5395		1	INTERMEDIARY SHAFT, ZA/60/624/24H7/14H7K	
	90600-5382		*1*	*HUB, ZA/60/14H7 KEYWAY/XX*	
	90600-5383		*1*	*HUB, ZA/60/24H7/XX*	
100	2738146-0000		1	PULLEY	
110	1517723-0000		16	SPACER	
120	315105-0195		1	WASHER BRB 23X40 RFR	
130	2770501-0000		1	SHAFT	
140	1498078-0000		2	PLATE	
170	1517732-0000		4	SPACER	
180	1548012-0000		1	GUIDE	
190	1548011-0000		1	GUIDE	
200	1524520-0000		2	PIN	
210	1524526-0000		1	FLANGE	
240	1524529-0000		2	WASHER	
250	2501231-0000		2	BRUSH	
260	1524532-0000		1	SPACER	
310	2813717-0000		1	FRAME	
320	2897886-0000		1	SHAFT	
330	1519443-0000		1	PLATE	
340	1548021-0000		1	SHAFT	
350	1512823-0000		2	NUT	
360	1517724-0000		2	SPACER	
370	2955003-0000		1	HOLDER	
400	2931744-0000		1	CONNECTION	
440	2779652-0000		1	SUPPORT	
450	2868081-0000		2	GUIDE	
460	1548022-0000		1	SHAFT	
480	1548013-0000		1	PIPE	
530	3015745-0000		1	PLATE	
560	2697054-0000		1	PIPE	
570	2872404-0000		1	SUPPORT	
580	312105-0366		2	SCREW M6S ISO 4017 M6X12 A480	
590	312105-0449		2	SCREW M6S ISO 4017 M8X16 A480	
600	312105-0451		4	SCREW M6S ISO 4017 M8X20 A480	
610	90458-0270		1	VENTING DEVICETCDF 1/8G ELESA 58669	
620	342921-0122		3	STRAIGHT COUPLING,EXT.THREADED 8/6-G1/4"	
630	90330-0066		4	PLUG, EXT. G-THREAD, G1/8	

See previous drawings pages: 5-132, 5-134, 5-136, 5-138, 5-140.

ECM: 461621 - 20101001
Group number: 1349498-0400
Assembly Drawing: 1349498-15_2_AE

This list covers pages from 5-132 to 5-171

Pos	Part No	UN	Qty	Description	Page No
TBA 0200S ANSI (Cont'd) (See drawing on page: 5-132)					
650	342931-0122		3	ELBOW 90 COUPL.,EXT.THREAD 8/6-G1/4"	
670	312105-0368		12	SCREW M6S ISO 4017 M6X16 A480	
680	312105-0370		8	SCREW M6S ISO 4017 M6X20 A480	
690	312105-0379		6	SCREW M6S ISO 4014 M6X45 A480	
700	312105-0455		3	SCREW M6S ISO 4017 M8X30 A480	
710	312105-0493		3	SCREW M6S ISO 4017 M10X25 A480	
730	315105-0153		29	WASHER BRB 6,4X12 RFR	
740	315105-0165		8	WASHER BRB 8,4X16 RFR	
750	315105-0173		11	WASHER BRB 10,5X22 RFR	
760	315204-0306		2	O-RING 74,5X3 MM	
780	315705-0330		2	PARALLEL KEY W. ROUND ENDS 12X8X32 MM	
790	90056-0164		1	WORM GEAR BS 71-F-TT 28:1 RH	
800	315105-0156		16	WASHER BRB 6,7X14 RFR	
810	312105-0457		1	SCREW M6S ISO 4014 M8X35 A480	
830	312105-0372		3	SCREW M6S ISO 4017 M6X25 A480	
840	90600-2813		1	TIMING BELT 16AT10/730 PU	
860	312105-0374		16	SCREW M6S ISO 4014 M6X30 A480	
870	312105-0502		4	SCREW M6S ISO 4014 M10X55 A480	
880	312105-0499		4	SCREW M6S ISO 4014 M10X40 A480	
890	359725-0116		1	WARNING SIGN ANSI (H), HOT SURFACE	
920	315125-0153		2	WASHER TBRSB 6,4X22X4 A4	
940	90091-0406		1	RADIAL SEAL 25X40X7 MM DUST LIP	
950	90091-0322		1	RADIAL SEAL 25X42X7 MM DUST LIP	
960	315701-0199		2	PARALLEL KEY W. ROUND ENDS 5X5X16 MM	
970	315705-0202		2	PARALLEL KEY W ROUND ENDS 5X5X25MM	
980	90458-2242		1	PARALLEL KEY W. ROUND ENDS 5X5X35 MM	
1000	315751-0116		1	RETAINING RING FOR SHAFT DIN 471 20 SS	
1030	90214-0225		2	BALL BEAR. 20/42X12 SOLID OIL	
1040	90214-0165		1	BALL BEARING, 25X47X12 MM	
1070	90458-1382		4	PLUG, M5X3.5 SMC - MS-5P	
1080	90062-0061		1	LOCK WASHER NORD-LOCK,6,5/10,8, T=2,2	
1090	90091-0439		4	RADIAL SEAL 35X62X7 MM DUST LIP	
1110	90141-0020		1	RETAINING RING FOR BORE DIN 472 42 SS	
1150	90458-0048		4	RETAINING RING FOR BORE DIN 472 62 SS	
1180	90458-1387		1	RADIAL SEAL 38X62X7 MM DUST LIP	
T50E7002	2846472-0000		1	GUIDE	
T50E7005	2846471-0000		1	GUIDE	
T50W1253	90166-0132	MM	4500	TUBE 6 MM PA,TRANSP.	
T50W1254	90166-0132	MM	1500	TUBE 6 MM PA,TRANSP.	
T50W7007	90166-0118	MM	450	TUBE 8 MM PA BLACK	
T50W7008	90166-0266	MM	3500	TUBE 6 MM PA BLACK	

Pos	Part No	UN	Qty	Description	Page No
TBA 0200S ISO (See drawing on page: 5-132)					
030	1517727-0000		1	FLANGE	
040	2738144-0000		1	PLATE	
050	2738145-0000		1	PULLEY	
055	2738147-0000		1	PULLEY	
060	2877429-0000		2	SPROCKET	
070	1517721-0000		2	FLANGE	
080	1517722-0000		2	FLANGE	
090	90600-5395		1	INTERMEDIARY SHAFT, ZA/60/624/24H7/14H7K	
	90600-5382		*1*	*HUB, ZA/60/14H7 KEYWAY/XX*	
	90600-5383		*1*	*HUB, ZA/60/24H7/XX*	
100	2738146-0000		1	PULLEY	
110	1517723-0000		16	SPACER	
120	315105-0195		1	WASHER BRB 23X40 RFR	
130	2770501-0000		1	SHAFT	
140	1498078-0000		2	PLATE	
170	1517732-0000		4	SPACER	
180	1548012-0000		1	GUIDE	
190	1548011-0000		1	GUIDE	
200	1524520-0000		2	PIN	
210	1524526-0000		1	FLANGE	
240	1524529-0000		2	WASHER	
250	2501231-0000		2	BRUSH	
260	1524532-0000		1	SPACER	
310	2813717-0000		1	FRAME	
320	2897886-0000		1	SHAFT	
330	1519443-0000		1	PLATE	
340	1548021-0000		1	SHAFT	
350	1512823-0000		2	NUT	
360	1517724-0000		2	SPACER	
370	2955003-0000		1	HOLDER	
400	2931744-0000		1	CONNECTION	
440	2779652-0000		1	SUPPORT	
450	2868081-0000		2	GUIDE	
460	1548022-0000		1	SHAFT	
480	1548013-0000		1	PIPE	
530	3015745-0000		1	PLATE	
560	2697054-0000		1	PIPE	
570	2872404-0000		1	SUPPORT	
580	312105-0366		2	SCREW M6S ISO 4017 M6X12 A480	
590	312105-0449		2	SCREW M6S ISO 4017 M8X16 A480	
600	312105-0451		4	SCREW M6S ISO 4017 M8X20 A480	

Machine Type | Group Description | Used-In | Group Number | Page No

See previous drawings pages: 5-132, 5-134, 5-136, 5-138, 5-140.

ECM: 461621 - 20101001
Group number: 1349498-0400
Assembly Drawing: 1349498-15_2_AE

This list covers pages from 5-132 to 5-171

Pos	Part No	UN	Qty	Description	Page No
TBA 0200S ISO (Cont'd) (See drawing on page: 5-132)					
610	90458-0270		1	VENTING DEVICETCDF 1/8G ELESA 58669	
620	342921-0122		3	STRAIGHT COUPLING,EXT.THREADED 8/6-G1/4"	
630	90330-0066		4	PLUG, EXT. G-THREAD, G1/8	
650	342931-0122		3	ELBOW 90 COUPL.,EXT.THREAD 8/6-G1/4"	
670	312105-0368		12	SCREW M6S ISO 4017 M6X16 A480	
680	312105-0370		8	SCREW M6S ISO 4017 M6X20 A480	
690	312105-0379		6	SCREW M6S ISO 4014 M6X45 A480	
700	312105-0455		3	SCREW M6S ISO 4017 M8X30 A480	
710	312105-0493		3	SCREW M6S ISO 4017 M10X25 A480	
730	315105-0153		29	WASHER BRB 6,4X12 RFR	
740	315105-0165		8	WASHER BRB 8,4X16 RFR	
750	315105-0173		11	WASHER BRB 10,5X22 RFR	
760	315204-0306		2	O-RING 74,5X3 MM	
780	315705-0330		2	PARALLEL KEY W. ROUND ENDS 12X8X32 MM	
790	90056-0164		1	WORM GEAR BS 71-F-TT 28:1 RH	
800	315105-0156		16	WASHER BRB 6,7X14 RFR	
810	312105-0457		1	SCREW M6S ISO 4014 M8X35 A480	
830	312105-0372		3	SCREW M6S ISO 4017 M6X25 A480	
840	90600-2813		1	TIMING BELT 16AT10/730 PU	
860	312105-0374		16	SCREW M6S ISO 4014 M6X30 A480	
870	312105-0502		4	SCREW M6S ISO 4014 M10X55 A480	
880	312105-0499		4	SCREW M6S ISO 4014 M10X40 A480	
890	359710-0001		1	WARNING SIGN ISO, HOT SURFACE	
920	315125-0153		2	WASHER TBRSB 6,4X22X4 A4	
940	90091-0406		1	RADIAL SEAL 25X40X7 MM DUST LIP	
950	90091-0322		1	RADIAL SEAL 25X42X7 MM DUST LIP	
960	315701-0199		2	PARALLEL KEY W. ROUND ENDS 5X5X16 MM	
970	315705-0202		2	PARALLEL KEY W ROUND ENDS 5X5X25MM	
980	90458-2242		1	PARALLEL KEY W. ROUND ENDS 5X5X35 MM	
1000	315751-0116		1	RETAINING RING FOR SHAFT DIN 471 20 SS	
1030	90214-0225		2	BALL BEAR. 20/42X12 SOLID OIL	
1040	90214-0165		1	BALL BEARING, 25X47X12 MM	
1070	90458-1382		4	PLUG, M5X3.5 SMC - MS-5P	
1080	90062-0061		1	LOCK WASHER NORD-LOCK,6,5/10,8, T=2,2	
1090	90091-0439		4	RADIAL SEAL 35X62X7 MM DUST LIP	
1110	90141-0020		1	RETAINING RING FOR BORE DIN 472 42 SS	
1150	90458-0048		4	RETAINING RING FOR BORE DIN 472 62 SS	
1180	90458-1387		1	RADIAL SEAL 38X62X7 MM DUST LIP	
T50E7002	2846472-0000		1	GUIDE	
T50E7005	2846471-0000		1	GUIDE	
T50W1253	90166-0132	MM	4500	TUBE 6 MM PA,TRANSP.	
T50W1254	90166-0132	MM	1500	TUBE 6 MM PA,TRANSP.	
T50W7007	90166-0118	MM	450	TUBE 8 MM PA BLACK	
T50W7008	90166-0266	MM	3500	TUBE 6 MM PA BLACK	
TBA 0250B ANSI (See drawing on page: 5-132)					
030	1517727-0000		1	FLANGE	
040	2738144-0000		1	PLATE	
050	2738145-0000		1	PULLEY	
055	2738147-0000		1	PULLEY	
060	2877429-0000		2	SPROCKET	
070	1517721-0000		2	FLANGE	
080	1517722-0000		2	FLANGE	
090	90600-5394		1	INTERMEDIARY SHAFT, ZA/60/607/24H7/14H7	
	90600-5383		*1*	*HUB, ZA/60/24H7/XX*	
	90600-5382		*1*	*HUB, ZA/60/14H7 KEYWAY/XX*	
100	2738146-0000		1	PULLEY	
110	1517723-0000		16	SPACER	
120	315105-0195		1	WASHER BRB 23X40 RFR	
130	2770501-0000		1	SHAFT	
140	1498078-0000		2	PLATE	
170	1517732-0000		4	SPACER	
180	1517736-0000		1	GUIDE	
190	1517737-0000		1	GUIDE	
200	1524520-0000		2	PIN	
210	1524526-0000		1	FLANGE	
240	1524529-0000		2	WASHER	
250	2501231-0000		2	BRUSH	
260	1524532-0000		1	SPACER	
310	2813718-0000		1	FRAME	
320	2897886-0000		1	SHAFT	
330	1519443-0000		1	PLATE	
340	1548021-0000		1	SHAFT	
350	1512823-0000		2	NUT	
360	1517724-0000		2	SPACER	
370	2955003-0000		1	HOLDER	
400	2931744-0000		1	CONNECTION	
440	2779652-0000		1	SUPPORT	
450	2868081-0000		2	GUIDE	
460	1548022-0000		1	SHAFT	
480	1548013-0000		1	PIPE	
530	3015745-0000		1	PLATE	
560	2697055-0000		1	PIPE	
570	2872404-0000		1	SUPPORT	

Machine Type | Group Description | Used-In | Group Number | Page No

See previous drawings pages: 5-132, 5-134, 5-136, 5-138, 5-140.

ECM: 461621 - 20101001
Group number: 1349498-0400
Assembly Drawing: 1349498-15_2_AE

This list covers pages from 5-132 to 5-171

Pos	Part No	UN	Qty	Description	Page No
TBA 0250B ANSI (Cont'd) (See drawing on page: 5-132)					
580	312105-0366		2	SCREW M6S ISO 4017 M6X12 A480	
590	312105-0449		2	SCREW M6S ISO 4017 M8X16 A480	
600	312105-0451		4	SCREW M6S ISO 4017 M8X20 A480	
610	90458-0270		1	VENTING DEVICETCDF 1/8G ELESA 58669	
620	342921-0122		3	STRAIGHT COUPLING,EXT.THREADED 8/6-G1/4"	
630	90330-0066		4	PLUG, EXT. G-THREAD, G1/8	
650	342931-0122		3	ELBOW 90 COUPL.,EXT.THREAD 8/6-G1/4"	
670	312105-0368		12	SCREW M6S ISO 4017 M6X16 A480	
680	312105-0370		8	SCREW M6S ISO 4017 M6X20 A480	
690	312105-0379		6	SCREW M6S ISO 4014 M6X45 A480	
700	312105-0455		3	SCREW M6S ISO 4017 M8X30 A480	
710	312105-0493		3	SCREW M6S ISO 4017 M10X25 A480	
730	315105-0153		29	WASHER BRB 6,4X12 RFR	
740	315105-0165		8	WASHER BRB 8,4X16 RFR	
750	315105-0173		11	WASHER BRB 10,5X22 RFR	
760	315204-0306		2	O-RING 74,5X3 MM	
780	315705-0330		2	PARALLEL KEY W. ROUND ENDS 12X8X32 MM	
790	90056-0164		1	WORM GEAR BS 71-F-TT 28:1 RH	
800	315105-0156		16	WASHER BRB 6,7X14 RFR	
810	312105-0457		1	SCREW M6S ISO 4014 M8X35 A480	
830	312105-0372		3	SCREW M6S ISO 4017 M6X25 A480	
840	90600-2813		1	TIMING BELT 16AT10/730 PU	
860	312105-0374		16	SCREW M6S ISO 4014 M6X30 A480	
870	312105-0502		4	SCREW M6S ISO 4014 M10X55 A480	
880	312105-0499		4	SCREW M6S ISO 4014 M10X40 A480	
890	359725-0116		1	WARNING SIGN ANSI (H), HOT SURFACE	
920	315125-0153		2	WASHER TBRSB 6,4X22X4 A4	
940	90091-0406		1	RADIAL SEAL 25X40X7 MM DUST LIP	
950	90091-0322		1	RADIAL SEAL 25X42X7 MM DUST LIP	
960	315701-0199		2	PARALLEL KEY W. ROUND ENDS 5X5X16 MM	
970	315705-0202		2	PARALLEL KEY W ROUND ENDS 5X5X25MM	
980	90458-2242		1	PARALLEL KEY W. ROUND ENDS 5X5X35 MM	
1000	315751-0116		1	RETAINING RING FOR SHAFT DIN 471 20 SS	
1030	90214-0225		2	BALL BEAR. 20/42X12 SOLID OIL	
1040	90214-0165		1	BALL BEARING, 25X47X12 MM	
1070	90458-1382		4	PLUG, M5X3.5 SMC - MS-5P	
1080	90062-0061		1	LOCK WASHER NORD-LOCK,6,5/10,8, T=2,2	
1090	90091-0439		4	RADIAL SEAL 35X62X7 MM DUST LIP	
1110	90141-0020		1	RETAINING RING FOR BORE DIN 472 42 SS	
1150	90458-0048		4	RETAINING RING FOR BORE DIN 472 62 SS	
1180	90458-1387		1	RADIAL SEAL 38X62X7 MM DUST LIP	
T50E7002	2872398-0000		1	GUIDE	
T50E7005	2872397-0000		1	GUIDE	
T50W1253	90166-0132	MM	4500	TUBE 6 MM PA,TRANSP.	
T50W1254	90166-0132	MM	1500	TUBE 6 MM PA,TRANSP.	
T50W7007	90166-0118	MM	450	TUBE 8 MM PA BLACK	
T50W7008	90166-0266	MM	3500	TUBE 6 MM PA BLACK	
TBA 0250B ISO (See drawing on page: 5-132)					
030	1517727-0000		1	FLANGE	
040	2738144-0000		1	PLATE	
050	2738145-0000		1	PULLEY	
055	2738147-0000		1	PULLEY	
060	2877429-0000		2	SPROCKET	
070	1517721-0000		2	FLANGE	
080	1517722-0000		2	FLANGE	
090	90600-5394		1	INTERMEDIARY SHAFT, ZA/60/607/24H7/14H7	
	90600-5383		*1*	*HUB, ZA/60/24H7/XX*	
	90600-5382		*1*	*HUB, ZA/60/14H7 KEYWAY/XX*	
100	2738146-0000		1	PULLEY	
110	1517723-0000		16	SPACER	
120	315105-0195		1	WASHER BRB 23X40 RFR	
130	2770501-0000		1	SHAFT	
140	1498078-0000		2	PLATE	
170	1517732-0000		4	SPACER	
180	1517736-0000		1	GUIDE	
190	1517737-0000		1	GUIDE	
200	1524520-0000		2	PIN	
210	1524526-0000		1	FLANGE	
240	1524529-0000		2	WASHER	
250	2501231-0000		2	BRUSH	
260	1524532-0000		1	SPACER	
310	2813718-0000		1	FRAME	
320	2897886-0000		1	SHAFT	
330	1519443-0000		1	PLATE	
340	1548021-0000		1	SHAFT	
350	1512823-0000		2	NUT	
360	1517724-0000		2	SPACER	
370	2955003-0000		1	HOLDER	
400	2931744-0000		1	CONNECTION	
440	2779652-0000		1	SUPPORT	
450	2868081-0000		2	GUIDE	
460	1548022-0000		1	SHAFT	
480	1548013-0000		1	PIPE	

Machine Type | Group Description | Used-In | Group Number | Page No

See previous drawings pages: 5-132, 5-134, 5-136, 5-138, 5-140.

ECM: 461621 - 20101001
Group number: 1349498-0400
Assembly Drawing: 1349498-15_2_AE

This list covers pages from 5-132 to 5-171

Pos	Part No	UN	Qty	Description	Page No
TBA 0250B ISO (Cont'd) (See drawing on page: 5-132)					
530	3015745-0000		1	PLATE	
560	2697055-0000		1	PIPE	
570	2872404-0000		1	SUPPORT	
580	312105-0366		2	SCREW M6S ISO 4017 M6X12 A480	
590	312105-0449		2	SCREW M6S ISO 4017 M8X16 A480	
600	312105-0451		4	SCREW M6S ISO 4017 M8X20 A480	
610	90458-0270		1	VENTING DEVICETCDF 1/8G ELESA 58669	
620	342921-0122		3	STRAIGHT COUPLING,EXT.THREADED 8/6-G1/4"	
630	90330-0066		4	PLUG, EXT. G-THREAD, G1/8	
650	342931-0122		3	ELBOW 90 COUPL.,EXT.THREAD 8/6-G1/4"	
670	312105-0368		12	SCREW M6S ISO 4017 M6X16 A480	
680	312105-0370		8	SCREW M6S ISO 4017 M6X20 A480	
690	312105-0379		6	SCREW M6S ISO 4014 M6X45 A480	
700	312105-0455		3	SCREW M6S ISO 4017 M8X30 A480	
710	312105-0493		3	SCREW M6S ISO 4017 M10X25 A480	
730	315105-0153		29	WASHER BRB 6,4X12 RFR	
740	315105-0165		8	WASHER BRB 8,4X16 RFR	
750	315105-0173		11	WASHER BRB 10,5X22 RFR	
760	315204-0306		2	O-RING 74,5X3 MM	
780	315705-0330		2	PARALLEL KEY W. ROUND ENDS 12X8X32 MM	
790	90056-0164		1	WORM GEAR BS 71-F-TT 28:1 RH	
800	315105-0156		16	WASHER BRB 6,7X14 RFR	
810	312105-0457		1	SCREW M6S ISO 4014 M8X35 A480	
830	312105-0372		3	SCREW M6S ISO 4017 M6X25 A480	
840	90600-2813		1	TIMING BELT 16AT10/730 PU	
860	312105-0374		16	SCREW M6S ISO 4014 M6X30 A480	
870	312105-0502		4	SCREW M6S ISO 4014 M10X55 A480	
880	312105-0499		4	SCREW M6S ISO 4014 M10X40 A480	
890	359710-0001		1	WARNING SIGN ISO, HOT SURFACE	
920	315125-0153		2	WASHER TBRSB 6,4X22X4 A4	
940	90091-0406		1	RADIAL SEAL 25X40X7 MM DUST LIP	
950	90091-0322		1	RADIAL SEAL 25X42X7 MM DUST LIP	
960	315701-0199		2	PARALLEL KEY W. ROUND ENDS 5X5X16 MM	
970	315705-0202		2	PARALLEL KEY W ROUND ENDS 5X5X25MM	
980	90458-2242		1	PARALLEL KEY W. ROUND ENDS 5X5X35 MM	
1000	315751-0116		1	RETAINING RING FOR SHAFT DIN 471 20 SS	
1030	90214-0225		2	BALL BEAR. 20/42X12 SOLID OIL	
1040	90214-0165		1	BALL BEARING, 25X47X12 MM	
1070	90458-1382		4	PLUG, M5X3.5 SMC - MS-5P	
1080	90062-0061		1	LOCK WASHER NORD-LOCK,6,5/10,8, T=2,2	
1090	90091-0439		4	RADIAL SEAL 35X62X7 MM DUST LIP	
1110	90141-0020		1	RETAINING RING FOR BORE DIN 472 42 SS	
1150	90458-0048		4	RETAINING RING FOR BORE DIN 472 62 SS	
1180	90458-1387		1	RADIAL SEAL 38X62X7 MM DUST LIP	
T50E7002	2872398-0000		1	GUIDE	
T50E7005	2872397-0000		1	GUIDE	
T50W1253	90166-0132	MM	4500	TUBE 6 MM PA,TRANSP.	
T50W1254	90166-0132	MM	1500	TUBE 6 MM PA,TRANSP.	
T50W7007	90166-0118	MM	450	TUBE 8 MM PA BLACK	
T50W7008	90166-0266	MM	3500	TUBE 6 MM PA BLACK	
TBA 0250S ANSI (See drawing on page: 5-132)					
030	1517727-0000		1	FLANGE	
040	2738144-0000		1	PLATE	
050	2738145-0000		1	PULLEY	
055	2738147-0000		1	PULLEY	
060	2877429-0000		2	SPROCKET	
070	1517721-0000		2	FLANGE	
080	1517722-0000		2	FLANGE	
090	90600-5392		1	INTERMEDIARY SHAFT, ZA/60/636/24H7/14H7	
	90600-5382		*1*	*HUB, ZA/60/14H7 KEYWAY/XX*	
	90600-5383		*1*	*HUB, ZA/60/24H7/XX*	
100	2738146-0000		1	PULLEY	
110	1517723-0000		16	SPACER	
120	315105-0195		1	WASHER BRB 23X40 RFR	
130	2770501-0000		1	SHAFT	
140	1498078-0000		2	PLATE	
170	1517732-0000		4	SPACER	
180	1548012-0000		1	GUIDE	
190	1548011-0000		1	GUIDE	
200	1524520-0000		2	PIN	
210	1524526-0000		1	FLANGE	
240	1524529-0000		2	WASHER	
250	2501231-0000		2	BRUSH	
260	1524532-0000		1	SPACER	
310	2813721-0000		1	FRAME	
320	2897886-0000		1	SHAFT	
330	1519443-0000		1	PLATE	
340	1548021-0000		1	SHAFT	
350	1512823-0000		2	NUT	
360	1517724-0000		2	SPACER	
370	2955003-0000		1	HOLDER	
400	2931744-0000		1	CONNECTION	
440	2779652-0000		1	SUPPORT	

Machine Type | Group Description | Used-In | Group Number | Page No

See previous drawings pages: 5-132, 5-134, 5-136, 5-138, 5-140.

ECM: 461621 - 20101001
Group number: 1349498-0400
Assembly Drawing: 1349498-15_2_AE

This list covers pages from 5-132 to 5-171

Pos	Part No	UN	Qty	Description	Page No
TBA 0250S ANSI (Cont'd) (See drawing on page: 5-132)					
450	2868081-0000		2	GUIDE	
460	1548022-0000		1	SHAFT	
480	1548013-0000		1	PIPE	
530	3015745-0000		1	PLATE	
560	2697052-0000		1	PIPE	
570	2872404-0000		1	SUPPORT	
580	312105-0366		2	SCREW M6S ISO 4017 M6X12 A480	
590	312105-0449		2	SCREW M6S ISO 4017 M8X16 A480	
600	312105-0451		4	SCREW M6S ISO 4017 M8X20 A480	
610	90458-0270		1	VENTING DEVICETCDF 1/8G ELESA 58669	
620	342921-0122		3	STRAIGHT COUPLING,EXT.THREADED 8/6-G1/4"	
630	90330-0066		4	PLUG, EXT. G-THREAD, G1/8	
650	342931-0122		3	ELBOW 90 COUPL.,EXT.THREAD 8/6-G1/4"	
670	312105-0368		12	SCREW M6S ISO 4017 M6X16 A480	
680	312105-0370		8	SCREW M6S ISO 4017 M6X20 A480	
690	312105-0379		6	SCREW M6S ISO 4014 M6X45 A480	
700	312105-0455		3	SCREW M6S ISO 4017 M8X30 A480	
710	312105-0493		3	SCREW M6S ISO 4017 M10X25 A480	
730	315105-0153		29	WASHER BRB 6,4X12 RFR	
740	315105-0165		8	WASHER BRB 8,4X16 RFR	
750	315105-0173		11	WASHER BRB 10,5X22 RFR	
760	315204-0306		2	O-RING 74,5X3 MM	
780	315705-0330		2	PARALLEL KEY W. ROUND ENDS 12X8X32 MM	
790	90056-0164		1	WORM GEAR BS 71-F-TT 28:1 RH	
800	315105-0156		16	WASHER BRB 6,7X14 RFR	
810	312105-0457		1	SCREW M6S ISO 4014 M8X35 A480	
830	312105-0372		3	SCREW M6S ISO 4017 M6X25 A480	
840	90600-2813		1	TIMING BELT 16AT10/730 PU	
860	312105-0374		16	SCREW M6S ISO 4014 M6X30 A480	
870	312105-0502		4	SCREW M6S ISO 4014 M10X55 A480	
880	312105-0499		4	SCREW M6S ISO 4014 M10X40 A480	
890	359725-0116		1	WARNING SIGN ANSI (H), HOT SURFACE	
920	315125-0153		2	WASHER TBRSB 6,4X22X4 A4	
940	90091-0406		1	RADIAL SEAL 25X40X7 MM DUST LIP	
950	90091-0322		1	RADIAL SEAL 25X42X7 MM DUST LIP	
960	315701-0199		2	PARALLEL KEY W. ROUND ENDS 5X5X16 MM	
970	315705-0202		2	PARALLEL KEY W ROUND ENDS 5X5X25MM	
980	90458-2242		1	PARALLEL KEY W. ROUND ENDS 5X5X35 MM	
1000	315751-0116		1	RETAINING RING FOR SHAFT DIN 471 20 SS	
1030	90214-0225		2	BALL BEAR. 20/42X12 SOLID OIL	
1040	90214-0165		1	BALL BEARING, 25X47X12 MM	
1070	90458-1382		4	PLUG, M5X3.5 SMC - MS-5P	
1080	90062-0061		1	LOCK WASHER NORD-LOCK,6,5/10,8, T=2,2	
1090	90091-0439		4	RADIAL SEAL 35X62X7 MM DUST LIP	
1110	90141-0020		1	RETAINING RING FOR BORE DIN 472 42 SS	
1150	90458-0048		4	RETAINING RING FOR BORE DIN 472 62 SS	
1180	90458-1387		1	RADIAL SEAL 38X62X7 MM DUST LIP	
T50E7002	2872406-0000		1	GUIDE	
T50E7005	2872405-0000		1	GUIDE	
T50W1253	90166-0132	MM	4500	TUBE 6 MM PA,TRANSP.	
T50W1254	90166-0132	MM	1500	TUBE 6 MM PA,TRANSP.	
T50W7007	90166-0118	MM	450	TUBE 8 MM PA BLACK	
T50W7008	90166-0266	MM	3500	TUBE 6 MM PA BLACK	
TBA 0250S ISO (See drawing on page: 5-132)					
030	1517727-0000		1	FLANGE	
040	2738144-0000		1	PLATE	
050	2738145-0000		1	PULLEY	
055	2738147-0000		1	PULLEY	
060	2877429-0000		2	SPROCKET	
070	1517721-0000		2	FLANGE	
080	1517722-0000		2	FLANGE	
090	90600-5392		1	INTERMEDIARY SHAFT, ZA/60/636/24H7/14H7	
	90600-5382		*1*	*HUB, ZA/60/14H7 KEYWAY/XX*	
	90600-5383		*1*	*HUB, ZA/60/24H7/XX*	
100	2738146-0000		1	PULLEY	
110	1517723-0000		16	SPACER	
120	315105-0195		1	WASHER BRB 23X40 RFR	
130	2770501-0000		1	SHAFT	
140	1498078-0000		2	PLATE	
170	1517732-0000		4	SPACER	
180	1548012-0000		1	GUIDE	
190	1548011-0000		1	GUIDE	
200	1524520-0000		2	PIN	
210	1524526-0000		1	FLANGE	
240	1524529-0000		2	WASHER	
250	2501231-0000		2	BRUSH	
260	1524532-0000		1	SPACER	
310	2813721-0000		1	FRAME	
320	2897886-0000		1	SHAFT	
330	1519443-0000		1	PLATE	
340	1548021-0000		1	SHAFT	
350	1512823-0000		2	NUT	
360	1517724-0000		2	SPACER	

Machine Type | Group Description | Used-In | Group Number | Page No

See previous drawings pages: 5-132, 5-134, 5-136, 5-138, 5-140.

ECM: 461621 - 20101001
Group number: 1349498-0400
Assembly Drawing: 1349498-15_2_AE

This list covers pages from 5-132 to 5-171

Pos	Part No	UN	Qty	Description	Page No
TBA 0250S ISO (Cont'd) (See drawing on page: 5-132)					
370	2955003-0000		1	HOLDER	
400	2931744-0000		1	CONNECTION	
440	2779652-0000		1	SUPPORT	
450	2868081-0000		2	GUIDE	
460	1548022-0000		1	SHAFT	
480	1548013-0000		1	PIPE	
530	3015745-0000		1	PLATE	
560	2697052-0000		1	PIPE	
570	2872404-0000		1	SUPPORT	
580	312105-0366		2	SCREW M6S ISO 4017 M6X12 A480	
590	312105-0449		2	SCREW M6S ISO 4017 M8X16 A480	
600	312105-0451		4	SCREW M6S ISO 4017 M8X20 A480	
610	90458-0270		1	VENTING DEVICETCDF 1/8G ELESA 58669	
620	342921-0122		3	STRAIGHT COUPLING,EXT.THREADED 8/6-G1/4"	
630	90330-0066		4	PLUG, EXT. G-THREAD, G1/8	
650	342931-0122		3	ELBOW 90 COUPL.,EXT.THREAD 8/6-G1/4"	
670	312105-0368		12	SCREW M6S ISO 4017 M6X16 A480	
680	312105-0370		8	SCREW M6S ISO 4017 M6X20 A480	
690	312105-0379		6	SCREW M6S ISO 4014 M6X45 A480	
700	312105-0455		3	SCREW M6S ISO 4017 M8X30 A480	
710	312105-0493		3	SCREW M6S ISO 4017 M10X25 A480	
730	315105-0153		29	WASHER BRB 6,4X12 RFR	
740	315105-0165		8	WASHER BRB 8,4X16 RFR	
750	315105-0173		11	WASHER BRB 10,5X22 RFR	
760	315204-0306		2	O-RING 74,5X3 MM	
780	315705-0330		2	PARALLEL KEY W. ROUND ENDS 12X8X32 MM	
790	90056-0164		1	WORM GEAR BS 71-F-TT 28:1 RH	
800	315105-0156		16	WASHER BRB 6,7X14 RFR	
810	312105-0457		1	SCREW M6S ISO 4014 M8X35 A480	
830	312105-0372		3	SCREW M6S ISO 4017 M6X25 A480	
840	90600-2813		1	TIMING BELT 16AT10/730 PU	
860	312105-0374		16	SCREW M6S ISO 4014 M6X30 A480	
870	312105-0502		4	SCREW M6S ISO 4014 M10X55 A480	
880	312105-0499		4	SCREW M6S ISO 4014 M10X40 A480	
890	359710-0001		1	WARNING SIGN ISO, HOT SURFACE	
920	315125-0153		2	WASHER TBRSB 6,4X22X4 A4	
940	90091-0406		1	RADIAL SEAL 25X40X7 MM DUST LIP	
950	90091-0322		1	RADIAL SEAL 25X42X7 MM DUST LIP	
960	315701-0199		2	PARALLEL KEY W. ROUND ENDS 5X5X16 MM	
970	315705-0202		2	PARALLEL KEY W ROUND ENDS 5X5X25MM	
980	90458-2242		1	PARALLEL KEY W. ROUND ENDS 5X5X35 MM	
1000	315751-0116		1	RETAINING RING FOR SHAFT DIN 471 20 SS	
1030	90214-0225		2	BALL BEAR. 20/42X12 SOLID OIL	
1040	90214-0165		1	BALL BEARING, 25X47X12 MM	
1070	90458-1382		4	PLUG, M5X3.5 SMC - MS-5P	
1080	90062-0061		1	LOCK WASHER NORD-LOCK,6,5/10,8, T=2,2	
1090	90091-0439		4	RADIAL SEAL 35X62X7 MM DUST LIP	
1110	90141-0020		1	RETAINING RING FOR BORE DIN 472 42 SS	
1150	90458-0048		4	RETAINING RING FOR BORE DIN 472 62 SS	
1180	90458-1387		1	RADIAL SEAL 38X62X7 MM DUST LIP	
T50E7002	2872406-0000		1	GUIDE	
T50E7005	2872405-0000		1	GUIDE	
T50W1253	90166-0132	MM	4500	TUBE 6 MM PA,TRANSP.	
T50W1254	90166-0132	MM	1500	TUBE 6 MM PA,TRANSP.	
T50W7007	90166-0118	MM	450	TUBE 8 MM PA BLACK	
T50W7008	90166-0266	MM	3500	TUBE 6 MM PA BLACK	
TBA 1000B ANSI (See drawing on pages: 5-134, 5-136)					
010	2529093-0000		1	SPACER	
030	1487883-0000		1	FLANGE	
040	2687783-0000		1	PLATE	
050	2541821-0000		1	PULLEY	
060	1487886-0000		2	SPROCKET	
070	1487887-0000		2	FLANGE	
080	1487888-0000		2	FLANGE	
090	1524257-0000		1	JOINT	
	90600-5382		*1*	*HUB, ZA/60/14H7 KEYWAY/XX*	
	90600-5383		*1*	*HUB, ZA/60/24H7/XX*	
100	2529102-0000		1	PULLEY	
110	1487891-0000		16	SPACER	
120	2520196-0000		1	WASHER	
130	2531787-0000		1	SHAFT	
140	3068336-0000		1	SUPPORT	
145	3068337-0000		1	SUPPORT	
170	1498081-0000		4	SPACER	
180	2933694-0000		1	GUIDE	
190	2933693-0000		1	GUIDE	
200	1498084-0000		2	PIN	
210	2687784-0000		1	FLANGE	
220	1498087-0000		1	SPACER	
240	2541828-0000		1	WASHER	
250	2958891-0000		4	BRUSH	
255	2958890-0000		4	HUB	
260	2531788-0000		1	SPACER	

Machine Type | Group Description | Used-In | Group Number | Page No

See previous drawings pages: 5-132, 5-134, 5-136, 5-138, 5-140.

ECM: 461621 - 20101001
Group number: 1349498-0400
Assembly Drawing: 1349498-15_2_AE

This list covers pages from 5-132 to 5-171

Pos	Part No	UN	Qty	Description	Page No
TBA 1000B ANSI (Cont'd) (See drawing on pages: 5-134, 5-136)					
310	2933683-0000		1	FRAME	
320	2541822-0000		1	SHAFT	
330	1549873-0000		1	PLATE	
340	2531792-0000		1	SHAFT	
350	1512823-0000		3	NUT	
360	1549875-0000		1	SPACER	
370	2781165-0000		1	HOLDER	
380	2933702-0000		1	PLATE	
400	2920989-0000		1	CONNECTION	
420	2933701-0000		1	RAIL	
430	2876627-0000		1	BRACKET	
440	2781164-0000		1	SUPPORT	
450	2751630-0000		1	GUIDE	
460	2511346-0000		1	SHAFT	
470	2511347-0000		1	PLUG	
490	2933700-0000		1	SHAFT	
500	2835095-0000		2	BUSHING	
530	3022253-0000		1	PLATE	
540	2751631-0000		1	GUIDE	
550	2531765-0000		1	TUBE	
600	312105-0451		6	SCREW M6S ISO 4017 M8X20 A480	
650	90055-0267		4	ELBOW PIPE JOINT,EXT.THREAD,D=8 MM G1/4	
670	312105-0368		4	SCREW M6S ISO 4017 M6X16 A480	
690	312105-0383		6	SCREW M6S ISO 4014 M6X65 A480	
700	312105-0455		4	SCREW M6S ISO 4017 M8X30 A480	
710	312105-0493		8	SCREW M6S ISO 4017 M10X25 A480	
730	315105-0153		26	WASHER BRB 6,4X12 RFR	
740	315105-0165		29	WASHER BRB 8,4X16 RFR	
750	315105-0173		16	WASHER BRB 10,5X22 RFR	
760	315204-0306		3	O-RING 74,5X3 MM	
780	315705-0332		2	PARALLEL KEY W. ROUND ENDS 12X8X40 MM	
790	90056-0163		1	WORM GEAR BS 71-F-TT 28:1 LH	
810	312105-0449		7	SCREW M6S ISO 4017 M8X16 A480	
840	90459-5592		1	TIMING BELT 25AT10 880 PU	
860	312105-0459		16	SCREW M6S ISO 4014 M8X40 A480	
870	312105-0503		4	SCREW M6S ISO 4014 M10X60 A480	
880	312109-0499		4	SCREW M6S ISO 4017 M10X40 A480	
890	359725-0116		1	WARNING SIGN ANSI (H), HOT SURFACE	
940	90459-4585		1	RADIAL SEAL 25X52X7 MM DUST LIP	
960	315705-0234		2	PARALLEL KEY W. ROUND ENDS 6X6X25 MM	
970	315705-0202		3	PARALLEL KEY W ROUND ENDS 5X5X25MM	
980	315701-0201		2	PARALLEL KEY W. ROUND ENDS 5X5X20 MM	
1000	315751-0119		1	RETAINING RING FOR SHAFT DIN 471 25 SS	
1010	315202-0219		1	O-RING 29,2X3 MM	
1020	311103-0401		2	PARALLEL PIN ISO 2338 8M6X20 A1	
1030	90459-0384		3	BALL BEARING 25/62X17 SOLID OIL	
1070	90458-1382		2	PLUG, M5X3.5 SMC - MS-5P	
1090	90091-0439		3	RADIAL SEAL 35X62X7 MM DUST LIP	
1150	90458-0048		5	RETAINING RING FOR BORE DIN 472 62 SS	
1180	90458-1387		2	RADIAL SEAL 38X62X7 MM DUST LIP	
1310	311112-0316		1	SPRING PIN, ISO 8752 5X40-C	
1320	90141-0015		1	RETAINING RING FOR SHAFT DIN 471 8 SS	
1330	2837650-0000		1	SPRING	
1350	2810981-0000		1	SHAFT	
1360	2936698-0000		1	SUPPORT	
1370	312105-0323		2	SCREW M6S ISO 4017 M5X8 A480	
1390	312318-0451		2	GRUB SCREW ISO4029 M8X20 A4	
1400	2837597-0000		1	NUT	
1410	90240-0263		2	FLANGE BUSHING, IGLIDUR X 15X17X12	
T50E7002	2933695-0000		1	GUIDE	
T50E7005	2933691-0000		1	GUIDE	
T50W1257	90166-0132	MM	1500	TUBE 6 MM PA,TRANSP.	
T50W1259	90166-0132	MM	1900	TUBE 6 MM PA,TRANSP.	
T50W7007	90166-0118	MM	1800	TUBE 8 MM PA BLACK	
TBA 1000B ISO (See drawing on pages: 5-134, 5-136)					
010	2529093-0000		1	SPACER	
030	1487883-0000		1	FLANGE	
040	2687783-0000		1	PLATE	
050	2541821-0000		1	PULLEY	
060	1487886-0000		2	SPROCKET	
070	1487887-0000		2	FLANGE	
080	1487888-0000		2	FLANGE	
090	1524257-0000		1	JOINT	
	90600-5382		*1*	*HUB, ZA/60/14H7 KEYWAY/XX*	
	90600-5383		*1*	*HUB, ZA/60/24H7/XX*	
100	2529102-0000		1	PULLEY	
110	1487891-0000		16	SPACER	
120	2520196-0000		1	WASHER	
130	2531787-0000		1	SHAFT	
140	3068336-0000		1	SUPPORT	
145	3068337-0000		1	SUPPORT	
170	1498081-0000		4	SPACER	
180	2933694-0000		1	GUIDE	

Machine Type | Group Description | Used-In | Group Number | Page No

See previous drawings pages: 5-132, 5-134, 5-136, 5-138, 5-140.

ECM: 461621 - 20101001
Group number: 1349498-0400
Assembly Drawing: 1349498-15_2_AE

This list covers pages from 5-132 to 5-171

Pos	Part No	UN	Qty	Description	Page No
TBA 1000B ISO (Cont'd) (See drawing on pages: 5-134, 5-136)					
190	2933693-0000		1	GUIDE	
200	1498084-0000		2	PIN	
210	2687784-0000		1	FLANGE	
220	1498087-0000		1	SPACER	
240	2541828-0000		1	WASHER	
250	2958891-0000		4	BRUSH	
255	2958890-0000		4	HUB	
260	2531788-0000		1	SPACER	
310	2933683-0000		1	FRAME	
320	2541822-0000		1	SHAFT	
330	1549873-0000		1	PLATE	
340	2531792-0000		1	SHAFT	
350	1512823-0000		3	NUT	
360	1549875-0000		1	SPACER	
370	2781165-0000		1	HOLDER	
380	2933702-0000		1	PLATE	
400	2920989-0000		1	CONNECTION	
420	2933701-0000		1	RAIL	
430	2876627-0000		1	BRACKET	
440	2781164-0000		1	SUPPORT	
450	2751630-0000		1	GUIDE	
460	2511346-0000		1	SHAFT	
470	2511347-0000		1	PLUG	
490	2933700-0000		1	SHAFT	
500	2835095-0000		2	BUSHING	
530	3022253-0000		1	PLATE	
540	2751631-0000		1	GUIDE	
550	2531765-0000		1	TUBE	
600	312105-0451		6	SCREW M6S ISO 4017 M8X20 A480	
650	90055-0267		4	ELBOW PIPE JOINT,EXT.THREAD,D=8 MM G1/4	
670	312105-0368		4	SCREW M6S ISO 4017 M6X16 A480	
680	312105-0370		14	SCREW M6S ISO 4017 M6X20 A480	
690	312105-0383		6	SCREW M6S ISO 4014 M6X65 A480	
700	312105-0455		4	SCREW M6S ISO 4017 M8X30 A480	
710	312105-0493		8	SCREW M6S ISO 4017 M10X25 A480	
730	315105-0153		26	WASHER BRB 6,4X12 RFR	
740	315105-0165		29	WASHER BRB 8,4X16 RFR	
750	315105-0173		16	WASHER BRB 10,5X22 RFR	
760	315204-0306		3	O-RING 74,5X3 MM	
780	315705-0332		2	PARALLEL KEY W. ROUND ENDS 12X8X40 MM	
790	90056-0163		1	WORM GEAR BS 71-F-TT 28:1 LH	
810	312105-0449		7	SCREW M6S ISO 4017 M8X16 A480	
840	90459-5592		1	TIMING BELT 25AT10 880 PU	
860	312105-0459		16	SCREW M6S ISO 4014 M8X40 A480	
870	312105-0503		4	SCREW M6S ISO 4014 M10X60 A480	
880	312109-0499		4	SCREW M6S ISO 4017 M10X40 A480	
890	359710-0001		1	WARNING SIGN ISO, HOT SURFACE	
940	90459-4585		1	RADIAL SEAL 25X52X7 MM DUST LIP	
960	315705-0234		2	PARALLEL KEY W. ROUND ENDS 6X6X25 MM	
970	315705-0202		3	PARALLEL KEY W ROUND ENDS 5X5X25MM	
980	315701-0201		2	PARALLEL KEY W. ROUND ENDS 5X5X20 MM	
1000	315751-0119		1	RETAINING RING FOR SHAFT DIN 471 25 SS	
1010	315202-0219		1	O-RING 29,2X3 MM	
1020	311103-0401		2	PARALLEL PIN ISO 2338 8M6X20 A1	
1030	90459-0384		3	BALL BEARING 25/62X17 SOLID OIL	
1070	90458-1382		2	PLUG, M5X3.5 SMC - MS-5P	
1090	90091-0439		3	RADIAL SEAL 35X62X7 MM DUST LIP	
1150	90458-0048		5	RETAINING RING FOR BORE DIN 472 62 SS	
1180	90458-1387		2	RADIAL SEAL 38X62X7 MM DUST LIP	
1310	311112-0316		1	SPRING PIN, ISO 8752 5X40-C	
1320	90141-0015		1	RETAINING RING FOR SHAFT DIN 471 8 SS	
1330	2837650-0000		1	SPRING	
1350	2810981-0000		1	SHAFT	
1360	2936698-0000		1	SUPPORT	
1370	312105-0323		2	SCREW M6S ISO 4017 M5X8 A480	
1390	312318-0451		2	GRUB SCREW ISO4029 M8X20 A4	
1400	2837597-0000		1	NUT	
1410	90240-0263		2	FLANGE BUSHING, IGLIDUR X 15X17X12	
T50E7002	2933695-0000		1	GUIDE	
T50E7005	2933691-0000		1	GUIDE	
T50W1257	90166-0132	MM	1500	TUBE 6 MM PA,TRANSP.	
T50W1259	90166-0132	MM	1900	TUBE 6 MM PA,TRANSP.	
T50W7007	90166-0118	MM	1800	TUBE 8 MM PA BLACK	
TBA 1000S ANSI (See drawing on pages: 5-134, 5-136)					
010	2529093-0000		1	SPACER	
030	1487883-0000		1	FLANGE	
040	2529095-0000		1	PLATE	
050	2541821-0000		1	PULLEY	
060	1487886-0000		2	SPROCKET	
070	1487887-0000		2	FLANGE	
080	1487888-0000		2	FLANGE	
090	2527341-0000		1	JOINT	
	90600-5383		*1*	*HUB, ZA/60/24H7/XX*	

Machine Type | Group Description | Used-In | Group Number | Page No

See previous drawings pages: 5-132, 5-134, 5-136, 5-138, 5-140.

ECM: 461621 - 20101001
Group number: 1349498-0400
Assembly Drawing: 1349498-15_2_AE

This list covers pages from 5-132 to 5-171

Pos	Part No	UN	Qty	Description	Page No
TBA 1000S ANSI (Cont'd) (See drawing on pages: 5-134, 5-136)					
100	2529102-0000		1	PULLEY	
110	1487891-0000		16	SPACER	
120	2520196-0000		1	WASHER	
130	2531787-0000		1	SHAFT	
140	3068338-0000		1	SUPPORT	
145	3068339-0000		1	SUPPORT	
170	1498081-0000		4	SPACER	
180	2933694-0000		1	GUIDE	
190	2933693-0000		1	GUIDE	
200	1498084-0000		2	PIN	
210	2531789-0000		1	FLANGE	
220	1498087-0000		1	SPACER	
240	2541828-0000		1	WASHER	
250	2958891-0000		4	BRUSH	
255	2958890-0000		4	HUB	
260	2531788-0000		1	SPACER	
310	2876785-0000		1	FRAME	
320	2541822-0000		1	SHAFT	
330	1549873-0000		1	PLATE	
340	2531792-0000		1	SHAFT	
350	1512823-0000		3	NUT	
360	1549875-0000		1	SPACER	
370	2781165-0000		1	HOLDER	
380	2933702-0000		1	PLATE	
400	2920989-0000		1	CONNECTION	
420	2933701-0000		1	RAIL	
430	2876627-0000		1	BRACKET	
440	2781164-0000		1	SUPPORT	
450	2751630-0000		1	GUIDE	
460	2511346-0000		1	SHAFT	
470	2511347-0000		1	PLUG	
490	2933700-0000		1	SHAFT	
500	2835095-0000		2	BUSHING	
530	3022253-0000		1	PLATE	
540	2751631-0000		1	GUIDE	
550	2541852-0000		1	TUBE	
600	312105-0451		6	SCREW M6S ISO 4017 M8X20 A480	
650	90055-0267		4	ELBOW PIPE JOINT,EXT.THREAD,D=8 MM G1/4	
670	312105-0368		4	SCREW M6S ISO 4017 M6X16 A480	
680	312105-0370		10	SCREW M6S ISO 4017 M6X20 A480	
690	312105-0383		6	SCREW M6S ISO 4014 M6X65 A480	
700	312105-0455		4	SCREW M6S ISO 4017 M8X30 A480	
710	312105-0493		8	SCREW M6S ISO 4017 M10X25 A480	
730	315105-0153		26	WASHER BRB 6,4X12 RFR	
740	315105-0165		29	WASHER BRB 8,4X16 RFR	
750	315105-0173		16	WASHER BRB 10,5X22 RFR	
760	315204-0306		3	O-RING 74,5X3 MM	
780	315705-0332		2	PARALLEL KEY W. ROUND ENDS 12X8X40 MM	
790	90056-0163		1	WORM GEAR BS 71-F-TT 28:1 LH	
810	312105-0449		7	SCREW M6S ISO 4017 M8X16 A480	
840	90459-1731		1	TIMING BELT 25AT10 920 PU	
860	312105-0459		16	SCREW M6S ISO 4014 M8X40 A480	
870	312105-0503		4	SCREW M6S ISO 4014 M10X60 A480	
890	359725-0116		1	WARNING SIGN ANSI (H), HOT SURFACE	
940	90459-4585		1	RADIAL SEAL 25X52X7 MM DUST LIP	
960	315705-0234		2	PARALLEL KEY W. ROUND ENDS 6X6X25 MM	
970	315705-0202		3	PARALLEL KEY W ROUND ENDS 5X5X25MM	
980	315701-0201		2	PARALLEL KEY W. ROUND ENDS 5X5X20 MM	
1000	315751-0119		1	RETAINING RING FOR SHAFT DIN 471 25 SS	
1010	315202-0219		1	O-RING 29,2X3 MM	
1020	311103-0401		2	PARALLEL PIN ISO 2338 8M6X20 A1	
1030	90459-0384		3	BALL BEARING 25/62X17 SOLID OIL	
1070	90458-1382		2	PLUG, M5X3.5 SMC - MS-5P	
1090	90091-0439		3	RADIAL SEAL 35X62X7 MM DUST LIP	
1150	90458-0048		5	RETAINING RING FOR BORE DIN 472 62 SS	
1180	90458-1387		2	RADIAL SEAL 38X62X7 MM DUST LIP	
1300	312105-0381		4	SCREW M6S ISO 4014 M6X55 A480	
1310	311112-0316		1	SPRING PIN, ISO 8752 5X40-C	
1320	90141-0015		1	RETAINING RING FOR SHAFT DIN 471 8 SS	
1330	2837650-0000		1	SPRING	
1350	2810981-0000		1	SHAFT	
1360	2936698-0000		1	SUPPORT	
1370	312105-0323		2	SCREW M6S ISO 4017 M5X8 A480	
1390	312318-0451		2	GRUB SCREW ISO4029 M8X20 A4	
1400	2837597-0000		1	NUT	
1410	90240-0263		2	FLANGE BUSHING, IGLIDUR X 15X17X12	
T50E7002	2933695-0000		1	GUIDE	
T50E7005	2933691-0000		1	GUIDE	
T50W1257	90166-0132	MM	1500	TUBE 6 MM PA,TRANSP.	
T50W1259	90166-0132	MM	1900	TUBE 6 MM PA,TRANSP.	
T50W7007	90166-0118	MM	1800	TUBE 8 MM PA BLACK	
TBA 1000S ISO (See drawing on pages: 5-134, 5-136)					
010	2529093-0000		1	SPACER	

Machine Type | Group Description | Used-In | Group Number | Page No

See previous drawings pages: 5-132, 5-134, 5-136, 5-138, 5-140.

ECM: 461621 - 20101001
Group number: 1349498-0400
Assembly Drawing: 1349498-15_2_AE

This list covers pages from 5-132 to 5-171

Pos	Part No	UN	Qty	Description	Page No
TBA 1000S ISO (Cont'd) (See drawing on pages: 5-134, 5-136)					
030	1487883-0000		1	FLANGE	
040	2529095-0000		1	PLATE	
050	2541821-0000		1	PULLEY	
060	1487886-0000		2	SPROCKET	
070	1487887-0000		2	FLANGE	
080	1487888-0000		2	FLANGE	
090	2527341-0000		1	JOINT	
	90600-5383		*1*	*HUB, ZA/60/24H7/XX*	
	90600-5382		*1*	*HUB, ZA/60/14H7 KEYWAY/XX*	
100	2529102-0000		1	PULLEY	
110	1487891-0000		16	SPACER	
120	2520196-0000		1	WASHER	
130	2531787-0000		1	SHAFT	
140	3068338-0000		1	SUPPORT	
145	3068339-0000		1	SUPPORT	
170	1498081-0000		4	SPACER	
180	2933694-0000		1	GUIDE	
190	2933693-0000		1	GUIDE	
200	1498084-0000		2	PIN	
210	2531789-0000		1	FLANGE	
220	1498087-0000		1	SPACER	
240	2541828-0000		1	WASHER	
250	2958891-0000		4	BRUSH	
255	2958890-0000		4	HUB	
260	2531788-0000		1	SPACER	
310	2876785-0000		1	FRAME	
320	2541822-0000		1	SHAFT	
330	1549873-0000		1	PLATE	
340	2531792-0000		1	SHAFT	
350	1512823-0000		3	NUT	
360	1549875-0000		1	SPACER	
370	2781165-0000		1	HOLDER	
380	2933702-0000		1	PLATE	
400	2920989-0000		1	CONNECTION	
420	2933701-0000		1	RAIL	
430	2876627-0000		1	BRACKET	
440	2781164-0000		1	SUPPORT	
450	2751630-0000		1	GUIDE	
460	2511346-0000		1	SHAFT	
470	2511347-0000		1	PLUG	
490	2933700-0000		1	SHAFT	
500	2835095-0000		2	BUSHING	
530	3022253-0000		1	PLATE	
540	2751631-0000		1	GUIDE	
550	2541852-0000		1	TUBE	
600	312105-0451		6	SCREW M6S ISO 4017 M8X20 A480	
650	90055-0267		4	ELBOW PIPE JOINT,EXT.THREAD,D=8 MM G1/4	
670	312105-0368		4	SCREW M6S ISO 4017 M6X16 A480	
680	312105-0370		10	SCREW M6S ISO 4017 M6X20 A480	
690	312105-0383		6	SCREW M6S ISO 4014 M6X65 A480	
700	312105-0455		4	SCREW M6S ISO 4017 M8X30 A480	
710	312105-0493		8	SCREW M6S ISO 4017 M10X25 A480	
730	315105-0153		26	WASHER BRB 6,4X12 RFR	
740	315105-0165		29	WASHER BRB 8,4X16 RFR	
750	315105-0173		16	WASHER BRB 10,5X22 RFR	
760	315204-0306		3	O-RING 74,5X3 MM	
780	315705-0332		2	PARALLEL KEY W. ROUND ENDS 12X8X40 MM	
790	90056-0163		1	WORM GEAR BS 71-F-TT 28:1 LH	
810	312105-0449		7	SCREW M6S ISO 4017 M8X16 A480	
840	90459-1731		1	TIMING BELT 25AT10 920 PU	
860	312105-0459		16	SCREW M6S ISO 4014 M8X40 A480	
870	312105-0503		4	SCREW M6S ISO 4014 M10X60 A480	
890	359710-0001		1	WARNING SIGN ISO, HOT SURFACE	
940	90459-4585		1	RADIAL SEAL 25X52X7 MM DUST LIP	
960	315705-0234		2	PARALLEL KEY W. ROUND ENDS 6X6X25 MM	
970	315705-0202		3	PARALLEL KEY W ROUND ENDS 5X5X25MM	
980	315701-0201		2	PARALLEL KEY W. ROUND ENDS 5X5X20 MM	
1000	315751-0119		1	RETAINING RING FOR SHAFT DIN 471 25 SS	
1010	315202-0219		1	O-RING 29,2X3 MM	
1020	311103-0401		2	PARALLEL PIN ISO 2338 8M6X20 A1	
1030	90459-0384		3	BALL BEARING 25/62X17 SOLID OIL	
1070	90458-1382		2	PLUG, M5X3.5 SMC - MS-5P	
1090	90091-0439		3	RADIAL SEAL 35X62X7 MM DUST LIP	
1150	90458-0048		5	RETAINING RING FOR BORE DIN 472 62 SS	
1180	90458-1387		2	RADIAL SEAL 38X62X7 MM DUST LIP	
1300	312105-0381		4	SCREW M6S ISO 4014 M6X55 A480	
1310	311112-0316		1	SPRING PIN, ISO 8752 5X40-C	
1320	90141-0015		1	RETAINING RING FOR SHAFT DIN 471 8 SS	
1330	2837650-0000		1	SPRING	
1350	2810981-0000		1	SHAFT	
1360	2936698-0000		1	SUPPORT	
1370	312105-0323		2	SCREW M6S ISO 4017 M5X8 A480	
1390	312318-0451		2	GRUB SCREW ISO4029 M8X20 A4	

Machine Type | Group Description | Used-In | Group Number | Page No

See previous drawings pages: 5-132, 5-134, 5-136, 5-138, 5-140.

ECM: 461621 - 20101001
Group number: 1349498-0400
Assembly Drawing: 1349498-15_2_AE

This list covers pages from 5-132 to 5-171

Pos	Part No	UN	Qty	Description	Page No
TBA 1000S ISO (Cont'd) (See drawing on pages: 5-134, 5-136)					
1400	2837597-0000		1	NUT	
1410	90240-0263		2	FLANGE BUSHING, IGLIDUR X 15X17X12	
T50E7002	2933695-0000		1	GUIDE	
T50E7005	2933691-0000		1	GUIDE	
T50W1257	90166-0132	MM	1500	TUBE 6 MM PA,TRANSP.	
T50W1259	90166-0132	MM	1900	TUBE 6 MM PA,TRANSP.	
T50W7007	90166-0118	MM	1800	TUBE 8 MM PA BLACK	
Common Parts					
020	2700884-0000		1	GEAR	
230	2700883-0000		1	GEAR	
280	1548186-0000		1	WASHER	
290	1548432-0000		1	SPACER	
300	1548433-0000		2	ROUND NUT	
390	2898538-0000		1	BRACKET	
410	2920990-0000		1	SPACER	
640	315125-0165		3	WASHER TBRSB 8,4X26X5 A4	
660	311103-0351		4	PARALLEL PIN ISO 2338 6M6X16 A1	
720	312812-0316		2	HEXAGON NUT, NY-LOCK M6 A480	
770	315705-0307		1	PARALLEL KEY W. ROUND ENDS 10X8X70 MM	
850	312105-0453		1	SCREW M6S ISO 4017 M8X25 A480	
900	90092-0080		1	OIL BRUSH FOR D=4 MM TUBE, D=11, 4	
990	315705-0265		1	PARALLEL KEY W. ROUND ENDS 8X7X25 MM	
1050	321330-0108		2	ANG. BALL BEAR 40/80X30,2	
1100	90091-0441		2	SEAL 50X72X8 MM DUST LIP	
1160	90458-0068		4	BALL BEARING 35/62X14	
1200	312605-0318		2	HEXAGON NUT, M6M M8 A280	
1210	90459-0246		1	GREASE, KLüBERSYNTH UH1, ONLY IN BOM	
	90459-7414		*1*	*GREASE, KLüBERSYNTH UH1 14-1600, 25 KG*	
	90459-7413		*1*	*GREASE, KLüBERSYNTH UH1 14-1600, 1 KG*	
1220	90030-0171		1	ADJUSTABLE ELBOW CONNECTION 6-G1/8	
1230	90458-2956		1	ELBOW PIPE JOINT, EXT.THREAD, D=6MM-G1/8	
1240	534310-0001		1	NOZZLE	
1250	90005-0094		1	GASKET C 19438-EPR	
1260	532413-0000		1	REDUCING NIPPLE	
1270	532414-0000		1	WASHER	
1280	90230-0027		1	NON-RETURN VALVE QJ 8355-1/4"	
	90230-0301		*1*	*DIAPHRAGM*	
	90230-0300		*1*	*STRAINER*	
1290	90055-0257		1	PUSH-IN Y-CONNECTOR QSY-6	
T50W7003	90166-0118	MM	3500	TUBE 8 MM PA BLACK	

Pos	Part No	UN	Qty	Description	Page No

Machine Type | Group Description | Used-In | Group Number | Page No

SWING FRAME

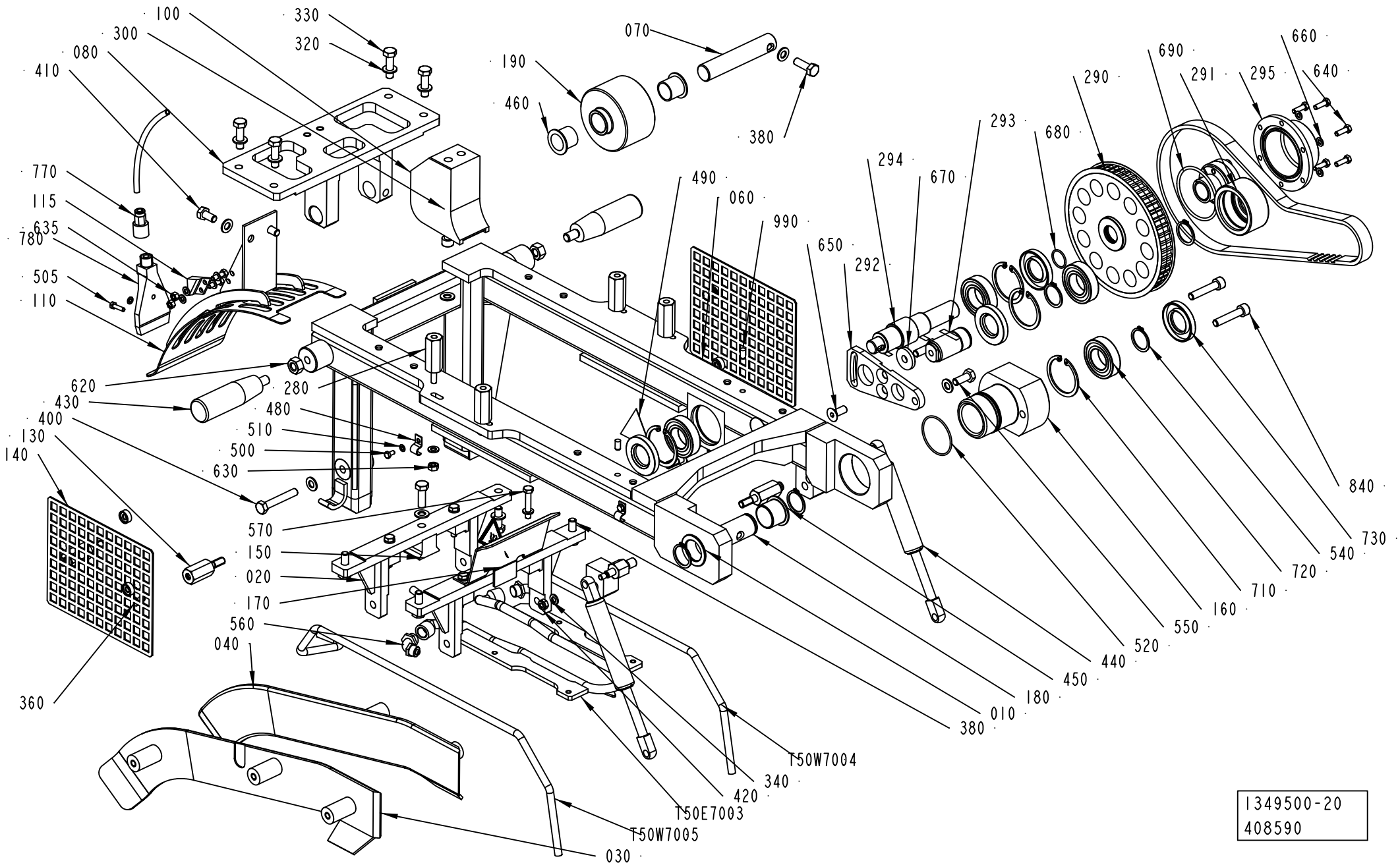

1349500-20
408590

ECM: 473533 - 20101003
Group number: 1349500-0500
Assembly Drawing: 1349500-20_1_AA

This list covers pages from 5-172 to 5-203

Pos	Part No	UN	Qty	Description	Page No
TBA 1000SQ ANSI (See drawing on page: 5-178)					
010	2511350-0000		1	WASHER	
030	3025689-0000		1	GUIDE	
040	3025688-0000		1	GUIDE	
060	2941718-0000		1	FRAME	
090	2959930-0000		2	ARM	
110	2920422-0000		1	TOP SECTION	
120	1498084-0000		2	PIN	
125	2944477-0000		1	TOP SECTION	
125	2919386-0000		1	TOP SECTION	
130	3046715-0000		4	SPACER	
140	3046716-0000		2	TOUCH GUARD	
145	2531791-0000		1	SPACER	
155	3052381-0000		1	PROTECTION	
160	2531785-0000		1	FLANGE	
170	1524444-0000		1	PROTECTION	
175	2898560-0000		1	COUPLING	
180	2500697-0000		1	PIN	
195	2898562-0000		2	HUB	
200	2579103-0000		3	PLATE	
205	312125-0287		1	SCREW ISO 1207 M4X8 A4	
215	90165-0057		1	PIPE CLIP FOR TUBE D=6 MM	
220	2666920-0000		2	SHAFT	
225	2579104-0000		1	PLATE	
245	90055-0257		1	PUSH-IN Y-CONNECTOR QSY-6	
255	2949665-0000		2	PULLEY	
265	2505533-0000		2	SCREW	
285	2898561-0000		4	PLATE	
290	2558900-0000		1	PULLEY	
291	2529106-0000		1	ROLLER	
292	2579099-0000		1	SUPPORT	
293	2529103-0000		1	SHAFT	
294	2529100-0000		1	SHAFT	
295	2531784-0000		1	COVER	
296	90459-1732		1	TIMING BELT AT10 780X25 MM	
305	90458-1387		1	RADIAL SEAL 38X62X7 MM DUST LIP	
315	90458-0048		1	RETAINING RING FOR BORE DIN 472 62 SS	
320	315105-0165		7	WASHER BRB 8,4X16 RFR	
325	3025690-0000		1	SPACER	
340	315105-0153		20	WASHER BRB 6,4X12 RFR	
355	3025678-0000		1	GUIDE	
370	312105-0370		6	SCREW M6S ISO 4017 M6X20 A480	
375	312105-0380		2	SCREW M6S ISO 4014 M6X50 A480	
380	312105-0453		5	SCREW M6S ISO 4017 M8X25 A480	
385	2950373-0000		1	PROTECTION	
390	315125-0153		6	WASHER TBRSB 6,4X22X4 A4	
400	312105-0505		2	SCREW M6S ISO 4014 M10X70 A480	
415	1558911-0000		2	PRESSURE ROLLER	
440	90600-5532		2	GAS PRING G10-23-100-1290-AU19-AU19-1200	
450	90240-0266		1	FLANGE BUSHING, IGLIDUR X 30X34X26	
470	3025680-0000		2	WHEEL	
480	90459-0127		3	PLASTIC TUBE CLAMP, 8935150104 - TYPE 1	
490	90459-7458		2	WARNING SIGN ANSI (H), HOT SURFACE	
500	312105-0287		3	SCREW M6S ISO 4017 M4X8 A470	
505	312105-0293		2	SCREW M6S ISO 4017 M4X16 A470	
510	315105-0136		5	WASHER BRB 4,3X8 RFR	
520	315205-0606		1	O-RING 56,74X3,53 MM	
530	315751-0122		2	RETAINING RING FOR SHAFT DIN 471 30 SS	
540	315751-0119		3	RETAINING RING FOR SHAFT DIN 471 25 SS	
550	312105-0451		3	SCREW M6S ISO 4017 M8X20 A480	
560	90055-0274		2	STRAIGHT COUPLING, D=8 MM - G1/4"	
570	312105-0376		6	SCREW M6S ISO 4014 M6X35 A480	
580	312105-0378		2	SCREW M6S ISO 4014 M6X40 A480	
590	2700867-0000		4	AXLE PIN	
600	312105-0368		8	SCREW M6S ISO 4017 M6X16 A480	
605	2956625-0000		2	ROLLER	
610	90240-0263		12	FLANGE BUSHING, IGLIDUR X 15X17X12	
670	315125-0165		3	WASHER TBRSB 8,4X26X5 A4	
680	315202-0217		1	O-RING 24,2X3 MM	
690	315202-0304		1	O-RING 64,5X3 MM	
700	90459-0384		2	BALL BEARING 25/62X17 SOLID OIL	
710	315753-0130		1	RETAINING RING FOR BORE DIN 472 47 SS	
720	321308-0205		1	BALL BEARING 25/47X12	
730	90091-0148		1	RADIAL SEAL 25X47X7 MM DUST LIP	
740	315705-0201		1	PARALLEL KEY W. ROUND ENDS 5X5X20 MM	
750	90208-0080		1	CLAMPING ELEMENT WITH SLEEVE, 25X34 MM	
770	350008-0004		2	PUSH-IN FITTING QSF-F-G1/4-6	
780	90424-0089		2	AIR NOZZLE, BSPT1/4, AAB727-1/4-15	
790	90091-0300		1	RADIAL SEAL 40X72X7 MM DUST LIP	
800	90459-4585		1	RADIAL SEAL 25X52X7 MM DUST LIP	
810	90459-0382		1	RETAINING RING FOR BORE DIN 472 72 SS	
820	90459-0385		1	BALL BEAR. 30/72X19 SOLID OIL	
830	90287-0234		2	SCREW, HEX.SOCK.HEAD SHOULD. M5X6	
870	315105-0171		2	WASHER BRB 10X18 RFR	

Machine Type | Group Description | Used-In | Group Number | Page No

SWING FRAME

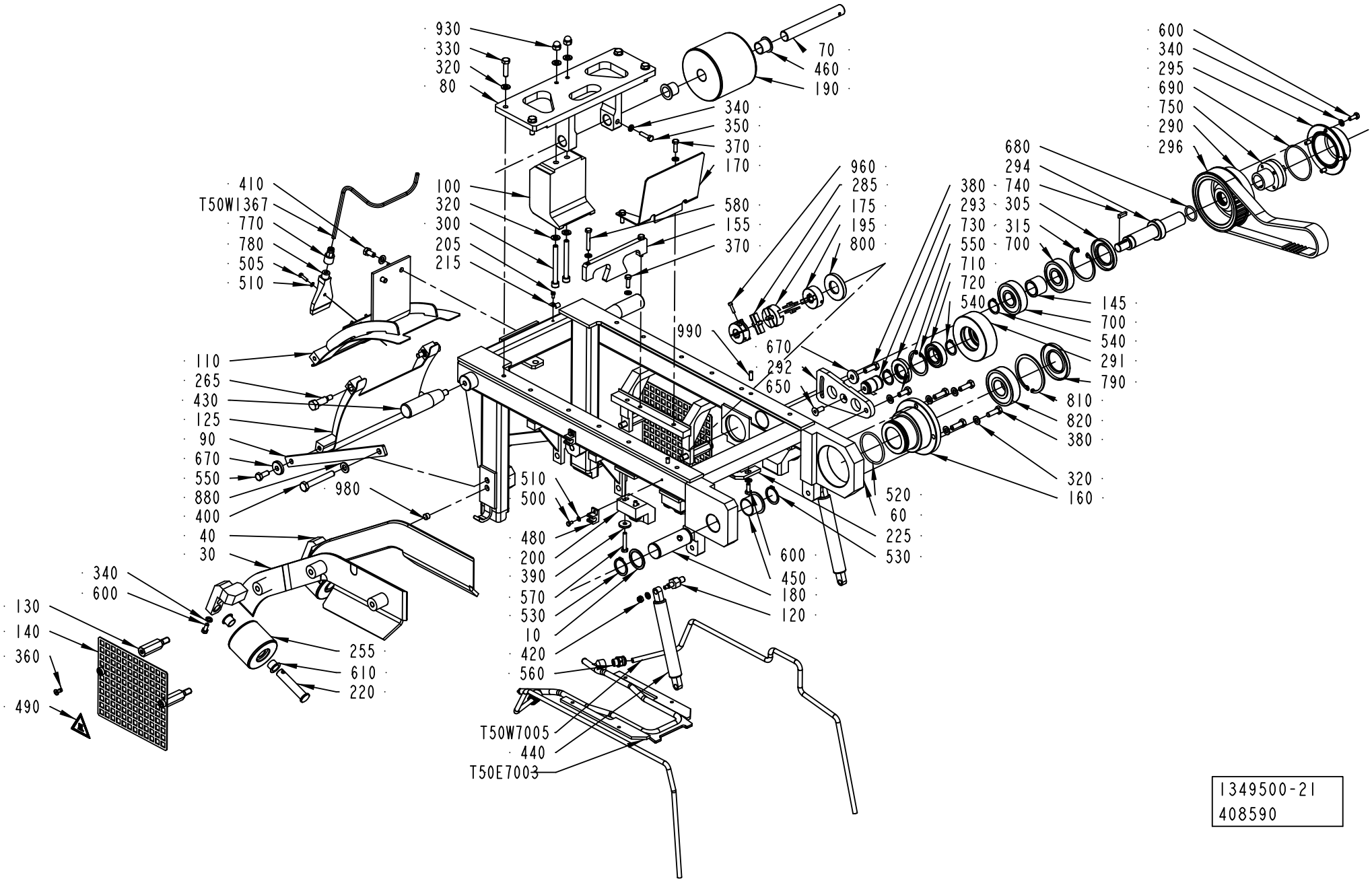
930
330
320
80
70
460
190
340
350
370
170
410
T50W1367
770
780
505
510
100
320
300
205
215
580
155
370
960
285
175
195
800
990
670
292
650
600
340
295
690
750
290
296
680
294
740
305
315
700
380
293
730
550
710
720
540
145
700
540
291
790
810
820
380
320
160
110
265
430
125
90
670
550
880
400
40
30
980
510
500
480
200
390
570
530
10
420
560
520
60
225
530
600
450
180
120
340
600
130
140
360
490
255
610
220
T50W7005
440
T50E7003
1349500-21
408590

ECM: 473533 - 20101003
Group number: 1349500-0500
Assembly Drawing: 1349500-21_1_AA

This list covers pages from 5-172 to 5-203

Pos	Part No	UN	Qty	Description	Page No
TBA 1000SQ ANSI (Cont'd) (See drawing on page: 5-178)					
880	315106-0173		2	WASHER ISO 7089-10-200 HV A4	
940	312105-0499		1	SCREW M6S ISO 4014 M10X40 A480	
960	312115-0293		2	SCREW ISO4762 M4X16 A4 80	
980	90459-7244		4	PLUG, BLIND, PLASTIC GPN300V5	
990	311103-0352		2	PARALLEL PIN ISO 2338 6M6X18 A1	
1000	312105-0497		1	SCREW M6S ISO 4017 M10X35 A480	
T50E7003	2902381-0000		1	TOP SECTION	
T50W1368	90166-0081	M	0.15	TUBE 6 MM PA BLUE	
T50W1369	90166-0081	M	0.1	TUBE 6 MM PA BLUE	
TBA 1000SQ ISO (See drawing on page: 5-178)					
010	2511350-0000		1	WASHER	
030	3025689-0000		1	GUIDE	
040	3025688-0000		1	GUIDE	
060	2941718-0000		1	FRAME	
090	2959930-0000		2	ARM	
110	2920422-0000		1	TOP SECTION	
120	1498084-0000		2	PIN	
125	2919386-0000		1	TOP SECTION	
125	2944477-0000		1	TOP SECTION	
130	3046715-0000		4	SPACER	
140	3046716-0000		2	TOUCH GUARD	
145	2531791-0000		1	SPACER	
155	3052381-0000		1	PROTECTION	
160	2531785-0000		1	FLANGE	
170	1524444-0000		1	PROTECTION	
175	2898560-0000		1	COUPLING	
180	2500697-0000		1	PIN	
195	2898562-0000		2	HUB	
200	2579103-0000		3	PLATE	
205	312125-0287		1	SCREW ISO 1207 M4X8 A4	
215	90165-0057		1	PIPE CLIP FOR TUBE D=6 MM	
220	2666920-0000		2	SHAFT	
225	2579104-0000		1	PLATE	
245	90055-0257		1	PUSH-IN Y-CONNECTOR QSY-6	
255	2949665-0000		2	PULLEY	
265	2505533-0000		2	SCREW	
285	2898561-0000		4	PLATE	
290	2558900-0000		1	PULLEY	
291	2529106-0000		1	ROLLER	
292	2579099-0000		1	SUPPORT	
293	2529103-0000		1	SHAFT	
294	2529100-0000		1	SHAFT	
295	2531784-0000		1	COVER	
296	90459-1732		1	TIMING BELT AT10 780X25 MM	
305	90458-1387		1	RADIAL SEAL 38X62X7 MM DUST LIP	
315	90458-0048		1	RETAINING RING FOR BORE DIN 472 62 SS	
320	315105-0165		7	WASHER BRB 8,4X16 RFR	
325	3025690-0000		1	SPACER	
340	315105-0153		20	WASHER BRB 6,4X12 RFR	
355	3025678-0000		1	GUIDE	
370	312105-0370		6	SCREW M6S ISO 4017 M6X20 A480	
375	312105-0380		2	SCREW M6S ISO 4014 M6X50 A480	
380	312105-0453		5	SCREW M6S ISO 4017 M8X25 A480	
385	2950373-0000		1	PROTECTION	
390	315125-0153		6	WASHER TBRSB 6,4X22X4 A4	
400	312105-0505		2	SCREW M6S ISO 4014 M10X70 A480	
415	1558911-0000		2	PRESSURE ROLLER	
440	90600-5532		2	GAS PRING G10-23-100-1290-AU19-AU19-1200	
450	90240-0266		1	FLANGE BUSHING, IGLIDUR X 30X34X26	
470	3025680-0000		2	WHEEL	
480	90459-0127		3	PLASTIC TUBE CLAMP, 8935150104 - TYPE 1	
490	359705-0007		2	WARNING SIGN ISO, HOT SURFACE	
500	312105-0287		3	SCREW M6S ISO 4017 M4X8 A470	
505	312105-0293		2	SCREW M6S ISO 4017 M4X16 A470	
510	315105-0136		5	WASHER BRB 4,3X8 RFR	
520	315205-0606		1	O-RING 56,74X3,53 MM	
530	315751-0122		2	RETAINING RING FOR SHAFT DIN 471 30 SS	
540	315751-0119		3	RETAINING RING FOR SHAFT DIN 471 25 SS	
550	312105-0451		3	SCREW M6S ISO 4017 M8X20 A480	
560	90055-0274		2	STRAIGHT COUPLING, D=8 MM - G1/4"	
570	312105-0376		6	SCREW M6S ISO 4014 M6X35 A480	
580	312105-0378		2	SCREW M6S ISO 4014 M6X40 A480	
590	2700867-0000		4	AXLE PIN	
600	312105-0368		8	SCREW M6S ISO 4017 M6X16 A480	
605	2956625-0000		2	ROLLER	
610	90240-0263		12	FLANGE BUSHING, IGLIDUR X 15X17X12	
670	315125-0165		3	WASHER TBRSB 8,4X26X5 A4	
680	315202-0217		1	O-RING 24,2X3 MM	
690	315202-0304		1	O-RING 64,5X3 MM	
700	90459-0384		2	BALL BEARING 25/62X17 SOLID OIL	
710	315753-0130		1	RETAINING RING FOR BORE DIN 472 47 SS	
720	321308-0205		1	BALL BEARING 25/47X12	
730	90091-0148		1	RADIAL SEAL 25X47X7 MM DUST LIP	

Machine Type | Group Description | Used-In | Group Number | Page No

SWING FRAME

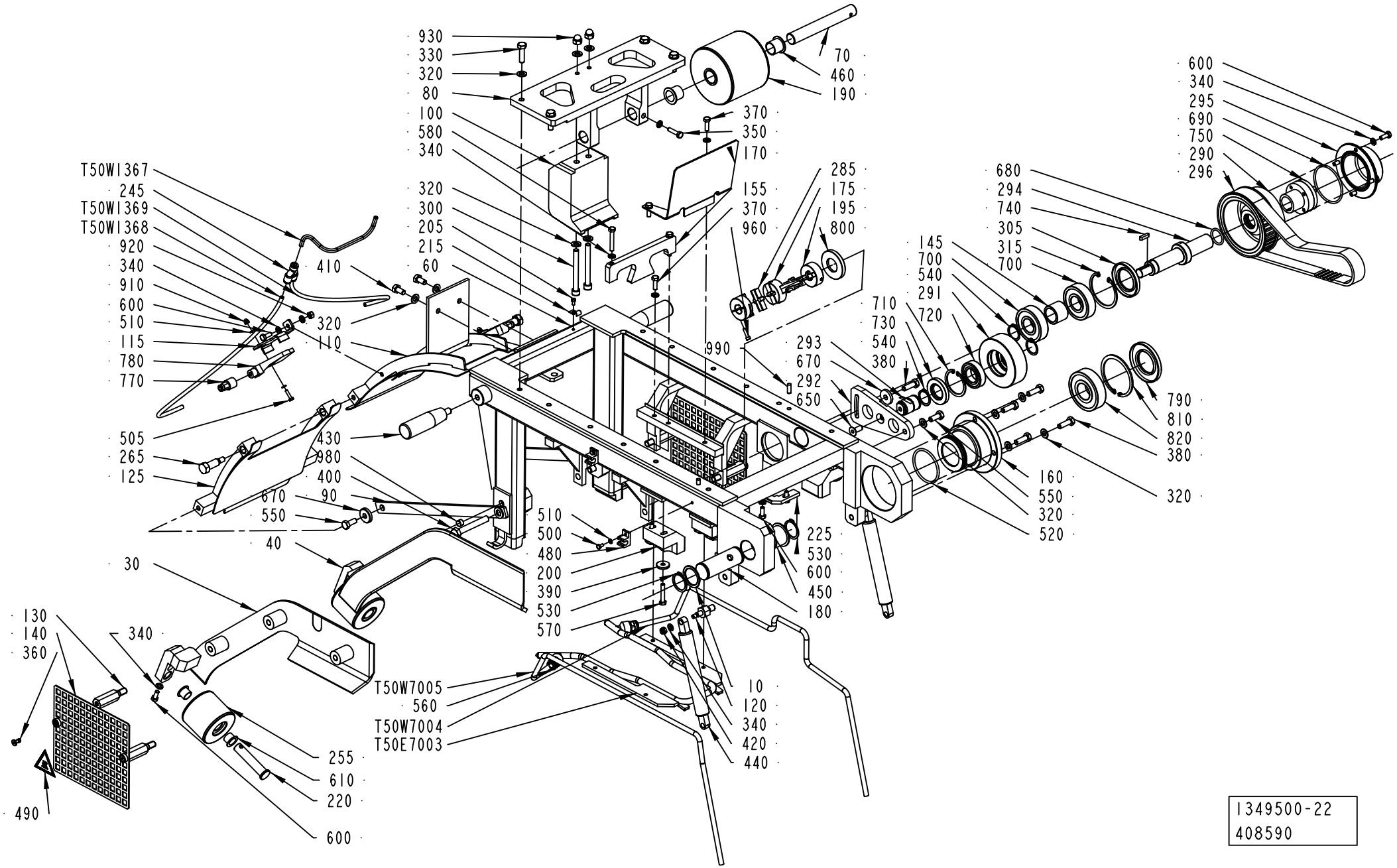

1349500-22
408590

Pos	Part No	UN	Qty	Description	Page No
TBA 1000SQ ISO (Cont'd) (See drawing on page: 5-178)					
740	315705-0201		1	PARALLEL KEY W. ROUND ENDS 5X5X20 MM	
750	90208-0080		1	CLAMPING ELEMENT WITH SLEEVE, 25X34 MM	
770	350008-0004		2	PUSH-IN FITTING QSF-F-G1/4-6	
780	90424-0089		2	AIR NOZZLE, BSPT1/4, AAB727-1/4-15	
790	90091-0300		1	RADIAL SEAL 40X72X7 MM DUST LIP	
800	90459-4585		1	RADIAL SEAL 25X52X7 MM DUST LIP	
810	90459-0382		1	RETAINING RING FOR BORE DIN 472 72 SS	
820	90459-0385		1	BALL BEAR. 30/72X19 SOLID OIL	
830	90287-0234		2	SCREW, HEX.SOCK.HEAD SHOULD. M5X6	
870	315105-0171		2	WASHER BRB 10X18 RFR	
880	315106-0173		2	WASHER ISO 7089-10-200 HV A4	
940	312105-0499		1	SCREW M6S ISO 4014 M10X40 A480	
960	312115-0293		2	SCREW ISO4762 M4X16 A4 80	
980	90459-7244		4	PLUG, BLIND, PLASTIC GPN300V5	
990	311103-0352		2	PARALLEL PIN ISO 2338 6M6X18 A1	
1000	312105-0497		1	SCREW M6S ISO 4017 M10X35 A480	
T50E7003	2902381-0000		1	TOP SECTION	
T50W1368	90166-0081	M	0.15	TUBE 6 MM PA BLUE	
T50W1369	90166-0081	M	0.1	TUBE 6 MM PA BLUE	
TBA 0125S ANSI					
010	1282796-0000		1	WASHER	
020	1524528-0000		2	BRACKET	
030	2835099-0000		1	GUIDE	
040	2835098-0000		1	GUIDE	
060	2835097-0000		1	SWING FRAME	
070	2514132-0000		1	PIN	
080	2794775-0000		1	BRACKET	
100	2892563-0000		1	SLIDER	
110	2835100-0000		1	TOP SECTION	
115	2827790-0000		1	TOUCH GUARD	
120	1524520-0000		2	PIN	
130	3046713-0000		4	SPACER	
140	3046714-0000		2	TOUCH GUARD	
150	1538577-0000		1	PLATE	
160	2897885-0000		1	FLANGE	
170	1524539-0000		1	PROTECTION	
180	1517731-0000		1	PIN	
190	2779653-0000		1	PULLEY	
280	2691822-0000		4	SPACER	
290	2738148-0000		1	PULLEY	
291	2738149-0000		1	ROLLER	
292	2738150-0000		1	SUPPORT	
293	2738151-0000		1	SHAFT	
294	2738152-0000		1	SHAFT	
295	2741808-0000		1	COVER	
296	90600-2816		1	TIMING BELT 16AT10/800 PU	
300	312115-0467		2	SCREW ISO4762 M8X80 A4 80	
320	315105-0165		17	WASHER BRB 8,4X16 RFR	
330	312105-0455		4	SCREW M6S ISO 4017 M8X30 A480	
340	315105-0153		10	WASHER BRB 6,4X12 RFR	
380	312105-0453		7	SCREW M6S ISO 4017 M8X25 A480	
440	90459-2851		2	GAS SPRING G10-23-60-1-207-AU19-AU19-900	
450	321153-0296		1	FLANGE BUSHING, IGLIDUR G 25X28X21,5	
460	90240-0265		2	FLANGE BUSHING, IGLIDUR X 20X23X21	
480	316810-0106		4	PIPE CLIP FOR TUBE D=8 MM	
490	90459-7458		2	WARNING SIGN ANSI (H), HOT SURFACE	
500	312105-0287		4	SCREW M6S ISO 4017 M4X8 A470	
505	312105-0293		1	SCREW M6S ISO 4017 M4X16 A470	
510	315105-0136		5	WASHER BRB 4,3X8 RFR	
520	315202-0803		1	O-RING 44,17X1,78 MM	
540	315751-0119		5	RETAINING RING FOR SHAFT DIN 471 25 SS	
550	312105-0451		1	SCREW M6S ISO 4017 M8X20 A480	
560	342931-0122		2	ELBOW 90 COUPL.,EXT.THREAD 8/6-G1/4"	
570	312105-0376		4	SCREW M6S ISO 4014 M6X35 A480	
600	312105-0368		4	SCREW M6S ISO 4017 M6X16 A480	
620	312605-0320		2	HEXAGON NUT, M6M M10 A280	
630	312605-0316		4	HEXAGON NUT, M6M M6 A280	
635	312605-0314		2	HEXAGON NUT, M6M M5 A280	
640	312105-0329		8	SCREW M6S ISO 4017 M5X16 A480	
660	315105-0146		10	WASHER BRB 5,3X10 RFR	
670	315125-0165		1	WASHER TBRSB 8,4X26X5 A4	
680	315202-0117		1	O-RING 19,1X1,6 MM	
690	315202-0303		1	O-RING 59,5X3 MM	
710	315753-0130		4	RETAINING RING FOR BORE DIN 472 47 SS	
720	321308-0205		4	BALL BEARING 25/47X12	
730	90091-0148		4	RADIAL SEAL 25X47X7 MM DUST LIP	
750	90208-0078		1	CLAMPING ELEMENT WITH SLEEVE, 20X28 MM	
770	350008-0004		1	PUSH-IN FITTING QSF-F-G1/4-6	
780	90424-0089		1	AIR NOZZLE, BSPT1/4, AAB727-1/4-15	
840	312115-0459		2	SCREW ISO4762 M8X40 A4 80	
990	311103-0349		2	PARALLEL PIN ISO 2338 6M6X12 A1	
T50E7003	2910599-0000		1	GUIDE	
TBA 0125S ISO (See drawing on page: 5-172)					

Machine Type	Group Description	Used-In	Group Number	Page No

SWING FRAME

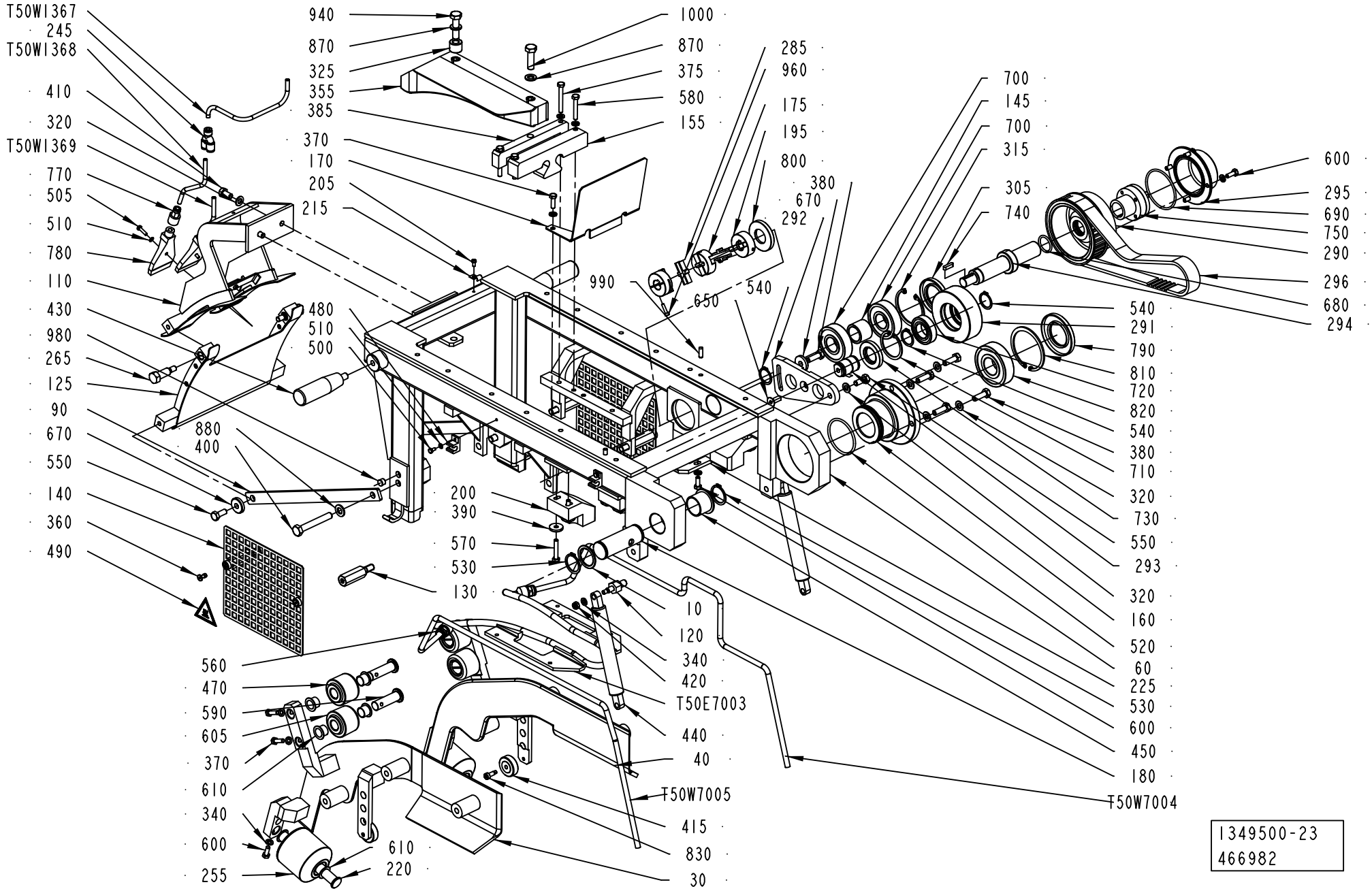
T50W1367
245
T50W1368
410
320
T50W1369
770
505
510
780
110
430
980
265
125
90
670
550
140
360
490
940
870
325
355
385
370
170
205
215
480
510
500
880
400
200
390
570
530
130
560
470
590
605
370
610
340
600
255
610
220
1000
870
375
580
155
990
650
540
285
960
175
195
800
380
670
292
700
145
700
315
305
740
600
295
690
750
290
296
680
294
540
291
790
810
720
820
540
380
710
320
730
550
293
320
160
520
60
225
530
600
450
180
T50W7004
10
120
340
420
T50E7003
440
40
T50W7005
415
830
30
1349500-23
466982

Pos	Part No	UN	Qty	Description	Page No
TBA 0125S ISO (Cont'd) (See drawing on page: 5-172)					
010	1282796-0000		1	WASHER	
020	1524528-0000		2	BRACKET	
030	2835099-0000		1	GUIDE	
040	2835098-0000		1	GUIDE	
060	2835097-0000		1	SWING FRAME	
070	2514132-0000		1	PIN	
080	2794775-0000		1	BRACKET	
100	2892563-0000		1	SLIDER	
110	2835100-0000		1	TOP SECTION	
115	2827790-0000		1	TOUCH GUARD	
120	1524520-0000		2	PIN	
130	3046713-0000		4	SPACER	
140	3046714-0000		2	TOUCH GUARD	
150	1538577-0000		1	PLATE	
160	2897885-0000		1	FLANGE	
170	1524539-0000		1	PROTECTION	
180	1517731-0000		1	PIN	
190	2779653-0000		1	PULLEY	
280	2691822-0000		4	SPACER	
290	2738148-0000		1	PULLEY	
291	2738149-0000		1	ROLLER	
292	2738150-0000		1	SUPPORT	
293	2738151-0000		1	SHAFT	
294	2738152-0000		1	SHAFT	
295	2741808-0000		1	COVER	
296	90600-2816		1	TIMING BELT 16AT10/800 PU	
300	312115-0467		2	SCREW ISO4762 M8X80 A4 80	
320	315105-0165		17	WASHER BRB 8,4X16 RFR	
330	312105-0455		4	SCREW M6S ISO 4017 M8X30 A480	
340	315105-0153		10	WASHER BRB 6,4X12 RFR	
380	312105-0453		7	SCREW M6S ISO 4017 M8X25 A480	
440	90459-2851		2	GAS SPRING G10-23-60-1-207-AU19-AU19-900	
450	321153-0296		1	FLANGE BUSHING, IGLIDUR G 25X28X21,5	
460	90240-0265		2	FLANGE BUSHING, IGLIDUR X 20X23X21	
480	316810-0106		4	PIPE CLIP FOR TUBE D=8 MM	
490	359705-0007		2	WARNING SIGN ISO, HOT SURFACE	
500	312105-0287		4	SCREW M6S ISO 4017 M4X8 A470	
505	312105-0293		1	SCREW M6S ISO 4017 M4X16 A470	
510	315105-0136		5	WASHER BRB 4,3X8 RFR	
520	315202-0803		1	O-RING 44,17X1,78 MM	
540	315751-0119		5	RETAINING RING FOR SHAFT DIN 471 25 SS	
550	312105-0451		1	SCREW M6S ISO 4017 M8X20 A480	
560	342931-0122		2	ELBOW 90 COUPL.,EXT.THREAD 8/6-G1/4"	
570	312105-0376		4	SCREW M6S ISO 4014 M6X35 A480	
600	312105-0368		4	SCREW M6S ISO 4017 M6X16 A480	
620	312605-0320		2	HEXAGON NUT, M6M M10 A280	
630	312605-0316		4	HEXAGON NUT, M6M M6 A280	
635	312605-0314		2	HEXAGON NUT, M6M M5 A280	
640	312105-0329		8	SCREW M6S ISO 4017 M5X16 A480	
660	315105-0146		10	WASHER BRB 5,3X10 RFR	
670	315125-0165		1	WASHER TBRSB 8,4X26X5 A4	
680	315202-0117		1	O-RING 19,1X1,6 MM	
690	315202-0303		1	O-RING 59,5X3 MM	
710	315753-0130		4	RETAINING RING FOR BORE DIN 472 47 SS	
720	321308-0205		4	BALL BEARING 25/47X12	
730	90091-0148		4	RADIAL SEAL 25X47X7 MM DUST LIP	
750	90208-0078		1	CLAMPING ELEMENT WITH SLEEVE, 20X28 MM	
770	350008-0004		1	PUSH-IN FITTING QSF-F-G1/4-6	
780	90424-0089		1	AIR NOZZLE, BSPT1/4, AAB727-1/4-15	
840	312115-0459		2	SCREW ISO4762 M8X40 A4 80	
990	311103-0349		2	PARALLEL PIN ISO 2338 6M6X12 A1	
T50E7003	2910599-0000		1	GUIDE	
TBA 0200B ANSI					
010	1282796-0000		1	WASHER	
020	1524528-0000		2	BRACKET	
030	2881025-0000		1	GUIDE	
040	1548016-0000		1	GUIDE	
060	2741804-0000		1	SWING FRAME	
070	2514132-0000		1	PIN	
080	2794775-0000		1	BRACKET	
100	2892565-0000		1	SLIDER	
110	2827788-0000		1	TOP SECTION	
115	2827790-0000		1	TOUCH GUARD	
120	1524520-0000		2	PIN	
130	3046713-0000		4	SPACER	
140	3046714-0000		2	TOUCH GUARD	
150	1519435-0000		1	PLATE	
160	2897885-0000		1	FLANGE	
170	1524539-0000		1	PROTECTION	
180	1517731-0000		1	PIN	
190	2779669-0000		1	PULLEY	
280	2691822-0000		4	SPACER	
290	2738148-0000		1	PULLEY	

See previous drawings pages: 5-172, 5-174, 5-176, 5-178.

ECM: 473533 - 20101003
Group number: 1349500-0500
Assembly Drawing: 1349500-23_1_AC

This list covers pages from 5-172 to 5-203

Pos	Part No	UN	Qty	Description	Page No
TBA 0200B ANSI (Cont'd) (See drawing on page: 5-172)					
291	2738149-0000		1	ROLLER	
292	2738150-0000		1	SUPPORT	
293	2738151-0000		1	SHAFT	
294	2738152-0000		1	SHAFT	
295	2741808-0000		1	COVER	
296	90600-2816		1	TIMING BELT 16AT10/800 PU	
300	312115-0467		2	SCREW ISO4762 M8X80 A4 80	
320	315105-0165		21	WASHER BRB 8,4X16 RFR	
330	312105-0455		4	SCREW M6S ISO 4017 M8X30 A480	
340	315105-0153		10	WASHER BRB 6,4X12 RFR	
380	312105-0453		7	SCREW M6S ISO 4017 M8X25 A480	
440	90459-2851		2	GAS SPRING G10-23-60-1-207-AU19-AU19-900	
450	321153-0296		1	FLANGE BUSHING, IGLIDUR G 25X28X21,5	
460	90240-0265		2	FLANGE BUSHING, IGLIDUR X 20X23X21	
480	316810-0106		4	PIPE CLIP FOR TUBE D=8 MM	
490	90459-7458		2	WARNING SIGN ANSI (H), HOT SURFACE	
500	312105-0287		4	SCREW M6S ISO 4017 M4X8 A470	
505	312105-0293		1	SCREW M6S ISO 4017 M4X16 A470	
510	315105-0136		5	WASHER BRB 4,3X8 RFR	
520	315202-0803		1	O-RING 44,17X1,78 MM	
540	315751-0119		5	RETAINING RING FOR SHAFT DIN 471 25 SS	
550	312105-0451		1	SCREW M6S ISO 4017 M8X20 A480	
560	342931-0122		2	ELBOW 90 COUPL.,EXT.THREAD 8/6-G1/4"	
570	312105-0376		4	SCREW M6S ISO 4014 M6X35 A480	
600	312105-0368		4	SCREW M6S ISO 4017 M6X16 A480	
620	312605-0320		2	HEXAGON NUT, M6M M10 A280	
630	312605-0316		4	HEXAGON NUT, M6M M6 A280	
635	312605-0314		2	HEXAGON NUT, M6M M5 A280	
640	312105-0329		8	SCREW M6S ISO 4017 M5X16 A480	
660	315105-0146		10	WASHER BRB 5,3X10 RFR	
670	315125-0165		1	WASHER TBRSB 8,4X26X5 A4	
680	315202-0117		1	O-RING 19,1X1,6 MM	
690	315202-0303		1	O-RING 59,5X3 MM	
710	315753-0130		4	RETAINING RING FOR BORE DIN 472 47 SS	
720	321308-0205		4	BALL BEARING 25/47X12	
730	90091-0148		4	RADIAL SEAL 25X47X7 MM DUST LIP	
750	90208-0078		1	CLAMPING ELEMENT WITH SLEEVE, 20X28 MM	
770	350008-0004		1	PUSH-IN FITTING QSF-F-G1/4-6	
780	90424-0089		1	AIR NOZZLE, BSPT1/4, AAB727-1/4-15	
840	312115-0459		2	SCREW ISO4762 M8X40 A4 80	
990	311103-0349		2	PARALLEL PIN ISO 2338 6M6X12 A1	
T50E7003	2792620-0000		1	GUIDE	
TBA 0200B ISO (See drawing on page: 5-172)					
010	1282796-0000		1	WASHER	
020	1524528-0000		2	BRACKET	
030	2881025-0000		1	GUIDE	
040	1548016-0000		1	GUIDE	
060	2741804-0000		1	SWING FRAME	
070	2514132-0000		1	PIN	
080	2794775-0000		1	BRACKET	
100	2892565-0000		1	SLIDER	
110	2827788-0000		1	TOP SECTION	
115	2827790-0000		1	TOUCH GUARD	
120	1524520-0000		2	PIN	
130	3046713-0000		4	SPACER	
140	3046714-0000		2	TOUCH GUARD	
150	1519435-0000		1	PLATE	
160	2897885-0000		1	FLANGE	
170	1524539-0000		1	PROTECTION	
180	1517731-0000		1	PIN	
190	2779669-0000		1	PULLEY	
280	2691822-0000		4	SPACER	
290	2738148-0000		1	PULLEY	
291	2738149-0000		1	ROLLER	
292	2738150-0000		1	SUPPORT	
293	2738151-0000		1	SHAFT	
294	2738152-0000		1	SHAFT	
295	2741808-0000		1	COVER	
296	90600-2816		1	TIMING BELT 16AT10/800 PU	
300	312115-0467		2	SCREW ISO4762 M8X80 A4 80	
320	315105-0165		21	WASHER BRB 8,4X16 RFR	
330	312105-0455		4	SCREW M6S ISO 4017 M8X30 A480	
340	315105-0153		10	WASHER BRB 6,4X12 RFR	
380	312105-0453		7	SCREW M6S ISO 4017 M8X25 A480	
440	90459-2851		2	GAS SPRING G10-23-60-1-207-AU19-AU19-900	
450	321153-0296		1	FLANGE BUSHING, IGLIDUR G 25X28X21,5	
460	90240-0265		2	FLANGE BUSHING, IGLIDUR X 20X23X21	
480	316810-0106		4	PIPE CLIP FOR TUBE D=8 MM	
490	359705-0007		2	WARNING SIGN ISO, HOT SURFACE	
500	312105-0287		4	SCREW M6S ISO 4017 M4X8 A470	
505	312105-0293		1	SCREW M6S ISO 4017 M4X16 A470	
510	315105-0136		5	WASHER BRB 4,3X8 RFR	
520	315202-0803		1	O-RING 44,17X1,78 MM	

Machine Type | Group Description | Used-In | Group Number | Page No

See previous drawings pages: 5-172, 5-174, 5-176, 5-178.

ECM: 473533 - 20101003
Group number: 1349500-0500
Assembly Drawing: 1349500-23_1_AC

This list covers pages from 5-172 to 5-203

Pos	Part No	UN	Qty	Description	Page No
TBA 0200B ISO (Cont'd) (See drawing on page: 5-172)					
540	315751-0119		5	RETAINING RING FOR SHAFT DIN 471 25 SS	
550	312105-0451		1	SCREW M6S ISO 4017 M8X20 A480	
560	342931-0122		2	ELBOW 90 COUPL.,EXT.THREAD 8/6-G1/4"	
570	312105-0376		4	SCREW M6S ISO 4014 M6X35 A480	
600	312105-0368		4	SCREW M6S ISO 4017 M6X16 A480	
620	312605-0320		2	HEXAGON NUT, M6M M10 A280	
630	312605-0316		4	HEXAGON NUT, M6M M6 A280	
635	312605-0314		2	HEXAGON NUT, M6M M5 A280	
640	312105-0329		8	SCREW M6S ISO 4017 M5X16 A480	
660	315105-0146		10	WASHER BRB 5,3X10 RFR	
670	315125-0165		1	WASHER TBRSB 8,4X26X5 A4	
680	315202-0117		1	O-RING 19,1X1,6 MM	
690	315202-0303		1	O-RING 59,5X3 MM	
710	315753-0130		4	RETAINING RING FOR BORE DIN 472 47 SS	
720	321308-0205		4	BALL BEARING 25/47X12	
730	90091-0148		4	RADIAL SEAL 25X47X7 MM DUST LIP	
750	90208-0078		1	CLAMPING ELEMENT WITH SLEEVE, 20X28 MM	
770	350008-0004		1	PUSH-IN FITTING QSF-F-G1/4-6	
780	90424-0089		1	AIR NOZZLE, BSPT1/4, AAB727-1/4-15	
840	312115-0459		2	SCREW ISO4762 M8X40 A4 80	
990	311103-0349		2	PARALLEL PIN ISO 2338 6M6X12 A1	
T50E7003	2792620-0000		1	GUIDE	
TBA 0200M ANSI					
020	1524528-0000		2	BRACKET	
030	2881026-0000		1	GUIDE	
040	1548038-0000		1	GUIDE	
060	2731037-0000		1	SWING FRAME	
070	2514132-0000		1	PIN	
080	2794775-0000		1	BRACKET	
100	2892564-0000		1	SLIDER	
110	2827786-0000		1	TOP SECTION	
115	2827790-0000		1	TOUCH GUARD	
120	1524520-0000		2	PIN	
130	3046713-0000		4	SPACER	
140	3046714-0000		2	TOUCH GUARD	
150	1548030-0000		1	PLATE	
160	2897885-0000		1	FLANGE	
170	1524539-0000		1	PROTECTION	
180	1517731-0000		1	PIN	
190	2779670-0000		1	PULLEY	
280	2693701-0000		4	SPACER	
290	2738148-0000		1	PULLEY	
291	2738149-0000		1	ROLLER	
292	2738150-0000		1	SUPPORT	
293	2738151-0000		1	SHAFT	
294	2738152-0000		1	SHAFT	
295	2741808-0000		1	COVER	
296	90600-2816		1	TIMING BELT 16AT10/800 PU	
300	312115-0467		2	SCREW ISO4762 M8X80 A4 80	
320	315105-0165		21	WASHER BRB 8,4X16 RFR	
330	312105-0455		4	SCREW M6S ISO 4017 M8X30 A480	
340	315105-0153		10	WASHER BRB 6,4X12 RFR	
380	312105-0453		7	SCREW M6S ISO 4017 M8X25 A480	
440	90459-2851		2	GAS SPRING G10-23-60-1-207-AU19-AU19-900	
450	321153-0296		1	FLANGE BUSHING, IGLIDUR G 25X28X21,5	
460	90240-0265		2	FLANGE BUSHING, IGLIDUR X 20X23X21	
480	316810-0106		4	PIPE CLIP FOR TUBE D=8 MM	
490	90459-7458		2	WARNING SIGN ANSI (H), HOT SURFACE	
500	312105-0287		4	SCREW M6S ISO 4017 M4X8 A470	
505	312105-0293		1	SCREW M6S ISO 4017 M4X16 A470	
510	315105-0136		5	WASHER BRB 4,3X8 RFR	
520	315202-0803		1	O-RING 44,17X1,78 MM	
540	315751-0119		5	RETAINING RING FOR SHAFT DIN 471 25 SS	
550	312105-0451		1	SCREW M6S ISO 4017 M8X20 A480	
560	342931-0122		2	ELBOW 90 COUPL.,EXT.THREAD 8/6-G1/4"	
570	312105-0376		4	SCREW M6S ISO 4014 M6X35 A480	
600	312105-0368		4	SCREW M6S ISO 4017 M6X16 A480	
620	312605-0320		2	HEXAGON NUT, M6M M10 A280	
630	312605-0316		4	HEXAGON NUT, M6M M6 A280	
635	312605-0314		2	HEXAGON NUT, M6M M5 A280	
640	312105-0329		8	SCREW M6S ISO 4017 M5X16 A480	
660	315105-0146		10	WASHER BRB 5,3X10 RFR	
670	315125-0165		1	WASHER TBRSB 8,4X26X5 A4	
680	315202-0117		1	O-RING 19,1X1,6 MM	
690	315202-0303		1	O-RING 59,5X3 MM	
710	315753-0130		4	RETAINING RING FOR BORE DIN 472 47 SS	
720	321308-0205		4	BALL BEARING 25/47X12	
730	90091-0148		4	RADIAL SEAL 25X47X7 MM DUST LIP	
750	90208-0078		1	CLAMPING ELEMENT WITH SLEEVE, 20X28 MM	
770	350008-0004		1	PUSH-IN FITTING QSF-F-G1/4-6	
780	90424-0089		1	AIR NOZZLE, BSPT1/4, AAB727-1/4-15	
840	312115-0459		2	SCREW ISO4762 M8X40 A4 80	
990	311103-0349		2	PARALLEL PIN ISO 2338 6M6X12 A1	

See previous drawings pages: 5-172, 5-174, 5-176, 5-178.

ECM: 473533 - 20101003
Group number: 1349500-0500
Assembly Drawing: 1349500-23_1_AC

This list covers pages from 5-172 to 5-203

Pos	Part No	UN	Qty	Description	Page No
TBA 0200M ANSI (Cont'd) (See drawing on page: 5-172)					
T50E7003	2792621-0000		1	GUIDE	
TBA 0200M ISO (See drawing on page: 5-172)					
020	1524528-0000		2	BRACKET	
030	2881026-0000		1	GUIDE	
040	1548038-0000		1	GUIDE	
060	2731037-0000		1	SWING FRAME	
070	2514132-0000		1	PIN	
080	2794775-0000		1	BRACKET	
100	2892564-0000		1	SLIDER	
110	2827786-0000		1	TOP SECTION	
115	2827790-0000		1	TOUCH GUARD	
120	1524520-0000		2	PIN	
130	3046713-0000		4	SPACER	
140	3046714-0000		2	TOUCH GUARD	
150	1548030-0000		1	PLATE	
160	2897885-0000		1	FLANGE	
170	1524539-0000		1	PROTECTION	
180	1517731-0000		1	PIN	
190	2779670-0000		1	PULLEY	
280	2693701-0000		4	SPACER	
290	2738148-0000		1	PULLEY	
291	2738149-0000		1	ROLLER	
292	2738150-0000		1	SUPPORT	
293	2738151-0000		1	SHAFT	
294	2738152-0000		1	SHAFT	
295	2741808-0000		1	COVER	
296	90600-2816		1	TIMING BELT 16AT10/800 PU	
300	312115-0467		2	SCREW ISO4762 M8X80 A4 80	
320	315105-0165		21	WASHER BRB 8,4X16 RFR	
330	312105-0455		4	SCREW M6S ISO 4017 M8X30 A480	
340	315105-0153		10	WASHER BRB 6,4X12 RFR	
380	312105-0453		7	SCREW M6S ISO 4017 M8X25 A480	
440	90459-2851		2	GAS SPRING G10-23-60-1-207-AU19-AU19-900	
450	321153-0296		1	FLANGE BUSHING, IGLIDUR G 25X28X21,5	
460	90240-0265		2	FLANGE BUSHING, IGLIDUR X 20X23X21	
480	316810-0106		4	PIPE CLIP FOR TUBE D=8 MM	
490	359705-0007		2	WARNING SIGN ISO, HOT SURFACE	
500	312105-0287		4	SCREW M6S ISO 4017 M4X8 A470	
505	312105-0293		1	SCREW M6S ISO 4017 M4X16 A470	
510	315105-0136		5	WASHER BRB 4,3X8 RFR	
520	315202-0803		1	O-RING 44,17X1,78 MM	
540	315751-0119		5	RETAINING RING FOR SHAFT DIN 471 25 SS	
550	312105-0451		1	SCREW M6S ISO 4017 M8X20 A480	
560	342931-0122		2	ELBOW 90 COUPL.,EXT.THREAD 8/6-G1/4"	
570	312105-0376		4	SCREW M6S ISO 4014 M6X35 A480	
600	312105-0368		4	SCREW M6S ISO 4017 M6X16 A480	
620	312605-0320		2	HEXAGON NUT, M6M M10 A280	
630	312605-0316		4	HEXAGON NUT, M6M M6 A280	
635	312605-0314		2	HEXAGON NUT, M6M M5 A280	
640	312105-0329		8	SCREW M6S ISO 4017 M5X16 A480	
660	315105-0146		10	WASHER BRB 5,3X10 RFR	
670	315125-0165		1	WASHER TBRSB 8,4X26X5 A4	
680	315202-0117		1	O-RING 19,1X1,6 MM	
690	315202-0303		1	O-RING 59,5X3 MM	
710	315753-0130		4	RETAINING RING FOR BORE DIN 472 47 SS	
720	321308-0205		4	BALL BEARING 25/47X12	
730	90091-0148		4	RADIAL SEAL 25X47X7 MM DUST LIP	
750	90208-0078		1	CLAMPING ELEMENT WITH SLEEVE, 20X28 MM	
770	350008-0004		1	PUSH-IN FITTING QSF-F-G1/4-6	
780	90424-0089		1	AIR NOZZLE, BSPT1/4, AAB727-1/4-15	
840	312115-0459		2	SCREW ISO4762 M8X40 A4 80	
990	311103-0349		2	PARALLEL PIN ISO 2338 6M6X12 A1	
T50E7003	2792621-0000		1	GUIDE	
TBA 0200S ANSI					
010	1282796-0000		1	WASHER	
020	1524528-0000		2	BRACKET	
030	2881023-0000		1	GUIDE	
040	1538576-0000		1	GUIDE	
060	2738153-0000		1	SWING FRAME	
070	2514132-0000		1	PIN	
080	2794775-0000		1	BRACKET	
100	2892563-0000		1	SLIDER	
110	2827787-0000		1	TOP SECTION	
115	2827790-0000		1	TOUCH GUARD	
120	1524520-0000		2	PIN	
130	3046713-0000		4	SPACER	
140	3046714-0000		2	TOUCH GUARD	
150	1538577-0000		1	PLATE	
160	2897885-0000		1	FLANGE	
170	1524539-0000		1	PROTECTION	
180	1517731-0000		1	PIN	
190	2779653-0000		1	PULLEY	
280	2691821-0000		4	SPACER	

Machine Type | Group Description | Used-In | Group Number | Page No

See previous drawings pages: 5-172, 5-174, 5-176, 5-178.

ECM: 473533 - 20101003
Group number: 1349500-0500
Assembly Drawing: 1349500-23_1_AC

This list covers pages from 5-172 to 5-203

Pos	Part No	UN	Qty	Description	Page No
TBA 0200S ANSI (Cont'd) (See drawing on page: 5-172)					
290	2738148-0000		1	PULLEY	
291	2738149-0000		1	ROLLER	
292	2738150-0000		1	SUPPORT	
293	2738151-0000		1	SHAFT	
294	2738152-0000		1	SHAFT	
295	2741808-0000		1	COVER	
296	90600-2816		1	TIMING BELT 16AT10/800 PU	
300	312115-0467		2	SCREW ISO4762 M8X80 A4 80	
320	315105-0165		21	WASHER BRB 8,4X16 RFR	
330	312105-0455		4	SCREW M6S ISO 4017 M8X30 A480	
340	315105-0153		10	WASHER BRB 6,4X12 RFR	
380	312105-0453		7	SCREW M6S ISO 4017 M8X25 A480	
440	90459-2851		2	GAS SPRING G10-23-60-1-207-AU19-AU19-900	
450	321153-0296		1	FLANGE BUSHING, IGLIDUR G 25X28X21,5	
460	90240-0265		2	FLANGE BUSHING, IGLIDUR X 20X23X21	
480	316810-0106		4	PIPE CLIP FOR TUBE D=8 MM	
490	90459-7458		2	WARNING SIGN ANSI (H), HOT SURFACE	
500	312105-0287		4	SCREW M6S ISO 4017 M4X8 A470	
505	312105-0293		1	SCREW M6S ISO 4017 M4X16 A470	
510	315105-0136		5	WASHER BRB 4,3X8 RFR	
520	315202-0803		1	O-RING 44,17X1,78 MM	
540	315751-0119		5	RETAINING RING FOR SHAFT DIN 471 25 SS	
550	312105-0451		1	SCREW M6S ISO 4017 M8X20 A480	
560	342931-0122		2	ELBOW 90 COUPL.,EXT.THREAD 8/6-G1/4"	
570	312105-0376		4	SCREW M6S ISO 4014 M6X35 A480	
600	312105-0368		4	SCREW M6S ISO 4017 M6X16 A480	
620	312605-0320		2	HEXAGON NUT, M6M M10 A280	
630	312605-0316		4	HEXAGON NUT, M6M M6 A280	
635	312605-0314		2	HEXAGON NUT, M6M M5 A280	
640	312105-0329		8	SCREW M6S ISO 4017 M5X16 A480	
660	315105-0146		10	WASHER BRB 5,3X10 RFR	
670	315125-0165		1	WASHER TBRSB 8,4X26X5 A4	
680	315202-0117		1	O-RING 19,1X1,6 MM	
690	315202-0303		1	O-RING 59,5X3 MM	
710	315753-0130		4	RETAINING RING FOR BORE DIN 472 47 SS	
720	321308-0205		4	BALL BEARING 25/47X12	
730	90091-0148		4	RADIAL SEAL 25X47X7 MM DUST LIP	
750	90208-0078		1	CLAMPING ELEMENT WITH SLEEVE, 20X28 MM	
770	350008-0004		1	PUSH-IN FITTING QSF-F-G1/4-6	
780	90424-0089		1	AIR NOZZLE, BSPT1/4, AAB727-1/4-15	
840	312115-0459		2	SCREW ISO4762 M8X40 A4 80	
990	311103-0349		2	PARALLEL PIN ISO 2338 6M6X12 A1	
T50E7003	2792619-0000		1	GUIDE	
TBA 0200S ISO (See drawing on page: 5-172)					
010	1282796-0000		1	WASHER	
020	1524528-0000		2	BRACKET	
030	2881023-0000		1	GUIDE	
040	1538576-0000		1	GUIDE	
060	2738153-0000		1	SWING FRAME	
070	2514132-0000		1	PIN	
080	2794775-0000		1	BRACKET	
100	2892563-0000		1	SLIDER	
110	2827787-0000		1	TOP SECTION	
115	2827790-0000		1	TOUCH GUARD	
120	1524520-0000		2	PIN	
130	3046713-0000		4	SPACER	
140	3046714-0000		2	TOUCH GUARD	
150	1538577-0000		1	PLATE	
160	2897885-0000		1	FLANGE	
170	1524539-0000		1	PROTECTION	
180	1517731-0000		1	PIN	
190	2779653-0000		1	PULLEY	
280	2691821-0000		4	SPACER	
290	2738148-0000		1	PULLEY	
291	2738149-0000		1	ROLLER	
292	2738150-0000		1	SUPPORT	
293	2738151-0000		1	SHAFT	
294	2738152-0000		1	SHAFT	
295	2741808-0000		1	COVER	
296	90600-2816		1	TIMING BELT 16AT10/800 PU	
300	312115-0467		2	SCREW ISO4762 M8X80 A4 80	
320	315105-0165		21	WASHER BRB 8,4X16 RFR	
330	312105-0455		4	SCREW M6S ISO 4017 M8X30 A480	
340	315105-0153		10	WASHER BRB 6,4X12 RFR	
380	312105-0453		7	SCREW M6S ISO 4017 M8X25 A480	
440	90459-2851		2	GAS SPRING G10-23-60-1-207-AU19-AU19-900	
450	321153-0296		1	FLANGE BUSHING, IGLIDUR G 25X28X21,5	
460	90240-0265		2	FLANGE BUSHING, IGLIDUR X 20X23X21	
480	316810-0106		4	PIPE CLIP FOR TUBE D=8 MM	
490	359705-0007		2	WARNING SIGN ISO, HOT SURFACE	
500	312105-0287		4	SCREW M6S ISO 4017 M4X8 A470	
505	312105-0293		1	SCREW M6S ISO 4017 M4X16 A470	
510	315105-0136		5	WASHER BRB 4,3X8 RFR	

Machine Type | Group Description | Used-In | Group Number | Page No

See previous drawings pages: 5-172, 5-174, 5-176, 5-178.

ECM: 473533 - 20101003
Group number: 1349500-0500
Assembly Drawing: 1349500-23_1_AC

This list covers pages from 5-172 to 5-203

Pos	Part No	UN	Qty	Description	Page No
TBA 0200S ISO (Cont'd) (See drawing on page: 5-172)					
520	315202-0803		1	O-RING 44,17X1,78 MM	
540	315751-0119		5	RETAINING RING FOR SHAFT DIN 471 25 SS	
550	312105-0451		1	SCREW M6S ISO 4017 M8X20 A480	
560	342931-0122		2	ELBOW 90 COUPL.,EXT.THREAD 8/6-G1/4"	
570	312105-0376		4	SCREW M6S ISO 4014 M6X35 A480	
600	312105-0368		4	SCREW M6S ISO 4017 M6X16 A480	
620	312605-0320		2	HEXAGON NUT, M6M M10 A280	
630	312605-0316		4	HEXAGON NUT, M6M M6 A280	
635	312605-0314		2	HEXAGON NUT, M6M M5 A280	
640	312105-0329		8	SCREW M6S ISO 4017 M5X16 A480	
660	315105-0146		10	WASHER BRB 5,3X10 RFR	
670	315125-0165		1	WASHER TBRSB 8,4X26X5 A4	
680	315202-0117		1	O-RING 19,1X1,6 MM	
690	315202-0303		1	O-RING 59,5X3 MM	
710	315753-0130		4	RETAINING RING FOR BORE DIN 472 47 SS	
720	321308-0205		4	BALL BEARING 25/47X12	
730	90091-0148		4	RADIAL SEAL 25X47X7 MM DUST LIP	
750	90208-0078		1	CLAMPING ELEMENT WITH SLEEVE, 20X28 MM	
770	350008-0004		1	PUSH-IN FITTING QSF-F-G1/4-6	
780	90424-0089		1	AIR NOZZLE, BSPT1/4, AAB727-1/4-15	
840	312115-0459		2	SCREW ISO4762 M8X40 A4 80	
990	311103-0349		2	PARALLEL PIN ISO 2338 6M6X12 A1	
T50E7003	2792619-0000		1	GUIDE	
TBA 0250B ANSI					
010	1282796-0000		1	WASHER	
020	1524528-0000		2	BRACKET	
030	2881024-0000		1	GUIDE	
040	1519429-0000		1	GUIDE	
060	2731037-0000		1	SWING FRAME	
070	2514132-0000		1	PIN	
080	2794775-0000		1	BRACKET	
100	2892565-0000		1	SLIDER	
110	2827786-0000		1	TOP SECTION	
115	2827790-0000		1	TOUCH GUARD	
120	1524520-0000		2	PIN	
130	3046713-0000		4	SPACER	
140	3046714-0000		2	TOUCH GUARD	
150	1519435-0000		1	PLATE	
160	2897885-0000		1	FLANGE	
170	1524539-0000		1	PROTECTION	
180	1517731-0000		1	PIN	
190	2779669-0000		1	PULLEY	
280	2693717-0000		4	SPACER	
290	2738148-0000		1	PULLEY	
291	2738149-0000		1	ROLLER	
292	2738150-0000		1	SUPPORT	
293	2738151-0000		1	SHAFT	
294	2738152-0000		1	SHAFT	
295	2741808-0000		1	COVER	
296	90600-2816		1	TIMING BELT 16AT10/800 PU	
300	312115-0467		2	SCREW ISO4762 M8X80 A4 80	
320	315105-0165		21	WASHER BRB 8,4X16 RFR	
330	312105-0455		4	SCREW M6S ISO 4017 M8X30 A480	
340	315105-0153		10	WASHER BRB 6,4X12 RFR	
380	312105-0453		7	SCREW M6S ISO 4017 M8X25 A480	
440	90459-2851		2	GAS SPRING G10-23-60-1-207-AU19-AU19-900	
450	321153-0296		1	FLANGE BUSHING, IGLIDUR G 25X28X21,5	
460	90240-0265		2	FLANGE BUSHING, IGLIDUR X 20X23X21	
480	316810-0106		4	PIPE CLIP FOR TUBE D=8 MM	
490	90459-7458		2	WARNING SIGN ANSI (H), HOT SURFACE	
500	312105-0287		4	SCREW M6S ISO 4017 M4X8 A470	
505	312105-0293		1	SCREW M6S ISO 4017 M4X16 A470	
510	315105-0136		5	WASHER BRB 4,3X8 RFR	
520	315202-0803		1	O-RING 44,17X1,78 MM	
540	315751-0119		5	RETAINING RING FOR SHAFT DIN 471 25 SS	
550	312105-0451		1	SCREW M6S ISO 4017 M8X20 A480	
560	342931-0122		2	ELBOW 90 COUPL.,EXT.THREAD 8/6-G1/4"	
570	312105-0376		4	SCREW M6S ISO 4014 M6X35 A480	
600	312105-0368		4	SCREW M6S ISO 4017 M6X16 A480	
620	312605-0320		2	HEXAGON NUT, M6M M10 A280	
630	312605-0316		4	HEXAGON NUT, M6M M6 A280	
635	312605-0314		2	HEXAGON NUT, M6M M5 A280	
640	312105-0329		8	SCREW M6S ISO 4017 M5X16 A480	
660	315105-0146		10	WASHER BRB 5,3X10 RFR	
670	315125-0165		1	WASHER TBRSB 8,4X26X5 A4	
680	315202-0117		1	O-RING 19,1X1,6 MM	
690	315202-0303		1	O-RING 59,5X3 MM	
710	315753-0130		4	RETAINING RING FOR BORE DIN 472 47 SS	
720	321308-0205		4	BALL BEARING 25/47X12	
730	90091-0148		4	RADIAL SEAL 25X47X7 MM DUST LIP	
750	90208-0078		1	CLAMPING ELEMENT WITH SLEEVE, 20X28 MM	
770	350008-0004		1	PUSH-IN FITTING QSF-F-G1/4-6	
780	90424-0089		1	AIR NOZZLE, BSPT1/4, AAB727-1/4-15	

Machine Type | Group Description | Used-In | Group Number | Page No

See previous drawings pages: 5-172, 5-174, 5-176, 5-178.

ECM: 473533 - 20101003
Group number: 1349500-0500
Assembly Drawing: 1349500-23_1_AC

This list covers pages from 5-172 to 5-203

Pos	Part No	UN	Qty	Description	Page No
TBA 0250B ANSI (Cont'd) (See drawing on page: 5-172)					
840	312115-0459		2	SCREW ISO4762 M8X40 A4 80	
990	311103-0349		2	PARALLEL PIN ISO 2338 6M6X12 A1	
T50E7003	2792620-0000		1	GUIDE	
TBA 0250B ISO (See drawing on page: 5-172)					
010	1282796-0000		1	WASHER	
020	1524528-0000		2	BRACKET	
030	2881024-0000		1	GUIDE	
040	1519429-0000		1	GUIDE	
060	2731037-0000		1	SWING FRAME	
070	2514132-0000		1	PIN	
080	2794775-0000		1	BRACKET	
100	2892565-0000		1	SLIDER	
110	2827786-0000		1	TOP SECTION	
115	2827790-0000		1	TOUCH GUARD	
120	1524520-0000		2	PIN	
130	3046713-0000		4	SPACER	
140	3046714-0000		2	TOUCH GUARD	
150	1519435-0000		1	PLATE	
160	2897885-0000		1	FLANGE	
170	1524539-0000		1	PROTECTION	
180	1517731-0000		1	PIN	
190	2779669-0000		1	PULLEY	
280	2693717-0000		4	SPACER	
290	2738148-0000		1	PULLEY	
291	2738149-0000		1	ROLLER	
292	2738150-0000		1	SUPPORT	
293	2738151-0000		1	SHAFT	
294	2738152-0000		1	SHAFT	
295	2741808-0000		1	COVER	
296	90600-2816		1	TIMING BELT 16AT10/800 PU	
300	312115-0467		2	SCREW ISO4762 M8X80 A4 80	
320	315105-0165		21	WASHER BRB 8,4X16 RFR	
330	312105-0455		4	SCREW M6S ISO 4017 M8X30 A480	
340	315105-0153		10	WASHER BRB 6,4X12 RFR	
380	312105-0453		7	SCREW M6S ISO 4017 M8X25 A480	
440	90459-2851		2	GAS SPRING G10-23-60-1-207-AU19-AU19-900	
450	321153-0296		1	FLANGE BUSHING, IGLIDUR G 25X28X21,5	
460	90240-0265		2	FLANGE BUSHING, IGLIDUR X 20X23X21	
480	316810-0106		4	PIPE CLIP FOR TUBE D=8 MM	
490	359705-0007		2	WARNING SIGN ISO, HOT SURFACE	
500	312105-0287		4	SCREW M6S ISO 4017 M4X8 A470	
505	312105-0293		1	SCREW M6S ISO 4017 M4X16 A470	
510	315105-0136		5	WASHER BRB 4,3X8 RFR	
520	315202-0803		1	O-RING 44,17X1,78 MM	
540	315751-0119		5	RETAINING RING FOR SHAFT DIN 471 25 SS	
550	312105-0451		1	SCREW M6S ISO 4017 M8X20 A480	
560	342931-0122		2	ELBOW 90 COUPL.,EXT.THREAD 8/6-G1/4"	
570	312105-0376		4	SCREW M6S ISO 4014 M6X35 A480	
600	312105-0368		4	SCREW M6S ISO 4017 M6X16 A480	
620	312605-0320		2	HEXAGON NUT, M6M M10 A280	
630	312605-0316		4	HEXAGON NUT, M6M M6 A280	
635	312605-0314		2	HEXAGON NUT, M6M M5 A280	
640	312105-0329		8	SCREW M6S ISO 4017 M5X16 A480	
660	315105-0146		10	WASHER BRB 5,3X10 RFR	
670	315125-0165		1	WASHER TBRSB 8,4X26X5 A4	
680	315202-0117		1	O-RING 19,1X1,6 MM	
690	315202-0303		1	O-RING 59,5X3 MM	
710	315753-0130		4	RETAINING RING FOR BORE DIN 472 47 SS	
720	321308-0205		4	BALL BEARING 25/47X12	
730	90091-0148		4	RADIAL SEAL 25X47X7 MM DUST LIP	
750	90208-0078		1	CLAMPING ELEMENT WITH SLEEVE, 20X28 MM	
770	350008-0004		1	PUSH-IN FITTING QSF-F-G1/4-6	
780	90424-0089		1	AIR NOZZLE, BSPT1/4, AAB727-1/4-15	
840	312115-0459		2	SCREW ISO4762 M8X40 A4 80	
990	311103-0349		2	PARALLEL PIN ISO 2338 6M6X12 A1	
T50E7003	2792620-0000		1	GUIDE	
TBA 0250S ANSI					
010	1282796-0000		1	WASHER	
020	1524528-0000		2	BRACKET	
030	2881027-0000		1	GUIDE	
040	1548029-0000		1	GUIDE	
060	2741807-0000		1	SWING FRAME	
070	2514132-0000		1	PIN	
080	2794775-0000		1	BRACKET	
100	2892564-0000		1	SLIDER	
110	2827789-0000		1	TOP SECTION	
115	2827790-0000		1	TOUCH GUARD	
120	1524520-0000		2	PIN	
130	3046713-0000		4	SPACER	
140	3046714-0000		2	TOUCH GUARD	
150	1548030-0000		1	PLATE	
160	2897885-0000		1	FLANGE	
170	1524539-0000		1	PROTECTION	

Machine Type | Group Description | Used-In | Group Number | Page No

See previous drawings pages: 5-172, 5-174, 5-176, 5-178.

ECM: 473533 - 20101003
Group number: 1349500-0500
Assembly Drawing: 1349500-23_1_AC

This list covers pages from 5-172 to 5-203

Pos	Part No	UN	Qty	Description	Page No
TBA 0250S ANSI (Cont'd) (See drawing on page: 5-172)					
180	1517731-0000		1	PIN	
190	2779670-0000		1	PULLEY	
280	2693719-0000		4	SPACER	
290	2738148-0000		1	PULLEY	
291	2738149-0000		1	ROLLER	
292	2738150-0000		1	SUPPORT	
293	2738151-0000		1	SHAFT	
294	2738152-0000		1	SHAFT	
295	2741808-0000		1	COVER	
296	90600-2816		1	TIMING BELT 16AT10/800 PU	
300	312115-0467		2	SCREW ISO4762 M8X80 A4 80	
320	315105-0165		21	WASHER BRB 8,4X16 RFR	
330	312105-0455		4	SCREW M6S ISO 4017 M8X30 A480	
340	315105-0153		10	WASHER BRB 6,4X12 RFR	
380	312105-0453		7	SCREW M6S ISO 4017 M8X25 A480	
440	90459-2851		2	GAS SPRING G10-23-60-1-207-AU19-AU19-900	
450	321153-0296		1	FLANGE BUSHING, IGLIDUR G 25X28X21,5	
460	90240-0265		2	FLANGE BUSHING, IGLIDUR X 20X23X21	
480	316810-0106		4	PIPE CLIP FOR TUBE D=8 MM	
490	90459-7458		2	WARNING SIGN ANSI (H), HOT SURFACE	
500	312105-0287		4	SCREW M6S ISO 4017 M4X8 A470	
505	312105-0293		1	SCREW M6S ISO 4017 M4X16 A470	
510	315105-0136		5	WASHER BRB 4,3X8 RFR	
520	315202-0803		1	O-RING 44,17X1,78 MM	
540	315751-0119		5	RETAINING RING FOR SHAFT DIN 471 25 SS	
550	312105-0451		1	SCREW M6S ISO 4017 M8X20 A480	
560	342931-0122		2	ELBOW 90 COUPL.,EXT.THREAD 8/6-G1/4"	
570	312105-0376		4	SCREW M6S ISO 4014 M6X35 A480	
600	312105-0368		4	SCREW M6S ISO 4017 M6X16 A480	
620	312605-0320		2	HEXAGON NUT, M6M M10 A280	
630	312605-0316		4	HEXAGON NUT, M6M M6 A280	
635	312605-0314		2	HEXAGON NUT, M6M M5 A280	
640	312105-0329		8	SCREW M6S ISO 4017 M5X16 A480	
660	315105-0146		10	WASHER BRB 5,3X10 RFR	
670	315125-0165		1	WASHER TBRSB 8,4X26X5 A4	
680	315202-0117		1	O-RING 19,1X1,6 MM	
690	315202-0303		1	O-RING 59,5X3 MM	
710	315753-0130		4	RETAINING RING FOR BORE DIN 472 47 SS	
720	321308-0205		4	BALL BEARING 25/47X12	
730	90091-0148		4	RADIAL SEAL 25X47X7 MM DUST LIP	
750	90208-0078		1	CLAMPING ELEMENT WITH SLEEVE, 20X28 MM	
770	350008-0004		1	PUSH-IN FITTING QSF-F-G1/4-6	
780	90424-0089		1	AIR NOZZLE, BSPT1/4, AAB727-1/4-15	
840	312115-0459		2	SCREW ISO4762 M8X40 A4 80	
990	311103-0349		2	PARALLEL PIN ISO 2338 6M6X12 A1	
T50E7003	2792621-0000		1	GUIDE	
TBA 0250S ISO (See drawing on page: 5-172)					
010	1282796-0000		1	WASHER	
020	1524528-0000		2	BRACKET	
030	2881027-0000		1	GUIDE	
040	1548029-0000		1	GUIDE	
060	2741807-0000		1	SWING FRAME	
070	2514132-0000		1	PIN	
080	2794775-0000		1	BRACKET	
100	2892564-0000		1	SLIDER	
110	2827789-0000		1	TOP SECTION	
115	2827790-0000		1	TOUCH GUARD	
120	1524520-0000		2	PIN	
130	3046713-0000		4	SPACER	
140	3046714-0000		2	TOUCH GUARD	
150	1548030-0000		1	PLATE	
160	2897885-0000		1	FLANGE	
170	1524539-0000		1	PROTECTION	
180	1517731-0000		1	PIN	
190	2779670-0000		1	PULLEY	
280	2693719-0000		4	SPACER	
290	2738148-0000		1	PULLEY	
291	2738149-0000		1	ROLLER	
292	2738150-0000		1	SUPPORT	
293	2738151-0000		1	SHAFT	
294	2738152-0000		1	SHAFT	
295	2741808-0000		1	COVER	
296	90600-2816		1	TIMING BELT 16AT10/800 PU	
300	312115-0467		2	SCREW ISO4762 M8X80 A4 80	
320	315105-0165		21	WASHER BRB 8,4X16 RFR	
330	312105-0455		4	SCREW M6S ISO 4017 M8X30 A480	
340	315105-0153		10	WASHER BRB 6,4X12 RFR	
380	312105-0453		7	SCREW M6S ISO 4017 M8X25 A480	
440	90459-2851		2	GAS SPRING G10-23-60-1-207-AU19-AU19-900	
450	321153-0296		1	FLANGE BUSHING, IGLIDUR G 25X28X21,5	
460	90240-0265		2	FLANGE BUSHING, IGLIDUR X 20X23X21	
480	316810-0106		4	PIPE CLIP FOR TUBE D=8 MM	
490	359705-0007		2	WARNING SIGN ISO, HOT SURFACE	

Machine Type | Group Description | Used-In | Group Number | Page No

See previous drawings pages: 5-172, 5-174, 5-176, 5-178.

ECM: 473533 - 20101003
Group number: 1349500-0500
Assembly Drawing: 1349500-23_1_AC

This list covers pages from 5-172 to 5-203

Pos	Part No	UN	Qty	Description	Page No
TBA 0250S ISO (Cont'd) (See drawing on page: 5-172)					
500	312105-0287		4	SCREW M6S ISO 4017 M4X8 A470	
505	312105-0293		1	SCREW M6S ISO 4017 M4X16 A470	
510	315105-0136		5	WASHER BRB 4,3X8 RFR	
520	315202-0803		1	O-RING 44,17X1,78 MM	
540	315751-0119		5	RETAINING RING FOR SHAFT DIN 471 25 SS	
550	312105-0451		1	SCREW M6S ISO 4017 M8X20 A480	
560	342931-0122		2	ELBOW 90 COUPL.,EXT.THREAD 8/6-G1/4"	
570	312105-0376		4	SCREW M6S ISO 4014 M6X35 A480	
600	312105-0368		4	SCREW M6S ISO 4017 M6X16 A480	
620	312605-0320		2	HEXAGON NUT, M6M M10 A280	
630	312605-0316		4	HEXAGON NUT, M6M M6 A280	
635	312605-0314		2	HEXAGON NUT, M6M M5 A280	
640	312105-0329		8	SCREW M6S ISO 4017 M5X16 A480	
660	315105-0146		10	WASHER BRB 5,3X10 RFR	
670	315125-0165		1	WASHER TBRSB 8,4X26X5 A4	
680	315202-0117		1	O-RING 19,1X1,6 MM	
690	315202-0303		1	O-RING 59,5X3 MM	
710	315753-0130		4	RETAINING RING FOR BORE DIN 472 47 SS	
720	321308-0205		4	BALL BEARING 25/47X12	
730	90091-0148		4	RADIAL SEAL 25X47X7 MM DUST LIP	
750	90208-0078		1	CLAMPING ELEMENT WITH SLEEVE, 20X28 MM	
770	350008-0004		1	PUSH-IN FITTING QSF-F-G1/4-6	
780	90424-0089		1	AIR NOZZLE, BSPT1/4, AAB727-1/4-15	
840	312115-0459		2	SCREW ISO4762 M8X40 A4 80	
990	311103-0349		2	PARALLEL PIN ISO 2338 6M6X12 A1	
T50E7003	2792621-0000		1	GUIDE	
TBA 1000B ANSI (See drawing on page: 5-174)					
010	2511350-0000		1	WASHER	
030	3012855-0000		1	GUIDE	
040	3012856-0000		1	GUIDE	
060	2941718-0000		1	FRAME	
070	1498016-0000		1	PIN	
080	2767860-0000		1	BRACKET	
090	2505532-0000		2	ARM	
100	2767862-0000		1	SLIDER	
110	2944478-0000		1	TOP SECTION	
120	1498084-0000		2	PIN	
130	3046715-0000		4	SPACER	
140	3046716-0000		2	TOUCH GUARD	
145	2531791-0000		1	SPACER	
155	2852551-0000		1	PROTECTION	
160	2531785-0000		1	FLANGE	
170	1524444-0000		1	PROTECTION	
175	2898560-0000		1	COUPLING	
180	2500697-0000		1	PIN	
190	1498015-0000		1	PULLEY	
195	2898562-0000		2	HUB	
200	2531768-0000		3	PLATE	
205	312125-0287		1	SCREW ISO 1207 M4X8 A4	
215	90165-0057		1	PIPE CLIP FOR TUBE D=6 MM	
220	2666920-0000		2	SHAFT	
225	2541861-0000		1	PLATE	
255	2666921-0000		2	PULLEY	
265	2505533-0000		2	SCREW	
285	2898561-0000		4	PLATE	
290	2541819-0000		1	PULLEY	
291	2529106-0000		1	ROLLER	
292	2579099-0000		1	SUPPORT	
293	2529103-0000		1	SHAFT	
294	2529100-0000		1	SHAFT	
295	2531784-0000		1	COVER	
296	90459-1732		1	TIMING BELT AT10 780X25 MM	
300	312115-0467		2	SCREW ISO4762 M8X80 A4 80	
305	90458-1387		1	RADIAL SEAL 38X62X7 MM DUST LIP	
315	90458-0048		1	RETAINING RING FOR BORE DIN 472 62 SS	
320	315105-0165		15	WASHER BRB 8,4X16 RFR	
330	312105-0455		4	SCREW M6S ISO 4017 M8X30 A480	
340	315105-0153		17	WASHER BRB 6,4X12 RFR	
350	312105-0372		1	SCREW M6S ISO 4017 M6X25 A480	
370	312105-0370		4	SCREW M6S ISO 4017 M6X20 A480	
380	312105-0453		5	SCREW M6S ISO 4017 M8X25 A480	
390	315125-0153		6	WASHER TBRSB 6,4X22X4 A4	
440	90600-5532		2	GAS PRING G10-23-100-1290-AU19-AU19-1200	
450	90240-0266		1	FLANGE BUSHING, IGLIDUR X 30X34X26	
460	90240-0265		2	FLANGE BUSHING, IGLIDUR X 20X23X21	
480	90459-0127		3	PLASTIC TUBE CLAMP, 8935150104 - TYPE 1	
490	90459-7458		2	WARNING SIGN ANSI (H), HOT SURFACE	
500	312105-0287		3	SCREW M6S ISO 4017 M4X8 A470	
505	312105-0293		1	SCREW M6S ISO 4017 M4X16 A470	
510	315105-0136		4	WASHER BRB 4,3X8 RFR	
520	315205-0606		1	O-RING 56,74X3,53 MM	
530	315751-0122		2	RETAINING RING FOR SHAFT DIN 471 30 SS	
540	315751-0119		3	RETAINING RING FOR SHAFT DIN 471 25 SS	

Machine Type | Group Description | Used-In | Group Number | Page No

See previous drawings pages: 5-172, 5-174, 5-176, 5-178.

ECM: 473533 - 20101003
Group number: 1349500-0500
Assembly Drawing: 1349500-23_1_AC

This list covers pages from 5-172 to 5-203

Pos	Part No	UN	Qty	Description	Page No
TBA 1000B ANSI (Cont'd) (See drawing on page: 5-174)					
550	312105-0451		3	SCREW M6S ISO 4017 M8X20 A480	
560	90055-0274		2	STRAIGHT COUPLING, D=8 MM - G1/4"	
570	312105-0376		6	SCREW M6S ISO 4014 M6X35 A480	
580	312105-0378		2	SCREW M6S ISO 4014 M6X40 A480	
600	312105-0368		8	SCREW M6S ISO 4017 M6X16 A480	
610	90240-0263		4	FLANGE BUSHING, IGLIDUR X 15X17X12	
670	315125-0165		3	WASHER TBRSB 8,4X26X5 A4	
680	315202-0217		1	O-RING 24,2X3 MM	
690	315202-0304		1	O-RING 64,5X3 MM	
700	90459-0384		2	BALL BEARING 25/62X17 SOLID OIL	
710	315753-0130		1	RETAINING RING FOR BORE DIN 472 47 SS	
720	321308-0205		1	BALL BEARING 25/47X12	
730	90091-0148		1	RADIAL SEAL 25X47X7 MM DUST LIP	
740	315705-0201		1	PARALLEL KEY W. ROUND ENDS 5X5X20 MM	
750	90208-0080		1	CLAMPING ELEMENT WITH SLEEVE, 25X34 MM	
770	350008-0004		1	PUSH-IN FITTING QSF-F-G1/4-6	
780	90424-0089		1	AIR NOZZLE, BSPT1/4, AAB727-1/4-15	
790	90091-0300		1	RADIAL SEAL 40X72X7 MM DUST LIP	
800	90459-4585		1	RADIAL SEAL 25X52X7 MM DUST LIP	
810	90459-0382		1	RETAINING RING FOR BORE DIN 472 72 SS	
820	90459-0385		1	BALL BEAR. 30/72X19 SOLID OIL	
880	315106-0173		2	WASHER ISO 7089-10-200 HV A4	
930	312705-0318		2	NUT HEX. DOMED CAP MHM-6 M8 A280	
960	312115-0293		2	SCREW ISO4762 M4X16 A4 80	
980	90459-7244		4	PLUG, BLIND, PLASTIC GPN300V5	
990	311103-0352		2	PARALLEL PIN ISO 2338 6M6X18 A1	
T50E7003	1498014-0000		1	GUIDE	
TBA 1000B ISO (See drawing on page: 5-174)					
010	2511350-0000		1	WASHER	
030	3012855-0000		1	GUIDE	
040	3012856-0000		1	GUIDE	
060	2941718-0000		1	FRAME	
070	1498016-0000		1	PIN	
080	2767860-0000		1	BRACKET	
090	2505532-0000		2	ARM	
100	2767862-0000		1	SLIDER	
110	2944478-0000		1	TOP SECTION	
120	1498084-0000		2	PIN	
130	3046715-0000		4	SPACER	
140	3046716-0000		2	TOUCH GUARD	
145	2531791-0000		1	SPACER	
155	2852551-0000		1	PROTECTION	
160	2531785-0000		1	FLANGE	
170	1524444-0000		1	PROTECTION	
175	2898560-0000		1	COUPLING	
180	2500697-0000		1	PIN	
190	1498015-0000		1	PULLEY	
195	2898562-0000		2	HUB	
200	2531768-0000		3	PLATE	
205	312125-0287		1	SCREW ISO 1207 M4X8 A4	
215	90165-0057		1	PIPE CLIP FOR TUBE D=6 MM	
220	2666920-0000		2	SHAFT	
225	2541861-0000		1	PLATE	
255	2666921-0000		2	PULLEY	
265	2505533-0000		2	SCREW	
285	2898561-0000		4	PLATE	
290	2541819-0000		1	PULLEY	
291	2529106-0000		1	ROLLER	
292	2579099-0000		1	SUPPORT	
293	2529103-0000		1	SHAFT	
294	2529100-0000		1	SHAFT	
295	2531784-0000		1	COVER	
296	90459-1732		1	TIMING BELT AT10 780X25 MM	
300	312115-0467		2	SCREW ISO4762 M8X80 A4 80	
305	90458-1387		1	RADIAL SEAL 38X62X7 MM DUST LIP	
315	90458-0048		1	RETAINING RING FOR BORE DIN 472 62 SS	
320	315105-0165		15	WASHER BRB 8,4X16 RFR	
330	312105-0455		4	SCREW M6S ISO 4017 M8X30 A480	
340	315105-0153		17	WASHER BRB 6,4X12 RFR	
350	312105-0372		1	SCREW M6S ISO 4017 M6X25 A480	
370	312105-0370		4	SCREW M6S ISO 4017 M6X20 A480	
380	312105-0453		5	SCREW M6S ISO 4017 M8X25 A480	
390	315125-0153		6	WASHER TBRSB 6,4X22X4 A4	
440	90600-5532		2	GAS PRING G10-23-100-1290-AU19-AU19-1200	
450	90240-0266		1	FLANGE BUSHING, IGLIDUR X 30X34X26	
460	90240-0265		2	FLANGE BUSHING, IGLIDUR X 20X23X21	
480	90459-0127		3	PLASTIC TUBE CLAMP, 8935150104 - TYPE 1	
490	359705-0007		2	WARNING SIGN ISO, HOT SURFACE	
500	312105-0287		3	SCREW M6S ISO 4017 M4X8 A470	
505	312105-0293		1	SCREW M6S ISO 4017 M4X16 A470	
510	315105-0136		4	WASHER BRB 4,3X8 RFR	
520	315205-0606		1	O-RING 56,74X3,53 MM	
530	315751-0122		2	RETAINING RING FOR SHAFT DIN 471 30 SS	

Machine Type | Group Description | Used-In | Group Number | Page No

See previous drawings pages: 5-172, 5-174, 5-176, 5-178.

ECM: 473533 - 20101003
Group number: 1349500-0500
Assembly Drawing: 1349500-23_1_AC

This list covers pages from 5-172 to 5-203

Pos	Part No	UN	Qty	Description	Page No
TBA 1000B ISO (Cont'd) (See drawing on page: 5-174)					
540	315751-0119		3	RETAINING RING FOR SHAFT DIN 471 25 SS	
550	312105-0451		3	SCREW M6S ISO 4017 M8X20 A480	
560	90055-0274		2	STRAIGHT COUPLING, D=8 MM - G1/4"	
570	312105-0376		6	SCREW M6S ISO 4014 M6X35 A480	
580	312105-0378		2	SCREW M6S ISO 4014 M6X40 A480	
600	312105-0368		8	SCREW M6S ISO 4017 M6X16 A480	
610	90240-0263		4	FLANGE BUSHING, IGLIDUR X 15X17X12	
670	315125-0165		3	WASHER TBRSB 8,4X26X5 A4	
680	315202-0217		1	O-RING 24,2X3 MM	
690	315202-0304		1	O-RING 64,5X3 MM	
700	90459-0384		2	BALL BEARING 25/62X17 SOLID OIL	
710	315753-0130		1	RETAINING RING FOR BORE DIN 472 47 SS	
720	321308-0205		1	BALL BEARING 25/47X12	
730	90091-0148		1	RADIAL SEAL 25X47X7 MM DUST LIP	
740	315705-0201		1	PARALLEL KEY W. ROUND ENDS 5X5X20 MM	
750	90208-0080		1	CLAMPING ELEMENT WITH SLEEVE, 25X34 MM	
770	350008-0004		1	PUSH-IN FITTING QSF-F-G1/4-6	
780	90424-0089		1	AIR NOZZLE, BSPT1/4, AAB727-1/4-15	
790	90091-0300		1	RADIAL SEAL 40X72X7 MM DUST LIP	
800	90459-4585		1	RADIAL SEAL 25X52X7 MM DUST LIP	
810	90459-0382		1	RETAINING RING FOR BORE DIN 472 72 SS	
820	90459-0385		1	BALL BEAR. 30/72X19 SOLID OIL	
880	315106-0173		2	WASHER ISO 7089-10-200 HV A4	
930	312705-0318		2	NUT HEX. DOMED CAP MHM-6 M8 A280	
960	312115-0293		2	SCREW ISO4762 M4X16 A4 80	
980	90459-7244		4	PLUG, BLIND, PLASTIC GPN300V5	
990	311103-0352		2	PARALLEL PIN ISO 2338 6M6X18 A1	
T50E7003	1498014-0000		1	GUIDE	
TBA 1000S ANSI (See drawing on page: 5-176)					
010	2511350-0000		1	WASHER	
030	3013351-0000		1	GUIDE	
040	3013352-0000		1	GUIDE	
060	2941718-0000		1	FRAME	
070	1498016-0000		1	PIN	
080	2767860-0000		1	BRACKET	
090	2958970-0000		2	ARM	
100	2767861-0000		1	SLIDER	
110	2908568-0000		1	TOP SECTION	
115	2872654-0000		2	BRACKET	
120	1498084-0000		2	PIN	
125	2908569-0000		1	TOP SECTION	
130	3046715-0000		4	SPACER	
140	3046716-0000		2	TOUCH GUARD	
145	2531791-0000		1	SPACER	
155	2852551-0000		1	PROTECTION	
160	2531785-0000		1	FLANGE	
170	1524444-0000		1	PROTECTION	
175	2898560-0000		1	COUPLING	
180	2500697-0000		1	PIN	
190	2527340-0000		1	PULLEY	
195	2898562-0000		2	HUB	
200	2531768-0000		3	PLATE	
205	312125-0287		1	SCREW ISO 1207 M4X8 A4	
215	90165-0057		1	PIPE CLIP FOR TUBE D=6 MM	
220	2666920-0000		2	SHAFT	
225	2541861-0000		1	PLATE	
245	90055-0257		1	PUSH-IN Y-CONNECTOR QSY-6	
255	2666921-0000		2	PULLEY	
265	2505533-0000		2	SCREW	
285	2898561-0000		4	PLATE	
290	2541819-0000		1	PULLEY	
291	2529106-0000		1	ROLLER	
292	2579099-0000		1	SUPPORT	
293	2529103-0000		1	SHAFT	
294	2529100-0000		1	SHAFT	
295	2531784-0000		1	COVER	
296	90459-1732		1	TIMING BELT AT10 780X25 MM	
300	312115-0467		2	SCREW ISO4762 M8X80 A4 80	
305	90458-1387		1	RADIAL SEAL 38X62X7 MM DUST LIP	
315	90458-0048		1	RETAINING RING FOR BORE DIN 472 62 SS	
320	315105-0165		15	WASHER BRB 8,4X16 RFR	
330	312105-0455		4	SCREW M6S ISO 4017 M8X30 A480	
340	315105-0153		21	WASHER BRB 6,4X12 RFR	
350	312105-0372		1	SCREW M6S ISO 4017 M6X25 A480	
370	312105-0370		4	SCREW M6S ISO 4017 M6X20 A480	
380	312105-0453		5	SCREW M6S ISO 4017 M8X25 A480	
390	315125-0153		6	WASHER TBRSB 6,4X22X4 A4	
400	312105-0505		2	SCREW M6S ISO 4014 M10X70 A480	
440	90600-5532		2	GAS PRING G10-23-100-1290-AU19-AU19-1200	
450	90240-0266		1	FLANGE BUSHING, IGLIDUR X 30X34X26	
460	90240-0265		2	FLANGE BUSHING, IGLIDUR X 20X23X21	
480	90459-0127		3	PLASTIC TUBE CLAMP, 8935150104 - TYPE 1	
490	90459-7458		2	WARNING SIGN ANSI (H), HOT SURFACE	

Machine Type | Group Description | Used-In | Group Number | Page No

See previous drawings pages: 5-172, 5-174, 5-176, 5-178.

ECM: 473533 - 20101003
Group number: 1349500-0500
Assembly Drawing: 1349500-23_1_AC

This list covers pages from 5-172 to 5-203

Pos	Part No	UN	Qty	Description	Page No
TBA 1000S ANSI (Cont'd) (See drawing on page: 5-176)					
500	312105-0287		3	SCREW M6S ISO 4017 M4X8 A470	
505	312105-0293		2	SCREW M6S ISO 4017 M4X16 A470	
510	315105-0136		7	WASHER BRB 4,3X8 RFR	
520	315205-0606		1	O-RING 56,74X3,53 MM	
530	315751-0122		2	RETAINING RING FOR SHAFT DIN 471 30 SS	
540	315751-0119		3	RETAINING RING FOR SHAFT DIN 471 25 SS	
550	312105-0451		3	SCREW M6S ISO 4017 M8X20 A480	
560	90055-0274		2	STRAIGHT COUPLING, D=8 MM - G1/4"	
570	312105-0376		6	SCREW M6S ISO 4014 M6X35 A480	
580	312105-0378		2	SCREW M6S ISO 4014 M6X40 A480	
600	312105-0368		10	SCREW M6S ISO 4017 M6X16 A480	
610	90240-0263		4	FLANGE BUSHING, IGLIDUR X 15X17X12	
670	315125-0165		3	WASHER TBRSB 8,4X26X5 A4	
680	315202-0217		1	O-RING 24,2X3 MM	
690	315202-0304		1	O-RING 64,5X3 MM	
700	90459-0384		2	BALL BEARING 25/62X17 SOLID OIL	
710	315753-0130		1	RETAINING RING FOR BORE DIN 472 47 SS	
720	321308-0205		1	BALL BEARING 25/47X12	
730	90091-0148		1	RADIAL SEAL 25X47X7 MM DUST LIP	
740	315705-0201		1	PARALLEL KEY W. ROUND ENDS 5X5X20 MM	
750	90208-0080		1	CLAMPING ELEMENT WITH SLEEVE, 25X34 MM	
770	350008-0004		2	PUSH-IN FITTING QSF-F-G1/4-6	
780	90424-0089		2	AIR NOZZLE, BSPT1/4, AAB727-1/4-15	
790	90091-0300		1	RADIAL SEAL 40X72X7 MM DUST LIP	
800	90459-4585		1	RADIAL SEAL 25X52X7 MM DUST LIP	
810	90459-0382		1	RETAINING RING FOR BORE DIN 472 72 SS	
820	90459-0385		1	BALL BEAR. 30/72X19 SOLID OIL	
880	315106-0173		2	WASHER ISO 7089-10-200 HV A4	
910	312705-0312		2	NUT HEX. DOMED CAP MHM-6 M4 A280	
920	312607-0316		2	HEXAGON NUT, EN 24032 M6M M6 A480	
930	312705-0318		2	NUT HEX. DOMED CAP MHM-6 M8 A280	
960	312115-0293		2	SCREW ISO4762 M4X16 A4 80	
980	90459-7244		4	PLUG, BLIND, PLASTIC GPN300V5	
990	311103-0352		2	PARALLEL PIN ISO 2338 6M6X18 A1	
T50E7003	2753164-0000		1	GUIDE	
T50W1368	90166-0081	M	0.15	TUBE 6 MM PA BLUE	
T50W1369	90166-0081	M	0.1	TUBE 6 MM PA BLUE	
TBA 1000S ISO (See drawing on page: 5-176)					
010	2511350-0000		1	WASHER	
030	3013351-0000		1	GUIDE	
040	3013352-0000		1	GUIDE	
060	2941718-0000		1	FRAME	
070	1498016-0000		1	PIN	
080	2767860-0000		1	BRACKET	
090	2958970-0000		2	ARM	
100	2767861-0000		1	SLIDER	
110	2908568-0000		1	TOP SECTION	
115	2872654-0000		2	BRACKET	
120	1498084-0000		2	PIN	
125	2908569-0000		1	TOP SECTION	
130	3046715-0000		4	SPACER	
140	3046716-0000		2	TOUCH GUARD	
145	2531791-0000		1	SPACER	
155	2852551-0000		1	PROTECTION	
160	2531785-0000		1	FLANGE	
170	1524444-0000		1	PROTECTION	
175	2898560-0000		1	COUPLING	
180	2500697-0000		1	PIN	
190	2527340-0000		1	PULLEY	
195	2898562-0000		2	HUB	
200	2531768-0000		3	PLATE	
205	312125-0287		1	SCREW ISO 1207 M4X8 A4	
215	90165-0057		1	PIPE CLIP FOR TUBE D=6 MM	
220	2666920-0000		2	SHAFT	
225	2541861-0000		1	PLATE	
245	90055-0257		1	PUSH-IN Y-CONNECTOR QSY-6	
255	2666921-0000		2	PULLEY	
265	2505533-0000		2	SCREW	
285	2898561-0000		4	PLATE	
290	2541819-0000		1	PULLEY	
291	2529106-0000		1	ROLLER	
292	2579099-0000		1	SUPPORT	
293	2529103-0000		1	SHAFT	
294	2529100-0000		1	SHAFT	
295	2531784-0000		1	COVER	
296	90459-1732		1	TIMING BELT AT10 780X25 MM	
300	312115-0467		2	SCREW ISO4762 M8X80 A4 80	
305	90458-1387		1	RADIAL SEAL 38X62X7 MM DUST LIP	
315	90458-0048		1	RETAINING RING FOR BORE DIN 472 62 SS	
320	315105-0165		15	WASHER BRB 8,4X16 RFR	
330	312105-0455		4	SCREW M6S ISO 4017 M8X30 A480	
340	315105-0153		21	WASHER BRB 6,4X12 RFR	
350	312105-0372		1	SCREW M6S ISO 4017 M6X25 A480	

Machine Type | Group Description | Used-In | Group Number | Page No

See previous drawings pages: 5-172, 5-174, 5-176, 5-178.

ECM: 473533 - 20101003
Group number: 1349500-0500
Assembly Drawing: 1349500-23_1_AC

This list covers pages from 5-172 to 5-203

Pos	Part No	UN	Qty	Description	Page No
TBA 1000S ISO (Cont'd) (See drawing on page: 5-176)					
370	312105-0370		4	SCREW M6S ISO 4017 M6X20 A480	
380	312105-0453		5	SCREW M6S ISO 4017 M8X25 A480	
390	315125-0153		6	WASHER TBRSB 6,4X22X4 A4	
400	312105-0505		2	SCREW M6S ISO 4014 M10X70 A480	
440	90600-5532		2	GAS PRING G10-23-100-1290-AU19-AU19-1200	
450	90240-0266		1	FLANGE BUSHING, IGLIDUR X 30X34X26	
460	90240-0265		2	FLANGE BUSHING, IGLIDUR X 20X23X21	
480	90459-0127		3	PLASTIC TUBE CLAMP, 8935150104 - TYPE 1	
490	359705-0007		2	WARNING SIGN ISO, HOT SURFACE	
500	312105-0287		3	SCREW M6S ISO 4017 M4X8 A470	
505	312105-0293		2	SCREW M6S ISO 4017 M4X16 A470	
510	315105-0136		7	WASHER BRB 4,3X8 RFR	
520	315205-0606		1	O-RING 56,74X3,53 MM	
530	315751-0122		2	RETAINING RING FOR SHAFT DIN 471 30 SS	
540	315751-0119		3	RETAINING RING FOR SHAFT DIN 471 25 SS	
550	312105-0451		3	SCREW M6S ISO 4017 M8X20 A480	
560	90055-0274		2	STRAIGHT COUPLING, D=8 MM - G1/4"	
570	312105-0376		6	SCREW M6S ISO 4014 M6X35 A480	
580	312105-0378		2	SCREW M6S ISO 4014 M6X40 A480	
600	312105-0368		10	SCREW M6S ISO 4017 M6X16 A480	
610	90240-0263		4	FLANGE BUSHING, IGLIDUR X 15X17X12	
670	315125-0165		3	WASHER TBRSB 8,4X26X5 A4	
680	315202-0217		1	O-RING 24,2X3 MM	
690	315202-0304		1	O-RING 64,5X3 MM	
700	90459-0384		2	BALL BEARING 25/62X17 SOLID OIL	
710	315753-0130		1	RETAINING RING FOR BORE DIN 472 47 SS	
720	321308-0205		1	BALL BEARING 25/47X12	
730	90091-0148		1	RADIAL SEAL 25X47X7 MM DUST LIP	
740	315705-0201		1	PARALLEL KEY W. ROUND ENDS 5X5X20 MM	
750	90208-0080		1	CLAMPING ELEMENT WITH SLEEVE, 25X34 MM	
770	350008-0004		2	PUSH-IN FITTING QSF-F-G1/4-6	
780	90424-0089		2	AIR NOZZLE, BSPT1/4, AAB727-1/4-15	
790	90091-0300		1	RADIAL SEAL 40X72X7 MM DUST LIP	
800	90459-4585		1	RADIAL SEAL 25X52X7 MM DUST LIP	
810	90459-0382		1	RETAINING RING FOR BORE DIN 472 72 SS	
820	90459-0385		1	BALL BEAR. 30/72X19 SOLID OIL	
880	315106-0173		2	WASHER ISO 7089-10-200 HV A4	
910	312705-0312		2	NUT HEX. DOMED CAP MHM-6 M4 A280	
920	312607-0316		2	HEXAGON NUT, EN 24032 M6M M6 A480	
930	312705-0318		2	NUT HEX. DOMED CAP MHM-6 M8 A280	
960	312115-0293		2	SCREW ISO4762 M4X16 A4 80	
980	90459-7244		4	PLUG, BLIND, PLASTIC GPN300V5	
990	311103-0352		2	PARALLEL PIN ISO 2338 6M6X18 A1	
T50E7003	2753164-0000		1	GUIDE	
T50W1368	90166-0081	M	0.15	TUBE 6 MM PA BLUE	
T50W1369	90166-0081	M	0.1	TUBE 6 MM PA BLUE	
Common Parts					
360	90601-2046		4	CAPTIVE SCREW M6, GUTBG 6-4-12	
400	312105-0461		2	SCREW M6S ISO 4014 M8X50 A480	
410	312105-0449		2	SCREW M6S ISO 4017 M8X16 A480	
420	312812-0316		2	HEXAGON NUT, NY-LOCK M6 A480	
430	90051-0127		2	HANDLE, NO. .601/90+X-M10-INOX	
650	312155-0451		1	SCREW DIN 7991 MF6S M8X20 A4 70	
T50W1367	90166-0081	M	5.5	TUBE 6 MM PA BLUE	
T50W7004	90166-0118	M	2	TUBE 8 MM PA BLACK	
T50W7005	90166-0118	M	1	TUBE 8 MM PA BLACK	

Machine Type | Group Description | Used-In | Group Number | Page No

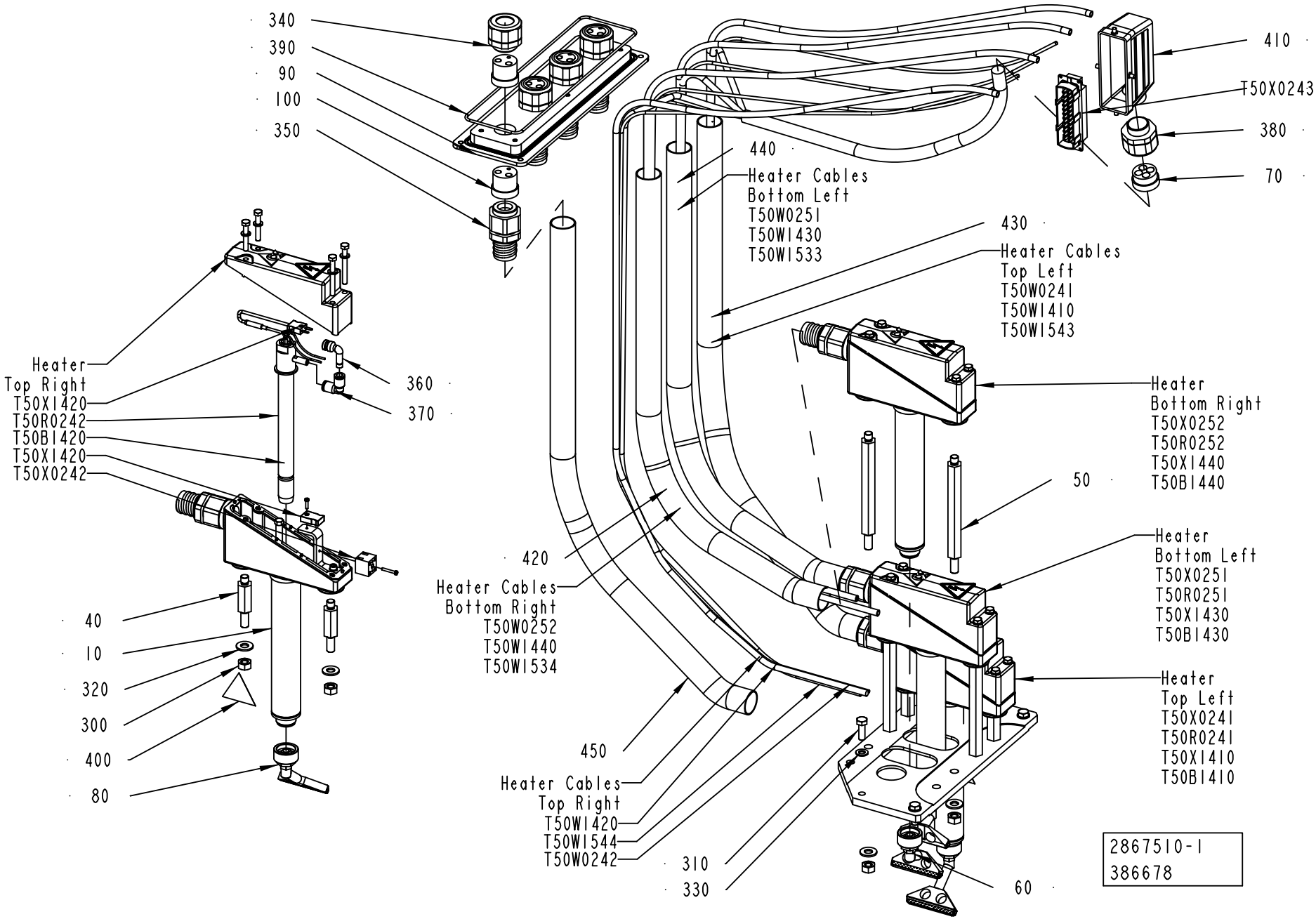
340
390
90
100
350
410
T50X0243
380
70
440
Heater Cables
Bottom Left
T50W0251
T50W1430
T50W1533
430
Heater Cables
Top Left
T50W0241
T50W1410
T50W1543
Heater
Top Right
T50X1420
T50R0242
T50B1420
T50X1420
T50X0242
360
370
Heater
Bottom Right
T50X0252
T50R0252
T50X1440
T50B1440
50
420
Heater Cables
Bottom Right
T50W0252
T50W1440
T50W1534
Heater
Bottom Left
T50X0251
T50R0251
T50X1430
T50B1430
40
10
320
300
400
80
450
Heater Cables
Top Right
T50W1420
T50W1544
T50W0242
Heater
Top Left
T50X0241
T50R0241
T50X1410
T50B1410
310
330
60
2867510-1
386678

ECM: 462916 - 20101002
Group number: 2867510-0100
Assembly Drawing: 2867510-1_1_AB

This list covers pages from 5-204 to 5-211

Pos	Part No	UN	Qty	Description	Page No
TBA 1000SQ ANSI (See drawing on page: 5-206)					
010	2864950-0100		4	HEATING ELEMENT	**5-213**
030	3051897-0000		1	PLATE	
040	2773838-0000		4	SPACER	
050	3055885-0000		2	SUPPORT	
060	2909531-0000		2	NOZZLE	
080	2909530-0000		2	NOZZLE	
305	312105-0493		4	SCREW M6S ISO 4017 M10X25 A480	
320	315105-0173		12	WASHER BRB 10,5X22 RFR	
325	312105-0492		8	SCREW M6S ISO 4017 M10X22 A480	
400	359725-0117		2	WARNING SIGN ANSI (V), HOT SURFACE	
420	90152-0070	MM	950	METAL HOSE, 32,5X26, UL 2621	
430	90152-0070	MM	950	METAL HOSE, 32,5X26, UL 2621	
440	90152-0070	MM	950	METAL HOSE, 32,5X26, UL 2621	
450	90152-0070	MM	950	METAL HOSE, 32,5X26, UL 2621	
TBA 1000SQ ISO (See drawing on page: 5-206)					
010	2864950-0100		4	HEATING ELEMENT	**5-213**
030	3051897-0000		1	PLATE	
040	2773838-0000		4	SPACER	
050	3055885-0000		2	SUPPORT	
060	2909531-0000		2	NOZZLE	
080	2909530-0000		2	NOZZLE	
305	312105-0493		4	SCREW M6S ISO 4017 M10X25 A480	
320	315105-0173		12	WASHER BRB 10,5X22 RFR	
325	312105-0492		8	SCREW M6S ISO 4017 M10X22 A480	
400	359710-0001		2	WARNING SIGN ISO, HOT SURFACE	
420	90152-0070	MM	950	METAL HOSE, 32,5X26, UL 2621	
430	90152-0070	MM	950	METAL HOSE, 32,5X26, UL 2621	
440	90152-0070	MM	950	METAL HOSE, 32,5X26, UL 2621	
450	90152-0070	MM	950	METAL HOSE, 32,5X26, UL 2621	
TBA 0125S ANSI (See drawing on page: 5-204)					
010	2864950-0100		4	HEATING ELEMENT	**5-213**
030	2971274-0000		1	PLATE	
040	2835108-0000		4	SPACER	
050	2835101-0000		4	SPACER	
060	2693702-0000		2	NOZZLE	
080	3044239-0000		2	NOZZLE	
300	312605-0320		8	HEXAGON NUT, M6M M10 A280	
320	315105-0173		8	WASHER BRB 10,5X22 RFR	
400	359725-0117		2	WARNING SIGN ANSI (V), HOT SURFACE	
420	90152-0070	MM	1100	METAL HOSE, 32,5X26, UL 2621	
430	90152-0070	MM	1100	METAL HOSE, 32,5X26, UL 2621	
440	90152-0070	MM	1100	METAL HOSE, 32,5X26, UL 2621	
450	90152-0070	MM	1100	METAL HOSE, 32,5X26, UL 2621	
TBA 0125S ISO (See drawing on page: 5-204)					
010	2864950-0100		4	HEATING ELEMENT	**5-213**
030	2971274-0000		1	PLATE	
040	2835108-0000		4	SPACER	
050	2835101-0000		4	SPACER	
060	2693702-0000		2	NOZZLE	
080	3044239-0000		2	NOZZLE	
300	312605-0320		8	HEXAGON NUT, M6M M10 A280	
320	315105-0173		8	WASHER BRB 10,5X22 RFR	
400	359710-0001		2	WARNING SIGN ISO, HOT SURFACE	
420	90152-0070	MM	1100	METAL HOSE, 32,5X26, UL 2621	
430	90152-0070	MM	1100	METAL HOSE, 32,5X26, UL 2621	
440	90152-0070	MM	1100	METAL HOSE, 32,5X26, UL 2621	
450	90152-0070	MM	1100	METAL HOSE, 32,5X26, UL 2621	
TBA 0200B ANSI (See drawing on page: 5-204)					
010	2864950-0100		4	HEATING ELEMENT	**5-213**
030	2971274-0000		1	PLATE	
040	2838417-0000		4	SPACER	
050	3015753-0000		4	SPACER	
060	2693718-0000		2	NOZZLE	
080	3051347-0000		2	NOZZLE	
300	312605-0320		8	HEXAGON NUT, M6M M10 A280	
320	315105-0173		8	WASHER BRB 10,5X22 RFR	
400	359725-0117		2	WARNING SIGN ANSI (V), HOT SURFACE	
420	90152-0070	MM	1100	METAL HOSE, 32,5X26, UL 2621	
430	90152-0070	MM	1100	METAL HOSE, 32,5X26, UL 2621	
440	90152-0070	MM	1100	METAL HOSE, 32,5X26, UL 2621	
450	90152-0070	MM	1100	METAL HOSE, 32,5X26, UL 2621	
TBA 0200B ISO (See drawing on page: 5-204)					
010	2864950-0100		4	HEATING ELEMENT	**5-213**
030	2971274-0000		1	PLATE	
040	2838417-0000		4	SPACER	
050	3015753-0000		4	SPACER	
060	2693718-0000		2	NOZZLE	
080	3051347-0000		2	NOZZLE	
300	312605-0320		8	HEXAGON NUT, M6M M10 A280	
320	315105-0173		8	WASHER BRB 10,5X22 RFR	
400	359710-0001		2	WARNING SIGN ISO, HOT SURFACE	
420	90152-0070	MM	1100	METAL HOSE, 32,5X26, UL 2621	
430	90152-0070	MM	1100	METAL HOSE, 32,5X26, UL 2621	

Machine Type | Group Description | Used-In | Group Number | Page No

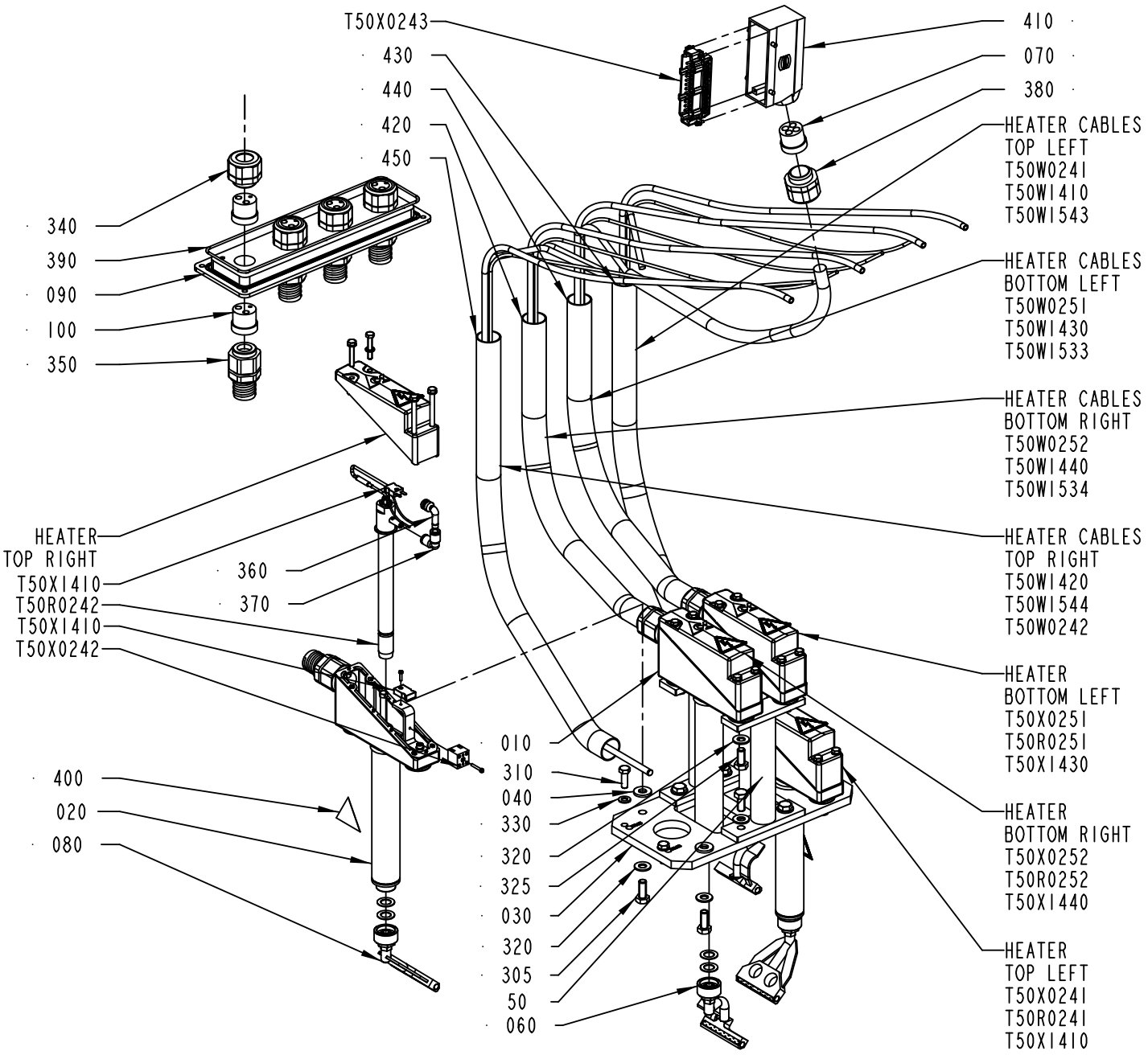

2867510-3
429429

ECM: 462916 - 20101002
Group number: 2867510-0100
Assembly Drawing: 2867510-3_1_AC

This list covers pages from 5-204 to 5-211

Pos	Part No	UN	Qty	Description	Page No
TBA 0200B ISO (Cont'd) (See drawing on page: 5-204)					
440	90152-0070	MM	1100	METAL HOSE, 32,5X26, UL 2621	
450	90152-0070	MM	1100	METAL HOSE, 32,5X26, UL 2621	
TBA 0200M ANSI (See drawing on page: 5-204)					
010	2864950-0100		4	HEATING ELEMENT	**5-213**
030	2971274-0000		1	PLATE	
040	2839956-0000		4	SPACER	
050	3024151-0000		4	SPACER	
060	2691494-0000		2	NOZZLE	
080	3051346-0000		2	NOZZLE	
300	312605-0320		8	HEXAGON NUT, M6M M10 A280	
320	315105-0173		8	WASHER BRB 10,5X22 RFR	
400	359725-0117		2	WARNING SIGN ANSI (V), HOT SURFACE	
420	90152-0070	MM	1100	METAL HOSE, 32,5X26, UL 2621	
430	90152-0070	MM	1100	METAL HOSE, 32,5X26, UL 2621	
440	90152-0070	MM	1100	METAL HOSE, 32,5X26, UL 2621	
450	90152-0070	MM	1100	METAL HOSE, 32,5X26, UL 2621	
TBA 0200M ISO (See drawing on page: 5-204)					
010	2864950-0100		4	HEATING ELEMENT	**5-213**
030	2971274-0000		1	PLATE	
040	2839956-0000		4	SPACER	
050	3024151-0000		4	SPACER	
060	2691494-0000		2	NOZZLE	
080	3051346-0000		2	NOZZLE	
300	312605-0320		8	HEXAGON NUT, M6M M10 A280	
320	315105-0173		8	WASHER BRB 10,5X22 RFR	
400	359710-0001		2	WARNING SIGN ISO, HOT SURFACE	
420	90152-0070	MM	1100	METAL HOSE, 32,5X26, UL 2621	
430	90152-0070	MM	1100	METAL HOSE, 32,5X26, UL 2621	
440	90152-0070	MM	1100	METAL HOSE, 32,5X26, UL 2621	
450	90152-0070	MM	1100	METAL HOSE, 32,5X26, UL 2621	
TBA 0200S ANSI (See drawing on page: 5-204)					
010	2864950-0100		4	HEATING ELEMENT	**5-213**
030	2971274-0000		1	PLATE	
040	2839956-0000		4	SPACER	
050	3024149-0000		4	SPACER	
060	2693702-0000		2	NOZZLE	
080	3044239-0000		2	NOZZLE	
300	312605-0320		8	HEXAGON NUT, M6M M10 A280	
320	315105-0173		8	WASHER BRB 10,5X22 RFR	
400	359725-0117		2	WARNING SIGN ANSI (V), HOT SURFACE	
420	90152-0070	MM	1100	METAL HOSE, 32,5X26, UL 2621	
430	90152-0070	MM	1100	METAL HOSE, 32,5X26, UL 2621	
440	90152-0070	MM	1100	METAL HOSE, 32,5X26, UL 2621	
450	90152-0070	MM	1100	METAL HOSE, 32,5X26, UL 2621	
TBA 0200S ISO (See drawing on page: 5-204)					
010	2864950-0100		4	HEATING ELEMENT	**5-213**
030	2971274-0000		1	PLATE	
040	2839956-0000		4	SPACER	
050	3024149-0000		4	SPACER	
060	2693702-0000		2	NOZZLE	
080	3044239-0000		2	NOZZLE	
300	312605-0320		8	HEXAGON NUT, M6M M10 A280	
320	315105-0173		8	WASHER BRB 10,5X22 RFR	
400	359710-0001		2	WARNING SIGN ISO, HOT SURFACE	
420	90152-0070	MM	1100	METAL HOSE, 32,5X26, UL 2621	
430	90152-0070	MM	1100	METAL HOSE, 32,5X26, UL 2621	
440	90152-0070	MM	1100	METAL HOSE, 32,5X26, UL 2621	
450	90152-0070	MM	1100	METAL HOSE, 32,5X26, UL 2621	
TBA 0250B ANSI (See drawing on page: 5-204)					
010	2864950-0100		4	HEATING ELEMENT	**5-213**
030	2971274-0000		1	PLATE	
040	2838416-0000		4	SPACER	
050	3024150-0000		4	SPACER	
060	2693718-0000		2	NOZZLE	
080	3051347-0000		2	NOZZLE	
300	312605-0320		8	HEXAGON NUT, M6M M10 A280	
320	315105-0173		8	WASHER BRB 10,5X22 RFR	
400	359725-0117		2	WARNING SIGN ANSI (V), HOT SURFACE	
420	90152-0070	MM	1100	METAL HOSE, 32,5X26, UL 2621	
430	90152-0070	MM	1100	METAL HOSE, 32,5X26, UL 2621	
440	90152-0070	MM	1100	METAL HOSE, 32,5X26, UL 2621	
450	90152-0070	MM	1100	METAL HOSE, 32,5X26, UL 2621	
TBA 0250B ISO (See drawing on page: 5-204)					
010	2864950-0100		4	HEATING ELEMENT	**5-213**
030	2971274-0000		1	PLATE	
040	2838416-0000		4	SPACER	
050	3024150-0000		4	SPACER	
060	2693718-0000		2	NOZZLE	
080	3051347-0000		2	NOZZLE	
300	312605-0320		8	HEXAGON NUT, M6M M10 A280	
320	315105-0173		8	WASHER BRB 10,5X22 RFR	
400	359710-0001		2	WARNING SIGN ISO, HOT SURFACE	
420	90152-0070	MM	1100	METAL HOSE, 32,5X26, UL 2621	

Machine Type | Group Description | Used-In | Group Number | Page No

See previous drawings pages: 5-204, 5-206.

ECM: 462916 - 20101002
Group number: 2867510-0100
Assembly Drawing: 2867510-3_1_AC

This list covers pages from 5-204 to 5-211

Pos	Part No	UN	Qty	Description	Page No
TBA 0250B ISO (Cont'd) (See drawing on page: 5-204)					
430	90152-0070	MM	1100	METAL HOSE, 32,5X26, UL 2621	
440	90152-0070	MM	1100	METAL HOSE, 32,5X26, UL 2621	
450	90152-0070	MM	1100	METAL HOSE, 32,5X26, UL 2621	
TBA 0250S ANSI (See drawing on page: 5-204)					
010	2864950-0100		4	HEATING ELEMENT	**5-213**
030	2971274-0000		1	PLATE	
040	2839956-0000		4	SPACER	
050	3024152-0000		4	SPACER	
060	2691494-0000		2	NOZZLE	
080	3051346-0000		2	NOZZLE	
300	312605-0320		8	HEXAGON NUT, M6M M10 A280	
320	315105-0173		8	WASHER BRB 10,5X22 RFR	
400	359725-0117		2	WARNING SIGN ANSI (V), HOT SURFACE	
420	90152-0070	MM	1100	METAL HOSE, 32,5X26, UL 2621	
430	90152-0070	MM	1100	METAL HOSE, 32,5X26, UL 2621	
440	90152-0070	MM	1100	METAL HOSE, 32,5X26, UL 2621	
450	90152-0070	MM	1100	METAL HOSE, 32,5X26, UL 2621	
TBA 0250S ISO (See drawing on page: 5-204)					
010	2864950-0100		4	HEATING ELEMENT	**5-213**
030	2971274-0000		1	PLATE	
040	2839956-0000		4	SPACER	
050	3024152-0000		4	SPACER	
060	2691494-0000		2	NOZZLE	
080	3051346-0000		2	NOZZLE	
300	312605-0320		8	HEXAGON NUT, M6M M10 A280	
320	315105-0173		8	WASHER BRB 10,5X22 RFR	
400	359710-0001		2	WARNING SIGN ISO, HOT SURFACE	
420	90152-0070	MM	1100	METAL HOSE, 32,5X26, UL 2621	
430	90152-0070	MM	1100	METAL HOSE, 32,5X26, UL 2621	
440	90152-0070	MM	1100	METAL HOSE, 32,5X26, UL 2621	
450	90152-0070	MM	1100	METAL HOSE, 32,5X26, UL 2621	
TBA 1000B ANSI (See drawing on page: 5-206)					
010	2864950-0100		4	HEATING ELEMENT	**5-213**
030	3051897-0000		1	PLATE	
040	2778689-0000		4	SPACER	
050	3057154-0000		2	SUPPORT	
060	2910394-0000		2	NOZZLE	
080	2910393-0000		2	NOZZLE	
305	312605-0320		4	HEXAGON NUT, M6M M10 A280	
320	315105-0173		12	WASHER BRB 10,5X22 RFR	
325	312105-0492		8	SCREW M6S ISO 4017 M10X22 A480	
400	359725-0117		2	WARNING SIGN ANSI (V), HOT SURFACE	
420	90152-0070	MM	950	METAL HOSE, 32,5X26, UL 2621	
430	90152-0070	MM	950	METAL HOSE, 32,5X26, UL 2621	
440	90152-0070	MM	950	METAL HOSE, 32,5X26, UL 2621	
450	90152-0070	MM	950	METAL HOSE, 32,5X26, UL 2621	
TBA 1000B ISO (See drawing on page: 5-206)					
010	2864950-0100		4	HEATING ELEMENT	**5-213**
030	3051897-0000		1	PLATE	
040	2778689-0000		4	SPACER	
050	3057154-0000		2	SUPPORT	
060	2910394-0000		2	NOZZLE	
080	2910393-0000		2	NOZZLE	
305	312605-0320		4	HEXAGON NUT, M6M M10 A280	
320	315105-0173		12	WASHER BRB 10,5X22 RFR	
325	312105-0492		8	SCREW M6S ISO 4017 M10X22 A480	
400	359710-0001		2	WARNING SIGN ISO, HOT SURFACE	
420	90152-0070	MM	950	METAL HOSE, 32,5X26, UL 2621	
430	90152-0070	MM	950	METAL HOSE, 32,5X26, UL 2621	
440	90152-0070	MM	950	METAL HOSE, 32,5X26, UL 2621	
450	90152-0070	MM	950	METAL HOSE, 32,5X26, UL 2621	
TBA 1000S ANSI (See drawing on page: 5-206)					
010	2864950-0100		2	HEATING ELEMENT	**5-213**
020	2864960-0100		2	HEATING ELEMENT	**5-215**
030	3051897-0000		1	PLATE	
040	2774487-0000		4	SPACER	
050	3057154-0000		2	SUPPORT	
060	2910394-0000		2	NOZZLE	
080	2910393-0000		2	NOZZLE	
305	312605-0320		4	HEXAGON NUT, M6M M10 A280	
320	315105-0173		12	WASHER BRB 10,5X22 RFR	
325	312105-0492		8	SCREW M6S ISO 4017 M10X22 A480	
400	359725-0117		2	WARNING SIGN ANSI (V), HOT SURFACE	
420	90152-0070	MM	950	METAL HOSE, 32,5X26, UL 2621	
430	90152-0070	MM	950	METAL HOSE, 32,5X26, UL 2621	
440	90152-0070	MM	950	METAL HOSE, 32,5X26, UL 2621	
450	90152-0070	MM	950	METAL HOSE, 32,5X26, UL 2621	
TBA 1000S ISO (See drawing on page: 5-206)					
010	2864950-0100		2	HEATING ELEMENT	**5-213**
020	2864960-0100		2	HEATING ELEMENT	**5-215**
030	3051897-0000		1	PLATE	
040	2774487-0000		4	SPACER	
050	3057154-0000		2	SUPPORT	

Machine Type | Group Description | Used-In | Group Number | Page No

See previous drawings pages: 5-204, 5-206.

Pos	Part No	UN	Qty	Description	Page No
TBA 1000S ISO (Cont'd) (See drawing on page: 5-206)					
060	2910394-0000		2	NOZZLE	
080	2910393-0000		2	NOZZLE	
305	312605-0320		4	HEXAGON NUT, M6M M10 A280	
320	315105-0173		12	WASHER BRB 10,5X22 RFR	
325	312105-0492		8	SCREW M6S ISO 4017 M10X22 A480	
400	359710-0001		2	WARNING SIGN ISO, HOT SURFACE	
420	90152-0070	MM	950	METAL HOSE, 32,5X26, UL 2621	
430	90152-0070	MM	950	METAL HOSE, 32,5X26, UL 2621	
440	90152-0070	MM	950	METAL HOSE, 32,5X26, UL 2621	
450	90152-0070	MM	950	METAL HOSE, 32,5X26, UL 2621	
Common Parts					
070	90457-0030		1	INSERT, MULTI HOLE, EK155M4X9	
090	2877129-0000		1	PLATE	
100	1484379-0000		8	INSERT	
310	312105-0453		4	SCREW M6S ISO 4017 M8X25 A480	
330	315105-0165		4	WASHER BRB 8,4X16 RFR	
340	90458-0423		4	GLAND W/O INSERT M32X1,5 EXTENDED	
350	90458-0451		4	HOSE GLAND EMC M32 EXTENDED	
360	90055-0172		4	ELBOW WITH TAILPIECE 8/8 MM	
370	342735-0103		4	ELBOW PIPE JOINT	
380	90458-0423		1	GLAND W/O INSERT M32X1,5 EXTENDED	
390	90161-0001	M	1	O-RING MATERIAL 3 MM	
410	90459-6631		1	HOOD 24 B SIDE ENTRY, 19 30 024 1522	
T50R0241	2877136-0000		1	HEATING ELEMENT	
T50R0242	2877136-0000		1	HEATING ELEMENT	
T50R0251	2877136-0000		1	HEATING ELEMENT	
T50R0252	2877136-0000		1	HEATING ELEMENT	
T50W0241	90220-0034	MM	2550	THERMOCABLE TEX/SITW-20F-KX 2X0,5MM2	
T50W0242	90220-0034	MM	2550	THERMOCABLE TEX/SITW-20F-KX 2X0,5MM2	
T50W0251	90220-0034	MM	2550	THERMOCABLE TEX/SITW-20F-KX 2X0,5MM2	
T50W0252	90220-0034	MM	2550	THERMOCABLE TEX/SITW-20F-KX 2X0,5MM2	
T50W1410	351150-0417	MM	2800	CABLE OLFLEX 3X2,5 MM2 LIGHT/GREY	
T50W1420	351150-0417	MM	2800	CABLE OLFLEX 3X2,5 MM2 LIGHT/GREY	
T50W1430	351150-0417	MM	2800	CABLE OLFLEX 3X2,5 MM2 LIGHT/GREY	
T50W1440	351150-0417	MM	2800	CABLE OLFLEX 3X2,5 MM2 LIGHT/GREY	
T50W1533	90166-0013	MM	2550	TUBE 8 MM PA BLUE	
T50W1534	90166-0013	MM	2550	TUBE 8 MM PA BLUE	
T50W1543	90166-0013	MM	2550	TUBE 8 MM PA BLUE	
T50W1544	90166-0013	MM	2550	TUBE 8 MM PA BLUE	
T50X0241	90195-0020		1	TERMINAL BLOCK, BK 2CRN; 0624720000	
T50X0242	90195-0020		1	TERMINAL BLOCK, BK 2CRN; 0624720000	
T50X0243	90110-0056		1	MALE INSERT HAN 24 E 09 33 024 2601	
T50X0251	90195-0020		1	TERMINAL BLOCK, BK 2CRN; 0624720000	
T50X0252	90195-0020		1	TERMINAL BLOCK, BK 2CRN; 0624720000	
T50X1410	90458-0135		1	MALE PLUG, COD.220-0397	
T50X1410	90458-0136		1	FEMALE PLUG, COD 220-0381	
T50X1420	90458-0135		1	MALE PLUG, COD.220-0397	
T50X1420	90458-0136		1	FEMALE PLUG, COD 220-0381	
T50X1430	90458-0135		1	MALE PLUG, COD.220-0397	
T50X1430	90458-0136		1	FEMALE PLUG, COD 220-0381	
T50X1440	90458-0135		1	MALE PLUG, COD.220-0397	
T50X1440	90458-0136		1	FEMALE PLUG, COD 220-0381	

HEATING ELEMENT

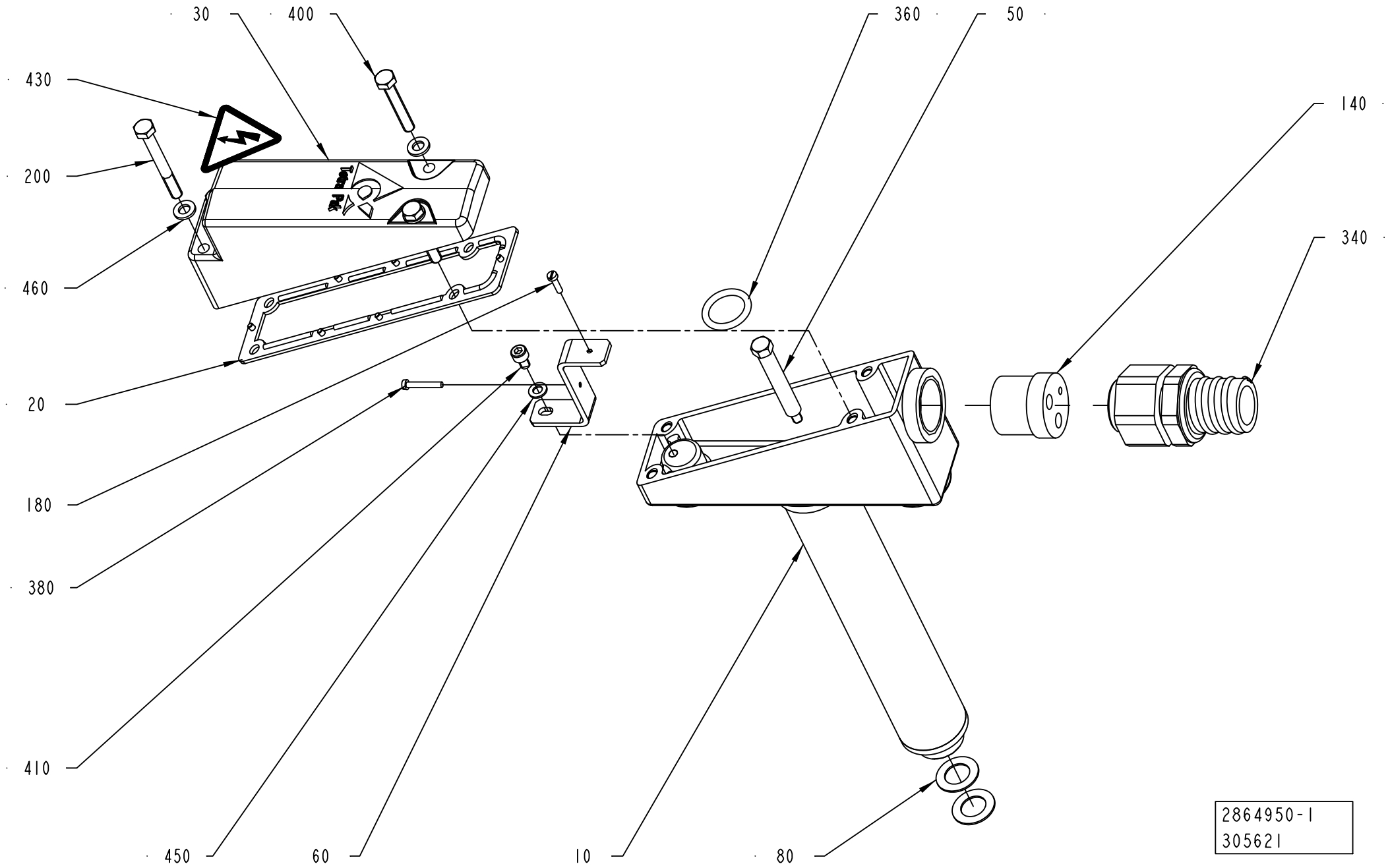

ECM: 451179 - 20101001
Group number: 2864950-0100
Assembly Drawing: 2864950-1_1_AA

Pos	Part No	UN	Qty	Description	Page No
ANSI					
430	359715-0101		1	WARNING SIGN ANSI (V), ELECTRIC SHOCK	
ISO					
430	359705-0015		1	WARNING SIGN ISO, RISK OF ELECTRIC SHOCK	
Common Parts					
010	2864951-0000		1	HEATING PIPE	
020	2833324-0000		1	GASKET	
030	2855849-0000		1	COVER	
050	2833326-0000		1	BRACKET	
060	2818560-0000		1	BRACKET	
080	2773832-0000		3	GASKET	
140	1484379-0000		1	INSERT	
180	312125-0226		1	SCREW ISO 1207 M3X12 A4	
200	312105-0381		2	SCREW M6S ISO 4014 M6X55 A480	
340	90458-0451		1	HOSE GLAND EMC M32 EXTENDED	
360	315205-0516		1	O-RING 20,22X3,53 MM	
380	312125-0230		1	SCREW ISO 1207 M3X20 A4	
400	312109-0376		2	SCREW M6S ISO 4017 M6X35 A480	
410	312115-0323		1	SCREW ISO4762 M5X8 A4 80	
450	315105-0146		1	WASHER BRB 5,3X10 RFR	
460	315105-0153		4	WASHER BRB 6,4X12 RFR	

Pos	Part No	UN	Qty	Description	Page No

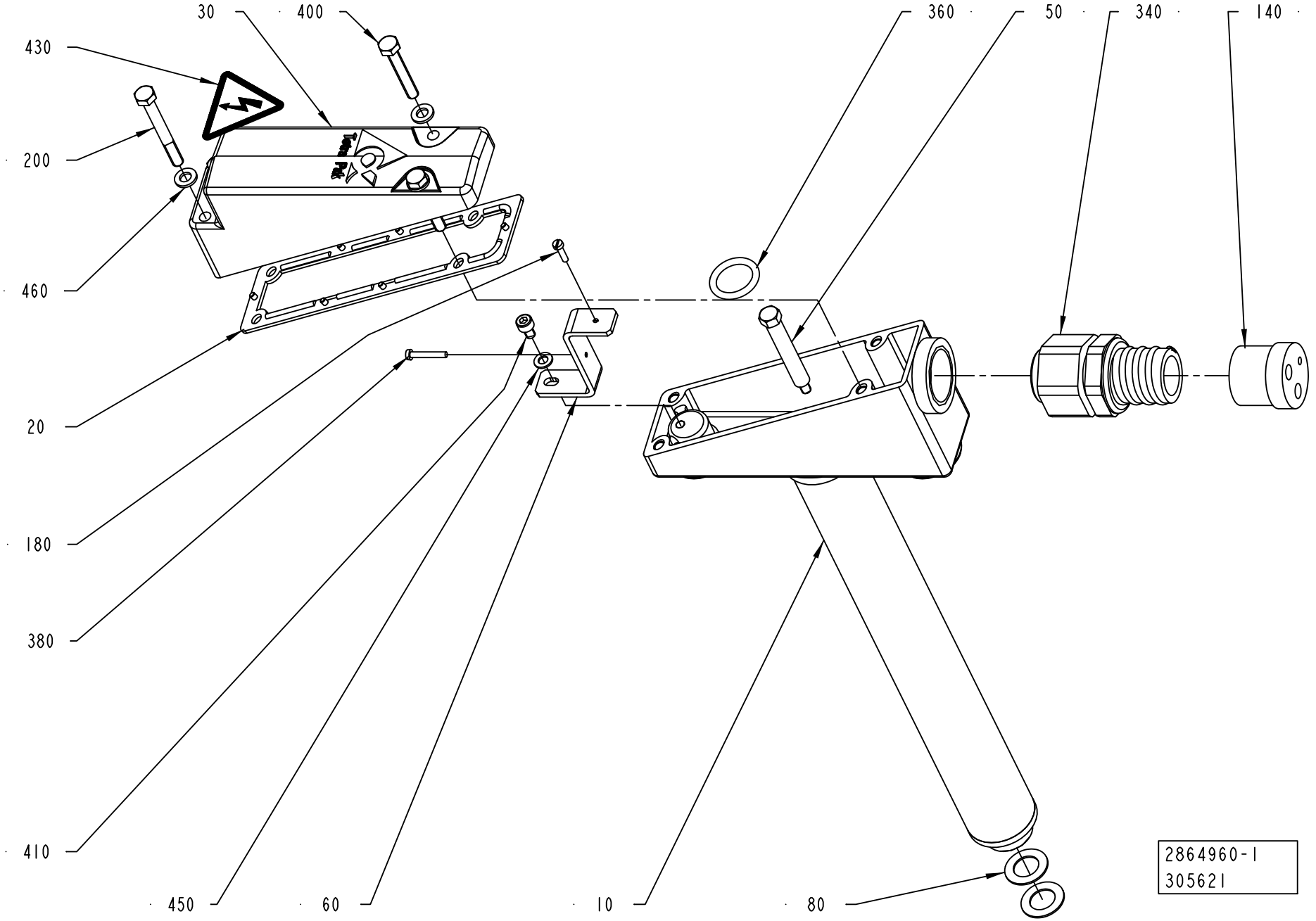
30
400
360
50
340
140
430
200
460
20
180
380
410
450
60
10
80
2864960-1
305621

ECM: 461303 - 20101002
Group number: 2864960-0100
Assembly Drawing: 2864960-1_1_AA

Pos	Part No	UN	Qty	Description	Page No
ANSI					
430	359715-0101		1	WARNING SIGN ANSI (V), ELECTRIC SHOCK	
ISO					
430	359705-0015		1	WARNING SIGN ISO, RISK OF ELECTRIC SHOCK	
Common Parts					
010	2864952-0000		1	HEATING PIPE	
020	2833324-0000		1	GASKET	
030	2855849-0000		1	COVER	
050	2833326-0000		1	BRACKET	
060	2818560-0000		1	BRACKET	
080	2773832-0000		3	GASKET	
140	1484379-0000		1	INSERT	
180	312125-0226		1	SCREW ISO 1207 M3X12 A4	
200	312105-0381		2	SCREW M6S ISO 4014 M6X55 A480	
340	90458-0451		1	HOSE GLAND EMC M32 EXTENDED	
360	315205-0516		1	O-RING 20,22X3,53 MM	
380	312125-0230		1	SCREW ISO 1207 M3X20 A4	
400	312109-0376		2	SCREW M6S ISO 4017 M6X35 A480	
410	312115-0323		1	SCREW ISO4762 M5X8 A4 80	
450	315105-0146		1	WASHER BRB 5,3X10 RFR	
460	315105-0153		4	WASHER BRB 6,4X12 RFR	

Pos	Part No	UN	Qty	Description	Page No

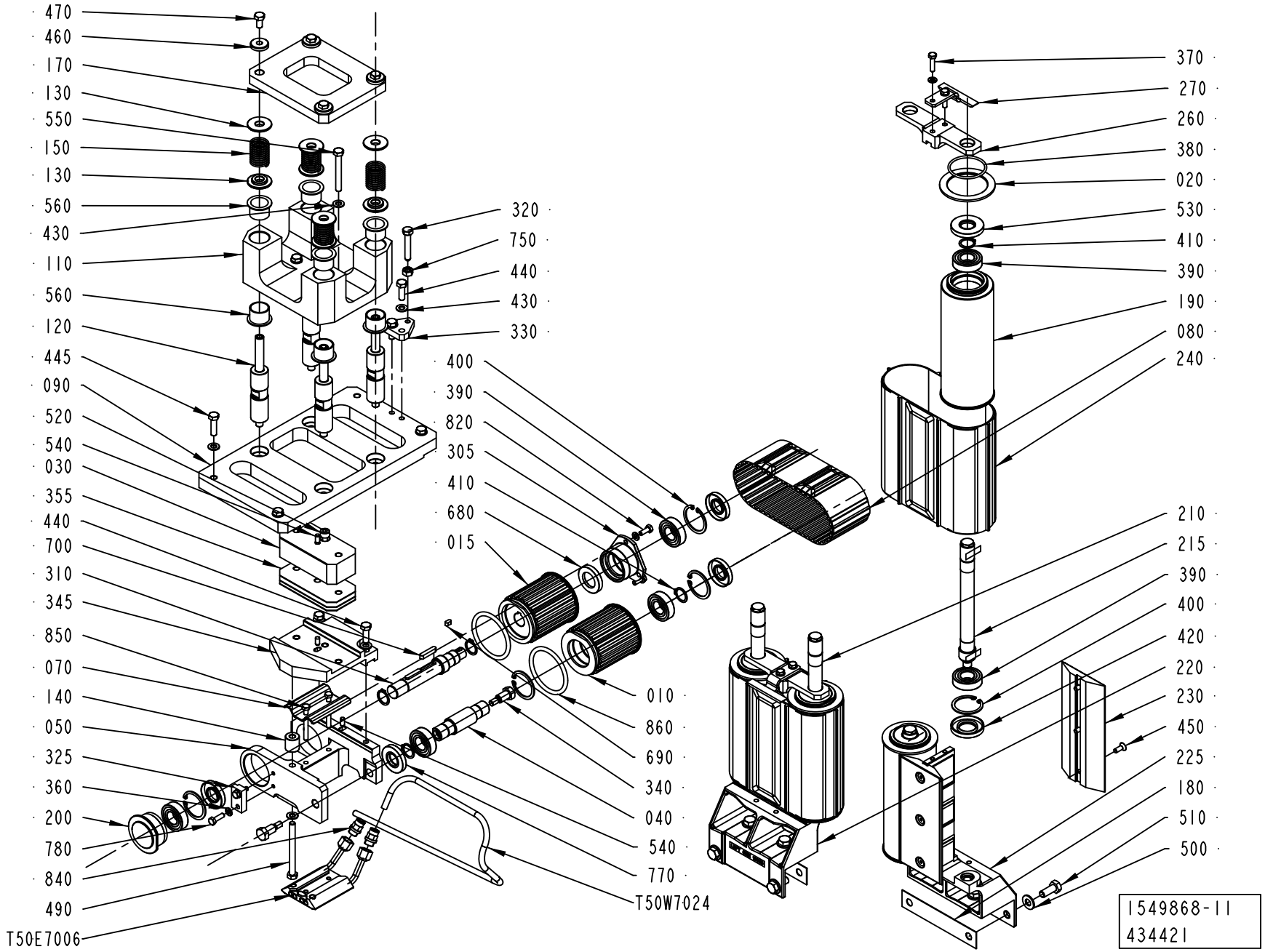
470
460
170
130
550
150
130
560
430
110
560
120
445
090
520
540
030
355
440
700
310
345
850
070
140
050
325
360
200
780
840
490
T50E7006
320
750
440
430
330
400
390
820
305
410
680
015
010
860
690
340
040
540
770
T50W7024
370
270
260
380
020
530
410
390
190
080
240
210
215
390
400
420
220
230
450
225
180
510
500
1549868-11
434421

ECM: 472321 - 20110101
Group number: 1549868-0300
Assembly Drawing: 1549868-11_1_AE

This list covers pages from 5-216 to 5-229

Pos	Part No	UN	Qty	Description	Page No
TBA 0125S (See drawing on page: 5-220)					
010	2738164-0000		1	PULLEY	
030	2791423-0000		1	SPACER BLOCK	
040	2738156-0000		1	SHAFT	
050	2791420-0000		1	SUPPORT	
060	3000405-0000		2	SLIDER	
075	2790258-0000		1	SLIDER	
080	2933927-0000		1	BELT	
090	2791424-0000		1	SUPPORT	
110	2791426-0000		1	GUIDE BRACKET	
120	2791425-0000		4	SHAFT	
130	2791427-0000		8	WASHER	
135	2794834-0000		12	WASHER	
140	2791421-0000		1	SPACER	
150	90600-2905		4	COMP. SPRING 21060, 1,25X17,25X10	
170	2791428-0000		1	PLATE	
180	3025661-0000		6	SHIM	
190	2835104-0000		4	PULLEY	
200	2738162-0000		1	FLANGE	
210	2835103-0000		4	SHAFT	
220	3025666-0000		2	SUPPORT	
230	2892570-0000		2	PLATE	
235	90286-0013		2	GREASE NIPPLE STRAIGHT, H1 M6X1 2346	
240	2910612-0000		2	BELT	
260	3010614-0000		2	PLATE	
270	3122892-0000		4	STOPPER	
280	1499689-0000		4	SPACER	
290	2898561-0000		4	PLATE	
295	2898562-0000		2	HUB	
300	2898560-0000		1	COUPLING	
305	2738158-0000		1	FLANGE	
310	2738159-0000		1	SHAFT	
315	2738163-0000		2	PULLEY	
330	2790259-0000		1	SUPPORT	
335	2933675-0000		2	SHIM	
345	2791422-0000		1	SLIDER	
355	3122891-0000		2	SHIM	
360	315105-0153		17	WASHER BRB 6,4X12 RFR	
370	312105-0372		8	SCREW M6S ISO 4017 M6X25 A480	
390	90214-0225		10	BALL BEAR. 20/42X12 SOLID OIL	
400	90141-0020		6	RETAINING RING FOR BORE DIN 472 42 SS	
410	315751-0116		6	RETAINING RING FOR SHAFT DIN 471 20 SS	
430	315105-0165		9	WASHER BRB 8,4X16 RFR	
440	312105-0453		2	SCREW M6S ISO 4017 M8X25 A480	
445	312105-0457		5	SCREW M6S ISO 4014 M8X35 A480	
450	312155-0366		3	SCREW DIN 7991 MF6S M6X12 A4 70	
460	315125-0153		2	WASHER TBRSB 6,4X22X4 A4	
480	312105-0460		2	SCREW M6S ISO 4014 M8X45 A480	
500	315105-0171		6	WASHER BRB 10X18 RFR	
510	312105-0495		6	SCREW M6S ISO 4017 M10X30 A480	
520	312115-0372		1	SCREW ISO4762 M6X25 A4 80	
690	315705-0196		3	PARALLEL KEY W.ROUND ENDS 5X5X10	
700	315705-0234		1	PARALLEL KEY W. ROUND ENDS 6X6X25 MM	
710	312115-0293		2	SCREW ISO4762 M4X16 A4 80	
720	90091-0302		2	RADIAL SEAL 20X32X7 MM DUST LIP	
730	90214-0195		2	BALL BEARING 20/32X7	
770	90091-0446		2	RADIAL SEAL 20X42X7 MM DUST LIP	
775	321156-0221		8	FLANGE BUSHING, IGLIDUR H370 16X18X17	
780	312105-0368		3	SCREW M6S ISO 4017 M6X16 A480	
790	315753-0123		2	RETAINING RING FOR BORE DIN 472 32 SS	
810	312105-0467		1	SCREW M6S ISO 4014 M8X80 A480	
820	312105-0368		2	SCREW M6S ISO 4017 M6X16 A480	
830	312105-0383		4	SCREW M6S ISO 4014 M6X65 A480	
850	312105-0362		2	SCREW M6S ISO 4017 M6X8 A480	
T50E7006	2933923-0000		1	SLIDER	
TBA 0200B (See drawing on page: 5-220)					
010	2738164-0000		1	PULLEY	
030	2791423-0000		1	SPACER BLOCK	
040	2738156-0000		1	SHAFT	
050	2791420-0000		1	SUPPORT	
060	3000403-0000		2	SLIDER	
075	2787433-0000		1	SLIDER	
080	2933926-0000		1	BELT	
090	2791424-0000		1	SUPPORT	
110	2791426-0000		1	GUIDE BRACKET	
120	2791425-0000		4	SHAFT	
130	2791427-0000		8	WASHER	
135	2794834-0000		12	WASHER	
140	2797367-0000		1	SPACER	
150	90600-2905		4	COMP. SPRING 21060, 1,25X17,25X10	
170	2791428-0000		1	PLATE	
180	3025661-0000		6	SHIM	
185	3025667-0000		2	SPACER	
190	2778458-0000		4	ROLLER	

Machine Type | Group Description | Used-In | Group Number | Page No

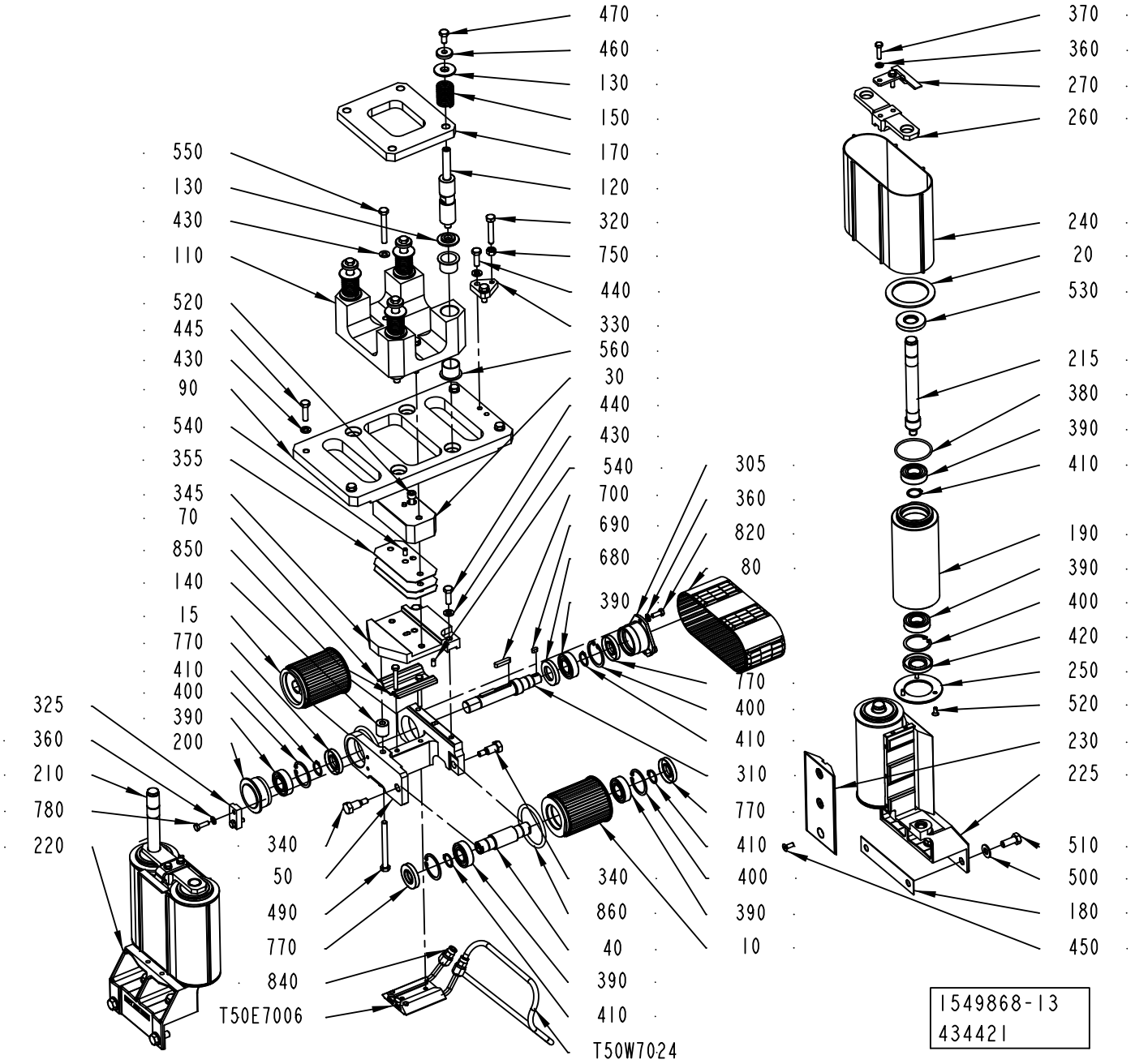
470
460
130
150
170
120
320
750
440
330
560
30
440
430
540
700
690
680
390
770
400
410
310
770
410
400
390
10
340
860
40
390
410
T50W7024
550
130
430
110
520
445
430
90
540
355
345
70
850
140
15
770
410
400
390
200
325
360
210
780
220
340
50
490
770
840
T50E7006
305
360
820
80
370
360
270
260
240
20
530
215
380
390
410
190
390
400
420
250
520
230
225
510
500
180
450
1549868-13
434421

ECM: 472321 - 20110101
Group number: 1549868-0300
Assembly Drawing: 1549868-13_1_AD

This list covers pages from 5-216 to 5-229

Pos	Part No	UN	Qty	Description	Page No
TBA 0200B (Cont'd) (See drawing on page: 5-220)					
200	2738162-0000		1	FLANGE	
210	2665719-0000		4	SHAFT	
220	3025665-0000		2	SUPPORT	
230	2890579-0000		2	PLATE	
235	90286-0013		2	GREASE NIPPLE STRAIGHT, H1 M6X1 2346	
240	1523100-0000		2	BELT	
260	3010614-0000		2	PLATE	
270	3122892-0000		4	STOPPER	
280	1499689-0000		4	SPACER	
290	2898561-0000		4	PLATE	
295	2898562-0000		2	HUB	
300	2898560-0000		1	COUPLING	
305	2738158-0000		1	FLANGE	
310	2738159-0000		1	SHAFT	
315	2738163-0000		2	PULLEY	
330	2790259-0000		1	SUPPORT	
335	2933675-0000		2	SHIM	
345	2791422-0000		1	SLIDER	
360	315105-0153		17	WASHER BRB 6,4X12 RFR	
370	312105-0372		8	SCREW M6S ISO 4017 M6X25 A480	
390	90214-0225		10	BALL BEAR. 20/42X12 SOLID OIL	
400	90141-0020		6	RETAINING RING FOR BORE DIN 472 42 SS	
410	315751-0116		6	RETAINING RING FOR SHAFT DIN 471 20 SS	
430	315105-0165		9	WASHER BRB 8,4X16 RFR	
440	312105-0453		2	SCREW M6S ISO 4017 M8X25 A480	
445	312105-0457		5	SCREW M6S ISO 4014 M8X35 A480	
450	312155-0366		3	SCREW DIN 7991 MF6S M6X12 A4 70	
460	315125-0153		2	WASHER TBRSB 6,4X22X4 A4	
480	312105-0460		2	SCREW M6S ISO 4014 M8X45 A480	
500	315105-0171		6	WASHER BRB 10X18 RFR	
510	312105-0499		6	SCREW M6S ISO 4014 M10X40 A480	
520	312115-0372		1	SCREW ISO4762 M6X25 A4 80	
690	315705-0196		3	PARALLEL KEY W.ROUND ENDS 5X5X10	
700	315705-0234		1	PARALLEL KEY W. ROUND ENDS 6X6X25 MM	
710	312115-0293		2	SCREW ISO4762 M4X16 A4 80	
720	90091-0302		2	RADIAL SEAL 20X32X7 MM DUST LIP	
730	90214-0195		2	BALL BEARING 20/32X7	
770	90091-0446		2	RADIAL SEAL 20X42X7 MM DUST LIP	
775	321156-0221		8	FLANGE BUSHING, IGLIDUR H370 16X18X17	
780	312105-0368		3	SCREW M6S ISO 4017 M6X16 A480	
790	315753-0123		2	RETAINING RING FOR BORE DIN 472 32 SS	
810	312105-0467		1	SCREW M6S ISO 4014 M8X80 A480	
820	312105-0368		2	SCREW M6S ISO 4017 M6X16 A480	
830	312105-0383		4	SCREW M6S ISO 4014 M6X65 A480	
850	312105-0362		2	SCREW M6S ISO 4017 M6X8 A480	
T50E7006	2933923-0000		1	SLIDER	
TBA 0200M (See drawing on page: 5-220)					
010	2738164-0000		1	PULLEY	
030	2791423-0000		1	SPACER BLOCK	
040	2738156-0000		1	SHAFT	
050	2791420-0000		1	SUPPORT	
060	3000401-0000		2	SLIDER	
075	2787432-0000		1	SLIDER	
080	2933925-0000		1	BELT	
090	2791424-0000		1	SUPPORT	
110	2791426-0000		1	GUIDE BRACKET	
120	2791425-0000		4	SHAFT	
130	2791427-0000		8	WASHER	
135	2794834-0000		12	WASHER	
140	2797368-0000		1	SPACER	
150	90600-2905		4	COMP. SPRING 21060, 1,25X17,25X10	
170	2791428-0000		1	PLATE	
180	3025661-0000		6	SHIM	
190	2779654-0000		4	PULLEY	
200	2738162-0000		1	FLANGE	
210	2666553-0000		4	SHAFT	
220	3025664-0000		2	SUPPORT	
230	2886030-0000		2	SLIDER	
235	90286-0013		2	GREASE NIPPLE STRAIGHT, H1 M6X1 2346	
240	1523101-0000		2	BELT	
260	3010614-0000		2	PLATE	
270	3122892-0000		4	STOPPER	
280	1487051-0000		4	SPACER	
290	2898561-0000		4	PLATE	
295	2898562-0000		2	HUB	
300	2898560-0000		1	COUPLING	
305	2738158-0000		1	FLANGE	
310	2738159-0000		1	SHAFT	
315	2738163-0000		2	PULLEY	
330	2790259-0000		1	SUPPORT	
335	2933675-0000		2	SHIM	
345	2791422-0000		1	SLIDER	
360	315105-0153		17	WASHER BRB 6,4X12 RFR	

Machine Type | Group Description | Used-In | Group Number | Page No

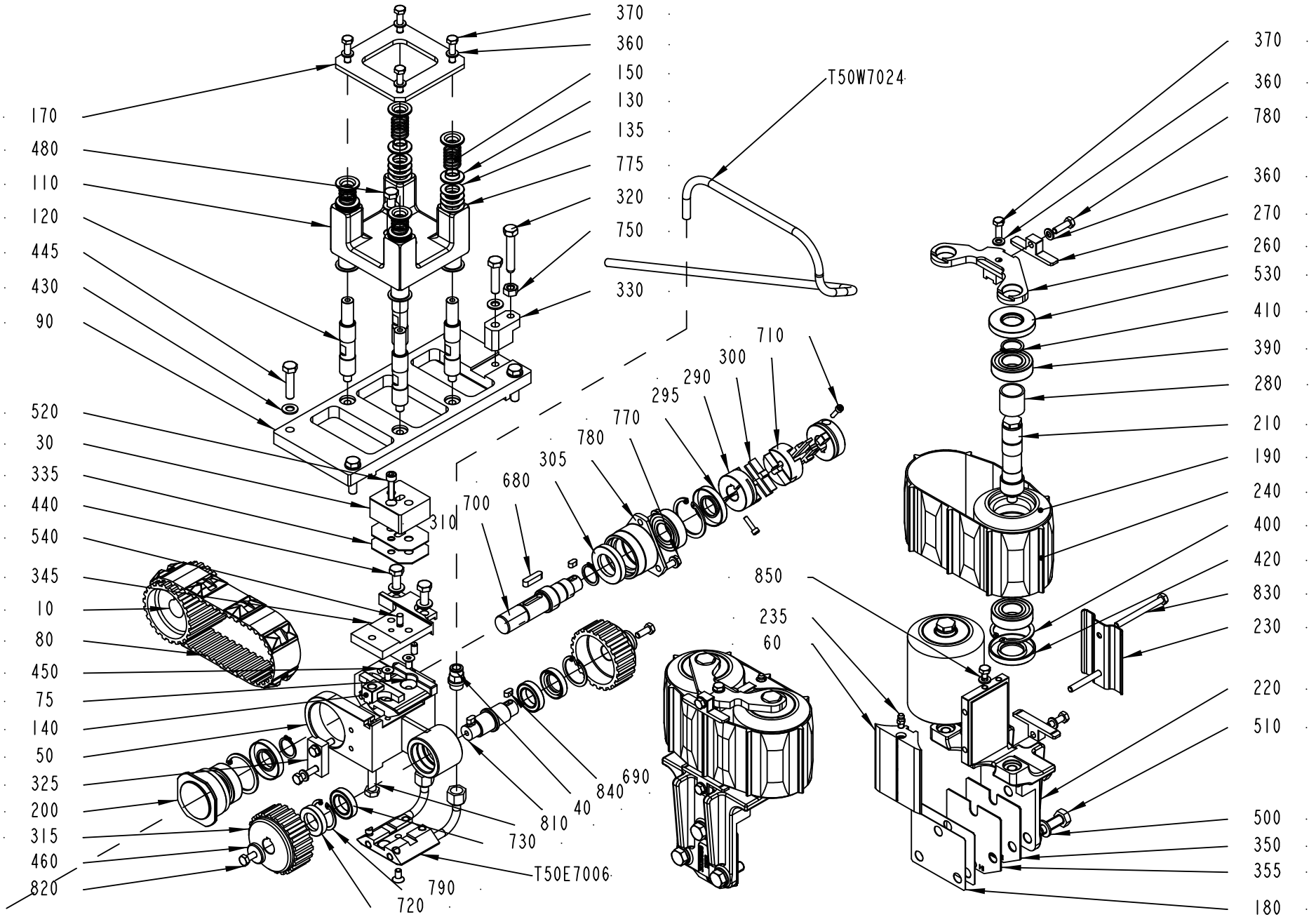

1549868-15
470340

Pos	Part No	UN	Qty	Description	Page No
TBA 0200M (Cont'd) (See drawing on page: 5-220)					
370	312105-0372		8	SCREW M6S ISO 4017 M6X25 A480	
390	90214-0225		10	BALL BEAR. 20/42X12 SOLID OIL	
400	90141-0020		6	RETAINING RING FOR BORE DIN 472 42 SS	
410	315751-0116		6	RETAINING RING FOR SHAFT DIN 471 20 SS	
430	315105-0165		9	WASHER BRB 8,4X16 RFR	
440	312105-0453		2	SCREW M6S ISO 4017 M8X25 A480	
445	312105-0457		5	SCREW M6S ISO 4014 M8X35 A480	
450	312155-0366		3	SCREW DIN 7991 MF6S M6X12 A4 70	
460	315125-0153		2	WASHER TBRSB 6,4X22X4 A4	
480	312105-0460		2	SCREW M6S ISO 4014 M8X45 A480	
500	315105-0171		6	WASHER BRB 10X18 RFR	
510	312105-0495		6	SCREW M6S ISO 4017 M10X30 A480	
520	312115-0372		1	SCREW ISO4762 M6X25 A4 80	
690	315705-0196		3	PARALLEL KEY W.ROUND ENDS 5X5X10	
700	315705-0234		1	PARALLEL KEY W. ROUND ENDS 6X6X25 MM	
710	312115-0293		2	SCREW ISO4762 M4X16 A4 80	
720	90091-0302		2	RADIAL SEAL 20X32X7 MM DUST LIP	
730	90214-0195		2	BALL BEARING 20/32X7	
770	90091-0446		2	RADIAL SEAL 20X42X7 MM DUST LIP	
775	321156-0221		8	FLANGE BUSHING, IGLIDUR H370 16X18X17	
780	312105-0368		3	SCREW M6S ISO 4017 M6X16 A480	
790	315753-0123		2	RETAINING RING FOR BORE DIN 472 32 SS	
810	312105-0467		1	SCREW M6S ISO 4014 M8X80 A480	
820	312105-0368		2	SCREW M6S ISO 4017 M6X16 A480	
830	312105-0383		4	SCREW M6S ISO 4014 M6X65 A480	
850	312105-0362		2	SCREW M6S ISO 4017 M6X8 A480	
T50E7006	2933923-0000		1	SLIDER	
TBA 0200S (See drawing on page: 5-220)					
010	2738164-0000		1	PULLEY	
030	2791423-0000		1	SPACER BLOCK	
040	2738156-0000		1	SHAFT	
050	2791420-0000		1	SUPPORT	
060	3000404-0000		2	SLIDER	
075	2790258-0000		1	SLIDER	
080	2933924-0000		1	BELT	
090	2791424-0000		1	SUPPORT	
110	2791426-0000		1	GUIDE BRACKET	
120	2791425-0000		4	SHAFT	
130	2791427-0000		8	WASHER	
135	2794834-0000		12	WASHER	
140	2791421-0000		1	SPACER	
150	90600-2905		4	COMP. SPRING 21060, 1,25X17,25X10	
170	2791428-0000		1	PLATE	
180	3025661-0000		6	SHIM	
190	2779655-0000		4	ROLLER	
200	2738162-0000		1	FLANGE	
210	2666554-0000		4	SHAFT	
220	3025663-0000		2	SUPPORT	
230	2895452-0000		2	SLIDER	
235	90286-0013		2	GREASE NIPPLE STRAIGHT, H1 M6X1 2346	
240	2525662-0000		2	BELT	
260	3010614-0000		2	PLATE	
270	3122892-0000		4	STOPPER	
280	1499011-0000		4	SPACER	
290	2898561-0000		4	PLATE	
295	2898562-0000		2	HUB	
300	2898560-0000		1	COUPLING	
305	2738158-0000		1	FLANGE	
310	2738159-0000		1	SHAFT	
315	2738163-0000		2	PULLEY	
330	2790259-0000		1	SUPPORT	
335	2933675-0000		2	SHIM	
345	2791422-0000		1	SLIDER	
360	315105-0153		17	WASHER BRB 6,4X12 RFR	
370	312105-0372		8	SCREW M6S ISO 4017 M6X25 A480	
390	90214-0225		10	BALL BEAR. 20/42X12 SOLID OIL	
400	90141-0020		6	RETAINING RING FOR BORE DIN 472 42 SS	
410	315751-0116		6	RETAINING RING FOR SHAFT DIN 471 20 SS	
430	315105-0165		9	WASHER BRB 8,4X16 RFR	
440	312105-0453		2	SCREW M6S ISO 4017 M8X25 A480	
445	312105-0457		5	SCREW M6S ISO 4014 M8X35 A480	
450	312155-0366		3	SCREW DIN 7991 MF6S M6X12 A4 70	
460	315125-0153		2	WASHER TBRSB 6,4X22X4 A4	
480	312105-0460		2	SCREW M6S ISO 4014 M8X45 A480	
500	315105-0171		6	WASHER BRB 10X18 RFR	
510	312105-0495		6	SCREW M6S ISO 4017 M10X30 A480	
520	312115-0372		1	SCREW ISO4762 M6X25 A4 80	
690	315705-0196		3	PARALLEL KEY W.ROUND ENDS 5X5X10	
700	315705-0234		1	PARALLEL KEY W. ROUND ENDS 6X6X25 MM	
710	312115-0293		2	SCREW ISO4762 M4X16 A4 80	
720	90091-0302		2	RADIAL SEAL 20X32X7 MM DUST LIP	
730	90214-0195		2	BALL BEARING 20/32X7	
770	90091-0446		2	RADIAL SEAL 20X42X7 MM DUST LIP	

See previous drawings pages: 5-216, 5-218, 5-220.

Pos	Part No	UN	Qty	Description	Page No
TBA 0200S (Cont'd) (See drawing on page: 5-220)					
775	321156-0221		8	FLANGE BUSHING, IGLIDUR H370 16X18X17	
780	312105-0368		3	SCREW M6S ISO 4017 M6X16 A480	
790	315753-0123		2	RETAINING RING FOR BORE DIN 472 32 SS	
810	312105-0467		1	SCREW M6S ISO 4014 M8X80 A480	
820	312105-0368		2	SCREW M6S ISO 4017 M6X16 A480	
830	312105-0383		4	SCREW M6S ISO 4014 M6X65 A480	
850	312105-0362		2	SCREW M6S ISO 4017 M6X8 A480	
T50E7006	2933923-0000		1	SLIDER	
TBA 0250B (See drawing on page: 5-220)					
010	2738164-0000		1	PULLEY	
030	2791423-0000		1	SPACER BLOCK	
040	2738156-0000		1	SHAFT	
050	2791420-0000		1	SUPPORT	
060	3000401-0000		2	SLIDER	
075	2787433-0000		1	SLIDER	
080	2933926-0000		1	BELT	
090	2791424-0000		1	SUPPORT	
110	2791426-0000		1	GUIDE BRACKET	
120	2791425-0000		4	SHAFT	
130	2791427-0000		8	WASHER	
135	2794834-0000		12	WASHER	
140	2797367-0000		1	SPACER	
150	90600-2905		4	COMP. SPRING 21060, 1,25X17,25X10	
170	2791428-0000		1	PLATE	
180	3025661-0000		6	SHIM	
190	2779654-0000		4	PULLEY	
200	2738162-0000		1	FLANGE	
210	2666553-0000		4	SHAFT	
220	3025664-0000		2	SUPPORT	
230	2886030-0000		2	SLIDER	
235	90286-0013		2	GREASE NIPPLE STRAIGHT, H1 M6X1 2346	
240	1523101-0000		2	BELT	
260	3010614-0000		2	PLATE	
270	3122892-0000		4	STOPPER	
280	1487051-0000		4	SPACER	
290	2898561-0000		4	PLATE	
295	2898562-0000		2	HUB	
300	2898560-0000		1	COUPLING	
305	2738158-0000		1	FLANGE	
310	2738159-0000		1	SHAFT	
315	2738163-0000		2	PULLEY	
330	2790259-0000		1	SUPPORT	
335	2933675-0000		2	SHIM	
345	2791422-0000		1	SLIDER	
360	315105-0153		17	WASHER BRB 6,4X12 RFR	
370	312105-0372		8	SCREW M6S ISO 4017 M6X25 A480	
390	90214-0225		10	BALL BEAR. 20/42X12 SOLID OIL	
400	90141-0020		6	RETAINING RING FOR BORE DIN 472 42 SS	
410	315751-0116		6	RETAINING RING FOR SHAFT DIN 471 20 SS	
430	315105-0165		9	WASHER BRB 8,4X16 RFR	
440	312105-0453		2	SCREW M6S ISO 4017 M8X25 A480	
445	312105-0457		5	SCREW M6S ISO 4014 M8X35 A480	
450	312155-0366		3	SCREW DIN 7991 MF6S M6X12 A4 70	
460	315125-0153		2	WASHER TBRSB 6,4X22X4 A4	
480	312105-0460		2	SCREW M6S ISO 4014 M8X45 A480	
500	315105-0171		6	WASHER BRB 10X18 RFR	
510	312105-0495		6	SCREW M6S ISO 4017 M10X30 A480	
520	312115-0372		1	SCREW ISO4762 M6X25 A4 80	
690	315705-0196		3	PARALLEL KEY W.ROUND ENDS 5X5X10	
700	315705-0234		1	PARALLEL KEY W. ROUND ENDS 6X6X25 MM	
710	312115-0293		2	SCREW ISO4762 M4X16 A4 80	
720	90091-0302		2	RADIAL SEAL 20X32X7 MM DUST LIP	
730	90214-0195		2	BALL BEARING 20/32X7	
770	90091-0446		2	RADIAL SEAL 20X42X7 MM DUST LIP	
775	321156-0221		8	FLANGE BUSHING, IGLIDUR H370 16X18X17	
780	312105-0368		3	SCREW M6S ISO 4017 M6X16 A480	
790	315753-0123		2	RETAINING RING FOR BORE DIN 472 32 SS	
810	312105-0467		1	SCREW M6S ISO 4014 M8X80 A480	
820	312105-0368		2	SCREW M6S ISO 4017 M6X16 A480	
830	312105-0383		4	SCREW M6S ISO 4014 M6X65 A480	
850	312105-0362		2	SCREW M6S ISO 4017 M6X8 A480	
T50E7006	2933923-0000		1	SLIDER	
TBA 0250S (See drawing on page: 5-220)					
010	2738164-0000		1	PULLEY	
030	2791423-0000		1	SPACER BLOCK	
040	2738156-0000		1	SHAFT	
050	2791420-0000		1	SUPPORT	
060	3000402-0000		2	SLIDER	
075	2787432-0000		1	SLIDER	
080	2933925-0000		1	BELT	
090	2791424-0000		1	SUPPORT	
110	2791426-0000		1	GUIDE BRACKET	
120	2791425-0000		4	SHAFT	

See previous drawings pages: 5-216, 5-218, 5-220.

Pos	Part No	UN	Qty	Description	Page No
TBA 0250S (Cont'd) (See drawing on page: 5-220)					
130	2791427-0000		8	WASHER	
135	2794834-0000		12	WASHER	
140	2797368-0000		1	SPACER	
150	90600-2905		4	COMP. SPRING 21060, 1,25X17,25X10	
170	2791428-0000		1	PLATE	
180	3025661-0000		6	SHIM	
190	2778457-0000		4	PULLEY	
200	2738162-0000		1	FLANGE	
210	2666555-0000		4	SHAFT	
220	3025650-0000		2	SUPPORT	
230	2895453-0000		2	SLIDER	
235	90286-0013		2	GREASE NIPPLE STRAIGHT, H1 M6X1 2346	
240	2852433-0000		2	BELT	
260	3010614-0000		2	PLATE	
270	3122892-0000		4	STOPPER	
280	1499005-0000		4	SPACER	
290	2898561-0000		4	PLATE	
295	2898562-0000		2	HUB	
300	2898560-0000		1	COUPLING	
305	2738158-0000		1	FLANGE	
310	2738159-0000		1	SHAFT	
315	2738163-0000		2	PULLEY	
330	2790259-0000		1	SUPPORT	
335	2933675-0000		2	SHIM	
345	2791422-0000		1	SLIDER	
360	315105-0153		17	WASHER BRB 6,4X12 RFR	
370	312105-0372		8	SCREW M6S ISO 4017 M6X25 A480	
390	90214-0225		10	BALL BEAR. 20/42X12 SOLID OIL	
400	90141-0020		6	RETAINING RING FOR BORE DIN 472 42 SS	
410	315751-0116		6	RETAINING RING FOR SHAFT DIN 471 20 SS	
430	315105-0165		9	WASHER BRB 8,4X16 RFR	
440	312105-0453		2	SCREW M6S ISO 4017 M8X25 A480	
445	312105-0457		5	SCREW M6S ISO 4014 M8X35 A480	
450	312155-0366		3	SCREW DIN 7991 MF6S M6X12 A4 70	
460	315125-0153		2	WASHER TBRSB 6,4X22X4 A4	
480	312105-0460		2	SCREW M6S ISO 4014 M8X45 A480	
500	315105-0171		6	WASHER BRB 10X18 RFR	
510	312105-0495		6	SCREW M6S ISO 4017 M10X30 A480	
520	312115-0372		1	SCREW ISO4762 M6X25 A4 80	
690	315705-0196		3	PARALLEL KEY W.ROUND ENDS 5X5X10	
700	315705-0234		1	PARALLEL KEY W. ROUND ENDS 6X6X25 MM	
710	312115-0293		2	SCREW ISO4762 M4X16 A4 80	
720	90091-0302		2	RADIAL SEAL 20X32X7 MM DUST LIP	
730	90214-0195		2	BALL BEARING 20/32X7	
770	90091-0446		2	RADIAL SEAL 20X42X7 MM DUST LIP	
775	321156-0221		8	FLANGE BUSHING, IGLIDUR H370 16X18X17	
780	312105-0368		3	SCREW M6S ISO 4017 M6X16 A480	
790	315753-0123		2	RETAINING RING FOR BORE DIN 472 32 SS	
810	312105-0467		1	SCREW M6S ISO 4014 M8X80 A480	
820	312105-0368		2	SCREW M6S ISO 4017 M6X16 A480	
830	312105-0383		4	SCREW M6S ISO 4014 M6X65 A480	
850	312105-0362		2	SCREW M6S ISO 4017 M6X8 A480	
T50E7006	2933923-0000		1	SLIDER	
TBA 1000B (See drawing on page: 5-218)					
010	2541827-0000		1	PULLEY	
015	2529094-0000		1	PULLEY	
020	2700881-0000		4	FLANGE	
030	2723037-0000		1	SPACER BLOCK	
040	2541825-0000		1	SHAFT	
050	2933710-0000		1	SUPPORT	
070	2933709-0000		1	PLATE	
080	2779126-0000		1	BELT	
090	2520202-0000		1	SUPPORT	
110	2954996-0000		1	GUIDE BRACKET	
120	2520200-0000		4	SHAFT	
130	2771540-0000		8	BUSHING	
140	2531763-0000		1	SPACER	
150	2771538-0000		4	SPRING	
170	2520207-0000		1	PLATE	
180	2521068-0000		4	SHIM	
190	1548438-0000		4	PULLEY	
200	2529096-0000		1	FLANGE	
210	1499086-0000		2	SHAFT	
215	2933689-0000		2	SHAFT	
220	3010575-0000		1	SUPPORT PLATE	
225	3010593-0000		1	SUPPORT PLATE	
230	2553050-0000		4	SLIDER	
240	2553045-0000		2	BELT	
250	1487871-0000		4	FLANGE	
260	2553049-0000		2	PLATE	
270	2810967-0000		2	GUIDE	
305	2529097-0000		1	FLANGE	
310	2541826-0000		1	SHAFT	

See previous drawings pages: 5-216, 5-218, 5-220.

ECM: 472321 - 20110101
Group number: 1549868-0300
Assembly Drawing: 1549868-15_1_AF

This list covers pages from 5-216 to 5-229

Pos	Part No	UN	Qty	Description	Page No
TBA 1000B (Cont'd) (See drawing on page: 5-218)					
330	2531796-0000		1	SUPPORT	
340	2531750-0000		2	SCREW	
345	2531762-0000		1	SUPPORT	
355	2723033-0000		3	SHIM	
360	315105-0153		9	WASHER BRB 6,4X12 RFR	
370	312105-0372		4	SCREW M6S ISO 4017 M6X25 A480	
380	315204-0302		4	O-RING 54,5X3 MM	
390	90214-0225		12	BALL BEAR. 20/42X12 SOLID OIL	
400	90141-0020		8	RETAINING RING FOR BORE DIN 472 42 SS	
410	315751-0116		8	RETAINING RING FOR SHAFT DIN 471 20 SS	
430	315105-0165		11	WASHER BRB 8,4X16 RFR	
440	312105-0453		4	SCREW M6S ISO 4017 M8X25 A480	
445	312105-0455		4	SCREW M6S ISO 4017 M8X30 A480	
450	312155-0368		12	SCREW DIN 7991 MF6S M6X16 A4 70	
460	315125-0165		4	WASHER TBRSB 8,4X26X5 A4	
470	312105-0449		4	SCREW M6S ISO 4017 M8X16 A480	
490	312105-0469		1	SCREW M6S ISO 4014 M8X90 A480	
500	315105-0173		8	WASHER BRB 10,5X22 RFR	
510	312105-0493		8	SCREW M6S ISO 4017 M10X25 A480	
520	312115-0457		1	SCREW ISO4762 M8X35 A4 80	
550	312105-0463		2	SCREW M6S ISO 4014 M8X60 A480	
560	90240-0293		8	FLANGE BUSHING, IGLIDUR X 25X28X21	
690	315705-0196		1	PARALLEL KEY W.ROUND ENDS 5X5X10	
700	315705-0236		2	PARALLEL KEY W. ROUND ENDS 6X6X30 MM	
770	90091-0446		4	RADIAL SEAL 20X42X7 MM DUST LIP	
780	312105-0370		2	SCREW M6S ISO 4017 M6X20 A480	
820	312105-0368		3	SCREW M6S ISO 4017 M6X16 A480	
850	312105-0381		2	SCREW M6S ISO 4014 M6X55 A480	
860	315202-0230		2	O-RING 64,2X5,7 MM	
T50E7006	2933708-0000		1	SLIDER	
TBA 1000S (See drawing on page: 5-216)					
010	2541827-0000		1	PULLEY	
015	2529094-0000		1	PULLEY	
020	2700881-0000		4	FLANGE	
030	2723037-0000		1	SPACER BLOCK	
040	2541825-0000		1	SHAFT	
050	2933710-0000		1	SUPPORT	
070	2933709-0000		1	PLATE	
080	2679672-0000		1	BELT	
090	2520202-0000		1	SUPPORT	
110	2954996-0000		1	GUIDE BRACKET	
120	2520200-0000		4	SHAFT	
130	2771540-0000		8	BUSHING	
140	2531763-0000		1	SPACER	
150	2771538-0000		4	SPRING	
170	2520207-0000		1	PLATE	
180	2521068-0000		4	SHIM	
190	2603525-0000		4	PULLEY	
200	2529096-0000		1	FLANGE	
210	2529101-0000		2	SHAFT	
215	2634555-0000		2	SHAFT	
220	3010576-0000		1	SUPPORT PLATE	
225	3010586-0000		1	SUPPORT PLATE	
230	2603530-0000		4	SLIDER	
240	2679673-0000		2	BELT	
260	2553049-0000		2	PLATE	
270	2810967-0000		2	GUIDE	
305	2529097-0000		1	FLANGE	
310	2541826-0000		1	SHAFT	
330	2531796-0000		1	SUPPORT	
340	2531750-0000		2	SCREW	
345	2531762-0000		1	SUPPORT	
355	2723033-0000		3	SHIM	
360	315105-0153		9	WASHER BRB 6,4X12 RFR	
370	312105-0372		4	SCREW M6S ISO 4017 M6X25 A480	
380	315204-0301		4	O-RING 49,5X3 MM	
390	90214-0225		12	BALL BEAR. 20/42X12 SOLID OIL	
400	90141-0020		8	RETAINING RING FOR BORE DIN 472 42 SS	
410	315751-0116		8	RETAINING RING FOR SHAFT DIN 471 20 SS	
430	315105-0165		11	WASHER BRB 8,4X16 RFR	
440	312105-0453		4	SCREW M6S ISO 4017 M8X25 A480	
445	312105-0455		4	SCREW M6S ISO 4017 M8X30 A480	
450	312155-0368		12	SCREW DIN 7991 MF6S M6X16 A4 70	
460	315125-0165		4	WASHER TBRSB 8,4X26X5 A4	
470	312105-0449		4	SCREW M6S ISO 4017 M8X16 A480	
490	312105-0469		1	SCREW M6S ISO 4014 M8X90 A480	
500	315105-0173		8	WASHER BRB 10,5X22 RFR	
510	312105-0493		8	SCREW M6S ISO 4017 M10X25 A480	
520	312115-0457		1	SCREW ISO4762 M8X35 A4 80	
550	312105-0464		2	SCREW M6S ISO 4014 M8X65 A480	
560	90240-0293		8	FLANGE BUSHING, IGLIDUR X 25X28X21	
690	315705-0196		1	PARALLEL KEY W.ROUND ENDS 5X5X10	
700	315705-0236		2	PARALLEL KEY W. ROUND ENDS 6X6X30 MM	

Machine Type | Group Description | Used-In | Group Number | Page No

See previous drawings pages: 5-216, 5-218, 5-220.

Pos	Part No	UN	Qty	Description	Page No
TBA 1000S (Cont'd) (See drawing on page: 5-216)					
770	90091-0446		4	RADIAL SEAL 20X42X7 MM DUST LIP	
780	312105-0370		2	SCREW M6S ISO 4017 M6X20 A480	
820	312105-0368		3	SCREW M6S ISO 4017 M6X16 A480	
850	312105-0381		2	SCREW M6S ISO 4014 M6X55 A480	
860	315202-0230		2	O-RING 64,2X5,7 MM	
T50E7006	2933708-0000		1	SLIDER	
TBA 1000SQ (See drawing on page: 5-216)					
010	2737499-0000		1	PULLEY	
015	2753151-0000		1	PULLEY	
030	2723037-0000		1	SPACER BLOCK	
040	2737500-0000		1	SHAFT	
050	2946753-0000		1	SUPPORT	
070	2933709-0000		1	PLATE	
080	2910622-0000		1	BELT	
090	2520202-0000		1	SUPPORT	
110	2954996-0000		1	GUIDE BRACKET	
120	2520200-0000		4	SHAFT	
130	2771540-0000		8	BUSHING	
140	2531763-0000		1	SPACER	
150	2771538-0000		4	SPRING	
170	2520207-0000		1	PLATE	
180	2521068-0000		4	SHIM	
190	2652234-0000		4	PULLEY	
200	2529096-0000		1	FLANGE	
210	2553058-0000		2	SHAFT	
215	2652238-0000		2	SHAFT	
220	3010577-0000		1	SUPPORT PLATE	
225	3010587-0000		1	SUPPORT PLATE	
230	2652231-0000		4	SLIDER	
240	2652232-0000		2	BELT	
260	2652233-0000		2	PLATE	
270	2810967-0000		2	GUIDE	
305	2529097-0000		1	FLANGE	
310	2753150-0000		1	SHAFT	
330	2531796-0000		1	SUPPORT	
340	2531750-0000		2	SCREW	
345	2753152-0000		1	SUPPORT	
355	2723033-0000		3	SHIM	
360	315105-0153		9	WASHER BRB 6,4X12 RFR	
370	312105-0372		4	SCREW M6S ISO 4017 M6X25 A480	
390	90214-0225		12	BALL BEAR. 20/42X12 SOLID OIL	
400	90141-0020		8	RETAINING RING FOR BORE DIN 472 42 SS	
410	315751-0116		8	RETAINING RING FOR SHAFT DIN 471 20 SS	
430	315105-0165		11	WASHER BRB 8,4X16 RFR	
440	312105-0453		4	SCREW M6S ISO 4017 M8X25 A480	
445	312105-0455		4	SCREW M6S ISO 4017 M8X30 A480	
450	312155-0368		12	SCREW DIN 7991 MF6S M6X16 A4 70	
460	315125-0165		4	WASHER TBRSB 8,4X26X5 A4	
470	312105-0449		4	SCREW M6S ISO 4017 M8X16 A480	
490	312105-0466		1	SCREW M6S ISO 4014 M8X75 A480	
500	315105-0173		8	WASHER BRB 10,5X22 RFR	
510	312105-0493		8	SCREW M6S ISO 4017 M10X25 A480	
520	312115-0457		1	SCREW ISO4762 M8X35 A4 80	
550	312105-0463		2	SCREW M6S ISO 4014 M8X60 A480	
560	90240-0293		8	FLANGE BUSHING, IGLIDUR X 25X28X21	
690	315705-0196		1	PARALLEL KEY W.ROUND ENDS 5X5X10	
700	315705-0240		1	PARALLEL KEY W. ROUND ENDS 6X6X45 MM	
770	90091-0446		4	RADIAL SEAL 20X42X7 MM DUST LIP	
780	312105-0370		2	SCREW M6S ISO 4017 M6X20 A480	
820	312105-0368		3	SCREW M6S ISO 4017 M6X16 A480	
850	312105-0381		2	SCREW M6S ISO 4014 M6X55 A480	
860	315202-0230		2	O-RING 64,2X5,7 MM	
T50E7006	2933708-0000		1	SLIDER	
Common Parts					
320	2531797-0000		1	SCREW	
325	2529107-0000		1	PLATE	
350	3122890-0000		2	SHIM	
420	90091-0263		4	RADIAL SEAL 24X47X7 MM DUST LIP	
530	90458-0137		4	RADIAL SEAL 20X47X7 MM DUST LIP	
540	311103-0349		3	PARALLEL PIN ISO 2338 6M6X12 A1	
680	90091-0322		1	RADIAL SEAL 25X42X7 MM DUST LIP	
750	312605-0318		1	HEXAGON NUT, M6M M8 A280	
840	350001-0009		2	PUSH-IN FITTING QS-F-G1/4-8	
T50W7024	90166-0118	M	1	TUBE 8 MM PA BLACK	

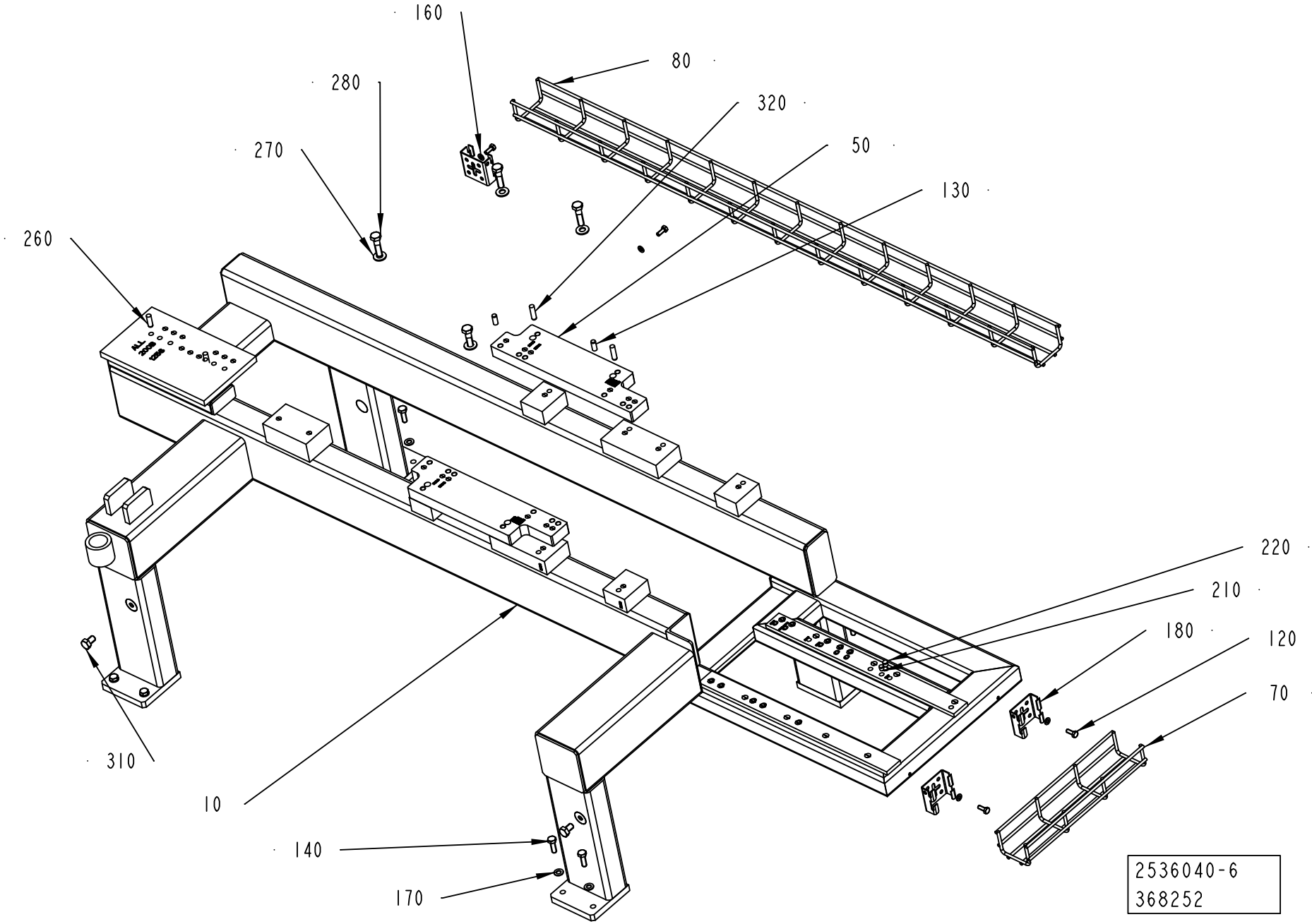
160
80
280
320
270
50
130
260
220
210
180
120
70
310
10
140
170
2536040-6
368252

ECM: 431730 - 20100401
Group number: 2536040-0300
Assembly Drawing: 2536040-6_1_AC

This list covers pages from 5-230 to 5-235

Pos	Part No	UN	Qty	Description	Page No
TBA 0125S (See drawing on page: 5-234)					
010	2963319-0000		1	FRAME	
050	2835125-0000		2	BRACKET	
070	2835129-0000		1	CABLE TRENCH	
080	2798503-0000		1	CABLE TRENCH	
140	312105-0453		8	SCREW M6S ISO 4017 M8X25 A480	
170	315105-0165		8	WASHER BRB 8,4X16 RFR	
210	90261-0016		8	PLUG, BLIND, PLASTIC GPN300V2	
220	90261-0017		14	PLUG, BLIND, PLASTIC GPN300V3	
260	311103-1403		7	PARALLEL PIN ISO 2338 8M6X24 A1	
270	315105-0173		4	WASHER BRB 10,5X22 RFR	
280	312105-0499		4	SCREW M6S ISO 4014 M10X40 A480	
320	311103-0405		4	PARALLEL PIN ISO 2338 8M6X30 A1	
TBA 0200B, TBA 0250B (See drawing on page: 5-230)					
010	2835112-0000		1	FRAME	
050	2835125-0000		2	BRACKET	
070	2835129-0000		1	CABLE TRENCH	
080	2798503-0000		1	CABLE TRENCH	
130	311103-0401		6	PARALLEL PIN ISO 2338 8M6X20 A1	
140	312105-0453		8	SCREW M6S ISO 4017 M8X25 A480	
170	315105-0165		8	WASHER BRB 8,4X16 RFR	
210	90261-0016		7	PLUG, BLIND, PLASTIC GPN300V2	
220	90261-0017		12	PLUG, BLIND, PLASTIC GPN300V3	
260	311103-1403		2	PARALLEL PIN ISO 2338 8M6X24 A1	
270	315105-0173		4	WASHER BRB 10,5X22 RFR	
280	312105-0499		4	SCREW M6S ISO 4014 M10X40 A480	
TBA 0200M (See drawing on page: 5-234)					
010	2963319-0000		1	FRAME	
050	2835125-0000		2	BRACKET	
070	2835129-0000		1	CABLE TRENCH	
080	2798503-0000		1	CABLE TRENCH	
140	312105-0453		8	SCREW M6S ISO 4017 M8X25 A480	
170	315105-0165		8	WASHER BRB 8,4X16 RFR	
210	90261-0016		8	PLUG, BLIND, PLASTIC GPN300V2	
220	90261-0017		14	PLUG, BLIND, PLASTIC GPN300V3	
260	311103-1403		7	PARALLEL PIN ISO 2338 8M6X24 A1	
320	311103-0405		4	PARALLEL PIN ISO 2338 8M6X30 A1	
TBA 0200S, TBA 0250S (See drawing on page: 5-234)					
010	2963319-0000		1	FRAME	
050	2835125-0000		2	BRACKET	
070	2835129-0000		1	CABLE TRENCH	
080	2798503-0000		1	CABLE TRENCH	
140	312105-0453		8	SCREW M6S ISO 4017 M8X25 A480	
170	315105-0165		8	WASHER BRB 8,4X16 RFR	
210	90261-0016		8	PLUG, BLIND, PLASTIC GPN300V2	
220	90261-0017		14	PLUG, BLIND, PLASTIC GPN300V3	
260	311103-1403		7	PARALLEL PIN ISO 2338 8M6X24 A1	
270	315105-0173		4	WASHER BRB 10,5X22 RFR	
280	312105-0499		4	SCREW M6S ISO 4014 M10X40 A480	
320	311103-0405		4	PARALLEL PIN ISO 2338 8M6X30 A1	
TBA 1000B (See drawing on page: 5-232)					
010	2860231-0000		1	FRAME	
020	2890640-0000		1	PLATE	
030	2772796-0000		4	SPACER	
070	2804317-0000		1	CABLE TRENCH	
080	2861925-0000		1	CABLE TRENCH	
130	311103-0401		2	PARALLEL PIN ISO 2338 8M6X20 A1	
140	312105-0453		10	SCREW M6S ISO 4017 M8X25 A480	
150	312105-0499		4	SCREW M6S ISO 4014 M10X40 A480	
170	315105-0165		14	WASHER BRB 8,4X16 RFR	
210	90261-0016		7	PLUG, BLIND, PLASTIC GPN300V2	
220	90261-0017		14	PLUG, BLIND, PLASTIC GPN300V3	
230	312115-0459		8	SCREW ISO4762 M8X40 A4 80	
250	311103-1403		4	PARALLEL PIN ISO 2338 8M6X24 A1	
290	312115-0449		2	SCREW ISO4762 M8X16 A4 80	
300	312115-0457		4	SCREW ISO4762 M8X35 A4 80	
330	312125-0287		3	SCREW ISO 1207 M4X8 A4	
340	352113-0203		3	ANCHOR PLATES FOR STRIPS, TYPE TM3S8-M0	
350	315106-0173		4	WASHER ISO 7089-10-200 HV A4	
TBA 1000S (See drawing on page: 5-232)					
010	2860231-0000		1	FRAME	
020	2864153-0000		1	PLATE	
070	2804317-0000		1	CABLE TRENCH	
080	2861925-0000		1	CABLE TRENCH	
130	311103-0401		2	PARALLEL PIN ISO 2338 8M6X20 A1	
140	312105-0453		10	SCREW M6S ISO 4017 M8X25 A480	
150	312105-0499		4	SCREW M6S ISO 4014 M10X40 A480	
170	315105-0165		14	WASHER BRB 8,4X16 RFR	
210	90261-0016		7	PLUG, BLIND, PLASTIC GPN300V2	
220	90261-0017		14	PLUG, BLIND, PLASTIC GPN300V3	
250	311103-1403		4	PARALLEL PIN ISO 2338 8M6X24 A1	
290	312115-0449		2	SCREW ISO4762 M8X16 A4 80	
300	312115-0457		4	SCREW ISO4762 M8X35 A4 80	
330	312125-0287		3	SCREW ISO 1207 M4X8 A4	

Machine Type | Group Description | Used-In | Group Number | Page No

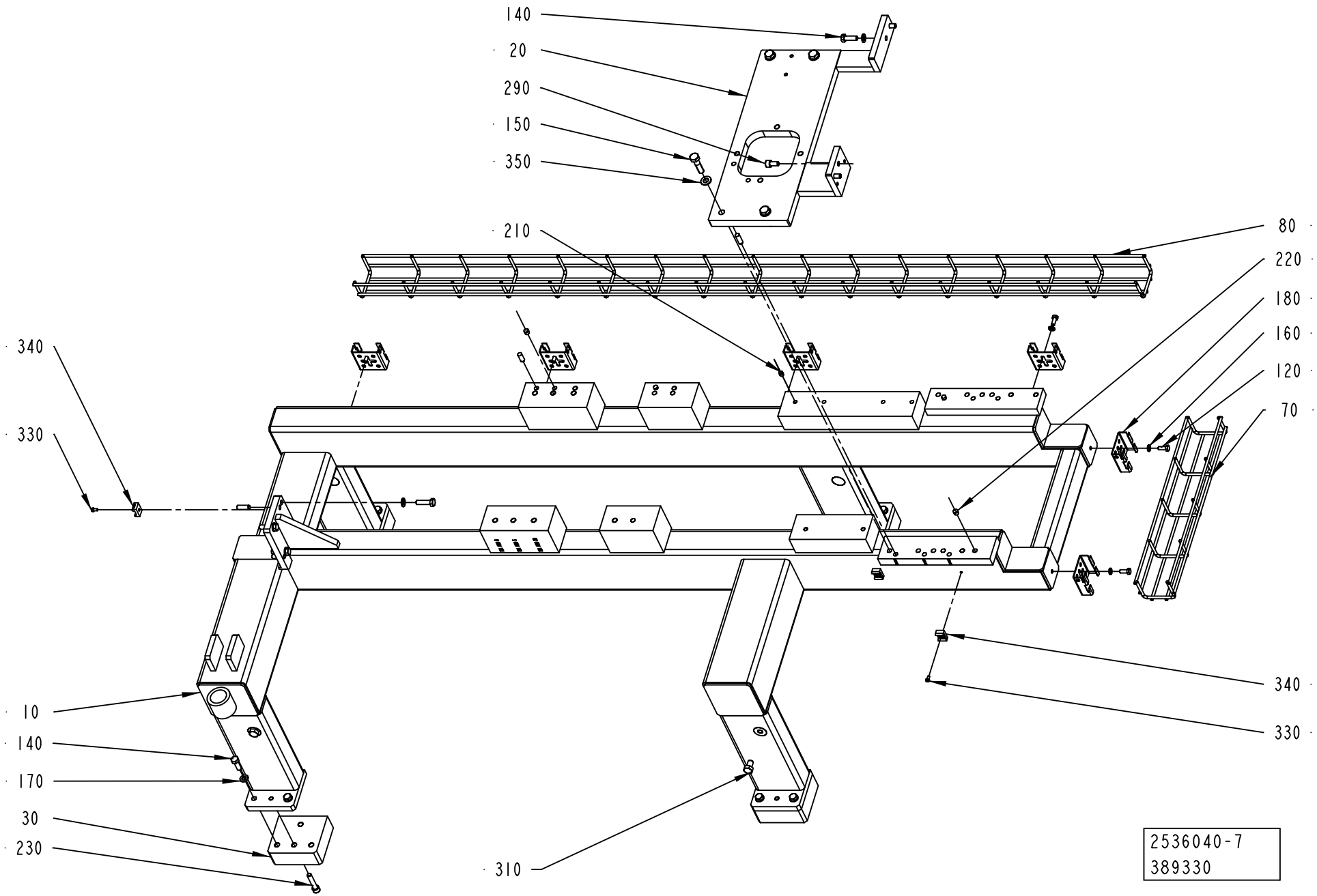
140
20
290
150
350
210
80
220
180
160
120
70
340
330
340
330
10
140
170
30
230
310
2536040-7
389330

ECM: 431730 - 20100401
Group number: 2536040-0300
Assembly Drawing: 2536040-7_1_AC

This list covers pages from 5-230 to 5-235

Pos	Part No	UN	Qty	Description	Page No
TBA 1000S (Cont'd) (See drawing on page: 5-232)					
340	352113-0203		3	ANCHOR PLATES FOR STRIPS, TYPE TM3S8-M0	
350	315106-0173		4	WASHER ISO 7089-10-200 HV A4	
TBA 1000SQ (See drawing on page: 5-232)					
010	2860231-0000		1	FRAME	
020	2863429-0000		1	PLATE	
070	2804317-0000		1	CABLE TRENCH	
080	2861925-0000		1	CABLE TRENCH	
130	311103-0401		2	PARALLEL PIN ISO 2338 8M6X20 A1	
140	312105-0453		10	SCREW M6S ISO 4017 M8X25 A480	
150	312105-0499		4	SCREW M6S ISO 4014 M10X40 A480	
170	315105-0165		14	WASHER BRB 8,4X16 RFR	
210	90261-0016		7	PLUG, BLIND, PLASTIC GPN300V2	
220	90261-0017		14	PLUG, BLIND, PLASTIC GPN300V3	
250	311103-1403		4	PARALLEL PIN ISO 2338 8M6X24 A1	
290	312115-0449		2	SCREW ISO4762 M8X16 A4 80	
300	312115-0457		4	SCREW ISO4762 M8X35 A4 80	
330	312125-0287		3	SCREW ISO 1207 M4X8 A4	
340	352113-0203		3	ANCHOR PLATES FOR STRIPS, TYPE TM3S8-M0	
350	315106-0173		4	WASHER ISO 7089-10-200 HV A4	
Common Parts					
120	312105-0368		6	SCREW M6S ISO 4017 M6X16 A480	
160	315105-0153		6	WASHER BRB 6,4X12 RFR	
180	90181-0190		6	CABLE DUCT, WALL BRACKET, B4 MINI	
310	312105-0489		4	SCREW M6S ISO 4017 M10X16 A480	

Pos	Part No	UN	Qty	Description	Page No

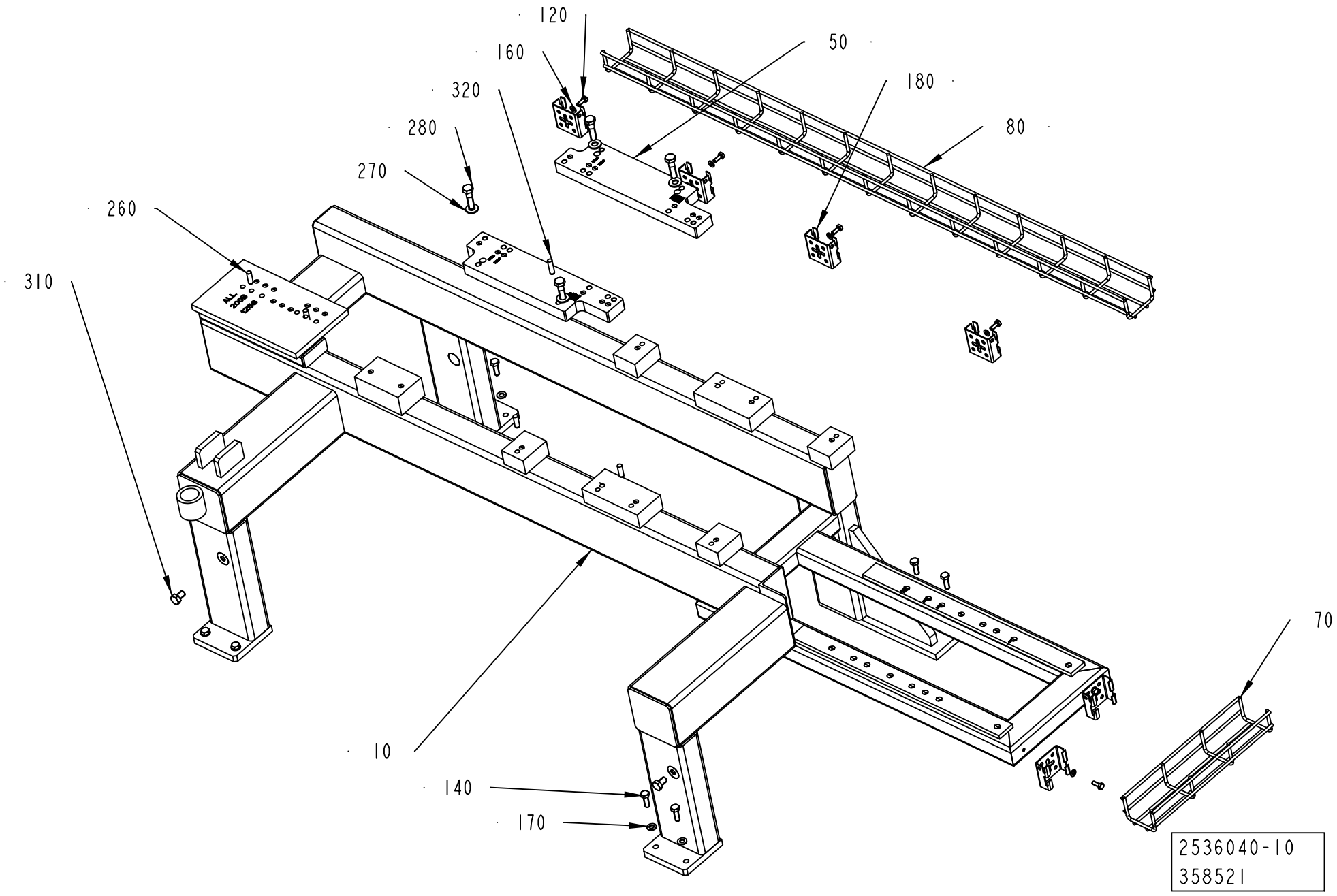
120
160
320
280
270
260
310
50
180
80
70
10
140
170
2536040-10
358521

ECM: 431730 - 20100401
Group number: 2536040-0300
Assembly Drawing: 2536040-10_1_AA

This list covers pages from 5-230 to 5-235

Pos	Part No	UN	Qty	Description	Page No
SEE PREVIOUS LISTS PAGES: 5-231, 5-233.					

Pos	Part No	UN	Qty	Description	Page No

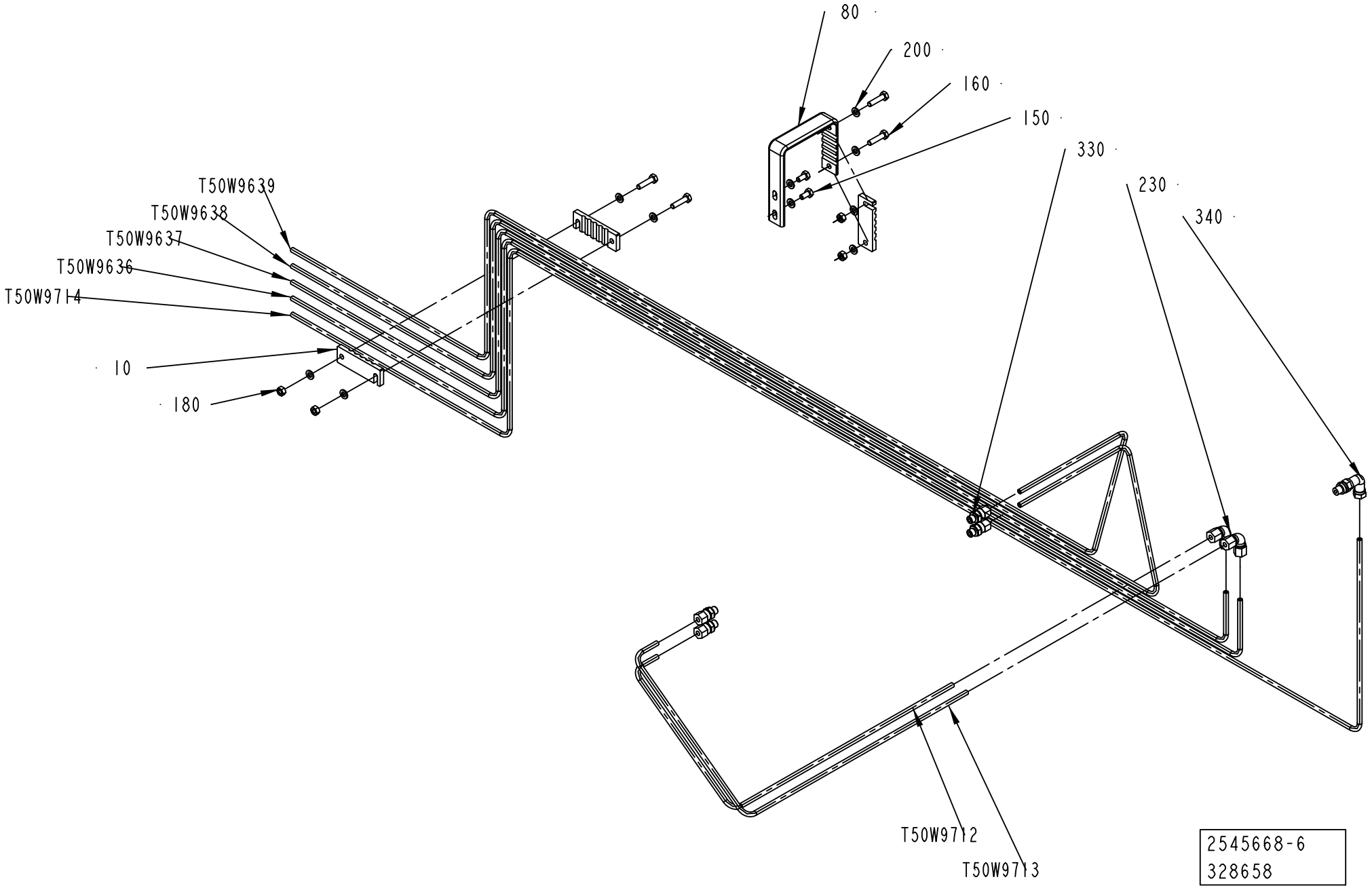
80
200
160
150
330
230
340
T50W9639
T50W9638
T50W9637
T50W9636
T50W9714
10
180
T50W9712
T50W9713
2545668-6
328658

Pos	Part No	UN	Qty	Description	Page No
TBA 0125S (See drawing on page: 5-236)					
080	2931746-0000		1	BRACKET	
T50W9636	2835124-0000		1	PIPE	
T50W9637	2835123-0000		1	PIPE	
T50W9638	2835122-0000		1	PIPE	
T50W9639	2835121-0000		1	PIPE	
T50W9712	2677084-0000		1	PIPE	
T50W9713	2677466-0000		1	PIPE	
T50W9714	2933676-0000		1	PIPE	
TBA 0200M, TBA 0200B, TBA 0250B (See drawing on page: 5-236)					
080	2931746-0000		1	BRACKET	
T50W9636	2689167-0000		1	PIPE	
T50W9637	2689166-0000		1	PIPE	
T50W9638	2689164-0000		1	PIPE	
T50W9639	2689165-0000		1	PIPE	
T50W9712	2677084-0000		1	PIPE	
T50W9713	2677466-0000		1	PIPE	
T50W9714	2933918-0000		1	PIPE	
TBA 0200S (See drawing on page: 5-236)					
080	2931746-0000		1	BRACKET	
T50W9636	2682625-0000		1	PIPE	
T50W9637	2677528-0000		1	PIPE	
T50W9638	2677080-0000		1	PIPE	
T50W9639	2677083-0000		1	PIPE	
T50W9712	2677084-0000		1	PIPE	
T50W9713	2677466-0000		1	PIPE	
T50W9714	2931745-0000		1	PIPE	
TBA 0250S					
080	2931746-0000		1	BRACKET	
T50W9636	2690272-0000		1	PIPE	
T50W9637	2690271-0000		1	PIPE	
T50W9638	2690270-0000		1	PIPE	
T50W9639	2690269-0000		1	PIPE	
T50W9712	2677084-0000		1	PIPE	
T50W9713	2677466-0000		1	PIPE	
T50W9714	2933919-0000		1	PIPE	
TBA 1000B (See drawing on page: 5-238)					
T50W9636	2933706-0000		1	PIPE	
T50W9637	2933707-0000		1	PIPE	
T50W9638	2545669-0000		1	PIPE	
T50W9639	2545670-0000		1	PIPE	
T50W9712	2933705-0000		1	PIPE	
T50W9713	2933704-0000		1	PIPE	
T50W9714	2942055-0000		1	PIPE	
TBA 1000S (See drawing on page: 5-238)					
080	2912200-0000		1	BRACKET	
T50W9636	2958554-0000		1	PIPE	
T50W9637	2549244-0000		1	PIPE	
T50W9638	2549241-0000		1	PIPE	
T50W9639	2549242-0000		1	PIPE	
T50W9712	2545672-0000		1	PIPE	
T50W9713	2958555-0000		1	PIPE	
T50W9714	2958552-0000		1	PIPE	
TBA 1000SQ (See drawing on page: 5-238)					
080	2912200-0000		1	BRACKET	
T50W9636	2958847-0000		1	PIPE	
T50W9637	2570753-0000		1	PIPE	
T50W9638	2570754-0000		1	PIPE	
T50W9639	2570755-0000		1	PIPE	
T50W9712	2570750-0000		1	PIPE	
T50W9713	2958846-0000		1	PIPE	
T50W9714	2942054-0000		1	PIPE	
Common Parts					
010	2912199-0000		3	CLAMP	
150	312105-0366		2	SCREW M6S ISO 4017 M6X12 A480	
160	312105-0372		4	SCREW M6S ISO 4017 M6X25 A480	
180	312605-0316		4	HEXAGON NUT, M6M M6 A280	
200	315105-0153		10	WASHER BRB 6,4X12 RFR	
230	342737-0204		2	ELBOW CONNECTION 6, W06L71	
330	90030-0184		4	CONN. STR., GE06LRED71	
340	90030-0171		1	ADJUSTABLE ELBOW CONNECTION 6-G1/8	

Machine Type | Group Description | Used-In | Group Number | Page No

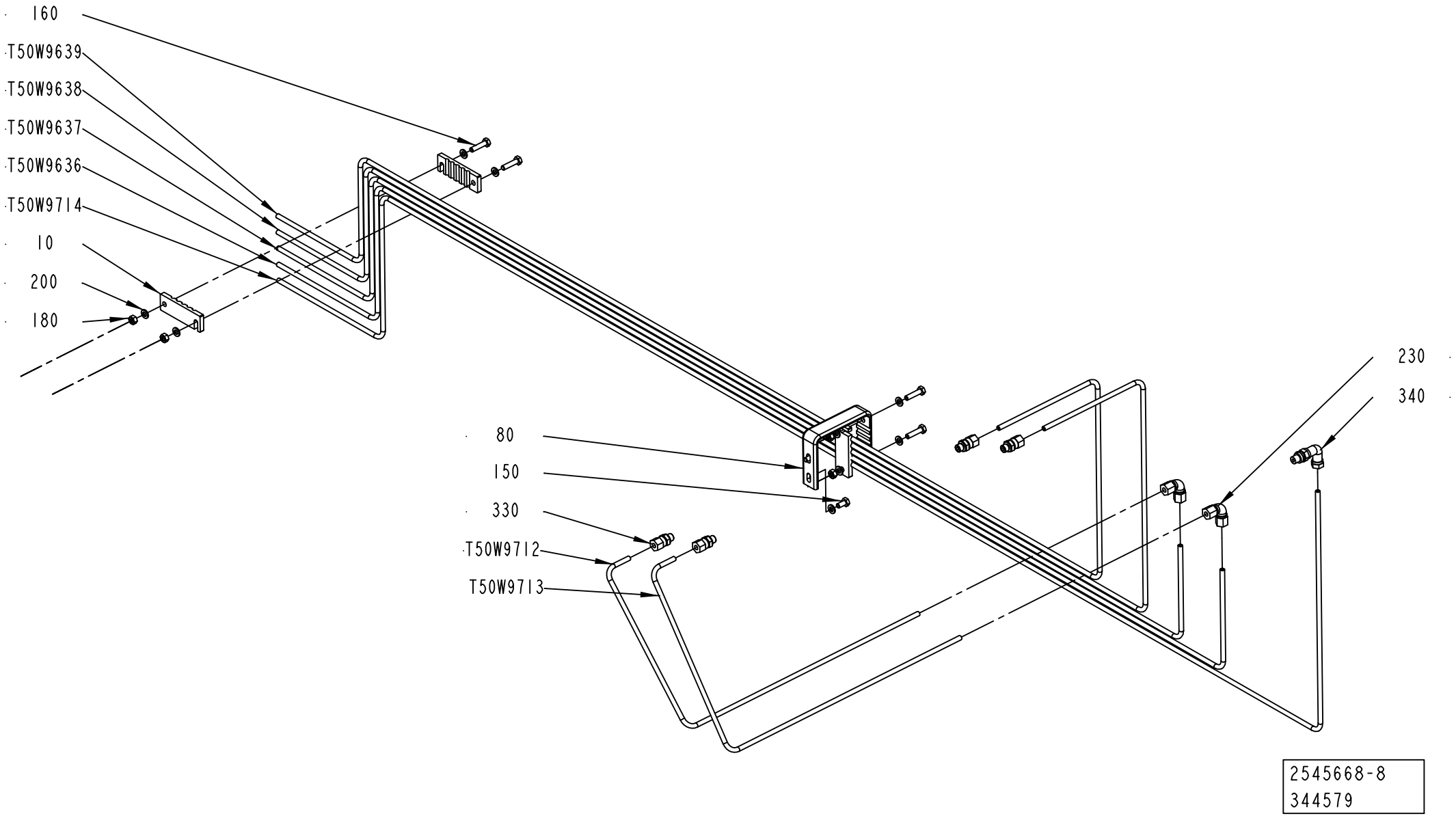
160
T50W9639
T50W9638
T50W9637
T50W9636
T50W9714
10
200
180
80
150
330
T50W9712
T50W9713
230
340
2545668-8
344579

Pos	Part No	UN	Qty	Description	Page No
TBA 0125S (See drawing on page: 5-236)					
080	2931746-0000		1	BRACKET	
T50W9636	2835124-0000		1	PIPE	
T50W9637	2835123-0000		1	PIPE	
T50W9638	2835122-0000		1	PIPE	
T50W9639	2835121-0000		1	PIPE	
T50W9712	2677084-0000		1	PIPE	
T50W9713	2677466-0000		1	PIPE	
T50W9714	2933676-0000		1	PIPE	
TBA 0200M, TBA 0200B, TBA 0250B (See drawing on page: 5-236)					
080	2931746-0000		1	BRACKET	
T50W9636	2689167-0000		1	PIPE	
T50W9637	2689166-0000		1	PIPE	
T50W9638	2689164-0000		1	PIPE	
T50W9639	2689165-0000		1	PIPE	
T50W9712	2677084-0000		1	PIPE	
T50W9713	2677466-0000		1	PIPE	
T50W9714	2933918-0000		1	PIPE	
TBA 0200S (See drawing on page: 5-236)					
080	2931746-0000		1	BRACKET	
T50W9636	2682625-0000		1	PIPE	
T50W9637	2677528-0000		1	PIPE	
T50W9638	2677080-0000		1	PIPE	
T50W9639	2677083-0000		1	PIPE	
T50W9712	2677084-0000		1	PIPE	
T50W9713	2677466-0000		1	PIPE	
T50W9714	2931745-0000		1	PIPE	
TBA 0250S					
080	2931746-0000		1	BRACKET	
T50W9636	2690272-0000		1	PIPE	
T50W9637	2690271-0000		1	PIPE	
T50W9638	2690270-0000		1	PIPE	
T50W9639	2690269-0000		1	PIPE	
T50W9712	2677084-0000		1	PIPE	
T50W9713	2677466-0000		1	PIPE	
T50W9714	2933919-0000		1	PIPE	
TBA 1000B (See drawing on page: 5-238)					
T50W9636	2933706-0000		1	PIPE	
T50W9637	2933707-0000		1	PIPE	
T50W9638	2545669-0000		1	PIPE	
T50W9639	2545670-0000		1	PIPE	
T50W9712	2933705-0000		1	PIPE	
T50W9713	2933704-0000		1	PIPE	
T50W9714	2942055-0000		1	PIPE	
TBA 1000S (See drawing on page: 5-238)					
080	2912200-0000		1	BRACKET	
T50W9636	2958554-0000		1	PIPE	
T50W9637	2549244-0000		1	PIPE	
T50W9638	2549241-0000		1	PIPE	
T50W9639	2549242-0000		1	PIPE	
T50W9712	2545672-0000		1	PIPE	
T50W9713	2958555-0000		1	PIPE	
T50W9714	2958552-0000		1	PIPE	
TBA 1000SQ (See drawing on page: 5-238)					
080	2912200-0000		1	BRACKET	
T50W9636	2958847-0000		1	PIPE	
T50W9637	2570753-0000		1	PIPE	
T50W9638	2570754-0000		1	PIPE	
T50W9639	2570755-0000		1	PIPE	
T50W9712	2570750-0000		1	PIPE	
T50W9713	2958846-0000		1	PIPE	
T50W9714	2942054-0000		1	PIPE	
Common Parts					
010	2912199-0000		3	CLAMP	
150	312105-0366		2	SCREW M6S ISO 4017 M6X12 A480	
160	312105-0372		4	SCREW M6S ISO 4017 M6X25 A480	
180	312605-0316		4	HEXAGON NUT, M6M M6 A280	
200	315105-0153		10	WASHER BRB 6,4X12 RFR	
230	342737-0204		2	ELBOW CONNECTION 6, W06L71	
330	90030-0184		4	CONN. STR., GE06LRED71	
340	90030-0171		1	ADJUSTABLE ELBOW CONNECTION 6-G1/8	

Machine Type | Group Description | Used-In | Group Number | Page No

Tetra Pak

SPC

Spare Parts Catalogue

Tetra Pak A3/Speed

648576-0300

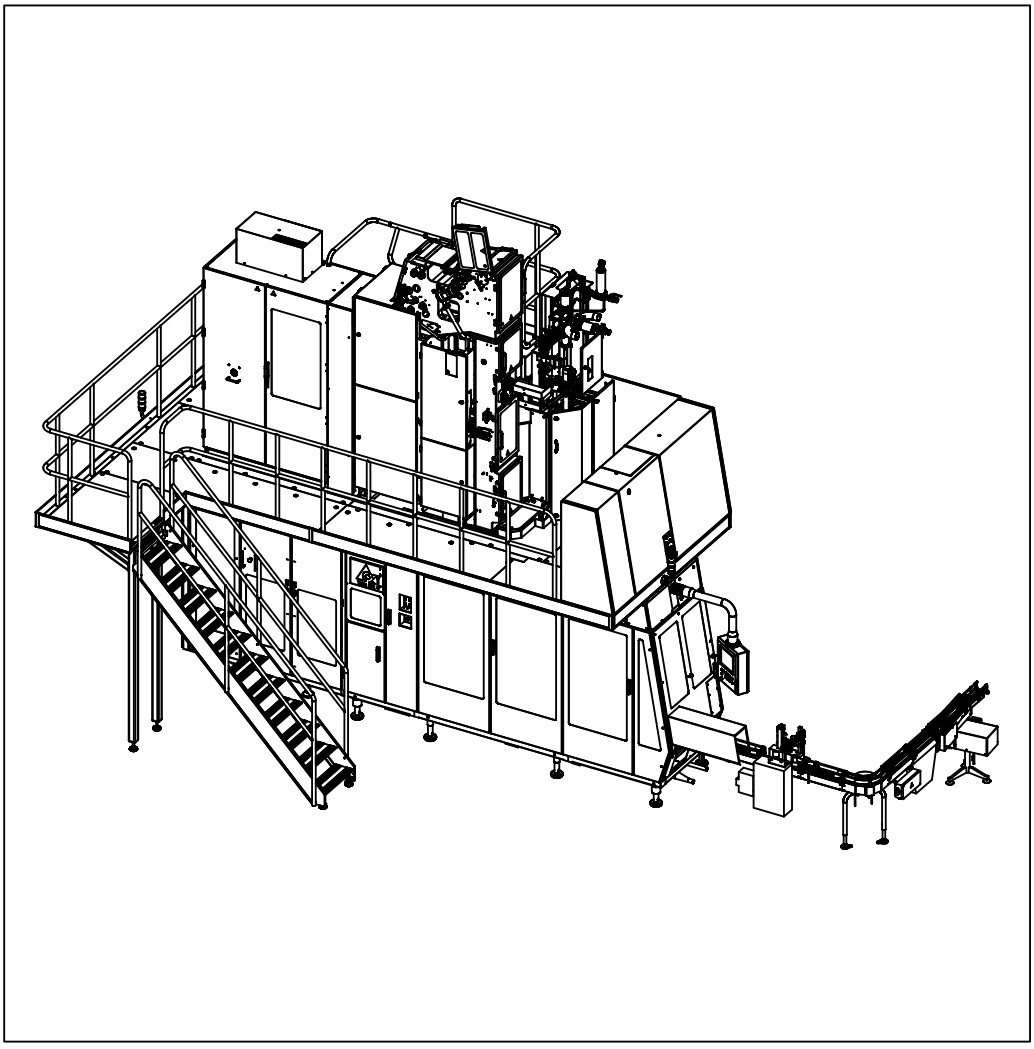

Tetra Pak

Doc. No: SPC-3022041-0108

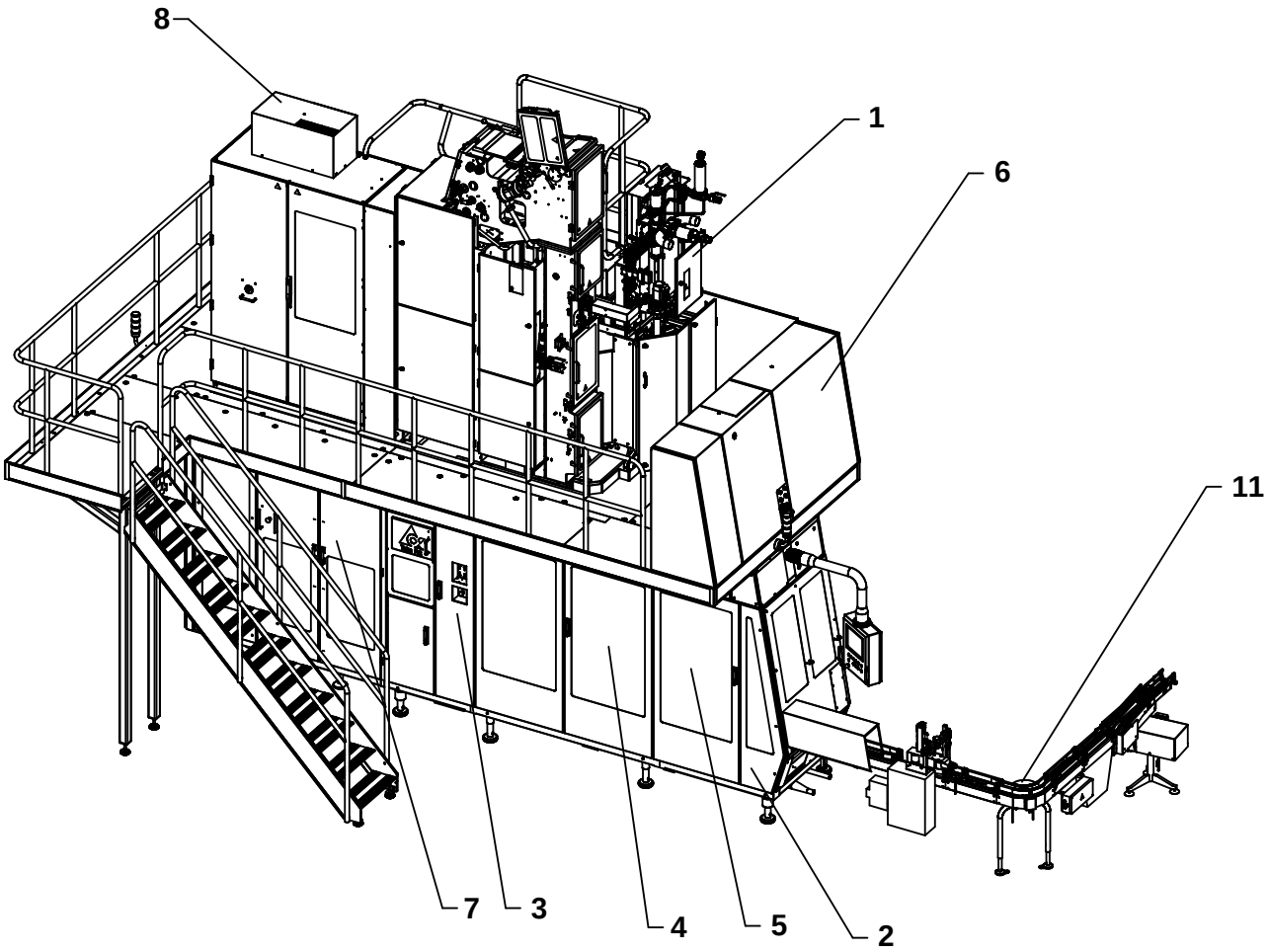

The position numbers in the illustration correspond with the chapter numbers listed on the next page.

Copyright © 2011 Tetra Pak Group

All rights reserved. No part of this document may be reproduced or copied in any form or by any means without written permission from Tetra Pak Packaging Solutions .

Tetra Pak and all Tetra Pak products are trademarks belonging to the Tetra Pak Group.

The content of this manual is in accordance with the design and construction of the machine or equipment at the time of publishing. Tetra Pak reserves the right to introduce design modifications without prior notice.

This document was produced by:

Tetra Pak Packaging Solutions
Via Delfini 1
41123 Modena
ITALY

Additional copies can be ordered from Tetra Pak. When ordering additional copies, always provide the document number.

Doc. No. SPC-3022041-0108

Issue 2011-01

This document is valid for:

Series No/Machine No Sign.

SPC

Spare Parts Catalogue

Tetra Pak A3/Speed
648576-0300

BINDER 1

i Introduction

1 Superstructure

2 Machine Body

3 Drive

4 Jaw System

5 Final Folder

BINDER 2

6 Service Unit

7 Automatic Splicing Unit

8 Electrical Cabinet

9 Regular Accessories

10 Electric Equipment

11 Conveyor Section

12 Optional Accessories

ii Part Number Index

iii Ref. Des. Parts Index

Machine or equipment configurations that this catalogue is valid for are described on the next page.

Doc. No: SPC-3022041-0108

Issue 2011-01

Tetra Pak

Tetra Pak Packaging Solutions

Valid for:

Name	Drawing Specification and Development Step	Additional Information
Tetra Pak A3/Speed 0300	648576-0300	Valid from T-order: 21215/00190

SPC
Spare Parts Catalogue

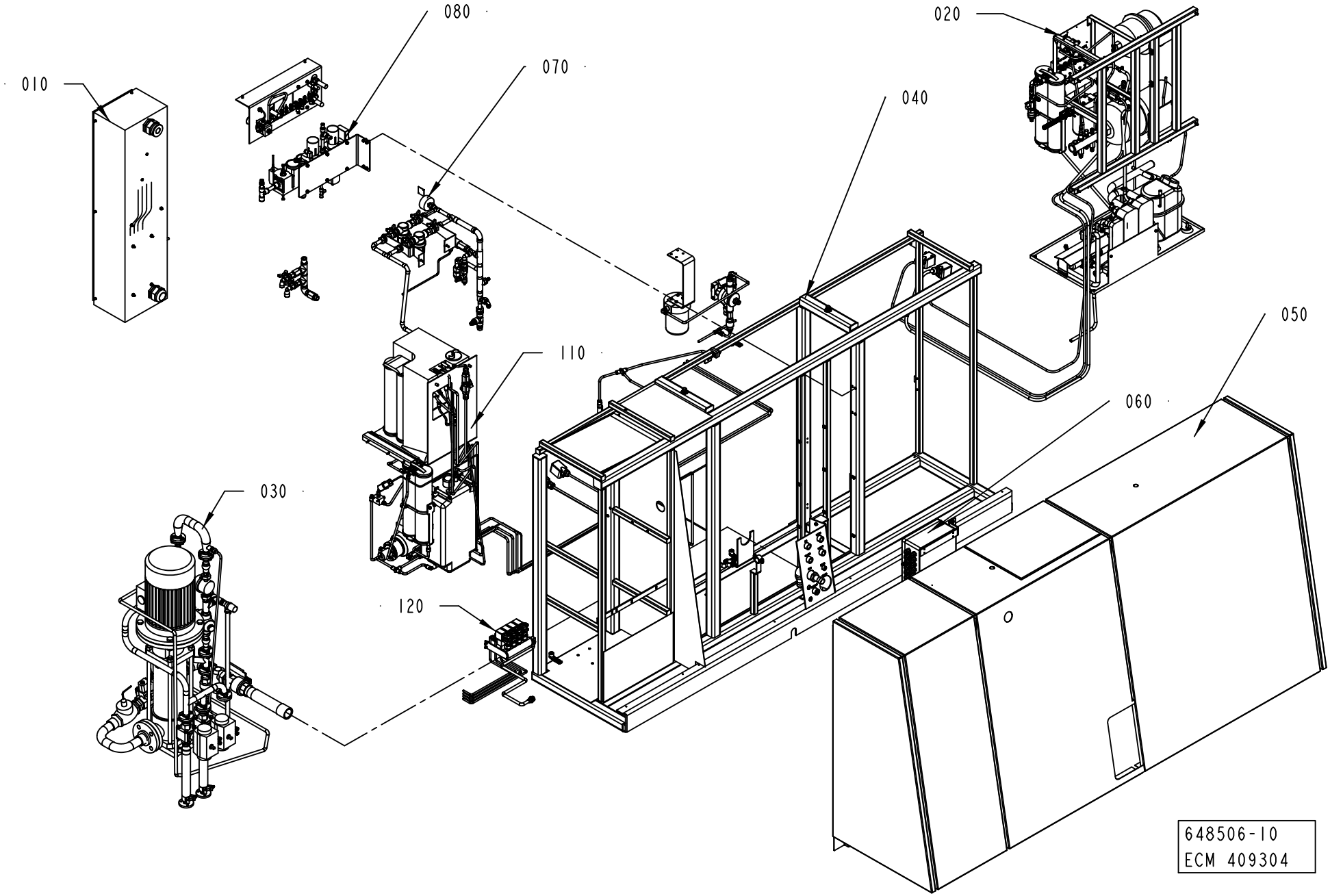
010
080
070
020
040
050
060
110
030
120
648506-10
ECM 409304

ECM: 418135 - 20091002
Group number: 648506-0600
Assembly Drawing: 648506-10_1_AB

Pos	Part No	UN	Qty	Description	Page No
A3/SPEED					
110	2833381-0200		1	WATER SYSTEM	**6-5**
120	2922541-0200		1	TUBE FLUSHING	**6-21**
Common Parts					
010	1095610-0600		1	SWITCH	**6-23**
020	1095612-0500		1	COOLING WATER SYSTEM	**6-29**
030	1095627-0400		1	FOAMING UNIT	**6-41**
040	2613034-0200		1	MACHINE BODY	**6-55**
050	1095607-0300		1	COVERING PANEL	**6-57**
060	2785231-0100		1	CONNECTION BOX	**6-77**
070	1095608-0200		1	PANEL	**6-81**
080	1095714-0400		1	SUPPLY SYSTEM	**6-83**

Pos	Part No	UN	Qty	Description	Page No

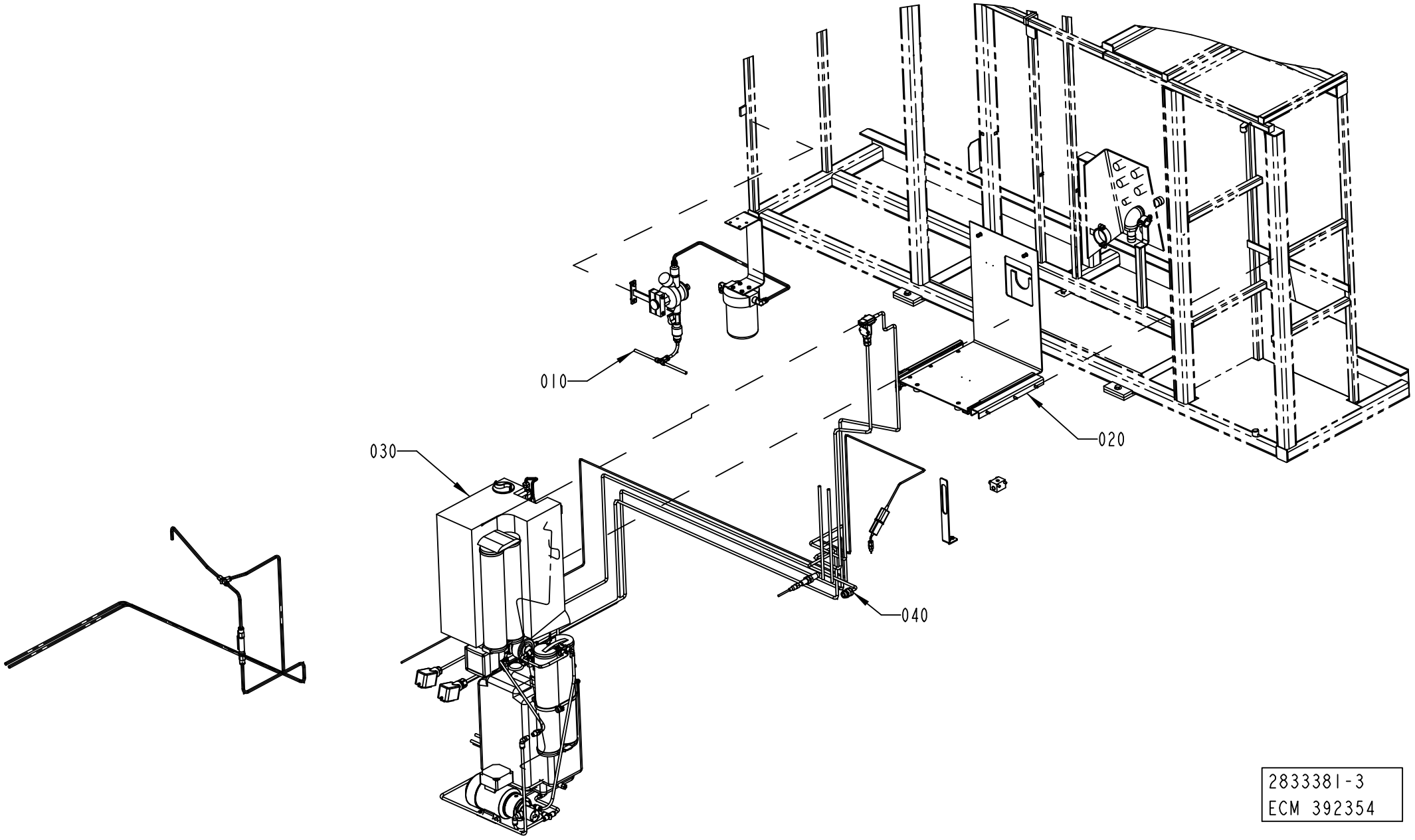

2833381-3
ECM 392354

ECM: 409955 - 20091001
Group number: 2833381-0200
Assembly Drawing: 2833381-3_1_AA

Pos	Part No	UN	Qty	Description	Page No
-					
010	2795888-0200		1	FILTER	**6-7**
020	2833383-0100		1	SUPPORT	**6-9**
030	2879650-0200		1	CIRCUIT	**6-11**
040	2879651-0100		1	ELECTRICAL CONNECTION	**6-17**

Pos	Part No	UN	Qty	Description	Page No

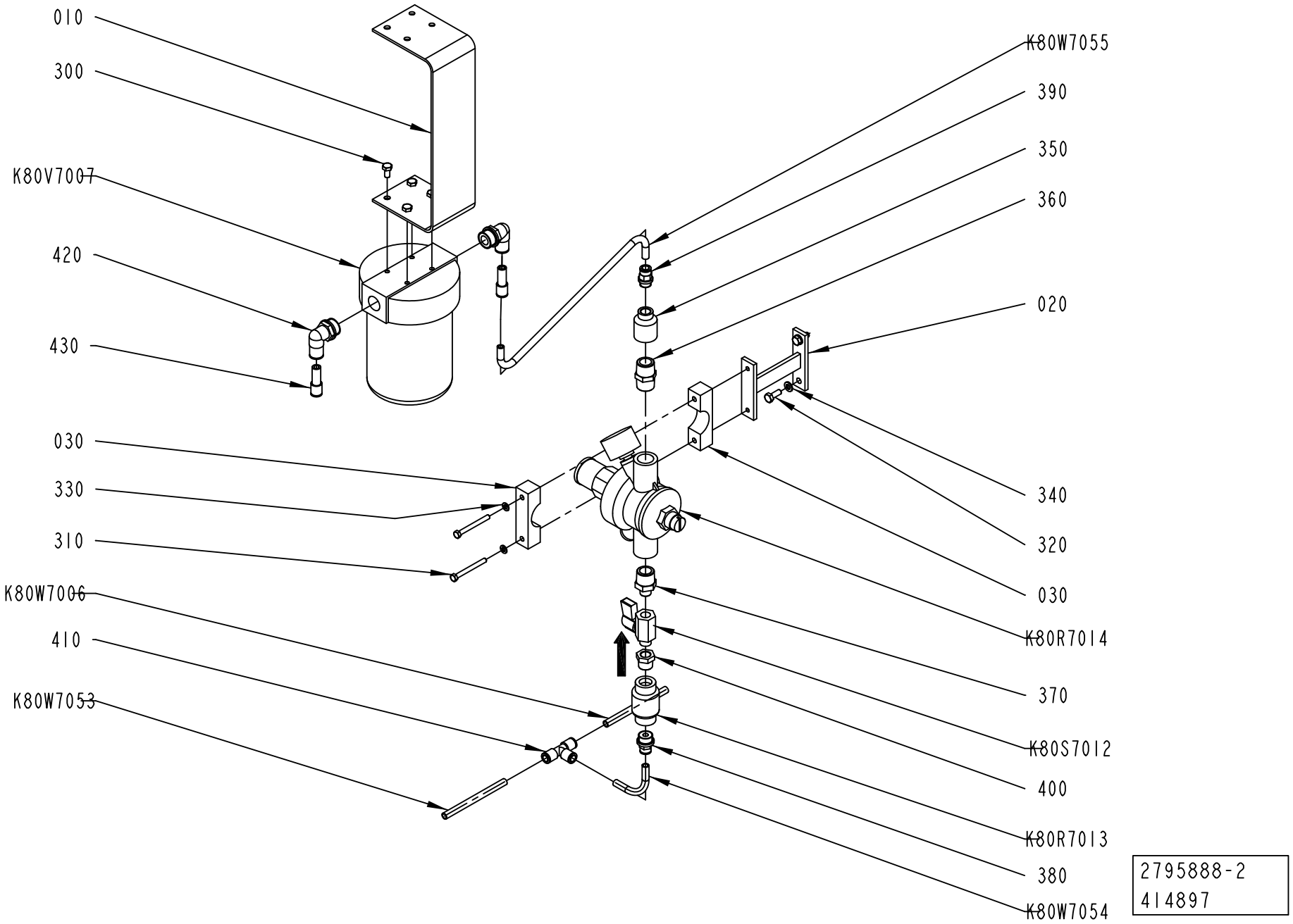
010
300
K80V7007
420
430
030
330
310
K80W7006
410
K80W7053
K80W7055
390
350
360
020
340
320
030
K80R7014
370
K80S7012
400
K80R7013
380
K80W7054
2795888-2
414897

ECM: 485469 - 20110101
Group number: 2795888-0200
Assembly Drawing: 2795888-2_1_AB

Pos	Part No	UN	Qty	Description	Page No
-					
010	2604069-0000		1	BRACKET	
020	2623715-0000		1	HOLDER	
030	2623717-0000		2	HOLDER	
300	312105-0366		4	SCREW M6S ISO 4017 M6X12 A480	
310	312105-0341		2	SCREW M6S ISO 4014 M5X50 A480	
320	312105-0368		2	SCREW M6S ISO 4017 M6X16 A480	
330	315105-0146		2	WASHER BRB 5,3X10 RFR	
340	315105-0153		2	WASHER BRB 6,4X12 RFR	
350	342217-0103		1	SLEEVE, REDUCTION, INT, R-2021/2X1/4	
360	90330-0021		1	NIPPLES, EXT. THREAD. R-207R1/2	
370	342203-0107		1	NIPPLES, EXT. THREAD, HEXAGON, NO. 209	
380	344235-0838		1	MALE CONNECTOR, 6305 08 17WP2	
390	344235-0814		1	MALE CONNECTOR, 6305 08 13WP2	
400	90330-0042		1	BUSHING, INT/EXT. THR. R3/8-RP1/4	
410	344234-0080		1	UNION TEE, 6304 08 00WP2	
420	344237-1012		2	SWIVEL ELBOW, 6309 10 21WP2	
430	344239-0810		2	REDUCER, 6366 08 10WP2	
K80R7013	90230-0040		1	NON-RETURN VALVE, R3/8, L=55	
K80R7014	90458-0201		1	FLUID AUT. FEEDER, ALINOX 1/2 46.04.00	
K80S7012	90187-0045		1	BALL VALVE G1/4 CR PL	
K80V7007	90415-0065		1	FILTER	
010	*90415-0357*		*1*	*FILTER INSERT*	
K80W7006	344240-0805	MM	700	TUBE 8 MM PE FDA, 1015Y08F01	
K80W7053	344240-0805	MM	60	TUBE 8 MM PE FDA, 1015Y08F01	
K80W7054	344240-0805	MM	800	TUBE 8 MM PE FDA, 1015Y08F01	
K80W7055	344240-0805	MM	800	TUBE 8 MM PE FDA, 1015Y08F01	

Pos	Part No	UN	Qty	Description	Page No

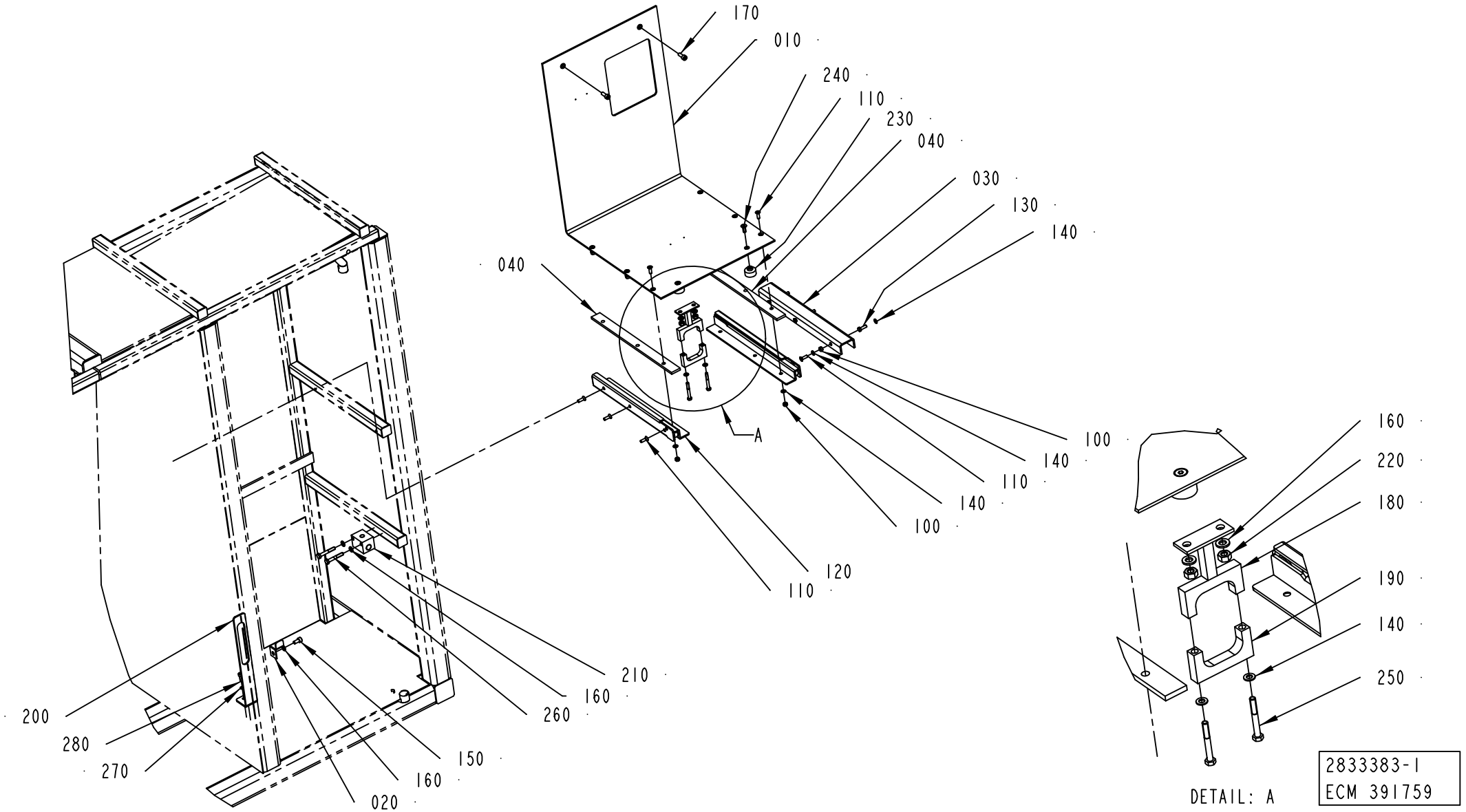
170
010
240
110
230
040
030
130
140
040
A
100
140
110
140
100
120
110
210
160
260
200
280
270
150
160
020
160
220
180
190
140
250
DETAIL: A
2833383-1
ECM 391759

ECM: 470875 - 20101001
Group number: 2833383-0100
Assembly Drawing: 2833383-1_1_AB

Pos	Part No	UN	Qty	Description	Page No
A3/SPEED					
140	315105-0146		14	WASHER BRB 5,3X10 RFR	
160	315105-0153		5	WASHER BRB 6,4X12 RFR	
180	2510755-0000		1	BRACKET	
190	1549344-0000		1	HOLDER	
220	312605-0316		2	HEXAGON NUT, M6M M6 A280	
250	312105-0339		2	SCREW M6S ISO 4014 M5X40 A480	
Common Parts					
010	2833384-0000		1	TOP COVER	
020	2866745-0000		1	HOLDER	
030	2866746-0000		1	SUPPORT	
040	2866749-0000		2	GASKET	
100	312605-0314		9	HEXAGON NUT, M6M M5 A280	
110	312155-0329		12	SCREW DIN 7991 MF6S M5X16 A4 70	
120	3078546-0000		1	GUIDE CONSOLE	
130	312105-0329		3	SCREW M6S ISO 4017 M5X16 A480	
150	312115-0366		1	SCREW ISO4762 M6X12 A4 80	
170	312115-0368		2	SCREW ISO4762 M6X16 A4 80	
200	2887528-0000		1	HOLDER	
210	2863540-0000		1	FITTING PIECE	
230	90051-0053		2	KNOB, INTERNAL THREAD, M6 24X17	
240	312155-0368		2	SCREW DIN 7991 MF6S M6X16 A4 70	
260	312105-0378		2	SCREW M6S ISO 4014 M6X40 A480	
270	315402-0146		2	LOCK WASHER FBB 5,1	
280	312115-0329		2	SCREW ISO4762 M5X16 A4 80	

Pos	Part No	UN	Qty	Description	Page No

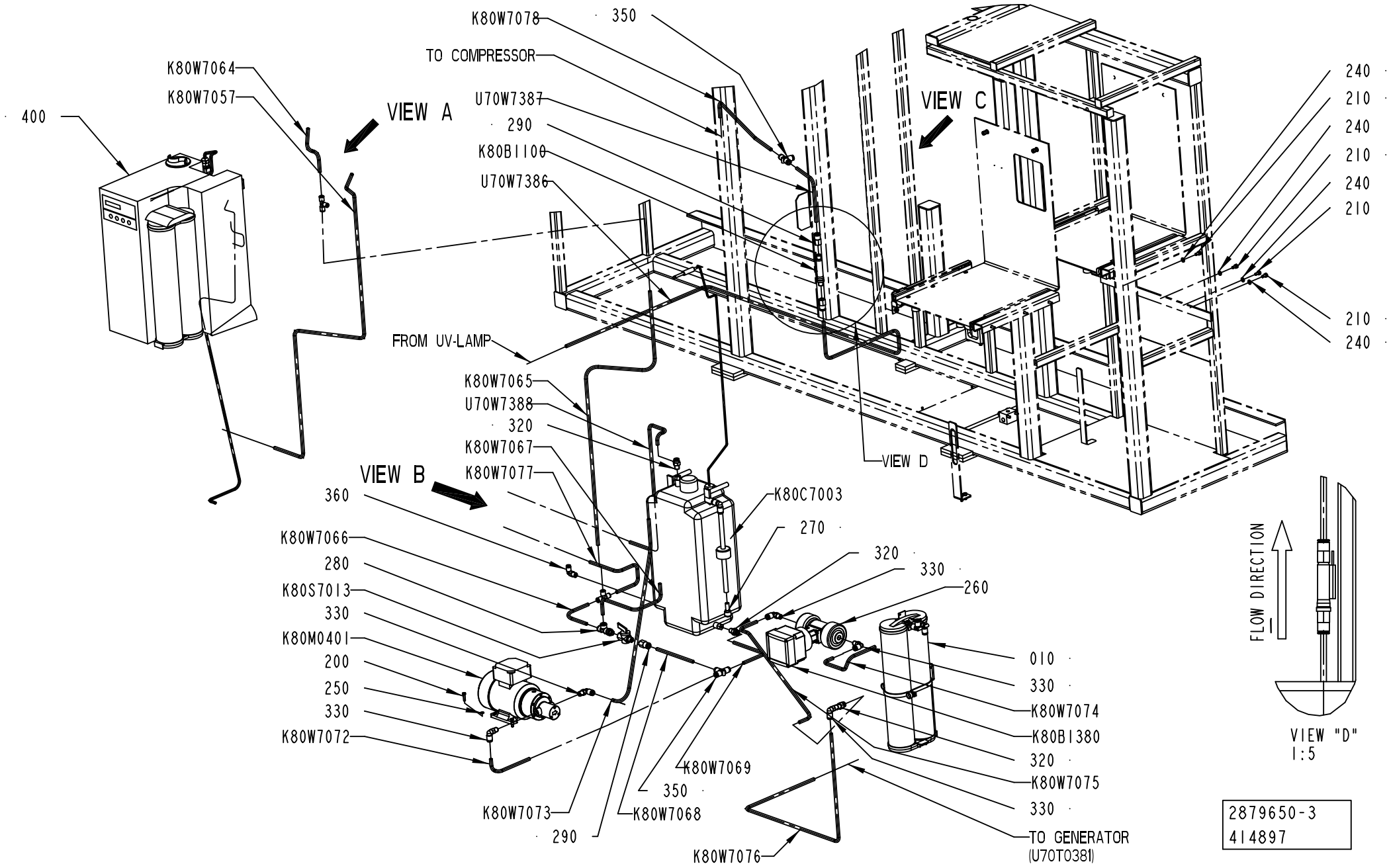
K80W7078
350
TO COMPRESSOR
K80W7064
K80W7057
400
VIEW A
U70W7387
290
K80B1100
U70W7386
VIEW C
240
210
240
210
240
210
210
240
FROM UV-LAMP
K80W7065
U70W7388
320
K80W7067
K80W7077
VIEW B
VIEW D
360
K80C7003
270
K80W7066
280
320
330
260
K80S7013
330
K80M0401
200
250
330
K80W7072
010
330
K80W7074
K80B1380
320
K80W7075
330
TO GENERATOR
(U70T0381)
K80W7069
350
K80W7073
K80W7068
290
K80W7076
FLOW DIRECTION
VIEW "D"
1:5
2879650-3
414897

ECM: 441469 - 20100701
Group number: 2879650-0200
Assembly Drawing: 2879650-3_1_AD

Pos	Part No	UN	Qty	Description	Page No
A3/SPEED					
010	2889953-0100		1	FILTER	**6-13**
210	312105-0366		4	SCREW M6S ISO 4017 M6X12 A480	
240	315105-0153		4	WASHER BRB 6,4X12 RFR	
260	90458-2173		1	PIPE CONNECTION, 552608M	
290	90055-0266		3	STRAIGHT CONNECTION	
320	90600-2651		3	PUSH-IN FITTING KPH08-02	
330	90600-2653		5	PUSH-IN L-FITTING KPL08-02	
350	90600-2650		4	PUSH-IN T-FITTING KPT08-00	
K80B1100	90459-1234		1	FLOW SWITCH, FS-3 SERIES/166703	
K80B1380	90458-2174		1	CONDUCTIVITY TRANSMITTER, 418962Z	
K80W7073	315300-0006	MM	800	TUBE, 8 MM PE BLACK	
K80W7074	315300-0006	MM	300	TUBE, 8 MM PE BLACK	
K80W7075	315300-0006	MM	500	TUBE, 8 MM PE BLACK	
K80W7076	315300-0006	MM	4000	TUBE, 8 MM PE BLACK	
K80W7078	315300-0006	MM	1000	TUBE, 8 MM PE BLACK	
U70W7386	315300-0006	MM	3000	TUBE, 8 MM PE BLACK	
U70W7387	315300-0006	MM	200	TUBE, 8 MM PE BLACK	
U70W7388	315300-0006	MM	3000	TUBE, 8 MM PE BLACK	
Common Parts					
200	312105-0331		4	SCREW M6S ISO 4017 M5X20 A480	
250	315105-0146		4	WASHER BRB 5,3X10 RFR	
270	90055-0249		1	REDUCER 8-10	
280	90055-0275		1	ELBOW FITTING, 8 - G1/4	
300	342716-0203		1	REDUCER 6-8	
360	90602-1710		1	PUSH-IN L-FITTING KPL06-02	
400	2944191-0200		1	STERILE WATER SYSTEM	**6-15**
K80C7003	90600-2901		1	TANK 10L, TANKPE010	
	90600-5774		*1*	*FILTER, SLFH025NS*	
	90600-5775		*1*	*LEVEL SENSOR, ZF3000197*	
	90600-5776		*1*	*CHECK VALVE, FTPF05386*	
K80M0401	90600-2900		1	PUMP, 1272514	
	90600-5766		*1*	*PUMP, MK313XE0PS00000*	
	90600-5768		*1*	*MAGNET COUPLING DISC, MKBS56S*	
	90600-5777		*1*	*MOTOR, 6910002*	
K80S7013	90187-0197		1	BALL VALVE G1/4	
K80W7057	315300-0006	MM	4000	TUBE, 8 MM PE BLACK	
K80W7064	315300-0006	MM	180	TUBE, 8 MM PE BLACK	
K80W7065	315300-0006	MM	1100	TUBE, 8 MM PE BLACK	
K80W7066	315300-0006	MM	200	TUBE, 8 MM PE BLACK	
K80W7067	315300-0006	MM	350	TUBE, 8 MM PE BLACK	
K80W7068	315300-0006	MM	150	TUBE, 8 MM PE BLACK	
K80W7069	315300-0006	MM	200	TUBE, 8 MM PE BLACK	
K80W7072	315300-0006	MM	190	TUBE, 8 MM PE BLACK	
K80W7077	315300-0006	MM	3000	TUBE, 8 MM PE BLACK	

Machine Type Group Description Used-In Group Number Page No

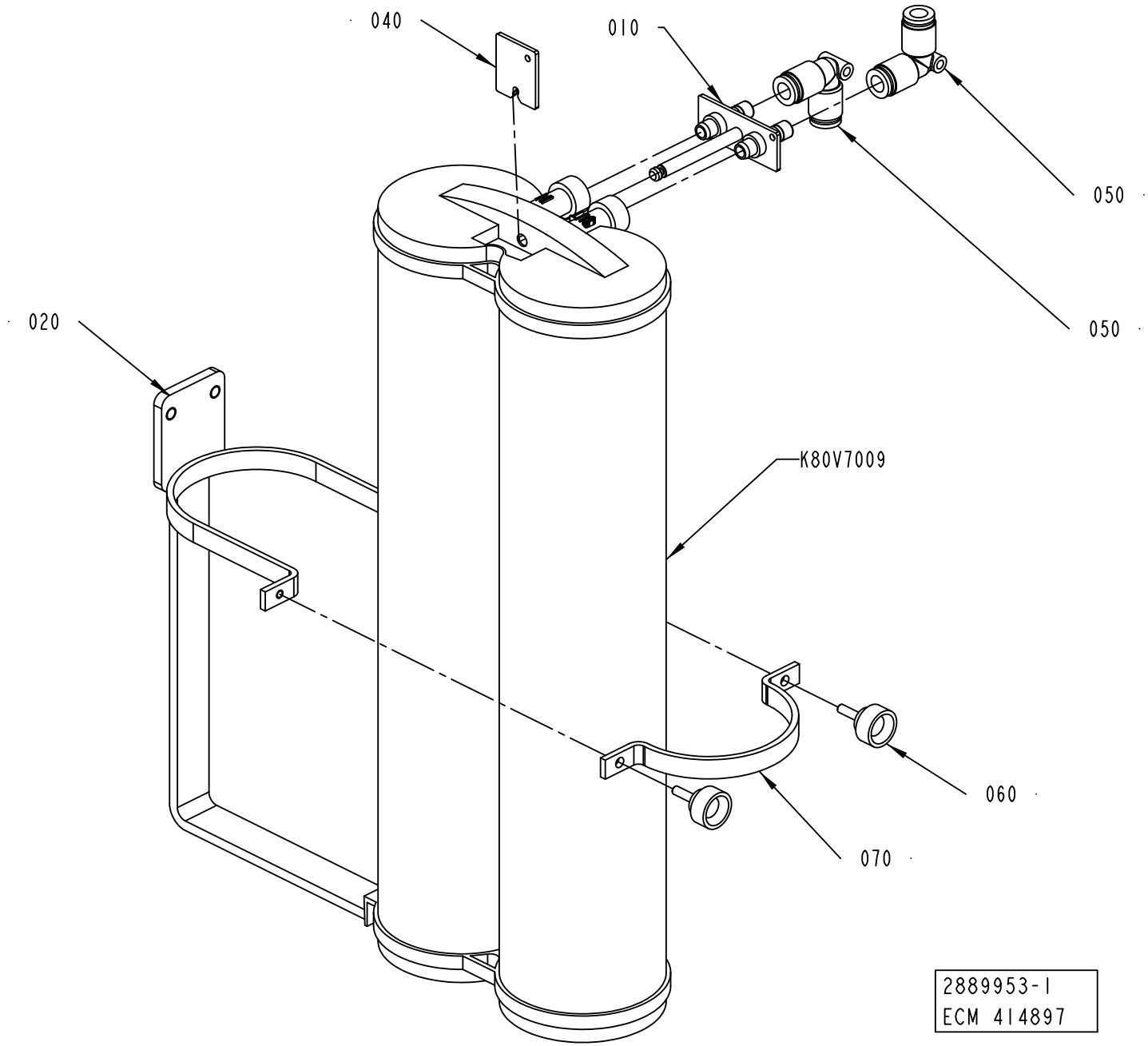
040
010
050
050
020
K80V7009
060
070
2889953-1
ECM 414897

ECM: 485463 - 20110101
Group number: 2889953-0100
Assembly Drawing: 2889953-1_1_AB

Pos	Part No	UN	Qty	Description	Page No
-					
010	2890241-0000		1	CONNECTOR	
020	2792118-0000		1	SUPPORT	
040	3102608-0000		1	FASTENING PLATE	
050	90600-2653		2	PUSH-IN L-FITTING KPL08-02	
060	318856-0101		2	KNOB, EXTERNAL THREAD. NO. 8308-1011	
070	2792120-0000		1	SUPPORT	
K80V7009	90459-7084		1	FILTER, CPDI0NJM1	

Pos	Part No	UN	Qty	Description	Page No

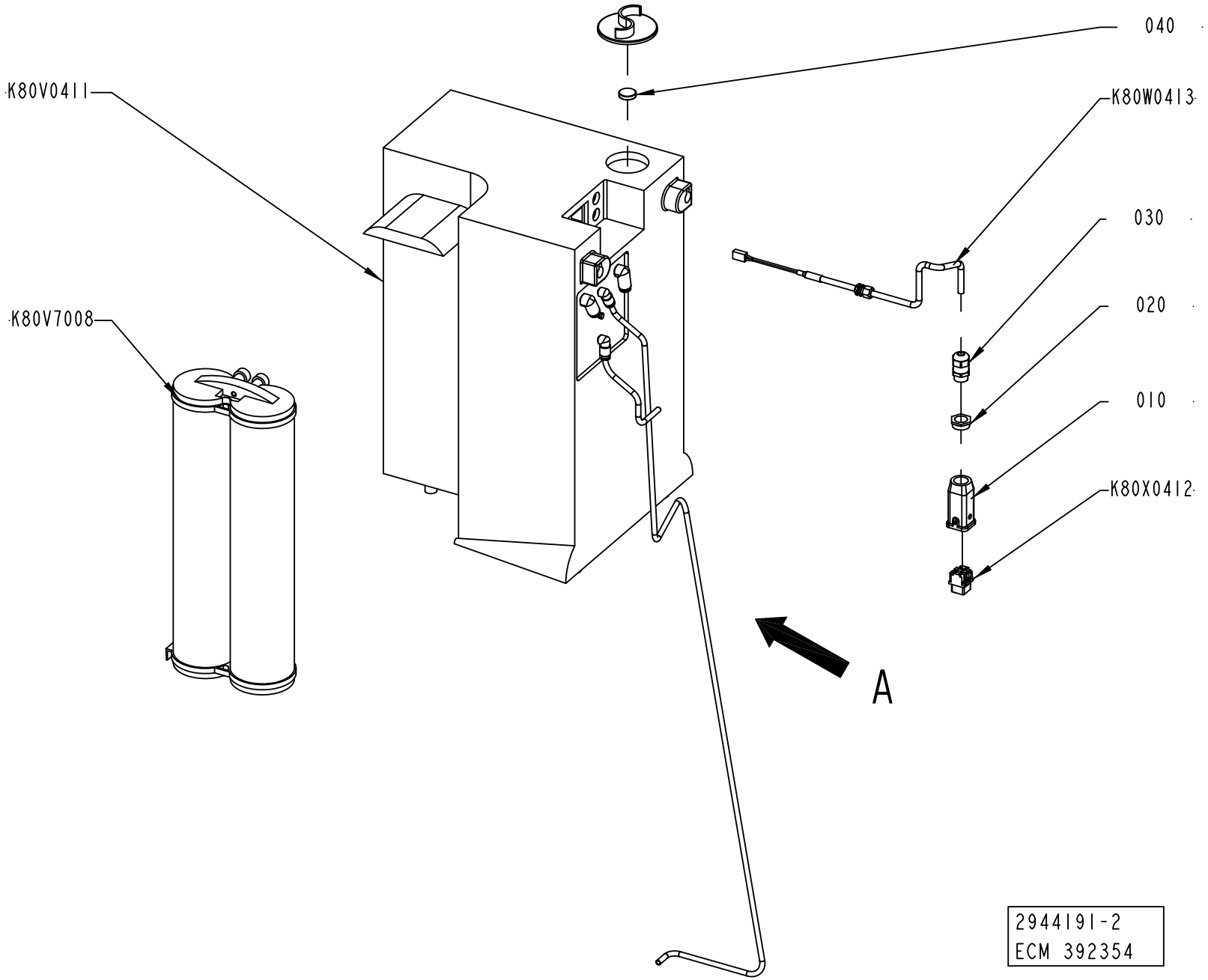
040
K80W0413
030
020
010
K80X0412
K80V0411
K80V7008
A
2944191-2
ECM 392354

ECM: 392354 - 20100311
Group number: 2944191-0200
Assembly Drawing: 2944191-2_1_AA

Pos	Part No	UN	Qty	Description	Page No
A3/SPEED					
K80V0411	90600-2902		1	STERILE WATER SYSTEM, ZLXS5003Y	
Common Parts					
010	90459-3080		1	HOOD HAN-BRID 3A 19 20 003 1443	
020	90459-7223		1	REDUCER, M20/M16	
030	90458-0314		1	CABLE GLAND, M16X1,5, NO.5311 1110	
040	90600-5773		1	TABLETS FOR SANITIZING, ZWCL01F50	
K80V7008	90600-3268		1	FILTER CARTRIDGE, PROG000S2	
K80W0416	90600-4464		1	CONNECTION, TEPKKIT01	
K80X0412	90459-6820		1	FEMALE INSERT HAN 4 A, 09 20 004 2711	

Pos	Part No	UN	Qty	Description	Page No

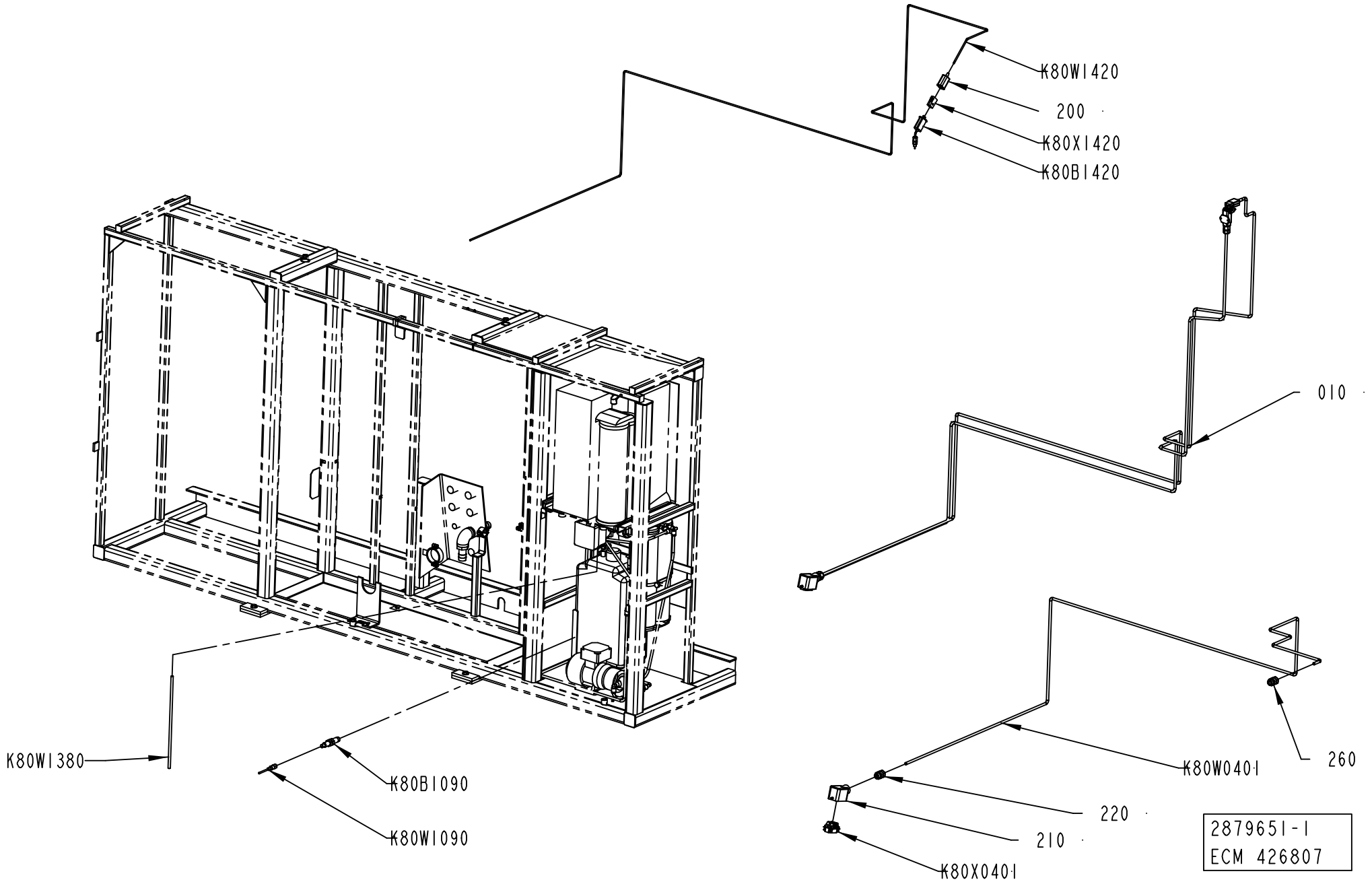
K80W1420
200
K80X1420
K80B1420
010
K80W1380
K80B1090
K80W1090
K80W0401
260
220
210
K80X0401
2879651-1
ECM 426807

ECM: 429601 - 20100120
Group number: 2879651-0100
Assembly Drawing: 2879651-1_1_AE

Pos	Part No	UN	Qty	Description	Page No
A3/SPEED					
200	90326-0012		1	PROTECTIVE COVER, T31A4618	
K80B1420	90326-0057		1	THERMOCOUPLE, CR-AL	
K80W1380	351150-0403	MM	5000	CABLE OLFLEX 3X0,75 MM2 LIGHT/GREY	
K80W1420	90220-0034	MM	2500	THERMOCABLE TEX/SITW-20F-KX 2X0,5MM2	
K80X1420	90326-0020		1	PLUG, FEMALE YELLOW CR-AL	
Common Parts					
010	2901822-0100		1	ELECTRICAL CONNECTION	**6-19**
210	90459-1458		1	HOOD HAN 6 E 19 30 006 1540	
220	90458-0307		1	CABLE GLAND, M20X1,5, NO.5311 1020	
260	90458-0315		1	CABLE GLAND, M20X1,5, NO.5311 1120	
K80B1090	90458-1840		1	CAPACITIVE SENSOR CM18-12NPP-KC1	
K80W0401	351150-0413	MM	2800	CABLE OLFLEX 4GX1,5 MM2 LIGHT/GREY	
K80W1090	351309-0050		1	ACTUATOR/SENSOR CABLE PRKT 4-07/5M	
K80X0401	90110-0052		1	MALE INSERT HAN 6E 09 33 006 2601	

Pos	Part No	UN	Qty	Description	Page No

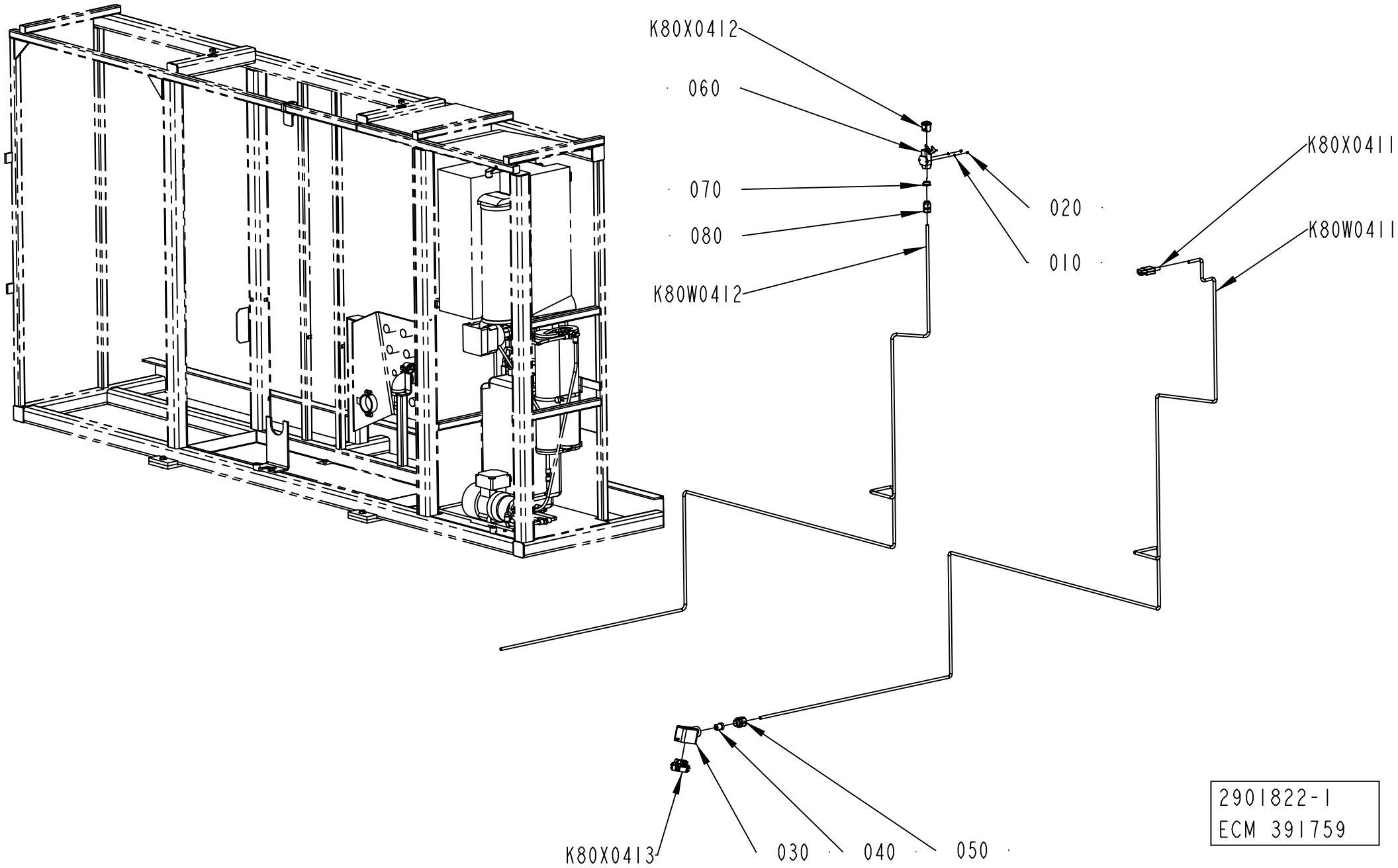
K80X0412
060
070
080
K80W0412
020
010
K80X0411
K80W0411
K80X0413
030
040
050
2901822-1
ECM 391759

ECM: 450951 - 20101001
Group number: 2901822-0100
Assembly Drawing: 2901822-1_1_AC

Pos	Part No	UN	Qty	Description	Page No
-					
010	315105-0124		2	WASHER BRB 3,2X6 RFR	
020	312812-0310		2	HEXAGON NUT, NY-LOCK M3 A480	
030	90459-1458		1	HOOD HAN 6 E 19 30 006 1540	
040	353249-0083		1	INSERT, MULTI HOLE, EK 153M2X8	
050	90458-0422		1	GLAND W/O INSERT M20 EXTENDED	
060	90459-3081		1	HOUSING HAN A 19 20 003 1250	
070	90459-7223		1	REDUCER, M20/M16	
080	90458-0436		1	GLAND, EXTENDED WITH INSERT, M16X1,5	
K80W0411	351150-0403	MM	4500	CABLE OLFLEX 3X0,75 MM2 LIGHT/GREY	
K80W0412	351150-0403	MM	3700	CABLE OLFLEX 3X0,75 MM2 LIGHT/GREY	
K80X0411	2803661-0000		1	CABLE	
K80X0412	90459-6821		1	MALE INSERT HAN 4A, 09 20 004 2611	
K80X0413	90110-0052		1	MALE INSERT HAN 6E 09 33 006 2601	

Pos	Part No	UN	Qty	Description	Page No

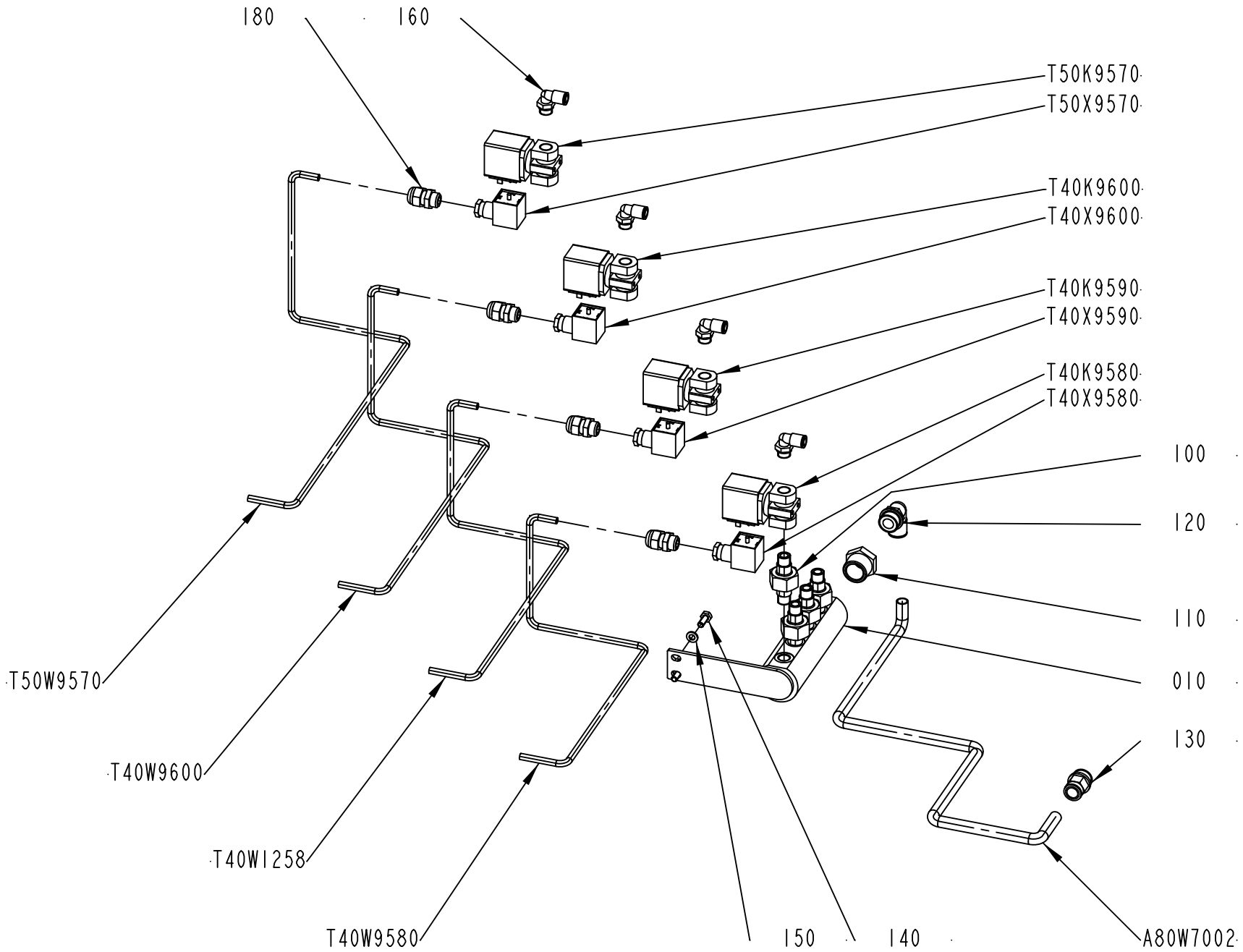

2922541-2
ECM 414897

ECM: 485470 - 20110101
Group number: 2922541-0200
Assembly Drawing: 2922541-2_1_AB

Pos	Part No	UN	Qty	Description	Page No
-					
010	3034923-0000		1	SUPPORT	
100	90601-7150		4	NIPPLE EXT. THREAD HEX. SF 149 FR 14-7	
110	342206-0109		1	BUSHING, TAPERED, INT/EXT. THR NO. R211	
120	344237-1212		1	SWIVEL ELBOW, 6309 12 21WP2	
130	344235-1212		1	MALE CONNECTOR, 6305 12 21WP2	
140	312105-0368		2	SCREW M6S ISO 4017 M6X16 A480	
150	315105-0153		2	WASHER BRB 6,4X12 RFR	
160	344237-0814		4	SWIVEL ELBOW, 6309 08 13WP2	
180	352103-0101		4	CABLE GLAND, ST 9, PR15,2/PG9	
A80W7002	344240-1209	MM	600	TUBE 12 MM PE FDA, 1015Y12F01	
T40K9580	90042-0248		1	SOLENOID VALVE OFFICIENE DI ENSINO	
T40K9590	90042-0248		1	SOLENOID VALVE OFFICIENE DI ENSINO	
T40K9600	90042-0248		1	SOLENOID VALVE OFFICIENE DI ENSINO	
T50K9570	90042-0248		1	SOLENOID VALVE OFFICIENE DI ENSINO	
T40W1258	351150-0403	MM	2000	CABLE OLFLEX 3X0,75 MM2 LIGHT/GREY	
T40W9580	351150-0403	MM	2000	CABLE OLFLEX 3X0,75 MM2 LIGHT/GREY	
T40W9600	351150-0403	MM	2000	CABLE OLFLEX 3X0,75 MM2 LIGHT/GREY	
T50W9570	351150-0403	MM	2000	CABLE OLFLEX 3X0,75 MM2 LIGHT/GREY	
T40X9580	90110-0095		1	CONNECTOR 3 POLE + EARTH	
T40X9590	90110-0095		1	CONNECTOR 3 POLE + EARTH	
T40X9600	90110-0095		1	CONNECTOR 3 POLE + EARTH	
T50X9570	90110-0095		1	CONNECTOR 3 POLE + EARTH	

Pos	Part No	UN	Qty	Description	Page No

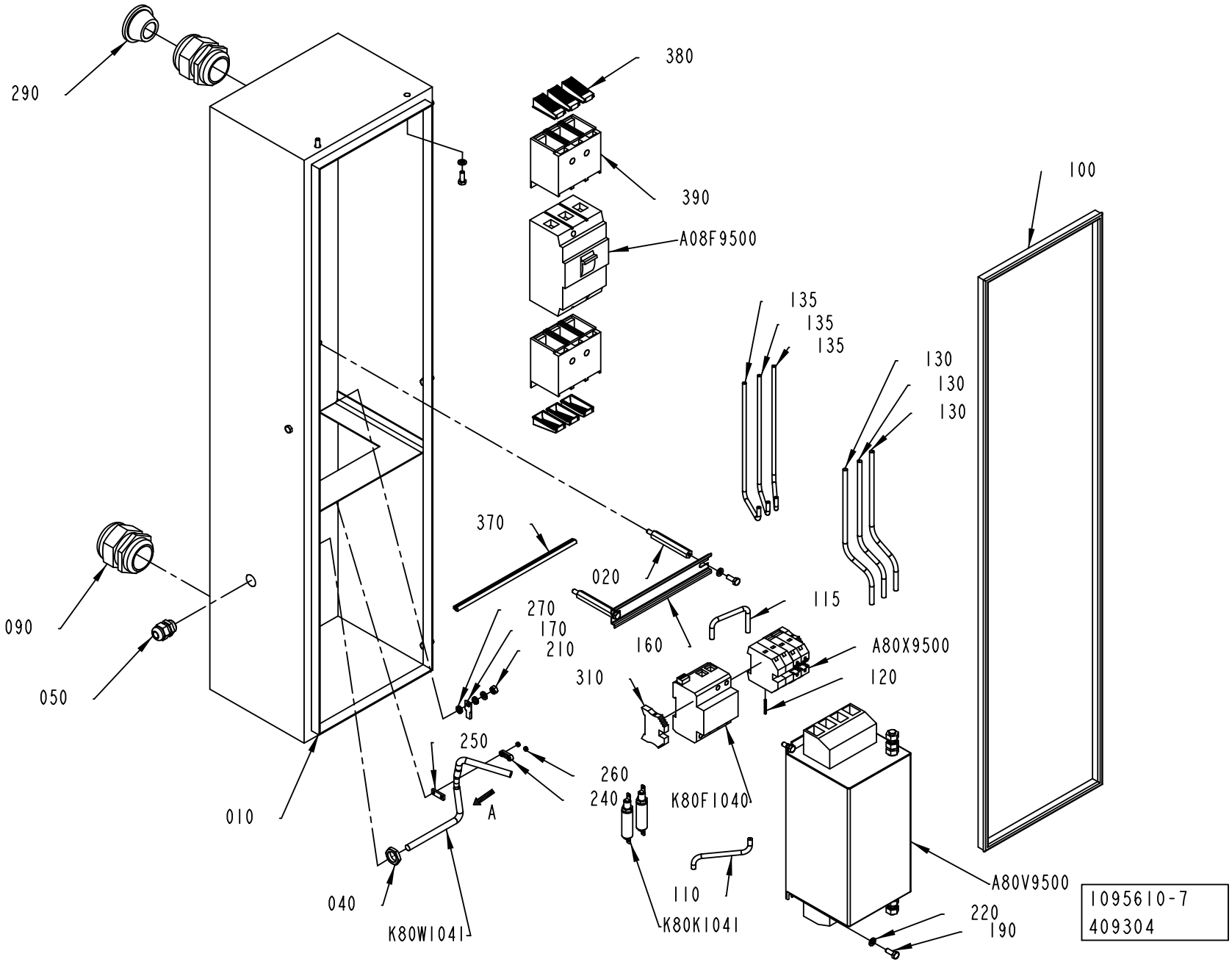
290
380
390
A08F9500
100
135
135
135
130
130
130
370
020
115
270
170
210
160
A80X9500
120
310
090
050
250
260
240
K80F1040
010
A
040
K80W1041
110
K80K1041
A80V9500
220
190
1095610-7
409304

ECM: 450807 - 20100401
Group number: 1095610-0600
Assembly Drawing: 1095610-7_1_AA

Pos	Part No	UN	Qty	Description	Page No
CE					
380	90459-6616		8	FINGER PROTECTION IP20, NZM1-4-XIPA	
390	90459-6617		2	COVER 4-POLE, NZM1-4-XKSA	
A80F9500	90459-6618		1	CIRCUIT BREAKER, NZMB1-4-A100	
UL, CSA					
380	90459-6616		6	FINGER PROTECTION IP20, NZM1-4-XIPA	
390	90600-5270		2	COVER 3-POLE, NZM1-XKSA	
A80F9500	90600-5269		1	CIRCUIT.BREAKER, NZMB1-AF100-NA	
Common Parts					
010	3050626-0000		1	CABINET	
020	3050627-0000		2	SPACER	
040	90099-0117		1	NUT, PR 18,6 (PG11)	
050	352103-0106		1	CABLE GLAND, ST 11, PR18,6/PG11	
090	352103-0123		2	CABLE GLAND, ST 42, PR54,0/PG42	
100	90143-0057	MM	2600	STRIP EMKA 1011-05 21X11MM	
110	351161-0111	MM	280	WIRE AWM 1X35 MM2 LIGHTBLUE	
115	351161-0110	MM	180	WIRE AWM 1X25 MM2 LIGHTBLUE	
120	351162-0109	MM	850	WIRE AWM 1X16 MM2 YELLOW-GREEN	
130	351164-0111	MM	840	WIRE AWM 1X35 MM2 BLACK	
135	351164-0110	MM	540	WIRE AWM 1X25 MM2 BLACK	
160	3050628-0000		1	RAIL	
170	353104-0168		1	CABLE SHOE, RING UNINS., YAV 16 M 6	
180	353105-0200		9	PIN CABLE SHOE A4630SR	
190	312105-0368		11	SCREW M6S ISO 4017 M6X16 A480	
210	312605-0316		1	HEXAGON NUT, M6M M6 A280	
220	315105-0153		12	WASHER BRB 6,4X12 RFR	
240	90220-0303		1	CLAMP FOR SCR.CABLE, 10MM, 55-016-22	
250	90220-0305		1	CLAMP FOR SCR.CABLE, 16MM,	
260	312605-0310		2	HEXAGON NUT, M6M M3 A280	
270	90062-0015		2	LOCK WASHER SERRAT.EXT.GEAR,6,4/11 H=0,7	
290	90015-0025		1	LEAD-IN, TET26-35, E-1458041	
310	353031-0203		1	END SUPPORT, WEW 35/2	
370	90143-0060	MM	250	EDGE STRIP 9,5X6,3MM BLACK PVC	
A80V9500	90600-5267		1	LINE FILTER, B84144A120R120	
A80X9500	3000085-0200		1	TERMINAL	**6-25, 6-27**
K80F1040	90600-7487		1	SURGE PROTECTION DEV., VAL-MS 230/3+1 FM	
	90600-7489		*1*	*SURGE PROTECTION DEV., SP, F-MS 12 ST*	
	90600-7488		*1*	*SURGE PROTECTION DEV., SP, VAL-MS 230 ST*	
K80K1041	90600-5266		2	FEED THROUGH FILTER, B85321A2502W160	
K80W1041	90220-0095	MM	3000	SCR. CABLE 3X0,75MM2	

Pos	Part No	UN	Qty	Description	Page No

Machine Type | Group Description | Used-In | Group Number | Page No

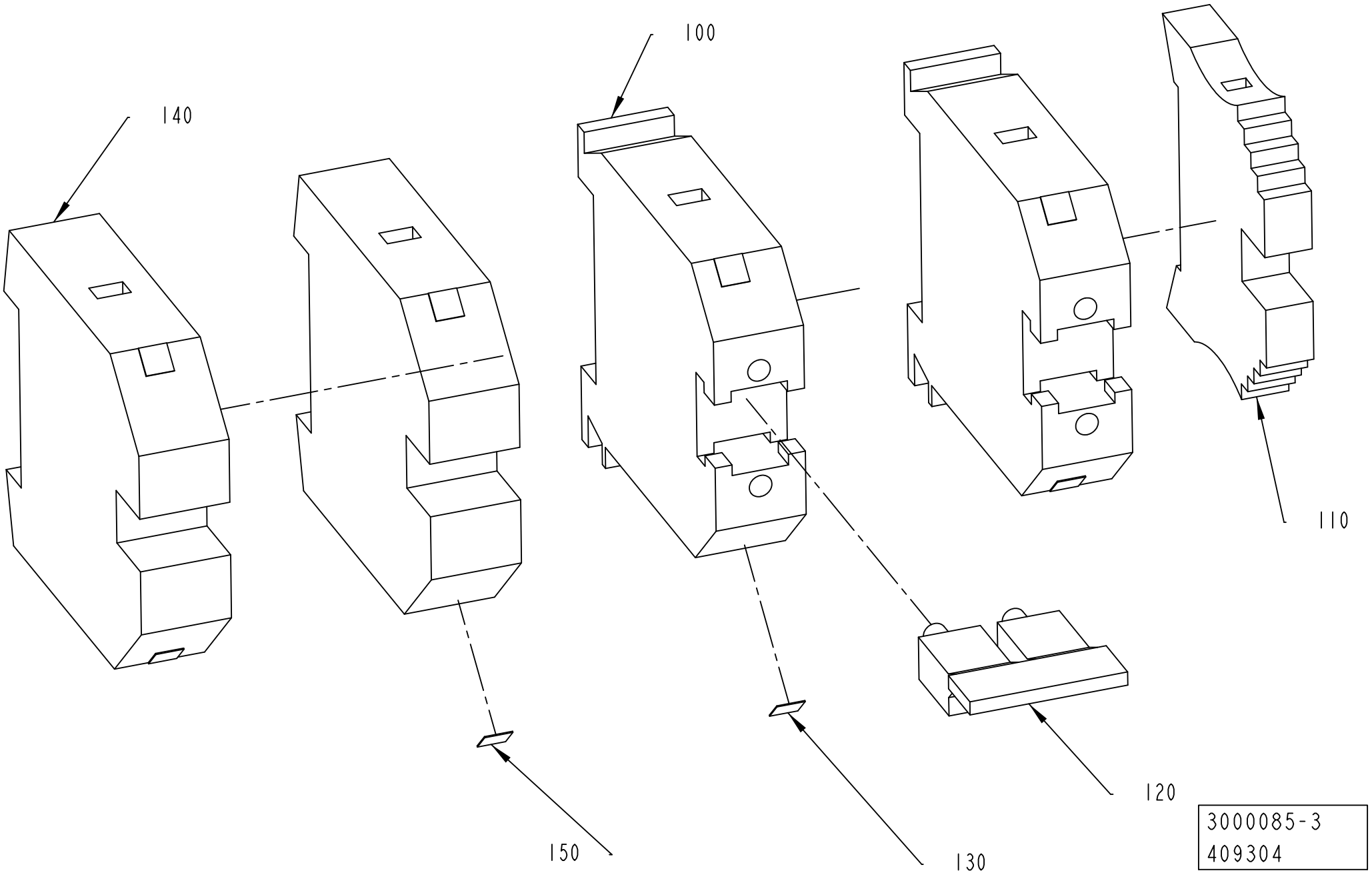
100
140
110
120
130
150
3000085-3
409304

ECM: 450809 - 20100401
Group number: 3000085-0200
Assembly Drawing: 3000085-3_1_AA

This list covers pages from 6-24 to 6-27

Pos	Part No	UN	Qty	Description	Page No
UL, CSA (See drawing on pages: 6-24, 6-26)					
100	353021-0219		2	FEED THROUGH TERMINAL, 10205.0	
120	353034-0026		1	BRIDGE CONNECTOR WQV 35/2	
130	359011-0807		4	MARKING, DEK 5 FW 1-50	
Common Parts					
110	353031-0203		1	END SUPPORT, WEW 35/2	
140	353024-0209		2	EARTH TERMINAL WPE 35	
150	359011-0819		1	MARKING, EARTH, DEK 5 GW ERDE I.KR.	

Pos	Part No	UN	Qty	Description	Page No

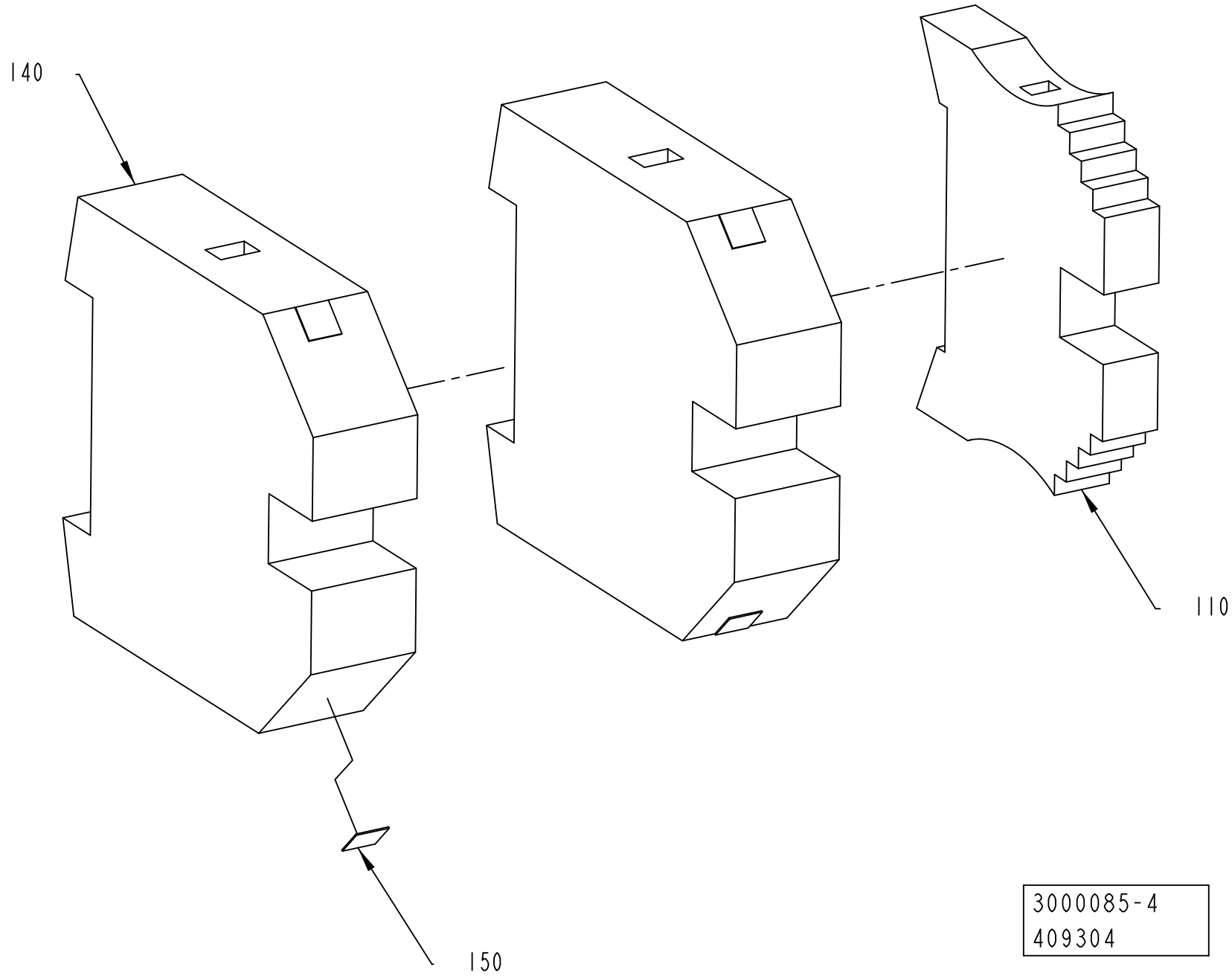
140
110
150
3000085-4
409304

ECM: 450809 - 20100401
Group number: 3000085-0200
Assembly Drawing: 3000085-4_1_AA

This list covers pages from 6-24 to 6-27

Pos	Part No	UN	Qty	Description	Page No
UL, CSA (See drawing on pages: 6-24, 6-26)					
100	353021-0219		2	FEED THROUGH TERMINAL, 10205.0	
120	353034-0026		1	BRIDGE CONNECTOR WQV 35/2	
130	359011-0807		4	MARKING, DEK 5 FW 1-50	
Common Parts					
110	353031-0203		1	END SUPPORT, WEW 35/2	
140	353024-0209		2	EARTH TERMINAL WPE 35	
150	359011-0819		1	MARKING, EARTH, DEK 5 GW ERDE I.KR.	

Pos	Part No	UN	Qty	Description	Page No

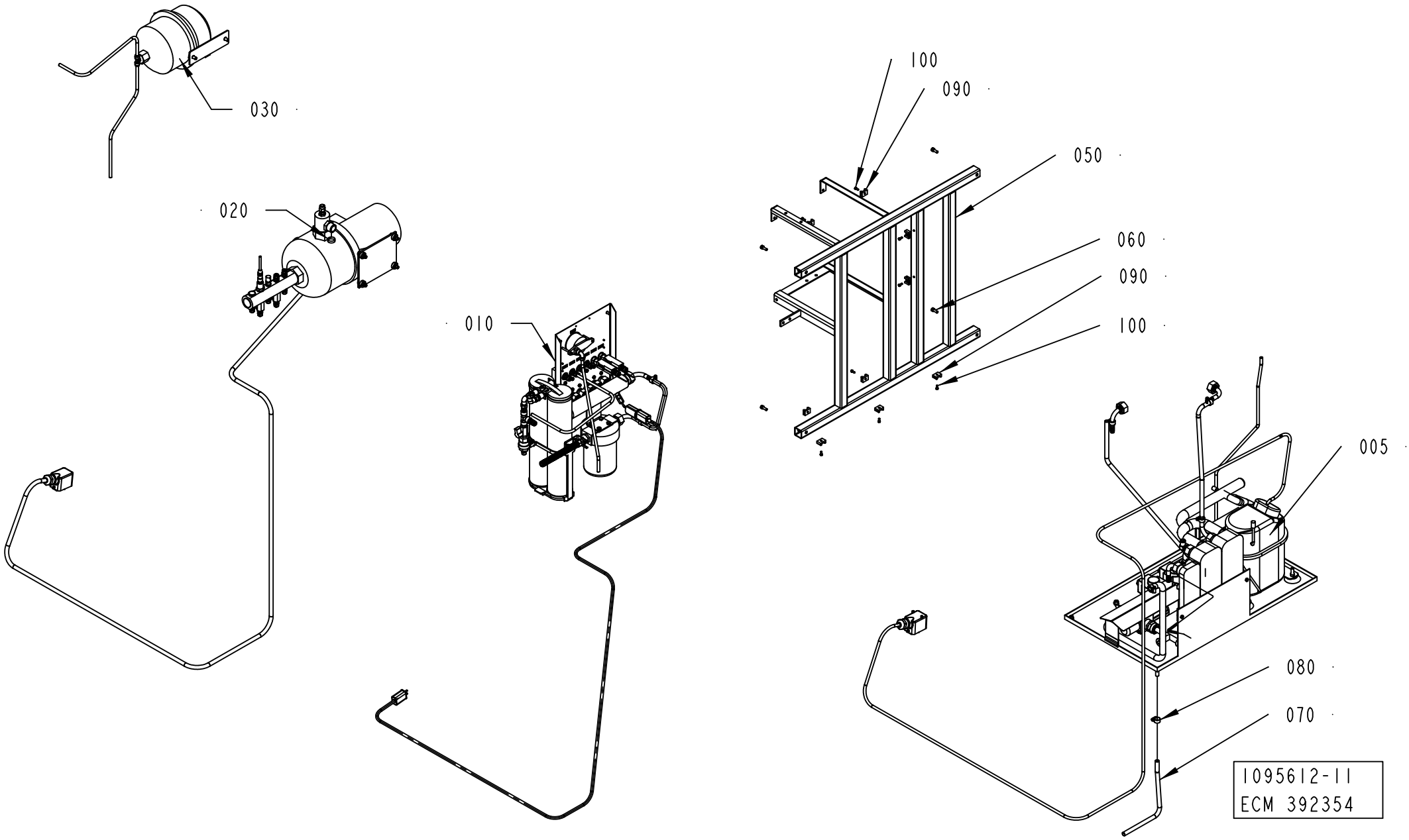
030
020
010
100
090
050
060
090
100
005
080
070
1095612-11
ECM 392354

ECM: 433842 - 20100101
Group number: 1095612-0500
Assembly Drawing: 1095612-11_1_AA

Pos	Part No	UN	Qty	Description	Page No
A3/SPEED COMPRESSOR					
005	1095710-0400		1	COMPRESSOR UNIT	**6-31**
Common Parts					
010	2552113-0300		1	FLOW METER	**6-33**
020	1095706-0500		1	COOLING WATER PUMP	**6-37**
030	2514077-0300		1	EXPANSION VESSEL	**6-39**
050	3026922-0000		1	MACHINE BODY	
060	312115-0368		4	SCREW ISO4762 M6X16 A4 80	
070	90166-0121	MM	1000	HOSE	
080	342991-0101		1	HOSE CLIP,WORM DRIVE TYPE (11)-17	
090	352113-0203		9	ANCHOR PLATES FOR STRIPS, TYPE TM3S8-M0	
100	312125-0289		9	SCREW ISO 1207 M4X10 A4	

Pos	Part No	UN	Qty	Description	Page No

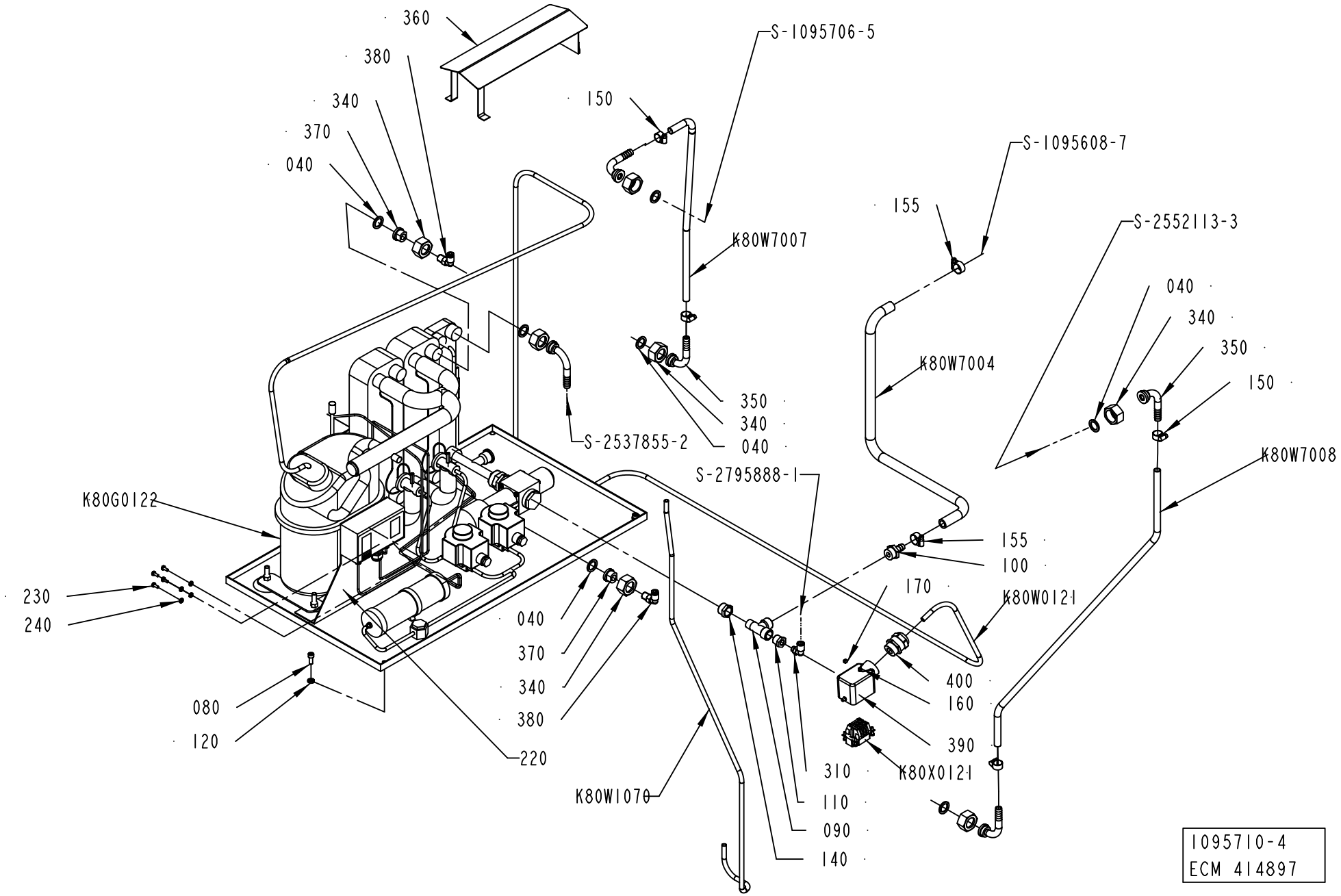
360
380
340
370
040
150
S-1095706-5
K80W7007
350
340
040
S-2537855-2
S-1095608-7
155
S-2552113-3
040
340
350
150
K80W7004
K80W7008
S-2795888-1
K80G0122
230
240
080
120
040
370
340
380
220
155
100
170
K80W0121
400
160
390
K80X0121
310
110
090
140
K80W1070
1095710-4
ECM 414897

ECM: 485465 - 20110101
Group number: 1095710-0400
Assembly Drawing: 1095710-4_1_AB

Pos	Part No	UN	Qty	Description	Page No
A3/SPEED					
040	90459-3339		7	GASKET NBR/PTFE 17X24X2 MM 3/4"	
340	2531423-0000		7	NUT	
370	2879648-0000		2	BUSHING	
380	344237-0814		2	SWIVEL ELBOW, 6309 08 13WP2	
K80G0122	2654082-0000		1	COMPRESSOR UNIT	
Common Parts					
080	312115-0368		2	SCREW ISO4762 M6X16 A4 80	
090	90140-0010		1	T-PIPE, INT. THREAD, 20031/2	
100	342901-0105		1	HOSE NIPPLE, EXT.THR. G1/2-12 MM	
110	342701-0205		1	BUSHING,INT./EXT.G-THREAD G1/2"-G1/4"	
120	315115-0153		2	WASHER PLAIN, TBRB 6,4/12 H=3	
140	342700-0113		1	NIPPLES,HEXAGON,EXT.G-THREAD G1/2"-G1/2"	
150	342991-0101		4	HOSE CLIP,WORM DRIVE TYPE (11)-17	
155	342991-0102		2	HOSE CLIP,WORM DRIVE TYPE (13)-20	
160	359005-0050		1	MARKING LABEL KIT X, 04.841.4550.0	
170	359005-0010		1	MARKING LABEL KIT 0 - 9, 04.841.2150.0	
220	1361560-0000		1	PLATE	
230	312132-0289		4	SLOTTED HEAD, PAN SCREW, MSCS M4X10	
240	90062-0029		4	LOCK WASHER 5,1X 8,6, T= 1,5 DIN 7980	
310	344237-0814		1	SWIVEL ELBOW, 6309 08 13WP2	
350	2531245-0000		5	HOSE NIPPLE	
360	2532574-0000		1	COVER	
390	90459-1458		1	HOOD HAN 6 E 19 30 006 1540	
400	90458-0308		1	CABLE GLAND, M25X1,5, NO.5311 1030	
K80W0121	351150-0418	MM	4000	CABLE OLFLEX 4X2,5 MM2 LIGHT/GREY	
K80W1070	351150-0404	MM	1000	CABLE OLFLEX 4X0,75 MM2 LIGHT/GREY	
K80W7004	90166-0121	MM	705	HOSE	
K80W7007	90166-0121	MM	840	HOSE	
K80W7008	90166-0121	MM	930	HOSE	
K80X0121	90110-0052		1	MALE INSERT HAN 6E 09 33 006 2601	

Pos	Part No	UN	Qty	Description	Page No

Machine Type | Group Description | Used-In | Group Number | Page No

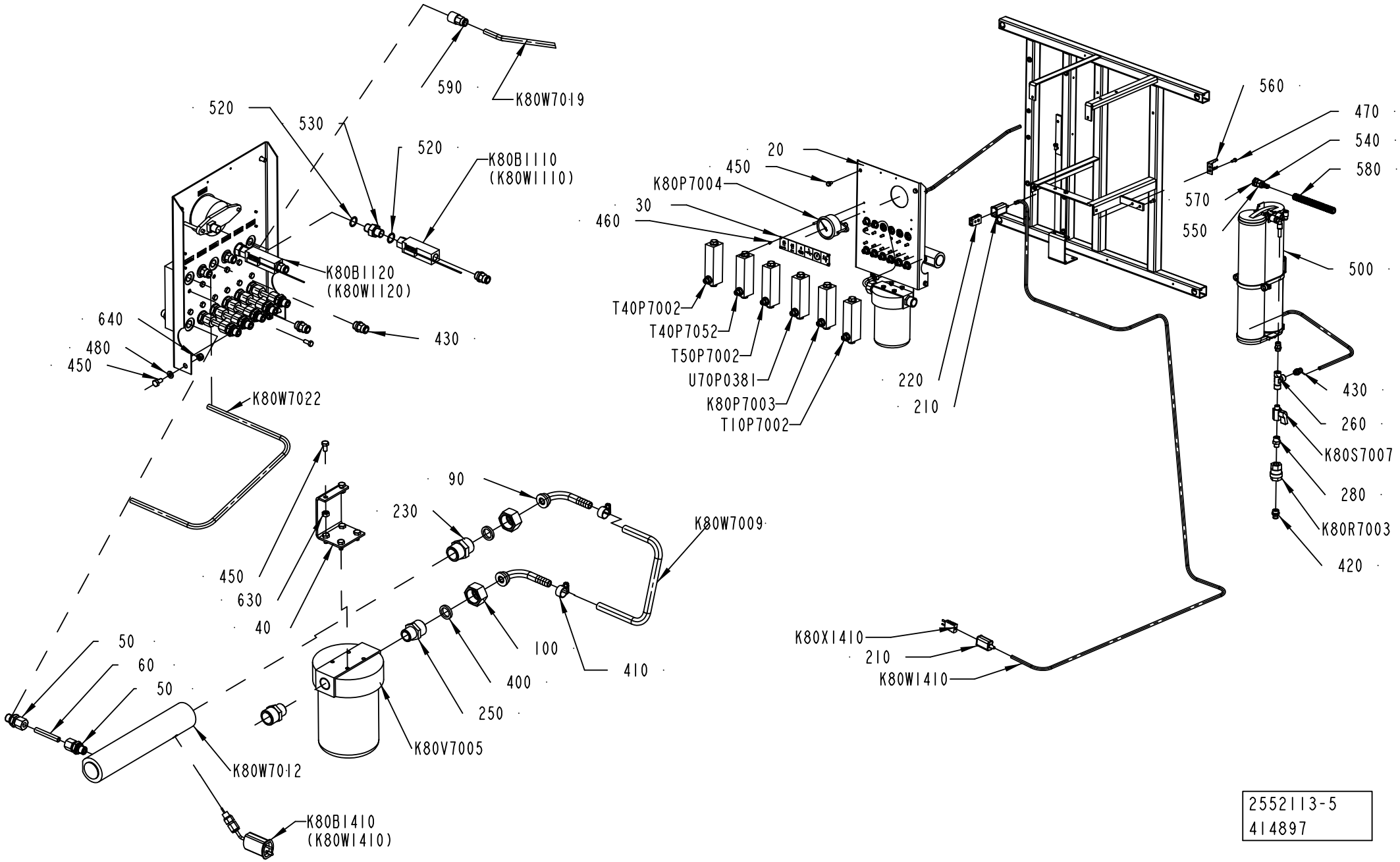
590
K80W7019
520
530
520
K80B1110
(K80W1110)
K80B1120
(K80W1120)
640
480
450
430
K80W7022
450
630
40
90
230
K80W7009
50
60
50
K80W7012
K80V7005
250
400
100
410
K80B1410
(K80W1410)
20
450
K80P7004
30
460
T40P7002
T40P7052
T50P7002
U70P0381
K80P7003
T10P7002
220
210
560
470
540
580
570
550
500
430
260
K80S7007
280
K80R7003
420
K80X1410
210
K80W1410
2552113-5
414897

ECM: 485467 - 20110101
Group number: 2552113-0300
Assembly Drawing: 2552113-5_1_AC

Pos	Part No	UN	Qty	Description	Page No
A3/SPEED					
020	3026921-0002		1	PIVOT BRACKET	
030	1484886-0000		1	SIGN LANGUAGEINDEPENDENT	
430	344235-0814		8	MALE CONNECTOR, 6305 08 13WP2	
T10P7002	1129079-0000		1	FLOW METER	
T40P7002	1129079-0000		1	FLOW METER	
T40P7052	1129079-0000		1	FLOW METER	
T50P7002	1041046-0000		1	FLOW METER	
U70P0381	1041046-0000		1	FLOW METER	
Common Parts					
040	3026924-0000		1	BRACKET	
050	90602-4406		12	CONN. STR., 8-G1/4, EXT. THREAD	
060	3078314-0000		6	PIPE	
090	2531245-0000		2	HOSE NIPPLE	
100	2531423-0000		2	NUT	
210	90326-0012		2	PROTECTIVE COVER, T31A4618	
220	90326-0020		1	PLUG, FEMALE YELLOW CR-AL	
230	90330-0004		1	NIPPLES,HEXAGON,EXT.R-THREAD R3/4"-R3/4"	
250	90358-0091		2	REDUCING NIPPLE	
260	90140-0018		1	T-PIPE, INT. THREAD, 2003-1/4	
280	90330-0083		1	NIPPLES, EXT. THREAD. R3/8-R1/4	
400	315229-0102		2	SQUARE RING, 16,8X23,8X3,7 MM 3/4" FDA	
410	342991-0101		2	HOSE CLIP,WORM DRIVE TYPE (11)-17	
420	344235-0838		1	MALE CONNECTOR, 6305 08 17WP2	
450	344237-0814		10	SWIVEL ELBOW, 6309 08 13WP2	
460	312125-0220		4	SCREW ISO 1207 M3X6 A4	
470	312105-0327		14	SCREW M6S ISO 4017 M5X12 A480	
480	315105-0153		4	WASHER BRB 6,4X12 RFR	
500	2792119-0300		1	FILTER	**6-35**
520	315233-0110		4	WASHER CAPTIVE SEALING G1/4	
530	90055-0042		2	NIPPLES, EXT. THREAD, HEXAGON, NO. 6835-	
540	353242-0005		1	HOSE GLAND W/O INSERT PG9 NORMAL	
550	353249-0067		1	INSERT, SINGLE HOLE, E150/7	
560	977527-0000		1	BRACKET	
570	90099-0104		1	NUT, PR 15,2 (PG9)	
580	90152-0058	M	1	SPIRAL CONDUIT, 15X9, UL 0909	
590	344236-0814		1	FEMALE CONNECTOR, 6315 08 13WP2	
630	312605-0316		2	HEXAGON NUT, M6M M6 A280	
640	312812-0316		2	HEXAGON NUT, NY-LOCK M6 A480	
K80B1110	90459-0180		1	FLOW SWITCH, 0,1 - 2,5 L/MIN	
K80B1120	90459-0180		1	FLOW SWITCH, 0,1 - 2,5 L/MIN	
K80B1410	90326-0057		1	THERMOCOUPLE, CR-AL	
K80P7003	1129079-0000		1	FLOW METER	
K80P7004	90043-0100		1	PRESSURE GAUGE, 2948 D=63 MM	
K80R7003	90230-0028		1	NON-RETURN VALVE H 151 R 3/8"	
K80S7007	90187-0045		1	BALL VALVE G1/4 CR PL	
K80V7005	90415-0065		1	FILTER	
010	*90415-0357*		*1*	*FILTER INSERT*	
K80W1410	90220-0034	MM	3700	THERMOCABLE TEX/SITW-20F-KX 2X0,5MM2	
K80W7009	90166-0121	MM	400	HOSE	
K80W7012	3026920-0000		1	ATTACHMENT PIPE	
K80W7019	344240-0805	MM	500	TUBE 8 MM PE FDA, 1015Y08F01	
K80W7022	344240-0805	MM	650	TUBE 8 MM PE FDA, 1015Y08F01	
K80X1410	90326-0022		1	PLUG, MALE YELLOW CR-AL	

Machine Type	Group Description	Used-In	Group Number	Page No

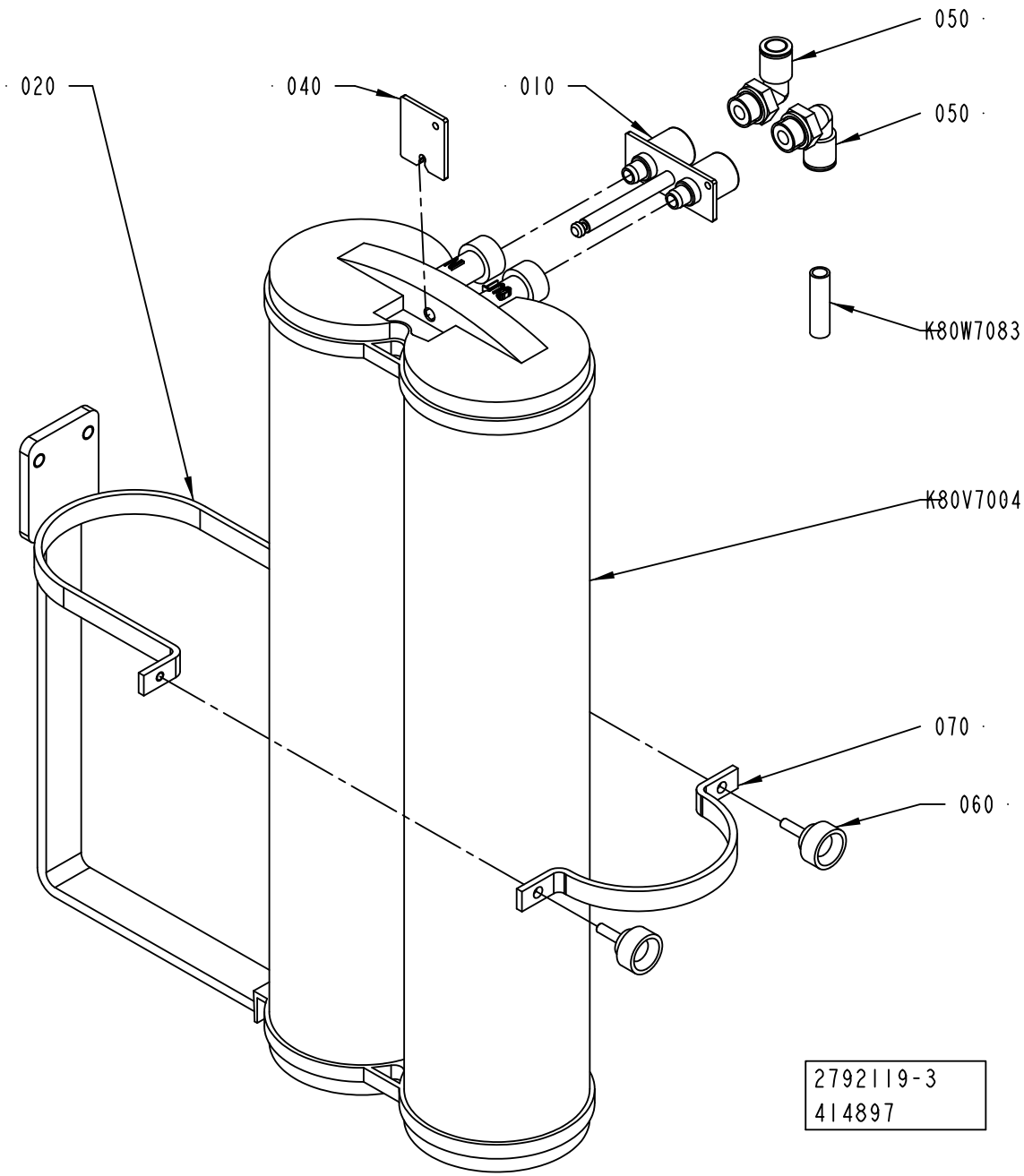
050
050
020
040
010
K80W7083
K80V7004
070
060
2792119-3
414897

ECM: 485468 - 20110101
Group number: 2792119-0300
Assembly Drawing: 2792119-3_1_AB

Pos	Part No	UN	Qty	Description	Page No
-					
010	2890241-0000		1	CONNECTOR	
020	2792118-0000		1	SUPPORT	
040	3102608-0000		1	FASTENING PLATE	
050	344237-0814		2	SWIVEL ELBOW, 6309 08 13WP2	
060	318856-0101		2	KNOB, EXTERNAL THREAD. NO. 8308-1011	
070	2792120-0000		1	SUPPORT	
K80V7004	90459-7084		1	FILTER, CPDI0NJM1	
K80W7083	344240-0805	MM	200	TUBE 8 MM PE FDA, 1015Y08F01	

Pos	Part No	UN	Qty	Description	Page No

COOLING WATER PUMP

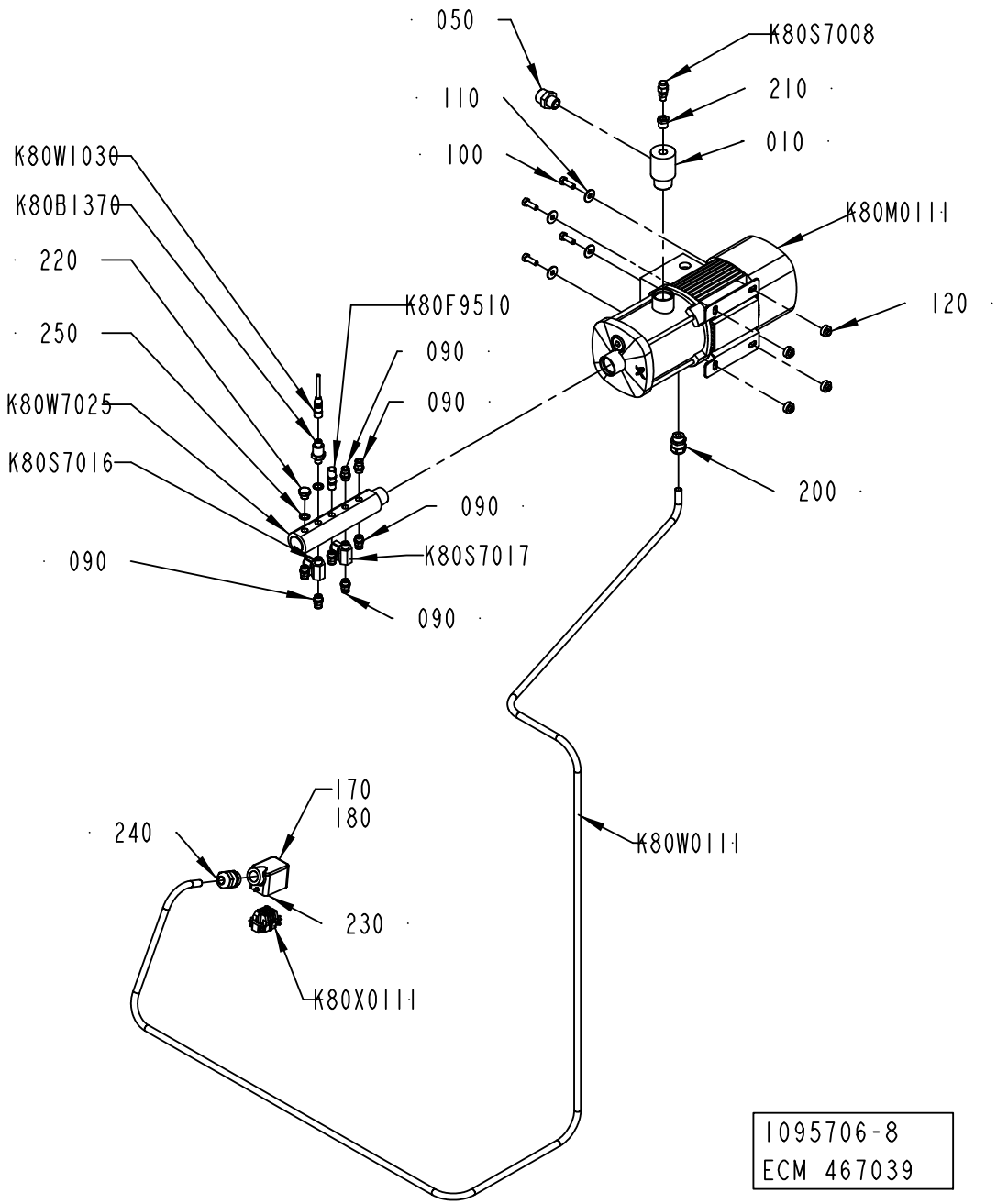

ECM: 485462 - 20110101
Group number: 1095706-0500
Assembly Drawing: 1095706-8_1_AD

Pos	Part No	UN	Qty	Description	Page No
A3/SPEED					
K80W7025	2922322-0002		1	RETURN PIPE	
Common Parts					
010	2532806-0000		1	ATTACHMENT PIPE	
050	90330-0080		1	NIPPLES, EXT. THREAD. R3/4-R1/2	
070	90330-0043		1	NIPPLES, EXT. THREAD. R-207R1/4	
090	344235-0814		7	MALE CONNECTOR, 6305 08 13WP2	
100	312105-0453		4	SCREW M6S ISO 4017 M8X25 A480	
110	90005-0116		4	WASHER PLAIN ROUND 8,4(M8)/24, H=2	
120	90015-0037		4	RUBBER BUSHING, 8920001	
170	359005-0050		1	MARKING LABEL KIT X, 04.841.4550.0	
180	359005-0010		1	MARKING LABEL KIT 0 - 9, 04.841.2150.0	
200	90458-0307		1	CABLE GLAND, M20X1,5, NO.5311 1020	
210	342701-0202		1	BUSHING,INT./EXT.G-THREAD G3/8"-G1/8"	
220	90330-0026		1	PLUG, EXT. G-THREAD, G1/4	
230	90459-1458		1	HOOD HAN 6 E 19 30 006 1540	
240	90458-0308		1	CABLE GLAND, M25X1,5, NO.5311 1030	
250	315239-0110		2	NYLON WASHER G1/4, 1/4RRP	
K80B1370	90600-5770		1	PRESSURE TRANSMITTER 10 BAR, 3100-B0010G	
K80F9510	90230-0041		1	PRESSURE RELIEF VALVE, SS-4CPA2-RT-DG-3	
K80M0111	90603-0788		1	PUMP, CM3-6 X-R-G-V AQQV O-A-A-N	
	90603-1011		*1*	*SEAL KIT, 96932440*	
K80S7008	90459-1736		1	PURGE VALVE, 2RM-PG4L-SS	
K80S7016	90187-0045		1	BALL VALVE G1/4 CR PL	
K80S7017	90187-0045		1	BALL VALVE G1/4 CR PL	
K80W0111	351150-0418	MM	3500	CABLE OLFLEX 4X2,5 MM2 LIGHT/GREY	
K80W1370	90600-1768		1	ACTUATOR/SENSOR CABLE RKTS 5-298/5M	
K80X0111	90110-0052		1	MALE INSERT HAN 6E 09 33 006 2601	

Pos	Part No	UN	Qty	Description	Page No

Machine Type | Group Description | Used-In | Group Number | Page No

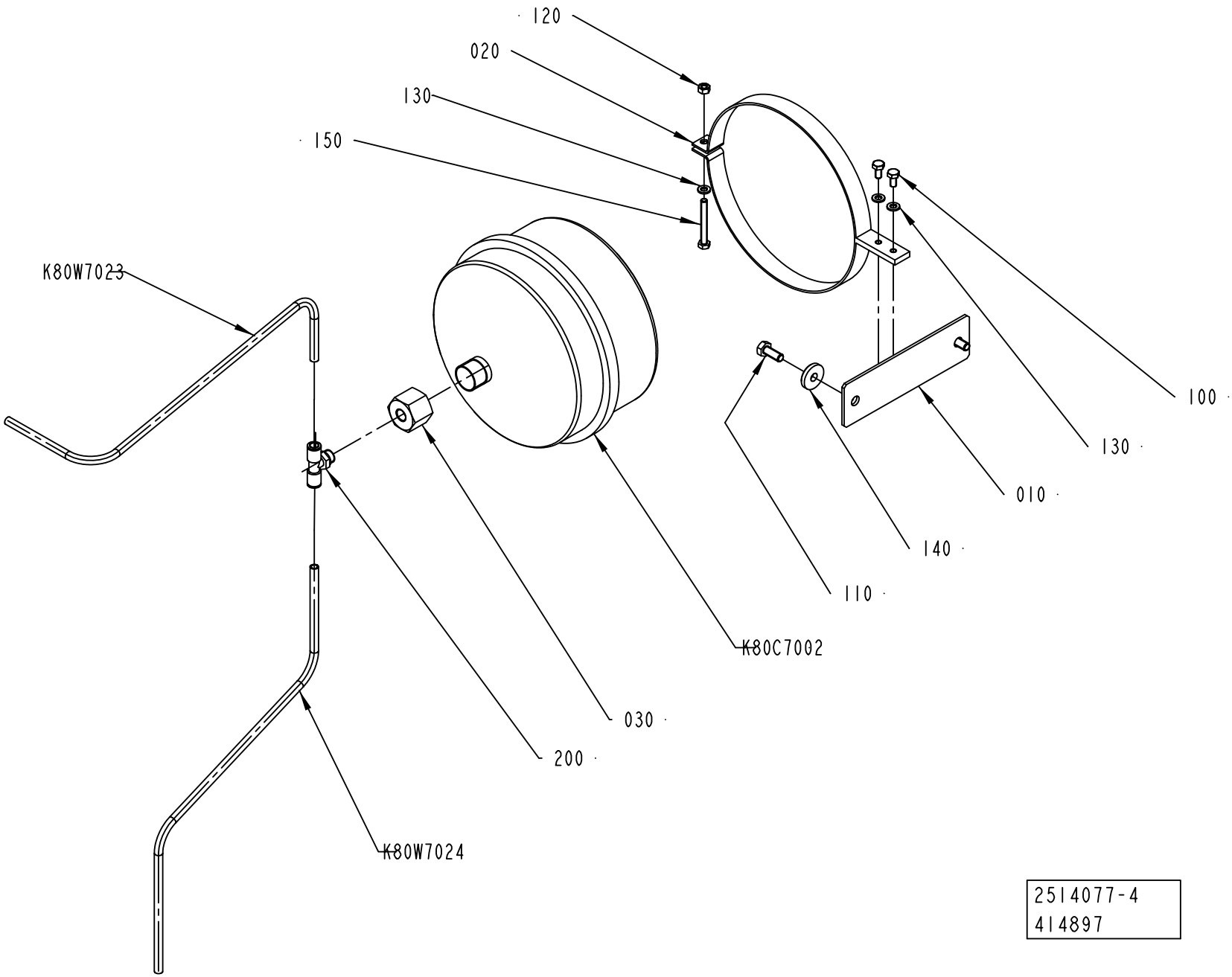
120
020
130
150
K80W7023
100
130
010
140
110
K80C7002
030
200
K80W7024
2514077-4
414897

ECM: 485466 - 20110101
Group number: 2514077-0300
Assembly Drawing: 2514077-4_1_AC

Pos	Part No	UN	Qty	Description	Page No
-					
010	2514087-0000		1	PLATE	
020	3057124-0000		1	BRACKET	
030	2514083-0000		1	REDUCTION NIPPLE	
100	312105-0366		2	SCREW M6S ISO 4017 M6X12 A480	
110	312105-0451		2	SCREW M6S ISO 4017 M8X20 A480	
120	312605-0316		1	HEXAGON NUT, M6M M6 A280	
130	315105-0153		3	WASHER BRB 6,4X12 RFR	
140	90005-0116		2	WASHER PLAIN ROUND 8,4(M8)/24, H=2	
150	312109-0380		1	SCREW M6S ISO 4017 M6X50 A480	
200	344238-0814		1	SWIVEL BRANCH TEE, 6308 08 13WP2	
K80C7002	90602-3531		1	PRESSURE EXPANSION VESSEL, 13424	
K80W7023	344240-0805	MM	450	TUBE 8 MM PE FDA, 1015Y08F01	
K80W7024	344240-0805	MM	500	TUBE 8 MM PE FDA, 1015Y08F01	

Pos	Part No	UN	Qty	Description	Page No

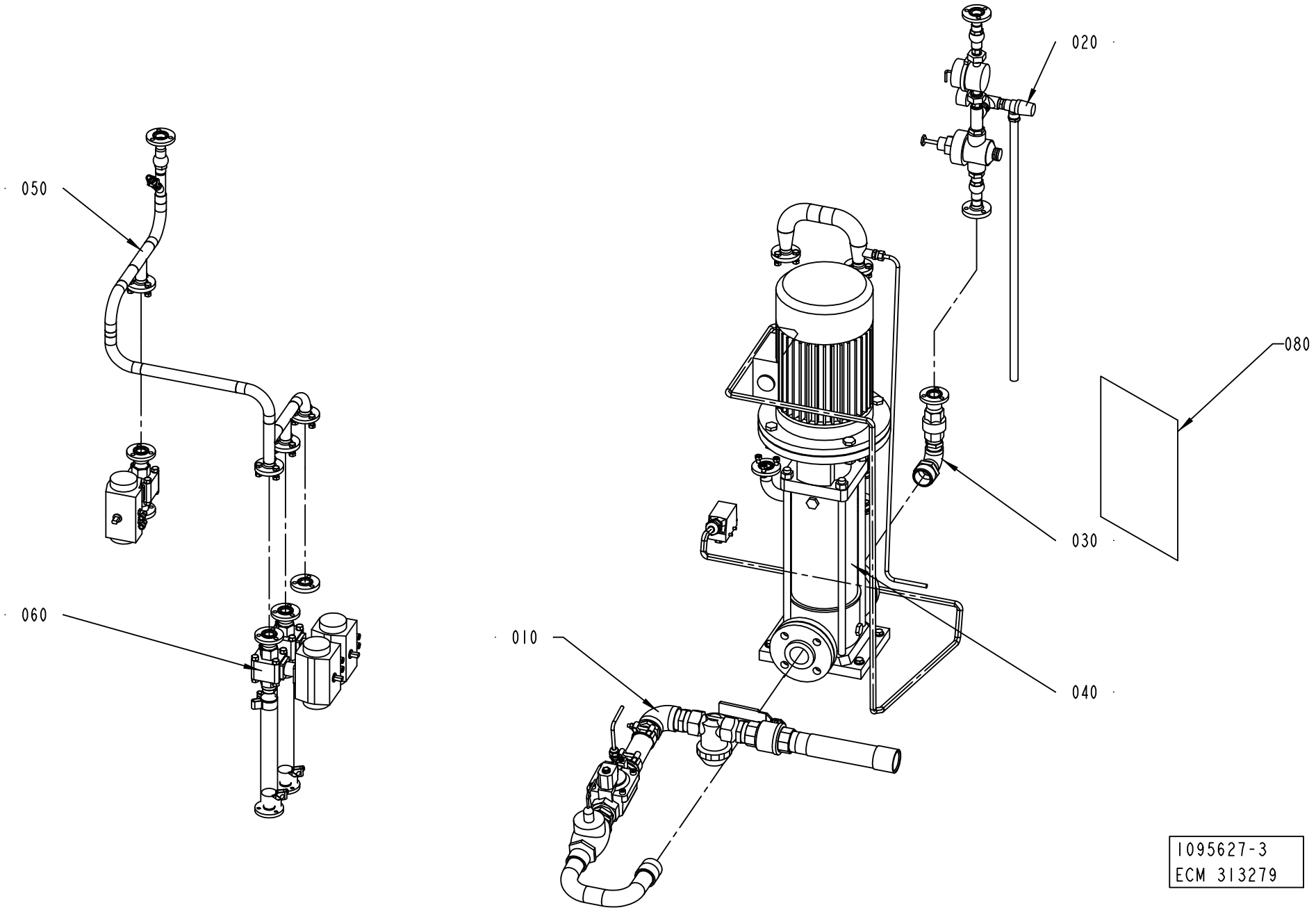
020
050
080
030
060
010
040
1095627-3
ECM 313279

ECM: 415337 - 20100701
Group number: 1095627-0400
Assembly Drawing: 1095627-3_1_AA

Pos	Part No	UN	Qty	Description	Page No
-					
010	1095672-0200		1	PIPE	6-43
020	1095673-0200		1	SIDE	6-45
030	1095675-0200		1	PIPE	6-47
040	1095676-0200		1	PUMP	6-49
050	1095677-0200		1	BRANCHING PIPE	6-51
060	1095678-0400		1	BALL VALVE	6-53

Pos	Part No	UN	Qty	Description	Page No

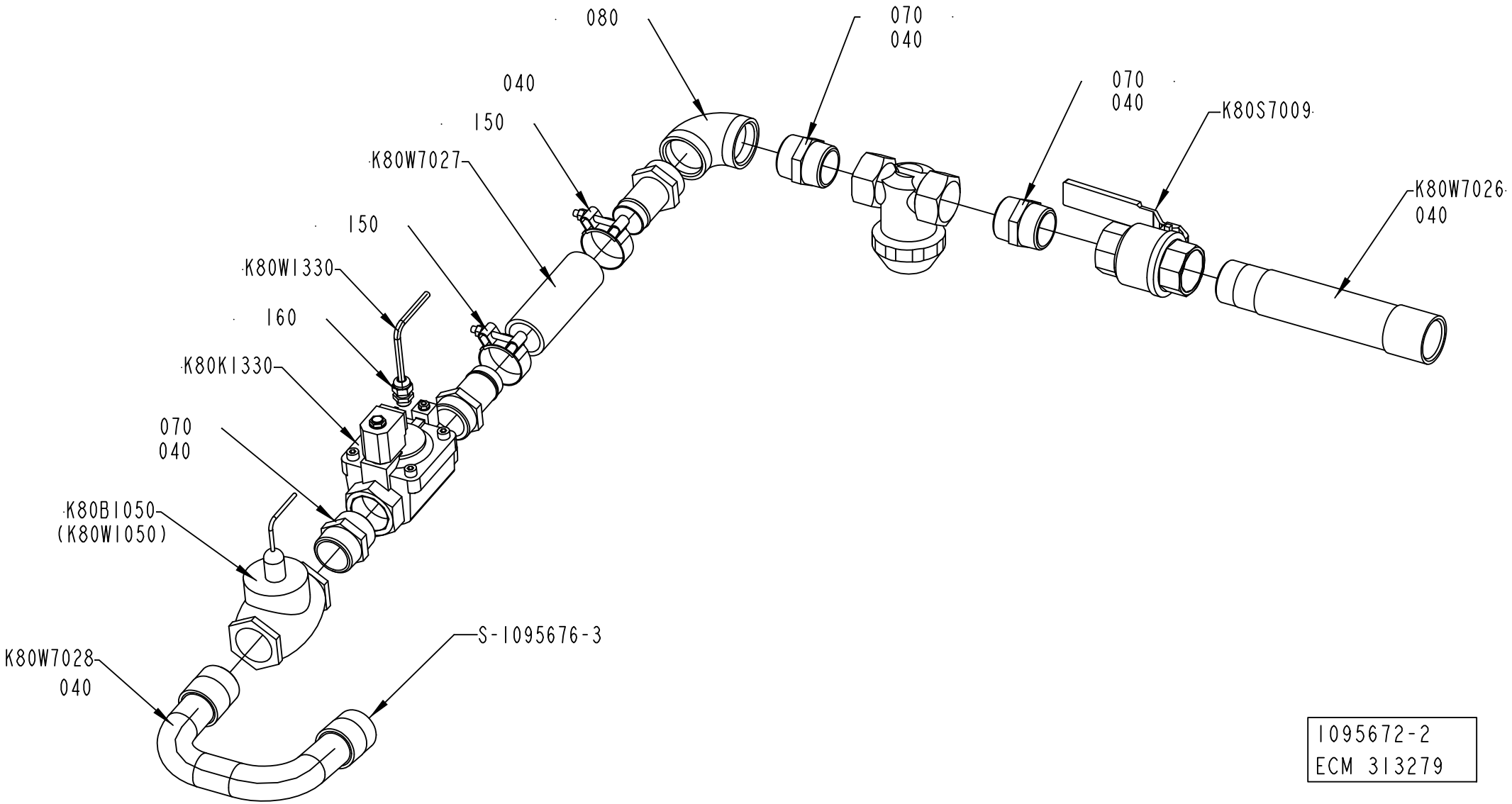

1095672-2
ECM 313279

ECM: 313499 - 20070629
Group number: 1095672-0200
Assembly Drawing: 1095672-2_1_AA

Pos	Part No	UN	Qty	Description	Page No
-					
040	90144-0007		1	TAPE	
070	90330-0056		3	NIPPLES, EXT. THREAD. R-207 KR11/2	
080	90330-0057		1	ELBOW, 90 INT. THREAD, R-222R11/2	
110	90055-0166		2	HOSE NIPPLE, EXT.THR. R11/2X38 MM	
150	90458-2850		2	HOSE CLIP , 51 MM	
160	352103-0101		1	CABLE GLAND, ST 9, PR15,2/PG9	
K80B1050	90274-0082		1	FLOW SWITCH, 2 - 3 L/MIN	
	90274-0322		*1*	*SPARE PART KIT*	
K80K1330	90042-0254		1	SOLENOID VALVE, DIAPHRAGM R1 1/2	
	90458-2575		*1*	*SOLENOID V.DIAPH. R450466/B F.90042-0254*	
	90042-0557		*1*	*COIL V24DC-N3*	
K80S7009	90187-0147		1	BALL VALVE G11/2	
K80V7006	90415-0032		1	FILTER / 3-02-00-1 1/2"	
	90415-0328		*1*	*FILTER INSERT*	
K80W1330	351150-0403	M	2	CABLE OLFLEX 3X0,75 MM2 LIGHT/GREY	
K80W7026	1041926-0000		1	PIPE	
K80W7027	90166-0236	MM	150	HOSE, 38/51 REINFORCED RUBBER	
K80W7028	1041925-0000		1	PIPE	

Pos	Part No	UN	Qty	Description	Page No

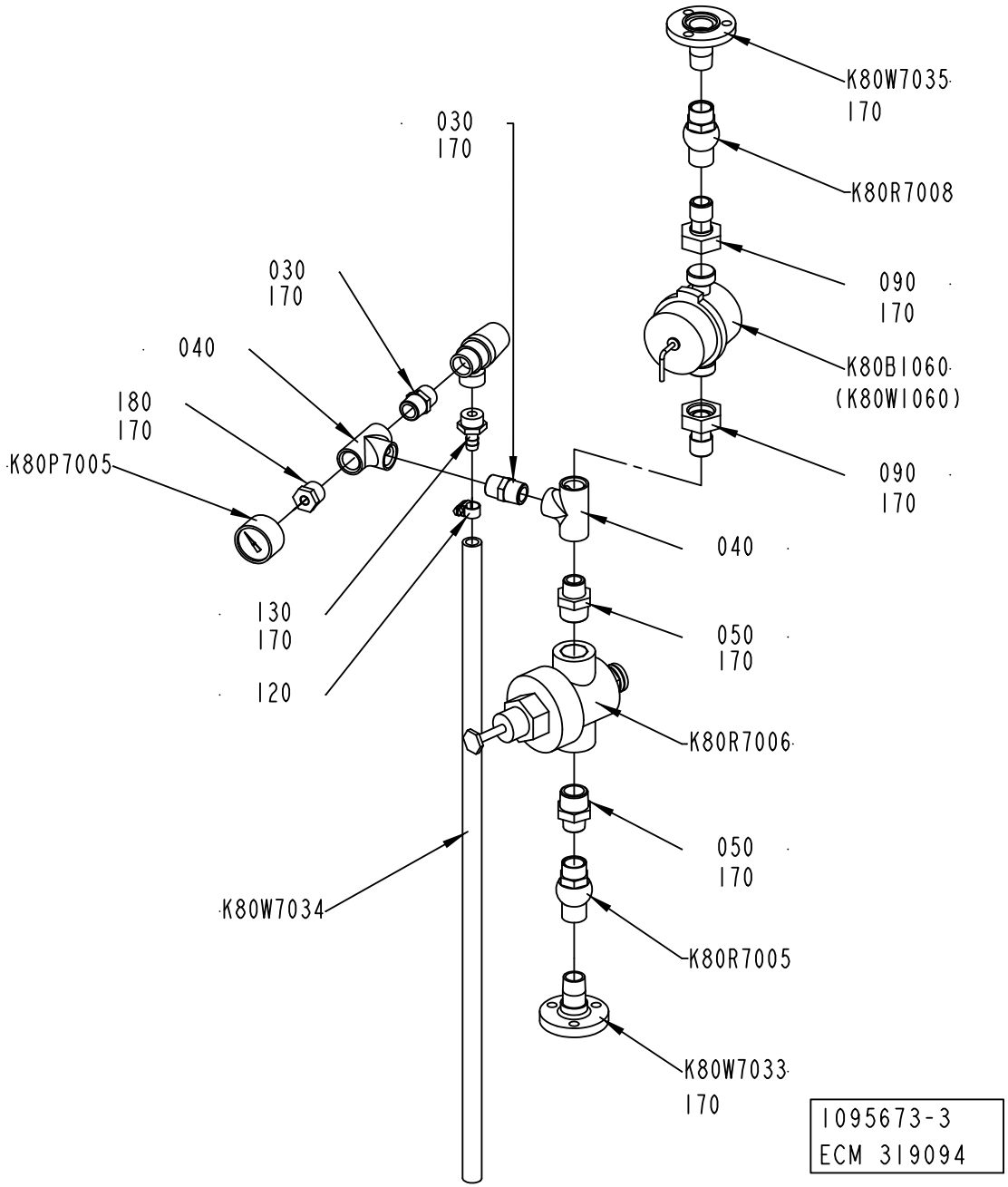
K80W7035
170
030
170
K80R7008
030
170
090
170
040
K80B1060
(K80W1060)
180
170
090
170
K80P7005
040
130
170
050
170
120
K80R7006
050
170
K80W7034
K80R7005
K80W7033
170
1095673-3
ECM 319094

ECM: 320972 - 20070705
Group number: 1095673-0200
Assembly Drawing: 1095673-3_1_AA

Pos	Part No	UN	Qty	Description	Page No
-					
030	90330-0021		2	NIPPLES, EXT. THREAD. R-207R1/2	
040	90330-0049		2	T-PIPE, INT. THREAD, R-221R1/2	
050	90330-0080		2	NIPPLES, EXT. THREAD. R3/4-R1/2	
090	90030-0465		2	STRAIGHT CONNECTION, MAD DN 15	
	90005-0156		*1*	*WASHER PLAIN ROUND 16/24, H=1,5*	
120	342991-0100		1	HOSE CLIP,WORM DRIVE TYPE (8)-14	
130	342901-0105		1	HOSE NIPPLE, EXT.THR. G1/2-12 MM	
170	90144-0007	MM	1	TAPE	
180	90330-0036		1	BUSHING, INT/EXT. THR. RP1/8-RP1/2	
K80B1060	90243-0245		1	MEASURING INSTRUMENT	
K80P7005	90043-0043		1	PRESSURE GAUGE, 2041D=40 MM	
K80R7005	90230-0042		1	NON-RETURN VALVE 1/2"	
K80R7006	90113-0098		1	PRESSURE REGULATOR	
K80R7007	90187-0133		1	SAFETY VALVE, 10 BARS, R1/2, R1/2	
K80R7008	90230-0042		1	NON-RETURN VALVE 1/2"	
K80W7033	1036826-0000		1	PIPE	
K80W7034	90166-0121	M	1	HOSE	
K80W7035	1036827-0000		1	PIPE	

Pos	Part No	UN	Qty	Description	Page No

Machine Type | Group Description | Used-In | Group Number | Page No

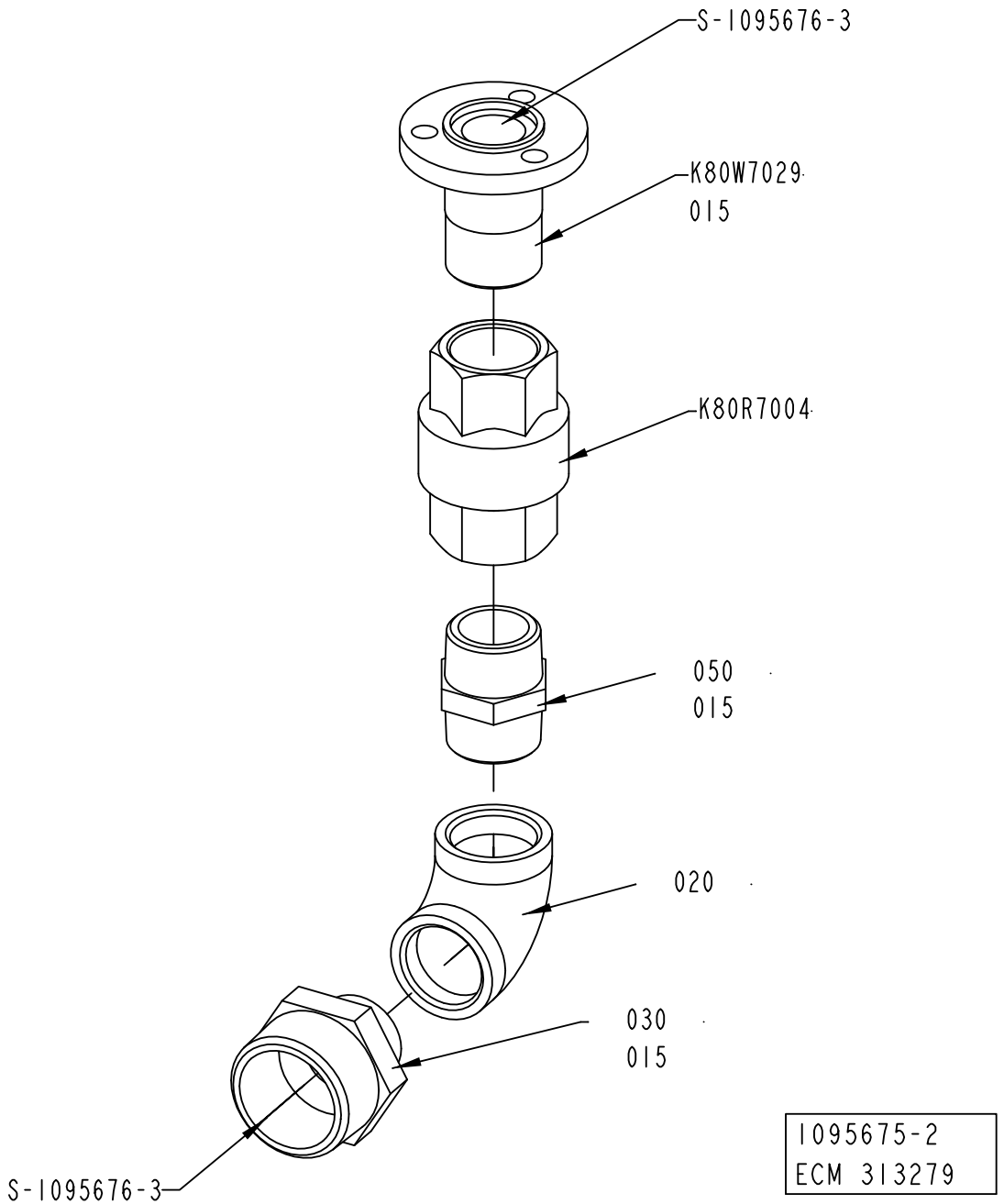
S-1095676-3
K80W7029
015
K80R7004
050
015
020
030
015
S-1095676-3
1095675-2
ECM 313279

ECM: 313501 - 20070629
Group number: 1095675-0200
Assembly Drawing: 1095675-2_1_AA

Pos	Part No	UN	Qty	Description	Page No
-					
015	90144-0007	MM	1	TAPE	
020	90330-0014		1	ELBOW, 90 INT. THREAD, R-222R1	
030	90330-0045		1	NIPPLES, EXT. THREAD. R-209 KR11/2- KR1	
050	342203-0120		1	NIPPLES, EXT. THREAD, HEXAGON, NO. 209	
K80R7004	90230-0044		1	NON-RETURN VALVE 1"	
	90230-0308		*1*	*SPARE PART KIT, 4968993*	
K80W7029	1036794-0000		1	PIPE	

Pos	Part No	UN	Qty	Description	Page No

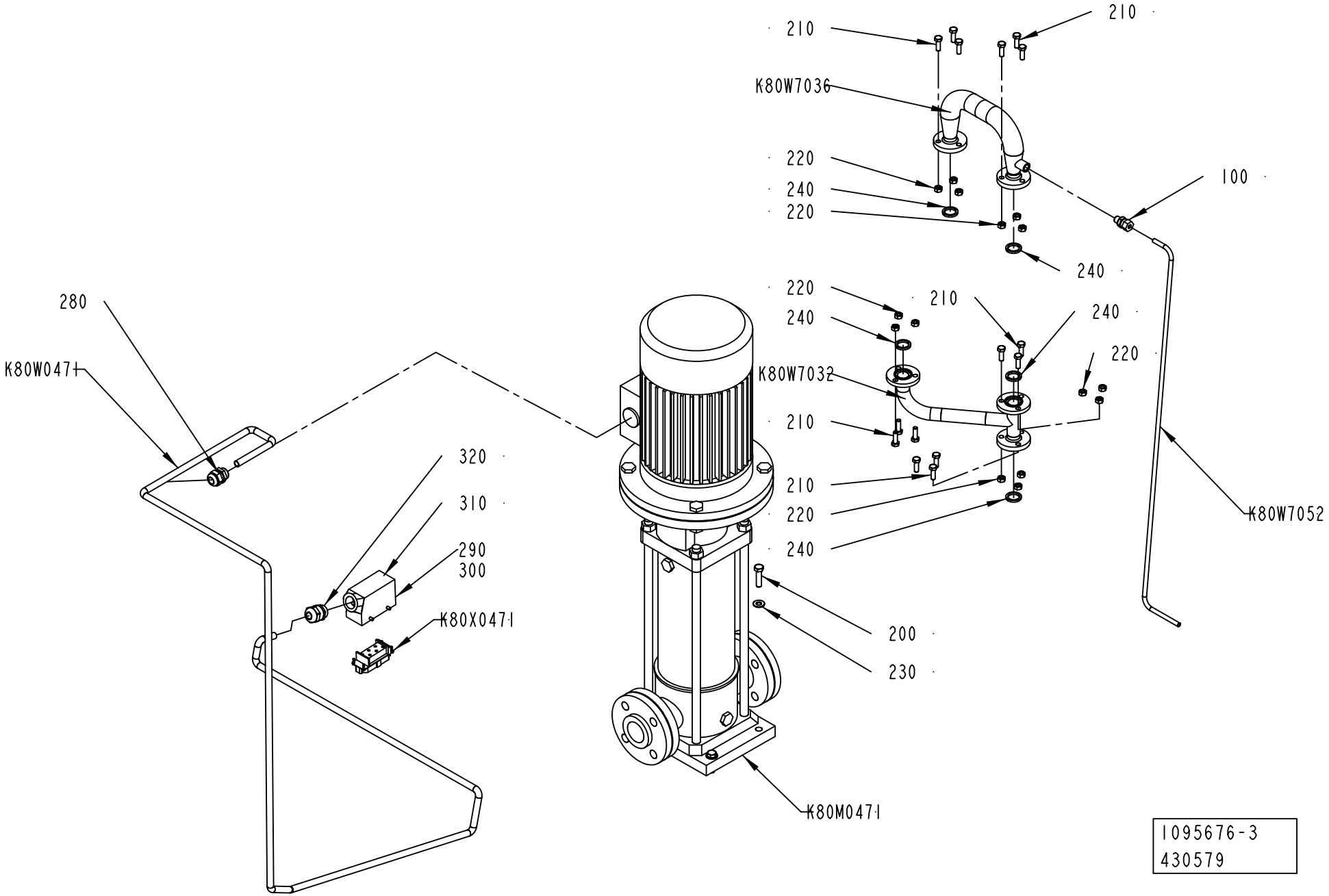
210
210
K80W7036
220
240
220
100
240
220
240
210
240
220
K80W7032
210
210
220
240
K80W7052
280
K80W047-
320
310
290
300
K80X047-
200
230
K80M047-
1095676-3
430579

ECM: 430579 - 20100401
Group number: 1095676-0200
Assembly Drawing: 1095676-3_1_AB

Pos	Part No	UN	Qty	Description	Page No
A3/SPEED 50HZ					
K80M0471	90600-1257		1	PUMP, 101501081YXXXC3	
A3/SPEED 60HZ					
K80M0471	90602-4056		1	PUMP 101511061YXXXP6 SV806 F556 T/P	
Common Parts					
100	90030-0185		1	CONN. STR., GE08LRED71	
200	312105-0499		4	SCREW M6S ISO 4014 M10X40 A480	
210	312105-0453		15	SCREW M6S ISO 4017 M8X25 A480	
220	312605-0318		15	HEXAGON NUT, M6M M8 A280	
230	315105-0173		4	WASHER BRB 10,5X22 RFR	
240	315229-0103		5	SQUARE RING, 23,1X30,1X3,7 MM 1" FDA	
280	352103-0111		1	CABLE GLAND, ST 16, PR22,5/PG16	
290	359005-0010		2	MARKING LABEL KIT 0 - 9, 04.841.2150.0	
300	359005-0050		1	MARKING LABEL KIT X, 04.841.4550.0	
310	90459-6630		1	HOOD 16 B SIDE ENTRY, 19 30 016 1521	
320	90458-0308		1	CABLE GLAND, M25X1,5, NO.5311 1030	
K80W0471	351150-0166	MM	4000	CABLE OLFLEX 4X4 MM2 LIGHT/GREY	
K80W7032	1041946-0000		1	PIPE	
K80W7036	1036828-0000		1	TANK	
K80W7052	1140642-0000		1	PIPE	
K80X0471	90110-0054		1	MALE INSERT HAN 6 HSB 09 31 006 2601	

Pos	Part No	UN	Qty	Description	Page No

BRANCHING PIPE

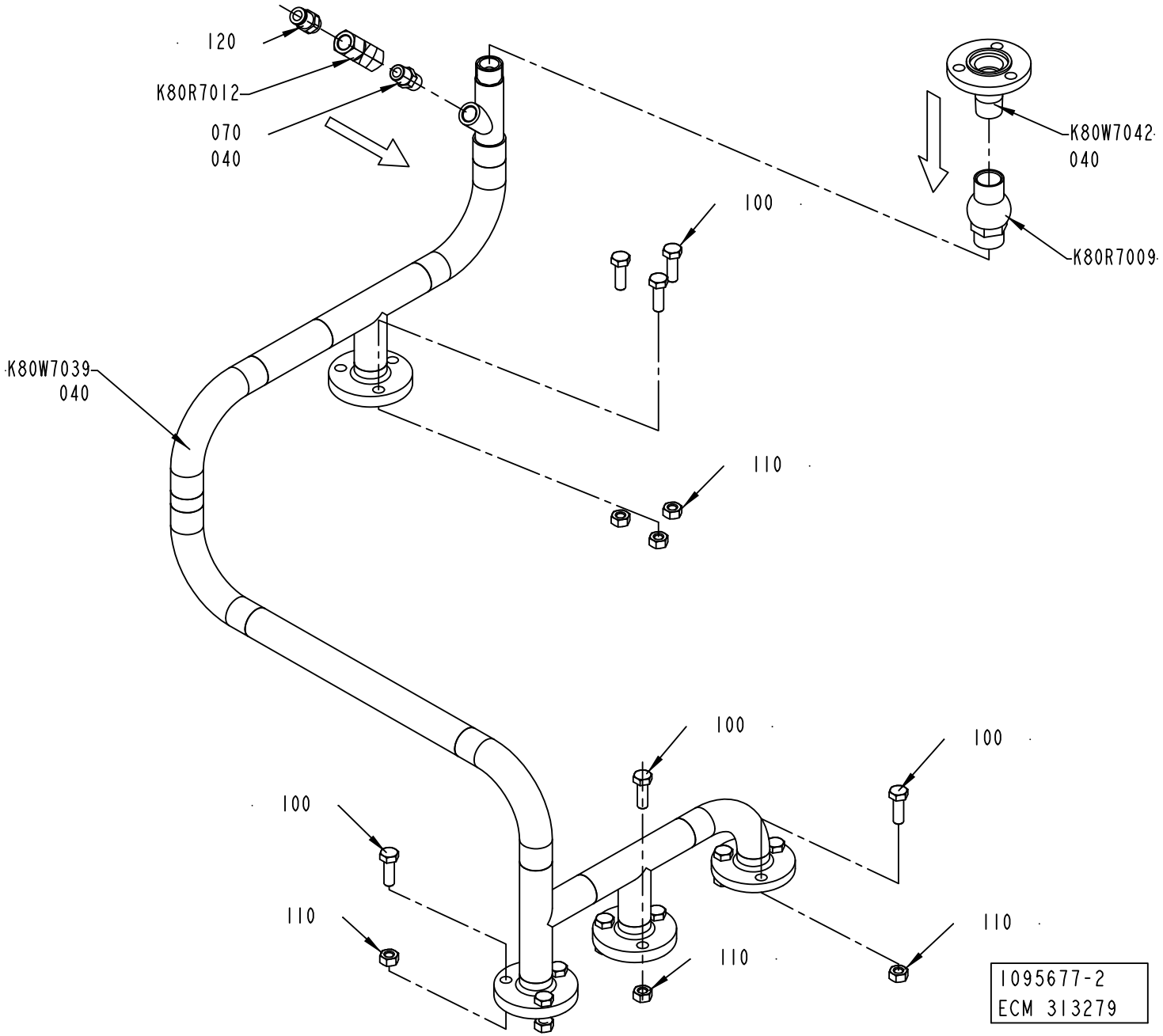

ECM: 485385 - 20110101
Group number: 1095677-0200
Assembly Drawing: 1095677-2_1_AA

Pos	Part No	UN	Qty	Description	Page No
-					
040	90144-0007	MM	1	TAPE	
070	90330-0043		1	NIPPLES, EXT. THREAD. R-207R1/4	
100	312105-0453		12	SCREW M6S ISO 4017 M8X25 A480	
110	312605-0318		12	HEXAGON NUT, M6M M8 A280	
120	350001-0009		1	PUSH-IN FITTING QS-F-G1/4-8	
K80R7009	90230-0042		1	NON-RETURN VALVE 1/2"	
K80R7012	90235-0151		1	NON-RETURN VALVE, 534 098 110 0	
K80W7039	1041934-0000		1	PIPE	
K80W7042	1036827-0000		1	PIPE	

Pos	Part No	UN	Qty	Description	Page No

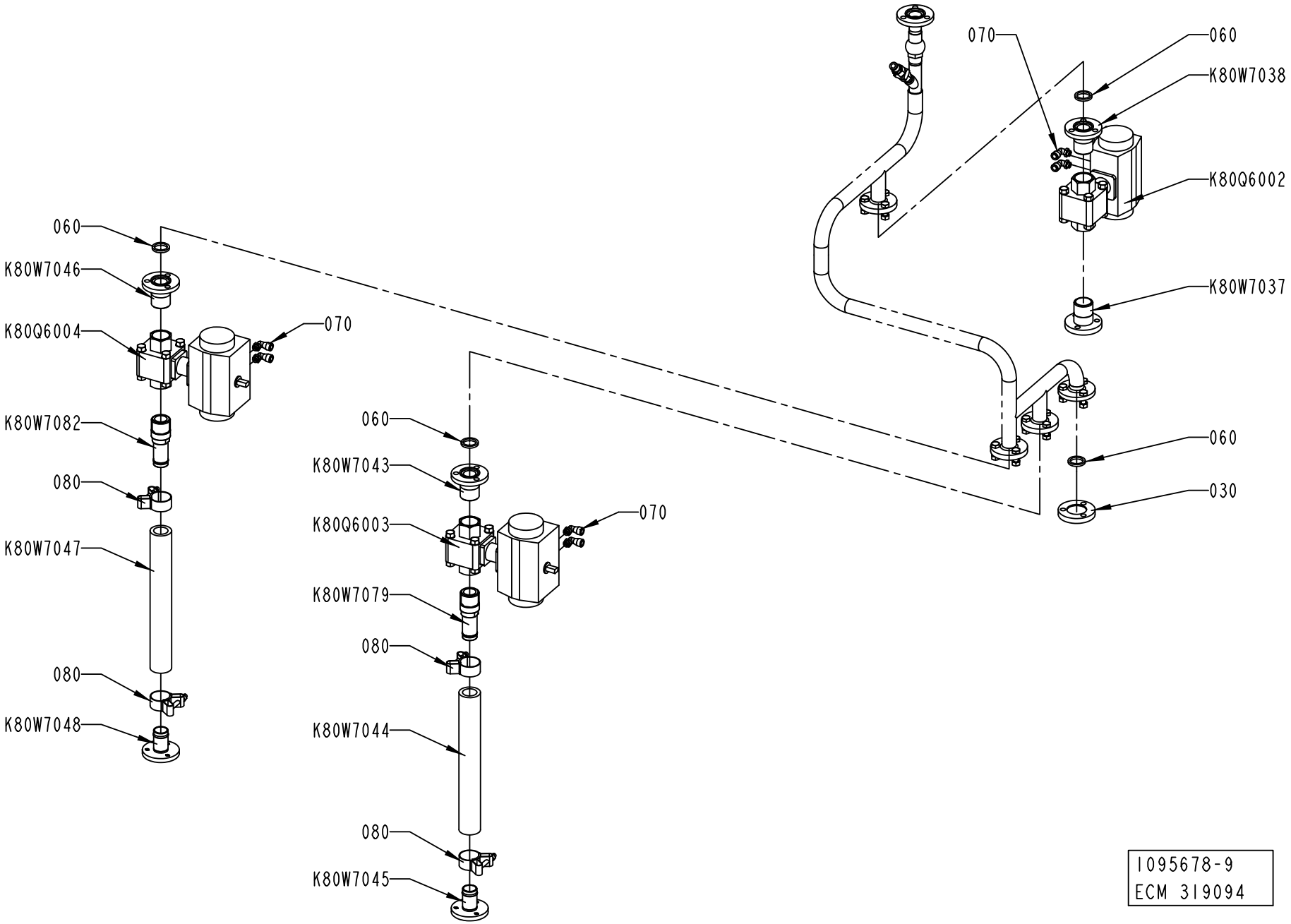
070
060
K80W7038
K80Q6002
K80W7037
060
030
060
K80W7046
K80Q6004
070
K80W7082
080
K80W7047
080
K80W7048
060
K80W7043
K80Q6003
070
K80W7079
080
K80W7044
080
K80W7045
1095678-9
ECM 319094

ECM: 485383 - 20110101
Group number: 1095678-0400
Assembly Drawing: 1095678-9_1_AB

Pos	Part No	UN	Qty	Description	Page No
-					
030	1037129-0000		1	LID	
060	315229-0103		4	SQUARE RING, 23,1X30,1X3,7 MM 1" FDA	
070	350002-0007		6	PUSH-IN L-FITTING QSL-F-G1/8-8	
080	90459-2366		4	HOSE CLIP, 32 - 35 MM	
K80Q6002	90187-0148		1	BALL VALVE G1	
	90187-0319		*1*	*GASKET UNIT*	
K80Q6003	90187-0148		1	BALL VALVE G1	
	90187-0319		*1*	*GASKET UNIT*	
K80Q6004	90187-0148		1	BALL VALVE G1	
	90187-0319		*1*	*GASKET UNIT*	
K80W7037	2522184-0000		1	PIPE	
K80W7038	2522148-0000		1	PIPE	
K80W7043	2522148-0000		1	PIPE	
K80W7044	90166-0233	MM	300	HOSE	
K80W7045	1195466-0000		1	PIPE	
K80W7046	2522148-0000		1	PIPE	
K80W7047	90166-0233	MM	300	HOSE	
K80W7048	1195466-0000		1	PIPE	
K80W7079	1487023-0000		1	PIPE	
K80W7082	1487023-0000		1	PIPE	

Pos	Part No	UN	Qty	Description	Page No

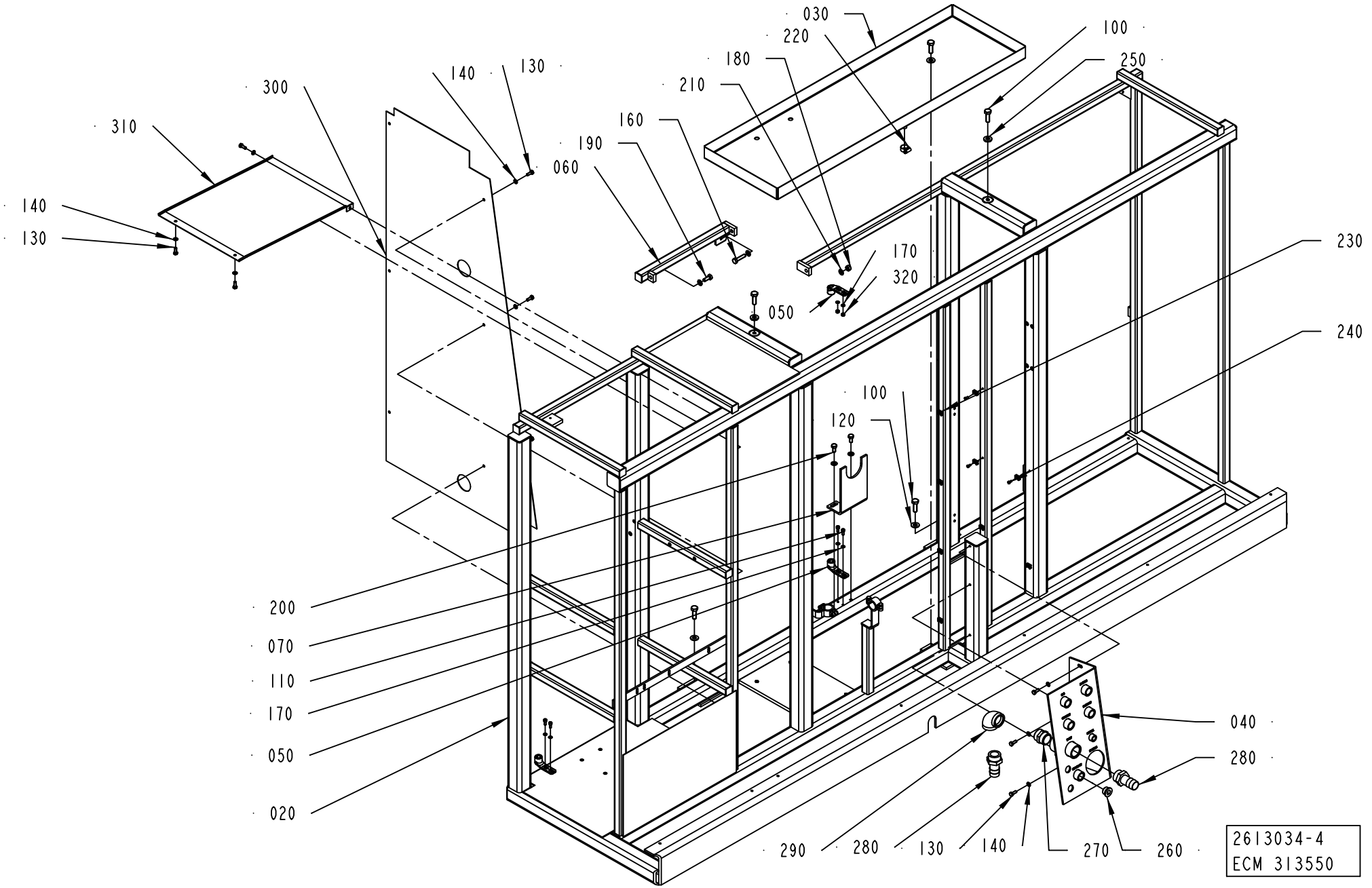
030
220
180
210
160
190
060
140
130
300
310
140
130
100
250
230
240
170
320
050
100
120
200
070
110
170
050
020
040
280
290
280
130
140
270
260
2613034-4
ECM 313550

ECM: 451530 - 20101001
Group number: 2613034-0200
Assembly Drawing: 2613034-4_1_AA

Pos	Part No	UN	Qty	Description	Page No
A3/SPEED					
130	312105-0368		9	SCREW M6S ISO 4017 M6X16 A480	
140	315105-0153		9	WASHER BRB 6,4X12 RFR	
300	2833377-0000		1	COVER	
310	2833382-0000		1	COVER	
Common Parts					
020	2833374-0000		1	MACHINE BODY	
030	1041963-0000		1	WASTE BOX	
040	1129387-0000		1	CONNECTION TABLE	
050	1538868-0000		4	BRACKET	
060	1255293-0000		1	CROSS BAR	
070	2524363-0000		1	HANGER	
100	312105-0495		5	SCREW M6S ISO 4017 M10X30 A480	
110	312115-0327		6	SCREW ISO4762 M5X12 A4 80	
120	315105-0173		3	WASHER BRB 10,5X22 RFR	
150	90261-0069		1	PLUG, BLIND, PLASTIC, NO. 055-0615	
160	312109-0457		1	SCREW M6S ISO 4017 M8X35 A480	
170	315125-0146		8	WASHER TBRSB 5.3X15X1 A4	
180	312605-0318		1	HEXAGON NUT, M6M M8 A280	
190	312105-0451		1	SCREW M6S ISO 4017 M8X20 A480	
200	312105-0449		2	SCREW M6S ISO 4017 M8X16 A480	
210	315105-0165		5	WASHER BRB 8,4X16 RFR	
220	342991-0102		1	HOSE CLIP,WORM DRIVE TYPE (13)-20	
230	352113-0205		15	ANCHOR PLATES FOR STRIPS, TYPE TM2S8-C10	
240	312125-0287		15	SCREW ISO 1207 M4X8 A4	
250	315115-0173		2	WASHER PLAIN, TBRB 10,5/22 H=4	
260	342713-0213		1	PLUG, EXT THREAD HEX SOCKET 8638-00-120	
270	342700-0116		1	NIPPLES,HEXAGON,EXT.G-THREAD G1"-G1"	
280	90055-0053		2	HOSE NIPPLE, EXT.THR. R1-25 MM	
290	90330-0014		1	ELBOW, 90 INT. THREAD, R-222R1	
320	312605-0314		2	HEXAGON NUT, M6M M5 A280	

Pos	Part No	UN	Qty	Description	Page No

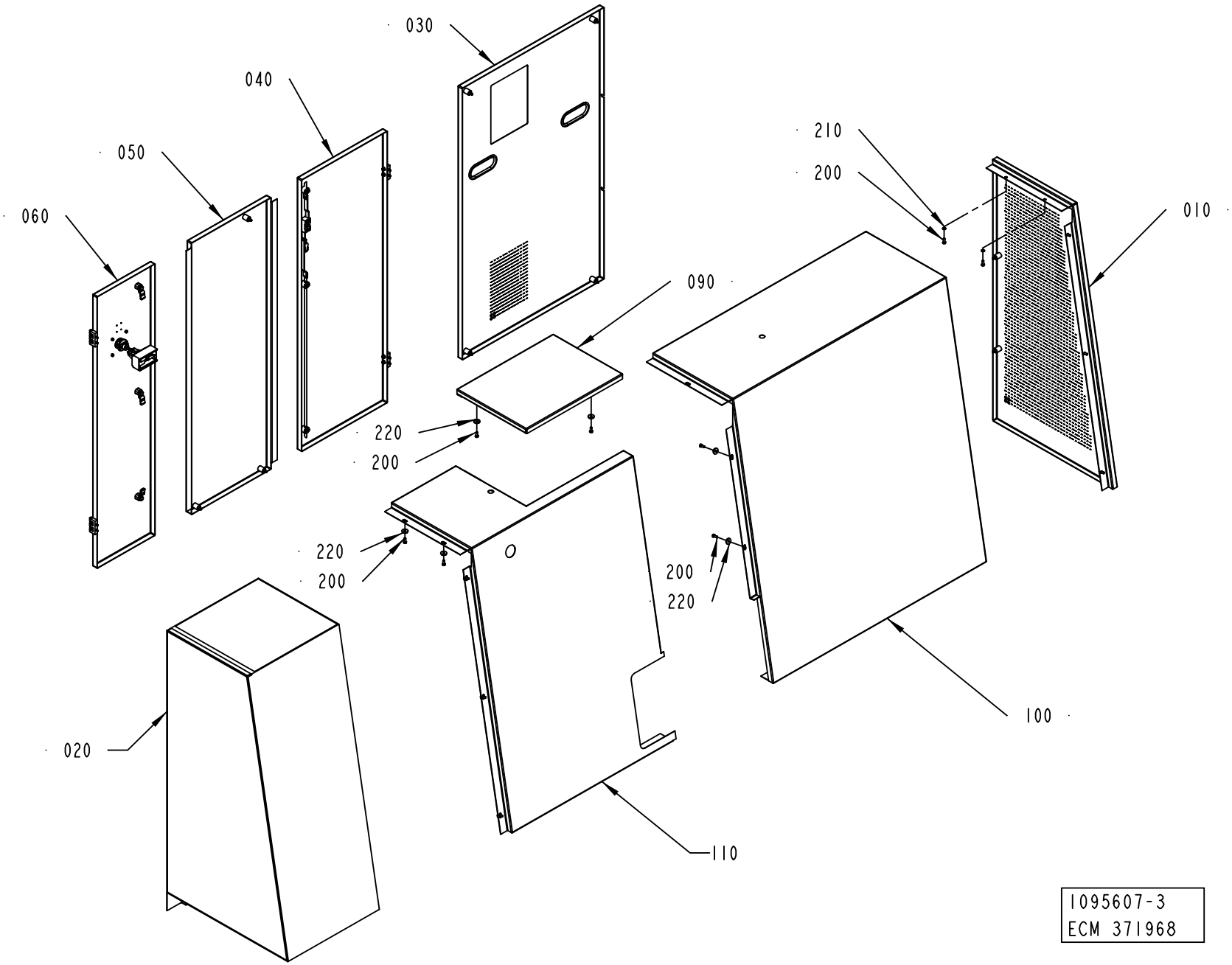
030
040
050
060
210
200
010
090
220
200
220
200
200
220
020
100
110
1095607-3
ECM 371968

ECM: 378761 - 20081130
Group number: 1095607-0300
Assembly Drawing: 1095607-3_1_AB

Pos	Part No	UN	Qty	Description	Page No
-					
010	1095883-0200		1	GABLE PLATE	**6-59**
020	1095886-0300		1	COVERING PANEL	**6-61**
030	1095888-0200		1	HATCH	**6-67**
040	1095889-0100		1	DOOR	**6-69**
050	1095890-0200		1	HATCH	**6-71**
060	1095891-0200		1	DOOR	**6-73, 6-75**
090	1255637-0000		1	COVER	
100	1255636-0000		1	COVERING PANEL	
110	1255638-0000		1	COVERING PANEL	
200	312105-0368		19	SCREW M6S ISO 4017 M6X16 A480	
210	315105-0153		5	WASHER BRB 6,4X12 RFR	
220	315125-0153		14	WASHER TBRSB 6,4X22X4 A4	

Pos	Part No	UN	Qty	Description	Page No

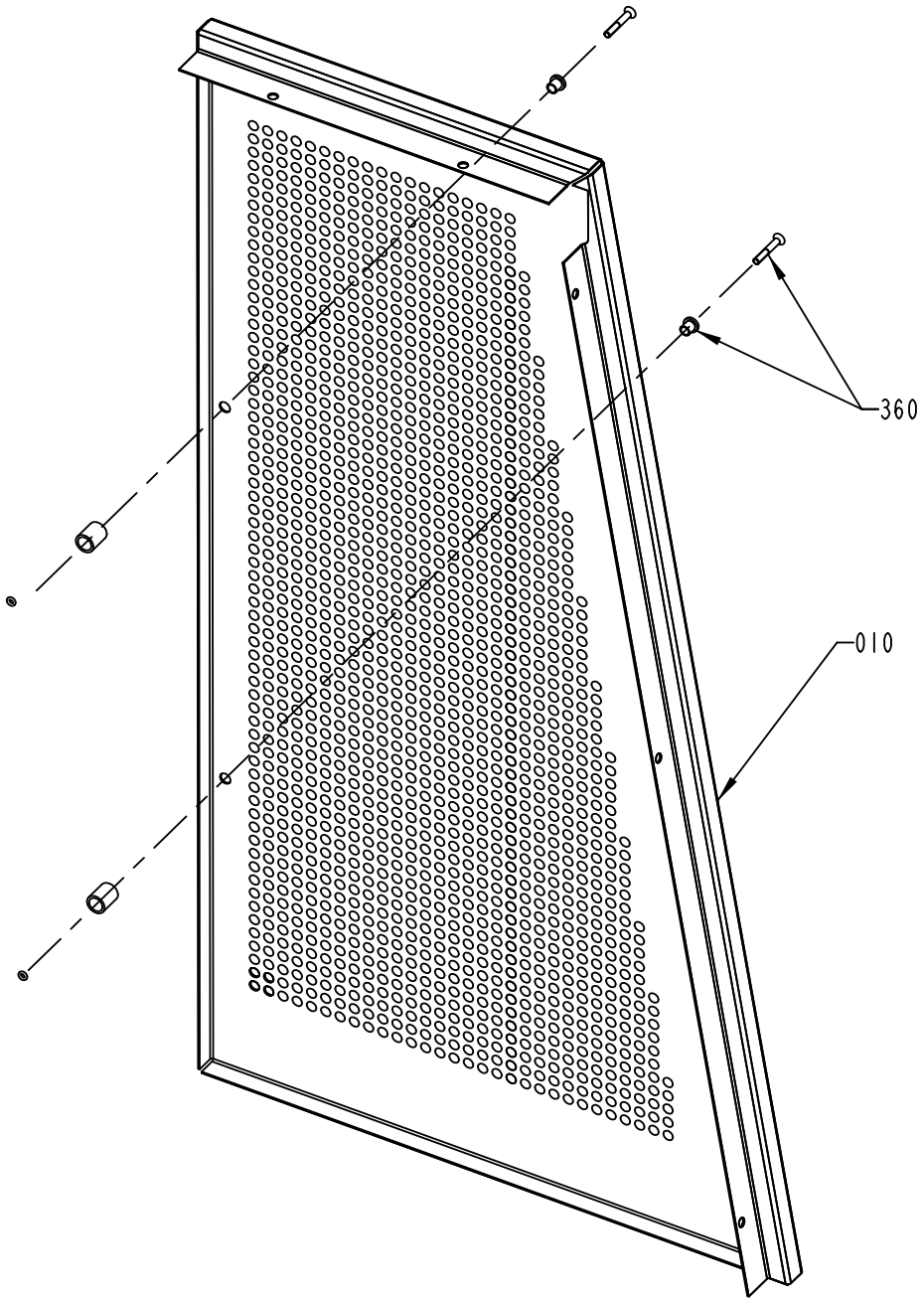
360
010

ECM: 189435 - 20041104
Group number: 1095883-0200
Assembly Drawing: 1095883-2_1_AA

Pos	Part No	UN	Qty	Description	Page No
-					
010	1255671-0000		1	GABLE PLATE	
360	90226-0458		2	MOUNTING SCREW	

Pos	Part No	UN	Qty	Description	Page No

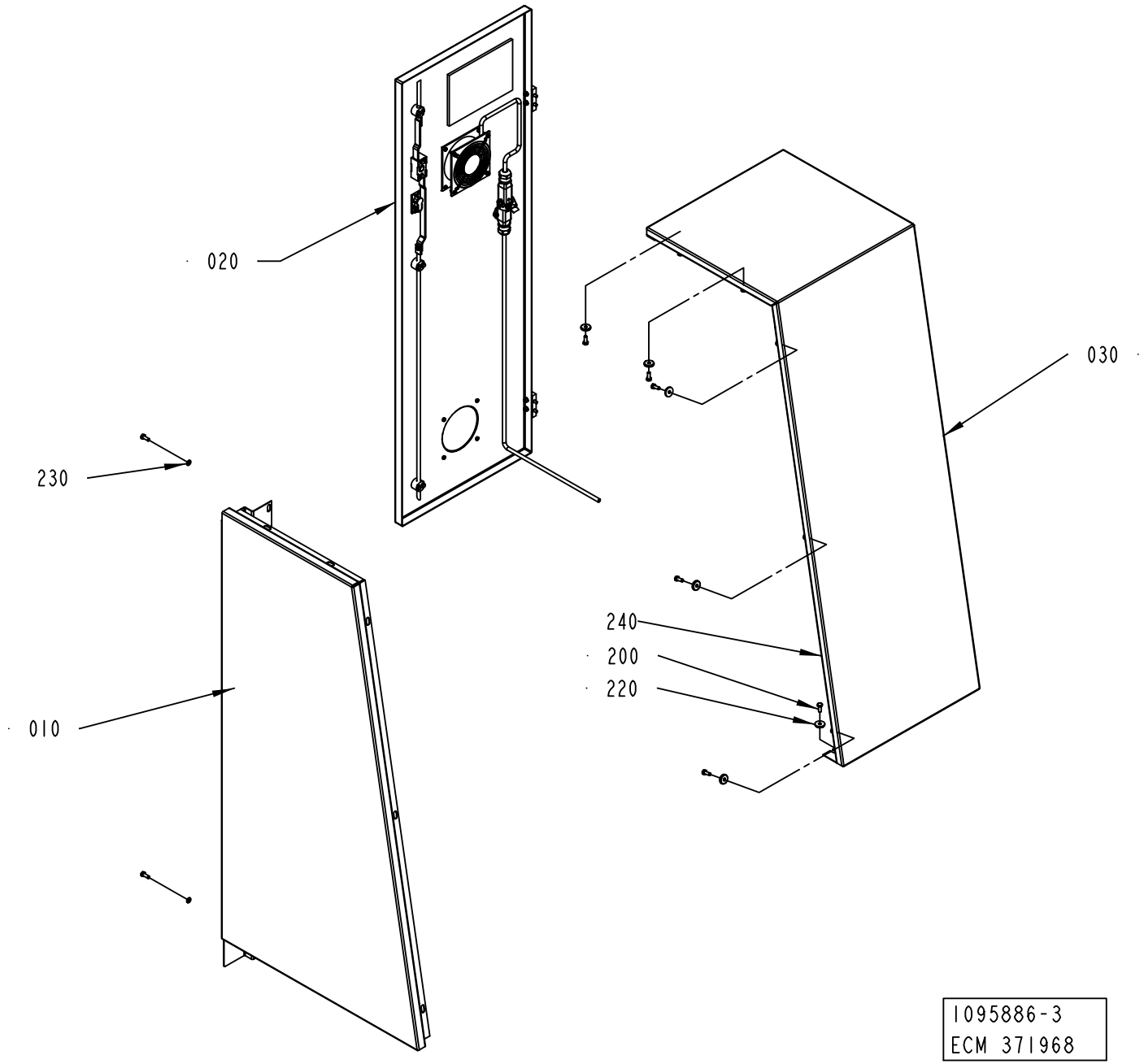
020
030
230
240
200
220
010
1095886-3
ECM 371968

ECM: 378762 - 20081130
Group number: 1095886-0300
Assembly Drawing: 1095886-3_1_AB

Pos	Part No	UN	Qty	Description	Page No
-					
010	2665129-0000		1	GABLE PLATE	
020	1484889-0200		1	DOOR	**6-63**
030	1041967-0000		1	COVERING PANEL	
200	312105-0368		7	SCREW M6S ISO 4017 M6X16 A480	
220	315125-0153		7	WASHER TBRSB 6,4X22X4 A4	
230	315105-0153		2	WASHER BRB 6,4X12 RFR	
240	90143-0060	MM	1120	EDGE STRIP 9,5X6,3MM BLACK PVC	

Pos	Part No	UN	Qty	Description	Page No

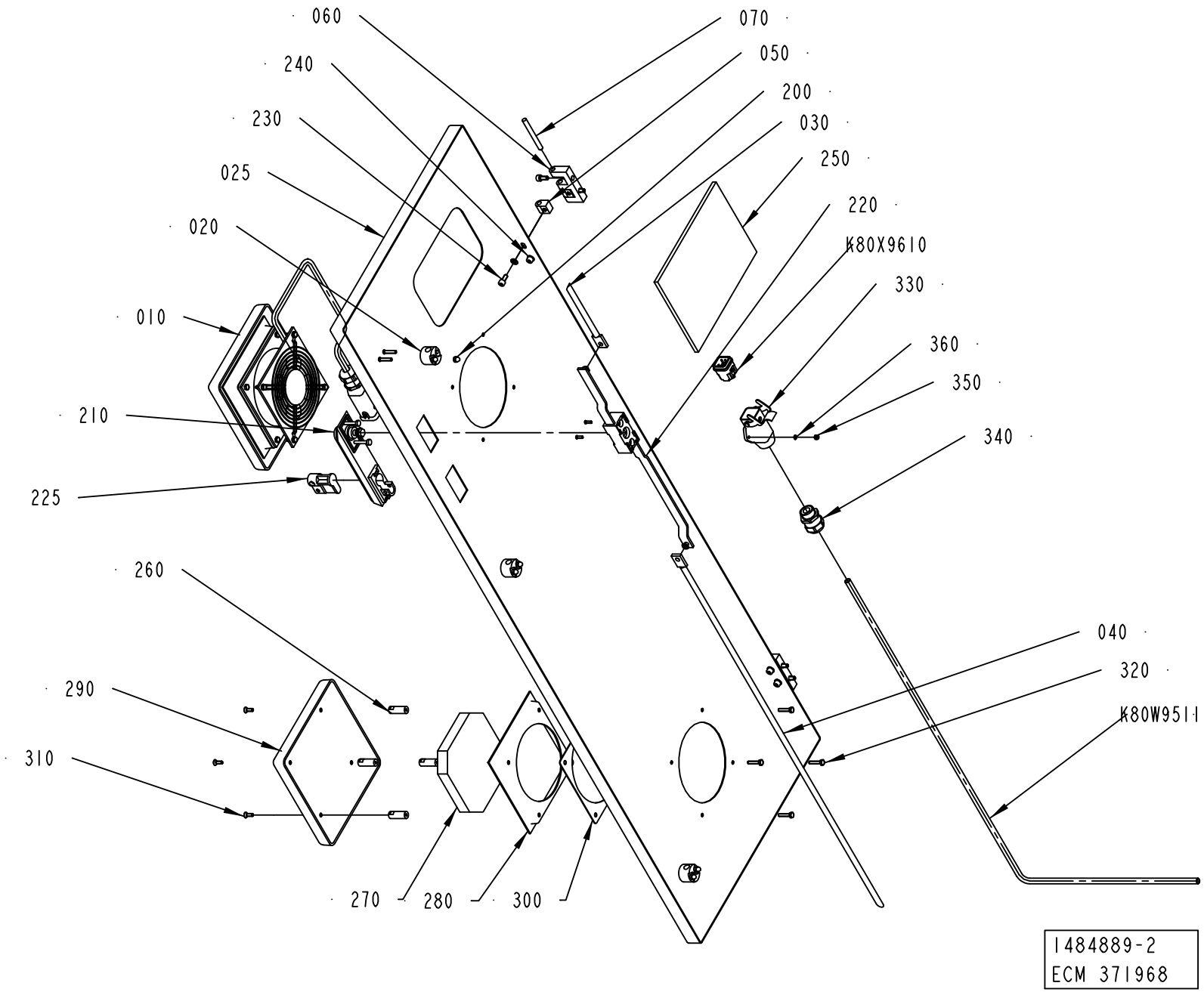
060
070
240
050
200
230
030
250
025
220
020
K80X9610
330
010
360
350
210
340
225
260
040
290
320
K80W9511
310
270
280
300
1484889-2
ECM 371968

ECM: 374645 - 20100311
Group number: 1484889-0200
Assembly Drawing: 1484889-2_1_AB

Pos	Part No	UN	Qty	Description	Page No
A3/SPEED					
010	2879652-0100		1	FAN	**6-65**
025	2994072-0000		1	DOOR	
250	2833376-0000		1	GLASS PANE	
260	599753-0000		4	SPACER	
270	599750-0000		1	FILTER	
280	599751-0000		1	INSERT	
290	599752-0000		1	COVER	
300	599755-0000		1	GASKET	
310	312155-0291		4	SCREW DIN 7991 MF6S M4X12 A4 70	
320	312105-0295		4	SCREW M6S ISO 4017 M4X20 A470	
330	90459-3081		1	HOUSING HAN A 19 20 003 1250	
340	90458-0315		1	CABLE GLAND, M20X1,5, NO.5311 1120	
350	312812-0310		2	HEXAGON NUT, NY-LOCK M3 A480	
360	315105-0124		2	WASHER BRB 3,2X6 RFR	
K80W9511	351150-0403	MM	2500	CABLE OLFLEX 3X0,75 MM2 LIGHT/GREY	
K80X9610	90459-6821		1	MALE INSERT HAN 4A, 09 20 004 2611	
Common Parts					
020	1129274-0000		3	GUIDE LUG	
030	2665132-0000		1	LOCKING ARM	
040	2665131-0000		1	LOCKING ARM	
050	1035794-0000		4	BLOCKING PIECE	
060	1035792-0000		2	E-HINGE	
070	988685-0000		2	PIN	
200	312705-0312		6	NUT HEX. DOMED CAP MHM-6 M4 A280	
210	90237-0175		1	TURNING HANDLE, 1125-U185-0A	
220	90237-0153		1	LOCK HOUSING, 1121-U26-0B	
225	90237-0128		1	LOCK CYLINDER, 1109-SU125	
230	312115-0327		8	SCREW ISO4762 M5X12 A4 80	
240	315105-0146		4	WASHER BRB 5,3X10 RFR	

Pos	Part No	UN	Qty	Description	Page No

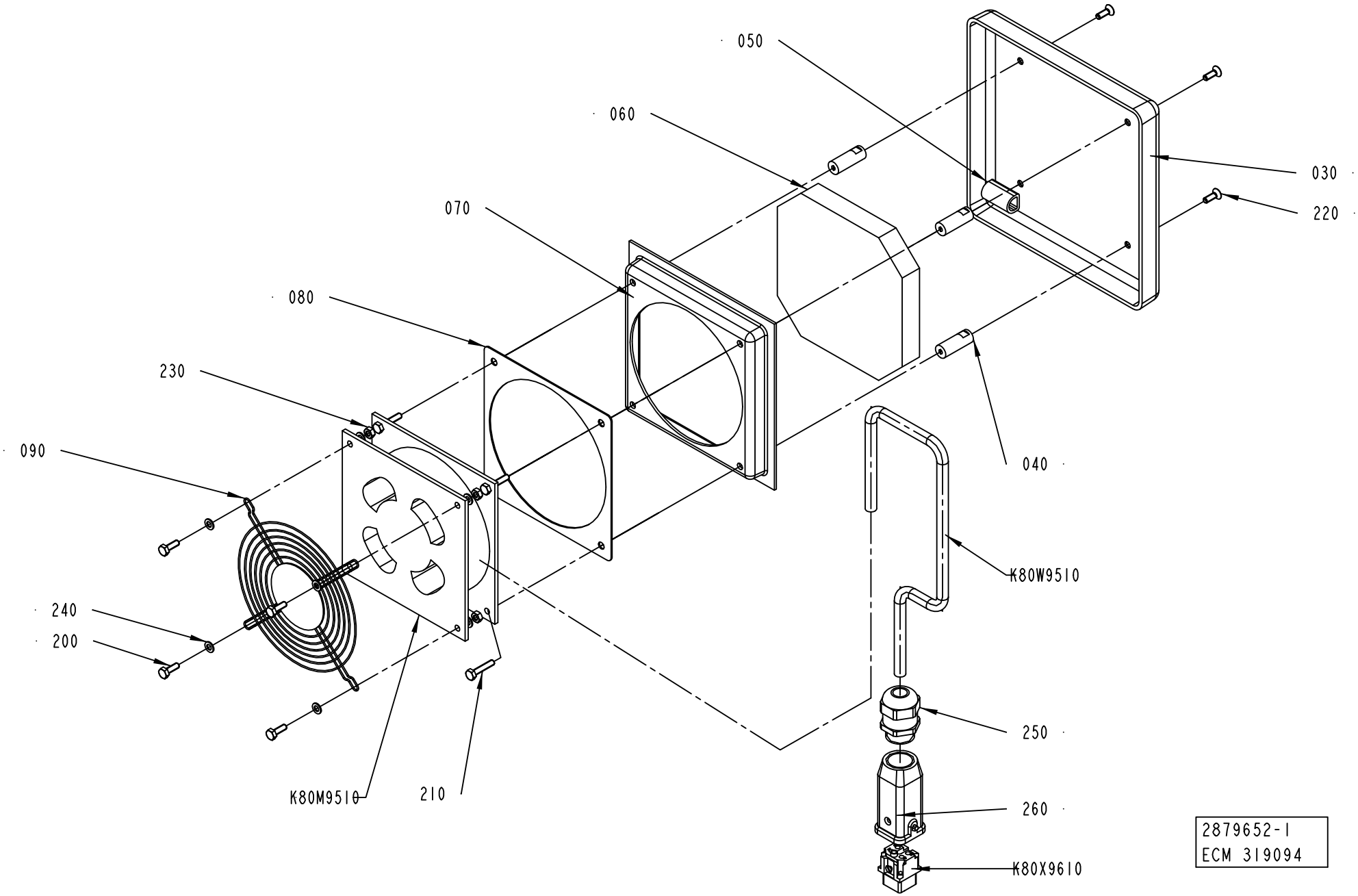
050
060
070
080
230
090
240
200
K80M9510
210
040
K80W9510
250
260
K80X9610
030
220
2879652-1
ECM 319094

ECM: 328067 - 20070705
Group number: 2879652-0100
Assembly Drawing: 2879652-1_1_AB

Pos	Part No	UN	Qty	Description	Page No
-					
30	599752-0000		1	COVER	
40	599753-0000		4	SPACER	
50	599760-0000		1	SPACER	
60	599750-0000		1	FILTER	
70	599751-0000		1	INSERT	
80	599755-0000		1	GASKET	
090	90600-2848		1	GRILL, LZ30	
200	312105-0291		4	SCREW M6S ISO 4017 M4X12 A470	
210	312105-0295		4	SCREW M6S ISO 4017 M4X20 A470	
220	312155-0291		4	SCREW DIN 7991 MF6S M4X12 A4 70	
230	312605-0312		4	HEXAGON NUT, M6M M4 A280	
240	315105-0136		8	WASHER BRB 4,3X8 RFR	
250	90458-0315		1	CABLE GLAND, M20X1,5, NO.5311 1120	
260	90459-3080		1	HOOD HAN-BRID 3A 19 20 003 1443	
K80M9510	2875358-0000		1	FAN	
K80W9510	351150-0403	MM	500	CABLE OLFLEX 3X0,75 MM2 LIGHT/GREY	
K80X9610	90459-6820		1	FEMALE INSERT HAN 4 A, 09 20 004 2711	

Pos	Part No	UN	Qty	Description	Page No

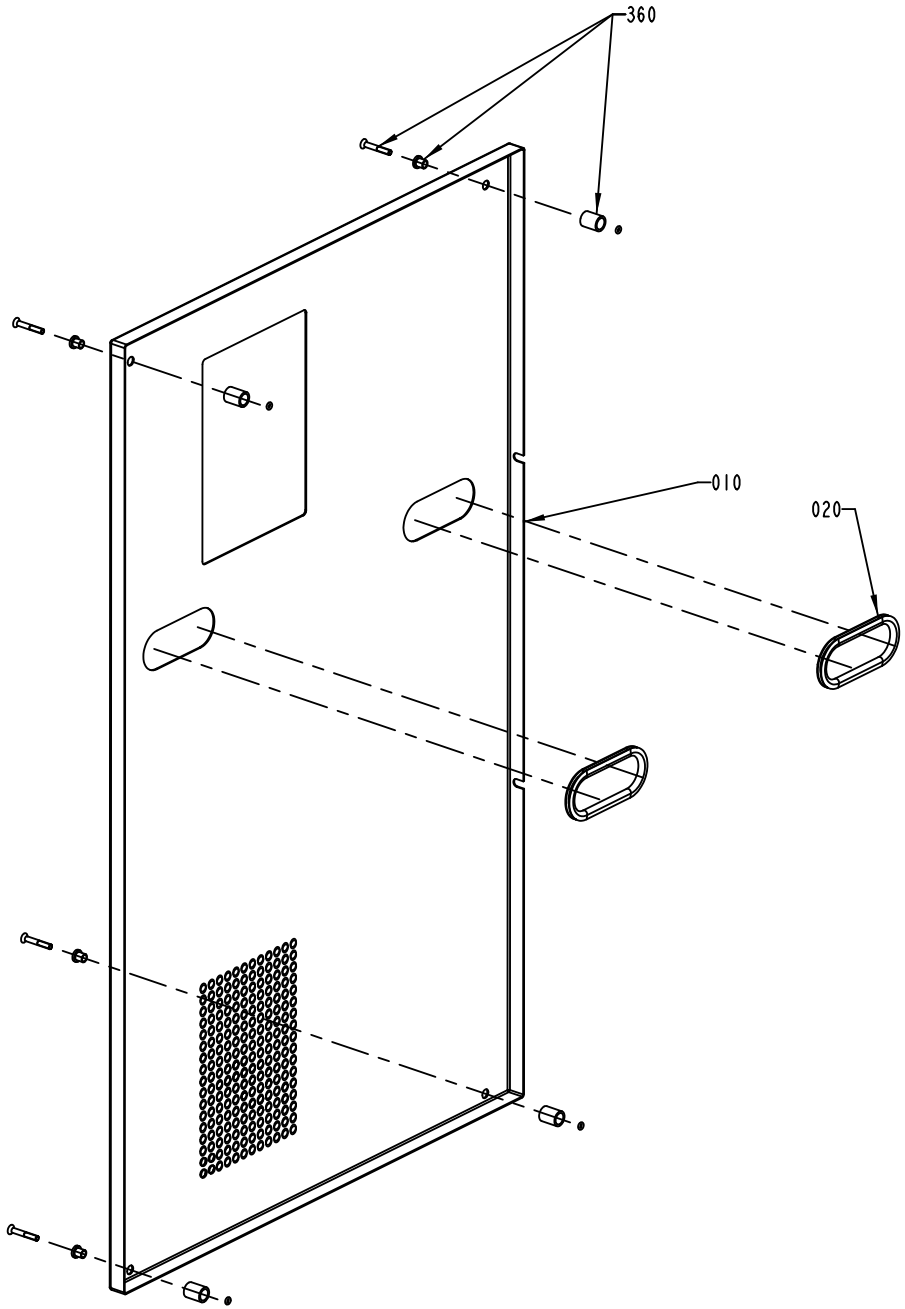
360
010
020

ECM: 384876 - 20090402
Group number: 1095888-0200
Assembly Drawing: 1095888-2_1_AB

Pos	Part No	UN	Qty	Description	Page No
-					
010	1255633-0000		1	HATCH	
020	90143-0060	M	1	EDGE STRIP 9,5X6,3MM BLACK PVC	
360	90226-0458		4	MOUNTING SCREW	

Pos	Part No	UN	Qty	Description	Page No

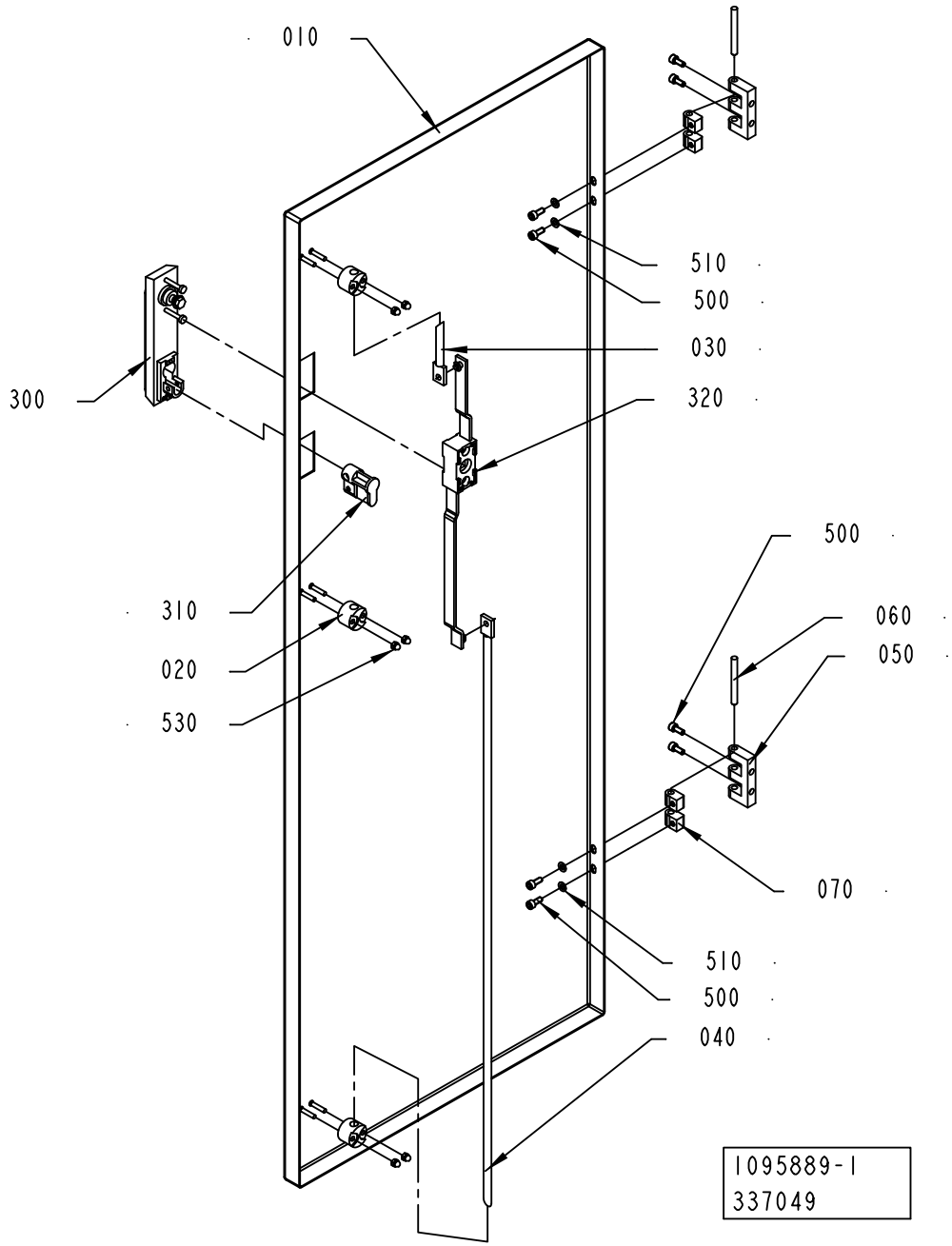
010
510
500
030
320
300
500
060
050
310
020
530
070
510
500
040
1095889-1
337049

ECM: 340138 - 20080124
Group number: 1095889-0100
Assembly Drawing: 1095889-1_1_AC

Pos	Part No	UN	Qty	Description	Page No
-					
010	1041970-0000		1	DOOR	
020	1129274-0000		1	GUIDE LUG	
030	1036304-0001		1	LOCKING ARM	
040	1036304-0014		1	LOCKING ARM	
050	1035792-0000		2	E-HINGE	
060	988685-0000		2	PIN	
070	1035794-0000		4	BLOCKING PIECE	
300	90237-0175		1	TURNING HANDLE, 1125-U185-0A	
310	90237-0128		1	LOCK CYLINDER, 1109-SU125	
320	90237-0153		1	LOCK HOUSING, 1121-U26-0B	
500	312115-0327		8	SCREW ISO4762 M5X12 A4 80	
510	315105-0146		4	WASHER BRB 5,3X10 RFR	
530	312705-0312		6	NUT HEX. DOMED CAP MHM-6 M4 A280	

Pos	Part No	UN	Qty	Description	Page No

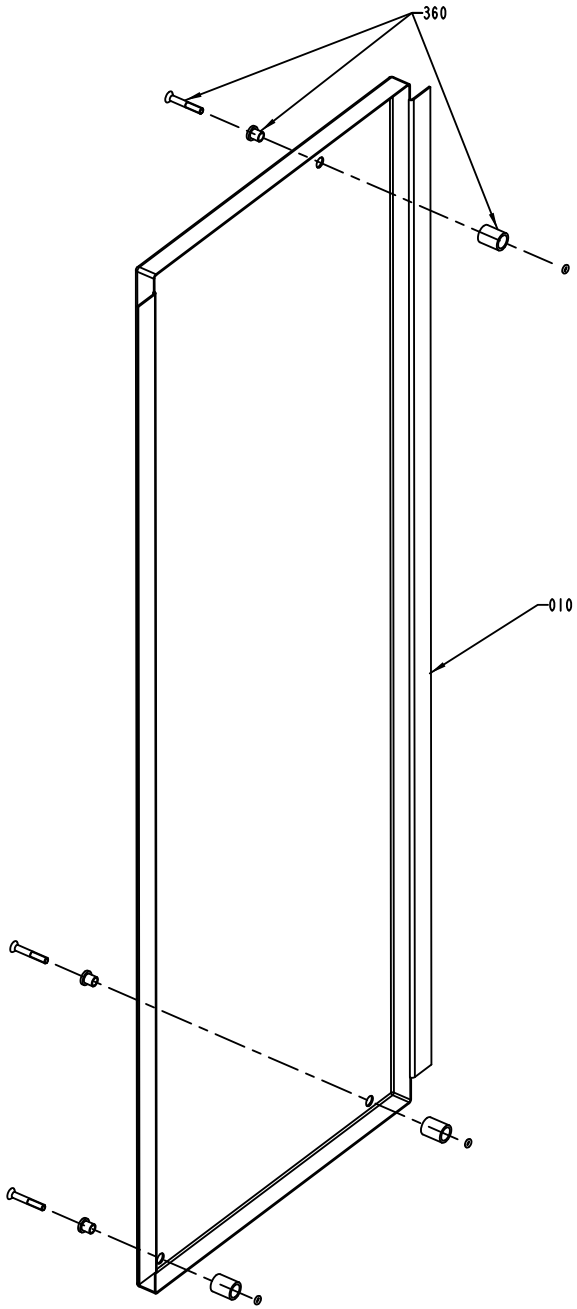
360
010

ECM: 189439 - 20041104
Group number: 1095890-0200
Assembly Drawing: 1095890-2_1_AA

Pos	Part No	UN	Qty	Description	Page No
-					
010	1255635-0000		1	HATCH	
360	90226-0458		3	MOUNTING SCREW	

Pos	Part No	UN	Qty	Description	Page No

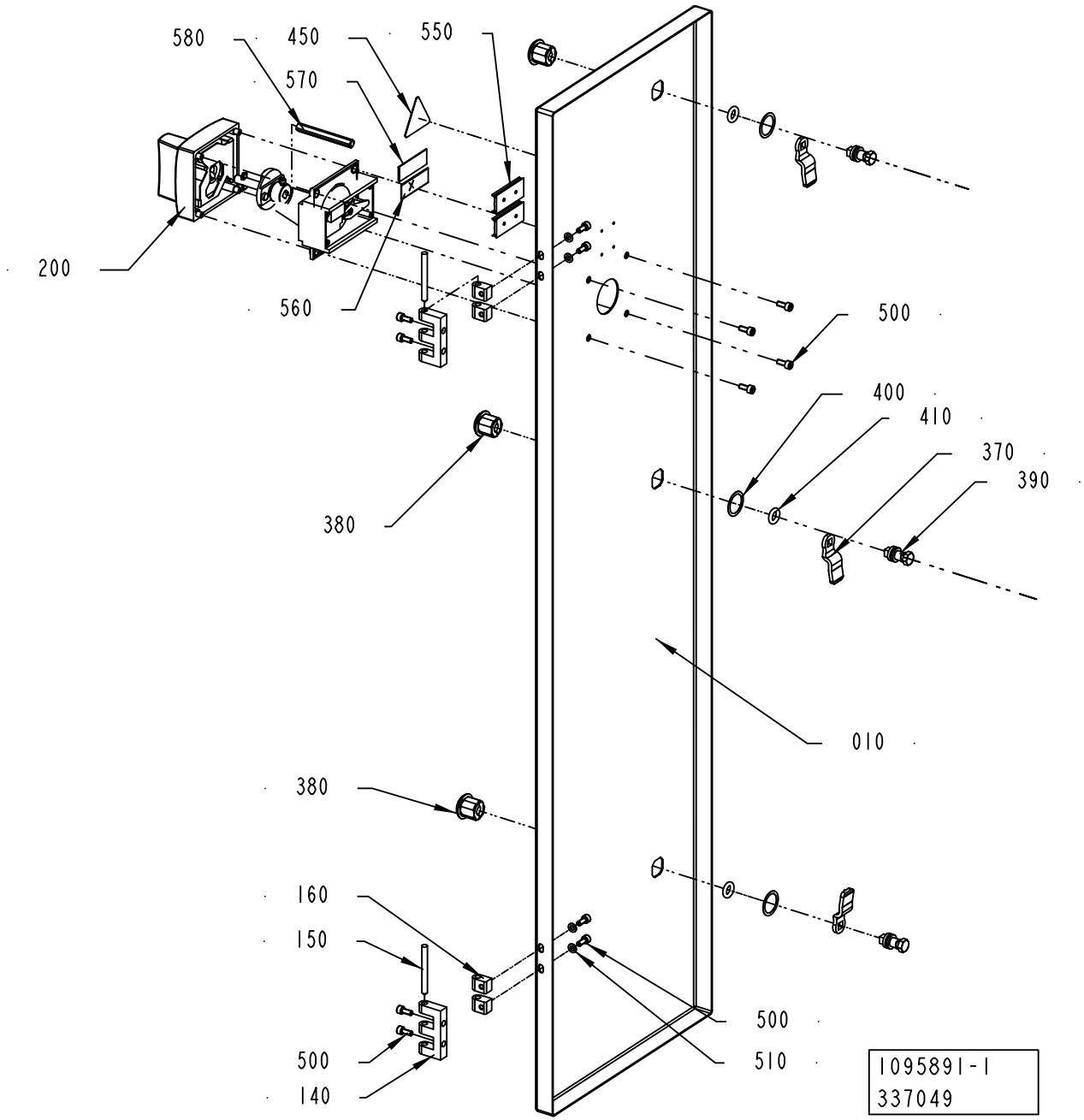
580
450
550
570
200
560
500
400
410
370
390
380
010
380
160
150
500
140
500
510
1095891-1
337049

ECM: 450808 - 20100401
Group number: 1095891-0200
Assembly Drawing: 1095891-1_1_AD

This list covers pages from 6-72 to 6-75

Pos	Part No	UN	Qty	Description	Page No
50HZ (See drawing on page: 6-72)					
010	2843000-0000		1	DOOR	
200	90459-6620		1	HANDLE, NZM1-XTVDV	
450	359705-0015		1	WARNING SIGN ISO, RISK OF ELECTRIC SHOCK	
550	359240-0100		2	SIGN HOLDER FOR 359240-0001	
570	359243-0917		1	SIGN"400V, 50HZ, 100A"	
CE 60HZ (See drawing on page: 6-72)					
010	2843000-0000		1	DOOR	
200	90459-6620		1	HANDLE, NZM1-XTVDV	
450	359705-0015		1	WARNING SIGN ISO, RISK OF ELECTRIC SHOCK	
550	359240-0100		2	SIGN HOLDER FOR 359240-0001	
570	359243-0918		1	SIGN"400V, 60HZ, 100A"	
CSA 60HZ, UL 60HZ (See drawing on page: 6-74)					
010	3000365-0000		1	DOOR	
200	90600-5272		1	ROTARY DOOR HANDLE, NZM1-XTVDV-NA	
450	359715-0100		1	WARNING SIGN ANSI (H), ELECTRIC SHOCK	
550	359240-0100		1	SIGN HOLDER FOR 359240-0001	
570	90459-7228		1	ELECTRICAL EQUIPMENT SIGN, TEMPLATE	
600	311521-0143		4	RIVET, BLANK 3,2X8	
Common Parts					
140	1035792-0000		2	E-HINGE	
150	988685-0000		2	PIN	
160	1035794-0000		4	BLOCKING PIECE	
370	90237-0157		3	LOCK BOLT, 1000-230	
380	90237-0319		3	LOCK HOUSING, 1000-U134	
390	90237-0320		3	LOCK HOUSING, 1000-U136	
400	90237-0322		3	LOCK GASKET, 1000-U137	
410	90237-0323		3	LOCK O-RING, 1000-24	
490	311520-0329		4	RIVET, BLANK 2,4X8	
500	312115-0327		12	SCREW ISO4762 M5X12 A4 80	
510	315105-0146		4	WASHER BRB 5,3X10 RFR	
560	359241-0431		1	SIGN: " MAIN SWITCH"	
580	2774348-0000		1	EXTENSION SHAFT	

Pos	Part No	UN	Qty	Description	Page No

Machine Type | Group Description | Used-In | Group Number | Page No

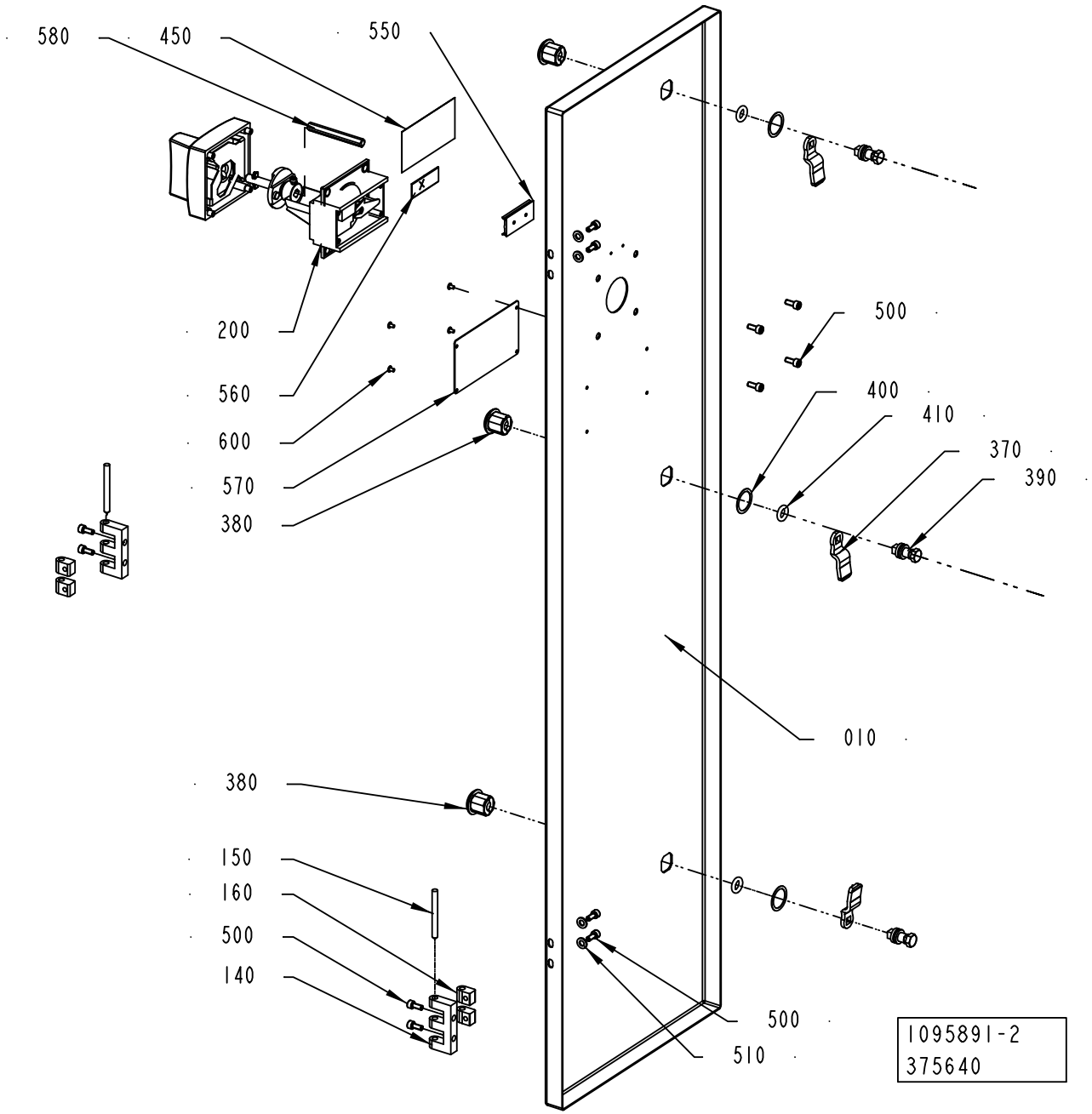
580
450
550
200
560
600
570
380
500
400
410
370
390
010
380
150
160
500
140
500
510
1095891-2
375640

ECM: 450808 - 20100401
Group number: 1095891-0200
Assembly Drawing: 1095891-2_1_AA

This list covers pages from 6-72 to 6-75

Pos	Part No	UN	Qty	Description	Page No
50HZ (See drawing on page: 6-72)					
010	2843000-0000		1	DOOR	
200	90459-6620		1	HANDLE, NZM1-XTVDV	
450	359705-0015		1	WARNING SIGN ISO, RISK OF ELECTRIC SHOCK	
550	359240-0100		2	SIGN HOLDER FOR 359240-0001	
570	359243-0917		1	SIGN"400V, 50HZ, 100A"	
CE 60HZ (See drawing on page: 6-72)					
010	2843000-0000		1	DOOR	
200	90459-6620		1	HANDLE, NZM1-XTVDV	
450	359705-0015		1	WARNING SIGN ISO, RISK OF ELECTRIC SHOCK	
550	359240-0100		2	SIGN HOLDER FOR 359240-0001	
570	359243-0918		1	SIGN"400V, 60HZ, 100A"	
CSA 60HZ, UL 60HZ (See drawing on page: 6-74)					
010	3000365-0000		1	DOOR	
200	90600-5272		1	ROTARY DOOR HANDLE, NZM1-XTVDV-NA	
450	359715-0100		1	WARNING SIGN ANSI (H), ELECTRIC SHOCK	
550	359240-0100		1	SIGN HOLDER FOR 359240-0001	
570	90459-7228		1	ELECTRICAL EQUIPMENT SIGN, TEMPLATE	
600	311521-0143		4	RIVET, BLANK 3,2X8	
Common Parts					
140	1035792-0000		2	E-HINGE	
150	988685-0000		2	PIN	
160	1035794-0000		4	BLOCKING PIECE	
370	90237-0157		3	LOCK BOLT, 1000-230	
380	90237-0319		3	LOCK HOUSING, 1000-U134	
390	90237-0320		3	LOCK HOUSING, 1000-U136	
400	90237-0322		3	LOCK GASKET, 1000-U137	
410	90237-0323		3	LOCK O-RING, 1000-24	
490	311520-0329		4	RIVET, BLANK 2,4X8	
500	312115-0327		12	SCREW ISO4762 M5X12 A4 80	
510	315105-0146		4	WASHER BRB 5,3X10 RFR	
560	359241-0431		1	SIGN: " MAIN SWITCH"	
580	2774348-0000		1	EXTENSION SHAFT	

Pos	Part No	UN	Qty	Description	Page No

Machine Type | Group Description | Used-In | Group Number | Page No

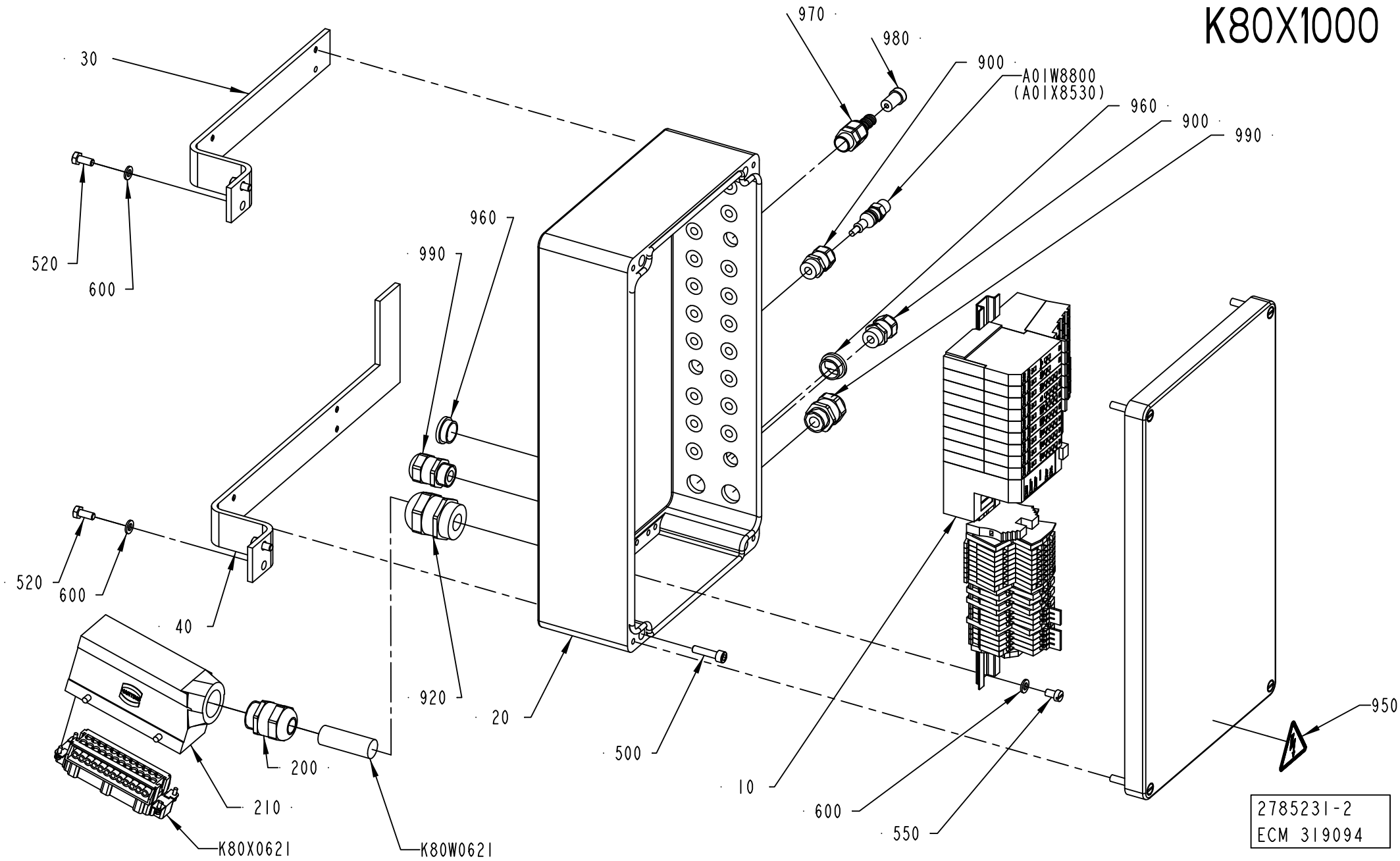
K80X1000
30
520
600
970
980
900
A01W8800
(A01X8530)
960
900
990
960
990
520
600
40
920
20
500
10
600
550
950
200
210
K80X0621
K80W0621
2785231-2
ECM 319094

ECM: 461577 - 20101001
Group number: 2785231-0100
Assembly Drawing: 2785231-2_1_AB

Pos	Part No	UN	Qty	Description	Page No
A3/SPEED ANSI (See drawing on page: 6-76)					
900	90458-0306		21	CABLE GLAND, M16X1,5, NO.5311 1010	
950	359715-0100		1	WARNING SIGN ANSI (H), ELECTRIC SHOCK	
A3/SPEED ISO (See drawing on page: 6-76)					
900	90458-0306		21	CABLE GLAND, M16X1,5, NO.5311 1010	
950	359705-0015		1	WARNING SIGN ISO, RISK OF ELECTRIC SHOCK	
Common Parts					
010	2701359-0100		1	BLOCK	**6-79**
020	2785232-0000		1	CONNECTION BOX	
030	2702949-0000		1	BRACKET	
040	2833378-0000		1	BRACKET	
200	90458-0308		1	CABLE GLAND, M25X1,5, NO.5311 1030	
210	90600-0717		1	HOOD 24 B SIDE ENTRY, 19 30 024 1521	
500	312115-0372		4	SCREW ISO4762 M6X25 A4 80	
520	312105-0367		4	SCREW M6S ISO 4017 M6X14 A480	
550	312121-0364		2	SCREW ISO 1207 M6X10 4.8-5.8 Z.PL.	
600	315105-0153		6	WASHER BRB 6,4X12 RFR	
920	90458-0309		1	CABLE GLAND, M32X1,5, NO.5311 1040	
960	90458-1308		2	BLIND PLUG CIRCULAR, M20X1,5 514GFK/220	
970	353242-0005		1	HOSE GLAND W/O INSERT PG9 NORMAL	
980	353249-0067		1	INSERT, SINGLE HOLE, E150/7	
990	90458-0307		2	CABLE GLAND, M20X1,5, NO.5311 1020	
A01W8800	351414-0020		1	DEVICENET CONN. CABLE, 0935 361 104/2M	
K80W0621	351150-0425	MM	3000	CABLE OLFLEX 25X0,75 MM2 LIGHT/GREY	
K80X0621	90110-0056		1	MALE INSERT HAN 24 E 09 33 024 2601	

Pos	Part No	UN	Qty	Description	Page No

Machine Type | Group Description | Used-In | Group Number | Page No

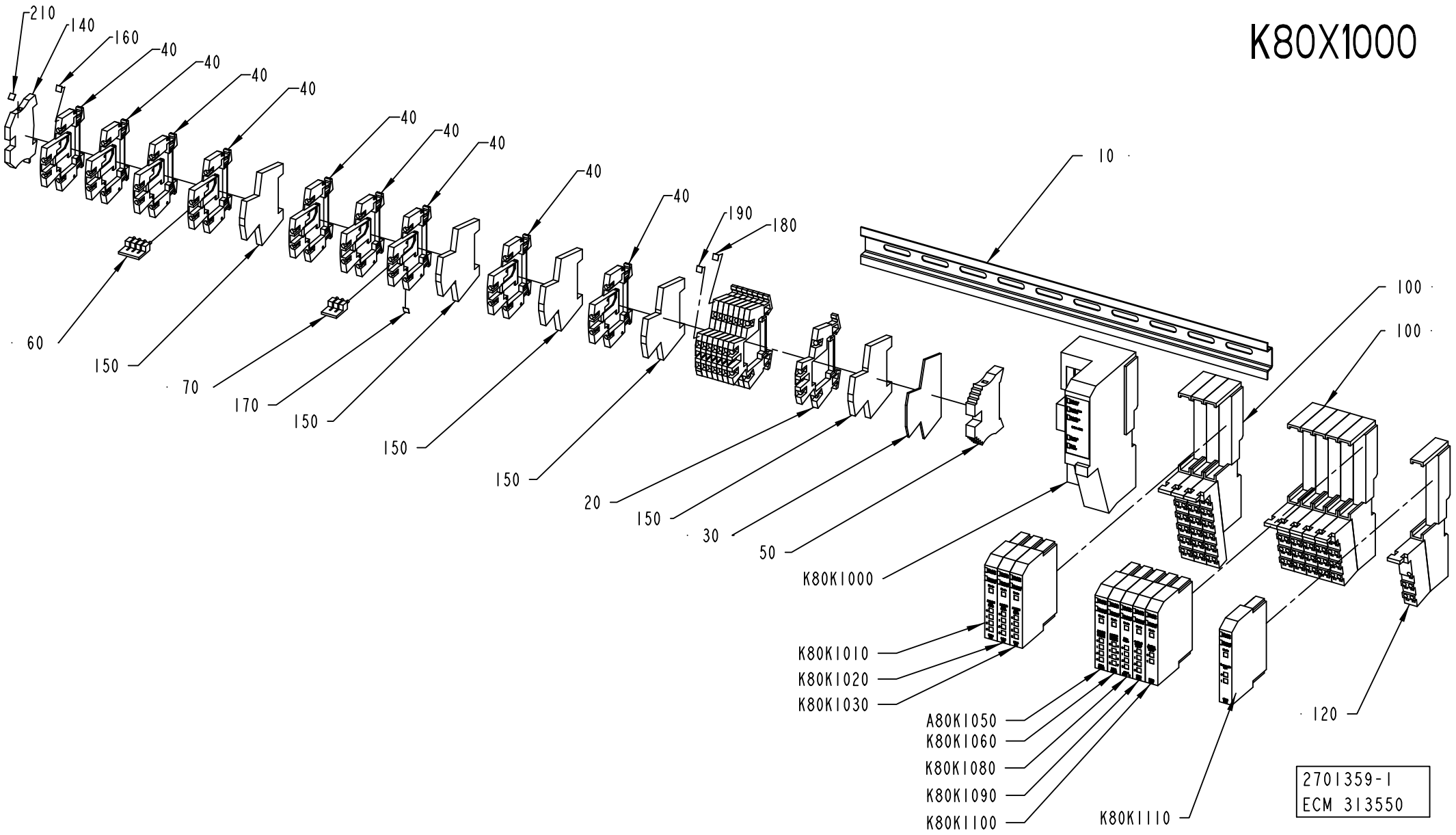
K80X1000
210
140
160
40
40
40
40
40
40
40
40
40
190
180
10
60
150
70
170
150
150
150
20
150
30
50
100
100
K80K1000
K80K1010
K80K1020
K80K1030
A80K1050
K80K1060
K80K1080
K80K1090
K80K1100
K80K1110
120
2701359-1
ECM 313550

ECM: 313558 - 20070629
Group number: 2701359-0100
Assembly Drawing: 2701359-1_1_AA

Pos	Part No	UN	Qty	Description	Page No
-					
010	353042-0004	MM	385	RAIL TS 35/7,5	
020	90077-0113		8	TERMINAL BLOCK WDK 2.5	
030	90077-0114		1	END PLATE, WAP/WDK 2,5	
040	90457-0049		9	TERMINAL BLOCK WDK 2.5V, 102230	
050	353031-0203		1	END SUPPORT, WEW 35/2	
060	353034-0030		1	BRIDGE CONNECTOR WQV 2,5/10	
070	353034-0030		1	BRIDGE CONNECTOR WQV 2,5/10	
100	90459-2526		5	REMOTE I/O BASE MODULE 8 POINTS, 1734-TB	
110	90459-2527		3	REMOTE I/O BASE MODULE 12 POINTS	
120	90459-2528		1	REMOTE I/O BASE MODULE FOR THERMOCOUPLE	
140	353024-0204		1	EARTH TERMINAL WPE 2,5	
150	353024-0212		5	EARTH TERMINAL WDK 2,5 PE	
160	359011-0807		1	MARKING, DEK 5 FW 1-50	
170	359011-0808		1	MARKING, DEK 5FW 51-100	
180	359011-0809		2	MARKING, DEK 5 FW 101-150	
190	359011-0810		2	MARKING, DEK 5 FW 151-200	
210	359011-0819		1	MARKING, EARTH, DEK 5 GW ERDE I.KR.	
A80K1050	90459-2505		1	DIGITAL OUTPUT 4 PTS, 1734-OB4E	
K80K1000	90459-2494		1	DEVICENET I/O ADAPTER MODULE, 1734-ADN	
K80K1010	90459-2503		1	DIGITAL INPUT 4 PTS SINK, 1734-IB4	
K80K1020	90459-2503		1	DIGITAL INPUT 4 PTS SINK, 1734-IB4	
K80K1030	90459-2503		1	DIGITAL INPUT 4 PTS SINK, 1734-IB4	
K80K1060	90459-6560		1	DIGITAL OUTPUT 8 PTS, 1734-OB8E/C	
K80K1080	90459-5261		1	REMOTE I/O, RELAY OUTP. 4 PTS,1734-OW4/C	
K80K1090	90459-2509		1	REMOTE I/O ANALOG INPUT CURRENT 2 PTS	
K80K1100	90459-2508		1	REMOTE I/O ANALOG INPUT VOLTAGE 2 PTS	
K80K1110	90459-2512		1	REMOTE I/O THERMOCOUPLE INPUT 2 PTS	

Pos	Part No	UN	Qty	Description	Page No

Machine Type | Group Description | Used-In | Group Number | Page No

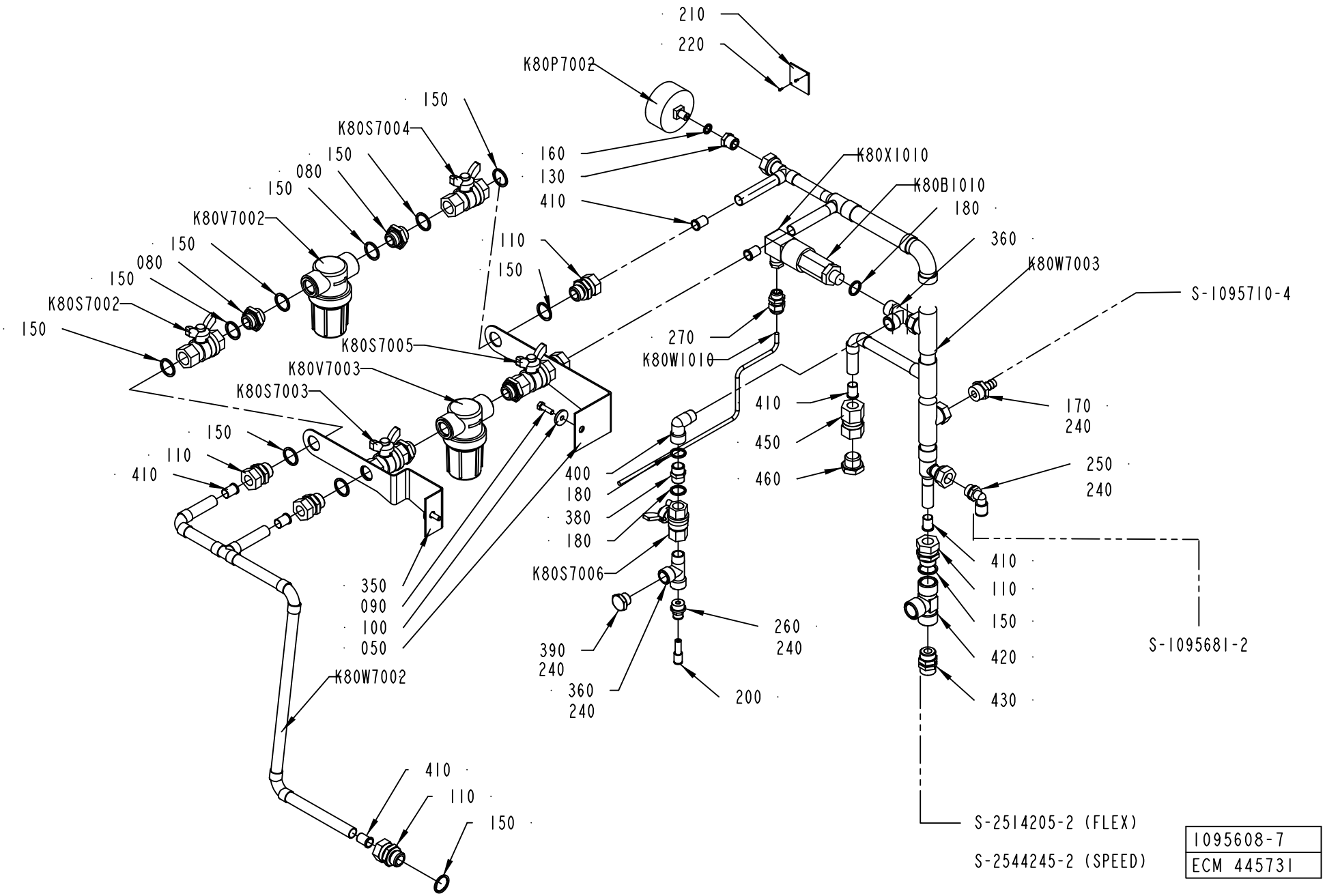
210
220
K80P7002
150
K80S7004
150
080
150
K80V7002
150
080
150
K80S7002
150
160
130
410
110
150
K80X1010
K80B1010
180
360
K80W7003
S-1095710-4
270
K80W1010
K80S7005
K80V7003
K80S7003
150
110
410
410
450
460
170
240
250
240
400
180
380
180
K80S7006
350
090
100
050
K80W7002
390
240
360
240
260
240
200
410
110
150
410
110
150
420
430
S-1095681-2
S-2514205-2 (FLEX)
S-2544245-2 (SPEED)
1095608-7
ECM 445731

ECM: 485464 - 20110101
Group number: 1095608-0200
Assembly Drawing: 1095608-7_1_AD

Pos	Part No	UN	Qty	Description	Page No
A3/SPEED COMPRESSOR					
110	342720-0114		6	CONN. STR. GA-15-G1/2	
150	315239-0113		18	NYLON WASHER G1/2, 1/2RRP	
170	342901-0105		1	HOSE NIPPLE, EXT.THR. G1/2-12 MM	
200	344239-0608		1	REDUCER, 6366 06 08WP2	
260	344235-0838		1	MALE CONNECTOR, 6305 08 17WP2	
270	352103-0101		1	CABLE GLAND, ST 9, PR15,2/PG9	
390	90330-0029		1	PLUG, EXT. G-THREAD, R-236R3/8	
450	342725-0114		1	CONN. STR. PIPE GAI15LR71	
460	342713-0213		1	PLUG, EXT THREAD HEX SOCKET 8638-00-120	
Common Parts					
050	1037583-0000		1	HOLDER	
080	479261-0000		4	NIPPLE	
090	312105-0370		2	SCREW M6S ISO 4017 M6X20 A480	
100	315125-0153		2	WASHER TBRSB 6,4X22X4 A4	
130	342701-0202		1	BUSHING,INT./EXT.G-THREAD G3/8"-G1/8"	
160	315239-0109		1	NYLON WASHER G1/8, 1/8RRP	
180	315239-0111		3	NYLON WASHER G3/8, 3/8RRP	
210	273455-0000		1	SIGN, COLD WATER	
220	312502-0120		2	DRIVE SCREW ROUND HEAD KDS 0X5	
240	90157-0016	ML	1	THREAD LOCKING, LOCTITE 242 50 ML	
250	344237-1038		1	SWIVEL ELBOW, 6309 10 17WP2	
350	2547061-0000		1	HOLDER	
360	90140-0023		2	T-PIPE, INT. THREAD, NO. 2070-3/8-3/8	
380	342700-0111		1	NIPPLES,HEXAGON,EXT.G-THREAD G3/8"-G3/8"	
400	90140-0020		1	ELBOW, 90, INT/EXT. THREAD, NO. 2020-3/8	
410	342708-0109		7	REINFORCING RING VSH 15X1 MM	
420	90140-0010		1	T-PIPE, INT. THREAD, 20031/2	
430	342921-0151		1	STRAIGHT COUPL.,EXT.THREAD.15/12,5-G1/2"	
K80B1010	90274-0042		1	PRESSURE GUARD, 200 KPA	
K80P7002	90043-0006		1	PRESSURE GAUGE, 2041 D=63 MM	
K80S7002	90187-0029		1	BALL VALVE G1/2, NPBR	
K80S7003	90187-0029		1	BALL VALVE G1/2, NPBR	
K80S7004	90187-0029		1	BALL VALVE G1/2, NPBR	
K80S7005	90187-0029		1	BALL VALVE G1/2, NPBR	
K80S7006	90187-0089		1	BALL VALVE G3/8, NPBR	
K80V7002	90458-0921		1	FILTER SP 122-200	
	90458-2541		*1*	*FILTER, CP23174-7-304SS*	
K80V7003	90458-0921		1	FILTER SP 122-200	
	90458-2541		*1*	*FILTER, CP23174-7-304SS*	
K80W1010	351150-0403	MM	2000	CABLE OLFLEX 3X0,75 MM2 LIGHT/GREY	
K80W7002	1041932-0000		1	PIPE	
K80W7003	1041933-0000		1	PIPE	
K80X1010	90110-0095		1	CONNECTOR 3 POLE + EARTH	

Machine Type | Group Description | Used-In | Group Number | Page No

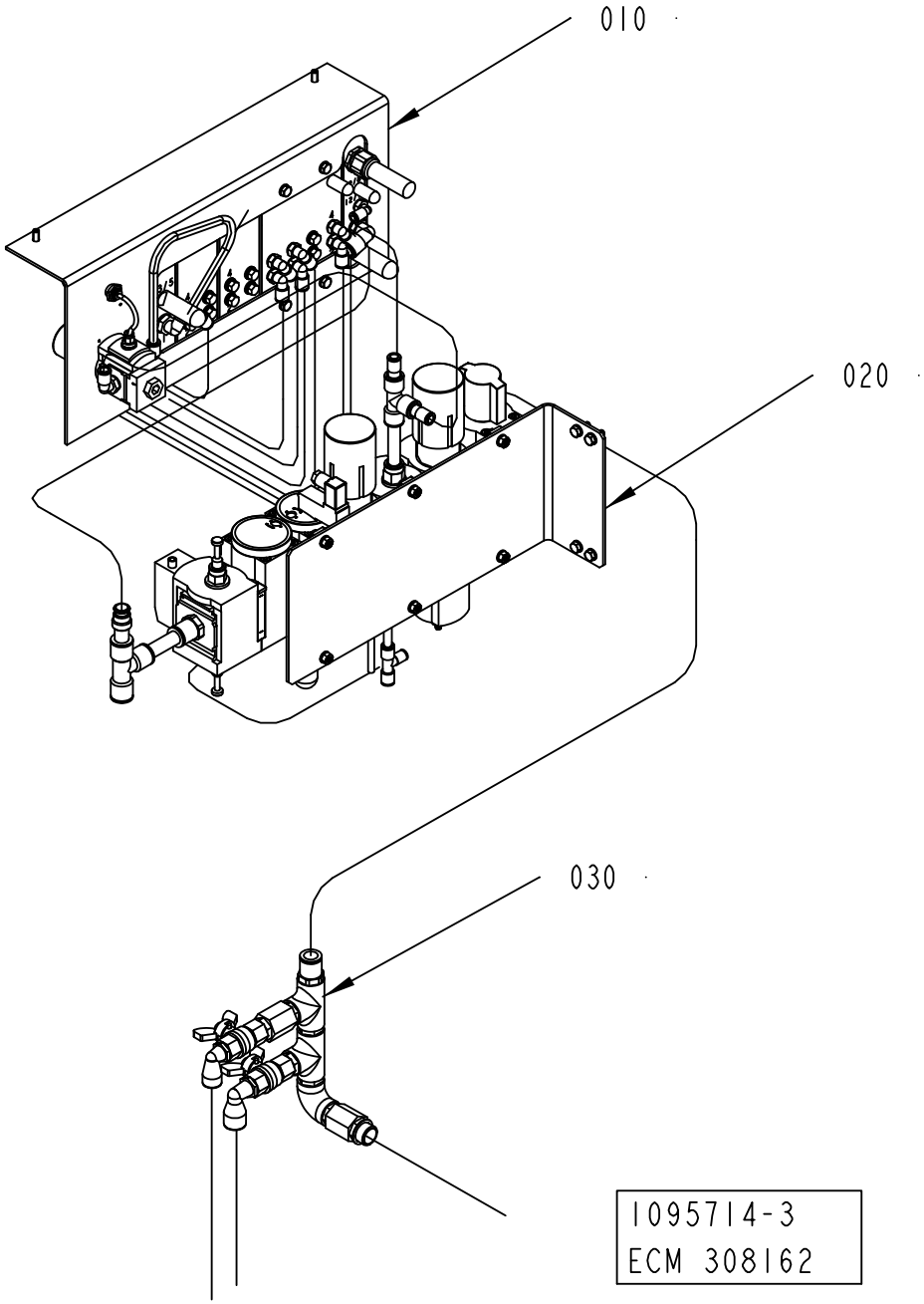
010
020
030
1095714-3
ECM 308162

ECM: 308166 - 20070629
Group number: 1095714-0400
Assembly Drawing: 1095714-3_1_AA

Pos	Part No	UN	Qty	Description	Page No
-					
010	2778526-0100		1	VALVE PANEL	**6-85**
020	2708544-0100		1	PANEL	**6-89**
030	1095716-0200		1	PIPE WORK-AIR	**6-93**

Pos	Part No	UN	Qty	Description	Page No

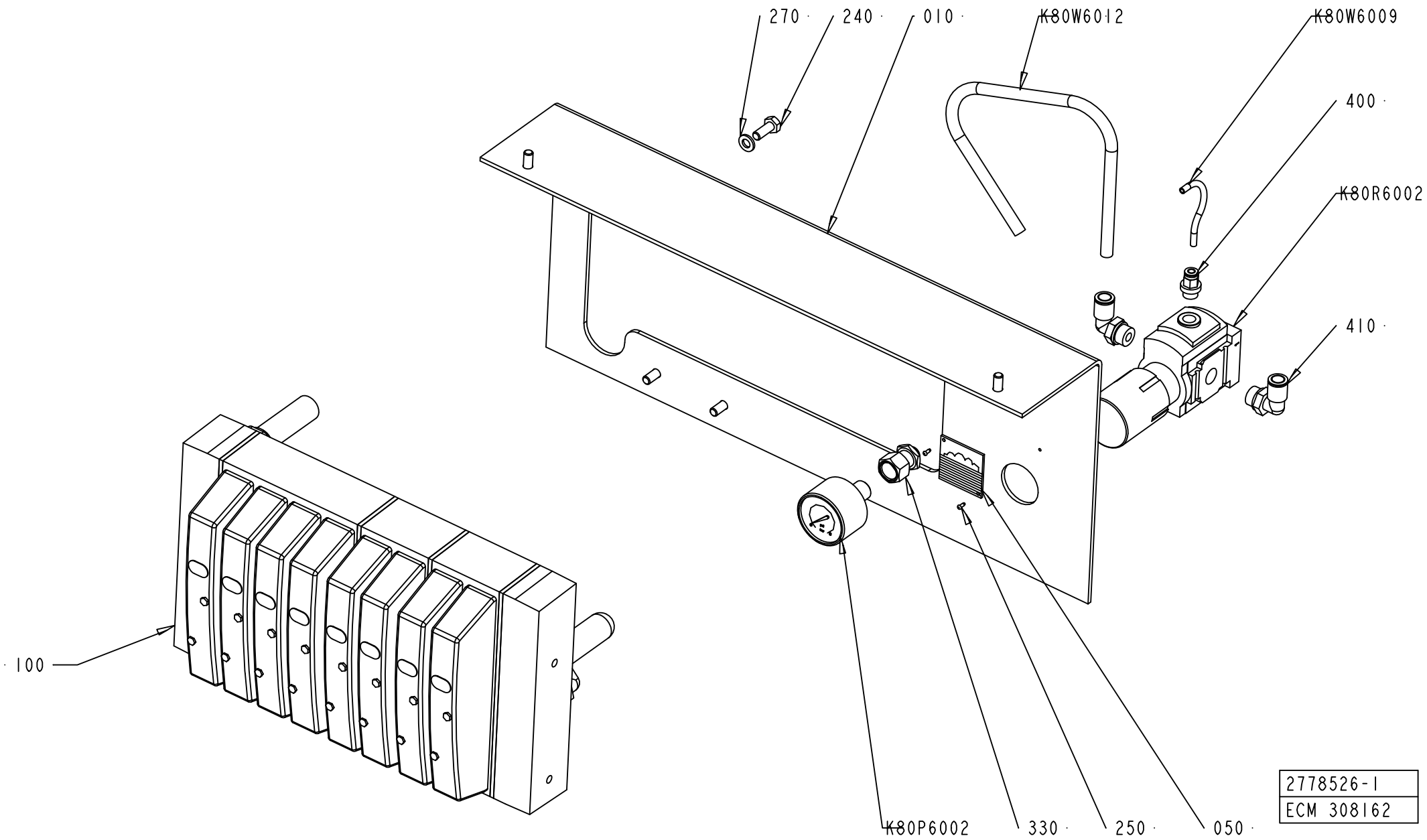
270
240
010
K80W6012
K80W6009
400
K80R6002
410
100
K80P6002
330
250
050
2778526-1
ECM 308162

ECM: 485379 - 20110101
Group number: 2778526-0100
Assembly Drawing: 2778526-1_1_AA

Pos	Part No	UN	Qty	Description	Page No
-					
010	2778767-0000		1	PLATE	
050	1041938-0000		1	SIGN	
100	2778525-0100		1	VALVE PANEL	**6-87**
240	312105-0368		6	SCREW M6S ISO 4017 M6X16 A480	
250	312502-0120		2	DRIVE SCREW ROUND HEAD KDS 0X5	
270	315105-0153		6	WASHER BRB 6,4X12 RFR	
330	90459-7333		1	PUSH-IN FITTING QSSF-1/4-4-B	
400	350001-0005		1	PUSH-IN FITTING QS-F-G1/8-4	
410	350002-0009		2	PUSH-IN L-FITTING QSL-F-G1/4-8	
K80P6002	90459-7344		1	PRESSURE GAUGE, MA-40-6-R1/4-EN	
K80R6002	90459-2822		1	REGULATOR, MS4-LR-1/4-D5-A8	
K80W6009	315300-0016	MM	300	TUBE 4MPE BLUE	
K80W6012	315300-0001	MM	360	TUBE, 6 MM PE BLUE	

Pos	Part No	UN	Qty	Description	Page No

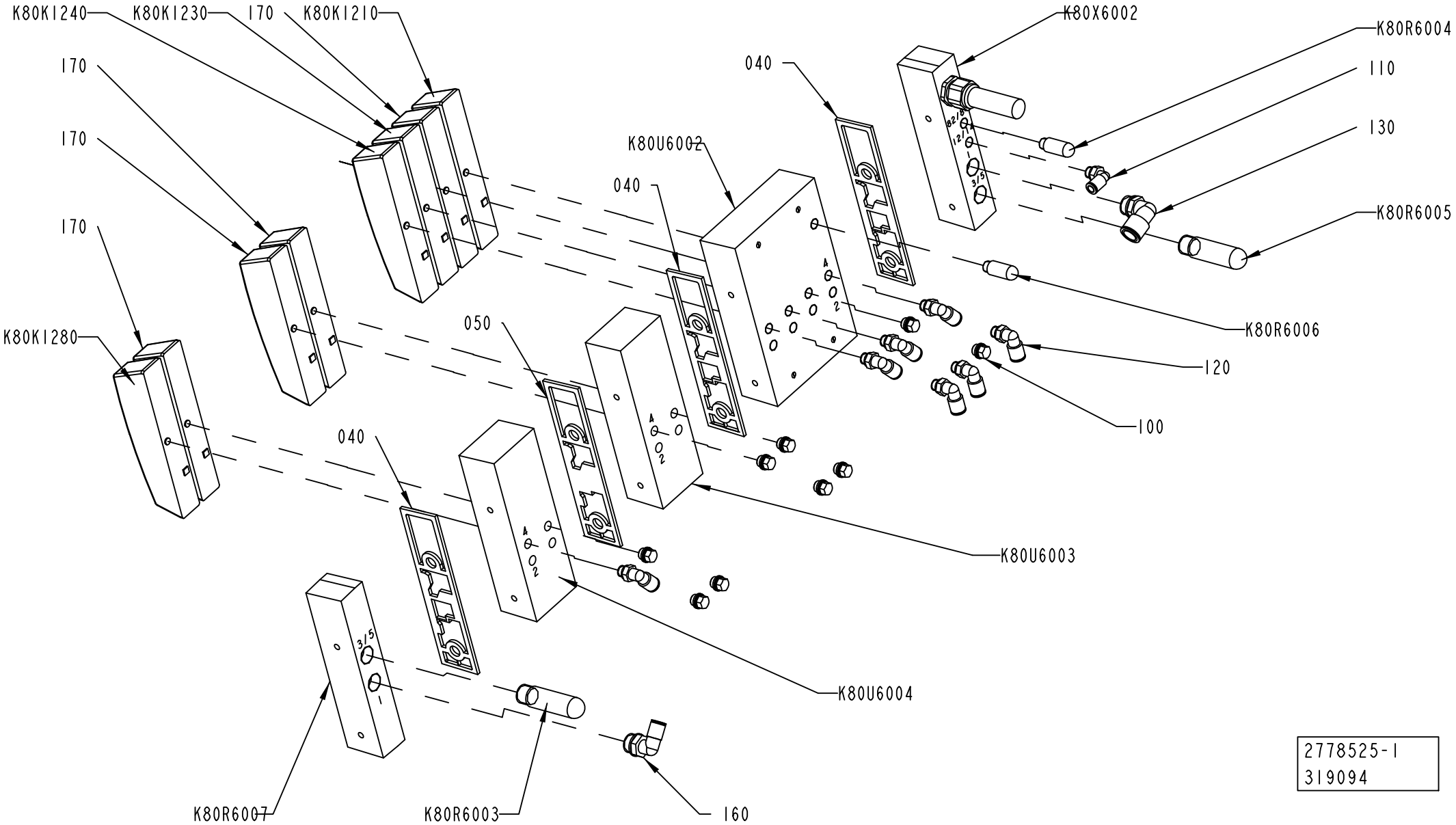
K80K1240
K80K1230
170
K80K1210
170
170
170
K80K1280
K80X6002
040
K80R6004
110
130
K80R6005
K80U6002
040
K80R6006
120
100
050
040
K80U6003
K80U6004
K80R6007
K80R6003
160
2778525-1
319094

ECM: 328068 - 20070705
Group number: 2778525-0100
Assembly Drawing: 2778525-1_1_AB

Pos	Part No	UN	Qty	Description	Page No
-					
040	90458-1207		3	SEALING, STANDARD	
050	90458-1208		1	SEALING, CHANNEL 1 BLOCKED	
100	90459-0698		9	PLUG, EXT. G-THREAD, G1/8	
110	350002-0006		1	PUSH-IN L-FITTING QSL-F-G1/8-6	
120	350002-0007		7	PUSH-IN L-FITTING QSL-F-G1/8-8	
130	350002-0014		1	PUSH-IN L-FITTING QSL-F-G3/8-12	
160	350002-0012		1	PUSH-IN L-FITTING QSL-F-G3/8-8	
170	90458-1215		4	COVER PLATE FOR EMPTY VALVE POSITION	
K80K1210	90458-1194		1	MONOSTABLE VALVE 5/2	
K80K1230	90458-1194		1	MONOSTABLE VALVE 5/2	
K80K1240	90458-1194		1	MONOSTABLE VALVE 5/2	
K80K1280	90458-1194		1	MONOSTABLE VALVE 5/2	
K80R6003	90328-0024		1	SILENCER G3/8"	
K80R6004	90328-0047		1	SILENCER G1/8"	
K80R6005	90328-0024		1	SILENCER G3/8"	
K80R6006	90328-0047		1	SILENCER G1/8"	
K80R6007	90458-1214		1	RIGHT ENDPL EXT. PILOT AIR,CDVI5.0-EPR-S	
K80U6002	90458-1204		1	BASIC SUB-BASE 4 VALVES, CDVI5.0-GB4-MP	
K80U6003	90458-1206		1	EXP. SUB-BASE 2 VALVES, CDVI5.0-EB	
K80U6004	90458-1206		1	EXP. SUB-BASE 2 VALVES, CDVI5.0-EB	
K80X6002	90458-1212		1	LEFT ENDPLATE INCL. 10M CABLE	

Pos	Part No	UN	Qty	Description	Page No

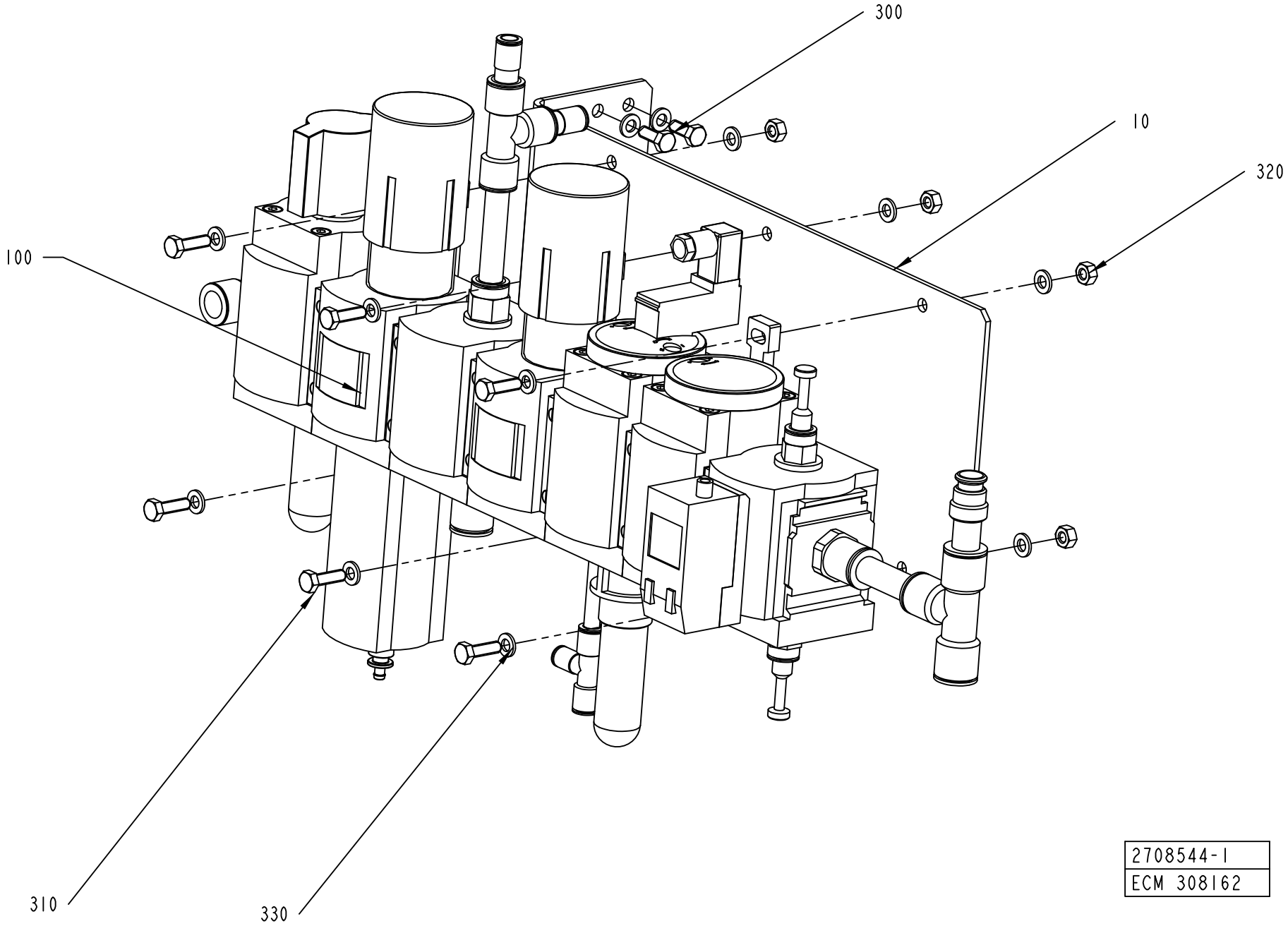
300
10
320
100
310
330
2708544-1
ECM 308162

ECM: 415338 - 20100701
Group number: 2708544-0100
Assembly Drawing: 2708544-1_1_AA

Pos	Part No	UN	Qty	Description	Page No
-					
010	2708543-0000		1	PLATE	
100	2708542-0100		1	PNEUMATIC UNIT	**6-91**
300	312105-0368		4	SCREW M6S ISO 4017 M6X16 A480	
310	312105-0370		6	SCREW M6S ISO 4017 M6X20 A480	
320	312605-0316		6	HEXAGON NUT, M6M M6 A280	
330	315105-0153		16	WASHER BRB 6,4X12 RFR	

Pos	Part No	UN	Qty	Description	Page No

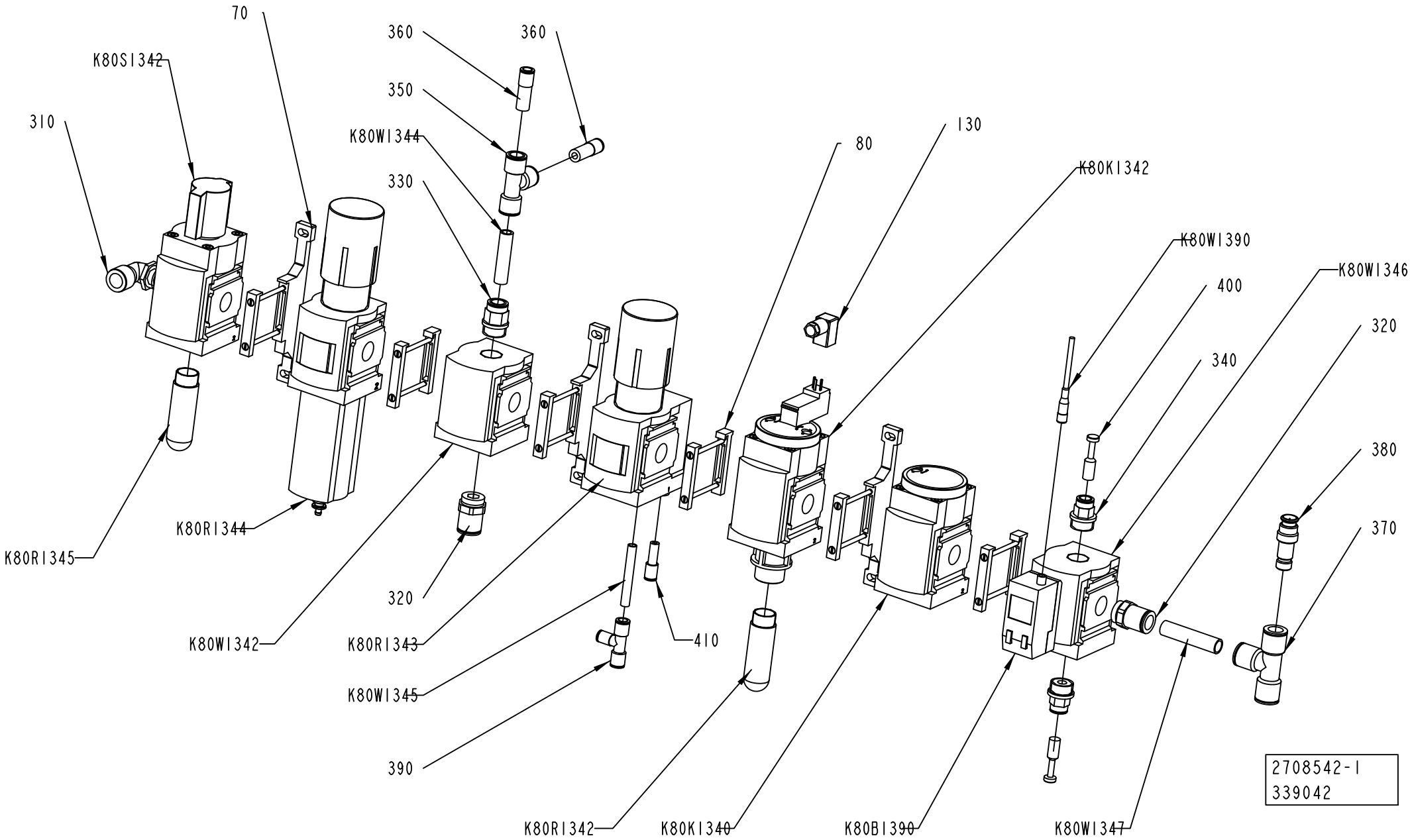
70
360
360
K80S1342
350
310
K80W1344
330
80
130
K80K1342
K80W1390
400
K80W1346
340
320
380
370
K80R1345
K80R1344
320
K80W1342
K80R1343
410
K80W1345
390
K80R1342
K80K1340
K80B1390
K80W1347
2708542-1
339042

ECM: 485381 - 20110101
Group number: 2708542-0100
Assembly Drawing: 2708542-1_1_AC

Pos	Part No	UN	Qty	Description	Page No
-					
070	90459-1858		3	BRACKET, MS6-WP	
080	90459-1859		3	BRACKET, MS6-MV	
	90459-4787		*1*	*SENSOR BRACKET, WSM-12-J-M5*	
130	90458-2837		1	CONNECTING CABLE KMEB-1-24-5-LED	
310	90458-2965		1	ELBOW PIPE JOINT, EXT.THREAD,D=14MM-G1/2	
320	90055-0097		2	STRAIGHT COUPLING	
330	350001-0016		1	PUSH-IN FITTING QS-F-G1/2-12	
340	350001-0015		2	PUSH-IN FITTING QS-F-G1/2-10	
350	350005-0005		1	PUSH-IN T-FITTING QST-F-12	
360	350006-0008		2	PUSH-IN FITTING QS-F-12H-8	
370	342748-0110		1	T-CONNECTION 14MM	
380	342716-0211		1	REDUCER 12-14	
390	350011-0002		1	PUSH-IN T-FITTING QST-F-8-6	
400	350013-0004		2	PLUG QSC-10H	
410	350006-0003		1	PUSH-IN FITTING QS-F-8H-6	
K80B1390	90600-2031		1	PRESSURE SENS. SDE1-D10-G2-MS6-C-PU-M8	
K80K1340	90459-1855		1	SOFT START VALVE, MS6-DL-1/2	
K80K1342	90459-1854		1	SHUT OFF VALVE, MS6-EE-1/2-10V24	
K80R1342	90328-0025		1	SILENCER G1/2"	
K80R1343	90459-7342		1	REGULATOR, MS6-LRB-1/2-D7-AS-BD	
K80R1344	90459-1853		1	FILTER REGULATOR, MS6-LFR-1/2-D7-ERV-AS	
	90459-3809		*1*	*FILTER CARTRIDGE, MS6-LFP-E*	
K80R1345	90328-0025		1	SILENCER G1/2"	
K80S1342	90459-1852		1	SHUT OFF VALVE, MS6-EM1-1/2	
K80W1342	90459-1856		1	DISTRIBUTOR, MS6-FRM-1/2	
K80W1344	315300-0010	MM	80	TUBE, 12 MM PE BLUE	
K80W1345	315300-0004	MM	80	TUBE, 8 MM PE BLUE	
K80W1346	90459-1856		1	DISTRIBUTOR, MS6-FRM-1/2	
K80W1347	90166-0196	MM	100	TUBE 14MM PA BLUE	
K80W1390	90600-3690		1	SENSOR CABLE SIM-M8-4GD-2,5-PU	

Pos	Part No	UN	Qty	Description	Page No

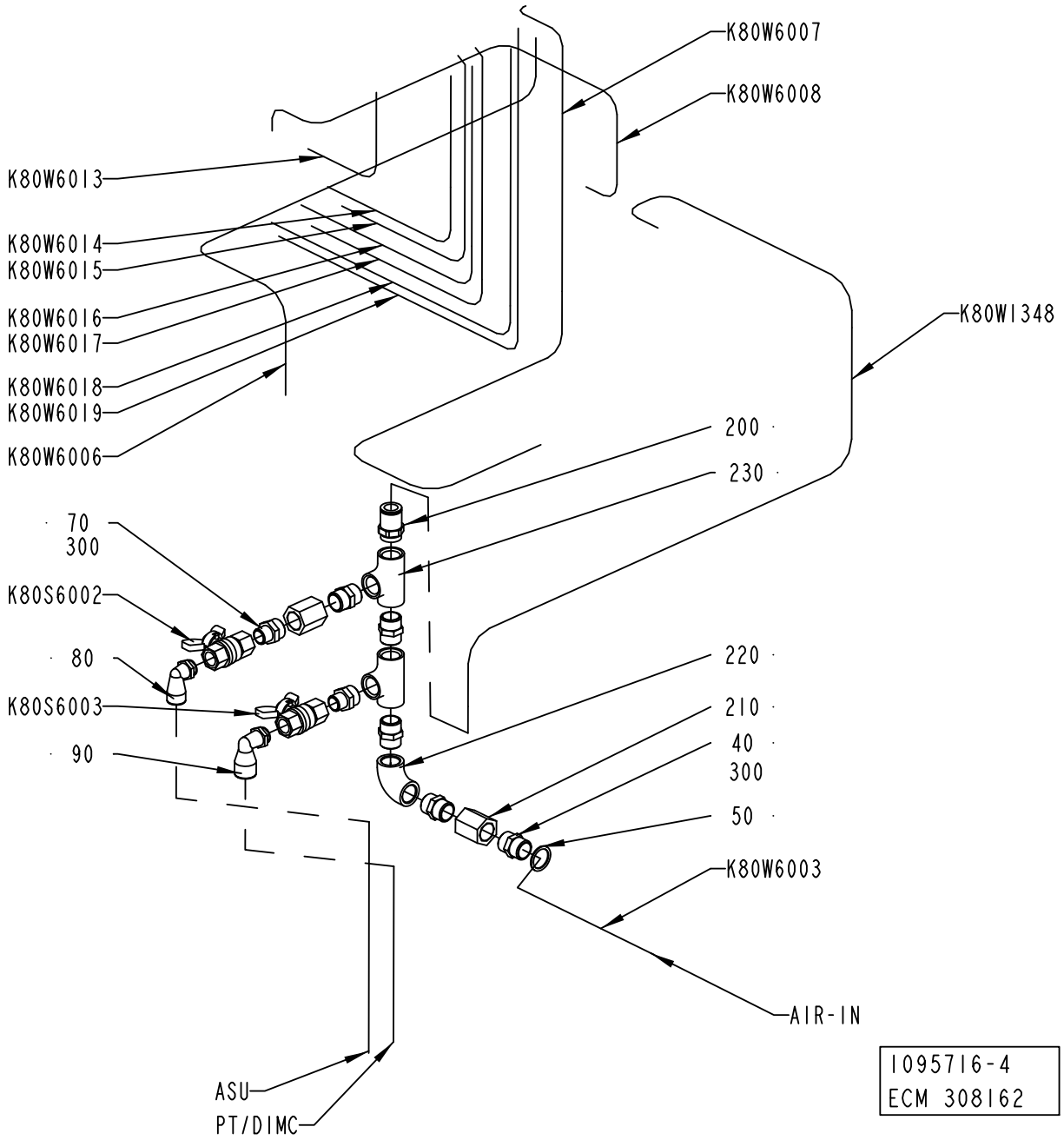
K80W6007
K80W6008
K80W6013
K80W6014
K80W6015
K80W6016
K80W6017
K80W6018
K80W6019
K80W6006
K80W1348
200
230
70
300
K80S6002
80
K80S6003
90
220
210
40
300
50
K80W6003
AIR-IN
ASU
PT/DIMC
1095716-4
ECM 308162

ECM: 485382 - 20110101
Group number: 1095716-0200
Assembly Drawing: 1095716-4_1_AA

Pos	Part No	UN	Qty	Description	Page No
-					
040	342700-0113		5	NIPPLES,HEXAGON,EXT.G-THREAD G1/2"-G1/2"	
050	315233-0113		1	WASHER CAPTIVE SEALING G1/2	
070	342700-0206		2	NIPPLES,HEXAGON,EXT.G-THREAD G1/2"-G3/8"	
080	350002-0014		1	PUSH-IN L-FITTING QSL-F-G3/8-12	
090	90458-2963		1	ELBOW PIPE JOINT, EXT.THREAD,D=14MM-G3/8	
200	90055-0097		1	STRAIGHT COUPLING	
210	90140-0079		2	SLEEVE, INT. THREAD, NO. 501-08	
220	90330-0020		1	ELBOW, 90 INT. THREAD, R-2221/2	
230	90330-0049		2	T-PIPE, INT. THREAD, R-221R1/2	
300	90144-0007		1	TAPE	
K80S6002	90187-0089		1	BALL VALVE G3/8, NPBR	
K80S6003	90187-0089		1	BALL VALVE G3/8, NPBR	
K80W1348	90166-0196	MM	1400	TUBE 14MM PA BLUE	
K80W6003	90166-0196	MM	1000	TUBE 14MM PA BLUE	
K80W6006	315300-0010	MM	1000	TUBE, 12 MM PE BLUE	
K80W6007	315300-0001	MM	1100	TUBE, 6 MM PE BLUE	
K80W6008	315300-0004	MM	1000	TUBE, 8 MM PE BLUE	
K80W6013	315300-0004	MM	1400	TUBE, 8 MM PE BLUE	
K80W6018	315300-0004	MM	1400	TUBE, 8 MM PE BLUE	
K80W6019	315300-0004	MM	1400	TUBE, 8 MM PE BLUE	
T40W6016	315300-0004	MM	1500	TUBE, 8 MM PE BLUE	
T40W6017	315300-0004	MM	1500	TUBE, 8 MM PE BLUE	
T50W6014	315300-0004	MM	1500	TUBE, 8 MM PE BLUE	
T50W6015	315300-0004	MM	1500	TUBE, 8 MM PE BLUE	

Pos	Part No	UN	Qty	Description	Page No

Machine Type | Group Description | Used-In | Group Number | Page No

Tetra Pak

SPC
Spare Parts Catalogue

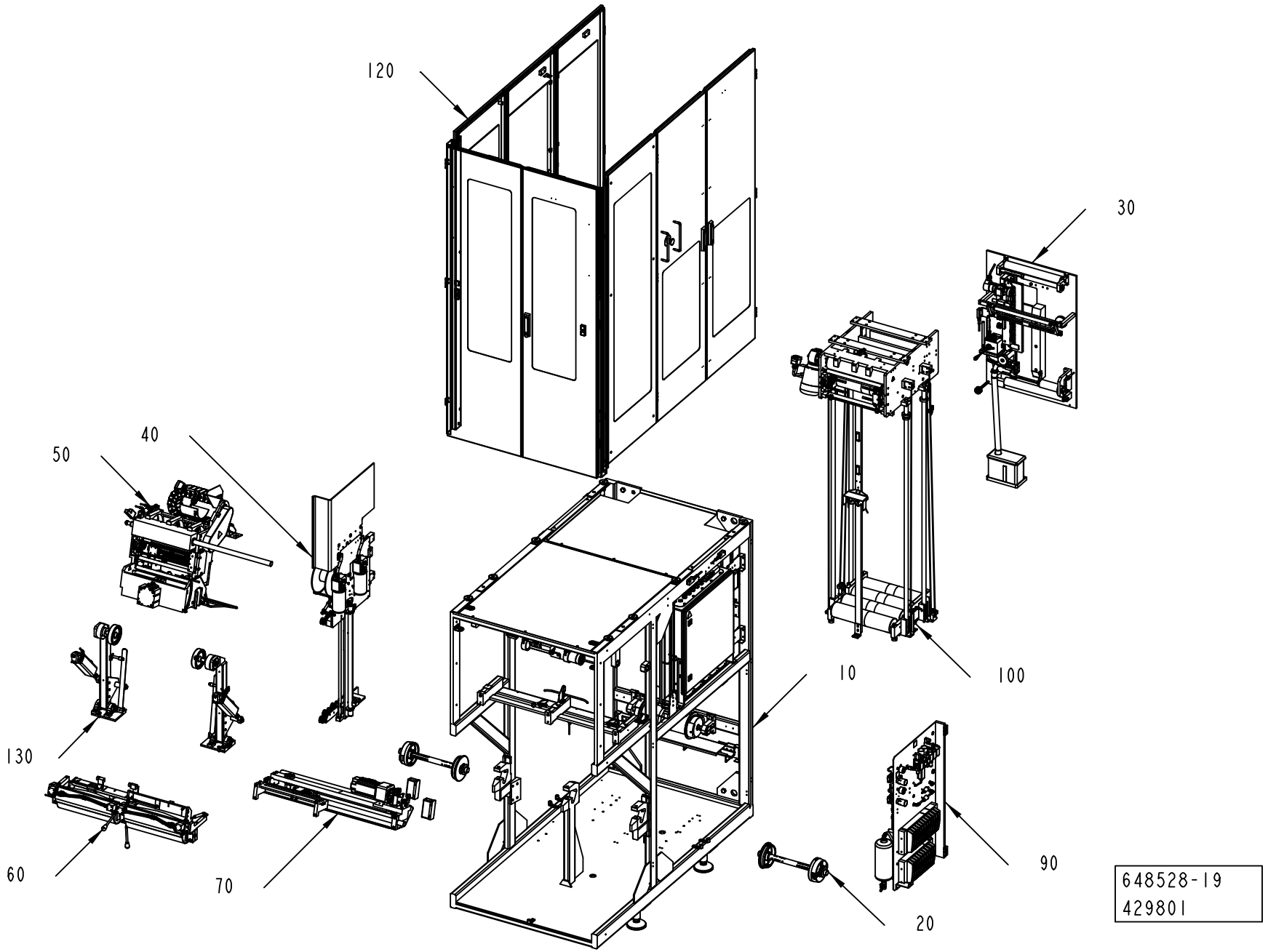
120
30
40
50
10
100
130
60
70
90
20
648528-19
429801

ECM: 448896 - 20101001
Group number: 648528-0400
Assembly Drawing: 648528-19_1_AB

Pos	Part No	UN	Qty	Description	Page No
-					
010	2741026-0200		1	MACHINE BODY	**7-5, 7-7, 7-9**
020	2731217-0200		2	PAPER REEL HOLDER	**7-21**
030	2765667-0200		1	STRIP APPLICATOR	**7-23**
040	2843884-0200		1	STRIP MAGAZINE	**7-51**
050	2737941-0200		1	SPLICING DEVICE	**7-69, 7-71**
060	2731220-0200		1	MATERIAL HOLDER	**7-97**
070	2751571-0300		1	SIDE FEEDER	**7-105**
090	2790920-0100		1	PNEUMATIC PANEL	**7-107**
100	3023632-0100		1	MAGAZINE	**7-119, 7-121, 7-123**
120	2746328-0200		1	COVERING PANEL	**7-155**
130	2731222-0100		1	BOBBIN BRAKE	**7-179**

Pos	Part No	UN	Qty	Description	Page No

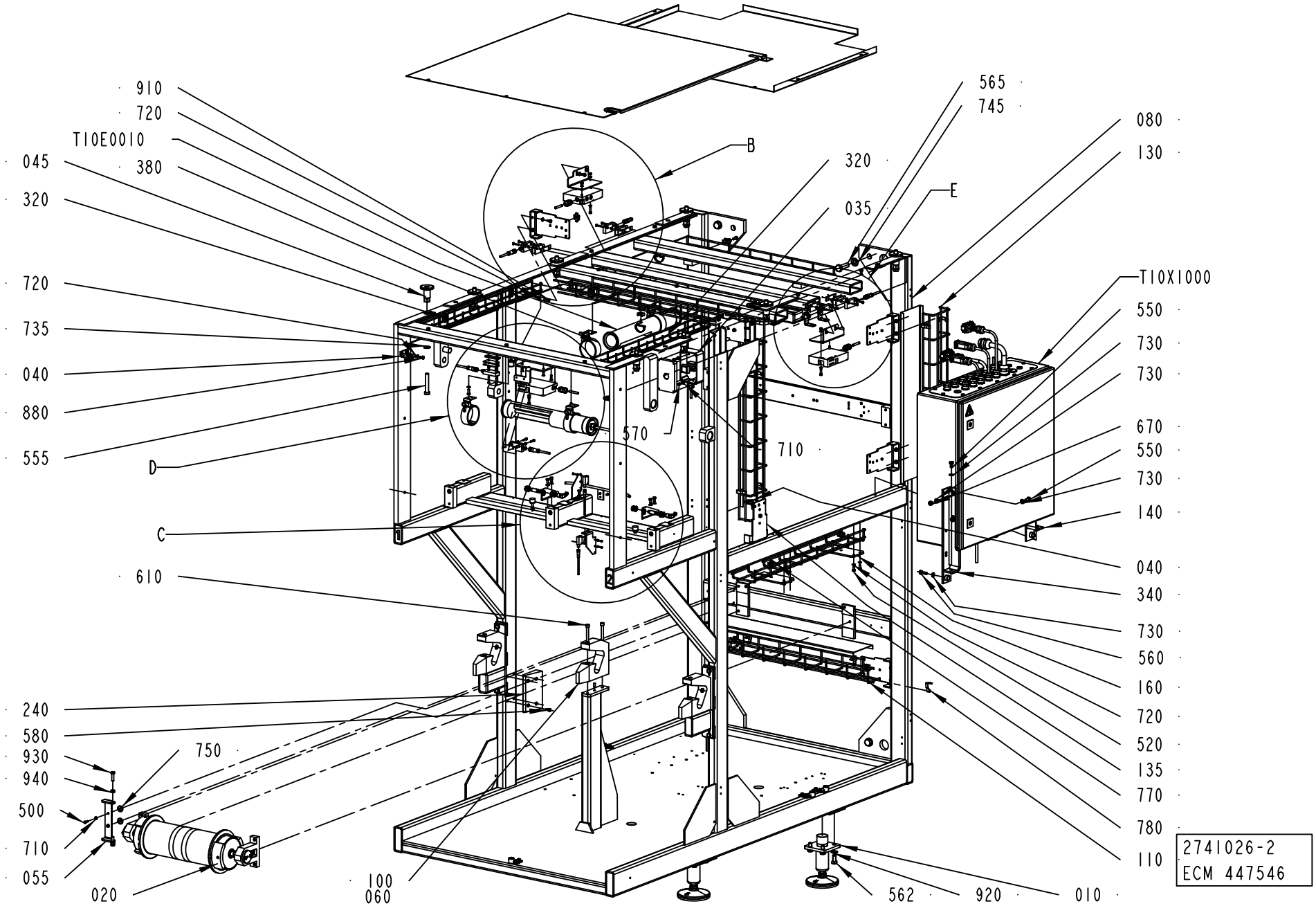
910
720
T10E0010
045
380
320
720
735
040
880
555
D
C
610
240
580
930
940
500
710
055
020
750
100
060
B
320
035
E
565
745
080
130
T10X1000
550
730
730
670
550
730
140
040
340
730
560
160
720
520
135
770
780
110
562
920
010
570
710
2741026-2
ECM 447546

ECM: 447549 - 20101001
Group number: 2741026-0200
Assembly Drawing: 2741026-2_1_AC

This list covers pages from 7-4 to 7-9

Pos	Part No	UN	Qty	Description	Page No
CE					
T10E0010	90164-0015		1	LIGHT FIXTURE, RL70CV-111 / 230V 50HZ	
	90297-0007		*1*	*FLUORESCENT TUBE, PLS 11*	
	92297-0301		*1*	*STARTER 4-65W S\10, E 8219023*	
T10E0011	90164-0015		1	LIGHT FIXTURE, RL70CV-111 / 230V 50HZ	
	90297-0007		*1*	*FLUORESCENT TUBE, PLS 11*	
	92297-0301		*1*	*STARTER 4-65W S\10, E 8219023*	
UL, CSA					
T10E0010	90459-3784		1	LIGHT FIXTURE, RL70CE-118	
	90459-3785		*1*	*FLUORESCENT TUBE, PL-L 18*	
T10E0011	90459-3784		1	LIGHT FIXTURE, RL70CE-118	
	90459-3785		*1*	*FLUORESCENT TUBE, PL-L 18*	
Common Parts					
010	90600-0725		4	FOOT 32000N, 90600-0725	
020	2771084-0100		1	BENDING ROLLER	**7-11**
035	2806687-0100		1	PUSH BUTTON	**7-13**
040	1558798-0000		3	BRACKET	
045	2599941-0000		8	SPACER	
050	2876447-0000		2	BRACKET	
055	2933050-0000		1	HANGER	
060	2940174-0000		3	SHIM	
080	2731209-0000		1	FRAME	
090	2927621-0000		2	BEARING BLOCK	
100	2927622-0000		1	BEARING BLOCK	
110	2731244-0000		2	CABLE DUCT	
120	2875286-0000		2	BRACKET	
130	2737917-0000		2	CABLE DUCT	
135	2741024-0000		7	SUPPORT	
140	2741047-0000		1	BRACKET	
160	2746315-0000		2	PLATE	
200	2746362-0000		2	BRACKET	
210	2927619-0000		1	COVER	
220	2927620-0000		1	COVER	
240	2755506-0000		2	PLATE	
250	2852897-0000		1	CABLE DUCT	
260	2996893-0000		3	COVER	
270	3061063-0000		1	PLATE	
280	2776093-0000		4	BRACKET	
300	1538868-0000		6	BRACKET	
320	2790944-0000		2	CABLE DUCT	
325	2790934-0000		5	WASHER	
330	2806665-0000		1	PLATE	
340	2819396-0000		1	BRACKET	
350	2859492-0000		1	SUPPORT	
360	2927616-0000		1	COVER	
365	2927623-0000		1	COVER	
370	3007681-0000		1	HOSE INSTALLATION PNEUMATIC	
375	3044458-0000		1	CABLE HARNESS	
380	90164-0303		4	LIGHT FIXTURE, BRACKET 70MM	
420	90458-0306		3	CABLE GLAND, M16X1,5, NO.5311 1010	
430	90458-0410		1	GLAND W/O INSERT M40 NORMAL	
435	90459-2726		2	RUBBER BUFFER, 20-00484-01	
440	90459-7218		1	HOOD 24 B TOP ENTRY, 19 30 024 1422	
450	90459-7226		1	REDUCER, M40/M32	
470	311103-0351		7	PARALLEL PIN ISO 2338 6M6X16 A1	
500	312105-0329		20	SCREW M6S ISO 4017 M5X16 A480	
520	312105-0366		36	SCREW M6S ISO 4017 M6X12 A480	
530	312105-0368		4	SCREW M6S ISO 4017 M6X16 A480	
550	312105-0449		6	SCREW M6S ISO 4017 M8X16 A480	
555	312105-0547		8	SCREW M6S ISO 4014 M12X75 A480	
560	312105-0453		6	SCREW M6S ISO 4017 M8X25 A480	
562	312105-0534		16	SCREW M6S ISO 4017 M12X25 A480	
565	312105-0630		4	SCREW M6S ISO 4017 M16X50 A480	
570	312115-0329		5	SCREW ISO4762 M5X16 A4 80	
575	312115-0331		4	SCREW ISO4762 M5X20 A4 80	
580	312115-0366		8	SCREW ISO4762 M6X12 A4 80	
610	312115-0463		4	SCREW ISO4762 M8X60 A4 80	
620	312125-0289		2	SCREW ISO 1207 M4X10 A4	
650	90600-2564		4	SCREW FLATHEAD SNAKE EYE SPANNER, M5X20	
660	312607-0316		3	HEXAGON NUT, EN 24032 M6M M6 A480	
670	312605-0318		4	HEXAGON NUT, M6M M8 A280	
690	312607-0314		4	HEXAGON NUT, EN 24032 M6M M5 A480	
700	312115-0453		2	SCREW ISO4762 M8X25 A4 80	
705	315105-0136		6	WASHER BRB 4,3X8 RFR	
710	315105-0146		18	WASHER BRB 5,3X10 RFR	
720	315105-0153		56	WASHER BRB 6,4X12 RFR	
730	315105-0165		17	WASHER BRB 8,4X16 RFR	
735	315105-0179		8	WASHER BRB 13,5X24 RFR	
740	315115-0153		20	WASHER PLAIN, TBRB 6,4/12 H=3	
745	315105-0186		4	WASHER BRB 17X30 RFR	
750	315125-0153		2	WASHER TBRSB 6,4X22X4 A4	
755	90459-4164		2	SAFETY SCREW SM4X20, 20-053-42	
760	90459-4165		10	SAFETY SCREW SM4X25, 20-053-43	
770	90600-1448		16	CLAMP, 6016 82 0	

Machine Type | Group Description | Used-In | Group Number | Page No

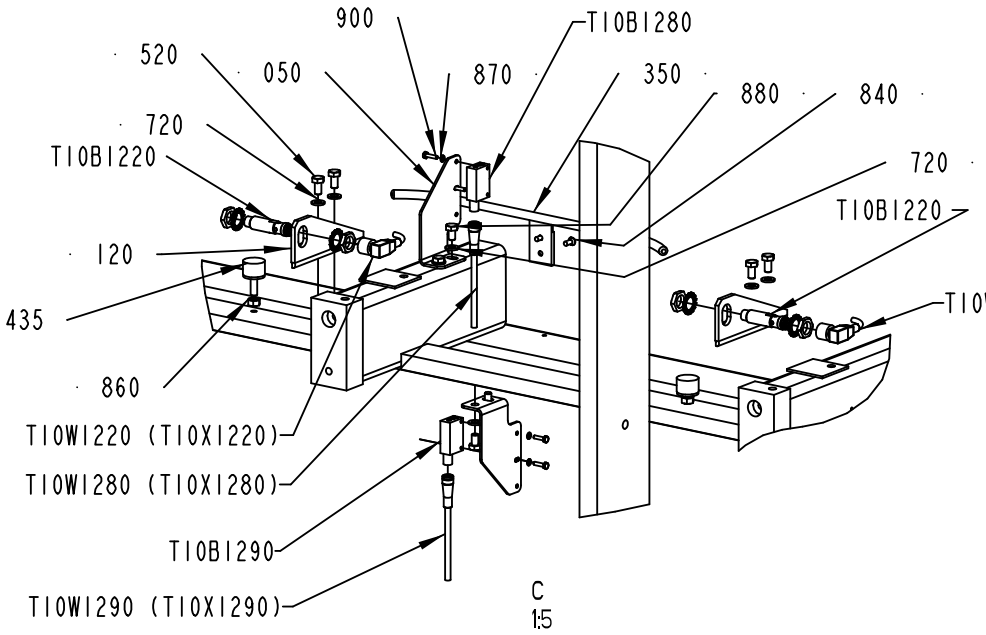

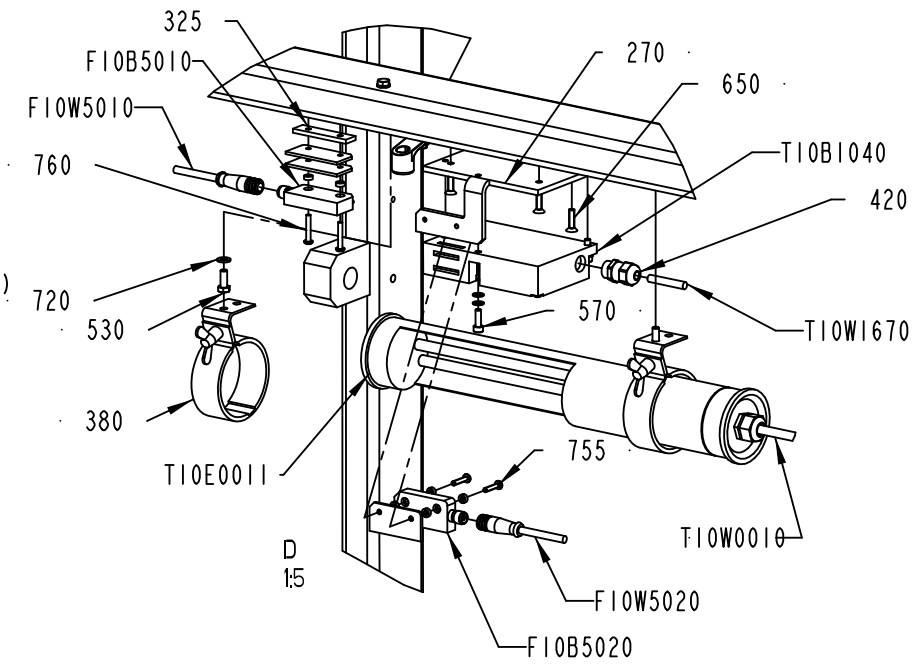

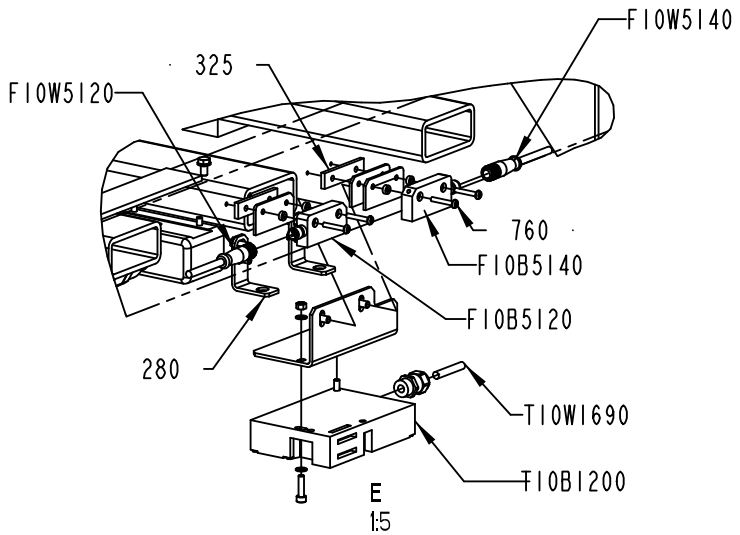

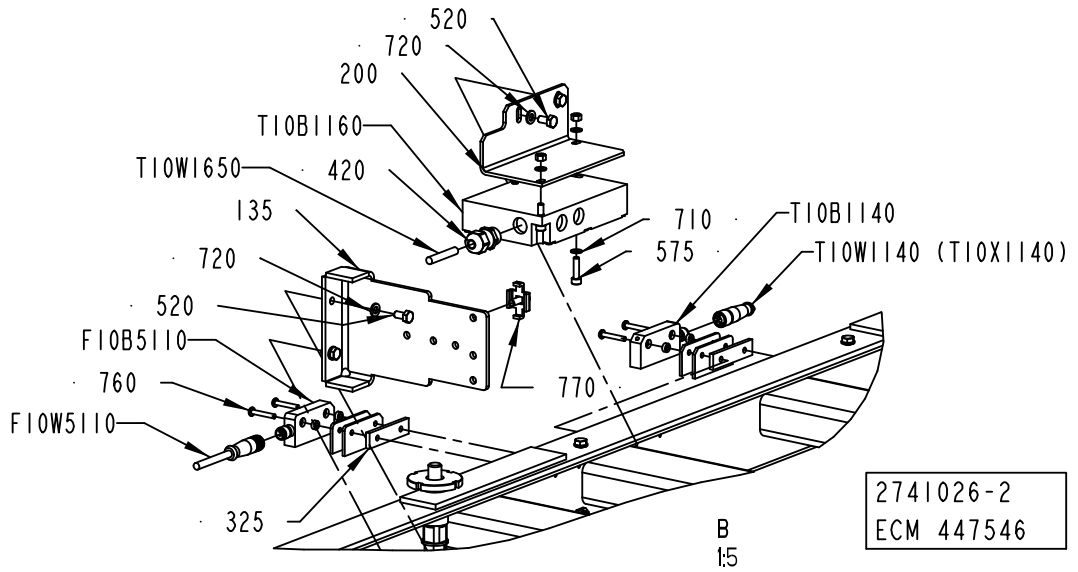

2741026-2
ECM 447546

Pos	Part No	UN	Qty	Description	Page No
Common Parts (Cont'd)					
780	90600-1954		12	CABLE DUCT, CABLE CLIP, 1149379	
840	312145-0289		2	SCREW ISO 2009 MFS M4X10 A4	
860	312605-0316		2	HEXAGON NUT, M6M M6 A280	
870	315105-0124		4	WASHER BRB 3,2X6 RFR	
880	312105-0364		10	SCREW M6S ISO 4017 M6X10 A480	
900	90287-0175		4	SCREW M6S M3X12 A480	
910	312115-0368		16	SCREW ISO4762 M6X16 A4 80	
920	315105-0178		16	WASHER BRB 13X24 RFR	
930	312101-0455		2	SCREW M6S M8X30 FZB	
940	312607-0318		2	HEXAGON NUT, EN 24032 M6M M8 A480	
950	312115-0366		2	SCREW ISO4762 M6X12 A4 80	
955	353249-0060		1	INSERT, MULTI HOLE, E155M2X13	
960	90143-0060	MM	300	EDGE STRIP 9,5X6,3MM BLACK PVC	
970	352113-0102		2	CABLE TIE, BLACK 188X4,8 MM	
980	352113-0203		2	ANCHOR PLATES FOR STRIPS, TYPE TM3S8-M0	
990	312115-0295		6	SCREW ISO4762 M4X20 A4 80	
F10B5010	90459-4142		1	SENSOR, ADAM M12 20-051-00	
F10B5020	90459-4142		1	SENSOR, ADAM M12 20-051-00	
F10B5110	90459-4142		1	SENSOR, ADAM M12 20-051-00	
F10B5120	90459-4142		1	SENSOR, ADAM M12 20-051-00	
F10B5140	90459-4142		1	SENSOR, ADAM M12 20-051-00	
F10K5030	90459-5627		1	CONNECTION TINA 1A, 20-054-00	
F10K5040	90459-5627		1	CONNECTION TINA 1A, 20-054-00	
F10W0520	90220-0046	M	12	SCR. CABLE 16X0,34MM2 GREEN/YELLOW	
F10W0521	90220-0046	M	11	SCR. CABLE 16X0,34MM2 GREEN/YELLOW	
F10W5010	90459-4876		1	FOCUS JUMPER CABLE M12 5P 3M, 20-056-21	
F10W5020	90459-4876		1	FOCUS JUMPER CABLE M12 5P 3M, 20-056-21	
F10W5110	90459-4876		1	FOCUS JUMPER CABLE M12 5P 3M, 20-056-21	
F10W5120	90459-7095		1	FOCUS JUMPER CABLE M12 5P 1M, 20-056-20	
F10W5140	90459-4876		1	FOCUS JUMPER CABLE M12 5P 3M, 20-056-21	
F10X0520	90110-0056		1	MALE INSERT HAN 24 E 09 33 024 2601	
F10X5000	90602-4058		1	CONNECTION BOX TINA 4A, 20-054-03	
F10X5100	90602-4058		1	CONNECTION BOX TINA 4A, 20-054-03	
T10B1140	90459-4142		1	SENSOR, ADAM M12 20-051-00	
T10B1160	90600-1056		1	KEY SAF.SW. AZM 161SK-12/12RKA 024	
T10B1200	90600-1056		1	KEY SAF.SW. AZM 161SK-12/12RKA 024	
T10B1220	90600-0460		1	INDUCTIVE SWITCH, E2A-M12KN05-M1-B1-TP	
T10B1230	90600-0460		1	INDUCTIVE SWITCH, E2A-M12KN05-M1-B1-TP	
T10B1280	90459-7421		1	PH.CELL WL100-P3439	
T10B1290	90459-7421		1	PH.CELL WL100-P3439	
T10W0010	351150-0412	MM	8000	CABLE OLFLEX 3X1,5 MM2 LIGHT/GREY	
T10W0011	351150-0412	MM	8000	CABLE OLFLEX 3X1,5 MM2 LIGHT/GREY	
T10W1140	90459-4252		1	CABLE M12-C101, 20-056-10	
T10W1220	90458-1076		1	L-SHAPED CONNECTOR CABLE Y92EM12PVC4A5ML	
T10W1230	90458-1076		1	L-SHAPED CONNECTOR CABLE Y92EM12PVC4A5ML	
T10W1280	90458-0165		1	CABLE, SICK DOL-0803-G05M	
T10W1290	90458-0165		1	CABLE, SICK DOL-0803-G05M	
T10W1650	351150-0403	MM	5500	CABLE OLFLEX 3X0,75 MM2 LIGHT/GREY	
T10W1670	351150-0403	MM	5500	CABLE OLFLEX 3X0,75 MM2 LIGHT/GREY	
T10W1690	351150-0403	MM	2000	CABLE OLFLEX 3X0,75 MM2 LIGHT/GREY	
T10X1000	2806682-0200		1	CONNECTION BOX	**7-15**

Machine Type | Group Description | Used-In | Group Number | Page No

MACHINE BODY

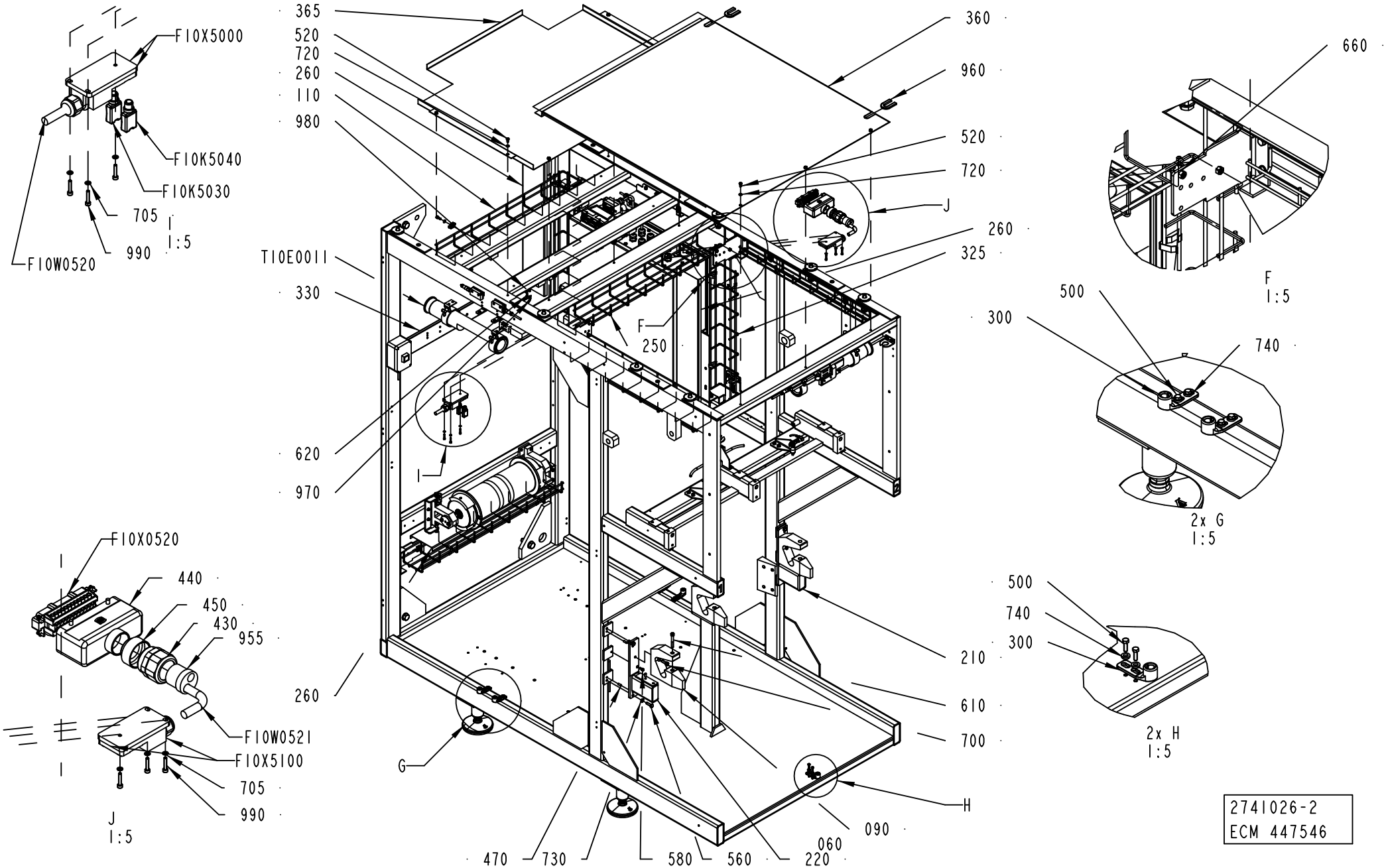

2741026-2
ECM 447546

Pos	Part No	UN	Qty	Description	Page No

SEE PREVIOUS LISTS PAGES: 7-5, 7-7.

Pos	Part No	UN	Qty	Description	Page No

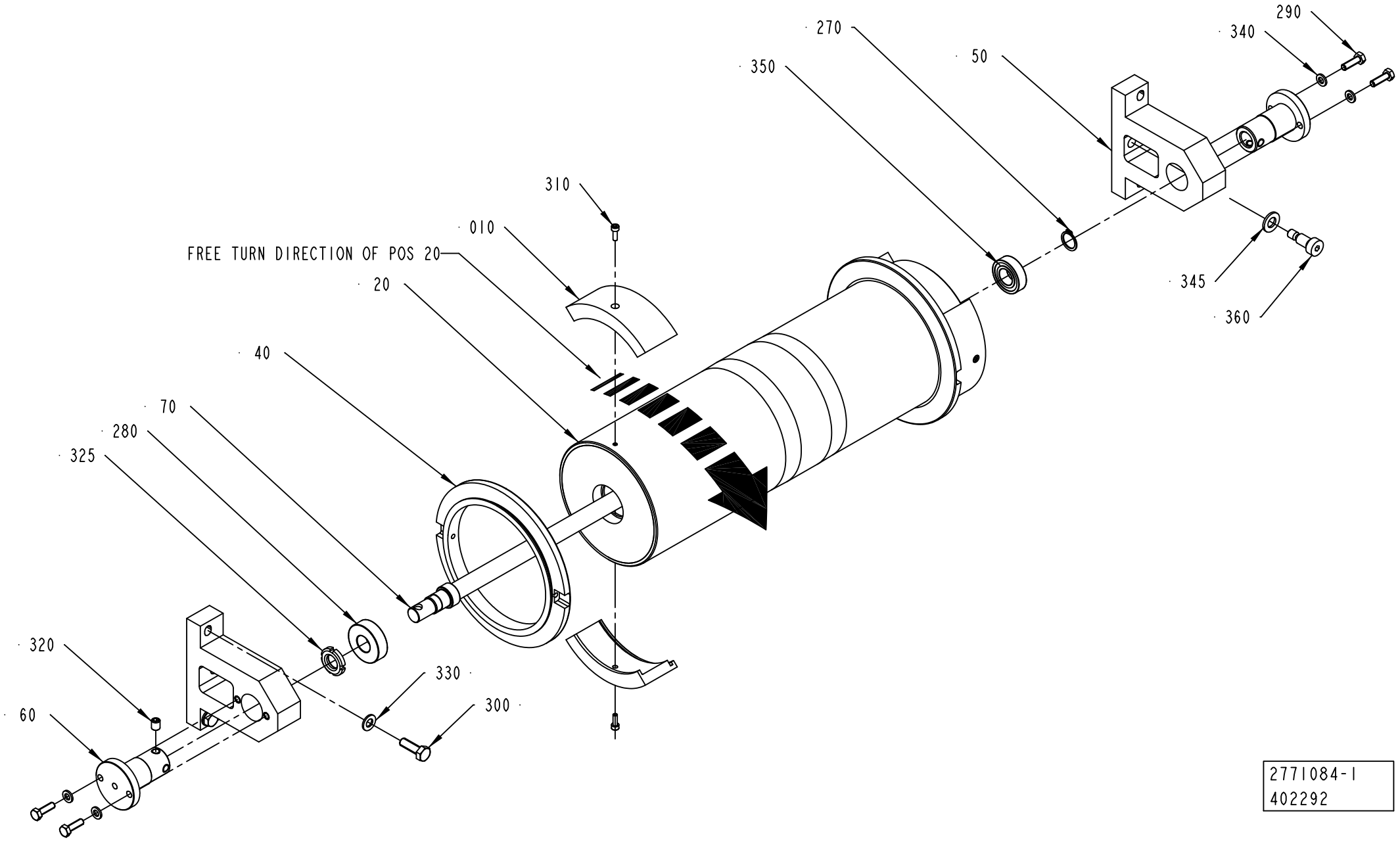
290
340
270
50
350
310
010
FREE TURN DIRECTION OF POS 20
20
345
360
40
70
280
325
320
330
300
60
2771084-1
402292

ECM: 415439 - 20100101
Group number: 2771084-0100
Assembly Drawing: 2771084-1_1_AD

Pos	Part No	UN	Qty	Description	Page No
TBA 0125S					
010	2523766-0011		4	BRACKET	
TBA 0200S					
010	2523766-0010		4	BRACKET	
TBA 0200B, TBA 0250B					
010	2523766-0007		4	BRACKET	
TBA 0200M, TBA 0250S					
010	2523766-0009		4	BRACKET	
TBA 1000SQ					
010	2523766-0003		4	BRACKET	
TBA 1000B					
010	2523766-0001		4	BRACKET	
TBA 1000S					
010	2523766-0002		4	BRACKET	
Common Parts					
020	3044656-0000		1	BENDING ROLLER	
040	2890424-0000		2	FLANGE	
050	3035351-0000		2	BRACKET	
060	2818674-0000		2	STOPPER	
070	3035352-0000		1	SHAFT	
270	90141-0017		1	RETAINING RING FOR SHAFT DIN 471 17 SS	
280	90348-0029		1	FREE-WHEEL COUPLING, 17X40 MM	
290	312105-0370		4	SCREW M6S ISO 4017 M6X20 A480	
300	312105-0453		2	SCREW M6S ISO 4017 M8X25 A480	
310	312115-0291		4	SCREW ISO4762 M4X12 A4 80	
320	312318-0445		2	NEW ISO4029 M8X10 A4	
325	312805-0103		1	NUT ROUND WITH SLOTS M17X1 FE	
330	315105-0165		2	WASHER BRB 8,4X16 RFR	
340	315106-0153		4	WASHER ISO 7089-6-200 HV A4	
345	315106-0173		1	WASHER ISO 7089-10-200 HV A4	
350	321308-0203		1	BALL BEARING 17/35X10	
360	312180-0489		1	SCREW ISO7379 H10X16	

Pos	Part No	UN	Qty	Description	Page No

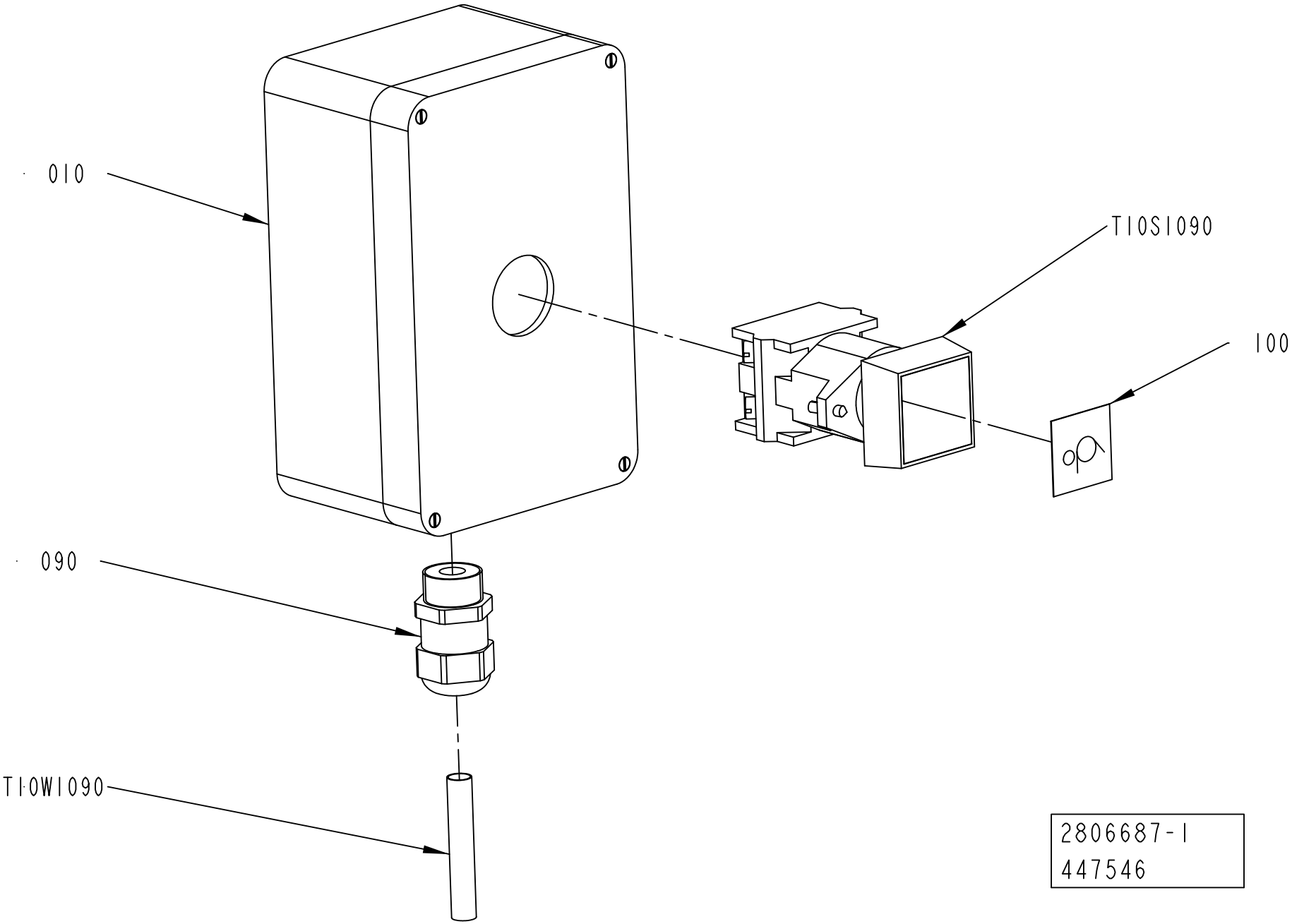
010
T10S1090
100
090
T10W1090
2806687-1
447546

ECM: 448376 - 20101001
Group number: 2806687-0100
Assembly Drawing: 2806687-1_1_AC

Pos	Part No	UN	Qty	Description	Page No
-					
010	2806686-0000		1	PUSH BUTTON	
090	90458-0306		1	CABLE GLAND, M16X1,5, NO.5311 1010	
100	90600-3597		1	SIGN, PAPER MAGAZINE PRESSURE ROLLER	
T10S1090	90602-9178		1	PUSH BUTTON, WHITE	
T10W1090	351150-0403	MM	5000	CABLE OLFLEX 3X0,75 MM2 LIGHT/GREY	

Pos	Part No	UN	Qty	Description	Page No

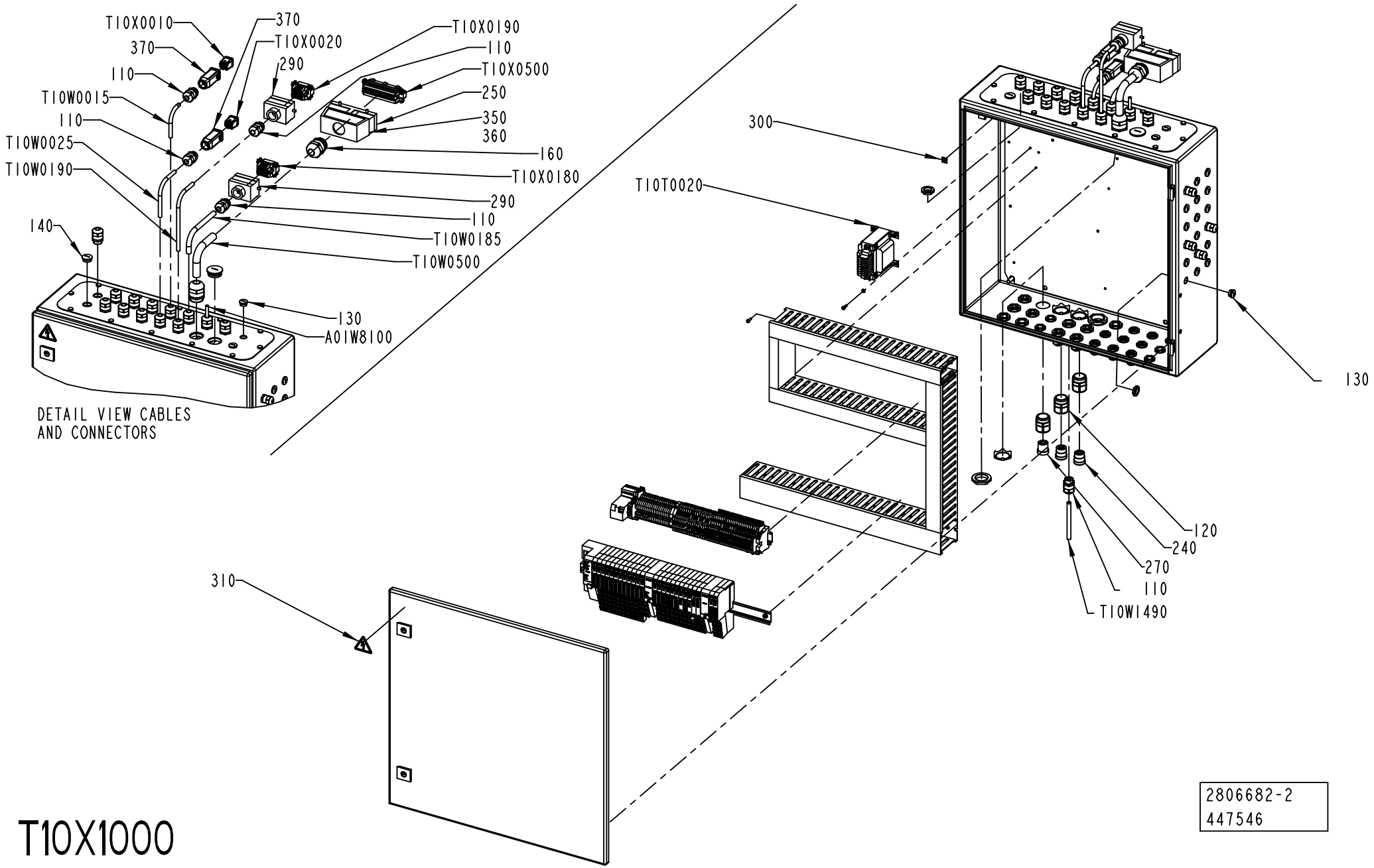
T10X0010
370
370
T10X0020
110
290
T10W0015
110
T10W0025
T10W0190
140
T10X0190
110
T10X0500
250
350
360
160
T10X0180
290
110
T10W0185
T10W0500
130
A01W8100
DETAIL VIEW CABLES
AND CONNECTORS
300
T10T0020
130
120
240
270
110
T10W1490
310
2806682-2
447546

T10X1000

ECM: 451055 - 20101001
Group number: 2806682-0200
Assembly Drawing: 2806682-2_1_AB

Pos	Part No	UN	Qty	Description	Page No
-					
010	2851534-0100		1	PLINTH	7-17
020	2851535-0100		1	TERMINAL BLOCK	7-19
030	2892690-0000		1	BOX	
040	2851538-0000		1	CABLE DUCT	
050	2851539-0000		1	CABLE DUCT	
060	2851540-0000		1	CABLE DUCT	
070	2851541-0000		1	CABLE DUCT	
080	2855891-0000		1	CABLE DUCT	
100	90458-0306		12	CABLE GLAND, M16X1,5, NO.5311 1010	
110	90458-0307		24	CABLE GLAND, M20X1,5, NO.5311 1020	
120	90458-0408		3	GLAND W/O INSERT M32 NORMAL	
130	90458-1307		21	BLIND PLUG CIRCULAR, M16X1,5 514GFK/216	
140	90458-1308		4	BLIND PLUG CIRCULAR, M20X1,5 514GFK/220	
150	90458-1310		2	BLIND PLUG CIRCULAR, M32X1,5 514GFK/232	
160	90458-0309		2	CABLE GLAND, M32X1,5, NO.5311 1040	
170	90458-0463		3	GLAND, LOCK NUT, M32X1,5	
180	90287-0124		14	SCREW PAN HEAD MSCS M4X12 NYLON	
190	90458-0322		32	NUT, M16X1,5	
200	90458-0323		24	NUT, M20X1,5	
210	90458-0325		3	NUT, M32X1,5	
220	312115-0291		4	SCREW ISO4762 M4X12 A4 80	
230	315105-0136		4	WASHER BRB 4,3X8 RFR	
240	90012-0125		2	GLAND FITTING	
250	90459-6636		1	HOOD 24 B TOP ENTRY, 19 30 024 0427	
270	353249-0051		1	INSERT, MULTI HOLE, E154M4X6	
290	90459-6632		2	HOOD 6 B TOP ENTRY, 19 30 006 1440	
300	90194-0152		1	SIGN, EARTH	
310	359705-0015		1	WARNING SIGN ISO, RISK OF ELECTRIC SHOCK	
350	359005-0010		7	MARKING LABEL KIT 0 - 9, 04.841.2150.0	
360	359005-0050		1	MARKING LABEL KIT X, 04.841.4550.0	
370	90459-3080		2	HOOD HAN-BRID 3A 19 20 003 1443	
A01W8100	90459-2530	M	10	DEVICENET CABLE THIN	
T10T0020	90458-0258		1	TRANSFORMER, 1-PH 100VA SEC 8,3A	
T10W0015	351150-0412	M	9	CABLE OLFLEX 3X1,5 MM2 LIGHT/GREY	
T10W0025	351150-0412	M	9	CABLE OLFLEX 3X1,5 MM2 LIGHT/GREY	
T10W0185	90220-0104	M	10	SCR. CABLE 4X1,5MM2	
T10W0190	351150-0412	M	9	CABLE OLFLEX 3X1,5 MM2 LIGHT/GREY	
T10W0500	351150-0425	M	8.5	CABLE OLFLEX 25X0,75 MM2 LIGHT/GREY	
T10W1490	351150-0406	M	6.5	CABLE OLFLEX 7X0,75 MM2 LIGHT/GREY	
T10X0010	90459-6821		1	MALE INSERT HAN 4A, 09 20 004 2611	
T10X0020	90459-6821		1	MALE INSERT HAN 4A, 09 20 004 2611	
T10X0180	90110-0052		1	MALE INSERT HAN 6E 09 33 006 2601	
T10X0190	90110-0052		1	MALE INSERT HAN 6E 09 33 006 2601	
T10X0500	90110-0056		1	MALE INSERT HAN 24 E 09 33 024 2601	

Machine Type | Group Description | Used-In | Group Number | Page No

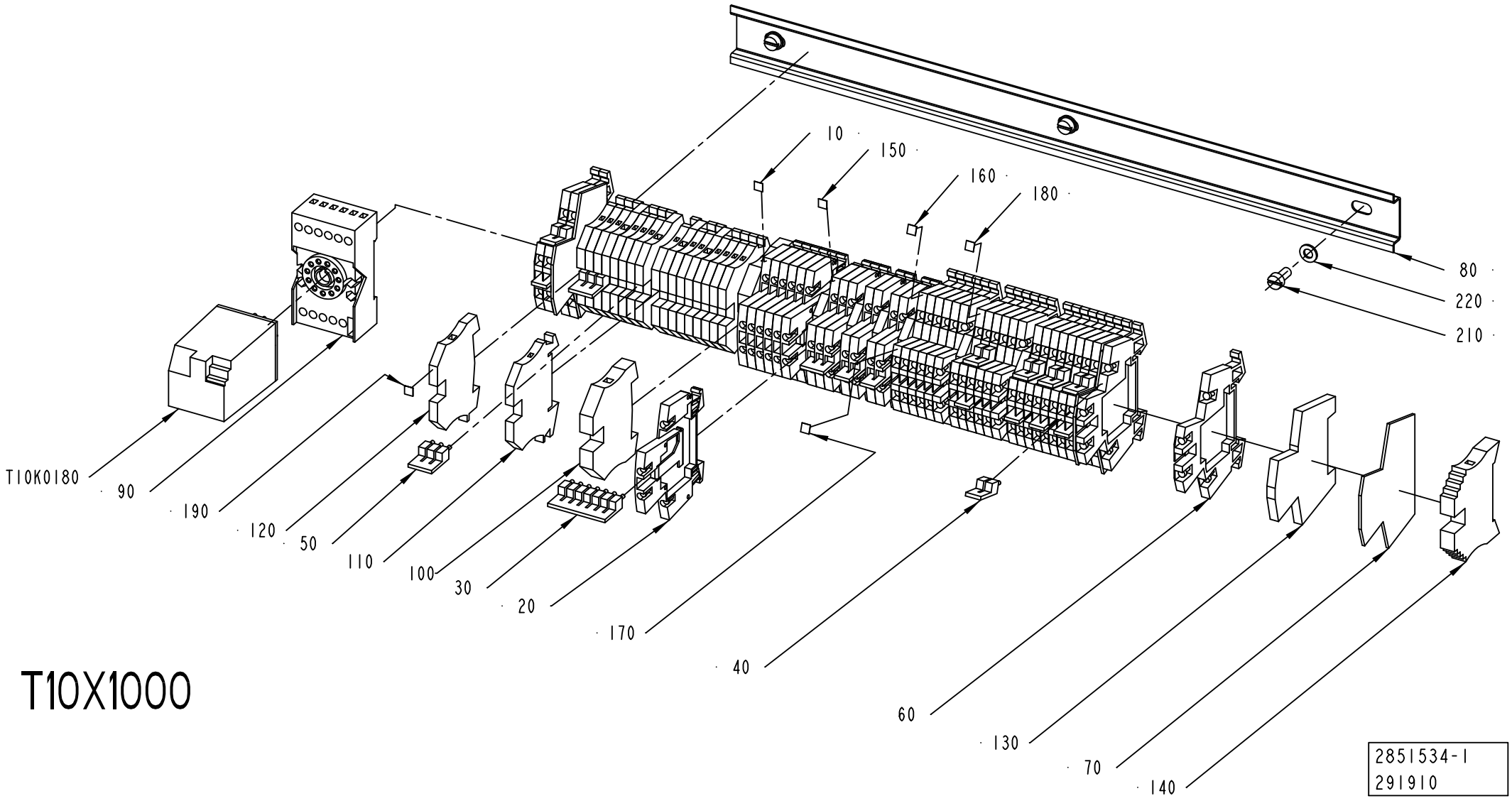
10
150
160
180
80
220
210
T10K0180
90
190
120
50
110
100
30
20
170
40
60
130
70
140
T10X1000
2851534-1
291910

ECM: 301419 - 20070508
Group number: 2851534-0100
Assembly Drawing: 2851534-1_1_AA

Pos	Part No	UN	Qty	Description	Page No
-					
010	359011-0807		1	MARKING, DEK 5 FW 1-50	
020	90457-0049		14	TERMINAL BLOCK WDK 2.5V, 102230	
030	353034-0030		1	BRIDGE CONNECTOR WQV 2,5/10, 10544.6	
040	353034-0030		13	BRIDGE CONNECTOR WQV 2,5/10, 10544.6	
050	353034-0030		3	BRIDGE CONNECTOR WQV 2,5/10, 10544.6	
060	90077-0113		24	FEED THROUGH TERMINAL, 10-00102150-1	
070	90077-0114		3	END PLATE, WAP/WDK 2,5	
080	2855890-0000		1	RAIL	
090	90129-0006		1	BASE, S3-B	
100	353024-0206		2	EARTH TERMINAL, 1010.2	
110	353021-0212		20	FEED THROUGH TERMINAL, 10200.0	
120	353024-0204		5	EARTH TERMINAL WPE 2,5	
130	353024-0212		1	EARTH TERMINAL, 10363.0	
140	353031-0203		1	END SUPPORT, WEW 35/2	
150	359011-0808		1	MARKING, DEK 5FW 51-100	
160	359011-0810		1	MARKING, DEK 5 FW 151-200	
170	359011-0811		1	MARKING, DEK 5 FW 201-250	
180	359011-0812		1	MARKING, DEK 5FW 251-300	
190	359011-0819		1	MARKING, EARTH, DEK 5 GW ERDE I.KR.	
210	312125-0325		3	SCREW ISO 1207 M5X10 A4	
220	315105-0146		3	WASHER BRB 5,3X10 RFR	
T10K0180	90119-0056		1	RELAY, AUXILIARY MK3P5-S 24VDC	

Pos	Part No	UN	Qty	Description	Page No

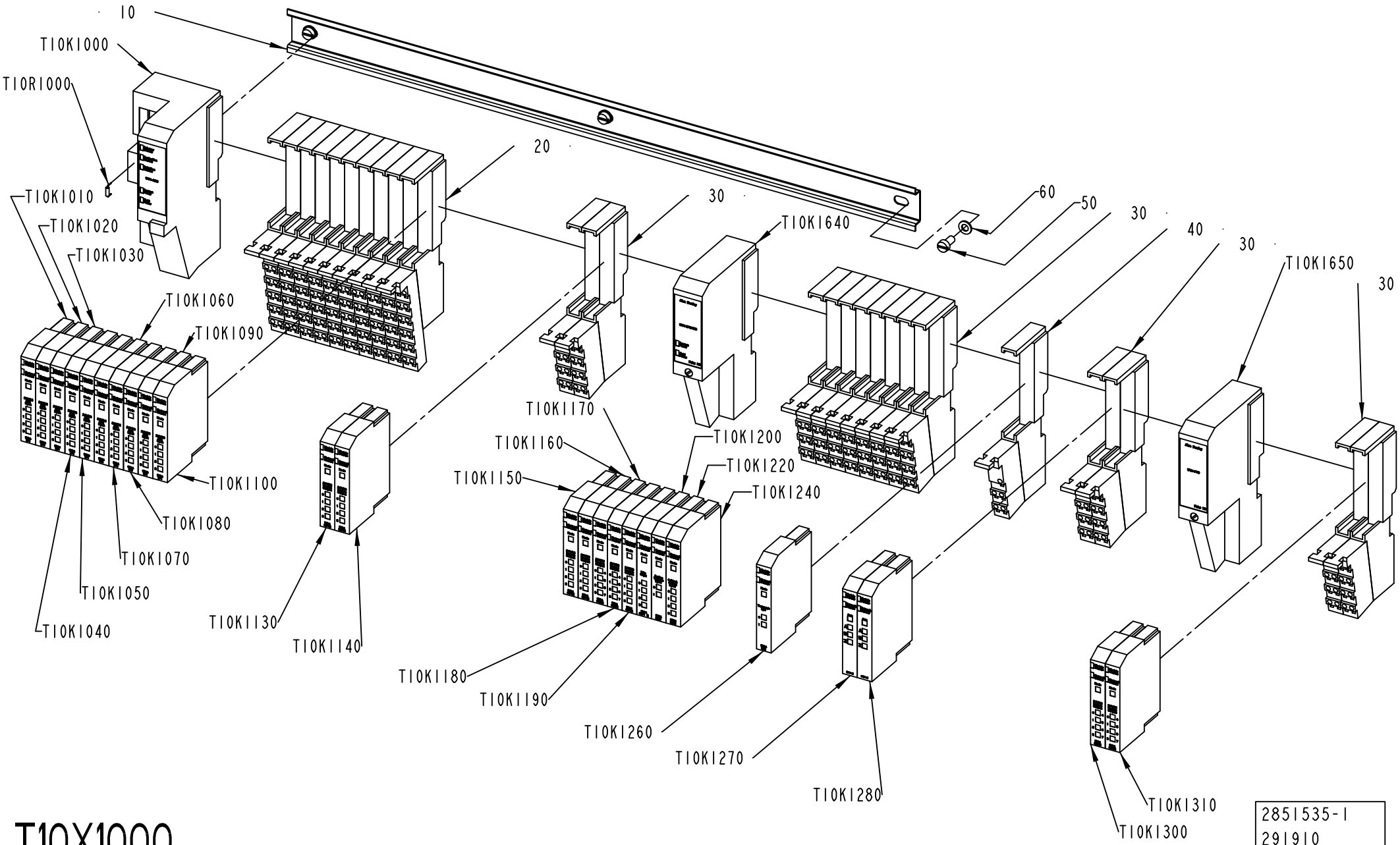
10
T10K1000
T10R1000
T10K1010
T10K1020
T10K1030
T10K1060
T10K1090
T10K1100
T10K1080
T10K1070
T10K1050
T10K1040
20
T10K1130
T10K1140
30
T10K1170
T10K1160
T10K1150
T10K1180
T10K1190
T10K1640
T10K1200
T10K1220
T10K1240
T10K1260
T10K1270
T10K1280
60
50
30
40
30
T10K1650
30
T10K1310
T10K1300
T10X1000
2851535-1
291910

ECM: 301420 - 20070508
Group number: 2851535-0100
Assembly Drawing: 2851535-1_1_AA

Pos	Part No	UN	Qty	Description	Page No
-					
010	2851537-0000		1	RAIL	
020	90459-2527		10	REMOTE I/O BASE MODULE 12 POINTS	
030	90459-2526		14	REMOTE I/O BASE MODULE 8 POINTS, 1734-TB	
040	90459-2528		1	REMOTE I/O BASE MODULE FOR THERMOCOUPLE	
050	312125-0325		3	SCREW ISO 1207 M5X10 A4	
060	315105-0146		3	WASHER BRB 5,3X10 RFR	
T10K1000	90459-2494		1	DEVICENET I/O ADAPTER MODULE, 1734-ADN	
T10K1010	90459-2503		1	DIGITAL INPUT 4 PTS SINK, 1734-IB4	
T10K1020	90459-2503		1	DIGITAL INPUT 4 PTS SINK, 1734-IB4	
T10K1030	90459-2503		1	DIGITAL INPUT 4 PTS SINK, 1734-IB4	
T10K1040	90459-2503		1	DIGITAL INPUT 4 PTS SINK, 1734-IB4	
T10K1050	90459-2503		1	DIGITAL INPUT 4 PTS SINK, 1734-IB4	
T10K1060	90459-2503		1	DIGITAL INPUT 4 PTS SINK, 1734-IB4	
T10K1070	90459-2503		1	DIGITAL INPUT 4 PTS SINK, 1734-IB4	
T10K1080	90459-2503		1	DIGITAL INPUT 4 PTS SINK, 1734-IB4	
T10K1090	90459-2503		1	DIGITAL INPUT 4 PTS SINK, 1734-IB4	
T10K1100	90459-2503		1	DIGITAL INPUT 4 PTS SINK, 1734-IB4	
T10K1130	90459-2505		1	DIGITAL OUTPUT 4 PTS, 1734-OB4E	
T10K1140	90459-2505		1	DIGITAL OUTPUT 4 PTS, 1734-OB4E	
T10K1150	90459-2505		1	DIGITAL OUTPUT 4 PTS, 1734-OB4E	
T10K1160	90459-2505		1	DIGITAL OUTPUT 4 PTS, 1734-OB4E	
T10K1170	90459-6560		1	DIGITAL OUTPUT 8 PTS, 1734-OB8E/C	
T10K1180	90459-6560		1	DIGITAL OUTPUT 8 PTS, 1734-OB8E/C	
T10K1190	90459-2505		1	DIGITAL OUTPUT 4 PTS, 1734-OB4E	
T10K1200	90459-5261		1	REMOTE I/O, RELAY OUTP. 4 PTS,1734-OW4/C	
T10K1220	90459-2508		1	REMOTE I/O ANALOG INPUT VOLTAGE 2 PTS	
T10K1240	90459-2509		1	REMOTE I/O ANALOG INPUT CURRENT 2 PTS	
T10K1260	90459-2512		1	REMOTE I/O THERMOCOUPLE INPUT 2 PTS	
T10K1270	90459-6731		1	ENCODER/COUNTER MODULE, 1734-IK SERIES C	
T10K1280	90459-6731		1	ENCODER/COUNTER MODULE, 1734-IK SERIES C	
T10K1300	90459-6560		1	DIGITAL OUTPUT 8 PTS, 1734-OB8E/C	
T10K1310	90459-6560		1	DIGITAL OUTPUT 8 PTS, 1734-OB8E/C	
T10K1640	90459-2500		1	EXPANSION POWER SUPPLY MODULE	
T10K1650	90459-2501		1	FIELD POWER DISTRIBUTOR, 1734-FPD	
T10R1000	90459-2523		1	OPEN STYLE TERMINATOR, 1485A-C2	

Pos	Part No	UN	Qty	Description	Page No

Machine Type | Group Description | Used-In | Group Number | Page No

PAPER REEL HOLDER

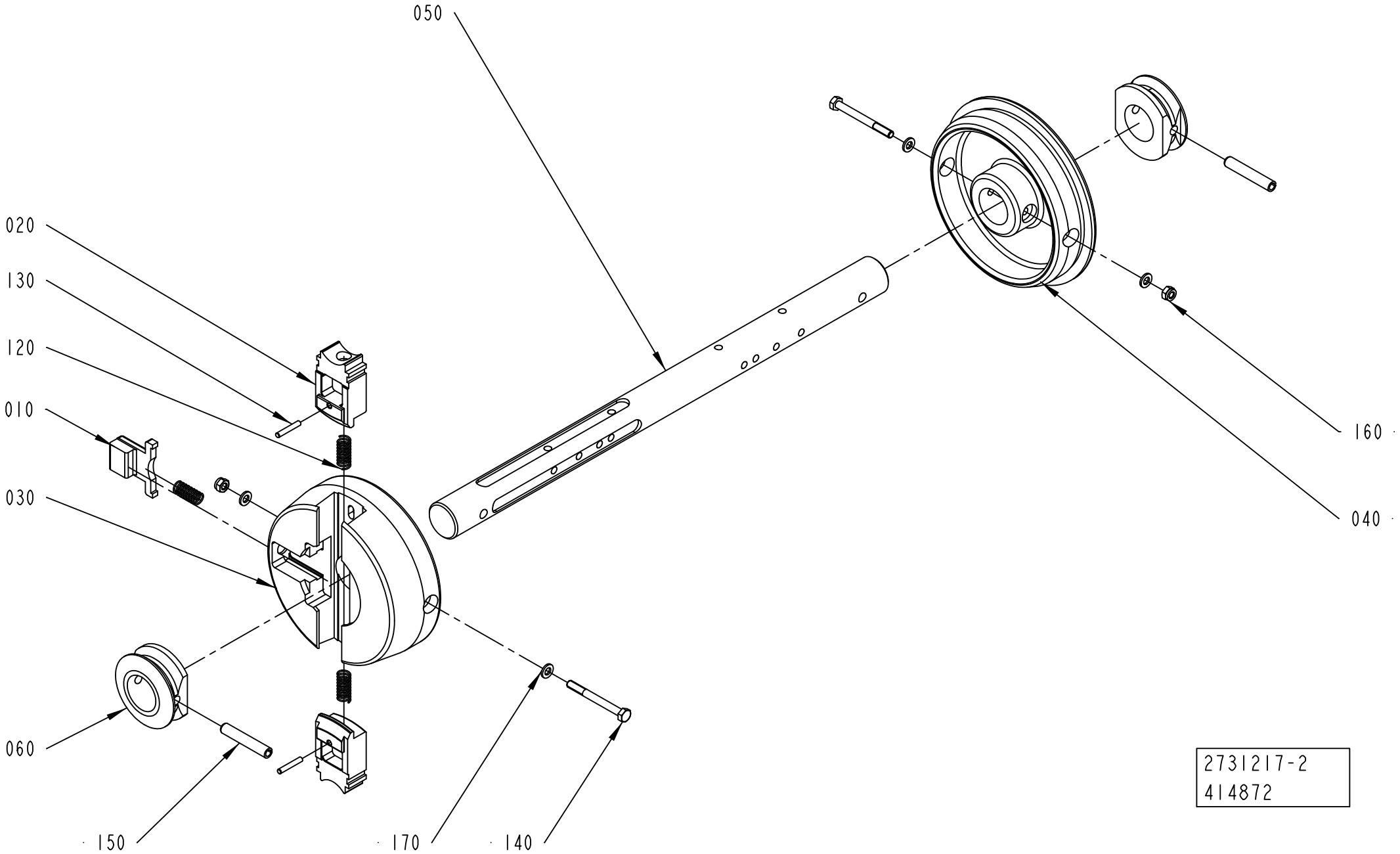

ECM: 417052 - 20100101
Group number: 2731217-0200
Assembly Drawing: 2731217-2_1_AA

Pos	Part No	UN	Qty	Description	Page No
TBA 0125S, TBA 0200M, TBA 0200B, TBA 0250S, TBA 0250B, TBA 1000S					
050	3051914-0001		1	SHAFT	
TBA 0200S, TBA 1000B, TBA 1000SQ					
050	3051914-0002		1	SHAFT	
Common Parts					
010	272728-0000		1	BARRIER	
020	2851385-0000		2	PLUNGER	
030	2790925-0000		1	SLEEVE	
040	2731210-0000		1	SLEEVE	
060	2731212-0000		2	RING	
120	90335-0025		3	COMP. SPRING 22010, 1X11X26	
130	311103-1274		2	PARALLEL PIN ISO 2338 4M6X24 A1	
140	312105-0382		2	SCREW M6S ISO 4014 M6X60 A480	
150	311112-0385		2	SPRING PIN, ISO 8752 8X50-C	
160	312812-0316		2	HEXAGON NUT, NY-LOCK M6 A480	
170	315105-0153		4	WASHER BRB 6,4X12 RFR	

Pos	Part No	UN	Qty	Description	Page No

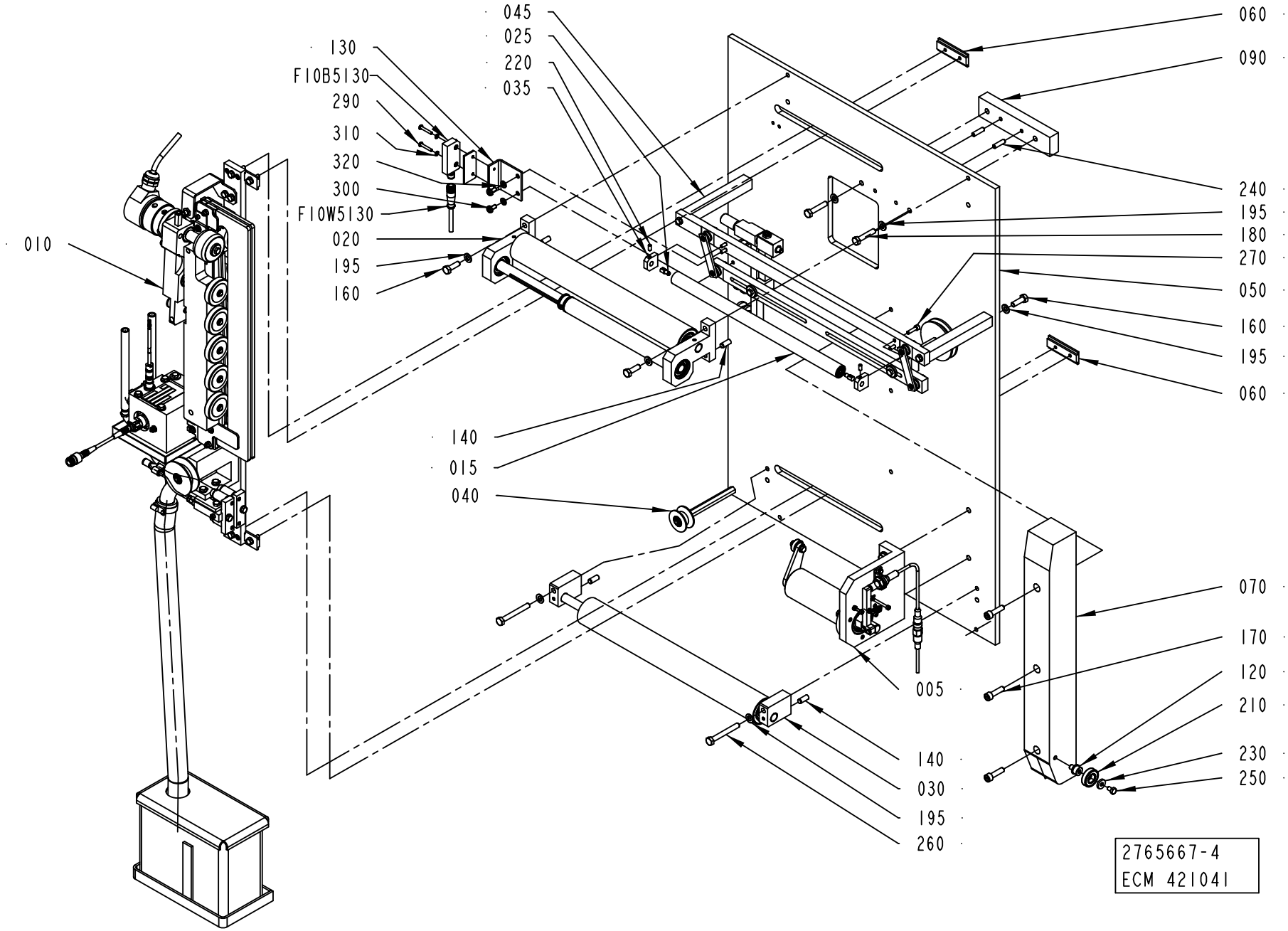
045
025
220
035
130
F10B5130
290
310
320
300
F10W5130
020
195
160
010
140
015
040
005
140
030
195
260
060
090
240
195
180
270
050
160
195
060
070
170
120
210
230
250
2765667-4
ECM 421041

ECM: 435127 - 20100402
Group number: 2765667-0200
Assembly Drawing: 2765667-4_1_AB

Pos	Part No	UN	Qty	Description	Page No
-					
005	2994565-0100		1	SPLICE DETECTOR	**7-25**
010	2765668-0100		1	INDUCTOR	**7-27**
015	2863550-0100		1	ROLLER	**7-39**
020	2771065-0100		1	ROLLER	**7-41**
025	2863547-0000		2	PIN	
030	2771070-0100		1	ROLLER	**7-43**
035	2863548-0000		2	BRACKET	
040	2771081-0100		1	BENDING ROLLER	**7-45**
045	2806658-0100		1	STRIP GUIDE	**7-49**
050	2765677-0000		1	SHEET	
060	2765680-0000		2	NUT	
070	2765687-0000		1	STEERING	
090	2868759-0000		1	SPACER	
120	2844168-0000		1	SPACER	
130	2868761-0000		1	PLATE	
140	311103-0401		4	PARALLEL PIN ISO 2338 8M6X20 A1	
160	312105-0453		4	SCREW M6S ISO 4017 M8X25 A480	
170	312115-0455		3	SCREW ISO4762 M8X30 A4 80	
180	312105-0459		2	SCREW M6S ISO 4014 M8X40 A480	
195	315105-0165		8	WASHER BRB 8,4X16 RFR	
210	321308-0102		1	BALL BEARING 15/32X9	
220	90459-7283		2	SCREW HEX.SOCK.SET CONEPT.MS6SS M5X12 A2	
230	90459-7441		1	WASHER PLAIN, DIN 7349, 6,4/17 H=3	
240	311112-0341		2	SPRING PIN, ISO 8752 6X24-C	
250	312105-0364		1	SCREW M6S ISO 4017 M6X10 A480	
260	312105-0464		2	SCREW M6S ISO 4014 M8X65 A480	
270	312115-0331		4	SCREW ISO4762 M5X20 A4 80	
290	90459-4165		2	SAFETY SCREW SM4X25, 20-053-43	
300	90600-2563		2	SCREW PANHEAD SNAKE EYE SPANNER, M6X12	
310	315105-0136		2	WASHER BRB 4,3X8 RFR	
320	315105-0153		2	WASHER BRB 6,4X12 RFR	
F10B5130	90459-4142		1	SENSOR, ADAM M12 20-051-00	
F10W5130	90600-0936		1	CABLE M12-C612 5 POLE, 20-056-22	

Pos	Part No	UN	Qty	Description	Page No

SPLICE DETECTOR

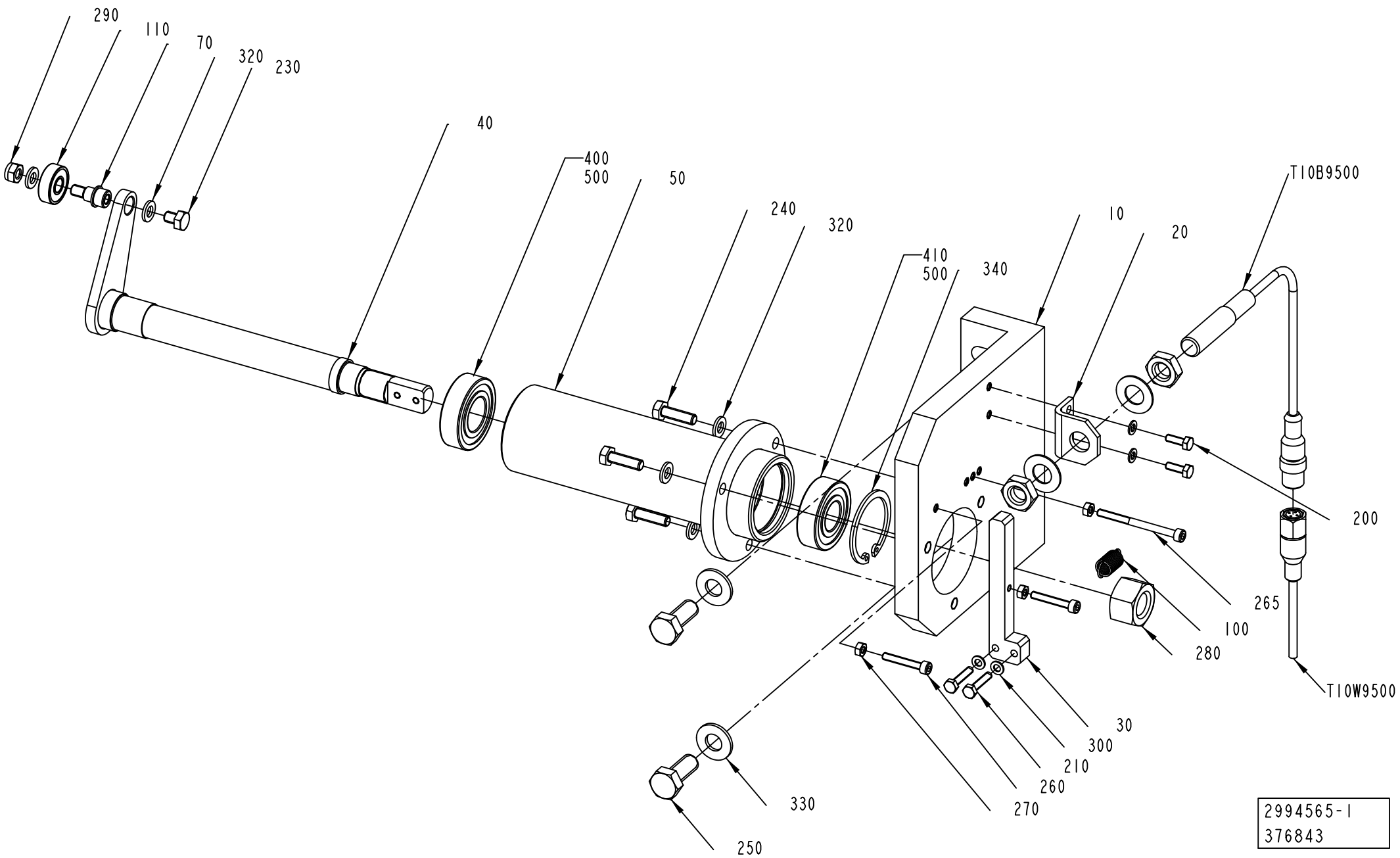

ECM: 435131 - 20100402
Group number: 2994565-0100
Assembly Drawing: 2994565-1_1_AA

Pos	Part No	UN	Qty	Description	Page No
-					
010	2994560-0000		1	BRACKET	
020	2994561-0000		1	PLATE	
030	2994562-0000		1	BAR	
040	2994563-0000		1	SHAFT	
050	2994564-0000		1	HUB	
070	3007884-0000		1	SHAFT	
100	90335-0089		1	TENSION SPRING 41490, 0,9X10X23	
110	90459-7501		1	BALL BEARING 8/22X7	
200	312105-0291		2	SCREW M6S ISO 4017 M4X12 A470	
210	312105-0295		2	SCREW M6S ISO 4017 M4X20 A470	
230	312105-0362		1	SCREW M6S ISO 4017 M6X8 A480	
240	312105-0370		3	SCREW M6S ISO 4017 M6X20 A480	
250	312105-0493		2	SCREW M6S ISO 4017 M10X25 A480	
260	312115-0297		2	SCREW ISO4762 M4X25 A4 80	
265	312115-0305		1	SCREW ISO4762 M4X50 A4 80	
270	312605-0312		3	HEXAGON NUT, M6M M4 A280	
280	312625-0324		1	HEXAGON THIN NUT, EN 24035 ML6M M16 A4	
290	312812-0316		1	HEXAGON NUT, NY-LOCK M6 A480	
300	315105-0136		4	WASHER BRB 4,3X8 RFR	
320	315105-0153		5	WASHER BRB 6,4X12 RFR	
330	315105-0173		2	WASHER BRB 10,5X22 RFR	
340	315753-0127		1	RETAINING RING FOR BORE DIN 472 40X1.75C	
400	321308-0204		1	BALL BEARING 20/42X12	
410	321313-0103		1	BALL BEARING 17/40X12	
500	90157-0035		1	LOCKING FLUID LOCTITE TYPE 641	
T10B9500	90600-2233		1	INDUCTIVE SENSOR	
T10W9500	351311-0020		1	ACTUATOR/SENSOR CABLE RKTN 4-225/2M	

Pos	Part No	UN	Qty	Description	Page No

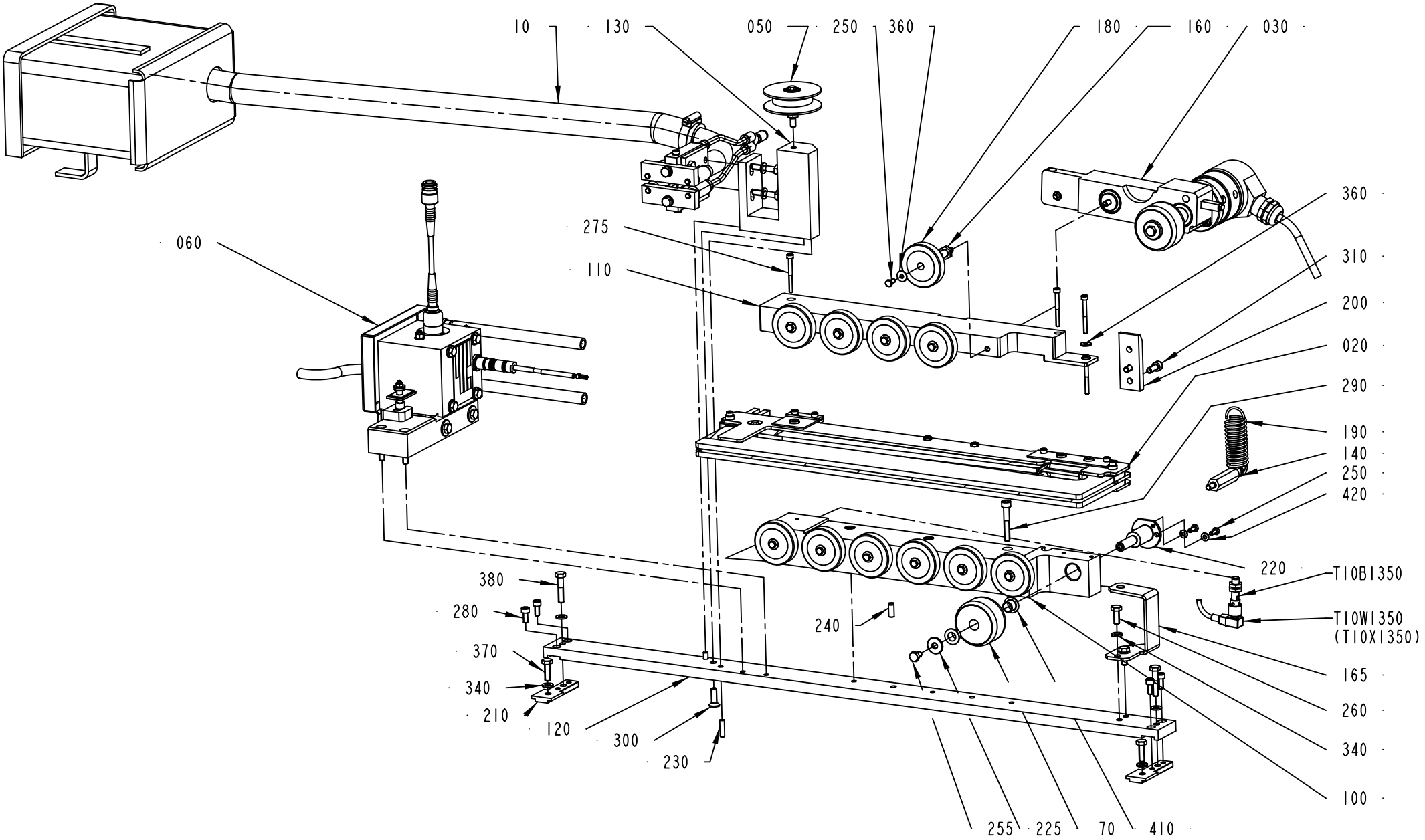
10
130
050
250
360
180
160
030
060
275
110
360
310
200
020
290
190
140
250
420
220
T10B1350
T10W1350
(T10X1350)
380
280
370
340
210
120
300
230
240
165
260
340
100
255
225
70
410

ECM: 402208 - 20090618
Group number: 2765668-0100
Assembly Drawing: 2765668-3_1_AE

Pos	Part No	UN	Qty	Description	Page No
A3/SPEED TBA 1000S PT/SPEED					
010	2900027-0100		1	AIR NOZZLE	**7-29**
Common Parts					
020	2765671-0100		1	INDUCTOR	**7-31**
030	2771068-0100		1	PRESSURE ROLLER	**7-33**
050	2771091-0100		1	PULLEY	**7-35**
060	2991051-0100		1	INDUCTOR	**7-37**
070	2963237-0000		1	ROLLER	
100	3042613-0000		1	BRACKET	
110	2765672-0000		1	BRACKET	
120	2765676-0000		1	BRACKET	
130	2900026-0000		1	SUPPORT	
140	2771083-0000		1	SHAFT	
160	2797161-0000		11	PIN	
165	2797162-0000		1	BRACKET	
180	2797167-0000		11	PRESSURE ROLLER	
190	2852893-0000		1	TENSION SPRING	
200	2852892-0000		1	BRACKET	
210	2860081-0000		2	NUT	
220	3042614-0000		1	SHAFT	
225	3017587-0000		1	WASHER	
230	311103-0310		2	PARALLEL PIN ISO 2338 5M6X20 A1	
240	311103-0351		2	PARALLEL PIN ISO 2338 6M6X16 A1	
250	312105-0289		13	SCREW M6S H4X10 A4 70 ISO4017/DIN933	
255	312105-0364		1	SCREW M6S ISO 4017 M6X10 A480	
260	312105-0368		2	SCREW M6S ISO 4017 M6X16 A480	
275	312115-0303		3	SCREW ISO4762 M4X40 A4 80	
280	312115-0327		4	SCREW ISO4762 M5X12 A4 80	
290	312115-0378		3	SCREW ISO4762 M6X40 A4 80	
300	312155-0370		1	SCREW DIN 7991 MF6S M6X20 A4 70	
310	312115-0368		2	SCREW ISO4762 M6X16 A4 80	
330	312180-0499		1	SCREW ISO7379 H10X40	
340	315105-0153		6	WASHER BRB 6,4X12 RFR	
360	90005-0082		12	WASHER PLAIN ROUND 4,3(M4)/12,H=1	
370	312105-0370		2	SCREW M6S ISO 4017 M6X20 A480	
380	312105-0374		2	SCREW M6S ISO 4014 M6X30 A480	
410	90600-7746		2	FLANGE BUSHING, 10X12X10 MM	
420	315106-0146		2	WASHER ISO 7089-5-200 HV A4	
T10B1350	90459-3286		1	INDUCTIVE SWITCH E2A-S08KS02-M1-B1	
T10W1350	90458-1076		1	L-SHAPED CONNECTOR CABLE Y92EM12PVC4A5ML	

Pos	Part No	UN	Qty	Description	Page No

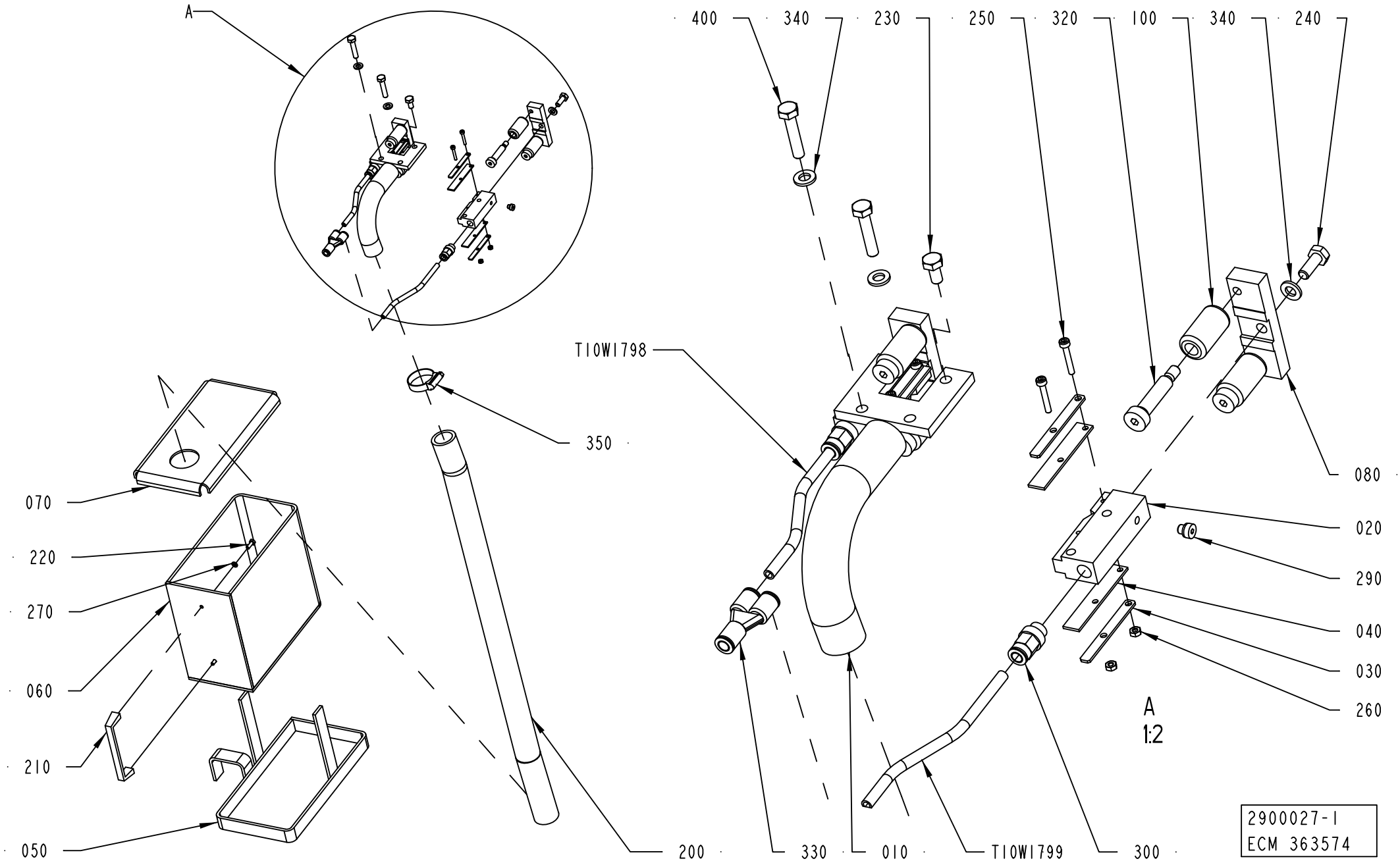
A
400
340
230
250
320
100
340
240
T10W1798
350
080
020
290
040
030
260
070
220
270
060
210
050
200
330
010
T10W1799
300
A
1:2
2900027-1
ECM 363574

ECM: 364201 - 20080825
Group number: 2900027-0100
Assembly Drawing: 2900027-1_1_AA

Pos	Part No	UN	Qty	Description	Page No
-					
010	2749546-0000		1	PIPE	
020	2749547-0000		2	NOZZLE	
030	2701449-0000		4	BRACKET	
040	2701448-0000		4	GASKET	
050	2701767-0000		1	FRAME	
060	2701768-0000		1	WASTE BOX	
070	2704501-0000		1	COVER	
080	2749544-0000		2	BRACKET	
100	2749548-0000		4	ROLLER	
200	90459-2903	MM	700	HOSE SILICONE, 25/34 MM	
210	90458-2633		1	HANDLE, 1045-05	
220	312105-0291		2	SCREW M6S ISO 4017 M4X12 A470	
230	312105-0366		2	SCREW M6S ISO 4017 M6X12 A480	
240	312105-0368		2	SCREW M6S ISO 4017 M6X16 A480	
250	312115-0230		4	SCREW ISO4762 M3X20 A4 80	
260	312605-0310		4	HEXAGON NUT, M6M M3 A280	
270	315105-0136		2	WASHER BRB 4,3X8 RFR	
290	342713-0208		2	PLUG, EXT. THREAD HEX. SOCKET. BPM05	
300	350001-0006		2	PUSH-IN FITTING QS-F-G1/8-6	
320	312180-0455		4	SCREW ISO7379 H8X30	
330	350015-0001		1	PUSH-IN Y-CONNECTOR QSY-F-6	
340	315105-0153		4	WASHER BRB 6,4X12 RFR	
350	342991-0106		1	HOSE CLIP,WORM DRIVE TYPE (26)-38	
400	312105-0374		2	SCREW M6S ISO 4014 M6X30 A480	
T10W1798	90166-0081	MM	300	TUBE 6 MM PA BLUE	
T10W1799	90166-0081	MM	300	TUBE 6 MM PA BLUE	

Pos	Part No	UN	Qty	Description	Page No

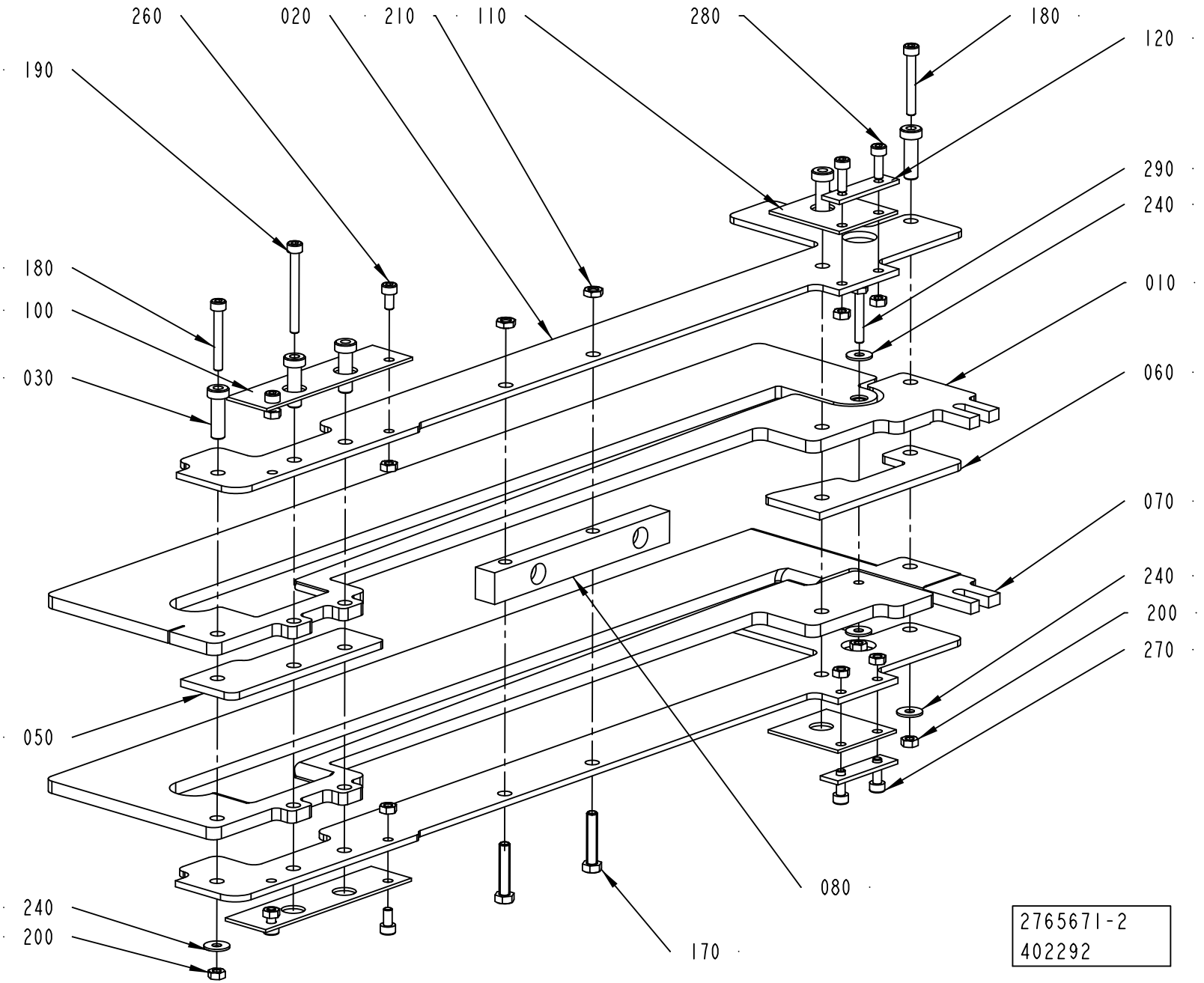
260
020
210
110
280
180
120
190
290
240
180
100
010
030
060
070
240
200
270
050
080
240
200
170
2765671-2
402292

ECM: 402442 - 20090618
Group number: 2765671-0100
Assembly Drawing: 2765671-2_1_AD

Pos	Part No	UN	Qty	Description	Page No
-					
010	2963240-0000		1	SEALING PLATE	
	2799308-0000		*1*	*SPACER*	
	2776094-0000		*1*	*SEALING PLATE*	
	90459-2130	*MM*	*2700*	*TAPE, ADHESIVE SI TAPE MON3154535033CL*	
020	3024324-0000		2	PLATE	
030	2776097-0000		5	SPACER	
050	2874469-0000		1	PLATE	
060	2874468-0000		1	PLATE	
070	2797158-0000		1	SEALING PLATE	
080	2797164-0000		1	PLATE	
090	2799308-0000		1	SPACER	
100	2852886-0000		2	SHIM	
110	2852885-0000		2	SHIM	
120	2852895-0000		2	PLATE	
170	312105-0333		2	SCREW M6S ISO 4017 M5X25 A480	
180	312115-0299		2	SCREW ISO4762 M4X30 A4 80	
190	312115-0303		1	SCREW ISO4762 M4X40 A4 80	
200	312607-0312		11	HEXAGON NUT, EN 24032 M6M M4 A480	
210	312625-0314		2	HEXAGON THIN NUT, EN 24035 ML6M M5 A4	
240	90005-0082		4	WASHER PLAIN ROUND 4,3(M4)/12,H=1	
260	312115-0287		4	SCREW ISO4762 M4X8 A4 80	
270	312111-0291		2	SCREW HEX.SOCK.HD.MC6S-TT 4X12 88 FZB	
280	312115-0291		2	SCREW ISO4762 M4X12 A4 80	
290	312105-0297		1	SCREW M6S ISO 4017 M4X25 A470	

Pos	Part No	UN	Qty	Description	Page No

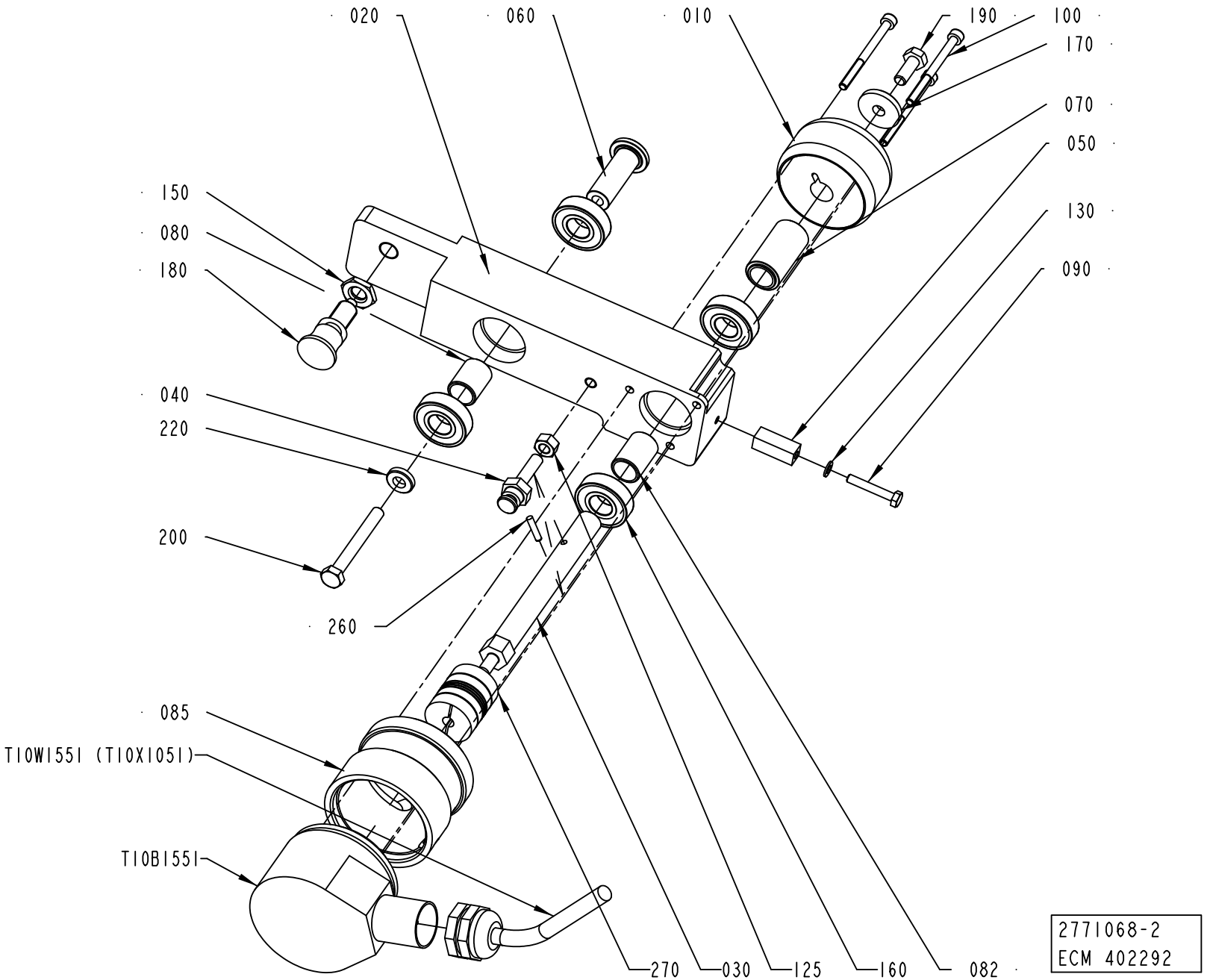
020
060
010
190
100
170
070
050
150
080
180
130
090
040
220
200
260
085
T10W155I (T10X105I)
T10B155I
270
030
125
160
082
2771068-2
ECM 402292

ECM: 448597 - 20101001
Group number: 2771068-0100
Assembly Drawing: 2771068-2_1_AD

Pos	Part No	UN	Qty	Description	Page No
-					
010	2963237-0000		1	ROLLER	
020	3044593-0000		1	ARM	
030	3044594-0000		1	PIN	
040	2819397-0000		1	SPRING PIN	
050	2535932-0000		1	CAM	
060	2841916-0000		1	SPACER	
070	2852887-0000		1	SPACER	
080	2852888-0000		1	SPACER	
082	3025750-0000		1	SPACER	
085	3040274-0000		1	SPACER	
090	312105-0297		1	SCREW M6S ISO 4017 M4X25 A470	
100	312115-0305		3	SCREW ISO4762 M4X50 A4 80	
125	312607-0316		1	HEXAGON NUT, EN 24032 M6M M6 A480	
130	315105-0136		1	WASHER BRB 4,3X8 RFR	
150	90099-0007		1	HEXAGON NUT, M10X1, E 63 137 10	
160	90459-5536		4	BALL BEARING 12/28X8	
170	315125-0153		1	WASHER TBRSB 6,4X22X4 A4	
180	90051-0087		1	LOCK KNOB, NO. GN 617 A5	
190	312105-0368		1	SCREW M6S ISO 4017 M6X16 A480	
200	312105-0380		1	SCREW M6S ISO 4014 M6X50 A480	
220	315111-0156		1	WASHER PLAIN, TBRB 6,7/14 H=3	
240	312105-0289		4	SCREW M6S H4X10 A4 70 ISO4017/DIN933	
250	315106-0136		4	WASHER ISO 7089-4-200 HV A4	
260	311103-0235		1	PARALLEL PIN ISO 2338 3M6X14 A1	
270	90458-1013		1	BELLOW COUPLING, 6X6 MM	
T10B1551	90600-1390		1	INCREMENTAL ENCODER, DGS60-G1A02000	
T10W1551	90459-6604		1	CABLE SICK DOL-2312-G 05MMA3	

Pos	Part No	UN	Qty	Description	Page No

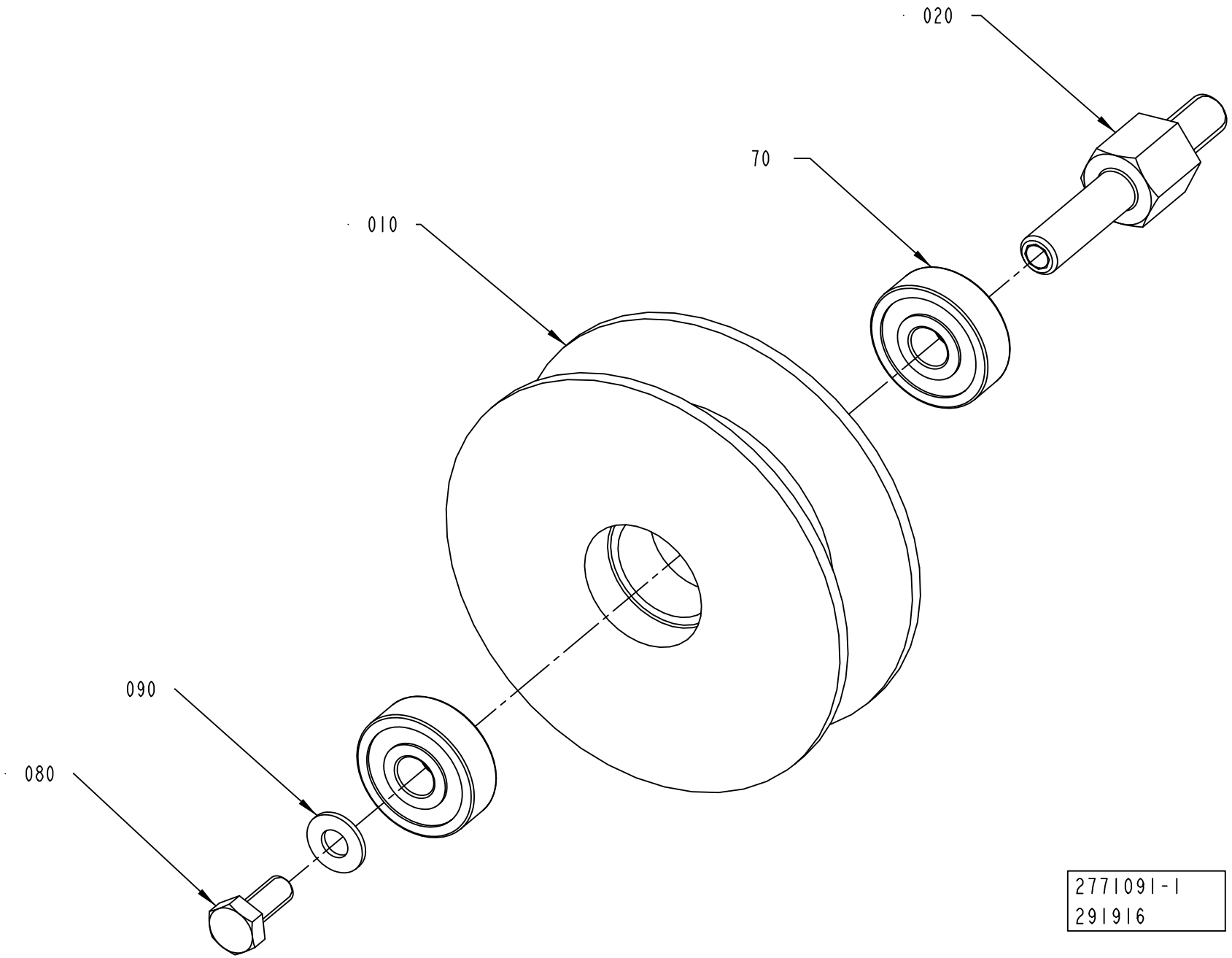
020
70
010
090
080
2771091-1
291916

ECM: 423834 - 20091028
Group number: 2771091-0100
Assembly Drawing: 2771091-1_1_AA

Pos	Part No	UN	Qty	Description	Page No
-					
010	2771080-0000		1	PULLEY	
020	2771090-0000		1	SHAFT	
070	90600-2897		2	BALL BEARING 6/19X6	
080	312105-0289		1	SCREW M6S H4X10 A4 70 ISO4017/DIN933	
090	315106-0136		1	WASHER ISO 7089-4-200 HV A4	

Pos	Part No	UN	Qty	Description	Page No

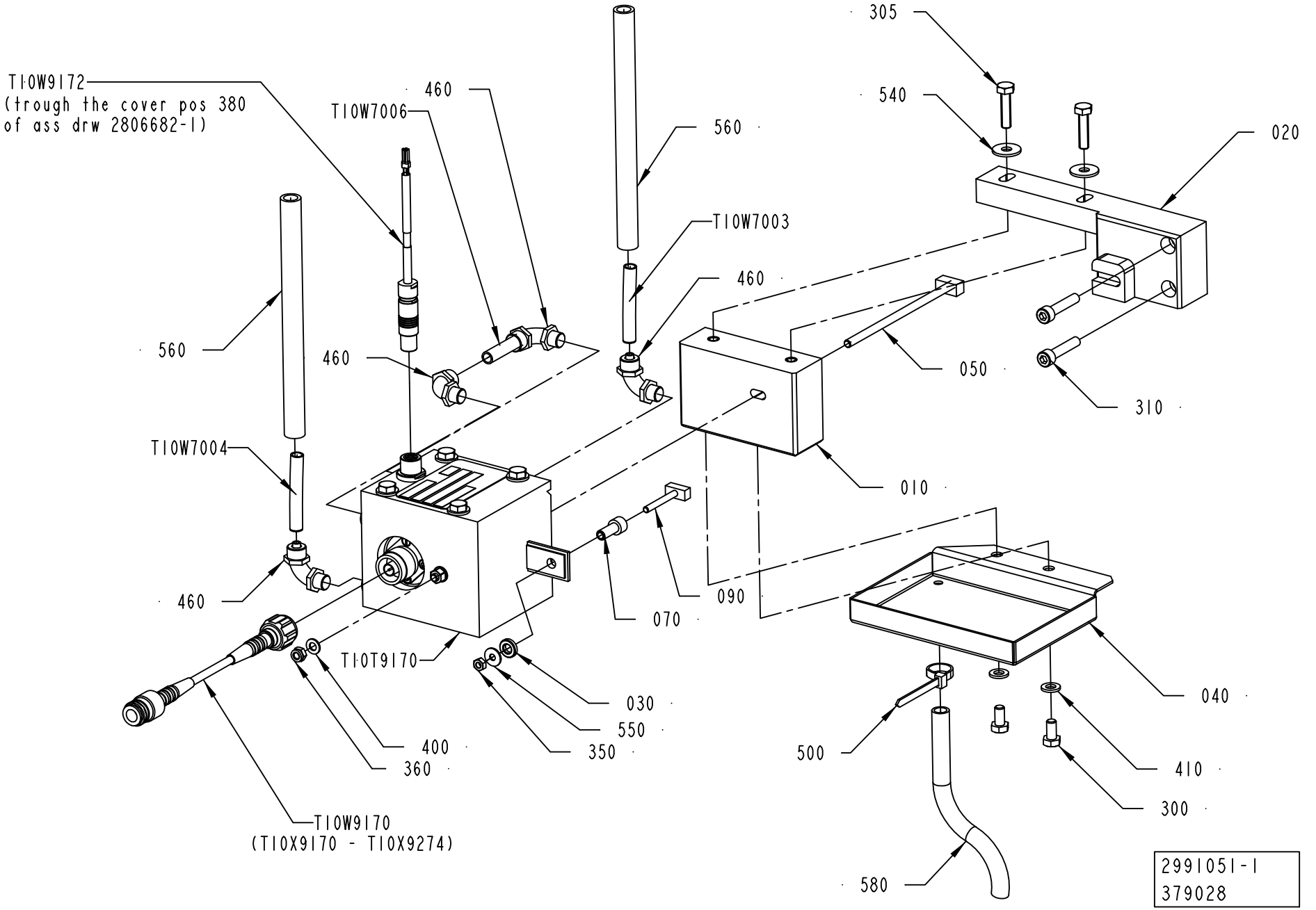
TI0W9172
(trough the cover pos 380
of ass drw 2806682-1)
460
TI0W7006
560
305
540
020
TI0W7003
460
560
460
050
310
TI0W7004
010
460
070
090
TI0T9170
030
550
350
400
360
040
500
410
300
TI0W9170
(TI0X9170 - TI0X9274)
580
2991051-1
379028

ECM: 402659 - 20090618
Group number: 2991051-0100
Assembly Drawing: 2991051-1_1_AA

Pos	Part No	UN	Qty	Description	Page No
-					
010	3007770-0000		1	BLOCK	
020	3007771-0000		1	BLOCK	
030	1558917-0000		1	SPACER DISC	
040	2862487-0000		1	PROTECTION	
050	2991054-0000		1	SCREW	
070	2776098-0000		1	SPACER	
090	2841914-0000		1	SCREW	
300	312105-0366		2	SCREW M6S ISO 4017 M6X12 A480	
305	312105-0372		2	SCREW M6S ISO 4017 M6X25 A480	
310	312115-0374		2	SCREW ISO4762 M6X30 A4 80	
350	312607-0312		1	HEXAGON NUT, EN 24032 M6M M4 A480	
360	312812-0314		1	HEXAGON NUT, NY-LOCK M5 A480	
400	315105-0146		1	WASHER BRB 5,3X10 RFR	
410	315105-0153		2	WASHER BRB 6,4X12 RFR	
460	342931-0121		4	LBOW 90 COUPL.,EXT.THREAD 8/6-G1/8"	
500	352113-0102		1	CABLE TIE, BLACK 188X4,8 MM	
540	90005-0060		2	WASHER PLAIN, RBS 6,4/M6)/18,H=1,5	
550	90005-0082		1	WASHER PLAIN ROUND 4,3(M4)/12,H=1	
560	90458-2329	MM	3200	HOSE, SILICONE, 50 SHORE, 9/13 MM	
580	90459-1126	MM	1000	PLASTIC HOSE PVC TRANSPARENT, 8X11MM	
T10T9170	2991055-0616		1	TRANSFORMER	
T10W7003	90166-0118	MM	1600	TUBE 8 MM PA BLACK	
T10W7004	90166-0118	MM	1600	TUBE 8 MM PA BLACK	
T10W7006	90166-0118	MM	55	TUBE 8 MM PA BLACK	
T10W9170	2540595-0009		1	COAXIAL CABLE	
T10W9172	3007928-0000		1	CABLE	

Pos	Part No	UN	Qty	Description	Page No

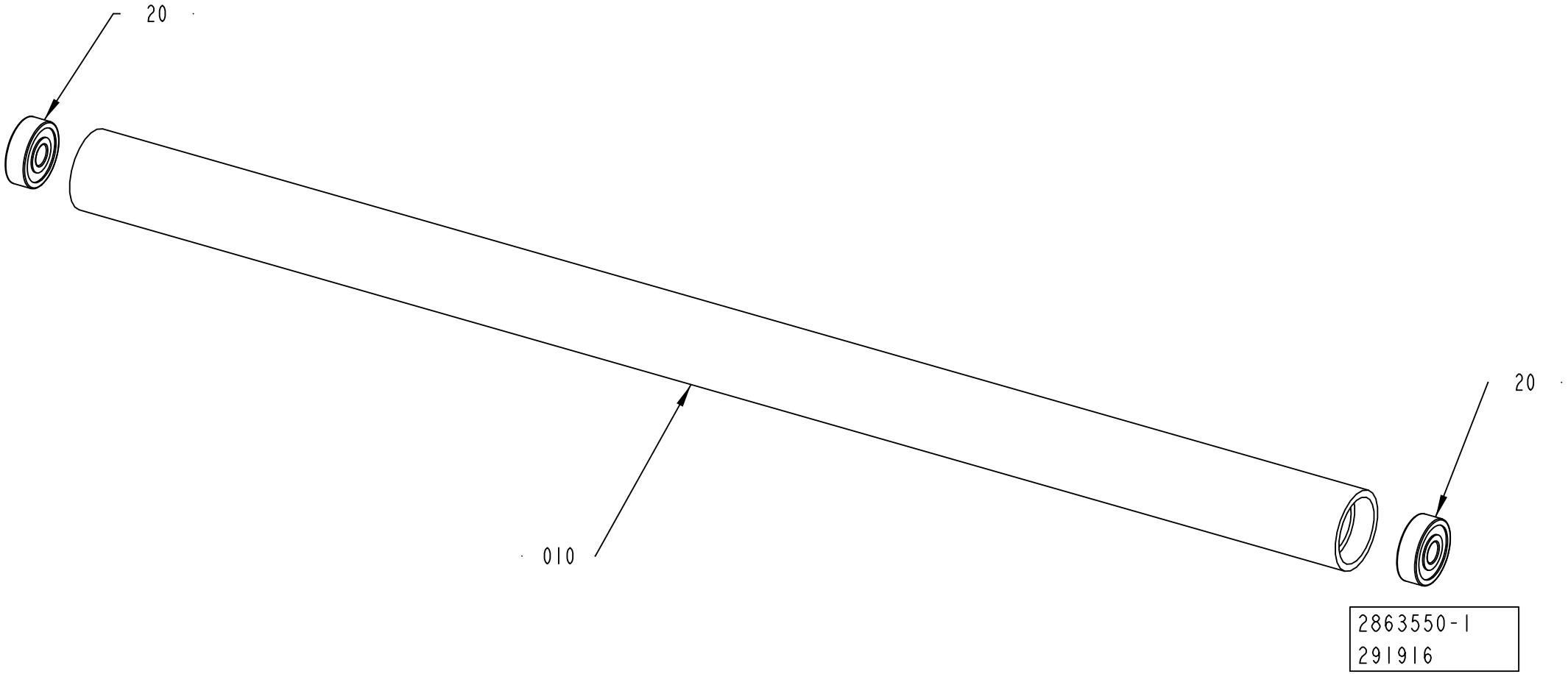
20
010
20
2863550-1
291916

ECM: 423837 - 20091028
Group number: 2863550-0100
Assembly Drawing: 2863550-1_1_AA

Pos	Part No	UN	Qty	Description	Page No
-					
010	2863546-0000		1	ROLLER	
020	90600-2897		2	BALL BEARING 6/19X6	

Pos	Part No	UN	Qty	Description	Page No

Machine Type	Group Description	Used-In	Group Number	Page No

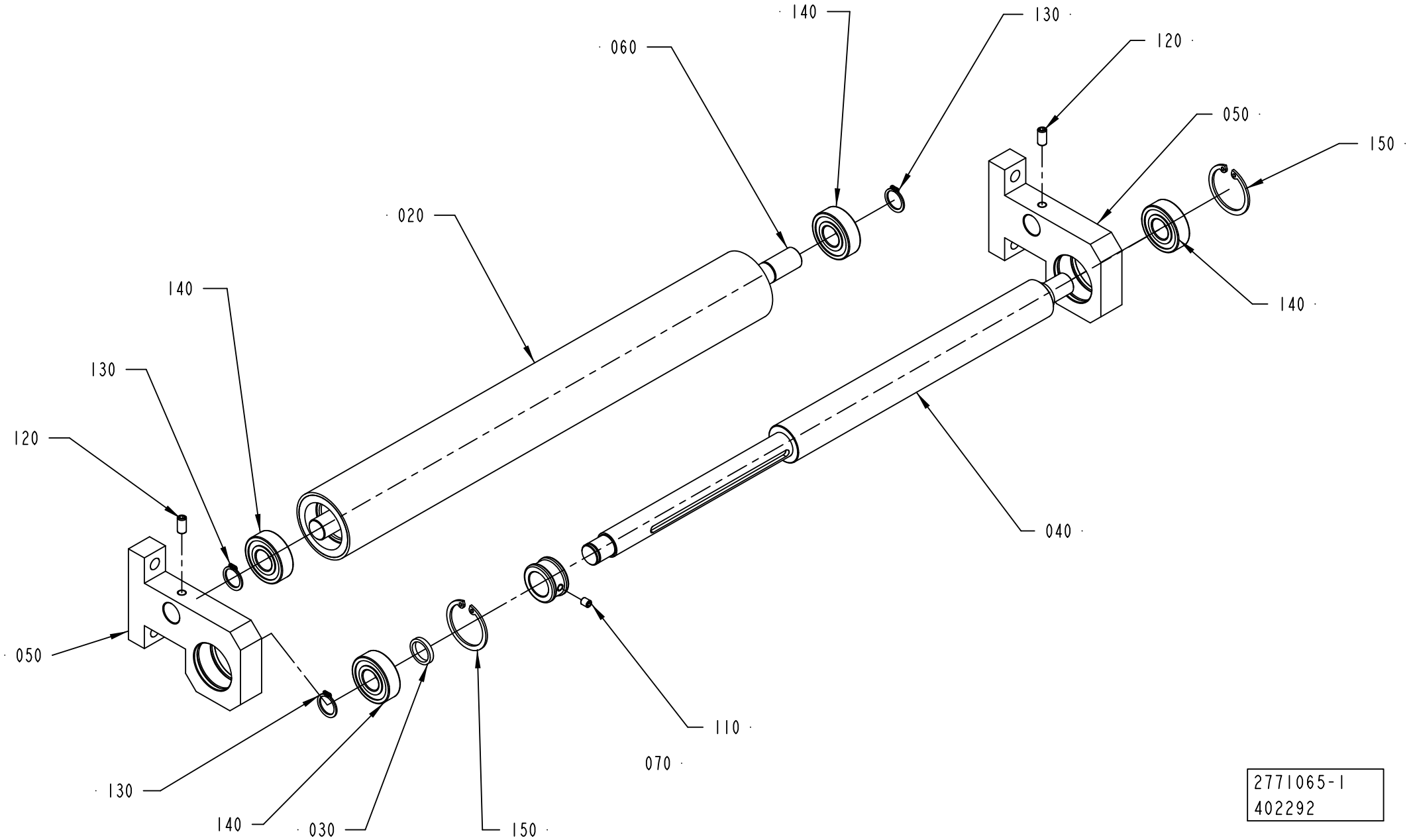
140
130
060
120
050
150
020
140
140
130
120
040
050
110
070
130
140
030
150
2771065-1
402292

ECM: 423831 - 20091028
Group number: 2771065-0100
Assembly Drawing: 2771065-1_1_AB

Pos	Part No	UN	Qty	Description	Page No
-					
020	2506661-0000		1	ROLLER	
030	2797163-0000		1	SPACER	
040	2506663-0000		1	SUPPORT	
050	2771066-0000		2	SUPPORT	
060	2506666-0000		1	AXEL	
070	3022265-0000		1	RING	
110	312318-0321		1	SCREW ISO4029 M5X6 A4	
120	312318-0366		2	SCREW ISO4029 M6X12 A4	
130	315751-0112		3	RETAINING RING FOR SHAFT DIN 471 15 SS	
140	321313-0102		4	BALL BEARING 15/35X11	
150	315753-0124		2	RETAINING RING FOR BORE DIN 472 35 SS	

Pos	Part No	UN	Qty	Description	Page No

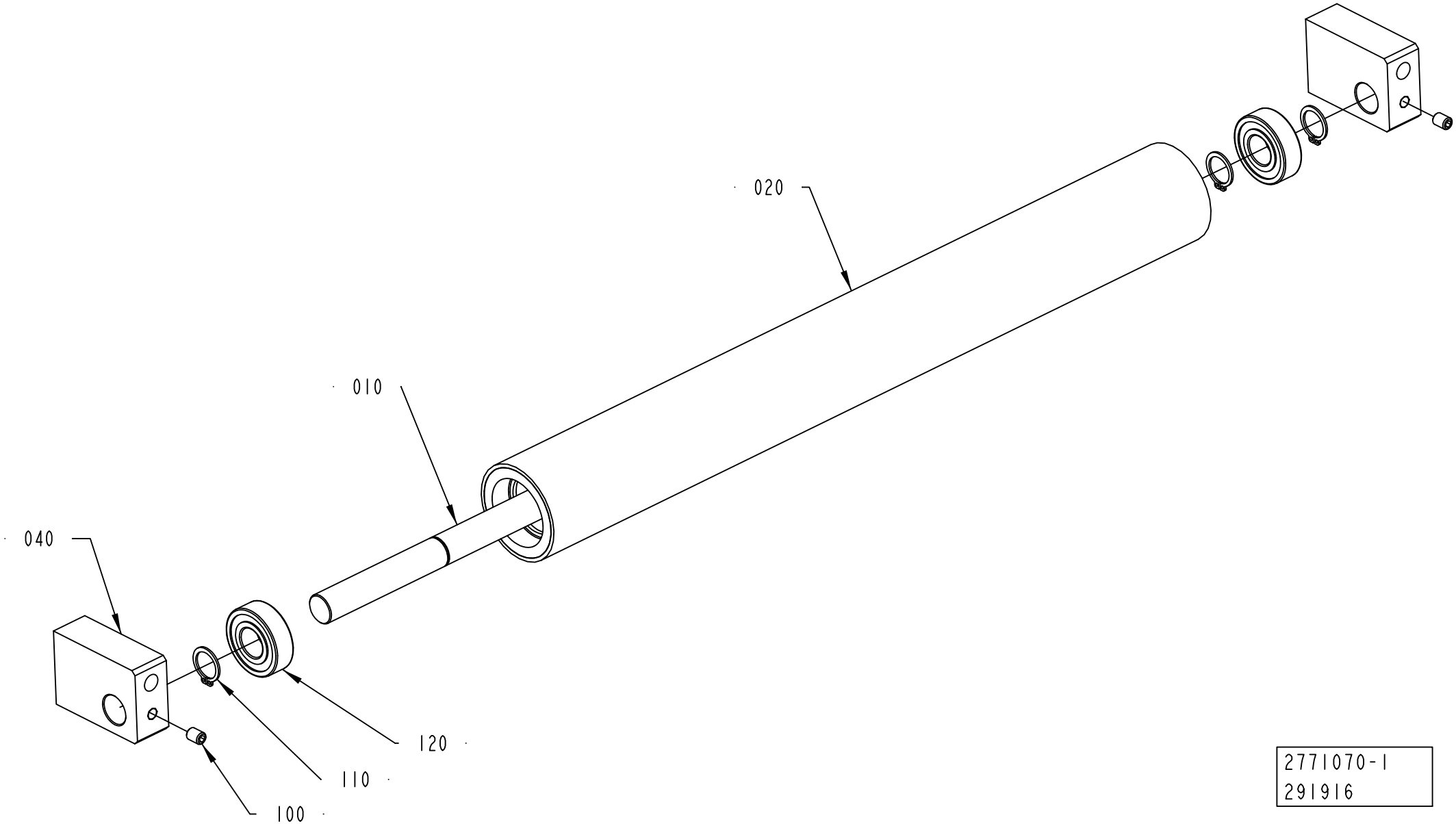

2771070-1
291916

ECM: 423833 - 20091028
Group number: 2771070-0100
Assembly Drawing: 2771070-1_1_AA

Pos	Part No	UN	Qty	Description	Page No
-					
010	2771071-0000		1	SHAFT	
020	2771072-0000		1	BENDING ROLLER	
040	2771077-0000		2	SUPPORT	
100	312318-0362		2	SCREW ISO4029 M6X8 A4	
110	315751-0112		3	RETAINING RING FOR SHAFT DIN 471 15 SS	
120	321313-0102		2	BALL BEARING 15/35X11	

Pos	Part No	UN	Qty	Description	Page No

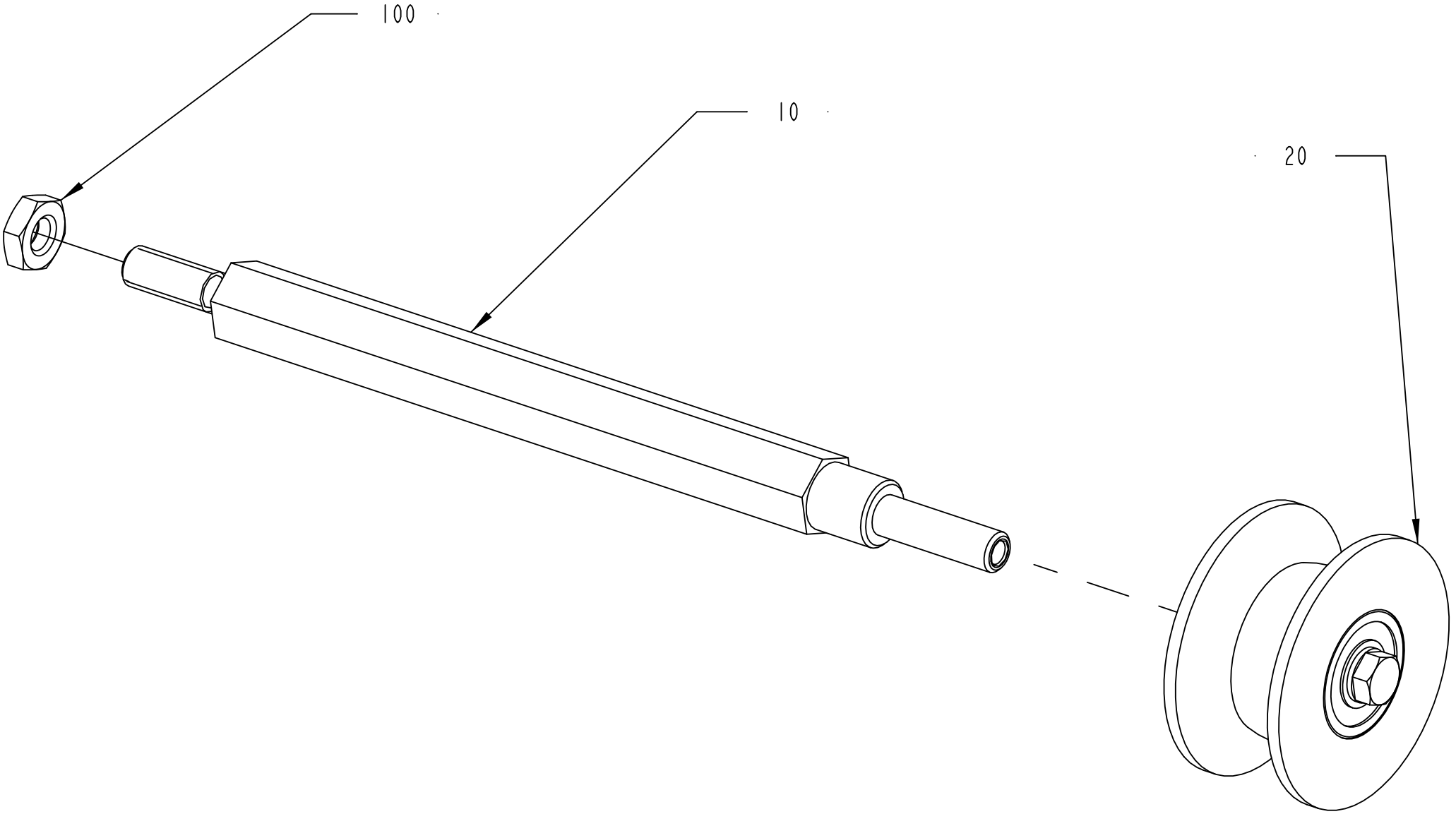
100
10
20
2771081-1
332669

ECM: 348188 - 20090114
Group number: 2771081-0100
Assembly Drawing: 2771081-1_1_AB

Pos	Part No	UN	Qty	Description	Page No
-					
010	2944545-0000		1	SHAFT	
020	2737899-0100		1	WHEEL	**7-47**
100	312625-0316		1	HEXAGON THIN NUT, EN 24035 ML6M M6 A4	

Pos	Part No	UN	Qty	Description	Page No

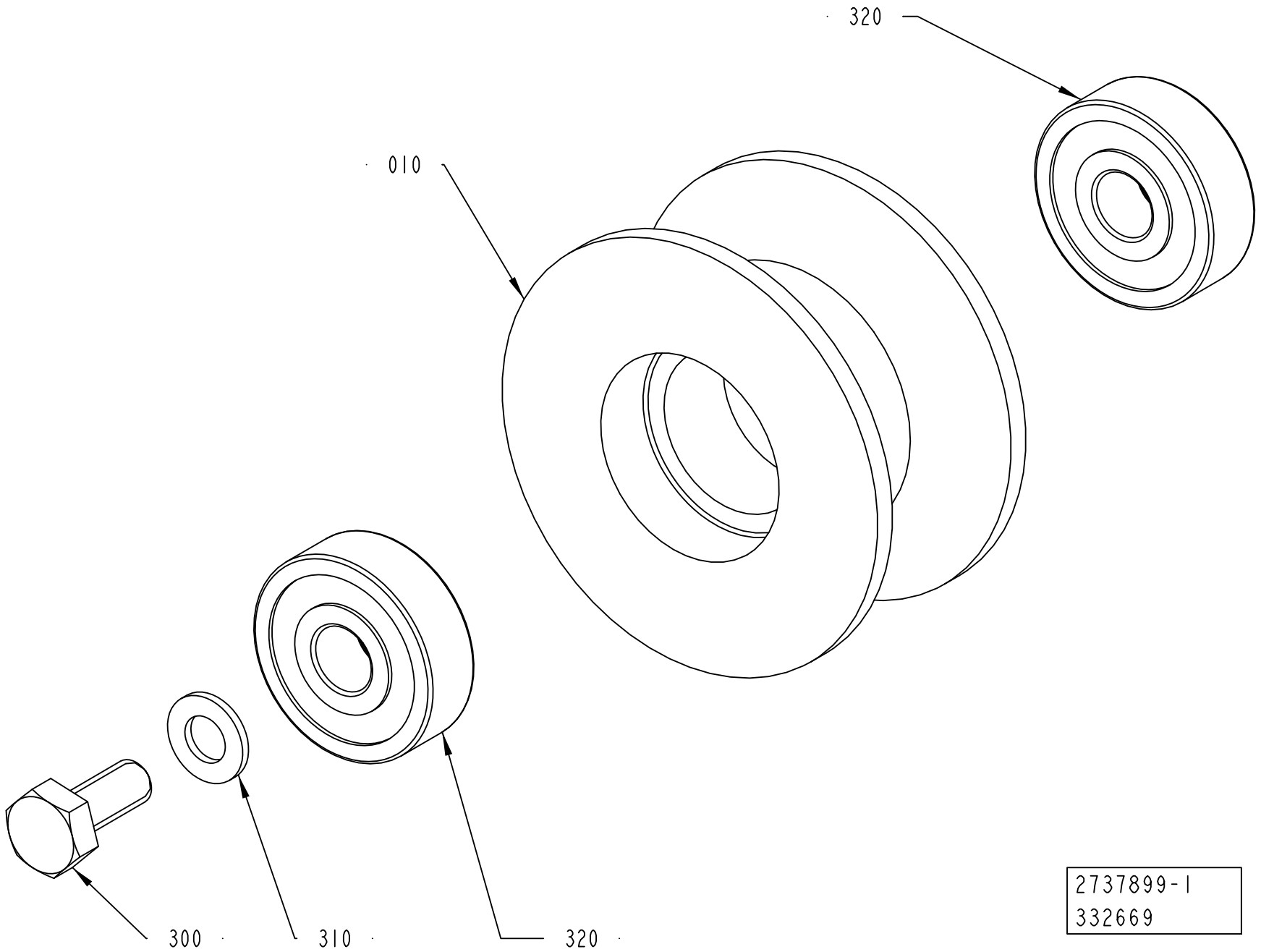
320
010
300
310
320
2737899-1
332669

ECM: 348238 - 20090114
Group number: 2737899-0100
Assembly Drawing: 2737899-1_1_AB

Pos	Part No	UN	Qty	Description	Page No
-					
010	2737898-0000		1	ROLLER	
300	312105-0289		1	SCREW M6S H4X10 A4 70 ISO4017/DIN933	
310	315105-0136		1	WASHER BRB 4,3X8 RFR	
320	90600-2897		2	BALL BEARING 6/19X6	

Pos	Part No	UN	Qty	Description	Page No

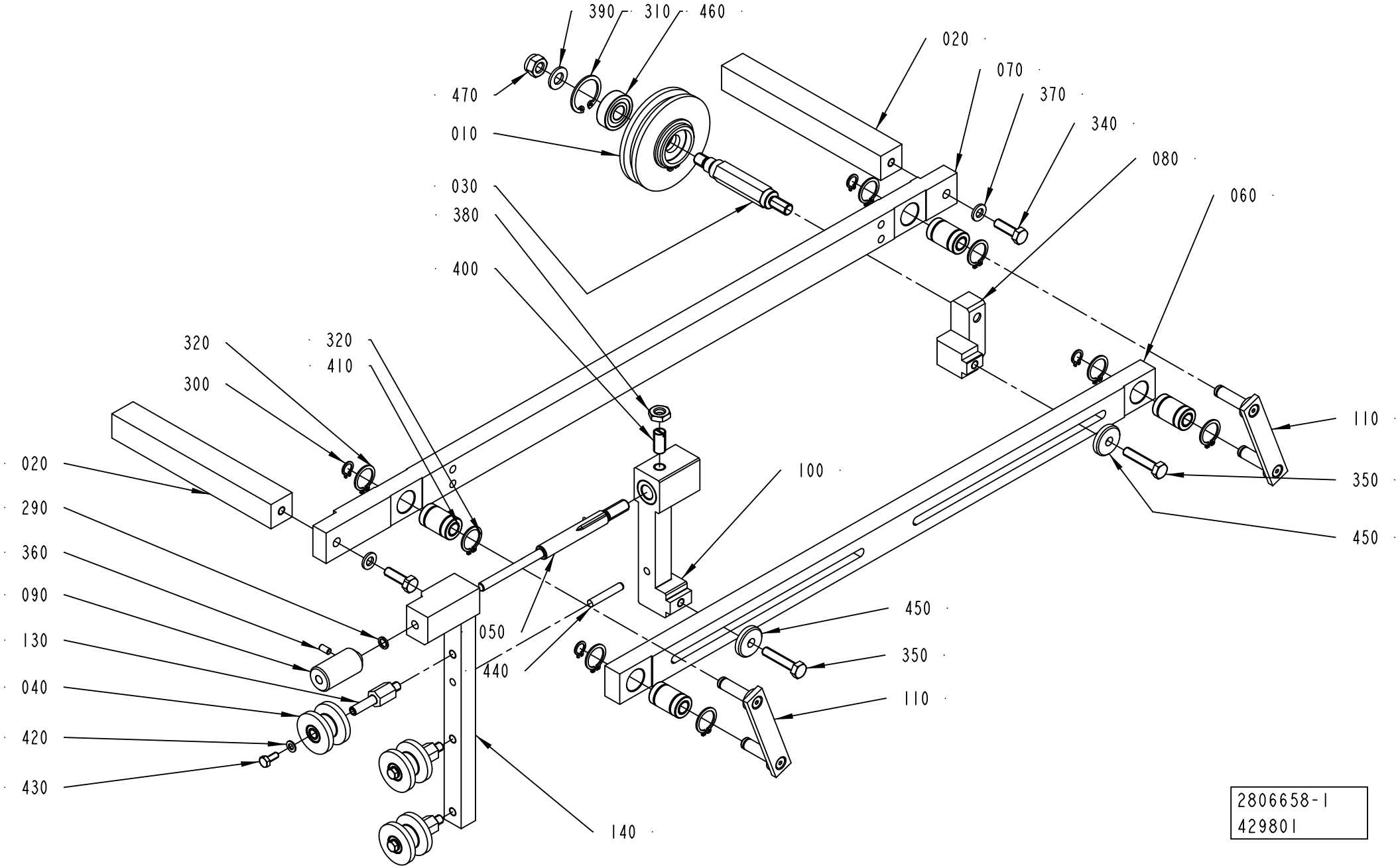
390
310
460
020
070
370
340
080
060
470
010
030
380
400
320
320
410
300
110
350
450
020
290
360
090
130
040
420
430
100
450
350
110
050
440
140
2806658-1
429801

ECM: 450062 - 20101001
Group number: 2806658-0100
Assembly Drawing: 2806658-1_1_AE

Pos	Part No	UN	Qty	Description	Page No
-					
010	2941710-0000		1	GUIDE WHEEL	
010	*315751-0123*		*1*	*RETAINING RING FOR SHAFT DIN 471 32 SS*	
020	2841915-0000		2	BRACKET	
030	2941709-0000		1	AXLE PIN	
040	2831686-0000		3	ROLLER	
050	3032448-0000		1	ADJUSTING SCREW	
060	2868756-0000		1	ROD	
070	2868755-0000		1	ROD	
080	2860082-0000		1	BRACKET	
090	2748699-0000		1	KNOB	
100	2841922-0000		1	BRACKET	
110	2863543-0000		2	LEVER	
130	2799295-0000		3	SHAFT	
140	2863545-0000		1	SUPPORT	
290	90005-0056		1	WASHER PL.RND.NYL.6/8,5,H=1	
300	90141-0015		4	RETAINING RING FOR SHAFT DIN 471 8 SS	
310	90458-0506		1	RETAINING RING FOR BORE DIN 472 26 SS	
320	315751-0113		8	RETAINING RING FOR SHAFT DIN 471 16 SS	
340	312105-0370		2	SCREW M6S ISO 4017 M6X20 A480	
350	312109-0374		2	SCREW M6S ISO 4017 M6X30 A480	
360	312318-0287		1	SCREW ISO4029 M4X8 A4	
370	315105-0153		2	WASHER BRB 6,4X12 RFR	
380	312625-0318		1	HEXAGON THIN NUT, EN 24035 ML6M M8 A4	
390	315106-0165		1	WASHER ISO 7089-8-200 HV A4	
400	90287-0334		1	SCREW SPRINGLOAD. SLOTTED HEAD M8X16	
410	90600-2854		4	LINEAR BUSHING 8X16X25	
420	315105-0136		3	WASHER BRB 4,3X8 RFR	
430	312105-0289		3	SCREW M6S H4X10 A4 70 ISO4017/DIN933	
440	311103-0314		1	PARALLEL PIN ISO 2338 5M6X30 A1	
450	315125-0153		2	WASHER TBRSB 6,4X22X4 A4	
460	90214-0029		1	BALL BEARING 10/26X8	
470	312812-0318		1	HEXAGON NUT, NY-LOCK M8 A480	

Pos	Part No	UN	Qty	Description	Page No

STRIP MAGAZINE

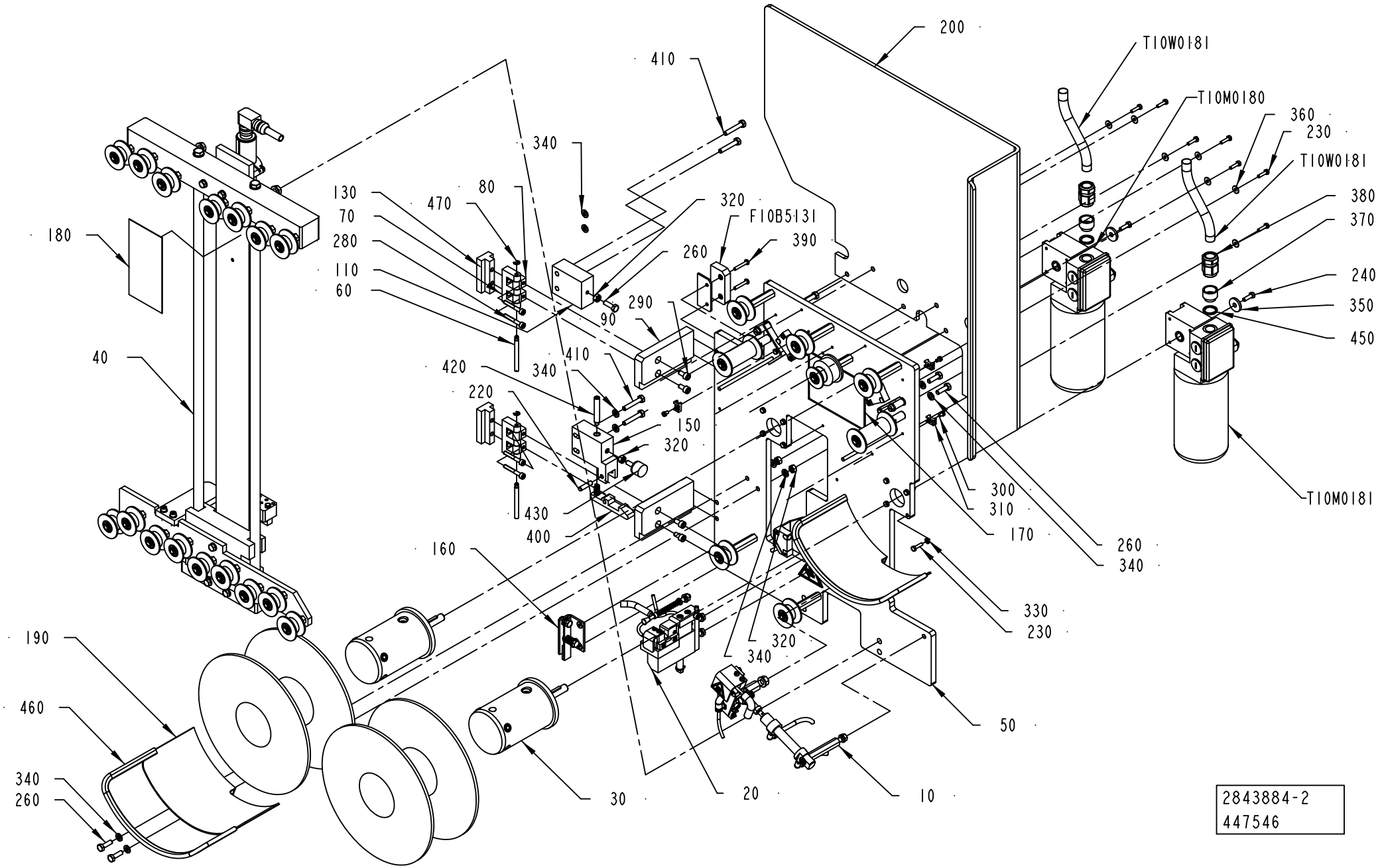

2843884-2
447546

ECM: 450484 - 20101001
Group number: 2843884-0200
Assembly Drawing: 2843884-2_1_AC

Pos	Part No	UN	Qty	Description	Page No
-					
010	2765649-0100		1	HEATING DEVICE	7-53
020	2765653-0100		1	CUTTING TABLE	7-55
030	2843840-0100		2	HUB	7-57
040	2843848-0100		1	BUFFER	7-59
050	2843883-0100		1	MOUNTING SHEET	7-61
060	1036329-0000		2	PIN	
070	1035792-0000		2	E-HINGE	
080	1129770-0000		4	BLOCKING PIECE	
090	2765657-0000		2	PLATE	
110	2841924-0000		1	BRACKET	
130	2844151-0000		2	SPACER	
150	2868760-0000		1	BLOCK	
160	2510401-0100		1	HOLDER	7-67
170	2558878-0000		1	SIGN	
180	2917420-0000		1	SIGN	
190	2921684-0000		2	PROTECTION	
200	3027368-0000		1	PROTECTION	
220	311102-1355		1	PARALLEL PIN ISO 2338 6M6X24 ST	
230	312105-0293		15	SCREW M6S ISO 4017 M4X16 A470	
240	312105-0329		2	SCREW M6S ISO 4017 M5X16 A480	
260	312105-0370		9	SCREW M6S ISO 4017 M6X20 A480	
280	312115-0337		4	SCREW ISO4762 M5X35 A4 80	
290	312115-0366		4	SCREW ISO4762 M6X12 A4 80	
300	312125-0285		3	SCREW ISO 1207 M4X6 A4	
310	352113-0205		3	ANCHOR PLATES FOR STRIPS, TYPE TM2S8-C10	
320	312605-0316		6	HEXAGON NUT, M6M M6 A280	
330	315105-0136		8	WASHER BRB 4,3X8 RFR	
340	315105-0153		16	WASHER BRB 6,4X12 RFR	
350	315125-0153		2	WASHER TBRSB 6,4X22X4 A4	
360	90005-0082		7	WASHER PLAIN ROUND 4,3(M4)/12,H=1	
370	90458-1155		2	ENLARGING SLEEVE, 5210 4452	
380	90458-0438		2	GLAND, EXTENDED WITH INSERT, M20X1,5	
390	90459-4165		2	SAFETY SCREW SM4X25, 20-053-43	
400	90600-2659		1	SPRING LOADED CATCH, EH 2220.080	
410	312105-0376		4	SCREW M6S ISO 4014 M6X35 A480	
420	312311-0461		1	SCREW ISO4028 M8X50 FZB	
430	90459-2726		1	RUBBER BUFFER, 20-00484-01	
450	315239-0111		2	NYLON WASHER G3/8, 3/8RRP	
460	90143-0060	M	1	EDGE STRIP 9,5X6,3MM BLACK PVC	
470	315755-0106		2	RETAINING RING SHAFT DIN 6799 4 SS	
F10B5131	90458-2794		1	SENSOR, EVA 20-046-00	
T10M0180	90600-1459		1	GEARS, WORM MOTOR MCKB 320P2TB5/S	
T10M0181	90600-1459		1	GEARS, WORM MOTOR MCKB 320P2TB5/S	
T10W0180	351150-0406	M	6	CABLE OLFLEX 7X0,75 MM2 LIGHT/GREY	
T10W0181	351150-0406	M	6	CABLE OLFLEX 7X0,75 MM2 LIGHT/GREY	

Machine Type	Group Description	Used-In	Group Number	Page No

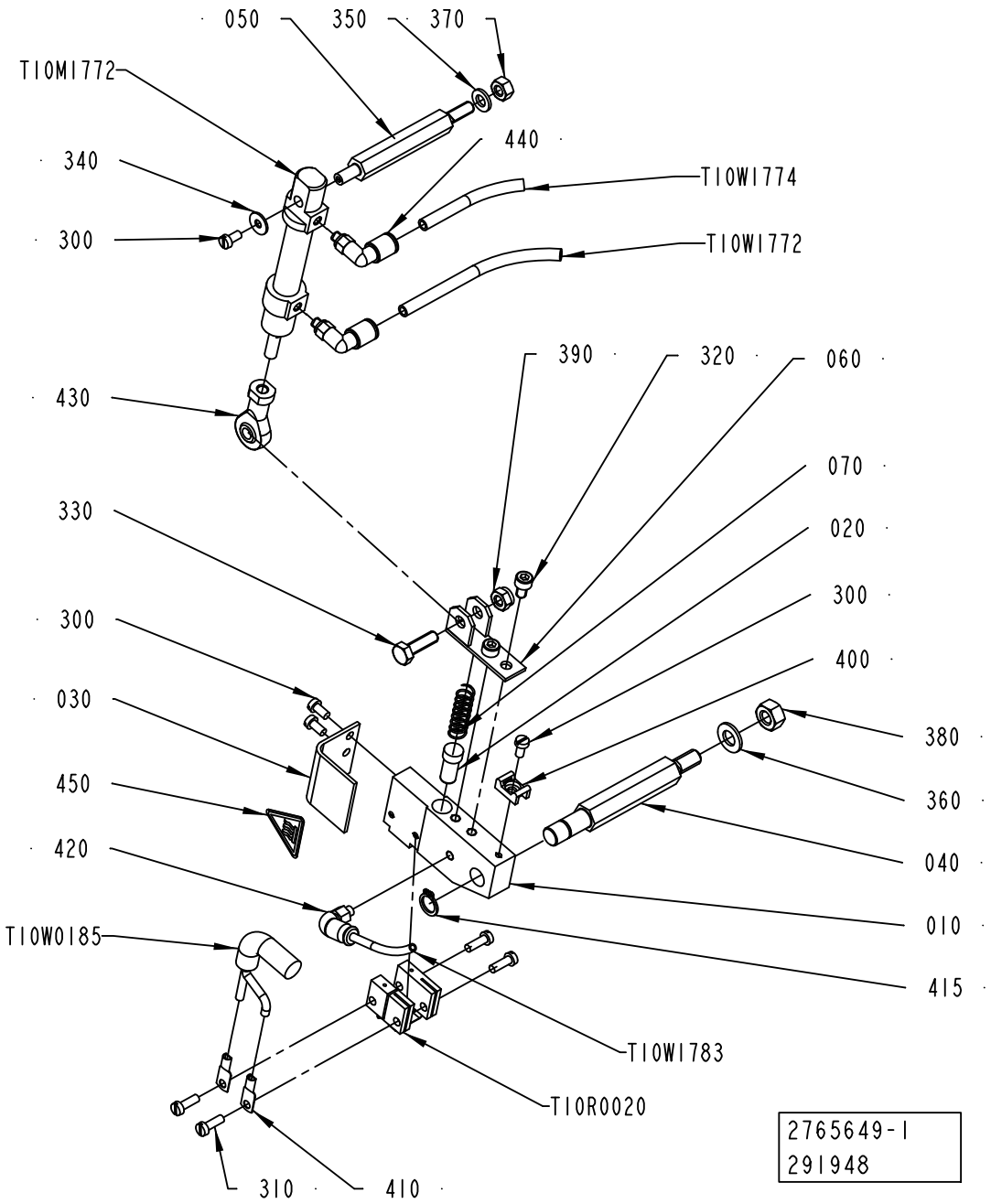
050
350
370
T10MI772
440
340
T10WI774
300
T10WI772
390
320
060
430
070
330
020
300
300
400
030
380
360
450
040
420
010
T10W0185
415
T10WI783
T10R0020
2765649-1
291948
310
410

ECM: 348195 - 20090114
Group number: 2765649-0100
Assembly Drawing: 2765649-1_1_AA

Pos	Part No	UN	Qty	Description	Page No
-					
010	1490804-0000		1	HOLDER	
020	400833-0000		1	PLUNGER	
030	1349181-0000		1	TOUCH GUARD	
040	2765650-0000		1	SHAFT	
050	2765651-0000		1	SHAFT	
060	1037124-0000		1	HOLDER	
070	400828-0000		1	SPRING	
300	312125-0287		4	SCREW ISO 1207 M4X8 A4	
310	312125-0291		4	SCREW ISO 1207 M4X12 A4	
320	312115-0323		2	SCREW ISO4762 M5X8 A4 80	
330	312105-0370		1	SCREW M6S ISO 4017 M6X20 A480	
340	90005-0082		1	WASHER PLAIN ROUND 4,3(M4)/12,H=1	
350	315105-0153		1	WASHER BRB 6,4X12 RFR	
360	315105-0165		1	WASHER BRB 8,4X16 RFR	
370	312605-0316		1	HEXAGON NUT, M6M M6 A280	
380	312605-0318		1	HEXAGON NUT, M6M M8 A280	
390	312812-0316		1	HEXAGON NUT, NY-LOCK M6 A480	
400	352113-0205		1	ANCHOR PLATES FOR STRIPS, TYPE TM2S8-C10	
410	353104-0140		2	CABLE SHOE, RING UNINS., YAV 06 M 4	
415	90141-0016		1	RETAINING RING FOR SHAFT DIN 471 10 SS	
420	90458-2954		1	ELBOW PIPE JOINT, EXT.THREAD, D=4MM M5	
430	90239-0491		1	ROD END, BALL JOINT EYE, MINI-ISO M6	
440	350002-0002		2	PUSH-IN L-FITTING QSL-F-M5-6	
450	90194-0143		1	WARNING SIGN ISO, HOT SURFACE	
T10M1772	90450-0306		1	DOUBLE ACTING, MINI-ISO, CYL. 12-25	
T10R0020	1498047-0000		1	SEALING BLOCK	
T10W0185	351120-0126	M	1	CABLE ÖLFLEX HEAT 180 SIHF 2X4	
T10W1772	90166-0193	M	1	TUBE 6 MM PUR BLUE	
T10W1774	90166-0193	M	1	TUBE 6 MM PUR BLUE	
T10W1783	90166-0095	M	1	TUBE 4 MM PA BLUE (50M)	

Pos	Part No	UN	Qty	Description	Page No

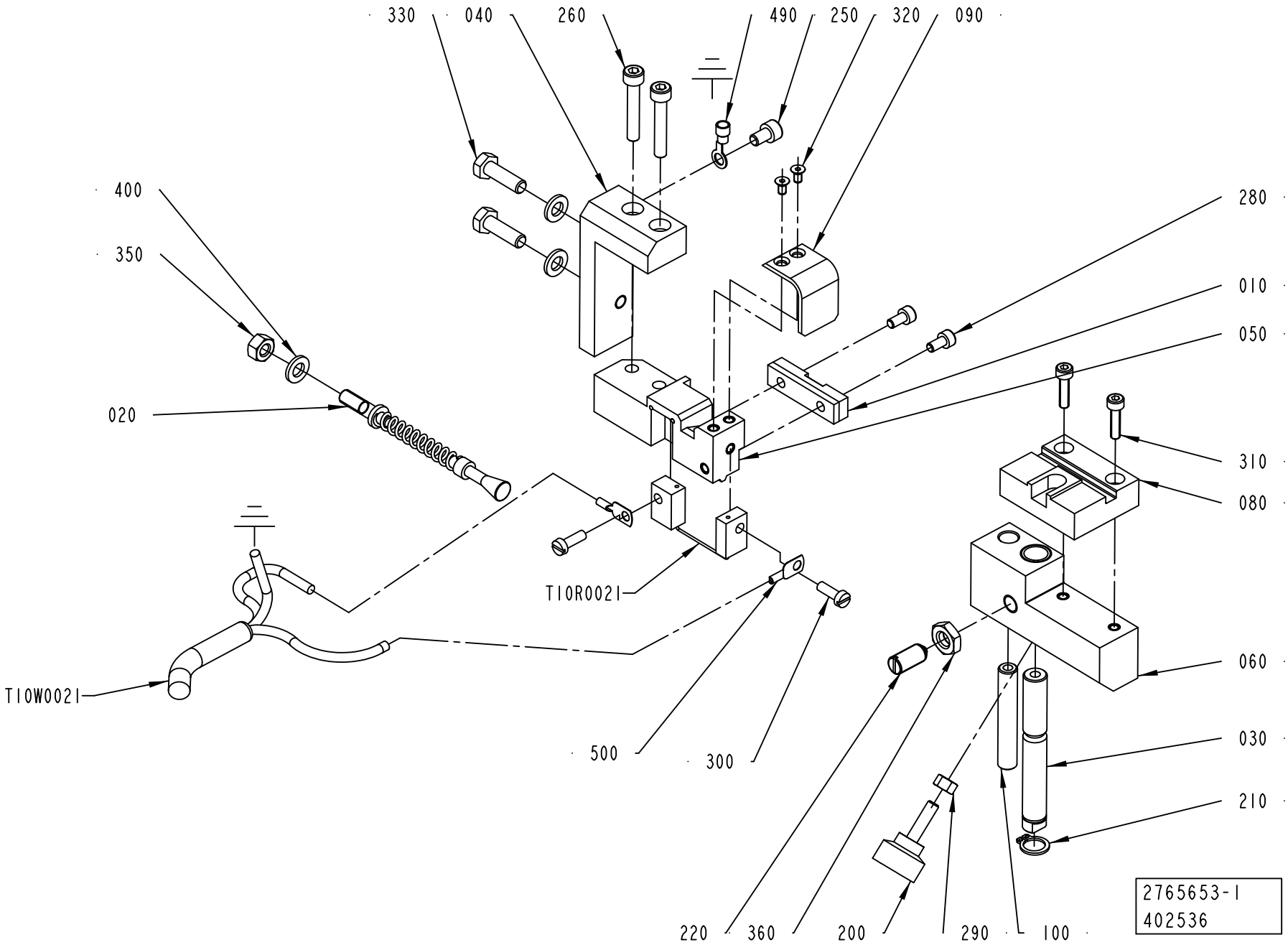
330
040
260
490
250
320
090
400
350
020
280
010
050
310
080
T10R0021
T10W0021
060
030
210
500
300
220
360
200
290
100
2765653-1
402536

ECM: 402653 - 20090618
Group number: 2765653-0100
Assembly Drawing: 2765653-1_1_AB

Pos	Part No	UN	Qty	Description	Page No
-					
010	1349014-0000		1	PAD	
020	2765652-0000		1	FINGER	
030	1517751-0000		1	SHAFT	
040	2765654-0000		1	BRACKET	
050	2523598-0000		1	SPLICING TABLE	
060	3034364-0000		1	SLIDER	
080	3034363-0000		1	PAD	
090	2579838-0000		1	TOUCH GUARD	
100	2523600-0000		1	PIN	
200	90051-0035		1	KNOB, EXTERNAL THREAD. NO. 8308-1135	
210	90141-0016		1	RETAINING RING FOR SHAFT DIN 471 10 SS	
220	90287-0112		1	SCREW SPRINGLOAD. SLOTTED HEAD M8X16	
250	312115-0323		1	SCREW ISO4762 M5X8 A4 80	
260	312115-0335		2	SCREW ISO4762 M5X30 A4 80	
280	312115-0287		2	SCREW ISO4762 M4X8 A4 80	
290	312605-0314		1	HEXAGON NUT, M6M M5 A280	
300	312125-0291		2	SCREW ISO 1207 M4X12 A4	
310	312155-0293		2	SCREW DIN 7991 MF6S M4X16 A4 70	
320	312155-0220		2	SCREW DIN 7991 MF6S M3X6 A4 70	
330	312105-0370		2	SCREW M6S ISO 4017 M6X20 A480	
350	312605-0316		1	HEXAGON NUT, M6M M6 A280	
360	312625-0318		1	HEXAGON THIN NUT, EN 24035 ML6M M8 A4	
400	315105-0153		3	WASHER BRB 6,4X12 RFR	
490	353101-0132		1	CABLE SHOE 1,5-2,5MM2 M5 BLUE	
500	353104-0130		2	CABLE SHOE, RING UNINS., YAV 025 M 4	
T10R0021	1524481-0000		1	SEALING BLOCK	
T10W0021	351120-0145	MM	4000	CABLE ÖLFLEX HEAT 180 SIHF 3X2,5	

Pos	Part No	UN	Qty	Description	Page No

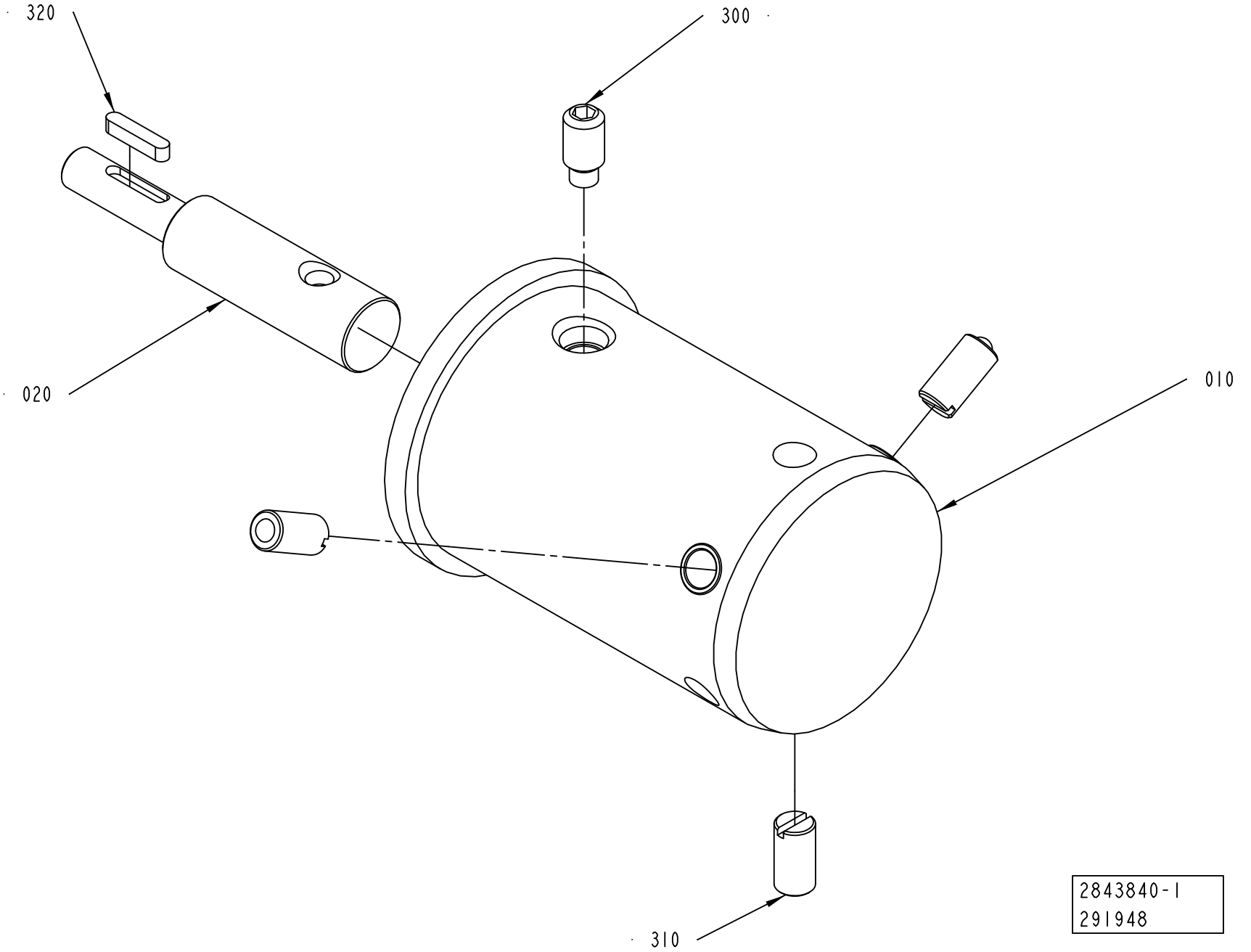
320
300
020
010
310
2843840-1
291948

ECM: 435128 - 20100402
Group number: 2843840-0100
Assembly Drawing: 2843840-1_1_AA

Pos	Part No	UN	Qty	Description	Page No
-					
010	2839989-0000		1	HUB	
020	2839988-0000		1	SHAFT	
300	312311-0491		1	SCREW ISO4028 M10X20 FZB	
310	90287-0106		3	SCREW SPRINGLOAD. SLOTTED HEAD M10X21	
320	315701-0170		1	PARALLEL KEY W. ROUND ENDS 4X4X20 MM	

Pos	Part No	UN	Qty	Description	Page No

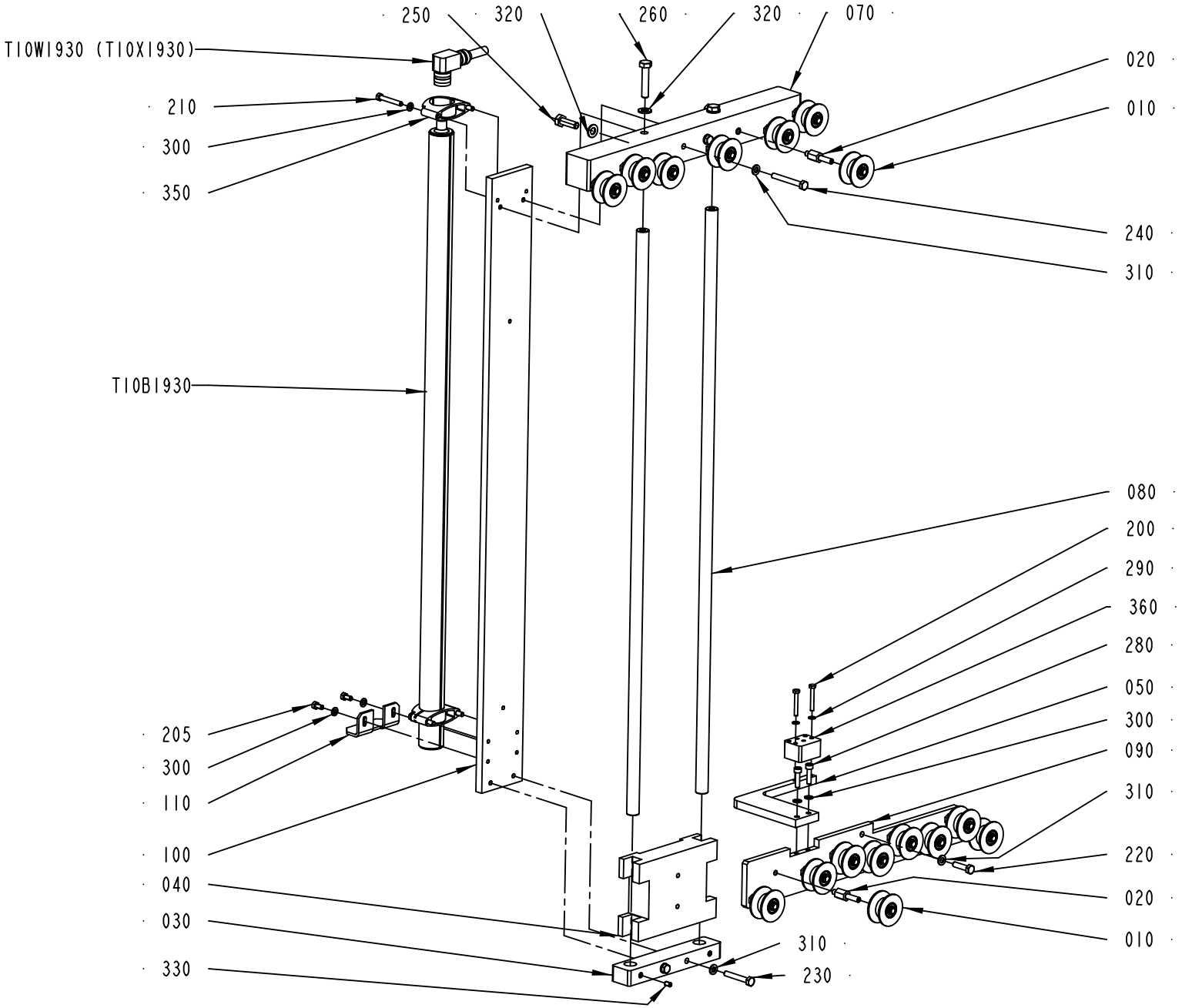
250
320
260
320
070
T10W1930 (T10X1930)
020
210
010
300
350
240
310
T10B1930
080
200
290
360
280
050
205
300
090
300
110
310
100
220
040
020
030
010
310
330
230
2843848-1
421041

ECM: 430029 - 20100401
Group number: 2843848-0100
Assembly Drawing: 2843848-1_1_AB

Pos	Part No	UN	Qty	Description	Page No
-					
010	2737899-0100		16	WHEEL	**7-47**
020	2799295-0000		16	SHAFT	
030	2841912-0000		1	PLATE	
040	2842998-0000		1	SLIDER	
050	2843003-0000		1	BRACKET	
070	2843844-0000		1	SPACER	
080	2843845-0000		2	GUIDE	
090	2862492-0000		1	PLATE	
100	2843847-0000		1	BRACKET	
110	3061318-0000		1	SUPPORT	
200	312105-0299		2	SCREW M6S ISO 4017 M4X30 A470	
205	312105-0325		2	SCREW M6S ISO 4017 M5X10 A480	
210	312105-0337		4	SCREW M6S ISO 4014 M5X35 A480	
220	312105-0372		2	SCREW M6S ISO 4017 M6X25 A480	
230	312105-0378		2	SCREW M6S ISO 4014 M6X40 A480	
240	312105-0380		2	SCREW M6S ISO 4014 M6X50 A480	
250	312105-0453		4	SCREW M6S ISO 4017 M8X25 A480	
260	312105-0459		2	SCREW M6S ISO 4014 M8X40 A480	
280	312115-0331		2	SCREW ISO4762 M5X20 A4 80	
290	315105-0136		2	WASHER BRB 4,3X8 RFR	
300	315105-0146		8	WASHER BRB 5,3X10 RFR	
310	315105-0153		6	WASHER BRB 6,4X12 RFR	
320	315105-0165		6	WASHER BRB 8,4X16 RFR	
330	312309-0323		2	SCREW ISO4026 M5X8 A4	
350	90600-0969		2	MOUNTING BRACKET, BTL6-A-MF03-K-50	
360	90600-0973		1	FLOATING MAGNET, BTL6-A-3800-2	
T10B1930	90600-0967		1	TRANSDUCER, BTL6-A110-M0650-A1-S115	
T10W1930	90600-0972		1	SENSOR CABLE BKS-S116-PU10	

Pos	Part No	UN	Qty	Description	Page No

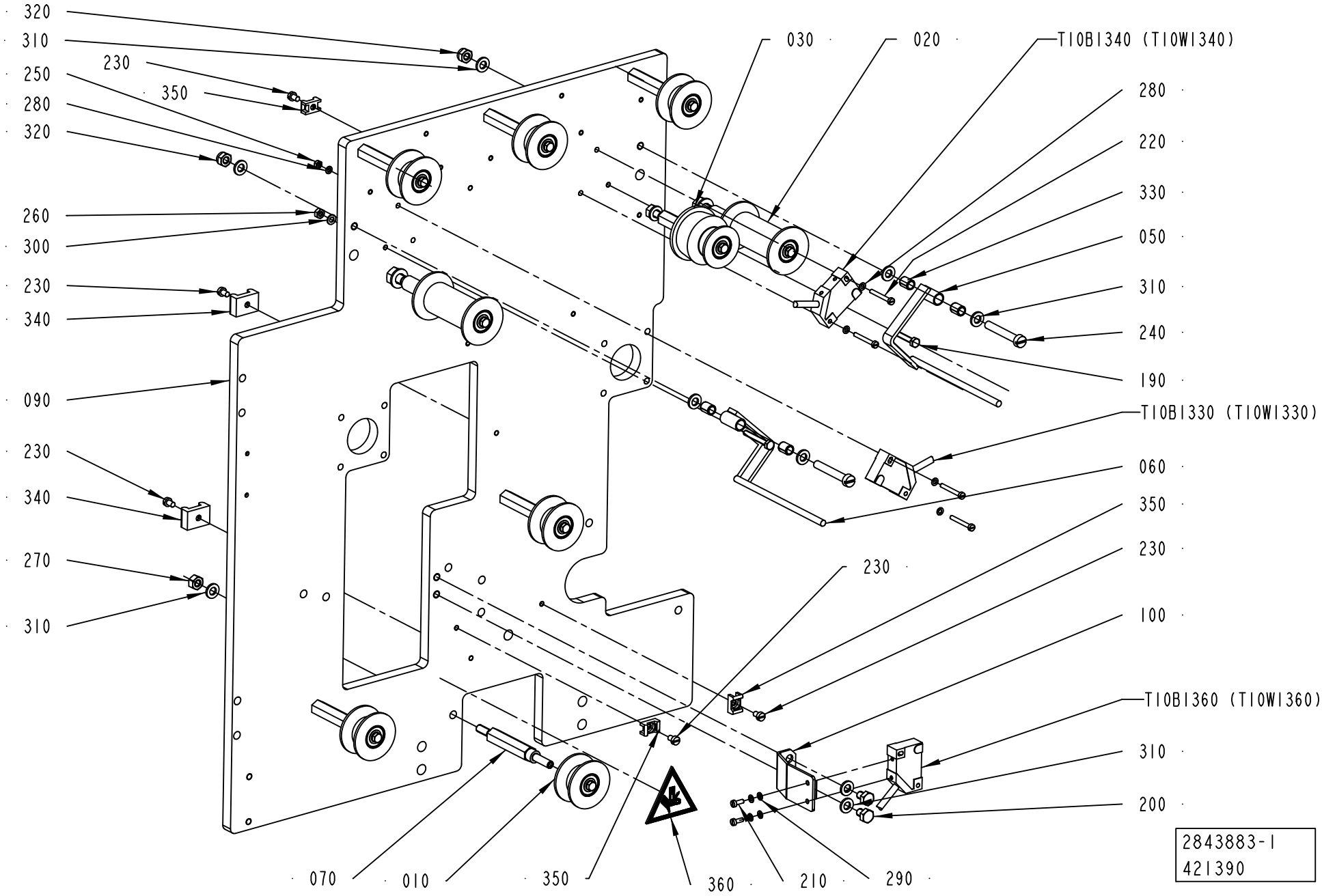
320
310
230
250
350
280
320
260
300
230
340
090
230
340
270
310
030
020
T10B1340 (T10W1340)
280
220
330
050
310
240
190
T10B1330 (T10W1330)
060
350
230
230
100
T10B1360 (T10W1360)
310
200
070
010
350
360
210
290
2843883-1
421390

ECM: 431480 - 20100401
Group number: 2843883-0100
Assembly Drawing: 2843883-1_1_AC

Pos	Part No	UN	Qty	Description	Page No
-					
010	2737899-0100		6	WHEEL	**7-47**
020	2760939-0100		2	BEARING ROLLER	**7-63**
030	2760942-0100		1	PULLEY	**7-65**
050	2862493-0000		1	ARM	
060	2862494-0000		1	ARM	
070	2765646-0000		6	SHAFT	
090	2843881-0000		1	MOUNTING PLATE	
100	2843882-0000		1	BRACKET	
190	312105-0299		2	SCREW M6S ISO 4017 M4X30 A470	
200	312105-0362		2	SCREW M6S ISO 4017 M6X8 A480	
210	312125-0222		2	SCREW ISO 1207 M3X8 A4	
220	312125-0232		4	SCREW ISO 1207 M3X25 A4	
230	312125-0285		5	SCREW ISO 1207 M4X6 A4	
240	312125-0378		2	SCREW ISO 1207 M6X40 A4	
250	312605-0310		4	HEXAGON NUT, M6M M3 A280	
260	312605-0312		2	HEXAGON NUT, M6M M4 A280	
270	312605-0316		6	HEXAGON NUT, M6M M6 A280	
280	315103-0124		8	WASHER, BRB, 3,2/6,H=0,5 NI PL BR	
290	315105-0124		4	WASHER BRB 3,2X6 RFR	
300	315105-0136		2	WASHER BRB 4,3X8 RFR	
310	315105-0153		14	WASHER BRB 6,4X12 RFR	
320	312812-0316		2	HEXAGON NUT, NY-LOCK M6 A480	
330	321141-0064		4	BEARING BUSH W/O FLANGE, 6X8X10 MM	
340	352113-0203		2	ANCHOR PLATES FOR STRIPS, TYPE TM3S8-M0	
350	352113-0205		3	ANCHOR PLATES FOR STRIPS, TYPE TM2S8-C10	
360	359705-0005		1	WARNING SIGN ISO, MOVING PART	
T10B1330	90044-0194		1	INDUCTIVE SENSOR IN5329	
T10B1340	90044-0194		1	INDUCTIVE SENSOR IN5329	
T10B1360	90044-0194		1	INDUCTIVE SENSOR IN5329	

Pos	Part No	UN	Qty	Description	Page No

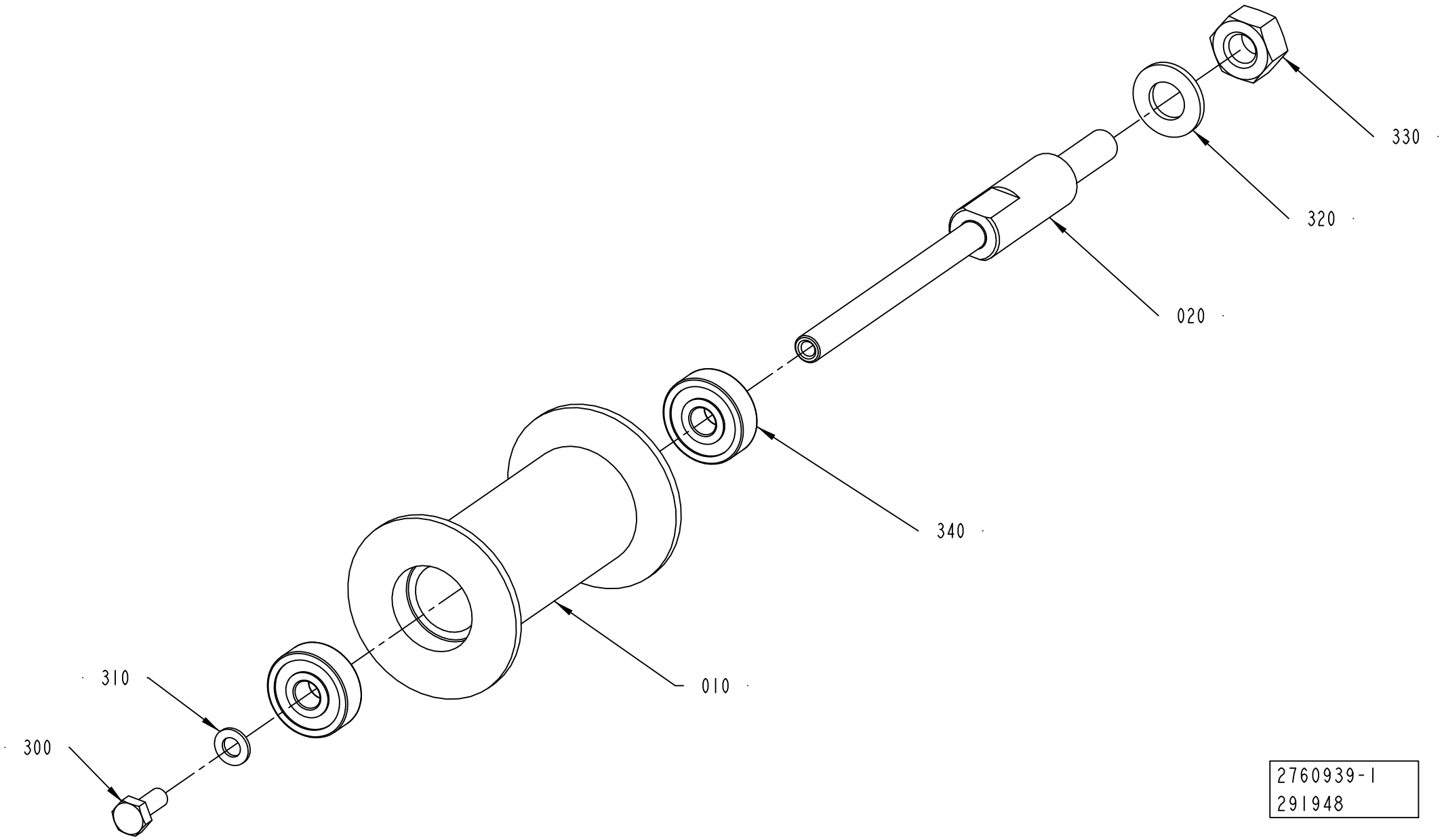
330
320
020
340
010
310
300
2760939-1
291948

ECM: 420394 - 20091028
Group number: 2760939-0100
Assembly Drawing: 2760939-1_1_AA

Pos	Part No	UN	Qty	Description	Page No
-					
010	2859686-0000		1	ROLLER	
020	2765647-0000		1	SHAFT	
300	312105-0289		1	SCREW M6S H4X10 A4 70 ISO4017/DIN933	
310	315105-0136		1	WASHER BRB 4,3X8 RFR	
320	315105-0165		1	WASHER BRB 8,4X16 RFR	
330	312605-0318		1	HEXAGON NUT, M6M M8 A280	
340	90600-2897		2	BALL BEARING 6/19X6	

Pos	Part No	UN	Qty	Description	Page No

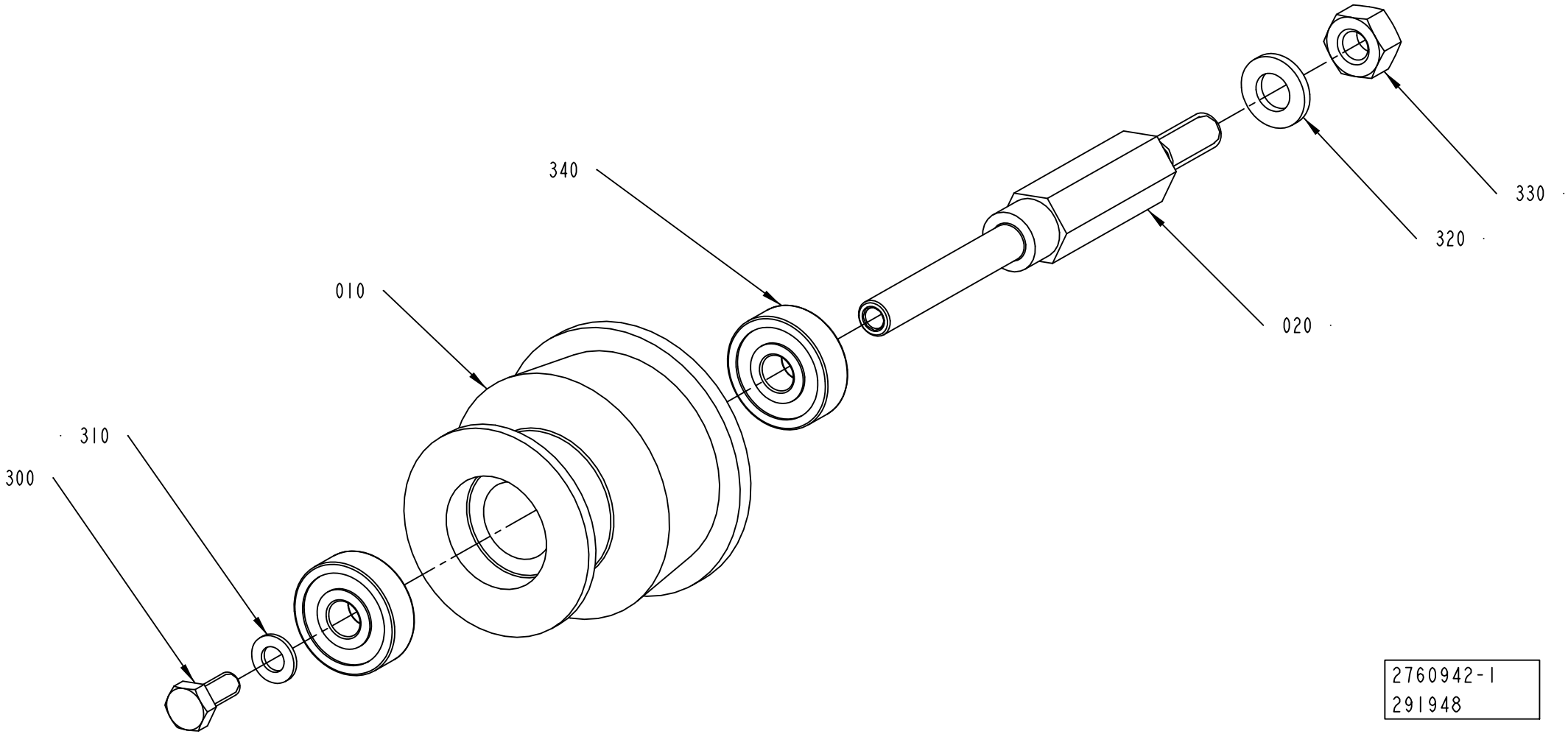
340
330
320
010
020
310
300
2760942-1
291948

ECM: 420395 - 20091028
Group number: 2760942-0100
Assembly Drawing: 2760942-1_1_AA

Pos	Part No	UN	Qty	Description	Page No
-					
010	2760941-0000		1	ROLLER	
020	2868758-0000		1	SHAFT	
300	312105-0289		1	SCREW M6S H4X10 A4 70 ISO4017/DIN933	
310	315105-0136		1	WASHER BRB 4,3X8 RFR	
320	315105-0153		1	WASHER BRB 6,4X12 RFR	
330	312605-0316		1	HEXAGON NUT, M6M M6 A280	
340	90600-2897		2	BALL BEARING 6/19X6	

Pos	Part No	UN	Qty	Description	Page No

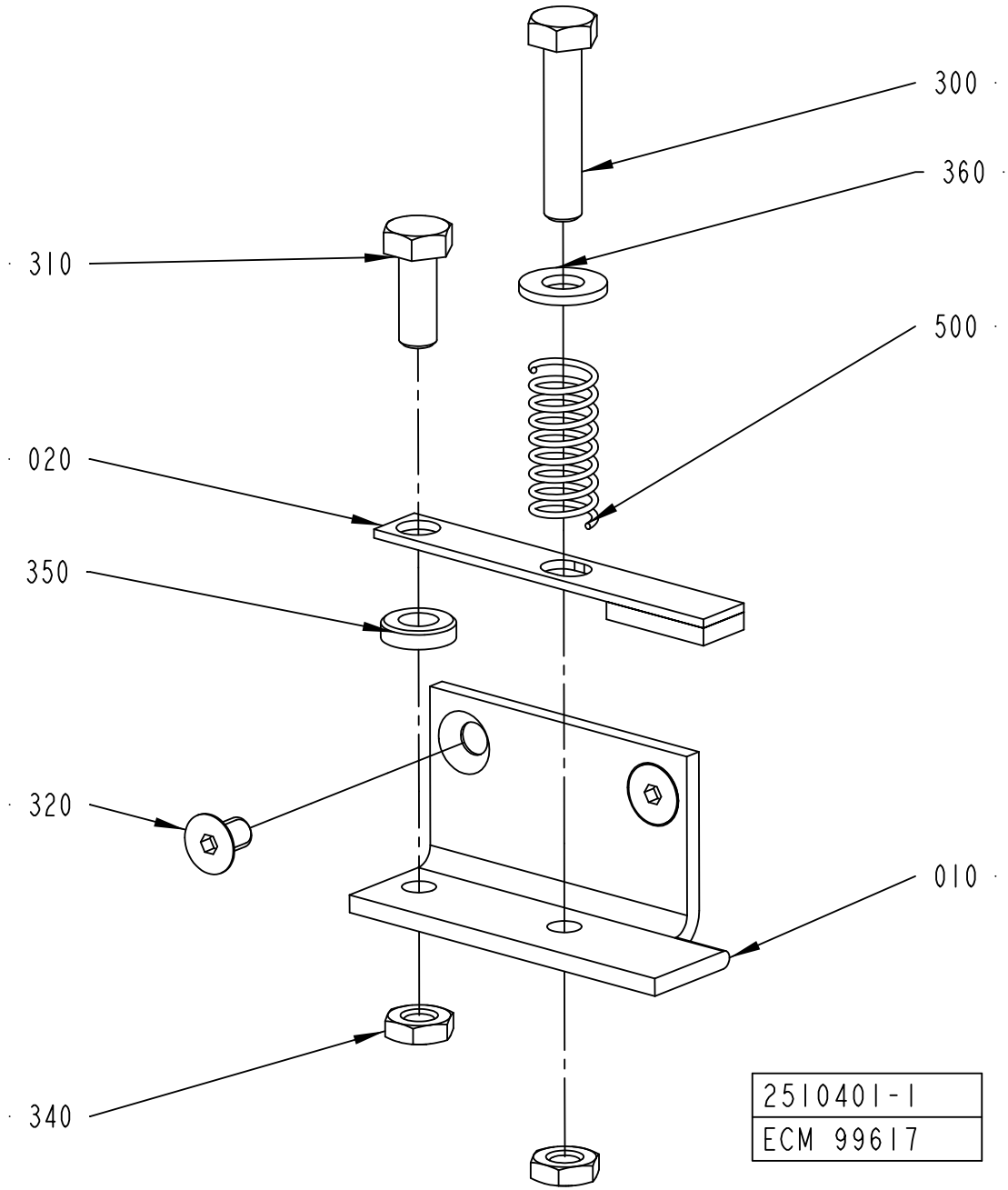
300
360
310
500
020
350
320
010
340
2510401-1
ECM 99617

ECM: 178408 - 20041005
Group number: 2510401-0100
Assembly Drawing: 2510401-1_1_AA

Pos	Part No	UN	Qty	Description	Page No
-					
010	2510399-0000		1	BRACKET	
020	2510400-0000		1	HOLDER	
300	312109-0374		1	SCREW M6S ISO 4017 M6X30 A480	
310	312105-0368		1	SCREW M6S ISO 4017 M6X16 A480	
320	312155-0323		2	SCREW DIN 7991 MF6S M5X8 A4 70	
340	312625-0316		2	HEXAGON THIN NUT, EN 24035 ML6M M6 A4	
350	315115-0153		1	WASHER PLAIN, TBRB 6,4/12 H=3	
360	315105-0156		1	WASHER BRB 6,7X14 RFR	
500	90335-0025		1	COMP. SPRING 22010, 1X11X26	

Pos	Part No	UN	Qty	Description	Page No

SPLICING DEVICE

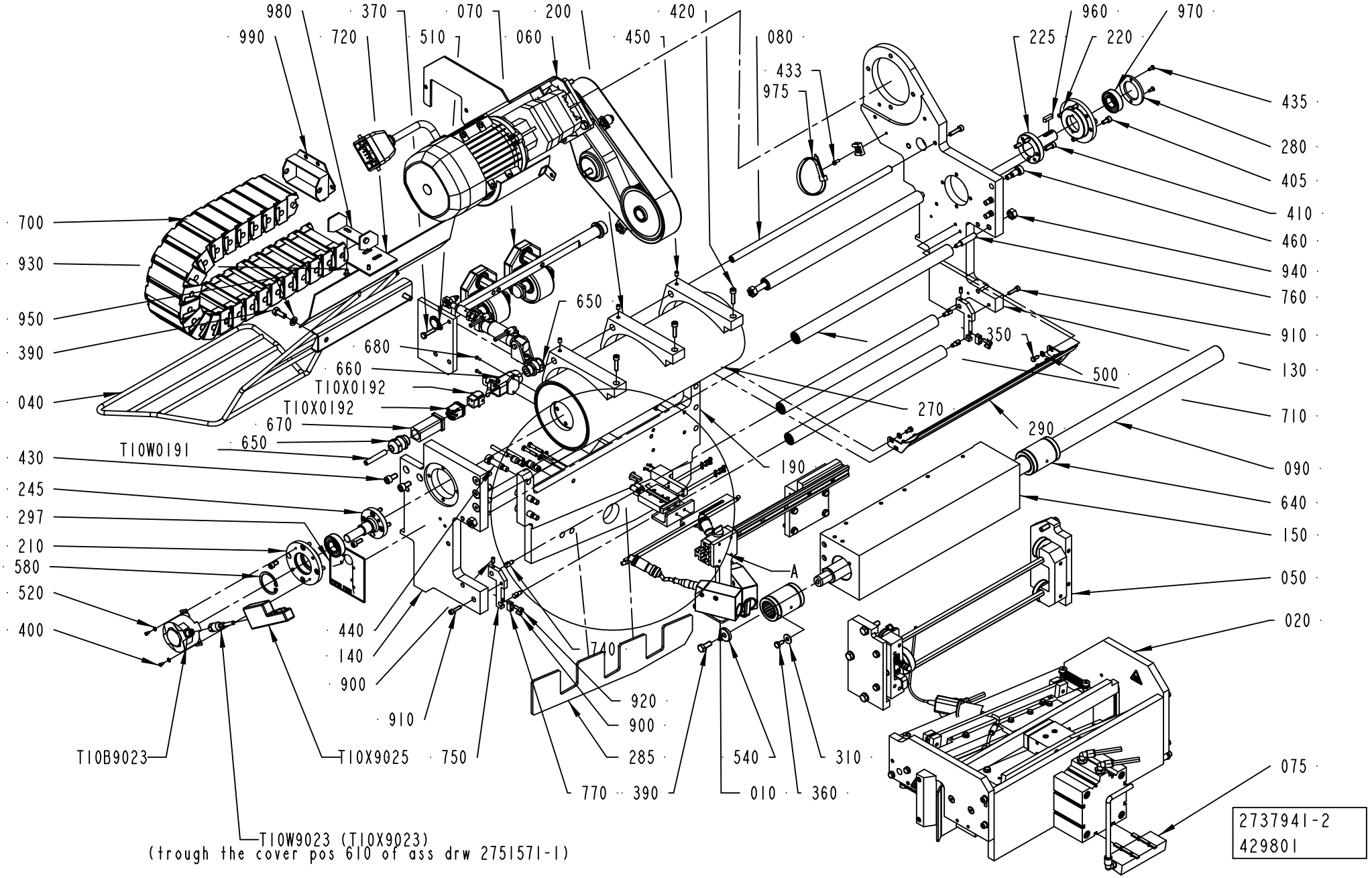

ECM: 440711 - 20101001
Group number: 2737941-0200
Assembly Drawing: 2737941-2_1_AC

This list covers pages from 7-68 to 7-71

Pos	Part No	UN	Qty	Description	Page No
-					
010	2737913-0100		1	BAR CODE READER	7-73
020	2741003-0100		1	PRESSURE JAW	7-75
040	2859151-0000		1	GUIDE RAIL	
050	2806677-0100		1	PAPER GUIDE	7-83
060	2806678-0200		1	DRIVE UNIT	7-89
070	2806679-0100		1	COUNTER ROLLER	7-91
075	3062179-0100		1	AIR NOZZLE	7-95
080	2737904-0000		1	SHAFT	
090	2737906-0000		1	SHAFT	
130	2737942-0000		1	PLATE	
140	2737943-0000		1	PLATE	
150	2737944-0000		1	BRACKET	
190	2741002-0000		1	PLATE	
200	2741020-0000		3	PAPER GUIDE	
210	2862727-0000		1	FLANGE	
220	2839980-0000		1	FLANGE	
225	2838959-0000		1	SHAFT	
245	2987335-0000		1	SHAFT	
270	2776128-0000		1	BENDING ROLLER	
280	2839981-0000		1	FLANGE	
282	3018426-0000		1	PLATE	
285	3018876-0000		1	SHIM	
287	3020285-0000		1	PLATE	
290	3026441-0000		1	PROTECTION	
295	3039533-0000		1	PLATE	
297	3067051-0000		1	LABEL	
300	90287-0175		4	SCREW M6S M3X12 A480	
305	311103-0274		2	PARALLEL PIN ISO 2338 4M6X25 A1	
310	90457-0192		2	WASHER PLAIN ROUND, 6,5/18, H=1,5	
340	312115-0291		2	SCREW ISO4762 M4X12 A4 80	
350	312105-0335		2	SCREW M6S ISO 4014 M5X30 A480	
350	312105-0325		4	SCREW M6S ISO 4017 M5X10 A480	
360	312105-0366		2	SCREW M6S ISO 4017 M6X12 A480	
370	312105-0372		1	SCREW M6S ISO 4017 M6X25 A480	
390	312105-0451		3	SCREW M6S ISO 4017 M8X20 A480	
400	312125-0220		2	SCREW ISO 1207 M3X6 A4	
405	312115-0366		8	SCREW ISO4762 M6X12 A4 80	
410	312115-0368		8	SCREW ISO4762 M6X16 A4 80	
420	312115-0372		4	SCREW ISO4762 M6X25 A4 80	
430	312115-0449		2	SCREW ISO4762 M8X16 A4 80	
433	312125-0289		1	SCREW ISO 1207 M4X10 A4	
435	312155-0289		2	SCREW DIN 7991 MF6S M4X10 A4 70	
440	312180-0495		8	SCREW ISO7379 H10X30	
450	312318-0362		3	SCREW ISO4029 M6X8 A4	
460	312180-0489		6	SCREW ISO7379 H10X16	
500	315105-0136		4	WASHER BRB 4,3X8 RFR	
502	315402-0136		2	LOCK WASHER FBB 4,1	
505	315105-0146		2	WASHER BRB 5,3X10 RFR	
510	315105-0153		1	WASHER BRB 6,4X12 RFR	
520	315106-0124		6	WASHER ISO 7089-3-200 HV A4	
540	315125-0165		1	WASHER TBRSB 8,4X26X5 A4	
570	350003-0001		2	PUSH-IN FITTING QS-F-M5-4-I	
580	90141-0020		1	RETAINING RING FOR BORE DIN 472 42 SS	
640	90600-3054		2	BEARING HOUSING, RJUM-01-30	
650	90458-0307		2	CABLE GLAND, M20X1,5, NO.5311 1020	
660	90459-3081		1	HOUSING HAN A 19 20 003 1250	
670	90459-3670		1	HOOD HAN 3A 19 20 003 1440	
680	312125-0222		2	SCREW ISO 1207 M3X8 A4	
700	2852891-0000		1	LINK CHAIN	
710	2863550-0100		4	ROLLER	7-39
720	2838965-0000		1	PLATE	
740	2863547-0000		4	PIN	
750	2863549-0000		2	BRACKET	
760	2863551-0000		4	PIN	
770	2868754-0000		2	BRACKET	
900	90459-7283		4	SCREW HEX.SOCK.SET CONEPT.MS6SS M5X12 A2	
910	312111-0331		2	SCREW HEX.SOCK.HD.MC6S-TT 5X20 88 FZB	
920	312115-0328		2	SCREW ISO4762 M5X14 A4 80	
930	312155-0325		2	SCREW DIN 7991 MF6S M5X10 A4 70	
940	312607-0320		4	HEXAGON NUT, EN 24032 M6M M10 A480	
950	315105-0165		2	WASHER BRB 8,4X16 RFR	
960	315705-0233		1	PARALLEL KEY W. ROUND ENDS 6X6X22 MM	
970	321308-0204		2	BALL BEARING 20/42X12	
975	352113-0106		1	CABLE TIE, BLACK 368X7,6 MM	
977	352113-0203		1	ANCHOR PLATES FOR STRIPS, TYPE TM3S8-M0	
980	90600-3055		1	FLEXIBLE CHAIN, BRACKET 582.1.2	
990	90600-3056		1	FLEXIBLE CHAIN, BRACKET 580.1.1	
995	315400-0016	MM	100	TUBE PUN-H-4X0,75-BL	
996	315400-0016	MM	130	TUBE PUN-H-4X0,75-BL	
997	90055-0237		2	HOSE,NIPPLE,REDUCER,TUBE, 4/6MM	
998	90157-0037	ML	1	THREAD SEALANT LOCTITE 542	
T10B9023	90600-4785		1	INCREMENTAL ENCODER, DFS60E - BHAC02000	
T10M1612	90600-8126		1	CYLINDER WITH INT. GUIDING BORE 10	

Machine Type | Group Description | Used-In | Group Number | Page No

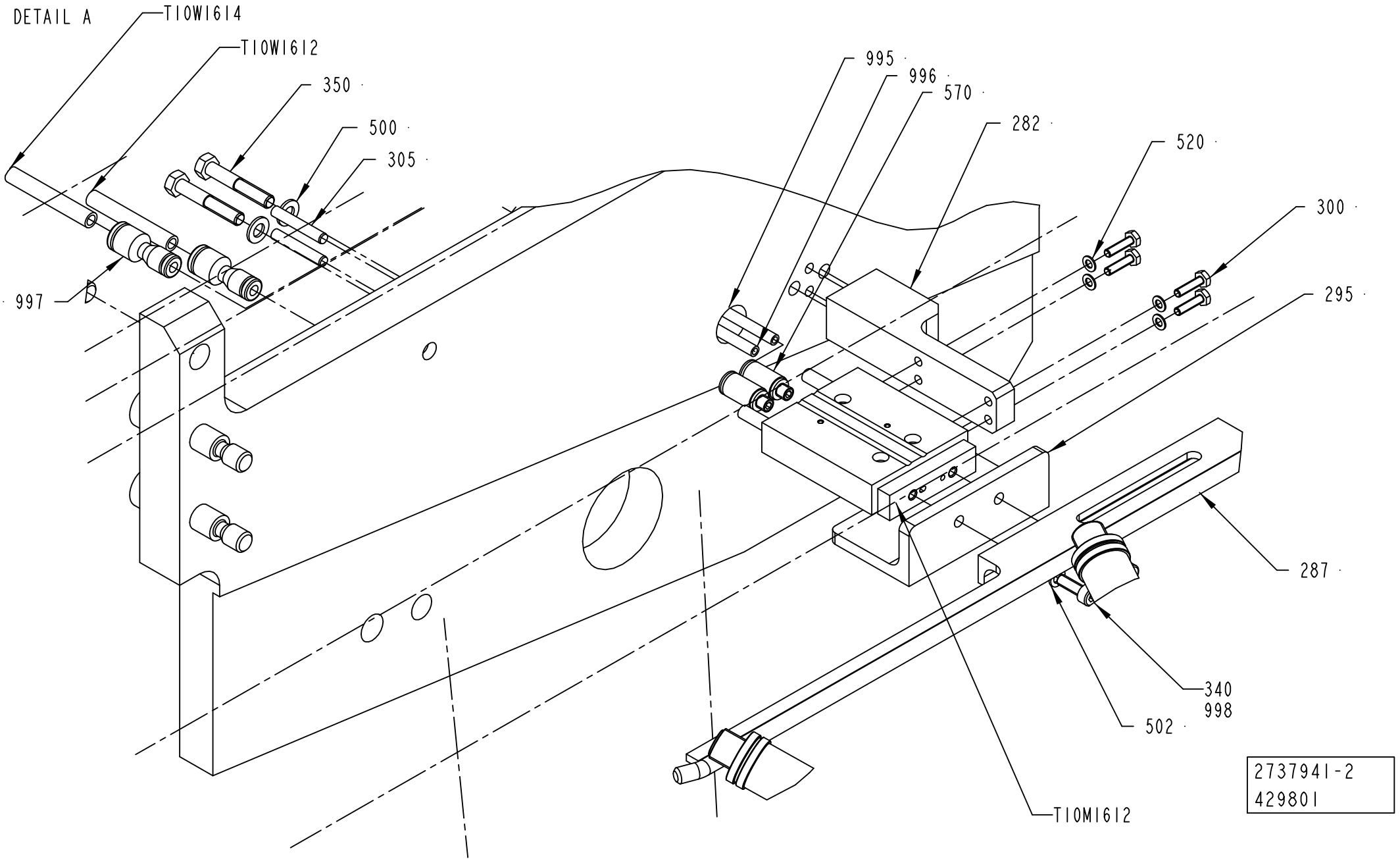
DETAIL A
T10W1614
T10W1612
350
500
305
997
995
996
570
282
520
300
295
287
340
998
502
T10M1612
2737941-2
429801

Pos	Part No	UN	Qty	Description	Page No
- (Cont'd)					
T10W0191	351150-0412	MM	8000	CABLE OLFLEX 3X1,5 MM2 LIGHT/GREY	
T10W1612	315400-0001	M	6	TUBE PUN-H-6X1-BL	
T10W1614	315400-0001	M	6	TUBE PUN-H-6X1-BL	
T10W9023	90601-0006		1	ACTUATOR/SENSOR CABLE DOL-1208-G20MAC1	
T10X0192	90459-6821		1	MALE INSERT HAN 4A, 09 20 004 2611	
T10X0192	90459-6820		1	FEMALE INSERT HAN 4 A, 09 20 004 2711	
T10X9025	90459-6679		1	CONN 15 P FEM, AUX. FEEDB,2090-K6CK-D15F	

Pos	Part No	UN	Qty	Description	Page No

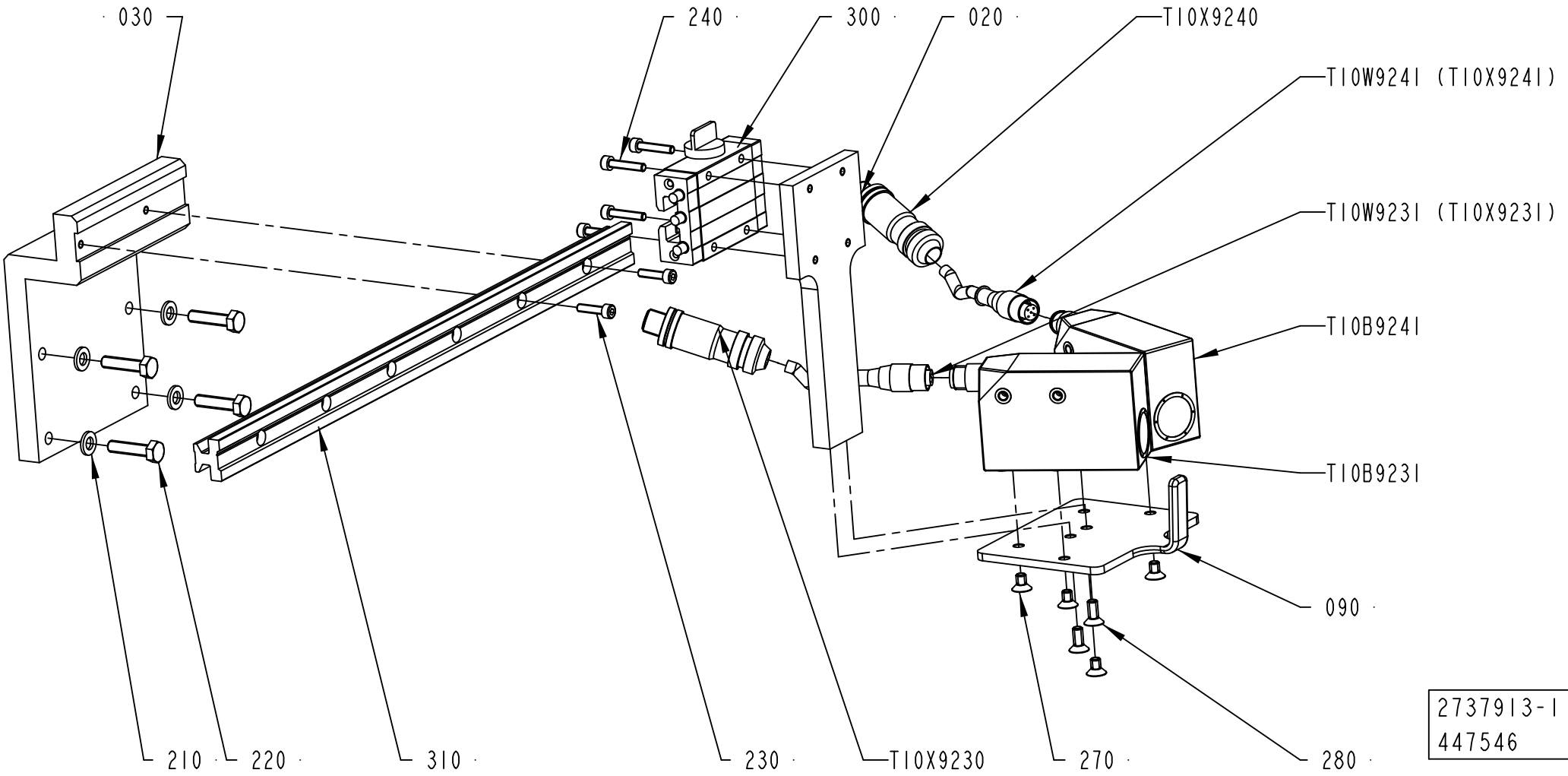
030
240
300
020
T10X9240
T10W924I (T10X924I)
T10W923I (T10X923I)
T10B924I
T10B923I
090
210
220
310
230
T10X9230
270
280
2737913-1
447546

ECM: 448549 - 20101001
Group number: 2737913-0100
Assembly Drawing: 2737913-1_1_AC

Pos	Part No	UN	Qty	Description	Page No
-					
020	2737919-0000		1	PLATE	
030	2737920-0000		1	PLATE	
090	2737933-0000		1	FASTENING PLATE	
220	312105-0372		4	SCREW M6S ISO 4017 M6X25 A480	
230	312115-0293		2	SCREW ISO4762 M4X16 A4 80	
240	312115-0295		4	SCREW ISO4762 M4X20 A4 80	
270	312155-0323		4	SCREW DIN 7991 MF6S M5X8 A4 70	
280	312155-0327		2	SCREW DIN 7991 MF6S M5X12 A4 70	
290	315105-0153		4	WASHER BRB 6,4X12 RFR	
300	90600-2667		1	CARRIAGE, TW-01-15-HKA	
310	90600-3051		1	GUIDE BAR, 15X15,5X380 MM	
T10B9231	90458-0602		1	CONTRAST SCANNER, KT15W-P2213S02	
T10B9241	90458-0602		1	CONTRAST SCANNER, KT15W-P2213S02	
T10W9231	90459-3250		1	SENSOR CABLE SICK DOP 1205 G15M	
T10W9241	90459-3250		1	SENSOR CABLE SICK DOP 1205 G15M	
T10X9230	90459-6387		1	CONNECTOR 5-POL M12, RSCS 5/9	
T10X9240	90459-6387		1	CONNECTOR 5-POL M12, RSCS 5/9	

Pos	Part No	UN	Qty	Description	Page No

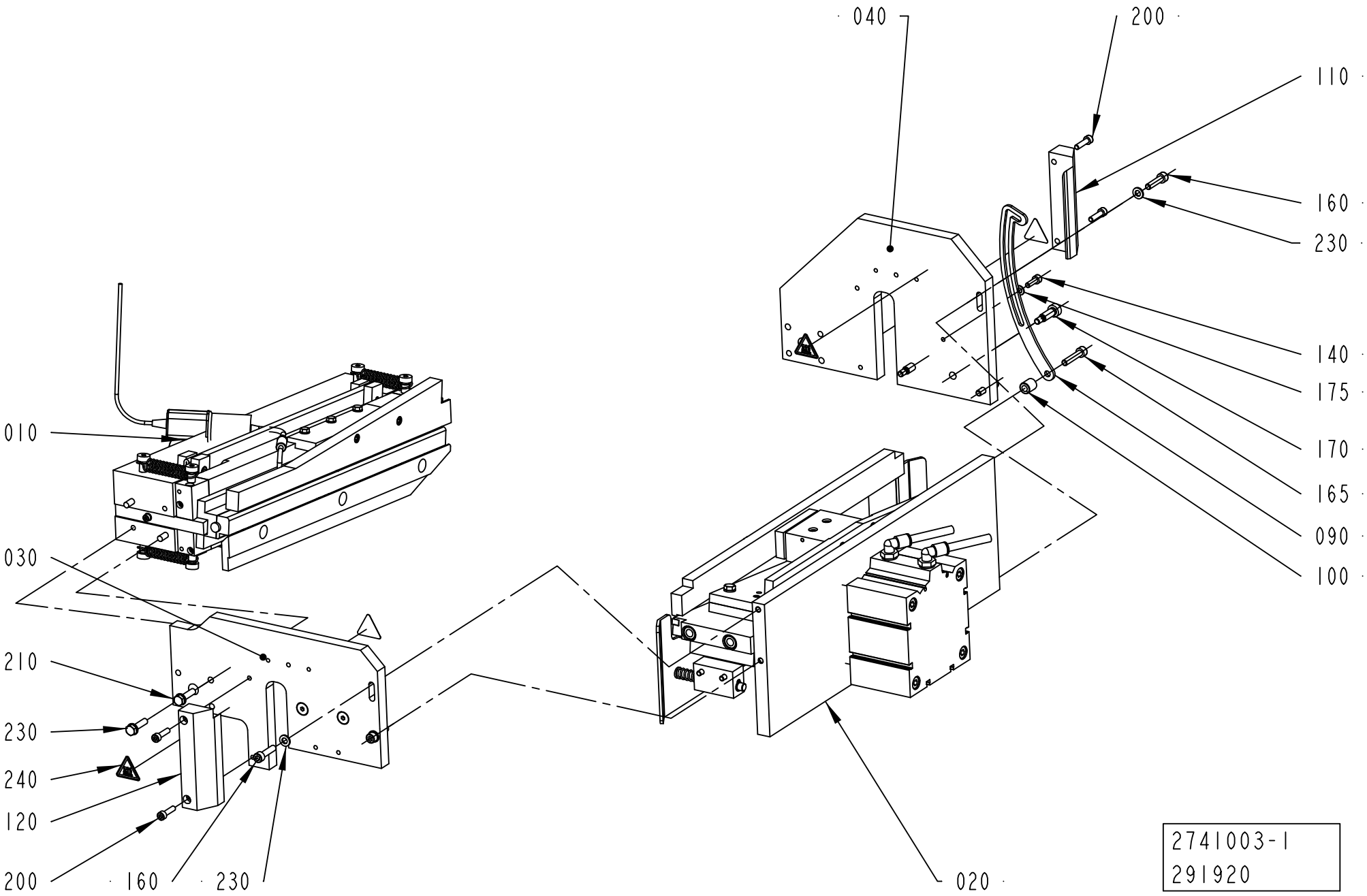
040
200
110
160
230
140
175
170
165
090
100
010
030
210
230
240
120
200
160
230
020
2741003-1
291920

ECM: 348237 - 20090114
Group number: 2741003-0100
Assembly Drawing: 2741003-1_1_AA

Pos	Part No	UN	Qty	Description	Page No
-					
010	2797149-0100		1	PRESSURE JAW	**7-77**
020	2797150-0100		1	PRESSURE JAW	**7-81**
030	2741009-0000		1	PLATE	
040	2741010-0000		1	PLATE	
090	2806661-0000		1	CATCH	
100	2806666-0000		1	SPACER	
110	2790940-0000		1	INFEEDER	
120	2790942-0000		1	INFEEDER	
140	312115-0329		1	SCREW ISO4762 M5X16 A4 80	
160	312115-0372		4	SCREW ISO4762 M6X25 A4 80	
165	312115-0374		1	SCREW ISO4762 M6X30 A4 80	
170	312180-0451		4	SCREW ISO7379 H8X20	
175	315105-0146		1	WASHER BRB 5,3X10 RFR	
180	315105-0153		6	WASHER BRB 6,4X12 RFR	
200	312115-0331		4	SCREW ISO4762 M5X20 A4 80	
210	312105-0372		4	SCREW M6S ISO 4017 M6X25 A480	
230	315105-0153		2	WASHER BRB 6,4X12 RFR	
240	90194-0143		4	WARNING SIGN ISO, HOT SURFACE	

Pos	Part No	UN	Qty	Description	Page No

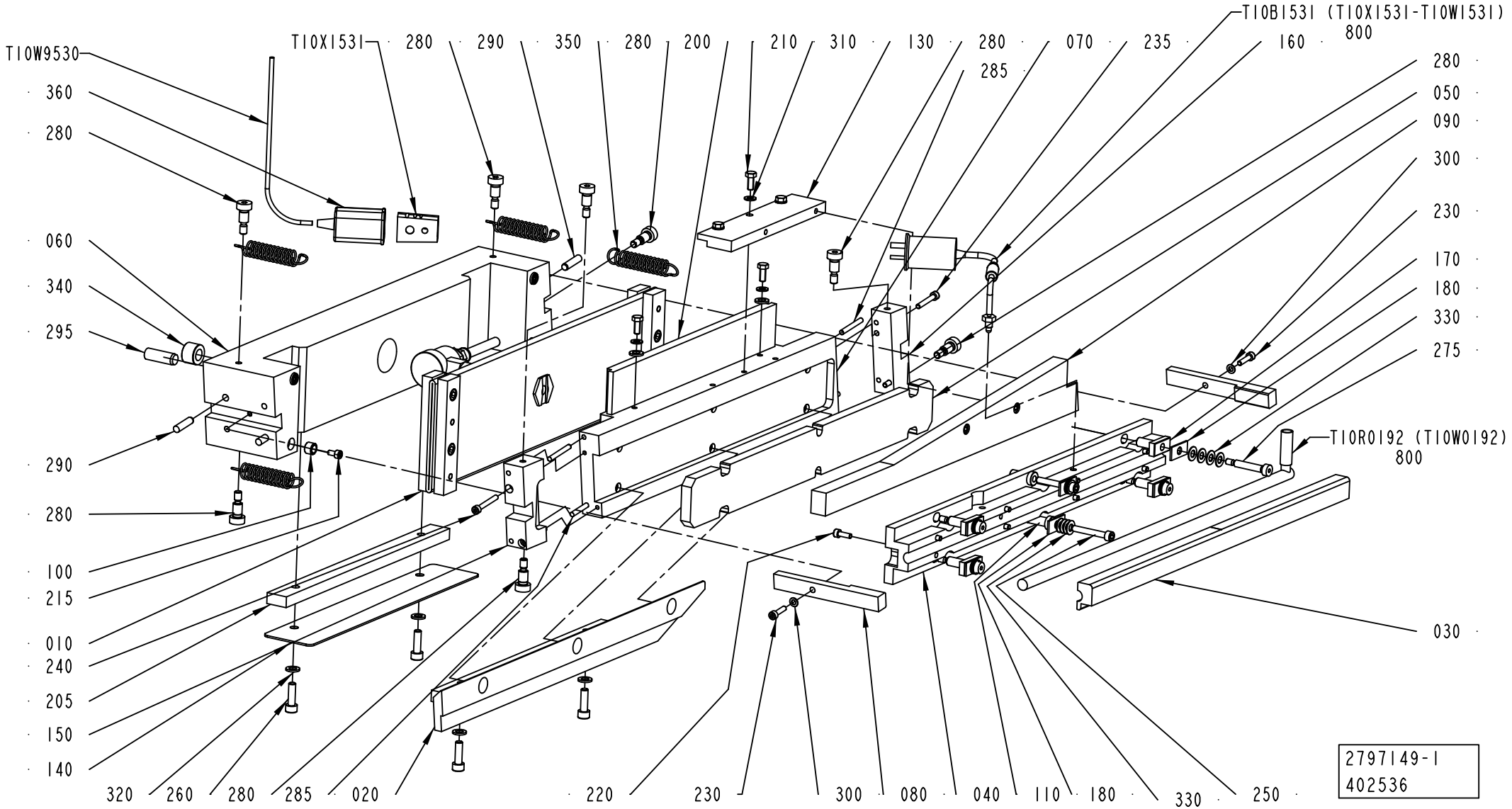
T10W9530
360
280
060
340
295
290
280
100
215
010
240
205
150
140
320
260
280
285
020
T10X1531
280
290
350
280
200
220
230
300
080
040
110
180
330
250
210
310
130
280
285
070
235
160
T10B1531 (T10X1531-T10W1531)
800
280
050
090
300
230
170
180
330
275
T10R0192 (T10W0192)
800
030
2797149-1
402536

ECM: 423835 - 20091028
Group number: 2797149-0100
Assembly Drawing: 2797149-1_1_AD

Pos	Part No	UN	Qty	Description	Page No
-					
010	2737938-0100		1	HOSE	7-79
020	2737916-0000		1	BAR	
030	2741004-0000		1	SEALING PLATE	
040	2741005-0000		1	SEALING PLATE	
050	2741006-0000		1	PLATE	
060	2741007-0000		1	PLATE	
070	2741011-0000		1	PLATE	
080	2741012-0000		2	PLATE	
090	2741014-0000		1	PLATE	
100	2819398-0000		4	SPACER	
110	2790938-0000		2	SPACER	
130	2797154-0000		1	PLATE	
140	2806668-0000		1	PLATE	
150	2806683-0000		1	PLATE	
160	2806684-0000		1	PLATE	
170	2838966-0000		4	SPACER	
180	2839982-0000		6	SPACER	
200	2990796-0000		1	INSULATING PLATE	
205	2994558-0000		1	SPACER	
210	312105-0327		2	SCREW M6S ISO 4017 M5X12 A480	
215	312115-0287		4	SCREW ISO4762 M4X8 A4 80	
220	312115-0291		8	SCREW ISO4762 M4X12 A4 80	
230	312115-0293		2	SCREW ISO4762 M4X16 A4 80	
235	312115-0297		2	SCREW ISO4762 M4X25 A4 80	
240	312115-0299		2	SCREW ISO4762 M4X30 A4 80	
245	312115-0329		2	SCREW ISO4762 M5X16 A4 80	
250	312115-0337		2	SCREW ISO4762 M5X35 A4 80	
260	312115-0370		4	SCREW ISO4762 M6X20 A4 80	
275	312180-0374		4	SCREW ISO7379 H6X30	
280	312180-0447		8	SCREW ISO7379 H8X12	
285	311103-0277		4	PARALLEL PIN ISO 2338 4M6X32 A1	
290	311103-1355		4	PARALLEL PIN ISO 2338 6M6X24 A1	
295	311103-0458		2	PARALLEL PIN ISO 2338 10M6X30 A1	
300	315105-0136		2	WASHER BRB 4,3X8 RFR	
310	315105-0146		2	WASHER BRB 5,3X10 RFR	
320	315105-0153		4	WASHER BRB 6,4X12 RFR	
330	319030-0125		24	DISC SPRING, CONICAL 12,5X6,2X0,5 MM	
340	90600-2575		2	BEARING BUSH W/O FLANGE, 10,1X18X12 MM	
350	90335-0120		4	TENSION SPRING 42010, 1,4X15X43,3	
360	90326-0012		1	PROTECTIVE COVER, T31A4618	
800	90296-0051		1	PASTE	
T10B1531	90326-0054		1	THERMOCOUPLE, CR-AL STD.GR, 12826-36	
T10R0192	90600-2586		1	HEATING CARTRIDGE, 800W 240V	
T10W9530	90220-0034	M	1	THERMOCABLE TEX/SITW-20F-KX 2X0,5MM2	
T10X1531	90326-0020		1	PLUG, FEMALE YELLOW CR-AL	

Machine Type | Group Description | Used-In | Group Number | Page No

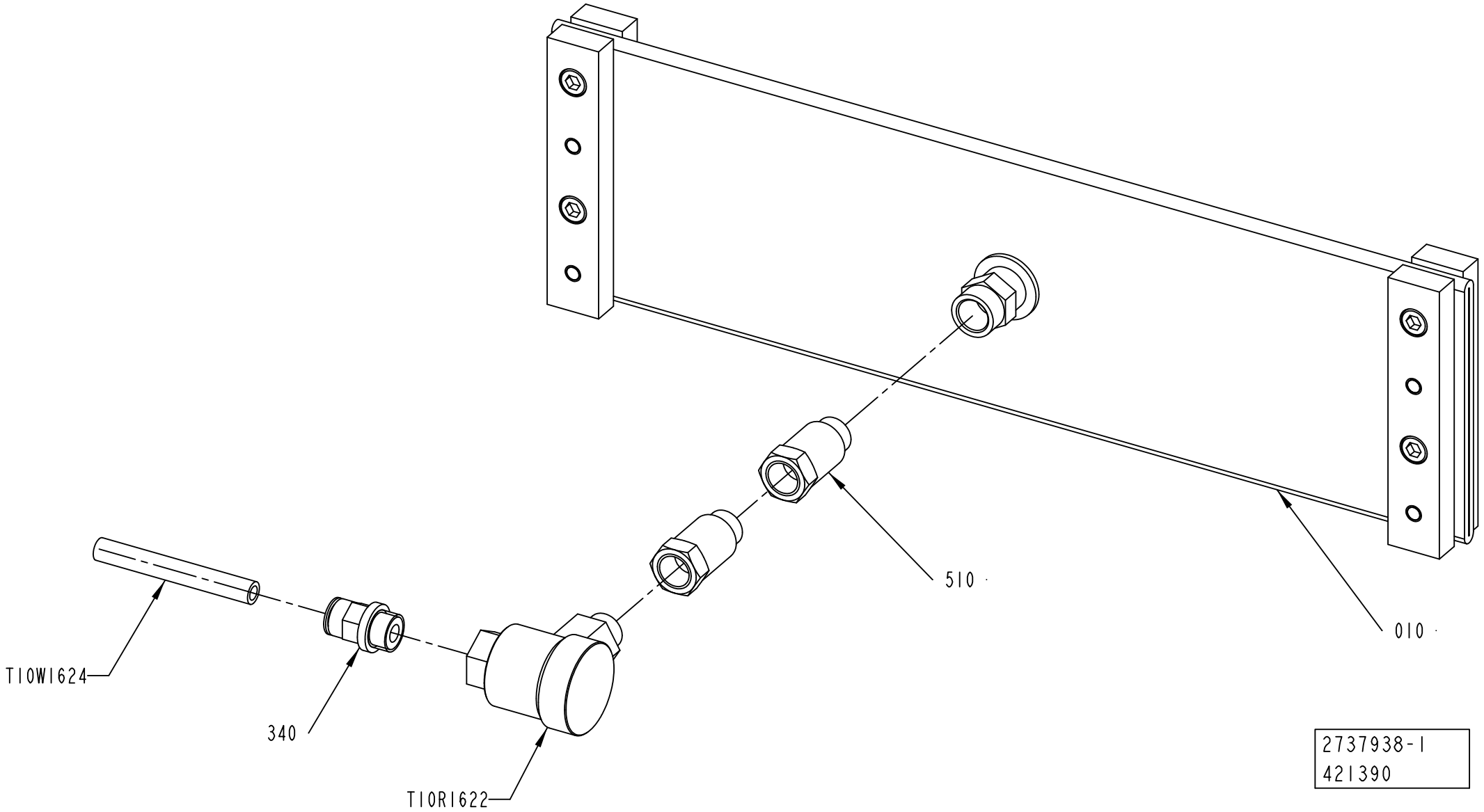
T10W1624
340
T10R1622
510
010
2737938-1
421390

ECM: 421390 - 20100401
Group number: 2737938-0100
Assembly Drawing: 2737938-1_1_AC

Pos	Part No	UN	Qty	Description	Page No
-					
010	3061448-0000		1	HOSE	
010	*2737935-0000*		*1*	*HOSE*	
020	*2790917-0000*		*1*	*AIR NOZZLE*	
030	*2737940-0000*		*4*	*BRACKET*	
050	*90157-0037*	*ML*	*1*	*THREAD SEALANT LOCTITE 542*	
100	*312115-0370*		*8*	*SCREW ISO4762 M6X20 A4 80*	
110	*315105-0178*		*1*	*WASHER BRB 13X24 RFR*	
120	*315202-0705*		*1*	*O-RING 17,17X1,78 MM*	
130	*342707-0110*		*1*	*SLEEVE, INT. THREAD, NO. 2543-1/4*	
340	350001-0009		1	PUSH-IN FITTING QS-F-G1/4-8	
510	90600-3047		2	BUSHING,INT/EXT THREAD, 1/4"GAS - 1/4"GA	
T10R1622	90600-6035		1	QUICK EXHAUST VALVE, SEU-1/4	
T10W1624	315400-0004	M	10	TUBE PUN-H-8X1,25-BL	

Pos	Part No	UN	Qty	Description	Page No

Machine Type | Group Description | Used-In | Group Number | Page No

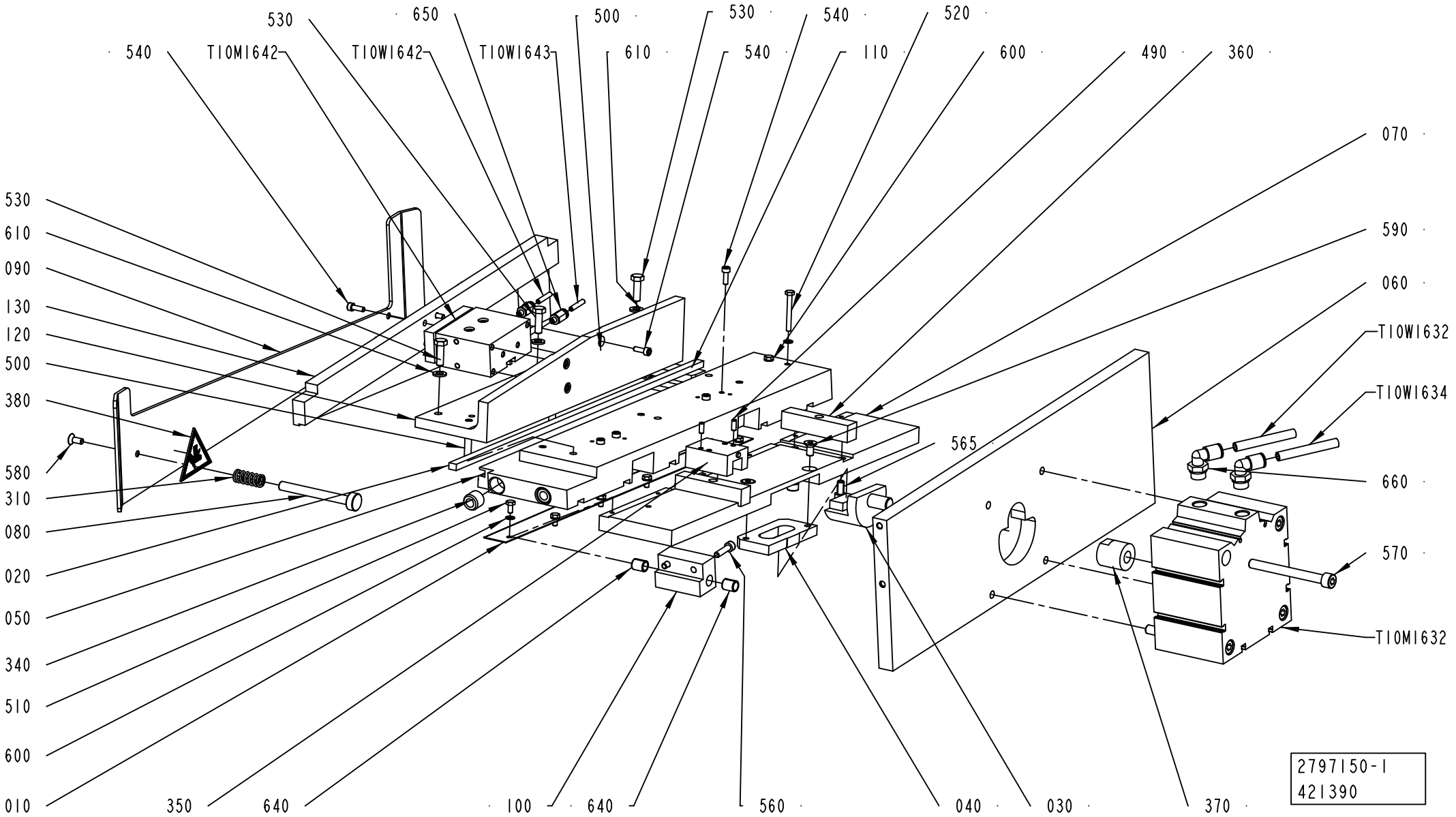
530
650
500
530
540
520
540
T10M1642
T10W1642
T10W1643
610
540
110
600
490
360
070
530
610
090
130
120
500
380
590
060
T10W1632
T10W1634
565
580
310
080
020
050
340
510
600
010
660
570
T10M1632
350
640
100
640
560
040
030
370
2797150-1
421390

ECM: 431479 - 20100401
Group number: 2797150-0100
Assembly Drawing: 2797150-1_1_AC

Pos	Part No	UN	Qty	Description	Page No	Pos	Part No	UN	Qty	Description	Page No
-											
010	1484695-0000		1	KNIFE							
020	2592780-0000		1	DOLLY							
030	2737914-0000		1	PIN							
040	2737915-0000		1	BRACKET							
050	2741008-0000		1	PRESSURE RAIL							
060	2741013-0000		1	PLATE							
070	2741019-0000		1	PLATE							
080	2797148-0000		2	PIN							
090	2839983-0000		1	PLATE							
100	2839985-0000		1	BRACKET							
110	2851928-0000		1	BRACKET							
120	2851943-0000		1	BRACKET							
130	2851944-0000		1	RAIL							
310	90458-2284		2	COMP. SPRING 22410, 1,6X11,6X27							
340	90600-2837		4	BEARING BUSH W/O FLANGE, 8,2X15X12 MM							
350	2994268-0000		2	SLIDE							
360	2994250-0000		2	RAIL							
370	90600-1204		1	DOUBLE ACTING, COMPACT, 100-15							
380	359705-0005		1	WARNING SIGN ISO, MOVING PART							
490	311103-0267		4	PARALLEL PIN ISO 2338 4M6X10 A1							
500	311103-0359		3	PARALLEL PIN ISO 2338 6M6X35 A1							
510	312105-0287		6	SCREW M6S ISO 4017 M4X8 A470							
520	312105-0301		2	SCREW M6S ISO 4017 M4X35 A470							
530	312105-0370		3	SCREW M6S ISO 4017 M6X20 A480							
540	312115-0327		11	SCREW ISO4762 M5X12 A4 80							
560	312115-0331		2	SCREW ISO4762 M5X20 A4 80							
565	312115-0366		4	SCREW ISO4762 M6X12 A4 80							
570	312115-0467		4	SCREW ISO4762 M8X80 A4 80							
580	312155-0327		2	SCREW DIN 7991 MF6S M5X12 A4 70							
590	312155-0366		2	SCREW DIN 7991 MF6S M6X12 A4 70							
600	315105-0136		8	WASHER BRB 4,3X8 RFR							
610	315105-0153		3	WASHER BRB 6,4X12 RFR							
640	321141-0104		2	BEARING BUSH W/O FLANGE, 8X10X12 MM							
650	350001-0001		2	PUSH-IN FITTING QS-F-M5-4							
660	350002-0009		2	PUSH-IN L-FITTING QSL-F-G1/4-8							
T10M1632	90600-1204		1	DOUBLE ACTING, COMPACT, 100-15							
T10M1642	90459-7306		1	CYLINDER WITH INT. GUIDING BORE 16							
T10W1632	315400-0004	M	6	TUBE PUN-H-8X1,25-BL							
T10W1634	315400-0004	M	6	TUBE PUN-H-8X1,25-BL							
T10W1642	315400-0016	M	6	TUBE PUN-H-4X0,75-BL							
T10W1643	315400-0016	M	6	TUBE PUN-H-4X0,75-BL							

Machine Type	Group Description	Used-In	Group Number	Page No

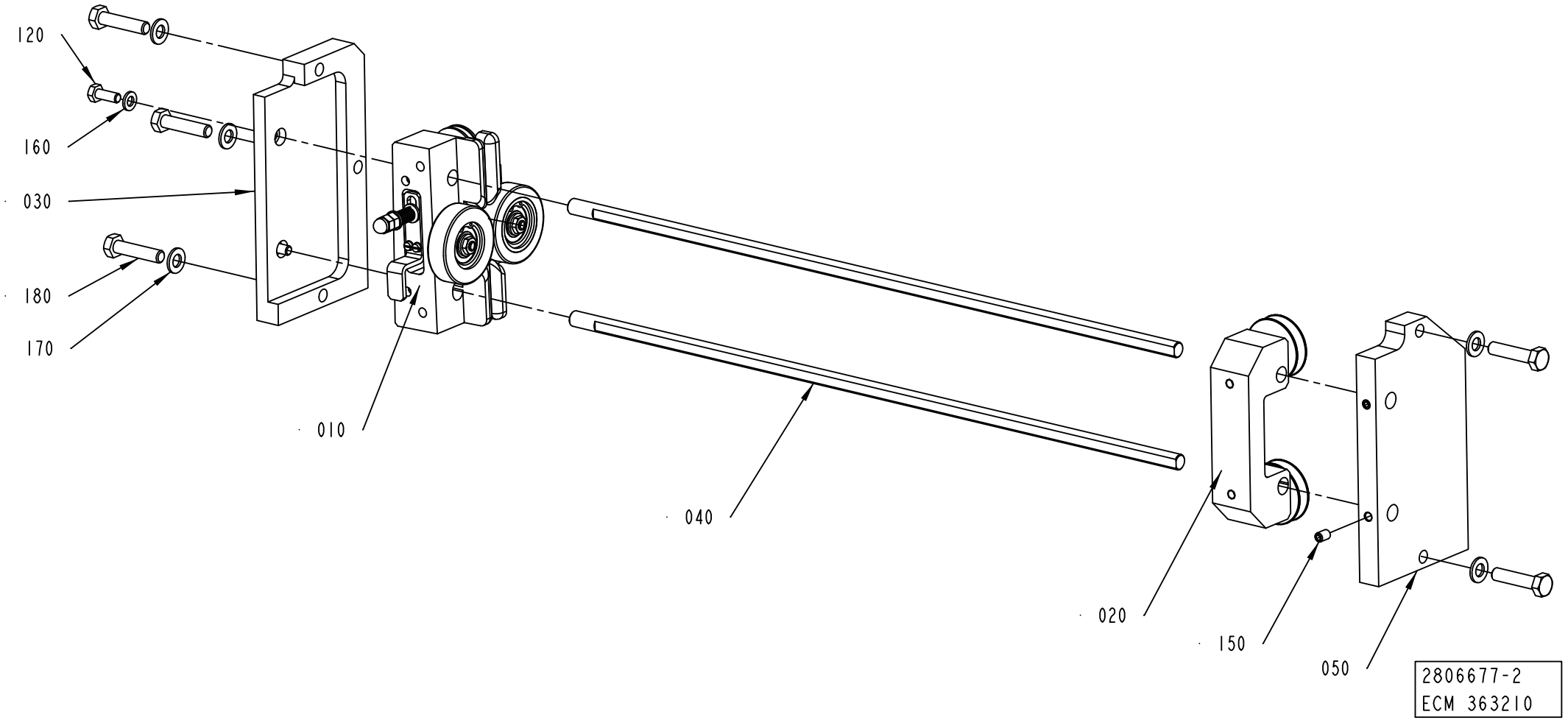
120
160
030
180
170
010
040
020
150
050
2806677-2
ECM 363210

ECM: 402457 - 20090618
Group number: 2806677-0100
Assembly Drawing: 2806677-2_1_AA

Pos	Part No	UN	Qty	Description	Page No
-					
010	2737931-0100		1	PAPER GUIDE	**7-85**
020	2985585-0100		1	PAPER GUIDE	**7-87**
030	2741000-0000		1	PLATE	
040	2741001-0000		2	SHAFT	
050	2790936-0000		1	PLATE	
120	312105-0368		2	SCREW M6S ISO 4017 M6X16 A480	
150	312309-0362		2	SCREW ISO4026 M6X8 A4	
160	315105-0153		2	WASHER BRB 6,4X12 RFR	
170	315106-0165		5	WASHER ISO 7089-8-200 HV A4	
180	312105-0457		5	SCREW M6S ISO 4014 M8X35 A480	

Pos	Part No	UN	Qty	Description	Page No

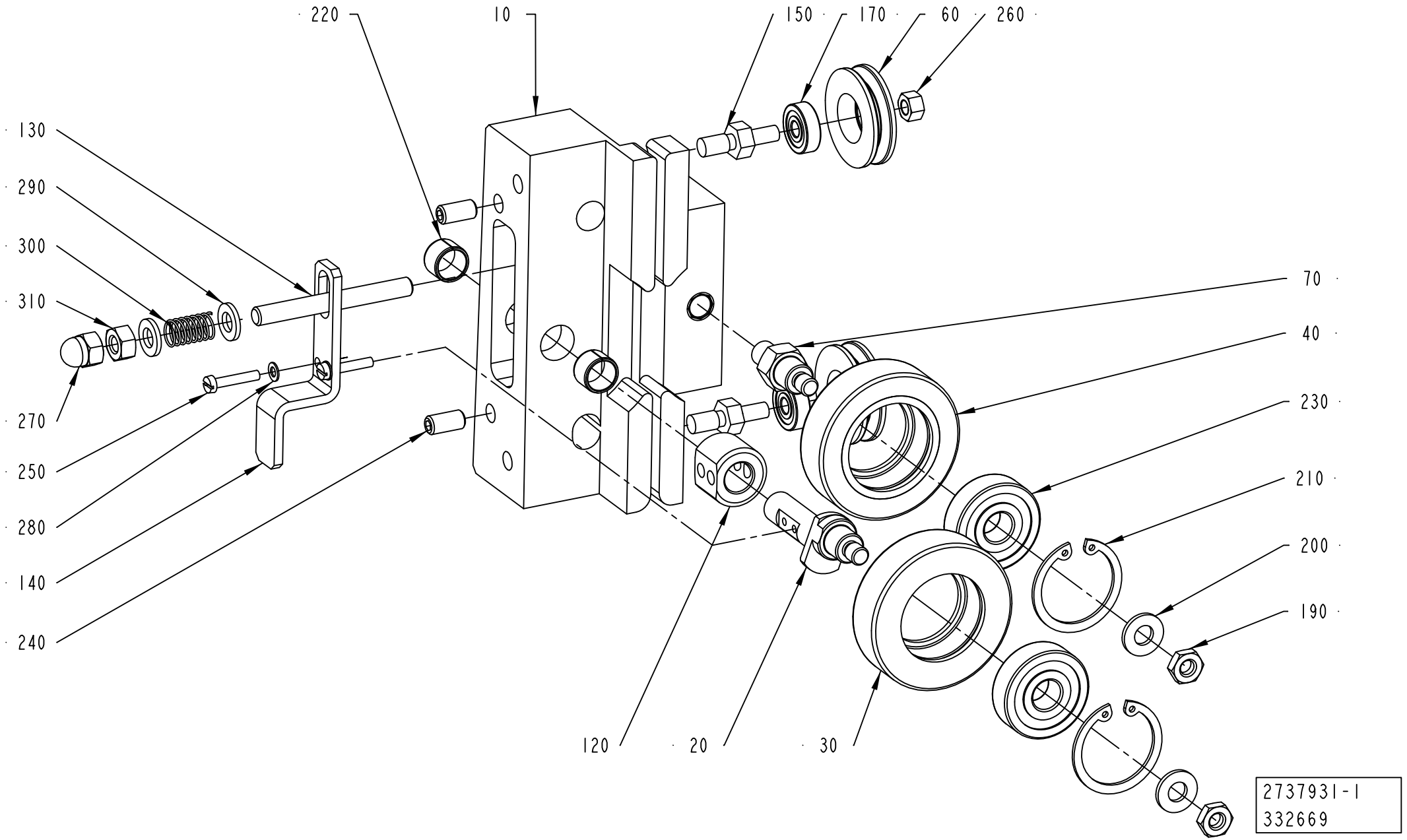
220
10
150
170
60
260
130
290
300
310
270
250
280
140
240
70
40
230
210
200
190
120
20
30
2737931-1
332669

ECM: 366509 - 20090114
Group number: 2737931-0100
Assembly Drawing: 2737931-1_1_AB

Pos	Part No	UN	Qty	Description	Page No
-					
010	2737930-0000		1	SUPPORT	
020	2876448-0000		1	SHAFT	
030	1036622-0000		1	GUIDE ROLLER	
040	1036623-0000		1	GUIDE ROLLER	
060	2533673-0000		2	ROLLER	
070	1558254-0000		1	SHAFT	
120	2805510-0000		1	SLEEVE	
130	2805509-0000		1	SHAFT	
140	2800316-0000		1	LEVER	
150	2776087-0000		2	PIN	
170	90214-0037		2	BALL BEARING 5/16X5	
190	312625-0316		2	HEXAGON THIN NUT, EN 24035 ML6M M6 A4	
200	315105-0156		2	WASHER BRB 6,7X14 RFR	
210	315753-0122		2	RETAINING RING FOR BORE DIN 472 30 SS	
220	321141-0138		2	BEARING BUSH W/O FLANGE, 10X12X8 MM	
230	321313-0100		2	BALL BEARING 10/30X9	
240	312318-0366		2	SCREW ISO4029 M6X12 A4	
250	312125-0228		2	SCREW ISO 1207 M3X16 A4	
260	312607-0314		2	HEXAGON NUT, EN 24032 M6M M5 A480	
270	312705-0316		1	NUT HEX. DOMED CAP MHM-6 M6 A280	
280	315105-0124		2	WASHER BRB 3,2X6 RFR	
290	315105-0153		2	WASHER BRB 6,4X12 RFR	
300	90600-1092		1	COMP. SPRING D21550, 0,63X8,63X16	
310	312605-0316		1	HEXAGON NUT, M6M M6 A280	

Pos	Part No	UN	Qty	Description	Page No

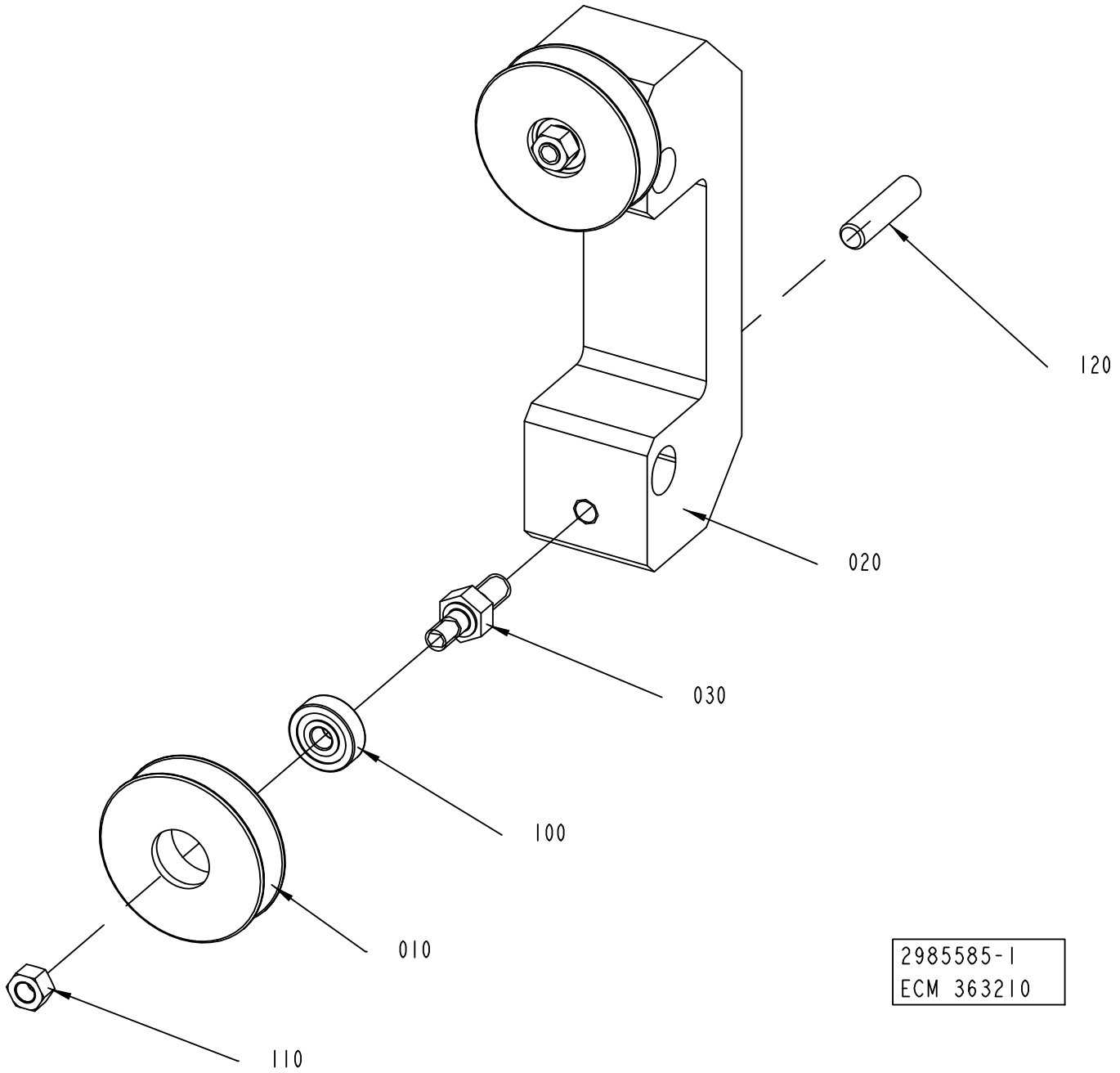
120
020
030
100
010
110
2985585-1
ECM 363210

ECM: 363263 - 20080825
Group number: 2985585-0100
Assembly Drawing: 2985585-1_1_AA

Pos	Part No	UN	Qty	Description	Page No
-					
010	2931010-0000		2	ROLLER	
020	2973963-0000		1	SUPPORT	
030	2776087-0000		2	PIN	
100	90214-0037		2	BALL BEARING 5/16X5	
110	312607-0314		2	HEXAGON NUT, EN 24032 M6M M5 A480	
120	312318-0372		2	SCREW ISO4029 M6X25 A4	

Pos	Part No	UN	Qty	Description	Page No

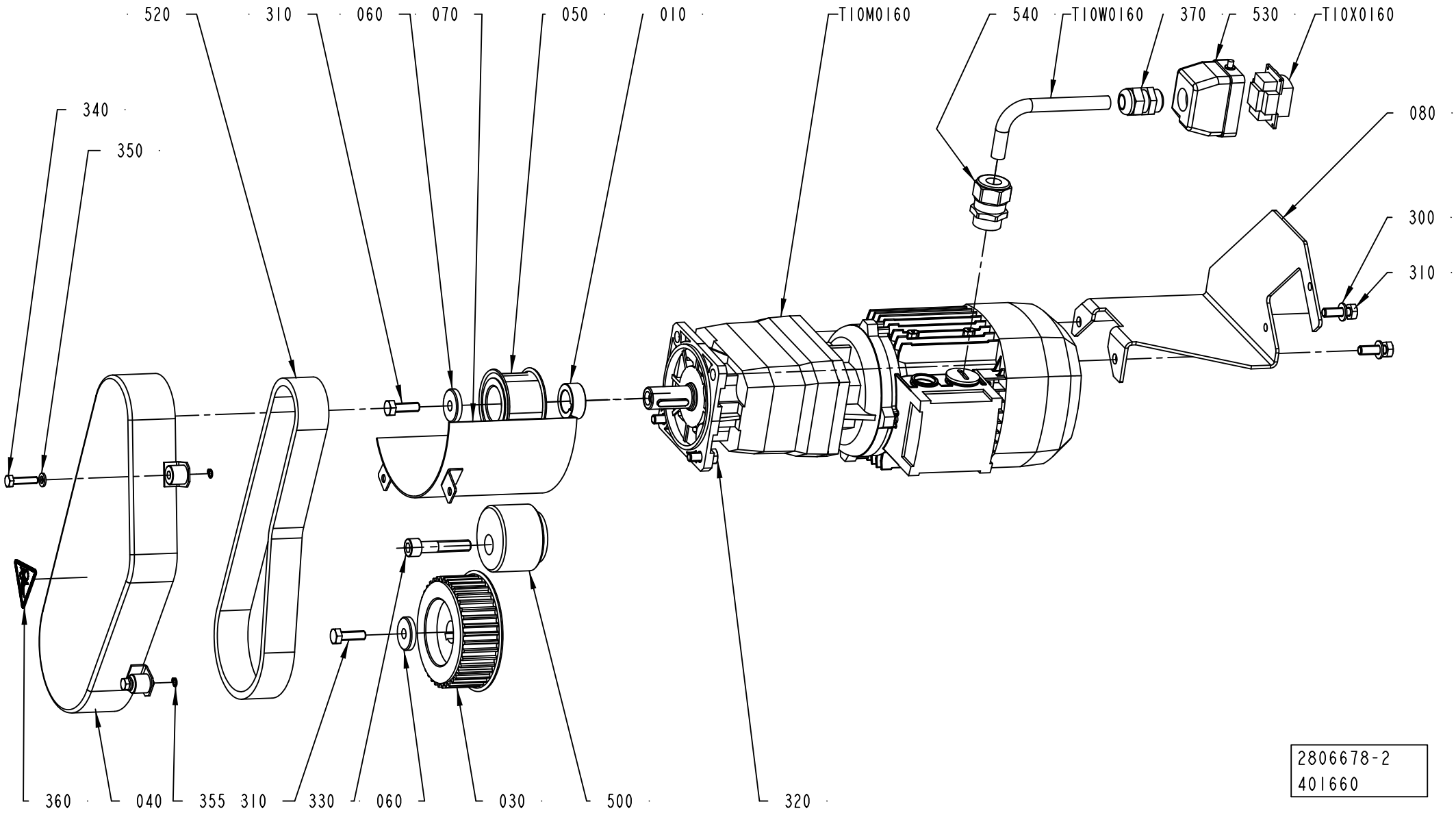
520
310
060
070
050
010
T10M0160
540
T10W0160
370
530
T10X0160
340
350
080
300
310
360
040
355
310
330
060
030
500
320
2806678-2
401660

ECM: 402207 - 20091001
Group number: 2806678-0200
Assembly Drawing: 2806678-2_1_AA

Pos	Part No	UN	Qty	Description	Page No
-					
010	2819402-0000		1	SPACER	
030	2852909-0000		1	PULLEY	
040	2838961-0000		1	COVER	
050	2852908-0000		1	PULLEY	
060	2838960-0000		2	WASHER	
070	2790922-0000		1	PROTECTION	
080	2838964-0000		1	PLATE	
300	315105-0165		4	WASHER BRB 8,4X16 RFR	
310	312105-0453		4	SCREW M6S ISO 4017 M8X25 A480	
320	312105-0451		2	SCREW M6S ISO 4017 M8X20 A480	
330	312115-0501		1	SCREW ISO4762 M10X50 A4 80	
340	312105-0372		3	SCREW M6S ISO 4017 M6X25 A480	
350	315105-0153		3	WASHER BRB 6,4X12 RFR	
355	315751-0103		3	RETAINING RING FOR SHAFT DIN 471 6X 0.7C	
360	359705-0001		1	WARNING SIGN ISO, ENTANGLEMENT	
370	352103-0108		1	CABLE GLAND, ST 13,5 , PR20,4/PG13,5	
500	90344-0078		1	PULLEY	
520	90600-1299		1	TIMING BELT HPPD 720-8M-30	
530	90110-0157		1	CABLE HOOD 6-POL 70.352.0628.1	
540	90458-0440		1	GLAND, EXTENDED WITH INSERT, M25X1,5	
T10M0160	90600-1249		1	GEARS, HELICAL MOTOR C 112 UF 6.2 S1 B52	
T10W0160	90220-0104	M	9	SCR. CABLE 4X1,5MM2	
T10X0160	90110-0159		1	MALE INSERT 70.310.0640.0	

Pos	Part No	UN	Qty	Description	Page No

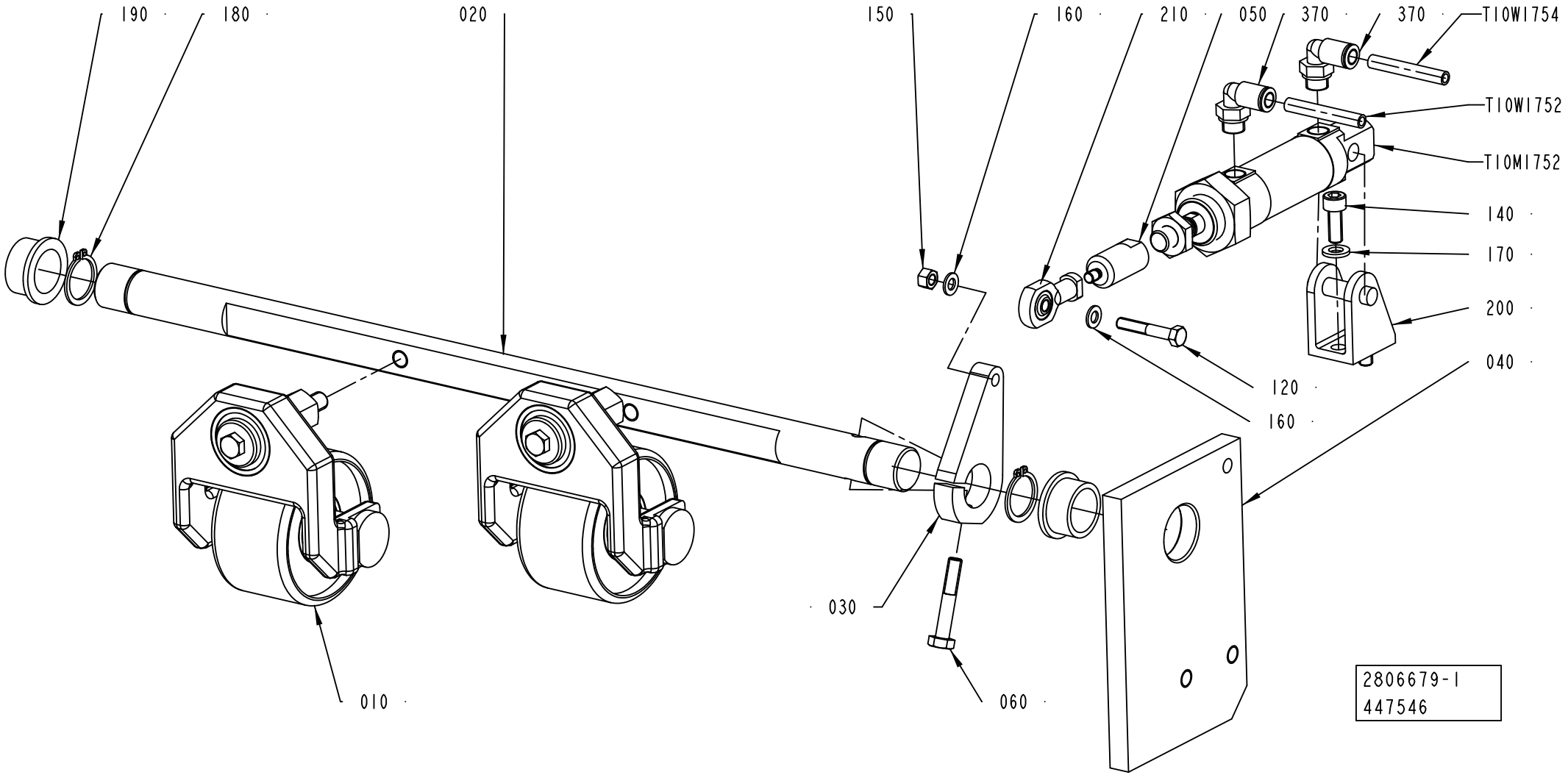
190
180
020
150
160
210
050
370
370
T10W1754
T10W1752
T10M1752
140
170
200
040
120
160
030
060
010
2806679-1
447546

ECM: 448051 - 20101001
Group number: 2806679-0100
Assembly Drawing: 2806679-1_1_AB

Pos	Part No	UN	Qty	Description	Page No
-					
010	2741021-0100		2	COUNTER ROLLER	**7-93**
020	2737903-0000		1	SHAFT	
030	2737905-0000		1	LEVER	
040	2755525-0000		1	PLATE	
050	2776131-0000		1	PIN	
060	3075787-0000		1	SCREW	
120	312105-0335		1	SCREW M6S ISO 4014 M5X30 A480	
140	312115-0368		2	SCREW ISO4762 M6X16 A4 80	
150	312607-0314		1	HEXAGON NUT, EN 24032 M6M M5 A480	
160	315105-0146		2	WASHER BRB 5,3X10 RFR	
180	315751-0116		2	RETAINING RING FOR SHAFT DIN 471 20 SS	
190	90240-0221		2	FLANGE BUSHING, 20X25X14 MM	
200	90459-1908		1	END FITTING LBN-20/25	
210	90600-3066		1	ROD END, ID=5 MM, M5	
370	350002-0006		2	PUSH-IN L-FITTING QSL-F-G1/8-6	
T10M1752	90459-1953		1	DOUBLE ACTING, MINI-ISO, CYL. 25-10	
T10W1752	315400-0001	M	10	TUBE PUN-H-6X1-BL	
T10W1754	315400-0001	M	10	TUBE PUN-H-6X1-BL	

Pos	Part No	UN	Qty	Description	Page No

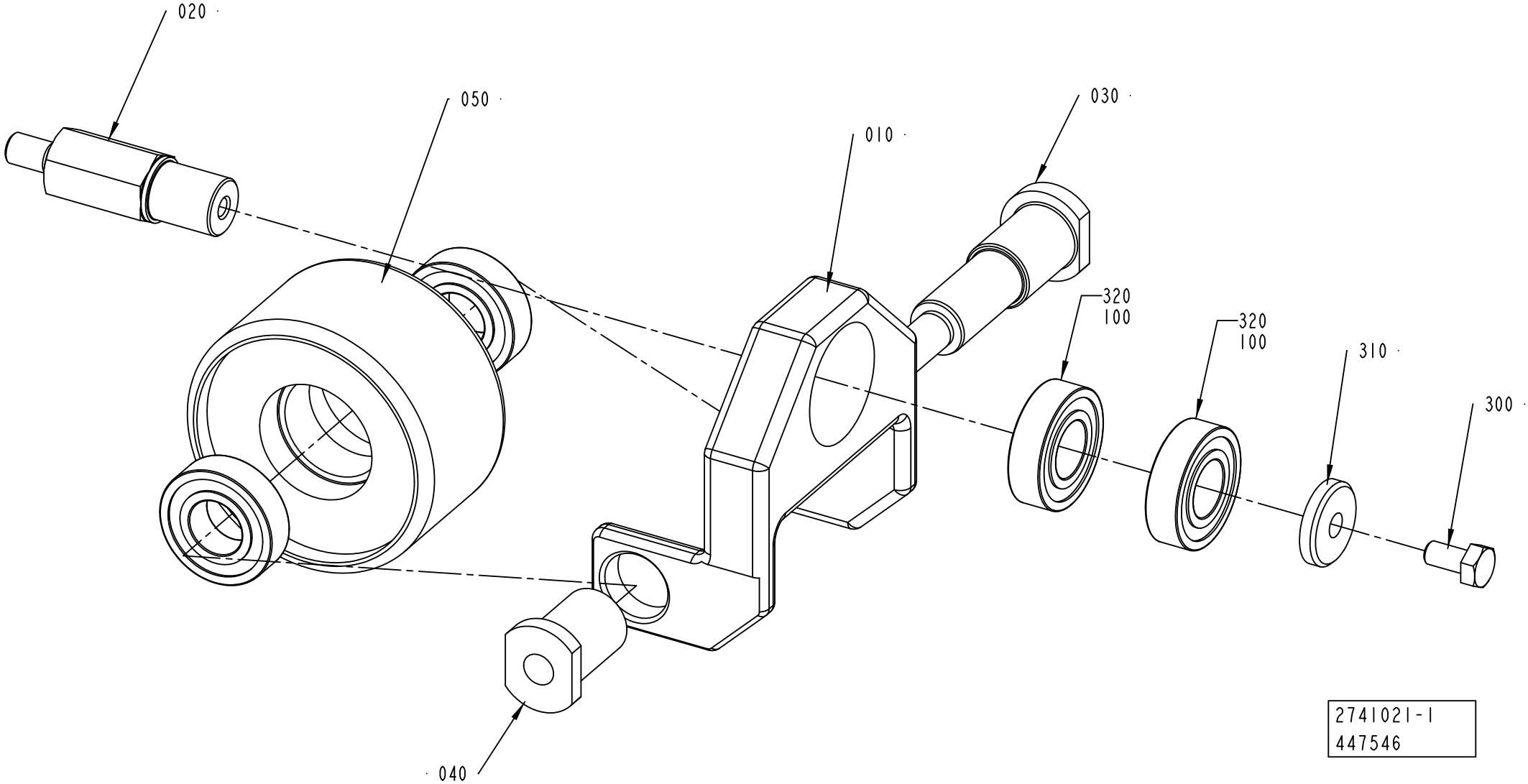
020
050
010
030
320
100
320
100
310
300
040
2741021-1
447546

ECM: 448490 - 20101001
Group number: 2741021-0100
Assembly Drawing: 2741021-1_1_AB

Pos	Part No	UN	Qty	Description	Page No
-					
010	263150-0000		1	BRACKET	
020	2741022-0000		1	PIN	
030	263152-0000		1	SHAFT	
040	263153-0000		1	NUT	
050	1145079-0000		1	WHEEL	
100	90157-0035		1	LOCKING FLUID LOCTITE TYPE 641	
300	312105-0366		1	SCREW M6S ISO 4017 M6X12 A480	
310	315125-0153		1	WASHER TBRSB 6,4X22X4 A4	
320	321308-0202		4	BALL BEARING 15/32X9	

Pos	Part No	UN	Qty	Description	Page No

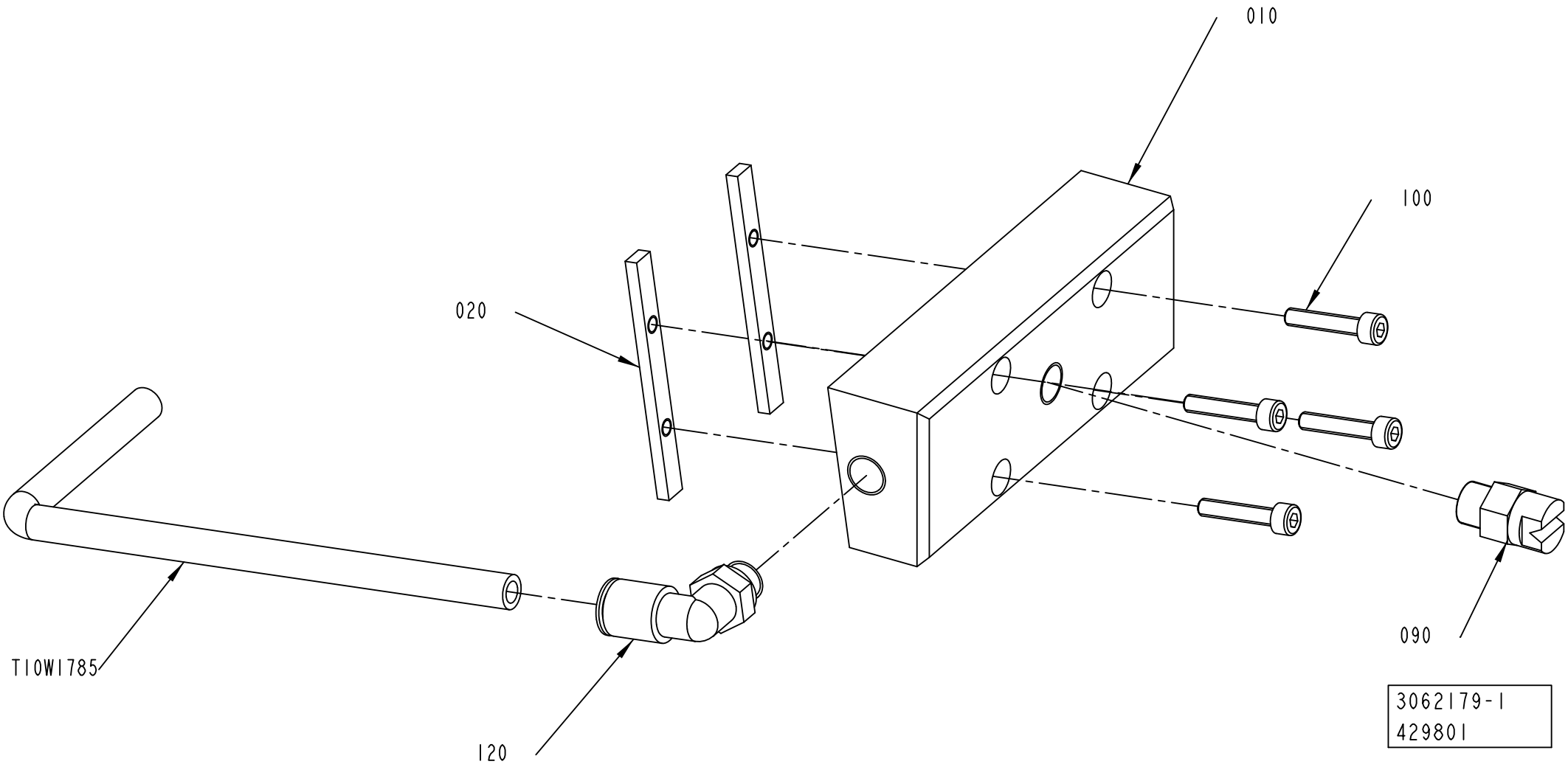
010
100
020
090
T10W1785
120
3062179-1
429801

ECM: 450191 - 20101001
Group number: 3062179-0100
Assembly Drawing: 3062179-1_1_AA

Pos	Part No	UN	Qty	Description	Page No
-					
010	3062181-0000		1	NOZZLE BRACKET	
020	3023350-0000		2	SUPPORT	
090	90424-0032		1	SPRAY NOZZLE 95 DEG	
100	312115-0295		4	SCREW ISO4762 M4X20 A4 80	
120	350002-0007		1	PUSH-IN L-FITTING QSL-F-G1/8-8	
T10W1785	315400-0004	MM	4500	TUBE PUN-H-8X1,25-BL	

Pos	Part No	UN	Qty	Description	Page No

MATERIAL HOLDER

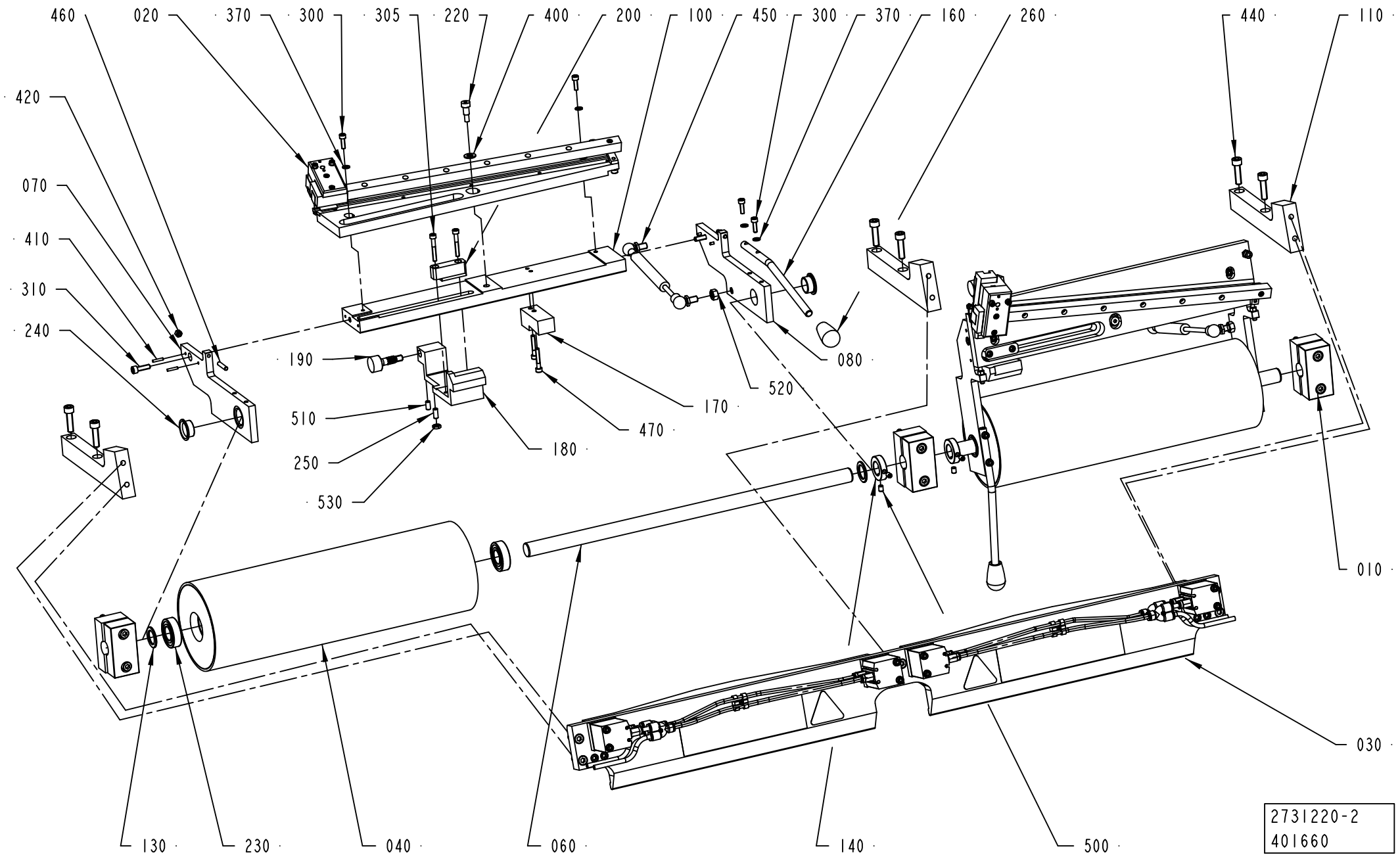

ECM: 402284 - 20091001
Group number: 2731220-0200
Assembly Drawing: 2731220-2_1_AA

Pos	Part No	UN	Qty	Description	Page No
-					
010	2731231-0100		3	BRACKET	**7-99**
020	2771102-0100		2	CUTTING TABLE	**7-101**
030	2735095-0200		1	BRAKE SHOE	**7-103**
040	2731216-0000		2	BENDING ROLLER	
060	2731221-0000		2	SHAFT	
070	2735073-0000		2	BRACKET	
080	2735074-0000		2	BRACKET	
100	2735079-0000		2	BAR	
110	2735099-0000		3	BRACKET	
130	2735101-0000		4	SPACER	
140	2876451-0000		2	SPACER	
160	2897024-0000		2	HANDLE	
170	2875285-0000		2	BRACKET	
180	2891813-0000		2	ANGLE PIECE	
190	2891814-0000		2	ADJUSTING SCREW	
200	2895374-0000		2	BLOCK	
220	90287-0265		2	SCREW, HEX.SOCK.HEAD SHOULD. M6X8	
230	90214-0170		4	BALL BEARING 20/42X12 SOLID OIL	
240	90459-5154		4	FLANGE BUSHING, 20X23X11,5 MM	
250	90287-0163		2	SCREW SPRINGLOAD. SLOTTED HEAD M6X14	
260	90600-2661		2	HANDLE, I.222/40N-10	
300	312115-0329		8	SCREW ISO4762 M5X16 A4 80	
305	312115-0337		4	SCREW ISO4762 M5X35 A4 80	
310	312115-0370		4	SCREW ISO4762 M6X20 A4 80	
370	315105-0146		8	WASHER BRB 5,3X10 RFR	
400	315105-0165		2	WASHER BRB 8,4X16 RFR	
410	311103-0236		8	PARALLEL PIN ISO 2338 3M6X16 A1	
420	312607-0314		4	HEXAGON NUT, EN 24032 M6M M5 A480	
440	312115-0455		6	SCREW ISO4762 M8X30 A4 80	
450	90600-5988		2	GAS SPRING, 4919 DE	
460	312318-0333		4	SCREW ISO4029 M5X25 A4	
470	312115-0335		4	SCREW ISO4762 M5X30 A4 80	
500	312318-0362		4	SCREW ISO4029 M6X8 A4	
510	312318-0366		2	SCREW ISO4029 M6X12 A4	
520	312605-0318		2	HEXAGON NUT, M6M M8 A280	
530	312625-0316		2	HEXAGON THIN NUT, EN 24035 ML6M M6 A4	

Pos	Part No	UN	Qty	Description	Page No

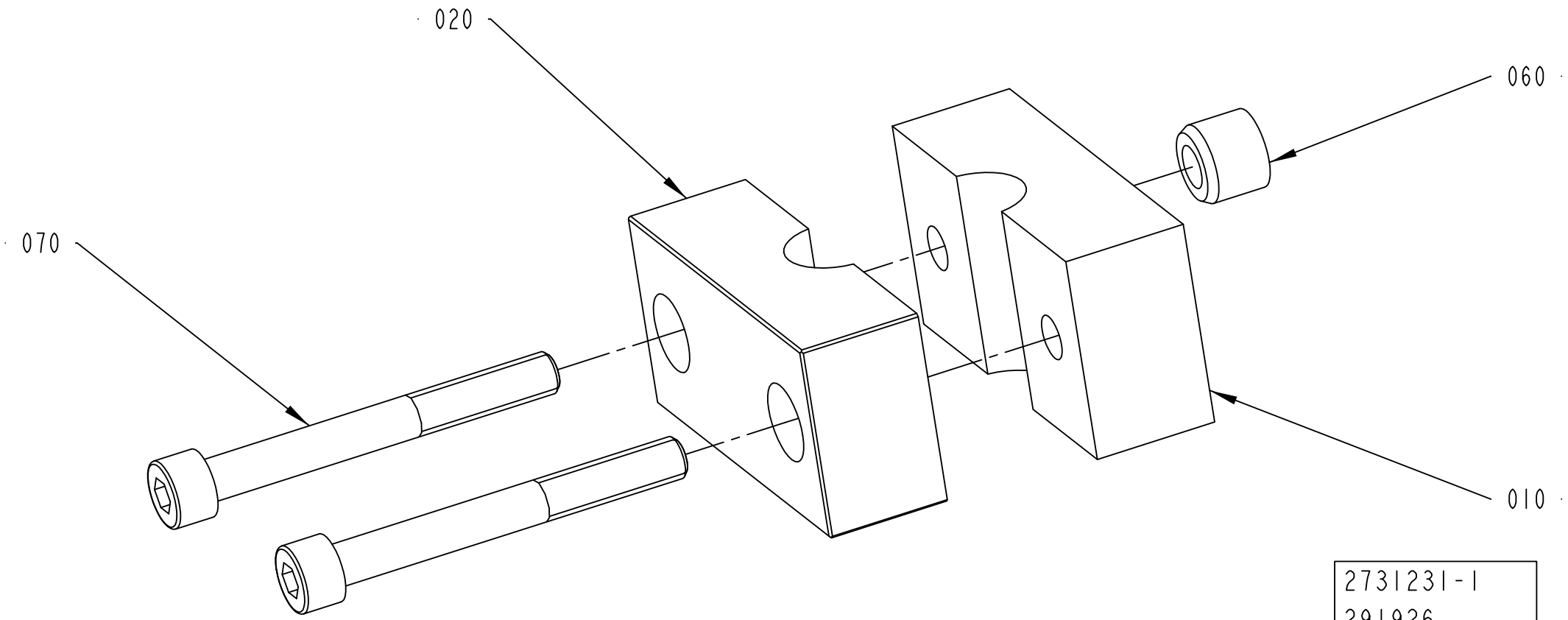
020
060
070
010
2731231-1
291926

ECM: 301716 - 20070508
Group number: 2731231-0100
Assembly Drawing: 2731231-1_1_AA

Pos	Part No	UN	Qty	Description	Page No
-					
010	2731219-0000		1	BRACKET	
020	2731232-0000		1	BRACKET	
060	90600-2837		1	BEARING BUSH W/O FLANGE, 8,2X15X12 MM	
070	312115-0465		2	SCREW ISO4762 M8X70 A4 80	

Pos	Part No	UN	Qty	Description	Page No

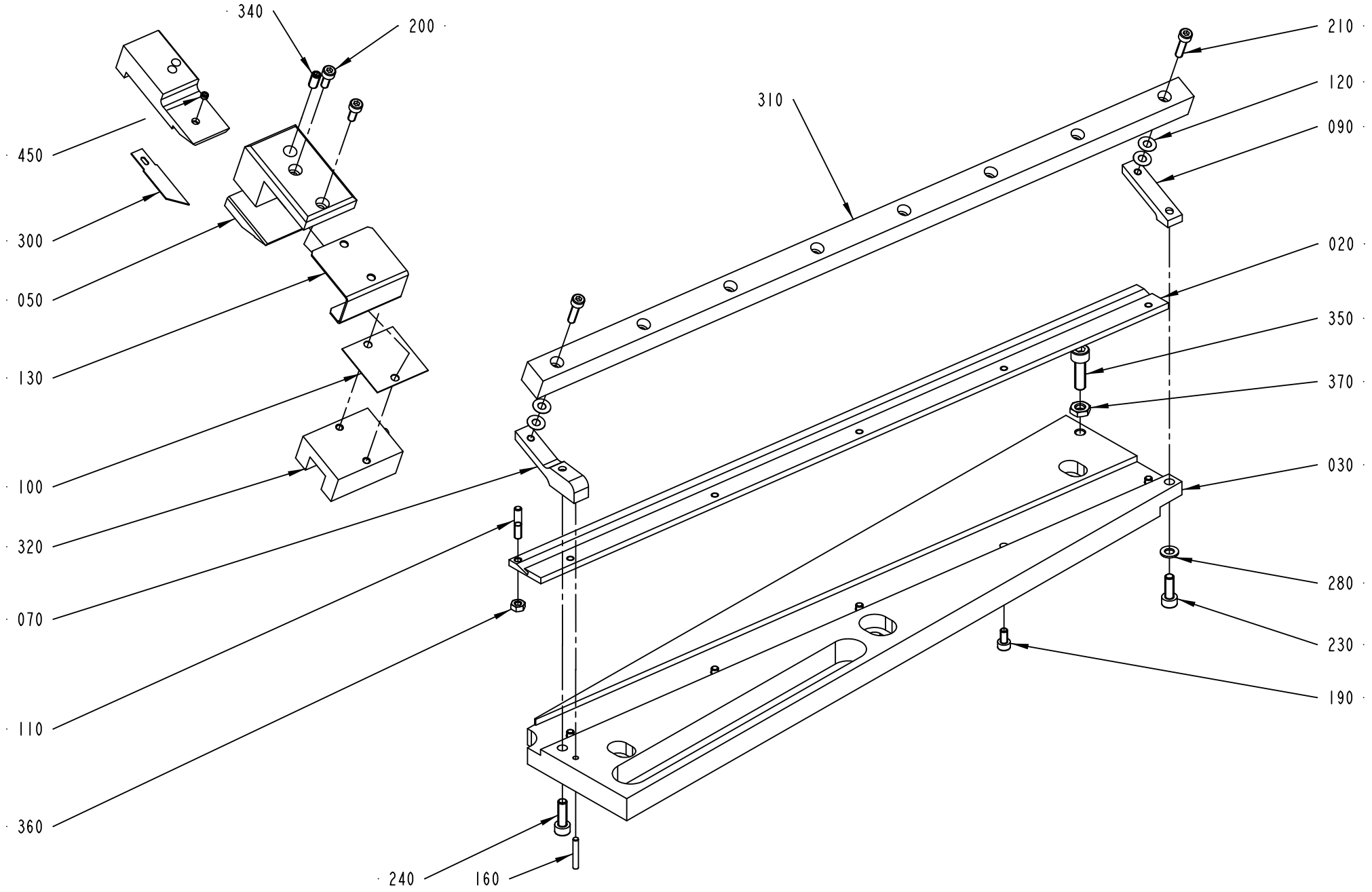
340
200
450
300
050
130
100
320
070
110
360
240
160
310
210
120
090
020
350
370
030
280
230
190

ECM: 430028 - 20100401
Group number: 2771102-0100
Assembly Drawing: 2771102-1_1_AB

Pos	Part No	UN	Qty	Description	Page No
-					
020	2755503-0000		1	RULER	
030	2771103-0000		1	TABLE	
050	3062003-0000		1	BRACKET	
060	2771108-0000		1	HOLDER	
010	*311102-0185*		*2*	*PARALLEL PIN ISO 2338 2M6X6 ST*	
070	3062005-0000		1	SHOE	
090	3062006-0000		1	SHOE	
100	2851526-0000		4	SHIM	
110	2895375-0000		1	PIN	
120	2033-0017		4	WASHER	
130	3077756-0000		1	COVER	
160	311103-0238		1	PARALLEL PIN ISO 2338 3M6X20 A1	
190	312115-0287		5	SCREW ISO4762 M4X8 A4 80	
200	312115-0289		2	SCREW ISO4762 M4X10 A4 80	
210	312115-0293		2	SCREW ISO4762 M4X16 A4 80	
230	312115-0328		1	SCREW ISO4762 M5X14 A4 80	
240	312115-0329		1	SCREW ISO4762 M5X16 A4 80	
250	90459-1395		1	SCREW HEX.SOCK.SET CONEPT.MS6SS M4X4 A2	
280	315105-0146		1	WASHER BRB 5,3X10 RFR	
300	90600-3039		1	BLADE, C5321 ART: 27.50	
310	90600-3042		1	GUIDE BAR, 15X16,2X450	
320	90600-3040		1	RUNNER BLOCK, 1666-114-20	
340	90459-7283		1	SCREW HEX.SOCK.SET CONEPT.MS6SS M5X12 A2	
350	312115-0370		1	SCREW ISO4762 M6X20 A4 80	
360	312605-0312		1	HEXAGON NUT, M6M M4 A280	
370	312625-0316		1	HEXAGON THIN NUT, EN 24035 ML6M M6 A4	
450	90459-1395		1	SCREW HEX.SOCK.SET CONEPT.MS6SS M4X4 A2	

Pos	Part No	UN	Qty	Description	Page No

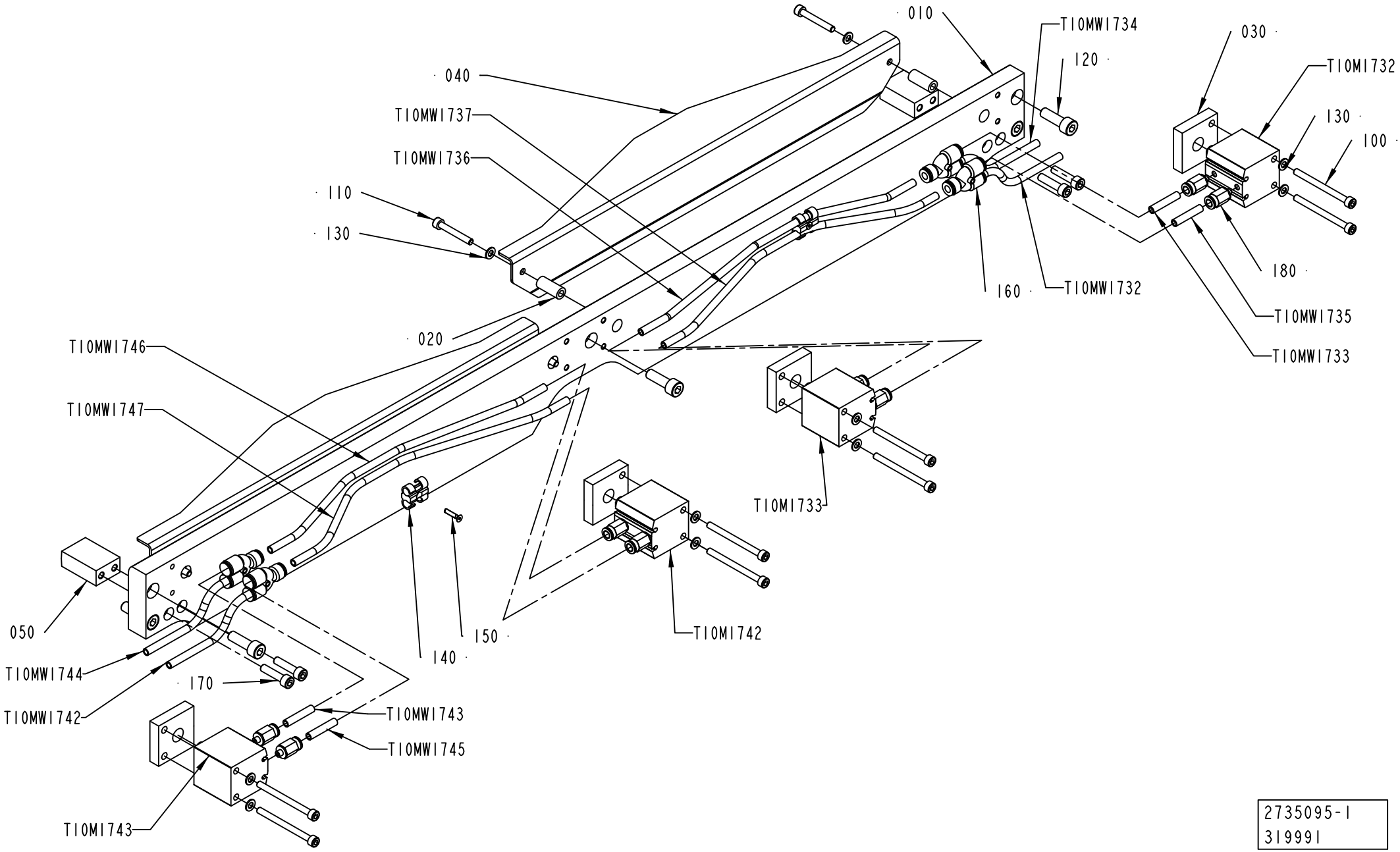

2735095-1
319991

ECM: 402258 - 20091001
Group number: 2735095-0200
Assembly Drawing: 2735095-1_1_AB

Pos	Part No	UN	Qty	Description	Page No
-					
010	2735094-0000		1	BAR	
020	2735096-0000		4	SPACER	
030	2735097-0000		4	SPACER	
040	2735098-0000		2	RAIL	
050	2735100-0000		2	BLOCK	
060	3034134-0000		2	LABEL	
100	312111-0343		8	SCREW HEX.SOCK.HD.MC6S-TT 5X60 88 FZB	
110	312115-0337		4	SCREW ISO4762 M5X35 A4 80	
120	312115-0453		5	SCREW ISO4762 M8X25 A4 80	
130	315105-0146		12	WASHER BRB 5,3X10 RFR	
140	90165-0087		2	T-CLIP T6 FOR TUBE D=6 - 7 MM	
150	312155-0228		2	SCREW DIN 7991 MF6S M3X16 A4 70	
160	90055-0257		4	PUSH-IN Y-CONNECTOR QSY-6	
170	312115-0372		4	SCREW ISO4762 M6X25 A4 80	
180	350001-0002		8	PUSH-IN FITTING QS-F-M5-6	
190	90459-7575		2	WARNING SIGN ISO, PINCH POINT	
T10M1732	90600-2793		1	DOUBLE ACTING, COMPACT, 25-10	
T10M1733	90600-2793		1	DOUBLE ACTING, COMPACT, 25-10	
T10M1742	90600-2793		1	DOUBLE ACTING, COMPACT, 25-10	
T10M1743	90600-2793		1	DOUBLE ACTING, COMPACT, 25-10	
T10W1732	315400-0001	MM	4000	TUBE PUN-H-6X1-BL	
T10W1733	315400-0001	MM	100	TUBE PUN-H-6X1-BL	
T10W1734	315400-0001	MM	4000	TUBE PUN-H-6X1-BL	
T10W1735	315400-0001	MM	100	TUBE PUN-H-6X1-BL	
T10W1736	315400-0001	MM	500	TUBE PUN-H-6X1-BL	
T10W1737	315400-0001	MM	500	TUBE PUN-H-6X1-BL	
T10W1742	315400-0001	MM	5000	TUBE PUN-H-6X1-BL	
T10W1743	315400-0001	MM	100	TUBE PUN-H-6X1-BL	
T10W1744	315400-0001	MM	5000	TUBE PUN-H-6X1-BL	
T10W1745	315400-0001	MM	100	TUBE PUN-H-6X1-BL	
T10W1746	315400-0001	MM	500	TUBE PUN-H-6X1-BL	
T10W1747	315400-0001	MM	500	TUBE PUN-H-6X1-BL	

Pos	Part No	UN	Qty	Description	Page No

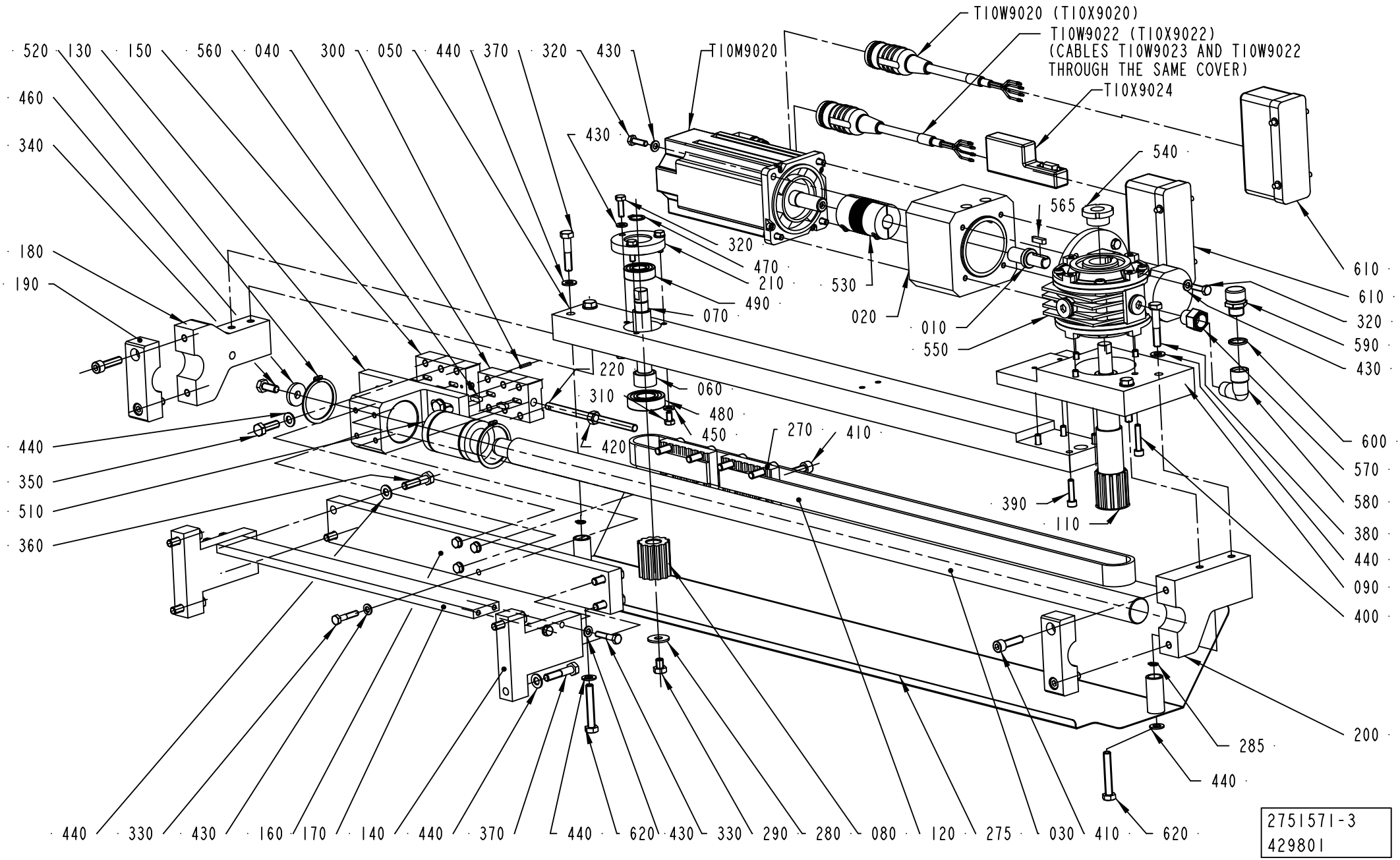
T10W9020 (T10X9020)
T10W9022 (T10X9022)
(CABLES T10W9023 AND T10W9022
THROUGH THE SAME COVER)
T10X9024
T10M9020
520
130
150
560
040
300
050
440
370
320
430
460
340
180
190
440
350
510
360
220
310
060
480
450
420
270
410
430
320
470
210
490
070
530
020
010
550
540
565
610
610
320
590
430
600
570
580
380
440
090
400
390
110
200
285
440
440
330
430
160
170
140
440
370
440
620
430
330
290
280
080
120
275
030
410
620
2751571-3
429801

ECM: 448741 - 20101001
Group number: 2751571-0300
Assembly Drawing: 2751571-3_1_AA

Pos	Part No	UN	Qty	Description	Page No
-					
010	2735107-0000		1	SHAFT	
020	2735108-0000		1	FLANGE	
030	2737906-0000		1	SHAFT	
040	2751569-0000		1	PLATE	
050	2751573-0000		1	BAR	
060	2751574-0000		1	SPACER	
070	2751575-0000		1	SHAFT	
080	2751576-0000		1	PULLEY	
090	2751579-0000		1	PLATE	
110	2844167-0000		1	PULLEY	
120	2751585-0000		1	TIMING BELT	
130	2751590-0000		1	BRACKET	
140	2751591-0000		2	PLATE	
150	2751592-0000		1	PLATE	
160	2751593-0000		1	PLATE	
170	2751594-0000		1	PLATE	
180	2751595-0000		1	PLATE	
190	2751596-0000		2	PLATE	
200	2751597-0000		1	PLATE	
210	2751598-0000		1	COVER	
220	2755496-0000		1	BAR	
270	2844166-0000		2	PLATE	
275	2891696-0000		1	PROTECTION	
280	90005-0116		1	WASHER PLAIN ROUND 8,4(M8)/24, H=2	
285	90141-0015		2	RETAINING RING FOR SHAFT DIN 471 8 SS	
290	90459-4735		1	SCREW M6S ISO 4017 M8X10 A480	
300	311103-0236		1	PARALLEL PIN ISO 2338 3M6X16 A1	
310	312105-0364		2	SCREW M6S ISO 4017 M6X10 A480	
320	312105-0370		11	SCREW M6S ISO 4017 M6X20 A480	
330	312105-0374		8	SCREW M6S ISO 4014 M6X30 A480	
340	312105-0451		1	SCREW M6S ISO 4017 M8X20 A480	
350	312105-0453		4	SCREW M6S ISO 4017 M8X25 A480	
360	312105-0457		4	SCREW M6S ISO 4014 M8X35 A480	
370	312105-0459		6	SCREW M6S ISO 4014 M8X40 A480	
380	312105-0460		2	SCREW M6S ISO 4014 M8X45 A480	
390	312115-0372		4	SCREW ISO4762 M6X25 A4 80	
400	312115-0374		4	SCREW ISO4762 M6X30 A4 80	
410	312115-0455		12	SCREW ISO4762 M8X30 A4 80	
420	312605-0318		1	HEXAGON NUT, M6M M8 A280	
430	315105-0153		19	WASHER BRB 6,4X12 RFR	
440	315105-0165		18	WASHER BRB 8,4X16 RFR	
450	315106-0153		2	WASHER ISO 7089-6-200 HV A4	
460	315125-0165		1	WASHER TBRSB 8,4X26X5 A4	
470	315751-0112		1	RETAINING RING FOR SHAFT DIN 471 15 SS	
480	321308-0204		1	BALL BEARING 20/42X12	
490	321313-0102		1	BALL BEARING 15/35X11	
510	90600-2722		1	6ALL BUSHING, 30X47X68 MM	
520	90600-2740		2	RETAINING RING FOR SHAFT DIN 471 47 SS	
530	90600-2733		1	BELLOW COUPLING, 16X16 MM	
540	90600-2721		1	CLAMPING ELEMENT TLK 250-15-25	
550	90600-2530		1	WORM GEAR VF-EP49-P1-7-P71-B14-B6-NP-PV-	
560	315705-0198		4	PARALLEL KEY W. ROUND ENDS 5X5X14 MM	
565	315705-0201		1	PARALLEL KEY W. ROUND ENDS 5X5X20 MM	
570	90030-0144		1	REDUCER, 2520-3/8-3/8	
580	90140-0020		1	ELBOW, 90, INT/EXT. THREAD, NO. 2020-3/8	
590	90600-2532		1	BREATHER PLUG, TSS2G	
600	315239-0111		1	NYLON WASHER G3/8, 3/8RRP	
610	90110-0381		2	COVER, 310601-33 CYR24.4	
620	312109-0461		2	SCREW M6S ISO 4017 M8X50 A480	
T10M9020	90601-1989		1	SERVO MOTOR MPL-B320P-MK74AA SERIES A	
T10W9020	90459-7173		1	MOTOR CABLE	
T10W9022	90459-7176		1	MOTOR CABLE	
T10X9024	90459-2551		1	CONNECTOR, MOTOR FEEDBACK 15 PIN MALE	

Machine Type	Group Description	Used-In	Group Number	Page No

PNEUMATIC PANEL

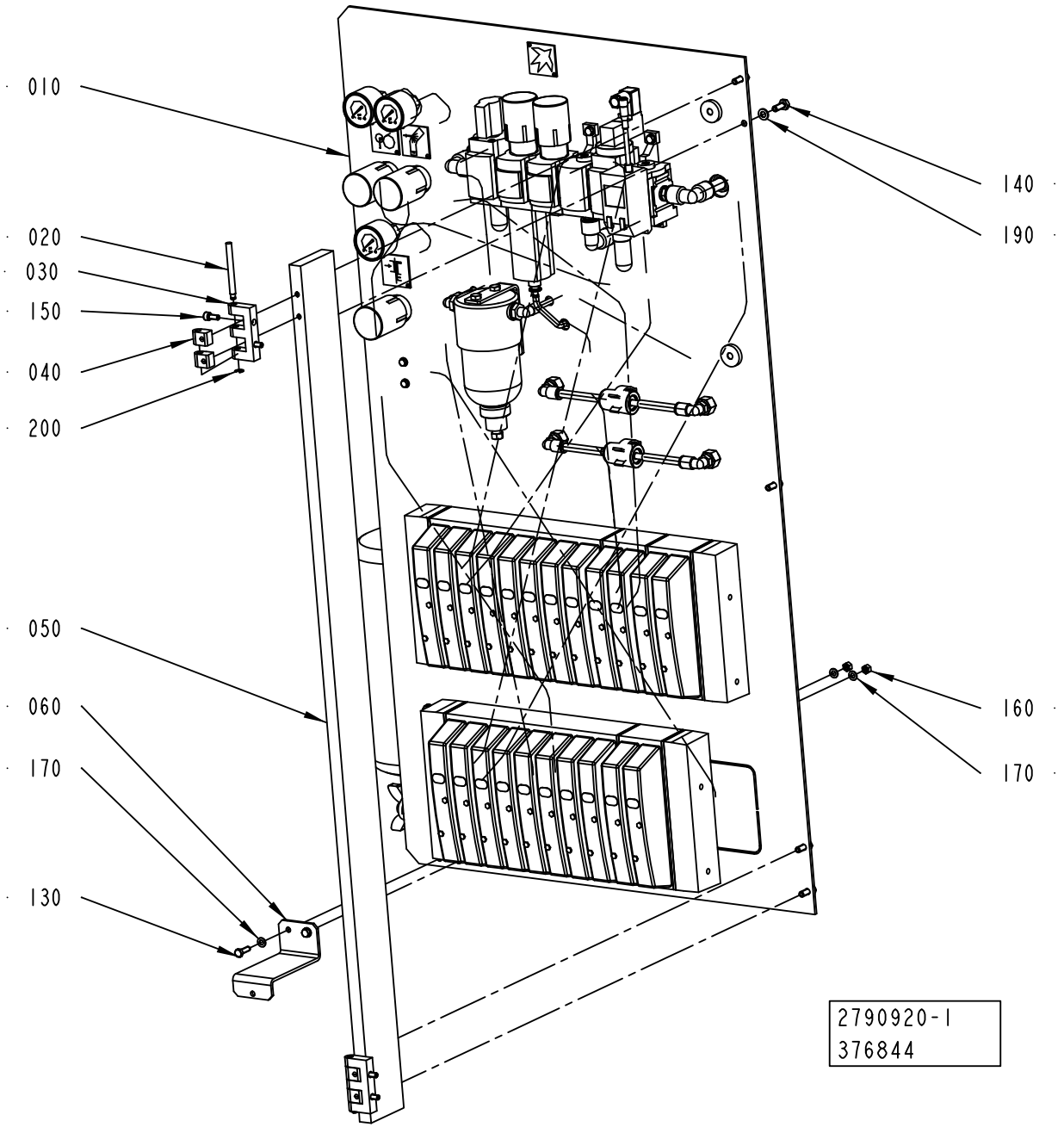

ECM: 415460 - 20100101
Group number: 2790920-0100
Assembly Drawing: 2790920-1_1_AC

Pos	Part No	UN	Qty	Description	Page No
-					
010	2797505-0100		1	VALVE PANEL	**7-109, 7-111**
020	1036329-0000		2	PIN	
030	1035792-0000		2	E-HINGE	
040	1129770-0000		4	BLOCKING PIECE	
050	2844157-0000		1	PLATE	
060	2844158-0000		1	BRACKET	
130	312105-0329		2	SCREW M6S ISO 4017 M5X16 A480	
140	312105-0368		5	SCREW M6S ISO 4017 M6X16 A480	
150	312115-0327		4	SCREW ISO4762 M5X12 A4 80	
160	312607-0314		2	HEXAGON NUT, EN 24032 M6M M5 A480	
170	315105-0146		4	WASHER BRB 5,3X10 RFR	
190	315105-0153		5	WASHER BRB 6,4X12 RFR	
200	315755-0106		2	RETAINING RING SHAFT DIN 6799 4 SS	

Pos	Part No	UN	Qty	Description	Page No

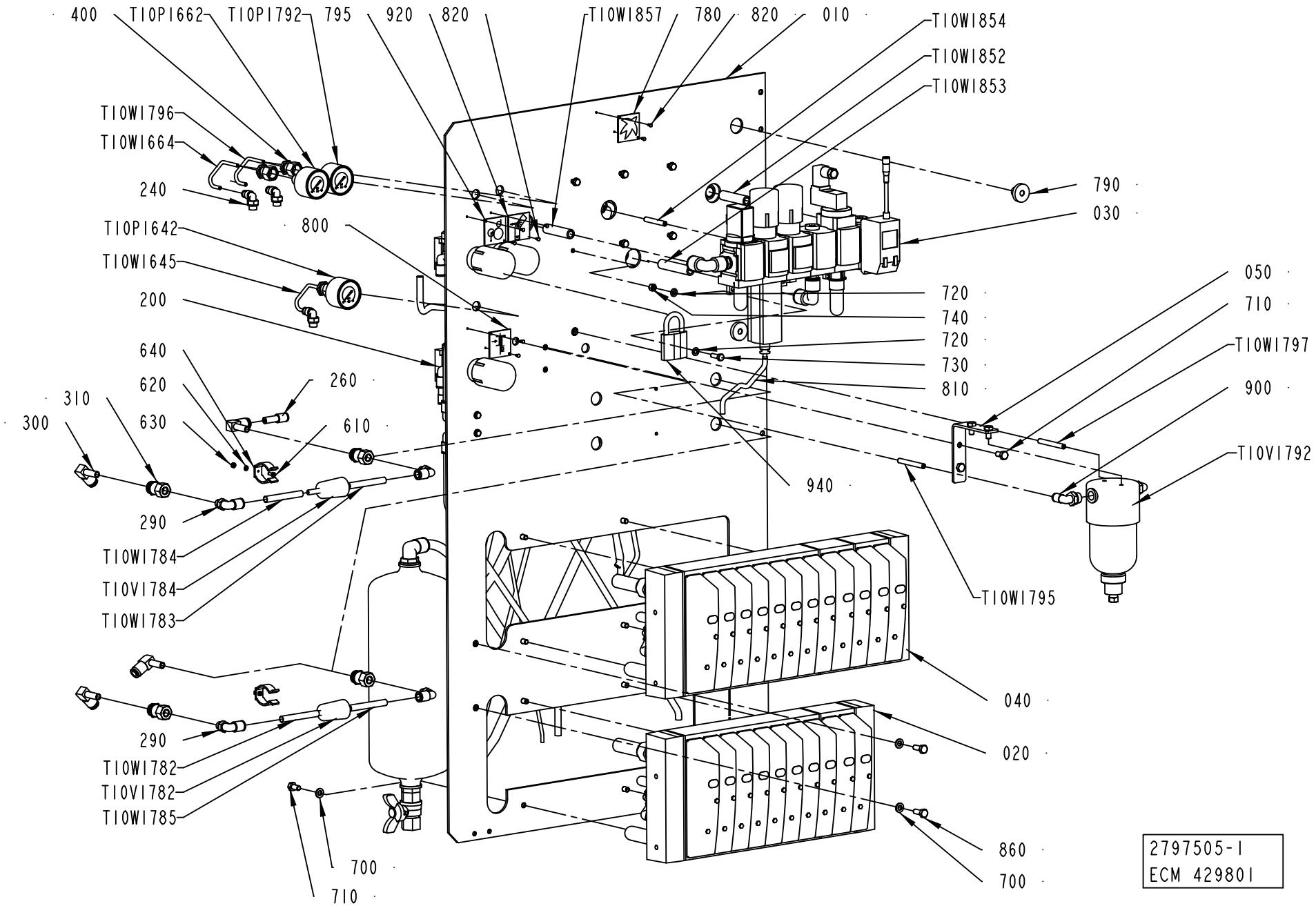
400
T10P1662
T10P1792
795
920
820
T10W1857
780
820
010
T10W1854
T10W1852
T10W1853
T10W1796
T10W1664
240
790
030
T10P1642
800
T10W1645
200
720
740
720
730
810
050
710
T10W1797
900
T10V1792
640
620
630
260
610
310
300
940
290
T10W1784
T10V1784
T10W1783
T10W1795
040
020
290
T10W1782
T10V1782
T10W1785
860
700
700
710
2797505-1
ECM 429801

ECM: 448115 - 20101001
Group number: 2797505-0100
Assembly Drawing: 2797505-1_1_AF

This list covers pages from 7-108 to 7-111

Pos	Part No	UN	Qty	Description	Page No
A3/SPEED NOPT					
240	350002-0005		2	PUSH-IN L-FITTING QSL-F-G1/8-4	
400	90459-7333		2	PUSH-IN FITTING QSSF-1/4-4-B	
710	312105-0366		8	SCREW M6S ISO 4017 M6X12 A480	
720	315106-0146		12	WASHER ISO 7089-5-200 HV A4	
740	312605-0314		6	HEXAGON NUT, M6M M5 A280	
820	312502-0169		6	DRIVE SCREW ROUND HEAD KDS 2X5	
A3/SPEED TBA 1000S PT/SPEED					
050	2986430-0000		1	HOLDER	
240	350002-0005		3	PUSH-IN L-FITTING QSL-F-G1/8-4	
400	90459-7333		3	PUSH-IN FITTING QSSF-1/4-4-B	
710	312105-0366		12	SCREW M6S ISO 4017 M6X12 A480	
720	315106-0146		14	WASHER ISO 7089-5-200 HV A4	
740	312605-0314		8	HEXAGON NUT, M6M M5 A280	
820	312502-0169		8	DRIVE SCREW ROUND HEAD KDS 2X5	
880	90459-2248		1	BRACKET, MS4-MV	
890	350001-0008		1	PUSH-IN FITTING QS-F-G1/4-6	
900	350002-0008		3	PUSH-IN L-FITTING QSL-F-G1/4-6	
910	350004-0002		2	PUSH-IN L-FITTING QSL-F-6	
920	359307-0010		1	SIGN "WASTE BLOWING"	
930	90600-1169		1	PLUG G1/4, B-1/4-NPT	
T10P1792	90459-7344		1	PRESSURE GAUGE, MA-40-6-R1/4-EN	
T10R1792	90459-4554		1	REGULATOR, MS4-LRB-1/4-D7-A8-AS	
T10V1792	90277-0116		1	FILTER HOUSING / ART.NO FILTER 58P-S5430	
	90277-0406		*1*	*FILTER CARTRIDGE 100-12-BX*	
T10W1794	315400-0001	MM	800	TUBE PUN-H-6X1-BL	
T10W1795	315400-0001	MM	250	TUBE PUN-H-6X1-BL	
T10W1796	315400-0016	MM	100	TUBE PUN-H-4X0,75-BL	
T10W1797	315400-0001	MM	50	TUBE PUN-H-6X1-BL	
Common Parts					
010	2797502-0000		1	PANEL	
020	2797506-0100		1	VALVE GROUP	**7-113**
030	2797504-0100		1	AIR INLET	**7-115**
040	2797503-0100		1	VALVE GROUP	**7-117**
100	90055-0189		1	HOSE,NIPPLE,REDUCER,TUBE, 6/8M	
200	350002-0009		3	PUSH-IN L-FITTING QSL-F-G1/4-8	
210	350001-0007		1	PUSH-IN FITTING QS-F-G1/8-8	
220	350001-0009		1	PUSH-IN FITTING QS-F-G1/4-8	
230	350004-0005		3	PUSH-IN L-FITTING QSL-F-12	
250	350006-0002		2	PUSH-IN FITTING QS-F-8H-4	
260	350006-0003		1	PUSH-IN FITTING QS-F-8H-6	
265	350008-0005		1	PUSH-IN FITTING QSF-F-G1/8-8	
270	350011-0004		1	PUSH-IN T-FITTING QST-F-12-10	
280	350005-0002		1	PUSH-IN T-FITTING QST-F-6	
290	350002-0007		6	PUSH-IN L-FITTING QSL-F-G1/8-8	
300	90600-1175		4	ELBOW WITH TAILPIECE 8/8 MM	
310	90600-1173		4	PUSH-IN BULKHEAD FITTING QSSF-1/8-8-B	
320	350006-0006		1	PUSH-IN FITTING QS-F-10H-8	
610	312125-0222		2	SCREW ISO 1207 M3X8 A4	
620	315105-0124		3	WASHER BRB 3,2X6 RFR	
630	312605-0310		2	HEXAGON NUT, M6M M3 A280	
640	90165-0019		2	TOOL CLIP, 81/3, OPEN, 20 - 30 MM	
700	315105-0153		12	WASHER BRB 6,4X12 RFR	
730	312105-0329		6	SCREW M6S ISO 4017 M5X16 A480	
750	315106-0136		4	WASHER ISO 7089-4-200 HV A4	
760	312105-0297		2	SCREW M6S ISO 4017 M4X25 A470	
770	312605-0312		2	HEXAGON NUT, M6M M4 A280	
780	273458-0000		1	SIGN, AIR	
790	90015-0023		2	LEAD-IN, TET7-10, E-1458019	
795	2912326-0000		1	LABEL	
800	2912327-0000		1	LABEL	
810	315400-0001	MM	1500	TUBE PUN-H-6X1-BL	
815	315400-0001	MM	50	TUBE PUN-H-6X1-BL	
817	315400-0004	MM	50	TUBE PUN-H-8X1,25-BL	
830	350002-0016		1	PUSH-IN L-FITTING QSL-F-G1/2-12	
840	342700-0205		1	NIPPLES,HEXAGON,EXT.G-THREAD G1/2"-G1/4"	
850	312630-0316		2	HEX.NUT FINE, EN 24032 M6M M6X0,75 FZB8	
860	312105-0368		2	SCREW M6S ISO 4017 M6X16 A480	
870	350005-0005		1	PUSH-IN T-FITTING QST-F-12	
930	90600-1169		1	PLUG G1/4, B-1/4-NPT	
940	90601-3710		1	PADLOCK, LRVS-D	
T10C1852	90187-0088		1	BALL VALVE G1/4, NPBR	
T10P1642	90459-7344		1	PRESSURE GAUGE, MA-40-6-R1/4-EN	
T10P1662	90459-7344		1	PRESSURE GAUGE, MA-40-6-R1/4-EN	
T10Q1662	90459-2141		1	LOGIC ELEMENT, OS-1/8-B	
T10R1642	90459-2822		1	REGULATOR, MS4-LR-1/4-D5-A8	
T10R1662	90459-4554		1	REGULATOR, MS4-LRB-1/4-D7-A8-AS	
T10R1782	90602-3893		1	FLOW CONTROL VALVE, GRLSA-1/8-QS-6	
T10S1852	90457-0100		1	ACCUMULATOR CRVZS-2	
T10V1782	90277-0035		1	FILTER / DFU 9933-05-A	
T10V1784	90277-0035		1	FILTER / DFU 9933-05-A	
T10W1644	315400-0016	MM	800	TUBE PUN-H-4X0,75-BL	
T10W1645	315400-0016	MM	100	TUBE PUN-H-4X0,75-BL	
T10W1662	315400-0004	MM	1000	TUBE PUN-H-8X1,25-BL	

Machine Type | Group Description | Used-In | Group Number | Page No

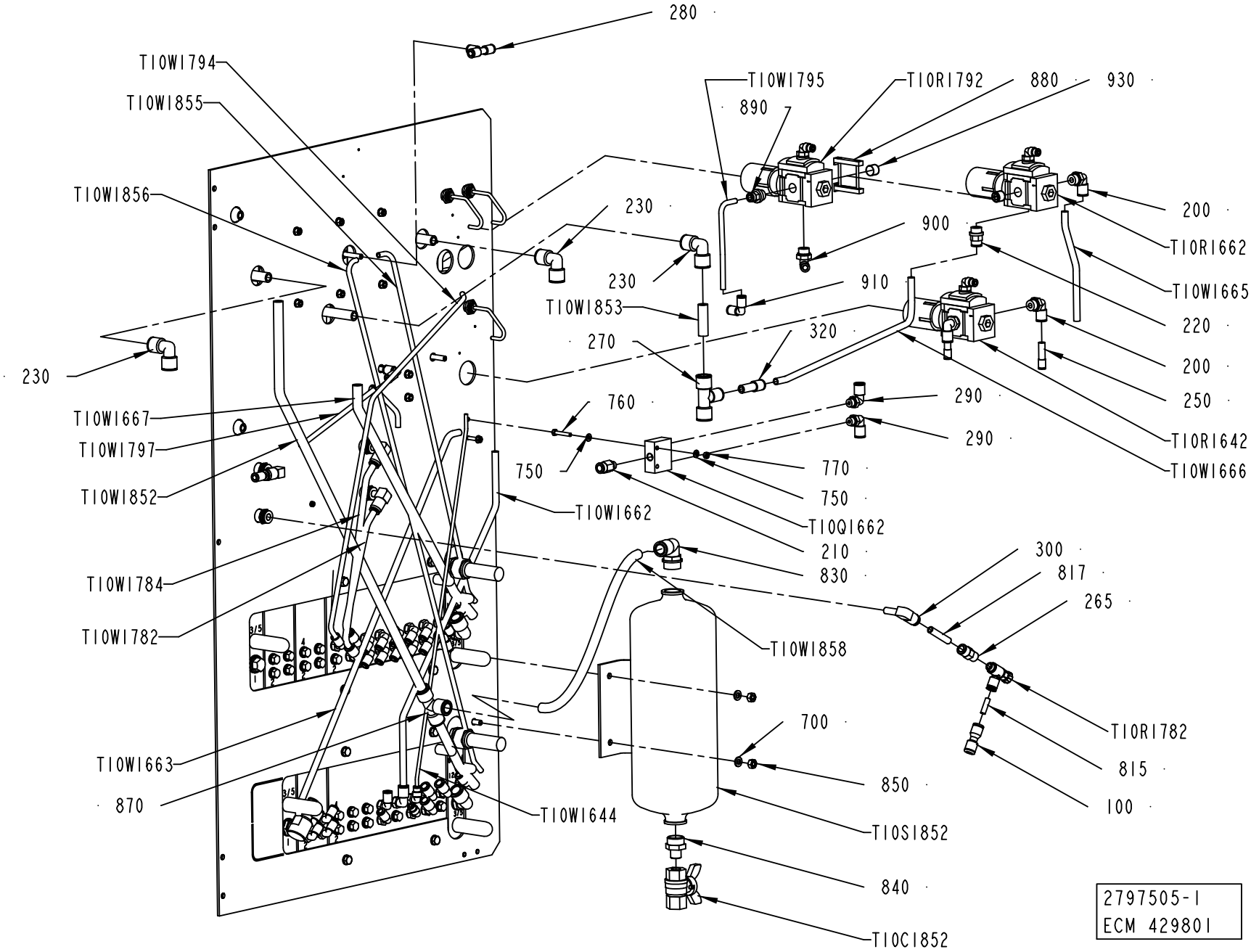
280
T10WI794
T10WI855
T10WI856
230
T10WI667
T10WI797
T10WI852
T10WI784
T10WI782
T10WI663
870
T10WI795
T10RI792
880
930
890
230
230
T10WI853
270
760
750
T10WI662
T10WI644
900
910
320
290
290
770
750
T10QI662
210
830
T10WI858
700
850
T10SI852
840
T10CI852
200
T10RI662
T10WI665
220
200
250
T10RI642
T10WI666
300
817
265
T10RI782
815
100
2797505-1
ECM 429801

Pos	Part No	UN	Qty	Description	Page No
Common Parts (Cont'd)					
T10W1663	315400-0004	MM	1000	TUBE PUN-H-8X1,25-BL	
T10W1664	315400-0016	MM	100	TUBE PUN-H-4X0,75-BL	
T10W1665	315400-0004	MM	250	TUBE PUN-H-8X1,25-BL	
T10W1666	315400-0004	MM	350	TUBE PUN-H-8X1,25-BL	
T10W1667	315400-0010	MM	500	TUBE PUN-H-12X2-BL	
T10W1782	315400-0004	MM	80	TUBE PUN-H-8X1,25-BL	
T10W1783	315400-0004	MM	80	TUBE PUN-H-8X1,25-BL	
T10W1784	315400-0004	MM	350	TUBE PUN-H-8X1,25-BL	
T10W1785	315400-0004	MM	80	TUBE PUN-H-8X1,25-BL	
T10W1852	315400-0010	MM	50	TUBE PUN-H-12X2-BL	
T10W1853	315400-0010	MM	50	TUBE PUN-H-12X2-BL	
T10W1854	315400-0001	MM	50	TUBE PUN-H-6X1-BL	
T10W1855	315400-0001	MM	650	TUBE PUN-H-6X1-BL	
T10W1856	315400-0001	MM	1200	TUBE PUN-H-6X1-BL	
T10W1857	315400-0010	MM	1700	TUBE PUN-H-12X2-BL	
T10W1858	315400-0010	MM	500	TUBE PUN-H-12X2-BL	

Pos	Part No	UN	Qty	Description	Page No

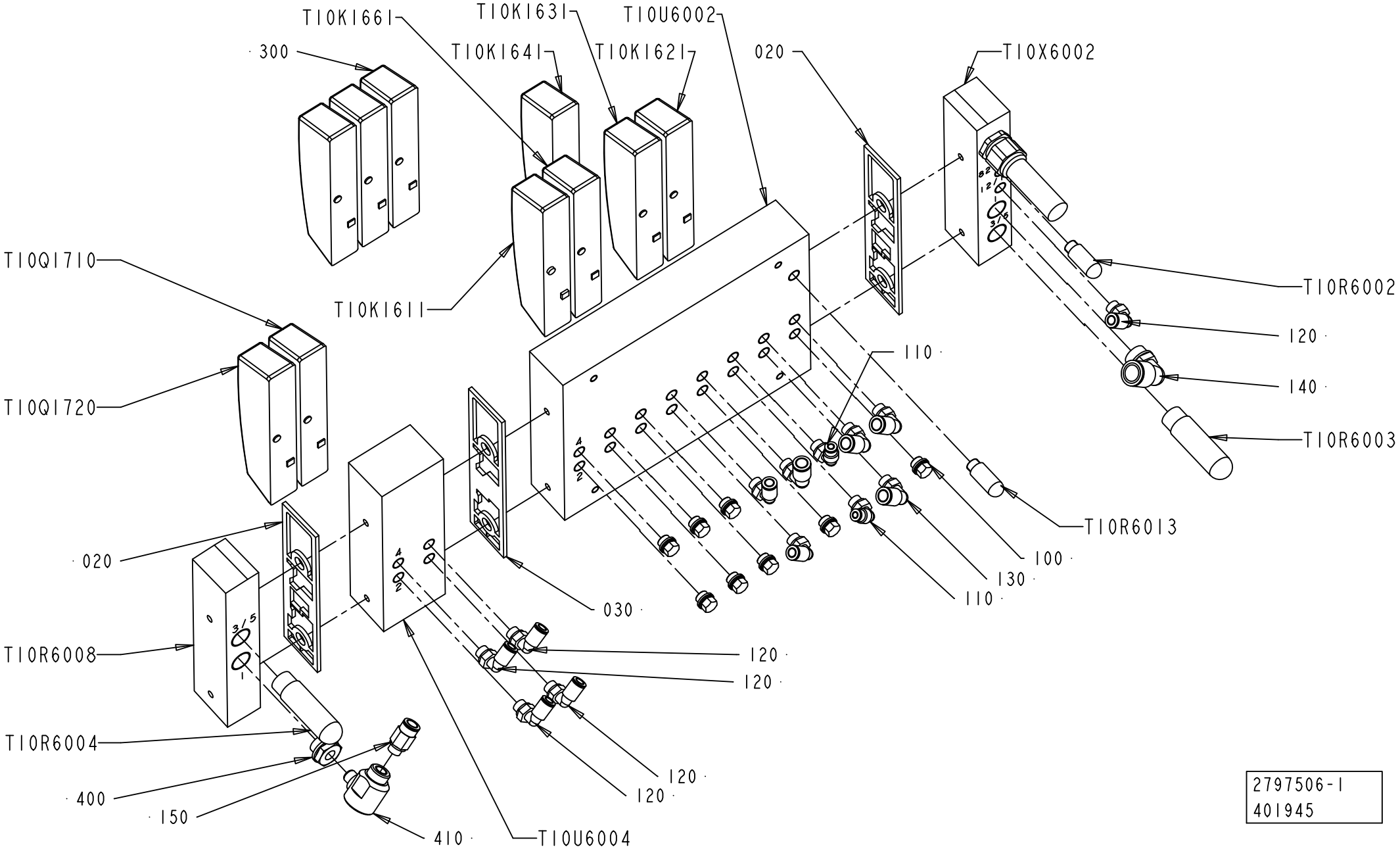

2797506-1
401945

ECM: 402211 - 20090618
Group number: 2797506-0100
Assembly Drawing: 2797506-1_1_AB

Pos	Part No	UN	Qty	Description	Page No
-					
020	90458-1207		2	SEALING, STANDARD	
030	90458-1208		1	SEALING, CHANNEL 1 BLOCKED	
040	90458-1212		1	LEFT ENDPLATE INCL. 10M CABLE	
100	90459-0698		8	PLUG, EXT. G-THREAD, G1/8	
110	350002-0005		2	PUSH-IN L-FITTING QSL-F-G1/8-4	
120	350002-0006		7	PUSH-IN L-FITTING QSL-F-G1/8-6	
130	350002-0007		4	PUSH-IN L-FITTING QSL-F-G1/8-8	
140	350002-0014		1	PUSH-IN L-FITTING QSL-F-G3/8-12	
150	350001-0007		1	PUSH-IN FITTING QS-F-G1/8-8	
300	90458-1215		3	COVER PLATE FOR EMPTY VALVE POSITION	
400	90600-3003		1	BUSHING,INT/EXT THREAD, 534147	
410	90235-0206		1	QUICK EXHAUST VALVE, SEU-1/8	
T10K1611	90458-1200		1	VALVE OPEN IN MID-POSITION 5/3	
T10K1621	90458-1194		1	MONOSTABLE VALVE 5/2	
T10K1631	90458-1194		1	MONOSTABLE VALVE 5/2	
T10K1641	90458-1203		1	VALVE 2X3/2 1X OPEN 1X CLOSED	
T10K1661	90458-1194		1	MONOSTABLE VALVE 5/2	
T10Q1710	90458-1194		1	MONOSTABLE VALVE 5/2	
T10Q1720	90458-1194		1	MONOSTABLE VALVE 5/2	
T10R6002	90328-0047		1	SILENCER G1/8"	
T10R6003	90328-0024		1	SILENCER G3/8"	
T10R6004	90328-0024		1	SILENCER G3/8"	
T10R6008	90458-1214		1	RIGHT ENDPL EXT. PILOT AIR,CDVI5.0-EPR-S	
T10R6013	90328-0047		1	SILENCER G1/8"	
T10U6002	90458-1205		1	BASIC SUB-BASE 8 VALVES, CDVI5.0-GB8-MP	
T10U6004	90458-1206		1	EXP. SUB-BASE 2 VALVES, CDVI5.0-EB	
T10X6002	90458-1212		1	LEFT ENDPLATE INCL. 10M CABLE	

Pos	Part No	UN	Qty	Description	Page No

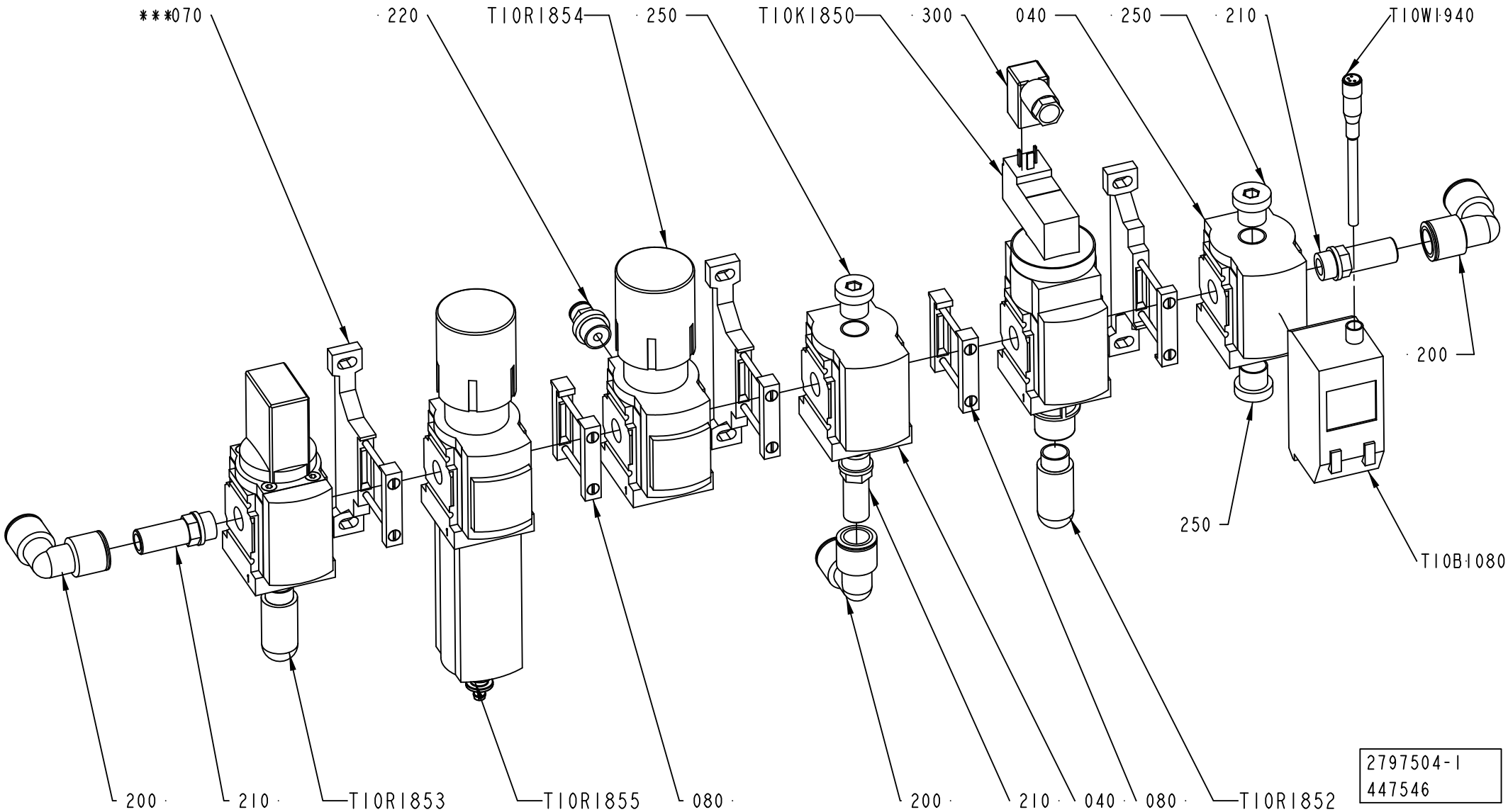
***070
220
T10R1854
250
T10K1850
300
040
250
210
T10W1940
200
250
T10B1080
200
210
T10R1853
T10R1855
080
200
210
040
080
T10R1852
2797504-1
447546

ECM: 448107 - 20101001
Group number: 2797504-0100
Assembly Drawing: 2797504-1_1_AD

Pos	Part No	UN	Qty	Description	Page No
-					
040	90459-2245		2	DISTRIBUTOR, MS4-FRM-1/4	
070	90459-2247		3	BRACKET, MS4-WP	
080	90459-2248		2	BRACKET, MS4-MV	
090	90224-0372		1	CONN. STRAIGHT ESK-1/4-1/4 151521	
200	350004-0005		3	PUSH-IN L-FITTING QSL-F-12	
210	350014-0011		3	FITTING QS-F-G1/4-12H	
220	350001-0008		1	PUSH-IN FITTING QS-F-G1/4-6	
250	90600-1167		3	PLUG, EXT. R-THREAD, R1/4	
300	90458-2837		1	CONNECTING CABLE KMEB-1-24-5-LED	
T10B1080	90600-2852		1	PRESSURE SENS. SDE1-D10-G2-MS4-C-PU-M8	
T10K1850	90459-2243		1	SHUT OFF VALVE, MS4-EE-1/4-10V24	
T10Q1852	90459-2337		1	SHUT OFF VALVE, MS4-EM1-1/4	
T10R1852	90328-0026		1	SILENCER G1/4"	
T10R1853	90328-0026		1	SILENCER G1/4"	
T10R1854	90459-2242		1	REGULATOR, MS4-LRB-1/4-D7-AS	
T10R1855	90459-2339		1	FILTER REGULATOR, MS4-LFR-1/4-D7-ERV-AS	
	90459-3814		*1*	*FILTER CARTRIDGE, MS4-LFP-E*	
T10W1940	90600-3690		1	SENSOR CABLE SIM-M8-4GD-2,5-PU	

Pos	Part No	UN	Qty	Description	Page No

Machine Type | Group Description | Used-In | Group Number | Page No

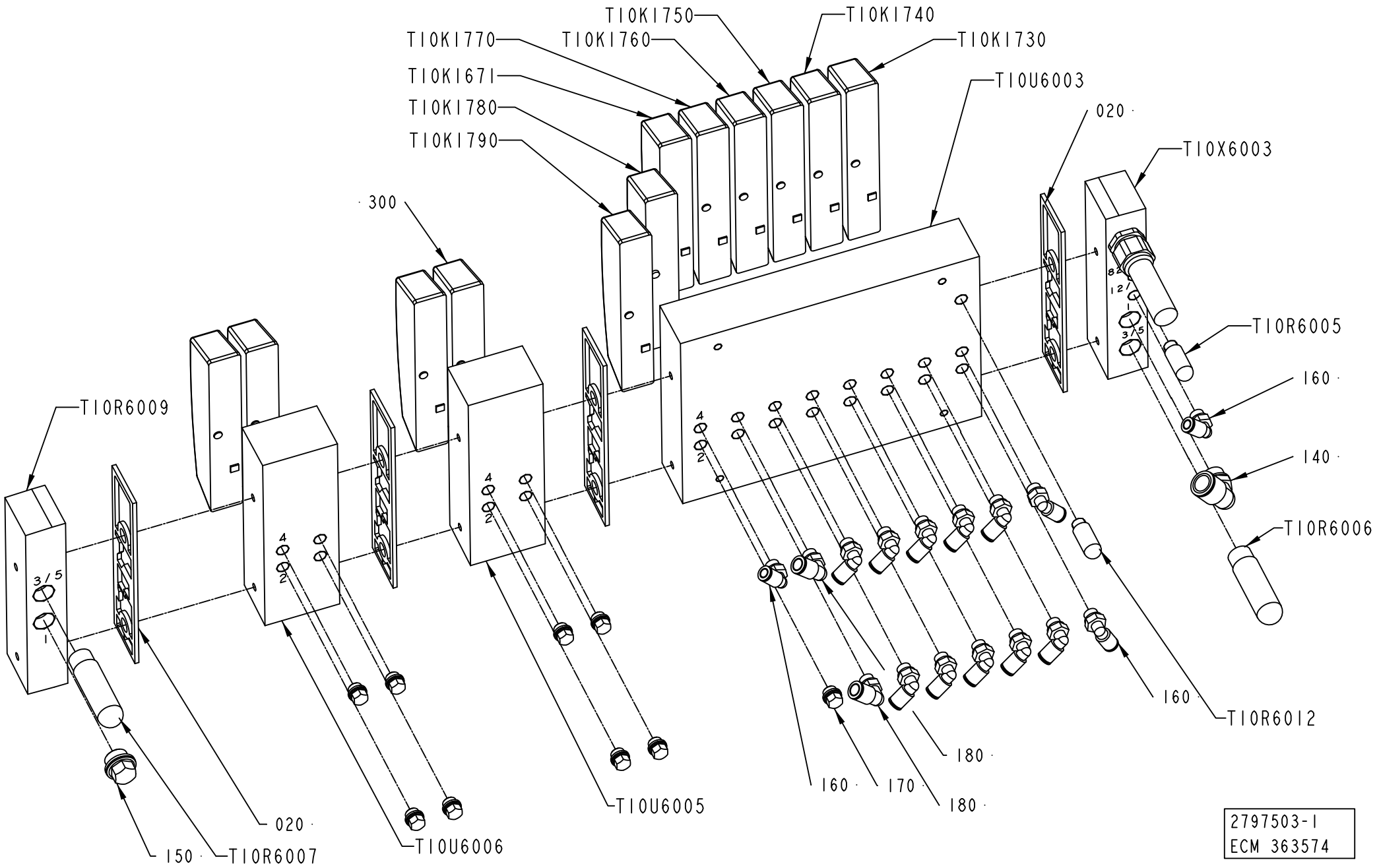
T10K1750
T10K1740
T10K1770
T10K1760
T10K1730
T10K1671
T10U6003
T10K1780
020
T10K1790
T10X6003
300
T10R6005
160
T10R6009
140
T10R6006
T10R6012
160
180
160
170
180
T10U6005
020
150
T10R6007
T10U6006
2797503-1
ECM 363574

ECM: 364202 - 20080825
Group number: 2797503-0100
Assembly Drawing: 2797503-1_1_AC

Pos	Part No	UN	Qty	Description	Page No
A3/SPEED NOPT					
160	350002-0006		13	PUSH-IN L-FITTING QSL-F-G1/8-6	
170	90459-0698		10	PLUG, EXT. G-THREAD, G1/8	
300	90458-1215		5	COVER PLATE FOR EMPTY VALVE POSITION	
A3/SPEED TBA 1000S PT/SPEED					
160	350002-0006		14	PUSH-IN L-FITTING QSL-F-G1/8-6	
170	90459-0698		9	PLUG, EXT. G-THREAD, G1/8	
300	90458-1215		4	COVER PLATE FOR EMPTY VALVE POSITION	
T10K1790	90458-1194		1	MONOSTABLE VALVE 5/2	
Common Parts					
020	90458-1207		4	SEALING, STANDARD	
140	350002-0014		1	PUSH-IN L-FITTING QSL-F-G3/8-12	
150	90459-0699		1	BLANKING PLUG, CDVI5.0-B-G3/8	
180	350002-0007		2	PUSH-IN L-FITTING QSL-F-G1/8-8	
T10K1671	90458-1194		1	MONOSTABLE VALVE 5/2	
T10K1730	90458-1194		1	MONOSTABLE VALVE 5/2	
T10K1740	90458-1194		1	MONOSTABLE VALVE 5/2	
T10K1750	90458-1194		1	MONOSTABLE VALVE 5/2	
T10K1760	90458-1194		1	MONOSTABLE VALVE 5/2	
T10K1770	90458-1194		1	MONOSTABLE VALVE 5/2	
T10K1780	90458-1202		1	VALVES 2X3/2, CLOSED	
T10R6005	90328-0047		1	SILENCER G1/8"	
T10R6006	90328-0024		1	SILENCER G3/8"	
T10R6007	90328-0024		1	SILENCER G3/8"	
T10R6009	90458-1212		1	LEFT ENDPLATE INCL. 10M CABLE	
T10R6012	90328-0047		1	SILENCER G1/8"	
T10U6003	90458-1205		1	BASIC SUB-BASE 8 VALVES, CDVI5.0-GB8-MP	
T10U6005	90458-1206		1	EXP. SUB-BASE 2 VALVES, CDVI5.0-EB	
T10U6006	90458-1206		1	EXP. SUB-BASE 2 VALVES, CDVI5.0-EB	
T10X6003	90458-1214		1	RIGHT ENDPL EXT. PILOT AIR,CDVI5.0-EPR-S	

Pos	Part No	UN	Qty	Description	Page No

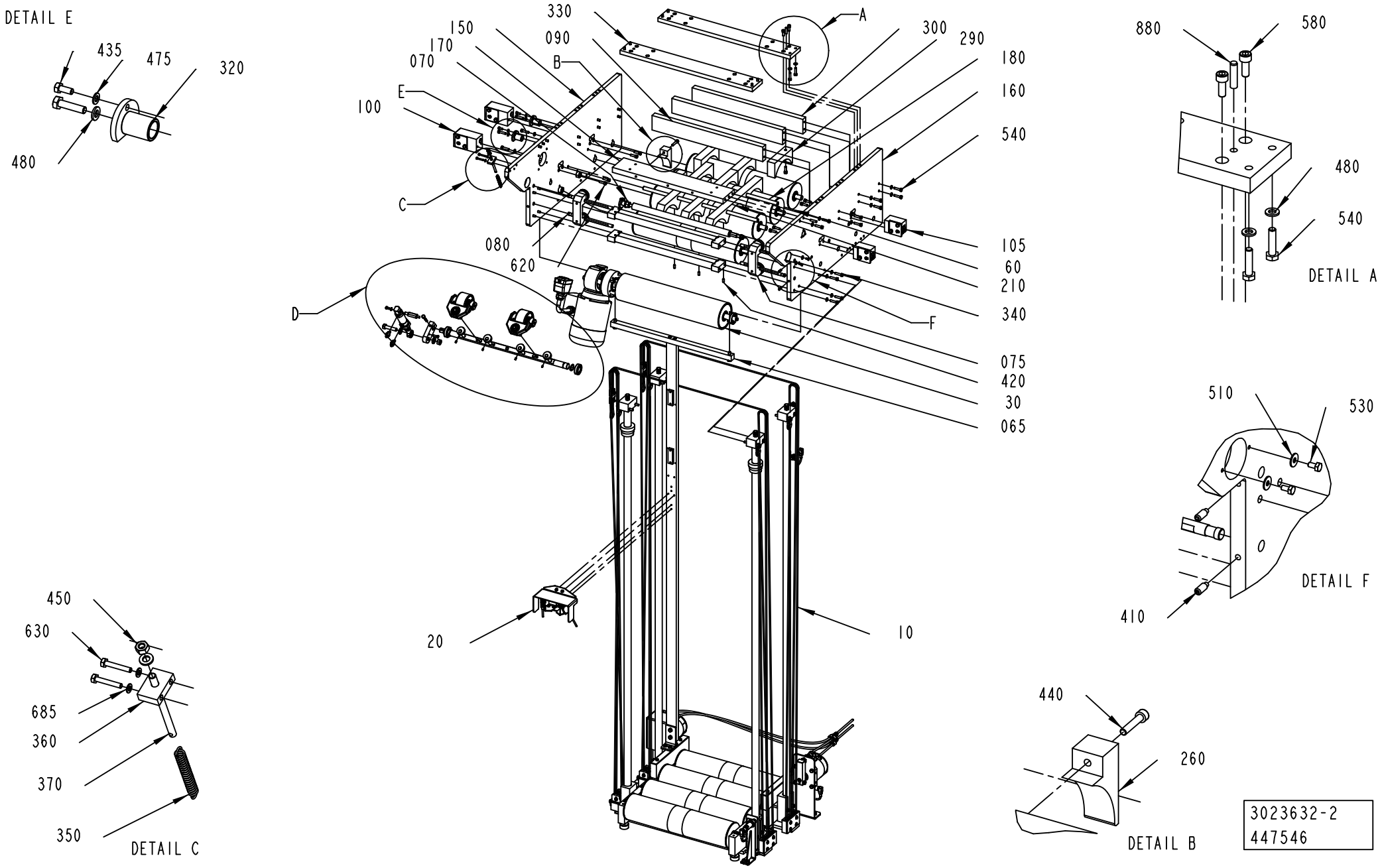
DETAIL E
435
475
320
480
330
150
170
090
070
B
E
100
C
080
620
D
A
300
290
180
160
540
105
60
210
340
F
075
420
30
065
20
10
880
580
480
540
DETAIL A
510
530
DETAIL F
410
450
630
685
360
370
350
DETAIL C
440
260
DETAIL B
3023632-2
447546

ECM: 448088 - 20101001
Group number: 3023632-0100
Assembly Drawing: 3023632-2_1_AB

This list covers pages from 7-118 to 7-123

Pos	Part No	UN	Qty	Description	Page No
A3/SPEED (See drawing on pages: 7-118, 7-120, 7-122)					
010	2746324-0200		1	MAGAZINE	**7-125**
020	3023661-0100		1	PHOTOCELL UNIT	**7-137**
060	2735064-0100		4	BENDING ROLLER	**7-139**
100	2934255-0100		2	ROPE BRACKET	**7-141**
105	2934257-0100		2	ROPE BRACKET	**7-143**
290	2746320-0000		3	GUIDE	
320	2765642-0000		4	PIN	
880	311103-1355		4	PARALLEL PIN ISO 2338 6M6X24 A1	
Common Parts					
030	2731246-0100		1	DRIVE UNIT	**7-145**
040	2564069-0100		2	COUNTER ROLLER	**7-147**
065	2741029-0100		1	BRACKET	**7-149**
070	2875291-0100		1	ROLLER	**7-151**
075	2985585-0100		2	PAPER GUIDE	**7-87**
080	1484704-0000		4	SHAFT	
090	1487800-0000		2	PLATE	
150	2951676-0000		1	PLATE	
160	2951677-0000		1	PLATE	
170	2731257-0000		1	PLATE	
180	2958852-0000		2	SHAFT	
210	2735068-0000		3	GUIDE	
260	2806674-0000		3	GUIDE	
300	2746321-0000		1	PLATE	
330	2765643-0000		2	PLATE	
340	2958955-0100		2	ROLLER	**7-153**
350	1478303-0000		1	TENSION SPRING	
360	2765678-0000		1	PLATE	
370	2765679-0000		1	PIN	
380	3075787-0000		1	SCREW	
410	312311-0368		4	SCREW ISO4028 M6X16 FZB	
420	312318-0366		3	SCREW ISO4029 M6X12 A4	
435	312105-0327		4	SCREW M6S ISO 4017 M5X12 A480	
440	312115-0374		6	SCREW ISO4762 M6X30 A4 80	
450	312605-0316		1	HEXAGON NUT, M6M M6 A280	
475	315105-0146		5	WASHER BRB 5,3X10 RFR	
480	315105-0153		33	WASHER BRB 6,4X12 RFR	
510	90005-0082		4	WASHER PLAIN ROUND 4,3(M4)/12,H=1	
520	311103-1355		6	PARALLEL PIN ISO 2338 6M6X24 A1	
530	312105-0287		4	SCREW M6S ISO 4017 M4X8 A470	
540	312105-0372		32	SCREW M6S ISO 4017 M6X25 A480	
580	312115-0368		8	SCREW ISO4762 M6X16 A4 80	
620	312115-0370		7	SCREW ISO4762 M6X20 A4 80	
630	312105-0297		2	SCREW M6S ISO 4017 M4X25 A470	
685	315105-0136		2	WASHER BRB 4,3X8 RFR	
690	2790924-0000		1	SHAFT	
700	2922103-0000		1	ROD	
710	2922117-0000		1	ROCKER ARM	
720	90214-0203		2	BALL BEARING 20/37X9	
730	315751-0116		2	RETAINING RING FOR SHAFT DIN 471 20 SS	
740	312605-0320		1	HEXAGON NUT, M6M M10 A280	
760	312105-0329		1	SCREW M6S ISO 4017 M5X16 A480	
770	90459-1018		1	ROD END,BALL JOINT EYE M10X1,25	
780	315105-0173		2	WASHER BRB 10,5X22 RFR	
790	350002-0006		2	PUSH-IN L-FITTING QSL-F-G1/8-6	
800	312105-0325		1	SCREW M6S ISO 4017 M5X10 A480	
890	311103-0470		4	PARALLEL PIN ISO 2338 10M6X60 A1	
900	2655456-0000		4	CAM	
910	312318-0285		4	SCREW ISO4029 M4X6 A4	
920	312105-0500		1	SCREW M6S ISO 4014 M10X45 A480	
T10M1762	90459-1953		1	DOUBLE ACTING, MINI-ISO, CYL. 25-10	
T10W1762	315400-0001	M	6000	TUBE PUN-H-6X1-BL	
T10W1764	315400-0001	M	6000	TUBE PUN-H-6X1-BL	

Machine Type	Group Description	Used-In	Group Number	Page No

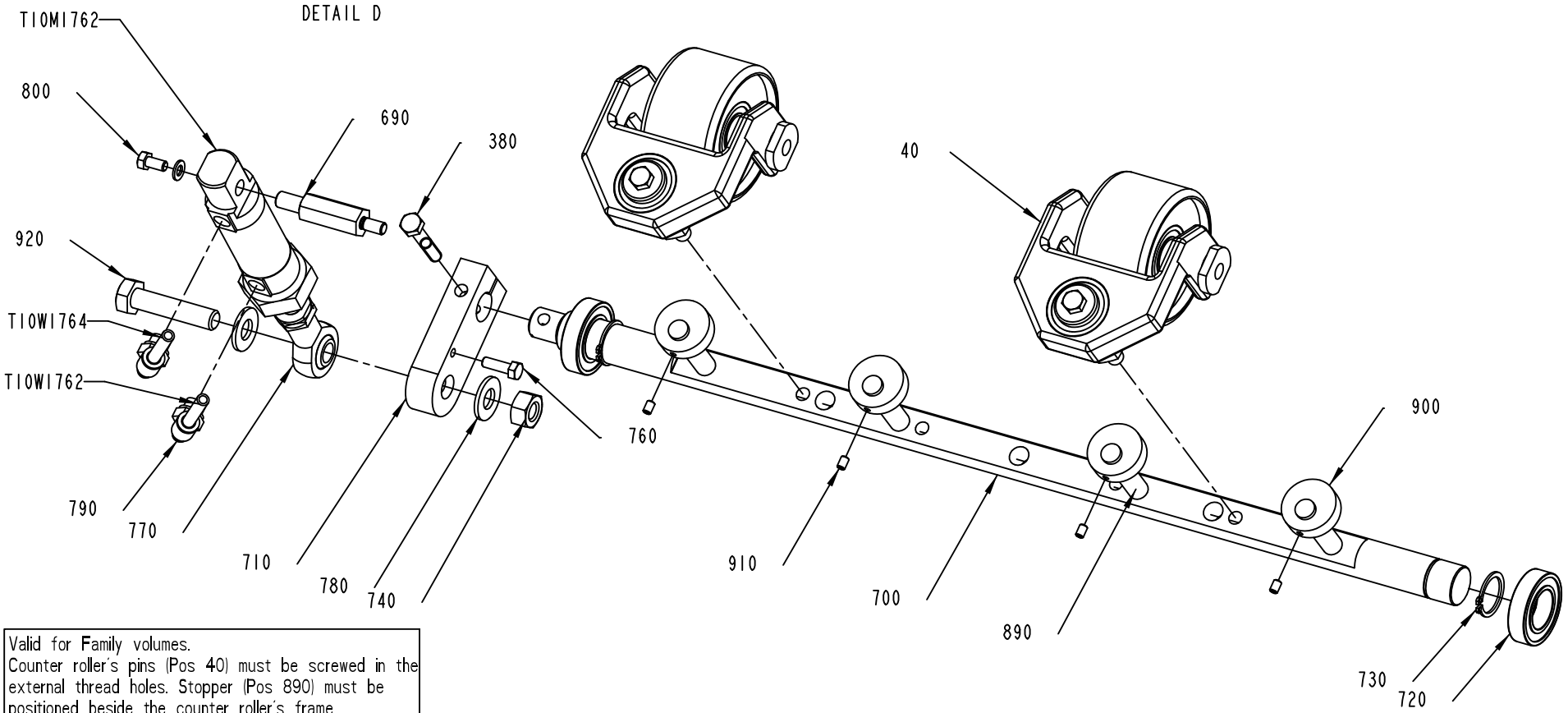

Valid for Family volumes.
Counter roller's pins (Pos 40) must be screwed in the external thread holes. Stopper (Pos 890) must be positioned beside the counter roller's frame.

3023632-2
447546

ECM: 448088 - 20101001
Group number: 3023632-0100
Assembly Drawing: 3023632-2_2_AB

This list covers pages from 7-118 to 7-123

Pos	Part No	UN	Qty	Description	Page No
A3/SPEED (See drawing on pages: 7-118, 7-120, 7-122)					
010	2746324-0200		1	MAGAZINE	**7-125**
020	3023661-0100		1	PHOTOCELL UNIT	**7-137**
060	2735064-0100		4	BENDING ROLLER	**7-139**
100	2934255-0100		2	ROPE BRACKET	**7-141**
105	2934257-0100		2	ROPE BRACKET	**7-143**
290	2746320-0000		3	GUIDE	
320	2765642-0000		4	PIN	
880	311103-1355		4	PARALLEL PIN ISO 2338 6M6X24 A1	
Common Parts					
030	2731246-0100		1	DRIVE UNIT	**7-145**
040	2564069-0100		2	COUNTER ROLLER	**7-147**
065	2741029-0100		1	BRACKET	**7-149**
070	2875291-0100		1	ROLLER	**7-151**
075	2985585-0100		2	PAPER GUIDE	**7-87**
080	1484704-0000		4	SHAFT	
090	1487800-0000		2	PLATE	
150	2951676-0000		1	PLATE	
160	2951677-0000		1	PLATE	
170	2731257-0000		1	PLATE	
180	2958852-0000		2	SHAFT	
210	2735068-0000		3	GUIDE	
260	2806674-0000		3	GUIDE	
300	2746321-0000		1	PLATE	
330	2765643-0000		2	PLATE	
340	2958955-0100		2	ROLLER	**7-153**
350	1478303-0000		1	TENSION SPRING	
360	2765678-0000		1	PLATE	
370	2765679-0000		1	PIN	
380	3075787-0000		1	SCREW	
410	312311-0368		4	SCREW ISO4028 M6X16 FZB	
420	312318-0366		3	SCREW ISO4029 M6X12 A4	
435	312105-0327		4	SCREW M6S ISO 4017 M5X12 A480	
440	312115-0374		6	SCREW ISO4762 M6X30 A4 80	
450	312605-0316		1	HEXAGON NUT, M6M M6 A280	
475	315105-0146		5	WASHER BRB 5,3X10 RFR	
480	315105-0153		33	WASHER BRB 6,4X12 RFR	
510	90005-0082		4	WASHER PLAIN ROUND 4,3(M4)/12,H=1	
520	311103-1355		6	PARALLEL PIN ISO 2338 6M6X24 A1	
530	312105-0287		4	SCREW M6S ISO 4017 M4X8 A470	
540	312105-0372		32	SCREW M6S ISO 4017 M6X25 A480	
580	312115-0368		8	SCREW ISO4762 M6X16 A4 80	
620	312115-0370		7	SCREW ISO4762 M6X20 A4 80	
630	312105-0297		2	SCREW M6S ISO 4017 M4X25 A470	
685	315105-0136		2	WASHER BRB 4,3X8 RFR	
690	2790924-0000		1	SHAFT	
700	2922103-0000		1	ROD	
710	2922117-0000		1	ROCKER ARM	
720	90214-0203		2	BALL BEARING 20/37X9	
730	315751-0116		2	RETAINING RING FOR SHAFT DIN 471 20 SS	
740	312605-0320		1	HEXAGON NUT, M6M M10 A280	
760	312105-0329		1	SCREW M6S ISO 4017 M5X16 A480	
770	90459-1018		1	ROD END,BALL JOINT EYE M10X1,25	
780	315105-0173		2	WASHER BRB 10,5X22 RFR	
790	350002-0006		2	PUSH-IN L-FITTING QSL-F-G1/8-6	
800	312105-0325		1	SCREW M6S ISO 4017 M5X10 A480	
890	311103-0470		4	PARALLEL PIN ISO 2338 10M6X60 A1	
900	2655456-0000		4	CAM	
910	312318-0285		4	SCREW ISO4029 M4X6 A4	
920	312105-0500		1	SCREW M6S ISO 4014 M10X45 A480	
T10M1762	90459-1953		1	DOUBLE ACTING, MINI-ISO, CYL. 25-10	
T10W1762	315400-0001	M	6000	TUBE PUN-H-6X1-BL	
T10W1764	315400-0001	M	6000	TUBE PUN-H-6X1-BL	

Machine Type	Group Description	Used-In	Group Number	Page No

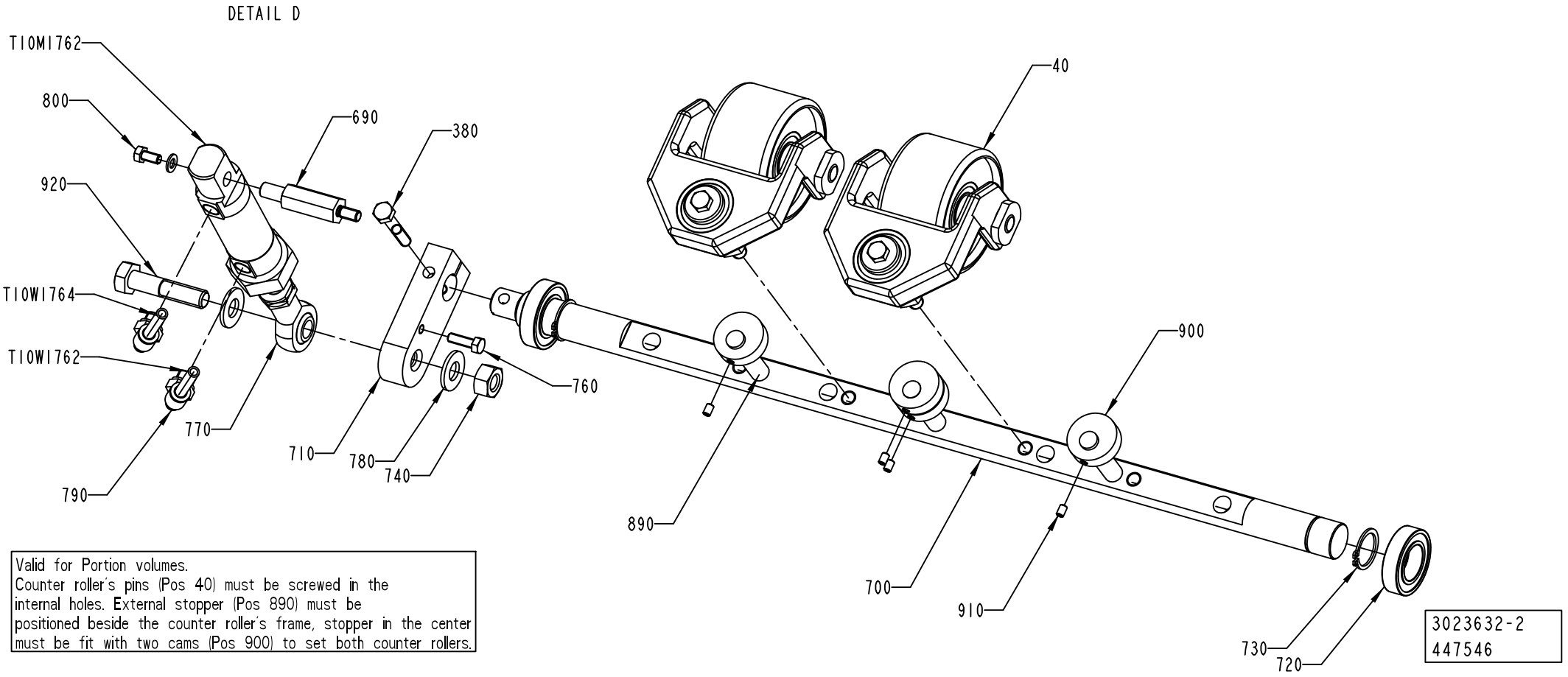

Valid for Portion volumes.
Counter roller's pins (Pos 40) must be screwed in the internal holes. External stopper (Pos 890) must be positioned beside the counter roller's frame, stopper in the center must be fit with two cams (Pos 900) to set both counter rollers.

ECM: 448088 - 20101001
Group number: 3023632-0100
Assembly Drawing: 3023632-2_3_AB

This list covers pages from 7-118 to 7-123

Pos	Part No	UN	Qty	Description	Page No
A3/SPEED (See drawing on pages: 7-118, 7-120, 7-122)					
010	2746324-0200		1	MAGAZINE	**7-125**
020	3023661-0100		1	PHOTOCELL UNIT	**7-137**
060	2735064-0100		4	BENDING ROLLER	**7-139**
100	2934255-0100		2	ROPE BRACKET	**7-141**
105	2934257-0100		2	ROPE BRACKET	**7-143**
290	2746320-0000		3	GUIDE	
320	2765642-0000		4	PIN	
880	311103-1355		4	PARALLEL PIN ISO 2338 6M6X24 A1	
Common Parts					
030	2731246-0100		1	DRIVE UNIT	**7-145**
040	2564069-0100		2	COUNTER ROLLER	**7-147**
065	2741029-0100		1	BRACKET	**7-149**
070	2875291-0100		1	ROLLER	**7-151**
075	2985585-0100		2	PAPER GUIDE	**7-87**
080	1484704-0000		4	SHAFT	
090	1487800-0000		2	PLATE	
150	2951676-0000		1	PLATE	
160	2951677-0000		1	PLATE	
170	2731257-0000		1	PLATE	
180	2958852-0000		2	SHAFT	
210	2735068-0000		3	GUIDE	
260	2806674-0000		3	GUIDE	
300	2746321-0000		1	PLATE	
330	2765643-0000		2	PLATE	
340	2958955-0100		2	ROLLER	**7-153**
350	1478303-0000		1	TENSION SPRING	
360	2765678-0000		1	PLATE	
370	2765679-0000		1	PIN	
380	3075787-0000		1	SCREW	
410	312311-0368		4	SCREW ISO4028 M6X16 FZB	
420	312318-0366		3	SCREW ISO4029 M6X12 A4	
435	312105-0327		4	SCREW M6S ISO 4017 M5X12 A480	
440	312115-0374		6	SCREW ISO4762 M6X30 A4 80	
450	312605-0316		1	HEXAGON NUT, M6M M6 A280	
475	315105-0146		5	WASHER BRB 5,3X10 RFR	
480	315105-0153		33	WASHER BRB 6,4X12 RFR	
510	90005-0082		4	WASHER PLAIN ROUND 4,3(M4)/12,H=1	
520	311103-1355		6	PARALLEL PIN ISO 2338 6M6X24 A1	
530	312105-0287		4	SCREW M6S ISO 4017 M4X8 A470	
540	312105-0372		32	SCREW M6S ISO 4017 M6X25 A480	
580	312115-0368		8	SCREW ISO4762 M6X16 A4 80	
620	312115-0370		7	SCREW ISO4762 M6X20 A4 80	
630	312105-0297		2	SCREW M6S ISO 4017 M4X25 A470	
685	315105-0136		2	WASHER BRB 4,3X8 RFR	
690	2790924-0000		1	SHAFT	
700	2922103-0000		1	ROD	
710	2922117-0000		1	ROCKER ARM	
720	90214-0203		2	BALL BEARING 20/37X9	
730	315751-0116		2	RETAINING RING FOR SHAFT DIN 471 20 SS	
740	312605-0320		1	HEXAGON NUT, M6M M10 A280	
760	312105-0329		1	SCREW M6S ISO 4017 M5X16 A480	
770	90459-1018		1	ROD END,BALL JOINT EYE M10X1,25	
780	315105-0173		2	WASHER BRB 10,5X22 RFR	
790	350002-0006		2	PUSH-IN L-FITTING QSL-F-G1/8-6	
800	312105-0325		1	SCREW M6S ISO 4017 M5X10 A480	
890	311103-0470		4	PARALLEL PIN ISO 2338 10M6X60 A1	
900	2655456-0000		4	CAM	
910	312318-0285		4	SCREW ISO4029 M4X6 A4	
920	312105-0500		1	SCREW M6S ISO 4014 M10X45 A480	
T10M1762	90459-1953		1	DOUBLE ACTING, MINI-ISO, CYL. 25-10	
T10W1762	315400-0001	M	6000	TUBE PUN-H-6X1-BL	
T10W1764	315400-0001	M	6000	TUBE PUN-H-6X1-BL	

Machine Type	Group Description	Used-In	Group Number	Page No

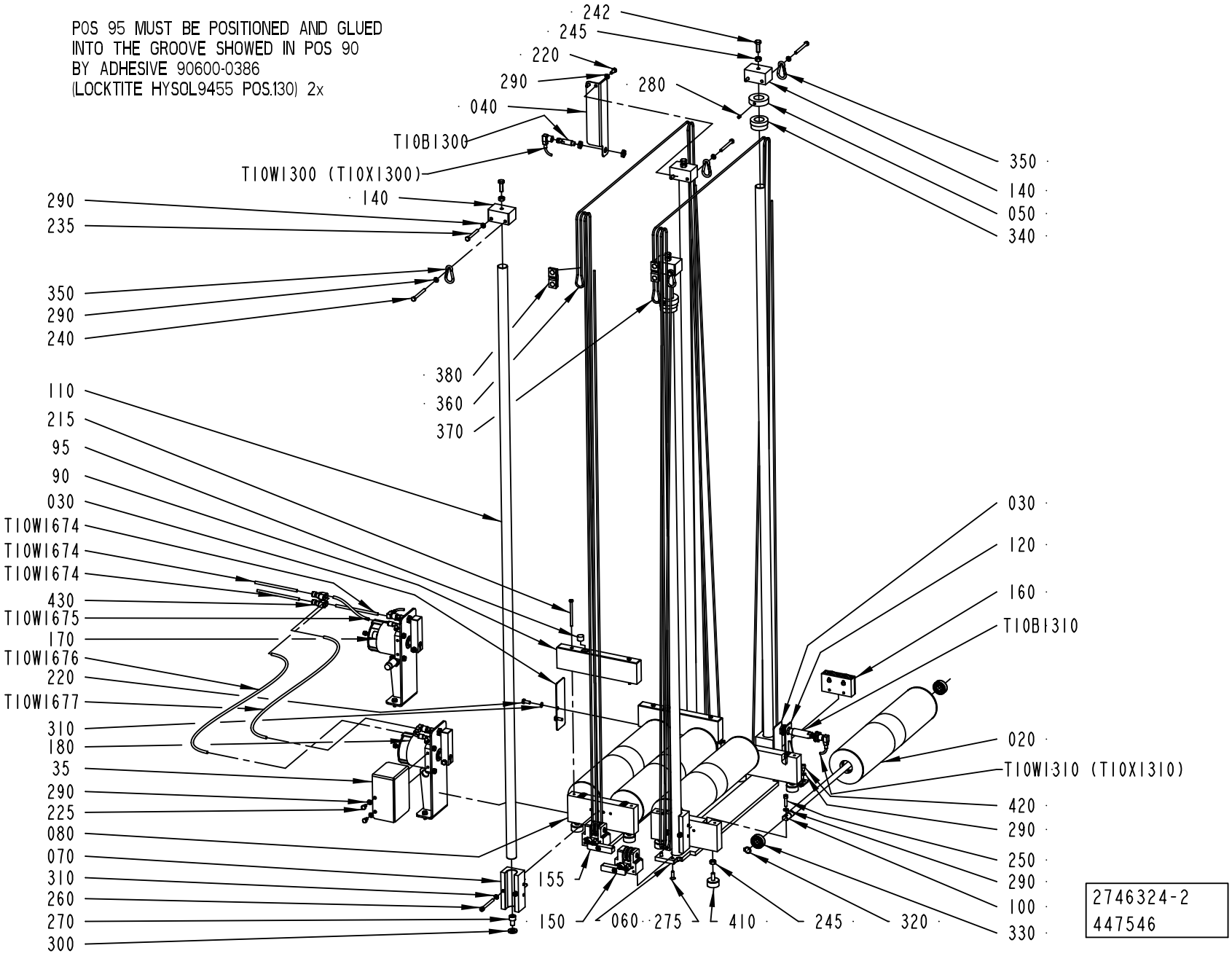
POS 95 MUST BE POSITIONED AND GLUED
INTO THE GROOVE SHOWED IN POS 90
BY ADHESIVE 90600-0386
(LOCKTITE HYSOL9455 POS.130) 2x
242
245
220
290
280
040
T10B1300
T10W1300 (T10X1300)
140
290
235
350
290
240
380
360
370
110
215
95
90
030
T10W1674
T10W1674
T10W1674
430
T10W1675
170
T10W1676
220
T10W1677
310
180
35
290
225
080
070
310
260
270
300
155
150
060
275
410
245
320
350
140
050
340
030
120
160
T10B1310
020
T10W1310 (T10X1310)
420
290
250
290
100
330
2746324-2
447546

ECM: 447896 - 20101001
Group number: 2746324-0200
Assembly Drawing: 2746324-2_1_AB

Pos	Part No	UN	Qty	Description	Page No
-					
020	1484766-0000		4	DANCE ROLLER	
030	2731238-0000		2	PLATE	
035	2955586-0000		1	COVER	
040	2806681-0000		1	ANGLE BRACKET	
050	1487769-0000		2	SPACER	
060	2936230-0000		2	PLATE	
070	2731233-0000		4	SLIDER	
080	2771113-0000		4	BRACKET	
090	2955421-0000		2	BALLAST COIL	
095	2837523-0000		2	SPRING	
100	2731236-0000		4	SHAFT	
110	2731237-0000		4	GUIDE ROD	
120	2760936-0000		1	ANGLE BRACKET	
130	90600-0386	L	1	LOCTITE HYSOL 9455 ADHESIVE, 250 GR	
140	3102942-0000		4	SUPPORT	
150	2935136-0100		1	LOCKING DEVICE	**7-127**
155	2949094-0100		1	LOCKING DEVICE	**7-129**
160	2935820-0100		2	ROPE BRACKET	**7-131**
170	2940018-0100		1	LOCKING DEVICE	**7-133**
180	2940019-0100		1	LOCKING DEVICE	**7-135**
215	90287-0208		4	SCREW M6S M5X70 A480	
220	312105-0368		6	SCREW M6S ISO 4017 M6X16 A480	
225	312105-0364		2	SCREW M6S ISO 4017 M6X10 A480	
235	312105-0381		4	SCREW M6S ISO 4014 M6X55 A480	
240	312105-0382		4	SCREW M6S ISO 4014 M6X60 A480	
242	312105-0453		4	SCREW M6S ISO 4017 M8X25 A480	
245	312605-0318		12	HEXAGON NUT, M6M M8 A280	
250	312115-0372		8	SCREW ISO4762 M6X25 A4 80	
260	312115-0382		8	SCREW ISO4762 M6X60 A4 80	
270	312115-0489		4	SCREW ISO4762 M10X16 A4 80	
275	312155-0370		8	SCREW DIN 7991 MF6S M6X20 A4 70	
280	312316-0362		2	SCREW HEX.SOCK.SET CUP P.MSK6SS6X8 FZB	
290	315105-0153		20	WASHER BRB 6,4X12 RFR	
300	315115-0173		4	WASHER PLAIN, TBRB 10,5/22 H=4	
310	315402-0156		12	LOCK WASHER FBB 6,5	
320	315751-0112		8	RETAINING RING FOR SHAFT DIN 471 15 SS	
330	321313-0102		8	BALL BEARING 15/35X11	
340	353249-0054		3	INSERT, SINGLE HOLE, EK 156/25	
350	90459-2704		4	SNAP HOOK STAINLESS 50X5MM	
360	90319-0013	M	17	POLYESTER-SILKROPE 4MM 3900N, 102079	
370	90319-0013	M	17	POLYESTER-SILKROPE 4MM 3900N, 102079	
380	90211-0002		2	WIRE LOCK, 5 MM	
410	90600-3899		8	RUBBER BUFFER, TYPE D 30/15 ART. NO. 319	
420	312115-0364		2	SCREW ISO4762 M6X10 A4 80	
430	90055-0257		2	PUSH-IN Y-CONNECTOR QSY-6	
T10B1300	90600-0460		1	INDUCTIVE SWITCH, E2A-M12KN05-M1-B1-TP	
T10B1310	90459-6392		1	INDUCTIV SWITCH E2A-M18LN16-M1-B1	
T10W1300	90458-1076		1	L-SHAPED CONNECTOR CABLE Y92EM12PVC4A5ML	
T10W1310	90458-1076		1	L-SHAPED CONNECTOR CABLE Y92EM12PVC4A5ML	
T10W1672	315400-0001	M	1	TUBE PUN-H-6X1-BL	
T10W1673	315400-0002	M	0.5	TUBE PUN-H-6X1-NT	
T10W1674	315400-0003	M	1	TUBE PUN-H-6X1-SW	
T10W1675	315400-0004	M	0.5	TUBE PUN-H-8X1,25-BL	
T10W1676	315400-0005	M	1	TUBE PUN-H-8X1,25-NT	
T10W1677	315400-0006	M	1	TUBE PUN-H-8X1,25-SW	

Machine Type | Group Description | Used-In | Group Number | Page No

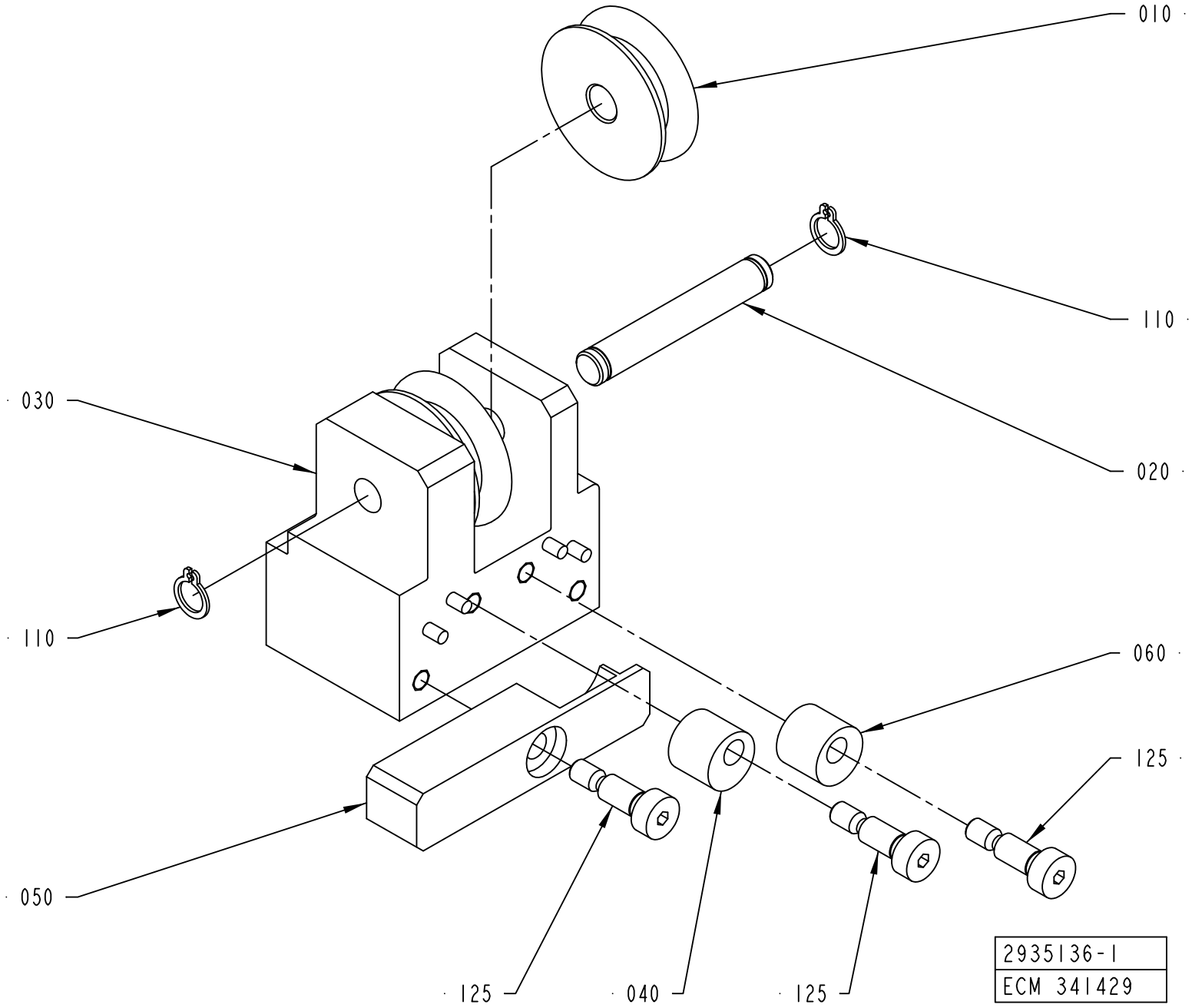
010
110
020
030
110
060
125
050
125
040
125
2935136-1
ECM 341429

ECM: 344937 - 20080228
Group number: 2935136-0100
Assembly Drawing: 2935136-1_1_AA

Pos	Part No	UN	Qty	Description	Page No
-					
010	2933544-0000		2	ROLLER	
020	2934253-0000		1	AXLE PIN	
030	2935135-0000		1	PIPE	
040	1539397-0000		1	ROLLER	
050	2948651-0000		1	ARM	
060	1549332-0000		1	ROLLER	
110	90141-0015		2	RETAINING RING FOR SHAFT DIN 471 8 SS	
125	312180-0366		3	SCREW ISO7379 H6X12	

Pos	Part No	UN	Qty	Description	Page No

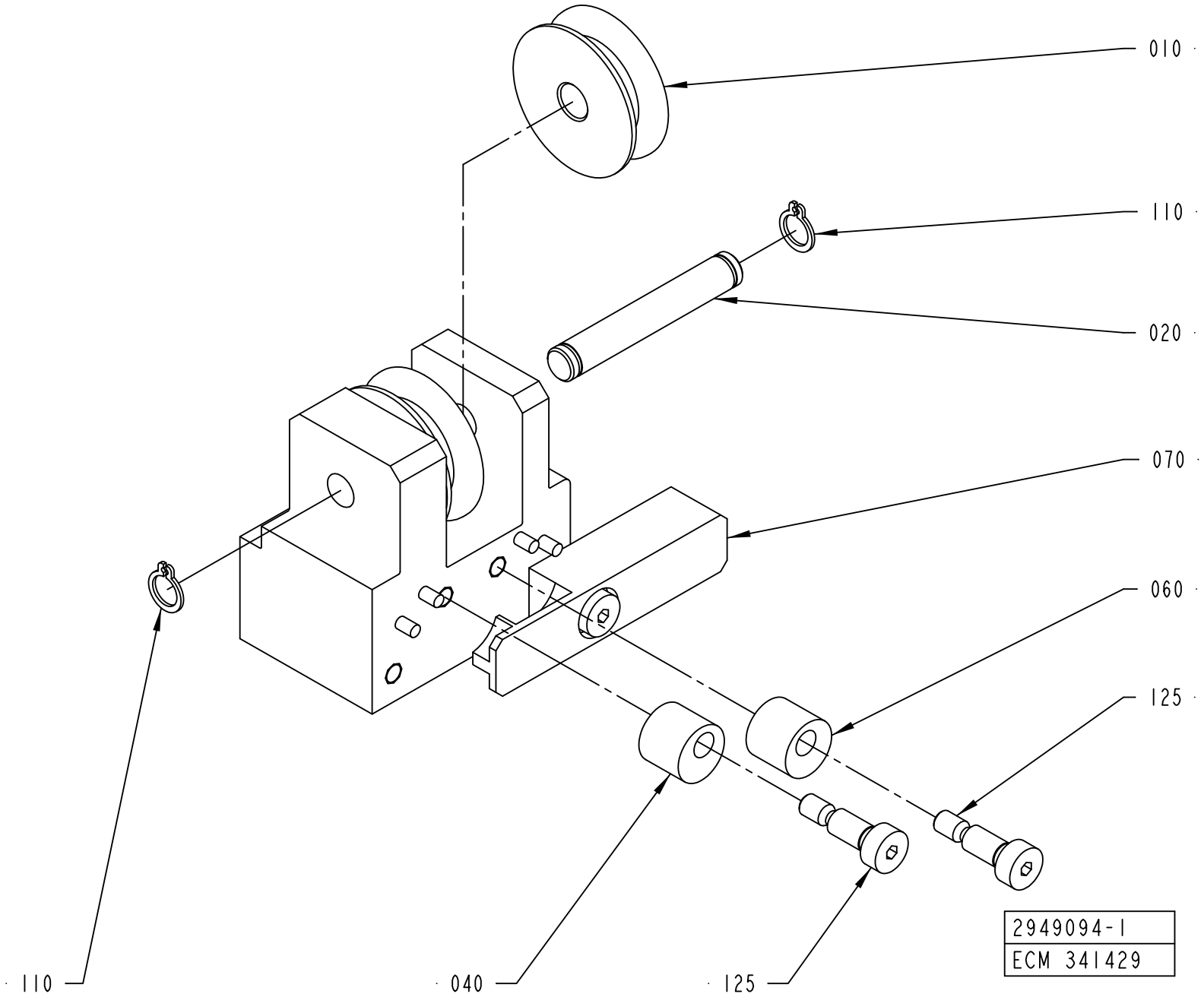
010
110
020
070
060
125
110
040
125
2949094-1
ECM 341429

ECM: 344936 - 20080228
Group number: 2949094-0100
Assembly Drawing: 2949094-1_1_AA

Pos	Part No	UN	Qty	Description	Page No
-					
010	2933544-0000		2	ROLLER	
020	2934253-0000		1	AXLE PIN	
030	2935135-0000		1	PIPE	
040	1539397-0000		1	ROLLER	
060	1549332-0000		1	ROLLER	
070	2948651-0000		1	ARM	
110	90141-0015		2	RETAINING RING FOR SHAFT DIN 471 8 SS	
125	312180-0366		3	SCREW ISO7379 H6X12	

Pos	Part No	UN	Qty	Description	Page No

ROPE BRACKET

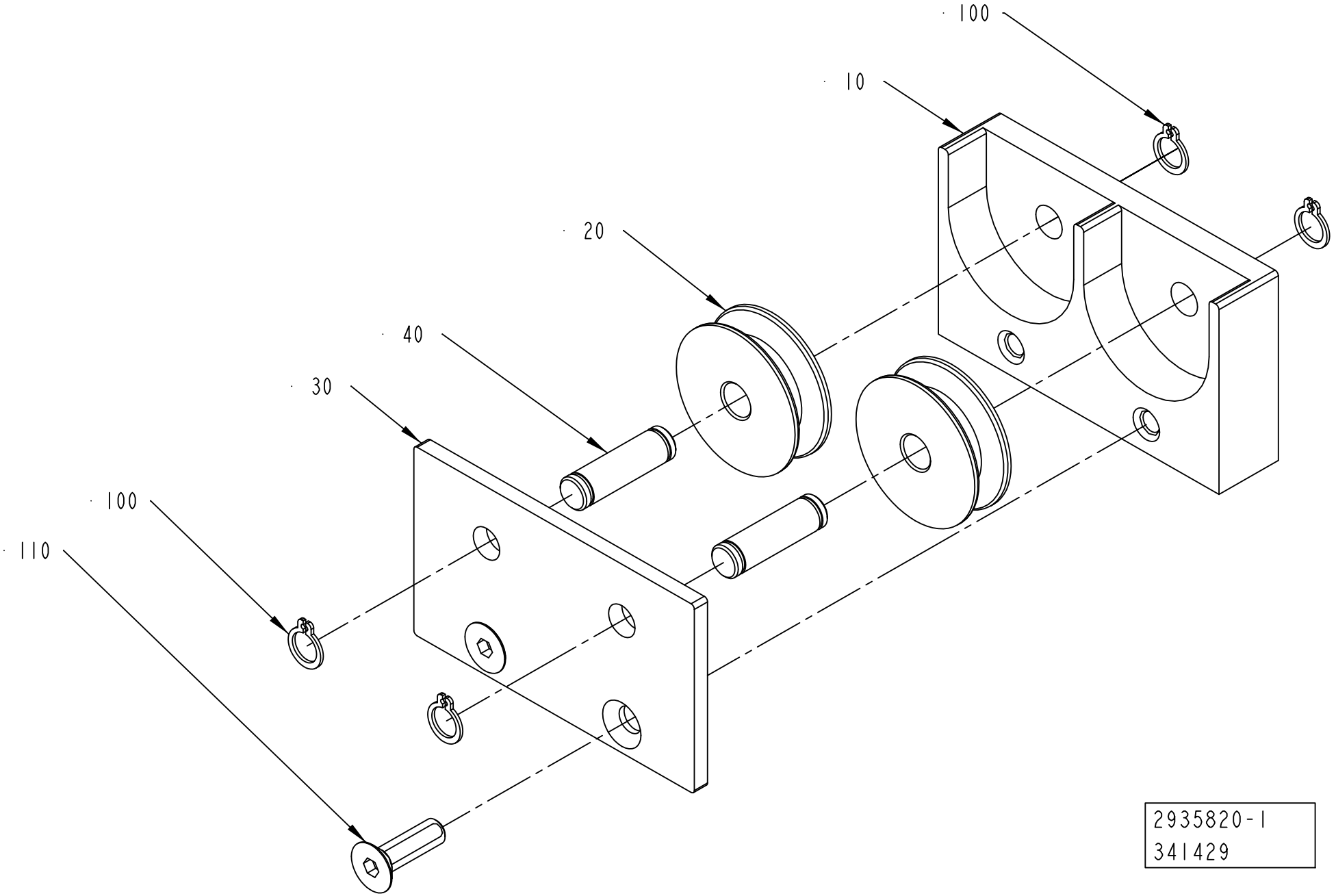

2935820-1
341429

ECM: 344938 - 20080228
Group number: 2935820-0100
Assembly Drawing: 2935820-1_1_AA

Pos	Part No	UN	Qty	Description	Page No
-					
010	2933542-0000		1	ROLLER BRACKET	
020	2933544-0000		2	ROLLER	
030	2933545-0000		1	PLATE	
040	2933546-0000		2	SHAFT	
100	90141-0015		4	RETAINING RING FOR SHAFT DIN 471 8 SS	
110	312155-0370		2	SCREW DIN 7991 MF6S M6X20 A4 70	

Pos	Part No	UN	Qty	Description	Page No

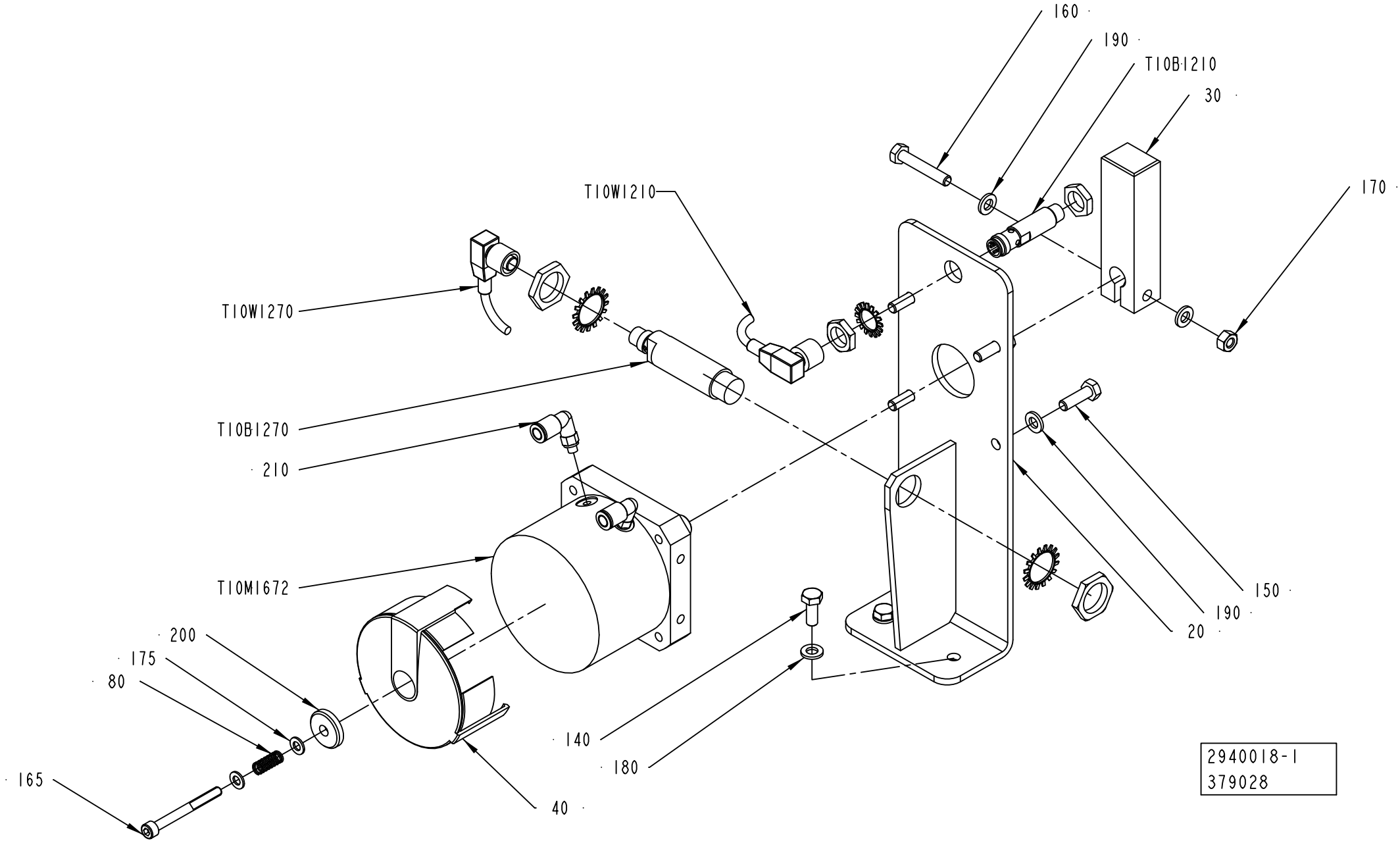
160
190
T10B1210
30
170
T10W1210
T10W1270
T10B1270
210
T10M1672
150
190
20
200
175
80
165
140
180
40
2940018-1
379028

ECM: 380532 - 20081130
Group number: 2940018-0100
Assembly Drawing: 2940018-1_1_AB

Pos	Part No	UN	Qty	Description	Page No
-					
020	2929982-0000		1	ANGLE BRACKET	
030	2929983-0000		1	ROCKER ARM	
040	3009085-0000		1	COVER	
080	90335-0048		1	COMP. SPRING 21510, 0,63X6,96X17	
140	312105-0368		2	SCREW M6S ISO 4017 M6X16 A480	
150	312105-0370		4	SCREW M6S ISO 4017 M6X20 A480	
160	312105-0376		1	SCREW M6S ISO 4014 M6X35 A480	
165	312115-0341		1	SCREW ISO4762 M5X50 A4 80	
170	312605-0316		1	HEXAGON NUT, M6M M6 A280	
175	315105-0146		2	WASHER BRB 5,3X10 RFR	
180	315105-0153		2	WASHER BRB 6,4X12 RFR	
190	315106-0153		6	WASHER ISO 7089-6-200 HV A4	
200	315125-0153		1	WASHER TBRSB 6,4X22X4 A4	
210	350002-0002		2	PUSH-IN L-FITTING QSL-F-M5-6	
T10B1210	90600-0460		1	INDUCTIVE SWITCH, E2A-M12KN05-M1-B1-TP	
T10B1270	90459-6392		1	INDUCTIV SWITCH E2A-M18LN16-M1-B1	
T10M1672	90600-3960		1	ROTARY ACTUATOR DSM-25-270-P-A-B	
T10W1210	90458-1076		1	L-SHAPED CONNECTOR CABLE Y92EM12PVC4A5ML	
T10W1270	90458-1076		1	L-SHAPED CONNECTOR CABLE Y92EM12PVC4A5ML	

Pos	Part No	UN	Qty	Description	Page No

LOCKING DEVICE

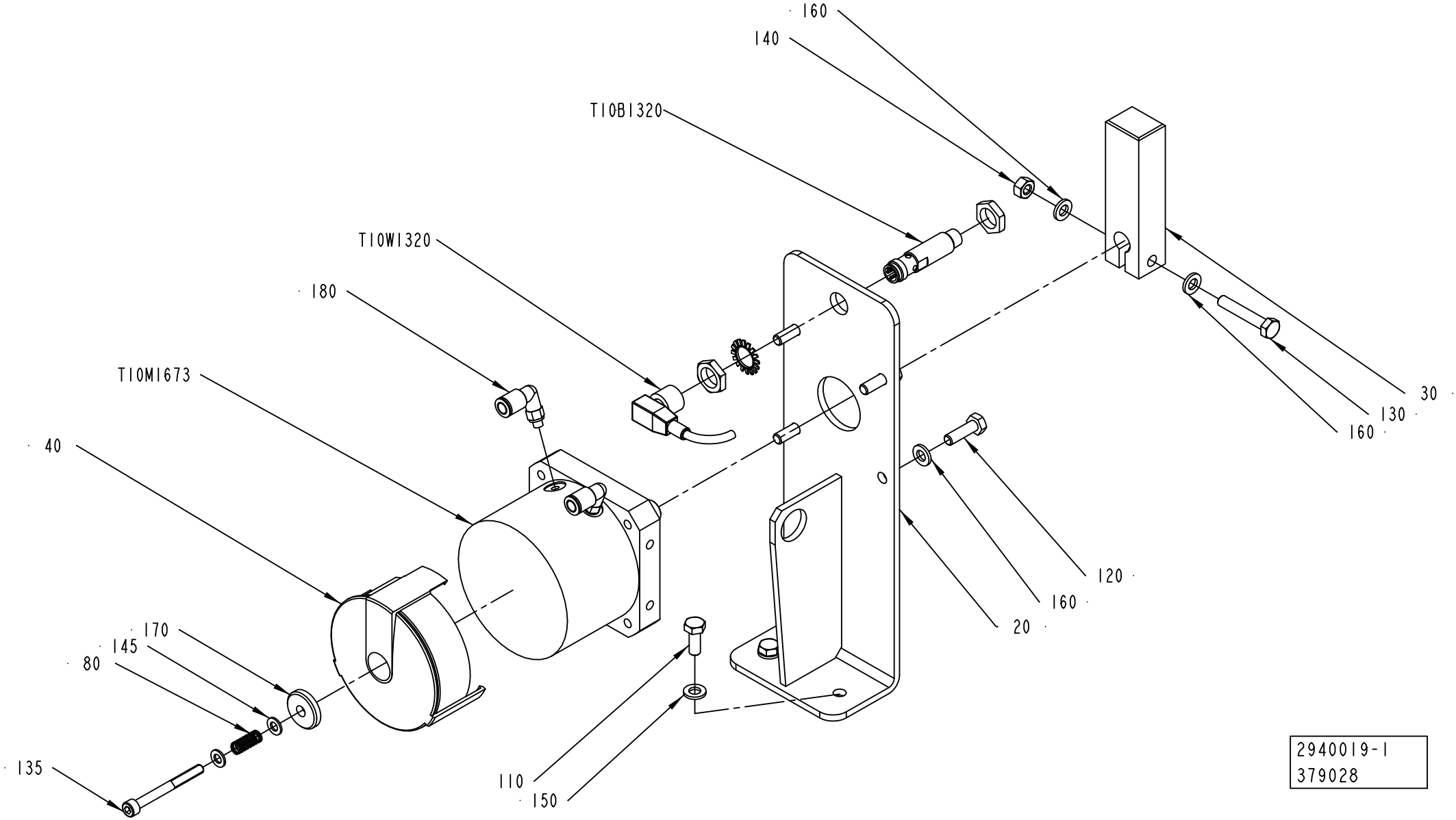

ECM: 380531 - 20081130
Group number: 2940019-0100
Assembly Drawing: 2940019-1_1_AB

Pos	Part No	UN	Qty	Description	Page No
-					
020	2929982-0000		1	ANGLE BRACKET	
030	2929983-0000		1	ROCKER ARM	
040	3009086-0000		1	COVER	
080	90335-0048		1	COMP. SPRING 21510, 0,63X6,96X17	
110	312105-0368		2	SCREW M6S ISO 4017 M6X16 A480	
120	312105-0370		4	SCREW M6S ISO 4017 M6X20 A480	
130	312105-0376		1	SCREW M6S ISO 4014 M6X35 A480	
135	312115-0341		1	SCREW ISO4762 M5X50 A4 80	
140	312605-0316		1	HEXAGON NUT, M6M M6 A280	
145	315105-0146		2	WASHER BRB 5,3X10 RFR	
150	315105-0153		2	WASHER BRB 6,4X12 RFR	
160	315106-0153		6	WASHER ISO 7089-6-200 HV A4	
170	315125-0153		1	WASHER TBRSB 6,4X22X4 A4	
180	350002-0002		2	PUSH-IN L-FITTING QSL-F-M5-6	
T10B1320	90600-0460		1	INDUCTIVE SWITCH, E2A-M12KN05-M1-B1-TP	
T10M1673	90600-3960		1	ROTARY ACTUATOR DSM-25-270-P-A-B	
T10W1320	90458-1076		1	L-SHAPED CONNECTOR CABLE Y92EM12PVC4A5ML	

Pos	Part No	UN	Qty	Description	Page No

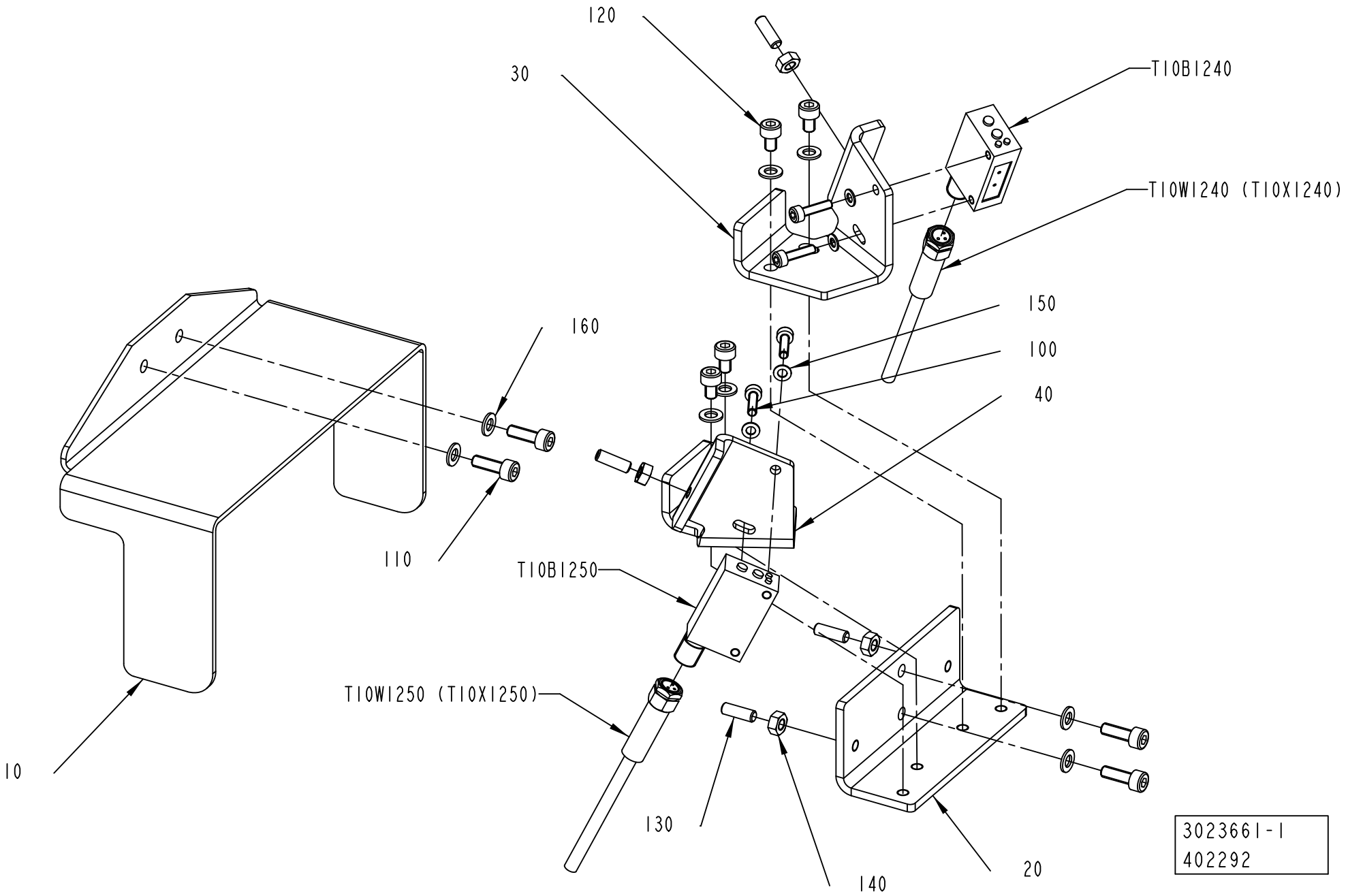
120
30
T10B1240
T10W1240 (T10X1240)
150
160
100
40
110
T10B1250
T10W1250 (T10X1250)
10
130
140
20
3023661-1
402292

ECM: 402477 - 20090618
Group number: 3023661-0100
Assembly Drawing: 3023661-1_1_AA

Pos	Part No	UN	Qty	Description	Page No
-					
010	2931466-0000		1	COVER	
020	2891992-0000		1	PLATE	
030	2891994-0000		1	SUPPORT	
040	2891995-0000		1	SUPPORT	
100	312115-0226		4	SCREW ISO4762 M3X12 A4 80	
110	312115-0291		4	SCREW ISO4762 M4X12 A4 80	
120	312115-0285		4	SCREW ISO4762 M4X6 A4 80	
130	312318-0291		4	SCREW ISO4029 M4X12 A4	
140	312607-0312		4	HEXAGON NUT, EN 24032 M6M M4 A480	
150	315105-0124		4	WASHER BRB 3,2X6 RFR	
160	315105-0136		8	WASHER BRB 4,3X8 RFR	
T10B1240	90459-7421		1	PH.CELL WL100-P3439	
T10B1250	90459-7421		1	PH.CELL WL100-P3439	
T10W1240	351303-0050		1	ACTUATOR/SENSOR CABLE RKMVN 3-224/5M	
T10W1250	351303-0050		1	ACTUATOR/SENSOR CABLE RKMVN 3-224/5M	

Pos	Part No	UN	Qty	Description	Page No

BENDING ROLLER

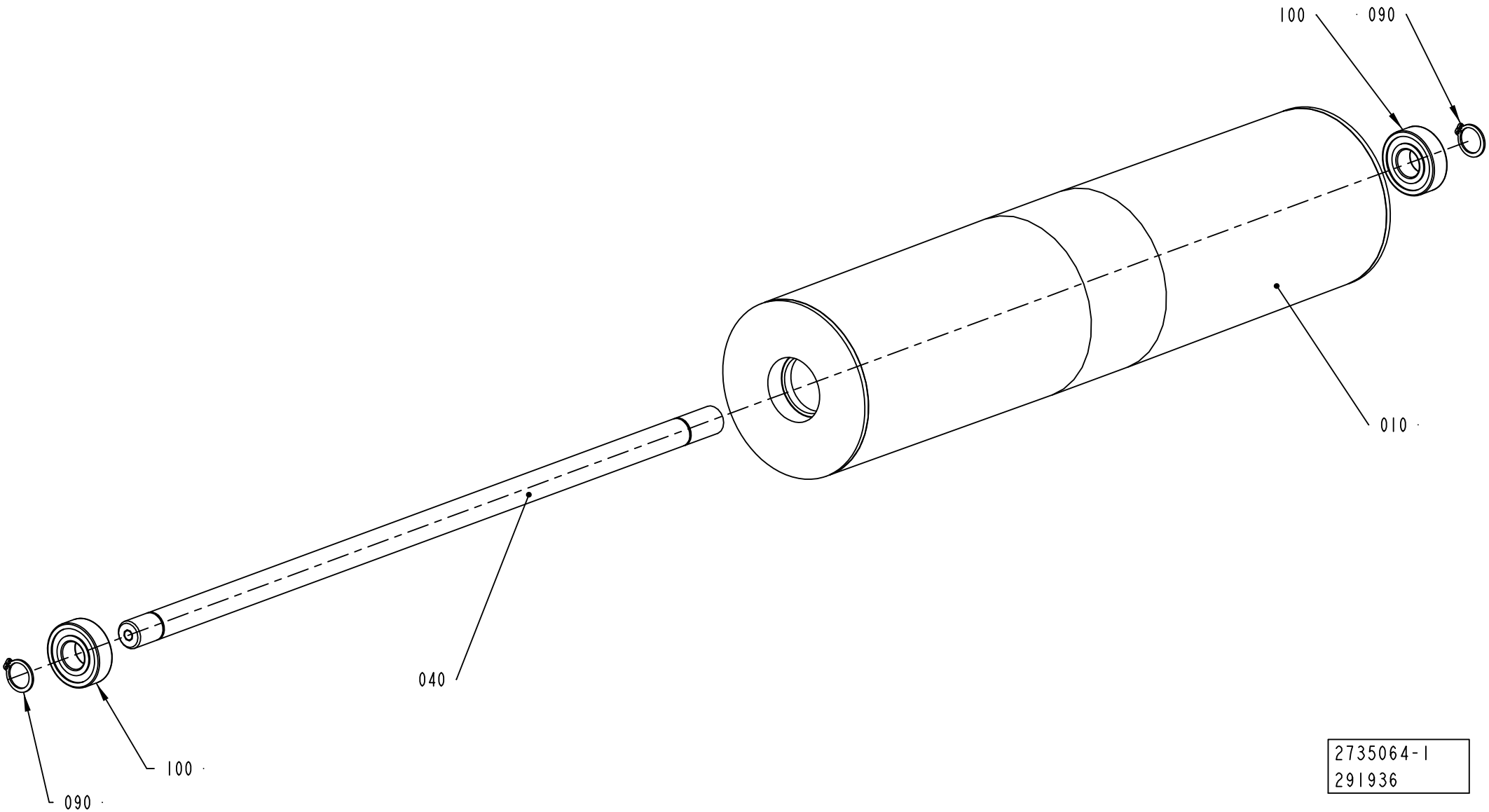

ECM: 301904 - 20070508
Group number: 2735064-0100
Assembly Drawing: 2735064-1_1_AA

Pos	Part No	UN	Qty	Description	Page No
-					
010	1484766-0000		1	DANCE ROLLER	
040	2735063-0000		1	SHAFT	
090	315751-0112		2	RETAINING RING FOR SHAFT DIN 471 15 SS	
100	321313-0102		2	BALL BEARING 15/35X11	

Pos	Part No	UN	Qty	Description	Page No

ROPE BRACKET

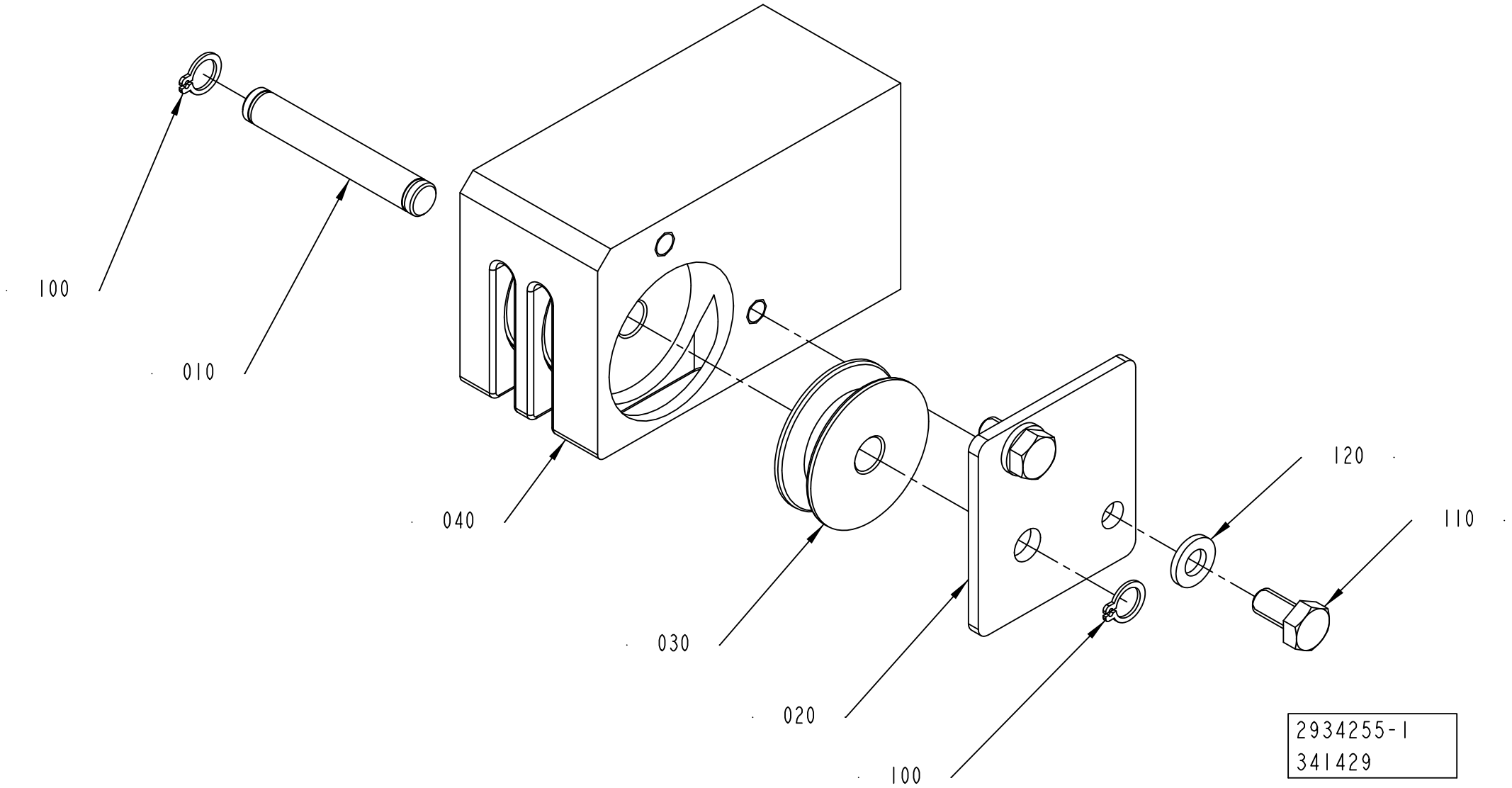

ECM: 341434 - 20080228
Group number: 2934255-0100
Assembly Drawing: 2934255-1_1_AA

Pos	Part No	UN	Qty	Description	Page No
-					
010	2934253-0000		1	AXLE PIN	
020	2934254-0000		1	COVER	
030	2933544-0000		3	ROLLER	
040	2934252-0000		1	ROLLER BRACKET	
100	90141-0015		2	RETAINING RING FOR SHAFT DIN 471 8 SS	
110	312105-0366		2	SCREW M6S ISO 4017 M6X12 A480	
120	315106-0153		2	WASHER ISO 7089-6-200 HV A4	

Pos	Part No	UN	Qty	Description	Page No

ROPE BRACKET

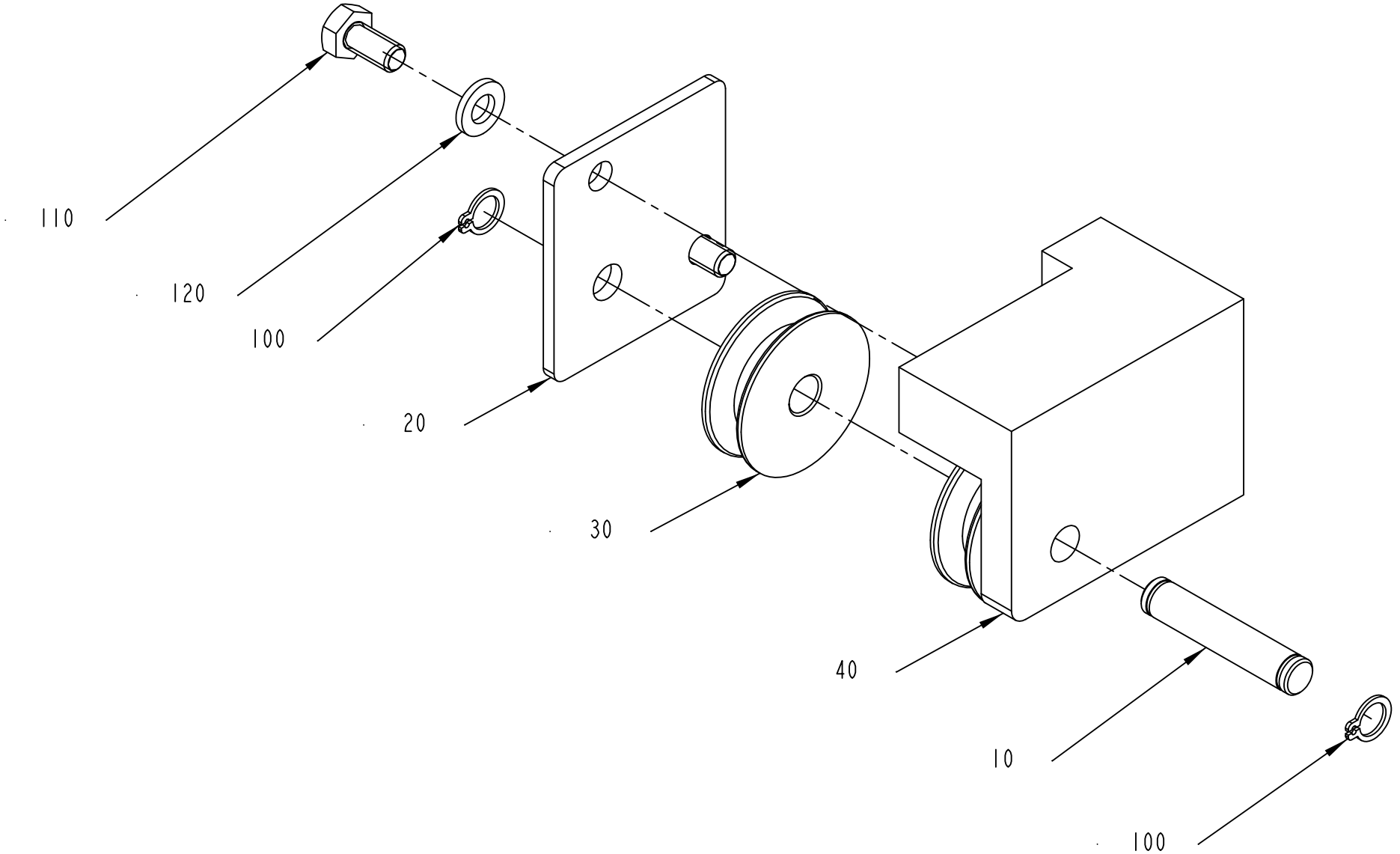

ECM: 341433 - 20080228
Group number: 2934257-0100
Assembly Drawing: 2934257-1_1_AA

Pos	Part No	UN	Qty	Description	Page No
-					
010	2935134-0000		1	AXLE PIN	
020	2934254-0000		1	COVER	
030	2933544-0000		2	ROLLER	
040	2934256-0000		1	ROLLER BRACKET	
100	90141-0015		2	RETAINING RING FOR SHAFT DIN 471 8 SS	
110	312105-0366		2	SCREW M6S ISO 4017 M6X12 A480	
120	315106-0153		2	WASHER ISO 7089-6-200 HV A4	

Pos	Part No	UN	Qty	Description	Page No

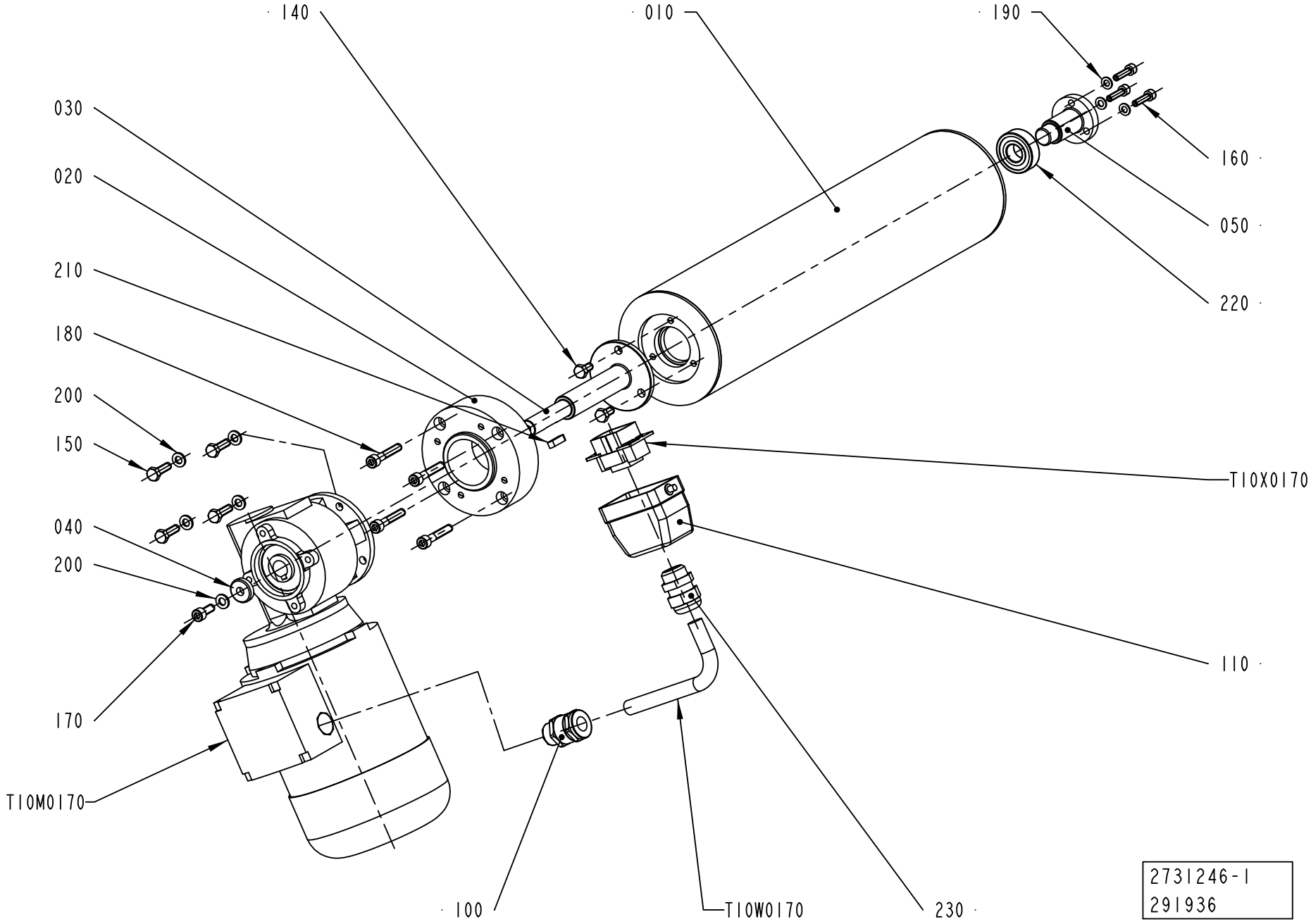
140
010
190
030
020
210
180
200
150
160
050
220
T10X0170
040
200
110
170
T10M0170
100
T10W0170
230
2731246-1
291936

ECM: 425145 - 20100401
Group number: 2731246-0100
Assembly Drawing: 2731246-1_1_AA

Pos	Part No	UN	Qty	Description	Page No
-					
010	2921681-0000		1	BENDING ROLLER	
020	2731247-0000		1	SPACER	
030	2731248-0000		1	SHAFT	
040	2731249-0000		1	COVER	
050	2731250-0000		1	COVER	
100	90012-0137		1	GLAND, EXTENDED WITH INSERT, PG11	
110	90110-0157		1	CABLE HOOD 6-POL 70.352.0628.1	
140	312105-0366		3	SCREW M6S ISO 4017 M6X12 A480	
150	312105-0370		4	SCREW M6S ISO 4017 M6X20 A480	
160	312115-0331		3	SCREW ISO4762 M5X20 A4 80	
170	312115-0368		1	SCREW ISO4762 M6X16 A4 80	
180	312115-0376		4	SCREW ISO4762 M6X35 A4 80	
190	315105-0146		3	WASHER BRB 5,3X10 RFR	
200	315105-0153		5	WASHER BRB 6,4X12 RFR	
210	315705-0201		1	PARALLEL KEY W. ROUND ENDS 5X5X20 MM	
220	321313-0102		1	BALL BEARING 15/35X11	
230	352103-0108		1	CABLE GLAND, ST 13,5 , PR20,4/PG13,5	
T10M0170	90459-2096		1	GEARS, WORM MOTOR F2 15 P63 B14 B8 PV 75	
T10W0170	90220-0104	M	7.5	SCR. CABLE 4X1,5MM2	
T10X0170	90110-0159		1	MALE INSERT 70.310.0640.0	

Pos	Part No	UN	Qty	Description	Page No

COUNTER ROLLER

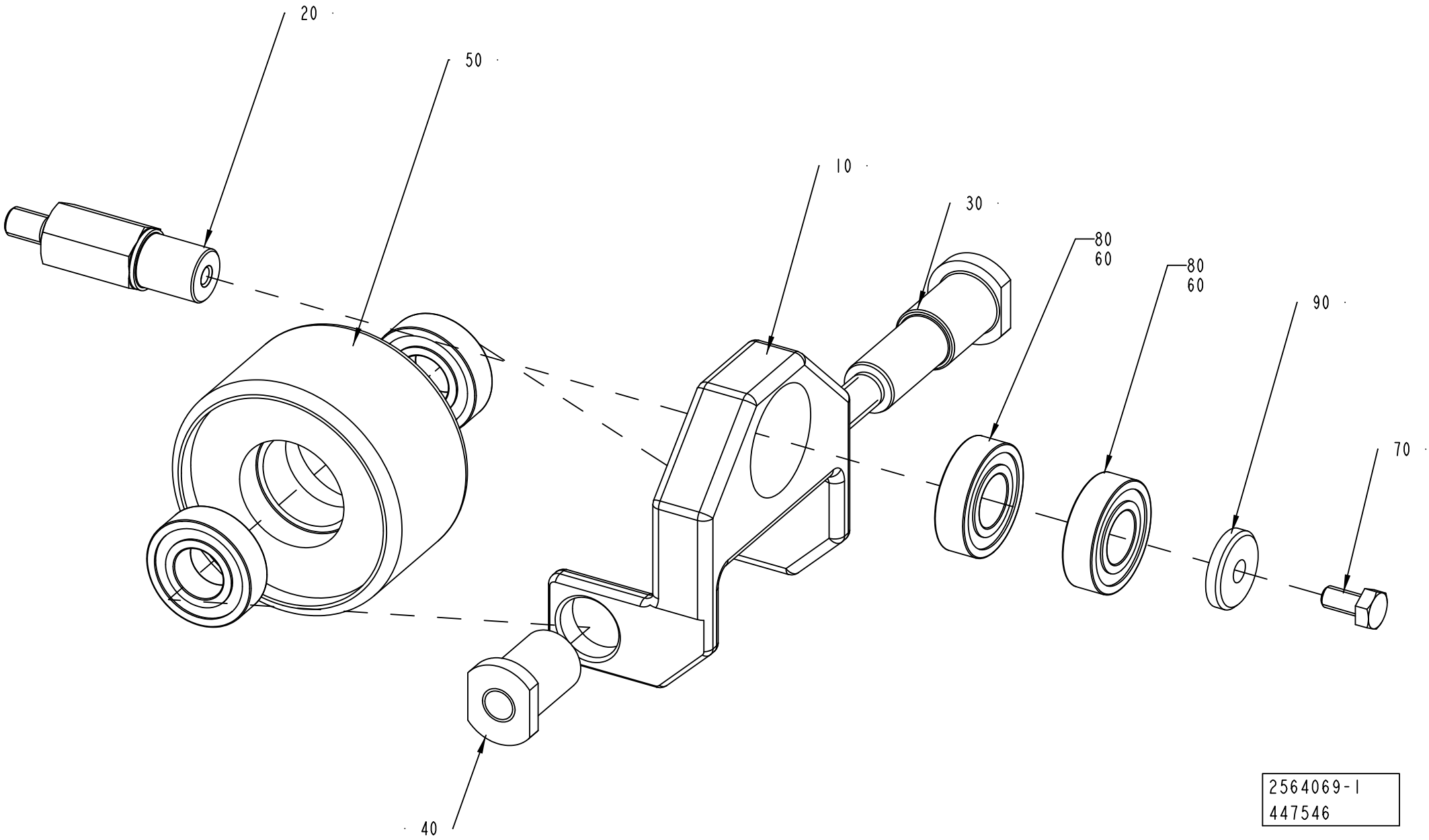

ECM: 448489 - 20101001
Group number: 2564069-0100
Assembly Drawing: 2564069-1_1_AB

Pos	Part No	UN	Qty	Description	Page No
-					
010	263150-0000		1	BRACKET	
020	2564070-0000		1	PIN	
030	263152-0000		1	SHAFT	
040	263153-0000		1	NUT	
050	1145079-0000		1	WHEEL	
060	90157-0035		1	LOCKING FLUID LOCTITE TYPE 641	
070	312105-0366		1	SCREW M6S ISO 4017 M6X12 A480	
080	321308-0202		4	BALL BEARING 15/32X9	
090	315125-0153		1	WASHER TBRSB 6,4X22X4 A4	

Pos	Part No	UN	Qty	Description	Page No

BRACKET

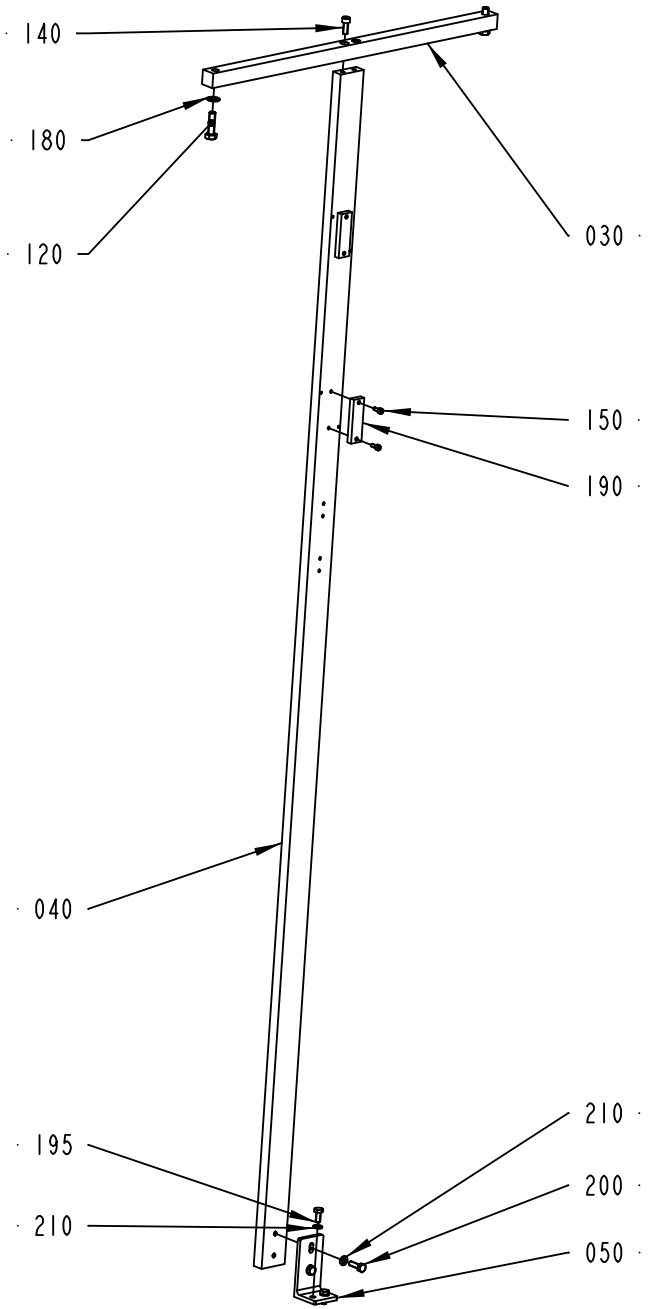

2741029-1
291936

ECM: 301903 - 20070508
Group number: 2741029-0100
Assembly Drawing: 2741029-1_1_AA

Pos	Part No	UN	Qty	Description	Page No
-					
030	2741030-0000		1	PLATE	
040	2741031-0000		1	PLATE	
050	2891996-0000		1	SUPPORT	
120	312105-0455		2	SCREW M6S ISO 4017 M8X30 A480	
140	312115-0368		2	SCREW ISO4762 M6X16 A4 80	
150	312115-0289		4	SCREW ISO4762 M4X10 A4 80	
180	315105-0165		2	WASHER BRB 8,4X16 RFR	
190	90458-0565		2	REFLECTOR, PL20A	
195	312105-0367		2	SCREW M6S ISO 4017 M6X14 A480	
200	312105-0370		2	SCREW M6S ISO 4017 M6X20 A480	
210	315105-0153		4	WASHER BRB 6,4X12 RFR	

Pos	Part No	UN	Qty	Description	Page No

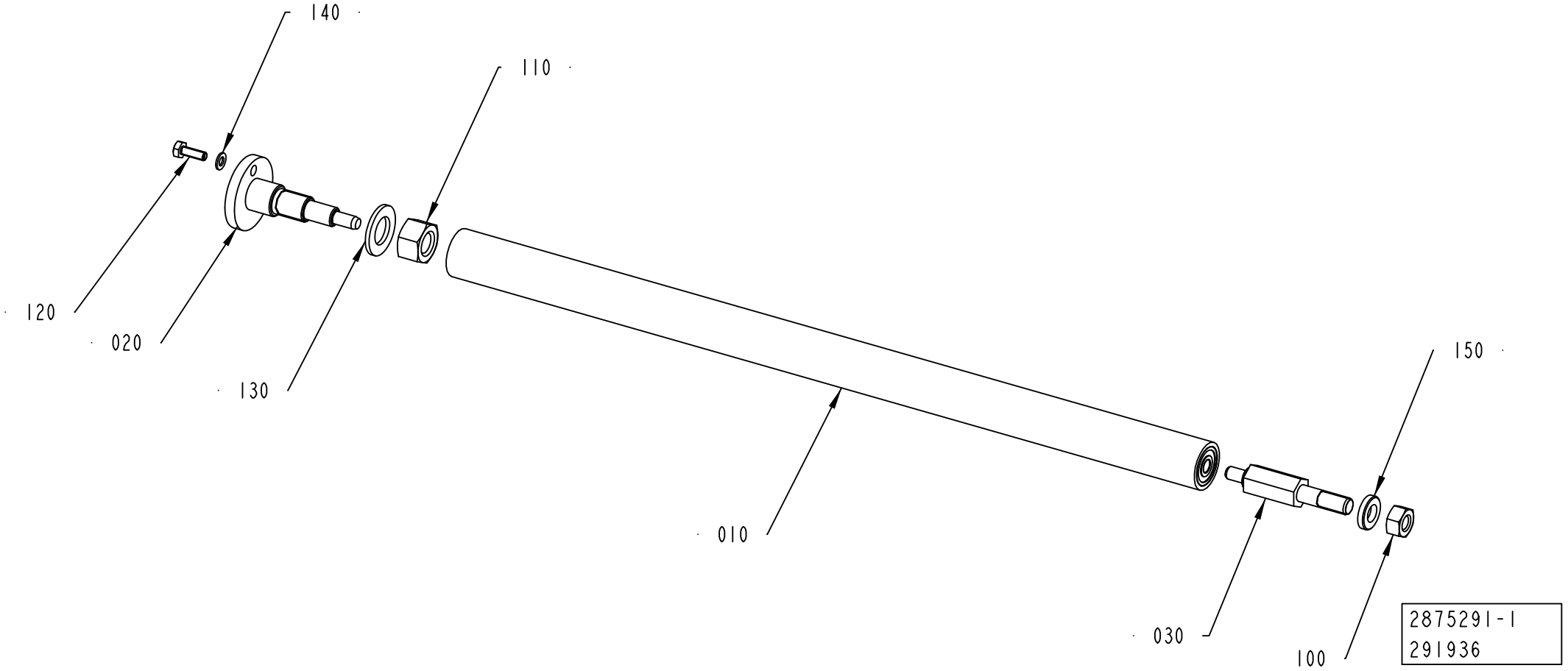
140
110
120
020
130
010
150
030
100
2875291-1
291936

ECM: 383225 - 20090114
Group number: 2875291-0100
Assembly Drawing: 2875291-1_1_AA

Pos	Part No	UN	Qty	Description	Page No
-					
010	2863550-0100		1	ROLLER	**7-39**
020	2875289-0000		1	PIN	
030	2875290-0000		1	SHAFT	
100	312605-0318		1	HEXAGON NUT, M6M M8 A280	
110	312605-0322		1	HEXAGON NUT, M6M M12 A280	
120	312105-0291		1	SCREW M6S ISO 4017 M4X12 A470	
130	315105-0179		1	WASHER BRB 13,5X24 RFR	
140	315105-0136		1	WASHER BRB 4,3X8 RFR	
150	315115-0165		1	WASHER PLAIN, TBRB 8,4/16 H=3	

Pos	Part No	UN	Qty	Description	Page No

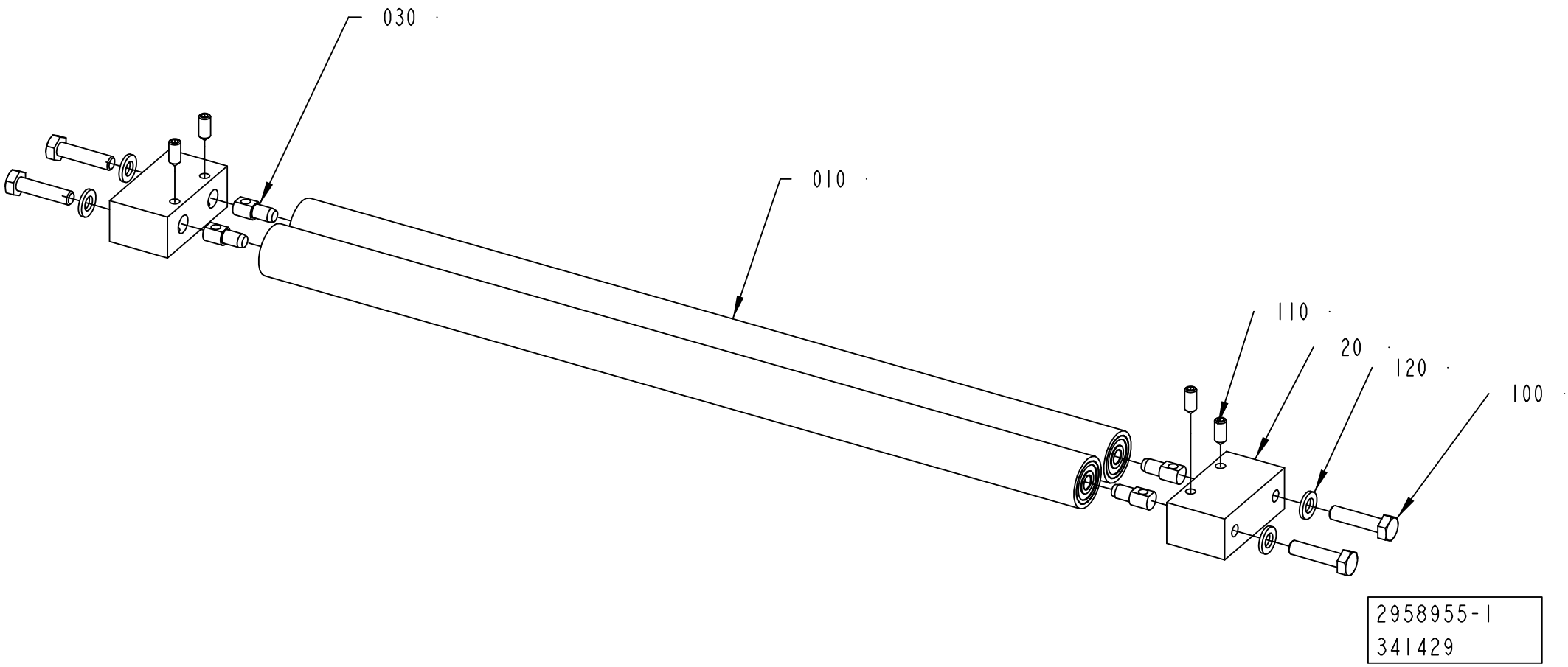
030
010
110
20
120
100
2958955-1
341429

ECM: 435130 - 20100402
Group number: 2958955-0100
Assembly Drawing: 2958955-1_1_AA

Pos	Part No	UN	Qty	Description	Page No
-					
010	2863550-0100		2	ROLLER	**7-39**
020	2958956-0000		2	BRACKET	
030	2863547-0000		4	PIN	
100	312105-0372		4	SCREW M6S ISO 4017 M6X25 A480	
110	90459-7283		4	SCREW HEX.SOCK.SET CONEPT.MS6SS M5X12 A2	
120	315105-0153		4	WASHER BRB 6,4X12 RFR	

Pos	Part No	UN	Qty	Description	Page No

COVERING PANEL

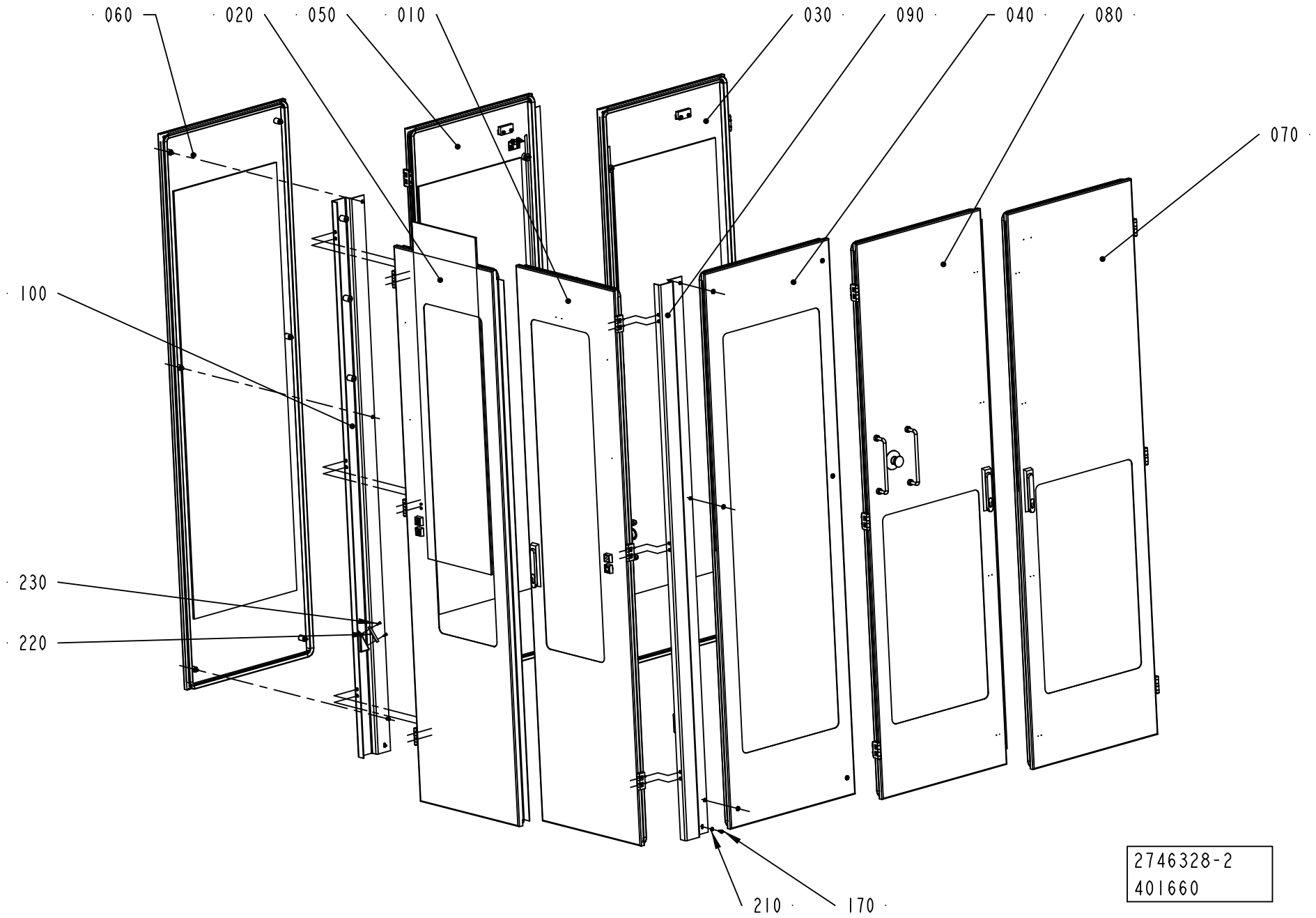

ECM: 401806 - 20091001
Group number: 2746328-0200
Assembly Drawing: 2746328-2_1_AA

Pos	Part No	UN	Qty	Description	Page No
-					
010	2746337-0200		1	DOOR	**7-157**
020	2746339-0100		1	DOOR	**7-161**
030	2746341-0100		1	DOOR	**7-165**
040	2746343-0100		1	DOOR	**7-167**
050	2746345-0200		1	DOOR	**7-169**
060	2746347-0100		1	DOOR	**7-171**
070	2746349-0200		1	DOOR	**7-173**
080	2746351-0100		1	DOOR	**7-175**
090	2790927-0000		1	BRACKET	
100	2790930-0000		1	BRACKET	
170	312105-0366		2	SCREW M6S ISO 4017 M6X12 A480	
210	315105-0153		2	WASHER BRB 6,4X12 RFR	
220	90458-0565		2	REFLECTOR, PL20A	
230	312115-0289		4	SCREW ISO4762 M4X10 A4 80	

Pos	Part No	UN	Qty	Description	Page No

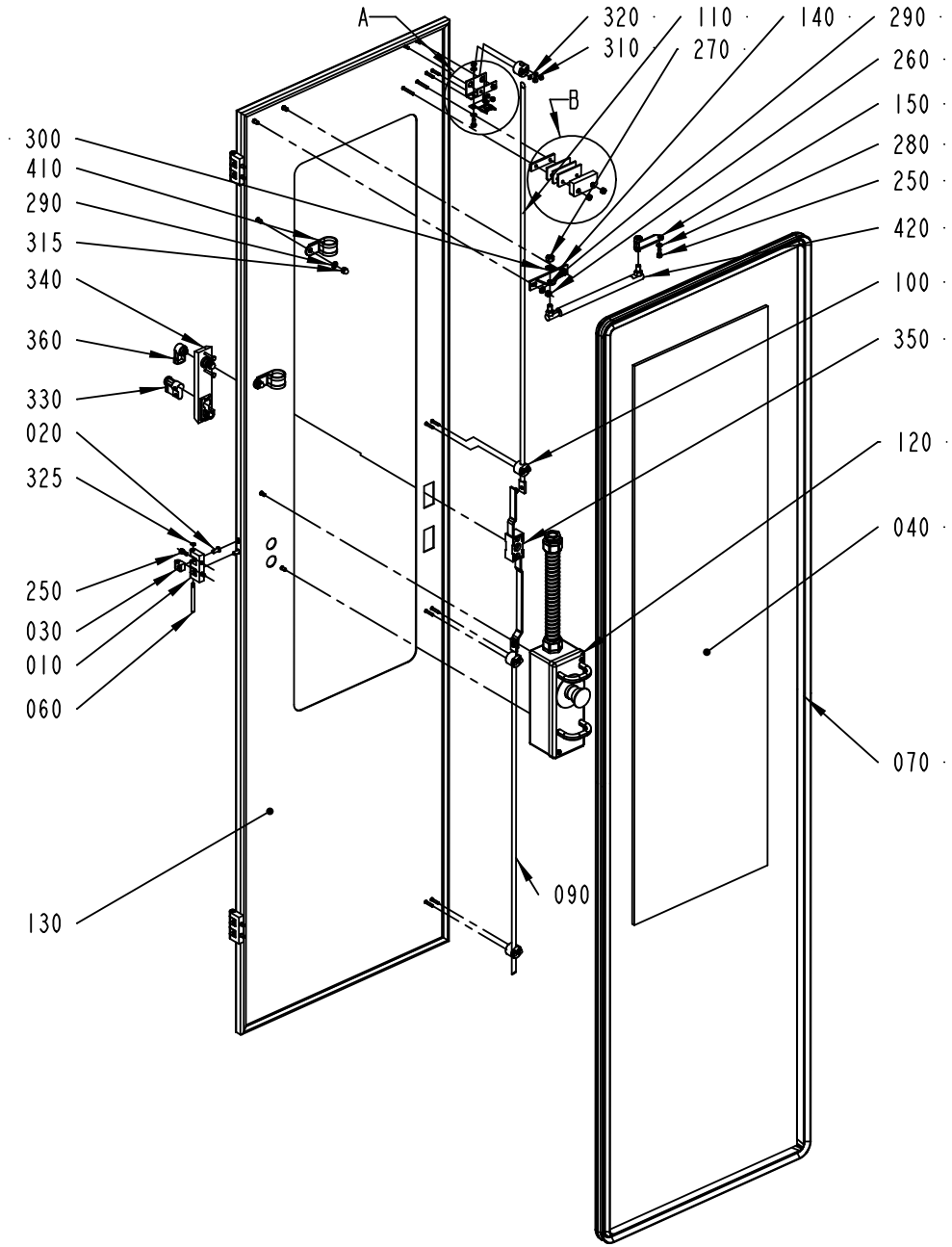

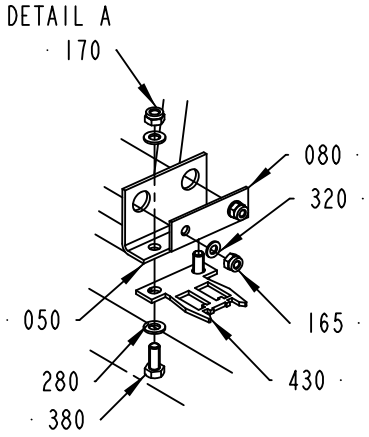

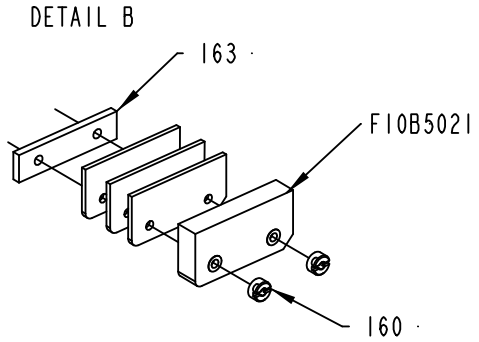

2746337-2
447546

ECM: 450487 - 20101001
Group number: 2746337-0200
Assembly Drawing: 2746337-2_1_AC

Pos	Part No	UN	Qty	Description	Page No
-					
010	1035792-0000		3	E-HINGE	
020	1129767-0000		6	SCREW	
030	1129770-0000		6	BLOCKING PIECE	
040	1498459-0001		1	GLASS PANE	
050	2755512-0000		1	BRACKET	
060	1036329-0000		3	PIN	
070	1498461-0001		1	SEALING STRIP	
080	1036563-0000		1	WASHER	
090	2790931-0000		1	LOCKING ARM	
100	1129274-0000		4	GUIDE LUG	
110	2746353-0000		1	LOCKING ARM	
120	3027427-0100		1	CONTROL PANEL	**7-159**
130	3066116-0000		1	DOOR	
140	2746354-0000		1	BRACKET	
150	2746355-0000		1	BRACKET	
160	1539391-0000		2	ROUND NUT	
163	2790934-0000		1	WASHER	
165	312605-0312		2	HEXAGON NUT, M6M M4 A280	
170	312605-0314		2	HEXAGON NUT, M6M M5 A280	
250	312115-0327		8	SCREW ISO4762 M5X12 A4 80	
260	312605-0316		2	HEXAGON NUT, M6M M6 A280	
270	312605-0318		2	HEXAGON NUT, M6M M8 A280	
280	315105-0146		6	WASHER BRB 5,3X10 RFR	
290	315105-0153		4	WASHER BRB 6,4X12 RFR	
300	315105-0165		2	WASHER BRB 8,4X16 RFR	
310	312705-0312		8	NUT HEX. DOMED CAP MHM-6 M4 A280	
315	312705-0316		2	NUT HEX. DOMED CAP MHM-6 M6 A280	
320	315105-0136		10	WASHER BRB 4,3X8 RFR	
325	315755-0106		3	RETAINING RING SHAFT DIN 6799 4 SS	
330	90237-0128		1	LOCK CYLINDER, 1109-SU125	
340	90237-0175		1	TURNING HANDLE, 1125-U185-0A	
350	90237-0153		1	LOCK HOUSING, 1121-U26-0B	
360	90237-0165		1	LATCH	
380	312105-0327		2	SCREW M6S ISO 4017 M5X12 A480	
410	90600-2668		2	PIPE CLAMP D=28 MM, RSGU 1.28/20 WI	
420	90600-2669		1	GAS SPRING, LIFT-0-MAT 5072DE (F1=50N)	
430	90600-3021		1	KEY FOR SAFETY SWITCH AZM - 161 - BIF	
F10B5021	90458-2794		1	SENSOR, EVA 20-046-00	

Pos	Part No	UN	Qty	Description	Page No

Machine Type | Group Description | Used-In | Group Number | Page No

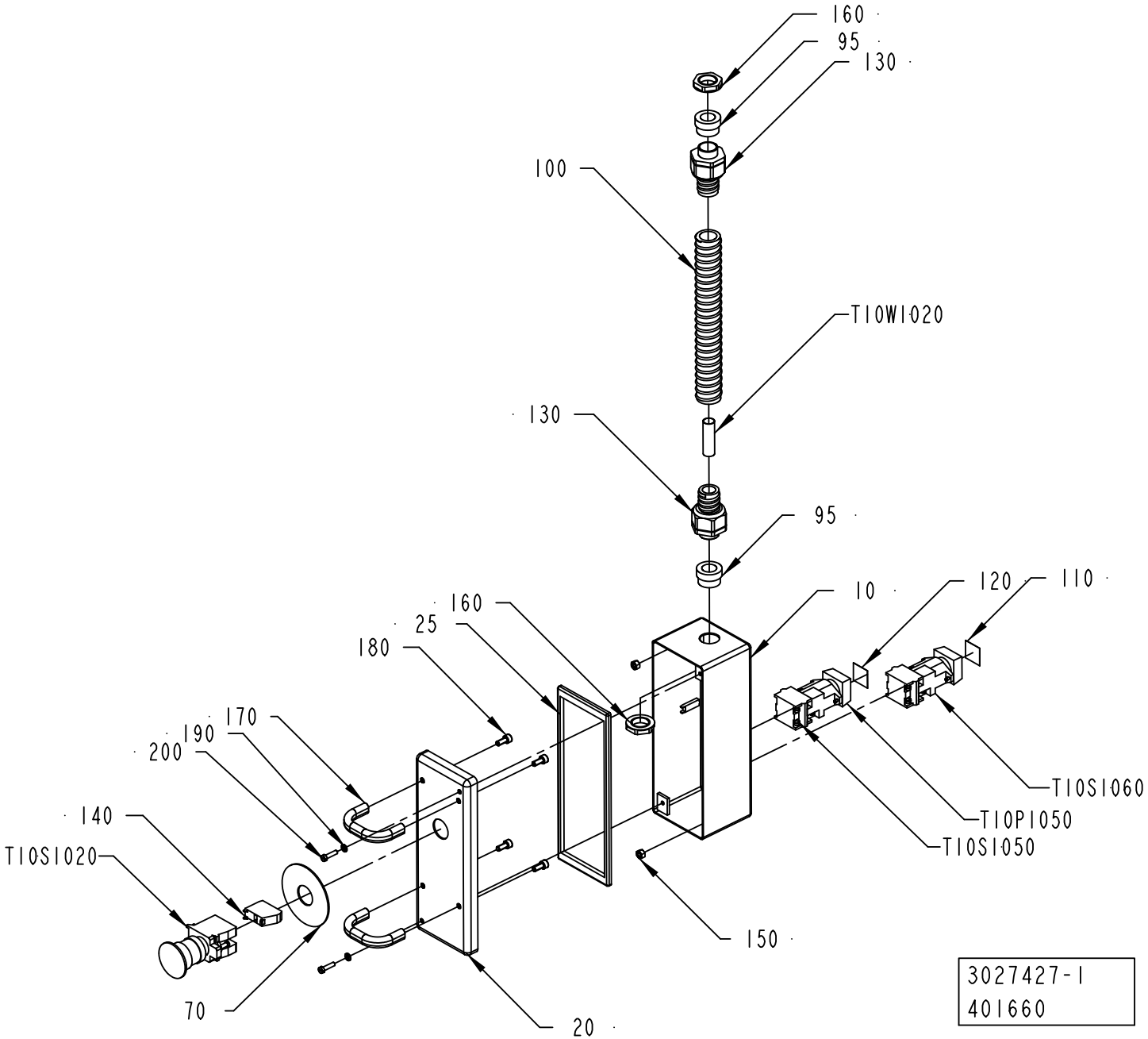
160
95
130
100
T10W1020
130
95
10
120
110
160
25
180
170
190
200
140
T10S1020
70
20
150
T10S1060
T10P1050
T10S1050
3027427-1
401660

ECM: 435132 - 20100402
Group number: 3027427-0100
Assembly Drawing: 3027427-1_1_AA

Pos	Part No	UN	Qty	Description	Page No
-					
010	3027429-0000		1	BOX	
020	3027428-0000		1	COVER	
025	90143-0069	MM	600	RUBBER STRIP	
070	486826-0001		1	11"SIGN ""EMERGENCY STOP"""	
095	353249-0014		2	INSERT, SINGLE HOLE, EK 154/16	
100	90152-0051	MM	2000	SPIRAL CONDUIT, 25X18, UL 1816	
110	359301-0110		1	BUTTON SIGN, SHORT STOP	
120	359301-0504		1	BUTTON SIGN, RESET	
130	90458-0430		2	HOSE GLAND W/O INSERT M20 EXTENDED	
140	90459-1917		1	CONTACT BLOCK ZBE-102 NC	
150	312605-0314		2	HEXAGON NUT, M6M M5 A280	
160	90458-0323		2	NUT, M20X1,5	
170	90600-5075		2	HANDLE, RHOA-12.55.01	
180	312115-0327		4	SCREW ISO4762 M5X12 A4 80	
190	315105-0136		2	WASHER BRB 4,3X8 RFR	
200	312125-0293		2	SCREW ISO 1207 M4X16 A4	
T10S1020	90458-1651		1	EMERGENCY STOP, ZB4-BS-844 ZB4-BZ-104	
T10S1050	90064-0098		1	PUSH BUTTON, CLEAR	
T10S1060	90064-0084		1	PUSH BUTTON, YELLOW	
T10W1020	351150-0407	MM	4000	CABLE OLFLEX 12X0,75 MM2 LIGHT/GREY	

Pos	Part No	UN	Qty	Description	Page No

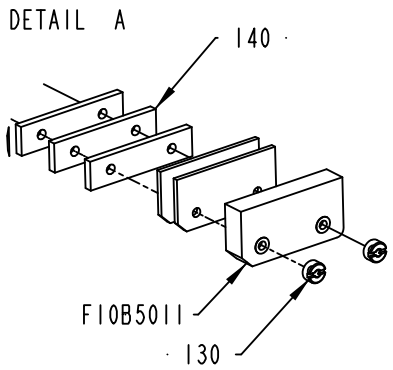
DETAIL A
140
F10B5011
130

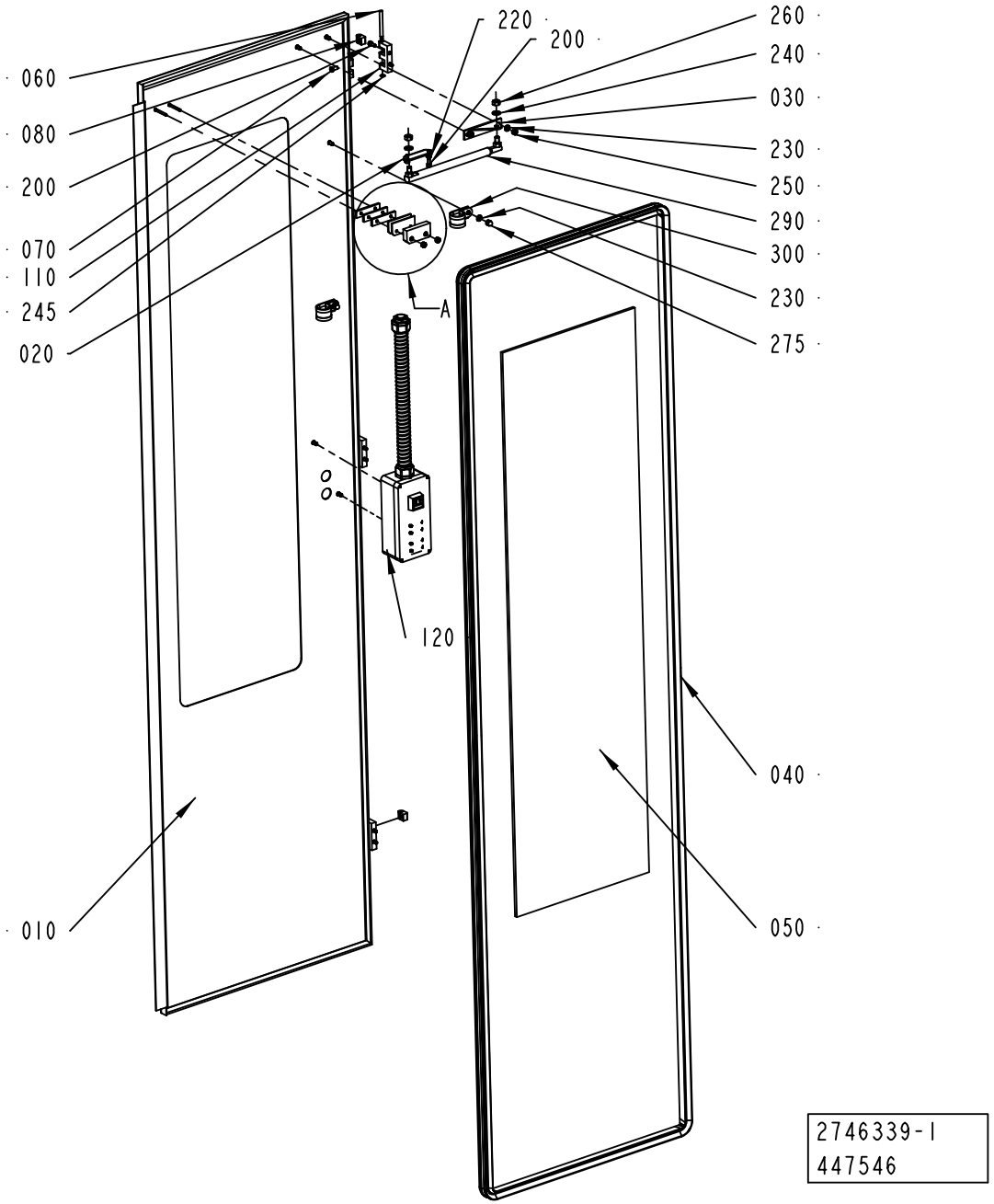
060
080
200
070
110
245
020
010
220
200
260
240
030
230
250
290
300
230
275
A
120
040
050
2746339-1
447546

ECM: 450485 - 20101001
Group number: 2746339-0100
Assembly Drawing: 2746339-1_1_AD

Pos	Part No	UN	Qty	Description	Page No
-					
010	3066115-0000		1	DOOR	
020	2746355-0000		1	BRACKET	
030	2746358-0000		1	BRACKET	
040	1498461-0001		1	SEALING STRIP	
050	1498459-0001		1	GLASS PANE	
060	1036329-0000		3	PIN	
070	1129767-0000		9	SCREW	
080	1129770-0000		9	BLOCKING PIECE	
110	1035792-0000		3	E-HINGE	
120	2746357-0100		1	CONTROL PANEL	**7-163**
130	1539391-0000		2	ROUND NUT	
140	2790934-0000		3	WASHER	
200	312115-0327		8	SCREW ISO4762 M5X12 A4 80	
220	315105-0146		2	WASHER BRB 5,3X10 RFR	
230	315105-0153		4	WASHER BRB 6,4X12 RFR	
240	315105-0165		2	WASHER BRB 8,4X16 RFR	
245	315755-0106		3	RETAINING RING SHAFT DIN 6799 4 SS	
250	312605-0316		2	HEXAGON NUT, M6M M6 A280	
260	312605-0318		2	HEXAGON NUT, M6M M8 A280	
275	312705-0316		2	NUT HEX. DOMED CAP MHM-6 M6 A280	
290	90600-2669		1	GAS SPRING, LIFT-0-MAT 5072DE (F1=50N)	
300	90600-2668		2	PIPE CLAMP D=28 MM, RSGU 1.28/20 WI	
F10B5011	90458-2794		1	SENSOR, EVA 20-046-00	

Pos	Part No	UN	Qty	Description	Page No

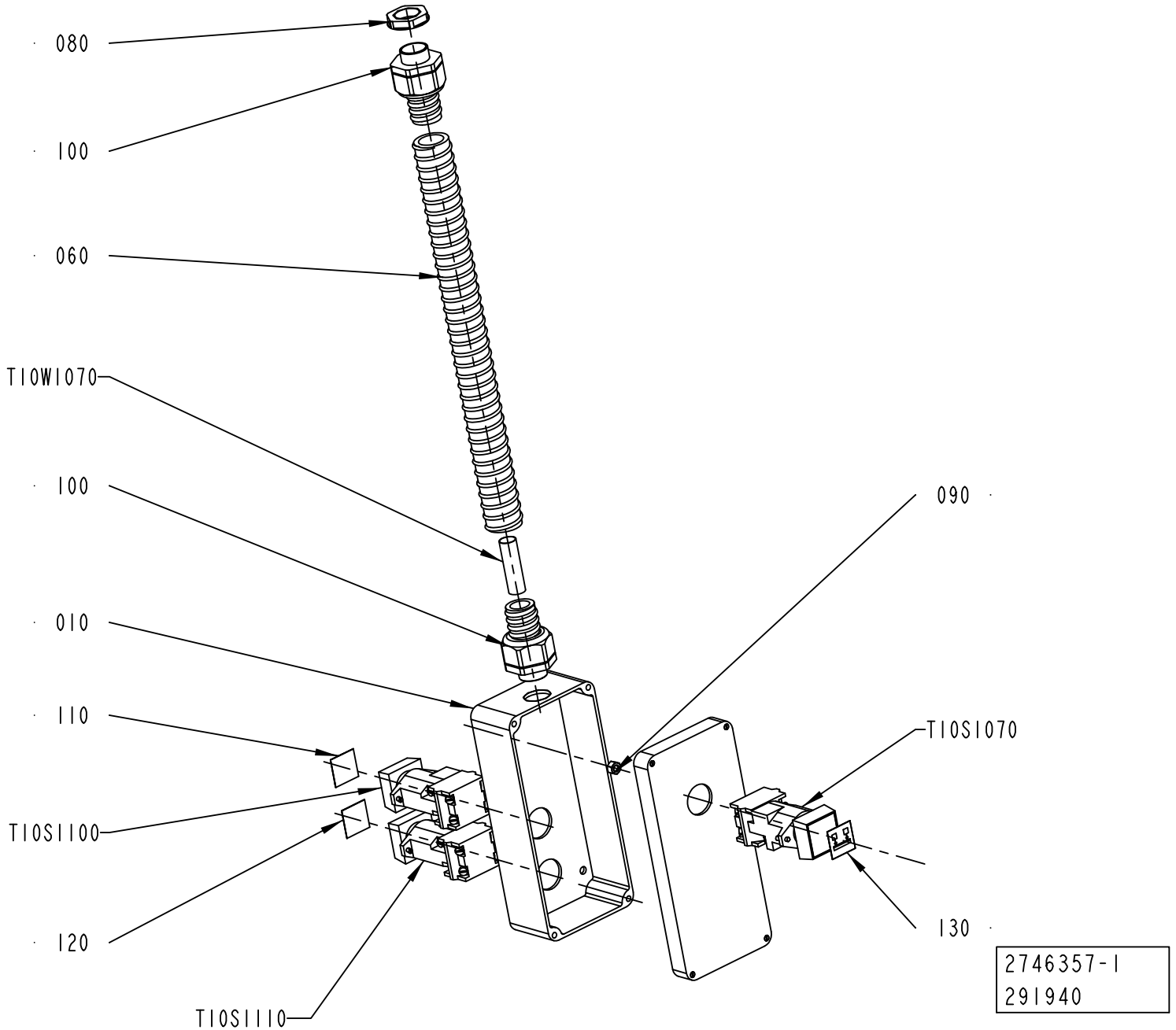
080
100
060
T10W1070
100
010
110
T10S1100
120
T10S1110
090
T10S1070
130
2746357-1
291940

ECM: 348234 - 20090114
Group number: 2746357-0100
Assembly Drawing: 2746357-1_1_AA

Pos	Part No	UN	Qty	Description	Page No
-					
010	2746356-0000		1	PUSH BUTTON	
060	90152-0051	MM	300	SPIRAL CONDUIT, 25X18, UL 1816	
080	90458-0323		1	NUT, M20X1,5	
090	312605-0314		2	HEXAGON NUT, M6M M5 A280	
100	90458-0430		2	HOSE GLAND W/O INSERT M20 EXTENDED	
110	359301-0100		1	BUTTON SIGN, SPLICING	
120	359301-0101		1	BUTTON SIGN, STRIP SPLICING ON	
130	359301-0488		1	BUTTON SIGN, MATERIAL LOCKING	
T10S1070	90064-0082		1	PUSH BUTTON, WHITE	
	90036-0057		*1*	*LIGHT BULB, BA9S 28V*	
T10S1100	90064-0082		1	PUSH BUTTON, WHITE	
	90036-0057		*1*	*LIGHT BULB, BA9S 28V*	
T10S1110	90064-0082		1	PUSH BUTTON, WHITE	
	90036-0057		*1*	*LIGHT BULB, BA9S 28V*	
T10W1070	351150-0407	MM	4000	CABLE OLFLEX 12X0,75 MM2 LIGHT/GREY	

Pos	Part No	UN	Qty	Description	Page No

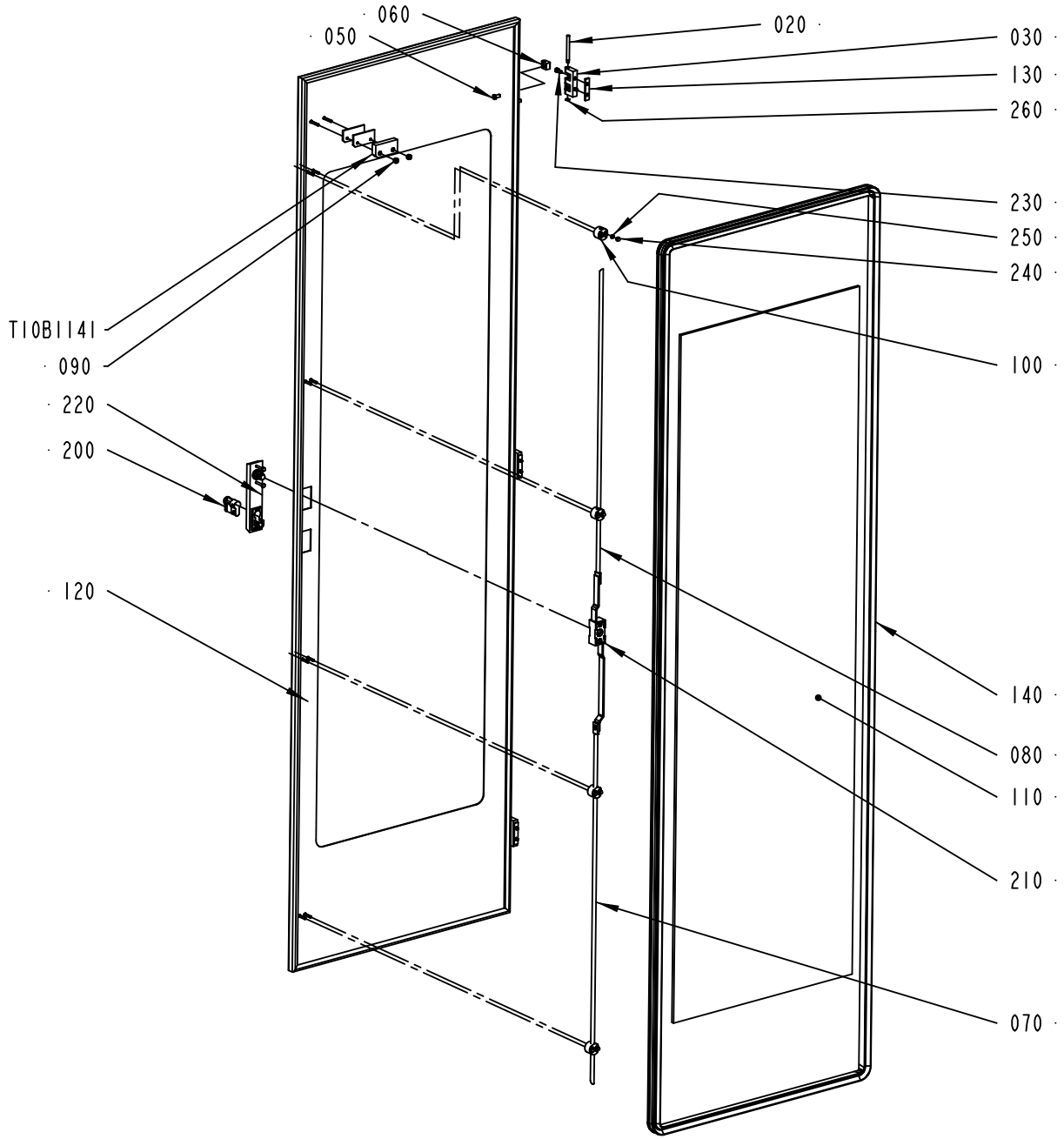
060
050
020
030
130
260
230
250
240
T10B1141
090
100
220
200
120
140
080
110
210
070
2746341-1
447546

ECM: 450490 - 20101001
Group number: 2746341-0100
Assembly Drawing: 2746341-1_1_AD

Pos	Part No	UN	Qty	Description	Page No
-					
020	1036329-0000		3	PIN	
030	1035792-0000		3	E-HINGE	
050	1129767-0000		6	SCREW	
060	1129770-0000		6	BLOCKING PIECE	
070	2790932-0000		1	LOCKING ARM	
080	1499562-0004		1	LOCKING ARM	
090	1539391-0000		2	ROUND NUT	
100	1129274-0000		4	GUIDE LUG	
110	2619039-0000		1	GLASS PANE	
120	3066113-0000		1	DOOR	
130	2746359-0000		3	SPACER	
140	2746360-0000		1	SEALING STRIP	
200	90237-0128		1	LOCK CYLINDER, 1109-SU125	
210	90237-0153		1	LOCK HOUSING, 1121-U26-0B	
220	90237-0175		1	TURNING HANDLE, 1125-U185-0A	
230	312115-0327		6	SCREW ISO4762 M5X12 A4 80	
240	312705-0312		8	NUT HEX. DOMED CAP MHM-6 M4 A280	
250	315105-0136		8	WASHER BRB 4,3X8 RFR	
260	315755-0106		3	RETAINING RING SHAFT DIN 6799 4 SS	
T10B1141	90458-2794		1	SENSOR, EVA 20-046-00	

Pos	Part No	UN	Qty	Description	Page No

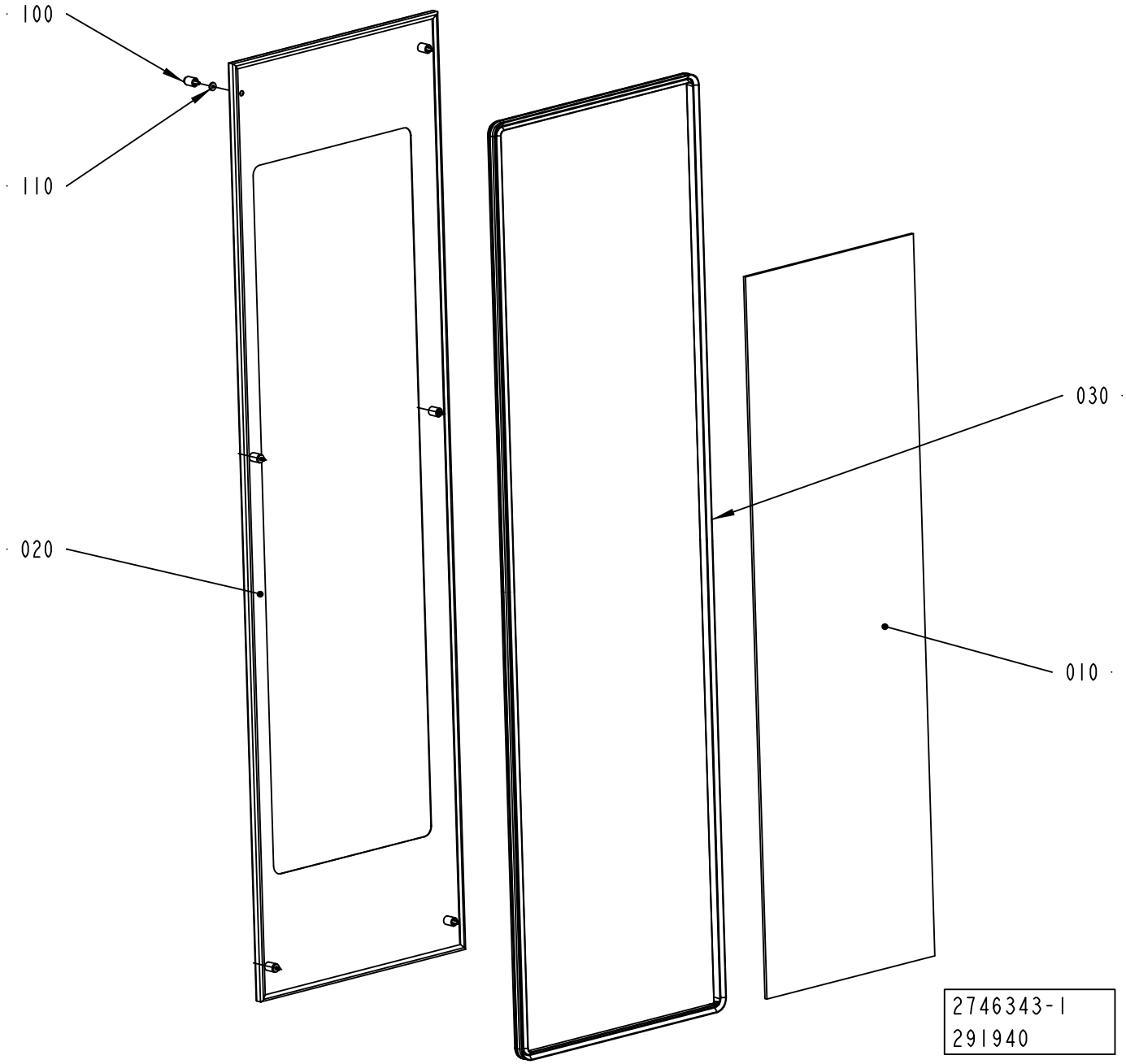
100
110
020
030
010
2746343-1
291940

ECM: 301939 - 20070508
Group number: 2746343-0100
Assembly Drawing: 2746343-1_1_AA

Pos	Part No	UN	Qty	Description	Page No
-					
010	2619039-0000		1	GLASS PANE	
020	2746342-0000		1	DOOR	
030	2746360-0000		1	SEALING STRIP	
100	90226-0458		6	MOUNTING SCREW	
110	90459-7441		3	WASHER PLAIN, DIN 7349, 6,4/17 H=3	

Pos	Part No	UN	Qty	Description	Page No

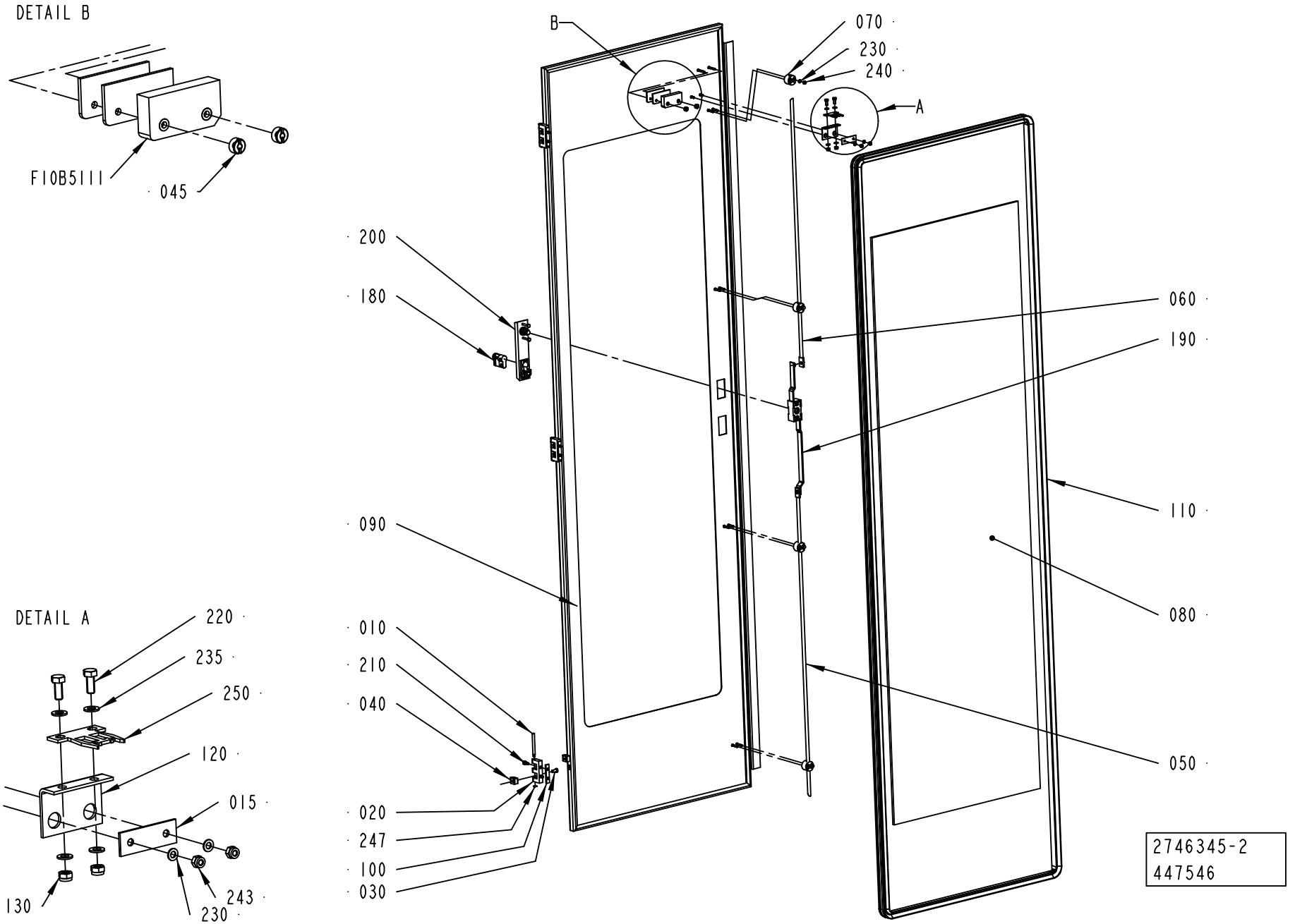
DETAIL B
F10B5111
045
DETAIL A
220
235
250
120
015
130
230
243
B
070
230
240
A
200
180
060
190
110
090
080
010
210
040
050
020
247
100
030
2746345-2
447546

ECM: 450483 - 20101001
Group number: 2746345-0200
Assembly Drawing: 2746345-2_1_AC

Pos	Part No	UN	Qty	Description	Page No
-					
010	1036329-0000		3	PIN	
015	1036563-0000		1	WASHER	
020	1035792-0000		3	E-HINGE	
030	1129767-0000		6	SCREW	
040	1129770-0000		6	BLOCKING PIECE	
045	1539391-0000		2	ROUND NUT	
050	2790932-0000		1	LOCKING ARM	
060	1499562-0004		1	LOCKING ARM	
070	1129274-0000		4	GUIDE LUG	
080	2619039-0000		1	GLASS PANE	
090	3066114-0000		1	DOOR	
100	2746359-0000		3	SPACER	
110	2746360-0000		1	SEALING STRIP	
120	2755512-0000		1	BRACKET	
130	312605-0314		2	HEXAGON NUT, M6M M5 A280	
180	90237-0128		1	LOCK CYLINDER, 1109-SU125	
190	90237-0153		1	LOCK HOUSING, 1121-U26-0B	
200	90237-0175		1	TURNING HANDLE, 1125-U185-0A	
210	312115-0327		6	SCREW ISO4762 M5X12 A4 80	
220	312105-0327		2	SCREW M6S ISO 4017 M5X12 A480	
230	315105-0136		10	WASHER BRB 4,3X8 RFR	
235	315105-0146		4	WASHER BRB 5,3X10 RFR	
240	312705-0312		8	NUT HEX. DOMED CAP MHM-6 M4 A280	
243	312605-0312		2	HEXAGON NUT, M6M M4 A280	
245	312607-0314		2	HEXAGON NUT, EN 24032 M6M M5 A480	
247	315755-0106		3	RETAINING RING SHAFT DIN 6799 4 SS	
250	90600-3021		1	KEY FOR SAFETY SWITCH AZM - 161 - BIF	
F10B5111	90458-2794		1	SENSOR, EVA 20-046-00	

Pos	Part No	UN	Qty	Description	Page No

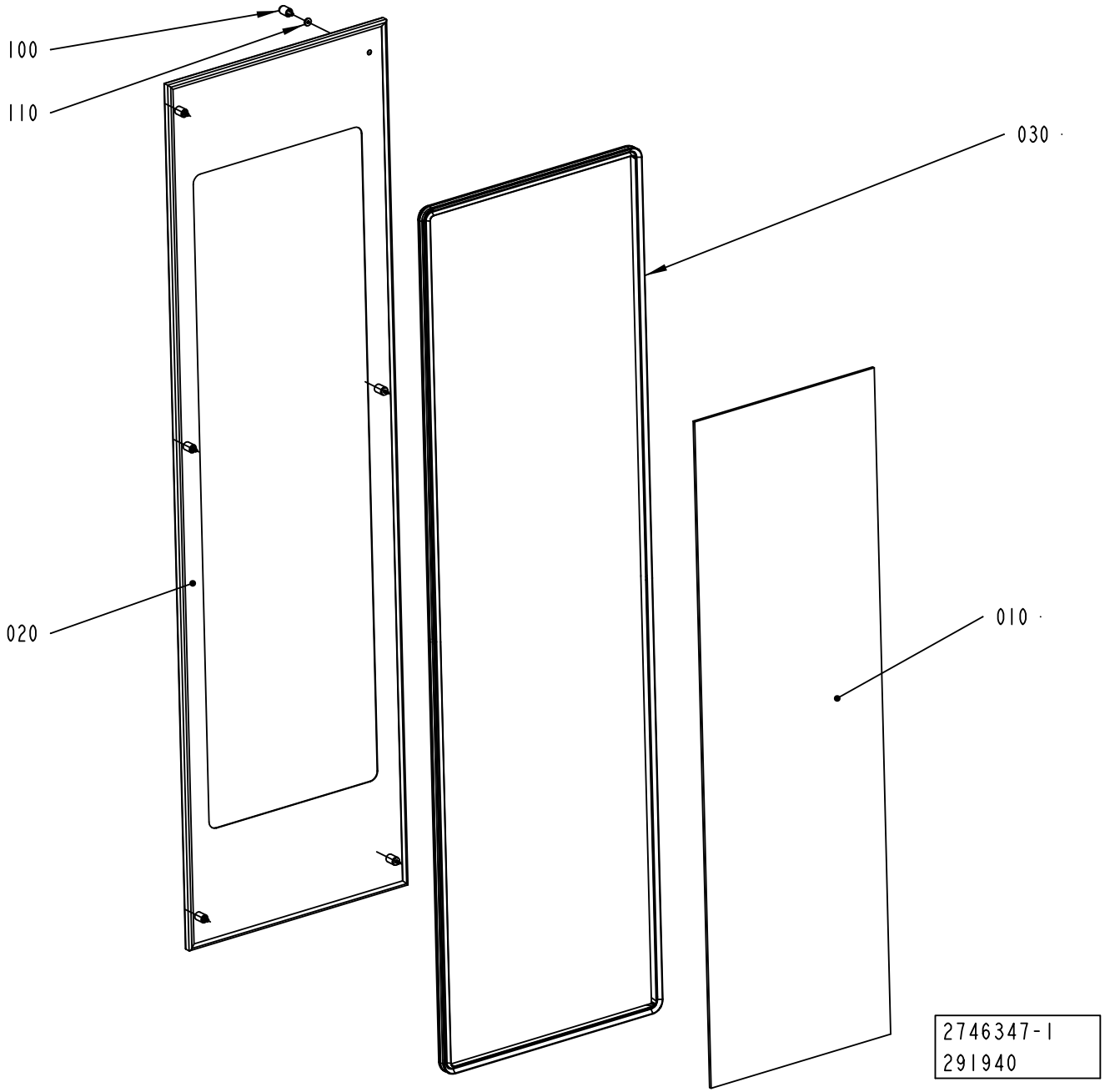
100
110
030
020
010
2746347-1
291940

ECM: 301941 - 20070508
Group number: 2746347-0100
Assembly Drawing: 2746347-1_1_AA

Pos	Part No	UN	Qty	Description	Page No
-					
010	2619039-0000		1	GLASS PANE	
020	2746346-0000		1	DOOR	
030	2746360-0000		1	SEALING STRIP	
100	90226-0458		6	MOUNTING SCREW	
110	90459-7441		3	WASHER PLAIN, DIN 7349, 6,4/17 H=3	

Pos	Part No	UN	Qty	Description	Page No

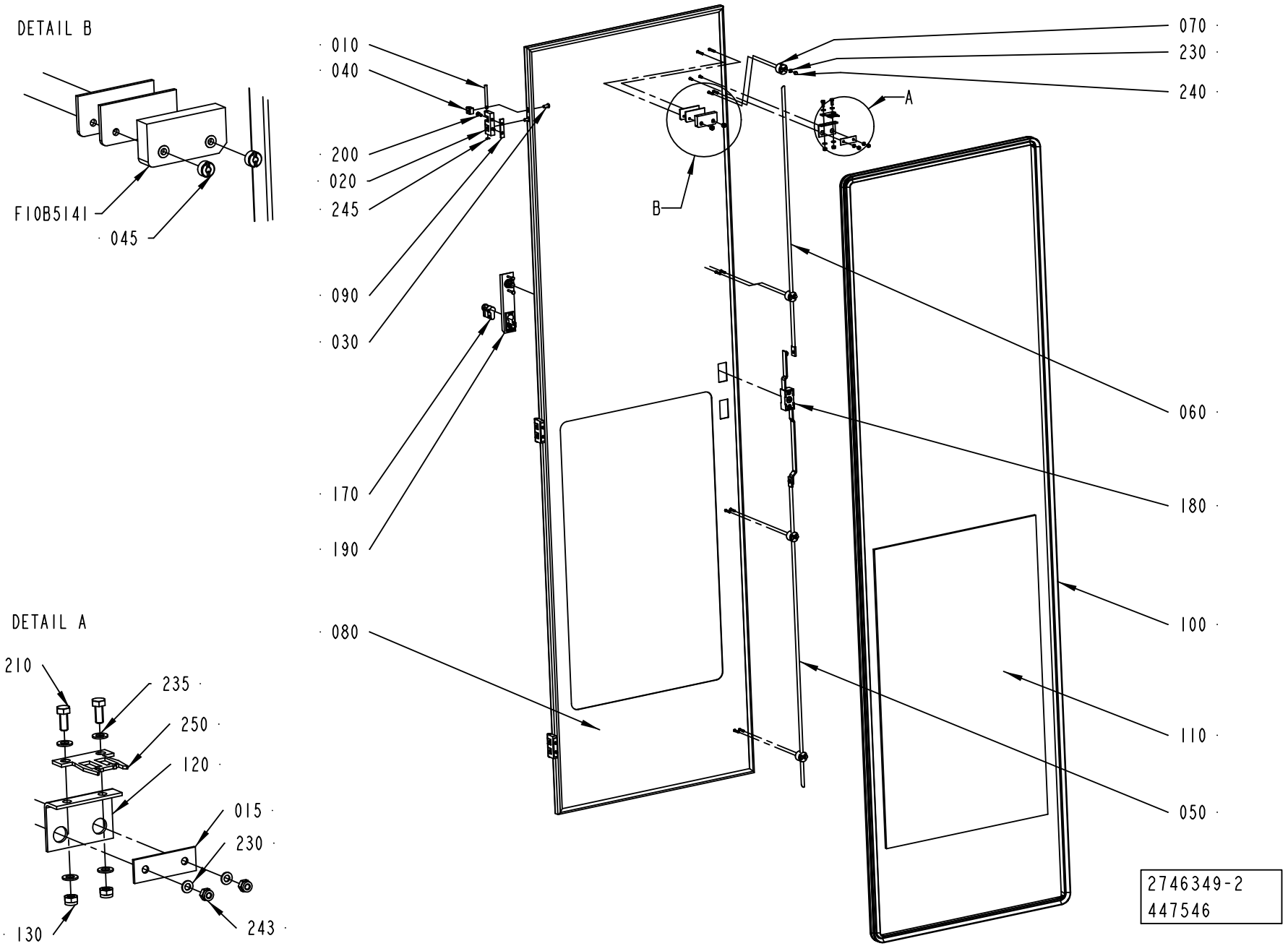
DETAIL B
F10B5141
045
DETAIL A
210
235
250
120
015
230
130
243
010
040
200
020
245
090
030
170
190
080
070
230
240
A
B
060
180
100
110
050
2746349-2
447546

ECM: 450482 - 20101001
Group number: 2746349-0200
Assembly Drawing: 2746349-2_1_AC

Pos	Part No	UN	Qty	Description	Page No
-					
010	1036329-0000		3	PIN	
015	1036563-0000		1	WASHER	
020	1035792-0000		3	E-HINGE	
030	1129767-0000		6	SCREW	
040	1129770-0000		6	BLOCKING PIECE	
045	1539391-0000		2	ROUND NUT	
050	2790932-0000		1	LOCKING ARM	
060	1499562-0004		1	LOCKING ARM	
070	1129274-0000		4	GUIDE LUG	
080	3066111-0000		1	DOOR	
090	2746359-0000		3	SPACER	
100	2746360-0000		1	SEALING STRIP	
110	2746361-0000		1	GLASS PANE	
120	2755512-0000		1	BRACKET	
130	312605-0314		2	HEXAGON NUT, M6M M5 A280	
170	90237-0128		1	LOCK CYLINDER, 1109-SU125	
180	90237-0153		1	LOCK HOUSING, 1121-U26-0B	
190	90237-0175		1	TURNING HANDLE, 1125-U185-0A	
200	312115-0327		6	SCREW ISO4762 M5X12 A4 80	
210	312105-0327		2	SCREW M6S ISO 4017 M5X12 A480	
230	315105-0136		10	WASHER BRB 4,3X8 RFR	
235	315105-0146		4	WASHER BRB 5,3X10 RFR	
240	312705-0312		8	NUT HEX. DOMED CAP MHM-6 M4 A280	
243	312605-0312		2	HEXAGON NUT, M6M M4 A280	
245	315755-0106		3	RETAINING RING SHAFT DIN 6799 4 SS	
250	90600-3021		1	KEY FOR SAFETY SWITCH AZM - 161 - BIF	
F10B5141	90458-2794		1	SENSOR, EVA 20-046-00	

Pos	Part No	UN	Qty	Description	Page No

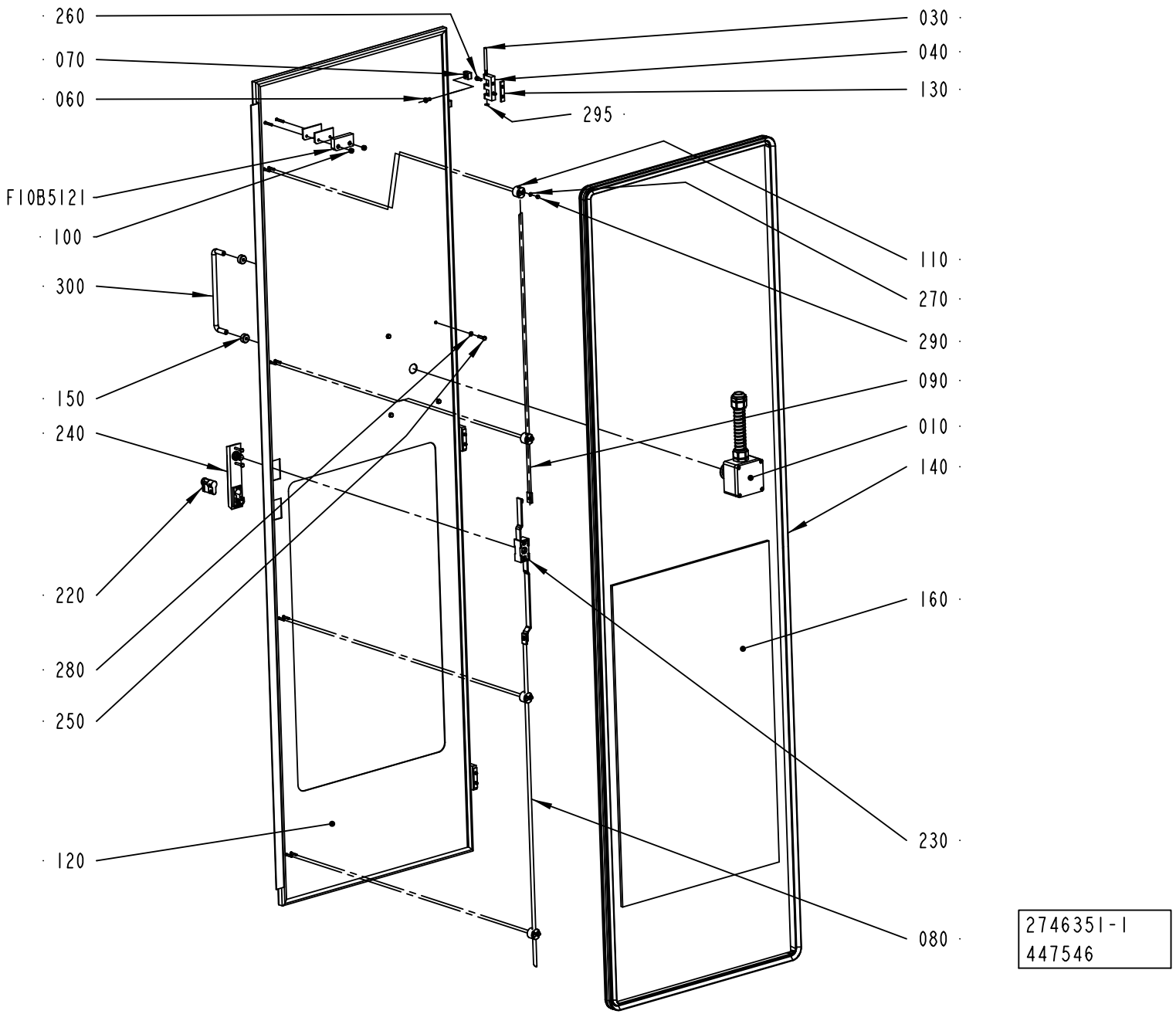
260
070
060
F10B5121
100
300
150
240
220
280
250
120
030
040
130
295
110
270
290
090
010
140
160
230
080
2746351-1
447546

ECM: 450476 - 20101001
Group number: 2746351-0100
Assembly Drawing: 2746351-1_1_AE

Pos	Part No	UN	Qty	Description	Page No
-					
010	2904947-0100		1	EMERGENCY STOP	**7-177**
030	1036329-0000		3	PIN	
040	1035792-0000		3	E-HINGE	
060	1129767-0000		6	SCREW	
070	1129770-0000		6	BLOCKING PIECE	
080	2790932-0000		1	LOCKING ARM	
090	1499562-0004		1	LOCKING ARM	
100	1539391-0000		2	ROUND NUT	
110	1129274-0000		4	GUIDE LUG	
120	3066112-0000		1	DOOR	
130	2746359-0000		3	SPACER	
140	2746360-0000		1	SEALING STRIP	
150	2751586-0000		4	SPACER	
160	2746361-0000		1	GLASS PANE	
220	90237-0128		1	LOCK CYLINDER, 1109-SU125	
230	90237-0153		1	LOCK HOUSING, 1121-U26-0B	
240	90237-0175		1	TURNING HANDLE, 1125-U185-0A	
250	312105-0331		4	SCREW M6S ISO 4017 M5X20 A480	
260	312115-0327		6	SCREW ISO4762 M5X12 A4 80	
270	315105-0136		8	WASHER BRB 4,3X8 RFR	
280	315105-0146		4	WASHER BRB 5,3X10 RFR	
290	312705-0312		8	NUT HEX. DOMED CAP MHM-6 M4 A280	
295	315755-0106		3	RETAINING RING SHAFT DIN 6799 4 SS	
300	90600-2670		2	HANDLE, GN 425-10-200-NI	
F10B5121	90458-2794		1	SENSOR, EVA 20-046-00	

Pos	Part No	UN	Qty	Description	Page No

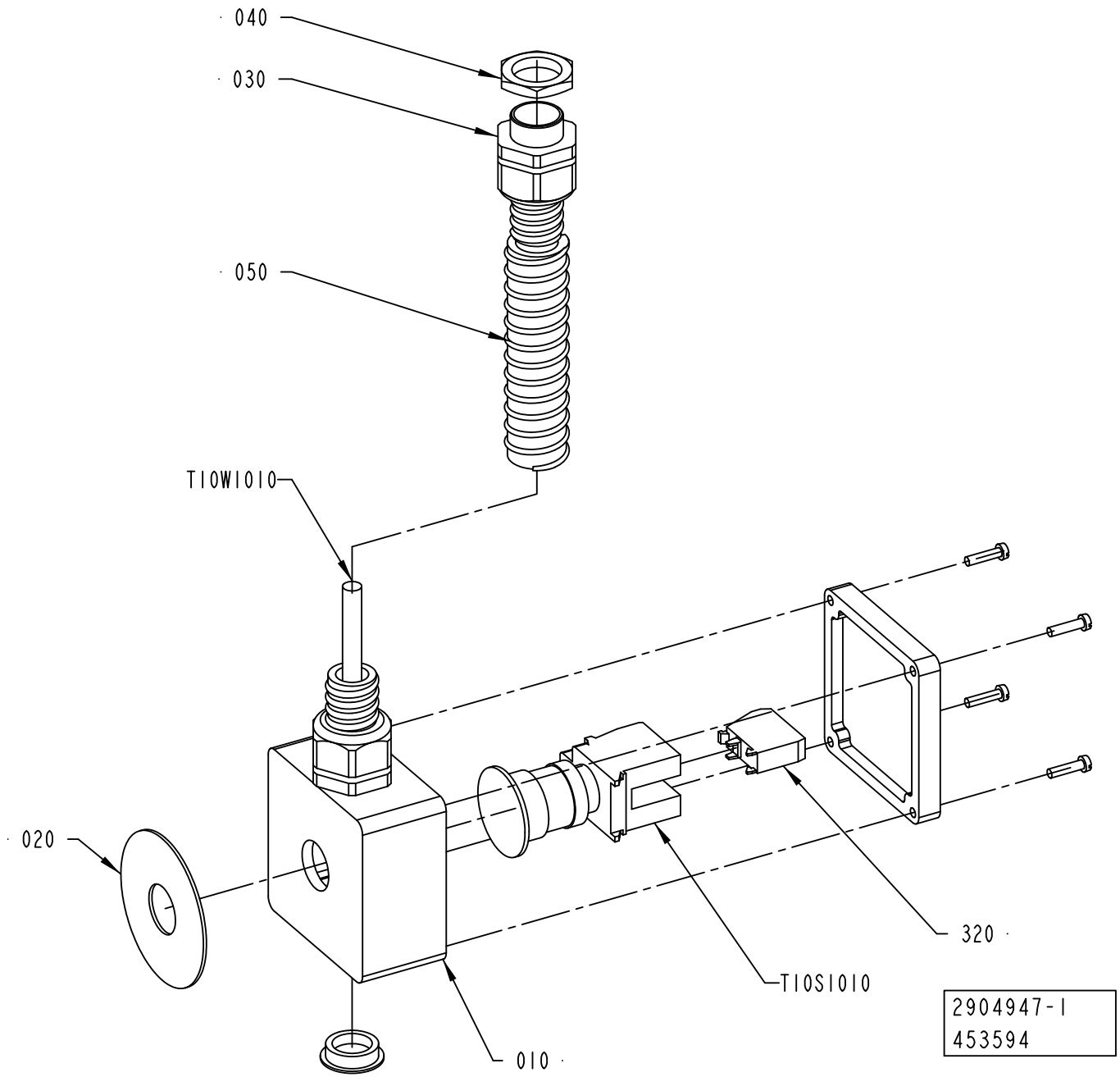
040
030
050
T10W1010
020
010
T10S1010
320
2904947-1
453594

ECM: 454140 - 20101001
Group number: 2904947-0100
Assembly Drawing: 2904947-1_1_AC

Pos	Part No	UN	Qty	Description	Page No
-					
010	1037130-0000		1	,CONNECTION BOX	
020	486826-0001		1	11"SIGN ""EMERGENCY STOP"""	
030	353243-0005		2	HOSE GLAND W/O INSERT PG16 EXTENDED	
040	90099-0110		1	NUT, PR 22,5 (PG16)	
050	90152-0051	MM	700	SPIRAL CONDUIT, 25X18, UL 1816	
300	352103-0110		1	CABLE GLAND, STR 16, PR22,5/PG16	
320	90459-1917		1	CONTACT BLOCK ZBE-102 NC	
T10S1010	90458-1651		1	EMERGENCY STOP, ZB4-BS-844 ZB4-BZ-104	
T10W1010	351150-0405	MM	3000	CABLE OLFLEX 5X0,75 MM2 LIGHT/GREY	

Pos	Part No	UN	Qty	Description	Page No

BOBBIN BRAKE

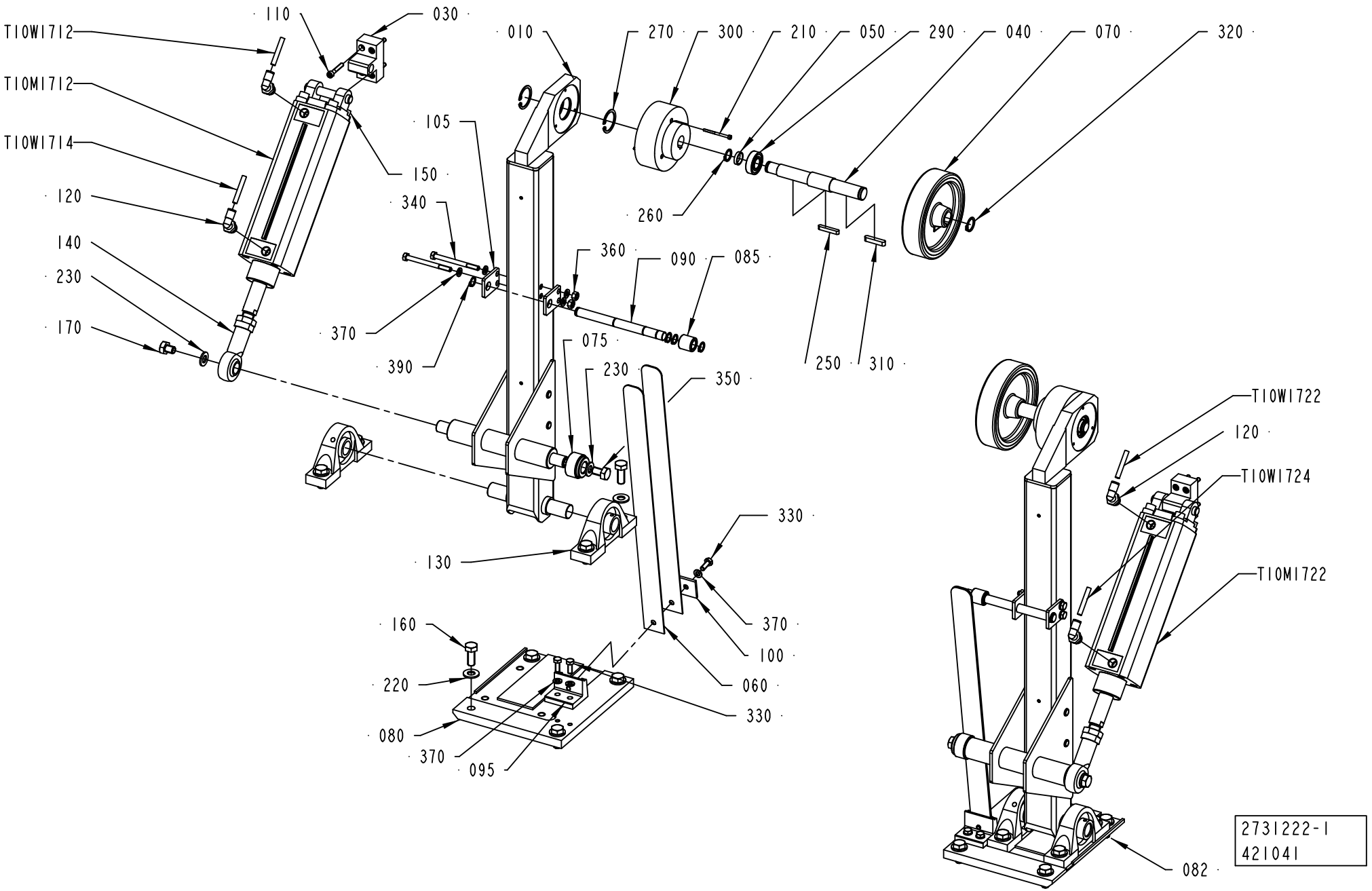

ECM: 430006 - 20100401
Group number: 2731222-0100
Assembly Drawing: 2731222-1_1_AC

Pos	Part No	UN	Qty	Description	Page No
-					
010	2851003-0000		2	ARM	
030	2844499-0000		2	SUPPORT	
040	2731227-0000		2	SHAFT	
050	2856034-0000		2	SPACER	
060	2875029-0000		4	SPRING	
070	2731230-0000		2	WHEEL	
075	2875030-0000		2	TURNING WHEEL	
080	3066171-0000		1	PLATE	
082	3066256-0000		1	PLATE	
085	2875031-0000		2	TURNING WHEEL	
090	2875032-0000		2	SHAFT	
095	2875033-0000		2	HOLDER	
100	2875034-0000		2	PLATE	
105	2876195-0000		4	HOLDER	
110	312115-0335		8	SCREW ISO4762 M5X30 A4 80	
120	350002-0008		4	PUSH-IN L-FITTING QSL-F-G1/4-6	
130	90345-0006		4	STANDING BEARING, TYPE SY 20 TF	
140	90459-6096		2	ROD END, BALL JOINT EYE M16X1,5	
150	90459-5727		2	BRACKET, REAR, EYE WITH AXLE 50	
160	312105-0493		16	SCREW M6S ISO 4017 M10X25 A480	
170	312105-0487		2	SCREW M6S ISO 4017 M10X12 A480	
210	90457-0937		6	SCREW MC6S M3X40 A480	
220	315105-0173		16	WASHER BRB 10,5X22 RFR	
230	315106-0173		4	WASHER ISO 7089-10-200 HV A4	
250	315701-0206		2	PARALLEL KEY W. ROUND ENDS 5X5X32 MM	
260	315751-0112		2	RETAINING RING FOR SHAFT DIN 471 15 SS	
270	315753-0123		4	RETAINING RING FOR BORE DIN 472 32 SS	
290	321308-0202		2	BALL BEARING 15/32X9	
300	90432-0024		2	ELECTROMAG. POWDER BRAKE, FAT50/24 VDC	
310	315705-0237		2	PARALLEL KEY W. ROUND ENDS 6X6X32 MM	
320	315751-0115		2	RETAINING RING FOR SHAFT DIN 471 18 SS	
330	312105-0368		6	SCREW M6S ISO 4017 M6X16 A480	
340	312105-0384		4	SCREW M6S ISO 4014 M6X70 A480	
350	312105-0489		2	SCREW M6S ISO 4017 M10X16 A480	
360	312607-0316		4	HEXAGON NUT, EN 24032 M6M M6 A480	
370	315106-0153		14	WASHER ISO 7089-6-200 HV A4	
390	315750-0109		8	RETAINING RING FOR SHAFT DIN 471 12	
T10M1712	90459-7102		1	DOUBLE ACTING, PROFILE,CYL 50-125	
T10M1722	90459-7102		1	DOUBLE ACTING, PROFILE,CYL 50-125	
T10W1712	315400-0001	MM	2000	TUBE PUN-H-6X1-BL	
T10W1714	315400-0001	MM	2000	TUBE PUN-H-6X1-BL	
T10W1722	315400-0001	MM	2000	TUBE PUN-H-6X1-BL	
T10W1724	315400-0001	MM	2000	TUBE PUN-H-6X1-BL	

Machine Type	Group Description	Used-In	Group Number	Page No

Tetra Pak

SPC
Spare Parts Catalogue

ELECTRICAL CABINET

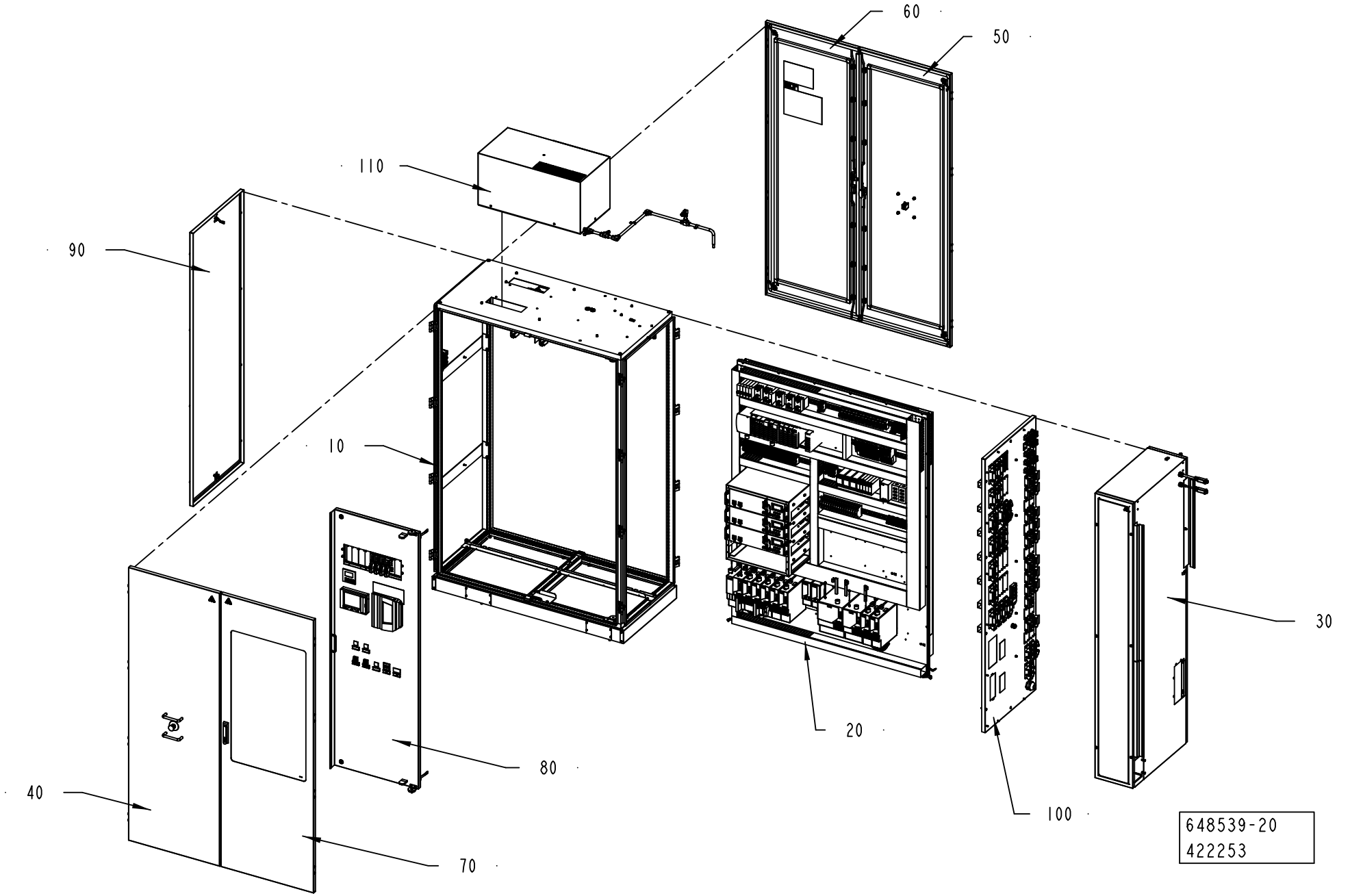

ECM: 429686 - 20100401
Group number: 648539-0400
Assembly Drawing: 648539-20_1_AB

Pos	Part No	UN	Qty	Description	Page No
-					
0010	2862701-0100		1	CABINET	**8-5, 8-7, 8-9, 8-11**
0020	2840947-0200		1	PLATE	**8-15, 8-17, 8-19, 8-21, 8-23, 8-25**
0030	2862711-0200		1	COVER	**8-77, 8-79**
0040	2862707-0200		1	DOOR	**8-81, 8-83**
0050	3046747-0100		1	DOOR	**8-85, 8-87**
0060	2862714-0100		1	DOOR	**8-89, 8-91**
0070	2862715-0100		1	DOOR	**8-93, 8-95**
0080	2849078-0200		1	DOOR	**8-97, 8-99**
0090	2862713-0100		1	DOOR	**8-107**
0100	2867677-0200		1	PANEL	**8-109, 8-111**
0110	2912647-0100		1	COOLING UNIT	**8-115**

Pos	Part No	UN	Qty	Description	Page No

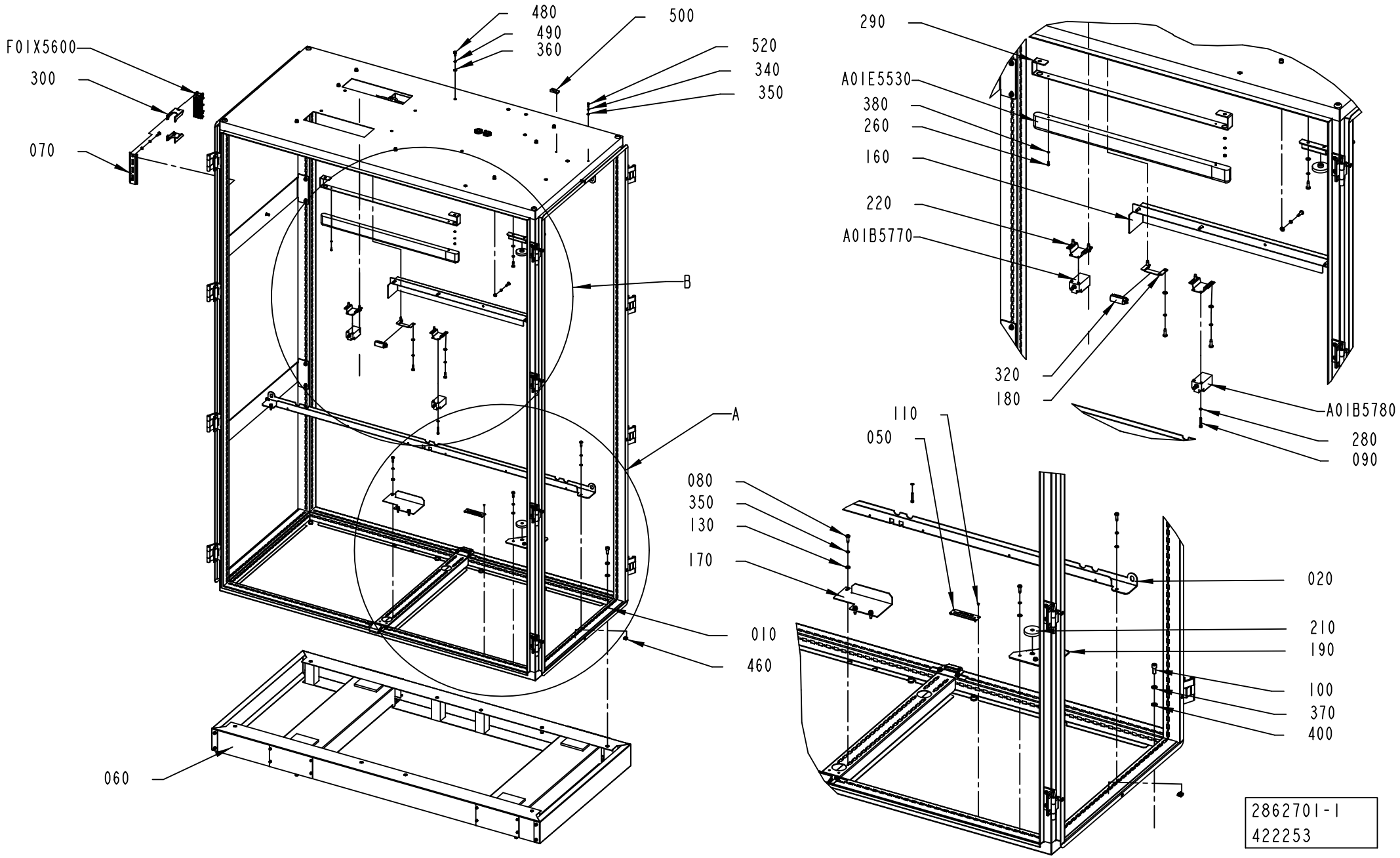
F01X5600
300
070
480
490
360
500
520
340
350
B
A
080
350
130
170
010
460
060
290
A01E5530
380
260
160
220
A01B5770
320
180
A01B5780
280
090
110
050
020
210
190
100
370
400
2862701-1
422253

ECM: 454292 - 20100403
Group number: 2862701-0100
Assembly Drawing: 2862701-1_1_AE

This list covers pages from 8-4 to 8-11

Pos	Part No	UN	Qty	Description	Page No
CE (See drawing on pages: 8-4, 8-6)					
A01E5520	90600-4048		1	LIGHT FIXTURE, TCH128 1XTL5-14W/830 HF	
	90600-4238		*1*	*FLUORESC. TUBE,MASTER TL5 HE 14W/830 SLV*	
A01E5530	90600-4048		1	LIGHT FIXTURE, TCH128 1XTL5-14W/830 HF	
	90600-4238		*1*	*FLUORESC. TUBE,MASTER TL5 HE 14W/830 SLV*	
UL, CSA (See drawing on pages: 8-8, 8-10)					
A01E5520	90602-1250		1	LIGHT FIXTURE, SLIM LED 112-544-001	
A01E5530	90602-1250		1	LIGHT FIXTURE, SLIM LED 112-544-001	
Common Parts					
0010	2986584-0000		1	FRAME	
0020	2986599-0000		2	SUPPORT	
0030	90099-0110		2	NUT, PR 22,5 (PG16)	
0040	2927010-0000		1	BRACKET	
0050	979548-0000		1	MACHINE PLATE	
0060	2986603-0100		1	FRAME	**8-13**
0070	353042-0004	MM	136	RAIL TS 35/7,5	
0080	312504-0451		50	TAPPING SCREW ISO 7049-A4-ST5,5X19-C-Z	
0090	312115-0297		8	SCREW ISO4762 M4X25 A4 80	
0100	312115-0451		9	SCREW ISO4762 M8X20 A4 80	
0110	311520-0315		4	RIVET, BLANK 2,4X4	
0120	315105-0146		12	WASHER BRB 5,3X10 RFR	
0130	315105-0153		40	WASHER BRB 6,4X12 RFR	
0140	352103-0110		2	CABLE GLAND, STR 16, PR22,5/PG16	
0150	2986608-0000		2	BRACKET	
0160	2986594-0000		1	BRACKET	
0170	2986595-0000		1	BRACKET	
0180	2986617-0000		4	BRACKET	
0190	2986592-0000		1	BRACKET	
0200	2986619-0000		2	PLATE	
0210	2986613-0000		2	SPACER	
0220	2986611-0000		4	SUPPORT	
0230	2986591-0000		1	BRACKET	
0240	318301-0122		4	LIFTING EYE BOLT, LT M12 FZB	
0240	90600-3965		4	ROOF FASTENING SCREW, PS 4198.000	
0250	312155-0368		34	SCREW DIN 7991 MF6S M6X16 A4 70	
0260	312115-0222		4	SCREW ISO4762 M3X8 A4 80	
0270	312605-0312		4	HEXAGON NUT, M6M M4 A280	
0280	315105-0136		17	WASHER BRB 4,3X8 RFR	
0290	2927017-0000		2	SUPPORT	
0300	90459-6859		1	HOUS.SIZE 6-24B HAN-SNAP, 09 33 000 9980	
0310	90459-0459		1	NUT HEX. M14X1,5 SS	
0320	2986615-0000		4	GASKET	
0330	312115-0287		6	SCREW ISO4762 M4X8 A4 80	
0340	315402-0136		5	LOCK WASHER FBB 4,1	
0350	315402-0146		50	LOCK WASHER FBB 5,1	
0360	315402-0156		10	LOCK WASHER FBB 6,5	
0370	315402-0165		9	LOCK WASHER FBB 8,2	
0380	315105-0124		4	WASHER BRB 3,2X6 RFR	
0390	315105-0136		1	WASHER BRB 4,3X8 RFR	
0400	315105-0165		9	WASHER BRB 8,4X16 RFR	
0430	2986598-0000		1	COVER	
0440	2986583-0000		16	HINGE	
0450	90143-0097	MM	2400	SELF GRIPPING GASKET, 1011-24	
0450	2927011-0000		1	PLATE	
0460	90600-6031		20	BLOCK-NUT-M6, 4106-C	
0470	312605-0316		2	HEXAGON NUT, M6M M6 A280	
0480	312115-0366		8	SCREW ISO4762 M6X12 A4 80	
0490	90005-0056		8	WASHER PL.RND.NYL.6/8,5,H=1	
0500	3076792-0000		1	SUPPORT	
0510	90005-0064		1	WASHER PL.RND.NYL.4,3/9, H=0,8	
0520	312115-0291		1	SCREW ISO4762 M4X12 A4 80	
A01B5760	90326-0053		1	THERMOCOUPLE, 12826-35	
A01B5770	90044-0192		1	LIMIT SW. SZ2586.000	
A01B5780	90044-0192		1	LIMIT SW. SZ2586.000	
A01B5790	90044-0192		1	LIMIT SW. SZ2586.000	
A01B5800	90044-0192		1	LIMIT SW. SZ2586.000	
A01X5760	90326-0020		1	PLUG, FEMALE YELLOW CR-AL	
F01X5600	90110-0057		1	FEMALE INSERT HAN 24 E 09 33 002 4201	
044O	315105-0178		4	WASHER BRB 13X24 RFR	

Machine Type | Group Description | Used-In | Group Number | Page No

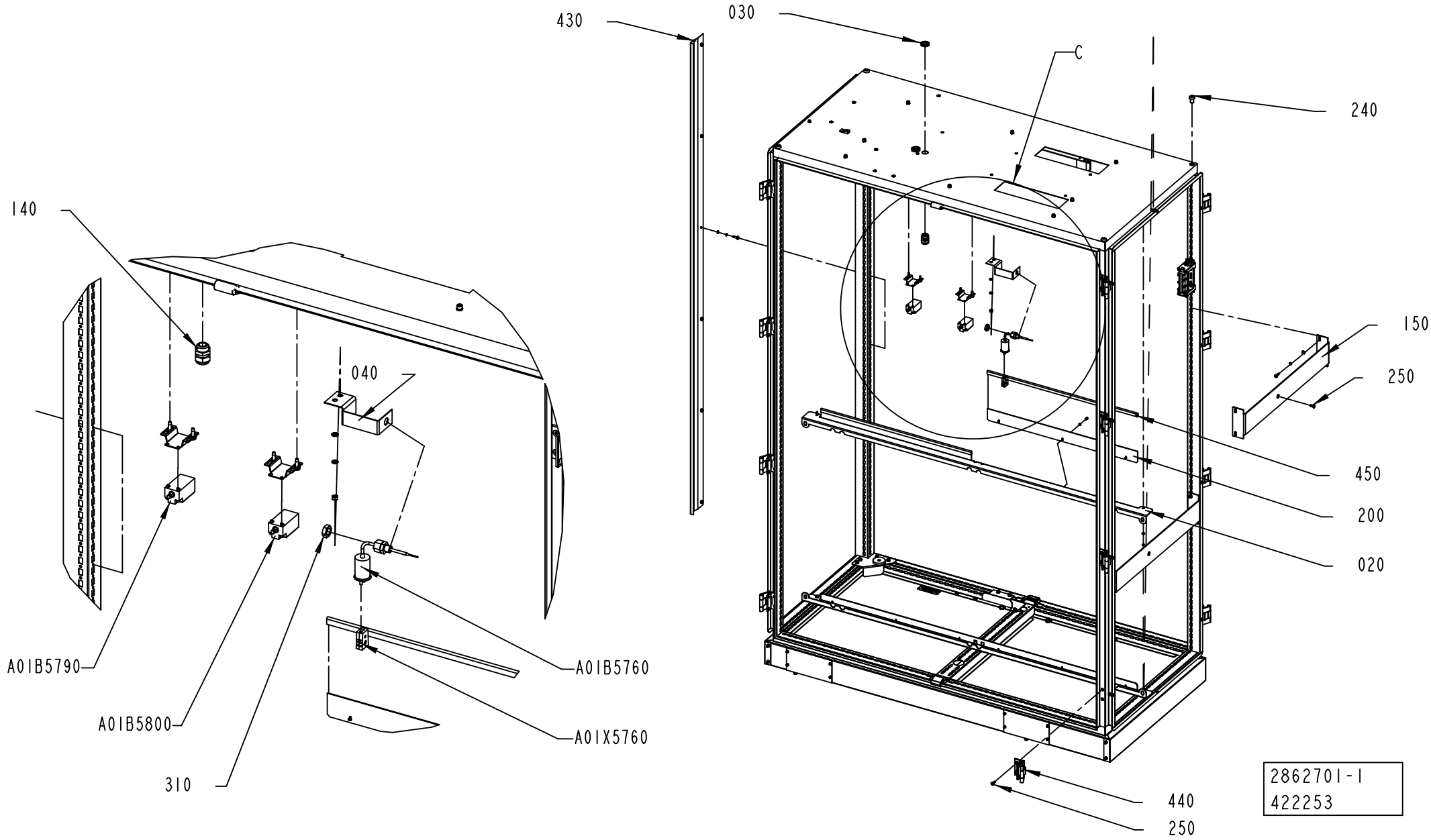
430
030
C
240
140
040
150
250
450
200
020
A01B5790
A01B5800
310
A01B5760
A01X5760
440
250
2862701-1
422253

ECM: 454292 - 20100403
Group number: 2862701-0100
Assembly Drawing: 2862701-1_2_AE

This list covers pages from 8-4 to 8-11

Pos	Part No	UN	Qty	Description	Page No
CE (See drawing on pages: 8-4, 8-6)					
A01E5520	90600-4048		1	LIGHT FIXTURE, TCH128 1XTL5-14W/830 HF	
	90600-4238		*1*	*FLUORESC. TUBE,MASTER TL5 HE 14W/830 SLV*	
A01E5530	90600-4048		1	LIGHT FIXTURE, TCH128 1XTL5-14W/830 HF	
	90600-4238		*1*	*FLUORESC. TUBE,MASTER TL5 HE 14W/830 SLV*	
UL, CSA (See drawing on pages: 8-8, 8-10)					
A01E5520	90602-1250		1	LIGHT FIXTURE, SLIM LED 112-544-001	
A01E5530	90602-1250		1	LIGHT FIXTURE, SLIM LED 112-544-001	
Common Parts					
0010	2986584-0000		1	FRAME	
0020	2986599-0000		2	SUPPORT	
0030	90099-0110		2	NUT, PR 22,5 (PG16)	
0040	2927010-0000		1	BRACKET	
0050	979548-0000		1	MACHINE PLATE	
0060	2986603-0100		1	FRAME	**8-13**
0070	353042-0004	MM	136	RAIL TS 35/7,5	
0080	312504-0451		50	TAPPING SCREW ISO 7049-A4-ST5,5X19-C-Z	
0090	312115-0297		8	SCREW ISO4762 M4X25 A4 80	
0100	312115-0451		9	SCREW ISO4762 M8X20 A4 80	
0110	311520-0315		4	RIVET, BLANK 2,4X4	
0120	315105-0146		12	WASHER BRB 5,3X10 RFR	
0130	315105-0153		40	WASHER BRB 6,4X12 RFR	
0140	352103-0110		2	CABLE GLAND, STR 16, PR22,5/PG16	
0150	2986608-0000		2	BRACKET	
0160	2986594-0000		1	BRACKET	
0170	2986595-0000		1	BRACKET	
0180	2986617-0000		4	BRACKET	
0190	2986592-0000		1	BRACKET	
0200	2986619-0000		2	PLATE	
0210	2986613-0000		2	SPACER	
0220	2986611-0000		4	SUPPORT	
0230	2986591-0000		1	BRACKET	
0240	318301-0122		4	LIFTING EYE BOLT, LT M12 FZB	
0240	90600-3965		4	ROOF FASTENING SCREW, PS 4198.000	
0250	312155-0368		34	SCREW DIN 7991 MF6S M6X16 A4 70	
0260	312115-0222		4	SCREW ISO4762 M3X8 A4 80	
0270	312605-0312		4	HEXAGON NUT, M6M M4 A280	
0280	315105-0136		17	WASHER BRB 4,3X8 RFR	
0290	2927017-0000		2	SUPPORT	
0300	90459-6859		1	HOUS.SIZE 6-24B HAN-SNAP, 09 33 000 9980	
0310	90459-0459		1	NUT HEX. M14X1,5 SS	
0320	2986615-0000		4	GASKET	
0330	312115-0287		6	SCREW ISO4762 M4X8 A4 80	
0340	315402-0136		5	LOCK WASHER FBB 4,1	
0350	315402-0146		50	LOCK WASHER FBB 5,1	
0360	315402-0156		10	LOCK WASHER FBB 6,5	
0370	315402-0165		9	LOCK WASHER FBB 8,2	
0380	315105-0124		4	WASHER BRB 3,2X6 RFR	
0390	315105-0136		1	WASHER BRB 4,3X8 RFR	
0400	315105-0165		9	WASHER BRB 8,4X16 RFR	
0430	2986598-0000		1	COVER	
0440	2986583-0000		16	HINGE	
0450	90143-0097	MM	2400	SELF GRIPPING GASKET, 1011-24	
0450	2927011-0000		1	PLATE	
0460	90600-6031		20	BLOCK-NUT-M6, 4106-C	
0470	312605-0316		2	HEXAGON NUT, M6M M6 A280	
0480	312115-0366		8	SCREW ISO4762 M6X12 A4 80	
0490	90005-0056		8	WASHER PL.RND.NYL.6/8,5,H=1	
0500	3076792-0000		1	SUPPORT	
0510	90005-0064		1	WASHER PL.RND.NYL.4,3/9, H=0,8	
0520	312115-0291		1	SCREW ISO4762 M4X12 A4 80	
A01B5760	90326-0053		1	THERMOCOUPLE, 12826-35	
A01B5770	90044-0192		1	LIMIT SW. SZ2586.000	
A01B5780	90044-0192		1	LIMIT SW. SZ2586.000	
A01B5790	90044-0192		1	LIMIT SW. SZ2586.000	
A01B5800	90044-0192		1	LIMIT SW. SZ2586.000	
A01X5760	90326-0020		1	PLUG, FEMALE YELLOW CR-AL	
F01X5600	90110-0057		1	FEMALE INSERT HAN 24 E 09 33 002 4201	
044O	315105-0178		4	WASHER BRB 13X24 RFR	

Machine Type | Group Description | Used-In | Group Number | Page No

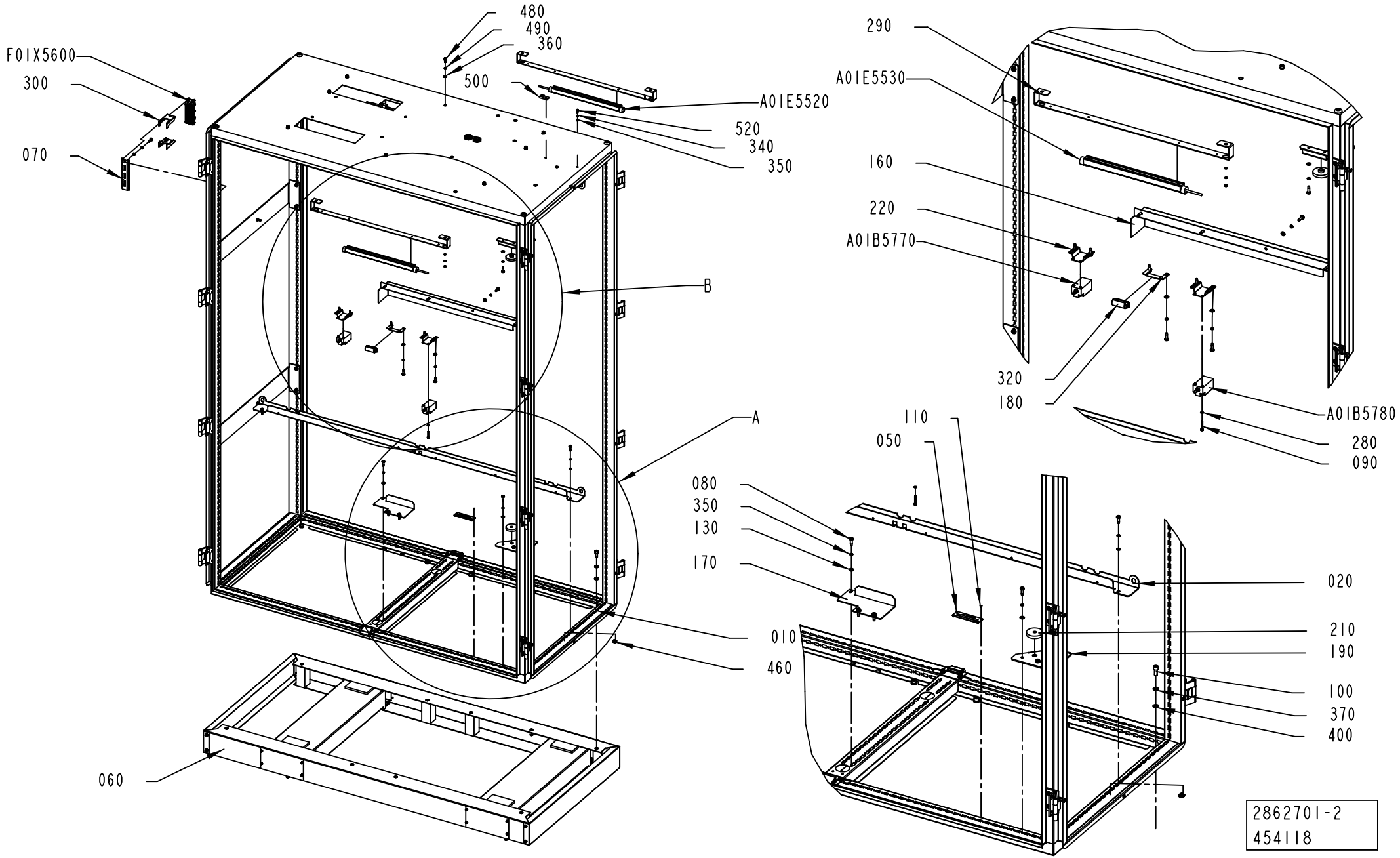
480
490
360
F01X5600
300
500
A01E5520
520
340
350
070
B
A
060
290
A01E5530
160
220
A01B5770
320
180
A01B5780
280
090
110
050
080
350
130
170
020
210
190
100
370
400
010
460
2862701-2
454118

ECM: 454292 - 20100403
Group number: 2862701-0100
Assembly Drawing: 2862701-2_1_AA

This list covers pages from 8-4 to 8-11

Pos	Part No	UN	Qty	Description	Page No
CE (See drawing on pages: 8-4, 8-6)					
A01E5520	90600-4048		1	LIGHT FIXTURE, TCH128 1XTL5-14W/830 HF	
	90600-4238		*1*	*FLUORESC. TUBE,MASTER TL5 HE 14W/830 SLV*	
A01E5530	90600-4048		1	LIGHT FIXTURE, TCH128 1XTL5-14W/830 HF	
	90600-4238		*1*	*FLUORESC. TUBE,MASTER TL5 HE 14W/830 SLV*	
UL, CSA (See drawing on pages: 8-8, 8-10)					
A01E5520	90602-1250		1	LIGHT FIXTURE, SLIM LED 112-544-001	
A01E5530	90602-1250		1	LIGHT FIXTURE, SLIM LED 112-544-001	
Common Parts					
0010	2986584-0000		1	FRAME	
0020	2986599-0000		2	SUPPORT	
0030	90099-0110		2	NUT, PR 22,5 (PG16)	
0040	2927010-0000		1	BRACKET	
0050	979548-0000		1	MACHINE PLATE	
0060	2986603-0100		1	FRAME	**8-13**
0070	353042-0004	MM	136	RAIL TS 35/7,5	
0080	312504-0451		50	TAPPING SCREW ISO 7049-A4-ST5,5X19-C-Z	
0090	312115-0297		8	SCREW ISO4762 M4X25 A4 80	
0100	312115-0451		9	SCREW ISO4762 M8X20 A4 80	
0110	311520-0315		4	RIVET, BLANK 2,4X4	
0120	315105-0146		12	WASHER BRB 5,3X10 RFR	
0130	315105-0153		40	WASHER BRB 6,4X12 RFR	
0140	352103-0110		2	CABLE GLAND, STR 16, PR22,5/PG16	
0150	2986608-0000		2	BRACKET	
0160	2986594-0000		1	BRACKET	
0170	2986595-0000		1	BRACKET	
0180	2986617-0000		4	BRACKET	
0190	2986592-0000		1	BRACKET	
0200	2986619-0000		2	PLATE	
0210	2986613-0000		2	SPACER	
0220	2986611-0000		4	SUPPORT	
0230	2986591-0000		1	BRACKET	
0240	318301-0122		4	LIFTING EYE BOLT, LT M12 FZB	
0240	90600-3965		4	ROOF FASTENING SCREW, PS 4198.000	
0250	312155-0368		34	SCREW DIN 7991 MF6S M6X16 A4 70	
0260	312115-0222		4	SCREW ISO4762 M3X8 A4 80	
0270	312605-0312		4	HEXAGON NUT, M6M M4 A280	
0280	315105-0136		17	WASHER BRB 4,3X8 RFR	
0290	2927017-0000		2	SUPPORT	
0300	90459-6859		1	HOUS.SIZE 6-24B HAN-SNAP, 09 33 000 9980	
0310	90459-0459		1	NUT HEX. M14X1,5 SS	
0320	2986615-0000		4	GASKET	
0330	312115-0287		6	SCREW ISO4762 M4X8 A4 80	
0340	315402-0136		5	LOCK WASHER FBB 4,1	
0350	315402-0146		50	LOCK WASHER FBB 5,1	
0360	315402-0156		10	LOCK WASHER FBB 6,5	
0370	315402-0165		9	LOCK WASHER FBB 8,2	
0380	315105-0124		4	WASHER BRB 3,2X6 RFR	
0390	315105-0136		1	WASHER BRB 4,3X8 RFR	
0400	315105-0165		9	WASHER BRB 8,4X16 RFR	
0430	2986598-0000		1	COVER	
0440	2986583-0000		16	HINGE	
0450	90143-0097	MM	2400	SELF GRIPPING GASKET, 1011-24	
0450	2927011-0000		1	PLATE	
0460	90600-6031		20	BLOCK-NUT-M6, 4106-C	
0470	312605-0316		2	HEXAGON NUT, M6M M6 A280	
0480	312115-0366		8	SCREW ISO4762 M6X12 A4 80	
0490	90005-0056		8	WASHER PL.RND.NYL.6/8,5,H=1	
0500	3076792-0000		1	SUPPORT	
0510	90005-0064		1	WASHER PL.RND.NYL.4,3/9, H=0,8	
0520	312115-0291		1	SCREW ISO4762 M4X12 A4 80	
A01B5760	90326-0053		1	THERMOCOUPLE, 12826-35	
A01B5770	90044-0192		1	LIMIT SW. SZ2586.000	
A01B5780	90044-0192		1	LIMIT SW. SZ2586.000	
A01B5790	90044-0192		1	LIMIT SW. SZ2586.000	
A01B5800	90044-0192		1	LIMIT SW. SZ2586.000	
A01X5760	90326-0020		1	PLUG, FEMALE YELLOW CR-AL	
F01X5600	90110-0057		1	FEMALE INSERT HAN 24 E 09 33 002 4201	
044O	315105-0178		4	WASHER BRB 13X24 RFR	

Machine Type | Group Description | Used-In | Group Number | Page No

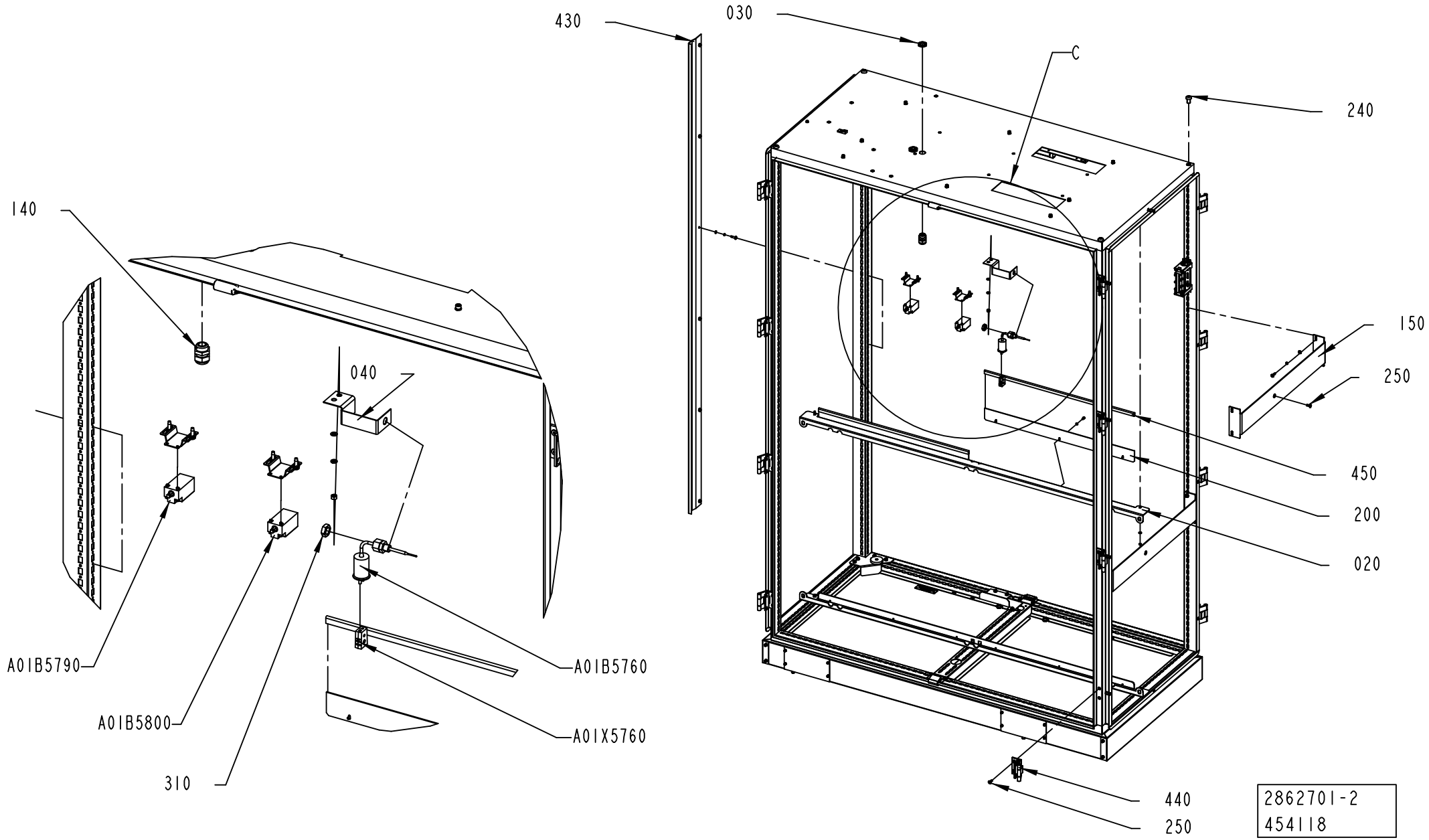
430
030
C
240
140
150
250
040
450
200
020
A01B5790
A01B5760
A01B5800
A01X5760
310
440
250
2862701-2
454118

ECM: 454292 - 20100403
Group number: 2862701-0100
Assembly Drawing: 2862701-2_2_AA

This list covers pages from 8-4 to 8-11

Pos	Part No	UN	Qty	Description	Page No
CE (See drawing on pages: 8-4, 8-6)					
A01E5520	90600-4048		1	LIGHT FIXTURE, TCH128 1XTL5-14W/830 HF	
	90600-4238		*1*	*FLUORESC. TUBE,MASTER TL5 HE 14W/830 SLV*	
A01E5530	90600-4048		1	LIGHT FIXTURE, TCH128 1XTL5-14W/830 HF	
	90600-4238		*1*	*FLUORESC. TUBE,MASTER TL5 HE 14W/830 SLV*	
UL, CSA (See drawing on pages: 8-8, 8-10)					
A01E5520	90602-1250		1	LIGHT FIXTURE, SLIM LED 112-544-001	
A01E5530	90602-1250		1	LIGHT FIXTURE, SLIM LED 112-544-001	
Common Parts					
0010	2986584-0000		1	FRAME	
0020	2986599-0000		2	SUPPORT	
0030	90099-0110		2	NUT, PR 22,5 (PG16)	
0040	2927010-0000		1	BRACKET	
0050	979548-0000		1	MACHINE PLATE	
0060	2986603-0100		1	FRAME	**8-13**
0070	353042-0004	MM	136	RAIL TS 35/7,5	
0080	312504-0451		50	TAPPING SCREW ISO 7049-A4-ST5,5X19-C-Z	
0090	312115-0297		8	SCREW ISO4762 M4X25 A4 80	
0100	312115-0451		9	SCREW ISO4762 M8X20 A4 80	
0110	311520-0315		4	RIVET, BLANK 2,4X4	
0120	315105-0146		12	WASHER BRB 5,3X10 RFR	
0130	315105-0153		40	WASHER BRB 6,4X12 RFR	
0140	352103-0110		2	CABLE GLAND, STR 16, PR22,5/PG16	
0150	2986608-0000		2	BRACKET	
0160	2986594-0000		1	BRACKET	
0170	2986595-0000		1	BRACKET	
0180	2986617-0000		4	BRACKET	
0190	2986592-0000		1	BRACKET	
0200	2986619-0000		2	PLATE	
0210	2986613-0000		2	SPACER	
0220	2986611-0000		4	SUPPORT	
0230	2986591-0000		1	BRACKET	
0240	318301-0122		4	LIFTING EYE BOLT, LT M12 FZB	
0240	90600-3965		4	ROOF FASTENING SCREW, PS 4198.000	
0250	312155-0368		34	SCREW DIN 7991 MF6S M6X16 A4 70	
0260	312115-0222		4	SCREW ISO4762 M3X8 A4 80	
0270	312605-0312		4	HEXAGON NUT, M6M M4 A280	
0280	315105-0136		17	WASHER BRB 4,3X8 RFR	
0290	2927017-0000		2	SUPPORT	
0300	90459-6859		1	HOUS.SIZE 6-24B HAN-SNAP, 09 33 000 9980	
0310	90459-0459		1	NUT HEX. M14X1,5 SS	
0320	2986615-0000		4	GASKET	
0330	312115-0287		6	SCREW ISO4762 M4X8 A4 80	
0340	315402-0136		5	LOCK WASHER FBB 4,1	
0350	315402-0146		50	LOCK WASHER FBB 5,1	
0360	315402-0156		10	LOCK WASHER FBB 6,5	
0370	315402-0165		9	LOCK WASHER FBB 8,2	
0380	315105-0124		4	WASHER BRB 3,2X6 RFR	
0390	315105-0136		1	WASHER BRB 4,3X8 RFR	
0400	315105-0165		9	WASHER BRB 8,4X16 RFR	
0430	2986598-0000		1	COVER	
0440	2986583-0000		16	HINGE	
0450	90143-0097	MM	2400	SELF GRIPPING GASKET, 1011-24	
0450	2927011-0000		1	PLATE	
0460	90600-6031		20	BLOCK-NUT-M6, 4106-C	
0470	312605-0316		2	HEXAGON NUT, M6M M6 A280	
0480	312115-0366		8	SCREW ISO4762 M6X12 A4 80	
0490	90005-0056		8	WASHER PL.RND.NYL.6/8,5,H=1	
0500	3076792-0000		1	SUPPORT	
0510	90005-0064		1	WASHER PL.RND.NYL.4,3/9, H=0,8	
0520	312115-0291		1	SCREW ISO4762 M4X12 A4 80	
A01B5760	90326-0053		1	THERMOCOUPLE, 12826-35	
A01B5770	90044-0192		1	LIMIT SW. SZ2586.000	
A01B5780	90044-0192		1	LIMIT SW. SZ2586.000	
A01B5790	90044-0192		1	LIMIT SW. SZ2586.000	
A01B5800	90044-0192		1	LIMIT SW. SZ2586.000	
A01X5760	90326-0020		1	PLUG, FEMALE YELLOW CR-AL	
F01X5600	90110-0057		1	FEMALE INSERT HAN 24 E 09 33 002 4201	
044O	315105-0178		4	WASHER BRB 13X24 RFR	

Machine Type | Group Description | Used-In | Group Number | Page No

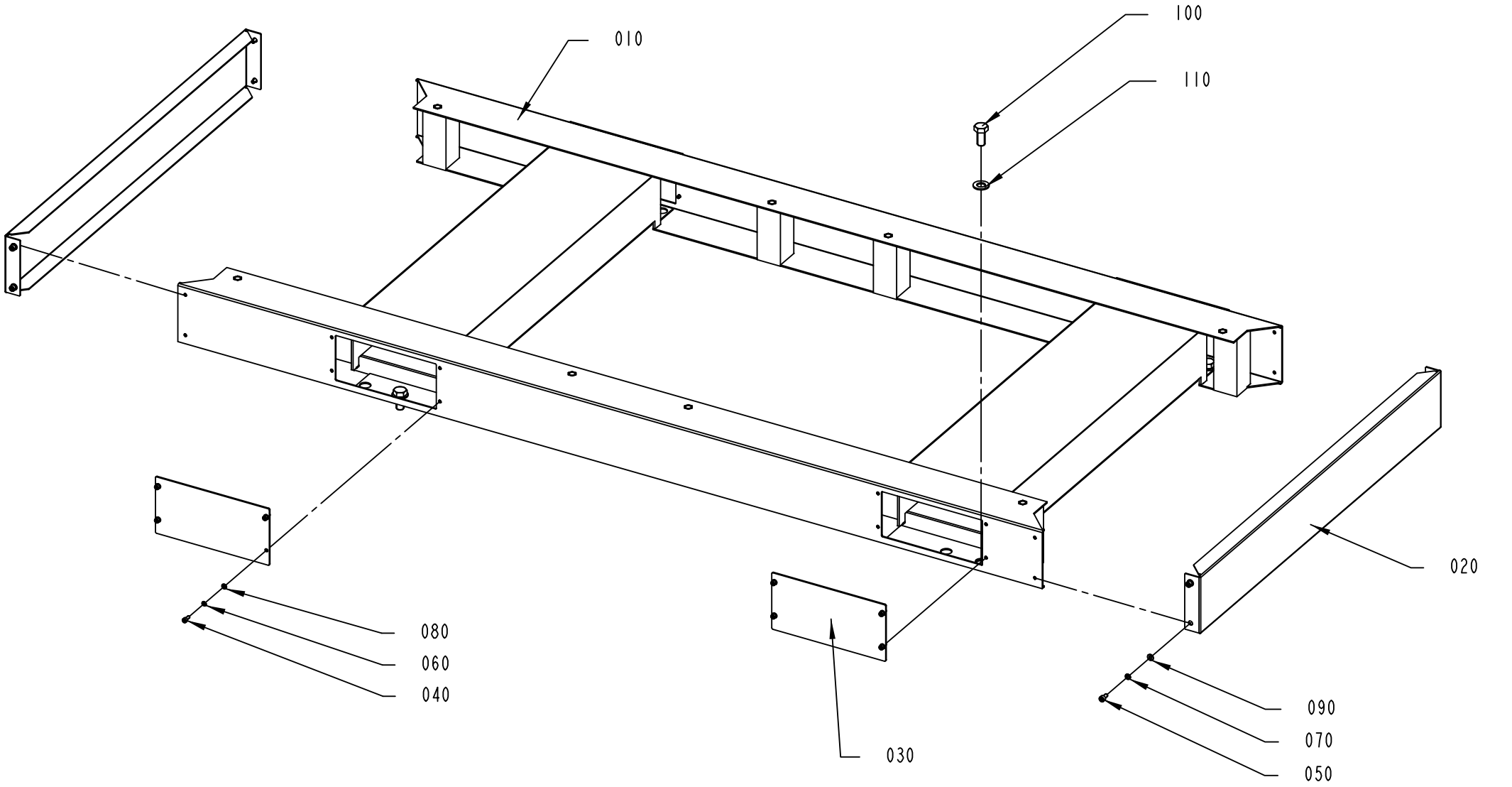
100
010
110
020
080
060
040
030
090
070
050
2986603-1
379404

ECM: 416292 - 20100402
Group number: 2986603-0100
Assembly Drawing: 2986603-1_1_AA

Pos	Part No	UN	Qty	Description	Page No
-					
010	2986612-0000		1	FRAME	
020	2986610-0000		2	FRAME	
030	1038408-0000		4	COVERING PLATE	
040	312115-0289		16	SCREW ISO4762 M4X10 A4 80	
050	312115-0325		8	SCREW ISO4762 M5X10 A4 80	
060	315402-0136		16	LOCK WASHER FBB 4,1	
070	315402-0146		8	LOCK WASHER FBB 5,1	
080	315105-0136		16	WASHER BRB 4,3X8 RFR	
090	315105-0146		8	WASHER BRB 5,3X10 RFR	
100	312105-0534		4	SCREW M6S ISO 4017 M12X25 A480	
110	315105-0178		4	WASHER BRB 13X24 RFR	

Pos	Part No	UN	Qty	Description	Page No

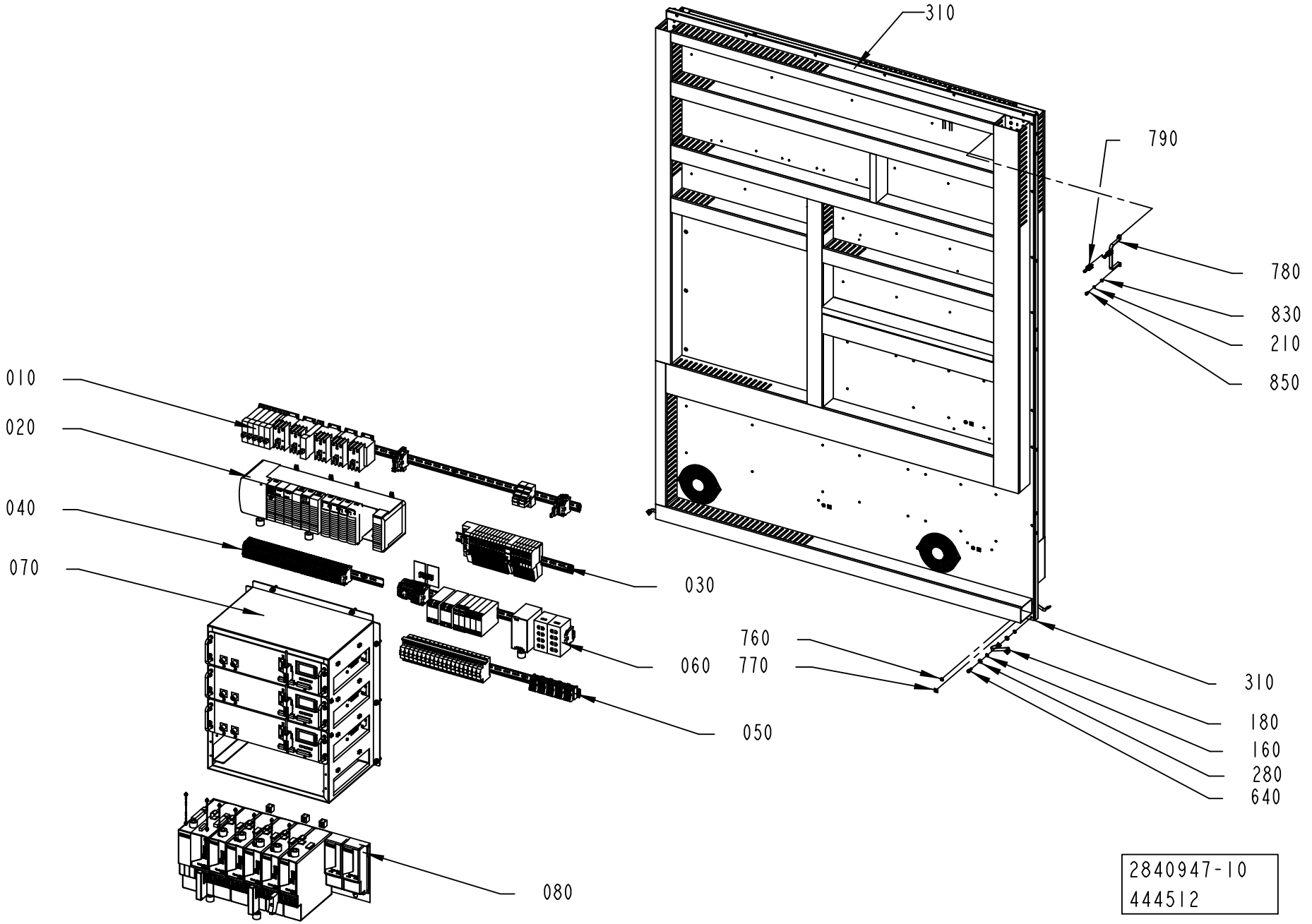
310
790
780
830
210
850
010
020
040
070
030
760
060
770
050
310
180
160
280
640
080
2840947-10
444512

ECM: 454118 - 20100701
Group number: 2840947-0200
Assembly Drawing: 2840947-10_1_AB

This list covers pages from 8-14 to 8-25

Pos	Part No	UN	Qty	Description	Page No
A3/SPEED ASU CE (See drawing on pages: 8-14, 8-16)					
0170	353042-0004	MM	850	RAIL TS 35/7,5	
0200	315402-0136		20	LOCK WASHER FBB 4,1	
0210	315402-0146		12	LOCK WASHER FBB 5,1	
0220	315402-0156		8	LOCK WASHER FBB 6,5	
0230	359705-0015		2	WARNING SIGN ISO, RISK OF ELECTRIC SHOCK	
0270	315105-0136		20	WASHER BRB 4,3X8 RFR	
0610	312115-0291		11	SCREW ISO4762 M4X12 A4 80	
0620	312115-0327		4	Z3REW ISO4762 M5X12 A4 80	
0640	312115-0368		12	SCREW ISO4762 M6X16 A4 80	
0650	312115-0232		5	SCREW ISO4762 M3X25 A4 80	
0660	315105-0153		8	WASHER BRB 6,4X12 RFR	
0690	90195-0020		5	TERMINAL BLOCK, BK 2CRN; 0624720000	
0790	90600-1200		2	SCREEN CLAMPING SADDLE, 790-108	
0820	90135-0039		3	CLAMPING YOKE, KLBU 4-13.5	
0830	315105-0146		12	WASHER BRB 5,3X10 RFR	
T40V9050	90600-5258		1	LINE FILTER, B84143A35R106	
T40V9051	90600-5253		1	LINE FILTER, B84113HB60	
A3/SPEED ASU CSA, A3/SPEED ASU UL (See drawing on pages: 8-18, 8-20)					
0200	315402-0136		20	LOCK WASHER FBB 4,1	
0210	315402-0146		12	LOCK WASHER FBB 5,1	
0220	315402-0156		12	LOCK WASHER FBB 6,5	
0230	359715-0100		2	WARNING SIGN ANSI (H), ELECTRIC SHOCK	
0270	315105-0136		20	WASHER BRB 4,3X8 RFR	
0610	312115-0291		11	SCREW ISO4762 M4X12 A4 80	
0620	312115-0327		4	Z3REW ISO4762 M5X12 A4 80	
0640	312115-0368		16	SCREW ISO4762 M6X16 A4 80	
0650	312115-0232		5	SCREW ISO4762 M3X25 A4 80	
0660	315105-0153		12	WASHER BRB 6,4X12 RFR	
0690	90195-0020		5	TERMINAL BLOCK, BK 2CRN; 0624720000	
0790	90600-1200		2	SCREEN CLAMPING SADDLE, 790-108	
0820	90135-0039		3	CLAMPING YOKE, KLBU 4-13.5	
0830	315105-0146		12	WASHER BRB 5,3X10 RFR	
0880	3108118-0100		1	BAR	**8-27**
0890	3108119-0100		1	BAR	**8-29**
A01T5880	90459-3760		1	TRANSFORMER, 1-PH 700VA SEC 6,36A	
T40V9050	90600-5258		1	LINE FILTER, B84143A35R106	
T40V9051	90600-5253		1	LINE FILTER, B84113HB60	
A3/SPEED ASU PPI CE (See drawing on pages: 8-22, 8-24)					
0170	353042-0004	MM	850	RAIL TS 35/7,5	
0200	315402-0136		20	LOCK WASHER FBB 4,1	
0210	315402-0146		12	LOCK WASHER FBB 5,1	
0220	315402-0156		8	LOCK WASHER FBB 6,5	
0230	359705-0015		2	WARNING SIGN ISO, RISK OF ELECTRIC SHOCK	
0270	315105-0136		20	WASHER BRB 4,3X8 RFR	
0610	312115-0291		11	SCREW ISO4762 M4X12 A4 80	
0620	312115-0327		4	Z3REW ISO4762 M5X12 A4 80	
0640	312115-0368		12	SCREW ISO4762 M6X16 A4 80	
0650	312115-0232		5	SCREW ISO4762 M3X25 A4 80	
0660	315105-0153		8	WASHER BRB 6,4X12 RFR	
0690	90195-0020		5	TERMINAL BLOCK, BK 2CRN; 0624720000	
0790	90600-1200		2	SCREEN CLAMPING SADDLE, 790-108	
0820	90135-0039		3	CLAMPING YOKE, KLBU 4-13.5	
0830	315105-0146		12	WASHER BRB 5,3X10 RFR	
T40V9050	90600-5258		1	LINE FILTER, B84143A35R106	
T40V9051	90600-5253		1	LINE FILTER, B84113HB60	
A3/SPEED ASU PPI CSA, A3/SPEED ASU PPI UL (See drawing on pages: 8-18, 8-20)					
0200	315402-0136		20	LOCK WASHER FBB 4,1	
0210	315402-0146		12	LOCK WASHER FBB 5,1	
0220	315402-0156		12	LOCK WASHER FBB 6,5	
0230	359715-0100		2	WARNING SIGN ANSI (H), ELECTRIC SHOCK	
0270	315105-0136		20	WASHER BRB 4,3X8 RFR	
0610	312115-0291		11	SCREW ISO4762 M4X12 A4 80	
0620	312115-0327		4	Z3REW ISO4762 M5X12 A4 80	
0640	312115-0368		16	SCREW ISO4762 M6X16 A4 80	
0650	312115-0232		5	SCREW ISO4762 M3X25 A4 80	
0660	315105-0153		12	WASHER BRB 6,4X12 RFR	
0690	90195-0020		5	TERMINAL BLOCK, BK 2CRN; 0624720000	
0790	90600-1200		2	SCREEN CLAMPING SADDLE, 790-108	
0820	90135-0039		3	CLAMPING YOKE, KLBU 4-13.5	
0830	315105-0146		12	WASHER BRB 5,3X10 RFR	
0880	3108118-0100		1	BAR	**8-27**
0890	3108119-0100		1	BAR	**8-29**
A01T5880	90459-3760		1	TRANSFORMER, 1-PH 700VA SEC 6,36A	
T40V9050	90600-5258		1	LINE FILTER, B84143A35R106	
T40V9051	90600-5253		1	LINE FILTER, B84113HB60	
Common Parts					
0010	2840929-0200		1	RELAY UNIT	**8-31**
0020	2840930-0100		1	PLC	**8-33**
0030	2840931-0200		1	PLC	**8-35**
0040	2840932-0100		1	PLINTH	**8-37, 8-39**
0050	2840933-0100		1	PLINTH	**8-41, 8-43**
0060	2840934-0200		1	RELAY	**8-45, 8-47**
0070	2840935-0200		1	IH EQUIPMENT	**8-49**

Machine Type | Group Description | Used-In | Group Number | Page No

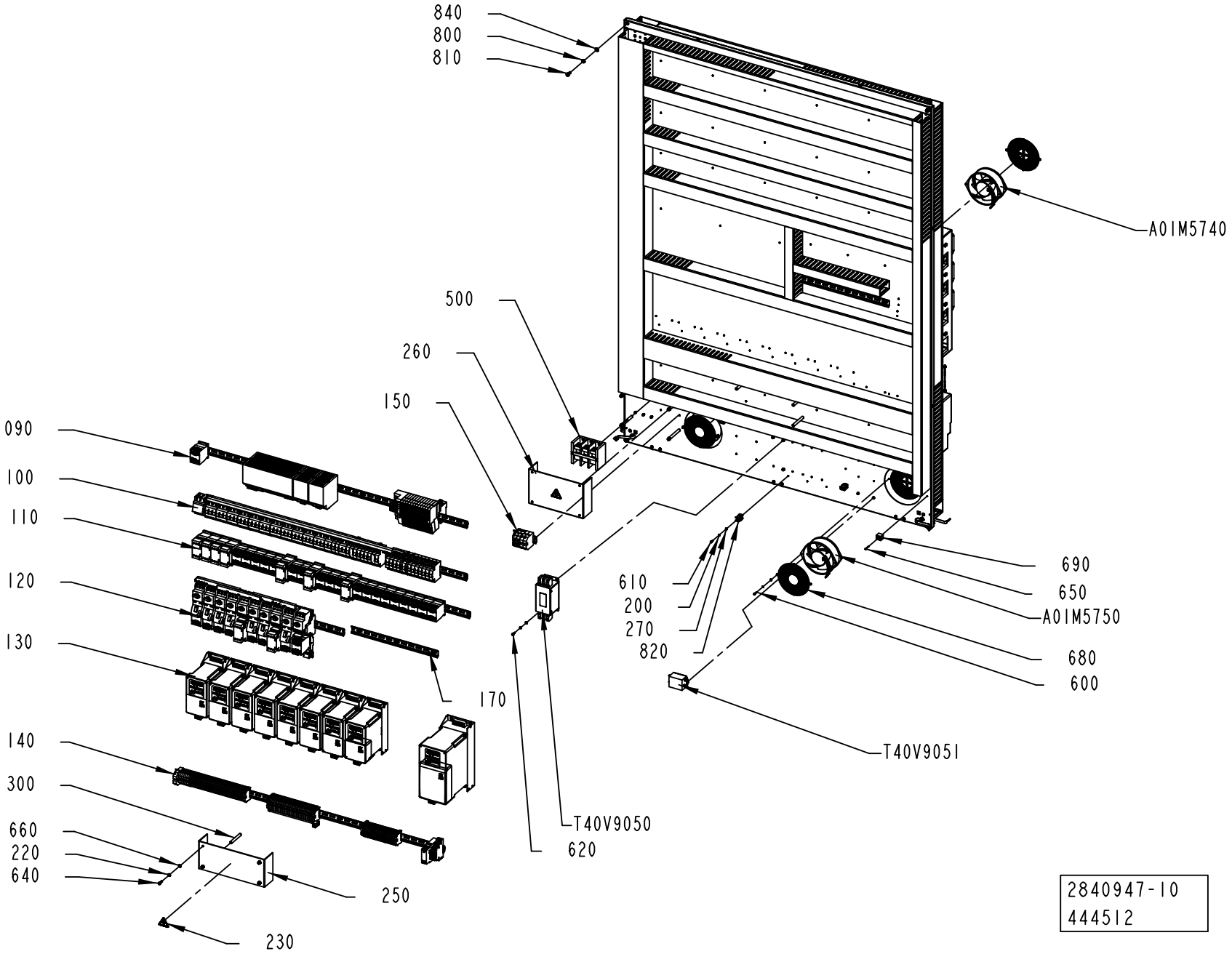
840
800
810
A01M5740
500
260
150
090
100
110
120
130
140
300
660
220
640
250
230
170
610
200
270
820
690
650
A01M5750
680
600
T40V9051
T40V9050
620
2840947-10
444512

Pos	Part No	UN	Qty	Description	Page No
Common Parts (Cont'd)					
0080	2840936-0100		1	MOTOR DRIVE CONTROL	**8-51**
0090	2840938-0200		1	PLC	**8-53, 8-55**
0100	2840939-0200		1	FUSE BOARD 1	**8-57, 8-59**
0110	2840940-0200		1	FUSE BOARD 2	**8-61**
0120	2840941-0200		1	FUSE BOARD 3	**8-63, 8-65**
0130	2840943-0100		1	FREQUENCY CONVERTER WITH ACCESSORIES	**8-67**
0140	2840944-0100		1	PLINTH	**8-69, 8-71**
0150	2840945-0100		1	PLINTH	**8-73**
0160	90062-0022		8	LOCK WASHER D=6,4/11	
0180	90600-2904		4	EARTH BRAID, 250/16/8,5	
0250	2840948-0000		1	COVER	
0260	2986587-0000		1	COVER	
0280	315105-0156		8	WASHER BRB 6,7X14 RFR	
0300	1038275-0012		8	SPACER	
0310	2986586-0100		1	COMPONENT PLATES	**8-75**
0500	90459-0959		1	DISTRIBUTOR BLOCK 1492-PD3163	
0600	312115-0293		8	SCREW ISO4762 M4X16 A4 80	
0680	90457-0057		4	GRID, LZ36	
0760	2608177-0000		7	SIGN	
0770	90194-0152		7	SIGN, EARTH	
0780	90600-1201		1	BUSBAR U-SHAPED, 790-191	
0800	315402-0165		4	LOCK WASHER FBB 8,2	
0810	312115-0449		4	SCREW ISO4762 M8X16 A4 80	
0840	315105-0165		4	WASHER BRB 8,4X16 RFR	
0850	312155-0325		8	SCREW DIN 7991 MF6S M5X10 A4 70	
A01M5740	90457-0056		1	FAN 7450 ES	
A01M5750	90457-0056		1	FAN 7450 ES	

Pos	Part No	UN	Qty	Description	Page No

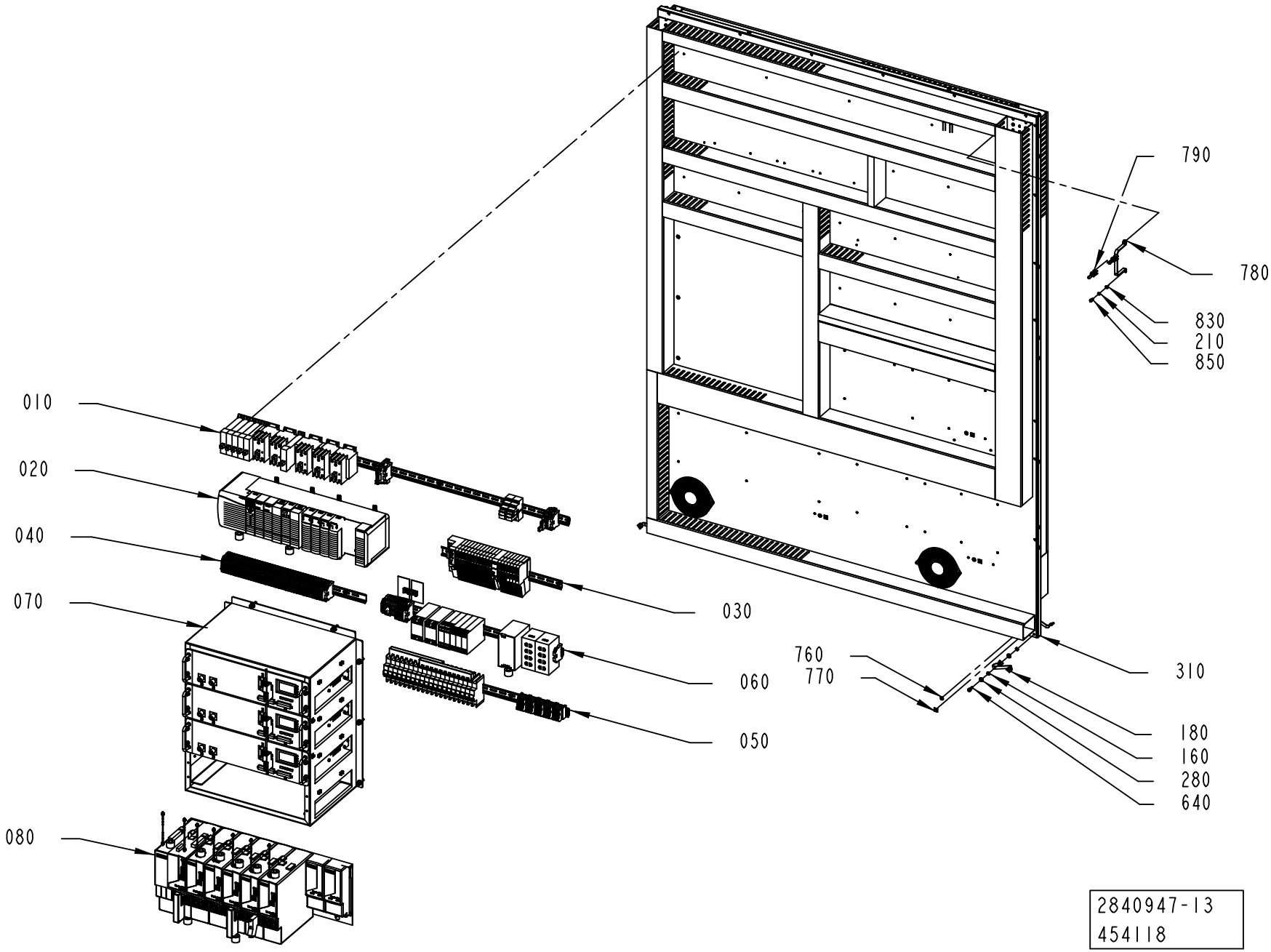
790
780
830
210
850
010
020
040
070
030
060
050
760
770
310
180
160
280
640
080
2840947-13
454118

Pos	Part No	UN	Qty	Description	Page No

SEE PREVIOUS LISTS PAGES: 8-15, 8-17.

Pos	Part No	UN	Qty	Description	Page No

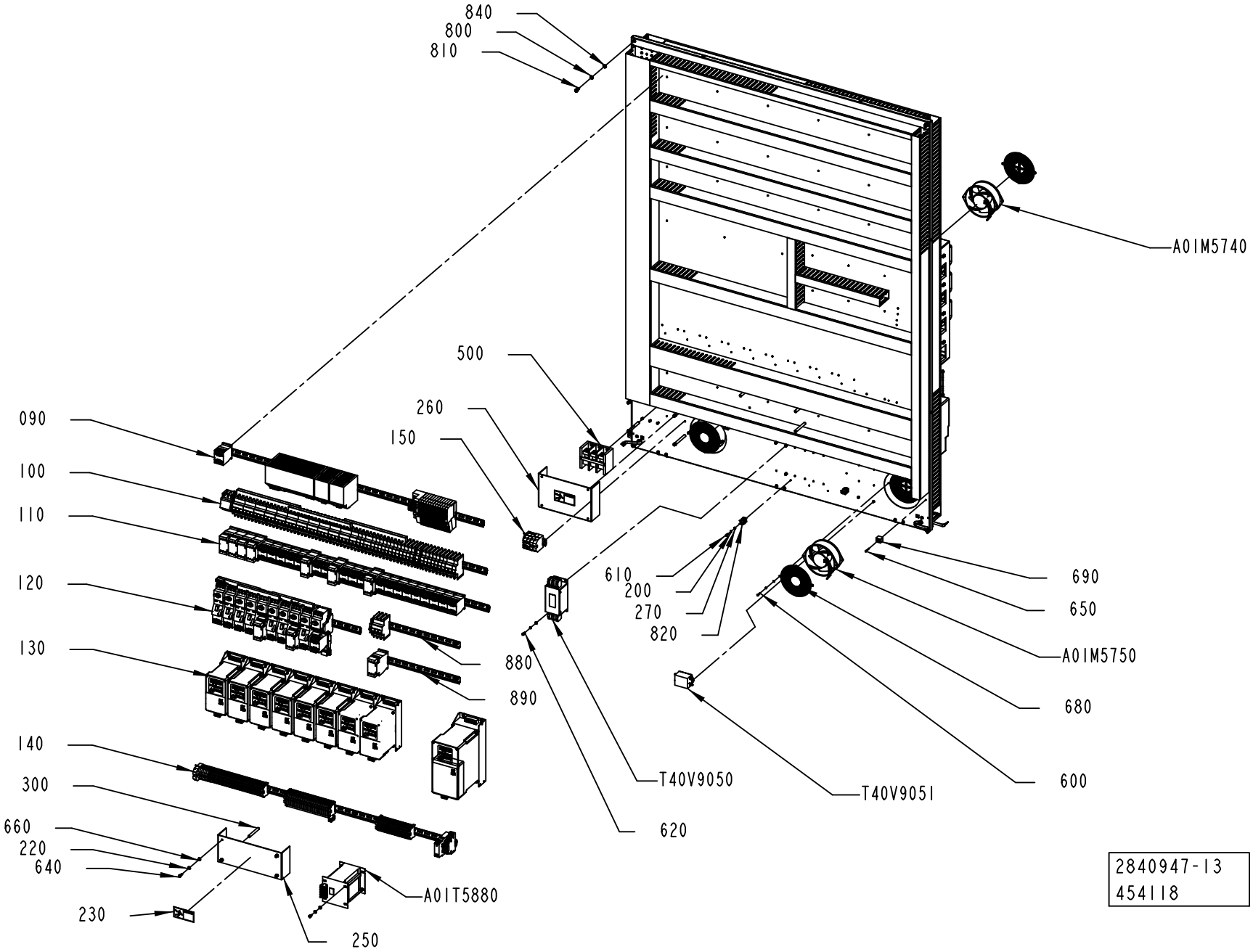
840
800
810
A01M5740
500
260
150
090
100
110
120
130
140
300
660
220
640
230
250
A01T5880
610
200
270
820
880
890
690
650
A01M5750
680
600
T40V9050
T40V9051
620
2840947-13
454118

Pos	Part No	UN	Qty	Description	Page No
SEE PREVIOUS LISTS PAGES: 8-15, 8-17.					

Pos	Part No	UN	Qty	Description	Page No

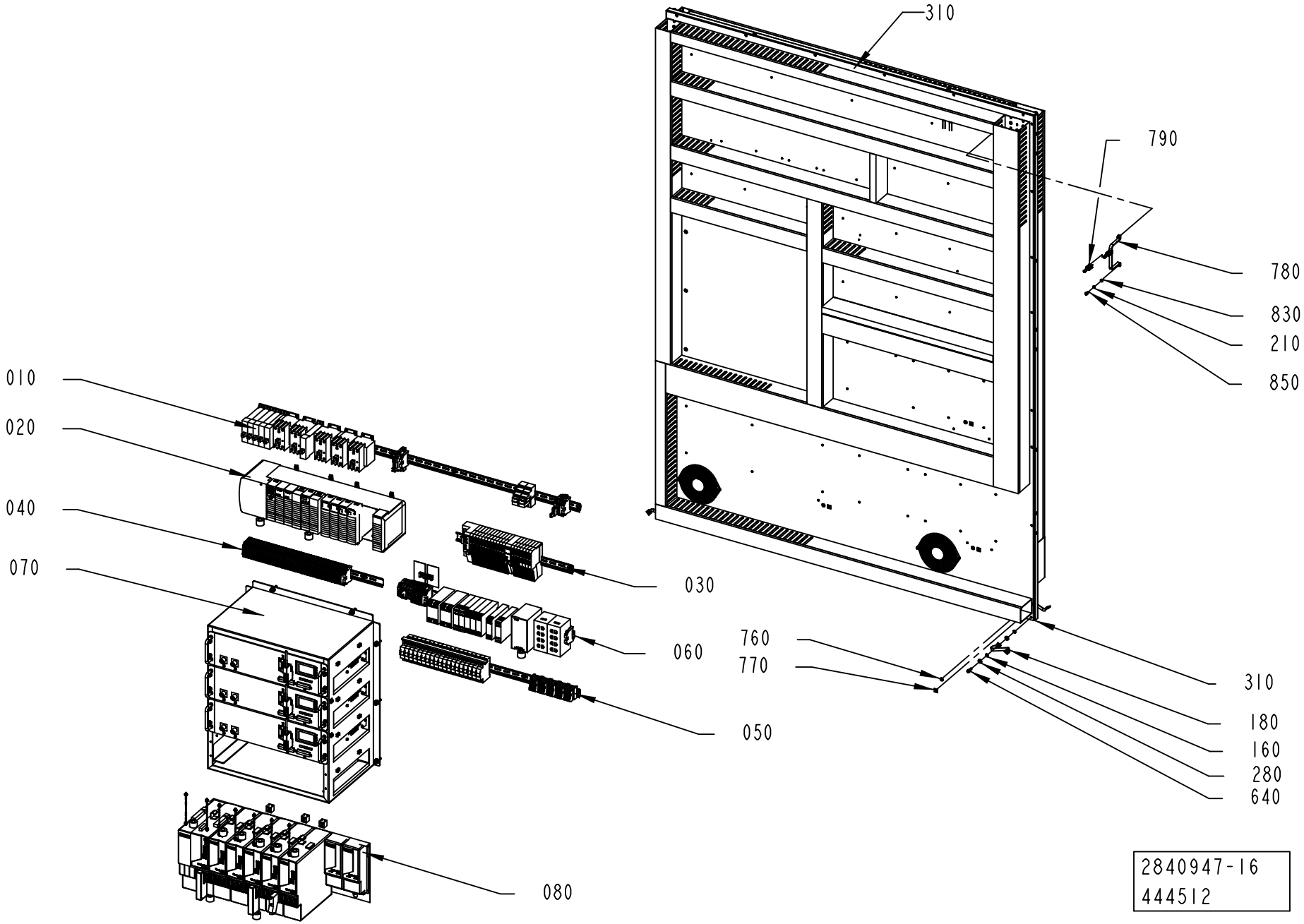
310
790
780
830
210
850
010
020
040
070
030
060
760
770
050
310
180
160
280
640
080
2840947-16
444512

Pos	Part No	UN	Qty	Description	Page No

SEE PREVIOUS LISTS PAGES: 8-15, 8-17.

Pos	Part No	UN	Qty	Description	Page No

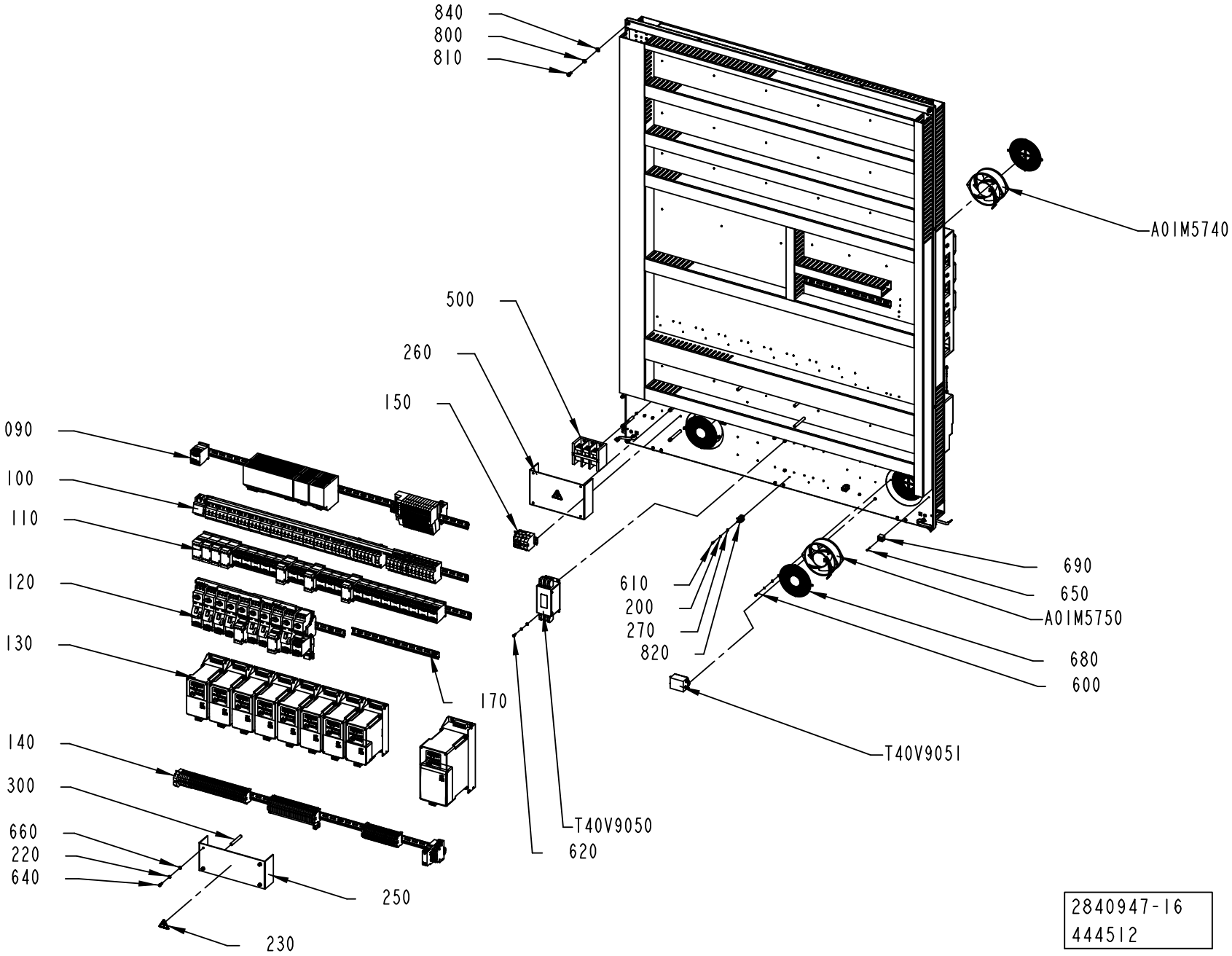
840
800
810
A01M5740
500
260
150
090
100
110
120
130
170
140
300
660
220
640
250
230
610
200
270
820
690
650
A01M5750
680
600
T40V9051
T40V9050
620
2840947-16
444512

Pos	Part No	UN	Qty	Description	Page No
SEE PREVIOUS LISTS PAGES: 8-15, 8-17.					

Pos	Part No	UN	Qty	Description	Page No

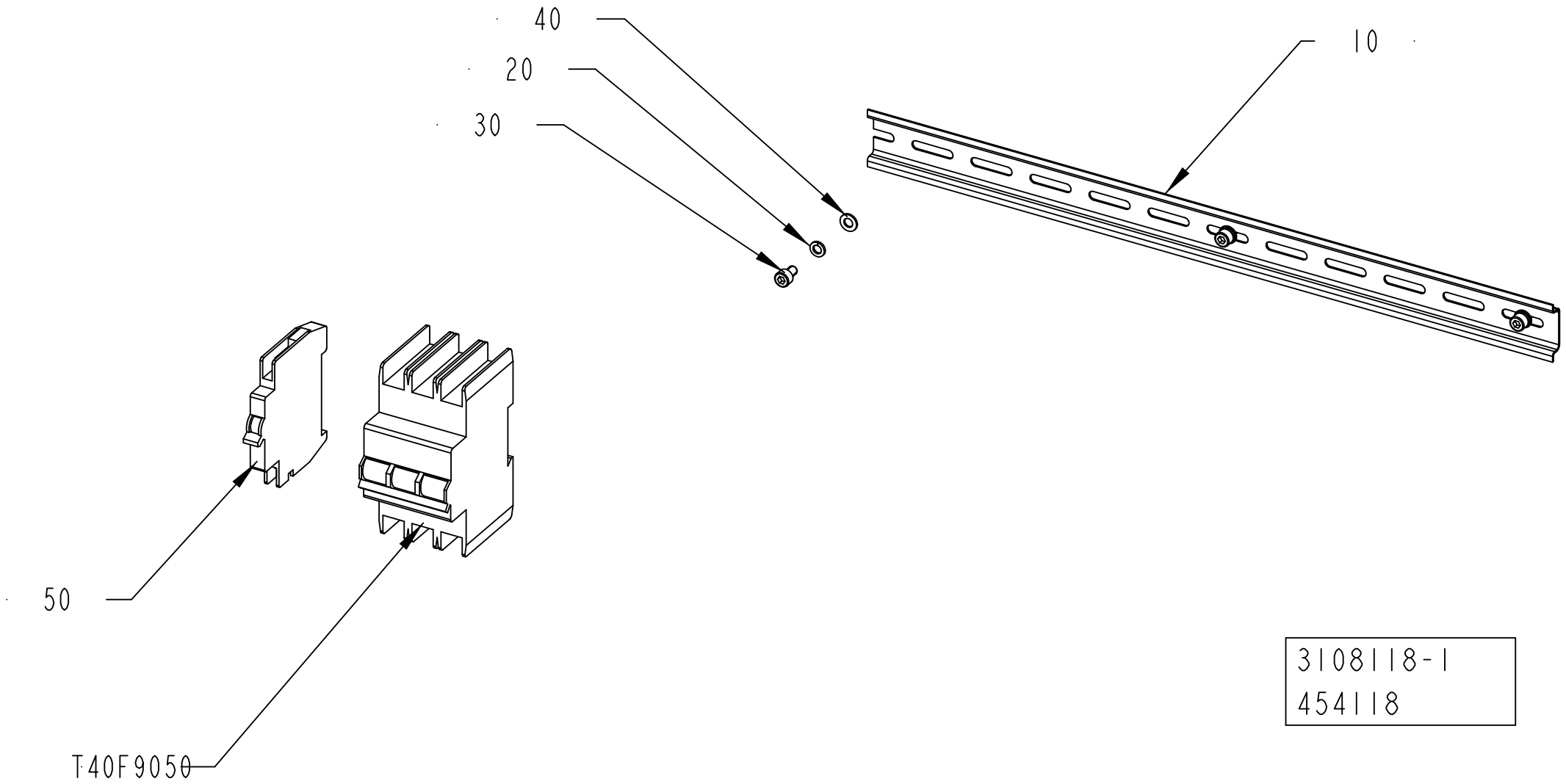
40
20
30
10
50
T40F9050
3108118-1
454118

ECM: 454293 - 20100403
Group number: 3108118-0100
Assembly Drawing: 3108118-1_1_AA

Pos	Part No	UN	Qty	Description	Page No
A3/SPEED					
050	90600-5517		1	AUXILIARY CONTACT, Z-NHK 248434	
T40F9050	315749-0250		1	MINIATURE CIRCUIT BREAKER, FAZ-D25/3-NA	
Common Parts					
010	353042-0004	MM	418	RAIL TS 35/7,5	
020	315402-0146		3	LOCK WASHER FBB 5,1	
030	312115-0323		3	SCREW ISO4762 M5X8 A4 80	
040	315105-0146		3	WASHER BRB 5,3X10 RFR	

Pos	Part No	UN	Qty	Description	Page No

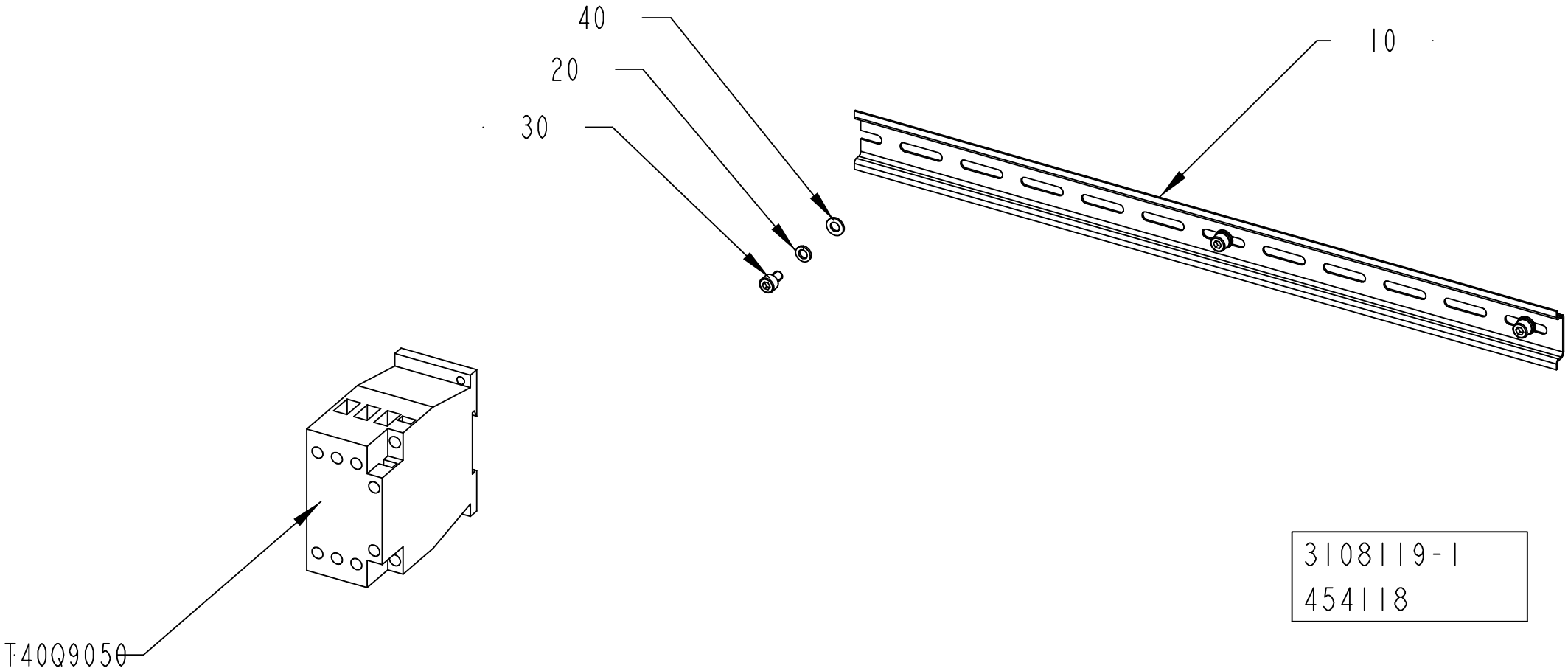
40
20
30
10
T40Q9050
3108119-1
454118

ECM: 454294 - 20100403
Group number: 3108119-0100
Assembly Drawing: 3108119-1_1_AA

Pos	Part No	UN	Qty	Description	Page No
A3/SPEED					
T40Q9050	90459-5444		1	CONTACTOR 15KW 24VDC, DILM32-01	
Common Parts					
010	353042-0004	MM	418	RAIL TS 35/7,5	
020	315402-0146		3	LOCK WASHER FBB 5,1	
030	312115-0323		3	SCREW ISO4762 M5X8 A4 80	
040	315105-0146		3	WASHER BRB 5,3X10 RFR	

Pos	Part No	UN	Qty	Description	Page No

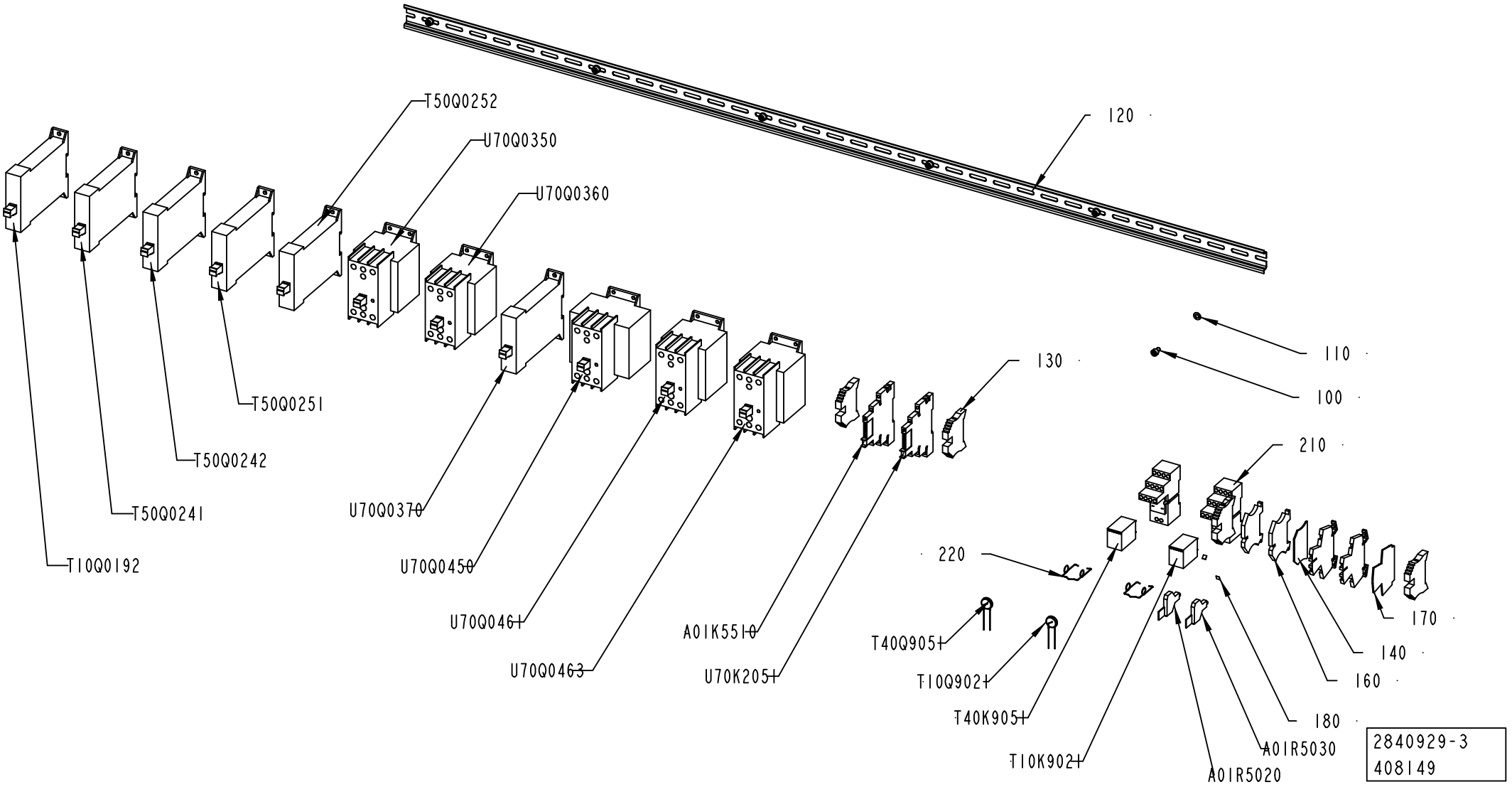
T50Q0252
U70Q0350
U70Q0360
120
T50Q0251
T50Q0242
T50Q0241
T10Q0192
U70Q0370
U70Q0450
U70Q0461
U70Q0463
A01K5510
U70K2051
130
110
100
210
220
T40Q9051
T10Q9021
T40K9051
T10K9021
A01R5020
A01R5030
180
160
140
170
2840929-3
408149

ECM: 444518 - 20100701
Group number: 2840929-0200
Assembly Drawing: 2840929-3_1_AA

Pos	Part No	UN	Qty	Description	Page No
A3/SPEED					
0150	90077-0113		2	FEED THROUGH TERMINAL, 10-00102150-1	
0160	90600-2134		2	TERMINAL DISCONNECATBLE, WTR 2,5/O.TNHE	
0210	90600-1219		2	SOCKET, 700-HN104	
0220	90600-5163		2	RETAINER CLIP, 700-HN114	
Common Parts					
0100	312115-0323		6	SCREW ISO4762 M5X8 A4 80	
0110	315105-0146		6	WASHER BRB 5,3X10 RFR	
0120	353042-0004	MM	1300	RAIL TS 35/7,5	
0130	353031-0203		4	END SUPPORT, WEW 35/2	
0140	353032-0004		1	END PLATE WAP 2,5-10 BEIGE	
0170	353032-0009		1	END PLATE, WAP FOR WDK	
0180	359011-0807		2	MARKING, DEK 5 FW 1-50	
A01K5510	90600-1211		1	TERMINAL BLOCK RELAY, 700-HLT1Z24	
A01R5020	90600-2135		1	MODULE CONNECTOR 250V, BEST/D 1878560000	
A01R5030	90600-2135		1	MODULE CONNECTOR 250V, BEST/D 1878560000	
T10K9021	90600-1214		1	SOLID STATE RELAY, 700-SCNN3Z26	
T40K9051	90600-1214		1	SOLID STATE RELAY, 700-SCNN3Z26	
T10Q0192	90600-0943		1	SOLID STATE RELAY, 3RF2320-1AA04	
T10Q9021	90601-2686		1	VARISTOR FILTER, B72210S0250K101	
T40Q9051	90601-2686		1	VARISTOR FILTER, B72210S0250K101	
T50Q0241	90600-0943		1	SOLID STATE RELAY, 3RF2320-1AA04	
T50Q0242	90600-0943		1	SOLID STATE RELAY, 3RF2320-1AA04	
T50Q0251	90600-0943		1	SOLID STATE RELAY, 3RF2320-1AA04	
T50Q0252	90600-0943		1	SOLID STATE RELAY, 3RF2320-1AA04	
U70K2051	90600-1211		1	TERMINAL BLOCK RELAY, 700-HLT1Z24	
U70Q0350	90600-0947		1	SOLID STATE CONTACTOR, 3RF2420-1AB45	
U70Q0360	90600-0947		1	SOLID STATE CONTACTOR, 3RF2420-1AB45	
U70Q0370	90600-0943		1	SOLID STATE RELAY, 3RF2320-1AA04	
U70Q0450	90600-0948		1	SOLID STATE CONTACTOR, 3RF2430-1AB45	
U70Q0461	90600-0947		1	SOLID STATE CONTACTOR, 3RF2420-1AB45	
U70Q0463	90600-0947		1	SOLID STATE CONTACTOR, 3RF2420-1AB45	

Pos	Part No	UN	Qty	Description	Page No

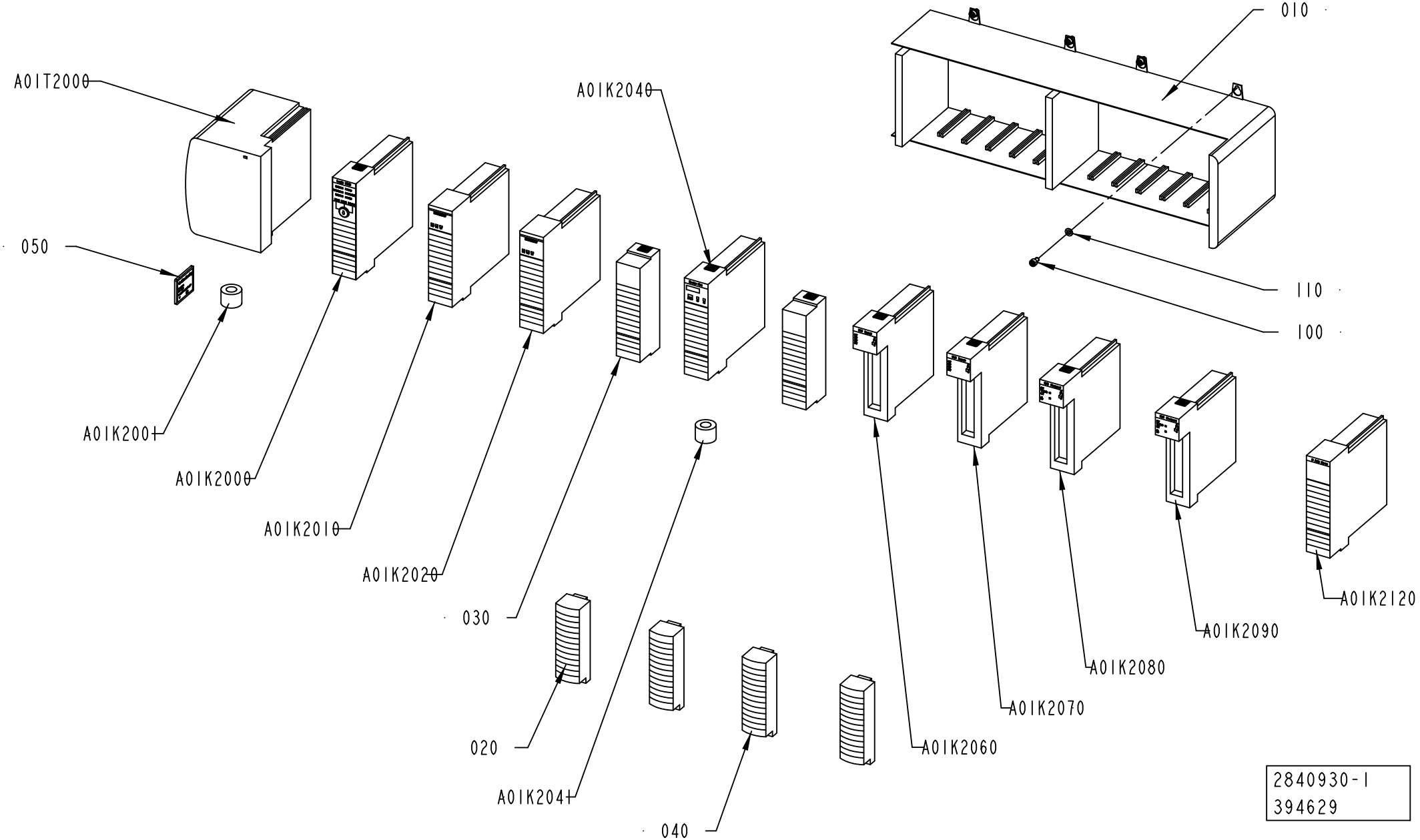
010
A01T2000
A01K2040
050
110
100
A01K2001
A01K2000
A01K2010
A01K2020
030
A01K2120
A01K2090
A01K2080
A01K2070
A01K2060
020
A01K2041
040
2840930-1
394629

ECM: 428629 - 20100402
Group number: 2840930-0100
Assembly Drawing: 2840930-1_1_AC

Pos	Part No	UN	Qty	Description	Page No
A3/SPEED					
A01K2120	90459-2480		1	8-AXIS SERCOS MOTION MODULE	
Common Parts					
0010	90459-2459		1	BASEPLATE, 13 SLOT CONTROLLOGIX CHASSIS	
0020	90459-2488		3	REMOVABLE TERMINAL BLOCK 36 POINTS	
0030	90459-5044		2	PLC EMPTY SLOT FILLER, 1756-N2 SERIE A	
0040	90459-2487		1	REMOVABLE TERMINAL BLOCK 20 POINTS	
0050	90459-3145		1	FLASH MEMORY 64MBYTE, 1784-CF64	
0100	312115-0323		8	SCREW ISO4762 M5X8 A4 80	
0110	315105-0146		8	WASHER BRB 5,3X10 RFR	
A01K2000	90459-6559		1	PROCESSOR L63, SERIES B, 1756-L63/B	
	90459-6726		*1*	*SPARE BATTERY FOR CONTROLLOGIX, 1756-BA2*	
A01K2001	90600-5249		1	FERRITE, B64290L616X38	
A01K2010	90459-2477		1	ETHERNET I/P BRIDGE MODULE, 1756-ENBT	
A01K2020	90459-2477		1	ETHERNET I/P BRIDGE MODULE, 1756-ENBT	
A01K2040	90600-5840		1	PLC DEVICEN. BR./SCAN MOD, 1756-DNB, D	
A01K2041	90600-5249		1	FERRITE, B64290L616X38	
A01K2060	90459-6556		1	PLC DIGITAL INPUT 32PTS, 1756-IB32/B	
A01K2070	90459-6556		1	PLC DIGITAL INPUT 32PTS, 1756-IB32/B	
A01K2080	90459-2474		1	PLC,DIGIT. OUTPUT MODULE 16 PTS 10-31VDC	
A01K2090	90600-4033		1	DIGITAL OUTPUT MODULE, 1756-OB16IS	
A01T2000	90459-7267		1	POWER SUPPLY 24VDC, 1756-PB75/B	

Pos	Part No	UN	Qty	Description	Page No

Machine Type | Group Description | Used-In | Group Number | Page No

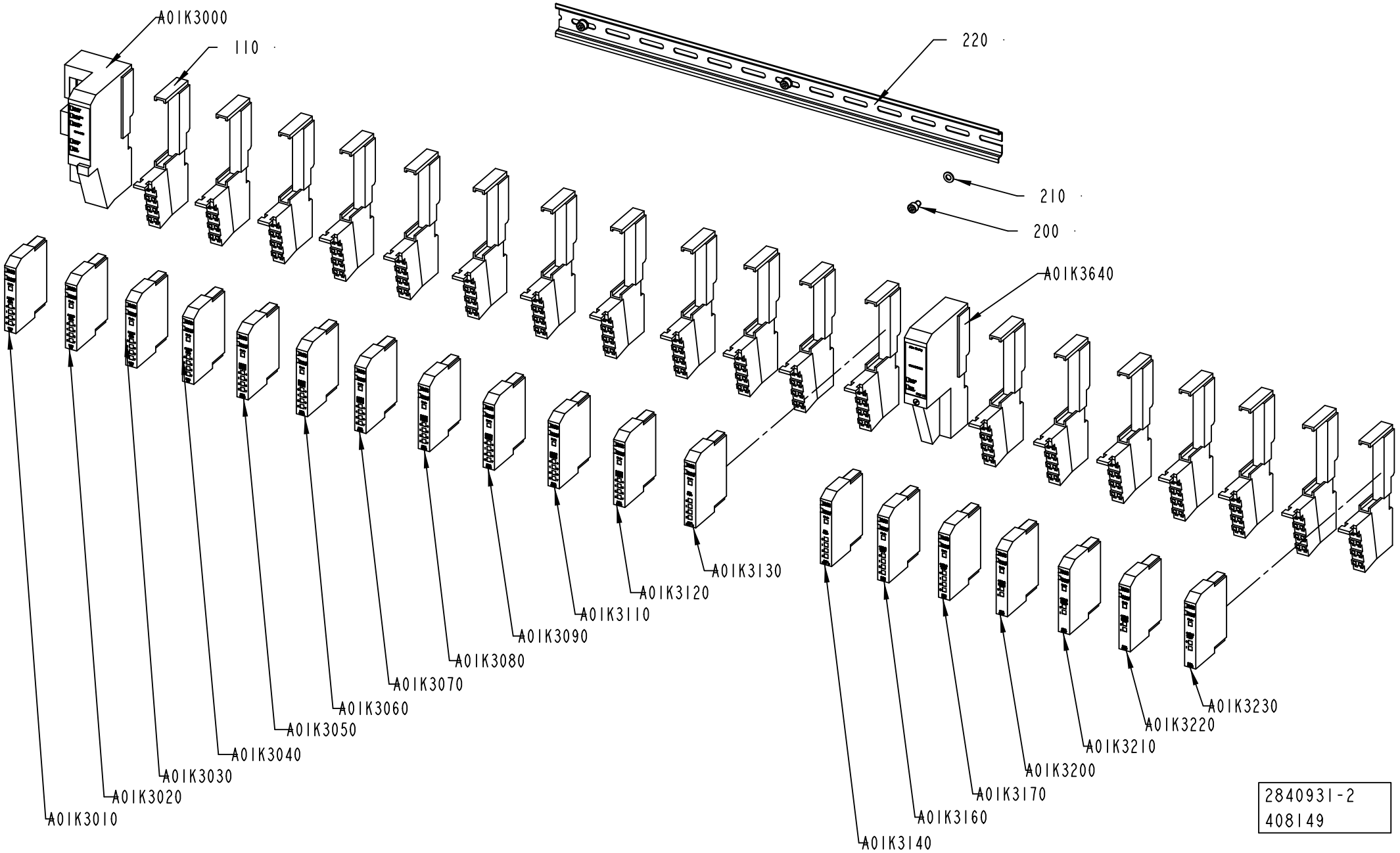
A01K3000
110
220
210
200
A01K3640
A01K3130
A01K3120
A01K3110
A01K3090
A01K3080
A01K3070
A01K3060
A01K3050
A01K3040
A01K3030
A01K3020
A01K3010
A01K3230
A01K3220
A01K3210
A01K3200
A01K3170
A01K3160
A01K3140
2840931-2
408149

ECM: 428630 - 20100402
Group number: 2840931-0200
Assembly Drawing: 2840931-2_1_AA

Pos	Part No	UN	Qty	Description	Page No
-					
0100	90459-5574		1	DEVICENET OPEN STYLE CONN, 1787-PLUG10R	
0110	90459-2526		19	REMOTE I/O BASE MODULE 8 POINTS, 1734-TB	
0200	312115-0323		3	SCREW ISO4762 M5X8 A4 80	
0210	315105-0146		3	WASHER BRB 5,3X10 RFR	
0220	353042-0004	MM	470	RAIL TS 35/7,5	
A01K3000	90459-2494		1	DEVICENET I/O ADAPTER MODULE, 1734-ADN	
A01K3010	90459-6561		1	DIGITAL INPUT 8 PTS SINK, 1734-IB8/C	
A01K3020	90459-6561		1	DIGITAL INPUT 8 PTS SINK, 1734-IB8/C	
A01K3030	90459-6561		1	DIGITAL INPUT 8 PTS SINK, 1734-IB8/C	
A01K3040	90459-6561		1	DIGITAL INPUT 8 PTS SINK, 1734-IB8/C	
A01K3050	90459-6560		1	DIGITAL OUTPUT 8 PTS, 1734-OB8E/C	
A01K3060	90459-6560		1	DIGITAL OUTPUT 8 PTS, 1734-OB8E/C	
A01K3070	90459-6560		1	DIGITAL OUTPUT 8 PTS, 1734-OB8E/C	
A01K3080	90459-6560		1	DIGITAL OUTPUT 8 PTS, 1734-OB8E/C	
A01K3090	90459-6560		1	DIGITAL OUTPUT 8 PTS, 1734-OB8E/C	
A01K3110	90459-6560		1	DIGITAL OUTPUT 8 PTS, 1734-OB8E/C	
A01K3120	90459-6560		1	DIGITAL OUTPUT 8 PTS, 1734-OB8E/C	
A01K3130	90459-5261		1	REMOTE I/O, RELAY OUTP. 4 PTS,1734-OW4/C	
A01K3140	90459-5261		1	REMOTE I/O, RELAY OUTP. 4 PTS,1734-OW4/C	
A01K3160	90459-2509		1	REMOTE I/O ANALOG INPUT CURRENT 2 PTS	
A01K3170	90459-2509		1	REMOTE I/O ANALOG INPUT CURRENT 2 PTS	
A01K3200	90459-2510		1	ANALOG OUTP. VOLT. 2PTS, 1734-OE2V SER.C	
A01K3210	90459-2510		1	ANALOG OUTP. VOLT. 2PTS, 1734-OE2V SER.C	
A01K3220	90459-2510		1	ANALOG OUTP. VOLT. 2PTS, 1734-OE2V SER.C	
A01K3230	90459-2511		1	REMOTE I/O ANALOG OUTPUT CURRENT 2PTS	
A01K3640	90459-2500		1	EXPANSION POWER SUPPLY MODULE	

Pos	Part No	UN	Qty	Description	Page No

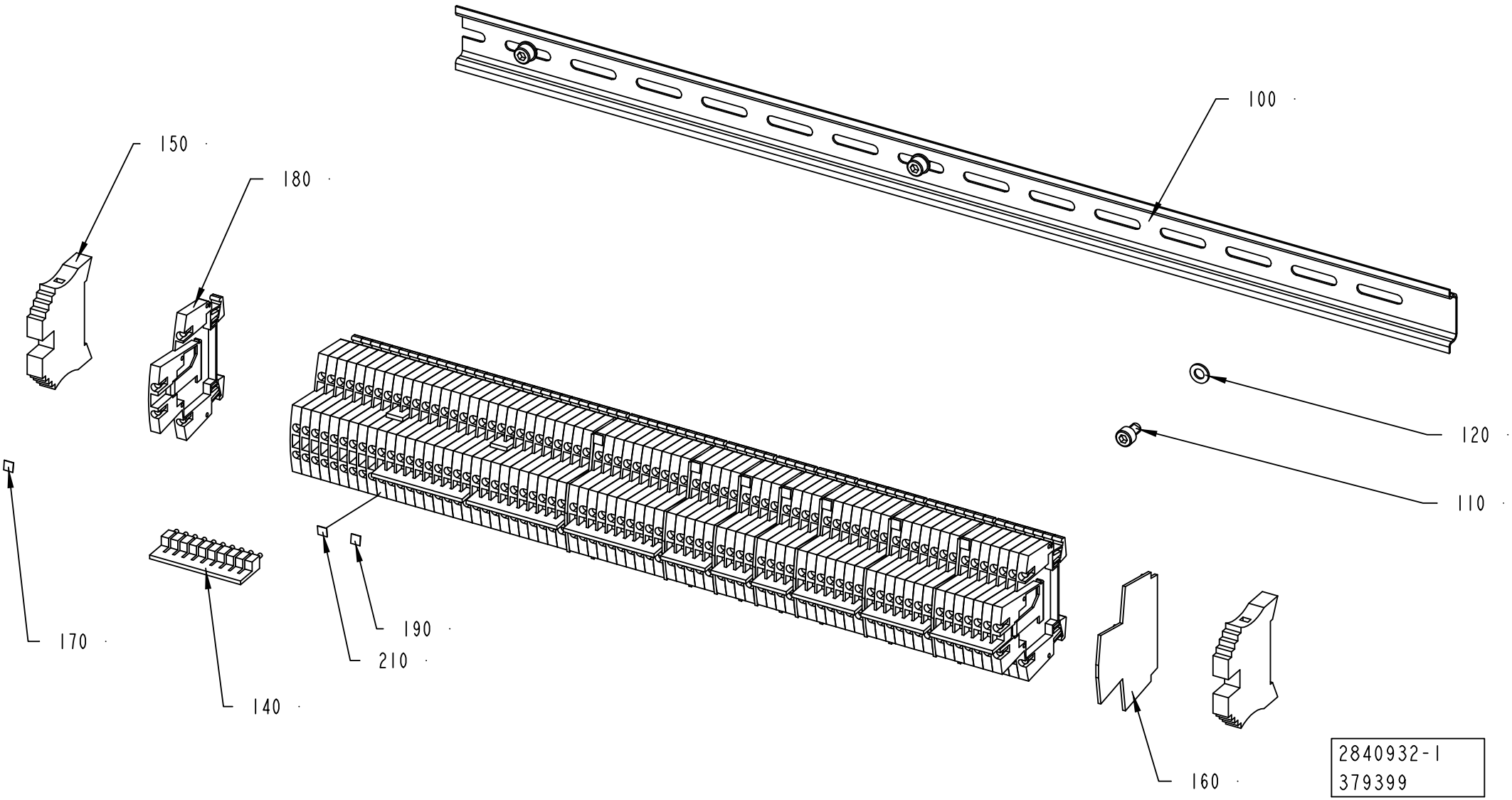
100
150
180
120
110
170
190
210
140
160
2840932-1
379399

ECM: 454288 - 20100403
Group number: 2840932-0100
Assembly Drawing: 2840932-1_1_AC

This list covers pages from 8-36 to 8-39

Pos	Part No	UN	Qty	Description	Page No
CE (See drawing on page: 8-36)					
0140	353034-0030		12	BRIDGE CONNECTOR WQV 2,5/10, 10544.6	
0150	353031-0203		2	END SUPPORT, WEW 35/2	
UL, CSA (See drawing on page: 8-38)					
0140	353034-0030		14	BRIDGE CONNECTOR WQV 2,5/10, 10544.6	
0150	353031-0203		4	END SUPPORT, WEW 35/2	
0220	353021-0212		4	FEED THROUGH TERMINAL, 10200.0	
0230	353032-0004		2	END PLATE WAP 2,5-10 BEIGE	
0240	359011-0807		2	MARKING, DEK 5 FW 1-50	
Common Parts					
0100	353042-0004	MM	546	RAIL TS 35/7,5	
0110	312115-0323		3	SCREW ISO4762 M5X8 A4 80	
0120	315105-0146		3	WASHER BRB 5,3X10 RFR	
0160	353032-0009		8	END PLATE, WAP FOR WDK	
0170	359011-0809		8	MARKING, DEK 5 FW 101-150	
0180	90459-5253		74	FEED THROUGH TERMINAL, WDK 2,5V	
0190	359011-0810		1	MARKING, DEK 5 FW 151-200	
0200	90459-6859		2	HOUS.SIZE 6-24B HAN-SNAP, 09 33 000 9980	
0210	359011-0811		1	MARKING, DEK 5 FW 201-250	
F01X5600	90110-0057		1	FEMALE INSERT HAN 24 E 09 33 002 4201	

Pos	Part No	UN	Qty	Description	Page No

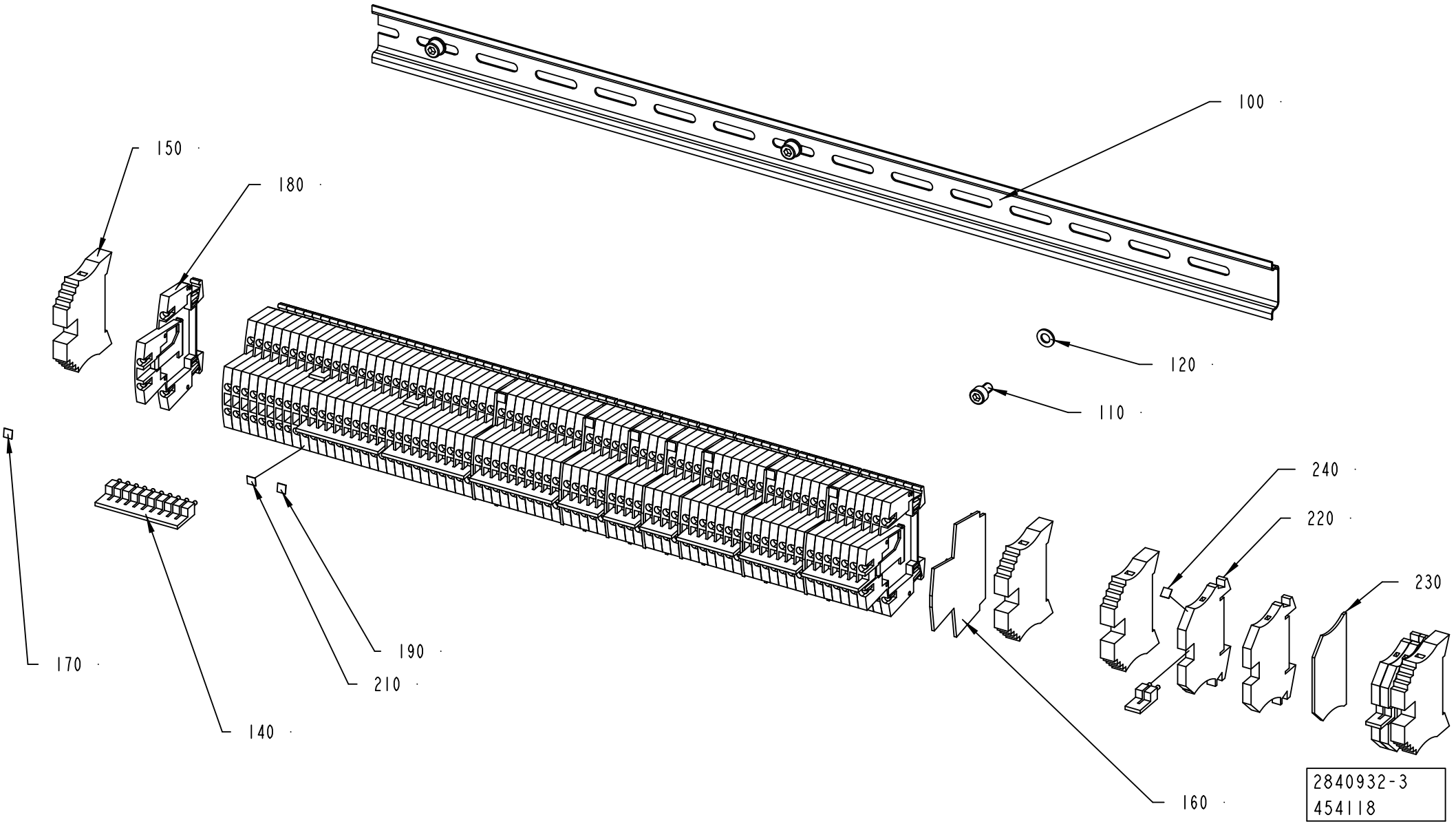
100
150
180
120
110
240
220
230
170
190
210
140
160
2840932-3
454118

ECM: 454288 - 20100403
Group number: 2840932-0100
Assembly Drawing: 2840932-3_1_AA

This list covers pages from 8-36 to 8-39

Pos	Part No	UN	Qty	Description	Page No
CE (See drawing on page: 8-36)					
0140	353034-0030		12	BRIDGE CONNECTOR WQV 2,5/10, 10544.6	
0150	353031-0203		2	END SUPPORT, WEW 35/2	
UL, CSA (See drawing on page: 8-38)					
0140	353034-0030		14	BRIDGE CONNECTOR WQV 2,5/10, 10544.6	
0150	353031-0203		4	END SUPPORT, WEW 35/2	
0220	353021-0212		4	FEED THROUGH TERMINAL, 10200.0	
0230	353032-0004		2	END PLATE WAP 2,5-10 BEIGE	
0240	359011-0807		2	MARKING, DEK 5 FW 1-50	
Common Parts					
0100	353042-0004	MM	546	RAIL TS 35/7,5	
0110	312115-0323		3	SCREW ISO4762 M5X8 A4 80	
0120	315105-0146		3	WASHER BRB 5,3X10 RFR	
0160	353032-0009		8	END PLATE, WAP FOR WDK	
0170	359011-0809		8	MARKING, DEK 5 FW 101-150	
0180	90459-5253		74	FEED THROUGH TERMINAL, WDK 2,5V	
0190	359011-0810		1	MARKING, DEK 5 FW 151-200	
0200	90459-6859		2	HOUS.SIZE 6-24B HAN-SNAP, 09 33 000 9980	
0210	359011-0811		1	MARKING, DEK 5 FW 201-250	
F01X5600	90110-0057		1	FEMALE INSERT HAN 24 E 09 33 002 4201	

Pos	Part No	UN	Qty	Description	Page No

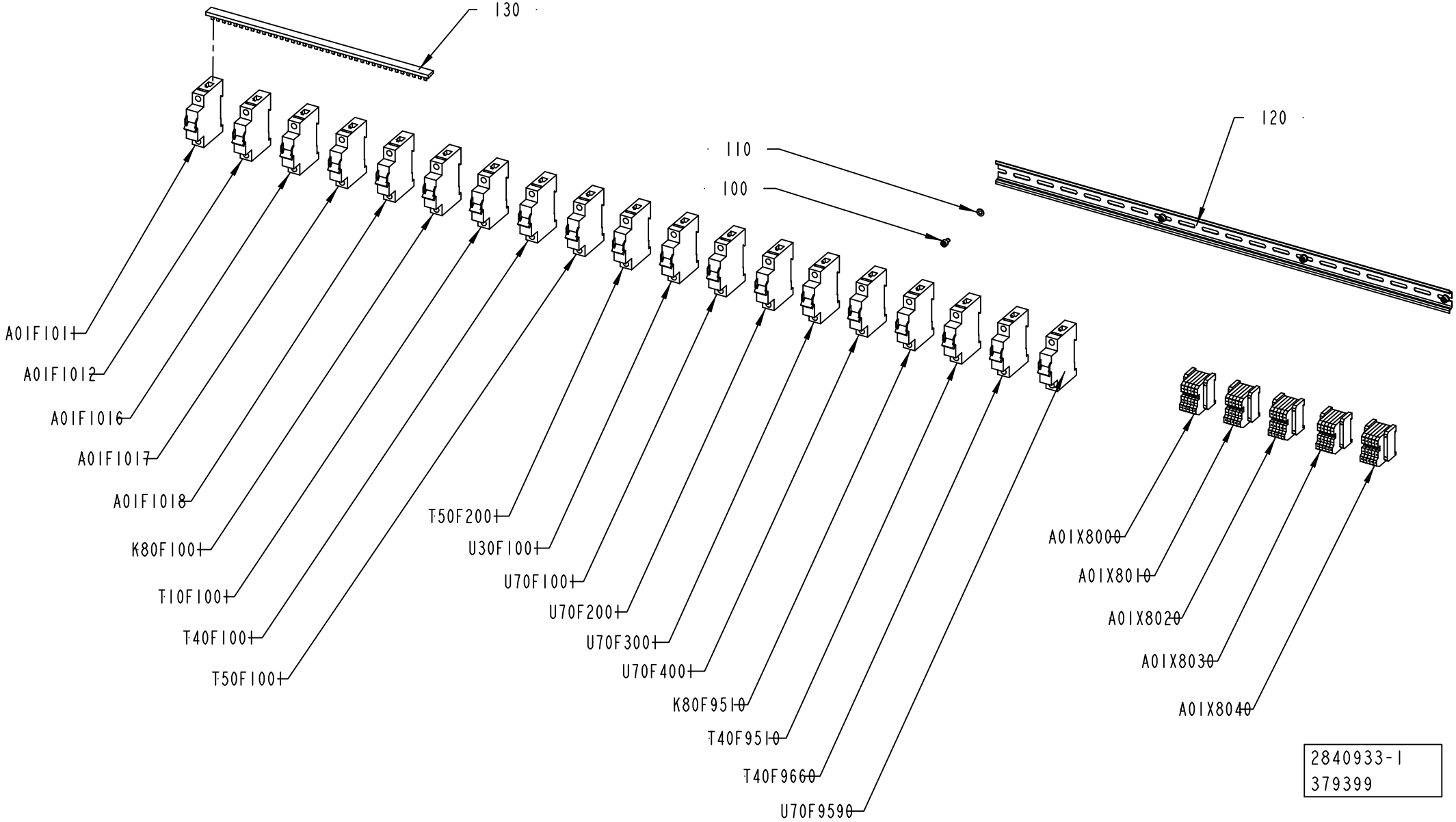
130
120
110
100
A01F1011
A01F1012
A01F1016
A01F1017
A01F1018
K80F1001
T10F1001
T40F1001
T50F1001
T50F2001
U30F1001
U70F1001
U70F2001
U70F3001
U70F4001
K80F9510
T40F9510
T40F9660
U70F9590
A01X8000
A01X8010
A01X8020
A01X8030
A01X8040
2840933-1
379399

ECM: 454118 - 20100403
Group number: 2840933-0100
Assembly Drawing: 2840933-1_1_AC

This list covers pages from 8-40 to 8-43

Pos	Part No	UN	Qty	Description	Page No
A3/SPEED CE (See drawing on page: 8-40)					
0130	90459-5883	MM	340	COMMONING BUSBAR, 1-P 1-PH 1X57 MOD 63A	
A01F1011	351416-0060		1	MINIATURE CIRC. BREAK., FAZ -D6 1-POLE	
A01F1012	351416-0060		1	MINIATURE CIRC. BREAK., FAZ -D6 1-POLE	
A01F1016	351416-0100		1	MINIATURE CIRC. BREAK., FAZ -D10 1-POLE	
A01F1017	351416-0060		1	MINIATURE CIRC. BREAK., FAZ -D6 1-POLE	
A01F1018	351416-0160		1	MINIATURE CIRC. BREAK., FAZ -D16 1-POLE	
K80F1001	351416-0040		1	MINIATURE CIRC. BREAK., FAZ -D4 1-POLE	
K80F9510	351416-0005		1	MINIATURE CIRC. BREAK., FAZ-D0,5 1-POLE	
T10F1001	351416-0040		1	MINIATURE CIRC. BREAK., FAZ -D4 1-POLE	
T40F1001	351416-0040		1	MINIATURE CIRC. BREAK., FAZ -D4 1-POLE	
T40F9510	351416-0005		1	MINIATURE CIRC. BREAK., FAZ-D0,5 1-POLE	
T40F9660	351416-0060		1	MINIATURE CIRC. BREAK., FAZ -D6 1-POLE	
T50F1001	351416-0040		1	MINIATURE CIRC. BREAK., FAZ -D4 1-POLE	
T50F2001	351416-0040		1	MINIATURE CIRC. BREAK., FAZ -D4 1-POLE	
U30F1001	351416-0040		1	MINIATURE CIRC. BREAK., FAZ -D4 1-POLE	
U70F1001	351416-0040		1	MINIATURE CIRC. BREAK., FAZ -D4 1-POLE	
U70F2001	351416-0040		1	MINIATURE CIRC. BREAK., FAZ -D4 1-POLE	
U70F3001	351416-0040		1	MINIATURE CIRC. BREAK., FAZ -D4 1-POLE	
U70F4001	351416-0040		1	MINIATURE CIRC. BREAK., FAZ -D4 1-POLE	
U70F9590	351416-0060		1	MINIATURE CIRC. BREAK., FAZ -D6 1-POLE	
A3/SPEED CSA, A3/SPEED UL (See drawing on page: 8-42)					
0130	90600-5519		2	BUSBAR, Z-SV/UL-16/1P-1TE/12 104893	
A01F1011	315747-0060		1	MINIATURE CIRCUIT BREAKER, FAZ-D6/1-NA	
A01F1012	315747-0060		1	MINIATURE CIRCUIT BREAKER, FAZ-D6/1-NA	
A01F1016	315747-0100		1	MINIATURE CIRCUIT BREAKER, FAZ-D10/1-NA	
A01F1017	315747-0060		1	MINIATURE CIRCUIT BREAKER, FAZ-D6/1-NA	
A01F1018	315747-0160		1	MINIATURE CIRCUIT BREAKER, FAZ-D16/1-NA	
A01F5530	315747-0040		1	MINIATURE CIRCUIT BREAKER, FAZ-D4/1-NA	
K80F1001	315747-0040		1	MINIATURE CIRCUIT BREAKER, FAZ-D4/1-NA	
K80F9510	315747-0005		1	MINIATURE CIRCUIT BREAKER, FAZ-D0,5/1-NA	
T10F1001	315747-0040		1	MINIATURE CIRCUIT BREAKER, FAZ-D4/1-NA	
T40F1001	315747-0040		1	MINIATURE CIRCUIT BREAKER, FAZ-D4/1-NA	
T40F9510	315747-0005		1	MINIATURE CIRCUIT BREAKER, FAZ-D0,5/1-NA	
T40F9660	315747-0060		1	MINIATURE CIRCUIT BREAKER, FAZ-D6/1-NA	
T50F1001	315747-0040		1	MINIATURE CIRCUIT BREAKER, FAZ-D4/1-NA	
T50F2001	315747-0040		1	MINIATURE CIRCUIT BREAKER, FAZ-D4/1-NA	
U30F1001	315747-0040		1	MINIATURE CIRCUIT BREAKER, FAZ-D4/1-NA	
U70F1001	315747-0040		1	MINIATURE CIRCUIT BREAKER, FAZ-D4/1-NA	
U70F2001	315747-0040		1	MINIATURE CIRCUIT BREAKER, FAZ-D4/1-NA	
U70F3001	315747-0040		1	MINIATURE CIRCUIT BREAKER, FAZ-D4/1-NA	
U70F4001	315747-0040		1	MINIATURE CIRCUIT BREAKER, FAZ-D4/1-NA	
U70F9590	315747-0060		1	MINIATURE CIRCUIT BREAKER, FAZ-D6/1-NA	
Common Parts					
0100	312115-0323		4	SCREW ISO4762 M5X8 A4 80	
0110	315105-0146		4	WASHER BRB 5,3X10 RFR	
0120	353042-0004	MM	694	RAIL TS 35/7,5	
A01X8000	90459-2519		1	OPEN STYLE TAP	
A01X8010	90459-2519		1	OPEN STYLE TAP	
A01X8020	90459-2519		1	OPEN STYLE TAP	
A01X8030	90459-2519		1	OPEN STYLE TAP	
A01X8040	90459-2519		1	OPEN STYLE TAP	

Machine Type | Group Description | Used-In | Group Number | Page No

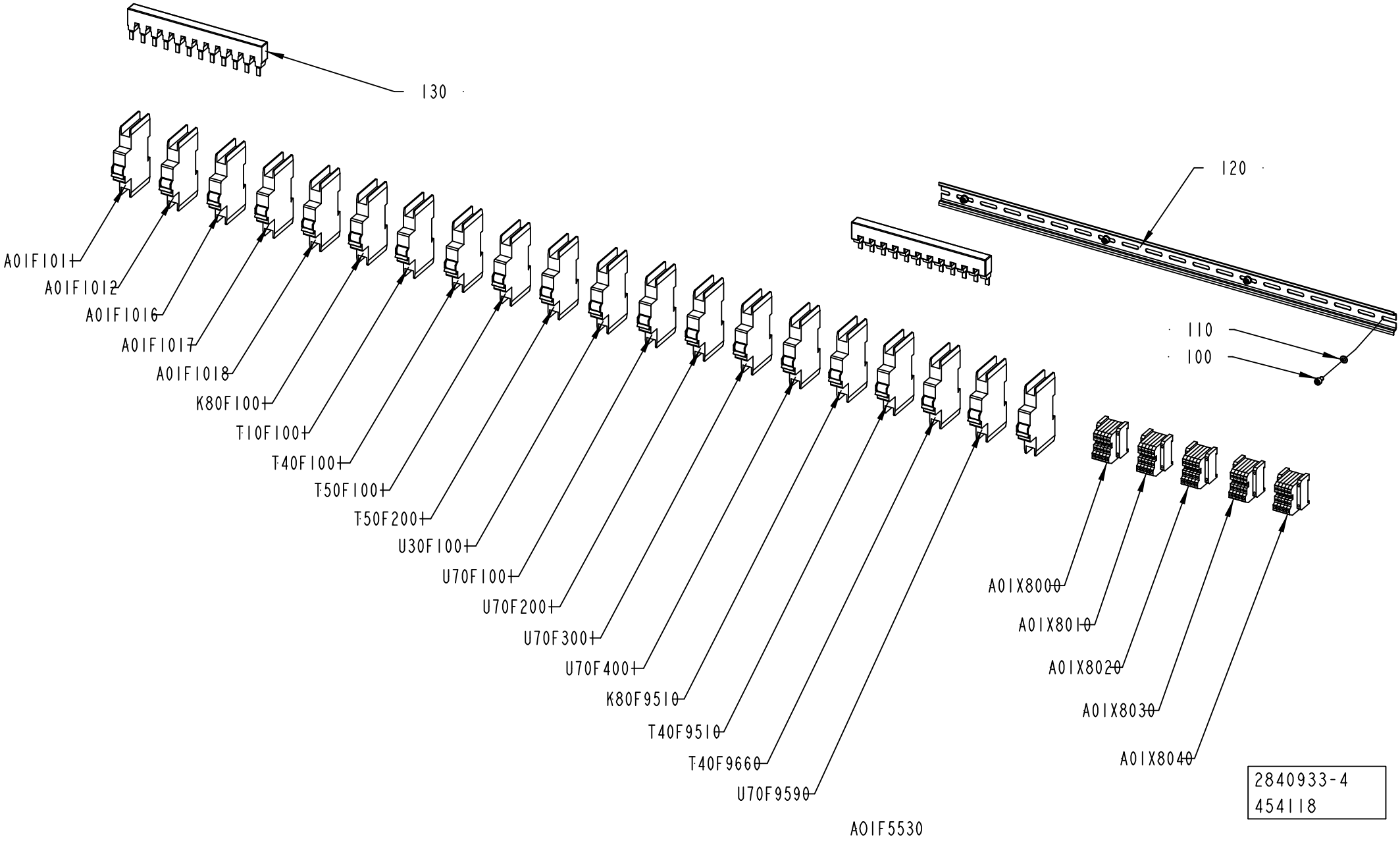
130
120
110
100
A01F1011
A01F1012
A01F1016
A01F1017
A01F1018
K80F1001
T10F1001
T40F1001
T50F1001
T50F2001
U30F1001
U70F1001
U70F2001
U70F3001
U70F4001
K80F9510
T40F9510
T40F9660
U70F9590
A01X8000
A01X8010
A01X8020
A01X8030
A01X8040
A01F5530
2840933-4
454118

ECM: 454118 - 20100403
Group number: 2840933-0100
Assembly Drawing: 2840933-4_1_AB

This list covers pages from 8-40 to 8-43

Pos	Part No	UN	Qty	Description	Page No
A3/SPEED CE (See drawing on page: 8-40)					
0130	90459-5883	MM	340	COMMONING BUSBAR, 1-P 1-PH 1X57 MOD 63A	
A01F1011	351416-0060		1	MINIATURE CIRC. BREAK., FAZ -D6 1-POLE	
A01F1012	351416-0060		1	MINIATURE CIRC. BREAK., FAZ -D6 1-POLE	
A01F1016	351416-0100		1	MINIATURE CIRC. BREAK., FAZ -D10 1-POLE	
A01F1017	351416-0060		1	MINIATURE CIRC. BREAK., FAZ -D6 1-POLE	
A01F1018	351416-0160		1	MINIATURE CIRC. BREAK., FAZ -D16 1-POLE	
K80F1001	351416-0040		1	MINIATURE CIRC. BREAK., FAZ -D4 1-POLE	
K80F9510	351416-0005		1	MINIATURE CIRC. BREAK., FAZ-D0,5 1-POLE	
T10F1001	351416-0040		1	MINIATURE CIRC. BREAK., FAZ -D4 1-POLE	
T40F1001	351416-0040		1	MINIATURE CIRC. BREAK., FAZ -D4 1-POLE	
T40F9510	351416-0005		1	MINIATURE CIRC. BREAK., FAZ-D0,5 1-POLE	
T40F9660	351416-0060		1	MINIATURE CIRC. BREAK., FAZ -D6 1-POLE	
T50F1001	351416-0040		1	MINIATURE CIRC. BREAK., FAZ -D4 1-POLE	
T50F2001	351416-0040		1	MINIATURE CIRC. BREAK., FAZ -D4 1-POLE	
U30F1001	351416-0040		1	MINIATURE CIRC. BREAK., FAZ -D4 1-POLE	
U70F1001	351416-0040		1	MINIATURE CIRC. BREAK., FAZ -D4 1-POLE	
U70F2001	351416-0040		1	MINIATURE CIRC. BREAK., FAZ -D4 1-POLE	
U70F3001	351416-0040		1	MINIATURE CIRC. BREAK., FAZ -D4 1-POLE	
U70F4001	351416-0040		1	MINIATURE CIRC. BREAK., FAZ -D4 1-POLE	
U70F9590	351416-0060		1	MINIATURE CIRC. BREAK., FAZ -D6 1-POLE	
A3/SPEED CSA, A3/SPEED UL (See drawing on page: 8-42)					
0130	90600-5519		2	BUSBAR, Z-SV/UL-16/1P-1TE/12 104893	
A01F1011	315747-0060		1	MINIATURE CIRCUIT BREAKER, FAZ-D6/1-NA	
A01F1012	315747-0060		1	MINIATURE CIRCUIT BREAKER, FAZ-D6/1-NA	
A01F1016	315747-0100		1	MINIATURE CIRCUIT BREAKER, FAZ-D10/1-NA	
A01F1017	315747-0060		1	MINIATURE CIRCUIT BREAKER, FAZ-D6/1-NA	
A01F1018	315747-0160		1	MINIATURE CIRCUIT BREAKER, FAZ-D16/1-NA	
A01F5530	315747-0040		1	MINIATURE CIRCUIT BREAKER, FAZ-D4/1-NA	
K80F1001	315747-0040		1	MINIATURE CIRCUIT BREAKER, FAZ-D4/1-NA	
K80F9510	315747-0005		1	MINIATURE CIRCUIT BREAKER, FAZ-D0,5/1-NA	
T10F1001	315747-0040		1	MINIATURE CIRCUIT BREAKER, FAZ-D4/1-NA	
T40F1001	315747-0040		1	MINIATURE CIRCUIT BREAKER, FAZ-D4/1-NA	
T40F9510	315747-0005		1	MINIATURE CIRCUIT BREAKER, FAZ-D0,5/1-NA	
T40F9660	315747-0060		1	MINIATURE CIRCUIT BREAKER, FAZ-D6/1-NA	
T50F1001	315747-0040		1	MINIATURE CIRCUIT BREAKER, FAZ-D4/1-NA	
T50F2001	315747-0040		1	MINIATURE CIRCUIT BREAKER, FAZ-D4/1-NA	
U30F1001	315747-0040		1	MINIATURE CIRCUIT BREAKER, FAZ-D4/1-NA	
U70F1001	315747-0040		1	MINIATURE CIRCUIT BREAKER, FAZ-D4/1-NA	
U70F2001	315747-0040		1	MINIATURE CIRCUIT BREAKER, FAZ-D4/1-NA	
U70F3001	315747-0040		1	MINIATURE CIRCUIT BREAKER, FAZ-D4/1-NA	
U70F4001	315747-0040		1	MINIATURE CIRCUIT BREAKER, FAZ-D4/1-NA	
U70F9590	315747-0060		1	MINIATURE CIRCUIT BREAKER, FAZ-D6/1-NA	
Common Parts					
0100	312115-0323		4	SCREW ISO4762 M5X8 A4 80	
0110	315105-0146		4	WASHER BRB 5,3X10 RFR	
0120	353042-0004	MM	694	RAIL TS 35/7,5	
A01X8000	90459-2519		1	OPEN STYLE TAP	
A01X8010	90459-2519		1	OPEN STYLE TAP	
A01X8020	90459-2519		1	OPEN STYLE TAP	
A01X8030	90459-2519		1	OPEN STYLE TAP	
A01X8040	90459-2519		1	OPEN STYLE TAP	

Machine Type | Group Description | Used-In | Group Number | Page No

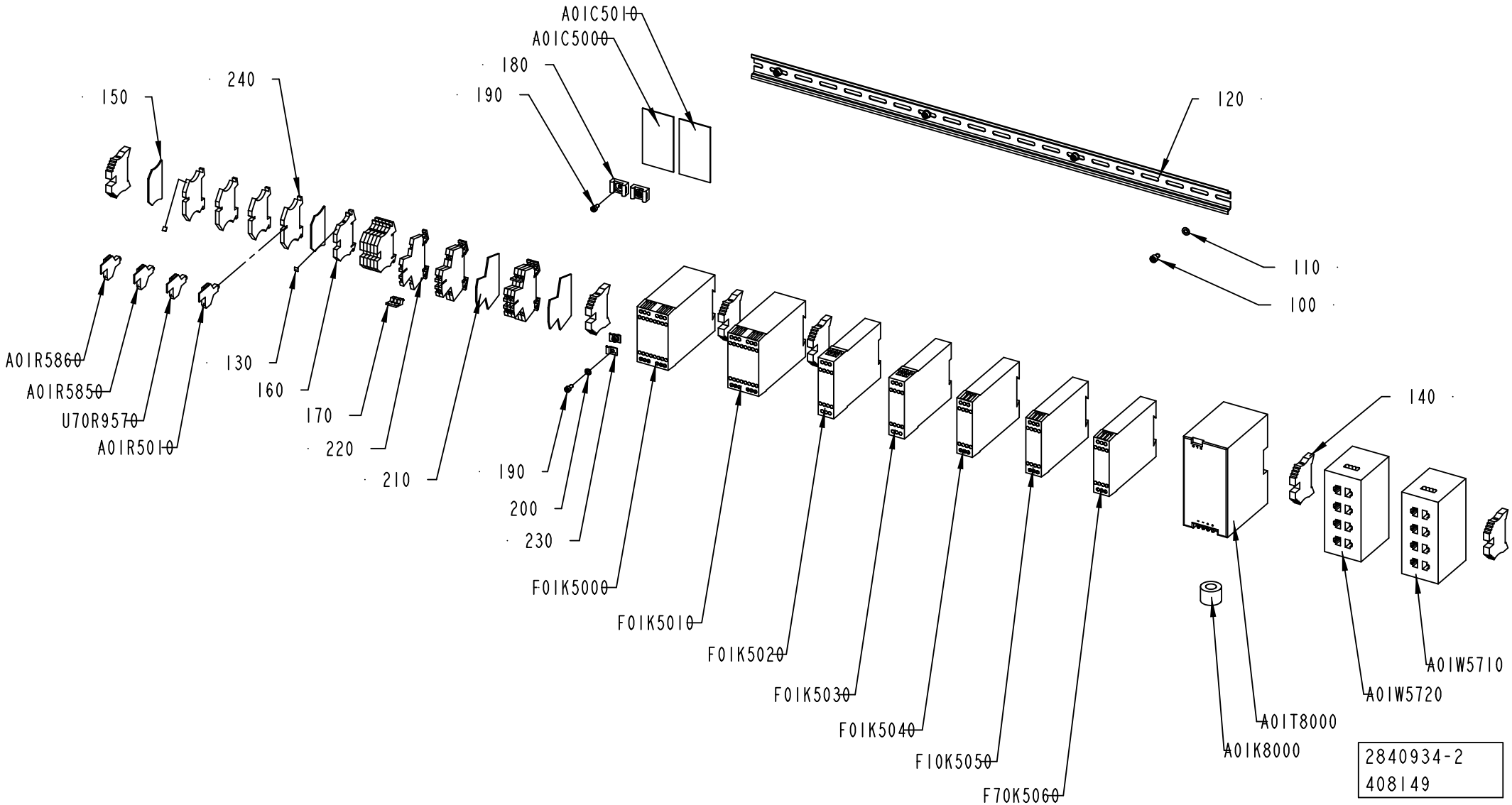
A01C5010
A01C5000
180
190
240
150
120
110
100
140
130
160
170
220
210
190
200
230
A01R5860
A01R5850
U70R9570
A01R5010
F01K5000
F01K5010
F01K5020
F01K5030
F01K5040
F10K5050
F70K5060
A01T8000
A01K8000
A01W5710
A01W5720
2840934-2
408149

ECM: 444521 - 20100701
Group number: 2840934-0200
Assembly Drawing: 2840934-2_1_AA

This list covers pages from 8-44 to 8-47

Pos	Part No	UN	Qty	Description	Page No
A3/SPEED ASU (See drawing on page: 8-44)					
0140	353031-0203		6	END SUPPORT, WEW 35/2	
A3/SPEED ASU PPI (See drawing on page: 8-46)					
F10K5080	90457-0092		1	SAFETY RELAY RT9-24VDC	
F10K5090	90459-1131		1	SAFETY RELAY, E1T 0SEC	
Common Parts					
0100	312115-0323		4	SCREW ISO4762 M5X8 A4 80	
0110	315105-0146		4	WASHER BRB 5,3X10 RFR	
0120	353042-0004	MM	693	RAIL TS 35/7,5	
0130	359011-0807		2	MARKING, DEK 5 FW 1-50	
0150	353032-0004		2	END PLATE WAP 2,5-10 BEIGE	
0160	353021-0212		6	FEED THROUGH TERMINAL, 10200.0	
0170	353034-0030		1	BRIDGE CONNECTOR WQV 2,5/10, 10544.6	
0180	352113-0203		3	ANCHOR PLATES FOR STRIPS, TYPE TM3S8-M0	
0190	312115-0287		5	SCREW ISO4762 M4X8 A4 80	
0200	315105-0136		2	WASHER BRB 4,3X8 RFR	
0210	90077-0114		3	END PLATE, WAP/WDK 2,5	
0220	90077-0113		8	FEED THROUGH TERMINAL, 10-00102150-1	
0230	90165-0022		2	PIPE CLIP, FOR TUBE D=2,5 MM, B-3570	
0240	90600-2134		4	TERMINAL DISCONNECATBLE, WTR 2,5/O.TNHE	
A01C5000	90459-4891		1	PROGR. IDENTIFIER ID-FIX RW, 20-070-21	
A01C5010	90459-4891		1	PROGR. IDENTIFIER ID-FIX RW, 20-070-21	
A01F5600	90459-5811		1	RESIDUAL CURRENT DEVICE, FI-25/2/003-A	
A01K8000	90600-5249		1	FERRITE, B64290L616X38	
A01R5010	90600-2135		1	MODULE CONNECTOR 250V, BEST/D 1878560000	
A01R5850	90600-2135		1	MODULE CONNECTOR 250V, BEST/D 1878560000	
A01R5860	90600-2135		1	MODULE CONNECTOR 250V, BEST/D 1878560000	
A01T8000	90459-5886		1	POWER SUPPLY UNIT 115-230 VAC/24VDC100W	
A01W5710	90600-1848		1	ETHERNET SW, FL SWITCH SFN 8TX	
A01W5720	90600-1848		1	ETHERNET SW, FL SWITCH SFN 8TX	
A01X5600	90459-3845		1	POWER SOCKET, Z-SD230	
F01K5000	90459-6692		1	SAFETY PLC, PLUTO B20 20-070-06	
F01K5010	90459-6692		1	SAFETY PLC, PLUTO B20 20-070-06	
F01K5020	90459-1131		1	SAFETY RELAY, E1T 0SEC	
F01K5030	90459-1131		1	SAFETY RELAY, E1T 0SEC	
F01K5040	90600-1454		1	SAFETY TIME RELAY, E1T-1.0S-24VDC	
F10K5050	90459-2291		1	SAFETY TIME RELAY, E1T-0.5S-24VDC	
F70K5060	90459-2291		1	SAFETY TIME RELAY, E1T-0.5S-24VDC	
U70R9570	90600-2135		1	MODULE CONNECTOR 250V, BEST/D 1878560000	

Pos	Part No	UN	Qty	Description	Page No

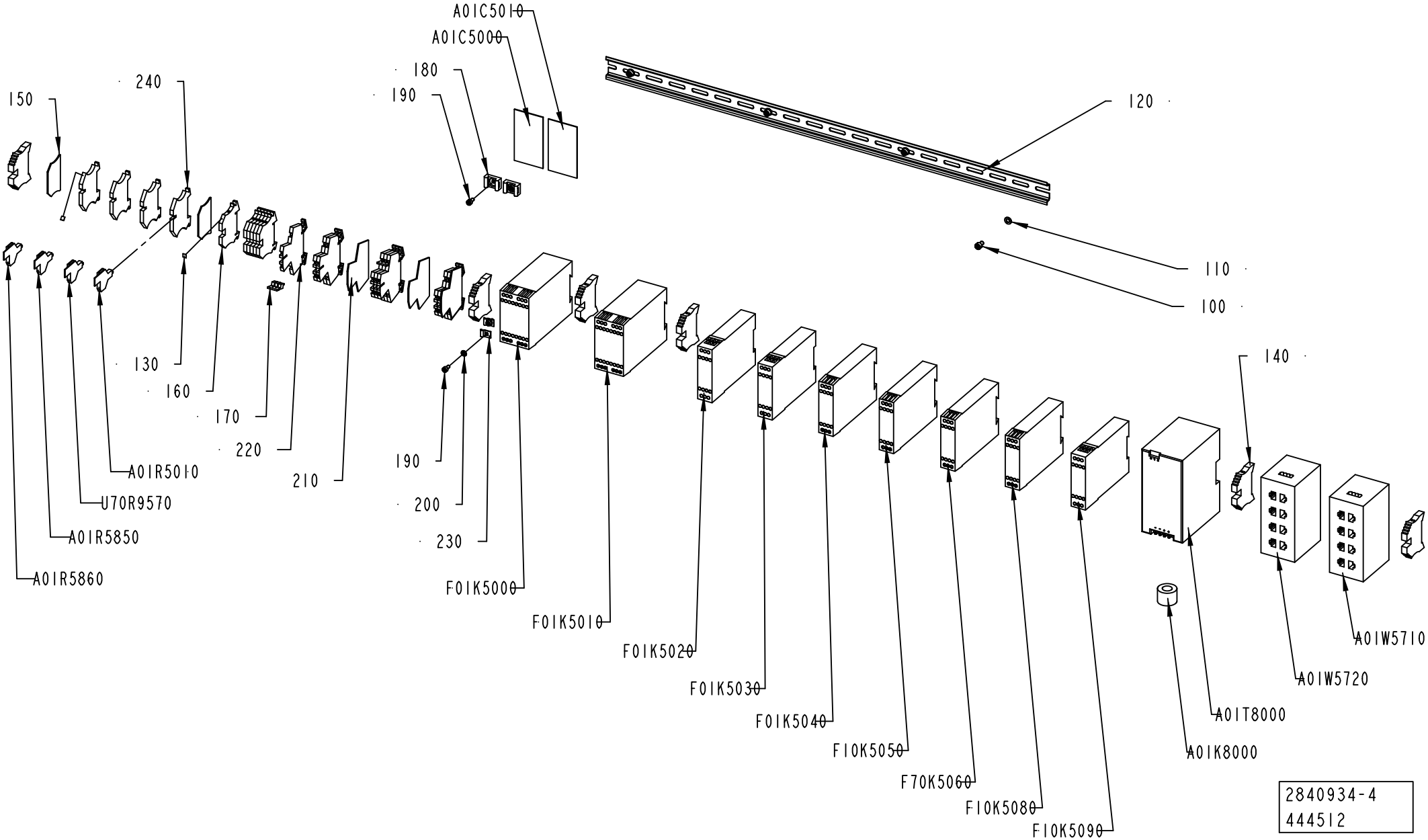
A01C5010
A01C5000
180
190
240
150
120
110
100
130
160
170
220
210
190
200
230
140
A01R5010
U70R9570
A01R5850
A01R5860
F01K5000
F01K5010
F01K5020
F01K5030
F01K5040
F10K5050
F70K5060
F10K5080
F10K5090
A01W5710
A01W5720
A01T8000
A01K8000
2840934-4
444512

ECM: 444521 - 20100701
Group number: 2840934-0200
Assembly Drawing: 2840934-4_1_AA

This list covers pages from 8-44 to 8-47

Pos	Part No	UN	Qty	Description	Page No
A3/SPEED ASU (See drawing on page: 8-44)					
0140	353031-0203		6	END SUPPORT, WEW 35/2	
A3/SPEED ASU PPI (See drawing on page: 8-46)					
F10K5080	90457-0092		1	SAFETY RELAY RT9-24VDC	
F10K5090	90459-1131		1	SAFETY RELAY, E1T 0SEC	
Common Parts					
0100	312115-0323		4	SCREW ISO4762 M5X8 A4 80	
0110	315105-0146		4	WASHER BRB 5,3X10 RFR	
0120	353042-0004	MM	693	RAIL TS 35/7,5	
0130	359011-0807		2	MARKING, DEK 5 FW 1-50	
0150	353032-0004		2	END PLATE WAP 2,5-10 BEIGE	
0160	353021-0212		6	FEED THROUGH TERMINAL, 10200.0	
0170	353034-0030		1	BRIDGE CONNECTOR WQV 2,5/10, 10544.6	
0180	352113-0203		3	ANCHOR PLATES FOR STRIPS, TYPE TM3S8-M0	
0190	312115-0287		5	SCREW ISO4762 M4X8 A4 80	
0200	315105-0136		2	WASHER BRB 4,3X8 RFR	
0210	90077-0114		3	END PLATE, WAP/WDK 2,5	
0220	90077-0113		8	FEED THROUGH TERMINAL, 10-00102150-1	
0230	90165-0022		2	PIPE CLIP, FOR TUBE D=2,5 MM, B-3570	
0240	90600-2134		4	TERMINAL DISCONNECATBLE, WTR 2,5/O.TNHE	
A01C5000	90459-4891		1	PROGR. IDENTIFIER ID-FIX RW, 20-070-21	
A01C5010	90459-4891		1	PROGR. IDENTIFIER ID-FIX RW, 20-070-21	
A01F5600	90459-5811		1	RESIDUAL CURRENT DEVICE, FI-25/2/003-A	
A01K8000	90600-5249		1	FERRITE, B64290L616X38	
A01R5010	90600-2135		1	MODULE CONNECTOR 250V, BEST/D 1878560000	
A01R5850	90600-2135		1	MODULE CONNECTOR 250V, BEST/D 1878560000	
A01R5860	90600-2135		1	MODULE CONNECTOR 250V, BEST/D 1878560000	
A01T8000	90459-5886		1	POWER SUPPLY UNIT 115-230 VAC/24VDC100W	
A01W5710	90600-1848		1	ETHERNET SW, FL SWITCH SFN 8TX	
A01W5720	90600-1848		1	ETHERNET SW, FL SWITCH SFN 8TX	
A01X5600	90459-3845		1	POWER SOCKET, Z-SD230	
F01K5000	90459-6692		1	SAFETY PLC, PLUTO B20 20-070-06	
F01K5010	90459-6692		1	SAFETY PLC, PLUTO B20 20-070-06	
F01K5020	90459-1131		1	SAFETY RELAY, E1T 0SEC	
F01K5030	90459-1131		1	SAFETY RELAY, E1T 0SEC	
F01K5040	90600-1454		1	SAFETY TIME RELAY, E1T-1.0S-24VDC	
F10K5050	90459-2291		1	SAFETY TIME RELAY, E1T-0.5S-24VDC	
F70K5060	90459-2291		1	SAFETY TIME RELAY, E1T-0.5S-24VDC	
U70R9570	90600-2135		1	MODULE CONNECTOR 250V, BEST/D 1878560000	

Pos	Part No	UN	Qty	Description	Page No

Machine Type | Group Description | Used-In | Group Number | Page No

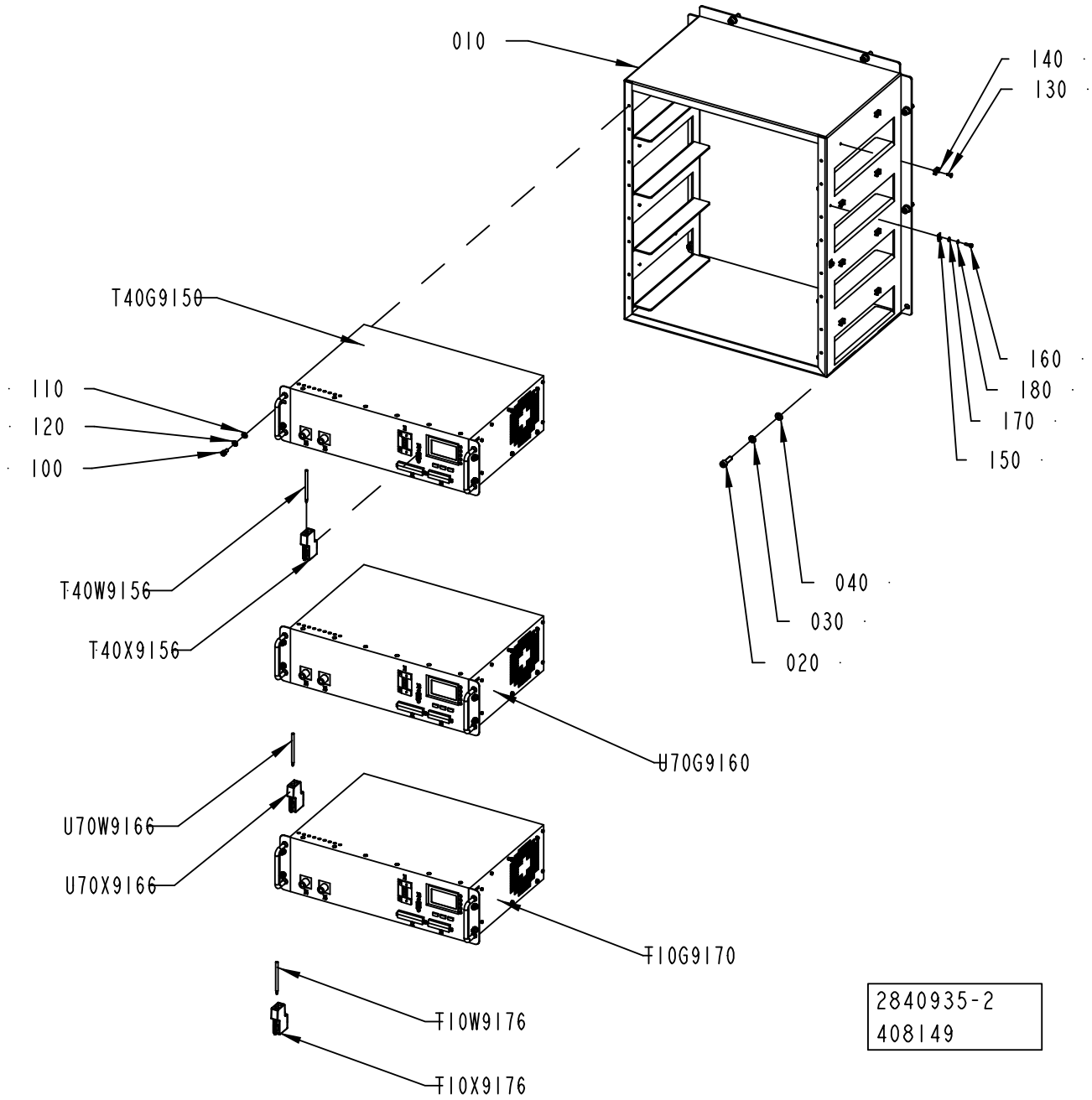
010
140
130
160
180
170
150
T40G9150
110
120
100
T40W9156
T40X9156
040
030
020
U70G9160
U70W9166
U70X9166
T10G9170
T10W9176
T10X9176
2840935-2
408149

ECM: 429622 - 20100402
Group number: 2840935-0200
Assembly Drawing: 2840935-2_1_AA

Pos	Part No	UN	Qty	Description	Page No
-					
0010	2840937-0000		1	RACK	
0020	312115-0453		8	SCREW ISO4762 M8X25 A4 80	
0030	315402-0165		8	LOCK WASHER FBB 8,2	
0040	315105-0165		8	WASHER BRB 8,4X16 RFR	
0100	312115-0366		12	SCREW ISO4762 M6X12 A4 80	
0110	315105-0153		12	WASHER BRB 6,4X12 RFR	
0120	315402-0156		12	LOCK WASHER FBB 6,5	
0130	312155-0289		16	SCREW DIN 7991 MF6S M4X10 A4 70	
0140	352113-0205		16	ANCHOR PLATES FOR STRIPS, TYPE TM2S8-C10	
0150	90165-0022		2	PIPE CLIP, FOR TUBE D=2,5 MM, B-3570	
0160	312115-0291		2	SCREW ISO4762 M4X12 A4 80	
0170	315105-0136		2	WASHER BRB 4,3X8 RFR	
0180	315402-0136		2	LOCK WASHER FBB 4,1	
T10G9170	1499642-0301		1	TPIH GENERATOR	
T40G9150	1499642-0301		1	TPIH GENERATOR	
T10W9176	90458-2894	MM	1800	PAIR TWISTED CABLE 1X2X0,2MM2	
T40W9156	90458-2894	MM	3400	PAIR TWISTED CABLE 1X2X0,2MM2	
T10X9176	90459-0184		1	INTERFACE CONNECTOR FOR TPIH 2500 GENER.	
T40X9156	90459-0184		1	INTERFACE CONNECTOR FOR TPIH 2500 GENER.	
U70G9160	1499642-0301		1	TPIH GENERATOR	
U70W9166	90458-2894	MM	3700	PAIR TWISTED CABLE 1X2X0,2MM2	
U70X9166	90459-0184		1	INTERFACE CONNECTOR FOR TPIH 2500 GENER.	

Pos	Part No	UN	Qty	Description	Page No

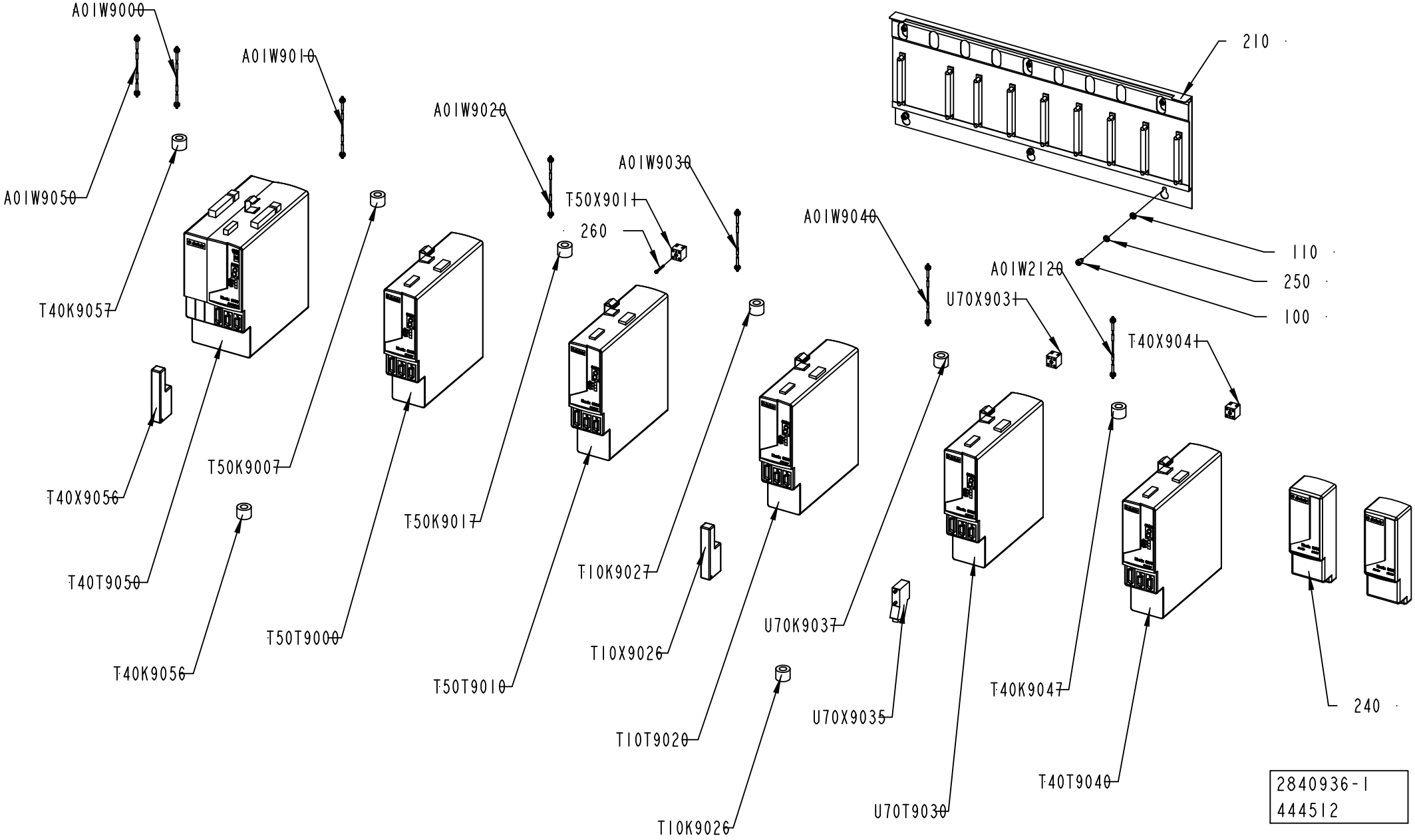
A01W9000
A01W9010
A01W9020
A01W9030
A01W9040
A01W9050
T40K9057
T40X9056
T40T9050
T40K9056
T50K9007
T50T9000
T50X9011
260
T50K9017
T50T9010
T10K9027
T10X9026
T10T9020
T10K9026
U70X9037
U70X9035
U70T9030
210
110
250
100
A01W2120
U70X9031
T40X9041
T40K9047
T40T9040
240
2840936-1
444512

ECM: 444517 - 20100701
Group number: 2840936-0100
Assembly Drawing: 2840936-1_1_AF

Pos	Part No	UN	Qty	Description	Page No
A3/SPEED					
0100	312115-0362		6	SCREW ISO4762 M6X8 A4 80	
0110	315105-0153		6	WASHER BRB 6,4X12 RFR	
0250	315402-0156		6	LOCK WASHER FBB 6,5	
260	312115-0232		3	SCREW ISO4762 M3X25 A4 80	
A01W9000	90459-2536		1	SERCOS CABLE 0.1M, 2090-SCEP0-1	
A01W9050	90459-2540		1	SERCOS CABLE 3.0M, 2090-SCEP3-0	
T40K9056	90600-5249		1	FERRITE, B64290L616X38	
T40T9050	90600-5212		1	AXIS MOD. W. PS,2094-BC02-M02-S SERIES B	
T50T9000	90600-5216		1	AXIS MOD. KINETIX 6000,2094-BM02-S SER.B	
T50T9010	90600-5213		1	AXIS MOD. KINETIX 6000,2094-BMP5-S SER.B	
T50X9011	90195-0020		1	TERMINAL BLOCK, BK 2CRN; 0624720000	
U70X9031	90195-0020		1	TERMINAL BLOCK, BK 2CRN; 0624720000	
Common Parts					
0210	90459-5195		1	SLIM POWER RAIL,KINETIX,8 AXIS,2094-PRS8	
0240	90459-2547		2	POWER RAIL SLOT FILLER MODULE, 2094-PRF	
A01W2120	90459-2540		1	SERCOS CABLE 3.0M, 2090-SCEP3-0	
A01W9010	90459-2536		1	SERCOS CABLE 0.1M, 2090-SCEP0-1	
A01W9020	90459-2536		1	SERCOS CABLE 0.1M, 2090-SCEP0-1	
A01W9030	90459-2536		1	SERCOS CABLE 0.1M, 2090-SCEP0-1	
A01W9040	90459-2536		1	SERCOS CABLE 0.1M, 2090-SCEP0-1	
T10K9026	90600-5249		1	FERRITE, B64290L616X38	
T10K9027	90600-5249		1	FERRITE, B64290L616X38	
T40K9047	90600-5249		1	FERRITE, B64290L616X38	
T40K9057	90600-5249		1	FERRITE, B64290L616X38	
T50K9007	90600-5249		1	FERRITE, B64290L616X38	
T50K9017	90600-5249		1	FERRITE, B64290L616X38	
T10T9020	90600-5214		1	AXIS MOD. KINETIX 6000,2094-BM01-S SER.B	
T40T9040	90600-5214		1	AXIS MOD. KINETIX 6000,2094-BM01-S SER.B	
T10X9026	90459-2550		1	I/O CONNECTOR 26 PIN MALE, 2090-K6CK-D26	
T40X9041	90195-0020		1	TERMINAL BLOCK, BK 2CRN; 0624720000	
T40X9056	90459-2550		1	I/O CONNECTOR 26 PIN MALE, 2090-K6CK-D26	
U70K9037	90600-5249		1	FERRITE, B64290L616X38	
U70T9030	90600-5214		1	AXIS MOD. KINETIX 6000,2094-BM01-S SER.B	
U70X9035	2870905-0000		1	CONNECTOR	

Pos	Part No	UN	Qty	Description	Page No

Machine Type | Group Description | Used-In | Group Number | Page No

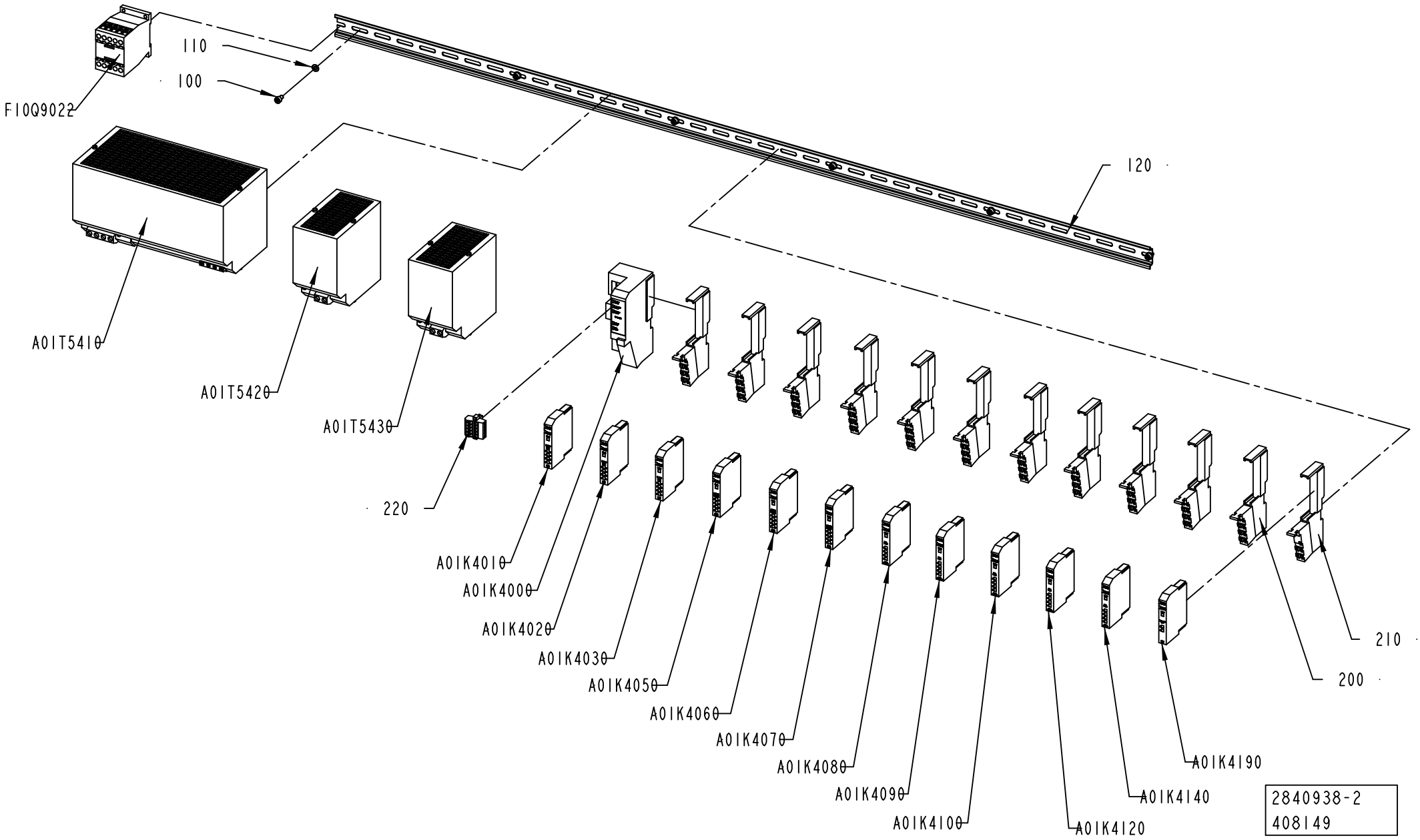
110
100
F10Q9022
120
A01T5410
A01T5420
A01T5430
220
A01K4010
A01K4000
A01K4020
A01K4030
A01K4050
A01K4060
A01K4070
A01K4080
A01K4090
A01K4100
A01K4120
A01K4140
A01K4190
210
200
2840938-2
408149

ECM: 454289 - 20100403
Group number: 2840938-0200
Assembly Drawing: 2840938-2_1_AA

This list covers pages from 8-52 to 8-55

Pos	Part No	UN	Qty	Description	Page No
A3/SPEED CSA, A3/SPEED UL (See drawing on pages: 8-52, 8-54)					
A01T5530	90459-5886		1	POWER SUPPLY UNIT 115-230 VAC/24VDC100W	
Common Parts					
0100	312115-0323		6	SCREW ISO4762 M5X8 A4 80	
0110	315105-0146		6	WASHER BRB 5,3X10 RFR	
0120	353042-0004	MM	1300	RAIL TS 35/7,5	
0200	90459-2526		11	REMOTE I/O BASE MODULE 8 POINTS, 1734-TB	
0210	90459-2528		1	REMOTE I/O BASE MODULE FOR THERMOCOUPLE	
0220	90459-5574		1	DEVICENET OPEN STYLE CONN, 1787-PLUG10R	
A01K4000	90459-2494		1	DEVICENET I/O ADAPTER MODULE, 1734-ADN	
A01K4010	90459-6561		1	DIGITAL INPUT 8 PTS SINK, 1734-IB8/C	
A01K4020	90459-6561		1	DIGITAL INPUT 8 PTS SINK, 1734-IB8/C	
A01K4030	90459-6561		1	DIGITAL INPUT 8 PTS SINK, 1734-IB8/C	
A01K4050	90459-6560		1	DIGITAL OUTPUT 8 PTS, 1734-OB8E/C	
A01K4060	90459-6560		1	DIGITAL OUTPUT 8 PTS, 1734-OB8E/C	
A01K4070	90459-6560		1	DIGITAL OUTPUT 8 PTS, 1734-OB8E/C	
A01K4080	90459-5261		1	REMOTE I/O, RELAY OUTP. 4 PTS,1734-OW4/C	
A01K4090	90459-5261		1	REMOTE I/O, RELAY OUTP. 4 PTS,1734-OW4/C	
A01K4100	90459-5261		1	REMOTE I/O, RELAY OUTP. 4 PTS,1734-OW4/C	
A01K4120	90459-5261		1	REMOTE I/O, RELAY OUTP. 4 PTS,1734-OW4/C	
A01K4140	90459-5261		1	REMOTE I/O, RELAY OUTP. 4 PTS,1734-OW4/C	
A01K4190	90459-2512		1	REMOTE I/O THERMOCOUPLE INPUT 2 PTS	
A01T5410	90459-2938		1	POWER SUPPLY UNIT 6EP1 437-3BA00	
A01T5420	90459-2939		1	BUFFER UNIT, 6EP1 961-3BA00	
A01T5430	90459-2939		1	BUFFER UNIT, 6EP1 961-3BA00	
F10Q9022	90459-5440		1	CONTACTOR 4KW 24VDC, DILM9-01	

Pos	Part No	UN	Qty	Description	Page No

Machine Type | Group Description | Used-In | Group Number | Page No

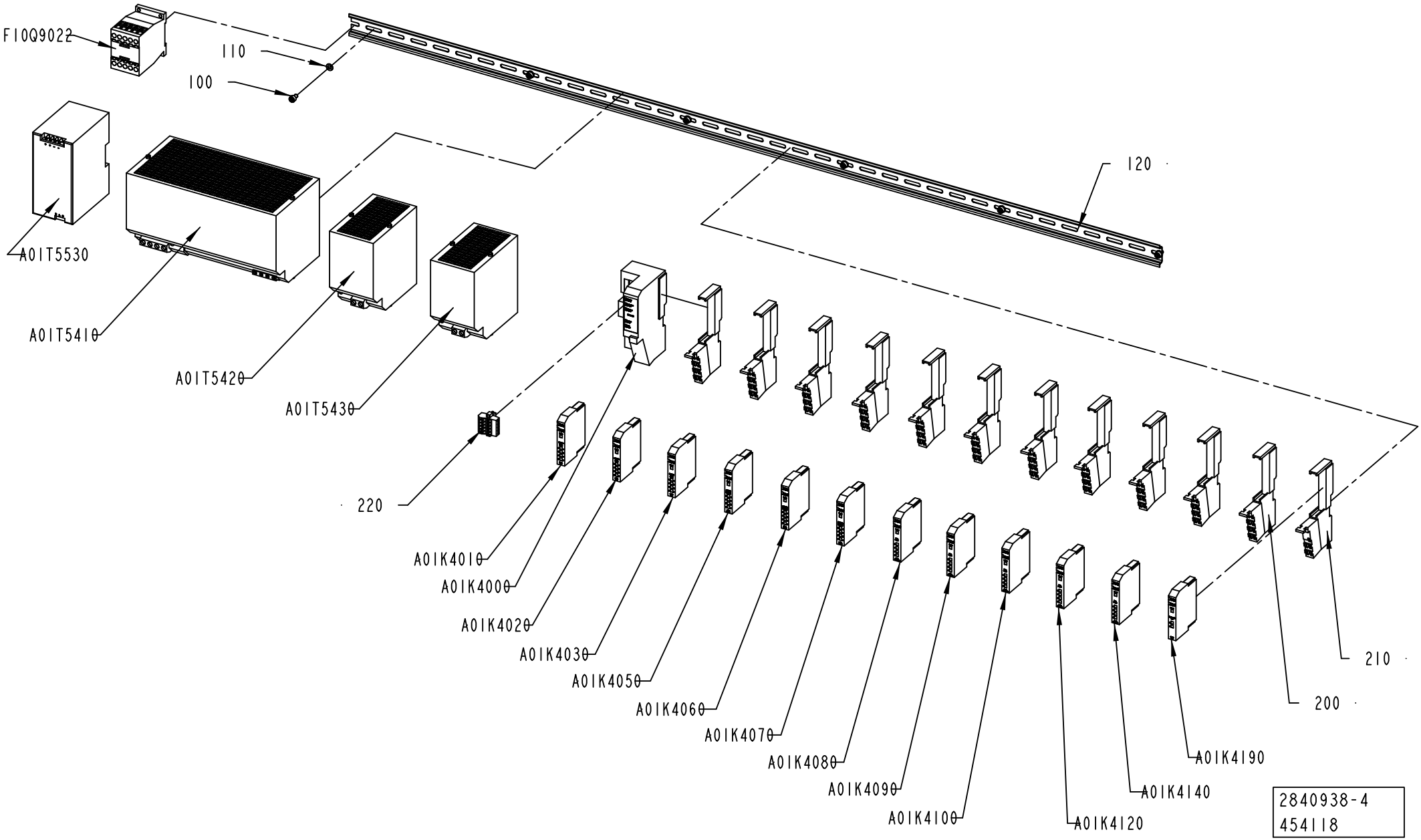
F10Q9022
110
100
120
A01T5530
A01T5410
A01T5420
A01T5430
220
A01K4010
A01K4000
A01K4020
A01K4030
A01K4050
A01K4060
A01K4070
A01K4080
A01K4090
A01K4100
A01K4120
A01K4140
A01K4190
200
210
2840938-4
454118

ECM: 454289 - 20100403
Group number: 2840938-0200
Assembly Drawing: 2840938-4_1_AA

This list covers pages from 8-52 to 8-55

Pos	Part No	UN	Qty	Description	Page No
A3/SPEED CSA, A3/SPEED UL (See drawing on pages: 8-52, 8-54)					
A01T5530	90459-5886		1	POWER SUPPLY UNIT 115-230 VAC/24VDC100W	
Common Parts					
0100	312115-0323		6	SCREW ISO4762 M5X8 A4 80	
0110	315105-0146		6	WASHER BRB 5,3X10 RFR	
0120	353042-0004	MM	1300	RAIL TS 35/7,5	
0200	90459-2526		11	REMOTE I/O BASE MODULE 8 POINTS, 1734-TB	
0210	90459-2528		1	REMOTE I/O BASE MODULE FOR THERMOCOUPLE	
0220	90459-5574		1	DEVICENET OPEN STYLE CONN, 1787-PLUG10R	
A01K4000	90459-2494		1	DEVICENET I/O ADAPTER MODULE, 1734-ADN	
A01K4010	90459-6561		1	DIGITAL INPUT 8 PTS SINK, 1734-IB8/C	
A01K4020	90459-6561		1	DIGITAL INPUT 8 PTS SINK, 1734-IB8/C	
A01K4030	90459-6561		1	DIGITAL INPUT 8 PTS SINK, 1734-IB8/C	
A01K4050	90459-6560		1	DIGITAL OUTPUT 8 PTS, 1734-OB8E/C	
A01K4060	90459-6560		1	DIGITAL OUTPUT 8 PTS, 1734-OB8E/C	
A01K4070	90459-6560		1	DIGITAL OUTPUT 8 PTS, 1734-OB8E/C	
A01K4080	90459-5261		1	REMOTE I/O, RELAY OUTP. 4 PTS,1734-OW4/C	
A01K4090	90459-5261		1	REMOTE I/O, RELAY OUTP. 4 PTS,1734-OW4/C	
A01K4100	90459-5261		1	REMOTE I/O, RELAY OUTP. 4 PTS,1734-OW4/C	
A01K4120	90459-5261		1	REMOTE I/O, RELAY OUTP. 4 PTS,1734-OW4/C	
A01K4140	90459-5261		1	REMOTE I/O, RELAY OUTP. 4 PTS,1734-OW4/C	
A01K4190	90459-2512		1	REMOTE I/O THERMOCOUPLE INPUT 2 PTS	
A01T5410	90459-2938		1	POWER SUPPLY UNIT 6EP1 437-3BA00	
A01T5420	90459-2939		1	BUFFER UNIT, 6EP1 961-3BA00	
A01T5430	90459-2939		1	BUFFER UNIT, 6EP1 961-3BA00	
F10Q9022	90459-5440		1	CONTACTOR 4KW 24VDC, DILM9-01	

Pos	Part No	UN	Qty	Description	Page No

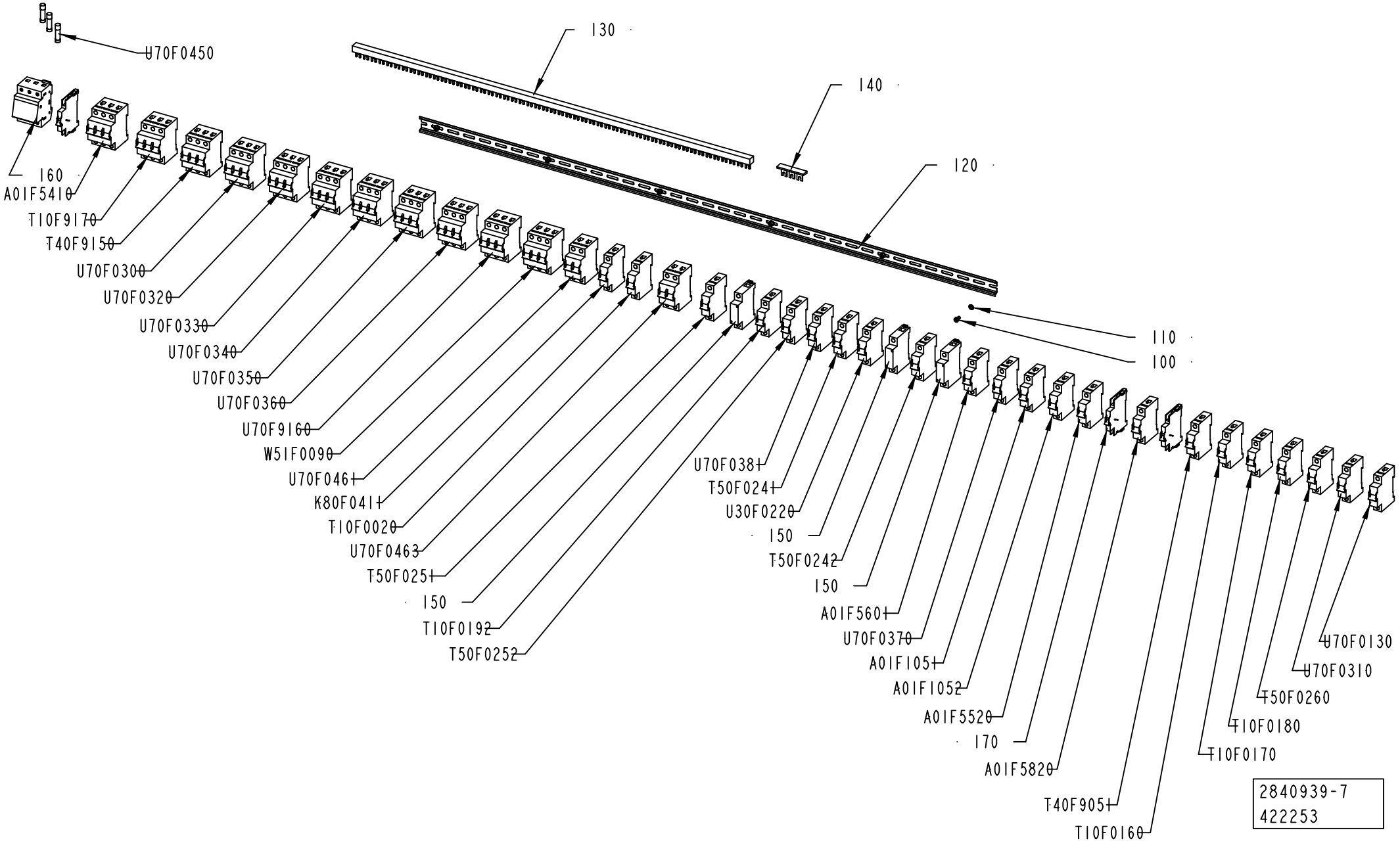
U70F0450
130
140
120
160
A01F5410
T10F9170
T40F9150
U70F0300
U70F0320
U70F0330
U70F0340
U70F0350
U70F0360
U70F9160
W51F0090
U70F0461
K80F0411
T10F0020
U70F0463
T50F0251
150
T10F0192
T50F0252
U70F0381
T50F0241
U30F0220
150
T50F0242
150
A01F5601
U70F0370
A01F1051
A01F1052
A01F5520
170
A01F5820
T40F9051
T10F0160
110
100
U70F0130
U70F0310
T50F0260
T10F0180
T10F0170
2840939-7
422253

ECM: 454118 - 20100701
Group number: 2840939-0200
Assembly Drawing: 2840939-7_1_AB

This list covers pages from 8-56 to 8-59

Pos	Part No	UN	Qty	Description	Page No
A3/SPEED CE (See drawing on page: 8-56)					
0130	90459-5884	MM	898	COMMONING BUSBAR, 3-P 3-PH 3X19 MOD 63A	
0140	90459-5883	MM	60	COMMONING BUSBAR, 1-P 1-PH 1X57 MOD 63A	
0150	90459-6856		3	FEEDER BLOCK, FAZ/FIP-XVS-KL	
0170	90459-5813		3	AUXILIARY CONTACT, FAZ-XHIN11	
A01F1051	351416-0100		1	MINIATURE CIRC. BREAK., FAZ -D10 1-POLE	
A01F1052	351416-0100		1	MINIATURE CIRC. BREAK., FAZ -D10 1-POLE	
A01F5410	351418-0060		1	MINIATURE CIRC. BREAK., FAZ-D6/3 3-POLE	
A01F5520	354000-0100		1	MINIATURE CIRCUIT BREAKER, FAZ-C10/1	
A01F5601	354000-0100		1	MINIATURE CIRCUIT BREAKER, FAZ-C10/1	
A01F5820	354000-0020		1	MINIATURE CIRCUIT BREAKER, FAZ-C2/1	
K80F0411	351416-0020		1	MINIATURE CIRC. BREAK., FAZ -D2 1-POLE	
T10F0020	354000-0010		1	MINIATURE CIRCUIT BREAKER, FAZ-C1/1	
T10F0160	351416-0160		1	MINIATURE CIRC. BREAK., FAZ -D16 1-POLE	
T10F0170	351416-0160		1	MINIATURE CIRC. BREAK., FAZ -D16 1-POLE	
T10F0180	351416-0160		1	MINIATURE CIRC. BREAK., FAZ -D16 1-POLE	
T10F0192	354000-0040		1	MINIATURE CIRCUIT BREAKER, FAZ-C4/1	
T10F9170	351418-0060		1	MINIATURE CIRC. BREAK., FAZ-D6/3 3-POLE	
T40F9051	351416-0160		1	MINIATURE CIRC. BREAK., FAZ -D16 1-POLE	
T40F9150	351418-0060		1	MINIATURE CIRC. BREAK., FAZ-D6/3 3-POLE	
T50F0241	354000-0160		1	MINIATURE CIRCUIT BREAKER, FAZ-C16/1	
T50F0242	354000-0160		1	MINIATURE CIRCUIT BREAKER, FAZ-C16/1	
T50F0251	354000-0160		1	MINIATURE CIRCUIT BREAKER, FAZ-C16/1	
T50F0252	354000-0160		1	MINIATURE CIRCUIT BREAKER, FAZ-C16/1	
T50F0260	351416-0160		1	MINIATURE CIRC. BREAK., FAZ -D16 1-POLE	
U30F0220	351416-0160		1	MINIATURE CIRC. BREAK., FAZ -D16 1-POLE	
U70F0130	351416-0005		1	MINIATURE CIRC. BREAK., FAZ-D0,5 1-POLE	
U70F0300	351418-0160		1	MINIATURE CIRC. BREAK.,FAZ-D16/3 3-POLE	
U70F0310	351416-0160		1	MINIATURE CIRC. BREAK., FAZ -D16 1-POLE	
U70F0320	351418-0100		1	MINIATURE CIRC. BREAK., FAZ-D10/3 3-POLE	
U70F0330	351418-0100		1	MINIATURE CIRC. BREAK., FAZ-D10/3 3-POLE	
U70F0340	354002-0100		1	IMINIATURE CIRCUIT BREAKER, FAZ-C10/3	
U70F0350	354002-0100		1	IMINIATURE CIRCUIT BREAKER, FAZ-C10/3	
U70F0360	354002-0100		1	IMINIATURE CIRCUIT BREAKER, FAZ-C10/3	
U70F0370	354000-0100		1	MINIATURE CIRCUIT BREAKER, FAZ-C10/1	
U70F0381	351416-0100		1	MINIATURE CIRC. BREAK., FAZ -D10 1-POLE	
U70F0461	354001-0320		1	MINIATURE CIRCUIT BREAKER, FAZ-C32/2	
U70F0463	354001-0250		1	MINIATURE CIRCUIT BREAKER, FAZ-C25/2	
U70F9160	351418-0060		1	MINIATURE CIRC. BREAK., FAZ-D6/3 3-POLE	
W51F0090	351418-0060		1	MINIATURE CIRC. BREAK., FAZ-D6/3 3-POLE	
A3/SPEED CSA, A3/SPEED UL (See drawing on page: 8-58)					
0130	90600-5526		3	BUSBAR, Z-SV/UL-16/3P-3TE/18 104900	
0150	315747-0100		2	MINIATURE CIRCUIT BREAKER, FAZ-D10/1-NA	
0170	90600-5517		3	AUXILIARY CONTACT, Z-NHK 248434	
A01F1051	315747-0100		1	MINIATURE CIRCUIT BREAKER, FAZ-D10/1-NA	
A01F1052	315747-0100		1	MINIATURE CIRCUIT BREAKER, FAZ-D10/1-NA	
A01F5410	315749-0060		1	MINIATURE CIRCUIT BREAKER, FAZ-D6/3-NA	
A01F5820	315744-0020		1	MINIATURE CIRCUIT BREAKER, FAZ-C2/1-NA	
A01F5880	315748-0040		1	MINIATURE CIRCUIT BREAKER, FAZ-D4/2-NA	
A01F5881	315747-0060		1	MINIATURE CIRCUIT BREAKER, FAZ-D6/1-NA	
K80F0411	315747-0020		1	MINIATURE CIRCUIT BREAKER, FAZ-D2/1-NA	
T10F0020	315744-0010		1	MINIATURE CIRCUIT BREAKER, FAZ-C1/1-NA	
T10F0160	315747-0160		1	MINIATURE CIRCUIT BREAKER, FAZ-D16/1-NA	
T10F0170	315747-0160		1	MINIATURE CIRCUIT BREAKER, FAZ-D16/1-NA	
T10F0180	315747-0160		1	MINIATURE CIRCUIT BREAKER, FAZ-D16/1-NA	
T10F0192	315744-0040		1	MINIATURE CIRCUIT BREAKER, FAZ-C4/1-NA	
T10F9170	315749-0060		1	MINIATURE CIRCUIT BREAKER, FAZ-D6/3-NA	
T40F9051	315747-0060		1	MINIATURE CIRCUIT BREAKER, FAZ-D6/1-NA	
T40F9150	315749-0060		1	MINIATURE CIRCUIT BREAKER, FAZ-D6/3-NA	
T50F0241	315744-0160		1	MINIATURE CIRCUIT BREAKER, FAZ-C16/1-NA	
T50F0242	315744-0160		1	MINIATURE CIRCUIT BREAKER, FAZ-C16/1-NA	
T50F0251	315744-0160		1	MINIATURE CIRCUIT BREAKER, FAZ-C16/1-NA	
T50F0252	315744-0160		1	MINIATURE CIRCUIT BREAKER, FAZ-C16/1-NA	
T50F0260	315747-0160		1	MINIATURE CIRCUIT BREAKER, FAZ-D16/1-NA	
U30F0220	315747-0160		1	MINIATURE CIRCUIT BREAKER, FAZ-D16/1-NA	
U70F0130	315747-0005		1	MINIATURE CIRCUIT BREAKER, FAZ-D0,5/1-NA	
U70F0300	315749-0160		1	MINIATURE CIRCUIT BREAKER, FAZ-D16/3-NA	
U70F0310	315747-0160		1	MINIATURE CIRCUIT BREAKER, FAZ-D16/1-NA	
U70F0320	315749-0100		1	MINIATURE CIRCUIT BREAKER, FAZ-D10/3-NA	
U70F0330	315749-0100		1	MINIATURE CIRCUIT BREAKER, FAZ-D10/3-NA	
U70F0340	315746-0100		1	MINIATURE CIRCUIT BREAKER, FAZ-C10/3-NA	
U70F0350	315746-0100		1	MINIATURE CIRCUIT BREAKER, FAZ-C10/3-NA	
U70F0360	315746-0100		1	MINIATURE CIRCUIT BREAKER, FAZ-C10/3-NA	
U70F0370	315744-0100		1	MINIATURE CIRCUIT BREAKER, FAZ-C10/1-NA	
U70F0381	315747-0100		1	MINIATURE CIRCUIT BREAKER, FAZ-D10/1-NA	
U70F0461	315745-0320		1	MINIATURE CIRCUIT BREAKER, FAZ-C32/2-NA	
U70F0463	315745-0250		1	MINIATURE CIRCUIT BREAKER, FAZ-C25/2-NA	
U70F9160	315749-0060		1	MINIATURE CIRCUIT BREAKER, FAZ-D6/3-NA	
W51F0090	315749-0060		1	MINIATURE CIRCUIT BREAKER, FAZ-D6/3-NA	
Common Parts					
0100	312115-0323		6	SCREW ISO4762 M5X8 A4 80	
0110	315105-0146		6	WASHER BRB 5,3X10 RFR	
0120	353042-0004	M	1300	RAIL TS 35/7,5	
0160	90600-3840		1	FUSE HOLDER CYLINDRICAL FUSE, 3NC1 093	

Machine Type | Group Description | Used-In | Group Number | Page No

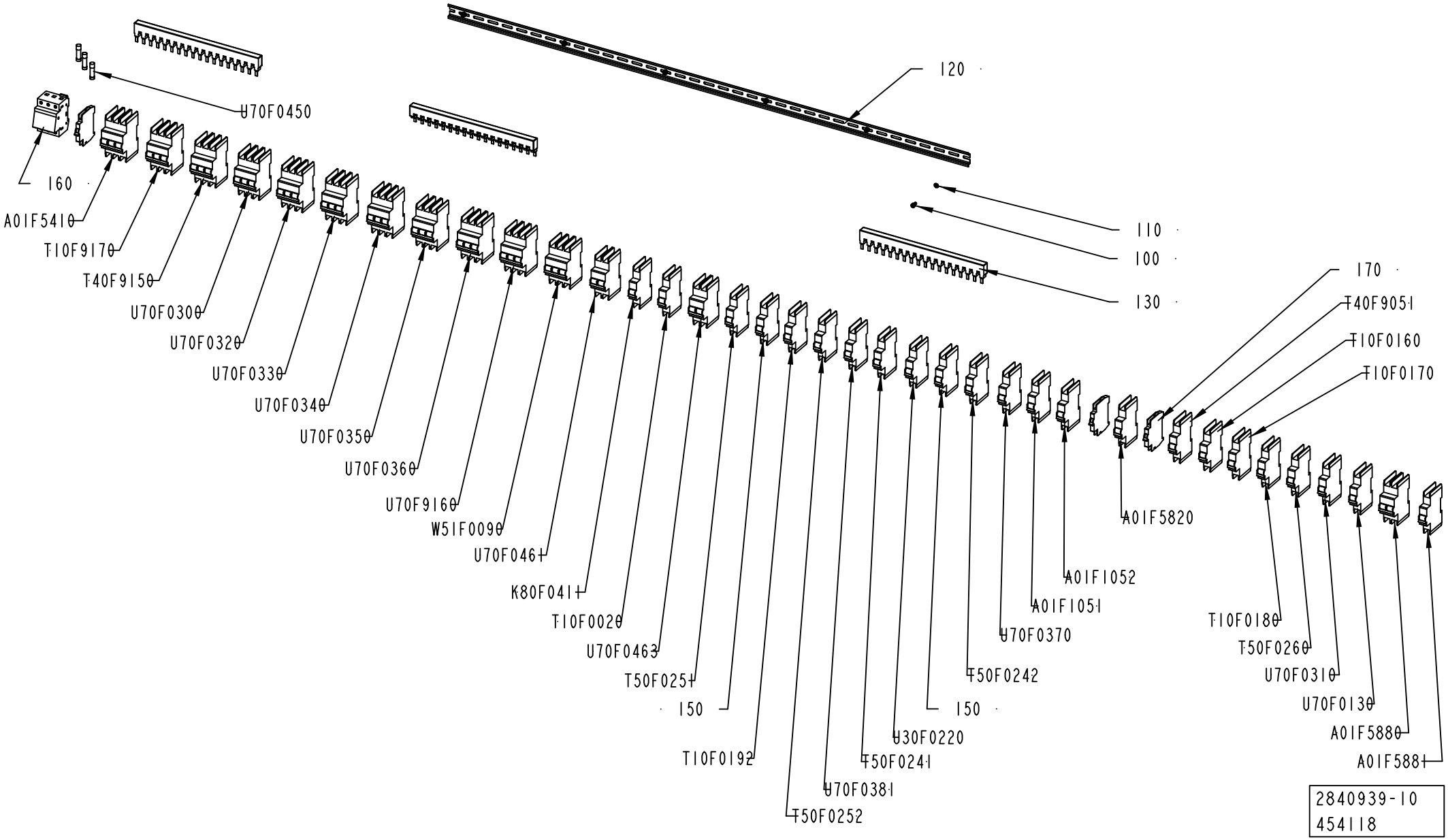
120
U70F0450
160
A01F5410
T10F9170
T40F9150
U70F0300
U70F0320
U70F0330
U70F0340
U70F0350
U70F0360
U70F9160
W51F0090
U70F0461
K80F0411
T10F0020
U70F0463
T50F0251
150
T10F0192
T50F0252
U70F0381
T50F0241
U30F0220
150
T50F0242
U70F0370
A01F1051
A01F1052
A01F5820
110
100
130
170
T40F9051
T10F0160
T10F0170
T10F0180
T50F0260
U70F0310
U70F0130
A01F5880
A01F5881
2840939-10
454118

Pos	Part No	UN	Qty	Description	Page No
Common Parts (Cont'd)					
A01F5820	354000-0040		1	MINIATURE CIRCUIT BREAKER, FAZ-C4/1	
U70F0450	352553-0250		3	CYLINDRICAL FUSE 25A, 3NC1025	

Pos	Part No	UN	Qty	Description	Page No

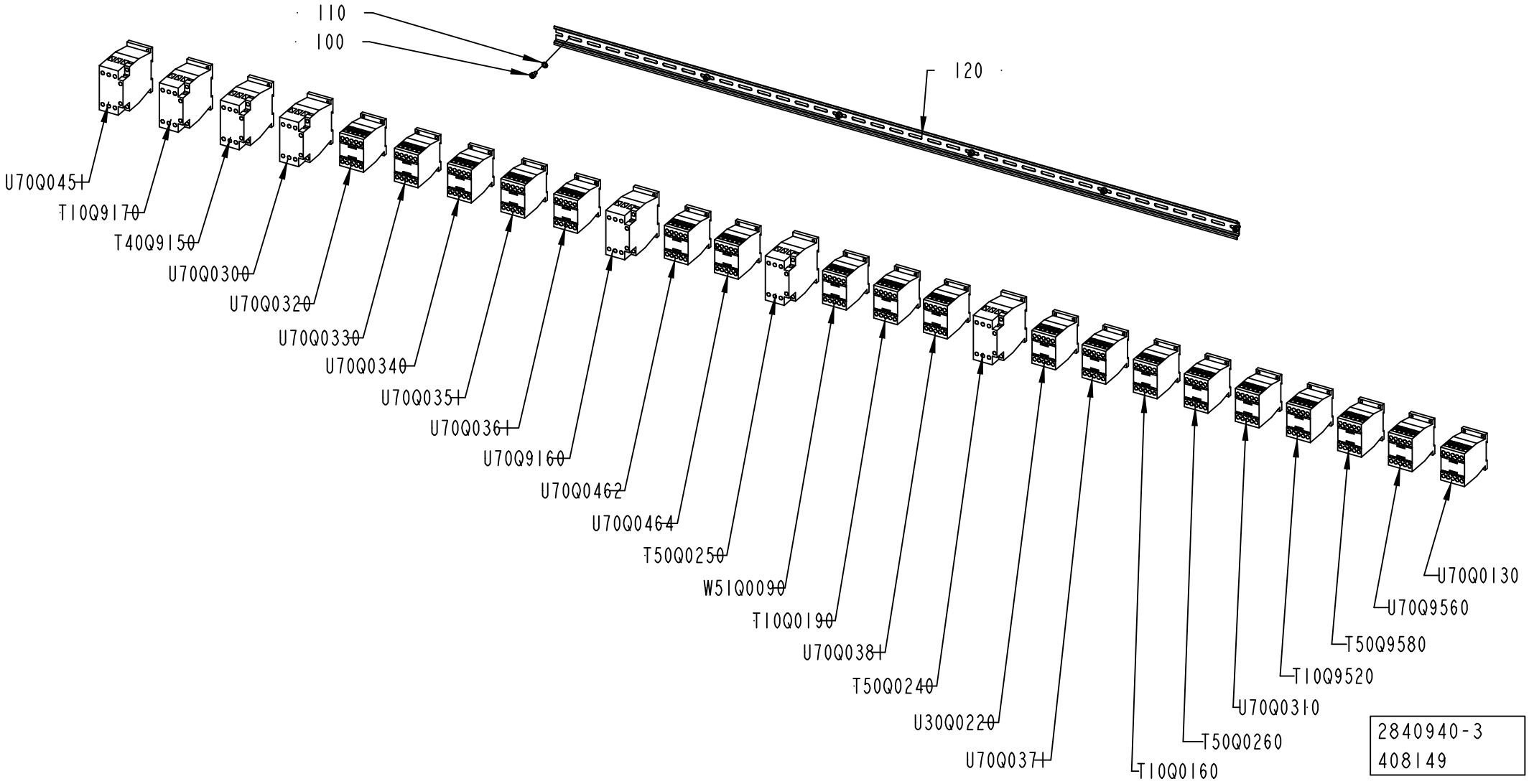
110
100
120
U70Q045
T10Q9170
T40Q9150
U70Q0300
U70Q0320
U70Q0330
U70Q0340
U70Q035
U70Q036
U70Q9160
U70Q0462
U70Q0464
T50Q0250
W51Q0090
T10Q0190
U70Q038
T50Q0240
U30Q0220
U70Q037
T10Q0160
T50Q0260
U70Q0310
T10Q9520
T50Q9580
U70Q9560
U70Q0130
2840940-3
408149

ECM: 429684 - 20100401
Group number: 2840940-0200
Assembly Drawing: 2840940-3_1_AA

Pos	Part No	UN	Qty	Description	Page No
A3/SPEED					
U70Q0320	90459-5440		1	CONTACTOR 4KW 24VDC, DILM9-01	
U70Q0381	90459-5440		1	CONTACTOR 4KW 24VDC, DILM9-01	
W51Q0090	90459-5440		1	CONTACTOR 4KW 24VDC, DILM9-01	
Common Parts					
0100	312115-0323		6	SCREW ISO4762 M5X8 A4 80	
0110	315105-0146		6	WASHER BRB 5,3X10 RFR	
0120	353042-0004	MM	1305	RAIL TS 35/7,5	
T10Q0160	90459-5440		1	CONTACTOR 4KW 24VDC, DILM9-01	
T10Q0190	90459-5440		1	CONTACTOR 4KW 24VDC, DILM9-01	
T10Q9170	90459-5441		1	CONTACTOR 7,5KW 24VDC, DILM17-01	
T10Q9520	90459-5440		1	CONTACTOR 4KW 24VDC, DILM9-01	
T40Q9150	90459-5441		1	CONTACTOR 7,5KW 24VDC, DILM17-01	
T50Q0240	90459-5441		1	CONTACTOR 7,5KW 24VDC, DILM17-01	
T50Q0250	90459-5441		1	CONTACTOR 7,5KW 24VDC, DILM17-01	
T50Q0260	90459-5440		1	CONTACTOR 4KW 24VDC, DILM9-01	
T50Q9580	90459-5440		1	CONTACTOR 4KW 24VDC, DILM9-01	
U30Q0220	90459-5440		1	CONTACTOR 4KW 24VDC, DILM9-01	
U70Q0130	90459-5440		1	CONTACTOR 4KW 24VDC, DILM9-01	
U70Q0300	90459-5441		1	CONTACTOR 7,5KW 24VDC, DILM17-01	
U70Q0310	90459-5440		1	CONTACTOR 4KW 24VDC, DILM9-01	
U70Q0330	90459-5440		1	CONTACTOR 4KW 24VDC, DILM9-01	
U70Q0340	90459-5440		1	CONTACTOR 4KW 24VDC, DILM9-01	
U70Q0351	90459-5440		1	CONTACTOR 4KW 24VDC, DILM9-01	
U70Q0361	90459-5440		1	CONTACTOR 4KW 24VDC, DILM9-01	
U70Q0371	90459-5440		1	CONTACTOR 4KW 24VDC, DILM9-01	
U70Q0451	90459-5441		1	CONTACTOR 7,5KW 24VDC, DILM17-01	
U70Q0462	90459-5440		1	CONTACTOR 4KW 24VDC, DILM9-01	
U70Q0464	90459-5440		1	CONTACTOR 4KW 24VDC, DILM9-01	
U70Q9160	90459-5441		1	CONTACTOR 7,5KW 24VDC, DILM17-01	
U70Q9560	90459-5440		1	CONTACTOR 4KW 24VDC, DILM9-01	

Pos	Part No	UN	Qty	Description	Page No

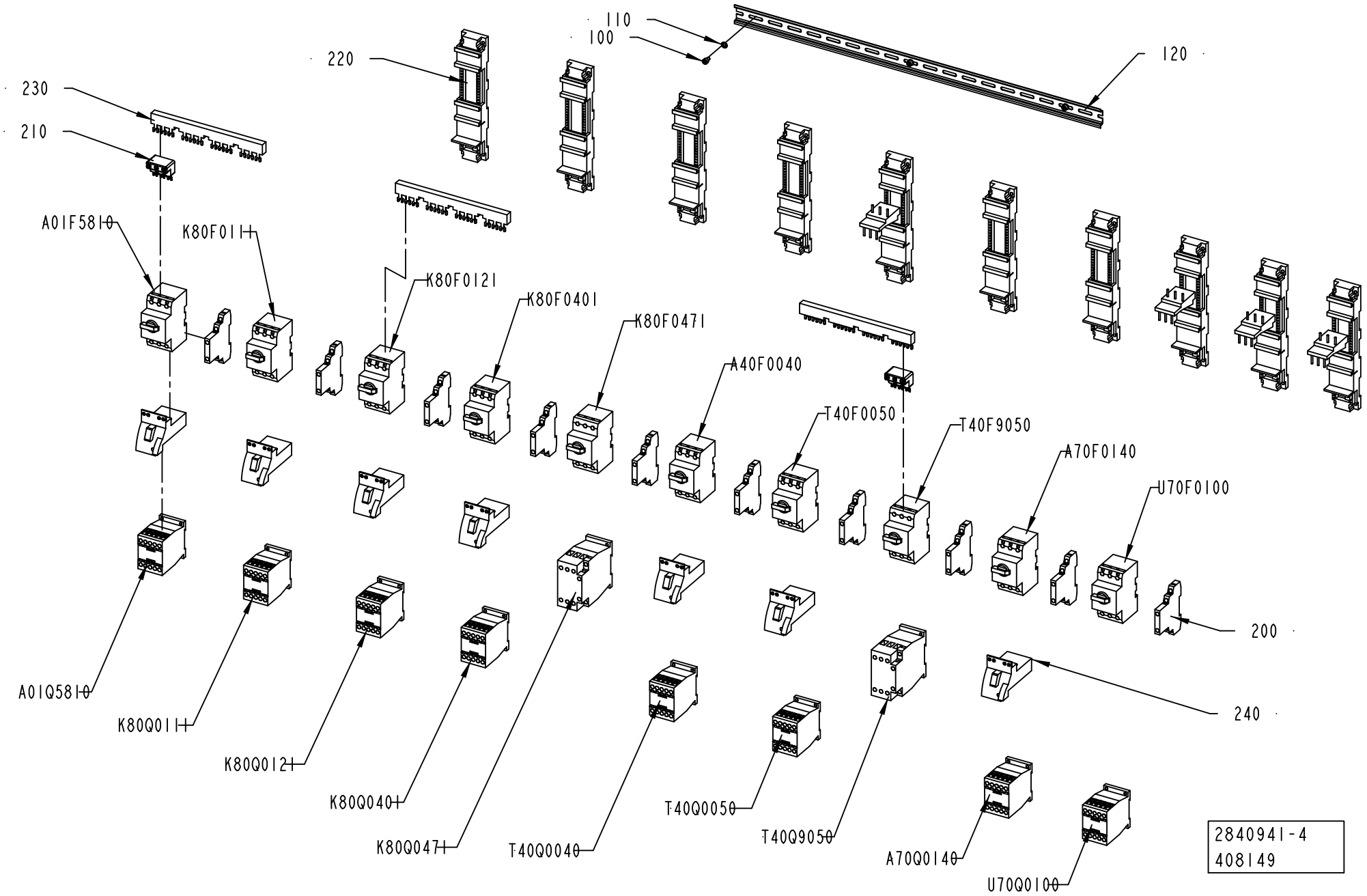
110
100
120
220
230
210
A01F5810
K80F011
K80F0121
K80F0401
K80F0471
A40F0040
T40F0050
T40F9050
A70F0140
U70F0100
200
240
A01Q5810
K80Q011
K80Q012
K80Q040
K80Q047
T40Q0040
T40Q0050
T40Q9050
A70Q0140
U70Q0100
2840941-4
408149

ECM: 454290 - 20100403
Group number: 2840941-0200
Assembly Drawing: 2840941-4_1_AA

This list covers pages from 8-62 to 8-65

Pos	Part No	UN	Qty	Description	Page No
A3/SPEED CE (See drawing on page: 8-62)					
0200	90259-0313		10	AUXILIARY CONTACT, NHI21-PKZ0	
0210	90259-0308		2	INCOMING TERMINAL, BK25/3-PKZ0	
0220	90459-6851		10	BASE UNIT, PKZM0-XDM32	
0230	90259-0309		3	BUSBAR, B3.1/4-PKZ0	
0240	90459-6850		7	CONNECTION, PKZM0-XDM12	
A01F5810	90459-5326		1	OVERLOAD PROTECTION, PKZM0-4	
A40F0040	90459-5323		1	OVERLOAD PROTECTION, PKZM0-1	
A40Q0040	90459-5440		1	CONTACTOR 4KW 24VDC, DILM9-01	
K80F0121	90459-5327		1	OVERLOAD PROTECTION, PKZM0-6,3	
T40F9050	90459-5333		1	VERLOAD PROTECTION, PKZM0-32	
T40Q9050	90459-5444		1	CONTACTOR 15KW 24VDC, DILM32-01	
A3/SPEED CSA, A3/SPEED UL (See drawing on page: 8-64)					
0200	90259-0313		9	AUXILIARY CONTACT, NHI21-PKZ0	
0220	90459-6851		9	BASE UNIT, PKZM0-XDM32	
0230	90259-0309		3	BUSBAR, B3.1/4-PKZ0	
Common Parts					
0100	312115-0323		3	SCREW ISO4762 M5X8 A4 80	
0110	315105-0146		3	WASHER BRB 5,3X10 RFR	
0120	353042-0004	MM	680	RAIL TS 35/7,5	
A70F0140	90459-5324		1	OVERLOAD PROTECTION, PKZM0-1,6	
A01Q5810	90459-5308		1	CONTACTOR 4KW 24VDC, DILM9-10	
A70Q0140	90459-5440		1	CONTACTOR 4KW 24VDC, DILM9-01	
K80F0111	90459-5325		1	OVERLOAD PROTECTION, PKZM0-2,5	
K80F0401	90459-5321		1	OVERLOAD PROTECTION, PKZM0-0,4	
K80F0471	90459-5330		1	OVERLOAD PROTECTION, PKZM0-16	
K80Q0111	90459-5440		1	CONTACTOR 4KW 24VDC, DILM9-01	
K80Q0121	90459-5440		1	CONTACTOR 4KW 24VDC, DILM9-01	
K80Q0401	90459-5440		1	CONTACTOR 4KW 24VDC, DILM9-01	
K80Q0471	90459-5441		1	CONTACTOR 7,5KW 24VDC, DILM17-01	
T40F0050	90459-5324		1	OVERLOAD PROTECTION, PKZM0-1,6	
T40Q0050	90459-5440		1	CONTACTOR 4KW 24VDC, DILM9-01	
U70F0100	90459-5323		1	OVERLOAD PROTECTION, PKZM0-1	
U70Q0100	90459-5440		1	CONTACTOR 4KW 24VDC, DILM9-01	

Pos	Part No	UN	Qty	Description	Page No

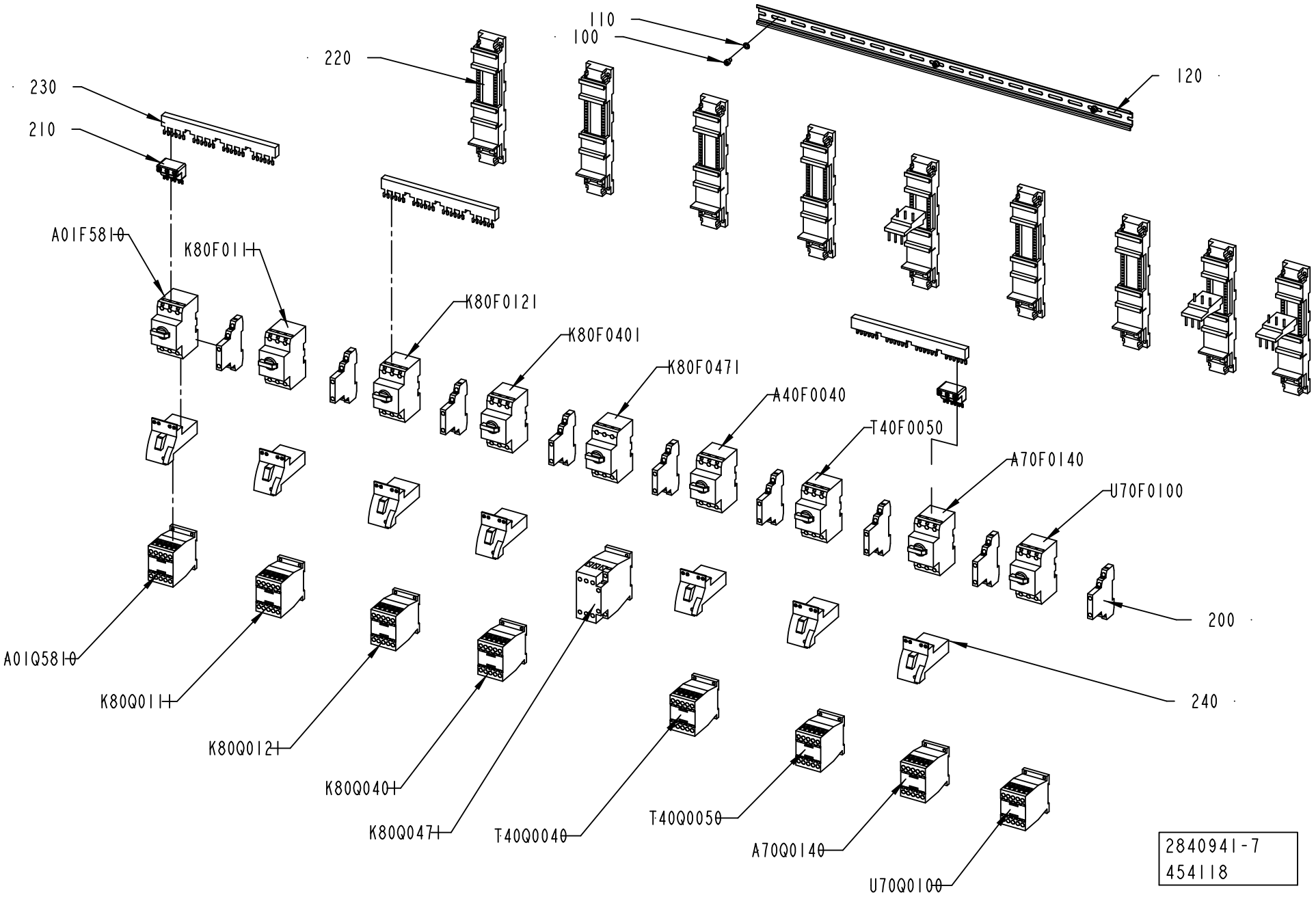
110
100
120
220
230
210
A01F5810
K80F011
K80F0121
K80F0401
K80F0471
A40F0040
T40F0050
A70F0140
U70F0100
200
240
A01Q5810
K80Q011
K80Q012
K80Q040
K80Q047
T40Q0040
T40Q0050
A70Q0140
U70Q0100
2840941-7
454118

ECM: 454290 - 20100403
Group number: 2840941-0200
Assembly Drawing: 2840941-7_1_AA

This list covers pages from 8-62 to 8-65

Pos	Part No	UN	Qty	Description	Page No
A3/SPEED CE (See drawing on page: 8-62)					
0200	90259-0313		10	AUXILIARY CONTACT, NHI21-PKZ0	
0210	90259-0308		2	INCOMING TERMINAL, BK25/3-PKZ0	
0220	90459-6851		10	BASE UNIT, PKZM0-XDM32	
0230	90259-0309		3	BUSBAR, B3.1/4-PKZ0	
0240	90459-6850		7	CONNECTION, PKZM0-XDM12	
A01F5810	90459-5326		1	OVERLOAD PROTECTION, PKZM0-4	
A40F0040	90459-5323		1	OVERLOAD PROTECTION, PKZM0-1	
A40Q0040	90459-5440		1	CONTACTOR 4KW 24VDC, DILM9-01	
K80F0121	90459-5327		1	OVERLOAD PROTECTION, PKZM0-6,3	
T40F9050	90459-5333		1	VERLOAD PROTECTION, PKZM0-32	
T40Q9050	90459-5444		1	CONTACTOR 15KW 24VDC, DILM32-01	
A3/SPEED CSA, A3/SPEED UL (See drawing on page: 8-64)					
0200	90259-0313		9	AUXILIARY CONTACT, NHI21-PKZ0	
0220	90459-6851		9	BASE UNIT, PKZM0-XDM32	
0230	90259-0309		3	BUSBAR, B3.1/4-PKZ0	
Common Parts					
0100	312115-0323		3	SCREW ISO4762 M5X8 A4 80	
0110	315105-0146		3	WASHER BRB 5,3X10 RFR	
0120	353042-0004	MM	680	RAIL TS 35/7,5	
A70F0140	90459-5324		1	OVERLOAD PROTECTION, PKZM0-1,6	
A01Q5810	90459-5308		1	CONTACTOR 4KW 24VDC, DILM9-10	
A70Q0140	90459-5440		1	CONTACTOR 4KW 24VDC, DILM9-01	
K80F0111	90459-5325		1	OVERLOAD PROTECTION, PKZM0-2,5	
K80F0401	90459-5321		1	OVERLOAD PROTECTION, PKZM0-0,4	
K80F0471	90459-5330		1	OVERLOAD PROTECTION, PKZM0-16	
K80Q0111	90459-5440		1	CONTACTOR 4KW 24VDC, DILM9-01	
K80Q0121	90459-5440		1	CONTACTOR 4KW 24VDC, DILM9-01	
K80Q0401	90459-5440		1	CONTACTOR 4KW 24VDC, DILM9-01	
K80Q0471	90459-5441		1	CONTACTOR 7,5KW 24VDC, DILM17-01	
T40F0050	90459-5324		1	OVERLOAD PROTECTION, PKZM0-1,6	
T40Q0050	90459-5440		1	CONTACTOR 4KW 24VDC, DILM9-01	
U70F0100	90459-5323		1	OVERLOAD PROTECTION, PKZM0-1	
U70Q0100	90459-5440		1	CONTACTOR 4KW 24VDC, DILM9-01	

Pos	Part No	UN	Qty	Description	Page No

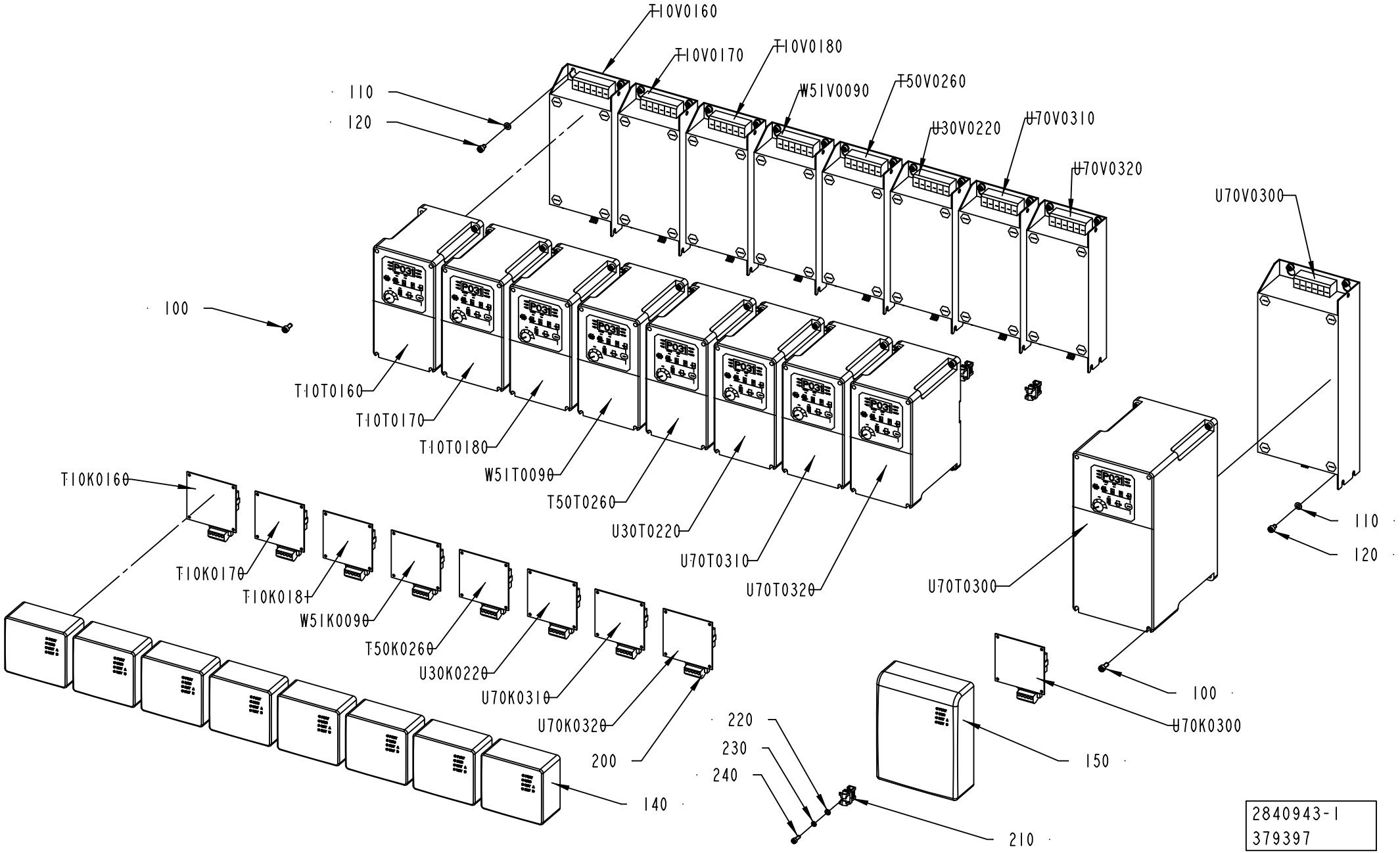
T10V0160
T10V0170
T10V0180
W51V0090
T50V0260
U30V0220
U70V0310
U70V0320
U70V0300
110
120
100
T10T0160
T10T0170
T10T0180
W51T0090
T50T0260
U30T0220
U70T0310
U70T0320
T10K0160
T10K0170
T10K0180
W51K0090
T50K0260
U30K0220
U70K0310
U70K0320
200
140
220
230
240
210
150
U70K0300
2840943-1
379397

ECM: 430863 - 20100401
Group number: 2840943-0100
Assembly Drawing: 2840943-1_1_AC

Pos	Part No	UN	Qty	Description	Page No
A3/SPEED					
0100	312115-0327		36	Z3REW ISO4762 M5X12 A4 80	
0110	315105-0146		36	WASHER BRB 5,3X10 RFR	
0120	312115-0323		36	SCREW ISO4762 M5X8 A4 80	
0140	90459-2795		8	FRONT LID FOR POWERFLEX 40, 22B-CCB	
0200	90459-5574		9	DEVICENET OPEN STYLE CONN, 1787-PLUG10R	
0210	90135-0039		9	CLAMPING YOKE, KLBU 4-13.5	
0220	315105-0136		9	WASHER BRB 4,3X8 RFR	
0230	315402-0136		9	LOCK WASHER FBB 4,1	
0240	312115-0291		9	SCREW ISO4762 M4X12 A4 80	
U70K0320	90459-2614		1	DEVICENET ADAPTER POWERFLEX 40 22-COMM-D	
U70T0320	90459-2607		1	VARIABLE FREQUENCY DRIVE 22B-D6P0N104	
U70V0320	90459-3458		1	FOOTPRINT FILTER 22-RF012-BL	
W51K0090	90459-2614		1	DEVICENET ADAPTER POWERFLEX 40 22-COMM-D	
W51T0090	90459-3444		1	VARIABLE FREQUENCY DRIVE 22B-D4P0N104	
W51V0090	90459-3458		1	FOOTPRINT FILTER 22-RF012-BL	
Common Parts					
0150	90459-2796		1	FRONT LID FOR POWERFLEX 40, 22B-CCC	
T10K0160	90459-2614		1	DEVICENET ADAPTER POWERFLEX 40 22-COMM-D	
T10K0170	90459-2614		1	DEVICENET ADAPTER POWERFLEX 40 22-COMM-D	
T10K0181	90459-2614		1	DEVICENET ADAPTER POWERFLEX 40 22-COMM-D	
T50K0260	90459-2614		1	DEVICENET ADAPTER POWERFLEX 40 22-COMM-D	
T10T0160	90459-3442		1	VARIABLE FREQUENCY DRIVE 22B-A5P0N104	
T10T0170	90459-3442		1	VARIABLE FREQUENCY DRIVE 22B-A5P0N104	
T10T0180	90459-3442		1	VARIABLE FREQUENCY DRIVE 22B-A5P0N104	
T50T0260	90459-3442		1	VARIABLE FREQUENCY DRIVE 22B-A5P0N104	
T10V0160	90459-3454		1	FOOTPRINT FILTER, 22-RF018-BL	
T10V0170	90459-3454		1	FOOTPRINT FILTER, 22-RF018-BL	
T10V0180	90459-3454		1	FOOTPRINT FILTER, 22-RF018-BL	
T50V0260	90459-3454		1	FOOTPRINT FILTER, 22-RF018-BL	
U30K0220	90459-2614		1	DEVICENET ADAPTER POWERFLEX 40 22-COMM-D	
U70K0300	90459-2614		1	DEVICENET ADAPTER POWERFLEX 40 22-COMM-D	
U70K0310	90459-2614		1	DEVICENET ADAPTER POWERFLEX 40 22-COMM-D	
U30T0220	90459-3442		1	VARIABLE FREQUENCY DRIVE 22B-A5P0N104	
U70T0300	90459-3446		1	FREQUENCY CONVERTER 5,5 KW	
U70T0310	90459-3442		1	VARIABLE FREQUENCY DRIVE 22B-A5P0N104	
U30V0220	90459-3454		1	FOOTPRINT FILTER, 22-RF018-BL	
U70V0300	90459-3459		1	FOOTPRINT FILTER, 22-RF018-CL	
U70V0310	90459-3454		1	FOOTPRINT FILTER, 22-RF018-BL	

Pos	Part No	UN	Qty	Description	Page No

Machine Type | Group Description | Used-In | Group Number | Page No

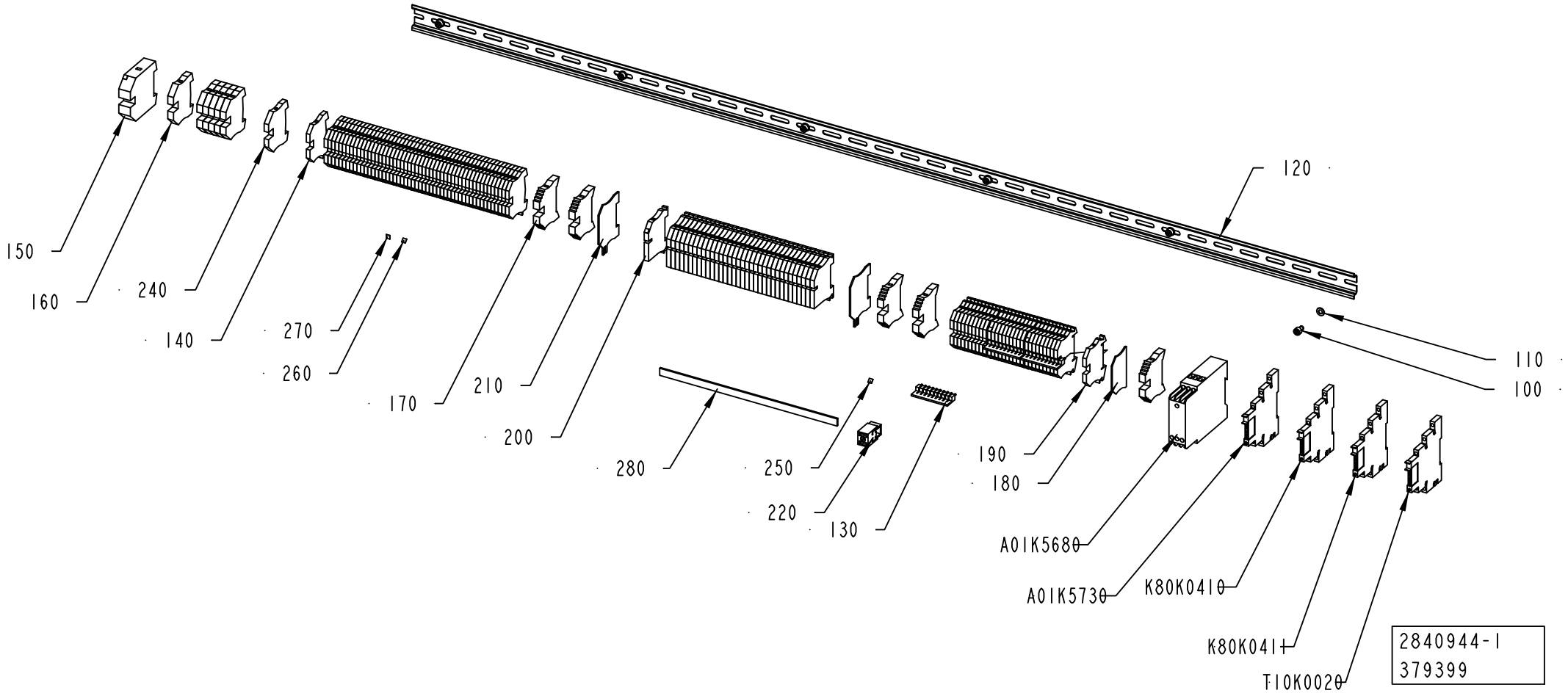
150
160
240
140
270
260
170
210
200
280
250
220
130
120
190
180
110
100
A01K5680
A01K5730
K80K0410
K80K0411
T10K0020
2840944-1
379399

ECM: 454118 - 20100701
Group number: 2840944-0100
Assembly Drawing: 2840944-1_1_AC

This list covers pages from 8-68 to 8-71

Pos	Part No	UN	Qty	Description	Page No
A3/SPEED CE (See drawing on page: 8-68)					
0130	353034-0030		3	BRIDGE CONNECTOR WQV 2,5/10, 10544.6	
0180	353032-0004		3	END PLATE WAP 2,5-10 BEIGE	
0190	353021-0212		30	FEED THROUGH TERMINAL, 10200.0	
0250	359011-0807		5	MARKING, DEK 5 FW 1-50	
A3/SPEED CSA, A3/SPEED UL (See drawing on page: 8-70)					
0130	353034-0030		5	BRIDGE CONNECTOR WQV 2,5/10, 10544.6	
0180	353032-0004		5	END PLATE WAP 2,5-10 BEIGE	
0190	353021-0212		36	FEED THROUGH TERMINAL, 10200.0	
0250	359011-0807		6	MARKING, DEK 5 FW 1-50	
0310	353034-0030		2	BRIDGE CONNECTOR WQV 2,5/10, 10544.6	
Common Parts					
0100	312115-0323		6	SCREW ISO4762 M5X8 A4 80	
0110	315105-0146		6	WASHER BRB 5,3X10 RFR	
0120	353042-0004	MM	1300	RAIL TS 35/7,5	
0140	353024-0204		52	EARTH TERMINAL WPE 2,5	
0150	353024-0209		1	EARTH TERMINAL, 1010.5	
0160	353024-0206		6	EARTH TERMINAL, 1010.2	
0170	353031-0203		5	END SUPPORT, WEW 35/2	
0200	353022-0002		35	NEUTRAL TERMINAL, 10107.8	
0210	353033-0104		2	END PLATE, 10502.8	
0220	353041-0106		1	HOLDER ZB35 K 5026.8	
0240	353024-0205		1	EARTH TERMINAL, 1010.1	
0260	359011-0808		1	MARKING, DEK 5FW 51-100	
0270	359011-0809		1	MARKING, DEK 5 FW 101-150	
0280	353041-0001	MM	245	BUS BAR RAIL 10X3MM SSCH	
A01K5680	90600-4814		1	PHASE MONITORING RELAY, EMR4-AWN280-1-F	
A01K5730	90600-1211		1	TERMINAL BLOCK RELAY, 700-HLT1Z24	
K80K0410	90600-1209		1	TERMINAL BLOCK RELAY, 700-HLT1U2	
K80K0411	90600-1211		1	TERMINAL BLOCK RELAY, 700-HLT1Z24	
T10K0020	90600-1211		1	TERMINAL BLOCK RELAY, 700-HLT1Z24	

Pos	Part No	UN	Qty	Description	Page No

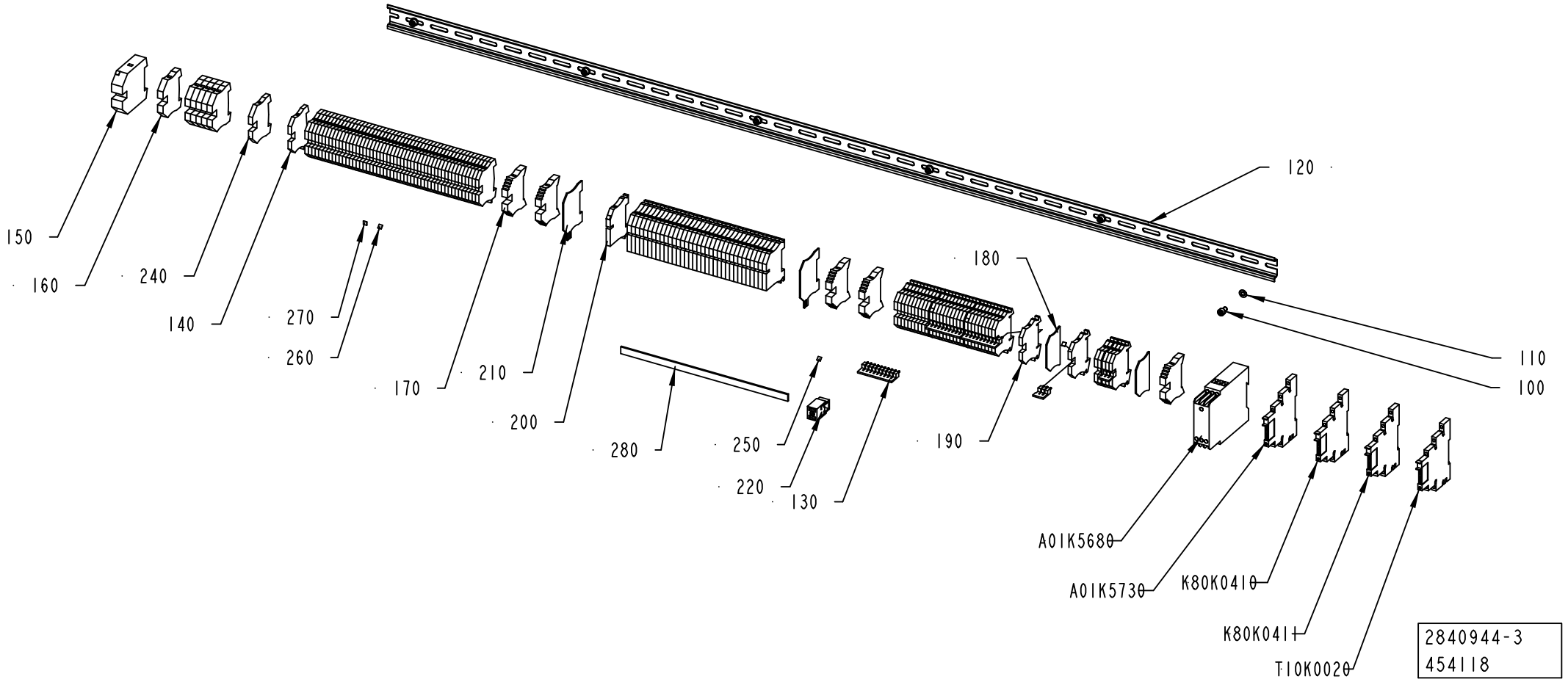
150
160
240
140
270
260
170
210
200
280
250
220
130
190
180
120
110
100
A01K5680
A01K5730
K80K0410
K80K0411
T10K0020
2840944-3
454118

ECM: 454118 - 20100701
Group number: 2840944-0100
Assembly Drawing: 2840944-3_1_AA

This list covers pages from 8-68 to 8-71

Pos	Part No	UN	Qty	Description	Page No
A3/SPEED CE (See drawing on page: 8-68)					
0130	353034-0030		3	BRIDGE CONNECTOR WQV 2,5/10, 10544.6	
0180	353032-0004		3	END PLATE WAP 2,5-10 BEIGE	
0190	353021-0212		30	FEED THROUGH TERMINAL, 10200.0	
0250	359011-0807		5	MARKING, DEK 5 FW 1-50	
A3/SPEED CSA, A3/SPEED UL (See drawing on page: 8-70)					
0130	353034-0030		5	BRIDGE CONNECTOR WQV 2,5/10, 10544.6	
0180	353032-0004		5	END PLATE WAP 2,5-10 BEIGE	
0190	353021-0212		36	FEED THROUGH TERMINAL, 10200.0	
0250	359011-0807		6	MARKING, DEK 5 FW 1-50	
0310	353034-0030		2	BRIDGE CONNECTOR WQV 2,5/10, 10544.6	
Common Parts					
0100	312115-0323		6	SCREW ISO4762 M5X8 A4 80	
0110	315105-0146		6	WASHER BRB 5,3X10 RFR	
0120	353042-0004	MM	1300	RAIL TS 35/7,5	
0140	353024-0204		52	EARTH TERMINAL WPE 2,5	
0150	353024-0209		1	EARTH TERMINAL, 1010.5	
0160	353024-0206		6	EARTH TERMINAL, 1010.2	
0170	353031-0203		5	END SUPPORT, WEW 35/2	
0200	353022-0002		35	NEUTRAL TERMINAL, 10107.8	
0210	353033-0104		2	END PLATE, 10502.8	
0220	353041-0106		1	HOLDER ZB35 K 5026.8	
0240	353024-0205		1	EARTH TERMINAL, 1010.1	
0260	359011-0808		1	MARKING, DEK 5FW 51-100	
0270	359011-0809		1	MARKING, DEK 5 FW 101-150	
0280	353041-0001	MM	245	BUS BAR RAIL 10X3MM SSCH	
A01K5680	90600-4814		1	PHASE MONITORING RELAY, EMR4-AWN280-1-F	
A01K5730	90600-1211		1	TERMINAL BLOCK RELAY, 700-HLT1Z24	
K80K0410	90600-1209		1	TERMINAL BLOCK RELAY, 700-HLT1U2	
K80K0411	90600-1211		1	TERMINAL BLOCK RELAY, 700-HLT1Z24	
T10K0020	90600-1211		1	TERMINAL BLOCK RELAY, 700-HLT1Z24	

Pos	Part No	UN	Qty	Description	Page No

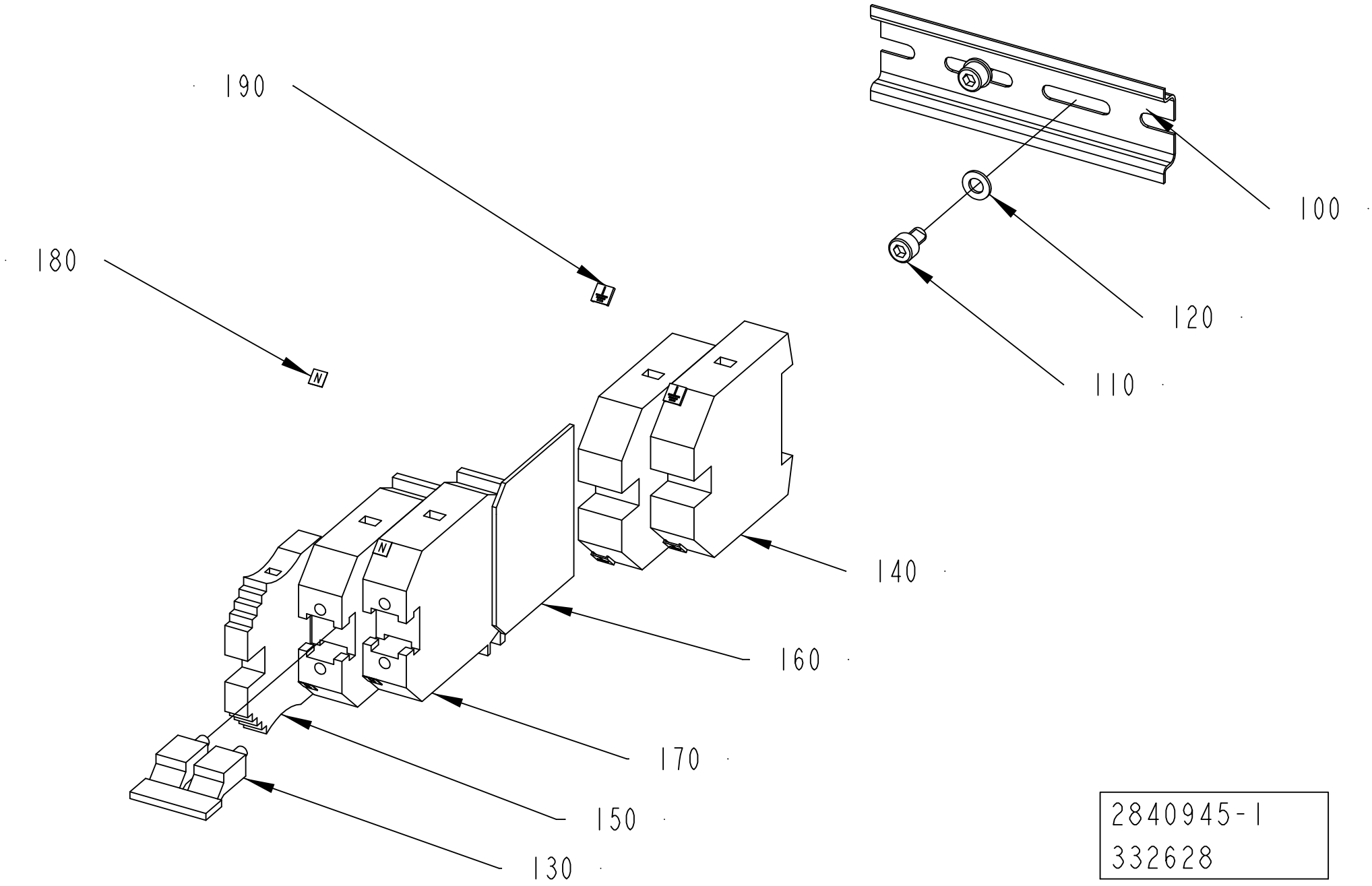

2840945-1
332628

ECM: 430803 - 20100402
Group number: 2840945-0100
Assembly Drawing: 2840945-1_1_AB

Pos	Part No	UN	Qty	Description	Page No
-					
0100	353042-0004	MM	108	RAIL TS 35/7,5	
0110	312115-0323		2	SCREW ISO4762 M5X8 A4 80	
0120	315105-0146		2	WASHER BRB 5,3X10 RFR	
0130	353034-0026		1	BRIDGE CONNECTOR, WQV 35/2, 10530.6	
0140	353024-0209		2	EARTH TERMINAL, 1010.5	
0150	353031-0203		1	END SUPPORT, WEW 35/2	
0160	353033-0105		1	PARTITITION, 10501.0	
0170	353021-0226		2	BY-PASS TERMINAL WDU 35	
0180	90600-0719		4	MARKING, PLATE DEK 5 GW N	
0190	359011-0834		4	MARKING, EARTH, DKE 6 GW ERDE I.KR.	

Pos	Part No	UN	Qty	Description	Page No

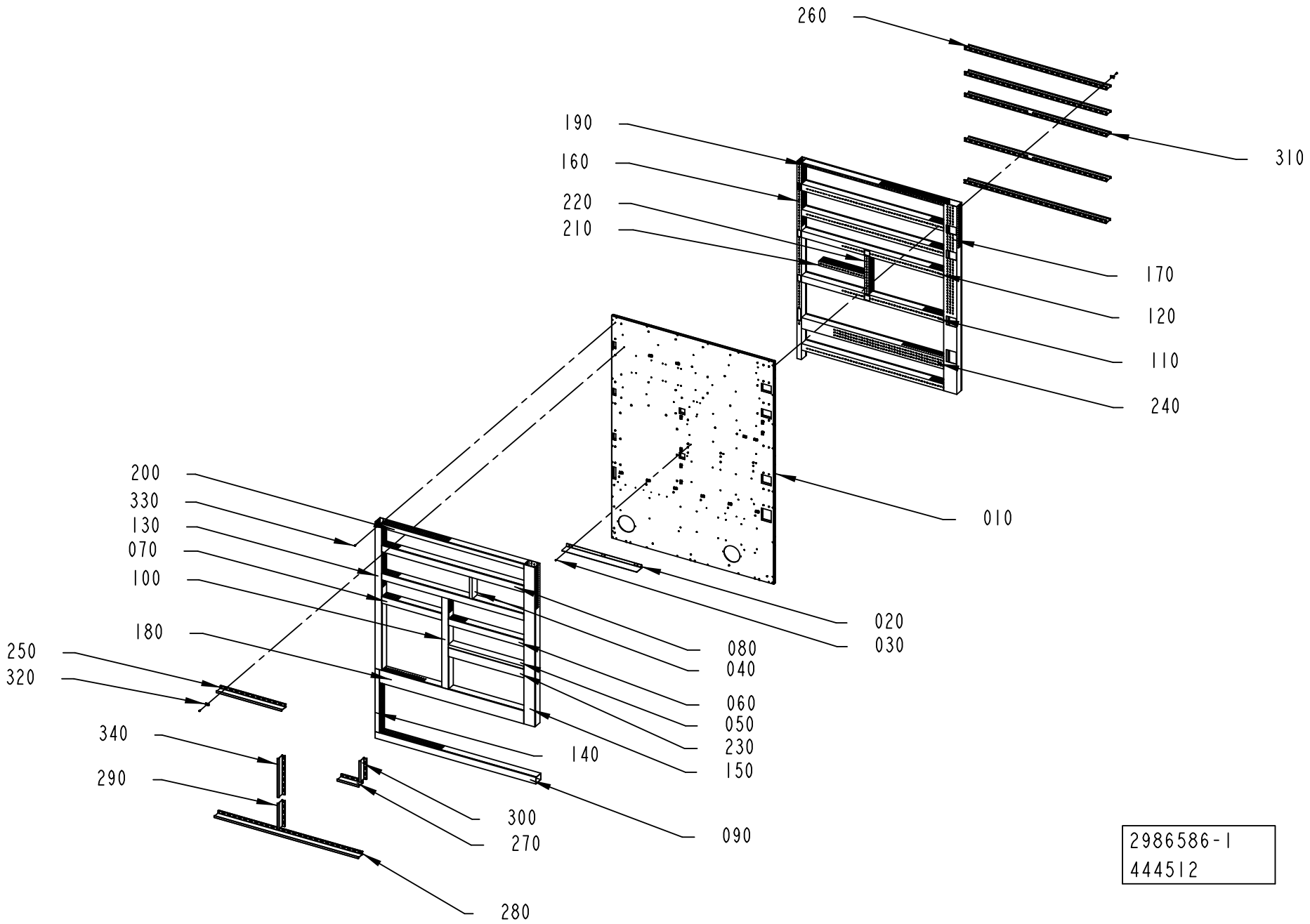
260
190
160
220
210
310
170
120
110
240
200
330
130
070
100
180
250
320
340
290
010
020
030
080
040
060
050
230
150
140
300
270
090
280
2986586-1
444512

ECM: 444516 - 20100701
Group number: 2986586-0100
Assembly Drawing: 2986586-1_1_AB

Pos	Part No	UN	Qty	Description	Page No
-					
010	2986585-0000		1	PLATE	
020	2849076-0000		1	BRACKET	
030	312155-0289		3	SCREW DIN 7991 MF6S M4X10 A4 70	
040	90181-0052	MM	198	CABLE DUCT 25X80MM	
050	90181-0052	MM	692	CABLE DUCT 25X80MM	
060	90181-0054	MM	692	CABLE DUCT 60X80MM	
070	90181-0054	MM	550	CABLE DUCT 60X80MM	
080	90181-0054	MM	1304	CABLE DUCT 60X80MM	
090	90181-0054	MM	1475	CABLE DUCT 60X80MM	
100	2845789-0000		1	CABLE DUCT 60 X 80 MM	
110	2845793-0000		1	CABLE DUCT 60 X 80 MM	
120	2845794-0000		1	CABLE DUCT 60 X 80 MM	
130	2845787-0000		1	CABLE DUCT 60 X 80 MM	
140	2845788-0000		1	CABLE DUCT 40X80MM	
150	2845790-0000		1	CABLE DUCT 100X80MM	
160	2845791-0000		1	CABLE DUCT 40X80MM	
170	2845792-0000		1	CABLE DUCT 100X80MM	
180	90181-0057	MM	1324	CABLE DUCT 120X80MM	
190	90181-0052	MM	730	CABLE DUCT 25X80MM	
200	90181-0053	MM	1304	CABLE DUCT 40X80MM	
210	90181-0053	MM	420	CABLE DUCT 40X80MM	
220	90181-0053	MM	353	CABLE DUCT 40X80MM	
230	90181-0055	MM	692	CABLE DUCT 80X80MM	
240	90181-0056	MM	1304	CABLE DUCT 100X80MM	
250	90181-0067	MM	600	DIVIDING PLATE SEP80	
260	90181-0067	MM	1304	DIVIDING PLATE SEP80	
270	90181-0067	MM	200	DIVIDING PLATE SEP80	
280	90181-0067	MM	1324	DIVIDING PLATE SEP80	
290	2918723-0000		1	DIVIDER	
300	2918726-0000		1	DIVIDER	
310	2918727-0000		2	DIVIDER	
320	90600-2830		42	FASTENING ELEMENT, BLOCKSEP-E 01026	
330	90181-0313		153	RIVET DUCTAFIX R4	
340	90181-0067	MM	360	DIVIDING PLATE SEP80	

Pos	Part No	UN	Qty	Description	Page No

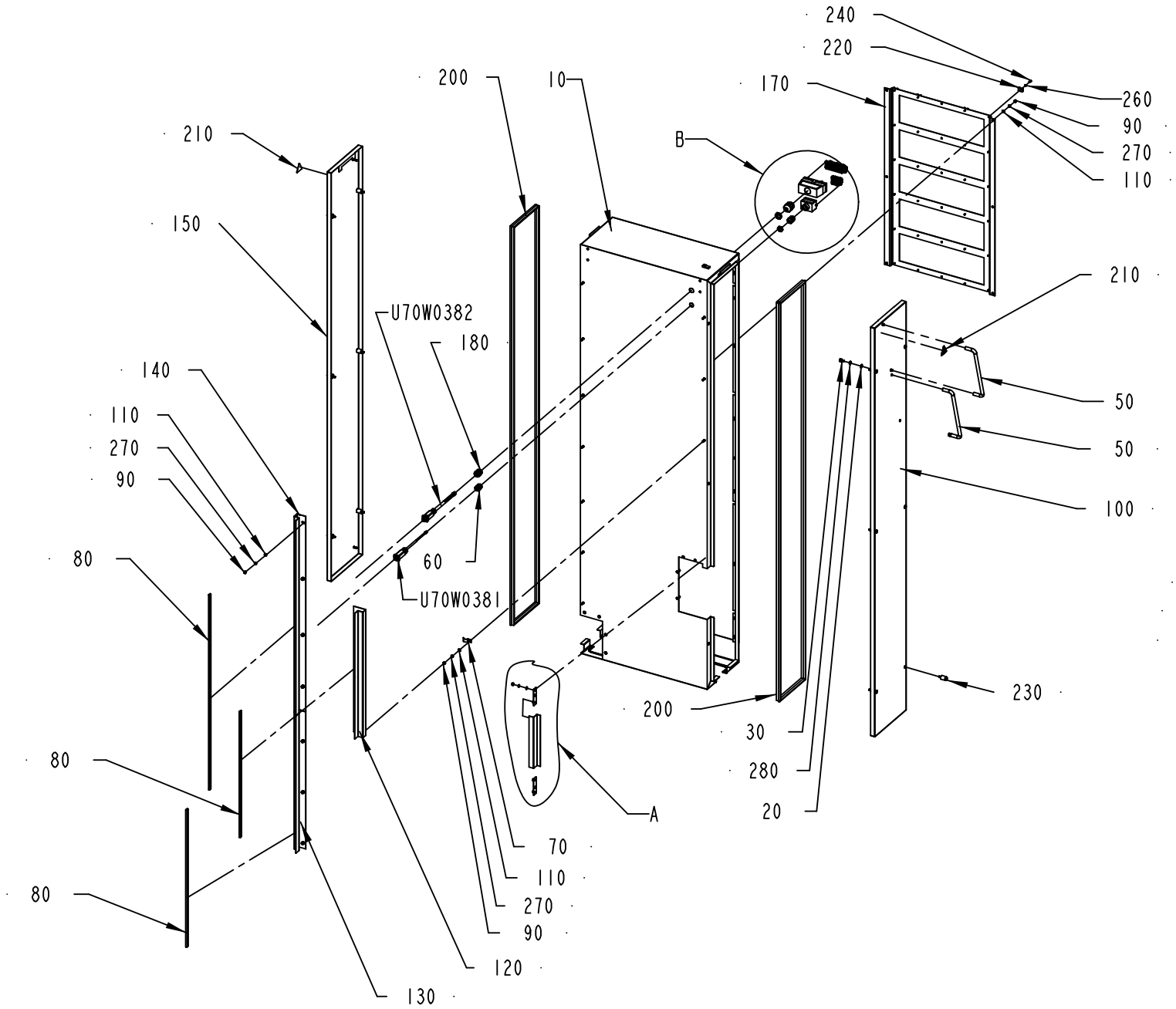

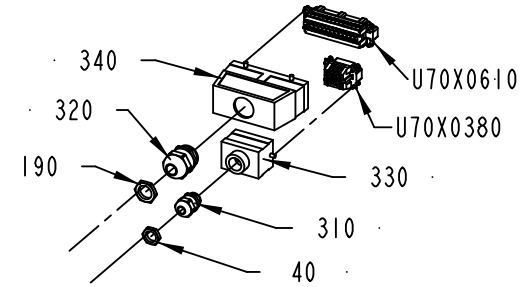

DETAIL B
SCALE 13:100

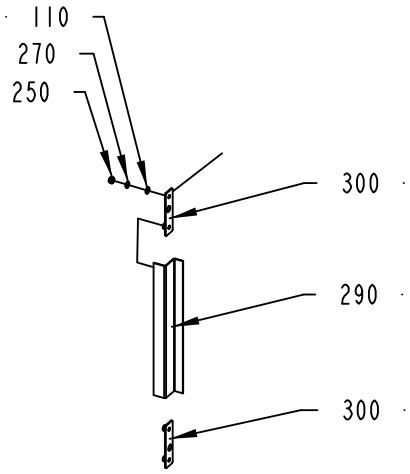

DETAIL A
SCALE 1:10

2862711-5
422253

ECM: 450816 - 20100403
Group number: 2862711-0200
Assembly Drawing: 2862711-5_1_AA

This list covers pages from 8-76 to 8-79

Pos	Part No	UN	Qty	Description	Page No
A3/SPEED CE (See drawing on page: 8-76)					
0060	352103-0108		1	CABLE GLAND, ST 13,5 , PR20,4/PG13,5	
0180	352103-0111		1	CABLE GLAND, ST 16, PR22,5/PG16	
0210	359705-0015		2	WARNING SIGN ISO, RISK OF ELECTRIC SHOCK	
0310	90458-0307		1	CABLE GLAND, M20X1,5, NO.5311 1020	
0320	90458-0309		1	CABLE GLAND, M32X1,5, NO.5311 1040	
0330	90459-6632		1	HOOD 6 B TOP ENTRY, 19 30 006 1440	
0340	90459-6636		1	HOOD 24 B TOP ENTRY, 19 30 024 0427	
U70W0381	2968981-0000		1	CABLE	
U70W0382	2968982-0000		1	CABLE	
U70X0380	90110-0052		1	MALE INSERT HAN 6E 09 33 006 2601	
U70X0610	90110-0056		1	MALE INSERT HAN 24 E 09 33 024 2601	
A3/SPEED CSA, A3/SPEED UL (See drawing on page: 8-78)					
0060	352103-0108		1	CABLE GLAND, ST 13,5 , PR20,4/PG13,5	
0180	352103-0111		1	CABLE GLAND, ST 16, PR22,5/PG16	
0210	359715-0100		2	WARNING SIGN ANSI (H), ELECTRIC SHOCK	
0310	90458-0307		1	CABLE GLAND, M20X1,5, NO.5311 1020	
0320	90458-0309		1	CABLE GLAND, M32X1,5, NO.5311 1040	
0330	90459-6632		1	HOOD 6 B TOP ENTRY, 19 30 006 1440	
0340	90459-6636		1	HOOD 24 B TOP ENTRY, 19 30 024 0427	
U70W0381	2968981-0000		1	CABLE	
U70W0382	2968982-0000		1	CABLE	
U70X0380	90110-0052		1	MALE INSERT HAN 6E 09 33 006 2601	
U70X0610	90110-0056		1	MALE INSERT HAN 24 E 09 33 024 2601	
Common Parts					
0010	3062542-0000		1	COVER	
0020	315105-0165		4	WASHER BRB 8,4X16 RFR	
0030	312115-0447		4	SCREW ISO4762 M8X12 A4 80	
0040	90099-0117		1	NUT, PR 18,6 (PG11)	
0050	90017-0015		2	HANDLE, NO. 14.4012.02.308	
0070	90074-0011		1	CABLE CLIPS, D=14 MM	
0080	90143-0097	MM	3820	SELF GRIPPING GASKET, 1011-24	
0090	312605-0316		16	HEXAGON NUT, M6M M6 A280	
0100	3062543-0000		1	PANEL	
0110	315105-0153		36	WASHER BRB 6,4X12 RFR	
0120	2748701-0000		1	BRACKET	
0130	2748702-0000		1	BRACKET	
0140	2747630-0000		1	BRACKET	
0150	3062544-0000		1	PANEL	
0170	1532911-0000		1	FASTENING PLATE	
0190	90099-0110		1	NUT, PR 22,5 (PG16)	
0200	90143-0057	M	10	STRIP EMKA 1011-05 21X11MM	
0220	352113-0203		24	ANCHOR PLATES FOR STRIPS, TYPE TM3S8-M0	
0230	90226-0458		12	MOUNTING SCREW	
0240	312115-0289		24	SCREW ISO4762 M4X10 A4 80	
0250	312812-0316		20	HEXAGON NUT, NY-LOCK M6 A480	
0260	315105-0136		24	WASHER BRB 4,3X8 RFR	
0270	315402-0156		36	LOCK WASHER FBB 6,5	
0280	315402-0165		4	LOCK WASHER FBB 8,2	
0290	2986629-0000		1	PANEL	
0300	2986630-0000		2	PLATE	

Machine Type | Group Description | Used-In | Group Number | Page No

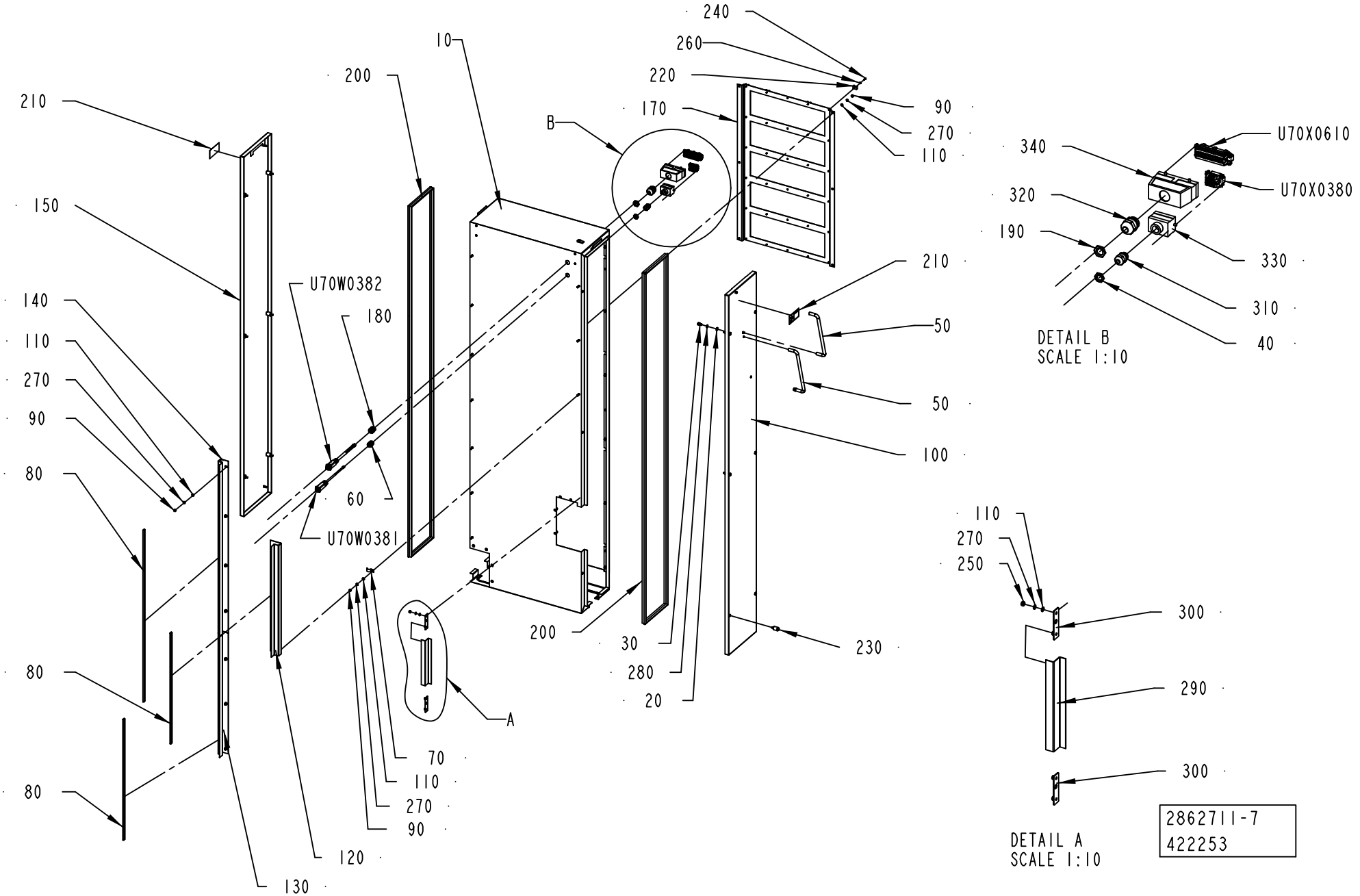
240
260
220
170
B
10
200
210
150
140
110
270
90
80
80
80
U70W0382
180
60
U70W0381
120
130
70
110
270
90
A
200
30
280
20
90
270
110
210
50
50
100
230
340
320
190
U70X0610
U70X0380
330
310
40
DETAIL B
SCALE 1:10
110
270
250
300
290
300
DETAIL A
SCALE 1:10
2862711-7
422253

ECM: 450816 - 20100403
Group number: 2862711-0200
Assembly Drawing: 2862711-7_1_AA

This list covers pages from 8-76 to 8-79

Pos	Part No	UN	Qty	Description	Page No
A3/SPEED CE (See drawing on page: 8-76)					
0060	352103-0108		1	CABLE GLAND, ST 13,5 , PR20,4/PG13,5	
0180	352103-0111		1	CABLE GLAND, ST 16, PR22,5/PG16	
0210	359705-0015		2	WARNING SIGN ISO, RISK OF ELECTRIC SHOCK	
0310	90458-0307		1	CABLE GLAND, M20X1,5, NO.5311 1020	
0320	90458-0309		1	CABLE GLAND, M32X1,5, NO.5311 1040	
0330	90459-6632		1	HOOD 6 B TOP ENTRY, 19 30 006 1440	
0340	90459-6636		1	HOOD 24 B TOP ENTRY, 19 30 024 0427	
U70W0381	2968981-0000		1	CABLE	
U70W0382	2968982-0000		1	CABLE	
U70X0380	90110-0052		1	MALE INSERT HAN 6E 09 33 006 2601	
U70X0610	90110-0056		1	MALE INSERT HAN 24 E 09 33 024 2601	
A3/SPEED CSA, A3/SPEED UL (See drawing on page: 8-78)					
0060	352103-0108		1	CABLE GLAND, ST 13,5 , PR20,4/PG13,5	
0180	352103-0111		1	CABLE GLAND, ST 16, PR22,5/PG16	
0210	359715-0100		2	WARNING SIGN ANSI (H), ELECTRIC SHOCK	
0310	90458-0307		1	CABLE GLAND, M20X1,5, NO.5311 1020	
0320	90458-0309		1	CABLE GLAND, M32X1,5, NO.5311 1040	
0330	90459-6632		1	HOOD 6 B TOP ENTRY, 19 30 006 1440	
0340	90459-6636		1	HOOD 24 B TOP ENTRY, 19 30 024 0427	
U70W0381	2968981-0000		1	CABLE	
U70W0382	2968982-0000		1	CABLE	
U70X0380	90110-0052		1	MALE INSERT HAN 6E 09 33 006 2601	
U70X0610	90110-0056		1	MALE INSERT HAN 24 E 09 33 024 2601	
Common Parts					
0010	3062542-0000		1	COVER	
0020	315105-0165		4	WASHER BRB 8,4X16 RFR	
0030	312115-0447		4	SCREW ISO4762 M8X12 A4 80	
0040	90099-0117		1	NUT, PR 18,6 (PG11)	
0050	90017-0015		2	HANDLE, NO. 14.4012.02.308	
0070	90074-0011		1	CABLE CLIPS, D=14 MM	
0080	90143-0097	MM	3820	SELF GRIPPING GASKET, 1011-24	
0090	312605-0316		16	HEXAGON NUT, M6M M6 A280	
0100	3062543-0000		1	PANEL	
0110	315105-0153		36	WASHER BRB 6,4X12 RFR	
0120	2748701-0000		1	BRACKET	
0130	2748702-0000		1	BRACKET	
0140	2747630-0000		1	BRACKET	
0150	3062544-0000		1	PANEL	
0170	1532911-0000		1	FASTENING PLATE	
0190	90099-0110		1	NUT, PR 22,5 (PG16)	
0200	90143-0057	M	10	STRIP EMKA 1011-05 21X11MM	
0220	352113-0203		24	ANCHOR PLATES FOR STRIPS, TYPE TM3S8-M0	
0230	90226-0458		12	MOUNTING SCREW	
0240	312115-0289		24	SCREW ISO4762 M4X10 A4 80	
0250	312812-0316		20	HEXAGON NUT, NY-LOCK M6 A480	
0260	315105-0136		24	WASHER BRB 4,3X8 RFR	
0270	315402-0156		36	LOCK WASHER FBB 6,5	
0280	315402-0165		4	LOCK WASHER FBB 8,2	
0290	2986629-0000		1	PANEL	
0300	2986630-0000		2	PLATE	

Machine Type	Group Description	Used-In	Group Number	Page No

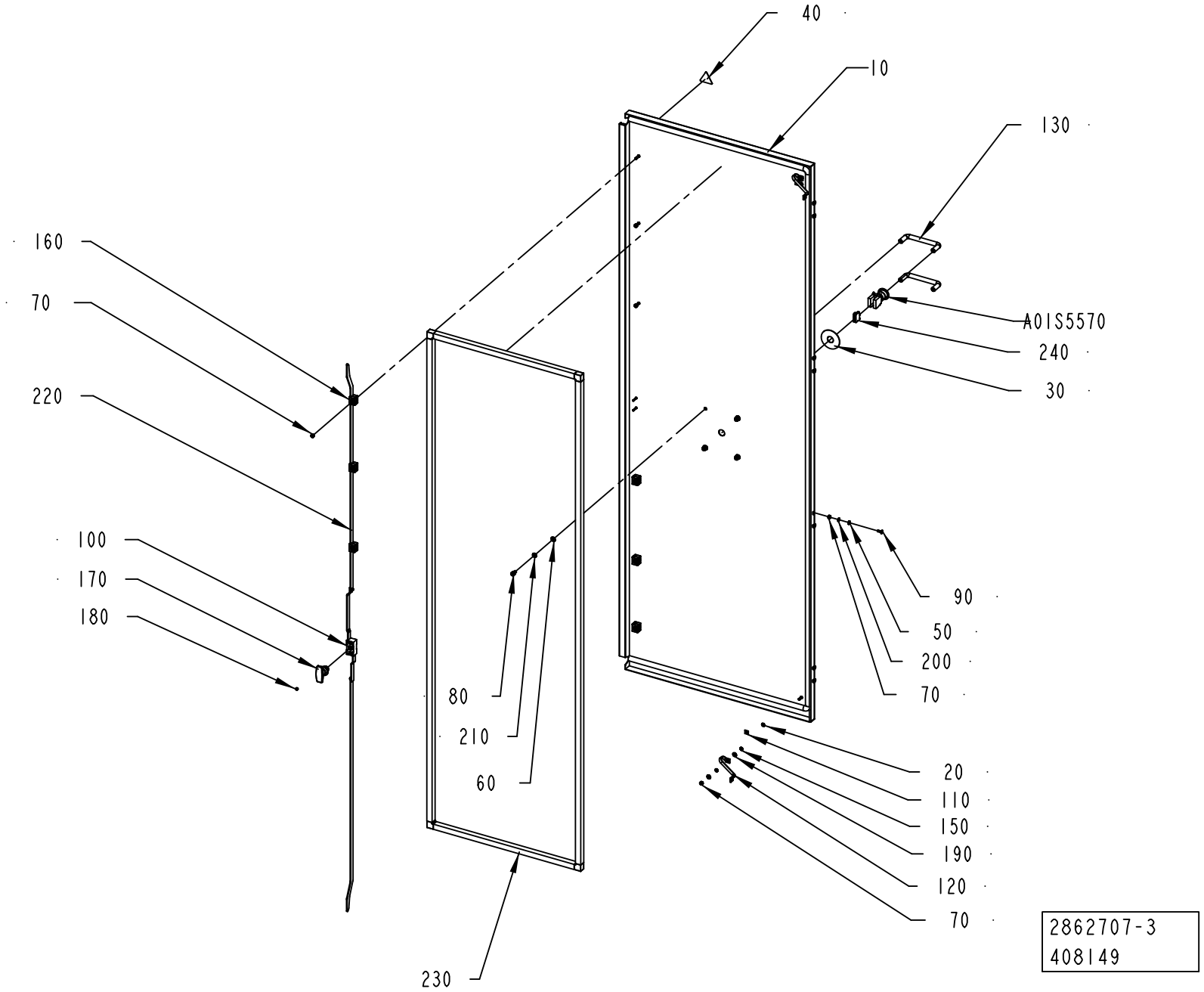
40
10
130
160
70
220
A01S5570
240
30
100
170
180
90
50
200
70
80
210
60
20
110
150
190
120
70
230
2862707-3
408149

ECM: 450815 - 20100403
Group number: 2862707-0200
Assembly Drawing: 2862707-3_1_AA

This list covers pages from 8-80 to 8-83

Pos	Part No	UN	Qty	Description	Page No
CE (See drawing on page: 8-80)					
0040	359705-0015		1	WARNING SIGN ISO, RISK OF ELECTRIC SHOCK	
UL, CSA (See drawing on page: 8-82)					
0040	359715-0100		1	WARNING SIGN ANSI (H), ELECTRIC SHOCK	
Common Parts					
0010	2986605-0000		1	DOOR	
0020	2608177-0000		2	SIGN	
0030	486826-0001		1	11"SIGN ""EMERGENCY STOP"""	
0050	315105-0153		8	WASHER BRB 6,4X12 RFR	
0060	315101-0165		4	WASHER PLAIN, BRB, 8,4/16 H=1,5	
0070	312605-0316		16	HEXAGON NUT, M6M M6 A280	
0080	312115-0447		4	SCREW ISO4762 M8X12 A4 80	
0090	312115-0366		2	SCREW ISO4762 M6X12 A4 80	
0100	90237-0153		1	LOCK HOUSING, 1121-U26-0B	
0110	90194-0152		2	SIGN, EARTH	
0120	90600-2904		2	EARTH BRAID, 250/16/8,5	
0130	90017-0016		2	HANDLE, NO. 14.4012.02.120	
0150	90062-0022		4	LOCK WASHER D=6,4/11	
0160	90600-6028		6	GUIDE FOR PLATE 3X14MM, 1121-U71-N	
0170	90600-6029		1	T-HANDLE, 1000-U775	
0180	312605-0312		2	HEXAGON NUT, M6M M4 A280	
0190	315105-0156		4	WASHER BRB 6,7X14 RFR	
0200	315402-0156		8	LOCK WASHER FBB 6,5	
0210	315402-0165		4	LOCK WASHER FBB 8,2	
0220	2986622-0000		2	BRACKET	
0230	2986623-0000		1	REINFORCEMENT	
0240	90459-1917		1	CONTACT BLOCK ZBE-102 NC	
A01S5570	90458-1651		1	EMERGENCY STOP, ZB4-BS-844 ZB4-BZ-104	

Pos	Part No	UN	Qty	Description	Page No

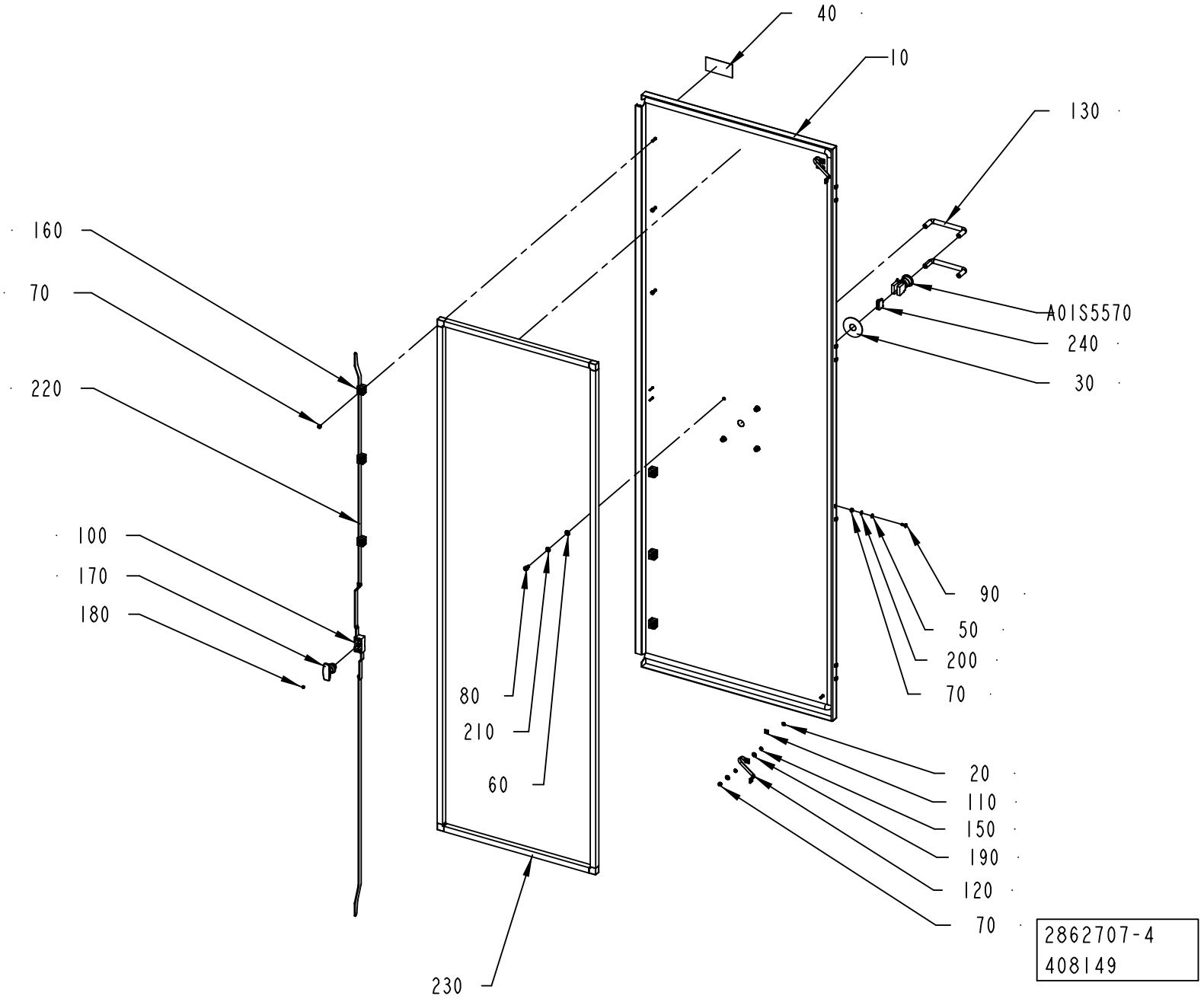
40
10
130
160
70
220
A01S5570
240
30
100
170
180
90
50
200
70
80
210
60
20
110
150
190
120
70
230
2862707-4
408149

ECM: 450815 - 20100403
Group number: 2862707-0200
Assembly Drawing: 2862707-4_1_AA

This list covers pages from 8-80 to 8-83

Pos	Part No	UN	Qty	Description	Page No
CE (See drawing on page: 8-80)					
0040	359705-0015		1	WARNING SIGN ISO, RISK OF ELECTRIC SHOCK	
UL, CSA (See drawing on page: 8-82)					
0040	359715-0100		1	WARNING SIGN ANSI (H), ELECTRIC SHOCK	
Common Parts					
0010	2986605-0000		1	DOOR	
0020	2608177-0000		2	SIGN	
0030	486826-0001		1	11"SIGN ""EMERGENCY STOP"""	
0050	315105-0153		8	WASHER BRB 6,4X12 RFR	
0060	315101-0165		4	WASHER PLAIN, BRB, 8,4/16 H=1,5	
0070	312605-0316		16	HEXAGON NUT, M6M M6 A280	
0080	312115-0447		4	SCREW ISO4762 M8X12 A4 80	
0090	312115-0366		2	SCREW ISO4762 M6X12 A4 80	
0100	90237-0153		1	LOCK HOUSING, 1121-U26-0B	
0110	90194-0152		2	SIGN, EARTH	
0120	90600-2904		2	EARTH BRAID, 250/16/8,5	
0130	90017-0016		2	HANDLE, NO. 14.4012.02.120	
0150	90062-0022		4	LOCK WASHER D=6,4/11	
0160	90600-6028		6	GUIDE FOR PLATE 3X14MM, 1121-U71-N	
0170	90600-6029		1	T-HANDLE, 1000-U775	
0180	312605-0312		2	HEXAGON NUT, M6M M4 A280	
0190	315105-0156		4	WASHER BRB 6,7X14 RFR	
0200	315402-0156		8	LOCK WASHER FBB 6,5	
0210	315402-0165		4	LOCK WASHER FBB 8,2	
0220	2986622-0000		2	BRACKET	
0230	2986623-0000		1	REINFORCEMENT	
0240	90459-1917		1	CONTACT BLOCK ZBE-102 NC	
A01S5570	90458-1651		1	EMERGENCY STOP, ZB4-BS-844 ZB4-BZ-104	

Pos	Part No	UN	Qty	Description	Page No

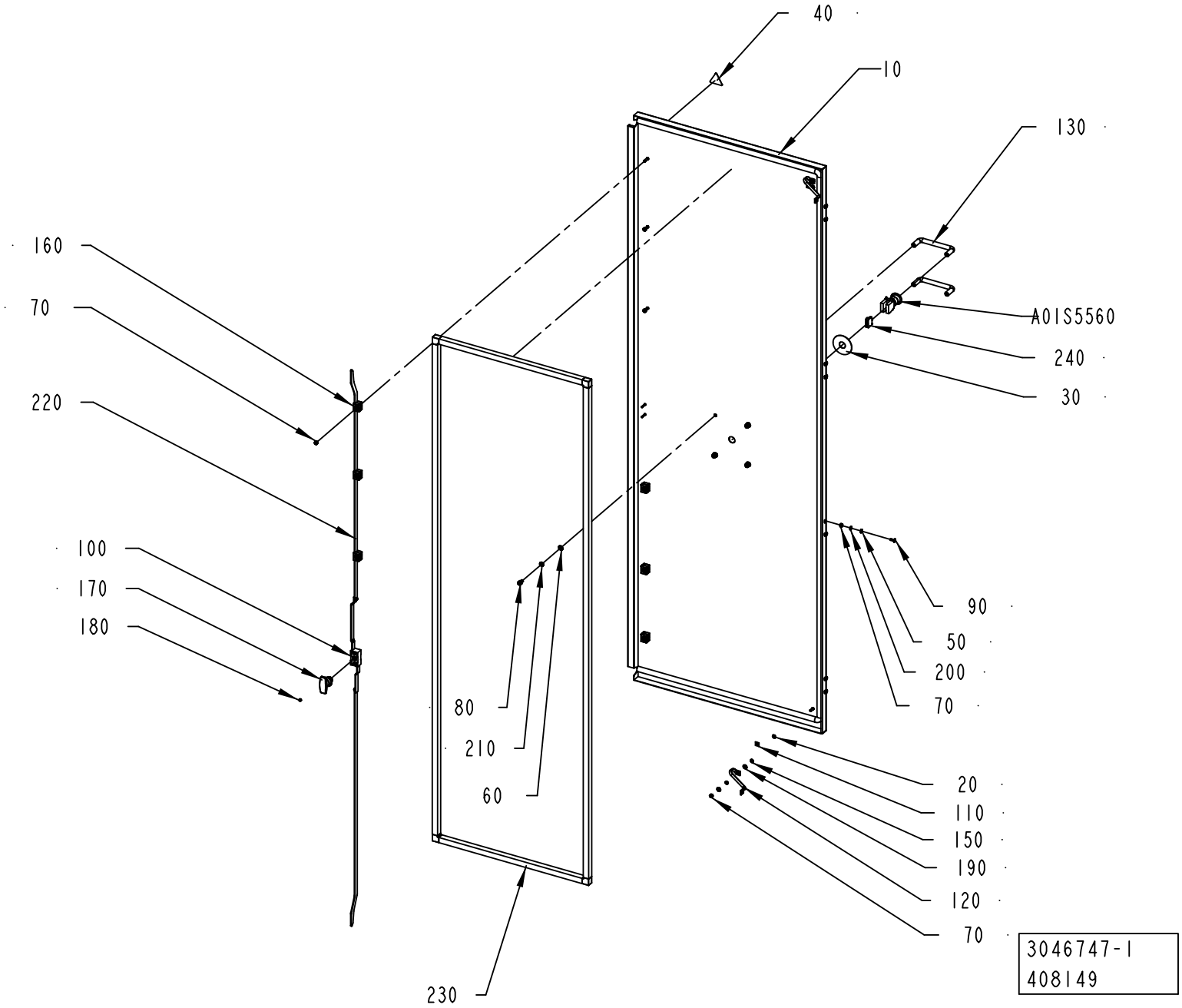
40
10
130
160
70
220
A01S5560
240
30
100
170
180
90
50
200
70
80
210
60
20
110
150
190
120
70
230
3046747-1
408149

ECM: 450819 - 20100403
Group number: 3046747-0100
Assembly Drawing: 3046747-1_1_AA

This list covers pages from 8-84 to 8-87

Pos	Part No	UN	Qty	Description	Page No
CE (See drawing on page: 8-84)					
0040	359705-0015		1	WARNING SIGN ISO, RISK OF ELECTRIC SHOCK	
UL, CSA (See drawing on page: 8-86)					
0040	359715-0100		1	WARNING SIGN ANSI (H), ELECTRIC SHOCK	
Common Parts					
0010	2986605-0000		1	DOOR	
0020	2608177-0000		2	SIGN	
0030	486826-0001		1	11"SIGN ""EMERGENCY STOP"""	
0050	315105-0153		8	WASHER BRB 6,4X12 RFR	
0060	315101-0165		4	WASHER PLAIN, BRB, 8,4/16 H=1,5	
0070	312605-0316		16	HEXAGON NUT, M6M M6 A280	
0080	312115-0447		4	SCREW ISO4762 M8X12 A4 80	
0090	312115-0366		2	SCREW ISO4762 M6X12 A4 80	
0100	90237-0153		1	LOCK HOUSING, 1121-U26-0B	
0110	90194-0152		2	SIGN, EARTH	
0120	90600-2904		2	EARTH BRAID, 250/16/8,5	
0130	90017-0016		2	HANDLE, NO. 14.4012.02.120	
0150	90062-0022		4	LOCK WASHER D=6,4/11	
0160	90600-6028		6	GUIDE FOR PLATE 3X14MM, 1121-U71-N	
0170	90600-6029		1	T-HANDLE, 1000-U775	
0180	312605-0312		2	HEXAGON NUT, M6M M4 A280	
0190	315105-0156		4	WASHER BRB 6,7X14 RFR	
0200	315402-0156		8	LOCK WASHER FBB 6,5	
0210	315402-0165		4	LOCK WASHER FBB 8,2	
0220	2986622-0000		2	BRACKET	
0230	2986623-0000		1	REINFORCEMENT	
0240	90459-1917		1	CONTACT BLOCK ZBE-102 NC	
A01S5560	90458-1651		1	EMERGENCY STOP, ZB4-BS-844 ZB4-BZ-104	

Pos	Part No	UN	Qty	Description	Page No

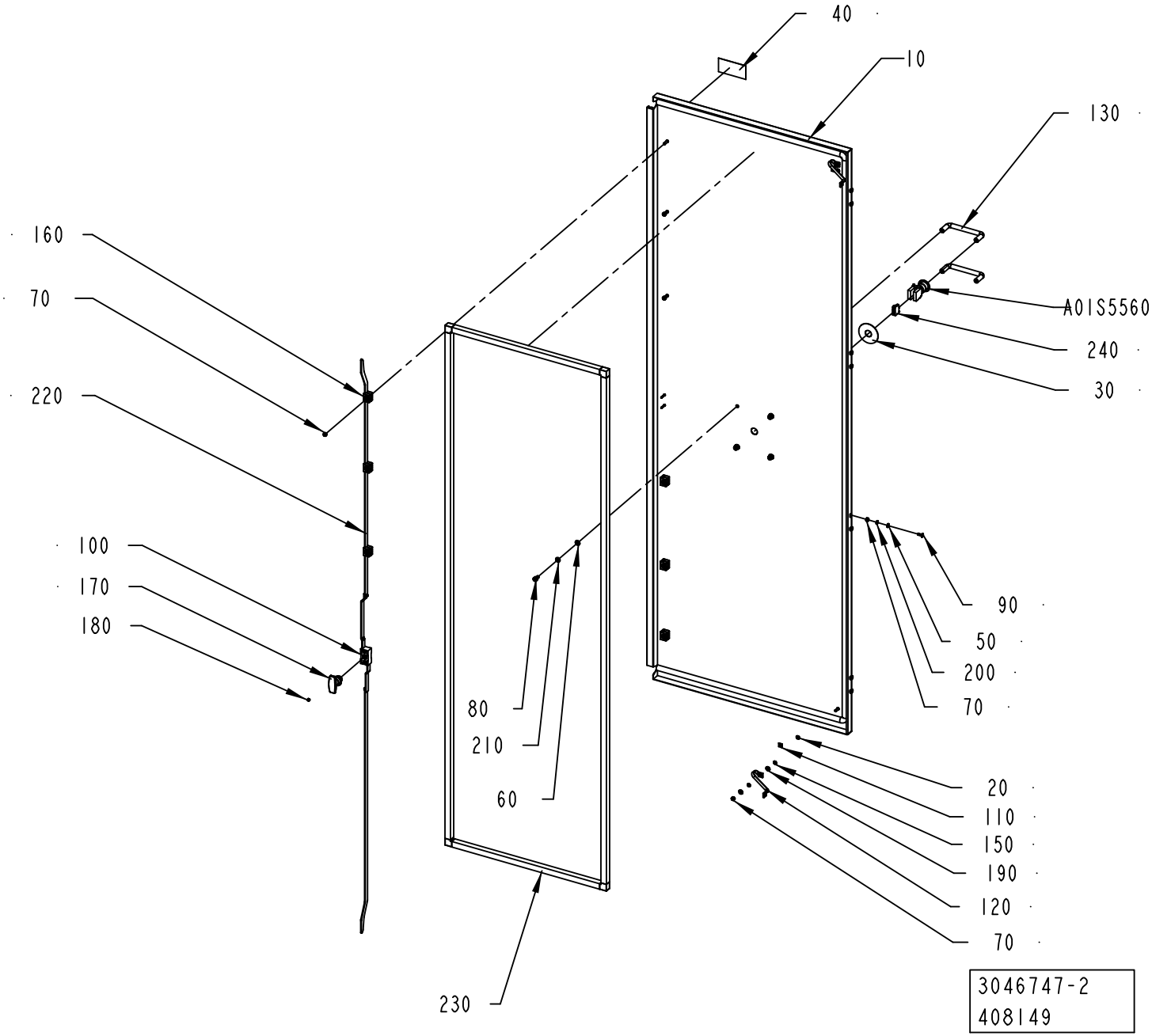
40
10
130
160
70
220
A01S5560
240
30
100
170
180
90
50
200
70
80
210
60
20
110
150
190
120
70
230
3046747-2
408149

ECM: 450819 - 20100403
Group number: 3046747-0100
Assembly Drawing: 3046747-2_1_AA

This list covers pages from 8-84 to 8-87

Pos	Part No	UN	Qty	Description	Page No
CE (See drawing on page: 8-84)					
0040	359705-0015		1	WARNING SIGN ISO, RISK OF ELECTRIC SHOCK	
UL, CSA (See drawing on page: 8-86)					
0040	359715-0100		1	WARNING SIGN ANSI (H), ELECTRIC SHOCK	
Common Parts					
0010	2986605-0000		1	DOOR	
0020	2608177-0000		2	SIGN	
0030	486826-0001		1	11"SIGN ""EMERGENCY STOP"""	
0050	315105-0153		8	WASHER BRB 6,4X12 RFR	
0060	315101-0165		4	WASHER PLAIN, BRB, 8,4/16 H=1,5	
0070	312605-0316		16	HEXAGON NUT, M6M M6 A280	
0080	312115-0447		4	SCREW ISO4762 M8X12 A4 80	
0090	312115-0366		2	SCREW ISO4762 M6X12 A4 80	
0100	90237-0153		1	LOCK HOUSING, 1121-U26-0B	
0110	90194-0152		2	SIGN, EARTH	
0120	90600-2904		2	EARTH BRAID, 250/16/8,5	
0130	90017-0016		2	HANDLE, NO. 14.4012.02.120	
0150	90062-0022		4	LOCK WASHER D=6,4/11	
0160	90600-6028		6	GUIDE FOR PLATE 3X14MM, 1121-U71-N	
0170	90600-6029		1	T-HANDLE, 1000-U775	
0180	312605-0312		2	HEXAGON NUT, M6M M4 A280	
0190	315105-0156		4	WASHER BRB 6,7X14 RFR	
0200	315402-0156		8	LOCK WASHER FBB 6,5	
0210	315402-0165		4	LOCK WASHER FBB 8,2	
0220	2986622-0000		2	BRACKET	
0230	2986623-0000		1	REINFORCEMENT	
0240	90459-1917		1	CONTACT BLOCK ZBE-102 NC	
A01S5560	90458-1651		1	EMERGENCY STOP, ZB4-BS-844 ZB4-BZ-104	

Pos	Part No	UN	Qty	Description	Page No

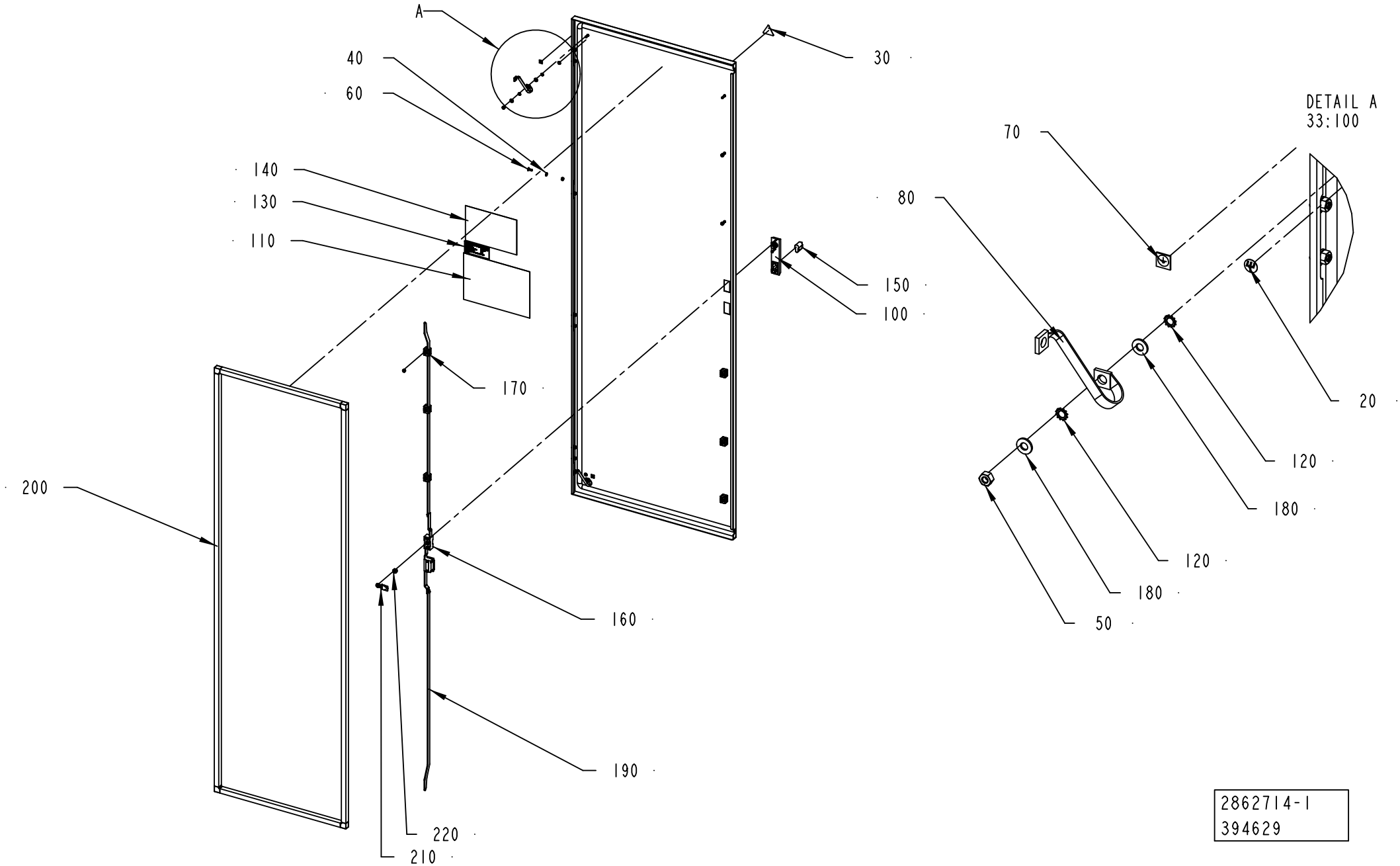

2862714-1
394629

ECM: 454118 - 20100403
Group number: 2862714-0100
Assembly Drawing: 2862714-1_1_AD

This list covers pages from 8-88 to 8-91

Pos	Part No	UN	Qty	Description	Page No
A3/SPEED CE (See drawing on page: 8-88)					
0030	359705-0015		1	WARNING SIGN ISO, RISK OF ELECTRIC SHOCK	
0110	2918732-0000		1	FUSE PANEL LABEL	
A3/SPEED CSA, A3/SPEED UL (See drawing on page: 8-90)					
0030	359715-0100		1	WARNING SIGN ANSI (H), ELECTRIC SHOCK	
0110	3109323-0000		1	FUSE PANEL LABEL	
Common Parts					
0010	2986606-0000		1	DOOR	
0020	2608177-0000		2	SIGN	
0040	315105-0153		8	WASHER BRB 6,4X12 RFR	
0050	312605-0316		16	HEXAGON NUT, M6M M6 A280	
0060	312155-0368		8	SCREW DIN 7991 MF6S M6X16 A4 70	
0070	90194-0152		2	SIGN, EARTH	
0080	90600-2904		2	EARTH BRAID, 250/16/8,5	
0100	90237-0176		1	TURNING HANDLE, 1125-U190-A	
0120	90062-0022		4	LOCK WASHER D=6,4/11	
0130	90459-7229		1	IDENTIF. OF SINGLE CONDUCTORS, TEMPLATE	
0140	90600-2068		1	DELIVERED DESIGN SIGN, 90600-2068	
0150	90237-0129		1	LOCK CYLINDER, 1109-U6	
0160	90237-0153		1	LOCK HOUSING, 1121-U26-0B	
0170	90600-6028		6	GUIDE FOR PLATE 3X14MM, 1121-U71-N	
0180	315105-0156		4	WASHER BRB 6,7X14 RFR	
0190	2986622-0000		2	BRACKET	
0200	2986623-0000		1	REINFORCEMENT	
0210	90237-0156		1	LOCK BOLT, 1000-16	
0220	90237-0214		1	LOCK ADAPTER, 1121-U40	

Pos	Part No	UN	Qty	Description	Page No

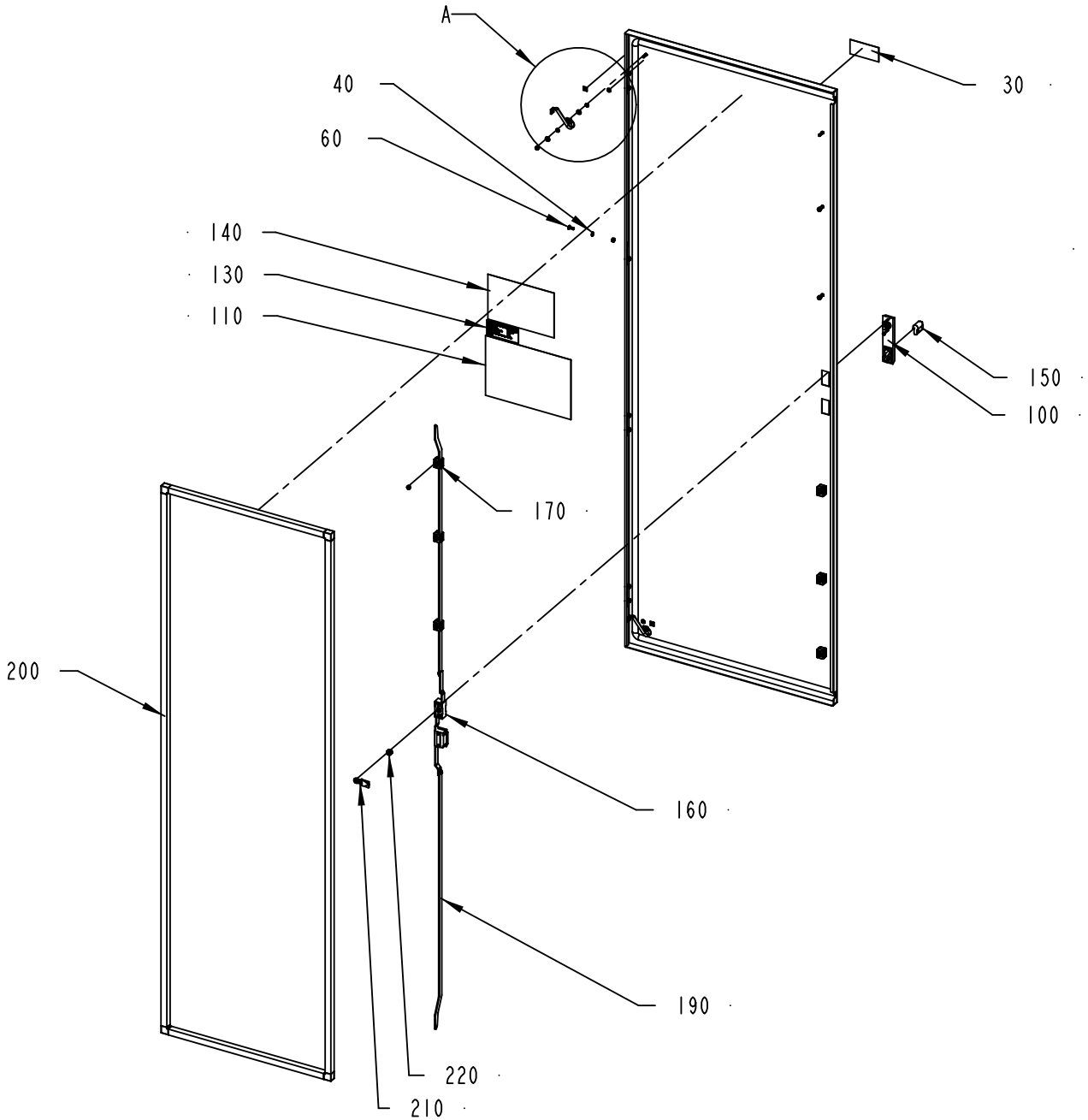

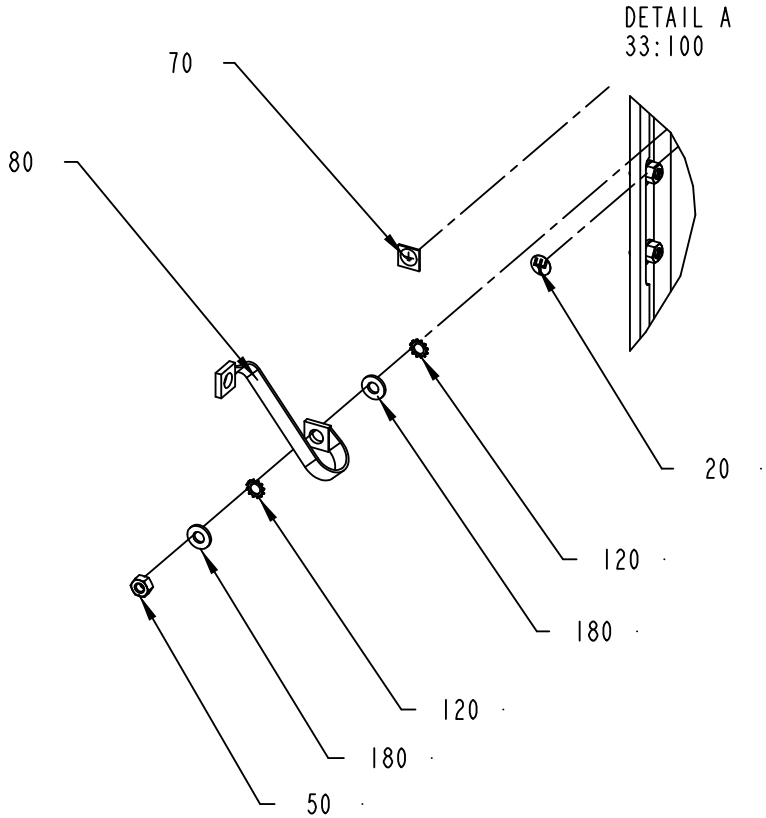

2862714-4
454118

ECM: 454118 - 20100403
Group number: 2862714-0100
Assembly Drawing: 2862714-4_1_AC

This list covers pages from 8-88 to 8-91

Pos	Part No	UN	Qty	Description	Page No
A3/SPEED CE (See drawing on page: 8-88)					
0030	359705-0015		1	WARNING SIGN ISO, RISK OF ELECTRIC SHOCK	
0110	2918732-0000		1	FUSE PANEL LABEL	
A3/SPEED CSA, A3/SPEED UL (See drawing on page: 8-90)					
0030	359715-0100		1	WARNING SIGN ANSI (H), ELECTRIC SHOCK	
0110	3109323-0000		1	FUSE PANEL LABEL	
Common Parts					
0010	2986606-0000		1	DOOR	
0020	2608177-0000		2	SIGN	
0040	315105-0153		8	WASHER BRB 6,4X12 RFR	
0050	312605-0316		16	HEXAGON NUT, M6M M6 A280	
0060	312155-0368		8	SCREW DIN 7991 MF6S M6X16 A4 70	
0070	90194-0152		2	SIGN, EARTH	
0080	90600-2904		2	EARTH BRAID, 250/16/8,5	
0100	90237-0176		1	TURNING HANDLE, 1125-U190-A	
0120	90062-0022		4	LOCK WASHER D=6,4/11	
0130	90459-7229		1	IDENTIF. OF SINGLE CONDUCTORS, TEMPLATE	
0140	90600-2068		1	DELIVERED DESIGN SIGN, 90600-2068	
0150	90237-0129		1	LOCK CYLINDER, 1109-U6	
0160	90237-0153		1	LOCK HOUSING, 1121-U26-0B	
0170	90600-6028		6	GUIDE FOR PLATE 3X14MM, 1121-U71-N	
0180	315105-0156		4	WASHER BRB 6,7X14 RFR	
0190	2986622-0000		2	BRACKET	
0200	2986623-0000		1	REINFORCEMENT	
0210	90237-0156		1	LOCK BOLT, 1000-16	
0220	90237-0214		1	LOCK ADAPTER, 1121-U40	

Pos	Part No	UN	Qty	Description	Page No

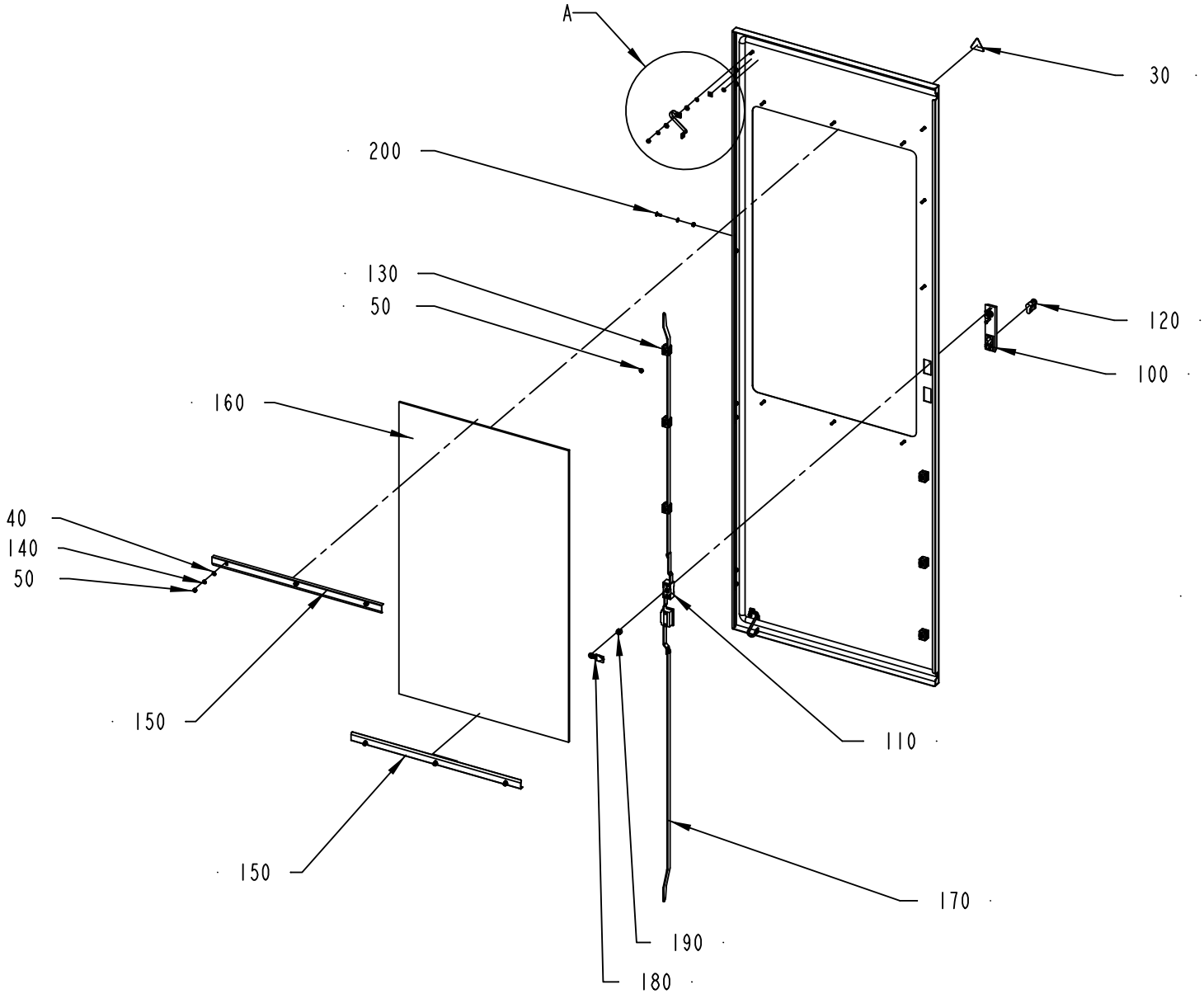

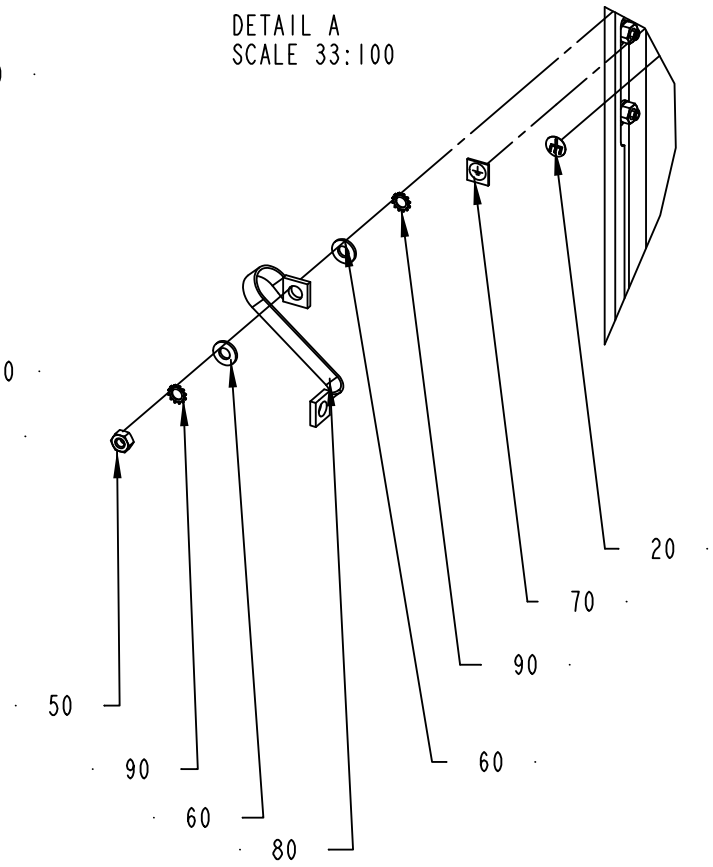

2862715-1
379397

ECM: 450818 - 20100403
Group number: 2862715-0100
Assembly Drawing: 2862715-1_1_AB

This list covers pages from 8-92 to 8-95

Pos	Part No	UN	Qty	Description	Page No
CE (See drawing on page: 8-92)					
0030	359705-0015		1	WARNING SIGN ISO, RISK OF ELECTRIC SHOCK	
UL, CSA (See drawing on page: 8-94)					
0030	359715-0100		1	WARNING SIGN ANSI (H), ELECTRIC SHOCK	
Common Parts					
0010	2986604-0000		1	DOOR	
0020	2608177-0000		2	SIGN	
0040	315105-0153		14	WASHER BRB 6,4X12 RFR	
0050	312605-0316		22	HEXAGON NUT, M6M M6 A280	
0060	315105-0156		4	WASHER BRB 6,7X14 RFR	
0070	90194-0152		2	SIGN, EARTH	
0080	90600-2904		2	EARTH BRAID, 250/16/8,5	
0090	90062-0022		4	LOCK WASHER D=6,4/11	
0100	90237-0176		1	TURNING HANDLE, 1125-U190-A	
0110	90237-0153		1	LOCK HOUSING, 1121-U26-0B	
0120	90237-0128		1	LOCK CYLINDER, 1109-SU125	
0130	90600-6028		6	GUIDE FOR PLATE 3X14MM, 1121-U71-N	
0140	315402-0156		6	LOCK WASHER FBB 6,5	
0150	2986616-0000		2	BRACKET	
0160	2986620-0000		1	GLASS	
0170	2986622-0000		2	BRACKET	
0180	90237-0156		1	LOCK BOLT, 1000-16	
0190	90237-0214		1	LOCK ADAPTER, 1121-U40	
0200	312155-0368		8	SCREW DIN 7991 MF6S M6X16 A4 70	

Pos	Part No	UN	Qty	Description	Page No

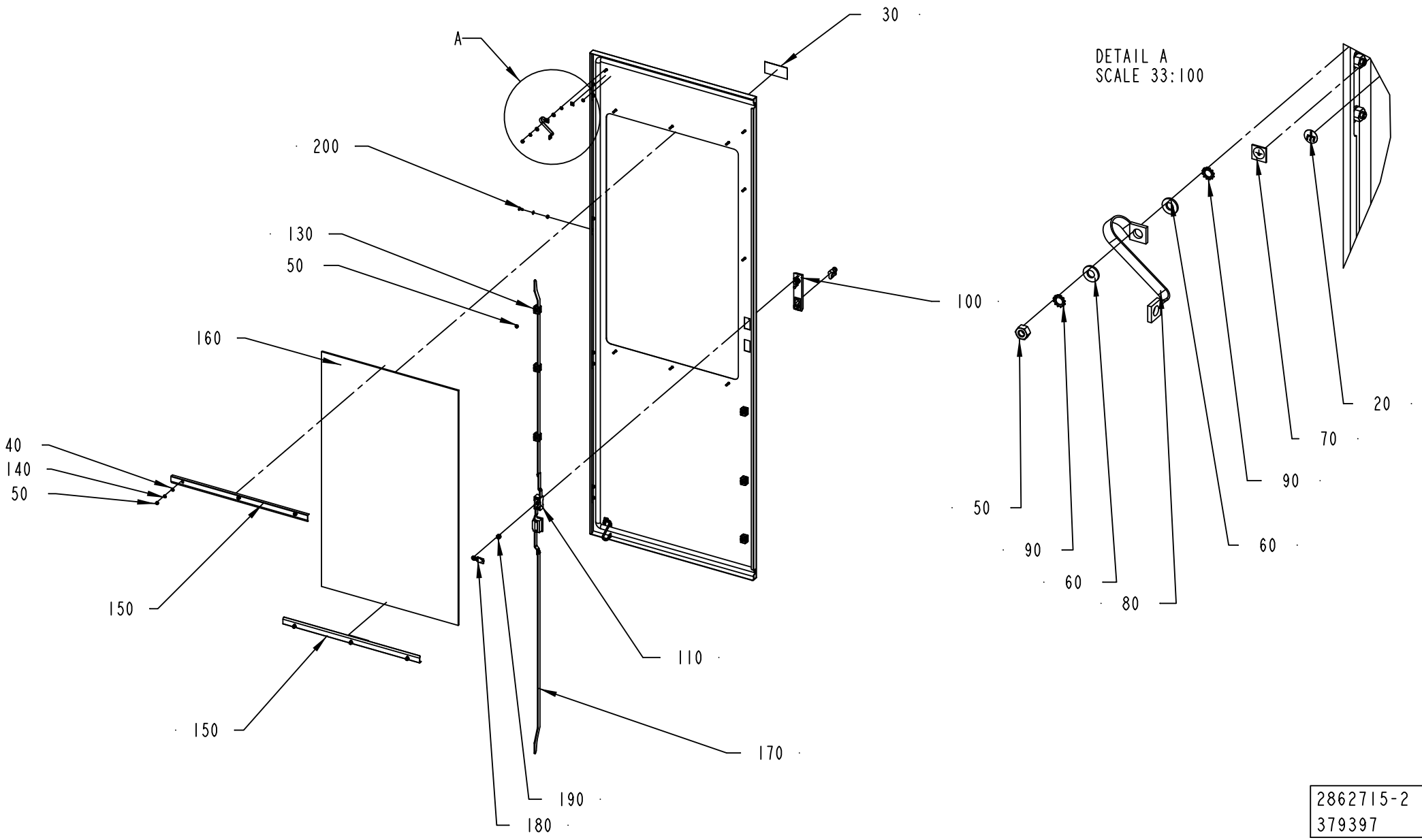

2862715-2
379397

ECM: 450818 - 20100403
Group number: 2862715-0100
Assembly Drawing: 2862715-2_1_AA

This list covers pages from 8-92 to 8-95

Pos	Part No	UN	Qty	Description	Page No
CE (See drawing on page: 8-92)					
0030	359705-0015		1	WARNING SIGN ISO, RISK OF ELECTRIC SHOCK	
UL, CSA (See drawing on page: 8-94)					
0030	359715-0100		1	WARNING SIGN ANSI (H), ELECTRIC SHOCK	
Common Parts					
0010	2986604-0000		1	DOOR	
0020	2608177-0000		2	SIGN	
0040	315105-0153		14	WASHER BRB 6,4X12 RFR	
0050	312605-0316		22	HEXAGON NUT, M6M M6 A280	
0060	315105-0156		4	WASHER BRB 6,7X14 RFR	
0070	90194-0152		2	SIGN, EARTH	
0080	90600-2904		2	EARTH BRAID, 250/16/8,5	
0090	90062-0022		4	LOCK WASHER D=6,4/11	
0100	90237-0176		1	TURNING HANDLE, 1125-U190-A	
0110	90237-0153		1	LOCK HOUSING, 1121-U26-0B	
0120	90237-0128		1	LOCK CYLINDER, 1109-SU125	
0130	90600-6028		6	GUIDE FOR PLATE 3X14MM, 1121-U71-N	
0140	315402-0156		6	LOCK WASHER FBB 6,5	
0150	2986616-0000		2	BRACKET	
0160	2986620-0000		1	GLASS	
0170	2986622-0000		2	BRACKET	
0180	90237-0156		1	LOCK BOLT, 1000-16	
0190	90237-0214		1	LOCK ADAPTER, 1121-U40	
0200	312155-0368		8	SCREW DIN 7991 MF6S M6X16 A4 70	

Pos	Part No	UN	Qty	Description	Page No

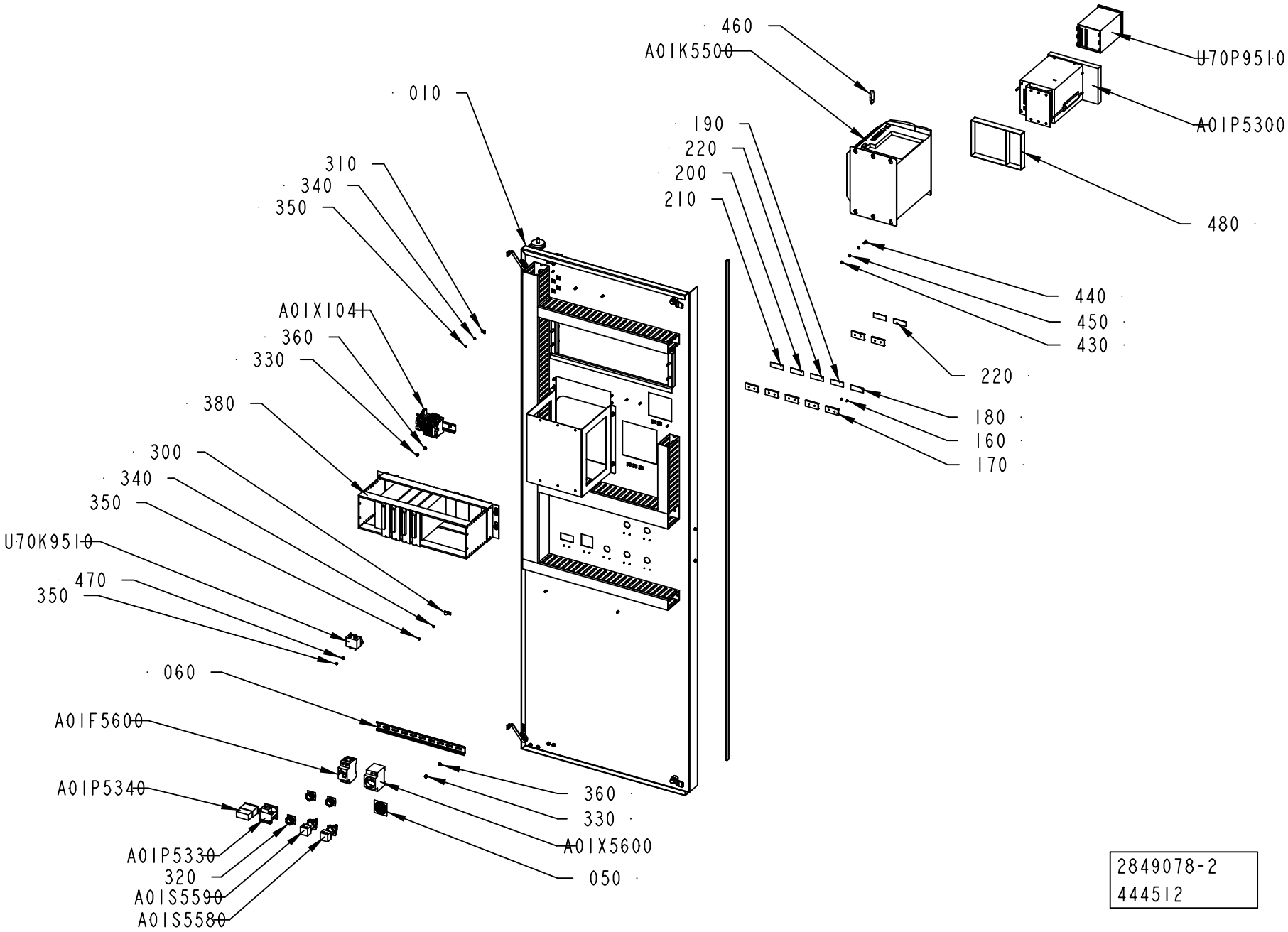
460
A01K5500
010
190
220
200
210
310
340
350
A01X1041
360
330
380
300
340
350
U70K9510
470
350
060
A01F5600
A01P5340
A01P5330
320
A01S5590
A01S5580
360
330
A01X5600
050
U70P9510
A01P5300
480
440
450
430
220
180
160
170
2849078-2
444512

Pos	Part No	UN	Qty	Description	Page No
CE (See drawing on page: 8-96)					
0050	90459-1738		1	MANDATORY ACTION SIGN ISO, READ MAINTENA	
A01F5600	90459-5811		1	RESIDUAL CURRENT DEVICE, FI-25/2/003-A	
A01X5600	90459-3845		1	POWER SOCKET, Z-SD230	
Common Parts					
0010	2986597-0100		1	COMPONENT DOOR	**8-101**
0060	353042-0004	MM	350	RAIL TS 35/7,5	
0160	311520-0320		14	RIVET, BLANK 2,4X6	
0170	359240-0100		7	SIGN HOLDER FOR 359240-0001	
0180	359241-0133		1	"SIGN: "" SERVICE SWITCH"""	
0190	359241-0122		1	SIGN: " CLEANING STEAM BARRIER SPACE"	
0200	359241-0201		1	SIGN: " HOUR METER"	
0210	359241-0482		1	SIGN "PACKAGE COUNTER"	
0220	359240-0001		3	SIGN, NOT ENGRAVED	
0300	90165-0007		1	PIPE CLIP FOR TUBE D=8 MM	
0310	90165-0022		10	PIPE CLIP, FOR TUBE D=2,5 MM, B-3570	
0320	90459-3279		3	BLANK PLUG BLACK, SQUARE, PLASTIC ZB5SZ5	
0330	312605-0314		4	HEXAGON NUT, M6M M5 A280	
0340	315106-0124		8	WASHER ISO 7089-3-200 HV A4	
0350	312605-0310		10	HEXAGON NUT, M6M M3 A280	
0360	315106-0146		4	WASHER ISO 7089-5-200 HV A4	
0380	2849071-0200		1	RACK	**8-103**
0430	312605-0312		6	HEXAGON NUT, M6M M4 A280	
0440	312115-0291		6	SCREW ISO4762 M4X12 A4 80	
0450	315105-0136		12	WASHER BRB 4,3X8 RFR	
0460	90600-5745		1	INTOUCH OEM 10.000 V.9,5 HW KEY USB	
0470	90457-0168		2	WASHER PLAIN ROUND 3,2/9, H=0,8	
0480	2986618-0000		1	SUPPORT	
0490	90143-0097	MM	2014	SELF GRIPPING GASKET, 1011-24	
A01K5500	90601-1326		1	COMPUTOR APC620, 5P62:TETRAPAK-30	
A01P5300	90459-4033		1	RECORDER 12-CHANNEL PAPERLESS FDA-APPR	
A01P5330	90070-0017		1	WORKING HOURS COUNTER, 7991 DR H?NLE	
A01P5340	90053-0029		1	COUNTER, F524.800FA3C 24VDC	
A01S5580	90111-0122		1	KEY SWITCH, 2 NO CONTACTS	
A01S5590	90111-0124		1	KEY SWITCH, 1NO,1NC CONTACT	
A01X1041	2849075-0100		1	PLINTH	**8-105**
U70K9510	90600-5250		1	LINE FILTER, B84111FB30	
U70P9510	90459-5187		1	CONDUCTIVITY TRANSMITTER CLM223-ID7105	

Pos	Part No	UN	Qty	Description	Page No

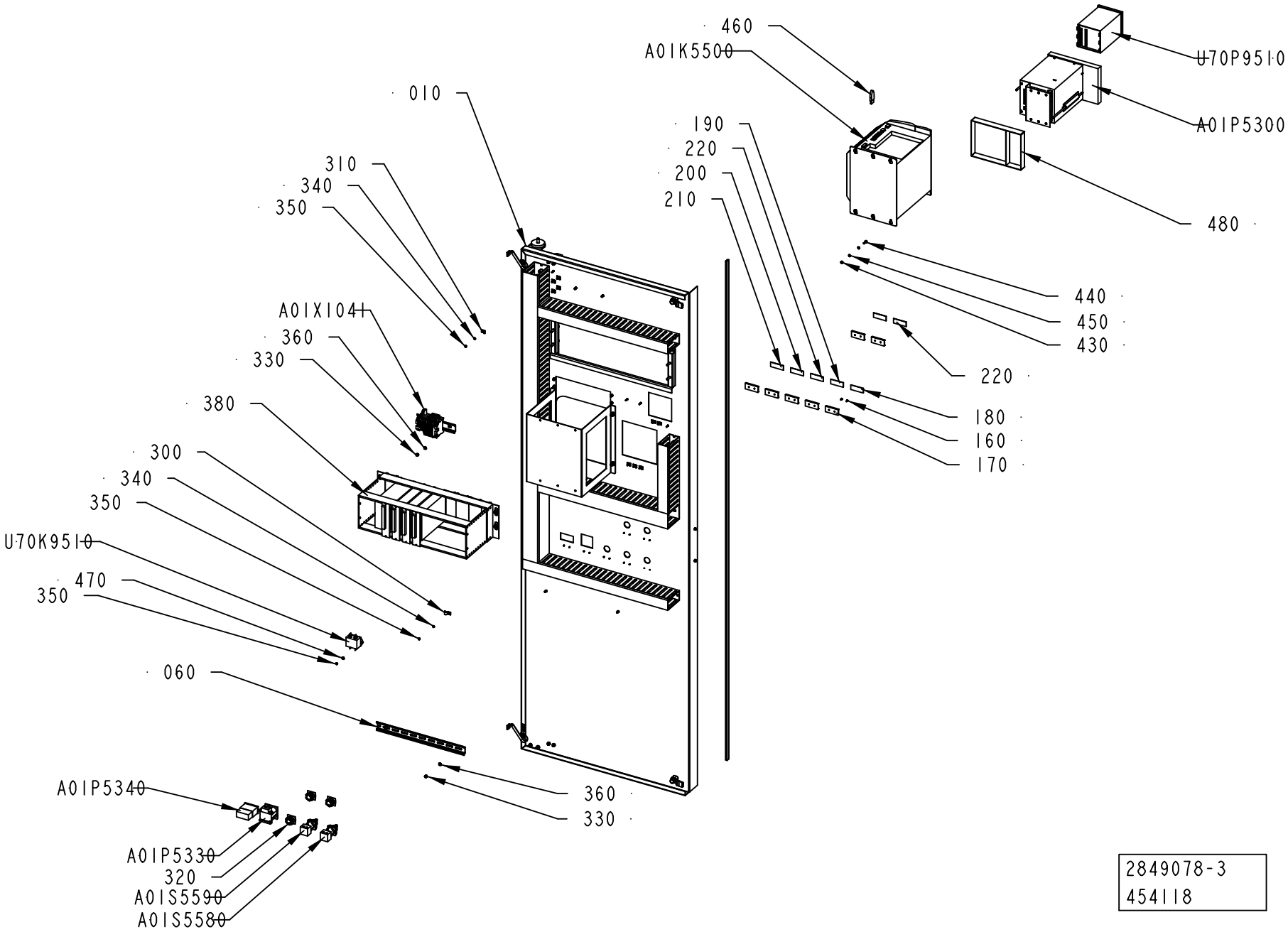
460
A01K5500
U70P9510
A01P5300
010
190
220
200
210
480
310
340
350
440
450
430
A01X1041
360
330
220
380
180
160
170
300
340
350
U70K9510
470
350
060
A01P5340
360
330
A01P5330
320
A01S5590
A01S5580
2849078-3
454118

Pos	Part No	UN	Qty	Description	Page No
CE (See drawing on page: 8-96)					
0050	90459-1738		1	MANDATORY ACTION SIGN ISO, READ MAINTENA	
A01F5600	90459-5811		1	RESIDUAL CURRENT DEVICE, FI-25/2/003-A	
A01X5600	90459-3845		1	POWER SOCKET, Z-SD230	
Common Parts					
0010	2986597-0100		1	COMPONENT DOOR	**8-101**
0060	353042-0004	MM	350	RAIL TS 35/7,5	
0160	311520-0320		14	RIVET, BLANK 2,4X6	
0170	359240-0100		7	SIGN HOLDER FOR 359240-0001	
0180	359241-0133		1	"SIGN: "" SERVICE SWITCH"""	
0190	359241-0122		1	SIGN: " CLEANING STEAM BARRIER SPACE"	
0200	359241-0201		1	SIGN: " HOUR METER"	
0210	359241-0482		1	SIGN "PACKAGE COUNTER"	
0220	359240-0001		3	SIGN, NOT ENGRAVED	
0300	90165-0007		1	PIPE CLIP FOR TUBE D=8 MM	
0310	90165-0022		10	PIPE CLIP, FOR TUBE D=2,5 MM, B-3570	
0320	90459-3279		3	BLANK PLUG BLACK, SQUARE, PLASTIC ZB5SZ5	
0330	312605-0314		4	HEXAGON NUT, M6M M5 A280	
0340	315106-0124		8	WASHER ISO 7089-3-200 HV A4	
0350	312605-0310		10	HEXAGON NUT, M6M M3 A280	
0360	315106-0146		4	WASHER ISO 7089-5-200 HV A4	
0380	2849071-0200		1	RACK	**8-103**
0430	312605-0312		6	HEXAGON NUT, M6M M4 A280	
0440	312115-0291		6	SCREW ISO4762 M4X12 A4 80	
0450	315105-0136		12	WASHER BRB 4,3X8 RFR	
0460	90600-5745		1	INTOUCH OEM 10.000 V.9,5 HW KEY USB	
0470	90457-0168		2	WASHER PLAIN ROUND 3,2/9, H=0,8	
0480	2986618-0000		1	SUPPORT	
0490	90143-0097	MM	2014	SELF GRIPPING GASKET, 1011-24	
A01K5500	90601-1326		1	COMPUTOR APC620, 5P62:TETRAPAK-30	
A01P5300	90459-4033		1	RECORDER 12-CHANNEL PAPERLESS FDA-APPR	
A01P5330	90070-0017		1	WORKING HOURS COUNTER, 7991 DR H?NLE	
A01P5340	90053-0029		1	COUNTER, F524.800FA3C 24VDC	
A01S5580	90111-0122		1	KEY SWITCH, 2 NO CONTACTS	
A01S5590	90111-0124		1	KEY SWITCH, 1NO,1NC CONTACT	
A01X1041	2849075-0100		1	PLINTH	**8-105**
U70K9510	90600-5250		1	LINE FILTER, B84111FB30	
U70P9510	90459-5187		1	CONDUCTIVITY TRANSMITTER CLM223-ID7105	

Pos	Part No	UN	Qty	Description	Page No

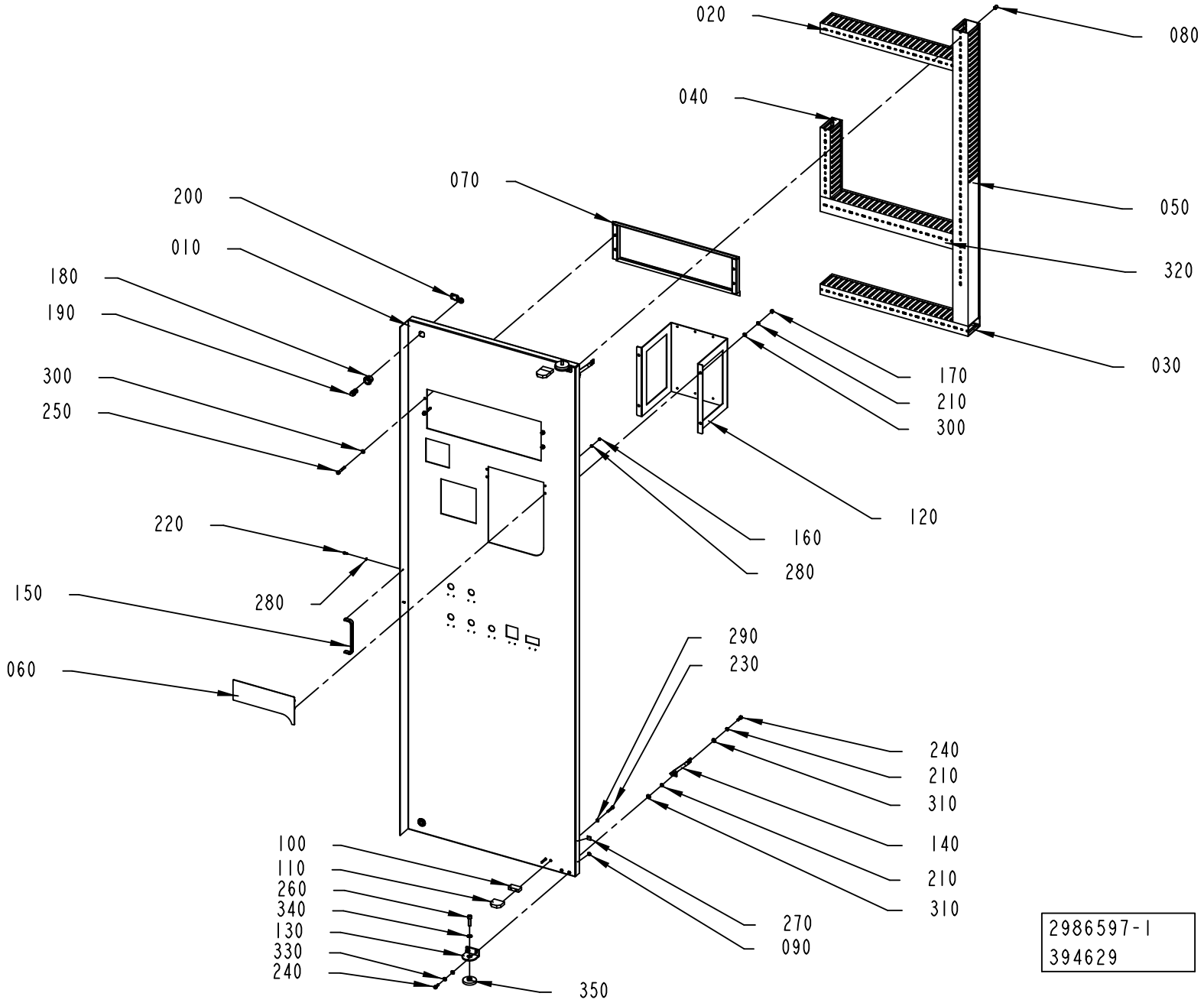
020
080
040
070
200
050
010
320
180
190
030
300
170
210
250
300
120
220
160
280
150
280
290
060
230
240
210
310
140
100
210
110
310
260
340
270
130
090
330
240
350
2986597-1
394629

ECM: 415764 - 20100402
Group number: 2986597-0100
Assembly Drawing: 2986597-1_1_AB

Pos	Part No	UN	Qty	Description	Page No
-					
010	2986596-0000		1	DOOR	
020	90181-0053	MM	520	CABLE DUCT 40X80MM	
030	90181-0053	MM	580	CABLE DUCT 40X80MM	
040	90181-0053	MM	272	CABLE DUCT 40X80MM	
050	90181-0054	MM	1160	CABLE DUCT 60X80MM	
060	2918720-0000		1	COVER	
070	1038355-0000		1	FRAME	
080	1285109-0000		15	NUT	
090	2608177-0000		2	SIGN	
100	1548116-0000		2	SPACER	
110	970215-0000		2	STOP BLOCK	
120	2912644-0000		1	SUPPORT	
130	2986593-0000		2	SUPPORT	
140	90600-2904		2	EARTH BRAID, 250/16/8,5	
150	90600-5161		1	HANDLE, 116.11.644	
160	312605-0312		4	HEXAGON NUT, M6M M4 A280	
170	312605-0316		4	HEXAGON NUT, M6M M6 A280	
180	90237-0319		2	LOCK HOUSING, 1000-U134	
190	90237-0320		2	LOCK HOUSING, 1000-U136	
200	90237-0157		2	LOCK BOLT, 1000-230	
210	90062-0022		8	LOCK WASHER D=6,4/11	
220	312115-0289		2	SCREW ISO4762 M4X10 A4 80	
230	312115-0335		4	SCREW ISO4762 M5X30 A4 80	
240	312115-0368		6	SCREW ISO4762 M6X16 A4 80	
250	312115-0378		4	SCREW ISO4762 M6X40 A4 80	
260	312115-0455		2	SCREW ISO4762 M8X30 A4 80	
270	90194-0152		2	SIGN, EARTH	
280	315105-0136		6	WASHER BRB 4,3X8 RFR	
290	315105-0146		4	WASHER BRB 5,3X10 RFR	
300	315105-0153		12	WASHER BRB 6,4X12 RFR	
310	315105-0156		4	WASHER BRB 6,7X14 RFR	
320	90181-0054	MM	520	CABLE DUCT 60X80MM	
340	315105-0165		2	WASHER BRB 8,4X16 RFR	
350	2986613-0000		2	SPACER	

Pos	Part No	UN	Qty	Description	Page No

Machine Type | Group Description | Used-In | Group Number | Page No

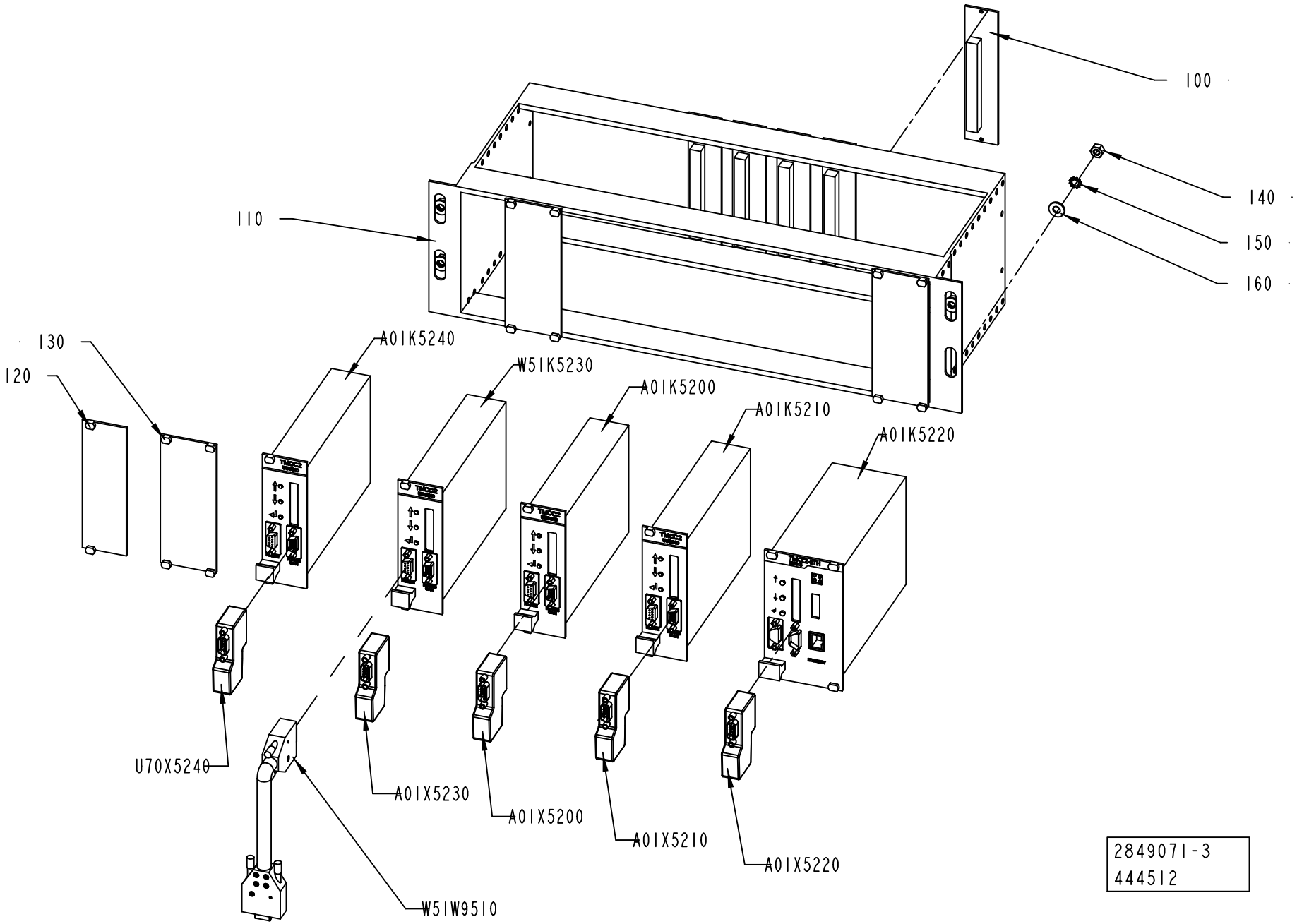
100
110
140
150
160
130
120
A01K5240
W51K5230
A01K5200
A01K5210
A01K5220
U70X5240
A01X5230
A01X5200
A01X5210
A01X5220
W51W9510
2849071-3
444512

ECM: 444519 - 20100701
Group number: 2849071-0200
Assembly Drawing: 2849071-3_1_AB

Pos	Part No	UN	Qty	Description	Page No
A3/SPEED					
0100	68262-0101		4	BACKPLANE FRONT RACK 8TE	
100	*543371-0000*		*1*	*CIRCUIT BOARD 8TE*	
110	*551927-0001*		*1*	*COMPONENTS WITHOUNT TP-NO*	
120	*551928-0000*		*1*	*TERMINAL LABELS 8TE*	
0120	68445-0104		2	FRONT PLATE 8 TE	
010 4	*543921-0004*		*1*	*COMPONENTS WITHOUT TP-NO*	
A01X5230	90459-0182		1	INTERFACE CONNECTOR FOR TMCC2	
W51K5230	559810-0101		1	TMCC2 CONTROLLER	
W51W9510	3098671-0000		1	CABLE	
Common Parts					
0110	67388-0102		1	RACK FRONTMOUNTED 84TE	
020 2	*542038-0002*		*1*	*COMPONENTS WITHOUT TP-NO*	
0130	68445-0105		3	FRONT PLATE 10TE	
010 5	*543921-0005*		*1*	*COMPONENTS WITHOUT TP-NO*	
0140	312605-0316		2	HEXAGON NUT, M6M M6 A280	
0150	90062-0022		4	LOCK WASHER D=6,4/11	
A01K5200	559810-0101		1	TMCC2 CONTROLLER	
A01K5210	559810-0101		1	TMCC2 CONTROLLER	
A01K5220	559815-0101		1	TMCC2 CONTROLLER	
A01K5240	559810-0101		1	TMCC2 CONTROLLER	
A01X5200	90459-0182		1	INTERFACE CONNECTOR FOR TMCC2	
A01X5210	90459-0182		1	INTERFACE CONNECTOR FOR TMCC2	
A01X5220	90459-0182		1	INTERFACE CONNECTOR FOR TMCC2	
A01X5240	90459-0182		1	INTERFACE CONNECTOR FOR TMCC2	

Pos	Part No	UN	Qty	Description	Page No

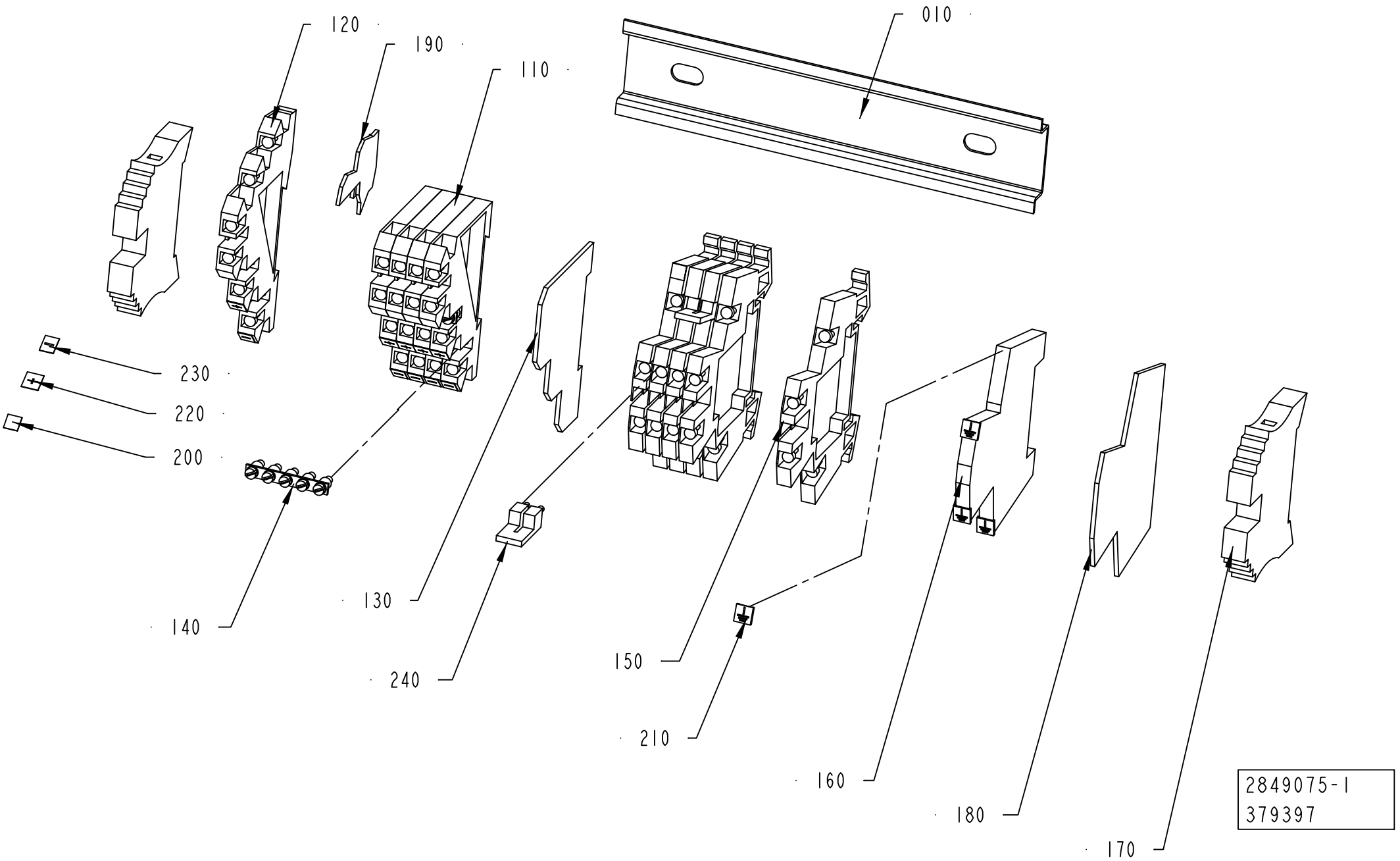
120
190
110
010
230
220
200
140
130
240
150
210
160
180
170
2849075-1
379397

ECM: 379614 - 20081217
Group number: 2849075-0100
Assembly Drawing: 2849075-1_1_AC

Pos	Part No	UN	Qty	Description	Page No
-					
0010	2849079-0000		1	RAIL	
0110	353021-0301		4	TERMINALS,TRIPLE-LEVEL, DLI 2,5/35 PA	
0120	353021-0302		1	TERMINALS,TRIPLE-LEVEL, DLD 2,5/35 PA	
0130	353032-0301		1	END PLATE WAP, 13132.6	
0140	353034-0404		2	BRIDGE CONNECTOR Q10, 13131.0	
0150	90077-0113		5	FEED THROUGH TERMINAL, 10-00102150-1	
0160	353024-0212		1	EARTH TERMINAL, 10363.0	
0170	353031-0203		2	END SUPPORT, WEW 35/2	
0180	90077-0114		1	END PLATE, WAP/WDK 2,5	
0190	353032-0013		1	END PLATE, 13818.6	
0200	359011-0807		2	MARKING, DEK 5 FW 1-50	
0210	359011-0834		4	MARKING, EARTH, DKE 6 GW ERDE I.KR.	
0220	359011-0817		6	MARKING, DEK 5GW (+)	
0230	359011-0818		6	MARKING, DEK 5GW (-)	
0240	353034-0030		2	BRIDGE CONNECTOR WQV 2,5/10, 10544.6	

Pos	Part No	UN	Qty	Description	Page No

Machine Type	Group Description	Used-In	Group Number	Page No

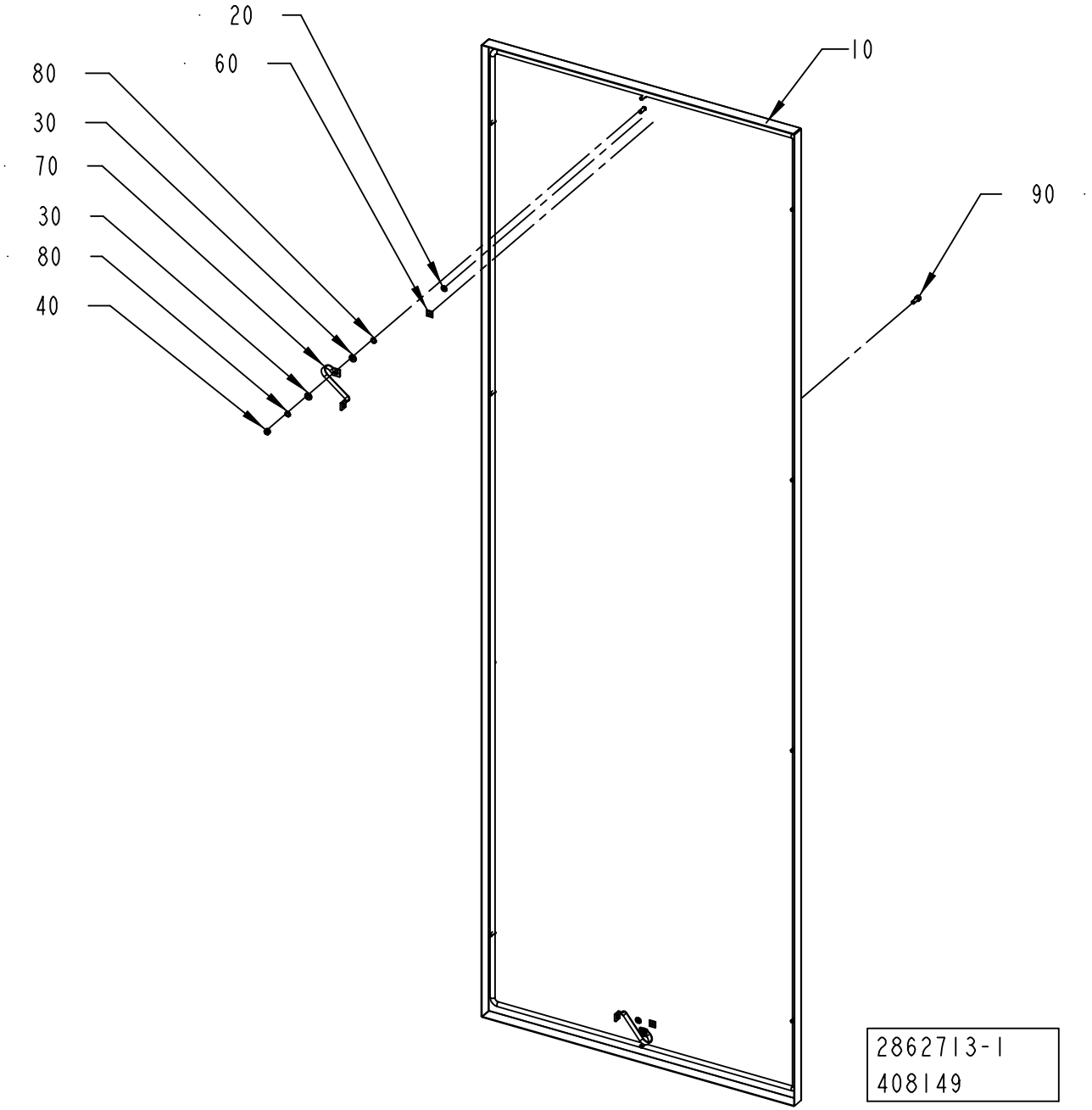
20
60
80
30
70
30
80
40
10
90
2862713-1
408149

ECM: 410667 - 20100402
Group number: 2862713-0100
Assembly Drawing: 2862713-1_1_AC

Pos	Part No	UN	Qty	Description	Page No
-					
0010	2986607-0000		1	PANEL	
0020	2608177-0000		2	SIGN	
0030	315105-0156		4	WASHER BRB 6,7X14 RFR	
0040	312605-0316		2	HEXAGON NUT, M6M M6 A280	
0060	90194-0152		2	SIGN, EARTH	
0070	90600-2904		2	EARTH BRAID, 250/16/8,5	
0080	90062-0022		4	LOCK WASHER D=6,4/11	
0090	312115-0368		10	SCREW ISO4762 M6X16 A4 80	

Pos	Part No	UN	Qty	Description	Page No

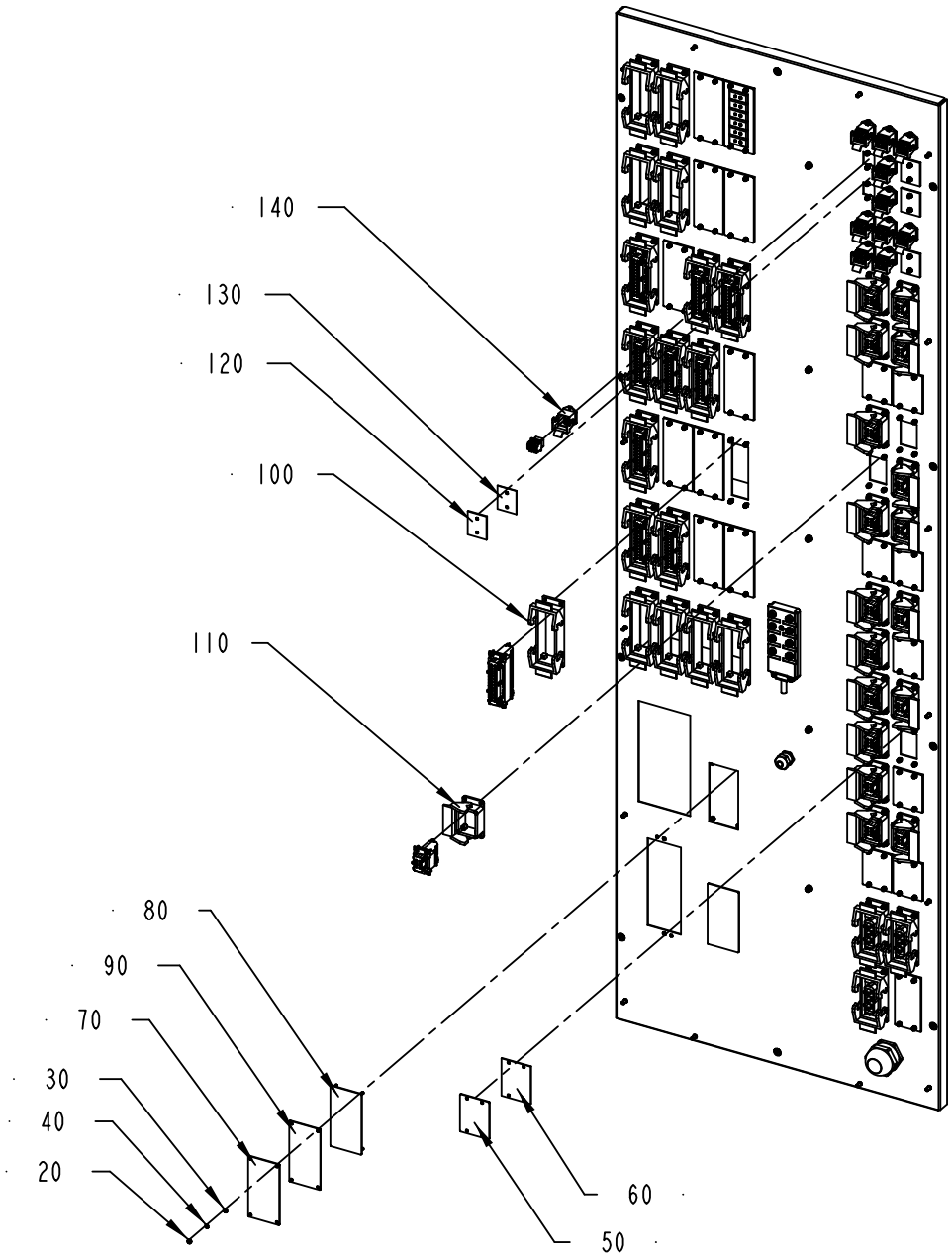
140
130
120
100
110
80
90
70
30
40
20
60
50

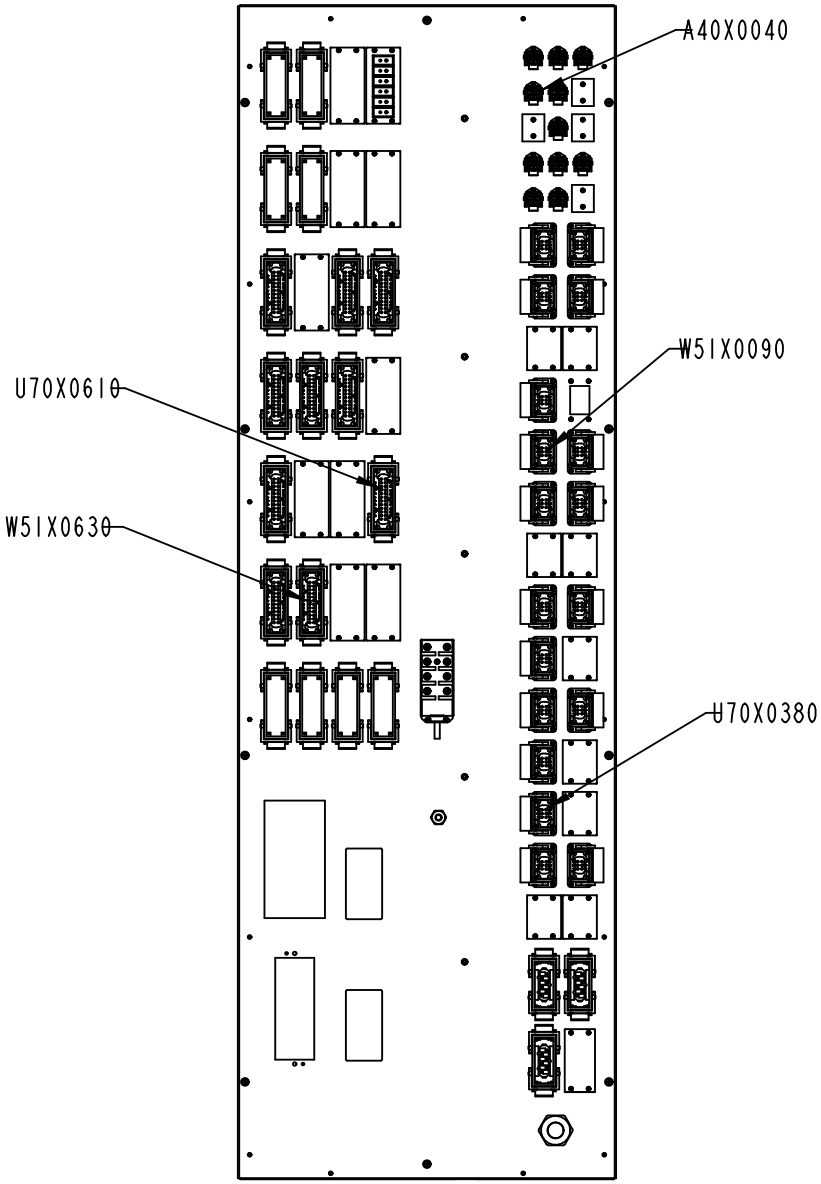
A40X0040
W51X0090
U70X0610
W51X0630
U70X0380
2867677-10
422253

ECM: 430865 - 20100401
Group number: 2867677-0200
Assembly Drawing: 2867677-10_1_AB

This list covers pages from 8-108 to 8-111

Pos	Part No	UN	Qty	Description	Page No
A3/SPEED HI (See drawing on page: 8-110)					
0020	312605-0312		8	HEXAGON NUT, M6M M4 A280	
0030	315105-0136		2	WASHER BRB 4,3X8 RFR	
0040	315402-0136		8	LOCK WASHER FBB 4,1	
0050	1037572-0000		1	COVER PLATE	
0060	1037573-0000		1	GASKET	
0070	2868064-0000		2	PLATE	
0080	2868065-0000		2	PLATE	
0090	2868066-0000		2	GASKET	
0100	90459-6639		2	HOUSING 24B BULKHEAD, 09 30 024 0301	
0110	90110-0123		3	HOUSING, 09 30 006 0301	
0120	1487430-0000		3	COVER	
0130	1487431-0000		3	GASKET	
0140	90459-6822		1	HOUSING 3A BULKHEAD, 09 20 003 0301	
A40X0040	90459-6820		1	FEMALE INSERT HAN 4 A, 09 20 004 2711	
U70X0370	90459-6624		1	FEMALE INSERT HAN E AV, 09 33 006 4735	
U70X0380	90459-6624		1	FEMALE INSERT HAN E AV, 09 33 006 4735	
U70X0610	90459-6627		1	FEMALE INSERT HAN E AV, 09 33 024 4735	
W51X0090	90459-6624		1	FEMALE INSERT HAN E AV, 09 33 006 4735	
W51X0630	90459-6627		1	FEMALE INSERT HAN E AV, 09 33 024 4735	
A3/SPEED NOHI (See drawing on page: 8-108)					
0020	312605-0312		8	HEXAGON NUT, M6M M4 A280	
0030	315105-0136		2	WASHER BRB 4,3X8 RFR	
0040	315402-0136		8	LOCK WASHER FBB 4,1	
0050	1037572-0000		2	COVER PLATE	
0060	1037573-0000		2	GASKET	
0070	2868064-0000		2	PLATE	
0080	2868065-0000		2	PLATE	
0090	2868066-0000		2	GASKET	
0100	90459-6639		2	HOUSING 24B BULKHEAD, 09 30 024 0301	
0110	90110-0123		2	HOUSING, 09 30 006 0301	
0120	1487430-0000		3	COVER	
0130	1487431-0000		3	GASKET	
0140	90459-6822		1	HOUSING 3A BULKHEAD, 09 20 003 0301	
A40X0040	90459-6820		1	FEMALE INSERT HAN 4 A, 09 20 004 2711	
U70X0380	90459-6624		1	FEMALE INSERT HAN E AV, 09 33 006 4735	
U70X0610	90459-6627		1	FEMALE INSERT HAN E AV, 09 33 024 4735	
W51X0090	90459-6624		1	FEMALE INSERT HAN E AV, 09 33 006 4735	
W51X0630	90459-6627		1	FEMALE INSERT HAN E AV, 09 33 024 4735	
Common Parts					
0010	2986628-0200		1	PANEL	**8-113**

Pos	Part No	UN	Qty	Description	Page No

Machine Type | Group Description | Used-In | Group Number | Page No

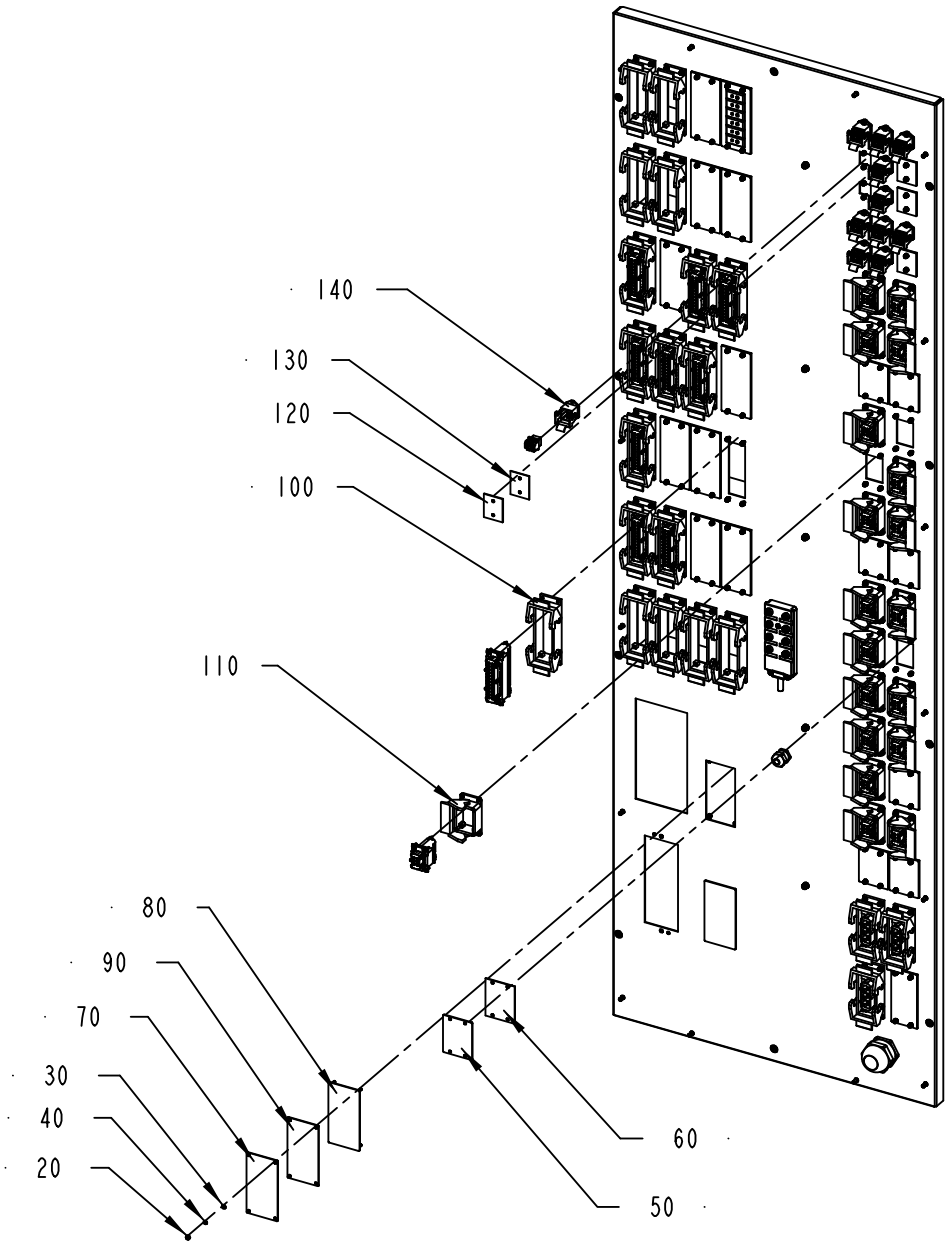

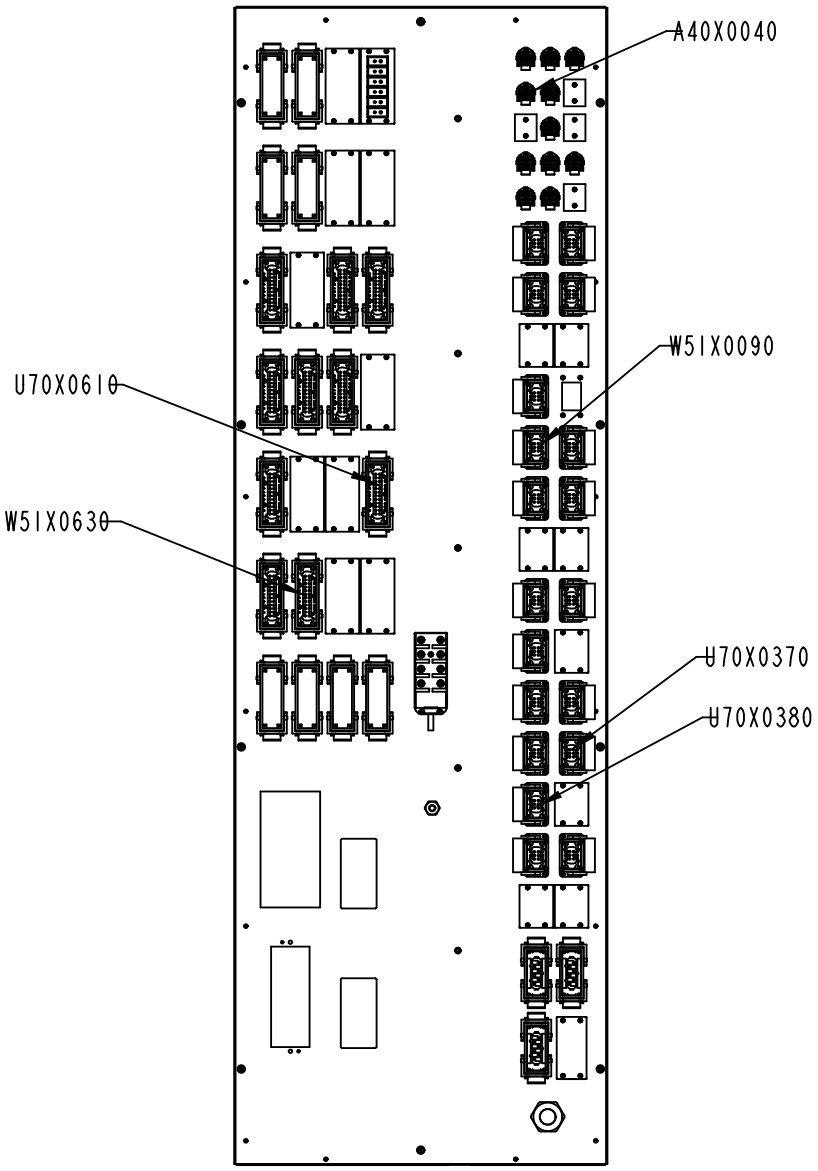

2867677-12
422253

ECM: 430865 - 20100401
Group number: 2867677-0200
Assembly Drawing: 2867677-12_1_AB

This list covers pages from 8-108 to 8-111

Pos	Part No	UN	Qty	Description	Page No
A3/SPEED HI (See drawing on page: 8-110)					
0020	312605-0312		8	HEXAGON NUT, M6M M4 A280	
0030	315105-0136		2	WASHER BRB 4,3X8 RFR	
0040	315402-0136		8	LOCK WASHER FBB 4,1	
0050	1037572-0000		1	COVER PLATE	
0060	1037573-0000		1	GASKET	
0070	2868064-0000		2	PLATE	
0080	2868065-0000		2	PLATE	
0090	2868066-0000		2	GASKET	
0100	90459-6639		2	HOUSING 24B BULKHEAD, 09 30 024 0301	
0110	90110-0123		3	HOUSING, 09 30 006 0301	
0120	1487430-0000		3	COVER	
0130	1487431-0000		3	GASKET	
0140	90459-6822		1	HOUSING 3A BULKHEAD, 09 20 003 0301	
A40X0040	90459-6820		1	FEMALE INSERT HAN 4 A, 09 20 004 2711	
U70X0370	90459-6624		1	FEMALE INSERT HAN E AV, 09 33 006 4735	
U70X0380	90459-6624		1	FEMALE INSERT HAN E AV, 09 33 006 4735	
U70X0610	90459-6627		1	FEMALE INSERT HAN E AV, 09 33 024 4735	
W51X0090	90459-6624		1	FEMALE INSERT HAN E AV, 09 33 006 4735	
W51X0630	90459-6627		1	FEMALE INSERT HAN E AV, 09 33 024 4735	
A3/SPEED NOHI (See drawing on page: 8-108)					
0020	312605-0312		8	HEXAGON NUT, M6M M4 A280	
0030	315105-0136		2	WASHER BRB 4,3X8 RFR	
0040	315402-0136		8	LOCK WASHER FBB 4,1	
0050	1037572-0000		2	COVER PLATE	
0060	1037573-0000		2	GASKET	
0070	2868064-0000		2	PLATE	
0080	2868065-0000		2	PLATE	
0090	2868066-0000		2	GASKET	
0100	90459-6639		2	HOUSING 24B BULKHEAD, 09 30 024 0301	
0110	90110-0123		2	HOUSING, 09 30 006 0301	
0120	1487430-0000		3	COVER	
0130	1487431-0000		3	GASKET	
0140	90459-6822		1	HOUSING 3A BULKHEAD, 09 20 003 0301	
A40X0040	90459-6820		1	FEMALE INSERT HAN 4 A, 09 20 004 2711	
U70X0380	90459-6624		1	FEMALE INSERT HAN E AV, 09 33 006 4735	
U70X0610	90459-6627		1	FEMALE INSERT HAN E AV, 09 33 024 4735	
W51X0090	90459-6624		1	FEMALE INSERT HAN E AV, 09 33 006 4735	
W51X0630	90459-6627		1	FEMALE INSERT HAN E AV, 09 33 024 4735	
Common Parts					
0010	2986628-0200		1	PANEL	**8-113**

Pos	Part No	UN	Qty	Description	Page No

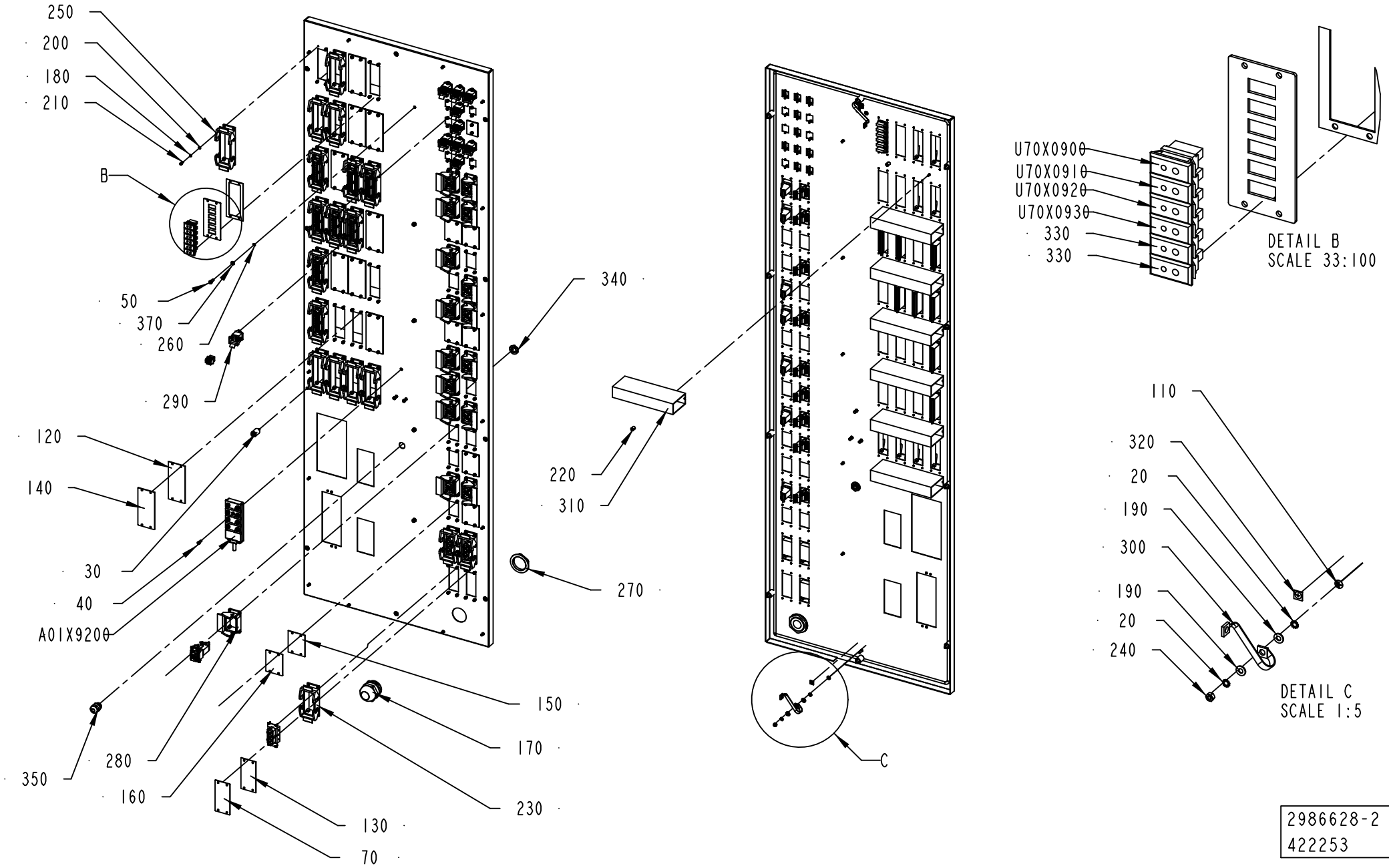

2986628-2
422253

ECM: 431140 - 20100401
Group number: 2986628-0200
Assembly Drawing: 2986628-2_1_AB

Pos	Part No	UN	Qty	Description	Page No
-					
010	2986588-0000		1	PLATE	
020	90062-0022		4	LOCK WASHER D=6,4/11	
030	90226-0458		10	MOUNTING SCREW	
040	312115-0329		3	SCREW ISO4762 M5X16 A4 80	
050	312115-0366		5	SCREW ISO4762 M6X12 A4 80	
060	2869590-0000		1	COVER PLATE	
070	1129481-0000		1	COVERING PLATE	
080	1129550-0000		1	GASKET	
090	1487430-0000		1	COVER	
100	1487431-0000		1	GASKET	
110	2608177-0000		2	SIGN	
120	1037575-0000		9	GASKET	
130	1129478-0000		1	GASKET	
140	1037574-0000		9	COVER PLATE	
150	1037573-0000		8	GASKET	
160	1037572-0000		8	COVER PLATE	
170	90458-0311		1	CABLE GLAND, M50X1,5, NO.5311 1060	
180	315402-0136		270	LOCK WASHER FBB 4,1	
190	315105-0156		4	WASHER BRB 6,7X14 RFR	
200	315105-0136		270	WASHER BRB 4,3X8 RFR	
210	312115-0289		270	SCREW ISO4762 M4X10 A4 80	
220	1285109-0000		7	NUT	
230	90459-6638		3	HOUSING 16B BULKHEAD, 09 30 016 0301	
240	312605-0316		2	HEXAGON NUT, M6M M6 A280	
250	90459-6639		16	HOUSING 24B BULKHEAD, 09 30 024 0301	
260	90005-0056		5	WASHER PL.RND.NYL.6/8,5,H=1	
270	90458-0327		1	NUT, M50X1,5	
280	90110-0123		16	HOUSING, 09 30 006 0301	
290	90459-6822		10	HOUSING 3A BULKHEAD, 09 20 003 0301	
300	90600-2904		2	EARTH BRAID, 250/16/8,5	
310	90181-0053	MM	225	CABLE DUCT 40X80MM	
320	90194-0152		2	SIGN, EARTH	
330	90459-4928		2	PANEL CONNECTOR FEMALE, TYPE K	
340	90458-0323		1	NUT, M20X1,5	
350	90458-0307		1	CABLE GLAND, M20X1,5, NO.5311 1020	
360	1285109-0000		7	NUT	
370	315402-0156		5	LOCK WASHER FBB 6,5	
A01X9200	90459-0839		1	DISTRIBUTION FRAME, ASBV 8 5-135/10M	
A70X0140	90459-6820		1	FEMALE INSERT HAN 4 A, 09 20 004 2711	
F10X0520	90459-6627		1	FEMALE INSERT HAN E AV, 09 33 024 4735	
F50X0530	90459-6627		1	FEMALE INSERT HAN E AV, 09 33 024 4735	
K80X0100	90459-6820		1	FEMALE INSERT HAN 4 A, 09 20 004 2711	
K80X0120	90459-6820		1	FEMALE INSERT HAN 4 A, 09 20 004 2711	
K80X0400	90459-6624		1	FEMALE INSERT HAN E AV, 09 33 006 4735	
K80X0410	90459-6624		1	FEMALE INSERT HAN E AV, 09 33 006 4735	
K80X0470	90110-0055		1	FEMALE INSERT HAN 6 HSB 09 31 006 2701	
K80X0620	90459-6627		1	FEMALE INSERT HAN E AV, 09 33 024 4735	
T10X0010	90459-6820		1	FEMALE INSERT HAN 4 A, 09 20 004 2711	
T10X0020	90459-6820		1	FEMALE INSERT HAN 4 A, 09 20 004 2711	
T10X0160	90459-6624		1	FEMALE INSERT HAN E AV, 09 33 006 4735	
T10X0170	90459-6624		1	FEMALE INSERT HAN E AV, 09 33 006 4735	
T10X0180	90459-6624		1	FEMALE INSERT HAN E AV, 09 33 006 4735	
T10X0190	90459-6624		1	FEMALE INSERT HAN E AV, 09 33 006 4735	
T10X0500	90459-6627		1	FEMALE INSERT HAN E AV, 09 33 024 4735	
T40X0030	90459-6820		1	FEMALE INSERT HAN 4 A, 09 20 004 2711	
T40X0050	90459-6820		1	FEMALE INSERT HAN 4 A, 09 20 004 2711	
T40X0550	90459-6627		1	FEMALE INSERT HAN E AV, 09 33 024 4735	
T50X0080	90459-6820		1	FEMALE INSERT HAN 4 A, 09 20 004 2711	
T50X240	90459-6624		1	FEMALE INSERT HAN E AV, 09 33 006 4735	
T50X0250	90459-6624		1	FEMALE INSERT HAN E AV, 09 33 006 4735	
T50X0260	90459-6624		1	FEMALE INSERT HAN E AV, 09 33 006 4735	
T50X0560	90459-6627		1	FEMALE INSERT HAN E AV, 09 33 024 4735	
U30X0220	90459-6624		1	FEMALE INSERT HAN E AV, 09 33 006 4735	
U30X0540	90459-6627		1	FEMALE INSERT HAN E AV, 09 33 024 4735	
U70X0100	90459-6820		1	FEMALE INSERT HAN 4 A, 09 20 004 2711	
U70X0130	90459-6820		1	FEMALE INSERT HAN 4 A, 09 20 004 2711	
U70X0300	90459-6624		1	FEMALE INSERT HAN E AV, 09 33 006 4735	
U70X0310	90459-6624		1	FEMALE INSERT HAN E AV, 09 33 006 4735	
U70X0320	90459-6624		1	FEMALE INSERT HAN E AV, 09 33 006 4735	
U70X0340	90459-6624		1	FEMALE INSERT HAN E AV, 09 33 006 4735	
U70X0350	90459-6624		1	FEMALE INSERT HAN E AV, 09 33 006 4735	
U70X0360	90459-6624		1	FEMALE INSERT HAN E AV, 09 33 006 4735	
U70X0450	90110-0055		1	FEMALE INSERT HAN 6 HSB 09 31 006 2701	
U70X0460	90110-0055		1	FEMALE INSERT HAN 6 HSB 09 31 006 2701	
U70X0580	90459-6627		1	FEMALE INSERT HAN E AV, 09 33 024 4735	
U70X0900	90459-4928		1	PANEL CONNECTOR FEMALE, TYPE K	
U70X0910	90459-4928		1	PANEL CONNECTOR FEMALE, TYPE K	
U70X0920	90459-4928		1	PANEL CONNECTOR FEMALE, TYPE K	
U70X0930	90459-4928		1	PANEL CONNECTOR FEMALE, TYPE K	

Machine Type	Group Description	Used-In	Group Number	Page No

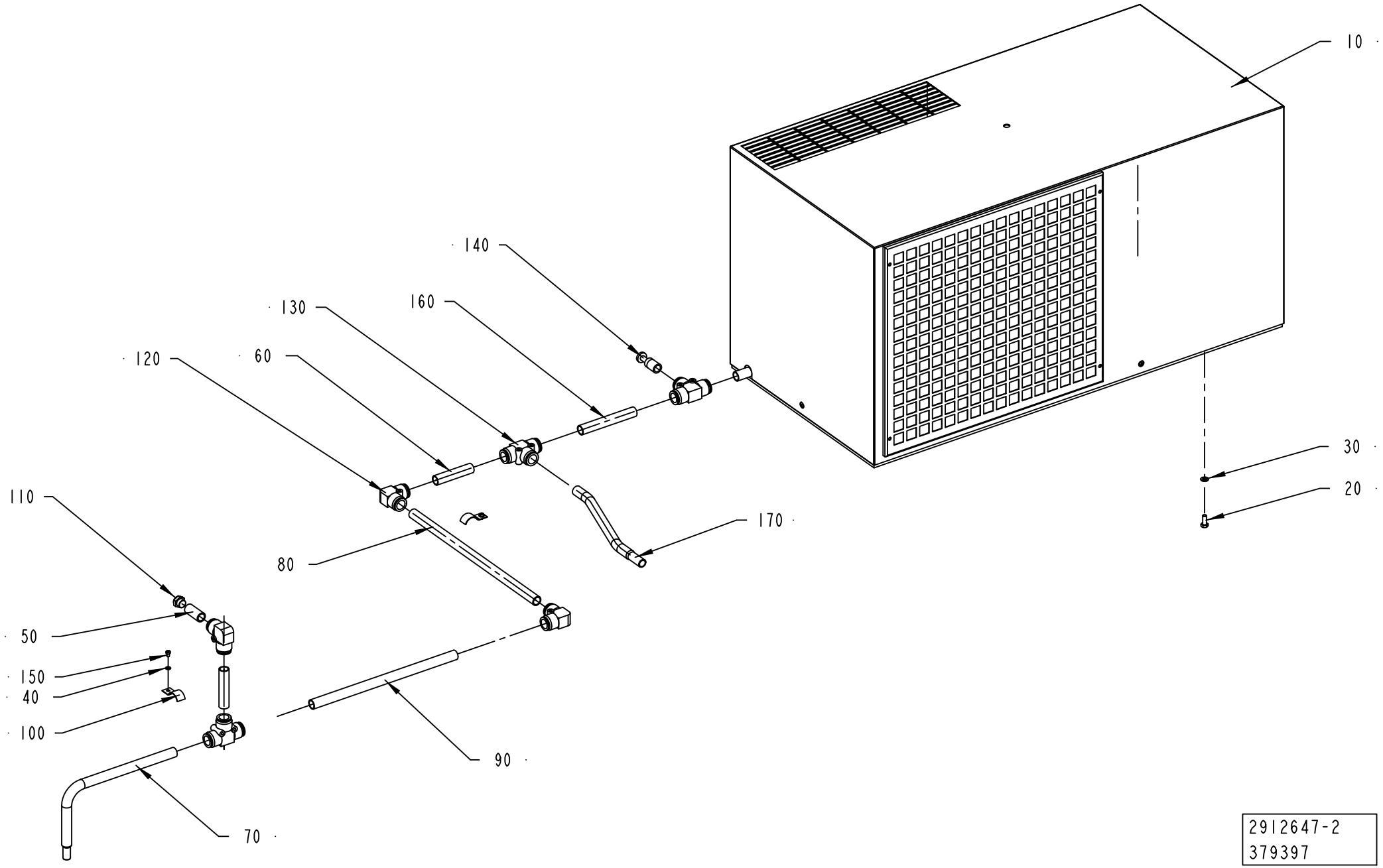

2912647-2
379397

ECM: 444520 - 20100701
Group number: 2912647-0100
Assembly Drawing: 2912647-2_1_AB

Pos	Part No	UN	Qty	Description	Page No
A3/SPEED CE (See drawing on page: 8-114)					
0010	90459-0363		1	COOLING UNIT, KB40A0721.03	
	90600-0676		*1*	*GRID, DISA1880AA*	
	90600-0675		*1*	*GASKET, A6411AA*	
	90600-0673		*1*	*THERMOSTAT, KELVIN TMI0000218*	
	90600-0672		*1*	*FAN, VBA0001499 , 50HZ_3UF , 60HZ_2UF*	
	90600-0670		*1*	*FAN, VBA0001508 ,50/60HZ 4UF*	
	90459-0364		*1*	*FILTER KB20/30/40 POLYURETH. FILTER 2001*	
0060	2800116-0000		2	HOSE	
0080	2918730-0000		1	HOSE	
0090	2986590-0000		1	HOSE	
0120	90459-2553		3	PUSH-IN L-FITTING QSL 16	
0130	90459-2555		3	PUSH-IN T-FITTING QST-16	
0140	90459-2557		1	BLIND PLUG 16 MM	
0160	2986589-0000		1	HOSE	
0170	2927019-0000		1	HOSE	
A3/SPEED CSA (See drawing on page: 8-114)					
0010	90600-5814		1	COOLING UNIT, KB40A0721.06	
	90600-5817		*1*	*FAN, VBH0001558*	
	90600-5816		*1*	*FAN, VBH0001555*	
	90600-0676		*1*	*GRID, DISA1880AA*	
	90600-0675		*1*	*GASKET, A6411AA*	
	90600-0673		*1*	*THERMOSTAT, KELVIN TMI0000218*	
	90459-0364		*1*	*FILTER KB20/30/40 POLYURETH. FILTER 2001*	
0060	2800116-0000		2	HOSE	
0080	2918730-0000		1	HOSE	
0090	2986590-0000		1	HOSE	
0120	90459-2553		3	PUSH-IN L-FITTING QSL 16	
0130	90459-2555		3	PUSH-IN T-FITTING QST-16	
0140	90459-2557		1	BLIND PLUG 16 MM	
0160	2986589-0000		1	HOSE	
0170	2927019-0000		1	HOSE	
A3/SPEED UL (See drawing on page: 8-114)					
0140	90459-2557		1	BLIND PLUG 16 MM	
0170	2927019-0000		1	HOSE	
Common Parts					
0020	312105-0368		6	SCREW M6S ISO 4017 M6X16 A480	
0030	315105-0153		6	WASHER BRB 6,4X12 RFR	
0040	315105-0136		2	WASHER BRB 4,3X8 RFR	
0050	2800104-0000		1	HOSE	
0070	2912646-0000		1	HOSE	
0100	90074-0011		2	CABLE CLIPS, D=14 MM	
0110	90257-0001		1	FILTER PLUG ART.NO.8145-00-140 TYPE F14	
0150	312125-0285		2	SCREW ISO 1207 M4X6 A4	

Machine Type	Group Description	Used-In	Group Number	Page No

Tetra Pak

SPC
Spare Parts Catalogue

This page is intentionally left blank.

ECM: 472098 - 20110101
Group number: 648562-0400
Assembly Drawing:

Pos	Part No	UN	Qty	Description	Page No
HI					
200	2981062-0100		1	PIPE	**9-5**
Common Parts					
010	3007732-0100		1	START-UP KIT JS	**9-7**
010	3007672-0200		1	START-UP KIT SS	**9-9**
010	3007673-0100		1	START-UP KIT MB	**9-19**
010	3007674-0100		1	START-UP KIT ASU	**9-21**
010	3007675-0100		1	START-UP KIT FF	**9-23**
010	2983314-0100		1	START-UP KIT SU	**9-25**
010	2980934-0200		1	START-UP KIT EC	**9-27**
020	531345-0200		1	PERSONAL PROTECT. EQ H2O2	**9-29**
030	2980990-0100		1	TRANSPORT EQUIPMENT	**9-31**
040	3007774-0200		1	TOOLS AND TEMPLATES, JAW SYSTEM	**9-33**
040	3007775-0200		1	TOOLS AND TEMPLATES SS	**9-39**
040	3007776-0100		1	TOOLS AND TEMPLATES FF	**9-49**
040	3010288-0100		1	TOOL & TEMPLATES ASU	**9-51**
050	2544873-0300		1	CONNECTION PIPE	**9-53**
070	3007676-0100		1	TRANSPORT EQUIPMENT	**9-55**
090	90600-3339		1	PAPER REEL TROLLEY, TP A3	**9-57**
130	2980991-0100		2	FRAME	**9-67**
250	2508173-0400		1	DIAGRAM	**9-69**

Pos	Part No	UN	Qty	Description	Page No

This page is intentionally left blank.

ECM: 443902 - 20101001
Group number: 2981062-0100
Assembly Drawing:

Pos	Part No	UN	Qty	Description	Page No
ANSI					
030	90459-7458		1	WARNING SIGN ANSI (H), HOT SURFACE	
ISO					
030	359705-0007		1	WARNING SIGN ISO, HOT SURFACE	
Common Parts					
010	3041515-0000		1	PIPE	
020	2874684-0000		1	TOUCH GUARD	
040	90600-0614		1	BLANK PLUG, 16AMP-316-1/2"-3/4"-AR	
050	342850-0304		1	GASKET 35,4X49,1X5,2 1"1/2 FDA, 3-A	

Pos	Part No	UN	Qty	Description	Page No

This page is intentionally left blank.

ECM: 348444 - 20090623
Group number: 3007732-0100
Assembly Drawing:

Pos	Part No	UN	Qty	Description	Page No
TBA 0125S					
010	2894324-0000		2	INDUCTOR	
020	2835922-0000		40	VOLUME SHIM	
030	2812440-0000		8	SPRING	
030	2812451-0000		8	SPRING	
040	2949862-0004		60	DOLLY	
TBA 0200B					
010	1533002-0000		2	INDUCTOR	
020	1498609-0000		40	VOLUME SHIM	
030	2812440-0000		8	SPRING	
030	2812451-0000		8	SPRING	
040	1520564-0003		60	DOLLY	
100	2812447-0000		2	LEVER	
TBA 0200M					
010	1520166-0000		2	INDUCTOR	
020	1498604-0000		40	VOLUME SHIM	
030	2812440-0000		8	SPRING	
030	2812451-0000		8	SPRING	
040	1520564-0003		60	DOLLY	
100	2844198-0000		2	LEVER	
TBA 0200S					
010	1533000-0000		2	INDUCTOR	
020	272991-0000		40	VOLUME SHIM	
030	2812440-0000		8	SPRING	
030	2812451-0000		8	SPRING	
040	1520564-0003		60	DOLLY	
100	2844198-0000		2	LEVER	
TBA 0250B					
010	1533002-0000		2	INDUCTOR	
020	2890874-0000		40	VOLUME SHIM	
030	2812440-0000		8	SPRING	
030	2812451-0000		8	SPRING	
040	1520564-0003		60	DOLLY	
100	2812447-0000		2	LEVER	
TBA 0250S					
010	1520166-0000		2	INDUCTOR	
020	574366-0000		40	VOLUME SHIM	
030	2812440-0000		8	SPRING	
030	2812451-0000		8	SPRING	
040	1520564-0003		60	DOLLY	
100	2844198-0000		2	LEVER	
TBA 1000B					
010	1520092-0000		2	INDUCTOR	
020	1539374-0000		40	VOLUME SHIM	
030	2835877-0000		8	SPRING	
030	2835899-0000		8	SPRING	
040	1110390-0000		60	DOLLY	
100	2847959-0000		2	LEVER	
TBA 1000S					
010	1533015-0000		2	INDUCTOR	
020	2511635-0000		40	VOLUME SHIM	
030	2835899-0000		8	SPRING	
030	2835877-0000		8	SPRING	
040	1110390-0000		60	DOLLY	
100	2847959-0000		2	LEVER	
TBA 1000SQ					
010	1566851-0000		2	INDUCTOR	
020	1487627-0000		40	VOLUME SHIM	
030	2854562-0000		8	SPRING	
030	2854561-0000		8	SPRING	
040	1110390-0000		60	DOLLY	
100	2836236-0000		2	LEVER	
Common Parts					
050	2967078-0000		2	CORE	
060	2663936-0000		1	WASHER	
070	2701244-0000		2	PLATE	
080	32544-0000		10	INSULATION NUT	
090	315202-0708		2	O-RING 21,95X1,78 MM	

Machine Type | Group Description | Used-In | Group Number | Page No

This page is intentionally left blank.

ECM: 443578 - 20100701
Group number: 3007672-0200
Assembly Drawing:

Pos	Part No	UN	Qty	Description	Page No
TBA 0125S					
140	315207-0515		3	O-RING 18,64X3,53 MM	
150	272479-0000		3	PRESSURE ROLLER (10PCS)	
TBA 0200B					
130	2909367-0000		3	PRESSURE ROLLER (PACK 10)	
140	315204-0215		3	O-RING 19,2X3 MM	
150	2909367-0000		3	PRESSURE ROLLER (PACK 10)	
TBA 0200M, TBA 0250S					
140	315204-0215		3	O-RING 19,2X3 MM	
150	272479-0000		3	PRESSURE ROLLER (10PCS)	
TBA 0200S					
120	272479-0000		3	PRESSURE ROLLER (10PCS)	
140	315204-0215		3	O-RING 19,2X3 MM	
150	272479-0000		3	PRESSURE ROLLER (10PCS)	
150	2909367-0000		3	PRESSURE ROLLER (PACK 10)	
TBA 0250B					
130	2909367-0000		3	PRESSURE ROLLER (PACK 10)	
140	315204-0215		3	O-RING 19,2X3 MM	
TBA 1000B, TBA 1000SQ					
140	90458-1144		3	O-RING 36,2X3 MM	
150	257330-0000		6	PRESSURE ROLLER (10 PCS)	
160	24928-0000		12	LOCKING RUBBER	
190	257330-0000		4	PRESSURE ROLLER (10 PCS)	
TBA 1000S					
140	90458-1144		3	O-RING 36,2X3 MM	
150	2932252-0000		6	PRESSURE ROLLER (PACK 10)	
160	24928-0000		12	LOCKING RUBBER	
190	257330-0000		4	PRESSURE ROLLER (10 PCS)	
Common Parts					
010	1296877-0100		1	SEAL KIT	**9-11**
020	1296878-0100		1	SEAL KIT	**9-13**
030	1296879-0100		1	SEAL KIT	**9-15**
040	2723313-0100		1	LAMP	**9-17**
050	90296-0009	L	1	SILICONE GREASE DOW CORNING 150 GR.	
070	342850-0306		4	GASKET 60,3X76,1X5,2 MM 2"1/2 FDA 3-A	
080	342850-0304		9	GASKET 35,4X49,1X5,2 1"1/2 FDA, 3-A	
090	2725145-0000		2	DIAPHRAGM	
100	90217-0348		6	GASKET 35,4X46,8X4 MM	
110	90459-4179		4	GASKET 30,5X42X4 MM FDA	
180	2832867-0000		4	ROLLER	
210	90601-2446		6	FLANGE BUSHING, 8X12X10 MM	

Pos	Part No	UN	Qty	Description	Page No

Machine Type | Group Description | Used-In | Group Number | Page No

This page is intentionally left blank.

ECM: 348443 - 20091001
Group number: 1296877-0100
Assembly Drawing:

Pos	Part No	UN	Qty	Description	Page No
-					
010	2826441-0000		4	SEAL RING	
020	2826440-0000		1	SEAL RING	
030	2826443-0000		1	DIAPHRAGM	
040	539212-0000		1	GASKET	
050	90091-0266		2	SEAL RING 10,4X16,3X2,5 MM	
060	90207-0363		1	GASKET 75X85X1,8 MM 3" FDA 3-A	
070	90207-0365		1	GASKET 53X63X1,8 MM 2,5" FDA 3-A	
100	315204-0215		1	O-RING 19,2X3 MM	
110	315204-0301		1	O-RING 49,5X3 MM	

Pos	Part No	UN	Qty	Description	Page No

This page is intentionally left blank.

ECM: 348442 - 20101001
Group number: 1296878-0100
Assembly Drawing:

Pos	Part No	UN	Qty	Description	Page No
-					
080	90030-0336		2	CONN. STRAIGHT, 316L-12M-BVCO-3	
090	90091-0237		5	ROD SEAL GLYD RING 20X27,5X3 MM	
100	315204-0215		2	O-RING 19,2X3 MM	
120	90091-0238		4	WEAR RING 20X22X10 MM	
140	315204-0308		2	O-RING 84,5X3 MM	

Pos	Part No	UN	Qty	Description	Page No

This page is intentionally left blank.

ECM: 348441 - 20101001
Group number: 1296879-0100
Assembly Drawing:

Pos	Part No	UN	Qty	Description	Page No
-					
090	90091-0237		3	ROD SEAL GLYD RING 20X27,5X3 MM	
100	315204-0215		1	O-RING 19,2X3 MM	
120	90091-0238		2	WEAR RING 20X22X10 MM	
130	90091-0335		1	PISTON SEAL GLYD RING 62,5X70X3,2 MM	
150	90091-0304		1	RADIAL SEAL 45X65X8 MM DUST LIP	

Pos	Part No	UN	Qty	Description	Page No

This page is intentionally left blank.

ECM: 191095 - 20050117
Group number: 2723313-0100
Assembly Drawing:

Pos	Part No	UN	Qty	Description	Page No
-					
010	90459-4302		1	EXCIMER LAMP, 510MM 8000 4661	
020	90459-4304		1	CLADDING TUBE, 8000 4663	
030	90459-4305		2	REFLECTOR, 4515 2838	
040	90459-4306		1	LAMP SPACER, 4500 4001	
050	90459-4307		2	O-RING 117X4 MM, 4515 0230	
060	90459-4308		1	O-RING 40X3 MM, 4515 0228	
070	90459-4326		1	O-RING 40X2 MM, 4515 2836	
080	90459-4327		1	O-RING 16X2.5 MM, 4515 0229	
090	90459-5840		1	TUBE FUSE, 10A	
100	90459-5838		1	TUBE FUSE, 4A	

Pos	Part No	UN	Qty	Description	Page No

This page is intentionally left blank.

ECM: 380914 - 20081130
Group number: 3007673-0100
Assembly Drawing:

Pos	Part No	UN	Qty	Description	Page No
-					
010	315229-0105		5	SQUARE RING, 48,5X55,5X3,7 MM 2" FDA	
020	315229-0104		4	SQUARE RING, 35,8X42,8X3,7 MM 1"1/2 FD	
030	315229-0103		2	SQUARE RING, 23,1X30,1X3,7 MM 1" FDA	
040	315229-0107		1	SQUARE RING, 73,9X80,9X3,7 MM 2"1/2 FDA	
050	90036-0057		3	LIGHT BULB, BA9S 28V	

Pos	Part No	UN	Qty	Description	Page No

This page is intentionally left blank.

ECM: 380913 - 20081130
Group number: 3007674-0100
Assembly Drawing:

Pos	Part No	UN	Qty	Description	Page No
-					
010	2592780-0000		1	DOLLY	
020	1498047-0000		1	SEALING BLOCK	
030	1484695-0000		1	KNIFE	

Pos	Part No	UN	Qty	Description	Page No

This page is intentionally left blank.

ECM: 380912 - 20081130
Group number: 3007675-0100
Assembly Drawing:

Pos	Part No	UN	Qty	Description	Page No
TBA 0125S					
010	2910612-0000		2	BELT	
020	2933927-0000		1	BELT	
040	2693702-0000		2	NOZZLE	
050	2693703-0000		2	NOZZLE	
TBA 0200B					
010	1523100-0000		2	BELT	
020	2933926-0000		1	BELT	
040	2693718-0000		2	NOZZLE	
050	2693448-0000		2	NOZZLE	
TBA 0200M, TBA 0250S					
010	1523101-0000		2	BELT	
020	2933925-0000		1	BELT	
040	2691494-0000		2	NOZZLE	
050	2691493-0000		2	NOZZLE	
TBA 0200S					
010	2525662-0000		2	BELT	
020	2933924-0000		1	BELT	
040	2693702-0000		2	NOZZLE	
050	2693703-0000		2	NOZZLE	
TBA 0250B					
010	1523101-0000		2	BELT	
020	2933926-0000		1	BELT	
040	2693718-0000		2	NOZZLE	
050	2693448-0000		2	NOZZLE	
TBA 1000B					
010	2553045-0000		2	BELT	
020	2779126-0000		1	BELT	
040	2910393-0000		2	NOZZLE	
050	2910394-0000		2	NOZZLE	
TBA 1000S					
010	2679673-0000		2	BELT	
020	2679672-0000		1	BELT	
040	2910393-0000		2	NOZZLE	
050	2910394-0000		2	NOZZLE	
TBA 1000SQ					
010	2652232-0000		2	BELT	
020	2910622-0000		1	BELT	
040	2909530-0000		2	NOZZLE	
050	2909531-0000		2	NOZZLE	
Common Parts					
060	2877136-0000		1	HEATING ELEMENT	

Pos	Part No	UN	Qty	Description	Page No

Machine Type	Group Description	Used-In	Group Number	Page No

This page is intentionally left blank.

ECM: 381986 - 20081130
Group number: 2983314-0100
Assembly Drawing:

Pos	Part No	UN	Qty	Description	Page No
A3/SPEED					
010	90600-3267		1	MAINTENANCE KIT, TPAKKIT01	
Common Parts					
010	90600-3267		1	MAINTENANCE KIT, TPAKKIT01	

Pos	Part No	UN	Qty	Description	Page No

Machine Type | Group Description | Used-In | Group Number | Page No

This page is intentionally left blank.

ECM: 418444 - 20091001
Group number: 2980934-0200
Assembly Drawing:

Pos	Part No	UN	Qty	Description	Page No	Pos	Part No	UN	Qty	Description	Page No
-											
010	352553-0250		10	CYLINDRICAL FUSE 25A, 3NC1025							

Machine Type	Group Description	Used-In	Group Number	Page No

This page is intentionally left blank.

ECM: 72190 - 19990628
Group number: 531345-0200
Assembly Drawing:

Pos	Part No	UN	Qty	Description	Page No	Pos	Part No	UN	Qty	Description	Page No
-											
	90303-0011		1	PROTECTIVE GOGGLES							
	90303-0012		1	PROTECTIVE GLOVES							
	90303-0013		1	APRON							

This page is intentionally left blank.

ECM: 381039 - 20081130
Group number: 2980990-0100
Assembly Drawing:

Pos	Part No	UN	Qty	Description	Page No
A3/SPEED					
010	2981085-0000		1	TRANSPORT EQUIPMENT	
Common Parts					
020	312105-0503		2	SCREW M6S ISO 4014 M10X60 A480	
030	315105-0173		2	WASHER BRB 10,5X22 RFR	

Pos	Part No	UN	Qty	Description	Page No

This page is intentionally left blank.

ECM: 443900 - 20101001
Group number: 3007774-0200
Assembly Drawing:

Pos	Part No	UN	Qty	Description	Page No
TBA 0125S, TBA 0200M, TBA 0200B, TBA 0200S, TBA 0250S, TBA 0250B					
030	2640362-0000		1	TOOL	
040	2715353-0000		1	TOOL	
090	3053983-0000		1	TEMPLATE	
TBA 1000B, TBA 1000S, TBA 1000SQ NOPT					
030	2656105-0000		1	TOOL	
TBA 1000SQ PT/SPEED					
030	2656105-0000		1	TOOL	
060	3010398-0000		2	TOOL	
070	312105-0540		2	SCREW M6S ISO 4017 M12X40 A480	
080	315106-0178		2	WASHER ISO 7089-12-200 HV A4	
Common Parts					
010	90459-4501		1	EXTRACTOR DEVICE 14.756.082	
020	1487215-0100		1	TOOL	**9-35**
050	2908997-0100		1	TOOL	**9-37**

Pos	Part No	UN	Qty	Description	Page No

Machine Type | Group Description | Used-In | Group Number | Page No

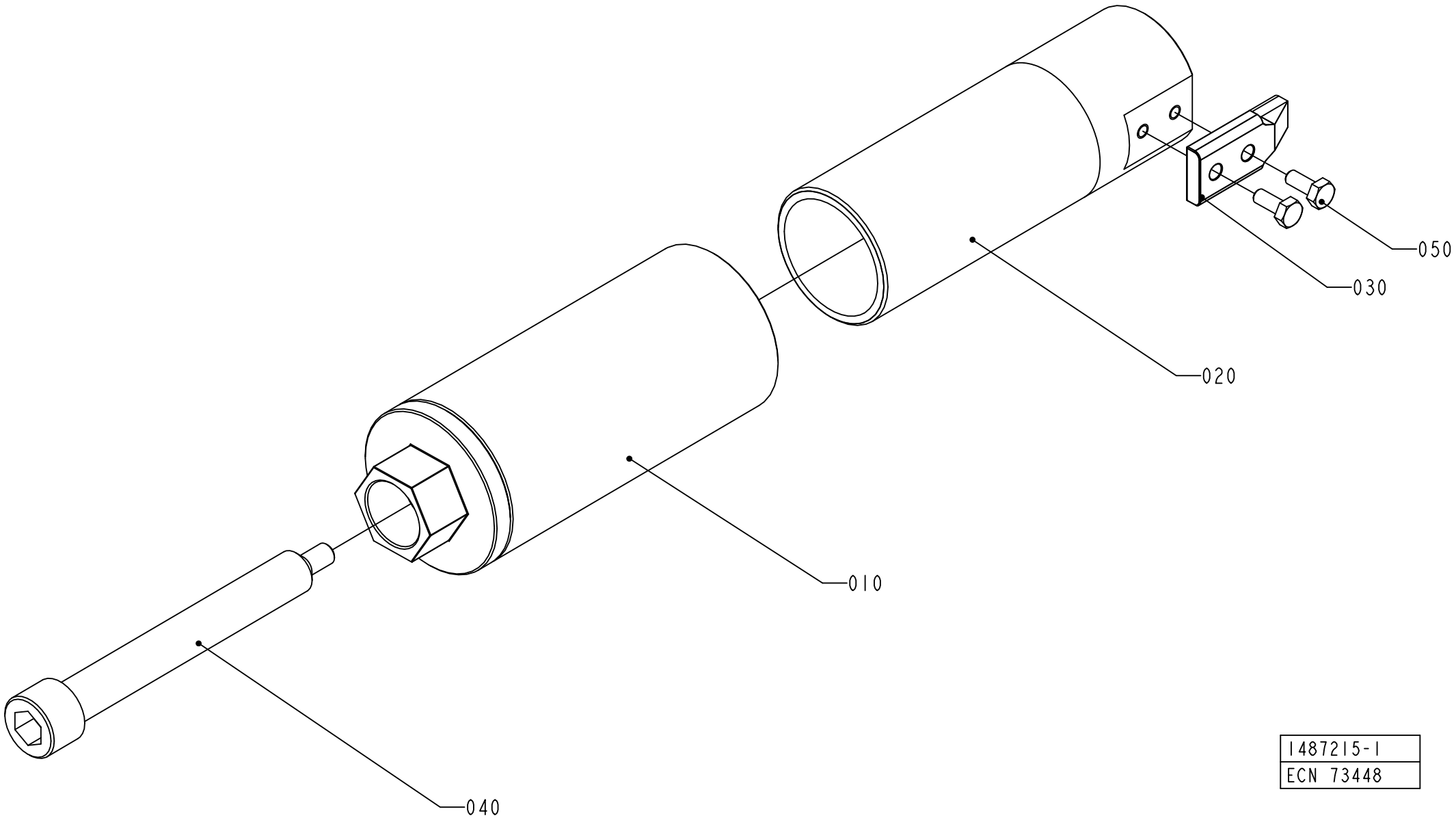

1487215-1
ECN 73448

ECM: 73448 - 20000302
Group number: 1487215-0100
Assembly Drawing: 1487215-1_1_AA

Pos	Part No	UN	Qty	Description	Page No
-					
010	1519725-0000		1	SHAFT	
020	1487213-0000		1	SHAFT	
030	1499186-0000		1	HOLDER	
030	1499129-0000		1	HOLDER	
040	1487214-0000		1	SCREW	
050	312105-0289		2	SCREW M6S H4X10 A4 70 ISO4017/DIN933	

Pos	Part No	UN	Qty	Description	Page No

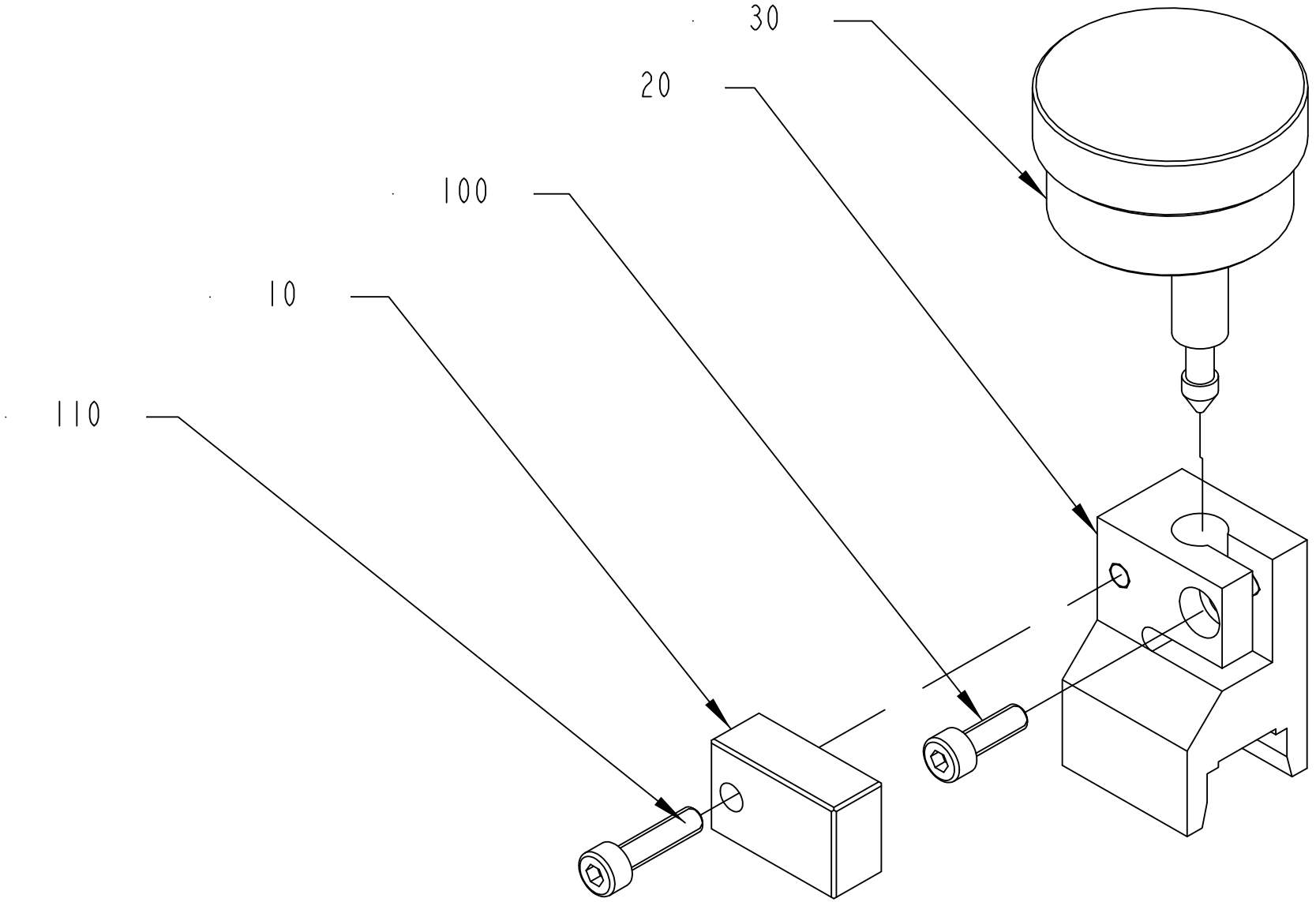

2908997-1
311572

ECM: 478591 - 20101003
Group number: 2908997-0100
Assembly Drawing: 2908997-1_1_AA

Pos	Part No	UN	Qty	Description	Page No
TBA 0125S					
010	2984760-0000		1	TOOL	
020	2984759-0000		1	TOOL	
TBA 0200M, TBA 0200B, TBA 0200S, TBA 0250S, TBA 0250B, TBA 1000B, TBA 1000SQ, TBA 1000S					
010	2908996-0000		1	TOOL	
020	2908923-0000		1	TOOL	
Common Parts					
030	90600-3053		1	DIAL GAUGE MITUTOYO 1160	
100	312115-0291		1	SCREW ISO4762 M4X12 A4 80	
110	312115-0293		1	SCREW ISO4762 M4X16 A4 80	

Pos	Part No	UN	Qty	Description	Page No

This page is intentionally left blank.

ECM: 432196 - 20100105
Group number: 3007775-0200
Assembly Drawing:

Pos	Part No	UN	Qty	Description	Page No
TBA 0125S					
060	2878628-0001		1	TEMPLATE	
TBA 0200B, TBA 0250B					
060	2878628-0004		1	TEMPLATE	
TBA 0200M, TBA 0250S					
060	2878628-0003		1	TEMPLATE	
TBA 0200S					
060	2878628-0002		1	TEMPLATE	
TBA 1000B					
060	2878628-0007		1	TEMPLATE	
TBA 1000S					
060	2878628-0006		1	TEMPLATE	
TBA 1000SQ					
060	2878628-0005		1	TEMPLATE	
Common Parts					
020	90600-2975		1	SNAKE EYES SPANNER BITS 1/4", SP-10	
030	2863968-0000		1	TOOL	
040	2793320-0300		1	TEMPLATE	**9-41, 9-43**
050	1517064-0000		1	KEY	
070	3038998-0100		1	TOOL	**9-45**
080	3038999-0100		1	TOOL	**9-47**

Pos	Part No	UN	Qty	Description	Page No

Machine Type | Group Description | Used-In | Group Number | Page No

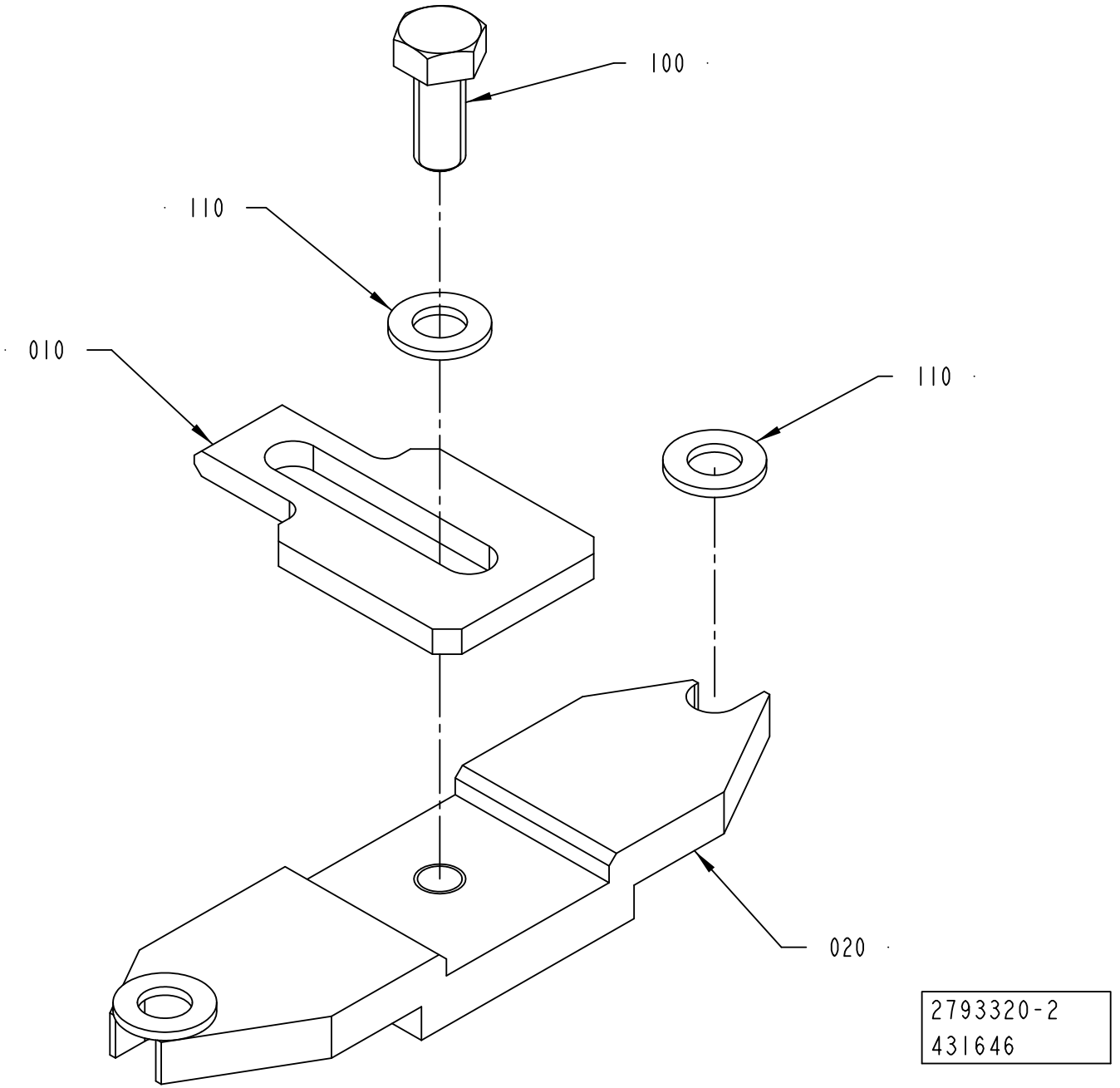
100
110
010
110
020
2793320-2
431646

ECM: 474895 - 20101001
Group number: 2793320-0300
Assembly Drawing: 2793320-2_1_AA

This list covers pages from 9-40 to 9-43

Pos	Part No	UN	Qty	Description	Page No
A3/SPEED TBA 1000SQ (See drawing on page: 9-40)					
020	3106761-0000		1	PLATE	
110	315105-0146		3	WASHER BRB 5,3X10 RFR	
A3/SPEED TBA 0125S (See drawing on page: 9-42)					
020	3106770-0001		1	PLATE	
110	315105-0146		1	WASHER BRB 5,3X10 RFR	
A3/SPEED TBA 0200M, A3/SPEED TBA 0250S (See drawing on page: 9-42)					
020	3106770-0002		1	PLATE	
110	315105-0146		1	WASHER BRB 5,3X10 RFR	
A3/SPEED TBA 0200S (See drawing on page: 9-40)					
020	3128690-0000		1	PLATE	
110	315105-0146		1	WASHER BRB 5,3X10 RFR	
A3/SPEED TBA 0250B, A3/SPEED TBA 0200B (See drawing on page: 9-40)					
020	3106763-0000		1	PLATE	
110	315105-0146		3	WASHER BRB 5,3X10 RFR	
A3/SPEED TBA 1000B (See drawing on page: 9-40)					
020	3106760-0000		1	PLATE	
110	315105-0146		3	WASHER BRB 5,3X10 RFR	
A3/SPEED TBA 1000S (See drawing on page: 9-40)					
020	3106762-0000		1	PLATE	
110	315105-0146		3	WASHER BRB 5,3X10 RFR	
Common Parts					
010	2736719-0000		1	PLATE	
100	312105-0327		1	SCREW M6S ISO 4017 M5X12 A480	

Pos	Part No	UN	Qty	Description	Page No

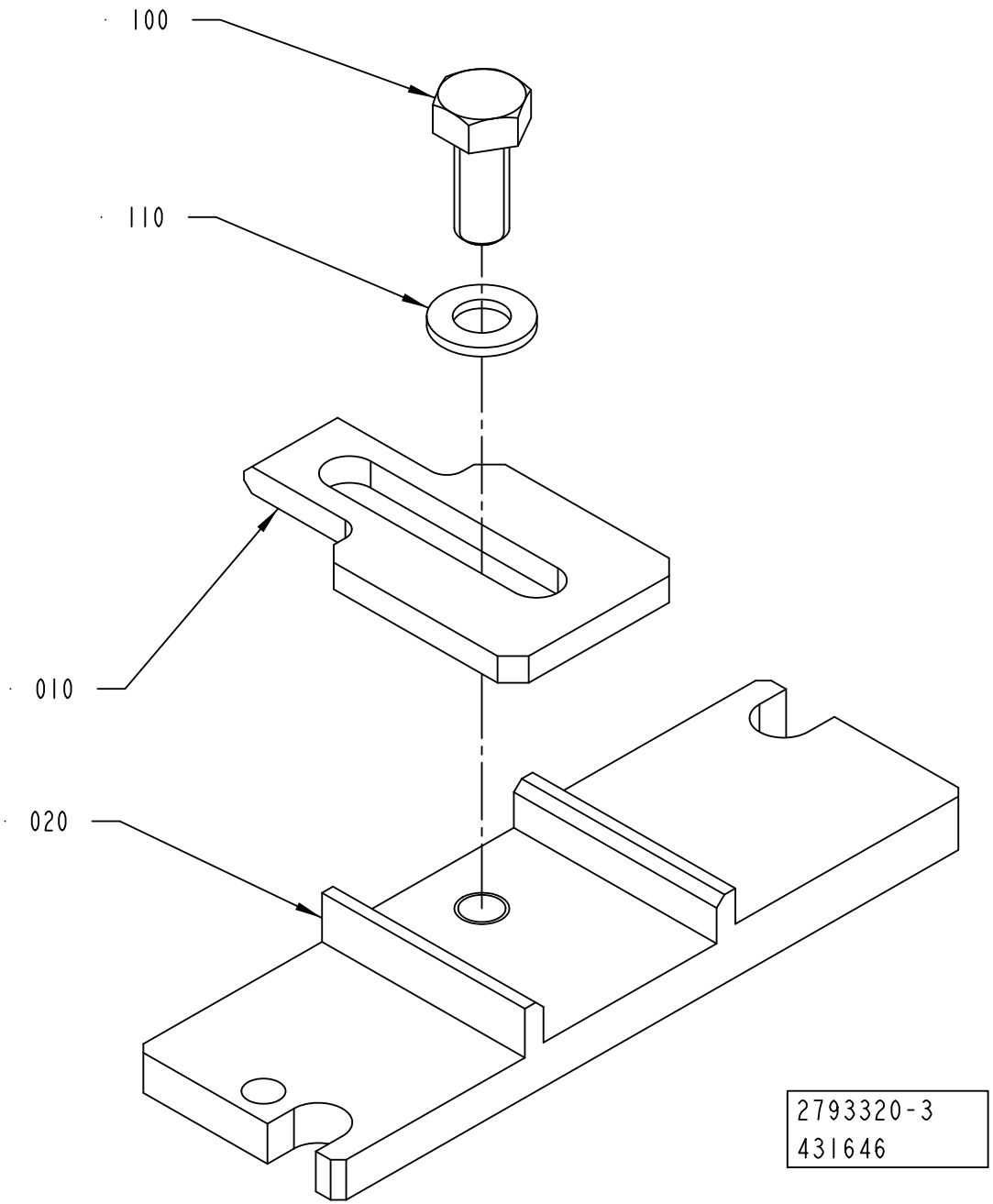
100
110
010
020
2793320-3
431646

Pos	Part No	UN	Qty	Description	Page No
A3/SPEED TBA 1000SQ (See drawing on page: 9-40)					
020	3106761-0000		1	PLATE	
110	315105-0146		3	WASHER BRB 5,3X10 RFR	
A3/SPEED TBA 0125S (See drawing on page: 9-42)					
020	3106770-0001		1	PLATE	
110	315105-0146		1	WASHER BRB 5,3X10 RFR	
A3/SPEED TBA 0200M, A3/SPEED TBA 0250S (See drawing on page: 9-42)					
020	3106770-0002		1	PLATE	
110	315105-0146		1	WASHER BRB 5,3X10 RFR	
A3/SPEED TBA 0200S (See drawing on page: 9-40)					
020	3128690-0000		1	PLATE	
110	315105-0146		1	WASHER BRB 5,3X10 RFR	
A3/SPEED TBA 0250B, A3/SPEED TBA 0200B (See drawing on page: 9-40)					
020	3106763-0000		1	PLATE	
110	315105-0146		3	WASHER BRB 5,3X10 RFR	
A3/SPEED TBA 1000B (See drawing on page: 9-40)					
020	3106760-0000		1	PLATE	
110	315105-0146		3	WASHER BRB 5,3X10 RFR	
A3/SPEED TBA 1000S (See drawing on page: 9-40)					
020	3106762-0000		1	PLATE	
110	315105-0146		3	WASHER BRB 5,3X10 RFR	
Common Parts					
010	2736719-0000		1	PLATE	
100	312105-0327		1	SCREW M6S ISO 4017 M5X12 A480	

Pos	Part No	UN	Qty	Description	Page No

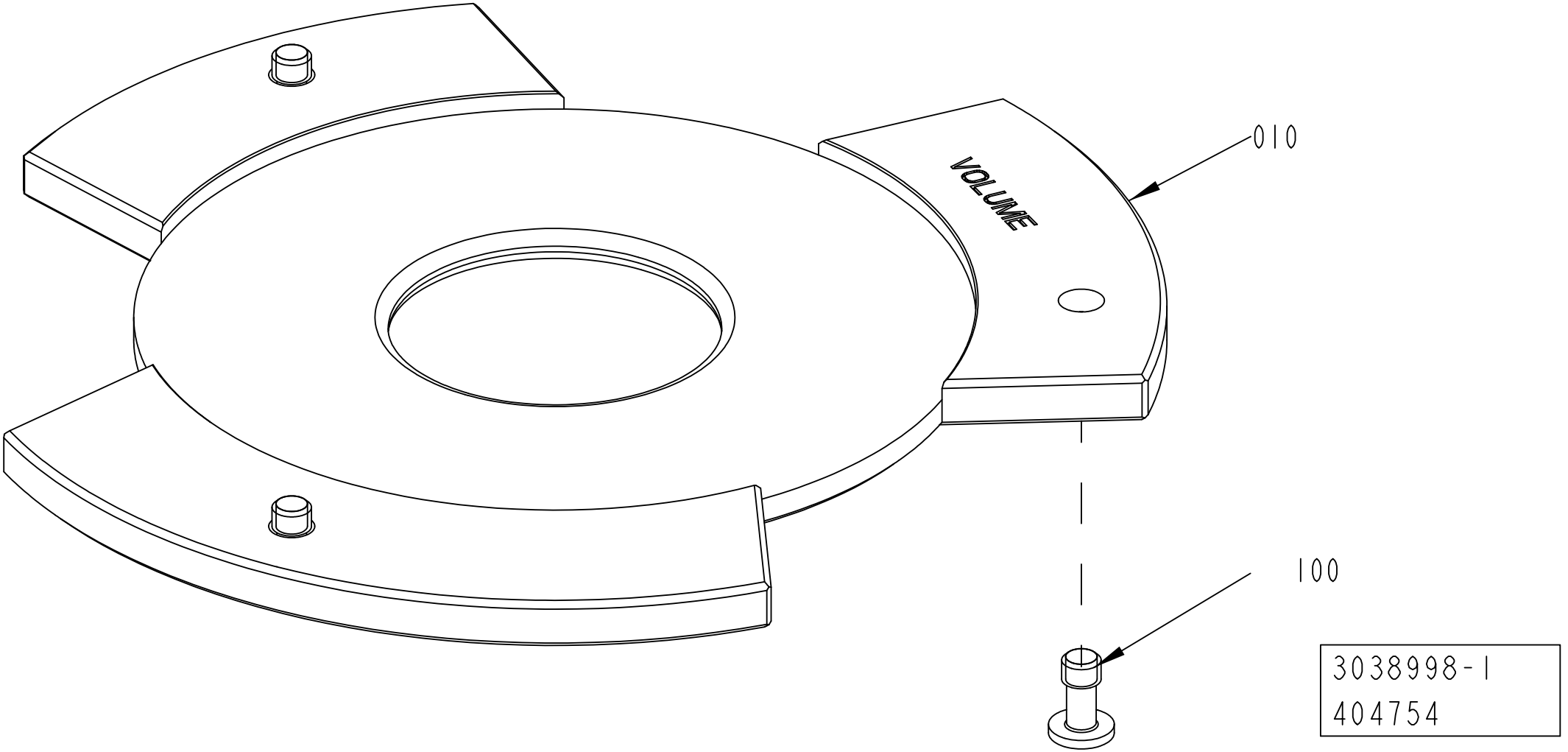
010
VOLUME
100
3038998-1
404754

ECM: 443901 - 20101001
Group number: 3038998-0100
Assembly Drawing: 3038998-1_1_AA

Pos	Part No	UN	Qty	Description	Page No
A3/SPEED TBA 0125S					
010	3037780-0001		1	TOOL	
A3/SPEED TBA 0200M, A3/SPEED TBA 0250S					
010	3037780-0003		1	TOOL	
A3/SPEED TBA 0200S					
010	3037780-0004		1	TOOL	
A3/SPEED TBA 0250B, A3/SPEED TBA 0200B					
010	3037780-0002		1	TOOL	
A3/SPEED TBA 1000B					
010	3037780-0005		1	TOOL	
A3/SPEED TBA 1000S					
010	3037780-0006		1	TOOL	
A3/SPEED TBA 1000SQ					
010	3037780-0007		1	TOOL	
Common Parts					
100	90601-2046		3	CAPTIVE SCREW M6, GUTBG 6-4-12	

Pos	Part No	UN	Qty	Description	Page No

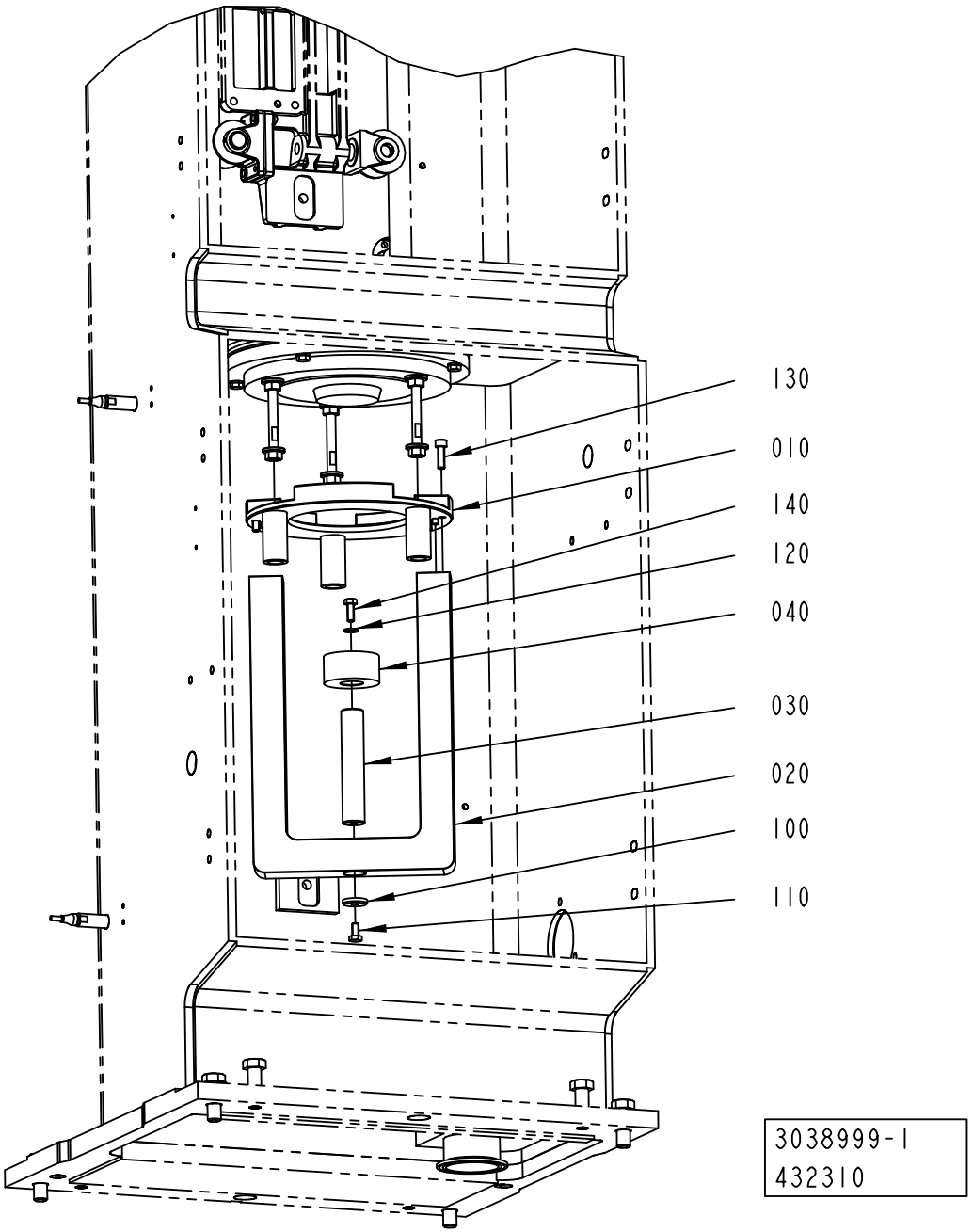
130
010
140
120
040
030
020
100
110
3038999-1
432310

ECM: 443898 - 20101001
Group number: 3038999-0100
Assembly Drawing: 3038999-1_1_AB

Pos	Part No	UN	Qty	Description	Page No
TBA 0125S					
040	2998398-0000		1	CENTERING DISC	
TBA 0200M, TBA 0200B, TBA 0200S, TBA 0250S, TBA 0250B					
040	2799894-0000		1	CENTERING UNIT	
TBA 1000B, TBA 1000SQ, TBA 1000S					
040	2539456-0000		1	CENTERING DISC	
Common Parts					
010	2998397-0000		1	HOLDER	
020	3091975-0000		1	BRACKET	
030	1487482-0000		1	SHAFT	
100	315125-0153		1	WASHER TBRSB 6,4X22X4 A4	
110	312105-0366		1	SCREW M6S ISO 4017 M6X12 A480	
120	315105-0153		1	WASHER BRB 6,4X12 RFR	
130	312115-0370		4	SCREW ISO4762 M6X20 A4 80	
140	312105-0368		1	SCREW M6S ISO 4017 M6X16 A480	

Pos	Part No	UN	Qty	Description	Page No

Machine Type | Group Description | Used-In | Group Number | Page No

This page is intentionally left blank.

ECM: 380909 - 20081130
Group number: 3007776-0100
Assembly Drawing:

Pos	Part No	UN	Qty	Description	Page No
TBA 0125S					
010	2846459-0000		1	TEMPLATE	
TBA 0200B					
010	2946749-0000		1	TEMPLATE	
TBA 0200M					
010	2946750-0000		1	TEMPLATE	
TBA 0200S					
010	2946747-0000		1	TEMPLATE	
TBA 0250B					
010	2946748-0000		1	TEMPLATE	
TBA 0250S					
010	2946751-0000		1	TEMPLATE	
TBA 1000S, TBA 1000B					
010	2527355-0000		1	TEMPLATE	
TBA 1000SQ					
010	2553032-0000		1	TEMPLATE	

Pos	Part No	UN	Qty	Description	Page No

This page is intentionally left blank.

ECM: 381985 - 20081130
Group number: 3010288-0100
Assembly Drawing:

Pos	Part No	UN	Qty	Description	Page No	Pos	Part No	UN	Qty	Description	Page No
-											
010	2994287-0000		1	TOOL							

Machine Type | Group Description | Used-In | Group Number | Page No

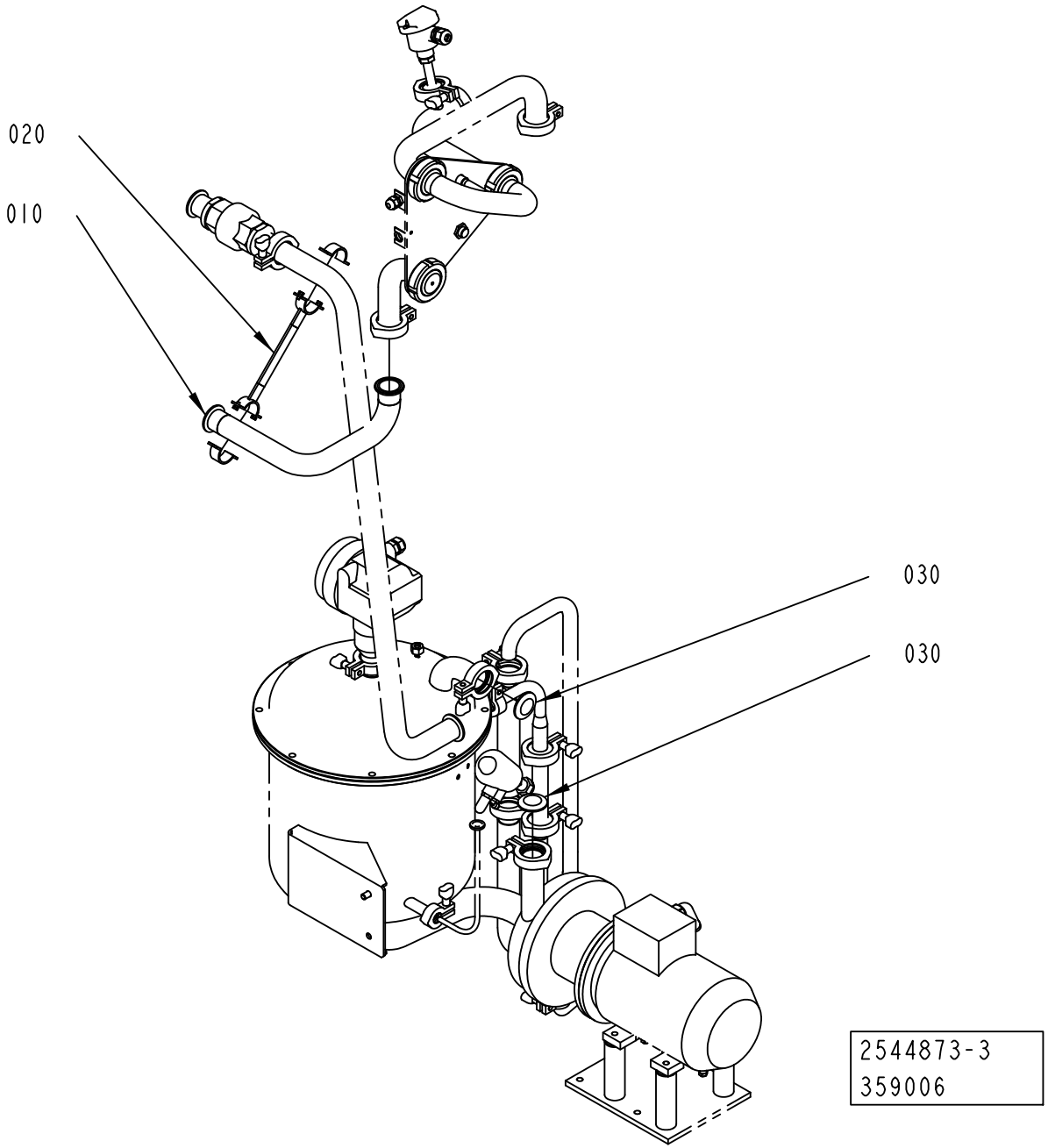
020
010
030
030
2544873-3
359006

ECM: 359006 - 20080708
Group number: 2544873-0300
Assembly Drawing: 2544873-3_1_AA

Pos	Part No	UN	Qty	Description	Page No
-					
010	2980909-0000		1	PIPE	
020	2980910-0000		1	PIPE SUPPORT	
030	90600-3699		2	END CAP 1,5", 210854	

Pos	Part No	UN	Qty	Description	Page No

This page is intentionally left blank.

ECM: 380917 - 20081130
Group number: 3007676-0100
Assembly Drawing:

Pos	Part No	UN	Qty	Description	Page No
TBA 0125S, TBA 0200M, TBA 0200B, TBA 0200S, TBA 0250S, TBA 0250B					
010	2912144-0000		1	TRANSPORT EQUIPMENT	
TBA 1000B, TBA 1000SQ, TBA 1000S					
010	2951175-0000		1	TRANSPORT EQUIPMENT	

Pos	Part No	UN	Qty	Description	Page No

This page is intentionally left blank.

ECM: 321306 - 20070903
Group number: 90600-3339
Assembly Drawing:

Pos	Part No	UN	Qty	Description	Page No
-					
	1558477-0100		1	WHEEL	**9-59**
	1558479-0100		1	HANDLE	**9-61**
	1558480-0100		1	LIFTING CYLINDER	**9-63**
	312812-0324		1	HEXAGON NUT, NY-LOCK M16 A480	
	312105-0634		1	SCREW M6S ISO 4014 M16X70 A480	
	312101-0678		2	SCREW M6S M20X70 FZB	
	90458-1473		1	PUMP, 34 73 521 7	**9-65**
	90067-0372		2	SHAFT, 32 04 174 1	
	90067-0371		4	SLEEVE, 32 04 175 8	
	90067-0370		2	WHEEL, 32 04 176 6	
	90067-0368		1	YOKE	
	90067-0365		1	HYDRAULIC HOSE, 32 04 169 1	

Pos	Part No	UN	Qty	Description	Page No

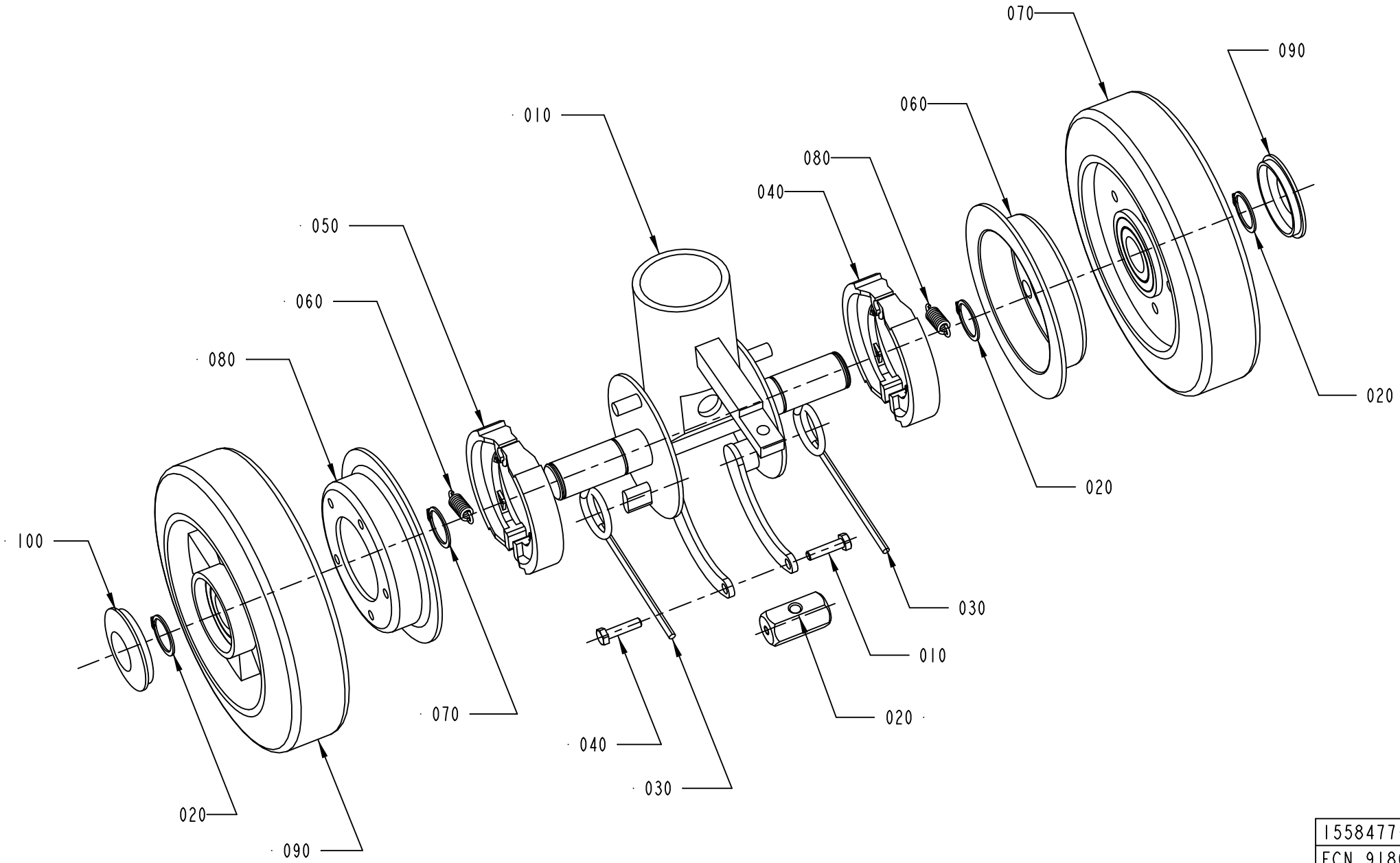

1558477-1
ECN 91803

ECM: 348440 - 20101001
Group number: 1558477-0100
Assembly Drawing: 1558477-1_1_AA

Pos	Part No	UN	Qty	Description	Page No
-					
010	90067-0336		1	GUIDE SHAFT UNIT, 32 82 123 3	
030	90067-0302		2	TORSION SPRING	
040	312105-0372		2	SCREW M6S ISO 4017 M6X25 A480	
050	90067-0317		2	BRAKE LINING	
060	90067-0342		2	TENSION SPRING	
070	315750-0119		4	RETAINING RING FOR SHAFT DIN 471 25	
080	90067-0337		2	BRAKE DRUM	
090	90067-0338		2	GUIDE ROLLER 32 44 117 2	
100	90458-1467		2	CAP, 32 44 129 7	

Pos	Part No	UN	Qty	Description	Page No

HANDLE

Drawing file: 1558479-1_1_AA.hpgl

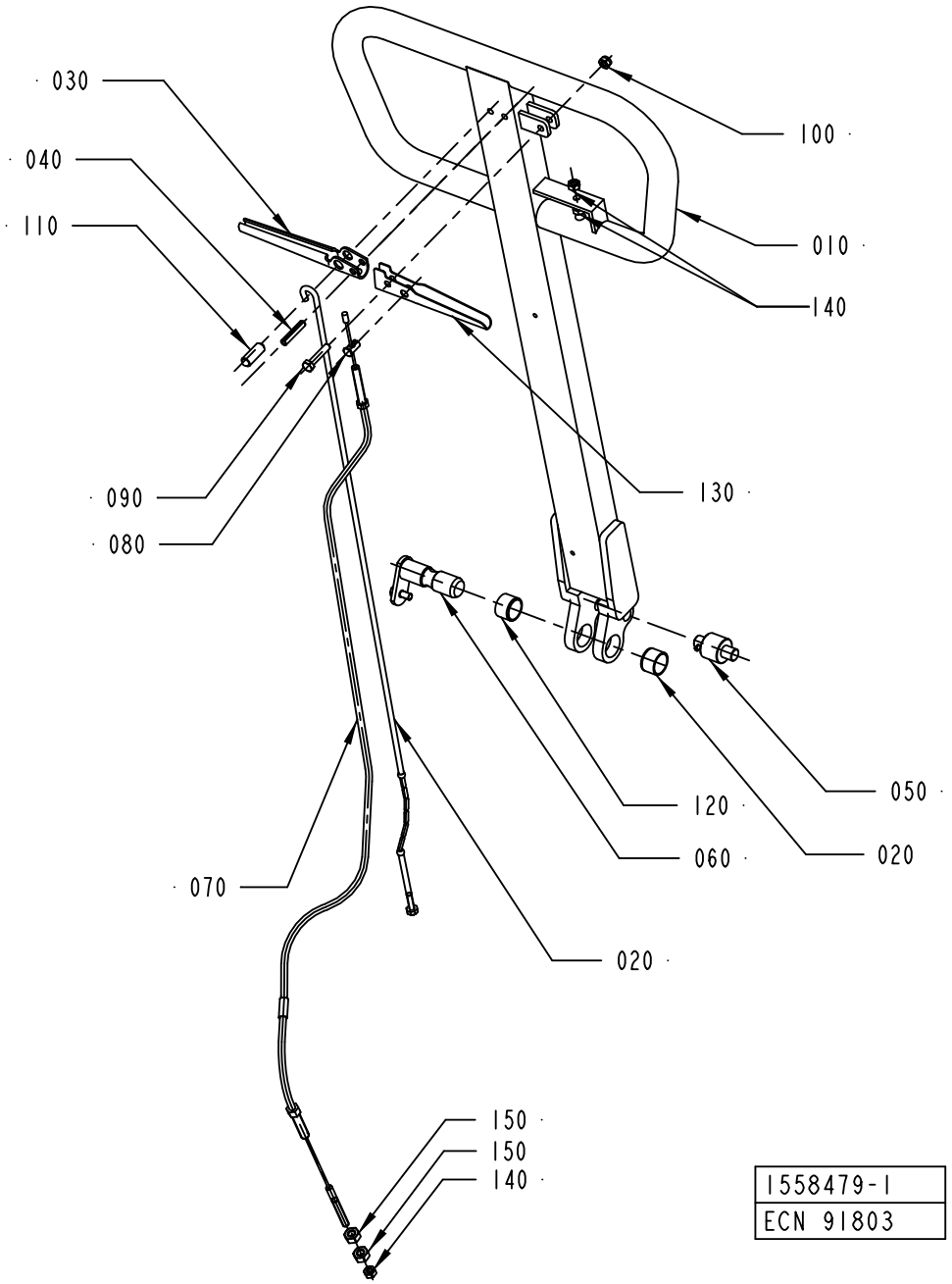

ECM: 348439 - 20101001
Group number: 1558479-0100
Assembly Drawing: 1558479-1_1_AA

Pos	Part No	UN	Qty	Description	Page No
-					
010	90067-0361		1	TIE ROD	
020	90067-0359		1	SINK ROD, 34 74 021 7	
030	90067-0358		1	SINK HANDLE	
040	311111-0345		1	SPRING PIN ISO 8752 6X32-ST	
050	90067-0349		1	ROLLER KIT, 34 73 050 7	
060	90067-0350		1	AXLE PIN	
070	90067-0301		1	BRAKE WIRE, 32 82 138 1	
080	90067-0320		1	COTTER FOR 90067-301	
090	312109-0374		1	SCREW M6S ISO 4017 M6X30 A480	
100	312812-0316		1	HEXAGON NUT, NY-LOCK M6 A480	
110	90067-0360		1	MOUNTING KIT, 34 74 022 5	
120	321120-0137		2	BEARING BUSH W/O FLANGE, 20X23X15 MM	
130	90067-0364		1	BRAKE HANDLE	
140	312602-0316		3	NUT, EN 24032 M6M M6 NIPLBR	
150	312602-0318		2	HEXAGON NUT, EN 24032 M6M M8 NIPLBR	

Pos	Part No	UN	Qty	Description	Page No

LIFTING CYLINDER

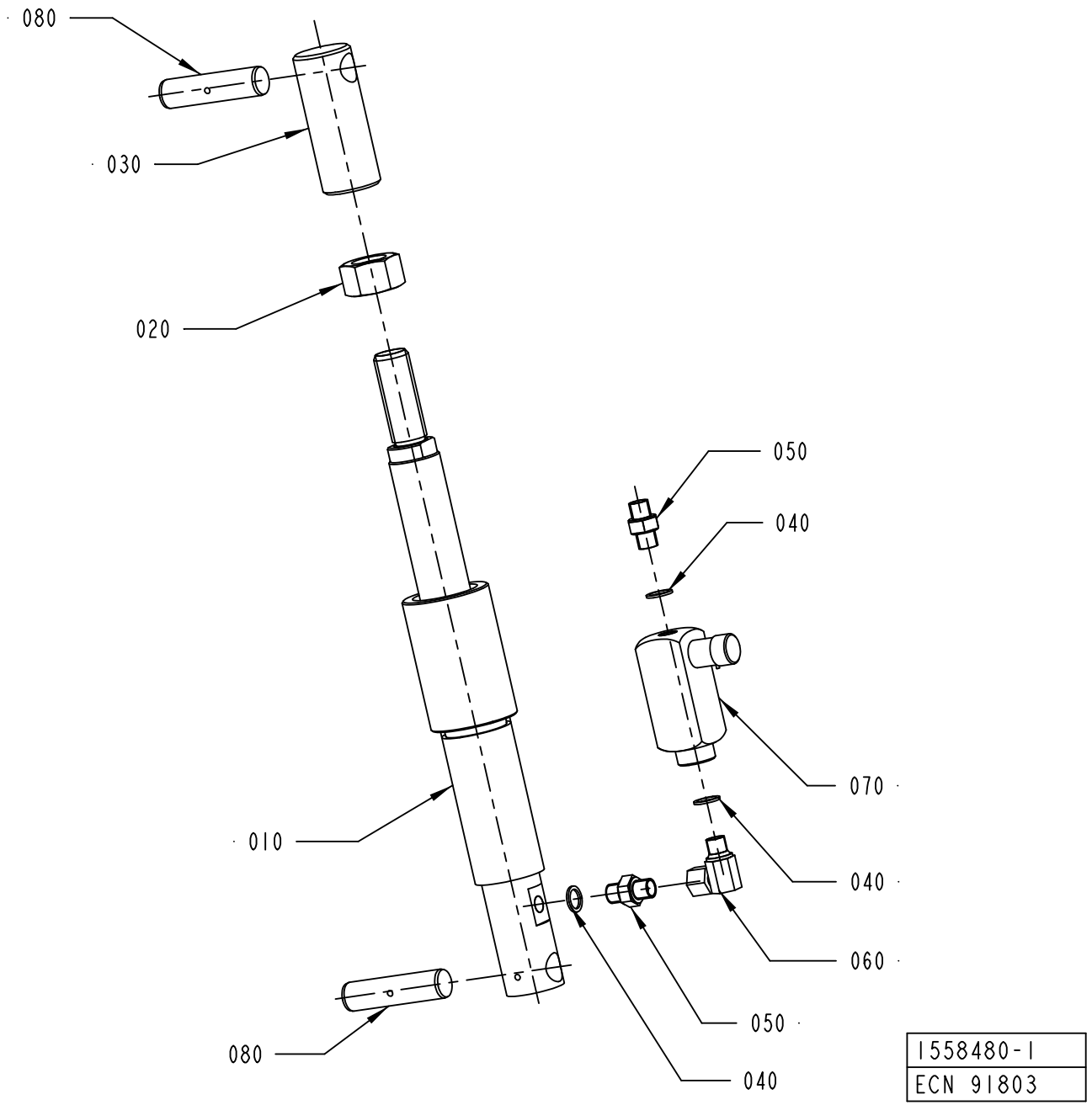

ECM: 348438 - 20101001
Group number: 1558480-0100
Assembly Drawing: 1558480-1_1_AA

Pos	Part No	UN	Qty	Description	Page No
-					
010	90458-1472		1	CYLINDER, 32 04 215 2	
020	312605-0328		1	HEXAGON NUT, M6M M24 A280	
030	90458-1471		1	PISTON ROD END, 32 04 214 5	
040	315234-0110		3	WASHER,PL.RND.CU.13,5/18 H=1,5	
050	90055-0042		2	NIPPLES, EXT. THREAD, HEXAGON, NO. 6835-	
060	90055-0145		1	ELBOW ADAPTOR-R1/4	
070	90201-0098		1	ADJ. FLOW CON. VALVE, NO. 9 PCCM 400SF	
080	90458-1476		2	AXLE PIN, 32 04 167 5	

Pos	Part No	UN	Qty	Description	Page No

PUMP, 34 73 521 7

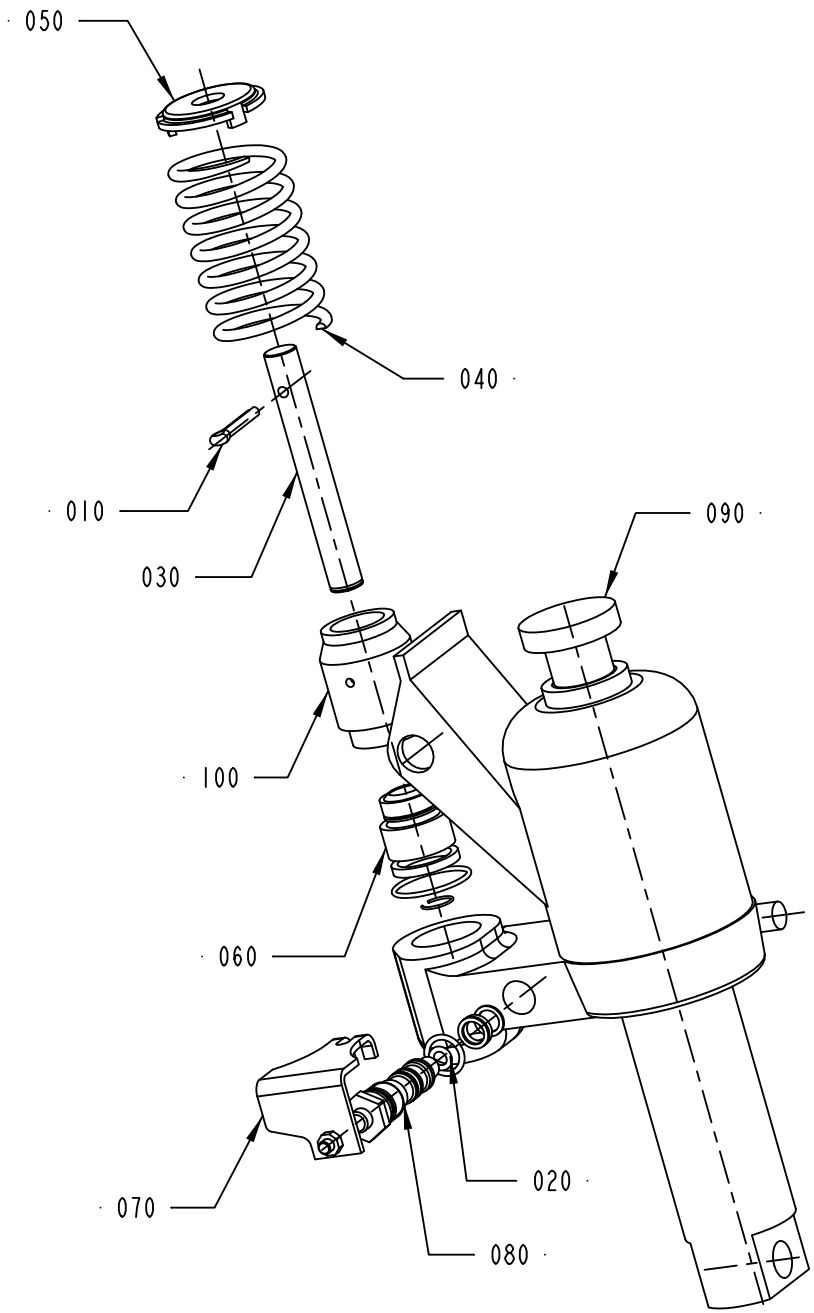

90458-1473
ECM 133556

ECM: 324175 - 20070903
Group number: 90458-1473
Assembly Drawing: 90458-1473_1_AB

Pos	Part No	UN	Qty	Description	Page No
-					
010	90458-1468		1	SPLIT PIN, 43 71 234 8	
020	90067-0351		1	SEAL KIT	
030	90067-0354		1	PUMP PISTON	
040	90067-0355		1	COMPRESSION SPRING	
050	90067-0356		1	TOP WASHER	
060	90067-0357		1	REPAIR KIT	
070	90067-0369		1	VALVE ARM	
080	90458-1470		1	SINK VALVE COMPL, 34 73 094 5	
100	90458-1393		1	PUMP CYLINDER, 34 73 522 5	

Pos	Part No	UN	Qty	Description	Page No

This page is intentionally left blank.

ECM: 381041 - 20081130
Group number: 2980991-0100
Assembly Drawing:

Pos	Part No	UN	Qty	Description	Page No
A3/SPEED					
020	90458-2138		4	SCREW M6S M12X120 A280	
030	312605-0322		8	HEXAGON NUT, M6M M12 A280	
040	315105-0178		8	WASHER BRB 13X24 RFR	
Common Parts					
010	1558933-0000		2	FRAME	

Pos	Part No	UN	Qty	Description	Page No

This page is intentionally left blank.

ECM: 472091 - 20110101
Group number: 2508173-0400
Assembly Drawing:

Pos	Part No	UN	Qty	Description	Page No
A3/SPEED TBA 0125S HI, A3/SPEED TBA 0200B HI, A3/SPEED TBA 0200M HI, A3/SPEED TBA 0200S HI, A3/SPEED TBA 0250B HI, A3/SPEED TBA 0250S HI					
FM040	2886621-0000		1	DIAGRAM	
FM030	2908562-0000		1	DIAGRAM	
MB010	3117858-0000		1	PNEUMATIC DIAGRAM	
SU010	3055965-0000		1	WATER DIAGRAM	
SS020	2979712-0000		1	PNEUMATIC DIAGRAM	
SS010	2895150-0000		1	PNEUMATIC DIAGRAM	
A3/SPEED TBA 0125S NOHI, A3/SPEED TBA 0200B NOHI, A3/SPEED TBA 0200M NOHI, A3/SPEED TBA 0200S NOHI, A3/SPEED TBA 0250B NOHI, A3/SPEED TBA 0250S NOHI					
FM040	2886621-0000		1	DIAGRAM	
FM030	2908562-0000		1	DIAGRAM	
MB010	3117858-0000		1	PNEUMATIC DIAGRAM	
SU010	3055965-0000		1	WATER DIAGRAM	
SS030	2979713-0000		1	PNEUMATIC DIAGRAM	
A3/SPEED TBA 1000B HI, A3/SPEED TBA 1000S HI, A3/SPEED TBA 1000SQ NOPT HI, A3/SPEED TBA 1000SQ PT/SPEED HI					
FM040	2886621-0000		1	DIAGRAM	
FM030	2908562-0000		1	DIAGRAM	
MB010	3117860-0000		1	PNEUMATIC DIAGRAM	
SU010	3055968-0000		1	WATER DIAGRAM	
SS020	2979712-0000		1	PNEUMATIC DIAGRAM	
SS010	2895150-0000		1	PNEUMATIC DIAGRAM	
A3/SPEED TBA 1000B NOHI, A3/SPEED TBA 1000S NOHI, A3/SPEED TBA 1000SQ NOPT NOHI, A3/SPEED TBA 1000SQ PT/SPEED NOHI					
FM040	2886621-0000		1	DIAGRAM	
FM030	2908562-0000		1	DIAGRAM	
MB010	3117860-0000		1	PNEUMATIC DIAGRAM	
SU010	3055968-0000		1	WATER DIAGRAM	
SS030	2979713-0000		1	PNEUMATIC DIAGRAM	
Common Parts					
AS010	3098672-0100		1	PNEUMATIC DIAGRAM	**9-71**
MB020	2887587-0000		1	PNEUMATIC DIAGRAM	
SU020	2816352-0000		1	PNEUMATIC DIAGRAM	
SU010	2778524-0000		1	PNEUMATIC DIAGRAM	

Pos	Part No	UN	Qty	Description	Page No

Machine Type | Group Description | Used-In | Group Number | Page No

This page is intentionally left blank.

ECM: 444401 - 20100519
Group number: 3098672-0100
Assembly Drawing:

Pos	Part No	UN	Qty	Description	Page No
ASU					
010	2816348-0000		1	PNEUMATIC DIAGRAM	
ASU-iLINEXT AUTOMATIC					
030	3097055-0000		1	PNEUMATIC DIAGRAM	
ASU-iLINEXT SEMI-AUTOMATIC					
020	3097024-0000		1	PNEUMATIC DIAGRAM	

Pos	Part No	UN	Qty	Description	Page No

Tetra Pak

SPC
Spare Parts Catalogue

This page is intentionally left blank.

ECM: 425226 - 20091002
Group number: 649488-0400
Assembly Drawing:

Pos	Part No	UN	Qty	Description	Page No
-					
0010	2918306-0200		1	ELECTRICAL DOCUMENT	
0020	2914244-0100		1	SOFTWARE	**10-5**

Pos	Part No	UN	Qty	Description	Page No

This page is intentionally left blank.

ECM: 454908 - 90001231
Group number: 2914244-0100
Assembly Drawing:

Pos	Part No	UN	Qty	Description	Page No	Pos	Part No	UN	Qty	Description	Page No
-											
0010	2914245-0012		1	SOFTWARE CD							
0020	2912228-0003		1	TPOP BASIC V 3.2							
0030	2923820-0006		1	PLMS CENTRE 140 BASIC							

Tetra Pak

SPC
Spare Parts Catalogue

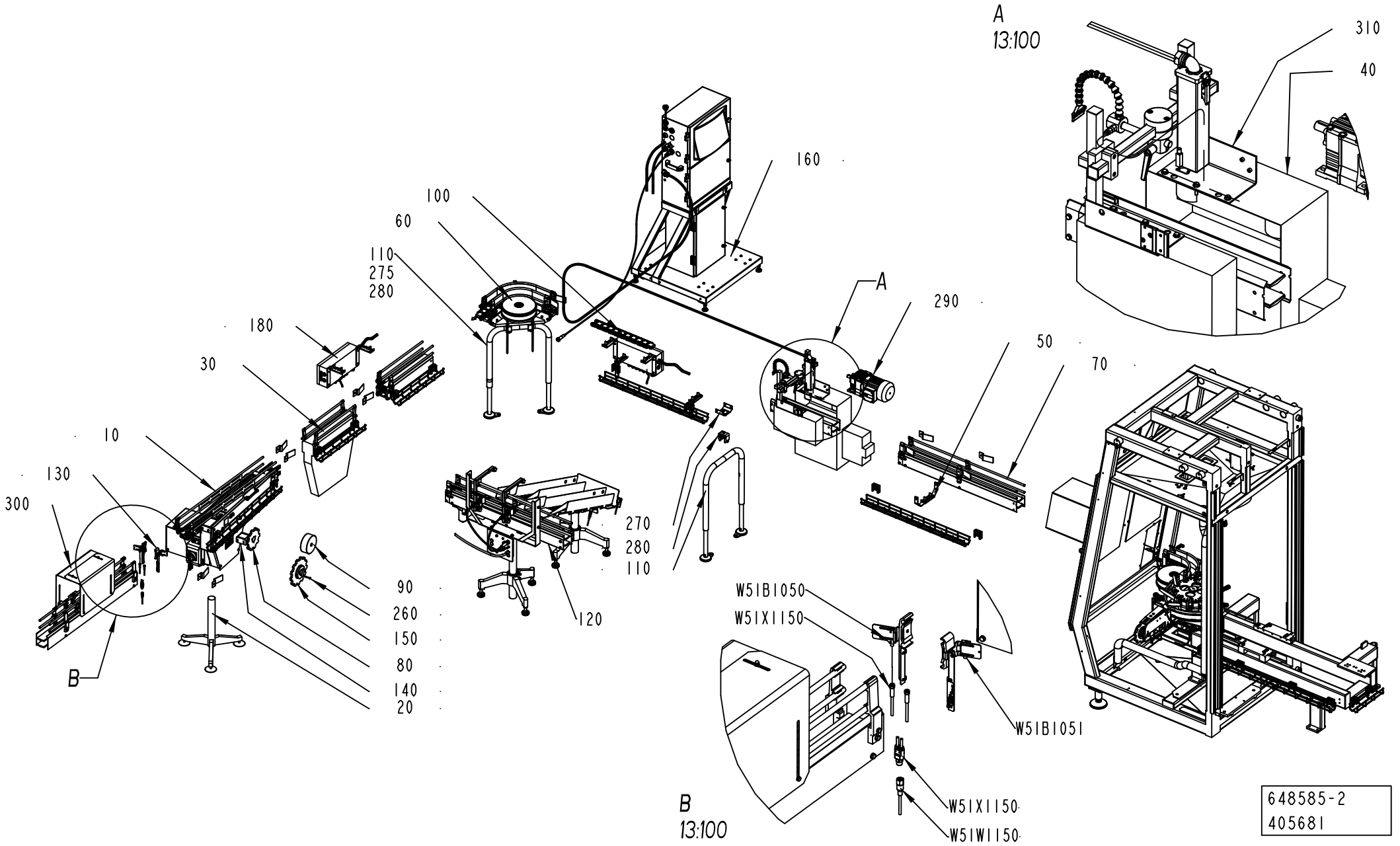
A
13:100
310
40
160
100
60
110
275
280
180
30
10
130
300
A
290
50
70
270
280
110
120
90
260
150
80
140
20
B
W51B1050
W51X1150
W51B1051
B
13:100
W51X1150
W51W1150
648585-2
405681

ECM: 462385 - 20101001
Group number: 648585-0200
Assembly Drawing: 648585-2_1_AA

This list covers pages from 11-2 to 11-19

Pos	Part No	UN	Qty	Description	Page No
TBA0200B DOMINO NO SAMPLING UNIT, TBA0200S DOMINO NO SAMPLING UNIT, TBA0250B DOMINO NO SAMPLING UNIT, TBA0125S DOMINO NO SAMPLING UNIT					
010	2589940-0307		1	TRANSFER UNIT	**11-21**
030	2589845-0101		1	CHAIN TENSIONER TPC21 SH	
040	2589843-0101		1	BELT BRAKE TPC21 SH (DOMINO)	
050	2878133-0100		1	SUPPORT PLATE	**11-47**
060	2891592-0100		1	CURVE	**11-49**
070	2902500-0100		1	STRAIGHT CONVEYOR	**11-51, 11-53**
080	2877416-0000		1	DRIVE WHEEL	
090	2891605-0000		1	WHEEL	
100	90600-3072		5	CONVEYOR CHAIN, L1765654842N1	
110	2807605-0101		2	LEG,CONVEYOR	**11-57**
140	2561319-0002		1	PROTECTION PLATE	
150	2891629-0000		1	DRIVE WHEEL	
160	3005198-0100		1	INK JET PRINTER	**11-59**
180	2910623-0100		1	CONNECTION BOX	**11-61**
260	312105-0378		3	SCREW M6S ISO 4014 M6X40 A480	
270	486884-0000		1	BRACKET	
280	2807592-0000		1	MULTI BRACKET SINGLE	
310	2763557-0200		1	BRACKET	**11-65**
TBA0200B DOMINO SAMPLING UNIT, TBA0200S DOMINO SAMPLING UNIT, TBA0250B DOMINO SAMPLING UNIT, TBA0125S DOMINO SAMPLING UNIT					
010	2589940-0307		1	TRANSFER UNIT	**11-21**
030	2589845-0101		1	CHAIN TENSIONER TPC21 SH	
040	2589843-0101		1	BELT BRAKE TPC21 SH (DOMINO)	
050	2878133-0100		1	SUPPORT PLATE	**11-47**
060	2891592-0100		1	CURVE	**11-49**
070	2902500-0100		1	STRAIGHT CONVEYOR	**11-51, 11-53**
080	2877416-0000		1	DRIVE WHEEL	
090	2891605-0000		1	WHEEL	
100	90600-3072		5	CONVEYOR CHAIN, L1765654842N1	
110	2807605-0101		2	LEG,CONVEYOR	**11-57**
120	2948042-0100		1	SAMPLING UNIT	**11-67**
140	2561319-0002		1	PROTECTION PLATE	
150	2891629-0000		1	DRIVE WHEEL	
160	3005198-0100		1	INK JET PRINTER	**11-59**
180	2910623-0100		1	CONNECTION BOX	**11-61**
260	312105-0378		3	SCREW M6S ISO 4014 M6X40 A480	
270	486884-0000		1	BRACKET	
280	2807592-0000		1	MULTI BRACKET SINGLE	
310	2763557-0200		1	BRACKET	**11-65**
TBA0200B NO DOMINO NO SAMPLING UNIT, TBA0200S NO DOMINO NO SAMPLING UNIT, TBA0250B NO DOMINO NO SAMPLING UNIT, TBA0125S NO DOMINO NO SAMPLING UNIT					
010	2589940-0307		1	TRANSFER UNIT	**11-21**
030	2589845-0101		1	CHAIN TENSIONER TPC21 SH	
040	2589843-0101		1	BELT BRAKE TPC21 SH (DOMINO)	
050	2878133-0100		1	SUPPORT PLATE	**11-47**
060	2891592-0100		1	CURVE	**11-49**
070	2902500-0100		1	STRAIGHT CONVEYOR	**11-51, 11-53**
080	2877416-0000		1	DRIVE WHEEL	
090	2891605-0000		1	WHEEL	
100	90600-3072		5	CONVEYOR CHAIN, L1765654842N1	
110	2807605-0101		2	LEG,CONVEYOR	**11-57**
140	2561319-0002		1	PROTECTION PLATE	
150	2891629-0000		1	DRIVE WHEEL	
180	2910623-0100		1	CONNECTION BOX	**11-61**
260	312105-0378		3	SCREW M6S ISO 4014 M6X40 A480	
270	486884-0000		1	BRACKET	
280	2807592-0000		1	MULTI BRACKET SINGLE	
TBA0200B NO DOMINO SAMPLING UNIT, TBA0200S NO DOMINO SAMPLING UNIT, TBA0250B NO DOMINO SAMPLING UNIT, TBA0125S NO DOMINO SAMPLING UNIT					
010	2589940-0307		1	TRANSFER UNIT	**11-21**
030	2589845-0101		1	CHAIN TENSIONER TPC21 SH	
040	2589843-0101		1	BELT BRAKE TPC21 SH (DOMINO)	
050	2878133-0100		1	SUPPORT PLATE	**11-47**
060	2891592-0100		1	CURVE	**11-49**
070	2902500-0100		1	STRAIGHT CONVEYOR	**11-51, 11-53**
080	2877416-0000		1	DRIVE WHEEL	
090	2891605-0000		1	WHEEL	
100	90600-3072		5	CONVEYOR CHAIN, L1765654842N1	
110	2807605-0101		2	LEG,CONVEYOR	**11-57**
120	2948042-0100		1	SAMPLING UNIT	**11-67**
140	2561319-0002		1	PROTECTION PLATE	
150	2891629-0000		1	DRIVE WHEEL	
180	2910623-0100		1	CONNECTION BOX	**11-61**
260	312105-0378		3	SCREW M6S ISO 4014 M6X40 A480	
270	486884-0000		1	BRACKET	
280	2807592-0000		1	MULTI BRACKET SINGLE	
TBA0200M DOMINO NO SAMPLING UNIT, TBA0250S DOMINO NO SAMPLING UNIT					
010	2589940-0307		1	TRANSFER UNIT	**11-21**
030	2589845-0101		1	CHAIN TENSIONER TPC21 SH	
040	2589843-0101		1	BELT BRAKE TPC21 SH (DOMINO)	
050	2878133-0100		1	SUPPORT PLATE	**11-47**
060	2891592-0100		1	CURVE	**11-49**

Machine Type | Group Description | Used-In | Group Number | Page No

CONVEYOR SECTION WITHOUT SAMPLING UNIT
CONVEYOR SECTION SENZA SAMPLING UNIT

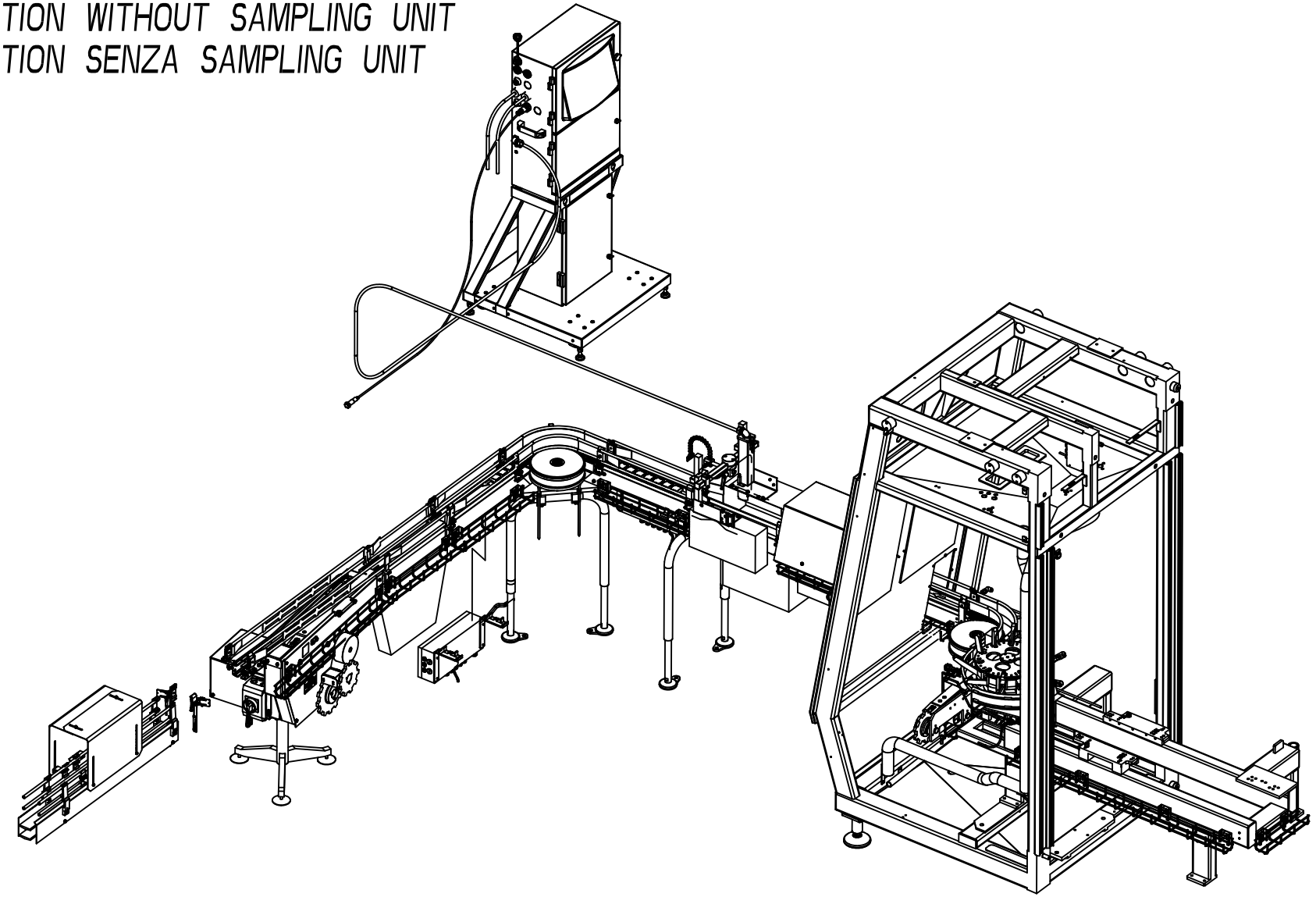

648585-2
405681

Pos	Part No	UN	Qty	Description	Page No
- (Cont'd)					
070	2902500-0100		1	STRAIGHT CONVEYOR	**11-51, 11-53**
080	2877416-0000		1	DRIVE WHEEL	
090	2891605-0000		1	WHEEL	
100	90600-3072		5	CONVEYOR CHAIN, L1765654842N1	
110	2807605-0101		1	LEG,CONVEYOR	**11-57**
110	2807604-0101		1	LEG,CONVEYOR	**11-79**
140	2561319-0002		1	PROTECTION PLATE	
150	2891629-0000		1	DRIVE WHEEL	
160	3005198-0100		1	INK JET PRINTER	**11-59**
180	2910623-0100		1	CONNECTION BOX	**11-61**
260	312105-0378		3	SCREW M6S ISO 4014 M6X40 A480	
270	486884-0000		1	BRACKET	
280	2807592-0000		1	MULTI BRACKET SINGLE	
310	2763557-0200		1	BRACKET	**11-65**
TBA0200M DOMINO SAMPLING UNIT, TBA0250S DOMINO SAMPLING UNIT					
010	2589940-0307		1	TRANSFER UNIT	**11-21**
030	2589845-0101		1	CHAIN TENSIONER TPC21 SH	
040	2589843-0101		1	BELT BRAKE TPC21 SH (DOMINO)	
050	2878133-0100		1	SUPPORT PLATE	**11-47**
060	2891592-0100		1	CURVE	**11-49**
070	2902500-0100		1	STRAIGHT CONVEYOR	**11-51, 11-53**
080	2877416-0000		1	DRIVE WHEEL	
090	2891605-0000		1	WHEEL	
100	90600-3072		5	CONVEYOR CHAIN, L1765654842N1	
110	2807605-0101		1	LEG,CONVEYOR	**11-57**
110	2807604-0101		1	LEG,CONVEYOR	**11-79**
120	2948042-0100		1	SAMPLING UNIT	**11-67**
140	2561319-0002		1	PROTECTION PLATE	
150	2891629-0000		1	DRIVE WHEEL	
160	3005198-0100		1	INK JET PRINTER	**11-59**
180	2910623-0100		1	CONNECTION BOX	**11-61**
260	312105-0378		3	SCREW M6S ISO 4014 M6X40 A480	
270	486884-0000		1	BRACKET	
280	2807592-0000		1	MULTI BRACKET SINGLE	
310	2763557-0200		1	BRACKET	**11-65**
TBA0200M NO DOMINO NO SAMPLING UNIT, TBA0250S NO DOMINO NO SAMPLING UNIT					
010	2589940-0307		1	TRANSFER UNIT	**11-21**
030	2589845-0101		1	CHAIN TENSIONER TPC21 SH	
040	2589843-0101		1	BELT BRAKE TPC21 SH (DOMINO)	
050	2878133-0100		1	SUPPORT PLATE	**11-47**
060	2891592-0100		1	CURVE	**11-49**
070	2902500-0100		1	STRAIGHT CONVEYOR	**11-51, 11-53**
080	2877416-0000		1	DRIVE WHEEL	
090	2891605-0000		1	WHEEL	
100	90600-3072		5	CONVEYOR CHAIN, L1765654842N1	
110	2807605-0101		1	LEG,CONVEYOR	**11-57**
110	2807604-0101		1	LEG,CONVEYOR	**11-79**
140	2561319-0002		1	PROTECTION PLATE	
150	2891629-0000		1	DRIVE WHEEL	
180	2910623-0100		1	CONNECTION BOX	**11-61**
260	312105-0378		3	SCREW M6S ISO 4014 M6X40 A480	
270	486884-0000		1	BRACKET	
280	2807592-0000		1	MULTI BRACKET SINGLE	
TBA0200M NO DOMINO SAMPLING UNIT, TBA0250S NO DOMINO SAMPLING UNIT					
010	2589940-0307		1	TRANSFER UNIT	**11-21**
030	2589845-0101		1	CHAIN TENSIONER TPC21 SH	
040	2589843-0101		1	BELT BRAKE TPC21 SH (DOMINO)	
050	2878133-0100		1	SUPPORT PLATE	**11-47**
060	2891592-0100		1	CURVE	**11-49**
070	2902500-0100		1	STRAIGHT CONVEYOR	**11-51, 11-53**
080	2877416-0000		1	DRIVE WHEEL	
090	2891605-0000		1	WHEEL	
100	90600-3072		5	CONVEYOR CHAIN, L1765654842N1	
110	2807605-0101		1	LEG,CONVEYOR	**11-57**
110	2807604-0101		1	LEG,CONVEYOR	**11-79**
120	2948042-0100		1	SAMPLING UNIT	**11-67**
140	2561319-0002		1	PROTECTION PLATE	
150	2891629-0000		1	DRIVE WHEEL	
180	2910623-0100		1	CONNECTION BOX	**11-61**
260	312105-0378		3	SCREW M6S ISO 4014 M6X40 A480	
270	486884-0000		1	BRACKET	
280	2807592-0000		1	MULTI BRACKET SINGLE	
TBA1000B DOMINO NO SAMPLING UNIT, TBA1000S DOMINO NO SAMPLING UNIT, TBA1000SQ DOMINO NO SAMPLING UNIT					
010	2807970-0207		1	DRIVE AND END UNIT,RH	**11-81**
040	2590050-0300		1	BELT BRAKE	**11-127, 11-129**
050	2960056-0100		1	SUPPORT PLATE	**11-151**
060	2763620-0200		1	WHEEL CURVE 90 DEGREES	**11-153, 11-155, 11-157**
070	2960060-0100		1	STRAIGHT CONVEYOR	**11-179, 11-181**
100	3019400-0100		2	CONVEYOR CHAIN	**11-205**
110	2807605-0101		2	LEG,CONVEYOR	**11-57**
160	3005198-0100		1	INK JET PRINTER	**11-59**
180	2958170-0100		1	CONNECTION BOX	**11-209**

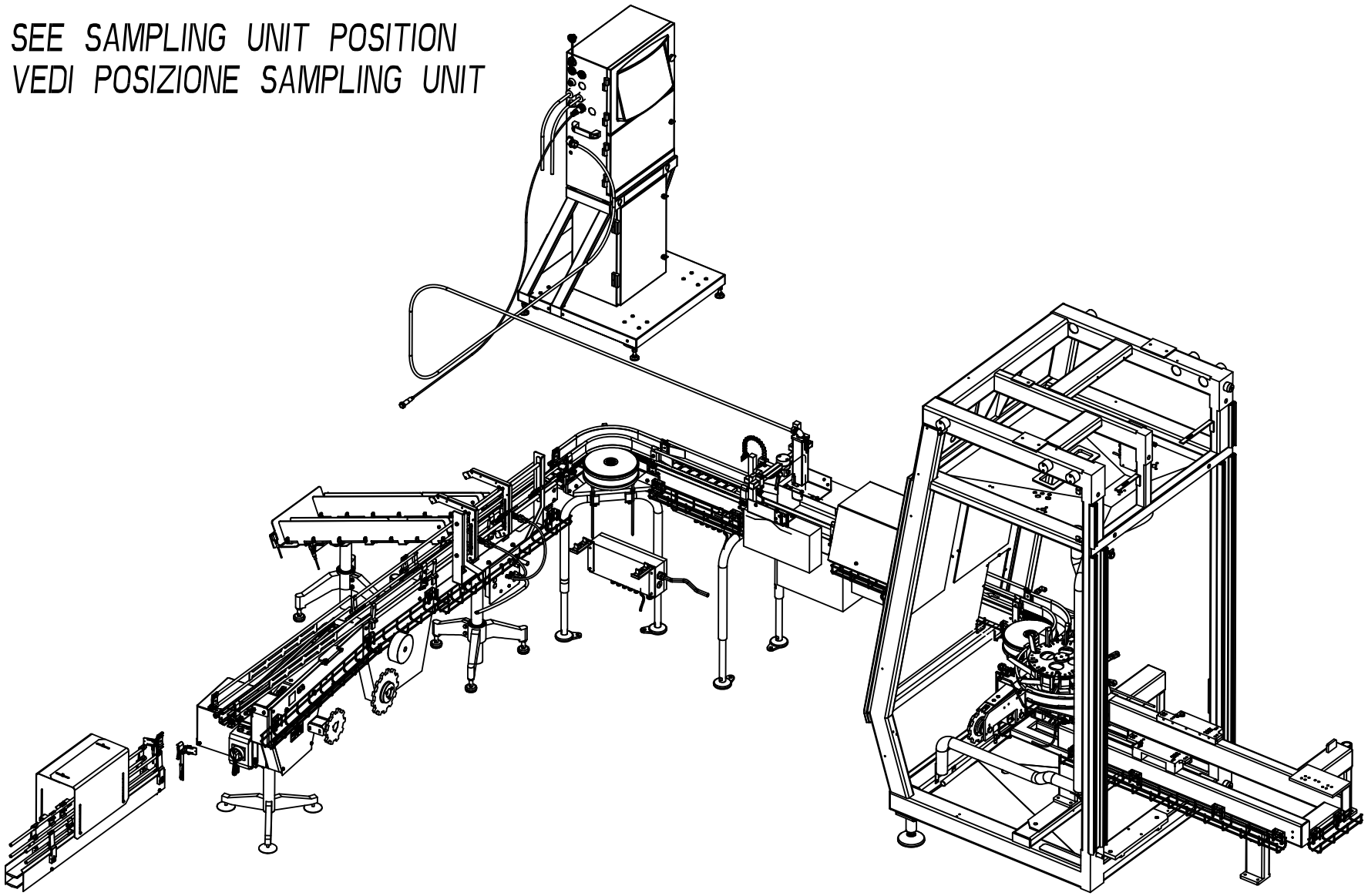
SEE SAMPLING UNIT POSITION
VEDI POSIZIONE SAMPLING UNIT
648585-2
405681

Pos	Part No	UN	Qty	Description	Page No
- (Cont'd)					
270	2656556-0000		1	BRACKET FOR LEG PC23	
275	2807593-0000		1	CURVE BRACKET	
280	2807592-0000		2	MULTI BRACKET SINGLE	
310	2763557-0200		1	BRACKET	**11-65**
TBA1000B DOMINO SAMPLING UNIT, TBA1000S DOMINO SAMPLING UNIT, TBA1000SQ DOMINO SAMPLING UNIT					
010	2807970-0207		1	DRIVE AND END UNIT,RH	**11-81**
040	2590050-0300		1	BELT BRAKE	**11-127, 11-129**
050	2960056-0100		1	SUPPORT PLATE	**11-151**
060	2763620-0200		1	WHEEL CURVE 90 DEGREES	**11-153, 11-155, 11-157**
070	2960060-0100		1	STRAIGHT CONVEYOR	**11-179, 11-181**
100	3019400-0100		2	CONVEYOR CHAIN	**11-205**
110	2807605-0101		2	LEG,CONVEYOR	**11-57**
120	2948043-0100		1	SAMPLING UNIT	**11-211**
160	3005198-0100		1	INK JET PRINTER	**11-59**
180	2958170-0100		1	CONNECTION BOX	**11-209**
270	2656556-0000		1	BRACKET FOR LEG PC23	
275	2807593-0000		1	CURVE BRACKET	
280	2807592-0000		2	MULTI BRACKET SINGLE	
310	2763557-0200		1	BRACKET	**11-65**
TBA1000B NO DOMINO SAMPLING UNIT, TBA1000S NO DOMINO SAMPLING UNIT, TBA1000SQ NO DOMINO SAMPLING UNIT					
010	2807970-0207		1	DRIVE AND END UNIT,RH	**11-81**
040	2590050-0300		1	BELT BRAKE	**11-127, 11-129**
050	2960056-0100		1	SUPPORT PLATE	**11-151**
060	2763620-0200		1	WHEEL CURVE 90 DEGREES	**11-153, 11-155, 11-157**
070	2960060-0100		1	STRAIGHT CONVEYOR	**11-179, 11-181**
100	3019400-0100		2	CONVEYOR CHAIN	**11-205**
110	2807605-0101		2	LEG,CONVEYOR	**11-57**
120	2948043-0100		1	SAMPLING UNIT	**11-211**
180	2958170-0100		1	CONNECTION BOX	**11-209**
270	2656556-0000		1	BRACKET FOR LEG PC23	
275	2807593-0000		1	CURVE BRACKET	
280	2807592-0000		2	MULTI BRACKET SINGLE	
TBA1000SQ NO DOMINO NO SAMPLING UNIT, TBA1000B NO DOMINO NO SAMPLING UNIT, TBA1000B NO DOMINO NO SAMPLING UNIT					
010	2807970-0207		1	DRIVE AND END UNIT,RH	**11-81**
040	2590050-0300		1	BELT BRAKE	**11-127, 11-129**
050	2960056-0100		1	SUPPORT PLATE	**11-151**
060	2763620-0200		1	WHEEL CURVE 90 DEGREES	**11-153, 11-155, 11-157**
070	2960060-0100		1	STRAIGHT CONVEYOR	**11-179, 11-181**
100	3019400-0100		2	CONVEYOR CHAIN	**11-205**
110	2807605-0101		2	LEG,CONVEYOR	**11-57**
180	2958170-0100		1	CONNECTION BOX	**11-209**
270	2656556-0000		1	BRACKET FOR LEG PC23	
275	2807593-0000		1	CURVE BRACKET	
280	2807592-0000		2	MULTI BRACKET SINGLE	
Common Parts					
020	1020164-0201		1	LEG, MOTOR	**11-229**
130	2807688-0100		1	QUEUE GUARD	**11-233**
290	90600-3726		1	COAXIAL GEARED MOTOR, R17DT71D4	
300	2872916-0200		1	LAST POINT DE	**11-237**
320	3116601-0100		1	SAFETY SIGNS ANSI	**11-243, 11-245, 11-247, 11-249, 11-251**
W51W1150	351309-0050		1	'ACTUATOR/SENSOR CABLE PRKT 4-07/5M	
W51X1150	90459-6586		1	ACT/SENS.Y-CABLE, ASBN 2-PRKMV 4-07/0,6M	

Machine Type	Group Description	Used-In	Group Number	Page No

CONVEYOR SECTION WITHOUT CURVE
CONVEYOR SECTION SENZA CURVA

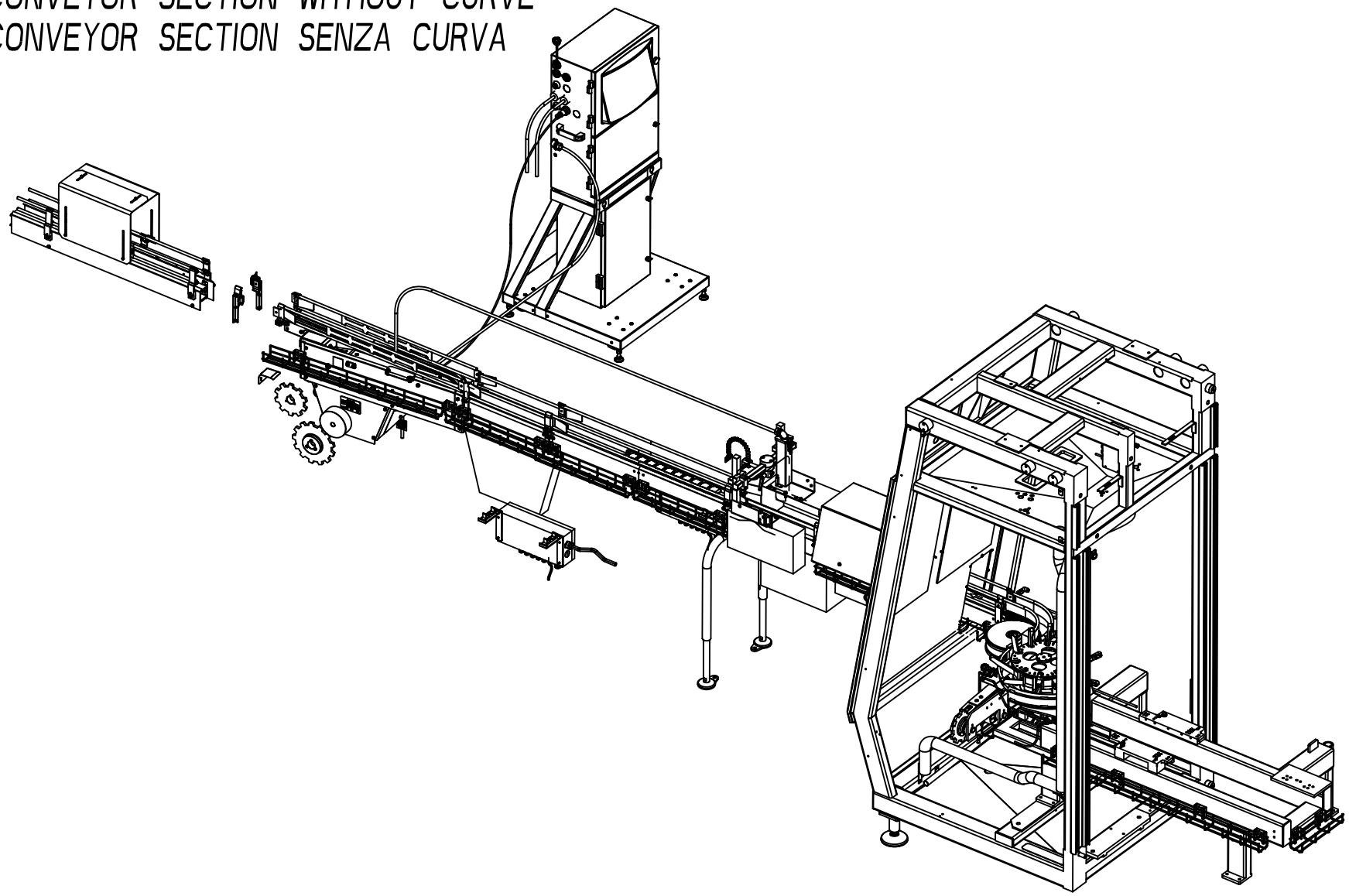

648585-2
405681

ECM: 462385 - 20101001
Group number: 648585-0200
Assembly Drawing: 648585-2_4_AA

This list covers pages from 11-2 to 11-19

Pos	Part No	UN	Qty	Description	Page No
SEE PREVIOUS LISTS PAGES: 11-3, 11-5, 11-7.					

Pos	Part No	UN	Qty	Description	Page No

CONVEYOR SECTION WITH INK JET PRINTER AND SAMPLING UNIT
CONVEYOR SECTION CON STAMPANTE E SAMPLING UNIT

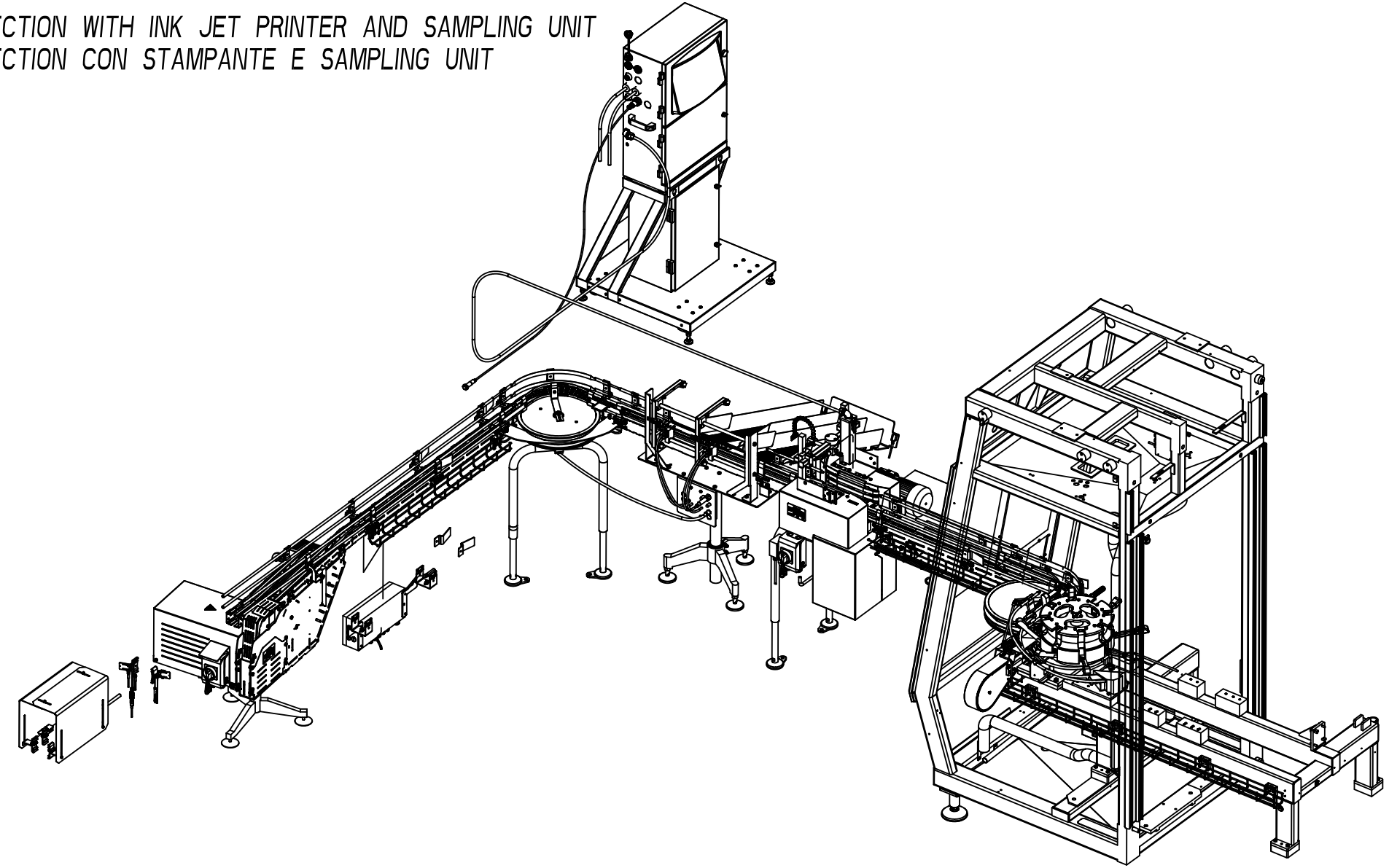

648585-2
405681

Pos	Part No	UN	Qty	Description	Page No
SEE PREVIOUS LISTS PAGES: 11-3, 11-5, 11-7.					

Pos	Part No	UN	Qty	Description	Page No

CONVEYOR SECTION WITH INK JET PRINTER AND WITHOUT SAMPLING UNIT
CONVEYOR SECTION CON STAMPANTE E SENZA SAMPLING UNIT

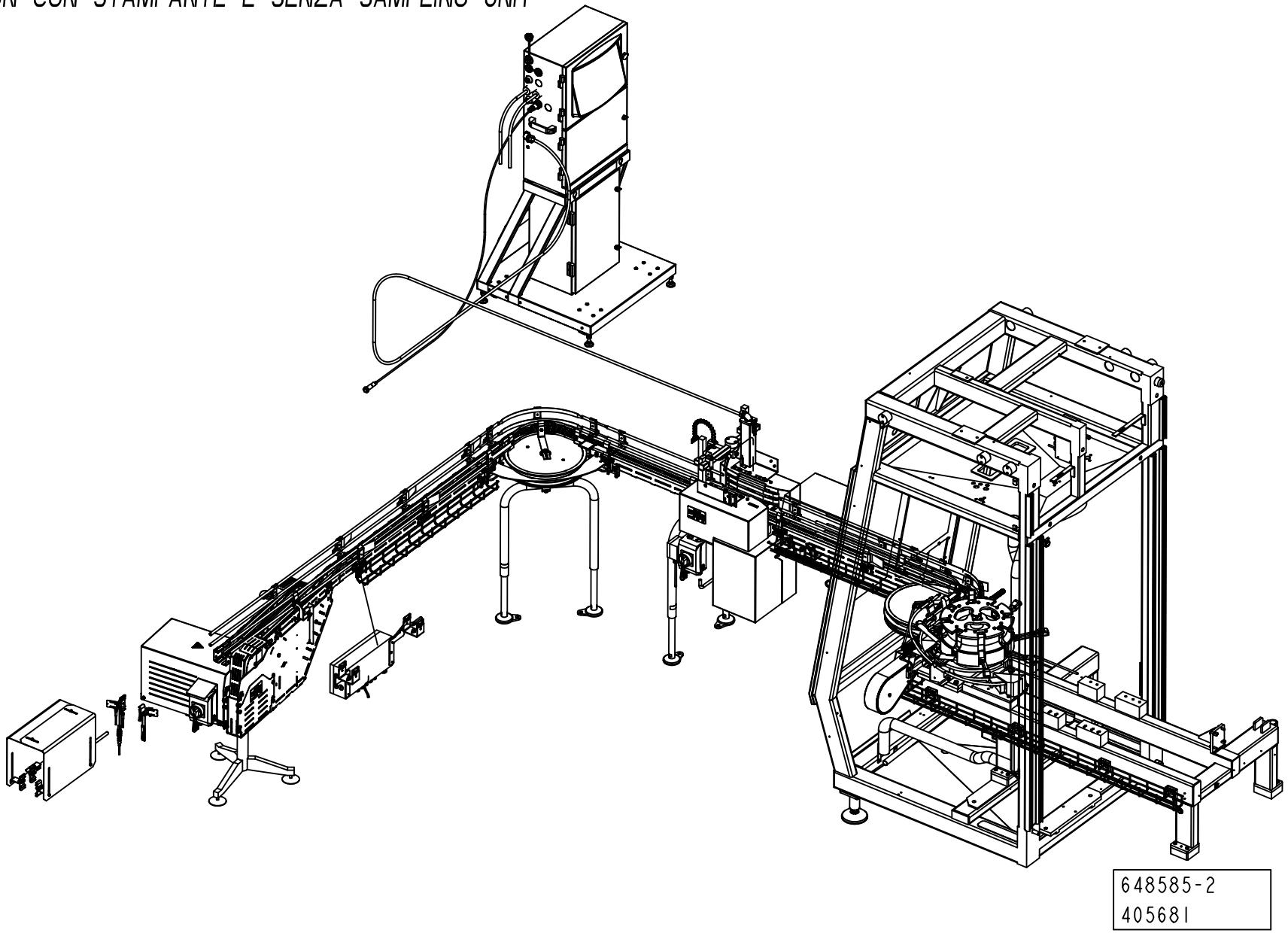

Pos	Part No	UN	Qty	Description	Page No	Pos	Part No	UN	Qty	Description	Page No

SEE PREVIOUS LISTS PAGES: 11-3, 11-5, 11-7.

CONVEYOR SECTION WITH SAMPLING UNIT AND WITHOUT INK JET PRINTER
CONVEYOR SECTION CON SAMPLING UNIT E SENZA STAMPANTE

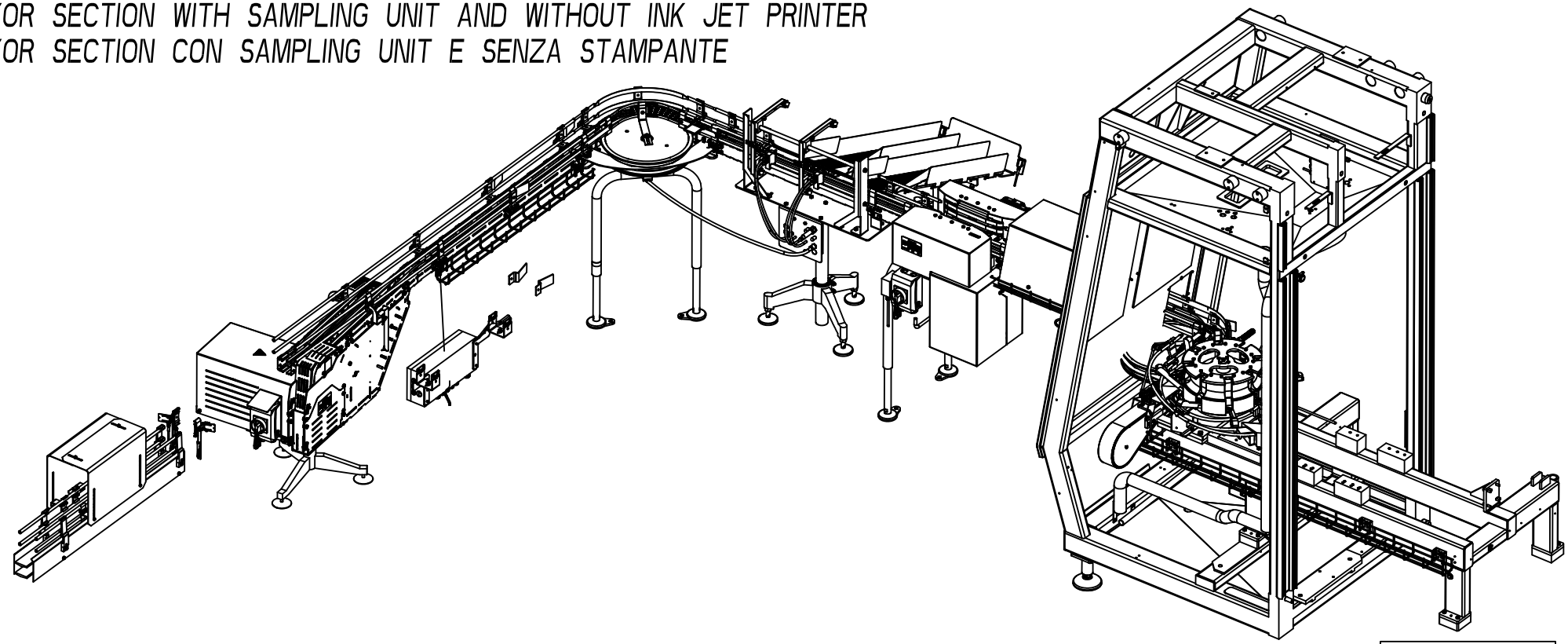

Pos	Part No	UN	Qty	Description	Page No	Pos	Part No	UN	Qty	Description	Page No

SEE PREVIOUS LISTS PAGES: 11-3, 11-5, 11-7.

CONVEYOR SECTION WITHOUT INK JET PRINTER AND SAMPLING UNIT
CONVEYOR SECTION SENZA STAMPANTE E SAMPLING UNIT

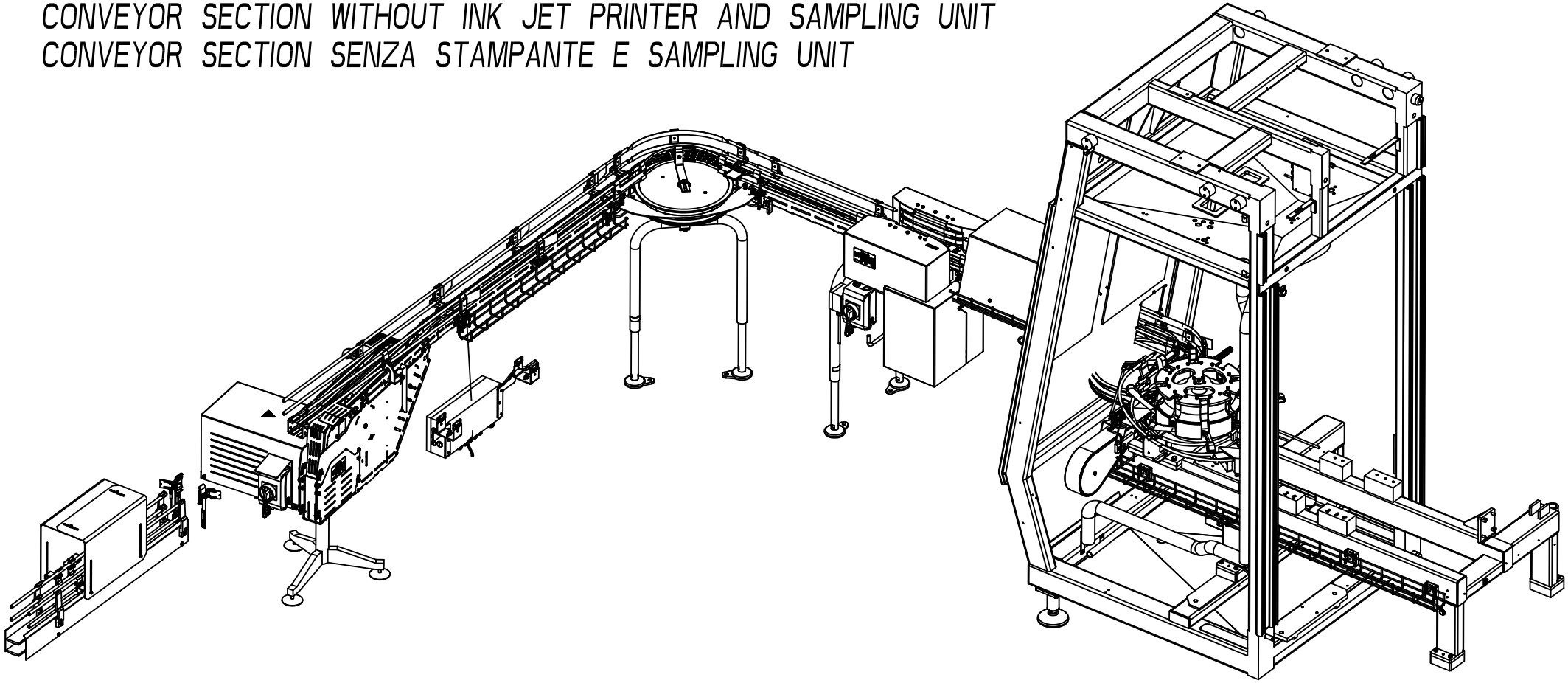

648585-2
405681

Pos	Part No	UN	Qty	Description	Page No
SEE PREVIOUS LISTS PAGES: 11-3, 11-5, 11-7.					

Pos	Part No	UN	Qty	Description	Page No

BIG VOLUMES CONVEYOR SECTION WITHOUT CURVE
CONVEYOR SECTION GRANDI VOLUMI SENZA CURVA

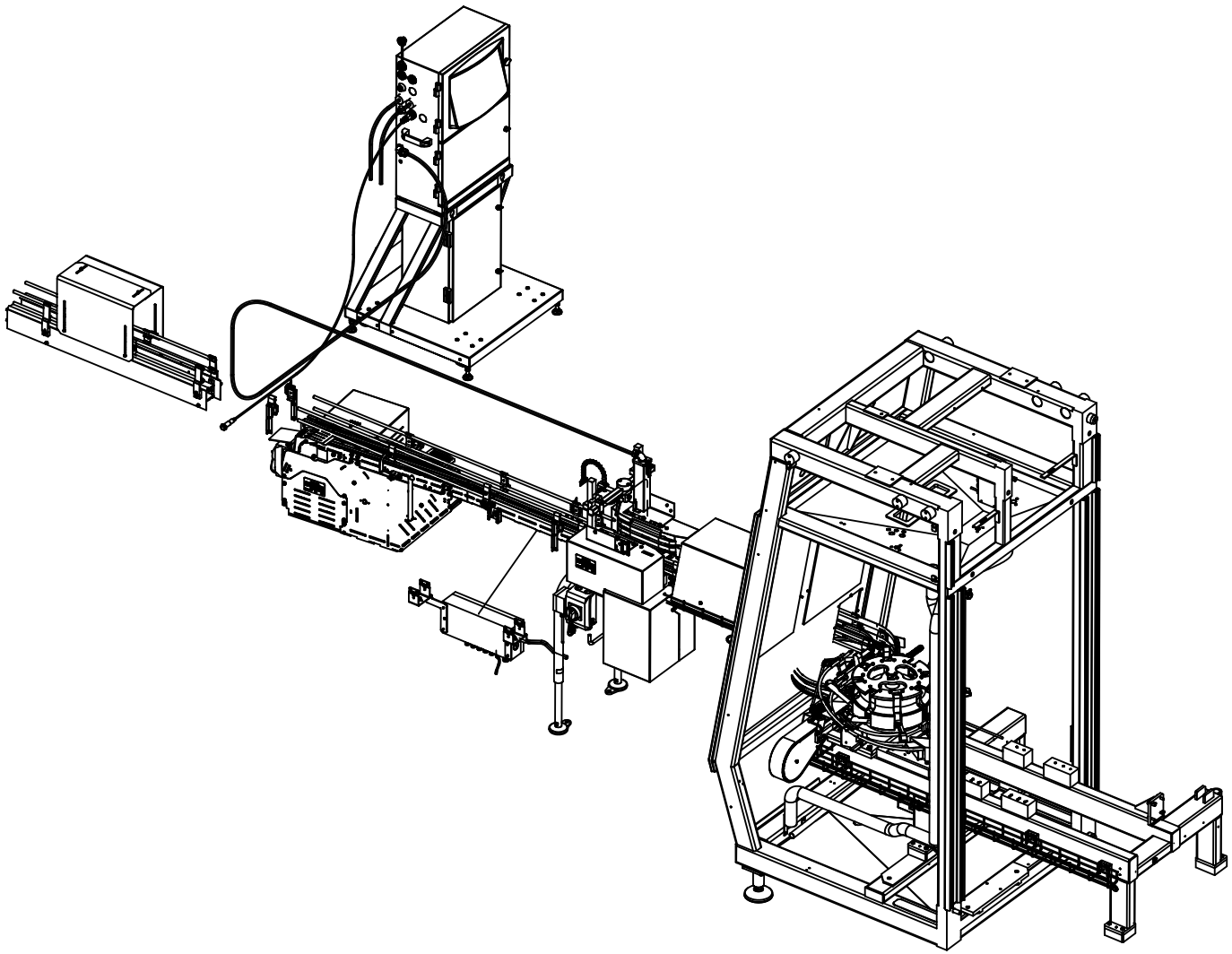

648585-2
405681

Pos	Part No	UN	Qty	Description	Page No	Pos	Part No	UN	Qty	Description	Page No

SEE PREVIOUS LISTS PAGES: 11-3, 11-5, 11-7.

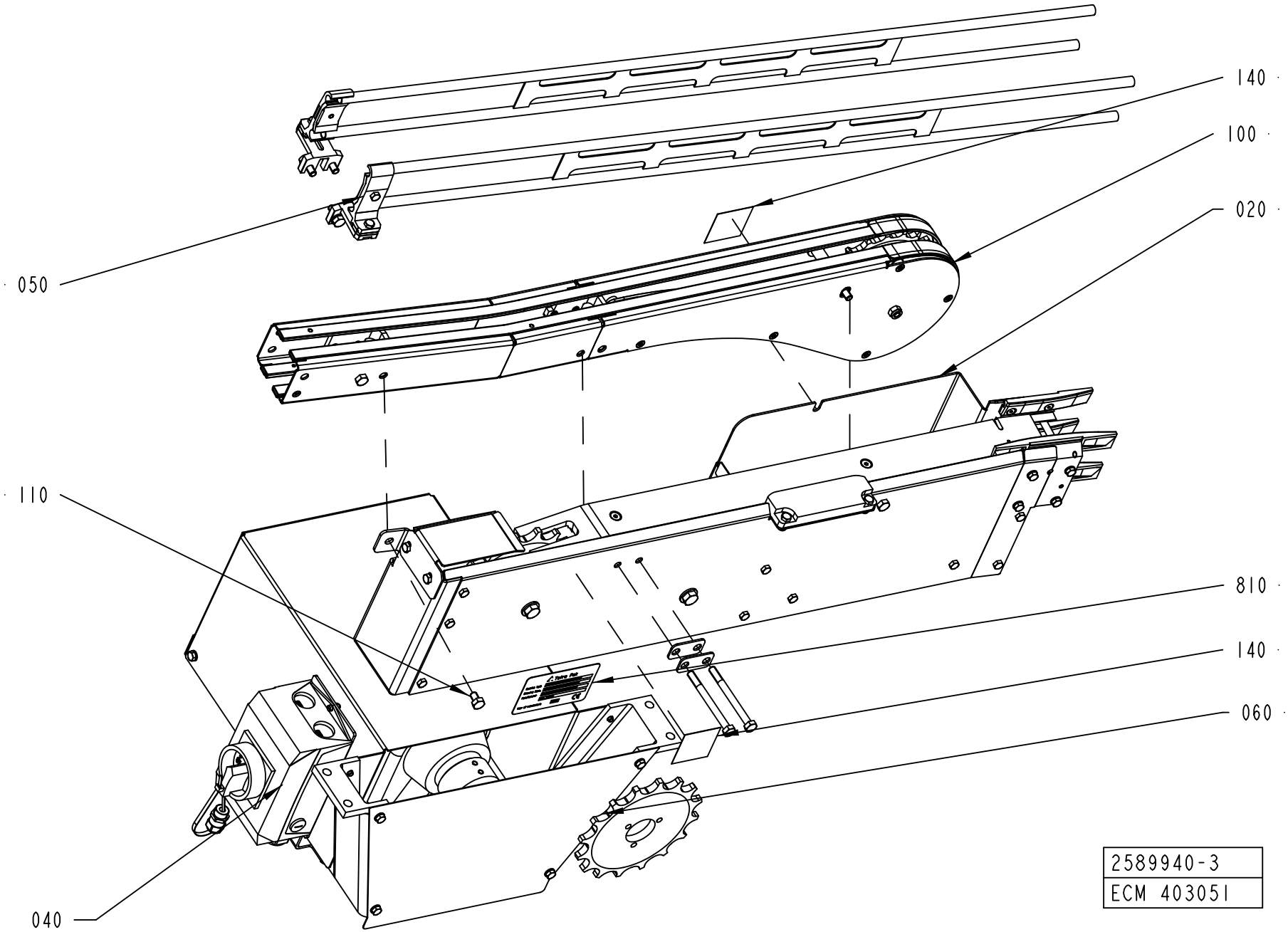
140
100
020
050
110
810
140
060
040
2589940-3
ECM 403051

ECM: 403051 -
Group number: 2589940-0307
Assembly Drawing: 2589940-3_1_AA

Pos	Part No	UN	Qty	Description	Page No
50HZ 21M/MIN CHAIN MOD02, 60HZ 21M/MIN CHAIN MOD02					
020	2561170-0101		1	DRIVE UNIT	**11-23**
50HZ 25M/MIN CHAIN MOD02, 60HZ 25M/MIN CHAIN MOD02					
020	2561170-0101		1	DRIVE UNIT	**11-23**
060	1550607-0000		1	SPROCKET	
50HZ 33M/MIN CHAIN MOD02					
020	2561170-0101		1	DRIVE UNIT	**11-23**
060	1550607-0000		1	SPROCKET	
50HZ 39M/MIN CHAIN MOD02					
020	2561170-0101		1	DRIVE UNIT	**11-23**
040	1359408-0202		1	MOTOR UNIT	**11-25**
060	1550607-0000		1	SPROCKET	
50HZ 39M/MIN CHAIN MOD86, 60HZ 39M/MIN CHAIN MOD86					
040	1359408-0202		1	MOTOR UNIT	**11-25**
60HZ 33M/MIN CHAIN MOD02					
020	2561170-0101		1	DRIVE UNIT	**11-23**
60HZ 39M/MIN CHAIN MOD02					
020	2561170-0101		1	DRIVE UNIT	**11-23**
040	1359408-0202		1	MOTOR UNIT	**11-25**
Common Parts					
050	2561156-0100		1	RAILING	**11-29**
070	2561230-0001		2	SPACER	
100	2699218-0100		1	END UNIT	**11-33**
110	312105-0447		1	SCREW M6S ISO 4017 M8X12 A480	
120	312105-0469		2	SCREW M6S ISO 4014 M8X90 A480	
140	90459-7584		2	PROHOBITION SIGN ISO, DO NOT REACH IN	
810	1359055-0000		1	SIGN	
820	2590251-0100		1	PACKING DESCRIPTION	**11-43**
821	2656366-0100		1	PACKING DESCRIPTION	**11-45**

Pos	Part No	UN	Qty	Description	Page No

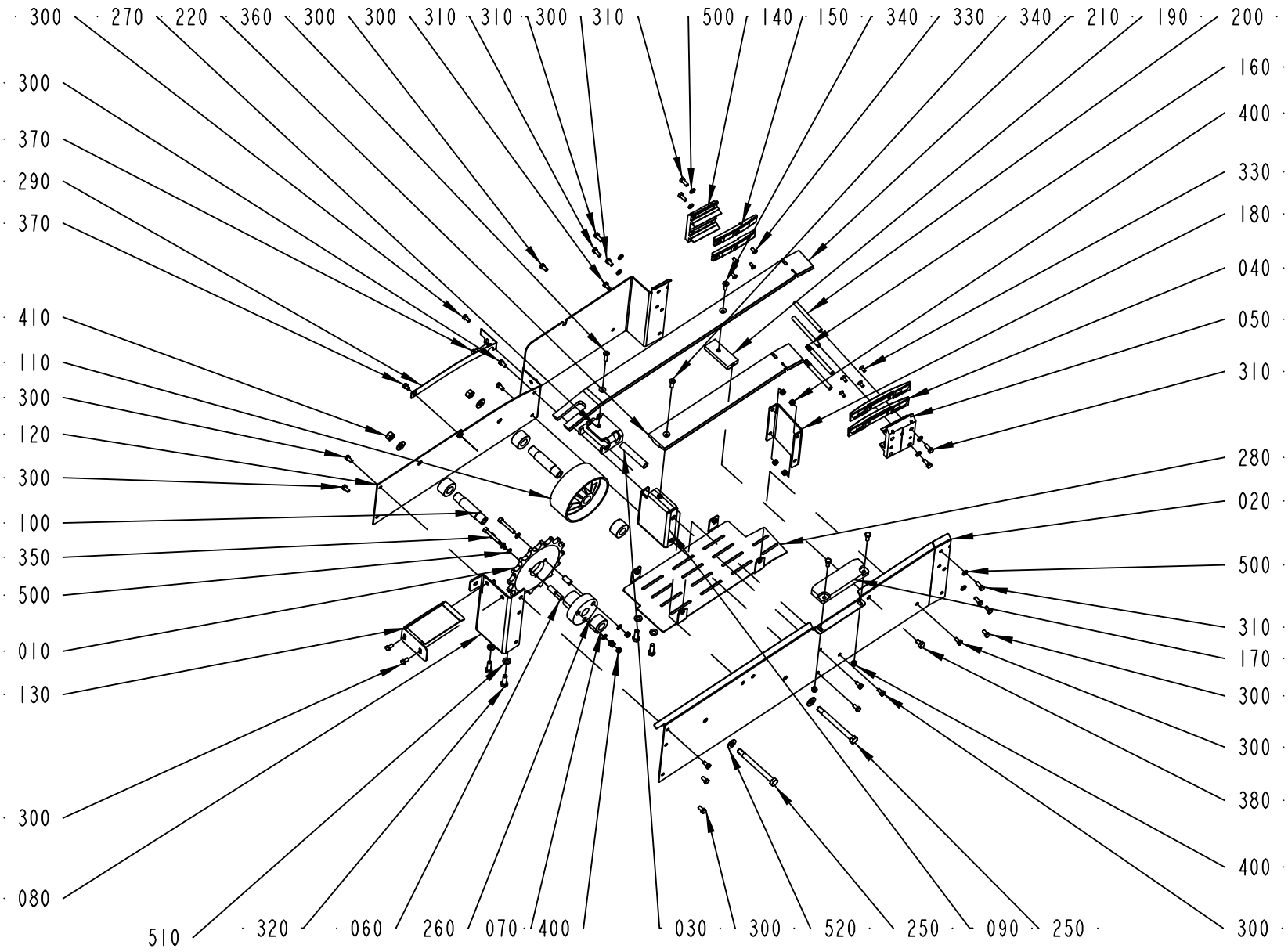
300
270
220
360
300
300
310
310
300
310
500
140
150
340
330
340
210
190
200
300
370
290
370
410
110
300
120
300
100
350
500
010
130
300
080
510
320
060
260
070
400
030
300
520
250
090
250
160
400
330
180
040
050
310
280
020
500
310
170
300
300
380
400
300
2561170-1
ECM 191051

ECM: 191051 -
Group number: 2561170-0101
Assembly Drawing: 2561170-1_1_AB

Pos	Part No	UN	Qty	Description	Page No
CHAIN MOD02					
010	1550606-0000		1	SPROCKET	
Common Parts					
020	1550794-0000		1	SIDE PLATE	
030	1550626-0007		2	SPACER	
040	486867-0000		2	EDGE GUIDE	
050	486918-0001		1	JOINT PIECE	
060	1359673-0000		3	SLEEVE	
070	497637-0003		4	SPACER	
080	2561194-0000		1	END SECTION	
090	2561195-0000		1	BRACKET	
100	531499-0000		1	BEARING SLEEVE	
110	476975-0000		1	WHEEL	
120	1550795-0000		1	SIDE PLATE	
130	2561319-0001		1	PROTECTION PLATE	
140	486918-0002		1	JOINT PIECE	
150	497672-0002		2	EDGE GUIDE	
160	531948-0000		2	SPACER	
170	1359242-0000		1	STEERING RAIL	
180	2561193-0000		1	END SECTION	
190	2561317-0000		1	MOUNTING BLOCK	
200	476220-0000		2	SPACER	
210	2561176-0000		1	SLIDE RAIL	
220	2561177-0000		1	SLIDE RAIL	
240	531499-0000		1	BEARING SLEEVE	
250	531508-0000		2	SCREW	
260	1359672-0000		1	HUB	
270	2561318-0000		1	SPACER	
280	2589832-0000		1	COVER	
290	2589833-0000		1	COVER	
300	312105-0366		19	SCREW M6S ISO 4017 M6X12 A480	
310	312105-0368		10	SCREW M6S ISO 4017 M6X16 A480	
320	312105-0453		4	SCREW M6S ISO 4017 M8X25 A480	
330	312155-0372		8	SCREW DIN 7991 MF6S M6X25 A4 70	
340	312155-0370		2	SCREW DIN 7991 MF6S M6X20 A4 70	
350	312115-0378		3	SCREW ISO4762 M6X40 A4 80	
360	312155-0372		1	SCREW DIN 7991 MF6S M6X25 A4 70	
370	312105-0362		2	SCREW M6S ISO 4017 M6X8 A480	
380	312105-0447		1	SCREW M6S ISO 4017 M8X12 A480	
400	312812-0316		9	HEXAGON NUT, NY-LOCK M6 A480	
410	312605-0320		2	HEXAGON NUT, M6M M10 A280	
500	315105-0153		2	WASHER BRB 6,4X12 RFR	
510	315105-0165		4	WASHER BRB 8,4X16 RFR	
520	315105-0173		4	WASHER BRB 10,5X22 RFR	
530	315105-0153		12	WASHER BRB 6,4X12 RFR	

Machine Type | Group Description | Used-In | Group Number | Page No

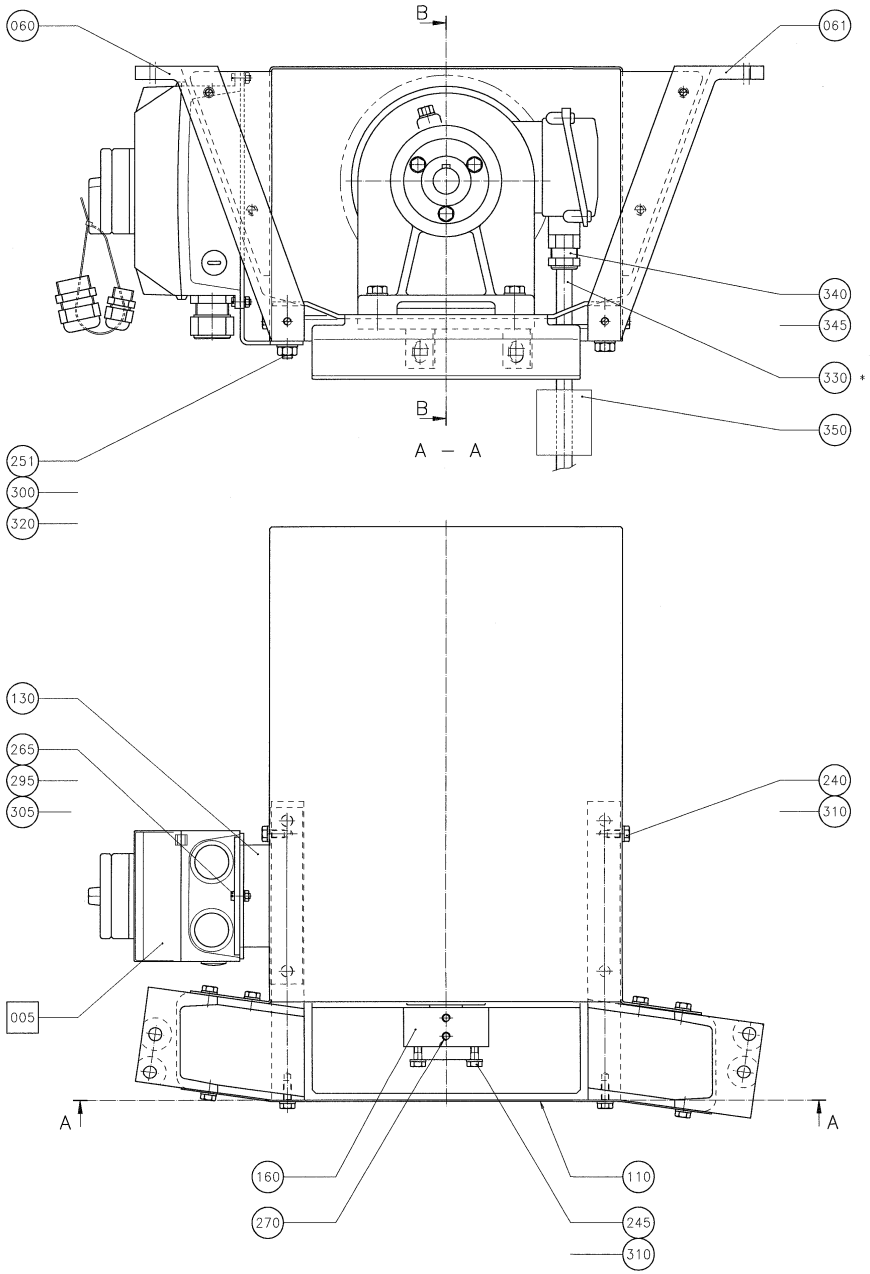
060
061
B
340
345
330 *
350
B
A – A
251
300
320
130
265
295
305
240
310
005
A
A
160
270
110
245
310

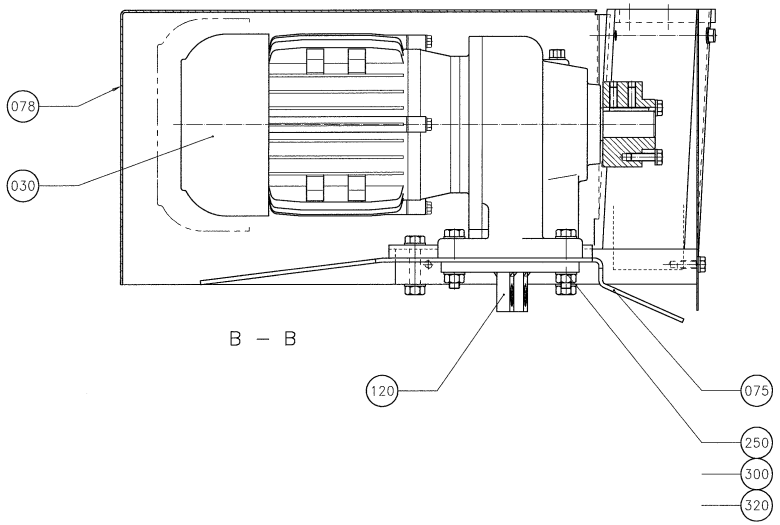
078
030
B – B
120
075
250
300
320

ECM: 93741 - 20011002
Group number: 1359408-0202
Assembly Drawing: 1359616-2_1_AA

Pos	Part No	UN	Qty	Description	Page No
-					
005	1359581-0200		1	SWITCH GEAR	**11-27**
030	90069-0181		1	GEARS, HELICAL MOTOR SK01V-80S/4	
060	486896-0001		1	CANTILEVER	
065	486896-0002		1	CANTILEVER	
075	1550112-0000		1	MOTOR SHELF	
078	1359622-0000		1	MOTOR COVER	
110	1550113-0000		1	MOTOR SHELF	
120	531487-0000		1	BRACKET	
130	1359732-0000		1	BRACKET	
160	497635-0000		1	HUB	
240	312105-0366		10	SCREW M6S ISO 4017 M6X12 A480	
245	312105-0370		3	SCREW M6S ISO 4017 M6X20 A480	
250	312105-0459		6	SCREW M6S ISO 4014 M8X40 A480	
251	312105-0460		2	SCREW M6S ISO 4014 M8X45 A480	
265	312125-0291		2	SCREW ISO 1207 M4X12 A4	
270	312318-0368		2	SCREW ISO4029 M6X16 A4	
295	312605-0312		2	HEXAGON NUT, M6M M4 A280	
300	312605-0318		8	HEXAGON NUT, M6M M8 A280	
305	315105-0136		2	WASHER BRB 4,3X8 RFR	
310	315105-0153		13	WASHER BRB 6,4X12 RFR	
320	315105-0165		16	WASHER BRB 8,4X16 RFR	
330	90220-0104	MM	750	SCR. CABLE 4X1,5MM2	
340	90458-0438		1	GLAND, EXTENDED WITH INSERT, M20X1,5	
345	90458-1155		1	ENLARGING SLEEVE, 5210 4452	
350	90458-1253		2	MANDATORY ACTION SIGN CONSULT OM ISO	

Pos	Part No	UN	Qty	Description	Page No

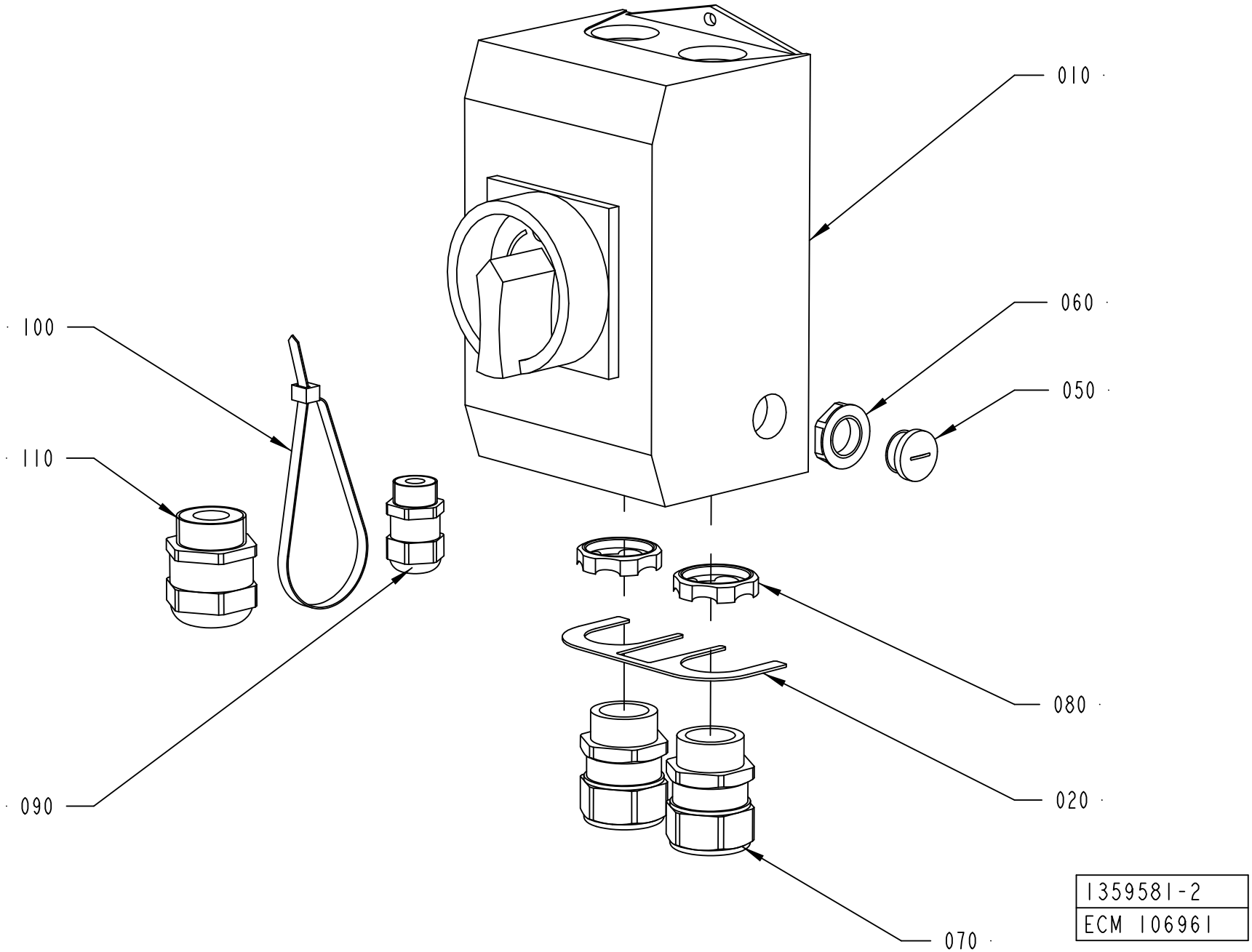
010
060
050
100
110
080
090
020
070
1359581-2
ECM 106961

ECM: 108686 - 20021106
Group number: 1359581-0200
Assembly Drawing: 1359581-2_1_AB

Pos	Part No	UN	Qty	Description	Page No
-					
010	1359831-0000		1	SWITCH GEAR	
020	1359734-0000		1	SHEET	
050	90458-1307		1	BLIND PLUG CIRCULAR, M16X1,5 514GFK/216	
060	90458-0322		1	NUT, M16X1,5	
070	90458-0440		2	GLAND, EXTENDED WITH INSERT, M25X1,5	
080	90458-0462		2	GLAND, LOCK NUT, M25X1,5	
090	90458-0306		1	CABLE GLAND, M16X1,5, NO.5311 1010	
100	352113-0102		1	CABLE TIE, BLACK 188X4,8 MM	
110	90458-0316		1	CABLE GLAND, M25X1,5, NO.5311 1130	

Pos	Part No	UN	Qty	Description	Page No

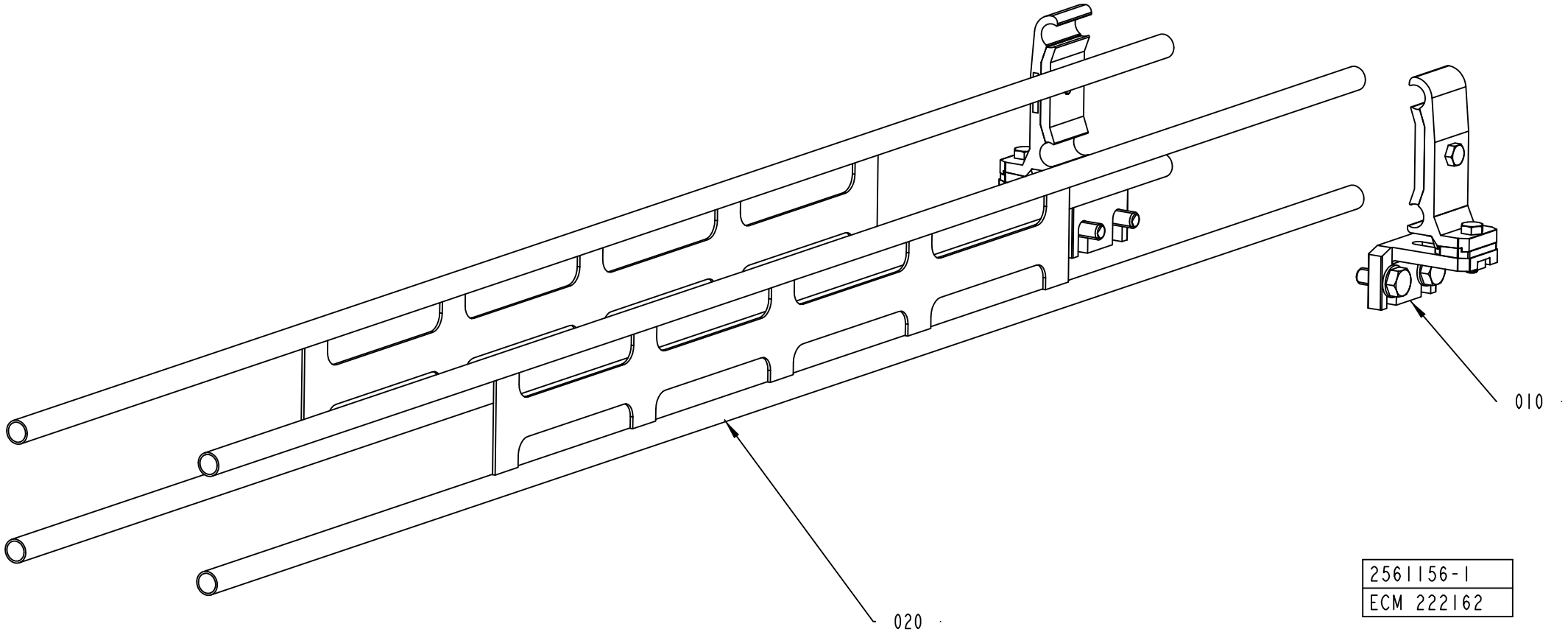
010
020
2561156-1
ECM 222162

ECM: 228033 - 20051222
Group number: 2561156-0100
Assembly Drawing: 2561156-1_1_AB

Pos	Part No	UN	Qty	Description	Page No
-					
010	1550743-0200		2	RAIL HOLDER	**5-73, 11-31**
020	2561242-0000		2	RAILING	

Pos	Part No	UN	Qty	Description	Page No

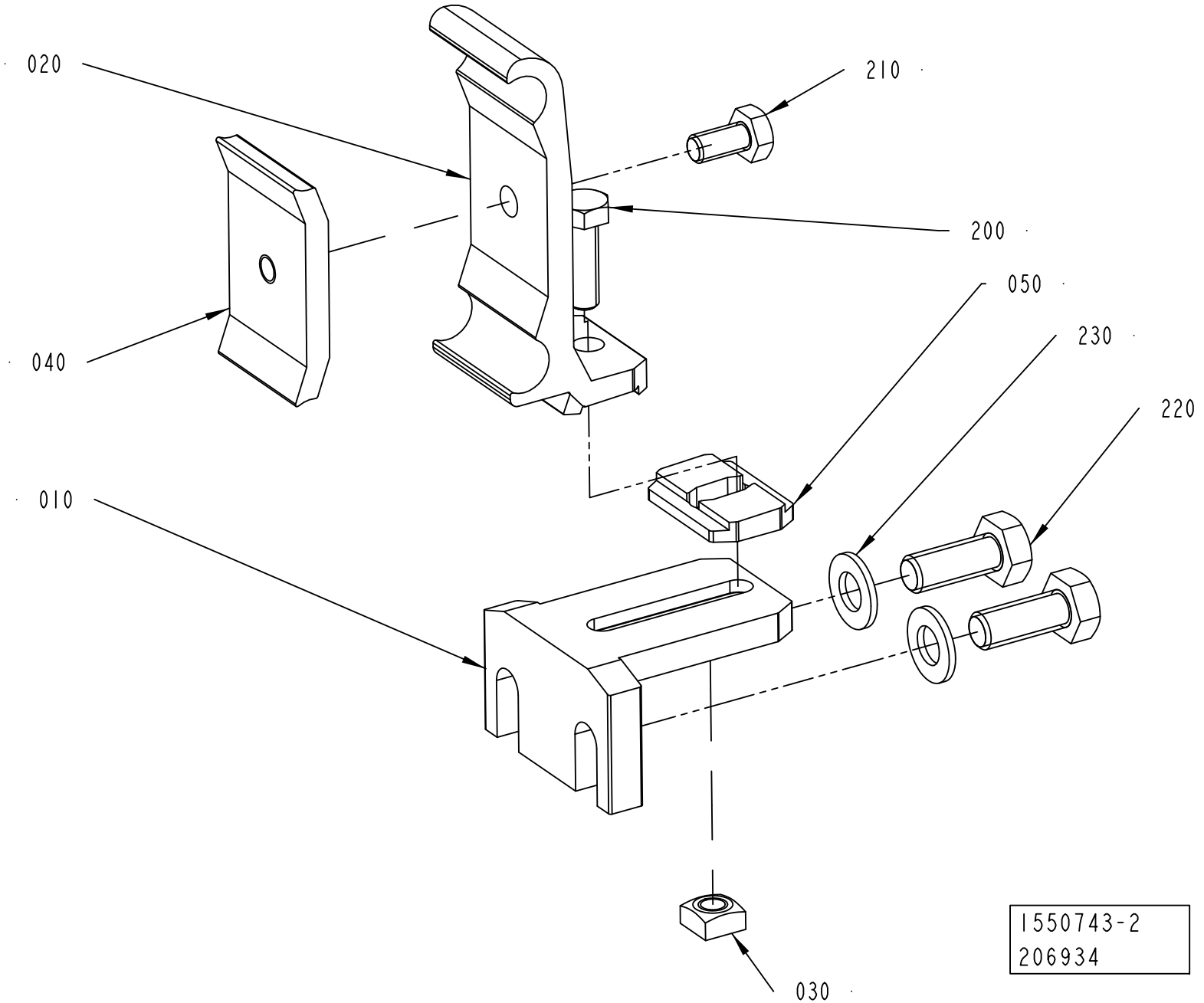
020
210
200
050
230
220
040
010
030
1550743-2
206934

ECM: 429045 - 20091201
Group number: 1550743-0200
Assembly Drawing: 1550743-2_1_AA

Pos	Part No	UN	Qty	Description	Page No
-					
010	1550772-0000		1	HOLDER	
020	2699437-0000		1	RAIL HOLDER	
030	1359565-0000		1	NUT	
040	1366727-0000		1	CLAMP	
050	2699436-0000		1	SPACER	
200	312105-0370		1	SCREW M6S ISO 4017 M6X20 A480	
210	312105-0366		1	SCREW M6S ISO 4017 M6X12 A480	
220	312105-0451		2	SCREW M6S ISO 4017 M8X20 A480	
230	315105-0165		2	WASHER BRB 8,4X16 RFR	

Pos	Part No	UN	Qty	Description	Page No

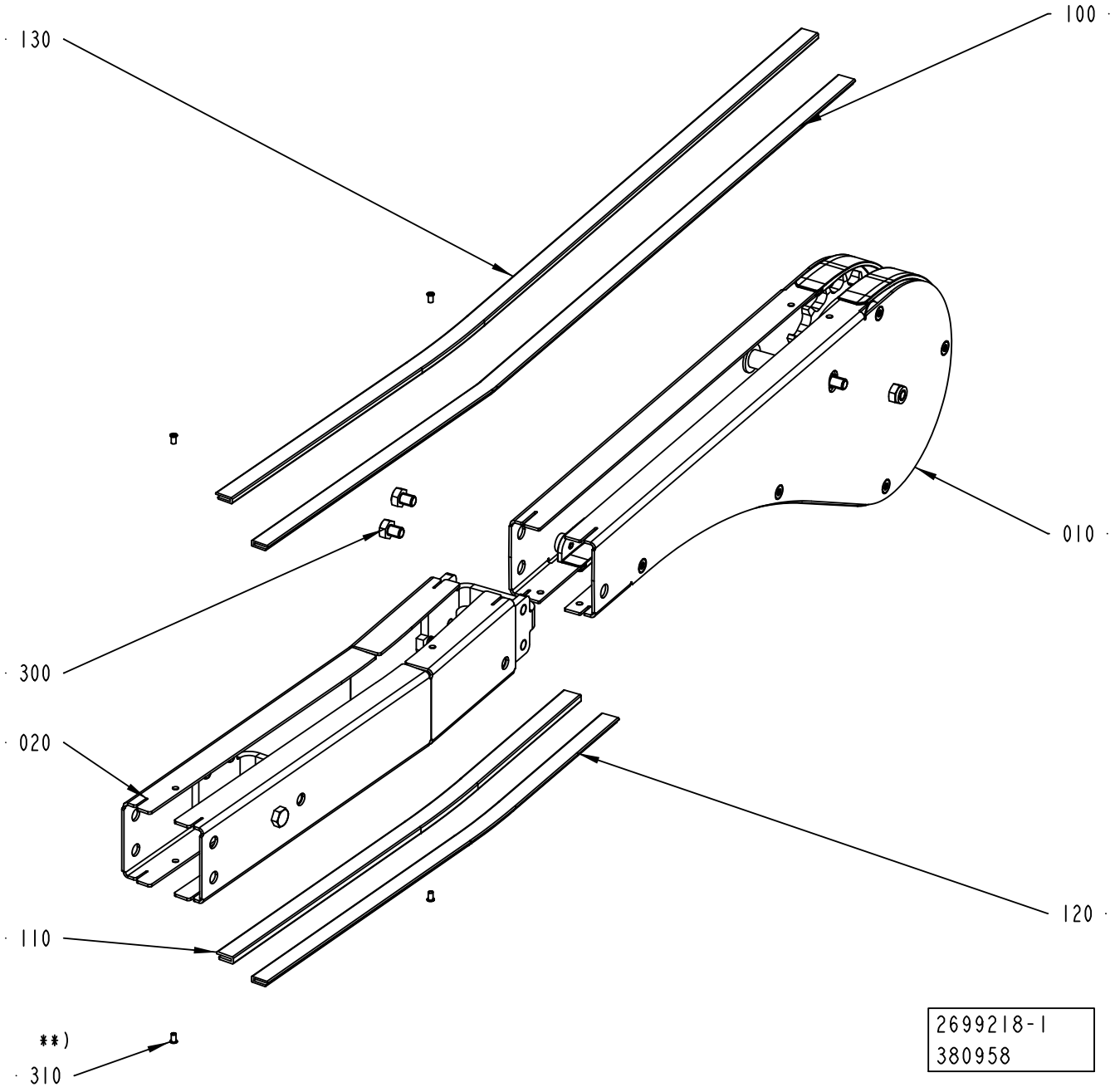
130
100
010
300
020
120
110
**)
310
2699218-1
380958

ECM: 389462 - 20090602
Group number: 2699218-0100
Assembly Drawing: 2699218-1_1_AD

Pos	Part No	UN	Qty	Description	Page No
-					
010	2561169-0300		1	END UNIT	**11-35**
020	2561320-0100		1	GLIDE CURVE	**11-41**
100	1550595-8100		1	SLIDING STRIP	
110	2589960-4630		1	SLIDING STRIP	
120	2589960-4700		1	SLIDING STRIP	
130	2589960-8080		1	SLIDING STRIP	
300	90459-4735		2	SCREW M6S ISO 4017 M8X10 A480	
310	90600-6183		4	TUBULAR RIVET 3,5X6,2	

Pos	Part No	UN	Qty	Description	Page No

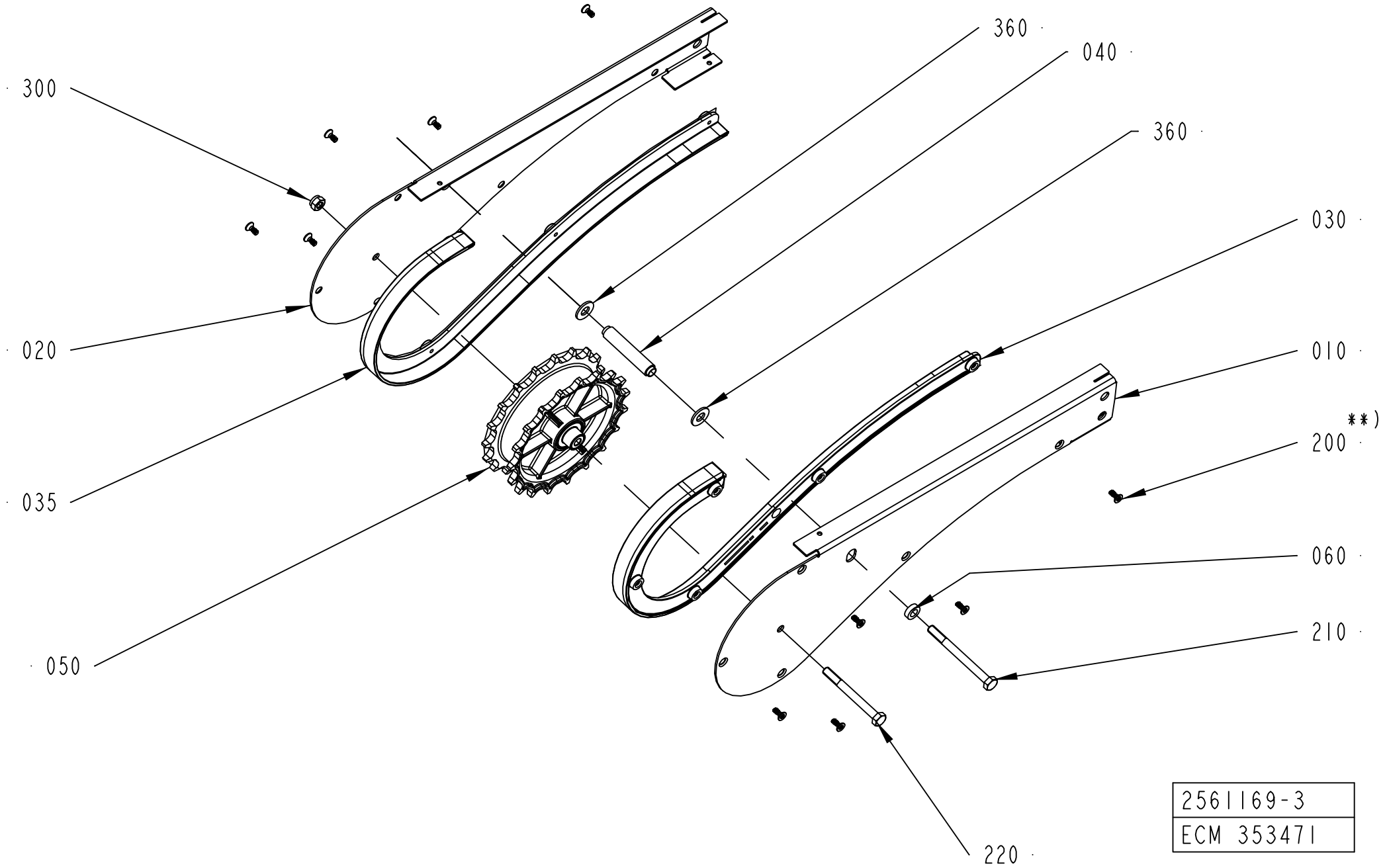
300
020
035
050
360
040
360
030
010
**)
200
060
210
220
2561169-3
ECM 353471

ECM: 353500 - 20081211
Group number: 2561169-0300
Assembly Drawing: 2561169-3_1_AB

Pos	Part No	UN	Qty	Description	Page No
-					
010	2876571-0000		1	SIDE PLATE	
020	2876572-0000		1	SIDE PLATE	
030	2775930-0000		1	CHAIN SUPPORT	
035	2775931-0000		1	CHAIN SUPPORT	
040	2561566-0000		1	SPACER	
050	2561244-0200		1	DRIVE WHEEL	**5-59, 5-61, 11-37, 11-39**
060	2699219-0000		1	SPACER	
200	90600-1933		10	SCREW 5X12, DELTA PT 50X12 WN5454 A4	
210	312105-0469		1	SCREW M6S ISO 4014 M8X90 A480	
220	312105-0467		1	SCREW M6S ISO 4014 M8X80 A480	
300	312812-0318		1	HEXAGON NUT, NY-LOCK M8 A480	
360	315105-0173		2	WASHER BRB 10,5X22 RFR	

Pos	Part No	UN	Qty	Description	Page No

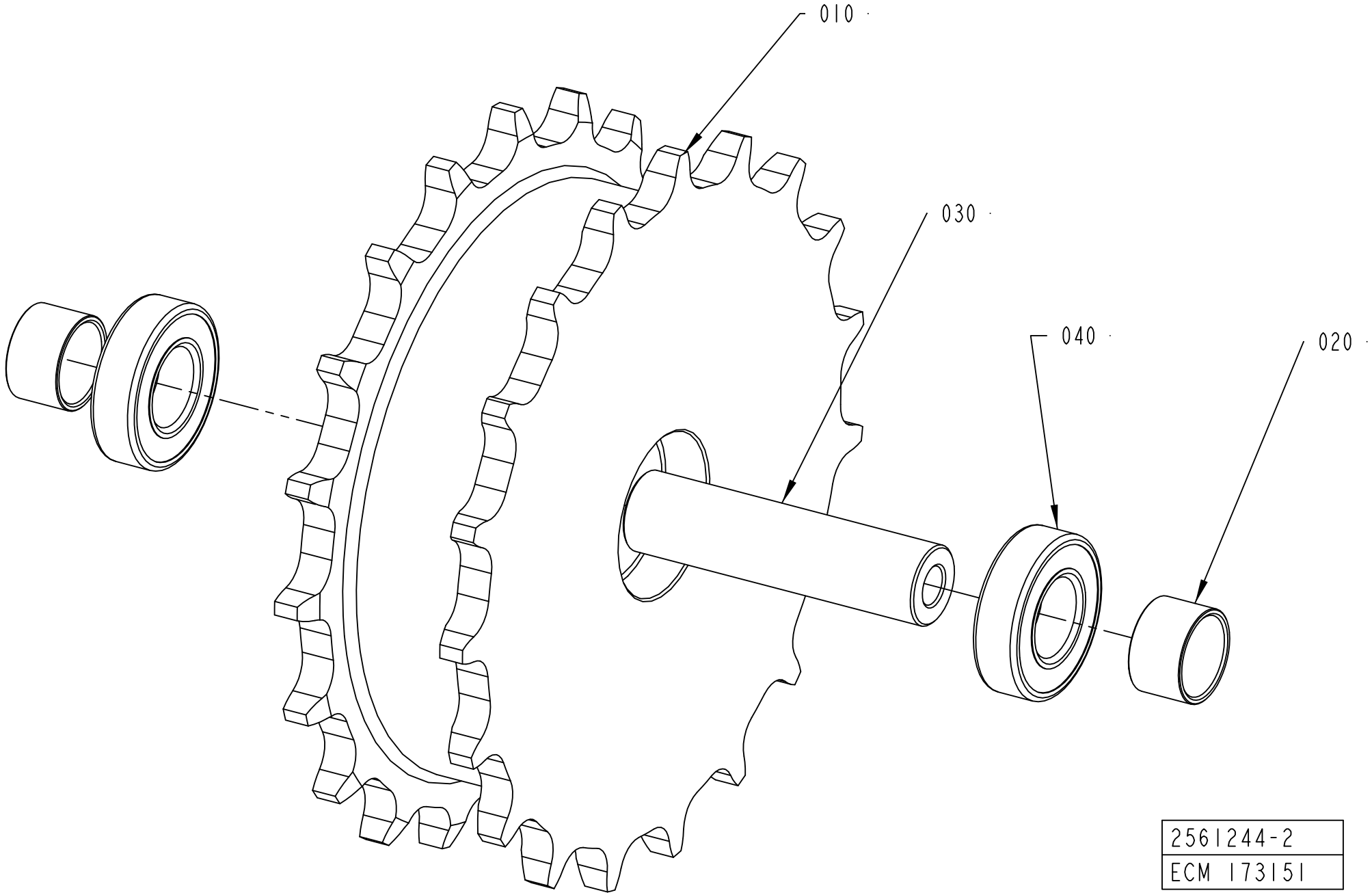
010
030
040
020
2561244-2
ECM 173151

ECM: 426050 - 20100112
Group number: 2561244-0200
Assembly Drawing: 2561244-2_1_AA

This list covers pages from 11-36 to 11-39

Pos	Part No	UN	Qty	Description	Page No
-					
010	2656672-0000		1	SPROCKET	
020	2656673-0000		2	SPACER	
030	2561267-0000		1	SHAFT	
040	1550348-0001		2	BALL BEARING 17/35X10	
040	90458-2172		2	BALL BEARING 17/35X10	

Pos	Part No	UN	Qty	Description	Page No

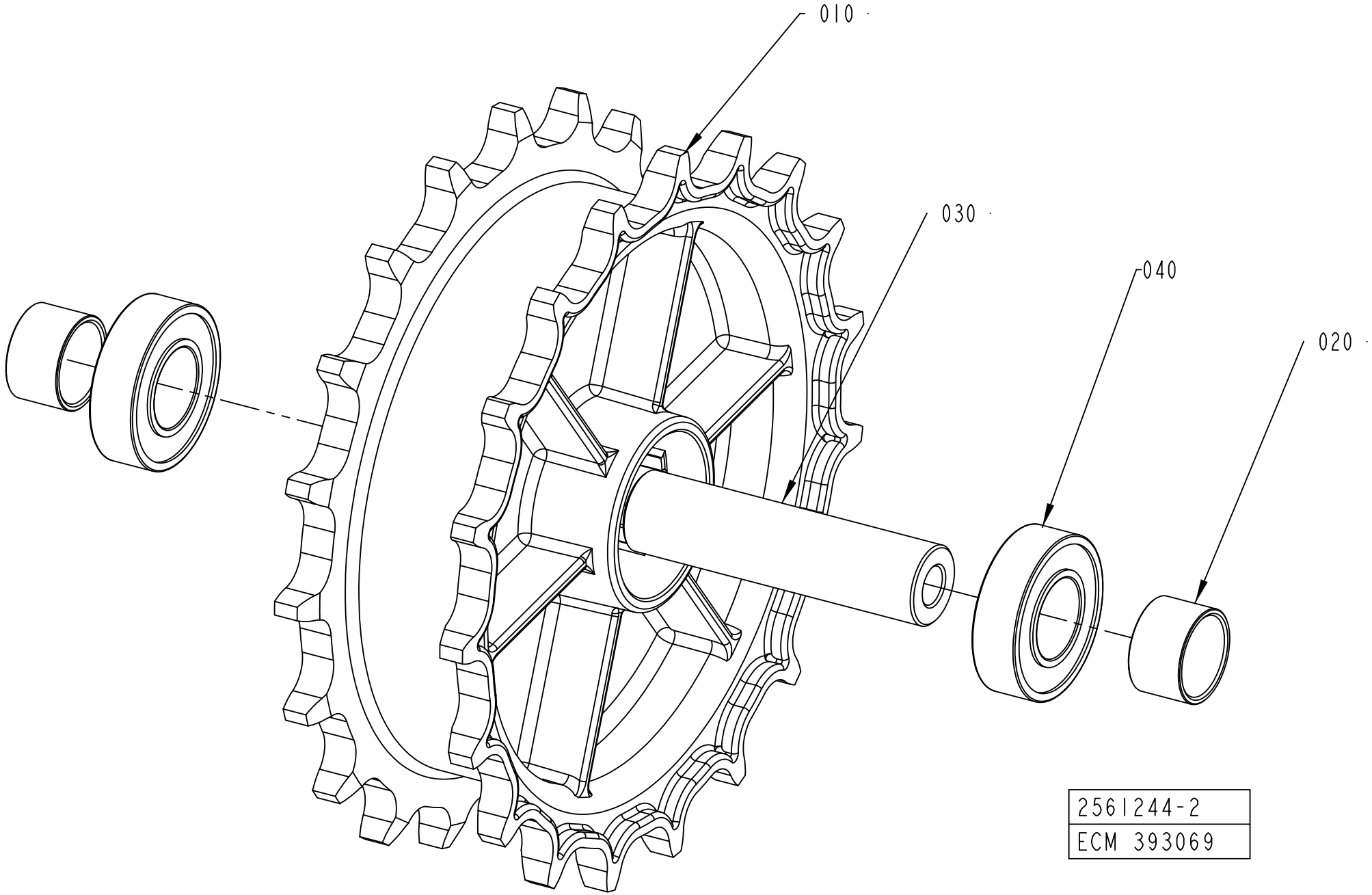
010
030
040
020
2561244-2
ECM 393069

ECM: 426050 - 20100112
Group number: 2561244-0200
Assembly Drawing: 2561244-2_1_AB

This list covers pages from 11-36 to 11-39

Pos	Part No	UN	Qty	Description	Page No
-					
010	2656672-0000		1	SPROCKET	
020	2656673-0000		2	SPACER	
030	2561267-0000		1	SHAFT	
040	1550348-0001		2	BALL BEARING 17/35X10	
040	90458-2172		2	BALL BEARING 17/35X10	

Pos	Part No	UN	Qty	Description	Page No

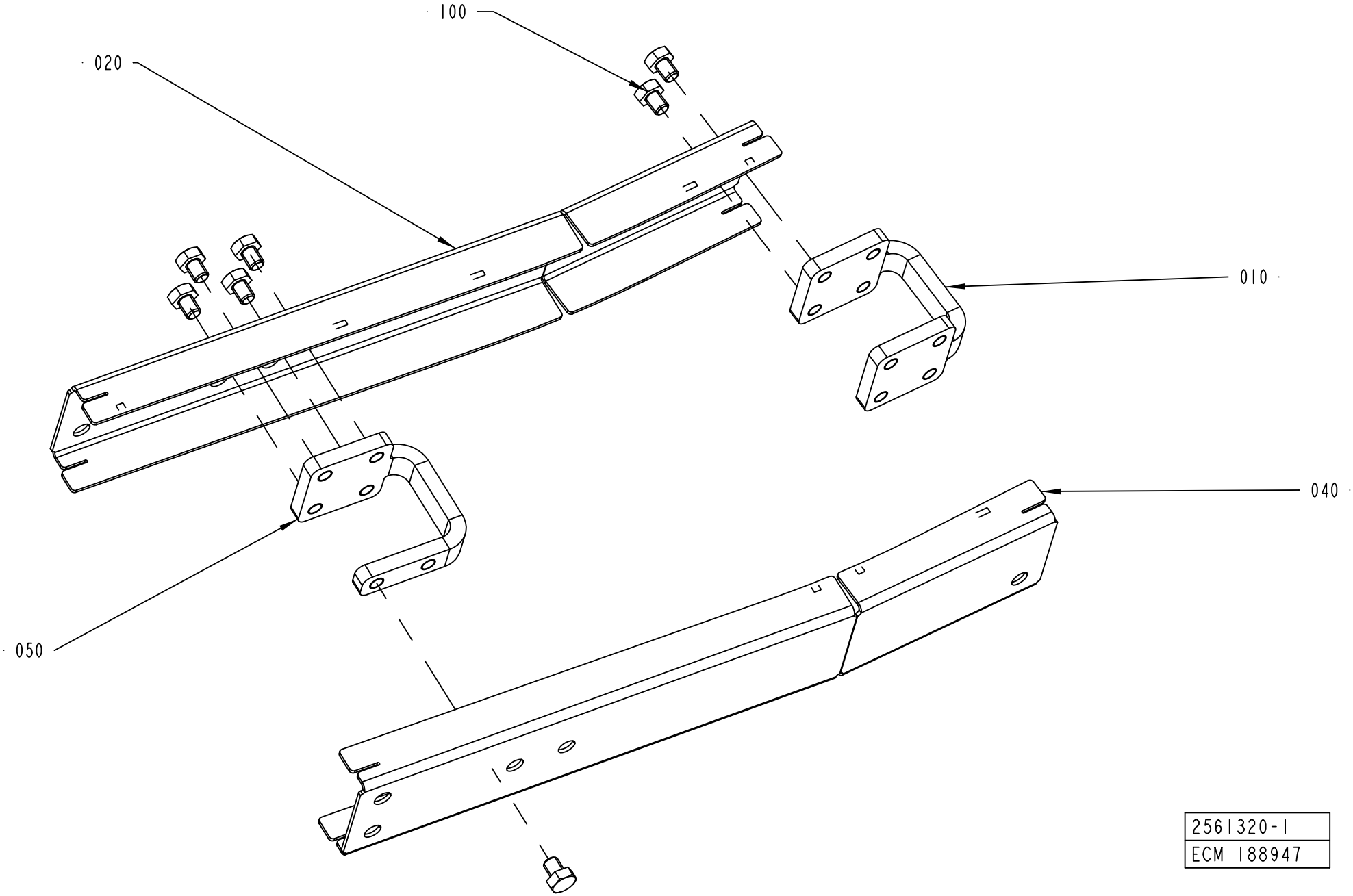

2561320-1
ECM 188947

ECM: 191111 - 20050121
Group number: 2561320-0100
Assembly Drawing: 2561320-1_1_AD

Pos	Part No	UN	Qty	Description	Page No
-					
010	2561206-0000		1	SPACER	
020	2561246-0000		1	SIDE PLATE	
040	2561321-0000		1	SIDE PLATE	
050	2590090-0000		1	SPACER	
100	90459-4735		7	SCREW M6S ISO 4017 M8X10 A480	

Pos	Part No	UN	Qty	Description	Page No

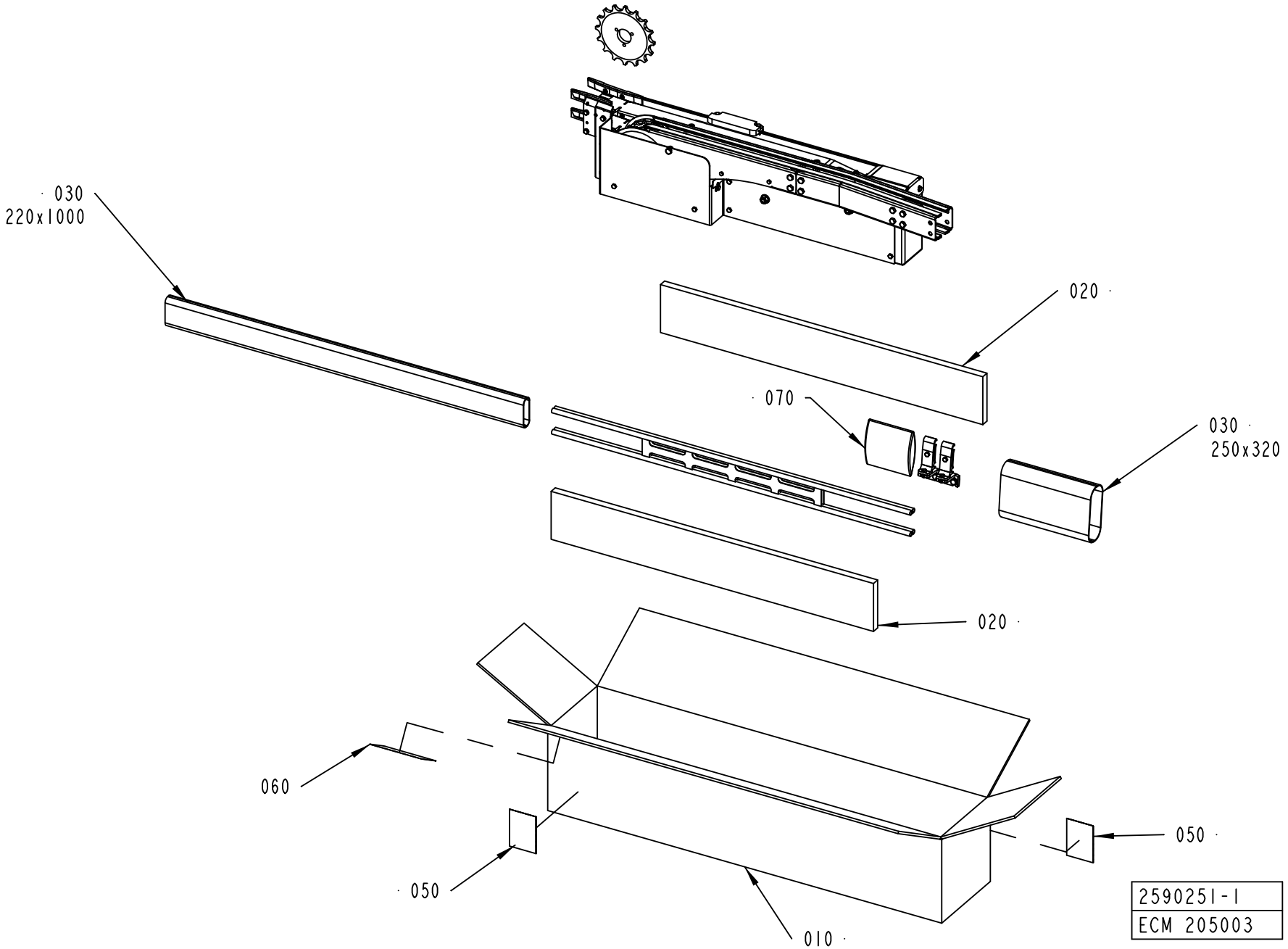
030
220x1000
020
070
030
250x320
020
060
050
050
010
2590251-1
ECM 205003

ECM: 205616 - 20050920
Group number: 2590251-0100
Assembly Drawing: 2590251-1_1_AB

Pos	Part No	UN	Qty	Description	Page No
-					
010	2590252-0000		1	CORRUGATED CARDBOARD BOX	
020	2590248-0002		2	SUPPORT BLOCK	
030	90003-0474		1	PACKING	
050	543267-0000		2	LABEL TAPE	
060	1086871-0000		1	LABEL TAPE	
070	90003-0019		1	BAG	

Pos	Part No	UN	Qty	Description	Page No

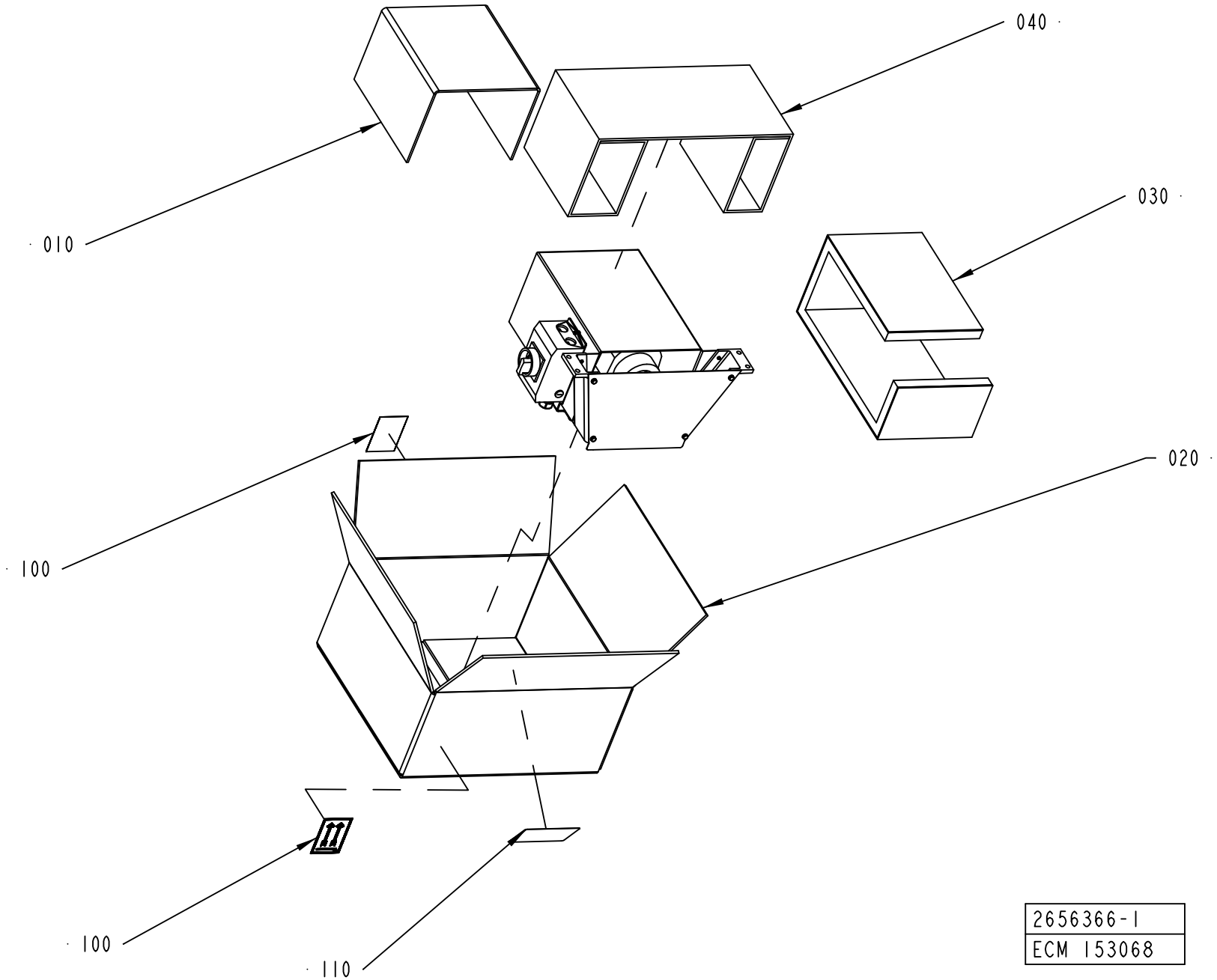
040
010
030
020
100
100
110
2656366-1
ECM 153068

ECM: 153100 - 20040309
Group number: 2656366-0100
Assembly Drawing: 2656366-1_1_AA

Pos	Part No	UN	Qty	Description	Page No
-					
010	90003-0474		1	PACKING	
020	538343-0000		1	CORRUGATED CARDBOARD BOX	
030	538344-0000		1	FITTING	
040	538345-0000		1	FITTING	
100	543267-0000		2	LABEL TAPE	
110	1086872-0000		1	LABEL TAPE	

Pos	Part No	UN	Qty	Description	Page No

SUPPORT PLATE

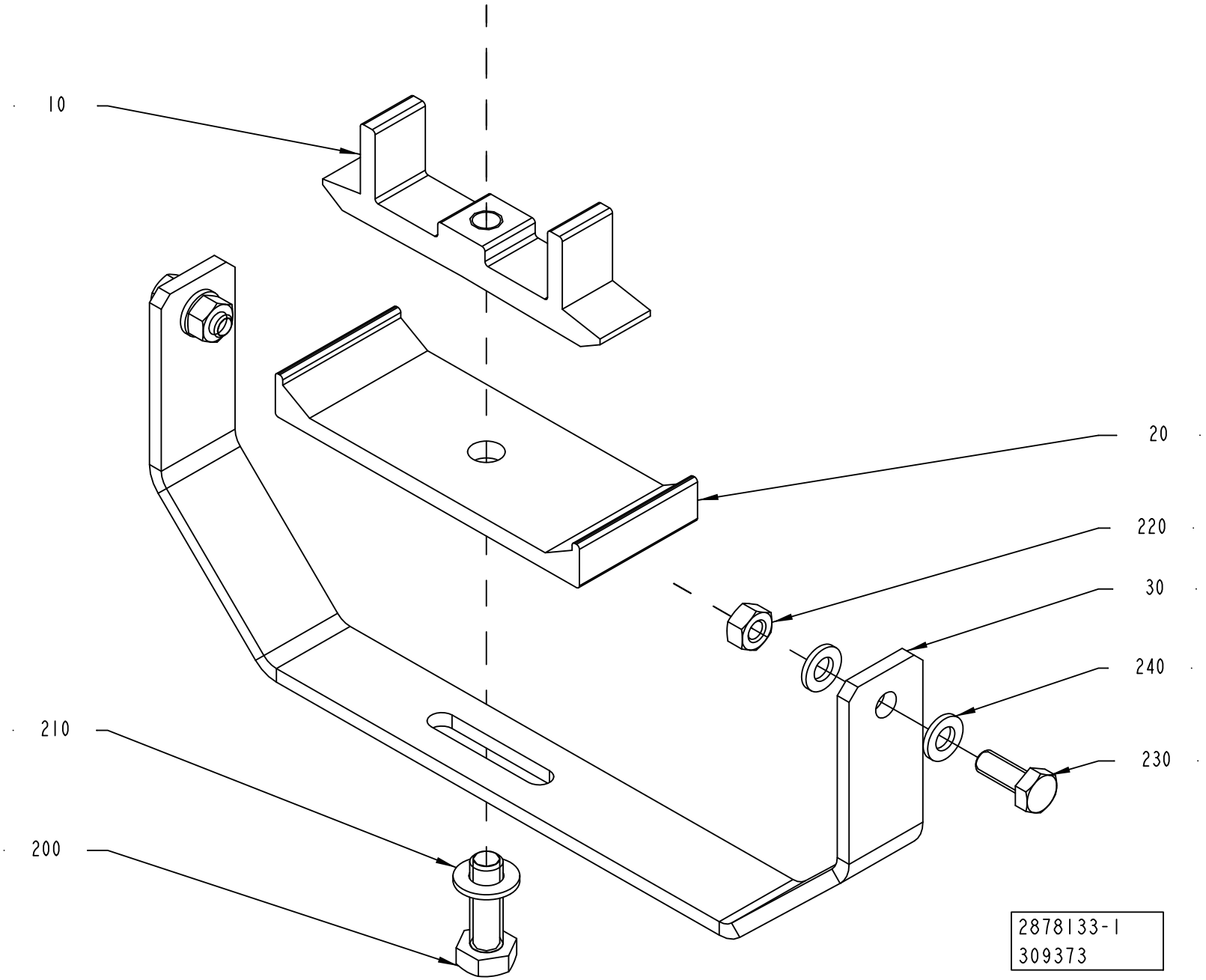

ECM: 313562 - 20070704
Group number: 2878133-0100
Assembly Drawing: 2878133-1_1_AA

Pos	Part No	UN	Qty	Description	Page No
-					
010	537482-0000		1	BRACKET	
020	537483-0000		1	BRACKET	
030	2878113-0000		1	SUPPORT	
200	312105-0453		1	SCREW M6S ISO 4017 M8X25 A480	
210	315105-0165		1	WASHER BRB 8,4X16 RFR	
220	312605-0316		2	HEXAGON NUT, M6M M6 A280	
230	312105-0368		2	SCREW M6S ISO 4017 M6X16 A480	
240	315105-0153		4	WASHER BRB 6,4X12 RFR	

Pos	Part No	UN	Qty	Description	Page No

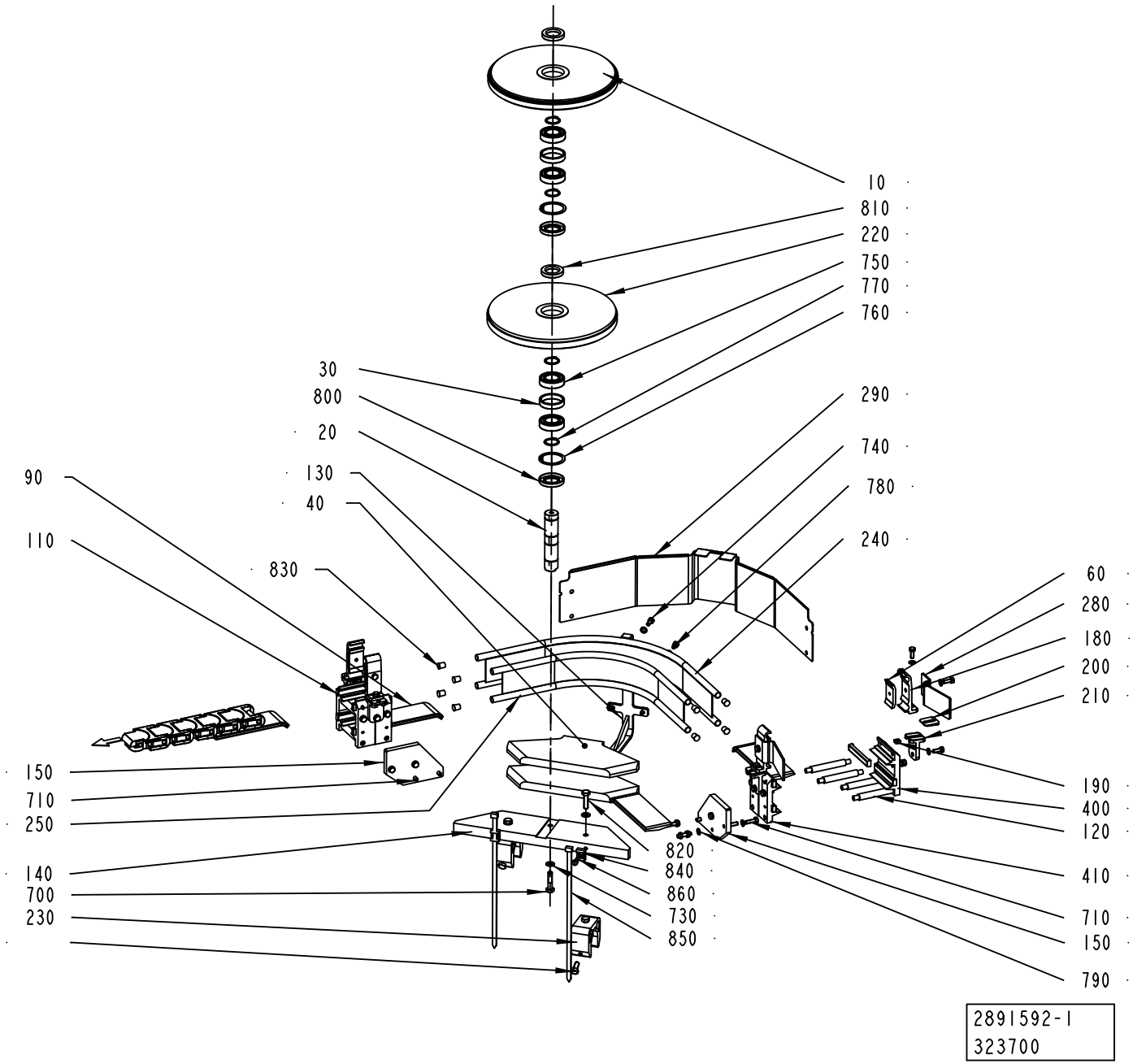
10
810
220
750
770
760
30
800
20
130
40
90
110
830
290
740
780
240
60
280
180
200
210
190
400
120
410
710
150
790
150
710
250
140
700
230
820
840
860
730
850
2891592-1
323700

ECM: 443952 - 20101001
Group number: 2891592-0100
Assembly Drawing: 2891592-1_1_AB

Pos	Part No	UN	Qty	Description	Page No
-					
010	2872770-0000		1	CURVE WHEEL	
020	2872772-0000		1	SHAFT	
030	2872773-0000		2	SPACER	
040	2891632-0000		2	SUPPORT	
060	1366727-0000		4	CLAMP	
090	2891631-0000		4	RAIL	
110	466074-0002		8	SLIDER	
120	1347900-0000		8	SPACER	
130	2891633-0000		1	SUPPORT	
140	2872774-0000		1	SUPPORT	
150	2877395-0000		2	SUPPORT	
180	1366726-0000		4	HOLDER	
190	1359565-0000		4	NUT	
200	1380701-0000		4	SPACER	
210	1359085-0000		4	T-HOLDER	
220	2877402-0000		1	CURVE WHEEL	
230	2807592-0000		2	MULTI BRACKET SINGLE	
240	2891594-0000		1	GUIDE	
250	2891595-0000		1	GUIDE	
280	2891596-0000		2	SUPPORT	
290	2902425-0000		1	COVER	
400	486918-0001		2	JOINT PIECE	
410	486918-0002		2	JOINT PIECE	
700	312105-0457		1	SCREW M6S ISO 4014 M8X35 A480	
710	312105-0370		22	SCREW M6S ISO 4017 M6X20 A480	
720	312105-0449		2	SCREW M6S ISO 4017 M8X16 A480	
730	315105-0165		5	WASHER BRB 8,4X16 RFR	
740	312105-0368		11	SCREW M6S ISO 4017 M6X16 A480	
750	90600-0140		4	BALL BEARING 25/47X12	
760	315753-0130		2	RETAINING RING FOR BORE DIN 472 47 SS	
770	315751-0119		4	RETAINING RING FOR SHAFT DIN 471 25 SS	
780	312105-0366		6	SCREW M6S ISO 4017 M6X12 A480	
790	315105-0153		37	WASHER BRB 6,4X12 RFR	
800	315221-0159		2	RADIAL SEAL 25X47X7 MM	
810	315221-0158		2	RADIAL SEAL 25X42X7 MM	
820	312105-0455		2	SCREW M6S ISO 4017 M8X30 A480	
830	484701-0000		8	SHUTTER	
840	352113-0204		2	ANCHOR PLATES FOR STRIPS, TYPE TM3S25-M	
850	352113-0104		2	CABLE TIE, BLACK 300X4,8 MM	
860	312125-0364		2	SCREW ISO 1207 M6X10 A4	

Pos	Part No	UN	Qty	Description	Page No

Machine Type | Group Description | Used-In | Group Number | Page No

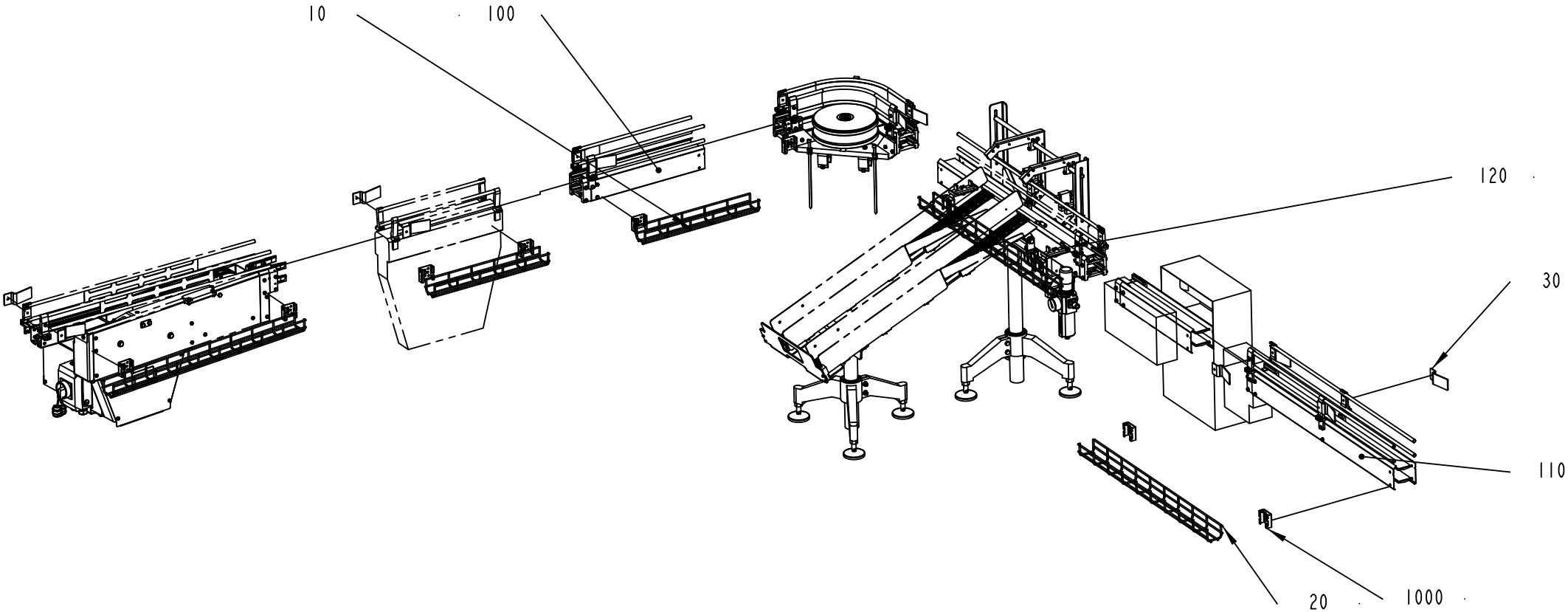
10
100
120
30
110
20
1000
2902500-1
309373

ECM: 313563 - 20070704
Group number: 2902500-0100
Assembly Drawing: 2902500-1_1_AA

This list covers pages from 11-50 to 11-53

Pos	Part No	UN	Qty	Description	Page No
WITHOUT SAMPLING UNIT					
010	2891622-0000		3	CABLE TRENCH	
020	2891623-0000		2	CABLE TRENCH	
030	2891596-0000		12	SUPPORT	
100	2589856-0101		2	STRAIGHT CONVEYOR TPC21 L500 SH	
1000	90181-0190		10	CABLE DUCT, WALL BRACKET, B4 MINI	
WITH SAMPLING UNIT					
010	2891622-0000		2	CABLE TRENCH	
020	2891623-0000		3	CABLE TRENCH	
030	2891596-0000		10	SUPPORT	
100	2589856-0101		1	STRAIGHT CONVEYOR TPC21 L500 SH	
120	2902450-0100		2	SUPPORT	**11-55**
1000	90181-0190		8	CABLE DUCT, WALL BRACKET, B4 MINI	
Common Parts					
110	2589857-0101		1	STRAIGHT CONVEYOR TPC21 L1000 SH	

Pos	Part No	UN	Qty	Description	Page No

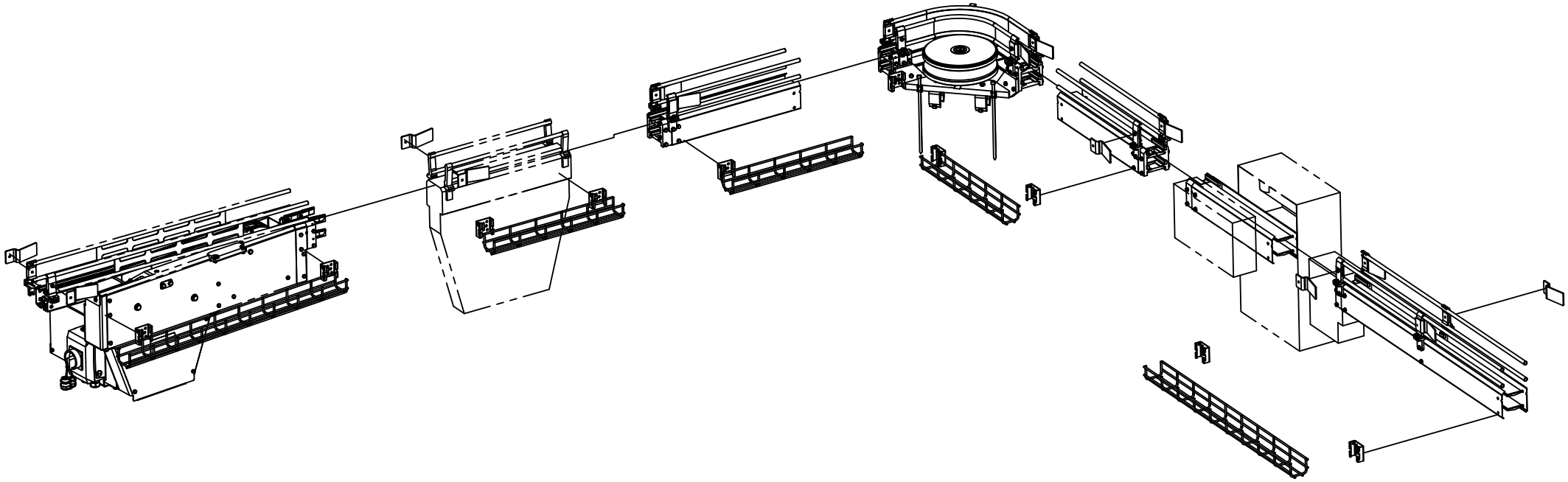

2902500-1
309373

ECM: 313563 - 20070704
Group number: 2902500-0100
Assembly Drawing: 2902500-1_2_AA

This list covers pages from 11-50 to 11-53

Pos	Part No	UN	Qty	Description	Page No
WITHOUT SAMPLING UNIT					
010	2891622-0000		3	CABLE TRENCH	
020	2891623-0000		2	CABLE TRENCH	
030	2891596-0000		12	SUPPORT	
100	2589856-0101		2	STRAIGHT CONVEYOR TPC21 L500 SH	
1000	90181-0190		10	CABLE DUCT, WALL BRACKET, B4 MINI	
WITH SAMPLING UNIT					
010	2891622-0000		2	CABLE TRENCH	
020	2891623-0000		3	CABLE TRENCH	
030	2891596-0000		10	SUPPORT	
100	2589856-0101		1	STRAIGHT CONVEYOR TPC21 L500 SH	
120	2902450-0100		2	SUPPORT	**11-55**
1000	90181-0190		8	CABLE DUCT, WALL BRACKET, B4 MINI	
Common Parts					
110	2589857-0101		1	STRAIGHT CONVEYOR TPC21 L1000 SH	

Pos	Part No	UN	Qty	Description	Page No

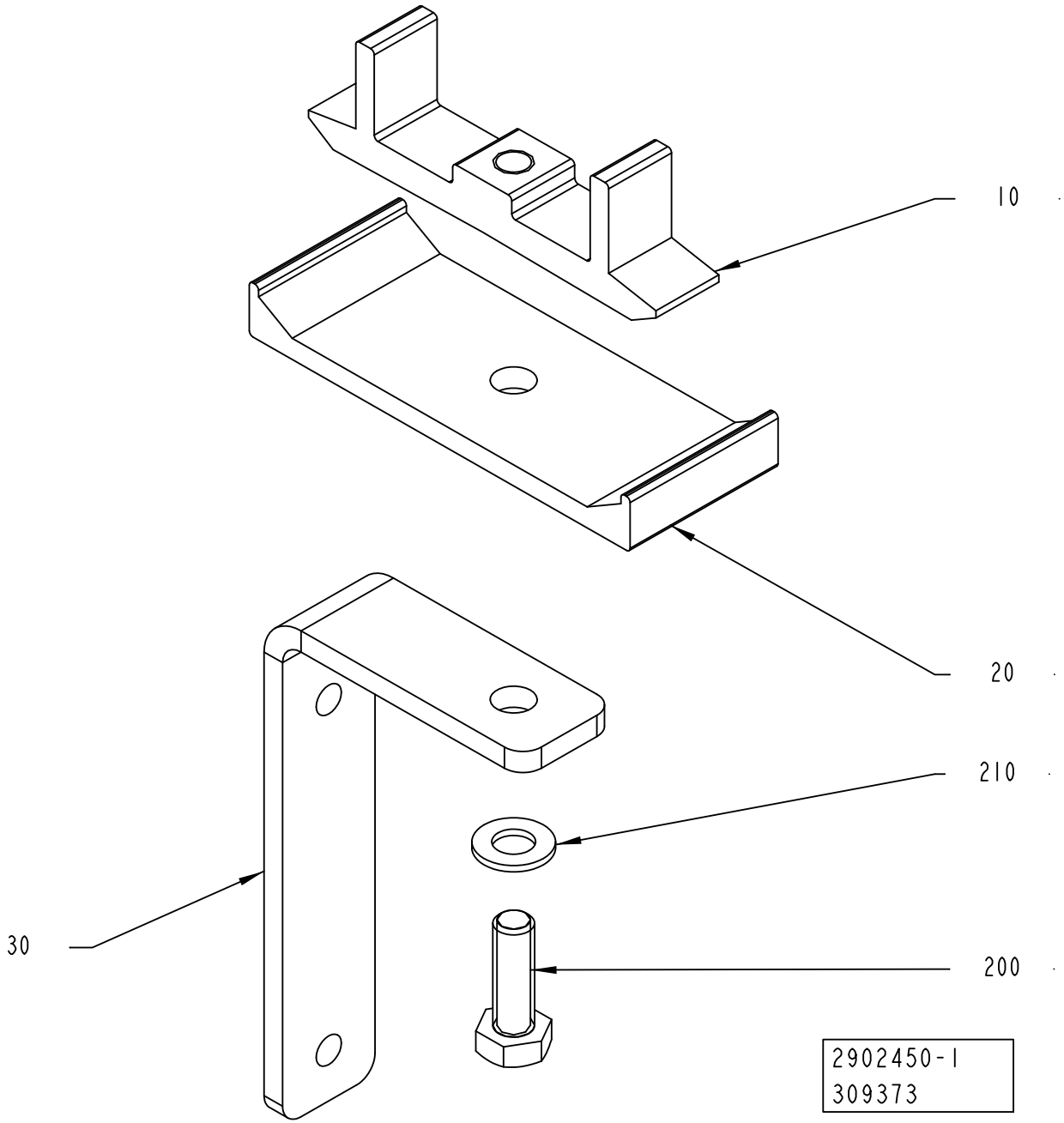
10
20
210
30
200
2902450-1
309373

ECM: 317109 - 20070704
Group number: 2902450-0100
Assembly Drawing: 2902450-1_1_AA

Pos	Part No	UN	Qty	Description	Page No
-					
010	537482-0000		1	BRACKET	
020	537483-0000		1	BRACKET	
030	1550407-0000		1	BRACKET	
200	312105-0453		1	SCREW M6S ISO 4017 M8X25 A480	
210	315105-0165		1	WASHER BRB 8,4X16 RFR	

Pos	Part No	UN	Qty	Description	Page No

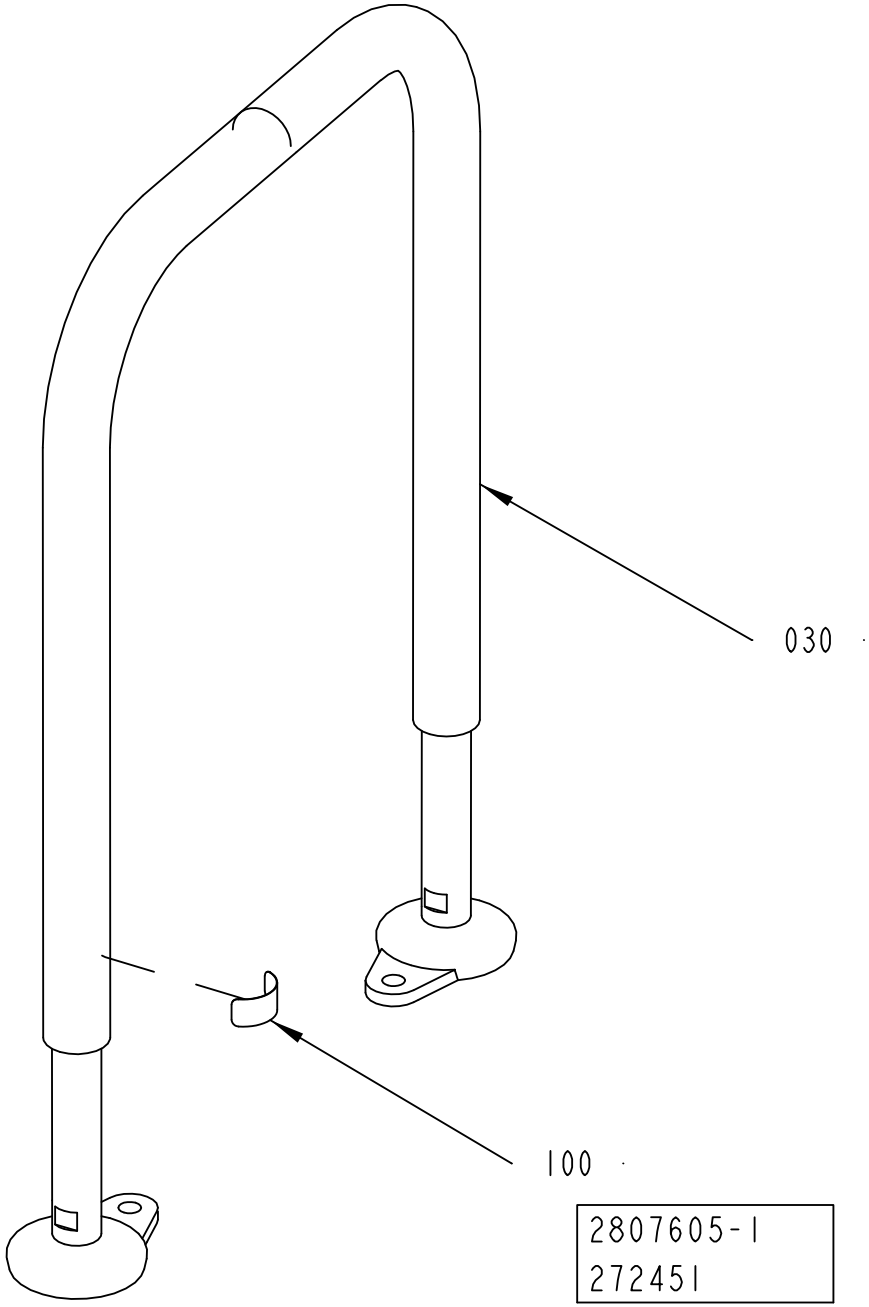
030
100
2807605-1
272451

ECM: 272451 -
Group number: 2807605-0101
Assembly Drawing: 2807605-1_1_AA

Pos	Part No	UN	Qty	Description	Page No
-					
030	2807615-0000		1	LEG,CONVEYOR	
100	1086870-0000		1	SIGN	

Pos	Part No	UN	Qty	Description	Page No

This page is intentionally left blank.

ECM: 379173 - 20081130
Group number: 3005198-0100
Assembly Drawing:

Pos	Part No	UN	Qty	Description	Page No
PRINTER LANG ARABIC					
	90600-5584		1	INK JET PRINTER A300+ARAB, TP 90600-5584	
PRINTER LANG EUROPEAN					
	90600-5583		1	INK JET PRINTER A300+EUR, TP 90600-5583	
PRINTER LANG GREEK, PRINTER LANG RUSSIAN					
	90600-5587		1	INK JET PRI. A300+GR/RUSS, TP 90600-5587	
PRINTER LANG JAPANESE					
	90600-5586		1	INK JET PRINTER A300+JAPA, TP 90600-5586	
PRINTER LANG TRAD CHINESE					
	90600-5585		1	INK JET PRINTER A300+CHIN, TP 90600-5585	

Pos	Part No	UN	Qty	Description	Page No

W51X1000

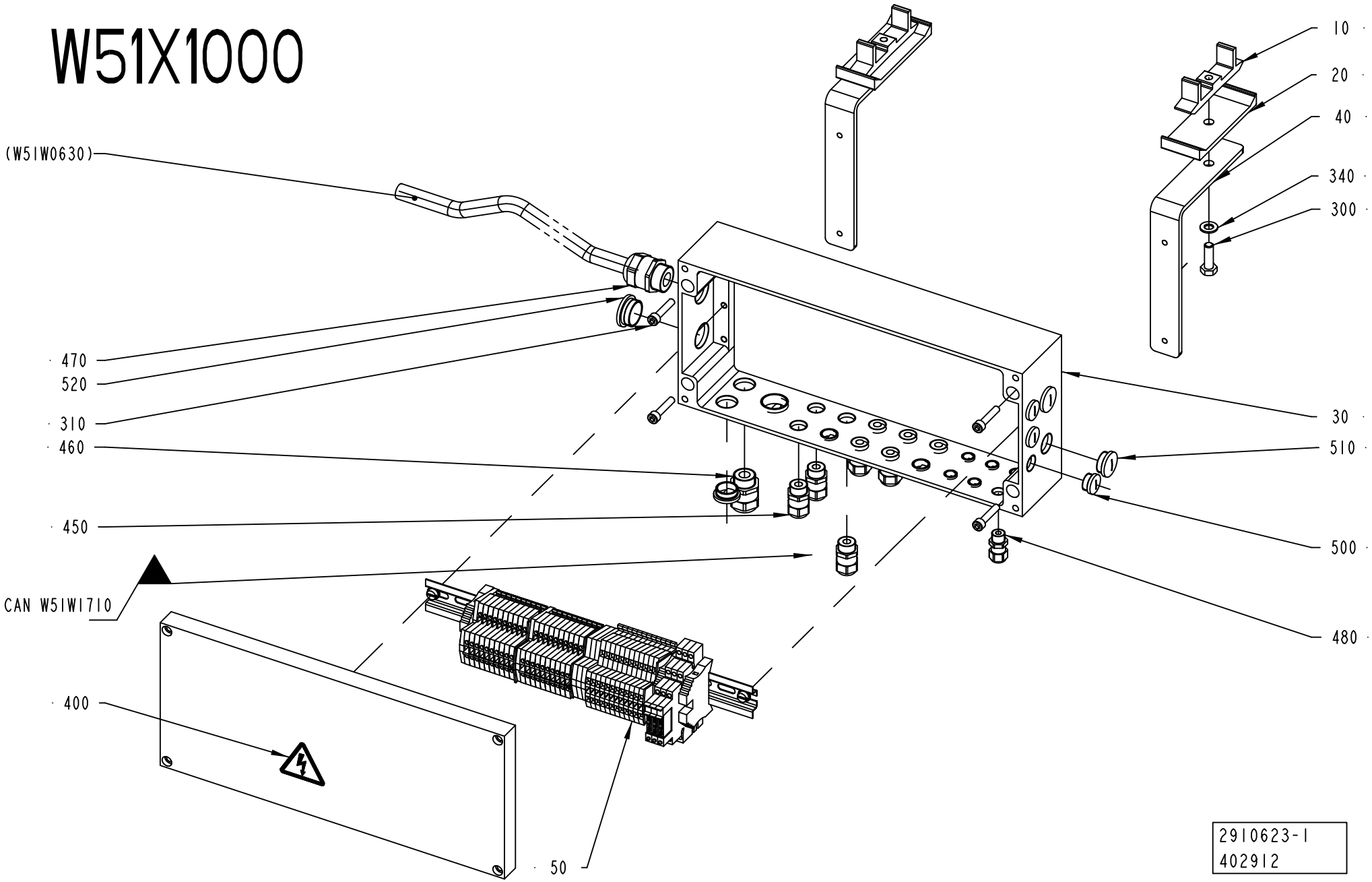
(W51W0630)
470
520
310
460
450
CAN W51W1710
400
50
10
20
40
340
300
30
510
500
480
2910623-1
402912

ECM: 461950 - 20101001
Group number: 2910623-0100
Assembly Drawing: 2910623-1_1_AF

Pos	Part No	UN	Qty	Description	Page No
A3/SPEED ANSI (See drawing on page: 11-60)					
400	359715-0100		1	WARNING SIGN ANSI (H), ELECTRIC SHOCK	
A3/SPEED ISO (See drawing on page: 11-60)					
400	359705-0015		1	WARNING SIGN ISO, RISK OF ELECTRIC SHOCK	
Common Parts					
010	537482-0000		2	BRACKET	
020	537483-0000		2	BRACKET	
030	2910624-0000		1	CONNECTION BOX	
040	2594878-0000		2	BRACKET	
050	2910625-0100		1	CONNECTION BOX	**11-63**
300	312105-0453		2	SCREW M6S ISO 4017 M8X25 A480	
310	312111-0374		4	SCREW HEX.SOCK.HD.MC6S-TT 6X30 88 FZB	
340	315105-0165		2	WASHER BRB 8,4X16 RFR	
450	90458-0306		9	CABLE GLAND, M16X1,5, NO.5311 1010	
460	90458-0307		1	CABLE GLAND, M20X1,5, NO.5311 1020	
470	90458-0308		1	CABLE GLAND, M25X1,5, NO.5311 1030	
480	90458-0313		2	CABLE GLAND, M12X1,5, NO.5311 1100	
490	90458-1306		6	BLIND PLUG CIRCULAR, M12X1,5 514GFK/212	
500	90458-1307		10	BLIND PLUG CIRCULAR, M16X1,5 514GFK/216	
510	90458-1308		4	BLIND PLUG CIRCULAR, M20X1,5 514GFK/220	
520	90458-1309		2	BLIND PLUG CIRCULAR, M25X1,5 514GFK/225	

Pos	Part No	UN	Qty	Description	Page No

CONNECTION BOX

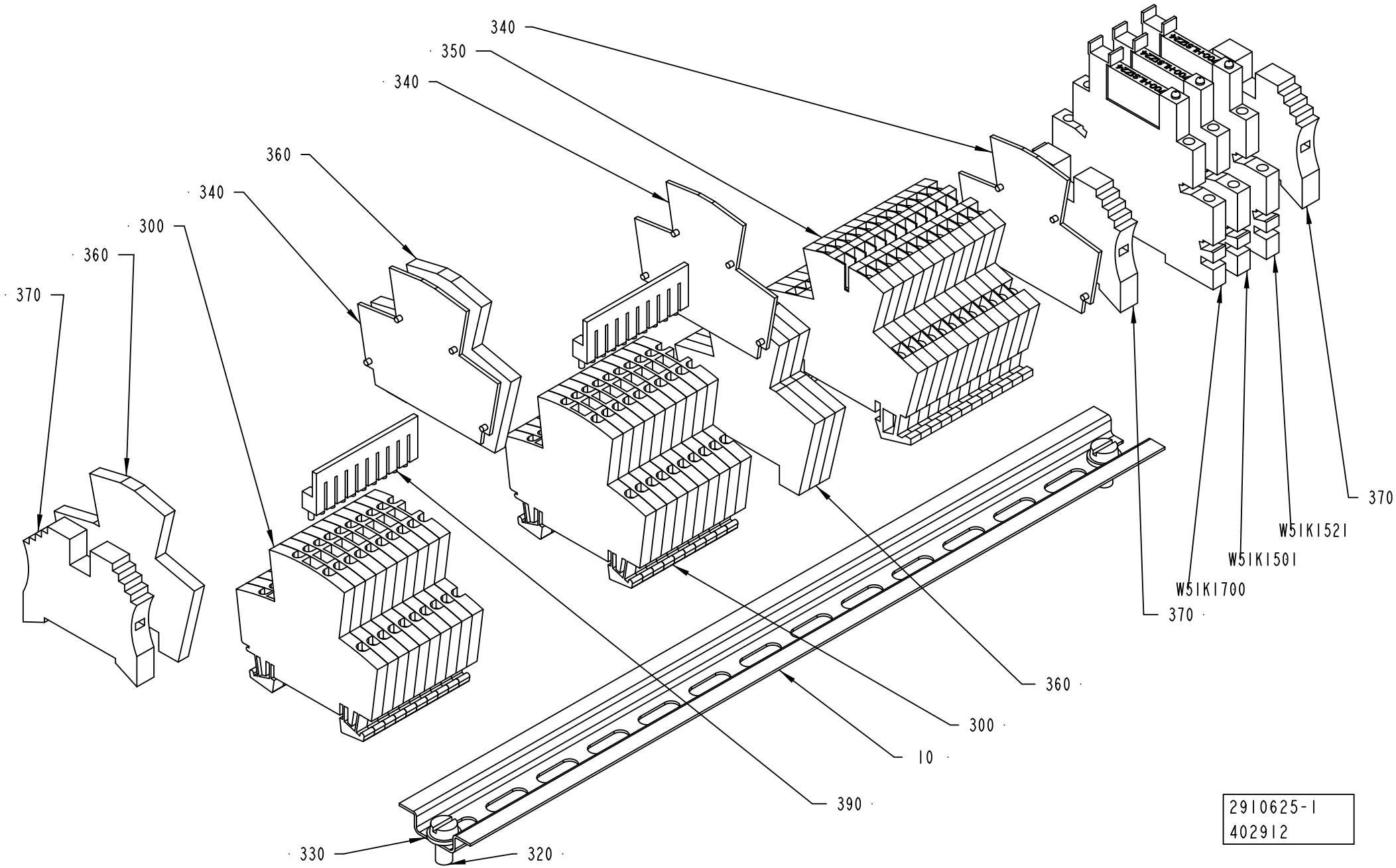

ECM: 466839 - 20100820
Group number: 2910625-0100
Assembly Drawing: 2910625-1_1_AC

Pos	Part No	UN	Qty	Description	Page No
A3/SPEED					
W51K1501	90601-6658		1	OPTOCOUPLER, DEK-OV-24DC/24DC/3	
W51K1521	90601-6658		1	OPTOCOUPLER, DEK-OV-24DC/24DC/3	
W51K1700	90601-6658		1	OPTOCOUPLER, DEK-OV-24DC/24DC/3	
Common Parts					
010	2635558-0000		1	RAIL	
300	90457-0049		20	TERMINAL BLOCK WDK 2.5V, 102230	
320	312125-0366		2	SCREW ISO 1207 M6X12 A4	
330	315105-0153		2	WASHER BRB 6,4X12 RFR	
340	353032-0009		3	END PLATE, WAP FOR WDK	
350	90077-0113		12	FEED THROUGH TERMINAL, 10-00102150-1	
360	353024-0212		5	EARTH TERMINAL, 10363.0	
370	353031-0203		3	END SUPPORT, WEW 35/2	
390	353034-0030		2	BRIDGE CONNECTOR WQV 2,5/10, 10544.6	
400	359011-0807		1	MARKING, DEK 5 FW 1-50	
410	359011-0808		1	MARKING, DEK 5FW 51-100	
420	359011-0809		2	MARKING, DEK 5 FW 101-150	

Pos	Part No	UN	Qty	Description	Page No

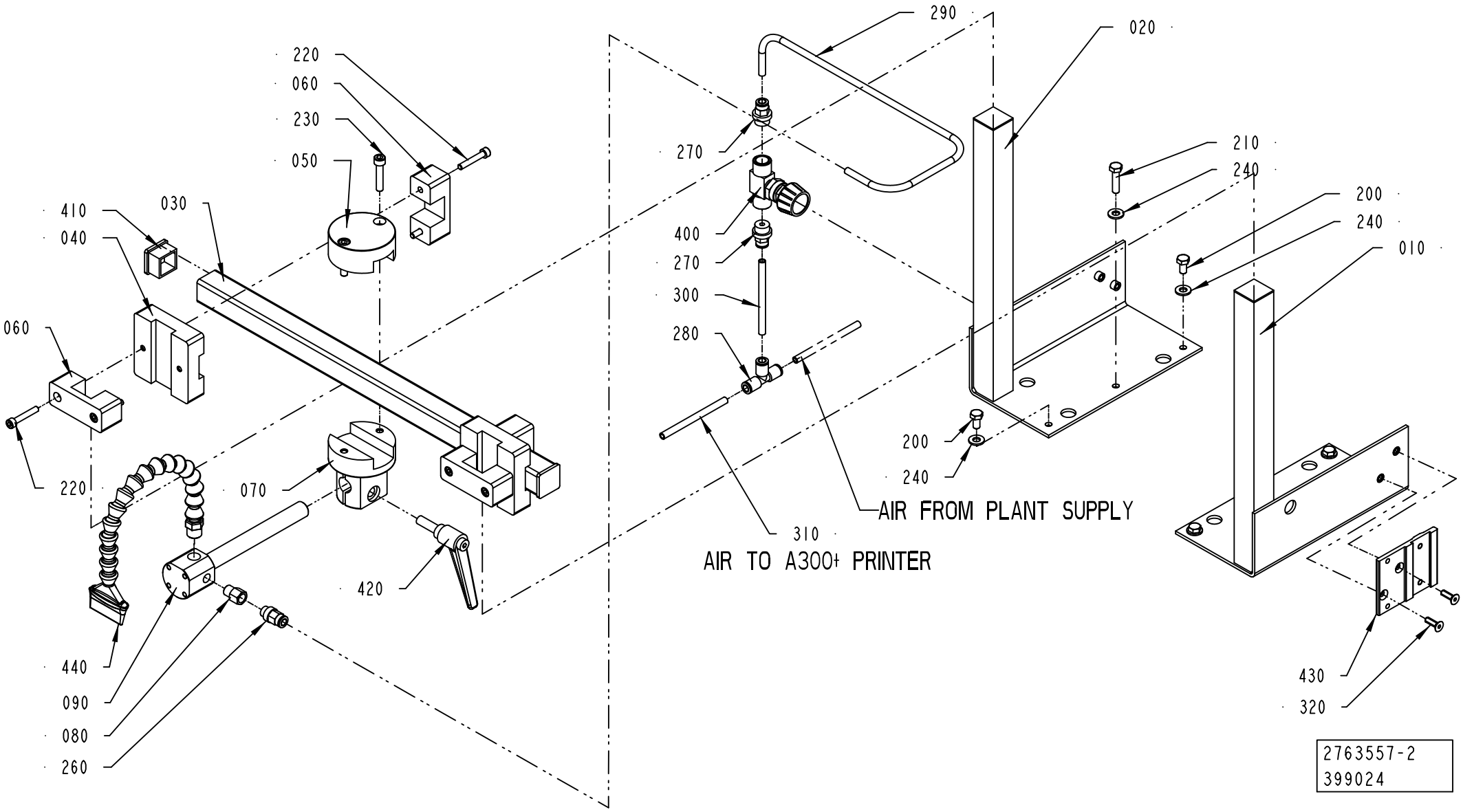
290
020
220
060
230
050
270
210
240
200
240
010
410
040
030
400
270
300
280
060
220
070
420
200
240
AIR FROM PLANT SUPPLY
310
AIR TO A300+ PRINTER
430
320
440
090
080
260
2763557-2
399024

ECM: 405068 - 20081201
Group number: 2763557-0200
Assembly Drawing: 2763557-2_1_AB

Pos	Part No	UN	Qty	Description	Page No
-					
010	2559041-0000		1	BRACKET	
020	2562468-0000		1	BRACKET	
030	3004384-0000		1	BEAM	
040	3004387-0000		2	BLOCK	
050	3004385-0000		1	BLOCK	
060	2763628-0000		4	BRACKET	
070	3004388-0000		1	CLAMPING PIECE	
080	3004389-0000		1	REDUCER	
090	3004386-0000		1	SUPPORT	
200	312105-0366		4	SCREW M6S ISO 4017 M6X12 A480	
210	312105-0372		2	SCREW M6S ISO 4017 M6X25 A480	
220	312115-0335		8	SCREW ISO4762 M5X30 A4 80	
230	312115-0374		2	SCREW ISO4762 M6X30 A4 80	
240	315105-0156		6	WASHER BRB 6,7X14 RFR	
260	350001-0006		1	PUSH-IN FITTING QS-F-G1/8-6	
270	350001-0008		2	PUSH-IN FITTING QS-F-G1/4-6	
280	350005-0002		1	PUSH-IN T-FITTING QST-F-6	
290	315400-0001	MM	700	TUBE PUN-H-6X1-BL	
300	315400-0001	MM	80	TUBE PUN-H-6X1-BL	
310	315400-0001	MM	3000	TUBE PUN-H-6X1-BL	
320	312155-0329		2	SCREW DIN 7991 MF6S M5X16 A4 70	
400	90187-0149		1	THROTTLE VALVE, G1/4, G1/4, MALE	
410	90261-0048		2	SQUARE PLUG GPN 260/Q2525	
420	90459-2596		1	LOCKING HANDLE, M8X25M	
430	90600-7506		1	SUPPORT PLATE, 26798	
440	90600-8708		1	AIR KNIFE, LL40100	

Pos	Part No	UN	Qty	Description	Page No

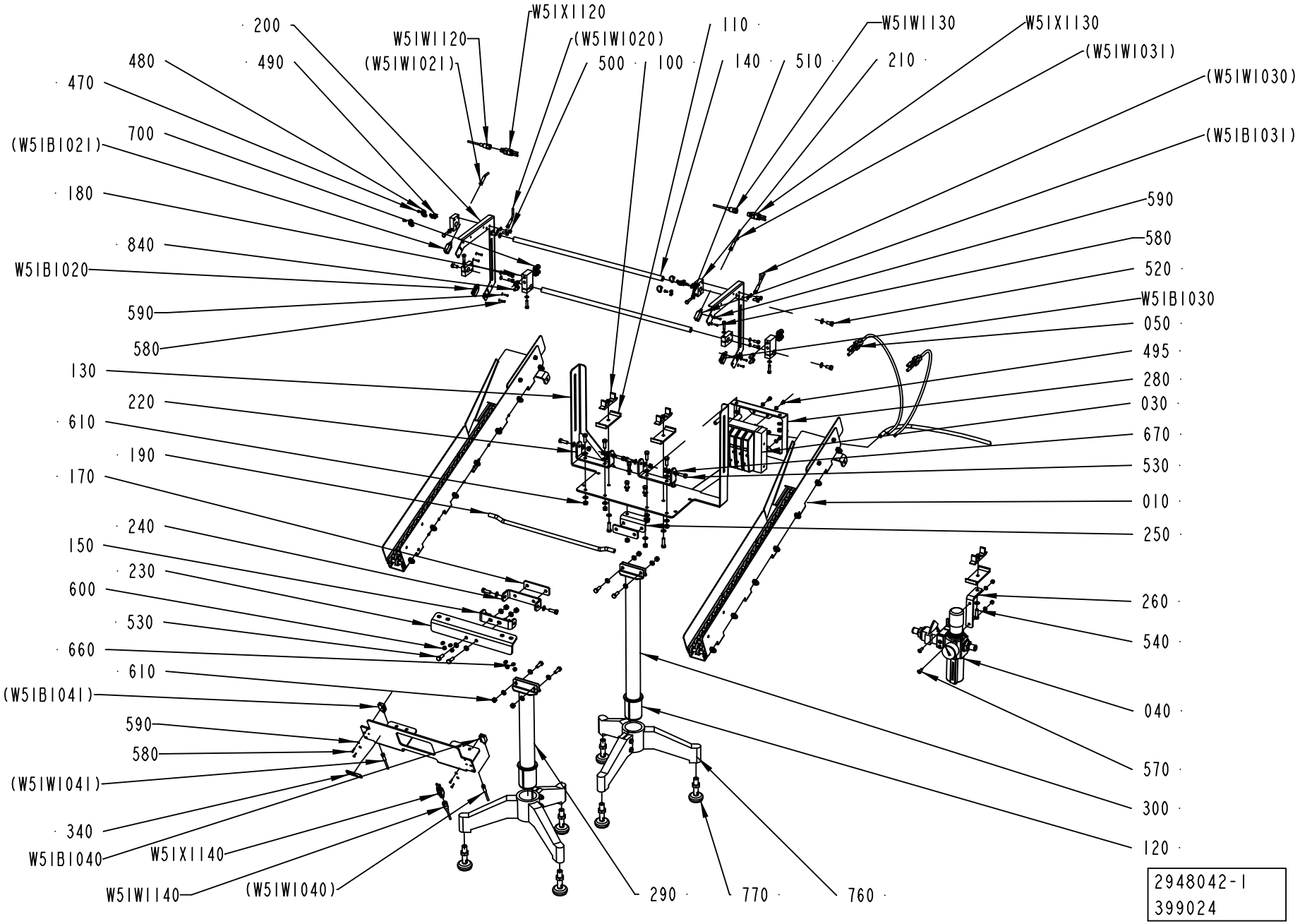
200
490
480
470
700
(W5IB1021)
180
840
W5IB1020
590
580
130
220
610
190
170
240
150
230
600
530
660
610
(W5IB1041)
590
580
(W5IW1041)
340
W5IB1040
W5IX1140
W5IW1140
(W5IW1040)
W5IX1120
W5IW1120
(W5IW1021)
(W5IW1020)
500
100
110
140
510
210
W5IW1130
W5IX1130
(W5IW1031)
(W5IW1030)
(W5IB1031)
590
580
520
W5IB1030
050
495
280
030
670
530
010
250
260
540
040
570
300
120
290
770
760
2948042-1
399024

ECM: 405063 - 20081201
Group number: 2948042-0100
Assembly Drawing: 2948042-1_1_AC

Pos	Part No	UN	Qty	Description	Page No
-					
	1550863-0100		1	PACKING DESCRIPTION	**11-69**
010	2890678-0100		2	CHUTE	**11-71**
030	2934968-0100		1	PNEUMATIC UNIT	**11-73**
040	2955542-0100		1	PRESSURE REGULATOR	**11-75**
050	2956750-0100		1	HOSE INSTALLATION	**11-77**
100	537482-0000		3	BRACKET	
110	537483-0000		3	BRACKET	
120	562015-0000		2	REDUCTION CASING	
130	1550162-0000		1	CANTILEVER	
140	1550177-0000		2	SHAFT	
150	1550179-0000		1	BOW CLAMP	
170	1550199-0000		2	SPACER	
180	1550206-0000		2	HOLDER	
190	1550248-0000		1	TUBE	
200	1550302-0000		2	PHOTOCELL BRACKET	
210	1550319-0000		4	BRACKET	
220	1550401-0000		2	BOW CLAMP	
230	1550404-0000		1	BRACKET	
240	1550405-0000		1	BOW CLAMP	
250	1550406-0000		1	BRACKET	
260	1550407-0000		1	BRACKET	
280	1550847-0000		1	BRACKET	
290	1020391-0003		1	PIPE	
300	1020391-0004		1	PIPE	
310	2955543-0000		1	PNEUMATIC DIAGRAM	
330	2699366-0000		1	STOP	
340	1086870-0000		1	SIGN	
470	312125-0287		6	SCREW ISO 1207 M4X8 A4	
480	352113-0101		6	CABLE TIE, BLACK 92X2,5 MM	
490	352113-0205		6	ANCHOR PLATES FOR STRIPS, TYPE TM2S8-C10	
495	312105-0366		4	SCREW M6S ISO 4017 M6X12 A480	
500	312105-0368		8	SCREW M6S ISO 4017 M6X16 A480	
510	312105-0372		6	SCREW M6S ISO 4017 M6X25 A480	
520	312105-0449		4	SCREW M6S ISO 4017 M8X16 A480	
525	312105-0451		2	SCREW M6S ISO 4017 M8X20 A480	
530	312105-0453		18	SCREW M6S ISO 4017 M8X25 A480	
540	312105-0455		3	SCREW M6S ISO 4017 M8X30 A480	
550	312105-0493		4	SCREW M6S ISO 4017 M10X25 A480	
580	312125-0226		12	SCREW ISO 1207 M3X12 A4	
590	315106-0124		12	WASHER ISO 7089-3-200 HV A4	
600	312605-0316		10	HEXAGON NUT, M6M M6 A280	
610	312605-0318		20	HEXAGON NUT, M6M M8 A280	
660	315105-0153		28	WASHER BRB 6,4X12 RFR	
670	315105-0165		47	WASHER BRB 8,4X16 RFR	
700	342722-0205		4	STRAIGHT COUPLING D=8-G1/4"	
760	90068-0016		2	FOOT, 3 LEGS. NO 15511	
770	90458-2581		6	FOOT PLATE, M50-16-70	
840	90424-0087		4	AIR NOZZLE	
W51B1020	90459-5529		1	PH.CELL E3Z-T86A, SENDER+RECIEVER	
W51B1030	90459-5529		1	PH.CELL E3Z-T86A, SENDER+RECIEVER	
W51B1040	90459-5529		1	PH.CELL E3Z-T86A, SENDER+RECIEVER	
W51W1120	351309-0100		1	ACTUATOR/SENSOR CABLE PRKT 4-07/10M	
W51W1130	351309-0100		1	ACTUATOR/SENSOR CABLE PRKT 4-07/10M	
W51W1140	351309-0100		1	ACTUATOR/SENSOR CABLE PRKT 4-07/10M	
W51X1120	90459-6586		1	ACT/SENS.Y-CABLE, ASBN 2-PRKMV 4-07/0,6M	
W51X1130	90459-6586		1	ACT/SENS.Y-CABLE, ASBN 2-PRKMV 4-07/0,6M	
W51X1140	90459-6586		1	ACT/SENS.Y-CABLE, ASBN 2-PRKMV 4-07/0,6M	

Machine Type | Group Description | Used-In | Group Number | Page No

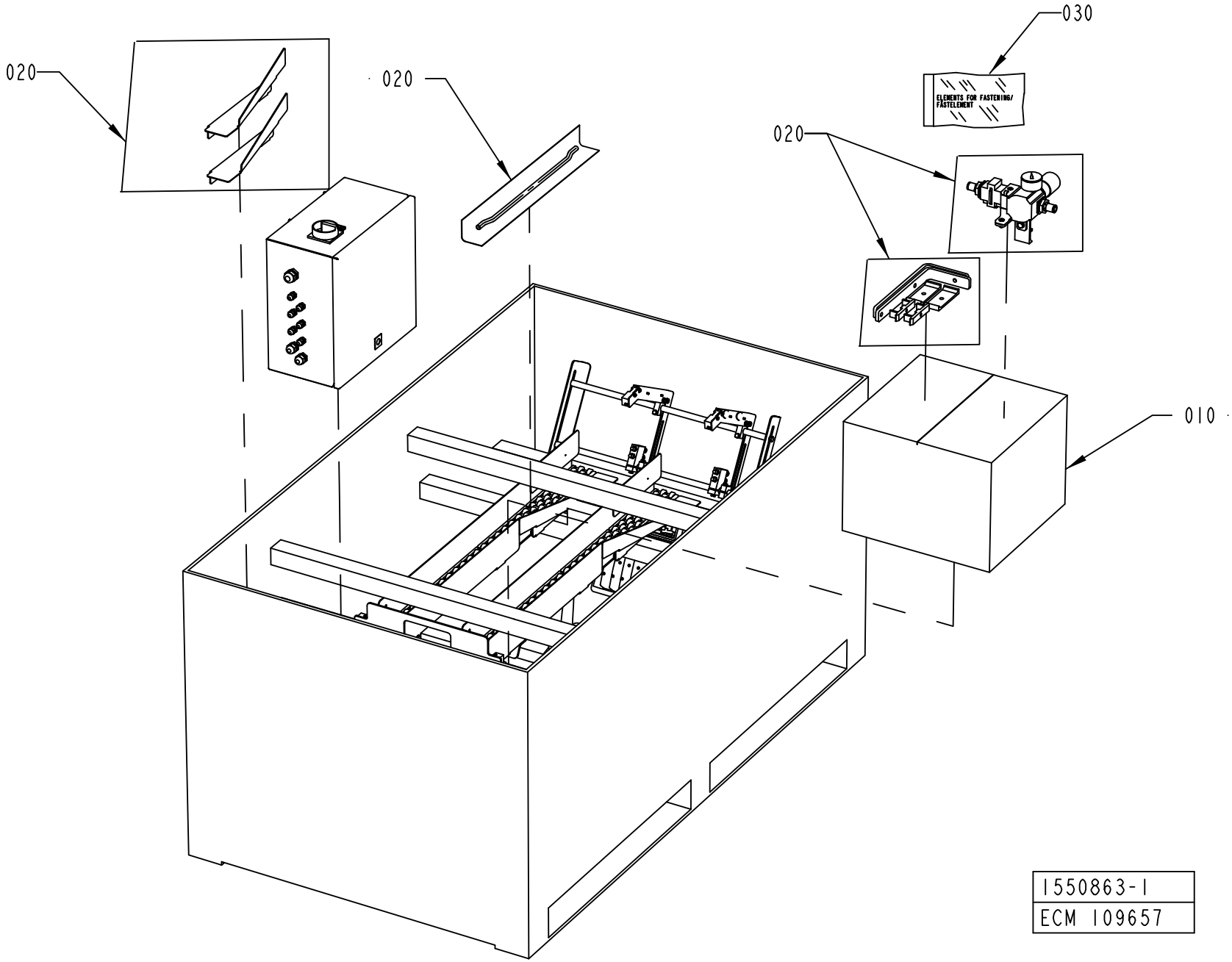
030
ELEMENTS FOR FASTENING/
FÄSTELEMENT
020
020
020
010
1550863-1
ECM 109657

ECM: 111797 - 20030211
Group number: 1550863-0100
Assembly Drawing: 1550863-1_1_AA

Pos	Part No	UN	Qty	Description	Page No
-					
010	1359473-0000		1	CORRUGATED CARDBOARD BOX	
020	90003-0474		1	PACKING	
030	90003-0019		1	BAG	

Pos	Part No	UN	Qty	Description	Page No

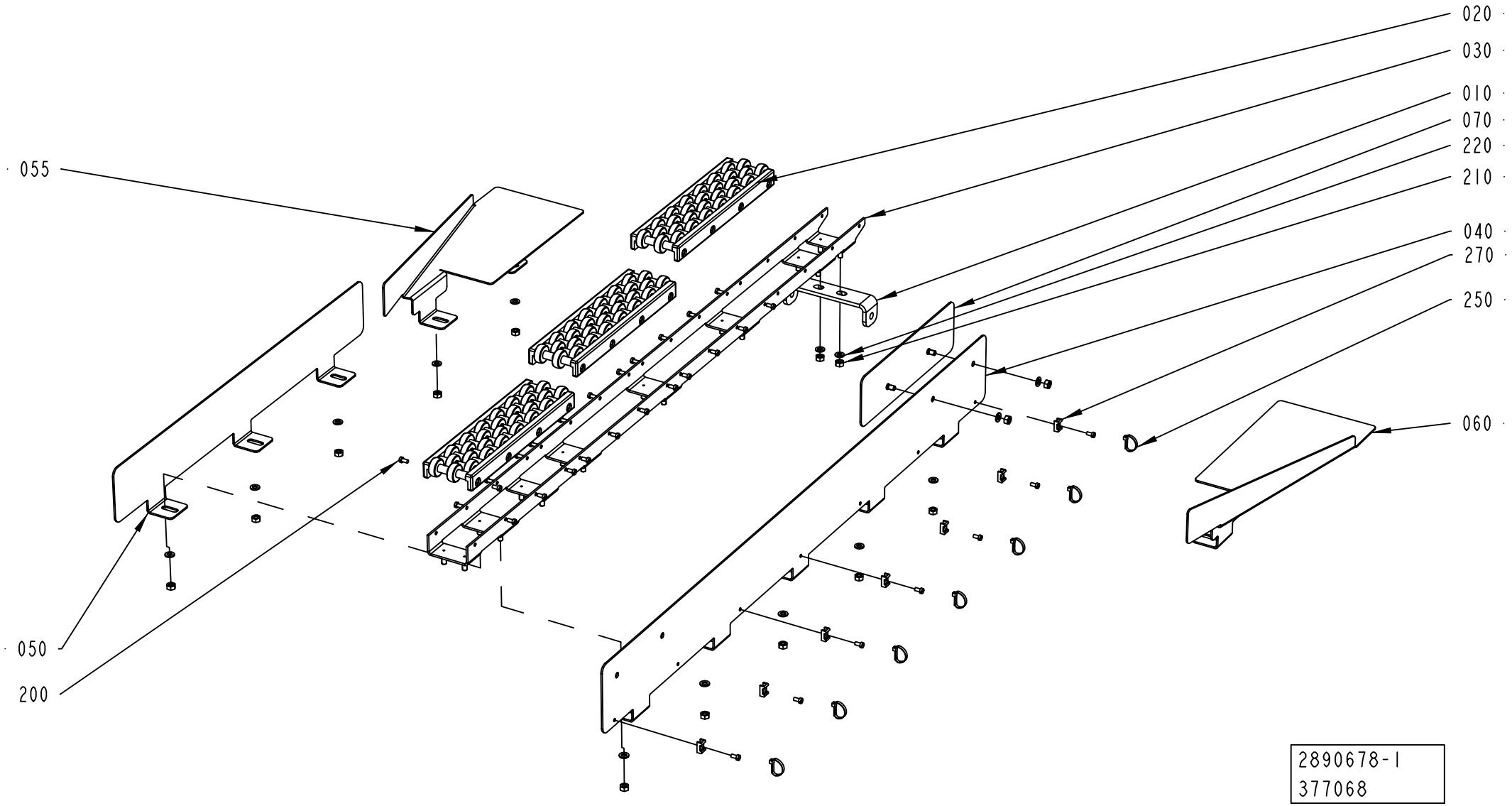
020
030
010
070
220
210
040
270
250
060
055
050
200
2890678-1
377068

ECM: 378855 - 20081130
Group number: 2890678-0100
Assembly Drawing: 2890678-1_1_AB

Pos	Part No	UN	Qty	Description	Page No
-					
010	1550179-0000		1	BOW CLAMP	
020	1550233-0000		3	ROLLER UNIT	
030	1550234-0000		1	CHUTE	
040	1550236-0000		1	SIDE PLATE	
050	1550237-0000		1	SIDE PLATE	
055	2890677-0000		1	SLIDE SHEET	
060	2877645-0000		1	SLIDE SHEET	
070	1550286-0000		1	PLATE	
200	312125-0287		31	SCREW ISO 1207 M4X8 A4	
210	312605-0316		14	HEXAGON NUT, M6M M6 A280	
220	315105-0153		14	WASHER BRB 6,4X12 RFR	
250	352113-0101		7	CABLE TIE, BLACK 92X2,5 MM	
270	352113-0205		7	ANCHOR PLATES FOR STRIPS, TYPE TM2S8-C10	

Pos	Part No	UN	Qty	Description	Page No

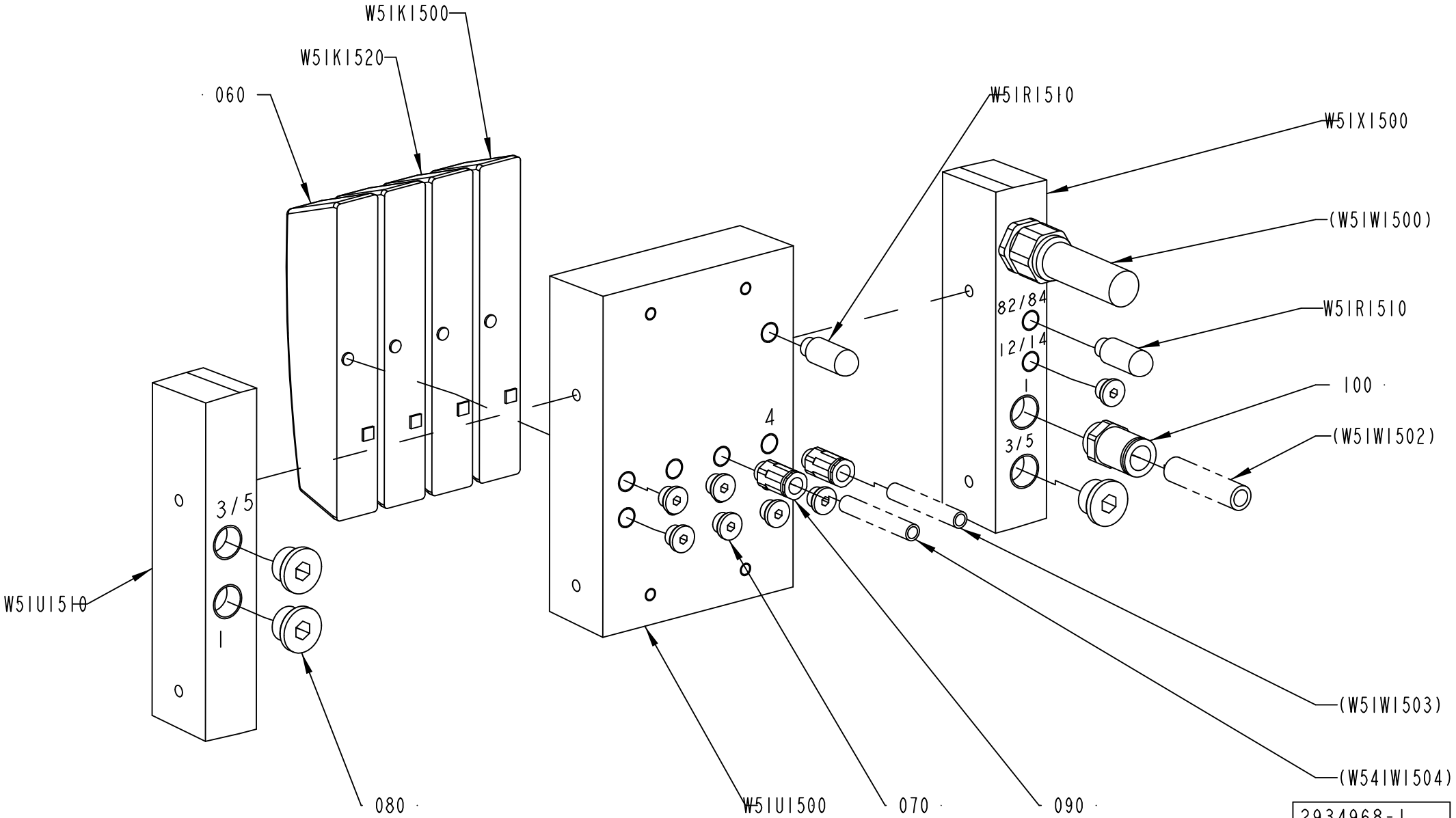

2934968-1
ECM 399024

ECM: 405064 - 20081201
Group number: 2934968-0100
Assembly Drawing: 2934968-1_1_AB

Pos	Part No	UN	Qty	Description	Page No
-					
060	90458-1215		2	COVER PLATE FOR EMPTY VALVE POSITION	
070	342713-0209		7	PLUG (QUANT.MINIMA= 10PC).	
080	342713-0211		3	PLUG, EXT THREAD HEX SOCKET 8638-00-380	
090	342722-0204		2	PIPE COUPLING	
100	342722-0210		1	STRAIGHT COUPLING, D=12 MM - G3/8"	
W51K1500	90458-1194		1	MONOSTABLE VALVE 5/2	
W51K1520	90458-1194		1	MONOSTABLE VALVE 5/2	
W51R1500	90328-0047		1	SILENCER G1/8"	
W51R1510	90328-0047		1	SILENCER G1/8"	
W51U1500	90458-1204		1	BASIC SUB-BASE 4 VALVES, CDVI5.0-GB4-MP	
W51U1510	90458-1213		1	RIGHT ENDPLATE INTERNAL PILOT AIR	
W51X1500	90458-1211		1	LEFT ENDPLATE INCL. 5M CABLE	

Pos	Part No	UN	Qty	Description	Page No

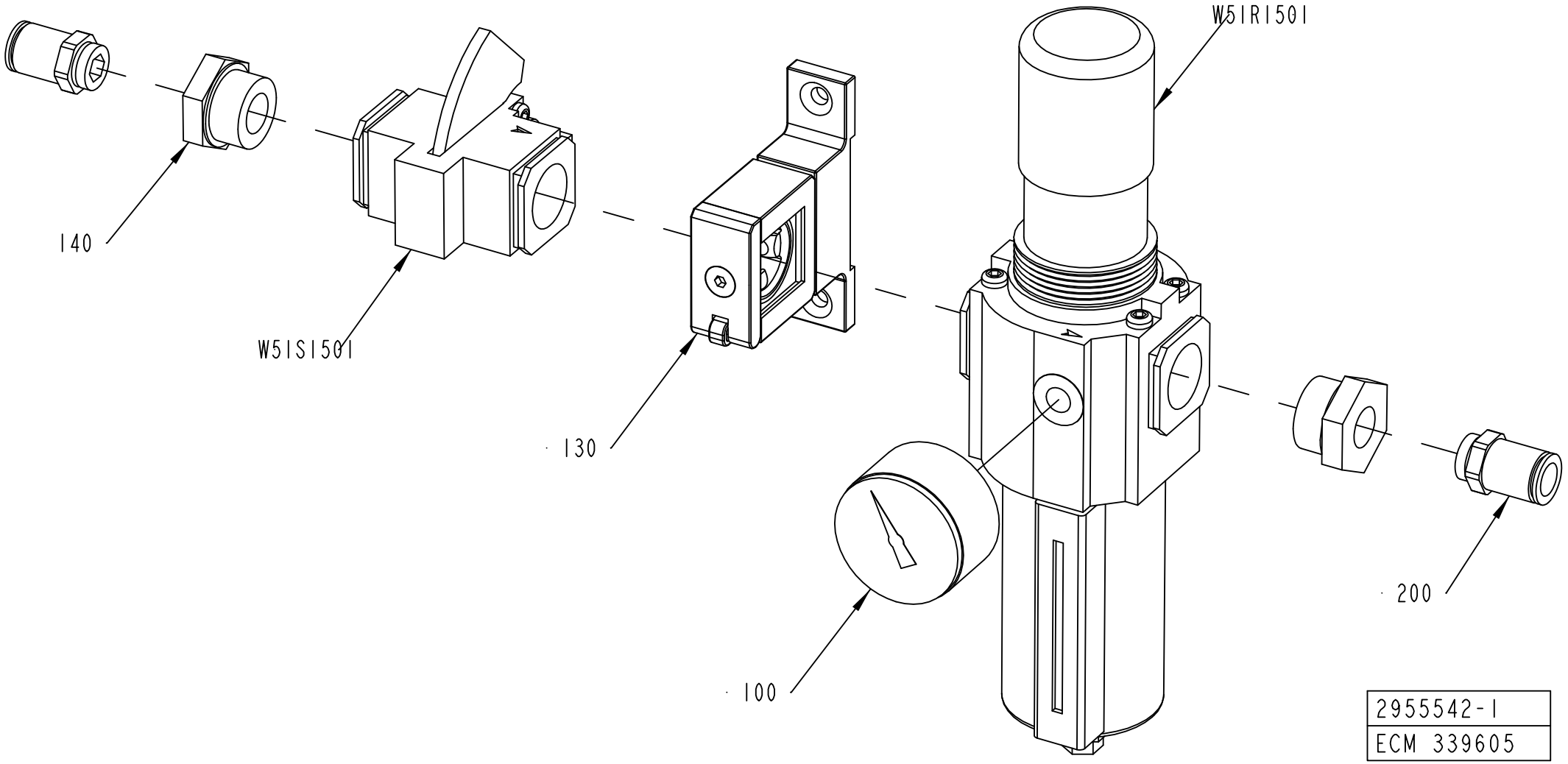
W5IR150I
140
W5IS150I
130
100
200
2955542-1
ECM 339605

ECM: 343341 - 20070704
Group number: 2955542-0100
Assembly Drawing: 2955542-1_1_AA

Pos	Part No	UN	Qty	Description	Page No
-					
100	90043-0135		1	PRESSURE GAUGE 10 BAR	
130	90113-0449		1	QUICK CLAMP WITH BRACKET, 4314-52	
140	90224-0054		2	REDUCER, ART.NO RMM 3438	
200	342722-0210		2	STRAIGHT COUPLING, D=12 MM - G3/8"	
W51R1501	90113-0141		1	FILTER REGULATOR 0-10 BAR 40 MICRON	
	90113-0452		*1*	*FILTER ELEMENT 40 MICRON, 4338-05*	
W51S1501	90113-0137		1	SHUT OFF VALVE G3/4, T74T-6GA-P1N	

Pos	Part No	UN	Qty	Description	Page No

HOSE INSTALLATION

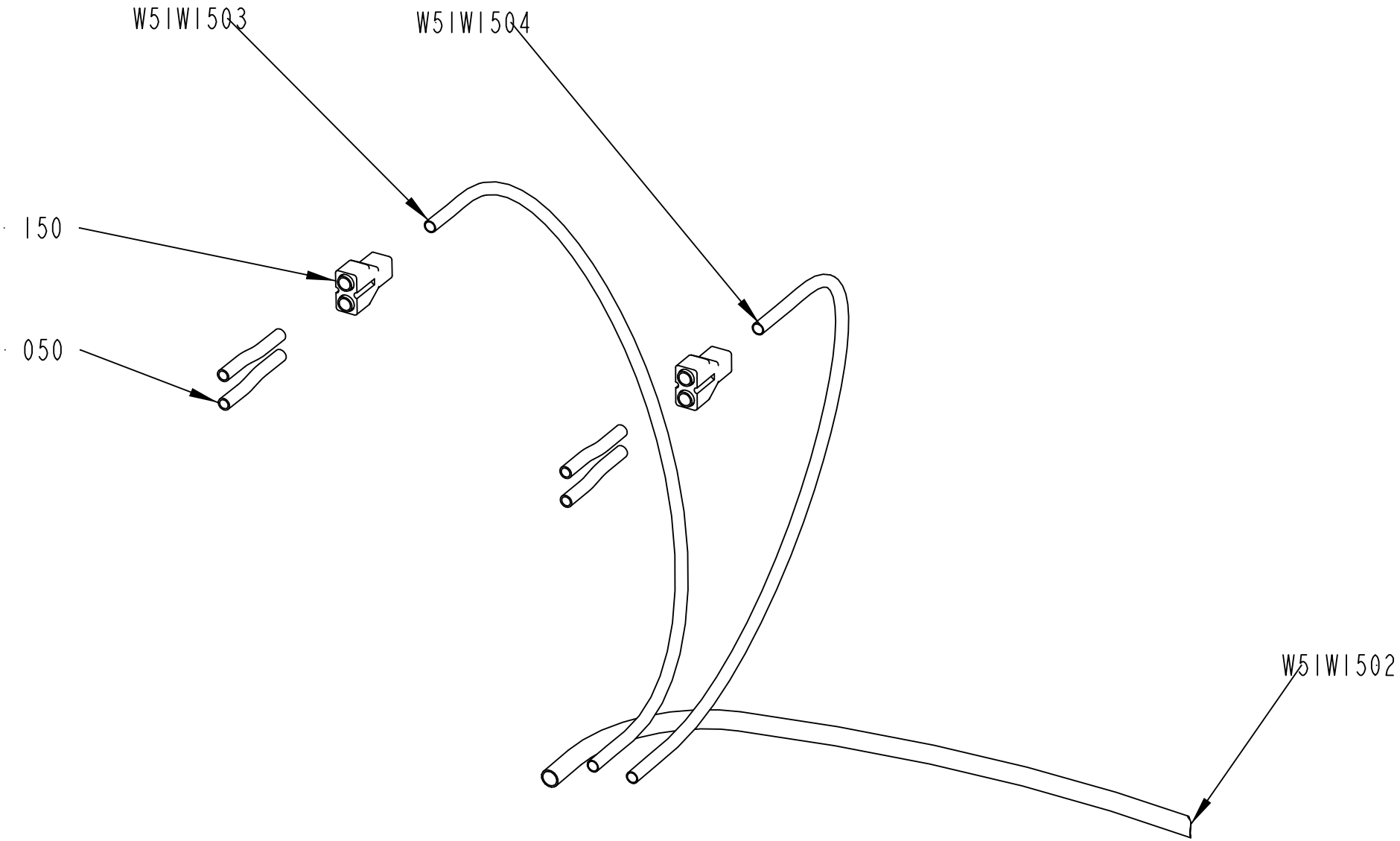

ECM: 405061 - 20081201
Group number: 2956750-0100
Assembly Drawing: 2956750-1_1_AB

Pos	Part No	UN	Qty	Description	Page No
-					
050	90166-0013	MM	240	TUBE 8 MM PA BLUE	
150	90055-0101		2	Y-CONNECTION, 8-8	
W51W1502	90166-0195	MM	1000	TUBE 12 MM PA BLUE	
W51W1503	90166-0013	MM	300	TUBE 8 MM PA BLUE	
W51W1504	90166-0013	MM	300	TUBE 8 MM PA BLUE	

Pos	Part No	UN	Qty	Description	Page No

LEG,CONVEYOR

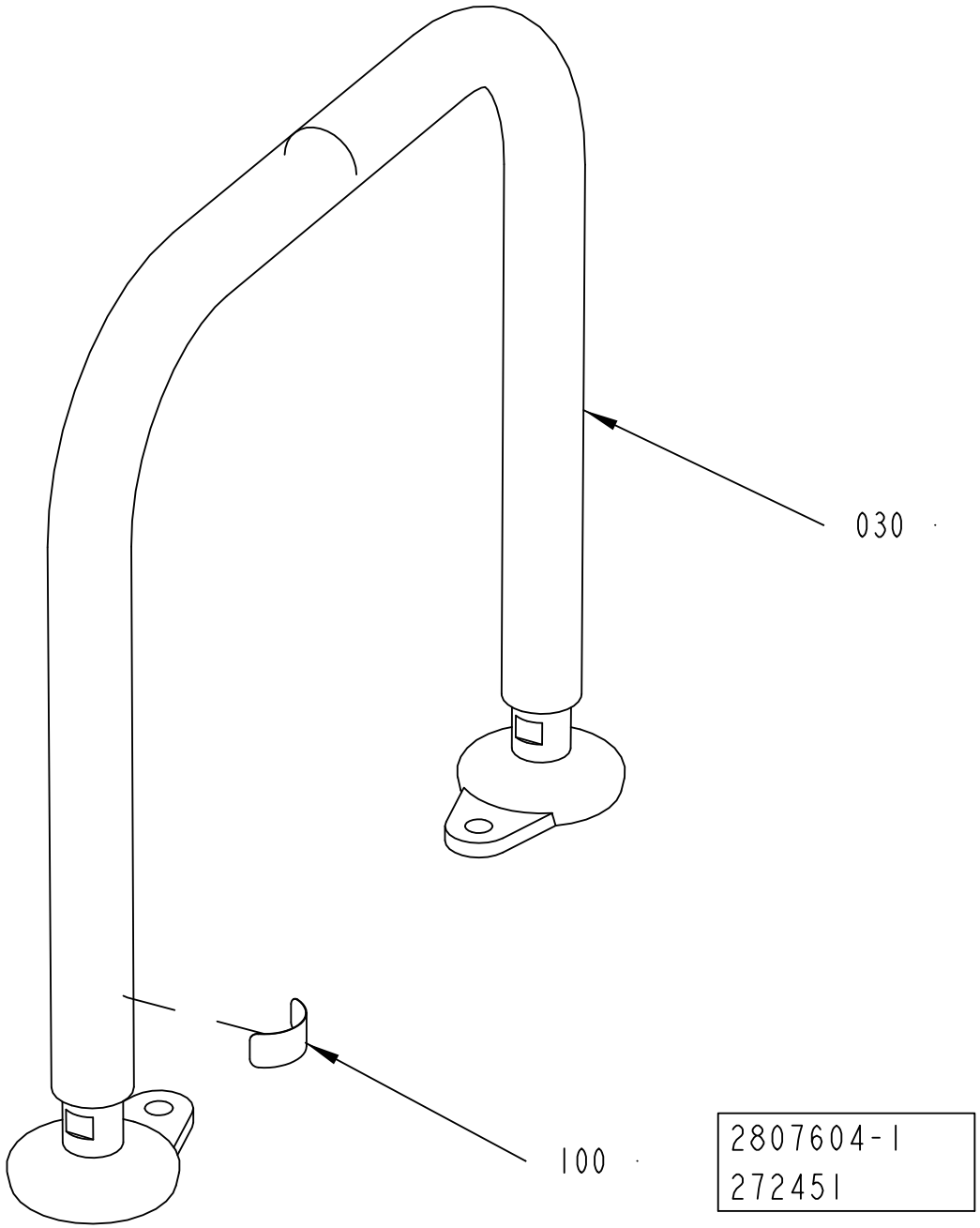

ECM: 272451 -
Group number: 2807604-0101
Assembly Drawing: 2807604-1_1_AA

Pos	Part No	UN	Qty	Description	Page No
-					
030	2807614-0000		1	LEG,CONVEYOR	
100	1086870-0000		1	SIGN	

Pos	Part No	UN	Qty	Description	Page No

DRIVE AND END UNIT,RH

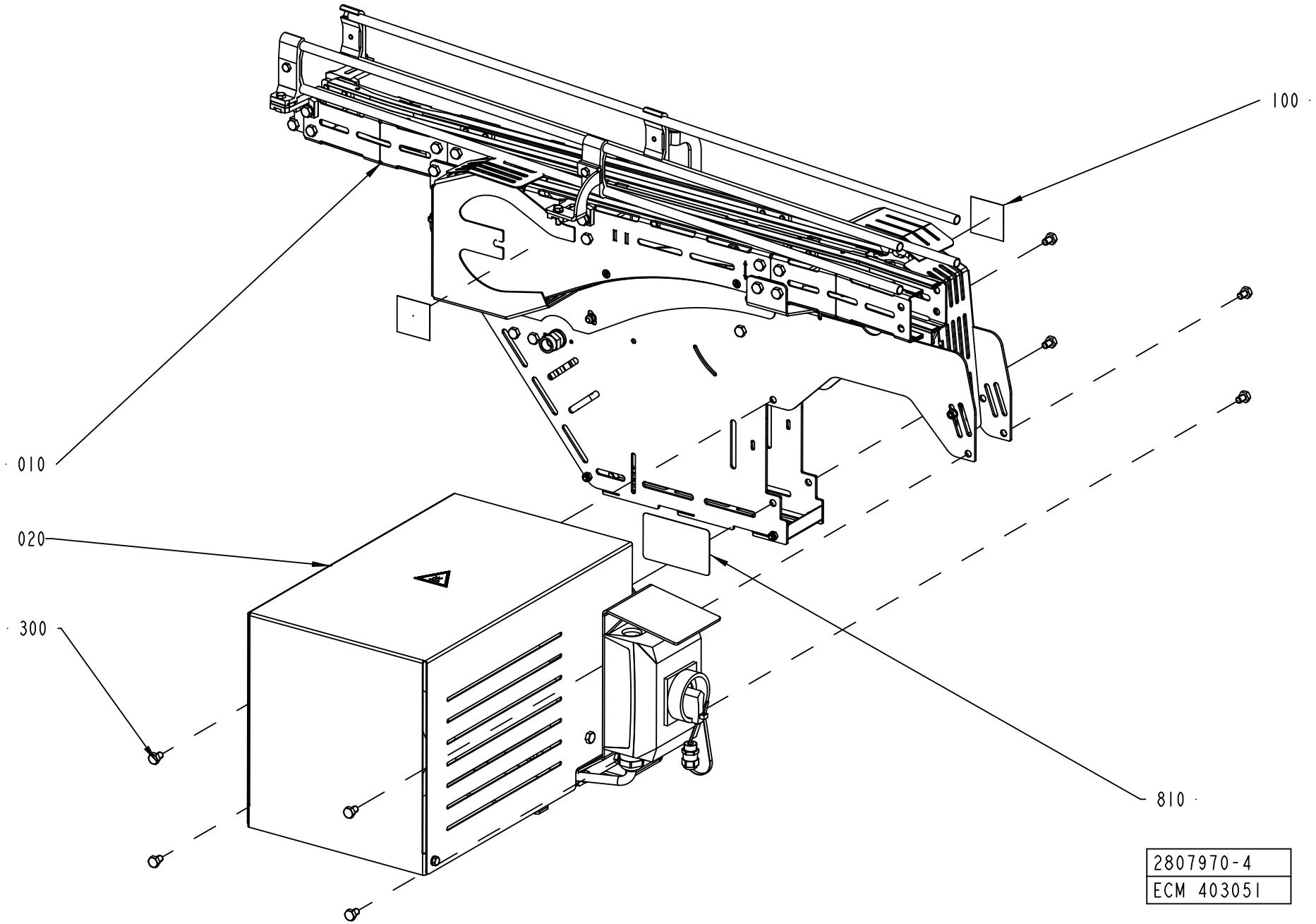

ECM: 403051 -
Group number: 2807970-0207
Assembly Drawing: 2807970-4_1_AA

Pos	Part No	UN	Qty	Description	Page No
PC025-075 50HZ 25M/MIN, PC025-075 50HZ 21M/MIN, PC025-075 50HZ 15M/MIN, PC025-075 60HZ 15M/MIN, PC025-075 60HZ 21M/MIN, PC025-075 60HZ 25M/MIN					
820	2590241-0100		1	PACKING DESCRIPTION	**11-83**
PC040-100 50HZ 15M/MIN, PC040-100 50HZ 21M/MIN, PC040-100 50HZ 25M/MIN, PC040-100 50HZ 33M/MIN, PC040-100 50HZ 39M/MIN, PC040-100 60HZ 15M/MIN, PC040-100 60HZ 21M/MIN, PC040-100 60HZ 25M/MIN, PC040-100 60HZ 33M/MIN, PC040-100 60HZ 39M/MIN					
820	2590241-0100		1	PACKING DESCRIPTION	**11-83**
Common Parts					
010	2763624-0100		1	DRIVE AND END UNIT	**11-85, 11-87, 11-89**
020	2590220-0300		1	MOTOR UNIT	**11-121**
100	90459-7584		2	PROHOBITION SIGN ISO, DO NOT REACH IN	
300	312105-0447		8	SCREW M6S ISO 4017 M8X12 A480	
810	1359055-0000		1	SIGN	
821	2590231-0100		1	PACKING DESCRIPTION	**11-125**

Pos	Part No	UN	Qty	Description	Page No

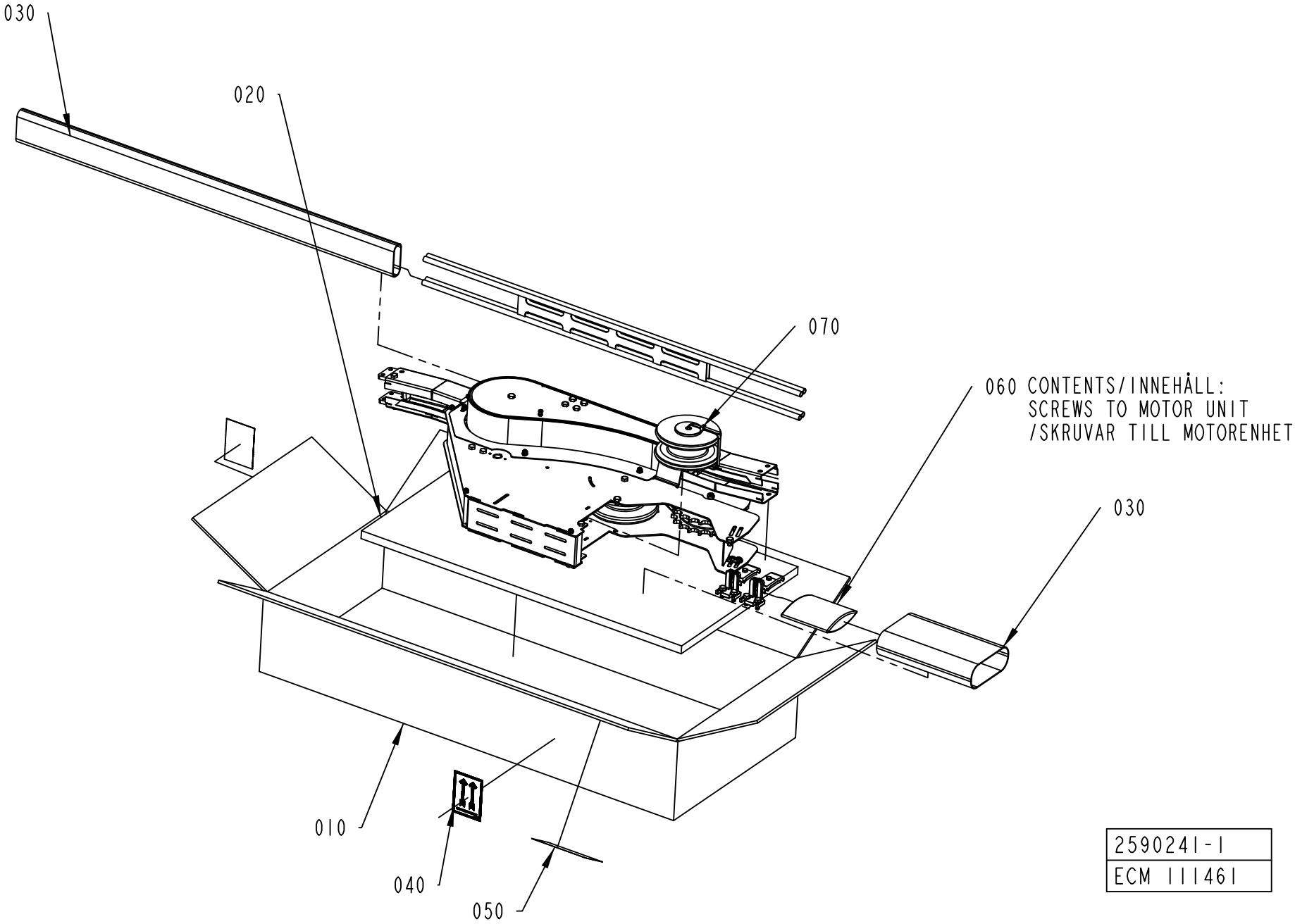
030
020
070
060 CONTENTS/INNEHÅLL:
SCREWS TO MOTOR UNIT
/SKRUVAR TILL MOTORENHET
030
010
040
050
2590241-1
ECM 111461

ECM: 397180 - 20090505
Group number: 2590241-0100
Assembly Drawing: 2590241-1_1_AA

Pos	Part No	UN	Qty	Description	Page No
-					
010	2590242-0000		1	CORRUGATED CARDBOARD BOX	
020	3002545-0000		4	SUPPORT BLOCK	
030	90003-0474		1	PACKING	
040	543267-0000		2	LABEL TAPE	
050	1086871-0000		1	LABEL TAPE	
060	90003-0019		1	BAG	
070	90182-0008		1	CLIP STRIP, 376X7,6 MM	

Pos	Part No	UN	Qty	Description	Page No

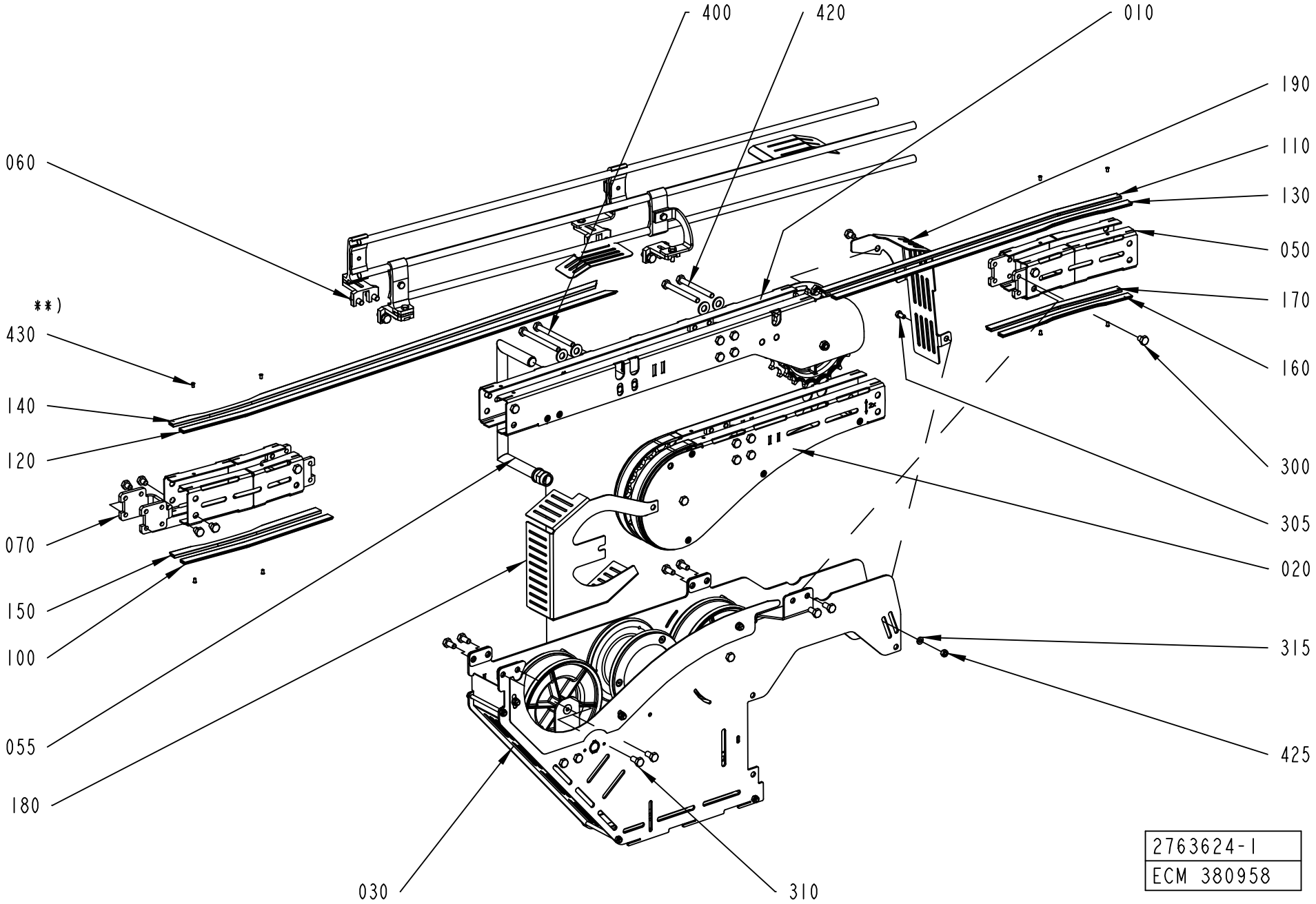
400
420
010
190
110
130
050
170
160
300
305
020
315
425
060
**)
430
140
120
070
150
100
055
180
030
310
2763624-1
ECM 380958

ECM: 393415 - 20090817
Group number: 2763624-0100
Assembly Drawing: 2763624-1_1_AD

This list covers pages from 11-84 to 11-89

Pos	Part No	UN	Qty	Description	Page No
PC025-075 (See drawing on page: 11-88)					
060	3000423-0100		1	RAILING KIT	**11-91**
PC040-100 (See drawing on page: 11-84)					
060	3021349-0100		1	RAILING KIT	**11-99**
PC065-160 (See drawing on page: 11-86)					
060	2763429-0100		1	RAILING KIT	**11-105**
Common Parts					
010	2763639-0100		1	INFEED	**11-107**
020	2763641-0100		1	CONVEYOR BODY	**11-109**
030	2775582-0100		1	CHAIN TENSIONER	**11-111**
050	2763636-0100		2	SLIDING CURVE	**11-115**
055	2807685-0100		1	WASHPOINT	**11-117**
070	2561206-0000		1	SPACER	
100	1550595-2950		1	SLIDING STRIP	
110	1550595-6100		1	SLIDING STRIP	
120	1550595-8853		1	SLIDING STRIP	
130	2699585-0608		1	SLIDING STRIP	
140	2699585-0880		1	SLIDING STRIP	
150	2699585-0293		1	SLIDING STRIP	
160	2699585-0263		1	SLIDING STRIP	
170	1550595-2650		1	SLIDING STRIP	
180	3010553-0000		1	CHAIN GUARD	
190	2871835-0000		1	PROTECTION	
300	90459-4735		9	SCREW M6S ISO 4017 M8X10 A480	
305	312105-0366		1	SCREW M6S ISO 4017 M6X12 A480	
310	312105-0449		8	SCREW M6S ISO 4017 M8X16 A480	
315	315105-0153		1	WASHER BRB 6,4X12 RFR	
320	315105-0165		2	WASHER BRB 8,4X16 RFR	
400	312105-0469		2	SCREW M6S ISO 4014 M8X90 A480	
420	312105-0467		2	SCREW M6S ISO 4014 M8X80 A480	
425	312605-0316		1	HEXAGON NUT, M6M M6 A280	
430	90600-6183		8	TUBULAR RIVET 3,5X6,2	

Pos	Part No	UN	Qty	Description	Page No

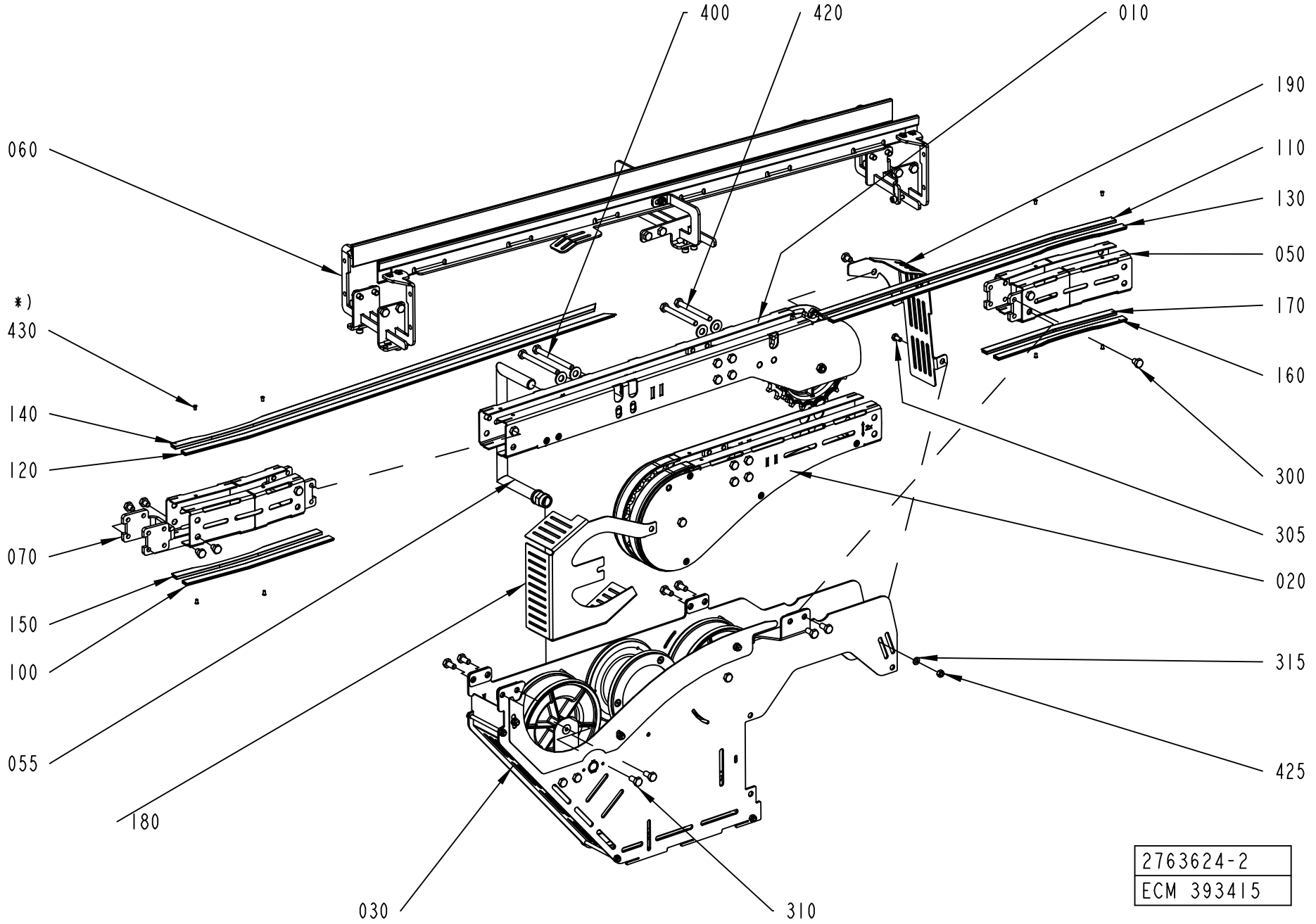
400
420
010
190
060
110
130
050
*)
430
170
160
140
120
300
305
070
020
150
315
100
055
425
180
030
310
2763624-2
ECM 393415

ECM: 393415 - 20090817
Group number: 2763624-0100
Assembly Drawing: 2763624-2_1_AB

This list covers pages from 11-84 to 11-89

Pos	Part No	UN	Qty	Description	Page No
PC025-075 (See drawing on page: 11-88)					
060	3000423-0100		1	RAILING KIT	**11-91**
PC040-100 (See drawing on page: 11-84)					
060	3021349-0100		1	RAILING KIT	**11-99**
PC065-160 (See drawing on page: 11-86)					
060	2763429-0100		1	RAILING KIT	**11-105**
Common Parts					
010	2763639-0100		1	INFEED	**11-107**
020	2763641-0100		1	CONVEYOR BODY	**11-109**
030	2775582-0100		1	CHAIN TENSIONER	**11-111**
050	2763636-0100		2	SLIDING CURVE	**11-115**
055	2807685-0100		1	WASHPOINT	**11-117**
070	2561206-0000		1	SPACER	
100	1550595-2950		1	SLIDING STRIP	
110	1550595-6100		1	SLIDING STRIP	
120	1550595-8853		1	SLIDING STRIP	
130	2699585-0608		1	SLIDING STRIP	
140	2699585-0880		1	SLIDING STRIP	
150	2699585-0293		1	SLIDING STRIP	
160	2699585-0263		1	SLIDING STRIP	
170	1550595-2650		1	SLIDING STRIP	
180	3010553-0000		1	CHAIN GUARD	
190	2871835-0000		1	PROTECTION	
300	90459-4735		9	SCREW M6S ISO 4017 M8X10 A480	
305	312105-0366		1	SCREW M6S ISO 4017 M6X12 A480	
310	312105-0449		8	SCREW M6S ISO 4017 M8X16 A480	
315	315105-0153		1	WASHER BRB 6,4X12 RFR	
320	315105-0165		2	WASHER BRB 8,4X16 RFR	
400	312105-0469		2	SCREW M6S ISO 4014 M8X90 A480	
420	312105-0467		2	SCREW M6S ISO 4014 M8X80 A480	
425	312605-0316		1	HEXAGON NUT, M6M M6 A280	
430	90600-6183		8	TUBULAR RIVET 3,5X6,2	

Pos	Part No	UN	Qty	Description	Page No

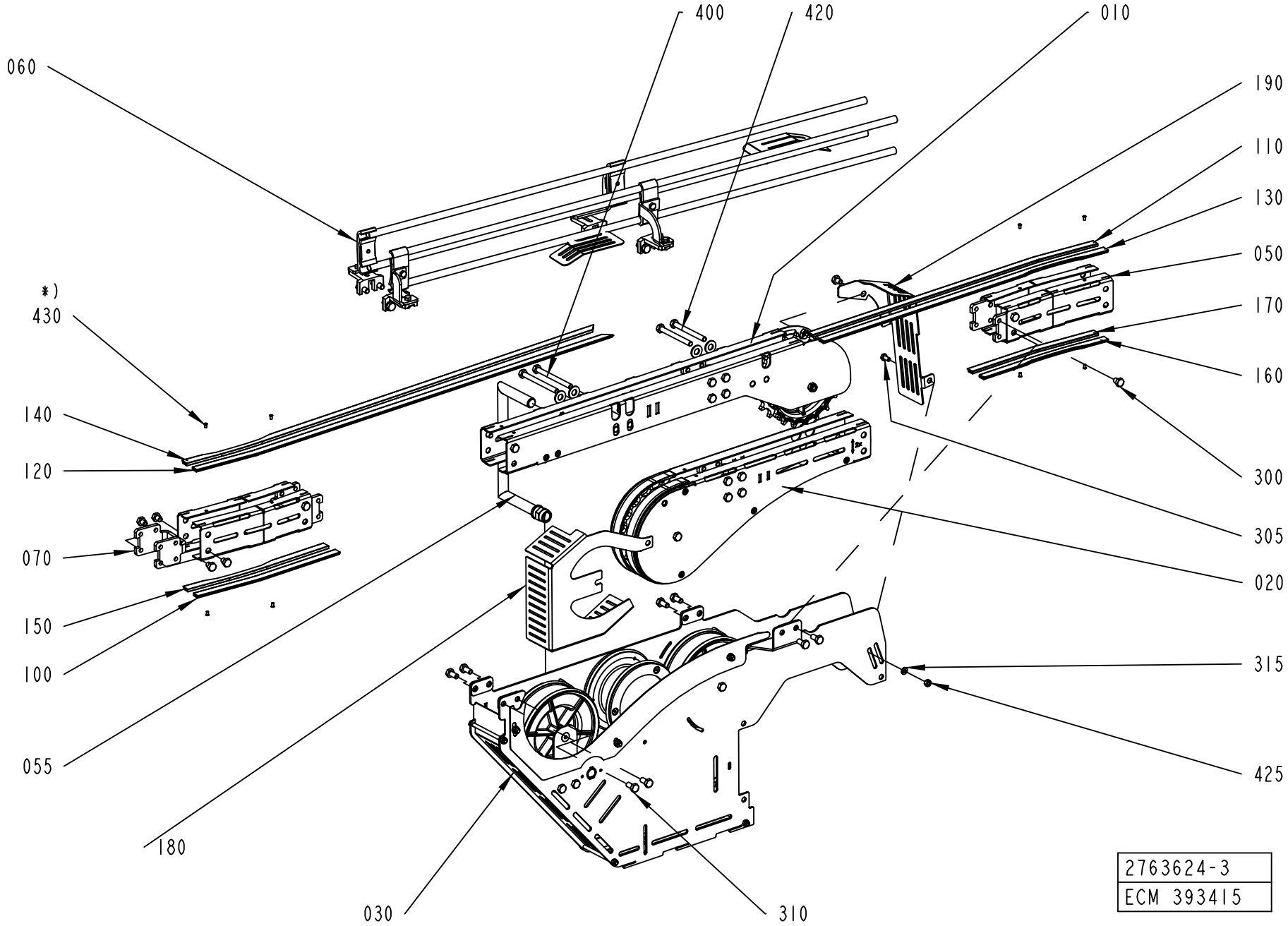
400
420
010
060
190
110
130
050
*)
430
170
160
140
120
300
305
070
020
150
100
315
055
425
180
030
310
2763624-3
ECM 393415

ECM: 393415 - 20090817
Group number: 2763624-0100
Assembly Drawing: 2763624-3_1_AB

This list covers pages from 11-84 to 11-89

Pos	Part No	UN	Qty	Description	Page No
PC025-075 (See drawing on page: 11-88)					
060	3000423-0100		1	RAILING KIT	**11-91**
PC040-100 (See drawing on page: 11-84)					
060	3021349-0100		1	RAILING KIT	**11-99**
PC065-160 (See drawing on page: 11-86)					
060	2763429-0100		1	RAILING KIT	**11-105**
Common Parts					
010	2763639-0100		1	INFEED	**11-107**
020	2763641-0100		1	CONVEYOR BODY	**11-109**
030	2775582-0100		1	CHAIN TENSIONER	**11-111**
050	2763636-0100		2	SLIDING CURVE	**11-115**
055	2807685-0100		1	WASHPOINT	**11-117**
070	2561206-0000		1	SPACER	
100	1550595-2950		1	SLIDING STRIP	
110	1550595-6100		1	SLIDING STRIP	
120	1550595-8853		1	SLIDING STRIP	
130	2699585-0608		1	SLIDING STRIP	
140	2699585-0880		1	SLIDING STRIP	
150	2699585-0293		1	SLIDING STRIP	
160	2699585-0263		1	SLIDING STRIP	
170	1550595-2650		1	SLIDING STRIP	
180	3010553-0000		1	CHAIN GUARD	
190	2871835-0000		1	PROTECTION	
300	90459-4735		9	SCREW M6S ISO 4017 M8X10 A480	
305	312105-0366		1	SCREW M6S ISO 4017 M6X12 A480	
310	312105-0449		8	SCREW M6S ISO 4017 M8X16 A480	
315	315105-0153		1	WASHER BRB 6,4X12 RFR	
320	315105-0165		2	WASHER BRB 8,4X16 RFR	
400	312105-0469		2	SCREW M6S ISO 4014 M8X90 A480	
420	312105-0467		2	SCREW M6S ISO 4014 M8X80 A480	
425	312605-0316		1	HEXAGON NUT, M6M M6 A280	
430	90600-6183		8	TUBULAR RIVET 3,5X6,2	

Pos	Part No	UN	Qty	Description	Page No

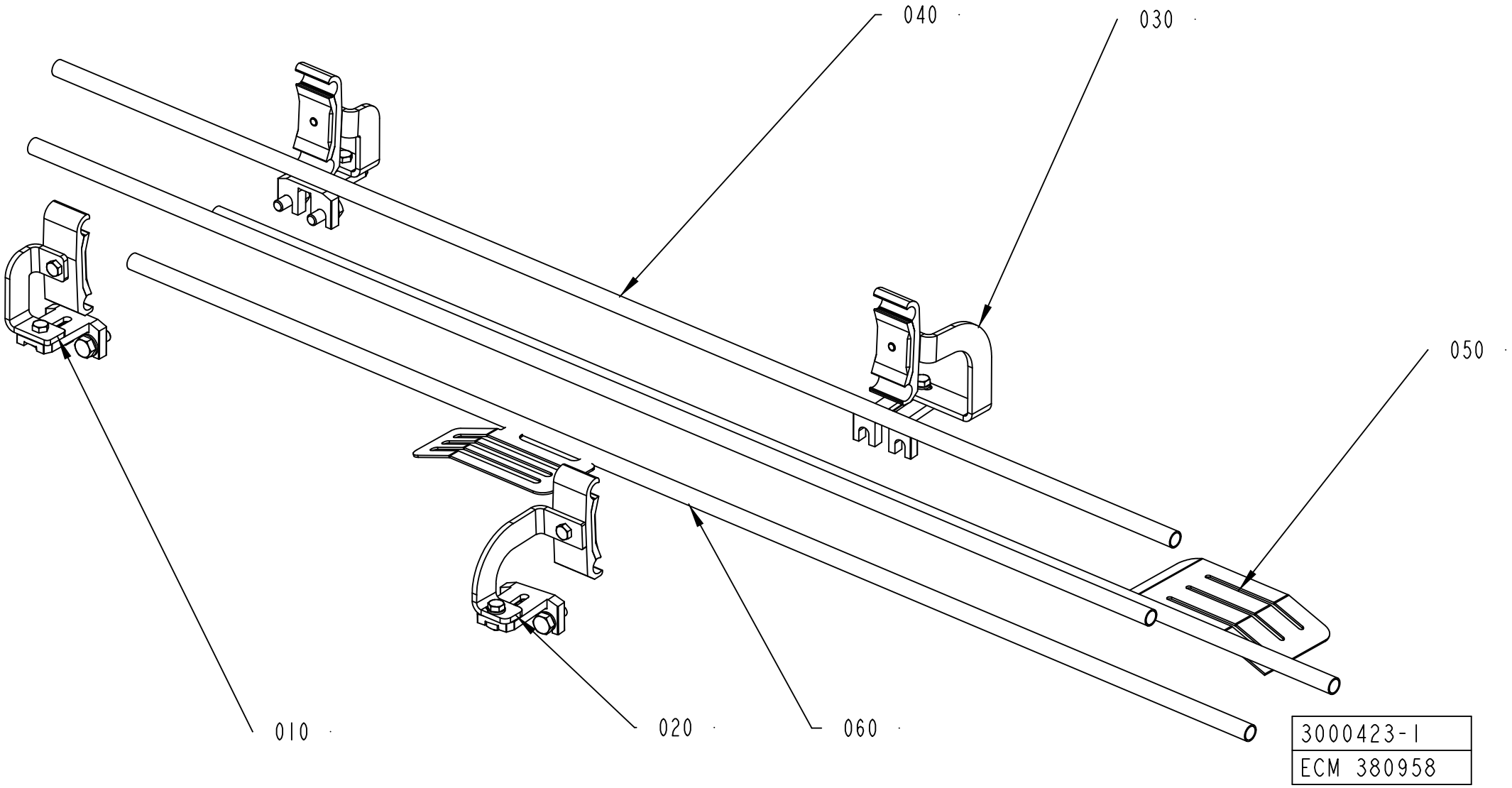
040
030
050
010
020
060
3000423-1
ECM 380958

ECM: 391327 - 20090602
Group number: 3000423-0100
Assembly Drawing: 3000423-1_1_AA

Pos	Part No	UN	Qty	Description	Page No
-					
010	2999197-0100		2	RAIL HOLDER	**11-93**
020	3019920-0100		1	RAIL HOLDER	**11-95**
030	3019921-0100		1	RAIL HOLDER	**11-97**
040	476221-0003		2	PIPE	
050	3021334-0000		1	RAILING	
060	3021335-0000		1	RAILING	

Pos	Part No	UN	Qty	Description	Page No

RAIL HOLDER

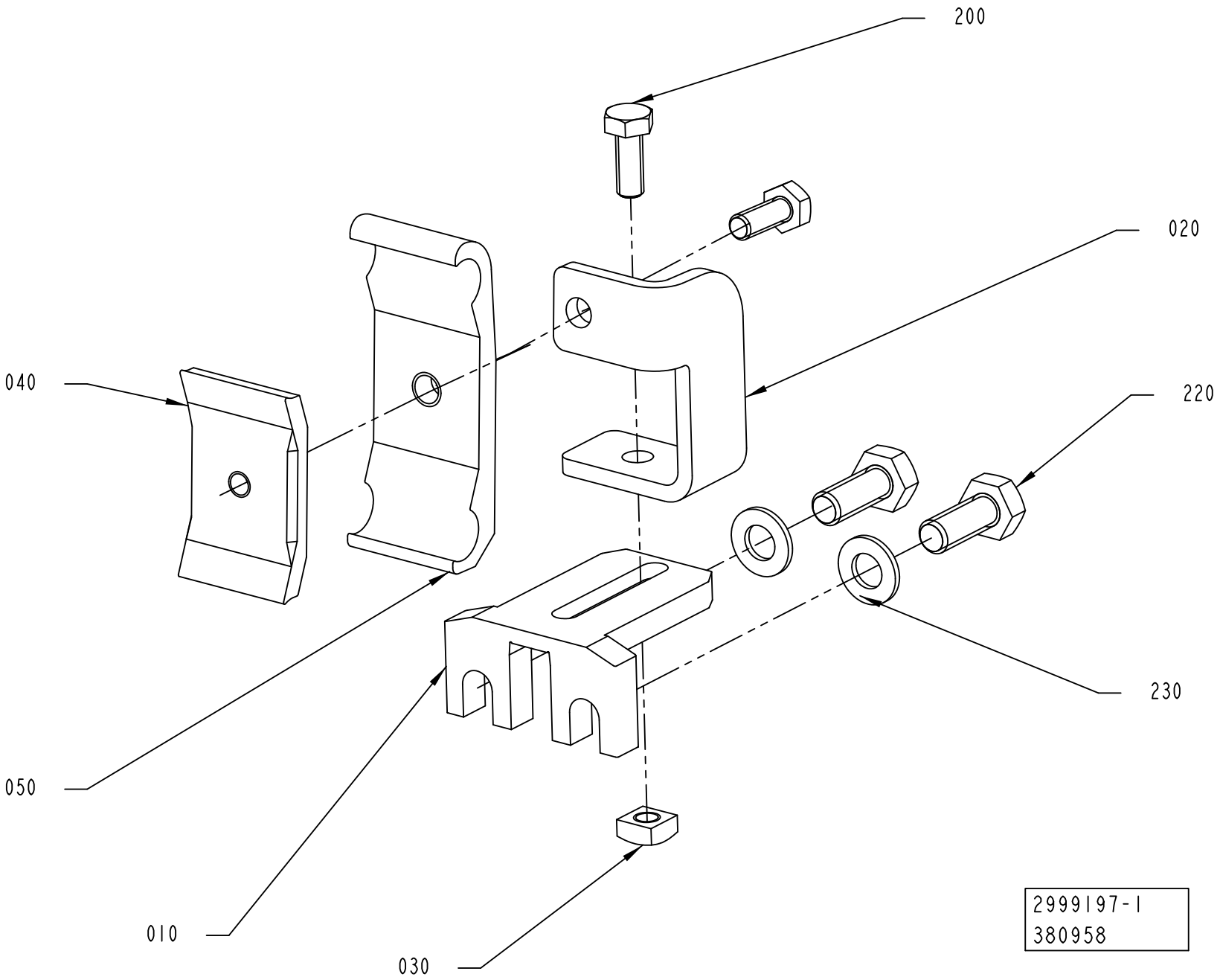

ECM: 436838 - 20100222
Group number: 2999197-0100
Assembly Drawing: 2999197-1_1_AA

Pos	Part No	UN	Qty	Description	Page No
-					
010	1550772-0000		1	HOLDER	
020	2998006-0000		1	RAIL HOLDER	
030	1359565-0000		1	NUT	
040	1366727-0000		1	CLAMP	
050	1366750-0000		1	HOLDER	
200	312105-0368		2	SCREW M6S ISO 4017 M6X16 A480	
220	312105-0451		2	SCREW M6S ISO 4017 M8X20 A480	
230	315105-0165		2	WASHER BRB 8,4X16 RFR	

Pos	Part No	UN	Qty	Description	Page No

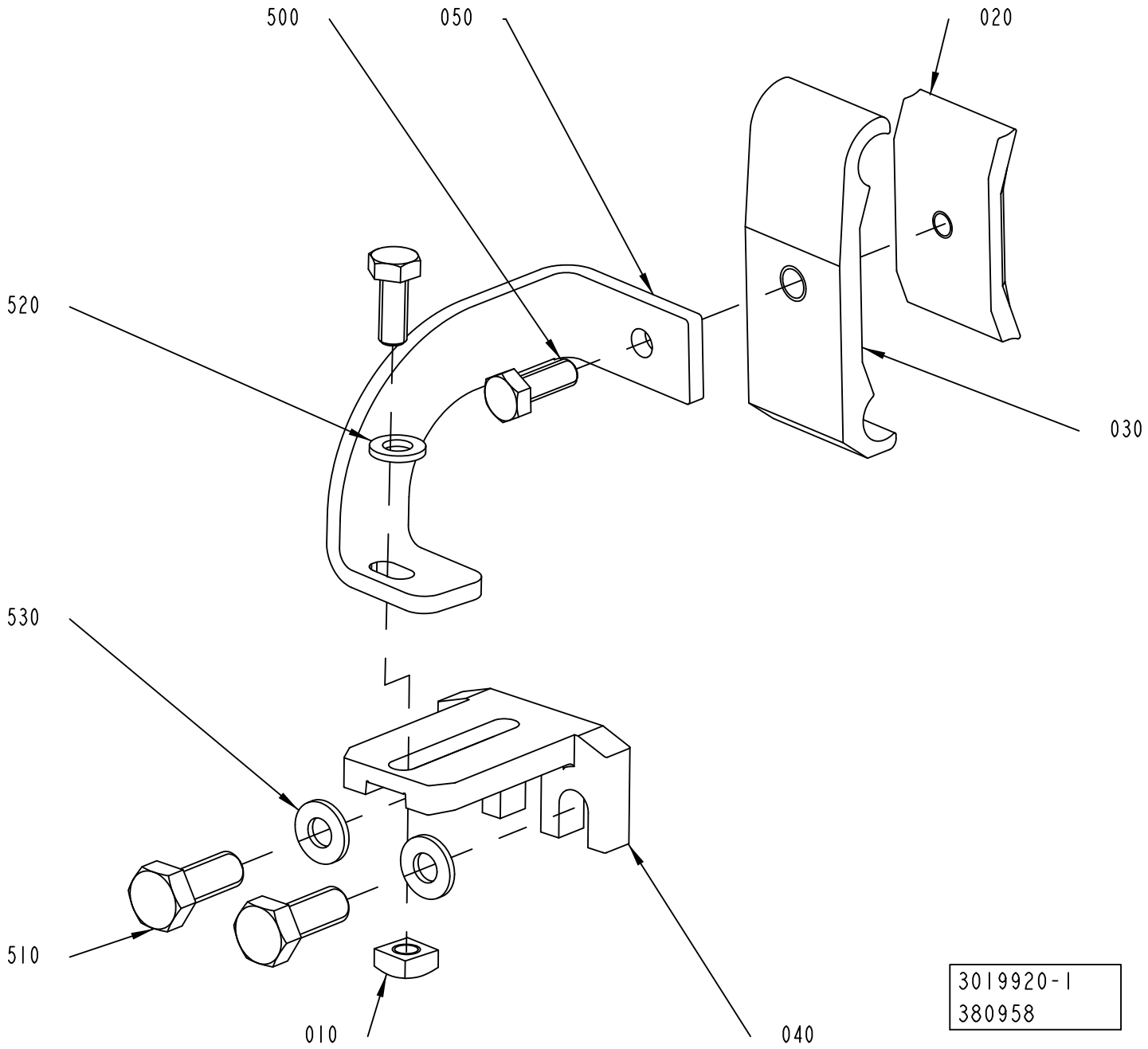
500
050
020
520
030
530
510
010
040
3019920-1
380958

ECM: 391326 - 20090602
Group number: 3019920-0100
Assembly Drawing: 3019920-1_1_AA

Pos	Part No	UN	Qty	Description	Page No
-					
010	1359565-0000		1	NUT	
020	1366727-0000		1	CLAMP	
030	1366750-0000		1	HOLDER	
040	1550772-0000		1	HOLDER	
050	3019922-0000		1	ANGLE BRACKET	
500	312105-0368		2	SCREW M6S ISO 4017 M6X16 A480	
510	312105-0451		2	SCREW M6S ISO 4017 M8X20 A480	
520	315105-0153		1	WASHER BRB 6,4X12 RFR	
530	315105-0156		2	WASHER BRB 6,7X14 RFR	

Pos	Part No	UN	Qty	Description	Page No

RAIL HOLDER

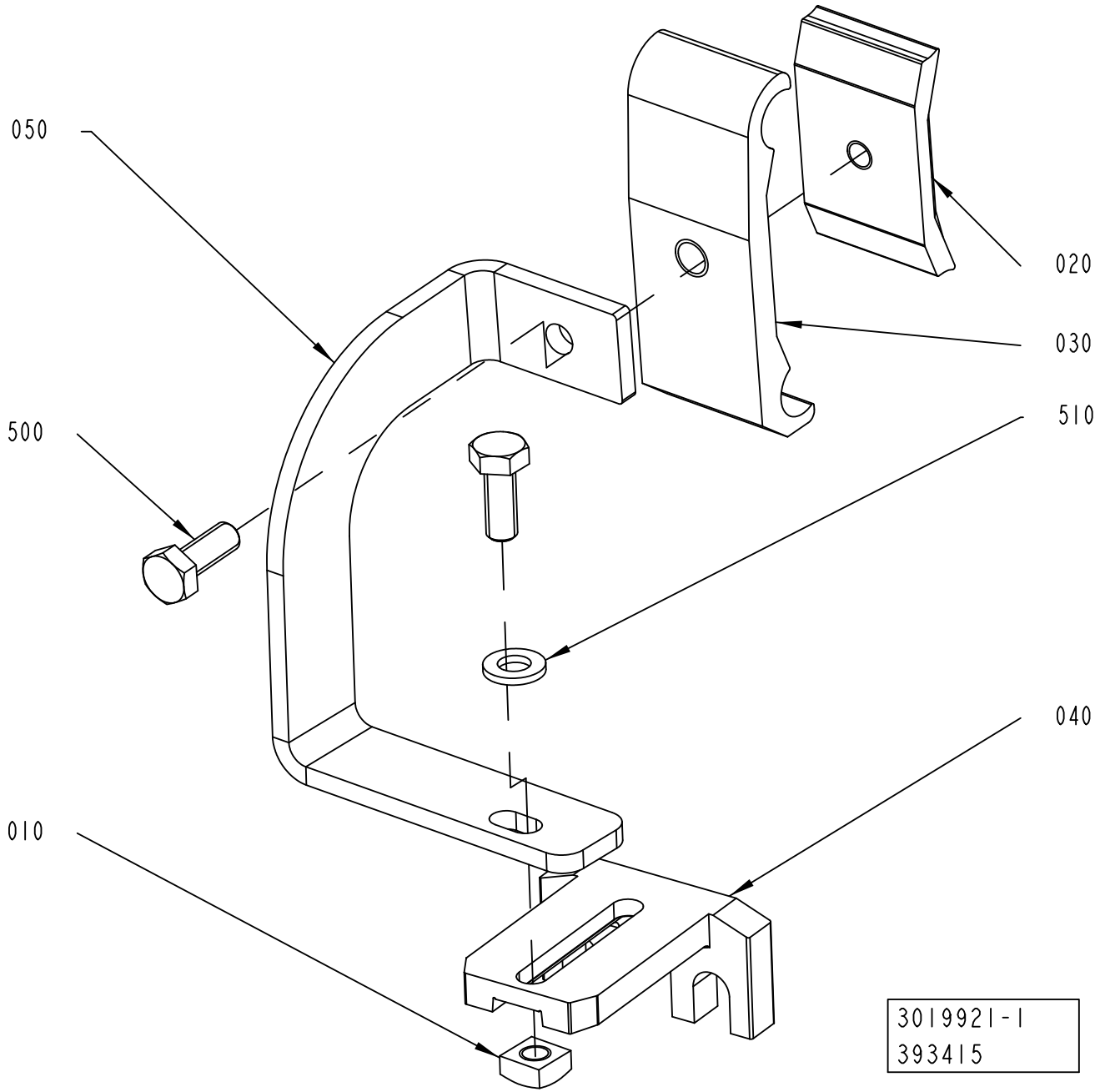

ECM: 395550 - 20090817
Group number: 3019921-0100
Assembly Drawing: 3019921-1_1_AB

Pos	Part No	UN	Qty	Description	Page No
-					
010	1359565-0000		1	NUT	
020	1366727-0000		1	CLAMP	
030	1366750-0000		1	HOLDER	
040	1550772-0000		1	HOLDER	
050	3019923-0000		1	ANGLE BRACKET	
500	312105-0368		2	SCREW M6S ISO 4017 M6X16 A480	
510	315105-0153		1	WASHER BRB 6,4X12 RFR	

Pos	Part No	UN	Qty	Description	Page No

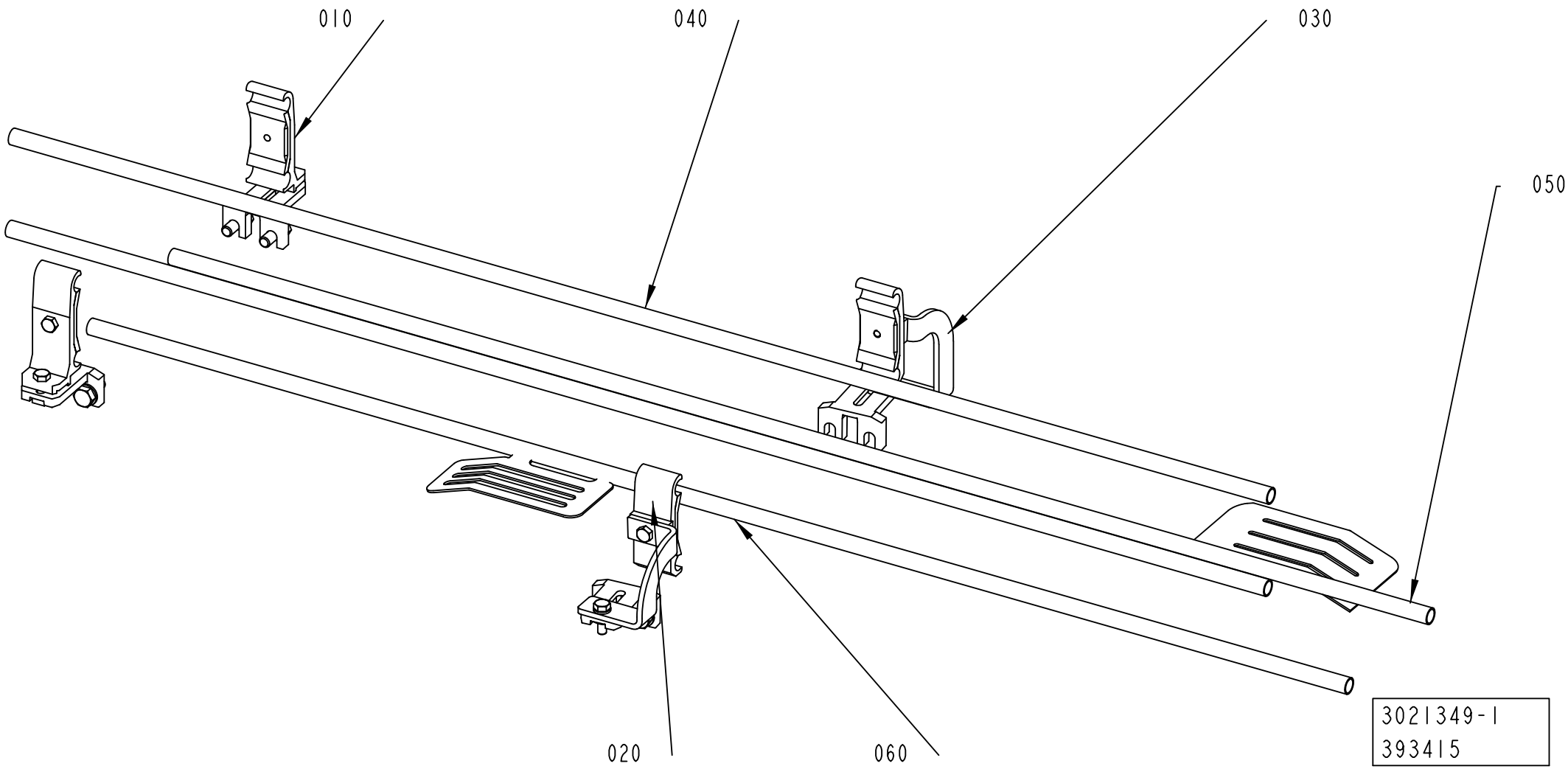
010
040
030
050
020
060
3021349-1
393415

ECM: 395561 - 20090817
Group number: 3021349-0100
Assembly Drawing: 3021349-1_1_AB

Pos	Part No	UN	Qty	Description	Page No
-					
010	1550743-0200		2	RAIL HOLDER	**5-73, 11-31**
020	3019534-0100		1	RAIL HOLDER	**11-101**
030	3019827-0100		1	RAIL HOLDER	**11-103**
040	476221-0003		2	PIPE	
050	3021334-0000		1	RAILING	
060	3021335-0000		1	RAILING	

Pos	Part No	UN	Qty	Description	Page No

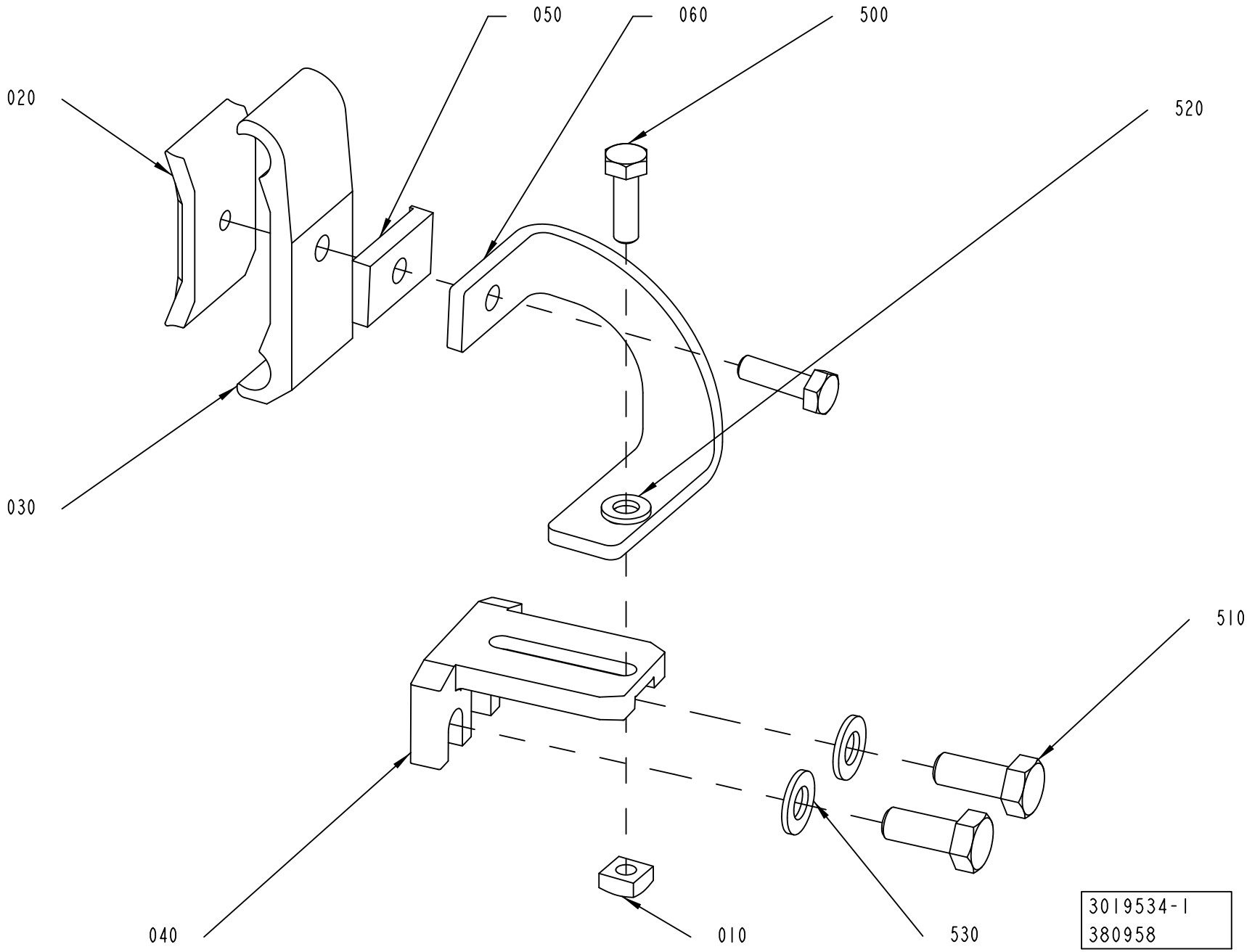
050
060
500
020
520
030
510
040
010
530
3019534-1
380958

ECM: 391324 - 20090602
Group number: 3019534-0100
Assembly Drawing: 3019534-1_1_AA

Pos	Part No	UN	Qty	Description	Page No
-					
010	1359565-0000		1	NUT	
020	1366727-0000		1	CLAMP	
030	1366750-0000		1	HOLDER	
040	1550772-0000		1	HOLDER	
050	3018768-0000		1	SPACER LUG	
060	3018769-0000		1	ANGLE BRACKET	
500	312105-0370		2	SCREW M6S ISO 4017 M6X20 A480	
510	312105-0451		2	SCREW M6S ISO 4017 M8X20 A480	
520	315105-0153		1	WASHER BRB 6,4X12 RFR	
530	315105-0165		2	WASHER BRB 8,4X16 RFR	

Pos	Part No	UN	Qty	Description	Page No

RAIL HOLDER

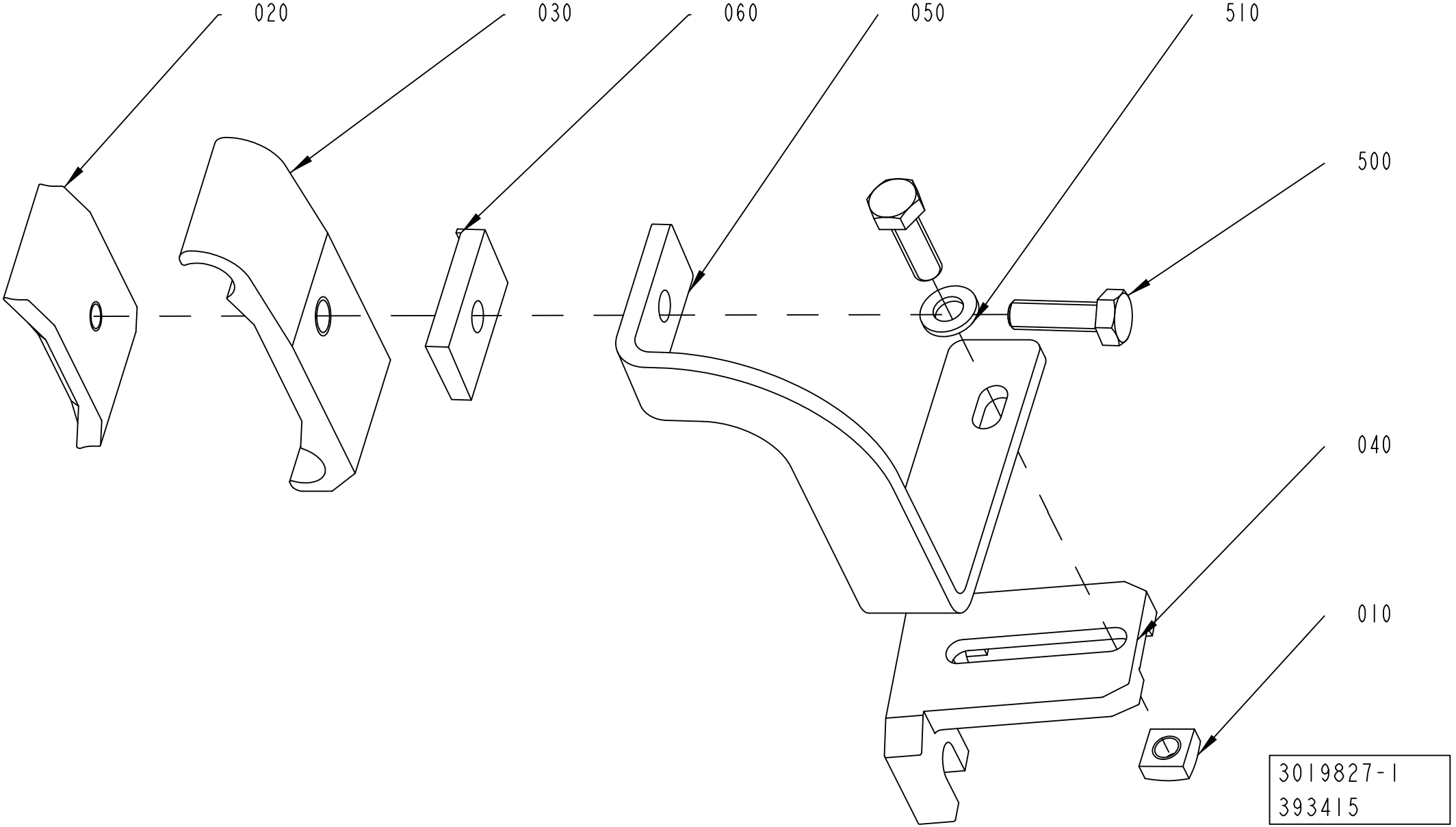

ECM: 395548 - 20090817
Group number: 3019827-0100
Assembly Drawing: 3019827-1_1_AB

Pos	Part No	UN	Qty	Description	Page No
-					
010	1359565-0000		1	NUT	
020	1366727-0000		1	CLAMP	
030	1366750-0000		1	HOLDER	
040	1550772-0000		1	HOLDER	
050	3018767-0000		1	ANGLE BRACKET	
060	3018768-0000		1	SPACER LUG	
500	312105-0370		2	SCREW M6S ISO 4017 M6X20 A480	
510	315105-0153		1	WASHER BRB 6,4X12 RFR	

Pos	Part No	UN	Qty	Description	Page No

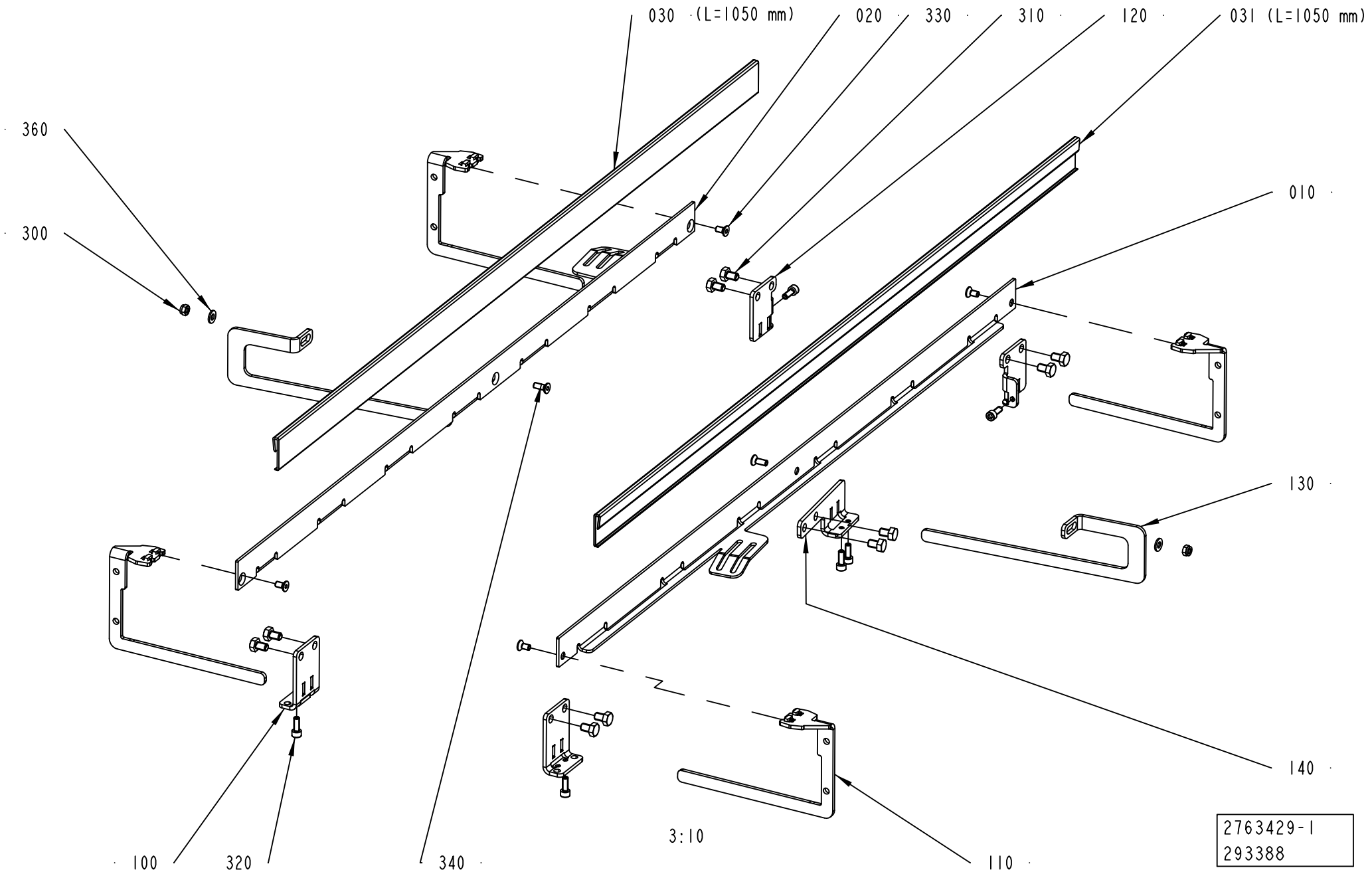
030 (L=1050 mm)
020
330
310
120
031 (L=1050 mm)
360
300
010
130
140
100
320
340
3:10
110
2763429-1
293388

ECM: 300560 - 20070817
Group number: 2763429-0100
Assembly Drawing: 2763429-1_1_AB

Pos	Part No	UN	Qty	Description	Page No
-					
010	2763435-0000		1	RAIL	
020	2763436-0000		1	RAIL	
030	2763303-0000	MM	1050	STRIP	
031	2763303-0000	MM	1050	STRIP	
100	2699603-0000		2	PLATE	
110	2699607-0000		4	HOLDER	
120	2699619-0000		2	BRACKET	
130	2699620-0000		2	RAIL HOLDER	
140	2699621-0000		1	BRACKET	
300	312812-0316		2	HEXAGON NUT, NY-LOCK M6 A480	
310	312105-0447		10	SCREW M6S ISO 4017 M8X12 A480	
320	312115-0368		6	SCREW ISO4762 M6X16 A4 80	
330	312155-0366		4	SCREW DIN 7991 MF6S M6X12 A4 70	
340	312155-0368		2	SCREW DIN 7991 MF6S M6X16 A4 70	
360	315105-0156		2	WASHER BRB 6,7X14 RFR	

Pos	Part No	UN	Qty	Description	Page No

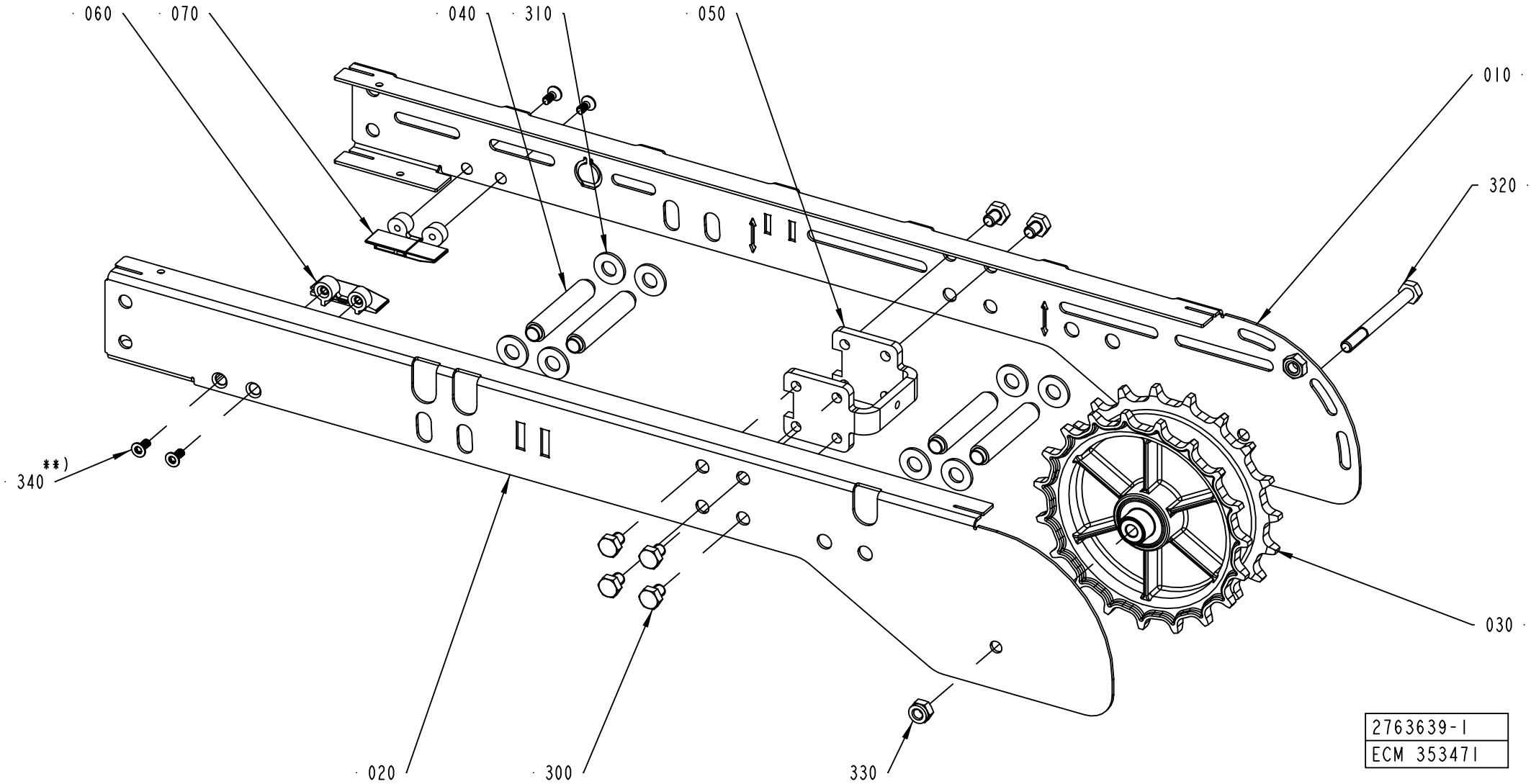
060
070
040
310
050
010
320
340
**)
020
300
330
030
2763639-1
ECM 353471

ECM: 353508 - 20081211
Group number: 2763639-0100
Assembly Drawing: 2763639-1_1_AC

Pos	Part No	UN	Qty	Description	Page No
-					
010	2881035-0000		1	SIDE PLATE	
020	2775737-0000		1	SIDE PLATE	
030	2561244-0200		1	DRIVE WHEEL	**5-59, 5-61, 11-37, 11-39**
040	2561566-0000		4	SPACER	
050	2561206-0000		1	SPACER	
060	2807804-0000		1	GUIDE	
070	2807805-0000		1	GUIDE	
300	90459-4735		6	SCREW M6S ISO 4017 M8X10 A480	
310	315105-0173		8	WASHER BRB 10,5X22 RFR	
320	312105-0467		1	SCREW M6S ISO 4014 M8X80 A480	
330	312812-0318		1	HEXAGON NUT, NY-LOCK M8 A480	
340	90600-1933		4	SCREW 5X12, DELTA PT 50X12 WN5454 A4	

Pos	Part No	UN	Qty	Description	Page No

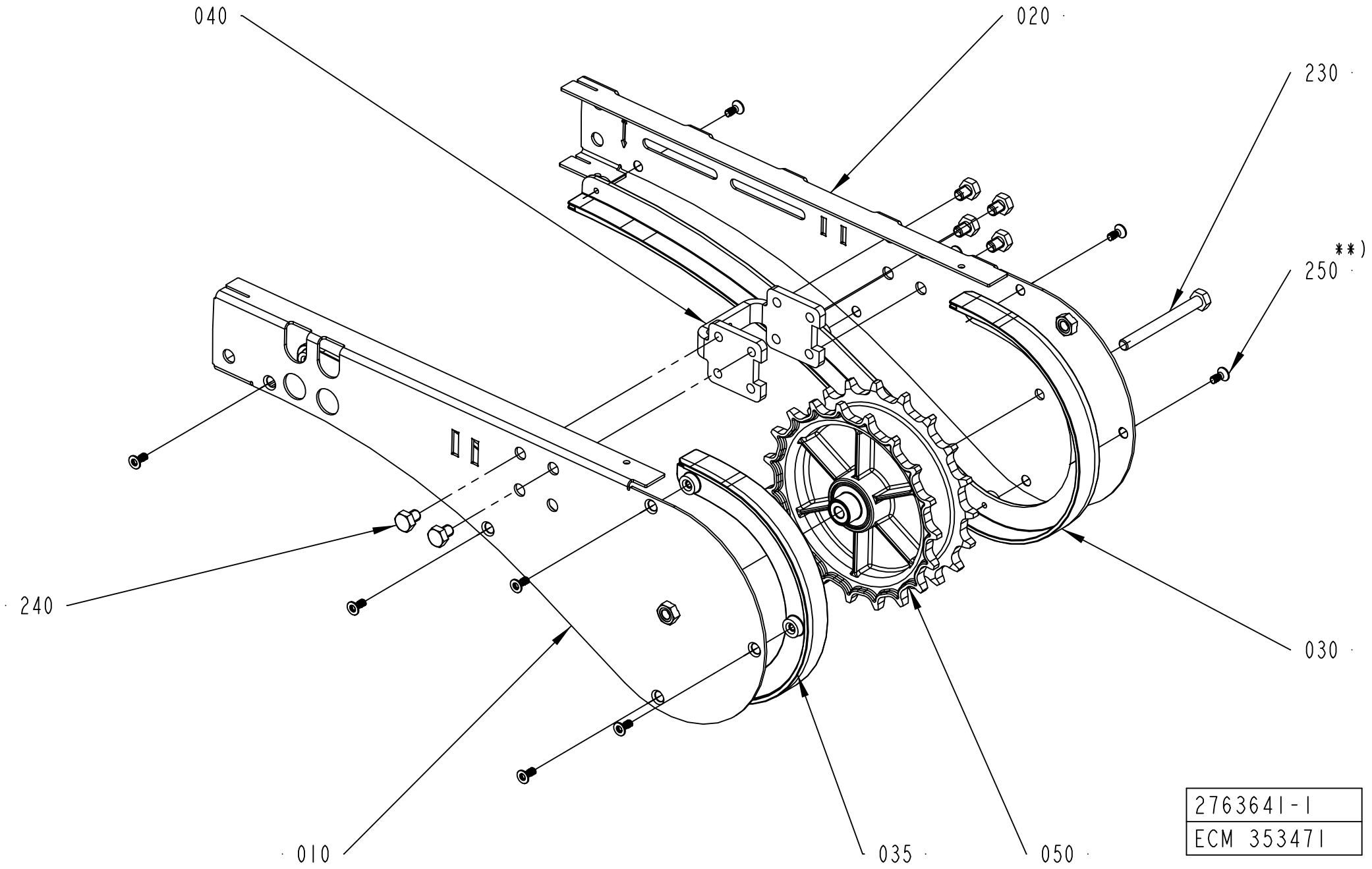
040
020
230
250 **)
240
030
010
035
050
2763641-1
ECM 353471

ECM: 353509 - 20081211
Group number: 2763641-0100
Assembly Drawing: 2763641-1_1_AC

Pos	Part No	UN	Qty	Description	Page No
-					
010	2775944-0000		1	SIDE PLATE	
020	2881038-0000		1	SIDE PLATE	
030	2775930-0000		1	CHAIN SUPPORT	
035	2775931-0000		1	CHAIN SUPPORT	
040	2561206-0000		1	SPACER	
050	2561244-0200		1	DRIVE WHEEL	**5-59, 5-61, 11-37, 11-39**
230	312105-0467		1	SCREW M6S ISO 4014 M8X80 A480	
240	90459-4735		6	SCREW M6S ISO 4017 M8X10 A480	
250	90600-1933		10	SCREW 5X12, DELTA PT 50X12 WN5454 A4	

Pos	Part No	UN	Qty	Description	Page No

CHAIN TENSIONER

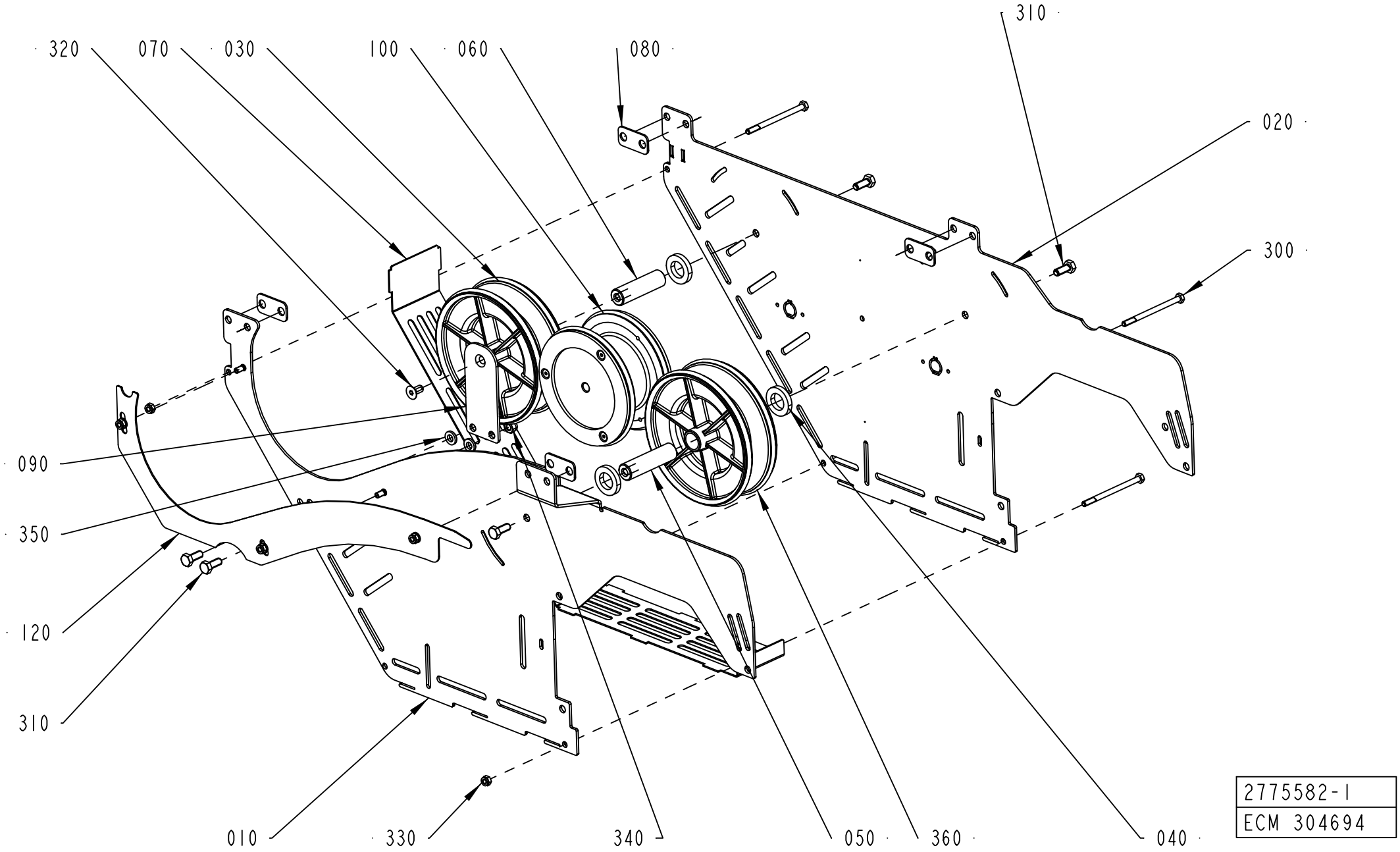

2775582-1
ECM 304694

ECM: 305418 - 20070817
Group number: 2775582-0100
Assembly Drawing: 2775582-1_1_AB

Pos	Part No	UN	Qty	Description	Page No
-					
010	2775583-0000		1	SIDE PLATE	
020	2775584-0000		1	SIDE PLATE	
030	2656679-0000		2	WHEEL	
040	2561226-0000		3	SPACER	
050	2561227-0001		1	SHAFT	
060	2561227-0002		1	SHAFT	
070	2807746-0000		1	PROTECTION	
080	2561230-0001		4	SPACER	
090	2561231-0000		1	BRACKET	
100	2561225-0200		1	GUIDE SPROCKET	**11-113**
120	2656678-0000		1	COVER	
300	312105-0388		3	SCREW M6S ISO 4014 M6X90 A480	
310	312105-0451		5	SCREW M6S ISO 4017 M8X20 A480	
320	312155-0449		1	SCREW DIN 7991 MF6S M8X16 A4 70	
330	312812-0316		6	HEXAGON NUT, NY-LOCK M6 A480	
340	312812-0318		2	HEXAGON NUT, NY-LOCK M8 A480	
350	315115-0165		2	WASHER PLAIN, TBRB 8,4/16 H=3	
360	315202-0246		4	O-RING 144,3X5,7 MM	
380	315105-0153		3	WASHER BRB 6,4X12 RFR	

Pos	Part No	UN	Qty	Description	Page No

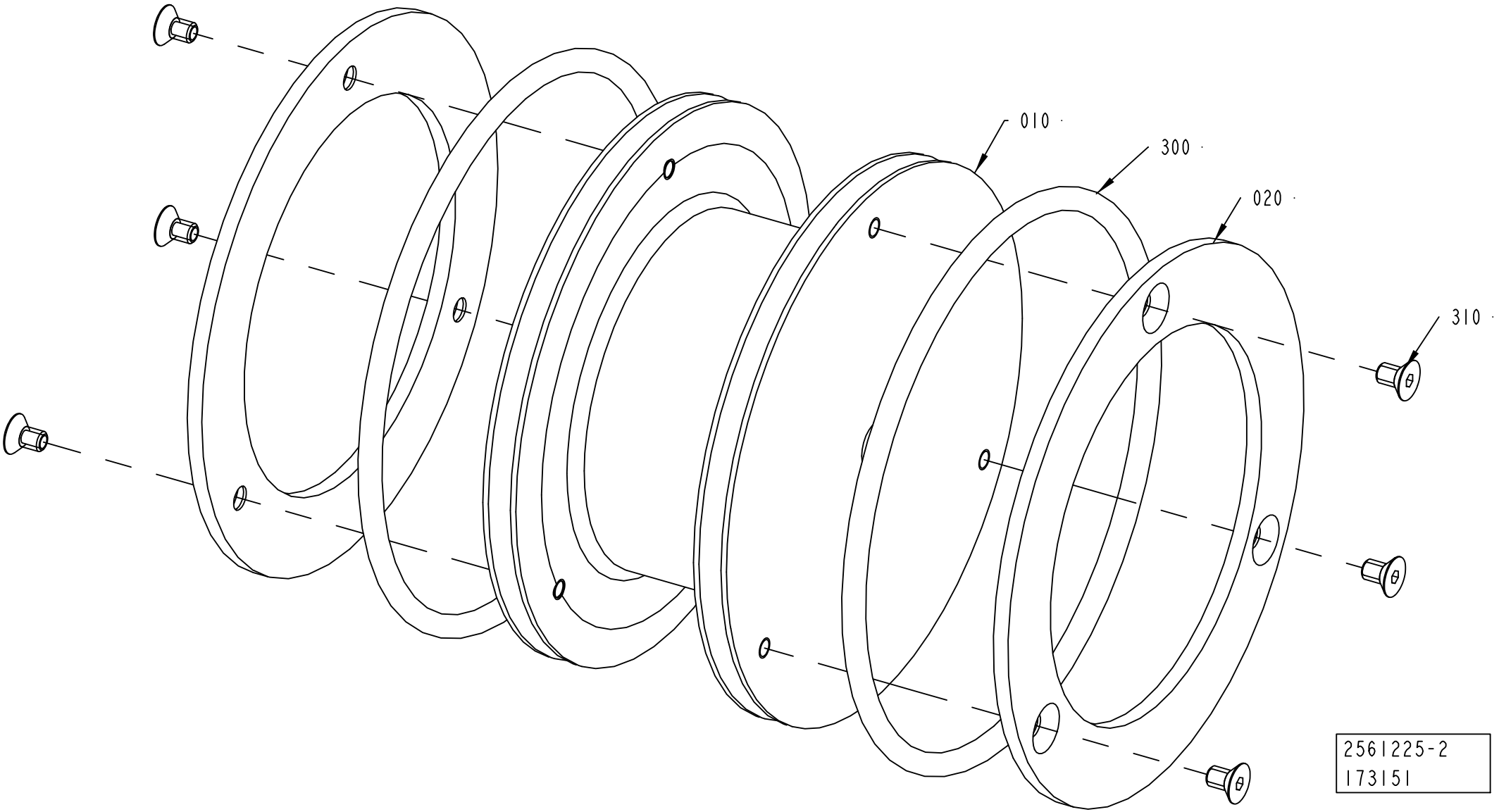
010
300
020
310
2561225-2
173151

ECM: 173358 - 20040614
Group number: 2561225-0200
Assembly Drawing: 2561225-2_1_AA

Pos	Part No	UN	Qty	Description	Page No
-					
010	2656683-0000		1	WHEEL	
020	2656682-0000		2	SLIDE PLATE	
300	315202-0242		2	O-RING 124,3X5,7 MM	
310	312155-0323		6	SCREW DIN 7991 MF6S M5X8 A4 70	

Pos	Part No	UN	Qty	Description	Page No

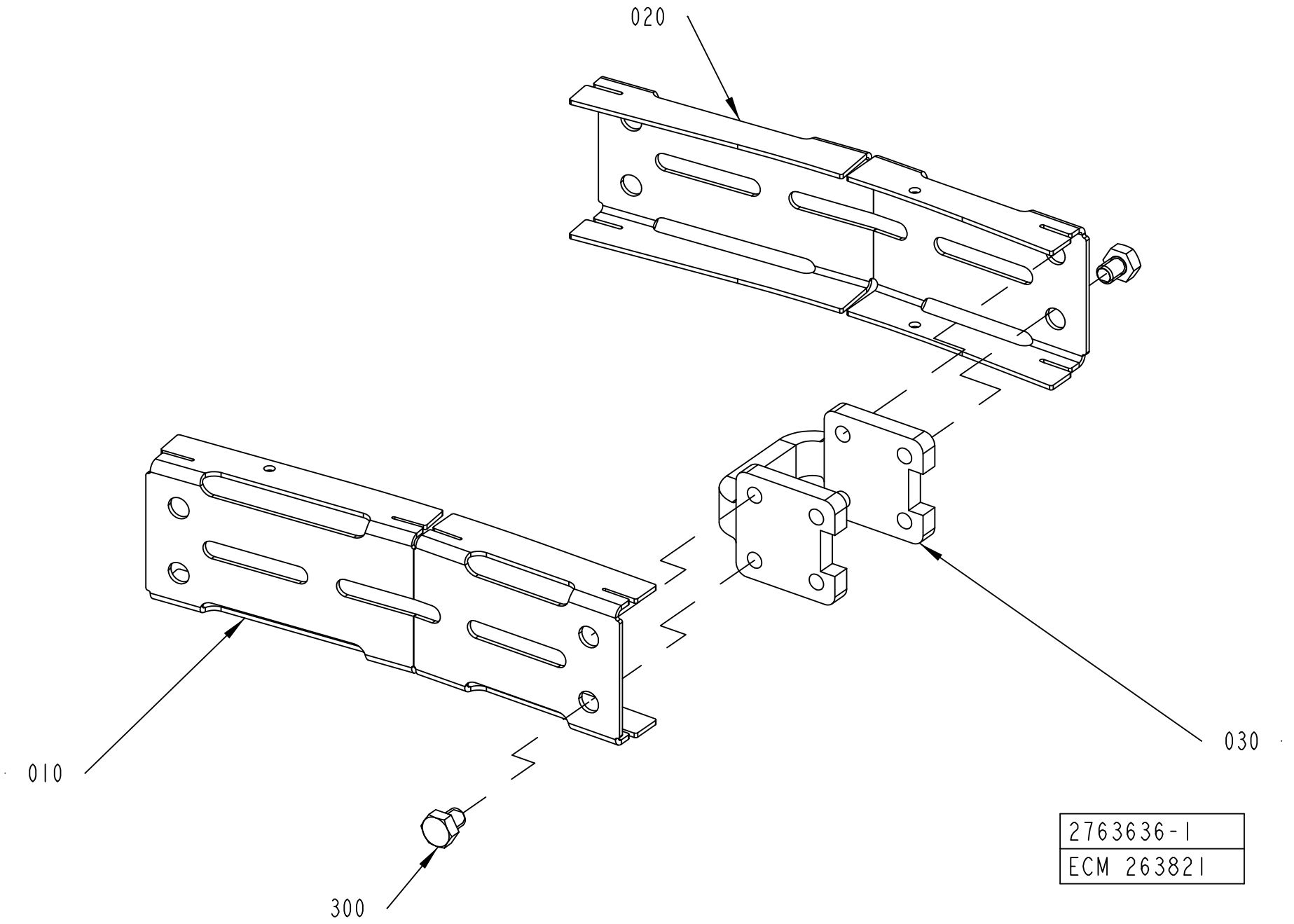
020
010
030
300
2763636-1
ECM 263821

ECM: 289117 - 20070412
Group number: 2763636-0100
Assembly Drawing: 2763636-1_1_AA

Pos	Part No	UN	Qty	Description	Page No
-					
010	2763637-0000		1	SIDE PLATE	
020	2763638-0000		1	SIDE PLATE	
030	2561206-0000		1	SPACER	
300	90459-4735		2	SCREW M6S ISO 4017 M8X10 A480	

Pos	Part No	UN	Qty	Description	Page No

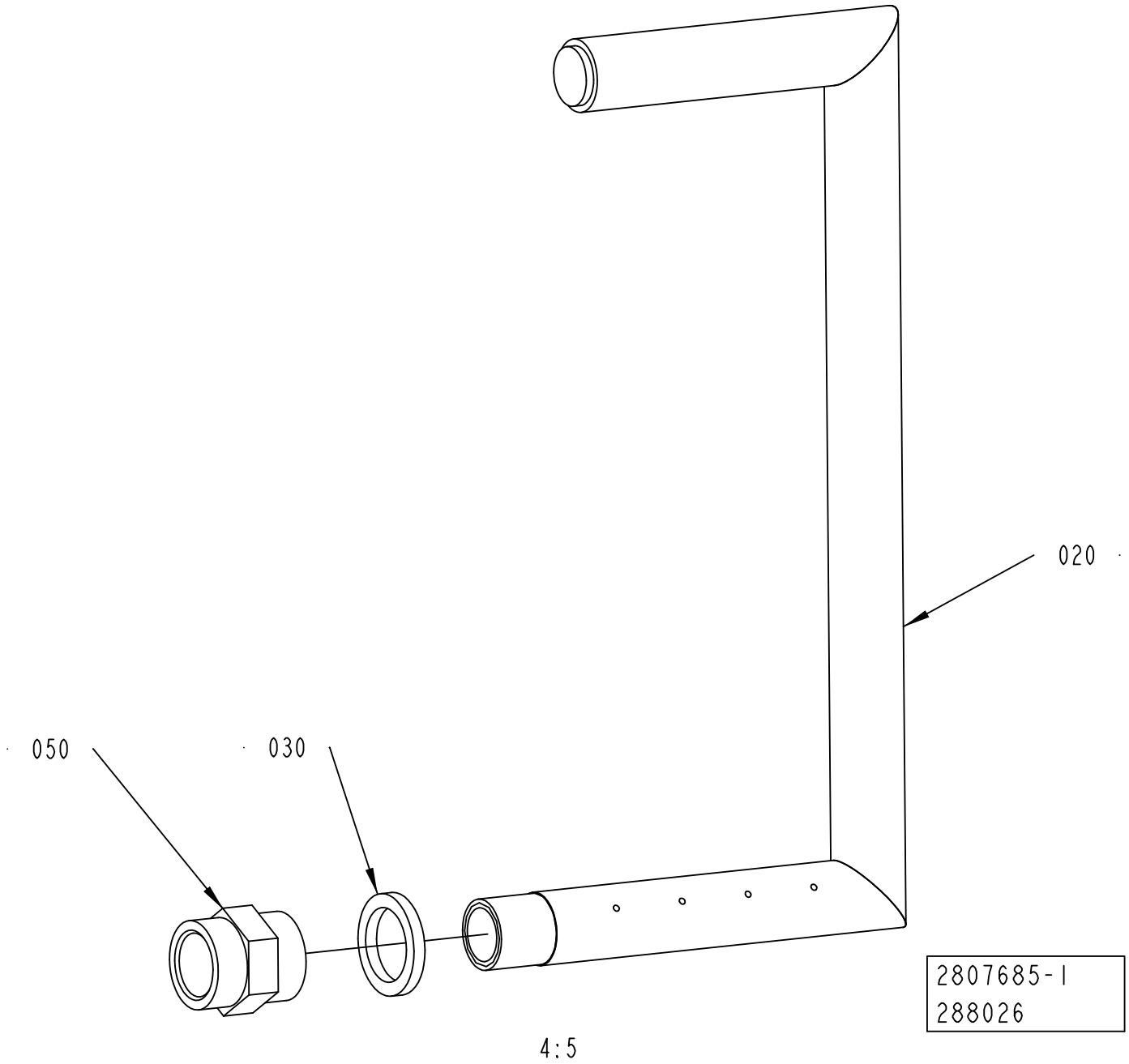
020
050
030
2807685-1
288026
4:5

ECM: 288043 - 20070129
Group number: 2807685-0100
Assembly Drawing: 2807685-1_1_AA

Pos	Part No	UN	Qty	Description	Page No
-					
010	2855897-0100		1	PACKING DESCRIPTION	**11-119**
020	2851232-0000		1	WASHPOINT	
030	2875172-0000		1	SPACER	
050	342707-0111		1	SLEEVE, INT. THREAD, NO. 2543-3/8	

Pos	Part No	UN	Qty	Description	Page No

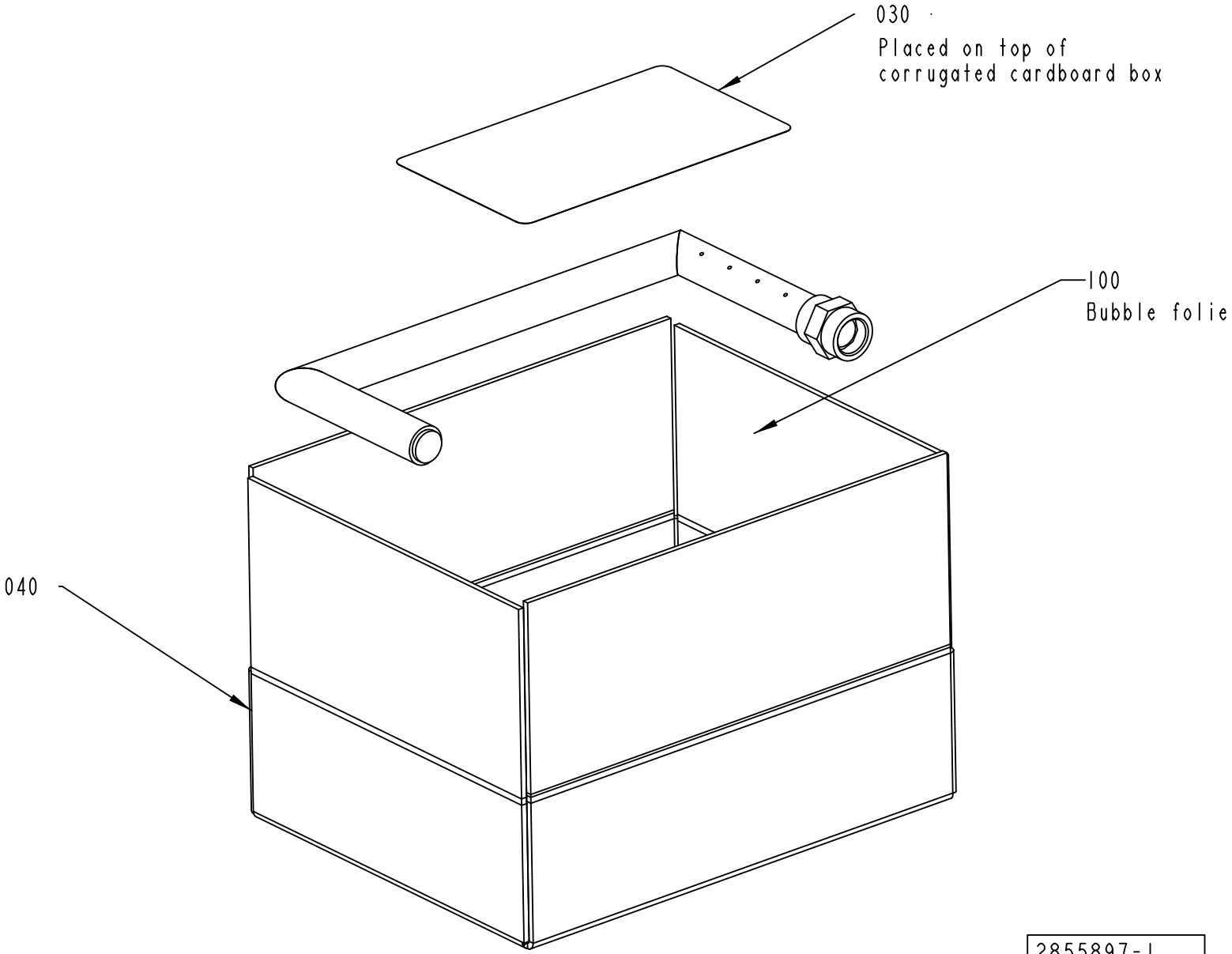
030
Placed on top of
corrugated cardboard box
100
Bubble folie
040
2855897-1
288026
1:2

ECM: 288042 - 20070129
Group number: 2855897-0100
Assembly Drawing: 2855897-1_1_AA

Pos	Part No	UN	Qty	Description	Page No
-					
030	1086871-0000		1	LABEL TAPE	
040	545861-0000		1	CORRUGATED CARDBOARD BOX	
100	90003-0474		1	PACKING	

Pos	Part No	UN	Qty	Description	Page No

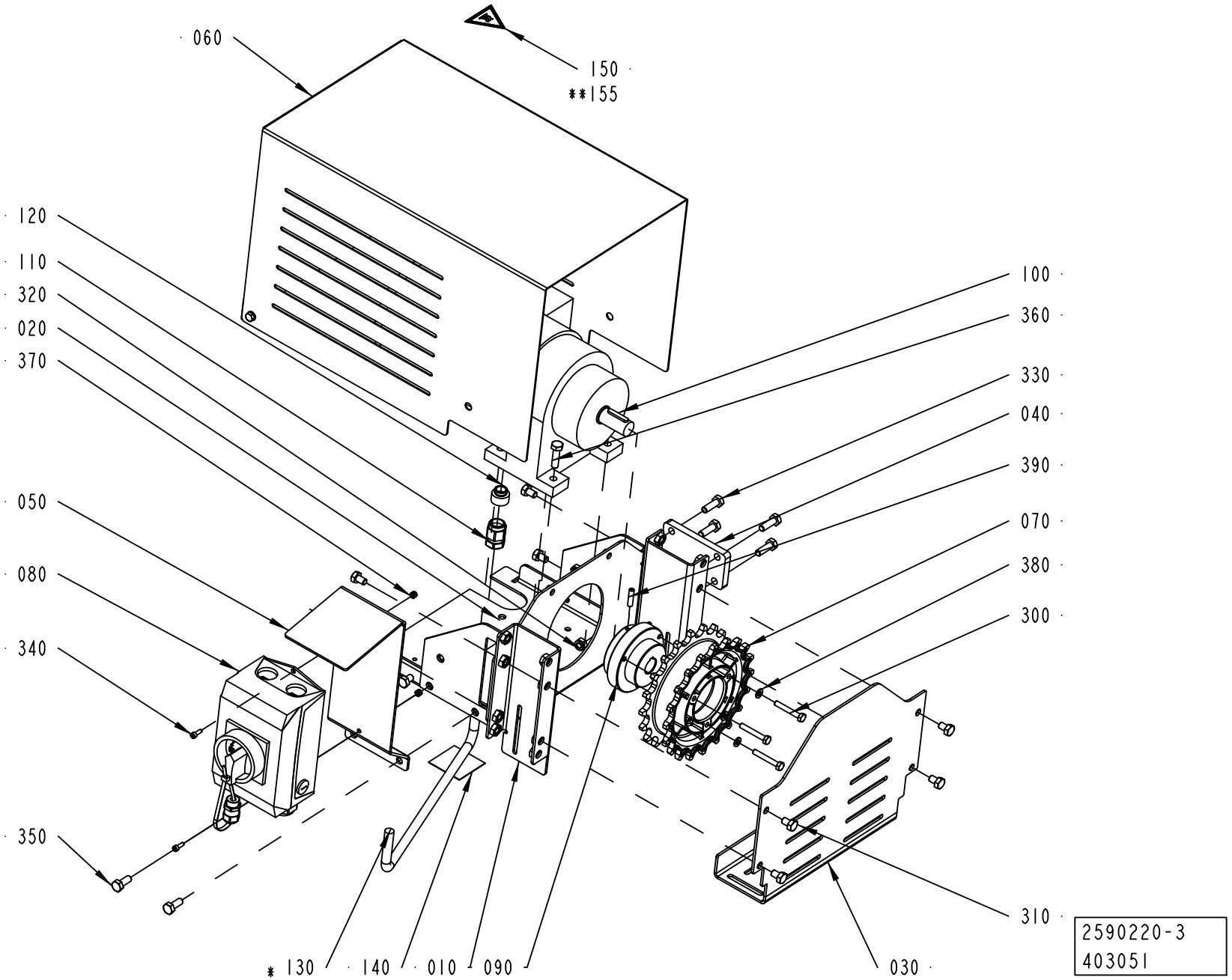
060
150
**155
120
110
320
020
370
100
360
330
040
390
070
380
300
050
080
340
350
310
* 130
140
010
090
030
2590220-3
403051

ECM: 408952 - 20091008
Group number: 2590220-0300
Assembly Drawing: 2590220-3_1_AA

Pos	Part No	UN	Qty	Description	Page No
50HZ 15M/MIN					
070	2656676-0000		1	SPROCKET	
100	90069-0111		1	GEARS, HELICAL MOTOR SK01-71S/4	
50HZ 21M/MIN					
070	2656676-0000		1	SPROCKET	
100	90069-0106		1	GEARS, HELICAL MOTOR SK01-71L/4	
120	90458-1155		1	ENLARGING SLEEVE, 5210 4452	
50HZ 25M/MIN					
070	2656677-0000		1	SPROCKET	
100	90069-0106		1	GEARS, HELICAL MOTOR SK01-71L/4	
120	90458-1155		1	ENLARGING SLEEVE, 5210 4452	
50HZ 33M/MIN					
070	2656677-0000		1	SPROCKET	
100	90069-0182		1	GEARS, HELICAL MOTOR SK01V-80S/4	
50HZ 39M/MIN					
070	2656677-0000		1	SPROCKET	
100	90069-0181		1	GEARS, HELICAL MOTOR SK01V-80S/4	
60HZ 15M/MIN					
070	2656676-0000		1	SPROCKET	
100	2808041-0000		1	GEARED MOTOR	
120	90458-1155		1	ENLARGING SLEEVE, 5210 4452	
60HZ 21M/MIN					
070	2656676-0000		1	SPROCKET	
100	90069-0110		1	GEARS, HELICAL MOTOR SK01-71L/4	
120	90458-1155		1	ENLARGING SLEEVE, 5210 4452	
60HZ 25M/MIN					
070	2656677-0000		1	SPROCKET	
100	90069-0110		1	GEARS, HELICAL MOTOR SK01-71L/4	
120	90458-1155		1	ENLARGING SLEEVE, 5210 4452	
60HZ 33M/MIN					
070	2656676-0000		1	SPROCKET	
100	90069-0182		1	GEARS, HELICAL MOTOR SK01V-80S/4	
60HZ 39M/MIN					
070	2656677-0000		1	SPROCKET	
100	90069-0182		1	GEARS, HELICAL MOTOR SK01V-80S/4	
Common Parts					
010	2561147-0000		2	BRACKET	
020	2561148-0000		1	MOTOR SHELF	
030	2561149-0000		1	SIDE PLATE	
040	2561151-0000		1	SPACER	
050	2561152-0000		1	BRACKET	
060	2561153-0000		1	COVER	
080	1359581-0300		1	SWITCH GEAR	**11-123**
090	2590155-0000		1	HUB	
110	90458-0438		1	GLAND, EXTENDED WITH INSERT, M20X1,5	
130	90220-0104	M	0.8	SCR. CABLE 4X1,5MM2	
140	90458-1253		2	MANDATORY ACTION SIGN CONSULT OM ISO	
150	359705-0007		1	WARNING SIGN ISO, HOT SURFACE	
150	359725-0116		1	WARNING SIGN ANSI (H), HOT SURFACE	
155	3021412-0000		1	ASSEMBLY INSTRUCTION	
300	312105-0378		3	SCREW M6S ISO 4014 M6X40 A480	
310	312105-0447		10	SCREW M6S ISO 4017 M8X12 A480	
320	312812-0318		10	HEXAGON NUT, NY-LOCK M8 A480	
330	312105-0453		4	SCREW M6S ISO 4017 M8X25 A480	
340	312115-0291		2	SCREW ISO4762 M4X12 A4 80	
350	312105-0451		2	SCREW M6S ISO 4017 M8X20 A480	
360	312105-0455		4	SCREW M6S ISO 4017 M8X30 A480	
370	312812-0312		2	HEXAGON NUT, NY-LOCK M4 A480	
380	315105-0153		3	WASHER BRB 6,4X12 RFR	
390	312318-0372		1	SCREW ISO4029 M6X25 A4	

Machine Type	Group Description	Used-In	Group Number	Page No

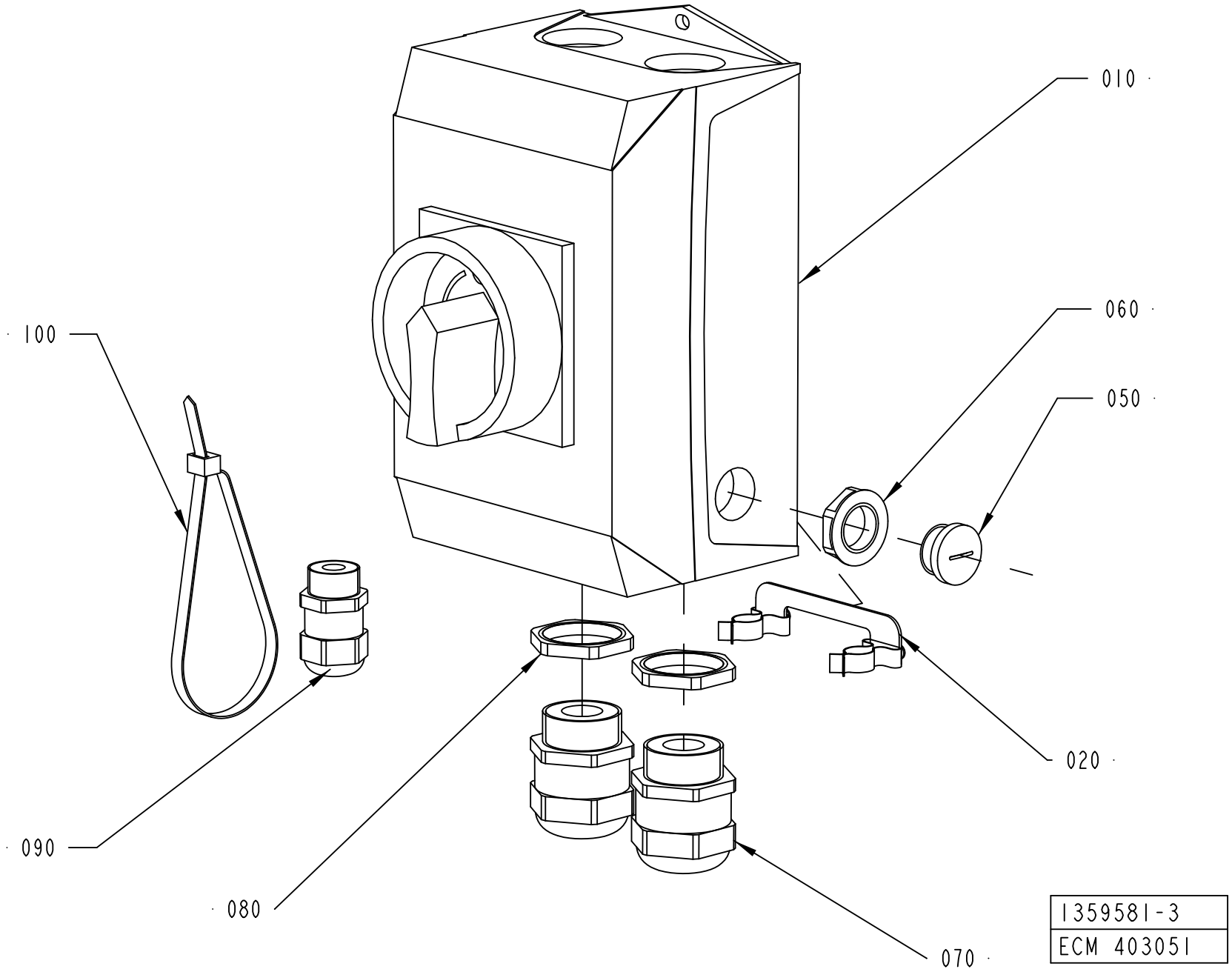
010
060
050
100
020
090
080
070
1359581-3
ECM 403051

ECM: 408627 - 20091008
Group number: 1359581-0300
Assembly Drawing: 1359581-3_1_AA

Pos	Part No	UN	Qty	Description	Page No
-					
010	1359831-0000		1	SWITCH GEAR	
020	3042019-0000		1	BRACKET	
050	90458-1307		1	BLIND PLUG CIRCULAR, M16X1,5 514GFK/216	
060	90458-0322		1	NUT, M16X1,5	
070	90458-0316		2	CABLE GLAND, M25X1,5, NO.5311 1130	
080	353250-0025		2	GLAND, LOCK NUT M25X1,5	
090	90458-0306		1	CABLE GLAND, M16X1,5, NO.5311 1010	
100	352113-0102		1	CABLE TIE, BLACK 188X4,8 MM	

Pos	Part No	UN	Qty	Description	Page No

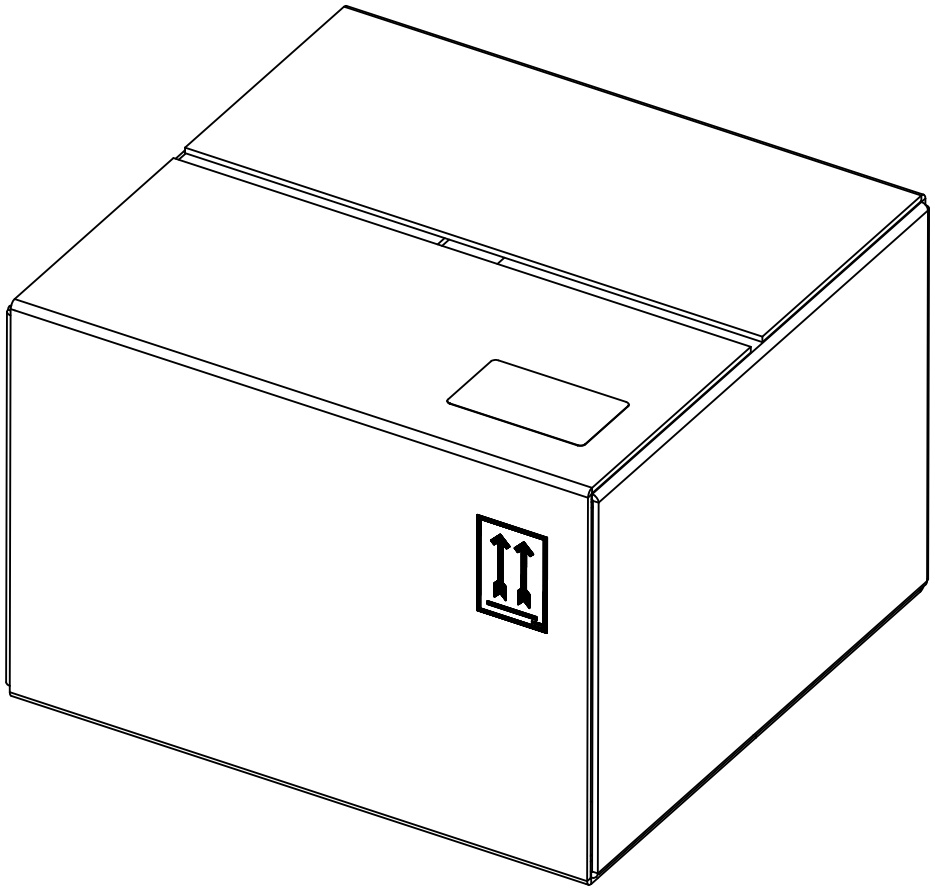

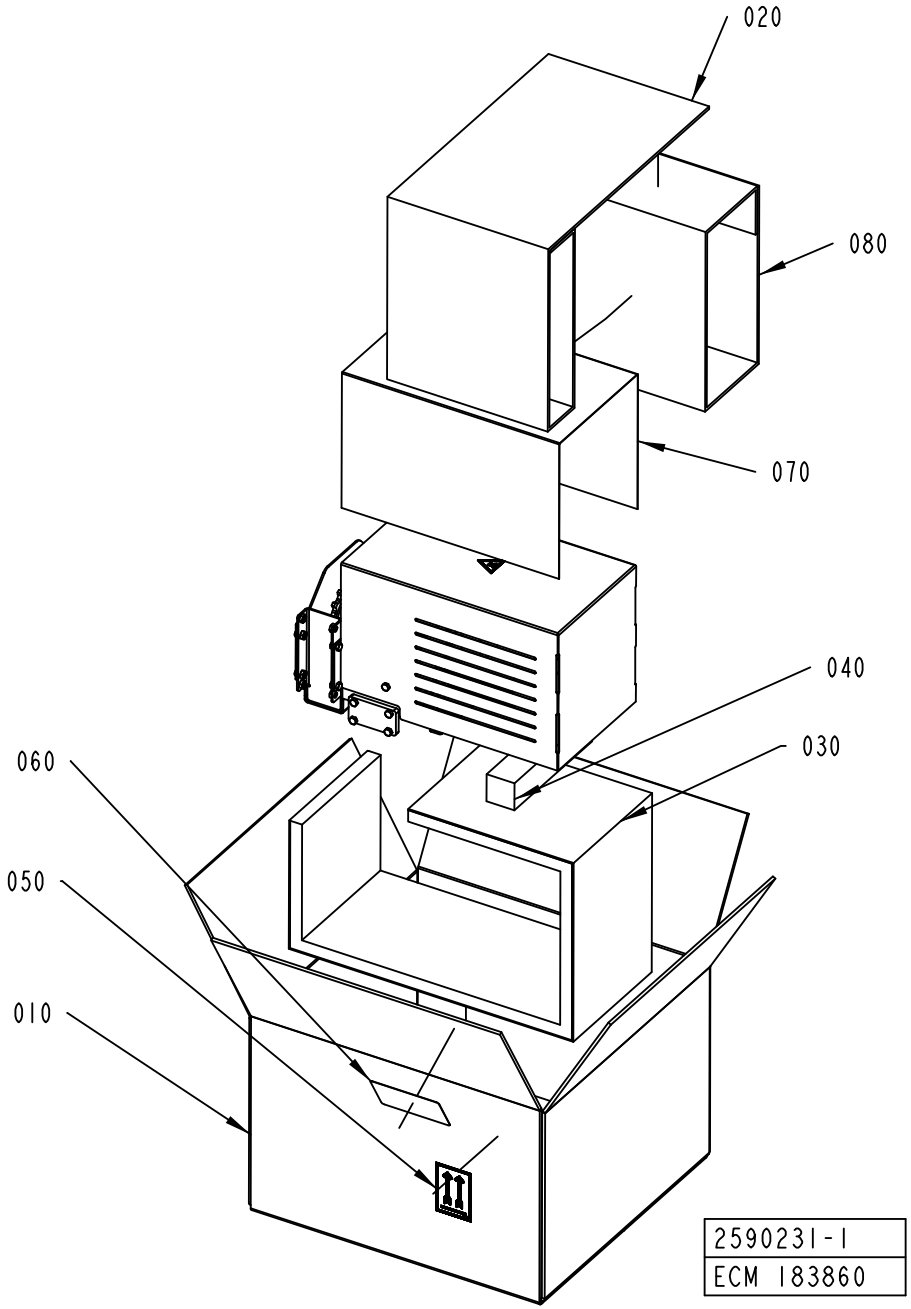
020
080
070
040
030
060
050
010
2590231-1
ECM 183860

ECM: 183865 - 20040827
Group number: 2590231-0100
Assembly Drawing: 2590231-1_1_AB

Pos	Part No	UN	Qty	Description	Page No
-					
010	2590232-0000		1	CORRUGATED CARDBOARD BOX	
020	2590233-0000		1	FILLING	
030	2590234-0000		1	FILLING	
040	2590235-0000		1	SUPPORT BLOCK	
050	543267-0000		2	LABEL TAPE	
060	1086872-0000		1	LABEL TAPE	
070	90003-0474		1	PACKING	
080	2699199-0000		1	FILLING	

Pos	Part No	UN	Qty	Description	Page No

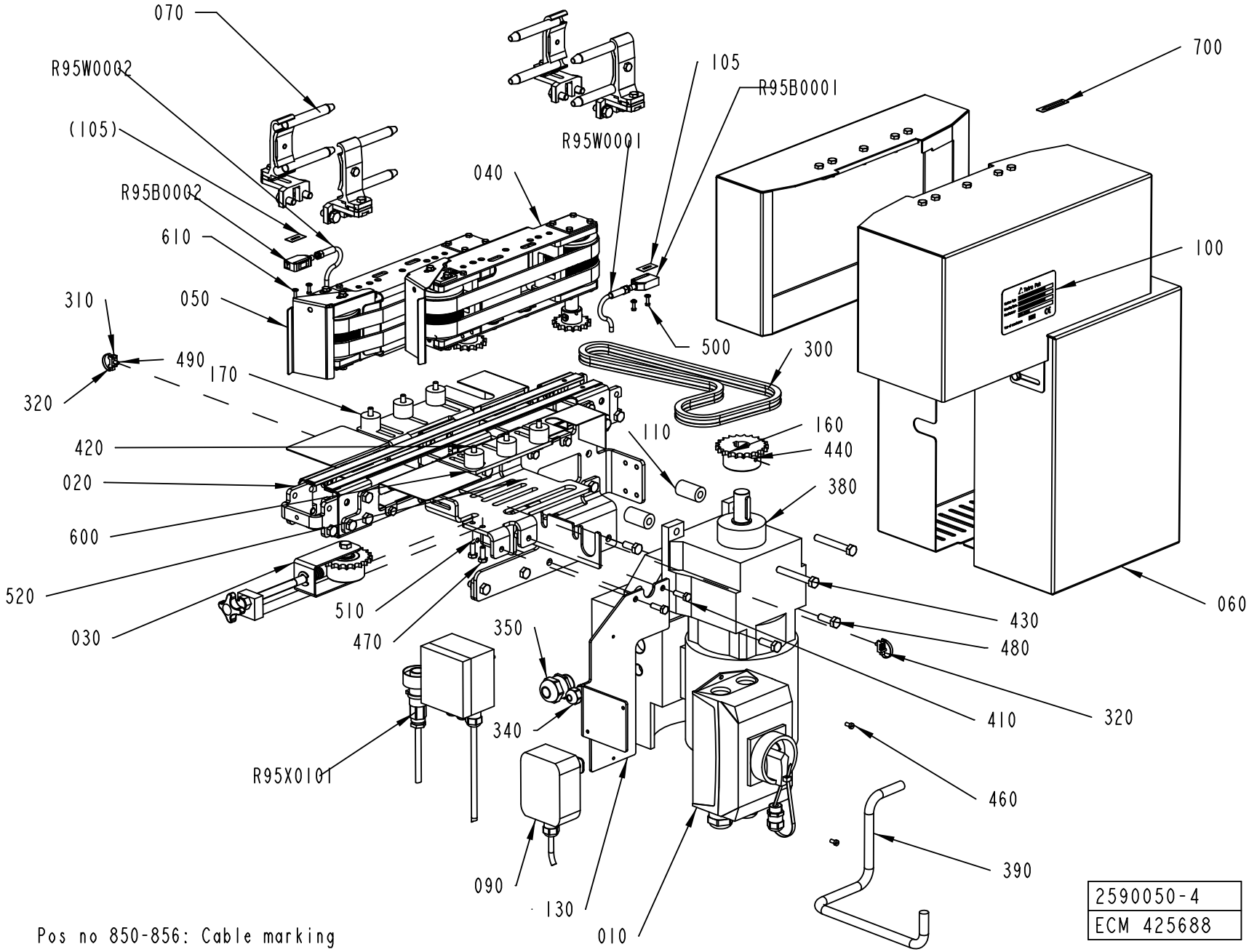
070
R95W0002
(105)
R95B0002
610
310
050
490
320
170
420
020
600
520
030
510
470
040
R95W0001
105
R95B0001
700
100
500
300
110
160
440
380
060
430
480
320
410
460
390
350
340
R95X0101
090
130
010
Pos no 850-856: Cable marking
2590050-4
ECM 425688

ECM: 429158 - 20091217
Group number: 2590050-0300
Assembly Drawing: 2590050-4_1_AB

This list covers pages from 11-126 to 11-129

Pos	Part No	UN	Qty	Description	Page No
PC025-075 (See drawing on page: 11-128)					
070	3010552-0100		1	RAILING KIT	**11-131**
PC040-100 (See drawing on page: 11-126)					
070	2590040-0100		1	RAILING KIT	**11-133**
Common Parts					
010	1359581-0300		1	SWITCH GEAR	**11-123**
020	1550880-0200		1	CONVEYOR BODY	**11-135**
030	1550957-0100		1	CHAIN TENSIONER	**11-137**
040	1550977-0300		1	BELT UNIT	**11-139**
050	1550997-0300		1	BELT UNIT	**11-141**
060	2589838-0300		1	COVER	**11-143**
090	2590048-0100		1	OPERATION DEVICE	**11-145**
100	1359055-0000		1	SIGN	
105	2859497-0000		1	SET OF SIGNS	
110	1550995-0000		2	SPACER	
130	1359938-0000		1	MOUNTING SHEET	
160	1550973-0000		1	SPROCKET	
170	2862606-0000		6	SPACER	
300	2656374-0086		1	ROLLER CHAIN	
310	352113-0205		2	ANCHOR PLATES FOR STRIPS, TYPE TM2S8-C10	
320	352113-0101		2	CABLE TIE, BLACK 92X2,5 MM	
340	90458-0306		1	CABLE GLAND, M16X1,5, NO.5311 1010	
350	90458-0308		1	CABLE GLAND, M25X1,5, NO.5311 1030	
380	90601-1808		1	GEARS, HELICAL MOTOR R17DT71D4MM05/MLU/B	
	90458-1328		*1*	*TRANSFORMER, SEW MLU 11A NO: 823 3837*	
390	90220-0104	M	0.8	SCR. CABLE 4X1,5MM2	
410	312105-0370		2	SCREW M6S ISO 4017 M6X20 A480	
420	312105-0376		6	SCREW M6S ISO 4014 M6X35 A480	
430	312105-0463		2	SCREW M6S ISO 4014 M8X60 A480	
440	312318-0362		1	SCREW ISO4029 M6X8 A4	
460	312125-0287		2	SCREW ISO 1207 M4X8 A4	
470	312105-0368		2	SCREW M6S ISO 4017 M6X16 A480	
480	312105-0453		2	SCREW M6S ISO 4017 M8X25 A480	
490	312115-0287		2	SCREW ISO4762 M4X8 A4 80	
500	312125-0226		4	SCREW ISO 1207 M3X12 A4	
510	312605-0316		2	HEXAGON NUT, M6M M6 A280	
520	312605-0318		4	HEXAGON NUT, M6M M8 A280	
600	315105-0153		6	WASHER BRB 6,4X12 RFR	
610	315106-0124		8	WASHER ISO 7089-3-200 HV A4	
700	1359885-0000		1	SIGN	
820	2590258-0100		1	PACKING DESCRIPTION	**11-147**
R95B0001	90459-7274		1	PHOTOCELL E3Z-T81C-G0SR L-CN	
R95B0002	90459-7273		1	PHOTOCELL E3Z-T81C-G0SR D-CN	
R95W0001	351305-0020		1	ACTUATOR/SENSOR CABLE PRKMV 4-07/2M	
R95W0002	351305-0020		1	ACTUATOR/SENSOR CABLE PRKMV 4-07/2M	
R95X0101	2590054-0100		1	CONNECTION BOX	**11-149**

Machine Type | Group Description | Used-In | Group Number | Page No

BELT BRAKE

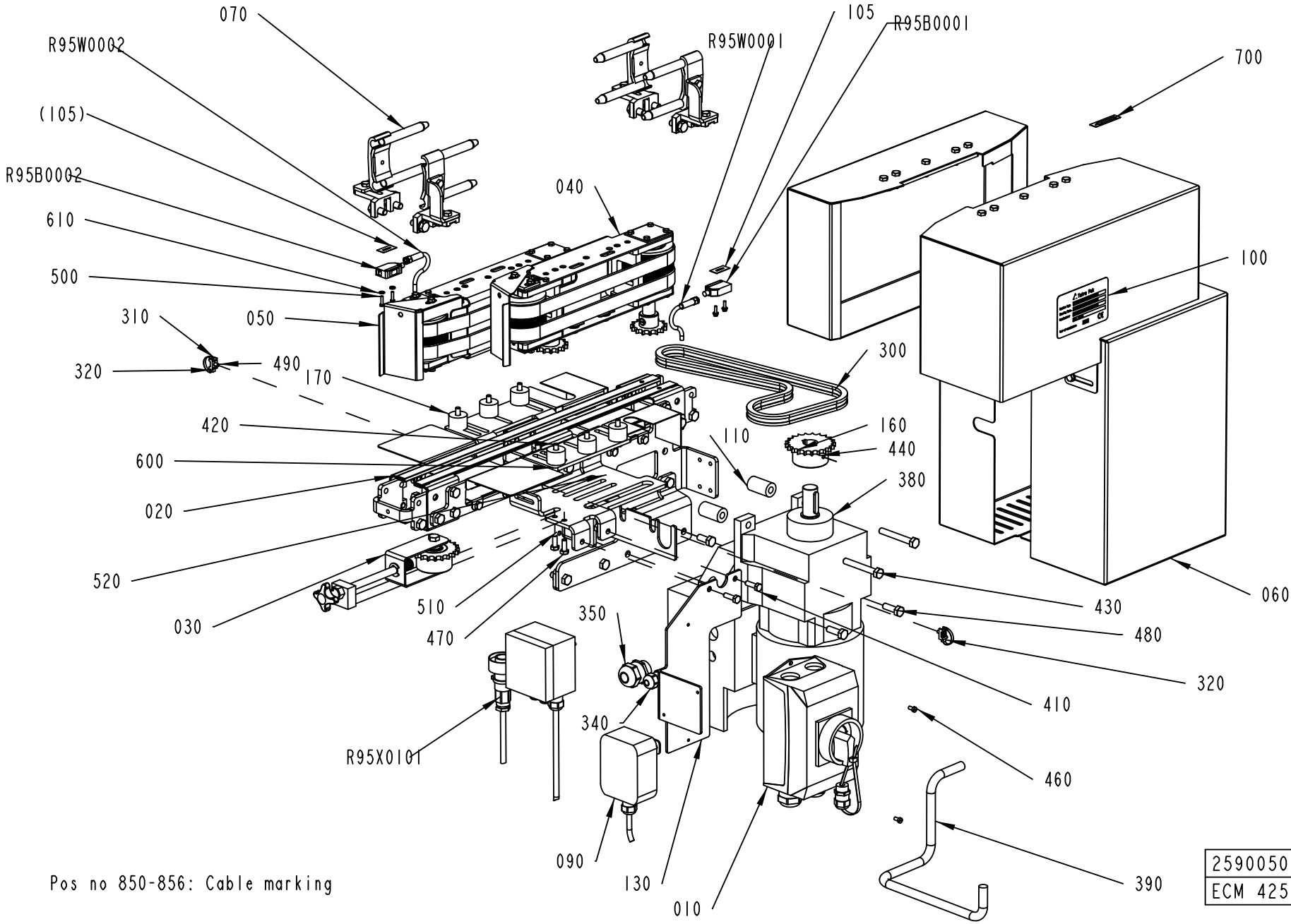
070
R95W0002
(105)
R95B0002
610
500
310
320
050
040
490
170
420
600
020
520
030
510
470
R95W0001
105
R95B0001
700
100
300
160
440
110
380
060
430
480
320
410
460
390
350
340
090
130
010
R95X0101
Pos no 850-856: Cable marking
2590050-5
ECM 425688

ECM: 429158 - 20091217
Group number: 2590050-0300
Assembly Drawing: 2590050-5_1_AB

This list covers pages from 11-126 to 11-129

Pos	Part No	UN	Qty	Description	Page No
PC025-075 (See drawing on page: 11-128)					
070	3010552-0100		1	RAILING KIT	**11-131**
PC040-100 (See drawing on page: 11-126)					
070	2590040-0100		1	RAILING KIT	**11-133**
Common Parts					
010	1359581-0300		1	SWITCH GEAR	**11-123**
020	1550880-0200		1	CONVEYOR BODY	**11-135**
030	1550957-0100		1	CHAIN TENSIONER	**11-137**
040	1550977-0300		1	BELT UNIT	**11-139**
050	1550997-0300		1	BELT UNIT	**11-141**
060	2589838-0300		1	COVER	**11-143**
090	2590048-0100		1	OPERATION DEVICE	**11-145**
100	1359055-0000		1	SIGN	
105	2859497-0000		1	SET OF SIGNS	
110	1550995-0000		2	SPACER	
130	1359938-0000		1	MOUNTING SHEET	
160	1550973-0000		1	SPROCKET	
170	2862606-0000		6	SPACER	
300	2656374-0086		1	ROLLER CHAIN	
310	352113-0205		2	ANCHOR PLATES FOR STRIPS, TYPE TM2S8-C10	
320	352113-0101		2	CABLE TIE, BLACK 92X2,5 MM	
340	90458-0306		1	CABLE GLAND, M16X1,5, NO.5311 1010	
350	90458-0308		1	CABLE GLAND, M25X1,5, NO.5311 1030	
380	90601-1808		1	GEARS, HELICAL MOTOR R17DT71D4MM05/MLU/B	
	90458-1328		*1*	*TRANSFORMER, SEW MLU 11A NO: 823 3837*	
390	90220-0104	M	0.8	SCR. CABLE 4X1,5MM2	
410	312105-0370		2	SCREW M6S ISO 4017 M6X20 A480	
420	312105-0376		6	SCREW M6S ISO 4014 M6X35 A480	
430	312105-0463		2	SCREW M6S ISO 4014 M8X60 A480	
440	312318-0362		1	SCREW ISO4029 M6X8 A4	
460	312125-0287		2	SCREW ISO 1207 M4X8 A4	
470	312105-0368		2	SCREW M6S ISO 4017 M6X16 A480	
480	312105-0453		2	SCREW M6S ISO 4017 M8X25 A480	
490	312115-0287		2	SCREW ISO4762 M4X8 A4 80	
500	312125-0226		4	SCREW ISO 1207 M3X12 A4	
510	312605-0316		2	HEXAGON NUT, M6M M6 A280	
520	312605-0318		4	HEXAGON NUT, M6M M8 A280	
600	315105-0153		6	WASHER BRB 6,4X12 RFR	
610	315106-0124		8	WASHER ISO 7089-3-200 HV A4	
700	1359885-0000		1	SIGN	
820	2590258-0100		1	PACKING DESCRIPTION	**11-147**
R95B0001	90459-7274		1	PHOTOCELL E3Z-T81C-G0SR L-CN	
R95B0002	90459-7273		1	PHOTOCELL E3Z-T81C-G0SR D-CN	
R95W0001	351305-0020		1	ACTUATOR/SENSOR CABLE PRKMV 4-07/2M	
R95W0002	351305-0020		1	ACTUATOR/SENSOR CABLE PRKMV 4-07/2M	
R95X0101	2590054-0100		1	CONNECTION BOX	**11-149**

Machine Type | Group Description | Used-In | Group Number | Page No

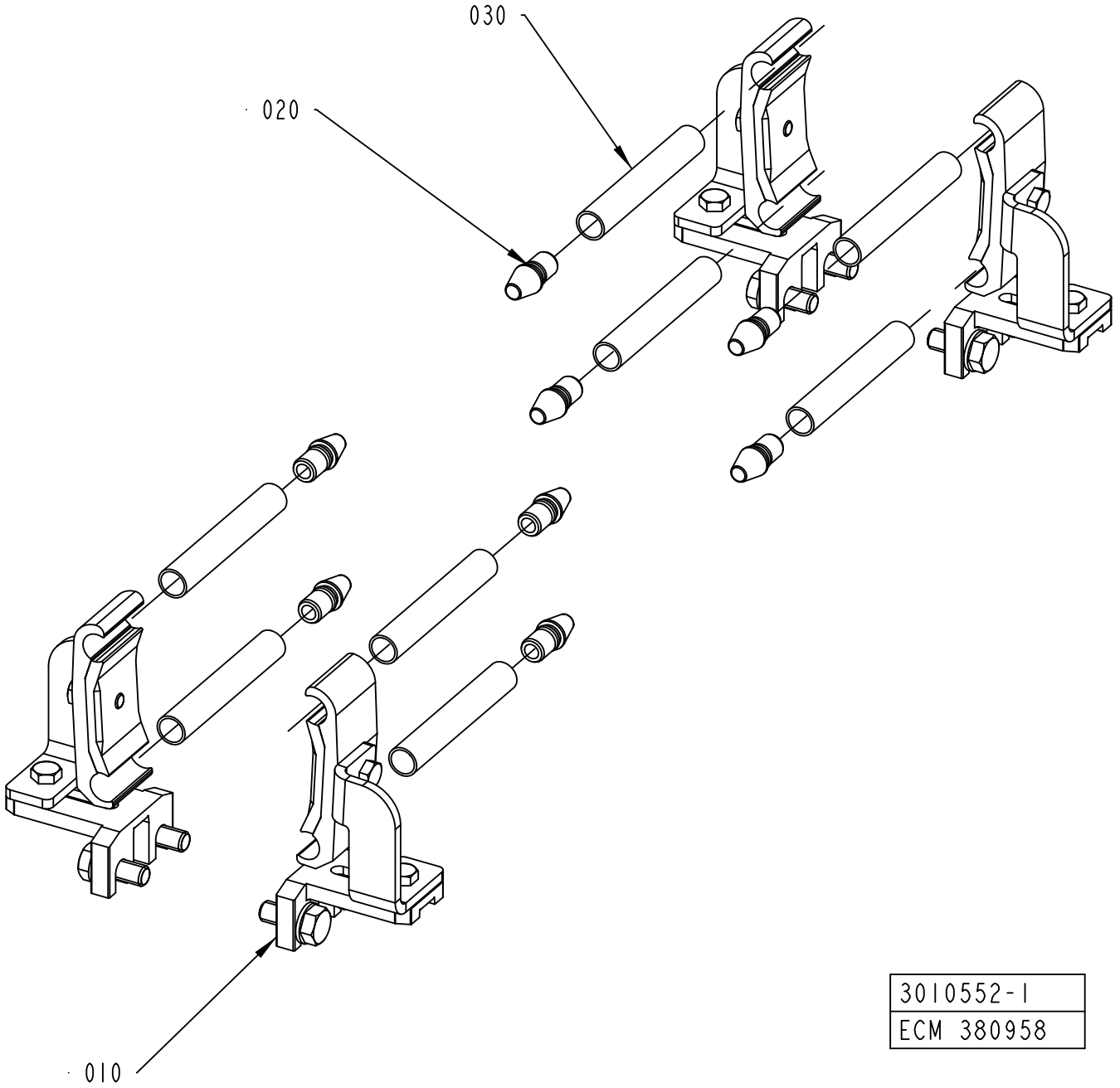
030
020
010
3010552-1
ECM 380958

ECM: 409003 - 20091008
Group number: 3010552-0100
Assembly Drawing: 3010552-1_1_AA

Pos	Part No	UN	Qty	Description	Page No
-					
010	2999197-0100		4	RAIL HOLDER	**11-93**
020	540169-0000		8	DOWEL	
030	2590051-0000		8	PIPE	

Pos	Part No	UN	Qty	Description	Page No

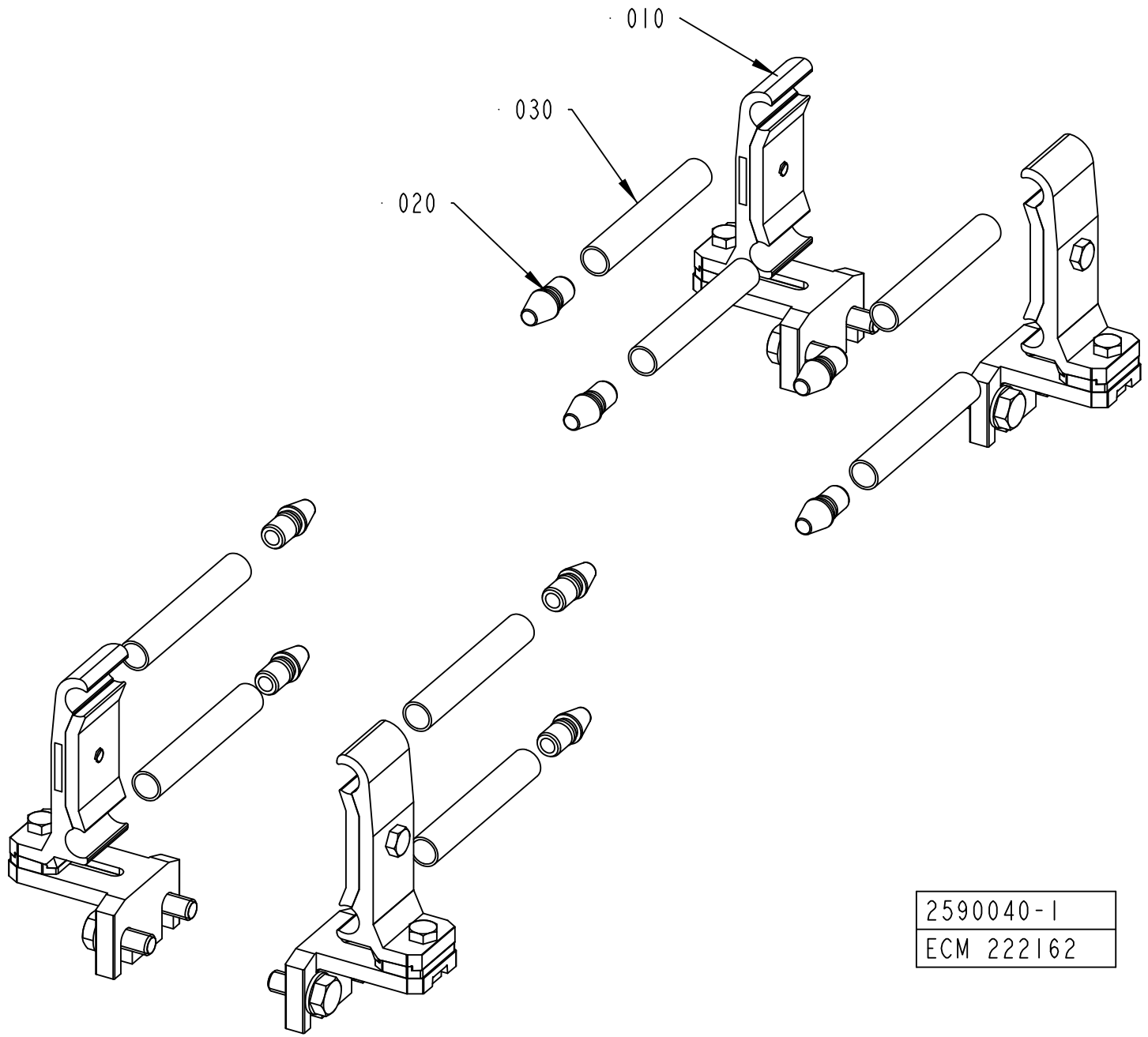
010
030
020
2590040-1
ECM 222162

ECM: 228041 - 20051222
Group number: 2590040-0100
Assembly Drawing: 2590040-1_1_AB

Pos	Part No	UN	Qty	Description	Page No
-					
010	1550743-0200		4	RAIL HOLDER	**5-73, 11-31**
020	540169-0000		8	DOWEL	
030	2590051-0000		8	PIPE	

Pos	Part No	UN	Qty	Description	Page No

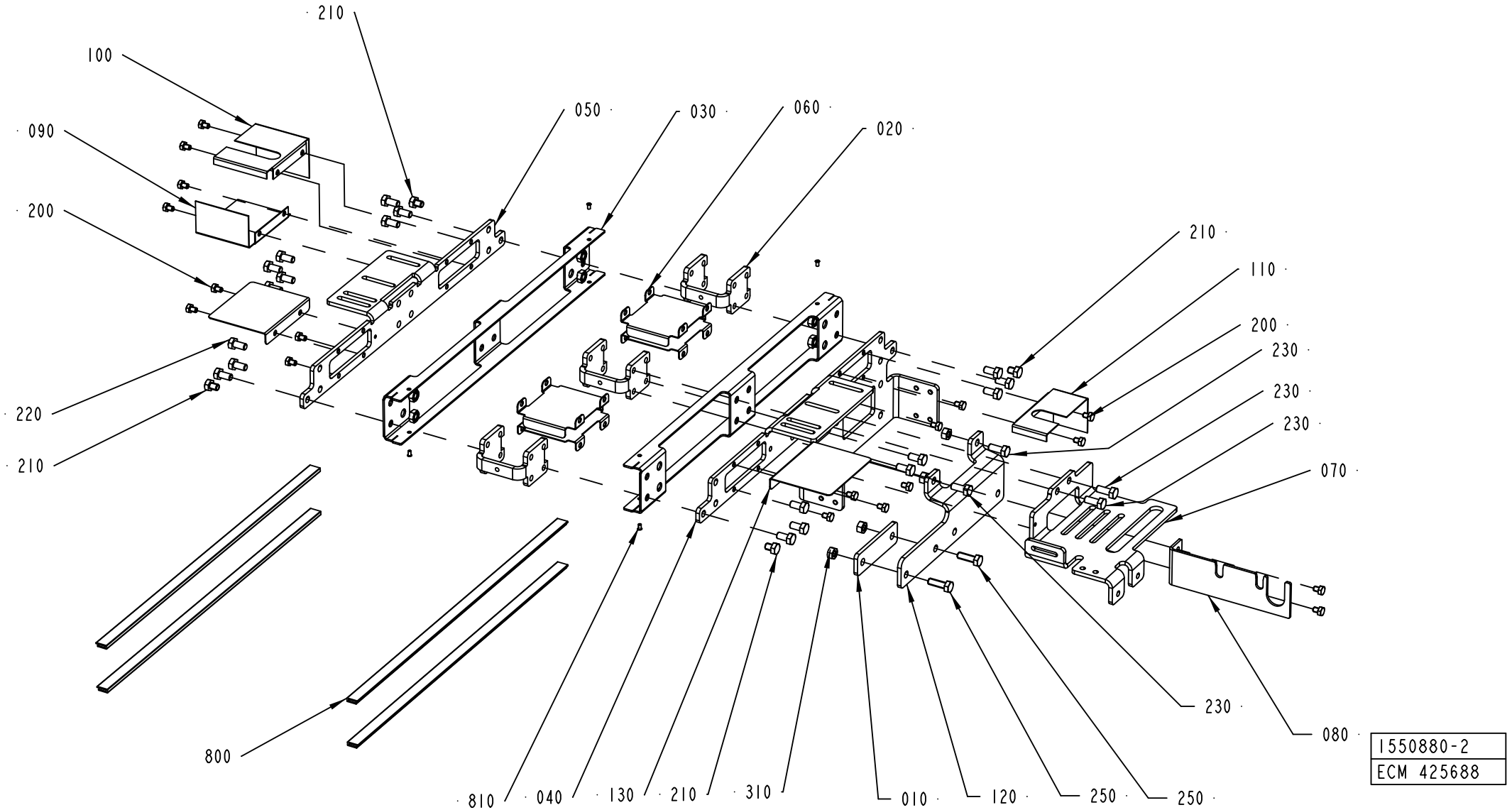
210
100
090
200
220
210
050
030
060
020
210
110
200
230
230
230
070
080
800
810
040
130
210
310
010
120
250
250
230
1550880-2
ECM 425688

ECM: 429153 - 20091217
Group number: 1550880-0200
Assembly Drawing: 1550880-2_1_AB

Pos	Part No	UN	Qty	Description	Page No
-					
010	1550199-0000		1	SPACER	
020	2561206-0000		3	SPACER	
030	3075957-0000		2	SIDE PLATE	
040	1550912-0000		1	PLATE	
050	1550913-0000		1	PLATE	
060	1550956-0000		4	PLATE	
070	3037105-0000		1	BRACKET	
080	2561609-0000		1	BRACKET	
090	2590044-0000		1	PLATE	
100	2590045-0000		1	PLATE	
110	2590046-0000		1	PLATE	
120	2590047-0000		1	BRACKET	
130	2590275-0000		2	COVER	
200	312105-0362		18	SCREW M6S ISO 4017 M6X8 A480	
210	90459-4735		4	SCREW M6S ISO 4017 M8X10 A480	
220	312105-0449		14	SCREW M6S ISO 4017 M8X16 A480	
230	312105-0451		4	SCREW M6S ISO 4017 M8X20 A480	
250	312105-0453		2	SCREW M6S ISO 4017 M8X25 A480	
310	312605-0318		4	HEXAGON NUT, M6M M8 A280	
800	1550595-4960		4	SLIDING STRIP	
810	90600-6183		4	TUBULAR RIVET 3,5X6,2	

Pos	Part No	UN	Qty	Description	Page No

CHAIN TENSIONER

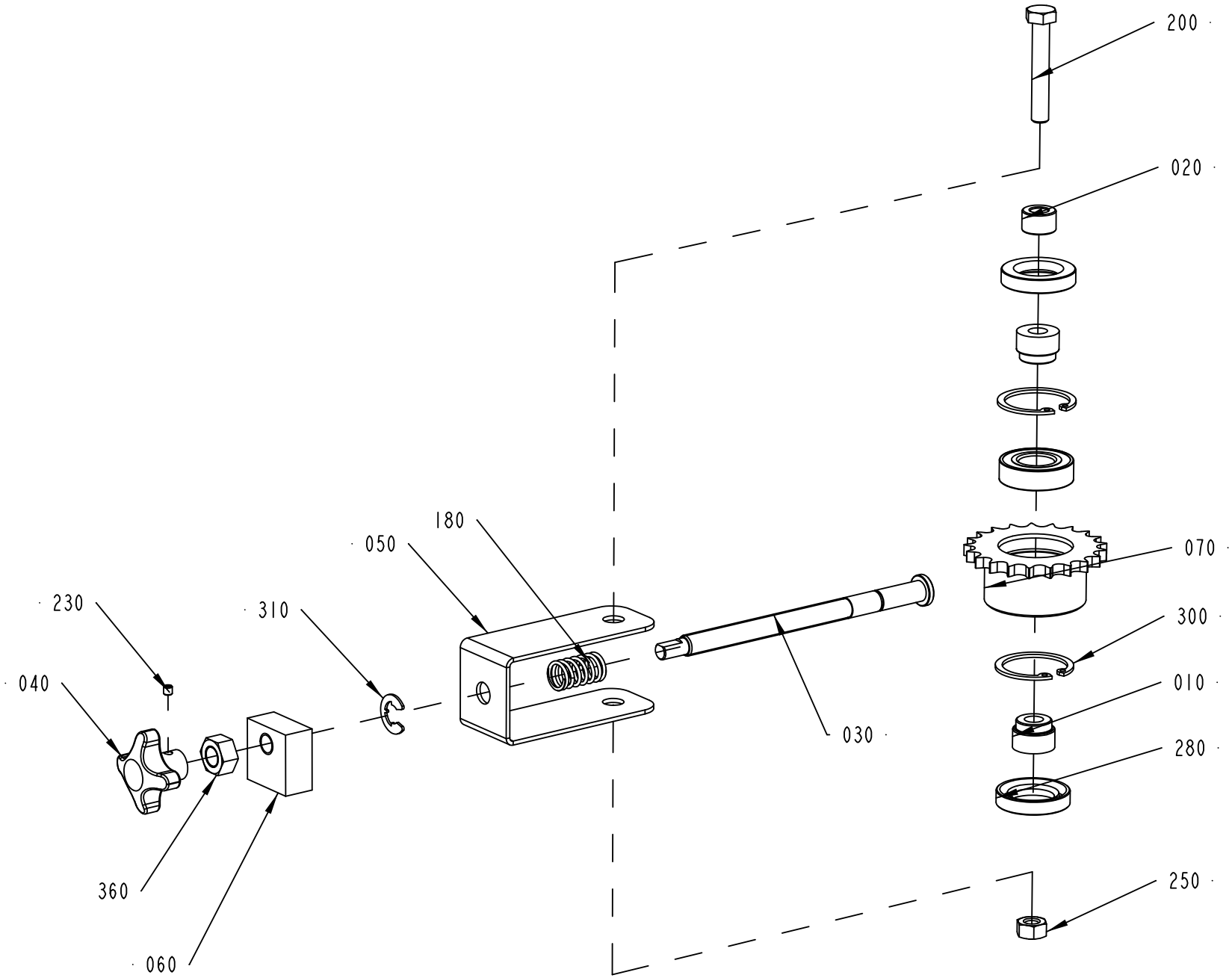

1550957-1
ECM 429598

ECM: 430827 - 20091216
Group number: 1550957-0100
Assembly Drawing: 1550957-1_1_AC

Pos	Part No	UN	Qty	Description	Page No
-					
010	533237-0000		2	AXLE PIN	
020	2561613-0000		1	SPACER	
030	2590266-0000		1	PIN	
040	1550185-0000		1	COCK HANDLE	
050	1550959-0000		1	CLAMP	
060	1550960-0000		1	BLOCK	
070	1550971-0000		1	SPROCKET	
180	90335-0036		1	COMP. SPRING 22450, 1,6X14,1X24	
200	312105-0461		1	SCREW M6S ISO 4014 M8X50 A480	
230	312318-0283		1	SCREW ISO4029 M4X4 A4	
250	312605-0318		1	HEXAGON NUT, M6M M8 A280	
280	315221-0145		2	RADIAL SEAL 20X35X7 MM	
300	315753-0124		2	RETAINING RING FOR BORE DIN 472 35 SS	
310	315755-0110		1	RETAINING RING SHAFT DIN 6799 9 SS	
350	1550348-0001		1	BALL BEARING 17/35X10	
360	312607-0320		1	HEXAGON NUT, EN 24032 M6M M10 A480	

Pos	Part No	UN	Qty	Description	Page No

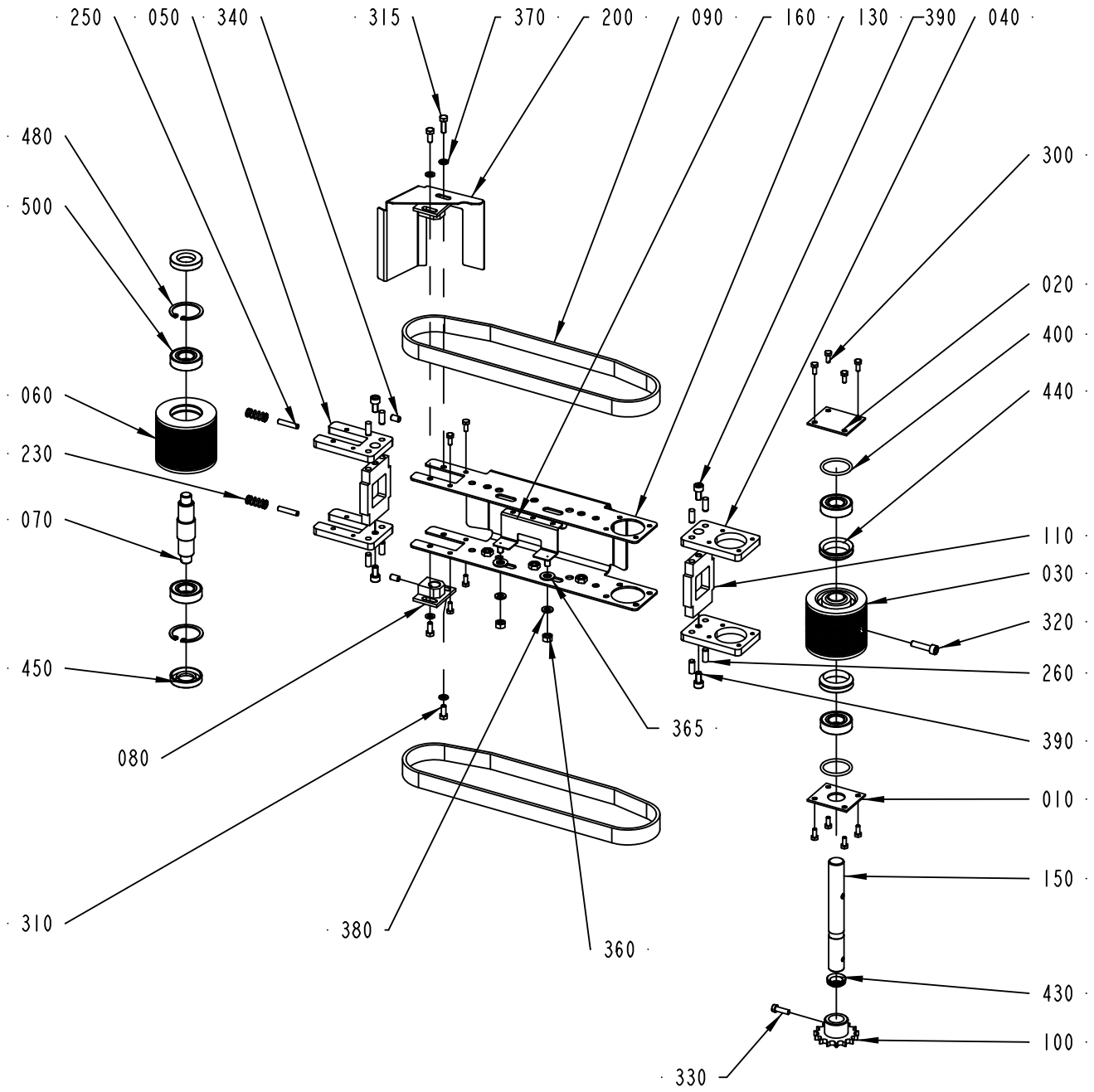
250
050
340
315
370
200
090
160
130
390
040
480
500
300
020
400
440
060
230
070
110
030
320
260
450
080
365
390
010
150
310
380
360
430
100
330
1550977-3
429598

ECM: 429813 - 20091216
Group number: 1550977-0300
Assembly Drawing: 1550977-3_1_AB

Pos	Part No	UN	Qty	Description	Page No
-					
010	533234-0000		1	LID	
020	533235-0000		1	LID	
030	561652-0000		1	WHEEL	
040	2656425-0000		2	PLATE	
050	2656426-0000		2	PLATE	
060	1359389-0000		1	ROLL	
070	1359390-0000		1	SHAFT	
080	1359391-0000		1	MOUNTING BLOCK	
090	1359776-0000		2	BELT	
100	1550972-0000		1	SPROCKET	
110	3042014-0000		2	PLATE	
130	3019347-0000		1	PLATE	
150	2862607-0000		1	SHAFT	
160	1550999-0000		1	PHOTOCELL BRACKET	
200	3068377-0000		1	TOUCH GUARD	
230	90335-0067		2	COMP. SPRING 22370, 1,6X9,6X31,75	
250	311103-1312		2	PARALLEL PIN ISO 2338 5M6X24 A1	
260	311103-0351		8	PARALLEL PIN ISO 2338 6M6X16 A1	
300	312105-0289		12	SCREW M6S H4X10 A4 70 ISO4017/DIN933	
310	312105-0327		3	SCREW M6S ISO 4017 M5X12 A480	
315	312105-0329		1	SCREW M6S ISO 4017 M5X16 A480	
320	312115-0372		1	SCREW ISO4762 M6X25 A4 80	
330	312125-0329		1	SCREW ISO 1207 M5X16 A4	
340	312318-0364		2	SCREW ISO4029 M6X10 A4	
360	312605-0316		2	HEXAGON NUT, M6M M6 A280	
365	315105-0165		2	WASHER BRB 8,4X16 RFR	
370	315105-0146		4	WASHER BRB 5,3X10 RFR	
380	315105-0153		2	WASHER BRB 6,4X12 RFR	
390	312115-0366		4	SCREW ISO4762 M6X12 A4 80	
400	315202-0219		2	O-RING 29,2X3 MM	
430	315220-0130		1	V-RING 14X20X7,7 MM V-16S	
440	315220-0172		2	V-RING 29X37X10,5 MM V-32S	
450	315221-0137		2	RADIAL SEAL 17X35X7 MM	
480	315753-0124		2	RETAINING RING FOR BORE DIN 472 35 SS	
500	1550348-0001		4	BALL BEARING 17/35X10	

Pos	Part No	UN	Qty	Description	Page No

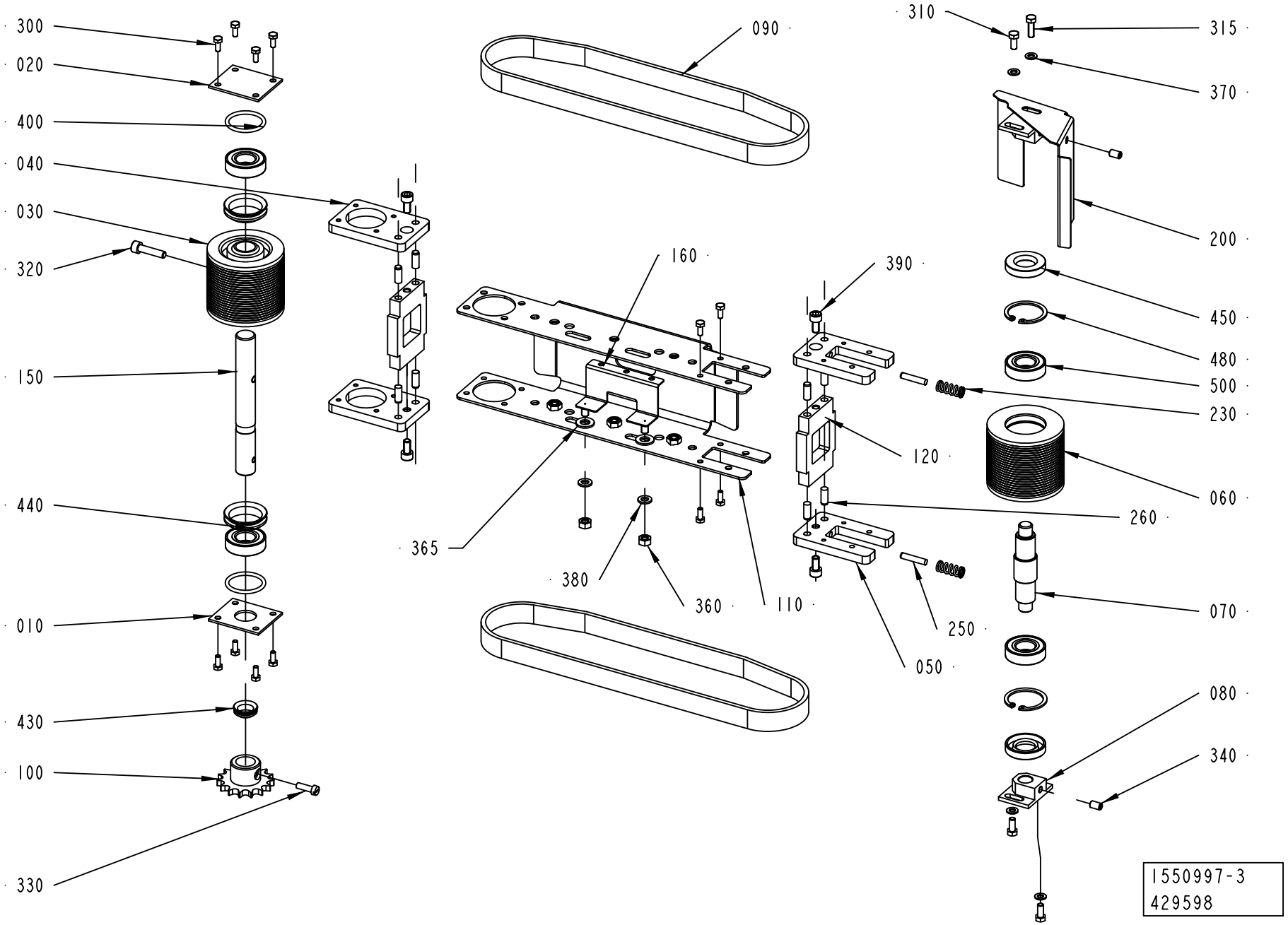
300
020
400
040
030
320
150
440
010
430
100
330
090
160
365
380
360
110
310
315
370
200
390
450
480
500
230
120
060
260
070
250
050
080
340
1550997-3
429598

ECM: 429814 - 20091216
Group number: 1550997-0300
Assembly Drawing: 1550997-3_1_AB

Pos	Part No	UN	Qty	Description	Page No
-					
010	533234-0000		1	LID	
020	533235-0000		1	LID	
030	561652-0000		1	WHEEL	
040	2656425-0000		2	PLATE	
050	2656426-0000		2	PLATE	
060	1359389-0000		1	ROLL	
070	1359390-0000		1	SHAFT	
080	1359391-0000		1	MOUNTING BLOCK	
090	1359776-0000		2	BELT	
100	1550972-0000		1	SPROCKET	
110	3019347-0000		1	PLATE	
120	3042014-0000		2	PLATE	
150	2862607-0000		1	SHAFT	
160	1550999-0000		1	PHOTOCELL BRACKET	
200	3068379-0000		1	TOUCH GUARD	
230	90335-0067		2	COMP. SPRING 22370, 1,6X9,6X31,75	
250	311103-1312		2	PARALLEL PIN ISO 2338 5M6X24 A1	
260	311103-0351		8	PARALLEL PIN ISO 2338 6M6X16 A1	
300	312105-0289		12	SCREW M6S H4X10 A4 70 ISO4017/DIN933	
310	312105-0327		4	SCREW M6S ISO 4017 M5X12 A480	
315	312105-0329		1	SCREW M6S ISO 4017 M5X16 A480	
320	312115-0372		1	SCREW ISO4762 M6X25 A4 80	
330	312125-0329		1	SCREW ISO 1207 M5X16 A4	
340	312318-0364		2	SCREW ISO4029 M6X10 A4	
360	312605-0316		2	HEXAGON NUT, M6M M6 A280	
365	315105-0165		2	WASHER BRB 8,4X16 RFR	
370	315105-0146		4	WASHER BRB 5,3X10 RFR	
380	315105-0153		2	WASHER BRB 6,4X12 RFR	
390	312115-0366		4	SCREW ISO4762 M6X12 A4 80	
400	315202-0219		2	O-RING 29,2X3 MM	
430	315220-0130		1	V-RING 14X20X7,7 MM V-16S	
440	315220-0172		2	V-RING 29X37X10,5 MM V-32S	
450	315221-0137		2	RADIAL SEAL 17X35X7 MM	
480	315753-0124		2	RETAINING RING FOR BORE DIN 472 35 SS	
500	1550348-0001		4	BALL BEARING 17/35X10	

Pos	Part No	UN	Qty	Description	Page No

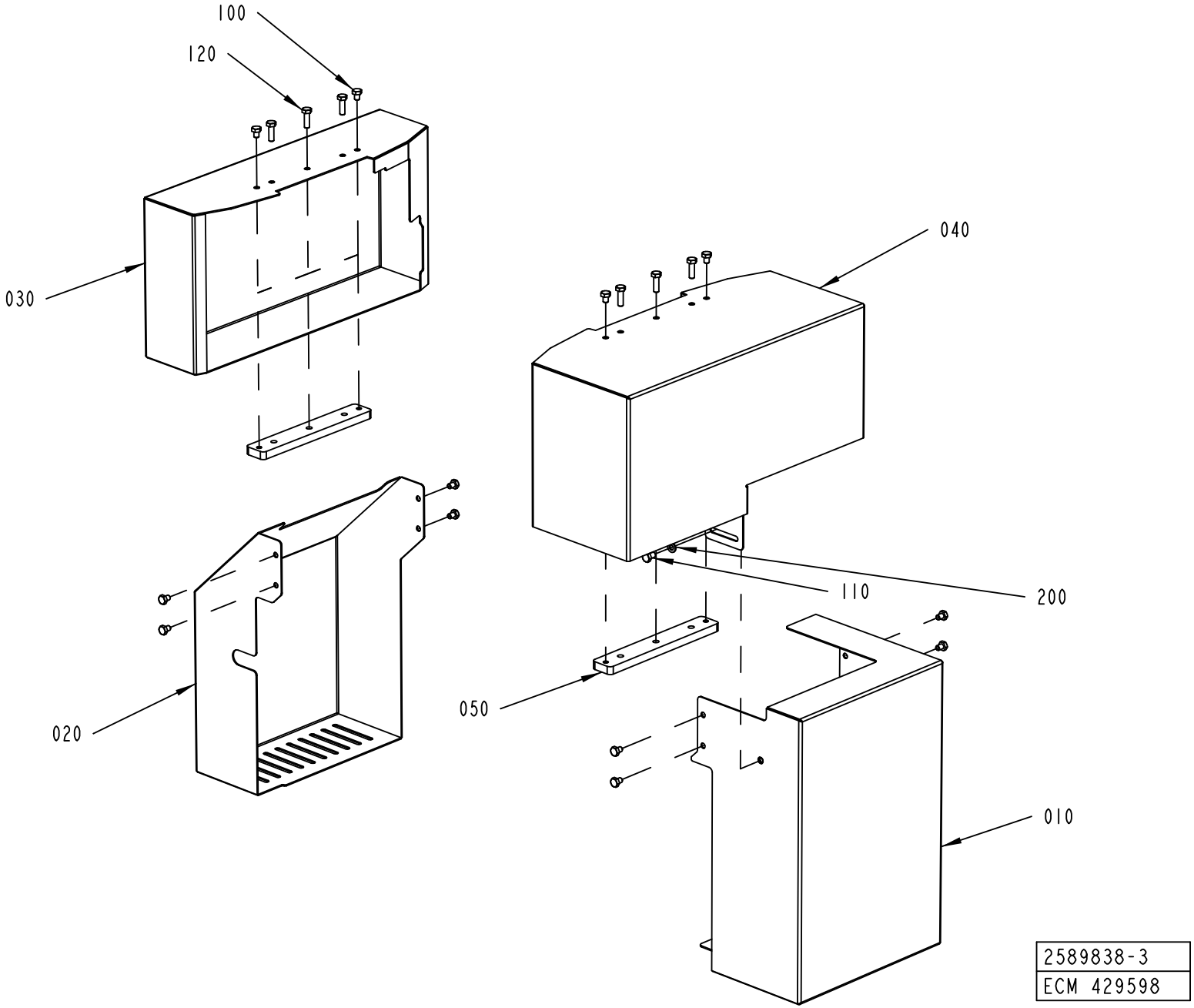
100
120
030
040
110
200
020
050
010
2589838-3
ECM 429598

ECM: 431442 - 20091217
Group number: 2589838-0300
Assembly Drawing: 2589838-3_1_AB

Pos	Part No	UN	Qty	Description	Page No
-					
010	2561620-0000		1	COVER	
020	2561622-0000		1	COVER	
030	3068380-0000		1	COVER	
040	3068375-0000		1	COVER	
050	2561625-0000		2	PLATE	
100	312105-0362		12	SCREW M6S ISO 4017 M6X8 A480	
110	312105-0364		1	SCREW M6S ISO 4017 M6X10 A480	
120	312105-0370		6	SCREW M6S ISO 4017 M6X20 A480	
200	315105-0153		1	WASHER BRB 6,4X12 RFR	

Pos	Part No	UN	Qty	Description	Page No

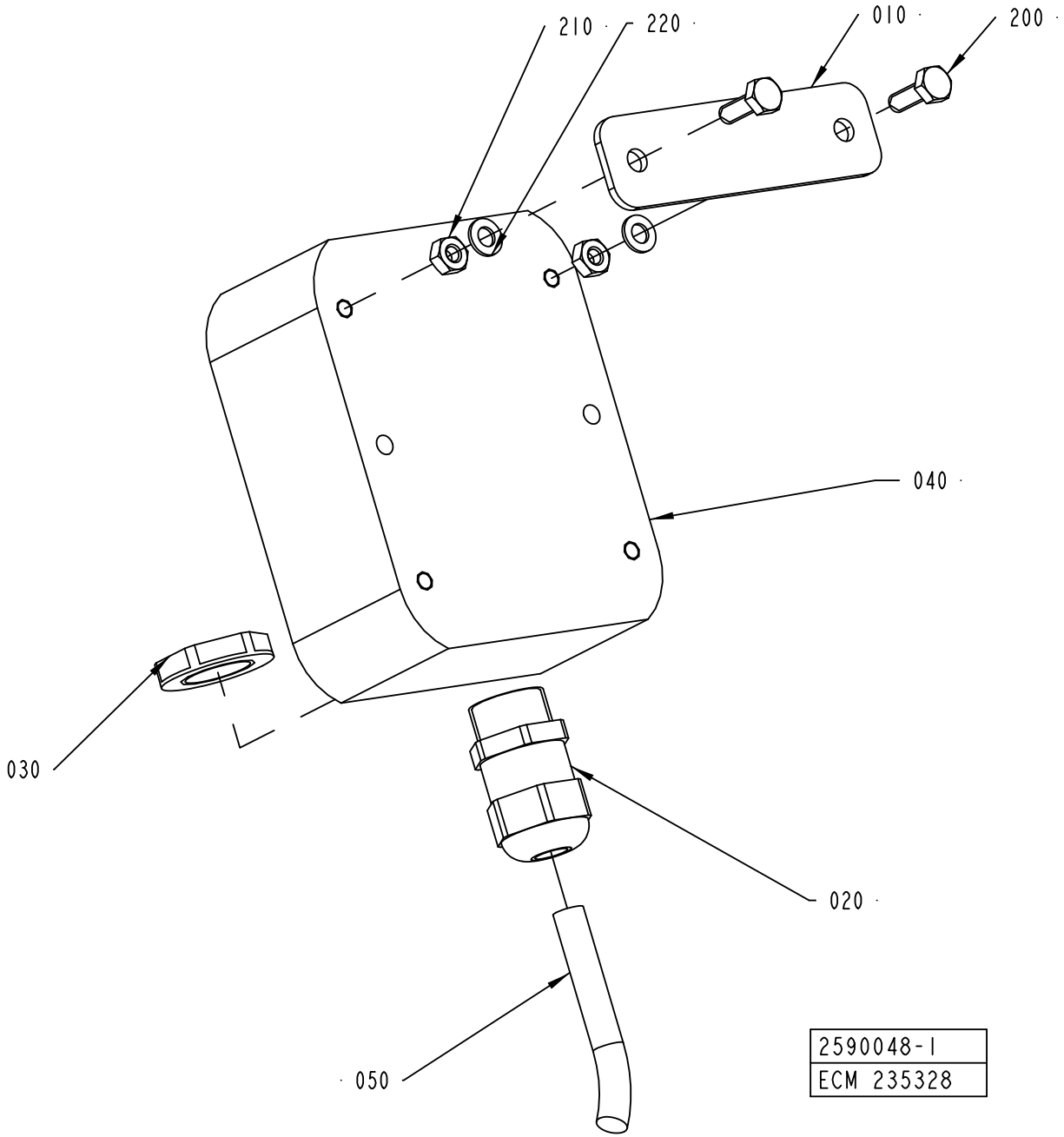
210
220
010
200
040
030
020
050
2590048-1
ECM 235328

ECM: 415017 - 20091113
Group number: 2590048-0100
Assembly Drawing: 2590048-1_1_AB

Pos	Part No	UN	Qty	Description	Page No
-					
010	2590049-0000		1	PLATE	
020	90458-0306		1	CABLE GLAND, M16X1,5, NO.5311 1010	
030	90458-0322		1	NUT, M16X1,5	
040	90458-1330		1	OPERATION DEVICE, MBG 22X, 823 8871	
050	90220-0091	CM	150	PAIR TWISTED CABLE 2X2X0,25MM2	
200	312105-0291		2	SCREW M6S ISO 4017 M4X12 A470	
210	312605-0312		2	HEXAGON NUT, M6M M4 A280	
220	315105-0136		2	WASHER BRB 4,3X8 RFR	

Pos	Part No	UN	Qty	Description	Page No

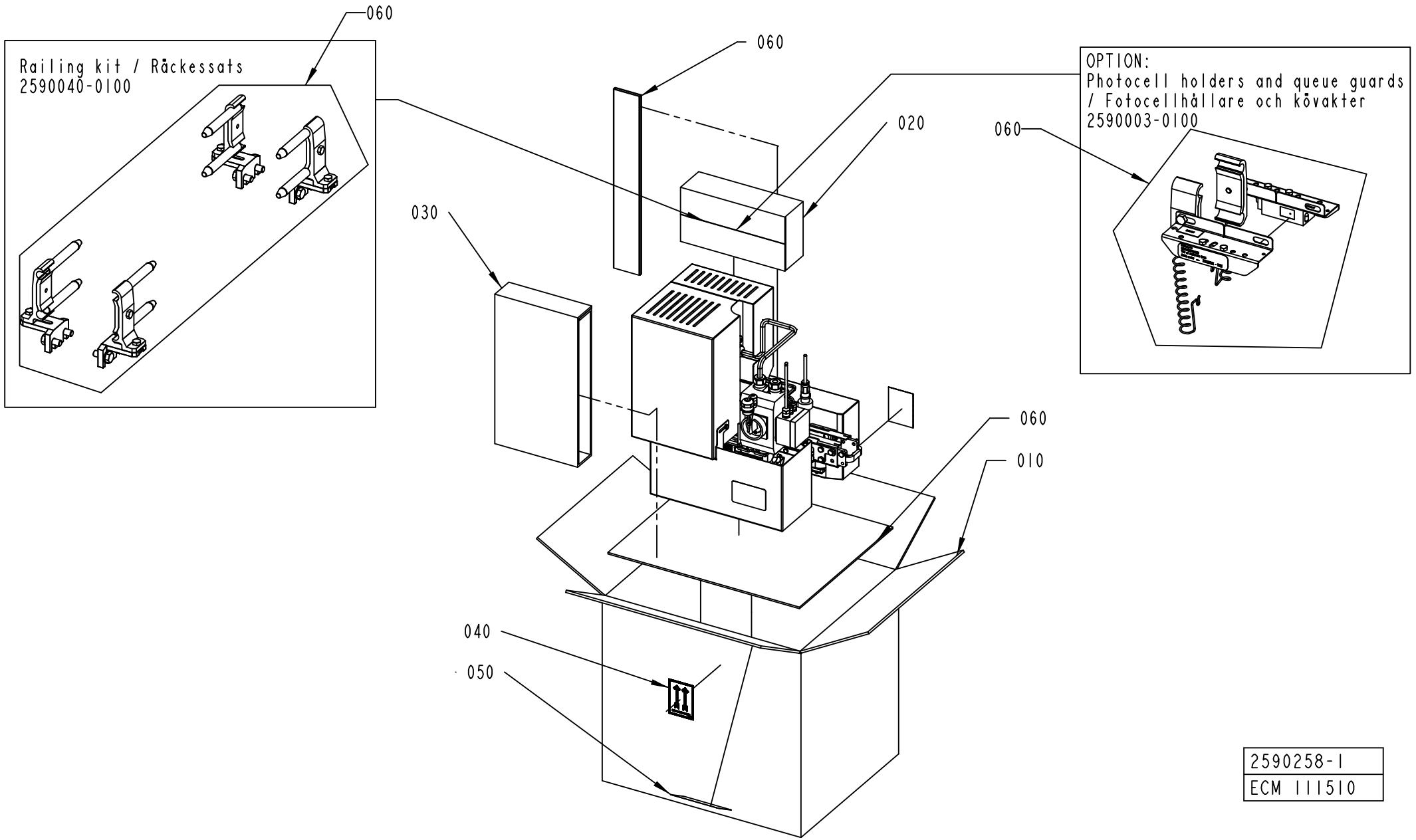

2590258-1
ECM 111510

ECM: 139005 - 20040212
Group number: 2590258-0100
Assembly Drawing: 2590258-1_1_AA

Pos	Part No	UN	Qty	Description	Page No
-					
010	2590259-0000		1	CORRUGATED CARDBOARD BOX	
020	2590260-0000		1	CORRUGATED CARDBOARD BOX	
030	2590261-0000		1	FILLING	
040	543267-0000		2	LABEL TAPE	
050	1086871-0000		1	LABEL TAPE	
060	90003-0474		1	PACKING	

Pos	Part No	UN	Qty	Description	Page No

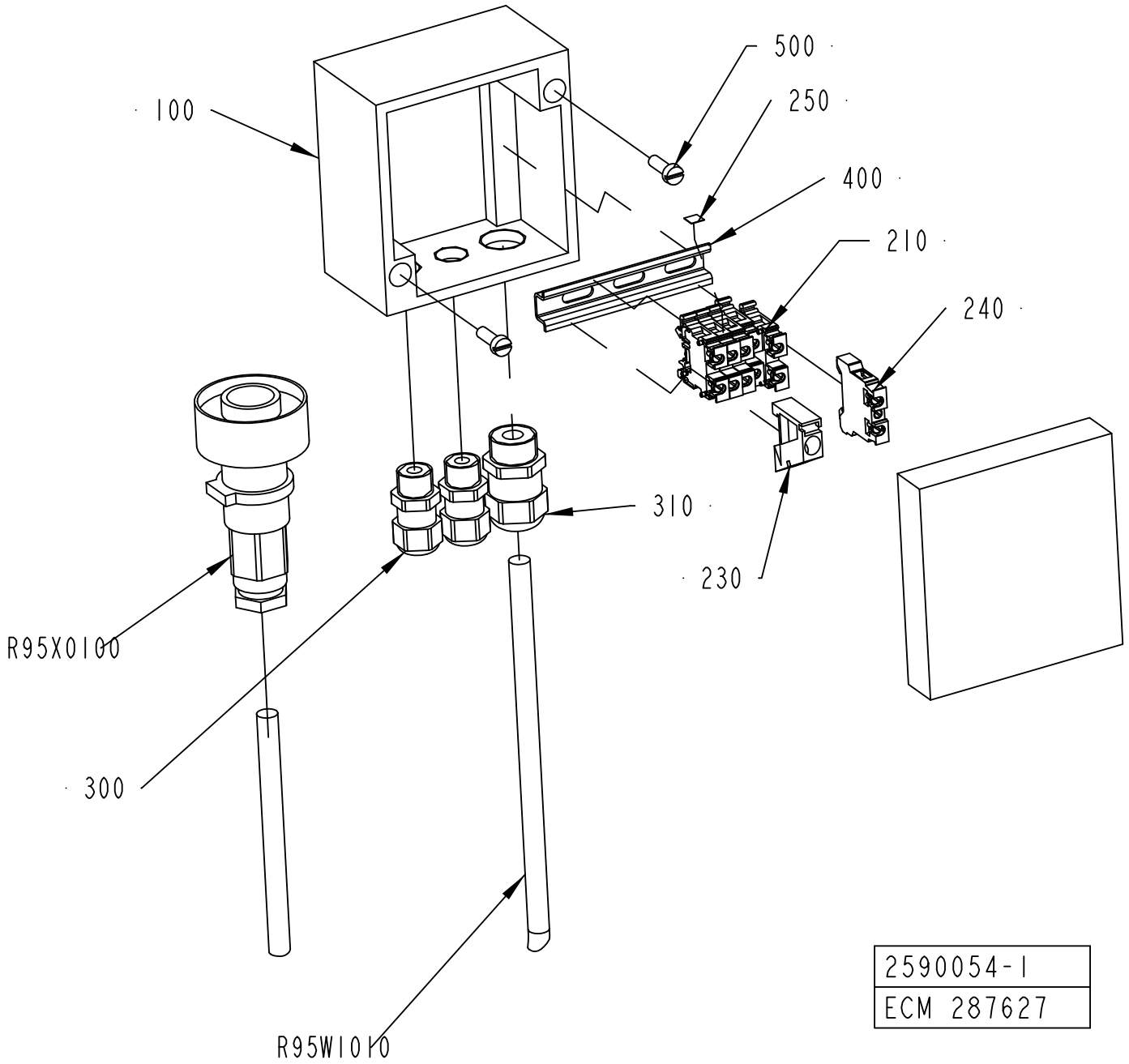

2590054-1
ECM 287627

ECM: 289538 - 20070516
Group number: 2590054-0100
Assembly Drawing: 2590054-1_1_AB

Pos	Part No	UN	Qty	Description	Page No
-					
100	2590053-0000		1	CONNECTION BOX	
210	90077-0123		5	FEED THROUGH TERMINAL, 017596	
230	90077-0308		1	END PLATE, 10-00038286-1	
240	90135-0042		1	EARTH TERMINAL, 130336	
250	359011-0807		1	MARKING, DEK 5 FW 1-50	
300	90458-0305		2	CABLE GLAND, M12X1,5, NO.5311 1000	
310	90458-0306		1	CABLE GLAND, M16X1,5, NO.5311 1010	
400	90077-0328	M	0.06	RAIL TS15/5	
500	312125-0291		2	SCREW ISO 1207 M4X12 A4	
600	351160-0102		1	WIRE AWM 1X0,75 MM2 DARKBLUE	
605	351162-0102	M	1	WIRE AWM 1X0,75 MM2 YELLOW-GREEN	
610	353001-0113		1	END SLEEVE 0,75MM2	
615	353101-0122		1	CABLE SHOE 0,5-1,5MM2 M5 RED	
620	359000-0201		1	WIRE MARKING, YELLOW, PA02/3"1"	
630	359000-0202		1	WIRE MARKING, YELLOW, PA02/3"2"	
640	359000-0203		1	YELLOW, PWIRE MARKING, YELLOW, PA02/3"3"	
650	359000-0204		1	WIRE MARKING, YELLOW, PA02/3"4"	
660	359000-0205		1	WIRE MARKING, YELLOW, PA02/3"5"	
670	359000-0654		1	WIRE MARKING, YELLOW, PA02/3"E"	
R95W1010	351150-0404	M	5	CABLE OLFLEX 4X0,75 MM2 LIGHT/GREY	
R95X0100	90110-0235		1	CABLE CONTACT, PX0739/P	

Pos	Part No	UN	Qty	Description	Page No

SUPPORT PLATE

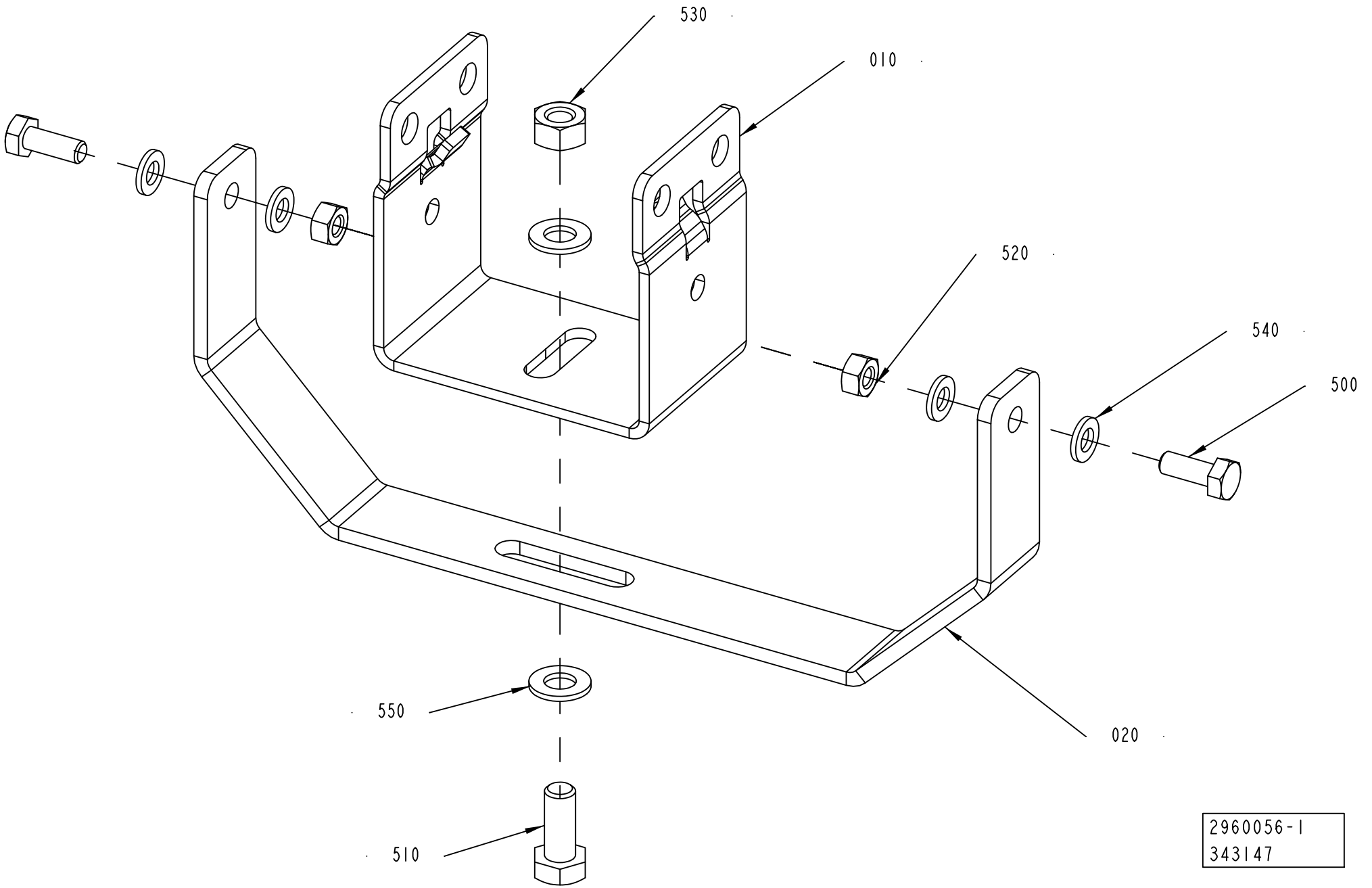

ECM: 346846 - 20070706
Group number: 2960056-0100
Assembly Drawing: 2960056-1_1_AA

Pos	Part No	UN	Qty	Description	Page No
-					
010	2656556-0000		1	BRACKET FOR LEG PC23	
020	2960057-0000		1	SUPPORT	
500	312105-0368		2	SCREW M6S ISO 4017 M6X16 A480	
510	312105-0451		1	SCREW M6S ISO 4017 M8X20 A480	
520	312605-0316		2	HEXAGON NUT, M6M M6 A280	
530	312605-0318		1	HEXAGON NUT, M6M M8 A280	
540	315105-0153		4	WASHER BRB 6,4X12 RFR	
550	315105-0165		2	WASHER BRB 8,4X16 RFR	

Pos	Part No	UN	Qty	Description	Page No

WHEEL CURVE 90 DEGREES

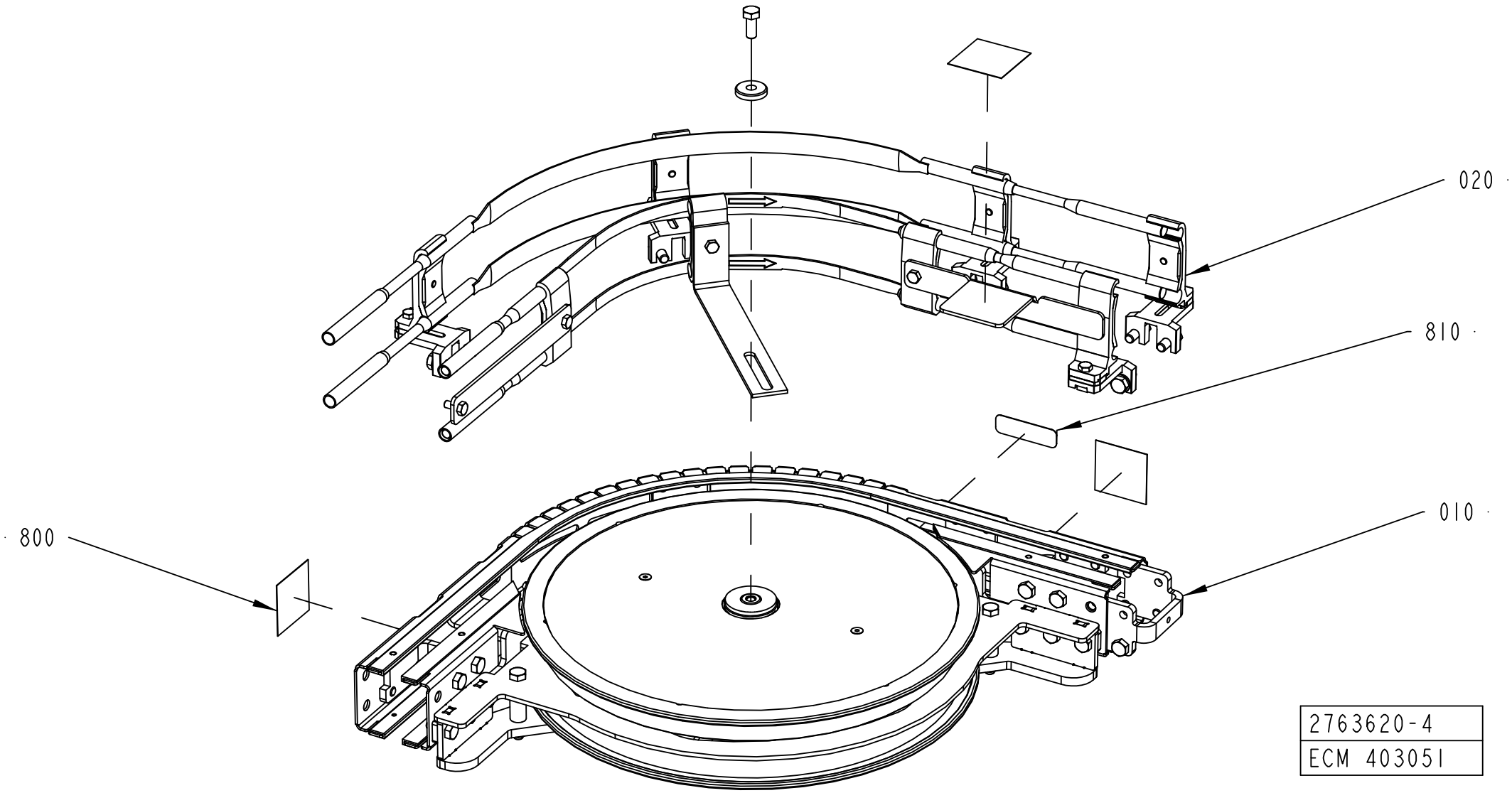

2763620-4
ECM 403051

ECM: 422715 - 20091106
Group number: 2763620-0200
Assembly Drawing: 2763620-4_1_AA

This list covers pages from 11-152 to 11-157

Pos	Part No	UN	Qty	Description	Page No
PC025-075 (See drawing on page: 11-156)					
020	3003841-0100		1	RAIL HOLDER	**11-159**
800	90459-7584		3	PROHOBITION SIGN ISO, DO NOT REACH IN	
820	2590237-0100		1	PACKING DESCRIPTION	**11-169**
PC040-100 (See drawing on page: 11-152)					
020	1550683-0100		1	RAILING KIT	**11-171**
800	90459-7584		3	PROHOBITION SIGN ISO, DO NOT REACH IN	
820	2590237-0100		1	PACKING DESCRIPTION	**11-169**
PC065-160 (See drawing on page: 11-154)					
020	2763424-0100		1	RAILING	**11-173**
820	2775679-0100		1	PACKING DESCRIPTION	**11-175**
Common Parts					
010	2763618-0100		1	CONVEYOR BODY	**11-177**
810	1086870-0000		1	SIGN	

Pos	Part No	UN	Qty	Description	Page No

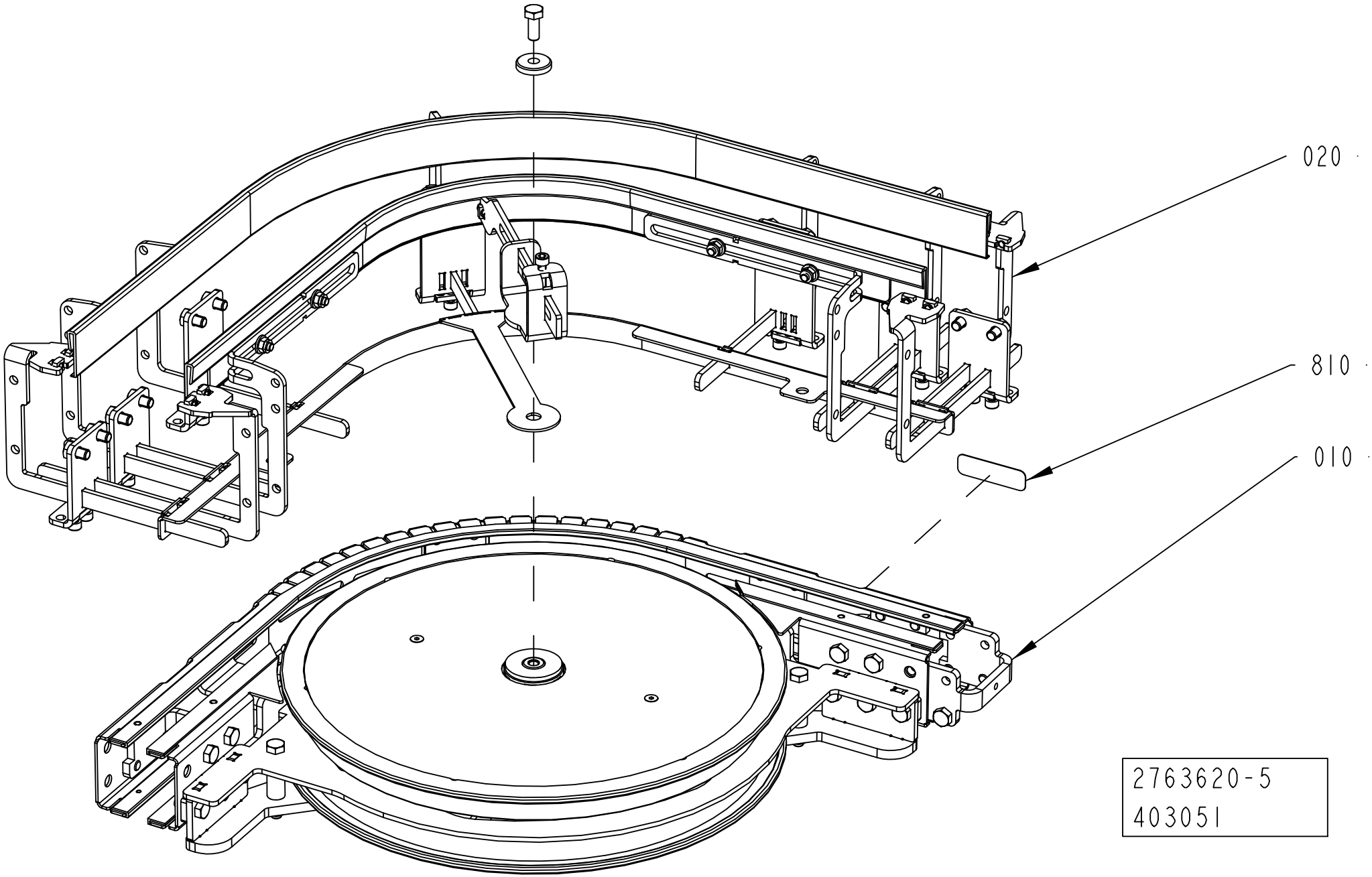
020
810
010
2763620-5
403051

ECM: 422715 - 20091106
Group number: 2763620-0200
Assembly Drawing: 2763620-5_1_AA

This list covers pages from 11-152 to 11-157

Pos	Part No	UN	Qty	Description	Page No
PC025-075 (See drawing on page: 11-156)					
020	3003841-0100		1	RAIL HOLDER	**11-159**
800	90459-7584		3	PROHOBITION SIGN ISO, DO NOT REACH IN	
820	2590237-0100		1	PACKING DESCRIPTION	**11-169**
PC040-100 (See drawing on page: 11-152)					
020	1550683-0100		1	RAILING KIT	**11-171**
800	90459-7584		3	PROHOBITION SIGN ISO, DO NOT REACH IN	
820	2590237-0100		1	PACKING DESCRIPTION	**11-169**
PC065-160 (See drawing on page: 11-154)					
020	2763424-0100		1	RAILING	**11-173**
820	2775679-0100		1	PACKING DESCRIPTION	**11-175**
Common Parts					
010	2763618-0100		1	CONVEYOR BODY	**11-177**
810	1086870-0000		1	SIGN	

Pos	Part No	UN	Qty	Description	Page No

WHEEL CURVE 90 DEGREES

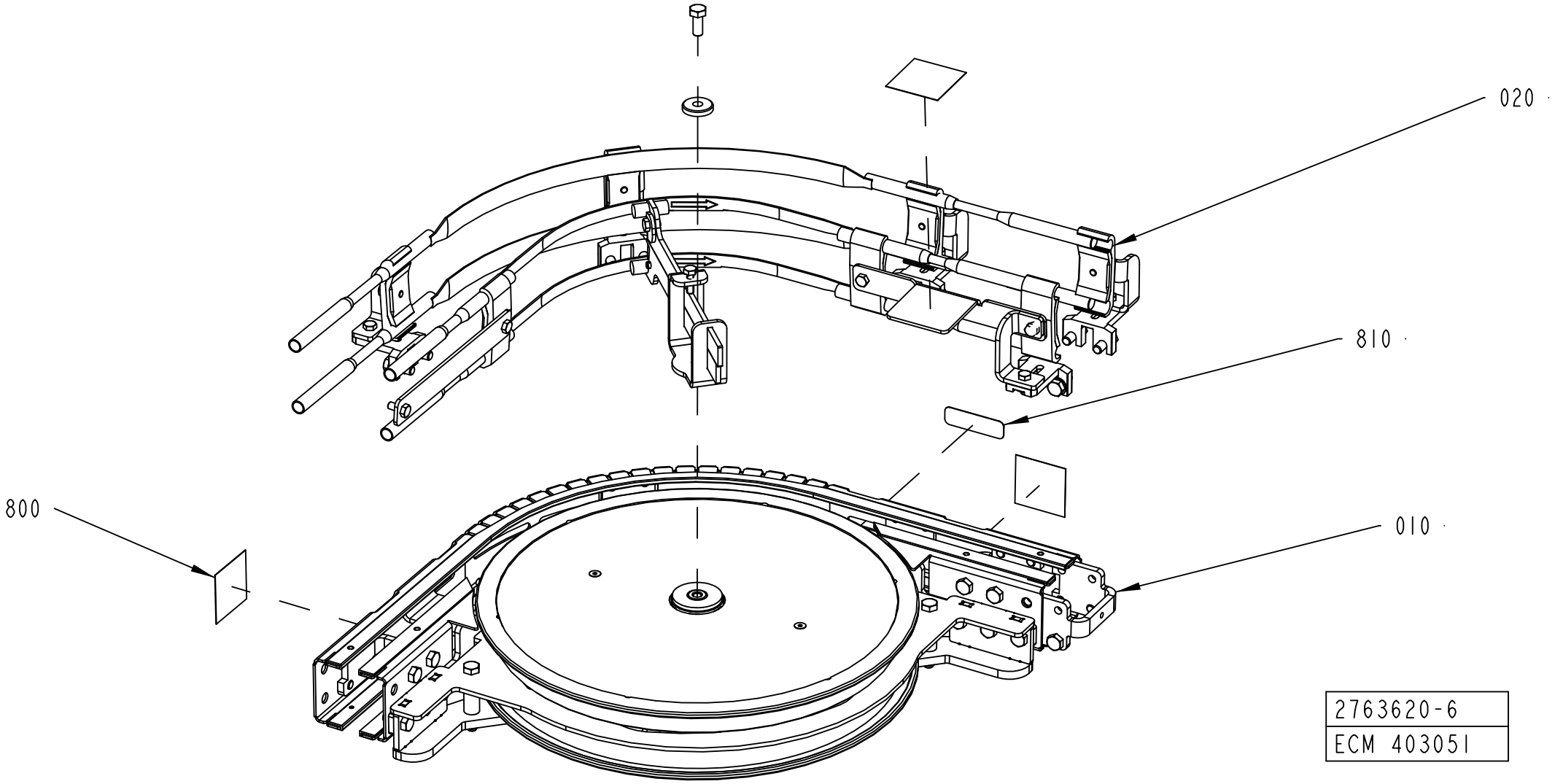

ECM: 422715 - 20091106
Group number: 2763620-0200
Assembly Drawing: 2763620-6_1_AA

This list covers pages from 11-152 to 11-157

Pos	Part No	UN	Qty	Description	Page No
PC025-075 (See drawing on page: 11-156)					
020	3003841-0100		1	RAIL HOLDER	**11-159**
800	90459-7584		3	PROHOBITION SIGN ISO, DO NOT REACH IN	
820	2590237-0100		1	PACKING DESCRIPTION	**11-169**
PC040-100 (See drawing on page: 11-152)					
020	1550683-0100		1	RAILING KIT	**11-171**
800	90459-7584		3	PROHOBITION SIGN ISO, DO NOT REACH IN	
820	2590237-0100		1	PACKING DESCRIPTION	**11-169**
PC065-160 (See drawing on page: 11-154)					
020	2763424-0100		1	RAILING	**11-173**
820	2775679-0100		1	PACKING DESCRIPTION	**11-175**
Common Parts					
010	2763618-0100		1	CONVEYOR BODY	**11-177**
810	1086870-0000		1	SIGN	

Pos	Part No	UN	Qty	Description	Page No

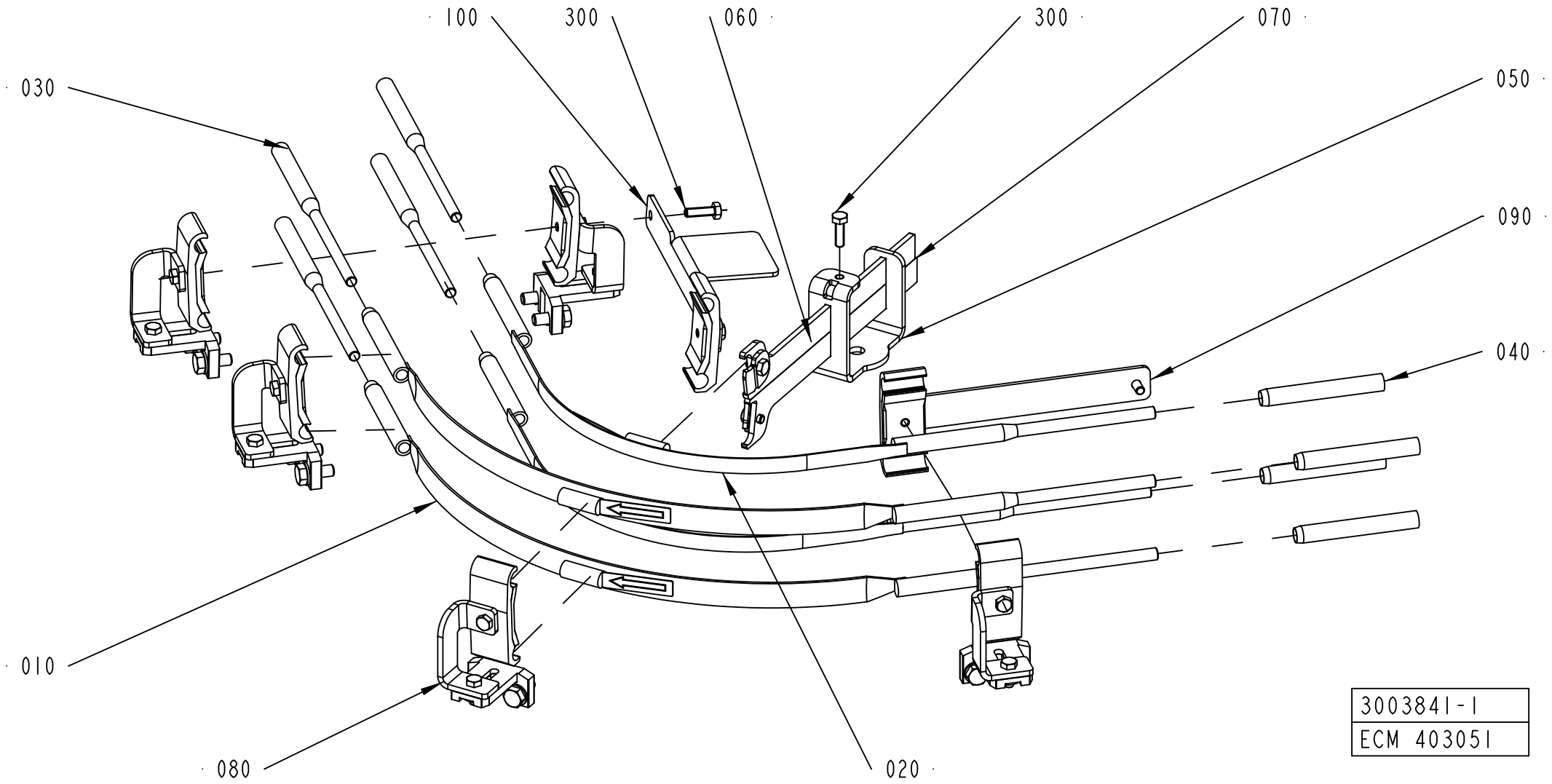
100
300
060
300
070
030
050
090
040
010
080
020
3003841-1
ECM 403051

ECM: 409108 - 20091008
Group number: 3003841-0100
Assembly Drawing: 3003841-1_1_AB

Pos	Part No	UN	Qty	Description	Page No
-					
010	1550684-0000		2	ARCH	
020	1550685-0000		2	ARCH	
030	1550664-0000		4	DOWEL	
040	1550665-0000		4	PIPE	
050	3003835-0000		1	BRACKET	
060	3003839-0100		1	RAIL HOLDER	**11-161**
070	3003840-0100		1	RAILHOLDER	**11-163**
080	2999197-0100		5	RAIL HOLDER	**11-93**
090	2561602-0100		1	RAIL HOLDER KIT	**5-51, 11-165**
100	3040991-0100		1	RAIL HOLDER KIT	**11-167**
300	312105-0370		2	SCREW M6S ISO 4017 M6X20 A480	

Pos	Part No	UN	Qty	Description	Page No

RAIL HOLDER

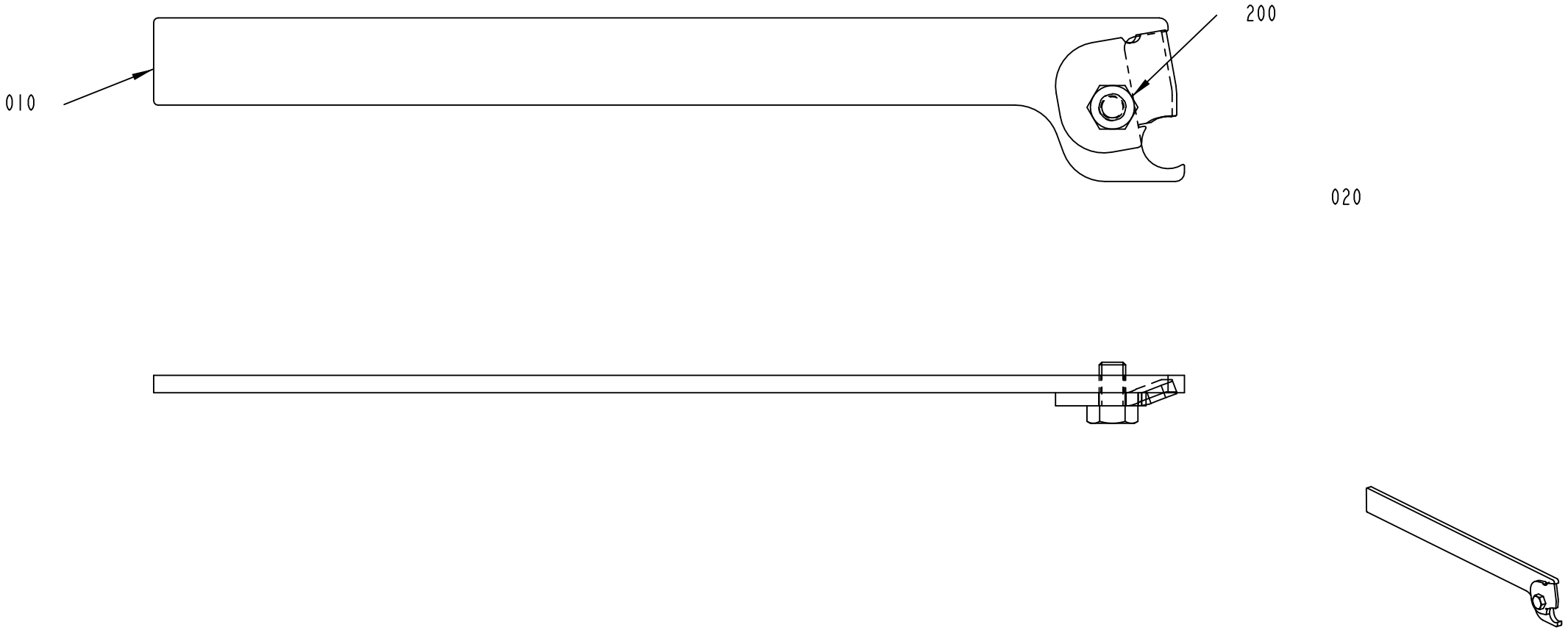

ECM: 389098 - 20090602
Group number: 3003839-0100
Assembly Drawing: 3003839-1_1_AA

Pos	Part No	UN	Qty	Description	Page No
-					
010	3003836-0000		1	RAIL HOLDER	
020	3003838-0000		1	BRACKET	
200	312105-0364		1	SCREW M6S ISO 4017 M6X10 A480	

Pos	Part No	UN	Qty	Description	Page No

RAILHOLDER



ECM: 389099 - 20090602
Group number: 3003840-0100
Assembly Drawing: 3003840-1_1_AA

Pos	Part No	UN	Qty	Description	Page No
-					
010	3003837-0000		1	RAIL HOLDER	
020	3003838-0000		1	BRACKET	
200	312105-0364		1	SCREW M6S ISO 4017 M6X10 A480	

Pos	Part No	UN	Qty	Description	Page No

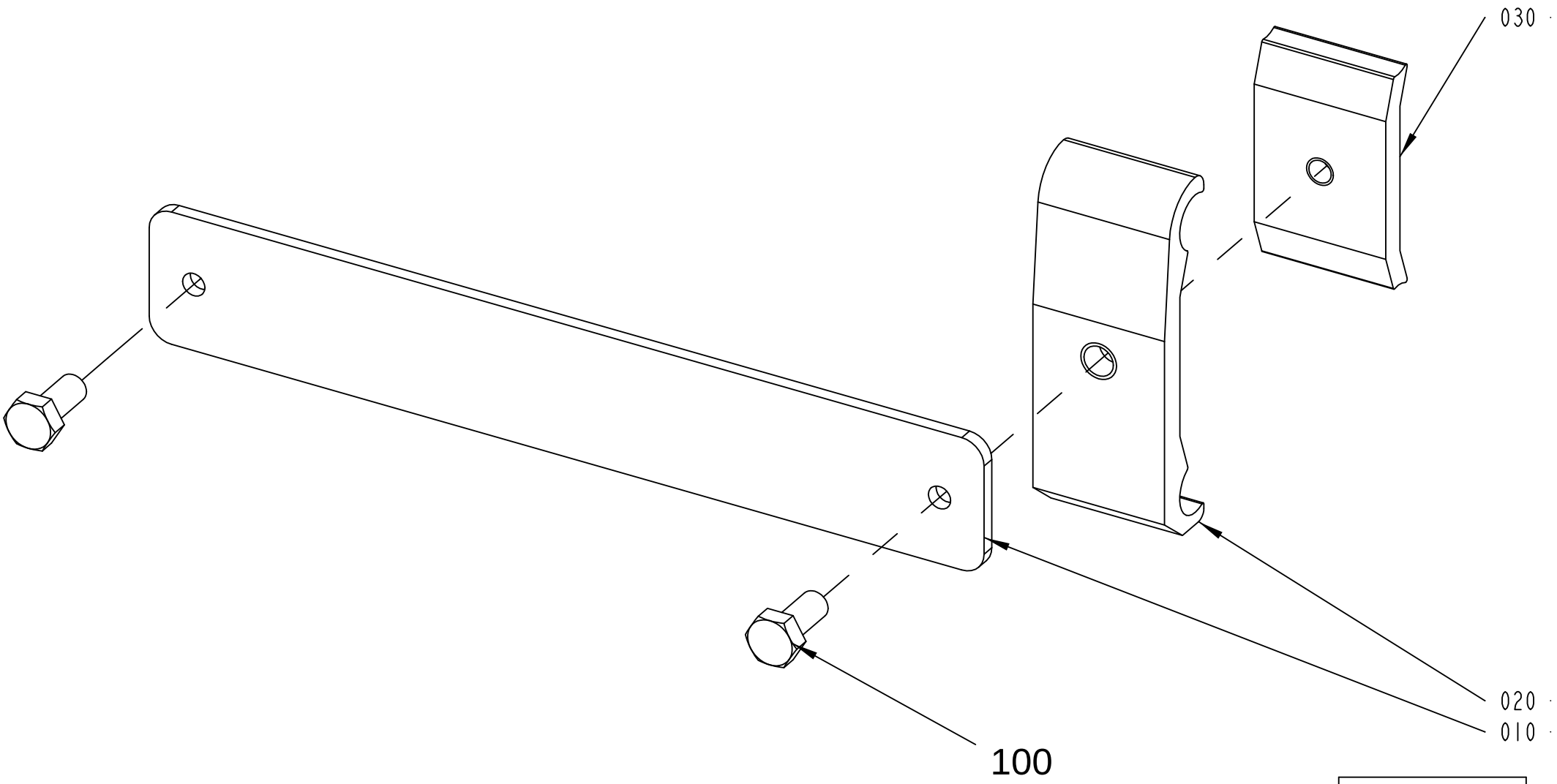

2561602-1
ECM 153837

ECM: 255321 - 20060302
Group number: 2561602-0100
Assembly Drawing: 2561602-1_1_AB

Pos	Part No	UN	Qty	Description	Page No
-					
010	2561596-0000		1	RAIL HOLDER KIT	
020	1366750-0000		1	HOLDER	
030	1366727-0000		1	CLAMP	
100	312105-0367		2	SCREW M6S ISO 4017 M6X14 A480	

Pos	Part No	UN	Qty	Description	Page No

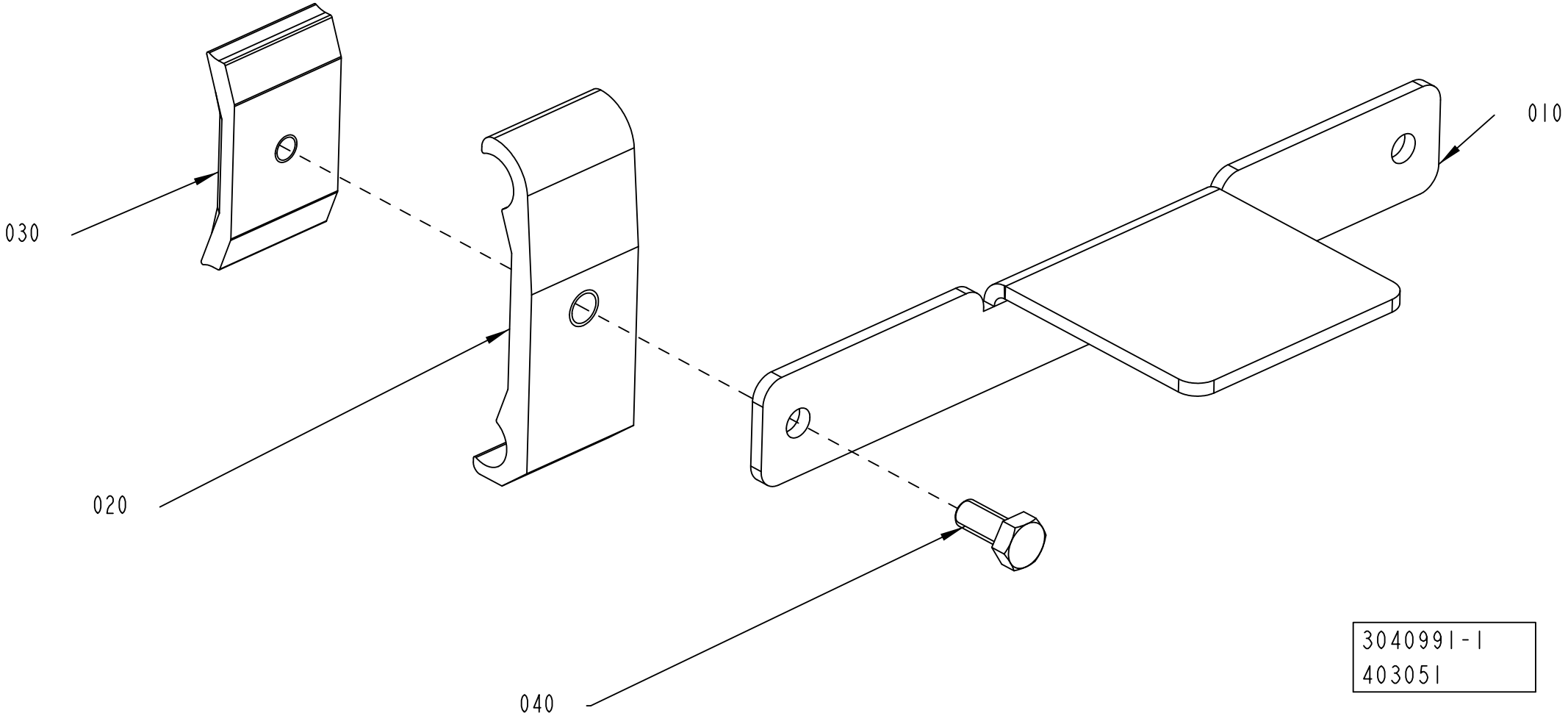
010
020
030
040
3040991-1
403051

ECM: 409104 - 20091008
Group number: 3040991-0100
Assembly Drawing: 3040991-1_1_AA

Pos	Part No	UN	Qty	Description	Page No
-					
010	3040992-0000		1	PLATE	
020	1366750-0000		1	HOLDER	
030	1366727-0000		1	CLAMP	
040	312105-0367		1	SCREW M6S ISO 4017 M6X14 A480	

Pos	Part No	UN	Qty	Description	Page No

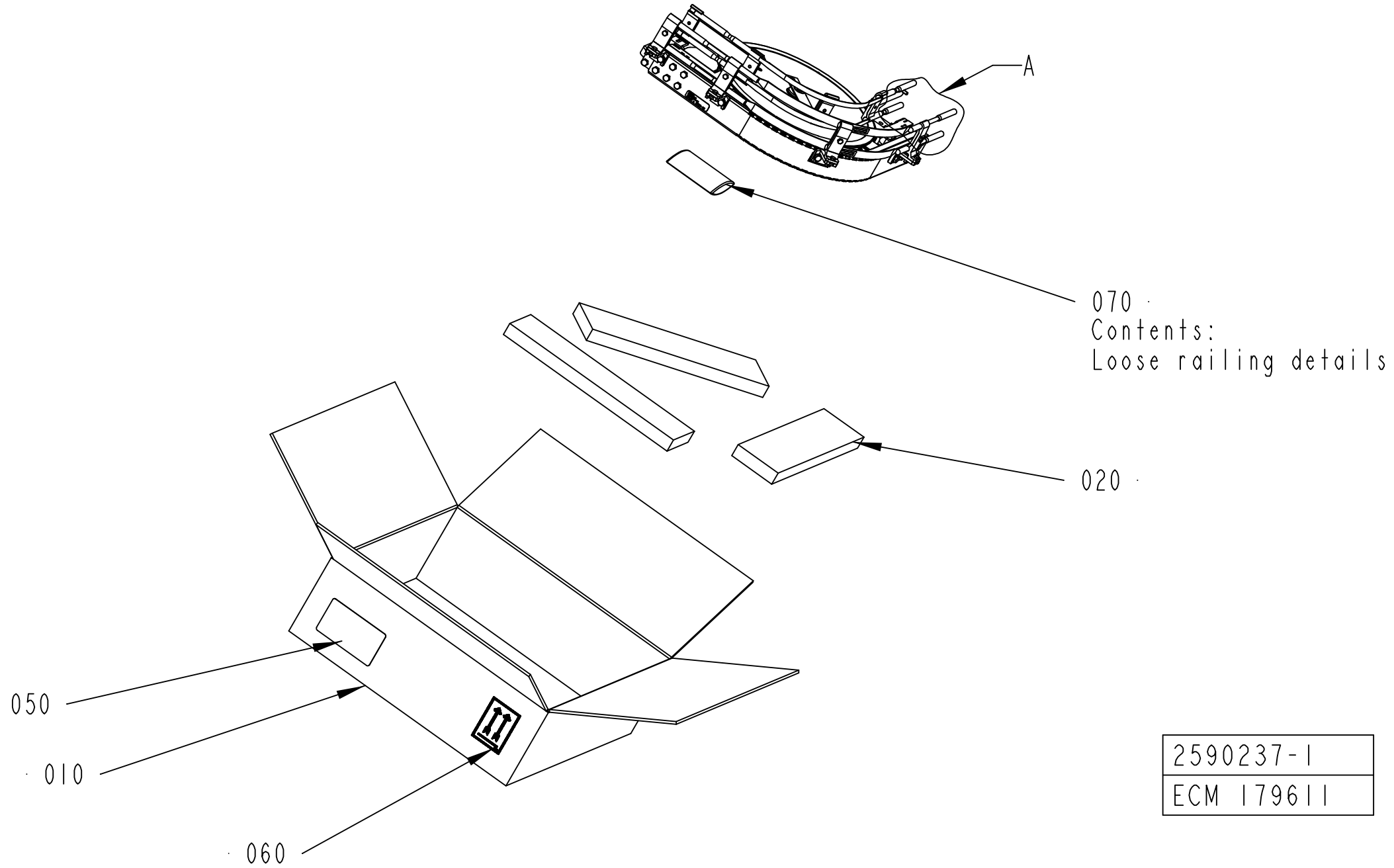

2590237-1
ECM 179611

ECM: 186687 - 20041124
Group number: 2590237-0100
Assembly Drawing: 2590237-1_1_AB

Pos	Part No	UN	Qty	Description	Page No	Pos	Part No	UN	Qty	Description	Page No
-											
010	2590229-0000		1	CORRUGATED CARDBOARD BOX							
020	2590245-0004		3	SUPPORT BLOCK							
050	1086871-0000		1	LABEL TAPE							
060	543267-0000		2	LABEL TAPE							
070	90003-0019		1	BAG							

RAILING KIT

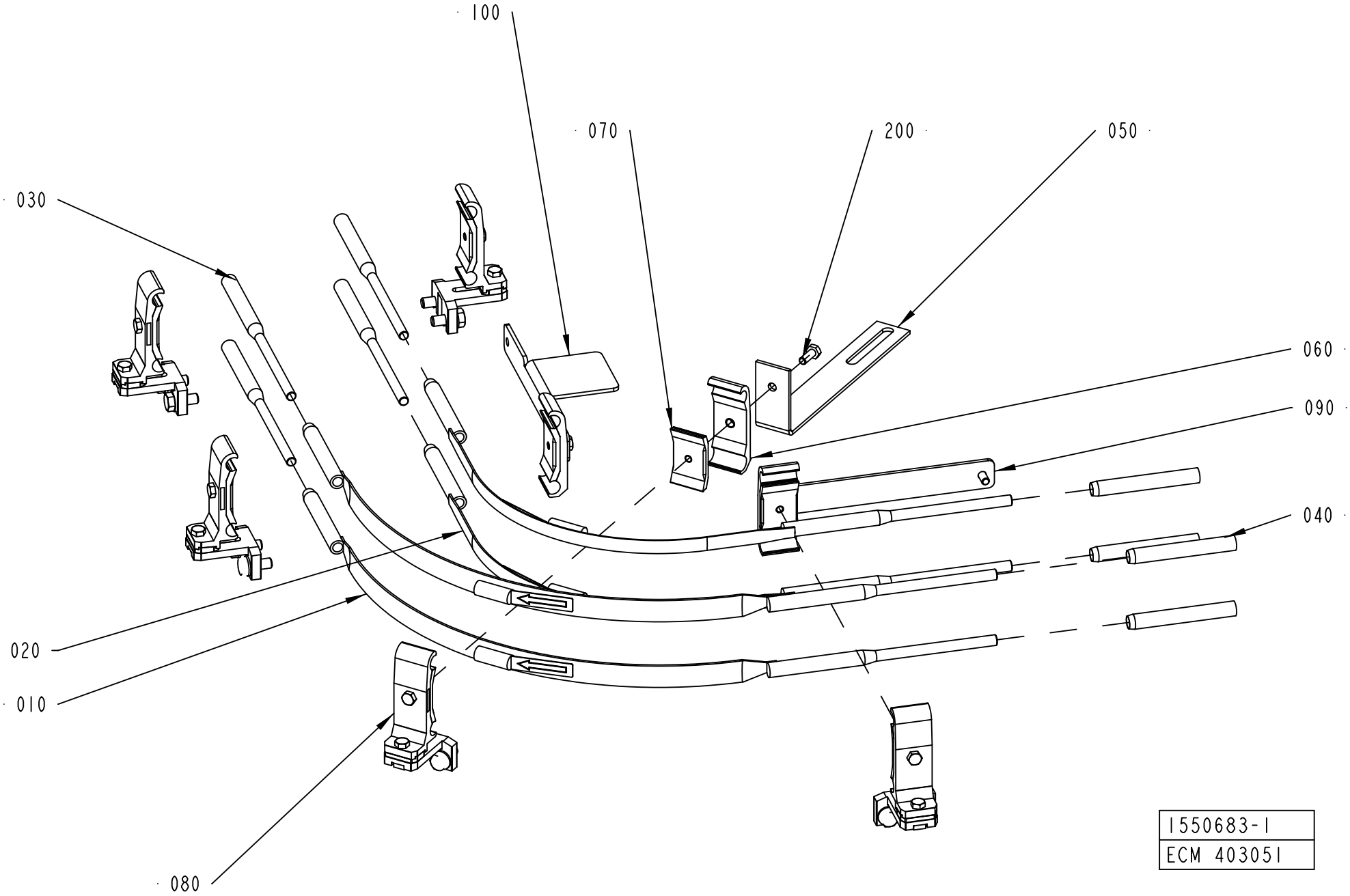
100
070
200
050
030
060
090
040
020
010
080
1550683-1
ECM 403051

ECM: 409106 - 20091008
Group number: 1550683-0100
Assembly Drawing: 1550683-1_1_AD

Pos	Part No	UN	Qty	Description	Page No
-					
010	1550684-0000		2	ARCH	
020	1550685-0000		2	ARCH	
030	1550664-0000		4	DOWEL	
040	1550665-0000		4	PIPE	
050	1550666-0000		1	HOLDER	
060	1366750-0000		1	HOLDER	
070	1366727-0000		1	CLAMP	
080	1550743-0200		5	RAIL HOLDER	**5-73, 11-31**
090	2561602-0100		1	RAIL HOLDER KIT	**5-51, 11-165**
100	3040991-0100		1	RAIL HOLDER KIT	**11-167**
200	312105-0368		1	SCREW M6S ISO 4017 M6X16 A480	

Pos	Part No	UN	Qty	Description	Page No

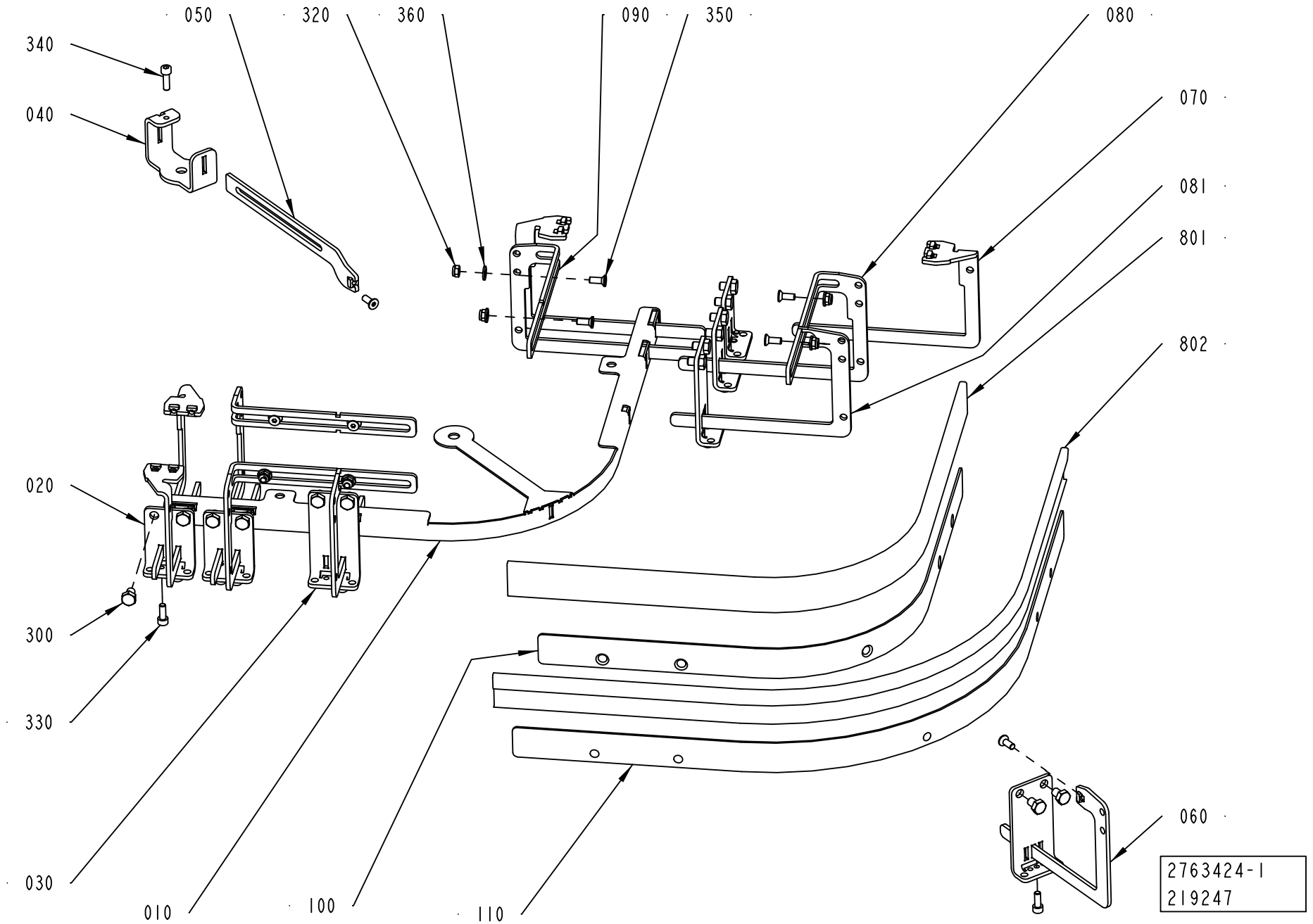
050
320
360
090
350
080
340
040
070
081
801
802
020
300
330
030
010
100
110
060
2763424-1
219247

ECM: 296119 - 20071221
Group number: 2763424-0100
Assembly Drawing: 2763424-1_1_AA

Pos	Part No	UN	Qty	Description	Page No
-					
010	2699611-0000		1	ARCH	
020	2699603-0000		4	PLATE	
030	2699604-0000		3	PLATE	
040	2699613-0000		1	BRACKET	
050	2699614-0000		1	HOLDER	
060	2699610-0000		1	HOLDER	
070	2699607-0000		4	HOLDER	
080	2699608-0001		2	HOLDER	
081	2699605-0000		2	HOLDER	
090	2699608-0002		2	HOLDER	
100	2699625-0002		1	RAIL	
110	2699626-0002		1	RAIL	
300	312105-0447		14	SCREW M6S ISO 4017 M8X12 A480	
320	312810-0316		8	HEXAGON NUT, NY-LOCK M6 FZB	
330	312115-0368		11	SCREW ISO4762 M6X16 A4 80	
340	312115-0370		1	SCREW ISO4762 M6X20 A4 80	
350	312155-0368		10	SCREW DIN 7991 MF6S M6X16 A4 70	
360	315105-0156		8	WASHER BRB 6,7X14 RFR	
801	2763303-0000	MM	730	STRIP	
802	2763303-0000	MM	890	STRIP	

Pos	Part No	UN	Qty	Description	Page No

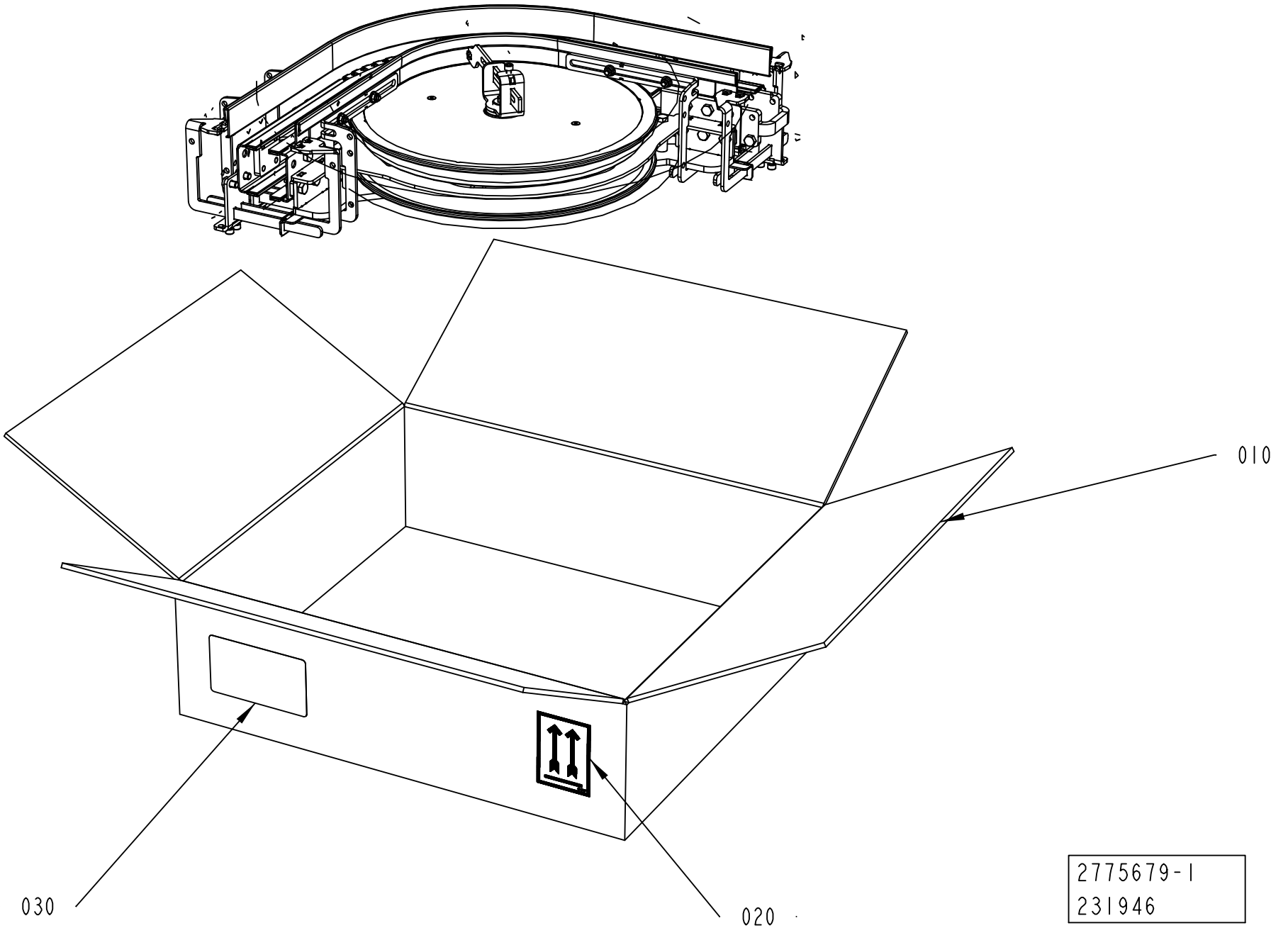
010
020
030
2775679-1
231946

ECM: 232724 - 20051212
Group number: 2775679-0100
Assembly Drawing: 2775679-1_1_AA

Pos	Part No	UN	Qty	Description	Page No
-					
010	2590229-0000		1	CORRUGATED CARDBOARD BOX	
020	543267-0000		1	LABEL TAPE	
030	1086871-0000		1	LABEL TAPE	

Pos	Part No	UN	Qty	Description	Page No

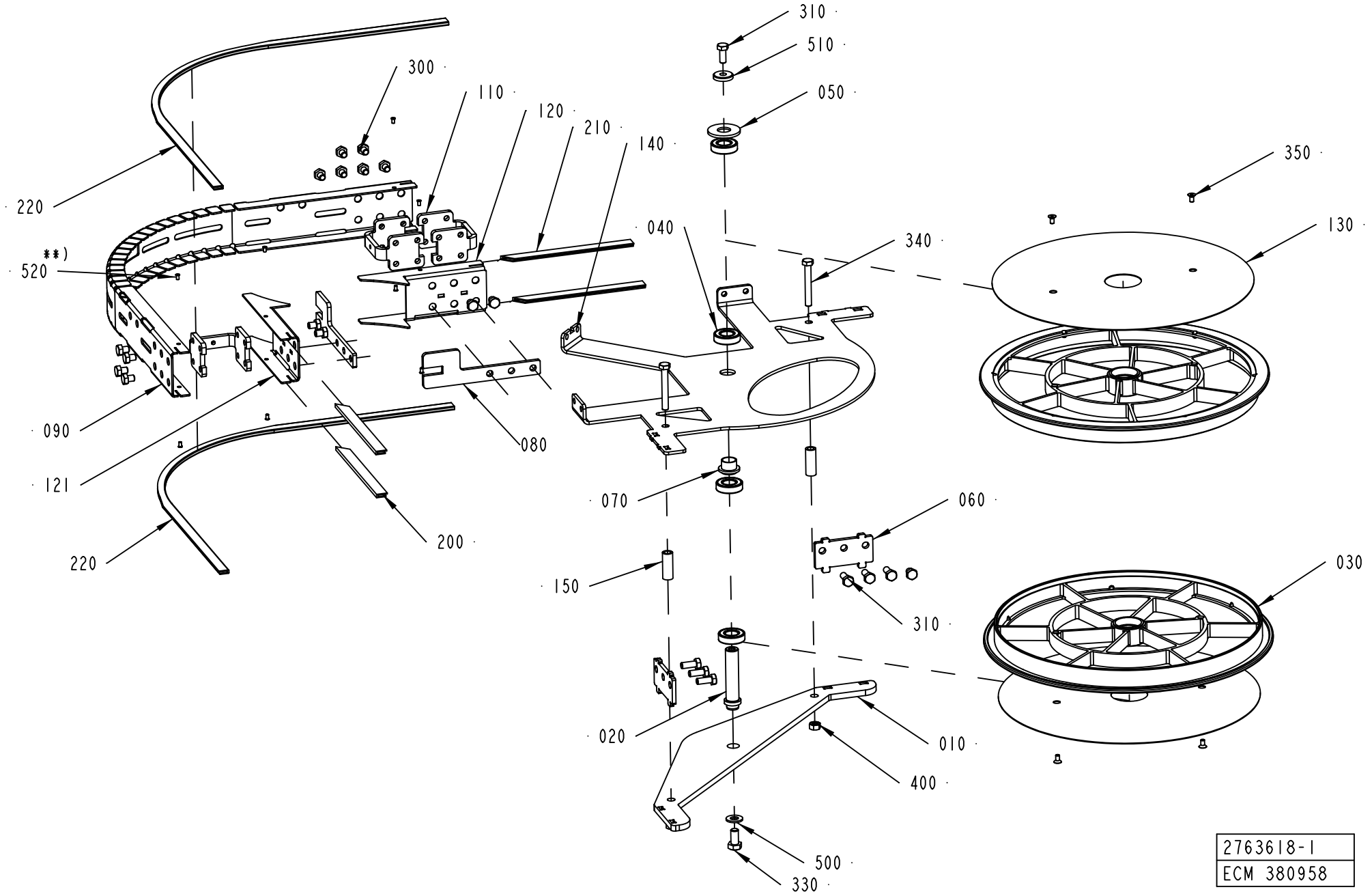
310
510
050
300
110
120
210
140
350
220
040
340
130
**)
520
090
080
121
070
060
200
220
150
030
310
020
010
400
500
330
2763618-1
ECM 380958

ECM: 389458 - 20090602
Group number: 2763618-0100
Assembly Drawing: 2763618-1_1_AB

Pos	Part No	UN	Qty	Description	Page No
-					
010	1550667-0000		1	BOTTOM PANEL	
020	1550689-0000		1	SHAFT	
030	2656655-0000		2	WHEEL	
040	1550348-0001		4	BALL BEARING 17/35X10	
050	1550693-0000		1	WASHER	
060	2561257-0000		2	SPACER	
070	1550690-0000		1	SLEEVE	
080	2561603-0000		2	SPACER	
090	2763622-0000		1	SIDE PLATE	
110	2561206-0000		3	SPACER	
120	1550687-0001		1	SIDE PLATE	
121	1550687-0002		1	SIDE PLATE	
130	2561232-0000		2	COVER	
140	1550668-0000		1	BRACKET	
150	1550626-0005		2	SPACER	
200	1550595-1801		2	SLIDING STRIP	
210	1550595-1802		2	SLIDING STRIP	
220	2699584-0830		2	SLIDING STRIP	
300	90459-4735		15	SCREW M6S ISO 4017 M8X10 A480	
310	312105-0451		7	SCREW M6S ISO 4017 M8X20 A480	
330	312105-0491		1	SCREW M6S ISO 4017 M10X20 A480	
340	312105-0463		2	SCREW M6S ISO 4014 M8X60 A480	
350	312155-0325		4	SCREW DIN 7991 MF6S M5X10 A4 70	
400	312605-0318		2	HEXAGON NUT, M6M M8 A280	
500	315105-0173		1	WASHER BRB 10,5X22 RFR	
510	315125-0165		1	WASHER TBRSB 8,4X26X5 A4	
520	90600-6183		8	TUBULAR RIVET 3,5X6,2	

Pos	Part No	UN	Qty	Description	Page No

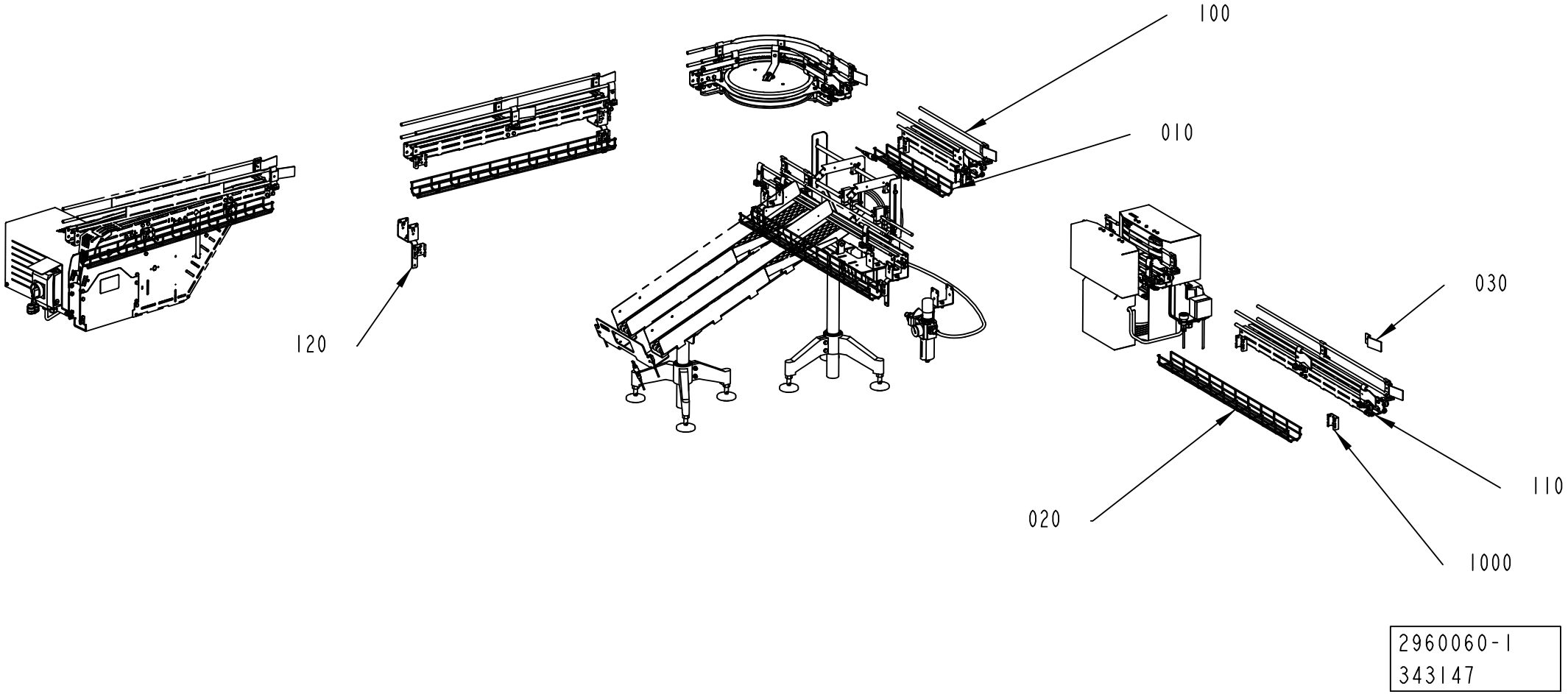

2960060-1
343147

ECM: 350211 - 20070707
Group number: 2960060-0100
Assembly Drawing: 2960060-1_1_AA

This list covers pages from 11-178 to 11-181

Pos	Part No	UN	Qty	Description	Page No
WITHOUT SAMPLING UNIT					
010	2891622-0000		1	CABLE TRENCH	
020	2960053-0000		3	CABLE DUCT	
100	2763600-0102		1	STRAIGHT CONVEYOR L=500MM.	**5-63, 11-183**
1000	2590294-0000		8	BRACKET FOR CABLE DUCT PC23 75MM	
WITH SAMPLING UNIT					
020	2960053-0000		4	CABLE DUCT	
120	2960054-0100		2	SUPPORT	**11-201**
1000	2590294-0000		6	BRACKET FOR CABLE DUCT PC23 75MM	
Common Parts					
030	2891596-0000		13	SUPPORT	
110	2763600-0103		2	STRAIGHT CONVEYOR, L1000	**11-203**

Pos	Part No	UN	Qty	Description	Page No

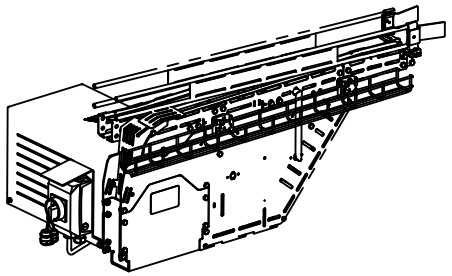

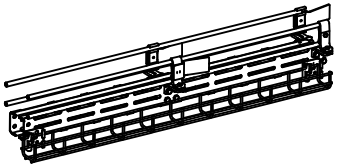

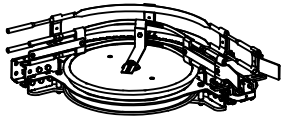

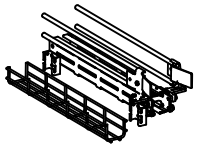

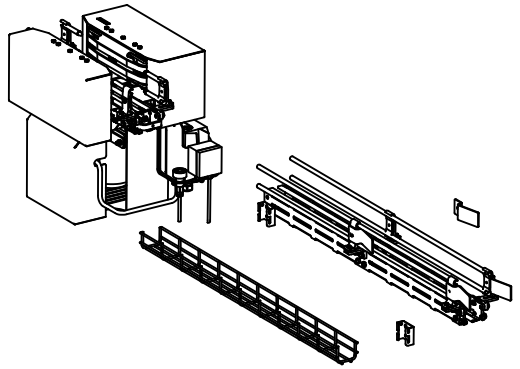

2960060-1
343147

ECM: 350211 - 20070707
Group number: 2960060-0100
Assembly Drawing: 2960060-1_2_AA

This list covers pages from 11-178 to 11-181

Pos	Part No	UN	Qty	Description	Page No
WITHOUT SAMPLING UNIT					
010	2891622-0000		1	CABLE TRENCH	
020	2960053-0000		3	CABLE DUCT	
100	2763600-0102		1	STRAIGHT CONVEYOR L=500MM.	**5-63, 11-183**
1000	2590294-0000		8	BRACKET FOR CABLE DUCT PC23 75MM	
WITH SAMPLING UNIT					
020	2960053-0000		4	CABLE DUCT	
120	2960054-0100		2	SUPPORT	**11-201**
1000	2590294-0000		6	BRACKET FOR CABLE DUCT PC23 75MM	
Common Parts					
030	2891596-0000		13	SUPPORT	
110	2763600-0103		2	STRAIGHT CONVEYOR, L1000	**11-203**

Pos	Part No	UN	Qty	Description	Page No

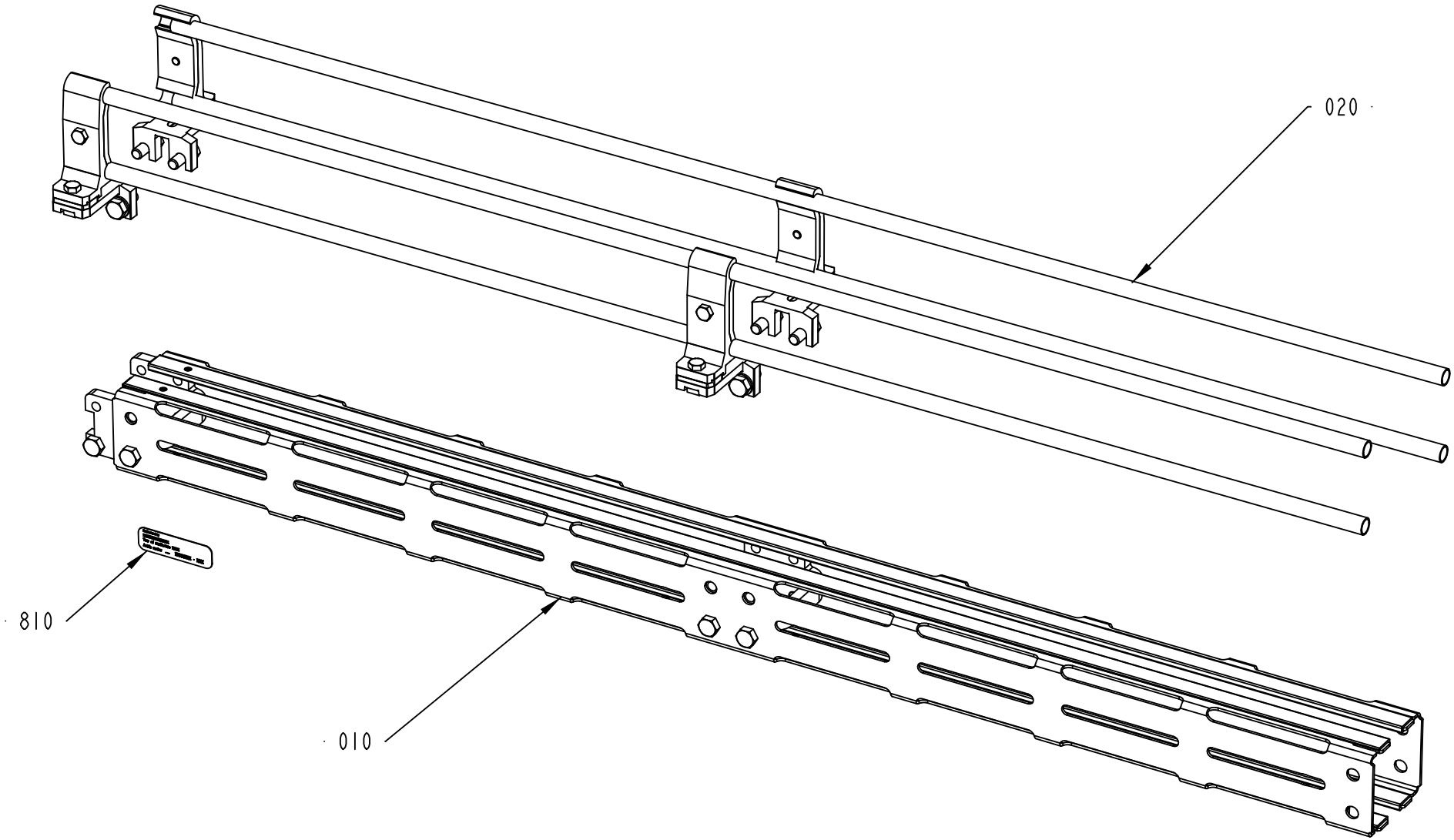

2763600-1
ECM 263821

ECM: 263821 -
Group number: 2763600-0102
Assembly Drawing: 2763600-1_1_AA

Pos	Part No	UN	Qty	Description	Page No
PC025-075 L0500					
820	2590221-0100		1	PACKING DESCRIPTION	**5-65, 5-67, 11-185, 11-187**
L 0500					
010	2763616-0102		1	CONVEYOR BODY	**5-69, 11-189**
020	2561274-0102		1	RAILING	**5-71, 11-191**
820	2590221-0100		1	PACKING DESCRIPTION	**5-65, 5-67, 11-185, 11-187**
PC040-100 L0500 (See drawing on pages: 5-62, 11-182, 11-202)					
020	2561274-0100		1	RAILING	**5-75, 11-193**
820	2590221-0100		1	PACKING DESCRIPTION	**5-65, 5-67, 11-185, 11-187**
Common Parts					
010	2763616-0103		1	CONVEYOR BODY	**5-77, 11-195**
010	2763616-0100		1	CONVEYOR BODY	**5-79, 11-197**
020	2561274-0103		1	RAILING	**5-81, 11-199**
810	1086870-0000		1	SIGN	

Pos	Part No	UN	Qty	Description	Page No

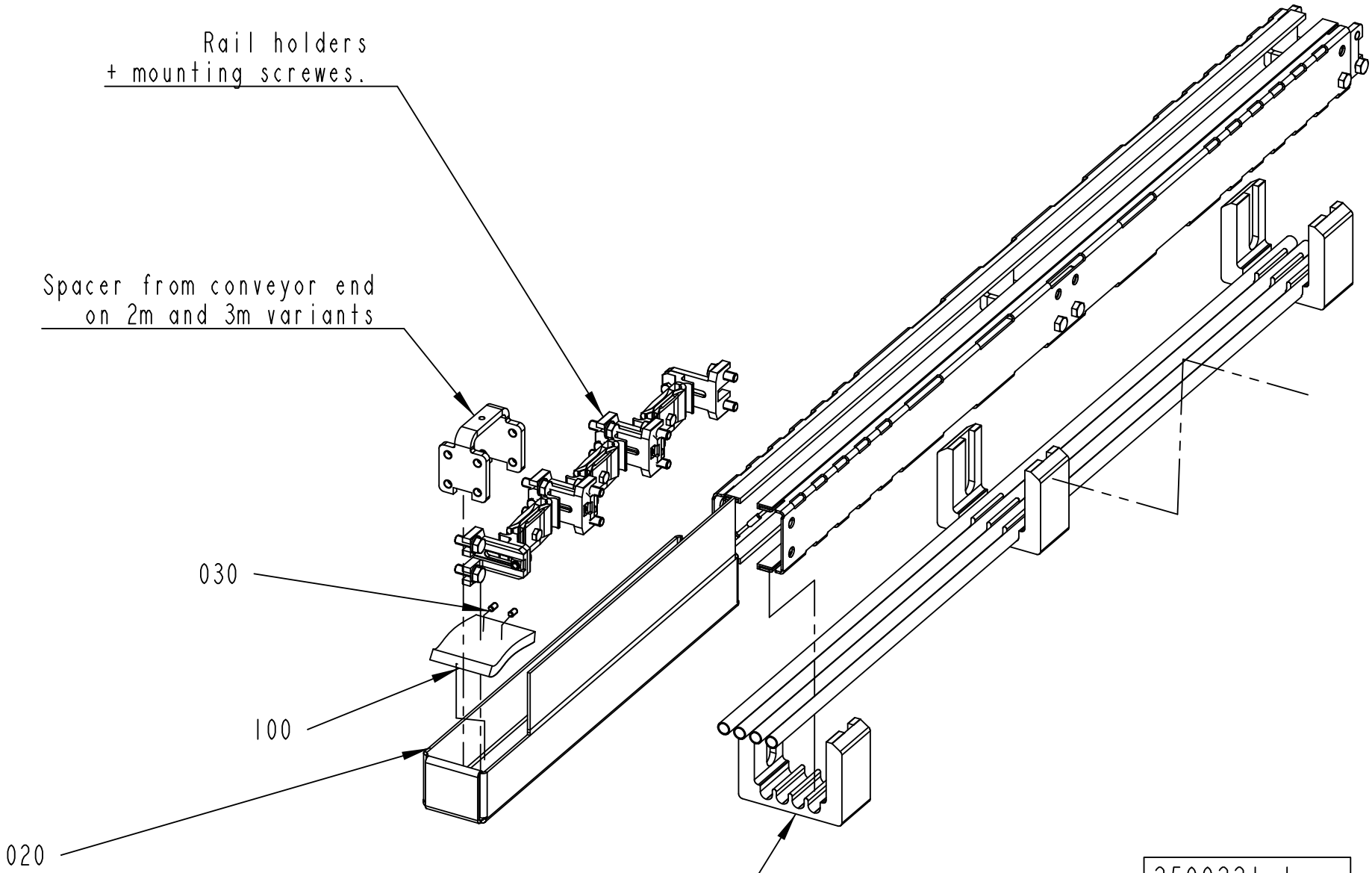

One or two boxes in each conveyor.
If two boxes, one in each end.
Including one spacer if two boxes (2m &3m).

2590221-1
439204

ECM: 450148 - 20100603
Group number: 2590221-0100
Assembly Drawing: 2590221-1_1_AG

This list covers pages from 11-184 to 11-187

Pos	Part No	UN	Qty	Description	Page No
L 0500					
010	2590222-0000		2	SPACER	
020	2590226-0000		1	CORRUGATED CARDBOARD BOX	
Common Parts					
030	90459-7293		2	SET SCREW DIN 551M5X8 PA66	
100	90003-0019		1	BAG	
100	90003-0018		1	BAG	

Pos	Part No	UN	Qty	Description	Page No

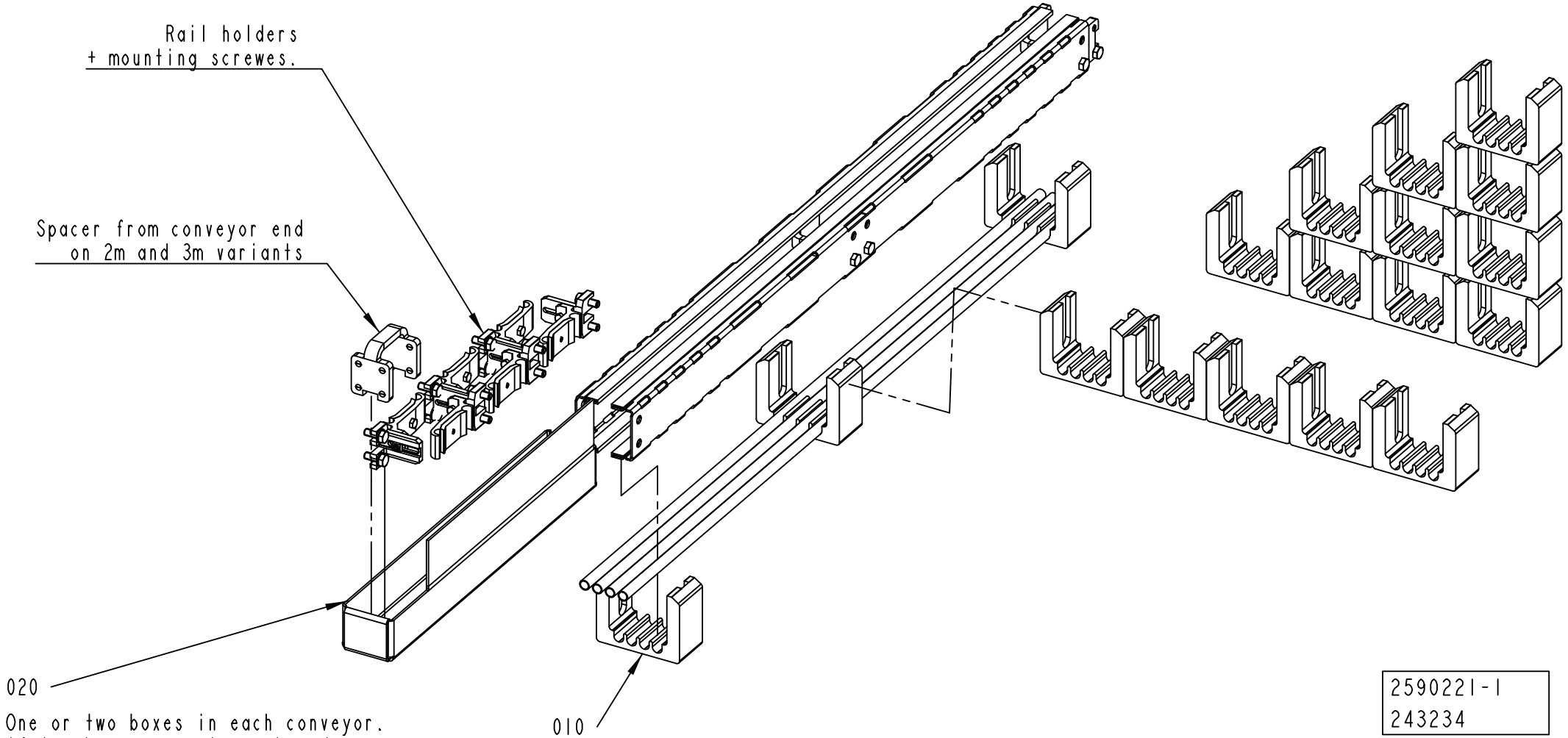

One or two boxes in each conveyor.
If two boxes, one in each end.
Including one spacer if two boxes (2m &3m).

ECM: 450148 - 20100603
Group number: 2590221-0100
Assembly Drawing: 2590221-1_1_AF

This list covers pages from 11-184 to 11-187

Pos	Part No	UN	Qty	Description	Page No
L 0500					
010	2590222-0000		2	SPACER	
020	2590226-0000		1	CORRUGATED CARDBOARD BOX	
Common Parts					
030	90459-7293		2	SET SCREW DIN 551M5X8 PA66	
100	90003-0019		1	BAG	
100	90003-0018		1	BAG	

Pos	Part No	UN	Qty	Description	Page No

CONVEYOR BODY

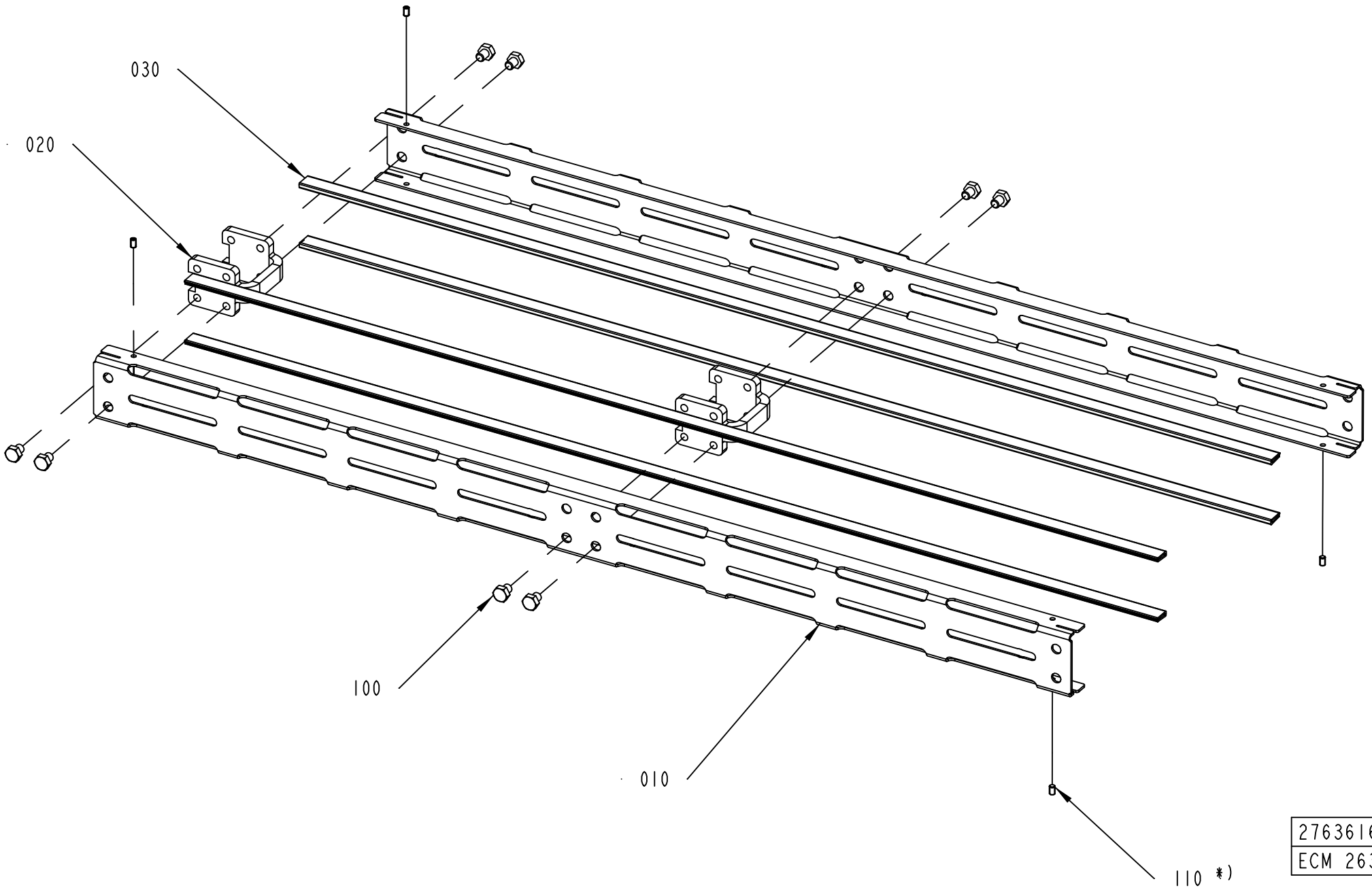

2763616-1
ECM 263821

ECM: 263821 -
Group number: 2763616-0102
Assembly Drawing: 2763616-1_1_AA

Pos	Part No	UN	Qty	Description	Page No
L 0500					
010	2763617-0002		2	SIDE PLATE	
020	2561206-0000		1	SPACER	
030	1550595-4960		4	SLIDING STRIP	
100	90459-4735		4	SCREW M6S ISO 4017 M8X10 A480	
Common Parts					
010	2763617-0003		2	SIDE PLATE	
020	2561206-0000		2	SPACER	
030	1550595-9960		4	SLIDING STRIP	
100	90459-4735		8	SCREW M6S ISO 4017 M8X10 A480	
110	90459-7293		6	SET SCREW DIN 551M5X8 PA66	

Pos	Part No	UN	Qty	Description	Page No

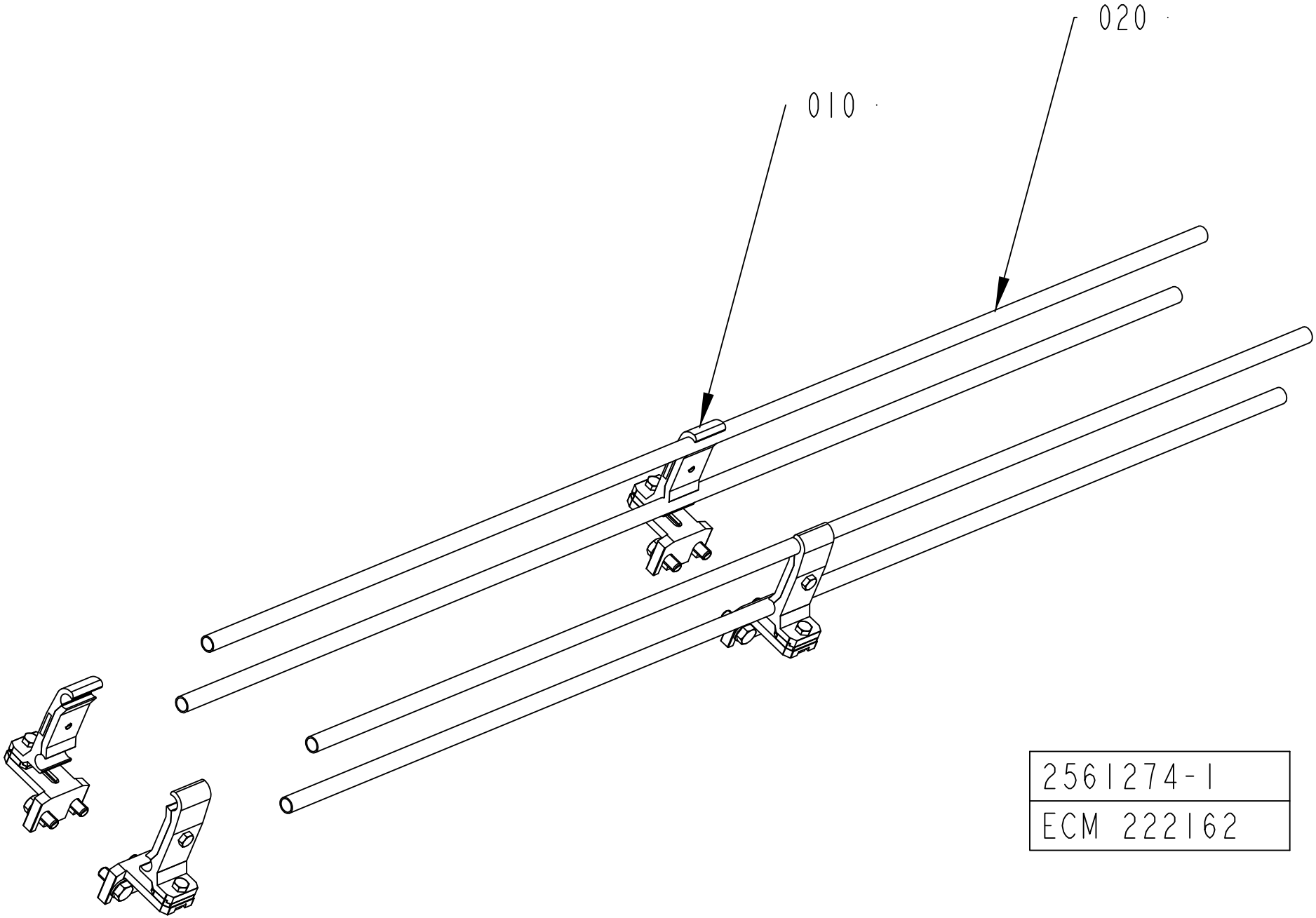
020
010
2561274-1
ECM 222162

ECM: 222162 -
Group number: 2561274-0102
Assembly Drawing: 2561274-1_1_AB

Pos	Part No	UN	Qty	Description	Page No
L 0500					
010	1550743-0200		2	RAIL HOLDER	**5-73, 11-31**
020	476221-0002		4	PIPE	
Common Parts					
010	1550743-0200		4	RAIL HOLDER	**5-73, 11-31**
020	476221-0003		4	PIPE	
020	476221-0004		4	PIPE	
020	476221-0005		4	PIPE	

Pos	Part No	UN	Qty	Description	Page No

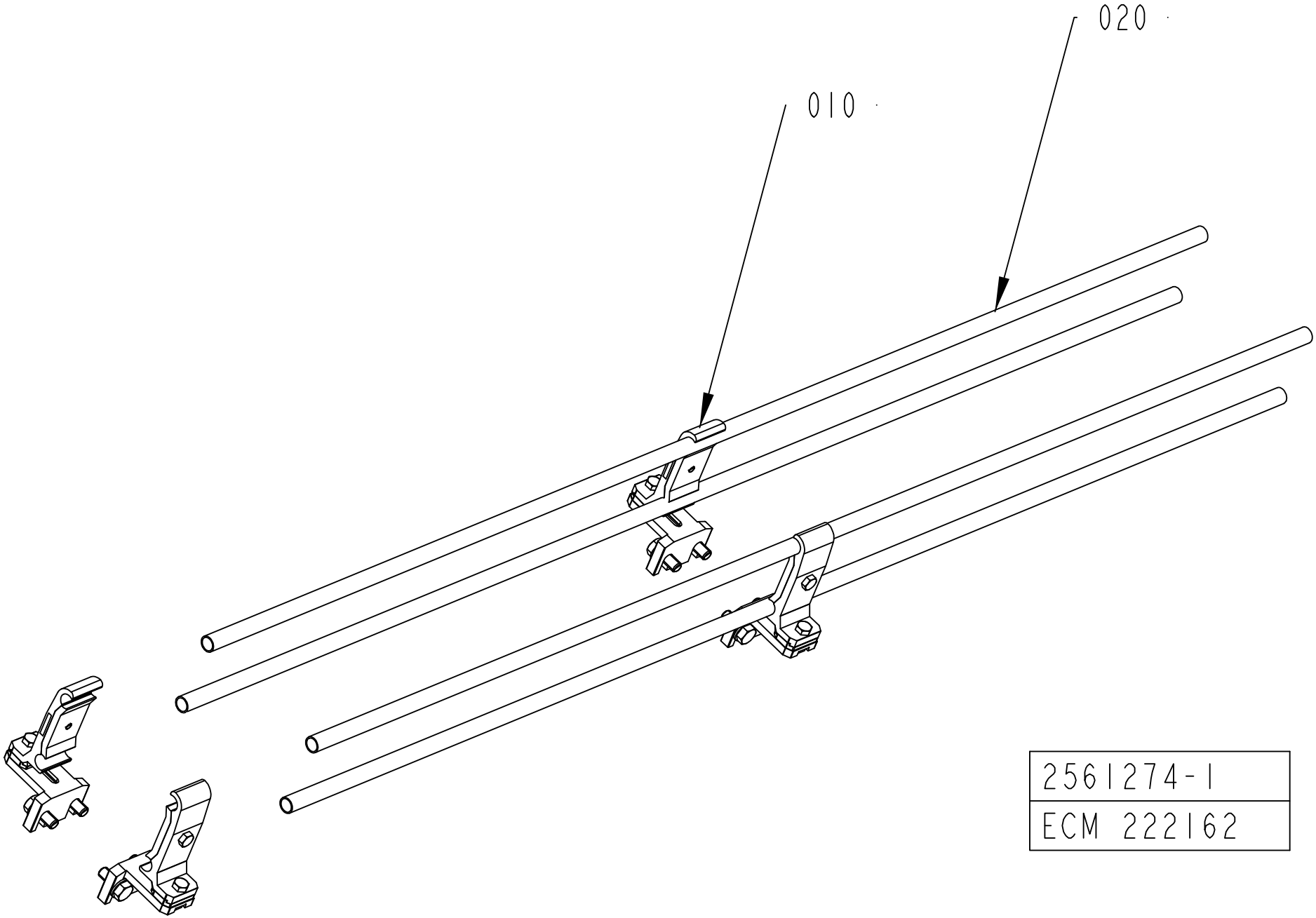
020
010
2561274-1
ECM 222162

ECM: 228025 - 20051222
Group number: 2561274-0100
Assembly Drawing: 2561274-1_1_AB

Pos	Part No	UN	Qty	Description	Page No
L 0500					
010	1550743-0200		2	RAIL HOLDER	**5-73, 11-31**
020	476221-0002		4	PIPE	

Pos	Part No	UN	Qty	Description	Page No

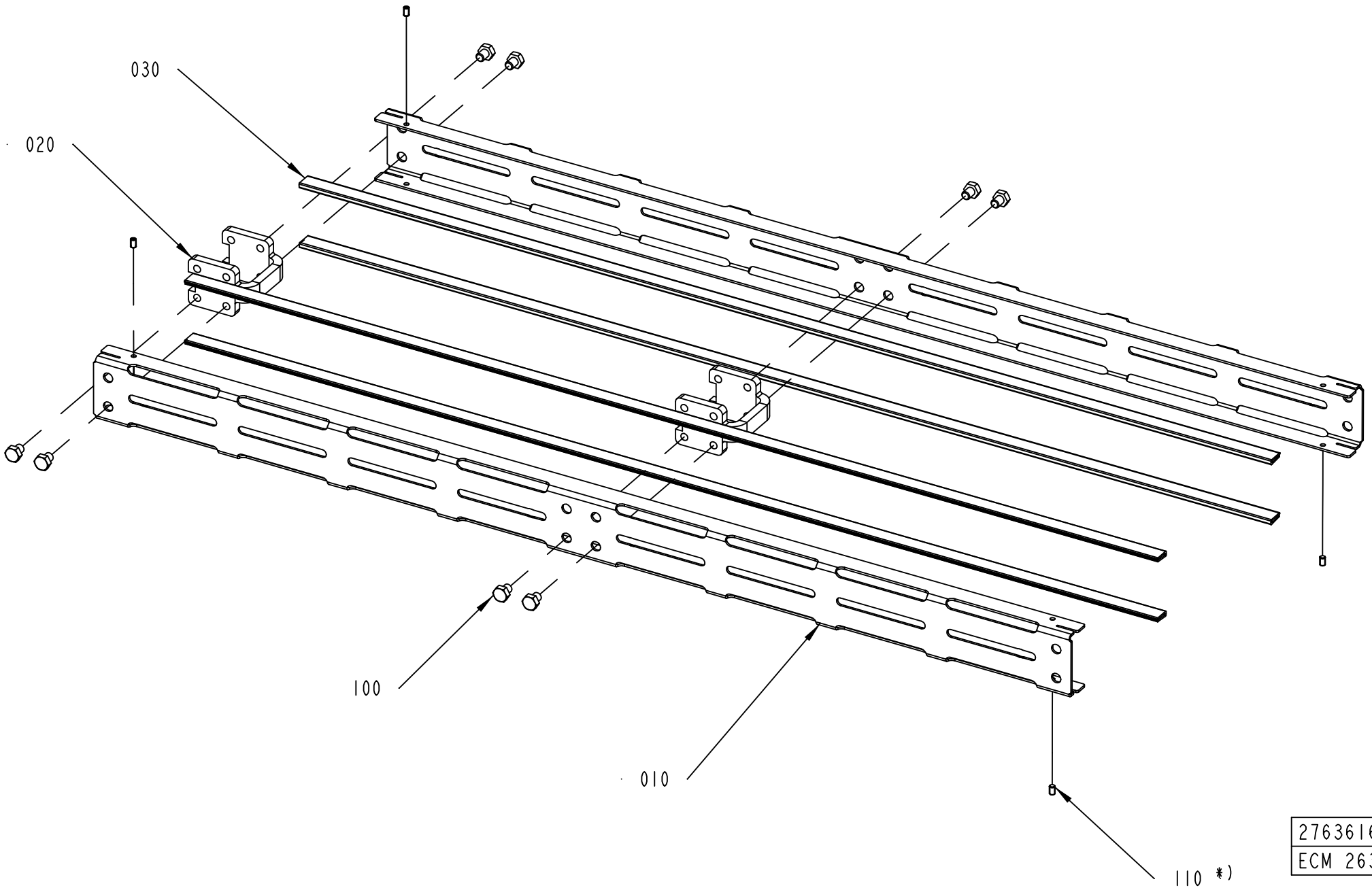
030
020
100
010
110 *)
2763616-1
ECM 263821

ECM: 263821 -
Group number: 2763616-0103
Assembly Drawing: 2763616-1_1_AA

Pos	Part No	UN	Qty	Description	Page No
-					
010	2763617-0002		2	SIDE PLATE	
020	2561206-0000		1	SPACER	
030	1550595-4960		4	SLIDING STRIP	
100	90459-4735		4	SCREW M6S ISO 4017 M8X10 A480	
110	90459-7293		6	SET SCREW DIN 551M5X8 PA66	

Pos	Part No	UN	Qty	Description	Page No

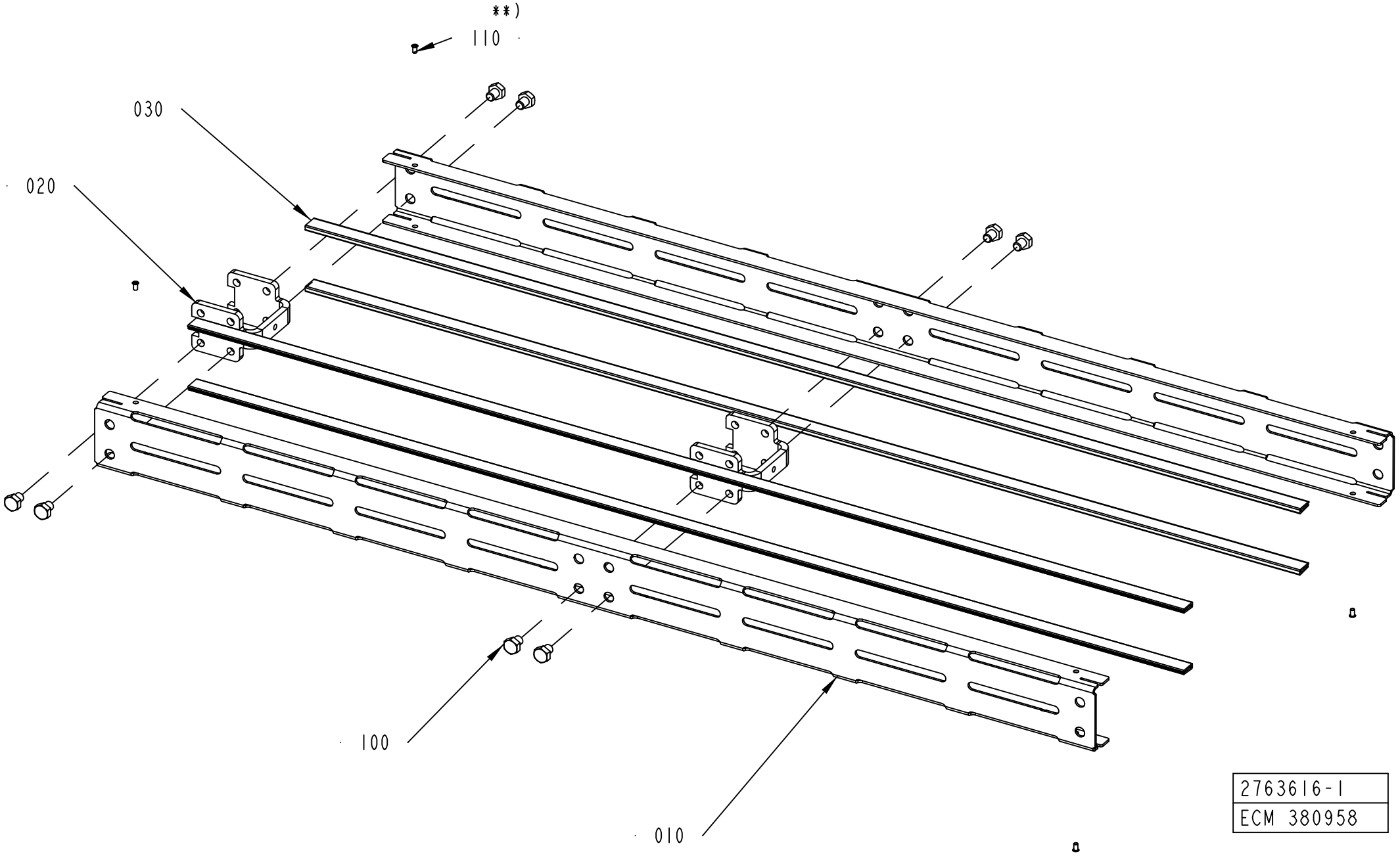
**)
110
030
020
100
010
2763616-1
ECM 380958

ECM: 450147 - 20100603
Group number: 2763616-0100
Assembly Drawing: 2763616-1_1_AB

Pos	Part No	UN	Qty	Description	Page No
L 0500					
010	2763617-0002		2	SIDE PLATE	
020	2561206-0000		1	SPACER	
030	1550595-4960		4	SLIDING STRIP	
100	90459-4735		4	SCREW M6S ISO 4017 M8X10 A480	
Common Parts					
110	90600-6183		4	TUBULAR RIVET 3,5X6,2	

Pos	Part No	UN	Qty	Description	Page No

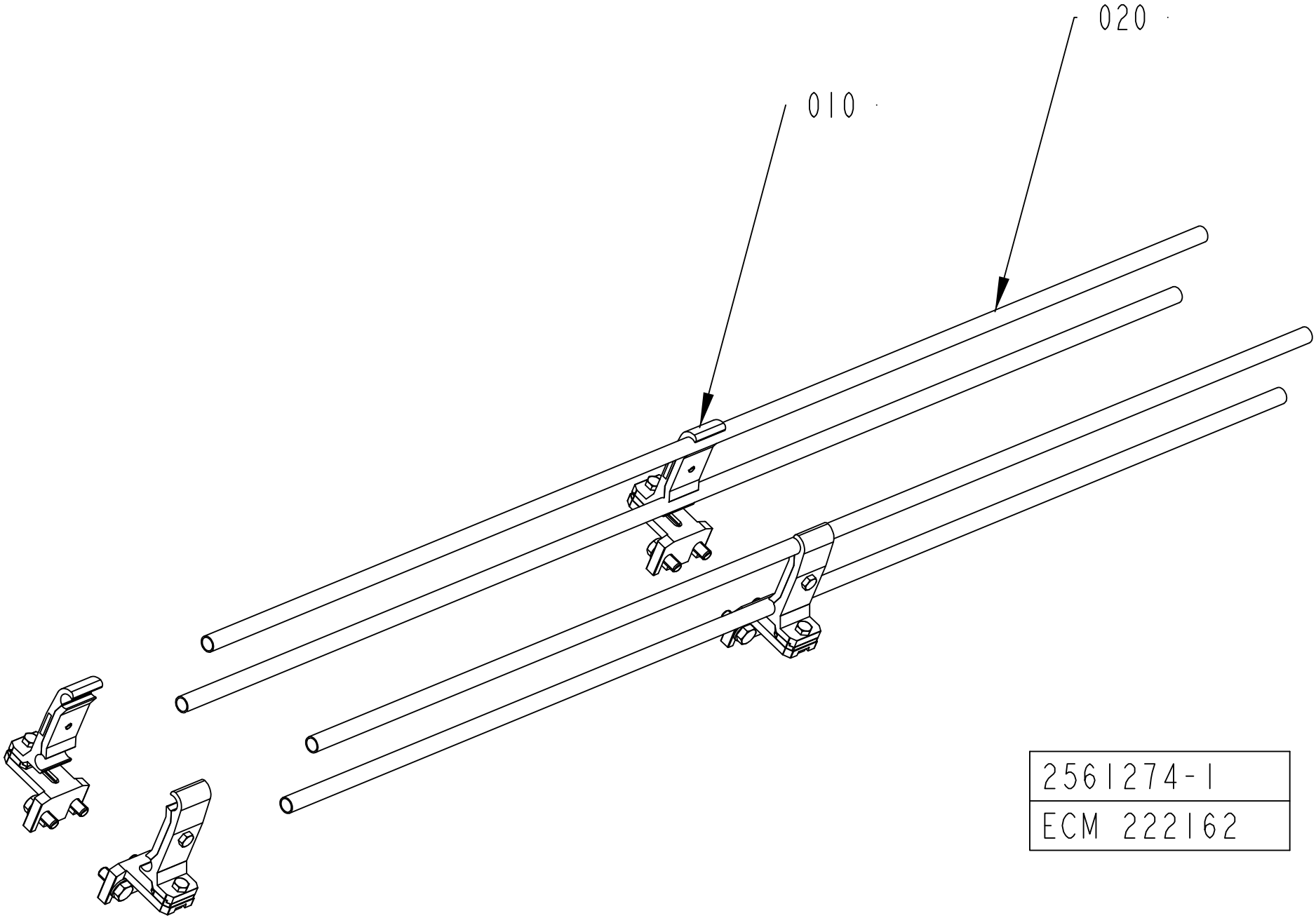
020
010
2561274-1
ECM 222162

ECM: 222162 -
Group number: 2561274-0103
Assembly Drawing: 2561274-1_1_AB

Pos	Part No	UN	Qty	Description	Page No
-					
010	1550743-0200		2	RAIL HOLDER	**5-73, 11-31**
020	476221-0002		4	PIPE	
020	476221-0004		4	PIPE	
020	476221-0005		4	PIPE	
020	476221-0009		4	PIPE	

Pos	Part No	UN	Qty	Description	Page No

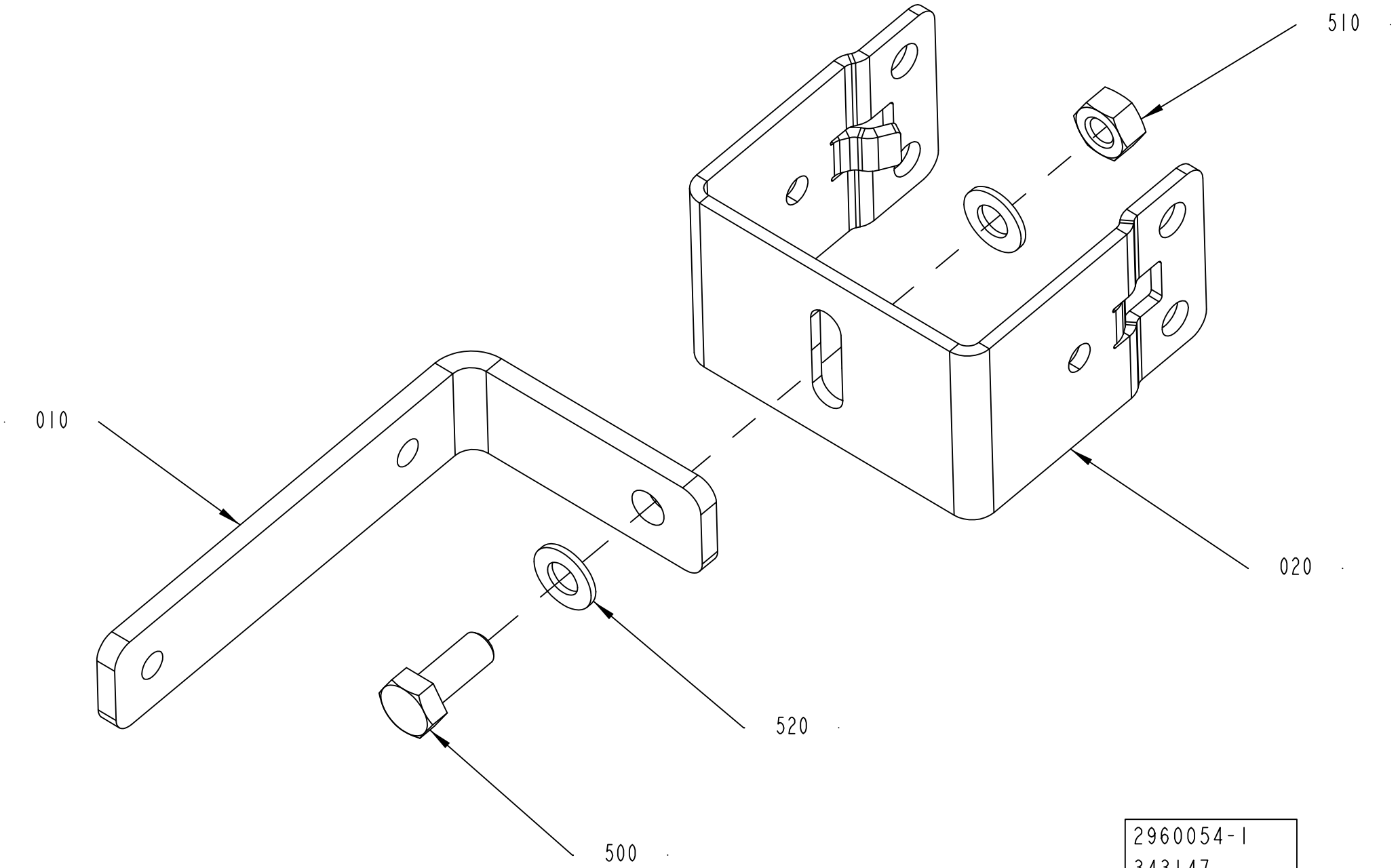
510
010
020
520
500
2960054-1
343147

ECM: 346848 - 20070706
Group number: 2960054-0100
Assembly Drawing: 2960054-1_1_AA

Pos	Part No	UN	Qty	Description	Page No
-					
010	1550407-0000		1	BRACKET	
020	2656556-0000		1	BRACKET FOR LEG PC23	
500	312105-0451		1	SCREW M6S ISO 4017 M8X20 A480	
510	312605-0318		1	HEXAGON NUT, M6M M8 A280	
520	315105-0165		2	WASHER BRB 8,4X16 RFR	

Pos	Part No	UN	Qty	Description	Page No

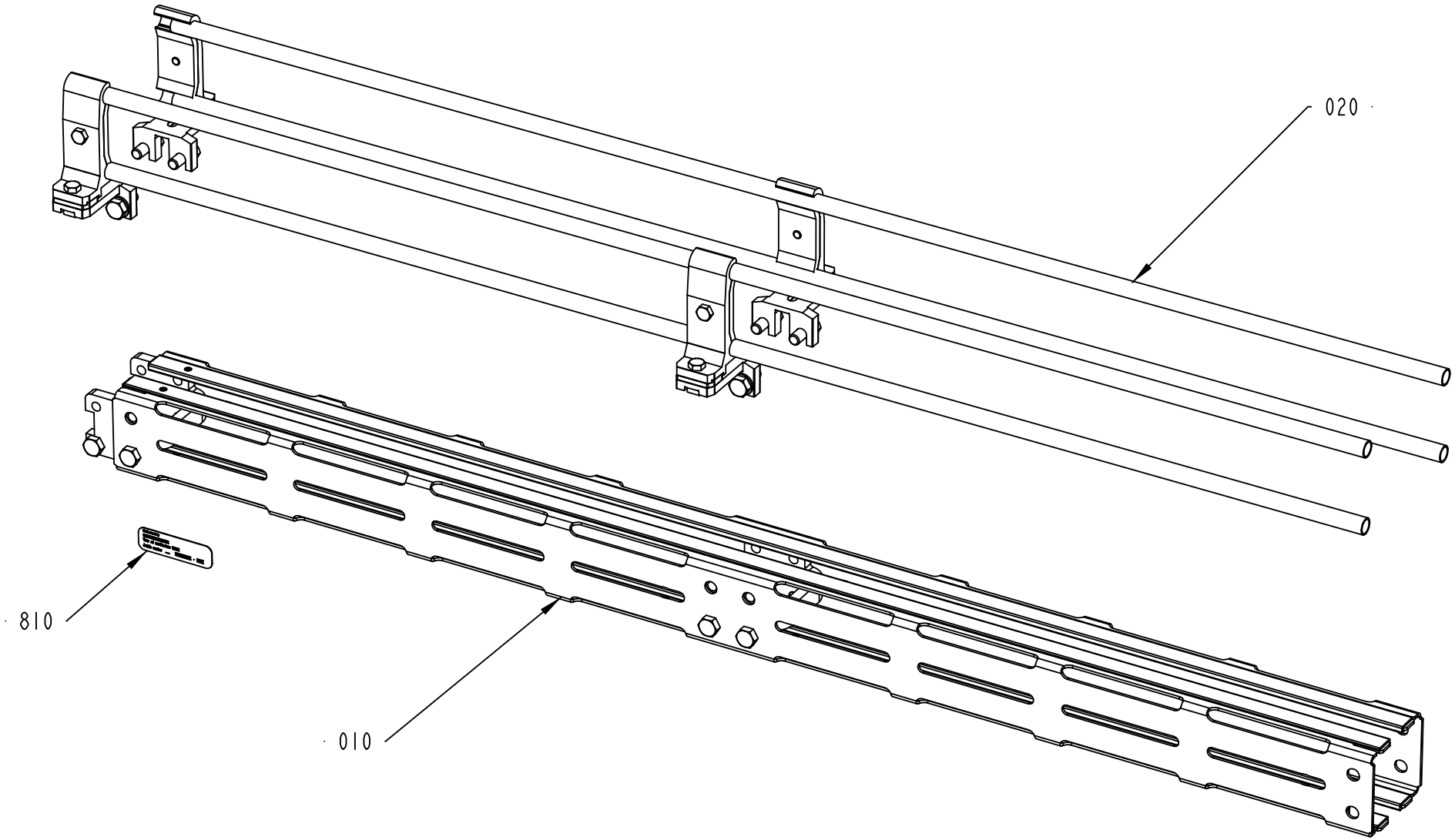

2763600-1
ECM 263821

ECM: 263821 -
Group number: 2763600-0103
Assembly Drawing: 2763600-1_1_AA

Pos	Part No	UN	Qty	Description	Page No
PC025-075 L0500					
820	2590221-0100		1	PACKING DESCRIPTION	**5-65, 5-67, 11-185, 11-187**
PC040-100 L0500					
020	2561274-0100		1	RAILING	**5-75, 11-193**
820	2590221-0100		1	PACKING DESCRIPTION	**5-65, 5-67, 11-185, 11-187**
Common Parts					
010	2763616-0100		1	CONVEYOR BODY	**5-79, 11-197**
810	1086870-0000		1	SIGN	

Pos	Part No	UN	Qty	Description	Page No

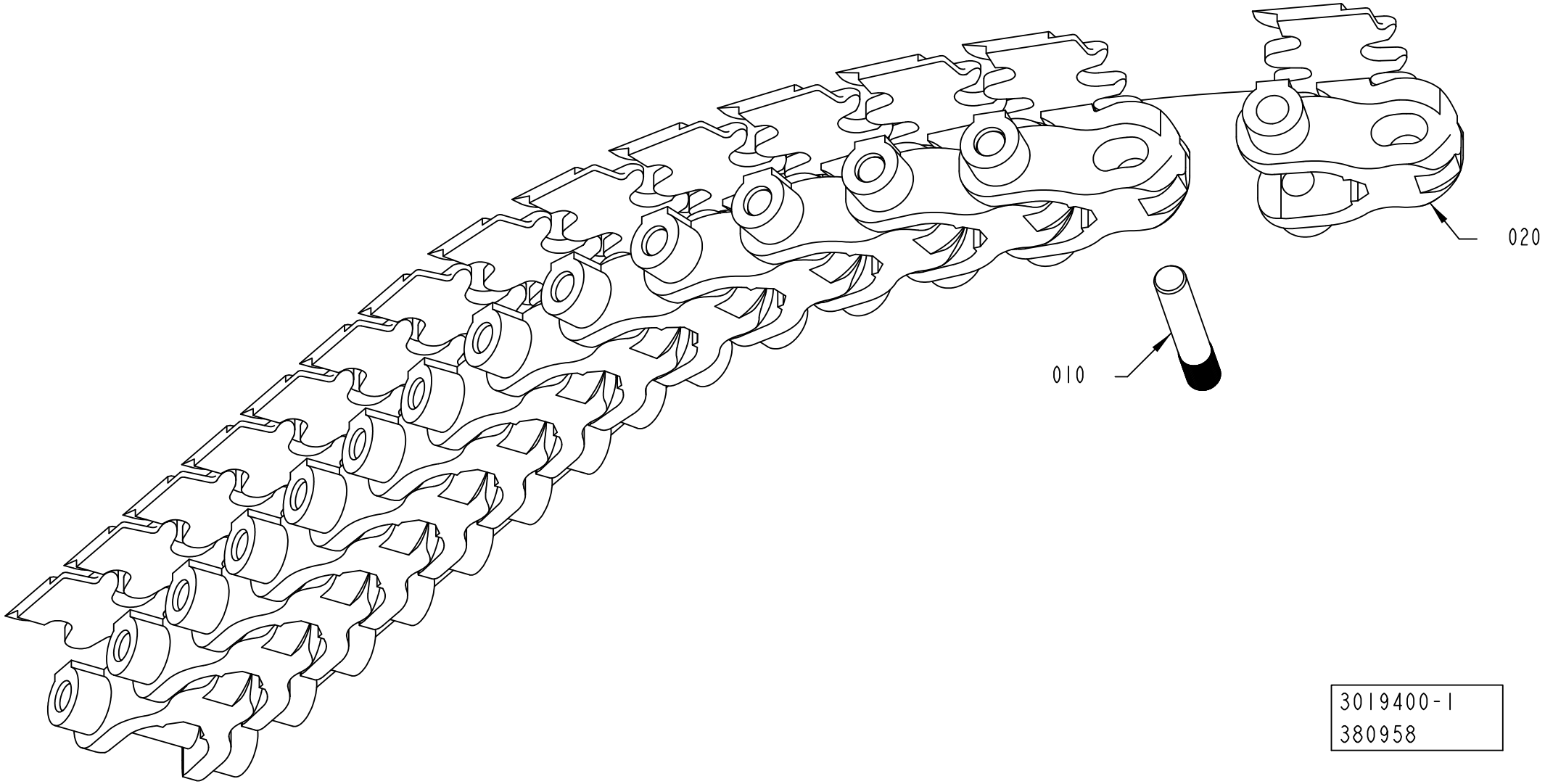
020
010
3019400-1
380958

ECM: 422565 - 20091106
Group number: 3019400-0100
Assembly Drawing: 3019400-1_1_AA

Pos	Part No	UN	Qty	Description	Page No
-					
010	3019401-0000		400	LINK	
020	2656671-0000		400	RIVET	
100	2589951-0200		1	PACKING DESCRIPTION	**11-207**

Pos	Part No	UN	Qty	Description	Page No

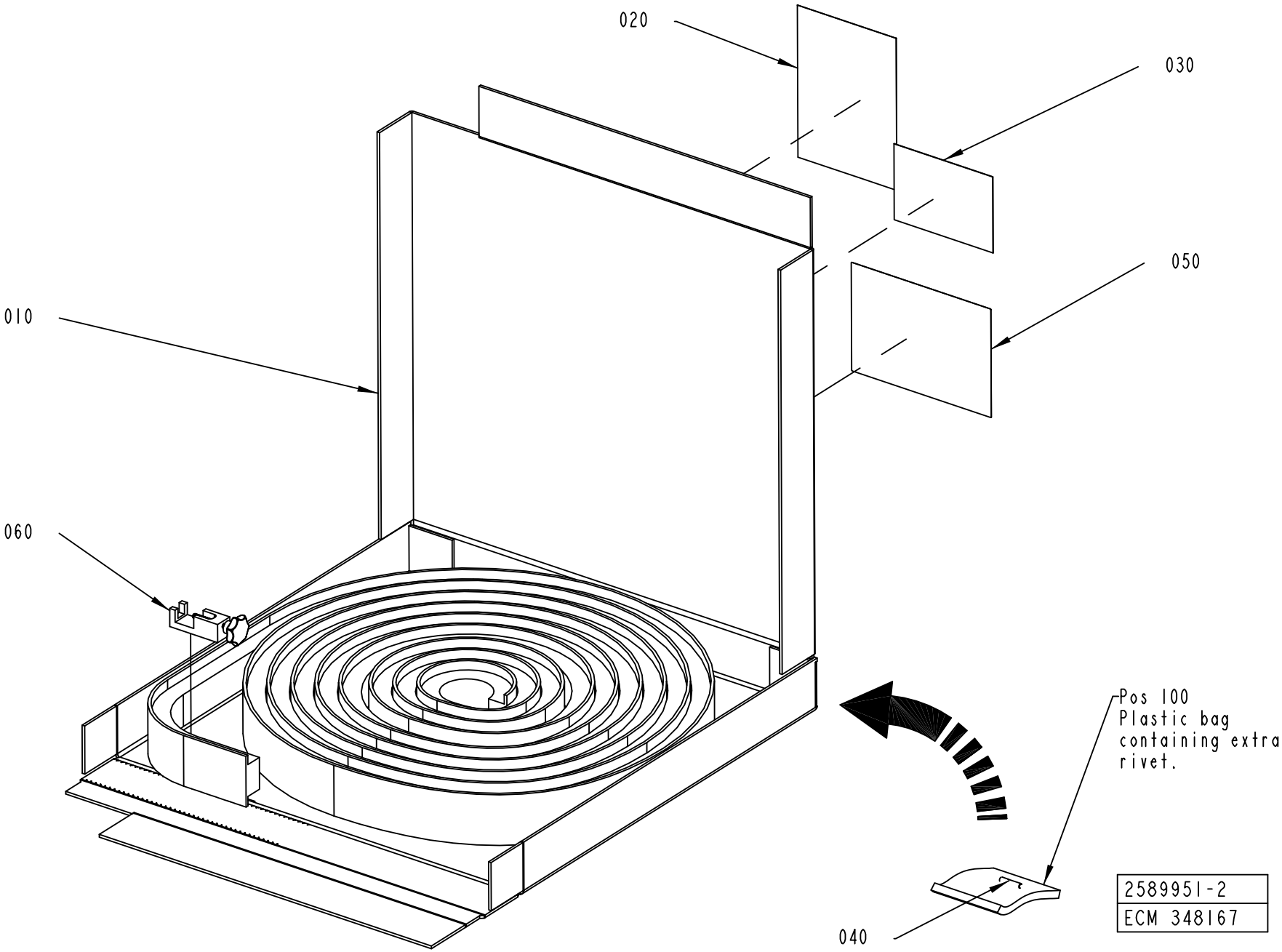
020
030
050
010
060
040
Pos 100
Plastic bag
containing extra
rivet.
2589951-2
ECM 348167

ECM: 348167 - 20081030
Group number: 2589951-0200
Assembly Drawing: 2589951-2_1_AB

Pos	Part No	UN	Qty	Description	Page No
-					
010	2589955-0000		1	CORRUGATED CARDBOARD BOX	
020	2589953-0000		1	INSTRUCTION	
030	2589952-0000		1	LABEL	
040	2590181-0000		1	RIVET	
050	2934966-0000		1	LABEL TAPE	
060	2561208-0000		1	TOOL	
100	90003-0018		1	BAG	
110	90003-0474		1	PACKING	

Pos	Part No	UN	Qty	Description	Page No

W51X1000

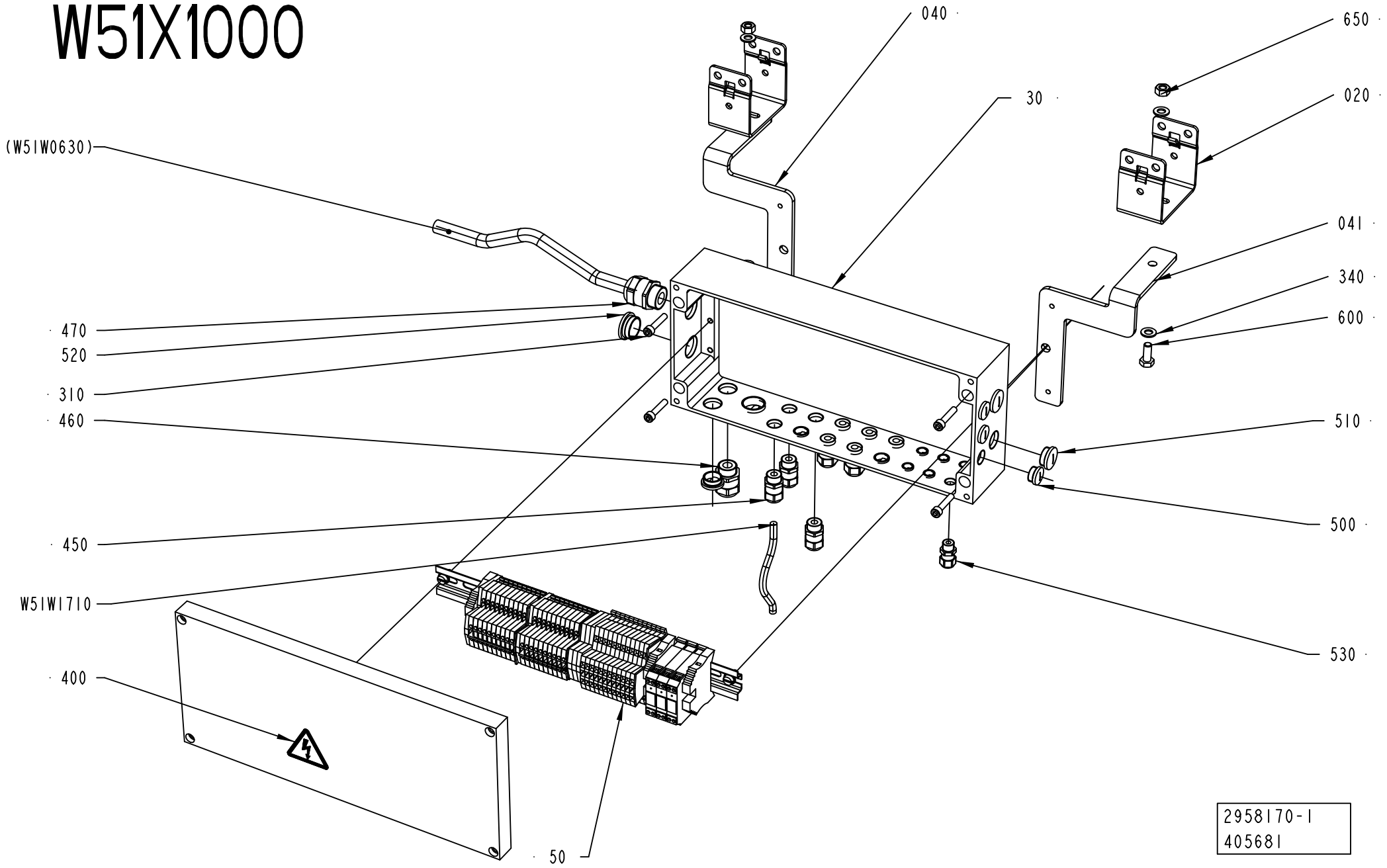
040
650
30
020
(W51W0630)
041
340
600
470
520
310
460
510
500
450
W51W1710
530
400
50
2958170-1
405681

ECM: 461951 - 20101001
Group number: 2958170-0100
Assembly Drawing: 2958170-1_1_AD

Pos	Part No	UN	Qty	Description	Page No
DOMINO ANSI					
400	359715-0100		1	WARNING SIGN ANSI (H), ELECTRIC SHOCK	
W51W1710	351150-0404	M	10	CABLE OLFLEX 4X0,75 MM2 LIGHT/GREY	
DOMINO ISO					
400	359705-0015		1	WARNING SIGN ISO, RISK OF ELECTRIC SHOCK	
W51W1710	351150-0404	M	10	CABLE OLFLEX 4X0,75 MM2 LIGHT/GREY	
Common Parts					
020	2656556-0000		2	BRACKET FOR LEG PC23	
030	2910624-0000		1	CONNECTION BOX	
040	2775694-0000		1	BRACKET	
041	2775695-0000		1	BRACKET	
050	2910625-0100		1	CONNECTION BOX	**11-63**
310	312111-0374		4	SCREW HEX.SOCK.HD.MC6S-TT 6X30 88 FZB	
340	315105-0165		4	WASHER BRB 8,4X16 RFR	
450	90458-0306		9	CABLE GLAND, M16X1,5, NO.5311 1010	
460	90458-0307		1	CABLE GLAND, M20X1,5, NO.5311 1020	
470	90458-0308		1	CABLE GLAND, M25X1,5, NO.5311 1030	
490	90458-1306		6	BLIND PLUG CIRCULAR, M12X1,5 514GFK/212	
500	90458-1307		10	BLIND PLUG CIRCULAR, M16X1,5 514GFK/216	
510	90458-1308		4	BLIND PLUG CIRCULAR, M20X1,5 514GFK/220	
520	90458-1309		2	BLIND PLUG CIRCULAR, M25X1,5 514GFK/225	
530	90458-0313		1	CABLE GLAND, M12X1,5, NO.5311 1100	
650	312605-0318		2	HEXAGON NUT, M6M M8 A280	
660	312105-0451		2	SCREW M6S ISO 4017 M8X20 A480	

Pos	Part No	UN	Qty	Description	Page No

SAMPLING UNIT

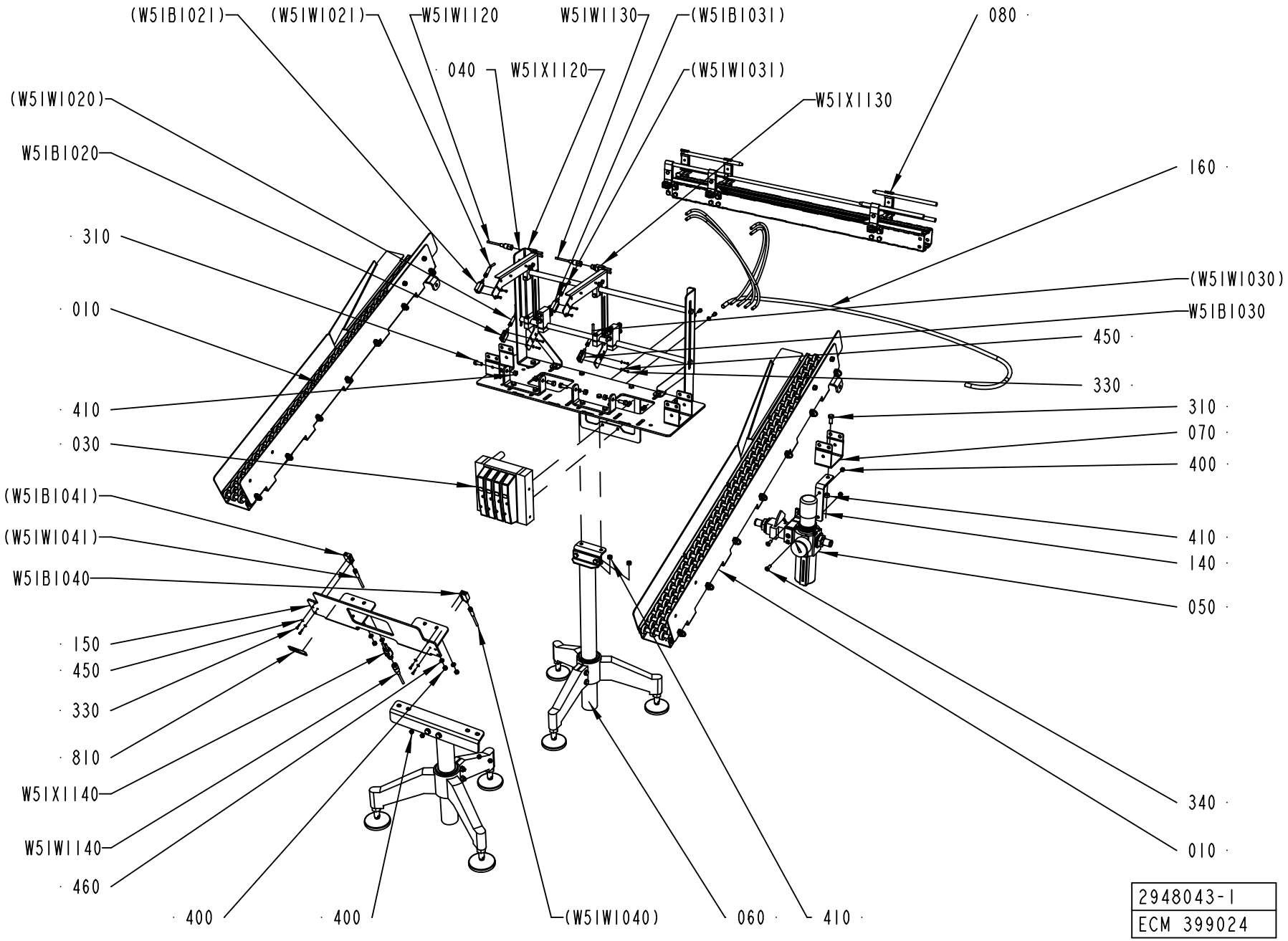

ECM: 405062 - 20081201
Group number: 2948043-0100
Assembly Drawing: 2948043-1_1_AC

Pos	Part No	UN	Qty	Description	Page No
-					
	1550863-0100		1	PACKING DESCRIPTION	**11-69**
010	1550161-0100		2	CHUTE	**11-213**
030	2958849-0100		1	PNEUMATIC UNIT	**11-215**
040	1550878-0100		1	CANTILEVER	**11-217**
050	2955542-0100		1	PRESSURE REGULATOR	**11-75**
060	1550883-0100		1	LEG	**11-219**
080	2656340-0100		1	STRAIGHT CONVEYOR	**11-221**
100	2958851-0000		1	PNEUMATIC DIAGRAM	
140	1550407-0000		1	BRACKET	
150	2699366-0000		1	STOP	
160	2958850-0100		1	HOSE INSTALLATION	**11-227**
310	312105-0451		7	SCREW M6S ISO 4017 M8X20 A480	
320	312125-0287		6	SCREW ISO 1207 M4X8 A4	
330	312125-0226		12	SCREW ISO 1207 M3X12 A4	
340	312155-0370		2	SCREW DIN 7991 MF6S M6X20 A4 70	
350	312105-0366		4	SCREW M6S ISO 4017 M6X12 A480	
400	312605-0316		10	HEXAGON NUT, M6M M6 A280	
410	312605-0318		9	HEXAGON NUT, M6M M8 A280	
450	315106-0124		12	WASHER ISO 7089-3-200 HV A4	
460	315105-0153		8	WASHER BRB 6,4X12 RFR	
500	352113-0101		6	CABLE TIE, BLACK 92X2,5 MM	
510	352113-0205		6	ANCHOR PLATES FOR STRIPS, TYPE TM2S8-C10	
810	1086870-0000		1	SIGN	
W51B1020	90459-5529		1	PH.CELL E3Z-T86A, SENDER+RECIEVER	
W51B1030	90459-5529		1	PH.CELL E3Z-T86A, SENDER+RECIEVER	
W51B1040	90459-5529		1	PH.CELL E3Z-T86A, SENDER+RECIEVER	
W51W1120	351309-0100		1	ACTUATOR/SENSOR CABLE PRKT 4-07/10M	
W51W1130	351309-0100		1	ACTUATOR/SENSOR CABLE PRKT 4-07/10M	
W51W1140	351309-0100		1	ACTUATOR/SENSOR CABLE PRKT 4-07/10M	
W51X1120	90459-6586		1	ACT/SENS.Y-CABLE, ASBN 2-PRKMV 4-07/0,6M	
W51X1130	90459-6586		1	ACT/SENS.Y-CABLE, ASBN 2-PRKMV 4-07/0,6M	
W51X1140	90459-6586		1	ACT/SENS.Y-CABLE, ASBN 2-PRKMV 4-07/0,6M	

Pos	Part No	UN	Qty	Description	Page No

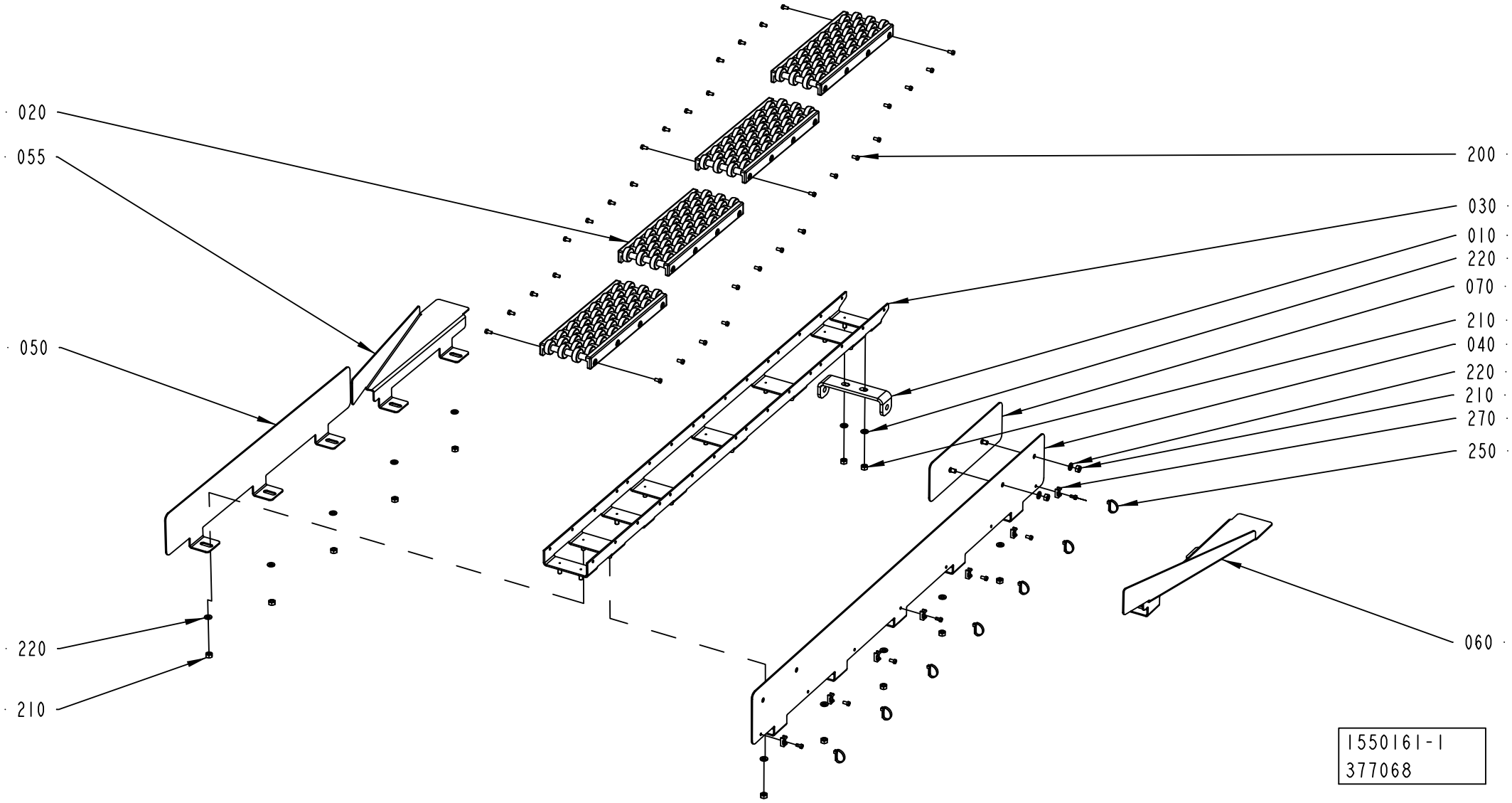
020
055
050
220
210
200
030
010
220
070
210
040
220
210
270
250
060
1550161-1
377068

ECM: 378854 - 20081130
Group number: 1550161-0100
Assembly Drawing: 1550161-1_1_AB

Pos	Part No	UN	Qty	Description	Page No
-					
010	1550179-0000		1	BOW CLAMP	
020	1550246-0000		4	ROLLER UNIT	
030	1550245-0000		1	CHUTE	
040	1550236-0000		1	SIDE PLATE	
050	1550237-0000		1	SIDE PLATE	
055	1550238-0000		1	SIDE PLATE	
060	1550239-0000		1	SIDE PLATE	
070	1550286-0000		1	PLATE	
200	312125-0287		39	SCREW ISO 1207 M4X8 A4	
210	312605-0316		14	HEXAGON NUT, M6M M6 A280	
220	315105-0153		14	WASHER BRB 6,4X12 RFR	
250	352113-0101		7	CABLE TIE, BLACK 92X2,5 MM	
270	352113-0205		7	ANCHOR PLATES FOR STRIPS, TYPE TM2S8-C10	

Pos	Part No	UN	Qty	Description	Page No

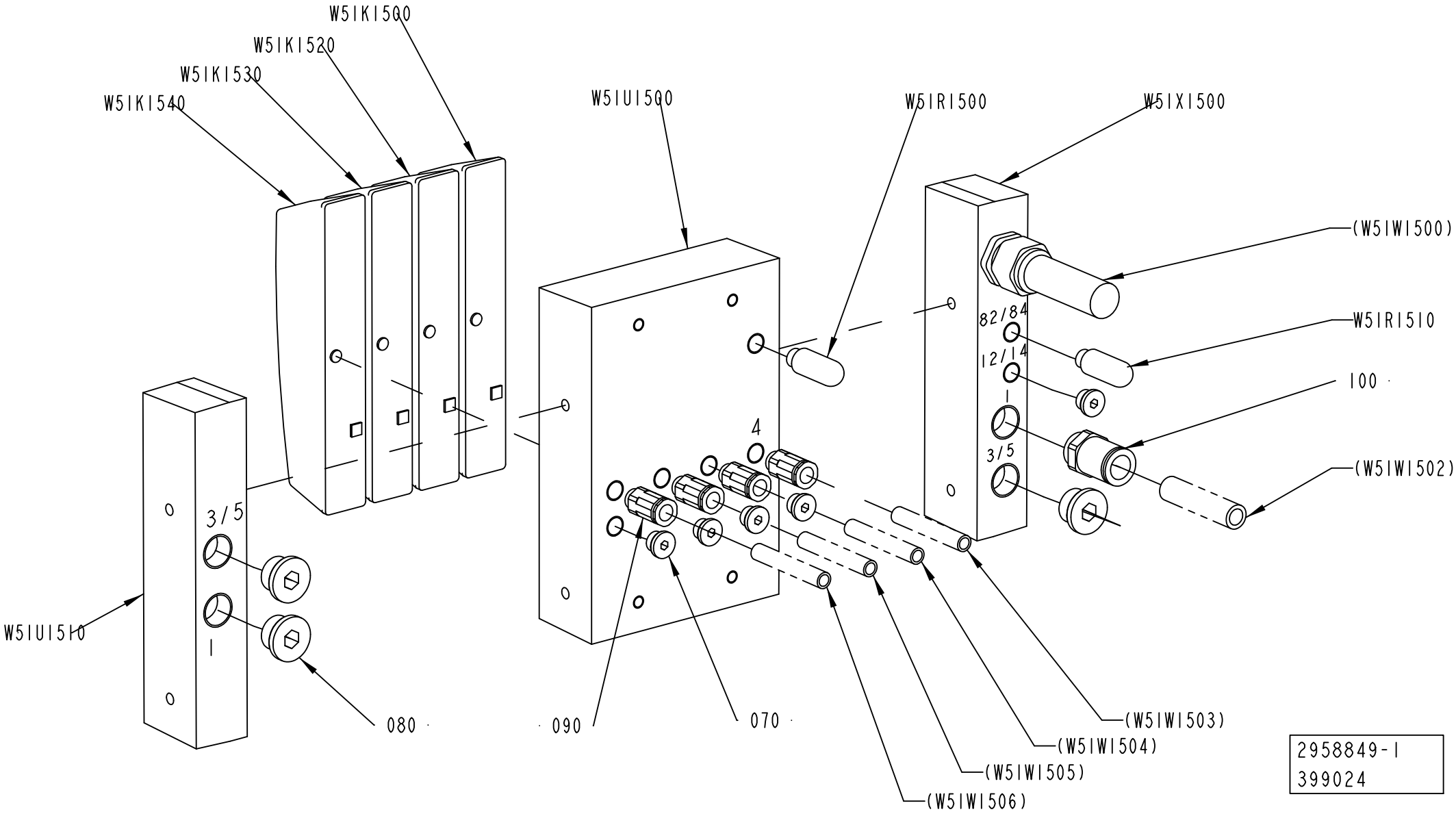
W5IK1500
W5IK1520
W5IK1530
W5IK1540
W5IU1500
W5IR1500
W5IX1500
(W5IW1500)
W5IR1510
100
(W5IW1502)
82/84
12/14
3/5
4
3/5
W5IU1510
080
090
070
(W5IW1503)
(W5IW1504)
(W5IW1505)
(W5IW1506)
2958849-1
399024

ECM: 405059 - 20081201
Group number: 2958849-0100
Assembly Drawing: 2958849-1_1_AB

Pos	Part No	UN	Qty	Description	Page No
-					
070	342713-0209		5	PLUG (QUANT.MINIMA= 10PC).	
080	342713-0211		3	PLUG, EXT THREAD HEX SOCKET 8638-00-380	
090	342722-0204		4	PIPE COUPLING	
100	342722-0210		1	STRAIGHT COUPLING, D=12 MM - G3/8"	
W51K1500	90458-1194		1	MONOSTABLE VALVE 5/2	
W51K1520	90458-1194		1	MONOSTABLE VALVE 5/2	
W51K1530	90458-1194		1	MONOSTABLE VALVE 5/2	
W51K1540	90458-1194		1	MONOSTABLE VALVE 5/2	
W51R1500	90328-0047		1	SILENCER G1/8"	
W51R1510	90328-0047		1	SILENCER G1/8"	
W51U1500	90458-1204		1	BASIC SUB-BASE 4 VALVES, CDVI5.0-GB4-MP	
W51U1510	90458-1213		1	RIGHT ENDPLATE INTERNAL PILOT AIR	
W51X1500	90458-1211		1	LEFT ENDPLATE INCL. 5M CABLE	

Pos	Part No	UN	Qty	Description	Page No

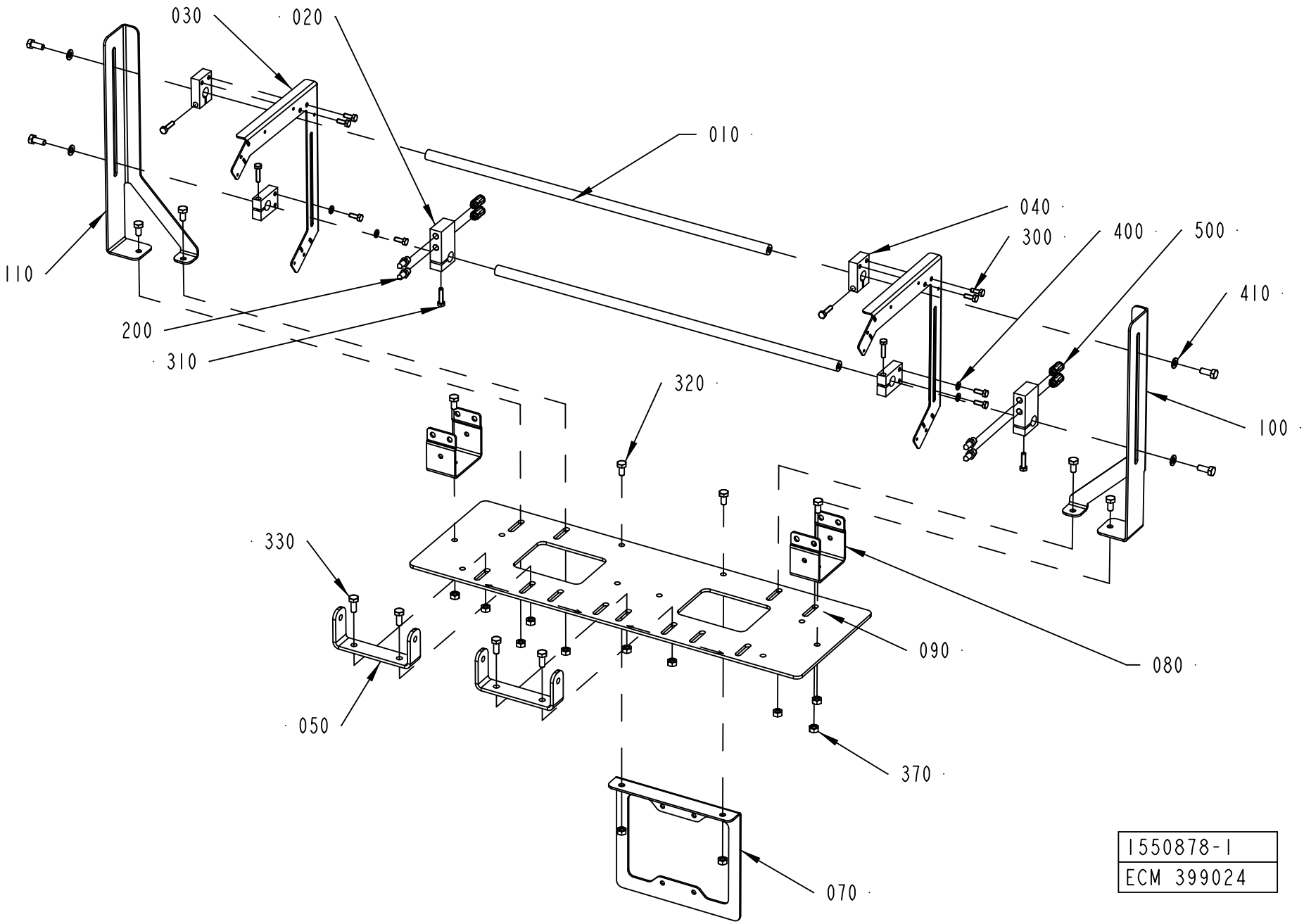
030
020
010
040
300
400
500
410
110
200
310
320
100
330
090
080
050
370
070
1550878-1
ECM 399024

ECM: 405067 - 20081201
Group number: 1550878-0100
Assembly Drawing: 1550878-1_1_AC

Pos	Part No	UN	Qty	Description	Page No
-					
010	1550177-0000		2	SHAFT	
020	1550206-0000		2	HOLDER	
030	1550302-0000		2	PHOTOCELL BRACKET	
040	1550319-0000		4	BRACKET	
050	1550401-0000		2	BOW CLAMP	
070	1550847-0000		1	BRACKET	
080	1550874-0000		2	BRACKET FOR LEG PC23	
090	1550875-0000		1	PLATE	
100	1550876-0000		1	BRACKET	
110	1550877-0000		1	BRACKET	
200	90424-0087		4	AIR NOZZLE	
300	312105-0368		8	SCREW M6S ISO 4017 M6X16 A480	
310	312105-0372		6	SCREW M6S ISO 4017 M6X25 A480	
320	312105-0449		8	SCREW M6S ISO 4017 M8X16 A480	
330	312105-0451		8	SCREW M6S ISO 4017 M8X20 A480	
370	312605-0318		12	HEXAGON NUT, M6M M8 A280	
400	315105-0153		4	WASHER BRB 6,4X12 RFR	
410	315105-0165		4	WASHER BRB 8,4X16 RFR	
500	342722-0204		4	PIPE COUPLING	

Pos	Part No	UN	Qty	Description	Page No

Machine Type | Group Description | Used-In | Group Number | Page No

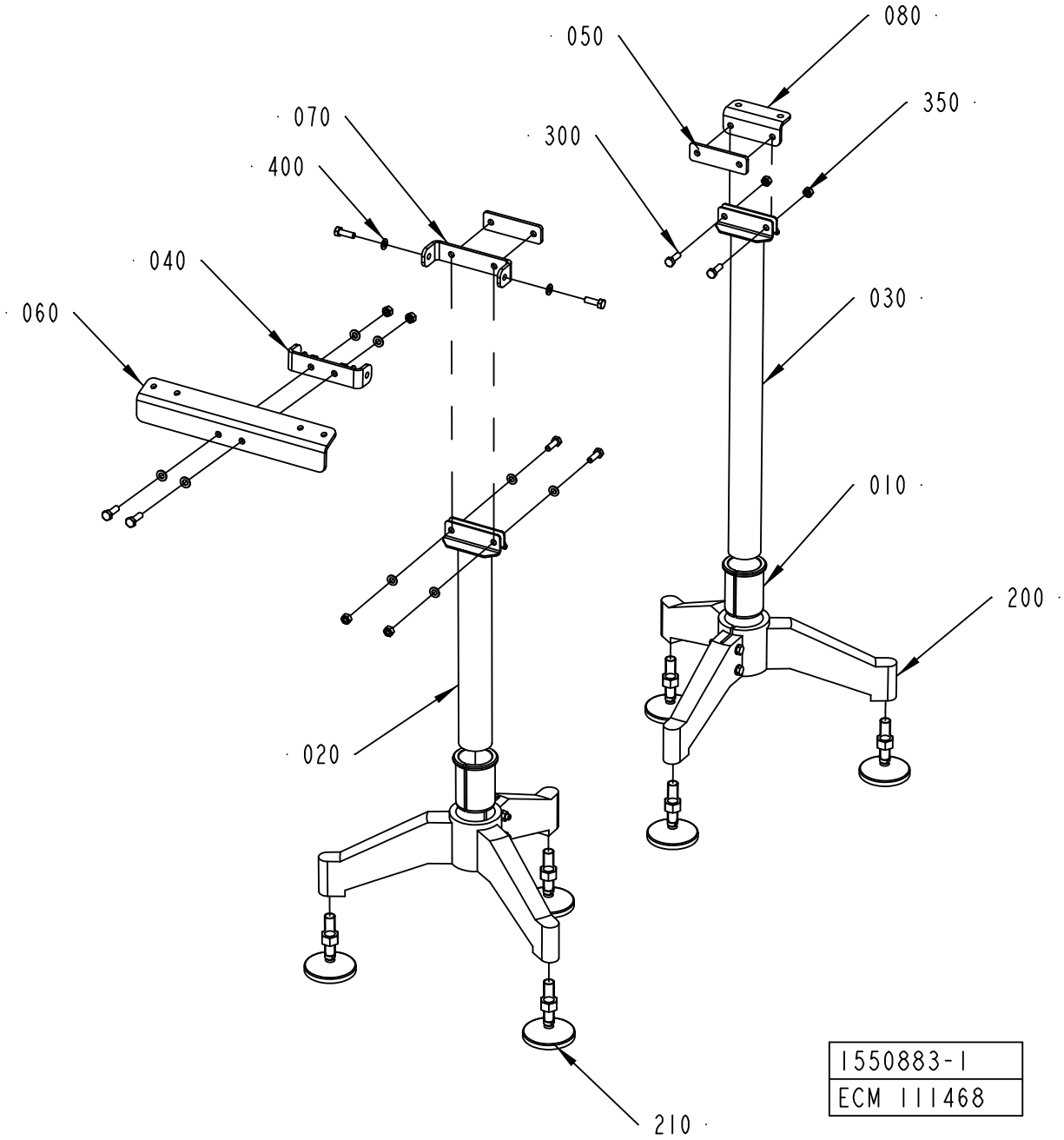
080
050
350
070
300
400
040
030
060
010
200
020
210
1550883-1
ECM 111468

ECM: 214425 - 20050920
Group number: 1550883-0100
Assembly Drawing: 1550883-1_1_AA

Pos	Part No	UN	Qty	Description	Page No
-					
010	562015-0000		2	REDUCTION CASING	
020	1020391-0003		1	PIPE	
030	1020391-0004		1	PIPE	
040	1550179-0000		1	BOW CLAMP	
050	1550199-0000		2	SPACER	
060	1550404-0000		1	BRACKET	
070	1550405-0000		1	BOW CLAMP	
080	1550406-0000		1	BRACKET	
200	90068-0016		2	FOOT, 3 LEGS. NO 15511	
210	90068-0017		6	ARTICULATED FOOT W. RUBBER PAD, NO 17532	
300	312105-0453		8	SCREW M6S ISO 4017 M8X25 A480	
350	312605-0318		8	HEXAGON NUT, M6M M8 A280	
400	315105-0165		12	WASHER BRB 8,4X16 RFR	

Pos	Part No	UN	Qty	Description	Page No

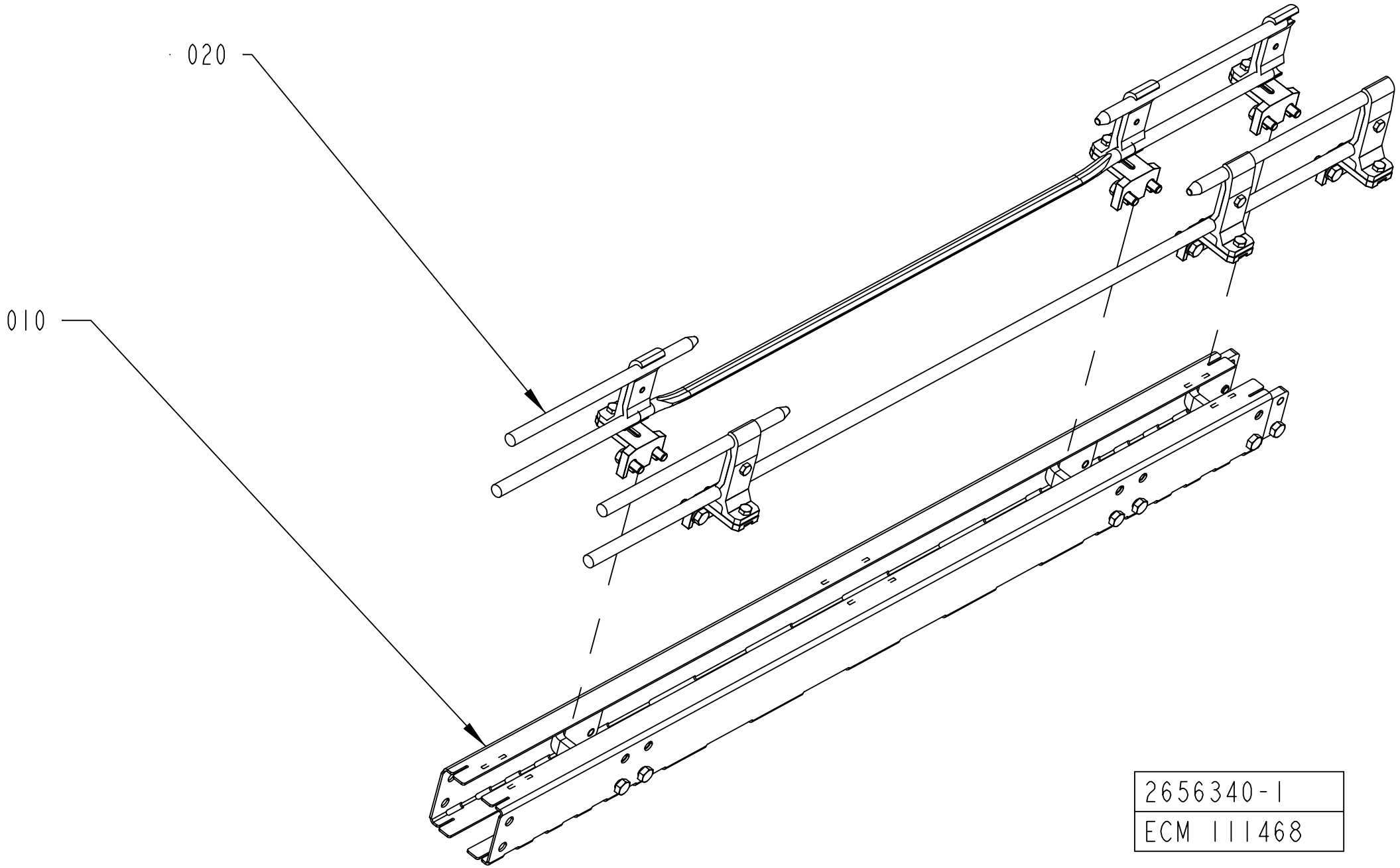
020
010
2656340-1
ECM 111468

ECM: 153134 - 20031113
Group number: 2656340-0100
Assembly Drawing: 2656340-1_1_AA

Pos	Part No	UN	Qty	Description	Page No
-					
010	2656341-0100		1	CONVEYOR BODY	**11-223**
020	2656342-0100		1	RAILING	**11-225**

Pos	Part No	UN	Qty	Description	Page No

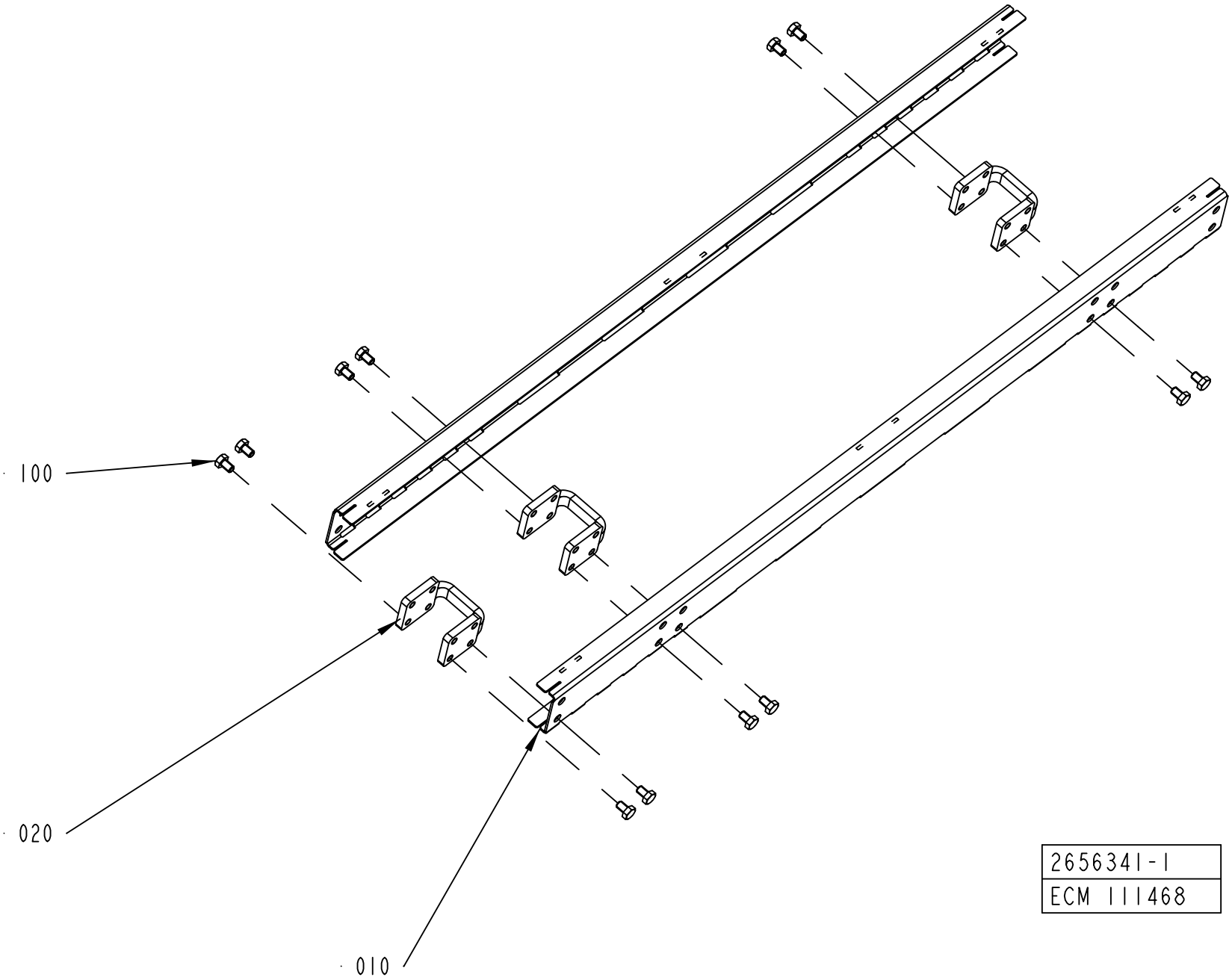
100
020
010
2656341-1
ECM 111468

ECM: 189319 - 20050121
Group number: 2656341-0100
Assembly Drawing: 2656341-1_1_AA

Pos	Part No	UN	Qty	Description	Page No
-					
010	2656345-0000		2	SIDE PLATE	
020	2561206-0000		3	SPACER	
100	90459-4735		12	SCREW M6S ISO 4017 M8X10 A480	
800	1550595-9960		4	SLIDING STRIP	

Pos	Part No	UN	Qty	Description	Page No

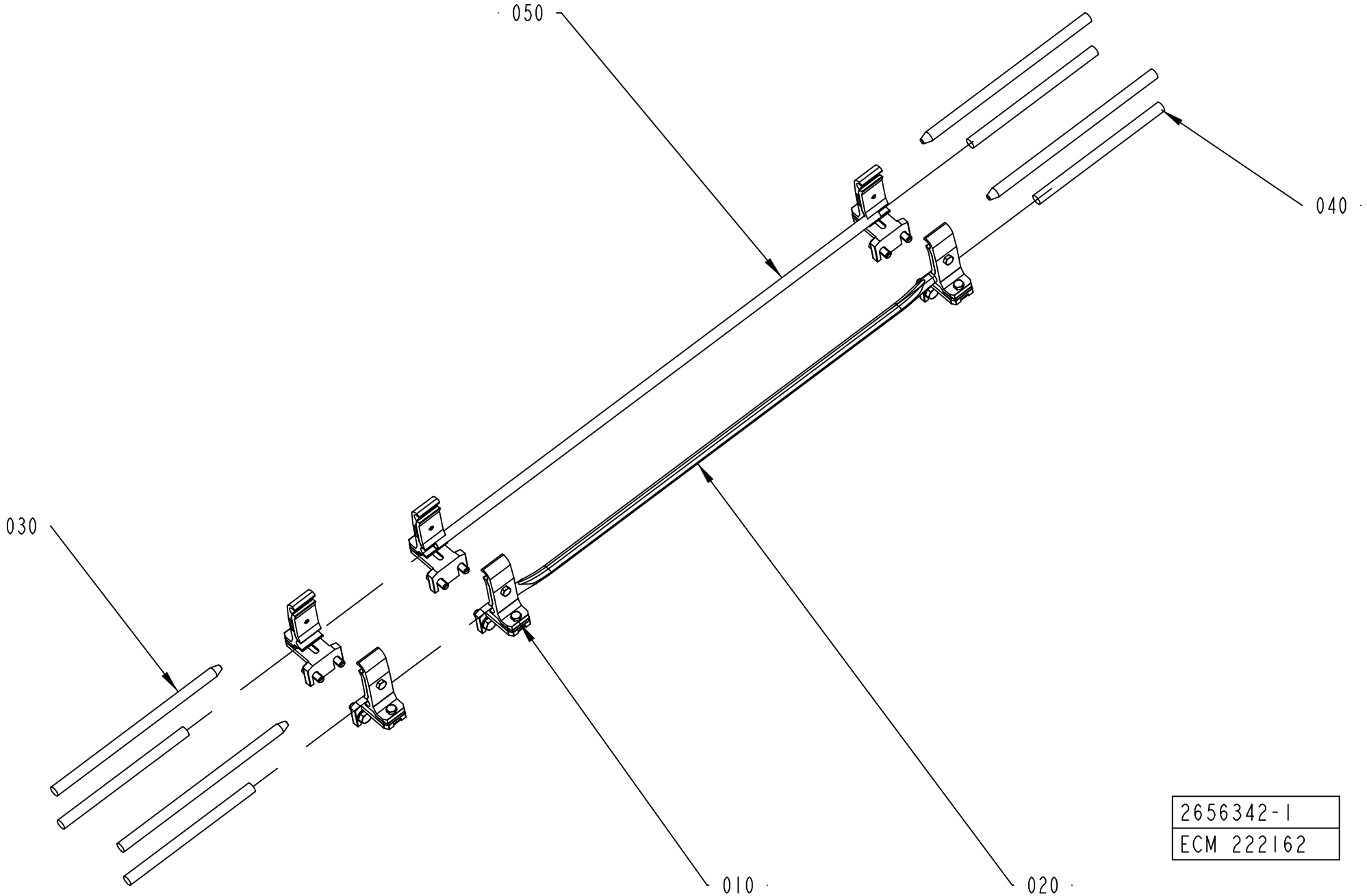
050
040
030
010
020
2656342-1
ECM 222162

ECM: 228042 - 20051222
Group number: 2656342-0100
Assembly Drawing: 2656342-1_1_AB

Pos	Part No	UN	Qty	Description	Page No
-					
010	1550743-0200		6	RAIL HOLDER	**5-73, 11-31**
020	2656343-0000		1	PIPE	
030	2656354-0000		4	PIPE	
040	2656356-0000		4	PIPE	
050	2656358-0000		1	PIPE	

Pos	Part No	UN	Qty	Description	Page No

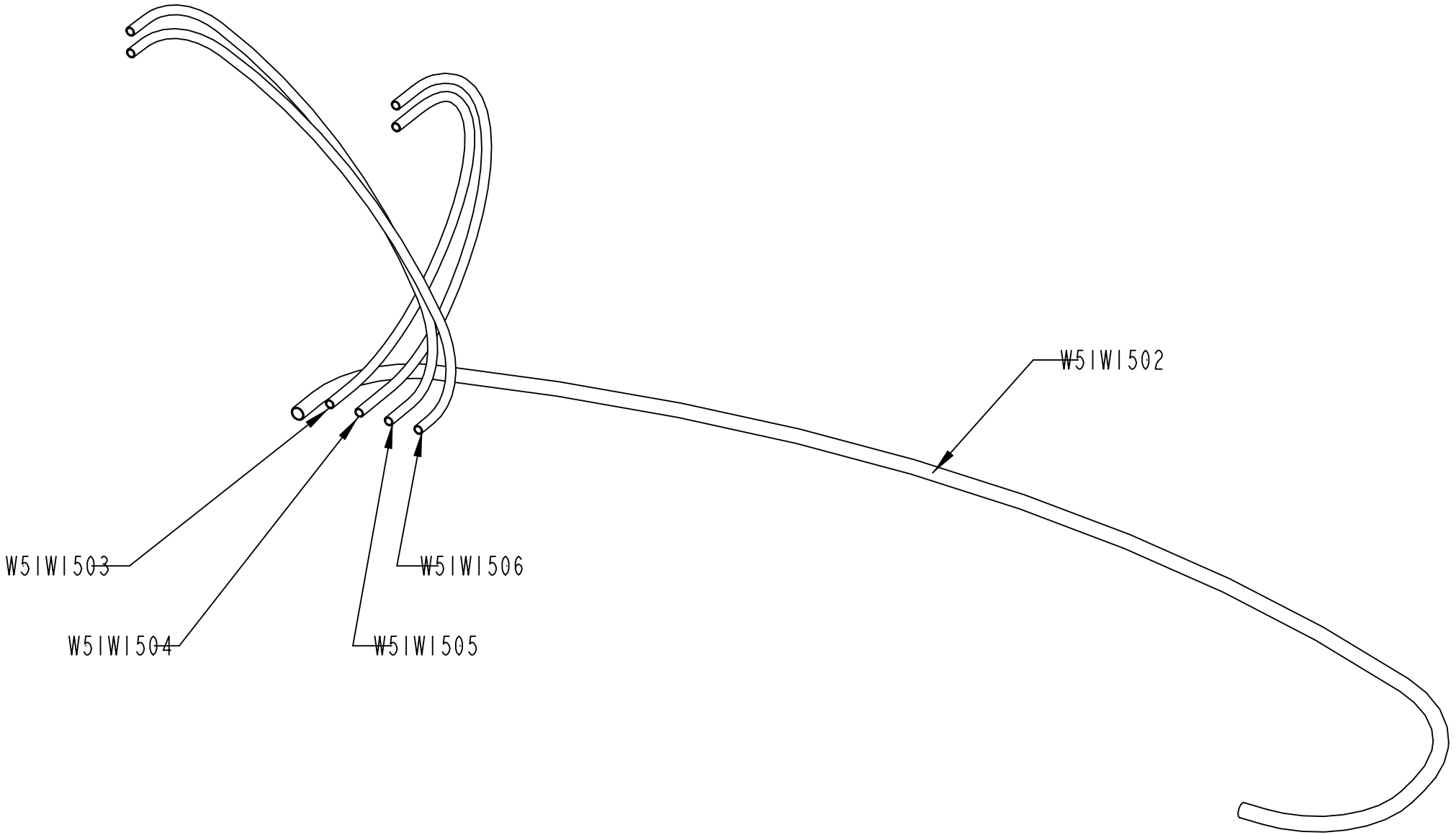
W5IWI502
W5IWI503
W5IWI504
W5IWI505
W5IWI506
2958850-1
399024

ECM: 405058 - 20081201
Group number: 2958850-0100
Assembly Drawing: 2958850-1_1_AB

Pos	Part No	UN	Qty	Description	Page No
-					
W51W1502	90166-0195	MM	1000	TUBE 12 MM PA BLUE	
W51W1503	90166-0013	MM	540	TUBE 8 MM PA BLUE	
W51W1504	90166-0013	MM	540	TUBE 8 MM PA BLUE	
W51W1505	90166-0013	MM	540	TUBE 8 MM PA BLUE	
W51W1506	90166-0013	MM	540	TUBE 8 MM PA BLUE	

Pos	Part No	UN	Qty	Description	Page No

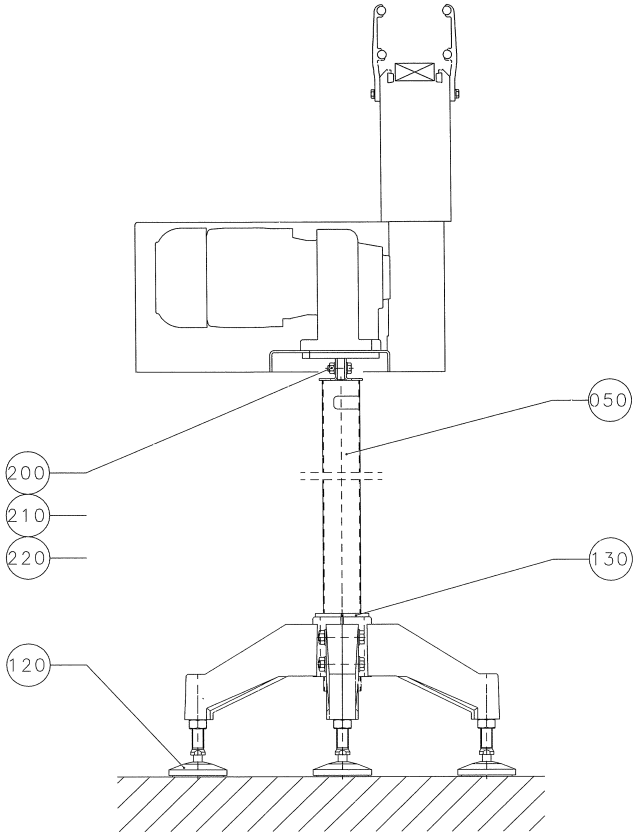

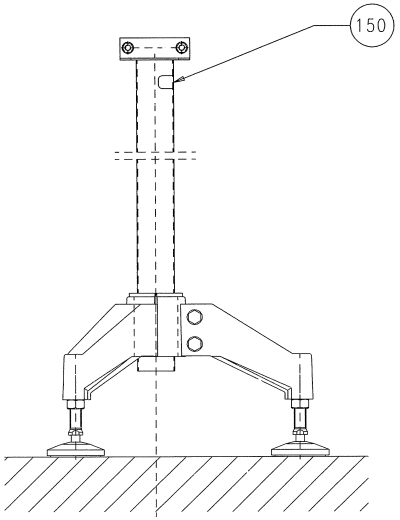

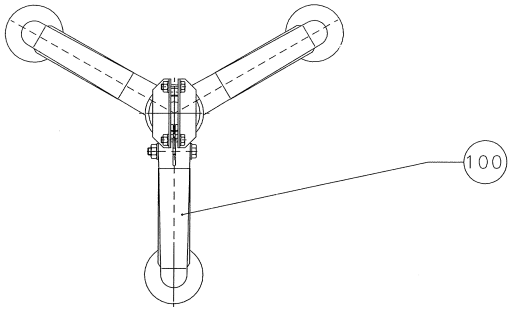

010	PACKING DESCRIPT'ON

ECM: 27110 -
Group number: 1020164-0201
Assembly Drawing: 1020164-2_1_AB

Pos	Part No	UN	Qty	Description	Page No
-					
010	1020418-0200		1	PACKING DESCRIPTION	**11-231**
050 2	1020391-0002		1	PIPE	
050 1	1020391-0001		1	PIPE	
100	90068-0016		1	FOOT, 3 LEGS. NO 15511	
120	90068-0017		3	ARTICULATED FOOT W. RUBBER PAD, NO 17532	
130	562015-0000		1	REDUCTION CASING	
150	1086870-0000		1	SIGN	
200	312105-0453		2	SCREW M6S ISO 4017 M8X25 A480	
210	312605-0318		2	HEXAGON NUT, M6M M8 A280	
220	315105-0165		4	WASHER BRB 8,4X16 RFR	

Pos	Part No	UN	Qty	Description	Page No

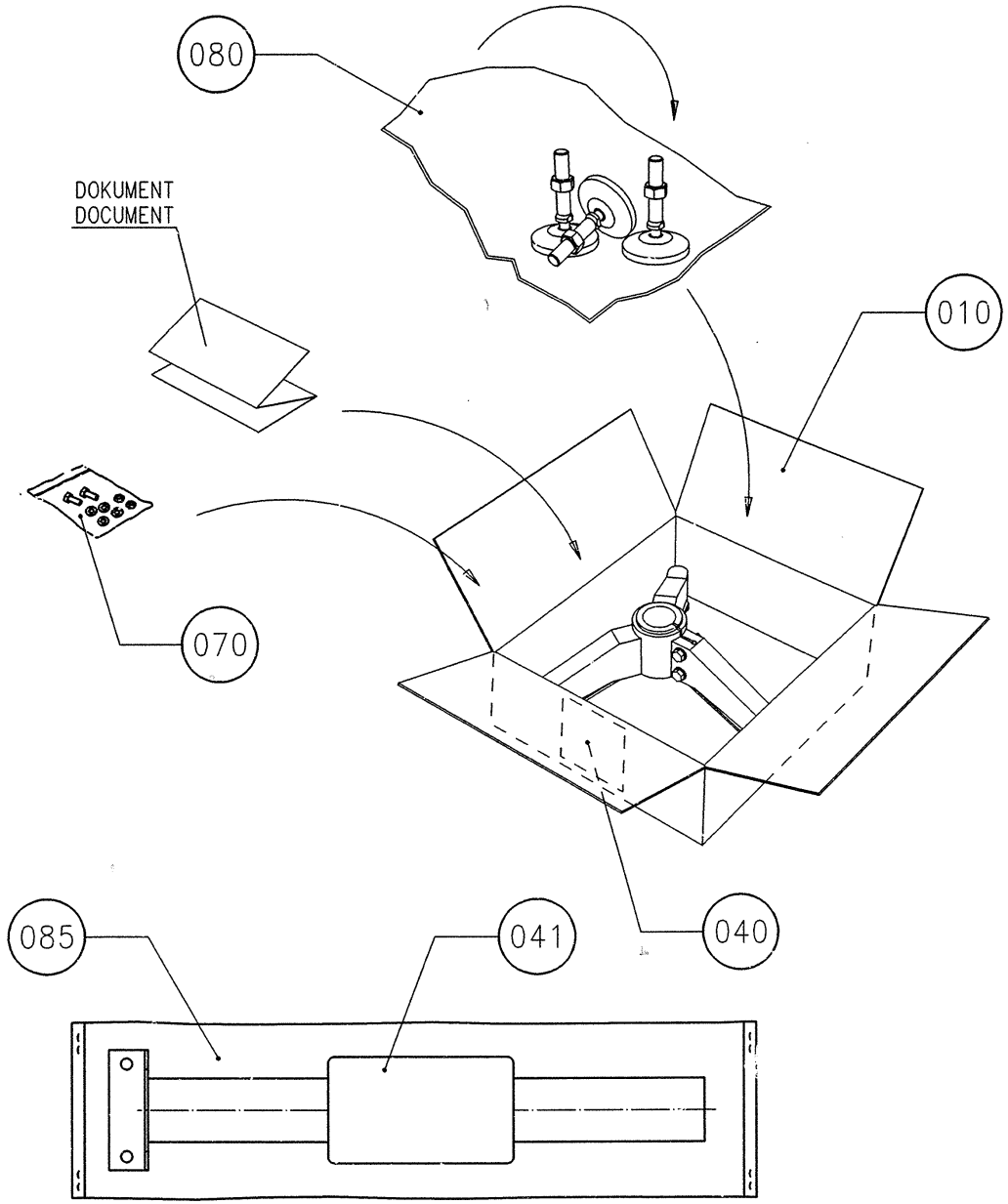
080
DOKUMENT
DOCUMENT
010
070
085
041
040

ECM: 221812 - 20050713
Group number: 1020418-0200
Assembly Drawing: 1020418-2_1_AA

Pos	Part No	UN	Qty	Description	Page No
-					
010	1020462-0000		1	CORRUGATED CARDBOARD BOX	
040	1086871-0000		1	LABEL TAPE	
070	90003-0019		1	BAG	
080	90003-0474			PACKING	

Pos	Part No	UN	Qty	Description	Page No

QUEUE GUARD

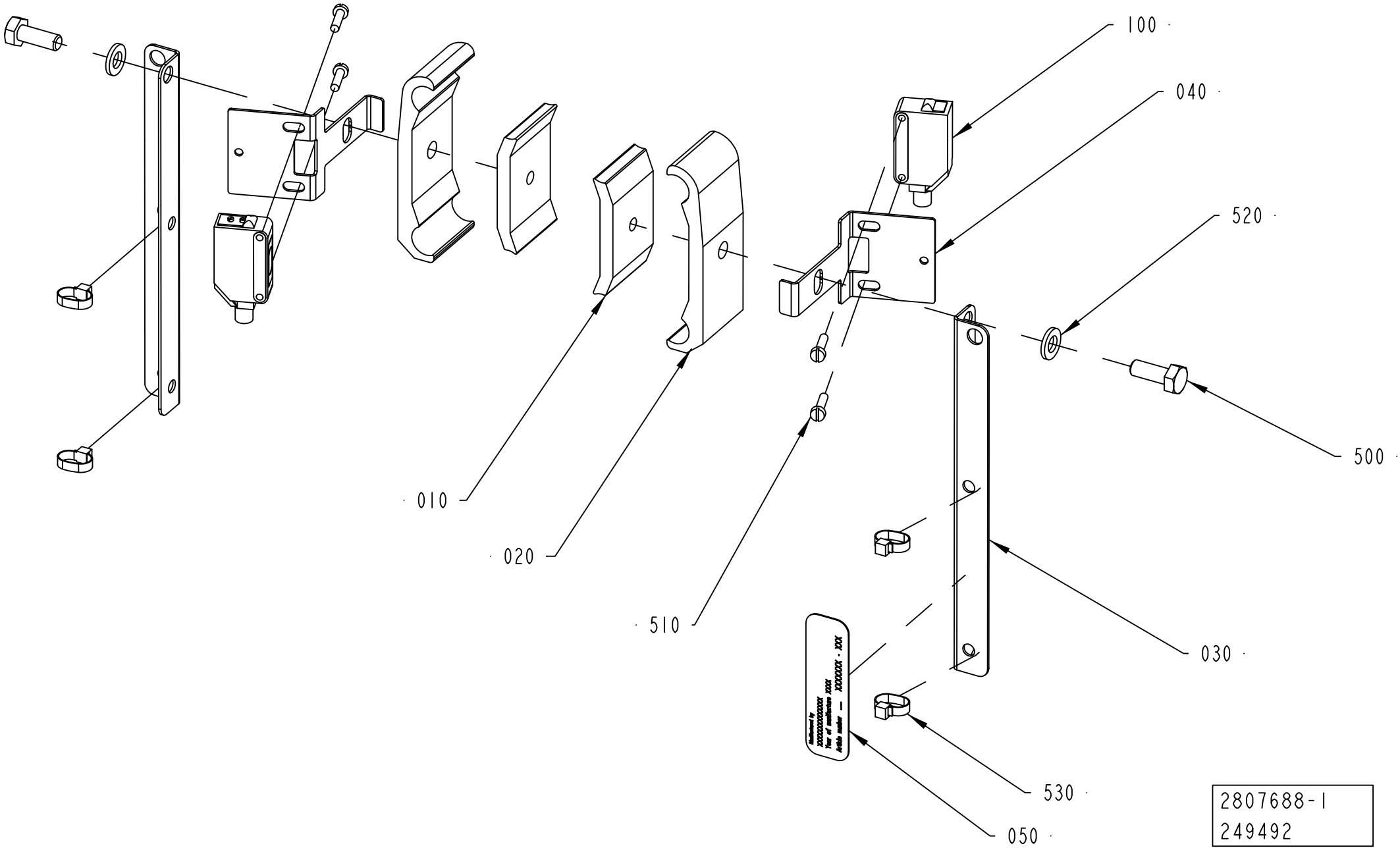

ECM: 420622 - 20091113
Group number: 2807688-0100
Assembly Drawing: 2807688-1_1_AA

Pos	Part No	UN	Qty	Description	Page No
-					
005	2808044-0100		1	PACKING DESCRIPTION	**11-235**
010	1366727-0000		2	CLAMP	
020	1366750-0000		2	HOLDER	
030	2989228-0000		2	CABLE DUCT	
040	2807690-0000		2	BRACKET	
050	1086870-0000		1	SIGN	
100	90459-5529		1	PH.CELL E3Z-T86A, SENDER+RECIEVER	
500	312105-0368		2	SCREW M6S ISO 4017 M6X16 A480	
510	312121-0226		4	SCREW ISO 1207 M3X12 4.8-5.8 Z.PL.	
520	315105-0153		2	WASHER BRB 6,4X12 RFR	
530	352113-0101		4	CABLE TIE, BLACK 92X2,5 MM	

Pos	Part No	UN	Qty	Description	Page No

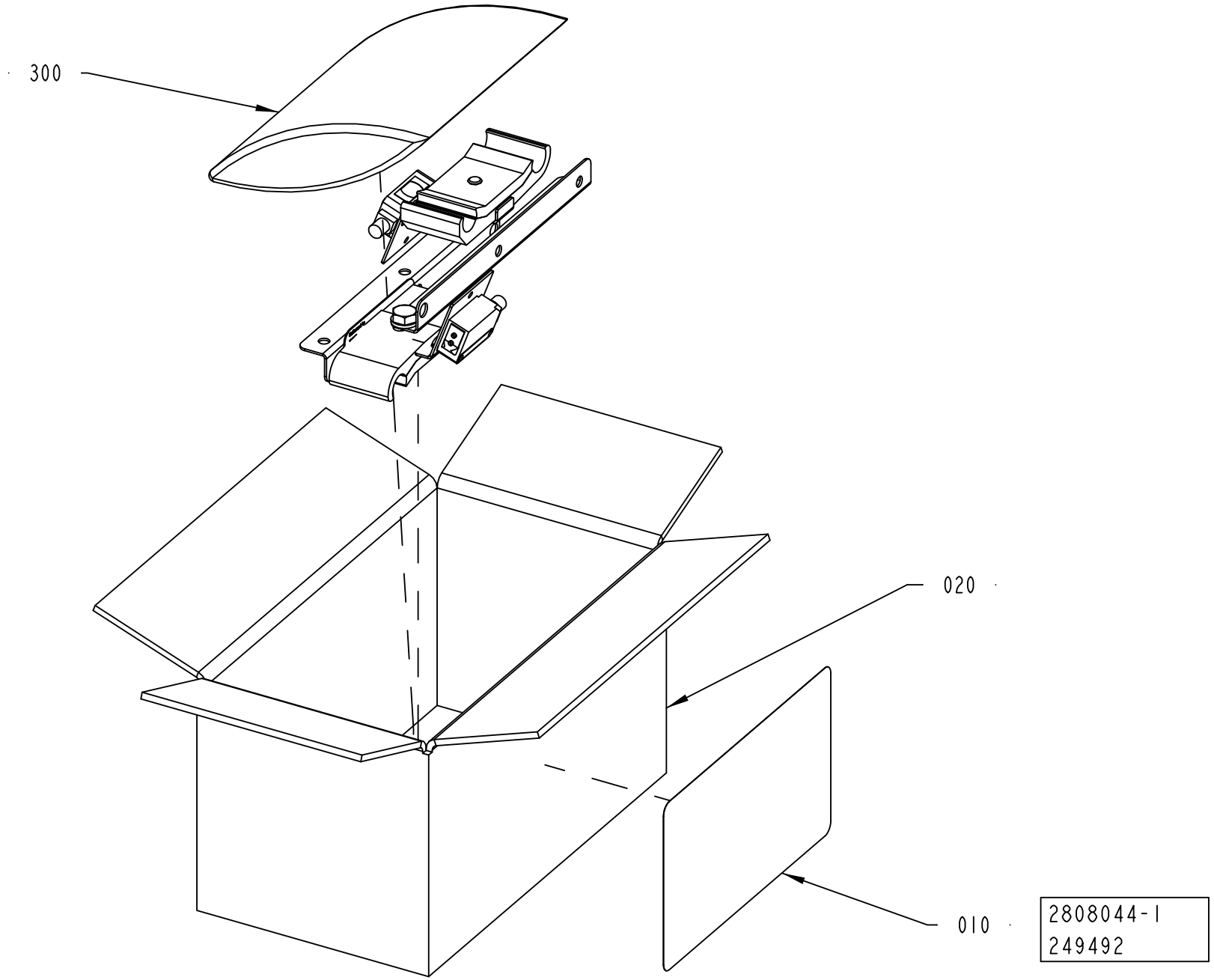
300
020
010
2808044-1
249492

ECM: 270816 - 20060922
Group number: 2808044-0100
Assembly Drawing: 2808044-1_1_AA

Pos	Part No	UN	Qty	Description	Page No
-					
010	1086871-0000		1	LABEL TAPE	
020	1550589-0000		1	CORRUGATED CARDBOARD BOX	
300	90003-0019		1	BAG	

Pos	Part No	UN	Qty	Description	Page No

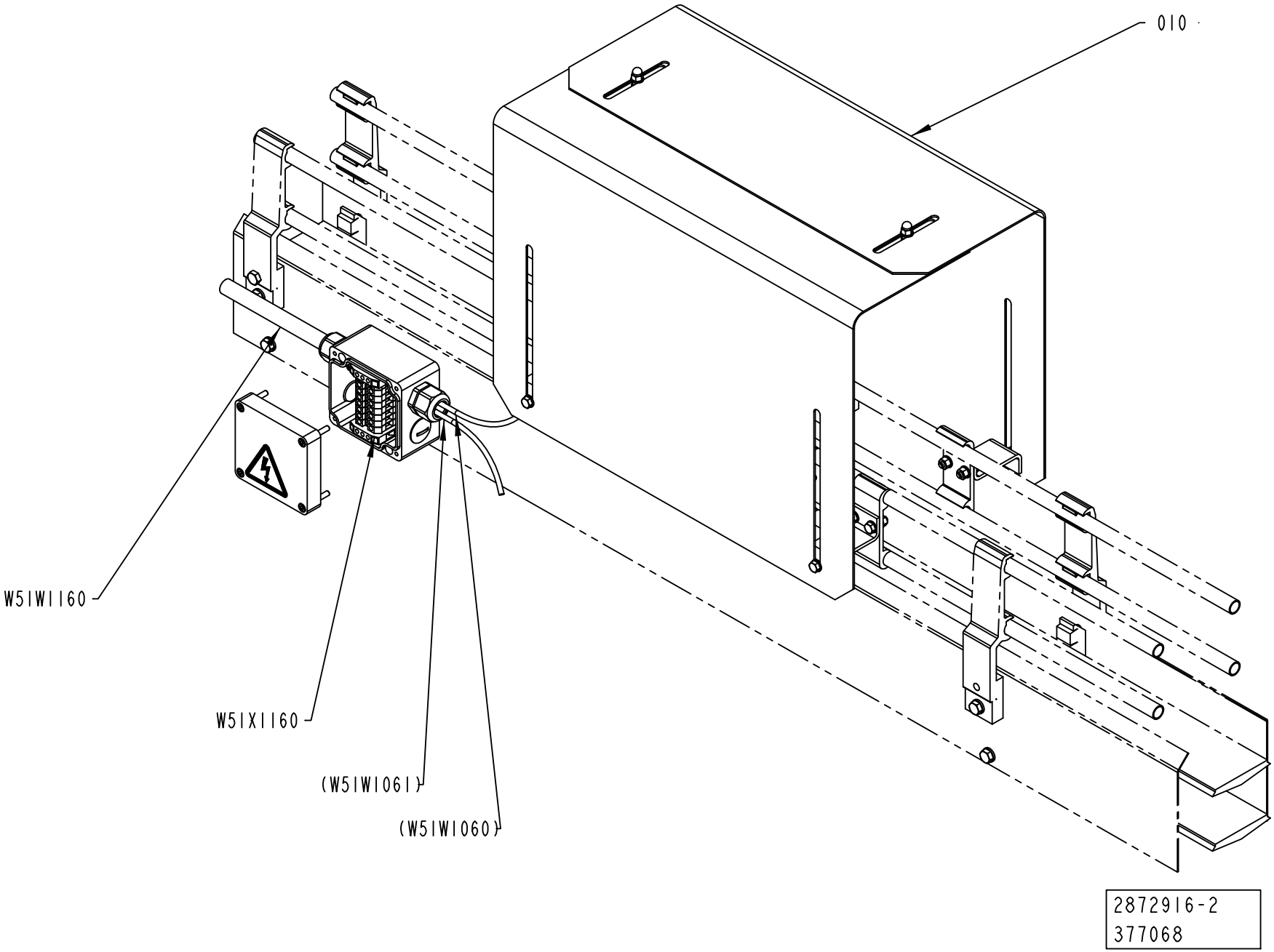
010
W5IWII60
W5IXII60
(W5IWI061)
(W5IWI060)
2872916-2
377068

ECM: 378804 - 20081130
Group number: 2872916-0200
Assembly Drawing: 2872916-2_1_AA

Pos	Part No	UN	Qty	Description	Page No
-					
010	2872918-0100		1	METERING DEVICE	**11-239**
W51W1160	351150-0405	M	100	CABLE OLFLEX 5X0,75 MM2 LIGHT/GREY	
W51X1160	2872919-0100		1	CONNECTION BOX	**11-241**

Pos	Part No	UN	Qty	Description	Page No

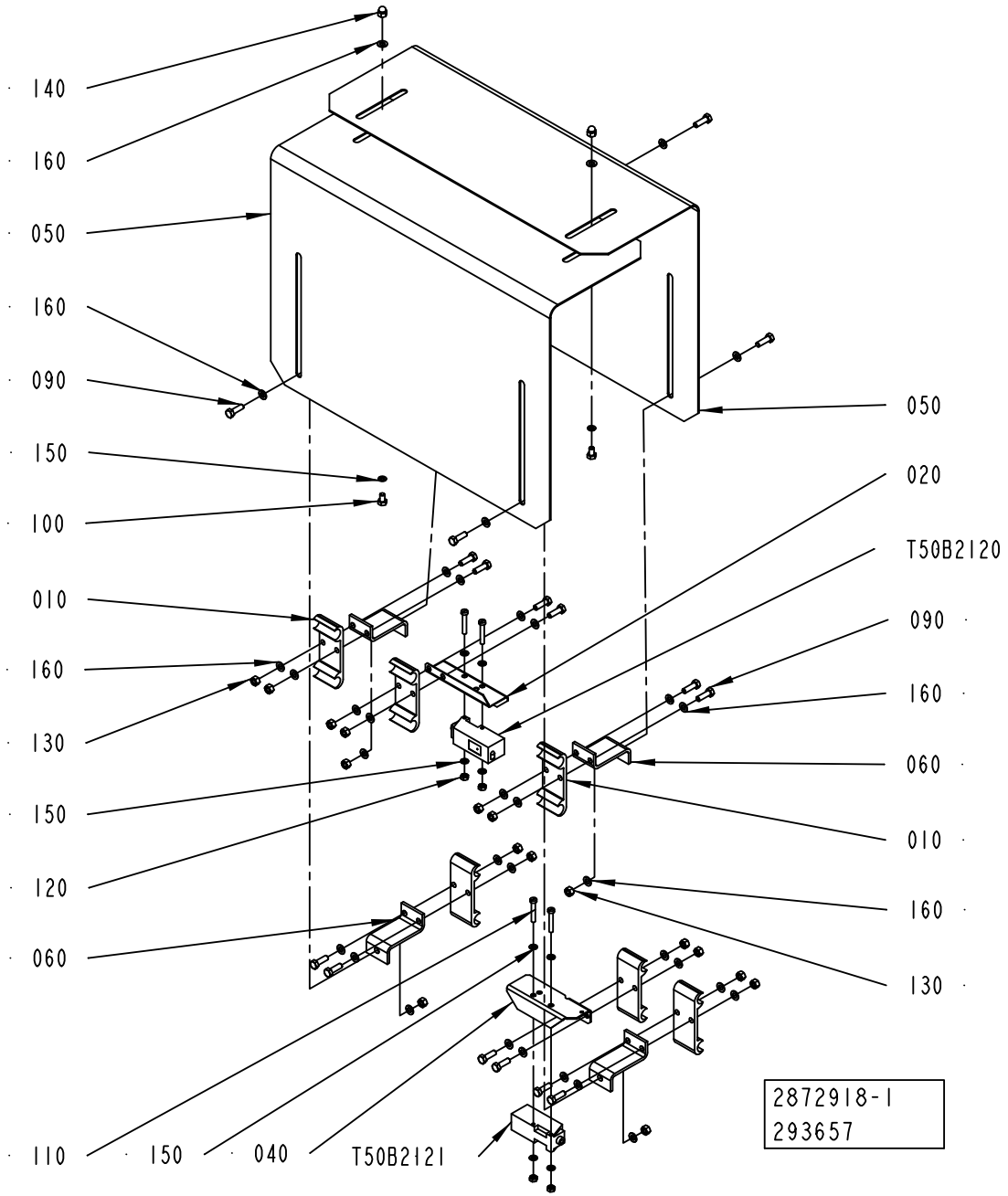
140
160
050
160
090
150
100
010
160
130
150
120
060
110
150
040
T50B2121
050
020
T50B2120
090
160
060
010
160
130
2872918-1
293657

ECM: 300224 - 20070701
Group number: 2872918-0100
Assembly Drawing: 2872918-1_1_AA

Pos	Part No	UN	Qty	Description	Page No
-					
010	1020637-0000		6	HOLDER	
020	1086889-0000		1	COVER	
030	1020638-0000		6	HOLDER	
040	1086888-0000		1	COVER	
050	1349566-0000		2	COVER	
060	1478659-0000		4	BRACKET	
090	312105-0329		16	SCREW M6S ISO 4017 M5X16 A480	
100	312105-0323		2	SCREW M6S ISO 4017 M5X8 A480	
110	312125-0297		4	SCREW ISO 1207 M4X25 A4	
120	312605-0312		4	HEXAGON NUT, M6M M4 A280	
130	312605-0314		16	HEXAGON NUT, M6M M5 A280	
140	312705-0314		2	NUT HEX. DOMED CAP MHM-6 M5 A280	
150	315105-0136		8	WASHER BRB 4,3X8 RFR	
160	315105-0146		42	WASHER BRB 5,3X10 RFR	
T50B2120	90232-0104		1	PH.CELL E3S-CT61-D-5M	
T50B2121	90232-0103		1	PH.CELL E3S-CT61-L-5M	

Pos	Part No	UN	Qty	Description	Page No

Machine Type | Group Description | Used-In | Group Number | Page No

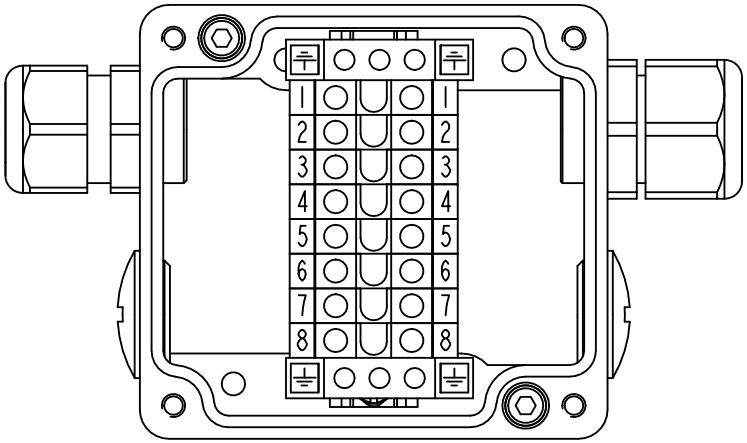

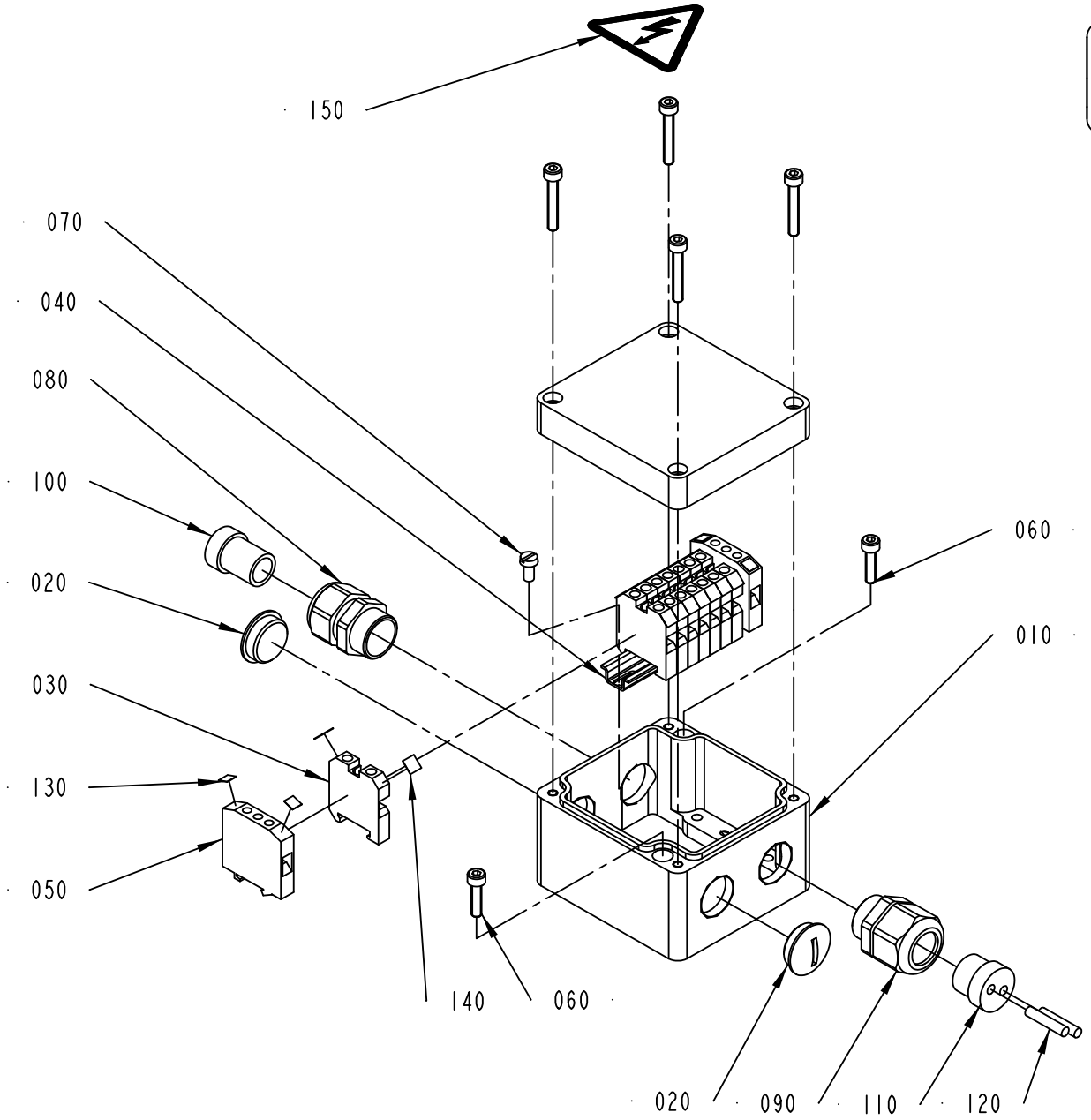

2872919-1
293657

ECM: 461304 - 20101002
Group number: 2872919-0100
Assembly Drawing: 2872919-1_1_AA

Pos	Part No	UN	Qty	Description	Page No
ANSI					
150	359715-0100		1	WARNING SIGN ANSI (H), ELECTRIC SHOCK	
ISO					
150	359705-0015		1	WARNING SIGN ISO, RISK OF ELECTRIC SHOCK	
Common Parts					
010	1349568-0000		1	CONNECTION BOX	
020	90002-0009		2	BLANK-OFF PLUG, PR 18.6 SKINDICHT-BLK11	
030	90077-0079		8	FEED THROUGH TERMINAL, 02943.6	
040	90077-0328	MM	65	RAIL TS15/5	
050	90135-0026		2	EARTH TERMINAL, 3802.6	
060	312115-0293		2	SCREW ISO4762 M4X16 A4 80	
070	312125-0287		2	SCREW ISO 1207 M4X8 A4	
080	353240-0002		1	GLAND W/O INSERT PG11 NORMAL	
090	353241-0002		1	GLAND W/O INSERT PG11 EXTENDED	
100	353249-0003		1	INSERT, SINGLE HOLE, E151/11	
110	353249-0036		1	INSERT, MULTI HOLE, EK152 M 2X4	
120	353249-0301		2	SEALING PIN, 4X20	
130	359011-0819		4	MARKING, EARTH, DEK 5 GW ERDE I.KR.	
140	359011-0821		2	MARKING, DEK 6 FW 1-50	

Pos	Part No	UN	Qty	Description	Page No

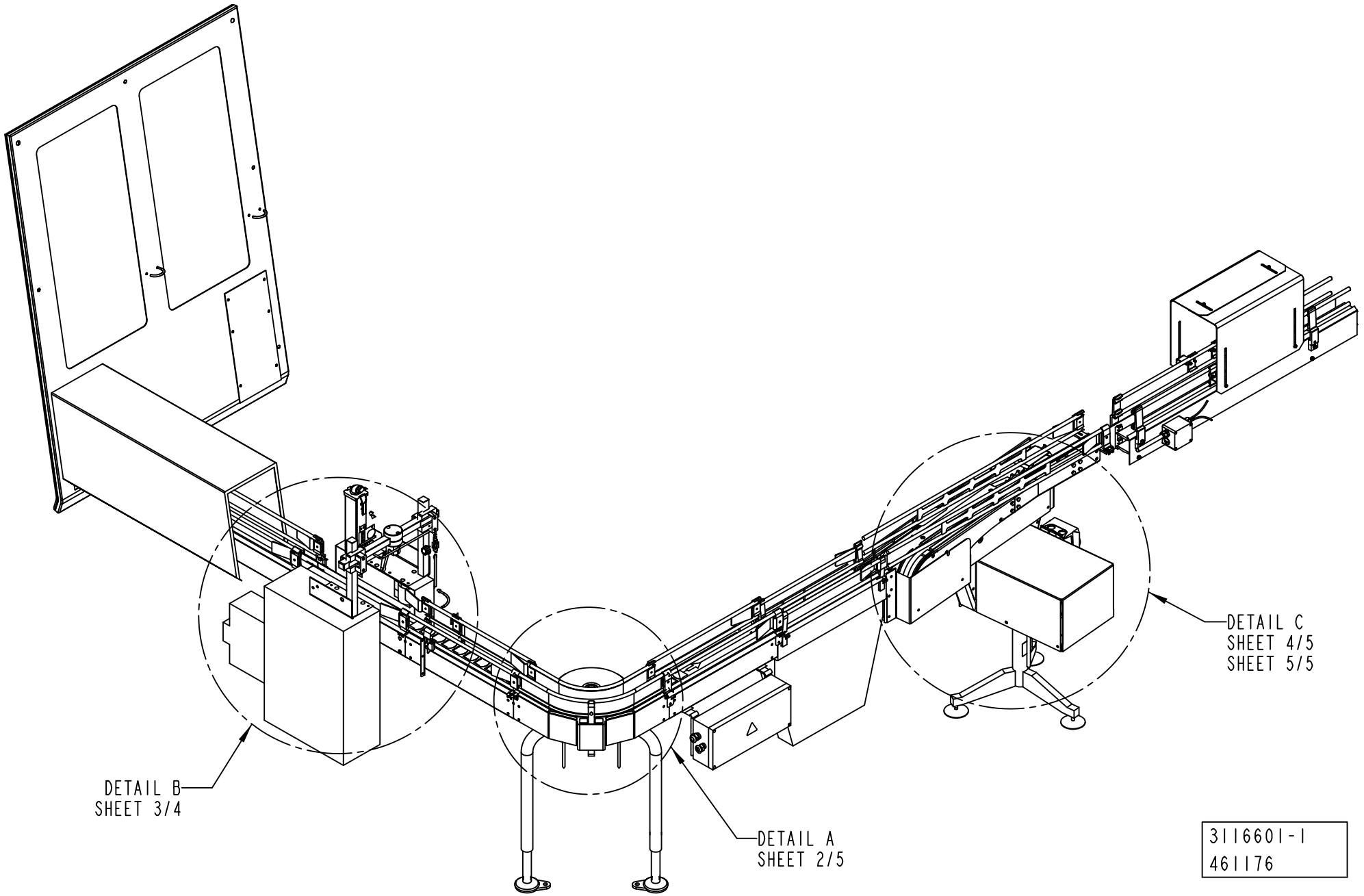
DETAIL B
SHEET 3/4
DETAIL A
SHEET 2/5
DETAIL C
SHEET 4/5
SHEET 5/5
3116601-1
461176

ECM: 461949 - 20101001
Group number: 3116601-0100
Assembly Drawing: 3116601-1_1_AA

This list covers pages from 11-242 to 11-251

Pos	Part No	UN	Qty	Description	Page No
ANSI (See drawing on pages: 11-242, 11-244, 11-246, 11-248, 11-250)					
010	3117186-0000		2	PLATE	
020	3117185-0000		1	PLATE	
100	90600-4040		5	CAUTION SIGN ANSI (H), DO NOT REACH IN	
110	90459-7458		1	WARNING SIGN ANSI (H), HOT SURFACE	
120	90459-2022		4	WARNING SIGN ANSI (V), READ OM	

Pos	Part No	UN	Qty	Description	Page No

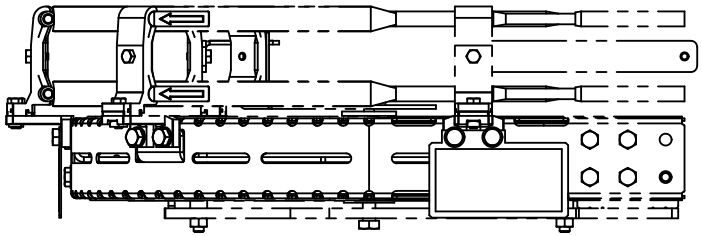

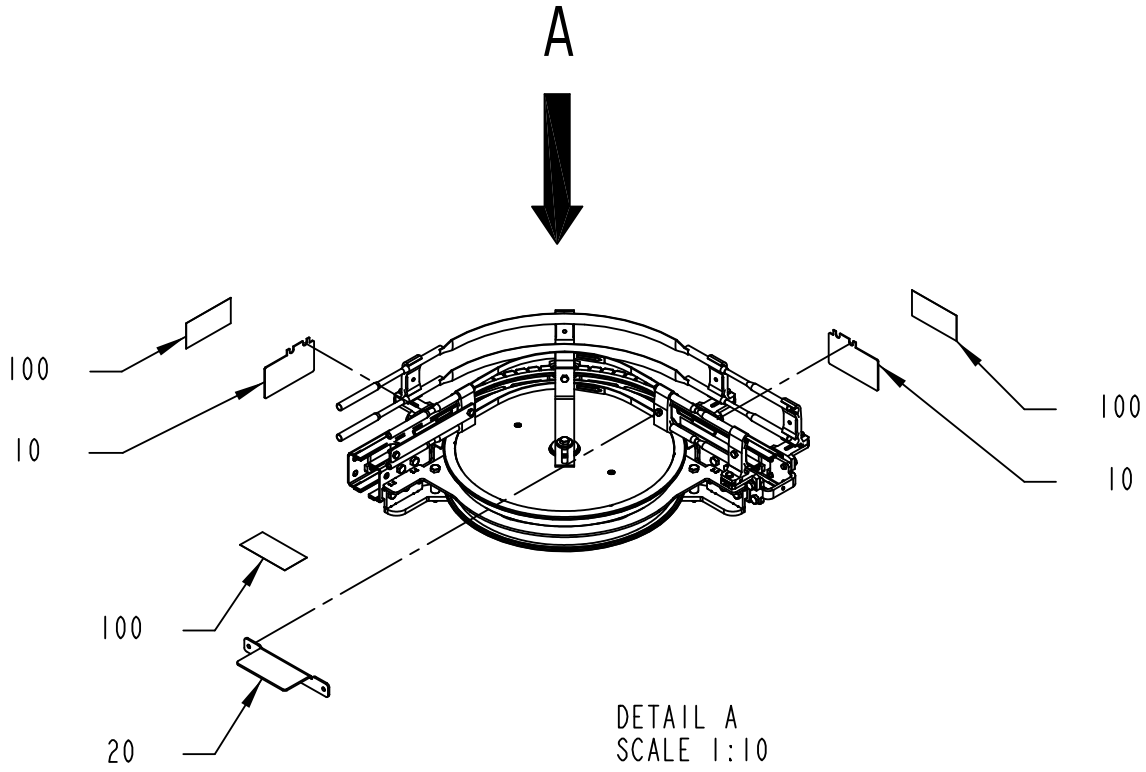

DETAIL A
SCALE 1:10

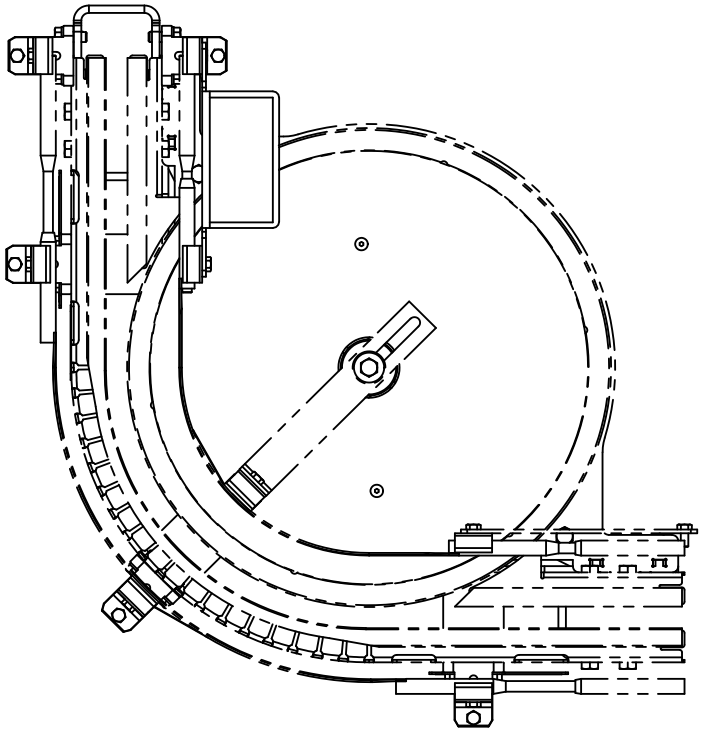

VIEW FROM A
SALE 1:5

3116601-1
461176

ECM: 461949 - 20101001
Group number: 3116601-0100
Assembly Drawing: 3116601-1_2_AA

This list covers pages from 11-242 to 11-251

Pos	Part No	UN	Qty	Description	Page No
ANSI (See drawing on pages: 11-242, 11-244, 11-246, 11-248, 11-250)					
010	3117186-0000		2	PLATE	
020	3117185-0000		1	PLATE	
100	90600-4040		5	CAUTION SIGN ANSI (H), DO NOT REACH IN	
110	90459-7458		1	WARNING SIGN ANSI (H), HOT SURFACE	
120	90459-2022		4	WARNING SIGN ANSI (V), READ OM	

Pos	Part No	UN	Qty	Description	Page No

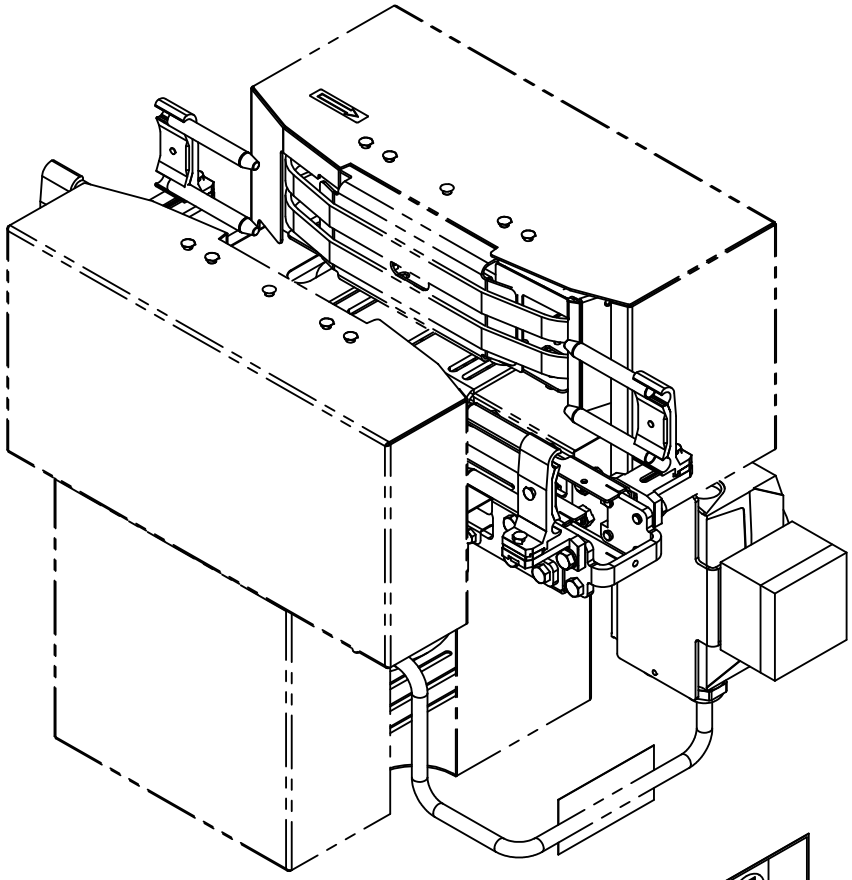

DETAIL B
SCALE 1:5

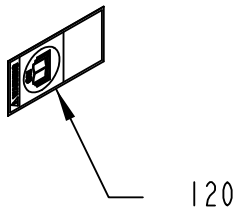

120
(2x)

A

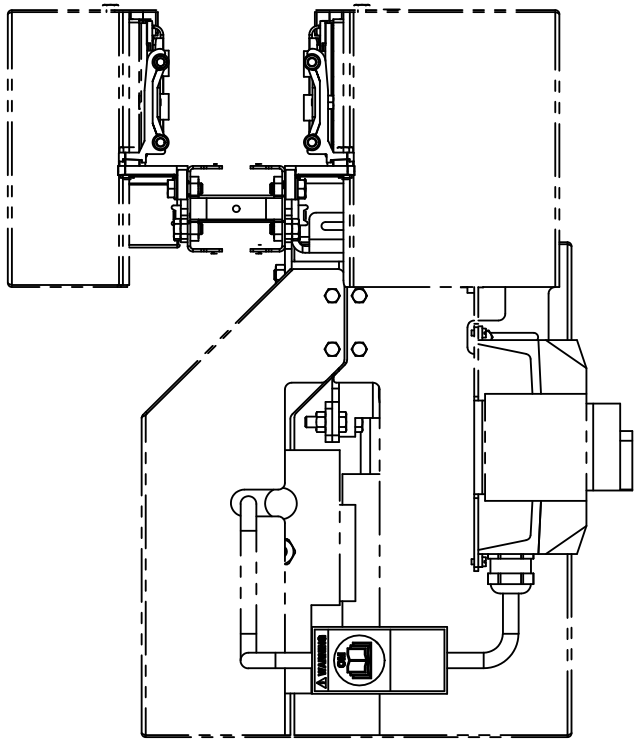

VIEW FROM A
SCALE 1:5

PLACE ON MOTOR CABLE

3116601-1
461176

ECM: 461949 - 20101001
Group number: 3116601-0100
Assembly Drawing: 3116601-1_3_AA

This list covers pages from 11-242 to 11-251

Pos	Part No	UN	Qty	Description	Page No
ANSI (See drawing on pages: 11-242, 11-244, 11-246, 11-248, 11-250)					
010	3117186-0000		2	PLATE	
020	3117185-0000		1	PLATE	
100	90600-4040		5	CAUTION SIGN ANSI (H), DO NOT REACH IN	
110	90459-7458		1	WARNING SIGN ANSI (H), HOT SURFACE	
120	90459-2022		4	WARNING SIGN ANSI (V), READ OM	

Pos	Part No	UN	Qty	Description	Page No

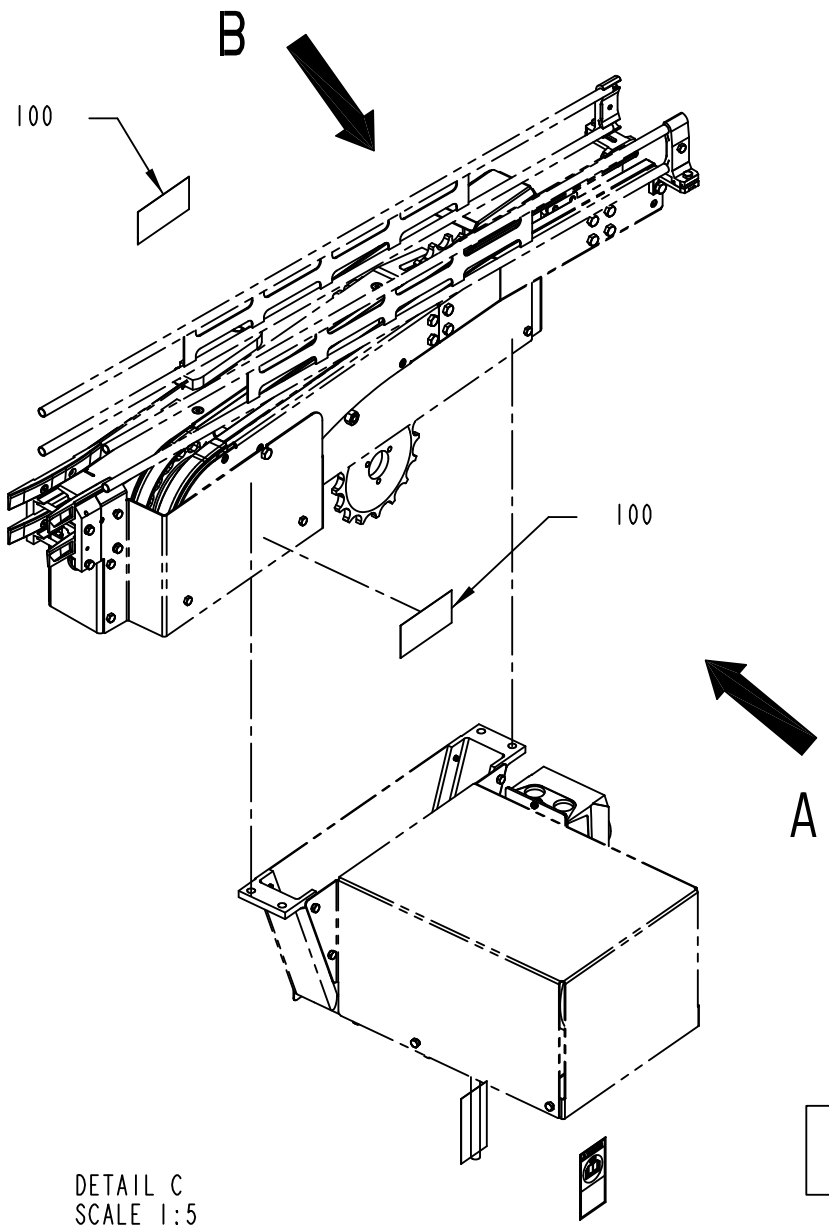

DETAIL C
SCALE 1:5

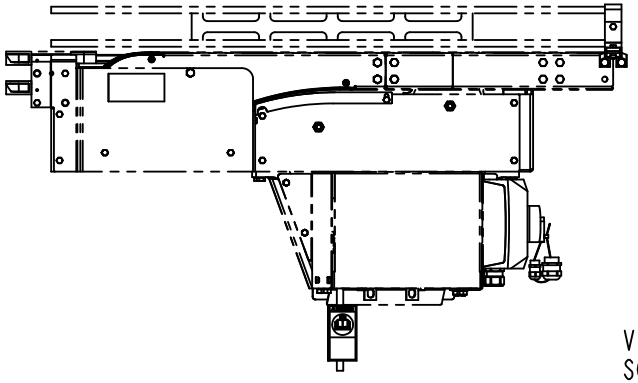

VIEW FROM A
SCALE 1:10

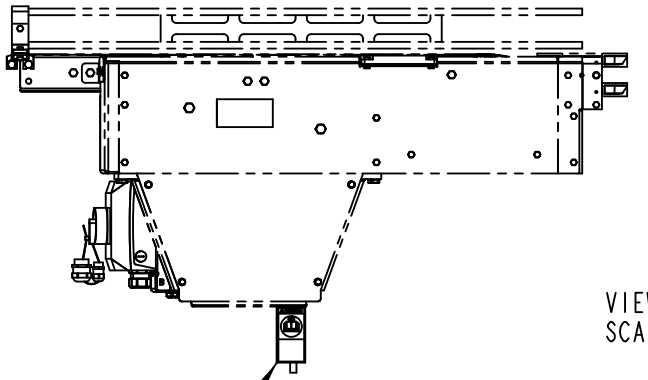

VIEW FROM B
SCALE 1:10

PLACE ON MOTOR CABLE

Transfer Unit (for Portion Packages TPC21 Conveyor)

3116601-1
461176

ECM: 461949 - 20101001
Group number: 3116601-0100
Assembly Drawing: 3116601-1_4_AA

This list covers pages from 11-242 to 11-251

Pos	Part No	UN	Qty	Description	Page No
ANSI (See drawing on pages: 11-242, 11-244, 11-246, 11-248, 11-250)					
010	3117186-0000		2	PLATE	
020	3117185-0000		1	PLATE	
100	90600-4040		5	CAUTION SIGN ANSI (H), DO NOT REACH IN	
110	90459-7458		1	WARNING SIGN ANSI (H), HOT SURFACE	
120	90459-2022		4	WARNING SIGN ANSI (V), READ OM	

Pos	Part No	UN	Qty	Description	Page No

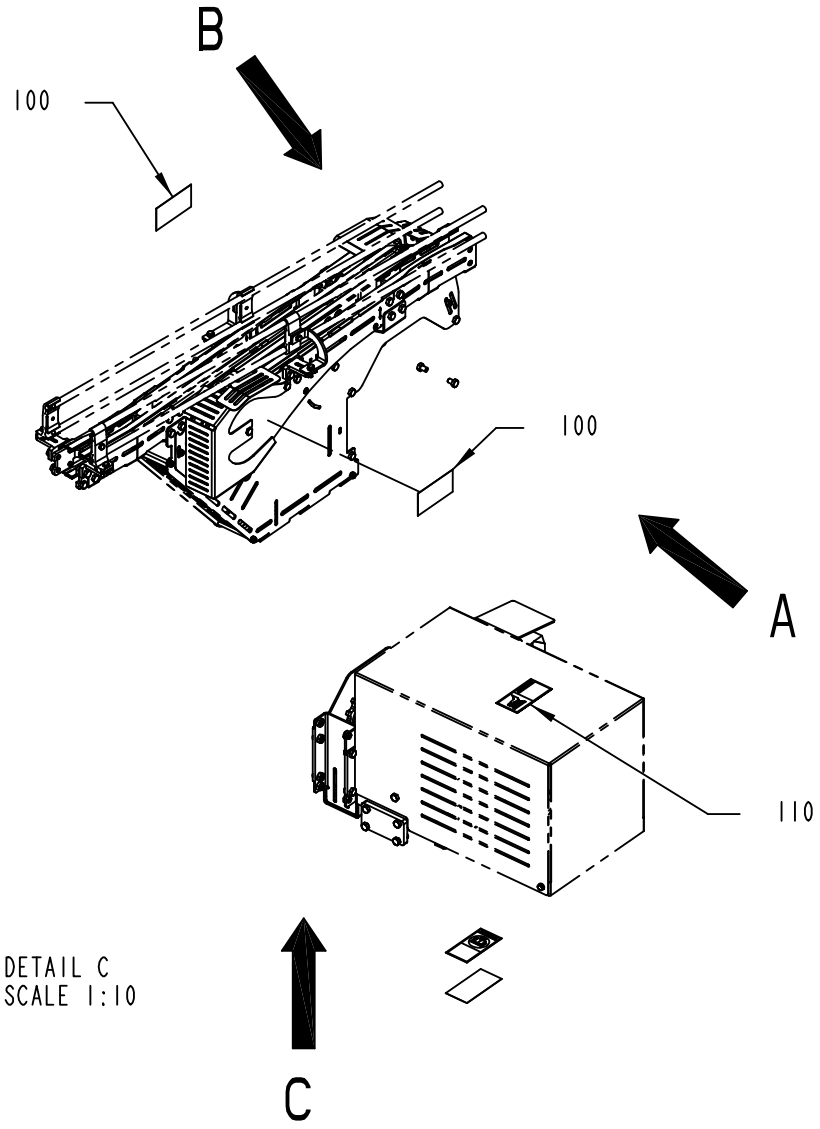

DETAIL C
SCALE 1:10

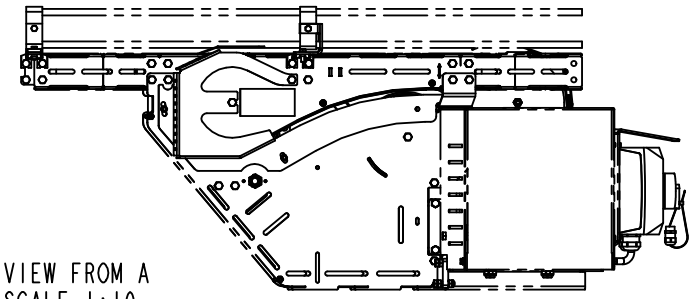

VIEW FROM A
SCALE 1:10

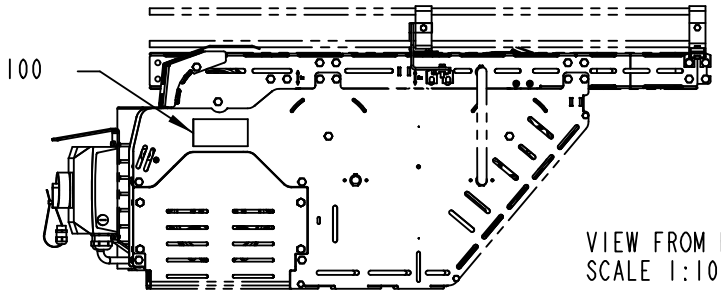

VIEW FROM B
SCALE 1:10

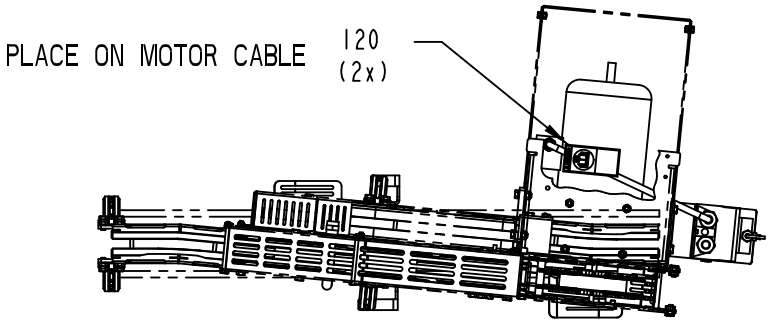

VIEW FROM C
SCALE 1:10

Drive & End Unit (for Family Packages PC23 Conveyor)

3116601-1
461176

ECM: 461949 - 20101001
Group number: 3116601-0100
Assembly Drawing: 3116601-1_5_AA

This list covers pages from 11-242 to 11-251

Pos	Part No	UN	Qty	Description	Page No
ANSI (See drawing on pages: 11-242, 11-244, 11-246, 11-248, 11-250)					
010	3117186-0000		2	PLATE	
020	3117185-0000		1	PLATE	
100	90600-4040		5	CAUTION SIGN ANSI (H), DO NOT REACH IN	
110	90459-7458		1	WARNING SIGN ANSI (H), HOT SURFACE	
120	90459-2022		4	WARNING SIGN ANSI (V), READ OM	

Pos	Part No	UN	Qty	Description	Page No

Tetra Pak

SPC
Spare Parts Catalogue

This page is intentionally left blank.

ECM: 313385 - 20070704
Group number: 648565-0200
Assembly Drawing:

Pos	Part No	UN	Qty	Description	Page No
-					
010	2560021-0200		1	TOOLS AND TEMPLATES	**12-5**
020	2560022-0200		1	ACCESSORIES	**12-27**

Pos	Part No	UN	Qty	Description	Page No

Machine Type | Group Description | Used-In | Group Number | Page No

This page is intentionally left blank.

ECM: 343302 - 20080226
Group number: 2560021-0200
Assembly Drawing:

Pos	Part No	UN	Qty	Description	Page No
-					
	90459-6473		1	HARDDISK COPYING TOOL, 03607-000	
EC010	90243-0203		1	MEASURING INSTRUMENT	
EC020	2559112-0100		1	CALIBRATION EQUIPMENT	**12-7**
FM020	90600-2975		1	SNAKE EYES SPANNER BITS 1/4", SP-10	
FM010	90600-3567		1	SNAKE EYES SPANNER BIT 1/4", 199 560	
FF020	90600-3415		1	BELT TENSION METER, TRUMMETER	
FF010	1478583-0100		1	PRESSURE GAUGE	**12-9**
JS070	2839739-0100		1	CHAIN LIFT	**12-11, 12-13, 12-15**
MB010	90459-1037		1	CRIMP TOOL FOR COAX. CONN. HTG 58-901200	
SS060	90459-1467		1	FORCE GAUGE 0-250N, AFG 250N	
SS030	777200-0101		1	PIPE WRENCH	
SS050	533014-0100		1	LEAK FINDING EQUIPMENT (SUPERSTRUCTURE)	**12-17, 12-19**
SS040	449969-0100		1	TOOL DISMOUNTING	**12-23**
SS010	1349738-0100		1	PRESSURE TEST EQUIPMENT	**12-25**

Pos	Part No	UN	Qty	Description	Page No

This page is intentionally left blank.

ECM: 121958 - 20030403
Group number: 2559112-0100
Assembly Drawing:

Pos	Part No	UN	Qty	Description	Page No
-					
10	90410-0338		1	CALIBRATION INSTRUMENT 5100071-001	
20	90326-0308		1	THERMOCOUPLE CABLE FOR CE-557793/MALE 5M	
30	90326-0309		1	THERMOCOUPLE CABLE FOR CE-557793/FEMALE	
40	90194-0113		1	ADHESIVE LABEL, CALIBRATED & DATE	
50	90410-0337		1	CALIBRATION INSTRUMENT 5100071-001	
60	90326-0310		1	THERMOCOUPLE, 5130020-000	

Pos	Part No	UN	Qty	Description	Page No

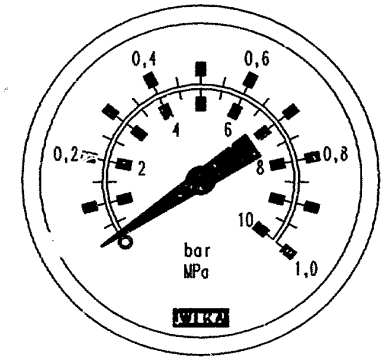
0,4
0,6
0,2
0,8
1
2
4
6
8
10
bar
MPa
1,0
WIKA

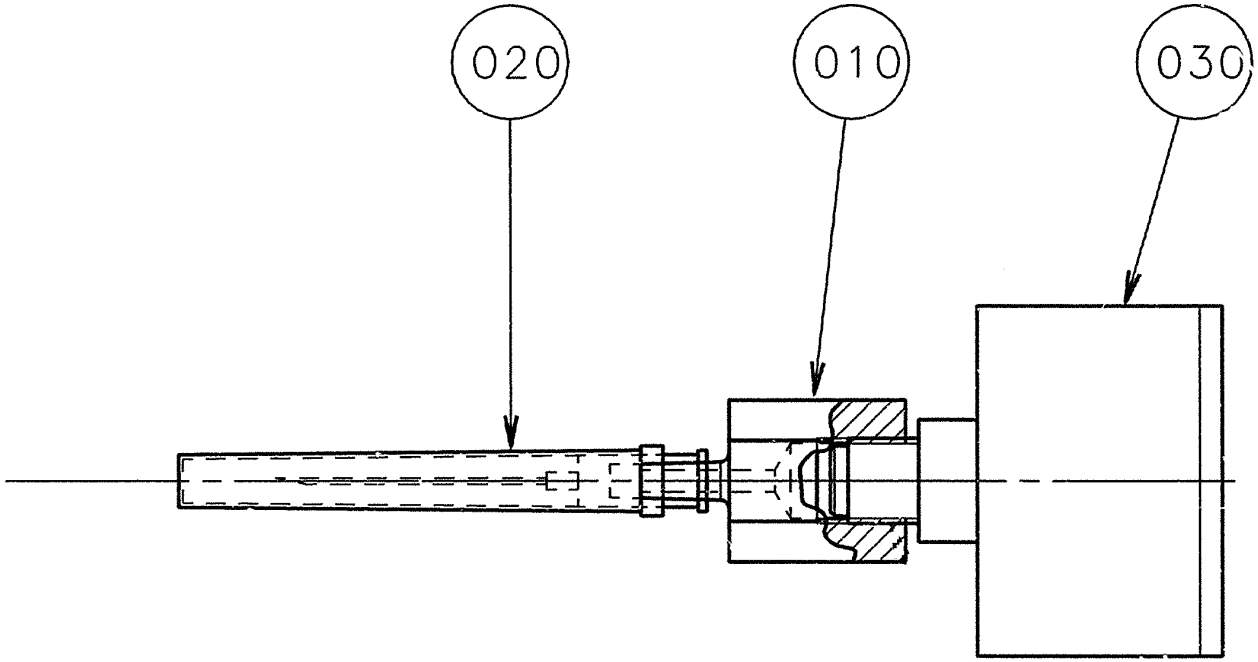
020
010
030

ECM: 110000 - 20030514
Group number: 1478583-0100
Assembly Drawing: 1478583-1_1_AA

Pos	Part No	UN	Qty	Description	Page No
-					
010	1478584-0000		1	NIPPLE	
020	1478585-0000		1	NEEDLE	
030	90043-0043		1	PRESSURE GAUGE 0-10 BAR 1/8"	

Pos	Part No	UN	Qty	Description	Page No

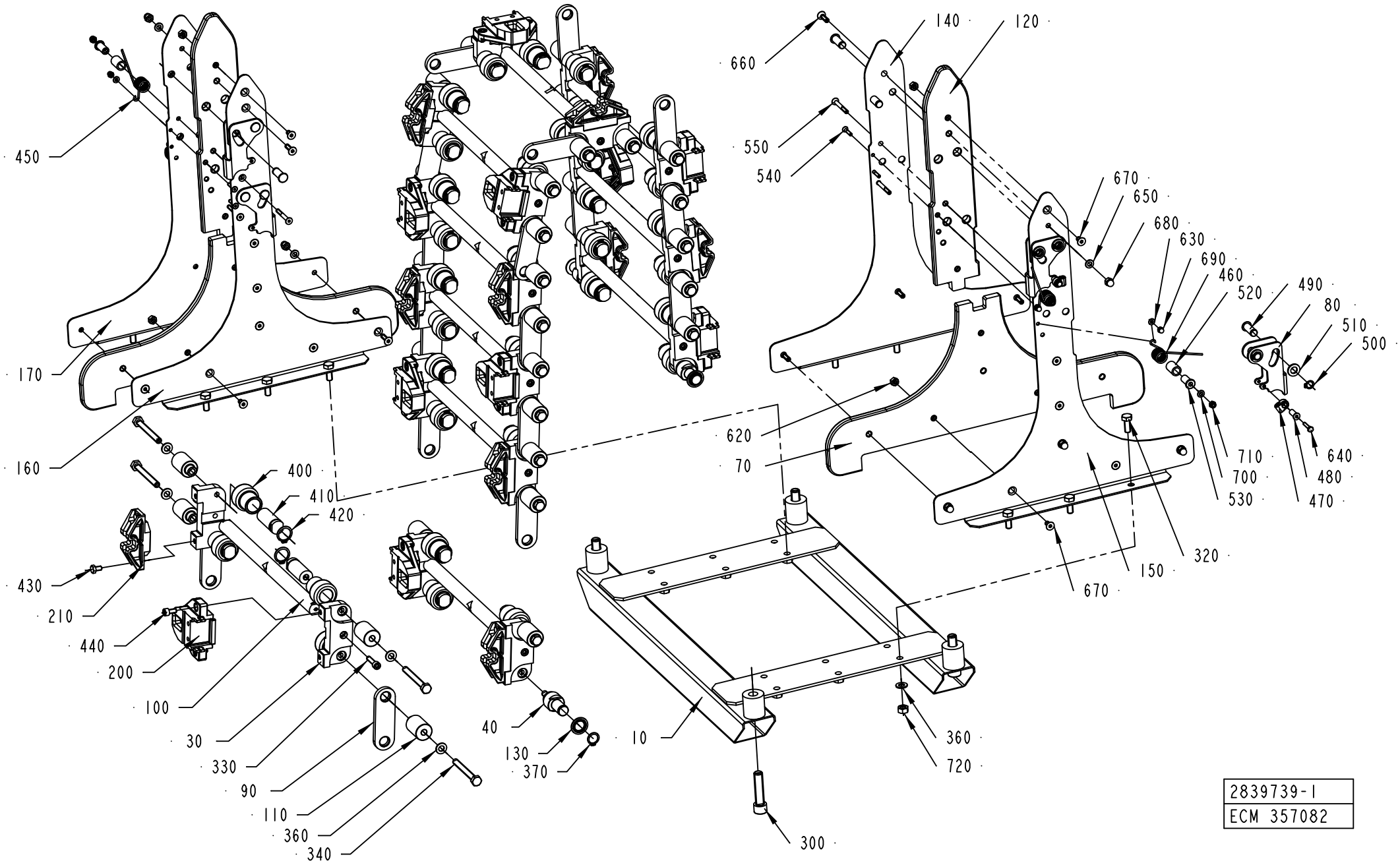
450
170
160
430
210
440
200
100
30
330
90
110
360
340
400
410
420
40
130
370
10
300
660
550
540
140
120
620
70
670
650
680
630
690
460
520
490
80
510
500
710
700
530
640
480
470
150
320
670
360
720
2839739-1
ECM 357082

ECM: 357087 - 20080623
Group number: 2839739-0100
Assembly Drawing: 2839739-1_1_AB

This list covers pages from 12-10 to 12-15

Pos	Part No	UN	Qty	Description	Page No
TBA 0125S, TBA 0200B (See drawing on page: 12-10)					
010	2934161-0000		1	BRACKET	
030	2934155-0000		20	LINK	
040	2934157-0000		4	BRACKET	
070	2934160-0000		2	GUIDE	
080	2897033-0000		4	HOOK	
090	2934159-0000		18	LINK	
100	2980440-0000		10	SPACER	
110	2934156-0000		36	SHAFT	
120	2942053-0000		2	GUIDE	
140	2942052-0000		1	PLATE	
150	2942051-0000		1	PLATE	
160	2948419-0000		1	PLATE	
170	2948420-0000		1	PLATE	
300	312115-0542		4	SCREW ISO4762 M12X50 A4 80	
320	312105-0451		12	SCREW M6S ISO 4017 M8X20 A480	
360	315105-0165		48	WASHER BRB 8,4X16 RFR	
400	2839809-0000		40	ROLLER	
440	312115-0366		20	SCREW ISO4762 M6X12 A4 80	
480	2875311-0000		4	BUSHING	
490	2875343-0000		8	PIN	
620	312605-0316		10	HEXAGON NUT, M6M M6 A280	
630	315106-0136		4	WASHER ISO 7089-4-200 HV A4	
640	312105-0295		4	SCREW M6S ISO 4017 M4X20 A470	
650	315105-0153		8	WASHER BRB 6,4X12 RFR	
660	312155-0370		8	SCREW DIN 7991 MF6S M6X20 A4 70	
680	312705-0316		8	NUT HEX. DOMED CAP MHM-6 M6 A280	
720	312605-0318		12	HEXAGON NUT, M6M M8 A280	
TBA 0250B, TBA 0200M (See drawing on page: 12-10)					
010	2945249-0000		1	BRACKET	
030	2895722-0000		20	LINK	
040	2934157-0000		4	BRACKET	
070	2895723-0000		2	GUIDE	
080	2897033-0000		4	HOOK	
090	2895721-0000		18	LINK	
100	2980440-0000		10	SPACER	
110	2934156-0000		36	SHAFT	
120	2945248-0000		2	GUIDE	
140	2942052-0000		1	PLATE	
150	2942051-0000		1	PLATE	
160	2948419-0000		1	PLATE	
170	2948420-0000		1	PLATE	
300	312115-0540		4	SCREW ISO4762 M12X40 A4 80	
320	312105-0451		12	SCREW M6S ISO 4017 M8X20 A480	
360	315105-0165		48	WASHER BRB 8,4X16 RFR	
400	2839809-0000		40	ROLLER	
440	312115-0366		20	SCREW ISO4762 M6X12 A4 80	
480	2875311-0000		4	BUSHING	
490	2875343-0000		8	PIN	
620	312605-0316		10	HEXAGON NUT, M6M M6 A280	
630	315106-0136		4	WASHER ISO 7089-4-200 HV A4	
640	312105-0295		4	SCREW M6S ISO 4017 M4X20 A470	
650	315105-0153		8	WASHER BRB 6,4X12 RFR	
660	312155-0370		8	SCREW DIN 7991 MF6S M6X20 A4 70	
680	312705-0316		8	NUT HEX. DOMED CAP MHM-6 M6 A280	
720	312605-0318		12	HEXAGON NUT, M6M M8 A280	
TBA 0200S (See drawing on page: 12-10)					
010	2945034-0000		1	BRACKET	
030	2839722-0000		20	LINK	
040	2934157-0000		4	BRACKET	
070	2895432-0000		2	GUIDE	
080	2897033-0000		4	HOOK	
090	2839741-0000		18	LINK	
100	2980440-0000		10	SPACER	
110	2934156-0000		36	SHAFT	
120	2945033-0000		2	GUIDE	
140	2942052-0000		1	PLATE	
150	2942051-0000		1	PLATE	
160	2948419-0000		1	PLATE	
170	2948420-0000		1	PLATE	
300	312115-0542		4	SCREW ISO4762 M12X50 A4 80	
320	312105-0451		12	SCREW M6S ISO 4017 M8X20 A480	
360	315105-0165		48	WASHER BRB 8,4X16 RFR	
400	2839809-0000		40	ROLLER	
440	312115-0366		20	SCREW ISO4762 M6X12 A4 80	
480	2875311-0000		4	BUSHING	
490	2875343-0000		8	PIN	
620	312605-0316		10	HEXAGON NUT, M6M M6 A280	
630	315106-0136		4	WASHER ISO 7089-4-200 HV A4	
640	312105-0295		4	SCREW M6S ISO 4017 M4X20 A470	
650	315105-0153		8	WASHER BRB 6,4X12 RFR	
660	312155-0370		8	SCREW DIN 7991 MF6S M6X20 A4 70	
680	312705-0316		8	NUT HEX. DOMED CAP MHM-6 M6 A280	
720	312605-0318		12	HEXAGON NUT, M6M M8 A280	

Machine Type | Group Description | Used-In | Group Number | Page No

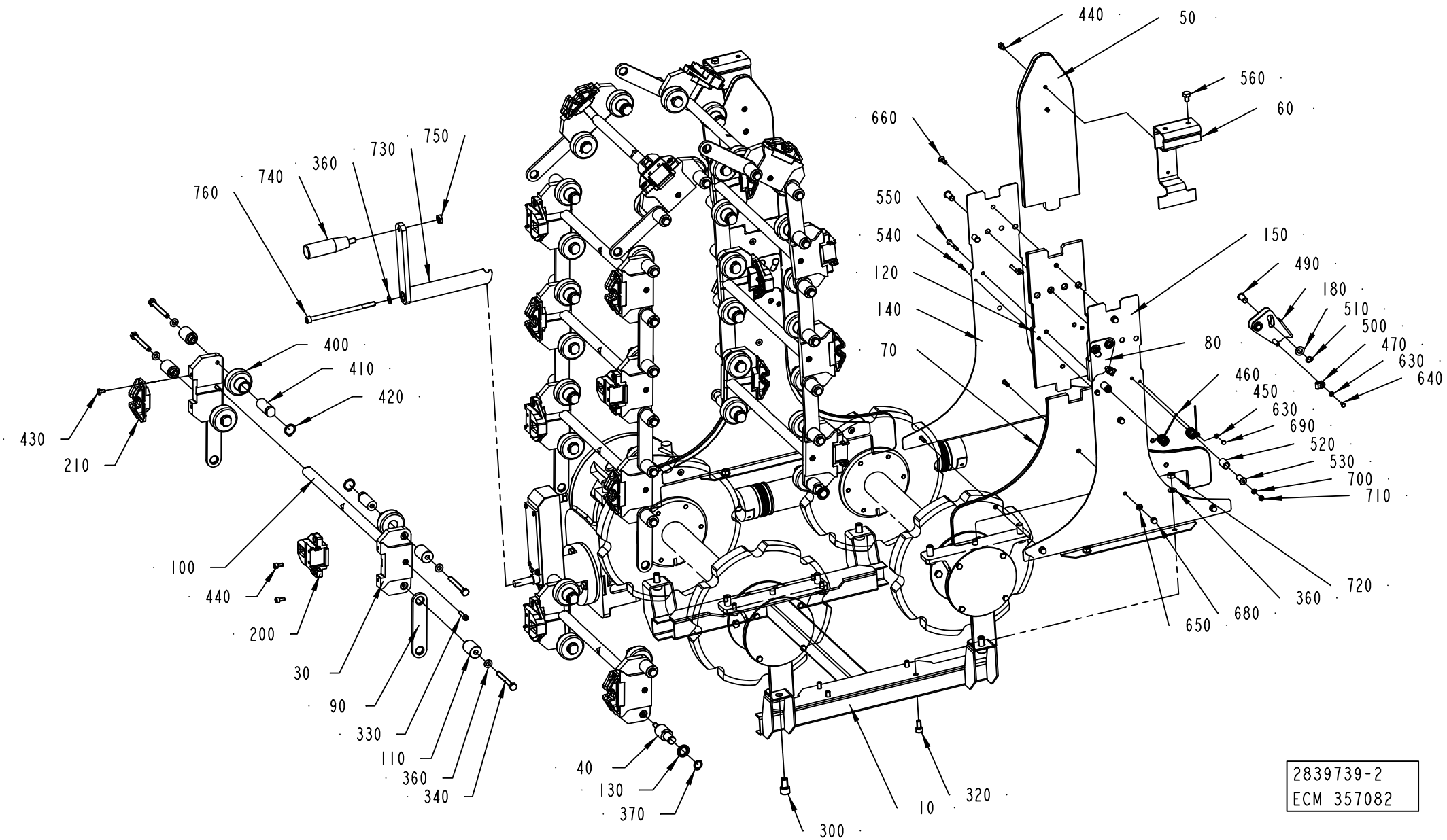
440
50
560
60
660
550
540
120
140
70
150
490
180
510
500
470
630
640
80
460
450
630
690
520
530
700
710
720
360
680
650
760
740
360
730
750
400
410
420
430
210
100
440
200
30
90
330
110
360
340
40
130
370
300
10
320
2839739-2
ECM 357082

Pos	Part No	UN	Qty	Description	Page No
TBA 0250S (Cont'd) (See drawing on page: 12-10)					
010	2946189-0000		1	BRACKET	
030	2937298-0000		20	LINK	
040	2934157-0000		4	BRACKET	
070	2937301-0000		2	GUIDE	
080	2897033-0000		4	HOOK	
090	2937299-0000		18	LINK	
100	2980440-0000		10	SPACER	
110	2934156-0000		36	SHAFT	
120	2946188-0000		2	GUIDE	
140	2946187-0000		1	PLATE	
150	2946186-0000		1	PLATE	
160	2948421-0000		1	PLATE	
170	2948422-0000		1	PLATE	
300	312115-0546		4	SCREW ISO4762 M12X70 A4 80	
320	312105-0451		12	SCREW M6S ISO 4017 M8X20 A480	
360	315105-0165		48	WASHER BRB 8,4X16 RFR	
400	2839809-0000		40	ROLLER	
440	312115-0366		20	SCREW ISO4762 M6X12 A4 80	
480	2875311-0000		4	BUSHING	
490	2875343-0000		8	PIN	
620	312605-0316		10	HEXAGON NUT, M6M M6 A280	
630	315106-0136		4	WASHER ISO 7089-4-200 HV A4	
640	312105-0295		4	SCREW M6S ISO 4017 M4X20 A470	
650	315105-0153		8	WASHER BRB 6,4X12 RFR	
660	312155-0370		8	SCREW DIN 7991 MF6S M6X20 A4 70	
680	312705-0316		8	NUT HEX. DOMED CAP MHM-6 M6 A280	
720	312605-0318		12	HEXAGON NUT, M6M M8 A280	
TBA 1000B (See drawing on page: 12-12)					
010	2970445-0000		1	BRACKET	
030	2970446-0000		20	LINK	
040	2936036-0000		4	SHAFT	
050	2970447-0000		2	GUIDE	
060	2877749-0000		2	BRACKET	
070	2970448-0000		2	GUIDE	
080	2875354-0000		2	HOOK	
090	2970449-0000		18	LINK	
100	2839979-0000		10	SPACER	
110	2968527-0000		36	SHAFT	
120	2954869-0000		2	GUIDE	
140	2954871-0000		2	PLATE	
150	2954870-0000		2	PLATE	
180	2974076-0000		2	HOOK	
300	312115-0532		4	SCREW ISO4762 M12X20 A4 80	
320	312115-0449		8	SCREW ISO4762 M8X16 A4 80	
360	315105-0165		45	WASHER BRB 8,4X16 RFR	
400	2790605-0000		40	ROLLER	
440	312115-0366		24	SCREW ISO4762 M6X12 A4 80	
490	2954875-0000		8	PIN	
560	312105-0447		2	SCREW M6S ISO 4017 M8X12 A480	
630	315106-0136		8	WASHER ISO 7089-4-200 HV A4	
640	312105-0289		4	SCREW M6S H4X10 A4 70 ISO4017/DIN933	
650	315105-0153		10	WASHER BRB 6,4X12 RFR	
660	312155-0370		10	SCREW DIN 7991 MF6S M6X20 A4 70	
670	312155-0366		10	SCREW DIN 7991 MF6S M6X12 A4 70	
680	312705-0316		10	NUT HEX. DOMED CAP MHM-6 M6 A280	
720	312605-0318		8	HEXAGON NUT, M6M M8 A280	
730	2980514-0000		1	HAND CRANK	
740	90051-0127		1	HANDLE, NO. .601/90+X-M10-INOX	
750	312625-0320		1	HEXAGON THIN NUT, EN 24035 ML6M M10 A4	
760	312115-0478		1	SCREW ISO4762 M8X140 A4 80	
TBA 1000S (See drawing on page: 12-12)					
010	2969154-0000		1	BRACKET	
030	2839882-0000		20	LINK	
040	2936036-0000		4	SHAFT	
050	2877754-0000		2	GUIDE	
060	2877749-0000		2	BRACKET	
070	2969153-0000		2	GUIDE	
080	2875354-0000		2	HOOK	
090	2839886-0000		18	LINK	
100	2839979-0000		10	SPACER	
110	2968527-0000		36	SHAFT	
120	2954869-0000		2	GUIDE	
140	2954871-0000		2	PLATE	
150	2954870-0000		2	PLATE	
180	2974076-0000		2	HOOK	
300	312115-0532		4	SCREW ISO4762 M12X20 A4 80	
320	312115-0449		8	SCREW ISO4762 M8X16 A4 80	
360	315105-0165		45	WASHER BRB 8,4X16 RFR	
400	2790605-0000		40	ROLLER	
440	312115-0366		24	SCREW ISO4762 M6X12 A4 80	
490	2954875-0000		8	PIN	
560	312105-0447		2	SCREW M6S ISO 4017 M8X12 A480	
630	315106-0136		8	WASHER ISO 7089-4-200 HV A4	

See previous drawings pages: 12-10, 12-12.

Pos	Part No	UN	Qty	Description	Page No
TBA 1000S (Cont'd) (See drawing on page: 12-12)					
640	312105-0289		4	SCREW M6S H4X10 A4 70 ISO4017/DIN933	
650	315105-0153		10	WASHER BRB 6,4X12 RFR	
660	312155-0370		10	SCREW DIN 7991 MF6S M6X20 A4 70	
670	312155-0366		10	SCREW DIN 7991 MF6S M6X12 A4 70	
680	312705-0316		10	NUT HEX. DOMED CAP MHM-6 M6 A280	
720	312605-0318		8	HEXAGON NUT, M6M M8 A280	
730	2980514-0000		1	HAND CRANK	
740	90051-0127		1	HANDLE, NO. .601/90+X-M10-INOX	
750	312625-0320		1	HEXAGON THIN NUT, EN 24035 ML6M M10 A4	
760	312115-0478		1	SCREW ISO4762 M8X140 A4 80	
TBA 1000SQ (See drawing on page: 12-12)					
010	2877376-0000		1	BRACKET	
030	2936383-0000		20	LINK	
040	2936036-0000		4	SHAFT	
050	2877754-0000		2	GUIDE	
060	2877749-0000		2	BRACKET	
070	2871858-0000		2	GUIDE	
080	2875354-0000		2	HOOK	
090	2936384-0000		18	LINK	
100	2839979-0000		10	SPACER	
110	2968527-0000		36	SHAFT	
120	2954869-0000		2	GUIDE	
140	2954871-0000		2	PLATE	
150	2954870-0000		2	PLATE	
180	2974076-0000		2	HOOK	
300	312115-0532		4	SCREW ISO4762 M12X20 A4 80	
320	312115-0449		8	SCREW ISO4762 M8X16 A4 80	
360	315105-0165		45	WASHER BRB 8,4X16 RFR	
400	2790605-0000		40	ROLLER	
440	312115-0366		24	SCREW ISO4762 M6X12 A4 80	
490	2954875-0000		8	PIN	
560	312105-0447		2	SCREW M6S ISO 4017 M8X12 A480	
630	315106-0136		8	WASHER ISO 7089-4-200 HV A4	
640	312105-0289		4	SCREW M6S H4X10 A4 70 ISO4017/DIN933	
650	315105-0153		10	WASHER BRB 6,4X12 RFR	
660	312155-0370		10	SCREW DIN 7991 MF6S M6X20 A4 70	
670	312155-0366		10	SCREW DIN 7991 MF6S M6X12 A4 70	
680	312705-0316		10	NUT HEX. DOMED CAP MHM-6 M6 A280	
720	312605-0318		8	HEXAGON NUT, M6M M8 A280	
730	2980514-0000		1	HAND CRANK	
740	90051-0127		1	HANDLE, NO. .601/90+X-M10-INOX	
750	312625-0320		1	HEXAGON THIN NUT, EN 24035 ML6M M10 A4	
760	312115-0478		1	SCREW ISO4762 M8X140 A4 80	
Common Parts					
130	1548817-0000		4	WASHER	
200	2791035-0000		10	BRACKET	
210	2791610-0000		10	GUIDE	
330	312115-0372		20	SCREW ISO4762 M6X25 A4 80	
340	312109-0465		36	SCREW M6S ISO 4017 M8X70 A480	
370	315751-0112		4	RETAINING RING FOR SHAFT DIN 471 15 SS	
410	2934158-0000		40	SHAFT	
420	315751-0116		40	RETAINING RING FOR SHAFT DIN 471 20 SS	
430	312105-0364		20	SCREW M6S ISO 4017 M6X10 A480	
450	2948423-0000		2	SPRING	
460	1140485-0000		2	SPRING	
470	1539348-0000		4	HOLDER	
500	90141-0016		8	RETAINING RING FOR SHAFT DIN 471 10 SS	
510	315105-0171		8	WASHER BRB 10X18 RFR	
520	2520215-0000		4	BUSHING	
530	2875495-0000		4	SHAFT	
540	312155-0295		4	SCREW DIN 7991 MF6S M4X20 A4 70	
550	312155-0339		4	SCREW DIN 7991 MF6S M5X40 A4 70	
690	312705-0312		4	NUT HEX. DOMED CAP MHM-6 M4 A280	
700	315106-0146		4	WASHER ISO 7089-5-200 HV A4	
710	312810-0314		4	HEXAGON NUT, NY-LOCK M5 FZB	

Machine Type	Group Description	Used-In	Group Number	Page No

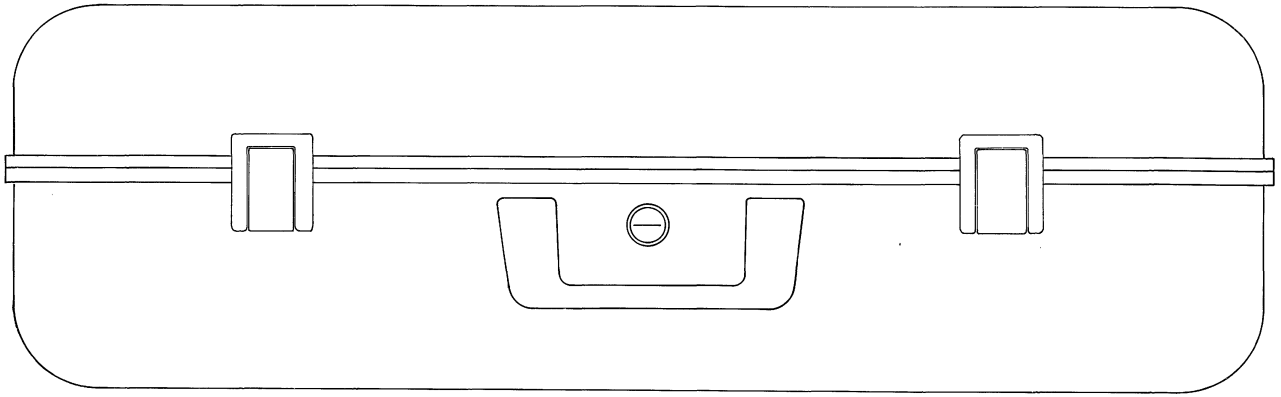

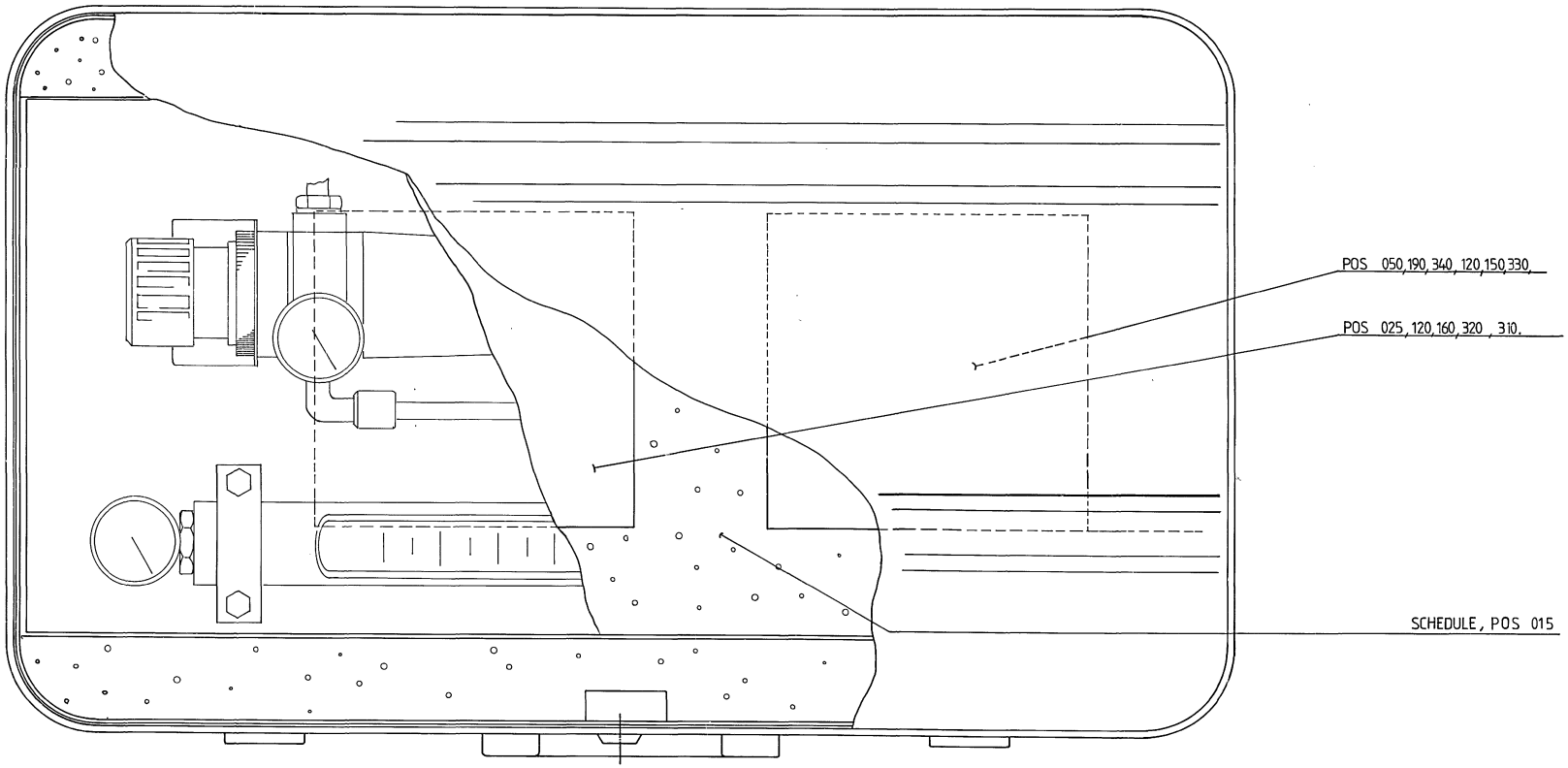
POS 050, 190, 340, 120, 150, 330,
POS 025, 120, 160, 320, 310,
SCHEDULE, POS 015

ECM: 71889 - 19980924
Group number: 533014-0100
Assembly Drawing: 533014-1_1_AA

This list covers pages from 12-16 to 12-19

Pos	Part No	UN	Qty	Description	Page No
-					
010	532676-0000		1	SHEET	
010	533905-0100		1	PONCH	**12-21**
015	533015-0000		1	WIRING DIAGRAM	
020	1360399-0000		4	PIPE HOLDER	
025	493735-0000		1	NIPPLE	
030	532677-0000		1	PIPE	
040	532678-0000		1	DOWEL	
050	532679-0000		1	PLATE	
060	90030-0223		1	BUSHING, INT/EXT. G-THREAD NO. 2531	
070	90030-0224		1	NIPPLES, EXT. THREAD, HEXAGON, NO. 2511	
075	90030-0225		2	BUSHING, INT/EXT. R-THREAD 1/4X3/8	
080	90043-0021		1	PRESSURE GAUGE 0-1 BAR 1/8" D=40	
090	90043-0043		1	PRESSURE GAUGE 0-10 BAR 1/8"	
100	90113-0059		1	FILTER REGULATOR 50UM, B08-396-A3MG	
110	90140-0015		1	T-PIPE, INT. THREAD, 2003-1/8	
120	90163-0056		2	QUICK COUPLING, (F) 5054-6/4	
130	90163-0057		1	QUICK COUPLING, (M) 5150-1/8	
140	90163-0087		1	QUICK COUPLING, (M) 5150-1/4	
150	90166-0124	MM	1250	TUBE 6 MM PA,TRANSP.	
160	90166-0124	MM	1250	TUBE 6 MM PA,TRANSP.	
170	90224-0303		2	CONN. ELBOW 1020-8-1/4	
172	90113-0384		1	BRACKET FOR R11, 5203-06	
175	90243-0137		1	PRESSURE GAUGE KIT 0-50 MM WC, 229900	
180	90243-0147		1	FLOW METER	
190	90330-0029		1	PLUG, EXT. G-THREAD, R-236R3/8	
200	312105-0325		2	SCREW M6S ISO 4017 M5X10 A480	
210	312105-0383		4	SCREW M6S ISO 4014 M6X65 A480	
220	312602-0312		1	HEXAGON NUT, EN 24032 M6M M4 NIPLBR	
230	312605-0314		2	HEXAGON NUT, M6M M5 A280	
240	312605-0316		4	HEXAGON NUT, M6M M6 A280	
250	315103-0136		1	WASHER PLAIN, BRB, 4,3/8,H=0,8 NI PL BR	
260	315105-0146		4	WASHER BRB 5,3X10 RFR	
270	315105-0153		8	WASHER BRB 6,4X12 RFR	
280	315233-0109		2	WASHER CAPTIVE SEALING G1/8	
290	315233-0110		1	WASHER CAPTIVE SEALING G1/4	
295	315233-0111		2	WASHER CAPTIVE SEALING G3/8	
300	315233-0113		2	WASHER CAPTIVE SEALING G1/2	
310	342921-0113		1	STRAIGHT COUPLING,EXT.THREADED 6/4-G1/8"	
320	342921-0114		1	STRAIGHT COUPLING,EXT.THREADED 6/4-G1/4"	
330	342980-0114		1	BANJO-CONNECTION,RING 6/4-G1/4"	
340	342980-0314		1	BANJO-HOLLOW BOLT COUPL,EXT.THR.02-G1/4	
350	342701-0201		1	BUSHING,INT./EXT.G-THREAD G1/4"-G1/8"	

Machine Type | Group Description | Used-In | Group Number | Page No

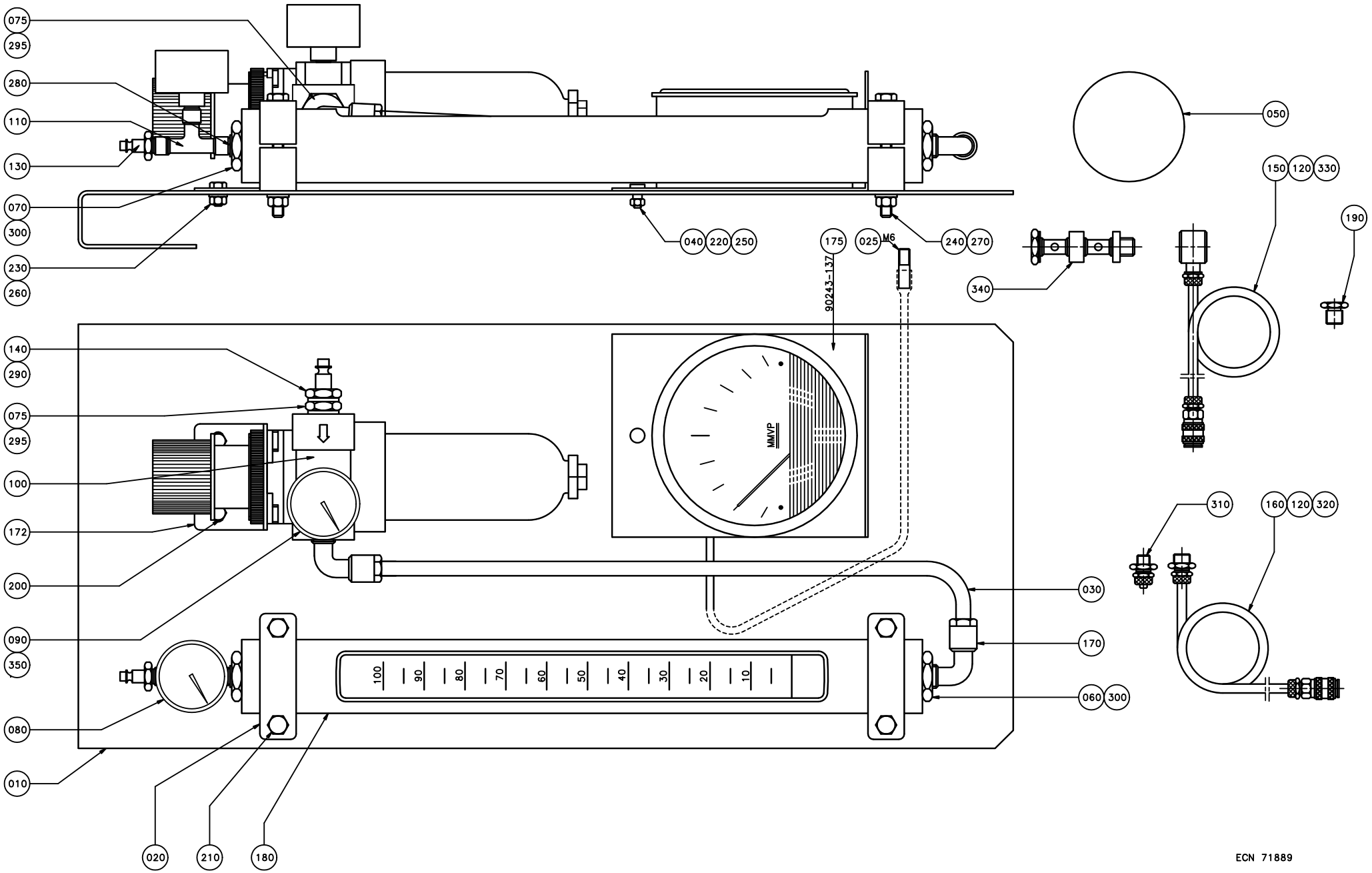
075
295
280
110
130
070
300
230
260
040
220
250
175
025
M6
240
270
90243-137
050
150
120
330
190
340
140
290
075
295
100
172
200
090
350
080
010
020
210
180
MMVP
100
90
80
70
60
50
40
30
20
10
030
170
060
300
310
160
120
320
ECN 71889

ECM: 71889 - 19980924
Group number: 533014-0100
Assembly Drawing: 533014-2_1_AB

This list covers pages from 12-16 to 12-19

Pos	Part No	UN	Qty	Description	Page No
-					
010	532676-0000		1	SHEET	
010	533905-0100		1	PONCH	**12-21**
015	533015-0000		1	WIRING DIAGRAM	
020	1360399-0000		4	PIPE HOLDER	
025	493735-0000		1	NIPPLE	
030	532677-0000		1	PIPE	
040	532678-0000		1	DOWEL	
050	532679-0000		1	PLATE	
060	90030-0223		1	BUSHING, INT/EXT. G-THREAD NO. 2531	
070	90030-0224		1	NIPPLES, EXT. THREAD, HEXAGON, NO. 2511	
075	90030-0225		2	BUSHING, INT/EXT. R-THREAD 1/4X3/8	
080	90043-0021		1	PRESSURE GAUGE 0-1 BAR 1/8" D=40	
090	90043-0043		1	PRESSURE GAUGE 0-10 BAR 1/8"	
100	90113-0059		1	FILTER REGULATOR 50UM, B08-396-A3MG	
110	90140-0015		1	T-PIPE, INT. THREAD, 2003-1/8	
120	90163-0056		2	QUICK COUPLING, (F) 5054-6/4	
130	90163-0057		1	QUICK COUPLING, (M) 5150-1/8	
140	90163-0087		1	QUICK COUPLING, (M) 5150-1/4	
150	90166-0124	MM	1250	TUBE 6 MM PA,TRANSP.	
160	90166-0124	MM	1250	TUBE 6 MM PA,TRANSP.	
170	90224-0303		2	CONN. ELBOW 1020-8-1/4	
172	90113-0384		1	BRACKET FOR R11, 5203-06	
175	90243-0137		1	PRESSURE GAUGE KIT 0-50 MM WC, 229900	
180	90243-0147		1	FLOW METER	
190	90330-0029		1	PLUG, EXT. G-THREAD, R-236R3/8	
200	312105-0325		2	SCREW M6S ISO 4017 M5X10 A480	
210	312105-0383		4	SCREW M6S ISO 4014 M6X65 A480	
220	312602-0312		1	HEXAGON NUT, EN 24032 M6M M4 NIPLBR	
230	312605-0314		2	HEXAGON NUT, M6M M5 A280	
240	312605-0316		4	HEXAGON NUT, M6M M6 A280	
250	315103-0136		1	WASHER PLAIN, BRB, 4,3/8,H=0,8 NI PL BR	
260	315105-0146		4	WASHER BRB 5,3X10 RFR	
270	315105-0153		8	WASHER BRB 6,4X12 RFR	
280	315233-0109		2	WASHER CAPTIVE SEALING G1/8	
290	315233-0110		1	WASHER CAPTIVE SEALING G1/4	
295	315233-0111		2	WASHER CAPTIVE SEALING G3/8	
300	315233-0113		2	WASHER CAPTIVE SEALING G1/2	
310	342921-0113		1	STRAIGHT COUPLING,EXT.THREADED 6/4-G1/8"	
320	342921-0114		1	STRAIGHT COUPLING,EXT.THREADED 6/4-G1/4"	
330	342980-0114		1	BANJO-CONNECTION,RING 6/4-G1/4"	
340	342980-0314		1	BANJO-HOLLOW BOLT COUPL,EXT.THR.02-G1/4	
350	342701-0201		1	BUSHING,INT./EXT.G-THREAD G1/4"-G1/8"	

Machine Type | Group Description | Used-In | Group Number | Page No

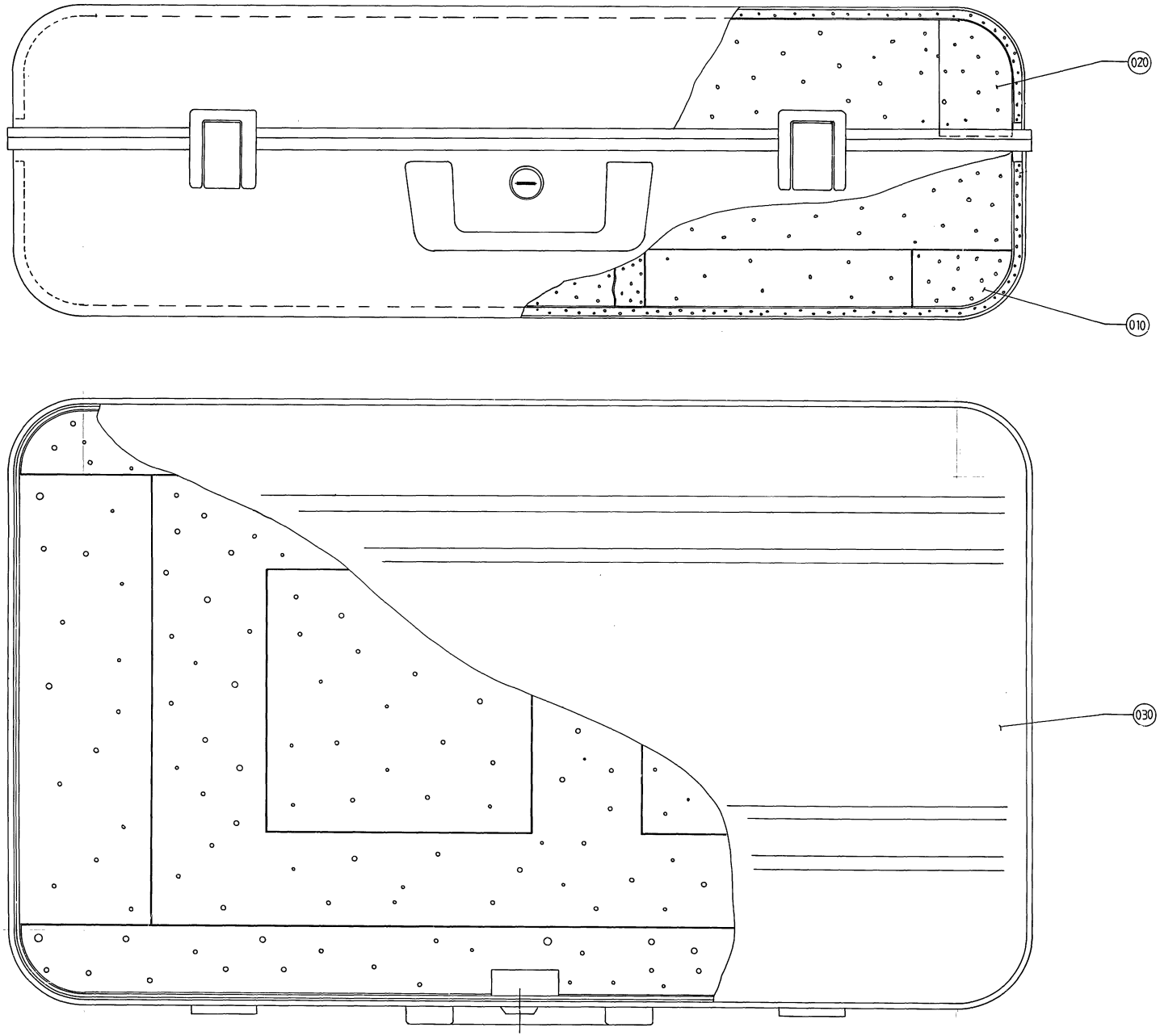
020
010
030

ECM: - -
Group number: 533905-0100
Assembly Drawing: 533905-1_1_AA

Pos	Part No	UN	Qty	Description	Page No
-					
010	533374-0000		1	FITMENT BOTTOM	
020	533906-0000		1	FITMENT COVER	
030	90243-0118		1	TOOL BOX, NO. ZERO 105X-SI	

Pos	Part No	UN	Qty	Description	Page No

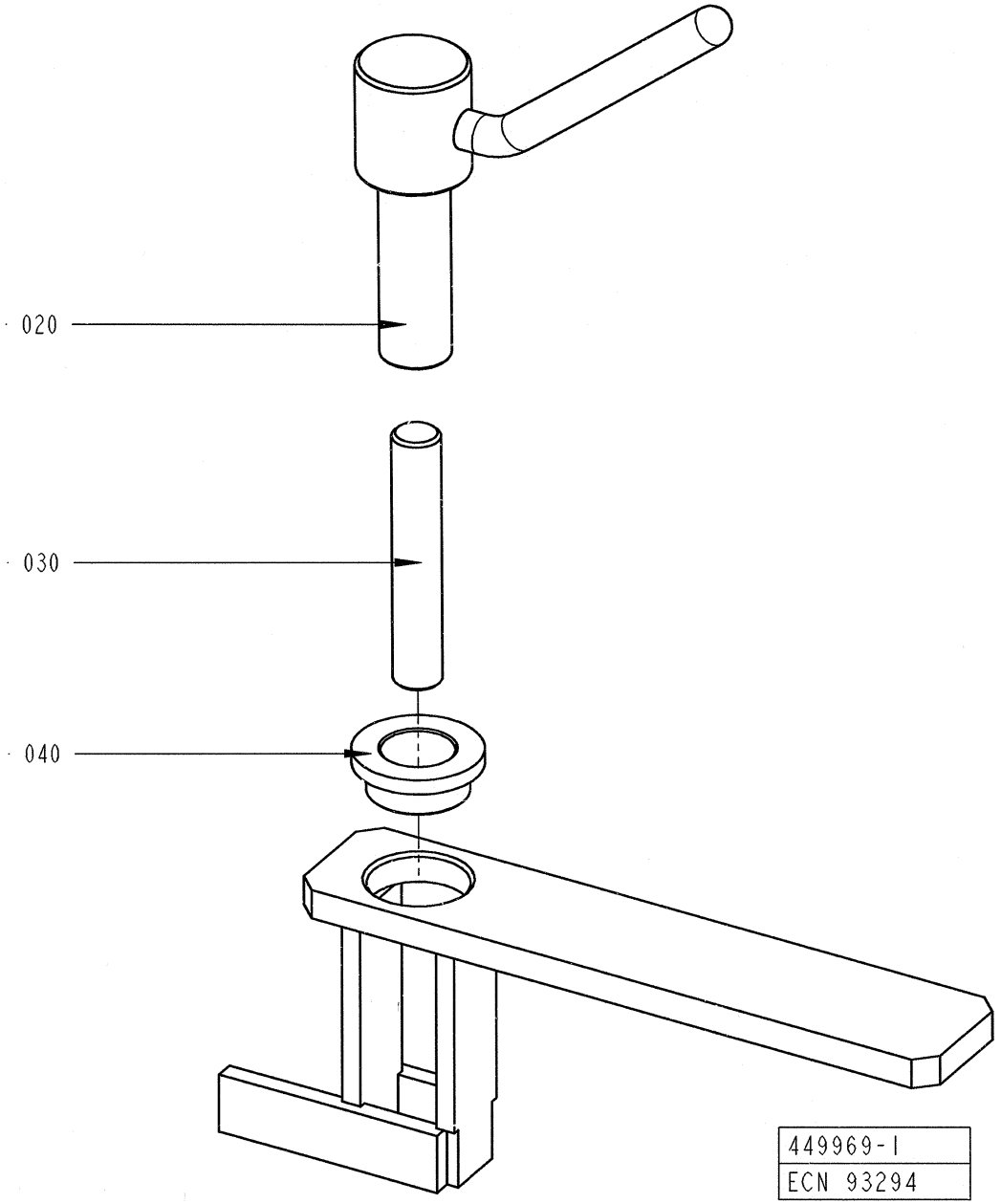
020
030
040
449969-1
ECN 93294

ECM: 6514 -
Group number: 449969-0100
Assembly Drawing: 449969-1_1_AA

Pos	Part No	UN	Qty	Description	Page No
-					
010	449970-0000		1	HOLDER	
020	449971-0000		1	SPINDLE	
030	312306-0546		1	SCREW ISO4026 M12X70 FZB	
040	321101-0222		1	FLANGE BUSHING, 18X25X12	

Pos	Part No	UN	Qty	Description	Page No

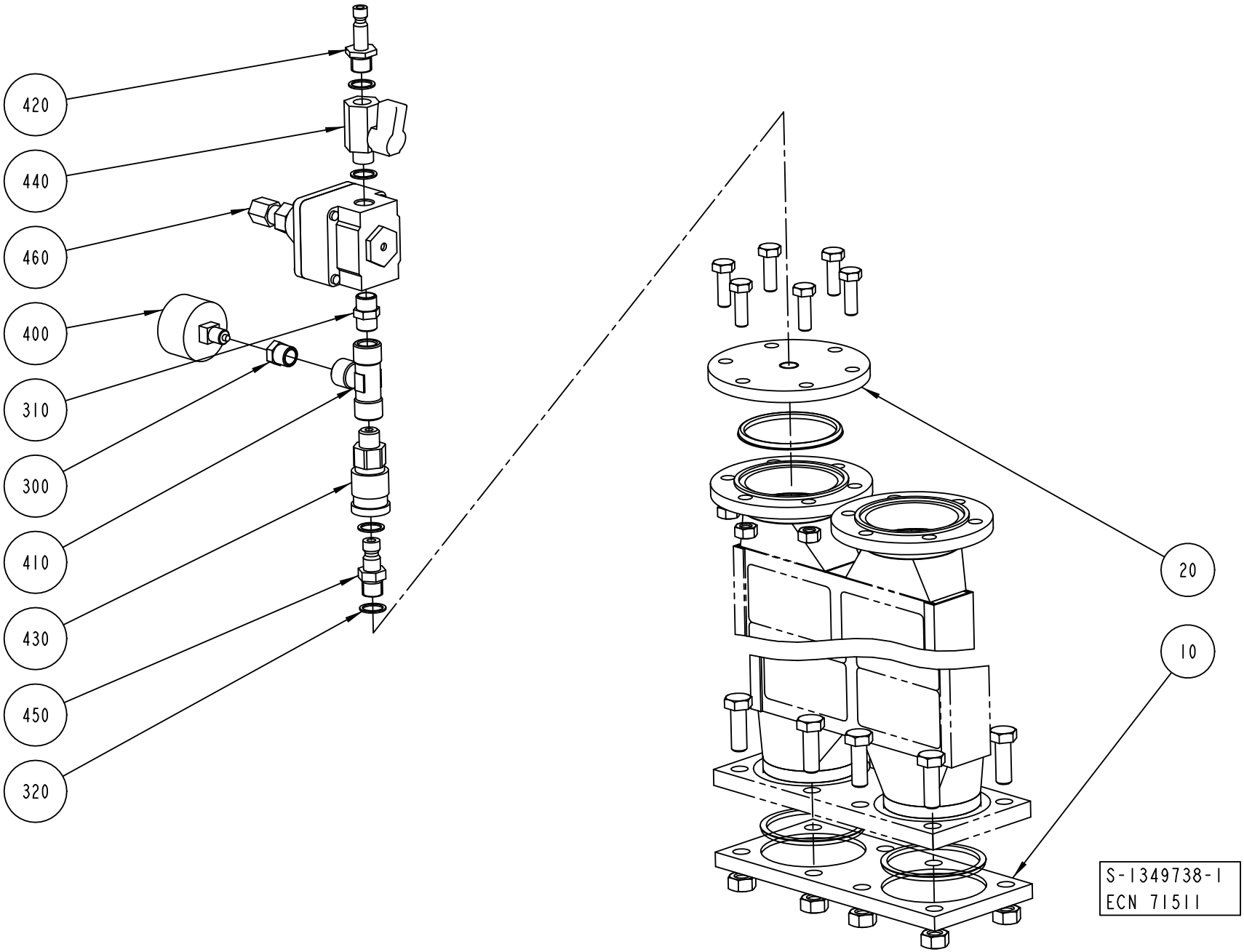
420
440
460
400
310
300
410
430
450
320
20
10
S-1349738-1
ECN 71511

ECM: 71511 - 19981102
Group number: 1349738-0100
Assembly Drawing: 1349738-1_1_AA

Pos	Part No	UN	Qty	Description	Page No
-					
010	1348263-0000		1	FLANGE	
020	979951-0000		1	FLANGE	
300	342701-0201		1	BUSHING,INT./EXT.G-THREAD G1/4"-G1/8"	
310	342700-0110		1	NIPPLES,HEXAGON,EXT.G-THREAD G1/4"-G1/4"	
320	315233-0110		4	WASHER CAPTIVE SEALING G1/4	
400	90043-0021		1	PRESSURE GAUGE 0-1 BAR 1/8" D=40	
410	90140-0018		1	T-PIPE, INT. THREAD, 2003-1/4	
420	90163-0007		1	CONNECTION	
430	90163-0016		1	QUICK COUPLING, (F) LP 006-0-WR013	
440	90187-0045		1	BALL VALVE G1/4 CR PL	
450	90163-0113		1	QUICK COUPLING, (M) LP-006-1-WR013-22	
460	90113-0056		1	REGULATOR, 11-818-998	
500	567372-0000		1	INSTRUCTION FOR USE	

Pos	Part No	UN	Qty	Description	Page No

This page is intentionally left blank.

ECM: 361592 - 20080627
Group number: 2560022-0200
Assembly Drawing:

Pos	Part No	UN	Qty	Description	Page No
-					
010	527898-0100		1	MKS CONTAINER H2O2	**2-253, 12-29**
020	529345-0100		1	FILLING STATION H2O2	**12-31**
030	532210-0100		1	PEROXIDE CONTAINER TROLLEY	**12-33**
040	2514392-0100		1	MACHINE CARRIAGE	**12-35**
080	90031-0300		1	PLC,COMM.CABLE AND ADAPTER	
110	2720716-0000		1	LIFTING DEVICE	
120	90459-2334		1	PNEUMATIC GREASE PUMP, EL 06983501	
130	2786998-0000		1	LOAD ANALYZER	
0010	*2967069-0000*		*1*	*POWER SUPPLY UNIT*	
0020	*2967070-0000*		*1*	*CABLE*	
0030	*2982733-0000*		*1*	*CONNECTOR*	
0040	*2954245-0101*		*1*	*TECHNICAL MANUAL*	

Pos	Part No	UN	Qty	Description	Page No

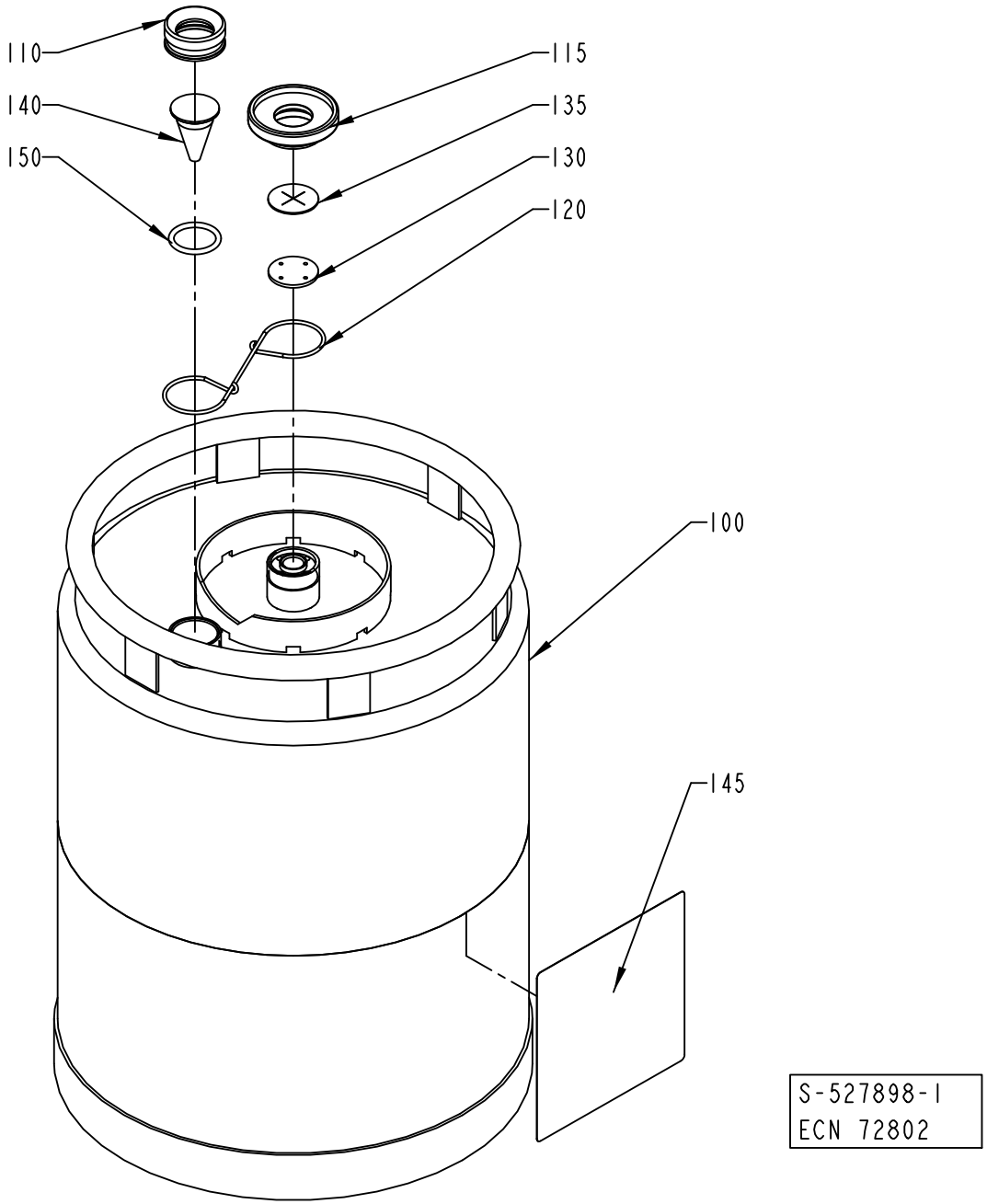
110
140
150
115
135
130
120
100
145
S-527898-1
ECN 72802

ECM: 224840 - 20050831
Group number: 527898-0100
Assembly Drawing: 527898-1_1_AB

Pos	Part No	UN	Qty	Description	Page No
-					
100	561427-0000		1	CONTAINER	
110	273977-0000		1	NUT	
115	273996-0000		1	NUT	
120	273980-0000		1	SPRING	
130	565250-0000		1	WASHER	
135	565251-0000		1	VALVE	
140	273978-0000		1	LEVEL GLAS	
145	532655-0000		1	CAUTION SIGN	
150	927422-0003		1	O.RING 24.2X3 SILICONE	

Pos	Part No	UN	Qty	Description	Page No

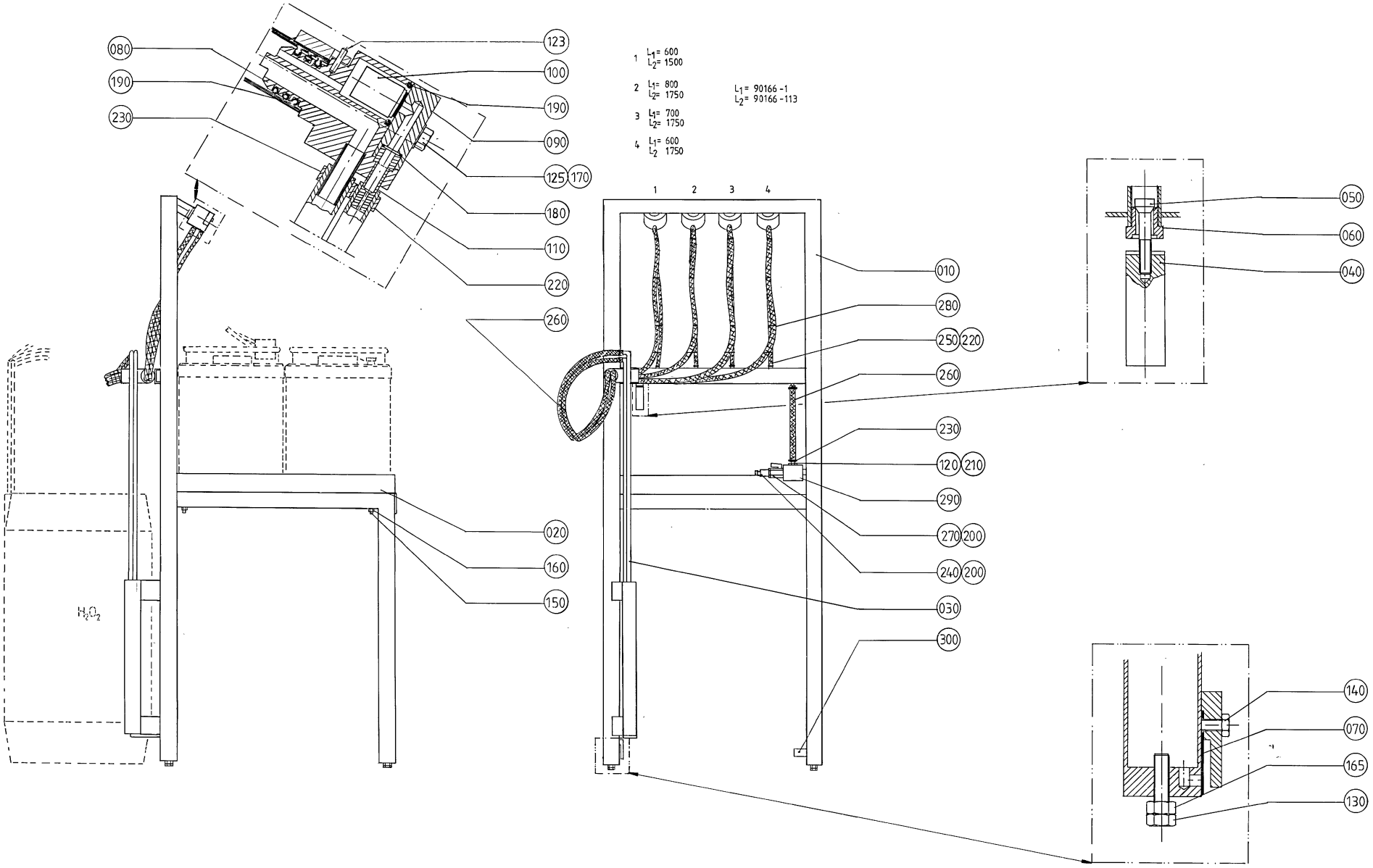
080
190
230
123
100
190
090
125
170
180
110
220
260
020
160
150
H_2O_2
1 L_1= 600 L_2= 1500
2 L_1= 800 L_2= 1750
3 L_1= 700 L_2= 1750
4 L_1= 600 L_2 1750
L_1= 90166-1
L_2= 90166-113
1 2 3 4
010
280
250 220
260
230
120 210
290
270 200
240 200
030
300
050
060
040
140
070
165
130

ECM: - -
Group number: 529345-0100
Assembly Drawing: 529345-1_1_AA

Pos	Part No	UN	Qty	Description	Page No
-					
010	534692-0000		1	FRAME SECTION	
020	534693-0000		1	PLATE	
030	534694-0000		1	SUCTIONPIPE	
040	534695-0000		1	WEIGHT	
050	534696-0000		1	VALVE	
060	534697-0000		1	VALVE HOUSING	
070	534691-0000		1	DIAPHRAGM	
080	534637-0000		4	ATTACHMENT	
090	534636-0000		4	LEVEL GLAS	
100	534635-0000		4	VALVE	
110	534634-0000		4	PIPE	
120	534698-0000		1	NIPPLE	
123	311103-0235		1	PARALLEL PIN ISO 2338 3M6X14 A1	
125	312105-0374		8	SCREW M6S ISO 4014 M6X30 A480	
130	312105-0455		4	SCREW M6S ISO 4017 M8X30 A480	
140	312125-0327		1	SCREW ISO 1207 M5X12 A4	
150	312145-0380		4	SCREW ISO 2009 MFS M6X50 A4	
160	312812-0316		4	HEXAGON NUT, NY-LOCK M6 A480	
165	312605-0318		4	HEXAGON NUT, M6M M8 A280	
170	315105-0153		8	WASHER BRB 6,4X12 RFR	
180	927421-0005		4	O-RING 7.3X2.4 SILICONE	
190	927422-0001		16	O-RING 19.2X3 SILICONE	
200	315233-0110		2	WASHER CAPTIVE SEALING G1/4	
210	315233-0113		2	WASHER CAPTIVE SEALING G1/2	
220	342991-0100		8	HOSE CLIP,WORM DRIVE TYPE 10-13	
230	342991-0101		10	HOSE CLIP,WORM DRIVE TYPE (13)-16	
240	90163-0007		1	CONNECTION	
250	90166-0045	MM	3500	HOSE PVC TRANSP. 6/12	
260	90166-0113	MM	7500	HOSE	
270	90187-0045		1	BALL VALVE G1/4 CR PL	
280	352113-0102		30	CABLE TIE, BLACK 188X4,8 MM	
290	90425-0016		1	MECMAN TYPE E120 735-120-000	
300	90328-0025		1	SILENCER G1/2"	

Pos	Part No	UN	Qty	Description	Page No

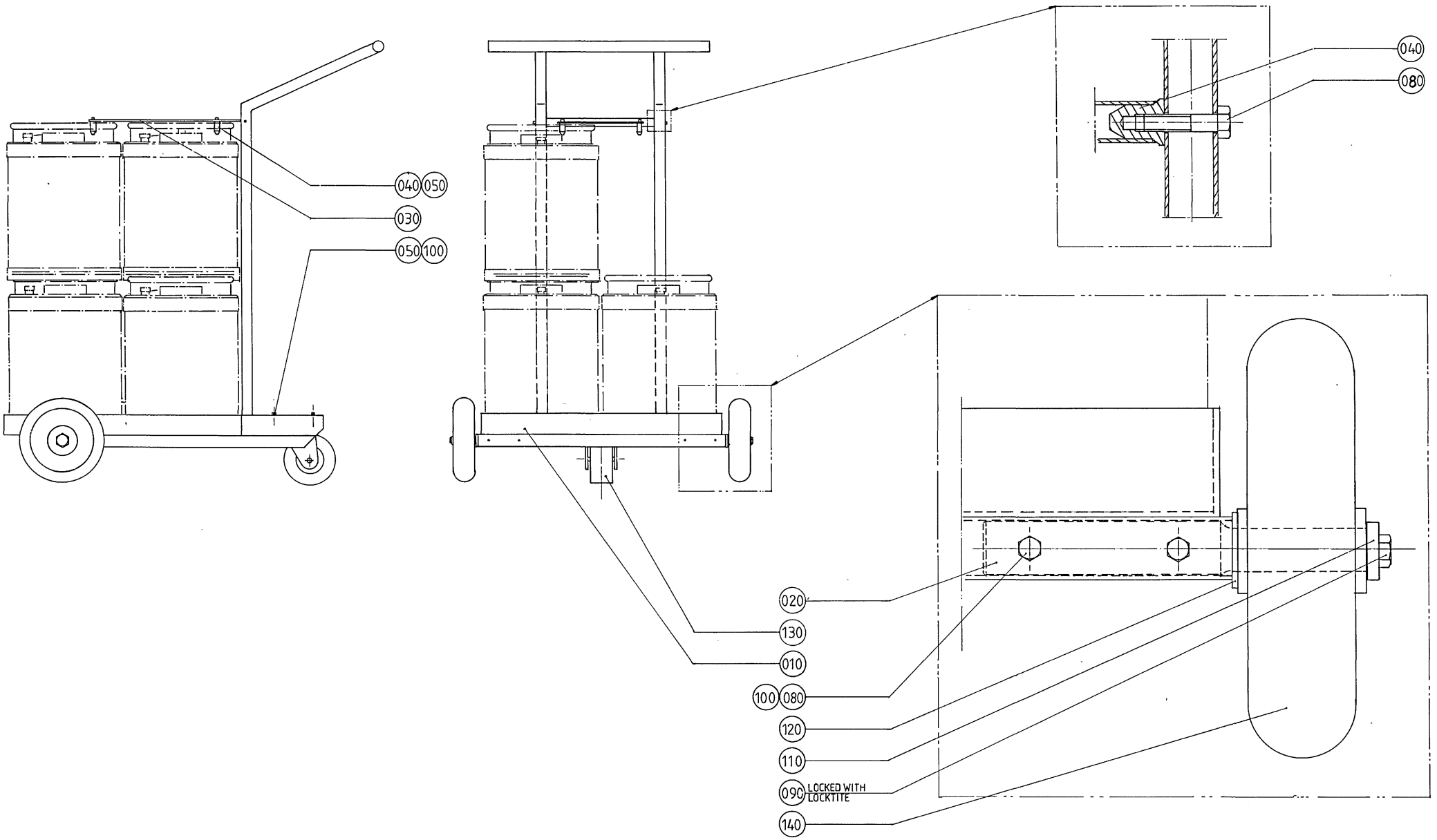
040
050
030
050
100
040
080
020
130
010
100
080
120
110
090
LOCKED WITH LOCKTITE
140

ECM: - -
Group number: 532210-0100
Assembly Drawing: 532210-1_1_AA

Pos	Part No	UN	Qty	Description	Page No
-					
010	273985-0000		1	CARRIAGE	
020	532208-0000		2	SHAFT	
030	532209-0000		1	SHEET	
040	532211-0000		6	DOWEL	
050	312105-0449		8	SCREW M6S ISO 4017 M8X16 A480	
080	312105-0459		6	SCREW M6S ISO 4014 M8X40 A480	
090	312105-0491		2	SCREW M6S ISO 4017 M10X20 A480	
100	312605-0318		4	HEXAGON NUT, M6M M8 A280	
110	315115-0173		2	WASHER PLAIN, TBRB 10,5/22 H=4	
120	315105-0192		2	WASHER BRB 21X36 RFR	
130	90191-0060		1	CASTOR WHEEL, NO. 1599PRT	
140	90191-0047		2	WHEEL, NO.798 821	

Pos	Part No	UN	Qty	Description	Page No

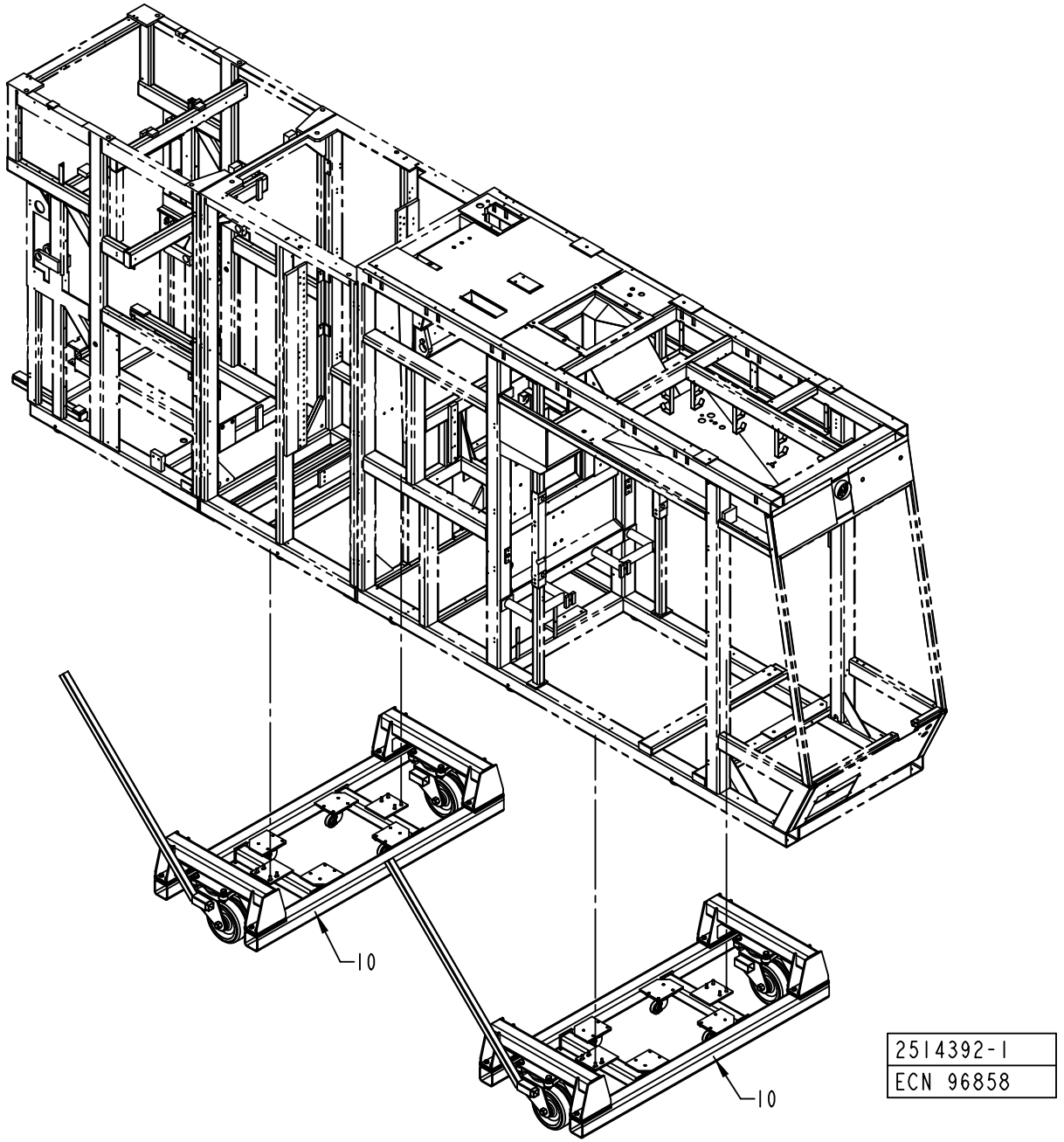
10
10
2514392-1
ECN 96858

ECM: 96863 - 20010830
Group number: 2514392-0100
Assembly Drawing: 2514392-1_1_AA

Pos	Part No	UN	Qty	Description	Page No
-					
0010	582526-0100		2	CARRIAGE	**12-37**

Pos	Part No	UN	Qty	Description	Page No

Machine Type | Group Description | Used-In | Group Number | Page No

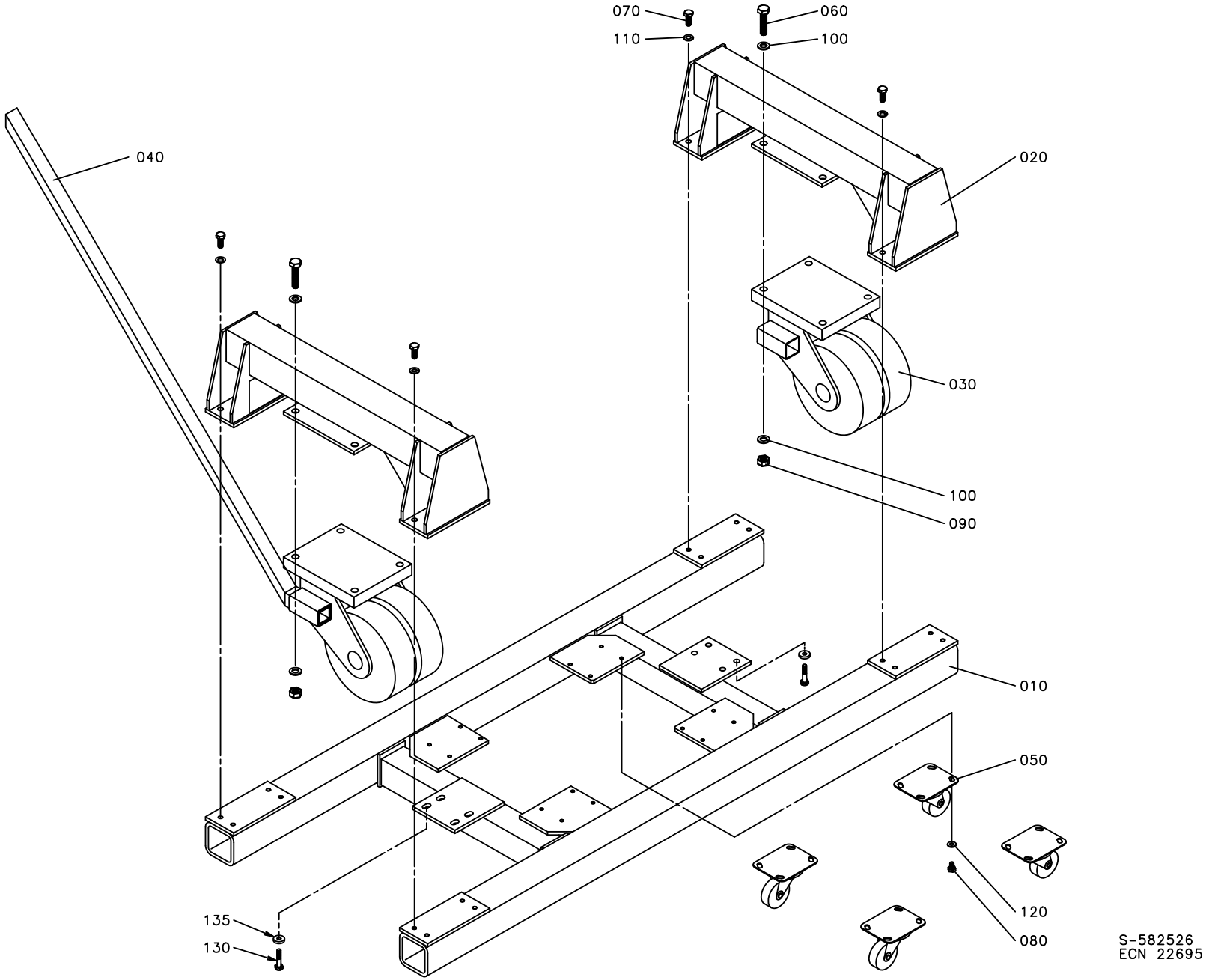
070
110
060
100
040
020
030
100
090
010
050
120
080
135
130
S-582526
ECN 22695

ECM: 96864 - 20010830
Group number: 582526-0100
Assembly Drawing: 582526-1_1_AA

Pos	Part No	UN	Qty	Description	Page No
-					
0010	1140039-0000		1	CONVEYOR FRAME	
0020	1140040-0000		2	BRACKET	
0030	1140840-0000		2	WHEEL	
0040	582527-0000		1	ROD	
0050	90191-0077		4	WHEEL	
0060	312105-0634		8	SCREW M6S ISO 4014 M16X70 A480	
0070	312105-0538		16	SCREW M6S ISO 4017 M12X35 A480	
0080	312105-0489		16	SCREW M6S ISO 4017 M10X16 A480	
0090	312605-0324		8	HEXAGON NUT, M6M M16 A280	
0100	315105-0186		16	WASHER BRB 17X30 RFR	
0110	315105-0178		16	WASHER BRB 13X24 RFR	
0120	315105-0173		16	WASHER BRB 10,5X22 RFR	
0130	312109-0499		8	SCREW M6S ISO 4017 M10X40 A480	
0135	315125-0173		8	WASHER TBRSB 10,5X28X6 A4	

Pos	Part No	UN	Qty	Description	Page No

Tetra Pak

SPC
Spare Parts Catalogue

Part No	Description	Page No
2033-0007	WASHER	1-21
2033-0008	WASHER	1-21
2033-0011	WASHER	1-21, 1-87, 1-89, 1-91, 1-93, 1-95, 1-97, 1-99, 1-103, 1-105, 1-107, 1-109, 1-117, 1-119, 1-121, 1-123, 1-125, 1-127, 1-133, 1-135, 1-137, 1-139, 1-141, 1-143
2033-0017	WASHER	7-101
7309-0000	HANDLE	1-351
12242-0002	GASKET 40X32X5,5	1-259
12242-0003	GASKET 48X38X5,5	1-31
12242-0004	WASHER 73,5X63,5X5,5	1-191
24928-0000	LOCKING RUBBER	1-195, 1-197, 9-9
29876-0000	COVER	1-185
30298-0000	INSULATION	1-185
32544-0000	INSULATION NUT	4-71, 4-73, 4-75, 4-77, 4-79, 4-81, 4-83, 4-85, 4-87, 4-89, 9-7
67388-0102	RACK FRONTMOUNTED 84TE	8-103
68262-0101	BACKPLANE FRONT RACK 8TE	8-103
68445-0104	FRONT PLATE 8 TE	8-103
68445-0105	FRONT PLATE 10TE	8-103
90002-0004	BLANK-OFF PLUG, PR 22,5 SKINDICHT-BLK16	1-295
90002-0009	BLANK-OFF PLUG, PR 18.6 SKINDICHT-BLK11	2-71, 11-241
90002-0013	BLANK-OFF PLUG, PR 15,2 SKINDICHT-BLK9	2-71, 2-81
90003-0018	BAG	5-65, 5-67, 11-185, 11-187, 11-207
90003-0019	BAG	5-23, 5-65, 5-67, 11-43, 11-69, 11-83, 11-169, 11-185, 11-187, 11-231, 11-235
90003-0474	PACKING	5-23, 11-43, 11-45, 11-69, 11-83, 11-119, 11-125, 11-147, 11-207, 11-231
90005-0056	WASHER PL.RND.NYL.6/8,5,H=1	7-49, 8-5, 8-7, 8-9, 8-11, 8-113
90005-0060	WASHER PLAIN, RBS 6,4/M6)/18,H=1,5	1-13, 1-177, 1-281, 1-299, 4-27, 4-29, 4-31, 4-71, 4-73, 4-75, 4-77, 4-79, 4-81, 7-37
90005-0064	WASHER PL.RND.NYL.4,3/9, H=0,8	8-5, 8-7, 8-9, 8-11
90005-0082	WASHER PLAIN ROUND 4,3(M4)/12,H=1	4-71, 4-73, 4-75, 4-77, 4-79, 4-81, 4-83, 4-85, 4-87, 4-89, 7-27, 7-31, 7-37, 7-51, 7-53, 7-119, 7-121, 7-123
90005-0094	GASKET C 19438-EPR	3-5, 3-7, 3-9, 3-11, 3-13, 3-15, 4-9, 4-11, 4-13, 4-15, 4-17, 4-19, 5-13, 5-25, 5-83, 5-85, 5-87, 5-89, 5-91, 5-93, 5-95, 5-97, 5-99, 5-101, 5-103, 5-105, 5-107, 5-109, 5-111, 5-113, 5-133, 5-135, 5-137, 5-139, 5-141, 5-143, 5-145, 5-147, 5-149, 5-151, 5-153, 5-155, 5-157, 5-159, 5-161, 5-163, 5-165, 5-167, 5-169, 5-171
90005-0105	WASHER PLAIN ROUND 8,4(M8)/24, H=1,5	1-261
90005-0116	WASHER PLAIN ROUND 8,4(M8)/24, H=2	1-143, 6-37, 6-39, 7-105
90005-0139	WASHER PLAIN ROUND 5,2(M5)/15, H=1,6	1-357
90012-0063	CABLE GLAND PR 15,2	2-265
90012-0125	GLAND FITTING	7-15
90012-0131	HOSE GLAND W/O INSERT PG21 NORMAL	1-279
90012-0137	GLAND, EXTENDED WITH INSERT, PG11	7-145
90015-0020	LEAD-IN, TET5-7, E-1458016	2-9, 2-19, 2-23, 2-25, 2-259, 2-261
90015-0021	LEAD-IN, TET10-14, E-1458023	2-19, 2-155, 2-225
90015-0022	LEAD-IN, TET14-20, E-1458029	2-9
90015-0023	LEAD-IN, TET7-10, E-1458019	2-9, 2-57, 2-97, 2-109, 2-259, 2-261, 7-109, 7-111
90015-0025	LEAD-IN, TET26-35, E-1458041	6-23
90015-0027	LEAD-IN, BUSHING 6MM, 107-020	4-9, 4-11, 4-13, 4-15, 4-17, 4-19
90015-0037	RUBBER BUSHING, 8920001	6-37
90017-0015	HANDLE, NO. 14.4012.02.308	8-77, 8-79
90017-0016	HANDLE, NO. 14.4012.02.120	1-347, 8-81, 8-83, 8-85, 8-87
90030-0030	CONN. BULKHEAD SV12L71	1-247
90030-0058	CONN. T-PIPE T12L71	1-245
90030-0071	CONN. ELBOW, WE08LR71	2-233
90030-0075	PIPE CONNECTION G 6	4-99, 4-101, 4-103, 4-105
90030-0096	ELBOW CONNECTION 12	1-243
90030-0106	PIPE CONNECTION G 12	1-243, 1-247, 1-281
90030-0109	STRAIGHT PIPE CONN. GE12LR1/271	1-243
90030-0144	REDUCER, 2520-3/8-3/8	7-105
90030-0159	CONN. BULKHEAD SV15L71	2-273
90030-0171	ADJUSTABLE ELBOW CONNECTION 6-G1/8	2-251, 4-99, 4-101, 4-103, 4-105, 5-133, 5-135, 5-137, 5-139, 5-141, 5-143, 5-145, 5-147, 5-149, 5-151, 5-153, 5-155, 5-157, 5-159, 5-161, 5-163, 5-165, 5-167, 5-169, 5-171, 5-237, 5-239
90030-0180	CONN. STR. GE12L1/2NPT71	1-243, 1-247, 1-281
90030-0184	CONN. STR., GE06LRED71	1-293, 1-323, 2-39, 2-41, 2-245, 4-9, 4-11, 4-13, 4-15, 4-17, 4-19, 4-99, 4-101, 4-103, 4-105, 5-237, 5-239
90030-0185	CONN. STR., GE08LRED71	6-49
90030-0187	CONN. STR. GE12LRED71	1-245, 1-281, 1-293
90030-0188	CONN. STR. GE15LRED71	1-181, 1-191, 1-243, 1-281
90030-0202	CONN. STR., 6-G1/4, EXT. THREAD	1-291, 1-293
90030-0203	ADJUSTABLE ELBOW CONNECTION 6-G1/4	1-293
90030-0223	BUSHING, INT/EXT. G-THREAD NO. 2531	12-17, 12-19
90030-0224	NIPPLES, EXT. THREAD, HEXAGON, NO. 2511	12-17, 12-19
90030-0225	BUSHING, INT/EXT. R-THREAD 1/4X3/8	12-17, 12-19
90030-0336	CONN. STRAIGHT, 316L-12M-BVCO-3	1-217, 9-13
90030-0338	NUT, PIPE & CONNECTORS, SS-8-BVCO-4	1-217
90030-0465	STRAIGHT CONNECTION, MAD DN 15	6-45
90030-0481	REDUCER M12TURM6-316	1-247
90030-0485	CONN. BULKHEAD BMC8-316	1-269, 2-259, 2-261
90030-0571	CONN. T-PIPE SS-6MO-3	1-233
90031-0300	PLC,COMM.CABLE AND ADAPTER	12-27
90036-0057	LIGHT BULB, BA9S 28V	9-19
90036-0068	BULB 5W 24V, SL-L24 205348	2-123, 2-137
90038-0049	DIODE	1-361
90042-0170	SOLENOID VALVE TYPE 121 2/2 NC	2-239
90042-0171	SOLENOID VALVE TYPE 330 3/2 NC	1-207

Part No	Description	Page No
90042-0172	SOLENOID VALVE 4023/1005/1032 24VDC	1-191
90042-0203	SOLENOID VALVE TYPE 331 3/2 NC	1-209, 1-293
90042-0206	SOLENOID VALVE G1/8, 444-111-000-1	2-243
90042-0248	SOLENOID VALVE OFFICIENE DI ENSINO	6-21
90042-0254	SOLENOID VALVE, DIAPHRAGM R1 1/2	6-43
90042-0487	COIL, 04983-197-18	2-243
90043-0002	PRESSURE GAUGE, 2040 D=63 MM	1-281
90043-0006	PRESSURE GAUGE, 2041 D=63 MM	6-81
90043-0021	PRESSURE GAUGE 0-1 BAR 1/8" D=40	12-17, 12-19, 12-25
90043-0043	PRESSURE GAUGE, 2041D=40 MM	6-45, 12-9, 12-17, 12-19
90043-0082	PRESSURE GAUGE, 2740, D=63 MM	1-191, 1-243, 1-247
90043-0095	PRESSURE GAUGE, 2740, D=63 MM, GLYC.	1-181
90043-0100	PRESSURE GAUGE, 2948 D=63 MM	6-33
90043-0135	PRESSURE GAUGE 10 BAR	11-75
90044-0108	LIMIT SW. 24 CE1-S6	1-253, 1-255, 1-257, 1-287, 1-289
90044-0192	LIMIT SW. SZ2586.000	1-357, 8-5, 8-7, 8-9, 8-11
90044-0194	INDUCTIVE SENSOR IN5329	7-61
90045-0162	MOTOR 4G42X25	2-265
90051-0035	KNOB, EXTERNAL THREAD. NO. 8308-1135	7-55
90051-0045	STELLAR KNOB, NO. 8323-257	1-37, 1-39
90051-0053	KNOB, INTERNAL THREAD, M6 24X17	6-9
90051-0059	KNOB, EXTERNAL THREAD. NO. 8308-1550	1-169
90051-0087	LOCK KNOB, NO. GN 617 A5	7-33
90051-0112	LOCK KNOB, NO. GN 617 NIK5	2-29, 2-31, 2-53, 2-69
90051-0127	HANDLE, NO. .601/90+X-M10-INOX	4-95, 4-97, 5-173, 5-175, 5-177, 5-179, 5-181, 5-183, 5-185, 5-187, 5-189, 5-191, 5-193, 5-195, 5-197, 5-199, 5-201, 5-203, 12-11, 12-13, 12-15
90053-0029	COUNTER, F524.800FA3C 24VDC	8-97, 8-99
90055-0033	HOSE NIPPLE, EXT.THR. R1/2-13 MM	2-227
90055-0042	NIPPLES, EXT. THREAD, HEXAGON, NO. 6835-	6-33, 9-63
90055-0051	HOSE NIPPLE, EXT.THR. R3/8X13 MM	2-237, 2-239, 2-259, 2-261
90055-0053	HOSE NIPPLE, EXT.THR. R1-25 MM	6-55
90055-0071	HOSE NIPPLE, EXT.THR. R1/2X13 MM	2-267
90055-0097	STRAIGHT COUPLING	6-91, 6-93
90055-0100	Y-CONNECTION, 6-6	3-5, 3-7, 3-9, 3-11, 3-13, 3-15
90055-0101	Y-CONNECTION, 8-8	11-77
90055-0129	REDUCER 8-14	2-155
90055-0132	HOSE NIPPLE, EXT.THR. R1/4X7,8 MM	2-233, 2-267
90055-0145	ELBOW ADAPTOR-R1/4	9-63
90055-0158	ELBOW PIPE JOINT,EXT.THR,D=6 MM NPT1/8	1-271, 2-259, 2-261
90055-0166	HOSE NIPPLE, EXT.THR. R11/2X38 MM	6-43
90055-0172	ELBOW WITH TAILPIECE 8/8 MM	5-205, 5-207, 5-209, 5-211
90055-0173	ELBOW WITH TAILPIECE 8/6 MM	2-29, 2-31
90055-0189	HOSE,NIPPLE,REDUCER,TUBE, 6/8M	7-109, 7-111
90055-0191	HOSE NIPPLE, EXT.THR. R1/2X16 MM	1-181
90055-0222	ELBOW WITH TAILPIECE 6/6 MM	4-21
90055-0229	T- WITH TAILPIECE 6 MM	4-99, 4-101, 4-103, 4-105, 5-93, 5-95, 5-97, 5-99, 5-101, 5-103, 5-105, 5-107, 5-109, 5-111, 5-113
90055-0237	HOSE,NIPPLE,REDUCER,TUBE, 4/6MM	7-69, 7-71
90055-0249	REDUCER 8-10	6-11
90055-0257	PUSH-IN Y-CONNECTOR QSY-6	5-83, 5-85, 5-87, 5-89, 5-91, 5-93, 5-95, 5-97, 5-99, 5-101, 5-103, 5-105, 5-107, 5-109, 5-111, 5-113, 5-133, 5-135, 5-137, 5-139, 5-141, 5-143, 5-145, 5-147, 5-149, 5-151, 5-153, 5-155, 5-157, 5-159, 5-161, 5-163, 5-165, 5-167, 5-169, 5-171, 5-173, 5-175, 5-177, 5-179, 5-181, 5-183, 5-185, 5-187, 5-189, 5-191, 5-193, 5-195, 5-197, 5-199, 5-201, 5-203, 7-103, 7-125
90055-0266	STRAIGHT CONNECTION	6-11
90055-0267	ELBOW PIPE JOINT,EXT.THREAD,D=8 MM G1/4	5-33, 5-35, 5-133, 5-135, 5-137, 5-139, 5-141, 5-143, 5-145, 5-147, 5-149, 5-151, 5-153, 5-155, 5-157, 5-159, 5-161, 5-163, 5-165, 5-167, 5-169, 5-171
90055-0269	ELBOW PIPE JOINT 8X8 MM	2-149
90055-0274	STRAIGHT COUPLING, D=8 MM - G1/4"	5-173, 5-175, 5-177, 5-179, 5-181, 5-183, 5-185, 5-187, 5-189, 5-191, 5-193, 5-195, 5-197, 5-199, 5-201, 5-203
90055-0275	ELBOW FITTING, 8 - G1/4	6-11
90056-0163	WORM GEAR BS 71-F-TT 28:1 LH	5-133, 5-135, 5-137, 5-139, 5-141, 5-143, 5-145, 5-147, 5-149, 5-151, 5-153, 5-155, 5-157, 5-159, 5-161, 5-163, 5-165, 5-167, 5-169, 5-171
90056-0164	WORM GEAR BS 71-F-TT 28:1 RH	5-133, 5-135, 5-137, 5-139, 5-141, 5-143, 5-145, 5-147, 5-149, 5-151, 5-153, 5-155, 5-157, 5-159, 5-161, 5-163, 5-165, 5-167, 5-169, 5-171
90056-0170	WORM GEAR BS 40 AL-TT 3,5:1 RH	5-93, 5-95, 5-97, 5-99, 5-101, 5-103, 5-105, 5-107, 5-109, 5-111, 5-113
90062-0015	LOCK WASHER SERRAT.EXT.GEAR,6,4/11 H=0,7	6-23
90062-0022	LOCK WASHER D=6,4/11	8-15, 8-17, 8-81, 8-83, 8-85, 8-87, 8-89, 8-91, 8-93, 8-95, 8-101, 8-103, 8-107, 8-113
90062-0029	LOCK WASHER 5,1X 8,6, T= 1,5 DIN 7980	6-31
90062-0061	LOCK WASHER NORD-LOCK,6,5/10,8, T=2,2	1-11, 1-17, 1-31, 4-39, 4-41, 4-43, 4-45, 4-47, 4-49, 4-51, 4-53, 4-55, 4-57, 4-59, 4-61, 4-63, 4-65, 4-67, 5-83, 5-85, 5-87, 5-89, 5-91, 5-115, 5-117, 5-133, 5-135, 5-137, 5-139, 5-141, 5-143, 5-145, 5-147, 5-149, 5-151, 5-153, 5-155, 5-157, 5-159, 5-161, 5-163, 5-165, 5-167, 5-169, 5-171
90062-0065	LOCK WASHER NORD-LOCK,5,4/9 T=2,2	1-87, 1-89, 1-91, 1-93, 1-95, 1-97, 1-103, 1-105, 1-107, 1-109, 1-117, 1-119, 1-121, 1-123, 1-125, 1-127, 1-133, 1-135, 1-137, 1-139, 1-141
90064-0082	PUSH BUTTON, WHITE	7-163
90064-0084	PUSH BUTTON, YELLOW	1-357, 7-159
90064-0098	PUSH BUTTON, CLEAR	2-207, 2-211, 7-159
90067-0301	BRAKE WIRE, 32 82 138 1	9-61
90067-0302	TORSION SPRING	9-59
90067-0317	BRAKE LINING	9-59

Part No	Description	Page No
90067-0320	COTTER FOR 90067-301	9-61
90067-0336	GUIDE SHAFT UNIT, 32 82 123 3	9-59
90067-0337	BRAKE DRUM	9-59
90067-0338	GUIDE ROLLER 32 44 117 2	9-59
90067-0342	TENSION SPRING	9-59
90067-0349	ROLLER KIT, 34 73 050 7	9-61
90067-0350	AXLE PIN	9-61
90067-0351	SEAL KIT	9-65
90067-0354	PUMP PISTON	9-65
90067-0355	COMPRESSION SPRING	9-65
90067-0356	TOP WASHER	9-65
90067-0357	REPAIR KIT	9-65
90067-0358	SINK HANDLE	9-61
90067-0359	SINK ROD, 34 74 021 7	9-61
90067-0360	MOUNTING KIT, 34 74 022 5	9-61
90067-0361	TIE ROD	9-61
90067-0364	BRAKE HANDLE	9-61
90067-0365	HYDRAULIC HOSE, 32 04 169 1	9-57
90067-0368	YOKE	9-57
90067-0369	VALVE ARM	9-65
90067-0370	WHEEL, 32 04 176 6	9-57
90067-0371	SLEEVE, 32 04 175 8	9-57
90067-0372	SHAFT, 32 04 174 1	9-57
90068-0016	FOOT, 3 LEGS. NO 15511	11-67, 11-219, 11-229
90068-0017	ARTICULATED FOOT W. RUBBER PAD, NO 17532	11-219, 11-229
90069-0106	GEARS, HELICAL MOTOR SK01-71L/4	11-121
90069-0110	GEARS, HELICAL MOTOR SK01-71L/4	11-121
90069-0111	GEARS, HELICAL MOTOR SK01-71S/4	11-121
90069-0181	GEARS, HELICAL MOTOR SK01V-80S/4	11-25, 11-121
90069-0182	GEARS, HELICAL MOTOR SK01V-80S/4	11-121
90070-0017	WORKING HOURS COUNTER, 7991 DR H?NLE	8-97, 8-99
90074-0011	CABLE CLIPS, D=14 MM	8-77, 8-79, 8-115
90077-0079	FEED THROUGH TERMINAL, 02943.6	11-241
90077-0113	TERMINAL BLOCK WDK 2.5	1-213, 1-361, 1-363, 2-17, 2-55, 2-103, 2-107, 6-79, 7-17, 8-31, 8-45, 8-47, 8-105, 11-63
90077-0114	END PLATE, WAP/WDK 2,5	1-213, 1-361, 1-363, 2-17, 2-55, 2-103, 2-107, 6-79, 7-17, 8-45, 8-47, 8-105
90077-0123	FEED THROUGH TERMINAL, 017596	11-149
90077-0308	END PLATE, 10-00038286-1	11-149
90077-0328	RAIL TS15/5	11-149, 11-241
90083-0055	ROLLER BEARING, 15X35X19 MM	4-9, 4-11, 4-13, 4-15, 4-17, 4-19, 4-39, 4-41, 4-43, 4-45, 4-47, 4-49, 4-51, 4-53, 4-55, 4-71, 4-73, 4-75, 4-77, 4-79, 4-81
90087-0010	PLUG, EXT. THREAD, HEX. SOCKET NR. M10-	4-9, 4-11, 4-13, 4-15, 4-17, 4-19
90089-0003	REDUCING SLEEVE, PR22,5/PR18,6	1-9
90091-0148	RADIAL SEAL 25X47X7 MM DUST LIP	5-173, 5-175, 5-177, 5-179, 5-181, 5-183, 5-185, 5-187, 5-189, 5-191, 5-193, 5-195, 5-197, 5-199, 5-201, 5-203
90091-0237	ROD SEAL GLYD RING 20X27,5X3 MM	1-219, 1-221, 1-223, 9-13, 9-15
90091-0238	WEAR RING 20X22X10 MM	1-219, 1-221, 1-223, 9-13, 9-15
90091-0263	RADIAL SEAL 24X47X7 MM DUST LIP	5-217, 5-219, 5-221, 5-223, 5-225, 5-227, 5-229
90091-0266	SEAL RING 10,4X16,3X2,5 MM	1-217, 9-11
90091-0298	RADIAL SEAL 45X65X8 MM DUST LIP	4-5, 4-7
90091-0300	RADIAL SEAL 40X72X7 MM DUST LIP	5-173, 5-175, 5-177, 5-179, 5-181, 5-183, 5-185, 5-187, 5-189, 5-191, 5-193, 5-195, 5-197, 5-199, 5-201, 5-203
90091-0302	RADIAL SEAL 20X32X7 MM DUST LIP	5-217, 5-219, 5-221, 5-223, 5-225, 5-227, 5-229
90091-0304	RADIAL SEAL 45X65X8 MM DUST LIP	9-15
90091-0322	RADIAL SEAL 25X42X7 MM DUST LIP	5-133, 5-135, 5-137, 5-139, 5-141, 5-143, 5-145, 5-147, 5-149, 5-151, 5-153, 5-155, 5-157, 5-159, 5-161, 5-163, 5-165, 5-167, 5-169, 5-171, 5-217, 5-219, 5-221, 5-223, 5-225, 5-227, 5-229
90091-0335	PISTON SEAL GLYD RING 62,5X70X3,2 MM	1-221, 9-15
90091-0336	PISTON SEAL GLYD RING 79X90X4,2 MM	1-219, 1-223
90091-0404	RADIAL SEAL 22X40X7 MM DUST LIP	5-93, 5-95, 5-97, 5-99, 5-101, 5-103, 5-105, 5-107, 5-109, 5-111, 5-113
90091-0406	RADIAL SEAL 25X40X7 MM DUST LIP	5-133, 5-135, 5-137, 5-139, 5-141, 5-143, 5-145, 5-147, 5-149, 5-151, 5-153, 5-155, 5-157, 5-159, 5-161, 5-163, 5-165, 5-167, 5-169, 5-171
90091-0412	SEALING RING, VARILIP 20X35X7 MM	2-251
90091-0429	SEALING RING, VARILIP 15X26X7 MM	1-13
90091-0430	RADIAL SEAL 15X35X7 MM DUST LIP	4-33, 4-35
90091-0431	RADIAL SEAL 8X22X7 MM	4-33, 4-35
90091-0436	RADIAL SEAL 20X40X7 MM DUST LIP	5-93, 5-95, 5-97, 5-99, 5-101, 5-103, 5-105, 5-107, 5-109, 5-111, 5-113
90091-0437	RADIAL SEAL 17X40X7 MM DUST LIP	5-93, 5-95, 5-97, 5-99, 5-101, 5-103, 5-105, 5-107, 5-109, 5-111, 5-113
90091-0438	RADIAL SEAL 25X52X10 MM DUST LIP	5-93, 5-95, 5-97, 5-99, 5-101, 5-103, 5-105, 5-107, 5-109, 5-111, 5-113
90091-0439	RADIAL SEAL 35X62X7 MM DUST LIP	5-133, 5-135, 5-137, 5-139, 5-141, 5-143, 5-145, 5-147, 5-149, 5-151, 5-153, 5-155, 5-157, 5-159, 5-161, 5-163, 5-165, 5-167, 5-169, 5-171
90091-0441	SEAL 50X72X8 MM DUST LIP	5-133, 5-135, 5-137, 5-139, 5-141, 5-143, 5-145, 5-147, 5-149, 5-151, 5-153, 5-155, 5-157, 5-159, 5-161, 5-163, 5-165, 5-167, 5-169, 5-171
90091-0446	RADIAL SEAL 20X42X7 MM DUST LIP	5-217, 5-219, 5-221, 5-223, 5-225, 5-227, 5-229
90091-0449	SEALING RING, VARILIP 40X52X7 MM	3-17, 3-19, 3-21, 3-23, 3-25
90092-0080	OIL BRUSH FOR D=4 MM TUBE, D=11, 4	5-133, 5-135, 5-137, 5-139, 5-141, 5-143, 5-145, 5-147, 5-149, 5-151, 5-153, 5-155, 5-157, 5-159, 5-161, 5-163, 5-165, 5-167, 5-169, 5-171
90099-0007	HEXAGON NUT, M10X1, E 63 137 10	7-33
90099-0027	HEXAGON NUT, M14, DIN936	1-11

Part No	Description	Page No
90099-0104	NUT, PR 15,2 (PG9)	1-229, 1-231, 1-233, 1-293, 2-259, 2-261, 5-25, 5-33, 5-35, 5-37, 5-39, 6-33
90099-0110	NUT, PR 22,5 (PG16)	1-233, 7-177, 8-5, 8-7, 8-9, 8-11, 8-77, 8-79
90099-0117	NUT, PR 18,6 (PG11)	6-23, 8-77, 8-79
90099-0120	NUT, PR 37 (PG29)	2-97, 2-183
90099-0131	NUT HEX. M16X2 SS	5-25, 5-33, 5-35
90110-0052	MALE INSERT HAN 6E 09 33 006 2601	1-9, 1-175, 1-179, 1-211, 1-267, 1-279, 2-19, 2-59, 2-97, 6-17, 6-19, 6-31, 6-37, 7-15, 8-77, 8-79
90110-0053	FEMALE INSERT HAN 6 E 09 33 006 2701	2-51
90110-0054	MALE INSERT HAN 6 HSB 09 31 006 2601	1-185, 2-59, 6-49
90110-0055	FEMALE INSERT HAN 6 HSB 09 31 006 2701	2-51, 8-113
90110-0056	MALE INSERT HAN 24 E 09 33 024 2601	1-357, 2-19, 2-53, 2-59, 2-97, 4-3, 5-205, 5-207, 5-209, 5-211, 6-77, 7-5, 7-7, 7-15, 8-77, 8-79
90110-0057	FEMALE INSERT HAN 24 E 09 33 002 4201	2-51, 2-59, 8-5, 8-7, 8-9, 8-11, 8-37, 8-39
90110-0095	CONNECTOR 3 POLE + EARTH	1-207, 2-243, 6-21, 6-81
90110-0123	HOUSING, 09 30 006 0301	8-109, 8-111, 8-113
90110-0144	COVER D-SUB 9, 8655MH0911LF	1-229, 1-231
90110-0147	PLUG D-SUB 9 FEMALE, DE09S064TLF	1-229, 1-231
90110-0157	CABLE HOOD 6-POL 70.352.0628.1	7-89, 7-145
90110-0159	MALE INSERT 70.310.0640.0	7-89, 7-145
90110-0235	CABLE CONTACT, PX0739/P	11-149
90110-0381	COVER, 310601-33 CYR24.4	1-75, 1-229, 1-231, 1-235, 1-237, 2-105, 7-105
90111-0122	KEY SWITCH, 2 NO CONTACTS	8-97, 8-99
90111-0124	KEY SWITCH, 1NO,1NC CONTACT	8-97, 8-99
90113-0056	REGULATOR, 11-818-998	2-29, 2-31, 12-25
90113-0059	FILTER REGULATOR 50UM, B08-396-A3MG	12-17, 12-19
90113-0098	PRESSURE REGULATOR	6-45
90113-0137	SHUT OFF VALVE G3/4, T74T-6GA-P1N	11-75
90113-0141	FILTER REGULATOR 0-10 BAR 40 MICRON	11-75
90113-0384	BRACKET FOR R11, 5203-06	12-17, 12-19
90113-0449	QUICK CLAMP WITH BRACKET, 4314-52	11-75
90115-0134	ROD END, ID=10 MM, M10X1,25	2-183, 4-109, 4-111, 4-113, 4-115
90115-0139	ROD END, ID=8 MM, M8X1,25	4-109, 4-111, 4-113, 4-115
90119-0056	RELAY, AUXILIARY MK3P5-S 24VDC	7-17
90121-0127	RESISTANCE FIXED, 1,5 KOHM, 0,25 W	1-361
90121-0132	RESISTANCE FIXED, 0,51 KOHM, 0,25 W	1-229, 1-231
90129-0006	BASE, S3-B	7-17
90132-0021	HOSE CLIP 6-10MM	1-233, 2-243, 2-267
90132-0030	SUPORTE MV 87177 KS 580T	1-191
90135-0026	EARTH TERMINAL, 3802.6	11-241
90135-0039	CLAMPING YOKE, KLBU 4-13.5	8-15, 8-17, 8-67
90135-0042	EARTH TERMINAL, 130336	11-149
90140-0010	T-PIPE, INT. THREAD, 20031/2	6-31, 6-81
90140-0012	ELBOW, 90 INT/EXT, 2020-1/2-1/2	1-281
90140-0013	ELBOW, 90 INT/EXT, 2020-1/4-1/4	1-191
90140-0015	T-PIPE, INT. THREAD, 2003-1/8	1-271, 2-259, 2-261, 12-17, 12-19
90140-0018	T-PIPE, INT. THREAD, 2003-1/4	6-33, 12-25
90140-0020	ELBOW, 90, INT/EXT. THREAD, NO. 2020-3/8	6-81, 7-105
90140-0023	T-PIPE, INT. THREAD, NO. 2070-3/8-3/8	6-81
90140-0079	SLEEVE, INT. THREAD, NO. 501-08	6-93
90141-0015	RETAINING RING FOR SHAFT DIN 471 8 SS	1-169, 5-133, 5-135, 5-137, 5-139, 5-141, 5-143, 5-145, 5-147, 5-149, 5-151, 5-153, 5-155, 5-157, 5-159, 5-161, 5-163, 5-165, 5-167, 5-169, 5-171, 7-49, 7-105, 7-127, 7-129, 7-131, 7-141, 7-143
90141-0016	RETAINING RING FOR SHAFT DIN 471 10 SS	1-31, 1-313, 1-315, 1-317, 3-5, 3-7, 3-9, 3-11, 3-13, 3-15, 7-53, 7-55, 12-11, 12-13, 12-15
90141-0017	RETAINING RING FOR SHAFT DIN 471 17 SS	5-93, 5-95, 5-97, 5-99, 5-101, 5-103, 5-105, 5-107, 5-109, 5-111, 5-113, 7-11
90141-0020	RETAINING RING FOR BORE DIN 472 42 SS	2-265, 5-133, 5-135, 5-137, 5-139, 5-141, 5-143, 5-145, 5-147, 5-149, 5-151, 5-153, 5-155, 5-157, 5-159, 5-161, 5-163, 5-165, 5-167, 5-169, 5-171, 5-217, 5-219, 5-221, 5-223, 5-225, 5-227, 5-229, 7-69, 7-71
90141-0022	SNAP RING B 16	1-183, 1-187
90143-0020	STRIP	2-247
90143-0054	STRIP	2-213
90143-0057	STRIP EMKA 1011-05 21X11MM	6-23, 8-77, 8-79
90143-0060	EDGE STRIP 9,5X6,3MM BLACK PVC	1-57, 1-345, 1-357, 2-43, 6-23, 6-61, 6-67, 7-5, 7-7, 7-51
90143-0069	RUBBER STRIP	7-159
90143-0097	SELF GRIPPING GASKET, 1011-24	1-331, 1-333, 1-341, 1-351, 2-9, 2-179, 2-199, 2-201, 2-203, 2-225, 2-259, 2-261, 8-5, 8-7, 8-9, 8-11, 8-77, 8-79, 8-97, 8-99
90144-0007	TAPE	1-291, 6-43, 6-45, 6-47, 6-51, 6-93
90144-0073	TREBOFLON-TAPE W=13MM	1-181, 1-191, 1-253, 1-255, 1-257, 1-279, 1-281, 1-287, 1-289, 2-237, 2-239, 2-245, 2-249, 2-259, 2-261, 2-267, 2-269, 2-271, 5-83, 5-85, 5-87, 5-89, 5-91
90152-0017	HOSE (SPIRAL)	2-151
90152-0050	SPIRAL CONDUIT, 20X13, UL 1313	1-27, 1-29, 1-35, 1-57, 1-61, 1-63, 1-65, 1-175, 1-187, 1-205, 1-229, 1-231, 1-279, 1-353
90152-0051	SPIRAL CONDUIT, 25X18, UL 1816	1-233, 1-279, 1-323, 1-345, 7-159, 7-163, 7-177
90152-0058	SPIRAL CONDUIT, 15X9, UL 0909	6-33
90152-0059	SPIRAL CONDUIT, 18X12, UL 1211	1-233, 5-25, 5-33, 5-35, 5-37, 5-39
90152-0060	SPIRAL CONDUIT, 42X35, UL3529	1-49, 4-9, 4-11, 4-13, 4-15, 4-17, 4-19
90152-0070	METAL HOSE, 32,5X26, UL 2621	5-205, 5-207, 5-209, 5-211
90153-0020	ADHESIVE, BOSTIK 1782 125ML	1-185
90153-0023	ADHESIVE, SILICON 251470 TUB 90CC(UN1993	1-67, 1-69, 1-71, 2-247
90153-0043	ADHESIVE, LOCTITE 495 20G	2-209
90155-0008	HANGER CHAIN, 18	1-275
90157-0016	THREAD LOCKING, LOCTITE 242 50 ML	4-5, 4-7, 5-93, 5-95, 5-97, 5-99, 5-101, 5-103, 5-105, 5-107, 5-109, 5-111, 5-113, 6-81

Part No	Description	Page No
90157-0021	LOCKING FLUID LOCTITE 270	2-93, 4-21, 4-39, 4-41, 4-43, 4-45, 4-47, 4-49, 4-51, 4-53, 4-55, 4-57, 4-59, 4-61, 4-63, 4-65, 4-67, 4-71, 4-73, 4-75, 4-77, 4-79, 4-81, 4-83, 4-85, 4-87, 4-89
90157-0034	THREAD SEALANT LOCTITE 572 50 ML	2-155
90157-0035	LOCKING FLUID LOCTITE TYPE 641	7-25, 7-93, 7-147
90157-0037	THREAD SEALANT LOCTITE 542	1-75, 1-181, 1-191, 1-279, 1-281, 7-69, 7-71
90157-0041	SEALING COMPOUND, RHODORSEAL 5651	2-159, 2-161, 2-163, 2-169, 2-171, 2-175, 2-179, 2-185, 2-199, 2-201, 2-203, 2-205, 2-213, 2-219
90161-0001	O-RING MATERIAL 3 MM	5-205, 5-207, 5-209, 5-211
90163-0007	CONNECTION	12-25, 12-31
90163-0016	QUICK COUPLING, (F) LP 006-0-WR013	12-25
90163-0039	HOSE NIPPLE EXT.THR. G1/2-17 MM	2-249
90163-0056	QUICK COUPLING, (F) 5054-6/4	12-17, 12-19
90163-0057	QUICK COUPLING, (M) 5150-1/8	1-343, 12-17, 12-19
90163-0062	QUICK COUPLING, (F) 5053-1/8	1-343
90163-0087	QUICK COUPLING, (M) 5150-1/4	12-17, 12-19
90163-0113	QUICK COUPLING, (M) LP-006-1-WR013-22	12-25
90163-0141	QUICK-RELEASE COUPLING SS-QTM2A-B-8M0-K2	2-269
90163-0172	QUICK-RELEASE COUPLING SS-QTM2A-B-8M0-K4	2-269
90164-0015	LIGHT FIXTURE, RL70CV-111 / 230V 50HZ	7-5, 7-7
90164-0303	LIGHT FIXTURE, BRACKET 70MM	7-5, 7-7
90165-0007	PIPE CLIP FOR TUBE D=8 MM	8-97, 8-99
90165-0019	TOOL CLIP, 81/3, OPEN, 20 - 30 MM	7-109, 7-111
90165-0022	PIPE CLIP, FOR TUBE D=2,5 MM, B-3570	8-45, 8-47, 8-49, 8-97, 8-99
90165-0039	PIPE CLAMP D=15 MM, GSK15/12	1-191
90165-0057	PIPE CLIP FOR TUBE D=6 MM	5-173, 5-175, 5-177, 5-179, 5-181, 5-183, 5-185, 5-187, 5-189, 5-191, 5-193, 5-195, 5-197, 5-199, 5-201, 5-203
90165-0076	T-CLIP T8 FOR TUBE D=8 - 9 MM	4-9, 4-11, 4-13, 4-15, 4-17, 4-19
90165-0087	T-CLIP T6 FOR TUBE D=6 - 7 MM	7-103
90166-0008	HOSE 7/10 PVC TRANSP.	1-79, 2-233
90166-0013	TUBE 8 MM PA BLUE	1-207, 4-109, 4-111, 4-113, 4-115, 5-205, 5-207, 5-209, 5-211, 11-77, 11-227
90166-0045	HOSE PVC TRANSP. 6/12	12-31
90166-0049	HOSE PVC 25/33-34	2-153
90166-0060	HOSE 19/26-27 REINF.PVC	1-281, 2-13
90166-0081	TUBE 6 MM PA BLUE	3-5, 3-7, 3-9, 3-11, 3-13, 3-15, 4-5, 4-7, 4-21, 4-99, 4-101, 4-103, 4-105, 5-93, 5-95, 5-97, 5-99, 5-101, 5-103, 5-105, 5-107, 5-109, 5-111, 5-113, 5-173, 5-175, 5-177, 5-179, 5-181, 5-183, 5-185, 5-187, 5-189, 5-191, 5-193, 5-195, 5-197, 5-199, 5-201, 5-203, 7-29
90166-0087	HOSE 15/23 REINF.PVC TRANSP.	1-181, 2-39, 2-41, 2-237, 2-245, 2-249, 2-267
90166-0095	TUBE 4 MM PA BLUE (50M)	7-53
90166-0101	HOSE, SILICONE, 60 SHORE, 6/10 MM	2-243, 2-267
90166-0110	TUBE 15 MM PA,TRANSP.	2-153
90166-0113	HOSE	12-31
90166-0118	TUBE 8 MM PA BLACK	1-75, 1-77, 1-357, 4-91, 4-93, 5-33, 5-35, 5-83, 5-85, 5-87, 5-89, 5-91, 5-133, 5-135, 5-137, 5-139, 5-141, 5-143, 5-145, 5-147, 5-149, 5-151, 5-153, 5-155, 5-157, 5-159, 5-161, 5-163, 5-165, 5-167, 5-169, 5-171, 5-173, 5-175, 5-177, 5-179, 5-181, 5-183, 5-185, 5-187, 5-189, 5-191, 5-193, 5-195, 5-197, 5-199, 5-201, 5-203, 5-217, 5-219, 5-221, 5-223, 5-225, 5-227, 5-229, 7-37
90166-0121	HOSE	1-181, 1-191, 2-9, 2-153, 2-271, 6-29, 6-31, 6-33, 6-45
90166-0124	TUBE 6 MM PA,TRANSP.	12-17, 12-19
90166-0132	TUBE 6 MM PA,TRANSP.	5-83, 5-85, 5-87, 5-89, 5-91, 5-93, 5-95, 5-97, 5-99, 5-101, 5-103, 5-105, 5-107, 5-109, 5-111, 5-113, 5-133, 5-135, 5-137, 5-139, 5-141, 5-143, 5-145, 5-147, 5-149, 5-151, 5-153, 5-155, 5-157, 5-159, 5-161, 5-163, 5-165, 5-167, 5-169, 5-171
90166-0133	TUBE 8 MM PA,TRANSP. (1 PACK=50 M)	3-5, 3-7, 3-9, 3-11, 3-13, 3-15, 4-9, 4-11, 4-13, 4-15, 4-17, 4-19, 4-109, 4-111, 4-113, 4-115
90166-0135	TUBE 10 MM PA BLACK	2-151
90166-0138	HOSE	2-237
90166-0151	HOSE SILICONE, 20/27 MM	2-79, 2-237
90166-0158	HOSE	2-39, 2-41, 2-245
90166-0161	HOSE	2-239, 2-243
90166-0176	RUBBER HOSE	1-323
90166-0193	TUBE 6 MM PUR BLUE	7-53
90166-0195	TUBE 12 MM PA BLUE	11-77, 11-227
90166-0196	TUBE 14MM PA BLUE	2-155, 6-91, 6-93
90166-0198	RUBBER HOSE	2-259, 2-261
90166-0225	HOSE	2-269
90166-0233	HOSE	1-261, 2-45, 6-53
90166-0236	HOSE, 38/51 REINFORCED RUBBER	1-271, 2-63, 2-227, 6-43
90166-0260	HOSE	2-153, 2-273
90166-0266	TUBE 6 MM PA BLACK	5-133, 5-135, 5-137, 5-139, 5-141, 5-143, 5-145, 5-147, 5-149, 5-151, 5-153, 5-155, 5-157, 5-159, 5-161, 5-163, 5-165, 5-167, 5-169, 5-171
90181-0052	CABLE DUCT 25X80MM	8-75
90181-0053	CABLE DUCT 40X80MM	8-75, 8-101, 8-113
90181-0054	CABLE DUCT 60X80MM	1-357, 8-75, 8-101
90181-0055	CABLE DUCT 80X80MM	1-357, 8-75
90181-0056	CABLE DUCT 100X80MM	8-75
90181-0057	CABLE DUCT 120X80MM	8-75
90181-0067	DIVIDING PLATE SEP80	8-75
90181-0183	CABLE DUCT, FITTING, B2	2-111
90181-0184	CABLE TRENCH PARTS	1-345
90181-0190	CABLE DUCT, WALL BRACKET, B4 MINI	5-231, 5-233, 11-51, 11-53
90181-0313	RIVET DUCTAFIX R4	8-75
90181-0314	CABLE TRENCH PARTS	1-345, 2-111
90182-0008	CLIP STRIP, 376X7,6 MM	11-83
90187-0029	BALL VALVE G1/2, NPBR	2-271, 6-81

Part No	Description	Page No
90187-0045	BALL VALVE G1/4 CR PL	6-7, 6-33, 6-37, 12-25, 12-31
90187-0059	BALL VALVE FOR HYDR.PER. G1/2 3MM HOLE	2-237, 2-245
90187-0062	BALL VALVE G1/2, NPBR	1-191, 1-281
90187-0088	BALL VALVE G1/4, NPBR	7-109, 7-111
90187-0089	BALL VALVE G3/8, NPBR	6-81, 6-93
90187-0110	DIAPHRAGM VALVE DN15, NC WELD CONN.	1-245
90187-0133	SAFETY VALVE, 10 BARS, R1/2, R1/2	6-45
90187-0147	BALL VALVE G11/2	6-43
90187-0148	BALL VALVE G1	6-53
90187-0149	THROTTLE VALVE, G1/4, G1/4, MALE	11-65
90187-0197	BALL VALVE G1/4	6-11
90191-0047	WHEEL, NO.798 821	12-33
90191-0060	CASTOR WHEEL, NO. 1599PRT	12-33
90191-0077	WHEEL	12-37
90194-0113	ADHESIVE LABEL, CALIBRATED & DATE	12-7
90194-0118	SIGN, RESIDUAL VOLTAGE, WAIT 5 MIN.	1-53
90194-0143	WARNING SIGN ISO, HOT SURFACE	7-53, 7-75
90194-0152	SIGN, EARTH	7-15, 8-15, 8-17, 8-81, 8-83, 8-85, 8-87, 8-89, 8-91, 8-93, 8-95, 8-101, 8-107, 8-113
90195-0020	TERMINAL BLOCK, BK 2CRN; 0624720000	2-265, 5-205, 5-207, 5-209, 5-211, 8-15, 8-17, 8-51
90195-0029	CONN. LINK NO324 FOR -28	1-185
90201-0098	ADJ. FLOW CON. VALVE, NO. 9 PCCM 400SF	9-63
90206-0070	HEATING ELEMENT 6000W 380/220V	1-279
90206-0326	CONNECTION BOX K2 FOR 90206-56 AND -70	1-279
90207-0363	GASKET 75X85X1,8 MM 3" FDA 3-A	1-217, 9-11
90207-0365	GASKET 53X63X1,8 MM 2,5" FDA 3-A	1-217, 9-11
90208-0078	CLAMPING ELEMENT WITH SLEEVE, 20X28 MM	5-173, 5-175, 5-177, 5-179, 5-181, 5-183, 5-185, 5-187, 5-189, 5-191, 5-193, 5-195, 5-197, 5-199, 5-201, 5-203
90208-0080	CLAMPING ELEMENT WITH SLEEVE, 25X34 MM	5-173, 5-175, 5-177, 5-179, 5-181, 5-183, 5-185, 5-187, 5-189, 5-191, 5-193, 5-195, 5-197, 5-199, 5-201, 5-203
90211-0002	WIRE LOCK, 5 MM	7-125
90214-0029	BALL BEARING 10/26X8	7-49
90214-0036	BALL BEARING 10/22X6	3-5, 3-7, 3-9, 3-11, 3-13, 3-15
90214-0037	BALL BEARING 5/16X5	1-319, 7-85, 7-87
90214-0096	BALL BEARING, 25X52X15 MM	1-93, 5-95, 5-97, 5-99, 5-101, 5-103, 5-105, 5-107, 5-109, 5-111, 5-113
90214-0165	BALL BEARING, 25X47X12 MM	1-9, 5-133, 5-135, 5-137, 5-139, 5-141, 5-143, 5-145, 5-147, 5-149, 5-151, 5-153, 5-155, 5-157, 5-159, 5-161, 5-163, 5-165, 5-167, 5-169, 5-171
90214-0170	BALL BEARING 20/42X12 SOLID OIL	7-97
90214-0189	BALL BEARING, 17X40X12 MM	1-93, 5-95, 5-97, 5-99, 5-101, 5-103, 5-105, 5-107, 5-109, 5-111, 5-113
90214-0195	BALL BEARING 20/32X7	5-217, 5-219, 5-221, 5-223, 5-225, 5-227, 5-229
90214-0203	BALL BEARING 20/37X9	7-119, 7-121, 7-123
90214-0225	BALL BEAR. 20/42X12 SOLID OIL	5-133, 5-135, 5-137, 5-139, 5-141, 5-143, 5-145, 5-147, 5-149, 5-151, 5-153, 5-155, 5-157, 5-159, 5-161, 5-163, 5-165, 5-167, 5-169, 5-171, 5-217, 5-219, 5-221, 5-223, 5-225, 5-227, 5-229
90214-0232	BALL BEARING 20/47X14	5-25, 5-33, 5-35
90214-0236	BALL BEARING 40/80X18	4-5, 4-7
90214-0303	SEALING RING, 18,6X35X2 MM	1-9, 1-15, 1-19, 1-25
90217-0348	GASKET 35,4X46,8X4 MM	1-229, 1-231, 1-275, 9-9
90220-0034	THERMOCABLE TEX/SITW-20F-KX 2X0,5MM2	1-55, 1-69, 1-71, 1-175, 1-185, 1-191, 1-211, 1-233, 1-245, 1-279, 1-287, 1-289, 2-237, 5-205, 5-207, 5-209, 5-211, 6-17, 6-33, 7-77
90220-0046	SCR. CABLE 16X0,34MM2 GREEN/YELLOW	2-83, 7-5, 7-7
90220-0072	SCR. CABLE 4X0,34MM2	2-237
90220-0091	PAIR TWISTED CABLE 2X2X0,25MM2	1-229, 1-231, 11-145
90220-0095	SCR. CABLE 3X0,75MM2	6-23
90220-0096	SCR. CABLE 3X1,5MM2	1-151
90220-0104	SCR. CABLE 4X1,5MM2	1-9, 1-267, 2-59, 2-97, 7-15, 7-89, 7-145, 11-25, 11-121, 11-127, 11-129
90220-0105	SCR. CABLE 4X2,5MM2	1-179
90220-0165	SCR. CABLE 5X0,34MM2	1-13, 1-211, 1-331, 1-333
90220-0303	CLAMP FOR SCR.CABLE, 10MM, 55-016-22	6-23
90220-0305	CLAMP FOR SCR.CABLE, 16MM,	6-23
90224-0054	REDUCER, ART.NO RMM 3438	11-75
90224-0303	CONN. ELBOW 1020-8-1/4	12-17, 12-19
90224-0308	CONN. BANJO, ART. NO. 2023-1/8-1/8	1-343
90224-0349	CONN. BULKHEAD. 1250-6	1-243, 1-343
90224-0372	CONN. STRAIGHT ESK-1/4-1/4 151521	7-115
90226-0458	MOUNTING SCREW	1-347, 2-165, 2-167, 2-169, 2-171, 2-173, 2-179, 2-183, 2-199, 2-201, 2-203, 2-221, 6-59, 6-67, 6-71, 7-167, 7-171, 8-77, 8-79, 8-113
90230-0027	NON-RETURN VALVE QJ 8355-1/4"	3-5, 3-7, 3-9, 3-11, 3-13, 3-15, 4-9, 4-11, 4-13, 4-15, 4-17, 4-19, 5-13, 5-25, 5-83, 5-85, 5-87, 5-89, 5-91, 5-93, 5-95, 5-97, 5-99, 5-101, 5-103, 5-105, 5-107, 5-109, 5-111, 5-113, 5-133, 5-135, 5-137, 5-139, 5-141, 5-143, 5-145, 5-147, 5-149, 5-151, 5-153, 5-155, 5-157, 5-159, 5-161, 5-163, 5-165, 5-167, 5-169, 5-171
90230-0028	NON-RETURN VALVE H 151 R 3/8"	6-33
90230-0040	NON-RETURN VALVE, R3/8, L=55	6-7
90230-0041	PRESSURE RELIEF VALVE, SS-4CPA2-RT-DG-3	6-37
90230-0042	NON-RETURN VALVE 1/2"	6-45, 6-51
90230-0044	NON-RETURN VALVE 1"	2-85, 6-47
90230-0045	NON-RETURN VALVE 1 1/2", 900025A	1-273
90230-0064	CHECK VALVE, 6 MM HIGH TEMP.	1-205, 2-251
90232-0103	PH.CELL E3S-CT61-L-5M	11-239
90232-0104	PH.CELL E3S-CT61-D-5M	11-239
90235-0151	NON-RETURN VALVE, 534 098 110 0	6-51
90235-0206	QUICK EXHAUST VALVE, SEU-1/8	7-113
90235-0259	VALVE	1-343
90235-0844	THROTTLE CHECK VALVE M5, MANUAL, 6MM	1-33
90235-0847	THROTTLE CHECK VALVE G1/4", MANUAL,6	1-73

Part No	Description	Page No
90237-0063	HOOK FOR 90237-62	1-309
90237-0128	LOCK CYLINDER, 1109-SU125	1-353, 2-161, 2-163, 2-175, 2-205, 2-209, 2-215, 2-217, 2-219, 6-63, 6-69, 7-157, 7-165, 7-169, 7-173, 7-175, 8-93, 8-95
90237-0129	LOCK CYLINDER, 1109-U6	1-347, 8-89, 8-91
90237-0153	LOCK HOUSING, 1121-U26-0B	2-205, 2-209, 2-215, 2-217, 6-63, 6-69, 7-157, 7-165, 7-169, 7-173, 7-175, 8-81, 8-83, 8-85, 8-87, 8-89, 8-91, 8-93, 8-95
90237-0156	LOCK BOLT, 1000-16	8-89, 8-91, 8-93, 8-95
90237-0157	LOCK BOLT, 1000-230	6-73, 6-75, 8-101
90237-0165	LATCH	7-157
90237-0175	TURNING HANDLE, 1125-U185-0A	1-347, 1-353, 6-63, 6-69, 7-157, 7-165, 7-169, 7-173, 7-175
90237-0176	TURNING HANDLE, 1125-U190-A	2-205, 2-209, 2-215, 2-217, 8-89, 8-91, 8-93, 8-95
90237-0214	LOCK ADAPTER, 1121-U40	8-89, 8-91, 8-93, 8-95
90237-0319	LOCK HOUSING, 1000-U134	1-249, 1-331, 1-333, 1-351, 6-73, 6-75, 8-101
90237-0320	LOCK HOUSING, 1000-U136	6-73, 6-75, 8-101
90237-0322	LOCK GASKET, 1000-U137	6-73, 6-75
90237-0323	LOCK O-RING, 1000-24	1-249, 1-331, 1-333, 1-351, 6-73, 6-75
90237-0335	LOCKING CATCH	1-249, 1-331, 1-333, 1-351
90237-0337	LOCK HANDLE FOR 90237-319	1-249, 1-331, 1-333, 1-351
90239-0323	ROD END,CLEVIS WITH AXLE M16X1,5	1-73
90239-0486	REAR, CLEVIS, MINI-ISO 16	4-21
90239-0489	ROD END, CLEVIS WITH AXLE M6X1,25	1-31, 1-33
90239-0491	ROD END, BALL JOINT EYE, MINI-ISO M6	7-53
90239-0532	ROD END, CLEVIS WITH AXLE M8X1,25	1-169
90240-0146	FLANGE BUSHING, 15X21X20 MM	1-287, 1-289
90240-0221	FLANGE BUSHING, 20X25X14 MM	1-303, 7-91
90240-0260	FLANGE BUSHING, IGLIDUR X 8X10X9	4-39, 4-41, 4-43, 4-45, 4-47, 4-49, 4-51, 4-53, 4-55, 4-57, 4-59, 4-61, 4-63, 4-65, 4-67, 4-71, 4-73, 4-75, 4-77, 4-79, 4-81, 4-83, 4-85, 4-87, 4-89
90240-0261	FLANGE BUSHING, IGLIDUR X 12X14X9	4-39, 4-41, 4-43, 4-45, 4-47, 4-49, 4-51, 4-53, 4-55, 4-71, 4-73, 4-75, 4-77, 4-79, 4-81, 4-95, 4-97, 5-93, 5-95, 5-97, 5-99, 5-101, 5-103, 5-105, 5-107, 5-109, 5-111, 5-113
90240-0263	FLANGE BUSHING, IGLIDUR X 15X17X12	5-83, 5-85, 5-87, 5-89, 5-91, 5-133, 5-135, 5-137, 5-139, 5-141, 5-143, 5-145, 5-147, 5-149, 5-151, 5-153, 5-155, 5-157, 5-159, 5-161, 5-163, 5-165, 5-167, 5-169, 5-171, 5-173, 5-175, 5-177, 5-179, 5-181, 5-183, 5-185, 5-187, 5-189, 5-191, 5-193, 5-195, 5-197, 5-199, 5-201, 5-203
90240-0265	FLANGE BUSHING, IGLIDUR X 20X23X21	4-27, 4-29, 4-31, 5-173, 5-175, 5-177, 5-179, 5-181, 5-183, 5-185, 5-187, 5-189, 5-191, 5-193, 5-195, 5-197, 5-199, 5-201, 5-203
90240-0266	FLANGE BUSHING, IGLIDUR X 30X34X26	5-173, 5-175, 5-177, 5-179, 5-181, 5-183, 5-185, 5-187, 5-189, 5-191, 5-193, 5-195, 5-197, 5-199, 5-201, 5-203
90240-0289	FLANGE BUSHING, IGLIDUR X 10X12X6	4-27, 4-29, 4-31
90240-0290	BUSHING, IGLIDUR X 30X34X30	4-95, 4-97
90240-0293	FLANGE BUSHING, IGLIDUR X 25X28X21	1-69, 1-71, 5-217, 5-219, 5-221, 5-223, 5-225, 5-227, 5-229
90240-0315	SPHER. BEARING, 30X47X22 PLASTIC MM	2-229
90240-0325	FLANGE BUSHING, IGLIDUR X 16X18X12	4-27, 4-29, 4-31
90240-0332	FLANGE BUSHING, IGLIDUR G 16X18X12	5-13, 5-83, 5-85, 5-87, 5-89, 5-91
90242-0222	O-RING 45,36X3,53 MM	2-265
90242-0223	O-RING 47,35X1,78 MM	2-265
90242-0224	O-RING 44,17X1,78 MM	2-265
90242-0270	O-RING 82,27X1,78 MM	1-17
90243-0118	TOOL BOX, NO. ZERO 105X-SI	12-21
90243-0137	PRESSURE GAUGE KIT 0-50 MM WC, 229900	12-17, 12-19
90243-0147	FLOW METER	12-17, 12-19
90243-0203	MEASURING INSTRUMENT	12-5
90243-0245	MEASURING INSTRUMENT	1-191, 6-45
90257-0001	FILTER PLUG ART.NO.8145-00-140 TYPE F14	8-115
90258-0031	PIN, STRAIGHT SLOTTED SPRING FRP 3X20	1-37, 1-39
90259-0308	INCOMING TERMINAL, BK25/3-PKZ0	8-63, 8-65
90259-0309	BUSBAR, B3.1/4-PKZ0	8-63, 8-65
90259-0313	AUXILIARY CONTACT, NHI21-PKZ0	8-63, 8-65
90261-0016	PLUG, BLIND, PLASTIC GPN300V2	5-231, 5-233
90261-0017	PLUG, BLIND, PLASTIC GPN300V3	5-231, 5-233
90261-0033	PLUG, BLIND, PLASTIC GPN300F182	2-125, 2-127, 2-139, 2-141
90261-0048	SQUARE PLUG GPN 260/Q2525	11-65
90261-0069	PLUG, BLIND, PLASTIC, NO. 055-0615	6-55
90261-0070	PLASTIC PLUG SS 0082.31	2-9
90261-0071	PLUG, BLIND, PLASTIC, NO. GPN500B58	4-33, 4-35
90274-0042	PRESSURE GUARD, 200 KPA	6-81
90274-0082	FLOW SWITCH, 2 - 3 L/MIN	6-43
90274-0103	PRESSURE SWITTCH PEV-1/4-B	2-29, 2-31
90277-0035	FILTER / DFU 9933-05-A	7-109, 7-111
90277-0045	FILTER / 9900-05-BK	2-29, 2-31
90277-0046	FILTER / 9933-05-101	2-29, 2-31
90277-0116	FILTER HOUSING / ART.NO FILTER 58P-S5430	7-109, 7-111
90277-0323	FILTER HOUSING / ART.NO 95S6-1/4 S 5430	1-207
90277-0324	FILTER CARTRIDGE 050-11-A	1-207
90277-0407	FILTER ELEMENT 60µ, SS-4F-K4-60	1-205
90286-0013	GREASE NIPPLE STRAIGHT, H1 M6X1 2346	4-39, 4-41, 4-43, 4-45, 4-47, 4-49, 4-51, 4-53, 4-55, 4-57, 4-59, 4-61, 4-63, 4-65, 4-67, 4-71, 4-73, 4-75, 4-77, 4-79, 4-81, 4-83, 4-85, 4-87, 4-89, 5-217, 5-219, 5-221, 5-223, 5-225, 5-227, 5-229
90287-0075	SCREW SLOT. PAN HEAD LKCS M6X12	2-79
90287-0106	SCREW SPRINGLOAD. SLOTTED HEAD M10X21	7-57
90287-0112	SCREW SPRINGLOAD. SLOTTED HEAD M8X16	1-69, 1-71, 3-5, 3-7, 3-9, 3-11, 3-13, 3-15, 7-55
90287-0124	SCREW PAN HEAD MSCS M4X12 NYLON	7-15
90287-0159	SCREW, SOCK.SET DOGPOINT M6X16	2-251

Part No	Description	Page No
90287-0163	SCREW SPRINGLOAD. SLOTTED HEAD M6X14	7-97
90287-0175	SCREW M6S M3X12 A480	5-25, 5-33, 5-35, 5-37, 5-39, 7-5, 7-7, 7-69, 7-71
90287-0208	SCREW M6S M5X70 A480	7-125
90287-0234	SCREW, HEX.SOCK.HEAD SHOULD. M5X6	5-173, 5-175, 5-177, 5-179, 5-181, 5-183, 5-185, 5-187, 5-189, 5-191, 5-193, 5-195, 5-197, 5-199, 5-201, 5-203
90287-0265	SCREW, HEX.SOCK.HEAD SHOULD. M6X8	7-97
90287-0295	SCREW HEX.SOCK.COUNT.MF6S M3X8 A280	1-233
90287-0314	SCREW MC6S M4X60 A470	1-207
90287-0328	SCREW M6S M12X160 A280	4-109, 4-111, 4-113, 4-115
90287-0334	SCREW SPRINGLOAD. SLOTTED HEAD M8X16	7-49
90296-0009	SILICONE GREASE DOW CORNING 150 GR.	9-9
90296-0051	PASTE	7-77
90296-0068	SHELL ALVANIA GREASE EP 2	5-83, 5-85, 5-87, 5-89, 5-91, 5-93, 5-95, 5-97, 5-99, 5-101, 5-103, 5-105, 5-107, 5-109, 5-111, 5-113
90296-0070	SHELL ALVANIA GREASE EP 1	4-33, 4-35
90296-0091	LUBRICATION GREASE	1-9, 1-13, 1-15, 1-19, 1-21, 1-25
90303-0011	PROTECTIVE GOGGLES	9-29
90303-0012	PROTECTIVE GLOVES	9-29
90303-0013	APRON	9-29
90304-0307	ATTACHMENT PIPE	1-281
90319-0013	POLYESTER-SILKROPE 4MM 3900N, 102079	7-125
90321-0102	PUMP, MG209XD0TT10000	2-265
90321-0128	CHEM. PUMP 081778	2-233
90321-0134	CIRC. PUMP TCB25-6LV.230 HZ 50	1-279
90321-0135	CIRC. PUMP 230V60HZ	1-279
90326-0012	PROTECTIVE COVER, T31A4618	1-55, 1-69, 1-71, 1-175, 1-205, 1-279, 1-287, 1-289, 1-357, 2-237, 6-17, 6-33, 7-77
90326-0020	PLUG, FEMALE YELLOW CR-AL	1-55, 1-69, 1-71, 1-175, 1-185, 1-205, 1-233, 1-245, 1-279, 1-287, 1-289, 1-357, 2-237, 6-17, 6-33, 7-77, 8-5, 8-7, 8-9, 8-11
90326-0022	PLUG, MALE YELLOW CR-AL	1-211, 1-233, 6-33
90326-0051	THERMOCOUPLE, 12826-33	1-185, 1-191
90326-0053	THERMOCOUPLE, 12826-35	1-205, 1-287, 1-289, 1-357, 8-5, 8-7, 8-9, 8-11
90326-0054	THERMOCOUPLE, CR-AL STD.GR, 12826-36	7-77
90326-0057	THERMOCOUPLE, CR-AL	1-55, 1-175, 1-279, 6-17, 6-33
90326-0060	THERMOCOUPLE, CR-AL	1-233
90326-0089	THERMOCOUPLE, 5110-089-000	1-175, 1-245
90326-0308	THERMOCOUPLE CABLE FOR CE-557793/MALE 5M	12-7
90326-0309	THERMOCOUPLE CABLE FOR CE-557793/FEMALE	12-7
90326-0310	THERMOCOUPLE, 5130020-000	12-7
90328-0024	SILENCER G3/8"	1-335, 1-337, 1-339, 2-33, 6-87, 7-113, 7-117
90328-0025	SILENCER G1/2"	6-91, 12-31
90328-0026	SILENCER G1/4"	1-243, 1-271, 7-115
90328-0029	SILENCER M5	2-27, 2-35
90328-0047	SILENCER G1/8"	1-245, 1-335, 1-337, 1-339, 2-27, 2-33, 2-35, 6-87, 7-113, 7-117, 11-73, 11-215
90330-0004	NIPPLES,HEXAGON,EXT.R-THREAD R3/4"-R3/4"	6-33
90330-0011	SLEEVE, REDUCTION, INT, R-2023/8X1/4	1-247
90330-0014	ELBOW, 90 INT. THREAD, R-222R1	6-47, 6-55
90330-0020	ELBOW, 90 INT. THREAD, R-2221/2	1-191, 2-239, 6-93
90330-0021	NIPPLES, EXT. THREAD. R-207R1/2	2-239, 2-245, 6-7, 6-45
90330-0022	SLEEVE, REDUCTION, INT, R-202 3/4X1/2	1-191
90330-0026	PLUG, EXT. G-THREAD, G1/4	2-9, 2-39, 2-41, 6-37
90330-0029	PLUG, EXT. G-THREAD, R-236R3/8	6-81, 12-17, 12-19
90330-0032	NIPPLES, EXT. THREAD. ISO 7/1 R1/8-R1/8	1-271
90330-0036	BUSHING, INT/EXT. THR. RP1/8-RP1/2	6-45
90330-0042	BUSHING, INT/EXT. THR. R3/8-RP1/4	6-7
90330-0043	NIPPLES, EXT. THREAD. R-207R1/4	1-279, 2-149, 2-239, 6-37, 6-51
90330-0045	NIPPLES, EXT. THREAD. R-209 KR11/2- KR1	6-47
90330-0048	BUSHING, INT/EXT. THR. R1/2-RP3/8	1-281, 2-239
90330-0049	T-PIPE, INT. THREAD, R-221R1/2	1-181, 1-191, 2-239, 6-45, 6-93
90330-0054	SLEEVE, INT. THREAD, NO. R-201R1/2	2-245
90330-0056	NIPPLES, EXT. THREAD. R-207 KR11/2	6-43
90330-0057	ELBOW, 90 INT. THREAD, R-222R11/2	6-43
90330-0066	PLUG, EXT. G-THREAD, G1/8	1-69, 1-71, 1-245, 5-133, 5-135, 5-137, 5-139, 5-141, 5-143, 5-145, 5-147, 5-149, 5-151, 5-153, 5-155, 5-157, 5-159, 5-161, 5-163, 5-165, 5-167, 5-169, 5-171
90330-0080	NIPPLES, EXT. THREAD. R3/4-R1/2	6-37, 6-45
90330-0083	NIPPLES, EXT. THREAD. R3/8-R1/4	6-33
90330-0085	BUSHING, INT/EXT. THR. R1/2-RP1/4	2-239
90330-0086	PLUG, INT. THREAD, NO. R-231-R1/2	2-85
90330-0093	NUT, HEXAGON, G1/2	2-149
90330-0144	T-PIPE, INT. THREAD, 3/8MMO-SS	2-237
90330-0171	ELBOW, 90 INT/EXT, 1/2NPT	2-249
90330-0172	ELBOW, 90 INT/EXT, SS-6-SE	1-247, 2-237
90335-0025	COMP. SPRING 22010, 1X11X26	7-21, 7-67
90335-0036	COMP. SPRING 22450, 1,6X14,1X24	11-137
90335-0048	COMP. SPRING 21510, 0,63X6,96X17	7-133, 7-135
90335-0067	COMP. SPRING 22370, 1,6X9,6X31,75	11-139, 11-141
90335-0089	TENSION SPRING 41490, 0,9X10X23	1-321, 7-25
90335-0120	TENSION SPRING 42010, 1,4X15X43,3	7-77
90337-0315	FILTER INSERT / MCS 4463	1-243, 1-247
90342-0022	BELLOWS	1-183
90342-0024	RUBBER BELLOWS, 100X100 MM	2-93
90344-0073	TOOTHED WHEEL	2-229
90344-0078	PULLEY	7-89

Part No	Description	Page No
90345-0006	STANDING BEARING, TYPE SY 20 TF	7-179
90347-0004	VIBRATION DAMPER D=30 TH=M8 H=17 H2=21MM	1-309
90347-0007	VIBRATION DAMPER	2-11
90347-0009	FLOOR PLATE, NO 1256730	2-139, 2-141, 2-143
90347-0034	VIBRATION DAMPER	1-331, 1-333, 1-351
90347-0039	DAMPER	1-27, 1-29
90347-0054	ROTARY DASHPOT, S-CRD-P277	1-313, 1-315, 1-317
90347-0115	RUBBER BUFFER, S20-01339-01	1-347
90347-0144	VIBRATION DAMPER, NO. RA 40EM-A	1-179
90348-0029	FREE-WHEEL COUPLING, 17X40 MM	7-11
90355-0369	COVER PLUG, 22X19X7 MM	4-33, 4-35
90358-0091	REDUCING NIPPLE	6-33
90360-0020	STEAM TRAP / MK36/51 3/8 INCH	1-245
90360-0305	FLOAT, ART NO 10739920	1-181
90410-0337	CALIBRATION INSTRUMENT 5100071-001	12-7
90410-0338	CALIBRATION INSTRUMENT 5100071-001	12-7
90411-0001	INSULATING MAT, WIRED 100 6000X600X30MM	1-205
90411-0005	INSULATION 1200MM SERIE 21 89/154X30	1-185
90411-0020	PIPE INSULATION, ARMAFLEX D-25	2-153
90415-0032	FILTER / 3-02-00-1 1/2"	6-43
90415-0052	FILTER ART NO 12565 C-340-6E FOTVENTI EP	2-233, 2-269
90415-0065	FILTER	6-7, 6-33
90424-0032	SPRAY NOZZLE 95 DEG	7-95
90424-0087	AIR NOZZLE	11-67, 11-217
90424-0089	AIR NOZZLE, BSPT1/4, AAB727-1/4-15	5-173, 5-175, 5-177, 5-179, 5-181, 5-183, 5-185, 5-187, 5-189, 5-191, 5-193, 5-195, 5-197, 5-199, 5-201, 5-203
90425-0016	MECMAN TYPE E120 735-120-000	12-31
90426-0003	HAND SHOWER, 361100	2-151
90432-0024	ELECTROMAG. POWDER BRAKE, FAT50/24 VDC	7-179
90450-0281	DOUBLE ACTING,PROF.CYL 32-80	1-187
90450-0306	DOUBLE ACTING, MINI-ISO, CYL. 12-25	7-53
90450-0669	SENSOR, BRACKET SERIES 168	1-187
90450-0725	ROD END, CLEVIS WITH AXLE M6	1-21, 1-177, 4-21
90457-0030	INSERT, MULTI HOLE, EK155M4X9	5-205, 5-207, 5-209, 5-211
90457-0047	SENSOR 2750-1-5111-1 W.ADAPTER PNP	1-187
90457-0049	TERMINAL BLOCK WDK 2.5V, 102230	1-213, 6-79, 7-17, 11-63
90457-0056	FAN 7450 ES	8-15, 8-17
90457-0057	GRID, LZ36	8-15, 8-17
90457-0092	SAFETY RELAY RT9-24VDC	8-45, 8-47
90457-0100	ACCUMULATOR CRVZS-2	7-109, 7-111
90457-0168	WASHER PLAIN ROUND 3,2/9, H=0,8	8-97, 8-99
90457-0192	WASHER PLAIN ROUND, 6,5/18, H=1,5	7-69, 7-71
90457-0196	LOCKABLE SAFETY GUARD TZ2RE024M-RC1635	2-57, 2-109
90457-0871	DOUBLE ACTING, MINI-ISO, CYL. 16-25	1-21
90457-0937	SCREW MC6S M3X40 A480	7-179
90457-1038	DOUBLE ACTING, COMPACT, 32-25	1-31
90458-0048	RETAINING RING FOR BORE DIN 472 62 SS	5-133, 5-135, 5-137, 5-139, 5-141, 5-143, 5-145, 5-147, 5-149, 5-151, 5-153, 5-155, 5-157, 5-159, 5-161, 5-163, 5-165, 5-167, 5-169, 5-171, 5-173, 5-175, 5-177, 5-179, 5-181, 5-183, 5-185, 5-187, 5-189, 5-191, 5-193, 5-195, 5-197, 5-199, 5-201, 5-203
90458-0068	BALL BEARING 35/62X14	5-133, 5-135, 5-137, 5-139, 5-141, 5-143, 5-145, 5-147, 5-149, 5-151, 5-153, 5-155, 5-157, 5-159, 5-161, 5-163, 5-165, 5-167, 5-169, 5-171
90458-0072	SCREW ISO 7380 S M6X12 A2	1-299, 2-121, 2-125, 2-127, 2-139, 2-141
90458-0073	WASHER 6,4/30, H=1,5	2-121, 2-125, 2-127, 2-139, 2-141
90458-0135	MALE PLUG, COD.220-0397	5-205, 5-207, 5-209, 5-211
90458-0136	FEMALE PLUG, COD 220-0381	5-205, 5-207, 5-209, 5-211
90458-0137	RADIAL SEAL 20X47X7 MM DUST LIP	5-217, 5-219, 5-221, 5-223, 5-225, 5-227, 5-229
90458-0165	CABLE, SICK DOL-0803-G05M	7-5, 7-7
90458-0181	RETAINING RING FOR BORE DIN 472 80 SS	4-5, 4-7
90458-0200	PEROX. SAFETY VALVE, NO. 527-430 1/2X3/4	1-281
90458-0201	FLUID AUT. FEEDER, ALINOX 1/2 46.04.00	1-281, 6-7
90458-0254	PRECISION PRESSURE REGULATOR,LRP-1/4-0,7	2-29, 2-31
90458-0258	TRANSFORMER, 1-PH 100VA SEC 8,3A	7-15
90458-0270	VENTING DEVICETCDF 1/8G ELESA 58669	5-133, 5-135, 5-137, 5-139, 5-141, 5-143, 5-145, 5-147, 5-149, 5-151, 5-153, 5-155, 5-157, 5-159, 5-161, 5-163, 5-165, 5-167, 5-169, 5-171
90458-0274	DISC FOR COUPLING, HUCO 236.50T	2-251, 4-27, 4-29, 4-31
90458-0289	PLUG,GPN 340-SW-5 MM	4-9, 4-11, 4-13, 4-15, 4-17, 4-19
90458-0292	TERMINAL ELEMENT, PSD-S CE-TM SCREW/W	2-123, 2-137
90458-0293	LIGHT ELEMENT, RED, PSD-S OE RD/W	2-123, 2-137
90458-0294	LIGHT ELEMENT, YELLOW, PSD-S OE YE/W	2-123, 2-137
90458-0295	LIGHT ELEMENT, BLUE, PSD-S OE BU/W	2-123, 2-137
90458-0302	SIREN ELEMENT, PSD-S AE SM8-5 100DB/1/W	2-123, 2-137
90458-0305	CABLE GLAND, M12X1,5, NO.5311 1000	11-149
90458-0306	CABLE GLAND, M16X1,5, NO.5311 1010	1-177, 1-211, 1-215, 1-275, 1-345, 1-357, 2-15, 2-53, 2-101, 2-105, 4-95, 4-97, 6-77, 7-5, 7-7, 7-13, 7-15, 11-27, 11-61, 11-123, 11-127, 11-129, 11-145, 11-149, 11-209
90458-0307	CABLE GLAND, M20X1,5, NO.5311 1020	1-9, 1-175, 1-211, 1-267, 1-279, 1-357, 2-15, 2-19, 2-51, 2-53, 2-57, 2-59, 2-71, 2-97, 2-101, 2-105, 2-109, 6-17, 6-37, 6-77, 7-15, 7-69, 7-71, 8-77, 8-79, 8-113, 11-61, 11-209
90458-0308	CABLE GLAND, M25X1,5, NO.5311 1030	1-179, 1-185, 2-51, 2-59, 6-31, 6-37, 6-49, 6-77, 11-61, 11-127, 11-129, 11-209
90458-0309	CABLE GLAND, M32X1,5, NO.5311 1040	1-357, 2-15, 2-19, 2-53, 2-59, 2-97, 2-101, 6-77, 7-15, 8-77, 8-79
90458-0311	CABLE GLAND, M50X1,5, NO.5311 1060	8-113

Part No	Description	Page No
90458-0313	CABLE GLAND, M12X1,5, NO.5311 1100	2-61, 11-61, 11-209
90458-0314	CABLE GLAND, M16X1,5, NO.5311 1110	6-15
90458-0315	CABLE GLAND, M20X1,5, NO.5311 1120	6-17, 6-63, 6-65
90458-0316	CABLE GLAND, M25X1,5, NO.5311 1130	2-207, 2-211, 11-27, 11-123
90458-0321	NUT, M12X1,5	2-61
90458-0322	UT, M16X1,5	1-27, 1-29, 1-35, 1-175, 1-177, 1-185, 1-187, 1-215, 1-275, 1-279, 1-345, 1-357, 2-39, 2-41, 7-15, 11-27, 11-123, 11-145
90458-0323	NUT, M20X1,5	1-57, 1-61, 1-63, 1-65, 1-81, 1-279, 1-345, 1-353, 7-15, 7-159, 7-163, 8-113
90458-0324	NUT, M25X1,5	1-345
90458-0325	NUT, M32X1,5	1-345, 1-357, 7-15
90458-0327	NUT, M50X1,5	1-49, 8-113
90458-0341	THERMOCOUPLE, 5130050-001	1-69, 1-71
90458-0353	BUSHING, IGLIDUR X 8X10X8	4-39, 4-41, 4-43, 4-45, 4-47, 4-49, 4-51, 4-53, 4-55, 4-57, 4-59, 4-61, 4-63, 4-65, 4-67, 4-71, 4-73, 4-75, 4-77, 4-79, 4-81, 4-83, 4-85, 4-87, 4-89
90458-0407	GLAND W/O INSERT M25 NORMAL	2-57, 2-109, 3-5, 3-7, 3-9, 3-11, 3-13, 3-15
90458-0408	GLAND W/O INSERT M32 NORMAL	7-15
90458-0410	GLAND W/O INSERT M40 NORMAL	7-5, 7-7
90458-0411	GLAND W/O INSERT M50 NORMAL	4-9, 4-11, 4-13, 4-15, 4-17, 4-19
90458-0413	HOSE GLAND W/O INSERT M20 NORMAL	1-345
90458-0416	HOSE GLAND W/O INSERT M50 NORMAL	1-49, 4-9, 4-11, 4-13, 4-15, 4-17, 4-19
90458-0422	GLAND W/O INSERT M20 EXTENDED	6-19
90458-0423	GLAND W/O INSERT M32X1,5 EXTENDED	4-3, 5-205, 5-207, 5-209, 5-211
90458-0427	HOSE GLAND W/O INSERT M16 EXTENDED	1-27, 1-29, 1-35, 1-175, 1-185, 1-187, 1-279
90458-0429	HOSE GLAND W/O INSERT M20 EXTENDED	1-57, 1-61, 1-63, 1-65, 1-175, 1-205, 1-211, 1-279, 1-345, 1-353
90458-0430	HOSE GLAND W/O INSERT M20 EXTENDED	1-81, 1-323, 7-159, 7-163
90458-0431	HOSE GLAND W/O INSERT M25 EXTENDED	1-345
90458-0433	HOSE GLAND W/O INSERT M32 EXTENDED	1-345
90458-0434	HOSE GLAND W/O INSERT M40 EXTENDED	1-185
90458-0436	GLAND, EXTENDED WITH INSERT, M16X1,5	6-19
90458-0437	GLAND, EXTENDED WITH INSERT, M25X1,5	1-201
90458-0438	GLAND, EXTENDED WITH INSERT, M20X1,5	7-51, 11-25, 11-121
90458-0440	GLAND, EXTENDED WITH INSERT, M25X1,5	1-9, 1-179, 1-267, 2-251, 7-89, 11-27
90458-0451	HOSE GLAND EMC M32 EXTENDED	5-205, 5-207, 5-209, 5-211, 5-213, 5-215
90458-0462	GLAND, LOCK NUT, M25X1,5	11-27
90458-0463	GLAND, LOCK NUT, M32X1,5	7-15
90458-0465	GLAND, LOCK NUT, M50X1,5	4-9, 4-11, 4-13, 4-15, 4-17, 4-19
90458-0506	RETAINING RING FOR BORE DIN 472 26 SS	2-183, 7-49
90458-0548	PARALLEL KEY W. ROUND ENDS 5X5X16 MM	4-27, 4-29, 4-31
90458-0565	REFLECTOR, PL20A	7-149, 7-155
90458-0601	CONTRAST SCANNER, KT15W-P2110S01	3-5, 3-7, 3-9, 3-11, 3-13, 3-15
90458-0602	CONTRAST SCANNER, KT15W-P2213S02	7-73
90458-0639	SEALING RING, VARILIP 20X30X7 MM	1-21
90458-0751	BUSHING,INT./EXT.G-THREAD G3/4"-G1/2"	1-281
90458-0806	FLOW METER, COPA-XF DF23-DN32	1-229, 1-231
90458-0873	STOP SCREW,M8X10	4-91, 4-93
90458-0921	FILTER SP 122-200	6-81
90458-1013	BELLOW COUPLING, 6X6 MM	7-33
90458-1076	L-SHAPED CONNECTOR CABLE Y92EM12PVC4A5ML	7-5, 7-7, 7-27, 7-125, 7-133, 7-135
90458-1092	PROPORTIONAL VALVE 0 - 10V/0-6 BAR	1-331, 1-333, 2-91
90458-1144	O-RING 36,2X3 MM	1-195, 1-197, 9-9
90458-1155	ENLARGING SLEEVE, 5210 4452	7-51, 11-25, 11-121
90458-1173	MULTI DIAMETER MODULE, CM 30W40	2-59
90458-1174	MULTI DIAMETER MODULE, CM 20W40	2-59
90458-1179	FRAME CF 32	2-59
90458-1194	MONOSTABLE VALVE 5/2	1-335, 1-337, 1-339, 2-27, 2-33, 6-87, 7-113, 7-117, 11-73, 11-215
90458-1200	VALVE OPEN IN MID-POSITION 5/3	2-33, 7-113
90458-1202	VALVES 2X3/2, CLOSED	1-335, 1-337, 1-339, 2-33, 2-35, 7-117
90458-1203	VALVE 2X3/2 1X OPEN 1X CLOSED	7-113
90458-1204	BASIC SUB-BASE 4 VALVES, CDVI5.0-GB4-MP	6-87, 11-73, 11-215
90458-1205	BASIC SUB-BASE 8 VALVES, CDVI5.0-GB8-MP	1-335, 1-337, 1-339, 2-33, 7-113, 7-117
90458-1206	EXP. SUB-BASE 2 VALVES, CDVI5.0-EB	1-335, 1-337, 1-339, 2-33, 6-87, 7-113, 7-117
90458-1207	SEALING, STANDARD	1-335, 1-337, 1-339, 2-33, 6-87, 7-113, 7-117
90458-1208	SEALING, CHANNEL 1 BLOCKED	1-335, 1-337, 1-339, 2-33, 6-87, 7-113
90458-1211	LEFT ENDPLATE INCL. 5M CABLE	11-73, 11-215
90458-1212	LEFT ENDPLATE INCL. 10M CABLE	1-335, 1-337, 1-339, 2-33, 6-87, 7-113, 7-117
90458-1213	RIGHT ENDPLATE INTERNAL PILOT AIR	2-33, 11-73, 11-215
90458-1214	RIGHT ENDPL EXT. PILOT AIR,CDVI5.0-EPR-S	1-335, 1-337, 1-339, 6-87, 7-113, 7-117
90458-1215	COVER PLATE FOR EMPTY VALVE POSITION	1-335, 1-337, 1-339, 2-33, 6-87, 7-113, 7-117, 11-73
90458-1253	MANDATORY ACTION SIGN CONSULT OM ISO	11-25, 11-121
90458-1306	BLIND PLUG CIRCULAR, M12X1,5 514GFK/212	11-61, 11-209
90458-1307	BLIND PLUG CIRCULAR, M16X1,5 514GFK/216	1-211, 1-357, 2-15, 2-39, 2-41, 2-53, 2-101, 2-105, 7-15, 11-27, 11-61, 11-123, 11-209
90458-1308	BLIND PLUG CIRCULAR, M20X1,5 514GFK/220	1-345, 2-15, 2-53, 2-97, 2-101, 2-105, 6-77, 7-15, 11-61, 11-209
90458-1309	BLIND PLUG CIRCULAR, M25X1,5 514GFK/225	1-345, 2-105, 11-61, 11-209
90458-1310	BLIND PLUG CIRCULAR, M32X1,5 514GFK/232	1-357, 2-15, 2-53, 2-101, 2-105, 7-15
90458-1330	OPERATION DEVICE, MBG 22X, 823 8871	11-145
90458-1382	PLUG, M5X3.5 SMC - MS-5P	5-133, 5-135, 5-137, 5-139, 5-141, 5-143, 5-145, 5-147, 5-149, 5-151, 5-153, 5-155, 5-157, 5-159, 5-161, 5-163, 5-165, 5-167, 5-169, 5-171
90458-1387	RADIAL SEAL 38X62X7 MM DUST LIP	5-133, 5-135, 5-137, 5-139, 5-141, 5-143, 5-145, 5-147, 5-149, 5-151, 5-153, 5-155, 5-157, 5-159, 5-161, 5-163, 5-165, 5-167, 5-169, 5-171, 5-173, 5-175, 5-177, 5-179, 5-181, 5-183, 5-185, 5-187, 5-189, 5-191, 5-193, 5-195, 5-197, 5-199, 5-201, 5-203
90458-1393	PUMP CYLINDER, 34 73 522 5	9-65

Part No	Description	Page No
90458-1404	FLANGE BUSHING, 12X16X16 MM	4-33, 4-35, 5-127, 5-129, 5-131
90458-1444	GAS SPRING G8-19-250-1-583-AU19-AU19-500	1-347
90458-1467	CAP, 32 44 129 7	9-59
90458-1468	SPLIT PIN, 43 71 234 8	9-65
90458-1470	SINK VALVE COMPL, 34 73 094 5	9-65
90458-1471	PISTON ROD END, 32 04 214 5	9-63
90458-1472	CYLINDER, 32 04 215 2	9-63
90458-1473	PUMP, 34 73 521 7	9-57
90458-1476	AXLE PIN, 32 04 167 5	9-63
90458-1477	CONNECTOR 6-1/8 NPT, EXT. TAPERED	2-255
90458-1478	BALL VALVE SS-43GS6MM-SH	2-255
90458-1531	ACTUATOR, N.O., PA 38/100	1-263
90458-1537	HOLDER FOR SENSORS, PA38/PO-TET-PTFE	1-263
90458-1541	DIAPHRAGM, NA 38/25 PFTE	1-263
90458-1557	WARNING SIGN ANSI (H), MOVING PART	1-305, 1-307
90458-1595	CONNECTION, BKS-S 33M-00	2-237
90458-1614	SCREW M6S ISO 4014 M5X80 A480	4-91, 4-93
90458-1651	EMERGENCY STOP, ZB4-BS-844 ZB4-BZ-104	2-207, 2-211, 7-159, 7-177, 8-81, 8-83, 8-85, 8-87
90458-1704	BALL BEARING 15/35X11	1-9, 1-15, 1-19, 1-25
90458-1740	AIR GUN ASSEMBLY, CEJN 199589668	2-89
90458-1840	CAPACITIVE SENSOR CM18-12NPP-KC1	6-17
90458-1849	CONN. STR., 1050-6-1/8	1-343
90458-1935	COMP. SPRING 49235, 8,2X37,3X51	4-57, 4-59, 4-61, 4-63, 4-65, 4-67
90458-1963	STRAIGHT COUPLING D=8-G3/8"	1-55
90458-1977	REFRACTOMETER SET DA15FC15A DFTP A	2-255
90458-2006	CONN. STR., 12-R1/2	1-191
90458-2102	DOUBLE ACTING, MINI-ISO, CYL. 20-50	1-169, 4-109, 4-111, 4-113, 4-115
90458-2138	SCREW M6S M12X120 A280	9-67
90458-2172	BALL BEARING 17/35X10	5-59, 5-61, 11-37, 11-39
90458-2173	PIPE CONNECTION, 552608M	6-11
90458-2174	CONDUCTIVITY TRANSMITTER, 418962Z	6-11
90458-2241	PRESSURE SWITCH 0,5-10 BAR ADJUSTABLE	1-207
90458-2242	PARALLEL KEY W. ROUND ENDS 5X5X35 MM	5-133, 5-135, 5-137, 5-139, 5-141, 5-143, 5-145, 5-147, 5-149, 5-151, 5-153, 5-155, 5-157, 5-159, 5-161, 5-163, 5-165, 5-167, 5-169, 5-171
90458-2264	PRESSURE REGULATOR ARC-30-1/2"	1-247
90458-2284	COMP. SPRING 22410, 1,6X11,6X27	7-81
90458-2329	HOSE, SILICONE, 50 SHORE, 9/13 MM	7-37
90458-2333	VALVE, M8A-V4LQ-KZ-11AO-SS PNEUM. OPER.	2-259, 2-261
90458-2343	FRAME CF 16	2-59
90458-2358	FLOAT, BTL2-S-4414-4Z	2-237
90458-2419	PLUG GPN 300 V 233	4-9, 4-11, 4-13, 4-15, 4-17, 4-19
90458-2554	STERILE GRADE MEMBRANE FILTER 0,2µM	1-247
90458-2581	FOOT PLATE, M50-16-70	11-67
90458-2633	HANDLE, 1045-05	7-29
90458-2738	THROTTLE CHECK VALVE, GRLA-1/8-B	1-343
90458-2752	PLASTIC HOSE, 3/4"X1"	2-65
90458-2794	SENSOR, EVA 20-046-00	1-27, 1-29, 1-35, 1-41, 1-61, 1-63, 1-65, 1-353, 7-51, 7-157, 7-161, 7-165, 7-169, 7-173, 7-175
90458-2837	CONNECTING CABLE KMEB-1-24-5-LED	6-91, 7-115
90458-2845	SCREW,HEXAGON HEAD M6S ISO 4017 M10X45	2-121, 2-125, 2-127
90458-2850	HOSE CLIP , 51 MM	6-43
90458-2890	CONNECTOR, 21N-50N12N133NE	1-75, 4-91, 4-93
90458-2892	CONNECTOR, 11 N-50-3-31/133 NE	1-75, 4-91, 4-93
90458-2893	SLEEVE, 78 Z-0-3-4	1-75, 4-91, 4-93
90458-2894	PAIR TWISTED CABLE 1X2X0,2MM2	8-49
90458-2895	COAXIAL CABLE RG 400/U BROWN	1-75, 4-91, 4-93
90458-2954	ELBOW PIPE JOINT, EXT.THREAD, D=4MM M5	7-53
90458-2956	ELBOW PIPE JOINT, EXT.THREAD, D=6MM-G1/8	1-169, 1-233, 1-293, 4-5, 4-7, 4-99, 4-101, 4-103, 4-105, 5-13, 5-25, 5-83, 5-85, 5-87, 5-89, 5-91, 5-93, 5-95, 5-97, 5-99, 5-101, 5-103, 5-105, 5-107, 5-109, 5-111, 5-113, 5-133, 5-135, 5-137, 5-139, 5-141, 5-143, 5-145, 5-147, 5-149, 5-151, 5-153, 5-155, 5-157, 5-159, 5-161, 5-163, 5-165, 5-167, 5-169, 5-171
90458-2963	ELBOW PIPE JOINT, EXT.THREAD,D=14MM-G3/8	6-93
90458-2965	ELBOW PIPE JOINT, EXT.THREAD,D=14MM-G1/2	6-91
90458-2969	PRESSURE GAUGE, MAP-40-1-1/8-EN	2-29, 2-31
90459-0075	HINGE, 1056-U30	1-233
90459-0106	SPRAY NOZZLE 103 DEG B1/4 HH - SS 14W	1-191
90459-0125	CYL.ROLLER BEARING, 20X52X25 MM	4-9, 4-11, 4-13, 4-15, 4-17, 4-19, 4-57, 4-59, 4-61, 4-63, 4-65, 4-67, 4-83, 4-85, 4-87, 4-89
90459-0127	PLASTIC TUBE CLAMP, 8935150104 - TYPE 1	5-173, 5-175, 5-177, 5-179, 5-181, 5-183, 5-185, 5-187, 5-189, 5-191, 5-193, 5-195, 5-197, 5-199, 5-201, 5-203
90459-0128	FLANGE BUSHING 15X2	5-127, 5-129, 5-131
90459-0180	FLOW SWITCH, 0,1 - 2,5 L/MIN	6-33
90459-0182	INTERFACE CONNECTOR FOR TMCC2	8-103
90459-0184	INTERFACE CONNECTOR FOR TPIH 2500 GENER.	8-49
90459-0221	TUBE, 6 MM PE BLACK	2-153
90459-0246	GREASE, KLüBERSYNTH UH1, ONLY IN BOM	4-9, 4-11, 4-13, 4-15, 4-17, 4-19, 4-39, 4-41, 4-43, 4-45, 4-47, 4-49, 4-51, 4-53, 4-55, 4-57, 4-59, 4-61, 4-63, 4-65, 4-67, 4-71, 4-73, 4-75, 4-77, 4-79, 4-81, 4-83, 4-85, 4-87, 4-89, 5-133, 5-135, 5-137, 5-139, 5-141, 5-143, 5-145, 5-147, 5-149, 5-151, 5-153, 5-155, 5-157, 5-159, 5-161, 5-163, 5-165, 5-167, 5-169, 5-171
90459-0252	PROX.SWITCH IX 0208	1-253, 1-255, 1-257
90459-0363	COOLING UNIT, KB40A0721.03	8-115
90459-0382	RETAINING RING FOR BORE DIN 472 72 SS	5-173, 5-175, 5-177, 5-179, 5-181, 5-183, 5-185, 5-187, 5-189, 5-191, 5-193, 5-195, 5-197, 5-199, 5-201, 5-203
90459-0383	SCHOCK ABSORBER, PM 25 MC -1SB -NM	4-109, 4-111, 4-113, 4-115

Part No	Description	Page No
90459-0384	BALL BEARING 25/62X17 SOLID OIL	5-133, 5-135, 5-137, 5-139, 5-141, 5-143, 5-145, 5-147, 5-149, 5-151, 5-153, 5-155, 5-157, 5-159, 5-161, 5-163, 5-165, 5-167, 5-169, 5-171, 5-173, 5-175, 5-177, 5-179, 5-181, 5-183, 5-185, 5-187, 5-189, 5-191, 5-193, 5-195, 5-197, 5-199, 5-201, 5-203
90459-0385	BALL BEAR. 30/72X19 SOLID OIL	5-173, 5-175, 5-177, 5-179, 5-181, 5-183, 5-185, 5-187, 5-189, 5-191, 5-193, 5-195, 5-197, 5-199, 5-201, 5-203
90459-0401	DOUBLE ACTING, MINI-ISO, CYL. 25-320	2-183
90459-0459	NUT HEX. M14X1,5 SS	4-109, 4-111, 4-113, 4-115, 8-5, 8-7, 8-9, 8-11
90459-0462	CANISTER LY 500-10	2-259, 2-261
90459-0586	SWIVEL FLANGE 50	1-11, 1-73
90459-0587	DOUBLE ACTING, PROFILE, CYL 50-50	1-73
90459-0698	PLUG, EXT. G-THREAD, G1/8	1-335, 1-337, 1-339, 2-33, 6-87, 7-113, 7-117
90459-0699	BLANKING PLUG, CDVI5.0-B-G3/8	7-117
90459-0713	DOUBLE ACTING, MINI-ISO, CYL. 12-80	1-177
90459-0729	HEXAGONAL PROTECTIVE CAP GPN 1000	1-195, 1-197
90459-0799	SENSOR BRACKET, SMBR-12 FOR CYL 12	1-177
90459-0805	BUSHING, IGLIDUR A200 10X14X8	1-13
90459-0828	BRIDGE CONNECTOR WQV 4/2	1-361
90459-0839	DISTRIBUTION FRAME, ASBV 8 5-135/10M	8-113
90459-0843	CONN. BANJO, 6-G1/8	2-39, 2-41, 4-99, 4-101, 4-103, 4-105
90459-0871	RING, VARILIP 18X30X7 MM	1-69, 1-71
90459-0941	QUICK COUPLING, PLCD 130-M8	1-55
90459-0951	TRANSDUCER, BTL7-A110-M0400-B-S32	2-237
90459-0959	DISTRIBUTOR BLOCK 1492-PD3163	8-15, 8-17
90459-0960	QUICK COUPLING, PLCD 200-M8	1-55
90459-1000	LIGHT FIXTURE, RL 70CV-136/230V 50HZ	2-49, 2-99
90459-1009	RUBBER STRIP, 1025088988	2-9, 2-79
90459-1018	ROD END, BALL JOINT EYE M10X1,25	1-13, 7-119, 7-121, 7-123
90459-1037	CRIMP TOOL FOR COAX. CONN. HTG 58-901200	12-5
90459-1058	FLANGE BUSHING, IGLIDUR G 25X28X11,5	1-21
90459-1126	PLASTIC HOSE PVC TRANSPARENT, 8X11MM	2-267, 7-37
90459-1130	EM. STOP XAL-K178F	1-81
90459-1131	SAFETY RELAY, E1T 0SEC	8-45, 8-47
90459-1147	GEARS, WORM MOTOR VF30 F1-10 P63 B14 V6	2-229
90459-1148	SEALING RING, VARILIP 14X24X7 MM	1-23
90459-1174	O-RING 75,87X2,62 MM	1-69, 1-71
90459-1175	O-RING 418X3,0 MM	1-69, 1-71
90459-1186	FLANGE BUSHING, IGLIDUR X 20X23X11	4-27, 4-29, 4-31
90459-1189	O-RING 56,87X1,78 MM	1-9, 1-19, 1-177
90459-1216	WORM GEAR 10.756.268	4-5, 4-7
90459-1234	FLOW SWITCH, FS-3 SERIES/166703	6-11
90459-1235	ANGLE SEAT VALVE, N.C. DN13 TYPE 2002	1-243
90459-1241	ANGLE SEAT VALVE, TRI-CLAMP, N.C. DN20	1-271
90459-1255	PUMP CYLINDER, 4415 000 00	4-99, 4-101, 4-103, 4-105
90459-1297	RESISTANCE FIXED, 120 OHM, 0,25 W	1-229, 1-231
90459-1395	SCREW HEX.SOCK.SET CONEPT.MS6SS M4X4 A2	1-73, 7-101
90459-1424	CONN. STR., 6-G1/8, EXT. THREAD	1-209, 1-233, 1-271, 2-259, 2-261
90459-1425	CONN. T-PIPE 8	2-259, 2-261
90459-1427	QUICK-RELEASE COUPLING, SS-QTM2-D-8M0-K2	2-259, 2-261
90459-1430	QUICK-RELEASE COUPLING, SS-QTM2-D-8M0-K4	2-259, 2-261
90459-1458	HOOD HAN 6 E 19 30 006 1540	6-17, 6-19, 6-31, 6-37
90459-1461	HOUSING HAN 6 E 19 30 006 1255	2-51
90459-1467	FORCE GAUGE 0-250N, AFG 250N	12-5
90459-1536	FLEXIBLE COUPLING DISC, 14 MM	2-251
90459-1537	UV-SENSOR, UV222 SENSOR	1-55
90459-1562	SCRAPER, 42X52X5 MM	4-57, 4-59, 4-61, 4-63, 4-65, 4-67
90459-1567	CONNECTOR CABLE FOR UVC-SE SENSOR	1-55
90459-1623	O-RING 66,4X1,78 MM	1-253, 1-255, 1-257
90459-1627	O-RING 114,02X1,78 MM	1-9, 1-15, 1-17, 1-19
90459-1643	CRIMP PIN FEMALE 09 33 000 6204	1-9
90459-1644	CRIMP PIN MALE 09 33 000 6104	1-9
90459-1650	SEALING RING, VARILIP 30X40X7 MM	1-9
90459-1655	HING. FR. HAN 32B HOODS, 09 14 016 0303	1-49
90459-1656	HING. FR. HAN 16B HOUSING,09 14 016 0313	1-49
90459-1728	SCREW ISO4029 M6X45 A4	1-31
90459-1731	TIMING BELT 25AT10 920 PU	5-133, 5-135, 5-137, 5-139, 5-141, 5-143, 5-145, 5-147, 5-149, 5-151, 5-153, 5-155, 5-157, 5-159, 5-161, 5-163, 5-165, 5-167, 5-169, 5-171
90459-1732	TIMING BELT AT10 780X25 MM	5-173, 5-175, 5-177, 5-179, 5-181, 5-183, 5-185, 5-187, 5-189, 5-191, 5-193, 5-195, 5-197, 5-199, 5-201, 5-203
90459-1736	PURGE VALVE, 2RM-PG4L-SS	6-37
90459-1738	MANDATORY ACTION SIGN ISO, READ MAINTENA	1-353, 8-97, 8-99
90459-1742	TERMINAL FEED THROUGH	1-297
90459-1795	LUBRICATION PUMP UNIT 10KG, BK 03173003	2-73
90459-1852	SHUT OFF VALVE, MS6-EM1-1/2	6-91
90459-1853	FILTER REGULATOR, MS6-LFR-1/2-D7-ERV-AS	6-91
90459-1854	SHUT OFF VALVE, MS6-EE-1/2-10V24	6-91
90459-1855	SOFT START VALVE, MS6-DL-1/2	6-91
90459-1856	DISTRIBUTOR, MS6-FRM-1/2	6-91
90459-1858	BRACKET, MS6-WP	1-207, 6-91
90459-1859	BRACKET, MS6-MV	6-91
90459-1908	END FITTING LBN-20/25	7-91
90459-1915	TIMING BELT 25AT10/980 PU	5-133, 5-135, 5-137, 5-139, 5-141, 5-143, 5-145, 5-147, 5-149, 5-151, 5-153, 5-155, 5-157, 5-159, 5-161, 5-163, 5-165, 5-167, 5-169, 5-171
90459-1917	CONTACT BLOCK ZBE-102 NC	2-207, 2-211, 7-159, 7-177, 8-81, 8-83, 8-85, 8-87
90459-1927	WARNING SIGN ANSI (H), EYE PROTECTION	2-215

Part No	Description	Page No
90459-1953	DOUBLE ACTING, MINI-ISO, CYL. 25-10	7-91, 7-119, 7-121, 7-123
90459-1993	FINGERGUARD, 101116-03	2-61
90459-2022	WARNING SIGN ANSI (V), READ OM	11-243, 11-245, 11-247, 11-249, 11-251
90459-2080	CONN. BULKHEAD G1/4	1-207
90459-2081	FAN, 7214N-24VDC-500MA-12W-FAN	2-61
90459-2096	GEARS, WORM MOTOR F2 15 P63 B14 B8 PV 75	7-145
90459-2106	CABLE CONNECTOR, C091 31D004 100 2	1-229, 1-231
90459-2122	THERMOCOUPLE, EN-5130060-0001	1-205
90459-2141	LOGIC ELEMENT, OS-1/8-B	7-109, 7-111
90459-2242	REGULATOR, MS4-LRB-1/4-D7-AS	7-115
90459-2243	SHUT OFF VALVE, MS4-EE-1/4-10V24	7-115
90459-2245	DISTRIBUTOR, MS4-FRM-1/4	7-115
90459-2246	END PLATE, MS4-AGB	2-29, 2-31
90459-2247	BRACKET, MS4-WP	2-29, 2-31, 7-115
90459-2248	BRACKET, MS4-MV	1-331, 1-333, 2-29, 2-31, 7-109, 7-111, 7-115
90459-2267	WARNING SIGN ANSI (H), READ MAINT. MAN.	1-353
90459-2291	SAFETY TIME RELAY, E1T-0.5S-24VDC	8-45, 8-47
90459-2334	PNEUMATIC GREASE PUMP, EL 06983501	12-27
90459-2337	SHUT OFF VALVE, MS4-EM1-1/4	7-115
90459-2338	FILTER, MS4-LF-1/4-CRV	2-29, 2-31
90459-2339	FILTER REGULATOR, MS4-LFR-1/4-D7-ERV-AS	7-115
90459-2341	HOSE ASSEMBLY, EL 03600101	2-73
90459-2342	HOSE ASSEMBLY, EL 03600102	2-73
90459-2343	HOSE ASSEMBLY, EL 03600103	2-73
90459-2366	HOSE CLIP, 32 - 35 MM	2-153, 6-53
90459-2409	INDUCTIVE SENSOR IN5230	1-11, 1-31, 1-215
90459-2459	BASEPLATE, 13 SLOT CONTROLLOGIX CHASSIS	8-33
90459-2474	PLC,DIGIT. OUTPUT MODULE 16 PTS 10-31VDC	8-33
90459-2477	ETHERNET I/P BRIDGE MODULE, 1756-ENBT	8-33
90459-2480	8-AXIS SERCOS MOTION MODULE	8-33
90459-2487	REMOVABLE TERMINAL BLOCK 20 POINTS	8-33
90459-2488	REMOVABLE TERMINAL BLOCK 36 POINTS	8-33
90459-2494	DEVICENET I/O ADAPTER MODULE, 1734-ADN	1-213, 1-359, 2-17, 2-55, 2-103, 2-107, 6-79, 7-19, 8-35, 8-53, 8-55
90459-2500	EXPANSION POWER SUPPLY MODULE	1-359, 2-17, 2-103, 7-19, 8-35
90459-2501	FIELD POWER DISTRIBUTOR, 1734-FPD	7-19
90459-2503	DIGITAL INPUT 4 PTS SINK, 1734-IB4	1-213, 1-359, 2-17, 2-55, 2-103, 2-107, 6-79, 7-19
90459-2505	DIGITAL OUTPUT 4 PTS, 1734-OB4E	1-213, 1-359, 2-55, 2-103, 6-79, 7-19
90459-2508	REMOTE I/O ANALOG INPUT VOLTAGE 2 PTS	1-213, 1-359, 2-17, 2-103, 6-79, 7-19
90459-2509	REMOTE I/O ANALOG INPUT CURRENT 2 PTS	1-213, 1-359, 2-17, 2-55, 6-79, 7-19, 8-35
90459-2510	ANALOG OUTPUT VOLTAGE MODULE 2 PTS	1-213, 1-359, 2-103, 8-35
90459-2511	REMOTE I/O ANALOG OUTPUT CURRENT 2PTS	8-35
90459-2512	REMOTE I/O THERMOCOUPLE INPUT 2 PTS	1-213, 1-359, 2-17, 2-55, 2-103, 6-79, 7-19, 8-53, 8-55
90459-2517	DEVICE BOX 8 PORT THIN CABLE	2-81
90459-2519	TAP, OPEN STYLE	1-363, 2-17, 8-41, 8-43
90459-2523	OPEN STYLE TERMINATOR, 1485A-C2	7-19
90459-2526	REMOTE I/O BASE MODULE 8 POINTS, 1734-TB	1-213, 1-359, 2-17, 2-55, 2-103, 2-107, 6-79, 7-19, 8-35, 8-53, 8-55
90459-2527	REMOTE I/O BASE MODULE 12 POINTS	1-213, 1-359, 2-17, 2-55, 2-103, 2-107, 6-79, 7-19
90459-2528	REMOTE I/O BASE MODULE FOR THERMOCOUPLE	1-213, 1-359, 2-17, 2-55, 2-103, 6-79, 7-19, 8-53, 8-55
90459-2530	DEVICENET CABLE THIN	1-151, 1-211, 2-15, 2-81, 3-17, 3-19, 3-21, 3-23, 3-25, 7-15
90459-2536	SERCOS CABLE 0.1M, 2090-SCEP0-1	8-51
90459-2540	SERCOS CABLE 3.0M, 2090-SCEP3-0	8-51
90459-2547	POWER RAIL SLOT FILLER MODULE, 2094-PRF	8-51
90459-2550	I/O CONNECTOR 26 PIN MALE, 2090-K6CK-D26	8-51
90459-2551	CONNECTOR, MOTOR FEEDBACK 15 PIN MALE	1-235, 1-237, 3-17, 3-19, 3-21, 3-23, 3-25, 5-13, 5-83, 5-85, 5-87, 5-89, 5-91, 7-105
90459-2553	PUSH-IN L-FITTING QSL 16	8-115
90459-2555	PUSH-IN T-FITTING QST-16	8-115
90459-2557	BLIND PLUG 16 MM	8-115
90459-2590	ROD END, CLEVIS WITH AXLE M8	1-11
90459-2591	SINGLE VALVE SUB-BASE CDSV5.0-AS-1/8	2-27, 2-35
90459-2596	LOCKING HANDLE, M8X25M	11-65
90459-2607	VARIABLE FREQUENCY DRIVE 22B-D6P0N104	8-67
90459-2609	BALL VALVE 3/8", 6A-V6LQ-SI-SSP-ALH	2-259, 2-261
90459-2614	DEVICENET ADAPTER POWERFLEX 40 22-COMM-D	8-67
90459-2615	HOSE NIPPLE SS-6-HC-A-601	2-259, 2-261
90459-2650	SWIVEL FLANGE 32	1-31
90459-2658	SLOTTED ROUND NUT DIN 546 M6	1-53
90459-2704	SNAP HOOK STAINLESS 50X5MM	7-125
90459-2726	RUBBER BUFFER, 20-00484-01	7-5, 7-7, 7-51
90459-2742	LEVEL CONTROL RELAY, RM4-LA32MW	1-213, 1-361, 1-363
90459-2795	FRONT LID FOR POWERFLEX 40, 22B-CCB	8-67
90459-2796	FRONT LID FOR POWERFLEX 40, 22B-CCC	8-67
90459-2804	REDUCING VALVE G1/2", 51.04.70	1-191
90459-2822	REGULATOR, MS4-LR-1/4-D5-A8	6-85, 7-109, 7-111
90459-2851	GAS SPRING G10-23-60-1-207-AU19-AU19-900	5-173, 5-175, 5-177, 5-179, 5-181, 5-183, 5-185, 5-187, 5-189, 5-191, 5-193, 5-195, 5-197, 5-199, 5-201, 5-203
90459-2903	HOSE SILICONE, 25/34 MM	7-29
90459-2938	POWER SUPPLY UNIT 6EP1 437-3BA00	8-53, 8-55
90459-2939	BUFFER UNIT, 6EP1 961-3BA00	8-53, 8-55
90459-3019	THROTTLE CHECK VALVE, M5, MANUAL, 6MM	1-177
90459-3080	HOOD HAN-BRID 3A 19 20 003 1443	1-279, 1-357, 2-53, 2-59, 2-71, 2-97, 6-15, 6-65, 7-15

Part No	Description	Page No
90459-3081	HOUSING HAN A 19 20 003 1250	6-19, 6-63, 7-69, 7-71
90459-3145	FLASH MEMORY 64MBYTE, 1784-CF64	8-33
90459-3154	CABLE OLFLONPTFE 1X4,72 MM² YELLOW-GREEN	1-205
90459-3165	CABLE OLFLON PTFE 1X4,72 MM² BLACK	1-205
90459-3198	PLUG, LD-PE Ø 7.2	1-235, 1-237
90459-3250	SENSOR CABLE SICK DOP 1205 G15M	1-253, 1-255, 1-257, 7-73
90459-3279	BLANK PLUG BLACK, SQUARE, PLASTIC ZB5SZ5	8-97, 8-99
90459-3286	INDUCTIVE SWITCH E2A-S08KS02-M1-B1	1-263, 7-27
90459-3339	GASKET NBR/PTFE 17X24X2 MM 3/4"	6-31
90459-3347	BEARING HOUSING, RJUM-01-16	2-183
90459-3442	VARIABLE FREQUENCY DRIVE 22B-A5P0N104	8-67
90459-3444	VARIABLE FREQUENCY DRIVE 22B-D4P0N104	8-67
90459-3446	FREQUENCY CONVERTER 5,5 KW	8-67
90459-3454	FOOTPRINT FILTER, 22-RF018-BL	8-67
90459-3458	FOOTPRINT FILTER 22-RF012-BL	8-67
90459-3459	FOOTPRINT FILTER, 22-RF018-CL	8-67
90459-3528	ONE WAY FLOW CONTROL G1/8", MANUAL	1-31
90459-3670	HOOD HAN 3A 19 20 003 1440	1-9, 1-175, 7-69, 7-71
90459-3671	MALE INSERT TB 09 20 003 2611	1-175
90459-3682	ROTARY POSITION SENSOR RPNS090AA1B11A	1-13
90459-3709	CONNECTOR 3-POLE AMP 282087-1	1-13
90459-3760	TRANSFORMER, 1-PH 700VA SEC 6,36A	8-15, 8-17
90459-3784	LIGHT FIXTURE, RL70CE-118	7-5, 7-7
90459-3845	POWER SOCKET, Z-SD230	8-45, 8-47, 8-97, 8-99
90459-4033	RECORDER 12-CHANNEL PAPERLESS FDA-APPR	8-97, 8-99
90459-4055	REMOTE I/O RELAY OUTPUT 2 PTS	1-359, 2-17
90459-4056	REMOTE I/O RTD INPUT 2PTS	1-359
90459-4077	WIRE SEAL , AMP 281934	1-13
90459-4079	MINI MIC SRS, AMP 183035-1	1-13
90459-4089	SAFETY SENSOR NON-CONTACT EVA E	2-57, 2-109
90459-4142	SENSOR, ADAM M12 20-051-00 .	1-27, 1-29, 1-35, 1-57, 1-61, 1-63, 1-65, 1-353, 7-5, 7-7, 7-23
90459-4148	CONN. STR., 1/2"-1/4 ISO 7/1, EXT. THREA	1-209
90459-4151	HOSE ASSEMBLY 12,7 X 304,8 MM	1-209
90459-4164	SAFETY SCREW SM4X20, 20-053-42	1-27, 1-29, 1-35, 1-41, 1-57, 1-61, 1-63, 1-65, 1-353, 7-5, 7-7
90459-4165	SAFETY SCREW SM4X25, 20-053-43	1-27, 1-29, 1-35, 1-61, 1-63, 1-65, 2-57, 2-109, 7-5, 7-7, 7-23, 7-51
90459-4169	HOSE ASSEMBLY 919-1D-1D-8-8-5C-3800	1-269
90459-4179	GASKET 30,5X42X4 MM FDA	1-229, 1-231, 9-9
90459-4186	REDUCER, M32/M25	1-179
90459-4252	CABLE M12-C101, 20-056-10	1-27, 1-29, 1-35, 1-57, 1-61, 1-63, 1-65, 1-353, 7-5, 7-7
90459-4274	SCR. CABLE 2X0,5MM2	1-269, 1-323
90459-4302	EXCIMER LAMP, 510MM 8000 4661	9-17
90459-4304	CLADDING TUBE, 8000 4663	9-17
90459-4305	REFLECTOR, 4515 2838	9-17
90459-4306	LAMP SPACER, 4500 4001	9-17
90459-4307	O-RING 117X4 MM, 4515 0230	9-17
90459-4308	O-RING 40X3 MM, 4515 0228	9-17
90459-4326	O-RING 40X2 MM, 4515 2836	9-17
90459-4327	O-RING 16X2.5 MM, 4515 0229	9-17
90459-4499	GEARS, WORM MOTOR VF 44P-10+BN71C 0.75KW	1-9
90459-4501	EXTRACTOR DEVICE 14.756.082	9-33
90459-4511	CONN. ELBOW, 6	1-205
90459-4554	REGULATOR, MS4-LRB-1/4-D7-A8-AS	1-331, 1-333, 2-29, 2-31, 7-109, 7-111
90459-4585	RADIAL SEAL 25X52X7 MM DUST LIP	5-133, 5-135, 5-137, 5-139, 5-141, 5-143, 5-145, 5-147, 5-149, 5-151, 5-153, 5-155, 5-157, 5-159, 5-161, 5-163, 5-165, 5-167, 5-169, 5-171, 5-173, 5-175, 5-177, 5-179, 5-181, 5-183, 5-185, 5-187, 5-189, 5-191, 5-193, 5-195, 5-197, 5-199, 5-201, 5-203
90459-4686	NON-RETURN VALVE, M12A-C6L-1-EPR-SS	1-247
90459-4697	SUPPLEMENTARY SIGN WARNING ISO, 6 KV	1-53, 1-55
90459-4698	DANGER SIGN ANSI (H), 6 KV	1-53, 1-55
90459-4705	LOCKING PLUG, S 103 A 053-130+ AND 90220	1-201
90459-4718	FEMALE INSERT HAN 3 A 09 20 003 2711	1-175
90459-4728	CLAMPING PIECE 6", C.025 DN 150	1-181
90459-4735	SCREW M6S ISO 4017 M8X10 A480	5-41, 5-69, 5-77, 5-79, 7-105, 11-33, 11-41, 11-85, 11-87, 11-89, 11-107, 11-109, 11-115, 11-135, 11-177, 11-189, 11-195, 11-197, 11-223
90459-4810	PRESS TRANSD (DIFF) 0 - 2000PA, 2681-20C	1-323
90459-4876	FOCUS JUMPER CABLE M12 5P 3M, 20-056-21	2-57, 2-109, 7-5, 7-7
90459-4891	PROGR. IDENTIFIER ID-FIX RW, 20-070-21	8-45, 8-47
90459-4928	PANEL CONNECTOR FEMALE, TYPE K	8-113
90459-4932	REAR CLEVIS FOOT MOUNTING, CRLBN-20/25	4-109, 4-111, 4-113, 4-115
90459-4977	LINEAR ACTUATOR LA 1 SP - SP36 17A16 - 0	1-183
90459-5044	PLC EMPTY SLOT FILLER, 1756-N2 SERIE A	8-33
90459-5154	FLANGE BUSHING, 20X23X11,5 MM	7-97
90459-5177	ANGLE SEAT VALVE W. FLANGES, N.O.8498668	2-241
90459-5178	ANGLE SEAT VALVE W. FLANGES, N.O.8498669	2-241
90459-5179	BALL VALVE 12MM, M12A-B8LJ-SSP-ST	1-283, 1-285
90459-5180	FLOW METER, PROWIRL 72W50-SD0BA1AAA0AW	1-191
90459-5187	CONDUCTIVITY TRANSMITTER CLM223-ID7105	8-97, 8-99
90459-5195	SLIM POWER RAIL,KINETIX,8 AXIS,2094-PRS8	8-51
90459-5253	TERMINAL BLOCK WDK 2,5 V	1-361, 1-363, 2-17, 2-55, 2-103, 2-107, 8-37, 8-39
90459-5261	REMOTE I/O, RELAY OUTP. 4 PTS,1734-OW4/C	1-359, 2-17, 2-107, 6-79, 7-19, 8-35, 8-53, 8-55
90459-5308	CONTACTOR 4KW 24VDC, DILM9-10	8-63, 8-65
90459-5321	OVERLOAD PROTECTION, PKZM0-0,4	8-63, 8-65
90459-5323	OVERLOAD PROTECTION, PKZM0-1	8-63, 8-65

Part No	Description	Page No
90459-5324	OVERLOAD PROTECTION, PKZM0-1,6	8-63, 8-65
90459-5325	OVERLOAD PROTECTION, PKZM0-2,5	8-63, 8-65
90459-5326	OVERLOAD PROTECTION, PKZM0-4	8-63, 8-65
90459-5327	OVERLOAD PROTECTION, PKZM0-6,3	8-63, 8-65
90459-5330	OVERLOAD PROTECTION, PKZM0-16	8-63, 8-65
90459-5333	VERLOAD PROTECTION, PKZM0-32	8-63, 8-65
90459-5440	CONTACTOR 4KW 24VDC, DILM9-01	8-53, 8-55, 8-61, 8-63, 8-65
90459-5441	CONTACTOR 7,5KW 24VDC, DILM17-01	8-61, 8-63, 8-65
90459-5444	CONTACTOR 15KW 24VDC, DILM32-01	8-29, 8-63, 8-65
90459-5529	PH.CELL E3Z-T86A, SENDER+RECIEVER	11-67, 11-211, 11-233
90459-5536	BALL BEARING 12/28X8	7-33
90459-5574	CONNECTOR, 1787-PLUG10R	2-17, 2-55, 8-35, 8-53, 8-55, 8-67
90459-5592	TIMING BELT 25AT10 880 PU	5-133, 5-135, 5-137, 5-139, 5-141, 5-143, 5-145, 5-147, 5-149, 5-151, 5-153, 5-155, 5-157, 5-159, 5-161, 5-163, 5-165, 5-167, 5-169, 5-171
90459-5622	PADLOCK, 1000-U45 1000-U5 1000-26	1-353
90459-5623	KEY, DOUBLE BIT 1004-05	1-353
90459-5627	CONNECTION TINA 1A, 20-054-00	2-83, 7-5, 7-7
90459-5727	BRACKET, REAR, EYE WITH AXLE 50	7-179
90459-5811	RESIDUAL CURRENT DEVICE, FI-25/2/003-A	8-45, 8-47, 8-97, 8-99
90459-5813	AUXILIARY CONTACT, FAZ-XHIN11	8-57, 8-59
90459-5838	TUBE FUSE, 4A	9-17
90459-5840	TUBE FUSE, 10A	9-17
90459-5883	COMMONING BUSBAR, 1-P 1-PH 1X57 MOD 63A	8-41, 8-43, 8-57, 8-59
90459-5884	COMMONING BUSBAR, 3-P 3-PH 3X19 MOD 63A	8-57, 8-59
90459-5886	POWER SUPPLY UNIT 115-230 VAC/24VDC100W	8-45, 8-47, 8-53, 8-55
90459-5901	DIAPHRAGM, 425 EPM SIZE 15	1-245
90459-5949	REAR CLEVIS FOOT MOUNTING, CRLBN-32	4-109, 4-111, 4-113, 4-115
90459-6065	PUSH-IN Y-CONNECTOR QSY-12-8	2-91
90459-6087	DANGER SIGN ANSI (H), HAZARDOUS RESIDUAL	1-53
90459-6096	ROD END, BALL JOINT EYE M16X1,5	7-179
90459-6165	HOSE CLIP, 34 -37 MM	1-261
90459-6215	FLOW SWITCH BFS-10-N-G1/4-MS-NO-ST	1-207
90459-6255	COMP. SPRING 23460, 3,2X35,2X190	1-183
90459-6272	O-RING 304,39X3,53 MM	1-37, 1-39
90459-6311	O-RING 400X3 MM	1-37, 1-39
90459-6335	BALL BEARING 8/22X7	1-321
90459-6387	CONNECTOR 5-POL M12, RSCS 5/9	3-5, 3-7, 3-9, 3-11, 3-13, 3-15, 7-73
90459-6392	INDUCTIV SWITCH E2A-M18LN16-M1-B1	7-125, 7-133
90459-6393	INDUCTIVE SWITCH E2A-M18LS08-M1-B1	1-275
90459-6473	HARDDISK COPYING TOOL, 03607-000	12-5
90459-6480	SCREW ISO4028 M4X25 SS	1-321
90459-6556	PLC DIGITAL INPUT 32PTS, 1756-IB32/B	8-33
90459-6559	PROCESSOR L63, SERIES B, 1756-L63/B	8-33
90459-6560	DIGITAL OUTPUT 8 PTS, 1734-OB8E/C	1-359, 2-17, 2-55, 2-103, 2-107, 6-79, 7-19, 8-35, 8-53, 8-55
90459-6561	DIGITAL INPUT 8 PTS SINK, 1734-IB8/C	2-17, 2-107, 8-35, 8-53, 8-55
90459-6586	ACT/SENS.Y-CABLE, ASBN 2-PRKMV 4-07/0,6M	11-3, 11-5, 11-7, 11-67, 11-211
90459-6604	CABLE SICK DOL-2312-G 05MMA3	7-33
90459-6616	FINGER PROTECTION IP20, NZM1-4-XIPA	6-23
90459-6617	COVER 4-POLE, NZM1-4-XKSA	6-23
90459-6618	CIRCUIT BREAKER, NZMB1-4-A100	6-23
90459-6620	HANDLE, NZM1-XTVDV	6-73, 6-75
90459-6624	FEMALE INSERT HAN E AV, 09 33 006 4735	8-109, 8-111, 8-113
90459-6627	FEMALE INSERT HAN E AV, 09 33 024 4735	8-109, 8-111, 8-113
90459-6630	HOOD 16 B SIDE ENTRY, 19 30 016 1521	6-49
90459-6631	HOOD 24 B SIDE ENTRY, 19 30 024 1522	4-3, 5-205, 5-207, 5-209, 5-211
90459-6632	HOOD 6 B TOP ENTRY, 19 30 006 1440	1-9, 1-175, 1-211, 1-267, 1-279, 2-19, 2-59, 2-97, 7-15, 8-77, 8-79
90459-6634	HOOD 16 B TOP ENTRY, 19 30 016 1421	1-185, 2-59
90459-6636	HOOD 24 B TOP ENTRY, 19 30 024 0427	1-357, 2-19, 2-53, 2-59, 2-97, 7-15, 8-77, 8-79
90459-6638	HOUSING 16B BULKHEAD, 09 30 016 0301	8-113
90459-6639	HOUSING 24B BULKHEAD, 09 30 024 0301	8-109, 8-111, 8-113
90459-6640	HOUSING 6B SURF MOUNT, 19 30 006 1250	2-51
90459-6642	HOUSING 16B SURF MOUNT, 19 30 016 1231	2-51
90459-6643	HOUSING 24B SURF MOUNT, 19 30 024 1231	2-51, 2-59
90459-6661	COMPRESSOR, 2BV5410-8FP02-6S	1-179
90459-6679	CONN 15 P FEM, AUX. FEEDB,2090-K6CK-D15F	7-69, 7-71
90459-6692	SAFETY PLC, PLUTO B20 20-070-06	8-45, 8-47
90459-6731	ENCODER/COUNTER MODULE, 1734-IK SERIES C	1-359, 7-19
90459-6820	FEMALE INSERT HAN 4 A, 09 20 004 2711	6-15, 6-65, 7-69, 7-71, 8-109, 8-111, 8-113
90459-6821	MALE INSERT HAN 4A, 09 20 004 2611	1-279, 1-357, 2-53, 2-59, 2-71, 2-97, 6-19, 6-63, 7-15, 7-69, 7-71
90459-6822	HOUSING 3A BULKHEAD, 09 20 003 0301	8-109, 8-111, 8-113
90459-6850	CONNECTION, PKZM0-XDM12	8-63, 8-65
90459-6851	BASE UNIT, PKZM0-XDM32	8-63, 8-65
90459-6856	FEEDER BLOCK, FAZ/FIP-XVS-KL	8-57, 8-59
90459-6859	HOUS.SIZE 6-24B HAN-SNAP, 09 33 000 9980	8-5, 8-7, 8-9, 8-11, 8-37, 8-39
90459-6881	SPHERICAL WASHER M10 DIN 6319 C SHAPE	1-69, 1-71
90459-6882	CONICAL WASHER M10 DIN 6319 D SHAPE	1-69, 1-71
90459-6956	INTERMEDIARY SHAFT, ZAE/60/423/24H7KEYWA	4-5, 4-7
90459-6961	SAFETY SENSOR, NON CONT. ADAM-E M12 0,5M	2-57, 2-109
90459-6975	SOLENOID VALVE G1/4, 2401186082702400	1-293
90459-6977	SOLENOID VALVE G1/4, V04B286N-B423A	1-293
90459-7081	GLAND, EXTENDED, M16X1,5	1-323

Part No	Description	Page No
90459-7084	FILTER, CPDI0NJM1	6-13, 6-35
90459-7086	DOUBLE ACTING, COMPACT, 50-25	1-11
90459-7095	FOCUS JUMPER CABLE M12 5P 1M, 20-056-20	7-5, 7-7
90459-7102	DOUBLE ACTING, PROFILE,CYL 50-125	7-179
90459-7115	GEARS, PLANETARY MP 080-2-50-15'-16-40-8	5-13, 5-83, 5-85, 5-87, 5-89, 5-91
90459-7173	MOTOR CABLE	7-105
90459-7176	MOTOR CABLE	7-105
90459-7195	STEPPER MOTOR HRA71-DLB04075	3-17, 3-19, 3-21, 3-23, 3-25
90459-7218	HOOD 24 B TOP ENTRY, 19 30 024 1422	7-5, 7-7
90459-7223	REDUCER, M20/M16	6-15, 6-19
90459-7226	REDUCER, M40/M32	7-5, 7-7
90459-7228	ELECTRICAL EQUIPMENT SIGN, TEMPLATE	6-73, 6-75
90459-7229	IDENTIF. OF SINGLE CONDUCTORS, TEMPLATE	8-89, 8-91
90459-7244	PLUG, BLIND, PLASTIC GPN300V5	5-173, 5-175, 5-177, 5-179, 5-181, 5-183, 5-185, 5-187, 5-189, 5-191, 5-193, 5-195, 5-197, 5-199, 5-201, 5-203
90459-7267	POWER SUPPLY 24VDC, 1756-PB75/B	8-33
90459-7273	PHOTOCELL E3Z-T81C-G0SR D-CN	11-127, 11-129
90459-7274	PHOTOCELL E3Z-T81C-G0SR L-CN	11-127, 11-129
90459-7283	SCREW HEX.SOCK.SET CONEPT.MS6SS M5X12 A21	229, 1-231, 7-23, 7-69, 7-71, 7-101, 7-153
90459-7293	SET SCREW DIN 551M5X8 PA66	5-41, 5-65, 5-67, 5-69, 5-77, 11-185, 11-187, 11-189, 11-195
90459-7306	CYLINDER WITH INT. GUIDING BORE 16	7-81
90459-7332	PUSH-IN FITTING QSSF-1/8-4-B	2-29, 2-31
90459-7333	PUSH-IN FITTING QSSF-1/4-4-B	2-29, 2-31, 6-85, 7-109, 7-111
90459-7342	REGULATOR, MS6-LRB-1/2-D7-AS-BD	6-91
90459-7344	PRESSURE GAUGE, MA-40-6-R1/4-EN	1-207, 1-331, 1-333, 2-29, 2-31, 6-85, 7-109, 7-111
90459-7364	PHOTOCELL WS4-3D1430 F20	4-109, 4-111, 4-113, 4-115
90459-7365	PHOTOCELL WE4-3P1430 F20	4-109, 4-111, 4-113, 4-115
90459-7421	PH.CELL WL100-P3439	7-5, 7-7, 7-137
90459-7432	HOUSING 24B SURF MOUNT, 19 30 024 1271	2-51
90459-7441	WASHER PLAIN, DIN 7349, 6,4/17 H=3	7-23, 7-167, 7-171
90459-7458	WARNING SIGN ANSI (H), HOT SURFACE	1-27, 1-29, 1-35, 1-61, 1-63, 1-65, 1-181, 1-189, 1-205, 1-229, 1-231, 1-253, 1-255, 1-257, 1-269, 1-279, 3-17, 3-19, 3-21, 3-23, 3-25, 4-5, 4-7, 5-173, 5-175, 5-177, 5-179, 5-181, 5-183, 5-185, 5-187, 5-189, 5-191, 5-193, 5-195, 5-197, 5-199, 5-201, 5-203, 9-5, 11-243, 11-245, 11-247, 11-249, 11-251
90459-7501	BALL BEARING 8/22X7	7-25
90459-7575	WARNING SIGN ISO, PINCH POINT	7-103
90459-7584	PROHOBITION SIGN ISO, DO NOT REACH IN	11-21, 11-81, 11-153, 11-155, 11-157
90510-5710	SENSOR CABLE 10M, 1XM12 STRAIGHT	4-21
90511-8936	ETHERNET PATCH CABLE FL CAT6 20M	2-59
90600-0140	BALL BEARING 25/47X12	5-33, 5-35, 11-49
90600-0260	CLAMPING PIECE, 10503.000.400.14	1-181
90600-0276	SNAP-IN BALL LOCK, 43X14,5 MM	1-233
90600-0362	PROX. SENSOR, SMTO-4U-PS-S-LED-24	1-169, 1-177
90600-0386	LOCTITE HYSOL 9455 ADHESIVE, 250 GR	7-125
90600-0460	INDUCTIVE SWITCH, E2A-M12KN05-M1-B1-TP	7-5, 7-7, 7-125, 7-133, 7-135
90600-0461	INDUCTIVE SWITCH, E2A-M12KS02-WP-B1-TP5M	2-39, 2-41
90600-0462	INDUCTIVE SWITCH, E2A-M12LN05-M1-B1-TP	1-69, 1-71, 1-233, 1-313, 1-315, 1-317
90600-0463	INDUCTIVE SWITCH,E2A-M12LN05-WP-B1-TP 5M	4-109, 4-111, 4-113, 4-115
90600-0473	INDUCTIVE SWITCH E2A-S08KS01-WP-B1-TP 5M	2-259, 2-261
90600-0477	LOCK HOUSING, 1121-U139	2-161, 2-163, 2-175, 2-219
90600-0495	O-RING 4X2 MM	1-229, 1-231, 1-233, 1-269
90600-0537	INTERMEDIARY SHAFT, ZAE/60/480/28H7KEYWA	4-5, 4-7
90600-0590	FLANGE BUSHING, IGLIDUR J 12X14X4,5	4-39, 4-41, 4-43, 4-45, 4-47, 4-49, 4-51, 4-53, 4-55, 4-57, 4-59, 4-61, 4-63, 4-65, 4-67, 4-71, 4-73, 4-75, 4-77, 4-79, 4-81, 4-83, 4-85, 4-87, 4-89
90600-0614	BLANK PLUG, 16AMP-316-1/2"-3/4"-AR	1-233, 9-5
90600-0644	INTERMEDIARY SHAFT, ZA/60/973/28H7 KEYWA	5-93, 5-95, 5-97, 5-99, 5-101, 5-103, 5-105, 5-107, 5-109, 5-111, 5-113
90600-0657	SCREW UNC 1/4-20 X10	1-189, 1-305, 1-307
90600-0682	INTERMEDIARY SHAFT, ZAE/60/414/24H7KEYWA	4-5, 4-7
90600-0717	HOOD 24 B SIDE ENTRY, 19 30 024 1521	6-77
90600-0719	MARKING, PLATE DEK 5 GW N	8-73
90600-0725	FOOT 32000N, 90600-0725	2-9, 2-39, 2-41, 2-79, 7-5, 7-7
90600-0731	ADJUSTABLE ELBOW CONNECTION,EXT 6-G1/4	1-207
90600-0775	BALL VALVE G1/4, 406F-1/4"	1-279, 2-39, 2-41, 2-149
90600-0805	DOUBLE ACTING, MINI-ISO, CYL. 25-62 MM	1-13
90600-0821	LEVEL PR.,LEVELFLEX-M FMP41C-AKTJKB11A2Y	1-269
90600-0858	INTERMEDIARY SHAFT, ZAE/60/398/24H7KEYWA	4-5, 4-7
90600-0864	GAS SPRING G8-19-250-1-583-AU19-AU19-200	1-299
90600-0936	CABLE M12-C612 5 POLE, 20-056-22	7-23
90600-0943	SOLID STATE RELAY, 3RF2320-1AA04	8-31
90600-0947	SOLID STATE CONTACTOR, 3RF2420-1AB45	8-31
90600-0948	SOLID STATE CONTACTOR, 3RF2430-1AB45	8-31
90600-0967	TRANSDUCER, BTL6-A110-M0650-A1-S115	7-59
90600-0969	MOUNTING BRACKET, BTL6-A-MF03-K-50	7-59
90600-0972	SENSOR CABLE BKS-S116-PU10	7-59
90600-0973	FLOATING MAGNET, BTL6-A-3800-2	7-59
90600-0976	INSERT, SINGLE HOLE, HI.TEMP, EK153I9	1-205, 1-211
90600-1056	KEY SAF.SW. AZM 161SK-12/12RKA 024	7-5, 7-7
90600-1068	SEAL COVER 22X7 MM	3-5, 3-7, 3-9, 3-11, 3-13, 3-15
90600-1092	COMP. SPRING D21550, 0,63X8,63X16	7-85
90600-1154	FLOW METER,D-6230-HGB-BB-AV-99-0-N2/IP65	1-207
90600-1167	PLUG, EXT. R-THREAD, R1/4	1-331, 1-333, 7-115
90600-1168	PUSH-IN FITTING QSSF-1/4-4-B	1-331, 1-333
90600-1169	PLUG G1/4, B-1/4-NPT	1-331, 1-333, 2-29, 2-31, 7-109, 7-111

Part No	Description	Page No
90600-1173	PUSH-IN BULKHEAD FITTING QSSF-1/8-8-B	7-109, 7-111
90600-1175	ELBOW WITH TAILPIECE 8/8 MM	2-29, 2-31, 7-109, 7-111
90600-1200	SCREEN CLAMPING SADDLE, 790-108	8-15, 8-17
90600-1201	BUSBAR U-SHAPED, 790-191	8-15, 8-17
90600-1204	DOUBLE ACTING, COMPACT, 100-15	7-81
90600-1209	TERMINAL BLOCK RELAY, 700-HLT1U2	8-69, 8-71
90600-1211	TERMINAL BLOCK RELAY, 700-HLT1Z24	8-31, 8-69, 8-71
90600-1214	SOLID STATE RELAY, 700-SCNN3Z26	8-31
90600-1219	SOCKET, 700-HN104	8-31
90600-1249	GEARS, HELICAL MOTOR C 112 UF 6.2 S1 B52	7-89
90600-1257	PUMP, 101501081YXXXC3	6-49
90600-1299	TIMING BELT HPPD 720-8M-30	7-89
90600-1390	INCREMENTAL ENCODER, DGS60-G1A02000	7-33
90600-1448	CLAMP, 6016 82 0	1-345, 7-5, 7-7
90600-1454	SAFETY TIME RELAY, E1T-1.0S-24VDC	8-45, 8-47
90600-1459	GEARS, WORM MOTOR MCKB 320P2TB5/S	7-51
90600-1618	TERMINAL BLOCK RELAY, 700-HLS1Z24	2-103
90600-1712	PLUG, EXT. THREAD HEX. SOCKET 09190017	1-179, 1-281
90600-1768	ACTUATOR/SENSOR CABLE RKTS 5-298/5M	1-207, 6-37
90600-1848	ETHERNET SW, FL SWITCH SFN 8TX	8-45, 8-47
90600-1933	SCREW 5X12, DELTA PT 50X12 WN5454 A4	11-35, 11-107, 11-109
90600-1946	VALVE, SEAT, 3A. 9613320304	1-273
90600-1949	CONTACT BLOCK 1NC, ZEN L1121	1-81
90600-1954	CABLE DUCT, CABLE CLIP, 1149379	7-5, 7-7
90600-1984	ACTUATOR/SENSOR CABLE PRKT 5/56-10M	1-183
90600-1986	BALL VALVE RP1/4	2-149
90600-2007	HEATING ELEM.15KW 3X230/400V,T90600-2007	1-185
90600-2031	PRESSURE SENS. SDE1-D10-G2-MS6-C-PU-M8	6-91
90600-2068	DELIVERED DESIGN SIGN, 90600-2068	8-89, 8-91
90600-2107	LEVEL SWITCH, FTL20H-0TCJ2B	1-181
90600-2134	TERMINAL DISCONNECATBLE, WTR 2,5/O.TNHE	8-31, 8-45, 8-47
90600-2135	MODULE CONNECTOR 250V, BEST/D 1878560000	8-31, 8-45, 8-47
90600-2233	INDUCTIVE SENSOR	1-321, 7-25
90600-2446	DISC SPRING, CONICAL 10X5,2X0,7 MM4-71, 4-73, 4-75, 4-77, 4-79, 4-81, 4-83, 4-85, 4-87, 4-89	
90600-2522	FLOATING JOINT, JS32-10-125	1-183
90600-2530	WORM GEAR VF-EP49-P1-7-P71-B14-B6-NP-PV-	7-105
90600-2532	BREATHER PLUG, TSS2G	7-105
90600-2563	SCREW PANHEAD SNAKE EYE SPANNER, M6X12	7-23
90600-2564	SCREW FLATHEAD SNAKE EYE SPANNER, M5X20	7-5, 7-7
90600-2575	BEARING BUSH W/O FLANGE, 10,1X18X12 MM	7-77
90600-2586	HEATING CARTRIDGE, 800W 240V	7-77
90600-2644	INTERMEDIARY SHAFT, ZAE/60/460/24H7 KEYW	4-5, 4-7
90600-2646	ROT.SPRAY NOZZLE, 599.186.1Y.AF.00.0	2-45, 2-85
90600-2650	PUSH-IN T-FITTING KPT08-00	6-11
90600-2651	PUSH-IN FITTING KPH08-02	1-55, 6-11
90600-2653	PUSH-IN L-FITTING KPL08-02	1-55, 6-11, 6-13
90600-2654	PUSH-IN L-FITTING KPL08-00	1-55
90600-2659	SPRING LOADED CATCH, EH 2220.080	7-51
90600-2661	HANDLE, I.222/40N-10	7-97
90600-2667	CARRIAGE, TW-01-15-HKA	7-73
90600-2668	PIPE CLAMP D=28 MM, RSGU 1.28/20 WI	7-157, 7-161
90600-2669	GAS SPRING, LIFT-0-MAT 5072DE (F1=50N)	7-157, 7-161
90600-2670	HANDLE, GN 425-10-200-NI	2-233, 7-175
90600-2721	CLAMPING ELEMENT TLK 250-15-25	7-105
90600-2722	6ALL BUSHING, 30X47X68 MM	7-105
90600-2733	BELLOW COUPLING, 16X16 MM	7-105
90600-2740	RETAINING RING FOR SHAFT DIN 471 47 SS	7-105
90600-2788	FLANGE BUSHING, 10X16X12 MM	4-71, 4-73, 4-75, 4-77, 4-79, 4-81, 4-83, 4-85, 4-87, 4-89
90600-2793	DOUBLE ACTING, COMPACT, 25-10	7-103
90600-2811	SCHOCK ABSORBER, PM 15 MF - 1B	4-109, 4-111, 4-113, 4-115
90600-2812	HEXAGON NUT, M12X1, JN M12X1.0 PRO 15 MF	4-109, 4-111, 4-113, 4-115
90600-2813	TIMING BELT 16AT10/730 PU	5-133, 5-135, 5-137, 5-139, 5-141, 5-143, 5-145, 5-147, 5-149, 5-151, 5-153, 5-155, 5-157, 5-159, 5-161, 5-163, 5-165, 5-167, 5-169, 5-171
90600-2814	TIMING BELT 16AT10/660 PU	5-133, 5-135, 5-137, 5-139, 5-141, 5-143, 5-145, 5-147, 5-149, 5-151, 5-153, 5-155, 5-157, 5-159, 5-161, 5-163, 5-165, 5-167, 5-169, 5-171
90600-2816	TIMING BELT 16AT10/800 PU	5-173, 5-175, 5-177, 5-179, 5-181, 5-183, 5-185, 5-187, 5-189, 5-191, 5-193, 5-195, 5-197, 5-199, 5-201, 5-203
90600-2830	FASTENING ELEMENT, BLOCKSEP-E 01026	8-75
90600-2837	BEARING BUSH W/O FLANGE, 8,2X15X12 MM	7-81, 7-99
90600-2848	GRILL, LZ30	6-65
90600-2852	PRESSURE SENS. SDE1-D10-G2-MS4-C-PU-M8	7-115
90600-2854	LINEAR BUSHING 8X16X25	7-49
90600-2862	LEVEL SWITCH, LIQUIPHANT FTL20-0025	1-287, 1-289
90600-2896	SPRAY NOZZLE 125 DEG B1/8 K - SS ,75	4-109, 4-111, 4-113, 4-115
90600-2897	BALL BEARING 6/19X6	7-35, 7-39, 7-47, 7-63, 7-65
90600-2900	PUMP, 1272514	6-11
90600-2901	TANK 10L, TANKPE010	6-11
90600-2902	STERILE WATER SYSTEM, ZLXS5003Y	6-15
90600-2904	EARTH BRAID, 250/16/8,5	8-15, 8-17, 8-81, 8-83, 8-85, 8-87, 8-89, 8-91, 8-93, 8-95, 8-101, 8-107, 8-113
90600-2905	COMP. SPRING 21060, 1,25X17,25X10	5-217, 5-219, 5-221, 5-223, 5-225, 5-227, 5-229
90600-2975	SNAKE EYES SPANNER BITS 1/4", SP-10	9-39, 12-5
90600-3003	BUSHING,INT/EXT THREAD, 534147	7-113
90600-3021	KEY FOR SAFETY SWITCH AZM - 161 - BIF	7-157, 7-169, 7-173

Part No	Description	Page No
90600-3039	BLADE, C5321 ART: 27.50	7-101
90600-3040	RUNNER BLOCK, 1666-114-20	7-101
90600-3042	GUIDE BAR, 15X16,2X450	7-101
90600-3045	DOUBLE ACTING, MINI-ISO, CYL. 16-40	4-21
90600-3047	BUSHING,INT/EXT THREAD, 1/4"GAS - 1/4"GA	7-79
90600-3050	REGULATOR, SA-235942A	2-29, 2-31
90600-3051	GUIDE BAR, 15X15,5X380 MM	7-73
90600-3053	DIAL GAUGE MITUTOYO 1160	9-37
90600-3054	BEARING HOUSING, RJUM-01-30	7-69, 7-71
90600-3055	FLEXIBLE CHAIN, BRACKET 582.1.2	7-69, 7-71
90600-3056	FLEXIBLE CHAIN, BRACKET 580.1.1	7-69, 7-71
90600-3066	ROD END, ID=5 MM, M5	7-91
90600-3072	CONVEYOR CHAIN, L1765654842N1	11-3, 11-5, 11-7
90600-3159	FILTER HOUSING, MDS4463G58383	1-243, 1-247
90600-3267	MAINTENANCE KIT, TPAKKIT01	9-25
90600-3268	FILTER CARTRIDGE, PROG000S2	6-15
90600-3278	INTERMEDIARY SHAFT, ZAE/60/432/24H7KEYWA	4-5, 4-7
90600-3293	MOTOR PWWER CABLE 2090-XXNPMF-16S09	1-235, 1-237, 3-17, 3-19, 3-21, 3-23, 3-25
90600-3294	MOTOR FEEDBACK CABLE 2090-XXNFMF-S09/C	1-235, 1-237, 3-17, 3-19, 3-21, 3-23, 3-25
90600-3313	BUSHING, 10X14X10 MM	1-155, 1-157, 1-159
90600-3339	PAPER REEL TROLLEY, TP A3	9-3
90600-3415	BELT TENSION METER, TRUMMETER	12-5
90600-3432	STEPPER MOTOR HRA71-D1B09036	1-151
90600-3558	GASKET 16,2X21,8X4,45 MM 3/4"	1-243, 1-267, 1-269, 1-271
90600-3559	CLAMPING PIECE, 211290	1-243, 1-267, 1-269, 1-271
90600-3567	SNAKE EYES SPANNER BIT 1/4", 199 560	12-5
90600-3597	SIGN, PAPER MAGAZINE PRESSURE ROLLER	7-13
90600-3677	BUSHING, 15X21X20 MM	1-21
90600-3690	SENSOR CABLE SIM-M8-4GD-2,5-PU	6-91, 7-115
90600-3697	SDL FLEX CABLE 10M, 5CASDL.0100-03	2-223
90600-3699	END CAP 1,5", 210854	9-53
90600-3701	BALL VALVE 1/2NPT	1-243, 1-247
90600-3726	COAXIAL GEARED MOTOR, R17DT71D4	11-3, 11-5, 11-7
90600-3817	HOOD TOP ENTRY, 19 30 006 0446	1-179
90600-3824	QUICK-LOCK, 701S-C-SS	1-309
90600-3840	FUSE HOLDER CYLINDRICAL FUSE, 3NC1 093	8-57, 8-59
90600-3852	BALL BEARING, 20X47X14 MM	1-11, 1-17
90600-3853	LOCK NUT MISUMI, HLBS17	1-11, 1-17
90600-3899	RUBBER BUFFER, TYPE D 30/15 ART. NO. 319	7-125
90600-3924	CONDUCTIVITY SENSOR CLS 54-ACS1022	1-273
90600-3960	ROTARY ACTUATOR DSM-25-270-P-A-B	7-133, 7-135
90600-3964	SWIVEL FLANGE 16	1-33
90600-3965	ROOF FASTENING SCREW, PS 4198.000	8-5, 8-7, 8-9, 8-11
90600-4033	DIGITAL OUTPUT MODULE, 1756-OB16IS	8-33
90600-4040	CAUTION SIGN ANSI (H), DO NOT REACH IN	11-243, 11-245, 11-247, 11-249, 11-251
90600-4048	LIGHT FIXTURE, TCH128 1XTL5-14W/830 HF	8-5, 8-7, 8-9, 8-11
90600-4354	PROP. PRESS. REG., VPPE-3-1/8-6-010	1-207
90600-4392	TEMPERATURE SENSOR, TR45-BF5A1Q3MA0000	1-275
90600-4464	CONNECTION, TEPKKIT01	6-15
90600-4542	LOCK CAM, 1000-227-01	2-161, 2-163, 2-175, 2-219
90600-4631	PROX.SWITCH IE5412	1-235, 1-237
90600-4683	COVER, GPN 340 SW4	4-91, 4-93
90600-4717	FLANGE BUSHING, IGLIDUR Z 16X18X14	4-57, 4-59, 4-61, 4-63, 4-65, 4-67, 4-83, 4-85, 4-87, 4-89
90600-4741	EXPANSION JOINT, TEGUFLEX P DN50 PN10 DI	1-179
90600-4782	FLEXIBLE COUPLING, 12X12 MM	2-229
90600-4783	HOOD HAN 6 B 19 30 032 0429	1-49
90600-4785	INCREMENTAL ENCODER, DFS60E - BHAC02000	7-69, 7-71
90600-4802	HOUSING 16B BULKHEAD, 09 30 032 0301	1-49
90600-4803	HAN PNEUMATIC MOD., 09140034501	1-49
90600-4804	HAN DUMMY MODULE, 09140009950	1-49
90600-4805	HAN PNEUMATIC FITTING, 09140006153	1-49
90600-4806	HAN PNEUMATIC FITTING, 09140006253	1-49
90600-4807	MALE INSERT HAN Q 09 12 005 3001	1-9
90600-4808	FEMALE INSERT HAN Q, 09 12 005 3101	1-9
90600-4814	PHASE MONITORING RELAY, EMR4-AWN280-1-F	8-69, 8-71
90600-4835	HOUSING 3A SURF MOUNT, 19 20 003 1252	1-9, 1-175
90600-4876	CONNECTION BOX TINA 8A , 20-054-05	2-83
90600-4887	TENSION SPRING T32940, 3,6X25X89,7	1-303
90600-4917	HINGE FLANGE, SCLBGN8 -12	1-87, 1-89, 1-103, 1-105
90600-5002	OPERATOR PANEL, 5AP920_1505-K42-C0	2-223
90600-5011	MOTOR PLINTH, 58142	1-185
90600-5059	TORQUE RIGID COUPLING, 6X6 MM	1-151
90600-5075	HANDLE, RHOA-12.55.01	7-159
90600-5083	LOCK HOUSING, 1121-SU161-C	1-347, 1-353
90600-5084	LEVER MECHANISM, 1125-SU404	2-161, 2-163, 2-175, 2-219
90600-5161	HANDLE, 116.11.644	8-101
90600-5163	RETAINER CLIP, 700-HN114	8-31
90600-5212	AXIS MOD. W. PS,2094-BC02-M02-S SERIES B	8-51
90600-5213	AXIS MOD. KINETIX 6000,2094-BMP5-S SER.B	8-51
90600-5214	AXIS MOD. KINETIX 6000,2094-BM01-S SER.B	8-51
90600-5216	AXIS MOD. KINETIX 6000,2094-BM02-S SER.B	8-51
90600-5249	FERRITE, B64290L616X38	8-33, 8-45, 8-47, 8-51
90600-5250	LINE FILTER, B84111FB30	8-97, 8-99
90600-5253	LINE FILTER, B84113HB60	8-15, 8-17

Part No	Description	Page No
90600-5258	LINE FILTER, B84143A35R106	8-15, 8-17
90600-5266	FEED THROUGH FILTER, B85321A2502W160	6-23
90600-5267	LINE FILTER, B84144A120R120	6-23
90600-5269	CIRCUIT.BREAKER, NZMB1-AF100-NA	6-23
90600-5270	COVER 3-POLE, NZM1-XKSA	6-23
90600-5272	ROTARY DOOR HANDLE, NZM1-XTVDV-NA	6-73, 6-75
90600-5274	ACTUATOR SAFETY SWITCH, 103845	2-57, 2-109
90600-5275	KEY FOR SAF.SW.TZRE024PG RC1635-104068 Z	2-109
90600-5387	INTERMEDIARY SHAFT, ZA/60/1287/24H7/14H7	5-93, 5-95, 5-97, 5-99, 5-101, 5-103, 5-105, 5-107, 5-109, 5-111, 5-113
90600-5388	INTERMEDIARY SHAFT, ZA/60/603/24H7/14H7	5-133, 5-135, 5-137, 5-139, 5-141, 5-143, 5-145, 5-147, 5-149, 5-151, 5-153, 5-155, 5-157, 5-159, 5-161, 5-163, 5-165, 5-167, 5-169, 5-171
90600-5389	INTERMEDIARY SHAFT, ZA/60/1052/24H7/14H7	5-93, 5-95, 5-97, 5-99, 5-101, 5-103, 5-105, 5-107, 5-109, 5-111, 5-113
90600-5390	INTERMEDIARY SHAFT, ZA/60/1027/24H7/14H7	5-93, 5-95, 5-97, 5-99, 5-101, 5-103, 5-105, 5-107, 5-109, 5-111, 5-113
90600-5391	INTERMEDIARY SHAFT, ZA/60/1047/24H7/14H7	5-93, 5-95, 5-97, 5-99, 5-101, 5-103, 5-105, 5-107, 5-109, 5-111, 5-113
90600-5392	INTERMEDIARY SHAFT, ZA/60/636/24H7/14H7	5-133, 5-135, 5-137, 5-139, 5-141, 5-143, 5-145, 5-147, 5-149, 5-151, 5-153, 5-155, 5-157, 5-159, 5-161, 5-163, 5-165, 5-167, 5-169, 5-171
90600-5393	INTERMEDIARY SHAFT, ZA/60/583/24H7/14H7	5-133, 5-135, 5-137, 5-139, 5-141, 5-143, 5-145, 5-147, 5-149, 5-151, 5-153, 5-155, 5-157, 5-159, 5-161, 5-163, 5-165, 5-167, 5-169, 5-171
90600-5394	INTERMEDIARY SHAFT, ZA/60/607/24H7/14H7	5-133, 5-135, 5-137, 5-139, 5-141, 5-143, 5-145, 5-147, 5-149, 5-151, 5-153, 5-155, 5-157, 5-159, 5-161, 5-163, 5-165, 5-167, 5-169, 5-171
90600-5395	INTERMEDIARY SHAFT, ZA/60/624/24H7/14H7K	5-133, 5-135, 5-137, 5-139, 5-141, 5-143, 5-145, 5-147, 5-149, 5-151, 5-153, 5-155, 5-157, 5-159, 5-161, 5-163, 5-165, 5-167, 5-169, 5-171
90600-5464	CABLE LEAD-IN, KEL-DPZ 24/17	1-357
90600-5465	CABLE LEAD-IN, KEL-DPZ 24/42	1-357
90600-5517	AUXILIARY CONTACT, Z-NHK 248434	8-27, 8-57, 8-59
90600-5519	BUSBAR, Z-SV/UL-16/1P-1TE/12 104893	8-41, 8-43
90600-5526	BUSBAR, Z-SV/UL-16/3P-3TE/18 104900	8-57, 8-59
90600-5531	DOUBLE ACTING, MINI-ISO, CYL. 32-50	4-109, 4-111, 4-113, 4-115
90600-5532	GAS PRING G10-23-100-1290-AU19-AU19-1200	5-173, 5-175, 5-177, 5-179, 5-181, 5-183, 5-185, 5-187, 5-189, 5-191, 5-193, 5-195, 5-197, 5-199, 5-201, 5-203
90600-5539	BEARING SEAL 17X26X5	1-21
90600-5541	DOUBLE ACTING, COMPACT, CYL 16-25	1-33
90600-5548	FILTER, MS6-LFM-1/4-AUV	1-207
90600-5583	INK JET PRINTER A300+EUR, TP 90600-5583	11-59
90600-5584	INK JET PRINTER A300+ARAB, TP 90600-5584	11-59
90600-5585	INK JET PRINTER A300+CHIN, TP 90600-5585	11-59
90600-5586	INK JET PRINTER A300+JAPA, TP 90600-5586	11-59
90600-5587	INK JET PRI. A300+GR/RUSS, TP 90600-5587	11-59
90600-5655	MOTOR POWER CABLE 2090-XXNPMF-14S09/A	3-17, 3-19, 3-21, 3-23, 3-25
90600-5745	INTOUCH OEM 10.000 V.9,5 HW KEY USB	8-97, 8-99
90600-5770	PRESSURE TRANSMITTER 10 BAR, 3100-B0010G	6-37
90600-5773	TABLETS FOR SANITIZING, ZWCL01F50	6-15
90600-5782	PROX. SENSOR, SMT-8M-PS-24V-K8,0-OE	1-73
90600-5783	TEMP. SENSOR, 902522/10-386-1003-1-11-90	1-229, 1-231
90600-5788	SENSOR BRACKET, SMBR-20	1-169
90600-5814	COOLING UNIT, KB40A0721.06	8-115
90600-5840	PLC DEVICEN. BR./SCAN MOD, 1756-DNB, D	8-33
90600-5900	CONN. BULKHEAD. SS-8MO-61-6M	2-259, 2-261
90600-5901	NEEDLE VALVE FOR 8 MM,SS-92S8MM-0-SI	2-259, 2-261
90600-5905	COMP. SPRING D23060, 2,5X22,5X81,5	4-23, 4-25
90600-5906	COMP. SPRING D 23340, 3,2X23,2X49,5	4-23, 4-25
90600-5988	GAS SPRING, 4919 DE	7-97
90600-5995	BUSHING, 35X39X20 MM	4-21
90600-5996	FLANGE BUSHING, IGLIDUR Z 20X23X21,5	4-21
90600-6015	VENTING VALVE, 12003 (+ 11163)	1-279
90600-6017	RADIAL SEAL 21,8X30X6 MM DUST LIP	1-11, 1-17
90600-6028	GUIDE FOR PLATE 3X14MM, 1121-U71-N	8-81, 8-83, 8-85, 8-87, 8-89, 8-91, 8-93, 8-95
90600-6029	T-HANDLE, 1000-U775	8-81, 8-83, 8-85, 8-87
90600-6031	BLOCK-NUT-M6, 4106-C	8-5, 8-7, 8-9, 8-11
90600-6035	QUICK EXHAUST VALVE, SEU-1/4	7-79
90600-6183	TUBULAR RIVET 3,5X6,2	5-79, 11-33, 11-85, 11-87, 11-89, 11-135, 11-177, 11-197
90600-7006	HOSE CLIP, 34 - 38 MM	2-45
90600-7487	SURGE PROTECTION DEV., VAL-MS 230/3+1 FM	6-23
90600-7506	SUPPORT PLATE, 26798	11-65
90600-7746	FLANGE BUSHING, 10X12X10 MM	7-27
90600-7827	PHOTOCELL E3ZM-T81-L 5M	5-25, 5-33, 5-35, 5-37, 5-39
90600-7828	PHOTOCELL E3ZM-T81-D 5M	5-25, 5-33, 5-35, 5-37, 5-39
90600-7846	SERVO MOTOR MPS-B310P-M-X183, ESM	5-13, 5-83, 5-85, 5-87, 5-89, 5-91
90600-7866	MOTOR FEEDBACK CABLE 2090-XXNFMF-S07/C	5-13, 5-83, 5-85, 5-87, 5-89, 5-91
90600-7867	MOTOR POWER CABLE 2090-XXNPMF-16S07/A	5-13, 5-83, 5-85, 5-87, 5-89, 5-91
90600-8108	GREASE, OKS 1110 NSF H1, 15G	1-87, 1-89, 1-91, 1-93, 1-95, 1-97, 1-99, 1-103, 1-105, 1-107, 1-109, 1-117, 1-119, 1-121, 1-123, 1-125, 1-127, 1-133, 1-135, 1-137, 1-139, 1-141, 1-143, 1-287, 1-289
90600-8126	CYLINDER WITH INT. GUIDING BORE 10	7-69, 7-71
90600-8306	COMP. SPRING 3887, 3X20X40,2	1-155, 1-157, 1-159
90600-8406	SPACER, 1000-S1455-SK	2-161, 2-163, 2-175, 2-219
90600-8708	AIR KNIFE, LL40100	11-65
90600-8806	BUSHING, 15X19X12 MM	1-21
90601-0006	ACTUATOR/SENSOR CABLE DOL-1208-G20MAC1	7-69, 7-71
90601-0626	COOLING UNIT, KWS10	1-357

Part No	Description	Page No
90601-0646	SERVO MOTOR MPL-B320P-SJ72AA SERIES A	1-235, 1-237
90601-0926	VALVE, 0968.50085	1-269
90601-1326	COMPUTOR APC620, 5P62:TETRAPAK-30	8-97, 8-99
90601-1727	STEEL BALL 15MM, RB-15 INOX316	1-201
90601-1808	GEARS, HELICAL MOTOR R17DT71D4MM05/MLU/B	11-127, 11-129
90601-1989	SERVO MOTOR MPL-B320P-MK74AA SERIES A	7-105
90601-2046	CAPTIVE SCREW M6, GUTBG 6-4-12	1-205, 1-249, 1-279, 1-299, 1-303, 1-351, 1-353, 2-181 2-193, 2-195, 2-197, 2-199, 2-201, 2-203, 5-173, 5-175, 5-177, 5-179, 5-181, 5-183, 5-185, 5-187 5-189, 5-191, 5-193, 5-195, 5-197, 5-199, 5-201, 5-203, 9-45
90601-2426	BUSHING, 22X281X31 MM	1-11
90601-2446	FLANGE BUSHING, 8X12X10 MM	1-87, 1-89, 1-91, 1-93, 1-95, 1-97, 1-99, 1-103, 1-105, 1-107 1-109, 1-117, 1-119, 1-121, 1-123, 1-125, 1-127, 1-133, 1-135, 1-137, 1-139, 1-141, 1-143, 9-9
90601-2466	CAPTIVE SCREW M6, GUTBG 6-4-20	1-189
90601-2686	VARISTOR FILTER, B72210S0250K101	8-31
90601-3167	GREASE, BARRIERTA L55/2 NSF H1, 100G	1-11, 1-17
90601-3710	PADLOCK, LRVS-D	7-109, 7-111
90601-5151	SERVO MOTOR MPL-B330P-SJ72AA SERIES A	3-17, 3-19, 3-21, 3-23, 3-25
90601-5870	SERVO MOTOR MPL-B430P-SJ72AA SERIES A	3-17, 3-19, 3-21, 3-23, 3-25
90601-6030	SERVO MOTOR MPL-B4540F-MJ72AA SERIES A	3-17, 3-19, 3-21, 3-23, 3-25
90601-6070	SERVO MOTOR MPL-B4540F-MJ74AA SERIES A	3-17, 3-19, 3-21, 3-23, 3-25
90601-6170	SERVO MOTOR MPL-B540D-MJ72AA SERIES A	3-17, 3-19, 3-21, 3-23, 3-25
90601-6658	OPTOCOUPLER, DEK-OV-24DC/24DC/3	11-63
90601-7150	NIPPLE EXT. THREAD HEX. SF 149 FR 14-7	6-21
90601-8470	PRESSURE REGULATOR, GD-30S G 1/2	1-243
90602-0970	PNEUMATIC NEEDLE VALVE, SS-92S6MM-C-S1	1-271, 2-259, 2-261
90602-1250	LIGHT FIXTURE, SLIM LED 112-544-001	8-5, 8-7, 8-9, 8-11
90602-1710	PUSH-IN L-FITTING KPL06-02	6-11
90602-2911	O-RING 19,2X3 MM FDA, 3-A	1-221
90602-2912	O-RING 49,5X3 MM FDA, 3-A	1-221
90602-3310	TIMING BELT 25AT5/725 PU	4-27, 4-29, 4-31
90602-3531	PRESSURE EXPANSION VESSEL, 13424	6-39
90602-3893	FLOW CONTROL VALVE, GRLSA-1/8-QS-6	7-109, 7-111
90602-3913	PRESSURE EXPANSION VESSEL, 13224	1-281
90602-4056	PUMP 101511061YXXXP6 SV806 F556 T/P	6-49
90602-4058	CONNECTION BOX TINA 4A, 20-054-03	7-5, 7-7
90602-4406	CONN. STR., 8-G1/4, EXT. THREAD	6-33
90602-4847	THREAD LOCKING, LOCTITE 243 50 ML	5-127, 5-129, 5-131
90602-7487	SERVO MOTOR MPL-B540D-MJ74AA SERIES A	3-17, 3-19, 3-21, 3-23, 3-25
90602-9178	PUSH BUTTON, WHITE	7-13
90602-9317	MOTOR 1LA9073-2KA12	2-251
90603-0788	PUMP, CM3-6 X-R-G-V AQQV O-A-A-N	6-37
90603-1353	SENSOR BRACKET E11975	4-21
90603-1413	VALVE 4-WAY H2O2, 424-PP-ALL-RA4	2-249
209183-0000	RING	1-275
255977-0000	SHAFT	1-195, 1-197
255978-0000	FORK	1-195, 1-197
257330-0000	PRESSURE ROLLER (10 PCS)	9-9
263150-0000	BRACKET	7-93, 7-147
263152-0000	SHAFT	7-93, 7-147
263153-0000	NUT	7-93, 7-147
263311-0000	WASHER	1-75
266737-0000	WASHER	1-321
269151-0000	SHAFT	1-155, 1-157, 1-159
271860-0000	CLAMP BLOCK	1-27, 1-29, 1-35, 1-61, 1-63, 1-65
272479-0000	PRESSURE ROLLER (10PCS)	9-9
272728-0000	BARRIER	7-21
272990-0000	VOLUME BULGE	4-39, 4-41, 4-43, 4-45, 4-47, 4-49, 4-51, 4-53, 4-55, 4-71, 4-73, 4-75, 4-77 4-79, 4-81
272991-0000	VOLUME SHIM	4-39, 4-41, 4-43, 4-45, 4-47, 4-49, 4-51, 4-53, 4-55, 4-71, 4-73, 4-75, 4-77, 4-79 4-81, 9-7
273429-0000	WASHER	1-185
273450-0000	SIGN, AIR SPRAY	1-331, 1-333
273452-0000	SIGN, ROLLING MACHINE FOR FABRICS	1-331, 1-333
273455-0000	SIGN, COLD WATER	6-81
273458-0000	SIGN, AIR	7-109, 7-111
273953-0000	SEAL	1-145
273977-0000	NUT	2-253, 12-29
273978-0000	LEVEL GLAS	2-253, 12-29
273980-0000	SPRING	2-253, 12-29
273981-0000	GASKET	2-243
273985-0000	CARRIAGE	12-33
273996-0000	NUT	2-253, 12-29
276360-0000	SPRING	1-31
279008-0000	BUSHING	1-23
295377-0001	HOOD	1-195, 1-197
311102-1355	PARALLEL PIN ISO 2338 6M6X24 ST	7-51
311103-0233	PARALLEL PIN ISO 2338 3M6X10 A1	1-87, 1-89, 1-103, 1-105
311103-0235	PARALLEL PIN ISO 2338 3M6X14 A1	1-13, 7-33, 12-31
311103-0236	PARALLEL PIN ISO 2338 3M6X16 A1	1-91, 1-93, 1-95, 1-97, 1-107, 1-109, 7-97, 7-105
311103-0238	PARALLEL PIN ISO 2338 3M6X20 A1	1-155, 1-157, 1-159, 7-101
311103-0267	PARALLEL PIN ISO 2338 4M6X10 A1	1-41, 7-81
311103-0268	PARALLEL PIN ISO 2338 4M6X12 A1	4-39, 4-41, 4-43, 4-45, 4-47, 4-49, 4-51, 4-53, 4-55, 4-57 4-59, 4-61, 4-63, 4-65, 4-67, 4-71, 4-73, 4-75, 4-77, 4-79, 4-81, 4-83, 4-85, 4-87, 4-89, 5-127 5-129, 5-131

Part No	Description	Page No
311103-0270 ..	PARALLEL PIN ISO 2338 4M6X16 A1	1-287, 1-289, 2-251
311103-0272 ..	PARALLEL PIN ISO 2338 4M6X20 A1	5-13, 5-83, 5-85, 5-87, 5-89, 5-91
311103-0274 ..	PARALLEL PIN ISO 2338 4M6X25 A1	7-69, 7-71
311103-0276 ..	PARALLEL PIN ISO 2338 4M6X30 A1	1-155, 1-157, 1-159, 5-83, 5-85, 5-87, 5-89, 5-91
311103-0277 ..	PARALLEL PIN ISO 2338 4M6X32 A1	7-77
311103-0305 ..	PARALLEL PIN ISO 2338 5M6X10 A1	1-177, 5-13, 5-83, 5-85, 5-87, 5-89, 5-91
311103-0306 ..	PARALLEL PIN ISO 2338 5M6X12 A1	1-155, 1-157, 1-159
311103-0307 ..	PARALLEL PIN ISO 2338 5M6X14 A1	1-177, 5-83, 5-85, 5-87, 5-89, 5-91
311103-0308 ..	PARALLEL PIN ISO 2338 5M6X16 A1	1-73, 1-303, 4-99, 4-101, 4-103, 4-105
311103-0310 ..	PARALLEL PIN ISO 2338 5M6X20 A1	1-47, 4-109, 4-111, 4-113, 4-115, 7-27
311103-0311 ..	PARALLEL PIN ISO 2338 5M6X22 A1	5-13, 5-83, 5-85, 5-87, 5-89, 5-91
311103-0314 ..	PARALLEL PIN ISO 2338 5M6X30 A1	7-49
311103-0349 ..	PARALLEL PIN ISO 2338 6M6X12 A1	5-173, 5-175, 5-177, 5-179, 5-181, 5-183, 5-185, 5-187, 5-189, 5-191, 5-193, 5-195, 5-197, 5-199, 5-201, 5-203, 5-217, 5-219, 5-221, 5-223, 5-225, 5-227, 5-229
311103-0351 ..	PARALLEL PIN ISO 2338 6M6X16 A1	1-73, 4-99, 4-101, 4-103, 4-105, 5-133, 5-135, 5-137, 5-139, 5-141, 5-143, 5-145, 5-147, 5-149, 5-151, 5-153, 5-155, 5-157, 5-159, 5-161, 5-163, 5-165, 5-167, 5-169, 5-171, 7-5, 7-7, 7-27, 11-139, 11-141
311103-0352 ..	PARALLEL PIN ISO 2338 6M6X18 A1	5-127, 5-129, 5-131, 5-173, 5-175, 5-177, 5-179, 5-181, 5-183, 5-185, 5-187, 5-189, 5-191, 5-193, 5-195, 5-197, 5-199, 5-201, 5-203
311103-0353 ..	PARALLEL PIN ISO 2338 6M6X20 A1	4-91, 4-93, 5-83, 5-85, 5-87, 5-89, 5-91
311103-0355 ..	PARALLEL PIN ISO 2338 6M6X25 A1	5-13, 5-25, 5-83, 5-85, 5-87, 5-89, 5-91
311103-0358 ..	PARALLEL PIN ISO 2338 6M6X32 A1	4-33, 4-35
311103-0359 ..	PARALLEL PIN ISO 2338 6M6X35 A1	7-81
311103-0367 ..	PARALLEL PIN ISO 2338 6M6X55 A1	1-31
311103-0401 ..	PARALLEL PIN ISO 2338 8M6X20 A1	2-39, 2-41, 3-5, 3-7, 3-9, 3-11, 3-13, 3-15, 4-9, 4-11, 4-13, 4-15, 4-17, 4-19, 5-15, 5-93, 5-95, 5-97, 5-99, 5-101, 5-103, 5-105, 5-107, 5-109, 5-111, 5-113, 5-133, 5-135, 5-137, 5-139, 5-141, 5-143, 5-145, 5-147, 5-149, 5-151, 5-153, 5-155, 5-157, 5-159, 5-161, 5-163, 5-165, 5-167, 5-169, 5-171, 5-231, 5-233, 7-23
311103-0404 ..	PARALLEL PIN ISO 2338 8M6X28 A1	1-305, 1-307
311103-0405 ..	PARALLEL PIN ISO 2338 8M6X30 A1	2-39, 2-41, 5-93, 5-95, 5-97, 5-99, 5-101, 5-103, 5-105, 5-107, 5-109, 5-111, 5-113, 5-231, 5-233
311103-0413 ..	PARALLEL PIN ISO 2338 8M6X50 A1	1-27, 1-29, 1-35, 1-61, 1-63, 1-65
311103-0454 ..	PARALLEL PIN ISO 2338 10M6X20 A1	4-5, 4-7
311103-0458 ..	PARALLEL PIN ISO 2338 10M6X30 A1	7-77
311103-0470 ..	PARALLEL PIN ISO 2338 10M6X60 A1	7-119, 7-121, 7-123
311103-1274 ..	PARALLEL PIN ISO 2338 4M6X24 A1	7-21
311103-1312 ..	PARALLEL PIN ISO 2338 5M6X24 A1	11-139, 11-141
311103-1355 ..	PARALLEL PIN ISO 2338 6M6X24 A1	4-109, 4-111, 4-113, 4-115, 7-77, 7-119, 7-121, 7-123
311103-1403 ..	PARALLEL PIN ISO 2338 8M6X24 A1	1-287, 1-289, 5-83, 5-85, 5-87, 5-89, 5-91, 5-93, 5-95, 5-97, 5-99, 5-101, 5-103, 5-105, 5-107, 5-109, 5-111, 5-113, 5-231, 5-233
311111-0345 ..	SPRING PIN ISO 8752 6X32-ST	9-61
311112-0256 ..	SPRING PIN, ISO 8752 4X20-C	3-5, 3-7, 3-9, 3-11, 3-13, 3-15
311112-0258 ..	SPRING PIN, ISO 8752 4X24-C	4-71, 4-73, 4-75, 4-77, 4-79, 4-81
311112-0306 ..	SPRING PIN, ISO 8752 5X16-C	4-71, 4-73, 4-75, 4-77, 4-79, 4-81
311112-0308 ..	SPRING PIN, ISO 8752 5X20-C	4-71, 4-73, 4-75, 4-77, 4-79, 4-81, 4-83, 4-85, 4-87, 4-89
311112-0310 ..	SPRING PIN, ISO 8752 5X24-C	4-83, 4-85, 4-87, 4-89
311112-0316 ..	SPRING PIN, ISO 8752 5X40-C	5-133, 5-135, 5-137, 5-139, 5-141, 5-143, 5-145, 5-147, 5-149, 5-151, 5-153, 5-155, 5-157, 5-159, 5-161, 5-163, 5-165, 5-167, 5-169, 5-171
311112-0341 ..	SPRING PIN, ISO 8752 6X24-C	7-23
311112-0385 ..	SPRING PIN, ISO 8752 8X50-C	7-21
311520-0315 ..	RIVET, BLANK 2,4X4	8-5, 8-7, 8-9, 8-11
311520-0320 ..	RIVET, BLANK 2,4X6	8-97, 8-99
311520-0329 ..	RIVET, BLANK 2,4X8	6-73, 6-75
311521-0142 ..	RIVET, BLANK 3,2X6	2-209
311521-0143 ..	RIVET, BLANK 3,2X8	6-73, 6-75
312101-0455 ..	SCREW M6S M8X30 FZB	7-5, 7-7
312101-0559 ..	SCREW M6S M12X140 FZB	5-83, 5-85, 5-87, 5-89, 5-91
312101-0678 ..	SCREW M6S M20X70 FZB	9-57
312104-0461 ..	SCREW M6S M8X50H FZB	1-309, 2-143
312105-0287 ..	SCREW M6S ISO 4017 M4X8 A470	1-57, 1-155, 1-157, 1-159, 1-185, 1-189, 1-191, 1-215, 2-59, 4-71, 4-73, 4-75, 4-77, 4-79, 4-81, 5-173, 5-175, 5-177, 5-179, 5-181, 5-183, 5-185, 5-187, 5-189, 5-191, 5-193, 5-195, 5-197, 5-199, 5-201, 5-203, 7-81, 7-119, 7-121, 7-123
312105-0289 ..	SCREW M6S H4X10 A4 70 ISO4017/DIN933	1-37, 1-39, 1-91, 1-93, 1-95, 1-97, 1-107, 1-109, 1-207, 1-215, 2-183, 2-259, 2-261, 7-27, 7-33, 7-35, 7-47, 7-49, 7-63, 7-65, 9-35, 11-139, 11-141, 12-11, 12-13, 12-15
312105-0291 ..	SCREW M6S ISO 4017 M4X12 A470	1-13, 1-207, 4-95, 4-97, 6-65, 7-25, 7-29, 7-151, 11-145
312105-0293 ..	SCREW M6S ISO 4017 M4X16 A470	1-87, 1-89, 1-103, 1-105, 1-207, 1-293, 2-209, 4-83, 4-85, 4-87, 4-89, 5-173, 5-175, 5-177, 5-179, 5-181, 5-183, 5-185, 5-187, 5-189, 5-191, 5-193, 5-195, 5-197, 5-199, 5-201, 5-203, 7-51
312105-0295 ..	SCREW M6S ISO 4017 M4X20 A470	1-155, 1-157, 1-159, 4-71, 4-73, 4-75, 4-77, 4-79, 4-81, 4-83, 4-85, 4-87, 4-89, 6-63, 6-65, 7-25, 12-11, 12-13, 12-15
312105-0297 ..	SCREW M6S ISO 4017 M4X25 A470	1-169, 7-31, 7-33, 7-109, 7-111, 7-119, 7-121, 7-123
312105-0299 ..	SCREW M6S ISO 4017 M4X30 A470	1-155, 1-157, 1-159, 7-59, 7-61
312105-0301 ..	SCREW M6S ISO 4017 M4X35 A470	1-75, 1-207, 7-81
312105-0303 ..	SCREW M6S ISO 4017 M4X40 A470	1-229, 1-231
312105-0323 ..	SCREW M6S ISO 4017 M5X8 A480	1-99, 5-55, 5-57, 5-133, 5-135, 5-137, 5-139, 5-141, 5-143, 5-145, 5-147, 5-149, 5-151, 5-153, 5-155, 5-157, 5-159, 5-161, 5-163, 5-165, 5-167, 5-169, 5-171, 11-239
312105-0325 ..	SCREW M6S ISO 4017 M5X10 A480	1-13, 1-79, 1-145, 1-155, 1-157, 1-159, 1-207, 1-233, 2-29, 2-31, 2-183, 4-109, 4-111, 4-113, 4-115, 7-59, 7-69, 7-71, 7-119, 7-121, 7-123, 12-17, 12-19
312105-0327 ..	SCREW M6S ISO 4017 M5X12 A480	1-33, 1-49, 1-57, 1-69, 1-71, 1-73, 1-155, 1-157, 1-159, 1-169, 1-283, 1-285, 1-309, 1-323, 2-39, 2-41, 2-183, 4-39, 4-41, 4-43, 4-45, 4-47, 4-49, 4-51, 4-53, 4-55, 4-57, 4-59, 4-61, 4-63, 4-65, 4-67, 4-71, 4-73, 4-75, 4-77, 4-79, 4-81, 4-83, 4-85, 4-87, 4-89, 4-109, 4-111, 4-113, 4-115, 5-25, 5-33, 5-35, 5-37, 5-39, 5-43, 5-45, 5-47, 5-49, 6-33, 7-77, 7-119, 7-121, 7-123, 7-157, 7-169, 7-173, 9-41, 9-43, 11-139, 11-141

Part No	Description	Page No
312105-0329 ..	SCREW M6S ISO 4017 M5X16 A480	1-33, 1-87, 1-89, 1-91, 1-93, 1-95, 1-97, 1-103, 1-105, 1-107, 1-109, 1-125, 1-127, 1-169, 1-173, 1-305, 1-307, 1-321, 1-351, 1-353, 1-357, 2-233, 2-259, 2-261, 3-5, 3-7, 3-9, 3-11, 3-13, 3-15, 5-173, 5-175, 5-177, 5-179, 5-181, 5-183, 5-185, 5-187, 5-189, 5-191, 5-193, 5-195, 5-197, 5-199, 5-201, 5-203, 6-9, 7-5, 7-7, 7-51, 7-107, 7-109, 7-111, ... 7-119, 7-121, 7-123, 11-139, 11-141, 11-239
312105-0331 ..	SCREW M6S ISO 4017 M5X20 A480	1-41, 1-91, 1-93, 1-95, 1-97, 1-107, 1-109, 1-117, 1-119, 1-121, 1-123, 1-125, 1-127, 1-135, 1-137, 1-139, 1-141, 1-321, 4-109, 4-111, 4-113, 4-115, 6-11, 7-175
312105-0332 ..	SCREW M6S ISO 4017 M5X22 A470	 1-169
312105-0333 ..	SCREW M6S ISO 4017 M5X25 A480	1-133, 1-137, 1-209, 1-233, 2-161, 2-163, 2-175, 2-185, ... 2-219, 7-31
312105-0335 ..	SCREW M6S ISO 4014 M5X30 A480	..... 1-17, 7-69, 7-71, 7-91
312105-0337 ..	SCREW M6S ISO 4014 M5X35 A480	..... 2-29, 2-31, 7-59
312105-0339 ..	SCREW M6S ISO 4014 M5X40 A480	..... 1-37, 1-39, 6-9
312105-0340 ..	SCREW M6S ISO 4014 M5X45 A480	 1-293
312105-0341 ..	SCREW M6S ISO 4014 M5X50 A480	..... 3-17, 3-19, 3-21, 3-23, 3-25, 6-7
312105-0362 ..	SCREW M6S ISO 4017 M6X8 A480	1-37, 1-39, 1-69, 1-71, 1-155, 1-157, 1-159, 1-189, 1-229, 1-231, 1-233, 2-225, 5-217, 5-219, 5-221, 5-223, 5-225, 5-227, 5-229, 7-25, 7-61, 11-23, 11-135, 11-143
312105-0364 ..	SCREW M6S ISO 4017 M6X10 A480	1-13, 1-155, 1-157, 1-159, 1-305, 1-307, 1-323, 1-347, 1-357, 2-43, 2-49, 2-91, 2-179, 2-259, 2-261, 3-5, 3-7, 3-9, 3-11, 3-13, 3-15, 4-5, 4-7, 4-39, 4-41, 4-43, 4-45, 4-47, 4-49, 4-51, 4-53, 4-55, 4-71, 4-73, 4-75, 4-77, 4-79, 4-81, 4-109, 4-111, 4-113, ... 4-115, 7-5, 7-7, 7-23, 7-27, 7-105, 7-125, 11-143, 11-161, 11-163, 12-11, 12-13, 12-15
312105-0366 ..	SCREW M6S ISO 4017 M6X12 A480	1-9, 1-13, 1-15, 1-19, 1-21, 1-31, 1-41, 1-45, 1-49, 1-55, 1-73, 1-177, 1-185, 1-207, 1-209, 1-229, 1-231, 1-245, 1-275, 1-279, 1-283, 1-285, 1-293, 1-295, 1-303, 1-331, 1-333, 1-345, 1-351, 1-353, 2-29, 2-31, 2-39, 2-41, 2-45, 2-51, 2-53, 2-79, 2-81, 2-99, 2-111, 2-161, 2-163, 2-175, 2-205, 2-209, 2-215, 2-217, 2-219, 2-227, 2-229, 2-233, 2-239, 2-249, 2-255, 2-273, 3-5, 3-7, 3-9, 3-11, 3-13, 3-15, 4-9, 4-11, 4-13, 4-15, 4-17, 4-19, 4-27, 4-29, 4-31, 4-33, 4-35, 4-57, 4-59, 4-61, 4-63, 4-65, 4-67, 4-71, 4-73, 4-75, 4-77, 4-79, 4-81, 4-83, 4-85, 4-87, 4-89, 4-91, 4-93, 4-109, 4-111, 4-113, 4-115, 5-21, 5-37, 5-39, 5-43, 5-45, 5-47, 5-49, 5-53, 5-73, 5-83, 5-85, 5-87, 5-89, 5-91, 5-115, 5-117, 5-133, 5-135, 5-137, 5-139, 5-141, 5-143, 5-145, 5-147, 5-149, 5-151, 5-153, 5-155, 5-157, 5-159, 5-161, 5-163, 5-165, 5-167, 5-169, 5-171, 5-237, 5-239, 6-7, 6-11, 6-39, 7-5, 7-7, 7-29, 7-37, 7-69, 7-71, 7-93, 7-109, 7-111, 7-141, 7-143, 7-145, 7-147, ... 7-155, 9-47, 11-23, 11-25, 11-31, 11-49, 11-65, 11-67, 11-85, 11-87, 11-89, 11-211
312105-0367 ..	SCREW M6S ISO 4017 M6X14 A480	2-85, 5-15, 5-43, 5-45, 5-47, 5-49, 5-51, 6-77, 7-149, ... 11-165, 11-167
312105-0368 ..	SCREW M6S ISO 4017 M6X16 A480	1-9, 1-11, 1-17, 1-19, 1-27, 1-29, 1-33, 1-35, 1-37, 1-39, 1-41, 1-45, 1-57, 1-61, 1-63, 1-65, 1-69, 1-71, 1-73, 1-143, 1-155, 1-157, 1-159, 1-207, 1-281, 1-283, 1-285, 1-293, 1-299, 1-313, 1-315, 1-317, 1-331, 1-333, 1-341, 1-345, 1-351, 1-353, 1-355, 1-357, 2-9, 2-15, 2-27, 2-29, 2-31, 2-35, 2-59, 2-61, 2-63, 2-69, 2-79, 2-101, 2-105, 2-179, 2-229, 2-243, 2-259, 2-261, 2-267, 4-21, 4-39, 4-41, 4-43, 4-45, 4-47, 4-49, 4-51, 4-53, 4-55, 4-57, 4-59, 4-61, 4-63, 4-65, 4-67, 4-83, 4-85, 4-87, 4-89, 4-99, 4-101, 4-103, 4-105, 4-109, 4-111, 4-113, 4-115, 5-19, 5-21, 5-25, 5-33, 5-35, 5-37, 5-39, 5-43, 5-45, 5-47, 5-49, 5-53, 5-83, 5-85, 5-87, 5-89, 5-91, 5-93, 5-95, 5-97, 5-99, 5-101, 5-103, 5-105, 5-107, 5-109, 5-111, 5-113, 5-115, 5-117, 5-127, 5-129, 5-131, 5-133, 5-135, 5-137, 5-139, 5-141, 5-143, 5-145, 5-147, 5-149, 5-151, 5-153, 5-155, 5-157, 5-159, 5-161, 5-163, 5-165, 5-167, 5-169, 5-171, 5-173, 5-175, 5-177, 5-179, 5-181, 5-183, 5-185, 5-187, 5-189, 5-191, 5-193, 5-195, 5-197, 5-199, 5-201, 5-203, 5-217, 5-219, 5-221, 5-223, 5-225, 5-227, 5-229, 6-7, 6-21, 6-23, 6-55, 6-57, 6-61, 6-85, 6-89, 7-5, 7-7, 7-27, 7-29, 7-33, 7-67, 7-83, 7-107, 7-109, 7-111, 7-125, 7-133, 7-135, 7-179, 8-115, 9-47, 11-23, 11-47, ... 11-49, 11-67, 11-93, 11-95, 11-97, 11-127, 11-129, 11-151, 11-171, 11-217, 11-233
312105-0370 ..	SCREW M6S ISO 4017 M6X20 A480	1-9, 1-11, 1-15, 1-17, 1-19, 1-23, 1-25, 1-31, 1-37, 1-39, 1-47, 1-69, 1-71, 1-87, 1-89, 1-103, 1-105, 1-117, 1-119, 1-121, 1-123, 1-135, 1-155, 1-157, 1-159, 1-167, 1-169, 1-177, 1-187, 1-239, 1-245, 1-281, 1-287, 1-289, 1-299, 1-301, 1-313, 1-315, 1-317, 1-345, 1-357, 2-39, 2-41, 2-49, 2-99, 2-125, 2-127, 2-139, 2-141, 2-229, 2-251, 2-271, 3-5, 3-7, 3-9, 3-11, 3-13, 3-15, 4-23, 4-25, 4-33, 4-35, 4-57, 4-59, 4-61, 4-63, 4-65, 4-67, 4-99, 4-101, 4-103, 4-105, 5-13, 5-17, 5-25, 5-33, 5-35, 5-37, 5-39, 5-43, 5-45, 5-47, 5-49, 5-73, 5-83, 5-85, 5-87, 5-89, 5-91, 5-93, 5-95, 5-97, 5-99, 5-101, 5-103, 5-105, 5-107, 5-109, 5-111, 5-113, 5-115, 5-117, 5-133, 5-135, 5-137, 5-139, 5-141, 5-143, 5-145, 5-147, 5-149, 5-151, 5-153, 5-155, 5-157, 5-159, 5-161, 5-163, 5-165, 5-167, 5-169, 5-171, 5-173, 5-175, 5-177, 5-179, 5-181, 5-183, 5-185, 5-187, 5-189, 5-191, 5-193, 5-195, 5-197, 5-199, 5-201, 5-203, 5-217, 5-219, 5-221, 5-223, 5-225, 5-227, 5-229, 6-81, 6-89, 7-11, 7-25, 7-27, 7-49, 7-51, 7-53, 7-55, 7-81, 7-105, 7-133, 7-135, 7-145, 7-149, ... 11-25, 11-31, 11-49, 11-101, 11-103, 11-127, 11-129, 11-143, 11-159
312105-0371 ..	SCREW M6S ISO 4017 M6X22 A480	..... 5-83, 5-85, 5-87, 5-89, 5-91
312105-0372 ..	SCREW M6S ISO 4017 M6X25 A480	1-13, 1-21, 1-33, 1-37, 1-39, 1-41, 1-43, 1-55, 1-155, 1-157, 1-159, 1-201, 1-283, 1-285, 1-299, 1-313, 1-315, 1-317, 1-345, 1-347, 2-251, 3-5, 3-7, 3-9, 3-11, 3-13, 3-15, 4-39, 4-41, 4-43, 4-45, 4-47, 4-49, 4-51, 4-53, 4-55, 4-57, 4-59, 4-61, 4-63, 4-65, 4-67, 4-71, 4-73, 4-75, 4-77, 4-79, 4-81, 4-83, 4-85, 4-87, 4-89, 4-109, 4-111, 4-113, 4-115, 5-37, 5-39, 5-83, 5-85, 5-87, 5-89, 5-91, 5-115, 5-117, 5-133, 5-135, 5-137, 5-139, 5-141, 5-143, 5-145, 5-147, 5-149, 5-151, 5-153, 5-155, 5-157, 5-159, 5-161, 5-163, 5-165, 5-167, 5-169, 5-171, 5-173, 5-175, 5-177, 5-179, 5-181, 5-183, 5-185, 5-187, 5-189, 5-191, 5-193, 5-195, 5-197, 5-199, 5-201, 5-203, 5-217, 5-219, 5-221, 5-223, 5-225, 5-227, 5-229, 5-237, 5-239, 7-37, 7-59, 7-69, 7-71, 7-73, ... 7-75, 7-89, 7-119, 7-121, 7-123, 7-153, 9-59, 11-65, 11-67, 11-217
312105-0374 ..	SCREW M6S ISO 4014 M6X30 A480	1-155, 1-157, 1-159, 1-287, 1-289, 1-303, 2-229, 4-21, 4-27, 4-29, 4-31, 4-71, 4-73, 4-75, 4-77, 4-79, 4-81, 4-91, 4-93, 4-109, 4-111, 4-113, 4-115, 5-25, 5-133, 5-135, 5-137, 5-139, 5-141, 5-143, 5-145, 5-147, 5-149, 5-151, 5-153, 5-155, 5-157, 5-159, ... 5-161, 5-163, 5-165, 5-167, 5-169, 5-171, 7-27, 7-29, 7-105, 12-31
312105-0376 ..	SCREW M6S ISO 4014 M6X35 A480	1-55, 2-161, 2-163, 2-175, 2-219, 4-27, 4-29, 4-31, 4-71, 4-73, 4-75, 4-77, 4-79, 4-81, 4-109, 4-111, 4-113, 4-115, 5-15, 5-25, 5-33, 5-35, 5-173, 5-175, 5-177, 5-179, 5-181, 5-183, 5-185, 5-187, 5-189, 5-191, 5-193, 5-195, 5-197, 5-199, 5-201, 5-203, ... 7-51, 7-133, 7-135, 11-127, 11-129
312105-0378 ..	SCREW M6S ISO 4014 M6X40 A480	1-299, 1-347, 2-27, 2-35, 2-39, 2-41, 2-229, 5-15, 5-173, 5-175, 5-177, 5-179, 5-181, 5-183, 5-185, 5-187, 5-189, 5-191, 5-193, 5-195, 5-197, 5-199, 5-201, ... 5-203, 6-9, 7-59, 11-3, 11-5, 11-7, 11-121
312105-0379 ..	SCREW M6S ISO 4014 M6X45 A480	1-303, 2-243, 4-83, 4-85, 4-87, 4-89, 5-133, 5-135, 5-137, 5-139, 5-141, 5-143, 5-145, 5-147, 5-149, 5-151, 5-153, 5-155, 5-157, 5-159, 5-161, 5-163, 5-165, ... 5-167, 5-169, 5-171

Part No	Description	Page No
312105-0380 ..	SCREW M6S ISO 4014 M6X50 A480	1-299, 4-27, 4-29, 4-31, 5-173, 5-175, 5-177, 5-179, 5-181 ..... 5-183, 5-185, 5-187, 5-189, 5-191, 5-193, 5-195, 5-197, 5-199, 5-201, 5-203, 7-33, 7-59
312105-0381 ..	SCREW M6S ISO 4014 M6X55 A480	1-181, 1-299, 4-95, 4-97, 5-133, 5-135, 5-137, 5-139 5-141, 5-143, 5-145, 5-147, 5-149, 5-151, 5-153, 5-155, 5-157, 5-159, 5-161, 5-163, 5-165, 5-167 ..... 5-169, 5-171, 5-213, 5-215, 5-217, 5-219, 5-221, 5-223, 5-225, 5-227, 5-229, 7-125
312105-0382 ..	SCREW M6S ISO 4014 M6X60 A480	..... 1-147, 1-149, 1-191, 7-21, 7-125
312105-0383 ..	SCREW M6S ISO 4014 M6X65 A480	3-5, 3-7, 3-9, 3-11, 3-13, 3-15, 5-133, 5-135, 5-137, 5-139 5-141, 5-143, 5-145, 5-147, 5-149, 5-151, 5-153, 5-155, 5-157, 5-159, 5-161, 5-163, 5-165, 5-167 ..... 5-169, 5-171, 5-217, 5-219, 5-221, 5-223, 5-225, 5-227, 5-229, 12-17, 12-19
312105-0384 ..	SCREW M6S ISO 4014 M6X70 A480	1-287, 1-289, 3-17, 3-19, 3-21, 3-23, 3-25, 4-21, 4-33, 4-35, 7-179
312105-0386 ..	SCREW M6S ISO 4014 M6X80 A480	..... 4-33, 4-35, 5-83, 5-85, 5-87, 5-89, 5-91
312105-0388 ..	SCREW M6S ISO 4014 M6X90 A480	..... 3-5, 3-7, 3-9, 3-11, 3-13, 3-15, 4-33, 4-35, 11-111
312105-0447 ..	SCREW M6S ISO 4017 M8X12 A480	1-69, 1-71, 1-169, 2-79, 2-139, 2-141, 2-225, 2-229, 2-245 ..... 2-271, 4-5, 4-7, 5-55, 5-57, 11-21, 11-23, 11-81, 11-105, 11-121, 11-173, 12-11, 12-13, 12-15
312105-0449 ..	SCREW M6S ISO 4017 M8X16 A480	1-27, 1-29, 1-53, 1-133, 1-137, 1-139, 1-141, 1-151, 1-177 1-179, 1-201, 1-279, 1-287, 1-289, 2-143, 2-237, 2-241, 2-255, 3-5, 3-7, 3-9, 3-11, 3-13, 3-15, 4-9 4-11, 4-13, 4-15, 4-17, 4-19, 4-33, 4-35, 4-91, 4-93, 5-33, 5-35, 5-37, 5-39, 5-83, 5-85, 5-87, 5-89 5-91, 5-133, 5-135, 5-137, 5-139, 5-141, 5-143, 5-145, 5-147, 5-149, 5-151, 5-153, 5-155, 5-157 5-159, 5-161, 5-163, 5-165, 5-167, 5-169, 5-171, 5-173, 5-175, 5-177, 5-179, 5-181, 5-183, 5-185 5-187, 5-189, 5-191, 5-193, 5-195, 5-197, 5-199, 5-201, 5-203, 5-217, 5-219, 5-221, 5-223, 5-225 ..... 5-227, 5-229, 6-55, 7-5, 7-7, 11-49, 11-67, 11-85, 11-87, 11-89, 11-135, 11-217, 12-33
312105-0451 ..	SCREW M6S ISO 4017 M8X20 A480	1-13, 1-27, 1-29, 1-35, 1-37, 1-39, 1-61, 1-63, 1-65, 1-107 1-109, 1-117, 1-125, 1-127, 1-139, 1-141, 1-151, 1-155, 1-157, 1-159, 1-175, 1-185, 1-201, 1-239 1-253, 1-255, 1-257, 1-267, 1-283, 1-285, 1-303, 1-309, 2-43, 2-75, 2-85, 2-143, 2-241, 2-243 2-245, 2-259, 2-261, 3-5, 3-7, 3-9, 3-11, 3-13, 3-15, 3-17, 3-19, 3-21, 3-23, 3-25, 5-41, 5-53, 5-73 5-83, 5-85, 5-87, 5-89, 5-91, 5-93, 5-95, 5-97, 5-99, 5-101, 5-103, 5-105, 5-107, 5-109, 5-111 5-113, 5-133, 5-135, 5-137, 5-139, 5-141, 5-143, 5-145, 5-147, 5-149, 5-151, 5-153, 5-155, 5-157 5-159, 5-161, 5-163, 5-165, 5-167, 5-169, 5-171, 5-173, 5-175, 5-177, 5-179, 5-181, 5-183, 5-185 5-187, 5-189, 5-191, 5-193, 5-195, 5-197, 5-199, 5-201, 5-203, 6-39, 6-55, 7-69, 7-71, 7-89, 7-105 11-31, 11-67, 11-93, 11-95, 11-101, 11-111, 11-121, 11-135, 11-151, 11-177, 11-201, 11-209 ..... 11-211, 11-217, 12-11, 12-13, 12-15
312105-0452 ..	SCREW M6S ISO 4017 M8X22 A480	 1-21
312105-0453 ..	SCREW M6S ISO 4017 M8X25 A480	1-11, 1-37, 1-39, 1-69, 1-71, 1-119, 1-121, 1-123, 1-143 1-173, 1-175, 1-179, 1-183, 1-185, 1-187, 1-233, 1-253, 1-255, 1-257, 1-283, 1-285, 1-287, 1-289 1-305, 1-307, 2-39, 2-41, 2-43, 2-237, 2-241, 3-5, 3-7, 3-9, 3-11, 3-13, 3-15, 4-5, 4-7, 4-91, 4-93 4-95, 4-97, 5-13, 5-83, 5-85, 5-87, 5-89, 5-91, 5-115, 5-117, 5-133, 5-135, 5-137, 5-139, 5-141 5-143, 5-145, 5-147, 5-149, 5-151, 5-153, 5-155, 5-157, 5-159, 5-161, 5-163, 5-165, 5-167, 5-169 5-171, 5-173, 5-175, 5-177, 5-179, 5-181, 5-183, 5-185, 5-187, 5-189, 5-191, 5-193, 5-195, 5-197 5-199, 5-201, 5-203, 5-205, 5-207, 5-209, 5-211, 5-217, 5-219, 5-221, 5-223, 5-225, 5-227, 5-229 5-231, 5-233, 6-37, 6-49, 6-51, 7-5, 7-7, 7-11, 7-23, 7-59, 7-89, 7-105, 7-125, 11-23, 11-47, 11-55 ..... 11-61, 11-67, 11-121, 11-127, 11-129, 11-135, 11-219, 11-229
312105-0455 ..	SCREW M6S ISO 4017 M8X30 A480	1-37, 1-39, 1-69, 1-71, 1-133, 1-135, 1-137, 1-175, 1-195 1-197, 1-253, 1-255, 1-257, 1-279, 1-283, 1-285, 2-43, 2-45, 3-5, 3-7, 3-9, 3-11, 3-13, 3-15, 4-23 4-25, 4-27, 4-29, 4-31, 4-95, 4-97, 5-37, 5-39, 5-83, 5-85, 5-87, 5-89, 5-91, 5-133, 5-135, 5-137 5-139, 5-141, 5-143, 5-145, 5-147, 5-149, 5-151, 5-153, 5-155, 5-157, 5-159, 5-161, 5-163, 5-165 5-167, 5-169, 5-171, 5-173, 5-175, 5-177, 5-179, 5-181, 5-183, 5-185, 5-187, 5-189, 5-191, 5-193 5-195, 5-197, 5-199, 5-201, 5-203, 5-217, 5-219, 5-221, 5-223, 5-225, 5-227, 5-229, 7-149, 11-49 ..... 11-67, 11-121, 12-31
312105-0457 ..	SCREW M6S ISO 4014 M8X35 A480	1-117, 2-11, 3-5, 3-7, 3-9, 3-11, 3-13, 3-15, 4-9, 4-11, 4-13 4-15, 4-17, 4-19, 4-23, 4-25, 5-33, 5-35, 5-37, 5-39, 5-133, 5-135, 5-137, 5-139, 5-141, 5-143 5-145, 5-147, 5-149, 5-151, 5-153, 5-155, 5-157, 5-159, 5-161, 5-163, 5-165, 5-167, 5-169, 5-171 ..... 5-217, 5-219, 5-221, 5-223, 5-225, 5-227, 5-229, 7-83, 7-105, 11-49
312105-0459 ..	SCREW M6S ISO 4014 M8X40 A480	3-5, 3-7, 3-9, 3-11, 3-13, 3-15, 4-23, 4-25, 4-27, 4-29, 4-31 5-133, 5-135, 5-137, 5-139, 5-141, 5-143, 5-145, 5-147, 5-149, 5-151, 5-153, 5-155, 5-157, 5-159 ..... 5-161, 5-163, 5-165, 5-167, 5-169, 5-171, 7-23, 7-59, 7-105, 11-25, 12-33
312105-0460 ..	SCREW M6S ISO 4014 M8X45 A480	2-271, 4-5, 4-7, 5-37, 5-39, 5-217, 5-219, 5-221, 5-223 ..... 5-225, 5-227, 5-229, 7-105, 11-25
312105-0461 ..	SCREW M6S ISO 4014 M8X50 A480	3-5, 3-7, 3-9, 3-11, 3-13, 3-15, 4-95, 4-97, 5-33, 5-35 5-173, 5-175, 5-177, 5-179, 5-181, 5-183, 5-185, 5-187, 5-189, 5-191, 5-193, 5-195, 5-197, 5-199 ..... 5-201, 5-203, 11-137
312105-0462 ..	SCREW M6S ISO 4014 M8X55 A480	1-279, 1-299, 4-9, 4-11, 4-13, 4-15, 4-17, 4-19, 4-27, 4-29 4-31
312105-0463 ..	SCREW M6S ISO 4014 M8X60 A480	3-17, 3-19, 3-21, 3-23, 3-25, 4-9, 4-11, 4-13, 4-15, 4-17 ..... 4-19, 5-41, 5-217, 5-219, 5-221, 5-223, 5-225, 5-227, 5-229, 11-127, 11-129, 11-177
312105-0464 ..	SCREW M6S ISO 4014 M8X65 A480	4-9, 4-11, 4-13, 4-15, 4-17, 4-19, 5-217, 5-219, 5-221 ..... 5-223, 5-225, 5-227, 5-229, 7-23
312105-0465 ..	SCREW M6S ISO 4014 M8X70 A480	..... 4-9, 4-11, 4-13, 4-15, 4-17, 4-19
312105-0466 ..	SCREW M6S ISO 4014 M8X75 A480	2-247, 4-27, 4-29, 4-31, 4-33, 4-35, 5-217, 5-219, 5-221 ..... 5-223, 5-225, 5-227, 5-229
312105-0467 ..	SCREW M6S ISO 4014 M8X80 A480	4-9, 4-11, 4-13, 4-15, 4-17, 4-19, 4-27, 4-29, 4-31, 5-55 5-57, 5-217, 5-219, 5-221, 5-223, 5-225, 5-227, 5-229, 11-35, 11-85, 11-87, 11-89, 11-107, 11-109
312105-0469 ..	SCREW M6S ISO 4014 M8X90 A480	4-9, 4-11, 4-13, 4-15, 4-17, 4-19, 4-27, 4-29, 4-31, 5-217 ..... 5-219, 5-221, 5-223, 5-225, 5-227, 5-229, 11-21, 11-35, 11-85, 11-87, 11-89
312105-0471 ..	SCREW M6S ISO 4014 M8X100 A480	4-9, 4-11, 4-13, 4-15, 4-17, 4-19, 4-27, 4-29, 4-31, 5-93 ..... 5-95, 5-97, 5-99, 5-101, 5-103, 5-105, 5-107, 5-109, 5-111, 5-113
312105-0475 ..	SCREW M6S ISO 4014 M8X120 A480	..... 4-27, 4-29, 4-31
312105-0477 ..	SCREW M6S ISO 4014 M8X130 A480	..... 5-13, 5-83, 5-85, 5-87, 5-89, 5-91
312105-0487 ..	SCREW M6S ISO 4017 M10X12 A480	 7-179
312105-0489 ..	SCREW M6S ISO 4017 M10X16 A480	1-69, 1-71, 3-5, 3-7, 3-9, 3-11, 3-13, 3-15, 5-231, 5-233 ..... 7-179, 12-37
312105-0491 ..	SCREW M6S ISO 4017 M10X20 A480	1-269, 1-305, 1-307, 2-125, 2-127, 3-17, 3-19, 3-21, 3-23 3-25, 4-57, 4-59, 4-61, 4-63, 4-65, 4-67, 5-41, 5-93, 5-95, 5-97, 5-99, 5-101, 5-103, 5-105, 5-107 ..... 5-109, 5-111, 5-113, 11-177, 12-33
312105-0492 ..	SCREW M6S ISO 4017 M10X22 A480	..... 5-205, 5-207, 5-209, 5-211

Part No	Description	Page No
312105-0493 ..	SCREW M6S ISO 4017 M10X25 A480	1-87, 1-89, 1-91, 1-93, 1-95, 1-97, 1-253, 1-255, 1-257 1-305, 1-307, 5-133, 5-135, 5-137, 5-139, 5-141, 5-143, 5-145, 5-147, 5-149, 5-151, 5-153, 5-155 5-157, 5-159, 5-161, 5-163, 5-165, 5-167, 5-169, 5-171, 5-205, 5-207, 5-209, 5-211, 5-217, 5-219 ..... 5-221, 5-223, 5-225, 5-227, 5-229, 7-25, 7-179, 11-67
312105-0495 ..	SCREW M6S ISO 4017 M10X30 A480	1-185, 1-195, 1-197, 1-253, 1-255, 1-257, 1-269, 2-125 2-127, 2-139, 2-141, 2-143, 3-5, 3-7, 3-9, 3-11, 3-13, 3-15, 5-93, 5-95, 5-97, 5-99, 5-101, 5-103 ..... 5-105, 5-107, 5-109, 5-111, 5-113, 5-217, 5-219, 5-221, 5-223, 5-225, 5-227, 5-229, 6-55
312105-0497 ..	SCREW M6S ISO 4017 M10X35 A480	1-179, 5-173, 5-175, 5-177, 5-179, 5-181, 5-183, 5-185 ..... 5-187, 5-189, 5-191, 5-193, 5-195, 5-197, 5-199, 5-201, 5-203
312105-0499 ..	SCREW M6S ISO 4014 M10X40 A480	1-179, 4-9, 4-11, 4-13, 4-15, 4-17, 4-19, 5-133, 5-135 5-137, 5-139, 5-141, 5-143, 5-145, 5-147, 5-149, 5-151, 5-153, 5-155, 5-157, 5-159, 5-161, 5-163 5-165, 5-167, 5-169, 5-171, 5-173, 5-175, 5-177, 5-179, 5-181, 5-183, 5-185, 5-187, 5-189, 5-191 5-193, 5-195, 5-197, 5-199, 5-201, 5-203, 5-217, 5-219, 5-221, 5-223, 5-225, 5-227, 5-229, 5-231 ..... 5-233, 6-49
312105-0500 ..	SCREW M6S ISO 4014 M10X45 A480	..... 4-9, 4-11, 4-13, 4-15, 4-17, 4-19, 7-119, 7-121, 7-123
312105-0501 ..	SCREW M6S ISO 4014 M10X50 A480	..... 4-9, 4-11, 4-13, 4-15, 4-17, 4-19
312105-0502 ..	SCREW M6S ISO 4014 M10X55 A480	3-17, 3-19, 3-21, 3-23, 3-25, 5-133, 5-135, 5-137, 5-139 5-141, 5-143, 5-145, 5-147, 5-149, 5-151, 5-153, 5-155, 5-157, 5-159, 5-161, 5-163, 5-165, 5-167 ..... 5-169, 5-171
312105-0503 ..	SCREW M6S ISO 4014 M10X60 A480	5-133, 5-135, 5-137, 5-139, 5-141, 5-143, 5-145, 5-147 ..... 5-149, 5-151, 5-153, 5-155, 5-157, 5-159, 5-161, 5-163, 5-165, 5-167, 5-169, 5-171, 9-31
312105-0505 ..	SCREW M6S ISO 4014 M10X70 A480	1-305, 1-307, 5-173, 5-175, 5-177, 5-179, 5-181, 5-183 ..... 5-185, 5-187, 5-189, 5-191, 5-193, 5-195, 5-197, 5-199, 5-201, 5-203
312105-0506 ..	FITTED BOLT M10X75MM	..... 2-125, 2-127
312105-0517 ..	SCREW M6S ISO 4014 M10X130 A480	 1-299
312105-0532 ..	SCREW M6S ISO 4017 M12X20 A480	..... 1-11, 4-9, 4-11, 4-13, 4-15, 4-17, 4-19
312105-0534 ..	SCREW M6S ISO 4017 M12X25 A480	..... 7-5, 7-7, 8-13
312105-0536 ..	SCREW M6S ISO 4017 M12X30 A480	..... 1-69, 1-71, 2-139, 2-141, 4-5, 4-7
312105-0538 ..	SCREW M6S ISO 4017 M12X35 A480	..... 1-69, 1-71, 2-9, 2-39, 2-41, 2-79, 12-37
312105-0540 ..	SCREW M6S ISO 4017 M12X40 A480	 9-33
312105-0541 ..	SCREW M6S ISO 4014 M12X45 A480	..... 2-39, 2-41, 4-5, 4-7, 5-13
312105-0542 ..	SCREW M6S ISO 4014 M12X50 A480	..... 4-9, 4-11, 4-13, 4-15, 4-17, 4-19
312105-0545 ..	SCREW M6S ISO 4014 M12X65 A480	 5-13
312105-0547 ..	SCREW M6S ISO 4014 M12X75 A480	..... 4-9, 4-11, 4-13, 4-15, 4-17, 4-19, 7-5, 7-7
312105-0550 ..	SCREW M6S ISO 4014 M12X90 A480	..... 4-109, 4-111, 4-113, 4-115, 5-13
312105-0552 ..	SCREW M6S ISO 4014 M12X100 A480	..... 4-109, 4-111, 4-113, 4-115
312105-0554 ..	SCREW M6S ISO 4014 M12X110 A480	..... 4-109, 4-111, 4-113, 4-115
312105-0560 ..	SCREW M6S ISO 4014 M12X150 A280	..... 4-109, 4-111, 4-113, 4-115
312105-0622 ..	SCREW M6S ISO 4017 M16X25 A480	..... 2-139, 2-141
312105-0630 ..	SCREW M6S ISO 4017 M16X50 A480	..... 7-5, 7-7
312105-0631 ..	SCREW M6S ISO 4014 M16X55 A480	..... 1-179, 1-191
312105-0632 ..	SCREW M6S ISO 4014 M16X60 A480	 1-179
312105-0633 ..	SCREW M6S ISO 4014 M16X65 A480	..... 2-125, 2-127
312105-0634 ..	SCREW M6S ISO 4014 M16X70 A480	..... 9-57, 12-37
312105-0638 ..	SCREW M6S ISO 4014 M16X90 A480	..... 2-9, 2-79
312105-0674 ..	SCREW M6S ISO 4017 M20X50 A480	..... 2-125, 2-127
312109-0374 ..	SCREW M6S ISO 4017 M6X30 A480	1-21, 1-33, 1-125, 1-127, 1-169, 2-237, 5-93, 5-95, 5-97 ..... 5-99, 5-101, 5-103, 5-105, 5-107, 5-109, 5-111, 5-113, 7-49, 7-67, 9-61
312109-0376 ..	SCREW M6S ISO 4017 M6X35 A480	1-229, 1-231, 1-233, 1-293, 4-27, 4-29, 4-31, 5-213, 5-215
312109-0378 ..	SCREW M6S ISO 4017 M6X40 A480	..... 2-125, 2-127
312109-0380 ..	SCREW M6S ISO 4017 M6X50 A480	..... 1-229, 1-231, 2-251, 6-39
312109-0457 ..	SCREW M6S ISO 4017 M8X35 A480	1-103, 1-105, 1-175, 1-205, 1-261, 1-355, 5-93, 5-95, 5-97 ..... 5-99, 5-101, 5-103, 5-105, 5-107, 5-109, 5-111, 5-113, 6-55
312109-0459 ..	SCREW M6S ISO 4017 M8X40 A480	1-37, 1-39, 1-103, 1-105, 1-107, 1-109, 4-9, 4-11, 4-13 ..... 4-15, 4-17, 4-19
312109-0460 ..	SCREW M6S ISO 4017 M8X45 A480	..... 1-107, 1-109
312109-0461 ..	SCREW M6S ISO 4017 M8X50 A480	 7-105
312109-0465 ..	SCREW M6S ISO 4017 M8X70 A480	..... 12-11, 12-13, 12-15
312109-0499 ..	SCREW M6S ISO 4017 M10X40 A480	5-133, 5-135, 5-137, 5-139, 5-141, 5-143, 5-145, 5-147 ..... 5-149, 5-151, 5-153, 5-155, 5-157, 5-159, 5-161, 5-163, 5-165, 5-167, 5-169, 5-171, 12-37
312109-0500 ..	SCREW M6S ISO 4017 M10X45 A480	..... 1-69, 1-71
312109-0541 ..	SCREW M6S ISO 4017 M12X45 A480	..... 2-125, 2-127
312109-0544 ..	SCREW M6S ISO 4017 M12X60 A480	 2-237
312111-0291 ..	SCREW HEX.SOCK.HD.MC6S-TT 4X12 88 FZB	 7-31
312111-0331 ..	SCREW HEX.SOCK.HD.MC6S-TT 5X20 88 FZB	..... 7-69, 7-71
312111-0343 ..	SCREW HEX.SOCK.HD.MC6S-TT 5X60 88 FZB	 7-103
312111-0374 ..	SCREW HEX.SOCK.HD.MC6S-TT 6X30 88 FZB	..... 11-61, 11-209
312111-0630 ..	SCREW HEX.SOCK.HD.MC6S-TT 16X50 88 FZB	..... 2-121, 2-125, 2-127, 2-139, 2-141
312115-0222 ..	SCREW ISO4762 M3X8 A4 80	..... 8-5, 8-7, 8-9, 8-11
312115-0226 ..	SCREW ISO4762 M3X12 A4 80	..... 1-9, 1-151, 1-175, 7-137
312115-0230 ..	SCREW ISO4762 M3X20 A4 80	 7-29
312115-0232 ..	SCREW ISO4762 M3X25 A4 80	..... 8-15, 8-17, 8-51
312115-0285 ..	SCREW ISO4762 M4X6 A4 80	 7-137
312115-0287 ..	SCREW ISO4762 M4X8 A4 80	1-205, 1-233, 7-31, 7-55, 7-77, 7-101, 8-5, 8-7, 8-9, 8-11, 8-45 ..... 8-47, 11-127, 11-129
312115-0289 ..	SCREW ISO4762 M4X10 A4 80	..... 1-81, 7-101, 7-149, 7-155, 8-13, 8-77, 8-79, 8-101, 8-113
312115-0291 ..	SCREW ISO4762 M4X12 A4 80	1-223, 2-81, 2-83, 2-251, 4-9, 4-11, 4-13, 4-15, 4-17, 4-19, 7-11 7-15, 7-31, 7-69, 7-71, 7-77, 7-137, 8-5, 8-7, 8-9, 8-11, 8-15, 8-17, 8-49, 8-67, 8-97, 8-99, 9-37, 11-121
312115-0293 ..	SCREW ISO4762 M4X16 A4 80	5-173, 5-175, 5-177, 5-179, 5-181, 5-183, 5-185, 5-187, 5-189 5-191, 5-193, 5-195, 5-197, 5-199, 5-201, 5-203, 5-217, 5-219, 5-221, 5-223, 5-225, 5-227, 5-229 ..... 7-73, 7-77, 7-101, 8-15, 8-17, 9-37, 11-241
312115-0295 ..	SCREW ISO4762 M4X20 A4 80	..... 2-61, 7-5, 7-7, 7-73, 7-95
312115-0297 ..	SCREW ISO4762 M4X25 A4 80	..... 1-357, 7-25, 7-77, 8-5, 8-7, 8-9, 8-11
312115-0299 ..	SCREW ISO4762 M4X30 A4 80	..... 7-31, 7-77

Part No	Description	Page No
312115-0303 ..	SCREW ISO4762 M4X40 A4 80	1-189, 7-27, 7-31
312115-0305 ..	SCREW ISO4762 M4X50 A4 80	1-331, 1-333, 2-91, 7-25, 7-33
312115-0323 ..	SCREW ISO4762 M5X8 A4 80	1-351, 4-21, 5-213, 5-215, 7-53, 7-55, 8-27, 8-29, 8-31, 8-33 8-35, 8-37, 8-39, 8-41, 8-43, 8-45, 8-47, 8-53, 8-55, 8-57, 8-59, 8-61, 8-63, 8-65, 8-67, 8-69, 8-71, 8-73
312115-0325 ..	SCREW ISO4762 M5X10 A4 80	1-31, 2-121, 2-125, 2-127, 4-33, 4-35, 8-13
312115-0327 ..	SCREW ISO4762 M5X12 A4 80	1-31, 1-331, 1-333, 1-351, 2-29, 2-31, 2-53, 2-57, 2-109, 2-143 2-161, 2-163, 2-175, 2-209, 2-215, 2-217, 4-39, 4-41, 4-43, 4-45, 4-47, 4-49, 4-51, 4-53, 4-55, 4-71 4-73, 4-75, 4-77, 4-79, 4-81, 6-55, 6-63, 6-69, 6-73, 6-75, 7-27, 7-81, 7-107, 7-157, 7-159, 7-161 7-165, 7-169, 7-173, 7-175, 8-15, 8-17, 8-67
312115-0328 ..	SCREW ISO4762 M5X14 A4 80	7-69, 7-71, 7-101
312115-0329 ..	SCREW ISO4762 M5X16 A4 80	1-287, 1-289, 3-17, 3-19, 3-21, 3-23, 3-25, 4-91, 4-93, 6-9, 7-5 7-7, 7-75, 7-77, 7-97, 7-101, 8-113
312115-0331 ..	SCREW ISO4762 M5X20 A4 80	1-31, 1-253, 1-255, 1-257, 2-251, 7-5, 7-7, 7-23, 7-59, 7-75 7-81, 7-145
312115-0333 ..	SCREW ISO4762 M5X25 A4 80	4-27, 4-29, 4-31
312115-0335 ..	SCREW ISO4762 M5X30 A4 80	7-55, 7-97, 7-179, 8-101, 11-65
312115-0337 ..	SCREW ISO4762 M5X35 A4 80	4-71, 4-73, 4-75, 4-77, 4-79, 4-81, 4-83, 4-85, 4-87, 4-89, 7-51 7-77, 7-97, 7-103
312115-0340 ..	SCREW ISO4762 M5X45 A4 80	2-57, 2-109
312115-0341 ..	SCREW ISO4762 M5X50 A4 80	7-133, 7-135
312115-0362 ..	SCREW ISO4762 M6X8 A4 80	2-215, 2-217, 8-51
312115-0364 ..	SCREW ISO4762 M6X10 A4 80	2-251, 7-125
312115-0366 ..	SCREW ISO4762 M6X12 A4 80	1-7, 1-235, 1-237, 1-347, 1-351, 1-353, 4-33, 4-35, 4-71, 4-73 4-75, 4-77, 4-79, 4-81, 4-83, 4-85, 4-87, 4-89, 6-9, 7-5, 7-7, 7-51, 7-69, 7-71, 7-81, 8-5, 8-7, 8-9 8-11, 8-49, 8-81, 8-83, 8-85, 8-87, 8-113, 11-139, 11-141, 12-11, 12-13, 12-15
312115-0368 ..	SCREW ISO4762 M6X16 A4 80	1-41, 1-235, 1-237, 2-39, 2-41, 4-91, 4-93, 5-83, 5-85, 5-87 5-89, 5-91, 5-115, 5-117, 6-9, 6-29, 6-31, 7-5, 7-7, 7-27, 7-69, 7-71, 7-91, 7-119, 7-121, 7-123 7-145, 7-149, 8-15, 8-17, 8-101, 8-107, 11-105, 11-173
312115-0370 ..	SCREW ISO4762 M6X20 A4 80	1-235, 1-237, 1-247, 1-287, 1-289, 4-33, 4-35, 4-39, 4-41, 4-43 4-45, 4-47, 4-49, 4-51, 4-53, 4-55, 4-57, 4-59, 4-61, 4-63, 4-65, 4-67, 4-71, 4-73, 4-75, 4-77, 4-79 4-81, 4-83, 4-85, 4-87, 4-89, 4-109, 4-111, 4-113, 4-115, 5-13, 5-83, 5-85, 5-87, 5-89, 5-91, 7-77 7-97, 7-101, 7-119, 7-121, 7-123, 9-47, 11-173
312115-0372 ..	SCREW ISO4762 M6X25 A4 80	1-295, 2-15, 2-53, 2-71, 2-101, 2-105, 3-17, 3-19, 3-21, 3-23 3-25, 5-217, 5-219, 5-221, 5-223, 5-225, 5-227, 5-229, 6-77, 7-69, 7-71, 7-75, 7-103, 7-105, 7-125 11-139, 11-141, 12-11, 12-13, 12-15
312115-0374 ..	SCREW ISO4762 M6X30 A4 80	1-73, 1-313, 1-315, 1-317, 1-347, 4-91, 4-93, 7-37, 7-75, 7-105 7-119, 7-121, 7-123, 11-65
312115-0376 ..	SCREW ISO4762 M6X35 A4 80	1-235, 1-237, 2-53, 4-27, 4-29, 4-31, 7-145
312115-0378 ..	SCREW ISO4762 M6X40 A4 80	4-27, 4-29, 4-31, 7-27, 8-101, 11-23
312115-0379 ..	SCREW ISO4762 M6X45 A4 80	1-189
312115-0382 ..	SCREW ISO4762 M6X60 A4 80	1-147, 1-149, 3-5, 3-7, 3-9, 3-11, 3-13, 3-15, 7-125
312115-0447 ..	SCREW ISO4762 M8X12 A4 80	1-347, 4-95, 4-97, 8-77, 8-79, 8-81, 8-83, 8-85, 8-87
312115-0449 ..	SCREW ISO4762 M8X16 A4 80	5-231, 5-233, 7-69, 7-71, 8-15, 8-17, 12-11, 12-13, 12-15
312115-0451 ..	SCREW ISO4762 M8X20 A4 80	1-107, 1-109, 3-5, 3-7, 3-9, 3-11, 3-13, 3-15, 8-5, 8-7, 8-9, 8-11
312115-0453 ..	SCREW ISO4762 M8X25 A4 80	1-287, 1-289, 3-5, 3-7, 3-9, 3-11, 3-13, 3-15, 3-17, 3-19, 3-21 3-23, 3-25, 5-55, 5-57, 7-5, 7-7, 7-103, 8-49
312115-0455 ..	SCREW ISO4762 M8X30 A4 80	1-287, 1-289, 1-311, 3-17, 3-19, 3-21, 3-23, 3-25, 5-83, 5-85 5-87, 5-89, 5-91, 7-23, 7-97, 7-105, 8-101
312115-0457 ..	SCREW ISO4762 M8X35 A4 80	5-15, 5-217, 5-219, 5-221, 5-223, 5-225, 5-227, 5-229, 5-231 5-233
312115-0459 ..	SCREW ISO4762 M8X40 A4 80	5-173, 5-175, 5-177, 5-179, 5-181, 5-183, 5-185, 5-187, 5-189 5-191, 5-193, 5-195, 5-197, 5-199, 5-201, 5-203, 5-231, 5-233
312115-0460 ..	SCREW ISO4762 M8X45 A4 80	1-287, 1-289
312115-0463 ..	SCREW ISO4762 M8X60 A4 80	7-5, 7-7
312115-0465 ..	SCREW ISO4762 M8X70 A4 80	4-9, 4-11, 4-13, 4-15, 4-17, 4-19, 7-99
312115-0467 ..	SCREW ISO4762 M8X80 A4 80	5-173, 5-175, 5-177, 5-179, 5-181, 5-183, 5-185, 5-187, 5-189 5-191, 5-193, 5-195, 5-197, 5-199, 5-201, 5-203, 7-81
312115-0478 ..	SCREW ISO4762 M8X140 A4 80	12-11, 12-13, 12-15
312115-0489 ..	SCREW ISO4762 M10X16 A4 80	7-125
312115-0495 ..	SCREW ISO4762 M10X30 A4 80	3-17, 3-19, 3-21, 3-23, 3-25
312115-0499 ..	SCREW ISO4762 M10X40 A4 80	2-93, 5-13, 5-83, 5-85, 5-87, 5-89, 5-91
312115-0501 ..	SCREW ISO4762 M10X50 A4 80	2-9, 7-89
312115-0532 ..	SCREW ISO4762 M12X20 A4 80	12-11, 12-13, 12-15
312115-0540 ..	SCREW ISO4762 M12X40 A4 80	12-11, 12-13, 12-15
312115-0542 ..	SCREW ISO4762 M12X50 A4 80	12-11, 12-13, 12-15
312115-0546 ..	SCREW ISO4762 M12X70 A4 80	2-121, 2-125, 2-127, 12-11, 12-13, 12-15
312115-0630 ..	SCREW ISO4762 M16X50 A4 80	1-299
312115-0634 ..	SCREW ISO4762 M16X70 A4 80	2-125, 2-127
312121-0226 ..	SCREW ISO 1207 M3X12 4.8-5.8 Z.PL.	11-233
312121-0364 ..	SCREW ISO 1207 M6X10 4.8-5.8 Z.PL.	2-105, 6-77
312122-0372 ..	SCREW ISO 1207 M6X25 NI PL BRASS	1-211
312125-0220 ..	SCREW ISO 1207 M3X6 A4	2-265, 6-33, 7-69, 7-71
312125-0222 ..	SCREW ISO 1207 M3X8 A4	1-313, 1-315, 1-317, 7-61, 7-69, 7-71, 7-109, 7-111
312125-0224 ..	SCREW ISO 1207 M3X10 A4	1-323, 4-109, 4-111, 4-113, 4-115
312125-0226 ..	SCREW ISO 1207 M3X12 A4	5-213, 5-215, 11-67, 11-127, 11-129, 11-211
312125-0228 ..	SCREW ISO 1207 M3X16 A4	1-11, 1-31, 7-85
312125-0230 ..	SCREW ISO 1207 M3X20 A4	1-215, 5-213, 5-215
312125-0232 ..	SCREW ISO 1207 M3X25 A4	2-265, 7-61
312125-0285 ..	SCREW ISO 1207 M4X6 A4	1-187, 1-293, 1-345, 1-351, 2-237, 7-51, 7-61, 8-115
312125-0287 ..	SCREW ISO 1207 M4X8 A4	1-313, 1-315, 1-317, 1-321, 1-331, 1-333, 2-51, 5-173, 5-175 5-177, 5-179, 5-181, 5-183, 5-185, 5-187, 5-189, 5-191, 5-193, 5-195, 5-197, 5-199, 5-201, 5-203 5-231, 5-233, 6-55, 7-53, 11-67, 11-71, 11-127, 11-129, 11-211, 11-213, 11-241
312125-0289 ..	SCREW ISO 1207 M4X10 A4	1-305, 1-307, 6-29, 7-5, 7-7, 7-69, 7-71
312125-0291 ..	SCREW ISO 1207 M4X12 A4	1-235, 1-237, 7-53, 7-55, 11-25, 11-149

Part No	Description	Page No
312125-0293 ..	SCREW ISO 1207 M4X16 A4	1-235, 1-237, 7-159
312125-0297 ..	SCREW ISO 1207 M4X25 A4	11-239
312125-0299 ..	SCREW ISO 1207 M4X30 A4	4-95, 4-97
312125-0323 ..	SCREW ISO 1207 M5X8 A4	1-185, 1-191, 1-219, 1-221, 1-223, 4-9, 4-11, 4-13, 4-15, 4-17, 4-19
312125-0325 ..	SCREW ISO 1207 M5X10 A4	1-357, 7-17, 7-19
312125-0327 ..	SCREW ISO 1207 M5X12 A4	12-31
312125-0329 ..	SCREW ISO 1207 M5X16 A4	11-139, 11-141
312125-0331 ..	SCREW ISO 1207 M5X20 A4	1-185
312125-0364 ..	SCREW ISO 1207 M6X10 A4	1-37, 1-39, 1-239, 1-279, 1-299, 1-305, 1-307, 2-15, 2-19, 2-39, 2-41, 2-59, 2-71, 2-101, 5-25, 11-49
312125-0366 ..	SCREW ISO 1207 M6X12 A4	1-69, 1-71, 1-213, 1-295, 2-53, 2-125, 2-127, 11-63
312125-0370 ..	SCREW ISO 1207 M6X20 A4	2-243
312125-0378 ..	SCREW ISO 1207 M6X40 A4	7-61
312132-0289 ..	SLOTTED HEAD, PAN SCREW, MSCS M4X10	6-31
312145-0224 ..	SCREW ISO 2009 MFS M3X10 A4	4-39, 4-41, 4-43, 4-45, 4-47, 4-49, 4-51, 4-53, 4-55
312145-0228 ..	SCREW ISO 2009 MFS M3X16 A4	1-233
312145-0287 ..	SCREW ISO 2009 MFS M4X8 A4	4-39, 4-41, 4-43, 4-45, 4-47, 4-49, 4-51, 4-53, 4-55, 4-71, 4-73, 4-75, 4-77, 4-79, 4-81
312145-0289 ..	SCREW ISO 2009 MFS M4X10 A4	4-57, 4-59, 4-61, 4-63, 4-65, 4-67, 4-83, 4-85, 4-87, 4-89, 7-5, 7-7
312145-0293 ..	SCREW ISO 2009 MFS M4X16 A4	4-57, 4-59, 4-61, 4-63, 4-65, 4-67, 4-83, 4-85, 4-87, 4-89
312145-0325 ..	SCREW ISO 2009 MFS M5X10 A4	4-91, 4-93
312145-0380 ..	SCREW ISO 2009 MFS M6X50 A4	12-31
312155-0220 ..	SCREW DIN 7991 MF6S M3X6 A4 70	1-55, 7-55
312155-0228 ..	SCREW DIN 7991 MF6S M3X16 A4 70	7-103
312155-0289 ..	SCREW DIN 7991 MF6S M4X10 A4 70	7-69, 7-71, 8-49, 8-75
312155-0291 ..	SCREW DIN 7991 MF6S M4X12 A4 70	1-235, 1-237, 1-309, 2-209, 5-93, 5-95, 5-97, 5-99, 5-101, 5-103, 5-105, 5-107, 5-109, 5-111, 5-113, 6-63, 6-65
312155-0293 ..	SCREW DIN 7991 MF6S M4X16 A4 70	4-9, 4-11, 4-13, 4-15, 4-17, 4-19, 7-55
312155-0295 ..	SCREW DIN 7991 MF6S M4X20 A4 70	12-11, 12-13, 12-15
312155-0299 ..	SCREW DIN 7991 MF6S M4X30 A4 70	4-9, 4-11, 4-13, 4-15, 4-17, 4-19
312155-0323 ..	SCREW DIN 7991 MF6S M5X8 A4 70	7-67, 7-73, 11-113
312155-0325 ..	SCREW DIN 7991 MF6S M5X10 A4 70	2-69, 5-41, 7-69, 7-71, 8-15, 8-17, 11-177
312155-0327 ..	SCREW DIN 7991 MF6S M5X12 A4 70	1-233, 1-309, 7-73, 7-81
312155-0329 ..	SCREW DIN 7991 MF6S M5X16 A4 70	1-235, 1-237, 2-161, 2-163, 2-175, 2-219, 4-33, 4-35, 5-25, 6-9, 11-65
312155-0331 ..	SCREW DIN 7991 MF6S M5X20 A4 70	2-69, 5-15
312155-0339 ..	SCREW DIN 7991 MF6S M5X40 A4 70	12-11, 12-13, 12-15
312155-0364 ..	SCREW DIN 7991 MF6S M6X10 A4 70	1-7
312155-0366 ..	SCREW DIN 7991 MF6S M6X12 A4 70	4-27, 4-29, 4-31, 5-127, 5-129, 5-131, 5-217, 5-219, 5-221, 5-223, 5-225, 5-227, 5-229, 7-81, 11-105, 12-11, 12-13, 12-15
312155-0368 ..	SCREW DIN 7991 MF6S M6X16 A4 70	1-41, 1-233, 2-229, 5-93, 5-95, 5-97, 5-99, 5-101, 5-103, 5-105, 5-107, 5-109, 5-111, 5-113, 5-217, 5-219, 5-221, 5-223, 5-225, 5-227, 5-229, 6-9, 8-5, 8-7, 8-9, 8-11, 8-89, 8-91, 8-93, 8-95, 11-105, 11-173
312155-0370 ..	SCREW DIN 7991 MF6S M6X20 A4 70	5-33, 5-35, 7-27, 7-125, 7-131, 11-23, 11-211, 12-11, 12-13, 12-15
312155-0372 ..	SCREW DIN 7991 MF6S M6X25 A4 70	5-25, 5-93, 5-95, 5-97, 5-99, 5-101, 5-103, 5-105, 5-107, 5-109, 5-111, 5-113, 11-23
312155-0374 ..	SCREW DIN 7991 MF6S M6X30 A4 70	5-93, 5-95, 5-97, 5-99, 5-101, 5-103, 5-105, 5-107, 5-109, 5-111, 5-113
312155-0376 ..	SCREW DIN 7991 MF6S M6X35 A4 70	5-93, 5-95, 5-97, 5-99, 5-101, 5-103, 5-105, 5-107, 5-109, 5-111, 5-113
312155-0378 ..	SCREW DIN 7991 MF6S M6X40 A4 70	2-213
312155-0449 ..	SCREW DIN 7991 MF6S M8X16 A4 70	1-155, 1-157, 1-159, 5-93, 5-95, 5-97, 5-99, 5-101, 5-103, 5-105, 5-107, 5-109, 5-111, 5-113, 11-111
312155-0451 ..	SCREW DIN 7991 MF6S M8X20 A4 70	5-173, 5-175, 5-177, 5-179, 5-181, 5-183, 5-185, 5-187, 5-189, 5-191, 5-193, 5-195, 5-197, 5-199, 5-201, 5-203
312180-0366 ..	SCREW ISO7379 H6X12	7-127, 7-129
312180-0374 ..	SCREW ISO7379 H6X30	7-77
312180-0447 ..	SCREW ISO7379 H8X12	7-77
312180-0451 ..	SCREW ISO7379 H8X20	1-299, 7-75
312180-0455 ..	SCREW ISO7379 H8X30	7-29
312180-0489 ..	SCREW ISO7379 H10X16	7-11, 7-69, 7-71
312180-0495 ..	SCREW ISO7379 H10X30	7-69, 7-71
312180-0499 ..	SCREW ISO7379 H10X40	7-27
312180-0534 ..	SCREW ISO7379 H12X25	1-299
312180-0536 ..	SCREW ISO7379 H12X30	1-309
312306-0546 ..	SCREW ISO4026 M12X70 FZB	12-23
312309-0323 ..	SCREW ISO4026 M5X8 A4	7-59
312309-0362 ..	SCREW ISO4026 M6X8 A4	7-83
312309-0536 ..	SCREW ISO4026 M12X30 A4	2-39, 2-41
312311-0327 ..	SCREW ISO4028 M5X12 FZB	2-93
312311-0329 ..	SCREW ISO4028 M5X16 FZB	1-305, 1-307
312311-0366 ..	SCREW ISO4028 M6X12 FZB	1-303
312311-0368 ..	SCREW ISO4028 M6X16 FZB	7-119, 7-121, 7-123
312311-0379 ..	SCREW ISO4028 M6X45 FZB	1-253, 1-255, 1-257
312311-0461 ..	SCREW ISO4028 M8X50 FZB	7-51
312311-0491 ..	SCREW ISO4028 M10X20 FZB	7-57
312316-0362 ..	SCREW HEX.SOCK.SET CUP P.MSK6SS6X8 FZB	7-125
312318-0222 ..	SCREW ISO4029 M3X8 A4	3-17, 3-19, 3-21, 3-23, 3-25
312318-0283 ..	SCREW ISO4029 M4X4 A4	1-235, 1-237, 11-137
312318-0285 ..	SCREW ISO4029 M4X6 A4	2-265, 4-95, 4-97, 7-119, 7-121, 7-123
312318-0287 ..	SCREW ISO4029 M4X8 A4	1-319, 7-49
312318-0291 ..	SCREW ISO4029 M4X12 A4	1-279, 7-137
312318-0320 ..	SCREW ISO4029 M5X5 A4	1-31

Part No	Description	Page No
312318-0321 ..	SCREW ISO4029 M5X6 A4	4-33, 4-35, 7-41
312318-0323 ..	SCREW ISO4029 M5X8 A4	1-99, 3-5, 3-7, 3-9, 3-11, 3-13, 3-15
312318-0325 ..	SCREW ISO4029 M5X10 A4	1-201, 2-183
312318-0327 ..	SCREW ISO4029 M5X12 A4	1-281
312318-0333 ..	SCREW ISO4029 M5X25 A4	7-97
312318-0362 ..	SCREW ISO4029 M6X8 A4	1-23, 7-43, 7-69, 7-71, 7-97, 11-127, 11-129
312318-0364 ..	SCREW ISO4029 M6X10 A4	2-11, 11-139, 11-141
312318-0366 ..	SCREW ISO4029 M6X12 A4	1-23, 4-91, 4-93, 7-41, 7-85, 7-97, 7-119, 7-121, 7-123
312318-0368 ..	SCREW ISO4029 M6X16 A4	11-25
312318-0370 ..	SCREW ISO4029 M6X20 A4	4-91, 4-93
312318-0372 ..	SCREW ISO4029 M6X25 A4	7-87, 11-121
312318-0443 ..	SCREW ISO4029 M8X8 A4	2-229
312318-0445 ..	NEW ISO4029 M8X10 A4	7-11
312318-0451 ..	GRUB SCREW ISO4029 M8X20 A4	5-133, 5-135, 5-137, 5-139, 5-141, 5-143, 5-145, 5-147, 5-149, 5-151, 5-153, 5-155, 5-157, 5-159, 5-161, 5-163, 5-165, 5-167, 5-169, 5-171
312318-0453 ..	SCREW ISO4029 M8X25 A4	1-311, 2-125, 2-127, 2-139, 2-141
312318-0459 ..	SCREW ISO4029 M8X40 A4	1-11
312502-0120 ..	DRIVE SCREW ROUND HEAD KDS 0X5	2-29, 2-31, 6-81, 6-85
312502-0169 ..	DRIVE SCREW ROUND HEAD KDS 2X5	7-109, 7-111
312503-0225 ..	TAPPING SCREW ISO 7049-ST2,9X9,5-C-Z	2-265
312504-0348 ..	TAPPING SCREW ISO 7049-A2-ST4,2X25-C-Z	2-161, 2-163, 2-175, 2-219
312504-0451 ..	TAPPING SCREW ISO 7049-A4-ST5,5X19-C-Z	8-5, 8-7, 8-9, 8-11
312602-0312 ..	HEXAGON NUT, EN 24032 M6M M4 NIPLBR	12-17, 12-19
312602-0316 ..	NUT, EN 24032 M6M M6 NIPLBR	9-61
312602-0318 ..	HEXAGON NUT, EN 24032 M6M M8 NIPLBR	9-61
312605-0310 ..	HEXAGON NUT, M6M M3 A280	1-215, 6-23, 7-29, 7-61, 7-109, 7-111, 8-97, 8-99
312605-0312 ..	HEXAGON NUT, M6M M4 A280	1-57, 1-75, 1-155, 1-157, 1-159, 1-205, 1-209, 1-293, 1-309, 1-321, 2-91, 2-259, 2-261, 6-65, 7-25, 7-61, 7-101, 7-109, 7-111, 7-157, 7-169, 7-173, 8-5, 8-7, 8-9, 8-11, 8-81, 8-83, 8-85, 8-87, 8-97, 8-99, 8-101, 8-109, 8-111, 11-25, 11-145, 11-239
312605-0314 ..	HEXAGON NUT, M6M M5 A280	1-37, 1-39, 1-75, 1-155, 1-157, 1-159, 1-293, 1-305, 1-307, 1-309, 1-321, 1-357, 4-91, 4-93, 5-25, 5-33, 5-35, 5-37, 5-39, 5-173, 5-175, 5-177, 5-179, 5-181, 5-183, 5-185, 5-187, 5-189, 5-191, 5-193, 5-195, 5-197, 5-199, 5-201, 5-203, 6-9, 6-55, 7-55, 7-109, 7-111, 7-157, 7-159, 7-163, 7-169, 7-173, 8-97, 8-99, 11-239, 12-17, 12-19
312605-0316 ..	HEXAGON NUT, M6M M6 A280	1-9, 1-11, 1-13, 1-15, 1-17, 1-19, 1-21, 1-23, 1-25, 1-31, 1-33, 1-37, 1-39, 1-41, 1-43, 1-45, 1-47, 1-53, 1-57, 1-69, 1-71, 1-75, 1-155, 1-157, 1-159, 1-167, 1-169, 1-177, 1-189, 1-191, 1-239, 1-249, 1-253, 1-255, 1-257, 1-283, 1-285, 1-287, 1-289, 1-299, 1-331, 1-333, 1-345, 1-347, 1-351, 1-355, 1-357, 2-9, 2-11, 2-27, 2-29, 2-31, 2-35, 2-53, 2-61, 2-85, 2-121, 2-179, 2-199, 2-201, 2-203, 2-227, 2-229, 2-243, 2-245, 2-251, 2-259, 2-261, 2-267, 2-271, 3-5, 3-7, 3-9, 3-11, 3-13, 3-15, 4-23, 4-25, 5-173, 5-175, 5-177, 5-179, 5-181, 5-183, 5-185, 5-187, 5-189, 5-191, 5-193, 5-195, 5-197, 5-199, 5-201, 5-203, 5-237, 5-239, 6-9, 6-23, 6-33, 6-39, 6-89, 7-5, 7-7, 7-51, 7-53, 7-55, 7-61, 7-65, 7-85, 7-119, 7-121, 7-123, 7-133, 7-135, 7-157, 7-161, 8-5, 8-7, 8-9, 8-11, 8-77, 8-79, 8-81, 8-83, 8-85, 8-87, 8-89, 8-91, 8-93, 8-95, 8-101, 8-103, 8-107, 8-113, 11-47, 11-67, 11-71, 11-85, 11-87, 11-89, 11-127, 11-129, 11-139, 11-141, 11-151, 11-211, 11-213, 12-11, 12-13, 12-15, 12-17, 12-19
312605-0318 ..	HEXAGON NUT, M6M M8 A280	1-11, 1-23, 1-27, 1-29, 1-35, 1-37, 1-39, 1-69, 1-71, 1-133, 1-137, 1-145, 1-155, 1-157, 1-159, 1-173, 1-175, 1-179, 1-183, 1-185, 1-187, 1-195, 1-197, 1-205, 1-233, 1-253, 1-255, 1-257, 1-261, 1-279, 1-283, 1-285, 1-309, 1-313, 1-315, 1-317, 1-355, 2-45, 2-85, 2-143, 2-229, 2-241, 2-247, 2-259, 2-261, 2-271, 4-109, 4-111, 4-113, 4-115, 5-41, 5-133, 5-135, 5-137, 5-139, 5-141, 5-143, 5-145, 5-147, 5-149, 5-151, 5-153, 5-155, 5-157, 5-159, 5-161, 5-163, 5-165, 5-167, 5-169, 5-171, 5-217, 5-219, 5-221, 5-223, 5-225, 5-227, 5-229, 6-49, 6-51, 6-55, 7-5, 7-7, 7-53, 7-63, 7-97, 7-105, 7-125, 7-151, 7-157, 7-161, 11-25, 11-67, 11-127, 11-129, 11-135, 11-137, 11-151, 11-177, 11-201, 11-209, 11-211, 11-217, 11-219, 11-229, 12-11, 12-13, 12-15, 12-31, 12-33
312605-0320 ..	HEXAGON NUT, M6M M10 A280	1-185, 1-195, 1-197, 1-253, 1-255, 1-257, 1-269, 1-309, 1-321, 3-5, 3-7, 3-9, 3-11, 3-13, 3-15, 5-173, 5-175, 5-177, 5-179, 5-181, 5-183, 5-185, 5-187, 5-189, 5-191, 5-193, 5-195, 5-197, 5-199, 5-201, 5-203, 5-205, 5-207, 5-209, 5-211, 7-119, 7-121, 7-123, 11-23
312605-0322 ..	HEXAGON NUT, M6M M12 A280	1-31, 2-237, 3-5, 3-7, 3-9, 3-11, 3-13, 3-15, 7-151, 9-67
312605-0324 ..	HEXAGON NUT, M6M M16 A280	1-179, 1-191, 2-139, 2-141, 2-143, 12-37
312605-0326 ..	HEXAGON NUT, M6M M20 A280	5-25, 5-93, 5-95, 5-97, 5-99, 5-101, 5-103, 5-105, 5-107, 5-109, 5-111, 5-113
312605-0328 ..	HEXAGON NUT, M6M M24 A280	9-63
312607-0312 ..	HEXAGON NUT, EN 24032 M6M M4 A480	7-31, 7-37, 7-137
312607-0314 ..	HEXAGON NUT, EN 24032 M6M M5 A480	7-5, 7-7, 7-85, 7-87, 7-91, 7-97, 7-107, 7-169
312607-0316 ..	HEXAGON NUT, EN 24032 M6M M6 A480	5-173, 5-175, 5-177, 5-179, 5-181, 5-183, 5-185, 5-187, 5-189, 5-191, 5-193, 5-195, 5-197, 5-199, 5-201, 5-203, 7-5, 7-7, 7-33, 7-179
312607-0318 ..	HEXAGON NUT, EN 24032 M6M M8 A480	1-303, 7-5, 7-7
312607-0320 ..	HEXAGON NUT, EN 24032 M6M M10 A480	1-303, 7-69, 7-71, 11-137
312625-0314 ..	HEXAGON THIN NUT, EN 24035 ML6M M5 A4	7-31
312625-0316 ..	HEXAGON THIN NUT, EN 24035 ML6M M6 A4	1-31, 1-319, 7-45, 7-67, 7-85, 7-97, 7-101
312625-0318 ..	HEXAGON THIN NUT, EN 24035 ML6M M8 A4	1-309, 3-5, 3-7, 3-9, 3-11, 3-13, 3-15, 7-49, 7-55
312625-0320 ..	HEXAGON THIN NUT, EN 24035 ML6M M10 A4	4-95, 4-97, 12-11, 12-13, 12-15
312625-0324 ..	HEXAGON THIN NUT, EN 24035 ML6M M16 A4	1-183, 7-25
312625-0326 ..	HEXAGON THIN NUT, EN 24035 ML6M M20 A4	2-125, 2-127
312630-0316 ..	HEX.NUT FINE, EN 24032 M6M M6X0,75 FZB8	7-109, 7-111
312631-0321 ..	HEX.NUT FINE, EN 24032 M6M M10X1,25 FZB8	1-183
312632-0320 ..	HEX.TH.NUT FINE,EN24035 ML6M M10X1,25 A4	4-109, 4-111, 4-113, 4-115
312705-0312 ..	NUT HEX. DOMED CAP MHM-6 M4 A280	1-27, 1-29, 1-35, 1-61, 1-63, 1-65, 1-347, 1-353, 2-161, 2-163, 2-175, 2-205, 2-209, 2-215, 2-217, 2-219, 5-173, 5-175, 5-177, 5-179, 5-181, 5-183, 5-185, 5-187, 5-189, 5-191, 5-193, 5-195, 5-197, 5-199, 5-201, 5-203, 6-63, 6-69, 7-157, 7-165, 7-169, 7-173, 7-175, 12-11, 12-13, 12-15
312705-0314 ..	NUT HEX. DOMED CAP MHM-6 M5 A280	2-229, 5-115, 5-117, 11-239
312705-0316 ..	HEX. DOMED CAP MHM-6 M6 A280	1-19, 1-45, 1-57, 1-87, 1-89, 1-103, 1-105, 2-179, 7-85, 7-157, 7-161, 12-11, 12-13, 12-15
312705-0318 ..	NUT HEX. DOMED CAP MHM-6 M8 A280	1-23, 1-143, 5-173, 5-175, 5-177, 5-179, 5-181, 5-183

Part No	Description	Page No
		5-185, 5-187, 5-189, 5-191, 5-193, 5-195, 5-197, 5-199, 5-201, 5-203
312715-0116 ..	WING NUT DIN 315 A2 MVM-K M6	1-45, 1-287, 1-289
312805-0100 ..	NUT ROUND WITH SLOTS M10X0,75 FE	4-33, 4-35
312805-0103 ..	NUT ROUND WITH SLOTS M17X1 FE	2-251, 7-11
312810-0314 ..	HEXAGON NUT, NY-LOCK M5 FZB	12-11, 12-13, 12-15
312810-0316 ..	HEXAGON NUT, NY-LOCK M6 FZB	11-173
312812-0310 ..	HEXAGON NUT, NY-LOCK M3 A480	6-19, 6-63
312812-0312 ..	HEXAGON NUT, NY-LOCK M4 A480	2-61, 2-159, 2-161, 2-169, 2-171, 2-185, 11-121
312812-0314 ..	HEXAGON NUT, NY-LOCK M5 A480	1-233, 1-347, 7-37
312812-0316 ..	HEXAGON NUT, NY-LOCK M6 A480	1-13, 1-37, 1-39, 1-147, 1-149, 1-287, 1-289, 1-321, 2-45
		2-49, 2-99, 2-125, 2-127, 2-229, 3-5, 3-7, 3-9, 3-11, 3-13, 3-15, 5-25, 5-83, 5-85, 5-87, 5-89, 5-91
		5-133, 5-135, 5-137, 5-139, 5-141, 5-143, 5-145, 5-147, 5-149, 5-151, 5-153, 5-155, 5-157, 5-159
		5-161, 5-163, 5-165, 5-167, 5-169, 5-171, 5-173, 5-175, 5-177, 5-179, 5-181, 5-183, 5-185, 5-187
		5-189, 5-191, 5-193, 5-195, 5-197, 5-199, 5-201, 5-203, 6-33, 7-21, 7-25, 7-53, 7-61, 8-77, 8-79
		9-61, 11-23, 11-105, 11-111, 12-31
312812-0318 ..	HEXAGON NUT, NY-LOCK M8 A480	1-201, 2-79, 3-5, 3-7, 3-9, 3-11, 3-13, 3-15, 4-109, 4-111
		4-113, 4-115, 5-55, 5-57, 5-93, 5-95, 5-97, 5-99, 5-101, 5-103, 5-105, 5-107, 5-109, 5-111, 5-113
		7-49, 11-35, 11-107, 11-111, 11-121
312812-0320 ..	HEXAGON NUT, NY-LOCK M10 A480	4-109, 4-111, 4-113, 4-115
312812-0322 ..	HEXAGON NUT, NY-LOCK M12 A480	2-121, 2-125, 2-127
312812-0324 ..	HEXAGON NUT, NY-LOCK M16 A480	9-57
315101-0153 ..	WASHER PLAIN, BRB, 6,4/12 H=1,5	2-139, 2-141
315101-0165 ..	WASHER PLAIN, BRB, 8,4/16 H=1,5	1-309, 2-139, 2-141, 8-81, 8-83, 8-85, 8-87
315103-0124 ..	WASHER, BRB, 3,2/6,H=0,5 NI PL BR	7-61
315103-0136 ..	WASHER PLAIN, BRB, 4,3/8,H=0,8 NI PL BR	12-17, 12-19
315105-0124 ..	WASHER BRB 3,2X6 RFR	1-11, 1-31, 1-215, 1-323, 4-109, 4-111, 4-113, 4-115, 5-37, 5-39, 6-19
		6-63, 7-5, 7-7, 7-61, 7-85, 7-109, 7-111, 7-137, 8-5, 8-7, 8-9, 8-11
315105-0136 ..	WASHER BRB 4,3X8 RFR	1-37, 1-39, 1-155, 1-157, 1-159, 1-169, 1-189, 1-191, 1-205, 1-207
		1-209, 1-215, 1-229, 1-231, 1-293, 1-305, 1-307, 1-309, 2-61, 2-159, 2-161, 2-163, 2-169, 2-171
		2-175, 2-183, 2-185, 2-205, 2-209, 2-215, 2-217, 2-219, 2-237, 2-259, 2-261, 5-173, 5-175, 5-177
		5-179, 5-181, 5-183, 5-185, 5-187, 5-189, 5-191, 5-193, 5-195, 5-197, 5-199, 5-201, 5-203, 6-65
		7-5, 7-7, 7-15, 7-23, 7-25, 7-29, 7-33, 7-47, 7-49, 7-51, 7-59, 7-61, 7-63, 7-65, 7-69, 7-71, 7-77
		7-81, 7-119, 7-121, 7-123, 7-137, 7-151, 7-157, 7-159, 7-165, 7-169, 7-173, 7-175, 8-5, 8-7, 8-9
		8-11, 8-13, 8-15, 8-17, 8-45, 8-47, 8-49, 8-67, 8-77, 8-79, 8-97, 8-99, 8-101, 8-109, 8-111, 8-113
		8-115, 11-25, 11-145, 11-239
315105-0146 ..	WASHER BRB 5,3X10 RFR	1-75, 1-79, 1-185, 1-207, 1-209, 1-233, 1-293, 1-305, 1-307, 1-309
		1-351, 1-353, 1-357, 2-39, 2-41, 2-143, 2-161, 2-163, 2-175, 2-183, 2-185, 2-219, 2-229, 2-233
		2-259, 2-261, 3-5, 3-7, 3-9, 3-11, 3-13, 3-15, 3-17, 3-19, 3-21, 3-23, 3-25, 4-39, 4-41, 4-43, 4-45
		4-47, 4-49, 4-51, 4-53, 4-55, 4-57, 4-59, 4-61, 4-63, 4-65, 4-67, 4-71, 4-73, 4-75, 4-77, 4-79, 4-81
		4-83, 4-85, 4-87, 4-89, 4-91, 4-93, 4-109, 4-111, 4-113, 4-115, 5-25, 5-33, 5-35, 5-37, 5-39, 5-43
		5-45, 5-47, 5-49, 5-173, 5-175, 5-177, 5-179, 5-181, 5-183, 5-185, 5-187, 5-189, 5-191, 5-193
		5-195, 5-197, 5-199, 5-201, 5-203, 5-213, 5-215, 6-7, 6-9, 6-11, 6-63, 6-69, 6-73, 6-75, 7-5, 7-7
		7-17, 7-19, 7-37, 7-59, 7-69, 7-71, 7-75, 7-77, 7-91, 7-97, 7-101, 7-103, 7-107, 7-119, 7-121
		7-123, 7-133, 7-135, 7-145, 7-157, 7-161, 7-169, 7-173, 7-175, 8-5, 8-7, 8-9, 8-11, 8-13, 8-15
		8-17, 8-27, 8-29, 8-31, 8-33, 8-35, 8-37, 8-39, 8-41, 8-43, 8-45, 8-47, 8-53, 8-55, 8-57, 8-59, 8-61
		8-63, 8-65, 8-67, 8-69, 8-71, 8-73, 8-101, 9-41, 9-43, 11-139, 11-141, 11-239, 12-17, 12-19
315105-0153 ..	WASHER BRB 6,4X12 RFR	1-7, 1-11, 1-17, 1-31, 1-33, 1-37, 1-39, 1-41, 1-49, 1-55, 1-57, 1-69
		1-71, 1-75, 1-143, 1-155, 1-157, 1-159, 1-189, 1-191, 1-205, 1-207, 1-213, 1-229, 1-231, 1-235
		1-237, 1-239, 1-245, 1-247, 1-249, 1-275, 1-281, 1-287, 1-289, 1-293, 1-295, 1-299, 1-301, 1-303
		1-305, 1-307, 1-313, 1-315, 1-317, 1-321, 1-331, 1-333, 1-341, 1-345, 1-347, 1-351, 1-353, 1-357
		2-9, 2-15, 2-27, 2-29, 2-31, 2-35, 2-39, 2-41, 2-43, 2-45, 2-49, 2-51, 2-53, 2-59, 2-61, 2-63, 2-69
		2-79, 2-81, 2-85, 2-91, 2-99, 2-101, 2-105, 2-111, 2-125, 2-127, 2-161, 2-163, 2-175, 2-179, 2-199
		2-201, 2-203, 2-205, 2-209, 2-215, 2-217, 2-219, 2-225, 2-229, 2-233, 2-239, 2-243, 2-249, 2-251
		2-255, 2-259, 2-261, 2-267, 2-271, 2-273, 3-5, 3-7, 3-9, 3-11, 3-13, 3-15, 3-17, 3-19, 3-21, 3-23
		3-25, 4-9, 4-11, 4-13, 4-15, 4-17, 4-19, 4-27, 4-29, 4-31, 4-33, 4-35, 4-57, 4-59, 4-61, 4-63, 4-65
		4-67, 4-71, 4-73, 4-75, 4-77, 4-79, 4-81, 4-83, 4-85, 4-87, 4-89, 4-91, 4-93, 4-95, 4-97, 4-99, 4-101
		4-103, 4-105, 4-109, 4-111, 4-113, 4-115, 5-13, 5-15, 5-17, 5-19, 5-21, 5-25, 5-33, 5-35, 5-37
		5-39, 5-43, 5-45, 5-47, 5-49, 5-83, 5-85, 5-87, 5-89, 5-91, 5-93, 5-95, 5-97, 5-99, 5-101, 5-103
		5-105, 5-107, 5-109, 5-111, 5-113, 5-115, 5-117, 5-133, 5-135, 5-137, 5-139, 5-141, 5-143, 5-145
		5-147, 5-149, 5-151, 5-153, 5-155, 5-157, 5-159, 5-161, 5-163, 5-165, 5-167, 5-169, 5-171, 5-173
		5-175, 5-177, 5-179, 5-181, 5-183, 5-185, 5-187, 5-189, 5-191, 5-193, 5-195, 5-197, 5-199, 5-201
		5-203, 5-213, 5-215, 5-217, 5-219, 5-221, 5-223, 5-225, 5-227, 5-229, 5-231, 5-233, 5-237, 5-239
		6-7, 6-9, 6-11, 6-21, 6-23, 6-33, 6-39, 6-55, 6-57, 6-61, 6-77, 6-85, 6-89, 7-5, 7-7, 7-21, 7-23, 7-25
		7-27, 7-29, 7-37, 7-49, 7-51, 7-53, 7-55, 7-59, 7-61, 7-65, 7-69, 7-71, 7-73, 7-75, 7-77, 7-81, 7-83
		7-85, 7-89, 7-105, 7-107, 7-109, 7-111, 7-119, 7-121, 7-123, 7-125, 7-133, 7-135, 7-145, 7-149
		7-153, 7-155, 7-157, 7-161, 8-5, 8-7, 8-9, 8-11, 8-15, 8-17, 8-49, 8-51, 8-77, 8-79, 8-81, 8-83, 8-85
		8-87, 8-89, 8-91, 8-93, 8-95, 8-101, 8-115, 9-47, 11-23, 11-25, 11-47, 11-49, 11-63, 11-67, 11-71
		11-85, 11-87, 11-89, 11-95, 11-97, 11-101, 11-103, 11-111, 11-121, 11-127, 11-129, 11-139
		11-141, 11-143, 11-151, 11-211, 11-213, 11-217, 11-233, 12-11, 12-13, 12-15, 12-17, 12-19, 12-31
315105-0156 ..	WASHER BRB 6,7X14 RFR	1-319, 2-183, 4-83, 4-85, 4-87, 4-89, 5-15, 5-133, 5-135, 5-137
		5-139, 5-141, 5-143, 5-145, 5-147, 5-149, 5-151, 5-153, 5-155, 5-157, 5-159, 5-161, 5-163, 5-165
		5-167, 5-169, 5-171, 7-67, 7-85, 8-15, 8-17, 8-81, 8-83, 8-85, 8-87, 8-89, 8-91, 8-93, 8-95, 8-101
		8-107, 8-113, 11-65, 11-95, 11-105, 11-173
315105-0165 ..	WASHER BRB 8,4X16 RFR	1-21, 1-23, 1-53, 1-103, 1-105, 1-117, 1-119, 1-121, 1-123, 1-133
		1-135, 1-137, 1-155, 1-157, 1-159, 1-201, 1-205, 1-233, 1-239, 1-267, 1-279, 1-283, 1-285, 1-287
		1-289, 1-299, 1-313, 1-315, 1-317, 1-321, 2-11, 2-39, 2-41, 2-43, 2-45, 2-79, 2-143, 2-225, 2-237
		2-243, 2-259, 2-261, 2-271, 3-5, 3-7, 3-9, 3-11, 3-13, 3-15, 3-17, 3-19, 3-21, 3-23, 3-25, 4-9, 4-11
		4-13, 4-15, 4-17, 4-19, 4-27, 4-29, 4-31, 4-33, 4-35, 4-91, 4-93, 4-95, 4-97, 4-109, 4-111, 4-113
		4-115, 5-13, 5-25, 5-33, 5-35, 5-37, 5-39, 5-53, 5-73, 5-83, 5-85, 5-87, 5-89, 5-91, 5-93, 5-95, 5-97
		5-99, 5-101, 5-103, 5-105, 5-107, 5-109, 5-111, 5-113, 5-115, 5-117, 5-133, 5-135, 5-137, 5-139
		5-141, 5-143, 5-145, 5-147, 5-149, 5-151, 5-153, 5-155, 5-157, 5-159, 5-161, 5-163, 5-165, 5-167
		5-169, 5-171, 5-173, 5-175, 5-177, 5-179, 5-181, 5-183, 5-185, 5-187, 5-189, 5-191, 5-193, 5-195
		5-197, 5-199, 5-201, 5-203, 5-205, 5-207, 5-209, 5-211, 5-217, 5-219, 5-221, 5-223, 5-225, 5-227
		5-229, 5-231, 5-233, 6-55, 7-5, 7-7, 7-11, 7-23, 7-53, 7-59, 7-63, 7-69, 7-71, 7-89, 7-97, 7-105

Part No	Description	Page No
		7-149, 7-157, 7-161, 8-5, 8-7, 8-9, 8-11, 8-15, 8-17, 8-49, 8-77, 8-79, 8-101, 11-23, 11-25, 11-31
		11-47, 11-49, 11-55, 11-61, 11-67, 11-85, 11-87, 11-89, 11-93, 11-101, 11-139, 11-141, 11-151
		11-201, 11-209, 11-217, 11-219, 11-229, 12-11, 12-13, 12-15
315105-0171 ..	WASHER BRB 10X18 RFR	5-173, 5-175, 5-177, 5-179, 5-181, 5-183, 5-185, 5-187, 5-189, 5-191
		5-193, 5-195, 5-197, 5-199, 5-201, 5-203, 5-217, 5-219, 5-221, 5-223, 5-225, 5-227, 5-229, 12-11
		12-13, 12-15
315105-0173 ..	WASHER BRB 10,5X22 RFR	1-13, 1-195, 1-197, 1-269, 1-321, 2-121, 2-125, 2-127, 2-139
		2-141, 2-143, 3-17, 3-19, 3-21, 3-23, 3-25, 4-9, 4-11, 4-13, 4-15, 4-17, 4-19, 5-41, 5-93, 5-95, 5-97
		5-99, 5-101, 5-103, 5-105, 5-107, 5-109, 5-111, 5-113, 5-133, 5-135, 5-137, 5-139, 5-141, 5-143
		5-145, 5-147, 5-149, 5-151, 5-153, 5-155, 5-157, 5-159, 5-161, 5-163, 5-165, 5-167, 5-169, 5-171
		5-205, 5-207, 5-209, 5-211, 5-217, 5-219, 5-221, 5-223, 5-225, 5-227, 5-229, 5-231, 5-233, 6-49
		6-55, 7-25, 7-119, 7-121, 7-123, 7-179, 9-31, 11-23, 11-35, 11-107, 11-177, 12-37
315105-0178 ..	WASHER BRB 13X24 RFR	2-9, 2-39, 2-41, 2-79, 2-125, 2-127, 2-139, 2-141, 2-237, 2-259
		2-261, 4-5, 4-7, 4-9, 4-11, 4-13, 4-15, 4-17, 4-19, 4-109, 4-111, 4-113, 4-115, 5-13, 5-83, 5-85
		5-87, 5-89, 5-91, 7-5, 7-7, 8-5, 8-7, 8-9, 8-11, 8-13, 9-67, 12-37
315105-0179 ..	WASHER BRB 13,5X24 RFR	7-5, 7-7, 7-151
315105-0186 ..	WASHER BRB 17X30 RFR	1-179, 1-183, 1-191, 2-9, 2-79, 2-125, 2-127, 2-139, 2-141, 7-5, 7-7, 12-37
315105-0191 ..	WASHER BRB 20X36 RFR	5-93, 5-95, 5-97, 5-99, 5-101, 5-103, 5-105, 5-107, 5-109, 5-111, 5-113
315105-0192 ..	WASHER BRB 21X36 RFR	5-25, 12-33
315105-0195 ..	WASHER BRB 23X40 RFR	5-133, 5-135, 5-137, 5-139, 5-141, 5-143, 5-145, 5-147, 5-149, 5-151
		5-153, 5-155, 5-157, 5-159, 5-161, 5-163, 5-165, 5-167, 5-169, 5-171
315106-0124 ..	WASHER ISO 7089-3-200 HV A4	7-69, 7-71, 8-97, 8-99, 11-67, 11-127, 11-129, 11-211
315106-0136 ..	WASHER ISO 7089-4-200 HV A4	1-235, 1-237, 7-33, 7-35, 7-109, 7-111, 12-11, 12-13, 12-15
315106-0146 ..	WASHER ISO 7089-5-200 HV A4	2-29, 2-31, 7-27, 7-109, 7-111, 8-97, 8-99, 12-11, 12-13, 12-15
315106-0153 ..	WASHER ISO 7089-6-200 HV A4	1-87, 1-89, 1-103, 1-105, 5-25, 7-11, 7-105, 7-133, 7-135
		7-141, 7-143, 7-179
315106-0165 ..	WASHER ISO 7089-8-200 HV A4	1-151, 7-49, 7-83
315106-0173 ..	WASHER ISO 7089-10-200 HV A4	5-83, 5-85, 5-87, 5-89, 5-91, 5-173, 5-175, 5-177, 5-179
		5-181, 5-183, 5-185, 5-187, 5-189, 5-191, 5-193, 5-195, 5-197, 5-199, 5-201, 5-203, 5-231, 5-233
		7-11, 7-179
315106-0178 ..	WASHER ISO 7089-12-200 HV A4	9-33
315111-0156 ..	WASHER PLAIN, TBRB 6,7/14 H=3	7-33
315111-0186 ..	WASHER PLAIN, TBRB 17/30 H=6	2-121, 2-125, 2-127, 2-139, 2-141
315115-0153 ..	WASHER PLAIN, TBRB 6,4/12 H=3	1-155, 1-157, 1-159, 2-27, 2-35, 2-229, 6-31, 7-5, 7-7, 7-67
315115-0165 ..	WASHER PLAIN, TBRB 8,4/16 H=3	1-27, 1-69, 1-71, 1-107, 1-109, 1-155, 1-157, 1-159, 1-201
		2-75, 2-229, 7-151, 11-111
315115-0173 ..	WASHER PLAIN, TBRB 10,5/22 H=4	1-179, 1-299, 5-83, 5-85, 5-87, 5-89, 5-91, 6-55, 7-125, 12-33
315115-0178 ..	WASHER PLAIN, TBRB 13/24 H=4	1-69, 1-71
315125-0146 ..	WASHER TBRSB 5.3X15X1 A4	6-55
315125-0153 ..	WASHER TBRSB 6,4X22X4 A4	1-73, 1-155, 1-157, 1-159, 1-201, 1-283, 1-285, 1-303, 1-345
		1-357, 2-121, 2-125, 2-127, 2-139, 2-141, 2-227, 4-27, 4-29, 4-31, 4-83, 4-85, 4-87, 4-89, 4-109
		4-111, 4-113, 4-115, 5-93, 5-95, 5-97, 5-99, 5-101, 5-103, 5-105, 5-107, 5-109, 5-111, 5-113, 5-133
		5-135, 5-137, 5-139, 5-141, 5-143, 5-145, 5-147, 5-149, 5-151, 5-153, 5-155, 5-157, 5-159, 5-161
		5-163, 5-165, 5-167, 5-169, 5-171, 5-173, 5-175, 5-177, 5-179, 5-181, 5-183, 5-185, 5-187, 5-189
		5-191, 5-193, 5-195, 5-197, 5-199, 5-201, 5-203, 5-217, 5-219, 5-221, 5-223, 5-225, 5-227, 5-229
		6-57, 6-61, 6-81, 7-5, 7-7, 7-33, 7-49, 7-51, 7-93, 7-133, 7-135, 7-147, 9-47
315125-0165 ..	WASHER TBRSB 8,4X26X5 A4	1-21, 1-23, 1-299, 1-305, 1-307, 2-237, 5-41, 5-93, 5-95, 5-97
		5-99, 5-101, 5-103, 5-105, 5-107, 5-109, 5-111, 5-113, 5-133, 5-135, 5-137, 5-139, 5-141, 5-143
		5-145, 5-147, 5-149, 5-151, 5-153, 5-155, 5-157, 5-159, 5-161, 5-163, 5-165, 5-167, 5-169, 5-171
		5-173, 5-175, 5-177, 5-179, 5-181, 5-183, 5-185, 5-187, 5-189, 5-191, 5-193, 5-195, 5-197, 5-199
		5-201, 5-203, 5-217, 5-219, 5-221, 5-223, 5-225, 5-227, 5-229, 7-69, 7-71, 7-105, 11-177
315125-0173 ..	WASHER TBRSB 10,5X28X6 A4	1-69, 1-71, 1-309, 5-93, 5-95, 5-97, 5-99, 5-101, 5-103, 5-105
		5-107, 5-109, 5-111, 5-113, 12-37
315202-0117 ..	O-RING 19,1X1,6 MM	5-173, 5-175, 5-177, 5-179, 5-181, 5-183, 5-185, 5-187, 5-189, 5-191
		5-193, 5-195, 5-197, 5-199, 5-201, 5-203
315202-0119 ..	O-RING 25,1X1,6 MM	2-207, 2-211
315202-0213 ..	O-RING 15,3X2,4 MM	5-25, 5-33, 5-35
315202-0217 ..	O-RING 24,2X3 MM	5-173, 5-175, 5-177, 5-179, 5-181, 5-183, 5-185, 5-187, 5-189, 5-191
		5-193, 5-195, 5-197, 5-199, 5-201, 5-203
315202-0219 ..	O-RING 29,2X3 MM	5-133, 5-135, 5-137, 5-139, 5-141, 5-143, 5-145, 5-147, 5-149, 5-151
		5-153, 5-155, 5-157, 5-159, 5-161, 5-163, 5-165, 5-167, 5-169, 5-171, 11-139, 11-141
315202-0223 ..	O-RING 39,2X3 MM	4-33, 4-35
315202-0230 ..	O-RING 64,2X5,7 MM	5-217, 5-219, 5-221, 5-223, 5-225, 5-227, 5-229
315202-0242 ..	O-RING 124,3X5,7 MM	11-113
315202-0246 ..	O-RING 144,3X5,7 MM	11-111
315202-0302 ..	O-RING 54,5X3 MM	2-63
315202-0303 ..	O-RING 59,5X3 MM	5-173, 5-175, 5-177, 5-179, 5-181, 5-183, 5-185, 5-187, 5-189, 5-191
		5-193, 5-195, 5-197, 5-199, 5-201, 5-203
315202-0304 ..	O-RING 64,5X3 MM	1-221, 5-173, 5-175, 5-177, 5-179, 5-181, 5-183, 5-185, 5-187, 5-189
		5-191, 5-193, 5-195, 5-197, 5-199, 5-201, 5-203
315202-0308 ..	O-RING 84,5X3 MM	1-219, 1-223
315202-0505 ..	O-RING 6,07X1,78 MM	4-91, 4-93
315202-0621 ..	O-RING 104,37X3,53 MM	4-5, 4-7
315202-0701 ..	O-RING 10,82X1,78 MM	2-265
315202-0708 ..	O-RING 21,95X1,78 MM	4-91, 4-93, 9-7
315202-0709 ..	O-RING 23,52X1,78 MM	2-79
315202-0729 ..	O-RING 39,34X2,62 MM	4-5, 4-7
315202-0734 ..	O-RING 47,29X2,62 MM	5-93, 5-95, 5-97, 5-99, 5-101, 5-103, 5-105, 5-107, 5-109, 5-111, 5-113
315202-0803 ..	O-RING 44,17X1,78 MM	5-173, 5-175, 5-177, 5-179, 5-181, 5-183, 5-185, 5-187, 5-189, 5-191
		5-193, 5-195, 5-197, 5-199, 5-201, 5-203
315204-0103 ..	O-RING 5,1X1,6 MM	2-243
315204-0110 ..	O-RING 12,1X1,6 MM	1-287, 1-289
315204-0123 ..	O-RING 35,1X1,6 MM	1-9, 1-15, 1-19, 1-41
315204-0206 ..	O-RING 7,3X2,4 MM	1-177

Part No	Description	Page No
315204-0207 ..	O-RING 8,3X2,4 MM	2-233
315204-0208 ..	O-RING 9,3X2,4 MM	1-233
315204-0214 ..	O-RING 17,3X2,4 MM	1-233
315204-0215 ..	O-RING 19,2X3 MM	1-195, 1-197, 1-219, 1-223, 9-9, 9-11, 9-13, 9-15
315204-0222 ..	O-RING 36,2X3 MM	2-251
315204-0301 ..	O-RING 49,5X3 MM	5-217, 5-219, 5-221, 5-223, 5-225, 5-227, 5-229, 9-11
315204-0302 ..	O-RING 54,5X3 MM	5-217, 5-219, 5-221, 5-223, 5-225, 5-227, 5-229
315204-0306 ..	O-RING 74,5X3 MM	5-133, 5-135, 5-137, 5-139, 5-141, 5-143, 5-145, 5-147, 5-149, 5-151, 5-153, 5-155, 5-157, 5-159, 5-161, 5-163, 5-165, 5-167, 5-169, 5-171
315204-0307 ..	O-RING 79,5X3 MM	1-47
315204-0308 ..	O-RING 84,5X3 MM	9-13
315204-0317 ..	O-RING 129,5X3 MM	1-191
315205-0516 ..	O-RING 20,22X3,53 MM	5-213, 5-215
315205-0606 ..	O-RING 56,74X3,53 MM	5-173, 5-175, 5-177, 5-179, 5-181, 5-183, 5-185, 5-187, 5-189, 5-191, 5-193, 5-195, 5-197, 5-199, 5-201, 5-203
315205-0703 ..	O-RING 14,00X1,78 MM	1-73
315205-0705 ..	O-RING 17,17X1,78 MM	1-11, 1-17
315205-0707 ..	O-RING 20,35X1,78 MM	1-69, 1-71, 1-169
315205-0709 ..	O-RING 23,52X1,78 MM	1-33
315205-0714 ..	O-RING 31,47X1,78 MM	1-23
315205-0715 ..	O-RING 33,05X1,78 MM	1-13, 1-21, 1-43
315205-0716 ..	O-RING 34,65X1,78 MM	1-11
315205-0731 ..	O-RING 42,52X2,62 MM	1-23
315205-0765 ..	O-RING 139,37X2,62 MM	1-145
315205-0802 ..	O-RING 41,00X1,78 MM	1-25, 1-167, 1-169, 1-287, 1-289
315205-0803 ..	O-RING 44,17X1,78 MM	1-11, 1-17, 1-25
315205-0804 ..	O-RING 47,35X1,78 MM	1-15, 1-21, 1-31, 1-43
315205-0807 ..	O-RING 94,97X1,78 MM	1-9, 1-19, 1-177
315206-0506 ..	O-RING 7,65X1,78 MM	2-259, 2-261
315206-0523 ..	O-RING 31,34X3,53 MM	4-39, 4-41, 4-43, 4-45, 4-47, 4-49, 4-51, 4-53, 4-55
315206-0707 ..	O-RING 20,35X1,78 MM	2-57, 2-109
315206-0711 ..	O-RING 26,70X1,78 MM	1-287, 1-289
315207-0506 ..	O-RING 7,65X1,78 MM	1-169
315207-0514 ..	O-RING 18,72X2,62 MM	1-195, 1-197
315207-0515 ..	O-RING 18,64X3,53 MM	9-9
315207-0723 ..	O-RING 29,82X2,62 MM	1-169
315211-0103 ..	BONDED SEAL SS/NBR90 M6	1-357
315211-0111 ..	BONDED SEAL SS/NBR90 G1/2	1-191
315220-0130 ..	V-RING 14X20X7,7 MM V-16S	11-139, 11-141
315220-0167 ..	V-RING 27X35X10,5 MM V-30S	3-5, 3-7, 3-9, 3-11, 3-13, 3-15
315220-0172 ..	V-RING 29X37X10,5 MM V-32S	11-139, 11-141
315220-0183 ..	V-RING 36X46X13 MM V-40S	2-63
315220-0198 ..	V-RING 45X55X13 MM V-50S	2-259, 2-261
315220-0216 ..	V-RING 58X68X13 MM V-65S	2-79
315221-0137 ..	RADIAL SEAL 17X35X7 MM	11-139, 11-141
315221-0145 ..	RADIAL SEAL 20X35X7 MM	11-137
315221-0158 ..	RADIAL SEAL 25X42X7 MM	5-33, 5-35, 11-49
315221-0159 ..	RADIAL SEAL 25X47X7 MM	5-33, 5-35, 11-49
315221-0160 ..	RADIAL SEAL 25X52X7 MM	5-93, 5-95, 5-97, 5-99, 5-101, 5-103, 5-105, 5-107, 5-109, 5-111, 5-113
315221-0175 ..	RADIAL SEAL 35X47X7 MM	5-25, 5-33, 5-35
315229-0101 ..	SQUARE RING, 10,4X17,4X3,7 MM 1/2" FDA	1-283, 1-285
315229-0102 ..	SQUARE RING, 16,8X23,8X3,7 MM 3/4" FDA	6-33
315229-0103 ..	SQUARE RING, 23,1X30,1X3,7 MM 1" FDA	1-279, 1-283, 1-285, 2-45, 2-85, 2-241, 6-49, 6-53, 9-19
315229-0104 ..	SQUARE RING, 35,8X42,8X3,7 MM 1"1/2 FD	1-37, 1-39, 1-279, 2-241, 9-19
315229-0105 ..	SQUARE RING, 48,5X55,5X3,7 MM 2" FDA	1-283, 1-285, 2-241, 2-245, 9-19
315229-0106 ..	SQUARE RING, 61,2X68,2X3,7 MM 2"1/2 FDA	1-253, 1-255, 1-257, 1-283, 1-285
315229-0107 ..	SQUARE RING, 73,9X80,9X3,7 MM 2"1/2 FDA	1-253, 1-255, 1-257, 2-241, 9-19
315229-0108 ..	SQUARE RING, 98,4X105,4X3,7 MM 4" FDA	1-253, 1-255, 1-257
315229-0203 ..	GASKET 22,1X30,1X3,7 MM 1"	1-169, 1-173, 1-175
315229-0204 ..	GASKET 34,8X42,8X3,7 MM 1"1/2	1-175
315229-0205 ..	GASKET 47,5X55,5X3,7 MM 2 INCH	1-175, 1-179, 1-183, 1-187, 1-191
315229-0206 ..	GASKET 60,2X68,2X3,7 MM 2"1/2	1-175, 1-183, 1-185, 1-187
315229-0208 ..	GASKET 97,4X105,4X3,7 MM 4"	1-205
315233-0101 ..	WASHER CAPTIVE SEALING M5(NEW315239-101)	1-219
315233-0109 ..	WASHER CAPTIVE SEALING G1/8	12-17, 12-19
315233-0110 ..	WASHER CAPTIVE SEALING G1/4	6-33, 12-17, 12-19, 12-25, 12-31
315233-0111 ..	WASHER CAPTIVE SEALING G3/8	12-17, 12-19
315233-0113 ..	WASHER CAPTIVE SEALING G1/2	6-93, 12-17, 12-19, 12-31
315234-0110 ..	WASHER,PL.RND.CU.13,5/18 H=1,5	1-205, 9-63
315237-0109 ..	WASHER,PL.RND.AL.10/14,H=1,5	1-343
315237-0110 ..	WASHER,PL.RND.AL.13,5/18,H=1,5	1-69, 1-71, 1-287, 1-289, 2-9
315239-0101 ..	NYLON WASHER M5, M5RRP	1-221, 1-223
315239-0109 ..	NYLON WASHER G1/8, 1/8RRP	6-81
315239-0110 ..	NYLON WASHER G1/4, 1/4RRP	6-37
315239-0111 ..	NYLON WASHER G3/8, 3/8RRP	6-81, 7-51, 7-105
315239-0113 ..	NYLON WASHER G1/2, 1/2RRP	2-149, 6-81
315300-0001 ..	TUBE, 6 MM PE BLUE	1-243, 1-247, 1-327, 1-329, 1-331, 1-333, 2-23, 2-25, 2-27, 2-29, 2-31, 2-43, 2-155, 2-259, 2-261, 6-85, 6-93
315300-0002 ..	TUBE, 6 MM PE TRANSPARENT	2-251
315300-0004 ..	TUBE, 8 MM PE BLUE	1-207, 1-331, 1-333, 2-23, 2-25, 2-27, 2-29, 2-31, 2-89, 2-153, 2-155, 6-91, 6-93
315300-0006 ..	TUBE, 8 MM PE BLACK	1-55, 2-39, 2-41, 2-147, 2-149, 2-153, 2-233, 6-11
315300-0007 ..	TUBE, 10 MM PE BLUE	1-327, 1-329, 1-331, 1-333

Part No	Description	Page No
315300-0010 ..	TUBE, 12 MM PE BLUE	1-247, 2-29, 2-31, 2-91, 2-155, 6-91, 6-93
315300-0016 ..	TUBE 4MPE BLUE	1-331, 1-333, 2-23, 2-25, 2-29, 2-31, 6-85
315300-0018 ..	TUBE, 4 MM PE BLACK	2-239
315400-0001 ..	TUBE PUN-H-6X1-BL	1-233, 1-245, 7-69, 7-71, 7-91, 7-103, 7-109, 7-111, 7-119, 7-121, 7-123 7-125, 7-179, 11-65
315400-0002 ..	TUBE PUN-H-6X1-NT	7-125
315400-0003 ..	TUBE PUN-H-6X1-SW	7-125
315400-0004 ..	TUBE PUN-H-8X1,25-BL	7-79, 7-81, 7-95, 7-109, 7-111, 7-125
315400-0005 ..	TUBE PUN-H-8X1,25-NT	7-125
315400-0006 ..	TUBE PUN-H-8X1,25-SW	7-125
315400-0010 ..	TUBE PUN-H-12X2-BL	7-109, 7-111
315400-0016 ..	TUBE PUN-H-4X0,75-BL	5-13, 7-69, 7-71, 7-81, 7-109, 7-111
315402-0136 ..	LOCK WASHER FBB 4,1	1-13, 1-223, 7-69, 7-71, 8-5, 8-7, 8-9, 8-11, 8-13, 8-15, 8-17, 8-49 8-67, 8-109, 8-111, 8-113
315402-0146 ..	LOCK WASHER FBB 5,1	1-31, 1-185, 6-9, 8-5, 8-7, 8-9, 8-11, 8-13, 8-15, 8-17, 8-27, 8-29
315402-0156 ..	LOCK WASHER FBB 6,5	1-9, 1-235, 1-237, 4-109, 4-111, 4-113, 4-115, 7-125, 8-5, 8-7, 8-9 8-11, 8-15, 8-17, 8-49, 8-51, 8-77, 8-79, 8-81, 8-83, 8-85, 8-87, 8-93, 8-95, 8-113
315402-0165 ..	LOCK WASHER FBB 8,2	1-287, 1-289, 8-5, 8-7, 8-9, 8-11, 8-15, 8-17, 8-49, 8-77, 8-79, 8-81 8-83, 8-85, 8-87
315402-0173 ..	LOCK WASHER FBB 10,2	2-93
315410-0100 ..	LOCK WASHER MB 0 D=10 H=1	4-33, 4-35
315410-0103 ..	LOCK WASHER MB 3 D=17 H=1	2-251
315701-0168 ..	PARALLEL KEY W. ROUND ENDS 4X4X16 MM	4-33, 4-35
315701-0170 ..	PARALLEL KEY W. ROUND ENDS 4X4X20 MM	7-57
315701-0199 ..	PARALLEL KEY W. ROUND ENDS 5X5X16 MM	5-133, 5-135, 5-137, 5-139, 5-141, 5-143, 5-145 5-147, 5-149, 5-151, 5-153, 5-155, 5-157, 5-159, 5-161, 5-163, 5-165, 5-167, 5-169, 5-171
315701-0201 ..	PARALLEL KEY W. ROUND ENDS 5X5X20 MM	5-133, 5-135, 5-137, 5-139, 5-141, 5-143, 5-145 5-147, 5-149, 5-151, 5-153, 5-155, 5-157, 5-159, 5-161, 5-163, 5-165, 5-167, 5-169, 5-171
315701-0206 ..	PARALLEL KEY W. ROUND ENDS 5X5X32 MM	7-179
315705-0164 ..	PARALLEL KEY W. ROUND ENDS 4X4X8 MM	2-229
315705-0166 ..	PARAPARALLEL KEY W. ROUND ENDS 4X4X12 MM	4-27, 4-29, 4-31, 4-95, 4-97
315705-0196 ..	PARALLEL KEY W.ROUND ENDS 5X5X10	4-109, 4-111, 4-113, 4-115, 5-217, 5-219, 5-221 5-223, 5-225, 5-227, 5-229
315705-0198 ..	PARALLEL KEY W. ROUND ENDS 5X5X14 MM	1-21, 7-105
315705-0201 ..	PARALLEL KEY W. ROUND ENDS 5X5X20 MM	2-229, 5-173, 5-175, 5-177, 5-179, 5-181, 5-183 5-185, 5-187, 5-189, 5-191, 5-193, 5-195, 5-197, 5-199, 5-201, 5-203, 7-105, 7-145
315705-0202 ..	PARALLEL KEY W ROUND ENDS 5X5X25MM	1-235, 1-237, 5-133, 5-135, 5-137, 5-139, 5-141 5-143, 5-145, 5-147, 5-149, 5-151, 5-153, 5-155, 5-157, 5-159, 5-161, 5-163, 5-165, 5-167, 5-169 5-171
315705-0230 ..	PARALLEL KEY W. ROUND ENDS 6X6X16 MM	4-33, 4-35
315705-0232 ..	PARALLEL KEY W. ROUND ENDS 6X6X20 MM	3-17, 3-19, 3-21, 3-23, 3-25, 4-109, 4-111 4-113, 4-115
315705-0233 ..	PARALLEL KEY W. ROUND ENDS 6X6X22 MM	7-69, 7-71
315705-0234 ..	PARALLEL KEY W. ROUND ENDS 6X6X25 MM	5-133, 5-135, 5-137, 5-139, 5-141, 5-143 5-145, 5-147, 5-149, 5-151, 5-153, 5-155, 5-157, 5-159, 5-161, 5-163, 5-165, 5-167, 5-169, 5-171 5-217, 5-219, 5-221, 5-223, 5-225, 5-227, 5-229
315705-0236 ..	PARALLEL KEY W. ROUND ENDS 6X6X30 MM	5-93, 5-95, 5-97, 5-99, 5-101, 5-103, 5-105 5-107, 5-109, 5-111, 5-113, 5-217, 5-219, 5-221, 5-223, 5-225, 5-227, 5-229
315705-0237 ..	PARALLEL KEY W. ROUND ENDS 6X6X32 MM	7-179
315705-0238 ..	PARALL KEY W. ROUND ENDS 6X6X36 MM	2-229
315705-0239 ..	PARALLEL KEY W. ROUND ENDS 6X6X40 MM	1-9, 5-93, 5-95, 5-97, 5-99, 5-101, 5-103 5-105, 5-107, 5-109, 5-111, 5-113
315705-0240 ..	PARALLEL KEY W. ROUND ENDS 6X6X45 MM	5-93, 5-95, 5-97, 5-99, 5-101, 5-103, 5-105 5-107, 5-109, 5-111, 5-113, 5-217, 5-219, 5-221, 5-223, 5-225, 5-227, 5-229
315705-0263 ..	PARALLEL KEY W. ROUND ENDS 8X7X20 MM	3-17, 3-19, 3-21, 3-23, 3-25
315705-0265 ..	PARALLEL KEY W. ROUND ENDS 8X7X25 MM	3-17, 3-19, 3-21, 3-23, 3-25, 5-133, 5-135 5-137, 5-139, 5-141, 5-143, 5-145, 5-147, 5-149, 5-151, 5-153, 5-155, 5-157, 5-159, 5-161, 5-163 5-165, 5-167, 5-169, 5-171
315705-0301 ..	PARALLEL KEY W. ROUND ENDS 10X8X40 MM	1-155, 1-157, 1-159
315705-0307 ..	PARALLEL KEY W. ROUND ENDS 10X8X70 MM	5-133, 5-135, 5-137, 5-139, 5-141, 5-143 5-145, 5-147, 5-149, 5-151, 5-153, 5-155, 5-157, 5-159, 5-161, 5-163, 5-165, 5-167, 5-169, 5-171
315705-0330 ..	PARALLEL KEY W. ROUND ENDS 12X8X32 MM	5-133, 5-135, 5-137, 5-139, 5-141, 5-143 5-145, 5-147, 5-149, 5-151, 5-153, 5-155, 5-157, 5-159, 5-161, 5-163, 5-165, 5-167, 5-169, 5-171
315705-0332 ..	PARALLEL KEY W. ROUND ENDS 12X8X40 MM	5-133, 5-135, 5-137, 5-139, 5-141, 5-143 5-145, 5-147, 5-149, 5-151, 5-153, 5-155, 5-157, 5-159, 5-161, 5-163, 5-165, 5-167, 5-169, 5-171
315741-0222 ..	RETAINING RING DIN 705 A4 30	2-229
315744-0010 ..	MINIATURE CIRCUIT BREAKER, FAZ-C1/1-NA	8-57, 8-59
315744-0020 ..	MINIATURE CIRCUIT BREAKER, FAZ-C2/1-NA	8-57, 8-59
315744-0040 ..	MINIATURE CIRCUIT BREAKER, FAZ-C4/1-NA	8-57, 8-59
315744-0100 ..	MINIATURE CIRCUIT BREAKER, FAZ-C10/1-NA	8-57, 8-59
315744-0160 ..	MINIATURE CIRCUIT BREAKER, FAZ-C16/1-NA	8-57, 8-59
315745-0250 ..	MINIATURE CIRCUIT BREAKER, FAZ-C25/2-NA	8-57, 8-59
315745-0320 ..	MINIATURE CIRCUIT BREAKER, FAZ-C32/2-NA	8-57, 8-59
315746-0100 ..	MINIATURE CIRCUIT BREAKER, FAZ-C10/3-NA	8-57, 8-59
315747-0005 ..	MINIATURE CIRCUIT BREAKER, FAZ-D0,5/1-NA	8-41, 8-43, 8-57, 8-59
315747-0020 ..	MINIATURE CIRCUIT BREAKER, FAZ-D2/1-NA	8-57, 8-59
315747-0040 ..	MINIATURE CIRCUIT BREAKER, FAZ-D4/1-NA	8-41, 8-43
315747-0060 ..	MINIATURE CIRCUIT BREAKER, FAZ-D6/1-NA	8-41, 8-43, 8-57, 8-59
315747-0100 ..	MINIATURE CIRCUIT BREAKER, FAZ-D10/1-NA	8-41, 8-43, 8-57, 8-59
315747-0160 ..	MINIATURE CIRCUIT BREAKER, FAZ-D16/1-NA	8-41, 8-43, 8-57, 8-59
315748-0040 ..	MINIATURE CIRCUIT BREAKER, FAZ-D4/2-NA	8-57, 8-59
315749-0060 ..	MINIATURE CIRCUIT BREAKER, FAZ-D6/3-NA	8-57, 8-59
315749-0100 ..	MINIATURE CIRCUIT BREAKER, FAZ-D10/3-NA	8-57, 8-59
315749-0160 ..	MINIATURE CIRCUIT BREAKER, FAZ-D16/3-NA	8-57, 8-59

Part No	Description	Page No
315749-0250 ..	MINIATURE CIRCUIT BREAKER, FAZ-D25/3-NA	8-27
315750-0109 ..	RETAINING RING FOR SHAFT DIN 471 12	7-179
315750-0119 ..	RETAINING RING FOR SHAFT DIN 471 25	9-59
315751-0103 ..	RETAINING RING FOR SHAFT DIN 471 6X 0.7C	1-33, 1-177, 2-213, 7-89
315751-0109 ..	RETAINING RING FOR SHAFT DIN 471 12 SS	1-321, 4-39, 4-41, 4-43, 4-45, 4-47, 4-49, 4-51 4-53, 4-55, 4-71, 4-73, 4-75, 4-77, 4-79, 4-81, 4-83, 4-85, 4-87, 4-89, 5-93, 5-95, 5-97, 5-99, 5-101 5-103, 5-105, 5-107, 5-109, 5-111, 5-113
315751-0112 ..	RETAINING RING FOR SHAFT DIN 471 15 SS	3-17, 3-19, 3-21, 3-23, 3-25, 4-23, 4-25, 4-57 4-59, 4-61, 4-63, 4-65, 4-67, 4-83, 4-85, 4-87, 4-89, 7-41, 7-43, 7-105, 7-125, 7-139, 7-179, 12-11 12-13, 12-15
315751-0113 ..	RETAINING RING FOR SHAFT DIN 471 16 SS	1-11, 1-69, 1-71, 2-93, 4-27, 4-29, 4-31, 7-49
315751-0115 ..	RETAINING RING FOR SHAFT DIN 471 18 SS	1-67, 7-179
315751-0116 ..	RETAINING RING FOR SHAFT DIN 471 20 SS	1-303, 4-9, 4-11, 4-13, 4-15, 4-17, 4-19, 5-133 5-135, 5-137, 5-139, 5-141, 5-143, 5-145, 5-147, 5-149, 5-151, 5-153, 5-155, 5-157, 5-159, 5-161 5-163, 5-165, 5-167, 5-169, 5-171, 5-217, 5-219, 5-221, 5-223, 5-225, 5-227, 5-229, 7-91, 7-119 7-121, 7-123, 12-11, 12-13, 12-15
315751-0119 ..	RETAINING RING FOR SHAFT DIN 471 25 SS	1-9, 1-303, 5-33, 5-35, 5-93, 5-95, 5-97, 5-99 5-101, 5-103, 5-105, 5-107, 5-109, 5-111, 5-113, 5-133, 5-135, 5-137, 5-139, 5-141, 5-143, 5-145 5-147, 5-149, 5-151, 5-153, 5-155, 5-157, 5-159, 5-161, 5-163, 5-165, 5-167, 5-169, 5-171, 5-173 5-175, 5-177, 5-179, 5-181, 5-183, 5-185, 5-187, 5-189, 5-191, 5-193, 5-195, 5-197, 5-199, 5-201 5-203, 11-49
315751-0122 ..	RETAINING RING FOR SHAFT DIN 471 30 SS	5-173, 5-175, 5-177, 5-179, 5-181, 5-183, 5-185 5-187, 5-189, 5-191, 5-193, 5-195, 5-197, 5-199, 5-201, 5-203
315751-0123 ..	RETAINING RING FOR SHAFT DIN 471 32 SS	3-5, 3-7, 3-9, 3-11, 3-13, 3-15
315751-0127 ..	10RETAINING RING FOR SHAFT DIN 471 40 SS	4-5, 4-7
315753-0117 ..	RETAINING RING FOR BORE DIN 472 22 SS	4-33, 4-35
315753-0122 ..	RETAINING RING FOR BORE DIN 472 30 SS	1-319, 7-85
315753-0123 ..	RETAINING RING FOR BORE DIN 472 32 SS	4-33, 4-35, 5-217, 5-219, 5-221, 5-223, 5-225 5-227, 5-229, 7-179
315753-0124 ..	RETAINING RING FOR BORE DIN 472 35 SS	1-19, 7-41, 11-137, 11-139, 11-141
315753-0127 ..	RETAINING RING FOR BORE DIN 472 40X1.75C	7-25
315753-0130 ..	RETAINING RING FOR BORE DIN 472 47 SS	1-9, 1-303, 5-33, 5-35, 5-173, 5-175, 5-177, 5-179 5-181, 5-183, 5-185, 5-187, 5-189, 5-191, 5-193, 5-195, 5-197, 5-199, 5-201, 5-203, 11-49
315753-0132 ..	RETAINING RING FOR BORE DIN 472 52 SS	5-93, 5-95, 5-97, 5-99, 5-101, 5-103, 5-105, 5-107 5-109, 5-111, 5-113
315754-0113 ..	RETAINING RING SHAFT DIN 6799 15	1-219, 1-221, 1-223
315755-0106 ..	RETAINING RING SHAFT DIN 6799 4 SS	1-21, 1-183, 1-347, 7-51, 7-107, 7-157, 7-161, 7-165 7-169, 7-173, 7-175
315755-0107 ..	RETAINING RING SHAFT DIN 6799 5 SS	1-13, 2-161, 2-163, 2-175, 2-219
315755-0108 ..	RETAINING RING SHAFT DIN 6799 6 SS	1-313, 1-315, 1-317
315755-0110 ..	RETAINING RING SHAFT DIN 6799 9 SS	2-237, 11-137
315755-0111 ..	RETAINING RING SHAFT DIN 6799 10 SS	3-5, 3-7, 3-9, 3-11, 3-13, 3-15
315755-0112 ..	RETAINING RING SHAFT DIN 6799 12 SS	4-9, 4-11, 4-13, 4-15, 4-17, 4-19
315755-0113 ..	RETAINING RING SHAFT DIN 6799 15 SS	1-21, 3-5, 3-7, 3-9, 3-11, 3-13, 3-15
315755-0801 ..	RETAINING RING SHAFT DIN 6799 8 SS	2-11
316810-0106 ..	PIPE CLIP FOR TUBE D=8 MM	5-173, 5-175, 5-177, 5-179, 5-181, 5-183, 5-185, 5-187, 5-189 5-191, 5-193, 5-195, 5-197, 5-199, 5-201, 5-203
318301-0122 ..	LIFTING EYE BOLT, LT M12 FZB	8-5, 8-7, 8-9, 8-11
318800-0104 ..	HANDLE,SPHERICAL KNOB,INT.THRE.,D.30-M8	1-69, 1-71
318800-0105 ..	HANDLE,SPHERICAL KNOB,INT.THRE.,D.35-M10	1-31
318800-0106 ..	HANDLE,SPHERICAL KNOB,INT.THRE,D.40-M10	1-303
318856-0101 ..	KNOB, EXTERNAL THREAD. NO. 8308-1011	6-13, 6-35
318860-0103 ..	KNOB, ADJUST.HI.EXT.THREAD, NO 8324-3585	1-313, 1-315, 1-317
319030-0125 ..	DISC SPRING, CONICAL 12,5X6,2X0,5 MM	7-77
321101-0143 ..	FLANGE BUSHING, 8/14X8-18X3 MM	1-201, 3-5, 3-7, 3-9, 3-11, 3-13, 3-15
321101-0222 ..	FLANGE BUSHING, 18X25X12	12-23
321101-0223 ..	FLANGE BUSHING, 18/25X16-32X4 MM	4-109, 4-111, 4-113, 4-115
321101-0273 ..	FLANGE BUSHING, 30/40X30-50X5 MM	4-9, 4-11, 4-13, 4-15, 4-17, 4-19
321111-0302 ..	FLANGE BUSHING, 20/26X15-32X3 MM	4-109, 4-111, 4-113, 4-115
321120-0137 ..	BEARING BUSH W/O FLANGE, 20X23X15 MM	9-61
321131-0350 ..	THRUST WASHER, 32X43X1,5 MM	3-5, 3-7, 3-9, 3-11, 3-13, 3-15
321134-0260 ..	BUSHING, IGLIDUR W300 20X23X20	1-169
321135-0060 ..	BUSHING, IGLIDUR X 6X8X6	4-21
321135-0219 ..	BUSHING, IGLIDUR X 16X18X15	4-27, 4-29, 4-31
321136-0100 ..	BUSHING, IGLIDUR H370 8X10X8	1-87, 1-89, 1-103, 1-105
321136-0183 ..	BUSHING, IGLIDUR H370 12X14X15	3-5, 3-7, 3-9, 3-11, 3-13, 3-15
321136-0295 ..	BUSHING, IGLIDUR H370 25X28X20	3-5, 3-7, 3-9, 3-11, 3-13, 3-15
321141-0064 ..	BEARING BUSH W/O FLANGE, 6X8X10 MM	7-61
321141-0104 ..	BEARING BUSH W/O FLANGE, 8X10X12 MM	7-81
321141-0138 ..	BEARING BUSH W/O FLANGE, 10X12X8 MM	1-319, 7-85
321141-0183 ..	BEARING BUSH W/O FLANGE, 12X14X15 MM	1-321
321153-0296 ..	FLANGE BUSHING, IGLIDUR G 25X28X21,5	5-173, 5-175, 5-177, 5-179, 5-181, 5-183, 5-185 5-187, 5-189, 5-191, 5-193, 5-195, 5-197, 5-199, 5-201, 5-203
321155-0062 ..	FLANGE BUSHING, IGLIDUR X 6X8X8	5-127, 5-129, 5-131
321155-0139 ..	FLANGE BUSHING, IGLIDUR X 10X12X9	5-83, 5-85, 5-87, 5-89, 5-91
321155-0221 ..	FLANGE BUSHING, IGLIDUR X 16X18X17	4-27, 4-29, 4-31
321156-0145 ..	FLANGE BUSHING, IGLIDUR H370 10X12X15	5-13, 5-83, 5-85, 5-87, 5-89, 5-91
321156-0188 ..	FLANGE BUSHING, IGLIDUR H370 12X14X15	3-5, 3-7, 3-9, 3-11, 3-13, 3-15
321156-0221 ..	FLANGE BUSHING, IGLIDUR H370 16X18X17	5-217, 5-219, 5-221, 5-223, 5-225, 5-227, 5-229
321156-0270 ..	FLANGE BUSHING, IGLIDUR H370 20X23X30	3-5, 3-7, 3-9, 3-11, 3-13, 3-15
321156-0371 ..	FLANGE BUSHING, IGLIDUR H370 35X39X26	3-5, 3-7, 3-9, 3-11, 3-13, 3-15
321158-0221 ..	FLANGE BUSHING, IGLIDUR J 16X18X17	1-21
321161-0221 ..	FLANGE BUSHING, 16X18X17 MM	2-93
321302-0298 ..	BALL BEARING 8/22X7	1-235, 1-237, 4-33, 4-35

Part No	Description	Page No
321308-0102 ..	BALL BEARING 15/32X9	7-23
321308-0202 ..	BALL BEARING 15/32X9	1-303, 7-93, 7-147, 7-179
321308-0203 ..	BALL BEARING 17/35X10	7-11
321308-0204 ..	BALL BEARING 20/42X12	7-25, 7-69, 7-71, 7-105
321308-0205 ..	BALL BEARING 25/47X12	1-303, 5-173, 5-175, 5-177, 5-179, 5-181, 5-183, 5-185, 5-187, 5-189, 5-191, 5-193, 5-195, 5-197, 5-199, 5-201, 5-203
321313-0100 ..	BALL BEARING 10/30X9	1-319, 7-85
321313-0101 ..	BALL BEARING 12/32X10	4-33, 4-35
321313-0102 ..	BALL BEARING 15/35X11	1-313, 1-315, 1-317, 2-11, 7-41, 7-43, 7-105, 7-125, 7-139, 7-145
321313-0103 ..	BALL BEARING 17/40X12	2-251, 7-25
321330-0108 ..	ANG. BALL BEAR 40/80X30,2	5-133, 5-135, 5-137, 5-139, 5-141, 5-143, 5-145, 5-147, 5-149, 5-151, 5-153, 5-155, 5-157, 5-159, 5-161, 5-163, 5-165, 5-167, 5-169, 5-171
321390-0145 ..	STEEL BALL 15MM, RB-15 RS	3-5, 3-7, 3-9, 3-11, 3-13, 3-15, 4-95, 4-97
342203-0107 ..	NIPPLES, EXT. THREAD, HEXAGON, NO. 209	6-7
342203-0120 ..	NIPPLES, EXT. THREAD, HEXAGON, NO. 209	6-47
342206-0109 ..	BUSHING, TAPERED, INT/EXT. THR NO. R211	1-181, 1-281, 6-21
342217-0103 ..	SLEEVE, REDUCTION, INT, R-2021/2X1/4	6-7
342700-0109 ..	NIPPLES,HEXAGON,EXT.G-THREAD G1/8"-G1/8"	1-343
342700-0110 ..	NIPPLES,HEXAGON,EXT.G-THREAD G1/4"-G1/4"	12-25
342700-0111 ..	NIPPLES,HEXAGON,EXT.G-THREAD G3/8"-G3/8"	6-81
342700-0113 ..	NIPPLES,HEXAGON,EXT.G-THREAD G1/2"-G1/2"	1-281, 6-31, 6-93
342700-0116 ..	NIPPLES,HEXAGON,EXT.G-THREAD G1"-G1"	6-55
342700-0205 ..	NIPPLES,HEXAGON,EXT.G-THREAD G1/2"-G1/4"	7-109, 7-111
342700-0206 ..	NIPPLES,HEXAGON,EXT.G-THREAD G1/2"-G3/8"	6-93
342701-0201 ..	BUSHING,INT./EXT.G-THREAD G1/4"-G1/8"	12-17, 12-19, 12-25
342701-0202 ..	BUSHING,INT./EXT.G-THREAD G3/8"-G1/8"	6-37, 6-81
342701-0203 ..	BUSHING, INT/EXT. G-THREAD NO. 3/8-1/4	1-281
342701-0205 ..	BUSHING,INT./EXT.G-THREAD G1/2"-G1/4"	2-151, 6-31
342701-0209 ..	BUSHING,INT./EXT.G-THREAD G3/4"-G3/8"	1-281
342706-0130 ..	STIFFNER SLEEVE FOR HOSE 6X1	1-243, 1-343, 2-251
342706-0195 ..	STIFFNER SLEEVE FOR HOSE 12X1,5	1-247
342707-0111 ..	SLEEVE, INT. THREAD, NO. 2543-3/8	11-117
342708-0109 ..	REINFORCING RING VSH 15X1 MM	6-81
342713-0208 ..	PLUG, EXT. THREAD HEX. SOCKET. BPM05	2-43, 7-29
342713-0209 ..	PLUG, EXT THREAD HEX SOCKET 8638-00-180	4-99, 4-101, 4-103, 4-105, 11-73, 11-215
342713-0210 ..	PLUG, EXT THREAD HEX SOCKET	1-207
342713-0211 ..	PLUG, EXT THREAD HEX SOCKET 8638-00-380	11-73, 11-215
342713-0213 ..	PLUG, EXT THREAD HEX SOCKET 8638-00-120	2-153, 2-227, 6-55, 6-81
342715-0106 ..	BLIND PLUG 14 MM	2-9
342716-0203 ..	REDUCER 6-8	6-11
342716-0211 ..	REDUCER 12-14	2-155, 6-91
342720-0114 ..	CONN. STR. GA-15-G1/2	6-81
342722-0202 ..	PIPE COUPLING 1/8" D=6MM	1-11, 1-13, 1-187, 1-263, 4-99, 4-101, 4-103, 4-105
342722-0204 ..	PIPE COUPLING	11-73, 11-215, 11-217
342722-0205 ..	STRAIGHT COUPLING D=8-G1/4"	2-149, 11-67
342722-0210 ..	STRAIGHT COUPLING, D=12 MM - G3/8"	11-73, 11-75, 11-215
342724-0102 ..	CONN. STR. PIPE GAI06LRCF	1-343
342725-0114 ..	CONN. STR. PIPE GAI15LR71	6-81
342735-0103 ..	ELBOW PIPE JOINT	5-205, 5-207, 5-209, 5-211
342735-0109 ..	ELBOW PIPE JOINT	1-247
342735-0110 ..	ELBOW PIPE	2-155
342737-0204 ..	ELBOW CONNECTION 6, W06L71	4-99, 4-101, 4-103, 4-105, 5-237, 5-239
342738-0221 ..	ADJUSTABLE ELBOW CONNECTION 15-G1/2	1-181, 1-281
342741-0209 ..	CONN. T-PIPE TE-12-R3/8	1-281
342748-0109 ..	T-CONNECTION 12MM	2-91
342748-0110 ..	T-CONNECTION 14MM	2-155, 6-91
342751-0215 ..	PIPE FITTING TEE	1-247
342751-0221 ..	PIPE FITTING TEE	1-243
342767-0100 ..	BULKHEAD LEAD-IN, G1/8	1-323
342767-0104 ..	BULKHEAD LEAD-IN, G1/4	2-89, 2-149, 2-151
342768-0102 ..	BULKHEAD CONNECTOR, 6 MM	1-233
342768-0110 ..	BULKHEAD CONNECTOR, 14 MM	2-9, 2-155
342772-0113 ..	ELBOW FITTING, 6 - G1/8	4-99, 4-101, 4-103, 4-105
342772-0122 ..	ELBOW FITTING, 8 - G1/4	3-5, 3-7, 3-9, 3-11, 3-13, 3-15
342797-0121 ..	BANJO CONN., RINGPIECE 6-1/8	1-343, 5-93, 5-95, 5-97, 5-99, 5-101, 5-103, 5-105, 5-107, 5-109, 5-111, 5-113
342797-0122 ..	BANJO CONN., RINGPIECE 6-1/4	1-243, 1-247
342800-1103 ..	DIAPHRAGM FDA PTFE/EPDM 5E, SEAT S. 25	1-267
342800-1303 ..	ACTUATOR, SS, N.O. SEAT S. 25	1-267
342800-1503 ..	VALVE ASSEMBLING KIT, SEAT S. 25	1-267
342840-0101 ..	CLAMP, 12,7 AND 19,1 MM 3-A PCS+PMCS	1-233
342840-0103 ..	CLAMPING PIECE DN 1-11/2, GH13LAH112304N	1-181, 1-233, 1-253, 1-255, 1-257, 1-259, 1-261, 1-267, 1-269, 1-271, 1-273, 1-275, 2-63, 2-227
342840-0105 ..	CLAMPING PIECE, GH13LAH2304NO79612011202	1-181, 1-191, 1-215, 1-267, 1-273, 2-75
342840-0106 ..	CLAMP, 63,5 MM 3-A PCS+PMCS	2-267
342840-0107 ..	CLAMP, 76,2 MM 3-A PCS+PMCS	1-215, 2-227
342850-0107 ..	GASKET 72,9X89,6X5,2 MM 3" FDA 3-A	2-227
342850-0206 ..	GASKET 60,3X76,1X5,2 MM 21/2" FDA 3-A	2-267
342850-0209 ..	GASKET 147,57X165,61X5,182 MM 6"	1-181
342850-0303 ..	GASKET 22,7X49,1X5,2 MM 1" FDA, 3-A	1-269, 1-271, 1-275
342850-0304 ..	GASKET 35,4X49,1X5,2 1"1/2 FDA, 3-A	1-253, 1-255, 1-257, 1-259, 1-261, 1-267, 1-269, 1-271, 1-273, 1-275, 2-63, 2-65, 2-227, 9-5, 9-9
342850-0305 ..	GASKET 47,8X62,6X5,2 MM 2" FDA 3-A	1-215, 1-267, 1-273, 2-75
342850-0306 ..	GASKET 60,3X76,1X5,2 MM 2"1/2 FDA 3-A	1-253, 1-255, 1-257, 1-259, 9-9

Part No	Description	Page No
342850-0307 ..	GASKET 72,9X89,6X5,2 MM 3" FDA 3-A	1-215, 1-253, 1-255, 1-257
342850-0308 ..	GASKET 97X117,7X5,2 MM 4" FDA 3-A	1-253, 1-255, 1-257
342850-0404 ..	GASKET 35,4X49,1X5,2 MM 1"1/2 FDA 3-A	1-181
342850-0405 ..	GASKET 47,8X62,6X5,2 MM 2" FDA 3-A	1-181, 1-191
342850-0408 ..	GASKET 97X117,7X5,2 MM 4" FDA 3-A	1-181
342901-0101 ..	HOSE NIPPLE, EXT.THR. G1/8-7 MM	2-243
342901-0105 ..	HOSE NIPPLE, EXT.THR. G1/2-12 MM	1-181, 1-191, 2-153, 2-271, 6-31, 6-45, 6-81
342901-0106 ..	HOSE NIPPLE, EXT.THR. G3/8-17 MM	2-237, 2-245
342920-0113 ..	STRAIGHT COUPLING,EXT.THREADED 6/4-R1/8"	2-39, 2-41
342920-0114 ..	STRAIGHT COUPLING,EXT.THREADED 6/4-R1/4"	2-39, 2-41
342920-0122 ..	STRAIGHT COUPLING,EXT.THREADED 8/6-R1/4"	2-39, 2-41, 2-89, 2-149
342920-0123 ..	STRAIGHT COUPLING,EXT.THREADED 8/6-R3/8"	1-357
342920-0132 ..	STRAIGHT COUPL.,EXT.THREADED 10/8-R1/4"	2-151
342920-0151 ..	STRAIGHT COUPL.,EXT.THREAD.15/12,5-R1/2"	1-191
342921-0113 ..	STRAIGHT COUPLING,EXT.THREADED 6/4-G1/8"	1-323, 12-17, 12-19
342921-0114 ..	STRAIGHT COUPLING,EXT.THREADED 6/4-G1/4"	12-17, 12-19
342921-0116 ..	STRAIGHT COUPLING,EXT.THREADED 6/4-G1/2"	2-267
342921-0121 ..	STRAIGHT CPLNG,EXT.THREADED 8/6-G1/8INCH	1-271, 2-259, 2-261
342921-0122 ..	STRAIGHT COUPLING,EXT.THREADED 8/6-G1/4"	1-207, 2-153, 5-133, 5-135, 5-137, 5-139 5-141, 5-143, 5-145, 5-147, 5-149, 5-151, 5-153, 5-155, 5-157, 5-159, 5-161, 5-163, 5-165, 5-167 5-169, 5-171
342921-0151 ..	STRAIGHT COUPL.,EXT.THREAD.15/12,5-G1/2"	6-81
342923-0113 ..	STRAIGHT COUPL.,INT.THREADED 6/4-G1/8"	1-271
342923-0122 ..	STRAIGHT COUPL.,INT.THREADED 8/6-G1/4"	2-233
342931-0113 ..	ELBOW 90 COUPL.,EXT.THREAD 6/4-G1/8"	2-39, 2-41
342931-0121 ..	ELBOW 90 COUPL.,EXT.THREAD 8/6-G1/8"	1-77, 1-207, 4-91, 4-93, 7-37
342931-0122 ..	ELBOW 90 COUPL.,EXT.THREAD 8/6-G1/4"	1-207, 2-39, 2-41, 5-133, 5-135, 5-137, 5-139 5-141, 5-143, 5-145, 5-147, 5-149, 5-151, 5-153, 5-155, 5-157, 5-159, 5-161, 5-163, 5-165, 5-167 5-169, 5-171, 5-173, 5-175, 5-177, 5-179, 5-181, 5-183, 5-185, 5-187, 5-189, 5-191, 5-193, 5-195 5-197, 5-199, 5-201, 5-203
342936-0122 ..	ELBOW 90 COUPL.,UNION 8/6	1-357, 2-39, 2-41
342940-0122 ..	T-COUPLING,EXT.THREAD 8/6-R1/4"	1-207
342941-0122 ..	T-COUPLING,EXT.THREAD 8/6-G1/4"	1-207
342946-0122 ..	T-COUPLING,UNION 8/6	2-147
342960-0112 ..	BULKHEAD COUPLING 6/4	2-39, 2-41
342960-0122 ..	BULKHEAD COUPLING 8/6	2-39, 2-41
342980-0114 ..	BANJO-CONNECTION,RING 6/4-G1/4"	12-17, 12-19
342980-0303 ..	BANJO-HOLLOW BOLT COUPL,EXT.THR.01-G1/8	1-343
342980-0304 ..	BANJO-HOLLOW BOLT COUPL,EXT.THR.01-G1/4	1-243, 1-247
342980-0313 ..	BANJO-HOLLOW BOLT COUPL,EXT.THR.02-G1/8	5-93, 5-95, 5-97, 5-99, 5-101, 5-103, 5-105 5-107, 5-109, 5-111, 5-113
342980-0314 ..	BANJO-HOLLOW BOLT COUPL,EXT.THR.02-G1/4	12-17, 12-19
342981-0113 ..	BANJO CONNEC,RING,FOR PLAST.TUBE 6-G1/8"	5-93, 5-95, 5-97, 5-99, 5-101, 5-103, 5-105 5-107, 5-109, 5-111, 5-113
342991-0100 ..	HOSE CLIP,WORM DRIVE TYPE (8)-14	1-247, 2-233, 6-45, 12-31
342991-0101 ..	HOSE CLIP,WORM DRIVE TYPE (11)-17	1-181, 1-191, 2-153, 2-227, 2-237, 2-239, 2-243 2-269, 2-271, 6-29, 6-31, 6-33, 12-31
342991-0102 ..	HOSE CLIP,WORM DRIVE TYPE (13)-20	1-181, 2-9, 2-259, 2-261, 6-31, 6-55
342991-0103 ..	HOSE CLIP,WORM DRIVE TYPE (15)-24	2-39, 2-41, 2-237, 2-245, 2-249, 2-267
342991-0104 ..	HOSE CLIP,WORM DRIVE TYPE (19)-28	2-65, 2-153, 2-237, 2-273
342991-0105 ..	HOSE CLIP,WORM DRIVE TYPE (22)-32	1-281, 2-13, 2-79
342991-0106 ..	HOSE CLIP,WORM DRIVE TYPE (26)-38	2-245, 7-29
342991-0109 ..	HOSE CLIP,WORM DRIVE TYPE (44)-56	1-183, 1-271, 2-63, 2-227
342991-0110 ..	HOSE CLIP,WORM DRIVE TYPE (50)-65	2-237, 2-245
342991-0114 ..	HOSE CLIP,WORM DRIVE TYPE (87)-112	2-93
344234-0080 ..	UNION TEE, 6304 08 00WP2	6-7
344235-0814 ..	MALE CONNECTOR, 6305 08 13WP2	6-7, 6-33, 6-37
344235-0838 ..	MALE CONNECTOR, 6305 08 17WP2	6-7, 6-33, 6-81
344235-1212 ..	MALE CONNECTOR, 6305 12 21WP2	6-21
344236-0814 ..	FEMALE CONNECTOR, 6315 08 13WP2	6-33
344237-0814 ..	SWIVEL ELBOW, 6309 08 13WP2	6-21, 6-31, 6-33, 6-35
344237-1012 ..	SWIVEL ELBOW, 6309 10 21WP2	6-7
344237-1038 ..	SWIVEL ELBOW, 6309 10 17WP2	6-81
344237-1212 ..	SWIVEL ELBOW, 6309 12 21WP2	6-21
344238-0814 ..	SWIVEL BRANCH TEE, 6308 08 13WP2	6-39
344239-0608 ..	REDUCER, 6366 06 08WP2	6-81
344239-0810 ..	REDUCER, 6366 08 10WP2	6-7
344240-0805 ..	TUBE 8 MM PE FDA, 1015Y08F01	6-7, 6-33, 6-35, 6-39
344240-1209 ..	TUBE 12 MM PE FDA, 1015Y12F01	6-21
346800-0109 ..	SILENCER FILTER R1/8"	1-343
346800-0110 ..	SILENCER FILTER R1/4"	1-293, 2-91
350001-0001 ..	PUSH-IN FITTING QS-F-M5-4	7-81
350001-0002 ..	PUSH-IN FITTING QS-F-M5-6	2-27, 2-35, 7-103
350001-0005 ..	PUSH-IN FITTING QS-F-G1/8-4	1-331, 1-333, 6-85
350001-0006 ..	PUSH-IN FITTING QS-F-G1/8-6	2-43, 7-29, 11-65
350001-0007 ..	PUSH-IN FITTING QS-F-G1/8-8	2-35, 3-5, 3-7, 3-9, 3-11, 3-13, 3-15, 4-9, 4-11, 4-13, 4-15, 4-17 4-19, 4-109, 4-111, 4-113, 4-115, 7-109, 7-111, 7-113
350001-0008 ..	PUSH-IN FITTING QS-F-G1/4-6	1-267, 2-241, 7-109, 7-111, 7-115, 11-65
350001-0009 ..	PUSH-IN FITTING QS-F-G1/4-8	1-337, 1-339, 2-29, 2-31, 2-233, 5-217, 5-219, 5-221, 5-223 5-225, 5-227, 5-229, 6-51, 7-79, 7-109, 7-111
350001-0010 ..	PUSH-IN FITTING QS-F-G1/4-10	1-331, 1-333
350001-0015 ..	PUSH-IN FITTING QS-F-G1/2-10	6-91
350001-0016 ..	PUSH-IN FITTING QS-F-G1/2-12	6-91
350002-0002 ..	PUSH-IN L-FITTING QSL-F-M5-6	1-21, 4-21, 7-53, 7-133, 7-135

Part No	Description	Page No
350002-0005 ..	PUSH-IN L-FITTING QSL-F-G1/8-4	2-29, 2-31, 7-109, 7-111, 7-113
350002-0006 ..	PUSH-IN L-FITTING QSL-F-G1/8-6	1-73, 1-209, 1-245, 1-335, 1-337, 1-339, 2-27, 2-33, 2-35, 2-183, 2-233, 2-259, 2-261, 6-87, 7-91, 7-113, 7-117, 7-119, 7-121, 7-123
350002-0007 ..	PUSH-IN L-FITTING QSL-F-G1/8-8	2-33, 2-243, 3-5, 3-7, 3-9, 3-11, 3-13, 3-15, 6-53, 6-87, 7-95, 7-109, 7-111, 7-113, 7-117
350002-0008 ..	PUSH-IN L-FITTING QSL-F-G1/4-6	1-271, 1-331, 1-333, 2-29, 2-31, 2-43, 2-249, 7-109, 7-111, 7-179
350002-0009 ..	PUSH-IN L-FITTING QSL-F-G1/4-8	1-331, 1-333, 2-29, 2-31, 2-239, 5-83, 5-85, 5-87, 5-89, 5-91, 6-85, 7-81, 7-109, 7-111
350002-0010 ..	PUSH-IN L-FITTING QSL-F-G1/4-10	1-331, 1-333
350002-0011 ..	PUSH-IN L-FITTING QSL-F-G1/4-12	2-91
350002-0012 ..	PUSH-IN L-FITTING QSL-F-G3/8-8	1-335, 2-33, 6-87
350002-0013 ..	PUSH-IN L-FITTING QSL-F-G3/8-10	1-331, 1-333, 1-335, 1-337, 1-339
350002-0014 ..	PUSH-IN L-FITTING QSL-F-G3/8-12	2-33, 6-87, 6-93, 7-113, 7-117
350002-0016 ..	PUSH-IN L-FITTING QSL-F-G1/2-12	7-109, 7-111
350003-0001 ..	PUSH-IN FITTING QS-F-M5-4-I	7-69, 7-71
350004-0002 ..	PUSH-IN L-FITTING QSL-F-6	7-109, 7-111
350004-0003 ..	PUSH-IN L-FITTING QSL-F-8	2-29, 2-31, 2-155
350004-0005 ..	PUSH-IN L-FITTING QSL-F-12	2-91, 2-155, 7-109, 7-111, 7-115
350005-0002 ..	PUSH-IN T-FITTING QST-F-6	1-327, 1-329, 4-21, 5-13, 7-109, 7-111, 11-65
350005-0003 ..	PUSH-IN T-FITTING QST-F-8	2-29, 2-31, 4-9, 4-11, 4-13, 4-15, 4-17, 4-19
350005-0004 ..	PUSH-IN T-FITTING QST-F-10	1-327, 1-329, 1-331, 1-333
350005-0005 ..	PUSH-IN T-FITTING QST-F-12	6-91, 7-109, 7-111
350006-0001 ..	PUSH-IN FITTING QS-F-6H-4	2-29, 2-31, 5-13
350006-0002 ..	PUSH-IN FITTING QS-F-8H-4	1-331, 1-333, 2-29, 2-31, 2-239, 7-109, 7-111
350006-0003 ..	PUSH-IN FITTING QS-F-8H-6	2-27, 2-29, 2-31, 2-155, 6-91, 7-109, 7-111
350006-0005 ..	PUSH-IN FITTING QS-F-10H-6	1-327, 1-329, 1-331, 1-333
350006-0006 ..	PUSH-IN FITTING QS-F-10H-8	1-327, 1-329, 7-109, 7-111
350006-0007 ..	PUSH-IN FITTING QS-F-12H-6	1-247
350006-0008 ..	PUSH-IN FITTING QS-F-12H-8	6-91
350006-0009 ..	PUSH-IN FITTING QS-F-12H-10	2-155
350007-0007 ..	PUSH-IN T-FITTING QST-F-G1/8-8	3-5, 3-7, 3-9, 3-11, 3-13, 3-15
350007-0009 ..	PUSH-IN T-FITTING QST-F-G1/4-8	2-29, 2-31
350007-0011 ..	PUSH-IN T-FITTING QST-F-G1/4-12	2-29, 2-31
350008-0004 ..	PUSH-IN FITTING QSF-F-G1/4-6	5-173, 5-175, 5-177, 5-179, 5-181, 5-183, 5-185, 5-187, 5-189, 5-191, 5-193, 5-195, 5-197, 5-199, 5-201, 5-203
350008-0005 ..	PUSH-IN FITTING QSF-F-G1/8-8	4-109, 4-111, 4-113, 4-115, 7-109, 7-111
350009-0003 ..	PUSH-IN FITTING QS-F-8	2-239
350010-0002 ..	PUSH-IN BULKHEAD FITTING QSS-F-6	2-23, 2-25, 2-155, 2-259, 2-261
350010-0003 ..	PUSH-IN BULKHEAD FITTING QSS-F-8	2-29, 2-31
350010-0005 ..	PUSH-IN BULKHEAD FITTING QSS-F-12	2-9, 2-155
350011-0002 ..	PUSH-IN T-FITTING QST-F-8-6	2-29, 2-31, 6-91
350011-0003 ..	PUSH-IN T-FITTING QST-F-10-8	1-207, 1-331, 1-333
350011-0004 ..	PUSH-IN T-FITTING QST-F-12-10	7-109, 7-111
350012-0003 ..	SLEEVE QSH-F-8	2-29, 2-31
350012-0004 ..	SLEEVE QSH-F-10	1-327, 1-329, 1-331, 1-333
350012-0005 ..	SLEEVE QSH-F-12	2-91
350013-0002 ..	PLUG QSC-6H	1-327, 1-329, 1-331, 1-333, 2-23, 2-25
350013-0003 ..	PLUG QSC-8H	1-327, 1-329
350013-0004 ..	PLUG QSC-10H	6-91
350013-0005 ..	PLUG QSC-12H	2-9
350014-0011 ..	FITTING QS-F-G1/4-12H	7-115
350015-0001 ..	PUSH-IN Y-CONNECTOR QSY-F-6	1-327, 1-329, 1-331, 1-333, 2-27, 2-29, 2-31, 7-29
350015-0003 ..	PUSH-IN Y-CONNECTOR QSY-F-8	2-27, 2-29, 2-31
350015-0005 ..	PUSH-IN Y-CONNECTOR QSY-F-10	1-331, 1-333
351120-0126 ..	CABLE ÖLFLEX HEAT 180 SIHF 2X4	7-53
351120-0145 ..	CABLE ÖLFLEX HEAT 180 SIHF 3X2,5	7-55
351120-0264 ..	CABLE ÖLFLEX HEAT 180 SIHF 4X1,5	1-175, 1-279
351120-0267 ..	CABLE ÖLFLEX HEAT 180 SIHF 4X6	1-185
351150-0166 ..	CABLE OLFLEX 4X4 MM2 LIGHT/GREY	2-51, 6-49
351150-0403 ..	CABLE OLFLEX 3X0,75 MM2 LIGHT/GREY	1-191, 1-211, 1-235, 1-237, 1-293, 2-19, 2-239, 2-243, 2-259, 2-261, 6-17, 6-19, 6-21, 6-43, 6-63, 6-65, 6-81, 7-5, 7-7, 7-13
351150-0404 ..	CABLE OLFLEX 4X0,75 MM2 LIGHT/GREY	1-181, 1-209, 1-211, 1-243, 1-275, 1-293, 2-259, 2-261, 6-31, 11-149, 11-209
351150-0405 ..	CABLE OLFLEX 5X0,75 MM2 LIGHT/GREY	4-95, 4-97, 7-177, 11-237
351150-0406 ..	CABLE OLFLEX 7X0,75 MM2 LIGHT/GREY	1-81, 1-211, 2-57, 2-97, 2-109, 7-15, 7-51
351150-0407 ..	CABLE OLFLEX 12X0,75 MM2 LIGHT/GREY	2-19, 2-53, 2-97, 2-105, 7-159, 7-163
351150-0412 ..	CABLE OLFLEX 3X1,5 MM2 LIGHT/GREY	1-279, 1-357, 2-49, 2-53, 2-97, 2-99, 7-5, 7-7, 7-15, 7-69, 7-71
351150-0413 ..	CABLE OLFLEX 4GX1,5 MM2 LIGHT/GREY	1-175, 2-51, 2-71, 2-229, 6-17
351150-0414 ..	CABLE OLFLEX 5X1,5 MM2 LIGHT/GREY	2-51
351150-0417 ..	CABLE OLFLEX 3X2,5 MM2 LIGHT/GREY	1-211, 5-205, 5-207, 5-209, 5-211
351150-0418 ..	CABLE OLFLEX 4X2,5 MM2 LIGHT/GREY	6-31, 6-37
351150-0419 ..	CABLE OLFLEX 5X2,5 MM2 LIGHT/GREY	2-51
351150-0424 ..	CABLE OLFLEX 18X0,75 MM2 LIGHT/GREY	2-59
351150-0425 ..	CABLE OLFLEX 25X0,75 MM2 LIGHT/GREY	1-357, 2-19, 2-51, 2-53, 2-71, 2-97, 6-77, 7-15
351150-0430 ..	CABLE OLFLEX 5X35 MM2 LIGHT/GREY	2-59
351150-0431 ..	CABLE OLFLEX 2X0,75 MM2 LIGHT/GREY	1-279
351150-0433 ..	CABLE OLFLEX 7X4 MM2 LIGHT/GREY	1-295
351160-0102 ..	WIRE AWM 1X0,75 MM2 DARKBLUE	11-149
351161-0110 ..	WIRE AWM 1X25 MM2 LIGHTBLUE	6-23
351161-0111 ..	WIRE AWM 1X35 MM2 LIGHTBLUE	6-23
351162-0102 ..	WIRE AWM 1X0,75 MM2 YELLOW-GREEN	2-265, 11-149
351162-0109 ..	WIRE AWM 1X16 MM2 YELLOW-GREEN	6-23
351164-0110 ..	WIRE AWM 1X25 MM2 BLACK	6-23

Part No	Description	Page No
351164-0111 ..	WIRE AWM 1X35 MM2 BLACK	6-23
351301-0050 ..	ACTUATOR/SENSOR CABLE PRKMV 3-06/5M	1-169
351301-0100 ..	ACTUATOR/SENSOR CABLE PRKMV 3-06/10M	1-11, 1-31, 1-177, 1-183, 1-215
351302-0050 ..	ACTUATOR/SENSOR CABLE PRKMWV 3-06/5M	1-235, 1-237
351303-0050 ..	ACTUATOR/SENSOR CABLE RKMVN 3-224/5M	7-137
351305-0020 ..	ACTUATOR/SENSOR CABLE PRKMV 4-07/2M	11-127, 11-129
351309-0050 ..	ACTUATOR/SENSOR CABLE PRKT 4-07/5M	6-17, 11-3, 11-5, 11-7
351309-0100 ..	ACTUATOR/SENSOR CABLE PRKT 4-07/10M	1-321, 11-67, 11-211
351310-0100 ..	ACTUATOR/SENSOR CABLE PRKWT 4-07/10M	1-69, 1-71, 1-233, 1-263, 1-275, 1-287, 1-289, 1-313, 1-315, 1-317
351311-0020 ..	ACTUATOR/SENSOR CABLE RKTN 4-225/2M	7-25
351414-0020 ..	DEVICENET CONN. CABLE, 0935 361 104/2M	6-77
351414-0100 ..	DEVICENET CONN. CABLE, 0935 361 104/10M	1-357
351415-0020 ..	DEVICENET CONN. CABLE, 0935 361 105/2M	2-81
351415-0050 ..	DEVICENET CONN. CABLE, 0935 361 105/5M	2-81
351416-0005 ..	MINIATURE CIRC. BREAK., FAZ-D0,5 1-POLE	8-41, 8-43, 8-57, 8-59
351416-0020 ..	MINIATURE CIRC. BREAK., FAZ -D2 1-POLE	8-57, 8-59
351416-0040 ..	MINIATURE CIRC. BREAK., FAZ -D4 1-POLE	8-41, 8-43
351416-0060 ..	MINIATURE CIRC. BREAK., FAZ -D6 1-POLE	8-41, 8-43
351416-0100 ..	MINIATURE CIRC. BREAK., FAZ -D10 1-POLE	8-41, 8-43, 8-57, 8-59
351416-0160 ..	MINIATURE CIRC. BREAK., FAZ -D16 1-POLE	8-41, 8-43, 8-57, 8-59
351418-0060 ..	MINIATURE CIRC. BREAK., FAZ-D6/3 3-POLE	8-57, 8-59
351418-0100 ..	MINIATURE CIRC. BREAK., FAZ-D10/3 3-POLE	8-57, 8-59
351418-0160 ..	MINIATURE CIRC. BREAK.,FAZ-D16/3 3-POLE	8-57, 8-59
351422-0202 ..	CABLE ÖLFLEX 150CY QUATTRO 3X1,5	3-17, 3-19, 3-21, 3-23, 3-25
351422-0203 ..	CABLE ÖLFLEX 150CY QUATTRO 4X1,5	2-251
351423-0006 ..	CABLE UNITRONIC LICY 5X0,34	2-91
351501-0075 ..	ETHERNET PATCH CABLE, FL CAT5 PATCH 7,5	2-105
352103-0100 ..	CABLE GLAND, STR 9, PR15,2/PG9	2-259, 2-261
352103-0101 ..	CABLE GLAND, ST 9, PR15,2/PG9	1-191, 1-207, 1-293, 1-295, 2-71, 2-243, 2-259, 2-261, 6-21, 6-43, 6-81
352103-0106 ..	CABLE GLAND, ST 11, PR18,6/PG11	1-207, 1-243, 2-71, 2-229, 2-239, 6-23
352103-0108 ..	CABLE GLAND, ST 13,5 , PR20,4/PG13,5	7-89, 7-145, 8-77, 8-79
352103-0110 ..	CABLE GLAND, STR 16, PR22,5/PG16	7-177, 8-5, 8-7, 8-9, 8-11
352103-0111 ..	CABLE GLAND, ST 16, PR22,5/PG16	6-49, 8-77, 8-79
352103-0115 ..	CABLE GLAND, STR 21, PR28,3/PG21	1-295
352103-0116 ..	CABLE GLAND, ST 21, PR28,3/PG21	2-71
352103-0123 ..	CABLE GLAND, ST 42, PR54,0/PG42	6-23
352113-0101 ..	CABLE TIE, BLACK 92X2,5 MM	1-79, 11-67, 11-71, 11-127, 11-129, 11-211, 11-213, 11-233
352113-0102 ..	CABLE TIE, BLACK 188X4,8 MM	7-5, 7-7, 7-37, 11-27, 11-123, 12-31
352113-0103 ..	CABLE TIE, BLACK 290X7,6 MM	2-39, 2-41, 2-59
352113-0104 ..	CABLE TIE, BLACK 300X4,8 MM	1-181, 2-153, 5-25, 11-49
352113-0106 ..	CABLE TIE, BLACK 368X7,6 MM	7-69, 7-71
352113-0203 ..	ANCHOR PLATES FOR STRIPS, TYPE TM3S8-M0	1-331, 1-333, 1-345, 1-351, 5-231, 5-233, 6-29, 7-5, 7-7, 7-61, 7-69, 7-71, 8-45, 8-47, 8-77, 8-79
352113-0204 ..	ANCHOR PLATES FOR STRIPS, TYPE TM3S25-M	1-37, 1-39, 1-69, 1-71, 1-239, 1-279, 1-299 . 1-305, 1-307, 2-19, 2-39, 2-41, 2-59, 2-125, 2-127, 4-9, 4-11, 4-13, 4-15, 4-17, 4-19, 5-25, 11-49
352113-0205 ..	ANCHOR PLATES FOR STRIPS, TYPE TM2S8-C10	1-313, 1-315, 1-317, 1-321, 6-55, 7-51, 7-53, 7-61, 8-49, 11-67, 11-71, 11-127, 11-129, 11-211, 11-213
352553-0250 ..	CYLINDRICAL FUSE 25A, 3NC1025	8-57, 8-59, 9-27
353001-0113 ..	END SLEEVE 0,75MM2	11-149
353021-0127 ..	TERMINAL DISCONNECTABLE, WTR 2,5+WSD 2,5	1-361
353021-0212 ..	FEED THROUGH TERMINAL, 10200.0	1-213, 1-363, 2-55, 2-103, 7-17, 8-37, 8-39, 8-45, 8-47, 8-69, 8-71
353021-0213 ..	FEED THROUGH TERMINAL, 10201.0	1-297, 1-361, 2-71
353021-0219 ..	FEED THROUGH TERMINAL, 10205.0	6-25, 6-27
353021-0226 ..	BY-PASS TERMINAL WDU 35	8-73
353021-0301 ..	TERMINALS,TRIPLE-LEVEL, DLI 2,5/35 PA	8-105
353021-0302 ..	TERMINALS,TRIPLE-LEVEL, DLD 2,5/35 PA	2-71, 8-105
353022-0002 ..	NEUTRAL TERMINAL, 10107.8	8-69, 8-71
353024-0204 ..	EARTH TERMINAL WPE 2,5	1-213, 1-297, 1-361, 1-363, 2-17, 2-55, 2-71, 2-103, 2-107, 6-79, 7-17, 8-69, 8-71
353024-0205 ..	EARTH TERMINAL WPE 4	1-361, 2-71, 8-69, 8-71
353024-0206 ..	EARTH TERMINAL, 1010.2	7-17, 8-69, 8-71
353024-0209 ..	EARTH TERMINAL WPE 35	6-25, 6-27, 8-69, 8-71, 8-73
353024-0212 ..	EARTH TERMINAL WDK 2,5 PE	1-213, 1-361, 1-363, 2-17, 2-55, 2-103, 2-107, 6-79, 7-17, 8-105, 11-63
353031-0203 ..	END SUPPORT, WEW 35/2	1-213, 1-361, 2-17, 2-55, 2-103, 2-107, 6-23, 6-25, 6-27, 6-79, 7-17, 8-31, 8-37, 8-39, 8-45, 8-47, 8-69, 8-71, 8-73, 8-105, 11-63
353032-0004 ..	END PLATE WAP 2,5-10 BEIGE	1-297, 8-31, 8-37, 8-39, 8-45, 8-47, 8-69, 8-71
353032-0009 ..	END PLATE, WAP FOR WDK	8-31, 8-37, 8-39, 11-63
353032-0013 ..	END PLATE, 13818.6	8-105
353032-0301 ..	END PLATE WAP, 13132.6	8-105
353032-0302 ..	END PLATE, AP DLD2,5 DB	2-71
353033-0104 ..	END PLATE, 10502.8	8-69, 8-71
353033-0105 ..	PARTITITION, 10501.0	8-73
353034-0026 ..	BRIDGE CONNECTOR WQV 35/2	6-25, 6-27, 8-73
353034-0030 ..	BRIDGE CONNECTOR WQV 2,5/10	1-213, 1-297, 1-361, 1-363, 2-17, 2-55, 2-103, 2-107, 6-79, 7-17, 8-37, 8-39, 8-45, 8-47, 8-69, 8-71, 8-105, 11-63
353034-0404 ..	BRIDGE CONNECTOR Q 10 DLI	2-71, 8-105
353041-0001 ..	BUS BAR RAIL 10X3MM SSCH	8-69, 8-71
353041-0106 ..	HOLDER ZB35 K 5026.8	8-69, 8-71
353042-0004 ..	RAIL TS 35/7,5	2-107, 6-79, 8-5, 8-7, 8-9, 8-11, 8-15, 8-17, 8-27, 8-29, 8-31, 8-35, 8-37, 8-39, 8-41, 8-43, 8-45, 8-47, 8-53, 8-55, 8-57, 8-59, 8-61, 8-63, 8-65, 8-69, 8-71, 8-73, 8-97, 8-99

Part No	Description	Page No
353101-0118 ..	CABLE SHOE 0,5-1,5MM2 M3 RED	2-265
353101-0122 ..	CABLE SHOE 0,5-1,5MM2 M5 RED	11-149
353101-0130 ..	CABLE SHOE 1,5-2,5MM2 M4 BLUE	1-235, 1-237, 2-229
353101-0132 ..	CABLE SHOE 1,5-2,5MM2 M5 BLUE	7-55
353104-0130 ..	CABLE SHOE, RING UNINS., YAV 025 M 4	7-55
353104-0140 ..	CABLE SHOE, RING UNINS., YAV 06 M 4	7-53
353104-0142 ..	CABLE SHOE, RING UNINS., YAV 06 M 5	1-205
353104-0168 ..	CABLE SHOE, RING UNINS., YAV 16 M 6	6-23
353105-0117 ..	PIN CABLE SHOE 0,75-1,5MM2 RED A1519SR	2-265
353105-0200 ..	PIN CABLE SHOE A4630SR	6-23
353240-0002 ..	GLAND W/O INSERT PG11 NORMAL	11-241
353240-0006 ..	GLAND W/O INSERT PG29 NORMAL	2-97
353241-0002 ..	GLAND W/O INSERT PG11 EXTENDED	11-241
353242-0005 ..	HOSE GLAND W/O INSERT PG9 NORMAL	6-33, 6-77
353243-0001 ..	HOSE GLAND W/O INSERT PG9 EXTENDED	1-229, 1-231, 1-233, 5-25, 5-33, 5-35, 5-37, 5-39
353243-0005 ..	HOSE GLAND W/O INSERT PG16 EXTENDED	1-233, 7-177
353243-0008 ..	HOSE GLAND W/O INSERT PG29 EXTENDED	2-183
353249-0003 ..	INSERT, SINGLE HOLE, E151/11	11-241
353249-0008 ..	INSERT, SINGLE HOLE, EK 152/7	1-175, 1-185, 1-187, 1-229, 1-231, 1-279, 1-345, 5-25, 5-33, 5-35, 5-37, 5-39
353249-0009 ..	INSERT, SINGLE HOLE, EK 152/9	1-27, 1-29, 1-35, 1-233
353249-0011 ..	INSERT, SINGLE HOLE, EK 153/11	1-57, 1-61, 1-63, 1-65, 1-175, 1-279, 1-345, 1-353
353249-0013 ..	INSERT, SINGLE HOLE, EK 154/13	1-81, 1-279, 1-345
353249-0014 ..	INSERT, SINGLE HOLE, EK 154/16	7-159
353249-0036 ..	INSERT, MULTI HOLE, EK152 M 2X4	11-241
353249-0049 ..	INSERT, SOLID, EK155G	2-97
353249-0051 ..	INSERT, MULTI HOLE, E154M4X6	7-15
353249-0054 ..	INSERT, SINGLE HOLE, EK 156/25	7-125
353249-0060 ..	INSERT, MULTI HOLE, E155M2X13	7-5, 7-7
353249-0061 ..	INSERT, SINGLE HOLE, EK 155/20	1-345
353249-0067 ..	INSERT, SINGLE HOLE, E150/7	6-33, 6-77
353249-0083 ..	INSERT, MULTI HOLE, EK 153M2X8	6-19
353249-0301 ..	SEALING PIN, 4X20	11-241
353250-0025 ..	GLAND, LOCK NUT M25X1,5	2-57, 2-97, 2-109, 3-5, 3-7, 3-9, 3-11, 3-13, 3-15, 11-123
353250-0032 ..	GLAND, LOCK NUT M32X1,5	1-179
354000-0010 ..	MINIATURE CIRCUIT BREAKER, FAZ-C1/1	8-57, 8-59
354000-0020 ..	MINIATURE CIRCUIT BREAKER, FAZ-C2/1	8-57, 8-59
354000-0040 ..	MINIATURE CIRCUIT BREAKER, FAZ-C4/1	8-57, 8-59
354000-0100 ..	MINIATURE CIRCUIT BREAKER, FAZ-C10/1	8-57, 8-59
354000-0160 ..	MINIATURE CIRCUIT BREAKER, FAZ-C16/1	8-57, 8-59
354001-0250 ..	MINIATURE CIRCUIT BREAKER, FAZ-C25/2	8-57, 8-59
354001-0320 ..	MINIATURE CIRCUIT BREAKER, FAZ-C32/2	8-57, 8-59
354002-0100 ..	IMINIATURE CIRCUIT BREAKER, FAZ-C10/3	8-57, 8-59
359000-0101 ..	WIRE MARKING, YELLOW, PY01/3"1"	2-265
359000-0102 ..	WIRE MARKING, YELLOW, PY01/3"2"	2-265
359000-0201 ..	WIRE MARKING, YELLOW, PA02/3"1"	11-149
359000-0202 ..	WIRE MARKING, YELLOW, PA02/3"2"	11-149
359000-0203 ..	YELLOW, PWIRE MARKING, YELLOW, PA02/3"3"	11-149
359000-0204 ..	WIRE MARKING, YELLOW, PA02/3"4"	11-149
359000-0205 ..	WIRE MARKING, YELLOW, PA02/3"5"	11-149
359000-0654 ..	WIRE MARKING, YELLOW, PA02/3"E"	11-149
359005-0010 ..	MARKING LABEL KIT 0 - 9, 04.841.2150.0	6-31, 6-37, 6-49, 7-15
359005-0050 ..	MARKING LABEL KIT X, 04.841.4550.0	6-31, 6-37, 6-49, 7-15
359011-0807 ..	MARKING, DEK 5 FW 1-50	1-213, 1-361, 1-363, 2-17, 2-55, 2-103, 2-107, 6-25, 6-27, 6-79, 7-17, 8-31, 8-37, 8-39, 8-45, 8-47, 8-69, 8-71, 8-105, 11-63, 11-149
359011-0808 ..	MARKING, DEK 5FW 51-100	1-213, 1-361, 2-17, 2-55, 2-103, 2-107, 6-79, 7-17, 8-69, 8-71, 11-63
359011-0809 ..	MARKING, DEK 5 FW 101-150	1-213, 1-361, 1-363, 2-17, 2-55, 2-103, 2-107, 6-79, 8-37, 8-39, 8-69, 8-71, 11-63
359011-0810 ..	MARKING, DEK 5 FW 151-200	1-213, 1-361, 1-363, 2-17, 2-55, 2-103, 2-107, 6-79, 7-17, 8-37, 8-39
359011-0811 ..	MARKING, DEK 5 FW 201-250	1-363, 2-17, 2-55, 2-103, 2-107, 7-17, 8-37, 8-39
359011-0812 ..	MARKING, DEK 5FW 251-300	1-363, 2-17, 2-55, 2-103, 2-107, 7-17
359011-0817 ..	MARKING, DEK 5GW (+)	8-105
359011-0818 ..	MARKING, DEK 5GW (-)	8-105
359011-0819 ..	MARKING, EARTH, DEK 5 GW ERDE I.KR.	1-213, 1-361, 1-363, 2-17, 2-55, 2-103, 2-107, 6-25, 6-27, 6-79, 7-17, 11-241
359011-0821 ..	MARKING, DEK 6 FW 1-50	1-297, 11-241
359011-0823 ..	MARKING, DEK 6 FW 101-150	1-297
359011-0832 ..	MARKING, DEK 6 GW (+)	1-297
359011-0833 ..	MARKING, DEK 6 GW (-)	1-297
359011-0834 ..	MARKING, EARTH, DKE 6 GW ERDE I.KR.	1-297, 8-73, 8-105
359240-0001 ..	SIGN, NOT ENGRAVED	8-97, 8-99
359240-0100 ..	SIGN HOLDER FOR 359240-0001	6-73, 6-75, 8-97, 8-99
359241-0122 ..	SIGN: " CLEANING STEAM BARRIER SPACE"	8-97, 8-99
359241-0133 ..	"SIGN: "" SERVICE SWITCH"""	8-97, 8-99
359241-0201 ..	SIGN: " HOUR METER"	8-97, 8-99
359241-0431 ..	SIGN: " MAIN SWITCH"	6-73, 6-75
359241-0482 ..	SIGN "PACKAGE COUNTER"	8-97, 8-99
359243-0917 ..	SIGN"400V, 50HZ, 100A"	6-73, 6-75
359243-0918 ..	SIGN"400V, 60HZ, 100A"	6-73, 6-75
359301-0100 ..	BUTTON SIGN, SPLICING	7-163
359301-0101 ..	BUTTON SIGN, STRIP SPLICING ON	7-163
359301-0110 ..	BUTTON SIGN, SHORT STOP	7-159
359301-0488 ..	BUTTON SIGN, MATERIAL LOCKING	7-163
359301-0504 ..	BUTTON SIGN, RESET	2-207, 2-211, 7-159

Part No	Description	Page No
359307-0010 ..	SIGN "WASTE BLOWING"	7-109, 7-111
359605-0002 ..	MANDATORY SIGN ISO, EYE PROTECTION	2-215
359705-0001 ..	WARNING SIGN ISO, ENTANGLEMENT	7-89
359705-0003 ..	WARNING SIGN ISO, DANGEROUS CHEMICALS	1-253, 1-255, 1-257, 1-353, 2-259, 2-261, 2-267, 2-271
359705-0004 ..	WARNING SIGN ISO, DANGEROUS CHEMICALS	1-287, 1-289, 2-237, 2-259, 2-261
359705-0005 ..	WARNING SIGN ISO, MOVING PART	1-305, 1-307, 7-61, 7-81
359705-0007 ..	WARNING SIGN ISO, HOT SURFACE	1-27, 1-29, 1-35, 1-61, 1-63, 1-65, 1-189, 1-205, 1-229, 1-231, 1-253, 1-255, 1-257, 1-269, 1-279, 1-283, 1-285, 3-17, 3-19, 3-21, 3-23, 3-25, 4-5, 4-7, 5-173, 5-175, 5-177, 5-179, 5-181, 5-183, 5-185, 5-187, 5-189, 5-191, 5-193, 5-195, 5-197, 5-199, 5-201, 5-203, 9-5, 11-121
359705-0008 ..	WARNING SIGN ISO, HOT SURFACE	1-181
359705-0015 ..	WARNING SIGN ISO, RISK OF ELECTRIC SHOCK	1-53, 1-55, 1-185, 1-211, 1-279, 1-295, 2-15, 2-53, 2-71, 2-81, 2-101, 2-105, 5-213, 5-215, 6-73, 6-75, 6-77, 7-15, 8-15, 8-17, 8-77, 8-79, 8-81, 8-83, 8-85, 8-87, 8-89, 8-91, 8-93, 8-95, 11-61, 11-209, 11-241
359710-0001 ..	WARNING SIGN ISO, HOT SURFACE	5-93, 5-95, 5-97, 5-99, 5-101, 5-103, 5-105, 5-107, 5-109, 5-111, 5-113, 5-133, 5-135, 5-137, 5-139, 5-141, 5-143, 5-145, 5-147, 5-149, 5-151, 5-153, 5-155, 5-157, 5-159, 5-161, 5-163, 5-165, 5-167, 5-169, 5-171, 5-205, 5-207, 5-209, 5-211
359715-0100 ..	WARNING SIGN ANSI (H), ELECTRIC SHOCK	1-185, 1-211, 1-279, 1-295, 2-15, 2-53, 2-71, 2-101, 2-105, 6-73, 6-75, 6-77, 8-15, 8-17, 8-77, 8-79, 8-81, 8-83, 8-85, 8-87, 8-89, 8-91, 8-93, 8-95, 11-61, 11-209, 11-241
359715-0101 ..	WARNING SIGN ANSI (V), ELECTRIC SHOCK	2-81, 5-213, 5-215
359725-0104 ..	WARNING SIGN ANSI (H), CHEMICAL HAZARD	1-287, 1-289, 2-259, 2-261
359725-0105 ..	WARNING SIGN ANSI (V), CHEMICAL HAZARD	1-253, 1-255, 1-257, 1-353, 2-237, 2-267, 2-271
359725-0116 ..	WARNING SIGN ANSI (H), HOT SURFACE	5-93, 5-95, 5-97, 5-99, 5-101, 5-103, 5-105, 5-107, 5-109, 5-111, 5-113, 5-133, 5-135, 5-137, 5-139, 5-141, 5-143, 5-145, 5-147, 5-149, 5-151, 5-153, 5-155, 5-157, 5-159, 5-161, 5-163, 5-165, 5-167, 5-169, 5-171, 11-121
359725-0117 ..	WARNING SIGN ANSI (V), HOT SURFACE	1-283, 1-285, 5-205, 5-207, 5-209, 5-211
400828-0000 ..	SPRING	7-53
400833-0000 ..	PLUNGER	7-53
436781-0000 ..	GASKET	1-283, 1-285
440655-0000 ..	RING	1-219
440659-0000 ..	CYLINDRICAL PIN	1-223
440660-0000 ..	COMPRESSION SPRING	1-223
440661-0000 ..	COMPRESSION SPRING	1-223
440662-0000 ..	COMPRESSION SPRING	1-221
440663-0000 ..	COMPRESSION SPRING	1-219, 1-223
441737-0000 ..	WASHER	1-27, 1-29, 1-35, 1-61, 1-63, 1-65
441739-0000 ..	WASHER	1-27, 1-29, 1-35, 1-61, 1-63, 1-65
441871-0000 ..	PENDULUM SUSPENSION	1-187
449969-0100 ..	TOOL DISMOUNTING	12-5
449970-0000 ..	HOLDER	12-23
449971-0000 ..	SPINDLE	12-23
450833-0000 ..	FILTER	1-209, 1-293
456123-0000 ..	SUPPORT	1-185
457359-0000 ..	BRACKET	3-5, 3-7, 3-9, 3-11, 3-13, 3-15
457361-0000 ..	CANTILEVER	3-5, 3-7, 3-9, 3-11, 3-13, 3-15
457364-0000 ..	PLATE RIGHT	3-5, 3-7, 3-9, 3-11, 3-13, 3-15
457367-0000 ..	SHAFT	1-201, 3-5, 3-7, 3-9, 3-11, 3-13, 3-15
457368-0000 ..	SPRING	1-201, 3-5, 3-7, 3-9, 3-11, 3-13, 3-15
457696-0001 ..	JOINT PIECE	5-19, 5-33, 5-35
464071-0010 ..	RAIL	5-19
466042-0000 ..	SEAL	1-145
466072-0006 ..	COVER PLATE	5-19
466074-0002 ..	SLIDER	5-19, 5-33, 5-35, 11-49
476220-0000 ..	SPACER	5-19, 11-23
476221-0002 ..	PIPE	5-71, 5-75, 5-81, 11-191, 11-193, 11-199
476221-0003 ..	PIPE	5-71, 11-91, 11-99, 11-191
476221-0004 ..	PIPE	5-71, 5-81, 11-191, 11-199
476221-0005 ..	PIPE	5-71, 5-81, 11-191, 11-199
476221-0009 ..	PIPE	5-19, 5-81, 11-199
476975-0000 ..	WHEEL	11-23
479261-0000 ..	NIPPLE	1-191, 6-81
484701-0000 ..	SHUTTER	5-19, 5-83, 5-85, 5-87, 5-89, 5-91, 11-49
486826-0001 ..	SIGN "EMERGENCY STOP"	2-207, 2-211, 7-159, 7-177, 8-81, 8-83, 8-85, 8-87
486867-0000 ..	EDGE GUIDE	5-25, 11-23
486884-0000 ..	BRACKET	11-3, 11-5, 11-7
486896-0001 ..	CANTILEVER	11-25
486896-0002 ..	CANTILEVER	11-25
486918-0001 ..	JOINT PIECE	5-25, 5-33, 5-35, 11-23, 11-49
486918-0002 ..	JOINT PIECE	5-25, 5-33, 5-35, 11-23, 11-49
490876-0000 ..	BRACKET	1-201
490900-0000 ..	SEALING RING	1-145
490901-0000 ..	SEAL	1-145
491230-0000 ..	GRUB SCREW(LI - CHINE)	4-39, 4-41, 4-43, 4-45, 4-47, 4-49, 4-51, 4-53, 4-55, 4-71, 4-73, 4-75, 4-77, 4-79, 4-81
491305-0000 ..	CONN.DIAGRAM AIR SUPERH.	1-185
491880-0000 ..	FASTENING PLATE	3-5, 3-7, 3-9, 3-11, 3-13, 3-15
493735-0000 ..	NIPPLE	12-17, 12-19
497635-0000 ..	HUB	11-25
497637-0003 ..	SPACER	11-23
497672-0002 ..	EDGE GUIDE	11-23
497748-0000 ..	PIN	1-225, 1-227
499011-0000 ..	SHAFT	1-195, 1-197

Part No	Description	Page No
527898-0100 ..	CONTAINER H2O2	2-235, 12-27
527912-0000 ..	NON-RETURN VALVE	2-243
529345-0100 ..	FILLING STATION H2O2	12-27
530551-0000 ..	WASHER	2-243
530587-0000 ..	WASHER	1-221
530589-0000 ..	SEAL RING	1-187
530591-0000 ..	HOLDER	1-223
530595-0000 ..	SEAL RING HOLDER	1-219
530597-0000 ..	WASHER	1-223
530598-0000 ..	WASHER	1-223
530599-0000 ..	RING	1-187, 1-223
531345-0200 ..	PERSONAL PROTECT. EQ H2O2	9-3
531487-0000 ..	BRACKET	11-25
531499-0000 ..	BEARING SLEEVE	11-23
531508-0000 ..	SCREW	11-23
531616-0000 ..	HOLDER	2-179, 2-199, 2-201, 2-203
531731-0000 ..	GASKET	1-185
531948-0000 ..	SPACER	11-23
532117-0000 ..	CLAMP RING	1-225
532118-0000 ..	CLAMP RING	1-227
532208-0000 ..	SHAFT	12-33
532209-0000 ..	SHEET	12-33
532210-0100 ..	PEROXIDE CONTAINER TROLLEY	12-27
532211-0000 ..	DOWEL	12-33
532349-0000 ..	PLAIN BEARING	1-183, 1-187
532413-0000 ..	REDUCING NIPPLE	3-5, 3-7, 3-9, 3-11, 3-13, 3-15, 4-9, 4-11, 4-13, 4-15, 4-17, 4-19, 5-13, 5-25, 5-83, 5-85, 5-87, 5-89, 5-91, 5-93, 5-95, 5-97, 5-99, 5-101, 5-103, 5-105, 5-107, 5-109, 5-111, 5-113, 5-133, 5-135, 5-137, 5-139, 5-141, 5-143, 5-145, 5-147, 5-149, 5-151, 5-153, 5-155, 5-157, 5-159, 5-161, 5-163, 5-165, 5-167, 5-169, 5-171
532414-0000 ..	WASHER	3-5, 3-7, 3-9, 3-11, 3-13, 3-15, 4-9, 4-11, 4-13, 4-15, 4-17, 4-19, 5-13, 5-25, 5-83, 5-85, 5-87, 5-89, 5-91, 5-93, 5-95, 5-97, 5-99, 5-101, 5-103, 5-105, 5-107, 5-109, 5-111, 5-113, 5-133, 5-135, 5-137, 5-139, 5-141, 5-143, 5-145, 5-147, 5-149, 5-151, 5-153, 5-155, 5-157, 5-159, 5-161, 5-163, 5-165, 5-167, 5-169, 5-171
532655-0000 ..	CAUTION SIGN	2-253, 12-29
532676-0000 ..	SHEET	12-17, 12-19
532677-0000 ..	PIPE	12-17, 12-19
532678-0000 ..	DOWEL	12-17, 12-19
532679-0000 ..	PLATE	12-17, 12-19
533014-0100 ..	LEAK FINDING EQUIPMENT (SUPERSTRUCTURE)	12-5
533015-0000 ..	WIRING DIAGRAM	12-17, 12-19
533169-0000 ..	DIAPHRAGM	1-219
533234-0000 ..	LID	11-139, 11-141
533235-0000 ..	LID	11-139, 11-141
533237-0000 ..	AXLE PIN	11-137
533374-0000 ..	FITMENT BOTTOM	12-21
533905-0100 ..	PONCH	12-17, 12-19
533906-0000 ..	FITMENT COVER	12-21
534310-0001 ..	NOZZLE	3-5, 3-7, 3-9, 3-11, 3-13, 3-15, 4-9, 4-11, 4-13, 4-15, 4-17, 4-19, 5-13, 5-25, 5-83, 5-85, 5-87, 5-89, 5-91, 5-93, 5-95, 5-97, 5-99, 5-101, 5-103, 5-105, 5-107, 5-109, 5-111, 5-113, 5-133, 5-135, 5-137, 5-139, 5-141, 5-143, 5-145, 5-147, 5-149, 5-151, 5-153, 5-155, 5-157, 5-159, 5-161, 5-163, 5-165, 5-167, 5-169, 5-171
534634-0000 ..	PIPE	12-31
534635-0000 ..	VALVE	12-31
534636-0000 ..	LEVEL GLAS	12-31
534637-0000 ..	ATTACHMENT	12-31
534691-0000 ..	DIAPHRAGM	12-31
534692-0000 ..	FRAME SECTION	12-31
534693-0000 ..	PLATE	12-31
534694-0000 ..	SUCTIONPIPE	12-31
534695-0000 ..	WEIGHT	12-31
534696-0000 ..	VALVE	12-31
534697-0000 ..	VALVE HOUSING	12-31
534698-0000 ..	NIPPLE	12-31
537482-0000 ..	BRACKET	11-47, 11-55, 11-61, 11-67
537483-0000 ..	BRACKET	11-47, 11-55, 11-61, 11-67
538343-0000 ..	CORRUGATED CARDBOARD BOX	11-45
538344-0000 ..	FITTING	11-45
538345-0000 ..	FITTING	11-45
539212-0000 ..	GASKET	1-217, 9-11
540169-0000 ..	DOWEL	11-131, 11-133
541163-0200 ..	CLAMP RING	1-217
541164-0200 ..	CLAMP RING	1-217
541165-0000 ..	WASHER	1-225, 1-227
541166-0000 ..	WASHER	1-219
543267-0000 ..	LABEL TAPE	11-43, 11-45, 11-83, 11-125, 11-147, 11-169, 11-175
544343-0000 ..	CANTILEVER	3-5, 3-7, 3-9, 3-11, 3-13, 3-15
545861-0000 ..	CORRUGATED CARDBOARD BOX	11-119
546929-0000 ..	FILTER	1-191
549267-0000 ..	LID	1-293
553607-0000 ..	SLEEVE	1-219, 1-221, 1-223
554141-0000 ..	FILTER	1-209, 1-293
554142-0000 ..	FILTER HOUSING	1-209, 1-293
554162-0000 ..	SCREW	1-225, 1-227
554585-0000 ..	STUD SCREW	1-293

Part No	Description	Page No
555458-0000 ..	SEALING WASHER	1-223
556133-0000 ..	SEALING WASHER	1-221
559810-0101 ..	TMCC2 CONTROLLER	8-103
559815-0101 ..	TMCC2 CONTROLLER	8-103
561427-0000 ..	CONTAINER	2-253, 12-29
561652-0000 ..	WHEEL	11-139, 11-141
562015-0000 ..	REDUCTION CASING	11-67, 11-219, 11-229
563285-0000 ..	BLIND PLUG	2-243
565250-0000 ..	WASHER	2-253, 12-29
565251-0000 ..	VALVE	2-253, 12-29
566171-0000 ..	CUP SPRING	2-247
566194-0000 ..	WEIGHT	2-247
566195-0000 ..	LID	2-247
566196-0100 ..	LID WITH WEIGHT	2-245
567018-0000 ..	STEAM HOUSE	1-217
567372-0000 ..	INSTRUCTION FOR USE	12-25
567743-0000 ..	SEAL	1-145
567746-0001 ..	ROLLER (STANDARD SIZE)	1-91, 1-93, 1-95, 1-97
567746-0002 ..	TRIMMING ROLLER PLUS	1-153
567746-0003 ..	TRIMMING ROLLER MINUS	1-153
568583-0000 ..	FORK	1-195, 1-197
568828-0000 ..	FLOAT GUARD	1-181
574336-0000 ..	SEAL	1-145
574366-0000 ..	VOLUME SHIM	4-39, 4-41, 4-43, 4-45, 4-47, 4-49, 4-51, 4-53, 4-55, 4-71, 4-73, 4-75, 4-77, 4-79, 4-81, 9-7
574367-0000 ..	VOLUME BULGE	4-39, 4-41, 4-43, 4-45, 4-47, 4-49, 4-51, 4-53, 4-55, 4-71, 4-73, 4-75, 4-77, 4-79, 4-81
575034-0000 ..	ROUND NUT	2-57, 2-109, 2-161, 2-163, 2-175, 2-185, 2-219
576436-0100 ..	A-CYLINDER	1-217
576437-0100 ..	C-CYLINDER	1-217
576438-0100 ..	B-CYLINDER	1-217
576439-0000 ..	CYLINDER HOUSING	1-219, 1-223
576440-0000 ..	END SECTION	1-219, 1-223
576441-0000 ..	PISTON	1-219, 1-223
576442-0000 ..	PISTON ROD	1-223
576443-0000 ..	CYLINDER HOUSING	1-221
576444-0000 ..	END SECTION	1-221
576445-0000 ..	PISTON	1-221
576446-0000 ..	PISTON ROD	1-219
576447-0000 ..	PISTON ROD	1-221
576448-0000 ..	SPACER	1-219
576449-0000 ..	SPACER	1-219
576450-0000 ..	SPACER	1-223
576451-0000 ..	SPACER	1-221
578640-0000 ..	CLAMPING RING	1-311
579318-0000 ..	SEAL	1-145
582526-0100 ..	CARRIAGE	12-35
582527-0000 ..	ROD	12-37
591341-0000 ..	PIN	2-9
599750-0000 ..	FILTER	6-63, 6-65
599751-0000 ..	INSERT	6-63, 6-65
599752-0000 ..	COVER	2-209, 6-63, 6-65
599753-0000 ..	SPACER	2-209, 6-63, 6-65
599755-0000 ..	GASKET	6-63, 6-65
599760-0000 ..	SPACER	6-65
735041-0000 ..	CONNECTION CLAMP	1-299
751009-0000 ..	INSULATION	1-185
751395-0000 ..	FLANGE	2-251
751456-0000 ..	HOLDER	1-201
751485-0000 ..	SCREW	1-311
751502-0000 ..	ROLLER	1-91, 1-93, 1-95, 1-97
777200-0101 ..	PIPE WRENCH	12-5
779910-0101 ..	PADLOCK, 250/40 W 2 KEYS	1-243, 1-247
927244-0100 ..	PUMP	2-259, 2-261
927262-0000 ..	PIPE	2-269
927339-0000 ..	ADAPTER	2-265
927340-0000 ..	DISC	2-265
927341-0000 ..	HOLDER	2-265
927342-0000 ..	CYLINDER	2-265
927354-0000 ..	SCREW	1-249
927362-0000 ..	MAGNET	2-265
927363-0000 ..	PLUG	2-265
927420-0001 ..	O-RING 5.1X1.6 SILICONE	1-209, 1-293
927421-0002 ..	O-RING 12.3X2.4 SILICONE	1-293
927421-0003 ..	O-RING 13.3X2.4 SILICONE	1-209, 1-283, 1-285
927421-0004 ..	O-RING 15.3X2.4 SILICONE	1-209, 1-293
927421-0005 ..	O-RING 7.3X2.4 SILICONE	12-31
927422-0001 ..	2X3 SILICONE	1-209, 1-293, 12-31
927422-0003 ..	O.RING 24.2X3 SILICONE	2-253, 12-29
927422-0005 ..	O-RING 36.2X3 SILICONE	2-251
927422-0006 ..	O-RING 42.2X3 SILICONE	1-209, 2-251
927422-0007 ..	O-RING 44.2X3 SILICONE	1-209, 1-293
927422-0009 ..	O-RING 54.5X3 SILICONE	1-293
927422-0016 ..	O-RING 79.5X3 SILICONE	2-237

Part No	Description	Page No
927454-0000 ..	GASKET	1-185
928025-0000 ..	PLUG	2-269
970215-0000 ..	STOP BLOCK	8-101
977527-0000 ..	BRACKET	6-33
978440-0000 ..	CRAMP	1-233
978603-0000 ..	SIGN	2-29, 2-31
978735-0000 ..	FASTENING PLATE	3-5, 3-7, 3-9, 3-11, 3-13, 3-15
979548-0000 ..	MACHINE PLATE	1-313, 1-315, 1-317, 8-5, 8-7, 8-9, 8-11
979951-0000 ..	FLANGE	12-25
985328-0000 ..	CONNECTION	1-311, 2-125, 2-127, 2-139, 2-141
988685-0000 ..	PIN	1-331, 1-333, 1-351, 1-353, 2-29, 2-31, 2-53, 2-161, 2-163, 2-175, 2-209, 2-215, 2-217, 6-63, 6-69, 6-73, 6-75
996388-0800 ..	PEROXIDE PUMP	2-235
1010822-0000 .	RAILING	2-125, 2-127, 2-139, 2-141
1020164-0201 .	LEG, MOTOR	11-3, 11-5, 11-7
1020391-0001 .	PIPE	11-229
1020391-0002 .	PIPE	11-229
1020391-0003 .	PIPE	11-67, 11-219
1020391-0004 .	PIPE	11-67, 11-219
1020418-0200 .	PACKING DESCRIPTION	11-229
1020462-0000 .	CORRUGATED CARDBOARD BOX	11-231
1020637-0000 .	HOLDER	5-37, 5-39, 5-43, 5-45, 5-47, 5-49, 11-239
1020638-0000 .	HOLDER	11-239
1035792-0000 .	E-HINGE	1-331, 1-333, 1-347, 1-351, 1-353, 2-29, 2-31, 2-53, 2-161, 2-163, 2-175, 2-209, 2-215 2-217, 5-115, 5-117, 6-63, 6-69, 6-73, 6-75, 7-51, 7-107, 7-157, 7-161, 7-165, 7-169, 7-173, 7-175
1035794-0000 .	BLOCKING PIECE	6-63, 6-69, 6-73, 6-75
1036187-0000 .	T-PIPE	1-183, 1-187
1036188-0000 .	SHAFT	1-187
1036189-0000 .	SPINDEL GUIDE	1-187
1036191-0000 .	SEAL HOLDER	1-187
1036192-0000 .	SPACER ROD	1-187
1036193-0000 .	CYLINDER BRACKET	1-187
1036293-0000 .	HOLDER	1-175, 1-187
1036294-0000 .	GASKET	1-175
1036304-0001 .	LOCKING ARM	1-347, 6-69
1036304-0002 .	LOCKING ARM	1-347
1036304-0012 .	LOCKING ARM	1-347
1036304-0014 .	LOCKING ARM	1-353, 6-69
1036329-0000 .	PIN	1-347, 7-51, 7-107, 7-157, 7-161, 7-165, 7-169, 7-173, 7-175
1036372-0000 .	PIPE	1-185
1036373-0000 .	HOLDER	1-185
1036475-0000 .	PIN	1-37, 1-39
1036563-0000 .	WASHER	7-157, 7-169, 7-173
1036610-0000 .	BRACKET	1-27, 1-29, 1-35, 1-177
1036622-0000 .	GUIDE ROLLER	7-85
1036623-0000 .	GUIDE ROLLER	1-319, 7-85
1036794-0000 .	PIPE	6-47
1036811-0000 .	CLAMP	1-181, 1-191
1036826-0000 .	PIPE	6-45
1036827-0000 .	PIPE	6-45, 6-51
1036828-0000 .	TANK	6-49
1036963-0000 .	HOOK HOLDER	1-309
1036965-0000 .	HOOK HOLDER	1-309
1037012-0000 .	AXLE PIN	2-11
1037089-0000 .	SPACER	1-27, 1-29
1037093-0000 .	SENSOR BRACKET	1-215
1037102-0000 .	SPACER PIPE	2-237
1037124-0000 .	HOLDER	7-53
1037129-0000 .	LID	6-53
1037130-0000 .	,CONNECTION BOX	7-177
1037391-0000 .	CANTILEVER	2-143
1037443-0000 .	GASKET	2-45, 2-85
1037539-0000 .	BRACKET	2-243
1037562-0000 .	SHAFT	2-229
1037571-0000 .	GUIDE BUSHING	2-125, 2-127
1037572-0000 .	COVER PLATE	8-109, 8-111, 8-113
1037573-0000 .	GASKET	8-109, 8-111, 8-113
1037574-0000 .	COVER PLATE	8-113
1037575-0000 .	GASKET	8-113
1037583-0000 .	HOLDER	6-81
1038275-0012 .	SPACER	8-15, 8-17
1038355-0000 .	FRAME	8-101
1038408-0000 .	COVERING PLATE	8-13
1038464-0000 .	SPROCKET	1-23
1038634-0000 .	DRAINING	1-181
1038688-0000 .	HOLDER	1-283, 1-285
1040796-0000 .	PIPE	2-251
1040807-0000 .	LID	2-245
1040808-0000 .	GASKET	2-245
1040840-0000 .	FLANGE	2-237
1040841-0000 .	FLANGE	2-237
1040852-0000 .	SEALING RING	2-237
1040853-0000 .	SEALING RING	2-237
1040970-0000 .	BRACKET	1-293

Part No	Description	Page No
1041046-0000	.FLOW METER	6-33
1041215-0000	.BLOCKING PIECE	4-23, 4-25
1041216-0000	.SHAFT	3-17, 3-19, 3-21, 3-23, 3-25
1041549-0000	.0,012WASHER	4-27, 4-29, 4-31
1041603-0000	.BRACKET	2-11
1041925-0000	.PIPE	6-43
1041926-0000	.PIPE	6-43
1041932-0000	.PIPE	6-81
1041933-0000	.PIPE	6-81
1041934-0000	.PIPE	6-51
1041937-0000	.SIGN	1-331, 1-333
1041938-0000	.SIGN	6-85
1041946-0000	.PIPE	6-49
1041963-0000	.WASTE BOX	6-55
1041967-0000	.COVERING PANEL	6-61
1041970-0000	.DOOR	6-69
1041978-0000	.HINGE FLANGE	1-27, 1-29, 1-35, 1-61, 1-63, 1-65
1041979-0000	.HINGE FLANGE	1-27, 1-29, 1-35, 1-61, 1-63, 1-65
1041988-0000	.CLAMP	1-229, 1-231, 1-233
1064420-0000	.WASHER	3-5, 3-7, 3-9, 3-11, 3-13, 3-15
1086870-0000	.SIGN	5-17, 5-63, 11-57, 11-67, 11-79, 11-153, 11-155, 11-157, 11-183, 11-203, 11-211, 11-229, 11-233
1086871-0000	.LABEL TAPE	5-23, 11-43, 11-83, 11-119, 11-147, 11-169, 11-175, 11-231, 11-235
1086872-0000	.LABEL TAPE	11-45, 11-125
1086888-0000	.COVER	11-239
1086889-0000	.COVER	11-239
1095607-0300	.COVERING PANEL	6-3
1095608-0200	.PANEL	6-3
1095610-0600	.SWITCH	6-3
1095612-0500	.COOLING WATER SYSTEM	6-3
1095627-0400	.FOAMING UNIT	6-3
1095672-0200	.PIPE	6-41
1095673-0200	.SIDE	6-41
1095675-0200	.PIPE	6-41
1095676-0200	.PUMP	6-41
1095677-0200	.BRANCHING PIPE	6-41
1095678-0400	.BALL VALVE	6-41
1095681-0300	.SPRAY GUN	2-145
1095682-0300	.AIR JET GUN	2-87
1095706-0500	.COOLING WATER PUMP	6-29
1095710-0400	.COMPRESSOR UNIT	6-29
1095714-0400	.SUPPLY SYSTEM	6-3
1095716-0200	.PIPE WORK-AIR	6-83
1095738-0400	.PROTECTIVE COVER	2-187, 2-189, 2-191
1095862-0300	.LADDER	1-299
1095883-0200	.GABLE PLATE	6-57
1095886-0300	.COVERING PANEL	6-57
1095888-0200	.HATCH	6-57
1095889-0100	.DOOR	6-57
1095890-0200	.HATCH	6-57
1095891-0200	.DOOR	6-57
1103298-0000	.NON-SKID	2-39, 2-41
1103300-0000	.NON-SKID	2-39, 2-41, 2-79
1110390-0000	.DOLLY	4-57, 4-59, 4-61, 4-63, 4-65, 4-67, 9-7
1129079-0000	.FLOW METER	6-33
1129086-0000	.BRACKET	1-57
1129253-0000	.FASTENING PLATE	2-229
1129274-0000	.GUIDE LUG	1-347, 1-353, 2-161, 2-163, 2-175, 2-205, 2-209, 2-215, 2-217, 2-219, 6-63, 6-69, 7-157, 7-165, 7-169, 7-173, 7-175
1129275-0000	.BOX FOR DIAGRAM	2-205
1129318-0000	.BRACKET	1-357
1129324-0000	.WASHER	2-159, 2-169, 2-171, 2-185
1129325-0000	.SEALING FLANGE	2-159, 2-169, 2-171, 2-185
1129328-0000	.ATTACHMENT	2-243
1129370-0000	.SIGN	2-29, 2-31
1129387-0000	.CONNECTION TABLE	6-55
1129432-0000	.LID	2-233
1129478-0000	.GASKET	8-113
1129481-0000	.COVERING PLATE	8-113
1129550-0000	.GASKET	8-113
1129767-0000	.SCREW	2-159, 2-161, 2-163, 2-175, 2-185, 2-205, 2-209, 2-215, 2-217, 2-219, 7-157, 7-161, 7-165, 7-169, 7-173, 7-175
1129770-0000	.BLOCKING PIECE	1-331, 1-333, 1-347, 1-351, 1-353, 2-29, 2-31, 2-53, 2-159, 2-161, 2-163, 2-175, 2-185, 2-205, 2-209, 2-215, 2-217, 2-219, 5-115, 5-117, 7-51, 7-107, 7-157, 7-161, 7-165, 7-169, 7-173, 7-175
1140039-0000	.CONVEYOR FRAME	12-37
1140040-0000	.BRACKET	12-37
1140129-0000	.HOLDER	2-49, 2-99
1140233-0000	.WASHER	4-39, 4-41, 4-43, 4-45, 4-47, 4-49, 4-51, 4-53, 4-55
1140287-0000	.CAM	4-9, 4-11, 4-13, 4-15, 4-17, 4-19
1140288-0000	.CAM	4-9, 4-11, 4-13, 4-15, 4-17, 4-19
1140437-0000	.BUSHING	4-71, 4-73, 4-75, 4-77, 4-79, 4-81
1140479-0000	.ROLLER	4-39, 4-41, 4-43, 4-45, 4-47, 4-49, 4-51, 4-53, 4-55, 4-71, 4-73, 4-75, 4-77, 4-79, 4-81
1140480-0000	.CLAMP	1-229, 1-231, 1-233
1140485-0000	.SPRING	12-11, 12-13, 12-15

Part No	Description	Page No
1140488-0000	.SHAFT	4-71, 4-73, 4-75, 4-77, 4-79, 4-81
1140642-0000	.PIPE	6-49
1140840-0000	.WHEEL	12-37
1140845-0000	.ROLLER	4-27, 4-29, 4-31
1140846-0000	.ECCENTRIC SHAFT	4-27, 4-29, 4-31
1140865-0000	.ROLL	3-17, 3-19, 3-21, 3-23, 3-25
1140866-0000	.BRACKET	3-17, 3-19, 3-21, 3-23, 3-25
1140872-0000	.BRACKET	4-23, 4-25
1144597-0000	.SPACER	5-93, 5-95, 5-97, 5-99, 5-101, 5-103, 5-105, 5-107, 5-109, 5-111, 5-113
1144653-0000	.SWITCH	4-95, 4-97
1145079-0000	.WHEEL	7-93, 7-147
1195204-0000	.BUSHING	4-83, 4-85, 4-87, 4-89
1195466-0000	.PIPE	6-53
1254025-0000	.STRIP	2-121
1254027-0000	.CORNER STRIP	2-121
1254028-0000	.FASTENING PLATE	2-121
1254030-0000	.CHECKER PLATE	2-121
1254410-0000	.WASHER	1-311
1254494-0000	.SPACER	2-93
1255293-0000	.CROSS BAR	6-55
1255551-0000	.SEAL CLOTH	1-283, 1-285
1255557-0000	.GASKET	2-251
1255633-0000	.HATCH	6-67
1255635-0000	.HATCH	6-71
1255636-0000	.COVERING PANEL	6-57
1255637-0000	.COVER	6-57
1255638-0000	.COVERING PANEL	6-57
1255671-0000	.GABLE PLATE	6-59
1260050-0000	.SHAFT	4-33, 4-35
1260051-0000	.HOUSING	4-33, 4-35
1260068-0000	.SHAFT	5-13, 5-83, 5-85, 5-87, 5-89, 5-91
1260070-0000	.SHAFT	5-13, 5-83, 5-85, 5-87, 5-89, 5-91
1260128-0000	.SHAFT	5-93, 5-95, 5-97, 5-99, 5-101, 5-103, 5-105, 5-107, 5-109, 5-111, 5-113
1260148-0000	.ECCENTRIC SHAFT	4-33, 4-35
1260149-0000	.WORM SCREW	4-33, 4-35
1260151-0000	.BRACKET	4-33, 4-35
1260152-0000	.WORM WHEEL	4-33, 4-35
1260153-0000	.SPACER	4-33, 4-35
1260154-0000	.WORM SCREW	4-33, 4-35
1260167-0000	.WASHER	5-93, 5-95, 5-97, 5-99, 5-101, 5-103, 5-105, 5-107, 5-109, 5-111, 5-113
1260169-0000	.WORM WHEEL	4-33, 4-35
1260177-0000	.COVER	4-33, 4-35
1260950-0000	.CURVE	4-27, 4-29, 4-31
1282796-0000	.WASHER	5-173, 5-175, 5-177, 5-179, 5-181, 5-183, 5-185, 5-187, 5-189, 5-191, 5-193, 5-195, 5-197, 5-199, 5-201, 5-203
1282876-0000	.PIPE	2-241
1282879-0000	.CONNECTING PIPE	2-241
1282891-0000	.PIPE	2-237
1282892-0000	.TANK	2-245
1282894-0300	.PEROXIDE TANK	2-235
1282895-0300	.PEROXIDE PIPE	2-235
1282896-0200	.TANK	2-235
1282898-0000	.HOSE	2-245
1282899-0000	.HOSE	2-237
1282901-0000	.PIPE	2-241
1282906-0000	.NIPPLE	2-237
1282995-0000	.SCREW	4-9, 4-11, 4-13, 4-15, 4-17, 4-19
1285109-0000	.NUT	8-101, 8-113
1296290-0000	.GASKET	2-193
1296845-0000	.BRACKET	2-229
1296877-0100	.SEAL KIT	9-9
1296878-0100	.SEAL KIT	9-9
1296879-0100	.SEAL KIT	9-9
1317226-0000	.WEIGHT	2-243
1317228-0000	.WASHER	2-213
1317784-0000	.BRACKET	2-243
1334507-0000	.TUBE	1-279
1334856-0000	.COUNTER ROLLER	1-91, 1-93, 1-95, 1-97
1344063-0100	.CONV.BODY,STRAIGHT	5-17
1346568-0000	.HEAT EXCHANGER	1-279
1346814-0400	.CONVEYOR	5-3, 5-5, 5-7
1346815-0500	.FINAL FOLDER	5-3, 5-5, 5-7
1346816-0400	.DISCHARGE DEVICE	5-3, 5-5, 5-7
1346885-0000	.SUPPORT	2-161, 2-163, 2-175, 2-185, 2-219
1347077-0000	.BRUSH	5-83, 5-85, 5-87, 5-89, 5-91
1347704-0000	.THERMOCOUPLE	2-237
1347878-0000	.RAIL	2-55, 2-103
1347900-0000	.SPACER	5-25, 5-33, 5-35, 11-49
1348116-0000	.LINK	4-57, 4-59, 4-61, 4-63, 4-65, 4-67, 4-83, 4-85, 4-87, 4-89
1348165-0000	.SLEEVE	4-57, 4-59, 4-61, 4-63, 4-65, 4-67
1348241-0000	.HOSE CLAMP	5-25, 5-33, 5-35
1348243-0000	.SPACER	5-25, 5-33, 5-35
1348263-0000	.FLANGE	12-25
1348287-0000	.GUIDE	4-33, 4-35

Part No	Description	Page No
1348386-0000	.BEARING HOUSING	2-229
1348529-0000	.STRAINER	2-241
1348530-0000	.LID	2-241
1348635-0000	.RUBBER SEAL	4-95, 4-97
1348663-0000	.PLATE	4-95, 4-97
1348750-0000	.BRACKET	5-33, 5-35
1348817-0000	.SHAFT	4-33, 4-35
1348818-0000	.SHAFT	4-33, 4-35
1349014-0000	.PAD	7-55
1349020-0000	.GLAND FITTING	4-95, 4-97
1349181-0000	.TOUCH GUARD	7-53
1349367-0000	.BRACKET	4-23, 4-25
1349375-0000	.CURVE	4-27, 4-29, 4-31
1349377-0000	.CURVE	4-27, 4-29, 4-31
1349379-0000	.CURVE	4-27, 4-29, 4-31
1349380-0000	.CURVE	4-27, 4-29, 4-31
1349386-0000	.SHAFT	4-33, 4-35
1349399-0000	.WASHER	4-71, 4-73, 4-75, 4-77, 4-79, 4-81, 4-83, 4-85, 4-87, 4-89
1349498-0400	.CHAIN SUPPORT	5-125
1349500-0500	.SWING FRAME	5-125
1349502-0400	.INFEEDER	5-27, 5-29, 5-31
1349566-0000	.COVER	11-239
1349568-0000	.CONNECTION BOX	11-241
1349608-0000	.HOLDER	1-279
1349738-0100	.PRESSURE TEST EQUIPMENT	12-5
1349762-0000	.SHAFT	1-169
1349851-0000	.ROLL	1-91, 1-93, 1-95, 1-97
1350718-0000	.CURVE	4-27, 4-29, 4-31
1359055-0000	.SIGN	11-21, 11-81, 11-127, 11-129
1359085-0000	.T-HOLDER	11-49
1359242-0000	.STEERING RAIL	11-23
1359389-0000	.ROLL	11-139, 11-141
1359390-0000	.SHAFT	11-139, 11-141
1359391-0000	.MOUNTING BLOCK	11-139, 11-141
1359408-0202	.MOTOR UNIT	11-21
1359473-0000	.CORRUGATED CARDBOARD BOX	11-69
1359565-0000	.NUT	5-21, 5-53, 5-73, 11-31, 11-49, 11-93, 11-95, 11-97, 11-101, 11-103
1359581-0200	.SWITCH GEAR	11-25
1359581-0300	.SWITCH GEAR	11-121, 11-127, 11-129
1359622-0000	.MOTOR COVER	11-25
1359672-0000	.HUB	11-23
1359673-0000	.SLEEVE	11-23
1359732-0000	.BRACKET	11-25
1359734-0000	.SHEET	11-27
1359776-0000	.BELT	11-139, 11-141
1359831-0000	.SWITCH GEAR	11-27, 11-123
1359885-0000	.SIGN	11-127, 11-129
1359938-0000	.MOUNTING SHEET	11-127, 11-129
1359951-0100	.PACKING DESCRIPTION	5-17
1359952-0000	.CORRUGATED CARDBOARD BOX	5-23
1360399-0000	.PIPE HOLDER	12-17, 12-19
1361560-0000	.PLATE	6-31
1366726-0000	.HOLDER	5-21, 11-49
1366727-0000	.CLAMP	5-21, 5-25, 5-33, 5-35, 5-43, 5-45, 5-47, 5-49, 5-51, 5-53, 5-73, 11-31, 11-49, 11-93, 11-95, 11-97, 11-101, 11-103, 11-165, 11-167, 11-171, 11-233
1366750-0000	.HOLDER	5-25, 5-33, 5-35, 5-43, 5-45, 5-47, 5-49, 5-51, 11-93, 11-95, 11-97, 11-101, 11-103, 11-165, 11-167, 11-171, 11-233
1380701-0000	.SPACER	11-49
1478170-0000	.CONTAINER	1-293
1478303-0000	.TENSION SPRING	7-119, 7-121, 7-123
1478583-0100	.PRESSURE GAUGE	12-5
1478584-0000	.NIPPLE	12-9
1478585-0000	.NEEDLE	12-9
1478659-0000	.BRACKET	11-239
1478959-0000	.ARM	4-71, 4-73, 4-75, 4-77, 4-79, 4-81
1478960-0000	.LINK ARM	4-71, 4-73, 4-75, 4-77, 4-79, 4-81
1484080-0000	.SUPPORT	1-185
1484306-0000	.GUIDE	5-93, 5-95, 5-97, 5-99, 5-101, 5-103, 5-105, 5-107, 5-109, 5-111, 5-113
1484308-0000	.SHAFT	5-93, 5-95, 5-97, 5-99, 5-101, 5-103, 5-105, 5-107, 5-109, 5-111, 5-113
1484319-0000	.BELT	5-93, 5-95, 5-97, 5-99, 5-101, 5-103, 5-105, 5-107, 5-109, 5-111, 5-113
1484336-0000	.CURVE	4-27, 4-29, 4-31
1484337-0000	.CURVE	4-27, 4-29, 4-31
1484379-0000	.INSERT	5-205, 5-207, 5-209, 5-211, 5-213, 5-215
1484695-0000	.KNIFE	7-81, 9-21
1484704-0000	.SHAFT	7-119, 7-121, 7-123
1484766-0000	.DANCE ROLLER	7-125, 7-139
1484826-0000	.CURVE	4-27, 4-29, 4-31
1484886-0000	.SIGN LANGUAGEINDEPENDENT	6-33
1484889-0200	.DOOR	6-61
1487023-0000	.PIPE	6-53
1487051-0000	.SPACER	5-217, 5-219, 5-221, 5-223, 5-225, 5-227, 5-229
1487087-0000	.SHAFT	5-83, 5-85, 5-87, 5-89, 5-91
1487091-0000	.SHAFT	5-83, 5-85, 5-87, 5-89, 5-91
1487213-0000	.SHAFT	9-35

Part No	Description	Page No
1487214-0000	.SCREW	9-35
1487215-0100	.TOOL	9-33
1487219-0000	.CURVE	4-23, 4-25
1487430-0000	.COVER	8-109, 8-111, 8-113
1487431-0000	.GASKET	8-109, 8-111, 8-113
1487482-0000	.SHAFT	9-47
1487627-0000	.VOLUME SHIM	4-57, 4-59, 4-61, 4-63, 4-65, 4-67, 4-83, 4-85, 4-87, 4-89, 9-7
1487769-0000	.SPACER	7-125
1487800-0000	.PLATE	7-119, 7-121, 7-123
1487871-0000	.FLANGE	5-217, 5-219, 5-221, 5-223, 5-225, 5-227, 5-229
1487883-0000	.FLANGE	5-133, 5-135, 5-137, 5-139, 5-141, 5-143, 5-145, 5-147, 5-149, 5-151, 5-153, 5-155, 5-157, 5-159, 5-161, 5-163, 5-165, 5-167, 5-169, 5-171
1487886-0000	.SPROCKET	5-133, 5-135, 5-137, 5-139, 5-141, 5-143, 5-145, 5-147, 5-149, 5-151, 5-153, 5-155, 5-157, 5-159, 5-161, 5-163, 5-165, 5-167, 5-169, 5-171
1487887-0000	.FLANGE	5-133, 5-135, 5-137, 5-139, 5-141, 5-143, 5-145, 5-147, 5-149, 5-151, 5-153, 5-155, 5-157, 5-159, 5-161, 5-163, 5-165, 5-167, 5-169, 5-171
1487888-0000	.FLANGE	5-133, 5-135, 5-137, 5-139, 5-141, 5-143, 5-145, 5-147, 5-149, 5-151, 5-153, 5-155, 5-157, 5-159, 5-161, 5-163, 5-165, 5-167, 5-169, 5-171
1487891-0000	.SPACER	5-133, 5-135, 5-137, 5-139, 5-141, 5-143, 5-145, 5-147, 5-149, 5-151, 5-153, 5-155, 5-157, 5-159, 5-161, 5-163, 5-165, 5-167, 5-169, 5-171
1490046-0000	.PIN	1-305, 1-307, 2-39, 2-41
1490713-0000	.SPRING HOLDER	1-7
1490714-0000	.GUIDE	1-7
1490715-0000	.DOLLY	1-7
1490804-0000	.HOLDER	7-53
1490950-0000	.SPLASH PLATE	2-243
1490962-0000	.LID	1-185
1490963-0000	.PIPE	1-181
1498014-0000	.GUIDE	5-173, 5-175, 5-177, 5-179, 5-181, 5-183, 5-185, 5-187, 5-189, 5-191, 5-193, 5-195, 5-197, 5-199, 5-201, 5-203
1498015-0000	.PULLEY	5-173, 5-175, 5-177, 5-179, 5-181, 5-183, 5-185, 5-187, 5-189, 5-191, 5-193, 5-195, 5-197, 5-199, 5-201, 5-203
1498016-0000	.PIN	5-173, 5-175, 5-177, 5-179, 5-181, 5-183, 5-185, 5-187, 5-189, 5-191, 5-193, 5-195, 5-197, 5-199, 5-201, 5-203
1498047-0000	.SEALING BLOCK	7-53, 9-21
1498078-0000	.PLATE	5-133, 5-135, 5-137, 5-139, 5-141, 5-143, 5-145, 5-147, 5-149, 5-151, 5-153, 5-155, 5-157, 5-159, 5-161, 5-163, 5-165, 5-167, 5-169, 5-171
1498081-0000	.SPACER	5-133, 5-135, 5-137, 5-139, 5-141, 5-143, 5-145, 5-147, 5-149, 5-151, 5-153, 5-155, 5-157, 5-159, 5-161, 5-163, 5-165, 5-167, 5-169, 5-171
1498084-0000	.PIN	5-133, 5-135, 5-137, 5-139, 5-141, 5-143, 5-145, 5-147, 5-149, 5-151, 5-153, 5-155, 5-157, 5-159, 5-161, 5-163, 5-165, 5-167, 5-169, 5-171, 5-173, 5-175, 5-177, 5-179, 5-181, 5-183, 5-185, 5-187, 5-189, 5-191, 5-193, 5-195, 5-197, 5-199, 5-201, 5-203
1498087-0000	.SPACER	5-133, 5-135, 5-137, 5-139, 5-141, 5-143, 5-145, 5-147, 5-149, 5-151, 5-153, 5-155, 5-157, 5-159, 5-161, 5-163, 5-165, 5-167, 5-169, 5-171
1498132-0000	.SHAFT	1-31
1498278-0000	.CAM	4-23, 4-25
1498279-0000	.SHAFT	4-23, 4-25
1498459-0001	.GLASS PANE	7-157, 7-161
1498461-0001	.SEALING STRIP	7-157, 7-161
1498578-0000	.CURVE	4-9, 4-11, 4-13, 4-15, 4-17, 4-19
1498579-0000	.CURVE	4-9, 4-11, 4-13, 4-15, 4-17, 4-19
1498591-0000	.PROTECTION	4-9, 4-11, 4-13, 4-15, 4-17, 4-19
1498592-0000	.BRACKET	4-23, 4-25
1498593-0000	.CURVE	4-23, 4-25
1498601-0000	.SHAFT	4-33, 4-35
1498604-0000	.VOLUME SHIM	4-39, 4-41, 4-43, 4-45, 4-47, 4-49, 4-51, 4-53, 4-55, 4-71, 4-73, 4-75, 4-77, 4-79, 4-81, 9-7
1498608-0000	.VOLUME BULGE	4-39, 4-41, 4-43, 4-45, 4-47, 4-49, 4-51, 4-53, 4-55, 4-71, 4-73, 4-75, 4-77, 4-79, 4-81
1498609-0000	.VOLUME SHIM	4-39, 4-41, 4-43, 4-45, 4-47, 4-49, 4-51, 4-53, 4-55, 4-71, 4-73, 4-75, 4-77, 4-79, 4-81, 9-7
1498782-0000	.TANK BRACKET	1-305, 1-307
1498783-0000	.WHEEL	1-15
1498856-0000	.FLANGE	2-63
1499005-0000	.SPACER	5-217, 5-219, 5-221, 5-223, 5-225, 5-227, 5-229
1499011-0000	.SPACER	5-217, 5-219, 5-221, 5-223, 5-225, 5-227, 5-229
1499086-0000	.SHAFT	5-217, 5-219, 5-221, 5-223, 5-225, 5-227, 5-229
1499127-0000	.FLANGE	1-261
1499129-0000	.HOLDER	9-35
1499157-0000	.HEATING PIPE	1-185
1499158-0200	.AIR SUPER-HEATER	1-163, 1-165
1499160-0500	.SCRUBBER	1-163, 1-165
1499166-0000	.PIPE	1-281
1499170-0000	.GASKET	1-37, 1-39
1499171-0000	.LID	1-37, 1-39
1499186-0000	.HOLDER	9-35
1499562-0004	.LOCKING ARM	7-165, 7-169, 7-173, 7-175
1499602-0000	.CAM	4-23, 4-25
1499603-0000	.CAM	4-9, 4-11, 4-13, 4-15, 4-17, 4-19
1499604-0000	.CAM	4-9, 4-11, 4-13, 4-15, 4-17, 4-19
1499642-0301	.TPIH GENERATOR	8-49
1499689-0000	.SPACER	5-217, 5-219, 5-221, 5-223, 5-225, 5-227, 5-229
1511396-0000	.CAM	4-9, 4-11, 4-13, 4-15, 4-17, 4-19
1511397-0000	.CAM	4-9, 4-11, 4-13, 4-15, 4-17, 4-19

Part No	Description	Page No
1511503-0000	.PIPE	1-187
1511504-0000	.SPACER	1-299
1511512-0000	.BEARING BUSHING	1-13
1511755-0000	.NET	1-187
1512365-0000	.BRACKET	4-23, 4-25
1512366-0000	.CURVE	4-27, 4-29, 4-31
1512367-0000	.CURVE	4-27, 4-29, 4-31
1512368-0000	.ECCENTRIC SHAFT	4-27, 4-29, 4-31
1512405-0000	.NUT	1-291
1512590-0000	.RUBBER BUSHING	4-39, 4-41, 4-43, 4-45, 4-47, 4-49, 4-51, 4-53, 4-55
1512598-0000	.GUIDE	4-33, 4-35
1512599-0000	.VOLUME CAM	4-33, 4-35
1512600-0000	.PIPE	4-9, 4-11, 4-13, 4-15, 4-17, 4-19
1512601-0000	.PIPE	4-9, 4-11, 4-13, 4-15, 4-17, 4-19
1512604-0000	.SHAFT	4-39, 4-41, 4-43, 4-45, 4-47, 4-49, 4-51, 4-53, 4-55, 4-71, 4-73, 4-75, 4-77, 4-79, 4-81
1512605-0000	.BRACKET	4-39, 4-41, 4-43, 4-45, 4-47, 4-49, 4-51, 4-53, 4-55, 4-71, 4-73, 4-75, 4-77, 4-79, 4-81
1512607-0000	.BRACKET	4-39, 4-41, 4-43, 4-45, 4-47, 4-49, 4-51, 4-53, 4-55, 4-71, 4-73, 4-75, 4-77, 4-79, 4-81
1512608-0000	.SHAFT	4-39, 4-41, 4-43, 4-45, 4-47, 4-49, 4-51, 4-53, 4-55, 4-71, 4-73, 4-75, 4-77, 4-79, 4-81
1512616-0000	.PIPE	4-9, 4-11, 4-13, 4-15, 4-17, 4-19
1512617-0000	.PIPE	4-9, 4-11, 4-13, 4-15, 4-17, 4-19
1512651-0000	.CURVE	4-27, 4-29, 4-31
1512652-0000	.SHAFT	4-33, 4-35
1512823-0000	.NUT	5-133, 5-135, 5-137, 5-139, 5-141, 5-143, 5-145, 5-147, 5-149, 5-151, 5-153, 5-155, 5-157, 5-159, 5-161, 5-163, 5-165, 5-167, 5-169, 5-171
1517064-0000	.KEY	9-39
1517188-0000	.BRACKET	5-25, 5-33, 5-35
1517289-0000	.KNIFE	4-39, 4-41, 4-43, 4-45, 4-47, 4-49, 4-51, 4-53, 4-55
1517291-0000	.SHAFT	4-39, 4-41, 4-43, 4-45, 4-47, 4-49, 4-51, 4-53, 4-55, 4-57, 4-59, 4-61, 4-63, 4-65, 4-67
1517482-0000	.TUBE	1-187
1517717-0000	.SHAFT	5-127, 5-129, 5-131
1517718-0000	.SCREW	5-127, 5-129, 5-131
1517721-0000	.FLANGE	5-133, 5-135, 5-137, 5-139, 5-141, 5-143, 5-145, 5-147, 5-149, 5-151, 5-153, 5-155, 5-157, 5-159, 5-161, 5-163, 5-165, 5-167, 5-169, 5-171
1517722-0000	.FLANGE	5-133, 5-135, 5-137, 5-139, 5-141, 5-143, 5-145, 5-147, 5-149, 5-151, 5-153, 5-155, 5-157, 5-159, 5-161, 5-163, 5-165, 5-167, 5-169, 5-171
1517723-0000	.SPACER	5-133, 5-135, 5-137, 5-139, 5-141, 5-143, 5-145, 5-147, 5-149, 5-151, 5-153, 5-155, 5-157, 5-159, 5-161, 5-163, 5-165, 5-167, 5-169, 5-171
1517724-0000	.SPACER	5-133, 5-135, 5-137, 5-139, 5-141, 5-143, 5-145, 5-147, 5-149, 5-151, 5-153, 5-155, 5-157, 5-159, 5-161, 5-163, 5-165, 5-167, 5-169, 5-171
1517727-0000	.FLANGE	5-133, 5-135, 5-137, 5-139, 5-141, 5-143, 5-145, 5-147, 5-149, 5-151, 5-153, 5-155, 5-157, 5-159, 5-161, 5-163, 5-165, 5-167, 5-169, 5-171
1517731-0000	.PIN	5-173, 5-175, 5-177, 5-179, 5-181, 5-183, 5-185, 5-187, 5-189, 5-191, 5-193, 5-195, 5-197, 5-199, 5-201, 5-203
1517732-0000	.SPACER	5-133, 5-135, 5-137, 5-139, 5-141, 5-143, 5-145, 5-147, 5-149, 5-151, 5-153, 5-155, 5-157, 5-159, 5-161, 5-163, 5-165, 5-167, 5-169, 5-171
1517736-0000	.GUIDE	5-133, 5-135, 5-137, 5-139, 5-141, 5-143, 5-145, 5-147, 5-149, 5-151, 5-153, 5-155, 5-157, 5-159, 5-161, 5-163, 5-165, 5-167, 5-169, 5-171
1517737-0000	.GUIDE	5-133, 5-135, 5-137, 5-139, 5-141, 5-143, 5-145, 5-147, 5-149, 5-151, 5-153, 5-155, 5-157, 5-159, 5-161, 5-163, 5-165, 5-167, 5-169, 5-171
1517751-0000	.SHAFT	7-55
1519150-0000	.PIN	1-69, 1-71
1519158-0000	.LID	1-31
1519159-0000	.BUSHING	1-31
1519166-0000	.BUSHING	1-31
1519429-0000	.GUIDE	5-173, 5-175, 5-177, 5-179, 5-181, 5-183, 5-185, 5-187, 5-189, 5-191, 5-193, 5-195, 5-197, 5-199, 5-201, 5-203
1519435-0000	.PLATE	5-173, 5-175, 5-177, 5-179, 5-181, 5-183, 5-185, 5-187, 5-189, 5-191, 5-193, 5-195, 5-197, 5-199, 5-201, 5-203
1519443-0000	.PLATE	5-133, 5-135, 5-137, 5-139, 5-141, 5-143, 5-145, 5-147, 5-149, 5-151, 5-153, 5-155, 5-157, 5-159, 5-161, 5-163, 5-165, 5-167, 5-169, 5-171
1519486-0000	.FILTER HOUSING	1-209, 1-293
1519725-0000	.SHAFT	9-35
1519799-0000	.ANGLE BRACKET	1-7
1519813-0000	.SHAFT	4-27, 4-29, 4-31
1519814-0000	.ECCENTRIC SHAFT	4-27, 4-29, 4-31
1519976-0000	.BRACKET	1-201
1520092-0000	.INDUCTOR	4-83, 4-85, 4-87, 4-89, 9-7
1520166-0000	.INDUCTOR	4-71, 4-73, 4-75, 4-77, 4-79, 4-81, 9-7
1520564-0003	.DOLLY	4-39, 4-41, 4-43, 4-45, 4-47, 4-49, 4-51, 4-53, 4-55, 9-7
1523100-0000	.BELT	5-217, 5-219, 5-221, 5-223, 5-225, 5-227, 5-229, 9-23
1523101-0000	.BELT	5-217, 5-219, 5-221, 5-223, 5-225, 5-227, 5-229, 9-23
1523154-0003	.SPRAY NOZZLE	1-233
1523154-0004	.SPRAY NOZZLE	1-233
1523154-0005	.SPRAY NOZZLE	1-233
1523154-0006	.SPRAY NOZZLE	1-233
1523185-0000	.AXLE PIN	1-33
1523190-0000	.SHAFT	1-23
1523369-0000	.PRESSURE RAIL	4-57, 4-59, 4-61, 4-63, 4-65, 4-67
1523777-0200	.STAIR	2-113, 2-115, 2-117, 2-119
1523784-0000	.TOE PLATE	2-121
1523793-0000	.TOE PLATE	2-125, 2-127
1523805-0000	.PIN	1-287, 1-289
1523808-0000	.GASKET	1-283, 1-285
1523980-0000	.MOUNTING BLOCK	4-39, 4-41, 4-43, 4-45, 4-47, 4-49, 4-51, 4-53, 4-55

Part No	Description	Page No
1524167-0000	.CORNER STRIP	2-125, 2-127, 2-139, 2-141
1524168-0000	.CORNER STRIP	2-125, 2-127
1524171-0000	.FRAME	2-139, 2-141
1524172-0000	.CHECKER PLATE	2-139, 2-141
1524173-0000	.CHECKER PLATE	2-139, 2-141
1524174-0000	.HOOK	2-139, 2-141
1524175-0000	.LEG	2-139, 2-141
1524176-0000	.CLAMP	2-139, 2-141
1524177-0000	.TOE PLATE	2-139, 2-141
1524179-0000	.TOE PLATE	2-139, 2-141
1524180-0000	.TOE PLATE	2-139, 2-141
1524181-0000	.PIN	2-139, 2-141
1524182-0000	.RAILING	2-139, 2-141
1524185-0000	.EXTENSION PIECE	2-139, 2-141, 2-143
1524186-0000	.PROFILE	2-143
1524187-0000	.PROFILE	2-143
1524188-0000	.STAIR	2-143
1524191-0000	.RIM	2-143
1524192-0000	.RAILING	2-143
1524193-0000	.RAILING	2-143
1524236-0000	.VALVE HOUSING	1-177
1524245-0300	.DOOR	1-59
1524257-0000	.JOINT	5-133, 5-135, 5-137, 5-139, 5-141, 5-143, 5-145, 5-147, 5-149, 5-151, 5-153, 5-155, 5-157, 5-159, 5-161, 5-163, 5-165, 5-167, 5-169, 5-171
1524260-0000	.SHAFT	4-9, 4-11, 4-13, 4-15, 4-17, 4-19
1524267-0000	.HOLDER	4-9, 4-11, 4-13, 4-15, 4-17, 4-19
1524444-0000	.PROTECTION	5-173, 5-175, 5-177, 5-179, 5-181, 5-183, 5-185, 5-187, 5-189, 5-191, 5-193, 5-195, 5-197, 5-199, 5-201, 5-203
1524481-0000	.SEALING BLOCK	7-55
1524520-0000	.PIN	5-133, 5-135, 5-137, 5-139, 5-141, 5-143, 5-145, 5-147, 5-149, 5-151, 5-153, 5-155, 5-157, 5-159, 5-161, 5-163, 5-165, 5-167, 5-169, 5-171, 5-173, 5-175, 5-177, 5-179, 5-181, 5-183, 5-185, 5-187, 5-189, 5-191, 5-193, 5-195, 5-197, 5-199, 5-201, 5-203
1524526-0000	.FLANGE	5-133, 5-135, 5-137, 5-139, 5-141, 5-143, 5-145, 5-147, 5-149, 5-151, 5-153, 5-155, 5-157, 5-159, 5-161, 5-163, 5-165, 5-167, 5-169, 5-171
1524528-0000	.BRACKET	5-173, 5-175, 5-177, 5-179, 5-181, 5-183, 5-185, 5-187, 5-189, 5-191, 5-193, 5-195, 5-197, 5-199, 5-201, 5-203
1524529-0000	.WASHER	5-133, 5-135, 5-137, 5-139, 5-141, 5-143, 5-145, 5-147, 5-149, 5-151, 5-153, 5-155, 5-157, 5-159, 5-161, 5-163, 5-165, 5-167, 5-169, 5-171
1524532-0000	.SPACER	5-133, 5-135, 5-137, 5-139, 5-141, 5-143, 5-145, 5-147, 5-149, 5-151, 5-153, 5-155, 5-157, 5-159, 5-161, 5-163, 5-165, 5-167, 5-169, 5-171
1524539-0000	.PROTECTION	5-173, 5-175, 5-177, 5-179, 5-181, 5-183, 5-185, 5-187, 5-189, 5-191, 5-193, 5-195, 5-197, 5-199, 5-201, 5-203
1524752-0000	.BRACKET	4-9, 4-11, 4-13, 4-15, 4-17, 4-19
1524763-0000	.PIPE	4-9, 4-11, 4-13, 4-15, 4-17, 4-19
1524764-0000	.PIPE	4-9, 4-11, 4-13, 4-15, 4-17, 4-19
1524854-0000	.BEAM	2-125, 2-127
1524864-0000	.RAILING	2-139, 2-141
1528639-0000	.GASKET	1-287, 1-289
1528746-0100	.GUIDE	1-5
1532223-0000	.BLOCK	1-293
1532231-0000	.CONNECTION	1-31
1532236-0000	.CONNECTION BOX	1-295
1532237-0000	.RAIL	1-297
1532238-0100	.TERMINAL BLOCK	1-295
1532239-0300	.CONNECTION BOX	1-277
1532250-0200	.HEAT EXCHANGER VALVE	1-163, 1-165
1532311-0000	.ECCENTRIC SHAFT	4-27, 4-29, 4-31
1532438-0000	.BRACKET	4-57, 4-59, 4-61, 4-63, 4-65, 4-67, 4-83, 4-85, 4-87, 4-89
1532500-0000	.VOLUME BULGE	4-57, 4-59, 4-61, 4-63, 4-65, 4-67, 4-83, 4-85, 4-87, 4-89
1532911-0000	.FASTENING PLATE	8-77, 8-79
1533000-0000	.INDUCTOR	4-71, 4-73, 4-75, 4-77, 4-79, 4-81, 9-7
1533002-0000	.INDUCTOR	4-71, 4-73, 4-75, 4-77, 4-79, 4-81, 9-7
1533015-0000	.INDUCTOR	4-83, 4-85, 4-87, 4-89, 9-7
1538049-0000	.PIPE	1-279
1538134-0000	.BRACKET	4-39, 4-41, 4-43, 4-45, 4-47, 4-49, 4-51, 4-53, 4-55, 4-71, 4-73, 4-75, 4-77, 4-79, 4-81
1538135-0000	.SHAFT	4-39, 4-41, 4-43, 4-45, 4-47, 4-49, 4-51, 4-53, 4-55, 4-71, 4-73, 4-75, 4-77, 4-79, 4-81
1538154-0000	.DRAIN PIPE	1-175
1538157-0000	.PIPE	1-183
1538158-0000	.PIPE	1-183
1538163-0000	.LEVER	1-33
1538166-0200	.AIR VALVE	1-163, 1-165
1538302-0000	.HUB	4-27, 4-29, 4-31
1538306-0000	.ROLLER	5-13, 5-83, 5-85, 5-87, 5-89, 5-91
1538487-0000	.PIPE	1-175
1538494-0000	.LID	1-47
1538502-0000	.PIPE	1-281
1538503-0000	.PIPE	1-279
1538576-0000	.GUIDE	5-173, 5-175, 5-177, 5-179, 5-181, 5-183, 5-185, 5-187, 5-189, 5-191, 5-193, 5-195, 5-197, 5-199, 5-201, 5-203
1538577-0000	.PLATE	5-173, 5-175, 5-177, 5-179, 5-181, 5-183, 5-185, 5-187, 5-189, 5-191, 5-193, 5-195, 5-197, 5-199, 5-201, 5-203
1538735-0000	.GASKET	1-287, 1-289
1538742-0000	.LID	1-287, 1-289
1538868-0000	.BRACKET	1-347, 1-353, 2-161, 2-163, 2-175, 2-205, 2-209, 2-215, 2-217, 2-219, 6-55, 7-5, 7-7

Part No	Description	Page No
1538950-0000	.ROLLER	1-99
1538953-0000	.SHAFT	1-195, 1-197
1539174-0000	.BUSHING	1-75
1539175-0000	.PLATE	1-75
1539348-0000	.HOLDER	12-11, 12-13, 12-15
1539374-0000	.VOLUME SHIM	4-57, 4-59, 4-61, 4-63, 4-65, 4-67, 4-83, 4-85, 4-87, 4-89, 9-7
1539376-0000	.PULLEY	4-27, 4-29, 4-31
1539391-0000	.ROUND NUT	2-161, 2-163, 2-175, 2-185, 2-219, 7-157, 7-161, 7-165, 7-169, 7-173, 7-175
1539397-0000	.ROLLER	7-127, 7-129
1539727-0000	.WHEEL	1-287, 1-289
1539729-0000	.BRACKET	1-287, 1-289
1539741-0000	.COVER	1-177
1548011-0000	.GUIDE	5-133, 5-135, 5-137, 5-139, 5-141, 5-143, 5-145, 5-147, 5-149, 5-151, 5-153, 5-155, 5-157, 5-159, 5-161, 5-163, 5-165, 5-167, 5-169, 5-171
1548012-0000	.GUIDE	5-133, 5-135, 5-137, 5-139, 5-141, 5-143, 5-145, 5-147, 5-149, 5-151, 5-153, 5-155, 5-157, 5-159, 5-161, 5-163, 5-165, 5-167, 5-169, 5-171
1548013-0000	.PIPE	5-133, 5-135, 5-137, 5-139, 5-141, 5-143, 5-145, 5-147, 5-149, 5-151, 5-153, 5-155, 5-157, 5-159, 5-161, 5-163, 5-165, 5-167, 5-169, 5-171
1548016-0000	.GUIDE	5-173, 5-175, 5-177, 5-179, 5-181, 5-183, 5-185, 5-187, 5-189, 5-191, 5-193, 5-195, 5-197, 5-199, 5-201, 5-203
1548021-0000	.SHAFT	5-133, 5-135, 5-137, 5-139, 5-141, 5-143, 5-145, 5-147, 5-149, 5-151, 5-153, 5-155, 5-157, 5-159, 5-161, 5-163, 5-165, 5-167, 5-169, 5-171
1548022-0000	.SHAFT	5-133, 5-135, 5-137, 5-139, 5-141, 5-143, 5-145, 5-147, 5-149, 5-151, 5-153, 5-155, 5-157, 5-159, 5-161, 5-163, 5-165, 5-167, 5-169, 5-171
1548029-0000	.GUIDE	5-173, 5-175, 5-177, 5-179, 5-181, 5-183, 5-185, 5-187, 5-189, 5-191, 5-193, 5-195, 5-197, 5-199, 5-201, 5-203
1548030-0000	.PLATE	5-173, 5-175, 5-177, 5-179, 5-181, 5-183, 5-185, 5-187, 5-189, 5-191, 5-193, 5-195, 5-197, 5-199, 5-201, 5-203
1548038-0000	.GUIDE	5-173, 5-175, 5-177, 5-179, 5-181, 5-183, 5-185, 5-187, 5-189, 5-191, 5-193, 5-195, 5-197, 5-199, 5-201, 5-203
1548116-0000	.SPACER	8-101
1548186-0000	.WASHER	5-133, 5-135, 5-137, 5-139, 5-141, 5-143, 5-145, 5-147, 5-149, 5-151, 5-153, 5-155, 5-157, 5-159, 5-161, 5-163, 5-165, 5-167, 5-169, 5-171
1548211-0000	.RAILING	2-125, 2-127
1548432-0000	.SPACER	5-133, 5-135, 5-137, 5-139, 5-141, 5-143, 5-145, 5-147, 5-149, 5-151, 5-153, 5-155, 5-157, 5-159, 5-161, 5-163, 5-165, 5-167, 5-169, 5-171
1548433-0000	.ROUND NUT	5-133, 5-135, 5-137, 5-139, 5-141, 5-143, 5-145, 5-147, 5-149, 5-151, 5-153, 5-155, 5-157, 5-159, 5-161, 5-163, 5-165, 5-167, 5-169, 5-171
1548438-0000	.PULLEY	5-217, 5-219, 5-221, 5-223, 5-225, 5-227, 5-229
1548531-0000	.ROLLER	1-107, 1-109
1548540-0000	.ROLLER	1-107, 1-109
1548541-0000	.ROLLER	1-107, 1-109
1548742-0000	.SPACER	1-177
1548751-0000	.BUSHING	1-9
1548766-0000	.SHAFT	4-39, 4-41, 4-43, 4-45, 4-47, 4-49, 4-51, 4-53, 4-55, 4-71, 4-73, 4-75, 4-77, 4-79, 4-81
1548768-0000	.ECCENTRIC SHAFT	4-27, 4-29, 4-31
1548798-0000	.TIMING BELT	4-27, 4-29, 4-31
1548804-0000	.CURVE	4-27, 4-29, 4-31
1548805-0000	.CURVE	4-27, 4-29, 4-31
1548806-0000	.ECCENTRIC SHAFT	4-27, 4-29, 4-31
1548807-0000	.CURVE	4-27, 4-29, 4-31
1548808-0000	.CURVE	4-27, 4-29, 4-31
1548810-0000	.PIVOT PIN	4-33, 4-35
1548817-0000	.WASHER	4-57, 4-59, 4-61, 4-63, 4-65, 4-67, 4-83, 4-85, 4-87, 4-89, 12-11, 12-13, 12-15
1548872-0400	.PILLAR	1-59
1548876-0300	.IH EQUIPMENT	1-59
1548880-0300	.DOOR	1-59
1548891-0000	.GASKET	1-61
1548892-0300	.CALENDER ROLLER	1-5
1549122-0000	.FLANGE BEARING	4-71, 4-73, 4-75, 4-77, 4-79, 4-81
1549123-0000	.PIVOT PIN	4-71, 4-73, 4-75, 4-77, 4-79, 4-81
1549160-0300	.FILLING PIPE	1-193
1549332-0000	.ROLLER	7-127, 7-129
1549344-0000	.HOLDER	6-9
1549526-0000	.CONTAINER	1-175
1549545-0000	.FLANGE	1-13
1549548-0000	.FLANGE	1-13
1549549-0400	.DOOR	1-59
1549552-0000	.GASKET	1-63
1549554-0000	.GASKET	1-65
1549573-0200	.CRANK	1-5
1549601-0000	.WASHER	4-39, 4-41, 4-43, 4-45, 4-47, 4-49, 4-51, 4-53, 4-55
1549868-0300	.SQUEEZER	5-125
1549873-0000	.PLATE	5-133, 5-135, 5-137, 5-139, 5-141, 5-143, 5-145, 5-147, 5-149, 5-151, 5-153, 5-155, 5-157, 5-159, 5-161, 5-163, 5-165, 5-167, 5-169, 5-171
1549875-0000	.SPACER	5-133, 5-135, 5-137, 5-139, 5-141, 5-143, 5-145, 5-147, 5-149, 5-151, 5-153, 5-155, 5-157, 5-159, 5-161, 5-163, 5-165, 5-167, 5-169, 5-171
1549971-0000	.FASTENING PLATE	5-83, 5-85, 5-87, 5-89, 5-91
1549972-0000	.FOOT	5-83, 5-85, 5-87, 5-89, 5-91
1549980-0700	.FRAME	1-299
1549981-0000	.FLANGE	1-23
1549982-0000	.FLANGE	1-23
1550112-0000	.MOTOR SHELF	11-25
1550113-0000	.MOTOR SHELF	11-25

Part No	Description	Page No
1550161-0100	.CHUTE	11-211
1550162-0000	.CANTILEVER	11-67
1550177-0000	.SHAFT	11-67, 11-217
1550179-0000	.BOW CLAMP	11-67, 11-71, 11-213, 11-219
1550185-0000	.COCK HANDLE	11-137
1550199-0000	.SPACER	11-67, 11-135, 11-219
1550206-0000	.HOLDER	11-67, 11-217
1550233-0000	.ROLLER UNIT	11-71
1550234-0000	.CHUTE	11-71
1550236-0000	.SIDE PLATE	11-71, 11-213
1550237-0000	.SIDE PLATE	11-71, 11-213
1550238-0000	.SIDE PLATE	11-213
1550239-0000	.SIDE PLATE	11-213
1550245-0000	.CHUTE	11-213
1550246-0000	.ROLLER UNIT	11-213
1550248-0000	.TUBE	11-67
1550286-0000	.PLATE	11-71, 11-213
1550302-0000	.PHOTOCELL BRACKET	11-67, 11-217
1550319-0000	.BRACKET	11-67, 11-217
1550348-0001	.BALL BEARING 17/35X10	5-41, 5-59, 5-61, 11-37, 11-39, 11-137, 11-139, 11-141, 11-177
1550401-0000	.BOW CLAMP	11-67, 11-217
1550404-0000	.BRACKET	11-67, 11-219
1550405-0000	.BOW CLAMP	11-67, 11-219
1550406-0000	.BRACKET	11-67, 11-219
1550407-0000	.BRACKET	11-55, 11-67, 11-201, 11-211
1550589-0000	.CORRUGATED CARDBOARD BOX	11-235
1550595-1801	.SLIDING STRIP	5-41, 11-177
1550595-1802	.SLIDING STRIP	5-41, 11-177
1550595-2650	.SLIDING STRIP	11-85, 11-87, 11-89
1550595-2950	.SLIDING STRIP	11-85, 11-87, 11-89
1550595-4960	.SLIDING STRIP	5-69, 5-77, 5-79, 11-135, 11-189, 11-195, 11-197
1550595-6100	.SLIDING STRIP	11-85, 11-87, 11-89
1550595-8100	.SLIDING STRIP	11-33
1550595-8853	.SLIDING STRIP	11-85, 11-87, 11-89
1550595-9960	.SLIDING STRIP	5-69, 11-189, 11-223
1550606-0000	.SPROCKET	11-23
1550607-0000	.SPROCKET	11-21
1550626-0005	.SPACER	5-41, 11-177
1550626-0007	.SPACER	11-23
1550664-0000	.DOWEL	11-159, 11-171
1550665-0000	.PIPE	5-43, 5-45, 5-47, 5-49, 11-159, 11-171
1550666-0000	.HOLDER	5-43, 5-45, 5-47, 5-49, 11-171
1550667-0000	.BOTTOM PANEL	5-41, 11-177
1550668-0000	.BRACKET	5-41, 11-177
1550669-0000	.SIDE PLATE	5-41
1550683-0100	.RAILING KIT	11-153, 11-155, 11-157
1550684-0000	.ARCH	11-159, 11-171
1550685-0000	.ARCH	11-159, 11-171
1550687-0001	.SIDE PLATE	5-41, 11-177
1550687-0002	.SIDE PLATE	5-41, 11-177
1550689-0000	.SHAFT	5-41, 11-177
1550690-0000	.SLEEVE	5-41, 11-177
1550693-0000	.WASHER	5-41, 11-177
1550698-0200	.WHEEL CURVE 90 DEGREES	5-37, 5-39
1550743-0100	.RAIL HOLDER	5-43, 5-45, 5-47, 5-49
1550743-0200	.RAIL HOLDER	5-71, 5-75, 5-81, 11-29, 11-99, 11-133, 11-171, 11-191, 11-193, 11-199, 11-225
1550772-0000	.HOLDER	5-53, 5-73, 11-31, 11-93, 11-95, 11-97, 11-101, 11-103
1550773-0000	.RAIL HOLDER	5-53
1550794-0000	.SIDE PLATE	11-23
1550795-0000	.SIDE PLATE	11-23
1550847-0000	.BRACKET	11-67, 11-217
1550863-0100	.PACKING DESCRIPTION	11-67, 11-211
1550874-0000	.BRACKET FOR LEG PC23	11-217
1550875-0000	.PLATE	11-217
1550876-0000	.BRACKET	11-217
1550877-0000	.BRACKET	11-217
1550878-0100	.CANTILEVER	11-211
1550880-0200	.CONVEYOR BODY	11-127, 11-129
1550883-0100	.LEG	11-211
1550912-0000	.PLATE	11-135
1550913-0000	.PLATE	11-135
1550956-0000	.PLATE	11-135
1550957-0100	.CHAIN TENSIONER	11-127, 11-129
1550959-0000	.CLAMP	11-137
1550960-0000	.BLOCK	11-137
1550971-0000	.SPROCKET	11-137
1550972-0000	.SPROCKET	11-139, 11-141
1550973-0000	.SPROCKET	11-127, 11-129
1550977-0300	.BELT UNIT	11-127, 11-129
1550995-0000	.SPACER	11-127, 11-129
1550997-0300	.BELT UNIT	11-127, 11-129
1550999-0000	.PHOTOCELL BRACKET	11-139, 11-141
1558057-0000	.HOLDER	4-9, 4-11, 4-13, 4-15, 4-17, 4-19
1558062-0000	.PRESSURE RAIL	4-39, 4-41, 4-43, 4-45, 4-47, 4-49, 4-51, 4-53, 4-55

Part No	Description	Page No
1558254-0000	.SHAFT	1-319, 7-85
1558327-0000	.LID	2-237
1558352-0000	.FLANGE	1-313, 1-315, 1-317
1558356-0300	.SPLICE DETECTOR	1-313, 1-315, 1-317
1558417-0000	.FLANGE	1-47
1558427-0000	.LID	1-283, 1-285
1558440-0000	.BRACKET	1-305, 1-307
1558477-0100	.WHEEL	9-57
1558479-0100	.HANDLE	9-57
1558480-0100	.LIFTING CYLINDER	9-57
1558494-0400	.PRODUCT VALVE	1-193
1558495-0300	.HEATING UNIT	1-277
1558497-0500	.FRAME SECTION,UPPER	1-3
1558510-0000	.PIPE	1-175
1558511-0400	.PIPE WORK-AIR	1-163, 1-165
1558769-0400	.SEPARATOR	1-163, 1-165
1558795-0000	.RAILING	2-125, 2-127
1558798-0000	.BRACKET	7-5, 7-7
1558842-0000	.PIPE	1-283, 1-285
1558911-0000	.PRESSURE ROLLER	5-173, 5-175, 5-177, 5-179, 5-181, 5-183, 5-185, 5-187, 5-189, 5-191, 5-193, 5-195, 5-197, 5-199, 5-201, 5-203
1558917-0000	.SPACER DISC	7-37
1558933-0000	.FRAME	9-67
1558945-0000	.PIVOT PIN	2-93
1558946-0000	.PLUG	2-143
1558947-0000	.STRIP	2-125, 2-127
1558975-0000	.BLOCKING PIECE	2-93
1564725-0000	.SPACER	1-299, 1-347
1566851-0000	.INDUCTOR	4-83, 4-85, 4-87, 4-89, 9-7
2500071-0000	.O-RING	1-195, 1-197
2500075-0000	.PIPE	1-261
2500076-0000	.GASKET	1-261
2500082-0000	.MOUNTING PLATE	1-195, 1-197
2500088-0300	.3-WAY VALVE	1-261
2500376-0000	.ARM	4-71, 4-73, 4-75, 4-77, 4-79, 4-81
2500377-0000	.LINK ARM	4-71, 4-73, 4-75, 4-77, 4-79, 4-81
2500383-0400	.DRIVE UNIT	4-3
2500384-0200	.FRAME	4-3
2500385-0200	.DESIGN CORRECTION	4-3
2500386-0200	.VOLUME ADJUSTER	4-3
2500387-0300	.SEALING JAW	4-69
2500388-0300	.SEALING JAW	4-69
2500389-0300	.PRESSURE JAW	4-37
2500390-0300	.PRESSURE JAW	4-37
2500391-0300	.PRESSURE JAW	4-37
2500395-0000	.SHAFT	4-57, 4-59, 4-61, 4-63, 4-65, 4-67, 4-83, 4-85, 4-87, 4-89
2500402-0200	.CHAIN TENSIONER	4-9, 4-11, 4-13, 4-15, 4-17, 4-19
2500404-0000	.BRACKET	4-23, 4-25
2500406-0000	.CURVE	4-9, 4-11, 4-13, 4-15, 4-17, 4-19
2500407-0000	.CURVE	4-9, 4-11, 4-13, 4-15, 4-17, 4-19
2500697-0000	.PIN	5-173, 5-175, 5-177, 5-179, 5-181, 5-183, 5-185, 5-187, 5-189, 5-191, 5-193, 5-195, 5-197, 5-199, 5-201, 5-203
2501231-0000	.BRUSH	5-133, 5-135, 5-137, 5-139, 5-141, 5-143, 5-145, 5-147, 5-149, 5-151, 5-153, 5-155, 5-157, 5-159, 5-161, 5-163, 5-165, 5-167, 5-169, 5-171
2501246-0000	.ROLLER	4-83, 4-85, 4-87, 4-89
2501251-0300	.PLATE	3-3
2501290-0500	.FILLING SYSTEM	1-3
2501292-0000	.VALVE HOUSING	1-263
2501305-0300	.LEVEL CONTROL DEVICE	1-193
2501378-0000	.PIPE	2-255
2501557-0000	.GENERATOR	1-53
2502406-0000	.PROTECTION	4-9, 4-11, 4-13, 4-15, 4-17, 4-19
2502413-0000	.SPRING	4-57, 4-59, 4-61, 4-63, 4-65, 4-67
2502415-0000	.PIPE	4-9, 4-11, 4-13, 4-15, 4-17, 4-19
2503436-0000	.SHAFT	1-319
2503438-0000	.LEVER	1-319
2504433-0000	.BEARING HOUSING	3-5, 3-7, 3-9, 3-11, 3-13, 3-15
2504434-0000	.KNOB	3-5, 3-7, 3-9, 3-11, 3-13, 3-15
2504496-0200	.TRANSPORT EQUIPMENT	1-3
2504523-0000	.CENTERING	1-73
2504779-0300	.REAR MODULE	2-3
2504780-0300	.MACHINE BODY	2-5, 2-7
2504781-0300	.HYDROGEN PEROXIDE	2-231
2504782-0300	.CHEMICALS	2-231
2504784-0200	.BENDING ROLLER	2-9
2504790-0200	.LIGHT FIXTURE	2-95
2504793-0300	.FRONT MODULE	2-3
2504794-0300	.MACHINE BODY	2-77
2504795-0200	.CLEANING SYSTEM	2-77
2504918-0300	.PNEUMATIC SYSTEM	2-3
2504920-0300	.DOORS AND COVERS	2-3
2505532-0000	.ARM	5-173, 5-175, 5-177, 5-179, 5-181, 5-183, 5-185, 5-187, 5-189, 5-191, 5-193, 5-195, 5-197, 5-199, 5-201, 5-203
2505533-0000	.SCREW	5-173, 5-175, 5-177, 5-179, 5-181, 5-183, 5-185, 5-187, 5-189, 5-191, 5-193, 5-195

Part No	Description	Page No
	.....	5-197, 5-199, 5-201, 5-203
2506263-0000	.WASHER	3-5, 3-7, 3-9, 3-11, 3-13, 3-15
2506264-0000	.GASKET	3-5, 3-7, 3-9, 3-11, 3-13, 3-15
2506269-0000	.BUSHING	1-73
2506273-0000	.LEVER	1-73
2506283-0000	.PIN	1-69, 1-71
2506291-0000	.BUSHING	1-73
2506521-0000	.SHAFT	4-57, 4-59, 4-61, 4-63, 4-65, 4-67
2506636-0000	.PIN	2-9, 2-79
2506637-0300	.AIR PIPE-LINE	2-235
2506661-0000	.ROLLER	7-41
2506663-0000	.SUPPORT	7-41
2506666-0000	.AXEL	7-41
2506711-0000	.GUIDE	5-83, 5-85, 5-87, 5-89, 5-91
2506714-0000	.WASHER	5-93, 5-95, 5-97, 5-99, 5-101, 5-103, 5-105, 5-107, 5-109, 5-111, 5-113
2506796-0200	.CABLE CONNECTION	2-47
2506922-0000	.PIPE	2-85
2506923-0000	.PIPE	2-85
2506924-0000	.PIPE	2-85
2506925-0000	.PIPE	2-85
2507048-0000	.GASKET	1-195, 1-197
2507060-0500	.PRODUCT LINES	1-193
2508133-0000	.LOCKING ARM	2-161, 2-163, 2-175, 2-205, 2-209, 2-217, 2-219
2508134-0000	.LOCKING ARM	2-175, 2-219
2508138-0300	.DOOR	2-157
2508140-0000	.LOCKING ARM	2-205, 2-209, 2-217
2508147-0000	.LOCKING ARM	2-215
2508149-0300	.DOOR	2-157
2508150-0000	.DOOR	2-215
2508151-0000	.RUBBER SEAL	2-215
2508152-0000	.LOCKING ARM	2-215
2508161-0000	.RUBBER SEAL	2-221
2508165-0100	.COVER	2-157
2508166-0000	.COVER	2-167
2508167-0000	.RUBBER SEAL	2-167
2508173-0400	.DIAGRAM	9-3
2508175-0300	.DOOR	2-157
2508177-0100	.DOOR	2-157
2508178-0000	.DOOR	2-169
2508179-0000	.RUBBER SEAL	2-169
2508180-0001	.GLASS PANE	2-169
2508180-0002	.GLASS PANE	2-171
2508181-0100	.DOOR	2-157
2508182-0000	.DOOR	2-171
2508183-0000	.RUBBER SEAL	2-171
2508186-0000	.RUBBER SEAL	2-205, 2-209
2508192-0000	.GUARD PLATE	2-229
2508196-0000	.DRIVE SHAFT	2-229
2508200-0000	.SHAFT	2-229
2508292-0000	.BUSHING	1-155, 1-157, 1-159
2508309-0000	.PLATE	1-155, 1-157, 1-159
2508311-0000	.PLATE	1-155, 1-157, 1-159
2508369-0300	.FRONT PLATFORM	2-113, 2-115, 2-117, 2-119
2508374-0000	.CHECKER PLATE	2-121
2508375-0000	.CHECKER PLATE	2-121
2508408-0000	.PIPE	4-9, 4-11, 4-13, 4-15, 4-17, 4-19
2508425-0000	.PIPE	2-85
2508426-0000	.BRACKET	2-85
2508430-0000	.CURVE	4-27, 4-29, 4-31
2509551-0000	.LINK ARM	4-71, 4-73, 4-75, 4-77, 4-79, 4-81
2509552-0000	.DRAINING	2-79
2509681-0000	.RAIL	1-31
2510347-0300	.FRONT GUARD	2-157
2510348-0000	.COVER	2-183
2510349-0000	.SEALING STRIP	2-183
2510350-0000	.SUPPORT	2-183
2510351-0000	.SHAFT	2-183
2510352-0000	.DOOR	2-183
2510353-0000	.GUIDE	2-183
2510354-0000	.PIN	2-183
2510355-0000	.SHAFT	2-183
2510399-0000	.BRACKET	7-67
2510400-0000	.HOLDER	7-67
2510401-0100	.HOLDER	7-51
2510546-0300	.POWER SUPPLY UNIT	1-51
2510755-0000	.BRACKET	6-9
2510785-0000	.COVER PLATE	2-79
2510833-0000	.PIPE	2-45
2510901-0000	.BRACKET	2-39, 2-41
2510904-0000	.HOLDER	2-45
2511238-0000	.LINK	4-57, 4-59, 4-61, 4-63, 4-65, 4-67, 4-83, 4-85, 4-87, 4-89
2511245-0000	.PROTECTION	4-9, 4-11, 4-13, 4-15, 4-17, 4-19
2511246-0000	.BUSHING	4-71, 4-73, 4-75, 4-77, 4-79, 4-81
2511346-0000	.SHAFT	5-133, 5-135, 5-137, 5-139, 5-141, 5-143, 5-145, 5-147, 5-149, 5-151, 5-153, 5-155

Part No	Description	Page No
		5-157, 5-159, 5-161, 5-163, 5-165, 5-167, 5-169, 5-171
2511347-0000	.PLUG	5-133, 5-135, 5-137, 5-139, 5-141, 5-143, 5-145, 5-147, 5-149, 5-151, 5-153, 5-155, 5-157
		5-159, 5-161, 5-163, 5-165, 5-167, 5-169, 5-171
2511350-0000	.WASHER	5-173, 5-175, 5-177, 5-179, 5-181, 5-183, 5-185, 5-187, 5-189, 5-191, 5-193, 5-195
		5-197, 5-199, 5-201, 5-203
2511401-0000	.BRACKET	4-57, 4-59, 4-61, 4-63, 4-65, 4-67, 4-83, 4-85, 4-87, 4-89
2511635-0000	.VOLUME SHIM	4-57, 4-59, 4-61, 4-63, 4-65, 4-67, 4-83, 4-85, 4-87, 4-89, 9-7
2512737-0000	.ROLLER	1-107, 1-109
2512738-0000	.ROLLER	1-107, 1-109
2512740-0000	.ROLLER	1-107, 1-109
2512741-0000	.ROLLER	1-107, 1-109
2512742-0000	.ROLLER	1-107, 1-109
2512746-0000	.ROLLER	1-125, 1-127
2512749-0000	.ROLLER	1-125, 1-127
2512768-0000	.SHAFT	1-69, 1-71
2512769-0000	.SHAFT	1-69, 1-71
2512774-0000	.SHIM	1-69, 1-71
2512830-0250	.FRONT COVER	2-157
2512830-0400	.FRONT COVER	2-157
2512900-0600	.CLEANING SECTION	1-251
2512910-0500	.CLEANING SYSTEM	1-3
2512915-0000	.PIPE	1-253, 1-255, 1-257
2512930-0300	.SUPPORT RAIL	1-59
2512938-0200	.CLEANING CUP	1-251
2512939-0000	.DISTRIBUTOR BLOCK	1-209
2512983-0000	.SPACER	5-83, 5-85, 5-87, 5-89, 5-91
2514077-0300	.EXPANSION VESSEL	6-29
2514083-0000	.REDUCTION NIPPLE	6-39
2514087-0000	.PLATE	6-39
2514132-0000	.PIN	5-173, 5-175, 5-177, 5-179, 5-181, 5-183, 5-185, 5-187, 5-189, 5-191, 5-193, 5-195, 5-197
		5-199, 5-201, 5-203
2514140-0000	.GUIDE	5-83, 5-85, 5-87, 5-89, 5-91
2514204-0100	.DRAINING	2-9
2514273-0000	.SHAFT	4-33, 4-35
2514320-0000	.SHAFT	4-33, 4-35
2514392-0100	.MACHINE CARRIAGE	12-27
2514514-0000	.INDUCTOR	1-155, 1-157, 1-159
2514522-0000	.INDUCTOR	1-155, 1-157, 1-159
2514540-0000	.SHAFT	3-5, 3-7, 3-9, 3-11, 3-13, 3-15
2514541-0000	.SPACER	3-5, 3-7, 3-9, 3-11, 3-13, 3-15
2514542-0000	.BUSHING	3-5, 3-7, 3-9, 3-11, 3-13, 3-15
2514546-0000	.COMPRESSION SPRING	1-235, 1-237
2514763-0000	.PLATE	2-39, 2-41
2514765-0000	.SHAFT	2-39, 2-41
2514831-0000	.SEALING STRIP	2-179, 2-199, 2-201, 2-203
2514832-0000	.GLASS PANE	2-179, 2-199, 2-201, 2-203
2517062-0250	.FRONT COVER	2-187, 2-189, 2-191
2517062-0400	.FRONT COVER	2-177
2517371-0000	.CLAMP	1-245
2519430-0000	.BRACKET	2-85
2519437-0000	.TUBE	1-191
2519440-0000	.TUBE	1-191
2519554-0000	.PIPE	2-241
2519555-0000	.PIPE	2-241
2519556-0000	.BRACKET	2-255
2519574-0200	.HYDROGEN PEROXIDE	2-231
2520196-0000	.WASHER	5-133, 5-135, 5-137, 5-139, 5-141, 5-143, 5-145, 5-147, 5-149, 5-151, 5-153, 5-155
		5-157, 5-159, 5-161, 5-163, 5-165, 5-167, 5-169, 5-171
2520200-0000	.SHAFT	5-217, 5-219, 5-221, 5-223, 5-225, 5-227, 5-229
2520202-0000	.SUPPORT	5-217, 5-219, 5-221, 5-223, 5-225, 5-227, 5-229
2520207-0000	.PLATE	5-217, 5-219, 5-221, 5-223, 5-225, 5-227, 5-229
2520215-0000	.BUSHING	12-11, 12-13, 12-15
2520433-0000	.LINK ARM	4-83, 4-85, 4-87, 4-89
2521068-0000	.SHIM	5-217, 5-219, 5-221, 5-223, 5-225, 5-227, 5-229
2521083-0000	.SHAFT	4-9, 4-11, 4-13, 4-15, 4-17, 4-19
2522142-0300	.PHOTOCELL UNIT	3-3
2522148-0000	.PIPE	6-53
2522184-0000	.PIPE	6-53
2522195-0000	.CONNECTION	1-243
2522233-0000	.BUSHING	1-73
2522235-0000	.COMPRESSION SPRING	1-73
2523598-0000	.SPLICING TABLE	7-55
2523600-0000	.PIN	7-55
2523618-0000	.PROTECTION	4-9, 4-11, 4-13, 4-15, 4-17, 4-19
2523629-0000	.LINK	4-57, 4-59, 4-61, 4-63, 4-65, 4-67, 4-83, 4-85, 4-87, 4-89
2523665-0000	.ARM	1-169
2523766-0001	.BRACKET	7-11
2523766-0002	.BRACKET	7-11
2523766-0003	.BRACKET	7-11
2523766-0007	.BRACKET	7-11
2523766-0009	.BRACKET	7-11
2523766-0010	.BRACKET	7-11
2523766-0011	.BRACKET	7-11
2524346-0000	.CAM	4-9, 4-11, 4-13, 4-15, 4-17, 4-19

Part No	Description	Page No
2524347-0000	.CAM	4-9, 4-11, 4-13, 4-15, 4-17, 4-19
2524363-0000	.HANGER	6-55
2524621-0000	.PIN	4-83, 4-85, 4-87, 4-89
2525338-0000	.PLUG	1-275
2525642-0000	.DISTRIBUTOR BLOCK	2-39, 2-41
2525649-0000	.PIPE	4-99, 4-101, 4-103, 4-105
2525662-0000	.BELT	5-217, 5-219, 5-221, 5-223, 5-225, 5-227, 5-229, 9-23
2525678-0000	.CURVE	4-27, 4-29, 4-31
2526820-0000	.LINK	1-33
2526825-0000	.WASHER	1-91, 1-93, 1-95, 1-97, 1-107, 1-109
2526826-0000	.BUSHING	1-91, 1-93, 1-95, 1-97, 1-107, 1-109
2526827-0000	.SHAFT	1-91, 1-93, 1-95, 1-97, 1-107, 1-109
2526841-0000	.SHAFT	1-73
2526842-0000	.LINK	1-33
2526849-0000	.PLATE	1-33
2526858-0000	.DOWEL	1-69, 1-71
2526859-0000	.CAM	1-69, 1-71
2527300-0300	.ELECTRIC EQUIPMENT	2-77
2527340-0000	.PULLEY	5-173, 5-175, 5-177, 5-179, 5-181, 5-183, 5-185, 5-187, 5-189, 5-191, 5-193, 5-195, 5-197, 5-199, 5-201, 5-203
2527341-0000	.JOINT	5-133, 5-135, 5-137, 5-139, 5-141, 5-143, 5-145, 5-147, 5-149, 5-151, 5-153, 5-155, 5-157, 5-159, 5-161, 5-163, 5-165, 5-167, 5-169, 5-171
2527355-0000	.TEMPLATE	9-49
2527359-0000	.GUIDE	5-93, 5-95, 5-97, 5-99, 5-101, 5-103, 5-105, 5-107, 5-109, 5-111, 5-113
2527365-0000	.BELT	5-93, 5-95, 5-97, 5-99, 5-101, 5-103, 5-105, 5-107, 5-109, 5-111, 5-113
2527639-0000	.RUBBER SEAL	2-175, 2-219
2527640-0000	.GLASS PANE	2-175, 2-219
2528044-0300	.PNEUMATIC SYSTEM	2-77
2528056-0000	.RESISTANCE	1-287, 1-289
2528059-0000	.BRACKET	1-287, 1-289
2528068-0000	.CAM	1-69, 1-71
2528070-0000	.LOCKING LEVER	1-69, 1-71
2528076-0300	.STERILE AIR SYSTEM	1-3
2528079-0400	.PNEUMATIC SYSTEM	1-3
2528080-0400	.HOSE INSTALLATION	1-325
2528081-0300	.HOSE HOLDER	1-325
2528082-0000	.PIPE	1-341
2528087-0200	.EMERGENCY STOP	1-59, 1-323
2528088-0000	.HOLDER	1-69, 1-71
2528102-0000	.LOCKING LEVER	1-69, 1-71
2528110-0000	.HOUSING	1-313, 1-315, 1-317
2528133-0000	.WASHER	1-37, 1-39
2528134-0000	.GASKET	1-37, 1-39
2528457-0300	.PNEUMATIC SYSTEM	2-5, 2-7
2529042-0000	.BRACKET	4-99, 4-101, 4-103, 4-105
2529043-0000	.PIPE	4-99, 4-101, 4-103, 4-105
2529073-0000	.PIPE	1-283, 1-285
2529093-0000	.SPACER	5-133, 5-135, 5-137, 5-139, 5-141, 5-143, 5-145, 5-147, 5-149, 5-151, 5-153, 5-155, 5-157, 5-159, 5-161, 5-163, 5-165, 5-167, 5-169, 5-171
2529094-0000	.PULLEY	5-217, 5-219, 5-221, 5-223, 5-225, 5-227, 5-229
2529095-0000	.PLATE	5-133, 5-135, 5-137, 5-139, 5-141, 5-143, 5-145, 5-147, 5-149, 5-151, 5-153, 5-155, 5-157, 5-159, 5-161, 5-163, 5-165, 5-167, 5-169, 5-171
2529096-0000	.FLANGE	5-217, 5-219, 5-221, 5-223, 5-225, 5-227, 5-229
2529097-0000	.FLANGE	5-217, 5-219, 5-221, 5-223, 5-225, 5-227, 5-229
2529100-0000	.SHAFT	5-173, 5-175, 5-177, 5-179, 5-181, 5-183, 5-185, 5-187, 5-189, 5-191, 5-193, 5-195, 5-197, 5-199, 5-201, 5-203
2529101-0000	.SHAFT	5-217, 5-219, 5-221, 5-223, 5-225, 5-227, 5-229
2529102-0000	.PULLEY	5-133, 5-135, 5-137, 5-139, 5-141, 5-143, 5-145, 5-147, 5-149, 5-151, 5-153, 5-155, 5-157, 5-159, 5-161, 5-163, 5-165, 5-167, 5-169, 5-171
2529103-0000	.SHAFT	5-173, 5-175, 5-177, 5-179, 5-181, 5-183, 5-185, 5-187, 5-189, 5-191, 5-193, 5-195, 5-197, 5-199, 5-201, 5-203
2529106-0000	.ROLLER	5-173, 5-175, 5-177, 5-179, 5-181, 5-183, 5-185, 5-187, 5-189, 5-191, 5-193, 5-195, 5-197, 5-199, 5-201, 5-203
2529107-0000	.PLATE	5-217, 5-219, 5-221, 5-223, 5-225, 5-227, 5-229
2529117-0400	.DOOR SAFETY SWITCH	2-47
2529412-0000	.PUMP HOUSING	2-251
2529417-0000	.SHAFT	1-195, 1-197
2529484-0300	.PEROXIDE PIPE	1-277
2529485-0400	.SPRAY SYSTEM	1-277
2529499-0300	.CABLE HARNESS	2-5, 2-7
2529579-0000	.COVER	2-229
2529597-0200	.DOOR	2-157
2529598-0000	.DOOR	2-217
2529599-0000	.RUBBER SEAL	2-217
2529670-0000	.WASHER	2-229
2529760-0600	.COVERING PANEL	1-349
2529791-0400	.PRESSURE JAW	4-37
2529792-0400	.PRESSURE JAW	4-37
2529793-0400	.PRESSURE JAW	4-37
2529794-0400	.SEALING JAW	4-69
2529795-0400	.SEALING JAW	4-69
2529925-0000	.STEP	1-301
2529959-0000	.SHAFT	4-57, 4-59, 4-61, 4-63, 4-65, 4-67, 4-83, 4-85, 4-87, 4-89
2529961-0000	.ARM	4-83, 4-85, 4-87, 4-89

Part No	Description	Page No
2529962-0000	.ARM	4-83, 4-85, 4-87, 4-89
2529963-0000	.LINK ARM	4-83, 4-85, 4-87, 4-89
2529976-0000	.PIN	4-83, 4-85, 4-87, 4-89
2529977-0000	.SPACER	4-83, 4-85, 4-87, 4-89
2529982-0000	.WASHER	4-57, 4-59, 4-61, 4-63, 4-65, 4-67
2529991-0500	.RAILING	1-299
2530080-0300	.DOOR	2-157
2530188-0100	.STEP	1-299
2530290-0000	.RUBBER BUSHING	4-57, 4-59, 4-61, 4-63, 4-65, 4-67
2530303-0000	.PIPE	2-79
2531052-0200	.PRESSURE UNIT	1-277
2531054-0000	.PLUG	1-167
2531055-0000	.PLUG	1-37, 1-39
2531060-0000	.BRACKET	1-155, 1-157, 1-159
2531083-0000	.SLEEVE	1-273
2531245-0000	.HOSE NIPPLE	6-31, 6-33
2531413-0000	.INSERT	4-9, 4-11, 4-13, 4-15, 4-17, 4-19
2531417-0000	.RAIL	2-71
2531423-0000	.NUT	6-31, 6-33
2531484-0000	.CAM	4-27, 4-29, 4-31
2531489-0000	.SLEEVE	4-95, 4-97
2531500-0000	.PIPE	2-255
2531501-0000	.PIPE	2-255
2531750-0000	.SCREW	5-217, 5-219, 5-221, 5-223, 5-225, 5-227, 5-229
2531762-0000	.SUPPORT	5-217, 5-219, 5-221, 5-223, 5-225, 5-227, 5-229
2531763-0000	.SPACER	5-217, 5-219, 5-221, 5-223, 5-225, 5-227, 5-229
2531765-0000	.TUBE	5-133, 5-135, 5-137, 5-139, 5-141, 5-143, 5-145, 5-147, 5-149, 5-151, 5-153, 5-155, 5-157, 5-159, 5-161, 5-163, 5-165, 5-167, 5-169, 5-171
2531768-0000	.PLATE	5-173, 5-175, 5-177, 5-179, 5-181, 5-183, 5-185, 5-187, 5-189, 5-191, 5-193, 5-195, 5-197, 5-199, 5-201, 5-203
2531774-0200	.STATION CHAIN	5-125
2531775-0000	.CARTON STATION	5-127, 5-129, 5-131
2531780-0000	.SHAFT	5-127, 5-129, 5-131
2531781-0000	.SCREW	5-127, 5-129, 5-131
2531784-0000	.COVER	5-173, 5-175, 5-177, 5-179, 5-181, 5-183, 5-185, 5-187, 5-189, 5-191, 5-193, 5-195, 5-197, 5-199, 5-201, 5-203
2531785-0000	.FLANGE	5-173, 5-175, 5-177, 5-179, 5-181, 5-183, 5-185, 5-187, 5-189, 5-191, 5-193, 5-195, 5-197, 5-199, 5-201, 5-203
2531787-0000	.SHAFT	5-133, 5-135, 5-137, 5-139, 5-141, 5-143, 5-145, 5-147, 5-149, 5-151, 5-153, 5-155, 5-157, 5-159, 5-161, 5-163, 5-165, 5-167, 5-169, 5-171
2531788-0000	.SPACER	5-133, 5-135, 5-137, 5-139, 5-141, 5-143, 5-145, 5-147, 5-149, 5-151, 5-153, 5-155, 5-157, 5-159, 5-161, 5-163, 5-165, 5-167, 5-169, 5-171
2531789-0000	.FLANGE	5-133, 5-135, 5-137, 5-139, 5-141, 5-143, 5-145, 5-147, 5-149, 5-151, 5-153, 5-155, 5-157, 5-159, 5-161, 5-163, 5-165, 5-167, 5-169, 5-171
2531791-0000	.SPACER	5-173, 5-175, 5-177, 5-179, 5-181, 5-183, 5-185, 5-187, 5-189, 5-191, 5-193, 5-195, 5-197, 5-199, 5-201, 5-203
2531792-0000	.SHAFT	5-133, 5-135, 5-137, 5-139, 5-141, 5-143, 5-145, 5-147, 5-149, 5-151, 5-153, 5-155, 5-157, 5-159, 5-161, 5-163, 5-165, 5-167, 5-169, 5-171
2531796-0000	.SUPPORT	5-217, 5-219, 5-221, 5-223, 5-225, 5-227, 5-229
2531797-0000	.SCREW	5-217, 5-219, 5-221, 5-223, 5-225, 5-227, 5-229
2532574-0000	.COVER	6-31
2532806-0000	.ATTACHMENT PIPE	6-37
2532890-0000	.PLATE	1-55
2532891-0000	.PLATE	1-55
2532892-0000	.GASKET	1-55
2532893-0000	.GRID ELEMENT	1-55
2532898-0000	.BRACKET	1-155, 1-157, 1-159
2532899-0000	.BRACKET	1-155, 1-157, 1-159
2532909-0500	.COVERING PANEL	1-3
2532911-0000	.ROLLER	1-313, 1-315, 1-317
2532914-0000	.SPACER	1-107, 1-109
2532915-0000	.WASHER	1-31
2532925-0000	.INDUCTOR	1-155, 1-157, 1-159
2532959-0000	.PLATE	1-67
2532960-0000	.KNOB	1-67
2532961-0000	.GASKET	1-67
2532962-0100	.LID	1-59
2532965-0000	.ROLLER	1-107, 1-109
2532979-0000	.SPACER	1-75
2533627-0000	.SUPPORT BLOCK	1-69, 1-71
2533628-0000	.SUPPORT BLOCK	1-69, 1-71
2533662-0000	.HOLDER	3-5, 3-7, 3-9, 3-11, 3-13, 3-15
2533663-0000	.KNOB	3-5, 3-7, 3-9, 3-11, 3-13, 3-15
2533671-0000	.SCREW	1-319
2533672-0000	.SHAFT	1-319
2533673-0000	.ROLLER	1-319, 7-85
2533721-0000	.BRACKET	3-5, 3-7, 3-9, 3-11, 3-13, 3-15
2533723-0000	.HOLDER	3-5, 3-7, 3-9, 3-11, 3-13, 3-15
2533766-0400	.COVERING PANEL	1-3
2534811-0000	.PIPE	2-45
2534812-0000	.PIPE	2-45
2534815-0000	.PIPE	2-45
2534816-0000	.PIPE	2-45
2534817-0000	.PIPE	2-45

Part No	Description	Page No
2534819-0000	.BRACKET	2-45
2535665-0000	.PIPE	4-99, 4-101, 4-103, 4-105
2535932-0000	.CAM	7-33
2536040-0300	.FRAME	5-3, 5-5, 5-7
2536055-0000	.BRACKET	2-45
2536056-0000	.CONNECTION	2-63
2537120-0000	.BRACKET	2-39, 2-41
2537839-0000	.CHECKER PLATE	2-121
2537840-0000	.CHECKER PLATE	2-121
2537841-0000	.CHECKER PLATE	2-121
2537844-0000	.RAILING	2-121
2537854-0300	.CENTRAL MODULE	2-3
2537855-0300	.MACHINE BODY	2-37
2537856-0200	.CLEANING SYSTEM	2-37
2537857-0300	.ELECTRIC EQUIPMENT	2-37
2537858-0200	.DRAINING	2-37
2539440-0400	.ASEPTIC CHAMBER	1-3
2539445-0400	.PENDULUM ROLLER	1-5
2539448-0400	.DRAINING	1-251
2539452-0400	.FLOW SWITCH	1-251
2539455-0200	.VALVE	1-5
2539456-0000	.CENTERING DISC	9-47
2539458-0200	.SPRAY TANK	1-203
2539503-0200	.CABLE DUCT	2-3
2539505-0000	.LID	2-225
2539548-0200	.IRRADIATION KIT	1-53
2540595-0009	.COAXIAL CABLE	7-37
2540716-0200	.SIGNAL LAMP	2-121
2540767-0000	.PIPE	2-123, 2-137
2540817-0000	.CHUTE	2-229
2540818-0000	.BRACKET	2-229
2540819-0000	.BRACKET	2-229
2540820-0000	.CHUTE	2-229
2540821-0000	.CONVEYOR CHAIN	2-229
2540961-0300	.UV LAMP	1-3
2541634-0300	.EDGE ROLLER	1-129, 1-131
2541655-0000	.FILM	1-55
2541658-0000	.SCREW	1-73
2541661-0000	.LID	1-33
2541680-0300	.HYDROGEN PEROXIDE	1-3
2541686-0200	.COVER	2-157
2541688-0000	.RUBBER SEAL	2-165
2541689-0300	.DOOR	2-157
2541691-0000	.GLASS PANE	2-159, 2-161, 2-163, 2-185
2541692-0000	.RUBBER SEAL	2-159
2541693-0300	.DOOR	2-157
2541695-0000	.RUBBER SEAL	2-161
2541696-0300	.DOOR	2-157
2541697-0000	.LOCKING ARM	2-163
2541698-0000	.LOCKING ARM	2-161
2541699-0300	.DOOR	2-157
2541700-0000	.RUBBER SEAL	2-185
2541701-0000	.RUBBER SEAL	2-185
2541703-0300	.DOOR	2-157
2541819-0000	.PULLEY	5-173, 5-175, 5-177, 5-179, 5-181, 5-183, 5-185, 5-187, 5-189, 5-191, 5-193, 5-195, 5-197, 5-199, 5-201, 5-203
2541821-0000	.PULLEY	5-133, 5-135, 5-137, 5-139, 5-141, 5-143, 5-145, 5-147, 5-149, 5-151, 5-153, 5-155, 5-157, 5-159, 5-161, 5-163, 5-165, 5-167, 5-169, 5-171
2541822-0000	.SHAFT	5-133, 5-135, 5-137, 5-139, 5-141, 5-143, 5-145, 5-147, 5-149, 5-151, 5-153, 5-155, 5-157, 5-159, 5-161, 5-163, 5-165, 5-167, 5-169, 5-171
2541825-0000	.SHAFT	5-217, 5-219, 5-221, 5-223, 5-225, 5-227, 5-229
2541826-0000	.SHAFT	5-217, 5-219, 5-221, 5-223, 5-225, 5-227, 5-229
2541827-0000	.PULLEY	5-217, 5-219, 5-221, 5-223, 5-225, 5-227, 5-229
2541828-0000	.WASHER	5-133, 5-135, 5-137, 5-139, 5-141, 5-143, 5-145, 5-147, 5-149, 5-151, 5-153, 5-155, 5-157, 5-159, 5-161, 5-163, 5-165, 5-167, 5-169, 5-171
2541852-0000	.TUBE	5-133, 5-135, 5-137, 5-139, 5-141, 5-143, 5-145, 5-147, 5-149, 5-151, 5-153, 5-155, 5-157, 5-159, 5-161, 5-163, 5-165, 5-167, 5-169, 5-171
2541861-0000	.PLATE	5-173, 5-175, 5-177, 5-179, 5-181, 5-183, 5-185, 5-187, 5-189, 5-191, 5-193, 5-195, 5-197, 5-199, 5-201, 5-203
2541983-0000	.PIPE	4-99, 4-101, 4-103, 4-105
2542325-0200	.WASTE CONVEYOR	2-3
2543325-0000	.RUBBER SEAL	2-161
2543326-0000	.RUBBER SEAL	2-163
2543327-0000	.PROFILE	2-161, 2-185
2543589-0400	.PIPE WORK-WATER	2-145
2543590-0300	.PIPE WORK-WATER	2-3
2543591-0300	.COOLING PIPE	2-145
2544199-0400	.STEAM PIPE	1-241
2544245-0300	.PIPE WORK	2-145
2544312-0000	.FLOAT	2-259, 2-261
2544313-0000	.PIPE	2-259, 2-261
2544314-0000	.PIPE	2-259, 2-261, 2-269
2544318-0000	.PIPE	2-259, 2-261
2544321-0000	.COVER	2-259, 2-261

Part No	Description	Page No
2544324-0000	.PIPE	2-259, 2-261
2544325-0000	.GASKET	2-259, 2-261
2544326-0300	.INTEGRATED CLEANING UNIT	2-257
2544330-0000	.PLUG	2-259, 2-261
2544332-0000	.PROTECTION	2-221
2544333-0200	.DOOR	2-157
2544850-0300	.FORMING SECTION	1-3
2544865-0000	.BUSHING	1-69, 1-71
2544866-0000	.WASHER	1-69, 1-71
2544873-0300	.CONNECTION PIPE	9-3
2544897-0000	.BRACKET	1-155, 1-157, 1-159
2544898-0000	.SHAFT	1-155, 1-157, 1-159
2544913-0000	.PIPE	4-99, 4-101, 4-103, 4-105
2544915-0000	.PIPE	4-99, 4-101, 4-103, 4-105
2544916-0000	.PIPE	4-99, 4-101, 4-103, 4-105
2544918-0000	.PIPE	4-99, 4-101, 4-103, 4-105
2544926-0000	.PIPE	4-99, 4-101, 4-103, 4-105
2545262-0000	.PIPE	4-99, 4-101, 4-103, 4-105
2545639-0500	.COVERING PANEL	1-349
2545651-0600	.STEAM SYSTEM	1-193
2545658-0000	.PLATE	1-305, 1-307
2545668-0200	.GREASE LUBRICATION SYST	5-3, 5-5, 5-7
2545669-0000	.PIPE	5-237, 5-239
2545670-0000	.PIPE	5-237, 5-239
2545672-0000	.PIPE	5-237, 5-239
2546232-0300	.CABLE HARNESS	2-47
2546319-0000	.HOLDER	2-29, 2-31
2547061-0000	.HOLDER	6-81
2547376-0200	.KNOB	1-155, 1-157, 1-159
2547377-0000	.WASHER	1-155, 1-157, 1-159
2547386-0000	.SHAFT	1-69, 1-71
2547388-0000	.AXLE PIN	1-155, 1-157, 1-159
2547391-0100	.NOZZLE	1-277
2547401-0000	.SUPPORT PLATE	1-73
2547402-0000	.BRACKET	1-73
2547403-0000	.WHEEL	1-73
2547404-0000	.BRACKET	1-155, 1-157, 1-159
2547405-0000	.BRACKET	1-155, 1-157, 1-159
2547410-0200	.PRODUCT VALVE	1-215
2547419-0000	.SHIM	1-73
2547420-0350	.EDGE ROLLER	1-129, 1-131
2547425-0000	.BRACKET	1-313, 1-315, 1-317
2547568-0000	.PLATE	1-313, 1-315, 1-317
2549241-0000	.PIPE	5-237, 5-239
2549242-0000	.PIPE	5-237, 5-239
2549244-0000	.PIPE	5-237, 5-239
2550138-0200	.PLATFORM	2-113, 2-115, 2-117, 2-119
2550139-0200	.PLATFORM	2-3
2550141-0000	.CHECKER PLATE	2-125, 2-127
2550142-0000	.PLATFORM	2-125, 2-127
2550143-0000	.PLATFORM	2-125, 2-127
2550145-0000	.RAILING	2-125, 2-127
2550146-0000	.RAILING	2-125, 2-127
2550147-0000	.RAILING	2-125, 2-127
2550189-0000	.RAILING	2-125, 2-127
2550191-0000	.TOE PLATE	2-125, 2-127
2550192-0000	.TOE PLATE	2-125, 2-127
2550193-0000	.TOE PLATE	2-125, 2-127
2550890-0100	.VALVE	1-5
2550895-0200	.CHANGE-OVER VALVE	1-175
2551951-0000	.RAILING	2-125, 2-127
2552113-0300	.FLOW METER	6-29
2552121-0000	.BRACKET	1-73
2552125-0200	.BENDING ROLLER	1-299
2552140-0000	.BRACKET	1-133, 1-137
2552141-0000	.BRACKET	1-133, 1-137
2552144-0000	.ROLLER	1-137
2552187-0000	.ROLLER	1-125, 1-127
2552188-0000	.ROLLER	1-125, 1-127
2552201-0000	.LOCKING DEVICE	1-229, 1-231
2552205-0000	.ROLLER	1-125, 1-127
2552206-0000	.ROLLER	1-125, 1-127
2552215-0700	.STEAM TRAP	1-241
2553032-0000	.TEMPLATE	9-49
2553045-0000	.BELT	5-217, 5-219, 5-221, 5-223, 5-225, 5-227, 5-229, 9-23
2553047-0000	.FRAME	5-133, 5-135, 5-137, 5-139, 5-141, 5-143, 5-145, 5-147, 5-149, 5-151, 5-153, 5-155, 5-157, 5-159, 5-161, 5-163, 5-165, 5-167, 5-169, 5-171
2553049-0000	.PLATE	5-217, 5-219, 5-221, 5-223, 5-225, 5-227, 5-229
2553050-0000	.SLIDER	5-217, 5-219, 5-221, 5-223, 5-225, 5-227, 5-229
2553058-0000	.SHAFT	5-217, 5-219, 5-221, 5-223, 5-225, 5-227, 5-229
2553118-0000	.TOE PLATE	2-125, 2-127
2553119-0000	.RAILING	2-125, 2-127
2553124-0000	.PIN	2-125, 2-127
2553167-0000	.LID	1-209

Part No	Description	Page No
2555438-0300	.HOSE INSTALLATION	2-21
2555616-0000	.ROLLER	1-155, 1-157, 1-159
2555617-0000	.PIN	1-155, 1-157, 1-159
2555618-0000	.SHAFT	1-155, 1-157, 1-159
2555625-0000	.ROLL	1-155, 1-157, 1-159
2555627-0350	.PRESSURE ROLLER	1-85
2555630-0000	.LAMP	1-55
2556362-0400	.HAND CRANK	4-3
2556538-0200	.DRAIN PIPE	2-37
2556606-0000	.INSERT	4-9, 4-11, 4-13, 4-15, 4-17, 4-19
2556665-0300	.CABLE HARNESS	2-95
2558878-0000	.SIGN	7-51
2558890-0000	.JOINT	5-133, 5-135, 5-137, 5-139, 5-141, 5-143, 5-145, 5-147, 5-149, 5-151, 5-153, 5-155, 5-157, 5-159, 5-161, 5-163, 5-165, 5-167, 5-169, 5-171
2558891-0000	.TUBE	5-133, 5-135, 5-137, 5-139, 5-141, 5-143, 5-145, 5-147, 5-149, 5-151, 5-153, 5-155, 5-157, 5-159, 5-161, 5-163, 5-165, 5-167, 5-169, 5-171
2558899-0000	.PULLEY	5-133, 5-135, 5-137, 5-139, 5-141, 5-143, 5-145, 5-147, 5-149, 5-151, 5-153, 5-155, 5-157, 5-159, 5-161, 5-163, 5-165, 5-167, 5-169, 5-171
2558900-0000	.PULLEY	5-173, 5-175, 5-177, 5-179, 5-181, 5-183, 5-185, 5-187, 5-189, 5-191, 5-193, 5-195, 5-197, 5-199, 5-201, 5-203
2559017-0000	.CAM	4-9, 4-11, 4-13, 4-15, 4-17, 4-19
2559018-0000	.CAM	4-9, 4-11, 4-13, 4-15, 4-17, 4-19
2559025-0000	.CAM	4-9, 4-11, 4-13, 4-15, 4-17, 4-19
2559026-0000	.CAM	4-23, 4-25
2559027-0000	.CAM	4-33, 4-35
2559031-0000	.SHAFT	4-57, 4-59, 4-61, 4-63, 4-65, 4-67
2559032-0000	.ECCENTRIC SHAFT	4-27, 4-29, 4-31
2559035-0000	.CAM	4-27, 4-29, 4-31
2559041-0000	.BRACKET	11-65
2559045-0003	.ELECTRODE	1-293
2559045-0004	.ELECTRODE	1-293
2559051-0000	.INSERT	1-233
2559066-0000	.STUD SCREW	1-75
2559095-0000	.BRACKET	1-215
2559112-0100	.CALIBRATION EQUIPMENT	12-5
2559461-0000	.SPACER	2-259, 2-261
2559976-0000	.BRACKET	2-259, 2-261
2559977-0000	.HOSE	2-259, 2-261
2559978-0000	.PIPE	2-259, 2-261
2560021-0200	.TOOLS AND TEMPLATES	12-3
2560022-0200	.ACCESSORIES	12-3
2561147-0000	.BRACKET	11-121
2561148-0000	.MOTOR SHELF	11-121
2561149-0000	.SIDE PLATE	11-121
2561151-0000	.SPACER	11-121
2561152-0000	.BRACKET	11-121
2561153-0000	.COVER	11-121
2561156-0100	.RAILING	11-21
2561169-0300	.END UNIT	11-33
2561170-0101	.DRIVE UNIT	11-21
2561176-0000	.SLIDE RAIL	11-23
2561177-0000	.SLIDE RAIL	11-23
2561193-0000	.END SECTION	11-23
2561194-0000	.END SECTION	11-23
2561195-0000	.BRACKET	11-23
2561206-0000	.SPACER	5-41, 5-55, 5-57, 5-69, 5-77, 5-79, 11-41, 11-85, 11-87, 11-89, 11-107, 11-109, 11-115, 11-135, 11-177, 11-189, 11-195, 11-197, 11-223
2561208-0000	.TOOL	11-207
2561225-0200	.GUIDE SPROCKET	11-111
2561226-0000	.SPACER	11-111
2561227-0001	.SHAFT	11-111
2561227-0002	.SHAFT	11-111
2561230-0001	.SPACER	11-21, 11-111
2561231-0000	.BRACKET	11-111
2561232-0000	.COVER	5-41, 11-177
2561242-0000	.RAILING	11-29
2561244-0200	.DRIVE WHEEL	5-55, 5-57, 11-35, 11-107, 11-109
2561246-0000	.SIDE PLATE	11-41
2561257-0000	.SPACER	5-41, 11-177
2561267-0000	.SHAFT	5-59, 5-61, 11-37, 11-39
2561274-0100	.RAILING	5-63, 11-183, 11-203
2561274-0102	.RAILING	5-63, 11-183
2561274-0103	.RAILING	5-63, 11-183
2561317-0000	.MOUNTING BLOCK	11-23
2561318-0000	.SPACER	11-23
2561319-0001	.PROTECTION PLATE	11-23
2561319-0002	.PROTECTION PLATE	11-3, 11-5, 11-7
2561320-0100	.GLIDE CURVE	11-33
2561321-0000	.SIDE PLATE	11-41
2561394-0000	.RAIL HOLDER	5-21
2561566-0000	.SPACER	11-35, 11-107
2561596-0000	.RAIL HOLDER KIT	5-51, 11-165
2561602-0100	.RAIL HOLDER KIT	5-43, 5-45, 5-47, 5-49, 11-159, 11-171
2561603-0000	.SPACER	5-41, 11-177

Part No	Description	Page No
2561609-0000	.BRACKET	11-135
2561613-0000	.SPACER	11-137
2561620-0000	.COVER	11-143
2561622-0000	.COVER	11-143
2561625-0000	.PLATE	11-143
2562307-0000	.PIPE	1-205
2562315-0000	.PLUG	1-205
2562468-0000	.BRACKET	11-65
2562664-0000	.ROLLER	1-137
2562677-0000	.WASHER	1-69, 1-71
2563759-0000	.SPRAY SYSTEM	1-291
2563760-0000	.EXTENSION	1-291
2563761-0000	.NUT	1-291
2563762-0000	.SPACER	1-291
2564069-0100	.COUNTER ROLLER	7-119, 7-121, 7-123
2564070-0000	.PIN	7-147
2564107-0000	.LID	1-283, 1-285
2564342-0000	.SPACER	2-251
2564545-0000	.PLATE	2-139, 2-141
2564546-0100	.LANDING	2-113, 2-115, 2-117, 2-119
2564561-0000	.PIPE	2-251
2564567-0000	.TOE PLATE	2-121
2564568-0000	.TOE PLATE	2-121
2564589-0000	.EXTENSION PIPE	4-99, 4-101, 4-103, 4-105
2564898-0000	.BRACKET	4-99, 4-101, 4-103, 4-105
2564953-0000	.GRUB SCREW	5-127, 5-129, 5-131
2564978-0000	.PIPE	2-251
2565291-0000	.BRACKET	4-99, 4-101, 4-103, 4-105
2565467-0000	.FLANGE	1-175
2565497-0000	.PLATE	1-69, 1-71
2565549-0000	.PIPE	4-99, 4-101, 4-103, 4-105
2565551-0000	.PIPE	4-99, 4-101, 4-103, 4-105
2565552-0000	.PIPE	4-99, 4-101, 4-103, 4-105
2566204-0400	.SUPPORT	2-67
2566209-0000	.PLATE	2-259, 2-261
2566210-0000	.PLATE	2-259, 2-261
2566211-0000	.LABEL	2-259, 2-261, 2-267, 2-271
2566212-0000	.LABEL	2-259, 2-261, 2-267, 2-271
2566258-0000	.TOE PLATE	2-125, 2-127
2569807-0000	.PIPE CONNECTION	1-261
2569972-0000	.CABLE PROTECTION	4-9, 4-11, 4-13, 4-15, 4-17, 4-19
2570369-0000	.PIPE	2-63
2570378-0000	.GASKET	2-63
2570526-0000	.SHAFT	4-57, 4-59, 4-61, 4-63, 4-65, 4-67, 4-83, 4-85, 4-87, 4-89
2570527-0000	.ROLLER	4-57, 4-59, 4-61, 4-63, 4-65, 4-67, 4-83, 4-85, 4-87, 4-89
2570528-0000	.GRUB SCREW	4-57, 4-59, 4-61, 4-63, 4-65, 4-67, 4-83, 4-85, 4-87, 4-89
2570750-0000	.PIPE	5-237, 5-239
2570753-0000	.PIPE	5-237, 5-239
2570754-0000	.PIPE	5-237, 5-239
2570755-0000	.PIPE	5-237, 5-239
2572071-0000	.HOOD	1-195, 1-197
2572196-0000	.DAMPER	4-57, 4-59, 4-61, 4-63, 4-65, 4-67, 4-83, 4-85, 4-87, 4-89
2572197-0000	.SPACER	4-57, 4-59, 4-61, 4-63, 4-65, 4-67, 4-83, 4-85, 4-87, 4-89
2574072-0000	.BRACKET	4-99, 4-101, 4-103, 4-105
2574383-0200	.ELECTRIC EQUIPMENT	2-67
2574421-0000	.PIPE	2-245
2574505-0000	.SPRING HOLDER	4-9, 4-11, 4-13, 4-15, 4-17, 4-19
2574506-0000	.SHAFT	4-23, 4-25
2574513-0000	.PIPE	4-99, 4-101, 4-103, 4-105
2574514-0000	.DAMPER	4-57, 4-59, 4-61, 4-63, 4-65, 4-67, 4-83, 4-85, 4-87, 4-89
2574517-0000	.HOLDER	3-5, 3-7, 3-9, 3-11, 3-13, 3-15
2574519-0000	.HOLDER	3-5, 3-7, 3-9, 3-11, 3-13, 3-15
2574520-0000	.SHAFT	3-5, 3-7, 3-9, 3-11, 3-13, 3-15
2574521-0000	.BRACKET	3-5, 3-7, 3-9, 3-11, 3-13, 3-15
2575105-0000	.BRACKET	4-99, 4-101, 4-103, 4-105
2575419-0000	.BRACKET	4-99, 4-101, 4-103, 4-105
2575521-0000	.PIPE	4-99, 4-101, 4-103, 4-105
2575522-0000	.PIPE	4-99, 4-101, 4-103, 4-105
2575629-0000	.PIPE	4-99, 4-101, 4-103, 4-105
2578482-0000	.BRACKET	4-99, 4-101, 4-103, 4-105
2578483-0000	.BRACKET	4-99, 4-101, 4-103, 4-105
2578486-0000	.BRACKET	1-293
2578772-0000	.PIPE	4-99, 4-101, 4-103, 4-105
2578773-0000	.PIPE	4-99, 4-101, 4-103, 4-105
2578782-0000	.PIPE	4-99, 4-101, 4-103, 4-105
2579099-0000	.SUPPORT	5-173, 5-175, 5-177, 5-179, 5-181, 5-183, 5-185, 5-187, 5-189, 5-191, 5-193, 5-195, 5-197, 5-199, 5-201, 5-203
2579103-0000	.PLATE	5-173, 5-175, 5-177, 5-179, 5-181, 5-183, 5-185, 5-187, 5-189, 5-191, 5-193, 5-195, 5-197, 5-199, 5-201, 5-203
2579104-0000	.PLATE	5-173, 5-175, 5-177, 5-179, 5-181, 5-183, 5-185, 5-187, 5-189, 5-191, 5-193, 5-195, 5-197, 5-199, 5-201, 5-203
2579689-0000	.BRACKET	4-99, 4-101, 4-103, 4-105
2579829-0000	.PIPE	4-99, 4-101, 4-103, 4-105
2579838-0000	.TOUCH GUARD	7-55

Part No	Description	Page No
2579908-0000	.PIPE	4-99, 4-101, 4-103, 4-105
2579910-0000	.PIPE	4-99, 4-101, 4-103, 4-105
2579921-0000	.PIPE	4-99, 4-101, 4-103, 4-105
2579985-0000	.PIPE	4-99, 4-101, 4-103, 4-105
2580000-0000	.BRACKET	4-99, 4-101, 4-103, 4-105
2580001-0000	.BRACKET	4-99, 4-101, 4-103, 4-105
2580102-0000	.BRACKET	4-99, 4-101, 4-103, 4-105
2580103-0000	.PIPE	4-99, 4-101, 4-103, 4-105
2580104-0000	.BRACKET	4-99, 4-101, 4-103, 4-105
2581995-0000	.PIPE	4-99, 4-101, 4-103, 4-105
2582019-0000	.SHAFT COUPLING	4-33, 4-35
2582590-0000	.PIPE	1-243
2588014-0000	.SHAFT	4-39, 4-41, 4-43, 4-45, 4-47, 4-49, 4-51, 4-53, 4-55
2588015-0000	.SLEEVE	4-39, 4-41, 4-43, 4-45, 4-47, 4-49, 4-51, 4-53, 4-55
2589832-0000	.COVER	11-23
2589833-0000	.COVER	11-23
2589838-0300	.COVER	11-127, 11-129
2589843-0101	.BELT BRAKE TPC21 SH (DOMINO)	11-3, 11-5, 11-7
2589845-0101	.CHAIN TENSIONER TPC21 SH	11-3, 11-5, 11-7
2589855-0100	.STRAIGHT CONVEYOR	5-9, 5-27, 5-29, 5-31
2589856-0101	.STRAIGHT CONVEYOR TPC21 L500 SH	11-51, 11-53
2589857-0101	.STRAIGHT CONVEYOR TPC21 L1000 SH	11-51, 11-53
2589940-0307	.TRANSFER UNIT	11-3, 11-5, 11-7
2589951-0200	.PACKING DESCRIPTION	11-205
2589952-0000	.LABEL	11-207
2589953-0000	.INSTRUCTION	11-207
2589955-0000	.CORRUGATED CARDBOARD BOX	11-207
2589960-2120	.SLIDING STRIP	5-55, 5-57
2589960-3220	.SLIDING STRIP	5-55, 5-57
2589960-4630	.SLIDING STRIP	11-33
2589960-4700	.SLIDING STRIP	11-33
2589960-5102	.SLIDING STRIP	5-55, 5-57
2589960-8080	.SLIDING STRIP	11-33
2589978-0100	.HOLDER	5-17, 5-25
2590040-0100	.RAILING KIT	11-127, 11-129
2590044-0000	.PLATE	11-135
2590045-0000	.PLATE	11-135
2590046-0000	.PLATE	11-135
2590047-0000	.BRACKET	11-135
2590048-0100	.OPERATION DEVICE	11-127, 11-129
2590049-0000	.PLATE	11-145
2590050-0300	.BELT BRAKE	11-3, 11-5, 11-7
2590051-0000	.PIPE	11-131, 11-133
2590053-0000	.CONNECTION BOX	11-149
2590054-0100	.CONNECTION BOX	11-127, 11-129
2590090-0000	.SPACER	11-41
2590155-0000	.HUB	11-121
2590181-0000	.RIVET	11-207
2590220-0300	.MOTOR UNIT	11-81
2590221-0100	.PACKING DESCRIPTION	5-63, 11-183, 11-203
2590222-0000	.SPACER	5-65, 5-67, 11-185, 11-187
2590226-0000	.CORRUGATED CARDBOARD BOX	5-65, 5-67, 11-185, 11-187
2590229-0000	.CORRUGATED CARDBOARD BOX	11-169, 11-175
2590231-0100	.PACKING DESCRIPTION	11-81
2590232-0000	.CORRUGATED CARDBOARD BOX	11-125
2590233-0000	.FILLING	11-125
2590234-0000	.FILLING	11-125
2590235-0000	.SUPPORT BLOCK	11-125
2590237-0100	.PACKING DESCRIPTION	11-153, 11-155, 11-157
2590241-0100	.PACKING DESCRIPTION	11-81
2590242-0000	.CORRUGATED CARDBOARD BOX	11-83
2590245-0004	.SUPPORT BLOCK	11-169
2590248-0002	.SUPPORT BLOCK	11-43
2590251-0100	.PACKING DESCRIPTION	11-21
2590252-0000	.CORRUGATED CARDBOARD BOX	11-43
2590258-0100	.PACKING DESCRIPTION	11-127, 11-129
2590259-0000	.CORRUGATED CARDBOARD BOX	11-147
2590260-0000	.CORRUGATED CARDBOARD BOX	11-147
2590261-0000	.FILLING	11-147
2590266-0000	.PIN	11-137
2590275-0000	.COVER	11-135
2590294-0000	.BRACKET FOR CABLE DUCT PC23 75MM	11-179, 11-181
2591782-0000	.SPRING	1-319
2592780-0000	.DOLLY	7-81, 9-21
2593851-0300	.EMERGENCY STOP	2-205
2594125-0000	.SLEEVE	1-319
2594126-0000	.GUIDE ROLLER	1-319
2594415-0000	.CONNECTION BOX	2-71
2594878-0000	.BRACKET	11-61
2594879-0000	.PIPE	2-63
2594880-0000	.PIPE	2-63
2594979-0000	.INSERT	4-9, 4-11, 4-13, 4-15, 4-17, 4-19
2595005-0000	.INSERT	4-3
2595689-0000	.WASHER	4-27, 4-29, 4-31

Part No	Description	Page No
2595690-0000	.WASHER	4-27, 4-29, 4-31
2595691-0000	.PULLEY	4-27, 4-29, 4-31
2598025-0000	.SIGN	2-29, 2-31
2598084-0000	.PLATE	1-205
2598085-0000	.SPACER	1-205
2598203-0300	.PUMP UNIT	2-37
2598689-0000	.HOSE	2-241
2599941-0000	.SPACER	2-125, 2-127, 7-5, 7-7
2601333-0000	.ROLLER	1-107, 1-109
2601334-0000	.ROLLER	1-107, 1-109
2601483-0100	.PAPER GUIDE	1-313, 1-315, 1-317
2603525-0000	.PULLEY	5-217, 5-219, 5-221, 5-223, 5-225, 5-227, 5-229
2603530-0000	.SLIDER	5-217, 5-219, 5-221, 5-223, 5-225, 5-227, 5-229
2603633-0000	.CAM	4-33, 4-35
2603658-0300	.TUNNEL	2-187, 2-189, 2-191
2604069-0000	.BRACKET	6-7
2605199-0200	.PUMP UNIT	2-67
2605704-0000	.PLATE	4-5, 4-7
2605710-0000	.DISC	4-5, 4-7
2605877-0000	.BENDING ROLLER	2-11
2605879-0000	.CANTILEVER	2-11
2605880-0000	.SHAFT	2-11
2608103-0000	.BRACKET	2-259, 2-261
2608104-0000	.BRACKET	2-259, 2-261
2608177-0000	.SIGN	8-15, 8-17, 8-81, 8-83, 8-85, 8-87, 8-89, 8-91, 8-93, 8-95, 8-101, 8-107, 8-113
2608195-0000	.BRACKET	4-99, 4-101, 4-103, 4-105
2611009-0000	.SHAFT	1-13
2611012-0000	.ROLLER	1-107, 1-109
2611040-0000	.ROLLER	1-139, 1-141
2611052-0000	.BRACKET	1-99
2611106-0000	.HOUSING	1-235, 1-237
2611108-0000	.CAM	1-235, 1-237
2611110-0000	.WASHER	1-235, 1-237
2611113-0000	.SPINDLE	1-235, 1-237
2611128-0000	.LINK	4-39, 4-41, 4-43, 4-45, 4-47, 4-49, 4-51, 4-53, 4-55, 4-71, 4-73, 4-75, 4-77, 4-79, 4-81
2611398-0000	.LINK	4-39, 4-41, 4-43, 4-45, 4-47, 4-49, 4-51, 4-53, 4-55, 4-71, 4-73, 4-75, 4-77, 4-79, 4-81
2611417-0000	.LINK	4-39, 4-41, 4-43, 4-45, 4-47, 4-49, 4-51, 4-53, 4-55, 4-71, 4-73, 4-75, 4-77, 4-79, 4-81
2611446-0000	.VOLUME FLAP	4-39, 4-41, 4-43, 4-45, 4-47, 4-49, 4-51, 4-53, 4-55, 4-71, 4-73, 4-75, 4-77, 4-79, 4-81
2611447-0000	.VOLUME FLAP	4-39, 4-41, 4-43, 4-45, 4-47, 4-49, 4-51, 4-53, 4-55, 4-71, 4-73, 4-75, 4-77, 4-79, 4-81
2611448-0000	.VOLUME FLAP	4-39, 4-41, 4-43, 4-45, 4-47, 4-49, 4-51, 4-53, 4-55, 4-71, 4-73, 4-75, 4-77, 4-79, 4-81
2611449-0000	.VOLUME FLAP	4-39, 4-41, 4-43, 4-45, 4-47, 4-49, 4-51, 4-53, 4-55, 4-71, 4-73, 4-75, 4-77, 4-79, 4-81
2611450-0000	.VOLUME FLAP	4-39, 4-41, 4-43, 4-45, 4-47, 4-49, 4-51, 4-53, 4-55, 4-71, 4-73, 4-75, 4-77, 4-79, 4-81
2611454-0300	.REGULATING VALVE	1-229, 1-231
2613034-0200	.MACHINE BODY	6-3
2613975-0000	.SPRING CUSHION	1-235, 1-237
2616157-0000	.BRACKET	5-93, 5-95, 5-97, 5-99, 5-101, 5-103, 5-105, 5-107, 5-109, 5-111, 5-113
2616167-0000	.COOLING PLATE	4-91, 4-93
2616168-0000	.COOLING PLATE	4-91, 4-93
2616169-0000	.BUSBAR	4-91, 4-93
2616172-0000	.CORE	4-91, 4-93
2616173-0000	.BRACKET	4-91, 4-93
2616298-0000	.BRACKET	1-247
2619039-0000	.GLASS PANE	7-165, 7-167, 7-169, 7-171
2623715-0000	.HOLDER	6-7
2623717-0000	.HOLDER	6-7
2623721-0300	.PEROXIDE REDUCER	2-237
2629310-0000	.ARM	4-71, 4-73, 4-75, 4-77, 4-79, 4-81
2629311-0000	.ARM	4-71, 4-73, 4-75, 4-77, 4-79, 4-81
2629312-0000	.ARM	4-71, 4-73, 4-75, 4-77, 4-79, 4-81
2629313-0000	.SHAFT	4-71, 4-73, 4-75, 4-77, 4-79, 4-81
2632642-0400	.NOZZLE UNIT	1-229, 1-231
2632808-0000	.CAM	4-27, 4-29, 4-31
2632809-0000	.ECCENTRIC SHAFT	4-27, 4-29, 4-31
2633447-0000	.BUSHING	4-5, 4-7
2633465-0000	.LINK	4-39, 4-41, 4-43, 4-45, 4-47, 4-49, 4-51, 4-53, 4-55, 4-71, 4-73, 4-75, 4-77, 4-79, 4-81
2634555-0000	.SHAFT	5-217, 5-219, 5-221, 5-223, 5-225, 5-227, 5-229
2634558-0000	.STATION CHAIN	5-127, 5-129, 5-131
2634917-0000	.SIGN	1-331, 1-333
2634943-0000	.ROLLER	1-139, 1-141
2634968-0000	.ROLLER	1-125, 1-127
2634969-0000	.ROLLER	1-125, 1-127
2634970-0000	.ROLLER	1-125, 1-127
2634972-0000	.SHAFT	1-195, 1-197
2634987-0000	.SPACER	1-107, 1-109
2634988-0000	.ROLLER	1-107, 1-109
2634989-0000	.ROLLER	1-107, 1-109
2634990-0000	.ROLLER	1-107, 1-109
2635558-0000	.RAIL	11-63
2638077-0000	.SHAFT	1-195, 1-197
2639006-0200	.GREASE LUBRICATION SYST	4-3
2639007-0000	.BRACKET	4-99, 4-101, 4-103, 4-105
2639009-0000	.PIPE	4-99, 4-101, 4-103, 4-105
2640353-0000	.BRACKET	1-139, 1-141
2640354-0000	.ROLLER	1-139, 1-141

Part No	Description	Page No
2640362-0000	.TOOL	9-33
2640822-0000	.SIGN	1-331, 1-333
2640993-0000	.PLATE	1-155, 1-157, 1-159
2641241-0000	.PIN	4-5, 4-7
2641243-0000	.FLANGE	4-5, 4-7
2641285-0000	.ROLLER	1-107, 1-109
2641287-0000	.ROLLER	1-107, 1-109
2641288-0000	.ROLLER	1-107, 1-109
2641289-0000	.ROLLER	1-107, 1-109
2641290-0000	.ROLLER	1-107, 1-109
2641296-0000	.PIPE	1-175
2641298-0000	.PIPE	1-173
2641926-0000	.SPROCKET	5-133, 5-135, 5-137, 5-139, 5-141, 5-143, 5-145, 5-147, 5-149, 5-151, 5-153, 5-155, 5-157, 5-159, 5-161, 5-163, 5-165, 5-167, 5-169, 5-171
2642679-0000	.BRACKET	4-99, 4-101, 4-103, 4-105
2644108-0000	.WHEEL	4-5, 4-7
2644109-0000	.WHEEL	4-5, 4-7
2644110-0000	.WHEEL	4-5, 4-7
2644111-0000	.WHEEL	4-5, 4-7
2651291-0000	.BUSHING	4-83, 4-85, 4-87, 4-89
2651789-0000	.ROLLER	1-133, 1-137
2651790-0000	.ROLLER	1-133, 1-137
2652231-0000	.SLIDER	5-217, 5-219, 5-221, 5-223, 5-225, 5-227, 5-229
2652232-0000	.BELT	5-217, 5-219, 5-221, 5-223, 5-225, 5-227, 5-229, 9-23
2652233-0000	.PLATE	5-217, 5-219, 5-221, 5-223, 5-225, 5-227, 5-229
2652234-0000	.PULLEY	5-217, 5-219, 5-221, 5-223, 5-225, 5-227, 5-229
2652238-0000	.SHAFT	5-217, 5-219, 5-221, 5-223, 5-225, 5-227, 5-229
2653607-0000	.SCREW	1-13
2653662-0000	.PIPE	4-99, 4-101, 4-103, 4-105
2654082-0000	.COMPRESSOR UNIT	6-31
2655456-0000	.CAM	7-119, 7-121, 7-123
2656105-0000	.TOOL	9-33
2656248-0000	.SUPPORT	4-95, 4-97
2656340-0100	.STRAIGHT CONVEYOR	11-211
2656341-0100	.CONVEYOR BODY	11-221
2656342-0100	.RAILING	11-221
2656343-0000	.PIPE	11-225
2656345-0000	.SIDE PLATE	11-223
2656354-0000	.PIPE	11-225
2656356-0000	.PIPE	11-225
2656358-0000	.PIPE	11-225
2656366-0100	.PACKING DESCRIPTION	11-21
2656374-0086	.ROLLER CHAIN	11-127, 11-129
2656425-0000	.PLATE	11-139, 11-141
2656426-0000	.PLATE	11-139, 11-141
2656556-0000	.BRACKET FOR LEG PC23	11-3, 11-5, 11-7, 11-151, 11-201, 11-209
2656655-0000	.WHEEL	5-41, 11-177
2656671-0000	.RIVET	11-205
2656672-0000	.SPROCKET	5-59, 5-61, 11-37, 11-39
2656673-0000	.SPACER	5-59, 5-61, 11-37, 11-39
2656676-0000	.SPROCKET	11-121
2656677-0000	.SPROCKET	11-121
2656678-0000	.COVER	11-111
2656679-0000	.WHEEL	11-111
2656682-0000	.SLIDE PLATE	11-113
2656683-0000	.WHEEL	11-113
2656910-0400	.HEAD SPACE BY INJECTION	1-193
2657860-0000	.BRACKET	1-139, 1-141
2657863-0000	.PIPE CONNECTION	1-209
2657864-0000	.PIPE CONNECTION	1-209
2657865-0000	.PIPE CONNECTION	1-209
2657873-0200	.LONGITUDINAL SEALING	1-83
2658077-0000	.SHAFT	1-13
2659361-0000	.BRACKET	1-99
2659364-0000	.FORK	1-195, 1-197
2659367-0000	.PIPE	1-253, 1-255, 1-257
2659371-0000	.FLOAT	1-195, 1-197
2659374-0000	.PIPE	4-99, 4-101, 4-103, 4-105
2662186-0000	.SUPPORT	5-133, 5-135, 5-137, 5-139, 5-141, 5-143, 5-145, 5-147, 5-149, 5-151, 5-153, 5-155, 5-157, 5-159, 5-161, 5-163, 5-165, 5-167, 5-169, 5-171
2662191-0000	.SUPPORT	5-133, 5-135, 5-137, 5-139, 5-141, 5-143, 5-145, 5-147, 5-149, 5-151, 5-153, 5-155, 5-157, 5-159, 5-161, 5-163, 5-165, 5-167, 5-169, 5-171
2663932-0000	.BUSBAR	4-71, 4-73, 4-75
2663933-0000	.BUSBAR	4-77, 4-79, 4-81
2663934-0000	.BRACKET	4-91, 4-93
2663935-0000	.SPACER	4-91, 4-93
2663936-0000	.WASHER	4-91, 4-93, 9-7
2663940-0000	.CORE	4-91, 4-93
2663948-0000	.SHIM	4-91, 4-93
2665129-0000	.GABLE PLATE	6-61
2665131-0000	.LOCKING ARM	6-63
2665132-0000	.LOCKING ARM	6-63
2665719-0000	.SHAFT	5-217, 5-219, 5-221, 5-223, 5-225, 5-227, 5-229
2666553-0000	.SHAFT	5-217, 5-219, 5-221, 5-223, 5-225, 5-227, 5-229

Part No	Description	Page No
2666554-0000	.SHAFT	5-217, 5-219, 5-221, 5-223, 5-225, 5-227, 5-229
2666555-0000	.SHAFT	5-217, 5-219, 5-221, 5-223, 5-225, 5-227, 5-229
2666920-0000	.SHAFT	5-173, 5-175, 5-177, 5-179, 5-181, 5-183, 5-185, 5-187, 5-189, 5-191, 5-193, 5-195, 5-197, 5-199, 5-201, 5-203
2666921-0000	.PULLEY	5-173, 5-175, 5-177, 5-179, 5-181, 5-183, 5-185, 5-187, 5-189, 5-191, 5-193, 5-195, 5-197, 5-199, 5-201, 5-203
2668088-0000	.SUPPORT	5-133, 5-135, 5-137, 5-139, 5-141, 5-143, 5-145, 5-147, 5-149, 5-151, 5-153, 5-155, 5-157, 5-159, 5-161, 5-163, 5-165, 5-167, 5-169, 5-171
2668094-0000	.PLATE	5-83, 5-85, 5-87, 5-89, 5-91
2671627-0000	.ARM	4-83, 4-85, 4-87, 4-89
2671628-0000	.ARM	4-83, 4-85, 4-87, 4-89
2672972-0000	.BOLT	1-209
2672973-0000	.ELECTRODE	1-209
2672974-0000	.BUSHING	1-209
2672995-0000	.BRACKET	1-195, 1-197
2674188-0350	.EDGE ROLLER	1-129, 1-131
2676409-0000	.PIPE	4-99, 4-101, 4-103, 4-105
2677080-0000	.PIPE	5-237, 5-239
2677083-0000	.PIPE	5-237, 5-239
2677084-0000	.PIPE	5-237, 5-239
2677466-0000	.PIPE	5-237, 5-239
2677528-0000	.PIPE	5-237, 5-239
2678293-0000	.PLATE	4-9, 4-11, 4-13, 4-15, 4-17, 4-19
2678294-0000	.PLATE	4-9, 4-11, 4-13, 4-15, 4-17, 4-19
2678297-0000	.HINGE	2-39, 2-41
2678298-0000	.PIN	2-39, 2-41, 4-9, 4-11, 4-13, 4-15, 4-17, 4-19
2678299-0000	.SHAFT	4-33, 4-35
2678300-0000	.SHAFT	4-27, 4-29, 4-31
2678302-0000	.HINGE	4-9, 4-11, 4-13, 4-15, 4-17, 4-19
2678303-0000	.SHAFT	3-5, 3-7, 3-9, 3-11, 3-13, 3-15
2678304-0000	.BRACKET	3-5, 3-7, 3-9, 3-11, 3-13, 3-15
2678305-0000	.CANTILEVER	3-5, 3-7, 3-9, 3-11, 3-13, 3-15
2678307-0000	.GUIDE	3-5, 3-7, 3-9, 3-11, 3-13, 3-15
2678308-0000	.SHAFT	3-5, 3-7, 3-9, 3-11, 3-13, 3-15
2678309-0000	.PLATE	3-5, 3-7, 3-9, 3-11, 3-13, 3-15
2678311-0000	.PIPE	4-99, 4-101, 4-103, 4-105
2678312-0000	.PIPE	4-99, 4-101, 4-103, 4-105
2679554-0000	.AIR DISTRIBUTOR	1-31
2679555-0000	.AIR DISTRIBUTOR	1-31
2679560-0000	.SHAFT	1-31
2679565-0000	.SHAFT	4-5, 4-7
2679672-0000	.BELT	5-217, 5-219, 5-221, 5-223, 5-225, 5-227, 5-229, 9-23
2679673-0000	.BELT	5-217, 5-219, 5-221, 5-223, 5-225, 5-227, 5-229, 9-23
2679859-0000	.DAMPER	4-57, 4-59, 4-61, 4-63, 4-65, 4-67, 4-83, 4-85, 4-87, 4-89
2680418-0000	.PLATE	2-59
2681388-0000	.LINK	4-39, 4-41, 4-43, 4-45, 4-47, 4-49, 4-51, 4-53, 4-55, 4-71, 4-73, 4-75, 4-77, 4-79, 4-81
2681390-0000	.SUPPORT	4-95, 4-97
2681391-0000	.GEAR WHEEL	4-95, 4-97
2681392-0000	.GEAR WHEEL	4-95, 4-97
2681617-0000	.GEAR WHEEL	3-5, 3-7, 3-9, 3-11, 3-13, 3-15
2682625-0000	.PIPE	5-237, 5-239
2685246-0000	.PIPE	1-181
2685283-0000	.HEAT EXCHANGER	1-185
2685284-0000	.FILTER	1-191
2685290-0000	.FLOAT	1-195, 1-197
2685303-0000	.SHUTTER	1-33
2685314-0000	.COIL	1-205
2685339-0000	.GASKET	1-205
2685340-0000	.COVER	1-205
2685341-0000	.COVER	1-205
2685346-0000	.PIPE	1-205
2685350-0000	.THREADED ROD	1-191
2686512-0000	.SHAFT	4-33, 4-35
2686513-0000	.PIPE	4-99, 4-101, 4-103, 4-105
2686514-0000	.PIPE	4-99, 4-101, 4-103, 4-105
2686515-0000	.PIPE	4-99, 4-101, 4-103, 4-105
2686516-0000	.PLATE	3-17, 3-19, 3-21, 3-23, 3-25
2686517-0000	.PLATE	4-9, 4-11, 4-13, 4-15, 4-17, 4-19
2686518-0000	.PLATE	4-9, 4-11, 4-13, 4-15, 4-17, 4-19
2686519-0000	.CANTILEVER	3-5, 3-7, 3-9, 3-11, 3-13, 3-15
2686520-0000	.PLATE	3-17, 3-19, 3-21, 3-23, 3-25
2686521-0000	.PLATE	4-9, 4-11, 4-13, 4-15, 4-17, 4-19
2686522-0000	.PLATE	4-9, 4-11, 4-13, 4-15, 4-17, 4-19
2686524-0000	.BRACKET	3-5, 3-7, 3-9, 3-11, 3-13, 3-15
2686525-0000	.SHAFT	3-5, 3-7, 3-9, 3-11, 3-13, 3-15
2686527-0000	.BRACKET	3-5, 3-7, 3-9, 3-11, 3-13, 3-15
2686528-0000	.PIPE	4-99, 4-101, 4-103, 4-105
2686529-0000	.PIPE	4-99, 4-101, 4-103, 4-105
2686530-0000	.PIPE	4-99, 4-101, 4-103, 4-105
2686532-0000	.SHAFT	4-33, 4-35
2686535-0000	.SHAFT	3-5, 3-7, 3-9, 3-11, 3-13, 3-15
2686537-0000	.PIPE	4-99, 4-101, 4-103, 4-105
2686538-0000	.PIPE	4-99, 4-101, 4-103, 4-105
2686539-0000	.PIPE	4-99, 4-101, 4-103, 4-105

Part No	Description	Page No
2686540-0000	.PIPE	4-99, 4-101, 4-103, 4-105
2686541-0000	.PIPE	4-99, 4-101, 4-103, 4-105
2686542-0000	.BRACKET	3-5, 3-7, 3-9, 3-11, 3-13, 3-15
2686543-0000	.PLATE	3-17, 3-19, 3-21, 3-23, 3-25
2686544-0000	.PLATE	4-9, 4-11, 4-13, 4-15, 4-17, 4-19
2686545-0000	.PLATE	4-9, 4-11, 4-13, 4-15, 4-17, 4-19
2686546-0000	.SHAFT	4-33, 4-35
2687772-0000	.SIDE PLATE	5-55, 5-57
2687773-0000	.SIDE PLATE	5-55, 5-57
2687774-0000	.SIDE PLATE	5-55, 5-57
2687776-0000	.SUPPORT	5-55, 5-57
2687780-0200	.END UNIT	5-27, 5-29, 5-31
2687783-0000	.PLATE	5-133, 5-135, 5-137, 5-139, 5-141, 5-143, 5-145, 5-147, 5-149, 5-151, 5-153, 5-155, 5-157, 5-159, 5-161, 5-163, 5-165, 5-167, 5-169, 5-171
2687784-0000	.FLANGE	5-133, 5-135, 5-137, 5-139, 5-141, 5-143, 5-145, 5-147, 5-149, 5-151, 5-153, 5-155, 5-157, 5-159, 5-161, 5-163, 5-165, 5-167, 5-169, 5-171
2689164-0000	.PIPE	5-237, 5-239
2689165-0000	.PIPE	5-237, 5-239
2689166-0000	.PIPE	5-237, 5-239
2689167-0000	.PIPE	5-237, 5-239
2690208-0000	.SPRING	4-39, 4-41, 4-43, 4-45, 4-47, 4-49, 4-51, 4-53, 4-55
2690269-0000	.PIPE	5-237, 5-239
2690270-0000	.PIPE	5-237, 5-239
2690271-0000	.PIPE	5-237, 5-239
2690272-0000	.PIPE	5-237, 5-239
2690911-0000	.DRAIN PIPE	2-75
2691183-0000	.FLANGED SHAFT	1-13
2691184-0000	.SHAFT	1-13
2691417-0000	.SPACER	4-39, 4-41, 4-43, 4-45, 4-47, 4-49, 4-51, 4-53, 4-55, 4-71, 4-73, 4-75, 4-77, 4-79, 4-81
2691471-0000	.BRACKET	4-91, 4-93
2691472-0000	.BUSBAR	4-91, 4-93
2691473-0000	.BRACKET	4-91, 4-93
2691474-0000	.SHIM	4-91, 4-93
2691475-0100	.ELECTRICAL CONNECTION	4-3
2691490-0101	.TRANSFORMER	4-91, 4-93
2691490-0102	.TRANSFORMER	4-91, 4-93
2691490-0103	.TRANSFORMER	4-91, 4-93
2691490-0104	.TRANSFORMER	4-91, 4-93
2691490-0105	.TRANSFORMER	4-91, 4-93
2691490-0106	.TRANSFORMER	4-91, 4-93
2691490-0107	.TRANSFORMER	4-91, 4-93
2691493-0000	.NOZZLE	9-23
2691494-0000	.NOZZLE	5-205, 5-207, 5-209, 5-211, 9-23
2691501-0000	.UPPER SECTION	1-191
2691641-0000	.LINK	4-39, 4-41, 4-43, 4-45, 4-47, 4-49, 4-51, 4-53, 4-55, 4-71, 4-73, 4-75, 4-77, 4-79, 4-81
2691667-0000	.PLATE	4-39, 4-41, 4-43, 4-45, 4-47, 4-49, 4-51, 4-53, 4-55, 4-57, 4-59, 4-61, 4-63, 4-65, 4-67
2691818-0000	.BUSHING	4-39, 4-41, 4-43, 4-45, 4-47, 4-49, 4-51, 4-53, 4-55
2691821-0000	.SPACER	5-173, 5-175, 5-177, 5-179, 5-181, 5-183, 5-185, 5-187, 5-189, 5-191, 5-193, 5-195, 5-197, 5-199, 5-201, 5-203
2691822-0000	.SPACER	5-173, 5-175, 5-177, 5-179, 5-181, 5-183, 5-185, 5-187, 5-189, 5-191, 5-193, 5-195, 5-197, 5-199, 5-201, 5-203
2693207-0000	.LINK	4-39, 4-41, 4-43, 4-45, 4-47, 4-49, 4-51, 4-53, 4-55, 4-71, 4-73, 4-75, 4-77, 4-79, 4-81
2693208-0000	.LINK	4-39, 4-41, 4-43, 4-45, 4-47, 4-49, 4-51, 4-53, 4-55, 4-71, 4-73, 4-75, 4-77, 4-79, 4-81
2693209-0000	.SHAFT	4-39, 4-41, 4-43, 4-45, 4-47, 4-49, 4-51, 4-53, 4-55
2693210-0000	.SPRING	4-39, 4-41, 4-43, 4-45, 4-47, 4-49, 4-51, 4-53, 4-55
2693448-0000	.NOZZLE	9-23
2693701-0000	.SPACER	5-173, 5-175, 5-177, 5-179, 5-181, 5-183, 5-185, 5-187, 5-189, 5-191, 5-193, 5-195, 5-197, 5-199, 5-201, 5-203
2693702-0000	.NOZZLE	5-205, 5-207, 5-209, 5-211, 9-23
2693703-0000	.NOZZLE	9-23
2693717-0000	.SPACER	5-173, 5-175, 5-177, 5-179, 5-181, 5-183, 5-185, 5-187, 5-189, 5-191, 5-193, 5-195, 5-197, 5-199, 5-201, 5-203
2693718-0000	.NOZZLE	5-205, 5-207, 5-209, 5-211, 9-23
2693719-0000	.SPACER	5-173, 5-175, 5-177, 5-179, 5-181, 5-183, 5-185, 5-187, 5-189, 5-191, 5-193, 5-195, 5-197, 5-199, 5-201, 5-203
2693914-0000	.GUIDE	5-93, 5-95, 5-97, 5-99, 5-101, 5-103, 5-105, 5-107, 5-109, 5-111, 5-113
2693915-0000	.FRAME	5-93, 5-95, 5-97, 5-99, 5-101, 5-103, 5-105, 5-107, 5-109, 5-111, 5-113
2694666-0000	.SUPPORT	5-43, 5-45, 5-47, 5-49
2694667-0000	.PIN	5-37, 5-39
2694714-0000	.GUIDE	1-155, 1-157, 1-159
2694716-0000	.PLATE	1-155, 1-157, 1-159
2694884-0000	.SHAFT	4-39, 4-41, 4-43, 4-45, 4-47, 4-49, 4-51, 4-53, 4-55, 4-71, 4-73, 4-75, 4-77, 4-79, 4-81
2694885-0000	.SHAFT	4-39, 4-41, 4-43, 4-45, 4-47, 4-49, 4-51, 4-53, 4-55, 4-71, 4-73, 4-75, 4-77, 4-79, 4-81
2695416-0000	.PRESSURE JAW	4-39, 4-41, 4-43, 4-45, 4-47, 4-49, 4-51, 4-53, 4-55
2695417-0000	.PRESSURE JAW	4-39, 4-41, 4-43, 4-45, 4-47, 4-49, 4-51, 4-53, 4-55
2695418-0000	.PRESSURE JAW	4-39, 4-41, 4-43, 4-45, 4-47, 4-49, 4-51, 4-53, 4-55
2695419-0000	.SEALING JAW	4-71, 4-73, 4-75, 4-77, 4-79, 4-81
2695420-0000	.SEALING JAW	4-71, 4-73, 4-75, 4-77, 4-79, 4-81
2695421-0000	.SEALING JAW	4-71, 4-73, 4-75, 4-77, 4-79, 4-81
2695422-0000	.PRESSURE JAW	4-39, 4-41, 4-43, 4-45, 4-47, 4-49, 4-51, 4-53, 4-55
2695423-0000	.PRESSURE JAW	4-39, 4-41, 4-43, 4-45, 4-47, 4-49, 4-51, 4-53, 4-55
2695424-0000	.SEALING JAW	4-71, 4-73, 4-75, 4-77, 4-79, 4-81
2695425-0000	.SEALING JAW	4-71, 4-73, 4-75, 4-77, 4-79, 4-81
2695434-0000	.HOLDER	1-31

Part No	Description	Page No
2695962-0200	.RAILING KIT	5-37, 5-39
2695963-0000	.ARCH	5-43, 5-45, 5-47, 5-49
2695994-0000	.ATTACHMENT PIPE	1-245
2695997-0000	.PIPE	1-175
2695998-0000	.PIPE	1-175
2696005-0000	.PIPE	1-271
2696021-0000	.PIPE	1-253, 1-255, 1-257
2696025-0000	.PIPE	1-245
2696034-0000	.HOLDER	1-305, 1-307
2696037-0000	.PIPE	1-245
2696054-0000	.BRACKET	1-143
2696055-0000	.BRACKET	1-143
2696056-0000	.COVER PLATE	1-143
2696106-0000	.BRACKET	1-233
2696108-0000	.PIPE	1-233
2696109-0000	.PLUG	1-233
2696111-0000	.VALVE BODY	1-233
2696112-0000	.VALVE BODY	1-233
2696117-0000	.PIPE	1-229, 1-231
2696118-0300	.HEATER	1-203
2696119-0000	.PIPE	1-205
2696120-0200	.PNEUMATIC PANEL	1-203
2696142-0100	.CURVE WHEEL	5-27, 5-29, 5-31
2696412-0000	.SPACER	1-107, 1-109
2696485-0000	.ARCH	5-43, 5-45, 5-47, 5-49
2696979-0000	.RAIL	2-17
2697052-0000	.PIPE	5-133, 5-135, 5-137, 5-139, 5-141, 5-143, 5-145, 5-147, 5-149, 5-151, 5-153, 5-155, 5-157, 5-159, 5-161, 5-163, 5-165, 5-167, 5-169, 5-171
2697053-0000	.PIPE	5-133, 5-135, 5-137, 5-139, 5-141, 5-143, 5-145, 5-147, 5-149, 5-151, 5-153, 5-155, 5-157, 5-159, 5-161, 5-163, 5-165, 5-167, 5-169, 5-171
2697054-0000	.PIPE	5-133, 5-135, 5-137, 5-139, 5-141, 5-143, 5-145, 5-147, 5-149, 5-151, 5-153, 5-155, 5-157, 5-159, 5-161, 5-163, 5-165, 5-167, 5-169, 5-171
2697055-0000	.PIPE	5-133, 5-135, 5-137, 5-139, 5-141, 5-143, 5-145, 5-147, 5-149, 5-151, 5-153, 5-155, 5-157, 5-159, 5-161, 5-163, 5-165, 5-167, 5-169, 5-171
2699199-0000	.FILLING	11-125
2699218-0100	.END UNIT	11-21
2699219-0000	.SPACER	11-35
2699366-0000	.STOP	11-67, 11-211
2699436-0000	.SPACER	5-73, 11-31
2699437-0000	.RAIL HOLDER	5-73, 11-31
2699584-0830	.SLIDING STRIP	5-41, 11-177
2699585-0263	.SLIDING STRIP	11-85, 11-87, 11-89
2699585-0293	.SLIDING STRIP	11-85, 11-87, 11-89
2699585-0608	.SLIDING STRIP	11-85, 11-87, 11-89
2699585-0880	.SLIDING STRIP	11-85, 11-87, 11-89
2699603-0000	.PLATE	11-105, 11-173
2699604-0000	.PLATE	11-173
2699605-0000	.HOLDER	11-173
2699607-0000	.HOLDER	11-105, 11-173
2699608-0001	.HOLDER	11-173
2699608-0002	.HOLDER	11-173
2699610-0000	.HOLDER	11-173
2699611-0000	.ARCH	11-173
2699613-0000	.BRACKET	11-173
2699614-0000	.HOLDER	11-173
2699619-0000	.BRACKET	11-105
2699620-0000	.RAIL HOLDER	11-105
2699621-0000	.BRACKET	11-105
2699625-0002	.RAIL	11-173
2699626-0002	.RAIL	11-173
2700059-0300	.COMPRESSOR UNIT	1-163, 1-165
2700546-0000	.FRONT RING	1-91, 1-93, 1-95, 1-97
2700867-0000	.AXLE PIN	5-173, 5-175, 5-177, 5-179, 5-181, 5-183, 5-185, 5-187, 5-189, 5-191, 5-193, 5-195, 5-197, 5-199, 5-201, 5-203
2700881-0000	.FLANGE	5-217, 5-219, 5-221, 5-223, 5-225, 5-227, 5-229
2700883-0000	.GEAR	5-133, 5-135, 5-137, 5-139, 5-141, 5-143, 5-145, 5-147, 5-149, 5-151, 5-153, 5-155, 5-157, 5-159, 5-161, 5-163, 5-165, 5-167, 5-169, 5-171
2700884-0000	.GEAR	5-133, 5-135, 5-137, 5-139, 5-141, 5-143, 5-145, 5-147, 5-149, 5-151, 5-153, 5-155, 5-157, 5-159, 5-161, 5-163, 5-165, 5-167, 5-169, 5-171
2701232-0200	.TERMINAL BLOCK	2-53
2701240-0000	.PLATE	4-91, 4-93
2701241-0000	.SHIM	4-91, 4-93
2701242-0000	.SHIM	4-91, 4-93
2701244-0000	.PLATE	4-91, 4-93, 9-7
2701352-0100	.TERMINAL BLOCK	2-105
2701355-0200	.TERMINAL BLOCK	2-101
2701359-0100	.BLOCK	6-77
2701448-0000	.GASKET	7-29
2701449-0000	.BRACKET	7-29
2701767-0000	.FRAME	7-29
2701768-0000	.WASTE BOX	7-29
2701831-0000	.WHEEL	4-5, 4-7
2701832-0000	.RING	4-5, 4-7
2702361-0000	.SPACER	4-5, 4-7

Part No	Description	Page No
2702372-0000	.PIN	4-5, 4-7
2702944-0100	.TERMINAL BLOCK	2-15
2702947-0000	.HOLDER	2-105
2702949-0000	.BRACKET	6-77
2704501-0000	.COVER	7-29
2707531-0000	.SUPPORT	3-5, 3-7, 3-9, 3-11, 3-13, 3-15
2707849-0000	.PLATE	3-17, 3-19, 3-21, 3-23, 3-25
2707850-0000	.PLATE	3-17, 3-19, 3-21, 3-23, 3-25
2707851-0000	.SHAFT	3-17, 3-19, 3-21, 3-23, 3-25
2707858-0000	.SUPPORT	4-109, 4-111, 4-113, 4-115
2707860-0000	.SUPPORT	4-71, 4-73, 4-75, 4-77, 4-79, 4-81
2707861-0000	.ROLLER	4-71, 4-73, 4-75, 4-77, 4-79, 4-81
2707865-0000	.SHAFT	3-17, 3-19, 3-21, 3-23, 3-25
2708542-0100	.PNEUMATIC UNIT	6-89
2708543-0000	.PLATE	6-89
2708544-0100	.PANEL	6-83
2708584-0000	.CONNECTION PIPE	1-283, 1-285
2709234-0000	.FILTER	1-181
2709262-0000	.SHAFT	1-73
2709274-0000	.FLANGE	1-69, 1-71
2709275-0000	.GASKET	1-69, 1-71
2709277-0000	.GASKET	1-69, 1-71
2709281-0000	.SHIM	1-69, 1-71
2711240-0000	.BRACKET	1-353
2711241-0000	.DOOR	1-351
2711246-0000	.COVERING PANEL	1-351
2711251-0000	.HINGE	1-249
2711261-0000	.BRACKET	1-351
2711263-0000	.BRACKET	1-351
2713123-0000	.PLATE	5-37, 5-39
2715353-0000	.TOOL	9-33
2715556-0300	.BATH	1-277
2715570-0000	.ROLLER	1-99
2715601-0000	.SHAFT	1-73
2715602-0000	.PIPE	1-233
2715618-0000	.LEVER	1-73
2715649-0008	.SPACER	1-99
2715649-0013	.SPACER	1-99
2715650-0003	.SCREW	1-99
2715650-0005	.SCREW	1-99
2715650-0009	.SCREW	1-99
2720716-0000	.LIFTING DEVICE	12-27
2720852-0000	.PIN	1-183
2721423-0000	.FORMING RING	1-91, 1-93, 1-95, 1-97
2723033-0000	.SHIM	5-217, 5-219, 5-221, 5-223, 5-225, 5-227, 5-229
2723037-0000	.SPACER BLOCK	5-217, 5-219, 5-221, 5-223, 5-225, 5-227, 5-229
2723313-0100	.LAMP	9-9
2725145-0000	.DIAPHRAGM	1-235, 1-237, 9-9
2725216-0000	.SHUTTER	1-235, 1-237
2725313-0000	.SHAFT	1-235, 1-237
2725419-0000	.FOLDING FLAP	4-83, 4-85, 4-87, 4-89
2725420-0000	.FOLDING FLAP	4-83, 4-85, 4-87, 4-89
2725526-0000	.SCREW	1-155, 1-157, 1-159
2725564-0000	.WHEEL	1-15
2725728-0000	.WHEEL	4-5, 4-7
2726295-0000	.COVER STRIP	2-217
2726296-0000	.COVER STRIP	2-215
2726570-0300	.TUBE HOLDER	1-229, 1-231
2728139-0000	.COVER STRIP	2-217
2728140-0000	.COVER STRIP	2-215
2730006-0000	.PULLEY	5-93, 5-95, 5-97, 5-99, 5-101, 5-103, 5-105, 5-107, 5-109, 5-111, 5-113
2730007-0000	.PULLEY	5-93, 5-95, 5-97, 5-99, 5-101, 5-103, 5-105, 5-107, 5-109, 5-111, 5-113
2731037-0000	.SWING FRAME	5-173, 5-175, 5-177, 5-179, 5-181, 5-183, 5-185, 5-187, 5-189, 5-191, 5-193, 5-195, 5-197, 5-199, 5-201, 5-203
2731209-0000	.FRAME	7-5, 7-7
2731210-0000	.SLEEVE	7-21
2731212-0000	.RING	7-21
2731216-0000	.BENDING ROLLER	7-97
2731217-0200	.PAPER REEL HOLDER	7-3
2731219-0000	.BRACKET	7-99
2731220-0200	.MATERIAL HOLDER	7-3
2731221-0000	.SHAFT	7-97
2731222-0100	.BOBBIN BRAKE	7-3
2731227-0000	.SHAFT	7-179
2731230-0000	.WHEEL	7-179
2731231-0100	.BRACKET	7-97
2731232-0000	.BRACKET	7-99
2731233-0000	.SLIDER	7-125
2731236-0000	.SHAFT	7-125
2731237-0000	.GUIDE ROD	7-125
2731238-0000	.PLATE	7-125
2731244-0000	.CABLE DUCT	7-5, 7-7
2731246-0100	.DRIVE UNIT	7-119, 7-121, 7-123
2731247-0000	.SPACER	7-145

Part No	Description	Page No
2731248-0000	.SHAFT	7-145
2731249-0000	.COVER	7-145
2731250-0000	.COVER	7-145
2731257-0000	.PLATE	7-119, 7-121, 7-123
2731428-0000	.NUT	1-91, 1-93, 1-95, 1-97, 1-107, 1-109
2731700-0000	.FLANGE	5-93, 5-95, 5-97, 5-99, 5-101, 5-103, 5-105, 5-107, 5-109, 5-111, 5-113
2731702-0000	.FLANGE	5-93, 5-95, 5-97, 5-99, 5-101, 5-103, 5-105, 5-107, 5-109, 5-111, 5-113
2731815-0000	.PLATE	5-93, 5-95, 5-97, 5-99, 5-101, 5-103, 5-105, 5-107, 5-109, 5-111, 5-113
2733502-0000	.SUPPORT	1-303
2734101-0000	.EXTENSION PIPE	2-251
2734102-0000	.BUSHING	2-251
2734104-0000	.BUSHING	2-251
2735063-0000	.SHAFT	7-139
2735064-0100	.BENDING ROLLER	7-119, 7-121, 7-123
2735068-0000	.GUIDE	7-119, 7-121, 7-123
2735073-0000	.BRACKET	7-97
2735074-0000	.BRACKET	7-97
2735079-0000	.BAR	7-97
2735094-0000	.BAR	7-103
2735095-0200	.BRAKE SHOE	7-97
2735096-0000	.SPACER	7-103
2735097-0000	.SPACER	7-103
2735098-0000	.RAIL	7-103
2735099-0000	.BRACKET	7-97
2735100-0000	.BLOCK	7-103
2735101-0000	.SPACER	7-97
2735107-0000	.SHAFT	7-105
2735108-0000	.FLANGE	7-105
2736630-0000	.LOWER FORMING RING	1-91, 1-93, 1-95, 1-97
2736635-0000	.UPPER FORMING RING	1-107, 1-109
2736636-0000	.UPPER FORMING RING	1-107, 1-109
2736676-0000	.UPPER FORMING RING	1-107, 1-109
2736677-0000	.UPPER FORMING RING	1-107, 1-109
2736680-0000	.RETAINING RING	1-181
2736697-0000	.UPPER FORMING RING	1-107, 1-109
2736705-0000	.LOWER FORMING RING	1-91, 1-93, 1-95, 1-97
2736707-0000	.PIPE	1-205
2736719-0000	.PLATE	9-41, 9-43
2737480-0000	.GUIDE	5-133, 5-135, 5-137, 5-139, 5-141, 5-143, 5-145, 5-147, 5-149, 5-151, 5-153, 5-155, 5-157, 5-159, 5-161, 5-163, 5-165, 5-167, 5-169, 5-171
2737497-0000	.SLIDE	5-93, 5-95, 5-97, 5-99, 5-101, 5-103, 5-105, 5-107, 5-109, 5-111, 5-113
2737498-0000	.SLIDE	5-93, 5-95, 5-97, 5-99, 5-101, 5-103, 5-105, 5-107, 5-109, 5-111, 5-113
2737499-0000	.PULLEY	5-217, 5-219, 5-221, 5-223, 5-225, 5-227, 5-229
2737500-0000	.SHAFT	5-217, 5-219, 5-221, 5-223, 5-225, 5-227, 5-229
2737825-0000	.VALVE HOUSING	1-235, 1-237
2737898-0000	.ROLLER	7-47
2737899-0100	.WHEEL	7-45, 7-59, 7-61
2737903-0000	.SHAFT	7-91
2737904-0000	.SHAFT	7-69, 7-71
2737905-0000	.LEVER	7-91
2737906-0000	.SHAFT	7-69, 7-71, 7-105
2737913-0100	.BAR CODE READER	7-69, 7-71
2737914-0000	.PIN	7-81
2737915-0000	.BRACKET	7-81
2737916-0000	.BAR	7-77
2737917-0000	.CABLE DUCT	7-5, 7-7
2737919-0000	.PLATE	7-73
2737920-0000	.PLATE	7-73
2737930-0000	.SUPPORT	7-85
2737931-0100	.PAPER GUIDE	7-83
2737933-0000	.FASTENING PLATE	7-73
2737938-0100	.HOSE	7-77
2737941-0200	.SPLICING DEVICE	7-3
2737942-0000	.PLATE	7-69, 7-71
2737943-0000	.PLATE	7-69, 7-71
2737944-0000	.BRACKET	7-69, 7-71
2738144-0000	.PLATE	5-133, 5-135, 5-137, 5-139, 5-141, 5-143, 5-145, 5-147, 5-149, 5-151, 5-153, 5-155, 5-157, 5-159, 5-161, 5-163, 5-165, 5-167, 5-169, 5-171
2738145-0000	.PULLEY	5-133, 5-135, 5-137, 5-139, 5-141, 5-143, 5-145, 5-147, 5-149, 5-151, 5-153, 5-155, 5-157, 5-159, 5-161, 5-163, 5-165, 5-167, 5-169, 5-171
2738146-0000	.PULLEY	5-133, 5-135, 5-137, 5-139, 5-141, 5-143, 5-145, 5-147, 5-149, 5-151, 5-153, 5-155, 5-157, 5-159, 5-161, 5-163, 5-165, 5-167, 5-169, 5-171
2738147-0000	.PULLEY	5-133, 5-135, 5-137, 5-139, 5-141, 5-143, 5-145, 5-147, 5-149, 5-151, 5-153, 5-155, 5-157, 5-159, 5-161, 5-163, 5-165, 5-167, 5-169, 5-171
2738148-0000	.PULLEY	5-173, 5-175, 5-177, 5-179, 5-181, 5-183, 5-185, 5-187, 5-189, 5-191, 5-193, 5-195, 5-197, 5-199, 5-201, 5-203
2738149-0000	.ROLLER	5-173, 5-175, 5-177, 5-179, 5-181, 5-183, 5-185, 5-187, 5-189, 5-191, 5-193, 5-195, 5-197, 5-199, 5-201, 5-203
2738150-0000	.SUPPORT	5-173, 5-175, 5-177, 5-179, 5-181, 5-183, 5-185, 5-187, 5-189, 5-191, 5-193, 5-195, 5-197, 5-199, 5-201, 5-203
2738151-0000	.SHAFT	5-173, 5-175, 5-177, 5-179, 5-181, 5-183, 5-185, 5-187, 5-189, 5-191, 5-193, 5-195, 5-197, 5-199, 5-201, 5-203
2738152-0000	.SHAFT	5-173, 5-175, 5-177, 5-179, 5-181, 5-183, 5-185, 5-187, 5-189, 5-191, 5-193, 5-195, 5-197, 5-199, 5-201, 5-203

Part No	Description	Page No
2738153-0000	.SWING FRAME	5-173, 5-175, 5-177, 5-179, 5-181, 5-183, 5-185, 5-187, 5-189, 5-191, 5-193, 5-195, 5-197, 5-199, 5-201, 5-203
2738156-0000	.SHAFT	5-217, 5-219, 5-221, 5-223, 5-225, 5-227, 5-229
2738158-0000	.FLANGE	5-217, 5-219, 5-221, 5-223, 5-225, 5-227, 5-229
2738159-0000	.SHAFT	5-217, 5-219, 5-221, 5-223, 5-225, 5-227, 5-229
2738162-0000	.FLANGE	5-217, 5-219, 5-221, 5-223, 5-225, 5-227, 5-229
2738163-0000	.PULLEY	5-217, 5-219, 5-221, 5-223, 5-225, 5-227, 5-229
2738164-0000	.PULLEY	5-217, 5-219, 5-221, 5-223, 5-225, 5-227, 5-229
2739087-0000	.WHEEL	4-5, 4-7
2741000-0000	.PLATE	7-83
2741001-0000	.SHAFT	7-83
2741002-0000	.PLATE	7-69, 7-71
2741003-0100	.PRESSURE JAW	7-69, 7-71
2741004-0000	.SEALING PLATE	7-77
2741005-0000	.SEALING PLATE	7-77
2741006-0000	.PLATE	7-77
2741007-0000	.PLATE	7-77
2741008-0000	.PRESSURE RAIL	7-81
2741009-0000	.PLATE	7-75
2741010-0000	.PLATE	7-75
2741011-0000	.PLATE	7-77
2741012-0000	.PLATE	7-77
2741013-0000	.PLATE	7-81
2741014-0000	.PLATE	7-77
2741019-0000	.PLATE	7-81
2741020-0000	.PAPER GUIDE	7-69, 7-71
2741021-0100	.COUNTER ROLLER	7-91
2741022-0000	.PIN	7-93
2741024-0000	.SUPPORT	7-5, 7-7
2741026-0200	.MACHINE BODY	7-3
2741029-0100	.BRACKET	7-119, 7-121, 7-123
2741030-0000	.PLATE	7-149
2741031-0000	.PLATE	7-149
2741047-0000	.BRACKET	7-5, 7-7
2741804-0000	.SWING FRAME	5-173, 5-175, 5-177, 5-179, 5-181, 5-183, 5-185, 5-187, 5-189, 5-191, 5-193, 5-195, 5-197, 5-199, 5-201, 5-203
2741807-0000	.SWING FRAME	5-173, 5-175, 5-177, 5-179, 5-181, 5-183, 5-185, 5-187, 5-189, 5-191, 5-193, 5-195, 5-197, 5-199, 5-201, 5-203
2741808-0000	.COVER	5-173, 5-175, 5-177, 5-179, 5-181, 5-183, 5-185, 5-187, 5-189, 5-191, 5-193, 5-195, 5-197, 5-199, 5-201, 5-203
2744234-0000	.SPACER	2-251
2745314-0000	.HOUSING	1-37, 1-39
2745337-0200	.BENDING ROLLER	1-5
2745347-0000	.PLATE	1-41
2745352-0000	.FILM	1-41
2745356-0000	.SHAFT	1-33
2746315-0000	.PLATE	7-5, 7-7
2746320-0000	.GUIDE	7-119, 7-121, 7-123
2746321-0000	.PLATE	7-119, 7-121, 7-123
2746324-0200	.MAGAZINE	7-119, 7-121, 7-123
2746328-0200	.COVERING PANEL	7-3
2746337-0200	.DOOR	7-155
2746339-0100	.DOOR	7-155
2746341-0100	.DOOR	7-155
2746342-0000	.DOOR	7-167
2746343-0100	.DOOR	7-155
2746345-0200	.DOOR	7-155
2746346-0000	.DOOR	7-171
2746347-0100	.DOOR	7-155
2746349-0200	.DOOR	7-155
2746351-0100	.DOOR	7-155
2746353-0000	.LOCKING ARM	7-157
2746354-0000	.BRACKET	7-157
2746355-0000	.BRACKET	7-157, 7-161
2746356-0000	.PUSH BUTTON	7-163
2746357-0100	.CONTROL PANEL	7-161
2746358-0000	.BRACKET	7-161
2746359-0000	.SPACER	7-165, 7-169, 7-173, 7-175
2746360-0000	.SEALING STRIP	7-165, 7-167, 7-169, 7-171, 7-173, 7-175
2746361-0000	.GLASS PANE	7-173, 7-175
2746362-0000	.BRACKET	7-5, 7-7
2747551-0000	.LEVER	1-73
2747630-0000	.BRACKET	8-77, 8-79
2748699-0000	.KNOB	7-49
2748701-0000	.BRACKET	8-77, 8-79
2748702-0000	.BRACKET	8-77, 8-79
2749544-0000	.BRACKET	7-29
2749546-0000	.PIPE	7-29
2749547-0000	.NOZZLE	7-29
2749548-0000	.ROLLER	7-29
2751466-0000	.SHAFT	1-73
2751510-0200	.BENDING ROLLER	1-5
2751569-0000	.PLATE	7-105
2751571-0300	.SIDE FEEDER	7-3

Part No	Description	Page No
2751573-0000	.BAR	7-105
2751574-0000	.SPACER	7-105
2751575-0000	.SHAFT	7-105
2751576-0000	.PULLEY	7-105
2751579-0000	.PLATE	7-105
2751585-0000	.TIMING BELT	7-105
2751586-0000	.SPACER	7-175
2751590-0000	.BRACKET	7-105
2751591-0000	.PLATE	7-105
2751592-0000	.PLATE	7-105
2751593-0000	.PLATE	7-105
2751594-0000	.PLATE	7-105
2751595-0000	.PLATE	7-105
2751596-0000	.PLATE	7-105
2751597-0000	.PLATE	7-105
2751598-0000	.COVER	7-105
2751630-0000	.GUIDE	5-133, 5-135, 5-137, 5-139, 5-141, 5-143, 5-145, 5-147, 5-149, 5-151, 5-153, 5-155, 5-157, 5-159, 5-161, 5-163, 5-165, 5-167, 5-169, 5-171
2751631-0000	.GUIDE	5-133, 5-135, 5-137, 5-139, 5-141, 5-143, 5-145, 5-147, 5-149, 5-151, 5-153, 5-155, 5-157, 5-159, 5-161, 5-163, 5-165, 5-167, 5-169, 5-171
2751632-0000	.SLIDER	5-127, 5-129, 5-131
2753150-0000	.SHAFT	5-217, 5-219, 5-221, 5-223, 5-225, 5-227, 5-229
2753151-0000	.PULLEY	5-217, 5-219, 5-221, 5-223, 5-225, 5-227, 5-229
2753152-0000	.SUPPORT	5-217, 5-219, 5-221, 5-223, 5-225, 5-227, 5-229
2753158-0100	.BRAKE	5-93, 5-95, 5-97, 5-99, 5-101, 5-103, 5-105, 5-107, 5-109, 5-111, 5-113
2753164-0000	.GUIDE	5-173, 5-175, 5-177, 5-179, 5-181, 5-183, 5-185, 5-187, 5-189, 5-191, 5-193, 5-195, 5-197, 5-199, 5-201, 5-203
2754798-0000	.FLOAT	1-195, 1-197
2755071-0000	.UPPER SECTION	1-181
2755376-0000	.SUPPORT	5-83, 5-85, 5-87, 5-89, 5-91
2755377-0000	.LOCK COMPONENT	4-109, 4-111, 4-113, 4-115
2755378-0000	.SHIM	4-109, 4-111, 4-113, 4-115
2755379-0000	.BUSHING	4-109, 4-111, 4-113, 4-115
2755496-0000	.BAR	7-105
2755503-0000	.RULER	7-101
2755506-0000	.PLATE	7-5, 7-7
2755512-0000	.BRACKET	7-157, 7-169, 7-173
2755525-0000	.PLATE	7-91
2758043-0000	.SUPPORT	1-45
2758044-0000	.PLATE	1-45
2758046-0000	.PLATE	1-45
2758052-0100	.DEFLECTOR	1-5
2758064-0200	.SQUEE-GEE ROLLER	1-5
2758067-0000	.PLATE	1-37, 1-39
2758068-0000	.GASKET	1-37, 1-39
2758079-0000	.BLOCK	1-37, 1-39
2758080-0000	.BLOCK	1-37, 1-39
2758082-0000	.LEVER	1-13
2758083-0000	.SUPPORT	1-13
2758728-0000	.HANDLE	1-169
2758729-0000	.CLAMPING LINK	1-169
2758730-0000	.HUB	1-169
2758731-0000	.ADJUSTING SCREW	1-169
2758732-0000	.AIR NOZZLE	1-171
2758733-0002	.AIR PIPE	1-171
2758733-0003	.AIR PIPE	1-171
2758734-0000	.HUB	1-169
2758737-0000	.SEAL	1-171
2758738-0002	.SCREW	1-171
2758738-0003	.SCREW	1-171
2758739-0000	.PLUG	1-169
2758740-0001	.SPACER	1-171
2758740-0002	.SPACER	1-171
2758910-0300	.TAB FOLDING	1-299
2760025-0000	.CARTON STATION	5-127, 5-129, 5-131
2760026-0000	.CARTON STATION	5-127, 5-129, 5-131
2760027-0000	.CARTON STATION	5-127, 5-129, 5-131
2760028-0000	.CARTON STATION	5-127, 5-129, 5-131
2760029-0000	.CARTON STATION	5-127, 5-129, 5-131
2760354-0000	.PLATE	3-17, 3-19, 3-21, 3-23, 3-25
2760355-0000	.PLATE	3-17, 3-19, 3-21, 3-23, 3-25
2760356-0000	.PLATE	3-17, 3-19, 3-21, 3-23, 3-25
2760360-0000	.BRACKET	3-5, 3-7, 3-9, 3-11, 3-13, 3-15
2760362-0000	.PLATE	3-17, 3-19, 3-21, 3-23, 3-25
2760363-0000	.PLATE	3-17, 3-19, 3-21, 3-23, 3-25
2760364-0000	.PLATE	3-5, 3-7, 3-9, 3-11, 3-13, 3-15
2760366-0000	.PLATE	4-9, 4-11, 4-13, 4-15, 4-17, 4-19
2760367-0000	.PLATE	4-9, 4-11, 4-13, 4-15, 4-17, 4-19
2760369-0000	.KEY	4-9, 4-11, 4-13, 4-15, 4-17, 4-19
2760370-0000	.PLATE	4-9, 4-11, 4-13, 4-15, 4-17, 4-19
2760371-0000	.PLATE	4-9, 4-11, 4-13, 4-15, 4-17, 4-19
2760372-0000	.PLATE	4-9, 4-11, 4-13, 4-15, 4-17, 4-19
2760373-0000	.PLATE	4-9, 4-11, 4-13, 4-15, 4-17, 4-19
2760374-0000	.PLATE	4-9, 4-11, 4-13, 4-15, 4-17, 4-19

Part No	Description	Page No
2760375-0000	.PLATE	4-9, 4-11, 4-13, 4-15, 4-17, 4-19
2760377-0000	.SHAFT	4-27, 4-29, 4-31
2760378-0000	.SHAFT	4-27, 4-29, 4-31
2760379-0000	.ECCENTRIC SHAFT	4-27, 4-29, 4-31
2760936-0000	.ANGLE BRACKET	7-125
2760939-0100	.BEARING ROLLER	7-61
2760941-0000	.ROLLER	7-65
2760942-0100	.PULLEY	7-61
2760964-0000	.RUBBER SEAL	2-173
2763303-0000	.STRIP	11-105, 11-173
2763424-0100	.RAILING	11-153, 11-155, 11-157
2763429-0100	.RAILING KIT	11-85, 11-87, 11-89
2763435-0000	.RAIL	11-105
2763436-0000	.RAIL	11-105
2763557-0200	.BRACKET	11-3, 11-5, 11-7
2763600-0102	.STRAIGHT CONVEYOR L=500MM.	5-27, 5-29, 5-31, 11-179, 11-181
2763600-0103	.STRAIGHT CONVEYOR, L1000	11-179, 11-181
2763616-0100	.CONVEYOR BODY	5-63, 11-183, 11-203
2763616-0102	.CONVEYOR BODY	5-63, 11-183
2763616-0103	.CONVEYOR BODY	5-63, 11-183
2763617-0002	.SIDE PLATE	5-69, 5-77, 5-79, 11-189, 11-195, 11-197
2763617-0003	.SIDE PLATE	5-69, 11-189
2763618-0100	.CONVEYOR BODY	11-153, 11-155, 11-157
2763620-0200	.WHEEL CURVE 90 DEGREES	11-3, 11-5, 11-7
2763622-0000	.SIDE PLATE	11-177
2763624-0100	.DRIVE AND END UNIT	11-81
2763628-0000	.BRACKET	11-65
2763636-0100	.SLIDING CURVE	11-85, 11-87, 11-89
2763637-0000	.SIDE PLATE	11-115
2763638-0000	.SIDE PLATE	11-115
2763639-0100	.INFEED	11-85, 11-87, 11-89
2763641-0100	.CONVEYOR BODY	11-85, 11-87, 11-89
2763959-0000	.SHAFT	1-169
2763963-0000	.SLEEVE	1-169
2763966-0000	.PIPE	1-293
2763967-0000	.PIPE	1-293
2763968-0000	.SPACER	1-293
2763969-0000	.REDUCER	1-293
2763976-0000	.TOUCH GUARD	1-229, 1-231
2763977-0000	.TOUCH GUARD	1-229, 1-231
2763987-0000	.BRACKET	1-299
2763999-0200	.BENDING ROLLER	1-5
2764007-0000	.SPACER	1-169
2764009-0000	.BRACKET	1-99
2764013-0000	.UPPER FORMING RING	1-107, 1-109
2764014-0000	.UPPER FORMING RING	1-107, 1-109
2764016-0000	.UPPER FORMING RING	1-107, 1-109
2764020-0000	.UPPER FORMING RING	1-107, 1-109
2764022-0000	.UPPER FORMING RING	1-107, 1-109
2764023-0000	.LOWER FORMING RING	1-91, 1-93, 1-95, 1-97
2764024-0000	.LOWER FORMING RING	1-91, 1-93, 1-95, 1-97
2764026-0000	.LOWER FORMING RING	1-91, 1-93, 1-95, 1-97
2764027-0000	.LOWER FORMING RING	1-91, 1-93, 1-95, 1-97
2764032-0000	.SHAFT	1-91, 1-93, 1-95, 1-97
2764033-0000	.SHAFT	1-91, 1-93, 1-95, 1-97
2764034-0000	.SHAFT	1-107, 1-109
2764035-0000	.SHAFT	1-107, 1-109
2764036-0000	.KNOB	1-91, 1-93, 1-95, 1-97, 1-107, 1-109
2765642-0000	.PIN	7-119, 7-121, 7-123
2765643-0000	.PLATE	7-119, 7-121, 7-123
2765646-0000	.SHAFT	7-61
2765647-0000	.SHAFT	7-63
2765649-0100	.HEATING DEVICE	7-51
2765650-0000	.SHAFT	7-53
2765651-0000	.SHAFT	7-53
2765652-0000	.FINGER	7-55
2765653-0100	.CUTTING TABLE	7-51
2765654-0000	.BRACKET	7-55
2765657-0000	.PLATE	7-51
2765667-0200	.STRIP APPLICATOR	7-3
2765668-0100	.INDUCTOR	7-23
2765671-0100	.INDUCTOR	7-27
2765672-0000	.BRACKET	7-27
2765676-0000	.BRACKET	7-27
2765677-0000	.SHEET	7-23
2765678-0000	.PLATE	7-119, 7-121, 7-123
2765679-0000	.PIN	7-119, 7-121, 7-123
2765680-0000	.NUT	7-23
2765687-0000	.STEERING	7-23
2766444-0000	.ROLLER	1-125, 1-127
2767860-0000	.BRACKET	5-173, 5-175, 5-177, 5-179, 5-181, 5-183, 5-185, 5-187, 5-189, 5-191, 5-193, 5-195, 5-197, 5-199, 5-201, 5-203
2767861-0000	.SLIDER	5-173, 5-175, 5-177, 5-179, 5-181, 5-183, 5-185, 5-187, 5-189, 5-191, 5-193, 5-195, 5-197, 5-199, 5-201, 5-203

Part No	Description	Page No
2767862-0000	.SLIDER	5-173, 5-175, 5-177, 5-179, 5-181, 5-183, 5-185, 5-187, 5-189, 5-191, 5-193, 5-195, 5-197, 5-199, 5-201, 5-203
2769575-0000	.ROLLER	4-21
2769619-0000	.PLATFORM	2-121
2769620-0000	.PLATFORM	2-121
2769875-0000	.MOUNTING BLOCK	4-45, 4-47, 4-49, 4-51, 4-53, 4-55
2770014-0000	.MOUNTING BLOCK	4-39, 4-41, 4-43
2770501-0000	.SHAFT	5-133, 5-135, 5-137, 5-139, 5-141, 5-143, 5-145, 5-147, 5-149, 5-151, 5-153, 5-155, 5-157, 5-159, 5-161, 5-163, 5-165, 5-167, 5-169, 5-171
2770644-0100	.CHAIN	4-3
2770645-0100	.CHAIN	4-3
2771065-0100	.ROLLER	7-23
2771066-0000	.SUPPORT	7-41
2771068-0100	.PRESSURE ROLLER	7-27
2771070-0100	.ROLLER	7-23
2771071-0000	.SHAFT	7-43
2771072-0000	.BENDING ROLLER	7-43
2771077-0000	.SUPPORT	7-43
2771080-0000	.PULLEY	7-35
2771081-0100	.BENDING ROLLER	7-23
2771083-0000	.SHAFT	7-27
2771084-0100	.BENDING ROLLER	7-5, 7-7
2771090-0000	.SHAFT	7-35
2771091-0100	.PULLEY	7-27
2771102-0100	.CUTTING TABLE	7-97
2771103-0000	.TABLE	7-101
2771108-0000	.HOLDER	7-101
2771113-0000	.BRACKET	7-125
2771120-0000	.SPACER	5-33, 5-35
2771518-0000	.SLIDE	5-93, 5-95, 5-97, 5-99, 5-101, 5-103, 5-105, 5-107, 5-109, 5-111, 5-113
2771519-0000	.SLIDE	5-93, 5-95, 5-97, 5-99, 5-101, 5-103, 5-105, 5-107, 5-109, 5-111, 5-113
2771538-0000	.SPRING	5-217, 5-219, 5-221, 5-223, 5-225, 5-227, 5-229
2771539-0000	.GUIDE	5-83, 5-85, 5-87, 5-89, 5-91
2771540-0000	.BUSHING	5-217, 5-219, 5-221, 5-223, 5-225, 5-227, 5-229
2772796-0000	.SPACER	5-231, 5-233
2773832-0000	.GASKET	5-213, 5-215
2773838-0000	.SPACER	5-205, 5-207, 5-209, 5-211
2774347-0000	.KNIFE	4-57, 4-59, 4-61, 4-63, 4-65, 4-67
2774348-0000	.EXTENSION SHAFT	6-73, 6-75
2774390-0000	.PLATE	1-45
2774391-0000	.SUPPORT	1-45
2774392-0000	.SUPPORT	1-45
2774393-0000	.SUPPORT	1-45
2774394-0000	.SUPPORT	1-45
2774395-0000	.SHAFT	1-45
2774463-0200	.VALVE PANEL	2-21
2774464-0000	.PANEL	2-29, 2-31
2774487-0000	.SPACER	5-205, 5-207, 5-209, 5-211
2774490-0000	.FLANGE	5-93, 5-95, 5-97, 5-99, 5-101, 5-103, 5-105, 5-107, 5-109, 5-111, 5-113
2775100-0300	.INTEGRATED CLEANING UNIT	1-251
2775582-0100	.CHAIN TENSIONER	11-85, 11-87, 11-89
2775583-0000	.SIDE PLATE	11-111
2775584-0000	.SIDE PLATE	11-111
2775679-0100	.PACKING DESCRIPTION	11-153, 11-155, 11-157
2775694-0000	.BRACKET	11-209
2775695-0000	.BRACKET	11-209
2775737-0000	.SIDE PLATE	11-107
2775930-0000	.CHAIN SUPPORT	11-35, 11-109
2775931-0000	.CHAIN SUPPORT	11-35, 11-109
2775944-0000	.SIDE PLATE	11-109
2776087-0000	.PIN	7-85, 7-87
2776093-0000	.BRACKET	7-5, 7-7
2776097-0000	.SPACER	7-31
2776098-0000	.SPACER	7-37
2776128-0000	.BENDING ROLLER	7-69, 7-71
2776131-0000	.PIN	7-91
2776368-0200	.VALVE GROUP	2-29, 2-31
2776851-0000	.SUPPORT	5-83, 5-85, 5-87, 5-89, 5-91
2776852-0000	.SUPPORT	5-13, 5-83, 5-85, 5-87, 5-89, 5-91
2776853-0000	.SHAFT	5-13, 5-83, 5-85, 5-87, 5-89, 5-91
2777968-0000	.SPACER	1-207
2777971-0000	.SHAFT	1-31
2778457-0000	.PULLEY	5-217, 5-219, 5-221, 5-223, 5-225, 5-227, 5-229
2778458-0000	.ROLLER	5-217, 5-219, 5-221, 5-223, 5-225, 5-227, 5-229
2778524-0000	.PNEUMATIC DIAGRAM	9-69
2778525-0100	.VALVE PANEL	6-85
2778526-0100	.VALVE PANEL	6-83
2778562-0000	.BOTTOM SECTION	1-287, 1-289
2778689-0000	.SPACER	5-205, 5-207, 5-209, 5-211
2778709-0000	.FOLDING FLAP	4-71, 4-73, 4-75, 4-77, 4-79, 4-81
2778710-0000	.FOLDING FLAP	4-71, 4-73, 4-75, 4-77, 4-79, 4-81
2778711-0000	.FOLDING FLAP	4-71, 4-73, 4-75, 4-77, 4-79, 4-81
2778712-0000	.FOLDING FLAP	4-71, 4-73, 4-75, 4-77, 4-79, 4-81
2778713-0000	.FOLDING FLAP	4-71, 4-73, 4-75, 4-77, 4-79, 4-81

Part No	Description	Page No
2778714-0000	.FOLDING FLAP	4-71, 4-73, 4-75, 4-77, 4-79, 4-81
2778715-0000	.FOLDING FLAP	4-71, 4-73, 4-75, 4-77, 4-79, 4-81
2778716-0000	.FOLDING FLAP	4-71, 4-73, 4-75, 4-77, 4-79, 4-81
2778767-0000	.PLATE	6-85
2779126-0000	.BELT	5-217, 5-219, 5-221, 5-223, 5-225, 5-227, 5-229, 9-23
2779651-0000	.FRAME	5-93, 5-95, 5-97, 5-99, 5-101, 5-103, 5-105, 5-107, 5-109, 5-111, 5-113
2779652-0000	.SUPPORT	5-133, 5-135, 5-137, 5-139, 5-141, 5-143, 5-145, 5-147, 5-149, 5-151, 5-153, 5-155, 5-157, 5-159, 5-161, 5-163, 5-165, 5-167, 5-169, 5-171
2779653-0000	.PULLEY	5-173, 5-175, 5-177, 5-179, 5-181, 5-183, 5-185, 5-187, 5-189, 5-191, 5-193, 5-195, 5-197, 5-199, 5-201, 5-203
2779654-0000	.PULLEY	5-217, 5-219, 5-221, 5-223, 5-225, 5-227, 5-229
2779655-0000	.ROLLER	5-217, 5-219, 5-221, 5-223, 5-225, 5-227, 5-229
2779669-0000	.PULLEY	5-173, 5-175, 5-177, 5-179, 5-181, 5-183, 5-185, 5-187, 5-189, 5-191, 5-193, 5-195, 5-197, 5-199, 5-201, 5-203
2779670-0000	.PULLEY	5-173, 5-175, 5-177, 5-179, 5-181, 5-183, 5-185, 5-187, 5-189, 5-191, 5-193, 5-195, 5-197, 5-199, 5-201, 5-203
2779678-0000	.BRACKET	4-57, 4-59, 4-61, 4-63, 4-65, 4-67, 4-83, 4-85, 4-87, 4-89
2781164-0000	.SUPPORT	5-133, 5-135, 5-137, 5-139, 5-141, 5-143, 5-145, 5-147, 5-149, 5-151, 5-153, 5-155, 5-157, 5-159, 5-161, 5-163, 5-165, 5-167, 5-169, 5-171
2781165-0000	.HOLDER	5-133, 5-135, 5-137, 5-139, 5-141, 5-143, 5-145, 5-147, 5-149, 5-151, 5-153, 5-155, 5-157, 5-159, 5-161, 5-163, 5-165, 5-167, 5-169, 5-171
2782131-0000	.SUPPORT	4-27, 4-29, 4-31
2782132-0000	.ADJUSTER	4-27, 4-29, 4-31
2782133-0000	.CAM	4-27, 4-29, 4-31
2782472-0000	.PLATE	4-9, 4-11, 4-13, 4-15, 4-17, 4-19
2782473-0000	.PLATE	4-9, 4-11, 4-13, 4-15, 4-17, 4-19
2782474-0000	.PLATE	4-9, 4-11, 4-13, 4-15, 4-17, 4-19
2782475-0000	.PLATE	4-9, 4-11, 4-13, 4-15, 4-17, 4-19
2782476-0000	.BLOCK	4-9, 4-11, 4-13, 4-15, 4-17, 4-19
2782478-0000	.PIPE	4-9, 4-11, 4-13, 4-15, 4-17, 4-19
2782479-0000	.PIPE	4-9, 4-11, 4-13, 4-15, 4-17, 4-19
2782480-0000	.SHAFT	3-17, 3-19, 3-21, 3-23, 3-25
2782481-0000	.SHAFT	4-5, 4-7
2782485-0000	.PIPE	4-99, 4-101, 4-103, 4-105
2782486-0000	.PIPE	4-99, 4-101, 4-103, 4-105
2782487-0000	.PIPE	4-99, 4-101, 4-103, 4-105
2782488-0000	.PIPE	4-99, 4-101, 4-103, 4-105
2782494-0000	.BUSBAR	4-87, 4-89
2782495-0000	.BUSBAR	4-83, 4-85
2782496-0000	.VOLUME FLAP	4-57, 4-59, 4-61, 4-63, 4-65, 4-67, 4-83, 4-85, 4-87, 4-89
2782497-0000	.VOLUME FLAP	4-57, 4-59, 4-61, 4-63, 4-65, 4-67, 4-83, 4-85, 4-87, 4-89
2782501-0000	.PIPE	4-99, 4-101, 4-103, 4-105
2782502-0000	.PIPE	4-99, 4-101, 4-103, 4-105
2782503-0000	.PIPE	4-99, 4-101, 4-103, 4-105
2782504-0000	.PIPE	4-99, 4-101, 4-103, 4-105
2782505-0000	.PIPE	4-9, 4-11, 4-13, 4-15, 4-17, 4-19
2782506-0000	.PIPE	4-9, 4-11, 4-13, 4-15, 4-17, 4-19
2782508-0000	.PLATE	4-9, 4-11, 4-13, 4-15, 4-17, 4-19
2782509-0000	.PLATE	4-9, 4-11, 4-13, 4-15, 4-17, 4-19
2782510-0000	.PLATE	4-9, 4-11, 4-13, 4-15, 4-17, 4-19
2782511-0000	.PLATE	4-9, 4-11, 4-13, 4-15, 4-17, 4-19
2782512-0000	.LINK ARM	4-83, 4-85, 4-87, 4-89
2782513-0000	.LINK ARM	4-83, 4-85, 4-87, 4-89
2782518-0000	.PIPE	4-9, 4-11, 4-13, 4-15, 4-17, 4-19
2782519-0000	.PIPE	4-9, 4-11, 4-13, 4-15, 4-17, 4-19
2782521-0000	.PLATE	4-9, 4-11, 4-13, 4-15, 4-17, 4-19
2782522-0000	.PLATE	4-9, 4-11, 4-13, 4-15, 4-17, 4-19
2782523-0000	.PLATE	4-9, 4-11, 4-13, 4-15, 4-17, 4-19
2782524-0000	.PLATE	4-9, 4-11, 4-13, 4-15, 4-17, 4-19
2783010-0400	.CABLE DUCT	1-3
2783015-0000	.PIPE	1-175
2783016-0000	.PIPE	1-175
2783017-0000	.PIPE	1-175
2783025-0000	.FLANGE	1-9
2783047-0200	.STERILE AIR PIPE	1-163, 1-165
2783049-0000	.FRAME	1-65
2783050-0000	.FRAME	1-61
2783053-0000	.FRAME	1-63
2783054-0000	.WINDOW FRAME	1-27
2783055-0100	.DOOR	1-5
2783064-0100	.DOOR	1-5
2783065-0000	.WINDOW FRAME	1-29
2783066-0000	.GASKET	1-29
2783067-0000	.GLASS PANE	1-29
2783068-0000	.CLAMP BLOCK	1-29
2783069-0100	.AIR KNIFE	1-5
2783074-0100	.DOOR	1-5
2783075-0000	.WINDOW FRAME	1-35
2783076-0000	.GASKET	1-35
2783077-0000	.GLASS PANE	1-35
2783088-0300	.STERILE AIR PIPE	1-163, 1-165
2783089-0000	.SHAFT	1-21
2783091-0000	.ROD	1-21
2783093-0000	.GASKET	1-27

Part No	Description	Page No
2783094-0000	.GLASS PANE	1-27
2783096-0000	.BASE PLATE	1-305, 1-307
2783101-0200	.HOUSING	1-5
2783103-0000	.AIR GUIDE	1-31
2783104-0000	.AIR GUIDE	1-31
2783106-0000	.FLANGE	1-19
2783108-0000	.FLANGE	1-9
2783223-0000	.CAM	4-9, 4-11, 4-13, 4-15, 4-17, 4-19
2783487-0000	.VOLUME FLAP	4-57, 4-59, 4-61, 4-63, 4-65, 4-67, 4-83, 4-85, 4-87, 4-89
2783488-0000	.VOLUME FLAP	4-57, 4-59, 4-61, 4-63, 4-65, 4-67, 4-83, 4-85, 4-87, 4-89
2783815-0000	.SUPPORT	5-93, 5-95, 5-97, 5-99, 5-101, 5-103, 5-105, 5-107, 5-109, 5-111, 5-113
2783816-0000	.HOLDER	5-93, 5-95, 5-97, 5-99, 5-101, 5-103, 5-105, 5-107, 5-109, 5-111, 5-113
2783817-0000	.FRAME	5-93, 5-95, 5-97, 5-99, 5-101, 5-103, 5-105, 5-107, 5-109, 5-111, 5-113
2783818-0000	.FRAME	5-93, 5-95, 5-97, 5-99, 5-101, 5-103, 5-105, 5-107, 5-109, 5-111, 5-113
2783819-0000	.FLANGE	5-93, 5-95, 5-97, 5-99, 5-101, 5-103, 5-105, 5-107, 5-109, 5-111, 5-113
2783820-0000	.PULLEY	5-93, 5-95, 5-97, 5-99, 5-101, 5-103, 5-105, 5-107, 5-109, 5-111, 5-113
2783821-0000	.FLANGE	5-93, 5-95, 5-97, 5-99, 5-101, 5-103, 5-105, 5-107, 5-109, 5-111, 5-113
2783822-0000	.PULLEY	5-93, 5-95, 5-97, 5-99, 5-101, 5-103, 5-105, 5-107, 5-109, 5-111, 5-113
2783823-0000	.PULLEY	5-93, 5-95, 5-97, 5-99, 5-101, 5-103, 5-105, 5-107, 5-109, 5-111, 5-113
2783837-0000	.SHAFT	3-17, 3-19, 3-21, 3-23, 3-25
2784674-0000	.PULLEY	5-93, 5-95, 5-97, 5-99, 5-101, 5-103, 5-105, 5-107, 5-109, 5-111, 5-113
2785231-0100	.CONNECTION BOX	6-3
2785232-0000	.CONNECTION BOX	6-77
2785233-0100	.CONNECTION BOX	2-95
2785234-0000	.CONNECTION BOX	2-105
2785235-0200	.CONNECTION BOX	2-95
2785236-0000	.CONNECTION BOX	2-15, 2-53, 2-101
2785237-0000	.SUPPORT	2-101
2785239-0100	.CONNECTION BOX	2-5, 2-7
2785243-0200	.CONNECTION BOX	2-47
2786750-0200	.DRAINING	2-3
2786751-0000	.PIPE	2-227
2786753-0000	.PIPE	2-227
2786754-0000	.BRACKET	2-227
2786998-0000	.LOAD ANALYZER	12-27
2787149-0000	.FITTING BOLT	1-347
2787432-0000	.SLIDER	5-217, 5-219, 5-221, 5-223, 5-225, 5-227, 5-229
2787433-0000	.SLIDER	5-217, 5-219, 5-221, 5-223, 5-225, 5-227, 5-229
2787568-0000	.HOOD	1-195, 1-197
2787590-0000	.SHAFT	4-5, 4-7
2787591-0000	.HOUSING	4-9, 4-11, 4-13, 4-15, 4-17, 4-19
2787592-0000	.INSERT	4-3
2787593-0000	.CRANK	4-95, 4-97
2787594-0000	.HOLDER	4-95, 4-97
2787745-0000	.SUPPORT	5-83, 5-85, 5-87, 5-89, 5-91
2788592-0000	.PLUG	1-43
2788593-0000	.PLUG	1-43
2788594-0000	.PLUG	1-43
2788596-0100	.PLUG	1-5
2788616-0000	.LID	1-355
2788617-0000	.LID	1-355
2788620-0000	.CLAMP	1-229, 1-231
2788621-0000	.CLAMP	1-229, 1-231
2788624-0000	.BENDING ROLLER	1-287, 1-289
2788625-0000	.SHAFT	1-11
2788631-0000	.PLATE	1-11
2788634-0200	.DRYING CHAMBER	1-3
2790043-0000	.SIGN	2-209
2790190-0000	.SPRING	5-115, 5-117
2790258-0000	.SLIDER	5-217, 5-219, 5-221, 5-223, 5-225, 5-227, 5-229
2790259-0000	.SUPPORT	5-217, 5-219, 5-221, 5-223, 5-225, 5-227, 5-229
2790605-0000	.ROLLER	12-11, 12-13, 12-15
2790687-0000	.SUPPORT	2-15
2790901-0000	.PIPE	1-283, 1-285
2790902-0000	.PIPE	1-283, 1-285
2790903-0000	.PIPE	1-283, 1-285
2790920-0100	.PNEUMATIC PANEL	7-3
2790922-0000	.PROTECTION	7-89
2790924-0000	.SHAFT	7-119, 7-121, 7-123
2790925-0000	.SLEEVE	7-21
2790927-0000	.BRACKET	7-155
2790930-0000	.BRACKET	7-155
2790931-0000	.LOCKING ARM	7-157
2790932-0000	.LOCKING ARM	7-165, 7-169, 7-173, 7-175
2790934-0000	.WASHER	7-5, 7-7, 7-157, 7-161
2790936-0000	.PLATE	7-83
2790938-0000	.SPACER	7-77
2790940-0000	.INFEEDER	7-75
2790942-0000	.INFEEDER	7-75
2790944-0000	.CABLE DUCT	7-5, 7-7
2791035-0000	.BRACKET	4-71, 4-73, 4-75, 4-77, 4-79, 4-81, 4-83, 4-85, 4-87, 4-89, 12-11, 12-13, 12-15
2791036-0000	.BRACKET	4-71, 4-73, 4-75, 4-77, 4-79, 4-81, 4-83, 4-85, 4-87, 4-89
2791091-0000	.BRACKET	4-71, 4-73, 4-75, 4-77, 4-79, 4-81, 4-83, 4-85, 4-87, 4-89
2791420-0000	.SUPPORT	5-217, 5-219, 5-221, 5-223, 5-225, 5-227, 5-229

Part No	Description	Page No
2791421-0000	.SPACER	5-217, 5-219, 5-221, 5-223, 5-225, 5-227, 5-229
2791422-0000	.SLIDER	5-217, 5-219, 5-221, 5-223, 5-225, 5-227, 5-229
2791423-0000	.SPACER BLOCK	5-217, 5-219, 5-221, 5-223, 5-225, 5-227, 5-229
2791424-0000	.SUPPORT	5-217, 5-219, 5-221, 5-223, 5-225, 5-227, 5-229
2791425-0000	.SHAFT	5-217, 5-219, 5-221, 5-223, 5-225, 5-227, 5-229
2791426-0000	.GUIDE BRACKET	5-217, 5-219, 5-221, 5-223, 5-225, 5-227, 5-229
2791427-0000	.WASHER	5-217, 5-219, 5-221, 5-223, 5-225, 5-227, 5-229
2791428-0000	.PLATE	5-217, 5-219, 5-221, 5-223, 5-225, 5-227, 5-229
2791610-0000	.GUIDE	4-71, 4-73, 4-75, 4-77, 4-79, 4-81, 4-83, 4-85, 4-87, 4-89, 12-11, 12-13, 12-15
2792118-0000	.SUPPORT	6-13, 6-35
2792119-0300	.FILTER	6-33
2792120-0000	.SUPPORT	6-13, 6-35
2792619-0000	.GUIDE	5-173, 5-175, 5-177, 5-179, 5-181, 5-183, 5-185, 5-187, 5-189, 5-191, 5-193, 5-195, 5-197, 5-199, 5-201, 5-203
2792620-0000	.GUIDE	5-173, 5-175, 5-177, 5-179, 5-181, 5-183, 5-185, 5-187, 5-189, 5-191, 5-193, 5-195, 5-197, 5-199, 5-201, 5-203
2792621-0000	.GUIDE	5-173, 5-175, 5-177, 5-179, 5-181, 5-183, 5-185, 5-187, 5-189, 5-191, 5-193, 5-195, 5-197, 5-199, 5-201, 5-203
2792625-0000	.CAM	4-9, 4-11, 4-13, 4-15, 4-17, 4-19
2792626-0000	.CAM	4-9, 4-11, 4-13, 4-15, 4-17, 4-19
2792850-0000	.CANTILEVER	2-51
2793298-0000	.CHECKER PLATE	2-121
2793317-0000	.PLUG	1-169
2793318-0000	.SLIDE	1-169
2793320-0300	.TEMPLATE	9-39
2793359-0000	.SLIDE BAR	1-73
2793366-0000	.LID	1-345
2793377-0000	.PIPE	1-229, 1-231
2793378-0000	.PIPE	1-229, 1-231
2793386-0000	.LID	1-57
2793387-0000	.COVER	1-351
2793390-0000	.FRAME	1-351
2793391-0000	.COVERING PANEL	1-351
2793393-0000	.BRACKET	1-57
2794722-0000	.MOUNTING BLOCK	4-61, 4-63, 4-65, 4-67
2794723-0000	.MOUNTING BLOCK	4-57, 4-59
2794775-0000	.BRACKET	5-173, 5-175, 5-177, 5-179, 5-181, 5-183, 5-185, 5-187, 5-189, 5-191, 5-193, 5-195, 5-197, 5-199, 5-201, 5-203
2794834-0000	.WASHER	5-217, 5-219, 5-221, 5-223, 5-225, 5-227, 5-229
2795887-0000	.CHECKER PLATE	2-125, 2-127
2795888-0200	.FILTER	6-5
2797148-0000	.PIN	7-81
2797149-0100	.PRESSURE JAW	7-75
2797150-0100	.PRESSURE JAW	7-75
2797154-0000	.PLATE	7-77
2797158-0000	.SEALING PLATE	7-31
2797161-0000	.PIN	7-27
2797162-0000	.BRACKET	7-27
2797163-0000	.SPACER	7-41
2797164-0000	.PLATE	7-31
2797167-0000	.PRESSURE ROLLER	7-27
2797367-0000	.SPACER	5-217, 5-219, 5-221, 5-223, 5-225, 5-227, 5-229
2797368-0000	.SPACER	5-217, 5-219, 5-221, 5-223, 5-225, 5-227, 5-229
2797502-0000	.PANEL	7-109, 7-111
2797503-0100	.VALVE GROUP	7-109, 7-111
2797504-0100	.AIR INLET	7-109, 7-111
2797505-0100	.VALVE PANEL	7-107
2797506-0100	.VALVE GROUP	7-109, 7-111
2798501-0000	.SPACER	5-93, 5-95, 5-97, 5-99, 5-101, 5-103, 5-105, 5-107, 5-109, 5-111, 5-113
2798503-0000	.CABLE TRENCH	5-231, 5-233
2799295-0000	.SHAFT	7-49, 7-59
2799308-0000	.SPACER	7-31
2799892-0000	.CLAMP	1-229, 1-231
2799894-0000	.CENTERING UNIT	9-47
2799899-0000	.CLEANING TANK	1-269
2800104-0000	.HOSE	8-115
2800116-0000	.HOSE	8-115
2800316-0000	.LEVER	7-85
2801967-0000	.BRACKET	5-43, 5-45, 5-47, 5-49
2802786-0000	.GUIDE	4-57, 4-59, 4-61, 4-63, 4-65, 4-67
2803141-0000	.BRACKET	5-43, 5-45, 5-47, 5-49
2803220-0000	.BRACKET	1-133
2803221-0000	.BRACKET	1-133
2803661-0000	.CABLE	6-19
2804317-0000	.CABLE TRENCH	5-231, 5-233
2805414-0000	.UPPER FILLING PIPE	1-195, 1-197
2805415-0000	.STOP PIN	1-195, 1-197
2805416-0000	.STOP PIN	1-195, 1-197
2805509-0000	.SHAFT	7-85
2805510-0000	.SLEEVE	7-85
2806294-0000	.SHAFT	5-93, 5-95, 5-97, 5-99, 5-101, 5-103, 5-105, 5-107, 5-109, 5-111, 5-113
2806369-0000	.SUPPORT	5-13, 5-83, 5-85, 5-87, 5-89, 5-91
2806613-0000	.BRACKET	5-83, 5-85, 5-87, 5-89, 5-91
2806658-0100	.STRIP GUIDE	7-23

Part No	Description	Page No
2806661-0000	.CATCH	7-75
2806665-0000	.PLATE	7-5, 7-7
2806666-0000	.SPACER	7-75
2806668-0000	.PLATE	7-77
2806674-0000	.GUIDE	7-119, 7-121, 7-123
2806677-0100	.PAPER GUIDE	7-69, 7-71
2806678-0200	.DRIVE UNIT	7-69, 7-71
2806679-0100	.COUNTER ROLLER	7-69, 7-71
2806681-0000	.ANGLE BRACKET	7-125
2806682-0200	.CONNECTION BOX	7-5, 7-7
2806683-0000	.PLATE	7-77
2806684-0000	.PLATE	7-77
2806686-0000	.PUSH BUTTON	7-13
2806687-0100	.PUSH BUTTON	7-5, 7-7
2806963-0000	.PIPE	2-245
2807274-0000	.ARCH	5-43, 5-45, 5-47, 5-49
2807275-0000	.ARCH	5-43, 5-45, 5-47, 5-49
2807592-0000	.MULTI BRACKET SINGLE	11-3, 11-5, 11-7, 11-49
2807593-0000	.CURVE BRACKET	11-3, 11-5, 11-7
2807604-0101	.LEG,CONVEYOR	11-3, 11-5, 11-7
2807605-0101	.LEG,CONVEYOR	11-3, 11-5, 11-7
2807614-0000	.LEG,CONVEYOR	11-79
2807615-0000	.LEG,CONVEYOR	11-57
2807685-0100	.WASHPOINT	11-85, 11-87, 11-89
2807688-0100	.QUEUE GUARD	11-3, 11-5, 11-7
2807690-0000	.BRACKET	11-233
2807746-0000	.PROTECTION	11-111
2807804-0000	.GUIDE	11-107
2807805-0000	.GUIDE	11-107
2807970-0207	.DRIVE AND END UNIT,RH	11-3, 11-5, 11-7
2808041-0000	.GEARED MOTOR	11-121
2808044-0100	.PACKING DESCRIPTION	11-233
2808595-0000	.PLATE	5-37, 5-39
2808597-0000	.ARCH	5-43, 5-45, 5-47, 5-49
2808806-0000	.ARCH	5-43, 5-45, 5-47, 5-49
2809791-0000	.SUPPORT	5-83, 5-85, 5-87, 5-89, 5-91
2809809-0000	.GASKET	2-199, 2-201, 2-203
2810967-0000	.GUIDE	5-217, 5-219, 5-221, 5-223, 5-225, 5-227, 5-229
2810969-0000	.SHAFT	5-93, 5-95, 5-97, 5-99, 5-101, 5-103, 5-105, 5-107, 5-109, 5-111, 5-113
2810975-0000	.RAIL	5-133, 5-135, 5-137, 5-139, 5-141, 5-143, 5-145, 5-147, 5-149, 5-151, 5-153, 5-155, 5-157, 5-159, 5-161, 5-163, 5-165, 5-167, 5-169, 5-171
2810980-0000	.BRACKET	5-133, 5-135, 5-137, 5-139, 5-141, 5-143, 5-145, 5-147, 5-149, 5-151, 5-153, 5-155, 5-157, 5-159, 5-161, 5-163, 5-165, 5-167, 5-169, 5-171
2810981-0000	.SHAFT	5-133, 5-135, 5-137, 5-139, 5-141, 5-143, 5-145, 5-147, 5-149, 5-151, 5-153, 5-155, 5-157, 5-159, 5-161, 5-163, 5-165, 5-167, 5-169, 5-171
2810982-0000	.SHAFT	5-133, 5-135, 5-137, 5-139, 5-141, 5-143, 5-145, 5-147, 5-149, 5-151, 5-153, 5-155, 5-157, 5-159, 5-161, 5-163, 5-165, 5-167, 5-169, 5-171
2811435-0000	.GASKET	2-195, 2-197
2811436-0000	.GASKET	2-195, 2-197
2811486-0000	.PRESSURE JAW	4-57, 4-59, 4-61, 4-63, 4-65, 4-67
2811487-0000	.LINK	4-57, 4-59, 4-61, 4-63, 4-65, 4-67
2811488-0000	.PRESSURE JAW	4-57, 4-59, 4-61, 4-63, 4-65, 4-67
2811489-0000	.SEALING JAW	4-83, 4-85, 4-87, 4-89
2811490-0000	.SEALING JAW	4-83, 4-85, 4-87, 4-89
2811491-0000	.SEALING JAW	4-83, 4-85, 4-87, 4-89
2811492-0000	.PLATE	4-9, 4-11, 4-13, 4-15, 4-17, 4-19
2811727-0100	.WASTE BOX	4-3
2811736-0000	.HOLDER	4-109, 4-111, 4-113, 4-115
2811737-0000	.SHAFT	4-57, 4-59, 4-61, 4-63, 4-65, 4-67, 4-83, 4-85, 4-87, 4-89
2811771-0000	.SHAFT	4-57, 4-59, 4-61, 4-63, 4-65, 4-67, 4-83, 4-85, 4-87, 4-89
2812157-0000	.BUSHING	4-57, 4-59, 4-61, 4-63, 4-65, 4-67
2812438-0000	.SHAFT	4-39, 4-41, 4-43, 4-45, 4-47, 4-49, 4-51, 4-53, 4-55, 4-71, 4-73, 4-75, 4-77, 4-79, 4-81
2812439-0000	.BUSHING	4-39, 4-41, 4-43, 4-45, 4-47, 4-49, 4-51, 4-53, 4-55, 4-57, 4-59, 4-61, 4-63, 4-65, 4-67, 4-71, 4-73, 4-75, 4-77, 4-79, 4-81, 4-83, 4-85, 4-87, 4-89
2812440-0000	.SPRING	4-39, 4-41, 4-43, 4-45, 4-47, 4-49, 4-51, 4-53, 4-55, 4-71, 4-73, 4-75, 4-77, 4-79, 4-81, 9-7
2812441-0000	.LEVER	4-39, 4-41, 4-43, 4-45, 4-47, 4-49, 4-51, 4-53, 4-55, 4-71, 4-73, 4-75, 4-77, 4-79, 4-81
2812442-0000	.WASHER	4-39, 4-41, 4-43, 4-45, 4-47, 4-49, 4-51, 4-53, 4-55, 4-57, 4-59, 4-61, 4-63, 4-65, 4-67, 4-71, 4-73, 4-75, 4-77, 4-79, 4-81, 4-83, 4-85, 4-87, 4-89
2812443-0000	.SHAFT	4-39, 4-41, 4-43, 4-45, 4-47, 4-49, 4-51, 4-53, 4-55, 4-71, 4-73, 4-75, 4-77, 4-79, 4-81
2812444-0000	.BUSHING	4-39, 4-41, 4-43, 4-45, 4-47, 4-49, 4-51, 4-53, 4-55, 4-57, 4-59, 4-61, 4-63, 4-65, 4-67, 4-71, 4-73, 4-75, 4-77, 4-79, 4-81, 4-83, 4-85, 4-87, 4-89
2812445-0000	.PIN	4-71, 4-73, 4-75, 4-77, 4-79, 4-81
2812446-0000	.SPRING	4-71, 4-73, 4-75, 4-77, 4-79, 4-81
2812447-0000	.LEVER	4-71, 4-73, 4-75, 4-77, 4-79, 4-81, 9-7
2812451-0000	.SPRING	4-39, 4-41, 4-43, 4-45, 4-47, 4-49, 4-51, 4-53, 4-55, 4-71, 4-73, 4-75, 4-77, 4-79, 4-81, 9-7
2812669-0000	.GASKET	2-195, 2-197
2812721-0000	.CONVEYOR	5-93, 5-95, 5-97, 5-99, 5-101, 5-103, 5-105, 5-107, 5-109, 5-111, 5-113
2813203-0000	.PIPE	2-259, 2-261
2813204-0000	.TANK	2-259, 2-261
2813403-0100	.BASKET	2-77
2813668-0000	.HOLDER	2-111
2813717-0000	.FRAME	5-133, 5-135, 5-137, 5-139, 5-141, 5-143, 5-145, 5-147, 5-149, 5-151, 5-153, 5-155

Part No	Description	Page No
		5-157, 5-159, 5-161, 5-163, 5-165, 5-167, 5-169, 5-171
2813718-0000	.FRAME	5-133, 5-135, 5-137, 5-139, 5-141, 5-143, 5-145, 5-147, 5-149, 5-151, 5-153, 5-155
		5-157, 5-159, 5-161, 5-163, 5-165, 5-167, 5-169, 5-171
2813719-0000	.FRAME	5-133, 5-135, 5-137, 5-139, 5-141, 5-143, 5-145, 5-147, 5-149, 5-151, 5-153, 5-155
		5-157, 5-159, 5-161, 5-163, 5-165, 5-167, 5-169, 5-171
2813720-0000	.FRAME	5-133, 5-135, 5-137, 5-139, 5-141, 5-143, 5-145, 5-147, 5-149, 5-151, 5-153, 5-155
		5-157, 5-159, 5-161, 5-163, 5-165, 5-167, 5-169, 5-171
2813721-0000	.FRAME	5-133, 5-135, 5-137, 5-139, 5-141, 5-143, 5-145, 5-147, 5-149, 5-151, 5-153, 5-155
		5-157, 5-159, 5-161, 5-163, 5-165, 5-167, 5-169, 5-171
2813784-0000	.SHUTTER	1-235, 1-237
2813815-0000	.SHAFT	4-5, 4-7
2814591-0000	.SUPPORT	2-81
2814659-0000	.CAM	4-27, 4-29, 4-31
2814838-0000	.CAM	4-27, 4-29, 4-31
2816113-0000	.PLATE	5-83, 5-85, 5-87, 5-89, 5-91
2816348-0000	.PNEUMATIC DIAGRAM	9-71
2816352-0000	.PNEUMATIC DIAGRAM	9-69
2817096-0000	.SUPPORT	4-109, 4-111, 4-113, 4-115
2818309-0000	.PLATE	4-109, 4-111, 4-113, 4-115
2818560-0000	.BRACKET	5-213, 5-215
2818674-0000	.STOPPER	7-11
2819096-0000	.SUPPORT	2-69
2819097-0000	.GUIDE	2-69
2819396-0000	.BRACKET	7-5, 7-7
2819397-0000	.SPRING PIN	7-33
2819398-0000	.SPACER	7-77
2819402-0000	.SPACER	7-89
2825382-0000	.VOLUME FLAP	4-57, 4-59, 4-61, 4-63, 4-65, 4-67, 4-83, 4-85, 4-87, 4-89
2826325-0000	.COVER	1-235, 1-237
2826381-0000	.BOX	1-57
2826382-0000	.BRACKET	1-57
2826383-0000	.BRACKET	1-351
2826384-0000	.BRACKET	1-351
2826392-0000	.SPRING	1-195, 1-197
2826398-0000	.SPRING	1-195, 1-197
2826399-0000	.SPRING	1-195, 1-197
2826410-0000	.ROLLER	1-99
2826414-0400	.COUNTER ROLLER	1-5
2826436-0000	.PIPE	1-215
2826439-0000	.VALVE CONE	1-221
2826440-0000	.SEAL RING	1-221, 9-11
2826441-0000	.SEAL RING	1-219, 1-223, 9-11
2826442-0000	.VALVE CONE	1-187, 1-219, 1-223
2826443-0000	.DIAPHRAGM	9-11
2826449-0000	.FLOAT	1-195, 1-197
2826481-0000	.CRANK	4-95, 4-97
2826482-0000	.CRANK	4-95, 4-97
2827786-0000	.TOP SECTION	5-173, 5-175, 5-177, 5-179, 5-181, 5-183, 5-185, 5-187, 5-189, 5-191, 5-193
		5-195, 5-197, 5-199, 5-201, 5-203
2827787-0000	.TOP SECTION	5-173, 5-175, 5-177, 5-179, 5-181, 5-183, 5-185, 5-187, 5-189, 5-191, 5-193
		5-195, 5-197, 5-199, 5-201, 5-203
2827788-0000	.TOP SECTION	5-173, 5-175, 5-177, 5-179, 5-181, 5-183, 5-185, 5-187, 5-189, 5-191, 5-193
		5-195, 5-197, 5-199, 5-201, 5-203
2827789-0000	.TOP SECTION	5-173, 5-175, 5-177, 5-179, 5-181, 5-183, 5-185, 5-187, 5-189, 5-191, 5-193
		5-195, 5-197, 5-199, 5-201, 5-203
2827790-0000	.TOUCH GUARD	5-173, 5-175, 5-177, 5-179, 5-181, 5-183, 5-185, 5-187, 5-189, 5-191, 5-193
		5-195, 5-197, 5-199, 5-201, 5-203
2829288-0000	.COVERING PLATE	1-189
2829639-0000	.SHAFT	5-115, 5-117
2829717-0000	.HORN	1-175
2829764-0000	.LID	1-269
2829766-0000	.SEALING	1-269
2829767-0000	.PIPE	1-273
2829769-0000	.PIPE	1-267
2829770-0200	.CENTRIFUGAL PUMP	1-265
2831686-0000	.ROLLER	7-49
2832218-0000	.PLATE	5-115, 5-117
2832463-0000	.SUPPORT	1-319
2832867-0000	.ROLLER	1-147, 1-149, 9-9
2833037-0000	.SEAL RING	1-219
2833039-0000	.PIPE	1-215
2833050-0000	.PLASTIC HOSE	1-283, 1-285
2833054-0000	.ROLLER	1-313, 1-315, 1-317
2833100-0000	.UPPER FILLING PIPE	1-195, 1-197
2833103-0000	..STOP PIN	1-195, 1-197
2833121-0000	.TOUCH GUARD	1-351
2833135-0000	.FILLING PIPE	1-195, 1-197
2833158-0000	.BRACKET	1-31
2833186-0000	.PANEL	1-351
2833187-0000	.PANEL	1-351
2833224-0000	.HOLDER	1-191
2833241-0000	.ARM	4-27, 4-29, 4-31
2833242-0000	.SHAFT	4-27, 4-29, 4-31
2833243-0000	.LINK	4-27, 4-29, 4-31

Part No	Description	Page No
2833267-0000	.SHAFT	4-27, 4-29, 4-31
2833314-0000	.WASHER	4-27, 4-29, 4-31
2833317-0000	.ECCENTRIC SHAFT	4-27, 4-29, 4-31
2833318-0000	.ROLLER	4-27, 4-29, 4-31
2833324-0000	.GASKET	5-213, 5-215
2833326-0000	.BRACKET	5-213, 5-215
2833345-0000	.PIPE	1-271
2833350-0200	.PIPE WORK	1-251
2833351-0000	.SUPPORT	1-267
2833354-0300	.PIPE-LINE	1-265
2833374-0000	.MACHINE BODY	6-55
2833376-0000	.GLASS PANE	6-63
2833377-0000	.COVER	6-55
2833378-0000	.BRACKET	6-77
2833381-0200	.WATER SYSTEM	6-3
2833382-0000	.COVER	6-55
2833383-0100	.SUPPORT	6-5
2833384-0000	.TOP COVER	6-9
2834016-0000	.SUPPORT	4-109, 4-111, 4-113, 4-115
2834201-0000	.DAMPER	4-39, 4-41, 4-43, 4-45, 4-47, 4-49, 4-51, 4-53, 4-55, 4-71, 4-73, 4-75, 4-77, 4-79, 4-81
2835095-0000	.BUSHING	5-133, 5-135, 5-137, 5-139, 5-141, 5-143, 5-145, 5-147, 5-149, 5-151, 5-153, 5-155, 5-157, 5-159, 5-161, 5-163, 5-165, 5-167, 5-169, 5-171
2835096-0000	.CARTON STATION	5-127, 5-129, 5-131
2835097-0000	.SWING FRAME	5-173, 5-175, 5-177, 5-179, 5-181, 5-183, 5-185, 5-187, 5-189, 5-191, 5-193, 5-195, 5-197, 5-199, 5-201, 5-203
2835098-0000	.GUIDE	5-173, 5-175, 5-177, 5-179, 5-181, 5-183, 5-185, 5-187, 5-189, 5-191, 5-193, 5-195, 5-197, 5-199, 5-201, 5-203
2835099-0000	.GUIDE	5-173, 5-175, 5-177, 5-179, 5-181, 5-183, 5-185, 5-187, 5-189, 5-191, 5-193, 5-195, 5-197, 5-199, 5-201, 5-203
2835100-0000	.TOP SECTION	5-173, 5-175, 5-177, 5-179, 5-181, 5-183, 5-185, 5-187, 5-189, 5-191, 5-193, 5-195, 5-197, 5-199, 5-201, 5-203
2835101-0000	.SPACER	5-205, 5-207, 5-209, 5-211
2835103-0000	.SHAFT	5-217, 5-219, 5-221, 5-223, 5-225, 5-227, 5-229
2835104-0000	.PULLEY	5-217, 5-219, 5-221, 5-223, 5-225, 5-227, 5-229
2835108-0000	.SPACER	5-205, 5-207, 5-209, 5-211
2835110-0000	.FRAME	5-93, 5-95, 5-97, 5-99, 5-101, 5-103, 5-105, 5-107, 5-109, 5-111, 5-113
2835112-0000	.FRAME	5-231, 5-233
2835121-0000	.PIPE	5-237, 5-239
2835122-0000	.PIPE	5-237, 5-239
2835123-0000	.PIPE	5-237, 5-239
2835124-0000	.PIPE	5-237, 5-239
2835125-0000	.BRACKET	5-231, 5-233
2835129-0000	.CABLE TRENCH	5-231, 5-233
2835130-0000	.SPACER	4-39, 4-41, 4-43, 4-45, 4-47, 4-49, 4-51, 4-53, 4-55, 4-71, 4-73, 4-75, 4-77, 4-79, 4-81
2835252-0000	.SUPPORT	5-115, 5-117
2835397-0000	.HINGE	5-115, 5-117
2835471-0000	.PLATE	1-69, 1-71
2835473-0000	.PLATE	1-69, 1-71
2835483-0350	.FORMING RING	1-115
2835483-0450	.FORMING RING	1-115
2835486-0000	.ROLLER	1-117
2835487-0000	.ROLLER	1-117
2835488-0000	.ROLLER	1-117
2835489-0000	.ROLLER	1-117
2835490-0000	.ROLLER	1-117
2835542-0000	.VOLUME FLAP	4-39, 4-41, 4-43, 4-45, 4-47, 4-49, 4-51, 4-53, 4-55, 4-71, 4-73, 4-75, 4-77, 4-79, 4-81
2835876-0000	.SHAFT	4-57, 4-59, 4-61, 4-63, 4-65, 4-67, 4-83, 4-85, 4-87, 4-89
2835877-0000	.SPRING	4-57, 4-59, 4-61, 4-63, 4-65, 4-67, 4-83, 4-85, 4-87, 4-89, 9-7
2835878-0000	.LEVER	4-57, 4-59, 4-61, 4-63, 4-65, 4-67, 4-83, 4-85, 4-87, 4-89
2835879-0000	.SHAFT	4-57, 4-59, 4-61, 4-63, 4-65, 4-67, 4-83, 4-85, 4-87, 4-89
2835892-0000	.PRESSURE JAW	4-39, 4-41, 4-43, 4-45, 4-47, 4-49, 4-51, 4-53, 4-55
2835899-0000	.SPRING	4-57, 4-59, 4-61, 4-63, 4-65, 4-67, 4-83, 4-85, 4-87, 4-89, 9-7
2835921-0000	.VOLUME BULGE	4-39, 4-41, 4-43, 4-45, 4-47, 4-49, 4-51, 4-53, 4-55, 4-71, 4-73, 4-75, 4-77, 4-79, 4-81
2835922-0000	.VOLUME SHIM	4-39, 4-41, 4-43, 4-45, 4-47, 4-49, 4-51, 4-53, 4-55, 4-71, 4-73, 4-75, 4-77, 4-79, 4-81, 9-7
2836235-0000	.SEALING JAW	4-71, 4-73, 4-75, 4-77, 4-79, 4-81
2836236-0000	.LEVER	4-83, 4-85, 4-87, 4-89, 9-7
2836237-0000	.SPRING	4-83, 4-85, 4-87, 4-89
2837100-0200	.CLEANING TANK	1-265
2837102-0000	.FLOAT	1-195, 1-197
2837523-0000	.SPRING	7-125
2837597-0000	.NUT	5-133, 5-135, 5-137, 5-139, 5-141, 5-143, 5-145, 5-147, 5-149, 5-151, 5-153, 5-155, 5-157, 5-159, 5-161, 5-163, 5-165, 5-167, 5-169, 5-171
2837650-0000	.SPRING	5-133, 5-135, 5-137, 5-139, 5-141, 5-143, 5-145, 5-147, 5-149, 5-151, 5-153, 5-155, 5-157, 5-159, 5-161, 5-163, 5-165, 5-167, 5-169, 5-171
2838416-0000	.SPACER	5-205, 5-207, 5-209, 5-211
2838417-0000	.SPACER	5-205, 5-207, 5-209, 5-211
2838959-0000	.SHAFT	7-69, 7-71
2838960-0000	.WASHER	7-89
2838961-0000	.COVER	7-89
2838964-0000	.PLATE	7-89
2838965-0000	.PLATE	7-69, 7-71
2838966-0000	.SPACER	7-77

Part No	Description	Page No
2838989-0000	.CAM	4-27, 4-29, 4-31
2839281-0000	.CAM	4-27, 4-29, 4-31
2839322-0000	.CAM	4-27, 4-29, 4-31
2839326-0000	.PLATE	5-93, 5-95, 5-97, 5-99, 5-101, 5-103, 5-105, 5-107, 5-109, 5-111, 5-113
2839378-0000	.CAM	4-27, 4-29, 4-31
2839722-0000	.LINK	12-11, 12-13, 12-15
2839739-0100	.CHAIN LIFT	12-5
2839741-0000	.LINK	12-11, 12-13, 12-15
2839809-0000	.ROLLER	12-11, 12-13, 12-15
2839811-0000	.CANTILEVER	3-5, 3-7, 3-9, 3-11, 3-13, 3-15
2839875-0000	.HOLDER	3-5, 3-7, 3-9, 3-11, 3-13, 3-15
2839882-0000	.LINK	12-11, 12-13, 12-15
2839886-0000	.LINK	12-11, 12-13, 12-15
2839956-0000	.SPACER	5-205, 5-207, 5-209, 5-211
2839979-0000	.SPACER	12-11, 12-13, 12-15
2839980-0000	.FLANGE	7-69, 7-71
2839981-0000	.FLANGE	7-69, 7-71
2839982-0000	.SPACER	7-77
2839983-0000	.PLATE	7-81
2839985-0000	.BRACKET	7-81
2839988-0000	.SHAFT	7-57
2839989-0000	.HUB	7-57
2840929-0200	.RELAY UNIT	8-15, 8-17
2840930-0100	.PLC	8-15, 8-17
2840931-0200	.PLC	8-15, 8-17
2840932-0100	.PLINTH	8-15, 8-17
2840933-0100	.PLINTH	8-15, 8-17
2840934-0200	.RELAY	8-15, 8-17
2840935-0200	.IH EQUIPMENT	8-15, 8-17
2840936-0100	.MOTOR DRIVE CONTROL	8-15, 8-17
2840937-0000	.RACK	8-49
2840938-0200	.PLC	8-15, 8-17
2840939-0200	.FUSE BOARD 1	8-15, 8-17
2840940-0200	.FUSE BOARD 2	8-15, 8-17
2840941-0200	.FUSE BOARD 3	8-15, 8-17
2840943-0100	.FREQUENCY CONVERTER WITH ACCESSORIES	8-15, 8-17
2840944-0100	.PLINTH	8-15, 8-17
2840945-0100	.PLINTH	8-15, 8-17
2840947-0200	.PLATE	8-3
2840948-0000	.COVER	8-15, 8-17
2841912-0000	.PLATE	7-59
2841914-0000	.SCREW	7-37
2841915-0000	.BRACKET	7-49
2841916-0000	.SPACER	7-33
2841922-0000	.BRACKET	7-49
2841924-0000	.BRACKET	7-51
2842998-0000	.SLIDER	7-59
2843000-0000	.DOOR	6-73, 6-75
2843003-0000	.BRACKET	7-59
2843394-0200	.TRANSDUCER HEAD	2-87
2843395-0000	.MOUNTING SHEET	2-91
2843840-0100	.HUB	7-51
2843844-0000	.SPACER	7-59
2843845-0000	.GUIDE	7-59
2843847-0000	.BRACKET	7-59
2843848-0100	.BUFFER	7-51
2843881-0000	.MOUNTING PLATE	7-61
2843882-0000	.BRACKET	7-61
2843883-0100	.MOUNTING SHEET	7-51
2843884-0200	.STRIP MAGAZINE	7-3
2844151-0000	.SPACER	7-51
2844157-0000	.PLATE	7-107
2844158-0000	.BRACKET	7-107
2844166-0000	.PLATE	7-105
2844167-0000	.PULLEY	7-105
2844168-0000	.SPACER	7-23
2844198-0000	.LEVER	4-71, 4-73, 4-75, 4-77, 4-79, 4-81, 9-7
2844228-0000	.HOLDER	4-57, 4-59, 4-61, 4-63, 4-65, 4-67
2844499-0000	.SUPPORT	7-179
2844795-0000	.SHAFT	3-5, 3-7, 3-9, 3-11, 3-13, 3-15
2845302-0000	.DRUM	5-83, 5-85, 5-87, 5-89, 5-91
2845571-0000	.BRACKET	5-83, 5-85, 5-87, 5-89, 5-91
2845576-0000	.GUIDE	4-33, 4-35
2845787-0000	.CABLE DUCT 60 X 80 MM	8-75
2845788-0000	.CABLE DUCT 40X80MM	8-75
2845789-0000	.CABLE DUCT 60 X 80 MM	8-75
2845790-0000	.CABLE DUCT 100X80MM	8-75
2845791-0000	.CABLE DUCT 40X80MM	8-75
2845792-0000	.CABLE DUCT 100X80MM	8-75
2845793-0000	.CABLE DUCT 60 X 80 MM	8-75
2845794-0000	.CABLE DUCT 60 X 80 MM	8-75
2846309-0000	.BRACKET	1-195, 1-197
2846311-0000	.FORK	1-195, 1-197
2846319-0000	.PIPE	2-259, 2-261

Part No	Description	Page No
2846452-0000	.SHAFT	4-39, 4-41, 4-43, 4-45, 4-47, 4-49, 4-51, 4-53, 4-55
2846459-0000	.TEMPLATE	9-49
2846471-0000	.GUIDE	5-133, 5-135, 5-137, 5-139, 5-141, 5-143, 5-145, 5-147, 5-149, 5-151, 5-153, 5-155, 5-157, 5-159, 5-161, 5-163, 5-165, 5-167, 5-169, 5-171
2846472-0000	.GUIDE	5-133, 5-135, 5-137, 5-139, 5-141, 5-143, 5-145, 5-147, 5-149, 5-151, 5-153, 5-155, 5-157, 5-159, 5-161, 5-163, 5-165, 5-167, 5-169, 5-171
2846479-0000	.GUIDE	5-133, 5-135, 5-137, 5-139, 5-141, 5-143, 5-145, 5-147, 5-149, 5-151, 5-153, 5-155, 5-157, 5-159, 5-161, 5-163, 5-165, 5-167, 5-169, 5-171
2846480-0000	.GUIDE	5-133, 5-135, 5-137, 5-139, 5-141, 5-143, 5-145, 5-147, 5-149, 5-151, 5-153, 5-155, 5-157, 5-159, 5-161, 5-163, 5-165, 5-167, 5-169, 5-171
2846487-0000	.CARRIER	5-83, 5-85, 5-87, 5-89, 5-91
2846491-0000	.CAM	5-83, 5-85, 5-87, 5-89, 5-91
2846562-0000	.PIPE	1-273
2846563-0000	.PIPE	1-273
2846722-0000	.BUSHING	4-71, 4-73, 4-75, 4-77, 4-79, 4-81
2846723-0000	.ARM	4-71, 4-73, 4-75, 4-77, 4-79, 4-81
2846724-0000	.LINK ARM	4-71, 4-73, 4-75, 4-77, 4-79, 4-81
2846725-0000	.ARM	4-71, 4-73, 4-75, 4-77, 4-79, 4-81
2847233-0100	.CONNECTION BOX	1-203
2847234-0000	.CONNECTION BOX	1-211
2847235-0000	.RAIL	1-213
2847236-0000	.BRACKET	1-207
2847310-0000	.CONNECTION	1-233
2847313-0000	.NUT	1-269
2847387-0000	.GLASS PANE	2-205
2847388-0000	.DOOR	2-205
2847951-0000	.SHAFT	4-57, 4-59, 4-61, 4-63, 4-65, 4-67, 4-83, 4-85, 4-87, 4-89
2847955-0000	.VOLUME FLAP	4-57, 4-59, 4-61, 4-63, 4-65, 4-67, 4-83, 4-85, 4-87, 4-89
2847956-0000	.VOLUME FLAP	4-57, 4-59, 4-61, 4-63, 4-65, 4-67, 4-83, 4-85, 4-87, 4-89
2847958-0000	.PIN	4-83, 4-85, 4-87, 4-89
2847959-0000	.LEVER	4-83, 4-85, 4-87, 4-89, 9-7
2848494-0000	.COVER	2-173
2848495-0100	.COVER	2-157
2848774-0000	.PLATE	5-93, 5-95, 5-97, 5-99, 5-101, 5-103, 5-105, 5-107, 5-109, 5-111, 5-113
2849071-0200	.RACK	8-97, 8-99
2849075-0100	.PLINTH	8-97, 8-99
2849076-0000	.BRACKET	8-75
2849078-0200	.DOOR	8-3
2849079-0000	.RAIL	8-105
2850928-0000	.PLATE	5-93, 5-95, 5-97, 5-99, 5-101, 5-103, 5-105, 5-107, 5-109, 5-111, 5-113
2850929-0000	.SCREW	5-93, 5-95, 5-97, 5-99, 5-101, 5-103, 5-105, 5-107, 5-109, 5-111, 5-113
2851003-0000	.ARM	7-179
2851232-0000	.WASHPOINT	11-117
2851385-0000	.PLUNGER	7-21
2851387-0000	.PRESSURE ROLLER	5-93, 5-95, 5-97, 5-99, 5-101, 5-103, 5-105, 5-107, 5-109, 5-111, 5-113
2851526-0000	.SHIM	7-101
2851533-0100	.TERMINAL BLOCK	1-211
2851534-0100	.PLINTH	7-15
2851535-0100	.TERMINAL BLOCK	7-15
2851537-0000	.RAIL	7-19
2851538-0000	.CABLE DUCT	7-15
2851539-0000	.CABLE DUCT	7-15
2851540-0000	.CABLE DUCT	7-15
2851541-0000	.CABLE DUCT	7-15
2851566-0000	.SPACER	1-117
2851878-0000	.PIPE	1-261
2851879-0000	.HOSE CONNECTION	1-261
2851881-0000	.DRAIN PIPE	1-267
2851883-0000	.PIPE	1-271
2851884-0000	.PIPE	2-65
2851885-0000	.PIPE	1-191
2851886-0000	.CENTRIFUGAL PUMP	1-267
2851928-0000	.BRACKET	7-81
2851943-0000	.BRACKET	7-81
2851944-0000	.RAIL	7-81
2852433-0000	.BELT	5-217, 5-219, 5-221, 5-223, 5-225, 5-227, 5-229
2852457-0000	.INDUCTOR	1-155, 1-157, 1-159
2852551-0000	.PROTECTION	5-173, 5-175, 5-177, 5-179, 5-181, 5-183, 5-185, 5-187, 5-189, 5-191, 5-193, 5-195, 5-197, 5-199, 5-201, 5-203
2852885-0000	.SHIM	7-31
2852886-0000	.SHIM	7-31
2852887-0000	.SPACER	7-33
2852888-0000	.SPACER	7-33
2852891-0000	.LINK CHAIN	7-69, 7-71
2852892-0000	.BRACKET	7-27
2852893-0000	.TENSION SPRING	7-27
2852895-0000	.PLATE	7-31
2852897-0000	.CABLE DUCT	7-5, 7-7
2852908-0000	.PULLEY	7-89
2852909-0000	.PULLEY	7-89
2854194-0000	.SPACER	4-91, 4-93
2854561-0000	.SPRING	4-57, 4-59, 4-61, 4-63, 4-65, 4-67, 4-83, 4-85, 4-87, 4-89, 9-7
2854562-0000	.SPRING	4-57, 4-59, 4-61, 4-63, 4-65, 4-67, 4-83, 4-85, 4-87, 4-89, 9-7
2855060-0000	.BRACKET	4-109, 4-111, 4-113, 4-115

Part No	Description	Page No
2855061-0000	.PLATE	4-109, 4-111, 4-113, 4-115
2855062-0000	.PLATE	4-109, 4-111, 4-113, 4-115
2855849-0000	.COVER	5-213, 5-215
2855890-0000	.RAIL	7-17
2855891-0000	.CABLE DUCT	7-15
2855897-0100	.PACKING DESCRIPTION	11-117
2856034-0000	.SPACER	7-179
2857894-0000	.SUPPORT	4-109, 4-111, 4-113, 4-115
2858069-0000	.SUPPORT	4-109, 4-111, 4-113, 4-115
2858820-0000	.HOLDER	4-39, 4-41, 4-43, 4-45, 4-47, 4-49, 4-51, 4-53, 4-55
2859151-0000	.GUIDE RAIL	7-69, 7-71
2859492-0000	.SUPPORT	7-5, 7-7
2859497-0000	.SET OF SIGNS	11-127, 11-129
2859686-0000	.ROLLER	7-63
2859746-0000	.VOLUME CAM	4-33, 4-35
2860081-0000	.NUT	7-27
2860082-0000	.BRACKET	7-49
2860231-0000	.FRAME	5-231, 5-233
2861925-0000	.CABLE TRENCH	5-231, 5-233
2862301-0000	.PEROXIDE TANK	2-237
2862487-0000	.PROTECTION	7-37
2862492-0000	.PLATE	7-59
2862493-0000	.ARM	7-61
2862494-0000	.ARM	7-61
2862606-0000	.SPACER	11-127, 11-129
2862607-0000	.SHAFT	11-139, 11-141
2862701-0100	.CABINET	8-3
2862707-0200	.DOOR	8-3
2862711-0200	.COVER	8-3
2862713-0100	.DOOR	8-3
2862714-0100	.DOOR	8-3
2862715-0100	.DOOR	8-3
2862727-0000	.FLANGE	7-69, 7-71
2862739-0000	.INSULATING PLATE	1-155, 1-157, 1-159
2862740-0000	.INSULATING PLATE	1-155, 1-157, 1-159
2862744-0000	.INSULATING PLATE	1-155, 1-157, 1-159
2862745-0000	.INSULATING PLATE	1-155, 1-157, 1-159
2863175-0000	.BUSBAR	1-69, 1-71
2863429-0000	.PLATE	5-231, 5-233
2863540-0000	.FITTING PIECE	6-9
2863543-0000	.LEVER	7-49
2863545-0000	.SUPPORT	7-49
2863546-0000	.ROLLER	7-39
2863547-0000	.PIN	7-23, 7-69, 7-71, 7-153
2863548-0000	.BRACKET	7-23
2863549-0000	.BRACKET	7-69, 7-71
2863550-0100	.ROLLER	7-23, 7-69, 7-71, 7-151, 7-153
2863551-0000	.PIN	7-69, 7-71
2863968-0000	.TOOL	9-39
2864153-0000	.PLATE	5-231, 5-233
2864356-0000	.GUIDE	5-83, 5-85, 5-87, 5-89, 5-91
2864885-0000	.SUPPORT	4-109, 4-111, 4-113, 4-115
2864886-0000	.SUPPORT	4-109, 4-111, 4-113, 4-115
2864888-0000	.SUPPORT	4-109, 4-111, 4-113, 4-115
2864889-0000	.SUPPORT	4-109, 4-111, 4-113, 4-115
2864895-0000	.SUPPORT	4-109, 4-111, 4-113, 4-115
2864896-0000	.PLATE	4-109, 4-111, 4-113, 4-115
2864913-0000	.SHAFT	5-83, 5-85, 5-87, 5-89, 5-91
2864950-0100	.HEATING ELEMENT	5-205, 5-207, 5-209, 5-211
2864951-0000	.HEATING PIPE	5-213
2864952-0000	.HEATING PIPE	5-215
2864960-0100	.HEATING ELEMENT	5-205, 5-207, 5-209, 5-211
2865480-0100	.CONNECTION BOX	2-79
2866601-0000	.GUIDE	5-37, 5-39
2866745-0000	.HOLDER	6-9
2866746-0000	.SUPPORT	6-9
2866749-0000	.GASKET	6-9
2866953-0000	.GUIDE	5-37, 5-39
2867485-0000	.BRACKET	1-245
2867488-0000	.CABLE DUCT	1-345
2867496-0000	.SEPARATOR	1-345
2867497-0000	.SEPARATOR	1-345
2867498-0000	.SEPARATOR	1-345
2867500-0000	.BRACKET	1-345
2867510-0100	.HEATING CHAMBER	5-125
2867677-0200	.PANEL	8-3
2868043-0000	.PIPE	1-243
2868064-0000	.PLATE	8-109, 8-111
2868065-0000	.PLATE	8-109, 8-111
2868066-0000	.GASKET	8-109, 8-111
2868080-0000	.SLIDER - SEE PN. 1517719-0000 FOR STOCK	5-127, 5-129, 5-131
2868081-0000	.GUIDE	5-133, 5-135, 5-137, 5-139, 5-141, 5-143, 5-145, 5-147, 5-149, 5-151, 5-153, 5-155, 5-157, 5-159, 5-161, 5-163, 5-165, 5-167, 5-169, 5-171
2868082-0000	.BUSHING	4-83, 4-85, 4-87, 4-89

Part No	Description	Page No
2868754-0000	.BRACKET	7-69, 7-71
2868755-0000	.ROD	7-49
2868756-0000	.ROD	7-49
2868758-0000	.SHAFT	7-65
2868759-0000	.SPACER	7-23
2868760-0000	.BLOCK	7-51
2868761-0000	.PLATE	7-23
2869125-0000	.PLATFORM	2-125, 2-127
2869175-0000	.PLUG	1-269
2869180-0100	.DRAIN PIPE	2-63
2869187-0000	.CHECKER PLATE	2-125, 2-127
2869188-0000	.TOE PLATE	2-125, 2-127
2869189-0000	.TOE PLATE	2-125, 2-127
2869190-0000	.RAILING	2-125, 2-127
2869191-0000	.RAILING	2-125, 2-127
2869315-0000	.CHECKER PLATE	2-125, 2-127
2869539-0000	.SUPPORT	5-83, 5-85, 5-87, 5-89, 5-91
2869590-0000	.COVER PLATE	8-113
2870076-0000	.GUIDE	5-83, 5-85, 5-87, 5-89, 5-91
2870893-0000	.ADAPTER	2-45
2870905-0000	.CONNECTOR	8-51
2871835-0000	.PROTECTION	11-85, 11-87, 11-89
2871858-0000	.GUIDE	12-11, 12-13, 12-15
2872065-0000	.PIN	1-147, 1-149
2872397-0000	.GUIDE	5-133, 5-135, 5-137, 5-139, 5-141, 5-143, 5-145, 5-147, 5-149, 5-151, 5-153, 5-155, 5-157, 5-159, 5-161, 5-163, 5-165, 5-167, 5-169, 5-171
2872398-0000	.GUIDE	5-133, 5-135, 5-137, 5-139, 5-141, 5-143, 5-145, 5-147, 5-149, 5-151, 5-153, 5-155, 5-157, 5-159, 5-161, 5-163, 5-165, 5-167, 5-169, 5-171
2872401-0000	.CARRIER	5-83, 5-85, 5-87, 5-89, 5-91
2872403-0000	.SUPPORT	5-83, 5-85, 5-87, 5-89, 5-91
2872404-0000	.SUPPORT	5-133, 5-135, 5-137, 5-139, 5-141, 5-143, 5-145, 5-147, 5-149, 5-151, 5-153, 5-155, 5-157, 5-159, 5-161, 5-163, 5-165, 5-167, 5-169, 5-171
2872405-0000	.GUIDE	5-133, 5-135, 5-137, 5-139, 5-141, 5-143, 5-145, 5-147, 5-149, 5-151, 5-153, 5-155, 5-157, 5-159, 5-161, 5-163, 5-165, 5-167, 5-169, 5-171
2872406-0000	.GUIDE	5-133, 5-135, 5-137, 5-139, 5-141, 5-143, 5-145, 5-147, 5-149, 5-151, 5-153, 5-155, 5-157, 5-159, 5-161, 5-163, 5-165, 5-167, 5-169, 5-171
2872654-0000	.BRACKET	5-173, 5-175, 5-177, 5-179, 5-181, 5-183, 5-185, 5-187, 5-189, 5-191, 5-193, 5-195, 5-197, 5-199, 5-201, 5-203
2872748-0000	.SLIDER	5-83, 5-85, 5-87, 5-89, 5-91
2872768-0000	.PLATE	5-33, 5-35
2872770-0000	.CURVE WHEEL	5-33, 5-35, 11-49
2872772-0000	.SHAFT	5-33, 5-35, 11-49
2872773-0000	.SPACER	5-33, 5-35, 11-49
2872774-0000	.SUPPORT	5-33, 5-35, 11-49
2872777-0000	.SUPPORT	5-33, 5-35
2872781-0000	.GUIDE	5-33, 5-35
2872916-0200	.LAST POINT DE	11-3, 11-5, 11-7
2872918-0100	.METERING DEVICE	11-237
2872919-0100	.CONNECTION BOX	11-237
2874468-0000	.PLATE	7-31
2874469-0000	.PLATE	7-31
2874673-0000	.SHAFT	1-23
2874674-0000	.WHEEL	1-23
2874675-0000	.SEPARATOR	1-345
2874679-0000	.CABLE DUCT	1-345
2874680-0000	.SHAFT	1-23
2874684-0000	.TOUCH GUARD	1-229, 1-231, 9-5
2874694-0200	.STEAM PIPE	1-241
2874700-0000	.PIPE	1-247
2874701-0000	.PIPE	1-243, 1-245, 1-247
2874702-0000	.PIPE	1-245, 1-247
2874703-0000	.PIPE	1-247
2874715-0000	.STUD SCREW	1-161
2874716-0000	.BODY	1-161
2874717-0000	.KNOB	1-161
2874731-0000	.SHUTTER	1-183
2874732-0000	.VALVE SPINDLE	1-183
2874733-0000	.JOINT	1-183
2874734-0000	.SPACER ROD	1-183
2874735-0000	.FLANGE	1-183
2874736-0000	.BEARING FLANGE	1-183
2874741-0000	.SPRING COLLAR	1-183
2874743-0000	.SPINDLE GUIDE	1-183
2874746-0000	.COVERING PANEL	1-351
2874753-0000	.GLASS PANE	1-63
2874754-0000	.GLASS PANE	1-61
2874756-0000	.GLASS PANE	1-65
2874766-0000	.BRACKET	1-201
2875029-0000	.SPRING	7-179
2875030-0000	.TURNING WHEEL	7-179
2875031-0000	.TURNING WHEEL	7-179
2875032-0000	.SHAFT	7-179
2875033-0000	.HOLDER	7-179
2875034-0000	.PLATE	7-179

Part No	Description	Page No
2875172-0000	.SPACER	11-117
2875285-0000	.BRACKET	7-97
2875286-0000	.BRACKET	7-5, 7-7
2875289-0000	.PIN	7-151
2875290-0000	.SHAFT	7-151
2875291-0100	.ROLLER	7-119, 7-121, 7-123
2875311-0000	.BUSHING	12-11, 12-13, 12-15
2875343-0000	.PIN	12-11, 12-13, 12-15
2875354-0000	.HOOK	12-11, 12-13, 12-15
2875358-0000	.FAN	6-65
2875495-0000	.SHAFT	12-11, 12-13, 12-15
2876043-0000	.WASHER	1-145
2876046-0000	.STEERING DEVICE	1-147, 1-149
2876047-0100	.STEERING RING	1-83
2876195-0000	.HOLDER	7-179
2876447-0000	.BRACKET	7-5, 7-7
2876448-0000	.SHAFT	7-85
2876451-0000	.SPACER	7-97
2876571-0000	.SIDE PLATE	11-35
2876572-0000	.SIDE PLATE	11-35
2876627-0000	.BRACKET	5-133, 5-135, 5-137, 5-139, 5-141, 5-143, 5-145, 5-147, 5-149, 5-151, 5-153, 5-155, 5-157, 5-159, 5-161, 5-163, 5-165, 5-167, 5-169, 5-171
2876664-0000	.COUNTER ROLLER	1-91, 1-93, 1-95, 1-97
2876668-0000	.PLATE	4-109, 4-111, 4-113, 4-115
2876785-0000	.FRAME	5-133, 5-135, 5-137, 5-139, 5-141, 5-143, 5-145, 5-147, 5-149, 5-151, 5-153, 5-155, 5-157, 5-159, 5-161, 5-163, 5-165, 5-167, 5-169, 5-171
2876901-0000	.SUPPORT	4-109, 4-111, 4-113, 4-115
2877127-0000	.BRACKET	5-83, 5-85, 5-87, 5-89, 5-91
2877129-0000	.PLATE	5-205, 5-207, 5-209, 5-211
2877130-0000	.CHUTE	5-93, 5-95, 5-97, 5-99, 5-101, 5-103, 5-105, 5-107, 5-109, 5-111, 5-113
2877131-0000	.GUIDE	5-93, 5-95, 5-97, 5-99, 5-101, 5-103, 5-105, 5-107, 5-109, 5-111, 5-113
2877132-0000	.GUIDE	5-93, 5-95, 5-97, 5-99, 5-101, 5-103, 5-105, 5-107, 5-109, 5-111, 5-113
2877133-0000	.CHUTE	5-93, 5-95, 5-97, 5-99, 5-101, 5-103, 5-105, 5-107, 5-109, 5-111, 5-113
2877134-0000	.GUIDE	5-93, 5-95, 5-97, 5-99, 5-101, 5-103, 5-105, 5-107, 5-109, 5-111, 5-113
2877135-0000	.GUIDE	5-93, 5-95, 5-97, 5-99, 5-101, 5-103, 5-105, 5-107, 5-109, 5-111, 5-113
2877136-0000	.HEATING ELEMENT	5-205, 5-207, 5-209, 5-211, 9-23
2877147-0000	.SUPPORT	4-109, 4-111, 4-113, 4-115
2877163-0000	.LEVER	4-109, 4-111, 4-113, 4-115
2877376-0000	.BRACKET	12-11, 12-13, 12-15
2877388-0000	.PLATE	4-109, 4-111, 4-113, 4-115
2877390-0000	.GUIDE	5-33, 5-35
2877391-0000	.SUPPORT	5-25, 5-33, 5-35
2877392-0000	.SUPPORT	5-33, 5-35
2877395-0000	.SUPPORT	5-33, 5-35, 11-49
2877396-0000	.SUPPORT	5-33, 5-35
2877397-0000	.SUPPORT	5-33, 5-35
2877398-0000	.SUPPORT	5-33, 5-35
2877401-0000	.RAIL	5-83, 5-85, 5-87, 5-89, 5-91
2877402-0000	.CURVE WHEEL	5-33, 5-35, 11-49
2877410-0000	.DRUM	5-83, 5-85, 5-87, 5-89, 5-91
2877411-0100	.CURVE WHEEL	5-27, 5-29, 5-31
2877413-0000	.GUIDE	5-33, 5-35
2877415-0000	.GUIDE	5-83, 5-85, 5-87, 5-89, 5-91
2877416-0000	.DRIVE WHEEL	11-3, 11-5, 11-7
2877418-0000	.GUIDE	5-93, 5-95, 5-97, 5-99, 5-101, 5-103, 5-105, 5-107, 5-109, 5-111, 5-113
2877419-0000	.GUIDE	5-93, 5-95, 5-97, 5-99, 5-101, 5-103, 5-105, 5-107, 5-109, 5-111, 5-113
2877422-0000	.GUIDE	5-93, 5-95, 5-97, 5-99, 5-101, 5-103, 5-105, 5-107, 5-109, 5-111, 5-113
2877423-0000	.PULLEY	5-93, 5-95, 5-97, 5-99, 5-101, 5-103, 5-105, 5-107, 5-109, 5-111, 5-113
2877425-0000	.CHUTE	5-93, 5-95, 5-97, 5-99, 5-101, 5-103, 5-105, 5-107, 5-109, 5-111, 5-113
2877426-0000	.PLATE	5-93, 5-95, 5-97, 5-99, 5-101, 5-103, 5-105, 5-107, 5-109, 5-111, 5-113
2877427-0000	.PLATE	5-93, 5-95, 5-97, 5-99, 5-101, 5-103, 5-105, 5-107, 5-109, 5-111, 5-113
2877429-0000	.SPROCKET	5-133, 5-135, 5-137, 5-139, 5-141, 5-143, 5-145, 5-147, 5-149, 5-151, 5-153, 5-155, 5-157, 5-159, 5-161, 5-163, 5-165, 5-167, 5-169, 5-171
2877430-0000	.CARRIER	5-83, 5-85, 5-87, 5-89, 5-91
2877436-0000	.SLIDER	5-83, 5-85, 5-87, 5-89, 5-91
2877437-0000	.GUIDE	5-33, 5-35
2877593-0100	.VALVE	2-245
2877645-0000	.SLIDE SHEET	11-71
2877749-0000	.BRACKET	12-11, 12-13, 12-15
2877754-0000	.GUIDE	12-11, 12-13, 12-15
2877756-0000	.PROTECTION	1-323
2878113-0000	.SUPPORT	11-47
2878133-0100	.SUPPORT PLATE	11-3, 11-5, 11-7
2878193-0000	.PLATFORM	2-125, 2-127
2878206-0000	.CHECKER PLATE	2-125, 2-127
2878258-0000	.PLATE	4-109, 4-111, 4-113, 4-115
2878384-0000	.LID	1-21
2878395-0000	.SUPPORT	4-109, 4-111, 4-113, 4-115
2878566-0000	.FLANGE	1-21
2878567-0000	.LID	1-21
2878625-0000	.BRACKET	1-147, 1-149
2878626-0000	.BRACKET	1-147, 1-149
2878627-0000	.BRACKET	1-147, 1-149
2878628-0001	.TEMPLATE	9-39

Part No	Description	Page No
2878628-0002	.TEMPLATE	9-39
2878628-0003	.TEMPLATE	9-39
2878628-0004	.TEMPLATE	9-39
2878628-0005	.TEMPLATE	9-39
2878628-0006	.TEMPLATE	9-39
2878628-0007	.TEMPLATE	9-39
2878634-0000	.BRACKET	1-147, 1-149
2878651-0000	.FILLING PIPE	1-195, 1-197
2879073-0000	.PLATE	2-249
2879246-0000	.SUPPORT	4-109, 4-111, 4-113, 4-115
2879247-0000	.SUPPORT	4-109, 4-111, 4-113, 4-115
2879367-0000	.CHUTE	5-93, 5-95, 5-97, 5-99, 5-101, 5-103, 5-105, 5-107, 5-109, 5-111, 5-113
2879368-0000	.GUIDE	5-93, 5-95, 5-97, 5-99, 5-101, 5-103, 5-105, 5-107, 5-109, 5-111, 5-113
2879369-0000	.GUIDE	5-93, 5-95, 5-97, 5-99, 5-101, 5-103, 5-105, 5-107, 5-109, 5-111, 5-113
2879370-0000	.CHUTE	5-93, 5-95, 5-97, 5-99, 5-101, 5-103, 5-105, 5-107, 5-109, 5-111, 5-113
2879371-0000	.GUIDE	5-93, 5-95, 5-97, 5-99, 5-101, 5-103, 5-105, 5-107, 5-109, 5-111, 5-113
2879372-0000	.GUIDE	5-93, 5-95, 5-97, 5-99, 5-101, 5-103, 5-105, 5-107, 5-109, 5-111, 5-113
2879374-0000	.GUIDE	5-93, 5-95, 5-97, 5-99, 5-101, 5-103, 5-105, 5-107, 5-109, 5-111, 5-113
2879375-0000	.GUIDE	5-93, 5-95, 5-97, 5-99, 5-101, 5-103, 5-105, 5-107, 5-109, 5-111, 5-113
2879536-0000	.GASKET	2-249
2879648-0000	.BUSHING	6-31
2879650-0200	.CIRCUIT	6-5
2879651-0100	.ELECTRICAL CONNECTION	6-5
2879652-0100	.FAN	6-63
2879788-0000	.PLATE	4-109, 4-111, 4-113, 4-115
2879789-0000	.PLATE	4-109, 4-111, 4-113, 4-115
2881023-0000	.GUIDE	5-173, 5-175, 5-177, 5-179, 5-181, 5-183, 5-185, 5-187, 5-189, 5-191, 5-193, 5-195, 5-197, 5-199, 5-201, 5-203
2881024-0000	.GUIDE	5-173, 5-175, 5-177, 5-179, 5-181, 5-183, 5-185, 5-187, 5-189, 5-191, 5-193, 5-195, 5-197, 5-199, 5-201, 5-203
2881025-0000	.GUIDE	5-173, 5-175, 5-177, 5-179, 5-181, 5-183, 5-185, 5-187, 5-189, 5-191, 5-193, 5-195, 5-197, 5-199, 5-201, 5-203
2881026-0000	.GUIDE	5-173, 5-175, 5-177, 5-179, 5-181, 5-183, 5-185, 5-187, 5-189, 5-191, 5-193, 5-195, 5-197, 5-199, 5-201, 5-203
2881027-0000	.GUIDE	5-173, 5-175, 5-177, 5-179, 5-181, 5-183, 5-185, 5-187, 5-189, 5-191, 5-193, 5-195, 5-197, 5-199, 5-201, 5-203
2881030-0000	.SLIDER	5-83, 5-85, 5-87, 5-89, 5-91
2881035-0000	.SIDE PLATE	11-107
2881038-0000	.SIDE PLATE	11-109
2881564-0000	.STOP PIN	1-195, 1-197
2882175-0000	.SHIM	4-91, 4-93
2882176-0000	.SHIM	4-91, 4-93
2883295-0000	.BUSHING	1-177
2884377-0000	.PLATE	5-37, 5-39
2884389-0000	.PLATE	5-37, 5-39
2886030-0000	.SLIDER	5-217, 5-219, 5-221, 5-223, 5-225, 5-227, 5-229
2886539-0000	.PLATE	2-229
2886605-0000	.FILLING PIPE	1-195, 1-197
2886621-0000	.DIAGRAM	9-69
2887528-0000	.HOLDER	6-9
2887587-0000	.PNEUMATIC DIAGRAM	9-69
2887735-0000	.FORK	1-195, 1-197
2887736-0000	.BRACKET	1-195, 1-197
2888970-0438	.TRANSFORMER VMN	1-77
2888970-0524	.TRANSFORMER VMN	1-77
2889116-0000	.PLATE	1-119, 1-121, 1-123
2889858-0000	.FASTENING PLATE	3-5, 3-7, 3-9, 3-11, 3-13, 3-15
2889894-0000	.PRESSURE RAIL	4-39, 4-41, 4-43, 4-45, 4-47, 4-49, 4-51, 4-53, 4-55
2889953-0100	.FILTER	6-11
2889959-0000	.ROLLER	1-119, 1-121, 1-123
2890041-0000	.WASHER	1-177
2890241-0000	.CONNECTOR	6-13, 6-35
2890424-0000	.FLANGE	7-11
2890518-0000	.RING	1-195, 1-197
2890565-0000	.GUIDE	5-83, 5-85, 5-87, 5-89, 5-91
2890579-0000	.PLATE	5-217, 5-219, 5-221, 5-223, 5-225, 5-227, 5-229
2890593-0000	.PIPE	1-271
2890594-0000	.PIPE	1-271
2890626-0000	.SUPPORT	4-109, 4-111, 4-113, 4-115
2890627-0000	.BAR	4-109, 4-111, 4-113, 4-115
2890640-0000	.PLATE	5-231, 5-233
2890677-0000	.SLIDE SHEET	11-71
2890678-0100	.CHUTE	11-67
2890873-0000	.VOLUME BULGE	4-39, 4-41, 4-43, 4-45, 4-47, 4-49, 4-51, 4-53, 4-55, 4-71, 4-73, 4-75, 4-77, 4-79, 4-81
2890874-0000	.VOLUME SHIM	4-39, 4-41, 4-43, 4-45, 4-47, 4-49, 4-51, 4-53, 4-55, 4-71, 4-73, 4-75, 4-77, 4-79, 4-81, 9-7
2890875-0000	.SUPPORT	4-9, 4-11, 4-13, 4-15, 4-17, 4-19
2891537-0000	.SUPPORT	2-69
2891538-0000	.BRACKET	2-69
2891592-0100	.CURVE	11-3, 11-5, 11-7
2891594-0000	.GUIDE	11-49
2891595-0000	.GUIDE	11-49
2891596-0000	.SUPPORT	11-49, 11-51, 11-53, 11-179, 11-181

Part No	Description	Page No
2891605-0000	.WHEEL	11-3, 11-5, 11-7
2891622-0000	.CABLE TRENCH	11-51, 11-53, 11-179, 11-181
2891623-0000	.CABLE TRENCH	11-51, 11-53
2891629-0000	.DRIVE WHEEL	11-3, 11-5, 11-7
2891631-0000	.RAIL	5-33, 5-35, 11-49
2891632-0000	.SUPPORT	5-33, 5-35, 11-49
2891633-0000	.SUPPORT	5-33, 5-35, 11-49
2891634-0000	.RAIL	5-33, 5-35
2891635-0000	.RAIL	5-33, 5-35
2891636-0000	.SUPPORT	5-33, 5-35
2891637-0000	.DRIVE WHEEL	5-33, 5-35
2891696-0000	.PROTECTION	7-105
2891806-0250	.EDGE ROLLER	1-129, 1-131
2891810-0000	.ROLLER	1-135
2891811-0000	.ROLLER	1-135
2891812-0000	.ROLLER	1-135
2891813-0000	.ANGLE PIECE	7-97
2891814-0000	.ADJUSTING SCREW	7-97
2891969-0000	.ROD	1-313, 1-315, 1-317
2891970-0000	.KNOB	1-313, 1-315, 1-317
2891971-0000	.PLUG	1-313, 1-315, 1-317
2891992-0000	.PLATE	7-137
2891994-0000	.SUPPORT	7-137
2891995-0000	.SUPPORT	7-137
2891996-0000	.SUPPORT	7-149
2892563-0000	.SLIDER	5-173, 5-175, 5-177, 5-179, 5-181, 5-183, 5-185, 5-187, 5-189, 5-191, 5-193, 5-195, 5-197, 5-199, 5-201, 5-203
2892564-0000	.SLIDER	5-173, 5-175, 5-177, 5-179, 5-181, 5-183, 5-185, 5-187, 5-189, 5-191, 5-193, 5-195, 5-197, 5-199, 5-201, 5-203
2892565-0000	.SLIDER	5-173, 5-175, 5-177, 5-179, 5-181, 5-183, 5-185, 5-187, 5-189, 5-191, 5-193, 5-195, 5-197, 5-199, 5-201, 5-203
2892566-0000	.PULLEY	5-93, 5-95, 5-97, 5-99, 5-101, 5-103, 5-105, 5-107, 5-109, 5-111, 5-113
2892567-0000	.SUPPORT	5-33, 5-35
2892570-0000	.PLATE	5-217, 5-219, 5-221, 5-223, 5-225, 5-227, 5-229
2892690-0000	.BOX	7-15
2893993-0000	.CAM	4-27, 4-29, 4-31
2894048-0000	.ROUND NUT	2-45
2894222-0000	.SPRING	1-195, 1-197
2894324-0000	.INDUCTOR	4-71, 4-73, 4-75, 4-77, 4-79, 4-81, 9-7
2894521-0000	.CABLE DUCT	2-111
2894563-0000	.PIPE	1-343
2894568-0000	.CHAIN GUIDE	1-37, 1-39
2894598-0000	.ARM	1-31
2894599-0000	.ARM	1-31
2894600-0000	.SUPPORT	1-31
2894601-0000	.SUPPORT	1-31
2894602-0000	.FILLING PIPE	1-195, 1-197
2894607-0000	.LOWER FILLING TUBE	1-195, 1-197
2894608-0000	.FILLING PIPE	1-195, 1-197
2894612-0000	.SHIM	1-305, 1-307
2894643-0000	.BRACKET	1-299
2894644-0000	.BRACKET	1-299
2894648-0000	.PLATE	1-53
2894649-0000	.FITTING PIECE	1-55
2894652-0000	.THREADED ROD	1-53
2894933-0000	.SHAFT	4-27, 4-29, 4-31
2894935-0000	.UPPER FILLING PIPE	1-195, 1-197
2895150-0000	.PNEUMATIC DIAGRAM	9-69
2895150-0250	.LOWER FORMING RING	1-83
2895151-0000	.FLOAT	1-195, 1-197
2895153-0000	.PEROXIDE CHAMBER	1-287, 1-289
2895154-0000	.RESISTANCE	1-287, 1-289
2895155-0000	.INSULATING MAT	1-287, 1-289
2895156-0000	.SPACER	1-287, 1-289
2895158-0000	.STEAM PIPE	1-269
2895197-0000	.STOP PIN	1-195, 1-197
2895374-0000	.BLOCK	7-97
2895375-0000	.PIN	7-101
2895432-0000	.GUIDE	12-11, 12-13, 12-15
2895439-0000	.PIPE	4-99, 4-101, 4-103, 4-105
2895452-0000	.SLIDER	5-217, 5-219, 5-221, 5-223, 5-225, 5-227, 5-229
2895453-0000	.SLIDER	5-217, 5-219, 5-221, 5-223, 5-225, 5-227, 5-229
2895457-0000	.ROLLER	1-107, 1-109
2895458-0000	.ROLLER	1-107, 1-109
2895459-0000	.ROLLER	1-107, 1-109
2895460-0000	.ROLLER	1-107, 1-109
2895461-0000	.ROLLER	1-107, 1-109
2895462-0000	.ROLLER	1-107, 1-109
2895463-0000	.ROLLER	1-107, 1-109
2895466-0000	.SPRING HOLDER	4-9, 4-11, 4-13, 4-15, 4-17, 4-19
2895721-0000	.LINK	12-11, 12-13, 12-15
2895722-0000	.LINK	12-11, 12-13, 12-15
2895723-0000	.GUIDE	12-11, 12-13, 12-15
2896520-0000	.ROLLER	1-125, 1-127

Part No	Description	Page No
2897024-0000	.HANDLE	7-97
2897028-0000	.PIPE	2-45
2897033-0000	.HOOK	12-11, 12-13, 12-15
2897660-0000	.SPLASH PLATE	2-229
2897843-0000	.VOLUME FLAP	4-57, 4-59, 4-61, 4-63, 4-65, 4-67, 4-83, 4-85, 4-87, 4-89
2897844-0000	.VOLUME FLAP	4-57, 4-59, 4-61, 4-63, 4-65, 4-67, 4-83, 4-85, 4-87, 4-89
2897857-0000	.BRACKET	1-147, 1-149
2897885-0000	.FLANGE	5-173, 5-175, 5-177, 5-179, 5-181, 5-183, 5-185, 5-187, 5-189, 5-191, 5-193, 5-195, 5-197, 5-199, 5-201, 5-203
2897886-0000	.SHAFT	5-133, 5-135, 5-137, 5-139, 5-141, 5-143, 5-145, 5-147, 5-149, 5-151, 5-153, 5-155, 5-157, 5-159, 5-161, 5-163, 5-165, 5-167, 5-169, 5-171
2897901-0000	.ROLLER	1-91, 1-93, 1-95, 1-97
2897947-0000	.INSERT	3-5, 3-7, 3-9, 3-11, 3-13, 3-15
2898203-0000	.VALVE CONE	1-219
2898309-0000	.ROLLER	1-91, 1-93, 1-95, 1-97
2898310-0000	.ROLLER	1-91, 1-93, 1-95, 1-97
2898459-0000	.PROTECTION	1-279
2898538-0000	.BRACKET	5-133, 5-135, 5-137, 5-139, 5-141, 5-143, 5-145, 5-147, 5-149, 5-151, 5-153, 5-155, 5-157, 5-159, 5-161, 5-163, 5-165, 5-167, 5-169, 5-171
2898560-0000	.COUPLING	5-173, 5-175, 5-177, 5-179, 5-181, 5-183, 5-185, 5-187, 5-189, 5-191, 5-193, 5-195, 5-197, 5-199, 5-201, 5-203, 5-217, 5-219, 5-221, 5-223, 5-225, 5-227, 5-229
2898561-0000	.PLATE	5-173, 5-175, 5-177, 5-179, 5-181, 5-183, 5-185, 5-187, 5-189, 5-191, 5-193, 5-195, 5-197, 5-199, 5-201, 5-203, 5-217, 5-219, 5-221, 5-223, 5-225, 5-227, 5-229
2898562-0000	.HUB	5-173, 5-175, 5-177, 5-179, 5-181, 5-183, 5-185, 5-187, 5-189, 5-191, 5-193, 5-195, 5-197, 5-199, 5-201, 5-203, 5-217, 5-219, 5-221, 5-223, 5-225, 5-227, 5-229
2898819-0000	.SCREW	5-83, 5-85, 5-87, 5-89, 5-91
2898917-0000	.INDUCTOR	1-155, 1-157, 1-159
2898918-0000	.INSULATING PLATE	1-155, 1-157, 1-159
2898990-0000	.BRACKET	1-155, 1-157, 1-159
2899002-0000	.CAM	4-23, 4-25
2899003-0000	.CAM	4-9, 4-11, 4-13, 4-15, 4-17, 4-19
2899089-0000	.SPACER	1-287, 1-289
2899090-0000	.SQUARE TUBE	1-287, 1-289
2899153-0000	.BUSHING	1-155, 1-157, 1-159
2899496-0000	.SUPPORT	4-109, 4-111, 4-113, 4-115
2899497-0000	.SUPPORT	4-109, 4-111, 4-113, 4-115
2899546-0000	.SUPPORT	4-109, 4-111, 4-113, 4-115
2899960-0000	.CAM	4-33, 4-35
2900026-0000	.SUPPORT	7-27
2900027-0100	.AIR NOZZLE	7-27
2901592-0000	.CABLE DUCT	2-225
2901594-0000	.COVER PLATE	2-229
2901595-0000	.CHUTE	2-229
2901822-0100	.ELECTRICAL CONNECTION	6-17
2902078-0200	.EMERGENCY STOP	2-209
2902378-0100	.TRANSFORMER	1-75
2902379-0100	.PIPE	1-169
2902381-0000	.TOP SECTION	5-173, 5-175, 5-177, 5-179, 5-181, 5-183, 5-185, 5-187, 5-189, 5-191, 5-193, 5-195, 5-197, 5-199, 5-201, 5-203
2902425-0000	.COVER	11-49
2902450-0100	.SUPPORT	11-51, 11-53
2902500-0100	.STRAIGHT CONVEYOR	11-3, 11-5, 11-7
2902503-0000	.GUIDE	5-25
2902504-0000	.RAIL	5-25
2903813-0100	.SIGNAL LAMP	2-125, 2-127
2904947-0100	.EMERGENCY STOP	7-175
2905162-0000	.SUPPORT	4-109, 4-111, 4-113, 4-115
2907816-0000	.LOWER FILLING TUBE	1-195, 1-197
2908562-0000	.DIAGRAM	9-69
2908568-0000	.TOP SECTION	5-173, 5-175, 5-177, 5-179, 5-181, 5-183, 5-185, 5-187, 5-189, 5-191, 5-193, 5-195, 5-197, 5-199, 5-201, 5-203
2908569-0000	.TOP SECTION	5-173, 5-175, 5-177, 5-179, 5-181, 5-183, 5-185, 5-187, 5-189, 5-191, 5-193, 5-195, 5-197, 5-199, 5-201, 5-203
2908923-0000	.TOOL	9-37
2908996-0000	.TOOL	9-37
2908997-0100	.TOOL	9-33
2909143-0000	.VOLUME CAM	4-33, 4-35
2909144-0000	.CAM	4-33, 4-35
2909295-0100	.LIGHT FIXTURE	2-47
2909367-0000	.PRESSURE ROLLER (PACK 10)	1-195, 1-197, 9-9
2909368-0000	.PRESSURE ROLLER (PACK 10)	1-195, 1-197
2909509-0100	.DRIVE	1-147, 1-149
2909530-0000	.NOZZLE	5-205, 5-207, 5-209, 5-211, 9-23
2909531-0000	.NOZZLE	5-205, 5-207, 5-209, 5-211, 9-23
2909791-0000	.SUPPORT	1-125, 1-127
2910374-0000	.LEVER	1-21
2910376-0000	.NUT	1-21
2910393-0000	.NOZZLE	5-205, 5-207, 5-209, 5-211, 9-23
2910394-0000	.NOZZLE	5-205, 5-207, 5-209, 5-211, 9-23
2910599-0000	.GUIDE	5-173, 5-175, 5-177, 5-179, 5-181, 5-183, 5-185, 5-187, 5-189, 5-191, 5-193, 5-195, 5-197, 5-199, 5-201, 5-203
2910601-0000	.GUIDE	5-133, 5-135, 5-137, 5-139, 5-141, 5-143, 5-145, 5-147, 5-149, 5-151, 5-153, 5-155, 5-157, 5-159, 5-161, 5-163, 5-165, 5-167, 5-169, 5-171
2910602-0000	.GUIDE	5-133, 5-135, 5-137, 5-139, 5-141, 5-143, 5-145, 5-147, 5-149, 5-151, 5-153, 5-155

Part No	Description	Page No
		5-157, 5-159, 5-161, 5-163, 5-165, 5-167, 5-169, 5-171
2910604-0000	.SUPPORT	5-33, 5-35
2910608-0000	.CAM	5-13
2910611-0000	.BRACKET	5-13
2910612-0000	.BELT	5-217, 5-219, 5-221, 5-223, 5-225, 5-227, 5-229, 9-23
2910622-0000	.BELT	5-217, 5-219, 5-221, 5-223, 5-225, 5-227, 5-229, 9-23
2910623-0100	.CONNECTION BOX	11-3, 11-5, 11-7
2910624-0000	.CONNECTION BOX	11-61, 11-209
2910625-0100	.CONNECTION BOX	11-61, 11-209
2910633-0000	.CAM	5-83, 5-85, 5-87, 5-89, 5-91
2911823-0250	.FORMING RING	1-83
2911831-0000	.SUPPORT	4-109, 4-111, 4-113, 4-115
2912004-0000	.CAM	4-33, 4-35
2912143-0000	.SHAFT	3-17, 3-19, 3-21, 3-23, 3-25
2912144-0000	.TRANSPORT EQUIPMENT	9-55
2912145-0000	.PIPE	4-99, 4-101, 4-103, 4-105
2912146-0000	.PIPE	4-99, 4-101, 4-103, 4-105
2912147-0000	.SUPPORT	4-109, 4-111, 4-113, 4-115
2912148-0000	.CAM	4-27, 4-29, 4-31
2912199-0000	.CLAMP	5-237, 5-239
2912200-0000	.BRACKET	5-237, 5-239
2912228-0003	.TPOP BASIC V 3.2	10-5
2912326-0000	.LABEL	7-109, 7-111
2912327-0000	.LABEL	7-109, 7-111
2912494-0000	.ROLLER	1-303
2912502-0000	.CAM	4-23, 4-25
2912503-0000	.CAM	4-9, 4-11, 4-13, 4-15, 4-17, 4-19
2912644-0000	.SUPPORT	8-101
2912646-0000	.HOSE	8-115
2912647-0100	.COOLING UNIT	8-3
2912701-0250	.UPPER FORMING RING	1-83
2912703-0250	.EDGE ROLLER	1-83
2912705-0250	.LOWER FORMING RING	1-85
2912706-0250	.UPPER FORMING RING	1-101
2912707-0250	.FORMING RING	1-115
2914244-0100	.SOFTWARE	10-3
2914245-0012	.SOFTWARE CD	10-5
2914523-0100	.VALVE PANEL	1-325
2914524-0100	.VALVE RAMP	1-331, 1-333
2914525-0100	.VALVE RAMP	1-331, 1-333
2914526-0000	.PLATE	1-331, 1-333
2914590-0000	.CARRIER	5-13
2914595-0000	.DRIVE WHEEL	5-25
2914597-0000	.RAIL	5-25
2914598-0000	.GUIDE	5-25
2914617-0100	.DISCHARGE DEVICE	5-3, 5-5, 5-7
2914620-0100	.OUTFEEDER	5-9
2914621-0100	.CURVE WHEEL	5-9
2914622-0100	.OUTFEEDER	5-11
2914623-0100	.RAIL	5-11
2914801-0000	.COVER	1-287, 1-289
2914802-0000	.COVER	1-287, 1-289
2914952-0000	.SPACER	1-287, 1-289
2915909-0000	.INSULATING MAT	1-287, 1-289
2915911-0000	.VOLUME CAM	4-33, 4-35
2915912-0000	.CAM	4-33, 4-35
2915913-0000	.CAM	4-33, 4-35
2916427-0000	.BRACKET	1-279
2916428-0000	.CAM	4-9, 4-11, 4-13, 4-15, 4-17, 4-19
2916429-0000	.CAM	4-9, 4-11, 4-13, 4-15, 4-17, 4-19
2916867-0000	.SUPPORT RING	1-125, 1-127
2917120-0000	.INDUCTOR	1-155, 1-157, 1-159
2917121-0000	.INSULATING PLATE	1-155, 1-157, 1-159
2917122-0000	.BRACKET	1-155, 1-157, 1-159
2917420-0000	.SIGN	7-51
2917444-0000	.CAM	4-27, 4-29, 4-31
2917479-0000	.SUPPORT	5-33, 5-35
2917480-0000	.SUPPORT	5-33, 5-35
2917482-0000	.SUPPORT	5-33, 5-35
2917483-0000	.SUPPORT	5-33, 5-35
2918306-0200	.ELECTRICAL DOCUMENT	10-3
2918680-0000	.PLATE	1-135
2918720-0000	.COVER	8-101
2918723-0000	.DIVIDER	8-75
2918726-0000	.DIVIDER	8-75
2918727-0000	.DIVIDER	8-75
2918730-0000	.HOSE	8-115
2918732-0000	.FUSE PANEL LABEL	8-89, 8-91
2919175-0000	.GUIDE	5-33, 5-35
2919176-0000	.GUIDE	5-83, 5-85, 5-87, 5-89, 5-91
2919282-0250	.EDGE ROLLER	1-129, 1-131
2919283-0000	.BRACKET	1-117, 1-119, 1-121, 1-123, 1-135
2919386-0000	.TOP SECTION	5-173, 5-175, 5-177, 5-179, 5-181, 5-183, 5-185, 5-187, 5-189, 5-191, 5-193
		5-195, 5-197, 5-199, 5-201, 5-203

Part No	Description	Page No
2919408-0000	.BRACKET	3-5, 3-7, 3-9, 3-11, 3-13, 3-15
2919409-0000	.PLATE	3-17, 3-19, 3-21, 3-23, 3-25
2919414-0000	.FOLDING FLAP	4-83, 4-85, 4-87, 4-89
2919415-0000	.FOLDING FLAP	4-83, 4-85, 4-87, 4-89
2920422-0000	.TOP SECTION	5-173, 5-175, 5-177, 5-179, 5-181, 5-183, 5-185, 5-187, 5-189, 5-191, 5-193, 5-195, 5-197, 5-199, 5-201, 5-203
2920989-0000	.CONNECTION	5-133, 5-135, 5-137, 5-139, 5-141, 5-143, 5-145, 5-147, 5-149, 5-151, 5-153, 5-155, 5-157, 5-159, 5-161, 5-163, 5-165, 5-167, 5-169, 5-171
2920990-0000	.SPACER	5-133, 5-135, 5-137, 5-139, 5-141, 5-143, 5-145, 5-147, 5-149, 5-151, 5-153, 5-155, 5-157, 5-159, 5-161, 5-163, 5-165, 5-167, 5-169, 5-171
2921394-0000	.BRACKET	1-147, 1-149
2921395-0000	.BRACKET	1-147, 1-149
2921575-0000	.ROLLER	1-91, 1-93, 1-95, 1-97
2921681-0000	.BENDING ROLLER	7-145
2921684-0000	.PROTECTION	7-51
2921948-0000	.PLATE	5-83, 5-85, 5-87, 5-89, 5-91
2922007-0000	.BRACKET	5-83, 5-85, 5-87, 5-89, 5-91
2922025-0000	.SUPPORT RING	1-125, 1-127
2922026-0000	.SUPPORT RING	1-125, 1-127
2922103-0000	.ROD	7-119, 7-121, 7-123
2922117-0000	.ROCKER ARM	7-119, 7-121, 7-123
2922153-0000	.SHAFT	5-83, 5-85, 5-87, 5-89, 5-91
2922322-0002	.RETURN PIPE	6-37
2922486-0000	.SHAFT	4-33, 4-35
2922541-0200	.TUBE FLUSHING	6-3
2922549-0000	.BRACKET	1-137
2922550-0000	.BRACKET	1-137
2922729-0000	.SHUTTER	1-177
2922731-0000	.SHOULDER SCREW	1-177
2923820-0006	.PLMS CENTRE 140 BASIC	10-5
2923889-0000	.BRACKET	1-21
2925286-0000	.VOLUME CAM	4-33, 4-35
2925287-0000	.CAM	4-33, 4-35
2925288-0000	.CAM	4-33, 4-35
2926461-0000	.BRACKET	1-155, 1-157, 1-159
2927010-0000	.BRACKET	8-5, 8-7, 8-9, 8-11
2927011-0000	.PLATE	8-5, 8-7, 8-9, 8-11
2927017-0000	.SUPPORT	8-5, 8-7, 8-9, 8-11
2927019-0000	.HOSE	8-115
2927552-0000	.BRACKET	2-233
2927616-0000	.COVER	7-5, 7-7
2927619-0000	.COVER	7-5, 7-7
2927620-0000	.COVER	7-5, 7-7
2927621-0000	.BEARING BLOCK	7-5, 7-7
2927622-0000	.BEARING BLOCK	7-5, 7-7
2927623-0000	.COVER	7-5, 7-7
2927689-0000	.PLATE	4-33, 4-35
2929982-0000	.ANGLE BRACKET	7-133, 7-135
2929983-0000	.ROCKER ARM	7-133, 7-135
2931010-0000	.ROLLER	7-87
2931192-0000	.IMPELLER WHEEL	2-251
2931466-0000	.COVER	7-137
2931744-0000	.CONNECTION	5-133, 5-135, 5-137, 5-139, 5-141, 5-143, 5-145, 5-147, 5-149, 5-151, 5-153, 5-155, 5-157, 5-159, 5-161, 5-163, 5-165, 5-167, 5-169, 5-171
2931745-0000	.PIPE	5-237, 5-239
2931746-0000	.BRACKET	5-237, 5-239
2931909-0000	.CLAMPING PIECE	1-17
2932054-0000	.TUNNEL	1-41
2932055-0000	.LID	1-41
2932252-0000	.PRESSURE ROLLER (PACK 10)	1-195, 1-197, 9-9
2932253-0000	.PRESSURE ROLLER (PACK 10)	1-195, 1-197
2933050-0000	.HANGER	7-5, 7-7
2933183-0000	.PLATE	1-41
2933542-0000	.ROLLER BRACKET	7-131
2933544-0000	.ROLLER	7-127, 7-129, 7-131, 7-141, 7-143
2933545-0000	.PLATE	7-131
2933546-0000	.SHAFT	7-131
2933675-0000	.SHIM	5-217, 5-219, 5-221, 5-223, 5-225, 5-227, 5-229
2933676-0000	.PIPE	5-237, 5-239
2933679-0000	.SUPPORT	5-13, 5-83, 5-85, 5-87, 5-89, 5-91
2933683-0000	.FRAME	5-133, 5-135, 5-137, 5-139, 5-141, 5-143, 5-145, 5-147, 5-149, 5-151, 5-153, 5-155, 5-157, 5-159, 5-161, 5-163, 5-165, 5-167, 5-169, 5-171
2933689-0000	.SHAFT	5-217, 5-219, 5-221, 5-223, 5-225, 5-227, 5-229
2933691-0000	.GUIDE	5-133, 5-135, 5-137, 5-139, 5-141, 5-143, 5-145, 5-147, 5-149, 5-151, 5-153, 5-155, 5-157, 5-159, 5-161, 5-163, 5-165, 5-167, 5-169, 5-171
2933693-0000	.GUIDE	5-133, 5-135, 5-137, 5-139, 5-141, 5-143, 5-145, 5-147, 5-149, 5-151, 5-153, 5-155, 5-157, 5-159, 5-161, 5-163, 5-165, 5-167, 5-169, 5-171
2933694-0000	.GUIDE	5-133, 5-135, 5-137, 5-139, 5-141, 5-143, 5-145, 5-147, 5-149, 5-151, 5-153, 5-155, 5-157, 5-159, 5-161, 5-163, 5-165, 5-167, 5-169, 5-171
2933695-0000	.GUIDE	5-133, 5-135, 5-137, 5-139, 5-141, 5-143, 5-145, 5-147, 5-149, 5-151, 5-153, 5-155, 5-157, 5-159, 5-161, 5-163, 5-165, 5-167, 5-169, 5-171
2933700-0000	.SHAFT	5-133, 5-135, 5-137, 5-139, 5-141, 5-143, 5-145, 5-147, 5-149, 5-151, 5-153, 5-155, 5-157, 5-159, 5-161, 5-163, 5-165, 5-167, 5-169, 5-171
2933701-0000	.RAIL	5-133, 5-135, 5-137, 5-139, 5-141, 5-143, 5-145, 5-147, 5-149, 5-151, 5-153, 5-155, 5-157

Part No	Description	Page No
		5-159, 5-161, 5-163, 5-165, 5-167, 5-169, 5-171
2933702-0000	.PLATE	5-133, 5-135, 5-137, 5-139, 5-141, 5-143, 5-145, 5-147, 5-149, 5-151, 5-153, 5-155
		5-157, 5-159, 5-161, 5-163, 5-165, 5-167, 5-169, 5-171
2933704-0000	.PIPE	5-237, 5-239
2933705-0000	.PIPE	5-237, 5-239
2933706-0000	.PIPE	5-237, 5-239
2933707-0000	.PIPE	5-237, 5-239
2933708-0000	.SLIDER	5-217, 5-219, 5-221, 5-223, 5-225, 5-227, 5-229
2933709-0000	.PLATE	5-217, 5-219, 5-221, 5-223, 5-225, 5-227, 5-229
2933710-0000	.SUPPORT	5-217, 5-219, 5-221, 5-223, 5-225, 5-227, 5-229
2933761-0000	.CABLE DUCT	2-111
2933786-0000	.GASKET	1-41
2933787-0000	.GASKET	1-41
2933918-0000	.PIPE	5-237, 5-239
2933919-0000	.PIPE	5-237, 5-239
2933923-0000	.SLIDER	5-217, 5-219, 5-221, 5-223, 5-225, 5-227, 5-229
2933924-0000	.BELT	5-217, 5-219, 5-221, 5-223, 5-225, 5-227, 5-229, 9-23
2933925-0000	.BELT	5-217, 5-219, 5-221, 5-223, 5-225, 5-227, 5-229, 9-23
2933926-0000	.BELT	5-217, 5-219, 5-221, 5-223, 5-225, 5-227, 5-229, 9-23
2933927-0000	.BELT	5-217, 5-219, 5-221, 5-223, 5-225, 5-227, 5-229, 9-23
2934155-0000	.LINK	12-11, 12-13, 12-15
2934156-0000	.SHAFT	12-11, 12-13, 12-15
2934157-0000	.BRACKET	12-11, 12-13, 12-15
2934158-0000	.SHAFT	12-11, 12-13, 12-15
2934159-0000	.LINK	12-11, 12-13, 12-15
2934160-0000	.GUIDE	12-11, 12-13, 12-15
2934161-0000	.BRACKET	12-11, 12-13, 12-15
2934201-0000	.PLATE	4-109, 4-111, 4-113, 4-115
2934252-0000	.ROLLER BRACKET	7-141
2934253-0000	.AXLE PIN	7-127, 7-129, 7-141
2934254-0000	.COVER	7-141, 7-143
2934255-0100	.ROPE BRACKET	7-119, 7-121, 7-123
2934256-0000	.ROLLER BRACKET	7-143
2934257-0100	.ROPE BRACKET	7-119, 7-121, 7-123
2934372-0000	.FILLING PIPE	1-195, 1-197
2934966-0000	.LABEL TAPE	11-207
2934968-0100	.PNEUMATIC UNIT	11-67
2935134-0000	.AXLE PIN	7-143
2935135-0000	.PIPE	7-127, 7-129
2935136-0100	.LOCKING DEVICE	7-125
2935820-0100	.ROPE BRACKET	7-125
2936036-0000	.SHAFT	12-11, 12-13, 12-15
2936230-0000	.PLATE	7-125
2936335-0000	.CHAIN	1-249
2936336-0000	.PIPE	1-273
2936342-0000	.STOP PLATE	1-331, 1-333
2936345-0000	.PIPE	1-283, 1-285
2936346-0000	.PIPE	1-283, 1-285
2936347-0000	.PIPE	1-283, 1-285
2936350-0000	.TUBE	1-191
2936355-0000	.BRACKET	3-5, 3-7, 3-9, 3-11, 3-13, 3-15
2936383-0000	.LINK	12-11, 12-13, 12-15
2936384-0000	.LINK	12-11, 12-13, 12-15
2936391-0000	.PLATE	1-41
2936698-0000	.SUPPORT	5-133, 5-135, 5-137, 5-139, 5-141, 5-143, 5-145, 5-147, 5-149, 5-151, 5-153, 5-155
		5-157, 5-159, 5-161, 5-163, 5-165, 5-167, 5-169, 5-171
2937284-0200	.DRAINING CONDENSE	1-59
2937298-0000	.LINK	12-11, 12-13, 12-15
2937299-0000	.LINK	12-11, 12-13, 12-15
2937301-0000	.GUIDE	12-11, 12-13, 12-15
2937386-0000	.PLATE	5-37, 5-39
2937533-0000	.ROLLER	1-107, 1-109
2937886-0000	.SPACER	1-119, 1-121, 1-123
2937891-0000	.GASKET	1-41
2938243-0000	.HOLDER	3-5, 3-7, 3-9, 3-11, 3-13, 3-15
2938245-0000	.HOLDER	3-5, 3-7, 3-9, 3-11, 3-13, 3-15
2938295-0000	.RAILING	2-125, 2-127
2938298-0000	.TOE PLATE	2-125, 2-127
2938299-0000	.RAILING	2-125, 2-127
2940018-0100	.LOCKING DEVICE	7-125
2940019-0100	.LOCKING DEVICE	7-125
2940174-0000	.SHIM	7-5, 7-7
2940246-0000	.SHAFT	1-287, 1-289
2940247-0000	.FLANGE	1-287, 1-289
2940248-0000	.FLANGE	1-287, 1-289
2940298-0000	.WHEEL	1-13
2940301-0000	.HUB	1-13
2940302-0000	.RING	1-13
2941044-0000	.CARRIER	5-83, 5-85, 5-87, 5-89, 5-91
2941045-0000	.LEVER	5-83, 5-85, 5-87, 5-89, 5-91
2941046-0000	.BUSHING	5-83, 5-85, 5-87, 5-89, 5-91
2941709-0000	.AXLE PIN	7-49
2941710-0000	.GUIDE WHEEL	7-49
2941718-0000	.FRAME	5-173, 5-175, 5-177, 5-179, 5-181, 5-183, 5-185, 5-187, 5-189, 5-191, 5-193, 5-195

Part No	Description	Page No
		5-197, 5-199, 5-201, 5-203
2942051-0000	.PLATE	12-11, 12-13, 12-15
2942052-0000	.PLATE	12-11, 12-13, 12-15
2942053-0000	.GUIDE	12-11, 12-13, 12-15
2942054-0000	.PIPE	5-237, 5-239
2942055-0000	.PIPE	5-237, 5-239
2944191-0200	.STERILE WATER SYSTEM	6-11
2944477-0000	.TOP SECTION	5-173, 5-175, 5-177, 5-179, 5-181, 5-183, 5-185, 5-187, 5-189, 5-191, 5-193, 5-195, 5-197, 5-199, 5-201, 5-203
2944478-0000	.TOP SECTION	5-173, 5-175, 5-177, 5-179, 5-181, 5-183, 5-185, 5-187, 5-189, 5-191, 5-193, 5-195, 5-197, 5-199, 5-201, 5-203
2944545-0000	.SHAFT	7-45
2945033-0000	.GUIDE	12-11, 12-13, 12-15
2945034-0000	.BRACKET	12-11, 12-13, 12-15
2945036-0000	.FLANGE	1-33
2945037-0000	.FLANGE	1-33
2945248-0000	.GUIDE	12-11, 12-13, 12-15
2945249-0000	.BRACKET	12-11, 12-13, 12-15
2946186-0000	.PLATE	12-11, 12-13, 12-15
2946187-0000	.PLATE	12-11, 12-13, 12-15
2946188-0000	.GUIDE	12-11, 12-13, 12-15
2946189-0000	.BRACKET	12-11, 12-13, 12-15
2946747-0000	.TEMPLATE	9-49
2946748-0000	.TEMPLATE	9-49
2946749-0000	.TEMPLATE	9-49
2946750-0000	.TEMPLATE	9-49
2946751-0000	.TEMPLATE	9-49
2946753-0000	.SUPPORT	5-217, 5-219, 5-221, 5-223, 5-225, 5-227, 5-229
2946869-0000	.PLATE	1-11
2946871-0000	.BRACKET	1-11
2946876-0000	.BRACKET	1-321
2946878-0000	.SHAFT	1-321
2946880-0000	.PLATE	1-321
2946887-0000	.BODY	1-169
2946888-0000	.SHUTTER	1-169
2946889-0000	.LID	1-169
2946890-0000	.PIPE	1-173
2946892-0000	.COVER	1-233
2946893-0000	.COVER	1-233
2946914-0000	.BRACKET	1-169
2946915-0000	.WASHER	1-169
2946917-0000	.SPRING	1-195, 1-197
2946918-0000	.TOUCH GUARD	1-233
2948042-0100	.SAMPLING UNIT	11-3, 11-5, 11-7
2948043-0100	.SAMPLING UNIT	11-3, 11-5, 11-7
2948419-0000	.PLATE	12-11, 12-13, 12-15
2948420-0000	.PLATE	12-11, 12-13, 12-15
2948421-0000	.PLATE	12-11, 12-13, 12-15
2948422-0000	.PLATE	12-11, 12-13, 12-15
2948423-0000	.SPRING	12-11, 12-13, 12-15
2948651-0000	.ARM	7-127, 7-129
2948764-0000	.PIPE	2-227
2948772-0000	.PLATE	2-39, 2-41
2949094-0100	.LOCKING DEVICE	7-125
2949665-0000	.PULLEY	5-173, 5-175, 5-177, 5-179, 5-181, 5-183, 5-185, 5-187, 5-189, 5-191, 5-193, 5-195, 5-197, 5-199, 5-201, 5-203
2949862-0004	.DOLLY	4-39, 4-41, 4-43, 4-45, 4-47, 4-49, 4-51, 4-53, 4-55, 9-7
2950373-0000	.PROTECTION	5-173, 5-175, 5-177, 5-179, 5-181, 5-183, 5-185, 5-187, 5-189, 5-191, 5-193, 5-195, 5-197, 5-199, 5-201, 5-203
2951058-0000	.LID	1-9, 1-15, 1-19
2951098-0000	.PLATE	5-83, 5-85, 5-87, 5-89, 5-91
2951174-0000	.SUPPORT	3-5, 3-7, 3-9, 3-11, 3-13, 3-15
2951175-0000	.TRANSPORT EQUIPMENT	9-55
2951177-0000	.VOLUME BULGE	4-57, 4-59, 4-61, 4-63, 4-65, 4-67, 4-83, 4-85, 4-87, 4-89
2951676-0000	.PLATE	7-119, 7-121, 7-123
2951677-0000	.PLATE	7-119, 7-121, 7-123
2953151-0000	.GUIDE	5-83, 5-85, 5-87, 5-89, 5-91
2953218-0000	.VOLUME BULGE	4-57, 4-59, 4-61, 4-63, 4-65, 4-67, 4-83, 4-85, 4-87, 4-89
2954869-0000	.GUIDE	12-11, 12-13, 12-15
2954870-0000	.PLATE	12-11, 12-13, 12-15
2954871-0000	.PLATE	12-11, 12-13, 12-15
2954875-0000	.PIN	12-11, 12-13, 12-15
2954996-0000	.GUIDE BRACKET	5-217, 5-219, 5-221, 5-223, 5-225, 5-227, 5-229
2955003-0000	.HOLDER	5-133, 5-135, 5-137, 5-139, 5-141, 5-143, 5-145, 5-147, 5-149, 5-151, 5-153, 5-155, 5-157, 5-159, 5-161, 5-163, 5-165, 5-167, 5-169, 5-171
2955005-0000	.ROLLER	1-139, 1-141
2955421-0000	.BALLAST COIL	7-125
2955542-0100	.PRESSURE REGULATOR	11-67, 11-211
2955543-0000	.PNEUMATIC DIAGRAM	11-67
2955586-0000	.COVER	7-125
2956447-0000	.LEVER	1-73
2956625-0000	.ROLLER	5-173, 5-175, 5-177, 5-179, 5-181, 5-183, 5-185, 5-187, 5-189, 5-191, 5-193, 5-195, 5-197, 5-199, 5-201, 5-203
2956750-0100	.HOSE INSTALLATION	11-67

Part No	Description	Page No
2957417-0000	.CABLE	1-75
2957419-0000	.INTERMEDIARY SECTION	1-181
2957420-0000	.PIPE	1-179
2957421-0000	.CONTAINER	1-191
2957427-0000	.BRACKET	1-49
2957428-0000	.BRACKET	1-49
2957435-0000	.CHAIN	1-23
2957436-0000	.BRACKET	1-177
2957437-0000	.SHUTTER	1-177
2957439-0000	.COVER	1-177
2957440-0000	.COVER	1-177
2957441-0000	.COVER	1-177
2957443-0000	.LEVER	1-177
2957444-0000	.LEVER	1-177
2957445-0000	.SHAFT	1-177
2957446-0000	.LEVER	1-177
2957447-0100	.PNEUMATIC COMPONENT	1-5
2957450-0200	.PNEUMATIC COMPONENT	1-325
2957451-0000	.PIPE	1-283, 1-285
2957453-0000	.PLATE	1-9, 1-175
2957815-0000	.SUPPORT	5-37, 5-39
2957826-0000	.SUPPORT	5-37, 5-39
2957827-0000	.SUPPORT	5-37, 5-39
2957835-0000	.CARRIER	5-83, 5-85, 5-87, 5-89, 5-91
2957837-0000	.CAM	5-83, 5-85, 5-87, 5-89, 5-91
2957856-0000	.CAM	5-83, 5-85, 5-87, 5-89, 5-91
2958038-0000	.SUPPORT	5-127, 5-129, 5-131
2958086-0000	.SUPPORT	5-25
2958096-0000	.SLIDE	5-15
2958104-0000	.PLATE	3-5, 3-7, 3-9, 3-11, 3-13, 3-15
2958105-0000	.SHAFT	3-5, 3-7, 3-9, 3-11, 3-13, 3-15
2958111-0000	.ROLLER	1-119, 1-121, 1-123
2958126-0000	.COVER	3-5, 3-7, 3-9, 3-11, 3-13, 3-15
2958170-0100	.CONNECTION BOX	11-3, 11-5, 11-7
2958418-0000	.INDUCTOR	1-155, 1-157, 1-159
2958552-0000	.PIPE	5-237, 5-239
2958554-0000	.PIPE	5-237, 5-239
2958555-0000	.PIPE	5-237, 5-239
2958846-0000	.PIPE	5-237, 5-239
2958847-0000	.PIPE	5-237, 5-239
2958849-0100	.PNEUMATIC UNIT	11-211
2958850-0100	.HOSE INSTALLATION	11-211
2958851-0000	.PNEUMATIC DIAGRAM	11-211
2958852-0000	.SHAFT	7-119, 7-121, 7-123
2958890-0000	.HUB	5-133, 5-135, 5-137, 5-139, 5-141, 5-143, 5-145, 5-147, 5-149, 5-151, 5-153, 5-155, 5-157, 5-159, 5-161, 5-163, 5-165, 5-167, 5-169, 5-171
2958891-0000	.BRUSH	5-133, 5-135, 5-137, 5-139, 5-141, 5-143, 5-145, 5-147, 5-149, 5-151, 5-153, 5-155, 5-157, 5-159, 5-161, 5-163, 5-165, 5-167, 5-169, 5-171
2958955-0100	.ROLLER	7-119, 7-121, 7-123
2958956-0000	.BRACKET	7-153
2958970-0000	.ARM	5-173, 5-175, 5-177, 5-179, 5-181, 5-183, 5-185, 5-187, 5-189, 5-191, 5-193, 5-195, 5-197, 5-199, 5-201, 5-203
2959053-0000	.ROLLER	5-83, 5-85, 5-87, 5-89, 5-91
2959054-0000	.SUPPORT PLATE	1-119, 1-121, 1-123
2959055-0000	.SUPPORT	1-119, 1-121, 1-123
2959408-0000	.PLATE	1-41
2959846-0000	.HOLDER	3-5, 3-7, 3-9, 3-11, 3-13, 3-15
2959902-0000	.HOLDER	3-5, 3-7, 3-9, 3-11, 3-13, 3-15
2959930-0000	.ARM	5-173, 5-175, 5-177, 5-179, 5-181, 5-183, 5-185, 5-187, 5-189, 5-191, 5-193, 5-195, 5-197, 5-199, 5-201, 5-203
2960053-0000	.CABLE DUCT	11-179, 11-181
2960054-0100	.SUPPORT	11-179, 11-181
2960056-0100	.SUPPORT PLATE	11-3, 11-5, 11-7
2960057-0000	.SUPPORT	11-151
2960060-0100	.STRAIGHT CONVEYOR	11-3, 11-5, 11-7
2960291-0000	.CAM	4-33, 4-35
2960361-0000	.BRACKET	1-87, 1-89
2960362-0000	.FORMING RING	1-87, 1-89, 1-103, 1-105
2960363-0000	.FORMING RING	1-87, 1-89, 1-103, 1-105
2960424-0000	.CAM	4-33, 4-35
2961258-0000	.SHAFT	4-83, 4-85, 4-87, 4-89
2961374-0000	.BUSHING	4-83, 4-85, 4-87, 4-89
2961385-0000	.AXLE PIN	4-83, 4-85, 4-87, 4-89
2961386-0000	.SHAFT	4-83, 4-85, 4-87, 4-89
2963237-0000	.ROLLER	7-27, 7-33
2963240-0000	.SEALING PLATE	7-31
2963255-0000	.CARRIER	5-83, 5-85, 5-87, 5-89, 5-91
2963256-0000	.CARRIER	5-83, 5-85, 5-87, 5-89, 5-91
2963319-0000	.FRAME	5-231, 5-233
2963321-0000	.ADJUSTING SHIM	5-13
2963322-0000	.SUPPORT	5-13
2963323-0000	.ADJUSTING SHIM	5-13
2963324-0000	.GUIDE	5-15
2963326-0000	.SHAFT	5-25

Part No	Description	Page No
2963327-0000	.PLATE	5-25
2963328-0000	.GUIDE	5-15
2963330-0000	.SPACER	5-13
2963333-0000	.SUPPORT	5-25
2963334-0000	.PIPE	5-25
2963768-0000	.PLATE	5-83, 5-85, 5-87, 5-89, 5-91
2964422-0100	.CUTTING DEVICE	4-9, 4-11, 4-13, 4-15, 4-17, 4-19
2964627-0000	.SUPPORT	1-303
2964628-0000	.SHAFT	1-303
2964629-0000	.SHAFT	1-303
2964630-0000	.BRACKET	1-303
2964631-0000	.PIN	1-303
2964632-0000	.SHAFT	1-303
2964633-0000	.NUT	1-303
2964634-0000	.ROLLER	1-303
2964635-0000	.SHAFT	1-303
2964636-0000	.FORK	1-303
2964637-0000	.SUPPORT	1-303
2966209-0000	.SHAFT	4-21
2966211-0000	.FLANGE	4-21
2966720-0000	.SUPPORT	1-303
2966723-0000	.SHAFT	1-303
2966724-0000	.SHAFT	1-303
2966898-0000	.SUPPORT	5-37, 5-39
2966899-0000	.GUIDE	5-83, 5-85, 5-87, 5-89, 5-91
2966928-0000	.BUSHING	4-21
2966953-0000	.PLUG	1-87, 1-89, 1-103, 1-105
2966954-0000	.KNOB	1-87, 1-89, 1-103, 1-105
2966955-0250	.LOWER FORMING RING	1-85
2967078-0000	.CORE	4-71, 4-73, 4-75, 4-77, 4-79, 4-81, 4-83, 4-85, 4-87, 4-89, 9-7
2968215-0100	.DRAINING	2-3
2968216-0000	.PIPE	2-273
2968217-0000	.DRAIN PIPE	2-273
2968251-0000	.MACHINE SIGN	2-209
2968253-0000	.BUSHING	1-13
2968254-0000	.LOCK WASHER	1-13
2968260-0000	.LEVEL PROBE	1-201
2968527-0000	.SHAFT	12-11, 12-13, 12-15
2968905-0000	.GUIDE	5-83, 5-85, 5-87, 5-89, 5-91
2968906-0000	.GUIDE	5-83, 5-85, 5-87, 5-89, 5-91
2968981-0000	.CABLE	8-77, 8-79
2968982-0000	.CABLE	8-77, 8-79
2969153-0000	.GUIDE	12-11, 12-13, 12-15
2969154-0000	.BRACKET	12-11, 12-13, 12-15
2970445-0000	.BRACKET	12-11, 12-13, 12-15
2970446-0000	.LINK	12-11, 12-13, 12-15
2970447-0000	.GUIDE	12-11, 12-13, 12-15
2970448-0000	.GUIDE	12-11, 12-13, 12-15
2970449-0000	.LINK	12-11, 12-13, 12-15
2970920-0000	.GUIDE	5-83, 5-85, 5-87, 5-89, 5-91
2970921-0000	.GUIDE	5-83, 5-85, 5-87, 5-89, 5-91
2971274-0000	.PLATE	5-205, 5-207, 5-209, 5-211
2971499-0000	.HOLDER	4-21
2971500-0000	.LEVER	4-21
2971501-0000	.HOLDER	4-21
2971938-0000	.PEROXIDE CHAMBER	1-287, 1-289
2972198-0000	.CARRIER	5-13
2972199-0000	.GUIDE	5-15
2973963-0000	.SUPPORT	7-87
2974076-0000	.HOOK	12-11, 12-13, 12-15
2974358-0000	.SHAFT	1-21
2974363-0000	.PIN	1-21
2974599-0000	.FOLDING FLAP	4-83, 4-85, 4-87, 4-89
2974610-0000	.FOLDING FLAP	4-83, 4-85, 4-87, 4-89
2974798-0000	.PIPE	1-283, 1-285
2974799-0000	.CONNECTION PIPE	1-283, 1-285
2977808-0000	.CLEANING PIPE	1-253, 1-255, 1-257
2977809-0000	.CLEANING PIPE	1-253, 1-255, 1-257
2978352-0000	.PIPE	1-253, 1-255, 1-257
2978353-0000	.CLEANING PIPE	1-253, 1-255, 1-257
2979712-0000	.PNEUMATIC DIAGRAM	9-69
2979713-0000	.PNEUMATIC DIAGRAM	9-69
2980440-0000	.SPACER	12-11, 12-13, 12-15
2980514-0000	.HAND CRANK	12-11, 12-13, 12-15
2980539-0200	.TPOP PANEL 15 INCH	2-3
2980909-0000	.PIPE	9-53
2980910-0000	.PIPE SUPPORT	9-53
2980934-0200	.START-UP KIT EC	9-3
2980990-0100	.TRANSPORT EQUIPMENT	9-3
2980991-0100	.FRAME	9-3
2980998-0000	.CLEANING PIPE	1-253, 1-255, 1-257
2980999-0000	.CLEANING PIPE	1-253, 1-255, 1-257
2981000-0000	.CLEANING PIPE	1-253, 1-255, 1-257
2981051-0000	.CLEANING PIPE	1-253, 1-255, 1-257

Part No	Description	Page No
2981052-0000	.CLEANING PIPE	1-253, 1-255, 1-257
2981053-0000	.CLEANING PIPE	1-253, 1-255, 1-257
2981055-0000	.CLEANING PIPE	1-253, 1-255, 1-257
2981056-0000	.CLEANING PIPE	1-253, 1-255, 1-257
2981057-0000	.CLEANING PIPE	1-253, 1-255, 1-257
2981058-0000	.CLEANING PIPE	1-253, 1-255, 1-257
2981062-0100	.PIPE	9-3
2981085-0000	.TRANSPORT EQUIPMENT	9-31
2982295-0000	.BRACKET	1-155, 1-157, 1-159
2982776-0000	.PLATE	2-179
2982778-0000	.GASKET	2-181
2983063-0000	.GUIDE	5-15
2983064-0000	.CARRIER	5-13
2983065-0000	.ADJUSTING SHIM	5-13
2983066-0000	.ADJUSTING SHIM	5-13
2983086-0000	.HOLDER	5-25
2983314-0100	.START-UP KIT SU	9-3
2984132-0000	.BRACKET	1-137
2984133-0000	.BRACKET	1-137
2984139-0000	.RAILING	1-311
2984145-0000	.FRAME	1-299
2984151-0000	.HANDLE	1-323
2984152-0000	.HOLDER	1-323
2984153-0000	.PIPE	1-323
2984701-0100	.TUNNEL	1-37, 1-39
2984702-0000	.HANDLE	1-41
2984759-0000	.TOOL	9-37
2984760-0000	.TOOL	9-37
2985488-0000	.UPPER FILLING TUBE	1-195, 1-197
2985489-0000	.LOWER FILLING TUBE	1-195, 1-197
2985490-0000	.PIN	1-195, 1-197
2985585-0100	.PAPER GUIDE	7-83, 7-119, 7-121, 7-123
2986260-0100	.ELECTRICAL EQUIPMENT	1-299
2986261-0100	.CABINET	1-3
2986262-0100	.TERMINAL BLOCK	1-357
2986263-0100	.TERMINAL BLOCK	1-357
2986264-0100	.TERMINAL BLOCK	1-357
2986265-0000	.BRACKET	1-357
2986266-0000	.BRACKET	1-357
2986274-0000	.RAIL	1-359
2986275-0000	.RAIL	1-361, 1-363
2986276-0000	.AXLE PIN	1-33
2986283-0000	.CLEANING PIPE	1-253, 1-255, 1-257
2986284-0000	.CLEANING PIPE	1-253, 1-255, 1-257
2986285-0000	.CLEANING PIPE	1-253, 1-255, 1-257
2986286-0000	.CLEANING PIPE	1-253, 1-255, 1-257
2986288-0000	.CLEANING PIPE	1-253, 1-255, 1-257
2986289-0000	.CLEANING PIPE	1-253, 1-255, 1-257
2986293-0000	.PLATE	1-45
2986294-0000	.BEARING FLANGE	1-253, 1-255, 1-257
2986295-0000	.PLATE	1-45
2986297-0000	.PLATE	1-45
2986305-0000	.CABLE DUCT	1-345
2986307-0000	.COVER	1-345
2986308-0000	.COVER	1-345
2986309-0000	.COVER	1-345
2986315-0000	.BRACKET	5-83, 5-85, 5-87, 5-89, 5-91
2986430-0000	.HOLDER	7-109, 7-111
2986583-0000	.HINGE	8-5, 8-7, 8-9, 8-11
2986584-0000	.FRAME	8-5, 8-7, 8-9, 8-11
2986585-0000	.PLATE	8-75
2986586-0100	.COMPONENT PLATES	8-15, 8-17
2986587-0000	.COVER	8-15, 8-17
2986588-0000	.PLATE	8-113
2986589-0000	.HOSE	8-115
2986590-0000	.HOSE	8-115
2986591-0000	.BRACKET	8-5, 8-7, 8-9, 8-11
2986592-0000	.BRACKET	8-5, 8-7, 8-9, 8-11
2986593-0000	.SUPPORT	8-101
2986594-0000	.BRACKET	8-5, 8-7, 8-9, 8-11
2986595-0000	.BRACKET	8-5, 8-7, 8-9, 8-11
2986596-0000	.DOOR	8-101
2986597-0100	.COMPONENT DOOR	8-97, 8-99
2986598-0000	.COVER	8-5, 8-7, 8-9, 8-11
2986599-0000	.SUPPORT	8-5, 8-7, 8-9, 8-11
2986603-0100	.FRAME	8-5, 8-7, 8-9, 8-11
2986604-0000	.DOOR	8-93, 8-95
2986605-0000	.DOOR	8-81, 8-83, 8-85, 8-87
2986606-0000	.DOOR	8-89, 8-91
2986607-0000	.PANEL	8-107
2986608-0000	.BRACKET	8-5, 8-7, 8-9, 8-11
2986610-0000	.FRAME	8-13
2986611-0000	.SUPPORT	8-5, 8-7, 8-9, 8-11
2986612-0000	.FRAME	8-13

Part No	Description	Page No
2986613-0000	.SPACER	8-5, 8-7, 8-9, 8-11, 8-101
2986615-0000	.GASKET	8-5, 8-7, 8-9, 8-11
2986616-0000	.BRACKET	8-93, 8-95
2986617-0000	.BRACKET	8-5, 8-7, 8-9, 8-11
2986618-0000	.SUPPORT	8-97, 8-99
2986619-0000	.PLATE	8-5, 8-7, 8-9, 8-11
2986620-0000	.GLASS	8-93, 8-95
2986622-0000	.BRACKET	8-81, 8-83, 8-85, 8-87, 8-89, 8-91, 8-93, 8-95
2986623-0000	.REINFORCEMENT	8-81, 8-83, 8-85, 8-87, 8-89, 8-91
2986628-0200	.PANEL	8-109, 8-111
2986629-0000	.PANEL	8-77, 8-79
2986630-0000	.PLATE	8-77, 8-79
2987075-0200	.COVER	1-163, 1-165
2987335-0000	.SHAFT	7-69, 7-71
2988511-0000	.VOLUME BULGE	4-39, 4-41, 4-43, 4-45, 4-47, 4-49, 4-51, 4-53, 4-55, 4-71, 4-73, 4-75, 4-77
		4-79, 4-81
2989228-0000	.CABLE DUCT	11-233
2990353-0000	.BRACKET	1-313, 1-315, 1-317
2990796-0000	.INSULATING PLATE	7-77
2990953-0000	.BRACKET	2-143
2991051-0100	.INDUCTOR	7-27
2991054-0000	.SCREW	7-37
2991055-0616	.TRANSFORMER	7-37
2991211-0000	.SHAFT	1-151
2991213-0000	.BRACKET	1-151
2991560-0000	.GUIDE	5-13
2992991-0000	.SPACER	1-151
2993130-0000	.COVER	1-189
2993778-0000	.COVER	1-189
2993841-0000	.COVER	2-209
2993872-0000	.COVER	2-221
2994072-0000	.DOOR	6-63
2994250-0000	.RAIL	7-81
2994268-0000	.SLIDE	7-81
2994287-0000	.TOOL	9-51
2994294-0000	.PLATE	2-61
2994295-0000	.BOX	2-61
2994296-0100	.REAR MODULE	2-47
2994370-0000	.CLAMP	1-189
2994371-0000	.CLAMP	1-189
2994372-0000	.CLAMP	1-189
2994373-0000	.CLAMP	1-189
2994558-0000	.SPACER	7-77
2994560-0000	.BRACKET	7-25
2994561-0000	.PLATE	7-25
2994562-0000	.BAR	7-25
2994563-0000	.SHAFT	7-25
2994564-0000	.HUB	7-25
2994565-0100	.SPLICE DETECTOR	7-23
2994595-0000	.CARTON STATION	5-127, 5-129, 5-131
2995619-0000	.PIPE	2-259, 2-261
2995620-0000	.PIPE	2-259, 2-261
2995623-0000	.PIPE	2-259, 2-261
2995625-0000	.CABLE DUCT	1-57
2995626-0000	.LID	1-57
2995627-0000	.RAILING	1-311
2996893-0000	.COVER	7-5, 7-7
2997103-0000	.SLIDE	2-43
2997104-0000	.SUPPORT	2-43
2997105-0000	.BRACKET	2-43
2997954-0000	.LEVER	1-13
2997955-0000	.SHAFT	1-13
2998006-0000	.RAIL HOLDER	11-93
2998017-0000	.INSULATING PLATE	1-155, 1-157, 1-159
2998047-0000	.COVER	2-165
2998397-0000	.HOLDER	9-47
2998398-0000	.CENTERING DISC	9-47
2998771-0200	.TUNNEL	2-177
2998933-0000	.CURVE	4-27, 4-29, 4-31
2998934-0000	.CURVE	4-27, 4-29, 4-31
2999045-0000	.BUSHING	1-33
2999197-0100	.RAIL HOLDER	11-91, 11-131, 11-159
3000085-0200	.TERMINAL	6-23
3000365-0000	.DOOR	6-73, 6-75
3000401-0000	.SLIDER	5-217, 5-219, 5-221, 5-223, 5-225, 5-227, 5-229
3000402-0000	.SLIDER	5-217, 5-219, 5-221, 5-223, 5-225, 5-227, 5-229
3000403-0000	.SLIDER	5-217, 5-219, 5-221, 5-223, 5-225, 5-227, 5-229
3000404-0000	.SLIDER	5-217, 5-219, 5-221, 5-223, 5-225, 5-227, 5-229
3000405-0000	.SLIDER	5-217, 5-219, 5-221, 5-223, 5-225, 5-227, 5-229
3000423-0100	.RAILING KIT	11-85, 11-87, 11-89
3000908-0000	.BRACKET	1-87, 1-89
3001985-0000	.CAM	4-27, 4-29, 4-31
3001986-0000	.CAM	4-27, 4-29, 4-31
3002545-0000	.SUPPORT BLOCK	11-83

Part No	Description	Page No
3003532-0000	.BELT	5-93, 5-95, 5-97, 5-99, 5-101, 5-103, 5-105, 5-107, 5-109, 5-111, 5-113
3003535-0000	.BELT	5-93, 5-95, 5-97, 5-99, 5-101, 5-103, 5-105, 5-107, 5-109, 5-111, 5-113
3003537-0000	.HOLDER	5-25, 5-33, 5-35
3003835-0000	.BRACKET	11-159
3003836-0000	.RAIL HOLDER	11-161
3003837-0000	.RAIL HOLDER	11-163
3003838-0000	.BRACKET	11-161, 11-163
3003839-0100	.RAIL HOLDER	11-159
3003840-0100	.RAILHOLDER	11-159
3003841-0100	.RAIL HOLDER	11-153, 11-155, 11-157
3004042-0000	.ROLLER	1-11, 1-17
3004044-0000	.BUSHING	1-11, 1-17
3004045-0000	.LID	1-11, 1-17
3004046-0000	.BEARING HOUSING	1-11, 1-17
3004047-0000	.SHAFT	1-11, 1-17
3004048-0000	.ARM	1-11
3004049-0000	.SHAFT	1-11
3004050-0000	.FLANGE	1-11
3004051-0000	.WASHER	1-11
3004052-0000	.SUPPORT	2-239
3004384-0000	.BEAM	11-65
3004385-0000	.BLOCK	11-65
3004386-0000	.SUPPORT	11-65
3004387-0000	.BLOCK	11-65
3004388-0000	.CLAMPING PIECE	11-65
3004389-0000	.REDUCER	11-65
3004391-0100	.SUPPORT	2-39, 2-41
3005198-0100	.INK JET PRINTER	11-3, 11-5, 11-7
3006215-0000	.SUPPORT ROLLER	1-139, 1-141
3006238-0000	.SUPPORT	1-239
3006251-0000	.HOLDER	1-309
3006252-0000	.SIDE PIECE	1-309
3006254-0000	.SIDE PIECE	1-309
3006255-0000	.PLATE	1-309
3006270-0200	.DRIVE ROLLER	1-5
3006271-0000	.DRIVE ROLLER	1-9
3006595-0000	.SLIDE	2-43
3006639-0000	.SLIDE	2-43
3007547-0000	.CLEANING CUP	1-259
3007548-0000	.CLEANING CUP	1-259
3007549-0000	.CLEANING CUP	1-259
3007672-0200	.START-UP KIT SS	9-3
3007673-0100	.START-UP KIT MB	9-3
3007674-0100	.START-UP KIT ASU	9-3
3007675-0100	.START-UP KIT FF	9-3
3007676-0100	.TRANSPORT EQUIPMENT	9-3
3007681-0000	.HOSE INSTALLATION PNEUMATIC	7-5, 7-7
3007732-0100	.START-UP KIT JS	9-3
3007770-0000	.BLOCK	7-37
3007771-0000	.BLOCK	7-37
3007774-0200	.TOOLS AND TEMPLATES, JAW SYSTEM	9-3
3007775-0200	.TOOLS AND TEMPLATES SS	9-3
3007776-0100	.TOOLS AND TEMPLATES FF	9-3
3007827-0000	.PLATE	5-83, 5-85, 5-87, 5-89, 5-91
3007838-0000	.RAIL	5-83, 5-85, 5-87, 5-89, 5-91
3007884-0000	.SHAFT	7-25
3007928-0000	.CABLE	7-37
3008114-0000	.SHAFT	1-321
3008116-0000	.PLATE	5-37, 5-39
3008117-0000	.SUPPORT	5-37, 5-39
3009085-0000	.COVER	7-133
3009086-0000	.COVER	7-135
3010276-0000	.INSERT	4-9, 4-11, 4-13, 4-15, 4-17, 4-19
3010288-0100	.TOOL & TEMPLATES ASU	9-3
3010398-0000	.TOOL	9-33
3010493-0000	.CARRIER	5-13
3010494-0000	.PLATE	5-13
3010552-0100	.RAILING KIT	11-127, 11-129
3010553-0000	.CHAIN GUARD	11-85, 11-87, 11-89
3010566-0000	.PLATE	5-127, 5-129, 5-131
3010571-0000	.CAM	5-127, 5-129, 5-131
3010575-0000	.SUPPORT PLATE	5-217, 5-219, 5-221, 5-223, 5-225, 5-227, 5-229
3010576-0000	.SUPPORT PLATE	5-217, 5-219, 5-221, 5-223, 5-225, 5-227, 5-229
3010577-0000	.SUPPORT PLATE	5-217, 5-219, 5-221, 5-223, 5-225, 5-227, 5-229
3010586-0000	.SUPPORT PLATE	5-217, 5-219, 5-221, 5-223, 5-225, 5-227, 5-229
3010587-0000	.SUPPORT PLATE	5-217, 5-219, 5-221, 5-223, 5-225, 5-227, 5-229
3010593-0000	.SUPPORT PLATE	5-217, 5-219, 5-221, 5-223, 5-225, 5-227, 5-229
3010602-0000	.GUIDE	5-133, 5-135, 5-137, 5-139, 5-141, 5-143, 5-145, 5-147, 5-149, 5-151, 5-153, 5-155, 5-157, 5-159, 5-161, 5-163, 5-165, 5-167, 5-169, 5-171
3010614-0000	.PLATE	5-217, 5-219, 5-221, 5-223, 5-225, 5-227, 5-229
3010662-0000	.ROLLER	1-137
3010663-0000	.ROLLER	1-137
3012855-0000	.GUIDE	5-173, 5-175, 5-177, 5-179, 5-181, 5-183, 5-185, 5-187, 5-189, 5-191, 5-193, 5-195, 5-197, 5-199, 5-201, 5-203

Part No	Description	Page No
3012856-0000	.GUIDE	5-173, 5-175, 5-177, 5-179, 5-181, 5-183, 5-185, 5-187, 5-189, 5-191, 5-193, 5-195, 5-197, 5-199, 5-201, 5-203
3013351-0000	.GUIDE	5-173, 5-175, 5-177, 5-179, 5-181, 5-183, 5-185, 5-187, 5-189, 5-191, 5-193, 5-195, 5-197, 5-199, 5-201, 5-203
3013352-0000	.GUIDE	5-173, 5-175, 5-177, 5-179, 5-181, 5-183, 5-185, 5-187, 5-189, 5-191, 5-193, 5-195, 5-197, 5-199, 5-201, 5-203
3013503-0150	.UPPER FORMING RING	1-101
3013505-0000	.ROLLER	1-103, 1-105
3013506-0000	.ROLLER	1-103, 1-105
3013507-0000	.ROLLER	1-103, 1-105
3013508-0000	.ROLLER	1-103, 1-105
3013521-0000	.ROLLER	1-21
3014801-0000	.PIPE	2-259, 2-261
3015745-0000	.PLATE	5-133, 5-135, 5-137, 5-139, 5-141, 5-143, 5-145, 5-147, 5-149, 5-151, 5-153, 5-155, 5-157, 5-159, 5-161, 5-163, 5-165, 5-167, 5-169, 5-171
3015748-0000	.BELT	5-93, 5-95, 5-97, 5-99, 5-101, 5-103, 5-105, 5-107, 5-109, 5-111, 5-113
3015753-0000	.SPACER	5-205, 5-207, 5-209, 5-211
3016234-0000	.TANK	2-267
3016357-0100	.OVER FLOW	2-257
3016391-0000	.BRACKET	5-83, 5-85, 5-87, 5-89, 5-91
3016972-0007	.SHAFT	1-99
3017587-0000	.WASHER	7-27
3018426-0000	.PLATE	7-69, 7-71
3018673-0000	.SUPPORT	2-259, 2-261
3018767-0000	.ANGLE BRACKET	11-103
3018768-0000	.SPACER LUG	11-101, 11-103
3018769-0000	.ANGLE BRACKET	11-101
3018876-0000	.SHIM	7-69, 7-71
3019127-0100	.STORAGE	2-257
3019128-0000	.BRACKET	2-271
3019129-0000	.BRACKET	2-271
3019130-0000	.CONTAINER	2-271
3019131-0000	.CONTAINER	2-271
3019132-0000	.LID	2-271
3019211-0000	.ROLLER	1-103, 1-105
3019347-0000	.PLATE	11-139, 11-141
3019400-0100	.CONVEYOR CHAIN	11-3, 11-5, 11-7
3019401-0000	.LINK	11-205
3019534-0100	.RAIL HOLDER	11-99
3019552-0000	.LID	2-267
3019553-0000	.CONNECTION	2-267
3019724-0000	.CONTAINER	2-271
3019725-0000	.CONTAINER	2-271
3019726-0000	.LID	2-271
3019727-0000	.PLATE	2-271
3019827-0100	.RAIL HOLDER	11-99
3019835-0000	.PIPE	2-269
3019920-0100	.RAIL HOLDER	11-91
3019921-0100	.RAIL HOLDER	11-91
3019922-0000	.ANGLE BRACKET	11-95
3019923-0000	.ANGLE BRACKET	11-97
3020112-0000	.SHAFT	1-143
3020118-0000	.ROLLER	1-143
3020119-0000	.HEATING ELEMENT	1-205
3020120-0000	.CONNECTION	1-185
3020121-0000	.CARRIER	1-23
3020122-0000	.ROLLER	1-125, 1-127
3020127-0000	.PIPE	1-279
3020129-0100	.SEAL	1-83
3020285-0000	.PLATE	7-69, 7-71
3020309-0000	.PILLAR	1-69, 1-71
3020447-0000	.LOCKING RING	1-275
3020525-0000	.BODY	1-217
3020530-0000	.FLANGE	1-17
3020531-0000	.FLANGE	1-17
3020537-0000	.BODY	1-217
3020651-0000	.HOLDER	2-239
3021334-0000	.RAILING	11-91, 11-99
3021335-0000	.RAILING	11-91, 11-99
3021349-0100	.RAILING KIT	11-85, 11-87, 11-89
3021412-0000	.ASSEMBLY INSTRUCTION	11-121
3021530-0000	.CABLE DUCT	1-345
3021532-0000	.CABLE TRENCH	1-345
3021533-0000	.CABLE TRENCH	1-345
3021534-0000	.BRACKET	1-295
3021538-0000	.BRACKET	1-305, 1-307
3021539-0000	.FRAME	1-305, 1-307
3021541-0000	.PIPE	1-191
3021542-0000	.PIPE	1-191
3021546-0000	.CHECKER PLATE	1-299
3021547-0000	.BRACKET	1-299
3021550-0000	.BRACKET	1-253, 1-255, 1-257
3021551-0000	.COVERING PLATE	1-347
3021554-0000	.BRACKET	1-293

Part No	Description	Page No
3021556-0000	.PIPE	1-343
3021557-0000	.PIPE	1-343
3021558-0000	.PIPE	1-343
3021559-0000	.PIPE	1-343
3021560-0000	.PIPE	1-343
3021561-0000	.PIPE	1-343
3021562-0000	.BRACKET	1-345
3021563-0000	.BRACKET	1-345
3021564-0000	.PLATE	1-345
3021565-0000	.PLATE	1-345
3021566-0000	.HOLDER	1-345
3021567-0000	.BRACKET	1-355
3021568-0000	.BRACKET	1-345
3021575-0000	.BRACKET	1-353
3021577-0000	.TANK	1-353
3021578-0000	.FRAME	1-353
3021579-0000	.FRAME	1-353
3021580-0000	.FRAME	1-353
3021581-0000	.LOCKING ARM	1-353
3021584-0000	.BRACKET	1-353
3021586-0000	.BRACKET	1-353
3021591-0000	.BRACKET	1-351
3021593-0000	.COVERING PANEL	1-351
3021607-0100	.STERILE AIR PIPE	1-163, 1-165
3021625-0000	.DOOR	1-353
3021626-0000	.BRACKET	1-353
3021628-0000	.PLATE	1-353
3022253-0000	.PLATE	5-133, 5-135, 5-137, 5-139, 5-141, 5-143, 5-145, 5-147, 5-149, 5-151, 5-153, 5-155, 5-157, 5-159, 5-161, 5-163, 5-165, 5-167, 5-169, 5-171
3022265-0000	.RING	7-41
3022288-0000	.CONNECTING PIPE	1-275
3023350-0000	.SUPPORT	7-95
3023519-0100	.PROTECTIVE COVER	2-157
3023520-0000	.PROTECTION	2-213
3023525-0000	.GLASS PANE	2-213
3023632-0100	.MAGAZINE	7-3
3023657-0000	.CAM	4-39, 4-41, 4-43, 4-45, 4-47, 4-49, 4-51, 4-53, 4-55, 4-57, 4-59, 4-61, 4-63, 4-65, 4-67
3023661-0100	.PHOTOCELL UNIT	7-119, 7-121, 7-123
3024149-0000	.SPACER	5-205, 5-207, 5-209, 5-211
3024150-0000	.SPACER	5-205, 5-207, 5-209, 5-211
3024151-0000	.SPACER	5-205, 5-207, 5-209, 5-211
3024152-0000	.SPACER	5-205, 5-207, 5-209, 5-211
3024155-0000	.RAIL	5-25
3024156-0000	.SLIDE	5-15
3024324-0000	.PLATE	7-31
3024533-0000	.PLATE	4-109, 4-111, 4-113, 4-115
3024536-0000	.FLANGE	4-109, 4-111, 4-113, 4-115
3025650-0000	.SUPPORT	5-217, 5-219, 5-221, 5-223, 5-225, 5-227, 5-229
3025652-0000	.GUIDE	5-133, 5-135, 5-137, 5-139, 5-141, 5-143, 5-145, 5-147, 5-149, 5-151, 5-153, 5-155, 5-157, 5-159, 5-161, 5-163, 5-165, 5-167, 5-169, 5-171
3025659-0000	.CAM	5-133, 5-135, 5-137, 5-139, 5-141, 5-143, 5-145, 5-147, 5-149, 5-151, 5-153, 5-155, 5-157, 5-159, 5-161, 5-163, 5-165, 5-167, 5-169, 5-171
3025660-0000	.CAM	5-133, 5-135, 5-137, 5-139, 5-141, 5-143, 5-145, 5-147, 5-149, 5-151, 5-153, 5-155, 5-157, 5-159, 5-161, 5-163, 5-165, 5-167, 5-169, 5-171
3025661-0000	.SHIM	5-217, 5-219, 5-221, 5-223, 5-225, 5-227, 5-229
3025663-0000	.SUPPORT	5-217, 5-219, 5-221, 5-223, 5-225, 5-227, 5-229
3025664-0000	.SUPPORT	5-217, 5-219, 5-221, 5-223, 5-225, 5-227, 5-229
3025665-0000	.SUPPORT	5-217, 5-219, 5-221, 5-223, 5-225, 5-227, 5-229
3025666-0000	.SUPPORT	5-217, 5-219, 5-221, 5-223, 5-225, 5-227, 5-229
3025667-0000	.SPACER	5-217, 5-219, 5-221, 5-223, 5-225, 5-227, 5-229
3025678-0000	.GUIDE	5-173, 5-175, 5-177, 5-179, 5-181, 5-183, 5-185, 5-187, 5-189, 5-191, 5-193, 5-195, 5-197, 5-199, 5-201, 5-203
3025680-0000	.WHEEL	5-173, 5-175, 5-177, 5-179, 5-181, 5-183, 5-185, 5-187, 5-189, 5-191, 5-193, 5-195, 5-197, 5-199, 5-201, 5-203
3025688-0000	.GUIDE	5-173, 5-175, 5-177, 5-179, 5-181, 5-183, 5-185, 5-187, 5-189, 5-191, 5-193, 5-195, 5-197, 5-199, 5-201, 5-203
3025689-0000	.GUIDE	5-173, 5-175, 5-177, 5-179, 5-181, 5-183, 5-185, 5-187, 5-189, 5-191, 5-193, 5-195, 5-197, 5-199, 5-201, 5-203
3025690-0000	.SPACER	5-173, 5-175, 5-177, 5-179, 5-181, 5-183, 5-185, 5-187, 5-189, 5-191, 5-193, 5-195, 5-197, 5-199, 5-201, 5-203
3025750-0000	.SPACER	7-33
3026441-0000	.PROTECTION	7-69, 7-71
3026920-0000	.ATTACHMENT PIPE	6-33
3026921-0002	.PIVOT BRACKET	6-33
3026922-0000	.MACHINE BODY	6-29
3026924-0000	.BRACKET	6-33
3027368-0000	.PROTECTION	7-51
3027427-0100	.CONTROL PANEL	7-157
3027428-0000	.COVER	7-159
3027429-0000	.BOX	7-159
3030256-0000	.PUSH BUTTON BOX	2-207, 2-211
3031045-0000	.TANK	2-233
3031046-0000	.BRACKET	2-267
3031346-0000	.PLATE	2-57, 2-109

Part No	Description	Page No
3031525-0000	.BRACKET	2-267
3032222-0000	.INSERT	2-57, 2-109
3032240-0000	.LID	2-9
3032241-0000	.LID	2-9
3032448-0000	.ADJUSTING SCREW	7-49
3032795-0000	.COVER	2-205, 2-209
3032800-0100	.CONNECTION BOX	2-79
3034134-0000	.LABEL	7-103
3034363-0000	.PAD	7-55
3034364-0000	.SLIDER	7-55
3034923-0000	.SUPPORT	6-21
3035351-0000	.BRACKET	7-11
3035352-0000	.SHAFT	7-11
3037105-0000	.BRACKET	11-135
3037721-0000	.COVER	1-249
3037722-0000	.COVER	1-249
3037723-0000	.SPACER	1-205
3037724-0000	.SPACER	1-205
3037725-0000	.BRACKET	1-305, 1-307
3037726-0000	.BRACKET	1-305, 1-307
3037728-0000	.BRACKET	1-305, 1-307
3037735-0000	.BRACKET	1-347
3037737-0000	.COVER	1-205
3037739-0000	.FRAME	1-305, 1-307
3037740-0000	.COVER	1-189
3037741-0000	.COVER	1-189
3037742-0000	.COVER	1-75
3037743-0000	.PROTECTION	1-79
3037744-0000	.BRACKET	1-75
3037745-0000	.BRACKET	1-279
3037746-0000	.BRACKET	1-279
3037748-0000	.FLANGE BUSHING	1-103, 1-105, 1-107, 1-109
3037749-0000	.ROLLER	1-119, 1-121, 1-123
3037750-0000	.ROLLER	1-119, 1-121, 1-123
3037751-0000	.ROLLER	1-119, 1-121, 1-123
3037752-0000	.ROLLER	1-119, 1-121, 1-123
3037753-0000	.ROLLER	1-119, 1-121, 1-123
3037755-0000	.ROLLER	1-119, 1-121, 1-123
3037756-0000	.ROLLER	1-119, 1-121, 1-123
3037763-0000	.STUD SCREW	1-145
3037764-0000	.PLUG	1-69, 1-71
3037765-0000	.PIPE-LINE	1-271
3037766-0000	.COVER	1-353
3037780-0001	.TOOL	9-45
3037780-0002	.TOOL	9-45
3037780-0003	.TOOL	9-45
3037780-0004	.TOOL	9-45
3037780-0005	.TOOL	9-45
3037780-0006	.TOOL	9-45
3037780-0007	.TOOL	9-45
3038079-0100	.REFILLING	2-257
3038080-0200	.INTEGRATED CLEANING UNIT	2-231
3038081-0000	.BOX	2-259, 2-261
3038998-0100	.TOOL	9-39
3038999-0100	.TOOL	9-39
3039305-0000	.BRACKET	2-271
3039533-0000	.PLATE	7-69, 7-71
3039761-0000	.DOOR	2-219
3039763-0000	.DOOR	2-175
3039767-0000	.FRAME	2-9
3039769-0000	.FRAME	2-79
3040274-0000	.SPACER	7-33
3040871-0000	.TUNNEL	2-195, 2-197
3040873-0000	.TUNNEL	2-181
3040874-0000	.FRONT COVER	2-179
3040875-0000	.COVER	2-195, 2-197
3040876-0000	.LID	2-199, 2-201, 2-203
3040877-0000	.FRONT COVER	2-199, 2-201, 2-203
3040926-0000	.PIPE SUPPORT	1-275
3040927-0000	.PIPE	1-233
3040928-0000	.VALVE BODY	1-235, 1-237
3040930-0000	.ECCENTRIC	1-229, 1-231
3040991-0100	.RAIL HOLDER KIT	11-159, 11-171
3040992-0000	.PLATE	11-167
3041515-0000	.PIPE	1-229, 1-231, 9-5
3041560-0000	.PIPE	1-229, 1-231
3041598-0000	.VALVE BODY	1-235, 1-237
3041977-0000	.BEARING SEAT	1-25
3041983-0000	.COVER	1-353
3041984-0000	.PLATE	1-61, 1-63, 1-65
3041985-0000	.TOUCH GUARD	1-303
3041986-0000	.PLATE	1-345
3041989-0000	.PLATE	1-351
3041990-0000	.TOUCH GUARD	1-303

Part No	Description	Page No
3041991-0000	.TOUCH GUARD	1-303
3041992-0000	.TOUCH GUARD	1-303
3041993-0000	.PIPE	1-305, 1-307
3041994-0000	.PLATE	1-299
3041995-0000	.PLATE	1-299
3041997-0000	.FRAME	1-279
3041998-0000	.COVERING PANEL	1-351
3041999-0000	.TOUCH GUARD	1-351
3042011-0000	.BENDING ROLLER	1-25
3042012-0000	.LID	1-25
3042014-0000	.PLATE	11-139, 11-141
3042019-0000	.BRACKET	11-123
3042030-0000	.PROTECTION	1-279
3042033-0000	.LID	2-199, 2-201, 2-203
3042034-0000	.COVER	2-195, 2-197
3042035-0000	.TUNNEL	2-195, 2-197
3042036-0000	.TUNNEL	2-193
3042037-0000	.LID	2-199, 2-201, 2-203
3042038-0000	.FRONT COVER	2-199, 2-201, 2-203
3042042-0000	.DOOR	2-209
3042311-0000	.FLANGE	1-9, 1-19
3042378-0000	.BRACKET	1-37, 1-39
3042533-0000	.BRACKET	1-155, 1-157, 1-159
3042534-0000	.HOLDER	1-155, 1-157, 1-159
3042553-0000	.BRACKET	1-155, 1-157, 1-159
3042562-0000	.BENDING ROLLER	1-19
3042613-0000	.BRACKET	7-27
3042614-0000	.SHAFT	7-27
3042657-0000	.FLANGE	1-19
3042662-0000	.FLANGE	1-15
3042672-0000	.FLANGE	1-15
3043232-0000	.BENDING ROLLER	1-15
3043255-0000	.BENDING ROLLER	1-15
3043263-0100	.DOOR SAFETY SWITCH	2-95
3043268-0000	.PLATE	2-57
3043269-0000	.DOOR	2-159, 2-185
3043270-0000	.DOOR	2-161
3043271-0000	.DOOR	2-163
3043272-0000	.MACHINE BODY	2-39, 2-41
3044000-0100	.VALVE GROUP	2-21
3044001-0000	.BRACKET	2-27, 2-35
3044239-0000	.NOZZLE	5-205, 5-207, 5-209, 5-211
3044246-0000	.SUPPORT	5-133, 5-135, 5-137, 5-139, 5-141, 5-143, 5-145, 5-147, 5-149, 5-151, 5-153, 5-155, 5-157, 5-159, 5-161, 5-163, 5-165, 5-167, 5-169, 5-171
3044248-0000	.SUPPORT	5-133, 5-135, 5-137, 5-139, 5-141, 5-143, 5-145, 5-147, 5-149, 5-151, 5-153, 5-155, 5-157, 5-159, 5-161, 5-163, 5-165, 5-167, 5-169, 5-171
3044252-0000	.SUPPORT	5-93, 5-95, 5-97, 5-99, 5-101, 5-103, 5-105, 5-107, 5-109, 5-111, 5-113
3044254-0000	.HOLDER	5-115, 5-117
3044257-0000	.PLATE	5-115, 5-117
3044458-0000	.CABLE HARNESS	7-5, 7-7
3044593-0000	.ARM	7-33
3044594-0000	.PIN	7-33
3044656-0000	.BENDING ROLLER	7-11
3046447-0100	.PIVOT ARM	2-77
3046448-0000	.PIPE BRACKET	2-93
3046713-0000	.SPACER	5-173, 5-175, 5-177, 5-179, 5-181, 5-183, 5-185, 5-187, 5-189, 5-191, 5-193, 5-195, 5-197, 5-199, 5-201, 5-203
3046714-0000	.TOUCH GUARD	5-173, 5-175, 5-177, 5-179, 5-181, 5-183, 5-185, 5-187, 5-189, 5-191, 5-193, 5-195, 5-197, 5-199, 5-201, 5-203
3046715-0000	.SPACER	5-173, 5-175, 5-177, 5-179, 5-181, 5-183, 5-185, 5-187, 5-189, 5-191, 5-193, 5-195, 5-197, 5-199, 5-201, 5-203
3046716-0000	.TOUCH GUARD	5-173, 5-175, 5-177, 5-179, 5-181, 5-183, 5-185, 5-187, 5-189, 5-191, 5-193, 5-195, 5-197, 5-199, 5-201, 5-203
3046747-0100	.DOOR	8-3
3046891-0000	.PLATE	2-125, 2-127
3046894-0000	.SPACER PLATE	2-109
3046895-0000	.PIPE	2-259, 2-261
3047431-0000	.STAIR	1-309
3047432-0000	.BRACKET	1-309
3047433-0000	.CHECKER PLATE	1-299
3047434-0000	.FRAME UPPER	1-305, 1-307
3047450-0000	.BRACKET	1-103, 1-105
3047470-0000	.SLIDE	1-155, 1-157, 1-159
3047471-0000	.SLIDE	1-155, 1-157, 1-159
3047472-0000	.SHAFT	1-155, 1-157, 1-159
3047473-0000	.CABLE TRENCH	1-345
3047474-0000	.CABLE TRENCH	1-345
3047643-0000	.SUPPORT	5-37, 5-39
3048564-0000	.ROLLER	3-5, 3-7, 3-9, 3-11, 3-13, 3-15
3050604-0000	.SUPPORT	1-155, 1-157, 1-159
3050611-0000	.PIPE	1-243
3050614-0000	.PIPE	1-283, 1-285
3050615-0000	.PIPE	1-283, 1-285
3050623-0000	.CATCH LEVER	1-31

Part No	Description	Page No
3050626-0000	.CABINET	6-23
3050627-0000	.SPACER	6-23
3050628-0000	.RAIL	6-23
3050641-0000	.COVER	1-189
3050642-0000	.PIPE	1-245
3050643-0000	.PIPE	1-245
3050644-0000	.PIPE	1-245
3050645-0000	.PIPE	1-243
3050648-0000	.PLATE	1-347
3050651-0000	.BRACKET	1-347
3050652-0000	.HINGE	1-347
3050653-0000	.HINGE	1-347
3051207-0000	.SUPPORT	5-133, 5-135, 5-137, 5-139, 5-141, 5-143, 5-145, 5-147, 5-149, 5-151, 5-153, 5-155, 5-157, 5-159, 5-161, 5-163, 5-165, 5-167, 5-169, 5-171
3051342-0000	.CHUTE	5-93, 5-95, 5-97, 5-99, 5-101, 5-103, 5-105, 5-107, 5-109, 5-111, 5-113
3051346-0000	.NOZZLE	5-205, 5-207, 5-209, 5-211
3051347-0000	.NOZZLE	5-205, 5-207, 5-209, 5-211
3051420-0000	.FLANGE	4-109, 4-111, 4-113, 4-115
3051421-0000	.PLATE	4-109, 4-111, 4-113, 4-115
3051897-0000	.PLATE	5-205, 5-207, 5-209, 5-211
3051900-0000	.COVER	2-251
3051914-0001	.SHAFT	7-21
3051914-0002	.SHAFT	7-21
3052381-0000	.PROTECTION	5-173, 5-175, 5-177, 5-179, 5-181, 5-183, 5-185, 5-187, 5-189, 5-191, 5-193, 5-195, 5-197, 5-199, 5-201, 5-203
3052653-0000	.PLATE	4-109, 4-111, 4-113, 4-115
3052683-0000	.BRACKET	1-155, 1-157, 1-159
3053983-0000	.TEMPLATE	9-33
3055164-0000	.PIPE	1-271
3055165-0000	.PIPE	1-271
3055885-0000	.SUPPORT	5-205, 5-207, 5-209, 5-211
3055965-0000	.WATER DIAGRAM	9-69
3055968-0000	.WATER DIAGRAM	9-69
3056256-0000	.SHIM	4-91, 4-93
3056305-0000	.SHIM	4-91, 4-93
3057124-0000	.BRACKET	6-39
3057154-0000	.SUPPORT	5-205, 5-207, 5-209, 5-211
3059145-0000	.PLATE	5-83, 5-85, 5-87, 5-89, 5-91
3059603-0000	.COVER	1-347
3059604-0000	.COVER	1-347
3059605-0000	.COVER	1-347
3059606-0000	.COVER	1-347
3059610-0001	.SHAFT	1-87, 1-89, 1-103, 1-105, 1-117, 1-119, 1-121, 1-123, 1-133, 1-137
3059610-0002	.SHAFT	1-107, 1-109, 1-119, 1-121, 1-123, 1-135
3059610-0003	.SHAFT	1-125, 1-127
3059610-0004	.SHAFT	1-91, 1-93, 1-95, 1-97, 1-107, 1-109, 1-125, 1-127
3059610-0005	.SHAFT	1-117, 1-119, 1-121, 1-123, 1-125, 1-127
3059610-0006	.SHAFT	1-125, 1-127
3059610-0007	.SHAFT	1-107, 1-109
3059610-0008	.SHAFT	1-91, 1-93, 1-95, 1-97, 1-119, 1-121, 1-123
3059610-0010	.SHAFT	1-107, 1-109
3059610-0012	.SHAFT	1-139, 1-141
3059610-0013	.SHAFT	1-117, 1-119, 1-121, 1-123, 1-135
3059610-0014	.SHAFT	1-91, 1-93, 1-95, 1-97, 1-119, 1-121, 1-123, 1-139, 1-141
3059610-0017	.SHAFT	1-135, 1-137, 1-139, 1-141
3060392-0001	.SHAFT	1-87, 1-89
3060392-0004	.SHAFT	1-91, 1-93, 1-95, 1-97
3060392-0008	.SHAFT	1-91, 1-93, 1-95, 1-97
3060392-0014	.SHAFT	1-91, 1-93, 1-95, 1-97
3060423-0000	.RAILING	1-311
3060424-0000	.RAILING	1-311
3060425-0000	.RAILING	1-311
3060430-0000	.BRACKET	1-299
3060431-0000	.SIDE PIECE	1-309
3060433-0000	.PIPE	1-281
3060435-0000	.SHIFTER HANDLE	1-23
3060436-0000	.SIDE PIECE	1-309
3060437-0000	.BRACKET	1-299
3060438-0000	.BRACKET	1-281
3060439-0000	.CLAMP	1-281
3060445-0000	.CABINET	1-357
3060457-0000	.BRACKET	1-33
3060458-0000	.BRACKET	1-33
3060463-0000	.SUPPORT PLATE	1-207
3060467-0000	.FLOW SWITCH	1-279
3061063-0000	.PLATE	7-5, 7-7
3061318-0000	.SUPPORT	7-59
3061448-0000	.HOSE	7-79
3062003-0000	.BRACKET	7-101
3062005-0000	.SHOE	7-101
3062006-0000	.SHOE	7-101
3062179-0100	.AIR NOZZLE	7-69, 7-71
3062181-0000	.NOZZLE BRACKET	7-95
3062297-0000	.PULLEY	4-27, 4-29, 4-31

Tetra Pak

SPC
Spare Parts Catalogue

Pos	Part No	Description	Page No
A			
AS010	3098672-0100 ..	PNEUMATIC DIAGRAM	9-69
B			
A01B5760	90326-0053	THERMOCOUPLE, 12826-35	8-5, 8-7, 8-9, 8-11
A01B5770	90044-0192	LIMIT SW. SZ2586.000	8-5, 8-7, 8-9, 8-11
A01B5780	90044-0192	LIMIT SW. SZ2586.000	8-5, 8-7, 8-9, 8-11
A01B5790	90044-0192	LIMIT SW. SZ2586.000	8-5, 8-7, 8-9, 8-11
A01B5800	90044-0192	LIMIT SW. SZ2586.000	8-5, 8-7, 8-9, 8-11
F10B5010	90459-4142	SENSOR, ADAM M12 20-051-00	7-5, 7-7
F10B5011	90458-2794	SENSOR, EVA 20-046-00	7-161
F10B5020	90459-4142	SENSOR, ADAM M12 20-051-00	7-5, 7-7
F10B5021	90458-2794	SENSOR, EVA 20-046-00	7-157
F10B5110	90459-4142	SENSOR, ADAM M12 20-051-00	7-5, 7-7
F10B5111	90458-2794	SENSOR, EVA 20-046-00	7-169
F10B5120	90459-4142	SENSOR, ADAM M12 20-051-00	7-5, 7-7
F10B5121	90458-2794	SENSOR, EVA 20-046-00	7-175
F10B5130	90459-4142	SENSOR, ADAM M12 20-051-00	7-23
F10B5131	90458-2794	SENSOR, EVA 20-046-00	7-51
F10B5140	90459-4142	SENSOR, ADAM M12 20-051-00	7-5, 7-7
F10B5141	90458-2794	SENSOR, EVA 20-046-00	7-173
F40B5010	90459-6961	SAFETY SENSOR, NON CONT. ADAM-E M12 0,5M	2-57
F40B5011	90459-4089	SAFETY SENSOR NON-CONTACT EVA E	2-57
F40B5020	90459-6961	SAFETY SENSOR, NON CONT. ADAM-E M12 0,5M	2-57
F40B5021	90459-4089	SAFETY SENSOR NON-CONTACT EVA E	2-57
F40B5030	90459-6961	SAFETY SENSOR, NON CONT. ADAM-E M12 0,5M	2-57
F40B5031	90459-4089	SAFETY SENSOR NON-CONTACT EVA E	2-57
F40B5040	90459-6961	SAFETY SENSOR, NON CONT. ADAM-E M12 0,5M	2-57
F40B5041	90459-4089	SAFETY SENSOR NON-CONTACT EVA E	2-57
F50B5050	90459-6961	SAFETY SENSOR, NON CONT. ADAM-E M12 0,5M	2-109
F50B5051	90459-4089	SAFETY SENSOR NON-CONTACT EVA E	2-109
F50B5060	90459-6961	SAFETY SENSOR, NON CONT. ADAM-E M12 0,5M	2-109
F50B5061	90459-4089	SAFETY SENSOR NON-CONTACT EVA E	2-109
K80B1010	90274-0042	PRESSURE GUARD, 200 KPA	6-81
K80B1050	90274-0082	FLOW SWITCH, 2 - 3 L/MIN	6-43
K80B1060	90243-0245	MEASURING INSTRUMENT	6-45
K80B1090	90458-1840	CAPACITIVE SENSOR CM18-12NPP-KC1	6-17
K80B1100	90459-1234	FLOW SWITCH, FS-3 SERIES/166703	6-11
K80B1110	90459-0180	FLOW SWITCH, 0,1 - 2,5 L/MIN	6-33
K80B1120	90459-0180	FLOW SWITCH, 0,1 - 2,5 L/MIN	6-33
K80B1370	90600-5770	PRESSURE TRANSMITTER 10 BAR, 3100-B0010G	6-37
K80B1380	90458-2174	CONDUCTIVITY TRANSMITTER, 418962Z	6-11
K80B1390	90600-2031	PRESSURE SENS. SDE1-D10-G2-MS6-C-PU-M8	6-91
K80B1410	90326-0057	THERMOCOUPLE, CR-AL	6-33
K80B1420	90326-0057	THERMOCOUPLE, CR-AL	6-17
R95B0001	90459-7274	PHOTOCELL E3Z-T81C-G0SR L-CN	11-127, 11-129
R95B0002	90459-7273	PHOTOCELL E3Z-T81C-G0SR D-CN	11-127, 11-129
T10B1080	90600-2852	PRESSURE SENS. SDE1-D10-G2-MS4-C-PU-M8	7-115
T10B1140	90459-4142	SENSOR, ADAM M12 20-051-00	7-5, 7-7
T10B1141	90458-2794	SENSOR, EVA 20-046-00	7-165
T10B1160	90600-1056	KEY SAF.SW. AZM 161SK-12/12RKA 024	7-5, 7-7
T10B1200	90600-1056	KEY SAF.SW. AZM 161SK-12/12RKA 024	7-5, 7-7
T10B1210	90600-0460	INDUCTIVE SWITCH, E2A-M12KN05-M1-B1-TP	7-133
T10B1220	90600-0460	INDUCTIVE SWITCH, E2A-M12KN05-M1-B1-TP	7-5, 7-7
T10B1230	90600-0460	INDUCTIVE SWITCH, E2A-M12KN05-M1-B1-TP	7-5, 7-7
T10B1240	90459-7421	PH.CELL WL100-P3439	7-137
T10B1250	90459-7421	PH.CELL WL100-P3439	7-137
T10B1270	90459-6392	INDUCTIV SWITCH E2A-M18LN16-M1-B1	7-133
T10B1280	90459-7421	PH.CELL WL100-P3439	7-5, 7-7
T10B1290	90459-7421	PH.CELL WL100-P3439	7-5, 7-7
T10B1300	90600-0460	INDUCTIVE SWITCH, E2A-M12KN05-M1-B1-TP	7-125
T10B1310	90459-6392	INDUCTIV SWITCH E2A-M18LN16-M1-B1	7-125
T10B1320	90600-0460	INDUCTIVE SWITCH, E2A-M12KN05-M1-B1-TP	7-135
T10B1330	90044-0194	INDUCTIVE SENSOR IN5329	7-61
T10B1340	90044-0194	INDUCTIVE SENSOR IN5329	7-61
T10B1350	90459-3286	INDUCTIVE SWITCH E2A-S08KS02-M1-B1	7-27
T10B1360	90044-0194	INDUCTIVE SENSOR IN5329	7-61
T10B1531	90326-0054	THERMOCOUPLE, CR-AL STD.GR, 12826-36	7-77
T10B1551	90600-1390	INCREMENTAL ENCODER, DGS60-G1A02000	7-33
T10B1930	90600-0967	TRANSDUCER, BTL6-A110-M0650-A1-S115	7-59
T10B9023	90600-4785	INCREMENTAL ENCODER, DFS60E - BHAC02000	7-69, 7-71
T10B9231	90458-0602	CONTRAST SCANNER, KT15W-P2213S02	7-73
T10B9241	90458-0602	CONTRAST SCANNER, KT15W-P2213S02	7-73
T10B9500	90600-2233	INDUCTIVE SENSOR	7-25
T10B9500	2968260-0000 ..	LEVEL PROBE	1-201
T40B1060	90600-0461	INDUCTIVE SWITCH, E2A-M12KS02-WP-B1-TP5M	2-39, 2-41
T40B1270	90457-0196	LOCKABLE SAFETY GUARD TZ2RE024M-RC1635	2-57
T40B1271	90457-0196	LOCKABLE SAFETY GUARD TZ2RE024M-RC1635	2-57
T40B9210	90458-0601	CONTRAST SCANNER, KT15W-P2110S01	3-5, 3-7, 3-9, 3-11, 3-13, 3-15
T40B9220	90458-0601	CONTRAST SCANNER, KT15W-P2110S01	3-5, 3-7, 3-9, 3-11, 3-13, 3-15
T40B9530	1144653-0000 ..	SWITCH	4-95, 4-97
T40B9540	90600-0463	INDUCTIVE SWITCH,E2A-M12LN05-WP-B1-TP 5M	4-109, 4-111, 4-113, 4-115
T40B9620	5985309-7004 ..	CYLINDER SENSOR, 0.3M CABLE W.M12-CONN.	4-21
T40B9630	5985309-7004 ..	CYLINDER SENSOR, 0.3M CABLE W.M12-CONN.	4-21

Pos	Part No	Description	Page No
B			
T40B9650	90459-7365	PHOTOCELL WE4-3P1430 F20	4-109, 4-111, 4-113, 4-115
T40B9651	90459-7364	PHOTOCELL WS4-3D1430 F20	4-109, 4-111, 4-113, 4-115
T40B9700	90274-0103	PRESSURE SWITTCH PEV-1/4-B	2-29, 2-31
T50B1060	90600-7828	PHOTOCELL E3ZM-T81-D 5M	5-25, 5-33, 5-35, 5-37, 5-39
T50B1061	90600-7827	PHOTOCELL E3ZM-T81-L 5M	5-25, 5-33, 5-35, 5-37, 5-39
T50B1170	90457-0196	LOCKABLE SAFETY GUARD TZ2RE024M-RC1635	2-109
T50B1171	90457-0196	LOCKABLE SAFETY GUARD TZ2RE024M-RC1635	2-109
T50B1440	90326-0089	THERMOCOUPLE, 5110-089-000	1-245
T50B2120	90232-0104	PH.CELL E3S-CT61-D-5M	11-239
T50B2121	90232-0103	PH.CELL E3S-CT61-L-5M	11-239
U30B1020	90600-0473	INDUCTIVE SWITCH E2A-S08KS01-WP-B1-TP 5M	2-259, 2-261
U30B1090	90600-0473	INDUCTIVE SWITCH E2A-S08KS01-WP-B1-TP 5M	2-259, 2-261
U30B1630	90458-1977	REFRACTOMETER SET DA15FC15A DFTP A	2-255
U30B1670	90459-0951	TRANSDUCER, BTL7-A110-M0400-B-S32	2-237
U30B1710	1347704-0000	THERMOCOUPLE	2-237
U70B1010	90459-2409	INDUCTIVE SENSOR IN5230	1-215
U70B1020	90459-2409	INDUCTIVE SENSOR IN5230	1-215
U70B1030	90459-2409	INDUCTIVE SENSOR IN5230	1-215
U70B1040	90044-0192	LIMIT SW. SZ2586.000	1-357
U70B1041	90044-0192	LIMIT SW. SZ2586.000	1-357
U70B1050	90600-0462	INDUCTIVE SWITCH, E2A-M12LN05-M1-B1-TP	1-69, 1-71
U70B1060	90459-6393	INDUCTIVE SWITCH E2A-M18LS08-M1-B1	1-275
U70B1070	90459-6393	INDUCTIVE SWITCH E2A-M18LS08-M1-B1	1-275
U70B1080	90459-4142	SENSOR, ADAM M12 20-051-00	1-353
U70B1100	90600-4631	PROX.SWITCH IE5412	1-235, 1-237
U70B1140	90459-4142	SENSOR, ADAM M12 20-051-00	1-65
U70B1160	90459-3286	INDUCTIVE SWITCH E2A-S08KS02-M1-B1	1-263
U70B1250	90459-0252	PROX.SWITCH IX 0208	1-253, 1-255, 1-257
U70B1260	90044-0108	LIMIT SW. 24 CE1-S6	1-253, 1-255, 1-257
U70B1270	90600-0462	INDUCTIVE SWITCH, E2A-M12LN05-M1-B1-TP	1-69, 1-71
U70B1280	90459-4142	SENSOR, ADAM M12 20-051-00	1-61
U70B1720	90326-0053	THERMOCOUPLE, 12826-35	1-357
U70B1730	90600-5783	TEMP. SENSOR, 902522/10-386-1003-1-11-90	1-229, 1-231
U70B1740	90600-4392	TEMPERATURE SENSOR, TR45-BF5A1Q3MA0000	1-275
U70B2010	90243-0245	MEASURING INSTRUMENT	1-191
U70B2020	90600-2862	LEVEL SWITCH, LIQUIPHANT FTL20-0025	1-287, 1-289
U70B2030	90457-0047	SENSOR 2750-1-5111-1 W.ADAPTER PNP	1-187
U70B2040	3060467-0000	FLOW SWITCH	1-279
U70B2050	90044-0108	LIMIT SW. 24 CE1-S6	1-287, 1-289
U70B2051	90044-0108	LIMIT SW. 24 CE1-S6	1-287, 1-289
U70B2060	90459-4142	SENSOR, ADAM M12 20-051-00	1-63
U70B2470	90459-5180	FLOW METER, PROWIRL 72W50-SD0BA1AAA0AW	1-191
U70B2480	90600-0821	LEVEL PR.,LEVELFLEX-M FMP41C-AKTJKB11A2Y	1-269
U70B2490	90459-4977	LINEAR ACTUATOR LA 1 SP - SP36 17A16 - 0	1-183
U70B2610	90326-0051	THERMOCOUPLE, 12826-33	1-185
U70B2620	90326-0057	THERMOCOUPLE, CR-AL	1-279
U70B2630	90326-0053	THERMOCOUPLE, 12826-35	1-287, 1-289
U70B2640	90326-0051	THERMOCOUPLE, 12826-33	1-191
U70B2670	90600-0462	INDUCTIVE SWITCH, E2A-M12LN05-M1-B1-TP	1-313, 1-315, 1-317
U70B3020	90600-0362	PROX. SENSOR, SMTO-4U-PS-S-LED-24	1-177
U70B3030	90600-0362	PROX. SENSOR, SMTO-4U-PS-S-LED-24	1-177
U70B3050	90600-0362	PROX. SENSOR, SMTO-4U-PS-S-LED-24	1-169
U70B3060	90600-0362	PROX. SENSOR, SMTO-4U-PS-S-LED-24	1-169
U70B3090	90600-5782	PROX. SENSOR, SMT-8M-PS-24V-K8,0-OE	1-73
U70B3100	90600-5782	PROX. SENSOR, SMT-8M-PS-24V-K8,0-OE	1-73
U70B3120	90459-2409	INDUCTIVE SENSOR IN5230	1-11
U70B3130	90459-4142	SENSOR, ADAM M12 20-051-00	1-27
U70B3140	90459-4142	SENSOR, ADAM M12 20-051-00	1-29
U70B3150	90459-4142	SENSOR, ADAM M12 20-051-00	1-35
U70B3160	90459-4142	SENSOR, ADAM M12 20-051-00	1-57
U70B3200	90600-2107	LEVEL SWITCH, FTL20H-0TCJ2B	1-181
U70B3220	90600-0362	PROX. SENSOR, SMTO-4U-PS-S-LED-24	1-177
U70B3230	90600-0362	PROX. SENSOR, SMTO-4U-PS-S-LED-24	1-177
U70B3240	90459-2409	INDUCTIVE SENSOR IN5230	1-31
U70B3241	90459-2409	INDUCTIVE SENSOR IN5230	1-31
U70B3420	90459-4810	PRESS TRANSD (DIFF) 0 - 2000PA, 2681-20C	1-323
U70B3470	90459-1537	UV-SENSOR, UV222 SENSOR	1-55
U70B3480	90459-3682	ROTARY POSITION SENSOR RPNS090AA1B11A	1-13
U70B3510	90326-0057	THERMOCOUPLE, CR-AL	1-55
U70B3520	90326-0057	THERMOCOUPLE, CR-AL	1-175
U70B3530	90326-0089	THERMOCOUPLE, 5110-089-000	1-175
U70B3540	90458-0341	THERMOCOUPLE, 5130050-001	1-69, 1-71
U70B4010	90458-2241	PRESSURE SWITCH 0,5-10 BAR ADJUSTABLE	1-207
U70B4020	90600-0462	INDUCTIVE SWITCH, E2A-M12LN05-M1-B1-TP	1-233
U70B4030	90600-0462	INDUCTIVE SWITCH, E2A-M12LN05-M1-B1-TP	1-233
U70B4040	90600-0462	INDUCTIVE SWITCH, E2A-M12LN05-M1-B1-TP	1-233
U70B4050	90600-0462	INDUCTIVE SWITCH, E2A-M12LN05-M1-B1-TP	1-233
U70B4060	2672972-0000	BOLT	1-209
U70B4070	90600-0462	INDUCTIVE SWITCH, E2A-M12LN05-M1-B1-TP	1-233
U70B4080	90459-6215	FLOW SWITCH BFS-10-N-G1/4-MS-NO-ST	1-207
U70B4290	90600-1154	FLOW METER,D-6230-HGB-BB-AV-99-0-N2/IP65	1-207
U70B4350	90459-2122	THERMOCOUPLE, EN-5130060-0001	1-205

Pos	Part No	Description	Page No
B			
U70B4360	90326-0053	THERMOCOUPLE, 12826-35	1-205
U70B4370	90326-0060	THERMOCOUPLE, CR-AL	1-233
U70B9510	90600-3924	CONDUCTIVITY SENSOR CLS 54-ACS1022	1-273
U70B9520	90458-0806	FLOW METER, COPA-XF DF23-DN32	1-229, 1-231
U70B9530	90600-2233	INDUCTIVE SENSOR	1-321
W51B1020	90459-5529	PH.CELL E3Z-T86A, SENDER+RECIEVER	11-67, 11-211
W51B1030	90459-5529	PH.CELL E3Z-T86A, SENDER+RECIEVER	11-67, 11-211
W51B1040	90459-5529	PH.CELL E3Z-T86A, SENDER+RECIEVER	11-67, 11-211
C			
A01C5000	90459-4891	PROGR. IDENTIFIER ID-FIX RW, 20-070-21	8-45, 8-47
A01C5010	90459-4891	PROGR. IDENTIFIER ID-FIX RW, 20-070-21	8-45, 8-47
K80C7002	90602-3531	PRESSURE EXPANSION VESSEL, 13424	6-39
K80C7003	90600-2901	TANK 10L, TANKPE010	6-11
T10C1852	90187-0088	BALL VALVE G1/4, NPBR	7-109, 7-111
E			
EC010	90243-0203	MEASURING INSTRUMENT	12-5
EC020	2559112-0100	CALIBRATION EQUIPMENT	12-5
A01E5520	90600-4048	LIGHT FIXTURE, TCH128 1XTL5-14W/830 HF	8-5, 8-7, 8-9, 8-11
A01E5520	90602-1250	LIGHT FIXTURE, SLIM LED 112-544-001	8-5, 8-7, 8-9, 8-11
A01E5530	90600-4048	LIGHT FIXTURE, TCH128 1XTL5-14W/830 HF	8-5, 8-7, 8-9, 8-11
A01E5530	90602-1250	LIGHT FIXTURE, SLIM LED 112-544-001	8-5, 8-7, 8-9, 8-11
T10E0010	90164-0015	LIGHT FIXTURE, RL70CV-111 / 230V 50HZ	7-5, 7-7
T10E0010	90459-3784	LIGHT FIXTURE, RL70CE-118	7-5, 7-7
T10E0011	90164-0015	LIGHT FIXTURE, RL70CV-111 / 230V 50HZ	7-5, 7-7
T10E0011	90459-3784	LIGHT FIXTURE, RL70CE-118	7-5, 7-7
T40E0031	90459-1000	LIGHT FIXTURE, RL 70CV-136/230V 50HZ	2-49
T40E0031	3111146-0000	LIGHT FIXTURE	2-49
T40E7002	2616167-0000	COOLING PLATE	4-91, 4-93
T40E7002	2616168-0000	COOLING PLATE	4-91, 4-93
T40E7052	2616167-0000	COOLING PLATE	4-91, 4-93
T40E7052	2616168-0000	COOLING PLATE	4-91, 4-93
T50E0080	90459-1000	LIGHT FIXTURE, RL 70CV-136/230V 50HZ	2-99
T50E0080	3111146-0000	LIGHT FIXTURE	2-99
T50E7002	2846472-0000	GUIDE	5-133, 5-135, 5-137, 5-139, 5-141, 5-143, 5-145, 5-147, 5-149, 5-151, 5-153, 5-155, 5-157, 5-159, 5-161, 5-163, 5-165, 5-167, 5-169, 5-171
T50E7002	2872398-0000	GUIDE	5-133, 5-135, 5-137, 5-139, 5-141, 5-143, 5-145, 5-147, 5-149, 5-151, 5-153, 5-155, 5-157, 5-159, 5-161, 5-163, 5-165, 5-167, 5-169, 5-171
T50E7002	2872406-0000	GUIDE	5-133, 5-135, 5-137, 5-139, 5-141, 5-143, 5-145, 5-147, 5-149, 5-151, 5-153, 5-155, 5-157, 5-159, 5-161, 5-163, 5-165, 5-167, 5-169, 5-171
T50E7002	2910602-0000	GUIDE	5-133, 5-135, 5-137, 5-139, 5-141, 5-143, 5-145, 5-147, 5-149, 5-151, 5-153, 5-155, 5-157, 5-159, 5-161, 5-163, 5-165, 5-167, 5-169, 5-171
T50E7002	2933695-0000	GUIDE	5-133, 5-135, 5-137, 5-139, 5-141, 5-143, 5-145, 5-147, 5-149, 5-151, 5-153, 5-155, 5-157, 5-159, 5-161, 5-163, 5-165, 5-167, 5-169, 5-171
T50E7002	3010602-0000	GUIDE	5-133, 5-135, 5-137, 5-139, 5-141, 5-143, 5-145, 5-147, 5-149, 5-151, 5-153, 5-155, 5-157, 5-159, 5-161, 5-163, 5-165, 5-167, 5-169, 5-171
T50E7003	1498014-0000	GUIDE	5-173, 5-175, 5-177, 5-179, 5-181, 5-183, 5-185, 5-187, 5-189, 5-191, 5-193, 5-195, 5-197, 5-199, 5-201, 5-203
T50E7003	2753164-0000	GUIDE	5-173, 5-175, 5-177, 5-179, 5-181, 5-183, 5-185, 5-187, 5-189, 5-191, 5-193, 5-195, 5-197, 5-199, 5-201, 5-203
T50E7003	2792619-0000	GUIDE	5-173, 5-175, 5-177, 5-179, 5-181, 5-183, 5-185, 5-187, 5-189, 5-191, 5-193, 5-195, 5-197, 5-199, 5-201, 5-203
T50E7003	2792620-0000	GUIDE	5-173, 5-175, 5-177, 5-179, 5-181, 5-183, 5-185, 5-187, 5-189, 5-191, 5-193, 5-195, 5-197, 5-199, 5-201, 5-203
T50E7003	2792621-0000	GUIDE	5-173, 5-175, 5-177, 5-179, 5-181, 5-183, 5-185, 5-187, 5-189, 5-191, 5-193, 5-195, 5-197, 5-199, 5-201, 5-203
T50E7003	2902381-0000	TOP SECTION	5-173, 5-175, 5-177, 5-179, 5-181, 5-183, 5-185, 5-187, 5-189, 5-191, 5-193, 5-195, 5-197, 5-199, 5-201, 5-203
T50E7003	2910599-0000	GUIDE	5-173, 5-175, 5-177, 5-179, 5-181, 5-183, 5-185, 5-187, 5-189, 5-191, 5-193, 5-195, 5-197, 5-199, 5-201, 5-203
T50E7004	2872781-0000	GUIDE	5-33, 5-35
T50E7005	2846471-0000	GUIDE	5-133, 5-135, 5-137, 5-139, 5-141, 5-143, 5-145, 5-147, 5-149, 5-151, 5-153, 5-155, 5-157, 5-159, 5-161, 5-163, 5-165, 5-167, 5-169, 5-171
T50E7005	2872397-0000	GUIDE	5-133, 5-135, 5-137, 5-139, 5-141, 5-143, 5-145, 5-147, 5-149, 5-151, 5-153, 5-155, 5-157, 5-159, 5-161, 5-163, 5-165, 5-167, 5-169, 5-171
T50E7005	2872405-0000	GUIDE	5-133, 5-135, 5-137, 5-139, 5-141, 5-143, 5-145, 5-147, 5-149, 5-151, 5-153, 5-155, 5-157, 5-159, 5-161, 5-163, 5-165, 5-167, 5-169, 5-171
T50E7005	2910601-0000	GUIDE	5-133, 5-135, 5-137, 5-139, 5-141, 5-143, 5-145, 5-147, 5-149, 5-151, 5-153, 5-155, 5-157, 5-159, 5-161, 5-163, 5-165, 5-167, 5-169, 5-171
T50E7005	2933691-0000	GUIDE	5-133, 5-135, 5-137, 5-139, 5-141, 5-143, 5-145, 5-147, 5-149, 5-151, 5-153, 5-155, 5-157, 5-159, 5-161, 5-163, 5-165, 5-167, 5-169, 5-171
T50E7005	3025652-0000	GUIDE	5-133, 5-135, 5-137, 5-139, 5-141, 5-143, 5-145, 5-147, 5-149, 5-151, 5-153, 5-155, 5-157, 5-159, 5-161, 5-163, 5-165, 5-167, 5-169, 5-171
T50E7006	2933708-0000	SLIDER	5-217, 5-219, 5-221, 5-223, 5-225, 5-227, 5-229
T50E7006	2933923-0000	SLIDER	5-217, 5-219, 5-221, 5-223, 5-225, 5-227, 5-229
T50E7007	2864356-0000	GUIDE	5-83, 5-85, 5-87, 5-89, 5-91
T50E7007	2966899-0000	GUIDE	5-83, 5-85, 5-87, 5-89, 5-91
T50E7007	3007838-0000	RAIL	5-83, 5-85, 5-87, 5-89, 5-91
T50E7008	2953151-0000	GUIDE	5-83, 5-85, 5-87, 5-89, 5-91
T50E7008	2968905-0000	GUIDE	5-83, 5-85, 5-87, 5-89, 5-91
T50E7008	2970920-0000	GUIDE	5-83, 5-85, 5-87, 5-89, 5-91
U70E0130	90601-0626	COOLING UNIT, KWS10	1-357

Pos	Part No	Description	Page No
F			
FF010	1478583-0100	PRESSURE GAUGE	12-5
FF020	90600-3415	BELT TENSION METER, TRUMMETER	12-5
FM010	90600-3567	SNAKE EYES SPANNER BIT 1/4", 199 560	12-5
FM020	90600-2975	SNAKE EYES SPANNER BITS 1/4", SP-10	12-5
FM030	2908562-0000	DIAGRAM	9-69
FM040	2886621-0000	DIAGRAM	9-69
A01F1011	315747-0060	MINIATURE CIRCUIT BREAKER, FAZ-D6/1-NA	8-41, 8-43
A01F1011	351416-0060	MINIATURE CIRC. BREAK., FAZ -D6 1-POLE	8-41, 8-43
A01F1012	315747-0060	MINIATURE CIRCUIT BREAKER, FAZ-D6/1-NA	8-41, 8-43
A01F1012	351416-0060	MINIATURE CIRC. BREAK., FAZ -D6 1-POLE	8-41, 8-43
A01F1016	315747-0100	MINIATURE CIRCUIT BREAKER, FAZ-D10/1-NA	8-41, 8-43
A01F1016	351416-0100	MINIATURE CIRC. BREAK., FAZ -D10 1-POLE	8-41, 8-43
A01F1017	315747-0060	MINIATURE CIRCUIT BREAKER, FAZ-D6/1-NA	8-41, 8-43
A01F1017	351416-0060	MINIATURE CIRC. BREAK., FAZ -D6 1-POLE	8-41, 8-43
A01F1018	315747-0160	MINIATURE CIRCUIT BREAKER, FAZ-D16/1-NA	8-41, 8-43
A01F1018	351416-0160	MINIATURE CIRC. BREAK., FAZ -D16 1-POLE	8-41, 8-43
A01F1051	315747-0100	MINIATURE CIRCUIT BREAKER, FAZ-D10/1-NA	8-57, 8-59
A01F1051	351416-0100	MINIATURE CIRC. BREAK., FAZ -D10 1-POLE	8-57, 8-59
A01F1052	315747-0100	MINIATURE CIRCUIT BREAKER, FAZ-D10/1-NA	8-57, 8-59
A01F1052	351416-0100	MINIATURE CIRC. BREAK., FAZ -D10 1-POLE	8-57, 8-59
A01F5410	315749-0060	MINIATURE CIRCUIT BREAKER, FAZ-D6/3-NA	8-57, 8-59
A01F5410	351418-0060	MINIATURE CIRC. BREAK., FAZ-D6/3 3-POLE	8-57, 8-59
A01F5520	354000-0100	MINIATURE CIRCUIT BREAKER, FAZ-C10/1	8-57, 8-59
A01F5530	315747-0040	MINIATURE CIRCUIT BREAKER, FAZ-D4/1-NA	8-41, 8-43
A01F5600	90459-5811	RESIDUAL CURRENT DEVICE, FI-25/2/003-A	8-45, 8-47, 8-97, 8-99
A01F5601	354000-0100	MINIATURE CIRCUIT BREAKER, FAZ-C10/1	8-57, 8-59
A01F5810	90459-5326	OVERLOAD PROTECTION, PKZM0-4	8-63, 8-65
A01F5820	315744-0020	MINIATURE CIRCUIT BREAKER, FAZ-C2/1-NA	8-57, 8-59
A01F5820	354000-0020	MINIATURE CIRCUIT BREAKER, FAZ-C2/1	8-57, 8-59
A01F5820	354000-0040	MINIATURE CIRCUIT BREAKER, FAZ-C4/1	8-57, 8-59
A01F5880	315748-0040	MINIATURE CIRCUIT BREAKER, FAZ-D4/2-NA	8-57, 8-59
A01F5881	315747-0060	MINIATURE CIRCUIT BREAKER, FAZ-D6/1-NA	8-57, 8-59
A40F0040	90459-5323	OVERLOAD PROTECTION, PKZM0-1	8-63, 8-65
A70F0140	90459-5324	OVERLOAD PROTECTION, PKZM0-1,6	8-63, 8-65
A80F9500	90459-6618	CIRCUIT BREAKER, NZMB1-4-A100	6-23
A80F9500	90600-5269	CIRCUIT.BREAKER, NZMB1-AF100-NA	6-23
K80F0111	90459-5325	OVERLOAD PROTECTION, PKZM0-2,5	8-63, 8-65
K80F0121	90459-5327	OVERLOAD PROTECTION, PKZM0-6,3	8-63, 8-65
K80F0401	90459-5321	OVERLOAD PROTECTION, PKZM0-0,4	8-63, 8-65
K80F0411	315747-0020	MINIATURE CIRCUIT BREAKER, FAZ-D2/1-NA	8-57, 8-59
K80F0411	351416-0020	MINIATURE CIRC. BREAK., FAZ -D2 1-POLE	8-57, 8-59
K80F0471	90459-5330	OVERLOAD PROTECTION, PKZM0-16	8-63, 8-65
K80F1001	315747-0040	MINIATURE CIRCUIT BREAKER, FAZ-D4/1-NA	8-41, 8-43
K80F1001	351416-0040	MINIATURE CIRC. BREAK., FAZ -D4 1-POLE	8-41, 8-43
K80F1040	90600-7487	SURGE PROTECTION DEV., VAL-MS 230/3+1 FM	6-23
K80F9510	90230-0041	PRESSURE RELIEF VALVE, SS-4CPA2-RT-DG-3	6-37
K80F9510	315747-0005	MINIATURE CIRCUIT BREAKER, FAZ-D0,5/1-NA	8-41, 8-43
K80F9510	351416-0005	MINIATURE CIRC. BREAK., FAZ-D0,5 1-POLE	8-41, 8-43
T10F0020	315744-0010	MINIATURE CIRCUIT BREAKER, FAZ-C1/1-NA	8-57, 8-59
T10F0020	354000-0010	MINIATURE CIRCUIT BREAKER, FAZ-C1/1	8-57, 8-59
T10F0160	315747-0160	MINIATURE CIRCUIT BREAKER, FAZ-D16/1-NA	8-57, 8-59
T10F0160	351416-0160	MINIATURE CIRC. BREAK., FAZ -D16 1-POLE	8-57, 8-59
T10F0170	315747-0160	MINIATURE CIRCUIT BREAKER, FAZ-D16/1-NA	8-57, 8-59
T10F0170	351416-0160	MINIATURE CIRC. BREAK., FAZ -D16 1-POLE	8-57, 8-59
T10F0180	315747-0160	MINIATURE CIRCUIT BREAKER, FAZ-D16/1-NA	8-57, 8-59
T10F0180	351416-0160	MINIATURE CIRC. BREAK., FAZ -D16 1-POLE	8-57, 8-59
T10F0192	315744-0040	MINIATURE CIRCUIT BREAKER, FAZ-C4/1-NA	8-57, 8-59
T10F0192	354000-0040	MINIATURE CIRCUIT BREAKER, FAZ-C4/1	8-57, 8-59
T10F1001	315747-0040	MINIATURE CIRCUIT BREAKER, FAZ-D4/1-NA	8-41, 8-43
T10F1001	351416-0040	MINIATURE CIRC. BREAK., FAZ -D4 1-POLE	8-41, 8-43
T10F9170	315749-0060	MINIATURE CIRCUIT BREAKER, FAZ-D6/3-NA	8-57, 8-59
T10F9170	351418-0060	MINIATURE CIRC. BREAK., FAZ-D6/3 3-POLE	8-57, 8-59
T40F0050	90459-5324	OVERLOAD PROTECTION, PKZM0-1,6	8-63, 8-65
T40F1001	315747-0040	MINIATURE CIRCUIT BREAKER, FAZ-D4/1-NA	8-41, 8-43
T40F1001	351416-0040	MINIATURE CIRC. BREAK., FAZ -D4 1-POLE	8-41, 8-43
T40F9050	90459-5333	VERLOAD PROTECTION, PKZM0-32	8-63, 8-65
T40F9050	315749-0250	MINIATURE CIRCUIT BREAKER, FAZ-D25/3-NA	8-27
T40F9051	315747-0060	MINIATURE CIRCUIT BREAKER, FAZ-D6/1-NA	8-57, 8-59
T40F9051	351416-0160	MINIATURE CIRC. BREAK., FAZ -D16 1-POLE	8-57, 8-59
T40F9150	315749-0060	MINIATURE CIRCUIT BREAKER, FAZ-D6/3-NA	8-57, 8-59
T40F9150	351418-0060	MINIATURE CIRC. BREAK., FAZ-D6/3 3-POLE	8-57, 8-59
T40F9510	315747-0005	MINIATURE CIRCUIT BREAKER, FAZ-D0,5/1-NA	8-41, 8-43
T40F9510	351416-0005	MINIATURE CIRC. BREAK., FAZ-D0,5 1-POLE	8-41, 8-43
T40F9660	315747-0060	MINIATURE CIRCUIT BREAKER, FAZ-D6/1-NA	8-41, 8-43
T40F9660	351416-0060	MINIATURE CIRC. BREAK., FAZ -D6 1-POLE	8-41, 8-43
T50F0241	315744-0160	MINIATURE CIRCUIT BREAKER, FAZ-C16/1-NA	8-57, 8-59
T50F0241	354000-0160	MINIATURE CIRCUIT BREAKER, FAZ-C16/1	8-57, 8-59
T50F0242	315744-0160	MINIATURE CIRCUIT BREAKER, FAZ-C16/1-NA	8-57, 8-59
T50F0242	354000-0160	MINIATURE CIRCUIT BREAKER, FAZ-C16/1	8-57, 8-59
T50F0251	315744-0160	MINIATURE CIRCUIT BREAKER, FAZ-C16/1-NA	8-57, 8-59
T50F0251	354000-0160	MINIATURE CIRCUIT BREAKER, FAZ-C16/1	8-57, 8-59
T50F0252	315744-0160	MINIATURE CIRCUIT BREAKER, FAZ-C16/1-NA	8-57, 8-59

Pos	Part No	Description	Page No
F			
T50F0252	354000-0160	MINIATURE CIRCUIT BREAKER, FAZ-C16/1	8-57, 8-59
T50F0260	315747-0160	MINIATURE CIRCUIT BREAKER, FAZ-D16/1-NA	8-57, 8-59
T50F0260	351416-0160	MINIATURE CIRC. BREAK., FAZ -D16 1-POLE	8-57, 8-59
T50F1001	315747-0040	MINIATURE CIRCUIT BREAKER, FAZ-D4/1-NA	8-41, 8-43
T50F1001	351416-0040	MINIATURE CIRC. BREAK., FAZ -D4 1-POLE	8-41, 8-43
T50F2001	315747-0040	MINIATURE CIRCUIT BREAKER, FAZ-D4/1-NA	8-41, 8-43
T50F2001	351416-0040	MINIATURE CIRC. BREAK., FAZ -D4 1-POLE	8-41, 8-43
U30F0220	315747-0160	MINIATURE CIRCUIT BREAKER, FAZ-D16/1-NA	8-57, 8-59
U30F0220	351416-0160	MINIATURE CIRC. BREAK., FAZ -D16 1-POLE	8-57, 8-59
U30F1001	315747-0040	MINIATURE CIRCUIT BREAKER, FAZ-D4/1-NA	8-41, 8-43
U30F1001	351416-0040	MINIATURE CIRC. BREAK., FAZ -D4 1-POLE	8-41, 8-43
U70F0100	90459-5323	OVERLOAD PROTECTION, PKZM0-1	8-63, 8-65
U70F0130	315747-0005	MINIATURE CIRCUIT BREAKER, FAZ-D0,5/1-NA	8-57, 8-59
U70F0130	351416-0005	MINIATURE CIRC. BREAK., FAZ-D0,5 1-POLE	8-57, 8-59
U70F0300	315749-0160	MINIATURE CIRCUIT BREAKER, FAZ-D16/3-NA	8-57, 8-59
U70F0300	351418-0160	MINIATURE CIRC. BREAK.,FAZ-D16/3 3-POLE	8-57, 8-59
U70F0310	315747-0160	MINIATURE CIRCUIT BREAKER, FAZ-D16/1-NA	8-57, 8-59
U70F0310	351416-0160	MINIATURE CIRC. BREAK., FAZ -D16 1-POLE	8-57, 8-59
U70F0320	315749-0100	MINIATURE CIRCUIT BREAKER, FAZ-D10/3-NA	8-57, 8-59
U70F0320	351418-0100	MINIATURE CIRC. BREAK., FAZ-D10/3 3-POLE	8-57, 8-59
U70F0330	315749-0100	MINIATURE CIRCUIT BREAKER, FAZ-D10/3-NA	8-57, 8-59
U70F0330	351418-0100	MINIATURE CIRC. BREAK., FAZ-D10/3 3-POLE	8-57, 8-59
U70F0340	315746-0100	MINIATURE CIRCUIT BREAKER, FAZ-C10/3-NA	8-57, 8-59
U70F0340	354002-0100	IMINIATURE CIRCUIT BREAKER, FAZ-C10/3	8-57, 8-59
U70F0350	315746-0100	MINIATURE CIRCUIT BREAKER, FAZ-C10/3-NA	8-57, 8-59
U70F0350	354002-0100	IMINIATURE CIRCUIT BREAKER, FAZ-C10/3	8-57, 8-59
U70F0360	315746-0100	MINIATURE CIRCUIT BREAKER, FAZ-C10/3-NA	8-57, 8-59
U70F0360	354002-0100	IMINIATURE CIRCUIT BREAKER, FAZ-C10/3	8-57, 8-59
U70F0370	315744-0100	MINIATURE CIRCUIT BREAKER, FAZ-C10/1-NA	8-57, 8-59
U70F0370	354000-0100	MINIATURE CIRCUIT BREAKER, FAZ-C10/1	8-57, 8-59
U70F0381	315747-0100	MINIATURE CIRCUIT BREAKER, FAZ-D10/1-NA	8-57, 8-59
U70F0381	351416-0100	MINIATURE CIRC. BREAK., FAZ -D10 1-POLE	8-57, 8-59
U70F0450	352553-0250	CYLINDRICAL FUSE 25A, 3NC1025	8-57, 8-59
U70F0461	315745-0320	MINIATURE CIRCUIT BREAKER, FAZ-C32/2-NA	8-57, 8-59
U70F0461	354001-0320	MINIATURE CIRCUIT BREAKER, FAZ-C32/2	8-57, 8-59
U70F0463	315745-0250	MINIATURE CIRCUIT BREAKER, FAZ-C25/2-NA	8-57, 8-59
U70F0463	354001-0250	MINIATURE CIRCUIT BREAKER, FAZ-C25/2	8-57, 8-59
U70F1001	315747-0040	MINIATURE CIRCUIT BREAKER, FAZ-D4/1-NA	8-41, 8-43
U70F1001	351416-0040	MINIATURE CIRC. BREAK., FAZ -D4 1-POLE	8-41, 8-43
U70F2001	315747-0040	MINIATURE CIRCUIT BREAKER, FAZ-D4/1-NA	8-41, 8-43
U70F2001	351416-0040	MINIATURE CIRC. BREAK., FAZ -D4 1-POLE	8-41, 8-43
U70F3001	315747-0040	MINIATURE CIRCUIT BREAKER, FAZ-D4/1-NA	8-41, 8-43
U70F3001	351416-0040	MINIATURE CIRC. BREAK., FAZ -D4 1-POLE	8-41, 8-43
U70F4001	315747-0040	MINIATURE CIRCUIT BREAKER, FAZ-D4/1-NA	8-41, 8-43
U70F4001	351416-0040	MINIATURE CIRC. BREAK., FAZ -D4 1-POLE	8-41, 8-43
U70F9160	315749-0060	MINIATURE CIRCUIT BREAKER, FAZ-D6/3-NA	8-57, 8-59
U70F9160	351418-0060	MINIATURE CIRC. BREAK., FAZ-D6/3 3-POLE	8-57, 8-59
U70F9590	90600-3432	STEPPER MOTOR HRA71-D1B09036	1-151
U70F9590	315747-0060	MINIATURE CIRCUIT BREAKER, FAZ-D6/1-NA	8-41, 8-43
U70F9590	351416-0060	MINIATURE CIRC. BREAK., FAZ -D6 1-POLE	8-41, 8-43
W51F0090	315749-0060	MINIATURE CIRCUIT BREAKER, FAZ-D6/3-NA	8-57, 8-59
W51F0090	351418-0060	MINIATURE CIRC. BREAK., FAZ-D6/3 3-POLE	8-57, 8-59
G			
A40G8002	90459-1795	LUBRICATION PUMP UNIT 10KG, BK 03173003	2-73
K80G0122	2654082-0000	COMPRESSOR UNIT	6-31
T10G9170	1499642-0301	TPIH GENERATOR	8-49
T40G9150	1499642-0301	TPIH GENERATOR	8-49
U70G9160	1499642-0301	TPIH GENERATOR	8-49
J			
JS070	2839739-0100	CHAIN LIFT	12-5
K			
A01K2000	90459-6559	PROCESSOR L63, SERIES B, 1756-L63/B	8-33
A01K2001	90600-5249	FERRITE, B64290L616X38	8-33
A01K2010	90459-2477	ETHERNET I/P BRIDGE MODULE, 1756-ENBT	8-33
A01K2020	90459-2477	ETHERNET I/P BRIDGE MODULE, 1756-ENBT	8-33
A01K2040	90600-5840	PLC DEVICEN. BR./SCAN MOD, 1756-DNB, D	8-33
A01K2041	90600-5249	FERRITE, B64290L616X38	8-33
A01K2060	90459-6556	PLC DIGITAL INPUT 32PTS, 1756-IB32/B	8-33
A01K2070	90459-6556	PLC DIGITAL INPUT 32PTS, 1756-IB32/B	8-33
A01K2080	90459-2474	PLC,DIGIT. OUTPUT MODULE 16 PTS 10-31VDC	8-33
A01K2090	90600-4033	DIGITAL OUTPUT MODULE, 1756-OB16IS	8-33
A01K2120	90459-2480	8-AXIS SERCOS MOTION MODULE	8-33
A01K3000	90459-2494	DEVICENET I/O ADAPTER MODULE, 1734-ADN	8-35
A01K3010	90459-6561	DIGITAL INPUT 8 PTS SINK, 1734-IB8/C	8-35
A01K3020	90459-6561	DIGITAL INPUT 8 PTS SINK, 1734-IB8/C	8-35
A01K3030	90459-6561	DIGITAL INPUT 8 PTS SINK, 1734-IB8/C	8-35
A01K3040	90459-6561	DIGITAL INPUT 8 PTS SINK, 1734-IB8/C	8-35
A01K3050	90459-6560	DIGITAL OUTPUT 8 PTS, 1734-OB8E/C	8-35
A01K3060	90459-6560	DIGITAL OUTPUT 8 PTS, 1734-OB8E/C	8-35
A01K3070	90459-6560	DIGITAL OUTPUT 8 PTS, 1734-OB8E/C	8-35
A01K3080	90459-6560	DIGITAL OUTPUT 8 PTS, 1734-OB8E/C	8-35
A01K3090	90459-6560	DIGITAL OUTPUT 8 PTS, 1734-OB8E/C	8-35

Pos	Part No	Description	Page No
K			
A01K3110	90459-6560	DIGITAL OUTPUT 8 PTS, 1734-OB8E/C	8-35
A01K3120	90459-6560	DIGITAL OUTPUT 8 PTS, 1734-OB8E/C	8-35
A01K3130	90459-5261	REMOTE I/O, RELAY OUTP. 4 PTS,1734-OW4/C	8-35
A01K3140	90459-5261	REMOTE I/O, RELAY OUTP. 4 PTS,1734-OW4/C	8-35
A01K3160	90459-2509	REMOTE I/O ANALOG INPUT CURRENT 2 PTS	8-35
A01K3170	90459-2509	REMOTE I/O ANALOG INPUT CURRENT 2 PTS	8-35
A01K3200	90459-2510	ANALOG OUTP. VOLT. 2PTS, 1734-OE2V SER.C	8-35
A01K3210	90459-2510	ANALOG OUTP. VOLT. 2PTS, 1734-OE2V SER.C	8-35
A01K3220	90459-2510	ANALOG OUTP. VOLT. 2PTS, 1734-OE2V SER.C	8-35
A01K3230	90459-2511	REMOTE I/O ANALOG OUTPUT CURRENT 2PTS	8-35
A01K3640	90459-2500	EXPANSION POWER SUPPLY MODULE	8-35
A01K4000	90459-2494	DEVICENET I/O ADAPTER MODULE, 1734-ADN	8-53, 8-55
A01K4010	90459-6561	DIGITAL INPUT 8 PTS SINK, 1734-IB8/C	8-53, 8-55
A01K4020	90459-6561	DIGITAL INPUT 8 PTS SINK, 1734-IB8/C	8-53, 8-55
A01K4030	90459-6561	DIGITAL INPUT 8 PTS SINK, 1734-IB8/C	8-53, 8-55
A01K4050	90459-6560	DIGITAL OUTPUT 8 PTS, 1734-OB8E/C	8-53, 8-55
A01K4060	90459-6560	DIGITAL OUTPUT 8 PTS, 1734-OB8E/C	8-53, 8-55
A01K4070	90459-6560	DIGITAL OUTPUT 8 PTS, 1734-OB8E/C	8-53, 8-55
A01K4080	90459-5261	REMOTE I/O, RELAY OUTP. 4 PTS,1734-OW4/C	8-53, 8-55
A01K4090	90459-5261	REMOTE I/O, RELAY OUTP. 4 PTS,1734-OW4/C	8-53, 8-55
A01K4100	90459-5261	REMOTE I/O, RELAY OUTP. 4 PTS,1734-OW4/C	8-53, 8-55
A01K4120	90459-5261	REMOTE I/O, RELAY OUTP. 4 PTS,1734-OW4/C	8-53, 8-55
A01K4140	90459-5261	REMOTE I/O, RELAY OUTP. 4 PTS,1734-OW4/C	8-53, 8-55
A01K4190	90459-2512	REMOTE I/O THERMOCOUPLE INPUT 2 PTS	8-53, 8-55
A01K5200	559810-0101	TMCC2 CONTROLLER	8-103
A01K5210	559810-0101	TMCC2 CONTROLLER	8-103
A01K5220	559815-0101	TMCC2 CONTROLLER	8-103
A01K5240	559810-0101	TMCC2 CONTROLLER	8-103
A01K5500	90601-1326	COMPUTOR APC620, 5P62:TETRAPAK-30	8-97, 8-99
A01K5510	90600-1211	TERMINAL BLOCK RELAY, 700-HLT1Z24	8-31
A01K5680	90600-4814	PHASE MONITORING RELAY, EMR4-AWN280-1-F	8-69, 8-71
A01K5730	90600-1211	TERMINAL BLOCK RELAY, 700-HLT1Z24	8-69, 8-71
A01K8000	90600-5249	FERRITE, B64290L616X38	8-45, 8-47
A30K1030	90459-6561	DIGITAL INPUT 8 PTS SINK, 1734-IB8/C	2-17
A30K1050	90459-6560	DIGITAL OUTPUT 8 PTS, 1734-OB8E/C	2-17
A30K1060	90459-6560	DIGITAL OUTPUT 8 PTS, 1734-OB8E/C	2-17
A30K1340	90458-1202	VALVES 2X3/2, CLOSED	2-33
A30K1360	90458-1202	VALVES 2X3/2, CLOSED	2-33
A80K1050	90459-2505	DIGITAL OUTPUT 4 PTS, 1734-OB4E	6-79
F01K5000	90459-6692	SAFETY PLC, PLUTO B20 20-070-06	8-45, 8-47
F01K5010	90459-6692	SAFETY PLC, PLUTO B20 20-070-06	8-45, 8-47
F01K5020	90459-1131	SAFETY RELAY, E1T 0SEC	8-45, 8-47
F01K5030	90459-1131	SAFETY RELAY, E1T 0SEC	8-45, 8-47
F01K5040	90600-1454	SAFETY TIME RELAY, E1T-1.0S-24VDC	8-45, 8-47
F10K5030	90459-5627	CONNECTION TINA 1A, 20-054-00	7-5, 7-7
F10K5040	90459-5627	CONNECTION TINA 1A, 20-054-00	7-5, 7-7
F10K5050	90459-2291	SAFETY TIME RELAY, E1T-0.5S-24VDC	8-45, 8-47
F10K5080	90457-0092	SAFETY RELAY RT9-24VDC	8-45, 8-47
F10K5090	90459-1131	SAFETY RELAY, E1T 0SEC	8-45, 8-47
F50K5070	90459-5627	CONNECTION TINA 1A, 20-054-00	2-83
F50K5080	90459-5627	CONNECTION TINA 1A, 20-054-00	2-83
F70K5060	90459-2291	SAFETY TIME RELAY, E1T-0.5S-24VDC	8-45, 8-47
K80K0410	90600-1209	TERMINAL BLOCK RELAY, 700-HLT1U2	8-69, 8-71
K80K0411	90600-1211	TERMINAL BLOCK RELAY, 700-HLT1Z24	8-69, 8-71
K80K1000	90459-2494	DEVICENET I/O ADAPTER MODULE, 1734-ADN	6-79
K80K1010	90459-2503	DIGITAL INPUT 4 PTS SINK, 1734-IB4	6-79
K80K1020	90459-2503	DIGITAL INPUT 4 PTS SINK, 1734-IB4	6-79
K80K1030	90459-2503	DIGITAL INPUT 4 PTS SINK, 1734-IB4	6-79
K80K1041	90600-5266	FEED THROUGH FILTER, B85321A2502W160	6-23
K80K1060	90459-6560	DIGITAL OUTPUT 8 PTS, 1734-OB8E/C	6-79
K80K1080	90459-5261	REMOTE I/O, RELAY OUTP. 4 PTS,1734-OW4/C	6-79
K80K1090	90459-2509	REMOTE I/O ANALOG INPUT CURRENT 2 PTS	6-79
K80K1100	90459-2508	REMOTE I/O ANALOG INPUT VOLTAGE 2 PTS	6-79
K80K1110	90459-2512	REMOTE I/O THERMOCOUPLE INPUT 2 PTS	6-79
K80K1210	90458-1194	MONOSTABLE VALVE 5/2	6-87
K80K1230	90458-1194	MONOSTABLE VALVE 5/2	6-87
K80K1240	90458-1194	MONOSTABLE VALVE 5/2	6-87
K80K1280	90458-1194	MONOSTABLE VALVE 5/2	6-87
K80K1330	90042-0254	SOLENOID VALVE, DIAPHRAGM R1 1/2	6-43
K80K1340	90459-1855	SOFT START VALVE, MS6-DL-1/2	6-91
K80K1342	90459-1854	SHUT OFF VALVE, MS6-EE-1/2-10V24	6-91
T10K0020	90600-1211	TERMINAL BLOCK RELAY, 700-HLT1Z24	8-69, 8-71
T10K0160	90459-2614	DEVICENET ADAPTER POWERFLEX 40 22-COMM-D	8-67
T10K0170	90459-2614	DEVICENET ADAPTER POWERFLEX 40 22-COMM-D	8-67
T10K0180	90119-0056	RELAY, AUXILIARY MK3P5-S 24VDC	7-17
T10K0181	90459-2614	DEVICENET ADAPTER POWERFLEX 40 22-COMM-D	8-67
T10K1000	90459-2494	DEVICENET I/O ADAPTER MODULE, 1734-ADN	7-19
T10K1010	90459-2503	DIGITAL INPUT 4 PTS SINK, 1734-IB4	7-19
T10K1020	90459-2503	DIGITAL INPUT 4 PTS SINK, 1734-IB4	7-19
T10K1030	90459-2503	DIGITAL INPUT 4 PTS SINK, 1734-IB4	7-19
T10K1040	90459-2503	DIGITAL INPUT 4 PTS SINK, 1734-IB4	7-19
T10K1050	90459-2503	DIGITAL INPUT 4 PTS SINK, 1734-IB4	7-19

Pos	Part No	Description	Page No
K			
T10K1060	90459-2503	DIGITAL INPUT 4 PTS SINK, 1734-IB4	7-19
T10K1070	90459-2503	DIGITAL INPUT 4 PTS SINK, 1734-IB4	7-19
T10K1080	90459-2503	DIGITAL INPUT 4 PTS SINK, 1734-IB4	7-19
T10K1090	90459-2503	DIGITAL INPUT 4 PTS SINK, 1734-IB4	7-19
T10K1100	90459-2503	DIGITAL INPUT 4 PTS SINK, 1734-IB4	7-19
T10K1130	90459-2505	DIGITAL OUTPUT 4 PTS, 1734-OB4E	7-19
T10K1140	90459-2505	DIGITAL OUTPUT 4 PTS, 1734-OB4E	7-19
T10K1150	90459-2505	DIGITAL OUTPUT 4 PTS, 1734-OB4E	7-19
T10K1160	90459-2505	DIGITAL OUTPUT 4 PTS, 1734-OB4E	7-19
T10K1170	90459-6560	DIGITAL OUTPUT 8 PTS, 1734-OB8E/C	7-19
T10K1180	90459-6560	DIGITAL OUTPUT 8 PTS, 1734-OB8E/C	7-19
T10K1190	90459-2505	DIGITAL OUTPUT 4 PTS, 1734-OB4E	7-19
T10K1200	90459-5261	REMOTE I/O, RELAY OUTP. 4 PTS,1734-OW4/C	7-19
T10K1220	90459-2508	REMOTE I/O ANALOG INPUT VOLTAGE 2 PTS	7-19
T10K1240	90459-2509	REMOTE I/O ANALOG INPUT CURRENT 2 PTS	7-19
T10K1260	90459-2512	REMOTE I/O THERMOCOUPLE INPUT 2 PTS	7-19
T10K1270	90459-6731	ENCODER/COUNTER MODULE, 1734-IK SERIES C	7-19
T10K1280	90459-6731	ENCODER/COUNTER MODULE, 1734-IK SERIES C	7-19
T10K1300	90459-6560	DIGITAL OUTPUT 8 PTS, 1734-OB8E/C	7-19
T10K1310	90459-6560	DIGITAL OUTPUT 8 PTS, 1734-OB8E/C	7-19
T10K1611	90458-1200	VALVE OPEN IN MID-POSITION 5/3	7-113
T10K1621	90458-1194	MONOSTABLE VALVE 5/2	7-113
T10K1631	90458-1194	MONOSTABLE VALVE 5/2	7-113
T10K1640	90459-2500	EXPANSION POWER SUPPLY MODULE	7-19
T10K1641	90458-1203	VALVE 2X3/2 1X OPEN 1X CLOSED	7-113
T10K1650	90459-2501	FIELD POWER DISTRIBUTOR, 1734-FPD	7-19
T10K1661	90458-1194	MONOSTABLE VALVE 5/2	7-113
T10K1671	90458-1194	MONOSTABLE VALVE 5/2	7-117
T10K1730	90458-1194	MONOSTABLE VALVE 5/2	7-117
T10K1740	90458-1194	MONOSTABLE VALVE 5/2	7-117
T10K1750	90458-1194	MONOSTABLE VALVE 5/2	7-117
T10K1760	90458-1194	MONOSTABLE VALVE 5/2	7-117
T10K1770	90458-1194	MONOSTABLE VALVE 5/2	7-117
T10K1780	90458-1202	VALVES 2X3/2, CLOSED	7-117
T10K1790	90458-1194	MONOSTABLE VALVE 5/2	7-117
T10K1850	90459-2243	SHUT OFF VALVE, MS4-EE-1/4-10V24	7-115
T10K9021	90600-1214	SOLID STATE RELAY, 700-SCNN3Z26	8-31
T10K9026	90600-5249	FERRITE, B64290L616X38	8-51
T10K9027	90600-5249	FERRITE, B64290L616X38	8-51
T40K1000	90459-2494	DEVICENET I/O ADAPTER MODULE, 1734-ADN	2-55
T40K1010	90459-2503	DIGITAL INPUT 4 PTS SINK, 1734-IB4	2-55
T40K1020	90459-2503	DIGITAL INPUT 4 PTS SINK, 1734-IB4	2-55
T40K1030	90459-2503	DIGITAL INPUT 4 PTS SINK, 1734-IB4	2-55
T40K1040	90459-2503	DIGITAL INPUT 4 PTS SINK, 1734-IB4	2-55
T40K1050	90459-2503	DIGITAL INPUT 4 PTS SINK, 1734-IB4	2-55
T40K1060	90459-2503	DIGITAL INPUT 4 PTS SINK, 1734-IB4	2-55
T40K1070	90459-2505	DIGITAL OUTPUT 4 PTS, 1734-OB4E	2-55
T40K1080	90459-6560	DIGITAL OUTPUT 8 PTS, 1734-OB8E/C	2-55
T40K1090	90459-2512	REMOTE I/O THERMOCOUPLE INPUT 2 PTS	2-55
T40K1100	90459-2509	REMOTE I/O ANALOG INPUT CURRENT 2 PTS	2-55
T40K9047	90600-5249	FERRITE, B64290L616X38	8-51
T40K9051	90600-1214	SOLID STATE RELAY, 700-SCNN3Z26	8-31
T40K9056	90600-5249	FERRITE, B64290L616X38	8-51
T40K9057	90600-5249	FERRITE, B64290L616X38	8-51
T40K9580	90042-0248	SOLENOID VALVE OFFICIENE DI ENSINO	6-21
T40K9590	90042-0248	SOLENOID VALVE OFFICIENE DI ENSINO	6-21
T40K9600	90042-0248	SOLENOID VALVE OFFICIENE DI ENSINO	6-21
T40K9670	90458-1194	MONOSTABLE VALVE 5/2	2-33
T40K9680	90458-1194	MONOSTABLE VALVE 5/2	2-33
T40K9700	90458-1200	VALVE OPEN IN MID-POSITION 5/3	2-33
T40K9780	90458-1194	MONOSTABLE VALVE 5/2	2-27
T50K0260	90459-2614	DEVICENET ADAPTER POWERFLEX 40 22-COMM-D	8-67
T50K1000	90459-2494	DEVICENET I/O ADAPTER MODULE, 1734-ADN	2-103
T50K1010	90459-2503	DIGITAL INPUT 4 PTS SINK, 1734-IB4	2-103
T50K1020	90459-2503	DIGITAL INPUT 4 PTS SINK, 1734-IB4	2-103
T50K1030	90459-2503	DIGITAL INPUT 4 PTS SINK, 1734-IB4	2-103
T50K1040	90459-2505	DIGITAL OUTPUT 4 PTS, 1734-OB4E	2-103
T50K1050	90459-2505	DIGITAL OUTPUT 4 PTS, 1734-OB4E	2-103
T50K1060	90459-6560	DIGITAL OUTPUT 8 PTS, 1734-OB8E/C	2-103
T50K1070	90459-6560	DIGITAL OUTPUT 8 PTS, 1734-OB8E/C	2-103
T50K1090	90459-2512	REMOTE I/O THERMOCOUPLE INPUT 2 PTS	2-103
T50K1100	90459-2512	REMOTE I/O THERMOCOUPLE INPUT 2 PTS	2-103
T50K1140	90459-2508	REMOTE I/O ANALOG INPUT VOLTAGE 2 PTS	2-103
T50K1150	90459-2510	ANALOG OUTPUT VOLTAGE MODULE 2 PTS	2-103
T50K1640	90459-2500	EXPANSION POWER SUPPLY MODULE	2-103
T50K2000	90459-2494	DEVICENET I/O ADAPTER MODULE, 1734-ADN	2-107
T50K2010	90459-2503	DIGITAL INPUT 4 PTS SINK, 1734-IB4	2-107
T50K2020	90459-2503	DIGITAL INPUT 4 PTS SINK, 1734-IB4	2-107
T50K2030	90459-2503	DIGITAL INPUT 4 PTS SINK, 1734-IB4	2-107
T50K2040	90459-6561	DIGITAL INPUT 8 PTS SINK, 1734-IB8/C	2-107
T50K2050	90459-6561	DIGITAL INPUT 8 PTS SINK, 1734-IB8/C	2-107
T50K2060	90459-5261	REMOTE I/O, RELAY OUTP. 4 PTS,1734-OW4/C	2-107

Pos	Part No	Description	Page No
K			
T50K2070	90459-5261	REMOTE I/O, RELAY OUTP. 4 PTS,1734-OW4/C	2-107
T50K2080	90459-5261	REMOTE I/O, RELAY OUTP. 4 PTS,1734-OW4/C	2-107
T50K2090	90459-5261	REMOTE I/O, RELAY OUTP. 4 PTS,1734-OW4/C	2-107
T50K2100	90459-5261	REMOTE I/O, RELAY OUTP. 4 PTS,1734-OW4/C	2-107
T50K2110	90459-6560	DIGITAL OUTPUT 8 PTS, 1734-OB8E/C	2-107
T50K9007	90600-5249	FERRITE, B64290L616X38	8-51
T50K9017	90600-5249	FERRITE, B64290L616X38	8-51
T50K9510	90600-1618	TERMINAL BLOCK RELAY, 700-HLS1Z24	2-103
T50K9530	90600-1618	TERMINAL BLOCK RELAY, 700-HLS1Z24	2-103
T50K9570	90042-0248	SOLENOID VALVE OFFICIENE DI ENSINO	6-21
U30K0220	90459-2614	DEVICENET ADAPTER POWERFLEX 40 22-COMM-D	8-67
U30K1000	90459-2494	DEVICENET I/O ADAPTER MODULE, 1734-ADN	2-17
U30K1010	90459-2503	DIGITAL INPUT 4 PTS SINK, 1734-IB4	2-17
U30K1020	90459-2503	DIGITAL INPUT 4 PTS SINK, 1734-IB4	2-17
U30K1070	90459-6560	DIGITAL OUTPUT 8 PTS, 1734-OB8E/C	2-17
U30K1090	90459-5261	REMOTE I/O, RELAY OUTP. 4 PTS,1734-OW4/C	2-17
U30K1100	90459-5261	REMOTE I/O, RELAY OUTP. 4 PTS,1734-OW4/C	2-17
U30K1110	90459-4055	REMOTE I/O RELAY OUTPUT 2 PTS	2-17
U30K1120	90459-2509	REMOTE I/O ANALOG INPUT CURRENT 2 PTS	2-17
U30K1140	90459-2508	REMOTE I/O ANALOG INPUT VOLTAGE 2 PTS	2-17
U30K1160	90459-2512	REMOTE I/O THERMOCOUPLE INPUT 2 PTS	2-17
U30K1250	90458-1194	MONOSTABLE VALVE 5/2	2-33
U30K1260	90458-1202	VALVES 2X3/2, CLOSED	2-33
U30K1280	90458-1202	VALVES 2X3/2, CLOSED	2-33
U30K1300	90458-1202	VALVES 2X3/2, CLOSED	2-33
U30K1370	90458-1194	MONOSTABLE VALVE 5/2	2-33
U30K1380	90458-1202	VALVES 2X3/2, CLOSED	2-33
U30K1420	90458-1202	VALVES 2X3/2, CLOSED	2-35
U30K1460	90042-0487	COIL, 04983-197-18	2-243
U30K1480	90042-0170	SOLENOID VALVE TYPE 121 2/2 NC	2-239
U30K1640	90459-2500	EXPANSION POWER SUPPLY MODULE	2-17
U70K0300	90459-2614	DEVICENET ADAPTER POWERFLEX 40 22-COMM-D	8-67
U70K0310	90459-2614	DEVICENET ADAPTER POWERFLEX 40 22-COMM-D	8-67
U70K0320	90459-2614	DEVICENET ADAPTER POWERFLEX 40 22-COMM-D	8-67
U70K1000	90459-2494	DEVICENET I/O ADAPTER MODULE, 1734-ADN	1-359
U70K1010	90459-2503	DIGITAL INPUT 4 PTS SINK, 1734-IB4	1-359
U70K1020	90459-2503	DIGITAL INPUT 4 PTS SINK, 1734-IB4	1-359
U70K1030	90459-2503	DIGITAL INPUT 4 PTS SINK, 1734-IB4	1-359
U70K1040	90459-2503	DIGITAL INPUT 4 PTS SINK, 1734-IB4	1-359
U70K1070	90459-2503	DIGITAL INPUT 4 PTS SINK, 1734-IB4	1-359
U70K1091	90459-2742	LEVEL CONTROL RELAY, RM4-LA32MW	1-361
U70K1100	90459-2505	DIGITAL OUTPUT 4 PTS, 1734-OB4E	1-359
U70K1110	90459-6560	DIGITAL OUTPUT 8 PTS, 1734-OB8E/C	1-359
U70K1120	90459-6560	DIGITAL OUTPUT 8 PTS, 1734-OB8E/C	1-359
U70K1160	90459-2510	ANALOG OUTPUT VOLTAGE MODULE 2 PTS	1-359
U70K1180	90459-2512	REMOTE I/O THERMOCOUPLE INPUT 2 PTS	1-359
U70K1190	90459-4056	REMOTE I/O RTD INPUT 2PTS	1-359
U70K1410	90458-1202	VALVES 2X3/2, CLOSED	1-337, 1-339
U70K1430	90187-0110	DIAPHRAGM VALVE DN15, NC WELD CONN.	1-245
U70K1430	90458-1202	VALVES 2X3/2, CLOSED	1-337, 1-339
U70K1450	90458-1202	VALVES 2X3/2, CLOSED	1-337, 1-339
U70K1470	90458-1194	MONOSTABLE VALVE 5/2	1-337, 1-339
U70K1500	90458-1202	VALVES 2X3/2, CLOSED	1-337, 1-339
U70K1520	90458-1194	MONOSTABLE VALVE 5/2	1-337, 1-339
U70K1530	90458-1194	MONOSTABLE VALVE 5/2	1-337, 1-339
U70K1640	90459-2500	EXPANSION POWER SUPPLY MODULE	1-359
U70K2000	90459-2494	DEVICENET I/O ADAPTER MODULE, 1734-ADN	1-359
U70K2010	90459-2503	DIGITAL INPUT 4 PTS SINK, 1734-IB4	1-359
U70K2020	90459-2503	DIGITAL INPUT 4 PTS SINK, 1734-IB4	1-359
U70K2040	90459-2505	DIGITAL OUTPUT 4 PTS, 1734-OB4E	1-359
U70K2050	90459-6560	DIGITAL OUTPUT 8 PTS, 1734-OB8E/C	1-359
U70K2051	90600-1211	TERMINAL BLOCK RELAY, 700-HLT1Z24	8-31
U70K2060	90459-6560	DIGITAL OUTPUT 8 PTS, 1734-OB8E/C	1-359
U70K2070	90459-6560	DIGITAL OUTPUT 8 PTS, 1734-OB8E/C	1-359
U70K2080	90459-5261	REMOTE I/O, RELAY OUTP. 4 PTS,1734-OW4/C	1-359
U70K2090	90459-4055	REMOTE I/O RELAY OUTPUT 2 PTS	1-359
U70K2100	90459-2509	REMOTE I/O ANALOG INPUT CURRENT 2 PTS	1-359
U70K2110	90459-2508	REMOTE I/O ANALOG INPUT VOLTAGE 2 PTS	1-359
U70K2130	90459-2510	ANALOG OUTPUT VOLTAGE MODULE 2 PTS	1-359
U70K2131	90042-0172	SOLENOID VALVE 4023/1005/1032 24VDC	1-191
U70K2150	90459-2512	REMOTE I/O THERMOCOUPLE INPUT 2 PTS	1-359
U70K2160	90459-2512	REMOTE I/O THERMOCOUPLE INPUT 2 PTS	1-359
U70K2170	90459-2512	REMOTE I/O THERMOCOUPLE INPUT 2 PTS	1-359
U70K2180	90459-2512	REMOTE I/O THERMOCOUPLE INPUT 2 PTS	1-359
U70K2200	90459-6731	ENCODER/COUNTER MODULE, 1734-IK SERIES C	1-359
U70K2250	90458-1194	MONOSTABLE VALVE 5/2	1-335
U70K2270	90458-1202	VALVES 2X3/2, CLOSED	1-335
U70K2300	90458-1194	MONOSTABLE VALVE 5/2	1-335
U70K2340	90458-1194	MONOSTABLE VALVE 5/2	1-335
U70K2350	90458-1194	MONOSTABLE VALVE 5/2	1-335
U70K2360	90458-1194	MONOSTABLE VALVE 5/2	1-335
U70K2370	90458-1194	MONOSTABLE VALVE 5/2	1-335

Pos	Part No	Description	Page No
K			
U70K2410	90458-1194	MONOSTABLE VALVE 5/2	1-335
U70K2420	90458-1194	MONOSTABLE VALVE 5/2	1-335
U70K2430	90458-1202	VALVES 2X3/2, CLOSED	1-335
U70K2440	90458-1194	MONOSTABLE VALVE 5/2	1-335
U70K2640	90459-2500	EXPANSION POWER SUPPLY MODULE	1-359
U70K3000	90459-2494	DEVICENET I/O ADAPTER MODULE, 1734-ADN	1-359
U70K3010	90459-2503	DIGITAL INPUT 4 PTS SINK, 1734-IB4	1-359
U70K3020	90459-2503	DIGITAL INPUT 4 PTS SINK, 1734-IB4	1-359
U70K3030	90459-2503	DIGITAL INPUT 4 PTS SINK, 1734-IB4	1-359
U70K3040	90459-2503	DIGITAL INPUT 4 PTS SINK, 1734-IB4	1-359
U70K3050	90459-2503	DIGITAL INPUT 4 PTS SINK, 1734-IB4	1-359
U70K3060	90459-2503	DIGITAL INPUT 4 PTS SINK, 1734-IB4	1-359
U70K3080	90459-2505	DIGITAL OUTPUT 4 PTS, 1734-OB4E	1-359
U70K3090	90459-2505	DIGITAL OUTPUT 4 PTS, 1734-OB4E	1-359
U70K3110	90459-2509	REMOTE I/O ANALOG INPUT CURRENT 2 PTS	1-359
U70K3130	90459-2508	REMOTE I/O ANALOG INPUT VOLTAGE 2 PTS	1-359
U70K3140	90459-2508	REMOTE I/O ANALOG INPUT VOLTAGE 2 PTS	1-359
U70K3160	90459-2512	REMOTE I/O THERMOCOUPLE INPUT 2 PTS	1-359
U70K3170	90459-2512	REMOTE I/O THERMOCOUPLE INPUT 2 PTS	1-359
U70K3290	90042-0203	SOLENOID VALVE TYPE 331 3/2 NC	1-293
U70K3330	90459-6975	SOLENOID VALVE G1/4, 2401186082702400	1-293
U70K3340	90459-6977	SOLENOID VALVE G1/4, V04B286N-B423A	1-293
U70K3640	90459-2500	EXPANSION POWER SUPPLY MODULE	1-359
U70K4000	90459-2494	DEVICENET I/O ADAPTER MODULE, 1734-ADN	1-213
U70K4010	90459-2503	DIGITAL INPUT 4 PTS SINK, 1734-IB4	1-213
U70K4020	90459-2503	DIGITAL INPUT 4 PTS SINK, 1734-IB4	1-213
U70K4040	90459-2505	DIGITAL OUTPUT 4 PTS, 1734-OB4E	1-213
U70K4060	90459-2509	REMOTE I/O ANALOG INPUT CURRENT 2 PTS	1-213
U70K4070	90459-2508	REMOTE I/O ANALOG INPUT VOLTAGE 2 PTS	1-213
U70K4080	90459-2510	ANALOG OUTPUT VOLTAGE MODULE 2 PTS	1-213
U70K4090	90459-2512	REMOTE I/O THERMOCOUPLE INPUT 2 PTS	1-213
U70K4100	90459-2512	REMOTE I/O THERMOCOUPLE INPUT 2 PTS	1-213
U70K4210	90042-0203	SOLENOID VALVE TYPE 331 3/2 NC	1-209
U70K4220	90042-0203	SOLENOID VALVE TYPE 331 3/2 NC	1-209
U70K4230	90042-0171	SOLENOID VALVE TYPE 330 3/2 NC	1-207
U70K4240	90042-0171	SOLENOID VALVE TYPE 330 3/2 NC	1-207
U70K9037	90600-5249	FERRITE, B64290L616X38	8-51
U70K9510	90600-5250	LINE FILTER, B84111FB30	8-97, 8-99
W51K0090	90459-2614	DEVICENET ADAPTER POWERFLEX 40 22-COMM-D	8-67
W51K1500	90458-1194	MONOSTABLE VALVE 5/2	11-73, 11-215
W51K1501	90601-6658	OPTOCOUPLER, DEK-OV-24DC/24DC/3	11-63
W51K1520	90458-1194	MONOSTABLE VALVE 5/2	11-73, 11-215
W51K1521	90601-6658	OPTOCOUPLER, DEK-OV-24DC/24DC/3	11-63
W51K1530	90458-1194	MONOSTABLE VALVE 5/2	11-215
W51K1540	90458-1194	MONOSTABLE VALVE 5/2	11-215
W51K1700	90601-6658	OPTOCOUPLER, DEK-OV-24DC/24DC/3	11-63
W51K5230	559810-0101	TMCC2 CONTROLLER	8-103
Y70K3300	90042-0203	SOLENOID VALVE TYPE 331 3/2 NC	1-293
M			
MB010	90459-1037	CRIMP TOOL FOR COAX. CONN. HTG 58-901200	12-5
MB010	3117858-0000	PNEUMATIC DIAGRAM	9-69
MB010	3117860-0000	PNEUMATIC DIAGRAM	9-69
MB020	2887587-0000	PNEUMATIC DIAGRAM	9-69
A01M5740	90457-0056	FAN 7450 ES	8-15, 8-17
A01M5750	90457-0056	FAN 7450 ES	8-15, 8-17
K80M0111	90603-0788	PUMP, CM3-6 X-R-G-V AQQV O-A-A-N	6-37
K80M0401	90600-2900	PUMP, 1272514	6-11
K80M0471	90600-1257	PUMP, 101501081YXXXC3	6-49
K80M0471	90602-4056	PUMP 101511061YXXXP6 SV806 F556 T/P	6-49
K80M9510	2875358-0000	FAN	6-65
T10M0160	90600-1249	GEARS, HELICAL MOTOR C 112 UF 6.2 S1 B52	7-89
T10M0170	90459-2096	GEARS, WORM MOTOR F2 15 P63 B14 B8 PV 75	7-145
T10M0180	90600-1459	GEARS, WORM MOTOR MCKB 320P2TB5/S	7-51
T10M0181	90600-1459	GEARS, WORM MOTOR MCKB 320P2TB5/S	7-51
T10M1612	90600-8126	CYLINDER WITH INT. GUIDING BORE 10	7-69, 7-71
T10M1632	90600-1204	DOUBLE ACTING, COMPACT, 100-15	7-81
T10M1642	90459-7306	CYLINDER WITH INT. GUIDING BORE 16	7-81
T10M1672	90600-3960	ROTARY ACTUATOR DSM-25-270-P-A-B	7-133
T10M1673	90600-3960	ROTARY ACTUATOR DSM-25-270-P-A-B	7-135
T10M1712	90459-7102	DOUBLE ACTING, PROFILE,CYL 50-125	7-179
T10M1722	90459-7102	DOUBLE ACTING, PROFILE,CYL 50-125	7-179
T10M1732	90600-2793	DOUBLE ACTING, COMPACT, 25-10	7-103
T10M1733	90600-2793	DOUBLE ACTING, COMPACT, 25-10	7-103
T10M1742	90600-2793	DOUBLE ACTING, COMPACT, 25-10	7-103
T10M1743	90600-2793	DOUBLE ACTING, COMPACT, 25-10	7-103
T10M1752	90459-1953	DOUBLE ACTING, MINI-ISO, CYL. 25-10	7-91
T10M1762	90459-1953	DOUBLE ACTING, MINI-ISO, CYL. 25-10	7-119, 7-121, 7-123
T10M1772	90450-0306	DOUBLE ACTING, MINI-ISO, CYL. 12-25	7-53
T10M9020	90601-1989	SERVO MOTOR MPL-B320P-MK74AA SERIES A	7-105
T40M0050	90459-1147	GEARS, WORM MOTOR VF30 F1-10 P63 B14 V6	2-229
T40M9040	90601-5151	SERVO MOTOR MPL-B330P-SJ72AA SERIES A	3-17, 3-19, 3-21, 3-23, 3-25
T40M9040	90601-5870	SERVO MOTOR MPL-B430P-SJ72AA SERIES A	3-17, 3-19, 3-21, 3-23, 3-25

Pos	Part No	Description	Page No
M			
T40M9050	90601-6070	SERVO MOTOR MPL-B4540F-MJ74AA SERIES A	3-17, 3-19, 3-21, 3-23, 3-25
T40M9050	90602-7487	SERVO MOTOR MPL-B540D-MJ74AA SERIES A	3-17, 3-19, 3-21, 3-23, 3-25
T40M9510	90459-2081	FAN, 7214N-24VDC-500MA-12W-FAN	2-61
T40M9660	90459-7195	STEPPER MOTOR HRA71-DLB04075	3-17, 3-19, 3-21, 3-23, 3-25
T40M9672	90459-0401	DOUBLE ACTING, MINI-ISO, CYL. 25-320	2-183
T40M9682	90459-1255	PUMP CYLINDER, 4415 000 00	4-99, 4-101, 4-103, 4-105
T40M9683	90459-1255	PUMP CYLINDER, 4415 000 00	4-99, 4-101, 4-103, 4-105
T40M9684	90459-1255	PUMP CYLINDER, 4415 000 00	4-99, 4-101, 4-103, 4-105
T40M9685	90459-1255	PUMP CYLINDER, 4415 000 00	4-99, 4-101, 4-103, 4-105
T40M9702	90458-2102	DOUBLE ACTING, MINI-ISO, CYL. 20-50	4-109, 4-111, 4-113, 4-115
T40M9702	90600-5531	DOUBLE ACTING, MINI-ISO, CYL. 32-50	4-109, 4-111, 4-113, 4-115
T40M9782	90600-3045	DOUBLE ACTING, MINI-ISO, CYL. 16-40	4-21
T40M9783	90600-3045	DOUBLE ACTING, MINI-ISO, CYL. 16-40	4-21
T50M9000	90601-6030	SERVO MOTOR MPL-B4540F-MJ72AA SERIES A	3-17, 3-19, 3-21, 3-23, 3-25
T50M9000	90601-6170	SERVO MOTOR MPL-B540D-MJ72AA SERIES A	3-17, 3-19, 3-21, 3-23, 3-25
T50M9010	90600-7846	SERVO MOTOR MPS-B310P-M-X183, ESM	5-13, 5-83, 5-85, 5-87, 5-89, 5-91
U30M0220	90602-9317	MOTOR 1LA9073-2KA12	2-251
U30M1252	90321-0128	CHEM. PUMP 081778	2-233
U30M1570	927244-0100	PUMP	2-259, 2-261
U30M1590	927244-0100	PUMP	2-259, 2-261
U70M0100	90321-0134	CIRC. PUMP TCB25-6LV.230 HZ 50	1-279
U70M0100	90321-0135	CIRC. PUMP 230V60HZ	1-279
U70M0300	90459-6661	COMPRESSOR, 2BV5410-8FP02-6S	1-179
U70M0310	90459-4499	GEARS, WORM MOTOR VF 44P-10+BN71C 0.75KW	1-9
U70M0320	2851886-0000	CENTRIFUGAL PUMP	1-267
U70M2252	90459-0587	DOUBLE ACTING, PROFILE, CYL 50-50	1-73
U70M2300	90450-0281	DOUBLE ACTING,PROF.CYL 32-80	1-187
U70M2350	90459-0713	DOUBLE ACTING, MINI-ISO, CYL. 12-80	1-177
U70M2360	90459-0713	DOUBLE ACTING, MINI-ISO, CYL. 12-80	1-177
U70M2370	90600-5541	DOUBLE ACTING, COMPACT, CYL 16-25	1-33
U70M2410	90457-0871	DOUBLE ACTING, MINI-ISO, CYL. 16-25	1-21
U70M2422	90600-0805	DOUBLE ACTING, MINI-ISO, CYL. 25-62 MM	1-13
U70M2432	90459-7086	DOUBLE ACTING, COMPACT, 50-25	1-11
U70M2433	90459-7086	DOUBLE ACTING, COMPACT, 50-25	1-11
U70M2442	90457-1038	DOUBLE ACTING, COMPACT, 32-25	1-31
U70M2443	90457-1038	DOUBLE ACTING, COMPACT, 32-25	1-31
U70M2452	90458-2102	DOUBLE ACTING, MINI-ISO, CYL. 20-50	1-169
U70M9030	90601-0646	SERVO MOTOR MPL-B320P-SJ72AA SERIES A	1-235, 1-237
P			
A01P5300	90459-4033	RECORDER 12-CHANNEL PAPERLESS FDA-APPR	8-97, 8-99
A01P5330	90070-0017	WORKING HOURS COUNTER, 7991 DR H?NLE	8-97, 8-99
A01P5340	90053-0029	COUNTER, F524.800FA3C 24VDC	8-97, 8-99
K80P6002	90459-7344	PRESSURE GAUGE, MA-40-6-R1/4-EN	6-85
K80P7002	90043-0006	PRESSURE GAUGE, 2041 D=63 MM	6-81
K80P7003	1129079-0000	FLOW METER	6-33
K80P7004	90043-0100	PRESSURE GAUGE, 2948 D=63 MM	6-33
K80P7005	90043-0043	PRESSURE GAUGE, 2041D=40 MM	6-45
T10P1490	2903813-0100	SIGNAL LAMP	2-125, 2-127
T10P1642	90459-7344	PRESSURE GAUGE, MA-40-6-R1/4-EN	7-109, 7-111
T10P1662	90459-7344	PRESSURE GAUGE, MA-40-6-R1/4-EN	7-109, 7-111
T10P1792	90459-7344	PRESSURE GAUGE, MA-40-6-R1/4-EN	7-109, 7-111
T10P7002	1129079-0000	FLOW METER	6-33
T40P6002	90458-2969	PRESSURE GAUGE, MAP-40-1-1/8-EN	2-29, 2-31
T40P7002	1129079-0000	FLOW METER	6-33
T40P7052	1129079-0000	FLOW METER	6-33
T40P9672	90459-7344	PRESSURE GAUGE, MA-40-6-R1/4-EN	2-29, 2-31
T50P1130	2540716-0200	SIGNAL LAMP	2-121
T50P1131	90458-0295	LIGHT ELEMENT, BLUE, PSD-S OE BU/W	2-123, 2-137
T50P1140	90458-0294	LIGHT ELEMENT, YELLOW, PSD-S OE YE/W	2-123, 2-137
T50P1150	90458-0293	LIGHT ELEMENT, RED, PSD-S OE RD/W	2-123, 2-137
T50P1160	90458-0302	SIREN ELEMENT, PSD-S AE SM8-5 100DB/1/W	2-123, 2-137
T50P1362	90459-7344	PRESSURE GAUGE, MA-40-6-R1/4-EN	2-29, 2-31
T50P7002	1041046-0000	FLOW METER	6-33
U30P1462	90458-2969	PRESSURE GAUGE, MAP-40-1-1/8-EN	2-29, 2-31
U30P6003	90458-2969	PRESSURE GAUGE, MAP-40-1-1/8-EN	2-29, 2-31
U70P0381	1041046-0000	FLOW METER	6-33
U70P1500	90459-7344	PRESSURE GAUGE, MA-40-6-R1/4-EN	1-331, 1-333
U70P2414	90459-7344	PRESSURE GAUGE, MA-40-6-R1/4-EN	1-331, 1-333
U70P2422	90459-7344	PRESSURE GAUGE, MA-40-6-R1/4-EN	1-331, 1-333
U70P2432	90459-7344	PRESSURE GAUGE, MA-40-6-R1/4-EN	1-331, 1-333
U70P3302	90459-7344	PRESSURE GAUGE, MA-40-6-R1/4-EN	1-331, 1-333
U70P4222	90459-7344	PRESSURE GAUGE, MA-40-6-R1/4-EN	1-331, 1-333
U70P4223	90459-7344	PRESSURE GAUGE, MA-40-6-R1/4-EN	1-207
U70P9510	90459-5187	CONDUCTIVITY TRANSMITTER CLM223-ID7105	8-97, 8-99
Q			
A01Q5810	90459-5308	CONTACTOR 4KW 24VDC, DILM9-10	8-63, 8-65
A40Q0040	90459-5440	CONTACTOR 4KW 24VDC, DILM9-01	8-63, 8-65
A70Q0140	90459-5440	CONTACTOR 4KW 24VDC, DILM9-01	8-63, 8-65
F10Q9022	90459-5440	CONTACTOR 4KW 24VDC, DILM9-01	8-53, 8-55
K80Q0111	90459-5440	CONTACTOR 4KW 24VDC, DILM9-01	8-63, 8-65
K80Q0121	90459-5440	CONTACTOR 4KW 24VDC, DILM9-01	8-63, 8-65
K80Q0401	90459-5440	CONTACTOR 4KW 24VDC, DILM9-01	8-63, 8-65

Pos	Part No	Description	Page No
Q			
K80Q0471	90459-5441	CONTACTOR 7,5KW 24VDC, DILM17-01	8-63, 8-65
K80Q6002	90187-0148	BALL VALVE G1	6-53
K80Q6003	90187-0148	BALL VALVE G1	6-53
K80Q6004	90187-0148	BALL VALVE G1	6-53
T10Q0160	90459-5440	CONTACTOR 4KW 24VDC, DILM9-01	8-61
T10Q0190	90459-5440	CONTACTOR 4KW 24VDC, DILM9-01	8-61
T10Q0192	90600-0943	SOLID STATE RELAY, 3RF2320-1AA04	8-31
T10Q1662	90459-2141	LOGIC ELEMENT, OS-1/8-B	7-109, 7-111
T10Q1710	90458-1194	MONOSTABLE VALVE 5/2	7-113
T10Q1720	90458-1194	MONOSTABLE VALVE 5/2	7-113
T10Q1852	90459-2337	SHUT OFF VALVE, MS4-EM1-1/4	7-115
T10Q9021	90601-2686	VARISTOR FILTER, B72210S0250K101	8-31
T10Q9170	90459-5441	CONTACTOR 7,5KW 24VDC, DILM17-01	8-61
T10Q9520	90459-5440	CONTACTOR 4KW 24VDC, DILM9-01	8-61
T40Q0050	90459-5440	CONTACTOR 4KW 24VDC, DILM9-01	8-63, 8-65
T40Q9050	90459-5444	CONTACTOR 15KW 24VDC, DILM32-01	8-29, 8-63, 8-65
T40Q9051	90601-2686	VARISTOR FILTER, B72210S0250K101	8-31
T40Q9150	90459-5441	CONTACTOR 7,5KW 24VDC, DILM17-01	8-61
T50Q0240	90459-5441	CONTACTOR 7,5KW 24VDC, DILM17-01	8-61
T50Q0241	90600-0943	SOLID STATE RELAY, 3RF2320-1AA04	8-31
T50Q0242	90600-0943	SOLID STATE RELAY, 3RF2320-1AA04	8-31
T50Q0250	90459-5441	CONTACTOR 7,5KW 24VDC, DILM17-01	8-61
T50Q0251	90600-0943	SOLID STATE RELAY, 3RF2320-1AA04	8-31
T50Q0252	90600-0943	SOLID STATE RELAY, 3RF2320-1AA04	8-31
T50Q0260	90459-5440	CONTACTOR 4KW 24VDC, DILM9-01	8-61
T50Q9580	90459-5440	CONTACTOR 4KW 24VDC, DILM9-01	8-61
U30Q0220	90459-5440	CONTACTOR 4KW 24VDC, DILM9-01	8-61
U30Q1262	90459-5177	ANGLE SEAT VALVE W. FLANGES, N.O.8498668	2-241
U30Q1264	90459-5178	ANGLE SEAT VALVE W. FLANGES, N.O.8498669	2-241
U30Q1282	90458-2333	VALVE, M8A-V4LQ-KZ-11AO-SS PNEUM. OPER.	2-259, 2-261
U30Q1284	90458-2333	VALVE, M8A-V4LQ-KZ-11AO-SS PNEUM. OPER.	2-259, 2-261
U30Q1302	90458-2333	VALVE, M8A-V4LQ-KZ-11AO-SS PNEUM. OPER.	2-259, 2-261
U30Q1304	90458-2333	VALVE, M8A-V4LQ-KZ-11AO-SS PNEUM. OPER.	2-259, 2-261
U30Q1372	90603-1413	VALVE 4-WAY H2O2, 424-PP-ALL-RA4	2-249
U30Q1382	90602-0970	PNEUMATIC NEEDLE VALVE, SS-92S6MM-C-S1	2-259, 2-261
U30Q1383	90602-0970	PNEUMATIC NEEDLE VALVE, SS-92S6MM-C-S1	2-259, 2-261
U30Q1423	90600-5901	NEEDLE VALVE FOR 8 MM,SS-92S8MM-0-SI	2-259, 2-261
U30Q1424	90600-5901	NEEDLE VALVE FOR 8 MM,SS-92S8MM-0-SI	2-259, 2-261
U70Q0100	90459-5440	CONTACTOR 4KW 24VDC, DILM9-01	8-63, 8-65
U70Q0130	90459-5440	CONTACTOR 4KW 24VDC, DILM9-01	8-61
U70Q0300	90459-5441	CONTACTOR 7,5KW 24VDC, DILM17-01	8-61
U70Q0310	90459-5440	CONTACTOR 4KW 24VDC, DILM9-01	8-61
U70Q0320	90459-5440	CONTACTOR 4KW 24VDC, DILM9-01	8-61
U70Q0330	90459-5440	CONTACTOR 4KW 24VDC, DILM9-01	8-61
U70Q0340	90459-5440	CONTACTOR 4KW 24VDC, DILM9-01	8-61
U70Q0350	90600-0947	SOLID STATE CONTACTOR, 3RF2420-1AB45	8-31
U70Q0351	90459-5440	CONTACTOR 4KW 24VDC, DILM9-01	8-61
U70Q0360	90600-0947	SOLID STATE CONTACTOR, 3RF2420-1AB45	8-31
U70Q0361	90459-5440	CONTACTOR 4KW 24VDC, DILM9-01	8-61
U70Q0370	90600-0943	SOLID STATE RELAY, 3RF2320-1AA04	8-31
U70Q0371	90459-5440	CONTACTOR 4KW 24VDC, DILM9-01	8-61
U70Q0381	90459-5440	CONTACTOR 4KW 24VDC, DILM9-01	8-61
U70Q0450	90600-0948	SOLID STATE CONTACTOR, 3RF2430-1AB45	8-31
U70Q0451	90459-5441	CONTACTOR 7,5KW 24VDC, DILM17-01	8-61
U70Q0461	90600-0947	SOLID STATE CONTACTOR, 3RF2420-1AB45	8-31
U70Q0462	90459-5440	CONTACTOR 4KW 24VDC, DILM9-01	8-61
U70Q0463	90600-0947	SOLID STATE CONTACTOR, 3RF2420-1AB45	8-31
U70Q0464	90459-5440	CONTACTOR 4KW 24VDC, DILM9-01	8-61
U70Q1412	90459-1241	ANGLE SEAT VALVE, TRI-CLAMP, N.C. DN20	1-271
U70Q1413	90602-0970	PNEUMATIC NEEDLE VALVE, SS-92S6MM-C-S1	1-271
U70Q1414	90600-1946	VALVE, SEAT, 3A. 9613320304	1-273
U70Q2344	342800-1303	ACTUATOR, SS, N.O. SEAT S. 25	1-267
U70Q9160	90459-5441	CONTACTOR 7,5KW 24VDC, DILM17-01	8-61
U70Q9560	90459-5440	CONTACTOR 4KW 24VDC, DILM9-01	8-61
W51Q0090	90459-5440	CONTACTOR 4KW 24VDC, DILM9-01	8-61
R			
A01R5010	90600-2135	MODULE CONNECTOR 250V, BEST/D 1878560000	8-45, 8-47
A01R5020	90600-2135	MODULE CONNECTOR 250V, BEST/D 1878560000	8-31
A01R5030	90600-2135	MODULE CONNECTOR 250V, BEST/D 1878560000	8-31
A01R5850	90600-2135	MODULE CONNECTOR 250V, BEST/D 1878560000	8-45, 8-47
A01R5860	90600-2135	MODULE CONNECTOR 250V, BEST/D 1878560000	8-45, 8-47
A30R6012	90328-0047	SILENCER G1/8"	2-33
A30R6013	90328-0024	SILENCER G3/8"	2-33
A30R6014	90328-0047	SILENCER G1/8"	2-33
A30R6015	90328-0024	SILENCER G3/8"	2-33
A30R6016	90458-1213	RIGHT ENDPLATE INTERNAL PILOT AIR	2-33
K80R1342	90328-0025	SILENCER G1/2"	6-91
K80R1343	90459-7342	REGULATOR, MS6-LRB-1/2-D7-AS-BD	6-91
K80R1344	90459-1853	FILTER REGULATOR, MS6-LFR-1/2-D7-ERV-AS	6-91
K80R1345	90328-0025	SILENCER G1/2"	6-91
K80R6002	90459-2822	REGULATOR, MS4-LR-1/4-D5-A8	6-85
K80R6003	90328-0024	SILENCER G3/8"	6-87

Pos	Part No	Description	Page No
R			
K80R6004	90328-0047	SILENCER G1/8"	6-87
K80R6005	90328-0024	SILENCER G3/8"	6-87
K80R6006	90328-0047	SILENCER G1/8"	6-87
K80R6007	90458-1214	RIGHT ENDPL EXT. PILOT AIR,CDVI5.0-EPR-S	6-87
K80R7003	90230-0028	NON-RETURN VALVE H 151 R 3/8"	6-33
K80R7004	90230-0044	NON-RETURN VALVE 1"	6-47
K80R7005	90230-0042	NON-RETURN VALVE 1/2"	6-45
K80R7006	90113-0098	PRESSURE REGULATOR	6-45
K80R7007	90187-0133	SAFETY VALVE, 10 BARS, R1/2, R1/2	6-45
K80R7008	90230-0042	NON-RETURN VALVE 1/2"	6-45
K80R7009	90230-0042	NON-RETURN VALVE 1/2"	6-51
K80R7012	90235-0151	NON-RETURN VALVE, 534 098 110 0	6-51
K80R7013	90230-0040	NON-RETURN VALVE, R3/8, L=55	6-7
K80R7014	90458-0201	FLUID AUT. FEEDER, ALINOX 1/2 46.04.00	6-7
K80R7017	90230-0044	NON-RETURN VALVE 1"	2-85
T10R0020	1498047-0000	SEALING BLOCK	7-53
T10R0021	1524481-0000	SEALING BLOCK	7-55
T10R0192	90600-2586	HEATING CARTRIDGE, 800W 240V	7-77
T10R1000	90459-2523	OPEN STYLE TERMINATOR, 1485A-C2	7-19
T10R1622	90600-6035	QUICK EXHAUST VALVE, SEU-1/4	7-79
T10R1642	90459-2822	REGULATOR, MS4-LR-1/4-D5-A8	7-109, 7-111
T10R1662	90459-4554	REGULATOR, MS4-LRB-1/4-D7-A8-AS	7-109, 7-111
T10R1782	90602-3893	FLOW CONTROL VALVE, GRLSA-1/8-QS-6	7-109, 7-111
T10R1792	90459-4554	REGULATOR, MS4-LRB-1/4-D7-A8-AS	7-109, 7-111
T10R1852	90328-0026	SILENCER G1/4"	7-115
T10R1853	90328-0026	SILENCER G1/4"	7-115
T10R1854	90459-2242	REGULATOR, MS4-LRB-1/4-D7-AS	7-115
T10R1855	90459-2339	FILTER REGULATOR, MS4-LFR-1/4-D7-ERV-AS	7-115
T10R6002	90328-0047	SILENCER G1/8"	7-113
T10R6003	90328-0024	SILENCER G3/8"	7-113
T10R6004	90328-0024	SILENCER G3/8"	7-113
T10R6005	90328-0047	SILENCER G1/8"	7-117
T10R6006	90328-0024	SILENCER G3/8"	7-117
T10R6007	90328-0024	SILENCER G3/8"	7-117
T10R6008	90458-1214	RIGHT ENDPL EXT. PILOT AIR,CDVI5.0-EPR-S	7-113
T10R6009	90458-1212	LEFT ENDPLATE INCL. 10M CABLE	7-117
T10R6012	90328-0047	SILENCER G1/8"	7-117
T10R6013	90328-0047	SILENCER G1/8"	7-113
T40R0002	90328-0029	SILENCER M5	2-27
T40R0003	90328-0047	SILENCER G1/8"	2-27
T40R0004	90328-0047	SILENCER G1/8"	2-27
T40R0005	90328-0029	SILENCER M5	2-27
T40R6002	90600-3050	REGULATOR, SA-235942A	2-29, 2-31
T40R9150	1520092-0000	INDUCTOR	4-83, 4-85, 4-87, 4-89
T40R9150	1520166-0000	INDUCTOR	4-71, 4-73, 4-75, 4-77, 4-79, 4-81
T40R9150	1533000-0000	INDUCTOR	4-71, 4-73, 4-75, 4-77, 4-79, 4-81
T40R9150	1533002-0000	INDUCTOR	4-71, 4-73, 4-75, 4-77, 4-79, 4-81
T40R9150	1533015-0000	INDUCTOR	4-83, 4-85, 4-87, 4-89
T40R9150	1566851-0000	INDUCTOR	4-83, 4-85, 4-87, 4-89
T40R9150	2894324-0000	INDUCTOR	4-71, 4-73, 4-75, 4-77, 4-79, 4-81
T40R9672	90459-4554	REGULATOR, MS4-LRB-1/4-D7-A8-AS	2-29, 2-31
T50R0241	2877136-0000	HEATING ELEMENT	5-205, 5-207, 5-209, 5-211
T50R0242	2877136-0000	HEATING ELEMENT	5-205, 5-207, 5-209, 5-211
T50R0251	2877136-0000	HEATING ELEMENT	5-205, 5-207, 5-209, 5-211
T50R0252	2877136-0000	HEATING ELEMENT	5-205, 5-207, 5-209, 5-211
T50R1362	90459-4554	REGULATOR, MS4-LRB-1/4-D7-A8-AS	2-29, 2-31
U30R1422	90328-0029	SILENCER M5	2-35
U30R1423	90328-0047	SILENCER G1/8"	2-35
U30R1424	90328-0029	SILENCER M5	2-35
U30R1425	90328-0047	SILENCER G1/8"	2-35
U30R1462	90113-0056	REGULATOR, 11-818-998	2-29, 2-31
U30R6003	90458-0254	PRECISION PRESSURE REGULATOR,LRP-1/4-0,7	2-29, 2-31
U70R0340	90206-0070	HEATING ELEMENT 6000W 380/220V	1-279
U70R0350	90206-0070	HEATING ELEMENT 6000W 380/220V	1-279
U70R0360	3101011-0000	HEATER	1-175
U70R0370	3020119-0000	HEATING ELEMENT	1-205
U70R0450	90600-2007	HEATING ELEM.15KW 3X230/400V,T90600-2007	1-185
U70R0461	2895154-0000	RESISTANCE	1-287, 1-289
U70R0462	2895154-0000	RESISTANCE	1-287, 1-289
U70R0463	2528056-0000	RESISTANCE	1-287, 1-289
U70R0464	2528056-0000	RESISTANCE	1-287, 1-289
U70R1500	90459-4554	REGULATOR, MS4-LRB-1/4-D7-A8-AS	1-331, 1-333
U70R2252	90235-0847	THROTTLE CHECK VALVE G1/4", MANUAL,6	1-73
U70R2254	90235-0847	THROTTLE CHECK VALVE G1/4", MANUAL,6	1-73
U70R2352	90459-3019	THROTTLE CHECK VALVE, M5, MANUAL, 6MM	1-177
U70R2354	90459-3019	THROTTLE CHECK VALVE, M5, MANUAL, 6MM	1-177
U70R2362	90459-3019	THROTTLE CHECK VALVE, M5, MANUAL, 6MM	1-177
U70R2364	90459-3019	THROTTLE CHECK VALVE, M5, MANUAL, 6MM	1-177
U70R2414	90459-4554	REGULATOR, MS4-LRB-1/4-D7-A8-AS	1-331, 1-333
U70R2432	90459-4554	REGULATOR, MS4-LRB-1/4-D7-A8-AS	1-331, 1-333
U70R2442	90459-3528	ONE WAY FLOW CONTROL G1/8", MANUAL	1-31
U70R2443	90459-3528	ONE WAY FLOW CONTROL G1/8", MANUAL	1-31

Pos	Part No	Description	Page No
R			
U70R2444	90459-3528	ONE WAY FLOW CONTROL G1/8", MANUAL	1-31
U70R2446	90459-3528	ONE WAY FLOW CONTROL G1/8", MANUAL	1-31
U70R2490	90121-0127	RESISTANCE FIXED, 1,5 KOHM, 0,25 W	1-361
U70R2491	90038-0049	DIODE	1-361
U70R3302	90459-4554	REGULATOR, MS4-LRB-1/4-D7-A8-AS	1-331, 1-333
U70R4222	90459-4554	REGULATOR, MS4-LRB-1/4-D7-A8-AS	1-331, 1-333
U70R6002	90328-0047	SILENCER G1/8"	1-337, 1-339
U70R6005	90458-1214	RIGHT ENDPL EXT. PILOT AIR,CDVI5.0-EPR-S	1-337, 1-339
U70R6006	90328-0024	SILENCER G3/8"	1-337, 1-339
U70R6007	90328-0047	SILENCER G1/8"	1-337, 1-339
U70R6008	90328-0024	SILENCER G3/8"	1-337, 1-339
U70R6009	90458-1214	RIGHT ENDPL EXT. PILOT AIR,CDVI5.0-EPR-S	1-335
U70R6010	90328-0024	SILENCER G3/8"	1-335
U70R6011	90328-0047	SILENCER G1/8"	1-335
U70R6012	90328-0024	SILENCER G3/8"	1-335
U70R6013	90328-0047	SILENCER G1/8"	1-335
U70R6014	90328-0047	SILENCER G1/8"	1-337, 1-339
U70R7003	90328-0047	SILENCER G1/8"	1-337, 1-339
U70R9520	90121-0132	RESISTANCE FIXED, 0,51 KOHM, 0,25 W	1-229, 1-231
U70R9521	90121-0132	RESISTANCE FIXED, 0,51 KOHM, 0,25 W	1-229, 1-231
U70R9522	90459-1297	RESISTANCE FIXED, 120 OHM, 0,25 W	1-229, 1-231
U70R9523	90459-1297	RESISTANCE FIXED, 120 OHM, 0,25 W	1-229, 1-231
U70R9570	90600-2135	MODULE CONNECTOR 250V, BEST/D 1878560000	8-45, 8-47
W51R1500	90328-0047	SILENCER G1/8"	11-73, 11-215
W51R1501	90113-0141	FILTER REGULATOR 0-10 BAR 40 MICRON	11-75
W51R1510	90328-0047	SILENCER G1/8"	11-73, 11-215
S			
SS010	1349738-0100	PRESSURE TEST EQUIPMENT	12-5
SS010	2895150-0000	PNEUMATIC DIAGRAM	9-69
SS020	2979712-0000	PNEUMATIC DIAGRAM	9-69
SS030	777200-0101	PIPE WRENCH	12-5
SS030	2979713-0000	PNEUMATIC DIAGRAM	9-69
SS040	449969-0100	TOOL DISMOUNTING	12-5
SS050	533014-0100	LEAK FINDING EQUIPMENT (SUPERSTRUCTURE)	12-5
SS060	90459-1467	FORCE GAUGE 0-250N, AFG 250N	12-5
SU010	2778524-0000	PNEUMATIC DIAGRAM	9-69
SU010	3055965-0000	WATER DIAGRAM	9-69
SU010	3055968-0000	WATER DIAGRAM	9-69
SU020	2816352-0000	PNEUMATIC DIAGRAM	9-69
A01S5560	90458-1651	EMERGENCY STOP, ZB4-BS-844 ZB4-BZ-104	8-85, 8-87
A01S5570	90458-1651	EMERGENCY STOP, ZB4-BS-844 ZB4-BZ-104	8-81, 8-83
A01S5580	90111-0122	KEY SWITCH, 2 NO CONTACTS	8-97, 8-99
A01S5590	90111-0124	KEY SWITCH, 1NO,1NC CONTACT	8-97, 8-99
K80S1342	90459-1852	SHUT OFF VALVE, MS6-EM1-1/2	6-91
K80S6002	90187-0089	BALL VALVE G3/8, NPBR	6-93
K80S6003	90187-0089	BALL VALVE G3/8, NPBR	6-93
K80S6004	90458-1740	AIR GUN ASSEMBLY, CEJN 199589668	2-89
K80S7002	90187-0029	BALL VALVE G1/2, NPBR	6-81
K80S7003	90187-0029	BALL VALVE G1/2, NPBR	6-81
K80S7004	90187-0029	BALL VALVE G1/2, NPBR	6-81
K80S7005	90187-0029	BALL VALVE G1/2, NPBR	6-81
K80S7006	90187-0089	BALL VALVE G3/8, NPBR	6-81
K80S7007	90187-0045	BALL VALVE G1/4 CR PL	6-33
K80S7008	90459-1736	PURGE VALVE, 2RM-PG4L-SS	6-37
K80S7009	90187-0147	BALL VALVE G11/2	6-43
K80S7012	90187-0045	BALL VALVE G1/4 CR PL	6-7
K80S7013	90187-0197	BALL VALVE G1/4	6-11
K80S7016	90187-0045	BALL VALVE G1/4 CR PL	6-37
K80S7017	90187-0045	BALL VALVE G1/4 CR PL	6-37
T10S1010	90458-1651	EMERGENCY STOP, ZB4-BS-844 ZB4-BZ-104	7-177
T10S1020	90458-1651	EMERGENCY STOP, ZB4-BS-844 ZB4-BZ-104	7-159
T10S1050	90064-0098	PUSH BUTTON, CLEAR	7-159
T10S1060	90064-0084	PUSH BUTTON, YELLOW	7-159
T10S1070	90064-0082	PUSH BUTTON, WHITE	7-163
T10S1090	90602-9178	PUSH BUTTON, WHITE	7-13
T10S1100	90064-0082	PUSH BUTTON, WHITE	7-163
T10S1110	90064-0082	PUSH BUTTON, WHITE	7-163
T10S1852	90457-0100	ACCUMULATOR CRVZS-2	7-109, 7-111
T10S7002	90600-0775	BALL VALVE G1/4, 406F-1/4"	2-149
T10S7003	90600-0775	BALL VALVE G1/4, 406F-1/4"	2-149
T50S7002	90600-1986	BALL VALVE RP1/4	2-149
T50S7003	90600-1986	BALL VALVE RP1/4	2-149
T50S7016	90426-0003	HAND SHOWER, 361100	2-151
U30S1050	90458-1651	EMERGENCY STOP, ZB4-BS-844 ZB4-BZ-104	2-207
U30S1060	90458-1651	EMERGENCY STOP, ZB4-BS-844 ZB4-BZ-104	2-211
U30S1100	90064-0098	PUSH BUTTON, CLEAR	2-207
U30S1101	90064-0098	PUSH BUTTON, CLEAR	2-211
U70S3040	90064-0084	PUSH BUTTON, YELLOW	1-357
W51S1501	90113-0137	SHUT OFF VALVE G3/4, T74T-6GA-P1N	11-75
T			
A01T2000	90459-7267	POWER SUPPLY 24VDC, 1756-PB75/B	8-33
A01T5410	90459-2938	POWER SUPPLY UNIT 6EP1 437-3BA00	8-53, 8-55

Pos	Part No	Description	Page No
T			
A01T5420	90459-2939	BUFFER UNIT, 6EP1 961-3BA00	8-53, 8-55
A01T5430	90459-2939	BUFFER UNIT, 6EP1 961-3BA00	8-53, 8-55
A01T5530	90459-5886	POWER SUPPLY UNIT 115-230 VAC/24VDC100W	8-53, 8-55
A01T5880	90459-3760	TRANSFORMER, 1-PH 700VA SEC 6,36A	8-15, 8-17
A01T8000	90459-5886	POWER SUPPLY UNIT 115-230 VAC/24VDC100W	8-45, 8-47
T10T0020	90458-0258	TRANSFORMER, 1-PH 100VA SEC 8,3A	7-15
T10T0160	90459-3442	VARIABLE FREQUENCY DRIVE 22B-A5P0N104	8-67
T10T0170	90459-3442	VARIABLE FREQUENCY DRIVE 22B-A5P0N104	8-67
T10T0180	90459-3442	VARIABLE FREQUENCY DRIVE 22B-A5P0N104	8-67
T10T9020	90600-5214	AXIS MOD. KINETIX 6000,2094-BM01-S SER.B	8-51
T10T9170	2991055-0616	TRANSFORMER	7-37
T40T9040	90600-5214	AXIS MOD. KINETIX 6000,2094-BM01-S SER.B	8-51
T40T9050	90600-5212	AXIS MOD. W. PS,2094-BC02-M02-S SERIES B	8-51
T40T9150	2691490-0101	TRANSFORMER	4-91, 4-93
T40T9150	2691490-0102	TRANSFORMER	4-91, 4-93
T40T9150	2691490-0103	TRANSFORMER	4-91, 4-93
T40T9150	2691490-0104	TRANSFORMER	4-91, 4-93
T40T9150	2691490-0105	TRANSFORMER	4-91, 4-93
T40T9150	2691490-0106	TRANSFORMER	4-91, 4-93
T40T9150	2691490-0107	TRANSFORMER	4-91, 4-93
T40T9151	2691490-0101	TRANSFORMER	4-91, 4-93
T40T9151	2691490-0102	TRANSFORMER	4-91, 4-93
T40T9151	2691490-0103	TRANSFORMER	4-91, 4-93
T40T9151	2691490-0104	TRANSFORMER	4-91, 4-93
T40T9151	2691490-0105	TRANSFORMER	4-91, 4-93
T40T9151	2691490-0106	TRANSFORMER	4-91, 4-93
T40T9151	2691490-0107	TRANSFORMER	4-91, 4-93
T50T0260	90459-3442	VARIABLE FREQUENCY DRIVE 22B-A5P0N104	8-67
T50T1530	90458-1092	PROPORTIONAL VALVE 0 - 10V/0-6 BAR	2-91
T50T1540	90458-1092	PROPORTIONAL VALVE 0 - 10V/0-6 BAR	2-91
T50T9000	90600-5216	AXIS MOD. KINETIX 6000,2094-BM02-S SER.B	8-51
T50T9010	90600-5213	AXIS MOD. KINETIX 6000,2094-BMP5-S SER.B	8-51
U30T0220	90459-3442	VARIABLE FREQUENCY DRIVE 22B-A5P0N104	8-67
U70T0300	90459-3446	FREQUENCY CONVERTER 5,5 KW	8-67
U70T0310	90459-3442	VARIABLE FREQUENCY DRIVE 22B-A5P0N104	8-67
U70T0320	90459-2607	VARIABLE FREQUENCY DRIVE 22B-D6P0N104	8-67
U70T2540	90458-1092	PROPORTIONAL VALVE 0 - 10V/0-6 BAR	1-331, 1-333
U70T4330	90600-4354	PROP. PRESS. REG., VPPE-3-1/8-6-010	1-207
U70T9030	90600-5214	AXIS MOD. KINETIX 6000,2094-BM01-S SER.B	8-51
U70T9160	2888970-0438	TRANSFORMER VMN	1-77
U70T9160	2888970-0524	TRANSFORMER VMN	1-77
W51T0090	90459-3444	VARIABLE FREQUENCY DRIVE 22B-D4P0N104	8-67
U			
A30U6002	90458-1205	BASIC SUB-BASE 8 VALVES, CDVI5.0-GB8-MP	2-33
A30U6003	90458-1206	EXP. SUB-BASE 2 VALVES, CDVI5.0-EB	2-33
A30U6004	90458-1206	EXP. SUB-BASE 2 VALVES, CDVI5.0-EB	2-33
K80U6002	90458-1204	BASIC SUB-BASE 4 VALVES, CDVI5.0-GB4-MP	6-87
K80U6003	90458-1206	EXP. SUB-BASE 2 VALVES, CDVI5.0-EB	6-87
K80U6004	90458-1206	EXP. SUB-BASE 2 VALVES, CDVI5.0-EB	6-87
T10U6002	90458-1205	BASIC SUB-BASE 8 VALVES, CDVI5.0-GB8-MP	7-113
T10U6003	90458-1205	BASIC SUB-BASE 8 VALVES, CDVI5.0-GB8-MP	7-117
T10U6004	90458-1206	EXP. SUB-BASE 2 VALVES, CDVI5.0-EB	7-113
T10U6005	90458-1206	EXP. SUB-BASE 2 VALVES, CDVI5.0-EB	7-117
T10U6006	90458-1206	EXP. SUB-BASE 2 VALVES, CDVI5.0-EB	7-117
T40U9780	90459-2591	SINGLE VALVE SUB-BASE CDSV5.0-AS-1/8	2-27
U30U1420	90459-2591	SINGLE VALVE SUB-BASE CDSV5.0-AS-1/8	2-35
U70U6003	90458-1205	BASIC SUB-BASE 8 VALVES, CDVI5.0-GB8-MP	1-337, 1-339
U70U6004	90458-1206	EXP. SUB-BASE 2 VALVES, CDVI5.0-EB	1-337, 1-339
U70U6005	90458-1205	BASIC SUB-BASE 8 VALVES, CDVI5.0-GB8-MP	1-335
U70U6006	90458-1206	EXP. SUB-BASE 2 VALVES, CDVI5.0-EB	1-337, 1-339
U70U6007	90458-1206	EXP. SUB-BASE 2 VALVES, CDVI5.0-EB	1-335
U70U6008	90458-1206	EXP. SUB-BASE 2 VALVES, CDVI5.0-EB	1-335
W51U1500	90458-1204	BASIC SUB-BASE 4 VALVES, CDVI5.0-GB4-MP	11-73, 11-215
W51U1510	90458-1213	RIGHT ENDPLATE INTERNAL PILOT AIR	11-73, 11-215
V			
A80V9500	90600-5267	LINE FILTER, B84144A120R120	6-23
K80V0411	90600-2902	STERILE WATER SYSTEM, ZLXS5003Y	6-15
K80V7002	90458-0921	FILTER SP 122-200	6-81
K80V7003	90458-0921	FILTER SP 122-200	6-81
K80V7004	90459-7084	FILTER, CPDI0NJM1	6-35
K80V7005	90415-0065	FILTER	6-33
K80V7006	90415-0032	FILTER / 3-02-00-1 1/2"	6-43
K80V7007	90415-0065	FILTER	6-7
K80V7008	90600-3268	FILTER CARTRIDGE, PROG000S2	6-15
K80V7009	90459-7084	FILTER, CPDI0NJM1	6-13
T10V0160	90459-3454	FOOTPRINT FILTER, 22-RF018-BL	8-67
T10V0170	90459-3454	FOOTPRINT FILTER, 22-RF018-BL	8-67
T10V0180	90459-3454	FOOTPRINT FILTER, 22-RF018-BL	8-67
T10V1782	90277-0035	FILTER / DFU 9933-05-A	7-109, 7-111
T10V1784	90277-0035	FILTER / DFU 9933-05-A	7-109, 7-111
T10V1792	90277-0116	FILTER HOUSING / ART.NO FILTER 58P-S5430	7-109, 7-111
T40V6002	90277-0046	FILTER / 9933-05-101	2-29, 2-31

Pos	Part No	Description	Page No
V			
T40V6003	90277-0045	FILTER / 9900-05-BK	2-29, 2-31
T40V9050	90600-5258	LINE FILTER, B84143A35R106	8-15, 8-17
T40V9051	90600-5253	LINE FILTER, B84113HB60	8-15, 8-17
T50V0260	90459-3454	FOOTPRINT FILTER, 22-RF018-BL	8-67
U30V0220	90459-3454	FOOTPRINT FILTER, 22-RF018-BL	8-67
U30V1462	90459-2338	FILTER, MS4-LF-1/4-CRV	2-29, 2-31
U30V7002	90415-0052	FILTER ART NO 12565 C-340-6E FOTVENTI EP	2-233
U70V0300	90459-3459	FOOTPRINT FILTER, 22-RF018-CL	8-67
U70V0310	90459-3454	FOOTPRINT FILTER, 22-RF018-BL	8-67
U70V0320	90459-3458	FOOTPRINT FILTER 22-RF012-BL	8-67
U70V4232	90600-5548	FILTER, MS6-LFM-1/4-AUV	1-207
U70V4233	90277-0323	FILTER HOUSING / ART.NO 95S6-1/4 S 5430	1-207
W51V0090	90459-3458	FOOTPRINT FILTER 22-RF012-BL	8-67
W			
A01W2120	90459-2540	SERCOS CABLE 3.0M, 2090-SCEP3-0	8-51
A01W5710	90600-1848	ETHERNET SW, FL SWITCH SFN 8TX	8-45, 8-47
A01W5720	90600-1848	ETHERNET SW, FL SWITCH SFN 8TX	8-45, 8-47
A01W5830	351501-0075	ETHERNET PATCH CABLE, FL CAT5 PATCH 7,5	2-105
A01W5840	351501-0075	ETHERNET PATCH CABLE, FL CAT5 PATCH 7,5	2-105
A01W8100	90459-2530	DEVICENET CABLE THIN	7-15
A01W8300	90459-2530	DEVICENET CABLE THIN	2-15
A01W8310	90459-2530	DEVICENET CABLE THIN	2-15
A01W8320	90459-2530	DEVICENET CABLE THIN	2-15
A01W8400	90459-2530	DEVICENET CABLE THIN	3-17, 3-19, 3-21, 3-23, 3-25
A01W8500	90459-2530	DEVICENET CABLE THIN	2-81
A01W8501	351415-0050	DEVICENET CONN. CABLE, 0935 361 105/5M	2-81
A01W8510	90459-2530	DEVICENET CABLE THIN	2-81
A01W8520	90459-2530	DEVICENET CABLE THIN	2-81
A01W8530	351415-0020	DEVICENET CONN. CABLE, 0935 361 105/2M	2-81
A01W8540	90459-2530	DEVICENET CABLE THIN	2-81
A01W8700	351414-0100	DEVICENET CONN. CABLE, 0935 361 104/10M	1-357
A01W8740	90459-2530	DEVICENET CABLE THIN	1-211
A01W8750	90459-2530	DEVICENET CABLE THIN	1-151
A01W8800	351414-0020	DEVICENET CONN. CABLE, 0935 361 104/2M	6-77
A01W9000	90459-2536	SERCOS CABLE 0.1M, 2090-SCEP0-1	8-51
A01W9010	90459-2536	SERCOS CABLE 0.1M, 2090-SCEP0-1	8-51
A01W9020	90459-2536	SERCOS CABLE 0.1M, 2090-SCEP0-1	8-51
A01W9030	90459-2536	SERCOS CABLE 0.1M, 2090-SCEP0-1	8-51
A01W9040	90459-2536	SERCOS CABLE 0.1M, 2090-SCEP0-1	8-51
A01W9050	90459-2540	SERCOS CABLE 3.0M, 2090-SCEP3-0	8-51
A30W1342	315300-0001	TUBE, 6 MM PE BLUE	2-43
A30W1343	315300-0001	TUBE, 6 MM PE BLUE	2-43
A30W1344	315300-0001	TUBE, 6 MM PE BLUE	2-23, 2-25
A30W1465	315300-0004	TUBE, 8 MM PE BLUE	2-27
A30W1466	315300-0001	TUBE, 6 MM PE BLUE	2-27
A30W6002	315300-0004	TUBE, 8 MM PE BLUE	2-155
A30W6003	90166-0196	TUBE 14MM PA BLUE	2-155
A30W6004	90166-0196	TUBE 14MM PA BLUE	2-155
A30W6005	315300-0001	TUBE, 6 MM PE BLUE	2-155
A30W6006	315300-0004	TUBE, 8 MM PE BLUE	2-155
A30W6007	315300-0010	TUBE, 12 MM PE BLUE	2-155
A30W6008	90166-0196	TUBE 14MM PA BLUE	2-155
A30W6009	315300-0010	TUBE, 12 MM PE BLUE	2-155
A30W6012	315300-0010	TUBE, 12 MM PE BLUE	2-29, 2-31
A30W6013	315300-0001	TUBE, 6 MM PE BLUE	2-23, 2-25
A30W6014	315300-0001	TUBE, 6 MM PE BLUE	2-27
A30W6015	315300-0001	TUBE, 6 MM PE BLUE	2-27
A40W0040	351150-0413	CABLE OLFLEX 4GX1,5 MM2 LIGHT/GREY	2-71
A50W6002	315300-0010	TUBE, 12 MM PE BLUE	2-155
A50W6004	315300-0010	TUBE, 12 MM PE BLUE	2-91
A70W6002	315300-0001	TUBE, 6 MM PE BLUE	2-155
A70W6003	315300-0010	TUBE, 12 MM PE BLUE	2-155
A70W6004	315300-0010	TUBE, 12 MM PE BLUE	2-155
A70W6012	315300-0006	TUBE, 8 MM PE BLACK	2-153
A70W6013	3055165-0000	PIPE	1-271
A70W6014	3055164-0000	PIPE	1-271
A70W6015	90459-0221	TUBE, 6 MM PE BLACK	2-153
A80W7002	344240-1209	TUBE 12 MM PE FDA, 1015Y12F01	6-21
A80W9500	351150-0430	CABLE OLFLEX 5X35 MM2 LIGHT/GREY	2-59
F10W0520	90220-0046	SCR. CABLE 16X0,34MM2 GREEN/YELLOW	7-5, 7-7
F10W0521	90220-0046	SCR. CABLE 16X0,34MM2 GREEN/YELLOW	7-5, 7-7
F10W5010	90459-4876	FOCUS JUMPER CABLE M12 5P 3M, 20-056-21	7-5, 7-7
F10W5020	90459-4876	FOCUS JUMPER CABLE M12 5P 3M, 20-056-21	7-5, 7-7
F10W5110	90459-4876	FOCUS JUMPER CABLE M12 5P 3M, 20-056-21	7-5, 7-7
F10W5120	90459-7095	FOCUS JUMPER CABLE M12 5P 1M, 20-056-20	7-5, 7-7
F10W5130	90600-0936	CABLE M12-C612 5 POLE, 20-056-22	7-23
F10W5140	90459-4876	FOCUS JUMPER CABLE M12 5P 3M, 20-056-21	7-5, 7-7
F40W5011	90459-4876	FOCUS JUMPER CABLE M12 5P 3M, 20-056-21	2-57
F40W5021	90459-4876	FOCUS JUMPER CABLE M12 5P 3M, 20-056-21	2-57
F40W5031	90459-4876	FOCUS JUMPER CABLE M12 5P 3M, 20-056-21	2-57
F40W5041	90459-4876	FOCUS JUMPER CABLE M12 5P 3M, 20-056-21	2-57
F50W0530	90220-0046	SCR. CABLE 16X0,34MM2 GREEN/YELLOW	2-83

Pos	Part No	Description	Page No
W			
F50W5051	90459-4876	FOCUS JUMPER CABLE M12 5P 3M, 20-056-21	2-109
F50W5061	90459-4876	FOCUS JUMPER CABLE M12 5P 3M, 20-056-21	2-109
K80W0110	351150-0413	CABLE OLFLEX 4GX1,5 MM2 LIGHT/GREY	2-51
K80W0111	351150-0418	CABLE OLFLEX 4X2,5 MM2 LIGHT/GREY	6-37
K80W0120	351150-0413	CABLE OLFLEX 4GX1,5 MM2 LIGHT/GREY	2-51
K80W0121	351150-0418	CABLE OLFLEX 4X2,5 MM2 LIGHT/GREY	6-31
K80W0400	351150-0413	CABLE OLFLEX 4GX1,5 MM2 LIGHT/GREY	2-51
K80W0401	351150-0413	CABLE OLFLEX 4GX1,5 MM2 LIGHT/GREY	6-17
K80W0410	351150-0414	CABLE OLFLEX 5X1,5 MM2 LIGHT/GREY	2-51
K80W0411	351150-0403	CABLE OLFLEX 3X0,75 MM2 LIGHT/GREY	6-19
K80W0412	351150-0403	CABLE OLFLEX 3X0,75 MM2 LIGHT/GREY	6-19
K80W0416	90600-4464	CONNECTION, TEPKKIT01	6-15
K80W0470	351150-0166	CABLE OLFLEX 4X4 MM2 LIGHT/GREY	2-51
K80W0471	351150-0166	CABLE OLFLEX 4X4 MM2 LIGHT/GREY	6-49
K80W0620	351150-0425	CABLE OLFLEX 25X0,75 MM2 LIGHT/GREY	2-51
K80W0621	351150-0425	CABLE OLFLEX 25X0,75 MM2 LIGHT/GREY	6-77
K80W1010	351150-0403	CABLE OLFLEX 3X0,75 MM2 LIGHT/GREY	6-81
K80W1041	90220-0095	SCR. CABLE 3X0,75MM2	6-23
K80W1070	351150-0404	CABLE OLFLEX 4X0,75 MM2 LIGHT/GREY	6-31
K80W1090	351309-0050	ACTUATOR/SENSOR CABLE PRKT 4-07/5M	6-17
K80W1330	351150-0403	CABLE OLFLEX 3X0,75 MM2 LIGHT/GREY	6-43
K80W1342	90459-1856	DISTRIBUTOR, MS6-FRM-1/2	6-91
K80W1343	315300-0004	TUBE, 8 MM PE BLUE	2-89
K80W1344	315300-0010	TUBE, 12 MM PE BLUE	6-91
K80W1345	315300-0004	TUBE, 8 MM PE BLUE	6-91
K80W1346	90459-1856	DISTRIBUTOR, MS6-FRM-1/2	6-91
K80W1347	90166-0196	TUBE 14MM PA BLUE	6-91
K80W1348	90166-0196	TUBE 14MM PA BLUE	6-93
K80W1370	90600-1768	ACTUATOR/SENSOR CABLE RKTS 5-298/5M	6-37
K80W1380	351150-0403	CABLE OLFLEX 3X0,75 MM2 LIGHT/GREY	6-17
K80W1390	90600-3690	SENSOR CABLE SIM-M8-4GD-2,5-PU	6-91
K80W1410	90220-0034	THERMOCABLE TEX/SITW-20F-KX 2X0,5MM2	6-33
K80W1420	90220-0034	THERMOCABLE TEX/SITW-20F-KX 2X0,5MM2	6-17
K80W6003	90166-0196	TUBE 14MM PA BLUE	6-93
K80W6004	90166-0196	TUBE 14MM PA BLUE	2-155
K80W6005	315300-0010	TUBE, 12 MM PE BLUE	2-155
K80W6006	315300-0010	TUBE, 12 MM PE BLUE	6-93
K80W6007	315300-0001	TUBE, 6 MM PE BLUE	6-93
K80W6008	315300-0004	TUBE, 8 MM PE BLUE	6-93
K80W6009	315300-0016	TUBE 4MPE BLUE	6-85
K80W6012	315300-0001	TUBE, 6 MM PE BLUE	6-85
K80W6013	315300-0004	TUBE, 8 MM PE BLUE	6-93
K80W6018	315300-0004	TUBE, 8 MM PE BLUE	6-93
K80W6019	315300-0004	TUBE, 8 MM PE BLUE	6-93
K80W7002	1041932-0000	PIPE	6-81
K80W7003	1041933-0000	PIPE	6-81
K80W7004	90166-0121	HOSE	6-31
K80W7006	344240-0805	TUBE 8 MM PE FDA, 1015Y08F01	6-7
K80W7007	90166-0121	HOSE	6-31
K80W7008	90166-0121	HOSE	6-31
K80W7009	90166-0121	HOSE	6-33
K80W7012	3026920-0000	ATTACHMENT PIPE	6-33
K80W7019	344240-0805	TUBE 8 MM PE FDA, 1015Y08F01	6-33
K80W7022	344240-0805	TUBE 8 MM PE FDA, 1015Y08F01	6-33
K80W7023	344240-0805	TUBE 8 MM PE FDA, 1015Y08F01	6-39
K80W7024	344240-0805	TUBE 8 MM PE FDA, 1015Y08F01	6-39
K80W7025	2922322-0002	RETURN PIPE	6-37
K80W7026	1041926-0000	PIPE	6-43
K80W7027	90166-0236	HOSE, 38/51 REINFORCED RUBBER	6-43
K80W7028	1041925-0000	PIPE	6-43
K80W7029	1036794-0000	PIPE	6-47
K80W7032	1041946-0000	PIPE	6-49
K80W7033	1036826-0000	PIPE	6-45
K80W7034	90166-0121	HOSE	6-45
K80W7035	1036827-0000	PIPE	6-45
K80W7036	1036828-0000	TANK	6-49
K80W7037	2522184-0000	PIPE	6-53
K80W7038	2522148-0000	PIPE	6-53
K80W7039	1041934-0000	PIPE	6-51
K80W7042	1036827-0000	PIPE	6-51
K80W7043	2522148-0000	PIPE	6-53
K80W7044	90166-0233	HOSE	6-53
K80W7045	1195466-0000	PIPE	6-53
K80W7046	2522148-0000	PIPE	6-53
K80W7047	90166-0233	HOSE	6-53
K80W7048	1195466-0000	PIPE	6-53
K80W7049	2506922-0000	PIPE	2-85
K80W7052	1140642-0000	PIPE	6-49
K80W7053	344240-0805	TUBE 8 MM PE FDA, 1015Y08F01	6-7
K80W7054	344240-0805	TUBE 8 MM PE FDA, 1015Y08F01	6-7
K80W7055	344240-0805	TUBE 8 MM PE FDA, 1015Y08F01	6-7
K80W7057	315300-0006	TUBE, 8 MM PE BLACK	6-11

Pos	Part No	Description	Page No
W			
K80W7064	315300-0006	TUBE, 8 MM PE BLACK	6-11
K80W7065	315300-0006	TUBE, 8 MM PE BLACK	6-11
K80W7066	315300-0006	TUBE, 8 MM PE BLACK	6-11
K80W7067	315300-0006	TUBE, 8 MM PE BLACK	6-11
K80W7068	315300-0006	TUBE, 8 MM PE BLACK	6-11
K80W7069	315300-0006	TUBE, 8 MM PE BLACK	6-11
K80W7072	315300-0006	TUBE, 8 MM PE BLACK	6-11
K80W7073	315300-0006	TUBE, 8 MM PE BLACK	6-11
K80W7074	315300-0006	TUBE, 8 MM PE BLACK	6-11
K80W7075	315300-0006	TUBE, 8 MM PE BLACK	6-11
K80W7076	315300-0006	TUBE, 8 MM PE BLACK	6-11
K80W7077	315300-0006	TUBE, 8 MM PE BLACK	6-11
K80W7078	315300-0006	TUBE, 8 MM PE BLACK	6-11
K80W7079	1487023-0000	PIPE	6-53
K80W7082	1487023-0000	PIPE	6-53
K80W7083	344240-0805	TUBE 8 MM PE FDA, 1015Y08F01	6-35
K80W7094	2506925-0000	PIPE	2-85
K80W7095	2508425-0000	PIPE	2-85
K80W7096	2508425-0000	PIPE	2-85
K80W7097	2506923-0000	PIPE	2-85
K80W7098	2506924-0000	PIPE	2-85
K80W7099	90166-0233	HOSE	2-45
K80W7102	2534815-0000	PIPE	2-45
K80W7103	2534811-0000	PIPE	2-45
K80W7104	2534812-0000	PIPE	2-45
K80W7105	2534817-0000	PIPE	2-45
K80W7106	2534816-0000	PIPE	2-45
K80W7107	90166-0233	HOSE	2-45
K80W7108	2897028-0000	PIPE	2-45
K80W7109	90166-0233	HOSE	2-45
K80W7112	2510833-0000	PIPE	2-45
K80W9510	351150-0403	CABLE OLFLEX 3X0,75 MM2 LIGHT/GREY	6-65
K80W9511	351150-0403	CABLE OLFLEX 3X0,75 MM2 LIGHT/GREY	6-63
P60W9500	90600-3697	SDL FLEX CABLE 10M, 5CASDL.0100-03	2-223
P60W9510	351150-0407	CABLE OLFLEX 12X0,75 MM2 LIGHT/GREY	2-97
R95W0001	351305-0020	ACTUATOR/SENSOR CABLE PRKMV 4-07/2M	11-127, 11-129
R95W0002	351305-0020	ACTUATOR/SENSOR CABLE PRKMV 4-07/2M	11-127, 11-129
R95W1010	351150-0404	CABLE OLFLEX 4X0,75 MM2 LIGHT/GREY	11-149
T10W0010	351150-0412	CABLE OLFLEX 3X1,5 MM2 LIGHT/GREY	7-5, 7-7
T10W0011	351150-0412	CABLE OLFLEX 3X1,5 MM2 LIGHT/GREY	7-5, 7-7
T10W0015	351150-0412	CABLE OLFLEX 3X1,5 MM2 LIGHT/GREY	7-15
T10W0021	351120-0145	CABLE ÖLFLEX HEAT 180 SIHF 3X2,5	7-55
T10W0025	351150-0412	CABLE OLFLEX 3X1,5 MM2 LIGHT/GREY	7-15
T10W0160	90220-0104	SCR. CABLE 4X1,5MM2	7-89
T10W0170	90220-0104	SCR. CABLE 4X1,5MM2	7-145
T10W0180	351150-0406	CABLE OLFLEX 7X0,75 MM2 LIGHT/GREY	7-51
T10W0181	351150-0406	CABLE OLFLEX 7X0,75 MM2 LIGHT/GREY	7-51
T10W0185	90220-0104	SCR. CABLE 4X1,5MM2	7-15
T10W0185	351120-0126	CABLE ÖLFLEX HEAT 180 SIHF 2X4	7-53
T10W0190	351150-0412	CABLE OLFLEX 3X1,5 MM2 LIGHT/GREY	7-15
T10W0191	351150-0412	CABLE OLFLEX 3X1,5 MM2 LIGHT/GREY	7-69, 7-71
T10W0500	351150-0425	CABLE OLFLEX 25X0,75 MM2 LIGHT/GREY	7-15
T10W1010	351150-0405	CABLE OLFLEX 5X0,75 MM2 LIGHT/GREY	7-177
T10W1020	351150-0407	CABLE OLFLEX 12X0,75 MM2 LIGHT/GREY	7-159
T10W1070	351150-0407	CABLE OLFLEX 12X0,75 MM2 LIGHT/GREY	7-163
T10W1090	351150-0403	CABLE OLFLEX 3X0,75 MM2 LIGHT/GREY	7-13
T10W1140	90459-4252	CABLE M12-C101, 20-056-10	7-5, 7-7
T10W1210	90458-1076	L-SHAPED CONNECTOR CABLE Y92EM12PVC4A5ML	7-133
T10W1220	90458-1076	L-SHAPED CONNECTOR CABLE Y92EM12PVC4A5ML	7-5, 7-7
T10W1230	90458-1076	L-SHAPED CONNECTOR CABLE Y92EM12PVC4A5ML	7-5, 7-7
T10W1240	351303-0050	ACTUATOR/SENSOR CABLE RKMVN 3-224/5M	7-137
T10W1250	351303-0050	ACTUATOR/SENSOR CABLE RKMVN 3-224/5M	7-137
T10W1270	90458-1076	L-SHAPED CONNECTOR CABLE Y92EM12PVC4A5ML	7-133
T10W1280	90458-0165	CABLE, SICK DOL-0803-G05M	7-5, 7-7
T10W1290	90458-0165	CABLE, SICK DOL-0803-G05M	7-5, 7-7
T10W1300	90458-1076	L-SHAPED CONNECTOR CABLE Y92EM12PVC4A5ML	7-125
T10W1310	90458-1076	L-SHAPED CONNECTOR CABLE Y92EM12PVC4A5ML	7-125
T10W1320	90458-1076	L-SHAPED CONNECTOR CABLE Y92EM12PVC4A5ML	7-135
T10W1350	90458-1076	L-SHAPED CONNECTOR CABLE Y92EM12PVC4A5ML	7-27
T10W1490	351150-0406	CABLE OLFLEX 7X0,75 MM2 LIGHT/GREY	7-15
T10W1551	90459-6604	CABLE SICK DOL-2312-G 05MMA3	7-33
T10W1612	315400-0001	TUBE PUN-H-6X1-BL	7-69, 7-71
T10W1614	315400-0001	TUBE PUN-H-6X1-BL	7-69, 7-71
T10W1624	315400-0004	TUBE PUN-H-8X1,25-BL	7-79
T10W1632	315400-0004	TUBE PUN-H-8X1,25-BL	7-81
T10W1634	315400-0004	TUBE PUN-H-8X1,25-BL	7-81
T10W1642	315400-0016	TUBE PUN-H-4X0,75-BL	7-81
T10W1643	315400-0016	TUBE PUN-H-4X0,75-BL	7-81
T10W1644	315400-0016	TUBE PUN-H-4X0,75-BL	7-109, 7-111
T10W1645	315400-0016	TUBE PUN-H-4X0,75-BL	7-109, 7-111
T10W1650	351150-0403	CABLE OLFLEX 3X0,75 MM2 LIGHT/GREY	7-5, 7-7
T10W1662	315400-0004	TUBE PUN-H-8X1,25-BL	7-109, 7-111

Pos	Part No	Description	Page No
W			
T10W1663	315400-0004	TUBE PUN-H-8X1,25-BL	7-109, 7-111
T10W1664	315400-0016	TUBE PUN-H-4X0,75-BL	7-109, 7-111
T10W1665	315400-0004	TUBE PUN-H-8X1,25-BL	7-109, 7-111
T10W1666	315400-0004	TUBE PUN-H-8X1,25-BL	7-109, 7-111
T10W1667	315400-0010	TUBE PUN-H-12X2-BL	7-109, 7-111
T10W1670	351150-0403	CABLE OLFLEX 3X0,75 MM2 LIGHT/GREY	7-5, 7-7
T10W1672	315400-0001	TUBE PUN-H-6X1-BL	7-125
T10W1673	315400-0002	TUBE PUN-H-6X1-NT	7-125
T10W1674	315400-0003	TUBE PUN-H-6X1-SW	7-125
T10W1675	315400-0004	TUBE PUN-H-8X1,25-BL	7-125
T10W1676	315400-0005	TUBE PUN-H-8X1,25-NT	7-125
T10W1677	315400-0006	TUBE PUN-H-8X1,25-SW	7-125
T10W1690	351150-0403	CABLE OLFLEX 3X0,75 MM2 LIGHT/GREY	7-5, 7-7
T10W1712	315400-0001	TUBE PUN-H-6X1-BL	7-179
T10W1714	315400-0001	TUBE PUN-H-6X1-BL	7-179
T10W1722	315400-0001	TUBE PUN-H-6X1-BL	7-179
T10W1724	315400-0001	TUBE PUN-H-6X1-BL	7-179
T10W1732	315400-0001	TUBE PUN-H-6X1-BL	7-103
T10W1733	315400-0001	TUBE PUN-H-6X1-BL	7-103
T10W1734	315400-0001	TUBE PUN-H-6X1-BL	7-103
T10W1735	315400-0001	TUBE PUN-H-6X1-BL	7-103
T10W1736	315400-0001	TUBE PUN-H-6X1-BL	7-103
T10W1737	315400-0001	TUBE PUN-H-6X1-BL	7-103
T10W1742	315400-0001	TUBE PUN-H-6X1-BL	7-103
T10W1743	315400-0001	TUBE PUN-H-6X1-BL	7-103
T10W1744	315400-0001	TUBE PUN-H-6X1-BL	7-103
T10W1745	315400-0001	TUBE PUN-H-6X1-BL	7-103
T10W1746	315400-0001	TUBE PUN-H-6X1-BL	7-103
T10W1747	315400-0001	TUBE PUN-H-6X1-BL	7-103
T10W1752	315400-0001	TUBE PUN-H-6X1-BL	7-91
T10W1754	315400-0001	TUBE PUN-H-6X1-BL	7-91
T10W1762	315400-0001	TUBE PUN-H-6X1-BL	7-119, 7-121, 7-123
T10W1764	315400-0001	TUBE PUN-H-6X1-BL	7-119, 7-121, 7-123
T10W1772	90166-0193	TUBE 6 MM PUR BLUE	7-53
T10W1774	90166-0193	TUBE 6 MM PUR BLUE	7-53
T10W1782	315400-0004	TUBE PUN-H-8X1,25-BL	7-109, 7-111
T10W1783	90166-0095	TUBE 4 MM PA BLUE (50M)	7-53
T10W1783	315400-0004	TUBE PUN-H-8X1,25-BL	7-109, 7-111
T10W1784	315400-0004	TUBE PUN-H-8X1,25-BL	7-109, 7-111
T10W1785	315400-0004	TUBE PUN-H-8X1,25-BL	7-95, 7-109, 7-111
T10W1794	315400-0001	TUBE PUN-H-6X1-BL	7-109, 7-111
T10W1795	315400-0001	TUBE PUN-H-6X1-BL	7-109, 7-111
T10W1796	315400-0016	TUBE PUN-H-4X0,75-BL	7-109, 7-111
T10W1797	315400-0001	TUBE PUN-H-6X1-BL	7-109, 7-111
T10W1798	90166-0081	TUBE 6 MM PA BLUE	7-29
T10W1799	90166-0081	TUBE 6 MM PA BLUE	7-29
T10W1852	315400-0010	TUBE PUN-H-12X2-BL	7-109, 7-111
T10W1853	315400-0010	TUBE PUN-H-12X2-BL	7-109, 7-111
T10W1854	315400-0001	TUBE PUN-H-6X1-BL	7-109, 7-111
T10W1855	315400-0001	TUBE PUN-H-6X1-BL	7-109, 7-111
T10W1856	315400-0001	TUBE PUN-H-6X1-BL	7-109, 7-111
T10W1857	315400-0010	TUBE PUN-H-12X2-BL	7-109, 7-111
T10W1858	315400-0010	TUBE PUN-H-12X2-BL	7-109, 7-111
T10W1930	90600-0972	SENSOR CABLE BKS-S116-PU10	7-59
T10W1940	90600-3690	SENSOR CABLE SIM-M8-4GD-2,5-PU	7-115
T10W7002	315300-0006	TUBE, 8 MM PE BLACK	2-149
T10W7003	90166-0118	TUBE 8 MM PA BLACK	7-37
T10W7004	90166-0118	TUBE 8 MM PA BLACK	7-37
T10W7005	315300-0006	TUBE, 8 MM PE BLACK	2-149
T10W7006	90166-0118	TUBE 8 MM PA BLACK	7-37
T10W9020	90459-7173	MOTOR CABLE	7-105
T10W9022	90459-7176	MOTOR CABLE	7-105
T10W9023	90601-0006	ACTUATOR/SENSOR CABLE DOL-1208-G20MAC1	7-69, 7-71
T10W9170	2540595-0009	COAXIAL CABLE	7-37
T10W9172	3007928-0000	CABLE	7-37
T10W9176	90458-2894	PAIR TWISTED CABLE 1X2X0,2MM2	8-49
T10W9231	90459-3250	SENSOR CABLE SICK DOP 1205 G15M	7-73
T10W9241	90459-3250	SENSOR CABLE SICK DOP 1205 G15M	7-73
T10W9500	351311-0020	ACTUATOR/SENSOR CABLE RKTN 4-225/2M	7-25
T10W9530	90220-0034	THERMOCABLE TEX/SITW-20F-KX 2X0,5MM2	7-77
T40W0031	351150-0412	CABLE OLFLEX 3X1,5 MM2 LIGHT/GREY	2-49
T40W0035	351150-0412	CABLE OLFLEX 3X1,5 MM2 LIGHT/GREY	2-53
T40W0050	351150-0413	CABLE OLFLEX 4GX1,5 MM2 LIGHT/GREY	2-229
T40W0240	351150-0419	CABLE OLFLEX 5X2,5 MM2 LIGHT/GREY	2-51
T40W0250	351150-0419	CABLE OLFLEX 5X2,5 MM2 LIGHT/GREY	2-51
T40W0550	351150-0425	CABLE OLFLEX 25X0,75 MM2 LIGHT/GREY	2-53
T40W1071	351150-0407	CABLE OLFLEX 12X0,75 MM2 LIGHT/GREY	2-53
T40W1091	351150-0407	CABLE OLFLEX 12X0,75 MM2 LIGHT/GREY	2-53
T40W1171	351150-0425	CABLE OLFLEX 25X0,75 MM2 LIGHT/GREY	2-71
T40W1252	315300-0006	TUBE, 8 MM PE BLACK	2-147
T40W1254	90166-0133	TUBE 8 MM PA,TRANSP. (1 PACK=50 M)	3-5, 3-7, 3-9, 3-11, 3-13, 3-15
T40W1255	90166-0133	TUBE 8 MM PA,TRANSP. (1 PACK=50 M)	4-9, 4-11, 4-13, 4-15, 4-17, 4-19

Pos	Part No	Description	Page No
W			
T40W1256	90166-0133	TUBE 8 MM PA,TRANSP. (1 PACK=50 M)	3-5, 3-7, 3-9, 3-11, 3-13, 3-15, 4-9
			4-11, 4-13, 4-15, 4-17, 4-19
T40W1257	90166-0133	TUBE 8 MM PA,TRANSP. (1 PACK=50 M)	3-5, 3-7, 3-9, 3-11, 3-13, 3-15, 4-9
			4-11, 4-13, 4-15, 4-17, 4-19
T40W1258	90166-0133	TUBE 8 MM PA,TRANSP. (1 PACK=50 M)	4-109, 4-111, 4-113, 4-115
T40W1258	351150-0403	CABLE OLFLEX 3X0,75 MM2 LIGHT/GREY	6-21
T40W1259	315300-0006	TUBE, 8 MM PE BLACK	2-147
T40W1270	351150-0406	CABLE OLFLEX 7X0,75 MM2 LIGHT/GREY	2-57
T40W1271	351150-0406	CABLE OLFLEX 7X0,75 MM2 LIGHT/GREY	2-57
T40W1302	90459-2342	HOSE ASSEMBLY, EL 03600102	2-73
T40W1303	90459-2342	HOSE ASSEMBLY, EL 03600102	2-73
T40W1305	2676409-0000	PIPE	4-99, 4-101, 4-103, 4-105
T40W1305	2686513-0000	PIPE	4-99, 4-101, 4-103, 4-105
T40W1305	2686530-0000	PIPE	4-99, 4-101, 4-103, 4-105
T40W1305	2686539-0000	PIPE	4-99, 4-101, 4-103, 4-105
T40W1305	2782488-0000	PIPE	4-99, 4-101, 4-103, 4-105
T40W1305	2782504-0000	PIPE	4-99, 4-101, 4-103, 4-105
T40W1305	2912145-0000	PIPE	4-99, 4-101, 4-103, 4-105
T40W1306	2678312-0000	PIPE	4-99, 4-101, 4-103, 4-105
T40W1306	2686515-0000	PIPE	4-99, 4-101, 4-103, 4-105
T40W1306	2686528-0000	PIPE	4-99, 4-101, 4-103, 4-105
T40W1306	2686537-0000	PIPE	4-99, 4-101, 4-103, 4-105
T40W1306	2686541-0000	PIPE	4-99, 4-101, 4-103, 4-105
T40W1307	2565549-0000	PIPE	4-99, 4-101, 4-103, 4-105
T40W1307	2574513-0000	PIPE	4-99, 4-101, 4-103, 4-105
T40W1307	2575522-0000	PIPE	4-99, 4-101, 4-103, 4-105
T40W1307	2578772-0000	PIPE	4-99, 4-101, 4-103, 4-105
T40W1307	2579908-0000	PIPE	4-99, 4-101, 4-103, 4-105
T40W1307	2895439-0000	PIPE	4-99, 4-101, 4-103, 4-105
T40W1308	2565552-0000	PIPE	4-99, 4-101, 4-103, 4-105
T40W1308	2578773-0000	PIPE	4-99, 4-101, 4-103, 4-105
T40W1308	2579910-0000	PIPE	4-99, 4-101, 4-103, 4-105
T40W1308	2782487-0000	PIPE	4-99, 4-101, 4-103, 4-105
T40W1308	2782503-0000	PIPE	4-99, 4-101, 4-103, 4-105
T40W1308	2912146-0000	PIPE	4-99, 4-101, 4-103, 4-105
T40W1309	2544916-0000	PIPE	4-99, 4-101, 4-103, 4-105
T40W1309	2545262-0000	PIPE	4-99, 4-101, 4-103, 4-105
T40W1309	2565551-0000	PIPE	4-99, 4-101, 4-103, 4-105
T40W1309	2579985-0000	PIPE	4-99, 4-101, 4-103, 4-105
T40W1312	90459-2343	HOSE ASSEMBLY, EL 03600103	2-73
T40W1313	2678311-0000	PIPE	4-99, 4-101, 4-103, 4-105
T40W1313	2686514-0000	PIPE	4-99, 4-101, 4-103, 4-105
T40W1313	2686529-0000	PIPE	4-99, 4-101, 4-103, 4-105
T40W1313	2686538-0000	PIPE	4-99, 4-101, 4-103, 4-105
T40W1313	2686540-0000	PIPE	4-99, 4-101, 4-103, 4-105
T40W1313	2782485-0000	PIPE	4-99, 4-101, 4-103, 4-105
T40W1313	2782501-0000	PIPE	4-99, 4-101, 4-103, 4-105
T40W1314	2529043-0000	PIPE	4-99, 4-101, 4-103, 4-105
T40W1314	2535665-0000	PIPE	4-99, 4-101, 4-103, 4-105
T40W1314	2544915-0000	PIPE	4-99, 4-101, 4-103, 4-105
T40W1314	2579829-0000	PIPE	4-99, 4-101, 4-103, 4-105
T40W1314	2580103-0000	PIPE	4-99, 4-101, 4-103, 4-105
T40W1314	2639009-0000	PIPE	4-99, 4-101, 4-103, 4-105
T40W1315	2544913-0000	PIPE	4-99, 4-101, 4-103, 4-105
T40W1315	2575629-0000	PIPE	4-99, 4-101, 4-103, 4-105
T40W1315	2581995-0000	PIPE	4-99, 4-101, 4-103, 4-105
T40W1315	2653662-0000	PIPE	4-99, 4-101, 4-103, 4-105
T40W1316	2541983-0000	PIPE	4-99, 4-101, 4-103, 4-105
T40W1316	2544926-0000	PIPE	4-99, 4-101, 4-103, 4-105
T40W1316	2578782-0000	PIPE	4-99, 4-101, 4-103, 4-105
T40W1316	2782486-0000	PIPE	4-99, 4-101, 4-103, 4-105
T40W1316	2782502-0000	PIPE	4-99, 4-101, 4-103, 4-105
T40W1317	2525649-0000	PIPE	4-99, 4-101, 4-103, 4-105
T40W1317	2544918-0000	PIPE	4-99, 4-101, 4-103, 4-105
T40W1317	2575521-0000	PIPE	4-99, 4-101, 4-103, 4-105
T40W1317	2579921-0000	PIPE	4-99, 4-101, 4-103, 4-105
T40W1317	2653662-0000	PIPE	4-99, 4-101, 4-103, 4-105
T40W1317	2659374-0000	PIPE	4-99, 4-101, 4-103, 4-105
T40W1318	2529043-0000	PIPE	4-99, 4-101, 4-103, 4-105
T40W1318	2535665-0000	PIPE	4-99, 4-101, 4-103, 4-105
T40W1318	2544915-0000	PIPE	4-99, 4-101, 4-103, 4-105
T40W1318	2579829-0000	PIPE	4-99, 4-101, 4-103, 4-105
T40W1318	2580103-0000	PIPE	4-99, 4-101, 4-103, 4-105
T40W1318	2639009-0000	PIPE	4-99, 4-101, 4-103, 4-105
T40W6016	315300-0004	TUBE, 8 MM PE BLUE	6-93
T40W6017	315300-0004	TUBE, 8 MM PE BLUE	6-93
T40W7002	90166-0118	TUBE 8 MM PA BLACK	4-91, 4-93
T40W7002	315300-0006	TUBE, 8 MM PE BLACK	2-149
T40W7005	90166-0118	TUBE 8 MM PA BLACK	4-91, 4-93
T40W7005	315300-0006	TUBE, 8 MM PE BLACK	2-149
T40W7052	90166-0118	TUBE 8 MM PA BLACK	4-91, 4-93
T40W7052	315300-0006	TUBE, 8 MM PE BLACK	2-149

Pos	Part No	Description	Page No
W			
T40W7055	90166-0118	TUBE 8 MM PA BLACK	4-91, 4-93
T40W7055	315300-0006	TUBE, 8 MM PE BLACK	2-149
T40W7602	315300-0006	TUBE, 8 MM PE BLACK	2-147
T40W7603	315300-0006	TUBE, 8 MM PE BLACK	2-147
T40W7605	315300-0006	TUBE, 8 MM PE BLACK	2-147
T40W9040	90600-3293	MOTOR PWWER CABLE 2090-XXNPMF-16S09	3-17, 3-19, 3-21, 3-23, 3-25
T40W9042	90600-3294	MOTOR FEEDBACK CABLE 2090-XXNFMF-S09/C	3-17, 3-19, 3-21, 3-23, 3-25
T40W9050	90600-3293	MOTOR PWWER CABLE 2090-XXNPMF-16S09	3-17, 3-19, 3-21, 3-23, 3-25
T40W9050	90600-5655	MOTOR POWER CABLE 2090-XXNPMF-14S09/A	3-17, 3-19, 3-21, 3-23, 3-25
T40W9052	90600-3294	MOTOR FEEDBACK CABLE 2090-XXNFMF-S09/C	3-17, 3-19, 3-21, 3-23, 3-25
T40W9150	90458-2895	COAXIAL CABLE RG 400/U BROWN	4-91, 4-93
T40W9151	90458-2895	COAXIAL CABLE RG 400/U BROWN	4-91, 4-93
T40W9156	90458-2894	PAIR TWISTED CABLE 1X2X0,2MM2	8-49
T40W9212	90166-0081	TUBE 6 MM PA BLUE	3-5, 3-7, 3-9, 3-11, 3-13, 3-15
T40W9213	90166-0081	TUBE 6 MM PA BLUE	3-5, 3-7, 3-9, 3-11, 3-13, 3-15
T40W9214	315300-0004	TUBE, 8 MM PE BLUE	2-29, 2-31
T40W9215	315300-0004	TUBE, 8 MM PE BLUE	2-29, 2-31
T40W9216	315300-0004	TUBE, 8 MM PE BLUE	2-29, 2-31
T40W9217	315300-0004	TUBE, 8 MM PE BLUE	2-29, 2-31
T40W9218	315300-0004	TUBE, 8 MM PE BLUE	2-29, 2-31
T40W9219	315300-0004	TUBE, 8 MM PE BLUE	2-29, 2-31
T40W9222	315300-0004	TUBE, 8 MM PE BLUE	2-29, 2-31
T40W9223	315300-0004	TUBE, 8 MM PE BLUE	2-29, 2-31
T40W9224	315300-0001	TUBE, 6 MM PE BLUE	2-23, 2-25
T40W9225	315300-0004	TUBE, 8 MM PE BLUE	2-29, 2-31
T40W9226	315300-0016	TUBE 4MPE BLUE	2-29, 2-31
T40W9227	315300-0016	TUBE 4MPE BLUE	2-29, 2-31
T40W9530	351150-0405	CABLE OLFLEX 5X0,75 MM2 LIGHT/GREY	4-95, 4-97
T40W9580	351150-0403	CABLE OLFLEX 3X0,75 MM2 LIGHT/GREY	6-21
T40W9600	351150-0403	CABLE OLFLEX 3X0,75 MM2 LIGHT/GREY	6-21
T40W9621	90510-5710	SENSOR CABLE 10M, 1XM12 STRAIGHT	4-21
T40W9631	90510-5710	SENSOR CABLE 10M, 1XM12 STRAIGHT	4-21
T40W9660	351422-0202	CABLE ÖLFLEX 150CY QUATTRO 3X1,5	3-17, 3-19, 3-21, 3-23, 3-25
T40W9672	315300-0001	TUBE, 6 MM PE BLUE	2-29, 2-31
T40W9673	315300-0001	TUBE, 6 MM PE BLUE	2-23, 2-25
T40W9674	315300-0001	TUBE, 6 MM PE BLUE	2-23, 2-25
T40W9675	315300-0016	TUBE 4MPE BLUE	2-29, 2-31
T40W9682	315300-0001	TUBE, 6 MM PE BLUE	2-23, 2-25
T40W9683	90166-0081	TUBE 6 MM PA BLUE	4-99, 4-101, 4-103, 4-105
T40W9684	315300-0001	TUBE, 6 MM PE BLUE	2-23, 2-25
T40W9685	90166-0081	TUBE 6 MM PA BLUE	4-99, 4-101, 4-103, 4-105
T40W9686	90166-0081	TUBE 6 MM PA BLUE	4-99, 4-101, 4-103, 4-105
T40W9687	90166-0081	TUBE 6 MM PA BLUE	4-99, 4-101, 4-103, 4-105
T40W9688	90166-0081	TUBE 6 MM PA BLUE	4-99, 4-101, 4-103, 4-105
T40W9689	90166-0081	TUBE 6 MM PA BLUE	4-99, 4-101, 4-103, 4-105
T40W9692	90166-0081	TUBE 6 MM PA BLUE	4-99, 4-101, 4-103, 4-105
T40W9693	90166-0081	TUBE 6 MM PA BLUE	4-99, 4-101, 4-103, 4-105
T40W9700	351150-0403	CABLE OLFLEX 3X0,75 MM2 LIGHT/GREY	2-19
T40W9702	90166-0013	TUBE 8 MM PA BLUE	4-109, 4-111, 4-113, 4-115
T40W9703	315300-0004	TUBE, 8 MM PE BLUE	2-29, 2-31
T40W9704	90166-0013	TUBE 8 MM PA BLUE	4-109, 4-111, 4-113, 4-115
T40W9705	315300-0004	TUBE, 8 MM PE BLUE	2-29, 2-31
T40W9706	315300-0004	TUBE, 8 MM PE BLUE	2-29, 2-31
T40W9708	315300-0004	TUBE, 8 MM PE BLUE	2-23, 2-25
T40W9709	315300-0004	TUBE, 8 MM PE BLUE	2-23, 2-25
T40W9712	1512600-0000	PIPE	4-9, 4-11, 4-13, 4-15, 4-17, 4-19
T40W9712	1512616-0000	PIPE	4-9, 4-11, 4-13, 4-15, 4-17, 4-19
T40W9712	1524763-0000	PIPE	4-9, 4-11, 4-13, 4-15, 4-17, 4-19
T40W9712	2502415-0000	PIPE	4-9, 4-11, 4-13, 4-15, 4-17, 4-19
T40W9712	2782478-0000	PIPE	4-9, 4-11, 4-13, 4-15, 4-17, 4-19
T40W9712	2782505-0000	PIPE	4-9, 4-11, 4-13, 4-15, 4-17, 4-19
T40W9712	2782518-0000	PIPE	4-9, 4-11, 4-13, 4-15, 4-17, 4-19
T40W9713	1512601-0000	PIPE	4-9, 4-11, 4-13, 4-15, 4-17, 4-19
T40W9713	1512617-0000	PIPE	4-9, 4-11, 4-13, 4-15, 4-17, 4-19
T40W9713	1524764-0000	PIPE	4-9, 4-11, 4-13, 4-15, 4-17, 4-19
T40W9713	2508408-0000	PIPE	4-9, 4-11, 4-13, 4-15, 4-17, 4-19
T40W9713	2782479-0000	PIPE	4-9, 4-11, 4-13, 4-15, 4-17, 4-19
T40W9713	2782506-0000	PIPE	4-9, 4-11, 4-13, 4-15, 4-17, 4-19
T40W9713	2782519-0000	PIPE	4-9, 4-11, 4-13, 4-15, 4-17, 4-19
T40W9782	315300-0001	TUBE, 6 MM PE BLUE	2-43
T40W9783	90166-0081	TUBE 6 MM PA BLUE	4-21
T40W9784	315300-0001	TUBE, 6 MM PE BLUE	2-43
T40W9785	90166-0081	TUBE 6 MM PA BLUE	4-21
T40W9786	90166-0081	TUBE 6 MM PA BLUE	4-21
T40W9787	90166-0081	TUBE 6 MM PA BLUE	4-21
T40W9788	90166-0081	TUBE 6 MM PA BLUE	4-21
T40W9789	90166-0081	TUBE 6 MM PA BLUE	4-21
T50W0080	351150-0412	CABLE OLFLEX 3X1,5 MM2 LIGHT/GREY	2-99
T50W0085	351150-0412	CABLE OLFLEX 3X1,5 MM2 LIGHT/GREY	2-97
T50W0241	90220-0034	THERMOCABLE TEX/SITW-20F-KX 2X0,5MM2	5-205, 5-207, 5-209, 5-211
T50W0242	90220-0034	THERMOCABLE TEX/SITW-20F-KX 2X0,5MM2	5-205, 5-207, 5-209, 5-211
T50W0251	90220-0034	THERMOCABLE TEX/SITW-20F-KX 2X0,5MM2	5-205, 5-207, 5-209, 5-211

Pos	Part No	Description	Page No
W			
T50W0252	90220-0034	THERMOCABLE TEX/SITW-20F-KX 2X0,5MM2	5-205, 5-207, 5-209, 5-211
T50W0260	90220-0104	SCR. CABLE 4X1,5MM2	2-97
T50W0560	351150-0425	CABLE OLFLEX 25X0,75 MM2 LIGHT/GREY	2-97
T50W1130	351150-0406	CABLE OLFLEX 7X0,75 MM2 LIGHT/GREY	2-97
T50W1170	351150-0406	CABLE OLFLEX 7X0,75 MM2 LIGHT/GREY	2-109
T50W1171	351150-0406	CABLE OLFLEX 7X0,75 MM2 LIGHT/GREY	2-109
T50W1252	315300-0006	TUBE, 8 MM PE BLACK	2-147
T50W1253	90166-0132	TUBE 6 MM PA,TRANSP.	5-93, 5-95, 5-97, 5-99, 5-101, 5-103, 5-105, 5-107, 5-109, 5-111, 5-113, 5-133, 5-135, 5-137, 5-139, 5-141, 5-143, 5-145, 5-147, 5-149, 5-151, 5-153, 5-155, 5-157, 5-159, 5-161, 5-163, 5-165, 5-167, 5-169, 5-171
T50W1254	90166-0132	TUBE 6 MM PA,TRANSP.	5-93, 5-95, 5-97, 5-99, 5-101, 5-103, 5-105, 5-107, 5-109, 5-111, 5-113, 5-133, 5-135, 5-137, 5-139, 5-141, 5-143, 5-145, 5-147, 5-149, 5-151, 5-153, 5-155, 5-157, 5-159, 5-161, 5-163, 5-165, 5-167, 5-169, 5-171
T50W1255	90166-0132	TUBE 6 MM PA,TRANSP.	5-83, 5-85, 5-87, 5-89, 5-91
T50W1256	90166-0132	TUBE 6 MM PA,TRANSP.	5-83, 5-85, 5-87, 5-89, 5-91, 5-93, 5-95, 5-97, 5-99, 5-101, 5-103, 5-105, 5-107, 5-109, 5-111, 5-113
T50W1257	90166-0132	TUBE 6 MM PA,TRANSP.	5-83, 5-85, 5-87, 5-89, 5-91, 5-133, 5-135, 5-137, 5-139, 5-141, 5-143, 5-145, 5-147, 5-149, 5-151, 5-153, 5-155, 5-157, 5-159, 5-161, 5-163, 5-165, 5-167, 5-169, 5-171
T50W1258	90166-0132	TUBE 6 MM PA,TRANSP.	5-83, 5-85, 5-87, 5-89, 5-91
T50W1259	90166-0132	TUBE 6 MM PA,TRANSP.	5-133, 5-135, 5-137, 5-139, 5-141, 5-143, 5-145, 5-147, 5-149, 5-151, 5-153, 5-155, 5-157, 5-159, 5-161, 5-163, 5-165, 5-167, 5-169, 5-171
T50W1364	315300-0001	TUBE, 6 MM PE BLUE	2-29, 2-31
T50W1365	315300-0016	TUBE 4MPE BLUE	2-29, 2-31
T50W1366	315300-0001	TUBE, 6 MM PE BLUE	2-23, 2-25
T50W1367	90166-0081	TUBE 6 MM PA BLUE	5-173, 5-175, 5-177, 5-179, 5-181, 5-183, 5-185, 5-187, 5-189, 5-191, 5-193, 5-195, 5-197, 5-199, 5-201, 5-203
T50W1367	315300-0001	TUBE, 6 MM PE BLUE	2-23, 2-25
T50W1368	90166-0081	TUBE 6 MM PA BLUE	5-173, 5-175, 5-177, 5-179, 5-181, 5-183, 5-185, 5-187, 5-189, 5-191, 5-193, 5-195, 5-197, 5-199, 5-201, 5-203
T50W1369	90166-0081	TUBE 6 MM PA BLUE	5-173, 5-175, 5-177, 5-179, 5-181, 5-183, 5-185, 5-187, 5-189, 5-191, 5-193, 5-195, 5-197, 5-199, 5-201, 5-203
T50W1410	351150-0417	CABLE OLFLEX 3X2,5 MM2 LIGHT/GREY	5-205, 5-207, 5-209, 5-211
T50W1420	351150-0417	CABLE OLFLEX 3X2,5 MM2 LIGHT/GREY	5-205, 5-207, 5-209, 5-211
T50W1430	351150-0417	CABLE OLFLEX 3X2,5 MM2 LIGHT/GREY	5-205, 5-207, 5-209, 5-211
T50W1440	351150-0417	CABLE OLFLEX 3X2,5 MM2 LIGHT/GREY	5-205, 5-207, 5-209, 5-211
T50W1530	351423-0006	CABLE UNITRONIC LICY 5X0,34	2-91
T50W1532	315300-0010	TUBE, 12 MM PE BLUE	2-91
T50W1533	90166-0013	TUBE 8 MM PA BLUE	5-205, 5-207, 5-209, 5-211
T50W1534	90166-0013	TUBE 8 MM PA BLUE	5-205, 5-207, 5-209, 5-211
T50W1535	315300-0010	TUBE, 12 MM PE BLUE	2-91
T50W1540	351423-0006	CABLE UNITRONIC LICY 5X0,34	2-91
T50W1542	315300-0010	TUBE, 12 MM PE BLUE	2-91
T50W1543	90166-0013	TUBE 8 MM PA BLUE	5-205, 5-207, 5-209, 5-211
T50W1544	90166-0013	TUBE 8 MM PA BLUE	5-205, 5-207, 5-209, 5-211
T50W1545	315300-0010	TUBE, 12 MM PE BLUE	2-91
T50W6014	315300-0004	TUBE, 8 MM PE BLUE	6-93
T50W6015	315300-0004	TUBE, 8 MM PE BLUE	6-93
T50W7002	315300-0006	TUBE, 8 MM PE BLACK	2-149
T50W7003	90166-0118	TUBE 8 MM PA BLACK	5-133, 5-135, 5-137, 5-139, 5-141, 5-143, 5-145, 5-147, 5-149, 5-151, 5-153, 5-155, 5-157, 5-159, 5-161, 5-163, 5-165, 5-167, 5-169, 5-171
T50W7004	90166-0118	TUBE 8 MM PA BLACK	5-173, 5-175, 5-177, 5-179, 5-181, 5-183, 5-185, 5-187, 5-189, 5-191, 5-193, 5-195, 5-197, 5-199, 5-201, 5-203
T50W7005	90166-0118	TUBE 8 MM PA BLACK	5-173, 5-175, 5-177, 5-179, 5-181, 5-183, 5-185, 5-187, 5-189, 5-191, 5-193, 5-195, 5-197, 5-199, 5-201, 5-203
T50W7006	90166-0118	TUBE 8 MM PA BLACK	5-33, 5-35, 5-83, 5-85, 5-87, 5-89, 5-91
T50W7007	90166-0118	TUBE 8 MM PA BLACK	5-133, 5-135, 5-137, 5-139, 5-141, 5-143, 5-145, 5-147, 5-149, 5-151, 5-153, 5-155, 5-157, 5-159, 5-161, 5-163, 5-165, 5-167, 5-169, 5-171
T50W7008	90166-0266	TUBE 6 MM PA BLACK	5-133, 5-135, 5-137, 5-139, 5-141, 5-143, 5-145, 5-147, 5-149, 5-151, 5-153, 5-155, 5-157, 5-159, 5-161, 5-163, 5-165, 5-167, 5-169, 5-171
T50W7009	315300-0006	TUBE, 8 MM PE BLACK	2-149
T50W7022	90166-0135	TUBE 10 MM PA BLACK	2-151
T50W7023	90152-0017	HOSE (SPIRAL)	2-151
T50W7024	90166-0118	TUBE 8 MM PA BLACK	5-217, 5-219, 5-221, 5-223, 5-225, 5-227, 5-229
T50W7025	90166-0118	TUBE 8 MM PA BLACK	5-83, 5-85, 5-87, 5-89, 5-91
T50W9000	90600-3293	MOTOR PWWER CABLE 2090-XXNPMF-16S09 ..	3-17, 3-19, 3-21, 3-23, 3-25
T50W9000	90600-5655	MOTOR POWER CABLE 2090-XXNPMF-14S09/A	3-17, 3-19, 3-21, 3-23, 3-25
T50W9002	90600-3294	MOTOR FEEDBACK CABLE 2090-XXNFMF-S09/C	3-17, 3-19, 3-21, 3-23, 3-25
T50W9010	90600-7866	MOTOR FEEDBACK CABLE 2090-XXNFMF-S07/C	5-13, 5-83, 5-85, 5-87, 5-89, 5-91
T50W9012	90600-7867	MOTOR POWER CABLE 2090-XXNPMF-16S07/A	5-13, 5-83, 5-85, 5-87, 5-89, 5-91
T50W9023	315300-0016	TUBE 4MPE BLUE	2-23, 2-25
T50W9023	315400-0016	TUBE PUN-H-4X0,75-BL	5-13
T50W9550	351150-0407	CABLE OLFLEX 12X0,75 MM2 LIGHT/GREY	2-105
T50W9570	351150-0403	CABLE OLFLEX 3X0,75 MM2 LIGHT/GREY	6-21
T50W9632	90459-2341	HOSE ASSEMBLY, EL 03600101	2-73
T50W9633	90459-2341	HOSE ASSEMBLY, EL 03600101	2-73
T50W9634	90459-2341	HOSE ASSEMBLY, EL 03600101	2-73
T50W9635	90459-2341	HOSE ASSEMBLY, EL 03600101	2-73
T50W9636	2682625-0000 ..	PIPE	5-237, 5-239

Pos	Part No	Description	Page No
W			
T50W9636	2689167-0000	PIPE	5-237, 5-239
T50W9636	2690272-0000	PIPE	5-237, 5-239
T50W9636	2835124-0000	PIPE	5-237, 5-239
T50W9636	2933706-0000	PIPE	5-237, 5-239
T50W9636	2958554-0000	PIPE	5-237, 5-239
T50W9636	2958847-0000	PIPE	5-237, 5-239
T50W9637	2549244-0000	PIPE	5-237, 5-239
T50W9637	2570753-0000	PIPE	5-237, 5-239
T50W9637	2677528-0000	PIPE	5-237, 5-239
T50W9637	2689166-0000	PIPE	5-237, 5-239
T50W9637	2690271-0000	PIPE	5-237, 5-239
T50W9637	2835123-0000	PIPE	5-237, 5-239
T50W9637	2933707-0000	PIPE	5-237, 5-239
T50W9638	2545669-0000	PIPE	5-237, 5-239
T50W9638	2549241-0000	PIPE	5-237, 5-239
T50W9638	2570754-0000	PIPE	5-237, 5-239
T50W9638	2677080-0000	PIPE	5-237, 5-239
T50W9638	2689164-0000	PIPE	5-237, 5-239
T50W9638	2690270-0000	PIPE	5-237, 5-239
T50W9638	2835122-0000	PIPE	5-237, 5-239
T50W9639	2545670-0000	PIPE	5-237, 5-239
T50W9639	2549242-0000	PIPE	5-237, 5-239
T50W9639	2570755-0000	PIPE	5-237, 5-239
T50W9639	2677083-0000	PIPE	5-237, 5-239
T50W9639	2689165-0000	PIPE	5-237, 5-239
T50W9639	2690269-0000	PIPE	5-237, 5-239
T50W9639	2835121-0000	PIPE	5-237, 5-239
T50W9712	2545672-0000	PIPE	5-237, 5-239
T50W9712	2570750-0000	PIPE	5-237, 5-239
T50W9712	2677084-0000	PIPE	5-237, 5-239
T50W9712	2933705-0000	PIPE	5-237, 5-239
T50W9713	2677466-0000	PIPE	5-237, 5-239
T50W9713	2933704-0000	PIPE	5-237, 5-239
T50W9713	2958555-0000	PIPE	5-237, 5-239
T50W9713	2958846-0000	PIPE	5-237, 5-239
T50W9714	2931745-0000	PIPE	5-237, 5-239
T50W9714	2933676-0000	PIPE	5-237, 5-239
T50W9714	2933918-0000	PIPE	5-237, 5-239
T50W9714	2933919-0000	PIPE	5-237, 5-239
T50W9714	2942054-0000	PIPE	5-237, 5-239
T50W9714	2942055-0000	PIPE	5-237, 5-239
T50W9714	2958552-0000	PIPE	5-237, 5-239
T50W9715	90459-2341	HOSE ASSEMBLY, EL 03600101	2-73
U30W0220	351422-0203	CABLE ÖLFLEX 150CY QUATTRO 4X1,5	2-251
U30W0570	351150-0425	CABLE OLFLEX 25X0,75 MM2 LIGHT/GREY	2-19
U30W1030	351150-0404	CABLE OLFLEX 4X0,75 MM2 LIGHT/GREY	2-259, 2-261
U30W1050	351150-0407	CABLE OLFLEX 12X0,75 MM2 LIGHT/GREY	2-19
U30W1060	351150-0407	CABLE OLFLEX 12X0,75 MM2 LIGHT/GREY	2-19
U30W1070	351150-0404	CABLE OLFLEX 4X0,75 MM2 LIGHT/GREY	2-259, 2-261
U30W1252	315300-0001	TUBE, 6 MM PE BLUE	2-23, 2-25
U30W1254	315300-0001	TUBE, 6 MM PE BLUE	2-23, 2-25
U30W1262	315300-0001	TUBE, 6 MM PE BLUE	2-23, 2-25
U30W1264	315300-0001	TUBE, 6 MM PE BLUE	2-23, 2-25
U30W1282	315300-0001	TUBE, 6 MM PE BLUE	2-23, 2-25
U30W1283	315300-0001	TUBE, 6 MM PE BLUE	2-259, 2-261
U30W1284	315300-0001	TUBE, 6 MM PE BLUE	2-23, 2-25
U30W1285	315300-0001	TUBE, 6 MM PE BLUE	2-259, 2-261
U30W1302	315300-0001	TUBE, 6 MM PE BLUE	2-23, 2-25
U30W1303	315300-0001	TUBE, 6 MM PE BLUE	2-259, 2-261
U30W1304	315300-0001	TUBE, 6 MM PE BLUE	2-23, 2-25
U30W1305	315300-0001	TUBE, 6 MM PE BLUE	2-259, 2-261
U30W1372	315300-0001	TUBE, 6 MM PE BLUE	2-23, 2-25
U30W1374	315300-0001	TUBE, 6 MM PE BLUE	2-23, 2-25
U30W1382	315300-0001	TUBE, 6 MM PE BLUE	2-23, 2-25
U30W1383	315300-0001	TUBE, 6 MM PE BLUE	2-23, 2-25
U30W1422	315300-0004	TUBE, 8 MM PE BLUE	2-23, 2-25
U30W1423	315300-0001	TUBE, 6 MM PE BLUE	2-23, 2-25
U30W1424	315300-0001	TUBE, 6 MM PE BLUE	2-259, 2-261
U30W1425	315300-0001	TUBE, 6 MM PE BLUE	2-23, 2-25
U30W1426	315300-0001	TUBE, 6 MM PE BLUE	2-259, 2-261
U30W1460	351150-0403	CABLE OLFLEX 3X0,75 MM2 LIGHT/GREY	2-243
U30W1462	315300-0004	TUBE, 8 MM PE BLUE	2-29, 2-31
U30W1463	315300-0004	TUBE, 8 MM PE BLUE	2-23, 2-25, 2-29, 2-31
U30W1464	315300-0016	TUBE 4MPE BLUE	2-29, 2-31
U30W1480	351150-0403	CABLE OLFLEX 3X0,75 MM2 LIGHT/GREY	2-239
U30W1570	351150-0403	CABLE OLFLEX 3X0,75 MM2 LIGHT/GREY	2-259, 2-261
U30W1590	351150-0403	CABLE OLFLEX 3X0,75 MM2 LIGHT/GREY	2-259, 2-261
U30W1670	90220-0072	SCR. CABLE 4X0,34MM2	2-237
U30W1710	90220-0034	THERMOCABLE TEX/SITW-20F-KX 2X0,5MM2	2-237
U30W2002	90166-0049	HOSE PVC 25/33-34	2-153
U30W6003	315300-0002	TUBE, 6 MM PE TRANSPARENT	2-251
U30W7002	315300-0006	TUBE, 8 MM PE BLACK	2-233

W

Pos	Part No	Description	Page No
U30W7003	90166-0008	HOSE 7/10 PVC TRANSP.	2-233
U30W7004	315300-0018	TUBE, 4 MM PE BLACK	2-239
U70W0100	351150-0412	CABLE OLFLEX 3X1,5 MM2 LIGHT/GREY	1-279
U70W0130	351150-0412	CABLE OLFLEX 3X1,5 MM2 LIGHT/GREY	1-357
U70W0300	90220-0105	SCR. CABLE 4X2,5MM2	1-179
U70W0310	90220-0104	SCR. CABLE 4X1,5MM2	1-9
U70W0320	90220-0104	SCR. CABLE 4X1,5MM2	1-267
U70W0340	351120-0264	CABLE ÖLFLEX HEAT 180 SIHF 4X1,5	1-279
U70W0350	351120-0264	CABLE ÖLFLEX HEAT 180 SIHF 4X1,5	1-279
U70W0360	351150-0413	CABLE OLFLEX 4GX1,5 MM2 LIGHT/GREY	1-175
U70W0361	351120-0264	CABLE ÖLFLEX HEAT 180 SIHF 4X1,5	1-175
U70W0370	90459-3165	CABLE OLFLON PTFE 1X4,72 MM² BLACK	1-205
U70W0371	351150-0417	CABLE OLFLEX 3X2,5 MM2 LIGHT/GREY	1-211
U70W0381	2968981-0000	CABLE	8-77, 8-79
U70W0382	2968982-0000	CABLE	8-77, 8-79
U70W0450	351120-0267	CABLE ÖLFLEX HEAT 180 SIHF 4X6	1-185
U70W0460	351150-0433	CABLE OLFLEX 7X4 MM2 LIGHT/GREY	1-295
U70W0580	351150-0425	CABLE OLFLEX 25X0,75 MM2 LIGHT/GREY	1-357
U70W0930	90220-0034	THERMOCABLE TEX/SITW-20F-KX 2X0,5MM2	1-211
U70W1010	351301-0100	ACTUATOR/SENSOR CABLE PRKMV 3-06/10M	1-215
U70W1020	351301-0100	ACTUATOR/SENSOR CABLE PRKMV 3-06/10M	1-215
U70W1030	351301-0100	ACTUATOR/SENSOR CABLE PRKMV 3-06/10M	1-215
U70W1050	351310-0100	ACTUATOR/SENSOR CABLE PRKWT 4-07/10M	1-69, 1-71
U70W1060	351310-0100	ACTUATOR/SENSOR CABLE PRKWT 4-07/10M	1-275
U70W1070	351310-0100	ACTUATOR/SENSOR CABLE PRKWT 4-07/10M	1-275
U70W1080	90459-4252	CABLE M12-C101, 20-056-10	1-353
U70W1090	351150-0403	CABLE OLFLEX 3X0,75 MM2 LIGHT/GREY	1-235, 1-237
U70W1100	351302-0050	ACTUATOR/SENSOR CABLE PRKMWV 3-06/5M	1-235, 1-237
U70W1130	351150-0404	CABLE OLFLEX 4X0,75 MM2 LIGHT/GREY	1-243
U70W1140	90459-4252	CABLE M12-C101, 20-056-10	1-65
U70W1160	351310-0100	ACTUATOR/SENSOR CABLE PRKWT 4-07/10M	1-263
U70W1250	90459-3250	SENSOR CABLE SICK DOP 1205 G15M	1-253, 1-255, 1-257
U70W1270	351310-0100	ACTUATOR/SENSOR CABLE PRKWT 4-07/10M	1-69, 1-71
U70W1280	90459-4252	CABLE M12-C101, 20-056-10	1-61
U70W1412	315300-0001	TUBE, 6 MM PE BLUE	1-327, 1-329
U70W1413	315300-0001	TUBE, 6 MM PE BLUE	1-327, 1-329
U70W1414	315300-0001	TUBE, 6 MM PE BLUE	1-327, 1-329
U70W1415	315300-0001	TUBE, 6 MM PE BLUE	1-327, 1-329
U70W1432	315300-0001	TUBE, 6 MM PE BLUE	1-243, 1-327, 1-329
U70W1434	315300-0001	TUBE, 6 MM PE BLUE	1-327, 1-329
U70W1452	315300-0001	TUBE, 6 MM PE BLUE	1-327, 1-329
U70W1454	315300-0001	TUBE, 6 MM PE BLUE	1-327, 1-329
U70W1455	315400-0001	TUBE PUN-H-6X1-BL	1-233
U70W1472	315300-0001	TUBE, 6 MM PE BLUE	1-327, 1-329
U70W1474	315300-0001	TUBE, 6 MM PE BLUE	1-327, 1-329
U70W1502	315300-0016	TUBE 4MPE BLUE	1-331, 1-333
U70W1503	315300-0001	TUBE, 6 MM PE BLUE	1-327, 1-329
U70W1504	315300-0001	TUBE, 6 MM PE BLUE	1-247, 1-331, 1-333
U70W1522	315300-0001	TUBE, 6 MM PE BLUE	1-327, 1-329
U70W1524	315300-0001	TUBE, 6 MM PE BLUE	1-327, 1-329
U70W1532	315300-0001	TUBE, 6 MM PE BLUE	1-327, 1-329
U70W1534	315300-0001	TUBE, 6 MM PE BLUE	1-327, 1-329
U70W1710	90220-0034	THERMOCABLE TEX/SITW-20F-KX 2X0,5MM2	1-245
U70W1740	351150-0404	CABLE OLFLEX 4X0,75 MM2 LIGHT/GREY	1-275
U70W2020	351310-0100	ACTUATOR/SENSOR CABLE PRKWT 4-07/10M	1-287, 1-289
U70W2040	351150-0431	CABLE OLFLEX 2X0,75 MM2 LIGHT/GREY	1-279
U70W2060	90459-4252	CABLE M12-C101, 20-056-10	1-63
U70W2131	351150-0403	CABLE OLFLEX 3X0,75 MM2 LIGHT/GREY	1-191
U70W2132	90166-0121	HOSE	2-153
U70W2252	315300-0001	TUBE, 6 MM PE BLUE	1-327, 1-329
U70W2254	315300-0001	TUBE, 6 MM PE BLUE	1-327, 1-329
U70W2255	315300-0001	TUBE, 6 MM PE BLUE	1-327, 1-329
U70W2272	315300-0001	TUBE, 6 MM PE BLUE	1-327, 1-329
U70W2274	315300-0001	TUBE, 6 MM PE BLUE	1-327, 1-329
U70W2302	315300-0001	TUBE, 6 MM PE BLUE	1-327, 1-329
U70W2304	315300-0001	TUBE, 6 MM PE BLUE	1-327, 1-329
U70W2344	315300-0001	TUBE, 6 MM PE BLUE	1-327, 1-329
U70W2352	315300-0001	TUBE, 6 MM PE BLUE	1-327, 1-329
U70W2354	315300-0001	TUBE, 6 MM PE BLUE	1-327, 1-329
U70W2362	315300-0001	TUBE, 6 MM PE BLUE	1-327, 1-329
U70W2364	315300-0001	TUBE, 6 MM PE BLUE	1-327, 1-329
U70W2372	315300-0001	TUBE, 6 MM PE BLUE	1-327, 1-329
U70W2374	315300-0001	TUBE, 6 MM PE BLUE	1-327, 1-329
U70W2412	315300-0001	TUBE, 6 MM PE BLUE	1-327, 1-329
U70W2414	315300-0001	TUBE, 6 MM PE BLUE	1-327, 1-329, 1-331, 1-333
U70W2415	315300-0016	TUBE 4MPE BLUE	1-331, 1-333
U70W2424	315300-0001	TUBE, 6 MM PE BLUE	1-327, 1-329
U70W2425	315300-0007	TUBE, 10 MM PE BLUE	1-331, 1-333
U70W2426	315300-0007	TUBE, 10 MM PE BLUE	1-331, 1-333
U70W2427	315300-0016	TUBE 4MPE BLUE	1-331, 1-333
U70W2428	315300-0001	TUBE, 6 MM PE BLUE	1-327, 1-329
U70W2432	315300-0001	TUBE, 6 MM PE BLUE	1-327, 1-329

Pos	Part No	Description	Page No
W			
U70W2433	315300-0001	TUBE, 6 MM PE BLUE	1-327, 1-329
U70W2434	315300-0001	TUBE, 6 MM PE BLUE	1-327, 1-329
U70W2435	315300-0001	TUBE, 6 MM PE BLUE	1-327, 1-329
U70W2436	315300-0001	TUBE, 6 MM PE BLUE	1-327, 1-329
U70W2437	315300-0001	TUBE, 6 MM PE BLUE	1-327, 1-329
U70W2438	315300-0004	TUBE, 8 MM PE BLUE	1-331, 1-333
U70W2439	315300-0016	TUBE 4MPE BLUE	1-331, 1-333
U70W2442	315300-0001	TUBE, 6 MM PE BLUE	1-327, 1-329
U70W2443	315300-0001	TUBE, 6 MM PE BLUE	1-327, 1-329
U70W2444	315300-0001	TUBE, 6 MM PE BLUE	1-327, 1-329
U70W2445	315300-0001	TUBE, 6 MM PE BLUE	1-327, 1-329
U70W2446	315300-0001	TUBE, 6 MM PE BLUE	1-327, 1-329
U70W2447	315300-0001	TUBE, 6 MM PE BLUE	1-327, 1-329
U70W2448	315300-0001	TUBE, 6 MM PE BLUE	1-327, 1-329
U70W2449	315300-0001	TUBE, 6 MM PE BLUE	1-327, 1-329
U70W2450	90600-1984	ACTUATOR/SENSOR CABLE PRKT 5/56-10M	1-183
U70W2453	315300-0001	TUBE, 6 MM PE BLUE	1-327, 1-329
U70W2454	315300-0001	TUBE, 6 MM PE BLUE	1-327, 1-329
U70W2470	351150-0403	CABLE OLFLEX 3X0,75 MM2 LIGHT/GREY	1-191
U70W2480	90459-4274	SCR. CABLE 2X0,5MM2	1-269
U70W2490	351301-0100	ACTUATOR/SENSOR CABLE PRKMV 3-06/10M	1-183
U70W2540	90220-0165	SCR. CABLE 5X0,34MM2	1-331, 1-333
U70W2610	90220-0034	THERMOCABLE TEX/SITW-20F-KX 2X0,5MM2	1-185
U70W2620	90220-0034	THERMOCABLE TEX/SITW-20F-KX 2X0,5MM2	1-279
U70W2630	90220-0034	THERMOCABLE TEX/SITW-20F-KX 2X0,5MM2	1-287, 1-289
U70W2640	90220-0034	THERMOCABLE TEX/SITW-20F-KX 2X0,5MM2	1-191
U70W2670	351310-0100	ACTUATOR/SENSOR CABLE PRKWT 4-07/10M	1-313, 1-315, 1-317
U70W3010	351150-0406	CABLE OLFLEX 7X0,75 MM2 LIGHT/GREY	1-81
U70W3020	351301-0100	ACTUATOR/SENSOR CABLE PRKMV 3-06/10M	1-177
U70W3030	351301-0100	ACTUATOR/SENSOR CABLE PRKMV 3-06/10M	1-177
U70W3050	351301-0050	ACTUATOR/SENSOR CABLE PRKMV 3-06/5M	1-169
U70W3060	351301-0050	ACTUATOR/SENSOR CABLE PRKMV 3-06/5M	1-169
U70W3120	351301-0100	ACTUATOR/SENSOR CABLE PRKMV 3-06/10M	1-11
U70W3130	90459-4252	CABLE M12-C101, 20-056-10	1-27
U70W3140	90459-4252	CABLE M12-C101, 20-056-10	1-29
U70W3150	90459-4252	CABLE M12-C101, 20-056-10	1-35
U70W3160	90459-4252	CABLE M12-C101, 20-056-10	1-57
U70W3180	351150-0404	CABLE OLFLEX 4X0,75 MM2 LIGHT/GREY	1-293
U70W3200	351150-0404	CABLE OLFLEX 4X0,75 MM2 LIGHT/GREY	1-181
U70W3220	351301-0100	ACTUATOR/SENSOR CABLE PRKMV 3-06/10M	1-177
U70W3230	351301-0100	ACTUATOR/SENSOR CABLE PRKMV 3-06/10M	1-177
U70W3240	351301-0100	ACTUATOR/SENSOR CABLE PRKMV 3-06/10M	1-31
U70W3241	351301-0100	ACTUATOR/SENSOR CABLE PRKMV 3-06/10M	1-31
U70W3290	351150-0403	CABLE OLFLEX 3X0,75 MM2 LIGHT/GREY	1-293
U70W3300	351150-0403	CABLE OLFLEX 3X0,75 MM2 LIGHT/GREY	1-293
U70W3302	315300-0001	TUBE, 6 MM PE BLUE	1-327, 1-329
U70W3303	315300-0016	TUBE 4MPE BLUE	1-331, 1-333
U70W3330	351150-0403	CABLE OLFLEX 3X0,75 MM2 LIGHT/GREY	1-293
U70W3340	351150-0403	CABLE OLFLEX 3X0,75 MM2 LIGHT/GREY	1-293
U70W3420	90459-4274	SCR. CABLE 2X0,5MM2	1-323
U70W3470	90459-1567	CONNECTOR CABLE FOR UVC-SE SENSOR	1-55
U70W3480	90220-0165	SCR. CABLE 5X0,34MM2	1-13
U70W3510	90220-0034	THERMOCABLE TEX/SITW-20F-KX 2X0,5MM2	1-55
U70W3520	90220-0034	THERMOCABLE TEX/SITW-20F-KX 2X0,5MM2	1-175
U70W3530	90220-0034	THERMOCABLE TEX/SITW-20F-KX 2X0,5MM2	1-175
U70W3540	90220-0034	THERMOCABLE TEX/SITW-20F-KX 2X0,5MM2	1-69, 1-71
U70W4001	351150-0406	CABLE OLFLEX 7X0,75 MM2 LIGHT/GREY	1-211
U70W4010	351150-0403	CABLE OLFLEX 3X0,75 MM2 LIGHT/GREY	1-211
U70W4020	351310-0100	ACTUATOR/SENSOR CABLE PRKWT 4-07/10M	1-233
U70W4030	351310-0100	ACTUATOR/SENSOR CABLE PRKWT 4-07/10M	1-233
U70W4040	351310-0100	ACTUATOR/SENSOR CABLE PRKWT 4-07/10M	1-233
U70W4050	351310-0100	ACTUATOR/SENSOR CABLE PRKWT 4-07/10M	1-233
U70W4060	351150-0404	CABLE OLFLEX 4X0,75 MM2 LIGHT/GREY	1-209, 1-211
U70W4070	351310-0100	ACTUATOR/SENSOR CABLE PRKWT 4-07/10M	1-233
U70W4080	351150-0403	CABLE OLFLEX 3X0,75 MM2 LIGHT/GREY	1-211
U70W4210	351150-0403	CABLE OLFLEX 3X0,75 MM2 LIGHT/GREY	1-211
U70W4220	351150-0403	CABLE OLFLEX 3X0,75 MM2 LIGHT/GREY	1-211
U70W4222	315300-0001	TUBE, 6 MM PE BLUE	1-327, 1-329
U70W4223	315300-0016	TUBE 4MPE BLUE	1-331, 1-333
U70W4230	351150-0403	CABLE OLFLEX 3X0,75 MM2 LIGHT/GREY	1-211
U70W4232	315300-0004	TUBE, 8 MM PE BLUE	1-207
U70W4233	315300-0004	TUBE, 8 MM PE BLUE	1-207
U70W4234	315300-0004	TUBE, 8 MM PE BLUE	1-207
U70W4235	315300-0004	TUBE, 8 MM PE BLUE	1-207
U70W4236	315300-0004	TUBE, 8 MM PE BLUE	1-207
U70W4237	315300-0004	TUBE, 8 MM PE BLUE	1-207
U70W4238	315300-0004	TUBE, 8 MM PE BLUE	1-207
U70W4239	315300-0004	TUBE, 8 MM PE BLUE	1-207
U70W4240	351150-0403	CABLE OLFLEX 3X0,75 MM2 LIGHT/GREY	1-211
U70W4248	315300-0004	TUBE, 8 MM PE BLUE	2-153
U70W4290	90220-0165	SCR. CABLE 5X0,34MM2	1-211
U70W4330	90220-0165	SCR. CABLE 5X0,34MM2	1-211

Pos	Part No	Description	Page No
W			
U70W4330	90600-1768	ACTUATOR/SENSOR CABLE RKTS 5-298/5M	1-207
U70W4350	90220-0034	THERMOCABLE TEX/SITW-20F-KX 2X0,5MM2	1-211
U70W4360	90220-0034	THERMOCABLE TEX/SITW-20F-KX 2X0,5MM2	1-211
U70W4370	90220-0034	THERMOCABLE TEX/SITW-20F-KX 2X0,5MM2	1-233
U70W4372	315300-0001	TUBE, 6 MM PE BLUE	1-327, 1-329
U70W4374	315300-0001	TUBE, 6 MM PE BLUE	1-327, 1-329
U70W4412	315300-0001	TUBE, 6 MM PE BLUE	1-327, 1-329
U70W4414	315300-0001	TUBE, 6 MM PE BLUE	1-327, 1-329
U70W4424	315300-0001	TUBE, 6 MM PE BLUE	1-327, 1-329
U70W4428	315300-0001	TUBE, 6 MM PE BLUE	1-327, 1-329
U70W4432	315300-0001	TUBE, 6 MM PE BLUE	1-327, 1-329
U70W4434	315300-0001	TUBE, 6 MM PE BLUE	1-327, 1-329
U70W4442	315300-0001	TUBE, 6 MM PE BLUE	1-327, 1-329
U70W4444	315300-0001	TUBE, 6 MM PE BLUE	1-327, 1-329
U70W6005	315300-0007	TUBE, 10 MM PE BLUE	1-327, 1-329
U70W6006	315300-0001	TUBE, 6 MM PE BLUE	1-327, 1-329
U70W6007	315300-0007	TUBE, 10 MM PE BLUE	1-327, 1-329
U70W6008	90166-0013	TUBE 8 MM PA BLUE	1-207
U70W6008	315300-0007	TUBE, 10 MM PE BLUE	1-327, 1-329
U70W6103	315300-0007	TUBE, 10 MM PE BLUE	1-331, 1-333
U70W6104	315300-0007	TUBE, 10 MM PE BLUE	1-331, 1-333
U70W6105	315300-0007	TUBE, 10 MM PE BLUE	1-331, 1-333
U70W6106	315300-0007	TUBE, 10 MM PE BLUE	1-331, 1-333
U70W6110	315300-0007	TUBE, 10 MM PE BLUE	1-331, 1-333
U70W6302	315300-0001	TUBE, 6 MM PE BLUE	1-331, 1-333
U70W6303	315300-0001	TUBE, 6 MM PE BLUE	1-331, 1-333
U70W7002	90166-0118	TUBE 8 MM PA BLACK	1-75
U70W7003	90166-0118	TUBE 8 MM PA BLACK	1-77
U70W7004	90166-0118	TUBE 8 MM PA BLACK	1-75
U70W7005	315300-0006	TUBE, 8 MM PE BLACK	2-149
U70W7006	315300-0006	TUBE, 8 MM PE BLACK	2-149
U70W7007	90166-0118	TUBE 8 MM PA BLACK	1-357
U70W7202	90166-0110	TUBE 15 MM PA,TRANSP.	2-153
U70W7203	90166-0260	HOSE	2-153
U70W7207	90166-0260	HOSE	2-153
U70W7382	315300-0006	TUBE, 8 MM PE BLACK	1-55
U70W7383	315300-0006	TUBE, 8 MM PE BLACK	1-55
U70W7384	315300-0006	TUBE, 8 MM PE BLACK	1-55
U70W7385	315300-0006	TUBE, 8 MM PE BLACK	1-55
U70W7386	315300-0006	TUBE, 8 MM PE BLACK	6-11
U70W7387	315300-0006	TUBE, 8 MM PE BLACK	6-11
U70W7388	315300-0006	TUBE, 8 MM PE BLACK	6-11
U70W7389	315300-0006	TUBE, 8 MM PE BLACK	2-147
U70W9030	90600-3293	MOTOR PWWER CABLE 2090-XXNPMF-16S09	1-235, 1-237
U70W9032	90600-3294	MOTOR FEEDBACK CABLE 2090-XXNFMF-S09/C	1-235, 1-237
U70W9160	90458-2895	COAXIAL CABLE RG 400/U BROWN	1-75
U70W9162	2957417-0000	CABLE	1-75
U70W9166	90458-2894	PAIR TWISTED CABLE 1X2X0,2MM2	8-49
U70W9521	90220-0091	PAIR TWISTED CABLE 2X2X0,25MM2	1-229, 1-231
U70W9530	351309-0100	ACTUATOR/SENSOR CABLE PRKT 4-07/10M	1-321
U70W9590	90220-0096	SCR. CABLE 3X1,5MM2	1-151
W51W0090	90220-0104	SCR. CABLE 4X1,5MM2	2-59
W51W0630	351150-0424	CABLE OLFLEX 18X0,75 MM2 LIGHT/GREY	2-59
W51W1120	351309-0100	ACTUATOR/SENSOR CABLE PRKT 4-07/10M	11-67, 11-211
W51W1130	351309-0100	ACTUATOR/SENSOR CABLE PRKT 4-07/10M	11-67, 11-211
W51W1140	351309-0100	ACTUATOR/SENSOR CABLE PRKT 4-07/10M	11-67, 11-211
W51W1150	351309-0050	'ACTUATOR/SENSOR CABLE PRKT 4-07/5M	11-3, 11-5, 11-7
W51W1160	351150-0405	CABLE OLFLEX 5X0,75 MM2 LIGHT/GREY	11-237
W51W1502	90166-0195	TUBE 12 MM PA BLUE	11-77, 11-227
W51W1503	90166-0013	TUBE 8 MM PA BLUE	11-77, 11-227
W51W1504	90166-0013	TUBE 8 MM PA BLUE	11-77, 11-227
W51W1505	90166-0013	TUBE 8 MM PA BLUE	11-227
W51W1506	90166-0013	TUBE 8 MM PA BLUE	11-227
W51W1710	351150-0404	CABLE OLFLEX 4X0,75 MM2 LIGHT/GREY	11-209
W51W9500	90511-8936	ETHERNET PATCH CABLE FL CAT6 20M	2-59
W51W9510	3098671-0000	CABLE	8-103
X			
T50X240	90459-6624	FEMALE INSERT HAN E AV, 09 33 006 4735	8-113
A01X1041	2849075-0100	PLINTH	8-97, 8-99
A01X5200	90459-0182	INTERFACE CONNECTOR FOR TMCC2	8-103
A01X5210	90459-0182	INTERFACE CONNECTOR FOR TMCC2	8-103
A01X5220	90459-0182	INTERFACE CONNECTOR FOR TMCC2	8-103
A01X5230	90459-0182	INTERFACE CONNECTOR FOR TMCC2	8-103
A01X5240	90459-0182	INTERFACE CONNECTOR FOR TMCC2	8-103
A01X5600	90459-3845	POWER SOCKET, Z-SD230	8-45, 8-47, 8-97, 8-99
A01X5760	90326-0020	PLUG, FEMALE YELLOW CR-AL	8-5, 8-7, 8-9, 8-11
A01X8000	90459-2519	OPEN STYLE TAP	8-41, 8-43
A01X8010	90459-2519	OPEN STYLE TAP	8-41, 8-43
A01X8020	90459-2519	OPEN STYLE TAP	8-41, 8-43
A01X8030	90459-2519	OPEN STYLE TAP	8-41, 8-43
A01X8040	90459-2519	OPEN STYLE TAP	8-41, 8-43
A01X8300	90459-2519	TAP, OPEN STYLE	2-17

Pos	Part No	Description	Page No
X			
A01X9200	90459-0839	DISTRIBUTION FRAME, ASBV 8 5-135/10M	8-113
A30X6002	90458-1212	LEFT ENDPLATE INCL. 10M CABLE	2-33
A40X0040	90459-6820	FEMALE INSERT HAN 4 A, 09 20 004 2711	8-109, 8-111
A40X0040	90459-6821	MALE INSERT HAN 4A, 09 20 004 2611	2-71
A70X0140	90459-6820	FEMALE INSERT HAN 4 A, 09 20 004 2711	8-113
A80X9500	3000085-0200	TERMINAL	6-23
F01X5600	90110-0057	FEMALE INSERT HAN 24 E 09 33 002 4201	8-5, 8-7, 8-9, 8-11, 8-37, 8-39
F10X0520	90110-0056	MALE INSERT HAN 24 E 09 33 024 2601	7-5, 7-7
F10X0520	90459-6627	FEMALE INSERT HAN E AV, 09 33 024 4735	8-113
F10X5000	90602-4058	CONNECTION BOX TINA 4A, 20-054-03	7-5, 7-7
F10X5100	90602-4058	CONNECTION BOX TINA 4A, 20-054-03	7-5, 7-7
F50X0530	90110-0056	MALE INSERT HAN 24 E 09 33 024 2601	2-97
F50X0530	90459-6627	FEMALE INSERT HAN E AV, 09 33 024 4735	8-113
F50X5000	90600-4876	CONNECTION BOX TINA 8A , 20-054-05	2-83
K80X0100	90459-6820	FEMALE INSERT HAN 4 A, 09 20 004 2711	8-113
K80X0110	90459-6821	MALE INSERT HAN 4A, 09 20 004 2611	2-59
K80X0111	90110-0052	MALE INSERT HAN 6E 09 33 006 2601	6-37
K80X0111	90110-0053	FEMALE INSERT HAN 6 E 09 33 006 2701	2-51
K80X0120	90459-6820	FEMALE INSERT HAN 4 A, 09 20 004 2711	8-113
K80X0120	90459-6821	MALE INSERT HAN 4A, 09 20 004 2611	2-59
K80X0121	90110-0052	MALE INSERT HAN 6E 09 33 006 2601	6-31
K80X0121	90110-0053	FEMALE INSERT HAN 6 E 09 33 006 2701	2-51
K80X0400	90110-0052	MALE INSERT HAN 6E 09 33 006 2601	2-59
K80X0400	90459-6624	FEMALE INSERT HAN E AV, 09 33 006 4735	8-113
K80X0401	90110-0052	MALE INSERT HAN 6E 09 33 006 2601	6-17
K80X0401	90110-0053	FEMALE INSERT HAN 6 E 09 33 006 2701	2-51
K80X0410	90110-0052	MALE INSERT HAN 6E 09 33 006 2601	2-59
K80X0410	90459-6624	FEMALE INSERT HAN E AV, 09 33 006 4735	8-113
K80X0411	2803661-0000	CABLE	6-19
K80X0412	90459-6820	FEMALE INSERT HAN 4 A, 09 20 004 2711	6-15
K80X0412	90459-6821	MALE INSERT HAN 4A, 09 20 004 2611	6-19
K80X0413	90110-0052	MALE INSERT HAN 6E 09 33 006 2601	6-19
K80X0413	90110-0053	FEMALE INSERT HAN 6 E 09 33 006 2701	2-51
K80X0470	90110-0054	MALE INSERT HAN 6 HSB 09 31 006 2601	2-59
K80X0470	90110-0055	FEMALE INSERT HAN 6 HSB 09 31 006 2701	8-113
K80X0471	90110-0054	MALE INSERT HAN 6 HSB 09 31 006 2601	6-49
K80X0471	90110-0055	FEMALE INSERT HAN 6 HSB 09 31 006 2701	2-51
K80X0620	90110-0056	MALE INSERT HAN 24 E 09 33 024 2601	2-59
K80X0620	90459-6627	FEMALE INSERT HAN E AV, 09 33 024 4735	8-113
K80X0621	90110-0056	MALE INSERT HAN 24 E 09 33 024 2601	6-77
K80X0621	90110-0057	FEMALE INSERT HAN 24 E 09 33 002 4201	2-51
K80X1010	90110-0095	CONNECTOR 3 POLE + EARTH	6-81
K80X1410	90326-0022	PLUG, MALE YELLOW CR-AL	6-33
K80X1420	90326-0020	PLUG, FEMALE YELLOW CR-AL	6-17
K80X6002	90458-1212	LEFT ENDPLATE INCL. 10M CABLE	6-87
K80X9610	90459-6820	FEMALE INSERT HAN 4 A, 09 20 004 2711	6-65
K80X9610	90459-6821	MALE INSERT HAN 4A, 09 20 004 2611	6-63
R95X0100	90110-0235	CABLE CONTACT, PX0739/P	11-149
R95X0101	2590054-0100	CONNECTION BOX	11-127, 11-129
T10X0010	90459-6820	FEMALE INSERT HAN 4 A, 09 20 004 2711	8-113
T10X0010	90459-6821	MALE INSERT HAN 4A, 09 20 004 2611	7-15
T10X0020	90459-6820	FEMALE INSERT HAN 4 A, 09 20 004 2711	8-113
T10X0020	90459-6821	MALE INSERT HAN 4A, 09 20 004 2611	7-15
T10X0160	90110-0159	MALE INSERT 70.310.0640.0	7-89
T10X0160	90459-6624	FEMALE INSERT HAN E AV, 09 33 006 4735	8-113
T10X0170	90110-0159	MALE INSERT 70.310.0640.0	7-145
T10X0170	90459-6624	FEMALE INSERT HAN E AV, 09 33 006 4735	8-113
T10X0180	90110-0052	MALE INSERT HAN 6E 09 33 006 2601	7-15
T10X0180	90459-6624	FEMALE INSERT HAN E AV, 09 33 006 4735	8-113
T10X0190	90110-0052	MALE INSERT HAN 6E 09 33 006 2601	7-15
T10X0190	90459-6624	FEMALE INSERT HAN E AV, 09 33 006 4735	8-113
T10X0192	90459-6820	FEMALE INSERT HAN 4 A, 09 20 004 2711	7-69, 7-71
T10X0192	90459-6821	MALE INSERT HAN 4A, 09 20 004 2611	7-69, 7-71
T10X0500	90110-0056	MALE INSERT HAN 24 E 09 33 024 2601	7-15
T10X0500	90459-6627	FEMALE INSERT HAN E AV, 09 33 024 4735	8-113
T10X1000	2806682-0200	CONNECTION BOX	7-5, 7-7
T10X1531	90326-0020	PLUG, FEMALE YELLOW CR-AL	7-77
T10X6002	90458-1212	LEFT ENDPLATE INCL. 10M CABLE	7-113
T10X6003	90458-1214	RIGHT ENDPL EXT. PILOT AIR,CDVI5.0-EPR-S	7-117
T10X9024	90459-2551	CONNECTOR, MOTOR FEEDBACK 15 PIN MALE	7-105
T10X9025	90459-6679	CONN 15 P FEM, AUX. FEEDB,2090-K6CK-D15F	7-69, 7-71
T10X9026	90459-2550	I/O CONNECTOR 26 PIN MALE, 2090-K6CK-D26	8-51
T10X9176	90459-0184	INTERFACE CONNECTOR FOR TPIH 2500 GENER.	8-49
T10X9230	90459-6387	CONNECTOR 5-POL M12, RSCS 5/9	7-73
T10X9240	90459-6387	CONNECTOR 5-POL M12, RSCS 5/9	7-73
T40X0030	90459-6820	FEMALE INSERT HAN 4 A, 09 20 004 2711	8-113
T40X0030	90459-6821	MALE INSERT HAN 4A, 09 20 004 2611	2-53
T40X0050	90459-6820	FEMALE INSERT HAN 4 A, 09 20 004 2711	8-113
T40X0050	90459-6821	MALE INSERT HAN 4A, 09 20 004 2611	2-97
T40X0550	90110-0056	MALE INSERT HAN 24 E 09 33 024 2601	2-53
T40X0550	90459-6627	FEMALE INSERT HAN E AV, 09 33 024 4735	8-113
T40X1071	90110-0056	MALE INSERT HAN 24 E 09 33 024 2601	4-3

Pos	Part No	Description	Page No
X			
T40X1071	90110-0057	FEMALE INSERT HAN 24 E 09 33 002 4201	2-59
T40X1091	90110-0056	MALE INSERT HAN 24 E 09 33 024 2601	4-3
T40X1091	90110-0057	FEMALE INSERT HAN 24 E 09 33 002 4201	2-59
T40X1170	2594415-0000	CONNECTION BOX	2-71
T40X9041	90195-0020	TERMINAL BLOCK, BK 2CRN; 0624720000	8-51
T40X9044	90459-2551	CONNECTOR, MOTOR FEEDBACK 15 PIN MALE	3-17, 3-19, 3-21, 3-23, 3-25
T40X9054	90459-2551	CONNECTOR, MOTOR FEEDBACK 15 PIN MALE	3-17, 3-19, 3-21, 3-23, 3-25
T40X9056	90459-2550	I/O CONNECTOR 26 PIN MALE, 2090-K6CK-D26	8-51
T40X9150	90458-2890	CONNECTOR, 21N-50N12N133NE	4-91, 4-93
T40X9151	90458-2890	CONNECTOR, 21N-50N12N133NE	4-91, 4-93
T40X9154	90458-2892	CONNECTOR, 11 N-50-3-31/133 NE	4-91, 4-93
T40X9155	90458-2892	CONNECTOR, 11 N-50-3-31/133 NE	4-91, 4-93
T40X9156	90459-0184	INTERFACE CONNECTOR FOR TPIH 2500 GENER.	8-49
T40X9210	90459-6387	CONNECTOR 5-POL M12, RSCS 5/9	3-5, 3-7, 3-9, 3-11, 3-13, 3-15
T40X9220	90459-6387	CONNECTOR 5-POL M12, RSCS 5/9	3-5, 3-7, 3-9, 3-11, 3-13, 3-15
T40X9580	90110-0095	CONNECTOR 3 POLE + EARTH	6-21
T40X9590	90110-0095	CONNECTOR 3 POLE + EARTH	6-21
T40X9600	90110-0095	CONNECTOR 3 POLE + EARTH	6-21
T50X0080	90459-6820	FEMALE INSERT HAN 4 A, 09 20 004 2711	8-113
T50X0080	90459-6821	MALE INSERT HAN 4A, 09 20 004 2611	2-97
T50X0240	90110-0052	MALE INSERT HAN 6E 09 33 006 2601	2-59
T50X0241	90195-0020	TERMINAL BLOCK, BK 2CRN; 0624720000	5-205, 5-207, 5-209, 5-211
T50X0242	90195-0020	TERMINAL BLOCK, BK 2CRN; 0624720000	5-205, 5-207, 5-209, 5-211
T50X0243	90110-0056	MALE INSERT HAN 24 E 09 33 024 2601	5-205, 5-207, 5-209, 5-211
T50X0243	90110-0057	FEMALE INSERT HAN 24 E 09 33 002 4201	2-51
T50X0250	90110-0052	MALE INSERT HAN 6E 09 33 006 2601	2-59
T50X0250	90459-6624	FEMALE INSERT HAN E AV, 09 33 006 4735	8-113
T50X0251	90195-0020	TERMINAL BLOCK, BK 2CRN; 0624720000	5-205, 5-207, 5-209, 5-211
T50X0252	90195-0020	TERMINAL BLOCK, BK 2CRN; 0624720000	5-205, 5-207, 5-209, 5-211
T50X0260	90110-0052	MALE INSERT HAN 6E 09 33 006 2601	2-97
T50X0260	90459-6624	FEMALE INSERT HAN E AV, 09 33 006 4735	8-113
T50X0560	90110-0056	MALE INSERT HAN 24 E 09 33 024 2601	2-97
T50X0560	90459-6627	FEMALE INSERT HAN E AV, 09 33 024 4735	8-113
T50X1410	90458-0135	MALE PLUG, COD.220-0397	5-205, 5-207, 5-209, 5-211
T50X1410	90458-0136	FEMALE PLUG, COD 220-0381	5-205, 5-207, 5-209, 5-211
T50X1420	90458-0135	MALE PLUG, COD.220-0397	5-205, 5-207, 5-209, 5-211
T50X1420	90458-0136	FEMALE PLUG, COD 220-0381	5-205, 5-207, 5-209, 5-211
T50X1430	90458-0135	MALE PLUG, COD.220-0397	5-205, 5-207, 5-209, 5-211
T50X1430	90458-0136	FEMALE PLUG, COD 220-0381	5-205, 5-207, 5-209, 5-211
T50X1440	90458-0135	MALE PLUG, COD.220-0397	5-205, 5-207, 5-209, 5-211
T50X1440	90458-0136	FEMALE PLUG, COD 220-0381	5-205, 5-207, 5-209, 5-211
T50X9004	90459-2551	CONNECTOR, MOTOR FEEDBACK 15 PIN MALE	3-17, 3-19, 3-21, 3-23, 3-25
T50X9011	90195-0020	TERMINAL BLOCK, BK 2CRN; 0624720000	8-51
T50X9014	90459-2551	CONNECTOR, MOTOR FEEDBACK 15 PIN MALE	5-13, 5-83, 5-85, 5-87, 5-89, 5-91
T50X9570	90110-0095	CONNECTOR 3 POLE + EARTH	6-21
U30X0220	90110-0052	MALE INSERT HAN 6E 09 33 006 2601	2-19
U30X0220	90459-6624	FEMALE INSERT HAN E AV, 09 33 006 4735	8-113
U30X0540	90110-0056	MALE INSERT HAN 24 E 09 33 024 2601	2-19
U30X0540	90459-6627	FEMALE INSERT HAN E AV, 09 33 024 4735	8-113
U30X1460	90110-0095	CONNECTOR 3 POLE + EARTH	2-243
U30X1670	90458-1595	CONNECTION, BKS-S 33M-00	2-237
U30X1710	90326-0020	PLUG, FEMALE YELLOW CR-AL	2-237
U70X0100	90459-6820	FEMALE INSERT HAN 4 A, 09 20 004 2711	8-113
U70X0130	90459-6820	FEMALE INSERT HAN 4 A, 09 20 004 2711	8-113
U70X0130	90459-6821	MALE INSERT HAN 4A, 09 20 004 2611	1-357
U70X0300	90459-6624	FEMALE INSERT HAN E AV, 09 33 006 4735	8-113
U70X0310	90110-0052	MALE INSERT HAN 6E 09 33 006 2601	1-9
U70X0310	90459-6624	FEMALE INSERT HAN E AV, 09 33 006 4735	8-113
U70X0312	90600-4807	MALE INSERT HAN Q 09 12 005 3001	1-9
U70X0312	90600-4808	FEMALE INSERT HAN Q, 09 12 005 3101	1-9
U70X0320	90459-6624	FEMALE INSERT HAN E AV, 09 33 006 4735	8-113
U70X0340	90459-6624	FEMALE INSERT HAN E AV, 09 33 006 4735	8-113
U70X0350	90459-6624	FEMALE INSERT HAN E AV, 09 33 006 4735	8-113
U70X0360	90110-0052	MALE INSERT HAN 6E 09 33 006 2601	1-175
U70X0360	90459-6624	FEMALE INSERT HAN E AV, 09 33 006 4735	8-113
U70X0361	90459-3671	MALE INSERT TB 09 20 003 2611	1-175
U70X0361	90459-4718	FEMALE INSERT HAN 3 A 09 20 003 2711	1-175
U70X0370	90110-0052	MALE INSERT HAN 6E 09 33 006 2601	1-211
U70X0370	90459-6624	FEMALE INSERT HAN E AV, 09 33 006 4735	8-109, 8-111
U70X0380	90110-0052	MALE INSERT HAN 6E 09 33 006 2601	8-77, 8-79
U70X0380	90459-6624	FEMALE INSERT HAN E AV, 09 33 006 4735	8-109, 8-111
U70X0450	90110-0055	FEMALE INSERT HAN 6 HSB 09 31 006 2701	8-113
U70X0460	90110-0055	FEMALE INSERT HAN 6 HSB 09 31 006 2701	8-113
U70X0461	1532239-0300	CONNECTION BOX	1-277
U70X0580	90110-0056	MALE INSERT HAN 24 E 09 33 024 2601	1-357
U70X0580	90459-6627	FEMALE INSERT HAN E AV, 09 33 024 4735	8-113
U70X0610	90110-0056	MALE INSERT HAN 24 E 09 33 024 2601	8-77, 8-79
U70X0610	90459-6627	FEMALE INSERT HAN E AV, 09 33 024 4735	8-109, 8-111
U70X0900	90459-4928	PANEL CONNECTOR FEMALE, TYPE K	8-113
U70X0910	90459-4928	PANEL CONNECTOR FEMALE, TYPE K	8-113
U70X0920	90459-4928	PANEL CONNECTOR FEMALE, TYPE K	8-113
U70X0930	90326-0022	PLUG, MALE YELLOW CR-AL	1-211

Pos	Part No	Description	Page No
X			
U70X0930	90459-4928	PANEL CONNECTOR FEMALE, TYPE K	8-113
U70X1710	90326-0020	PLUG, FEMALE YELLOW CR-AL	1-245
U70X1720	90326-0020	PLUG, FEMALE YELLOW CR-AL	1-357
U70X3480	90459-3709	CONNECTOR 3-POLE AMP 282087-1	1-13
U70X3510	90326-0020	PLUG, FEMALE YELLOW CR-AL	1-55
U70X3540	90326-0020	PLUG, FEMALE YELLOW CR-AL	1-69, 1-71
U70X4000	2847233-0100	CONNECTION BOX	1-203
U70X4350	90326-0020	PLUG, FEMALE YELLOW CR-AL	1-205
U70X4360	90326-0020	PLUG, FEMALE YELLOW CR-AL	1-205
U70X6002	90458-1212	LEFT ENDPLATE INCL. 10M CABLE	1-337, 1-339
U70X6003	90458-1212	LEFT ENDPLATE INCL. 10M CABLE	1-335
U70X9031	90195-0020	TERMINAL BLOCK, BK 2CRN; 0624720000	8-51
U70X9034	90459-2551	CONNECTOR, MOTOR FEEDBACK 15 PIN MALE	1-235, 1-237
U70X9035	2870905-0000	CONNECTOR	8-51
U70X9166	90459-0184	INTERFACE CONNECTOR FOR TPIH 2500 GENER.	8-49
U70X9520	90459-2106	CABLE CONNECTOR, C091 31D004 100 2	1-229, 1-231
U70X9522	90110-0147	PLUG D-SUB 9 FEMALE, DE09S064TLF	1-229, 1-231
W51X0090	90110-0052	MALE INSERT HAN 6E 09 33 006 2601	2-59
W51X0090	90459-6624	FEMALE INSERT HAN E AV, 09 33 006 4735	8-109, 8-111
W51X0630	90110-0056	MALE INSERT HAN 24 E 09 33 024 2601	2-59
W51X0630	90459-6627	FEMALE INSERT HAN E AV, 09 33 024 4735	8-109, 8-111
W51X1120	90459-6586	ACT/SENS.Y-CABLE, ASBN 2-PRKMV 4-07/0,6M	11-67, 11-211
W51X1130	90459-6586	ACT/SENS.Y-CABLE, ASBN 2-PRKMV 4-07/0,6M	11-67, 11-211
W51X1140	90459-6586	ACT/SENS.Y-CABLE, ASBN 2-PRKMV 4-07/0,6M	11-67, 11-211
W51X1150	90459-6586	ACT/SENS.Y-CABLE, ASBN 2-PRKMV 4-07/0,6M	11-3, 11-5, 11-7
W51X1160	2872919-0100	CONNECTION BOX	11-237
W51X1500	90458-1211	LEFT ENDPLATE INCL. 5M CABLE	11-73, 11-215
X1512	90459-4077	WIRE SEAL , AMP 281934	1-13
X1513	90459-4079	MINI MIC SRS, AMP 183035-1	1-13

Tetra Pak

SPC binder labels. 40 mm Full width *Note! This page is generated* **automatically.**
using the **variable definitions** *made in the* **front page** *file!!*

Tetra Pak A3/Speed 1(2)
648576-0300
Issue: 2011-01 Doc No: SPC-3022041-0108

Tetra Pak A3/Speed 1(2)
648576-0300
Issue: 2011-01 Doc No: SPC-3022041-0108

Tetra Pak A3/Speed 2(2)
648576-0300
Issue: 2011-01 Doc No: SPC-3022041-0108

Tetra Pak A3/Speed 2(2)
648576-0300
Issue: 2011-01 Doc No: SPC-3022041-0108

Tetra Pak A3/Speed 1(2)
648576-0300
Issue: 2011-01 Doc No: SPC-3022041-0108

Tetra Pak A3/Speed 1(2)
648576-0300
Issue: 2011-01 Doc No: SPC-3022041-0108

Tetra Pak A3/Speed 2(2)
648576-0300
Issue: 2011-01 Doc No: SPC-3022041-0108

Tetra Pak A3/Speed 2(2)
648576-0300
Issue: 2011-01 Doc No: SPC-3022041-0108

Tetra Pak A3/Speed 1(2)
648576-0300
Issue: 2011-01 Doc No: SPC-3022041-0108

Tetra Pak A3/Speed 1(2)
648576-0300
Issue: 2011-01 Doc No: SPC-3022041-0108

Tetra Pak A3/Speed 2(2)
648576-0300
Issue: 2011-01 Doc No: SPC-3022041-0108

Tetra Pak A3/Speed 2(2)
648576-0300
Issue: 2011-01 Doc No: SPC-3022041-0108

SPC binder labels. 30 mm Half width *Note! This page is generated* **automatically.**
using the **variable definitions** *made in the* **front page** *file!!*

Tetra Pak A3/Speed 1(2)
648576-0300
Issue: 2011-01 Doc No: SPC-3022041-0108

Tetra Pak A3/Speed 1(2)
648576-0300
Issue: 2011-01 Doc No: SPC-3022041-0108

Tetra Pak A3/Speed 2(2)
648576-0300
Issue: 2011-01 Doc No: SPC-3022041-0108

Tetra Pak A3/Speed 1(2)
648576-0300
Issue: 2011-01 Doc No: SPC-3022041-0108

Tetra Pak A3/Speed 1(2)
648576-0300
Issue: 2011-01 Doc No: SPC-3022041-0108

Tetra Pak A3/Speed 2(2)
648576-0300
Issue: 2011-01 Doc No: SPC-3022041-0108

Tetra Pak A3/Speed 2(2)
648576-0300
Issue: 2011-01 Doc No: SPC-3022041-0108

Tetra Pak A3/Speed 1(2)
648576-0300
Issue: 2011-01 Doc No: SPC-3022041-0108

Tetra Pak A3/Speed 1(2)
648576-0300
Issue: 2011-01 Doc No: SPC-3022041-0108

Tetra Pak A3/Speed 2(2)
648576-0300
Issue: 2011-01 Doc No: SPC-3022041-0108

Tetra Pak A3/Speed 2(2)
648576-0300
Issue: 2011-01 Doc No: SPC-3022041-0108

Tetra Pak A3/Speed 1(2)
648576-0300
Issue: 2011-01 Doc No: SPC-3022041-0108

Tetra Pak A3/Speed 1(2)
648576-0300
Issue: 2011-01 Doc No: SPC-3022041-0108

Tetra Pak A3/Speed 2(2)
648576-0300
Issue: 2011-01 Doc No: SPC-3022041-0108

Tetra Pak A3/Speed 2(2)
648576-0300
Issue: 2011-01 Doc No: SPC-3022041-0108