10.2 Templates and Tools

Illustration	Description
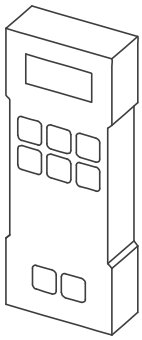	Force Gauge (Optional Accessories) TP No. 90459-1467 **1 Superstructure** 5 Final Folder **8 ASU** 1.5.1-5 Filling Pipe - Set Pressure Roller 5.2.2-3 Swing Frame - Set Belt 5.2.3-6 Chain Support - Set Belt 8.2.2-8 Inductor - Set Pressure Roller 8.4-3 Splicing Device - Set Drive Unit Belt
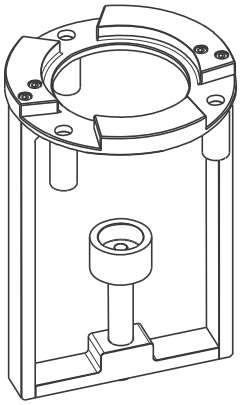	Filing Pipe Alignment Template (Regular Accessories) TP No. 3038999-0100 **1 Superstructure** 1.5.1-4 Filling Pipe - Set Position
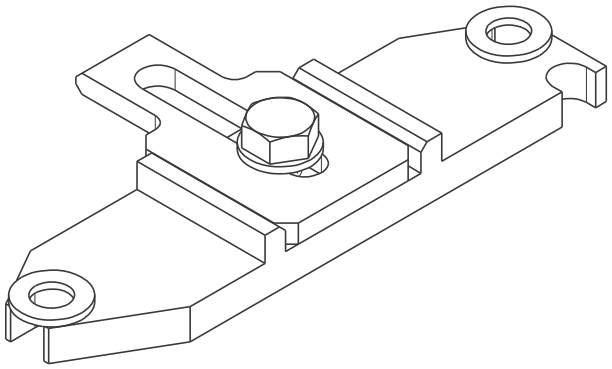	LS Roller Adjustment Template (Regular Accessories) TP No. 2793320-0301 (for TBA 125 S) TP No. 2793320-0302 (for TBA 200 B) TP No. 2793320-0303 (for TBA 250 B) TP No. 2793320-0304 (for TBA 200 M) TP No. 2793320-0305 (for TBA 250 S) TP No. 2793320-0306(for TBA 200 S) TP No. 2793320-0326 (for TBA 1000 B) TP No. 2793320-0327 (for TBA 1000 S) TP No. 2793320-0328 (for TBA 1000 Sq) **1 Superstructure** 1.2.1-2 Lower Forming Ring - Set Position
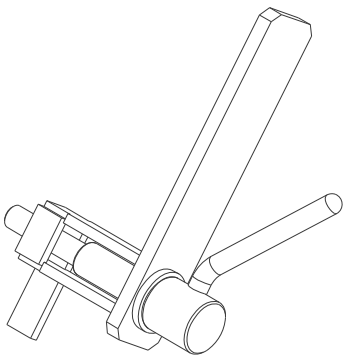	Tool Dismounting (Optional Accessories) TP No. 449969-0100 **1 Superstructure** 1.5.2-1 Product Valve - Remove Cylinders 1.5.2-2 Product Valve - Change Seals and Membranes 1.5.2-3 Product Valve - Change O-Rings

TechPub_2614345_0108 - 0904_3048258_01.fm

Illustration	Description
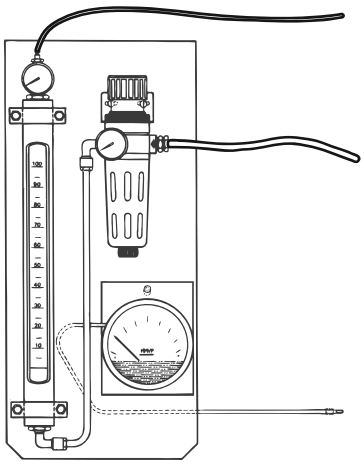	Leak Finding Equipment (Optional Accessories) TP No. 533014-0100 **1 Superstructure** 1.3-2 Drying Chamber - Leakage Detection
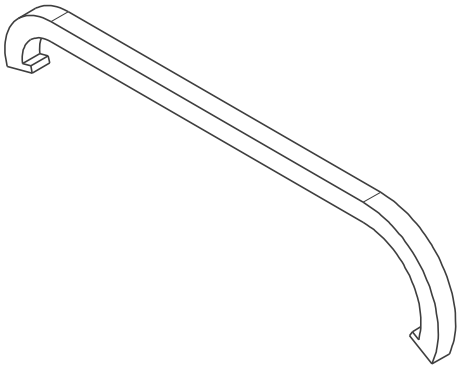	Pipe Wrench (Optional Accessories) TP No. 777200-0101 **1 Superstructure** 1.6.1-1 Flow Switch - Check Gaskets
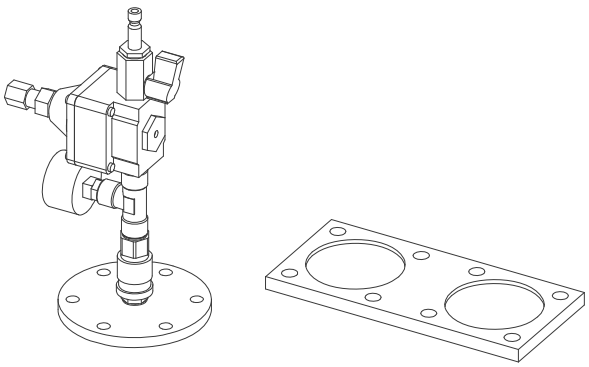	Pressure Test Equipment (Optional Accessories) TP No. 1349738-0100 **1 Superstructure** 1.4.5-2 Air Super Heater - Check Heat Exchanger
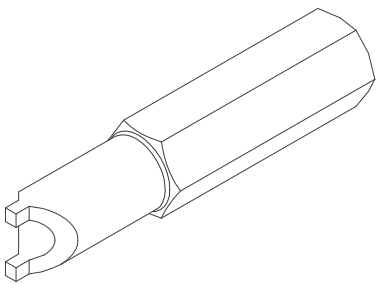	Key (Regular Accessories) TP No.1517064-0000 **1 Superstructure** 1.11.1-2 Irradiation Kit - Overhaul

TechPub_2614345_0108 - 0904_3048258_01.fm

Illustration	Description
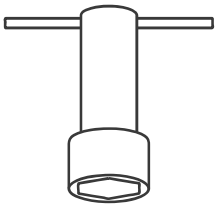	Socket Wrench (Optional Accessories) TP No. 90206-0330 **1 Superstructure** 1.7.1-1 Heating Unit - Change Heating Elements
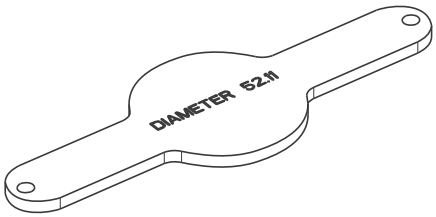	Steering Ring Template (Regular Accessories) TP No. 2878628-1 (for TBA 125 S) TP No. 2878628-2 (for TBA 200 S) TP No. 2878928-3 (for TBA 250 S - TBA 200 M)) TP No. 2878628-4 (for TBA 250 B - TBA 200 B) TP No. 2878628-5 (for TBA 1000 Sq) TP No. 2878628-6 (for TBA 1000 S) TP No. 2878928-7 (for TBA 1000 B) **1 Superstructure** 1.2.7-2 Steering Ring - Set Rollers
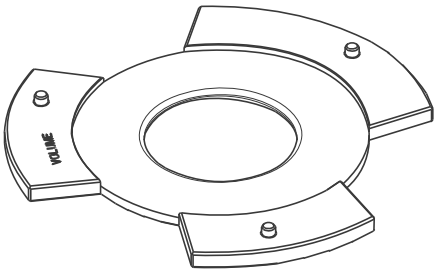	Seal Ring Alignment Tool (Regular Accessories) TP No. 3038998-0100 **1 Superstructure** 1.2.6-3 Seal - Set Position
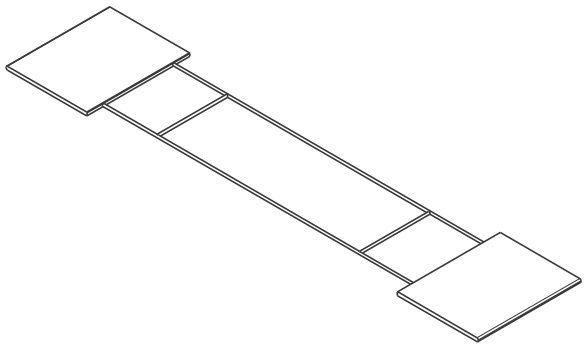	Template (Optional Accessories) TP No. 3122373-0000 **1 Superstructure** 1.7.3-3 Bath - Change Heating Elements

TechPub_2614345_0108 - 0904_3048258_01.fm

Illustration	Description
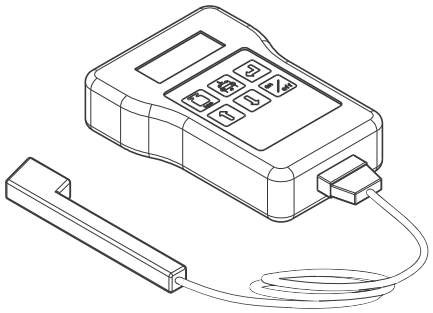	Belt Tension Meter (Optional Accessories) TP No. 90600-3415 **4 Jaw System** **5 Final Folder** **8 ASU** 4.5-1 Design Correction - Set Belt Tension 5.2.2-3 Swing Frame - Set Belt 5.2.3-6 Chain Support - Set Belt 8.6-3 Side Feeder - Check Timing Belt Tension
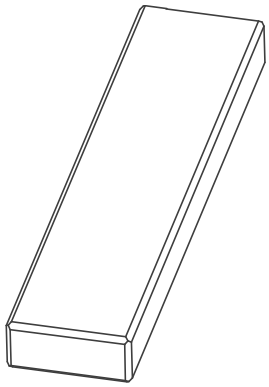	Tool (Regular Accessories) TP No. 2640362-0000 (Portion Packages) TP No. 2656105-0000 (Family Packages) **4 Jaw System** 4.3-1 Drive Unit - Overhaul
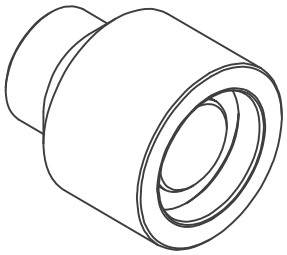	Shaft Removal Tool (Regular Accessories) TP No. 90459-4501 **4 Jaw System** 4.3-1 Drive Unit - Overhaul
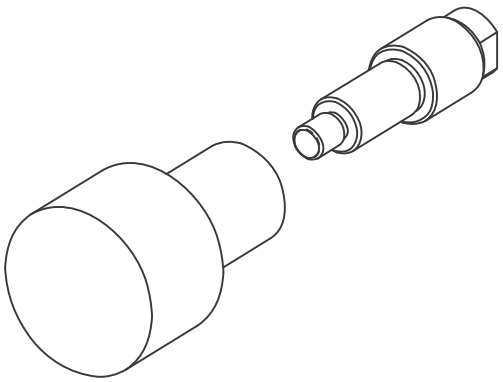	Bushing Tool (Regular Accessories) TP No. 2715353-0000 **4 Jaw System** 4.2-11 Pressure Jaw - Overhaul

TechPub_2614345_0108 - 0904_3048258_01.fm

Illustration	Description
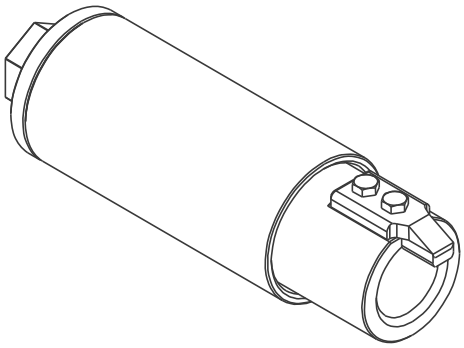	Jaw Bearing Extraction Tool (Regular Accessories) TP No. 1487215-0000 Attachment for sealing jaws, 1499129 (thick) Attachment for pressure jaws, 1499186 (thin) **4 Jaw System** 4.2-11 Pressure Jaw - Overhaul 4.1-12 Sealing Jaw - Overhaul
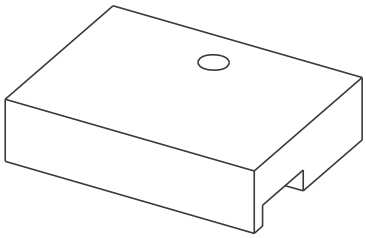	Tool TP No. 3010398-0000 **4 Jaw System** 4-11 Jaw System - Overhaul Cutting Device
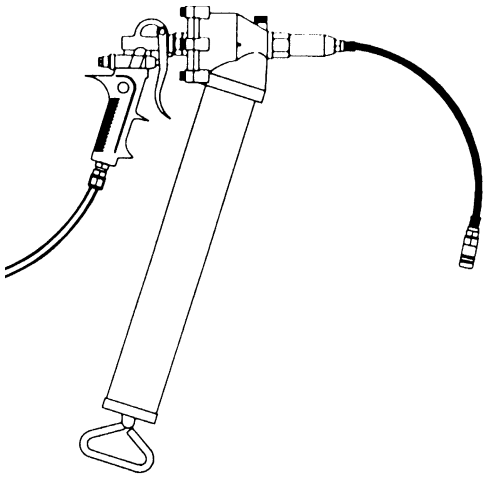	Spray Gun TP No. 1512559-0000 **4 Jaw System**
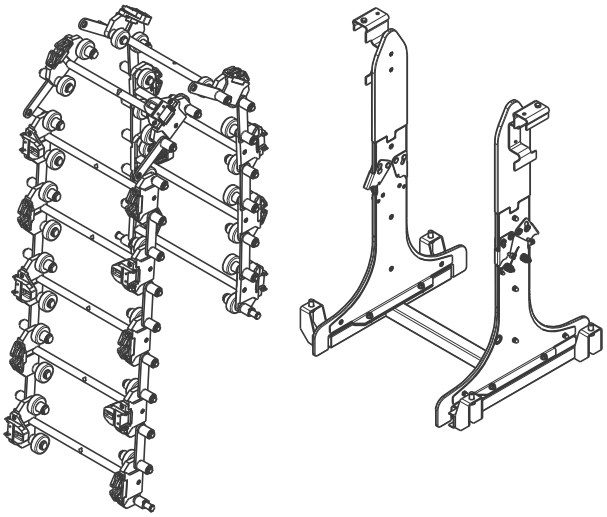	Chain Lift Tool (Optional Accessories) TP No. 2839739-0101 (for TBA 125 S) TP No. 2839739-0102 (for TBA 200 B) TP No. 2839739-0103 (for TBA 200 M) TP No. 2839739-0104 (for TBA 250 B) TP No. 2839739-0105 (for TBA 200 S) TP No. 2839739-0106 (for TBA 250 S) TP No. 2839739-0107 (for TBA 1000 B) TP No. 2839739-0108 (for TBA 1000 S) TP No. 2839739-0109 (for TBA 1000 Sq) **4 Jaw System** 4-7 Jaw System - Remove and Assemble Chains

TechPub_2614345_0108 - 0904_3048258_01.fm

Illustration	Description
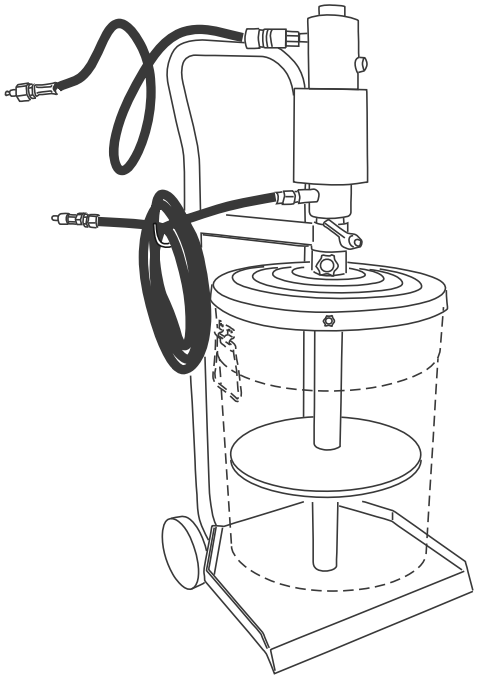	Portable grease pump (Optional Accessories) TP No. 90459-2334 **4 Jaw System**
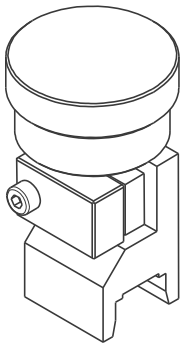	Micrometer Tool (Optional Accessories) TP No. 2908997-0102 (for TBA 125 S) TP No. 2908997-0103 (for TBA 200 B) TP No. 2908997-0104 (for TBA 200 M) TP No. 2908997-0105 (for TBA 200 S) TP No. 2908997-0107 (for TBA 250 B) TP No. 2908997-0108 (for TBA 250 S) TP No. 2908997-0115 (for TBA 1000 B) TP No. 2908997-0116 (for TBA 1000 S) TP No. 2908997-0117 (for TBA 1000 Sq) **4 Jaw System** 4.1-7 Sealing Jaw - Check Inductor
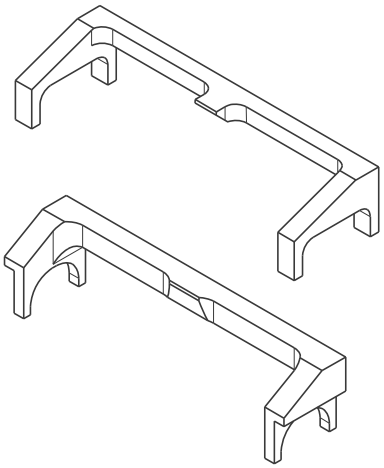	Waste Box Tool (Regular Accessories) TP No. 2954995-0000 (for T-orders: 21215/00001 to 21215/00070) TP No. 3053983-0000 (for T-orders: 21215/00071 and above). **4 Jaw System** 4.7-3 Waste Box - Set Pneumatic Cylinder

TechPub_2614345_0108 - 0904_3048258_01.fm

Illustration	Description
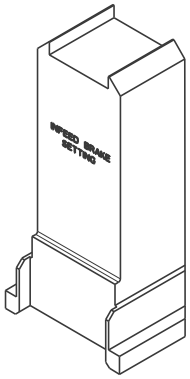	Heat Applicator Template (Regular Accessories) TP No. 2946747-0000 (for TBA 200 S) TP No. 2946748-0000 (for TBA 250 B) TP No. 2946749-0000 (for TBA 200 B) TP No. 2846459-0000 (for TBA 125 S) TP No. 2946750-0000 (for TBA 200 M) TP No. 2946751-0000 (for TBA 250 S) TP No. 2527355-0000 (for TBA 1000 S - TBA 1000 B) TP No. 2553032-0000 (for TBA 1000 Sq) **5 Final Folder** 5.2.5-1 Heating Chamber - Set Flap Sealing Nozzles
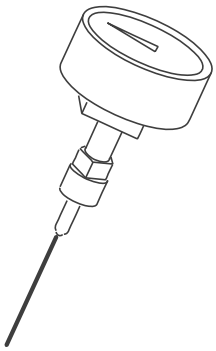	Needle Pressure Gauge (Optional Accessories) TP No. 1478583-0100 **5 Final Folder** 5.2.4-1 Squeezer - Set Position
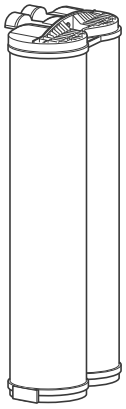	Maintenance Kit (Regular Accessories) TP No. 90600-3267 **7 Service Unit** 7.5.2-4 Sterile Water System - Change Progard Pack
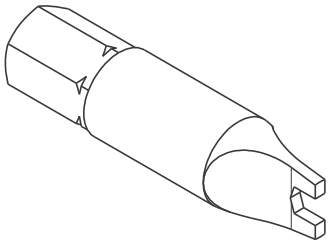	Tool for Snake Eyes M5 Screws (Regular Accessories) TP No. 90600-2975 **8 ASU** 8.10-3 Covering Panel - Change Safety Key

TechPub_2614345_0108 - 0904_3048258_01.fm

Illustration	Description
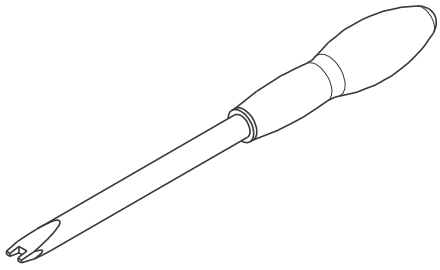	Tool for Special Round Nuts (Regular Accessories) TP No. 2863968-0000 **8 ASU** 8.10-3 Covering Panel - Change Safety Key
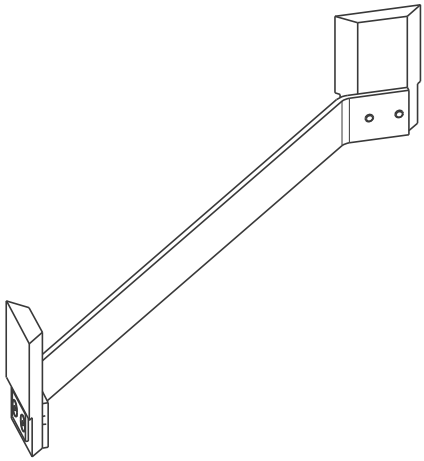	Sealing Plate Cleaning Tool (Regular Accessories) TP No. 2994287-0000 **8 ASU** 8.4.4-1 Heating Unit - Check Sealing Plate
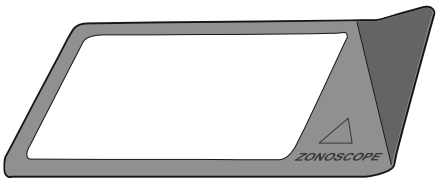	Measuring Instrument (Optional Accessories) TP No. 90243-0203 **9 Electrical Cabinet**
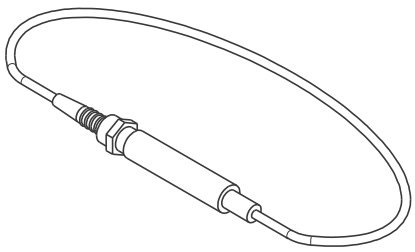	Resistance (Optional Accessories) TP No. 3031848-0000 **9 Electrical Cabinet** 9.7.3-2 Conductivity Meter - Check 9.7.3-4 Conductivity Meter - Calibrate

TechPub_2614345_0108 - 0904_3048258_01.fm

Illustration	Description
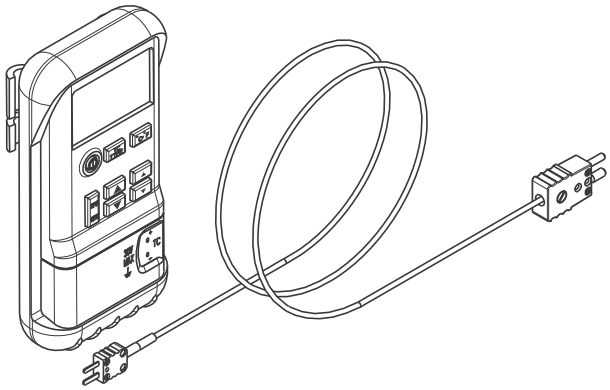	Temperature Calibrator (FLUKE 714) (Optional Accessories) TP No. 90458-0914 Thermocouple Cable Male (Optional Accessories) TP No. 90458-0915 **9 Electrical Cabinet** 9.7.5-1 Temperature Regulators - Calibrate 9.7.5.1-1 Calibrator - Set Fluke 714
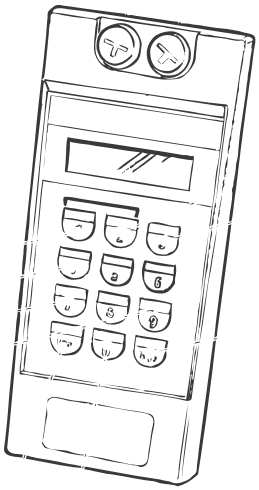 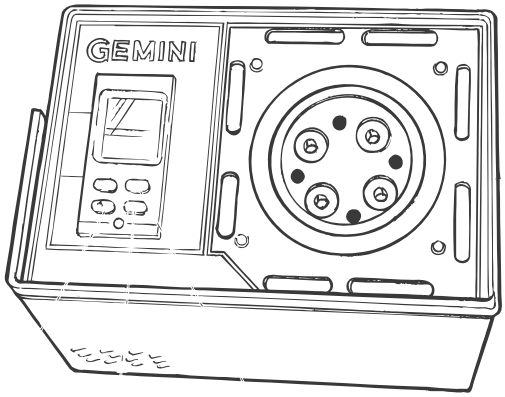	Calibration Equipment (Optional Accessories) TP No. 2559112-0100 Including: Temperature Calibrator (Micromite instrument) TP No. 90410-0338 Extension Wire Male 5m. (temp.controller) TP No. 90326-0308 Extension Wire Female 1m. (oven) TP No. 90326-0309 Label TP No. 90194-0113 Temperature Calibrator Oven (Gemini) TP No. 90410-0337 Calibrated Thermocouple Type K TP No. 90326-0310 **9 Electrical Cabinet** 9.7.5.1-2 Calibrator - Set Micromite II 9.7.6-1 Thermocouples - Check

TechPub_2614345_0108 - 0904_3048258_01.fm