SPC

Spare Parts Catalogue

CAP 30/Flex ScrewCap 030V

662950-0300

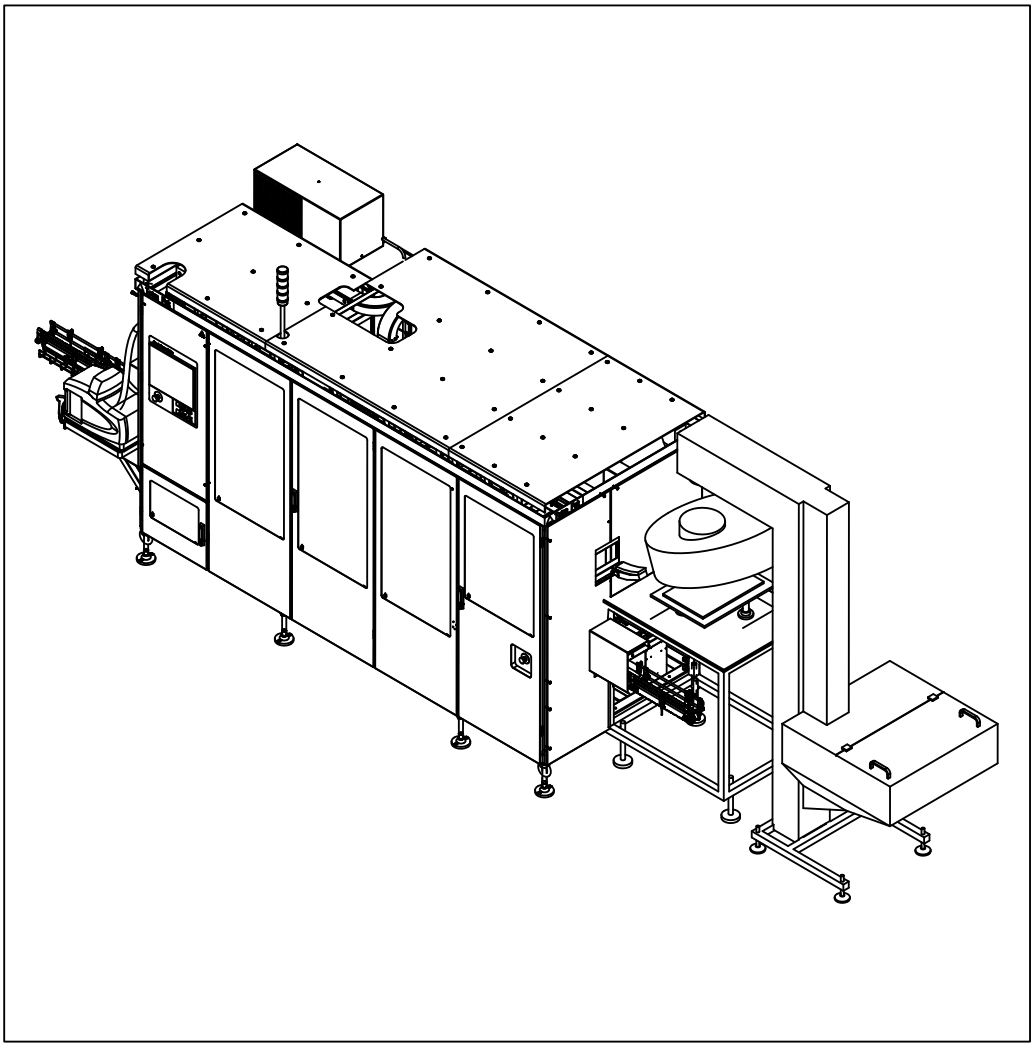

Tetra Pak

Doc. No: SPC-3202357-0103

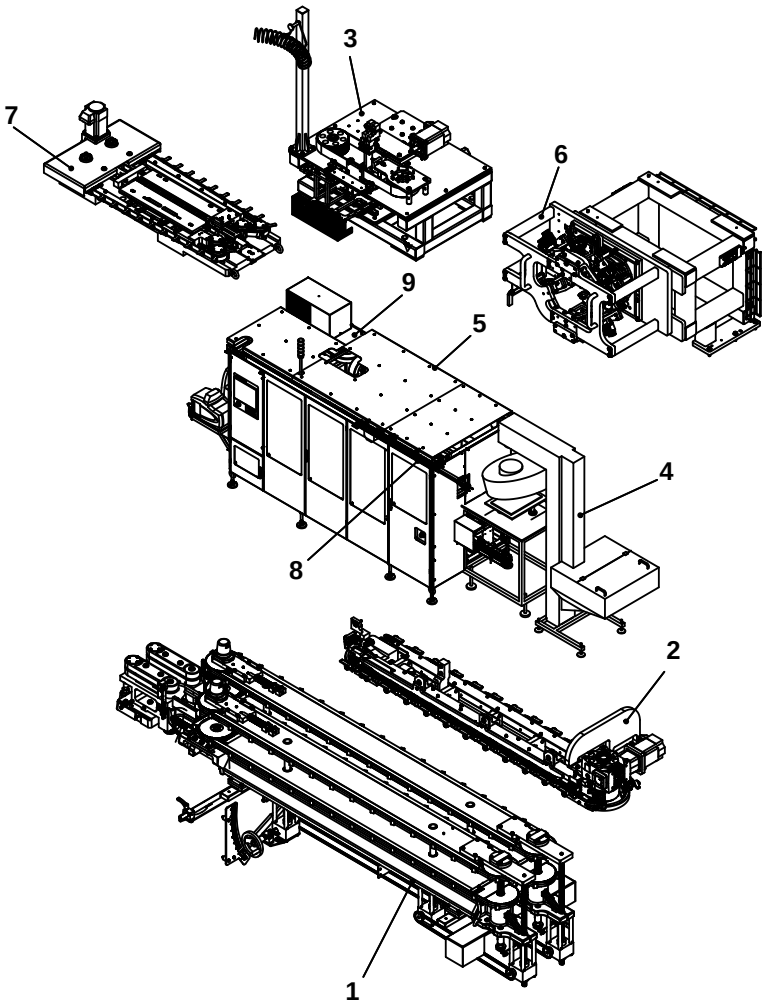

The position numbers in the illustration correspond with the chapter numbers listed on the next page.

Copyright © 2012 Tetra Pak Group

All rights reserved. No part of this document may be reproduced or copied in any form or by any means without written permission from Tetra Pak Packaging Solutions .

Tetra Pak and all Tetra Pak products are trademarks belonging to the Tetra Pak Group.

The content of this manual is in accordance with the design and construction of the machine or equipment at the time of publishing. Tetra Pak reserves the right to introduce design modifications without prior notice.

This document was produced by:

Tetra Pak Packaging Solutions
Via Delfini 1
41123 Modena
ITALY

Additional copies can be ordered from Tetra Pak. When ordering additional copies, always provide the document number.

Doc. No. SPC-3202357-0103

Issue 2012-08

This document is valid for:

Series No/Machine No Sign.

SPC

Spare Parts Catalogue

CAP 30/Flex ScrewCap 030V
662950-0300

i Introduction
1 Package Line
2 Push Down
3 Screw Cap Hot Melt Applic.
4 Cap Sorter
5 Machine Body
6 Applicator Unit
7 Cap Sequencer
8 Cap Conveyor
9 Electrical Cabinet
10 Regular Accessories
11 Electric Equipment
12 Optional Equipment
ii Part Number Index
iii Ref. Des. Parts Index

Machine or equipment configurations that this catalogue is valid for are described on the next page.

Doc. No: SPC-3202357-0103

Issue 2012-08

Tetra Pak

Tetra Pak Packaging Solutions

Valid for:

Name	Drawing Specification and Development Step	Additional Information
CAP 30/Flex ScrewCap	662950-0300	Valid from T-order: 75757/00061

Update Log for Doc. No. SPC-3202357-0103

This table shows all changes made to this catalogue, including installed rebuilding kits, added or removed pages.

Date	Installed Kit	Added Pages (Doc. No.)	Removed Pages	Signature

Date	Installed Kit	Added Pages (Doc. No.)	Removed Pages	Signature

i Introduction

en About the Introduction Chapter
This chapter contains basic information about this catalogue and related Tetra Pak equipment.

bg За уводната глава
Тази глава съдържа основна информация за този каталог и приложимото Tetra Pak оборудване.

cs O kapitole Úvod
Tato kapitola obsahuje základní informace o této příručce a souvisejícím zařízení Tetra Pak.

da Om indledningen
Kapitlet indeholder grundlæggende oplysninger om dette katalog og tilhørende Tetra Pak-udstyr.

de Über das Einleitungskapitel
Diese Kapitel enthält grundlegende Informationen über diesen Katalog und die zugehörige Tetra Pak-Ausrüstung.

el Σχετικά με το Κεφάλαιο 'Εισαγωγή'
Αυτό το κεφάλαιο περιέχει βασικές πληροφορίες για τον παρόντα κατάλογο και τον σχετικό εξοπλισμό της Tetra Pak.

es Acerca del capítulo Introducción
Este capítulo contiene información básica sobre este catálogo y el equipo Tetra Pak relacionado.

et Sissejuhatava peatüki kohta
See peatükk sisaldab teavet käesoleva kataloogi ja sellega seonduva Tetra Paki seadme kohta.

fi Tietoja Johdanto-luvusta
Tässä luvussa on perustietoja tästä luettelosta ja Tetra Pak -laitteesta.

fr À propos du chapitre Introduction
Ce chapitre contient les informations de base à propos de ce catalogue et de l'équipement Tetra Pak concerné.

hu A Bevezetés fejezetről
Ez a fejezet alapvető információkat tartalmaz a katalógusról és a hozzá tartozó Tetra Pak berendezésről.

is Um inngangskaflann
Þessi kafli inniheldur grundvallarupplýsingar um þennan vörulista og tengdan Tetra Pak búnað.

it Informazioni sul capitolo Introduzione
Questo capitolo contiene informazioni generali sul presente catalogo e sulla relativa macchina Tetra Pak.

lt Apie įvadinį skyrių
Šiame skyriuje pateikta pagrindinė informacija apie šį katalogą ir su juo susijusią "Tetra Pak" įrangą.

lv Par Ievada nodaļu
Šī nodaļa ietver galveno informāciju par šo katalogu un saistītajām Tetra Pak iekārtām.

nl Over de inleiding
Dit hoofdstuk bevat basisinformatie omtrent deze catalogus en aanverwante Tetra Pak-installatie.

no Om kapitlet Introduksjon
Dette kapitlet inneholder grunnleggende informasjon om denne katalogen og relatert Tetra Pak-ustyr.

pl Informacje na temat rozdziału wprowadzającego
Rozdział wprowadzający zawiera podstawowe informacje dotyczące niniejszego katalogu i związanej z nim maszyny Tetra Pak.

pt Acerca do Capítulo de Introdução
Este capítulo contém informações básicas sobre este catálogo e os equipamentos relacionados da Tetra Pak.

ro Despre capitolul introductiv
Acest capitol conține informații de bază despre acest catalog şi despre echipamentul Tetra Pak corelat.

sk O kapitole Úvod
Táto kapitola obsahuje základné informácie o tomto návode a informácie súvisiace so zariadením Tetra Pak.

sl O uvodnem poglavju
To poglavje vsebuje osnovne informacije o tem katalogu in opremi Tetra Pak.

sv Om inledningskapitlet
Det här kapitlet innehåller grundläggande information om katalogen och Tetra Pak-utrustningen.

Manual Information

Illustrations . . . . . i - 7

English Text . . . . . i - 9

Информация за ръководството

Илюстрации . . . . . i - 7

Текст на български език . . . . . i - 15

Informace o příručce

Obrázky . . . . . i - 7

Český text . . . . . i - 21

Oplysninger om vejledninger

Illustrationer . . . . . i - 7

Dansk tekst . . . . . i - 27

Handbuch-Informationen

Abbildungen . . . . . i - 7

Deutscher Text . . . . . i - 33

Πληροφορίες εγχειριδίου

Εικόνες . . . . . i - 7

Ελληνικό Κείμενο . . . . . i - 39

Información del manual

Ilustraciones . . . . . i - 7

Texto en español . . . . . i - 45

Manuaali informatsioon

Joonised . . . . . i - 7

Eestikeelne tekst . . . . . i - 51

Tiedot käsikirjasta

Kuvat . . . . . i - 7

Suomenkielinen teksti . . . . . i - 57

Information sur le manuel

Illustrations . . . . . i - 7

Texte français . . . . . i - 63

Kézikönyv információ

Ábrák . . . . . i - 7

Magyar szöveg . . . . . i - 69

Handbókaupplýsingar

Skýringarmyndir . . . . . i - 7

Íslenskur texti . . . . . i - 75

Informazioni sul manuale

Figure . . . . . i - 7

Testo in italiano . . . . . i - 81

Vadovo informacija

Paveikslėliai . . . . . i - 7

Lietuviškas tekstas . . . . . i - 87

Informācija par instrukciju

Ilustrācijas . . . . . i - 7

Teksts latviešu valodā . . . . . i - 93

Handboekinformatie

Afbeeldingen . . . . . i - 7

Nederlands tekst . . . . . i - 99

Informasjon om manualen

Illustrasjoner . . . . . i - 7

Norsk tekst . . . . . i - 105

Informacje na temat instrukcji

Rysunki . . . . . i - 7

Tekst polski . . . . . i - 111

Informação do Manual

Ilustrações . . . . . i - 7

Texto em português . . . . . i - 117

Informațiile de manual

Ilustrații . . . . . i - 7

Text în limba română . . . . . i - 123

Informácie o príručke

Ilustrácie . . . . . i - 7

Slovenský text . . . . . i - 129

Informacije o navodilu

Slike . . . . . i - 7

Slovensko besedilo . . . . . i - 135

Information om handboken

Bilder . . . . . i - 7

Svensk text . . . . . i - 141

This page intentionally left blank

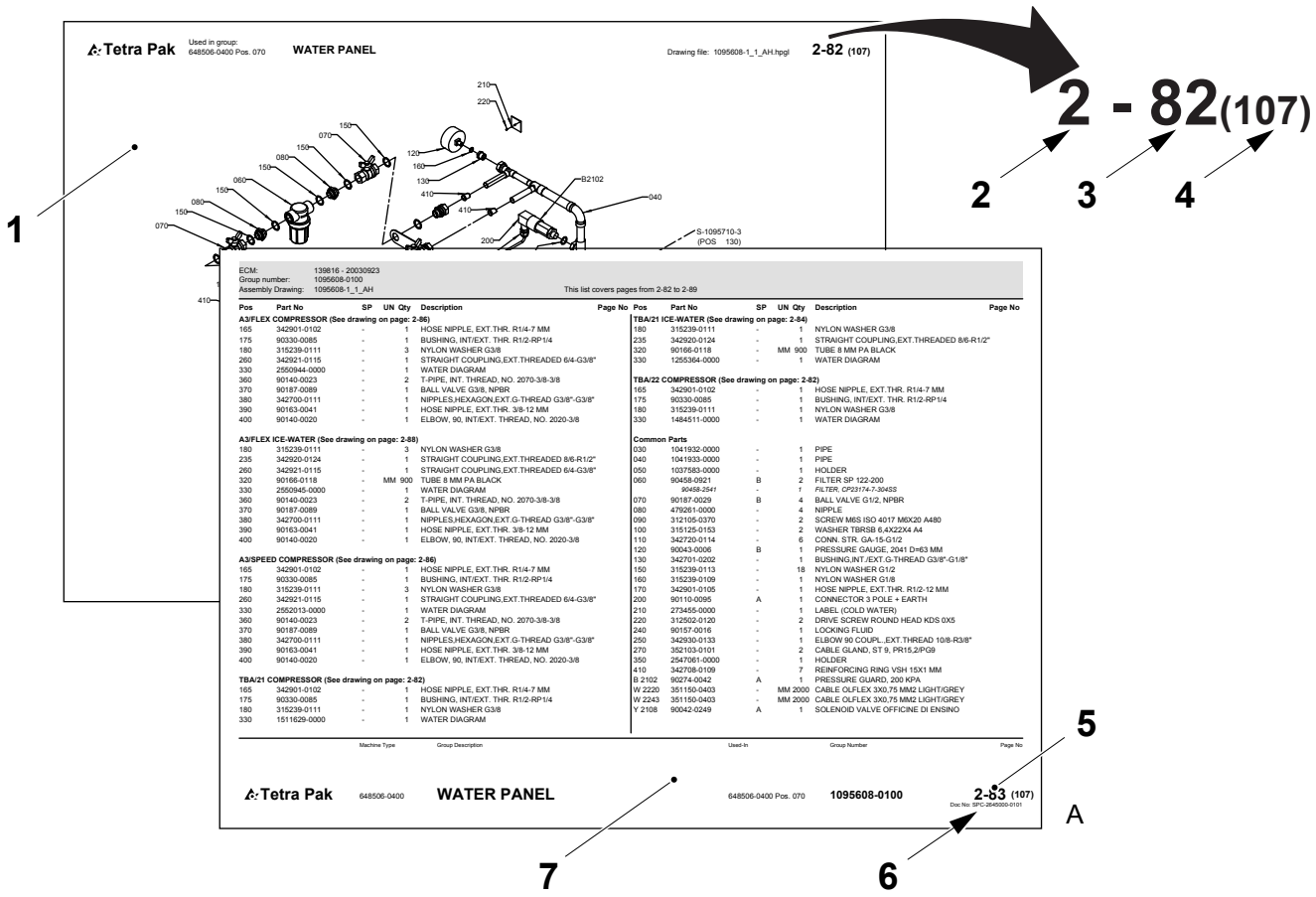
Tetra Pak
Used in group:
648506-0400 Pos. 070
WATER PANEL
Drawing file: 1095608-1_1_AH.hpgl
2-82 (107)
2 - 82(107)
1
2
3
4
5
6
7
A
ECM: 139816 - 20030923
Group number: 1095608-0100
Assembly Drawing: 1095608-1_1_AH
This list covers pages from 2-82 to 2-89
Tetra Pak 648506-0400 WATER PANEL 648506-0400 Pos. 070 1095608-0100 2-83 (107)

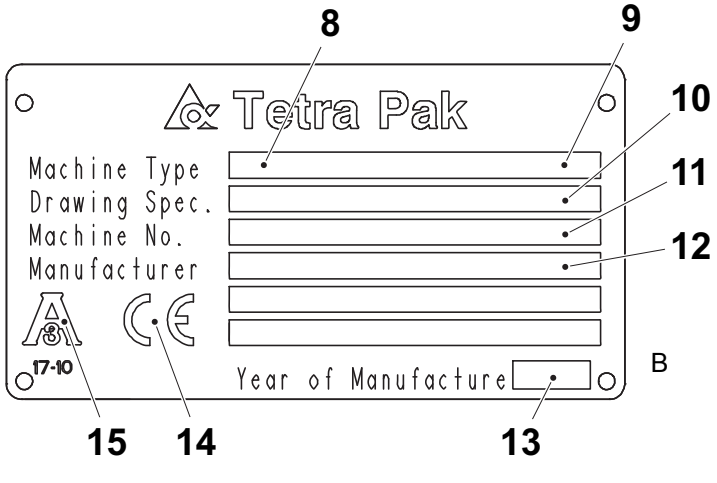
Tetra Pak
Machine Type
Drawing Spec.
Machine No.
Manufacturer
17-10
Year of Manufacture
8
9
10
11
12
13
14
15
B

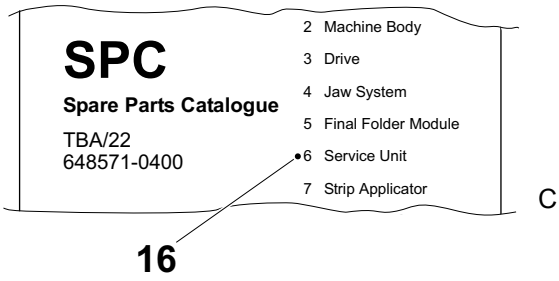
SPC
Spare Parts Catalogue
TBA/22
648571-0400
2 Machine Body
3 Drive
4 Jaw System
5 Final Folder Module
6 Service Unit
7 Strip Applicator
16
C

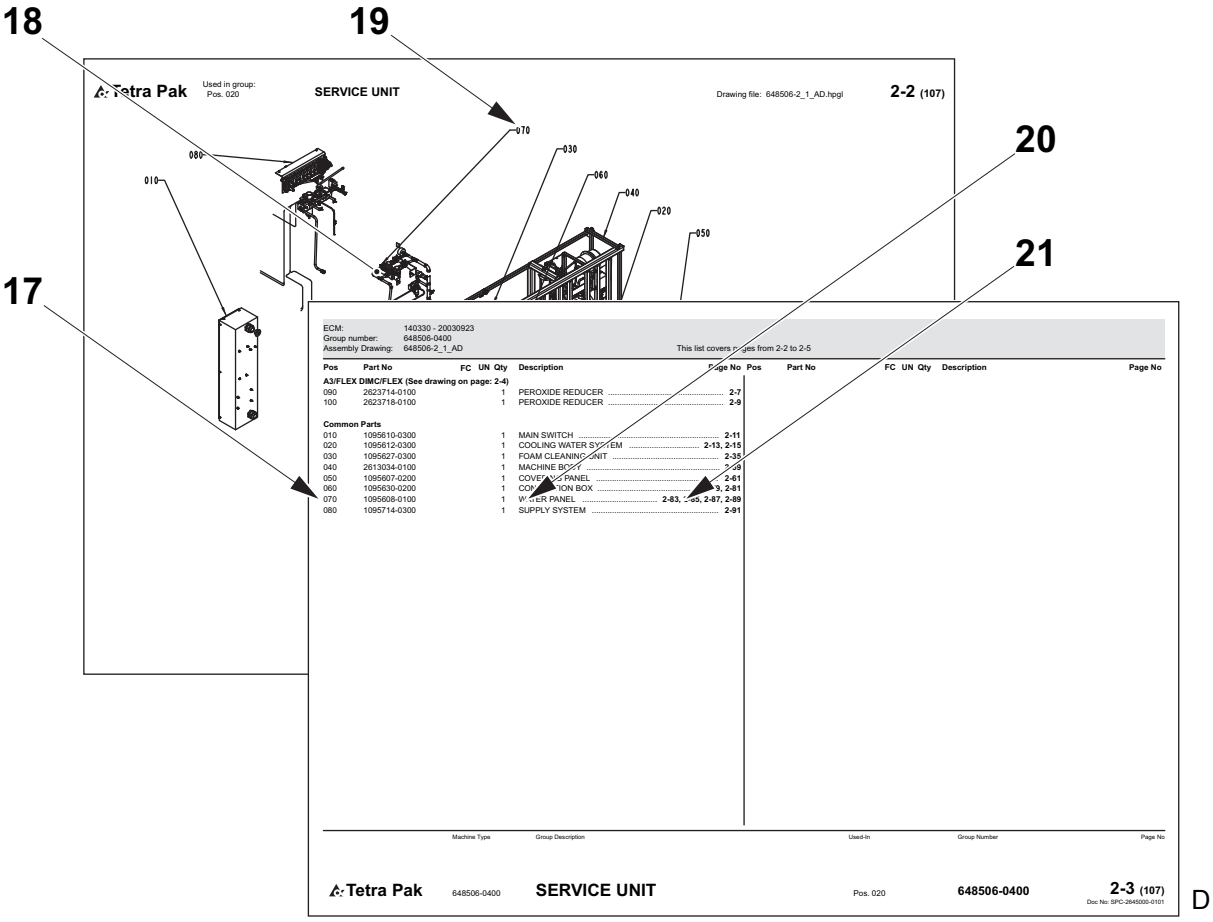
18
19
20
21
17
Tetra Pak
Used in group:
Pos. 020
SERVICE UNIT
Drawing file: 648506-2_1_AD.hpgl
2-2 (107)
070
030
060
040
020
050
080
010
ECM: 140330 - 20030923
Group number: 648506-0400
Assembly Drawing: 648506-2_1_AD
This list covers pages from 2-2 to 2-5
Pos Part No FC UN Qty Description Page No
A3/FLEX DIMC/FLEX (See drawing on page: 2-4)
090 2623714-0100 1 PEROXIDE REDUCER 2-7
100 2623718-0100 1 PEROXIDE REDUCER 2-9
Common Parts
010 1095610-0300 1 MAIN SWITCH 2-11
020 1095612-0300 1 COOLING WATER SYSTEM 2-13, 2-15
030 1095627-0300 1 FOAM CLEANING UNIT 2-35
040 2613034-0100 1 MACHINE BODY 2-39
050 1095607-0200 1 COVER SIDE PANEL 2-61
060 1095630-0200 1 CONNECTION BOX 2-81
070 1095608-0100 1 WATER PANEL 2-83, 2-85, 2-87, 2-89
080 1095714-0300 1 SUPPLY SYSTEM 2-91
Pos Part No FC UN Qty Description Page No
Machine Type
Group Description
Used-In
Group Number
Page No
Tetra Pak
648506-0400
SERVICE UNIT
Pos. 020
648506-0400
2-3 (107)
Doc No: SPC-2645000-0101
D

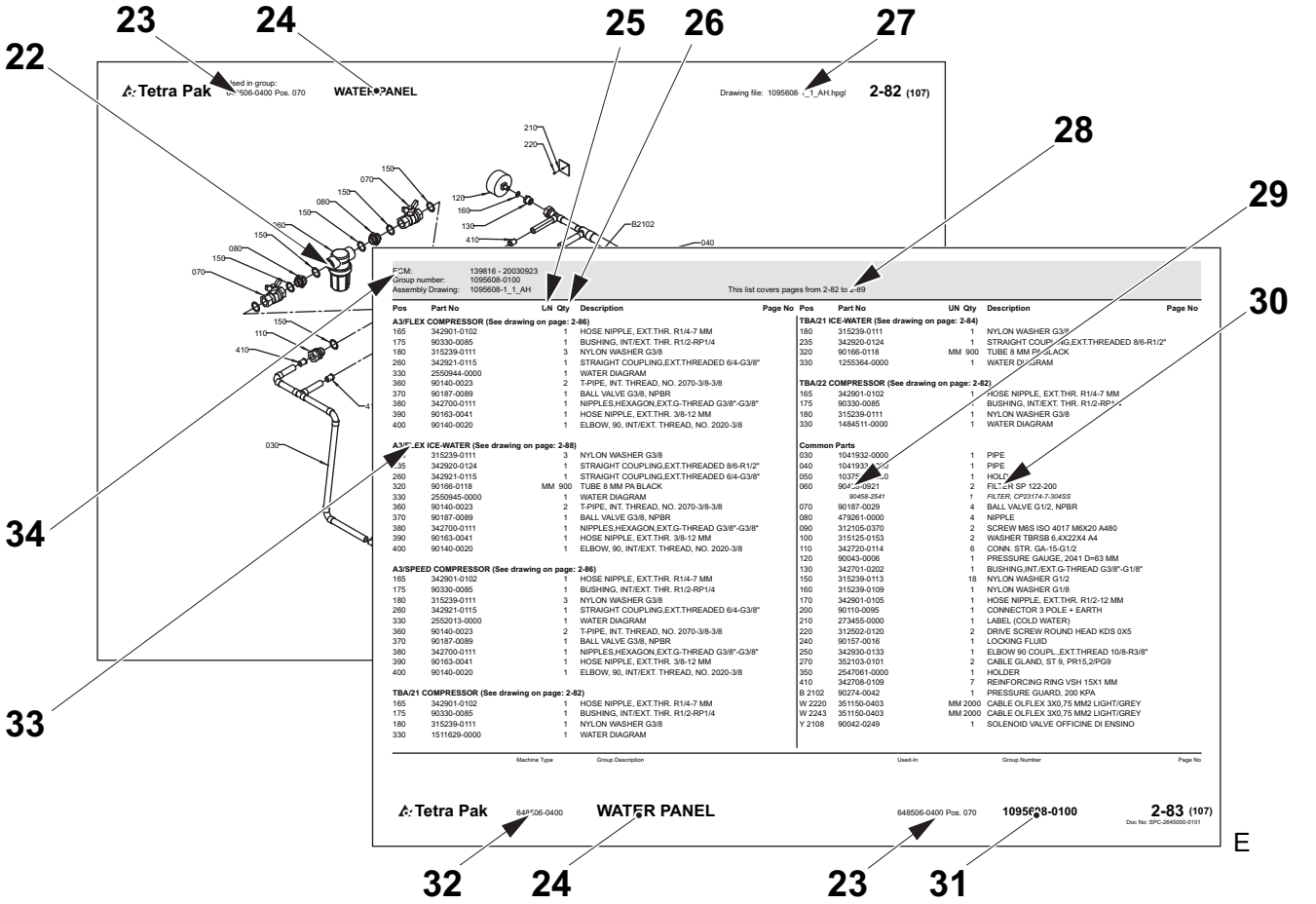
22
23
24
25
26
27
28
29
30
34
33
Tetra Pak
Used in group:
506-0400 Pos. 070
WATER PANEL
Drawing file: 1095608-_1_AH.hpgl
2-82 (107)
210
220
150
070
080
150
160
150
080
150
070
120
169
130
410
B2102
040
150
110
410
030
ECM: 139816 - 20030923
Group number: 1095608-0100
Assembly Drawing: 1095608-1_1_AH
This list covers pages from 2-82 to 2-89
Pos Part No UN Qty Description Page No
A3/FLEX COMPRESSOR (See drawing on page: 2-86)
165 342901-0102 1 HOSE NIPPLE, EXT.THR. R1/4-7 MM
175 90330-0085 1 BUSHING, INT/EXT. THR. R1/2-RP1/4
180 315239-0111 3 NYLON WASHER G3/8
260 342921-0115 1 STRAIGHT COUPLING,EXT.THREADED 6/4-G3/8"
330 2550944-0000 1 WATER DIAGRAM
360 90140-0023 2 T-PIPE, INT. THREAD, NO. 2070-3/8-3/8
370 90187-0089 1 BALL VALVE G3/8, NPBR
380 342700-0111 1 NIPPLES,HEXAGON,EXT.G-THREAD G3/8"-G3/8"
390 90163-0041 1 HOSE NIPPLE, EXT.THR. 3/8-12 MM
400 90140-0020 1 ELBOW, 90, INT/EXT. THREAD, NO. 2020-3/8
A3/FLEX ICE-WATER (See drawing on page: 2-88)
235 315239-0111 3 NYLON WASHER G3/8
240 342920-0124 1 STRAIGHT COUPLING,EXT.THREADED 8/6-R1/2"
260 342921-0115 1 STRAIGHT COUPLING,EXT.THREADED 6/4-G3/8"
320 90166-0118 MM 900 TUBE 8 MM PA BLACK
330 2550945-0000 1 WATER DIAGRAM
360 90140-0023 2 T-PIPE, INT. THREAD, NO. 2070-3/8-3/8
370 90187-0089 1 BALL VALVE G3/8, NPBR
380 342700-0111 1 NIPPLES,HEXAGON,EXT.G-THREAD G3/8"-G3/8"
390 90163-0041 1 HOSE NIPPLE, EXT.THR. 3/8-12 MM
400 90140-0020 1 ELBOW, 90, INT/EXT. THREAD, NO. 2020-3/8
A3/SPEED COMPRESSOR (See drawing on page: 2-86)
165 342901-0102 1 HOSE NIPPLE, EXT.THR. R1/4-7 MM
175 90330-0085 1 BUSHING, INT/EXT. THR. R1/2-RP1/4
180 315239-0111 3 NYLON WASHER G3/8
260 342921-0115 1 STRAIGHT COUPLING,EXT.THREADED 6/4-G3/8"
330 2552013-0000 1 WATER DIAGRAM
360 90140-0023 2 T-PIPE, INT. THREAD, NO. 2070-3/8-3/8
370 90187-0089 1 BALL VALVE G3/8, NPBR
380 342700-0111 1 NIPPLES,HEXAGON,EXT.G-THREAD G3/8"-G3/8"
390 90163-0041 1 HOSE NIPPLE, EXT.THR. 3/8-12 MM
400 90140-0020 1 ELBOW, 90, INT/EXT. THREAD, NO. 2020-3/8
TBA/21 COMPRESSOR (See drawing on page: 2-82)
165 342901-0102 1 HOSE NIPPLE, EXT.THR. R1/4-7 MM
175 90330-0085 1 BUSHING, INT/EXT. THR. R1/2-RP1/4
180 315239-0111 1 NYLON WASHER G3/8
330 1511629-0000 1 WATER DIAGRAM
TBA/21 ICE-WATER (See drawing on page: 2-84)
180 315239-0111 1 NYLON WASHER G3/8
235 342920-0124 1 STRAIGHT COUPLING,EXT.THREADED 8/6-R1/2"
320 90166-0118 MM 900 TUBE 8 MM PA BLACK
330 1255364-0000 1 WATER DIAGRAM
TBA/22 COMPRESSOR (See drawing on page: 2-82)
165 342901-0102 1 HOSE NIPPLE, EXT.THR. R1/4-7 MM
175 90330-0085 1 BUSHING, INT/EXT. THR. R1/2-RP1/4
180 315239-0111 1 NYLON WASHER G3/8
330 148451 1-0000 1 WATER DIAGRAM
Common Parts
030 1041932-0000 1 PIPE
040 1041933-0000 1 PIPE
050 1037[illegible]-0000 1 HOLDER
060 90458-0921 2 FILTER SP 122-200
90458-2541 1 FILTER, CP23174-7-30ASS
070 90187-0029 4 BALL VALVE G1/2, NPBR
080 479261-0000 4 NIPPLE
090 312105-0370 2 SCREW M6S ISO 4017 M6X20 A480
100 315125-0153 2 WASHER TBRSB 6.4X22X4 A4
110 342720-0114 6 CONN. STR. GA-15-G1/2
120 90043-0006 1 PRESSURE GAUGE, 2041 D=63 MM
130 342701-0202 1 BUSHING,INT./EXT.G-THREAD G3/8"-G1/8"
150 315239-0113 18 NYLON WASHER G1/2
160 315239-0109 1 NYLON WASHER G1/8
170 342901-0105 1 HOSE NIPPLE, EXT.THR. R1/2-12 MM
200 90110-0095 1 CONNECTOR 3 POLE + EARTH
210 273455-0000 1 LABEL (COLD WATER)
220 312502-0120 2 DRIVE SCREW ROUND HEAD KDS 0X5
240 90157-0016 1 LOCKING FLUID
250 342930-0133 1 ELBOW 90 COUPL.,EXT.THREAD 10/8-R3/8"
270 352103-0101 2 CABLE GLAND, ST 9, PR15,2/PG9
350 2547061-0000 1 HOLDER
410 342708-0109 7 REINFORCING RING VSH 15X1 MM
B 2102 90274-0042 1 PRESSURE GUARD, 200 KPA
W 2220 351150-0403 MM 2000 CABLE OLFLEX 3X0,75 MM2 LIGHT/GREY
W 2243 351150-0403 MM 2000 CABLE OLFLEX 3X0,75 MM2 LIGHT/GREY
Y 2108 90042-0249 1 SOLENOID VALVE OFFICINE DI ENSINO
Pos Part No UN Qty Description Page No
Machine Type
Group Description
Used-In
Group Number
Page No
Tetra Pak
648506-0400
WATER PANEL
648506-0400 Pos. 070
1095608-0100
2-83 (107)
Doc No: SPC-2645000-0101
E
32
24
23
31

Manual Information

Tetra Pak recommends reading all delivered manuals carefully. Make sure that the delivered manuals are available to personnel who operate or maintain the equipment.

It is important to keep this catalogue for the lifetime of the equipment and to pass the catalogue on to any subsequent holder or user.

Tetra Pak will not be held responsible for any damage to the equipment caused by not following the instructions given in the manuals that accompany this equipment.

Delivered Manuals

Manuals delivered with this equipment:

CM

The Conversion Manual provides technicians with information on converting the equipment between different production modes.

EM

The Electrical Manual provides technicians with information about the equipment’s electrical system.

IM

The Installation Manual provides technicians with information required to safely install the equipment.

MM

The Maintenance Manual provides technicians with information on maintaining the equipment.

OM

The Operation Manual provides the operator with information on handling and operating the equipment before, during, and after production.

RM

The Rebuilding Manual provides technicians with information required to safely install a kit to an installed machine or equipment.

(Cont'd)

(Cont'd)

SPC

The Spare Parts Catalogue provides the information necessary to order spare parts from Tetra Pak.

TeM

The Technical Manual provides technicians with information which can be:

- information required to safely install the equipment
- information required to maintaining the equipment
- information about the machine's/equipment's electrical system
- information necessary to order spare parts from Tetra Pak
- other technical information

UP

The Update Pages provides new pages to update existing machine manuals.

Page Layout

Refer to the illustration (A) on page i-7: The main pages in a Spare Parts Catalogue consist of an illustration page (1) and a corresponding list page (7). The page number (5) is shown in the header of an illustration page and in the footer of a list page. The document number (6) is shown in the footer of a list page.

Page Numbering

Refer to the illustration (A) on page i-7: A page number (5) has three parts:

- chapter number (2)
- consecutive page number within the chapter (3)
- total number of pages in the chapter (4)

Note! The letters UP may replace the chapter number (2) if the manual includes update pages. The consecutive page number (3) and the total number of pages (4) of update pages do not follow the existing sequential page numbering of the chapter.

Machine Introduction

Manufacturer

For the manufacturer’s name and address, see the second page of this catalogue.

Service

Tetra Pak does not accept responsibility for any damages or any injuries to equipment, staff or consumers that is caused by spare parts that are not genuine Tetra Pak spare parts.

To order genuine Tetra Pak spare parts for this machine contact the nearest Tetra Pak office.

Identification

CE Classification

This equipment complies with the basic health and safety regulations of the European Economic Area (EEA).

(Cont'd)

(Cont'd)

3-A Compliance

If the machine plate contains the 3-A mark (15) (see illustration (B) on page i-7) this equipment complies with the 3-A Sanitary Standards for Formers, Fillers, and Sealers of Containers for Fluid Milk and Fluid Milk Products, Number 17-10.

Machine Plate

The illustration (B) on page i-7 shows an example of a machine plate. An illustration of the valid machine plate and its location on the equipment is shown in the Introduction chapter of the manuals delivered with this equipment. The machine plate contains the data listed below, needed when contacting Tetra Pak concerning this specific equipment.

- Machine type (8)
- Volume (9)
- Drawing specifications (10)
- Machine serial number (11)
- Manufacturer (12)
- Year of manufacture (13)
- CE mark (14)
- 3-A mark (if applicable) (15)

Make sure that the equipment data in the front pages of this manual corresponds to the machine plate data and the machine specification.

How to Use This Spare Parts Catalogue

Locate a Spare Part Number

a) Refer to the illustration (C) on page i-7: Go to the chapter number (16) indicated beside the main group that contains the part you want to locate.

Items b) and c) refer to the illustration (D) on page i-8.

b) On the main group illustration, look for the machine subgroup (18) that contains the part or subgroup you are looking for. Note the position number (19) and go to the list page that follows the illustration.

c) Look for the position number/reference designation (17) or the subgroup name (20). Go to the corresponding page number (21) listed in the right-hand column. Tetra Pak has chosen to always use the function oriented structure for reference designation. The prefix indicating function oriented structure (=) is not shown in the reference designation

(Cont'd)

(Cont'd)

Items d) and e) refer to the illustration (E) on page i-8.

d) Locate the part (22) that you are looking for on the subgroup illustration and note the part's position number.

e) The part number (29) and part description (30) are listed beside the position number on the list page.

Information Listed in a Spare Parts Catalogue

The list below refers to the illustration (E) on page i-8. A Spare Parts Catalogue contains the following information about groups, subgroups, and spare parts for the equipment:

- Group structure reference (23). Indicates the next higher group in the equipment list structure.
- Group name (24)
- Unit of measure (25)
- Quantity (26)
- Assembly drawing number (27)
- List page range (28). Included if there are multiple pages in the group illustration or list.
- Part or subgroup number (29)
- Subgroup name or part description (30)
- Group number (31)
- Equipment number (32)
- Group information heading (33). Indicates if the section below the heading is for a specific machine variant or if it is a list of common parts. If a list has more than one variant and each variant has its own assembly drawing, a page reference to the variant's assembly drawing is shown.
- Internal information (34)

Support and Feedback

For assistance when operating this equipment, or other inquiries, comments, or suggestions, pose the questions or give feedback on the E-Liaison home page at http://e-liaison.tetrapak.com. If access to the Tetra Pak intranet is not available, contact the nearest Tetra Pak representative.

Информация за ръководството

Tetra Pak препоръчва внимателното прочитане на всички доставени ръководства. Уверете се, че всички доставени ръководства са достъпни за персонала, който работи с оборудването или го поддържа.

Важно е да съхранявате това ръководство през целия експлоатационен срок на оборудването и да го предадете на всеки следващ собственик или ползвател.

Tetra Pak няма да носи отговорност за никакви повреди на оборудването, предизвикани от неспазването на инструкциите, дадени в ръководството, което придружава това оборудване.

Доставени ръководства

Ръководства, доставени с това оборудване:

CM

Ръководството за преустройство предоставя на техниците информация за преустройство на оборудването за различните производствени режими.

EM

Електрическият наръчник осигурява на техниците информация за електрическата система на оборудването.

IM

Наръчникът за инсталацията осигурява на техниците информация за безопасно инсталиране на оборудването.

MM

Наръчникът за поддръжка осигурява на техниците информация за поддържане на оборудването.

OM

Ръководството за експлоатация предоставя на оператора информацията, която му е необходима за работата и експлоатацията на оборудването, преди, по време на и след производство.

PP

Ръководството за възстановяване предоставя на техниците информация, необходима за безопасно монтиране на .принадлежности на инсталирана машина или оборудване.

(Продължение)

(Продължение)

SPC

Каталогът за резервни части осигурява информация за поръчка на резервни части от Tetra pak.

TeM

Техническите ръководства, осигуряват на техниците информация, която може да бъде:

- информация, необходима за безопасното инсталиране на оборудването
- информация, необходима за поддръжката на оборудването
- информацията за електрическата система на оборудването/машината
- предоставя информацията необходима за поръчката на резервни части от Tetra Pak
- друга техническа информация.

НАГОРЕ

Страниците с актуализации предоставят нови страници за актуализиране на вече съществуващите ръководства за машината.

Разположение на страниците

Вижте илюстрация (A) на страница i-7: Основните страници на Каталога с резервни части съдържат страница с илюстрация (1) и страница със съответен списък (7). Номерът на страницата (5) е даден в горната част на илюстрованата страница и в долната част на страницата със списък.. Номерът на документа (6) е даден в долната част на списъчната страница.

Номериране на страниците

Вижте илюстрация (A) на страница i-7: Номерът на страница (5) има три части:

- номер на глава (2)
- пореден номер на страница (3) в рамките на главата
- общ брой страници (4) в главата.

Забележка! Буквите UP може да заместват номера на главата (2), ако ръководството включва страници с актуализации. Поредният номер на страница (3) и общият брой страници (4) на страниците с актуализации не следват съществуващата поредност в номерата на страниците на главата..

Въведение на машината

Производител

За името на производителя и адреса му, виж на втора страница от този каталог.

Обслужване

Tetra pak не носи отговорност за щети или наранявания на оборудване, персонал или клиенти, които са причинени от резервни части, които не са оригинални резервни части Tetra pak.

За да поръчате оригинални резервни части Tetra pak за тази машина, свържете се с най-близкия офис на Tetra pak.

Идентификация

CE Класификация

Това оборудване съответства на основните разпоредби за опазване на здравето и безопасност на Европейската Икономическа Зона (EEA).

(Продължение)

(Продължение)

3-A Съответствие

Ако табелката на машината съдържа означението 3-A (15) (виж илюстрация (B) на страница i-7), оборудването съответства на 3-A Санитарните стандарти за формоващи, пълнещи и запечатващи устройства за контейнери за течно мляко и течни млечни продукти, номер 17-10.

Табела с технически данни на машината

Илюстрация (B) на страница i-7 показва примерна табела с технически данни на машината.
Илюстрация на реална табела с технически данни на машината и нейното местоположение върху оборудването е дадена в глава Въведение на ръководството, придружаващо оборудването. Табелата с технически данни за машината съдържа данните, описани по-долу, необходими, когато се свързвате с Tetra pak относно това оборудване.

- Тип на машината (8)
- Обем (9)
- Спецификации (10)
- Сериен номер на машината (11)
- Производител (12)
- Година на производство (13)
- CE маркировка (14)
- 3-A маркировка (ако е приложимо) (15)

Уверете се, че данните за оборудването, дадени на първите страници на това ръководство съответстват на данните върху табелата с технически спецификации, и спецификацията на машината.

Как да ползвате Каталога за резервни части

Откриване номер на резервна част

a) Вижте илюстрация (C) на страница i-7: Преминете на глава номер (16), посочена .до основната група, която съдържа частта, която желаете да откриете.

Позиции b) и c) вижте на илюстрации (D) на страница i-8.

b) На главната илюстрация на група, потърсете машинната подгрупа (18), която съдържа частта или подгрупата, която търсите. Отбележете номера на позицията (19) и отидете на страницата със списъка, който следва илюстрацията.

c) Потърсете номера на позиция/вижте обозначението (17) или наименованието на подгрупата (20). Преминете на съответния номер на страница (21), вписан в дясната колона.
От Tetra Pak са избрали, винаги да се използва функционално ориентирана структура за обозначение препратка.
Представката посочва функционално ориентирана структура (=) не се показва в обозначението препратка.

(Продължение)

(Продължение)

Позиции d) и e) вижте на илюстрация (E) на страница i-8.

d) Открийте частта (22), която търсите на илюстрацията с подгрупи и отбележете номера на позицията на частта.

e) Номерът на частта (29) и описанието на частта (30) са вписани до номера на позицията на страницата със списъка.

Информация в Каталога за резервни части

Списъкът по-долу се отнася за илюстрация (E) на страница i-8.
Каталогът за резервни части съдържа следната информация за групи, подгрупи и резервни части за оборудването:

- Препратка към структура на групата (23). Посочва по-горната група в структурата на оборудването.
- Наименование на групата (24)
- Мерна единица (25)
- Количество (26)
- Номер от сборния чертеж (27)
- Серия страници със списък (28). Включен, ако има няколко страници в групова илюстрация или списък
- Част или номер на подгрупа (29)
- Наименование на подгрупа или описание на част (30)
- Номер на група (31)
- Номер на оборудването (32)
- Информационен надпис за група (33). Индицира, че раздела под заглавието е за определен модел машина или че е списък на унифицирани части. Ако списъкът има повече от един вариант и всеки вариант има своя монтажна схема, е показана препратка към страница със сборния чертеж.
- Международна информация (34)

Поддръжка и обратна връзка

За помощ при работа с това оборудване или за други запитвания, коментари или предложения, задайте въпросите си или изпратете информация за обратна връзка на страницата на E-Liaison http://e-liaison.tetrapak.com. Ако достъпът до вътрешната мрежа на Tetra pak не е възможен, свържете се с най-близкия представител на Tetra pak.

Informace o příručce

Společnost Tetra Pak doporučuje se důkladně seznámit se všemi dodanými příručkami. Dodané příručky musí být k dispozici pracovníkům, kteří provádějí obsluhu nebo údržbu zařízení.

Tento katalog je třeba uchovávat po celou dobu životnosti zařízení a předat jej každému dalšímu vlastníkovi nebo uživateli.

Společnost Tetra Pak nezodpovídá za škody na zařízení způsobené nedodržováním pokynů uvedených v příručkách, které doprovází toto zařízení.

Dodané příručky

Příručky dodávané s tímto zařízením:

CM

Příručka pro konverzi poskytuje technikům informace o konverzi zařízení mezi různými produkčními režimy.

EM

Příručka elektrického zařízení (EM) poskytuje technikům informace o elektrickém systému zařízení.

IM

Montážní příručka (IM) poskytuje technikům informace nutné pro bezpečné provedení montáže zařízení.

MM

Příručky údržby (MM) poskytuje technikům informace o údržbě zařízení.

OM

Návod k obsluze poskytuje technikům informace o manipulaci a provozu zařízení před, během a po ukončení výroby.

RM

Příručka pro rekonstrukci poskytuje technikům informace požadované pro bezpečnou instalaci soupravy na nainstalovaný stroj nebo zařízení.

(Pokračování)

(Pokračování)

SPC

Katalog náhradních dílů (SPC) obsahuje informace nezbytné pro objednávání náhradních dílů od společnosti Tetra Pak

TeM

Technická příručka poskytuje technikům informace, kterými mohou být:

- potřebné informace pro bezpečnou instalaci zařízení
- potřebné pro údržbu zařízení
- informace o elektrickém systému zařízení/stroje
- informace nezbytné pro objednávání náhradních dílů od společnosti Tetra Pak
- ostatní technické informace

UP

Aktualizované stránky poskytují nové stránky k existujícím příručkám k zařízení.

Vzhled stránky

Podívejte se na obrázek (A) na straně i-7: hlavní stránky v Katalogu náhradních dílů tvoří stránky s ilustracemi (1) a odpovídající stránka se seznamem (7). Číslo stránky (5) je uvedeno v záhlaví stránky s ilustrací a v zápatí stránky se seznamem. Číslo dokumentu (6) je uvedeno v zápatí stránky se seznamem.

Číslování stránek

Podívejte se na obrázek (A) na straně i-7: číslo stránky (5) má tři části:

- číslo kapitoly (2)
- číslo další stránky v rámci kapitoly (3),
- celkového počtu stránek v kapitole (4)

Poznámka! Písmena UP mohou nahradit číslo kapitoly (2) v případě, že manuál obsahuje aktualizované stránky. Následující číslo stránky (3) a celkový počet stran (4) aktualizovaných stránek se nedrží existujícího sekvenčního číslování stránek v této kapitole.

Seznámení se zařízením

Výrobce

Jméno a adresu výrobce najdete na druhé straně tohoto katalogu.

Servis

Tetra Pak nepřebírá odpovědnost za jakékoli škody na zařízení nebo za zranění zaměstnance nebo spotřebitele, které budou způsobeny tím, že se nepoužijí originální náhradní díly Tetra Pak.

Chcete-li pro tento stroj objednat originální náhradní díly Tetra Pak, kontaktujte nejbližší kancelář společnosti Tetra Pak.

Označení

Klasifikace CE

Toto zařízení vyhovuje základním zdravotním a bezpečnostním směrnicím EU.

(Pokračování)

(Pokračování)

3-A Soulad

Pokud štítek stroje obsahuje označení 3-A (15) (viz obrázek (B) na straně i-7), pak je toto zařízení v souladu s hygienickými normami 3-A pro formování, plnění a uzavírání obalů pro tekuté mléko a tekuté mléčné výrobky, číslo 17-10.

Typový štítek

Obrázek (B) na straně i-7 ukazuje příklad typového štítku.
Obrázek platného typového štítku a jeho umístění na zařízení je uvedeno v úvodní kapitole příruček dodaných s tímto zařízením.
Typový štítek obsahuje údaje uvedené níže, tyto údaje jsou zapotřebí, když kontaktujete společnost Tetra Pak ve věci týkající se tohoto specifického vybavení.

- Typ stroje (8)
- Objem (9)
- Specifikace výkresů (10)
- Sériové číslo stroje (11)
- Výrobce (12)
- Rok výroby (13)
- Symbol CE (14)
- Symbol 3-A (pokud se používá) (15)

Údaje o zařízení uvedené na předních stránkách této příručky musí souhlasit s údaji na typovém štítku a specifikacím zařízení.

Jak používat tento katalog náhradních dílů

Vyhledat číslo náhradního dílu

a) Viz obrázek (C) na straně i-7: Přejít na číslo kapitoly (16) uvedené vedle hlavní skupiny, která obsahuje díl, který chcete najít.

Položky b) a c) se vztahují k obrázku (D) na straně i-8.

b) Na obrázku hlavní skupiny se podívejte na podskupinu stroje (18), která obsahuje díly nebo podskupiny, které hledáte. Poznamenejte si číslo pozice (19) a přejděte na stránku seznamu, který následuje za obrázkem.

c) Podívejte se na číslo pozice/označení reference (17) nebo na název podskupiny (20). Přejděte na odpovídající číslo strany (21) uvedené v seznamu ve sloupci na pravé straně. Firma Tetra Pak si pro referenční označení zvolila vždy používat funkčně orientovanou strukturu. Předpona označující funkčně orientovanou strukturu (=) není uvedena v referenčním označení.

(Pokračování)

(Pokračování)

Položky d) a e) se vztahují k obrázku (E) na straně i-8.

d) Lokalizujte díl (22), který hledáte, na obrázku podskupiny a poznamenejte si číslo pozice dílu.

e) Číslo dílu (29) a popis dílu (30) jsou uvedeny vedle čísla pozice na stránce se seznamem.

Informace uvedené v katalogu náhradních dílů

Níže uvedený seznam se odkazuje na obrázek (E) na stránce i-8.
Katalog náhradních dílů obsahuje následující informace o skupinách, podskupinách a náhradních dílech pro zařízení:

- Reference struktury skupiny (23). Označuje následující vyšší skupinu ve struktuře seznamu výbavy.
- Název skupiny (24)
- Měrná jednotka (25)
- Množství (26)
- Číslo montážního výkresu (27)
- Rozsah stránek se seznamem (28). Zahrnuty, pokud existuje více stránek ve skupině obrázků nebo seznamu.
- Číslo dílu nebo podskupiny (29)
- Název podskupiny nebo popis dílu (30)
- Číslo skupiny (31)
- Číslo výbavy (32)
- Záhlaví informací o skupině (33). Označuje, zdali se část pod záhlavím týká konkrétní varianty stroje, nebo zdali se jedná o seznam společných dílů. Pokud seznam obsahuje více než jednu variantu a každá varianta má své vlastní montážní výkresy, je zobrazen odkaz na stránku s montážním výkresem varianty.
- Vnitřní informace (34)

Podpora a zpětná vazba

Můžete se na nás obracet s žádostí o pomoc při provozu tohoto zařízení nebo s jinými dotazy, připomínkami nebo náměty pomocí internetové kontaktní domovské stránky http://e-liaison.tetrapak.com, kde můžete rovněž poskytnout svou zpětnou vazbu. Pokud nemáte přístup na intranet společnosti Tetra Pak, obraťte se na nejbližšího zástupce firmy Tetra Pak.

Oplysninger om vejledninger

Tetra Pak anbefaler, at alle leverede vejledninger læses grundigt.
Sørg for, at de leverede vejledninger er til rådighed for det personale, som betjener eller vedligeholder udstyret.

Det er vigtigt, at dette katalog opbevares i hele udstyrets levetid og overdrages til en efterfølgende ejer eller bruger.

Tetra Pak hæfter ikke for skader på udstyret, som skyldes manglende overholdelse af anvisningerne i de vejledninger, som følger med dette udstyr.

Leverede vejledninger

Vejledninger, der leveres sammen med dette udstyr:

CM

Konverteringsvejledningen forsyner teknikere med oplysninger om konvertering af udstyret mellem forskellige produktionstilstande.

EM

Den elektriske vejledning forsyner teknikere med oplysninger om udstyrets elektriske system.

IM

Installationsvejledningen forsyner teknikere med oplysninger, som er nødvendige til sikker installation af udstyret.

MM

Vedligeholdelsesvejledningen forsyner teknikere med oplysninger om vedligeholdelsen af udstyret.

OM

Driftsvejledningen forsyner operatøren med oplysninger om håndteringen og betjeningen af udstyret før, under og efter produktion.

RM

Ombygningsvejledningen forsyner teknikere med oplysninger, der er nødvendige til sikker installation af et sæt på en installeret maskine eller installeret udstyr.

(Forts.)

(Forts.)

SPC

Reservedelskataloget indeholder de oplysninger, som er nødvendige til at bestille reservedele fra Tetra Pak.

TeM

Den Tekniske vejledning forsyner tekniker med oplysninger, der kan være:

- nødvendige oplysninger til sikker installation af udstyret
- nødvendige oplysninger til vedligeholdelse af udstyret
- oplysninger om maskinens/udstyrets elektriske system
- oplysninger, som er nødvendige til bestilling af reservedele fra Tetra Pak
- andre tekniske oplysninger

UP

Opdateringssiderne indeholder nye sider til opdatering af eksisterende maskinvejledninger.

Sidelayout

Se illustrationen (A) på side i-7: Hovedsiden i et reservedelskatalog består af en illustrationsside (1) og en tilsvarende listeside (7). Sidetallet (5) vises i overskriften på en illustrationsside og i fodteksten på en listeside. Dokumentnumret (6) vises i fodteksten på en listeside.

Sidenummerering

Se illustrationen (A) på side i-7: Et sidetal (5) har tre dele:

- kapitelnummer (2)
- fortløbende sidetal inden for kapitlet (3)
- det samlede antal sider i kapitlet (4)

Bemærk! Bogstaverne UP kan erstatte kapitelnumret (2), hvis vejledningen inkluderer opdateringssider. Det fortløbende sidetal (3) og det samlede antal sider (4) af opdateringssider følger ikke kapitlets eksisterende fortløbende sidenummerering.

Præsentation af maskinen

Producent

For producentens navn og adresse se anden side i dette katalog.

Service

Tetra Pak påtager sig intet ansvar for skader på udstyret eller kvæstelser af personale eller forbrugere, som forårsages af reservedele, der ikke er ægte reservedele fra Tetra Pak.

For at bestille ægte reservedele fra Tetra Pak til denne maskine kontakt det nærmeste Tetra Pak-kontor.

Identifikation

CE-klassificering

Dette udstyr overholder det Europæiske Økonomiske Samarbejdsområdes (EØS) grundlæggende sundheds- og sikkerhedsbestemmelser.

(Forts.)

(Forts.)

3-A overholdelse

Hvis typeskiltet indeholder 3-A-mærket (15) (se illustration (B) på side i-7), overholder dette udstyr 3-A-sanitetsstandarderne for formnings-, fylde- og forseglingsmaskiner for beholdere til flydende mælk og flydende mælkeprodukter, nummer 17-10.

Maskinens typeskilt

Illustration (B) på side i-7 viser et eksempel på et typeskilt.
En illustration af maskinens gældende typeskilt og dens placering på udstyret vises i kapitlet Indledning af de vejledninger, der leveres sammen med dette udstyr. Maskinens typeskilt indeholder de data, der opføres nedenfor og om der er brug for, hvis der rettes henvendelse til Tetra Pak vedrørende det specifikke udstyr.

- Maskintype (8)
- Volumen (9)
- Tegningsspecifikationer (10)
- Maskinens serienummer (11)
- Producent (12)
- Fremstillingsår (13)
- CE-mærke (14)
- 3-A mærke (i givet fald) (15)

Kontrollér, at udstyrsdataene på de første sider i denne vejledning svarer til dataene på typeskiltet og maskinens specifikation.

Sådan bruges dette reservedelskatalog

Sådan finder men et reservedelsnummer

a) Se illustrationen (C) på side i-7: Gå til kapitelnumret (16), der vises ved siden af hovedgruppen, som indeholder den del, der skal findes.

Punkterne b) og c) refererer til illustrationen (D) på side i-8.

b) På hovedgruppens illustration søg efter den maskinundergruppe (18), der indeholder den del eller undergruppe, der ledes efter. Notér positionsnumret (19) og gå til den listeside, der følger illustrationen.

c) Søg efter positionsnumret/henvisningsbetegnelsen (17) eller undergruppens navn (20). Gå til det tilsvarende sidetal (21), der er opført i højre spalte. Tetra Pak har valgt altid at bruge funktionen orienteret struktur til henvisningsbetegnelse. Det præfiks, der angiver funktionsorienteret struktur (=) vises ikke i henvisningsbetegnelsen.

(Forts.)

(Forts.)

Punkterne d) og e) refererer til illustrationen (E) på side i-8.

d) Find den del (22), der ledes efter, på undergruppens illustration og notér delens positionsnummer.

e) Delnumret (29) og delbeskrivelsen (30) er opført ved siden af positionsnumret på listesiden.

Oplysninger, der er opført i et reservedelskatalog

Listen nedenfor refererer til illustrationen (E) på side i-8.
Et reservedelskatalog indeholder følgende oplysninger om grupper, undergrupper og reservedele for udstyret:

- Gruppens strukturhenvisning (23). Viser den næste højere gruppe i udstyrets listestruktur.
- Gruppenavn (24)
- Måleenhed (25)
- Mængde (26)
- Monteringstegningens nummer (27)
- Listesideområde (28). Inkluderet, hvis gruppeillustrationen eller listen har flere sider.
- Del- eller undergruppenummer (29)
- Undergruppenavn eller delbeskrivelse (30)
- Gruppenummer (31)
- Udstyrsnummer (32)
- Gruppeinformationsoverskrift (33). Angiver, om afsnittet under overskriften gælder for en bestemt maskinversion eller om det er en liste over fælles dele. Hvis en liste har mere end en version og hver version har en egen monteringstegning, vises der en sidehenvisning til versionens monteringstegning.
- Interne oplysninger (34)

Support og feedback

For hjælp med betjening af dette udstyr, eller ved andre forespørgsler, kommentarer eller forslag, kan der stilles spørgsmål eller gives feedback på E-Liaison hjemmesiden på http://e-liaison.tetrapak.com.
Hvis adgang til Tetra Paks intranet ikke er til rådighed, kontakt den nærmeste Tetra Pak-repræsentant.

Handbuch-Informationen

Tetra Pak empfiehlt, alle gelieferten Handbücher sorgfältig zu lesen.
Es muss sichergestellt werden, dass die gelieferten Handbücher dem Bediener- oder Wartungspersonal der Ausrüstung verfügbar sind.

Es ist wichtig, diesen Katalog während der Lebensdauer der Ausrüstung vorzuhalten und an nachfolgende Halter oder Benutzer weiterzugeben.

Tetra Pak ist nicht verantwortlich für Schäden an der Ausrüstung, die durch die Nichtbefolgung der beiliegenden Anweisungen der Handbücher verursacht werden.

Gelieferte Handbücher

Mit dieser Ausrüstung gelieferte Handbücher

CM

Das Umbauhandbuch liefert den Technikern Informationen über den Umbau der Ausrüstung zwischen den verschiedenen Produktionsweisen.

EM

Das Elektrohandbuch liefert den Technikern Informationen zum Elektrosystem der Ausrüstung.

IM

Das Installationshandbuch liefert den Technikern Informationen für die sichere Installation der Ausrüstung.

MM

Das Wartungshandbuch liefert den Technikern Informationen über die Wartung der Ausrüstung.

OM

Das Betriebshandbuch enthält Informationen für den Bediener zu Handhabung und Betrieb der Ausrüstung vor, während und nach der Produktion.

RM

Das Umbauhandbuchliefert Informationen an die Techniker, die diese benötigen, um die Ausrüstung aus dem Kit sicher zu installieren.

(Forts.)

(Forts.)

SPC

Der Ersatzteilkatalog liefert die für die Bestellung von Ersatzteilen bei Tetra Pak erforderlichen Informationen.

TeM

Das Technische Handbuch liefert den Technikern folgende Informationen:

- Informationen für die sichere Installation der Ausrüstung
- Informationen für die Wartung der Ausrüstung
- Informationen über das Elektrosystem der Maschine/Ausrüstung.
- Notwendige Informationen für die Bestellung von Ersatzteilen bei Tetra Pak.
- andere technische Informationen

UP

Die Aktualisierungsseiten sind neu, um die Maschinenhandbücher zu aktualisieren.

Seitenlayout

Siehe die Abbildung (A) auf Seite i-7: Die Hauptseiten in einem Ersatzteilkatalog bestehen auf dem Abbildungsseite (1) und einer entsprechenden Listenseite (7). Die Seitennummer (5) ist im Kopf einer Abbildungsseite und im Fuß einer Listenseite aufgeführt.
Die Dokumentennummer (6) ist im Fuß einer Listenseite angegeben.

Seitennummerierung

Siehe die Abbildung (A) auf Seite i-7: Eine Seitennummer (5) hat drei Teile

- Kapitel Nummer (2)
- Fortlaufende Seitennummer (2) innerhalb des Kapitels (3)
- Gesamtanzahl der Seiten im Kapitel (4)

Hinweis! Die Buchstaben UP können die Kapitelnummer (2) ersetzen, wenn das Handbuch aktualisierte Seiten enthält. Die fortlaufende Seitennummer (3) und die Gesamtanzahl der Seiten (4) der aktualisierten Seiten folgen nicht der laufenden Seitennummerierung des Kapitels.

Einführung in die Maschine

Hersteller

Die zweite Seite des Katalogs enthält Name und Anschrift des Herstellers.

Service

Tetra Pak übernimmt keine Verantwortung für Schäden an Ausrüstungen und Verletzungen von Personen, verursacht durch Ersatzteile, die keine echten Tetra Pak-Ersatzteile sind.

Für die Bestellung echter Tetra Pak-Ersatzteile für die Maschine wende man sich an die nächstgelegene Tetra Pak-Stelle.

Identifizierung

CE-Klassifizierung

Diese Ausrüstung entspricht den grundlegenden Gesundheits- und Sicherheitsvorschriften des Europäischen Wirtschaftsraumes (EWR).

(Forts.)

(Forts.)

3-A Erfüllung

Wenn die Maschinenplatte eine 3-A Markierung (15) enthält (siehe Abbildung (B) auf Seite i-7), entspricht diese Ausrüstung den 3-A Sanitärnormen für Former, Füller und Versiegler von Containern für lose Milch und Milchprodukte Nummer 17-10.

Maschinenschild

Die Abbildung (B) auf Seite i-7 zeigt ein Beispiel eines Maschinenschildes. Eine Abbildung eines gültigen Maschinenschildes und dessen Lage an der Ausrüstung finden Sie in der Einleitung zu dem mit der Ausrüstung gelieferten Handbuch. Das Maschinenschild enthält die nachstehenden Daten, erforderlich für die Kontaktnahme mit Tetra Pak bezüglich dieser spezifischen Ausrüstung.

- Maschinentyp (8)
- Volumen (9)
- Zeichnungsspezifikationen (10)
- Serien-Nummer der Maschine (11)
- Hersteller (12)
- Baujahr (13)
- CE-Markierung (14)
- 3-A Markierung (falls zutreffend) (15)

Es muss sichergestellt sein, dass die in den Frontseiten dieses Handbuchs aufgeführten Ausrüstungsdaten mit den Daten des Maschinenschildes und der Maschinenspezifikation übereinstimmen.

Benutzung dieses Ersatzteilkatalogs

Lokalisieren einer Teilenummer

a) Bezugnahme auf Abbildung (C) auf Seite i-7: Weiter zu Kapitel Nummer (16) neben der Hauptgruppe, die das entsprechende Teil enthält.

Pos. b) und c) beziehen sich auf die Abb. (D) auf Seite i-8.

b) Auf der Abbildung der Hauptgruppe die Untergruppe (18) der Maschine suchen, welche das Teil oder die Untergruppe enthält, das/die Sie suchen. Die Positionsnummer (19) notieren und zu der Listenseite gehen, die auf die Abbildung folgt.

c) Suchen Sie die Positionsnummer/Referenzbezeichnung (17) oder den Untergruppennamen (20). Weiter zur entsprechenden Seitennummer (21) in der rechten Spalte. Tetra Pak verwendet die funktionsorientierte Struktur für die Referenzbezeichnung. Präfix zur funktionsorientierten Struktur (=) ist in der Referenzbezeichnung nicht dargestellt.

(Forts.)

(Forts.)

Pos. d) und e) beziehen sich auf die Abbildung (E) auf Seite i-8.

d) Das gesuchte Teil (22) auf der Untergruppen-Abbildung suchen und die Positionsnummer (060) des Teils notieren.

e) Die Teilenummer (29) und die Beschreibung (30) des Teils sind neben der Positionsnummer auf der Listenseite angegeben.

Information in einem Ersatzteilkatalog

Nachstehende Liste bezieht sich auf die Abbildung (E) auf Seite i-8.
Ein Ersatzteilkatalog enthält folgende Informationen zu Gruppen, Untergruppen und Ersatzteile der Ausrüstung.

- Verweis auf Gruppenstruktur (23). zeigt die nächsthöhere Gruppe in der Listenstruktur.
- Gruppenbezeichnung (24)
- Maßeinheit (25)
- Menge (26)
- Nummer der Montagezeichnung (27)
- Liste Seitenbereich (28). vorhanden, wenn mehrere Seiten in der Gruppenabbildung oder Liste vorhanden sind.
- Teile- oder Untergruppen-Nummer (29)
- Untergruppenbezeichnung oder Beschreibung des Teils (30)
- Gruppennummer (31)
- Gerätenummer (32)
- Gruppeninformations-Überschrift (33). erläutert, ob der Abschnitt unter der Überschrift für eine spezifische Maschinenvariante gilt oder ob es sich um eine Liste allgemeiner Teile handelt. Hat eine Liste mehr als eine Variante und ist jeder Variante eine eigene Montagezeichnung zugeordnet, wird ein Seiten-Querverweis auf die Montagezeichnung der Variante angegeben.
- Interne Informationen (34)

Unterstützung und Feedback

Für Hilfeleistung beim Betrieb der Ausrüstung oder für Anfragen, Kommentare oder Vorschläge wollen Sie Fragen oder Feedback richten an E-Liaison Home Page unter http://e-liaison.tetrapak.com.
Wenn kein Zugang zum Tetra Pak Intranet verfügbar ist, wenden Sie sich an den nächsten Tetra Pak-Vertreter.

Πληροφορίες εγχειριδίου

Η Tetra Pak συνιστά να διαβάζετε προσεκτικά όλα τα παρεχόμενα εγχειρίδια. Βεβαιωθείτε ότι τα παρεχόμενα εγχειρίδια είναι διαθέσιμα στο προσωπικό που χειρίζεται ή συντηρεί τον εξοπλισμό.

Είναι σημαντικό να διατηρήσετε το εγχειρίδιο αυτό καθ' όλη τη διάρκεια ζωής του εξοπλισμού και να το μεταβιβάσετε σε οποιονδήποτε επακόλουθο κάτοχο ή χρήστη.

Η Tetra Pak δεν μπορεί να καταστεί υπεύθυνη για οποιαδήποτε ζημιά στον εξοπλισμό που οφείλεται σε μη τήρηση των οδηγιών που παρατίθενται στα εγχειρίδια που συνοδεύουν τον εξοπλισμό.

Παρεχόμενα εγχειρίδια

Τα εγχειρίδια παρέχονται μαζί με αυτό τον εξοπλισμό:

CM

Το Εγχειρίδιο Μετατροπών (CM) παρέχει πληροφορίες στους τεχνικούς σχετικά με τη μετατροπή του εξοπλισμού για τους διαφορετικούς τρόπους παραγωγής.

EM

Το Ηλεκτρολογικό Εγχειρίδιο (EM) παρέχει στους τεχνικούς τις πληροφορίες για το ηλεκτρικό σύστημα του εξοπλισμού.

IM

Το Εγχειρίδιο Εγκατάστασης (IM) παρέχει στους τεχνικούς τις πληροφορίες που απαιτούνται για την ασφαλή τοποθέτηση του εξοπλισμού.

MM

Το Εγχειρίδιο Συντήρησης (MM) παρέχει στους τεχνικούς πληροφορίες σχετικά με τη συντήρηση του εξοπλισμού.

OM

Το Εγχειρίδιο Χειρισμού (OM) παρέχει στο χειριστή πληροφορίες σχετικά με το χειρισμό και τη λειτουργία του εξοπλισμού πριν, κατά και μετά την παραγωγή.

RM

Το Εγχειρίδιο Μετασκευής (RM) παρέχει πληροφορίες στους τεχνικούς σχετικά με την ασφαλή εγκατάσταση ενός κιτ σε μια εγκατεστημένη μηχανή ή εξοπλισμό.

(Συνέχεια)

(Συνέχεια)

SPC

Ο Κατάλογος Ανταλλακτικών (SPC) παρέχει πληροφορίες που είναι απαραίτητες για την παραγγελία ανταλλακτικών από την Tetra Pak

TeM

Το Τεχνικό Εγχειρίδιο (TeM) παρέχει στους τεχνικούς πληροφορίες που μπορεί να είναι:

- πληροφορίες που είναι απαραίτητες για την ασφαλή εγκατάσταση του εξοπλισμού
- πληροφορίες που απαιτούνται για τη συντήρηση του εξοπλισμού
- πληροφορίες σχετικά με το ηλεκτρικό σύστημα της μηχανής/ εξοπλισμού.
- απαραίτητες πληροφορίες για να παραγγείλετε ανταλλακτικά από την Tetra Pak.
- άλλες τεχνικές πληροφορίες

ΠΑΝΩ

Οι Σελίδες Ενημέρωσης παρέχουν νέες σελίδες για την ενημέρωση των υφιστάμενων εγχειριδίων της μηχανής.

Διάταξη σελίδας

Βλέπε εικόνα (A) στη σελίδα i-7: Οι κύριες σελίδες του Καταλόγου Ανταλλακτικών αποτελούνται από μία σελίδα με εικόνα (1) και μια σελίδα με αντίστοιχη λίστα (7). Ο αριθμός σελίδας (5) αναγράφεται στο πάνω μέρος της σελίδας με την εικόνα και στο κάτω μέρος της σελίδας με τη λίστα.
Ο αριθμός εγγράφου (6) αναγράφεται στο κάτω μέρος της σελίδας με τη λίστα.

Αρίθμηση σελίδων

Βλέπε εικόνα (A) στη σελίδα i-7: Ο αριθμός σελίδας (5) αποτελείται από τρία μέρη:

- τον αριθμό κεφαλαίου (2)
- τον αύξοντα αριθμό σελίδας (3) εντός του κεφαλαίου
- τον συνολικό αριθμό σελίδων (4) στο κεφάλαιο

Σημειωση! Αν το εγχειρίδιο περιέχει σελίδες ενημέρωσης, ο αριθμός κεφαλαίου (2) μπορεί να αντικαθίσταται με τα γράμματα «UP».
Ο αύξων αριθμός σελίδας (3) και ο συνολικός αριθμός σελίδων (4) των σελίδων ενημέρωσης δεν ακολουθούν την αρχική αύξουσα αρίθμηση σελίδων του κεφαλαίου.

Εισαγωγικές πληροφορίες για τη μηχανή

Κατασκευαστής

Για το όνομα και τη διεύθυνση του κατασκευαστή, βλέπε τη δεύτερη σελίδα αυτού του καταλόγου.

Τεχνική εξυπηρέτηση

Η Tetra Pak δεν αναλαμβάνει καμία ευθύνη για οποιαδήποτε ζημιά στον εξοπλισμό ή τραυματισμό του προσωπικού ή των καταναλωτών που οφείλεται σε χρήση ανταλλακτικών που δεν είναι γνήσια ανταλλακτικά της Tetra Pak.

Για να παραγγείλετε γνήσια ανταλλακτικά της Tetra Pak για αυτή τη μηχανή, επικοινωνήστε με το πλησιέστερο γραφείο Tetra Pak.

Αναγνώριση

Ταξινόμηση CE

Ο εξοπλισμός αυτός συμμορφώνεται με τους βασικούς κανονισμούς υγείας και ασφάλειας του Ευρωπαϊκού Οικονομικού Χώρου (ΕΕΑ).

(Συνέχεια)

(Συνέχεια)

Συμμόρφωση 3-A

Αν η πλάκα μηχανής περιλαμβάνει το σήμα 3-A (15) (βλέπε απεικόνιση (B) στη σελίδα i-7), ο εξοπλισμός αυτός συμμορφώνεται με τα υγειονομικά πρότυπα για διαμορφωτές, γεμιστικές μηχανές και διατάξεις σφράγισης των περιεκτών για υγρό γάλα και προϊόντα υγρού γάλακτος, αριθμός 17-10.

Πινακίδα χαρακτηριστικών μηχανής

Η εικόνα (B) στη σελίδα i-7 δείχνει ένα παράδειγμα μιας πινακίδας τύπου. Για μια εικόνα της πινακίδας τύπου της συγκεκριμένης μηχανής και της θέσης της πάνω στον εξοπλισμό, βλέπε το κεφάλαιο «Εισαγωγή» των εγχειριδίων που παραδίδονται μαζί με τον εξοπλισμό. Η πινακίδα τύπου περιέχει τα παρακάτω στοιχεία, τα οποία θα χρειάζεστε όταν επικοινωνείτε με την Tetra Pak σχετικά με τον συγκεκριμένο εξοπλισμό.

- Τύπος μηχανής (8)
- Όγκος (9)
- Στοιχεία σχεδίου (10)
- Αριθμός σειράς μηχανής (11)
- Κατασκευαστής (12)
- Έτος κατασκευής (13)
- Σήμανση CE (14)
- Σήμανση 3-A (εάν εφαρμόζεται) (15)

Βεβαιωθείτε ότι τα δεδομένα εξοπλισμού στις μπροστινές σελίδες αυτού του εγχειριδίου αντιστοιχούν στην πινακίδα χαρακτηριστικών της μηχανής και τις προδιαγραφής αυτής.

Πως να χρησιμοποιήσετε αυτό τον Κατάλογο Ανταλλακτικών

Παράδειγμα: Εντοπισμός αριθμού ανταλλακτικού

a) Βλέπε εικόνα (C) στη σελίδα i-7: Ανοίξτε το κεφάλαιο (16) που αναφέρεται δίπλα στην κυρίως ομάδα που περιέχει το εξάρτημα που θέλετε να εντοπίσετε.

Τα στοιχεία b) και c) αναφέρονται στην εικόνα (D) στη σελίδα i-8.

b) Στην απεικόνιση της k;yriaw ομάδας αναζητήστε την υποομάδα της μηχανής (18) που περιλαμβάνει το εξάρτημα ή την υποομάδα που αναζητάτε. Σημειώστε τον αριθμό θέσης (19) και μεταβείτε στη σελίδα λίστας που ακολουθεί την απεικόνιση.

c) Αναζητήστε τον αριθμό θέσης / χαρακτηρισμό αναφοράς (17) ή το όνομα της υπο-ομάδας (20). Ανοίξτε την αντίστοιχη σελίδα (21) που αναφέρεται στη δεξιά στήλη. Η Tetra Pak έχει επιλέξει να χρησιμοποιεί πάντα τη διάρθρωση που προσανατολίζεται στη λειτουργία για τον ορισμό αναφοράς. Το πρόθεμα που υποδεικνύει διάρθρωση που προσανατολίζεται στη λειτουργία (=) δεν εμφανίζεται στον ορισμό αναφοράς.

(Συνέχεια)

(Συνέχεια)

Τα στοιχεία d) και e) αναφέρονται στην εικόνα (E) στη σελίδα i-8.

d) Εντοπίστε το εξάρτημα (22) που αναζητάτε στην απεικόνιση της υποομάδας και σημειώστε τον αριθμο θέσης του εξαρτήματος.

e) Ο αριθμός εξαρτήματος (29) και η περιγραφή εξαρτήματος (30) παρατίθενται δίπλα στον αριθμό θέσης στη σελίδα λίστας.

Πληροφορίες που αναφέρονται στον Κατάλογο ανταλλακτικών

Η λίστα που ακολουθεί παραπέμπει στην εικόνα (E) στη σελίδα i-8.
Ο Κατάλογος Ανταλλακτικών περιέχει τις εξής πληροφορίες σχετικά με ομάδες, υπο-ομάδες και ανταλλακτικά για τον εξοπλισμό:

- Αναφορά στη δομή της ομάδας (23). Δείχνει την αμέσως μεγαλύτερη ομάδα στη δομή του καταλόγου του εξοπλισμού.
- Όνομα ομάδας (24)
- Μονάδα μέτρησης (25)
- Ποσότητα (26)
- Αριθμός σχεδίου συναρμολόγησης (27)
- Εύρος σελίδων της λίστας (28). Περιλαμβάνεται όταν υπάρχουν πολλαπλές σελίδες στην ομάδα ή στη λίστα.
- Αριθμός εξαρτήματος ή υποομάδας (29)
- Όνομα υποομάδας ή περιγραφή εξαρτήματος (30)
- Αριθμός ομάδας (31)
- Αριθμός εξοπλισμού (32)
- Επικεφαλίδα πληροφοριών ομάδας (33). Δείχνει αν το τμήμα της λίστας κάτω από την επικεφαλίδα ισχύει για συγκεκριμένη παραλλαγή της μηχανής ή αν πρόκειται για κατάλογο κοινών εξαρτημάτων.
  Αν μια λίστα αναφέρεται σε περισσότερες από μία παραλλαγές και κάθε παραλλαγή έχει το δικό της σχέδιο συναρμολόγησης, υπάρχει εδώ μια παραμπομπή στη σελίδα που δείχνει το σχέδιο συναρμολόγησης της παραλλαγής.
- Εσωτερικές πληροφορίες (34)

Υποστήριξη και σχολιασμός

Αν χρειαστείτε βοήθεια με τον χειρισμό αυτού του εξοπλισμού, ή αν έχετε απορίες, σχόλια ή προτάσεις, υποβάλετε τις ερωτήσεις ή τις παρατηρήσεις σας στην ιστοσελίδα της E-Liaison, στη διεύθυνση http://e-liaison.tetrapak.com. Αν δεν έχετε πρόσβαση στο Intranet της Tetra Pak, επικοινωνήστε με τον πλησιέστερο αντιπρόσωπο της Tetra Pak.

Información del manual

Tetra Pak recomienda que se lean cuidadosamente todos los manuales entregados. Comprobar que todos los manuales entregados estén disponibles para el personal que efectúe la operación o el mantenimiento del equipo.

Es importante conservar este manual durante la vida útil del equipo, así como facilitárselo a cualquier propietario o usuario posterior.

Tetra Pak no se responsabilizará de daños en la máquina o equipo debidos a la inobservancia de las instrucciones dadas en los manuales que acompañan este equipo.

Manuales entregados

Manuales entregados con este equipo:

CM

El Manual de conversión proporciona a los técnicos información sobre cómo convertir el equipo entre diferentes modos de producción.

EM

El Manual eléctrico proporciona a los técnicos información acerca del sistema eléctrico del equipo.

IM

El Manual de instalación proporciona a los técnicos la información requerida para instalar el equipo con seguridad.

MM

El Manual de mantenimiento proporciona a los técnicos información sobre el mantenimiento del equipo.

OM

El Manual de servicio proporciona a los operadores información sobre la manipulación y operación del equipo antes, durante y después de la producción.

RM

El Manual de Modificación provee la información necesaria a los técnicos para instalar con seguridad un kit en una máquina o equipo ya instalado.

(Continúa)

(Continuación)

SPC

El Catálogo de piezas de recambio proporciona la información necesaria para pedir piezas de recambio de Tetra Pak.

TeM

El Manual técnico proporciona información a los técnicos, que puede ser:

- la información requerida para instalar el equipo con seguridad
- información requerida para el mantenimiento del equipo
- información acerca del sistema eléctrico de la máquina/del equipo
- la información necesaria para pedir piezas de recambio a Tetra Pak
- otras informaciones técnicas

PA

Las Páginas de Actualización suministran nuevas páginas para actualizar los manuales de máquinas ya existentes.

Organización de las páginas

Remitirse a la ilustración (A) en la página i-7: Las páginas principales en un Catálogo de piezas de recambio se componen de una página de ilustración (1) y una página de lista correspondiente (7). El número de la página (5) se muestra en el encabezado de una página de ilustración y en el pie de página de una página de lista. El número del documento (6) se muestra en el pie de página de una página de lista.

Numeración de las páginas

Remitirse a la ilustración (A) en la página i-7:
Un número de página (5) se compone de tres partes:

- Número de capítulo (2)
- número de página consecutivo dentro del capítulo (3)
- número total de páginas del capítulo (4).

¡Nota! Las letras UP pueden reemplazar el número del capítulo (2) si el manual incluye páginas de actualización. El número de página consecutivo (3) y el número total de páginas (4) de páginas de actualización no siguen la numeración secuencial de páginas del capítulo.

Introducción a la máquina

Fabricante

Para el nombre y la dirección del fabricante, ver la segunda página de este catálogo.

Servicio

Tetra Pak no se hace responsable de cualquier daño o lesión al equipo, personal o consumidores que sea causado por piezas de recambio que no sean piezas Tetra Pak genuinas.

Para pedir piezas de recambio Tetra Pak genuinas para esta máquina, comunicarse con la oficina de Tetra Pak más cercana.

Identificación

Clasificación de la CE

Este equipo cumple los requisitos esenciales relativos a la salud y la seguridad del Área Económica Europea (EEA).

(Continúa)

(Continuación)

Conformidad con 3-A

Si la placa de la máquina contiene la marca 3-A (15) (consultar la ilustración (B) en la página i-7), este equipo cumple con las Normas sanitarias 3-A para formadoras, llenadoras y selladoras de envases para para leche fluida y productos de leche fluida 17-10.

Placa de la máquina

La ilustración (B) en la página i-7 muestra un ejemplo de placa de máquina. En la Introducción del capítulo de los manuales entregados con este equipo se muestra una ilustración de la placa de máquina válida y su ubicación en el equipo La placa de máquina contiene los datos listados a continuación requeridos al contactar con Tetra Pak en relación a este equipo específico.

- Tipo de máquina (8)
- Volumen (9)
- Especificaciones de plano (10)
- Número de serie de la máquina (11)
- Fabricante (12)
- Año de fabricación (13)
- Marca de la CE (14)
- Marca 3-A (si procede) (15)

Asegúrese que los datos de equipo listados en las páginas de cubierta de este manual corresponden a los datos de la placa de máquina y a la especificación máquina.

Cómo utilizar este Catálogo de piezas de recambio

Localizar un número de pieza de recambio

a) Remitirse a la ilustración (C) en la página i-7: Ir al número de capítulo (16) indicado al lado del grupo principal que contiene la pieza que usted desea localizar.

Los items b) y c) se refieren a la ilustración (D) en la página i-8.

b) En la ilustración del grupo principal, buscar el subgrupo máquina (18) que contiene la pieza o subgrupo que usted busca.
Anote el número de posición (19) y vaya a la página de lista que sigue a la ilustración.

c) Buscar el número de posición/designación de referencia (17) o el nombre del subgrupo (20). Vaya al número de página correspondiente (21) listado en la columna de la derecha. Tetra Pak ha elegido utilizar siempre la estructura orientada a la función para la designación de referencia. El prefijo que indica la estructura orientada a la función (=) no se muestra en la designación de referencia

(Continúa)

(Continuación)

Los Items d) y e) se refieren a la ilustración (E) en la página i-8.

d) Localizar la pieza (22) que busca en la ilustración del subgrupo y anotar el número de posición de la pieza.

e) El número de la pieza (29) y la descripción de la pieza (30) están listados al lado del número de posición en la página de lista.

Información listada en un Catálogo de piezas de recambio

La lista a continuación remite a la ilustración (E) en la página i-8.
Un Catálogo de piezas de recambio contiene la siguiente información sobre grupos, subgrupos y piezas de recambio para el equipo:

- Referencia de estructura de grupo (23). Indica el siguiente grupo más alto en la estructura de lista del equipo.
- Nombre de grupo (24)
- Unidad de medida (25)
- Cantidad (26)
- Número de plano de montaje (27)
- Rango de la página de lista (28). Incluida si hay páginas múltiples en la ilustración o lista de grupo.
- Número de pieza o subgrupo (29)
- Nombre del subgrupo o descripción de la pieza (30)
- Número de grupo (31)
- Número de equipo (32)
- Encabezado de información de grupo (33). Indica si la sección debajo del encabezado es para una variante máquina específica o si es una lista de piezas comunes. Si la lista tiene más de una variante y cada variante tiene su propio plano de conjunto, se muestra una referencia página para el plano de conjunto de la variante.
- Información interna (34)

Soporte y retroalimentación

Para asistencia al operar este equipo u otras preguntas, comentarios o sugerencias, haga sus preguntas u ofrezca información en la página de inicio de E-Liaison en http://e-liaison.tetrapak.com. Si no dispone de acceso a la intranet de Tetra Pak, comuníquese con el representante de Tetra Pak más cercano.

Manuaali informatsioon

Tetra Pak soovitab kõiki saadetud manuaale hoolikalt lugeda. Kindlustage saadetud manuaalide kättesaadavus seadmetega töötavale või neid hooldavale personalile.

Kataloog tuleb seadmete eluea jooksul alles hoida ning anda üle seadmete järgmisele omanikule või kasutajale.

Tetra Pak ei vastuta seadmete kahjustuste eest, mis on tekkinud seadmetega kaasapandud juhendites antud juhiste eiramise tagajärjel.

Kättetoimetatud manuaalid

Antud seadmega kaasasolevad manuaalid:

CM

Muutmise juhend annab tehnikutele informatsiooni seadmete muutmiseks vastavalt erinevatele tootmisrežiimidele.

EM

Elektrialane kasutusjuhend annab tehnikutele informatsiooni seadmete elektrisüsteemi kohta.

IM

Paigaldusjuhend annab tehnikutele seadmete turvaliseks paigaldamiseks vajalikku informatsiooni.

MM

Hooldusjuhend annab tehnikutele informatsiooni seadmete hooldamiseks.

OM

Kasutusjuhend annab operaatorile informatsiooni seadmete käsitsemiseks ja nendega töötamiseks enne tootmise alustamist, tootmise ajal ja pärast selle lõpetamist.

RM

Ümberehituse juhend annab tehnikutele vajalikku informatsiooni komplekti ohutuks paigaldamiseks eelnevalt paigaldatud masinale või seadmetele.

(Jätkub)

(Jätkub)

SPC

Varuosade kataloog annab vajalikku informatsiooni Tetra Pakist varuosade tellimiseks.

TeM

Tehniline juhend annab tehnikutele informatsiooni, mis võib olla näiteks:

- vajalik informatsioon seadmete ohutuks paigaldamiseks
- vajalik informatsioon seadmete hooldamiseks
- informatsioon masina/seadmestiku elektrisüsteemi kohta
- vajalik informatsioon tagavaraosade tellimiseks Tetra Pakist
- muu tehniline informatsioon

UP

Ajakohastatud leheküljed sisaldavad uusi lehekülgi olemasolevate masina juhendite ajakohastamiseks.

Lehekülje kujundus

Vaadake joonist (A) leheküljel i-7: varuosade kataloogi põhileheküljed koosnevad joonise leheküljest (1) ja vastava loendi leheküljest (7). Lehekülje number (5) näidatakse joonise lehekülje päises ja loendi lehekülje jaluses. Dokumendi number (6) näidatakse loendi lehekülje jaluses.

Lehekülgede nummerdamine

Vaadake joonist (A) leheküljel i-7: lehekülje numbril (5) on kolm osa:

- peatüki number (2)
- järjestikune lehekülje number peatükis (3)
- lehekülgede koguarv (4) peatükis

Pange tähele! Kui juhend sisaldab ajakohastatud lehekülgi, võivad peatüki numbrit (2) asendada tähed UP. Ajakohastatud lehekülgede järjestikune lehekülje number (3) ja lehekülgede koguarv (4) ei järgi peatüki olemasolevat järjestikust lehekülgede nummerdamist.

Masina sissejuhatus

Tootja

Tootja nime ja aadressi leiate kataloogi teiselt leheküljelt.

Teenindus

Tetra Pak ei vastuta seadmetele, töötajatele või tarbijatele põhjustatud kahjustuste või kehavigastuste eest, mis on tekkinud selliste varuosade kasutamise tagajärjel, mis ei ole Tetra Paki originaalvaruosad.

Tetra Paki originaalvaruosade tellimiseks käesoleva masina jaoks pöörduge lähimasse Tetra Paki kontorisse.

Identifikatsioon

CE klassifikatsioon

Need seadmed on vastavuses Euroopa Majanduspiirkonna (EEA) tervisekaitse ja ohutusmeetmete põhireeglitega.

(Jätkub)

(Jätkub)

3-A vastavus

Kui masina andmeplaadil on märk "3-A" (15) (vt joonist (B) lk i-7), vastab käesolev seadmestik piima- ja piimatoodete mahutite vormimis-, villimis- ja sulgemisseadmete sanitaarnormidele 3-A, number 17-10.

Seadmeplaat

Masina andmeplaadi näidis on toodud leheküljel i-7 oleval joonisel (B). Kehtiv andmeplaat ja selle asukoht seadmel on näidatud joonisel, mille leiate koos seadmestikuga tarnitud juhendite sissejuhatavast peatükist.
Masina andmeplaat sisaldab allpool loetletud andmeid, mida Te vajate antud seadme asjus Tetra Pakiga ühenduse võtmisel.

- Masina tüüp (8)
- Maht (9)
- Joonise spetsifikatsioonid (10)
- Masina seerianumber (11)
- Tootja (12)
- Valmistamise aasta (13)
- CE-märgistus (14)
- 3-A-märgistus (kui on asjakohane) (15)

Veenduge, et antud juhendi esilehtedel olevad andmed vastaksid masina andmesildil olevatele andmetele ja masina tehnilistele andmetele.

Varuosade kataloogi kasutamine

Leidke varuosa number

a) Vaadake joonist (C) leheküljel i-7: minge peatüki juurde, mille number (16) on näidatud selle põhigrupi kõrval, mis sisaldab Teie poolt otsitavat varuosa.

Elemendid b) ja c) viitavad joonisele (D) leheküljel i-8.

b) Põhigrupi joonisel otsige masina alamgruppi (18), mis sisaldab Teie poolt otsitavat varuosa või alamgruppi. Märkige üles positsiooni number (19) ja minge loendi leheküljele, mis järgneb joonisele.

c) Otsige üles positsiooni number/viitetähis (17) või alamgrupi nimi (20). Minge vastavale leheküljele, mille numbri (21) leiate parempoolses veerus olevast loetelust. Tetra Pak kasutab viitetähistes alati funktsioonile orienteeritud struktuuri. Prefiksit, mis näitab funktsioonile orienteeritud struktuuri (=), viitetähises ei näidata.

(Jätkub)

(Jätkub)

Elemendid d) ja e) viitavad joonisele (E) leheküljel i-8.

d) Leidke alamgrupi jooniselt üles otsitav varuosa (22) ja pange kirja varuosa positsiooni number.

e) Varuosa numbri (29) ja varuosa kirjelduse (30) leiate loendi leheküljelt positsiooni numbri kõrvalt.

Varuosade kataloogis loetletud informatsioon

Allpool antud loend viitab joonisele (E) leheküljel i-8.
Varuosade kataloog sisaldab alljärgnevat informatsiooni seadmete gruppide, alamgruppide ja varuosade kohta:

- Grupi struktuuri viide (23). Näitab järgmist kõrgemat gruppi seadmete loetelu struktuuris.
- Grupi nimetus (24)
- Mõõtühik (25)
- Kogus (26)
- Koostejoonise number (27)
- Loendi lehekülgede vahemik (28). Lisatakse juhul, kui grupi joonis või loend paiknevad mitmel leheküljel.
- Varuosa või alamgrupi number (29)
- Alamgrupi nimetus või varuosa kirjeldus (30)
- Grupi number (31)
- Seadme number (32)
- Grupis sisalduva informatsiooni pealkiri (33). Näitab, kas pealkirja all olev lõik puudutab konkreetset masina varianti või sisaldab see üldiste varuosade loendit. Kui loendis on variante rohkem kui üks ning nendel kõigil on eraldi koostejoonised, siis näidatakse konkreetse variandi koostejoonise lehekülgede numbrid.
- Siseinformatsioon (34)

Tugi ja tagasiside

Kui vajate abi seadmete kasutamisel või siis, kui Teil on küsimusi või soovite teha märkusi või ettepanekuid, esitage küsimused ja andke tagasisidet E-Liaisoni kodulehe kaudu aadressil http://e-liaison.tetrapak.com. Kui juurdepääs Tetra Paki intranetile puudub, võtke ühendust lähima Tetra Paki esindajaga.

Tiedot käsikirjasta

Tetra Pak suosittelee kaikkien toimitettujen käyttöohjeiden huolellista lukemista. Varmista että toimitetut käsikirjat ovat niiden henkilöiden käytettävissä, jotka käyttävät tai huoltavat laitetta.

On tärkeää, että käsikirjaa pidetään tallella koko laitteen käyttöiän ajan ja että käsikirja annetaan jokaiselle laitteen tulevalle omistajalle tai käyttäjälle.

Tetra Pak ei ole vastuussa mistään laitteille aiheutuneista vahingoista, jotka ovat johtuneet tämän käsikirjan ohjeiden noudattamatta jättämisestä.

Toimitetut käsikirjat

Laitteen mukana toimitetut käsikirjat:

CM

Muunnoskäsikirja (CM) palvelee teknikoita antamalla tiedot laitteen muuntamisesta erilaisiin tuotantotiloihin.

EM

Sähkökäsikirja (EM) palvelee teknikoita antamalla tiedot laitteen sähköjärjestelmästä.

IM

Asennuskäsikirja (IM) palvelee teknikoita antamalla tiedot laitteiden turvalliseksi asentamiseksi.

MM

Huoltokäsikirja (MM) palvelee teknikoita antamalla tiedot laitteiden huoltamisesta.

OM

Käyttäjän käsikirja (OM) palvelee käyttäjää antamalla tiedot laitteen käyttämisestä ennen tuotantoa, sen aikana ja sen jälkeen.

RM

Korjaus käsikirja antaa teknikoille vaadittavat tiedot turvallisesti asentaa rakennussarja valmiiseen koneeseen tai laitteeseen.

(Jatkuu)

(Jatkoa)

SPC

Varaosaluettelo antaa ne tarpeelliset tiedot, joiden avulla voi tilata varaosia Tetra Pakilta

TeM

Tekninen käsikirja antaa teknikoille tietoja, joka voi olla:

- tietoja laitteen turvallista asennusta varten
- tietoja, joita tarvitaan laitteita huollettaessa
- tietoja koneen/laitteen sähköjärjestelmästä
- tietoja, joita tarvitaan tilattaessa varaosia Tetra Pakilta.
- muita teknisiä tietoja.

SP

Sivujen Päivitys tarjoaa uusia sivuja jo olemassa oleviin koneen käyttöohjeisiin.

Sivutaitto

Katso kuvaa (A) sivulla i-7: Varaosaluettelon pääsivut koostuvat kuvitetusta sivusta (1) ja sitä vastaavasta luettelo sivusta (7). Sivunumero (5) näkyy kuvasivun otsikossa ja luettelo sivun alatunnisteessa.
Dokumentin numero (6) näkyy luettelo sivun alatunnisteessa.

Sivunumerointi

Katso kuvaa (A) sivulla i-7: sivunumerossa (5) on kolme osaa:

- kappaleen numero (2)
- juokseva sivunumero kappaleessa (2)
- kappaleen kokonaissivumäärä (3)

Huom! Kirjaimet SP voivat korvata kappaleen numeron (2) jos sivujen päivitys sisältyy käyttöohjeisiin. Peräkkäisten sivujen numero (3) ja päivitys sivujen kokonaismäärä (4) eivät noudata käytössä olevaa kappaleiden juoksevaa sivunumerointia.

Koneen esittely

Valmistaja

Katso valmistajan nimi ja osoite tämän luettelon toiselta sivulta.

Huolto

Tetra Pak ei vastaa sellaisista vahingoista tai mistään työvälineiden, henkilöstön tai kuluttajien vaurioista, jotka johtuvat varaosista, jotka eivät ole aitoja Tetra Pakin varaosia.

Aitoja Tetra Pakin tämän laitteen varaosia voi tilata ottamalla yhteys lähimpään Tetra Pak toimistoon.

Koneen tunnistaminen

CE-luokitus

Tämä laite täyttää Euroopan talousalueen (ETA) perus turvallisuus- ja terveysvaatimukset.

(Jatkuu)

(Jatkoa)

3-A Soveltuvuus

Jos konekilvessä on merkintä A-3 (15) (ks. kuvasta (B) sivulla i-7) se tarkoittaa, että laite täyttää A-3 -standardin puhtausvaatimukset muotoilimille, täyttimille ja tiivisteille astioissa, jotka on tarkoitettu maidolle ja maitotuotteille, numero 17-10.

Konekilpi

Kuva (B) sivulla i-7 näyttää esimerkin konekilvestä.
Esimerkki voimassa olevasta konekilvestä ja sen sijainnista laitteessa näkyy tämän laitteen mukana toimitettujen käyttöohjeiden johdanto luvussa.
Konekilpi sisältää alla luetellut tiedot, joita tarvitaan kun otetaan yhteyttä Tetra Pakkiin koskien erityisesti tätä laitetta.

- Koneen tyyppi (8)
- Teho (9)
- Piirustus erittelyt (10)
- Koneen sarjanumero (11)
- Valmistaja (12)
- Valmistusvuosi (13)
- CE-merkintä (14)
- 3-A merkintä (tarvittaessa) (15)

Varmista, että tämän käsikirjan etusivuilla olevat tuotetiedot vastaavat konekilven tietoja ja laitteen teknistä erittelyä.

Kuinka tätä varaosaluetteloa käytetään

Löydä ensin varaosan numero

a) Katso kuvaa (C) sivulla i-7: Mene pääryhmän vieressä ilmoitettuun kappaleeseen (16), joka sisältää sen osan, jonka haluat löytää.

Osat b) ja c) katso kuvaa (D) sivulla i-8.

b) Pääryhmän kuvassa etsi sitä koneen alaryhmää (18), joka sisältää etsimäsi osan tai alaryhmän. Huomioi sijaintinumero (19) ja siirry kuvaa seuraavaa luettelosivulle.

c) Etsi sijaintinumeroa/viitenimitystä (17) tai alaryhmän nimeä (20). Siirry vastaavalle sivunumerolle (21), joka on mainittu oikeanpuoleisessa sarakkeessa. Tetra Pak käyttää aina viitteissä toiminnallisia rakenteita. Prefiksi ilmaisin toiminto rakenne (=) ei näy viitenimityksissä.

(Jatkuu)

(Jatkoa)

Osat d) ja e) katso kuvaa (E) sivulla i-8.

d) Paikanna etsimäsi osa (22) alaryhmän piirroksessa ja huomioi osan sijaintinumero.

e) Osanumero (29) ja osan kuvaus (30) on luetteloitu sijaintinumeron vieressä luettelosivulla.

Varaosaluettelossa luetellut tiedot

Seuraava luettelo viittaa kuvaan (E) sivulla i-8. Varaosaluettelo sisältää seuraavat tiedot ryhmistä, alaryhmistä ja varaosista laitteelle:

- Viite ryhmän rakenteeseen (23). Osoittaa seuraavan ylemmän ryhmän laiteluettelon rakenteessa.
- Ryhmän nimi (24)
- Mittayksikkö (25)
- Määrä (26)
- Kokoamispiirustus numero (27)
- Luettelon sivualue (28). Sisällytetty, jos ryhmän kuvissa tai luetteloisssa on useita sivuja.
- Osan tai alaryhmän numero (29)
- Alaryhmän nimi tai osan kuvaus (30)
- Ryhmän numero (31)
- Laitteen numero (32)
- Ryhmätietojen otsikko (33). Ilmoittaa, onko otsikon alla oleva kohta erityiselle konevaihtoehdolle vai onko se luettelo yhteisistä osista. Jos luettelossa on useampi kuin yksi muunnos ja kullakin muunnoksella on oma asennuspiirroksensa, näytetään sivuviite muunnoksen asennuspiirustukseen.
- Sisäinen tiedotus (34)

Tuotetuki ja palaute

Tämän laitteen käyttöön, tai muihin tiedusteluihin, kommentteihin tai ehdotuksiin, esitettyihin kysymyksiin tai palautteeseen saa apua E-yhteystoimiston kotisivuilta osoitteesta http://e-liaison.tetrapak.com.
Jos pääsy Tetra Pak intranet sivuille ei ole saatavilla, ota yhteyttä lähimpään Tetra Pak edustajaan.

Information sur le manuel

Tetra Pak recommande de lire attentivement tous les manuels fournis. S'assurer que les manuels fournis sont accessibles au personnel qui s'occupe du fonctionnement ou de la maintenance de l'équipement.

Il est important de conserver ce manuel pendant toute la durée d'utilisation de la machine et de le transmettre à tout détenteur ou utilisateur ultérieur.

Tetra Pak ne sera pas tenu responsable d'un dommage causé à la machine ou à l'équipement par le fait de ne pas avoir respecté les instructions figurant dans le présent manuel.

Manuels fournis

Manuels fournis avec l'équipement:

CM

Le Manuel de Conversion fournit aux techniciens les informations nécessaires pour convertir la machine en vue des différents modes de production.

EM

Ce manuel électrique fournit aux techniciens les informations sur le système électrique de la machine.

IM

Ce manuel de Mise en place fournit aux techniciens les informations nécessaires pour l'installation de la machine en toute sécurité.

MM

Ce manuel de Maintenance fournit aux techniciens les informations pour la maintenance.

OM

Le Manuel d'Opérateur fournit à l'opérateur les informations sur la manutention et le fonctionnement de l'équipement avant, pendant et après la production.

RM

Le Manuel de Conversion fournit aux techniciens les renseignements nécessaires pour installer en toute sécurité un ensemble sur une machine ou un équipement mis en place.

(Suite à la page suivante)

(Suite de la page précédente)

SPC

Le Catalogue de pièces de rechange fournit les renseignements nécessaires pour commander les pièces de rechange chez Tetra Pak.

TeM

Le Manuel technique offre aux techniciens des informations qui peuvent être:

- des informations nécessaires pour installer l'équipement en toute sécurité,
- des informations nécessaires pour entretenir l'équipement
- des informations concernant le système électrique de l'équipement/des machines.
- des informations nécessaires à la commande de pièces de rechange auprès de Tetra Pak
- d'autres informations techniques.

HAUT

Les pages de Mise à Jour fournissent de nouvelles pages pour mettre à jour les manuels de machine existants.

Présentation d'une page

Se référer à la figure (A) à la page i-7: Les pages principales du Catalogue des Pièces de Rechange sont composées d'une page de figure (1) et d'une page de liste correspondante (7). Le numéro de page (5) est indiqué dans le titre de la page de figure et dans le bas de page d'une page de liste. Le numéro de document (6) est indiqué dans le bas de page de la page de liste.

Numérotation de page

Se référer (A) à la page i-7: Un numéro de page (5) possède trois parties:

- Numéro de chapitre (2)
- numéro de page consécutif (2) à l'intérieur du chapitre (3)
- nombre total de pages dans le chapitre (4)

Remarque! Les lettres UP peuvent remplacer le numéro de chapitre (2), si le manuel comprend des pages de mise à jour. Le numéro de page consécutif (3) et le nombre total de pages (4) des pages de mise à jour ne suivent pas la pagination séquentielle du chapitre.

Présentation de la machine

Fabricant

Pour le nom et l'adresse du fabricant, voir la deuxième page de ce catalogue.

Assistance technique

Tetra Pak ne sera pas tenu responsable des dommages sur l'équipement ou des blessures au personnel ou aux consommateurs qui pourraient être causés par des pièces de rechange qui ne sont pas des pièces de rechange Tetra Pak originales.

Pour commander les pièces de rechange originales de cette machine, prendre contact avec le bureau Tetra Pak le plus proche.

Identification

Certification CE

Cet équipement est conforme aux réglementations essentielles d'hygiène et de sécurité de la Communauté Économique Européenne (CEE).

(Suite à la page suivante)

(Suite de la page précédente)

3-A Conformité

Si la plaque de machine contient le repère 3-A (15) (voir la figure (B) à la page i-7), cet équipement est conforme aux Normes Sanitaires 3-A pour les moules, les remplisseuses et systèmes de soudure de conteneurs pour lait liquide et produits laitiers liquides, Numéro 17-10.

Plaque signalétique de la machine

La figure (B) à la page i-7 montre un exemple d'une plaque signalétique de machine.
Une représentation de la plaque de machine valable et son emplacement sur l'équipement est indiquée au chapitre Introduction des manuels fournis avec l'équipement. La plaque de machine contient les caractéristiques figurant dans la liste ci-dessous, nécessaires pour prendre contact avec Tetra Pak au sujet de cet équipement spécifique.

- Type de machine (8)
- Volume (9)
- Spécifications du plan (10)
- Numéro de série de la machine (11)
- Fabricant (12)
- Année de fabrication (13)
- Marquage CE (14)
- Repère 3-A (s'il y a lieu) (15)

S'assurer que les caractéristiques de l'équipement figurant dans la liste des pages de garde de ce manuel correspondent aux caractéristiques de la plaque signalétique de la machine et à ses spécifications.

Comment utiliser ce Catalogue de Pièces de Rechange

Localiser un Numéro de Pièce de rechange.

a) Se référer à la figure (C) à la page i-7: Aller au numéro de chapitre (16) indiqué à côté du groupe principal qui contient la pièce que vous souhaitez localiser.

Les articles b) et c) se réfèrent à la figure (D) à la page i-8.

b) Sur la figure du groupe principal, chercher la sous-groupe de machine (18) qui contient la pièce ou le sous-groupe que recherché. Noter le numéro de repère (19) et aller à la page de liste qui suit la figure.

c) Rechercher le numéro de repère/la désignation de référence (17) ou le nom de sous-groupe (20). Aller au numéro de page correspondant (21) figurant dans la liste de la colonne de droite. Tetra Pak a choisi de toujours utiliser la structure orientée vers la fonction pour la désignation de référence. Le préfixe indiquant la structure orientée vers la fonction (=) n'est pas indiquée dans la désignation de référence.

(Suite à la page suivante)

(Suite de la page précédente)

Les articles d) et e) se réfèrent à la figure (E) à la page i-8.

d) Localiser la pièce (22) recherchée sur la figure de sous-groupe et noter le numéro de repère de la pièce.
e) Le numéro de pièce (29) et la description de la pièce (30) figurent dans la liste à côté du numéro de repère sur la page de liste.

Informations figurant dans la Liste dans un Catalogue de Pièces de Rechange.

La liste ci-dessous se réfère à la figure (E) à la page i-8. Un Catalogue de Pièces de Rechange contient les renseignements suivants relatifs aux groupes, sous-groupes et pièces de rechange de l'équipement.

- Référence de structure de groupe (23). Indique le groupe supérieur suivant dans la structure de liste d'équipement.
- Nom du groupe (24)
- Unité de mesure (25)
- Quantité (26)
- Numéro de plan de montage (27)
- Gamme de la page de liste (28). Incluse s'il y a des pages multiples dans la figure de groupe ou dans la liste.
- Numéro de pièce ou de sous-groupe (29)
- Nom de sous-groupe ou description de la pièce (30)
- No. de groupe (31)
- Numéro de l'équipement (32)
- Titre des informations de groupe (33). Indique si la section sous le titre est pour une variante de machine spécifique ou s'il y a une liste de pièces communes. Si une liste comporte plus d'une variante et que chaque variante possède son propre plan de montage, une référence de page au plan de montage de la variante est alors indiqué.
- Informations internes (34)

Service Assistance et Réaction ("Support and Feeback")

Pour toute assistance lors de l'utilisation de cet équipement, ou pour toutes autres questions, commentaires ou suggestions, poser les questions ou faire part des réactions sur la page d'accueil du site de liaison électronique: http://e-liaison.tetrapak.com. Si l'accès au réseau interne Tetra Pak n'est pas disponible, prendre contact avec le représentant Tetra Pak le plus proche.

Kézikönyv információ

A Tetra Pak az összes leszállított kézikönyv alapos átolvasását javasolja. Gondoskodjon arról, hogy a készüléket üzemeltető és karbantartó személyzet számára elérhetőek legyenek a leszállított kézikönyvek.

Fontos, hogy a kézikönyvet a berendezés teljes élettartama alatt megőrizzék, és továbbadják azt minden későbbi tulajdonosnak és felhasználónak.

A Tetra Pak nem vállal felelősséget semmilyen a készülékben keletkező kárért, amely a berendezéshez mellékelt kézikönyvben lévő utasítások be nem tartásának következménye.

Leszállított kézikönyvek

A berendezéssel leszállított kézikönyvek:

CM

A CM Átállítási kézikönyv ellátja a szakembereket a különböző gyártási üzemmódokra való átállításról szóló információkkal.

EM

Az EM Elektromossági kézikönyv ellátja a szakembereket a készülék elektromos rendszerével kapcsolatos információkkal.

IM

Az IM Telepítési kézikönyv a készülék biztonságos telepítéséhez szolgáltat információkat a szakemberek számára.

MM

Az MM Karbantartási kézikönyv a készülék karbantartásával kapcsolatosan szolgáltat információkat a szakemberek számára.

OM

Az OM Üzemeltetési kézikönyv a kezelők részére szolgáltat információkat a berendezés kezeléséről és működtetéséről a gyártás előtt, alatt és után.

RM

Az RM újraépítési kézikönyv ellátja a szakembereket azokkal az információkkal, amelyek egy készletnek a már telepített gépre való biztonságos felszereléséhez szükségesek.

(Folyt.)

(Folyt.)

SPC

Az SPC Alkatrész-katalógus a Tetra Paktól megrendelhető alkatrészek megrendeléséhez szükséges információkat tartalmazza.

TeM

A TeM Műszaki útmutató az alábbi információkkal látja el a technikusokat:

- a berendezés biztonságos felszereléséhez szükséges információkkal,
- a berendezés karbantartásához szükséges információkkal,
- a gép/berendezés elektromos rendszerével kapcsolatos információkkal,
- A Tetra Paktól történő cserealkatrész rendeléshez szükséges információkkal,
- egyéb műszaki információkkal.

UP

A UP Termékfrissítési oldalak új oldalakkal frissíti a gépkönyveket.

Oldal elrendezés

Lásd az (A) ábrát a(z) i-7 oldalon: Az Alkatrész-katalógus fő oldalai egy ábrákat tartalmazó oldalból (1) és a megfelelő listát tartalmazó oldalból (7) állnak. Az oldalszám (5) az ábrákat tartalmazó oldal fejlécében és a listát tartalmazó oldal láblécében jelenik meg. A dokumentumszám a listát tartalmazó oldal (6) láblécében jelenik meg.

Oldalszámozás

Lásd az ábrát (A) a(z) i-7 oldalon: Az oldalszám (5) három részből áll:

- fejezetszám (2)
- fejezeten belüli egymást követő oldalak száma (3)
- a fejezet összoldalszáma (4)

Megjegyzés! A UP betűk helyettesíthetik a fejezetszámot (2), ha a kézikönyv termékfrissítési oldalakat tartalmaz. A termékfrissítési oldalak egymást követő oldalai (3) és összoldalszáma (4) nem igazodik a fejezet egymást követő oldalszámozásához.

Gép bevezetés

Gyártó

A gyártó neve és címe a katalógus második oldalán található.

Szerviz

A Tetra Pak nem vállal felelősséget a berendezés, személyzet vagy fogyasztók olyan sérüléseiért, amelyet nem eredeti Tetra Pak pótalkatrészek használata okozott.

Eredeti Tetra Pak pótalkatrészeket a legközelebbi Tetra Pak irodából rendelhet.

Azonosítás

CE besorolás

A berendezés megfelel az Európai Gazdasági Térség (EEA) alapvető egészségügyi és biztonsági előírásainak.

(Folyt.)

(Folyt.)

3-A megfelelőség

Ha a gép adattáblája tartalmazza a 3-A jelzést (15) (lásd (B) ábra az i-7 oldalon), akkor ez a berendezés megfelelő a 3-A Egészségügyi szabványok folyékony tej és folyékony tejtermékek csomagolásának alakító, töltő és lezáró eszközeire, 17-10. sz.

Géptábla

A (B) ábra a(z) i-7 oldalon egy példa a géptáblára.
Az érvényes géptáblát és annak a gépen elfoglalt helyét bemutató ábra a berendezéshez mellékelt kézikönyvek bevezető fejezetében található. A géptábla az alább felsorolt adatokat tartalmazza, amelyekre akkor van szükség, amikor felveszi a kapcsolatot a Tetra Pakkal ezzel a sajátos berendezéssel kapcsolatban.

- Géptípus (8)
- Térfogat (9)
- Tervrajz specifikációk (10)
- Gép gyártási száma (11)
- Gyártó (12)
- Gyártási év (13)
- CE jelölés (14)
- 3-A jelölés (ha van ilyen) (15)

Bizonyosodjon meg arról, hogy a kézikönyv első oldalán található berendezés-adatok megfelelnek a géptábla adatainak és a gép specifikációinak.

Az Alkatrész-katalógus használata

Keresse meg az alkatrész-számot

a) Lásd a (C) ábrát a(z) i-7 oldalon: Ugorjon a fejezetszámra (16), amely a keresett alkatrészt tartalmazó fő csoport mellett található.

A(z) b) és c) adatok a(z) i-8 oldalon található (D) ábrára vonatkoznak.

b) A főcsoport ábráját lásd a gép alcsoportban (18), amely a keresett alkatrészt vagy alcsoportot tartalmazza. Jegyezze fel a pozíció számot (19) és ugorjon az illusztrációt követő lista oldalra.

c) Keresse a pozíció számot/referencia elnevezést (17) vagy az alcsoport nevét (20). Ugorjon a jobboldali oszlopban feltüntetett megfelelő oldalszámra (21). A Tetra Pak úgy döntött, hogy referencia elnevezésre mindig a funkcióorientált szerkezetet alkalmazza. A funkcióorientált szerkezetet jelző előtag (=) nem jelenik meg a referencia elnevezésben.

(Folyt.)

(Folyt.)

A(z) d) és e) adatok a(z) i-8 oldalon található (E) ábrára vonatkoznak.

d) Keresse meg az alkatrészt (22) az alcsoport ábrán és jegyezze fel az alkatrész pozíció számát.

e) Az alkatrész-szám (29) és az alkatrész leírása (30) a lista oldalon a pozíció szám mellett van feltüntetve.

Az Alkatrész-katalógusban feltüntetett információk

Az alábbi lista a(z) i-8 oldalon lévő (E) ábrára vonatkozik.
Az Alkatrész-katalógus a következő információkat tartalmazza a berendezés alcsoportokról, csoportokról és alkatrészekről.

- Csoportszerkezet referencia (23). A következő nagyobb csoportot jelzi a berendezés listaszerkezetében.
- Csoportnév (24)
- Mértékegység (25)
- Mennyiség (26)
- Szerelési rajz száma (27)
- Listaoldal tartomány (28). Akkor található meg, ha több oldalt tartalmaz a csoportábrában vagy a listában.
- Alkatrész vagy alcsoport szám (29)
- Alcsoport név vagy alkatrész leírás (30)
- Csoportszám (31)
- Berendezés szám (32)
- Csoportinformáció címsor (33). Azt jelzi, hogy az alábbi szakaszban a címsor egy bizonyos gépváltozatra vonatkozik, vagy általános alkatrészek egy listája Ha egy lista egynél több változattal rendelkezik, és mindegyik változatnak saját összeszerelési rajza van, a változatok szerelési rajzának egy oldal-hivatkozása jelenik meg.
- Belső információk (34)

Támogatás és visszajelzés

A berendezés üzemeltetésére vonatkozó segítséghez, vagy egyéb kérésekhez, megjegyzésekhez vagy javaslatokhoz az E-Liaison http://e-liaison.tetrapak.com honlapján kell feltenni kérdéseket vagy visszajelzést adni. Ha a Tetra Pak intranet nem érhető el, forduljon a legközelebbi Tetra Pak képviselethez.

Handbókaupplýsingar

Tetra Pak mælir með því að allar handbækur séu lesnar vandlega.
Gangið úr skugga um að afhentar handbækur séu tiltækar starfsmönnum sem reka tækin eða viðhalda þeim.

Mikilvægt er geyma þessa handbók á endingartíma búnaðarins og afhenda hana arftökum eða öðrum notendum.

Tetra Pak ber ekki ábyrgð á neinu tjóni á tækjunum sem stafar af því að ekki var farið eftir leiðbeiningum í þessari handbók.

Afhentar handbækur

Handbækur sem afhentar voru með þessum tækjum:

CM

Breytingahandbók veitir tæknimönnum upplýsingar um breytingar á tækjunum svo að þau hæfi hinum ýmsu framleiðsluháttum.

EM

Raftækjahandbók veitir tæknimönnum upplýsingar um rafkerfi tækjanna.

IM

Uppsetningarhandbók veitir tæknimönnum nauðsynlegar upplýsingar um örugga uppsetningu tækjanna.

MM

Viðhaldshandbók veitir tæknimönnum upplýsingar um viðhald tækjanna.

OM

Rekstrarhandbók veitir stjórnanda upplýsingar um meðhöndlun og rekstur tækjanna fyrir og eftir framleiðslu.

RM

Endurbyggingarhandbók veitir tæknimönnum nauðsynlegar upplýsingar um örugga uppsetningu viðbótarbúnaðar við þegar uppsetta vél eða tæki.

(frh.)

(frh.)

SPC

Varahlutalisti veitir upplýsingar sem nauðsynlegar eru til að panta varahluti frá Tetra Pak.

TeM

Í Tæknihandbókinni eru tæknimönnum veittar upplýsingar, svo sem:

- upplýsingar um örugga uppsetningu tækjanna
- upplýsingar um viðhald tækjanna
- upplýsingar um rafkerfi vélarinnar/búnaðarins
- nauðsynlegar upplýsingar um pantanir varahluta frá Tetra Pak
- aðrar tæknilegar upplýsingar

UP

Uppfærslublaðsíður eru nýjar blaðsíður til að uppfæra eldri vélahandbækur.

Umbrot

Vísað er til myndar (A) á bls. i-7: Meginblaðsíður í Varahlutalistanum eru myndablaðsíða (1) og samsvarandi listablaðsíða (7). Blaðsíða númer (5) er sýnd í fyrirsögn myndablaðsíðu og neðst á listablaðsíðu. Skjalsnúmer (6) er neðst á listablaðsíðu.

Blaðsíðunúmer

Vísað er til myndar (A) á blaðsíðu i-7: Blaðsíðunúmer (5) skiptist í þrjá hluta:

- kaflanúmer (2)
- raðnúmer (3) innan kaflans
- heildarfjölda blaðsíðna (4) í kaflanum.

Ath.! Stafirnir UP kunna að koma í stað kaflanúmers (2) ef uppfærslublaðsíður eru í handbókinni. Raðnúmer blaðsíðu (3) og heildarfjöldi síðna (4) af uppfærslublaðsíðum sýna ekki eldri raðnúmer í kaflanum.

Inngangur um vélina

Framleiðandi

Nafn og heimilisfang framleiðanda er birt á 2. bls. þessa vörulista.

Þjónusta

Tetra Pak ber enga ábyrgð á tjóni eða slysum á tækjum, starfsmönnum eða neytendum af völdum varahluta sem eru ekki ekta Tetra Pak-varahlutir.

Pantanir á ekta Tetra Pak-varahlutum í þessa vél skulu sendar næstu skrifstofu Tetra Pak.

Auðkenni

CE flokkun

Þessi tæki fullnægja grundvallarheilbrigðis- og öryggisreglugerðum Evrópska efnahagssvæðisins (EES).

(frh.)

(frh.)

3-A samræmi

Ef vélarplatan inniheldur 3-A merkingu (15) (sjá mynd (B) á bls. i-7) er þessi búnaður í samræmi við 3-A hreinlætisstaðla fyrir mótara, áfyllara og lokara íláta fyrir mjólkurvökva og mjólkurvökvavörur, nr. 17-10.

Vélarskilti

Myndin (B) á bls. i-7 sýnir dæmi um vélarskilti.
Mynd af gildandi vélarskilti og staðsetning þess á búnaðinun er birt í inngangskafla handbókanna sem afhentar eru með þessum búnaði.
Á vélarskiltinu er að finna þau gögn sem talin eru upp hér að neðan og þörf er fyrir þegar haft er samband við Tetra Pak vegna þessa sérstaka búnaðar.

- Vélargerð (8)
- Magn (9)
- Tækniteikningar (10)
- Raðnúmer vélar (11)
- Framleiðandi vélar (12)
- Framleiðsluár(13)
- CE-merki (14)
- 3-A-merki (ef við á) (15)

Gangið úr skugga um að gögn um búnaðinn á fyrstu blaðsíðum þessarar handbókar komi heim og saman við vélarskiltið og tæknilýsingu vélarinnar.

Notkun þessa varahlutalista

Finna ber númer varahlutar

a) Vísað er til myndar (C) á bls. i-7: Fletta skal upp á kafla (16) sem birtist við hlið meginhópsins sem hefur að geyma þann hlut sem ætlunin er að finna.

Atriði b) og c) vísa til myndar (D) á bls. i-8.

b) Á mynd af meginhópnum ber að gá að undirflokki (18) vélar sem hefur að geyma hlut eða undirflokk sem leitað er að.
Aðgæta skal staðsetningarnúmerið (19) og fletta upp á listablaðsíðu sem fylgir myndinni.

c) Finna ber staðsetningarnúmer/tilvísaða skilgreiningu (17) eða heiti undirhóps (20). Aðgæta skal viðeigandi blaðsíðunúmer (21) sem birt er í dálkinum hægra megin. Tetra Pak hefur valið að nota ávallt virkniform sem skilgreiningarhlut. Forskeytið, sem bendir til virkniformsins (=), er ekki sýnt í skilgreiningarhlutnum

(frh.)

(frh.)

Atriði d) og e) eiga við um mynd (E) á bls. i-8.

d) Finna ber hlutinn (22) sem leitað er að í undirhópsmyndinni og aðgæta hvert er staðsetningarnúmer hlutarins.

e) Hlutarnúmerið (29) og lýsing hlutarins (30) eru listuð við hlið staðsetningarnúmersins á listablaðsíðunni.

Upplýsingar sem birtar eru í Varahlutalistanum

Listinn hér að neðan á við um mynd (E) á bls. i-8. Í Varahlutalista er að finna eftirfarandi upplýsingar um hópa, undirhópa og varahluti fyrir tækin:

- Skilgreining uppbyggingar hóps (23). Bendir til næsta hóps fyrir ofan í uppbyggingu hlutalistans.
- Heiti hóps (24)
- Mælieiningar (25)
- Magn (26)
- Númer á samsetningarteikningu (27)
- Svið listablaðsíðu (28). Fylgir með ef um er að ræða margar blaðsíður á hópmyndninni eða listanum.
- Númer hlutar eða undirflokks (29)
- Heiti undirhóps eða lýsing hlutar (30)
- Hópnúmer (31)
- Númer búnaðar (32)
- Fyrirsögn upplýsingar um hóp (33). Bendir til þess hvort kaflinn undir fyrirsögninni fjalli um sérstaka gerð vélar eða í honum sé listi yfir almenna hluti. Ef í listanum er að finna fleiri en einn frábrugðinn hlut og birt er samsetningarteikning fyrir sérhvern frábrugðinn hlut er vísað til blaðsíðunnar með samsetningarteikningu hins frábrugðna hlutar.
- Innri upplýsingar (34)

Stuðningur og endurgjöf

Ef óskað er aðstoðar við notkun þessa búnaðar, eða að bera fram fyrirspurnir, athugasemdir eða tillögur, á að bera upp spurningar eða veita endurgjöf á E-Liaison-heimasíðunni http://e-liaison.tetrapak.com. Ef ekki er um að ræða aðgang að Tetra Pak-heimasíðunni ber að hafa samband við næsta umboðsmann Tetra Pak.

Informazioni sul manuale

Tetra Pak raccomanda di leggere con attenzione tutti i manuali forniti. Assicurarsi che i manuali forniti siano disponibili per il personale che opera o mantiene in efficienza l'equipaggiamento.

E' importante conservare questo catalogo per tutta la durata dell'equipaggiamento e consegnarlo ad ogni successivo possessore o utilizzatore.

Tetra Pak non si assumerà alcuna responsabilità per qualsiasi danno all'equipaggiamento causato dall'inosservanza delle istruzioni contenute nei manuali forniti con questo equipaggiamento.

Manuali forniti

Manuali forniti con questo equipaggiamento:

CM

Il Manuale di Conversione fornisce ai tecnici le informazioni sulla conversione dell'equipaggiamento tra i diversi modi di produzione.

EM

Il Manuale Elettrico fornisce ai tecnici le informazioni sul sistema elettrico dell'equipaggiamento.

IM

Il Manuale d'Installazione fornisce ai tecnici le informazioni necessarie per installare facilmente l'equipaggiamento.

MM

Il Manuale di Manutenzione fornisce ai tecnici le informazioni sulla manutenzione dell'equipaggiamento.

OM

Il Manuale Operativo fornisce all'operatore informazioni su come movimentare ed azionare l'equipaggiamento prima, durante e dopo la produzione.

RM

Il Manuale di modifica fornisce ai tecnici le informazioni necessarie per installare facilmente un kit ad una macchina o ad un equipaggiamento.

(Continua)

(Continuazione)

SPC

Il Catalogo parti di ricambio fornisce informazioni necessarie per ordinare le parti di ricambio da Tetra Pak.

TeM

Il Manuale Tecnico fornisce le informazioni ai tecnici che possono essere:

- informazioni necessarie per installare in modo sicuro l'equipaggiamento
- informazioni necessarie per la manutenzione dell'equipaggiamento
- informazioni sul sistema elettrico della macchina/equipaggiamento
- informazioni necessarie per ordinare le parti di ricambio a Tetra Pak.
- altre informazioni tecniche

SU

Le pagine di aggiornamento forniscono nuove pagine per aggiornare i manuali delle macchine esistenti.

Schema pagina

Fare riferimento alla figura (A) a pagina i-7: Le pagine principali in un catalogo parti di ricambio consistono di una pagina di illustrazione (1) ed una corrispondente pagina della lista (7). Il numero di pagina (5) è indicato nell'intestazione di una pagina di illustrazione e nel piè di pagina di una pagina della lista. Il numero di documento (6) è indicato nel piè di pagina di una pagina della lista.

Numerazione pagina

Fare riferimento alla figura (A) a pagina i-7: Un numero di pagina (5) ha tre parti:

- numero capitolo (2)
- numero pagina consecutivo nel capitolo (3)
- numero totale di pagine nel capitolo (4)

Nota! Le lettere UP possono sostituire il numero del capitolo (2) se il manuale include le pagine di aggiornamento. Il numero di pagina consecutivo (3) ed il numero totale di pagine (4) delle pagine di aggiornamento non seguono la numerazione esistente sequenziale delle pagine del capitolo.

Introduzione macchina

Fabbricante

Per il nome e l'indirizzo del fabbricante, vedere la seconda pagina di questo catalogo.

Assistenza

Tetra Pak non si assume alcuna responsabilità per qualsiasi danno all'equipaggiamento, o lesioni al personale o ai clienti che sia stato causato da parti di ricambio non originali Tetra Pak.

Per ordinare le parti di ricambio originali Tetra Pak per questa macchina, contattare l'ufficio Tetra Pak più vicino.

Identificazione

Classificazione CE

Questa macchina è conforme alle norme sanitarie e di sicurezza dell'Area Economica Europea (EEA).

(Continua)

(Continuazione)

Conformità 3-A

Se la targhetta macchina contiene il marchio 3-A (15) (vedere la figura (B) a pagina i-7), questo equipaggiamento è conforme alle norme sanitarie 3-A per formatrici, riempitrici e saldatori di contenitori per latte liquido e prodotti lattiero-caseari liquidi, numero 17-10.

Targhetta macchina

La figura (B) a pagina i-7 mostra un esempio della targhetta della macchina. Una figura della targhetta della macchina valida e la relativa posizione sull'equipaggiamento è mostrata nel capitolo Introduzione dei manuali forniti con questo equipaggiamento. La targhetta della macchina contiene i dati elencati in basso, necessari quando si contatta Tetra Pak in merito a questo specifico equipaggiamento.

- Tipo di macchina (8)
- Volume (9)
- Specifiche disegni (10)
- Numero di serie della macchina (11)
- Fabbricante (12)
- Anno di fabbricazione (13)
- Sigla CE (14)
- Marcatura 3-A (se applicabile) (15)

Assicurarsi che i dati dell'equipaggiamento nelle pagine anteriori di questo manuale corrispondano alla targhetta della macchina ed alle specifiche della macchina stessa.

Come usare questo catalogo parti di ricambio

Individuazione di un numero di parte di ricambio

a) Fare riferimento alla figura (C) a pagina i-7: Passare al numero del capitolo (16) indicato accanto al gruppo principale che contiene la parte che si vuole individuare.

Punti b) e c) fare riferimento alla figura (D) a pagina i-8.

b) Sulla figura del gruppo principale, cercare il sottogruppo della macchina (18) che contiene la parte o il sottogruppo che si sta cercando. Annotare il numero di posizione (19) e passare alla pagina della lista che segue la figura.

c) Cercare il numero di posizione/denominazione di riferimento (17) o il nome del sottogruppo (20). Passare al numero di pagina corrispondente (21) elencato nella colonna destra. Tetra Pak ha scelto di utilizzare sempre la funzione della struttura orientata per la denominazione di riferimento. Il prefisso che indica la funzione della struttura orientata (=) non è mostrato nella denominazione di riferimento

(Continua)

(Continuazione)

Punti d) e e) fare riferimento alla figura (E) a pagina i-8 .

d) Individuare la parte (22) che si sta cercando sulla figura del sottogruppo ed annotare il numero di posizione della parte.

e) Il numero della parte (29) e la descrizione della parte (30) sono elencati accanto al numero di posizione nella pagina della lista.

Informazioni elencate nel catalogo parti di ricambio

La lista in basso si riferisce alla figura (E) a pagina i-8. Un catalogo parti di ricambio contiene le seguenti informazioni sui gruppi, sottogruppi e parti di ricambio per l'equipaggiamento:

- Riferimento struttura gruppo (23). Indica il gruppo successivo superiore nella struttura della lista dell'equipaggiamento.
- Nome del gruppo (24)
- Unità di misura (25)
- Quantità (26)
- Numero disegno di montaggio (27)
- Gamma di pagine della lista (28). Inclusa se ci sono pagine multiple nella figura del gruppo o della lista.
- Numero della parte o del sottogruppo (29)
- Nome del sottogruppo o descrizione della parte (30)
- Numero gruppo (31)
- Numero dell'equipaggiamento (32)
- Sezione informazioni del gruppo (33). Indica se la sezione sotto l'intestazione è per una variante macchina specifica o se è una lista di parti comuni. Se una lista ha più di una variante e ogni variante ha il proprio disegno di montaggio, un riferimento della pagina è indicato nel disegno di montaggio della variante.
- Informazioni interne (34)

Supporto e feedback

Per l'assistenza durante il funzionamento di questo equipaggiamento, o altre richieste, commenti, o suggerimenti, presentare le domande o fornire il feedback sulla pagina iniziale E-Liaison a http://e-liaison.tetrapak.com. Se l'accesso all'intranet Tetra Pak non è disponibile, contattare il rappresentante Tetra Pak più vicino.

Vadovo informacija

Tetra Pak rekomenduoja atidžiai perskaityti visus pristatomus vadovus. Įsitikinkite, kad pristatomi vadovai yra prieinami personalui, kuris dirba su įranga arba ją prižiūri.

Svarbu saugoti šį vadovą visam įrangos gyvavimo laikotarpiui ir perduoti vadovą kiekvienam sekančiam savininkui arba naudotojui.

Tetra Pak neatsako už bet kokius įrangos gedimus, atsiradusius nesilaikant šią įrangą lydinčiuose vadovuose pateiktų instrukcijų.

Pristatomi vadovai

Kartu su šia įranga pristatomi vadovai:

CM

Perjungimų vadove specialistams suteikiama informacija apie įrangos perjungimą tarp įvairių gamybos režimų.

EM

Elektrinės dalies vadove pateikiama informacija specialistams apie įrangos elektros sistemą.

IM

Montavimo vadove pateikiama specialistams informacija, reikalinga saugiam įrangos montavimui

MM

Priežiūros vadove pateikiama specialistams informacija, reikalinga prižiūrint įrangą.

OM

Darbo vadove pateikiama informacija operatoriams apie darbą su įranga ir įrangos valdymą prieš gamybą, gamybos metu ir po gamybos.

RM

Restauravimo vadove pateikiama specialistams informacija, reikalinga saugiai sumontuoti komplektą dalių į sumontuotą mašiną ar įrangą.

(Tęsiama)

(Tęsiama)

SPC

Atsarginių dalių kataloge pateikiama informacija, reikalinga užsakant atsargines dalis iš Tetra Pak.

TeM

Techniniame vadove pateikiama specialistams informacija, kuri gali būti:

- informacija, reikalinga saugiam įrangos montavimui
- informacija, reikalinga atliekant techninę įrangos priežiūrą
- informacija apie mašinos / įrangos elektros sistemą
- informacija, reikalinga užsakant atsargines dalis iš Tetra Pak
- kitokia techninė informacija

UP

Nauji puslapiai skirti esamų mašinos vadovų atnaujinimui naujais puslapiais.

Puslapio išdėstymas

Vadovaukitės (A) paveikslėliu i-7 puslapyje: atsarginių dalių katalogo pagrindinius puslapius sudaro paveikslėlių puslapis (1) ir atitinkamo sąrašo puslapis (7). Puslapio numeris (5) nurodytas paveikslėlių puslapio antraštėje ir apatinėje sąrašo puslapio poraštėje. Dokumento numeris (6) nurodytas apatinėje sąrašo puslapio poraštėje.

Puslapių numeravimas

Vadovaukitės (A) paveikslėliu i-7 puslapyje: puslapio numerį (5) sudaro trys dalys:

- skyriaus numeris (2)
- puslapio eilės numeris (3) skyriuje
- bendras puslapių skaičius (4) skyriuje

Pastaba! Jei vadove yra atnaujinimų puslapiai, UP raidės gali būti vietoje skyriaus numerio (2). Atnaujinimo puslapio eilės numeris (3) ir bendras atnaujinimo puslapių skaičius (4) neatitinka nuoseklios skyriaus puslapių numeracijos.

Mašinos įvadas

Gamintojas

Apie gamintojo įmonės pavadinimą ir adresą skaitykite antrame šio katalogo puslapyje.

Aptarnavimas

Tetra Pak neprisiims jokios atsakomybės už žalą ir įrangos gedimus ar darbuotojų arba vartotojų traumas, patirtas naudojant atsargines dalis, kurios nėra originalios Tetra Pak atsarginės dalys.

Norėdami užsakyti originalias Tetra Pak atsargines dalis susisiekite su artimiausia Tetra Pak įstaiga.

Identifikacija

CE klasifikacija

Ši įranga tenkina pagrindines Europos Ekonominės Zonos (EEA) sveikatos ir saugumo taisykles.

(Tęsiama)

(Tęsiama)

3-A atitiktis

Jei mašinos lentelėje yra ženklas 3-A (15) (žr. (B) iliustraciją i-7 puslapyje), ši įranga atitinka 3-A higienos standartus skysto pieno ir skysto prieno produktų talpyklų formuotojams, pripildytojams ir sandarikliams, numeris 17-10.

Mašinos plokštė

Paveikslėlyje (B), esančiame i-7 puslapyje, pavaizduotas įrenginio kortelės pavyzdys.
Mašinos galiojančios kortelės paveikslėlis ir kortelės vieta ant įrangos nurodyta kartu su įranga tiekiamų vadovų įžanginiame skyriuje. Įrangos kortelėje pateikiami išvardinti duomenys, kurių reikia kreipiantis į Tetra Pak dėl konkrečios įrangos.

- Mašinos tipas (8)
- Tūris (9)
- Brėžinio specifikacijos (10)
- Mašinos serijos numeris (11)
- Gamintojas (12)
- Pagaminimo metai (13)
- CE ženklas (14)
- 3-A ženklas (jei taikomas) (15)

Įsitikinkite, kad šio vadovo pirmuose puslapiuose pateikti įrangos duomenis atitinka duomenis pateiktus mašinos informacinėje lentelėje ir mašinos specifikacijoje.

Kaip naudotis šiuo atsarginių dalių katalogu?

Nustatykite atsarginės dalies numerį

a) Vadovaukitės (C) paveikslėliu, esančiu i-7 puslapyje: atsiverskite skyrių, kurio numeris (16) nurodytas prieš pagrindinę grupę, kurioje yra reikiama surasti dalis.

Elementai b) ir c) atitinka (D) paveikslėlį, esantį i-8 puslapyje.

b) Pagrindinės grupės paveikslėlyje ieškokite mašinos dalinės grupės (18), kurioje yra ieškoma dalis ar dalinė grupė. Įsidėmėkite pozicijos numerį (19) ir atsiverskite už paveikslėlio esantį sąrašo puslapį.

c) Suraskite pozicijos numerio / nuorodos aprašymą (17) ar dalinės grupės pavadinimą (20). Atsiverskite atitinkamą puslapio numerį (21), nurodytą dešiniajame stulpelyje. Tetra Pak nuorodų aprašymams pasirinko visuomet naudoti su atliekama funkcija susietą struktūrą. Nuorodos aprašyme nenaudojamas priešdėlis, pažymintis su atliekama funkcija susietą struktūrą (=)

(Tęsiama)

(Tęsiama)

Elementai d) ir e) atitinka (E) paveikslėlį, esantį i-8 puslapyje.

d) Ieškomą dalį (22) suraskite dalinės grupės paveikslėlyje ir įsidėmėkite dalies pozicijos numerį.

e) Dalies numeris (29) ir dalies aprašymas (30) nurodyti sąrašo puslapyje prie pozicijos numerio.

Atsarginių dalių kataloge pateikiama informacija

Pateiktas sąrašas atitinka (E) paveikslėlį, esantį i-8 puslapyje. Atsarginių dalių kataloge pateikiama tokia informacija apie įrangos grupes, dalines grupes ir atsargines dalis:

- Grupės struktūros apibūdinimas (23). Nurodo kitą aukščiausią grupę įrangos sąrašo struktūroje.
- Grupės pavadinimas (24)
- Mato vienetas (25)
- Kiekis (26)
- Surinkimo brėžinio numeris (27)
- Sąrašo puslapių intervalas (28). Nurodomas tuomet, kai grupės paveikslėlį ar sąrašą sudaro keli puslapiai.
- Dalies ar dalinės grupės numeris (29)
- Dalinės grupės pavadinimas arba dalies aprašymas (30)
- Grupės numeris (31)
- Įrangos numeris (32)
- Grupės informacijos antraštė (33). Pažymi, ar po antrašte esantis skyrius skirtas konkrečiam mašinos variantui, ar tai bendrų dalių sąrašas. Jei sąrašą sudaro daugiau kaip vienas variantas ir kiekvienas iš jų atitinka skirtingą surinkimo numerį, pateikiama varianto surinkimo brėžinio puslapio nuoroda.
- Vidinė informacija (34)

Techninė pagalba ir grįžtamasis ryšys

Dėl techninės pagalbos ar kitokių pasiteiravimų eksploatuojant šią įrangą, norėdami pateikti pastabas arba pasiūlymus, užduokite klausimus ar suteikite grįžtamąją informaciją E-Liaison pagrindiniame puslapyje, adresu http://e-liaison.tetrapak.com. Jei nepavyks pasiekti vidinio Tetra Pak tinklo, susisiekite su artimiausia Tetra Pak atstovybe.

Informācija par instrukciju

Tetra Pak iesaka uzmanīgi izlasīt visas piegādātās instrukcijas. Nodrošiniet, lai piegādātās instrukcijas būtu pieejamas personālam, kurš ekspluatē un apkalpo iekārtu.

Ir svarīgi saglabāt šo katalogu visā ierīces kalpošanas laikā un nodot to jebkuram sekojošam īpašniekam vai lietotājam.

Tetra Pak neuzņemas atbildību par jebkādiem šīs iekārtas bojājumiem, ko izraisa šim aprīkojumam pievienotajās rokasgrāmatās sniegto instrukciju neievērošana.

Piegādātās instrukcijas

Ar iekārtu piegādātās instrukcijas:

CM

Šī Maiņas instrukcija (CM) nodrošina tehnisko personālu ar informāciju par iekārtas pārvēršanu dažādiem ražošanas režīmiem.

EM

Elektrisko savienojumu instrukcija (EM) nodrošina tehniķus ar informāciju par iekārtas elektrisko sistēmu.

IM

Instalācijas instrukcija (IM) nodrošina tehniķus ar informāciju, kas ir nepieciešama drošai iekārtas instalācijai.

MM

Tehniskās apkopes instrukcija (MM) sniedz tehniķiem informāciju par aprīkojuma tehnisko apkopi.

OM

Ekspluatācijas instrukcija (OM) nodrošina operatorus ar informāciju par rīcību ar iekārtu un tās ekspluatāciju pirms un pēc ražošanas procesa, kā arī tā laikā.

RM

Pārveidošanas instrukcija (RM) sniedz tehniķiem informāciju, kas nepieciešama, lai uz uzstādītas iekārtas vai aprīkojuma droši uzstādītu komplektu.

(Turpinājums seko)

(Turpinājums seko)

SPC

Rezerves daļu katalogs (SPC) sniedz informāciju, kas ir nepieciešama rezerves daļu pasūtīšanai no Tetra Pak.

TeM

Tehniskā instrukcija (TeM) sniedz tehniķiem informāciju, kas var būt:

- informācija, kura nepieciešama, lai droši uzstādītu aprīkojumu;
- informācija, kura nepieciešama, lai veiktu aprīkojuma tehnisko apkopi;
- informācija par iekārtas/ aprīkojuma elektrosistēmu;
- informācija, kura nepieciešama rezerves daļu pasūtīšanai no Tetra Pak;
- cita tehniskā informācija.

UP

Atjauninājuma lappuses ir jaunas lapas, kas nepieciešamas, lai atjauninātu iekārtas esošās rokasgrāmatas.

Lappuses formāts

Skatiet attēlu (A) lappusē i-7: Rezerves daļu kataloga (SPC) galvenās lapas iekļauj ilustrāciju lapu (1) un attiecīgo saraksta lapu (7). Lappuses numurs (5) ir attēlots ilustrācijas lapas galvenes daļā un saraksta lapas kājenes daļā. Dokumenta numurs (6) ir attēlots saraksta lapas kājenes daļā.

Lappušu numerācija

Skatiet attēlu (A) lappusē i-7: lappuses numuram (5) ir trīs daļas:

- sadaļas numurs (2);
- lappuses kārtas numurs (2) sadaļā;
- kopējais lappušu skaits (3) sadaļā.

Piezīme! Burti UP var aizvietot sadaļas numuru (2), ja rokasgrāmata iekļauj atjauninājumu lappuses. Lappuses kārtas numurs (3) un atjauninājumu lappušu kopējais lappušu skaits (4) neatbilst sadaļas esošajai secīgajai lappušu numerācijai.

Ievads par ierīci

Ražotājs

Ražotāja nosaukumu un adresi skatiet šī kataloga otrajā lappusē.

Serviss

Tetra Pak neuzņemas atbildību par bojājumiem vai kaitējumu aprīkojumam, personālam vai klientiem, ko rada tādu rezerves daļu izmantošana, kas nav oriģinālas Tetra Pak rezerves daļas.

Lai pasūtītu oriģinālas Tetra Pak rezerves daļas šai iekārtai, sazinieties ar tuvāko Tetra Pak biroju.

Identifikācija

CE klasifikācija

Šī iekārta atbilst Eiropas Ekonomiskās Telpas (EEA) galvenajiem veselības un drošības noteikumiem.

(Turpinājums seko)

(Turpinājums seko)

3-A atbilstība

Ja uz iekārtas datu plāksnītes ir 3-A marķējums (15) (skatīt attēlu (B) lappusē i-7), šāds aprīkojums atbilst 3-A Šķidrā piena un šķidro piena produktu iepakojuma formētāju, pildītāju un sakausētāju sanitārajām normām Nr. 17-10.

Iekārtas datu plāksne

Attēlā (B) lappusē i-7 ir attēlots iekārtas datu plāksnes piemērs. Iekārtas datu plāksnes attēls, kā arī šīs plāksnes atrašanās vieta uz aprīkojuma ir attēlota līdz ar šo iekārtu piegādāto rokasgrāmatu ievada sadaļā. Iekārtas datu plāksnē ir iekļauti tālāk norādītie dati, kas ir nepieciešami, sazinoties ar Tetra Pak jautājumos, kuri saistīti ar šo specifisko aprīkojumu.

- Iekārtas tips (8)
- Tilpums (9)
- Rasējuma specifikācijas (10)
- Iekārtas sērijas numurs (11)
- Ražotājs (12)
- Ražošanas gads (13)
- CE marķējums (14)
- 3-A marķējums (ja piemērojams) (15)

Pārliecinieties, vai iekārtas dati šīs instrukcijas pirmajā lappusē atbilst datiem iekārtas datu plāksnē un iekārtas specifikācijai.

Kā lietot šo Rezerves daļu katalogu

Atrodiet rezerves daļas numuru

a) Skatiet attēlu (C) lappusē i-7: atrodiet sadaļas numuru (16), kas norādīts līdzās galvenajai grupai, kur atrodas meklējamā detaļa.

Punkti b) un c) attiecas uz attēlu (D) lappusē i-8.

b) Galvenās grupas attēlā atrodiet iekārtas apakšgrupu (18), kur atrodas meklējamā detaļa vai apakšgrupa. Atcerieties pozīcijas numuru (19) un skatiet sarakstu, kas seko pēc šī attēla.

c) Atrodiet pozīcijas numuru/ atsauces apzīmējumu (17) vai apakšgrupas nosaukumu (20). Atšķiriet attiecīgo lappusi (21), kas norādīta labajā ailē. Atsauču apzīmējumiem Tetra Pak vienmēr izvēlas lietot uz funkciju orientētu struktūru. Prefikss, kas apzīmē uz funkciju orientēto struktūru (=), atsauču apzīmējumos nav norādīts.

(Turpinājums seko)

(Turpinājums seko)

Punkti d) un e) attiecas uz attēlu (E) lappusē i-8.

d) Apakšgrupas attēlā atrodiet meklēto detaļu (22) un atcerieties detaļas pozīcijas numuru.

e) Detaļas numurs (29) un detaļas apraksts (30) ir sniegts saraksta lapā blakus pozīcijas numuram.

Informācija, kas sniegta Rezerves daļu katalogā

Tālāk sniegtais saraksts attiecas uz attēlu (E) lappusē i-8.
Rezerves daļu katalogs satur šādu informāciju par grupām, apakšgrupām un aprīkojuma rezerves daļām:

- grupas struktūras atsauci (23). Norāda uz aprīkojuma saraksta struktūras nākamo augstāko grupu.
- Grupas nosaukumu (24).
- Mērvienība (25)
- Daudzums (26)
- Montāžas rasējuma numurs (27)
- Saraksta lappušu diapazons (28). Ja grupas attēli vai saraksts iekļauj vairākas lappuses.
- Detaļas vai apakšgrupas numurs (29)
- Apakšgrupas nosaukums vai detaļas apraksts (30)
- Grupas numurs (31)
- Aprīkojuma numurs (32)
- Grupas informācijas virsraksts (33). Ja sadaļa, kas seko pēc virsraksta, attiecas uz specifisku iekārtas versiju, vai kopēju detaļu saraksta gadījumā. Ja sarakstā ir vairāk nekā viena versija un katrai versijai ir savs montāžas rasējums, ir sniegta atsauce uz konkrētās versijas montāžas rasējuma lappusi.
- Iekšējā informācija (34)

Atbalsts un atgriezeniskā saite

Lai saņemtu palīdzību attiecībā uz darbu ar šo aprīkojumu, pieprasītu informāciju, izteiktu komentārus, sniegtu ieteikumus, uzdotu jautājumus vai sniegtu atsauksmes, apmeklējiet E-Liaison mājas lapu: http://e-liaison.tetrapak.com. Ja piekļuve Tetra Pak iekštīklam nav iespējama, sazinieties ar tuvāko Tetra Pak pārstāvniecību.

Handboekinformatie

Tetra Pak raadt aan alle geleverde documentatie zorgvuldig te lezen. Ga na of de geleverde documentatie ter beschikking is van het personeel dat de machine moet bedienen of servicewerkzaamheden moet uitvoeren.

Het is belangrijk deze catalogus voor de duur van de machine te bewaren en de catalogus door te geven aan elke volgende eigenaar of gebruiker.

Tetra Pak aanvaardt geen verantwoordelijkheid voor om het even welke soort beschadiging aan de machine als gevolg van het niet opvolgen van de in dit handboek gegeven instructies.

Meegeleverde handboeken

Met deze apparatuur meegeleverde handboeken:

CM

Dit conversiehandboek geeft technici informatie over het ombouwen van de apparatuur tussen verschillende productiemodi.

EM

Het Elektrisch Handboek geeft technici informatie betreffende het elektrisch systeem van de apparatuur.

IM

Het Installatiehandboek geeft technici informatie om op veilige wijze de apparatuur te installeren.

MM

Het Onderhoudshandboek geeft technici informatie over het onderhoud van de apparatuur.

OM

Het Bedieningshandboek geeft operators informatie over hoe de machine moet worden bediend en hoe ermee moet worden omgegaan voor, tijdens en na productie.

RM

Het Ombouwhandboek bevat de nodige informatie voor technici om een kit veilig aan een geïnstalleerde machine of apparatuur te installeren.

(Zie volg. blz.)

(Vervolg)

SPC

De Catalogus Reservedelen geeft informatie die nodig is om reserveonderdelen bij Tetra Pak te bestellen.

TeM

Het Technische Handboek bevat informatie voor technici betreffende:

- het veilig installeren van de apparatuur
- het onderhoud van de apparatuur
- het elektrische systeem van de machine/apparatuur.
- het bestellen van reserveonderdelen bij Tetra Pak
- andere technische informatie

UP

De Update Pages bevat nieuwe bladzijden voor het updaten van de bestaande machinehandboeken.

Pagina lay-out

Zie de illustratie (A) op bladzijde i-7: De belangrijkste bladzijden van een Catalogus Reserveonderdelen bestaan uit een bladzijde met een illustratie (1) en een corresponderende bladzijde met een lijst (7).
Het bladzijdenummer (5) is te vinden in de kop van een illustratiebladzijde en in de voetnoot van de lijstbladzijde. Het documentnummer (6) is te vinden in de voetnoot van een lijstbladzijde.

Bladzijdenummering

Zie de illustratie (A) op bladzijde i-7: een bladzijdenummer (5) bestaat uit drie delen.

- hoofdstuknummer (2)
- opeenvolgende bladzijdenummer in het hoofdstuk (3)
- totaal aantal bladzijden in het hoofdstuk (4)

N.B.! De letters UP kunnen het hoofdstuknummer (2) vervangen als het handboek update-bladzijden omvat. Het opeenvolgende bladzijdenummer (3) en het totale aantal bladzijden (4) van de updatebladzijden volgen niet de bestaande volgordenummering van het hoofdstuk.

Introductie van de machine

Fabrikant

Voor naam en adres van de fabrikant, zie de tweede bladzijde van deze catalogus.

Service

Tetra Pak wijst elke verantwoordelijkheid af voor schade aan machines of letsels aan personeel of consumenten die zijn veroorzaakt door reserveonderdelen die geen originele Tetra Pak-reserveonderdelen zijn.

Neem voor het bestellen van originele Tetra Pak-reserveonderdelen voor deze machine contact op met het dichtstbijzijnde Tetra Pak-kantoor.

Identificatie

CE-classificatie

Deze apparatuur voldoet aan de basiseisen voor gezondheid en veiligheid voor de Europese Economische Ruimte (EEA).

(Zie volg. blz.)

(Vervolg)

3-A Naleving

Als het machineplaatje het 3-A merkteken (15) bevat (zie illustratie (B) op bladzijde i-7), voldoet deze apparatuur aan de 3-A hygiënenormen voor vorm-, vul- en sluitmachines van containers voor vloeibare melk en vloeibare melkproducten, nummer 17-10.

Machineplaatje

De illustratie (B) op bladzijde i-7 toont een voorbeeld van een machineplaatje.
Een illustratie van het wettige machineplaatje en de plaatsing ervan wordt getoond in het hoofdstuk Introductie van de handboeken, meegeleverd met deze apparatuur. Het machineplaatje bevat onderstaande gegevens die nodig zijn wanneer Tetra Pak moet worden gecontacteerd betreffende deze apparatuur.

- Machinetype (8)
- Volume (9)
- Tekeningspecificaties (10)
- Serienummer machine (11)
- Fabrikant (12)
- Fabricagejaar (13)
- CE-markering (14)
- Markering 3-A (indien van toepassing) (15)

Controleer of de gegevens betreffende de apparatuur in de voorste bladzijden van dit handboek overeenkomen met de gegevens op het machineplaatje en de machinespecificatie.

Hoe dient deze catalogus reserveonderdelen te worden gebruikt.

Lokaliseren van een nummer van een reserveonderdeel

a) Zie de illustratie (C) op bladzijde i-7: ga naar het hoofdstuknummer (16), naast de hoofdgroep die het gewenste deel bevat.

Items b) en c) refereren naar de illustratie (D) op bladzijde i-8.

b) Zoek in de illustratie van de hoofdgroep de machinesubgroep (18) op die het deel van de gewenste subgroep bevat. Noteer het positienummer (19) en ga naar de lijstbladzijde die op de illustratie volgt.

c) Zoek het positienummer/referentiebenaming (17) of de naam van de subgroep (20). Ga naar het corresponderende bladzijdenummer (21), aangegeven in de rechterkolom. Tetra Pak heeft altijd gekozen voor een functiegerichte structuur voor referentiebenaming. Het prefix dat de functiegerichte structuur aangeeft (=) wordt niet getoond in de referentiebenaming.

(Zie volg. blz.)

(Vervolg)

Items d) en e) refereren naar de illustratie (E) op bladzijde i-8.

d) Lokaliseer het gewenste onderdeel (22) in de illustratie van de subgroep en noteer het positienummer van het onderdeel.

e) Het onderdeelnummer (29) en de beschrijving ervan (30) worden naast het positienummer op de lijstbladzijde weergegeven.

Informatie die in een Catalogus reserveonderdelen wordt gegeven

Onderstaande lijst verwijst naar de illustratie (E) op bladzijde i-8.
Een Catalogus reserveonderdelen bevat de volgende informatie betreffende groepen, subgroepen en reserveonderdelen voor de apparatuur.

- Referentie groepsstructuur (23). Geeft de volgende hoogste groep in de structuur van de apparatuur aan.
- Groepsnaam (24)
- Meeteenheid (25)
- Hoeveelheid (26)
- Nummer montagetekening (27)
- Bereik lijstbladzijde (28). Inclusief indien er meerdere bladzijden in de groepsillustratie of lijst voorkomen.
- Onderdeel of subgroepsnummer (29)
- Naam subgroep of beschrijving onderdeel (30)
- Groepsnummer (31)
- Apparatuurnummer (32)
- Kopregel groepsinformatie (33). Geeft aan of het deel onder de titel bedoeld is voor een specifieke machinevariant dan wel of het een lijst is met algemene onderdelen. Indien een lijst meer dan één variant bevat en elke variant heeft zijn eigen montagetekening, wordt een bladzijdereferentie naar de montagetekening van de variant gegeven.
- Interne informatie (34)

Ondersteuning en feedback

Voor hulp bij het gebruik van deze apparatuur, of met andere vragen, commentaar, suggesties of feedback kunt u terecht op de E-Liaison homepage op http://e-liaison.tetrapak.com. Als u geen toegang hebt tot het intranet van Tetra Pak, dient u contact op te nemen met de dichtstbijzijnde Tetra Pak-vertegenwoordiger.

Informasjon om manualen

Tetra Pak anbefaler at du leser alle medfølgende manualer nøye. Kontroller at personalet som bruker eller vedlikeholder utstyret har adgang til de medfølgende manualene.

Det er viktig at denne manualen oppbevares trygt gjennom hele utstyrets levetid, og at den gis videre til senere eiere eller brukere av utstyret.

Tetra Pak kan ikke holdes ansvarlig for skader på utstyr som skyldes at instruksjonene i manualene som følger dette utstyret ikke er fulgt.

Medfølgende manualer

Manualer som følger med dette utstyret:

CM

Konverteringsmanualen gir teknikere opplysninger om konvertering av utstyret mellom forskjellige produksjonsmodus.

EM

Denne manualen gir teknikere opplysninger om utstyrets elektriske system.

IM

Denne manualen gir teknikere informasjonen som trengs for sikker installasjon av utstyret.

MM

Denne manualen gir teknikere informasjon om vedlikehold av utstyret.

OM

Driftsmanualen gir operatørene informasjon om håndtering og drift av utstyret før, under og etter produksjon.

RM

Ombyggingsmanualen gir teknikere informasjon som kreves for å installere et sett trygt på en installert maskin eller et utstyr.

(Forts.)

(Forts.)

SPC

Reservedelskatalogen gir nødvendige opplysninger for å kunne bestille reservedeler fra Tetra Pak.

TeM

Den tekniske manualen gir teknikerne informasjon som kan være:

- informasjon som kreves for en trygg installering av utstyret
- informasjon som kreves for vedlikehold av utstyret
- informasjon om maskinens/utstyrets elektriske system
- nødvendig informasjon for å bestille reservedeler fra Tetra Pak.
- annen teknisk informasjon

OPP

Oppdateringssidene har nye sider for å oppdatere eksisterende maskinmanualer.

Sideoppsett

Gå til illustrasjonen (A) på side i-7: Hovedsidene i en reservedelskatalog består av en illustrasjonsside (1) og en korresponderende oversiktsside (7). Sidenummeret (5) vises i overskriften på en illustrasjonsside og i fotnoten på en oversiktsside. Dokumentnummeret (6) vises i fotnoten på en oversiktsside.

Sidenummerering

Gå til illustrasjon (A) på side i-7: Et sidenummer (5) har tre deler:

- kapittelnummer (2)
- neste sidenummer innen kapitlet (3)
- totalt antall sider i kapitlet (4)

Merk! Bokstavene UP kan erstatte kapittelnummer (2) hvis manualen inkluderer oppdateringssidene. Følgende sidenummer (3) og totalt antall sider (4) på oppdateringssidene følger ikke eksisterende sekvensnummerering av sidene i kapitlet.

Innføring i maskinen

Produsent

For produsentens navn og adresse, se andre siden i denne katalogen.

Service

Tetra Pak aksepter ikke ansvar for skader eller personskader på utstyr, ansatte eller brukere forårsaket av reservedeler som ikke er originale Tetra Pak reservedeler.

For å bestille originale Tetra Pak reservedeler til denne maskinen, kontakt nærmeste Tetra Pak kontor.

Identifikasjon

CE-klassifisering

Dette utstyret tilfredsstiller grunnleggende helse- og sikkerhetskrav i Det europeiske økonomiske samarbeidsområde (EØS).

(Forts.)

(Forts.)

3-A samsvar

Hvis maskinplaten er 3-A-merket (15) (se illustrasjon (B) på side i-7), er dette utstyret i samsvar med 3-A Sanitærstandarder for formings-, påfyllings-, og tetningssystemer for beholdere for flytende melkeprodukter, nummer 17-10.

Merkeplate

Illustrasjonen (B) på side i-7 viser et eksempel på en maskinplate.
En illustrasjon av gyldig maskinplate og dennes plassering på utstyret vises i introduksjonskapitlet i manualene som følger dette utstyret.
Maskinplaten inneholder dataen som er oppført under, som er nødvendig når du kontakter Tetra Pak om dette spesifikke utstyret.

- Maskintype (8)
- Volum (9)
- Tegnespesifikasjoner (10)
- Maskinens serienummer (11)
- Produsent (12)
- Produksjonsår (13)
- CE merke (14)
- 3-A merke (hvis relevant) (15)

Pass på at utstyrsdataen på forsidene i denne manualen stemmer overens med merkeplaten og maskinspesifikasjonen.

Hvordan bruke denne reservedelskatalogen

Finn et reservedelsnummer

a) Gå til illustrasjonen (C) på side i-7: Gå til kapittelnummer (16) som er indikert ved siden av hovedgruppen som inneholder delen du ønsker å lokalisere.

Deler b) og c) viser til illustrasjonen (D) på side i-8.

b) På hovedgruppeillustrasjonen, se etter maskinundergruppen (18) som inneholder delen eller undergruppen du ser etter.
Merk posisjonsnummeret (19) og gå til oversiktssiden som følger illustrasjonen.

c) Se etter posisjonsnummer /referanseanvisning (17) eller undergruppenavnet (20). Gå til korresponderende sidenummer (21) oppført i søylen på høyre hånd. Tetra Pak har valgt alltid å bruke funksjonsorientert struktur for referansebestemmelse.
Forinnstilt indikering av funksjonsorientert struktur (=) vises ikke i referansehenvisningen

(Forts.)

(Forts.)

Deler d) og e) viser til illustrasjonen (E) på side i-8.

d) Finn delen (22) som du leter etter i undergruppeillustrasjonen og merk delens posisjonsnummer.

e) Delenummeret (29) og delebeskrivelsen (30) er oppført ved siden av posisjonsnummeret på listesiden.

Informasjon oppført i en reservedelskatalog

Listen under viser til illustrasjonen (E) på side i-8. En reservedelskatalog inneholder følgende informasjon om grupper, undergrupper og reservedeler for utstyret:

- Gruppestrukturreferanse (23). Indikerer den neste gruppen over i utstyrslistestrukturen.
- Gruppenavn (24)
- Måleenhet (25)
- Antall (26)
- Monteringstegningens nummer (27)
- Oversiktssideomfang (28). Inkludert hvis det er mange sider i gruppeillustrasjonen eller listen.
- Delenummer eller undergruppenummer (29)
- Undergruppenavn eller delebeskrivelse (30)
- Gruppenavn (31)
- Utstyrsnummer (32)
- Gruppeinformasjon overskrift (33). Indikerer om seksjonen under overskriften er for en spesiell maskinvariant eller om det er en liste med fellesdeler. Hvis en liste har mer enn en variant og hver variant har sin egen monteringstegning, vil det vises en sidereferanse til denne variantens monteringstegning.
- Intern informasjon (34)

Støtte og tilbakemeldinger

For hjelp med bruk av utstyret, eller andre spørsmål, kommentarer, eller forslag kan du stille spørsmålene eller gi tilbakemelding på E-Liason hjemmesiden på http://e-liaison.tetrapak.com. Hvis tilgang på Tetra Pak intranet ikke finnes, kontakt den nærmeste Tetra Pak representanten.

Informacje na temat instrukcji

Tetra Pak zaleca, aby uważnie przeczytano dostarczone instrukcje. Należy dopilnować, aby instrukcje zostały udostępnione pracownikom, którzy obsługują lub wykonują przeglądy urządzenia.

Ważne jest, aby zachować niniejszy katalog przez okres użytkowania maszyny i przekazać go kolejnemu właścicielowi lub użytkownikowi.

Tetra Pak nie ponosi odpowiedzialności za uszkodzenia maszyny spowodowane nieprzestrzeganiem wskazówek podanych w niniejszej instrukcji dołączonej do maszyny.

Dostarczone instrukcje

Instrukcje dostarczone w raz z maszyną:

CM

Instrukcja przestawienia dostarcza technikom informacji na temat przestawiania maszyny między różnymi trybami produkcji.

EM

Instrukcja elektryczna dostarcza technikom informacji na temat układu elektrycznego maszyny.

IM

Instrukcja instalacyjna dostarcza technikom informacji niezbędnych do bezpiecznej instalacji maszyny.

MM

Instrukcja serwisowa dostarcza technikom informacji na temat przeglądów i napraw maszyny.

OM

Instrukcja obsługi dostarcza operatorowi informacji na temat obsługi maszyny przed, w trakcie i po zakończeniu produkcji.

RM

Instrukcja przebudowy dostarcza technikom informacji niezbędnych do wykonania bezpiecznej instalacji zestawu do przebudowy w zainstalowanej maszynie lub wyposażeniu.

(Ciąg dalszy)

(Ciąg dalszy)

SPC

Katalog części zamiennych dostarcza informacji niezbędnych do zamawiania części zamiennych w Tetra Pak.

TeM

Instrukcja techniczna dostarcza technikom informacji, które mogą być:

- informacjami wymaganymi do bezpiecznej instalacji wyposażenia
- informacjami wymaganymi do wykonywania przeglądów i napraw wyposażenia
- informacjami o systemie elektrycznym maszyny/wyposażenia.
- informacjami niezbędnymi do zamawiania części zamiennych w Tetra Pak.
- innymi informacjami technicznymi

UP

Rozdział Strony aktualizacji zawiera nowe strony użyte do aktualizacji istniejących instrukcji maszyny.

Układ strony

Zapoznaj się z rysunkiem (A) na stronie i-7: Główne strony w Katalogu Części Zamiennych zawierają stronę z rysunkiem (1) i odpowiednią stronę z wykazem (7). Numer strony (5) znajduje się w nagłówku strony z rysunkiem oraz w stopce strony z wykazem. Numer dokumentu (6) znajduje się w stopce strony z wykazem.

Numeracja stron

Zapoznaj się z rysunkiem (A) na stronie i-7: Numer strony (5) składa się z trzech części:

- numer rozdziału (2)
- kolejny numer strony (3) w danym rozdziale
- całkowita ilość stron (4) w rozdziale

Uwaga! Litery UP mogą zastępować numer rozdziału (2) jeśli instrukcja zawiera strony aktualizacji. Kolejny numer strony (3) i całkowita ilość stron (4) aktualizacji nie odpowiada istniejącej numeracji stron rozdziału.

Informacje na temat maszyny

Producent

Nazwa i adres producenta, patrz druga strona niniejszego katalogu.

Serwis

Tetra Pak nie odpowiada za wszelkie uszkodzenia wyposażenia, obrażenia personelu lub konsumentów spowodowane przez części zamienne, które nie są oryginalnymi częściami zamiennymi Tetra Pak.

W celu zamówienia oryginalnych części zamiennych Tetra Pak dla maszyny, skontaktuj się z najbliższym biurem Tetra Pak.

Identyfikacja

Znak CE

Oznacza on, iż urządzenie spełnia wymagania określone w podstawowych przepisach dotyczących bezpieczeństwa i zdrowia, obowiązujących w Europejskiej Strefie Ekonomicznej (EEA).

(Ciąg dalszy)

(Ciąg dalszy)

Zgodność z normą 3-A

Jeśli tabliczka znamionowa maszyny zawiera znak 3-A (15) (patrz rysunek (B) na stronie i-7), oznacza to, że wyposażenie jest zgodne z normami sanitarnymi 3-A dla jednostek formowania, maszyn napełniających i zgrzewarek pojemników dla mleka płynnego i płynnych produktów mlecznych, numer 17-10.

Tabliczka znamionowa

Na rysunku (B) na stronie i-7 pokazano przykład tabliczki znamionowej. Rysunek tabliczki znamionowej i jej lokalizacja na wyposażeniu znajduje się w rozdziale Wstęp instrukcji dostarczonych wraz z wyposażeniem. Tabliczka znamionowa zawiera dane przedstawione poniżej, które trzeba podać kontaktując się z Tetra Pak w sprawach dotyczących określonego wyposażenia.

- Typ maszyny (8)
- Pojemność (9)
- Specyfikacje rysunkowe (10)
- Numer seryjny maszyny (11)
- Producent (12)
- Rok produkcji (13)
- Znak CE (14)
- Znak 3-A (jeśli ma zastosowanie) (15)

Upewnij się, czy dane wyposażenia na pierwszych stronach niniejszej instrukcji odpowiadają danym przedstawionym na tabliczce znamionowej maszyny i specyfikacji maszyny.

Jak korzystać z Katalogu Części Zamiennych

Lokalizacja numeru części zamiennej

a) Zapoznaj się z rysunkiem (C) na stronie i-7: Przejdź do numeru rozdziału (16) wskazanego obok głównej grupy, która zawiera część, którą chcesz zlokalizować.

Pozycje b) i c) dotyczą rysunku (D) na stronie i-8.

b) Na rysunku głównej grupy, poszukaj podgrupy maszyny (18), która zawiera część lub podgrupę, której szukasz. Zanotuj numer pozycji (19) i przejdź na stronę z wykazem odpowiadającym rysunkowi.

c) Poszukaj numeru pozycji/oznaczenia referencyjnego (17) lub nazwy podgrupy (20). Przejdź na odpowiedni numer strony (21) podany w prawej kolumnie. Do oznaczania referencyjnego firma Tetra Pak zdecydowała się zawsze wykorzystywać strukturę zorientowaną na funkcję. Przedrostek wskazujący strukturę zorientowaną na funkcję (=) nie jest uwzględniony w oznaczeniu referencyjnym.

(Ciąg dalszy)

(Ciąg dalszy)

Pozycje d) i e) dotyczą rysunku (E) na stronie i-8.

d) Zlokalizuj część (22), której szukasz na rysunku podgrupy i zanotuj jej numer pozycji.

e) Numer części (29) i opis części (30) znajdują się obok numeru pozycji na stronie z wykazem.

Informacje podane w Katalogu Części Zamiennych

Poniższy wykaz dotyczy rysunku (E) na stronie i-8.
Katalog Części Zamiennych zawiera następujące informacje o grupach, podgrupach i częściach zamiennych wyposażenia.

- Odnośnik struktury grupy (23). Wskazuje następną wyższą grupę w strukturze wykazu wyposażenia.
- Nazwa grupy (24)
- Jednostka miary (25)
- Ilość (26)
- Numer rysunku zespołu (27)
- Zakres stron (28). Dołączony, jeśli na wykazie lub rysunku grupy znajdują się strony o numerach wieloczęściowych.
- Numer części lub podgrupy (29)
- Nazwa podgrupy lub opis części (30)
- Numer grupy (31)
- Numer wyposażenia (32)
- Nagłówek z informacją o grupie (33). Wskazuje czy sekcja poniżej nagłówka przynależy do określonej wersji maszyny, lub czy jest wykazem części. Jeśli wykaz ma więcej niż jedną wersję i każda wersja ma swój własny rysunek montażowy, podany będzie numer strony z rysunkiem montażowym danej wersji.
- Informacje wewnętrzne (34)

Wsparcie techniczne i informacje zwrotne

Jeśli będziesz potrzebował pomocy odnośnie obsługi wyposażenia, lub będziesz miał pytania, komentarze albo sugestie, umieść swoje pytania lub przekaż informacje zwrotne na internetowej stronie pod adresem http://e-liaison.tetrapak.com. Jeśli dostęp do sieci wewnętrznej Tetra Pak nie jest możliwy, skontaktuj się z najbliższym przedstawicielem Tetra Pak.

Informação do Manual

A Tetra Pak recomenda ler cuidadosamente todos os manuais fornecidos. Verificar se os manuais fornecidos estão ao dispor do pessoal que trabalha com o equipamento ou que faz a manutenção do mesmo.

É importante guardar este catálogo durante o tempo útil de vida da máquina ou do equipamento e de entregar o catálogo a qualquer proprietário ou utilizador subsequente.

A Tetra Pak não toma a responsabilidade por quaisquer danos no equipamento causados devido ao facto de que as instruções dadas nos manuais que acompanham este equipamento não foram seguidas.

Manuais fornecidos

Manuais fornecidos com este equipamento:

CM

O Manual de conversão fornece aos técnicos as informações sobre a conversão do equipamento entre os diferentes modos de produção.

EM

Este Manual Eléctrico fornece aos técnicos as informações sobre o sistema eléctrico do equipamento.

IM

Este Manual de Instalação fornece aos técnicos as informações necessárias para instalar seguramente o equipamento.

MM

Este Manual de Manutenção fornece aos técnicos as informações para a manutenção do equipamento.

OM

O Manual de Operação fornece ao operador as informações que ele necessita para manusear e accionar o equipamento antes, durante e depois da produção.

RM

O Manual de Remodelação fornece aos técnicos as informações necessárias para instalar seguramente um conjunto numa máquina ou equipamento instalado.

(Cont.)

(Cont.)

SPC

O Catálogo de Peças Sobressalentes fornece as informações necessárias para se encomendar peças sobressalentes à Tetra Pak.

TeM

O Manual Técnico fornece os técnicos com informações que podem ser:

- informações necessárias para instalar seguramente o equipamento,
- informações necessárias para a manutenção do equipamento
- informações sobre o sistema eléctrico da máquina/do equipamento.
- informações necessárias para encomendar peças sobressalentes à Tetra Pak.
- outras informações técnicas

UP

As Páginas de Actualização fornecem novas páginas para actualizar os manuais existentes da máquina.

Disposição da página

Referência à ilustração (A) na página i-7: As páginas principais num Catálogo de Peças Sobressalentes consistem numa página ilustrada (1) e numa página com a lista correspondente (7). O número da página (5) é mostrado no cabeçalho de uma página ilustrada e no rodapé de uma página com lista. O número do documento (6) é mostrado no rodapé de uma página com lista.

Numeração da página

Referência à ilustração (A) na página i-7: Um número de página (5) tem três partes:

- Número do capítulo (2)
- número consecutivo da página dentro do capítulo (3)
- número total de páginas no capítulo (4)

Nota! As letras UP podem substituir o número do capítulo (2) se o manual incluir páginas de actualização. O número consecutivo da página (3) e o número total de páginas (4) das páginas de actualização não seguem a numeração sequente das páginas do capítulo.

Introdução da máquina

Fabricante

Para o nome e morada do fabricante, ver a segunda página deste catálogo.

Assistência técnica

Tetra Pak não aceita responsabilidade por quaisquer danos ou prejuízos no equipamento, equipa ou consumidores que sejam causados por peças sobressalentes não originais da Tetra Pak.

Para encomendar as peças sobressalentes originais para esta máquina, contactar o representante Tetra Pak mais próximo.

Identificação

Classificação CE

Este equipamento está de acordo com os regulamentos de segurança e saúde da Área Económica Europeia (EEA).

(Cont.)

(Cont.)

3-A Concordância

Se a placa da máquina conter a marca 3-A (15) (ver a ilustração (B) na página i-7), este equipamento cumpre com as Normas Sanitárias 3-A para Formadores, Enchedores e Vedadores de Recipientes para Leite Líquido e Produtos de Leite Líquido, Número 17-10.

Placa da máquina

A ilustração (B) na página i-7 mostra um exemplo de uma placa da máquina. Uma ilustração da placa da máquina válida e a sua localização no equipamento é mostrada no capítulo Introdução dos manuais fornecidos com este equipamento. A placa da máquina contem os dados alistados em baixo, necessários quando se contactar a Tetra Pak relacionando-se a este equipamento em específico.

- Tipo da máquina (8)
- Volume (9)
- Especificações dos desenhos (10)
- Número de série da máquina (11)
- Fabricante (12)
- Ano de construção (13)
- Marca CE (14)
- Marca 3-A (se aplicável) (15)

Verificar se os dados do equipamento indicados nas páginas da frente deste manual correspondem aos dados na placa da máquina e à especificação da máquina.

Como usar este Catálogo de Peças Sobressalentes

Localizar um Número da peça sobressalente

a) Referência à ilustração (C) na página i-7: Para o número do capítulo (16) indicado ao lado do grupo principal que contem a peça que quer localizar.

Itens b) e c) referem-se à ilustração (D) na página i-8.

b) Na ilustração do grupo principal, procurar o subgrupo da máquina (18) que contem a peça ou subgrupo que está à procura. Anotar o número da posição (19) e passar para a página da lista que segue a ilustração.

c) Procurar o número/referência da posição (17) ou o nome do subgrupo (20). Passar para o número da página correspondente (21) alistado na coluna do lado direito. A Tetra Pak escolheu para usar sempre a estrutura orientada na função para a designação da referência.
O prefixo indicando a estrutura orientada na função (=) não está mostrada na designação de referência.

(Cont.)

(Cont.)

Itens d) e e) referem-se à ilustração (E) na página i-8.

d) Localizar a peça (22) que está à procura na ilustração do subgrupo e anotar o número da posição da peça.

e) O número da peça (29) e a descrição da peça (30) estão alistados ao lado do número da posição na página da lista.

Informações indicadas num Catálogo de Peças Sobressalentes

A lista em baixo refere-se à ilustração (E) na página i-8.
Um Catálogo de Peças Sobressalentes contem as seguintes informações sobre grupos, subgrupos e peças sobressalentes para o equipamento:

- Referência da estrutura do grupo (23). Indica o grupo a seguir mais elevado na estrutura da lista do equipamento.
- Nome do grupo (24)
- Unidade de medição (25)
- Quantidade (26)
- Número do desenho de montagem (27)
- Gama da página de lista (28). Incluída se houver páginas múltiplas na ilustração do grupo ou lista.
- Número da peça ou do subgrupo (29)
- Nome do subgrupo ou descrição da peça (30)
- Número do grupo (31)
- Número do equipamento (32)
- Título da informação do grupo (33). Indica se a secção abaixo do título é para uma variante de máquina específica ou se é uma lista de peças comuns. Se uma lista tiver mais do que uma variante e cada variante tiver o seu próprio desenho de montagem, é mostrada uma referência para a página do desenho de montagem da variante.
- Informação interna (34)

Apoio e retro alimentação

Para assistência durante o accionamento deste equipamento, ou outros inquéritos, comentários ou sugestões, fazer as questões ou dar feedback no site da E-Liaison em http://e-liaison.tetrapak.com. Se não estiver disponível o acesso à intranet Tetra Pak, contactar por favor o representante Tetra Pak mais próximo.

Informațiile de manual

Tetra Pak recomandă citirea cu atenție a tuturor manualelor livrate. Asigurați-vă că manuale livrate sunt adecvate pentru personalul ce manipulează sau întreține instalația.

Este important să păstrați acest catalog pe tot parcursul funcționării instalației și să-l transmiteți următorului utilizator sau proprietar.

Tetra Pak nu își asumă nicio responsabilitate pentru nicio defecțiune a instalației cauzată de nerespectarea instrucțiunilor din manualul care însoțește instalația.

Manuale livrate

Manualele livrate împreună cu instalația

CM

Manualul de conversie (CM) furnizează tehnicienilor informații pentru conversia (adaptarea) echipamentului la diferite moduri de producție.

EM

Manualul electric oferă technicienilor informații despre sistemul electric al instalației.

IM

Manualul de instalare oferă tehnicienilor informații legate de montarea în siguranță a instalației.

MM

Manualul de întreținere oferă tehnicienilor informații privind întreținerea instalației.

OM

Manualul de funcționare (OM) oferă operatorului informații despre manipularea și funcționarea echipamentului înainte, în timpul și după procesul tehnologic.

RM

Manualul de reconstrucție oferă tehnicienilor informații necesare pentru montarea în siguranță a unui set pe un utilaj sau echipament montat.

(se continuă)

(se continuă)

SPC

Catalogul cu piese de schimb oferă informații necesare pentru comandarea pieselor de schimb de la Tetra Pak.

TeM

Manualul tehnic furnizează informații tehnicienilor ca de exemplu:

- informații necesare pentru a instala în condiții de siguranță echipamentul
- informații necesare pentru a întreține echipamentul
- informații privind sistemul electric al utilajului/echipamentului
- informațiile necesare pentru a comanda piesele de schimb de la Tetra Pak.
- alte informații tehnice

UP

Paginile pentru actualizare furnizează pagini noi pentru actualizarea manualelor existente ale utilajelor.

Configurația paginii

Consultați ilustrația (A) de la pagina i-7: Paginile principale din Catalogul pieselor de schimb sunt formate dintr-o pagină a ilustrațiilor (1) și o pagină a listei corespunzătoare (7). Numărul paginii (5) este prezentat în antetul unei pagini cu ilustrații și în subsolul unei pagini cu lista. Numărul documentului (6) este prezentat în subsolul unei pagini cu lista.

Numerotarea paginilor

Consultați ilustrația (A) de la pagina i-7: Numărul paginii (5) are trei părți:

- numărul capitolului (2)
- numărul consecutiv al paginii din cadrul capitolului (3)
- numărul total de pagini din capitol (4)

Notă! Literele UP pot înlocui numărul capitolului (2) dacă manualul include pagini actualizate. Numărul consecutiv al paginii (3) și numărul total de pagini (4) al paginilor actualizate nu urmează numerotarea existentă, secvențială a paginilor din cadrul capitolului.

Prezentarea aparatului

Producător

Pentru numele și adresa producătorului, vezi pagina a doua a acestui catalog.

Service

Tetra Pak nu își asumă responsabilitatea pentru nicio avarie sau rănire asupra echipamentului, personalului sau clienților, produsă de piese de schimb care nu sunt piese de schimb originale Tetra Pak.

Pentru a comanda piese de schimb originale Tetra Pak pentru acest utilaj, adresați-vă celui mai apropiat birou Tetra Pak.

Identificare

Clasificare CE

Acest echipament este în conformitate cu regulamentele de bază sanitare și de protecție ale Agenție Europene de Mediu (EEA).

(se continuă)

(se continuă)

Conformitatea 3-A

Dacă plăcuța cu numele utilajului conține marcajul 3-A (15) (vezi ilustrația (B) de la pagina i-7), acest echipament respectă standardele sanitare 3-A pentru dispozitive de formare, umplere și etanșare a containerelor pentru lapte lichid și produse lactate lichide, numărul 17-10.

Plăcuța mașinii

Ilustrația (B) de la pagina i-7 prezintă un exemplu al plăcuței mașinii. O ilustrație a plăcuței valabile a mașinii și a amplasării sale pe echipament este prezentată în capitolul Introducere al manualelor livrate cu acest echipament. Plăcuța mașinii conține datele prezentate mai jos, necesare când vă adresați Tetra Pak referitor la acest echipament.

- Tipul utilajului (8)
- Volum (9)
- Specificațiile desenului (10)
- Numărul de serie al utilajului (11)
- Producător (12)
- Anul de fabricație (13)
- Marcaj CE (14)
- Marcaj 3-A (dacă este cazul) (15)

Verificați dacă datele instalației din primele pagini ale acestui manual corespund cu datele de pe plăcuța mașinii și cu specificația mașinii.

Cum să folosiți acest catalog pentru piese de schimb

Localizați numărul piesei de schimb

a) Consultați ilustrația (C) de la pagina i-7: Mergeți la numărul capitolului (16) indicat lângă grupul principal care conține piesa pe care doriți să o localizați.

Elementele b) și c) se referă la ilustrația (D) de la pagina i-8.

b) Pe ilustrația grupului principal, căutați subgrupul mașinii (18) care conține piesa sau subgrupul pe care îl căutați. Notați numărul poziției (19) și mergeți la pagina listei de după ilustrație.

c) Căutați numărul poziției/denumirea referinței (17) sau numele subgrupului (20). Mergeți la numărul corespunzător al paginii (21) precizat în coloana din dreapta. Tetra Pak a ales să utilizeze întotdeuana structura orientată pe funcții pentru denumirea referinței. Prefixul care indică structura orientată pe funcții (=) nu este prezentat în denumirea referinței.

(se continuă)

(se continuă)

Elementele d) și e) se referă la ilustrația (E) de la pagina i-8.

d) Localizați piesa (22) pe care o căutați în ilustrația subgrupului și notați numărul poziției piesei.
e) Numărul piesei (29) și descrierea piesei (30) sunt listate lângă numărul poziției de pe pagina listei.

Informațiile enumerate în catalogul pentru piese de schimb

Lista de mai jos se referă la ilustrația (E) de la pagina i-8.
Un Catalog cu piese de schimb conține următoarele informații despre grupuri, subgrupuri și piese de schimb pentru echipament.

- Referința structurii grupului (23). Indică următorul grup superior din structura listei echipamentului.
- Numele grupului (24)
- Unitate de măsură (25)
- Cantitate (26)
- Numărul desenului de ansamblu (27)
- Domeniul paginii listei (28). Inclus dacă există mai multe pagini în ilustrația sau lista grupului.
- Numărul piesei sau subgrupului (29)
- Numele subgrupului sau descrierea piesei (30)
- Numărul grupului (31)
- Numărul echipamentului (32)
- Titlul cu informațiile grupului (33). Indică dacă secțiunea de sub titlu este pentru o anumită variantă de mașină sau este o listă de piese comune. Dacă o mașină are mai mult de o variantă și fiecare variantă își are propriul desen de ansamblu, este prezentată o referință a paginii la desenul de ansamblu al variantei.
- Informații interne (34)

Asistență şi feedback

Pentru asistență la operarea acestui echipament sau alte probleme, comentarii sau sugestii, adresați întrebările sau acordați feedback pe pagina E-Liaison, la http://e-liaison.tetrapak.com. Dacă nu este disponibil accesul la intranetul Tetra Pak, adresați-vă celui mai apropiat reprezentant Tetra Pak.

Informácie o príručke

Tetra Pak odporúča, aby ste si pozorne prečítali všetky dodané príručky. Presvedčite sa, či sú dodané príručky k dispozícii personálu, ktorý obsluhuje alebo vykonáva údržbu zariadenia.

Je dôležité, aby ste uchovávali tento katalóg po celý čas životnosti zariadenia, a odovzdali katalóg každému ďalšiemu vlastníkovi alebo užívateľovi zariadenia.

Spoločnosť Tetra Pak nezodpovedá za škody na zariadení spôsobené nedodržaním pokynov uvedených v príručkách, ktoré doprevádzajú toto zariadenie.

Dodané príručky

Príručky dodávané s týmto zariadením:

CM

Príručka na adaptáciu poskytuje technikom informácie o adaptácii zariadenia medzi rôznymi výrobnými režimami.

EM

Táto Elektrická príručka poskytuje technikom informácie o elektrickom systéme zariadenia.

IM

Táto Inštalačná príručka poskytuje technikom informácie potrebné pre bezpečnú inštaláciu zariadenia

MM

Táto Údržbárska príručka poskytuje technikom informácie o vykonávaní údržby zariadenia.

OM

Tento Návod na obsluhu poskytuje operátorovi informácie o tom, ako treba manipulovať so strojom a obsluhovať ho pred, počas a po výrobe.

RM

Príručka na prestavbu poskytuje technikom informácie potrebné pre bezpečnú inštaláciu súpravy na nainštalovaný stroj alebo zariadenie.

(Pokrač.)

(Pokrač.)

SPC

Katalóg náhradných dielov poskytuje informácie potrebné pre objednanie náhradných dielov od Tetra Pak.

TeM

Technická príručka poskytuje technikom informácie, ktorými môžu byť:

- potrebné informácie pre bezpečnú inštaláciu zariadenia
- potrebné informácie pre údržbu zariadenia
- informácie o elektrickom systéme stroja/zariadenia.
- poskytuje informácie potrebné na objednanie náhradných dielov od firmy Tetra Pak
- ostatné technické informácie

NAHOR

Aktualizované stránky poskytujú nové stránky k existujúcim príručkám na zariadenie.

Usporiadanie strany

Pozrite sa na obrázok (A) na strane i-7: hlavné stránky v Katalógu náhradných dielov tvorí stránky s ilustráciami (1) a odpovedajúca stránka so zoznamom (7). Číslo stránky (5) je uvedené v záhlaví stránky s obrázkom a v zápätí stránky so zoznamom. Číslo dokumentu (6) je uvedené v zápätí stránky so zoznamom.

Číslovanie strán

Pozrite sa na obrázok (A) na strane i-7: číslo stránky (5) má tri časti:

- číslo kapitoly (2)
- číslo ďalšej stránky v rámci kapitoly (3),
- celkový počet stránok v kapitole (4)

Poznámka! Písmena UP môžu nahradiť číslo kapitoly (2) v prípade, že manuál obsahuje aktualizované stránky. Nasledujúce číslo stránky (3) a celkový počet strán (4) aktualizovaných stránok sa nedrží existujúceho sekvenčného číslovania stránok v tejto kapitole.

Úvod k zariadeniu

Výrobca

Meno a adresu výrobcu nájdete na druhej strane tohto katalógu.

Servis

Tetra Pak nepreberá zodpovednosť za akúkoľvek škodu na zariadení alebo za zranení zamestnanca alebo spotrebiteľa, ktoré budú spôsobené tým, že sa nepoužijú originálne náhradné diele Tetra Pak.

Ak chcete pre tento stroj objednať originálne náhradné diely Tetra Pak, kontaktujte najbližšiu kanceláriu spoločnosti Tetra Pak.

Identifikácia

Klasifikácia CE

Toto zariadenie vyhovuje základným zdravotným a bezpečnostným predpisom Európskej hospodárskej oblasti (EEA).

(Pokrač.)

(Pokrač.)

3-A Súlad

Ak štítok stroja obsahuje označenie 3-A (15) (pozri obrázok (B) na strane i-7), potom je toto zariadenie v súlade s hygienickými normami 3-A pre formovanie, plnenie a uzatváranie obalov na tekuté mlieko a tekuté mliečne výrobky, číslo 17 -10.

Štítok zariadenia

Obrázok (B) na strane i-7 ukazuje príklad typového štítku.
Obrázok platného typového štítku a jeho umiestnenia na zariadení je uvedený v úvodnej kapitole príručiek dodaných s týmto zariadením.
Typový štítok obsahuje údaje uvedené niže, tieto údaje sú treba, keď kontaktujete spoločnosť Tetra Pak vo veci týkajúcej sa tohto špecifického vybavenia.

- Typ stroja (8)
- Objem (9)
- Špecifikácie výkresov (10)
- Sériové číslo stroja (11)
- Výrobca (12)
- Rok výroby (13)
- Symbol CE (14)
- Symbol 3-A (ak sa používa) (15)

Presvedčte sa, či dáta uvedené na čelnej strane tohoto manuálu korešpondujú s údajmi na identifikačnom typovom štítku stroja a so špecifikáciou stroja.

Ako používať tento katalóg náhradných dielov

Vyhľadať číslo náhradného dielu

a) Pozrite obrázok (C) na strane i-7: Prejsť na číslo kapitoly (16) uvedené vedľa hlavnej skupiny, ktorá obsahuje diel, ktorý chcete nájsť.

Položky b) a c) sa vzťahujú na obrázok (D) na strane i-8.

b) Na obrázku hlavnej skupiny sa pozrite na podskupinu stroja (18), ktorá obsahuje diely alebo podskupiny, ktoré hľadáte. Poznamenajte si číslo pozície (19) a prejdite na stránku zoznamu, ktorý nasleduje za obrázkom.

c) Pozrite sa na číslo pozície/označenie referencie (17) alebo na názov podskupiny (20). Prejdite na odpovedajúce číslo strany (21) uvedené v zozname v stĺpci na pravej strane. Spoločnosť Tetra Pak si zvolila vždy používať pre referenčné označenie štruktúru zameranú na funkciu. Predpona označujúca funkčne orientovanú štruktúru (=) nie je uvedená v referenčnom označení.

(Pokrač.)

(Pokrač.)

Položky d) a e) sa vzťahujú na obrázok (E) na strane i-8.

d) Lokalizujte diel (22), ktorý hľadáte, na obrázku podskupiny a poznamenajte si číslo pozície dielu.

e) Číslo dielu (29) a popis dielu (30) sú uvedené vedľa čísla pozície na stránke so zoznamom.

Informácie uvedené v katalógu náhradných dielov

Niže uvedený zoznam sa odkazuje na obrázok (E) na stránke i-8.
Katalóg náhradných dielov obsahuje nasledujúce informácie o skupinách, podskupinách a náhradných dieloch pre zariadenie:

- Referencia štruktúry skupiny (23). Označuje nasledujúcu vyššiu skupinu vo štruktúre zoznamu výbavy.
- Názov skupiny (24)
- Merná jednotka (25)
- Množstvo (26)
- Číslo montážneho výkresu (27)
- Rozsah stránok so zoznamom (28). Zahrnuté, ak existuje viac stránok v skupine obrázkov alebo v zozname.
- Číslo dielu alebo podskupiny (29)
- Názov podskupiny alebo popis dielu (30)
- Číslo skupiny (31)
- Číslo výbavy (32)
- Záhlavie informácií o skupine (33). Označuje, či sa časť pod záhlavím týka konkrétneho variantu stroja, alebo či sa jedná o zoznam spoločných dielov. Ak zoznam obsahuje viac ako jeden variant a každý variant má svoje vlastné montážne výkresy, je zobrazený odkaz na stránku s montážnym výkresom variantu.
- Vnútorné informácie (34)

Podpora a spätná väzba

Môžete sa na nás obracať s žiadosťou o pomoc počas prevádzky tohto zariadenia alebo s inými dotazmi, pripomienkami alebo námetmi pomocou internetovej kontaktnej domovskej stránky http://e-liaison.tetrapak.com, kde môžete takisto poskytnúť svoju spätnú väzbu. Ak nemáte prístup na intranet spoločnosti Tetra Pak, obráťte sa na najbližšieho zástupcu firmy Tetra Pak.

Informacije o navodilu

Tetra Pak priporoča, da vsa dobavljena navodila pazljivo prebrete. Prepričajte se, da so dobavljena navodila na razpolagu osebju, ki dela s strojem ali pa izvaja vzdrževalna dela na opremi.

Ta navodila je potrebno shraniti do konca življenjske dobe opreme in navodilo predati vsakemu naslednjemu imetniku ali uporabniku.

Tetra Pak ne nosi odgovornosti za poškodbo na opremi, do katere je prišlo zaradi neupoštevanja teh navodilih.

Dobavljena navodila

Navodila, ki se dobavljajo s to opremo:

CM

Navodila za spremembo (CM) oskrbujejo tehnike z informacijami glede zamenjav opreme med različnimi načini proizvodnje.

EM

Električna navodila oskrbujejo tehnike z informacijami glede električnega sistema opreme.

IM

Navodila za inštalacijo oskrbujejo tehnike z informacijami, ki so potrebne za varno inštalacijo opreme.

MM

Navodila za vzdrževanje oskrbujejo tehnika z informacijami glede vzdrževanja opreme.

OM

Navodila za delovanje (OM) oskrbijo strojnike z informacijami glede rokovanja z opremo in delovanjem le-te pred, med in po proizvodnji.

RM

Navodila za predelavo (RM) oskrbujejo tehnike z informacijami, ki so potrebne za varno inštalacijo opreme na inštalirani stroj ali opremo.

(Obrnite)

(Obrnite)

SPC

Katalog rezervnih delov prinaša informacije, ki so potrebne za naročanje rezervnih delov iz podjetja Tetra Pak.

TeM

Tehnološka navodila tehnikom podajo informacije, ki so lahko:

- potrebne za varno inštalacijo opreme
- potrebne za vzdževanje opreme
- vezane na električni sistem stroja/opreme
- ponujajo informacije, ki so potrebna za naročanje nadomestnih delov pri Tetra Paku
- druge tehnične informacije

GOR

Strani za posodobitev podajo nove strani za posodabljanje obstoječih navodil stroja.

Ureditev strani

Sklicujte se na ilustracijo (A) na strani i-7: Glavne strani v katalogu rezervnih delov so sestavljene iz strani z ilustracijami (1) in stranjo s seznamom (7). Številka strani (5) je prikazana v glavi strani z ilustracijo in v nogi strani s seznamom. Številka dokumenta (6) je prikazana v nogi strani s seznamom.

Oštevilčenje strani

Sklicujte se na ilustracijo (A) na strani i-7: Številka strani (5) ima tri dele:

- številko poglavja (2)
- zaporedno številko strani (2) znotraj poglavja (3)
- skupno število strani v poglavju (4)

Opomba! Črke UP lahko zamenjajo številko poglavja (2), če so v navodilih vključene posodobljene strani. Zaporedna številka strani (3) in skupno število strani (4) posodobljenih strani se ne ujemajo z obstoječim zaporedjem strani v poglavju.

Predstavitev stroja

Proizvajalec

Ime in naslov proizvajalca se nahajata na drugi strani tega kataloga.

Servisiranje

Tetra Pak ne prevzema odgovornosti za okvare ali poškodbe opreme, osebja ali potrošnikov, ki ga povzročijo rezervni deli, ki niso originalni Tetra Pak rezervni deli.

Za naročanje originalnih Tetra Pak rezervnih delov kontaktirajte najbližjo pisarno Tetra Pak.

Identifikacija

CE klasifikacija

Ta oprema izpolnjuje osnovne zdravstvene in varnostne ukrepe Evropskega ekonomskega prostora (EEA).

(Obrnite)

(Obrnite)

3-A Skladnost

Če ploščica stroja vsebuje oznako 3-A (15) (glejte ilustracijo (B) na strani i-7), ta oprema ustreza sanitetnim standardom 3-A za kalupe, polnilce in tesnila zbiralnikov za tekoče mleko in izdelke iz tekočega mleka, številka 17-10.

Strojna plošča

Ilustracija (B) na strani i-7 prikazuje primer ploščice za identifikacijo stroja. Ilustracija veljavne ploščice za identifikacijo stroja in njene lokacije na opremi je prikazana v uvodnem poglavju navodil, ki so bila dostavljena s to opremo. Ploščica za identifikacijo stroja vsebuje spodaj navedene podatke, ki so potrebni ob kontaktiranju podjetja Tetra Pak glede te specifične opreme.

- Tip stroja (8)
- Prostornina (9)
- Specifikacije skice (10)
- Serijska številka stroja (11)
- Proizvajalec (12)
- Leto izdelave (13)
- CE oznaka (14)
- 3-A oznaka (če obstaja) (15)

Prepričajte se, da se podatki o opremi, ki se nahajajo na sprednjih straneh teh navodil, v skladu s podatki strojne plošče in specifikacije stroja.

Kako uporabljati ta katalog rezrevnih delov

Poiščite številko rezervnega dela

a) Sklicujte se na ilustracijo (C) na strani i-7: Pojdite na številko poglavja (16), ki se nahaja poleg glavne skupine in ki vsebuje del, ki ga želite poiskati.

Predmeti b) in c) se nanašajo na ilustracijo (D) na strani i-8.

b) Na ilustraciji glavne skupine poiščite podskupino stroja (18), ki vsebuje del ali podskupino, ki jo iščete. Opazite položaj številke (19) in pojdite na stran seznama, ki sledi ilustraciji.

c) Poiščite številko lokacije/referenco (17) ali pa ime podskupine (20). Pojdite na ustrezno številko strani (21), ki je navedena v stolpcu na desni strani. Tetra Pak se je odločil za to, da vedno uporablja funkcijsko naravnano strukturo kot referenco. Predpona, ki nakazuje funkcijsko naravnano strukturo (=), ni prikazana v referenci.

(Obrnite)

(Obrnite)

Predmeti d) in e) se nanašajo na ilustracijo (E) na strani i-8.

d) Poiščite del (22), ki ga iščete, na ilustraciji podskupine in zabeležite številko lokacije dela.

e) Številka dela (29) in opis dela (30) sta navedena poleg lokacije številke na strani s seznamom.

Informacije, ki so navedene v katalogu rezervnih delov

Spodnji seznam se nanaša na ilustracijo (E) na strani i-8. Katalog rezervnih delov vsebuje naslednje informacije o skupinah, podskupinah in rezervnih delih za opremo.

- Referenca strukture skupine (23). Določa naslednjo višjo skupino v strukturi seznama opreme.
- Ime skupine (24)
- Enota merjenja (25)
- Količina (26)
- Številka skice sistema (27)
- Razpon seznama strani (28). Vključeno, če obstaja več strani v ilustraciji skupine ali na seznamu.
- Del ali številka podskupine (29)
- Ime podskupine ali opis dela (30)
- Številka skupine (31)
- Številka opreme (32)
- Naslov informacije o skupini (33). Nakazuje ali je spodnji odsek naslov specifične različice stroja ali pa če gre za seznam splošnih delov. Če ima seznam več kot eno različico in ima vsaka različica svojo skico sistema, je prikazana referenca strani na skici sistema vsake različice.
- Notranje informacije (34)

Podpora in ponovna uporaba

Za pomoč pri rokovanju z opremo ali druga vprašanja, komentarje ali predloge, se obrnite ali podajte mnenje na domači spletni strani sodelavcev na naslovu http://e-liaison.tetrapak.com. Če dostop do Tetra Pak intraneta ni na voljo, kontaktirajte najbližjega zastopnika podjetja Tetra Pak.

Information om handboken

Tetra Pak rekommenderar att alla handböcker läses noggrant.
Se till att handböckerna är tillgängliga för personalen som använder eller underhåller utrustningen.

Det är viktigt att denna katalog behålls under utrustningens livslängd, och att katalogen överlämnas till varje efterföljande innehavare eller användare.

Tetra Pak kan inte hållas ansvarig för eventuella skador på utrustningen som orsakas av man inte följer de instruktioner som ges i de handböcker som medföljer denna utrustning.

Medföljande handböcker

Handböcker som levereras tillsammans med denna utrustning:

CM

Konverteringshandboken ger tekniker information om konvertering av utrustningen mellan olika produktionssätt.

EM

Den elektriska handboken ger teknikerna information om utrustningens elektriska system.

IM

Installationshandboken ger teknikerna information som krävs för att kunna installera utrustningen säkert.

MM

Underhållshandboken ger teknikerna information om hur utrustningen ska underhållas.

OM

Drifthandboken ger operatören information om hur utrustningen ska hanteras före, under och efter produktion.

RM

Ombyggnadshandboken ger teknikerna den information som krävs för att säkert installera en sats på en installerad maskin eller utrustning.

(Forts.)

(Forts.)

SPC

Reservdelskatalogen (SPC) ger den information som krävs för att kunna beställa reservdelar från Tetra Pak.

TeM

Teknisk handbok ger tekniker information i form av:

- information som krävs för att säkert kunna installera utrustningen
- information som krävs för att underhålla utrustningen
- information om maskinens/utrustningens elsystem
- information som krävs för beställning av reservdelar från Tetra Pak
- annan teknisk information

UPP

Uppdateringssidorna innehåller nya sidor för att uppdatera befintliga maskinhandböcker.

Sidlayout

Se illustration (A) på sidan i-7: Huvudsidorna i en Reservdelskatalog består av en illustrationssida (1) och en tillhörande listsida (7).
Sidnumret (5) visas i sidhuvudet på en illustrationssida och i sidfoten på en listsida. Dokumentnumret (6) visas i sidfoten på listsidan.

Sidnumrering

Se illustration (A) på sidan i-7: Ett sidnummer (5) har tre delar:

- kapitelnummer (2)
- löpande sidnummer inom kapitlet (3)
- totalt sidantal i kapitlet (4)

OBS! Bokstäverna UP kan ersätta kapitelnumret (2) om handboken innehåller uppdateringssidor. Det löpande sidnumret (3) och det totala antalet sidor (4) för uppdateringssidor följer inte den befintliga löpande sidnumreringen av kapitlet.

Introduktion till maskinen

Tillverkare

För tillverkarens namn and adress, se andra sidan i denna katalog.

Service

Tetra Pak tar inte något ansvar för eventuella skador eller eventuella personskador på utrustning, personal eller konsumenter som orsakas av att reservdelarna inte är original Tetra Pak reservdelar.

Vid beställning av original Tetra Pak reservdelar för denna maskin, kontakta närmaste Tetra Pak-kontor.

Identifiering

CE-klassificering

Denna utrustning uppfyller de grundläggande hälso- och säkerhetskraven inom European Economic Area (EEA).

(Forts.)

(Forts.)

3-A överensstämmelse

Om maskinskylten är märkt med 3-A (15) (se bild (B) på sidan i-7), uppfyller denna utrustning 3-A Hygienstandarder för resare, fyllare och förseglare av behållare för flytande mjölk och flytande mjölkprodukter, Nummer 17-10.

Maskinskylt

Illustration (B) på sidan i-7 visar ett exempel på en maskinskylt.
En illustration av gällande maskinskylt och dess placering på utrustningen visas i Introduktion-kapitlet i de handböcker som levereras med denna utrustning. Maskinskylten innehåller data som listas nedan, vilken behövs för att kontakta Tetra Pak rörande denna specifika utrustning.

- Maskintyp (8)
- Volym (9)
- Ritningsspecifikationer (10)
- Maskinnummer (11)
- Tillverkare (12)
- Tillverkningsår (13)
- CE-märkning (14)
- 3A-märke (om tillämpligt) (15)

Kontrollera att utrustningsdata som finns på de inledande sidorna i denna handbok överensstämmer med maskinskyltens data och maskinspecifikationen.

Hur man använder denna reservdelskatalog

Hitta ett reservdelsnummer

a) Se illustration (C) på sidan i-7: Gå till det kapitelnummer (16) som anges bredvid huvudgruppen som innehåller delen du vill lokalisera.

Punkterna b) och c) refererar till illustration (D) på sidan i-8.

b) Leta på huvudgruppens bild upp den undergrupp (18) i maskinen som innehåller delen eller undergruppen du letar efter. Notera positionsnumret (19) och gå till listsidan som följer på bilden.

c) Leta upp positionsnummer/referensbeteckning (17) eller undergruppens namn (20). Gå till motsvarande sidnummer (21) som anges i den högra kolumnen. Tetra Pak har valt att alltid använda en funktionsorienterad struktur för referensbeteckning. Prefix som anger funktionsorienterad struktur (=) visas inte i referensbeteckningen.

(Forts.)

(Forts.)

Punkterna d) och e) refererar till illustration (E) på sidan i-8.

d) Leta upp den del (22) som du letar efter på undergruppens bild och notera delens positionsnummer.

e) Artikelnumret (29) och artikelbeskrivningen (30) anges bredvid positionsnumret på listsidan.

Information som anges i en Reservdelskatalog

Listan nedan refererar till illustration (E) på sidan i-8. En Reservdelskatalog innehåller följande information om grupper, undergrupper och reservdelar för utrustningen:

- Gruppstrukturreferens (23). Anger närmast högre grupp i utrustningens liststruktur.
- Gruppnamn (24)
- Måttenhet (25)
- Antal (26)
- Sammanställningsritningens nummer (27)
- Listans sidomfång (28). Anges om det finns flera sidor i gruppens bild eller lista.
- Artikel- eller undergruppnummer (29)
- Undergruppens namn eller beskrivning av delen (30)
- Gruppnummer (31)
- Utrustningsnummer (32)
- Gruppinformationsrubrik (33). Anger om avsnittet under rubriken gäller för en specifik maskinvariant eller om det är en lista över gemensamma delar. Om en lista har mer än en variant och varje variant har sin egen sammanställningsritning, visas en sidreferens till variantens sammanställningsritning.
- Intern information (34)

Support och feedback

För hjälp med att handha denna utrustning, eller andra frågor, kommentarer eller förslag, ställ frågorna eller ge feedback på E-Liaison hemsida på http://e-liaison.tetrapak.com. Om tillgång till Tetra Pak intranet inte föreligger, kontakta närmaste Tetra Pak-representant.

This page intentionally left blank

SPC
Spare Parts Catalogue

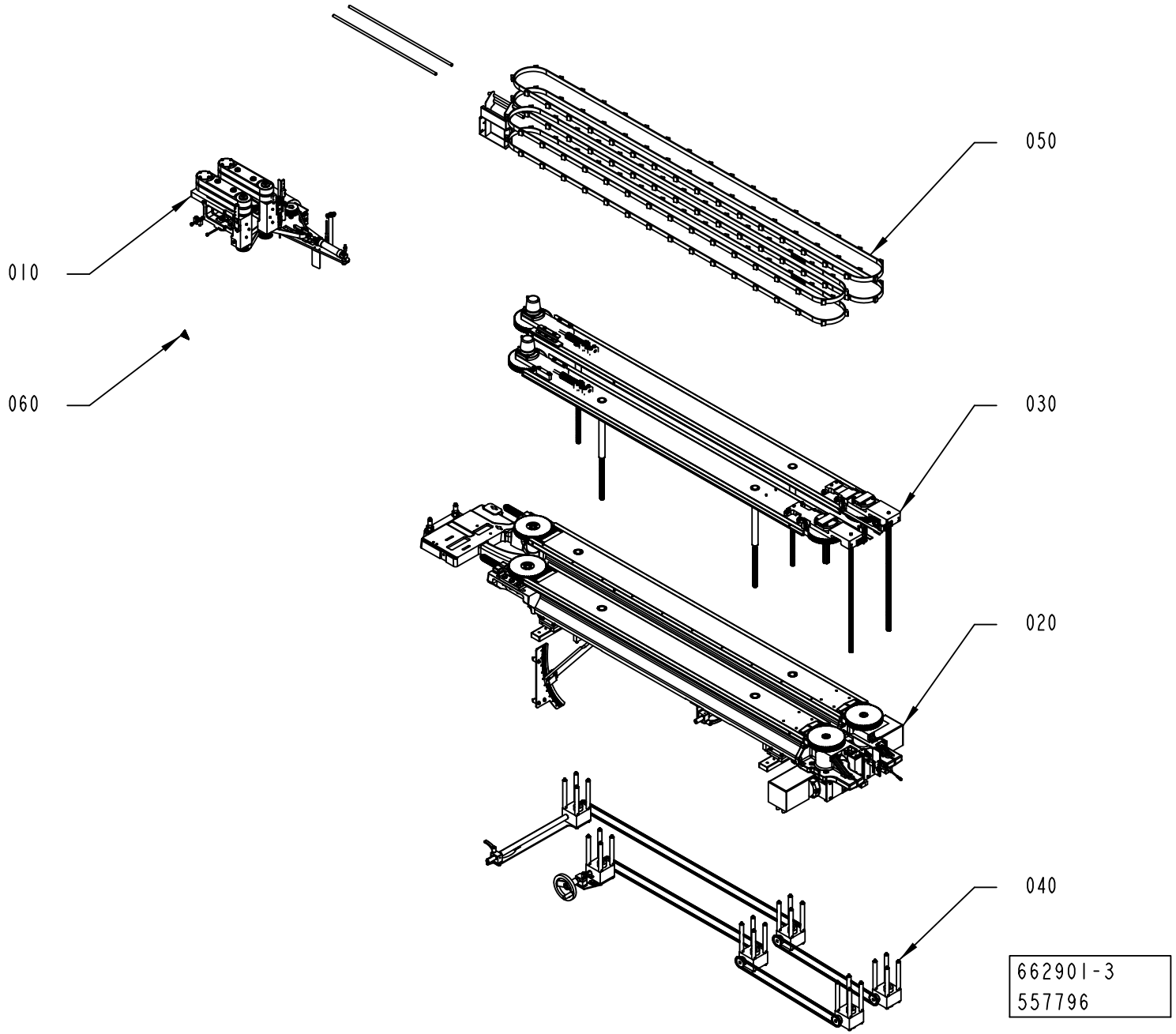
050
010
060
030
020
040
662901-3
557796

ECM: 557796 - 20120701
Group number: 662901-0300
Assembly Drawing: 662901-3_1_AB

This list covers pages from 1-2 to 1-5

Pos	Part No	UN	Qty	Description	Page No
TBA 0500S, TBA 0500SQ, TBA 1000B, TBA 1000SQ, TBA 1000S, TBA 1500S, TPA, TBA 1890S, TBA 2000S, TGA, TBA 0200E, TBA 0250E (See drawing on pages: 1-2, 1-4)					
030	3199893-0100		1	PACKAGE POSITIONER	**1-7**
040	2838647-0200		1	SLIDING RACK	**1-25**
Common Parts					
010	2838654-0300		1	BELT BRAKE	**1-29**
020	3199892-0100		1	PACKAGE POSITIONER	**1-41**
050	3199895-0100		1	PACKAGE HANDLING	**1-73, 1-75, 1-77, 1-79, 1-81**
060	3217278-0100		1	WARNING SIGN	**1-97**

Pos	Part No	UN	Qty	Description	Page No

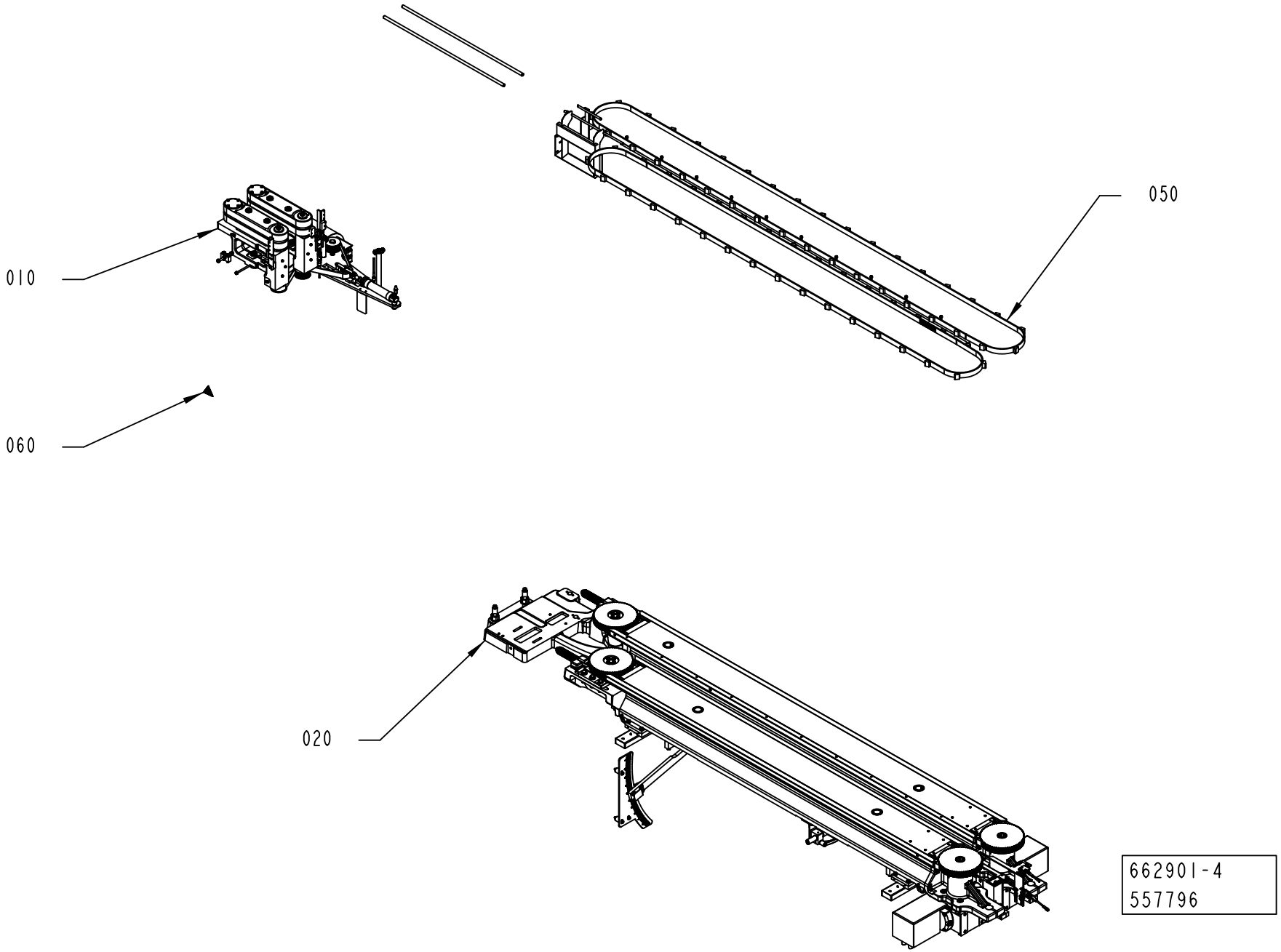
010
050
060
020
662901-4
557796

ECM: 557796 - 20120701
Group number: 662901-0300
Assembly Drawing: 662901-4_1_AA

This list covers pages from 1-2 to 1-5

Pos	Part No	UN	Qty	Description	Page No
TBA 0500S, TBA 0500SQ, TBA 1000B, TBA 1000SQ, TBA 1000S, TBA 1500S, TPA, TBA 1890S, TBA 2000S, TGA, TBA 0200E, TBA 0250E (See drawing on pages: 1-2, 1-4)					
030	3199893-0100		1	PACKAGE POSITIONER	**1-7**
040	2838647-0200		1	SLIDING RACK	**1-25**
Common Parts					
010	2838654-0300		1	BELT BRAKE	**1-29**
020	3199892-0100		1	PACKAGE POSITIONER	**1-41**
050	3199895-0100		1	PACKAGE HANDLING	**1-73, 1-75, 1-77, 1-79, 1-81**
060	3217278-0100		1	WARNING SIGN	**1-97**

Pos	Part No	UN	Qty	Description	Page No

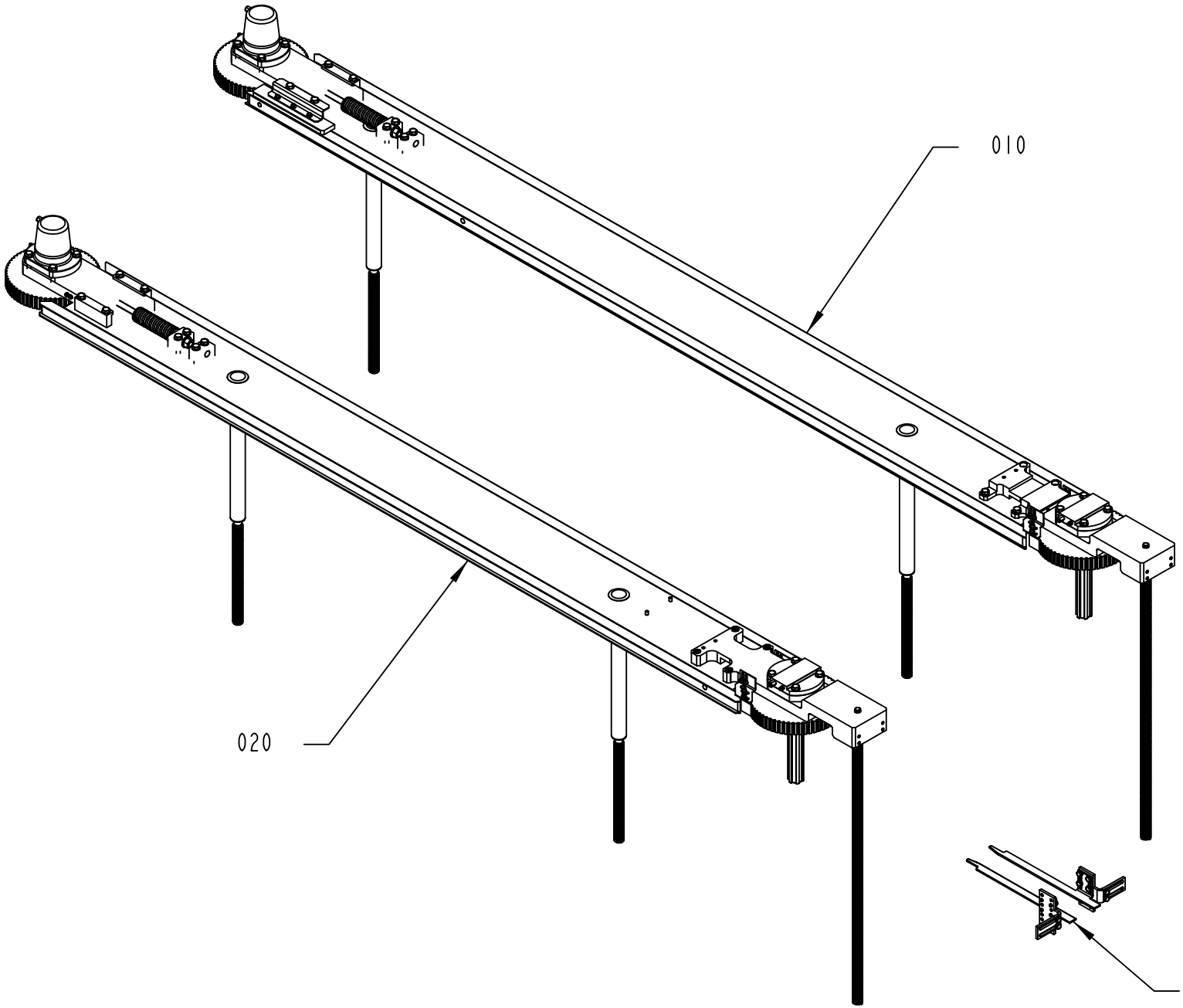

3199893-1
529087

ECM: 529609 - 20120401
Group number: 3199893-0100
Assembly Drawing: 3199893-1_1_AA

Pos	Part No	UN	Qty	Description	Page No
-					
010	3199889-0100		1	SIDE ADJUSTER	**1-9**
020	3199890-0100		1	SIDE ADJUSTER	**1-17**
030	3208157-0100		1	ADJUSTABLE GUIDE	**1-23**

Pos	Part No	UN	Qty	Description	Page No

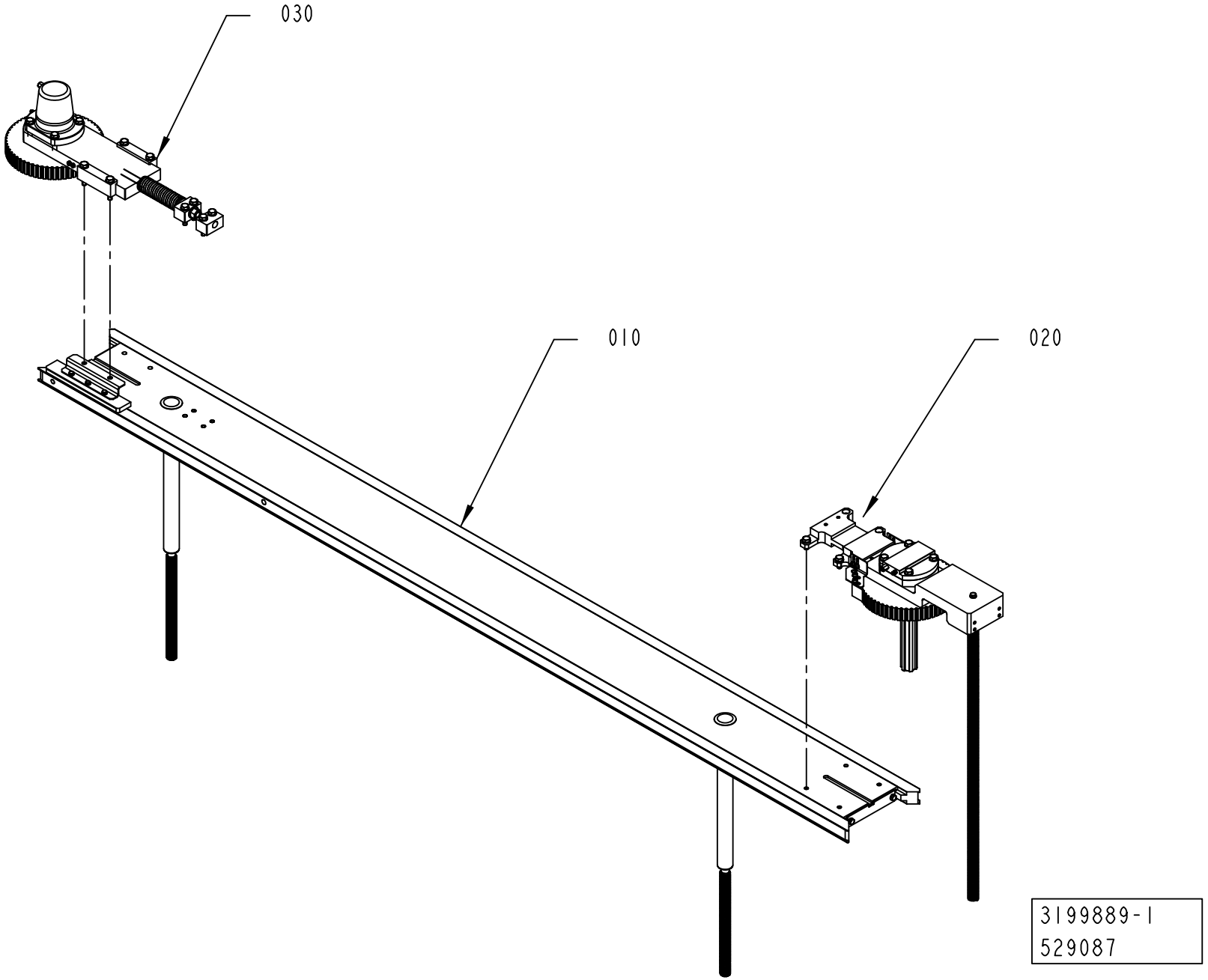
030
010
020
3199889-1
529087

ECM: 529605 - 20120401
Group number: 3199889-0100
Assembly Drawing: 3199889-1_1_AA

Pos	Part No	UN	Qty	Description	Page No
-					
010	3209480-0100		1	FRAME UPPER	**1-11**
020	3199891-0100		1	DRIVE	**1-13**
030	2766954-0200		1	BELT TENSIONER	**1-15**

Pos	Part No	UN	Qty	Description	Page No

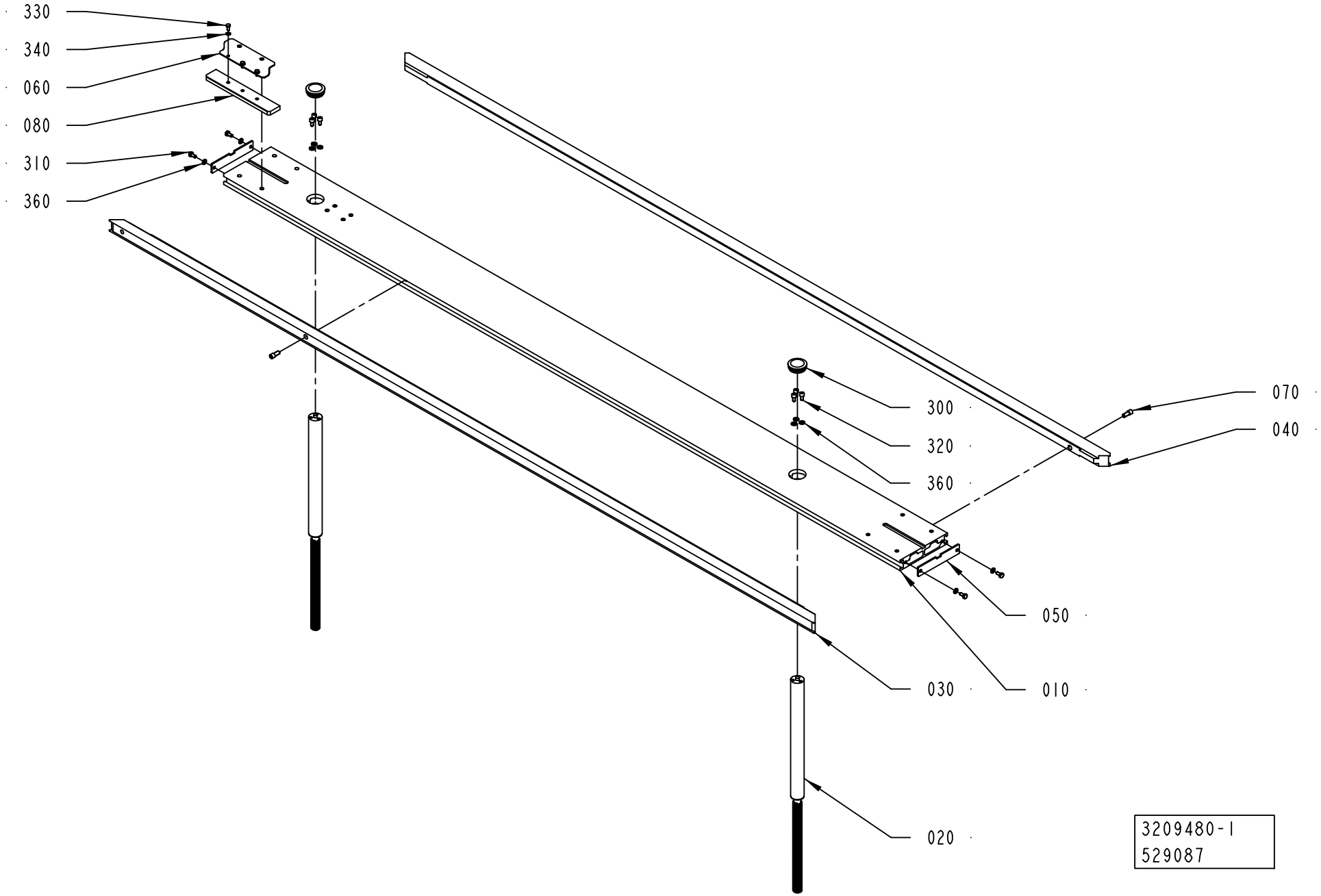
330
340
060
080
310
360
300
320
360
070
040
050
030
010
020
3209480-1
529087

ECM: 529615 - 20120401
Group number: 3209480-0100
Assembly Drawing: 3209480-1_1_AA

Pos	Part No	UN	Qty	Description	Page No
-					
010	3217911-0000		1	FRAME	
020	2766927-0000		2	PILLAR	
030	3217906-0000		1	GUIDE	
040	3203258-0000		1	GUIDE	
050	2788134-0000		2	COVER	
060	3199900-0000		1	BRACKET	
070	3202908-0000		2	SCREW	
080	3217277-0000		1	PLATE	
300	90261-0064		2	PLUG, BLIND, PLASTIC, NO. SFL42	
310	312105-0366		4	SCREW, M6S ISO 4017 M6X12 A4 80	
320	312115-0366		6	SCREW ISO4762 M6X12 A4 80	
330	312105-0325		3	SCREW, M6S ISO 4017 M5X10 A4 80	
340	315105-0146		3	WASHER PLAIN, 5,3X10X1 A4 BRB	
360	315105-0153		10	WASHER PLAIN, 6,4X12X1,5 A4 BRB	

Pos	Part No	UN	Qty	Description	Page No

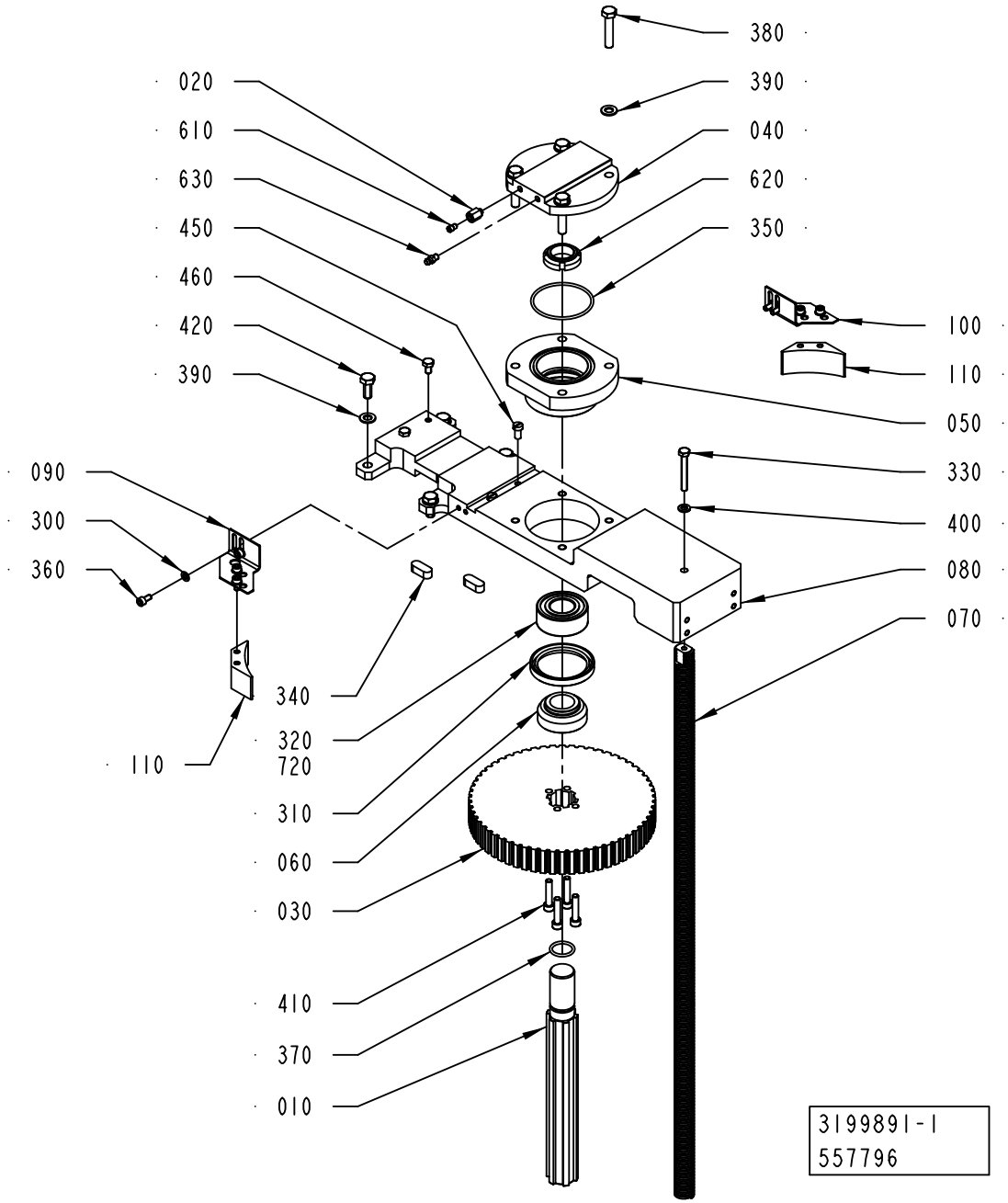
380
020
390
610
040
630
620
450
350
460
100
420
110
390
050
090
330
300
400
360
080
070
340
320
720
110
310
060
030
410
370
010
3199891-1
557796

ECM: 560244 - 20120701
Group number: 3199891-0100
Assembly Drawing: 3199891-1_1_AB

Pos	Part No	UN	Qty	Description	Page No
-					
010	2775446-0000		1	SHAFT	
020	3147226-0000		1	ADAPTER	
030	2775442-0000		1	TOOTHED PULLEY	
040	2778566-0000		1	BELLOWS	
050	2775445-0000		1	SPACER	
060	2775443-0000		1	SPACER	
070	2802392-0000		1	PILLAR	
080	3203747-0000		1	PLATE	
090	3161464-0000		1	BRACKET	
100	3161465-0000		1	BRACKET	
110	3186487-0000		2	PROTECTION PLUG	
300	315105-0146		8	WASHER PLAIN, 5,3X10X1 A4 BRB	
310	315221-0198		1	RADIAL SEAL 50X65X8 MM	
320	321330-0105		1	ANG. BALL BEAR 25/52X20,6	
330	312104-0379		1	SCREW M6S M6X45H FZB	
340	315705-0303		2	PARALLEL KEY W. ROUND ENDS, 10X8X50 MM	
350	315202-0741		1	O-RING 58,42X2,62 MM	
360	312115-0325		8	SCREW ISO4762 M5X10 A4 80	
370	315202-0717		1	O-RING 20,29X2,62 MM	
380	312105-0459		4	SCREW, M6S ISO 4014 M8X40 A4 80	
390	315105-0165		8	WASHER PLAIN, 8,4X16X1,6 A4 BRB	
400	315105-0153		1	WASHER PLAIN, 6,4X12X1,5 A4 BRB	
410	312115-0374		4	SCREW ISO4762 M6X30 A4 80	
420	312105-0451		4	SCREW, M6S ISO 4017 M8X20 A4 80	
450	312125-0366		2	SLOTTED HEAD SCREW, ISO1207 M6X12 A4	
460	312105-0364		2	SCREW, M6S ISO 4017 M6X10 A4 80	
600	90157-0037	ML	1	THREAD SEALANT LOCTITE 542	
610	90604-3329		1	NON-RETURN VALVE, RVA-M6	
620	90459-6280		1	NUT GUK 5 M25 X 1.5 FZB	
630	90286-0013		1	GREASE NIPPLE STRAIGHT, H1 M6X1 2346	
720	90603-5339	L	1	KLüBEROIL 4 UH1 320 N, ONLY IN BOM	
	90603-6434		*1*	*KLUBEROIL 4 UH1 320 N, 5 L CANISTER*	
	90603-6454		*1*	*KLüBEROIL 4 UH1 320 N, 20 L CANISTER*	

Pos	Part No	UN	Qty	Description	Page No

Machine Type	Group Description	Used-In	Group Number	Page No

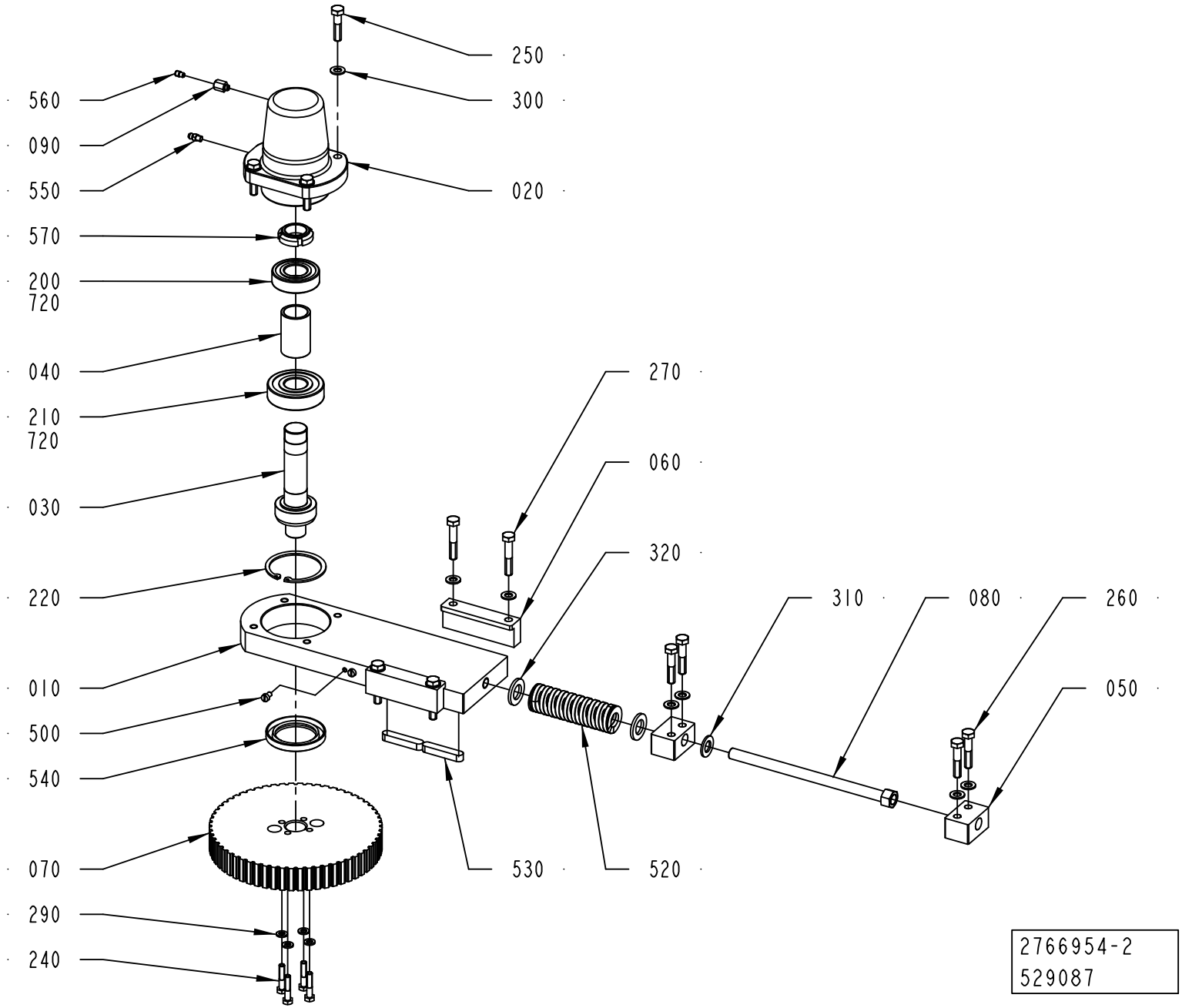
250
300
020
560
090
550
570
200
720
040
210
720
030
220
010
500
540
070
290
240
270
060
320
310
080
260
050
530
520
2766954-2
529087

ECM: 552645 - 20120404
Group number: 2766954-0200
Assembly Drawing: 2766954-2_1_AA

Pos	Part No	UN	Qty	Description	Page No
-					
010	2766953-0000		1	PLATE	
020	3022796-0000		1	BELLOWS	
030	2766958-0000		1	SHAFT	
040	2766959-0000		1	SPACER	
050	2766962-0000		2	BLOCK	
060	2766963-0000		2	BRACKET	
070	2766981-0000		1	TOOTHED PULLEY	
080	2817784-0000		1	SCREW	
090	3147226-0000		1	ADAPTER	
200	321309-0105		1	BALL BEARING 25/52X15	
210	321314-0105		1	BALL BEARING 25/62X17	
220	315752-0136		1	RETAINING RING FOR BORE DIN 472 62	
240	312105-0374		4	SCREW, M6S ISO 4014 M6X30 A4 80	
250	312105-0457		4	SCREW, M6S ISO 4014 M8X35 A4 80	
260	312105-0459		4	SCREW, M6S ISO 4014 M8X40 A4 80	
270	312105-0460		4	SCREW, M6S ISO 4014 M8X45 A4 80	
290	315105-0153		4	WASHER PLAIN, 6,4X12X1,5 A4 BRB	
300	315105-0165		12	WASHER PLAIN, 8,4X16X1,6 A4 BRB	
310	315105-0178		1	WASHER PLAIN, 13X24X2,5 A4 BRB	
320	315105-0186		2	WASHER PLAIN, 17X30X3 A4 BRB	
500	312125-0323		4	SLOTTED HEAD SCREW, ISO1207 M5X8 A4	
520	90604-3324		1	COMP. SPRING, 5443, ?X31,2X115	
530	315705-0303		2	PARALLEL KEY W. ROUND ENDS, 10X8X50 MM	
540	90091-0304		1	RADIAL SEAL 45X65X8 MM DUST LIP	
550	90286-0013		1	GREASE NIPPLE STRAIGHT, H1 M6X1 2346	
560	90604-3329		1	NON-RETURN VALVE, RVA-M6	
570	90459-6280		1	NUT GUK 5 M25 X 1.5 FZB	
720	90603-5339	L	1	KLüBEROIL 4 UH1 320 N, ONLY IN BOM	
	90603-6434		*1*	*KLUBEROIL 4 UH1 320 N, 5 L CANISTER*	
	90603-6454		*1*	*KLüBEROIL 4 UH1 320 N, 20 L CANISTER*	

Pos	Part No	UN	Qty	Description	Page No

Machine Type	Group Description	Used-In	Group Number	Page No

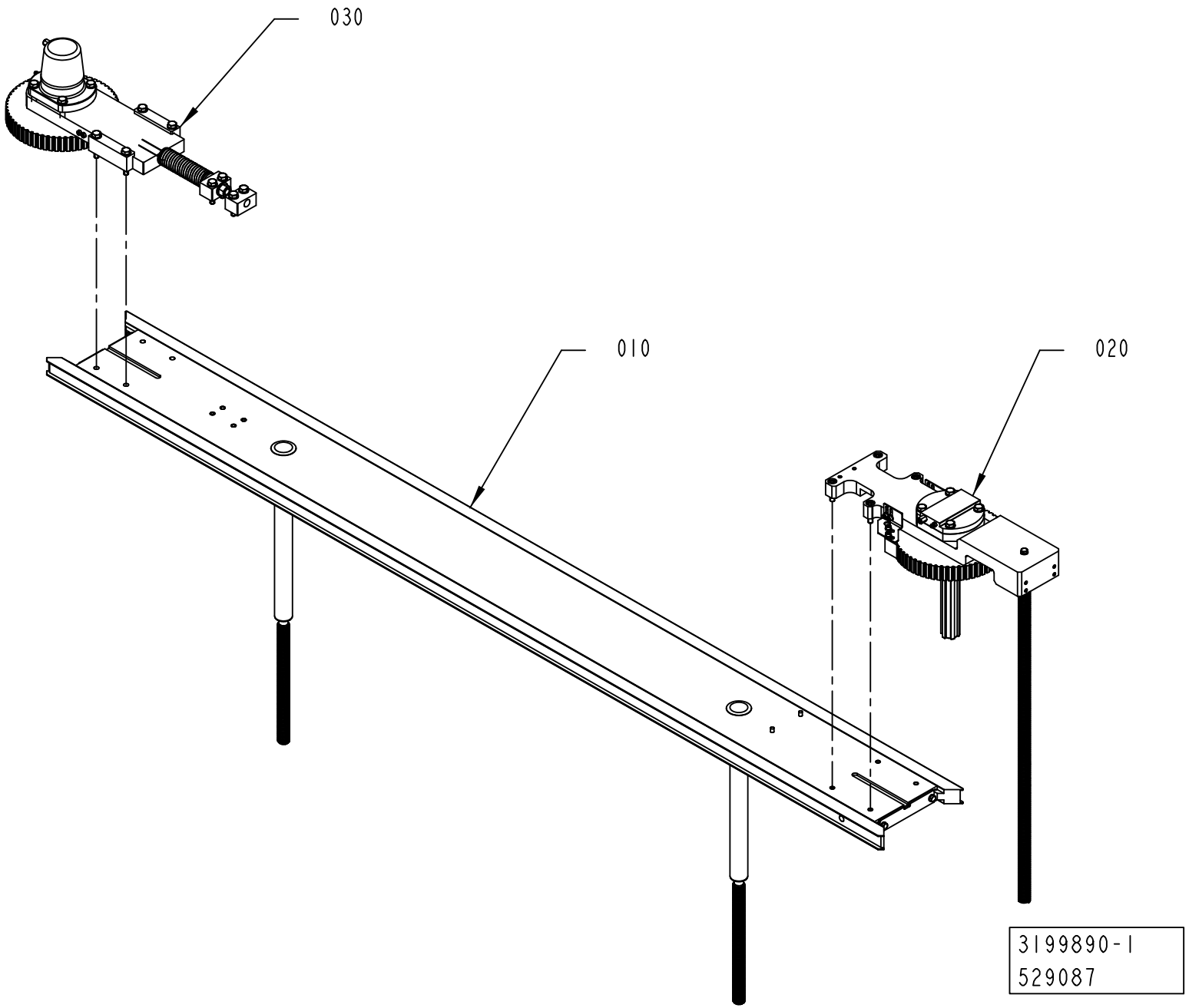
030
010
020
3199890-1
529087

ECM: 529606 - 20120401
Group number: 3199890-0100
Assembly Drawing: 3199890-1_1_AA

Pos	Part No	UN	Qty	Description	Page No
-					
010	3209481-0100		1	FRAME UPPER	**1-19**
020	3217276-0100		1	DRIVE	**1-21**
030	2766954-0200		1	BELT TENSIONER	**1-15**

Pos	Part No	UN	Qty	Description	Page No

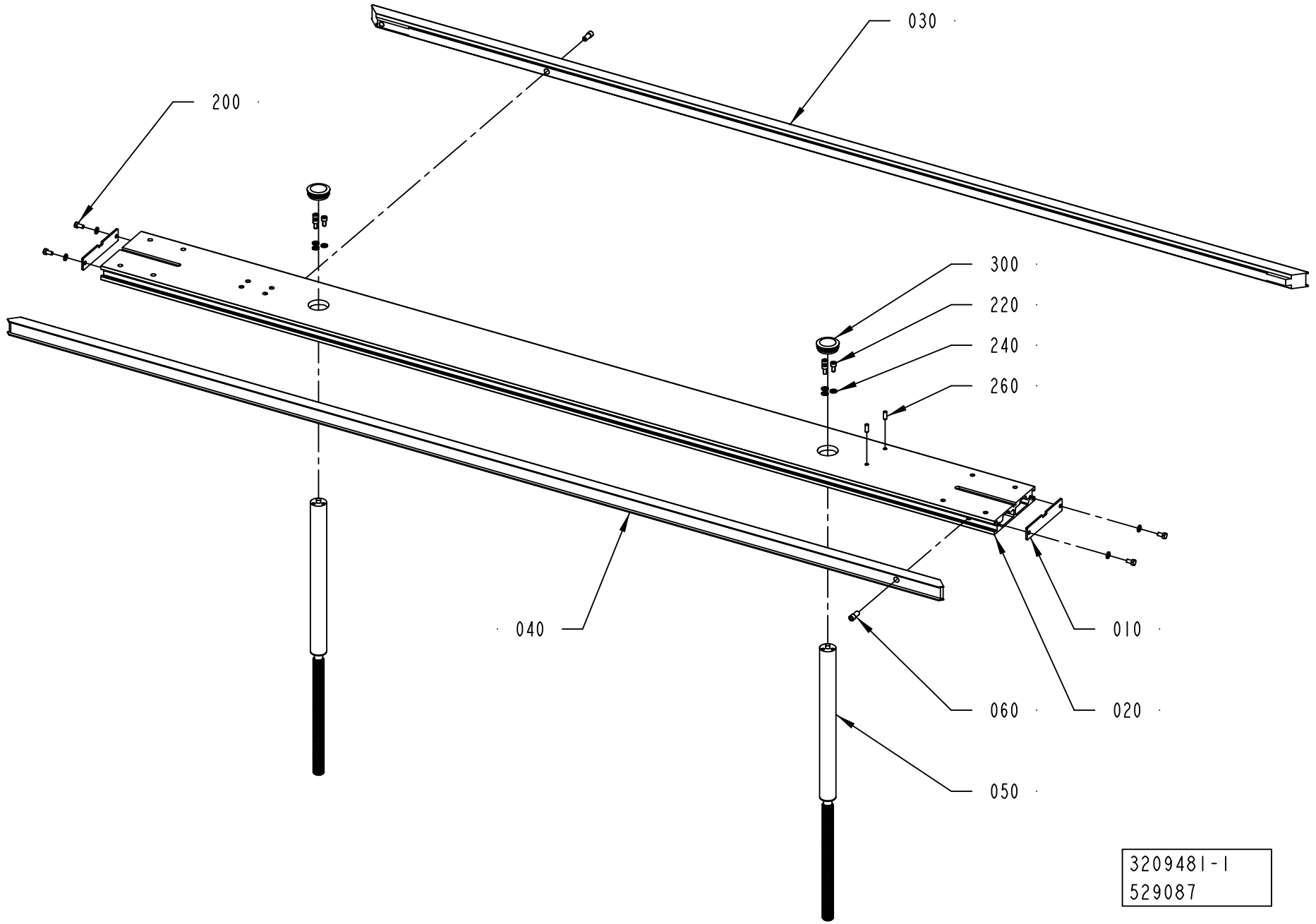
030
200
300
220
240
260
040
010
060
020
050
3209481-1
529087

ECM: 529616 - 20120401
Group number: 3209481-0100
Assembly Drawing: 3209481-1_1_AA

Pos	Part No	UN	Qty	Description	Page No
-					
010	2788134-0000		2	COVER	
020	3217913-0000		1	FRAME	
030	3217907-0000		1	GUIDE	
040	3203260-0000		1	GUIDE	
050	2766927-0000		2	PILLAR	
060	3202908-0000		2	SCREW	
200	312105-0366		4	SCREW, M6S ISO 4017 M6X12 A4 80	
220	312115-0366		6	SCREW ISO4762 M6X12 A4 80	
240	315105-0153		10	WASHER PLAIN, 6,4X12X1,5 A4 BRB	
260	311103-0351		2	PARALLEL PIN ISO 2338 6M6X16 A1	
300	90261-0064		2	PLUG, BLIND, PLASTIC, NO. SFL42	

Pos	Part No	UN	Qty	Description	Page No

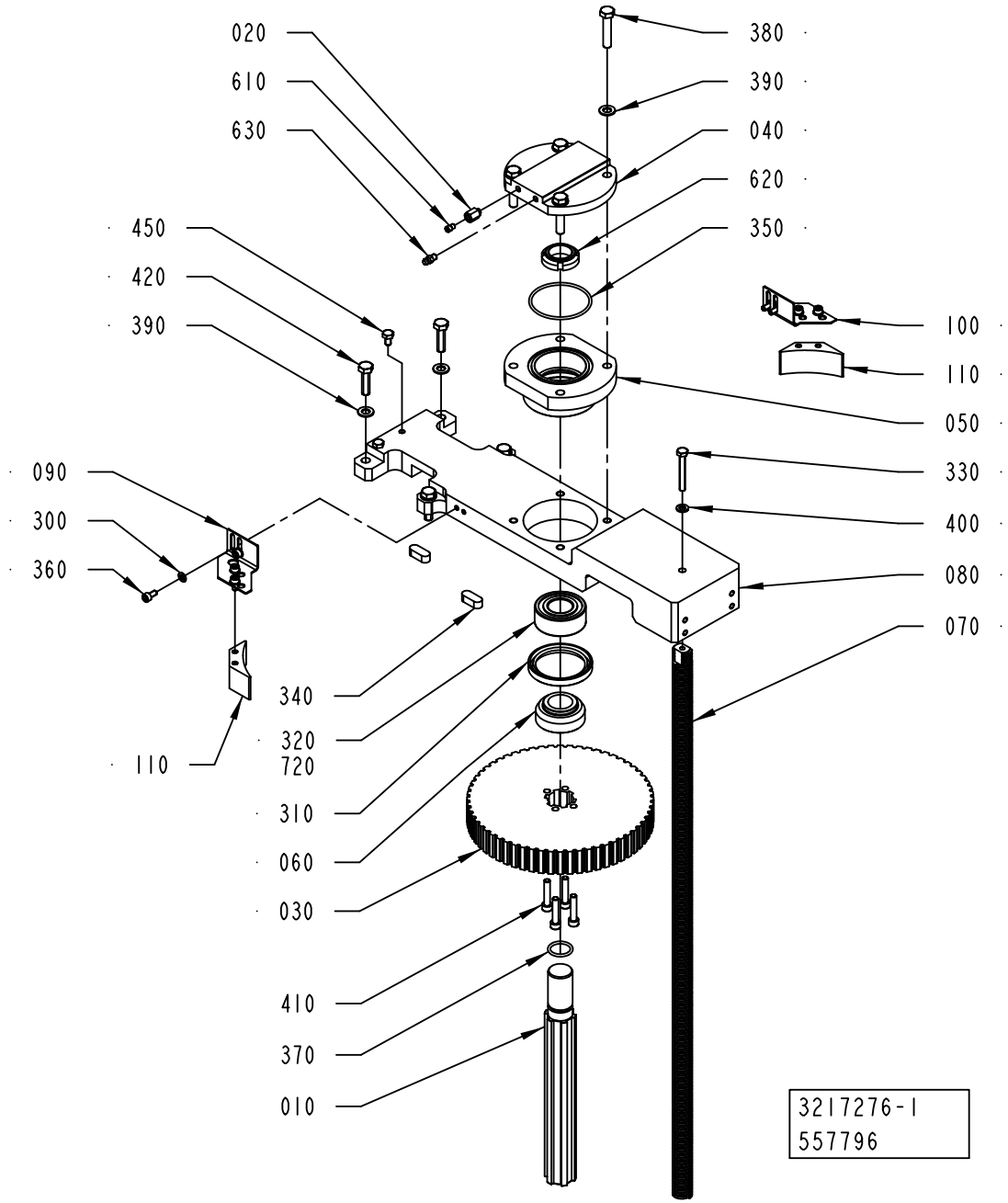
020
610
630
450
420
390
090
300
360
110
340
320
720
310
060
030
410
370
010
380
390
040
620
350
100
110
050
330
400
080
070
3217276-1
557796

ECM: 560245 - 20120701
Group number: 3217276-0100
Assembly Drawing: 3217276-1_1_AB

Pos	Part No	UN	Qty	Description	Page No
-					
010	2775446-0000		1	SHAFT	
020	3147226-0000		1	ADAPTER	
030	2775442-0000		1	TOOTHED PULLEY	
040	2778566-0000		1	BELLOWS	
050	2775445-0000		1	SPACER	
060	2775443-0000		1	SPACER	
070	2802392-0000		1	PILLAR	
080	3217924-0000		1	PLATE	
090	3161464-0000		1	BRACKET	
100	3161465-0000		1	BRACKET	
110	3186487-0000		2	PROTECTION PLUG	
300	315105-0146		8	WASHER PLAIN, 5,3X10X1 A4 BRB	
310	315221-0198		1	RADIAL SEAL 50X65X8 MM	
320	321330-0105		1	ANG. BALL BEAR 25/52X20,6	
330	312104-0379		1	SCREW M6S M6X45H FZB	
340	315705-0296		2	PARALLEL KEY W. ROUND ENDS, 10X8X25 MM	
350	315202-0741		1	O-RING 58,42X2,62 MM	
360	312115-0325		8	SCREW ISO4762 M5X10 A4 80	
370	315202-0717		1	O-RING 20,29X2,62 MM	
380	312105-0459		4	SCREW, M6S ISO 4014 M8X40 A4 80	
390	315105-0165		8	WASHER PLAIN, 8,4X16X1,6 A4 BRB	
400	315105-0153		1	WASHER PLAIN, 6,4X12X1,5 A4 BRB	
410	312115-0374		4	SCREW ISO4762 M6X30 A4 80	
420	312105-0455		4	SCREW, M6S ISO 4017 M8X30 A4 80	
450	312105-0364		2	SCREW, M6S ISO 4017 M6X10 A4 80	
600	90157-0037	ML	1	THREAD SEALANT LOCTITE 542	
610	90604-3329		1	NON-RETURN VALVE, RVA-M6	
620	90459-6280		1	NUT GUK 5 M25 X 1.5 FZB	
630	90286-0013		1	GREASE NIPPLE STRAIGHT, H1 M6X1 2346	
720	90603-5339	L	1	KLüBEROIL 4 UH1 320 N, ONLY IN BOM	
	90603-6434		*1*	*KLUBEROIL 4 UH1 320 N, 5 L CANISTER*	
	90603-6454		*1*	*KLüBEROIL 4 UH1 320 N, 20 L CANISTER*	

Pos	Part No	UN	Qty	Description	Page No

Machine Type | Group Description | Used-In | Group Number | Page No

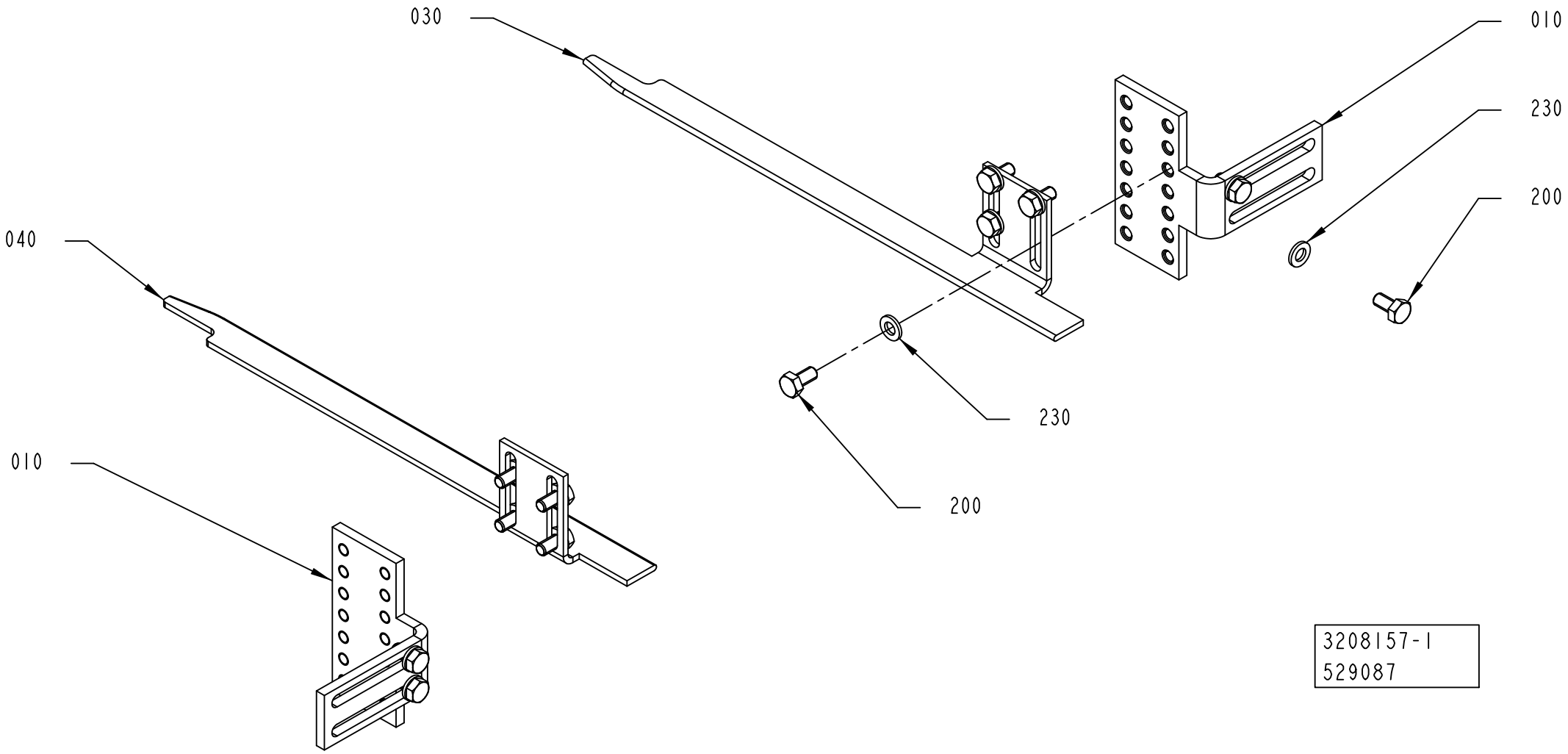
030
010
230
200
040
010
230
200
3208157-1
529087

ECM: 529614 - 20120401
Group number: 3208157-0100
Assembly Drawing: 3208157-1_1_AA

Pos	Part No	UN	Qty	Description	Page No
-					
010	3117145-0000		2	ANGLE	
030	3117146-0000		1	GUIDE	
040	3120838-0000		1	GUIDE	
200	312105-0366		12	SCREW, M6S ISO 4017 M6X12 A4 80	
230	315105-0153		12	WASHER PLAIN, 6,4X12X1,5 A4 BRB	

Pos	Part No	UN	Qty	Description	Page No

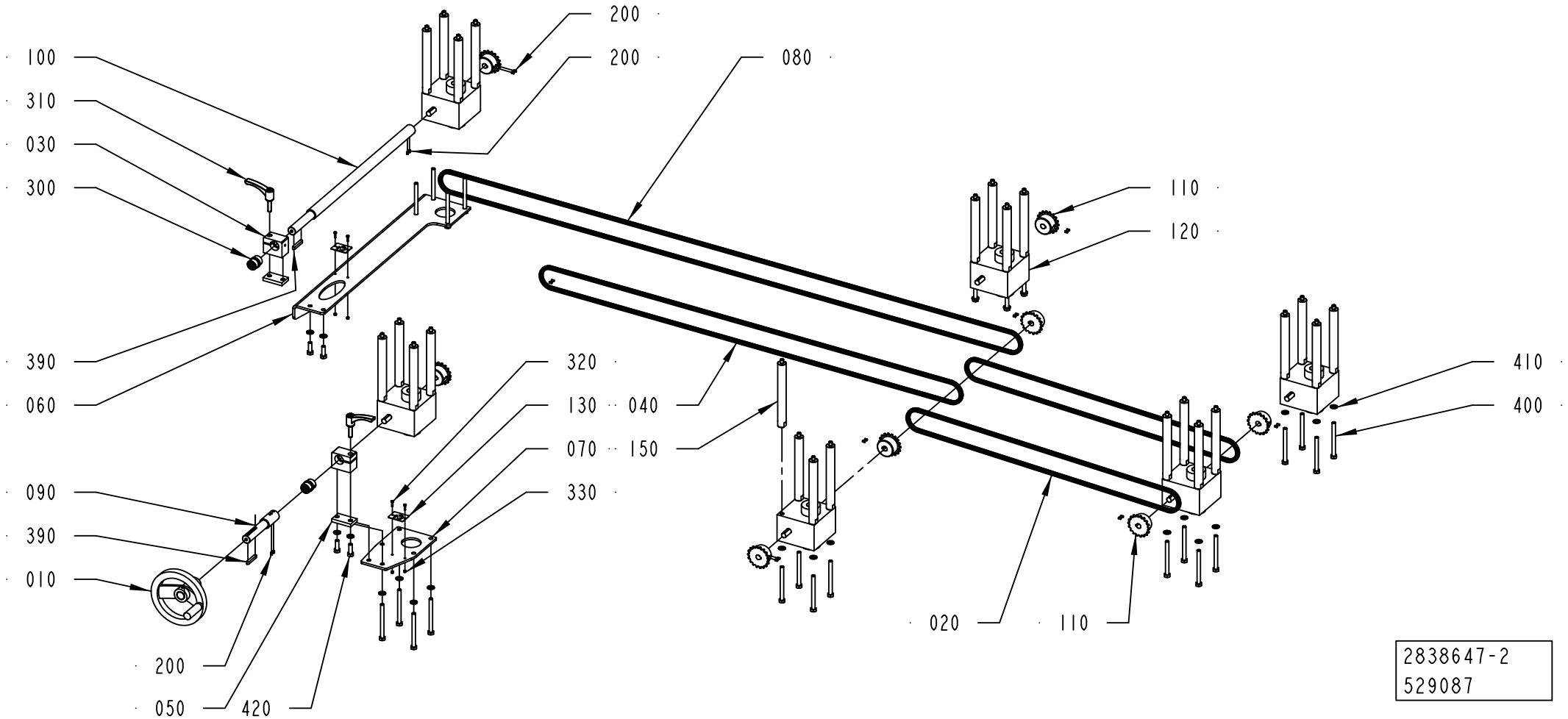
100
310
030
300
200
200
080
110
120
390
060
320
130
040
070
150
330
090
390
010
200
050
420
020
110
410
400
2838647-2
529087

ECM: 529593 - 20120401
Group number: 2838647-0200
Assembly Drawing: 2838647-2_1_AA

Pos	Part No	UN	Qty	Description	Page No
-					
010	2802404-0100		1	HANDLE	**1-27**
020	90600-0961		2	ROLLER CHAIN, SIMPLEX 3/8 -159, SS	
030	2769726-0000		2	BRACKET	
040	90600-0962		1	ROLLER CHAIN, SIMPLEX 3/8 -243, SS	
050	2778594-0000		2	PLATE	
060	2779063-0000		1	PLATE	
070	2779759-0000		1	PLATE	
080	90600-0964		1	ROLLER CHAIN, SIMPLEX 3/8 -333, SS	
090	2769729-0000		1	SHAFT	
100	2779756-0000		1	SHAFT	
110	2779062-0000		8	SPROCKET	
120	90600-0812		6	GEAR BOX, TP00042000110	
130	2873941-0000		2	SIGN	
150	2778585-0000		24	PILLAR	
200	312318-0285		20	SET SCREW, CUP END ISO4029 M4X6 A4	
300	90458-2932		2	PLAIN BEARING, JUM-02-20	
310	90017-0029		2	LOCKING LEVER, NO. KR8X30-SUS	
320	90287-0175		4	SCREW M6S M3X12 A480	
330	312605-0310		4	HEXAGON NUT, M6M M3 A280	
390	315705-0239		2	PARALLEL KEY W. ROUND ENDS, 6X6X40 MM	
400	312105-0469		24	SCREW, M6S ISO 4014 M8X90 A4 80	
410	315105-0165		28	WASHER PLAIN, 8,4X16X1,6 A4 BRB	
420	312105-0453		4	SCREW, M6S ISO 4017 M8X25 A4 80	

Pos	Part No	UN	Qty	Description	Page No

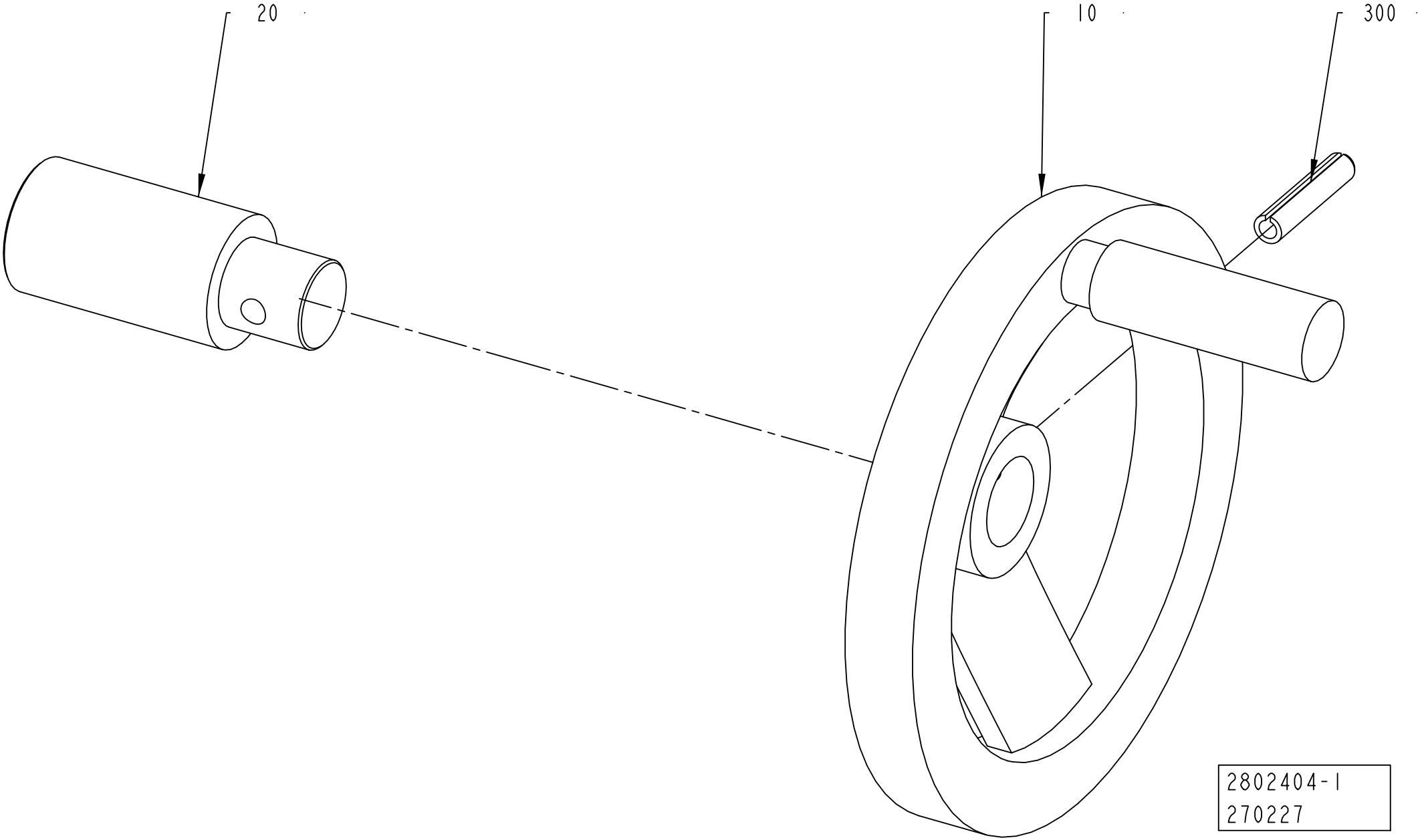
20
10
300
2802404-1
270227

ECM: 273295 - 20060921
Group number: 2802404-0100
Assembly Drawing: 2802404-1_1_AA

Pos	Part No	UN	Qty	Description	Page No
-					
010	2781286-0000		1	HAND WHEEL	
020	2788144-0000		1	SHAFT	
300	311112-0345		1	SPRING PIN, ISO 8752 6X32 A2	

Pos	Part No	UN	Qty	Description	Page No

Machine Type | Group Description | Used-In | Group Number | Page No

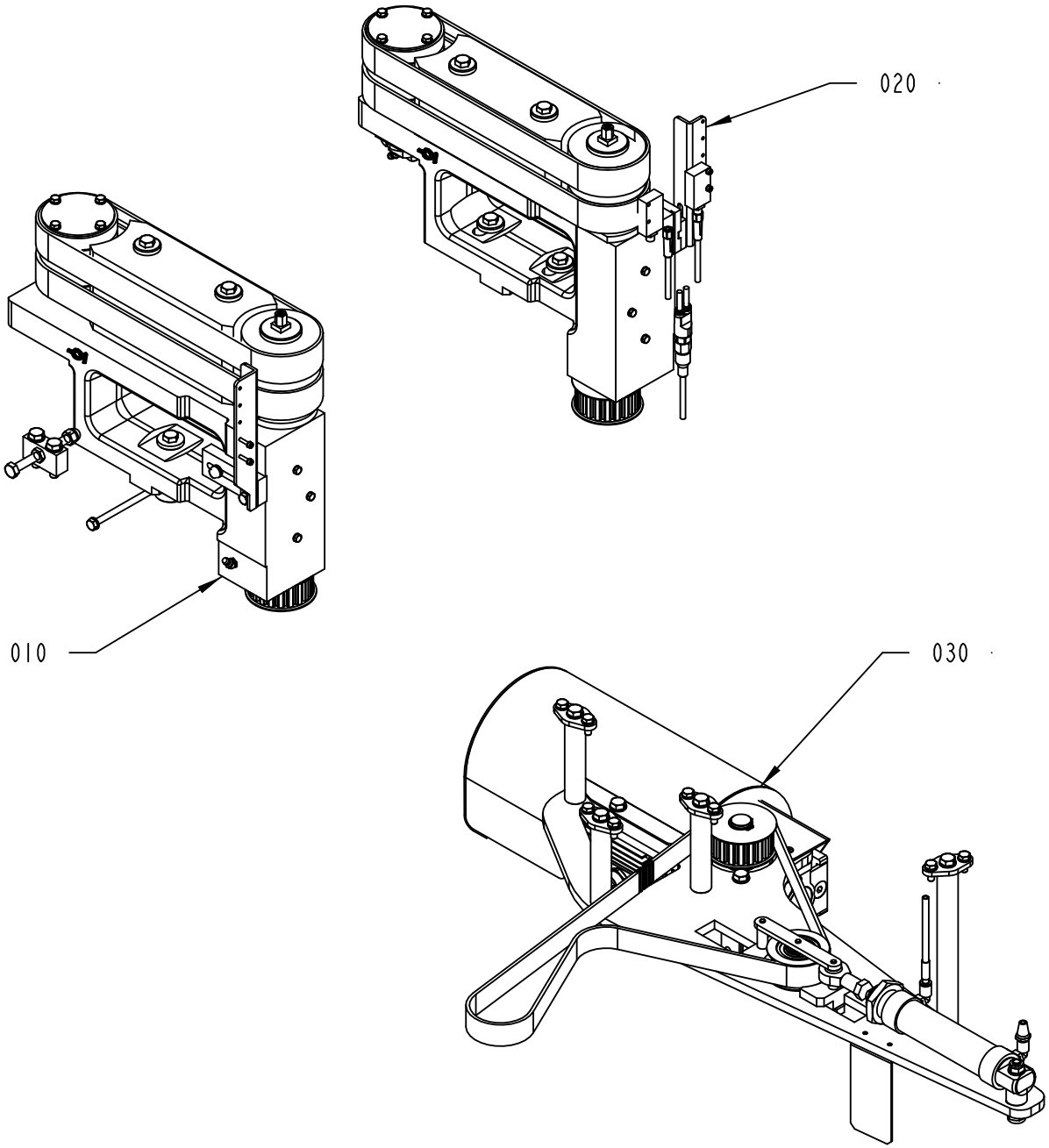

2838654-3
529087

ECM: 529596 - 20120401
Group number: 2838654-0300
Assembly Drawing: 2838654-3_1_AA

Pos	Part No	UN	Qty	Description	Page No
-					
010	2766990-0200		1	BRAKE UNIT	**1-31**
020	2766991-0200		1	BRAKE UNIT	**1-33**
030	2766994-0300		1	ACCELERATION PUSHER	**1-35**

Pos	Part No	UN	Qty	Description	Page No

BRAKE UNIT

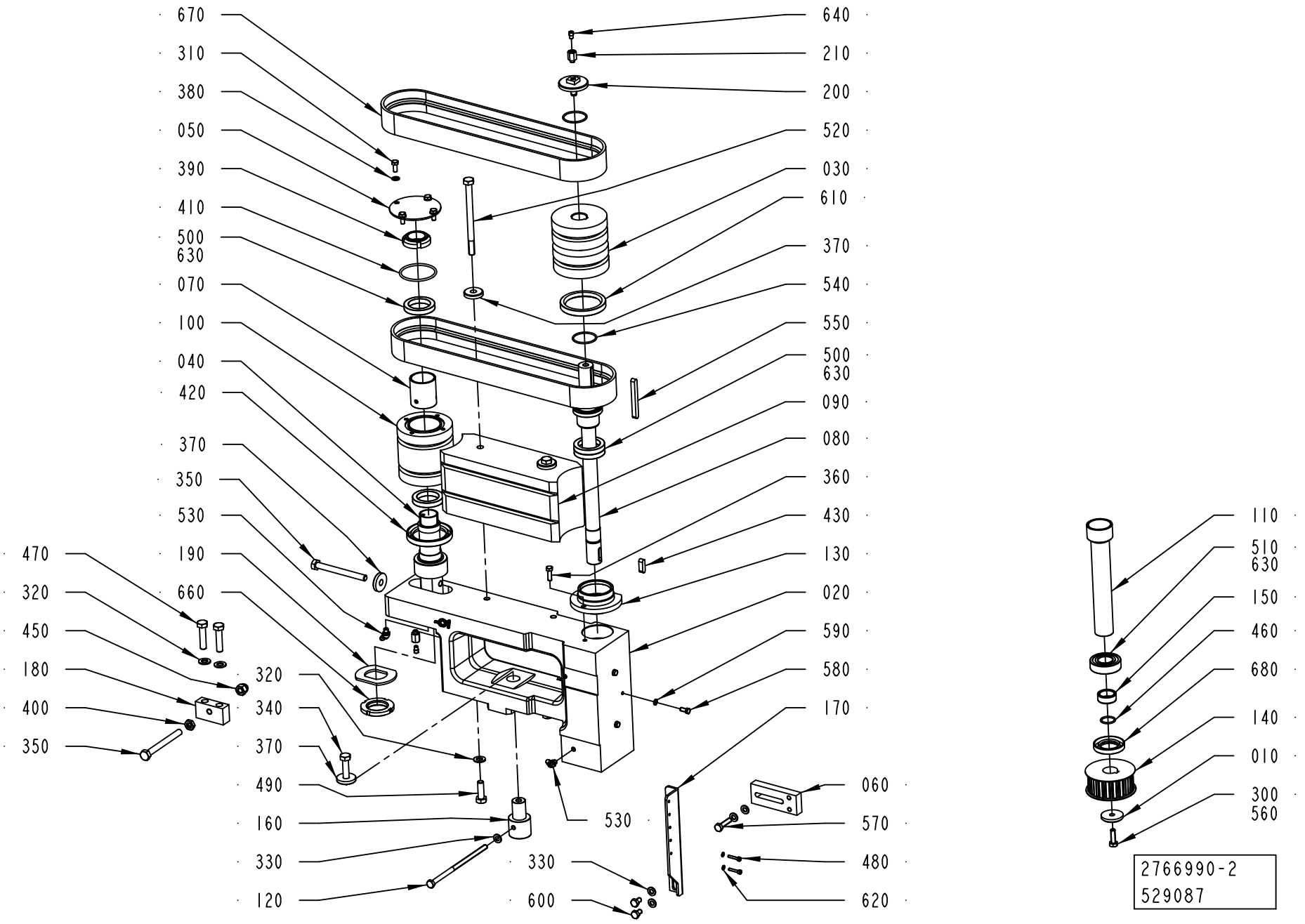
670
310
380
050
390
410
500
630
070
100
040
420
370
350
530
190
660
470
320
450
180
400
350
320
340
370
490
160
330
120
530
330
600
640
210
200
520
030
610
370
540
550
500
630
090
080
360
430
130
020
590
580
170
060
570
480
620
110
510
630
150
460
680
140
010
300
560
2766990-2
529087

ECM: 552647 - 20120404
Group number: 2766990-0200
Assembly Drawing: 2766990-2_1_AA

Pos	Part No	UN	Qty	Description	Page No
-					
010	290027-0000		2	WASHER	
020	3010622-0000		1	CANTILEVER	
030	3115079-0000		1	DRIVE PULLEY	
040	3217280-0000		1	SHAFT	
050	2769686-0000		1	COVER	
060	2936120-0000		1	BRACKET	
070	2769741-0000		1	SPACER	
080	3108987-0000		1	DRIVE SHAFT	
090	2826737-0000		1	GUIDE	
100	2826729-0000		1	PULLEY	
110	3115081-0000		1	SPACER	
120	2805468-0000		1	SCREW	
130	3115080-0000		1	FLANGE	
140	3039030-0000		1	TOOTHED PULLEY	
150	2773600-0000		1	SPACER	
160	2775418-0000		1	SHAFT	
170	2936740-0000		1	BRACKET	
180	2775427-0000		1	BRACKET	
190	2778564-0000		1	WASHER	
200	3199899-0000		1	SCREW	
210	3147226-0000		2	ADAPTER	
300	312105-0370		1	SCREW, M6S ISO 4017 M6X20 A4 80	
310	312105-0327		4	SCREW, M6S ISO 4017 M5X12 A4 80	
320	315105-0165		4	WASHER PLAIN, 8,4X16X1,6 A4 BRB	
330	315105-0153		5	WASHER PLAIN, 6,4X12X1,5 A4 BRB	
340	312105-0455		1	SCREW, M6S ISO 4017 M8X30 A4 80	
350	312109-0467		2	SCREW, M6S ISO 4017 M8X80 A4 80	
360	312105-0329		1	SCREW, M6S ISO 4017 M5X16 A4 80	
370	315125-0165		4	WASHER HIGH, TBRSB 8,4X26X5 A4	
380	315105-0146		4	WASHER PLAIN, 5,3X10X1 A4 BRB	
390	90459-6280		1	NUT GUK 5 M25 X 1.5 FZB	
400	312625-0318		1	HEXAGON THIN NUT, EN 24035 ML6M M8 A4	
410	315202-0733		1	O-RING 45,69X2,62 MM	
420	315221-0192		1	RADIAL SEAL 45X62X8 MM	
430	315705-0232		1	PARALLEL KEY W. ROUND ENDS, 6X6X20 MM	
450	312705-0318		1	NUT HEX. DOMED CAP MHM-6 M8 A280	
460	315202-0705		1	O-RING 17,17X1,78 MM	
470	312105-0457		2	SCREW, M6S ISO 4014 M8X35 A4 80	
480	312115-0228		2	SCREW ISO4762 M3X16 A4 80	
490	312105-0453		2	SCREW, M6S ISO 4017 M8X25 A4 80	
500	90214-0186		4	BALL BEARING 30/42X7	
510	321306-0104		1	BALL BEARING 20/42X12	
520	312105-0473		2	SCREW, M6S ISO 4014 M8X110 A4 80	
530	90286-0012		1	GREASE NIPPLE 45 DEG. M6X1, 2107	
540	315202-0713		2	O-RING 29,87X1,78 MM	
550	90458-0507		1	PARALLEL KEY W. ROUND ENDS 6X6X60 MM	
560	90157-0037	ML	1	THREAD SEALANT LOCTITE 542	
570	312105-0372		1	SCREW, M6S ISO 4017 M6X25 A4 80	
580	312105-0289		3	SCREW, M6S ISO 4017 M4X10 A4 70	
590	315105-0136		3	WASHER PLAIN, 4,3X9X0,8 A4 BRB	
600	312105-0364		2	SCREW, M6S ISO 4017 M6X10 A4 80	
610	315221-0196		1	RADIAL SEAL 48X62X8 MM	
620	315105-0124		2	WASHER PLAIN, 3,2X6X0,5 A4 BRB	
630	90603-5339	L	1	KLüBEROIL 4 UH1 320 N, ONLY IN BOM	
	90603-6434		*1*	*KLUBEROIL 4 UH1 320 N, 5 L CANISTER*	
	90603-6454		*1*	*KLüBEROIL 4 UH1 320 N, 20 L CANISTER*	
640	90604-3329		2	NON-RETURN VALVE, RVA-M6	
650	90286-0012		1	GREASE NIPPLE 45 DEG. M6X1, 2107	
660	90459-2644		1	NUT ROUND WITH SLOTS M30X1,5 SS	
670	90602-4686		2	TIMING BELT 32TK5K6/780 PU + MINIGRIP	
680	90091-0322		1	RADIAL SEAL 25X42X7 MM DUST LIP	

Machine Type | Group Description | Used-In | Group Number | Page No

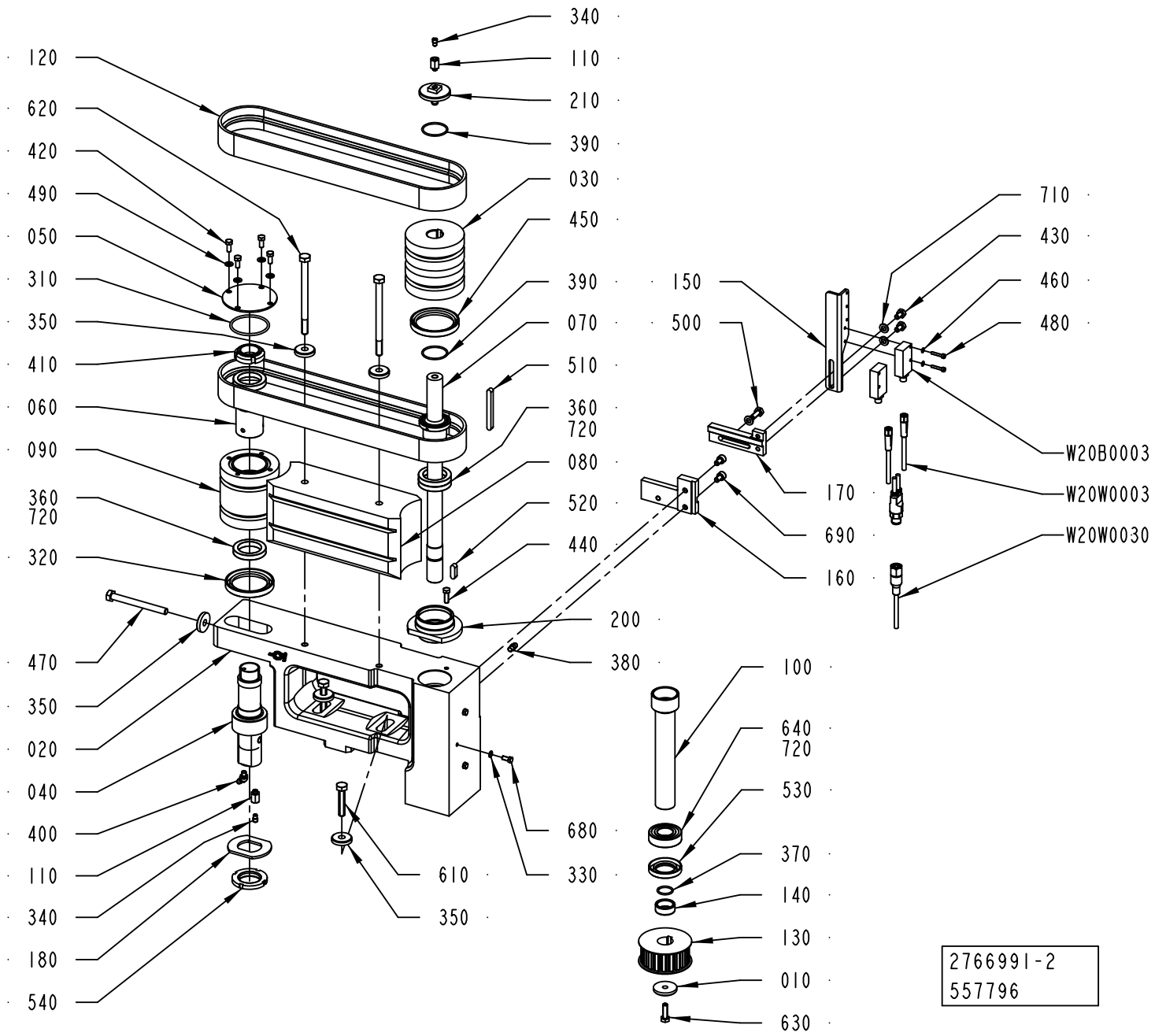
340
110
210
390
030
450
390
070
510
360
720
080
520
440
200
380
120
620
420
490
050
310
350
410
060
090
360
720
320
470
350
020
040
400
110
340
180
540
610
350
680
330
710
430
460
480
150
500
W20B0003
W20W0003
W20W0030
170
690
160
100
640
720
530
370
140
130
010
630
2766991-2
557796

ECM: 561714 - 20120701
Group number: 2766991-0200
Assembly Drawing: 2766991-2_1_AB

Pos	Part No	UN	Qty	Description	Page No
-					
010	290027-0000		2	WASHER	
020	3010624-0000		1	CANTILEVER	
030	3115079-0000		1	DRIVE PULLEY	
040	3217280-0000		1	SHAFT	
050	2769686-0000		1	COVER	
060	2769741-0000		1	SPACER	
070	3108987-0000		1	DRIVE SHAFT	
080	2826737-0000		1	GUIDE	
090	2826729-0000		1	PULLEY	
100	3115081-0000		1	SPACER	
110	3147226-0000		2	ADAPTER	
120	90602-4686		2	TIMING BELT 32TK5K6/780 PU + MINIGRIP	
130	3039030-0000		1	TOOTHED PULLEY	
140	2773600-0000		1	SPACER	
150	2936506-0000		1	BRACKET	
160	2943597-0000		1	PLATE	
170	2944164-0000		1	PLATE	
180	2778564-0000		1	WASHER	
200	3115080-0000		1	FLANGE	
210	3199899-0000		1	SCREW	
310	315202-0733		1	O-RING 45,69X2,62 MM	
320	315221-0192		1	RADIAL SEAL 45X62X8 MM	
330	315105-0136		3	WASHER PLAIN, 4,3X9X0,8 A4 BRB	
340	90604-3329		2	NON-RETURN VALVE, RVA-M6	
350	315125-0165		5	WASHER HIGH, TBRSB 8,4X26X5 A4	
360	90214-0186		4	BALL BEARING 30/42X7	
370	315202-0705		1	O-RING 17,17X1,78 MM	
380	90286-0012		1	GREASE NIPPLE 45 DEG. M6X1, 2107	
390	315202-0713		2	O-RING 29,87X1,78 MM	
400	90286-0012		1	GREASE NIPPLE 45 DEG. M6X1, 2107	
410	90459-6280		1	NUT GUK 5 M25 X 1.5 FZB	
420	312105-0327		4	SCREW, M6S ISO 4017 M5X12 A4 80	
430	312105-0364		2	SCREW, M6S ISO 4017 M6X10 A4 80	
440	312105-0329		1	SCREW, M6S ISO 4017 M5X16 A4 80	
450	315221-0196		1	RADIAL SEAL 48X62X8 MM	
460	315105-0124		2	WASHER PLAIN, 3,2X6X0,5 A4 BRB	
470	312109-0467		1	SCREW, M6S ISO 4017 M8X80 A4 80	
480	312115-0228		2	SCREW ISO4762 M3X16 A4 80	
490	315105-0146		4	WASHER PLAIN, 5,3X10X1 A4 BRB	
500	312105-0368		1	SCREW, M6S ISO 4017 M6X16 A4 80	
510	90458-0507		1	PARALLEL KEY W. ROUND ENDS 6X6X60 MM	
520	315705-0232		1	PARALLEL KEY W. ROUND ENDS, 6X6X20 MM	
530	90091-0322		1	RADIAL SEAL 25X42X7 MM DUST LIP	
540	90459-2644		1	NUT ROUND WITH SLOTS M30X1,5 SS	
610	312109-0459		2	SCREW, M6S ISO 4017 M8X40 A4 80	
620	312105-0473		2	SCREW, M6S ISO 4014 M8X110 A4 80	
630	312105-0370		1	SCREW, M6S ISO 4017 M6X20 A4 80	
640	321306-0104		1	BALL BEARING 20/42X12	
650	90157-0037	ML	1	THREAD SEALANT LOCTITE 542	
680	312105-0289		3	SCREW, M6S ISO 4017 M4X10 A4 70	
690	312115-0364		2	SCREW ISO4762 M6X10 A4 80	
710	315105-0153		3	WASHER PLAIN, 6,4X12X1,5 A4 BRB	
720	90603-5339	L	1	KLüBEROIL 4 UH1 320 N, ONLY IN BOM	
	90603-6434		*1*	*KLUBEROIL 4 UH1 320 N, 5 L CANISTER*	
	90603-6454		*1*	*KLüBEROIL 4 UH1 320 N, 20 L CANISTER*	
W20B0003	90600-4732		1	LASER SENSOR, WS/WE9L-P330	
W20W0003	90603-3979		1	SENSOR Y-CABLE, EVT339	
W20W0030	344253-0100		1	SENSOR CABLE, EVT002	

Machine Type	Group Description	Used-In	Group Number	Page No

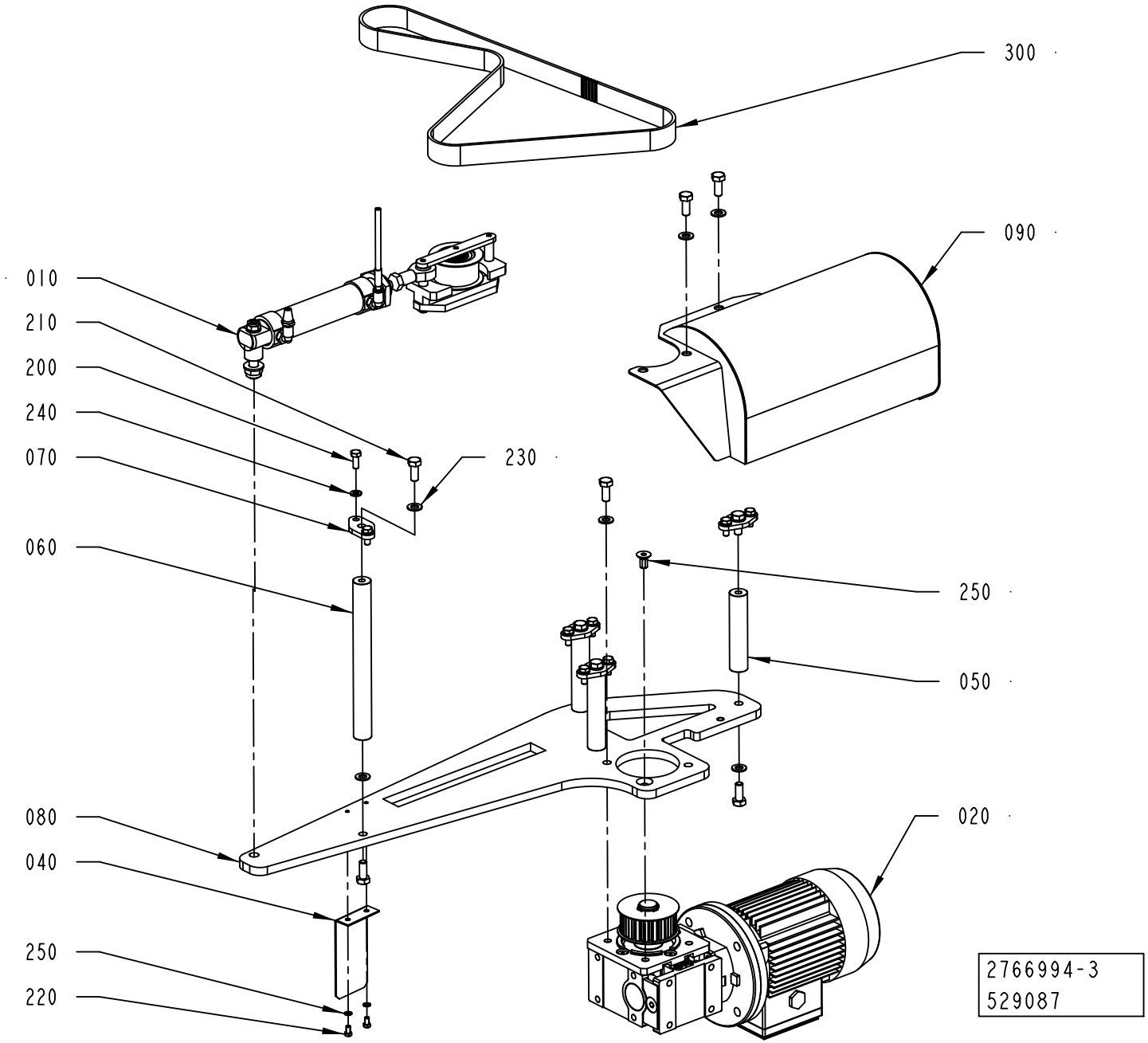
300
090
010
210
200
240
070
230
060
250
050
080
020
040
250
220
2766994-3
529087

ECM: 529589 - 20120401
Group number: 2766994-0300
Assembly Drawing: 2766994-3_1_AA

Pos	Part No	UN	Qty	Description	Page No
-					
010	2773636-0200		1	BELT TENSIONER	**1-37**
020	2838710-0300		1	WORM GEAR MOTOR	**1-39**
040	2985847-0000		1	PLATE	
050	2769773-0000		3	SPACER	
060	2773601-0000		1	SPACER	
070	2775412-0000		4	PLATE	
080	3017287-0000		1	PLATE	
090	2985832-0000		1	COVER	
200	312105-0368		8	SCREW, M6S ISO 4017 M6X16 A4 80	
210	312105-0451		11	SCREW, M6S ISO 4017 M8X20 A4 80	
220	312105-0287		2	SCREW, M6S ISO 4017 M4X8 A4 70	
230	315105-0165		12	WASHER PLAIN, 8,4X16X1,6 A4 BRB	
240	315105-0153		8	WASHER PLAIN, 6,4X12X1,5 A4 BRB	
250	315105-0136		2	WASHER PLAIN, 4,3X9X0,8 A4 BRB	
260	312155-0449		1	SCREW DIN 7991 MF6S M8X16 A4 70	
300	90602-4674		1	TIMING BELT 25T10/1150-DL PU	

Pos	Part No	UN	Qty	Description	Page No

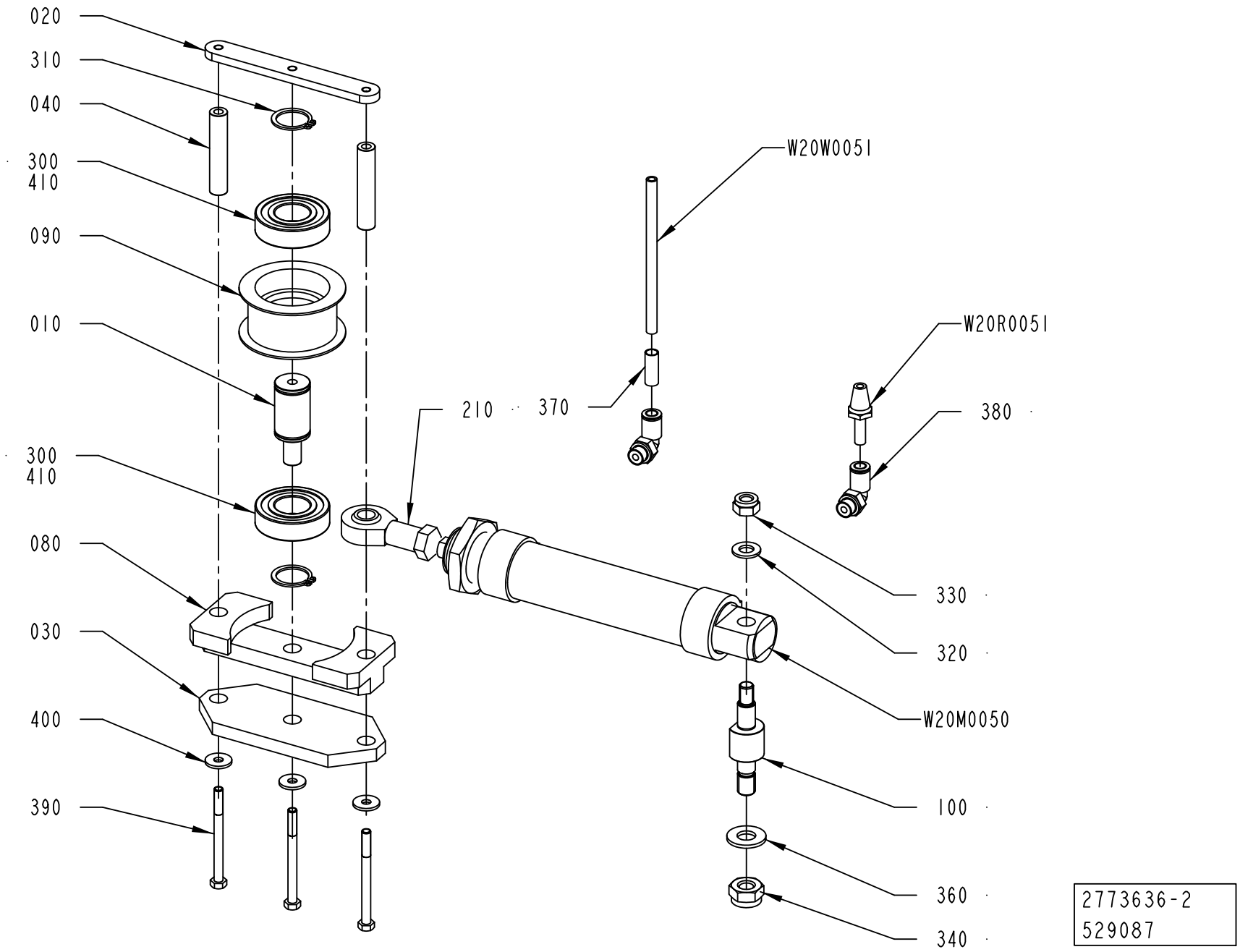
020
310
040
300
410
090
010
300
410
080
030
400
390
W20W0051
W20R0051
210
370
380
330
320
W20M0050
100
360
340
2773636-2
529087

ECM: 552650 - 20120404
Group number: 2773636-0200
Assembly Drawing: 2773636-2_1_AA

Pos	Part No	UN	Qty	Description	Page No
-					
010	2775398-0000		1	PIN	
020	2773604-0000		1	PLATE	
030	2773638-0000		1	PLATE	
040	2773639-0000		2	SHAFT	
080	2773637-0000		1	BRACKET	
090	2773615-0000		1	ROLLER	
100	2781292-0000		1	SHAFT	
210	90115-0134		1	ROD END, ID=10 MM, M10X1,25	
300	344224-0204		2	BALL BEARING 20/42X12	
310	315751-0116		2	RETAINING RING FOR SHAFT DIN 471 20 SS	
320	315105-0165		1	WASHER PLAIN, 8,4X16X1,6 A4 BRB	
330	312812-0318		1	HEXAGON NUT, NY-LOCK M8 A4 80	
340	312812-0320		1	HEXAGON NUT, NY-LOCK M10 A4 80	
360	315105-0173		1	WASHER PLAIN, 10,5X22X2 A4 BRB	
370	90459-7369		1	MARKING FOR PNEUM. TUBING, PRZ06	
380	350002-0006		2	PUSH-IN L-FITTING QSL-F-G1/8-6	
390	312105-0343		3	SCREW, M6S ISO 4014 M5X60 A4 80	
400	90005-0139		3	WASHER PLAIN ROUND 5,2(M5)/15, H=1,6	
410	90603-5339	L	1	KLüBEROIL 4 UH1 320 N, ONLY IN BOM	
	90603-6434		*1*	*KLUBEROIL 4 UH1 320 N, 5 L CANISTER*	
	90603-6454		*1*	*KLüBEROIL 4 UH1 320 N, 20 L CANISTER*	
W20M0050	90604-3137		1	DOUBLE ACTING, ROUND, CYL 32-80	
W20R0051	90328-0017		1	SILENCER, D=6 MM	
W20W0051	315400-0001	M	3	TUBE PUN-H-6X1-BL	

Pos	Part No	UN	Qty	Description	Page No

Machine Type	Group Description	Used-In	Group Number	Page No

WORM GEAR MOTOR

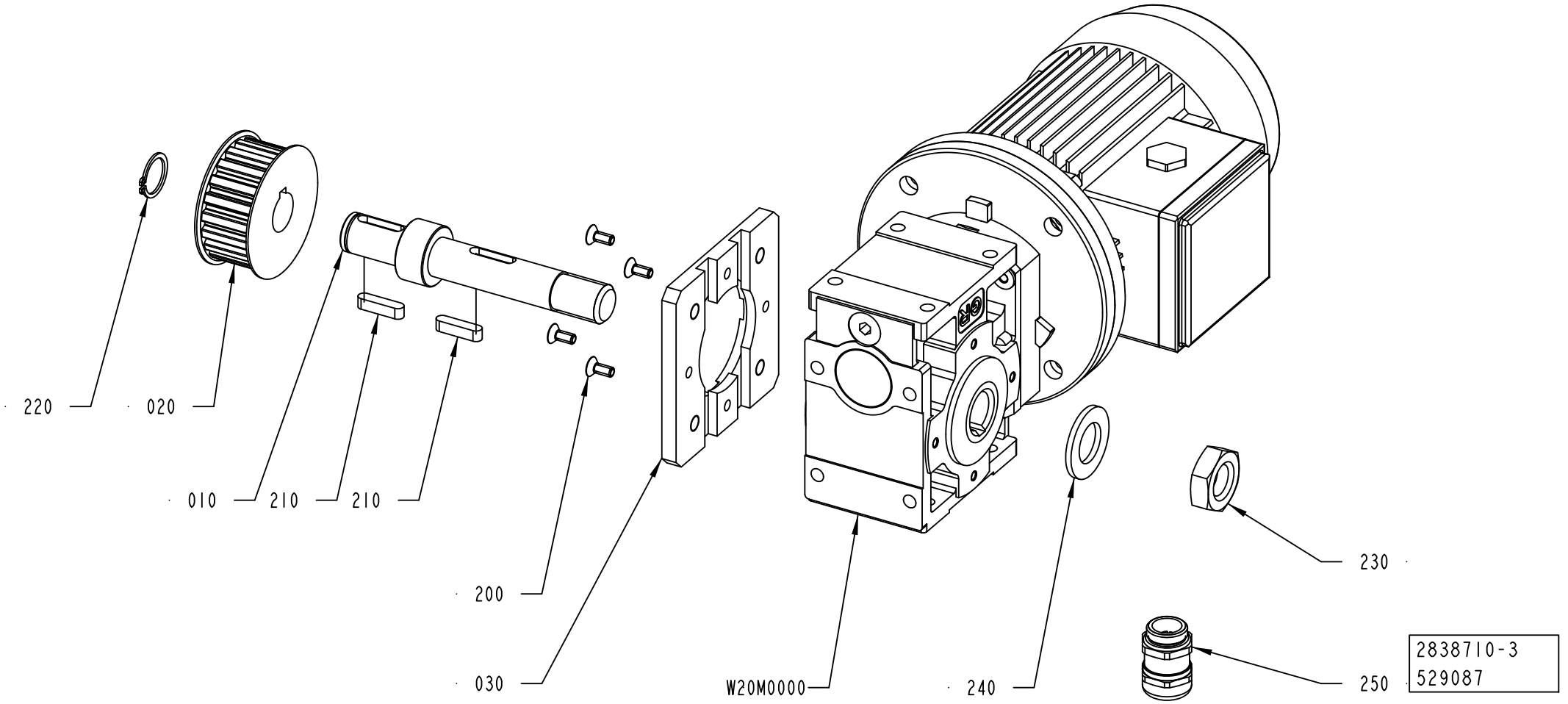

ECM: 529598 - 20120401
Group number: 2838710-0300
Assembly Drawing: 2838710-3_1_AA

Pos	Part No	UN	Qty	Description	Page No
-					
010	3016909-0000		1	DRIVE SHAFT	
020	3039030-0000		1	TOOTHED PULLEY	
030	3017300-0000		1	FLANGE	
200	312155-0327		4	SCREW DIN 7991 MF6S M5X12 A4 70	
210	315705-0234		2	PARALLEL KEY W. ROUND ENDS, 6X6X25 MM	
220	315751-0116		1	RETAINING RING FOR SHAFT DIN 471 20 SS	
230	312625-0326		1	HEXAGON THIN NUT, EN 24035 ML6M M20 A4	
240	315106-0192		1	WASHER PLAIN, M20 ISO7089-20-200 HV A4	
250	344202-0003		1	CABLE GLAND; MS-SC-M, 7-12,5MM, M20X1,5	
W20M0000	90604-4247		1	GEARS, WORM MOTOR MR V 32 UO3A - 63 B 4	

Pos	Part No	UN	Qty	Description	Page No

PACKAGE POSITIONER

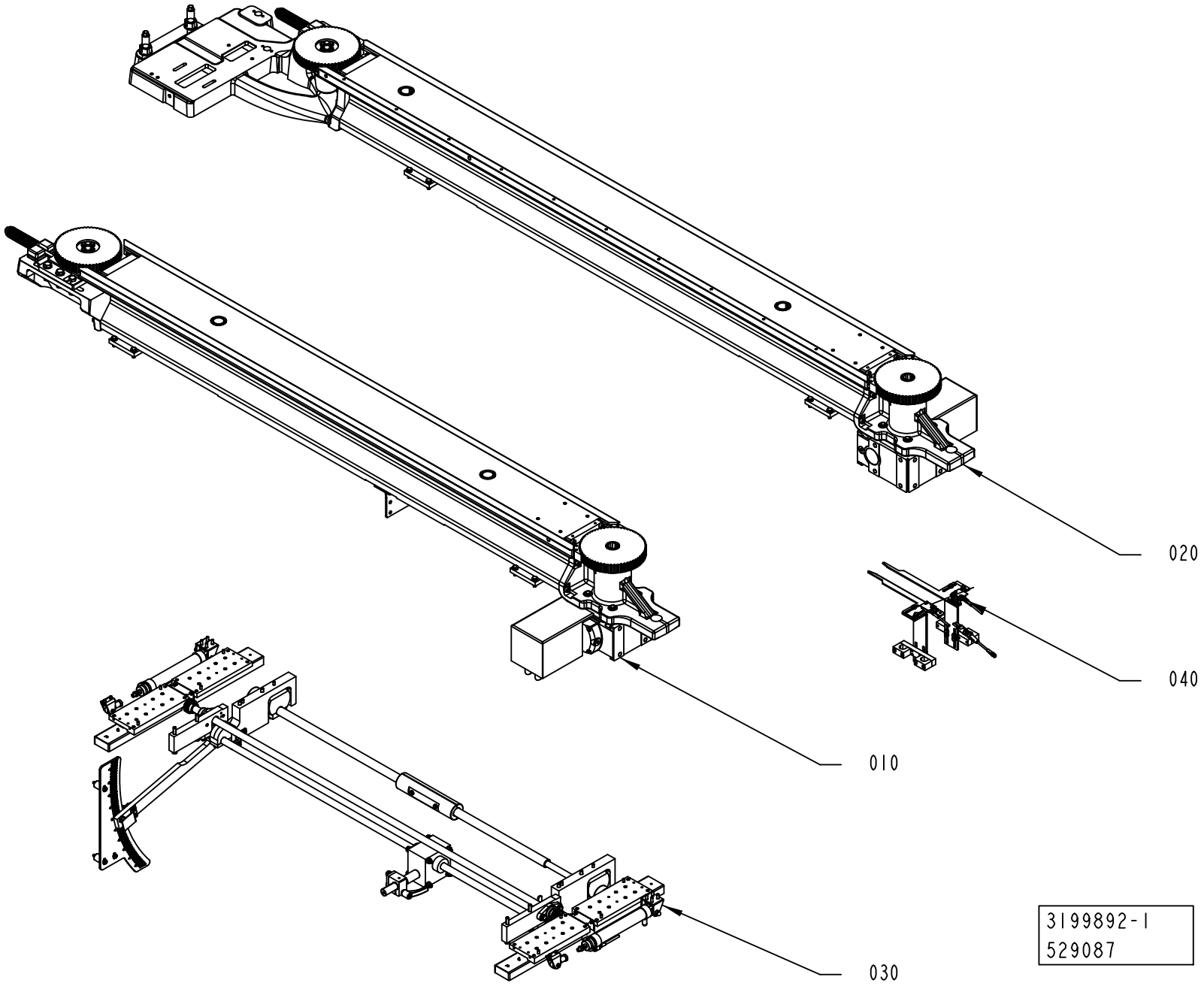

ECM: 529608 - 20120401
Group number: 3199892-0100
Assembly Drawing: 3199892-1_1_AA

Pos	Part No	UN	Qty	Description	Page No
-					
010	3199886-0100		1	SIDE FRAME	**1-43**
020	3199887-0100		1	SIDE FRAME	**1-51**
030	2838650-0200		1	SLIDING RACK	**1-59**
040	3199894-0100		1	ADJUSTABLE GUIDE	**1-71**

Pos	Part No	UN	Qty	Description	Page No

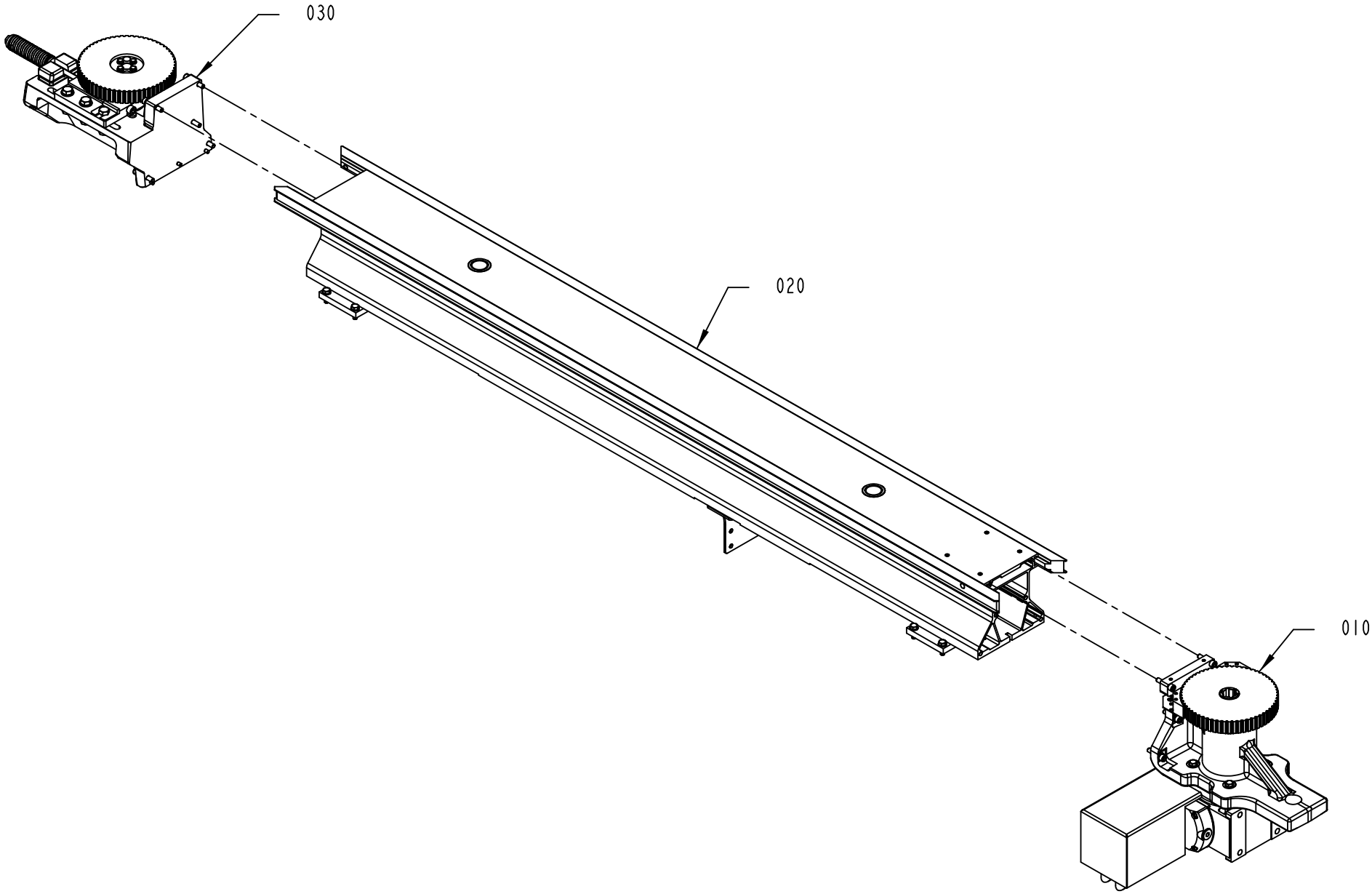
030
020
010
3199886-1
529087

ECM: 529603 - 20120401
Group number: 3199886-0100
Assembly Drawing: 3199886-1_1_AA

Pos	Part No	UN	Qty	Description	Page No
-					
010	3199873-0100		1	DRIVE	**1-45**
020	3209483-0100		1	FRAME BOTTOM	**1-47**
030	2769743-0200		1	BELT TENSIONER	**1-49**

Pos	Part No	UN	Qty	Description	Page No

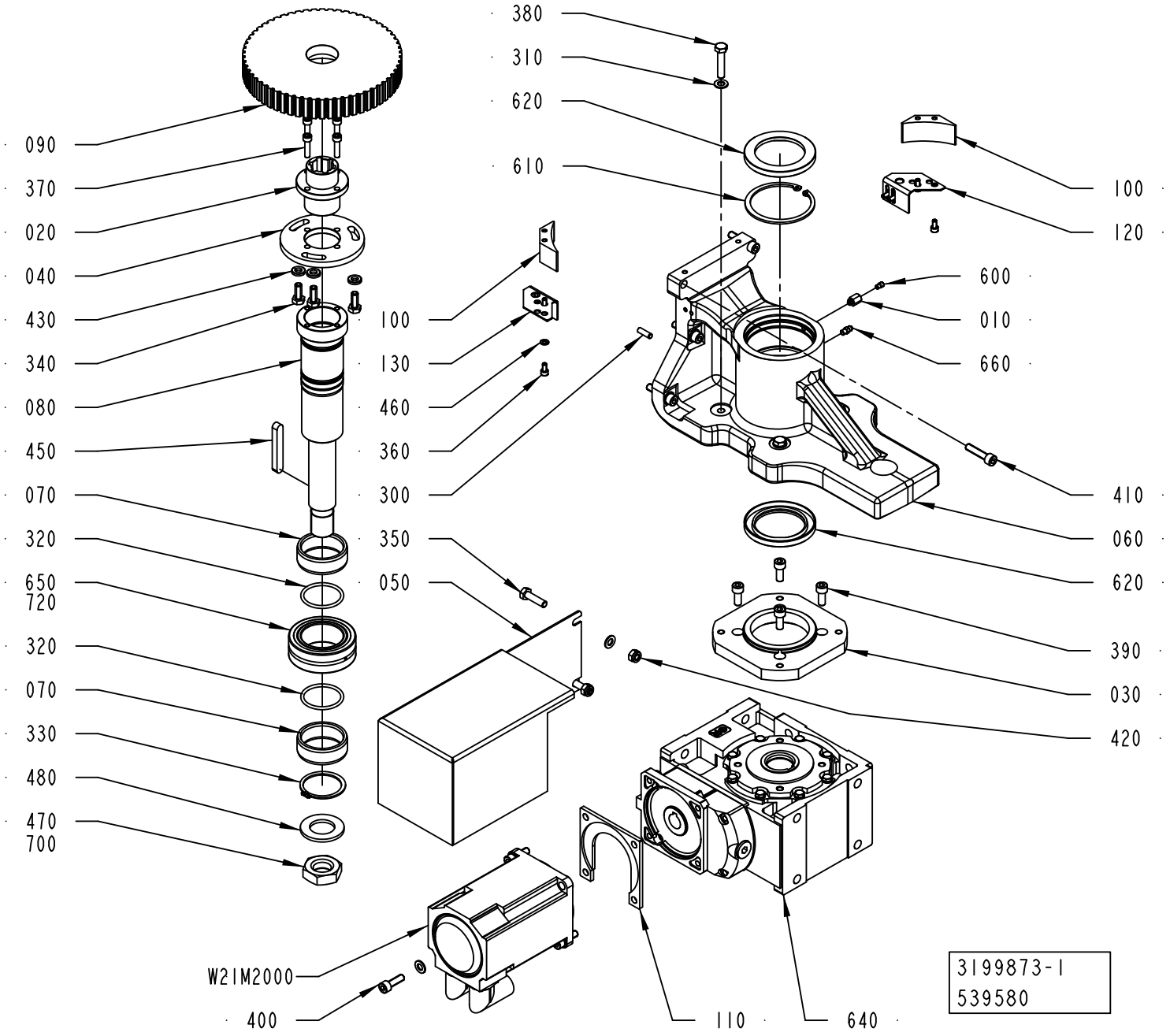
380
310
620
610
090
370
020
040
430
340
080
450
070
320
650
720
320
070
330
480
470
700
100
130
460
360
300
350
050
600
010
660
100
120
410
060
620
390
030
420
W21M2000
400
110
640
3199873-1
539580

ECM: 552651 - 20120404
Group number: 3199873-0100
Assembly Drawing: 3199873-1_1_AB

Pos	Part No	UN	Qty	Description	Page No
-					
010	3147226-0000		1	ADAPTER	
020	2775439-0000		1	BUSHING	
030	2837627-0000		1	FLANGE	
040	2775438-0000		1	PLATE	
050	2837625-0000		1	COVER	
060	2837623-0000		1	BRACKET	
070	2837628-0000		2	SPACER	
080	2837624-0000		1	SHAFT	
090	2775437-0000		1	TOOTHED PULLEY	
100	3186487-0000		2	PROTECTION PLUG	
110	2985781-0000		1	PLATE	
120	3161464-0000		1	BRACKET	
130	3161465-0000		1	BRACKET	
300	311103-0353		3	PARALLEL PIN ISO 2338 6M6X20 A1	
310	315105-0165		9	WASHER PLAIN, 8,4X16X1,6 A4 BRB	
320	315202-0602		2	O-RING 44,04X3,53 MM	
330	315751-0130		1	RETAINING RING FOR SHAFT DIN 471 50 SS	
340	312105-0451		3	SCREW, M6S ISO 4017 M8X20 A4 80	
350	312105-0455		3	SCREW, M6S ISO 4017 M8X30 A4 80	
360	312115-0325		8	SCREW ISO4762 M5X10 A4 80	
370	312115-0372		4	SCREW ISO4762 M6X25 A4 80	
380	312105-0459		4	SCREW, M6S ISO 4014 M8X40 A4 80	
390	312115-0451		4	SCREW ISO4762 M8X20 A4 80	
400	312115-0453		4	SCREW ISO4762 M8X25 A4 80	
410	312115-0457		6	SCREW ISO4762 M8X35 A4 80	
420	312812-0318		3	HEXAGON NUT, NY-LOCK M8 A4 80	
430	315115-0165		3	WASHER PLAIN, TBRB 8,4/16 H=3	
440	315105-0165		6	WASHER PLAIN, 8,4X16X1,6 A4 BRB	
450	315705-0307		1	PARALLEL KEY W. ROUND ENDS, 10X8X70 MM	
460	315105-0146		8	WASHER PLAIN, 5,3X10X1 A4 BRB	
470	312625-0330		1	HEXAGON THIN NUT, EN 24035 ML6M M27 A4	
480	315105-0203		1	WASHER PLAIN, 30X52X4 A4 BRB	
600	90604-3329		1	NON-RETURN VALVE, RVA-M6	
610	90458-0181		1	RETAINING RING FOR BORE DIN 472 80 SS	
620	90459-4588		2	RADIAL SEAL 60X85X8 MM DUST LIP	
640	90604-4254		1	WORM GEAR MR V 63 UO3A-80B4 … B5/35 H1 F	
650	90600-0892		1	NEEDLE ROLLER BEARING, 50X80X28 MM	
660	90286-0013		1	GREASE NIPPLE STRAIGHT, H1 M6X1 2346	
700	90157-0037	ML	1	THREAD SEALANT LOCTITE 542	
720	90603-5339	L	1	KLüBEROIL 4 UH1 320 N, ONLY IN BOM	
	90603-6434		*1*	*KLUBEROIL 4 UH1 320 N, 5 L CANISTER*	
	90603-6454		*1*	*KLüBEROIL 4 UH1 320 N, 20 L CANISTER*	
W21M2000	90601-0668		1	SERVO MOTOR, MPL-B420P-MK72AA SERIES A	

Machine Type	Group Description	Used-In	Group Number	Page No

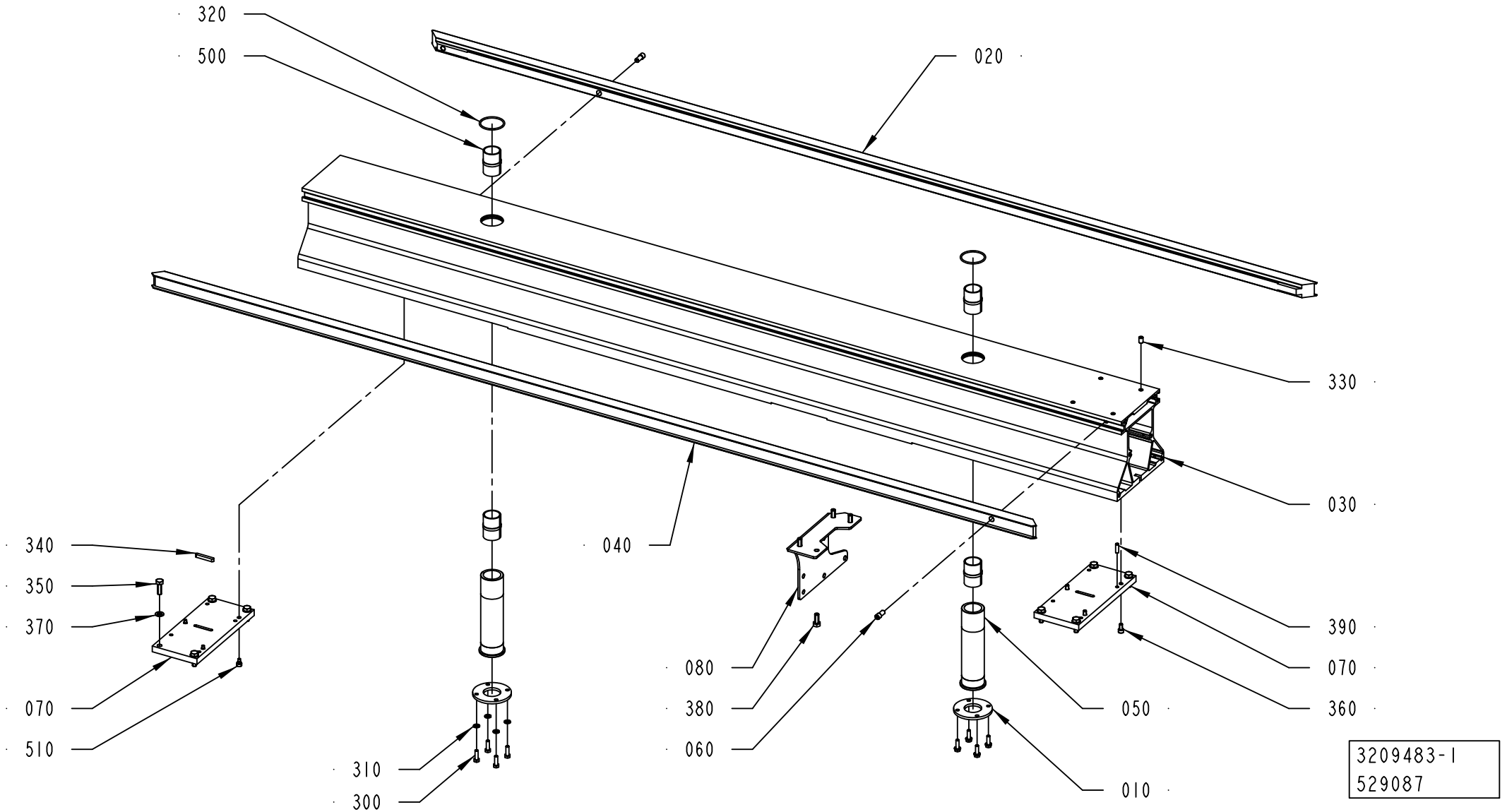
320
500
020
330
030
340
350
370
040
390
070
080
380
060
050
360
070
510
310
300
010
3209483-1
529087

ECM: 529618 - 20120401
Group number: 3209483-0100
Assembly Drawing: 3209483-1_1_AA

Pos	Part No	UN	Qty	Description	Page No
-					
010	2766976-0000		2	FLANGE	
020	3217908-0000		1	GUIDE	
030	3217912-0000		1	FRAME	
040	3203260-0000		1	GUIDE	
050	2766974-0000		2	SLEEVE	
060	3202908-0000		2	SCREW	
070	2788169-0000		2	PLATE	
080	2778592-0000		1	PLATE	
300	312105-0370		8	SCREW, M6S ISO 4017 M6X20 A4 80	
310	315105-0153		8	WASHER PLAIN, 6,4X12X1,5 A4 BRB	
320	315202-0732		2	O-RING 44,12X2,62 MM	
330	312318-0447		4	SET SCREW, CUP END ISO4029 M8X12 A4	
340	315705-0239		1	PARALLEL KEY W. ROUND ENDS, 6X6X40 MM	
350	312105-0453		8	SCREW, M6S ISO 4017 M8X25 A4 80	
360	312115-0366		3	SCREW ISO4762 M6X12 A4 80	
370	315106-0165		8	WASHER PLAIN, M8 ISO7089-8-200 HV A4	
380	312105-0451		4	SCREW, M6S ISO 4017 M8X20 A4 80	
390	311103-0353		1	PARALLEL PIN ISO 2338 6M6X20 A1	
500	90600-0798		4	BUSHING INSERT, JUM-02-30	
510	90287-0230		1	SHOULDER SCREW, 6X4/M5 SS	

Pos	Part No	UN	Qty	Description	Page No

BELT TENSIONER

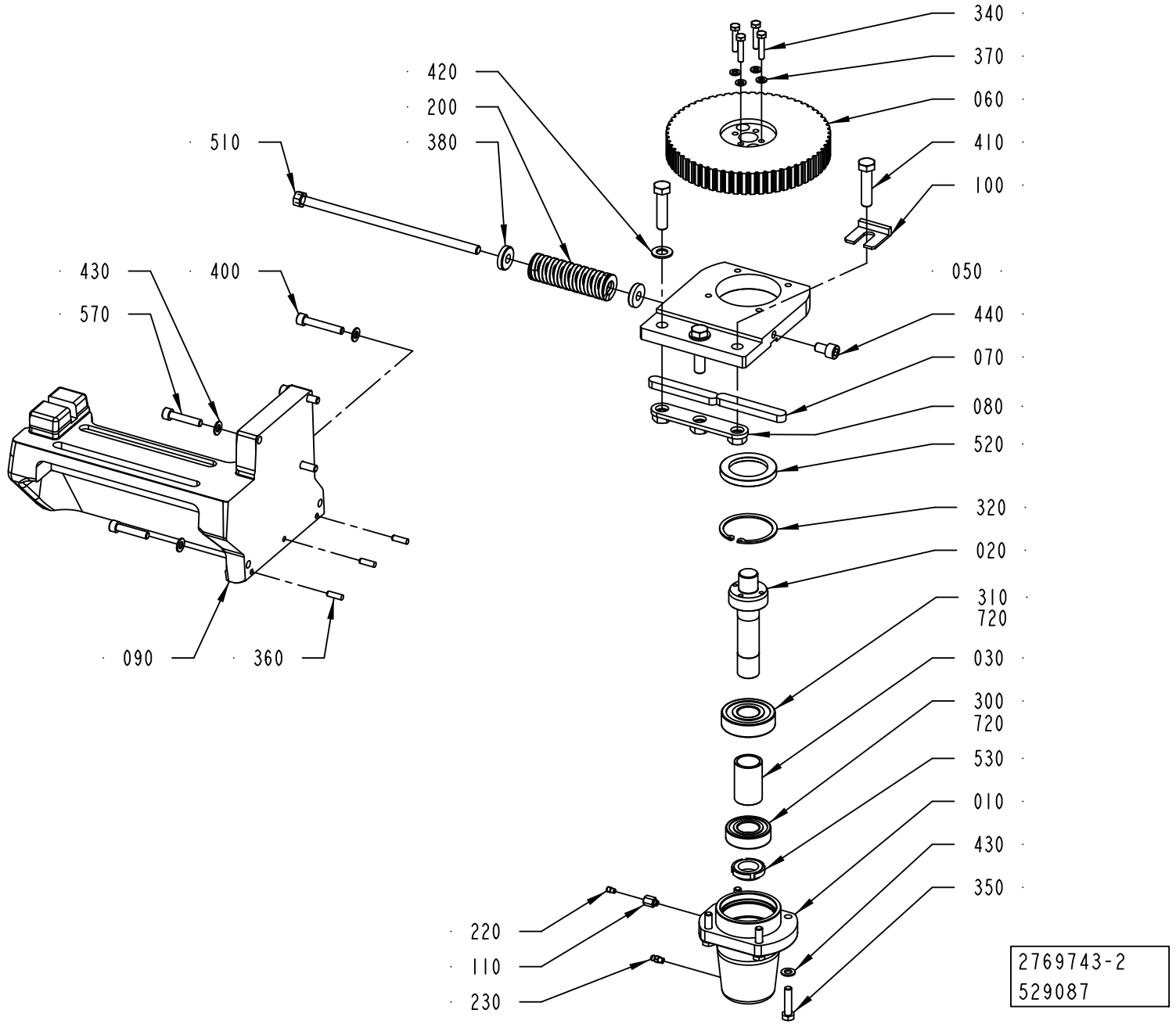

ECM: 552649 - 20120404
Group number: 2769743-0200
Assembly Drawing: 2769743-2_1_AA

Pos	Part No	UN	Qty	Description	Page No
-					
010	3022796-0000		1	BELLOWS	
020	2766958-0000		1	SHAFT	
030	2766959-0000		1	SPACER	
050	2766989-0000		1	BRACKET	
060	2766981-0000		1	TOOTHED PULLEY	
070	315701-0371		2	PARALLEL KEY W. ROUND ENDS, 14X9X90 MM	
080	2775417-0000		1	BRACKET	
090	2778571-0000		1	FRAME	
100	2937337-0000		1	SPACER	
110	3147226-0000		1	ADAPTER	
200	90604-3324		1	COMP. SPRING, 5443, ?X31,2X115	
220	90604-3329		1	NON-RETURN VALVE, RVA-M6	
230	90286-0013		1	GREASE NIPPLE STRAIGHT, H1 M6X1 2346	
300	321309-0105		1	BALL BEARING 25/52X15	
310	321314-0105		1	BALL BEARING 25/62X17	
320	315752-0136		1	RETAINING RING FOR BORE DIN 472 62	
340	312105-0374		4	SCREW, M6S ISO 4014 M6X30 A4 80	
350	312105-0457		4	SCREW, M6S ISO 4014 M8X35 A4 80	
360	311103-0353		3	PARALLEL PIN ISO 2338 6M6X20 A1	
370	315105-0153		4	WASHER PLAIN, 6,4X12X1,5 A4 BRB	
380	315125-0173		2	WASHER HIGH, TBRSB 10,5X28X6 A4	
400	312115-0461		2	SCREW ISO4762 M8X50 A4 80	
410	312109-0542		3	SCREW M6S ISO 4017 M12X50 A280	
420	315105-0178		2	WASHER PLAIN, 13X24X2,5 A4 BRB	
430	315105-0165		9	WASHER PLAIN, 8,4X16X1,6 A4 BRB	
440	312115-0489		1	SCREW ISO4762 M10X16 A4 80	
510	2805467-0000		1	SCREW	
520	90091-0304		1	RADIAL SEAL 45X65X8 MM DUST LIP	
530	90459-6280		1	NUT GUK 5 M25 X 1.5 FZB	
570	312115-0459		3	SCREW ISO4762 M8X40 A4 80	
720	90603-5339	L	1	KLüBEROIL 4 UH1 320 N, ONLY IN BOM	
	90603-6434		*1*	*KLUBEROIL 4 UH1 320 N, 5 L CANISTER*	
	90603-6454		*1*	*KLüBEROIL 4 UH1 320 N, 20 L CANISTER*	

Pos	Part No	UN	Qty	Description	Page No

Machine Type	Group Description	Used-In	Group Number	Page No

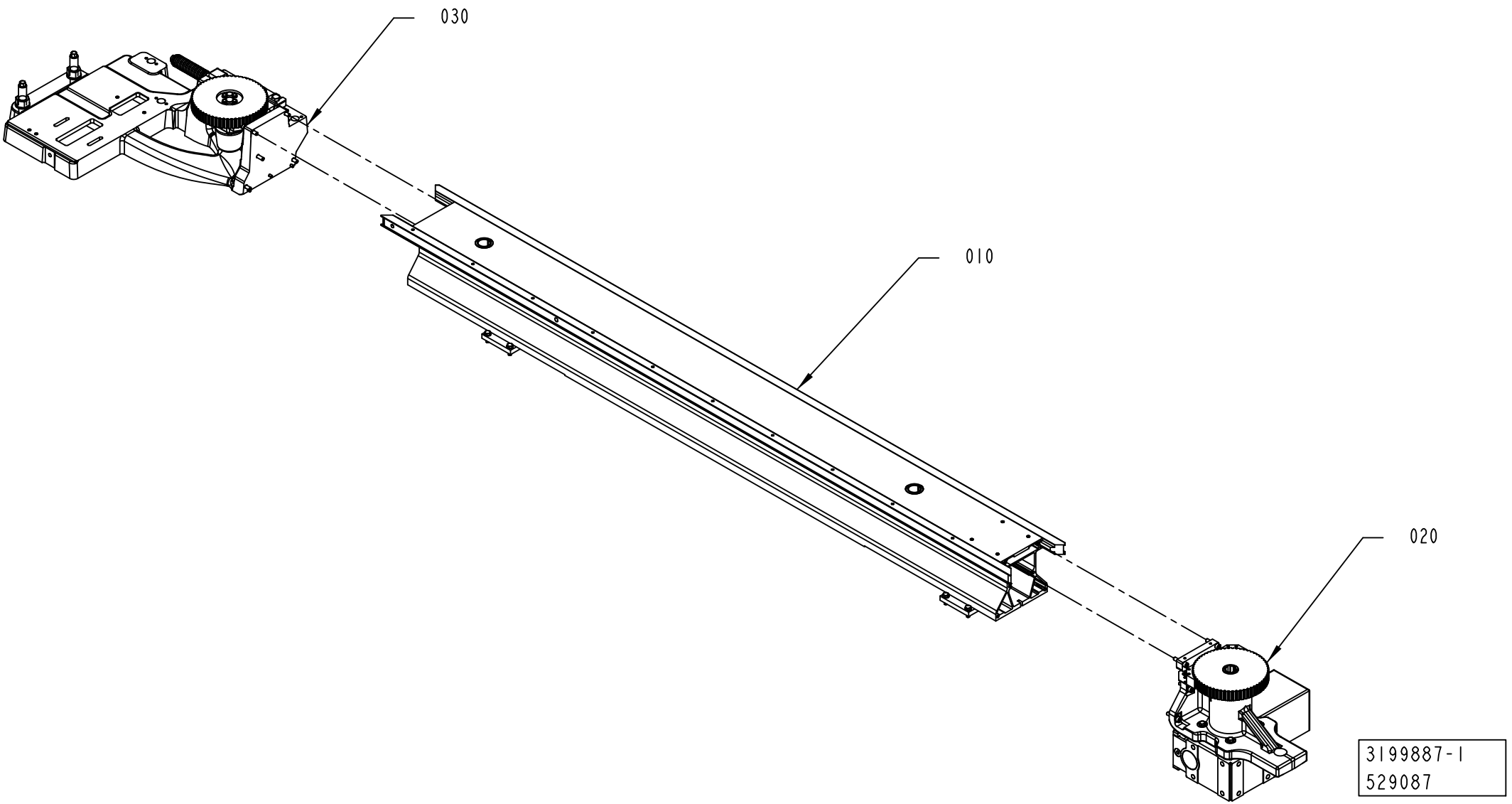
030
010
020
3199887-1
529087

ECM: 529604 - 20120401
Group number: 3199887-0100
Assembly Drawing: 3199887-1_1_AA

Pos	Part No	UN	Qty	Description	Page No
-					
010	3209482-0100		1	FRAME BOTTOM	**1-53**
020	3199874-0100		1	DRIVE	**1-55**
030	2766980-0200		1	BELT TENSIONER	**1-57**

Pos	Part No	UN	Qty	Description	Page No

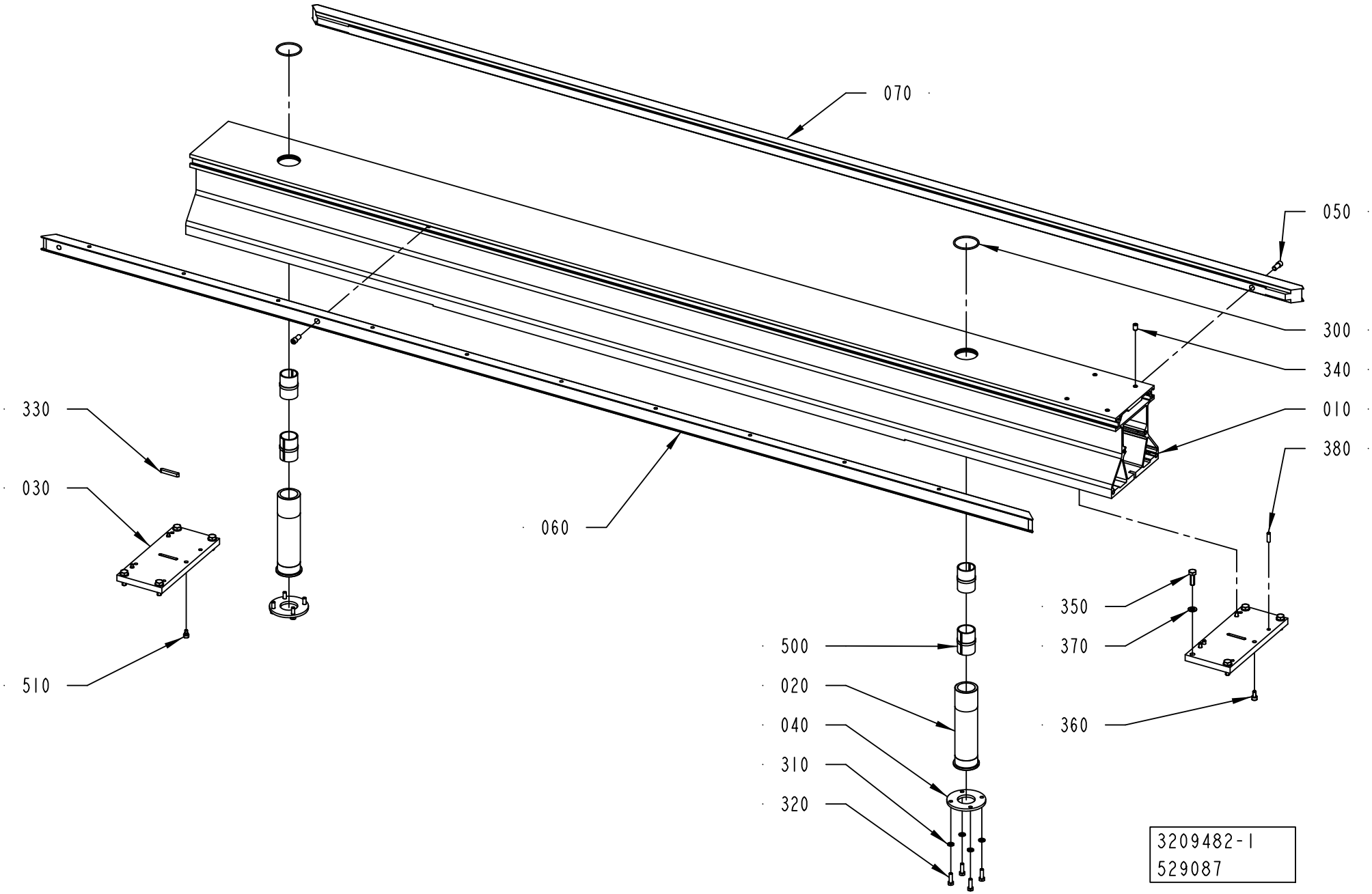
070
050
300
340
010
380
330
030
060
510
500
020
040
310
320
350
370
360
3209482-1
529087

ECM: 529617 - 20120401
Group number: 3209482-0100
Assembly Drawing: 3209482-1_1_AA

Pos	Part No	UN	Qty	Description	Page No
-					
010	3217910-0000		1	FRAME	
020	2766974-0000		2	SLEEVE	
030	2788169-0000		2	PLATE	
040	2766976-0000		2	FLANGE	
050	3202908-0000		2	SCREW	
060	3217909-0000		1	GUIDE	
070	3203258-0000		1	GUIDE	
300	315202-0732		2	O-RING 44,12X2,62 MM	
310	315105-0153		8	WASHER PLAIN, 6,4X12X1,5 A4 BRB	
320	312105-0370		8	SCREW, M6S ISO 4017 M6X20 A4 80	
330	315705-0239		1	PARALLEL KEY W. ROUND ENDS, 6X6X40 MM	
340	312318-0447		4	SET SCREW, CUP END ISO4029 M8X12 A4	
350	312105-0453		8	SCREW, M6S ISO 4017 M8X25 A4 80	
360	312115-0366		3	SCREW ISO4762 M6X12 A4 80	
370	315106-0165		8	WASHER PLAIN, M8 ISO7089-8-200 HV A4	
380	311103-0353		2	PARALLEL PIN ISO 2338 6M6X20 A1	
500	90600-0798		4	BUSHING INSERT, JUM-02-30	
510	90287-0230		1	SHOULDER SCREW, 6X4/M5 SS	

Pos	Part No	UN	Qty	Description	Page No

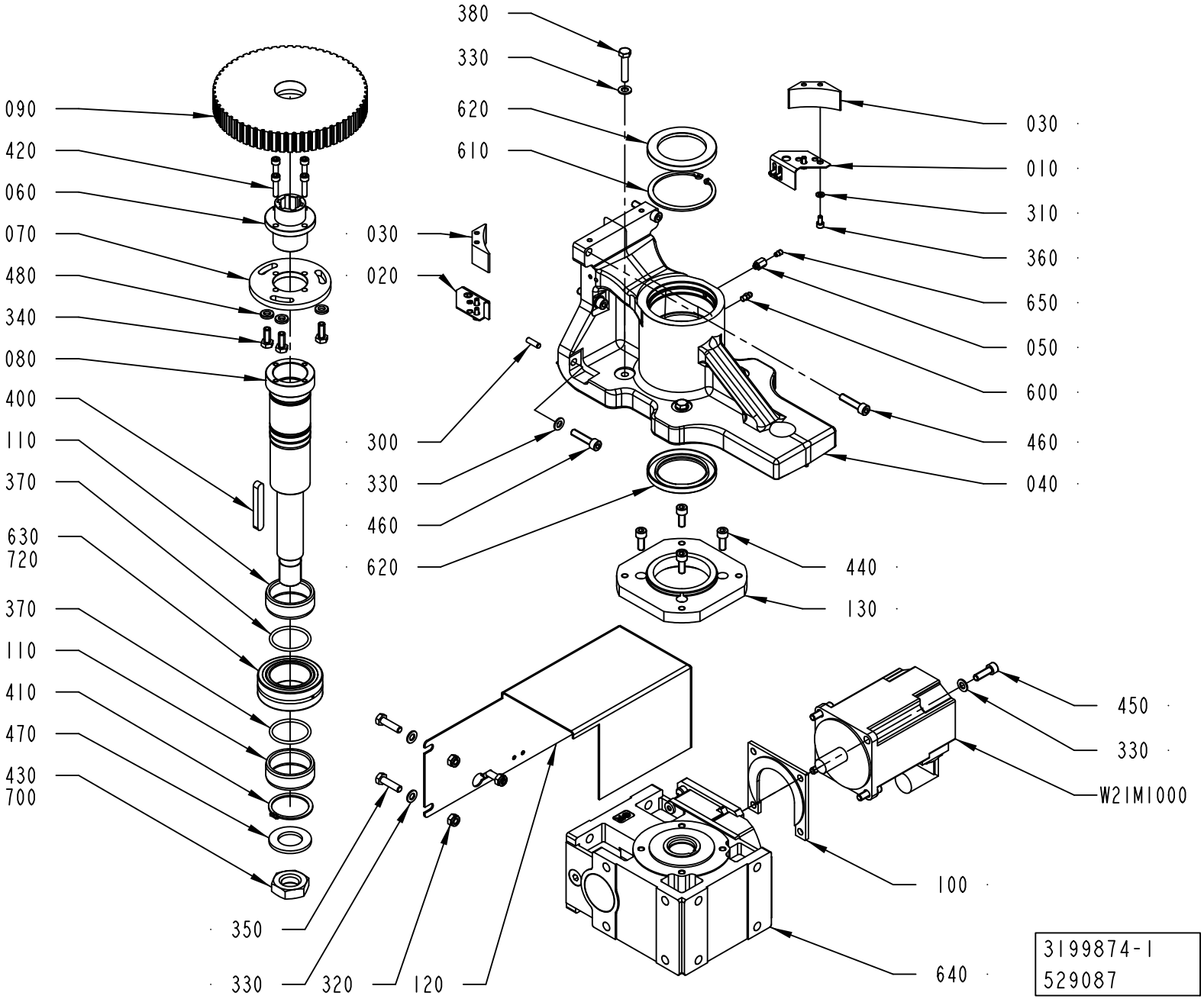
380
330
620
610
030
010
310
360
650
050
600
460
040
090
420
060
070
480
340
080
400
110
370
630
720
370
110
410
470
430
700
030
020
300
330
460
620
440
130
450
330
W21M1000
100
640
350
330
320
120
3199874-1
529087

ECM: 552652 - 20120404
Group number: 3199874-0100
Assembly Drawing: 3199874-1_1_AA

Pos	Part No	UN	Qty	Description	Page No
-					
010	3161464-0000		1	BRACKET	
020	3161465-0000		1	BRACKET	
030	3186487-0000		2	PROTECTION PLUG	
040	2837623-0000		1	BRACKET	
050	3147226-0000		1	ADAPTER	
060	2775439-0000		1	BUSHING	
070	2775438-0000		1	PLATE	
080	2837624-0000		1	SHAFT	
090	2775437-0000		1	TOOTHED PULLEY	
100	2985781-0000		1	PLATE	
110	2837628-0000		2	SPACER	
120	2837630-0000		1	COVER	
130	2837627-0000		1	FLANGE	
300	311103-0353		3	PARALLEL PIN ISO 2338 6M6X20 A1	
310	315105-0146		8	WASHER PLAIN, 5,3X10X1 A4 BRB	
320	312812-0318		3	HEXAGON NUT, NY-LOCK M8 A4 80	
330	315105-0165		15	WASHER PLAIN, 8,4X16X1,6 A4 BRB	
340	312105-0451		3	SCREW, M6S ISO 4017 M8X20 A4 80	
350	312105-0455		3	SCREW, M6S ISO 4017 M8X30 A4 80	
360	312115-0325		8	SCREW ISO4762 M5X10 A4 80	
370	315202-0602		2	O-RING 44,04X3,53 MM	
380	312105-0459		4	SCREW, M6S ISO 4014 M8X40 A4 80	
400	315705-0307		1	PARALLEL KEY W. ROUND ENDS, 10X8X70 MM	
410	315751-0130		1	RETAINING RING FOR SHAFT DIN 471 50 SS	
420	312115-0372		4	SCREW ISO4762 M6X25 A4 80	
430	312625-0330		1	HEXAGON THIN NUT, EN 24035 ML6M M27 A4	
440	312115-0451		4	SCREW ISO4762 M8X20 A4 80	
450	312115-0453		4	SCREW ISO4762 M8X25 A4 80	
460	312115-0457		6	SCREW ISO4762 M8X35 A4 80	
470	315105-0203		1	WASHER PLAIN, 30X52X4 A4 BRB	
480	315115-0165		3	WASHER PLAIN, TBRB 8,4/16 H=3	
600	90286-0013		1	GREASE NIPPLE STRAIGHT, H1 M6X1 2346	
610	90458-0181		1	RETAINING RING FOR BORE DIN 472 80 SS	
620	90459-4588		2	RADIAL SEAL 60X85X8 MM DUST LIP	
630	90600-0892		1	NEEDLE ROLLER BEARING, 50X80X28 MM	
640	90604-4254		1	WORM GEAR MR V 63 UO3A-80B4 … B5/35 H1 F	
650	90604-3329		1	NON-RETURN VALVE, RVA-M6	
700	90157-0037	ML	1	THREAD SEALANT LOCTITE 542	
720	90603-5339	L	1	KLüBEROIL 4 UH1 320 N, ONLY IN BOM	
	90603-6434		*1*	*KLUBEROIL 4 UH1 320 N, 5 L CANISTER*	
	90603-6454		*1*	*KLüBEROIL 4 UH1 320 N, 20 L CANISTER*	

Pos	Part No	UN	Qty	Description	Page No
W21M1000	90601-0668		1	SERVO MOTOR, MPL-B420P-MK72AA SERIES A	

Machine Type	Group Description	Used-In	Group Number	Page No

BELT TENSIONER

Drawing file: 2766980-2_1_AA.hpgl

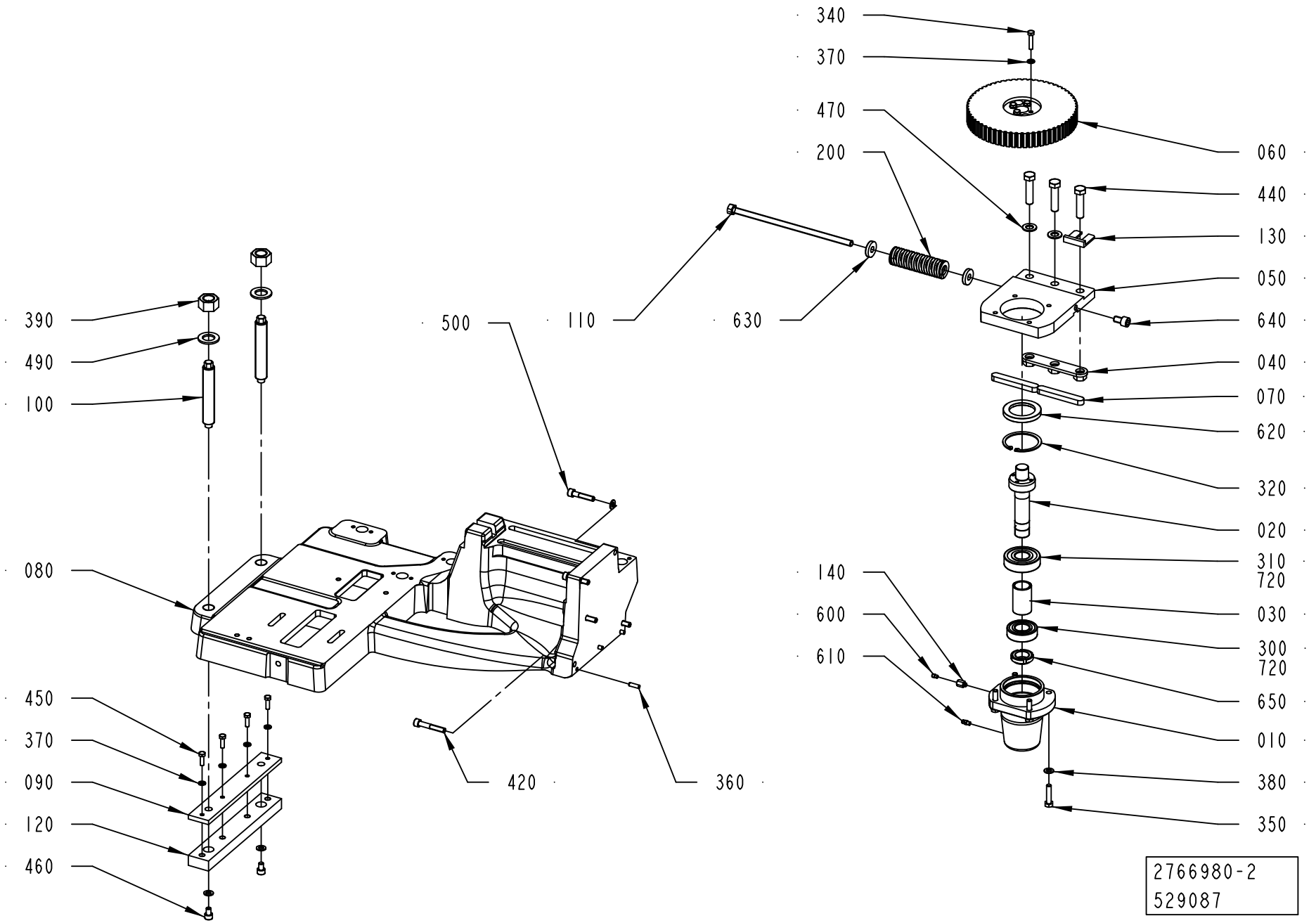

ECM: 552646 - 20120404
Group number: 2766980-0200
Assembly Drawing: 2766980-2_1_AA

Pos	Part No	UN	Qty	Description	Page No
-					
010	3022796-0000		1	BELLOWS	
020	2766958-0000		1	SHAFT	
030	2766959-0000		1	SPACER	
040	2775417-0000		1	BRACKET	
050	2766989-0000		1	BRACKET	
060	2766981-0000		1	TOOTHED PULLEY	
070	315701-0371		2	PARALLEL KEY W. ROUND ENDS, 14X9X90 MM	
080	2769746-0000		1	FRAME	
090	2775423-0000		1	PLATE	
100	2775421-0000		2	SCREW	
110	2805467-0000		1	SCREW	
120	2775420-0000		1	SLIDE	
130	2937337-0000		1	SPACER	
140	3147226-0000		1	ADAPTER	
200	90604-3324		1	COMP. SPRING, 5443, ?X31,2X115	
300	321309-0105		1	BALL BEARING 25/52X15	
310	321314-0105		1	BALL BEARING 25/62X17	
320	315752-0136		1	RETAINING RING FOR BORE DIN 472 62	
340	312105-0374		4	SCREW, M6S ISO 4014 M6X30 A4 80	
350	312105-0457		4	SCREW, M6S ISO 4014 M8X35 A4 80	
360	311103-0353		3	PARALLEL PIN ISO 2338 6M6X20 A1	
370	315105-0153		8	WASHER PLAIN, 6,4X12X1,5 A4 BRB	
380	315105-0165		11	WASHER PLAIN, 8,4X16X1,6 A4 BRB	
390	312607-0326		2	HEXAGON NUT, EN 24032 M6M M20 A480	
420	312115-0461		2	SCREW ISO4762 M8X50 A4 80	
440	312109-0542		3	SCREW M6S ISO 4017 M12X50 A280	
450	312105-0370		4	SCREW, M6S ISO 4017 M6X20 A4 80	
460	312115-0447		2	SCREW ISO4762 M8X12 A4 80	
470	315105-0178		2	WASHER PLAIN, 13X24X2,5 A4 BRB	
490	315105-0192		2	WASHER PLAIN, 21X36X3 A4 BRB	
500	312115-0459		3	SCREW ISO4762 M8X40 A4 80	
600	90604-3329		1	NON-RETURN VALVE, RVA-M6	
610	90286-0013		1	GREASE NIPPLE STRAIGHT, H1 M6X1 2346	
620	90091-0304		1	RADIAL SEAL 45X65X8 MM DUST LIP	
630	315125-0173		2	WASHER HIGH, TBRSB 10,5X28X6 A4	
640	312115-0489		1	SCREW ISO4762 M10X16 A4 80	
650	90459-6280		1	NUT GUK 5 M25 X 1.5 FZB	
720	90603-5339	L	1	KLüBEROIL 4 UH1 320 N, ONLY IN BOM	
	90603-6434		*1*	*KLUBEROIL 4 UH1 320 N, 5 L CANISTER*	
	90603-6454		*1*	*KLüBEROIL 4 UH1 320 N, 20 L CANISTER*	

Pos	Part No	UN	Qty	Description	Page No

Machine Type	Group Description	Used-In	Group Number	Page No

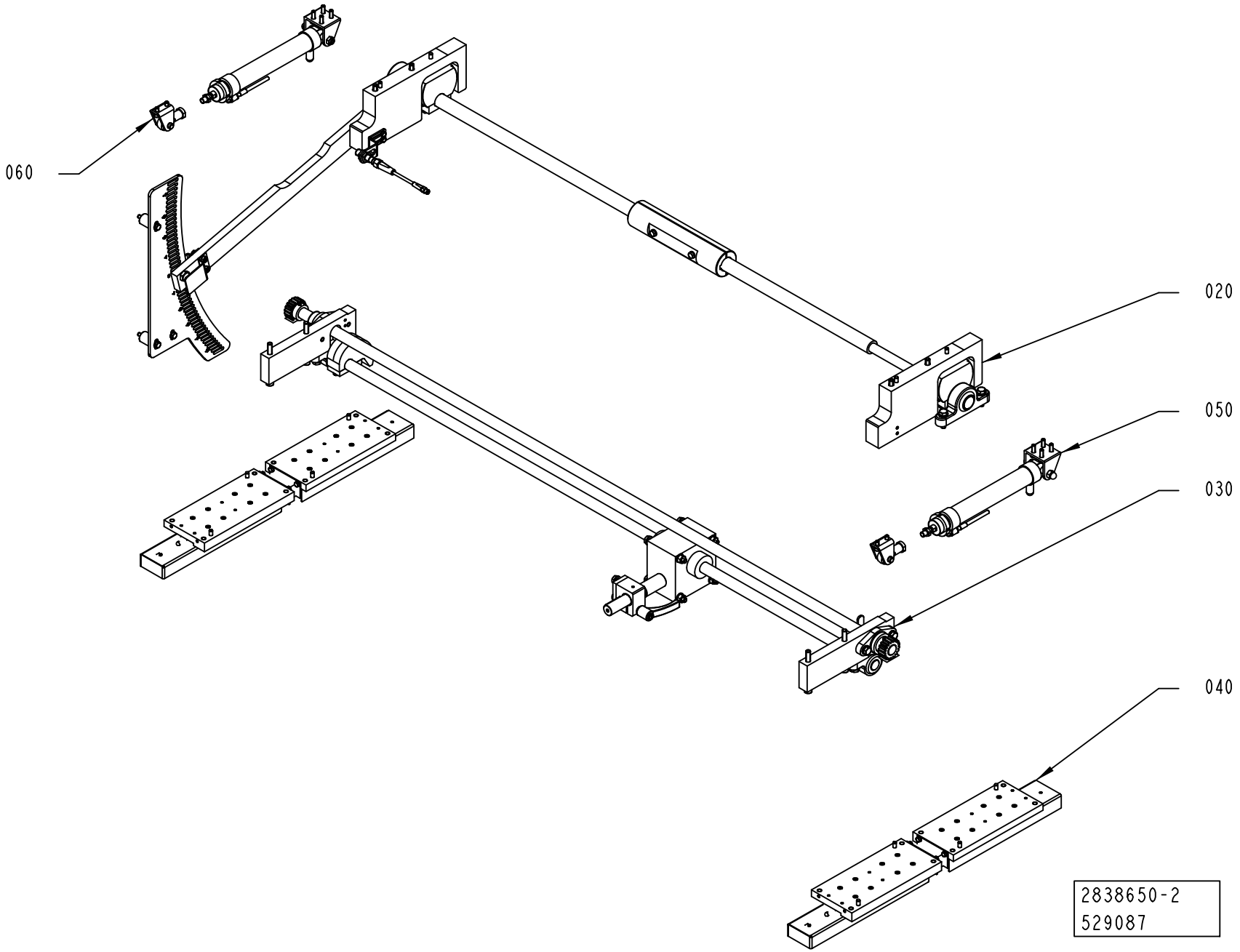
060
020
050
030
040
2838650-2
529087

ECM: 529594 - 20120401
Group number: 2838650-0200
Assembly Drawing: 2838650-2_1_AA

Pos	Part No	UN	Qty	Description	Page No
-					
020	2838669-0200		1	SETTING ARM	**1-61**
030	2845127-0200		1	SETTING ARM	**1-63**
040	2838653-0200		1	GUIDE RAIL	**1-65**
050	2769718-0200		1	PNEUMATIC CYLINDER	**1-67**
060	3199896-0100		1	PNEUMATIC CYLINDER	**1-69**

Pos	Part No	UN	Qty	Description	Page No

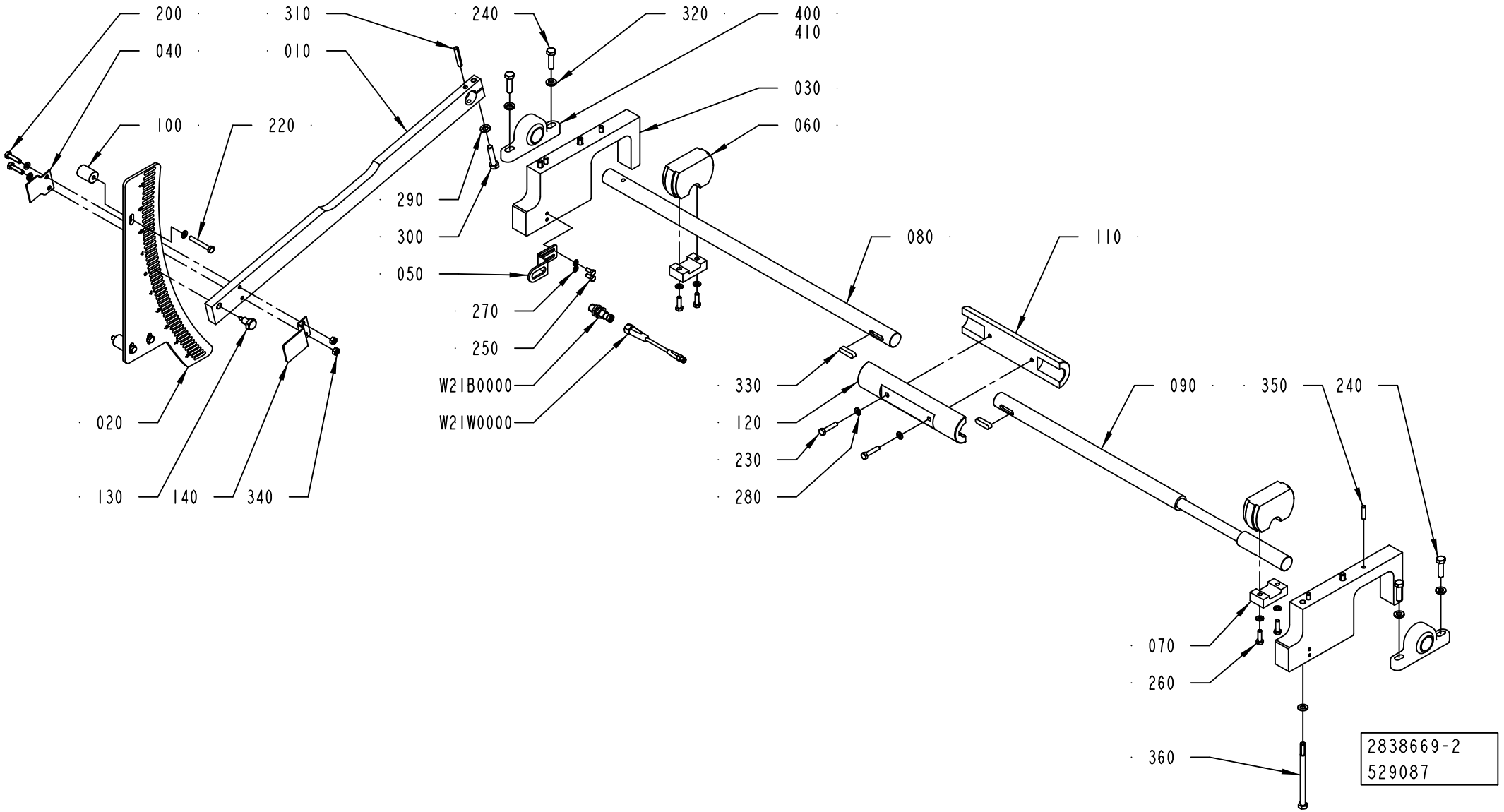
200
040
100
220
310
010
240
320
400
410
030
060
290
300
050
270
250
W21B0000
W21W0000
080
110
330
120
230
280
090
350
240
020
130
140
340
070
260
360
2838669-2
529087

ECM: 529597 - 20120401
Group number: 2838669-0200
Assembly Drawing: 2838669-2_1_AA

Pos	Part No	UN	Qty	Description	Page No
-					
010	2788174-0000		1	LEVER	
020	3021525-0000		1	PLATE	
030	2766944-0000		2	BRACKET	
040	2769695-0000		1	BRACKET	
050	2779057-0000		1	PLATE	
060	3022488-0000		2	CAM	
070	2838683-0000		2	PLATE	
080	3022022-0000		1	SHAFT	
090	3022023-0000		1	SHAFT	
100	2773632-0000		3	SPACER	
110	2985809-0000		1	HOUSING	
120	3022021-0000		1	HOUSING	
130	3086231-0000		1	SCREW	
140	3086233-0000		1	BRACKET	
200	312105-0372		2	SCREW, M6S ISO 4017 M6X25 A4 80	
220	312105-0379		3	SCREW, M6S ISO 4014 M6X45 A4 80	
230	312109-0374		2	SCREW, M6S ISO 4017 M6X30 A4 80	
240	312105-0455		4	SCREW, M6S ISO 4017 M8X30 A4 80	
250	312105-0327		2	SCREW, M6S ISO 4017 M5X12 A4 80	
260	312105-0370		4	SCREW, M6S ISO 4017 M6X20 A4 80	
270	315105-0146		2	WASHER PLAIN, 5,3X10X1 A4 BRB	
280	315105-0153		11	WASHER PLAIN, 6,4X12X1,5 A4 BRB	
290	315105-0165		5	WASHER PLAIN, 8,4X16X1,6 A4 BRB	
300	312105-0459		1	SCREW, M6S ISO 4014 M8X40 A4 80	
310	311112-0347		1	SPRING PIN, ISO 8752 6X40 A2	
320	315115-0165		4	WASHER PLAIN, TBRB 8,4/16 H=3	
330	315705-0267		2	PARALLEL KEY W. ROUND ENDS, 8X7X30 MM	
340	312605-0316		2	HEXAGON NUT, M6M M6 A280	
350	311103-1355		4	PARALLEL PIN ISO 2338 6M6X24 A1	
360	312105-0475		4	SCREW, M6S ISO 4014 M8X120 A4 80	
400	90600-0799		2	STANDING BEARING, KSTM-25	
W21B0000	90458-2907		1	PROX.SWITCH IFS204	
W21W0000	344261-0050		1	SENSOR CABLE, EVT216	

Pos	Part No	UN	Qty	Description	Page No

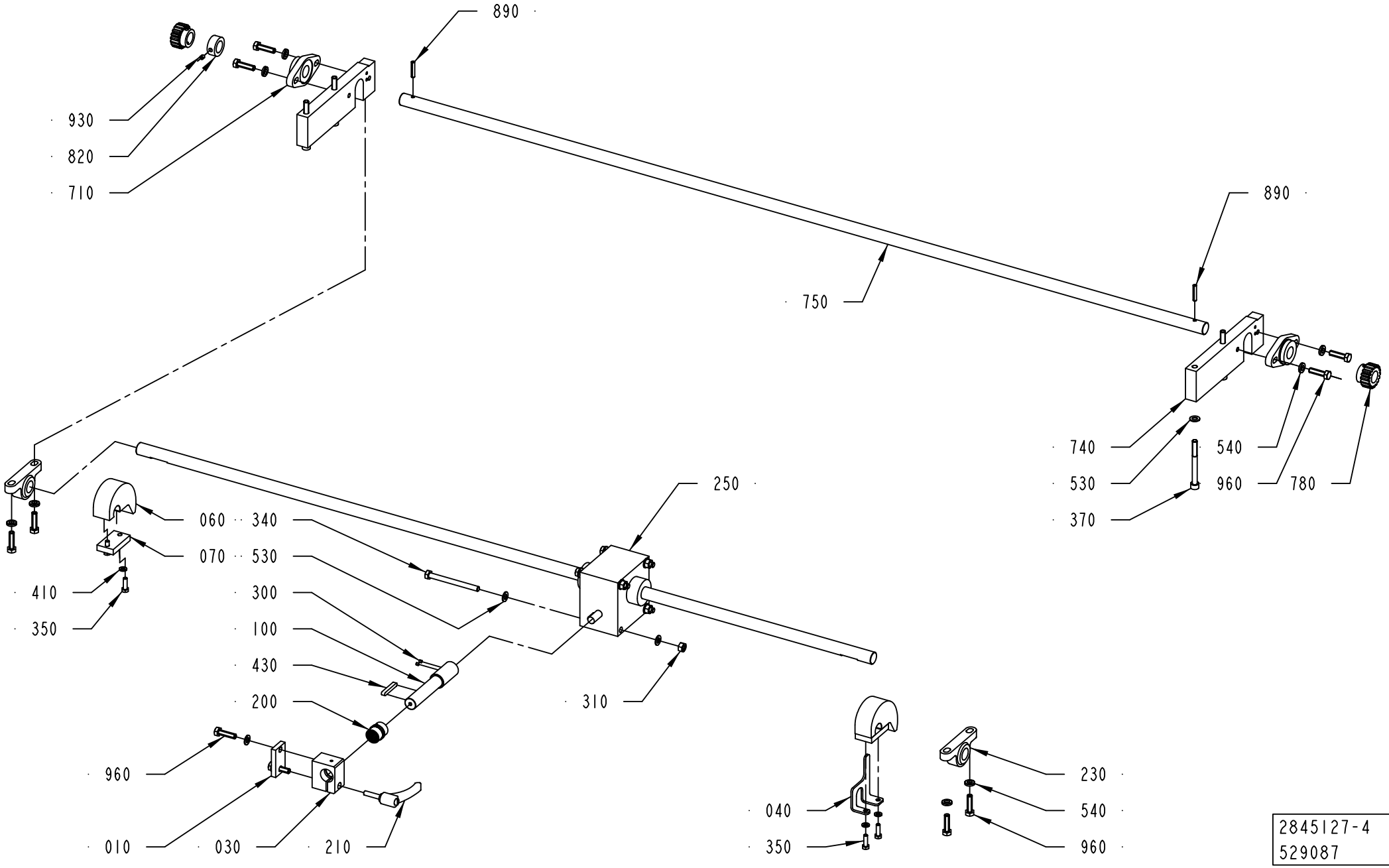

2845127-4
529087

ECM: 529599 - 20120401
Group number: 2845127-0200
Assembly Drawing: 2845127-4_1_AA

Pos	Part No	UN	Qty	Description	Page No
CAP 30/FLEX					
010	2778594-0000		1	PLATE	
030	2769726-0000		1	BRACKET	
040	2802405-0000		1	STOP ARM	
060	2779013-0000		2	CAM	
070	2712603-0000		2	PLATE	
100	2769729-0000		1	SHAFT	
200	90458-2932		1	PLAIN BEARING, JUM-02-20	
210	90017-0029		1	LOCKING LEVER, NO. KR8X30-SUS	
230	90459-4727		2	STANDING BEARING, KSTM-20	
250	90600-1005		1	WORM GEAR SCREW JACK, TR00042000130	
300	312318-0283		2	SET SCREW, CUP END ISO4029 M4X4 A4	
310	312605-0318		4	HEXAGON NUT, M6M M8 A280	
340	312105-0469		4	SCREW, M6S ISO 4014 M8X90 A4 80	
350	312105-0370		4	SCREW, M6S ISO 4017 M6X20 A4 80	
410	315105-0153		4	WASHER PLAIN, 6,4X12X1,5 A4 BRB	
430	315705-0239		1	PARALLEL KEY W. ROUND ENDS, 6X6X40 MM	
530	315105-0165		14	WASHER PLAIN, 8,4X16X1,6 A4 BRB	
540	315115-0165		8	WASHER PLAIN, TBRB 8,4/16 H=3	
750	2766950-0000		1	SHAFT	
820	315741-0216		1	RETAINING RING, DIN 705 A4 20	
960	312105-0455		10	SCREW, M6S ISO 4017 M8X30 A4 80	
Common Parts					
370	312115-0467		4	SCREW ISO4762 M8X80 A4 80	
710	90600-0800		2	FLANGE BEARING 20X89X20 MM	
740	2779014-0000		2	PLATE	
780	2838690-0000		2	WHEEL	
890	311112-0312		2	SPRING PIN, ISO 8752 5X28 A2	
930	312318-0360		2	SET SCREW, CUP END ISO4029 M6X6 A4	

Pos	Part No	UN	Qty	Description	Page No

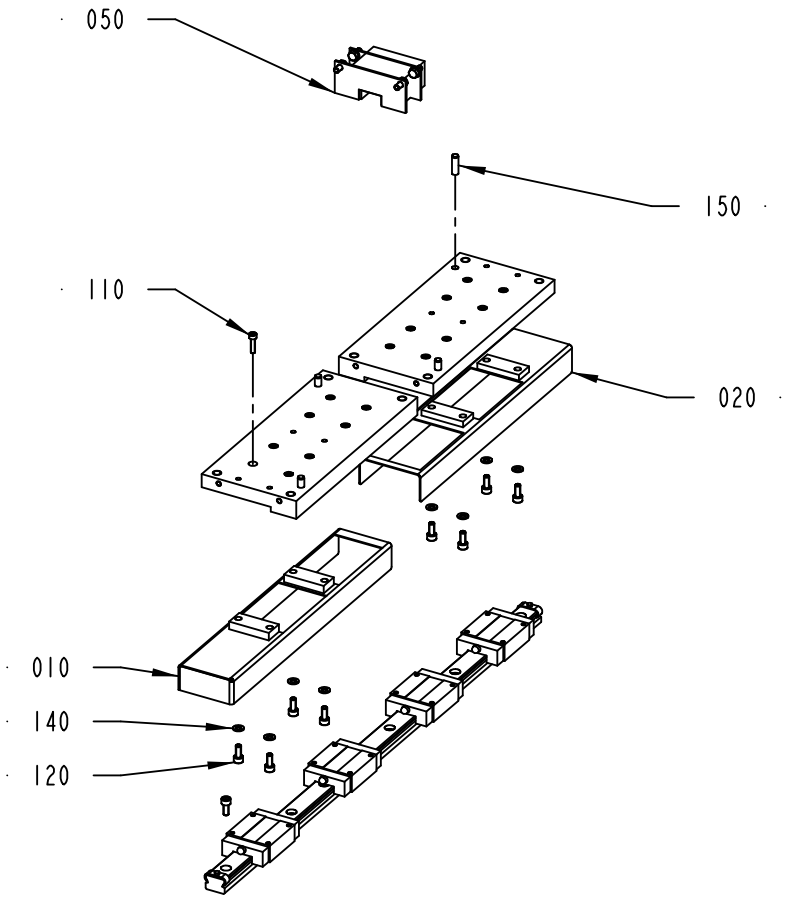
050
150
110
020
010
140
120

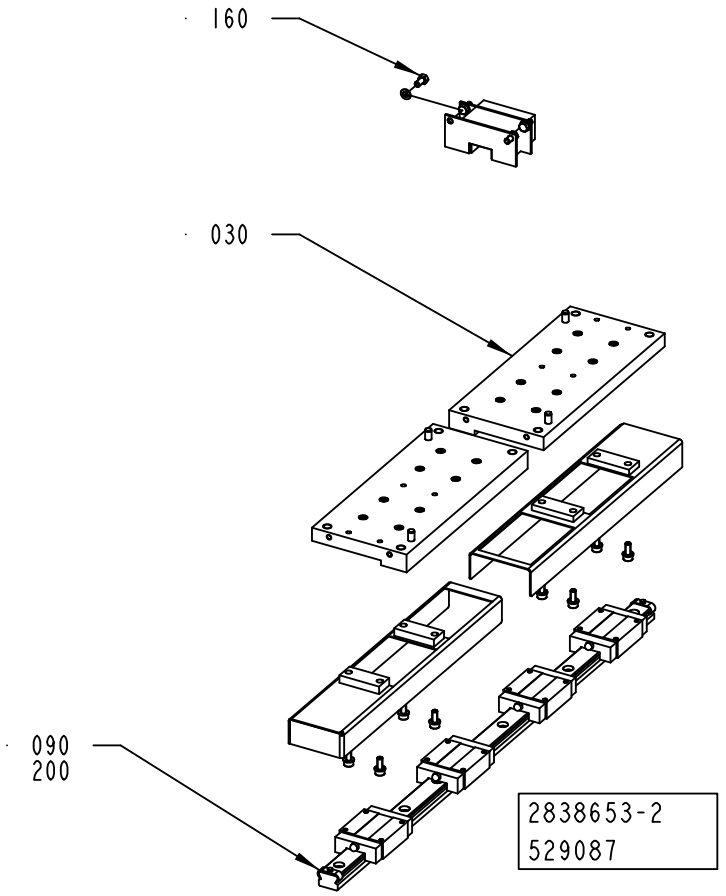
160
030
090
200
2838653-2
529087

ECM: 529595 - 20120401
Group number: 2838653-0200
Assembly Drawing: 2838653-2_1_AA

Pos	Part No	UN	Qty	Description	Page No
-					
010	3209476-0000		2	COVER	
020	3209475-0000		2	COVER	
030	2788168-0000		4	PLATE	
050	3209479-0000		2	BELLOWS	
090	90604-3333		2	GUIDE RAIL, 15X20X580	
110	312115-0293		32	SCREW ISO4762 M4X16 A4 80	
120	312115-0327		36	SCREW ISO4762 M5X12 A4 80	
140	315105-0146		16	WASHER PLAIN, 5,3X10X1 A4 BRB	
150	311103-0353		8	PARALLEL PIN ISO 2338 6M6X20 A1	
160	312105-0325		8	SCREW, M6S ISO 4017 M5X10 A4 80	
200	90603-6233	G	1	KLüBERSYNTH UH1 14-151, ONLY IN BOM	
	90603-6253		*1*	*KLüBERSYNTH UH1 14-151, 1 KG TIN*	
	90603-6234		*1*	*KLüBERSYNTH UH1 14-151, 400G CARTRIDGE*	

Pos	Part No	UN	Qty	Description	Page No

Machine Type | Group Description | Used-In | Group Number | Page No

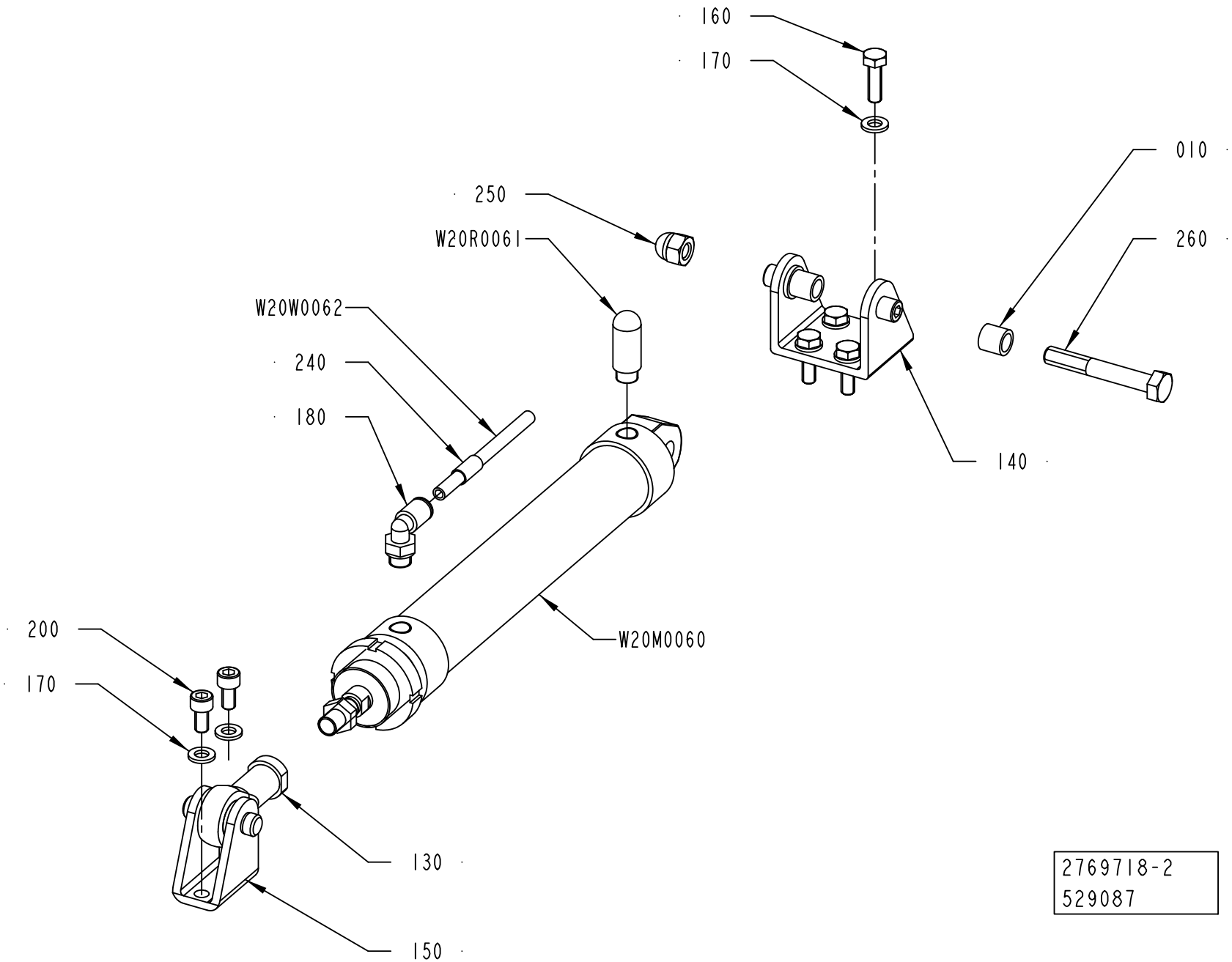
160
170
010
250
260
W20R0061
W20W0062
240
180
140
200
170
W20M0060
130
150
2769718-2
529087

ECM: 529590 - 20120401
Group number: 2769718-0200
Assembly Drawing: 2769718-2_1_AA

Pos	Part No	UN	Qty	Description	Page No
-					
010	3209472-0000		2	SPACER	
130	90459-1018		1	ROD END, BALL JOINT EYE M10X1,25	
140	90459-3115		1	BRACKET, REAR, CLEVIS, ROUND, BORE 32	
150	90459-5949		1	REAR CLEVIS FOOT MOUNTING, CRLBN-32	
160	312105-0370		4	SCREW, M6S ISO 4017 M6X20 A4 80	
170	315105-0153		6	WASHER PLAIN, 6,4X12X1,5 A4 BRB	
180	350002-0006		1	PUSH-IN L-FITTING QSL-F-G1/8-6	
200	312115-0366		2	SCREW ISO4762 M6X12 A4 80	
240	90459-7369		1	MARKING FOR PNEUM. TUBING, PRZ06	
250	312705-0318		1	NUT HEX. DOMED CAP MHM-6 M8 A280	
260	312105-0462		1	SCREW, M6S ISO 4014 M8X55 A4 80	
W20M0060	90604-3143		1	DOUBLE ACTING, ROUND, CYL 32-150	
W20R0061	90328-0047		1	SILENCER, G1/8"	
W20W0062	315400-0001	MM	200	TUBE PUN-H-6X1-BL	

Pos	Part No	UN	Qty	Description	Page No

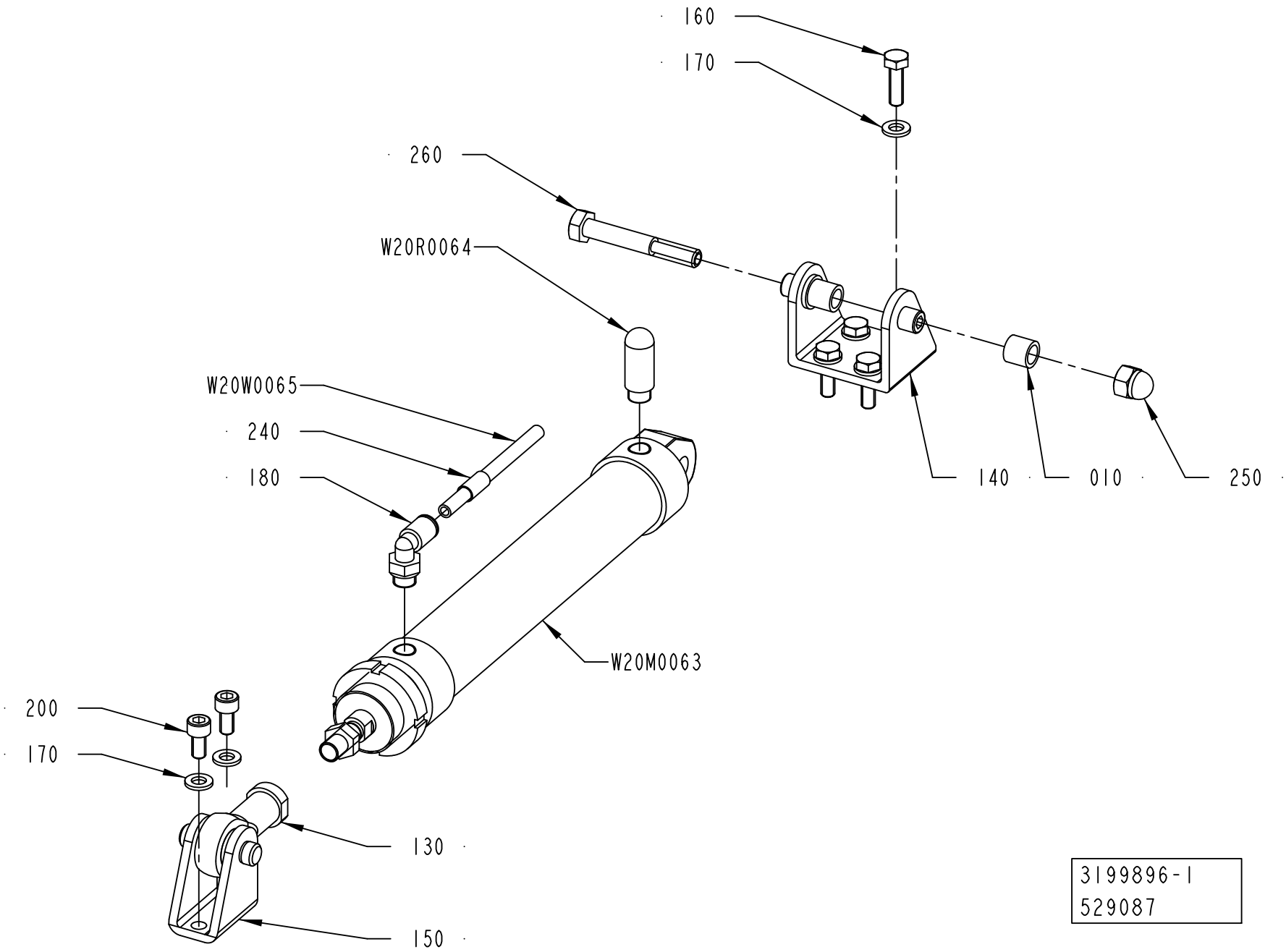
160
170
260
W20R0064
W20W0065
240
180
W20M0063
200
170
130
150
140
010
250
3199896-1
529087

ECM: 529612 - 20120401
Group number: 3199896-0100
Assembly Drawing: 3199896-1_1_AA

Pos	Part No	UN	Qty	Description	Page No
-					
010	3209472-0000		2	SPACER	
130	90459-1018		1	ROD END, BALL JOINT EYE M10X1,25	
140	90459-3115		1	BRACKET, REAR, CLEVIS, ROUND, BORE 32	
150	90459-5949		1	REAR CLEVIS FOOT MOUNTING, CRLBN-32	
160	312105-0370		4	SCREW, M6S ISO 4017 M6X20 A4 80	
170	315105-0153		6	WASHER PLAIN, 6,4X12X1,5 A4 BRB	
180	350002-0006		1	PUSH-IN L-FITTING QSL-F-G1/8-6	
200	312115-0366		2	SCREW ISO4762 M6X12 A4 80	
240	90459-7369		1	MARKING FOR PNEUM. TUBING, PRZ06	
250	312705-0318		1	NUT HEX. DOMED CAP MHM-6 M8 A280	
260	312105-0462		1	SCREW, M6S ISO 4014 M8X55 A4 80	
W20M0063	90604-3143		1	DOUBLE ACTING, ROUND, CYL 32-150	
W20R0064	90328-0047		1	SILENCER, G1/8"	
W20W0065	315400-0001	MM	200	TUBE PUN-H-6X1-BL	

Pos	Part No	UN	Qty	Description	Page No

ADJUSTABLE GUIDE

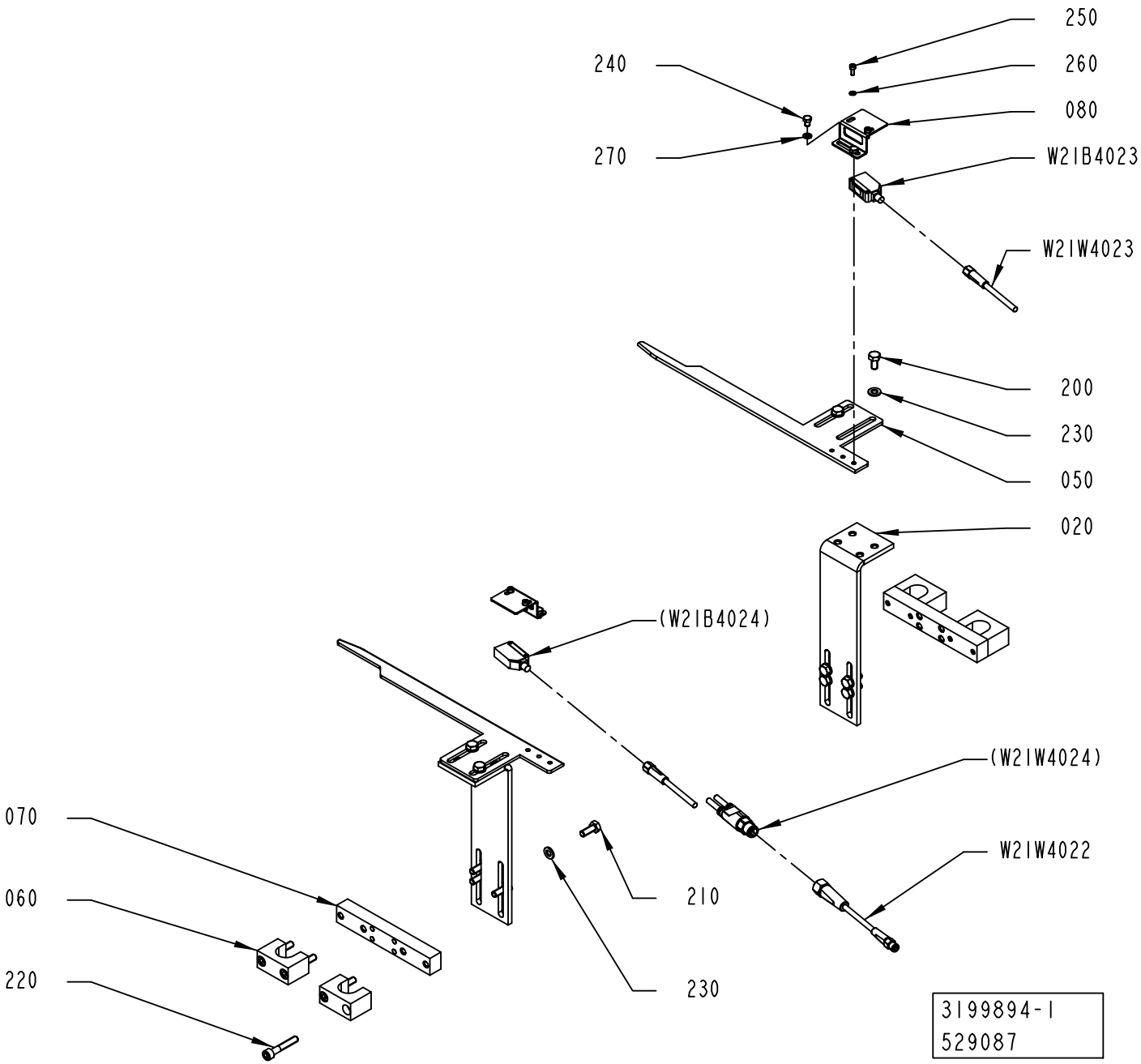

ECM: 529610 - 20120401
Group number: 3199894-0100
Assembly Drawing: 3199894-1_1_AA

Pos	Part No	UN	Qty	Description	Page No
-					
020	3120841-0000		2	ANGLE	
050	3120842-0000		2	GUIDE	
060	3120839-0000		4	PLATE	
070	3120840-0000		2	PLATE	
080	3193666-0000		2	SUPPORT	
200	312105-0366		4	SCREW, M6S ISO 4017 M6X12 A4 80	
210	312105-0368		8	SCREW, M6S ISO 4017 M6X16 A4 80	
220	312115-0376		8	SCREW ISO4762 M6X35 A4 80	
230	315105-0153		12	WASHER PLAIN, 6,4X12X1,5 A4 BRB	
240	312105-0285		4	SCREW, M6S ISO 4017 M4X6 A4 70	
250	312115-0222		4	SCREW ISO4762 M3X8 A4 80	
260	315105-0124		4	WASHER PLAIN, 3,2X6X0,5 A4 BRB	
270	315105-0136		4	WASHER PLAIN, 4,3X9X0,8 A4 BRB	
W21B4023	90459-5529		1	PHOTOCELL E3Z-T86A, SENDER+RECIEVER	
W21W4022	344261-0006		1	SENSOR CABLE, EVT261	
W21W4023	90603-3979		1	SENSOR Y-CABLE, EVT339	

Pos	Part No	UN	Qty	Description	Page No

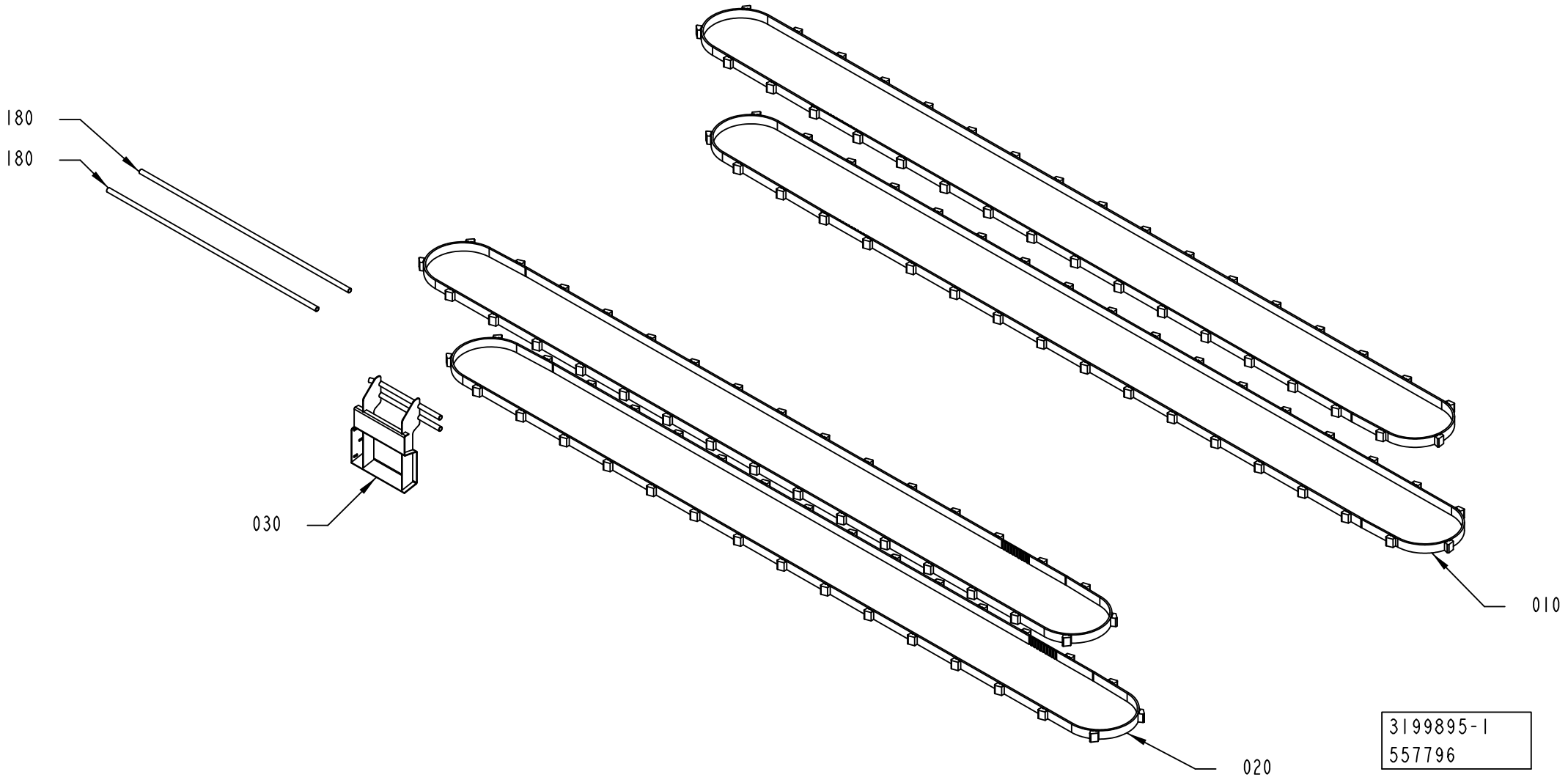
180
180
030
010
020
3199895-1
557796

Pos	Part No	UN	Qty	Description	Page No
TBA 0200E, TBA 0250E (See drawing on page: 1-80)					
010	90600-0814		2	TIMING BELT AT10 5250X25 MM+35236050	
020	90600-0815		2	TIMING BELT 25AT10/4800 +32 2. 3.6.050	
070	3139123-0100		1	INFEED GUIDE	**1-83**
180	2779831-0000		2	PIPE	
TBA 0200SQ, TBA 0250SQ (See drawing on page: 1-78)					
010	90600-0814		1	TIMING BELT AT10 5250X25 MM+35236050	
020	90600-0815		1	TIMING BELT 25AT10/4800 +32 2. 3.6.050	
030	2940677-0000		1	GUIDE	
040	2940569-0000		1	GUIDE	
090	2907981-0000		2	NUT	
120	2873952-0100		1	COVER	**1-85, 1-87**
180	2779831-0000		2	PIPE	
TBA 0500S, TBA 0500SQ, TBA 1000B, TBA 1000SQ, TBA 1000S, TBA 1500S, TBA 1890S, TBA 2000S, TGA 1000SQ, TGA 0750SQ, TGA 0500SQ, TGA 1500SQ (See drawing on page: 1-72)					
010	90600-0814		2	TIMING BELT AT10 5250X25 MM+35236050	
020	90600-0815		2	TIMING BELT 25AT10/4800 +32 2. 3.6.050	
030	2805461-0000		1	GUIDE	
180	2779831-0000		2	PIPE	
TGA 1000CR, TGA 1000LF (See drawing on page: 1-74)					
080	3208122-0100		1	PHOTOCELL BRACKET	**1-89**
100	3115099-0200		1	PACKAGE ALIGNER	**1-91**
120	2873952-0100		1	COVER	**1-85, 1-87**
130	3199898-0100		1	ROLLER	**1-95**
180	3162977-0000		2	GUIDE	
TPA 0330SQ (See drawing on page: 1-76)					
010	90600-4822		2	TIMING BELT 25AT10/5250+35 2.3.7.358	
020	90600-4821		2	TIMING BELT 25AT10/4800 PU	
080	3208122-0100		1	PHOTOCELL BRACKET	**1-89**
100	3115099-0200		1	PACKAGE ALIGNER	**1-91**
120	2873952-0100		1	COVER	**1-85, 1-87**
130	3199898-0100		1	ROLLER	**1-95**
180	3162977-0000		2	GUIDE	
TPA 1000SQ, TPA 0500SQ, TPA 0750SQ (See drawing on page: 1-74)					
010	90600-3011		2	CONVEYOR BELT, -25 AT10/5250 +35 2.3.7.3	
020	90600-3012		2	TIMING BELT 25AT10/4800 PU	
080	3208122-0100		1	PHOTOCELL BRACKET	**1-89**
100	3115099-0200		1	PACKAGE ALIGNER	**1-91**
120	2873952-0100		1	COVER	**1-85, 1-87**
130	3199898-0100		1	ROLLER	**1-95**
180	3162977-0000		2	GUIDE	

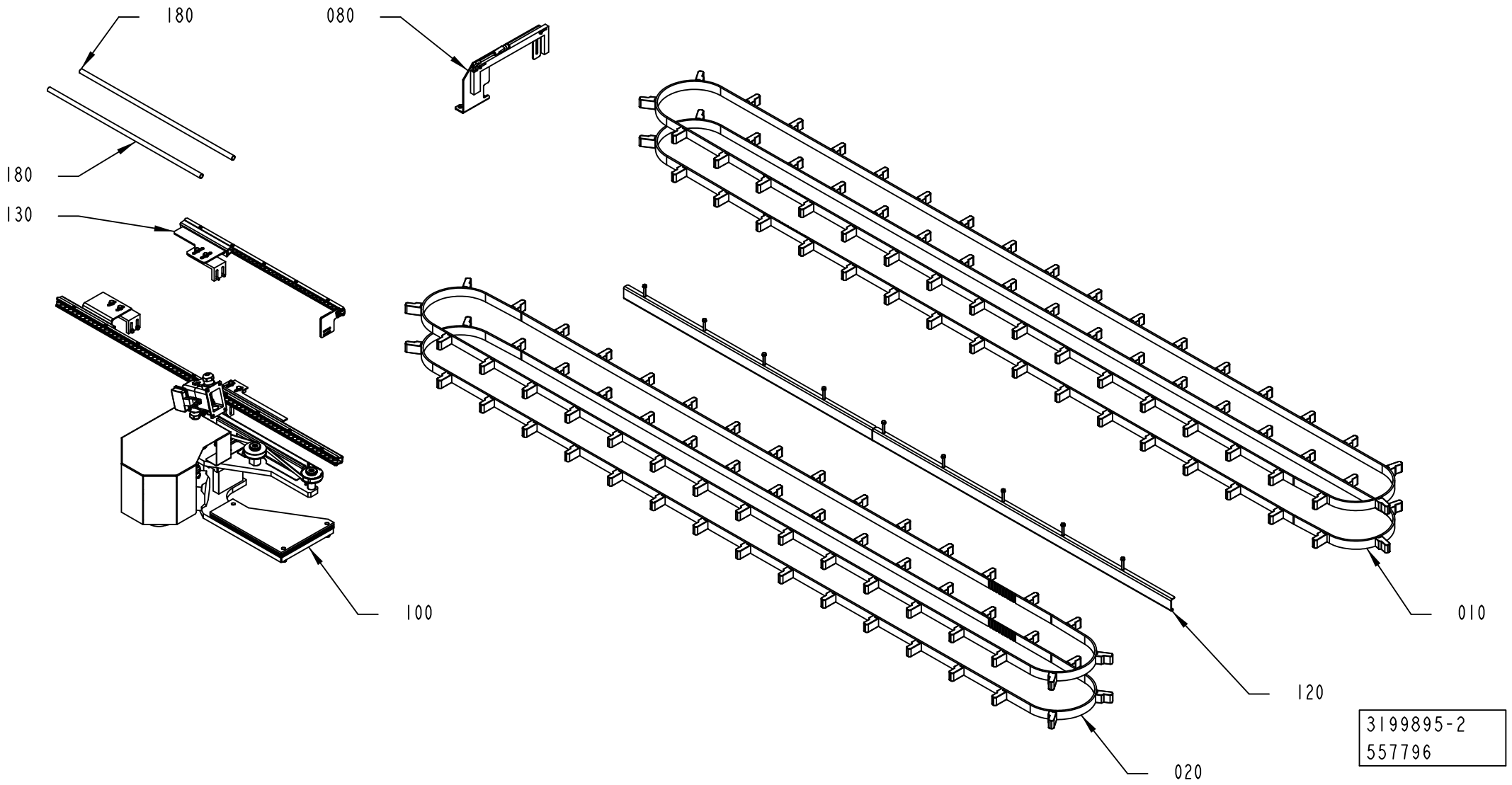
180
080
180
130
100
010
120
020
3199895-2
557796

Pos	Part No	UN	Qty	Description	Page No
TBA 0200E, TBA 0250E (See drawing on page: 1-80)					
010	90600-0814		2	TIMING BELT AT10 5250X25 MM+35236050	
020	90600-0815		2	TIMING BELT 25AT10/4800 +32 2. 3.6.050	
070	3139123-0100		1	INFEED GUIDE	**1-83**
180	2779831-0000		2	PIPE	
TBA 0200SQ, TBA 0250SQ (See drawing on page: 1-78)					
010	90600-0814		1	TIMING BELT AT10 5250X25 MM+35236050	
020	90600-0815		1	TIMING BELT 25AT10/4800 +32 2. 3.6.050	
030	2940677-0000		1	GUIDE	
040	2940569-0000		1	GUIDE	
090	2907981-0000		2	NUT	
120	2873952-0100		1	COVER	**1-85, 1-87**
180	2779831-0000		2	PIPE	
TBA 0500S, TBA 0500SQ, TBA 1000B, TBA 1000SQ, TBA 1000S, TBA 1500S, TBA 1890S, TBA 2000S, TGA 1000SQ, TGA 0750SQ, TGA 0500SQ, TGA 1500SQ (See drawing on page: 1-72)					
010	90600-0814		2	TIMING BELT AT10 5250X25 MM+35236050	
020	90600-0815		2	TIMING BELT 25AT10/4800 +32 2. 3.6.050	
030	2805461-0000		1	GUIDE	
180	2779831-0000		2	PIPE	
TGA 1000CR, TGA 1000LF (See drawing on page: 1-74)					
080	3208122-0100		1	PHOTOCELL BRACKET	**1-89**
100	3115099-0200		1	PACKAGE ALIGNER	**1-91**
120	2873952-0100		1	COVER	**1-85, 1-87**
130	3199898-0100		1	ROLLER	**1-95**
180	3162977-0000		2	GUIDE	
TPA 0330SQ (See drawing on page: 1-76)					
010	90600-4822		2	TIMING BELT 25AT10/5250+35 2.3.7.358	
020	90600-4821		2	TIMING BELT 25AT10/4800 PU	
080	3208122-0100		1	PHOTOCELL BRACKET	**1-89**
100	3115099-0200		1	PACKAGE ALIGNER	**1-91**
120	2873952-0100		1	COVER	**1-85, 1-87**
130	3199898-0100		1	ROLLER	**1-95**
180	3162977-0000		2	GUIDE	
TPA 1000SQ, TPA 0500SQ, TPA 0750SQ (See drawing on page: 1-74)					
010	90600-3011		2	CONVEYOR BELT, -25 AT10/5250 +35 2.3.7.3	
020	90600-3012		2	TIMING BELT 25AT10/4800 PU	
080	3208122-0100		1	PHOTOCELL BRACKET	**1-89**
100	3115099-0200		1	PACKAGE ALIGNER	**1-91**
120	2873952-0100		1	COVER	**1-85, 1-87**
130	3199898-0100		1	ROLLER	**1-95**
180	3162977-0000		2	GUIDE	

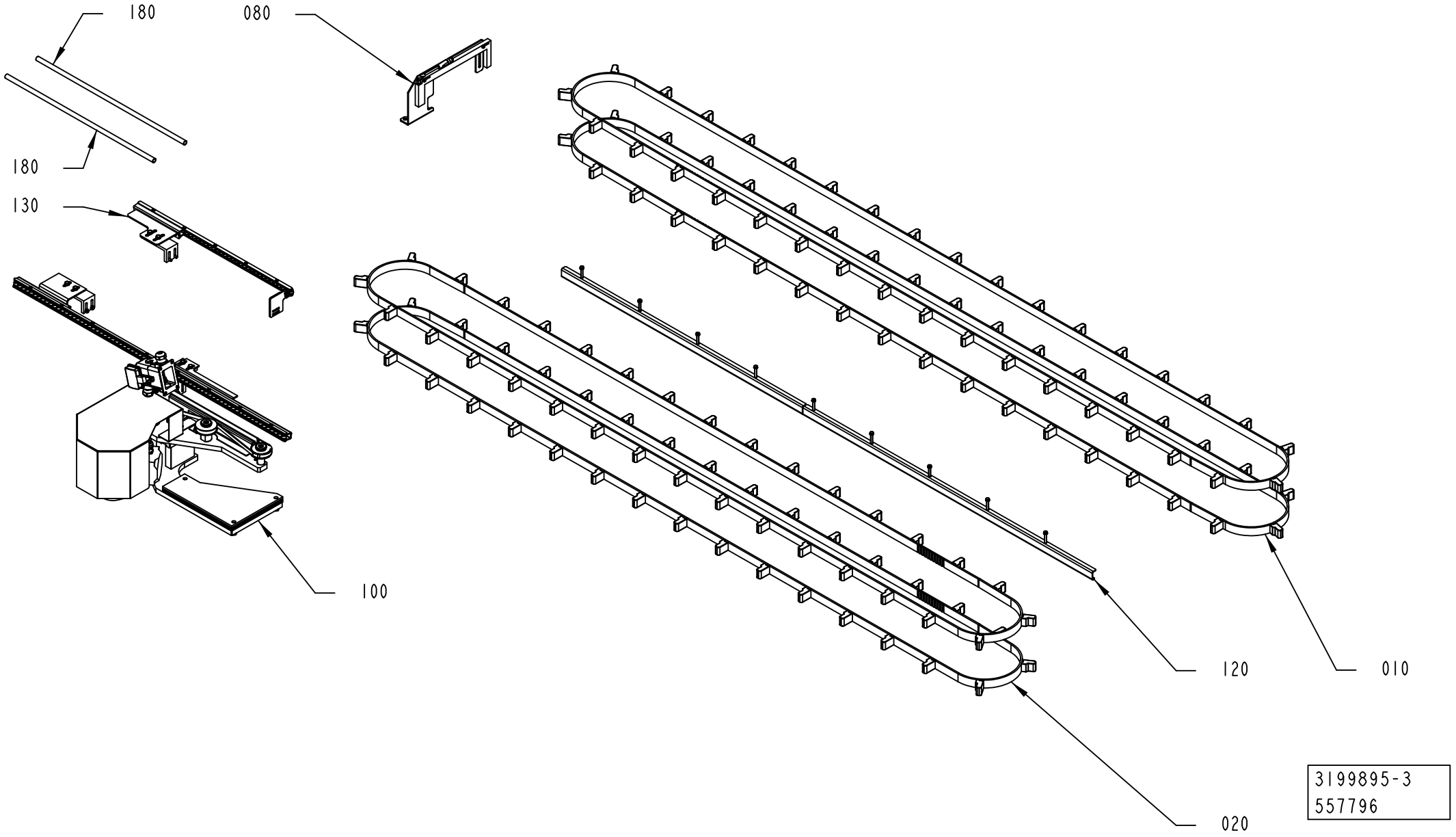
180
080
180
130
100
120
010
020
3199895-3
557796

Pos	Part No	UN	Qty	Description	Page No
TBA 0200E, TBA 0250E (See drawing on page: 1-80)					
010	90600-0814		2	TIMING BELT AT10 5250X25 MM+35236050	
020	90600-0815		2	TIMING BELT 25AT10/4800 +32 2. 3.6.050	
070	3139123-0100		1	INFEED GUIDE	**1-83**
180	2779831-0000		2	PIPE	
TBA 0200SQ, TBA 0250SQ (See drawing on page: 1-78)					
010	90600-0814		1	TIMING BELT AT10 5250X25 MM+35236050	
020	90600-0815		1	TIMING BELT 25AT10/4800 +32 2. 3.6.050	
030	2940677-0000		1	GUIDE	
040	2940569-0000		1	GUIDE	
090	2907981-0000		2	NUT	
120	2873952-0100		1	COVER	**1-85, 1-87**
180	2779831-0000		2	PIPE	
TBA 0500S, TBA 0500SQ, TBA 1000B, TBA 1000SQ, TBA 1000S, TBA 1500S, TBA 1890S, TBA 2000S, TGA 1000SQ, TGA 0750SQ, TGA 0500SQ, TGA 1500SQ (See drawing on page: 1-72)					
010	90600-0814		2	TIMING BELT AT10 5250X25 MM+35236050	
020	90600-0815		2	TIMING BELT 25AT10/4800 +32 2. 3.6.050	
030	2805461-0000		1	GUIDE	
180	2779831-0000		2	PIPE	
TGA 1000CR, TGA 1000LF (See drawing on page: 1-74)					
080	3208122-0100		1	PHOTOCELL BRACKET	**1-89**
100	3115099-0200		1	PACKAGE ALIGNER	**1-91**
120	2873952-0100		1	COVER	**1-85, 1-87**
130	3199898-0100		1	ROLLER	**1-95**
180	3162977-0000		2	GUIDE	
TPA 0330SQ (See drawing on page: 1-76)					
010	90600-4822		2	TIMING BELT 25AT10/5250+35 2.3.7.358	
020	90600-4821		2	TIMING BELT 25AT10/4800 PU	
080	3208122-0100		1	PHOTOCELL BRACKET	**1-89**
100	3115099-0200		1	PACKAGE ALIGNER	**1-91**
120	2873952-0100		1	COVER	**1-85, 1-87**
130	3199898-0100		1	ROLLER	**1-95**
180	3162977-0000		2	GUIDE	
TPA 1000SQ, TPA 0500SQ, TPA 0750SQ (See drawing on page: 1-74)					
010	90600-3011		2	CONVEYOR BELT, -25 AT10/5250 +35 2.3.7.3	
020	90600-3012		2	TIMING BELT 25AT10/4800 PU	
080	3208122-0100		1	PHOTOCELL BRACKET	**1-89**
100	3115099-0200		1	PACKAGE ALIGNER	**1-91**
120	2873952-0100		1	COVER	**1-85, 1-87**
130	3199898-0100		1	ROLLER	**1-95**
180	3162977-0000		2	GUIDE	

Pos	Part No	UN	Qty	Description	Page No

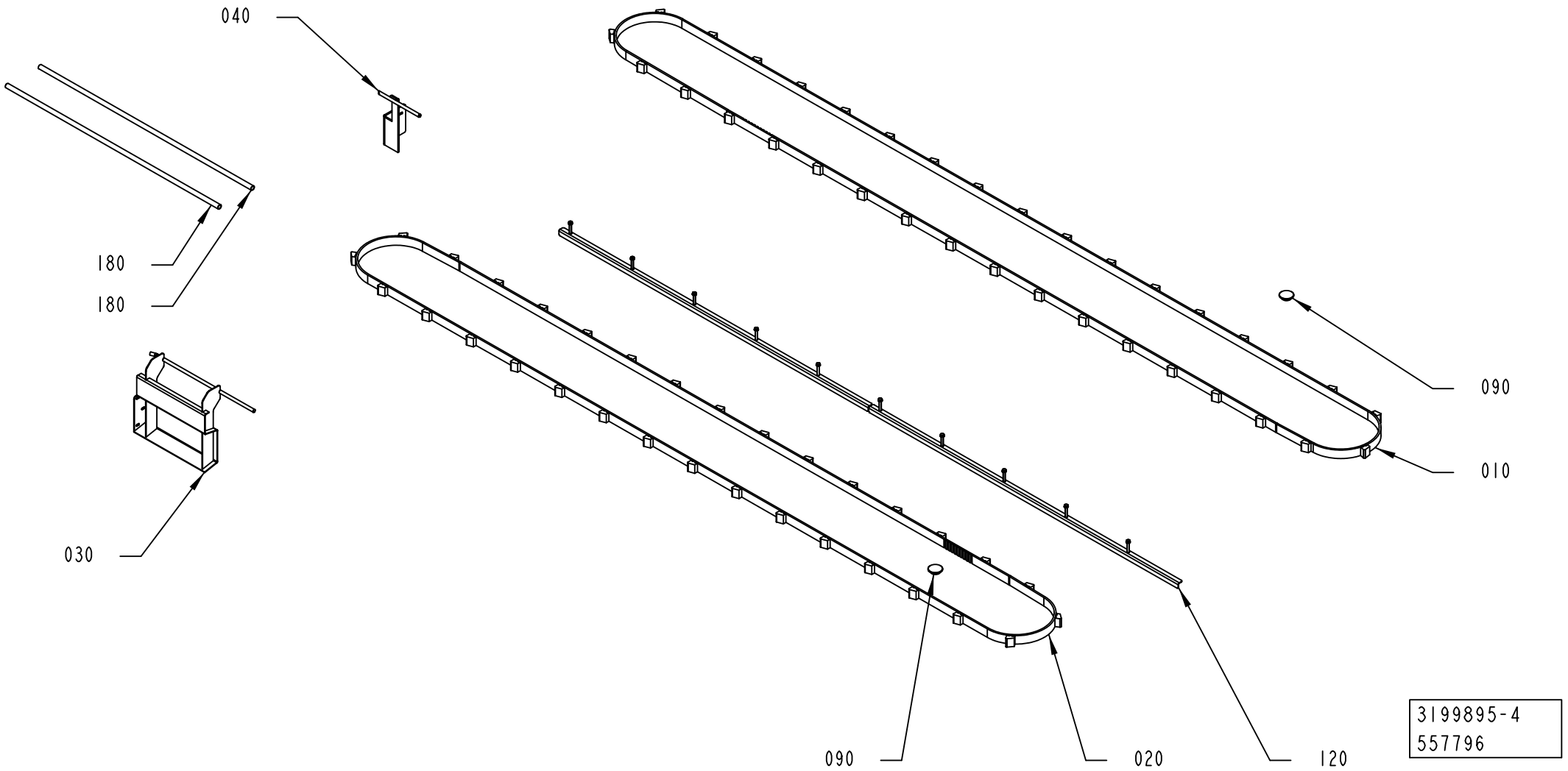
040
180
180
030
090
010
090
020
120
3199895-4
557796

Pos	Part No	UN	Qty	Description	Page No
TBA 0200E, TBA 0250E (See drawing on page: 1-80)					
010	90600-0814		2	TIMING BELT AT10 5250X25 MM+35236050	
020	90600-0815		2	TIMING BELT 25AT10/4800 +32 2. 3.6.050	
070	3139123-0100		1	INFEED GUIDE	**1-83**
180	2779831-0000		2	PIPE	
TBA 0200SQ, TBA 0250SQ (See drawing on page: 1-78)					
010	90600-0814		1	TIMING BELT AT10 5250X25 MM+35236050	
020	90600-0815		1	TIMING BELT 25AT10/4800 +32 2. 3.6.050	
030	2940677-0000		1	GUIDE	
040	2940569-0000		1	GUIDE	
090	2907981-0000		2	NUT	
120	2873952-0100		1	COVER	**1-85, 1-87**
180	2779831-0000		2	PIPE	
TBA 0500S, TBA 0500SQ, TBA 1000B, TBA 1000SQ, TBA 1000S, TBA 1500S, TBA 1890S, TBA 2000S, TGA 1000SQ, TGA 0750SQ, TGA 0500SQ, TGA 1500SQ (See drawing on page: 1-72)					
010	90600-0814		2	TIMING BELT AT10 5250X25 MM+35236050	
020	90600-0815		2	TIMING BELT 25AT10/4800 +32 2. 3.6.050	
030	2805461-0000		1	GUIDE	
180	2779831-0000		2	PIPE	
TGA 1000CR, TGA 1000LF (See drawing on page: 1-74)					
080	3208122-0100		1	PHOTOCELL BRACKET	**1-89**
100	3115099-0200		1	PACKAGE ALIGNER	**1-91**
120	2873952-0100		1	COVER	**1-85, 1-87**
130	3199898-0100		1	ROLLER	**1-95**
180	3162977-0000		2	GUIDE	
TPA 0330SQ (See drawing on page: 1-76)					
010	90600-4822		2	TIMING BELT 25AT10/5250+35 2.3.7.358	
020	90600-4821		2	TIMING BELT 25AT10/4800 PU	
080	3208122-0100		1	PHOTOCELL BRACKET	**1-89**
100	3115099-0200		1	PACKAGE ALIGNER	**1-91**
120	2873952-0100		1	COVER	**1-85, 1-87**
130	3199898-0100		1	ROLLER	**1-95**
180	3162977-0000		2	GUIDE	
TPA 1000SQ, TPA 0500SQ, TPA 0750SQ (See drawing on page: 1-74)					
010	90600-3011		2	CONVEYOR BELT, -25 AT10/5250 +35 2.3.7.3	
020	90600-3012		2	TIMING BELT 25AT10/4800 PU	
080	3208122-0100		1	PHOTOCELL BRACKET	**1-89**
100	3115099-0200		1	PACKAGE ALIGNER	**1-91**
120	2873952-0100		1	COVER	**1-85, 1-87**
130	3199898-0100		1	ROLLER	**1-95**
180	3162977-0000		2	GUIDE	

Pos	Part No	UN	Qty	Description	Page No

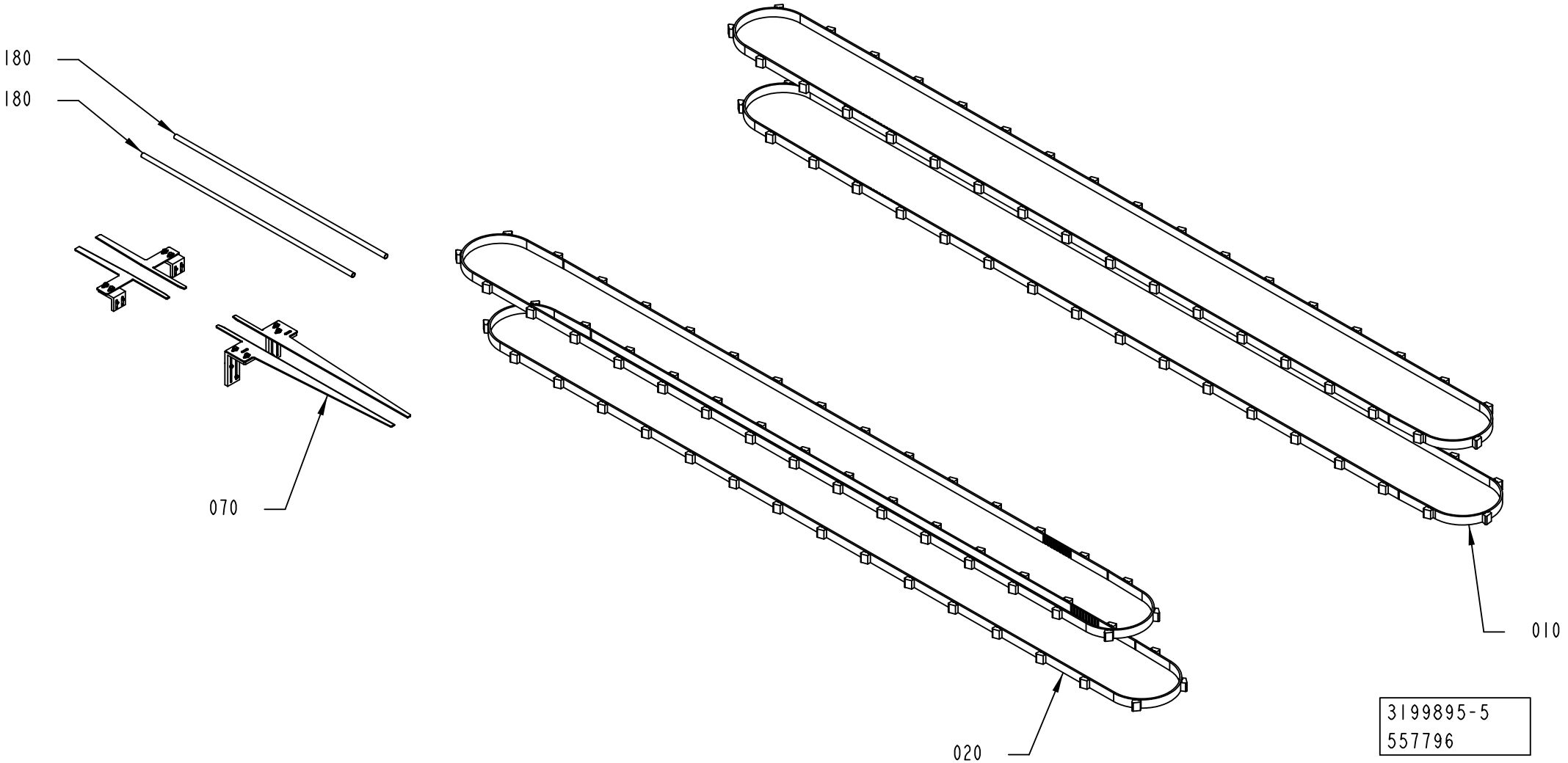
180
180
070
010
020
3199895-5
557796

Pos	Part No	UN	Qty	Description	Page No
TBA 0200E, TBA 0250E (See drawing on page: 1-80)					
010	90600-0814		2	TIMING BELT AT10 5250X25 MM+35236050	
020	90600-0815		2	TIMING BELT 25AT10/4800 +32 2. 3.6.050	
070	3139123-0100		1	INFEED GUIDE	**1-83**
180	2779831-0000		2	PIPE	
TBA 0200SQ, TBA 0250SQ (See drawing on page: 1-78)					
010	90600-0814		1	TIMING BELT AT10 5250X25 MM+35236050	
020	90600-0815		1	TIMING BELT 25AT10/4800 +32 2. 3.6.050	
030	2940677-0000		1	GUIDE	
040	2940569-0000		1	GUIDE	
090	2907981-0000		2	NUT	
120	2873952-0100		1	COVER	**1-85, 1-87**
180	2779831-0000		2	PIPE	
TBA 0500S, TBA 0500SQ, TBA 1000B, TBA 1000SQ, TBA 1000S, TBA 1500S, TBA 1890S, TBA 2000S, TGA 1000SQ, TGA 0750SQ, TGA 0500SQ, TGA 1500SQ (See drawing on page: 1-72)					
010	90600-0814		2	TIMING BELT AT10 5250X25 MM+35236050	
020	90600-0815		2	TIMING BELT 25AT10/4800 +32 2. 3.6.050	
030	2805461-0000		1	GUIDE	
180	2779831-0000		2	PIPE	
TGA 1000CR, TGA 1000LF (See drawing on page: 1-74)					
080	3208122-0100		1	PHOTOCELL BRACKET	**1-89**
100	3115099-0200		1	PACKAGE ALIGNER	**1-91**
120	2873952-0100		1	COVER	**1-85, 1-87**
130	3199898-0100		1	ROLLER	**1-95**
180	3162977-0000		2	GUIDE	
TPA 0330SQ (See drawing on page: 1-76)					
010	90600-4822		2	TIMING BELT 25AT10/5250+35 2.3.7.358	
020	90600-4821		2	TIMING BELT 25AT10/4800 PU	
080	3208122-0100		1	PHOTOCELL BRACKET	**1-89**
100	3115099-0200		1	PACKAGE ALIGNER	**1-91**
120	2873952-0100		1	COVER	**1-85, 1-87**
130	3199898-0100		1	ROLLER	**1-95**
180	3162977-0000		2	GUIDE	
TPA 1000SQ, TPA 0500SQ, TPA 0750SQ (See drawing on page: 1-74)					
010	90600-3011		2	CONVEYOR BELT, -25 AT10/5250 +35 2.3.7.3	
020	90600-3012		2	TIMING BELT 25AT10/4800 PU	
080	3208122-0100		1	PHOTOCELL BRACKET	**1-89**
100	3115099-0200		1	PACKAGE ALIGNER	**1-91**
120	2873952-0100		1	COVER	**1-85, 1-87**
130	3199898-0100		1	ROLLER	**1-95**
180	3162977-0000		2	GUIDE	

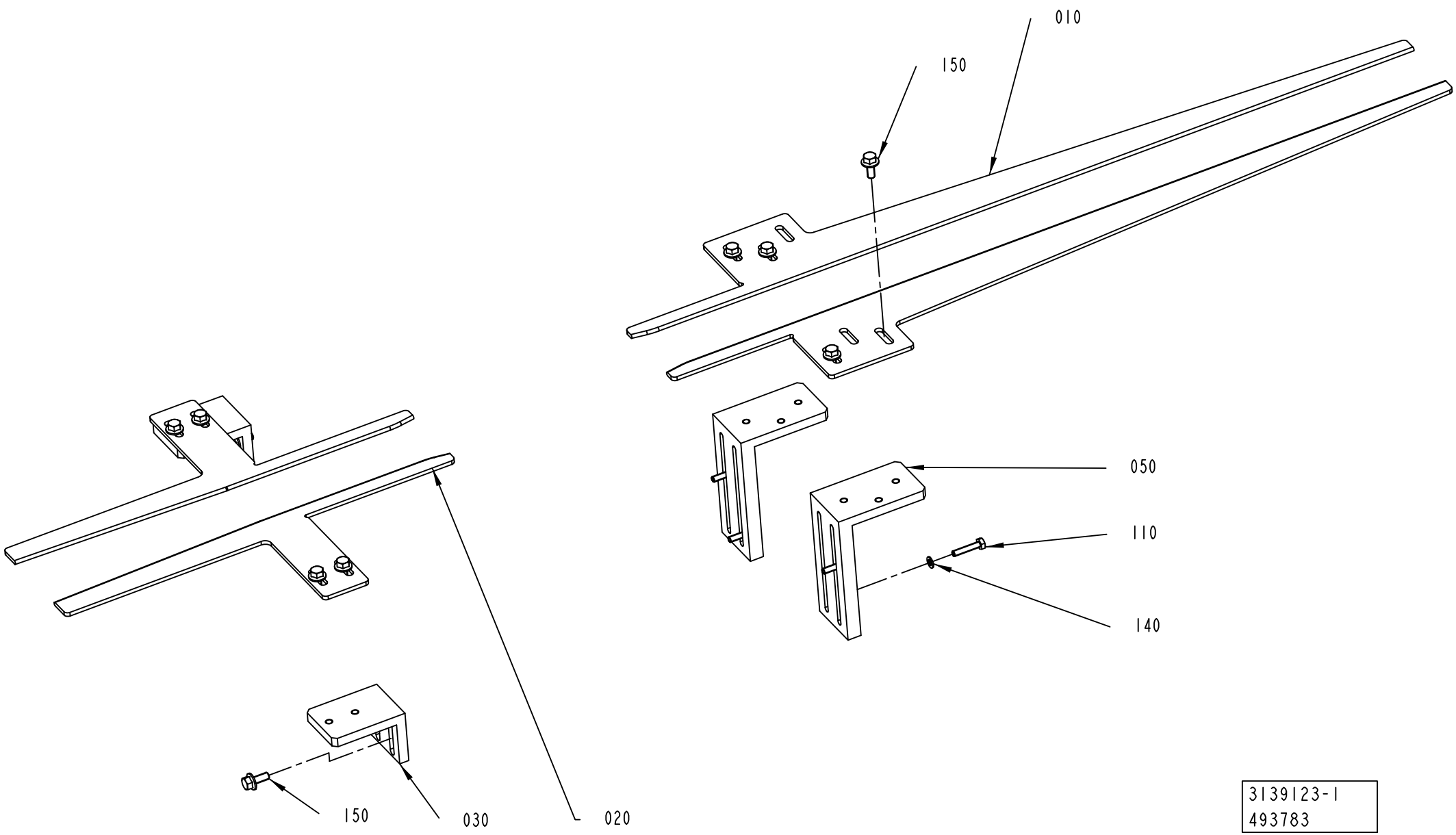

3139123-1
493783

ECM: 493783 - 20110701
Group number: 3139123-0100
Assembly Drawing: 3139123-1_1_AA

Pos	Part No	UN	Qty	Description	Page No
-					
010	3139124-0000		2	BRACKET	
020	3103326-0000		2	GUIDE	
030	3103328-0000		2	BRACKET	
050	3139125-0000		2	BRACKET	
110	312105-0295		4	SCREW, M6S ISO 4017 M4X20 A4 70	
140	315105-0136		4	WASHER PLAIN, 4,3X9X0,8 A4 BRB	
150	312108-0327		12	SCREW EN 1665 TYPE F M5X12 A270	

Pos	Part No	UN	Qty	Description	Page No

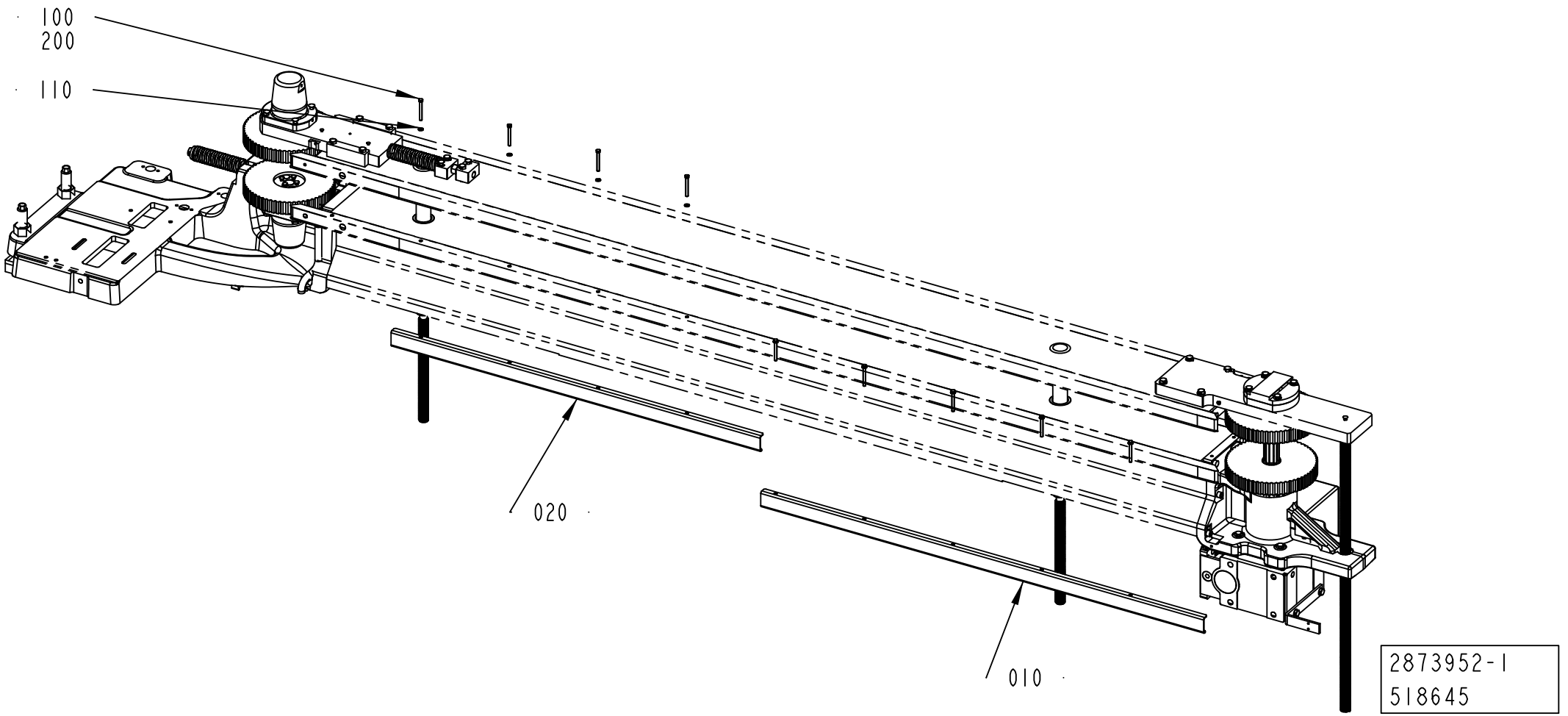
100
200
110
020
010
2873952-1
518645

ECM: 560250 - 20120701
Group number: 2873952-0100
Assembly Drawing: 2873952-1_1_AC

This list covers pages from 1-84 to 1-87

Pos	Part No	UN	Qty	Description	Page No
TBA 0200SQ, TBA 0250SQ (See drawing on page: 1-86)					
010	2991257-0000		2	COVER	
100	312109-0340		10	SCREW, M6S ISO 4017 M5X45 A4 80	
110	315106-0146		10	WASHER PLAIN, M5 ISO7089-5-200 HV A4	
TPA 0330SQ (See drawing on page: 1-84)					
010	2873966-0000		1	COVER	
020	3123924-0000		1	COVER	
100	312109-0340		9	SCREW, M6S ISO 4017 M5X45 A4 80	
110	315106-0146		9	WASHER PLAIN, M5 ISO7089-5-200 HV A4	
TPA 1000SQ, TPA 0500SQ, TPA 0750SQ, TGA 1000CR, TGA 1000LF (See drawing on page: 1-84)					
010	2873951-0000		1	COVER	
020	3200713-0000		1	COVER	
100	312109-0340		9	SCREW, M6S ISO 4017 M5X45 A4 80	
110	315106-0146		9	WASHER PLAIN, M5 ISO7089-5-200 HV A4	
Common Parts					
200	90602-4847		1	THREAD LOCKING, LOCTITE 243 50 ML	

Pos	Part No	UN	Qty	Description	Page No

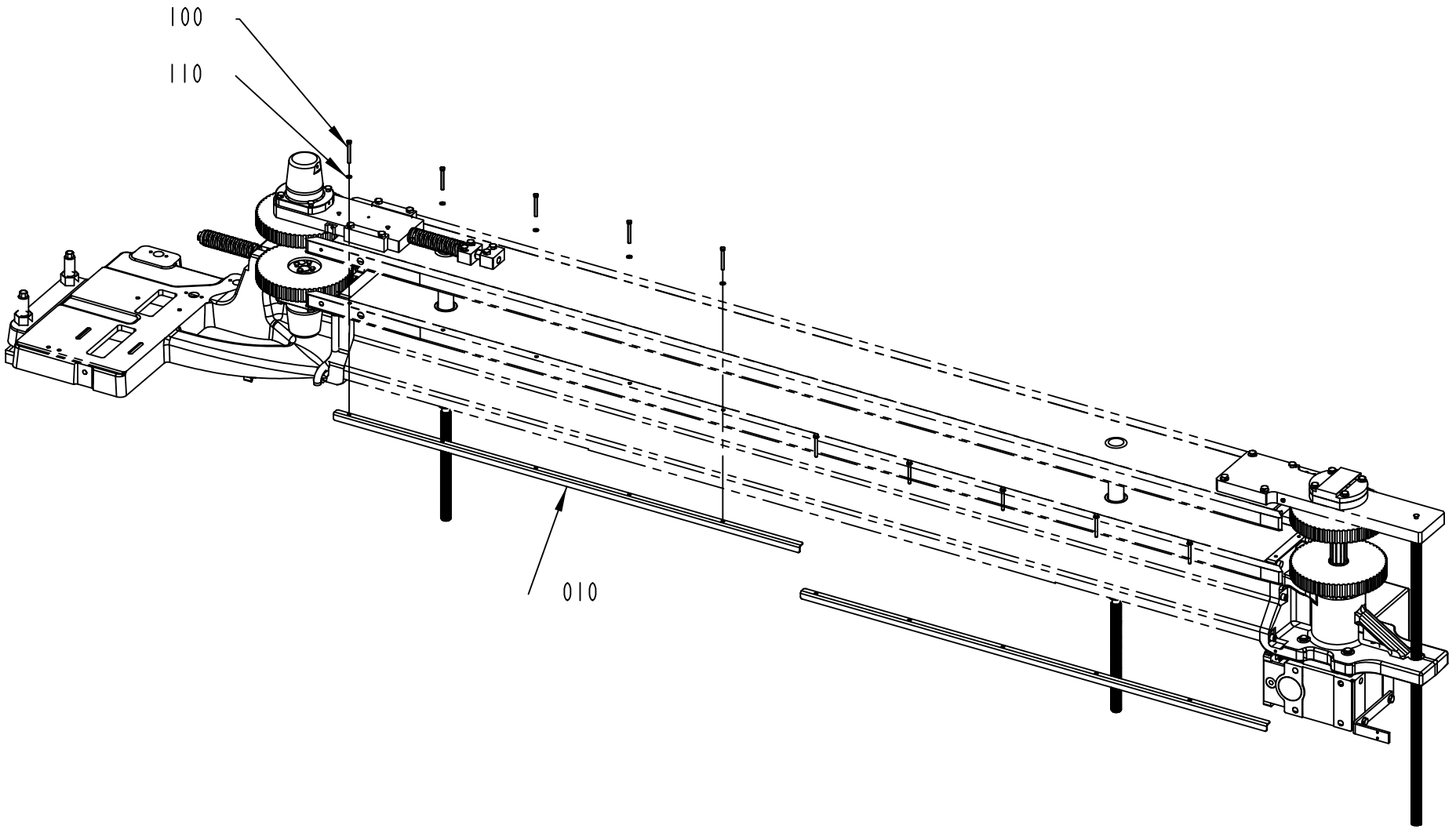

2873952-3
518645

ECM: 560250 - 20120701
Group number: 2873952-0100
Assembly Drawing: 2873952-3_1_AA

This list covers pages from 1-84 to 1-87

Pos	Part No	UN	Qty	Description	Page No
TBA 0200SQ, TBA 0250SQ (See drawing on page: 1-86)					
010	2991257-0000		2	COVER	
100	312109-0340		10	SCREW, M6S ISO 4017 M5X45 A4 80	
110	315106-0146		10	WASHER PLAIN, M5 ISO7089-5-200 HV A4	
TPA 0330SQ (See drawing on page: 1-84)					
010	2873966-0000		1	COVER	
020	3123924-0000		1	COVER	
100	312109-0340		9	SCREW, M6S ISO 4017 M5X45 A4 80	
110	315106-0146		9	WASHER PLAIN, M5 ISO7089-5-200 HV A4	
TPA 1000SQ, TPA 0500SQ, TPA 0750SQ, TGA 1000CR, TGA 1000LF (See drawing on page: 1-84)					
010	2873951-0000		1	COVER	
020	3200713-0000		1	COVER	
100	312109-0340		9	SCREW, M6S ISO 4017 M5X45 A4 80	
110	315106-0146		9	WASHER PLAIN, M5 ISO7089-5-200 HV A4	
Common Parts					
200	90602-4847		1	THREAD LOCKING, LOCTITE 243 50 ML	

Pos	Part No	UN	Qty	Description	Page No

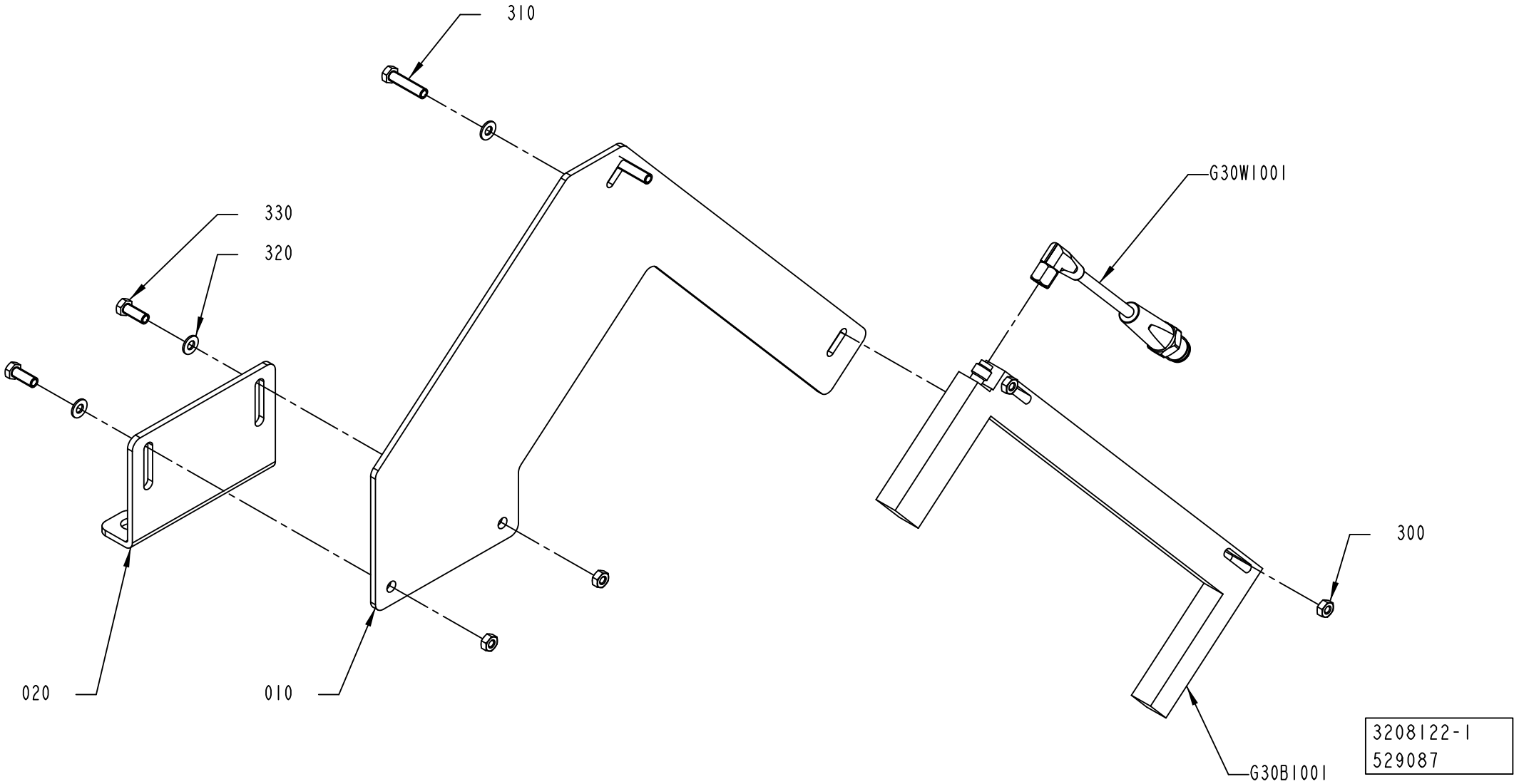
310
330
320
G30W1001
300
020
010
G30B1001
3208122-1
529087

ECM: 560252 - 20120701
Group number: 3208122-0100
Assembly Drawing: 3208122-1_1_AA

Pos	Part No	UN	Qty	Description	Page No
TGA 1000CR, TGA 1000LF					
010	3193670-0000		1	SUPPORT	
020	3193669-0000		1	SUPPORT	
TPA					
010	3166547-0000		1	BRACKET	
Common Parts					
300	312605-0312		4	HEXAGON NUT, M6M M4 A280	
310	312105-0295		2	SCREW, M6S ISO 4017 M4X20 A4 70	
320	315106-0136		4	WASHER PLAIN, M4 ISO7089-4-200 HV A4	
330	312105-0291		2	SCREW, M6S ISO 4017 M4X12 A4 70	
G30B1001	90459-6947		1	PHOTOCELL, WF 225-B4150	
G30W1001	344266-0020		1	SENSOR CABLE, EVT256	

Pos	Part No	UN	Qty	Description	Page No

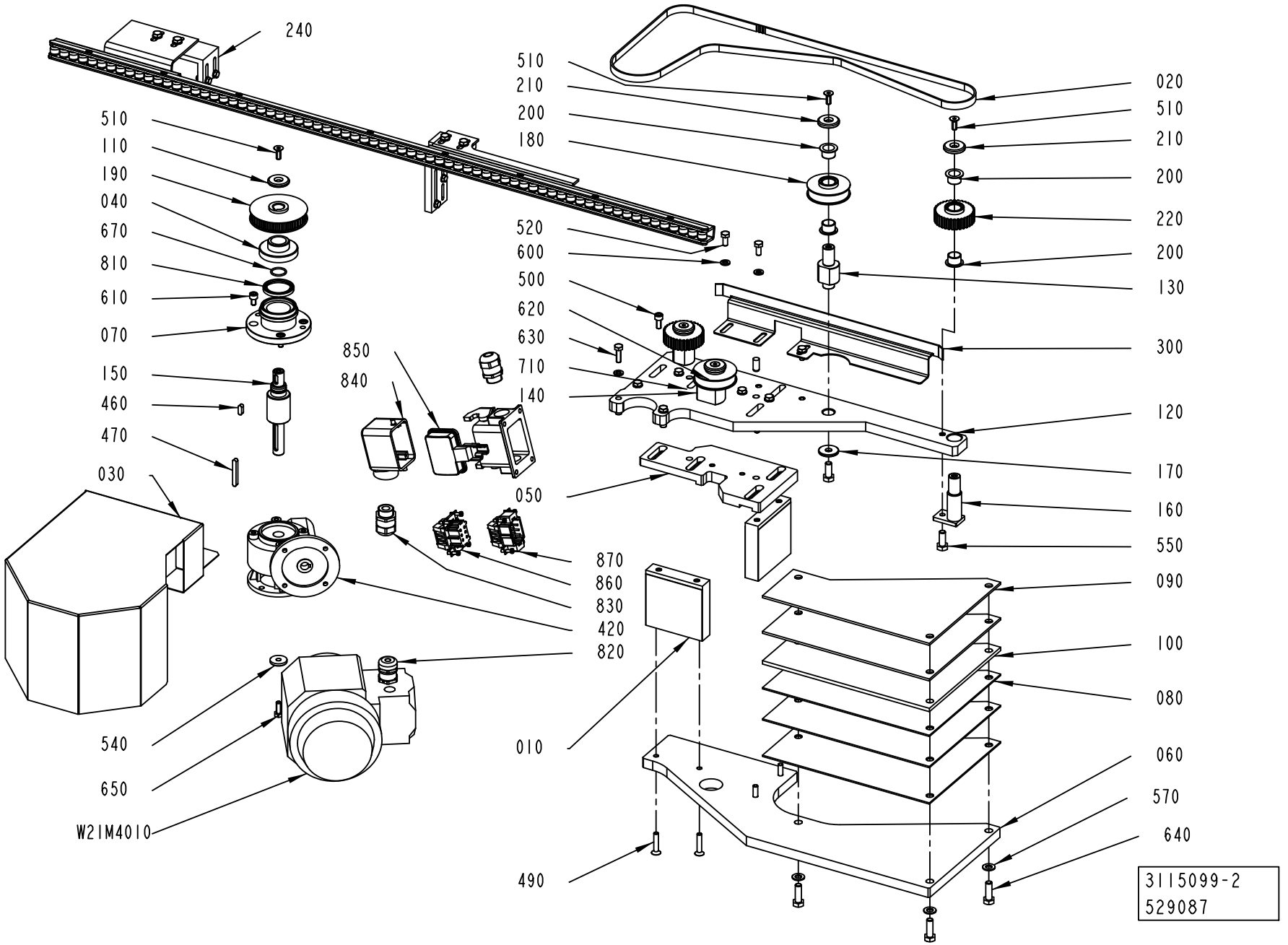
240
510
110
190
040
670
810
610
070
150
460
470
030
540
650
W21M4010
850
840
510
210
200
180
520
600
500
620
630
710
140
050
870
860
830
420
820
010
490
020
510
210
200
220
200
130
300
120
170
160
550
090
100
080
060
570
640
3115099-2
529087

ECM: 529600 - 20120401
Group number: 3115099-0200
Assembly Drawing: 3115099-2_1_AA

Pos	Part No	UN	Qty	Description	Page No
-					
010	3149907-0000		2	SPACER	
020	3178061-0000		1	BELT	
030	3149910-0000		1	COVER	
040	3149911-0000		1	SPACER	
050	3149906-0000		1	PLATE	
060	3149901-0000		1	PLATE	
070	3149900-0000		1	FLANGE	
080	3117151-0000		3	PLATE	
090	3117152-0000		2	PLATE	
100	3117153-0000		1	PLATE	
110	3117136-0000		1	WASHER	
120	3177603-0000		1	PLATE	
130	3115098-0000		2	SHAFT	
140	3115103-0000		1	SHAFT	
150	3149902-0000		1	SHAFT	
160	3149912-0000		1	SHAFT	
170	3051110-0000		3	WASHER	
180	3152722-0000		2	WHEEL	
190	3152724-0000		1	WHEEL	
200	3115097-0000		8	FLANGE BUSHING	
210	3115101-0000		4	WASHER	
220	3152725-0000		2	WHEEL	
240	3114810-0100		1	ROLLER	**1-93**
300	3149908-0000		1	GUIDE	
420	90603-2980		1	WORM GEAR W2003500390018	
460	315701-0198		1	PARALLEL KEY W. ROUND ENDS, 5X5X14 MM	
470	315701-0208		1	PARALLEL KEY W. ROUND ENDS, 5X5X40 MM	
490	312155-0374		4	SCREW DIN 7991 MF6S M6X30 A4 70	
500	312115-0366		4	SCREW ISO4762 M6X12 A4 80	
510	312155-0368		6	SCREW DIN 7991 MF6S M6X16 A4 70	
520	312105-0366		6	SCREW, M6S ISO 4017 M6X12 A4 80	
540	315125-0153		1	WASHER HIGH, TBRSB 6,4X22X4 A4	
550	312105-0451		4	SCREW, M6S ISO 4017 M8X20 A4 80	
570	315105-0165		3	WASHER PLAIN, 8,4X16X1,6 A4 BRB	
600	315105-0153		10	WASHER PLAIN, 6,4X12X1,5 A4 BRB	
610	312115-0364		4	SCREW ISO4762 M6X10 A4 80	
620	312105-0372		2	SCREW, M6S ISO 4017 M6X25 A4 80	
630	312105-0370		2	SCREW, M6S ISO 4017 M6X20 A4 80	
640	312105-0453		3	SCREW, M6S ISO 4017 M8X25 A4 80	
650	312105-0368		1	SCREW, M6S ISO 4017 M6X16 A4 80	
670	315202-0705		1	O-RING 17,17X1,78 MM	
710	311103-0400		2	PARALLEL PIN ISO 2338 8M6X18 A	
810	315230-0353		1	BEARING SEAL G30X40X4 MM	
820	344202-0003		1	CABLE GLAND; MS-SC-M, 7-12,5MM, M20X1,5	
830	90458-0307		2	CABLE GLAND, M20X1,5, 5311 1020	
840	90459-1458		1	HOOD, SIDE ENTRY, HAN6E, 19 30 006 1540	
850	90459-1461		1	HOUSING, 19 30 006 1255	
860	90110-0053		1	FEMALE INSERT, HAN 6 E 09 33 006 2701	
870	90110-0052		1	MALE INSERT, HAN E06, 0933 0062 601	
W21M4010	2901694-0000		1	MOTOR	

Machine Type	Group Description	Used-In	Group Number	Page No

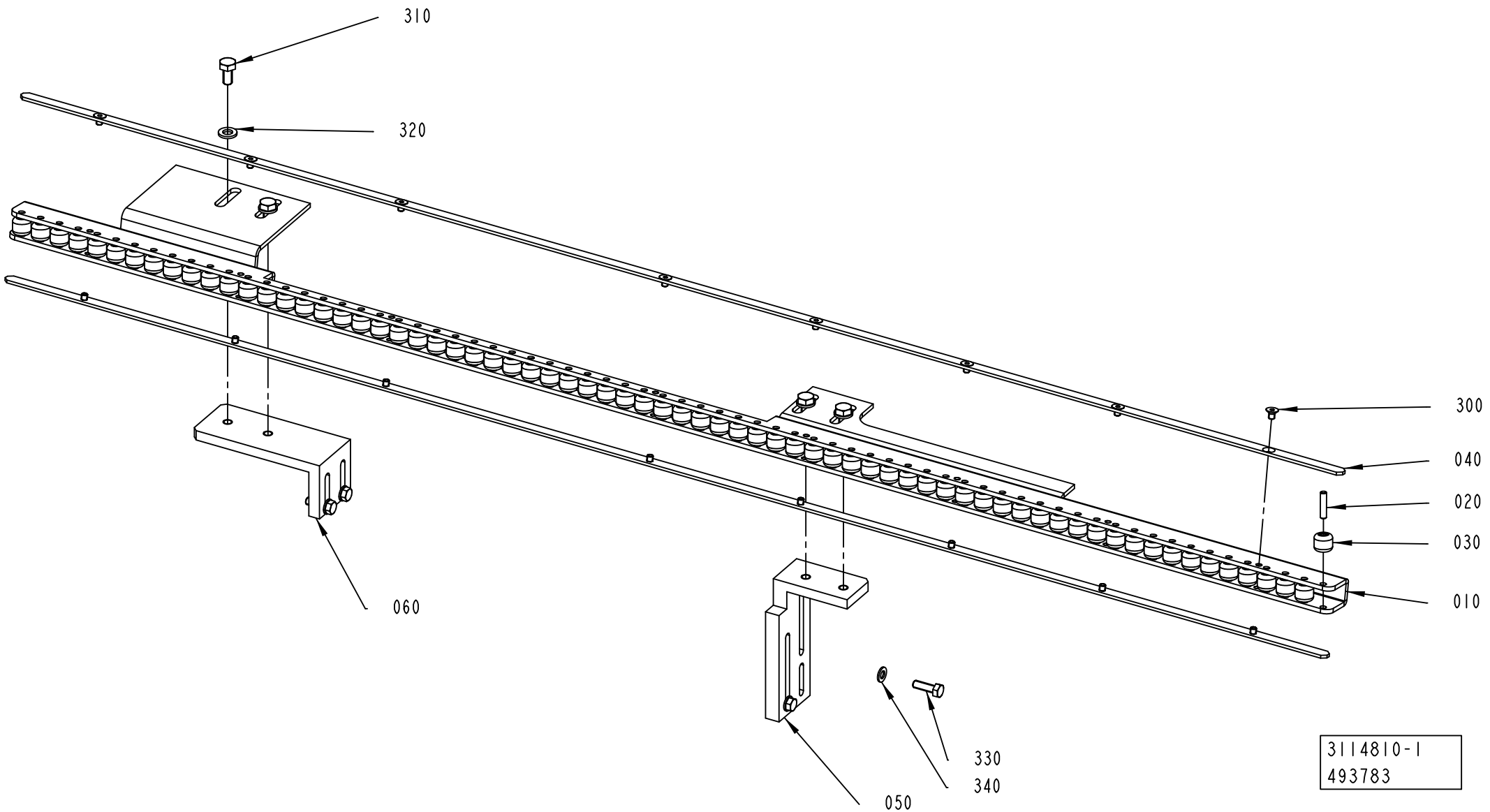
310
320
300
040
020
030
010
060
050
330
340
3114810-1
493783

ECM: 493783 - 20110701
Group number: 3114810-0100
Assembly Drawing: 3114810-1_1_AB

Pos	Part No	UN	Qty	Description	Page No
-					
010	3114082-0000		1	BRACKET	
020	3114083-0000		70	AXLE PIN	
030	3114084-0000		70	ROLL	
040	3114692-0000		2	PLATE	
050	3123928-0000		1	BRACKET	
060	3123929-0000		1	BRACKET	
300	312155-0285		16	SCREW DIN 7991 MF6S M4X6 A4 70	
310	312105-0366		4	SCREW, M6S ISO 4017 M6X12 A4 80	
320	315105-0153		4	WASHER PLAIN, 6,4X12X1,5 A4 BRB	
330	312105-0329		4	SCREW, M6S ISO 4017 M5X16 A4 80	
340	315106-0146		4	WASHER PLAIN, M5 ISO7089-5-200 HV A4	

Pos	Part No	UN	Qty	Description	Page No

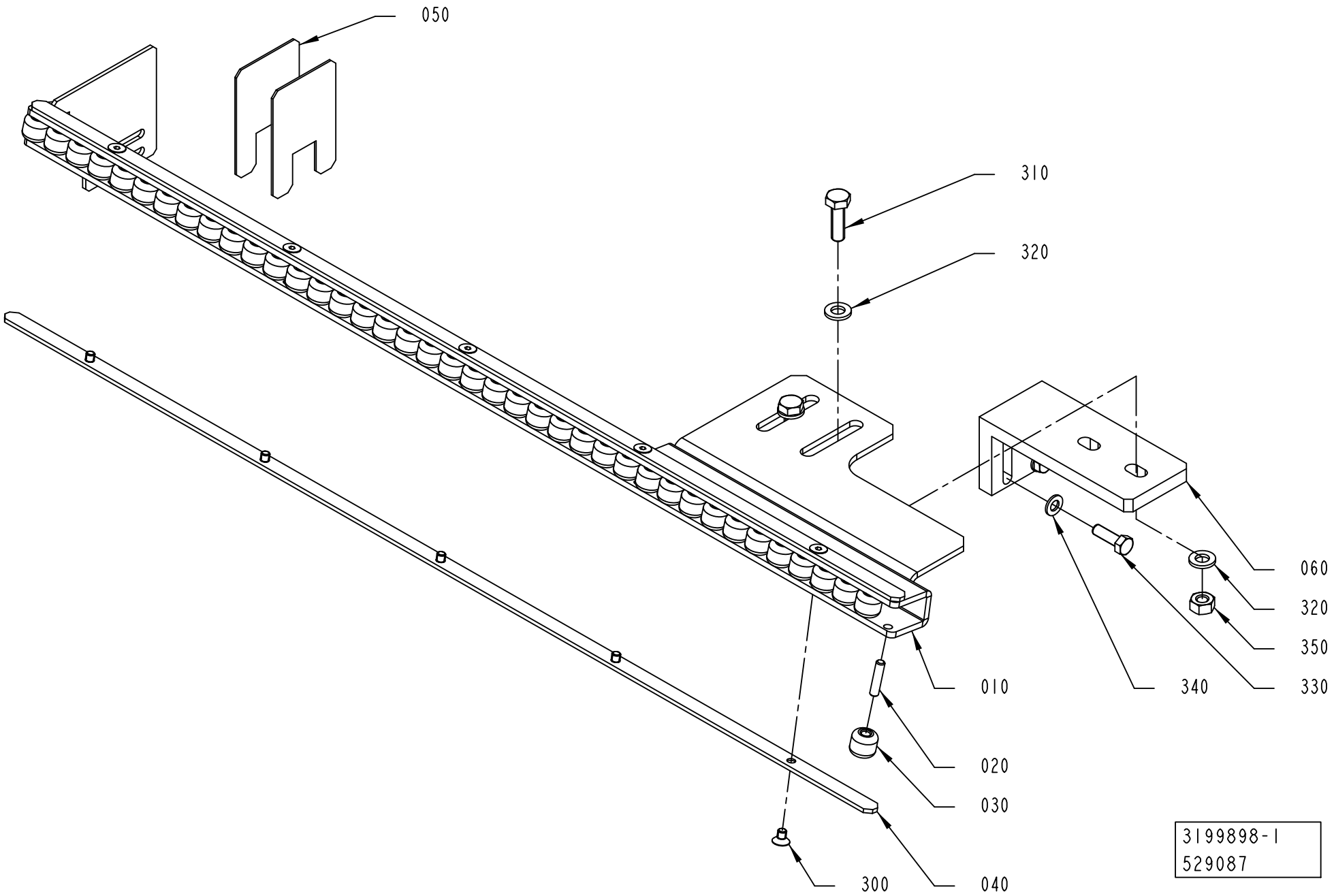
050
310
320
060
320
350
330
340
010
020
030
300
040
3199898-1
529087

ECM: 531667 - 20120401
Group number: 3199898-0100
Assembly Drawing: 3199898-1_1_AA

Pos	Part No	UN	Qty	Description	Page No
-					
010	3209478-0000		1	BRACKET	
020	3114083-0000		40	AXLE PIN	
030	3114084-0000		40	ROLL	
040	3209477-0000		2	PLATE	
050	3209473-0000		2	SHIM	
060	3209474-0000		1	BRACKET	
300	312155-0285		10	SCREW DIN 7991 MF6S M4X6 A4 70	
310	312105-0370		2	SCREW, M6S ISO 4017 M6X20 A4 80	
320	315105-0153		4	WASHER PLAIN, 6,4X12X1,5 A4 BRB	
330	312105-0329		2	SCREW, M6S ISO 4017 M5X16 A4 80	
340	315106-0146		2	WASHER PLAIN, M5 ISO7089-5-200 HV A4	
350	312605-0316		2	HEXAGON NUT, M6M M6 A280	

Pos	Part No	UN	Qty	Description	Page No

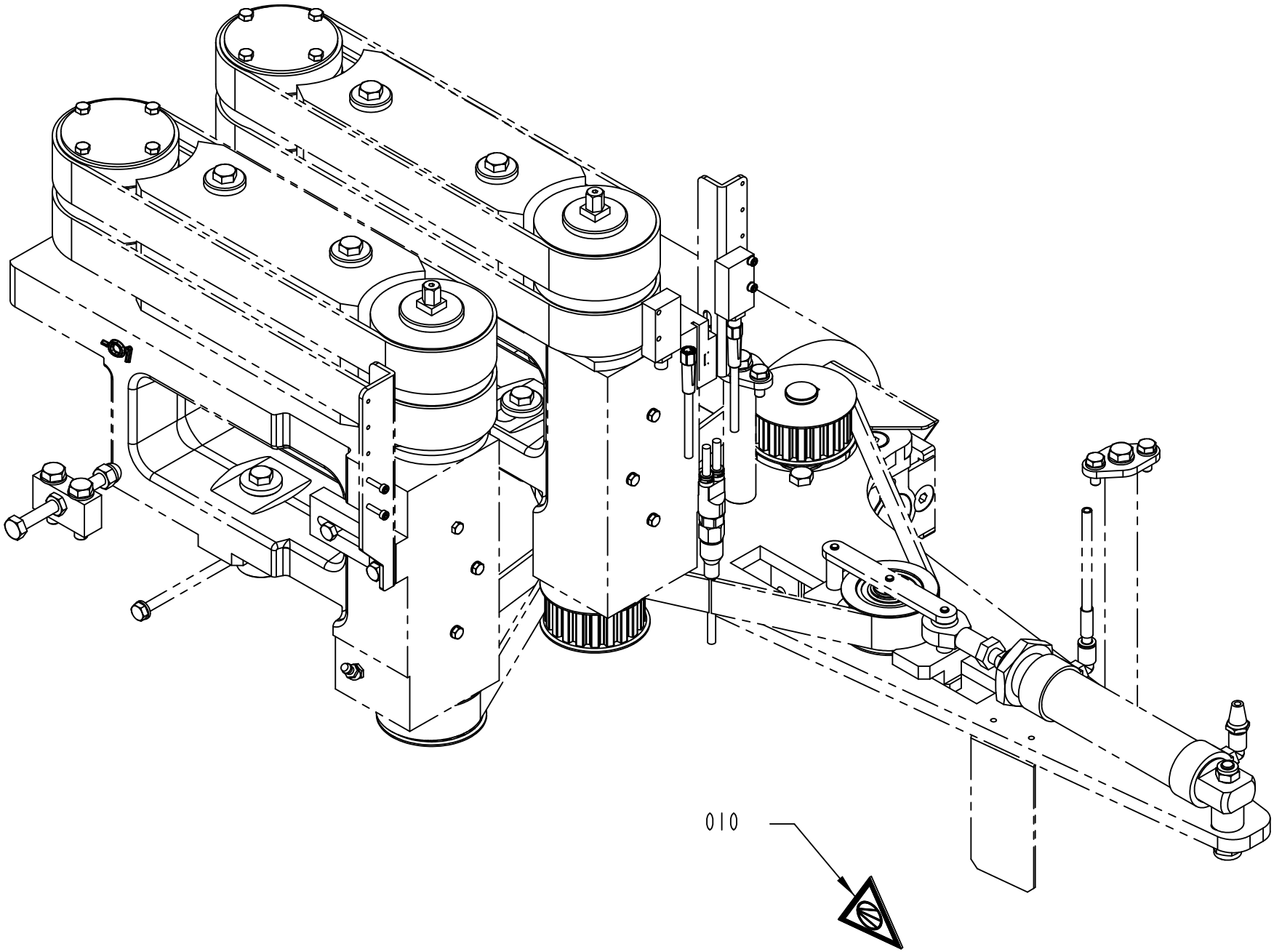

3217278-1
529087

ECM: 534705 - 20120401
Group number: 3217278-0100
Assembly Drawing: 3217278-1_1_AA

Pos	Part No	UN	Qty	Description	Page No
ANSI					
010	359725-0125		1	WARNING SIGN ANSI (V), PNEUMATIC ENERGY	
ISO					
010	359705-0021		1	WARNING SIGN ISO, PNEUMATIC ENERGY	

Pos	Part No	UN	Qty	Description	Page No

Tetra Pak

SPC
Spare Parts Catalogue

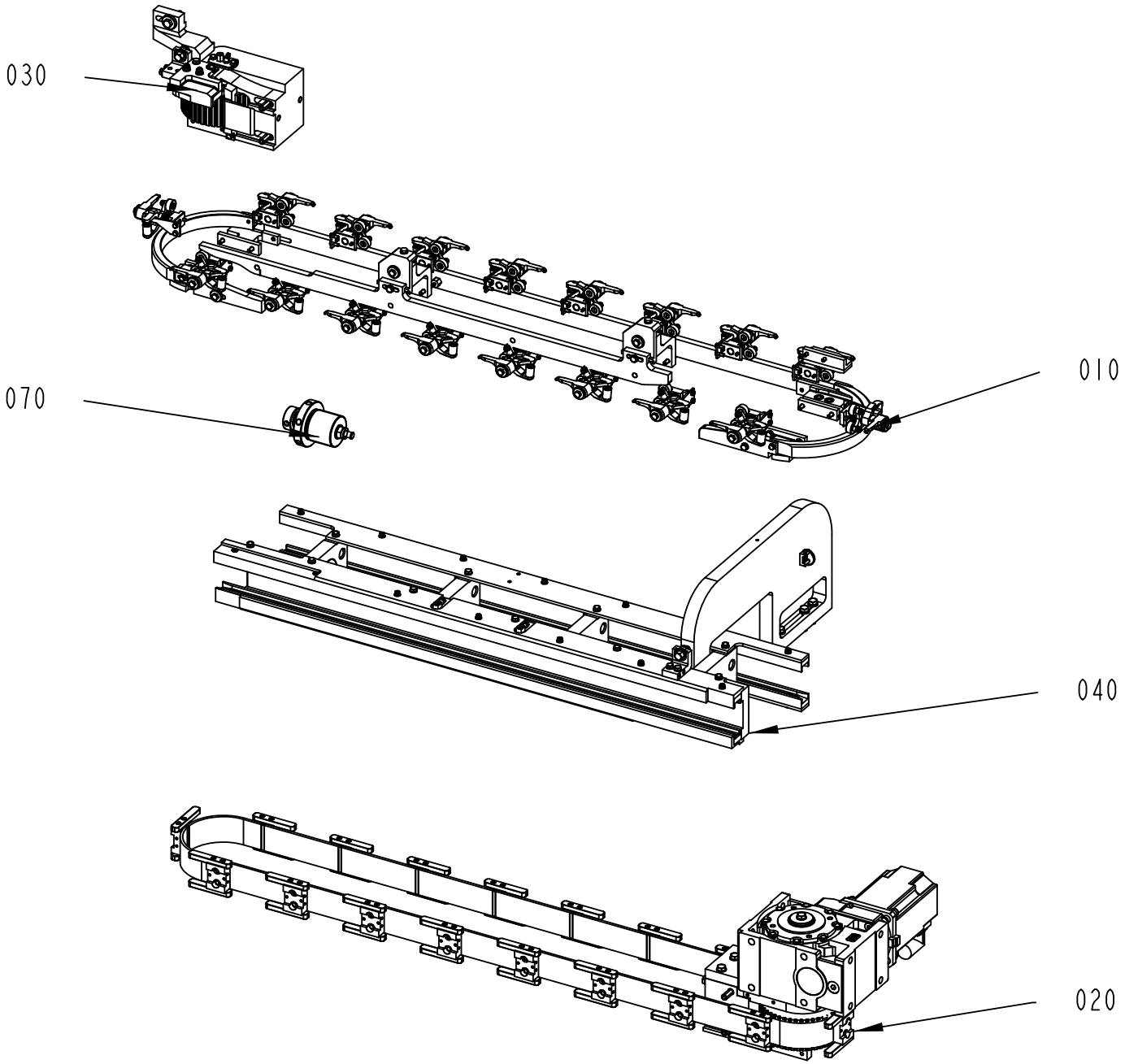

662902-3
527236

ECM: 527253 - 20120401
Group number: 662902-0200
Assembly Drawing: 662902-3_1_AA

Pos	Part No	UN	Qty	Description	Page No
-					
010	2802648-0200		1	CAP HOLDERS GROUP	**2-5, 2-7, 2-9**
020	2802647-0200		1	DRIVE UNIT	**2-13**
030	2802645-0200		1	BELT STRETCHER	**2-15**
040	2802646-0200		1	FRAME SECTION	**2-17**
070	2843157-0100		1	CLAMPING ELEMENT	**2-19**

Pos	Part No	UN	Qty	Description	Page No

CAP HOLDERS GROUP

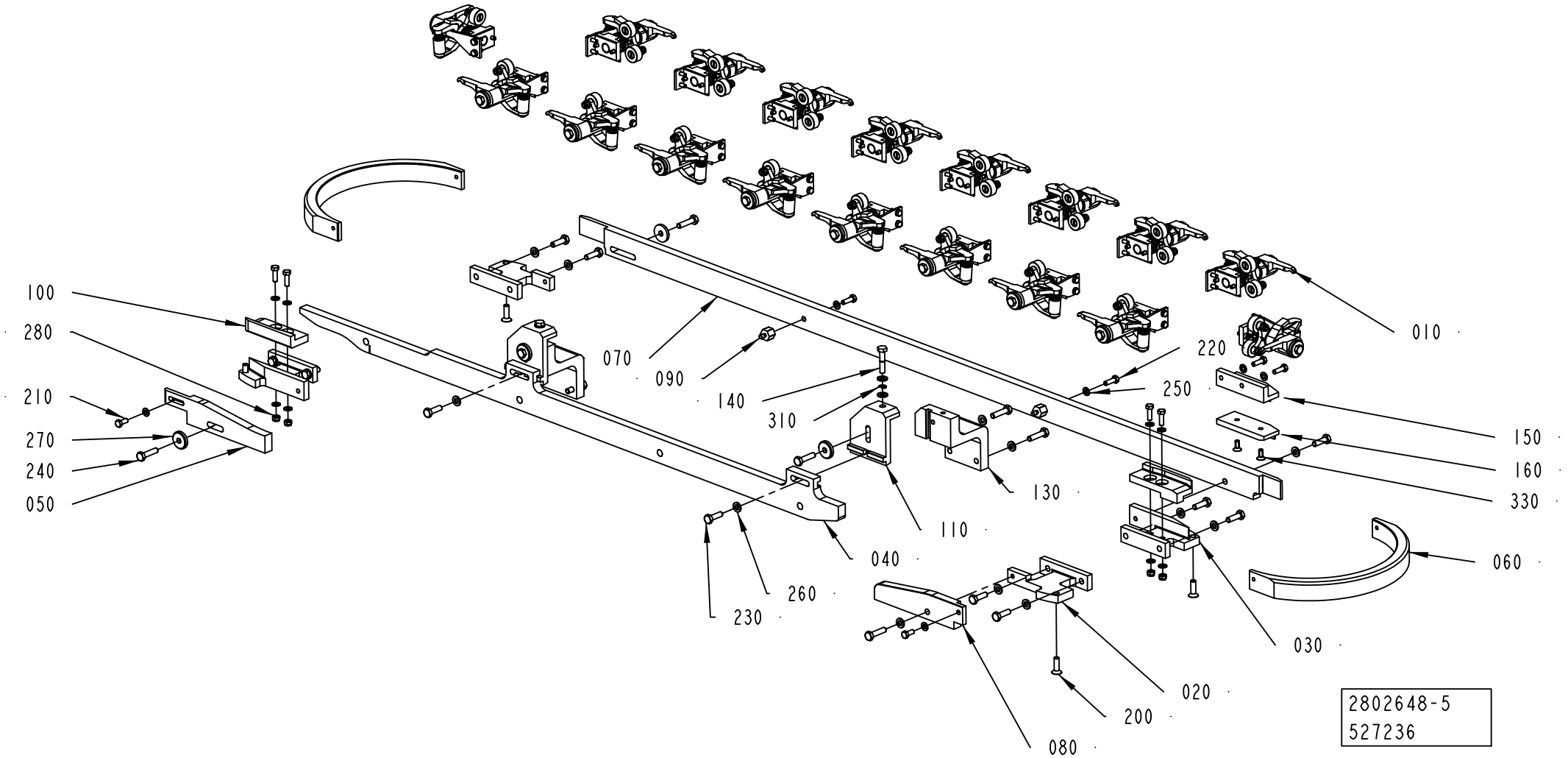

ECM: 562833 - 20120701
Group number: 2802648-0200
Assembly Drawing: 2802648-5_1_AA

This list covers pages from 2-4 to 2-9

Pos	Part No	UN	Qty	Description	Page No
TBA 0200E HELICAP 23, TBA 0250E HELICAP 23 (See drawing on page: 2-8)					
020	2780339-0000		2	BRACKET	
030	2780338-0000		2	BRACKET	
040	3073407-0000		1	CURVE	
050	3073402-0000		1	CURVE	
060	3073401-0000		2	CURVE	
070	3073404-0000		1	CURVE	
080	3073403-0000		1	CURVE	
090	2715807-0000		2	SPACER	
110	2838728-0000		2	ADJUSTMENT BRACKET	
130	3073405-0000		2	BRACKET	
200	312155-0370		4	SCREW DIN 7991 MF6S M6X20 A4 70	
210	312105-0327		2	SCREW, M6S ISO 4017 M5X12 A4 80	
220	312105-0329		6	SCREW, M6S ISO 4017 M5X16 A4 80	
230	312105-0370		10	SCREW, M6S ISO 4017 M6X20 A4 80	
240	312105-0372		9	SCREW, M6S ISO 4017 M6X25 A4 80	
250	315105-0146		14	WASHER PLAIN, 5,3X10X1 A4 BRB	
260	315105-0153		20	WASHER PLAIN, 6,4X12X1,5 A4 BRB	
270	315125-0153		4	WASHER HIGH, TBRSB 6,4X22X4 A4	
340	312105-0378		1	SCREW, M6S ISO 4014 M6X40 A4 80	
350	312105-0339		2	SCREW, M6S ISO 4014 M5X40 A4 80	
TBA 1000S HELICAP2 23 (See drawing on page: 2-4)					
020	2715666-0000		2	BRACKET	
030	2715671-0000		2	BRACKET	
040	2873895-0000		1	CURVE	
050	2838737-0000		1	CURVE	
060	2751708-0000		2	CURVE	
070	2751722-0000		1	CURVE	
080	2751733-0000		1	CURVE	
090	2751721-0000		2	SPACER	
110	2838728-0000		2	ADJUSTMENT BRACKET	
130	2751742-0000		2	BRACKET	
200	312155-0370		4	SCREW DIN 7991 MF6S M6X20 A4 70	
210	312105-0327		2	SCREW, M6S ISO 4017 M5X12 A4 80	
220	312105-0329		8	SCREW, M6S ISO 4017 M5X16 A4 80	
230	312105-0370		11	SCREW, M6S ISO 4017 M6X20 A4 80	
240	312105-0372		9	SCREW, M6S ISO 4017 M6X25 A4 80	
250	315105-0146		14	WASHER PLAIN, 5,3X10X1 A4 BRB	
260	315105-0153		20	WASHER PLAIN, 6,4X12X1,5 A4 BRB	
270	315125-0153		4	WASHER HIGH, TBRSB 6,4X22X4 A4	
TBA SLIMCAP1000, TBA STREAMCAP1000, TBA SLIMCAP 2000, TBA STREAMCAP200, TBA HELICAP 27 (See drawing on page: 2-4)					
020	2715666-0000		2	BRACKET	
030	2715671-0000		2	BRACKET	
040	2873895-0000		1	CURVE	
050	2838737-0000		1	CURVE	
060	2751708-0000		2	CURVE	
070	2751722-0000		1	CURVE	
080	2751733-0000		1	CURVE	
090	2751721-0000		2	SPACER	
110	2838728-0000		2	ADJUSTMENT BRACKET	
130	2751742-0000		2	BRACKET	
200	312155-0370		4	SCREW DIN 7991 MF6S M6X20 A4 70	
210	312105-0327		2	SCREW, M6S ISO 4017 M5X12 A4 80	
220	312105-0329		8	SCREW, M6S ISO 4017 M5X16 A4 80	
230	312105-0370		11	SCREW, M6S ISO 4017 M6X20 A4 80	
240	312105-0372		9	SCREW, M6S ISO 4017 M6X25 A4 80	
250	315105-0146		14	WASHER PLAIN, 5,3X10X1 A4 BRB	
260	315105-0153		20	WASHER PLAIN, 6,4X12X1,5 A4 BRB	
270	315125-0153		4	WASHER HIGH, TBRSB 6,4X22X4 A4	
TGA (See drawing on page: 2-6)					
020	2873859-0000		2	BRACKET	
030	2873868-0000		1	BRACKET	
040	2873857-0000		1	CAM	
050	2873860-0000		1	CURVE	
060	2873864-0000		2	CAM	
080	2873869-0000		1	CURVE	
110	2873870-0000		2	ADJUSTMENT BRACKET	
130	2780469-0000		2	BRACKET	
200	312155-0370		1	SCREW DIN 7991 MF6S M6X20 A4 70	
220	312105-0329		6	SCREW, M6S ISO 4017 M5X16 A4 80	
230	312105-0370		10	SCREW, M6S ISO 4017 M6X20 A4 80	
240	312105-0372		7	SCREW, M6S ISO 4017 M6X25 A4 80	
250	315105-0146		10	WASHER PLAIN, 5,3X10X1 A4 BRB	
260	315105-0153		21	WASHER PLAIN, 6,4X12X1,5 A4 BRB	
270	315125-0153		2	WASHER HIGH, TBRSB 6,4X22X4 A4	
290	312812-0316		1	HEXAGON NUT, NY-LOCK M6 A4 80	
300	312109-0376		2	SCREW, M6S ISO 4017 M6X35 A4 80	
TPA STREAMCAP 1000, TPA STREAMCAP 500, TPA HELICAP 27 (See drawing on page: 2-4)					
020	2780339-0000		2	BRACKET	
030	2780338-0000		2	BRACKET	
040	2838727-0000		1	CURVE	
050	2780341-0000		1	CURVE	
060	2780337-0000		2	CURVE	

Machine Type	Group Description	Used-In	Group Number	Page No

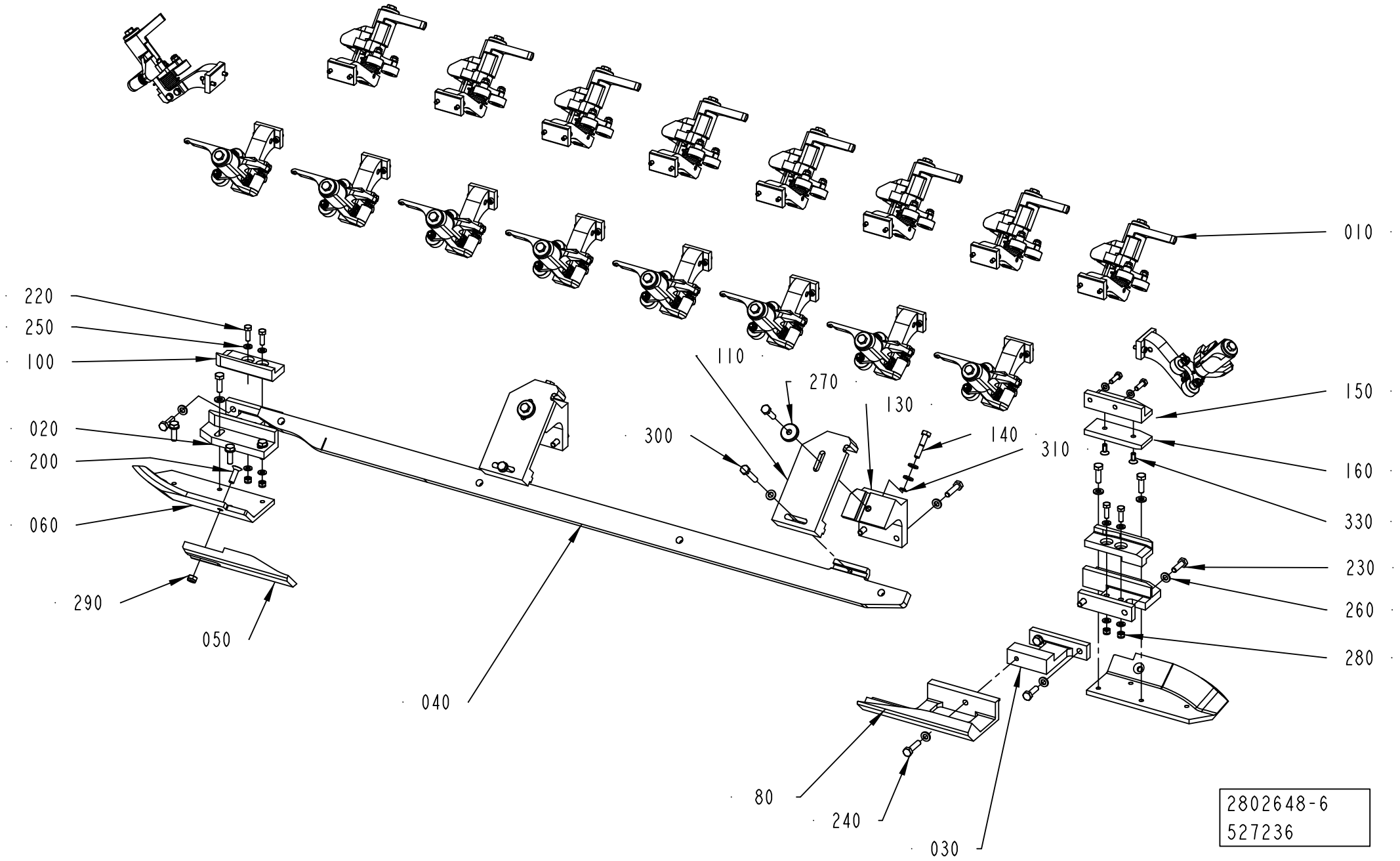
010
220
250
100
020
200
060
290
050
040
110
270
130
300
140
310
150
160
330
230
260
280
80
240
030
2802648-6
527236

ECM: 562833 - 20120701
Group number: 2802648-0200
Assembly Drawing: 2802648-6_1_AA

This list covers pages from 2-4 to 2-9

Pos	Part No	UN	Qty	Description	Page No
TPA STREAMCAP 1000, TPA STREAMCAP 500, TPA HELICAP 27 (Cont'd) (See drawing on page: 2-4)					
070	2780343-0000		1	CURVE	
080	2780342-0000		1	CURVE	
090	2715807-0000		2	SPACER	
110	2838728-0000		2	ADJUSTMENT BRACKET	
130	2780344-0000		2	BRACKET	
200	312155-0370		4	SCREW DIN 7991 MF6S M6X20 A4 70	
210	312105-0327		2	SCREW, M6S ISO 4017 M5X12 A4 80	
220	312105-0329		6	SCREW, M6S ISO 4017 M5X16 A4 80	
230	312105-0370		11	SCREW, M6S ISO 4017 M6X20 A4 80	
240	312105-0372		9	SCREW, M6S ISO 4017 M6X25 A4 80	
250	315105-0146		14	WASHER PLAIN, 5,3X10X1 A4 BRB	
260	315105-0153		20	WASHER PLAIN, 6,4X12X1,5 A4 BRB	
270	315125-0153		4	WASHER HIGH, TBRSB 6,4X22X4 A4	
320	312105-0331		2	SCREW, M6S ISO 4017 M5X20 A4 80	
Common Parts					
010	2751667-0200		18	PRESSURE FINGER	**2-11**
100	2751695-0000		2	STEERING	
140	2715804-0000		2	SCREW	
150	2873871-0000		1	BRACKET	
160	2838781-0000		1	STEERING	
280	312812-0314		4	HEXAGON NUT, NY-LOCK M5 A4 80	
310	315755-0106		2	RETAINING RING SHAFT DIN 6799 4 SS	
330	312155-0327		2	SCREW DIN 7991 MF6S M5X12 A4 70	

Pos	Part No	UN	Qty	Description	Page No

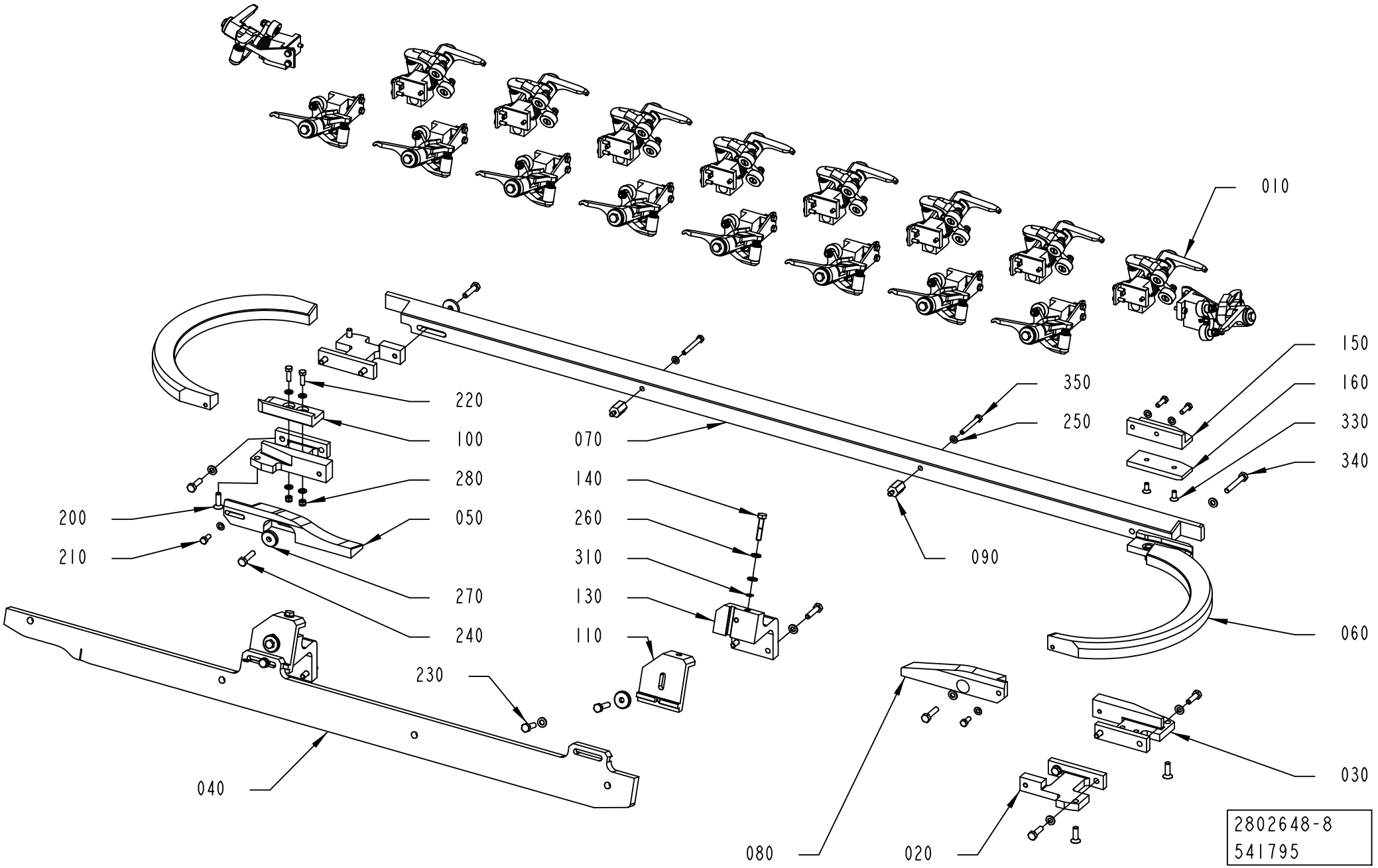
010
150
160
330
340
350
250
220
100
280
050
070
140
260
310
130
110
200
210
270
240
230
090
060
040
080
020
030
2802648-8
541795

ECM: 562833 - 20120701
Group number: 2802648-0200
Assembly Drawing: 2802648-8_1_AA

This list covers pages from 2-4 to 2-9

Pos	Part No	UN	Qty	Description	Page No
SEE PREVIOUS LISTS PAGES: 2-5, 2-7.					

Pos	Part No	UN	Qty	Description	Page No

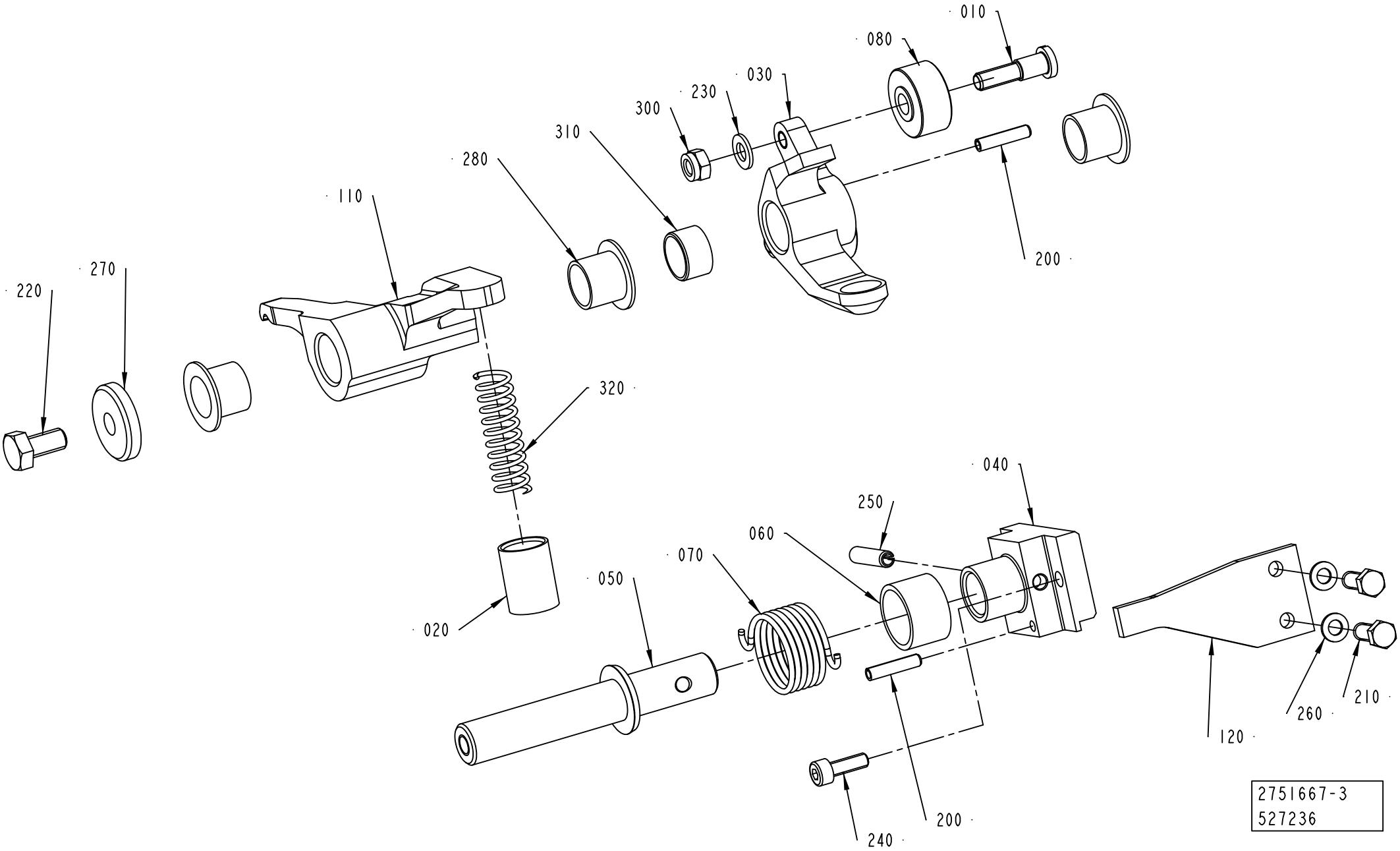
010
080
030
230
300
310
280
110
270
220
200
320
020
040
250
060
070
050
120
260
210
240
200
2751667-3
527236

ECM: 562832 - 20120701
Group number: 2751667-0200
Assembly Drawing: 2751667-3_1_AA

Pos	Part No	UN	Qty	Description	Page No
CAP 30/FLEX TBA 0200E HELICAP 23, CAP 30/FLEX TBA 0250E HELICAP 23 (See drawing on page: 2-10)					
010	2684864-0000		2	SHAFT	
040	3073406-0000		1	HOLDER	
050	2703715-0000		1	SHAFT	
080	2703725-0000		2	ROLLER	
110	2780346-0000		1	ARM	
120	3073408-0000		1	BRACKET	
230	315105-0146		2	WASHER PLAIN, 5,3X10X1 A4 BRB	
250	311112-0256		1	SPRING PIN, ISO 8752 4X20 A2	
270	315125-0153		1	WASHER HIGH, TBRSB 6,4X22X4 A4	
300	312812-0314		2	HEXAGON NUT, NY-LOCK M5 A4 80	
310	90600-5135		1	BUSHING, 12X14X8 MM	
320	90600-0683		1	COMP. SPRING, 2496, 1,2X10,4X45	
CAP 30/FLEX TBA 1000S HELICAP 23 (See drawing on page: 2-10)					
010	2684864-0000		2	SHAFT	
040	2703714-0000		1	HOLDER	
050	2703715-0000		1	SHAFT	
080	2703725-0000		2	ROLLER	
110	2716056-0000		1	ARM	
120	2751732-0000		1	BRACKET	
230	315105-0146		2	WASHER PLAIN, 5,3X10X1 A4 BRB	
250	311112-0256		1	SPRING PIN, ISO 8752 4X20 A2	
270	315125-0153		1	WASHER HIGH, TBRSB 6,4X22X4 A4	
300	312812-0314		2	HEXAGON NUT, NY-LOCK M5 A4 80	
310	90600-5135		1	BUSHING, 12X14X8 MM	
320	3058864-0000		1	COMPRESSION SPRING	
TBA SLIMCAP1000, TBA STREAMCAP1000, TBA SLIMCAP 2000, TBA STREAMCAP200, TBA HELICAP 27 (See drawing on page: 2-10)					
010	2684864-0000		2	SHAFT	
040	2703714-0000		1	HOLDER	
050	2703715-0000		1	SHAFT	
080	2703725-0000		2	ROLLER	
110	2716056-0000		1	ARM	
120	2751732-0000		1	BRACKET	
230	315105-0146		2	WASHER PLAIN, 5,3X10X1 A4 BRB	
250	311112-0256		1	SPRING PIN, ISO 8752 4X20 A2	
270	315125-0153		1	WASHER HIGH, TBRSB 6,4X22X4 A4	
300	312812-0314		2	HEXAGON NUT, NY-LOCK M5 A4 80	
310	90600-5135		1	BUSHING, 12X14X8 MM	
320	90600-0683		1	COMP. SPRING, 2496, 1,2X10,4X45	
TGA (See drawing on page: 2-10)					
010	2684864-0000		2	SHAFT	
040	2780391-0000		1	HOLDER	
050	2780393-0000		1	SHAFT	
080	2703725-0000		2	ROLLER	
110	2780394-0000		1	ARM	
120	2715813-0000		1	BRACKET	
230	315105-0146		2	WASHER PLAIN, 5,3X10X1 A4 BRB	
250	311112-0256		1	SPRING PIN, ISO 8752 4X20 A2	
270	315125-0153		1	WASHER HIGH, TBRSB 6,4X22X4 A4	
300	312812-0314		2	HEXAGON NUT, NY-LOCK M5 A4 80	
310	90600-5135		1	BUSHING, 12X14X8 MM	
320	90600-0683		1	COMP. SPRING, 2496, 1,2X10,4X45	
TPA STREAMCAP 1000, TPA STREAMCAP 500, TPA HELICAP 27 (See drawing on page: 2-10)					
010	2684864-0000		2	SHAFT	
040	2780352-0000		1	HOLDER	
050	2703715-0000		1	SHAFT	
080	2703725-0000		2	ROLLER	
110	2780346-0000		1	ARM	
120	2780353-0000		1	BRACKET	
230	315105-0146		2	WASHER PLAIN, 5,3X10X1 A4 BRB	
250	311112-0256		1	SPRING PIN, ISO 8752 4X20 A2	
270	315125-0153		1	WASHER HIGH, TBRSB 6,4X22X4 A4	
300	312812-0314		2	HEXAGON NUT, NY-LOCK M5 A4 80	
310	90600-5135		1	BUSHING, 12X14X8 MM	
320	90600-0683		1	COMP. SPRING, 2496, 1,2X10,4X45	
Common Parts					
020	2715695-0000		1	SLEEVE	
030	2715794-0000		1	ARM	
060	2715797-0000		1	BUSHING	
070	2715798-0000		1	TURN SPRING	
200	311112-0208		2	SPRING PIN, ISO 8752 3X16 A2	
210	312105-0291		2	SCREW, M6S ISO 4017 M4X12 A4 70	
220	312105-0366		1	SCREW, M6S ISO 4017 M6X12 A4 80	
240	312115-0291		2	SCREW ISO4762 M4X12 A4 80	
260	315105-0136		2	WASHER PLAIN, 4,3X9X0,8 A4 BRB	
280	90240-0262		3	FLANGE BUSHING, IGLIDUR X 12X14X12	

Machine Type | Group Description | Used-In | Group Number | Page No

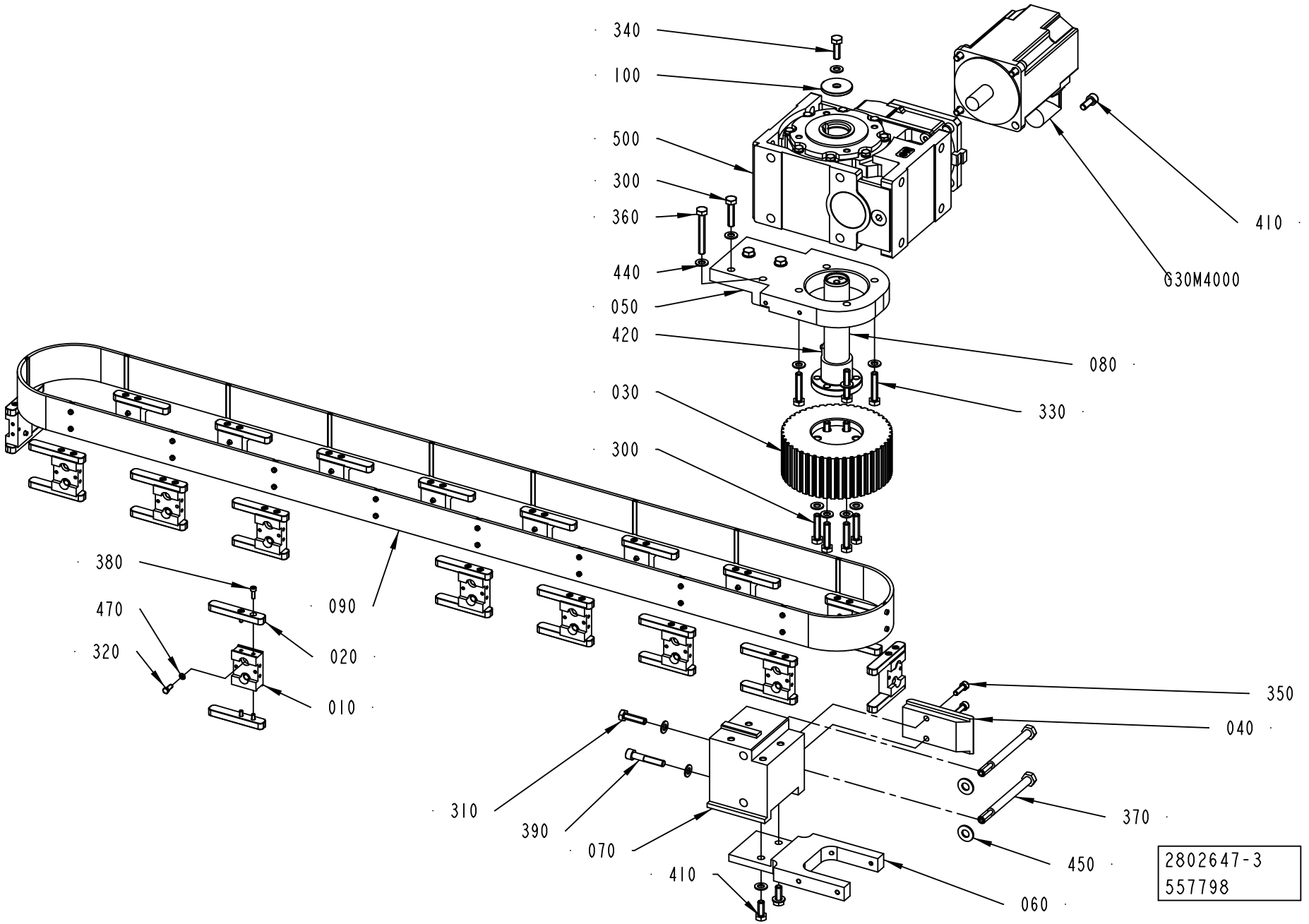
340
100
500
300
360
440
050
420
030
300
380
470
320
090
020
010
410
G30M4000
080
330
350
040
370
450
060
310
390
070
410
2802647-3
557798

ECM: 567280 - 20120701
Group number: 2802647-0200
Assembly Drawing: 2802647-3_1_AB

Pos	Part No	UN	Qty	Description	Page No
-					
010	2703711-0000		18	HOLDER	
020	2715837-0000		36	KEY	
030	2837191-0000		1	TOOTHED PULLEY	
040	2751710-0000		1	SUPPORT PLATE	
050	2837175-0000		1	BEARING HALF	
060	2716041-0000		1	BRACKET	
070	2751700-0000		1	BOW CLAMP	
080	2838721-0000		1	SHAFT	
090	3117862-0000		1	TIMING BELT	
010	*90603-1153*		*1*	*TIMING BELT 50AT10/2700-V PU*	
020	*90603-1154*		*18*	*INSERT NUT, 50 M4 X 50AT10-00*	
100	2837255-0000		1	WASHER	
300	312109-0457		8	SCREW, M6S ISO 4017 M8X35 A4 80	
310	312105-0455		1	SCREW, M6S ISO 4017 M8X30 A4 80	
320	312105-0291		36	SCREW, M6S ISO 4017 M4X12 A4 70	
330	312109-0459		4	SCREW, M6S ISO 4017 M8X40 A4 80	
340	312105-0453		1	SCREW, M6S ISO 4017 M8X25 A4 80	
350	312115-0370		2	SCREW ISO4762 M6X20 A4 80	
360	312109-0463		2	SCREW, M6S ISO 4017 M8X60 A4 80	
370	312105-0515		2	SCREW, M6S ISO 4014 M10X120 A4 80	
380	312115-0291		72	SCREW ISO4762 M4X12 A4 80	
390	312115-0460		1	SCREW ISO4762 M8X45 A4 80	
410	312105-0451		6	SCREW, M6S ISO 4017 M8X20 A4 80	
420	315705-0307		1	PARALLEL KEY W. ROUND ENDS, 10X8X70 MM	
440	315105-0165		19	WASHER PLAIN, 8,4X16X1,6 A4 BRB	
450	315105-0173		2	WASHER PLAIN, 10,5X22X2 A4 BRB	
470	315105-0136		36	WASHER PLAIN, 4,3X9X0,8 A4 BRB	
500	90604-4255		1	WORM GEAR MR V 63 UO3A-80B4 … B5/140 H1	
G30M4000	90601-0668		1	SERVO MOTOR, MPL-B420P-MK72AA SERIES A	

Pos	Part No	UN	Qty	Description	Page No

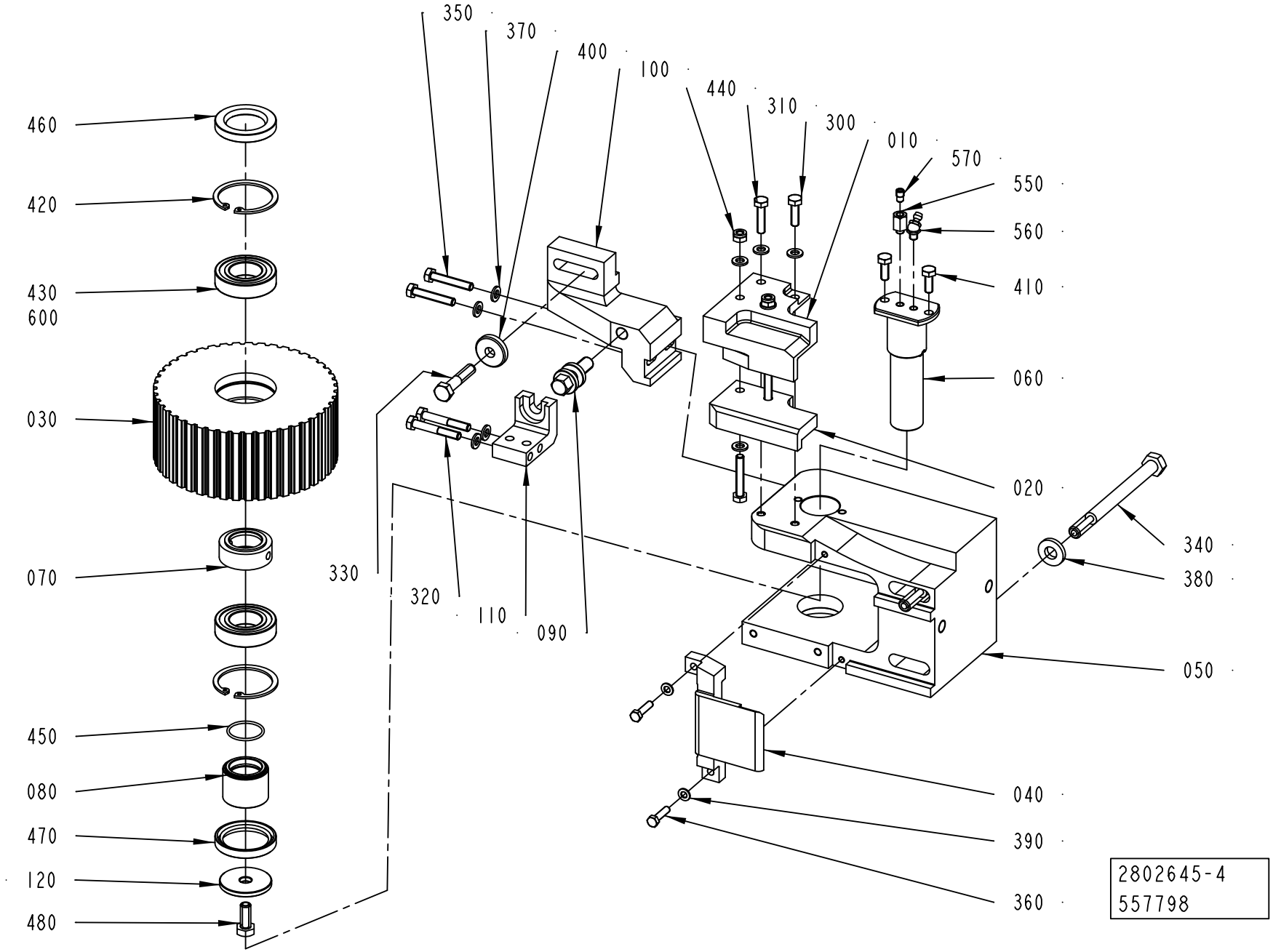
350
370
400
100
440
310
300
010
570
550
560
410
060
020
340
380
050
040
390
360
460
420
430
600
030
070
450
080
470
120
480
330
320
110
090
2802645-4
557798

ECM: 560219 - 20120701
Group number: 2802645-0200
Assembly Drawing: 2802645-4_1_AB

Pos	Part No	UN	Qty	Description	Page No
STREAMCAP500, STREAMCAP1000, SLIMCAP 2000, SLIMCAP 1000, STREAMCAP200, HELICAP2 23, HELICAP 27					
010	2751692-0000		1	BRACKET	
100	2802629-0000		1	BRACKET	
310	312105-0372		1	SCREW, M6S ISO 4017 M6X25 A4 80	
350	312109-0376		4	SCREW, M6S ISO 4017 M6X35 A4 80	
370	315105-0153		10	WASHER PLAIN, 6,4X12X1,5 A4 BRB	
Common Parts					
020	2751693-0000		1	STEERING	
030	2751712-0000		1	TOOTHED PULLEY	
040	2751714-0000		1	SUPPORT PLATE	
050	2751725-0000		1	BOW CLAMP	
060	3208104-0000		1	SHAFT	
070	2751747-0000		1	SPACER	
080	2751748-0000		1	SLEEVE	
090	2703842-0000		1	ADJUSTING SCREW	
110	2802635-0000		1	SUPPORT	
120	2837255-0000		1	WASHER	
300	312105-0370		1	SCREW, M6S ISO 4017 M6X20 A4 80	
320	312105-0378		2	SCREW, M6S ISO 4014 M6X40 A4 80	
330	312105-0459		1	SCREW, M6S ISO 4014 M8X40 A4 80	
340	312105-0515		2	SCREW, M6S ISO 4014 M10X120 A4 80	
360	312105-0331		2	SCREW, M6S ISO 4017 M5X20 A4 80	
380	315115-0173		2	WASHER PLAIN, TBRB 10,5/22 H=4	
390	315105-0146		2	WASHER PLAIN, 5,3X10X1 A4 BRB	
400	315125-0165		1	WASHER HIGH, TBRSB 8,4X26X5 A4	
410	312105-0368		2	SCREW, M6S ISO 4017 M6X16 A4 80	
420	315753-0130		2	RETAINING RING FOR BORE DIN 472 47 SS	
430	321306-0105		2	BALL BEARING 25/47X12	
440	312812-0316		2	HEXAGON NUT, NY-LOCK M6 A4 80	
450	315202-0710		1	O-RING 25,12X1,78 MM	
460	315221-0169		1	RADIAL SEAL 30X47X7 MM	
470	315221-0175		1	RADIAL SEAL 35X47X7 MM	
480	312105-0451		1	SCREW, M6S ISO 4017 M8X20 A4 80	
550	3147226-0000		1	ADAPTER	
560	90286-0012		1	GREASE NIPPLE 45 DEG. M6X1, 2107	
570	90604-3329		1	NON-RETURN VALVE, RVA-M6	
600	90603-5339	L	1	KLüBEROIL 4 UH1 320 N, ONLY IN BOM	
	90603-6434		*1*	*KLUBEROIL 4 UH1 320 N, 5 L CANISTER*	
	90603-6454		*1*	*KLüBEROIL 4 UH1 320 N, 20 L CANISTER*	

Pos	Part No	UN	Qty	Description	Page No

Machine Type | Group Description | Used-In | Group Number | Page No

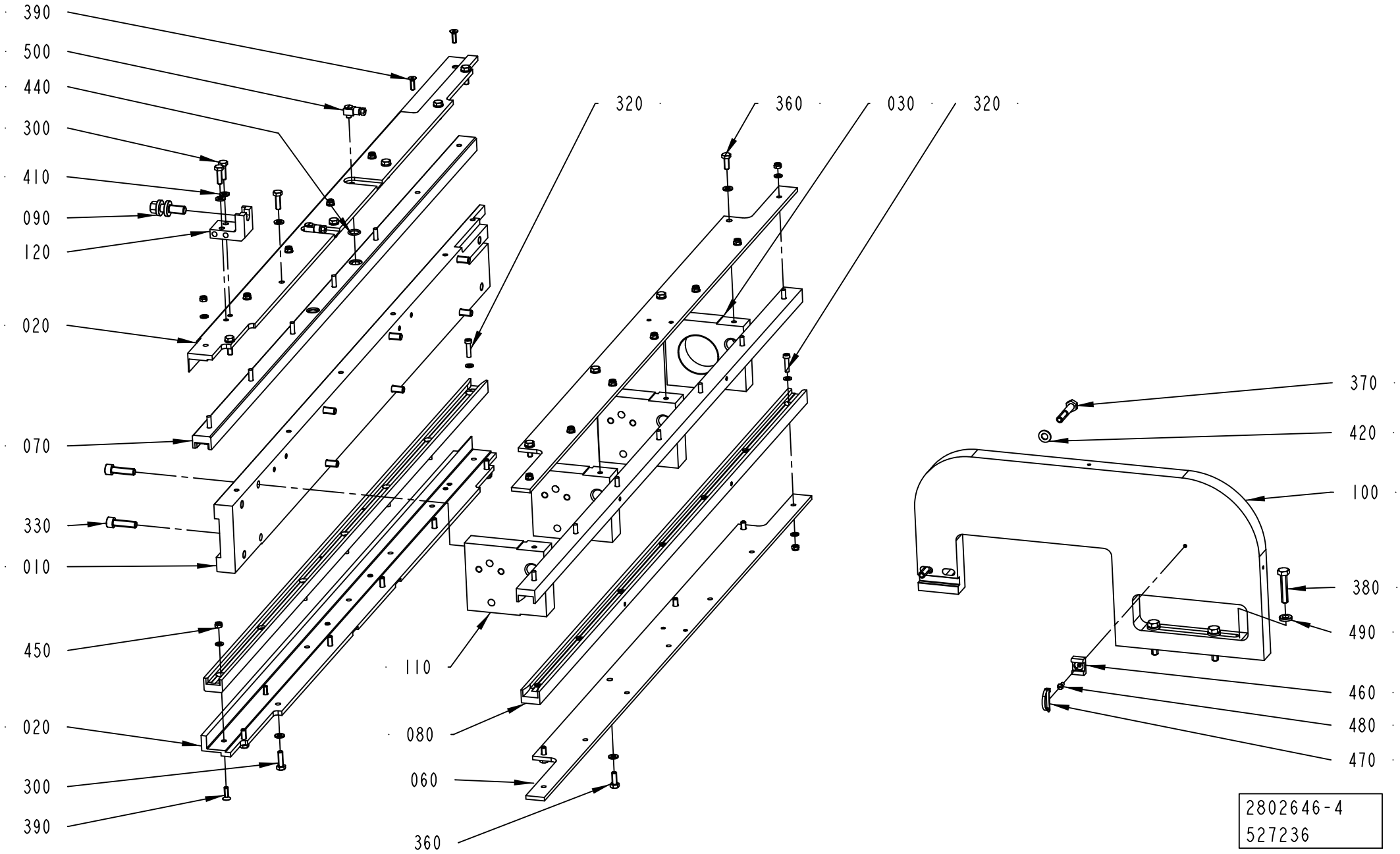
390
500
440
300
410
090
120
020
070
330
010
450
020
300
390
320
360
030
320
110
080
060
360
370
420
100
380
490
460
480
470
2802646-4
527236

ECM: 531103 - 20120401
Group number: 2802646-0200
Assembly Drawing: 2802646-4_1_AA

Pos	Part No	UN	Qty	Description	Page No
STREAMCAP500, STREAMCAP1000, SLIMCAP 2000, SLIMCAP 1000, STREAMCAP200, HELICAP2 23, HELICAP 27					
010	3095793-0000		1	PLATE	
020	3095794-0000		2	ANGLE BRACKET	
070	3095795-0000		2	SLIDING STRIP	
100	2802637-0000		1	MOUNTING SHEET	
320	312125-0331		24	SLOTTED HEAD SCREW, ISO1207 M5X20 A4	
390	312155-0329		4	SCREW DIN 7991 MF6S M5X16 A4 70	
400	315105-0146		52	WASHER PLAIN, 5,3X10X1 A4 BRB	
410	315105-0153		23	WASHER PLAIN, 6,4X12X1,5 A4 BRB	
Common Parts					
030	2837631-0000		1	SPACER	
060	2838783-0000		2	PLATE	
080	2838784-0000		2	SLIDING STRIP	
090	2703842-0000		1	ADJUSTING SCREW	
110	2802644-0000		3	SPACER	
120	2802635-0000		1	SUPPORT	
300	312105-0370		15	SCREW, M6S ISO 4017 M6X20 A4 80	
330	312115-0455		8	SCREW ISO4762 M8X30 A4 80	
360	312105-0368		8	SCREW, M6S ISO 4017 M6X16 A4 80	
370	312105-0460		2	SCREW, M6S ISO 4014 M8X45 A4 80	
380	312109-0459		3	SCREW, M6S ISO 4017 M8X40 A4 80	
420	315105-0165		2	WASHER PLAIN, 8,4X16X1,6 A4 BRB	
440	315202-0702		4	O-RING 12,42X1,78 MM	
450	312812-0314		28	HEXAGON NUT, NY-LOCK M5 A4 80	
460	352113-0203		1	ANCHOR PLATES FOR STRIPS, TM3S8-M0	
470	352113-0104		1	CABLE TIE, BLACK 300X4,8 MM	
480	312125-0287		1	SLOTTED HEAD SCREW, ISO1207 M4X8 A4	
490	315115-0165		3	WASHER PLAIN, TBRB 8,4/16 H=3	
500	90134-0058		3	CONNECTION	

Pos	Part No	UN	Qty	Description	Page No

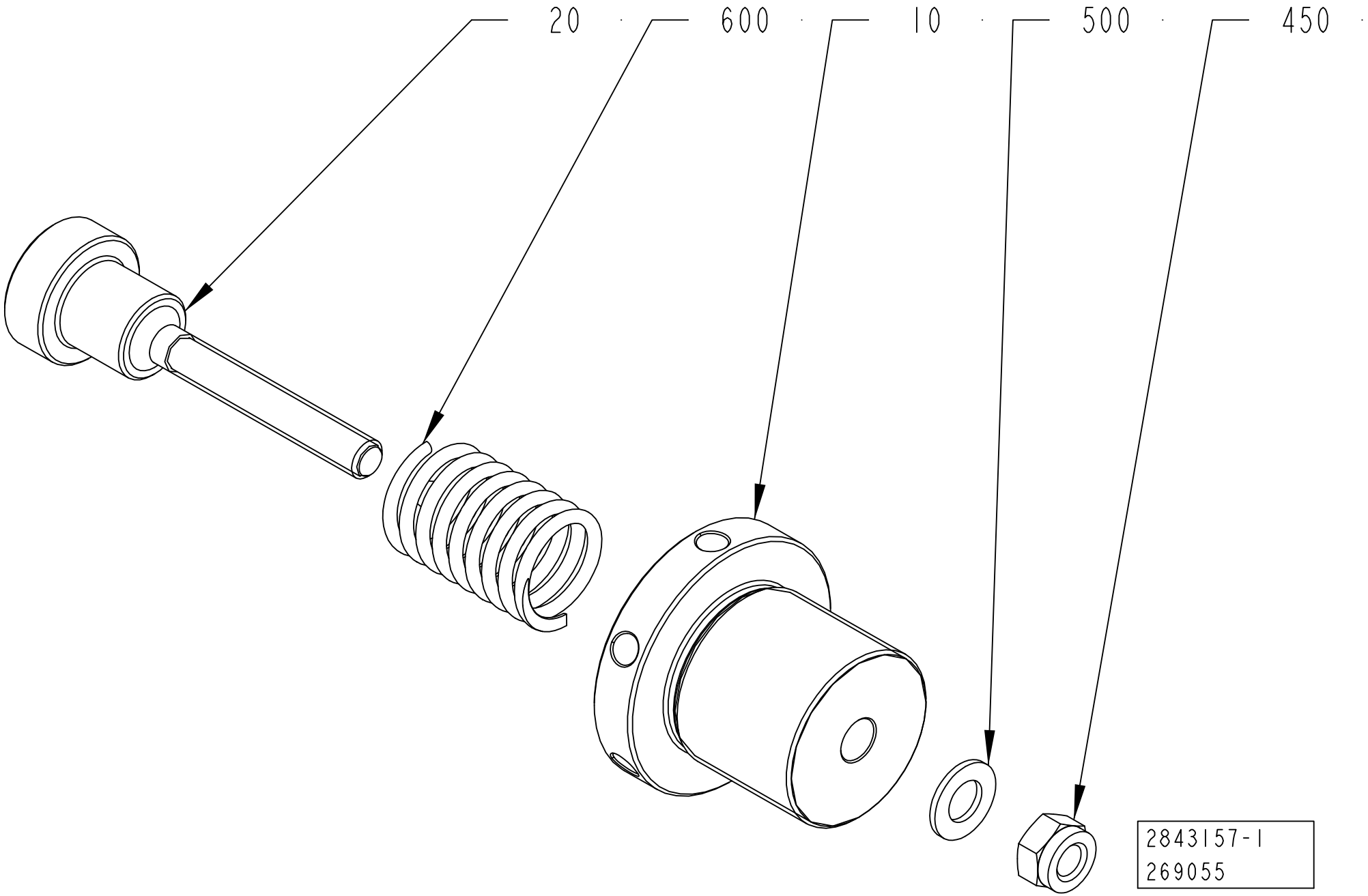
20
600
10
500
450
2843157-1
269055

ECM: 350651 - 20080701
Group number: 2843157-0100
Assembly Drawing: 2843157-1_1_AA

Pos	Part No	UN	Qty	Description	Page No
-					
010	2843158-0000		1	FLANGE	
020	2843159-0000		1	SHAFT	
450	312812-0322		1	HEXAGON NUT, NY-LOCK M12 A4 80	
500	315105-0178		1	WASHER PLAIN, 13X24X2,5 A4 BRB	
600	90600-0656		1	COMP. SPRING, 6777, 4X36X120 DIN2098	

Pos	Part No	UN	Qty	Description	Page No

Tetra Pak

SPC
Spare Parts Catalogue

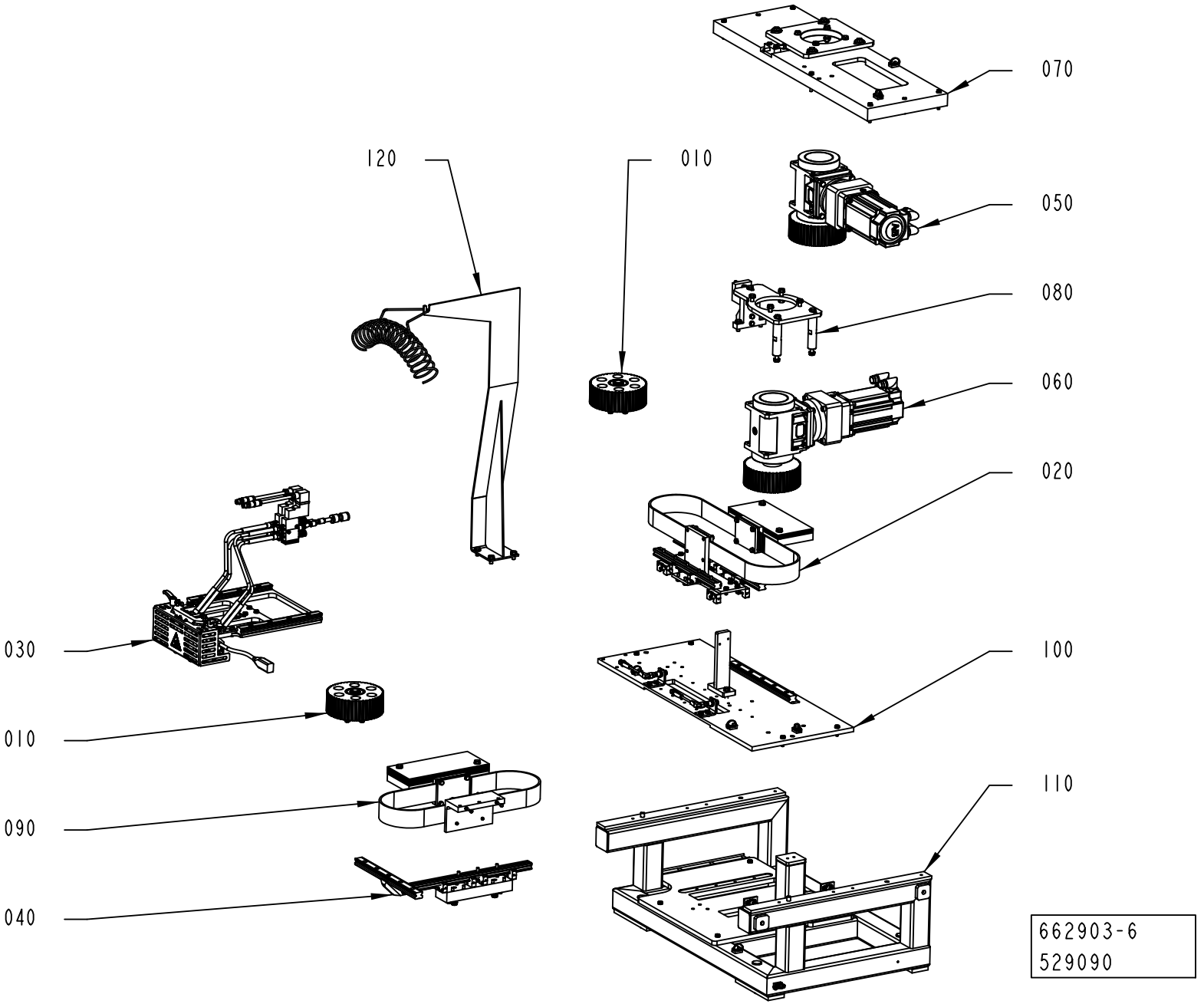
070
120
010
050
080
060
020
030
010
100
090
110
040
662903-6
529090

Pos	Part No	UN	Qty	Description	Page No
CAP 30/FLEX SLIMCAP1000, CAP 30/FLEX STREAMCAP1000, CAP 30/FLEX SLIMCAP2000, CAP 30/FLEX STREAMCAP500, CAP 30/FLEX STREAMCAP200, CAP 30/FLEX HELICAP2 23, CAP 30/FLEX HELICAP 27					
030	2716091-0400		1	HOTMELT GUN	**3-5**
080	2840146-0100		1	MOTOR BRACKET	**3-9**
Common Parts					
010	2695135-0200		2	PULLEY	**3-11**
020	2716090-0200		1	MOTION CONTROL	**3-13**
040	2716092-0200		1	TRANSMISSION RAIL	**3-15**
050	2840143-0200		1	SERVO MOTOR	**3-17**
060	2840144-0200		1	SERVO MOTOR	**3-19**
070	2840145-0100		1	MOTOR BRACKET	**3-21**
090	2716097-0200		1	MOTION CONTROL	**3-23**
100	2840147-0200		1	FASTENING BRACKET	**3-25**
110	2841501-0200		1	FRAME	**3-27**
120	2901708-0100		1	SUPPORT TUBE	**3-29**

Pos	Part No	UN	Qty	Description	Page No

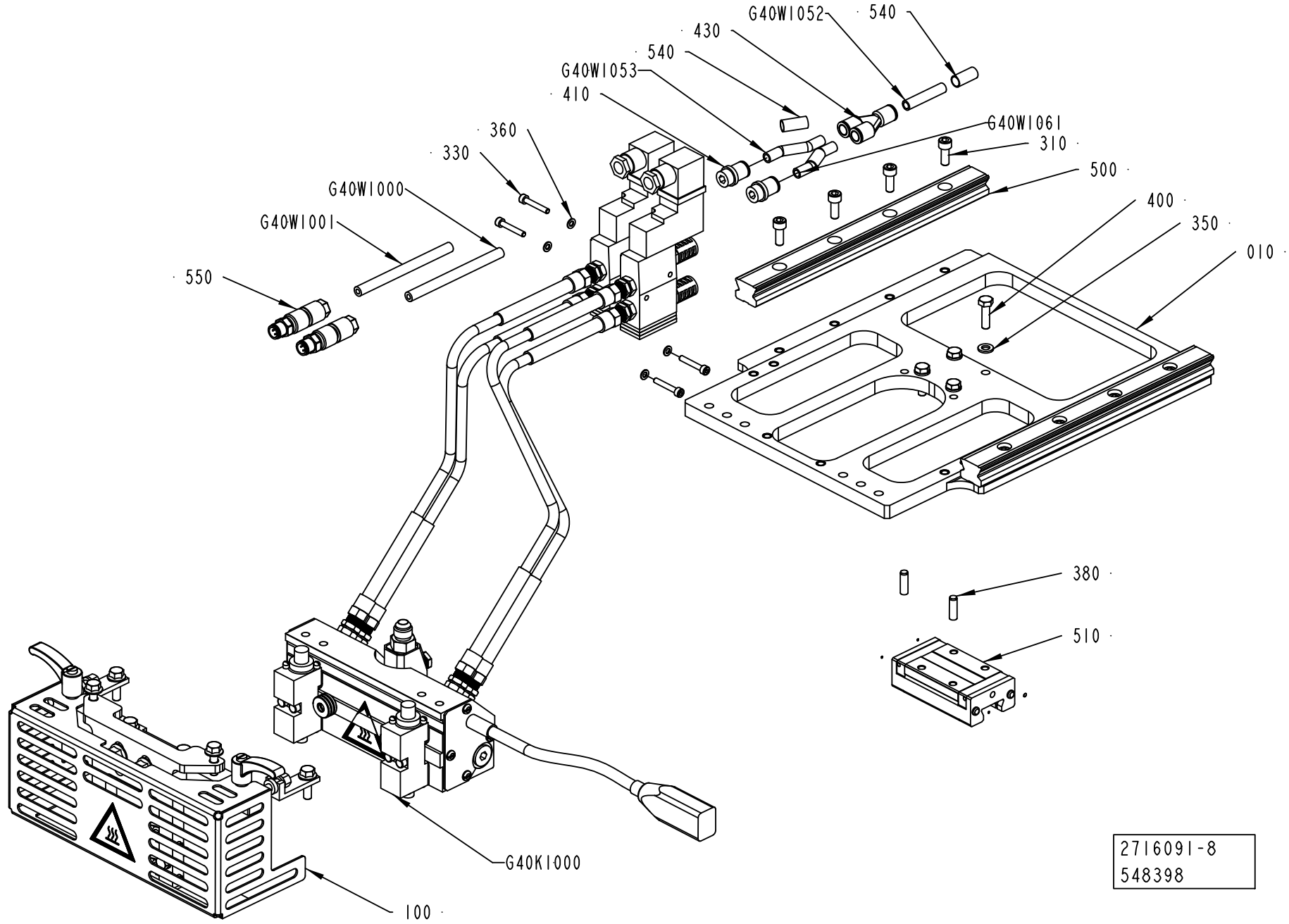
G40W1052
540
430
540
G40W1053
410
360
330
G40W1000
G40W1001
550
G40W1061
310
500
400
350
010
380
510
G40K1000
100
2716091-8
548398

ECM: 550834 - 20120403
Group number: 2716091-0400
Assembly Drawing: 2716091-8_1_AC

Pos	Part No	UN	Qty	Description	Page No
CAP 30/FLEX					
330	312115-0297		4	SCREW ISO4762 M4X25 A4 80	
360	315105-0136		5	WASHER PLAIN, 4,3X9X0,8 A4 BRB	
410	350003-0007		2	USH-IN FITTING QS-F-G1/4-8-I	
430	350015-0003		1	PUSH-IN Y-CONNECTOR QSY-F-8	
540	90459-7370		3	MARKING FOR PNEUM. TUBING, PRZ08	
550	90603-5568		2	CONNECTOR, SACC-M12MS-4QO-0,34-VA	
G40K1000	90604-3317		1	GUN,TP EASYC. SBLA2T 120 1A, 1099064H1	
010	*90459-6327*		*2*	*SOLENOID VALVE, SOLIDBLUE, 105 3894*	
	90459-6332		*1*	*MUFFLER, 1/8 INCH, 105 8058*	
	90042-0392		*1*	*CONTACT 2 POLE + EARTH*	
020	*90600-0684*		*6*	*SPACER 75ODX.328IDX.12THK, 102 8115*	
030	*90600-0550*		*4*	*STRAIGHT COUPLING,EXT.THREADED 8/6-R1/8"*	
040	*90600-0551*		*4*	*STRAIGHT COUPLING,EXT.THREADED 8/6-R1/4"*	
050	*342903-0121*		*8*	*NUT WITH SPRING, 1723 8/6-M12X1*	
060	*90600-0558*		*1*	*BLUE SERIES PNUEMATIC GUN, 939 586*	
070	*3100274-0000*		*1*	*FILTER*	
	3117842-0000		*1*	*FILTER INSERT*	
080	*90459-6329*		*2*	*MODULE SOLIDBLUE A, 105 2927*	
090	*90600-0547*		*1*	*APPLICATOR UNIT, 1062257*	
100	*90439-0206*		*1*	*CABLE*	
110	*90600-0561*		*1*	*BLUE SERIES PNUEMATIC GUN, 105 4659*	
120	*90600-0553*	*M*	*4*	*TUBE, 8X1 MM PTFE*	
Common Parts					
010	3123206-0000		1	PLATE	
100	3073395-0100		1	ADJUSTMENT BRACKET	**3-7**
310	312115-0368		10	SCREW ISO4762 M6X16 A4 80	
350	315105-0153		10	WASHER PLAIN, 6,4X12X1,5 A4 BRB	
380	311103-0353		2	PARALLEL PIN ISO 2338 6M6X20 A1	
400	312105-0370		4	SCREW, M6S ISO 4017 M6X20 A4 80	
500	90600-0484		2	GUIDE BAR, SSR 25 253L-YM G36.5/36.5	
510	90604-3338		1	CARRIAGE, SSR25XWSSHHME(C) BLOCK WITH FO	
G40W1000	351150-0403	M	2	CABLE OLFLEX 3X0,75 MM2 LIGHT/GREY	
G40W1001	351150-0403	M	2	CABLE OLFLEX 3X0,75 MM2 LIGHT/GREY	
G40W1051	315400-0004	M	1	TUBE PUN-H-8X1,25-BL	
G40W1052	315400-0004	M	1	TUBE PUN-H-8X1,25-BL	
G40W1061	315400-0004	M	1	TUBE PUN-H-8X1,25-BL	

Pos	Part No	UN	Qty	Description	Page No

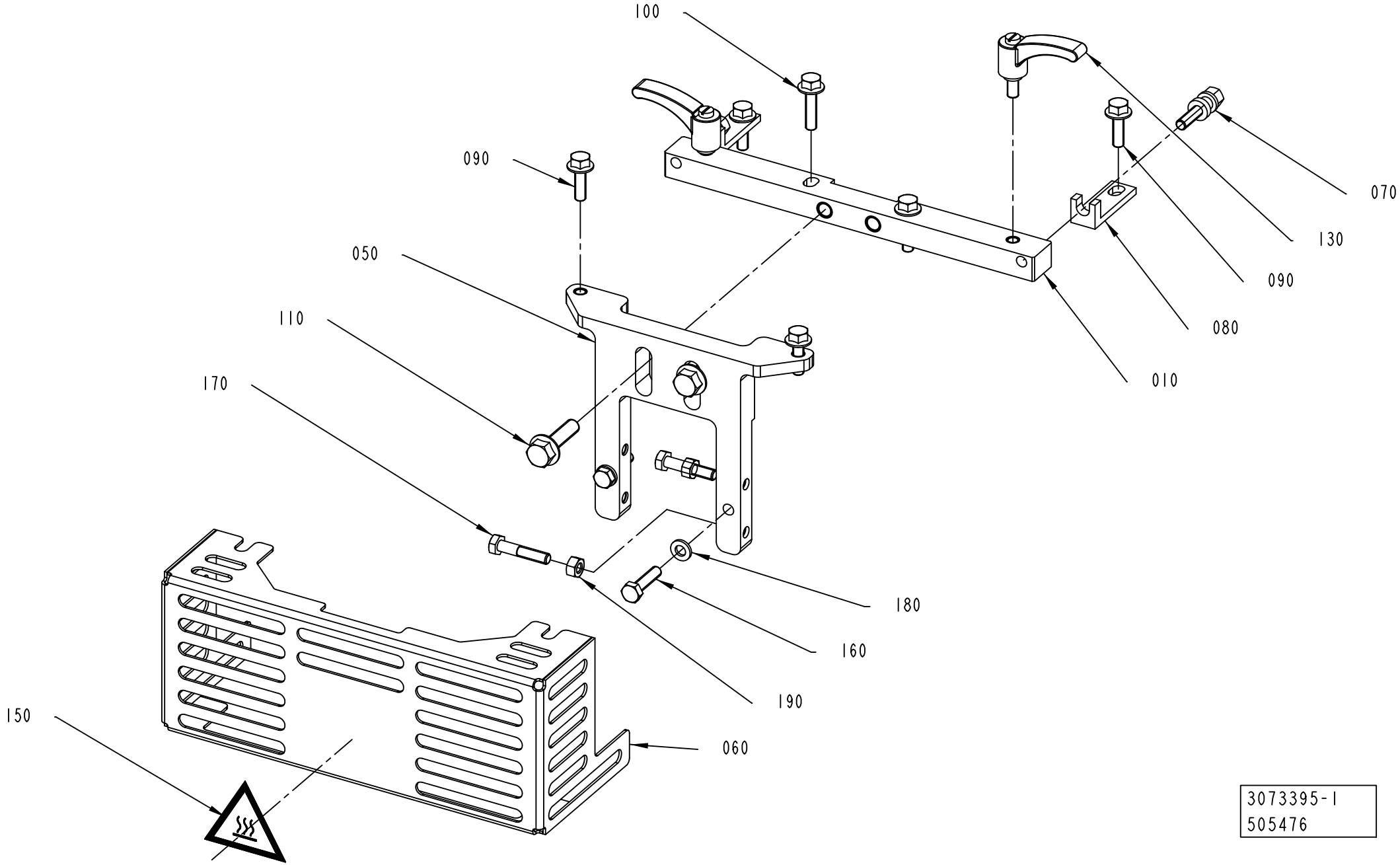
100
090
050
110
170
150
060
180
160
190
010
080
090
130
070
3073395-1
505476

ECM: 507783 - 20111003
Group number: 3073395-0100
Assembly Drawing: 3073395-1_1_AC

Pos	Part No	UN	Qty	Description	Page No
CAP 30/FLEX					
170	312105-0374		2	SCREW, M6S ISO 4014 M6X30 A4 80	
190	312605-0316		2	HEXAGON NUT, M6M M6 A280	
Common Parts					
010	3073387-0000		1	PLATE	
050	3096118-0000		1	PLATE	
060	3073391-0000		1	COVER	
070	3034454-0000		2	ADJUSTING SCREW	
080	3034455-0000		2	SUPPORT	
090	312108-0370		4	SCREW EN 1665 TYPE F M6X20 A270	
100	312108-0372		2	SCREW EN 1665 TYPE F M6X25 A270	
110	312108-0455		2	SCREW EN 1665 TYPE F M8X30 A270	
130	2911985-0000		2	LOCKING LEVER	
150	359710-0001		1	WARNING SIGN ISO, HOT SURFACE	
160	312105-0372		2	SCREW, M6S ISO 4017 M6X25 A4 80	
180	315106-0153		2	WASHER PLAIN, M6 ISO7089-6-200 HV A4	

Pos	Part No	UN	Qty	Description	Page No

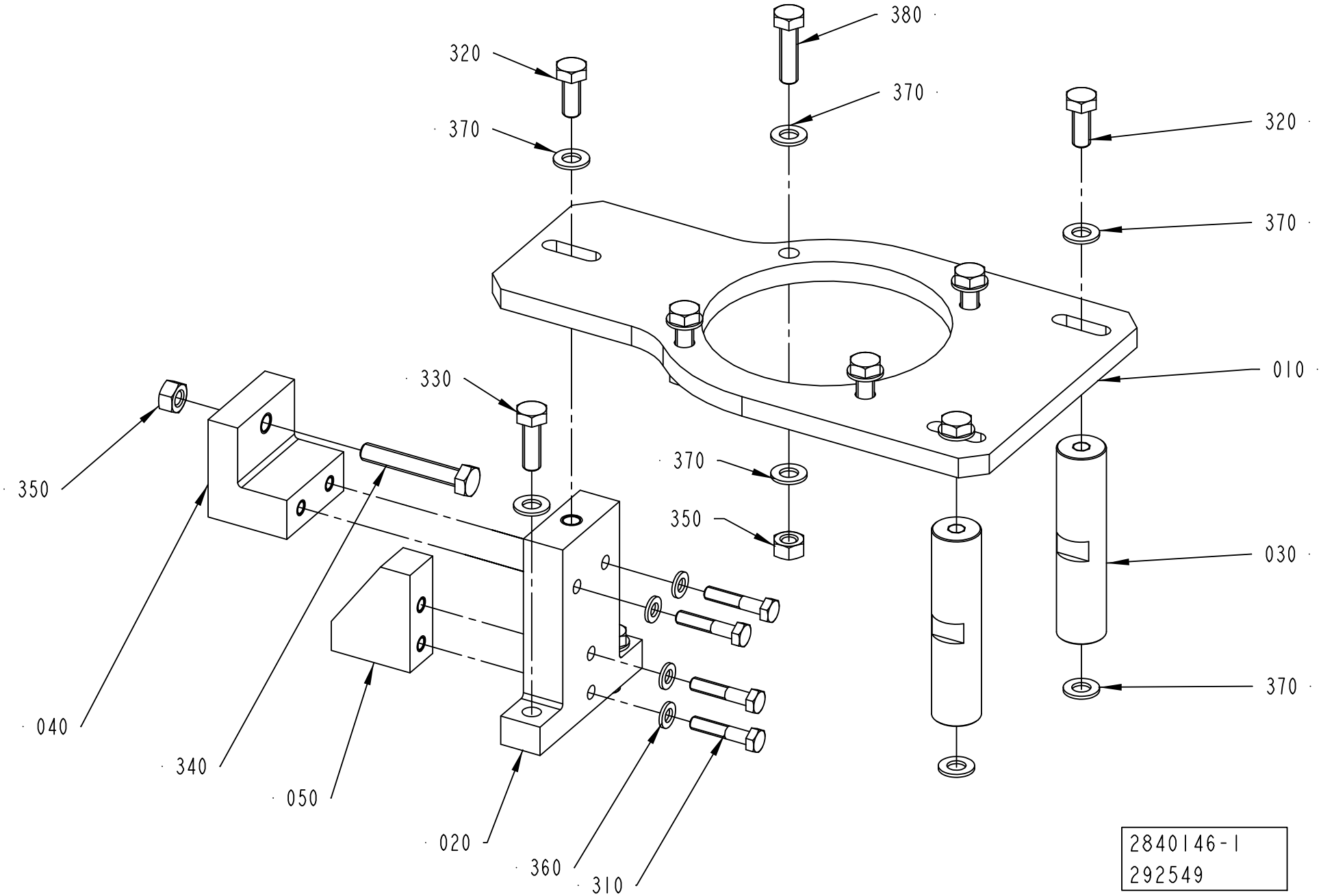
380
320
370
370
320
370
010
330
370
350
350
030
370
040
340
050
020
360
310
2840146-1
292549

ECM: 293232 - 20070323
Group number: 2840146-0100
Assembly Drawing: 2840146-1_1_AB

Pos	Part No	UN	Qty	Description	Page No
-					
010	2841344-0000		1	PLATE	
020	2841346-0000		1	BLOCK	
030	2841345-0000		2	COLUMN	
040	2696481-0000		1	BLOCK	
050	2873921-0000		1	BLOCK	
310	312105-0374		4	SCREW, M6S ISO 4014 M6X30 A4 80	
320	312105-0451		3	SCREW, M6S ISO 4017 M8X20 A4 80	
330	312105-0453		4	SCREW, M6S ISO 4017 M8X25 A4 80	
340	312109-0461		1	SCREW, M6S ISO 4017 M8X50 A4 80	
350	312605-0318		5	HEXAGON NUT, M6M M8 A280	
360	315105-0153		4	WASHER PLAIN, 6,4X12X1,5 A4 BRB	
370	315105-0165		15	WASHER PLAIN, 8,4X16X1,6 A4 BRB	
380	312105-0455		4	SCREW, M6S ISO 4017 M8X30 A4 80	

Pos	Part No	UN	Qty	Description	Page No

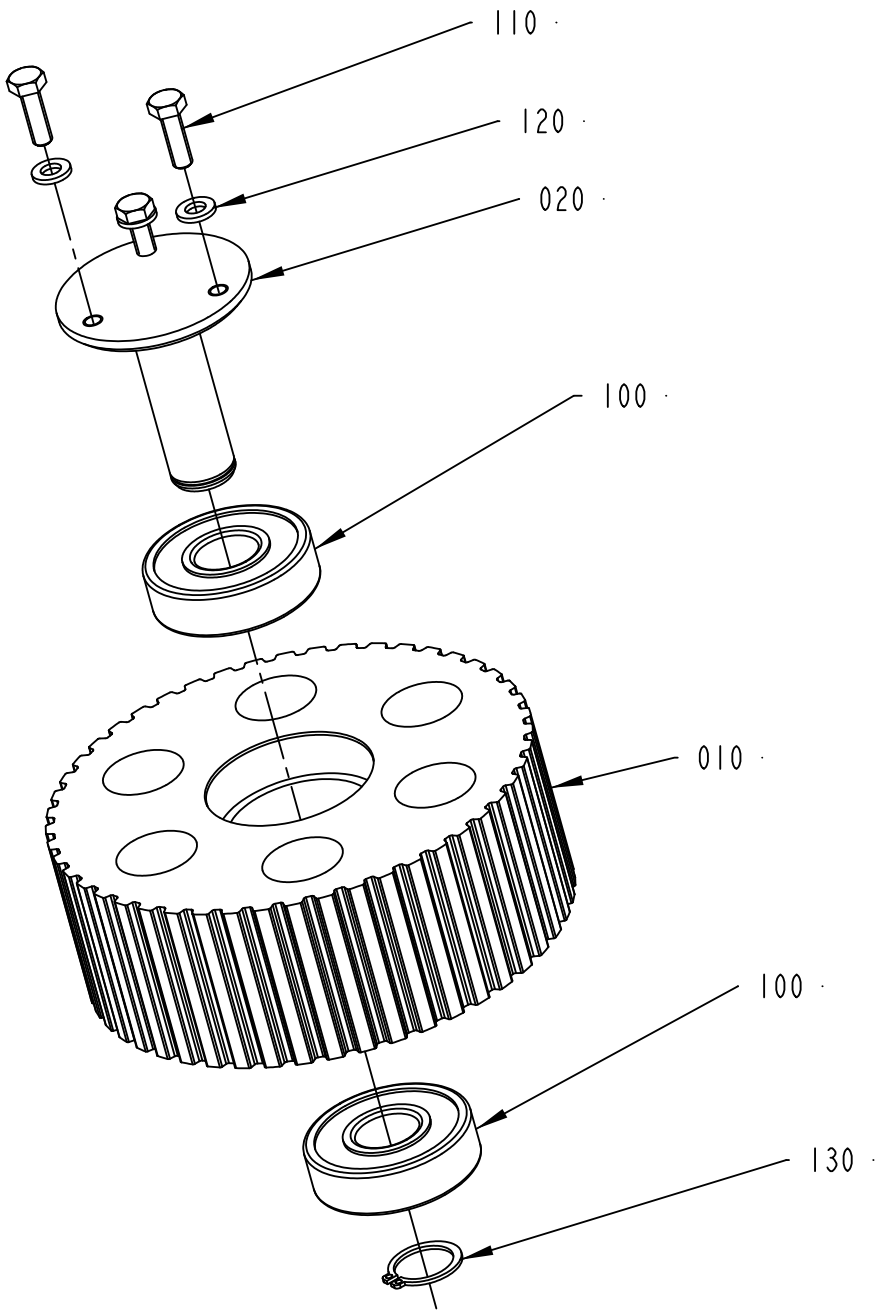

2695135-2
529090

ECM: 529637 - 20120401
Group number: 2695135-0200
Assembly Drawing: 2695135-2_1_AA

Pos	Part No	UN	Qty	Description	Page No
-					
010	2695133-0000		1	TOOTHED PULLEY	
020	2695134-0000		1	SHAFT	
100	90603-2323		2	BALL BEARING 20/52X15	
110	312105-0370		3	SCREW, M6S ISO 4017 M6X20 A4 80	
120	315106-0153		3	WASHER PLAIN, M6 ISO7089-6-200 HV A4	
130	315751-0116		1	RETAINING RING FOR SHAFT DIN 471 20 SS	

Pos	Part No	UN	Qty	Description	Page No

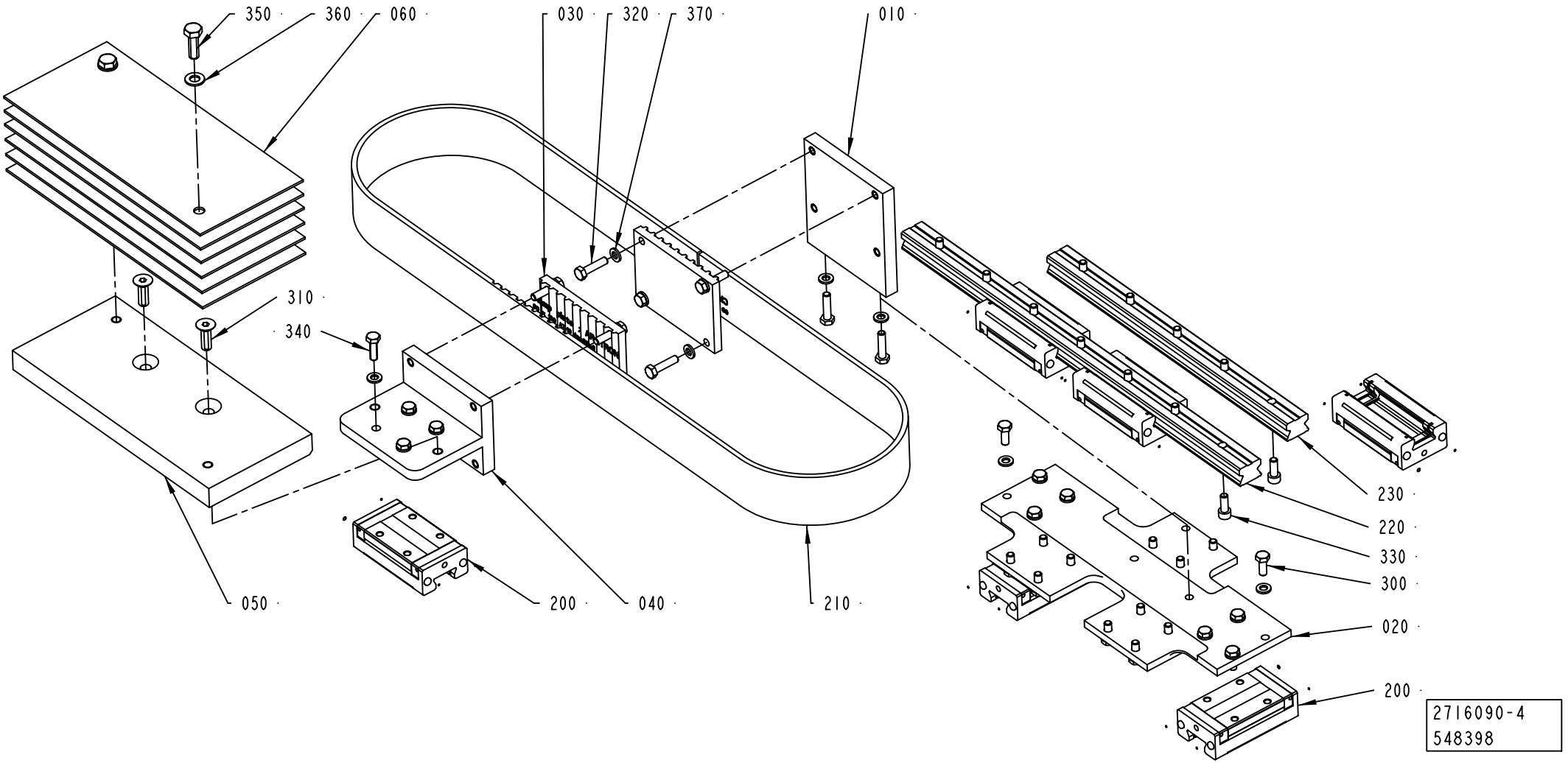
350
360
060
030
320
370
010
310
340
230
220
330
300
020
200
050
200
040
210
2716090-4
548398

ECM: 550833 - 20120403
Group number: 2716090-0200
Assembly Drawing: 2716090-4_1_AB

Pos	Part No	UN	Qty	Description	Page No
STREAMCAP500, STREAMCAP1000, SLIMCAP 2000, SLIMCAP 1000, STREAMCAP200, HELICAP2 23, HELICAP 27					
010	2695610-0000		1	CLAMP BRACKET	
020	2716083-0000		1	BRACKET	
200	90604-3338		6	CARRIAGE, SSR25XWSSHHME(C) BLOCK WITH FO	
220	90600-0483		1	GUIDE BAR, SSR 25-430LYM G35/35	
230	90600-0482		1	GUIDE BAR, SSR 25 305 LYM G32.5/32.5	
300	312105-0368		20	SCREW, M6S ISO 4017 M6X16 A4 80	
320	312105-0372		10	SCREW, M6S ISO 4017 M6X25 A4 80	
330	312115-0368		9	SCREW ISO4762 M6X16 A4 80	
370	315106-0153		34	WASHER PLAIN, M6 ISO7089-6-200 HV A4	
Common Parts					
030	2716073-0000		2	BELT HOLDER	
040	2716074-0000		1	BRACKET	
050	2716085-0000		1	COUNTERWEIGHT	
060	2716075-0000		6	COUNTERWEIGHT	
210	90600-0487		1	TIMING BELT 50AT10/1410 PU	
310	312155-0453		2	SCREW DIN 7991 MF6S M8X25 A4 70	
340	312105-0370		4	SCREW, M6S ISO 4017 M6X20 A4 80	
350	312105-0453		2	SCREW, M6S ISO 4017 M8X25 A4 80	
360	315105-0165		2	WASHER PLAIN, 8,4X16X1,6 A4 BRB	
500	90603-6233		1	KLüBERSYNTH UH1 14-151, ONLY IN BOM	
	90603-6253		*1*	*KLüBERSYNTH UH1 14-151, 1 KG TIN*	
	90603-6234		*1*	*KLüBERSYNTH UH1 14-151, 400G CARTRIDGE*	

Pos	Part No	UN	Qty	Description	Page No

Machine Type | Group Description | Used-In | Group Number | Page No

TRANSMISSION RAIL

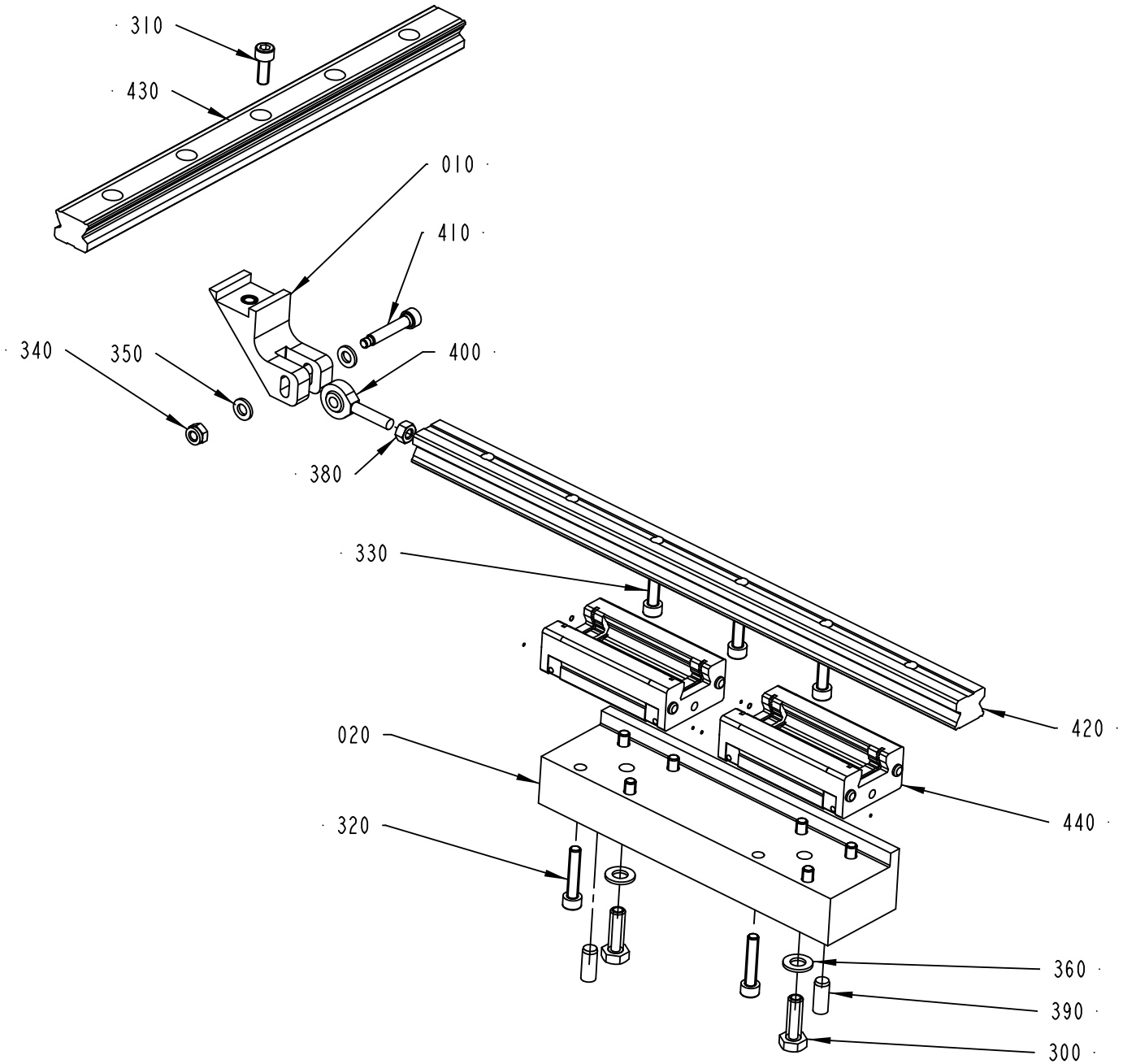

2716092-3
548398

ECM: 550835 - 20120403
Group number: 2716092-0200
Assembly Drawing: 2716092-3_1_AB

Pos	Part No	UN	Qty	Description	Page No
STREAMCAP500, STREAMCAP1000, SLIMCAP 2000, SLIMCAP 1000, STREAMCAP200, HELICAP2 23, HELICAP 27					
020	2716089-0000		1	FASTENING BRACKET	
310	312115-0368		1	SCREW ISO4762 M6X16 A4 80	
320	312115-0374		8	SCREW ISO4762 M6X30 A4 80	
330	312115-0370		3	SCREW ISO4762 M6X20 A4 80	
420	90600-0485		1	GUIDE BAR, SSR25 385L YM G42.5/42.5	
Common Parts					
010	3039032-0000		1	LINK ATTACHMENT	
300	312105-0453		2	SCREW, M6S ISO 4017 M8X25 A4 80	
340	312812-0316		1	HEXAGON NUT, NY-LOCK M6 A4 80	
350	315106-0153		2	WASHER PLAIN, M6 ISO7089-6-200 HV A4	
360	315106-0165		2	WASHER PLAIN, M8 ISO7089-8-200 HV A4	
380	312605-0316		1	HEXAGON NUT, M6M M6 A280	
390	311103-0401		2	PARALLEL PIN ISO 2338 8M6X20 A1	
400	90115-0137		1	ROD END, ID=6 MM, M6X1	
410	90287-0239		1	SHOULDER SCREW, 6X30/M5 SS	
430	90600-0482		1	GUIDE BAR, SSR 25 305 LYM G32.5/32.5	
440	90604-3338		2	CARRIAGE, SSR25XWSSHHME(C) BLOCK WITH FO	

Pos	Part No	UN	Qty	Description	Page No

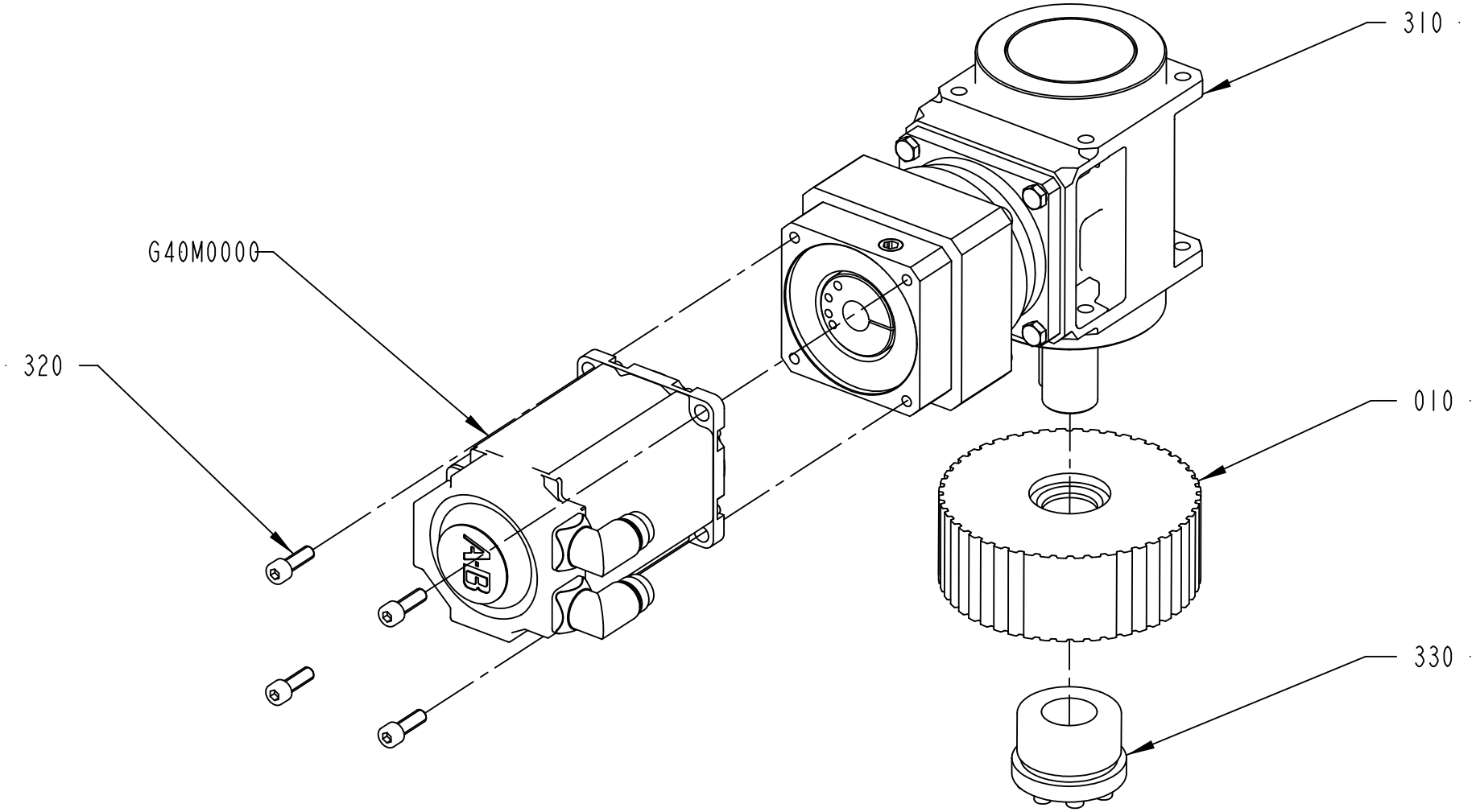
310
G40M0000
320
010
330
A
B
2840143-2
529090

ECM: 530956 - 20120401
Group number: 2840143-0200
Assembly Drawing: 2840143-2_1_AA

Pos	Part No	UN	Qty	Description	Page No
-					
010	3018761-0000		1	TOOTHED PULLEY	
310	90604-4259		1	GEARS, PLAN. MR 112 EC FO2C 00 / I=10 H1	
320	312115-0453		4	SCREW ISO4762 M8X25 A4 80	
330	90603-2066		1	CLAMP.ELEMENT, WITHOUT SLEEVE, 32X60	
G40M0000	90601-1926		1	SERVO MOTOR, MPL-B430P-MK72AA SERIES A	

Pos	Part No	UN	Qty	Description	Page No

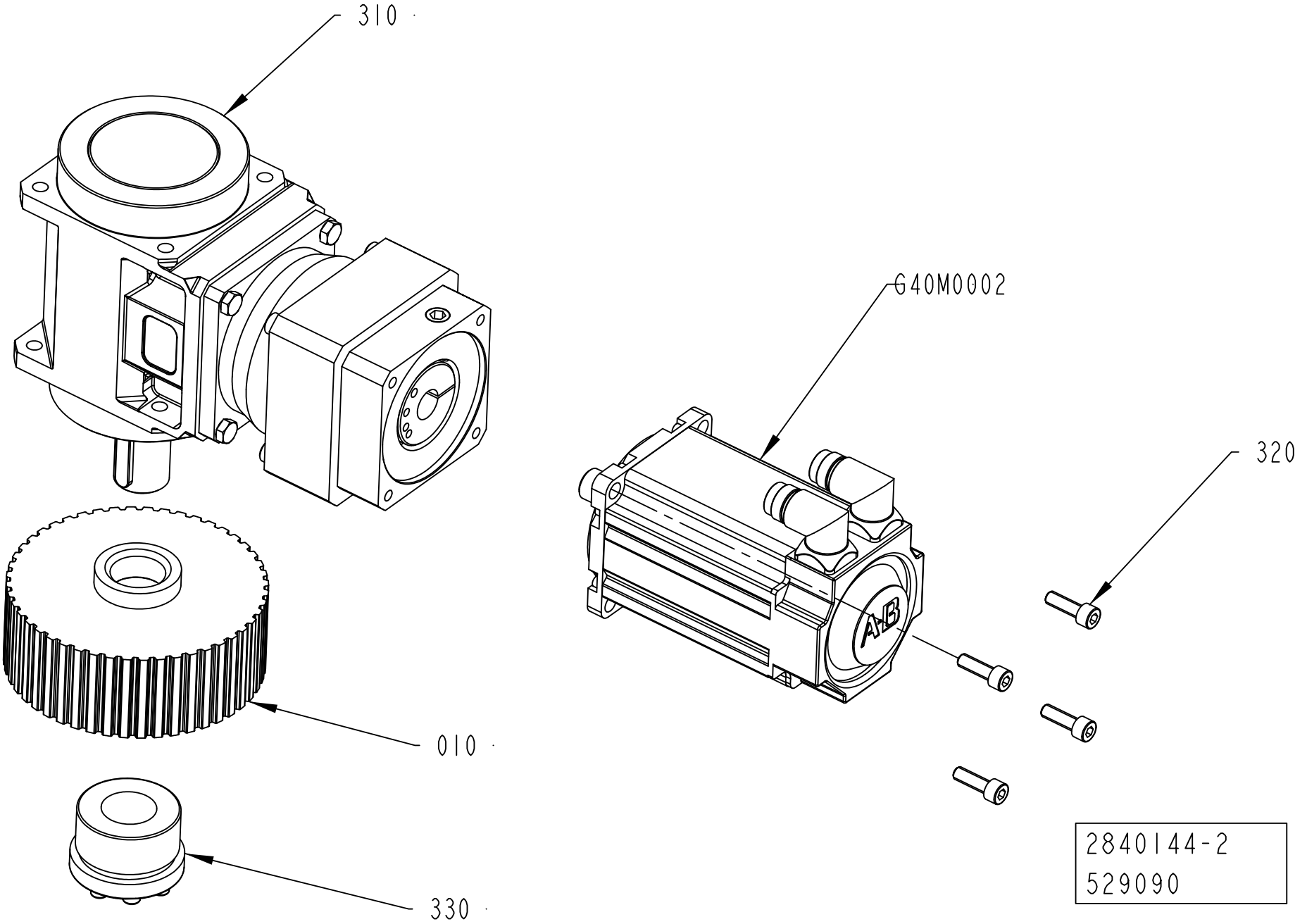
310
G40M0002
320
010
330
2840144-2
529090

ECM: 530957 - 20120401
Group number: 2840144-0200
Assembly Drawing: 2840144-2_1_AA

Pos	Part No	UN	Qty	Description	Page No
-					
010	3018762-0000		1	TOOTHED PULLEY	
310	90604-4259		1	GEARS, PLAN. MR 112 EC FO2C 00 / I=10 H1	
320	312115-0453		4	SCREW ISO4762 M8X25 A4 80	
330	90603-2066		1	CLAMP.ELEMENT, WITHOUT SLEEVE, 32X60	
G40M0002	90601-1926		1	SERVO MOTOR, MPL-B430P-MK72AA SERIES A	

Pos	Part No	UN	Qty	Description	Page No

MOTOR BRACKET

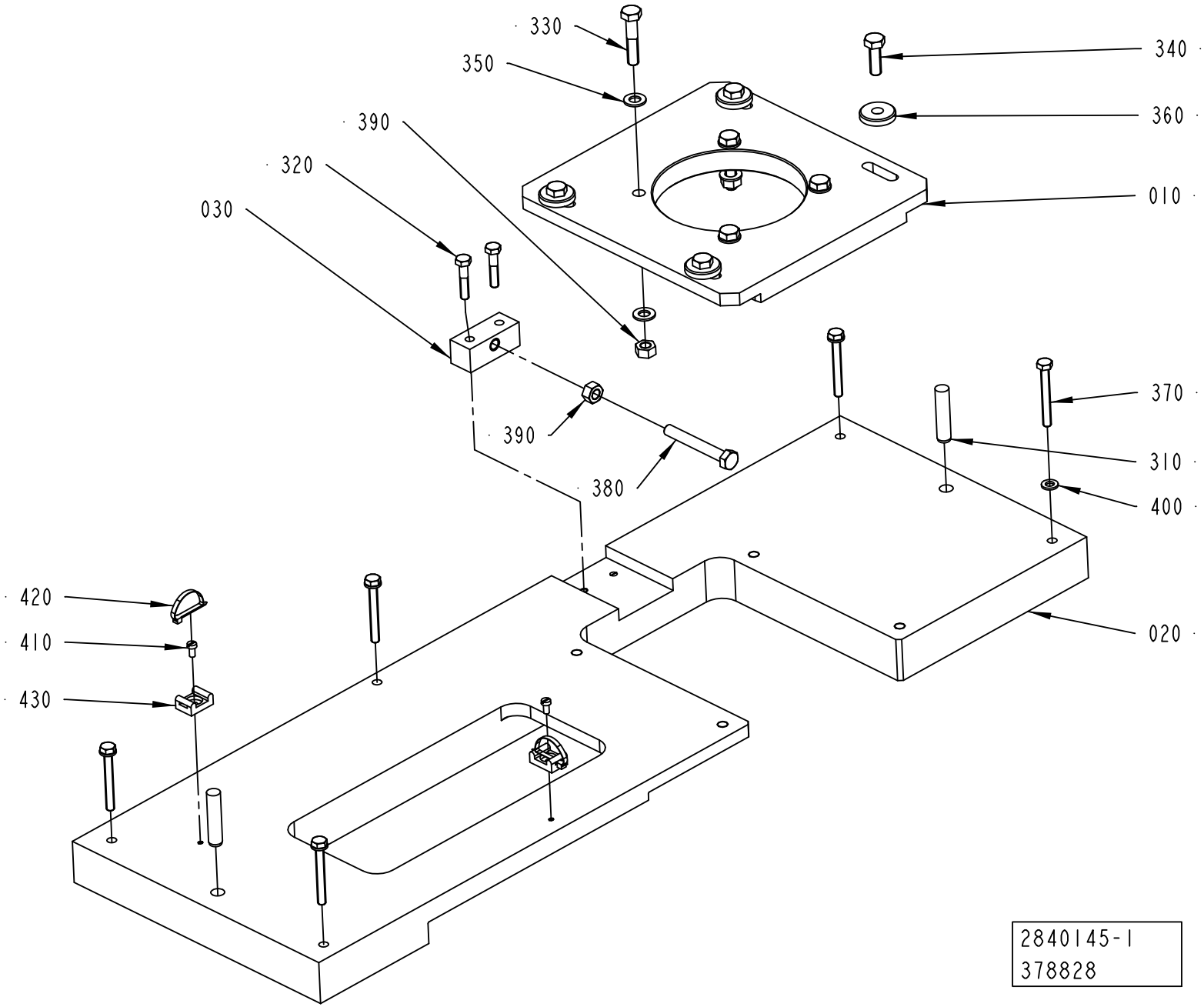

ECM: 378828 - 20090406
Group number: 2840145-0100
Assembly Drawing: 2840145-1_1_AC

Pos	Part No	UN	Qty	Description	Page No
-					
010	2985770-0000		1	FLANGE	
020	2909473-0000		1	PLATE	
030	2840851-0000		1	BLOCK	
310	311103-0464		2	PARALLEL PIN ISO 2338 10M6X45 A1	
320	312105-0374		2	SCREW, M6S ISO 4014 M6X30 A4 80	
330	312105-0459		4	SCREW, M6S ISO 4014 M8X40 A4 80	
340	312105-0453		4	SCREW, M6S ISO 4017 M8X25 A4 80	
350	315105-0165		8	WASHER PLAIN, 8,4X16X1,6 A4 BRB	
360	315125-0165		4	WASHER HIGH, TBRSB 8,4X26X5 A4	
370	312109-0380		5	SCREW, M6S ISO 4017 M6X50 A4 80	
380	312109-0463		1	SCREW, M6S ISO 4017 M8X60 A4 80	
390	312607-0318		5	HEXAGON NUT, EN 24032 M6M M8 A480	
400	315105-0178		5	WASHER PLAIN, 13X24X2,5 A4 BRB	
410	312125-0287		2	SLOTTED HEAD SCREW, ISO1207 M4X8 A4	
420	352113-0104		2	CABLE TIE, BLACK 300X4,8 MM	
430	352113-0203		2	ANCHOR PLATES FOR STRIPS, TM3S8-M0	

Pos	Part No	UN	Qty	Description	Page No

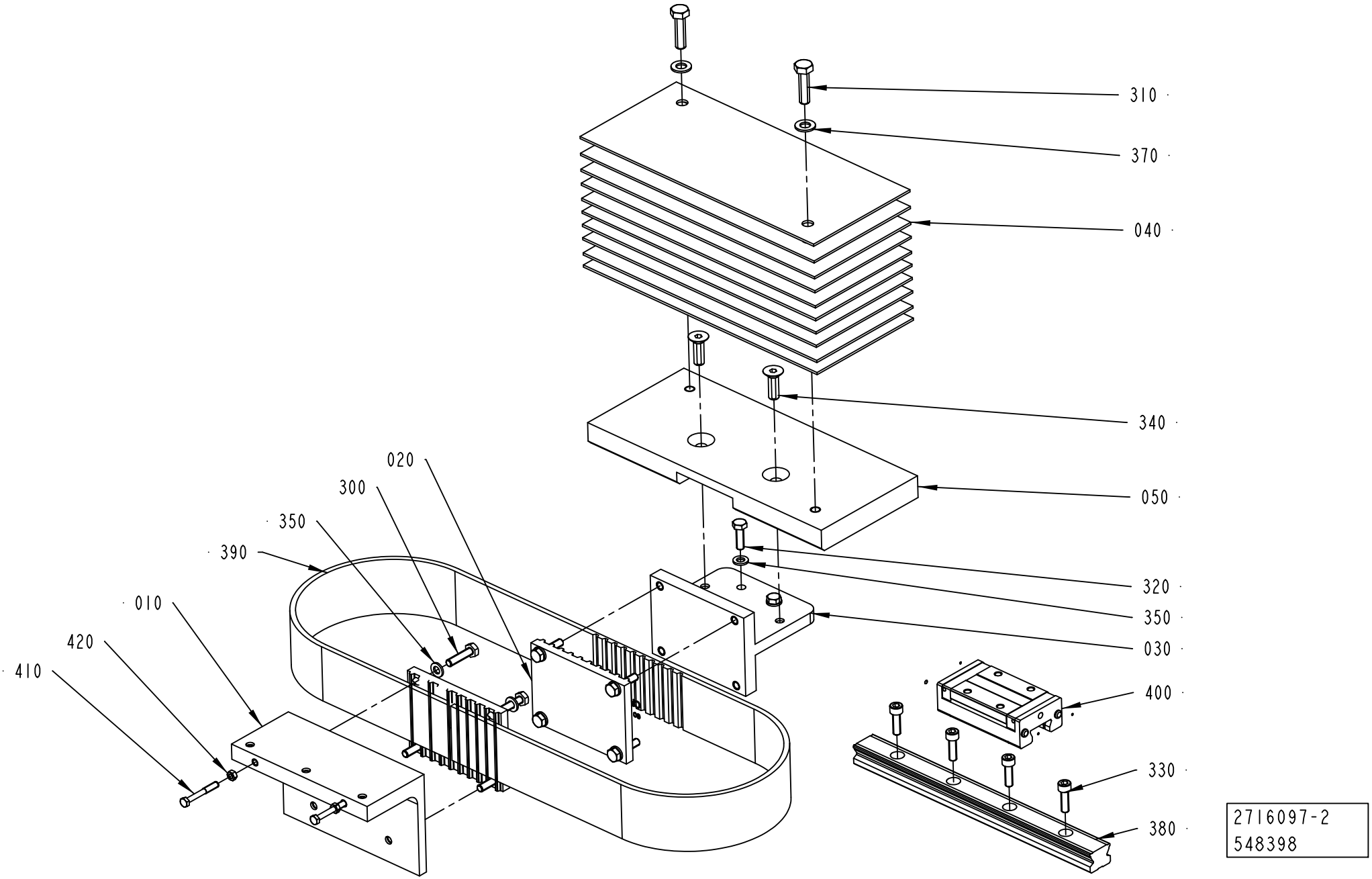
310
370
040
340
050
320
350
030
400
330
380
020
300
350
390
010
420
410
2716097-2
548398

ECM: 550836 - 20120403
Group number: 2716097-0200
Assembly Drawing: 2716097-2_1_AB

Pos	Part No	UN	Qty	Description	Page No
STREAMCAP500, STREAMCAP1000, SLIMCAP 2000, SLIMCAP 1000, STREAMCAP200, HELICAP2 23, HELICAP 27					
010	2985772-0000		1	BRACKET	
030	2716074-0000		1	BRACKET	
050	2716085-0000		1	COUNTERWEIGHT	
Common Parts					
020	2716073-0000		2	BELT HOLDER	
040	2716075-0000		10	COUNTERWEIGHT	
300	312105-0372		8	SCREW, M6S ISO 4017 M6X25 A4 80	
310	312105-0455		2	SCREW, M6S ISO 4017 M8X30 A4 80	
320	312105-0370		4	SCREW, M6S ISO 4017 M6X20 A4 80	
330	312115-0370		4	SCREW ISO4762 M6X20 A4 80	
340	312155-0453		2	SCREW DIN 7991 MF6S M8X25 A4 70	
350	315105-0153		12	WASHER PLAIN, 6,4X12X1,5 A4 BRB	
370	315105-0165		2	WASHER PLAIN, 8,4X16X1,6 A4 BRB	
380	90600-0484		1	GUIDE BAR, SSR 25 253L-YM G36.5/36.5	
390	90600-0486		1	TIMING BELT 50AT10/1120 PU	
400	90604-3338		1	CARRIAGE, SSR25XWSSHHME(C) BLOCK WITH FO	
410	312105-0331		2	SCREW, M6S ISO 4017 M5X20 A4 80	
420	312607-0314		2	HEXAGON NUT, EN 24032 M6M M5 A480	

Pos	Part No	UN	Qty	Description	Page No

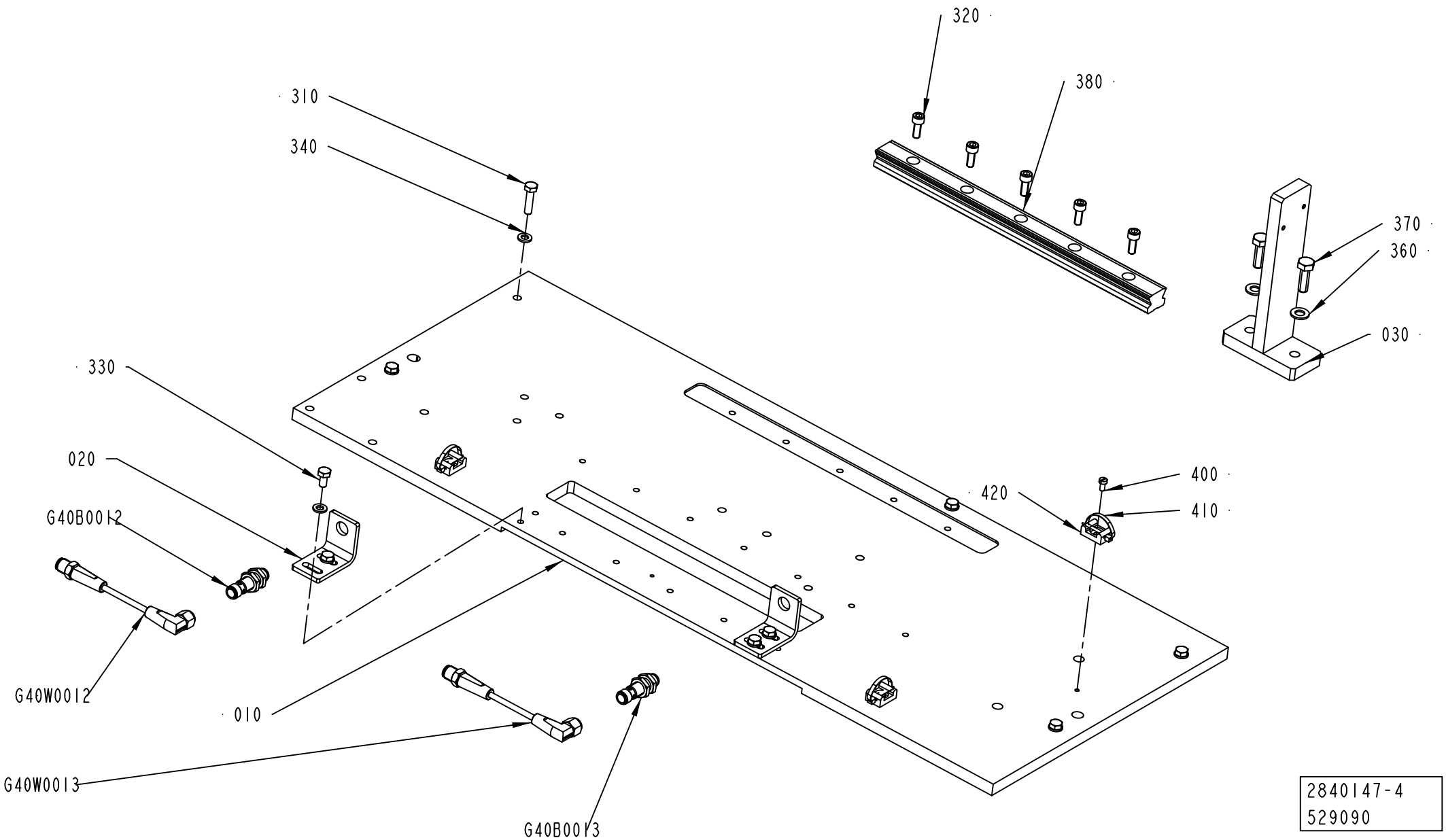
320
380
310
340
370
360
030
330
020
G40B0012
420
400
410
G40W0012
010
G40W0013
G40B0013
2840147-4
529090

ECM: 543038 - 20120402
Group number: 2840147-0200
Assembly Drawing: 2840147-4_1_AA

Pos	Part No	UN	Qty	Description	Page No
STREAMCAP500, STREAMCAP1000, SLIMCAP 2000, SLIMCAP 1000, STREAMCAP200, HELICAP2 23, HELICAP 27					
010	2840680-0000		1	ASSEMBLY PLATE	
020	2695629-0000		2	BRACKET	
030	2796055-0000		1	BRACKET	
310	312105-0372		5	SCREW, M6S ISO 4017 M6X25 A4 80	
330	312105-0366		4	SCREW, M6S ISO 4017 M6X12 A4 80	
340	315105-0153		9	WASHER PLAIN, 6,4X12X1,5 A4 BRB	
360	315105-0165		2	WASHER PLAIN, 8,4X16X1,6 A4 BRB	
370	312105-0453		2	SCREW, M6S ISO 4017 M8X25 A4 80	
Common Parts					
320	312115-0368		5	SCREW ISO4762 M6X16 A4 80	
380	90600-0482		1	GUIDE BAR, SSR 25 305 LYM G32.5/32.5	
400	312125-0287		3	SLOTTED HEAD SCREW, ISO1207 M4X8 A4	
410	352113-0104		3	CABLE TIE, BLACK 300X4,8 MM	
420	352113-0203		3	ANCHOR PLATES FOR STRIPS, TM3S8-M0	
G40B0012	90459-6948		1	INDUCTIVE SENSOR, IFS 206	
G40B0013	90459-6948		1	INDUCTIVE SENSOR, IFS 206	
G40W0012	344268-0015		1	SENSOR CABLE, EVT120	
G40W0013	344268-0015		1	SENSOR CABLE, EVT120	

Pos	Part No	UN	Qty	Description	Page No

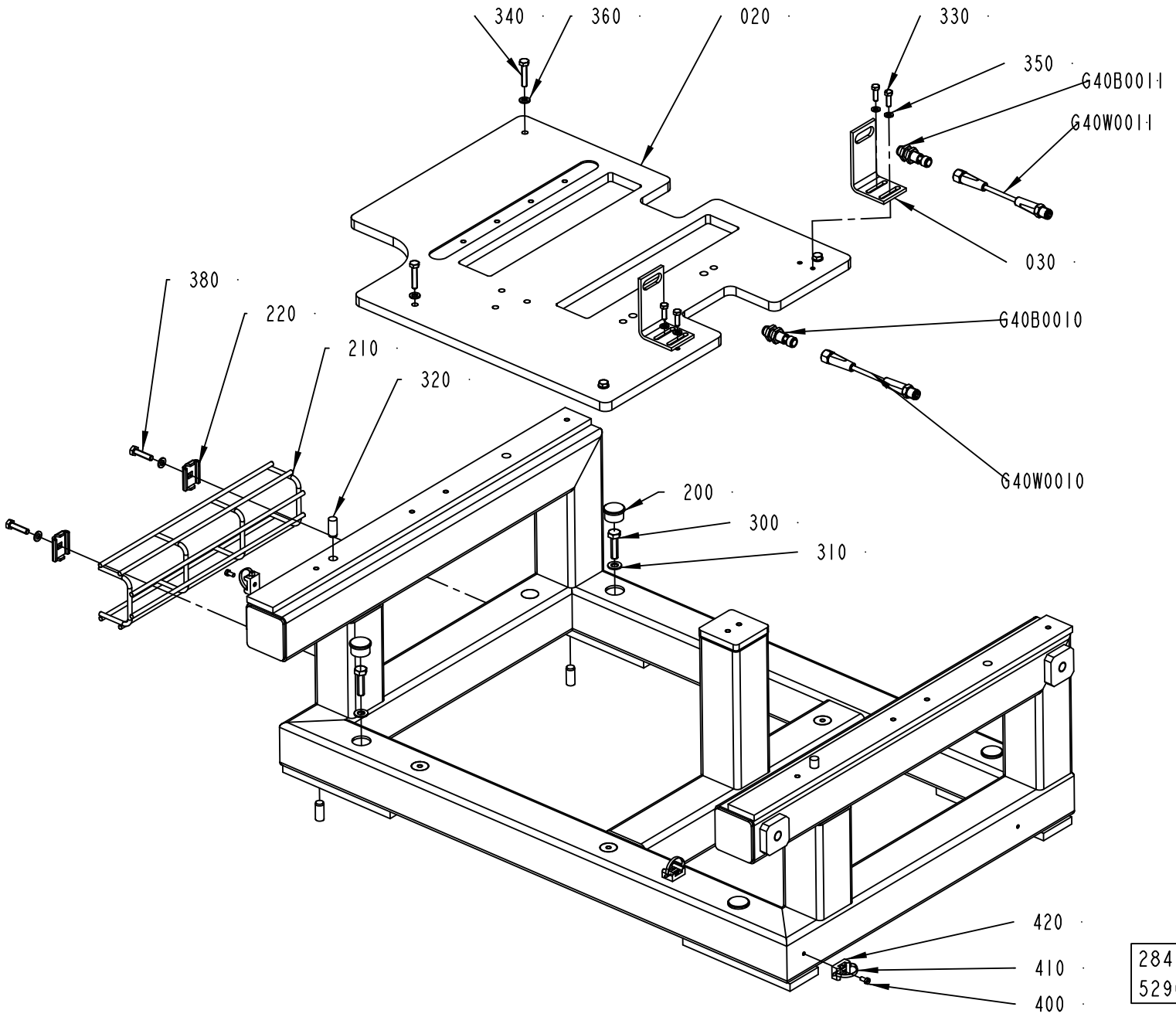
340
360
020
330
350
G40B0011
G40W0011
030
380
220
210
320
G40B0010
G40W0010
200
300
310
420
410
400
2841501-3
529090

ECM: 530686 - 20120401
Group number: 2841501-0200
Assembly Drawing: 2841501-3_1_AA

Pos	Part No	UN	Qty	Description	Page No
STREAMCAP500, STREAMCAP1000, SLIMCAP 2000, SLIMCAP 1000, STREAMCAP200, HELICAP2 23, HELICAP 27					
010	2838753-0000		1	FRAME	
020	2985771-0000		1	PLATE	
030	2716112-0000		2	BRACKET	
310	315105-0165		4	WASHER PLAIN, 8,4X16X1,6 A4 BRB	
360	315105-0153		10	WASHER PLAIN, 6,4X12X1,5 A4 BRB	
400	312125-0287		3	SLOTTED HEAD SCREW, ISO1207 M4X8 A4	
410	352113-0104		3	CABLE TIE, BLACK 300X4,8 MM	
420	352113-0203		3	ANCHOR PLATES FOR STRIPS, TM3S8-M0	
Common Parts					
200	90261-0060		4	PLUG, BLIND, PLASTIC, NO. IKPK25X1, 5	
210	2873896-0000		1	CABLE TRAY	
220	90181-0183		2	CABLE DUCT, FITTING, B2	
300	312105-0455		4	SCREW, M6S ISO 4017 M8X30 A4 80	
320	311103-1456		4	PARALLEL PIN ISO 2338 10M6X24 A1	
330	312105-0329		4	SCREW, M6S ISO 4017 M5X16 A4 80	
340	312109-0374		4	SCREW, M6S ISO 4017 M6X30 A4 80	
350	315105-0146		4	WASHER PLAIN, 5,3X10X1 A4 BRB	
380	312105-0372		2	SCREW, M6S ISO 4017 M6X25 A4 80	
G40B0010	90459-6948		1	INDUCTIVE SENSOR, IFS 206	
G40B0011	90459-6948		1	INDUCTIVE SENSOR, IFS 206	
G40W0010	344267-0010		1	SENSOR CABLE, EVT042	
G40W0011	344267-0010		1	SENSOR CABLE, EVT042	

Pos	Part No	UN	Qty	Description	Page No

SUPPORT TUBE

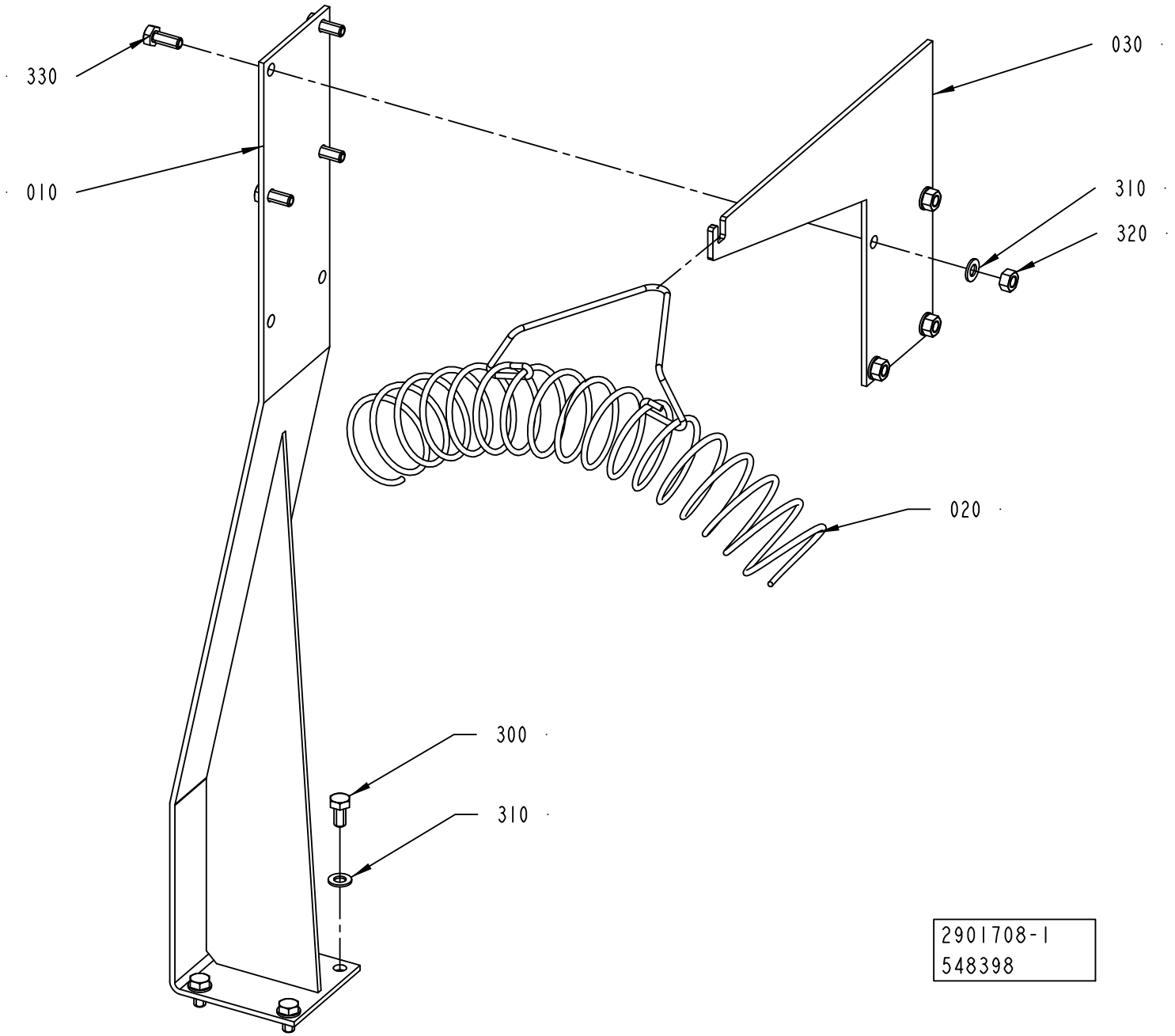

ECM: 548401 - 20120403
Group number: 2901708-0100
Assembly Drawing: 2901708-1_1_AC

Pos	Part No	UN	Qty	Description	Page No
-					
010	3223764-0000		1	BRACKET	
020	1258624-0000		1	HOSE HOLDER	
030	3223765-0000		1	PLATE	
300	312105-0449		4	SCREW, M6S ISO 4017 M8X16 A4 80	
310	315105-0165		8	WASHER PLAIN, 8,4X16X1,6 A4 BRB	
320	312607-0318		4	HEXAGON NUT, EN 24032 M6M M8 A480	
330	312105-0451		4	SCREW, M6S ISO 4017 M8X20 A4 80	

Pos	Part No	UN	Qty	Description	Page No

Tetra Pak

SPC
Spare Parts Catalogue

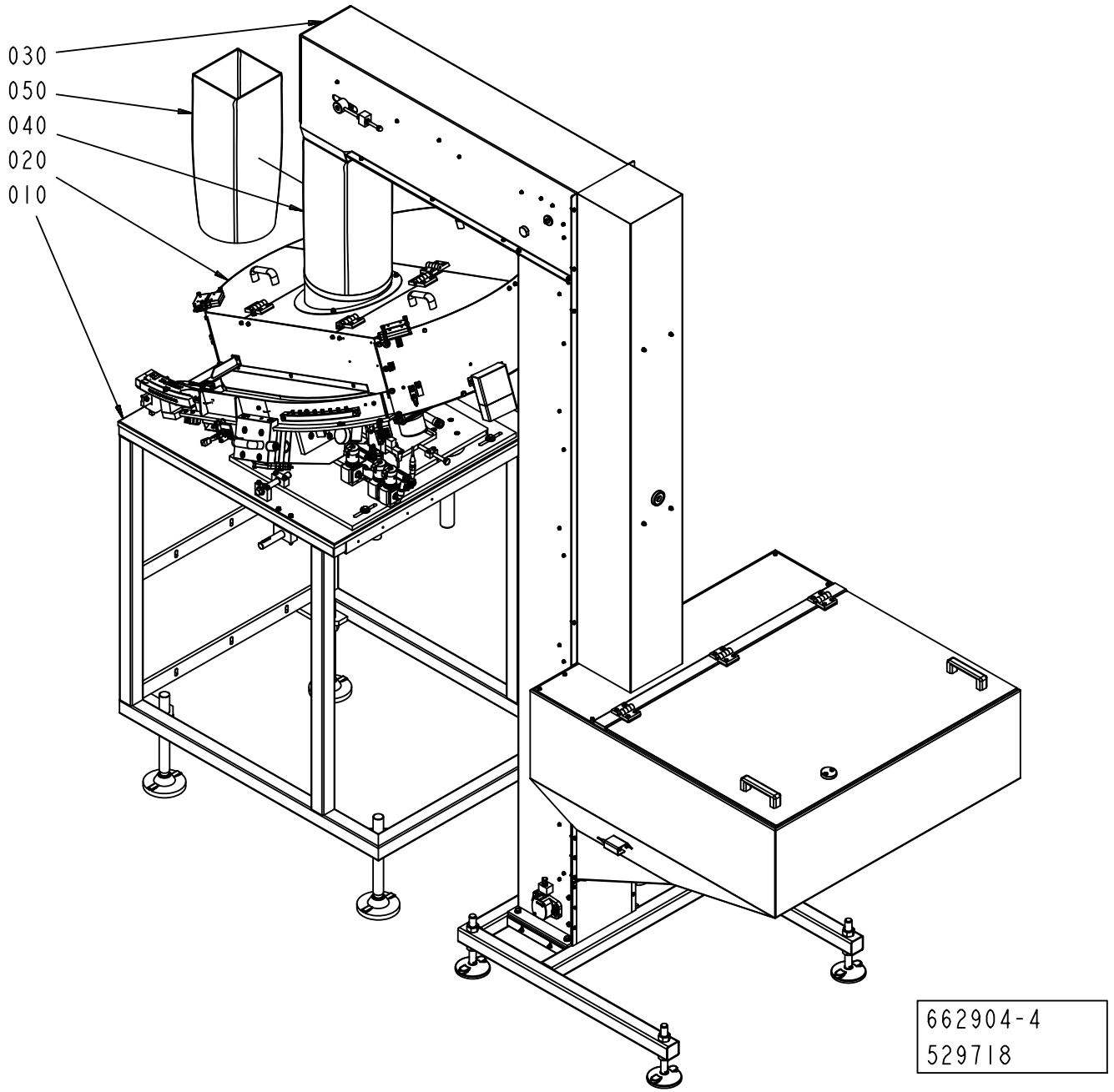
030
050
040
020
010
662904-4
529718

ECM: 529718 - 20120401
Group number: 662904-0300
Assembly Drawing: 662904-4_1_AA

Pos	Part No	UN	Qty	Description	Page No
-					
010	2842830-0100		1	SUPPORT	**4-5**
020	2846416-0300		1	FEEDER	**4-7**
030	2812005-0300		1	ELEVATOR	**4-43, 4-45**
040	2852912-0000		1	CONNECTION PIPE	
050	2852913-0000		1	CONNECTION PIPE	

Pos	Part No	UN	Qty	Description	Page No

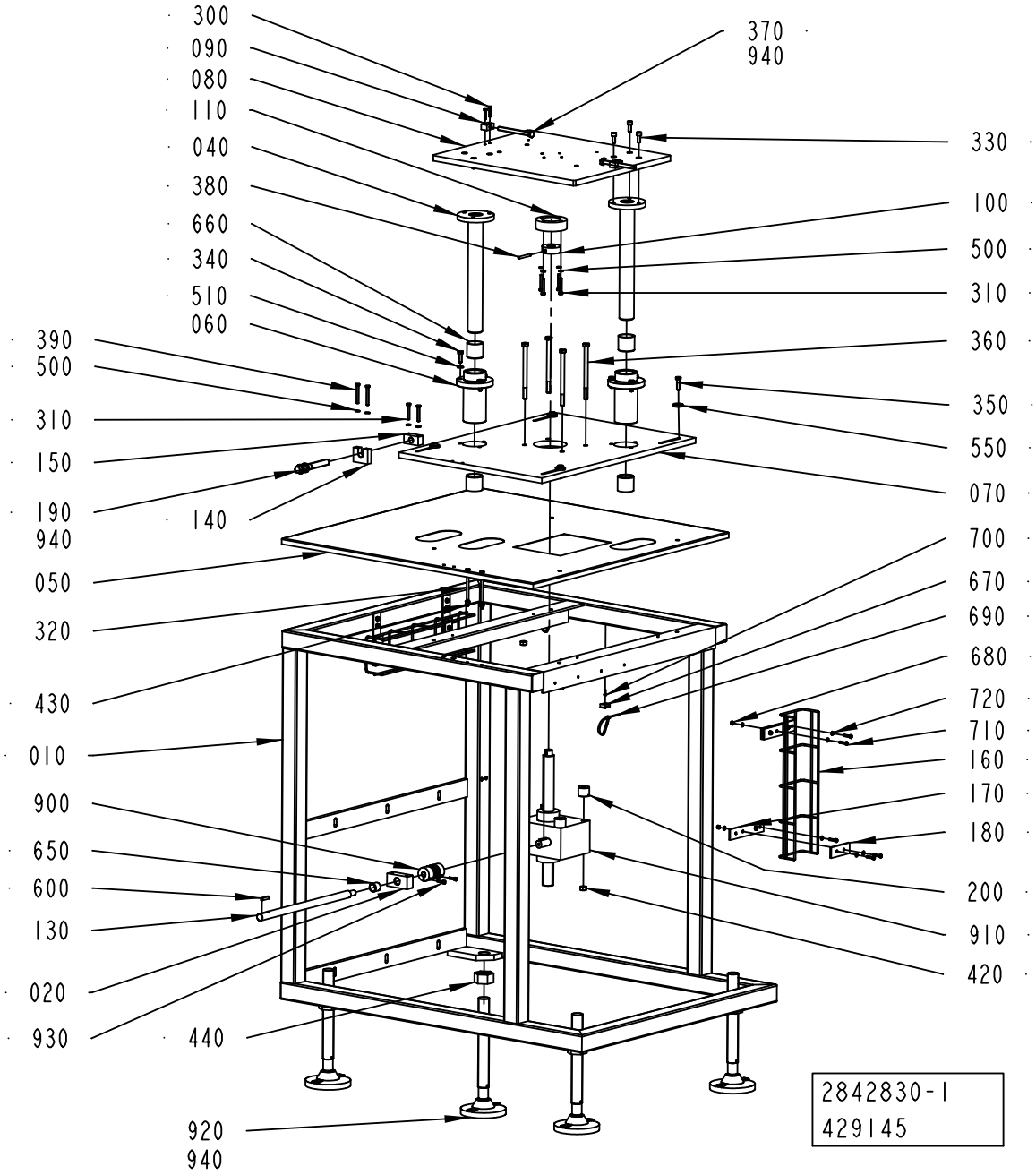
300
090
080
110
040
380
660
340
510
060
390
500
310
150
190
940
140
050
320
430
010
900
650
600
130
020
930
440
920
940
370
940
330
100
500
310
360
350
550
070
700
670
690
680
720
710
160
170
180
200
910
420
2842830-1
429145

ECM: 552672 - 20120404
Group number: 2842830-0100
Assembly Drawing: 2842830-1_1_AD

Pos	Part No	UN	Qty	Description	Page No
-					
010	3068598-0000		1	FRAME	
020	2842832-0000		1	BRACKET	
040	2842835-0000		2	COLUMN	
050	3068596-0000		1	COVER	
060	2842834-0000		2	FLANGE	
070	3068597-0000		1	PLATE	
080	2842837-0000		1	PLATE	
090	2842838-0000		2	BLOCK	
100	2769739-0000		1	DISC	
110	2766964-0000		1	FLANGE	
130	2842831-0000		1	ROD	
140	3068594-0000		1	BLOCK	
150	3068595-0000		1	BLOCK	
160	2844525-0000		2	CABLE DUCT	
170	2844526-0000		4	PLATE	
180	2844527-0000		4	PLATE	
190	3068593-0000		1	SCREW	
200	2845097-0000		4	SPACER	
300	312105-0333		4	SCREW, M6S ISO 4017 M5X25 A4 80	
310	312109-0378		6	SCREW, M6S ISO 4017 M6X40 A4 80	
320	312105-0390		2	SCREW, M6S ISO 4014 M6X100 A4 80	
330	312115-0451		6	SCREW ISO4762 M8X20 A4 80	
340	312105-0453		6	SCREW, M6S ISO 4017 M8X25 A4 80	
350	312105-0455		4	SCREW, M6S ISO 4017 M8X30 A4 80	
360	312105-0519		4	SCREW, M6S ISO 4014 M10X150 A4 80	
370	6-4000 0006 08		2	SCREW M6S 10 X 110	
380	311103-0365		1	PARALLEL PIN ISO 2338 6M6X50 A1	
390	312109-0380		2	SCREW, M6S ISO 4017 M6X50 A4 80	
420	312605-0320		4	HEXAGON NUT, M6M M10 A280	
430	312607-0316		2	HEXAGON NUT, EN 24032 M6M M6 A480	
440	312607-0332		4	HEXAGON NUT, EN 24032 M6M M30 A480	
500	315105-0153		10	WASHER PLAIN, 6,4X12X1,5 A4 BRB	
510	315105-0165		6	WASHER PLAIN, 8,4X16X1,6 A4 BRB	
550	315125-0165		4	WASHER HIGH, TBRSB 8,4X26X5 A4	
600	315705-0237		1	PARALLEL KEY W. ROUND ENDS, 6X6X32 MM	
650	321133-0260		1	BUSHING IGLIDUR G 20X23X20	
660	321133-0420		4	BUSHING IGLIDUR G 40X44X40	
670	352113-0203		5	ANCHOR PLATES FOR STRIPS, TM3S8-M0	
680	312605-0314		8	HEXAGON NUT, M6M M5 A280	
690	352113-0102		5	CABLE TIE, BLACK 188X4,8 MM	
700	312125-0291		5	SLOTTED HEAD SCREW, ISO1207 M4X12 A4	
710	312105-0332		16	SCREW, M6S ISO 4017 M5X22 A4 70	
720	315105-0146		24	WASHER PLAIN, 5,3X10X1 A4 BRB	
900	90600-2560		1	COUPLING 14X20 MM, 727-38-4838	
910	90600-0658		1	WORM GEAR SCREW JACK, TP00063000130	
920	90600-1002		4	FOOT 50000N, HPA125-30-325	
930	312115-0331		2	SCREW ISO4762 M5X20 A4 80	
940	90603-5339	L	1	KLüBEROIL 4 UH1 320 N, ONLY IN BOM	
	90603-6434		*1*	*KLUBEROIL 4 UH1 320 N, 5 L CANISTER*	
	90603-6454		*1*	*KLüBEROIL 4 UH1 320 N, 20 L CANISTER*	

Machine Type	Group Description	Used-In	Group Number	Page No

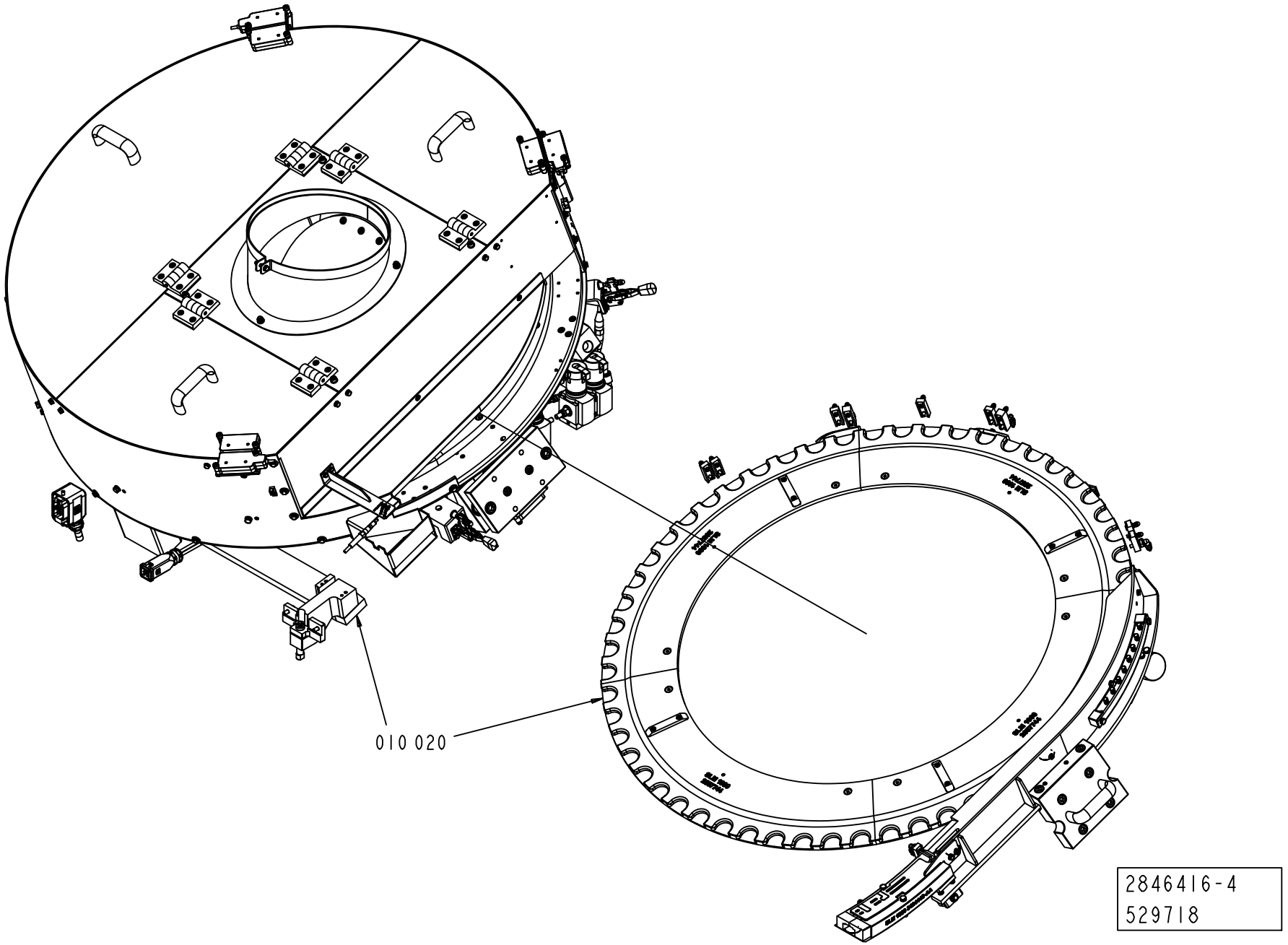
010 020
2846416-4
529718

ECM: 529728 - 20120401
Group number: 2846416-0300
Assembly Drawing: 2846416-4_1_AA

Pos	Part No	UN	Qty	Description	Page No
HELICAP 27					
010	2846406-0300		1	CAP SORTER	**4-9, 4-11**
020	3102968-0200		1	VOLUME KIT	**4-29**
HELICAP2 23					
010	2846406-0300		1	CAP SORTER	**4-9, 4-11**
020	3068635-0200		1	VOLUME KIT	**4-31**
SLIMCAP 1000					
010	2846406-0300		1	CAP SORTER	**4-9, 4-11**
020	2846408-0300		1	VOLUME KIT	**4-33**
SLIMCAP 2000					
010	2846406-0300		1	CAP SORTER	**4-9, 4-11**
020	2873977-0300		1	VOLUME KIT	**4-35**
STREAMCAP1000					
010	2846406-0300		1	CAP SORTER	**4-9, 4-11**
020	2846407-0300		1	VOLUME KIT	**4-37**
STREAMCAP200					
010	2846406-0300		1	CAP SORTER	**4-9, 4-11**
020	2874001-0300		1	VOLUME KIT	**4-39**
STREAMCAP500					
010	2846406-0300		1	CAP SORTER	**4-9, 4-11**
020	2873978-0300		1	VOLUME KIT	**4-41**

Pos	Part No	UN	Qty	Description	Page No

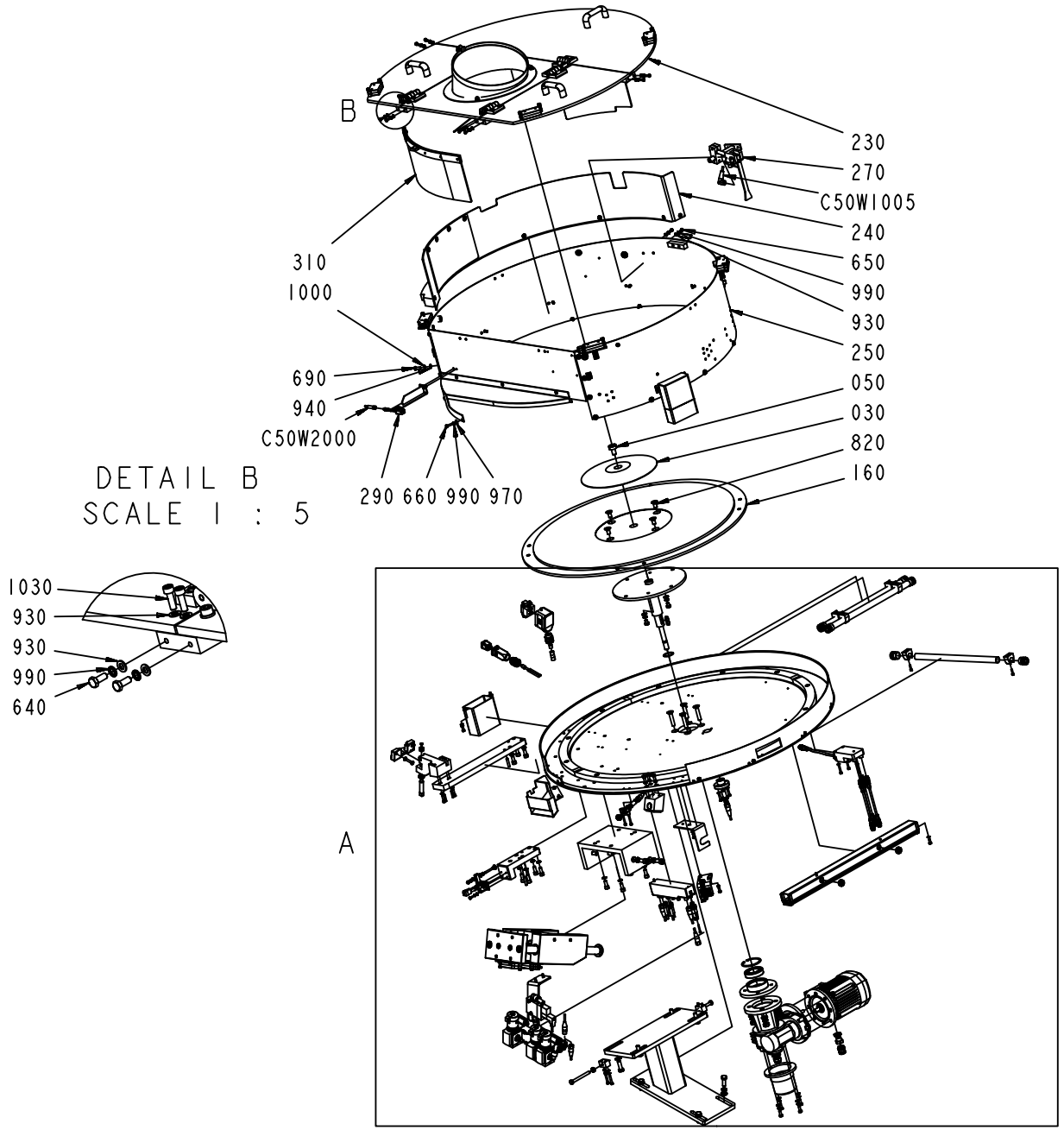

2846406-4
541792

ECM: 551147 - 20120403
Group number: 2846406-0300
Assembly Drawing: 2846406-4_1_AB

This list covers pages from 4-8 to 4-11

Pos	Part No	UN	Qty	Description	Page No
-					
0010	3115239-0000		1	SHAFT	
0020	3115240-0000		1	REDUCER	
0030	3115241-0000		1	CAP	
0040	3115242-0000		1	BUSHING	
0050	3115243-0000		1	SCREW	
0060	3115244-0000		1	PROTECTIVE COVER	
0070	3115245-0000		1	SUPPORT	
0080	3115246-0000		1	BRACKET	
0090	3115247-0000		1	ARM	
0100	3115248-0000		1	CENTERING	
0110	3115249-0000		1	CONNECTION BOX	
0120	3115250-0000		2	BLOCK	
0130	3115251-0000		1	BRACKET	
0140	3115252-0000		1	CAP	
0150	3115253-0000		1	SUPPORT	
0160	3115254-0000		1	SUPPORT	
0170	3115255-0000		1	BASE	
0180	3115256-0000		1	BASE	
0190	3115257-0000		1	CONNECTION	
0200	3115258-0000		2	CONNECTION	
0210	3115259-0000		1	COVER	
0220	3108413-0200		1	PULLER	**4-13**
0230	3108442-0200		1	COVER	**4-15**
0240	3108443-0100		1	RAKE	**4-17**
0250	3108444-0200		1	BODY	**4-19**
0260	3108445-0200		1	PNEUMATIC COMPONENT	**4-21**
0270	3108446-0200		1	SENSOR	**4-23**
0280	3108447-0100		1	HARD DISK	**4-25**
0290	3108448-0200		1	PHOTOCELL UNIT	**4-27**
0300	3124472-0000		1	SHIM	
0310	3115291-0000		1	PLATE	
0320	3124528-0000		1	GUIDE	
0330	3124529-0000		1	PIN	
0340	3124530-0000		1	PLATE	
0400	90603-3670		1	WORM GEAR W23986027004	
0410	344224-0207		1	BALL BEARING 35/62X14	
0420	3115260-0000		2	LOCKING LEVER	
0430	3115261-0000		2	STOP SCREW	
0440	3115234-0000		6	CAP	
0450	3115233-0000		6	CLAMP	
0460	3115263-0000		1	CLAMP	
0470	3108471-0000		2	PROTECTION RING	
0480	90459-1458		1	HOOD, SIDE ENTRY, HAN6E, 19 30 006 1540	
0490	90458-0406		2	CABLE GLAND, VK 22052Y	
0500	353249-0004		1	INSERT, SINGLE HOLE, E152 13	
0510	344202-0003		1	CABLE GLAND; MS-SC-M, 7-12,5MM, M20X1,5	
0520	3115266-0000		1	REDUCTION	
0530	90458-0460		1	GLAND, LOCK NUT, M16X1,5	
0540	90459-3670		1	HOOD, HAN3A, 19 20 003 1440	
0550	353249-0041		1	INSERT, SOLID, E151 G	
0600	315701-0267		1	PARALLEL KEY W. ROUND ENDS, 8X7X30 MM	
0610	90458-0048		1	RETAINING RING FOR BORE DIN 472 62 SS	
0620	312105-0289		8	SCREW, M6S ISO 4017 M4X10 A4 70	
0630	312115-0297		3	SCREW ISO4762 M4X25 A4 80	
0640	312105-0327		18	SCREW, M6S ISO 4017 M5X12 A4 80	
0650	312105-0323		2	SCREW, M6S ISO 4017 M5X8 A4 80	
0660	312105-0331		14	SCREW, M6S ISO 4017 M5X20 A4 80	
0670	312109-0335		4	SCREW, M6S ISO 4017 M5X30 A4 80	
0690	312105-0368		9	SCREW, M6S ISO 4017 M6X16 A4 80	
0710	90459-4735		2	SCREW, M6S ISO 4017 M8X10 A4 80	
0720	312109-0467		2	SCREW, M6S ISO 4017 M8X80 A4 80	
0740	312105-0495		8	SCREW, M6S ISO 4017 M10X30 A4 80	
0750	312115-0232		2	SCREW ISO4762 M3X25 A4 80	
0760	312115-0293		6	SCREW ISO4762 M4X16 A4 80	
0770	312115-0299		2	SCREW ISO4762 M4X30 A4 80	
0780	312115-0331		2	SCREW ISO4762 M5X20 A4 80	
0790	312115-0368		3	SCREW ISO4762 M6X16 A4 80	
0800	312115-0451		11	SCREW ISO4762 M8X20 A4 80	
0810	312115-0493		4	SCREW ISO4762 M10X25 A4 80	
0820	312155-0491		4	SCREW DIN 7991 MF6S M10X20 A4 70	
0830	312155-0501		4	SCREW DIN 7991 MF6S M10X50A4 70	
0840	311103-1274		2	PARALLEL PIN ISO 2338 4M6X24 A1	
0850	311103-0357		4	PARALLEL PIN ISO 2338 6M6X30 A1	
0870	312605-0318		6	HEXAGON NUT, M6M M8 A280	
0880	312605-0320		4	HEXAGON NUT, M6M M10 A280	
0890	90099-0187		1	HEXAGON NUT, LOCK, M14, DIN985	
0900	312705-0314		2	NUT HEX. DOMED CAP MHM-6 M5 A280	
0910	3108449-0000		1	WASHER	
0920	315103-0136		11	WASHER PLAIN, 4,3X8X0,8 BR NI PL	
0930	315103-0146		20	WASHER PLAIN, 5,3X10X1 BR NI PL	
0940	315103-0153		11	WASHER PLAIN, 6,4X12X1,5 BR NI PL	
0950	315103-0165		2	WASHER PLAIN, 8,4X15X1,5 BR NI PL	
0960	315103-0173		12	WASHER PLAIN, 10,5X22X2 BR NI PL	

Machine Type | Group Description | Used-In | Group Number | Page No

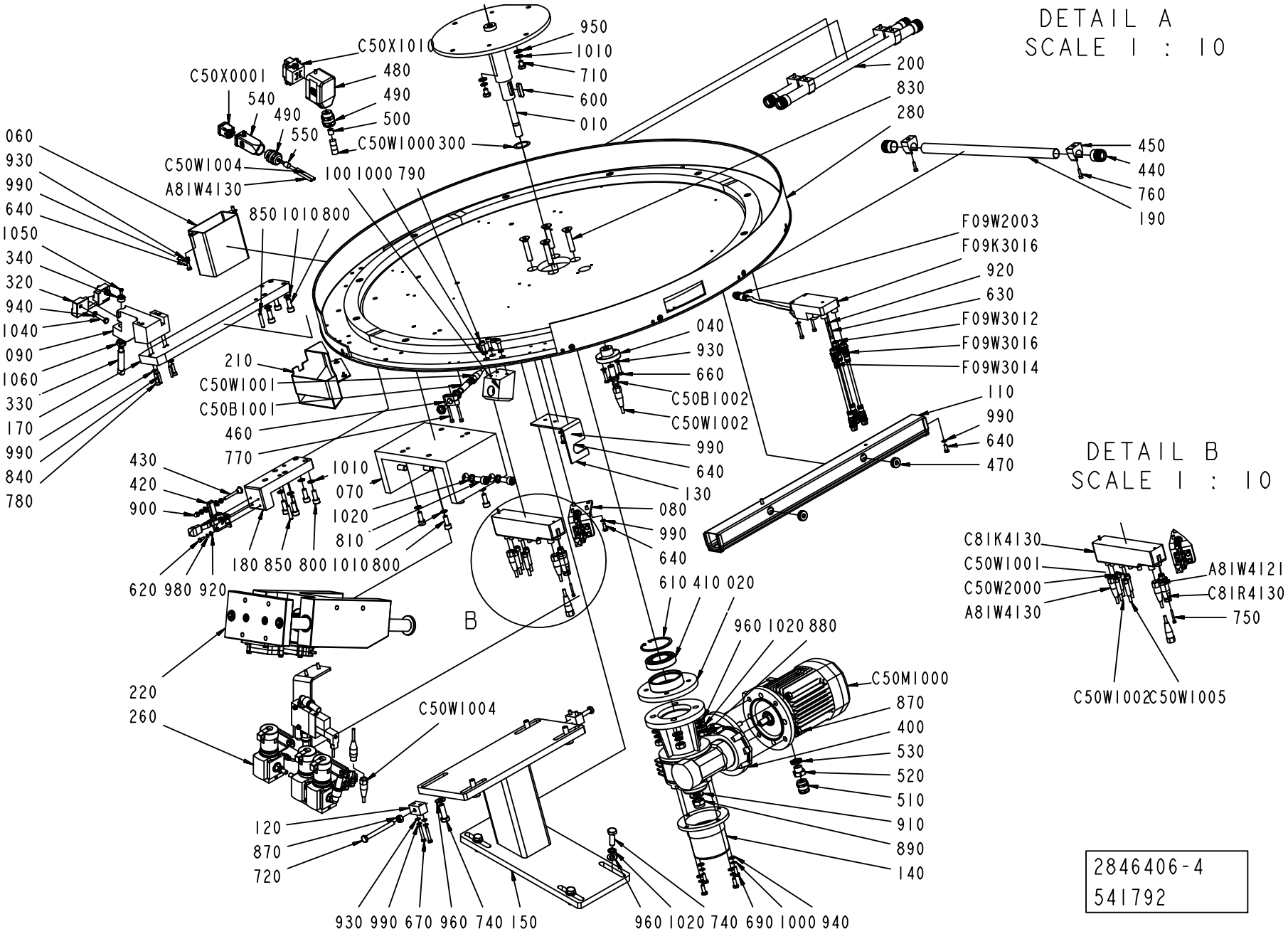
DETAIL A
SCALE 1 : 10
DETAIL B
SCALE 1 : 10
B
C50X1010
C50X0001
950
1010
710
600
010
480
490
500
540
490
550
C50W1000300
C50W1004
A81W4130
100 1000 790
850 1010 800
060
930
990
640
1050
340
320
940
1040
090
1060
330
170
990
840
780
200
830
280
450
440
760
190
F09W2003
F09K3016
920
630
F09W3012
F09W3016
F09W3014
040
930
660
C50B1002
C50W1002
110
990
640
470
210
C50W1001
C50B1001
460
770
990
640
130
430
420
900
1010
070
1020
810
080
990
640
180 850 800 1010 800
620 980 920
610 410 020
960 1020 880
C50M1000
870
400
530
520
510
910
890
140
220
260
C50W1004
120
870
720
930 990 670 960 740 150
960 1020 740 690 1000 940
C81K4130
C50W1001
C50W2000
A81W4130
A81W4121
C81R4130
750
C50W1002
C50W1005
2846406-4
541792

Pos	Part No	UN	Qty	Description	Page No
- (Cont'd)					
0970	315125-0146		12	WASHER HIGH, TBRSB 5.3X15X1 A4	
0980	3108451-0000		8	WASHER	
0990	3108452-0000		38	WASHER	
1000	3108453-0000		12	WASHER	
1010	3108454-0000		13	WASHER	
1020	3108455-0000		12	WASHER	
1030	312115-0329		2	SCREW ISO4762 M5X16 A4 80	
1040	312105-0370		2	SCREW, M6S ISO 4017 M6X20 A4 80	
1050	312155-0291		1	SCREW DIN 7991 MF6S M4X12 A4 70	
1060	312605-0322		1	HEXAGON NUT, M6M M12 A280	
A81W4121	344293-0030		1	DEVICEN CAB.SAC-5P-M12MS/3,0-927/M12FSVA	
A81W4130	344253-0050		1	SENSOR CABLE, EVT001	
C50B1001	90458-2907		1	PROX.SWITCH IFS204	
C50B1002	90458-2907		1	PROX.SWITCH IFS204	
C81K4130	90459-6062		1	ARMORBLOCK DIGITAL CONFIGURABLE I/O	
C50M1000	90458-2483		1	MOTOR 3GVA062002-BSB	
C81R4130	90603-5560		1	CONNECTOR, SACC-M12MS-5CON-PG 7-VA	
C50W1000	315756-0009	M	3	ÖLFLEX CONTROL TM CY 4G1,5, 281604CY	
C50W1001	344261-0006		1	SENSOR CABLE, EVT261	
C50W1002	344261-0006		1	SENSOR CABLE, EVT261	
C50W1004	344253-0050		1	SENSOR CABLE, EVT001	
C50W1005	344262-0015		1	SENSOR CABLE, EVT271	
C50W2000	344257-0006		1	SENSOR CABLE, EVT143	
C50X0001	90459-6821		1	MALE INSERT HAN 4A, 0920 0042 611	
C50X1010	90110-0052		1	MALE INSERT, HAN E06, 0933 0062 601	
F09K3016	90604-0093		1	CONNECTION BLOCK, TINA4A 2TLJ020054R0300	
F09W2003	3115264-0000		1	CABLE	
F09W3012	3115265-0000		1	CABLE	
F09W3014	3115265-0000		1	CABLE	
F09W3016	3115265-0000		1	CABLE	

Pos	Part No	UN	Qty	Description	Page No

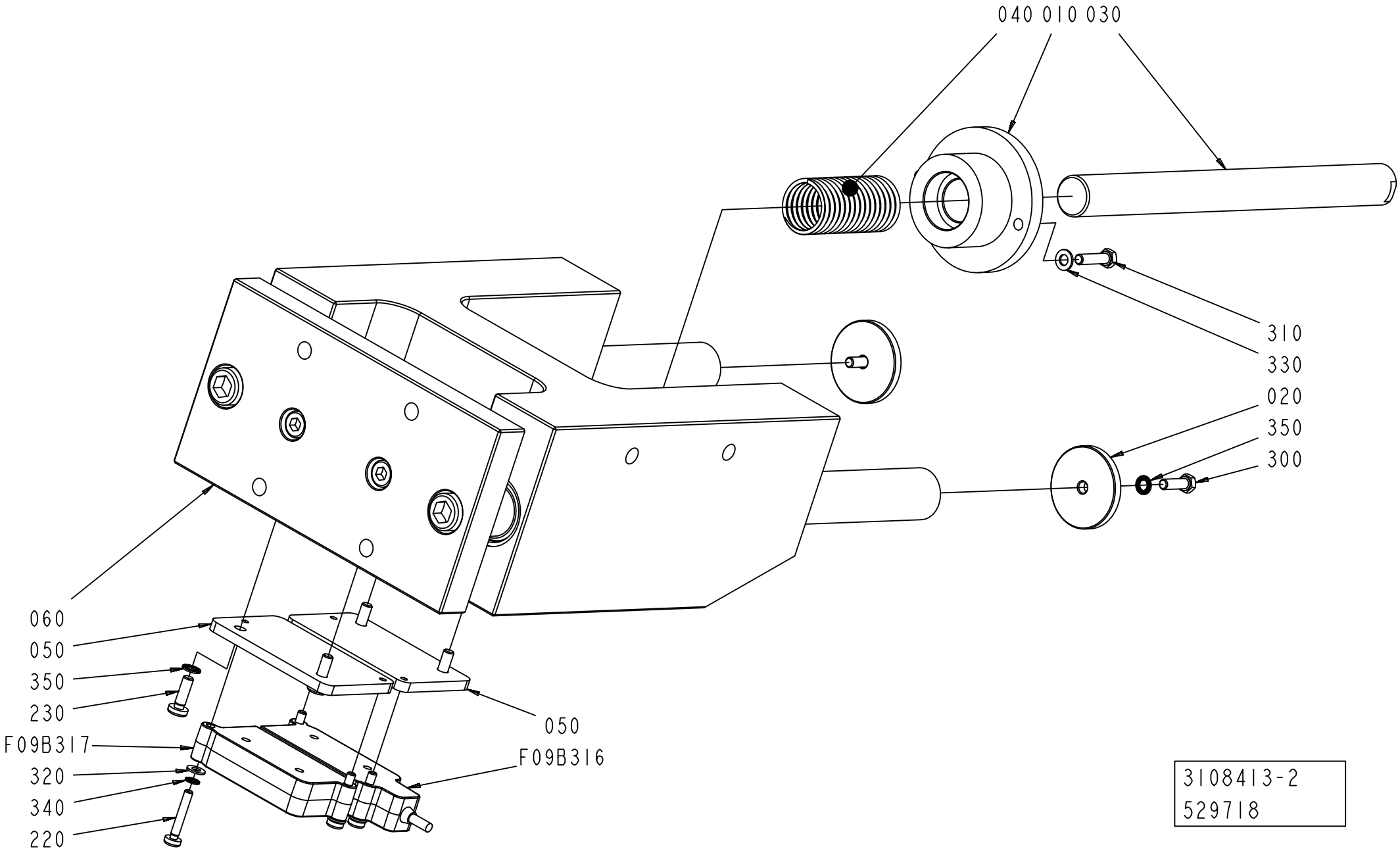
040 010 030
310
330
020
350
300
060
050
350
230
F09B317
320
340
220
050
F09B316
3108413-2
529718

ECM: 532650 - 20120401
Group number: 3108413-0200
Assembly Drawing: 3108413-2_1_AA

Pos	Part No	UN	Qty	Description	Page No
-					
010	3115268-0000		1	BUSHING	
020	3115269-0000		2	WASHER	
030	3115270-0000		1	PIN	
040	3115271-0000		1	SPRING	
050	3115272-0000		2	PLATE	
060	3115273-0000		1	GUIDE	
220	90459-4165		4	SAFETY SCREW, SM4X25	
230	3115274-0000		4	SCREW	
300	312105-0329		2	SCREW, M6S ISO 4017 M5X16 A4 80	
310	312105-0331		2	SCREW, M6S ISO 4017 M5X20 A4 80	
320	315103-0136		4	WASHER PLAIN, 4,3X8X0,8 BR NI PL	
330	315103-0146		2	WASHER PLAIN, 5,3X10X1 BR NI PL	
340	3108451-0000		4	WASHER	
350	3108452-0000		6	WASHER	
F09B3016	90459-6961		1	SAFETY SENSOR, ADAM E 0,5 M12	
F09B3017	90459-4089		1	SAFETY SENSOR, EVA E, 20-046-06	

Pos	Part No	UN	Qty	Description	Page No

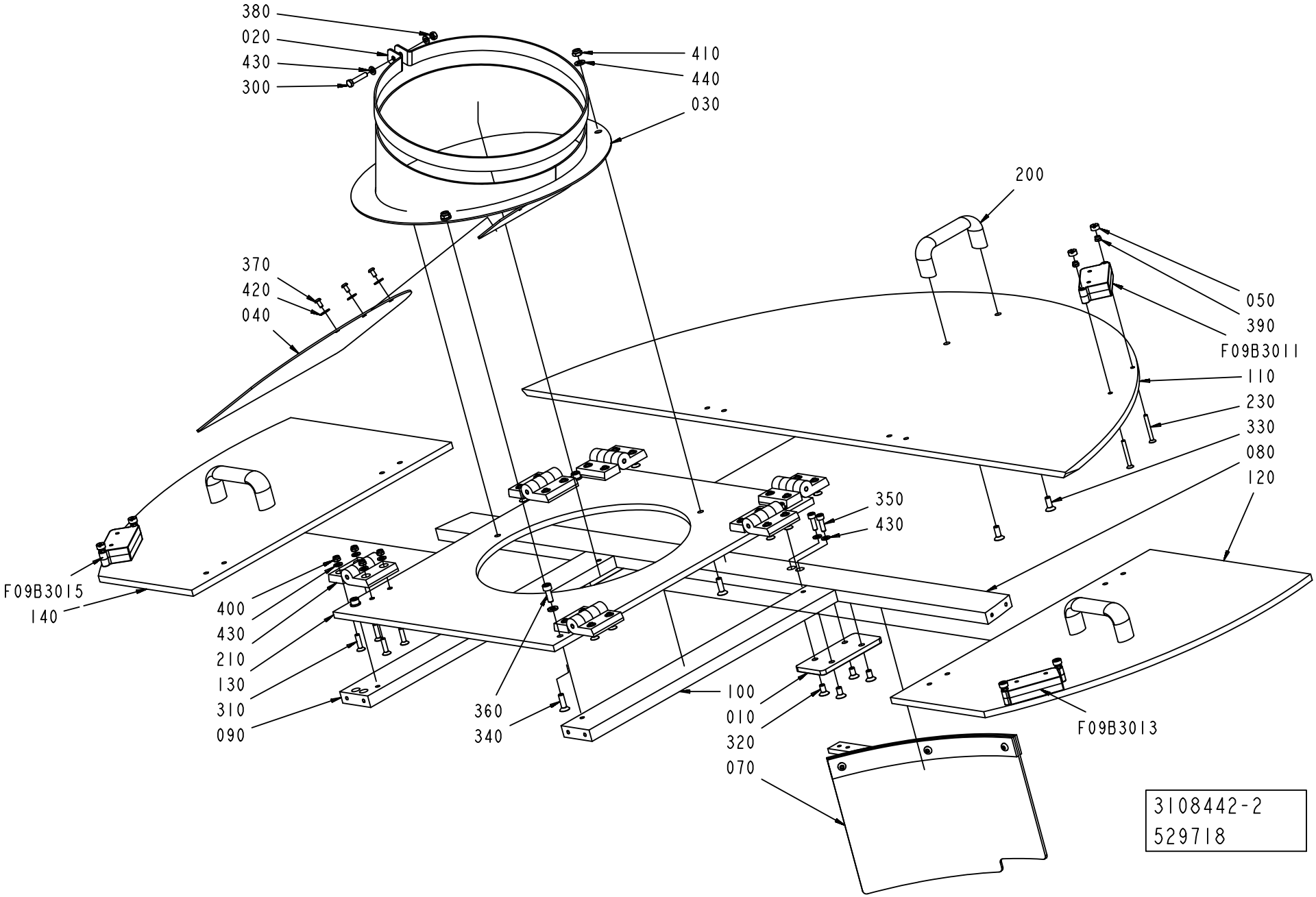
380
020
430
300
410
440
030
200
370
420
040
050
390
F09B3011
110
230
330
080
120
350
430
F09B3015
140
400
430
210
130
310
090
360
340
100
010
320
070
F09B3013
3108442-2
529718

ECM: 532651 - 20120401
Group number: 3108442-0200
Assembly Drawing: 3108442-2_1_AA

Pos	Part No	UN	Qty	Description	Page No
-					
010	3115287-0000		2	PLATE	
020	3115288-0000		1	CLAMP	
030	3115289-0000		1	FUNNEL	
040	3115290-0000		1	DAMPING ELEMENT	
050	1539391-0000		6	ROUND NUT	
070	3115292-0000		1	PLATE	
080	3115293-0000		1	CROSS BAR	
090	3115294-0000		1	CROSS BAR	
100	3115295-0000		1	CROSS BAR	
110	3115296-0000		1	PANEL	
120	3115297-0000		1	PANEL	
130	3115298-0000		1	PANEL	
140	3115299-0000		1	PANEL	
200	3115300-0000		3	HANDLE	
210	3115232-0000		6	HINGE	
230	3115301-0000		6	SCREW	
300	312105-0333		1	SCREW, M6S ISO 4017 M5X25 A4 80	
310	312155-0331		24	SCREW DIN 7991 MF6S M5X20 A4 70	
320	312155-0366		8	SCREW DIN 7991 MF6S M6X12 A4 70	
330	312155-0368		6	SCREW DIN 7991 MF6S M6X16 A4 70	
340	312155-0370		3	SCREW DIN 7991 MF6S M6X20 A4 70	
350	312115-0329		2	SCREW ISO4762 M5X16 A4 80	
360	312115-0368		4	SCREW ISO4762 M6X16 A4 80	
370	3108456-0000		3	SCREW	
380	312605-0314		1	HEXAGON NUT, M6M M5 A280	
390	312810-0312		6	HEXAGON NUT, NY-LOCK M4 FZB	
400	312810-0314		24	HEXAGON NUT, NY-LOCK M5 FZB	
410	312810-0316		3	HEXAGON NUT, NY-LOCK M6 FZB	
420	3108458-0000		3	WASHER	
430	315103-0146		28	WASHER PLAIN, 5,3X10X1 BR NI PL	
440	315103-0153		7	WASHER PLAIN, 6,4X12X1,5 BR NI PL	
F09B3011	90459-4089		1	SAFETY SENSOR, EVA E, 20-046-06	
F09B3013	90459-4089		1	SAFETY SENSOR, EVA E, 20-046-06	
F09B3015	90459-4089		1	SAFETY SENSOR, EVA E, 20-046-06	

Pos	Part No	UN	Qty	Description	Page No

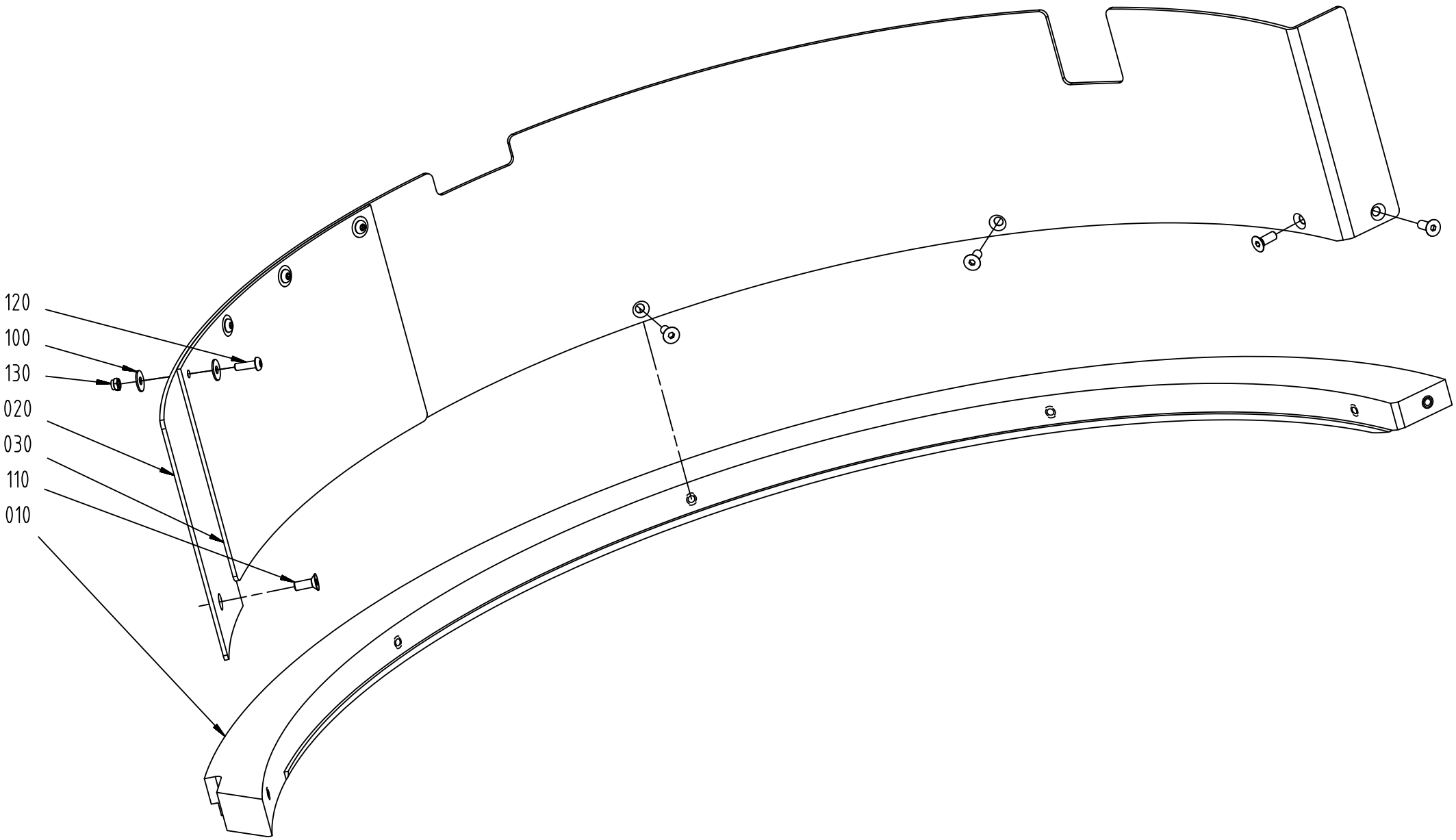
120
100
130
020
030
110
010

ECM: 481900 - 20110401
Group number: 3108443-0100
Assembly Drawing: 3108443-1_1_AA

Pos	Part No	UN	Qty	Description	Page No
-					
010	3115284-0000		1	RING	
020	3115285-0000		1	PLATE	
030	3115286-0000		1	PLATE	
100	315125-0146		8	WASHER HIGH, TBRSB 5.3X15X1 A4	
110	312155-0368		6	SCREW DIN 7991 MF6S M6X16 A4 70	
120	3108457-0000		4	SCREW	
130	312810-0314		4	HEXAGON NUT, NY-LOCK M5 FZB	

Pos	Part No	UN	Qty	Description	Page No

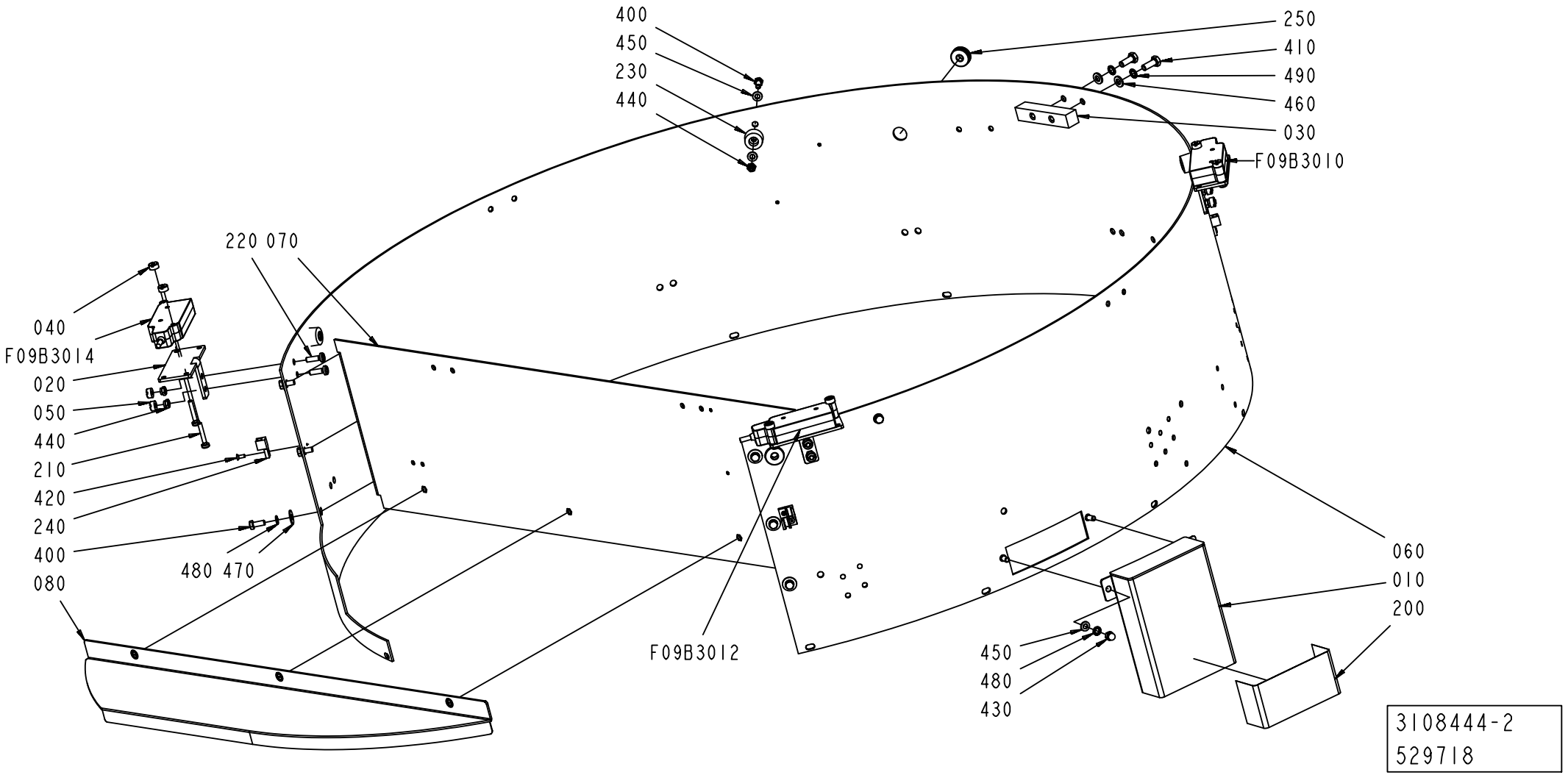
400
450
230
440
250
410
490
460
030
F09B3010
220 070
040
F09B3014
020
050
440
210
420
240
400
080
480 470
F09B3012
060
010
200
450
480
430
3108444-2
529718

ECM: 532652 - 20120401
Group number: 3108444-0200
Assembly Drawing: 3108444-2_1_AA

Pos	Part No	UN	Qty	Description	Page No
STREAMCAP500, STREAMCAP1000, SLIMCAP 2000, SLIMCAP 1000, STREAMCAP200, HELICAP2 23, HELICAP 27					
060	3115280-0000		1	STRIP	
Common Parts					
010	3115275-0000		1	COVER	
020	3115276-0000		3	BRACKET	
030	3115277-0000		1	SUPPORT	
040	1539391-0000		6	ROUND NUT	
050	575034-0000		6	ROUND NUT	
070	3115278-0000		1	PLATE	
080	3115279-0000		1	COVERING	
200	3115281-0000		1	LABEL TAPE	
210	90459-4165		6	SAFETY SCREW, SM4X25	
220	3115274-0000		6	SCREW	
230	3115282-0000		4	FOOT	
240	3115283-0000		6	CLAMP	
250	3108471-0000		2	PROTECTION RING	
400	312105-0327		10	SCREW, M6S ISO 4017 M5X12 A4 80	
410	312105-0368		2	SCREW, M6S ISO 4017 M6X16 A4 80	
420	3108462-0000		5	SCREW	
430	312705-0314		2	NUT HEX. DOMED CAP MHM-6 M5 A280	
440	312810-0314		10	HEXAGON NUT, NY-LOCK M5 FZB	
450	315103-0146		16	WASHER PLAIN, 5,3X10X1 BR NI PL	
460	315103-0153		2	WASHER PLAIN, 6,4X12X1,5 BR NI PL	
470	315125-0146		6	WASHER HIGH, TBRSB 5.3X15X1 A4	
480	3108452-0000		8	WASHER	
490	3108453-0000		2	WASHER	
F09B3010	90459-6961		1	SAFETY SENSOR, ADAM E 0,5 M12	
F09B3012	90459-6961		1	SAFETY SENSOR, ADAM E 0,5 M12	
F09B3014	90459-6961		1	SAFETY SENSOR, ADAM E 0,5 M12	

Pos	Part No	UN	Qty	Description	Page No

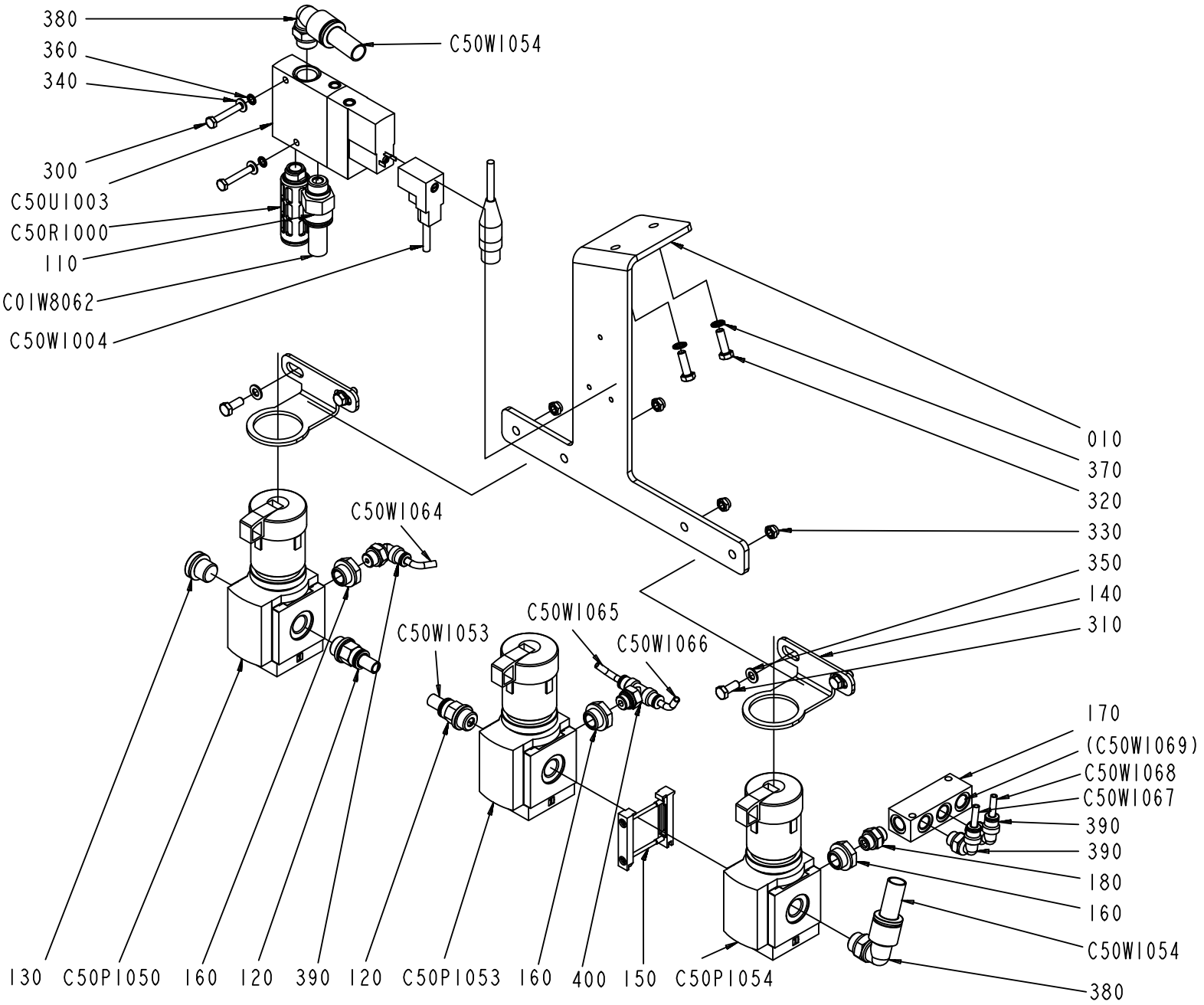

3108445-2
541792

ECM: 543027 - 20120402
Group number: 3108445-0200
Assembly Drawing: 3108445-2_1_AB

Pos	Part No	UN	Qty	Description	Page No
-					
010	3124420-0000		1	BRACKET	
110	350001-0011		1	PUSH-IN FITTING QS-F-G1/4-12	
120	350001-0009		2	PUSH-IN FITTING QS-F-G1/4-8	
130	90600-1167		1	PLUG, EXT. R-THREAD, R1/4	
140	90459-2389		2	BRACKET, MS4-LR-WR	
150	90459-2248		1	BRACKET, MS4-MV	
160	90224-0289		3	BUSHING, INT.EXT. THR. R1/8-R1/4	
170	90224-0314		1	DISTRIBUTOR BLOCK, FR-4-1/8-B	
180	342700-0109		1	NIPPLE, EXT.THREAD, HEXAGON, G1/8-G1/8	
300	312105-0297		2	SCREW, M6S ISO 4017 M4X25 A4 70	
310	312105-0327		4	SCREW, M6S ISO 4017 M5X12 A4 80	
320	312105-0329		2	SCREW, M6S ISO 4017 M5X16 A4 80	
330	312810-0314		4	HEXAGON NUT, NY-LOCK M5 FZB	
340	315103-0136		2	WASHER PLAIN, 4,3X8X0,8 BR NI PL	
350	315103-0146		4	WASHER PLAIN, 5,3X10X1 BR NI PL	
360	3108451-0000		2	WASHER	
370	3108452-0000		2	WASHER	
380	350002-0011		2	PUSH-IN L-FITTING QSL-F-G1/4-12	
390	350002-0005		1	PUSH-IN L-FITTING QSL-F-G1/8-4	
400	350007-0005		1	PUSH-IN T-FITTING QST-F-G1/8-4	
C50P1050	90600-1420		1	REGULATOR, MS4-LRB-1/4-D6-AS	
C50P1053	90600-1420		1	REGULATOR, MS4-LRB-1/4-D6-AS	
C50P1054	90600-1420		1	REGULATOR, MS4-LRB-1/4-D6-AS	
C50R1000	90328-0013		1	SILENCER U-1/4, 2316	
C50U1003	90600-5813		1	SOLENOID VALVE, CPE18-M1H-3GL-1/4	
C01W1053	315400-0004	M	1	TUBE PUN-H-8X1,25-BL	
C01W1054	315400-0010	M	1	TUBE PUN-H-12X2-BL	
C01W8062	315400-0010	M	1	TUBE PUN-H-12X2-BL	
C50W1004	90600-3573		1	SOCKET CONN. CABLE, KMEB-2-24-M12-0,5-LE	
C50W1064	315400-0016	M	1	TUBE PUN-H-4X0,75-BL	
C50W1065	315400-0016	M	1	TUBE PUN-H-4X0,75-BL	
C50W1066	315400-0016	M	1	TUBE PUN-H-4X0,75-BL	
C50W1067	315400-0016	M	1	TUBE PUN-H-4X0,75-BL	
C50W1068	315400-0016	M	1	TUBE PUN-H-4X0,75-BL	
C50W1069	315400-0016	M	1	TUBE PUN-H-4X0,75-BL	

Pos	Part No	UN	Qty	Description	Page No

Machine Type | Group Description | Used-In | Group Number | Page No

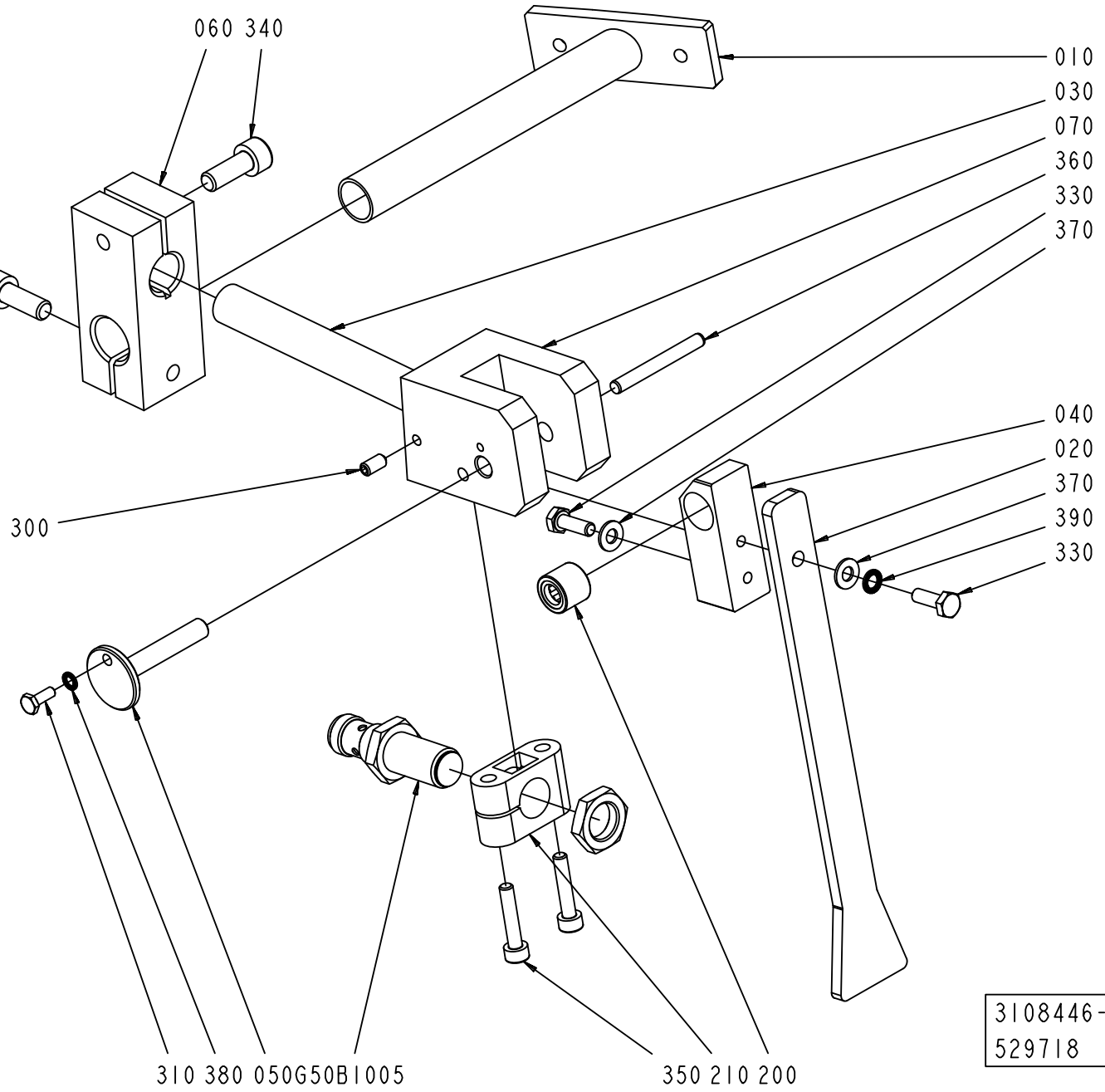
060 340
010
030
070
360
330
370
040
020
370
390
330
300
310 380 050G50B1005
350 210 200
3108446-2
529718

ECM: 532654 - 20120401
Group number: 3108446-0200
Assembly Drawing: 3108446-2_1_AA

Pos	Part No	UN	Qty	Description	Page No
-					
010	3115302-0000		1	BRACKET	
020	3115303-0000		1	DIP STICK	
030	3115304-0000		1	PIPE	
040	3115305-0000		1	BRACKET	
050	3115306-0000		1	PIN	
060	3115307-0000		1	CLAMP	
070	3115308-0000		1	PLATE	
200	3115309-0000		1	BEARING	
210	3115263-0000		1	CLAMP	
300	312318-0287		1	SET SCREW, CUP END ISO4029 M4X8 A4	
310	312115-0222		1	SCREW ISO4762 M3X8 A4 80	
330	312105-0291		2	SCREW, M6S ISO 4017 M4X12 A4 70	
340	312115-0368		2	SCREW ISO4762 M6X16 A4 80	
350	312115-0295		2	SCREW ISO4762 M4X20 A4 80	
360	311103-0278		1	PARALLEL PIN ISO 2338 4M6X35 A1	
370	315103-0136		2	WASHER PLAIN, 4,3X8X0,8 BR NI PL	
380	3108450-0000		1	WASHER	
390	3108451-0000		1	WASHER	
G50B1005	90458-2907		1	PROX.SWITCH IFS204	

Pos	Part No	UN	Qty	Description	Page No

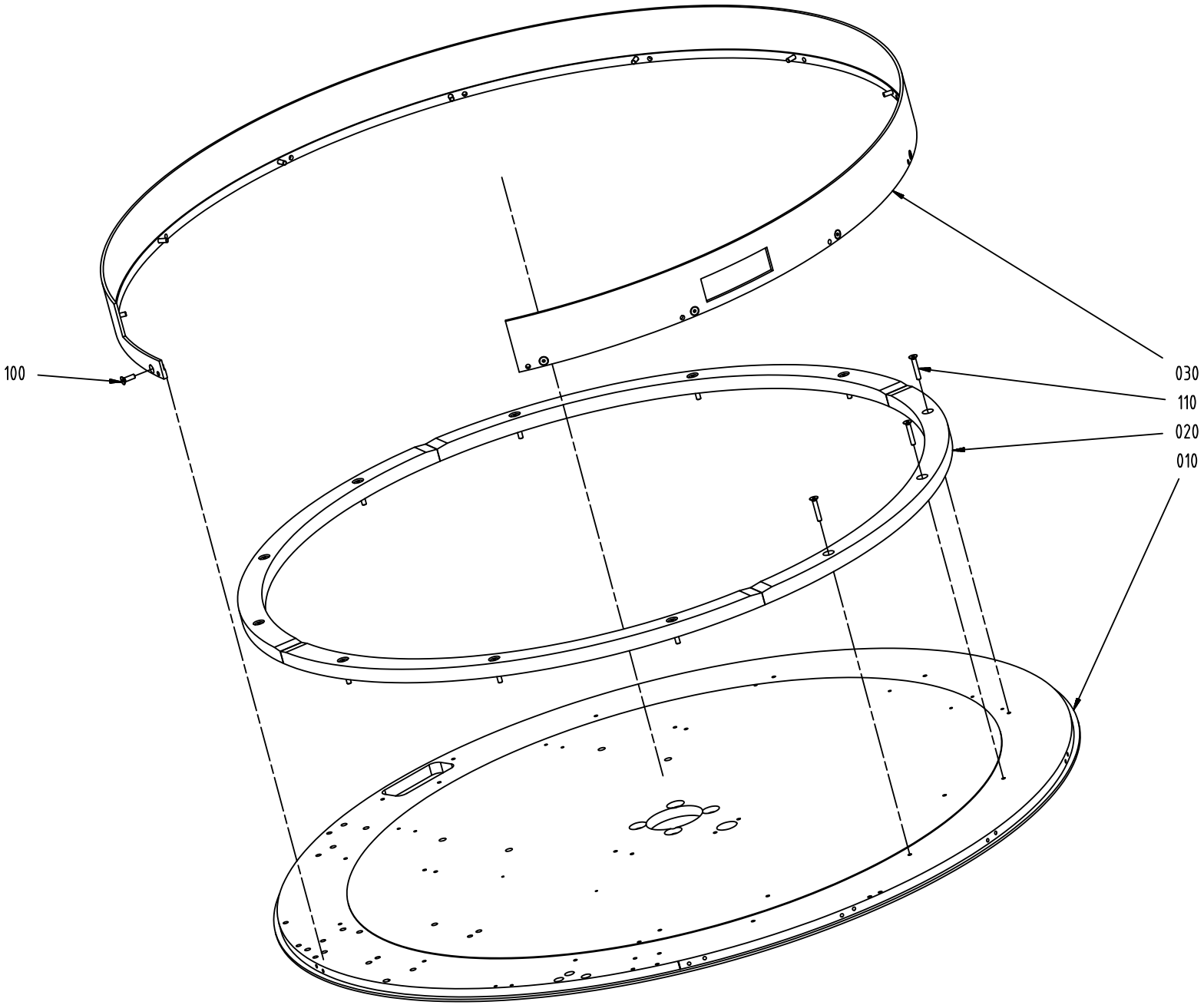
100
030
110
020
010

ECM: 481904 - 20110401
Group number: 3108447-0100
Assembly Drawing: 3108447-1_1_AA

Pos	Part No	UN	Qty	Description	Page No
-					
010	3108464-0000		1	STUD BOLT	
020	3108465-0000		4	SECTOR	
030	3108466-0000		1	RING	
100	312155-0329		12	SCREW DIN 7991 MF6S M5X16 A4 70	
110	312155-0335		12	SCREW DIN 7991 MF6S M5X30 A4 70	

Pos	Part No	UN	Qty	Description	Page No

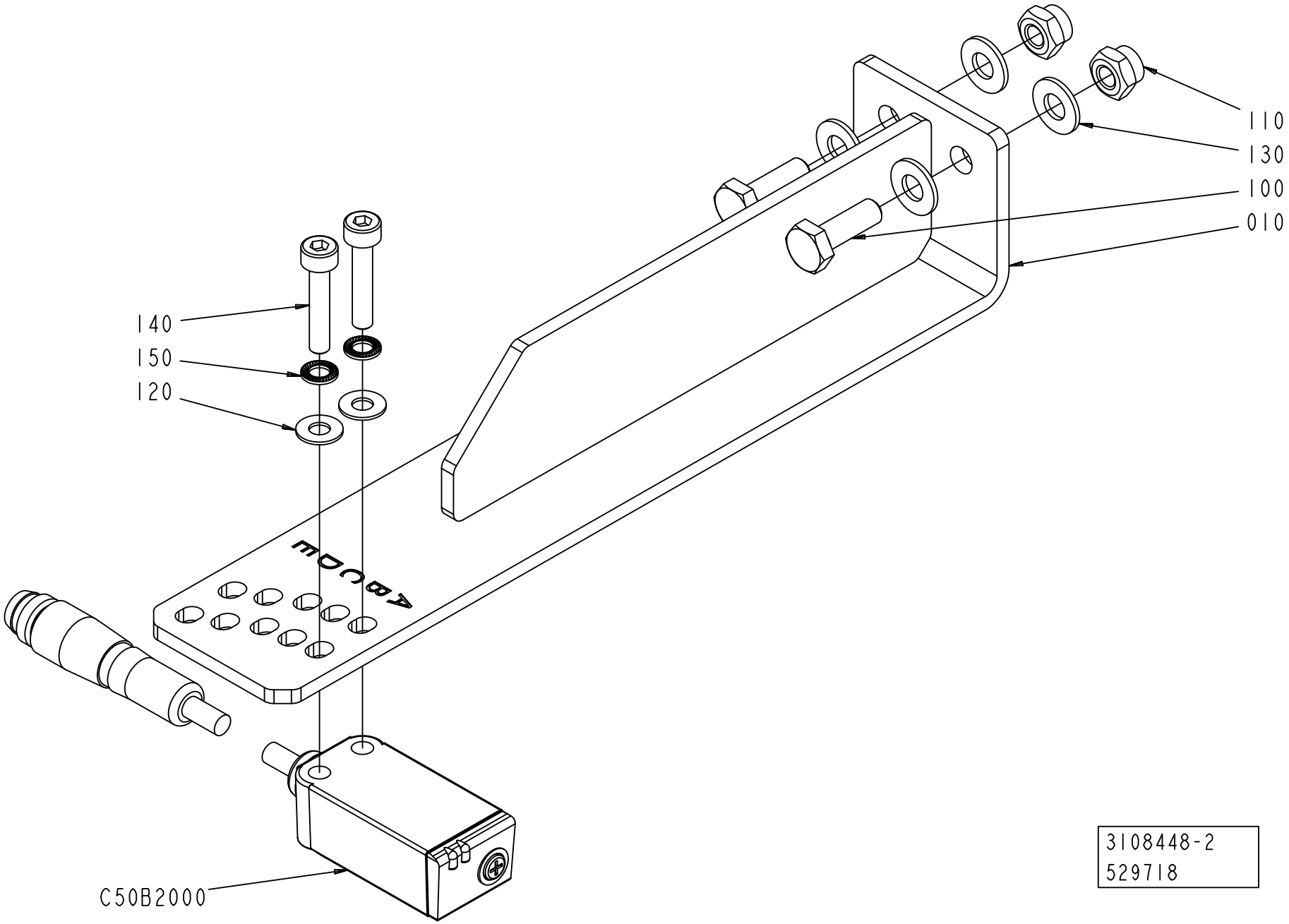
110
130
100
010
140
150
120
C50B2000
3108448-2
529718

ECM: 532655 - 20120401
Group number: 3108448-0200
Assembly Drawing: 3108448-2_1_AA

Pos	Part No	UN	Qty	Description	Page No
-					
010	3115267-0000		1	PHOTOCELL	
100	312105-0291		2	SCREW, M6S ISO 4017 M4X12 A4 70	
110	312810-0312		2	HEXAGON NUT, NY-LOCK M4 FZB	
120	315103-0124		2	WASHER PLAIN, 3,2X/6X0,5 BR NI PL	
130	315103-0136		4	WASHER PLAIN, 4,3X8X0,8 BR NI PL	
140	312115-0228		2	SCREW ISO4762 M3X16 A4 80	
150	3108450-0000		2	WASHER	
C50B2000	90459-7366		1	PHOTOCELL, WTB4-3P3161 F20	

Pos	Part No	UN	Qty	Description	Page No

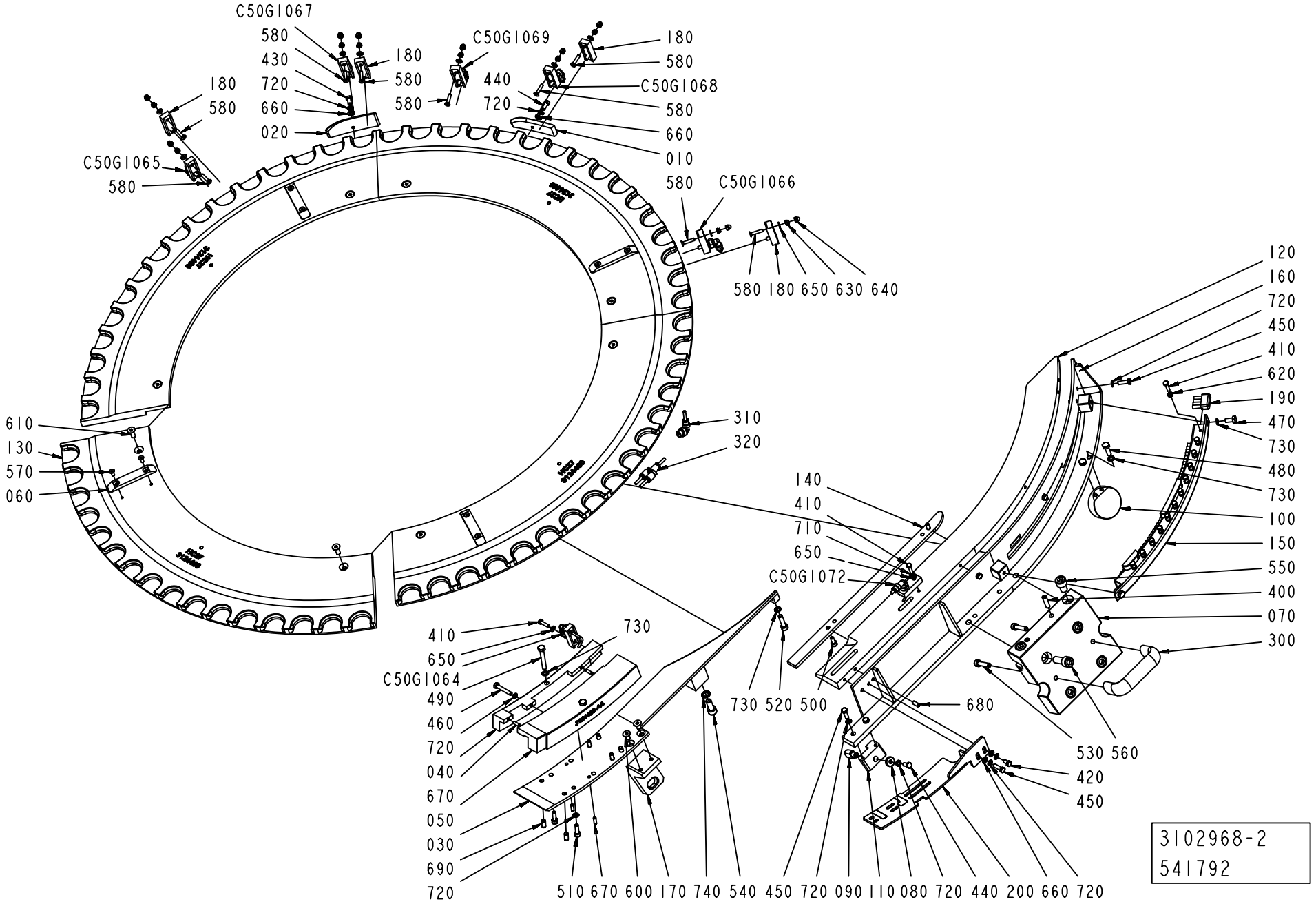
C50G1067
580
430
720
660
020
180
580
580
C50G1069
180
580
580
440
720
180
580
C50G1068
580
660
010
580
C50G1066
580 180 650 630 640
180
580
C50G1065
580
610
130
570
060
310
320
140
410
710
650
C50G1072
730 520 500
680
120
160
720
450
410
620
190
470
730
480
730
100
150
550
400
070
300
530 560
420
450
410
650
C50G1064
490
460
720
040
670
050
030
690
720
730
510 670 600 170 740 540 450 720 090 110 080 720 440 200 660 720
3102968-2
541792

ECM: 544980 - 20120402
Group number: 3102968-0200
Assembly Drawing: 3102968-2_1_AB

Pos	Part No	UN	Qty	Description	Page No
-					
010	2981410-0000		1	CAM	
020	2981411-0000		1	CAM	
030	3115368-0000		1	BASE	
040	3124455-0000		1	GUIDE	
050	3124456-0000		1	GUIDE	
060	3115346-0000		4	CARRIER	
070	3115347-0000		1	PLATE	
080	3115348-0000		1	WASHER	
090	3115349-0000		1	PIN	
100	3115350-0000		1	PIN	
110	3115351-0000		1	PIN	
120	3124459-0000		1	PULLER	
130	3124460-0000		4	GUIDE	
140	3124461-0000		1	PLATE	
150	3124462-0000		1	BOX	
160	3124463-0000		1	PLATE	
170	3115356-0000		1	CENTERING	
180	2981406-0000		4	AIR BLOW REGULATOR	
190	2857743-0000		12	BRUSH	
200	3124443-0000		1	SUPPORT	
300	3115300-0000		1	HANDLE	
310	350002-0005		1	PUSH-IN L-FITTING QSL-F-G1/8-4	
320	90458-0745		1	Y-CONNECTION	
400	3108463-0000		2	TAPER PIN	
410	312105-0293		14	SCREW, M6S ISO 4017 M4X16 A4 70	
420	312105-0323		1	SCREW, M6S ISO 4017 M5X8 A4 80	
430	312105-0325		1	SCREW, M6S ISO 4017 M5X10 A4 80	
440	312105-0327		2	SCREW, M6S ISO 4017 M5X12 A4 80	
450	312105-0329		6	SCREW, M6S ISO 4017 M5X16 A4 80	
460	312109-0335		1	SCREW, M6S ISO 4017 M5X30 A4 80	
470	312105-0366		2	SCREW, M6S ISO 4017 M6X12 A4 80	
480	312105-0370		2	SCREW, M6S ISO 4017 M6X20 A4 80	
490	312109-0378		2	SCREW, M6S ISO 4017 M6X40 A4 80	
500	312115-0327		2	SCREW ISO4762 M5X12 A4 80	
510	312115-0329		4	SCREW ISO4762 M5X16 A4 80	
520	312115-0372		1	SCREW ISO4762 M6X25 A4 80	
530	312115-0374		2	SCREW ISO4762 M6X30 A4 80	
540	312115-0451		1	SCREW ISO4762 M8X20 A4 80	
550	312115-0489		2	SCREW ISO4762 M10X16 A4 80	
560	312115-0495		4	SCREW ISO4762 M10X30 A4 80	
570	312155-0289		8	SCREW DIN 7991 MF6S M4X10 A4 70	
580	312155-0295		9	SCREW DIN 7991 MF6S M4X20 A4 70	
600	312155-0366		2	SCREW DIN 7991 MF6S M6X12 A4 70	
610	312155-0368		8	SCREW DIN 7991 MF6S M6X16 A4 70	
620	312605-0312		12	HEXAGON NUT, M6M M4 A280	
630	312810-0312		9	HEXAGON NUT, NY-LOCK M4 FZB	
640	312705-0312		9	NUT HEX. DOMED CAP MHM-6 M4 A280	
650	315103-0136		11	WASHER PLAIN, 4,3X8X0,8 BR NI PL	
660	315103-0146		4	WASHER PLAIN, 5,3X10X1 BR NI PL	
670	311103-0268		4	PARALLEL PIN ISO 2338 4M6X12 A1	
680	311103-0306		2	PARALLEL PIN ISO 2338 5M6X12 A1	
690	311103-0349		4	PARALLEL PIN ISO 2338 6M6X12 A1	
710	3108451-0000		1	WASHER	
720	3108452-0000		15	WASHER	
730	3108453-0000		7	WASHER	
740	3108454-0000		1	WASHER	
C50G1064	3115358-0000		1	AIR NOZZLE	
C50G1065	2930228-0000		1	AIR NOZZLE	
C50G1066	3124524-0000		1	AIR NOZZLE	
C50G1067	2930228-0000		1	AIR NOZZLE	
C50G1068	2930228-0000		1	AIR NOZZLE	
C50G1069	3124524-0000		1	AIR NOZZLE	
C50G1072	3124444-0000		1	AIR NOZZLE	

Machine Type	Group Description	Used-In	Group Number	Page No

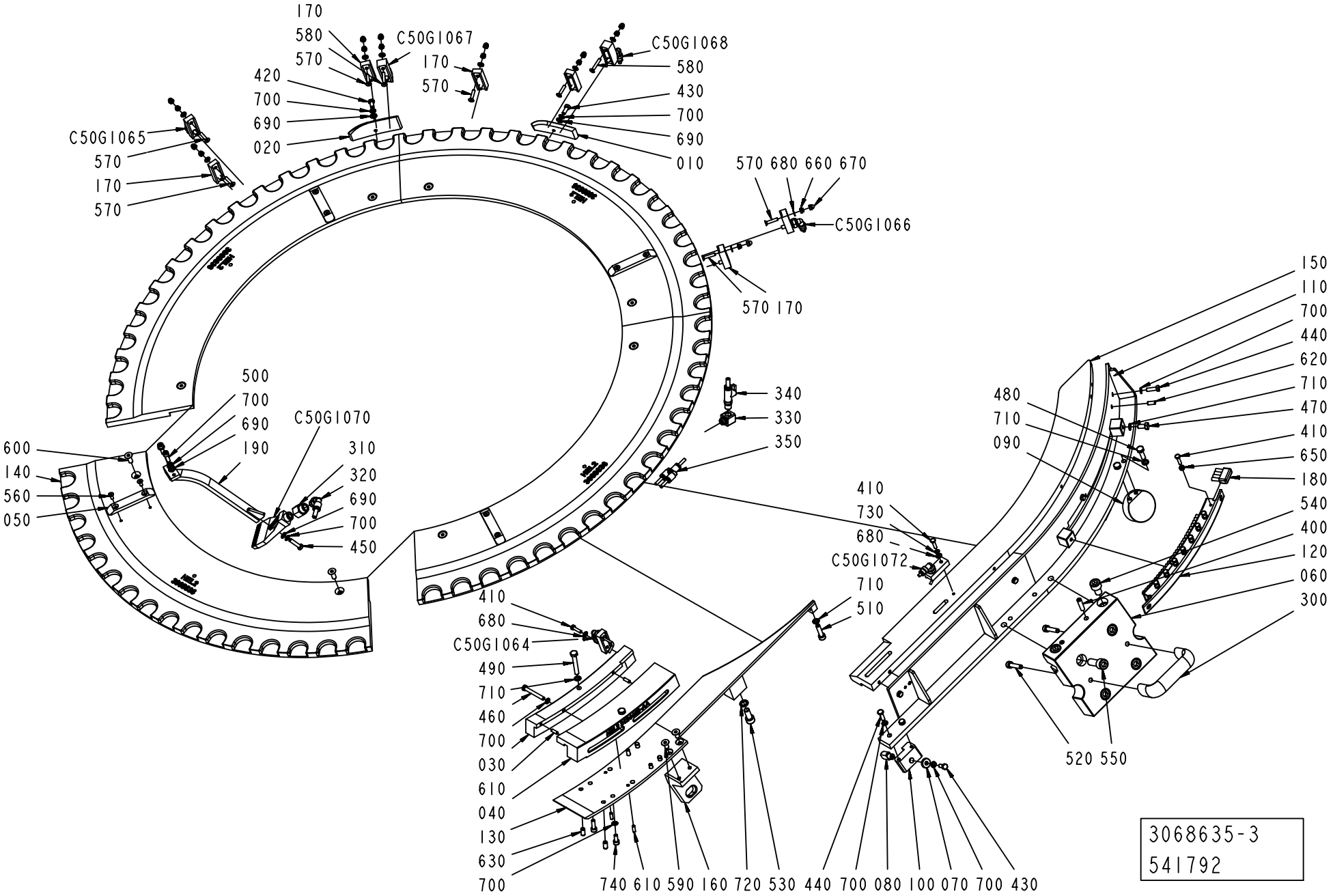
170
580
570
C50G1067
170
570
420
700
690
020
C50G1065
570
170
570
C50G1068
580
430
700
690
010
570 680 660 670
C50G1066
570 170
500
700
690
190
C50G1070
310
320
690
700
450
600
140
560
050
340
330
350
410
730
680
C50G1072
710
510
480
710
090
150
110
700
440
620
710
470
410
650
180
540
400
120
060
300
520 550
410
680
C50G1064
490
710
460
700
030
610
040
130
630
700
740 610 590 160 720 530 440 700 080 100 070 700 430
3068635-3
541792

ECM: 544979 - 20120402
Group number: 3068635-0200
Assembly Drawing: 3068635-3_1_AB

Pos	Part No	UN	Qty	Description	Page No
-					
010	2981410-0000		1	CAM	
020	2981411-0000		1	CAM	
030	3124457-0000		1	GUIDE	
040	3124458-0000		1	GUIDE	
050	3115346-0000		4	CARRIER	
060	3115347-0000		1	PLATE	
070	3115348-0000		1	WASHER	
080	3115349-0000		1	PIN	
090	3115350-0000		1	PIN	
100	3115351-0000		1	PIN	
110	3115354-0000		1	PLATE	
120	3115355-0000		1	BRUSH	
130	3115368-0000		1	BASE	
140	3068636-0000		4	GUIDE	
150	3124373-0000		1	PULLER	
160	3115356-0000		1	CENTERING	
170	2981406-0000		5	AIR BLOW REGULATOR	
180	2857743-0000		8	BRUSH	
190	2981418-0000		1	AIR NOZZLE	
300	3115300-0000		1	HANDLE	
310	3124360-0000		1	REDUCTION SLEEVE	
320	350002-0006		1	PUSH-IN L-FITTING QSL-F-G1/8-6	
330	90224-0031		1	CONN. ELBOW, ART.NO 3814	
340	90187-0191		1	BALL VALVE, R1/8 - HOSE 6 MM	
350	90458-0745		1	Y-CONNECTION	
400	3108463-0000		2	TAPER PIN	
410	312105-0293		10	SCREW, M6S ISO 4017 M4X16 A4 70	
420	312105-0325		1	SCREW, M6S ISO 4017 M5X10 A4 80	
430	312105-0327		2	SCREW, M6S ISO 4017 M5X12 A4 80	
440	312105-0329		6	SCREW, M6S ISO 4017 M5X16 A4 80	
450	312105-0331		1	SCREW, M6S ISO 4017 M5X20 A4 80	
460	312109-0339		1	SCREW, M6S ISO 4017 M5X40 A4 80	
470	312105-0366		2	SCREW, M6S ISO 4017 M6X12 A4 80	
480	312105-0370		2	SCREW, M6S ISO 4017 M6X20 A4 80	
490	312109-0378		2	SCREW, M6S ISO 4017 M6X40 A4 80	
500	312115-0329		4	SCREW ISO4762 M5X16 A4 80	
510	312115-0372		1	SCREW ISO4762 M6X25 A4 80	
520	312115-0374		2	SCREW ISO4762 M6X30 A4 80	
530	312115-0451		1	SCREW ISO4762 M8X20 A4 80	
540	312115-0489		2	SCREW ISO4762 M10X16 A4 80	
550	312115-0495		4	SCREW ISO4762 M10X30 A4 80	
560	312155-0289		8	SCREW DIN 7991 MF6S M4X10 A4 70	
570	312155-0295		7	SCREW DIN 7991 MF6S M4X20 A4 70	
580	312155-0297		2	SCREW DIN 7991 MF6S M4X25 A4 70	
590	312155-0366		2	SCREW DIN 7991 MF6S M6X12 A4 70	
600	312155-0368		8	SCREW DIN 7991 MF6S M6X16 A4 70	
610	311103-0268		4	PARALLEL PIN ISO 2338 4M6X12 A1	
620	311103-0306		2	PARALLEL PIN ISO 2338 5M6X12 A1	
630	311103-0349		4	PARALLEL PIN ISO 2338 6M6X12 A1	
650	312605-0312		8	HEXAGON NUT, M6M M4 A280	
660	312810-0312		9	HEXAGON NUT, NY-LOCK M4 FZB	
670	312705-0312		9	NUT HEX. DOMED CAP MHM-6 M4 A280	
680	315103-0136		11	WASHER PLAIN, 4,3X8X0,8 BR NI PL	
690	315103-0146		5	WASHER PLAIN, 5,3X10X1 BR NI PL	
700	3108452-0000		17	WASHER	
710	3108453-0000		7	WASHER	
720	3108454-0000		1	WASHER	
730	3108451-0000		1	WASHER	
740	312115-0327		2	SCREW ISO4762 M5X12 A4 80	
C50G1064	3115358-0000		1	AIR NOZZLE	
C50G1065	2930228-0000		1	AIR NOZZLE	
C50G1066	2930229-0000		1	AIR NOZZLE	
C50G1067	3115238-0000		1	AIR NOZZLE	
C50G1068	3115238-0000		1	AIR NOZZLE	
C50G1070	2981418-0000		1	AIR NOZZLE	
C50G1072	3124444-0000		1	AIR NOZZLE	

Machine Type	Group Description	Used-In	Group Number	Page No

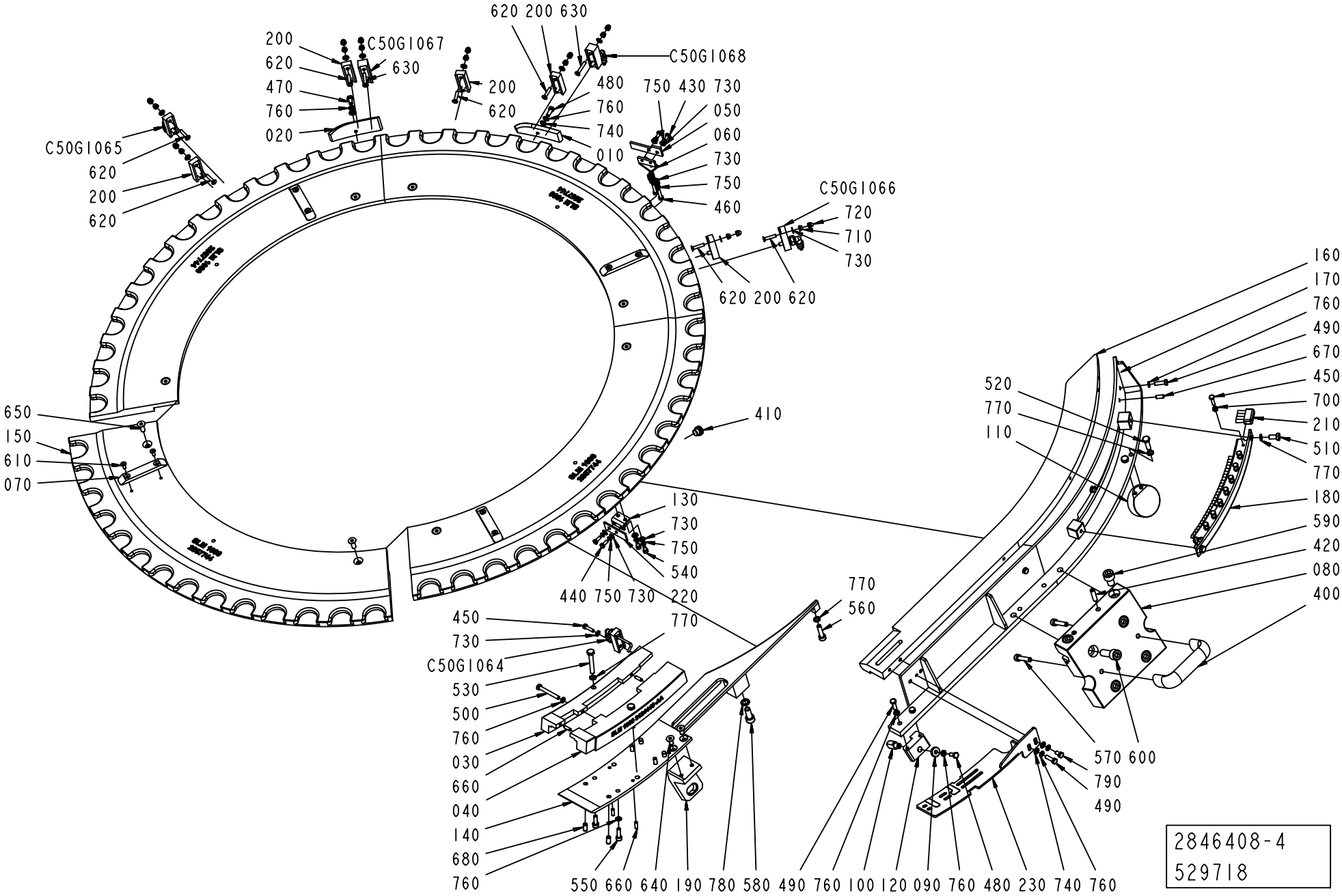
620 200 630
200
620
470
760
020
C50G1067
630
C50G1068
480
760
740
010
750 430 730
050
060
730
750
460
C50G1065
620
200
620
C50G1066
720
710
730
620 200 620
650
150
610
070
410
160
170
760
490
670
450
700
210
510
770
180
590
420
080
400
520
770
110
130
730
750
540
220
440 750 730
770
560
450
730
C50G1064
530
500
760
030
660
040
140
680
760
550 660 640 190 780 580 490 760 100 120 090 760 480 230 740 760
570 600
790
490
2846408-4
529718

ECM: 529727 - 20120401
Group number: 2846408-0300
Assembly Drawing: 2846408-4_1_AA

Pos	Part No	UN	Qty	Description	Page No
-					
010	2981410-0000		1	CAM	
020	2981411-0000		1	CAM	
030	3124445-0000		1	GUIDE	
040	3124446-0000		1	GUIDE	
050	2981407-0000		1	SCRAPER	
060	3115345-0000		1	SUPPORT	
070	3115346-0000		4	CARRIER	
080	3115347-0000		1	PLATE	
090	3115348-0000		1	WASHER	
100	3115349-0000		1	PIN	
110	3115350-0000		1	PIN	
120	3115351-0000		1	PIN	
130	2981407-0000		1	SCRAPER	
140	3115352-0000		1	BASE	
150	2857744-0000		4	GUIDE	
160	3115353-0000		1	PULLER	
170	3115354-0000		1	PLATE	
180	3115355-0000		1	BRUSH	
190	3115356-0000		1	CENTERING	
200	2981406-0000		5	AIR BLOW REGULATOR	
210	2857743-0000		8	BRUSH	
220	3115357-0000		1	SCRAPER	
230	3124443-0000		1	SUPPORT	
400	3115300-0000		1	HANDLE	
410	342713-0209		1	PLUG, EXT THREAD HEX SOCKET 8638-00-180	
420	3108463-0000		2	TAPER PIN	
430	312105-0287		2	SCREW, M6S ISO 4017 M4X8 A4 70	
440	312105-0289		2	SCREW, M6S ISO 4017 M4X10 A4 70	
450	312105-0293		9	SCREW, M6S ISO 4017 M4X16 A4 70	
460	312105-0287		2	SCREW, M6S ISO 4017 M4X8 A4 70	
470	312105-0325		1	SCREW, M6S ISO 4017 M5X10 A4 80	
480	312105-0327		2	SCREW, M6S ISO 4017 M5X12 A4 80	
490	312105-0329		6	SCREW, M6S ISO 4017 M5X16 A4 80	
500	312109-0339		1	SCREW, M6S ISO 4017 M5X40 A4 80	
510	312105-0366		2	SCREW, M6S ISO 4017 M6X12 A4 80	
520	312105-0370		2	SCREW, M6S ISO 4017 M6X20 A4 80	
530	312109-0378		2	SCREW, M6S ISO 4017 M6X40 A4 80	
540	312115-0287		2	SCREW ISO4762 M4X8 A4 80	
550	312115-0329		4	SCREW ISO4762 M5X16 A4 80	
560	312115-0372		1	SCREW ISO4762 M6X25 A4 80	
570	312115-0374		2	SCREW ISO4762 M6X30 A4 80	
580	312115-0451		1	SCREW ISO4762 M8X20 A4 80	
590	312115-0489		2	SCREW ISO4762 M10X16 A4 80	
600	312115-0495		4	SCREW ISO4762 M10X30 A4 80	
610	312155-0289		8	SCREW DIN 7991 MF6S M4X10 A4 70	
620	312155-0295		7	SCREW DIN 7991 MF6S M4X20 A4 70	
630	312155-0297		2	SCREW DIN 7991 MF6S M4X25 A4 70	
640	312155-0366		2	SCREW DIN 7991 MF6S M6X12 A4 70	
650	312155-0368		8	SCREW DIN 7991 MF6S M6X16 A4 70	
660	311103-0268		4	PARALLEL PIN ISO 2338 4M6X12 A1	
670	311103-0306		2	PARALLEL PIN ISO 2338 5M6X12 A1	
680	311103-0349		4	PARALLEL PIN ISO 2338 6M6X12 A1	
700	312605-0312		8	HEXAGON NUT, M6M M4 A280	
710	312810-0312		9	HEXAGON NUT, NY-LOCK M4 FZB	
720	312705-0312		9	NUT HEX. DOMED CAP MHM-6 M4 A280	
730	315103-0136		22	WASHER PLAIN, 4,3X8X0,8 BR NI PL	
740	315103-0146		4	WASHER PLAIN, 5,3X10X1 BR NI PL	
750	3108451-0000		8	WASHER	
760	3108452-0000		15	WASHER	
770	3108453-0000		7	WASHER	
780	3108454-0000		1	WASHER	
790	312105-0323		1	SCREW, M6S ISO 4017 M5X8 A4 80	
C50G1064	3115358-0000		1	AIR NOZZLE	
C50G1065	2930228-0000		1	AIR NOZZLE	
C50G1066	2930229-0000		1	AIR NOZZLE	
C50G1067	2981405-0000		1	AIR NOZZLE	
C50G1068	2981405-0000		1	AIR NOZZLE	

Machine Type	Group Description	Used-In	Group Number	Page No

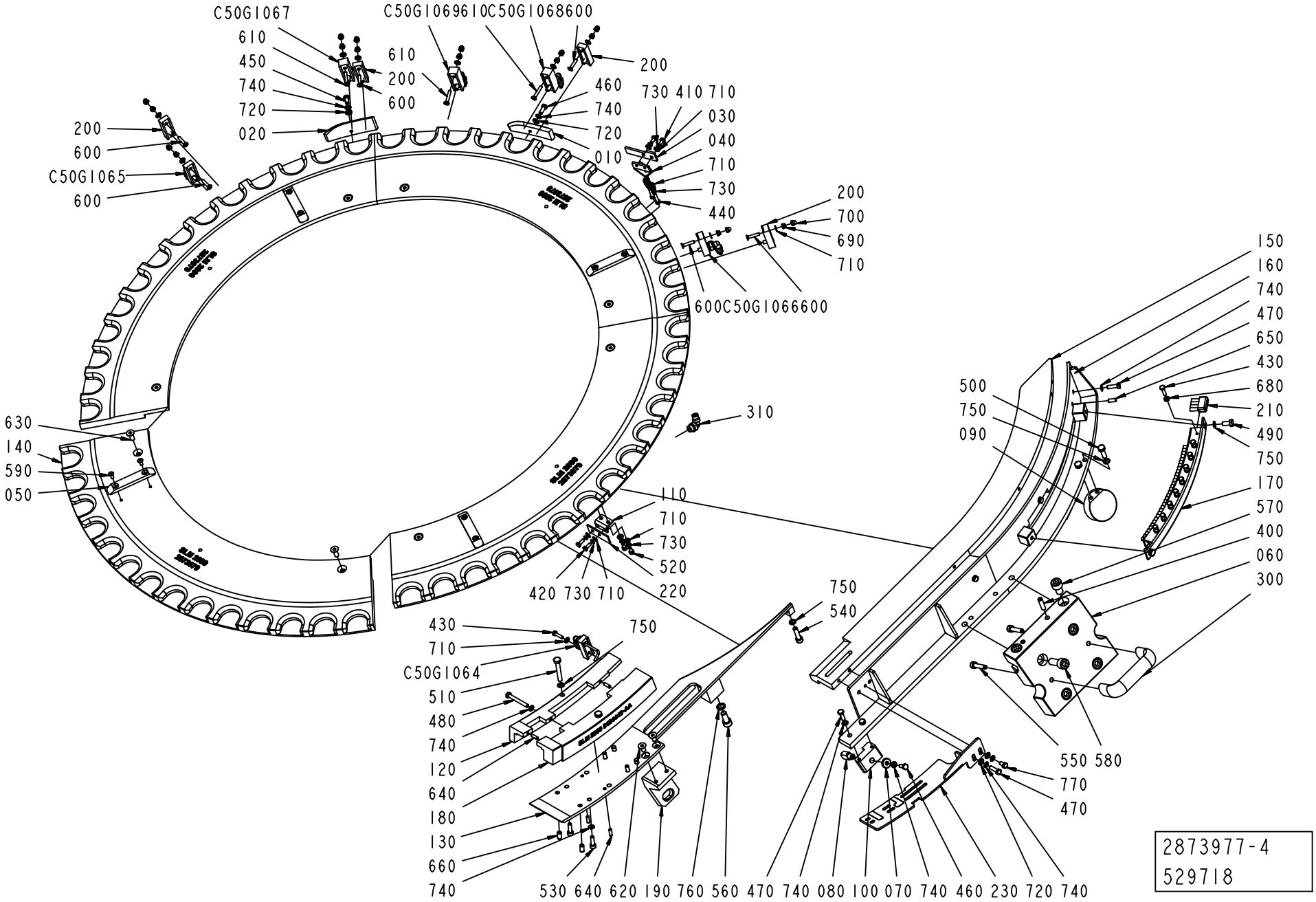
C50G1067
610
450
740
720
020
610
200
600
C50G1069
610
C50G1068
600
200
460
740
720
010
730 410 710
030
040
710
730
440
200
700
690
710
600C50G1066600
200
600
C50G1065
600
630
140
590
050
310
110
710
730
520
220
420 730 710
750
540
500
750
090
150
160
740
470
650
430
680
210
490
750
170
570
400
060
300
550 580
770
470
430
710
C50G1064
510
480
740
120
640
180
130
660
740
750
530 640 620 190 760 560 470 740 080 100 070 740 460 230 720 740
2873977-4
529718

ECM: 529729 - 20120401
Group number: 2873977-0300
Assembly Drawing: 2873977-4_1_AA

Pos	Part No	UN	Qty	Description	Page No
-					
010	2981410-0000		1	CAM	
020	2981411-0000		1	CAM	
030	2981407-0000		1	SCRAPER	
040	3115345-0000		1	SUPPORT	
050	3115346-0000		4	CARRIER	
060	3115347-0000		1	PLATE	
070	3115348-0000		1	WASHER	
080	3115349-0000		1	PIN	
090	3115350-0000		1	PIN	
100	3115351-0000		1	PIN	
110	2981407-0000		1	SCRAPER	
120	3124447-0000		1	GUIDE	
130	3115360-0000		1	BASE	
140	2873979-0000		4	GUIDE	
150	3115361-0000		1	PULLER	
160	3115362-0000		1	PLATE	
170	3115363-0000		1	HOLDER	
180	3124448-0000		1	GUIDE	
190	3115356-0000		1	CENTERING	
200	2981406-0000		4	AIR BLOW REGULATOR	
210	2857743-0000		9	BRUSH	
220	3115357-0000		1	SCRAPER	
230	3124443-0000		1	SUPPORT	
300	3115300-0000		1	HANDLE	
310	350002-0005		1	PUSH-IN L-FITTING QSL-F-G1/8-4	
400	3108463-0000		2	TAPER PIN	
410	312105-0287		2	SCREW, M6S ISO 4017 M4X8 A4 70	
420	312105-0289		2	SCREW, M6S ISO 4017 M4X10 A4 70	
430	312105-0293		10	SCREW, M6S ISO 4017 M4X16 A4 70	
440	312105-0287		2	SCREW, M6S ISO 4017 M4X8 A4 70	
450	312105-0325		1	SCREW, M6S ISO 4017 M5X10 A4 80	
460	312105-0327		2	SCREW, M6S ISO 4017 M5X12 A4 80	
470	312105-0329		6	SCREW, M6S ISO 4017 M5X16 A4 80	
480	312109-0339		1	SCREW, M6S ISO 4017 M5X40 A4 80	
490	312105-0366		2	SCREW, M6S ISO 4017 M6X12 A4 80	
500	312105-0370		2	SCREW, M6S ISO 4017 M6X20 A4 80	
510	312109-0378		2	SCREW, M6S ISO 4017 M6X40 A4 80	
520	312115-0287		2	SCREW ISO4762 M4X8 A4 80	
530	312115-0329		4	SCREW ISO4762 M5X16 A4 80	
540	312115-0372		1	SCREW ISO4762 M6X25 A4 80	
550	312115-0374		2	SCREW ISO4762 M6X30 A4 80	
560	312115-0451		1	SCREW ISO4762 M8X20 A4 80	
570	312115-0489		2	SCREW ISO4762 M10X16 A4 80	
580	312115-0495		4	SCREW ISO4762 M10X30 A4 80	
590	312155-0289		8	SCREW DIN 7991 MF6S M4X10 A4 70	
600	312155-0295		6	SCREW DIN 7991 MF6S M4X20 A4 70	
610	312155-0297		3	SCREW DIN 7991 MF6S M4X25 A4 70	
620	312155-0366		2	SCREW DIN 7991 MF6S M6X12 A4 70	
630	312155-0368		8	SCREW DIN 7991 MF6S M6X16 A4 70	
640	311103-0268		4	PARALLEL PIN ISO 2338 4M6X12 A1	
650	311103-0306		2	PARALLEL PIN ISO 2338 5M6X12 A1	
660	311103-0349		4	PARALLEL PIN ISO 2338 6M6X12 A1	
680	312605-0312		9	HEXAGON NUT, M6M M4 A280	
690	312810-0312		9	HEXAGON NUT, NY-LOCK M4 FZB	
700	312705-0312		9	NUT HEX. DOMED CAP MHM-6 M4 A280	
710	315103-0136		22	WASHER PLAIN, 4,3X8X0,8 BR NI PL	
720	315103-0146		4	WASHER PLAIN, 5,3X10X1 BR NI PL	
730	3108451-0000		8	WASHER	
740	3108452-0000		15	WASHER	
750	3108453-0000		7	WASHER	
760	3108454-0000		1	WASHER	
770	312105-0323		1	SCREW, M6S ISO 4017 M5X8 A4 80	
C50G1064	3115358-0000		1	AIR NOZZLE	
C50G1065	2930228-0000		1	AIR NOZZLE	
C50G1066	2930229-0000		1	AIR NOZZLE	
C50G1067	2930230-0000		1	AIR NOZZLE	
C50G1068	2930230-0000		1	AIR NOZZLE	
C50G1069	2981405-0000		1	AIR NOZZLE	

Machine Type	Group Description	Used-In	Group Number	Page No

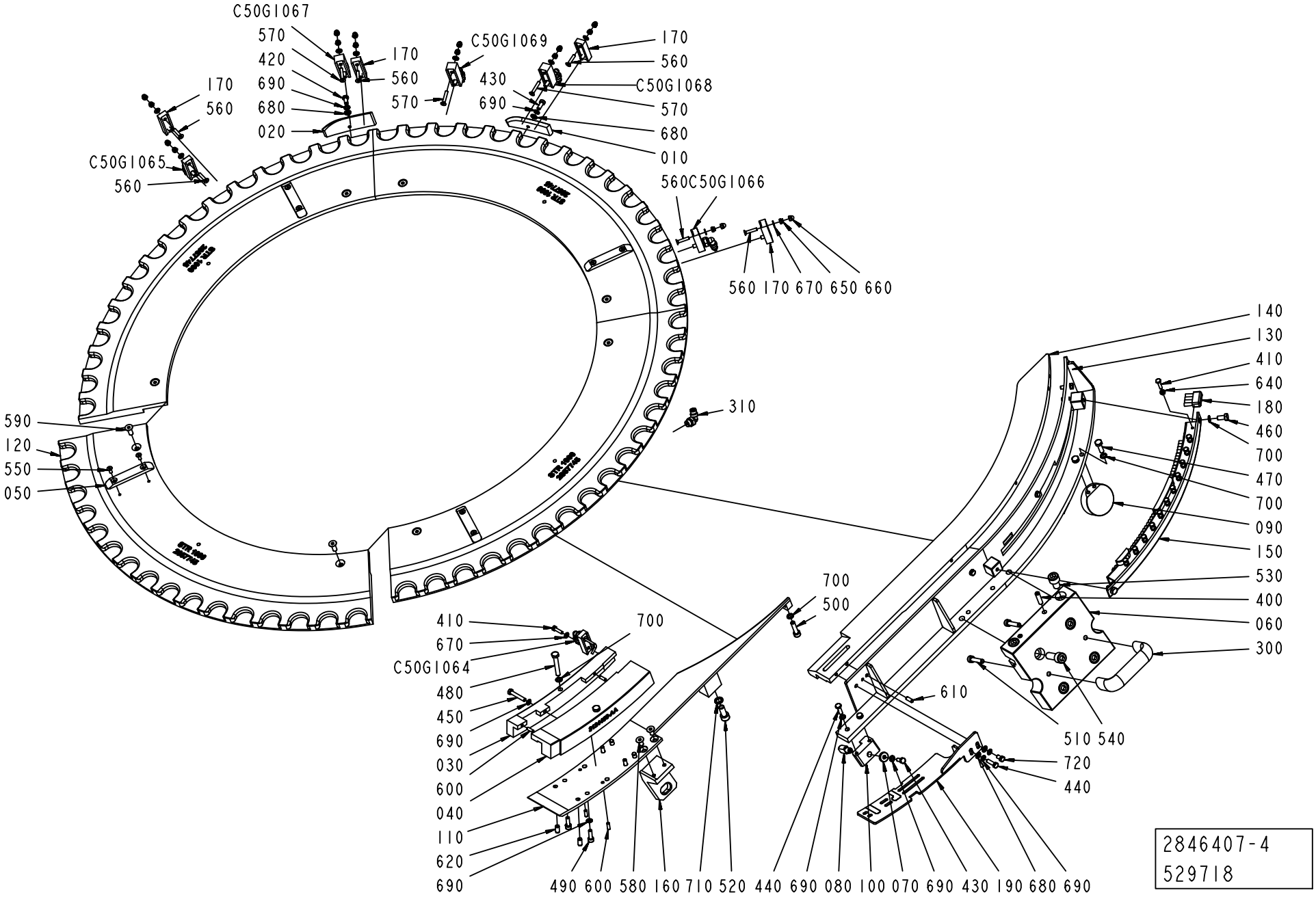
C50G1067
570
420
690
680
020
170
560
570
C50G1069
430
690
170
560
C50G1068
570
680
010
170
560
C50G1065
560
560C50G1066
560 170 670 650 660
310
590
120
550
050
140
130
410
640
180
460
700
470
700
090
150
530
400
060
300
700
500
410
670
C50G1064
480
450
690
030
600
040
110
620
690
700
610
510 540
720
440
490 600 580 160 710 520 440 690 080 100 070 690 430 190 680 690
2846407-4
529718

ECM: 529726 - 20120401
Group number: 2846407-0300
Assembly Drawing: 2846407-4_1_AA

Pos	Part No	UN	Qty	Description	Page No
-					
010	2981410-0000		1	CAM	
020	2981411-0000		1	CAM	
030	3124455-0000		1	GUIDE	
040	3124456-0000		1	GUIDE	
050	3115346-0000		4	CARRIER	
060	3115347-0000		1	PLATE	
070	3115348-0000		1	WASHER	
080	3115349-0000		1	PIN	
090	3115350-0000		1	PIN	
100	3115351-0000		1	PIN	
110	3115368-0000		1	BASE	
120	2857745-0000		4	GUIDE	
130	3124364-0000		1	PLATE	
140	3124368-0000		1	PULLER	
150	3124365-0000		1	BOX	
160	3115356-0000		1	CENTERING	
170	2981406-0000		4	AIR BLOW REGULATOR	
180	2857743-0000		12	BRUSH	
190	3124443-0000		1	SUPPORT	
300	3115300-0000		1	HANDLE	
310	350002-0005		1	PUSH-IN L-FITTING QSL-F-G1/8-4	
400	3108463-0000		2	TAPER PIN	
410	312105-0293		13	SCREW, M6S ISO 4017 M4X16 A4 70	
420	312105-0325		1	SCREW, M6S ISO 4017 M5X10 A4 80	
430	312105-0327		2	SCREW, M6S ISO 4017 M5X12 A4 80	
440	312105-0329		6	SCREW, M6S ISO 4017 M5X16 A4 80	
450	312109-0335		1	SCREW, M6S ISO 4017 M5X30 A4 80	
460	312105-0366		2	SCREW, M6S ISO 4017 M6X12 A4 80	
470	312105-0370		2	SCREW, M6S ISO 4017 M6X20 A4 80	
480	312109-0378		2	SCREW, M6S ISO 4017 M6X40 A4 80	
490	312115-0329		4	SCREW ISO4762 M5X16 A4 80	
500	312115-0372		1	SCREW ISO4762 M6X25 A4 80	
510	312115-0374		2	SCREW ISO4762 M6X30 A4 80	
520	312115-0451		1	SCREW ISO4762 M8X20 A4 80	
530	312115-0489		2	SCREW ISO4762 M10X16 A4 80	
540	312115-0495		4	SCREW ISO4762 M10X30 A4 80	
550	312155-0289		8	SCREW DIN 7991 MF6S M4X10 A4 70	
560	312155-0295		6	SCREW DIN 7991 MF6S M4X20 A4 70	
570	312155-0297		3	SCREW DIN 7991 MF6S M4X25 A4 70	
580	312155-0366		2	SCREW DIN 7991 MF6S M6X12 A4 70	
590	312155-0368		8	SCREW DIN 7991 MF6S M6X16 A4 70	
600	311103-0268		4	PARALLEL PIN ISO 2338 4M6X12 A1	
610	311103-0306		2	PARALLEL PIN ISO 2338 5M6X12 A1	
620	311103-0349		4	PARALLEL PIN ISO 2338 6M6X12 A1	
640	312605-0312		12	HEXAGON NUT, M6M M4 A280	
650	312810-0312		9	HEXAGON NUT, NY-LOCK M4 FZB	
660	312705-0312		9	NUT HEX. DOMED CAP MHM-6 M4 A280	
670	315103-0136		10	WASHER PLAIN, 4,3X8X0,8 BR NI PL	
680	315103-0146		4	WASHER PLAIN, 5,3X10X1 BR NI PL	
690	3108452-0000		15	WASHER	
700	3108453-0000		7	WASHER	
710	3108454-0000		1	WASHER	
720	312105-0323		1	SCREW, M6S ISO 4017 M5X8 A4 80	
C50G1064	3115358-0000		1	AIR NOZZLE	
C50G1065	2930228-0000		1	AIR NOZZLE	
C50G1066	2930229-0000		1	AIR NOZZLE	
C50G1067	2930230-0000		1	AIR NOZZLE	
C50G1068	2930230-0000		1	AIR NOZZLE	
C50G1069	2981405-0000		1	AIR NOZZLE	

Machine Type	Group Description	Used-In	Group Number	Page No

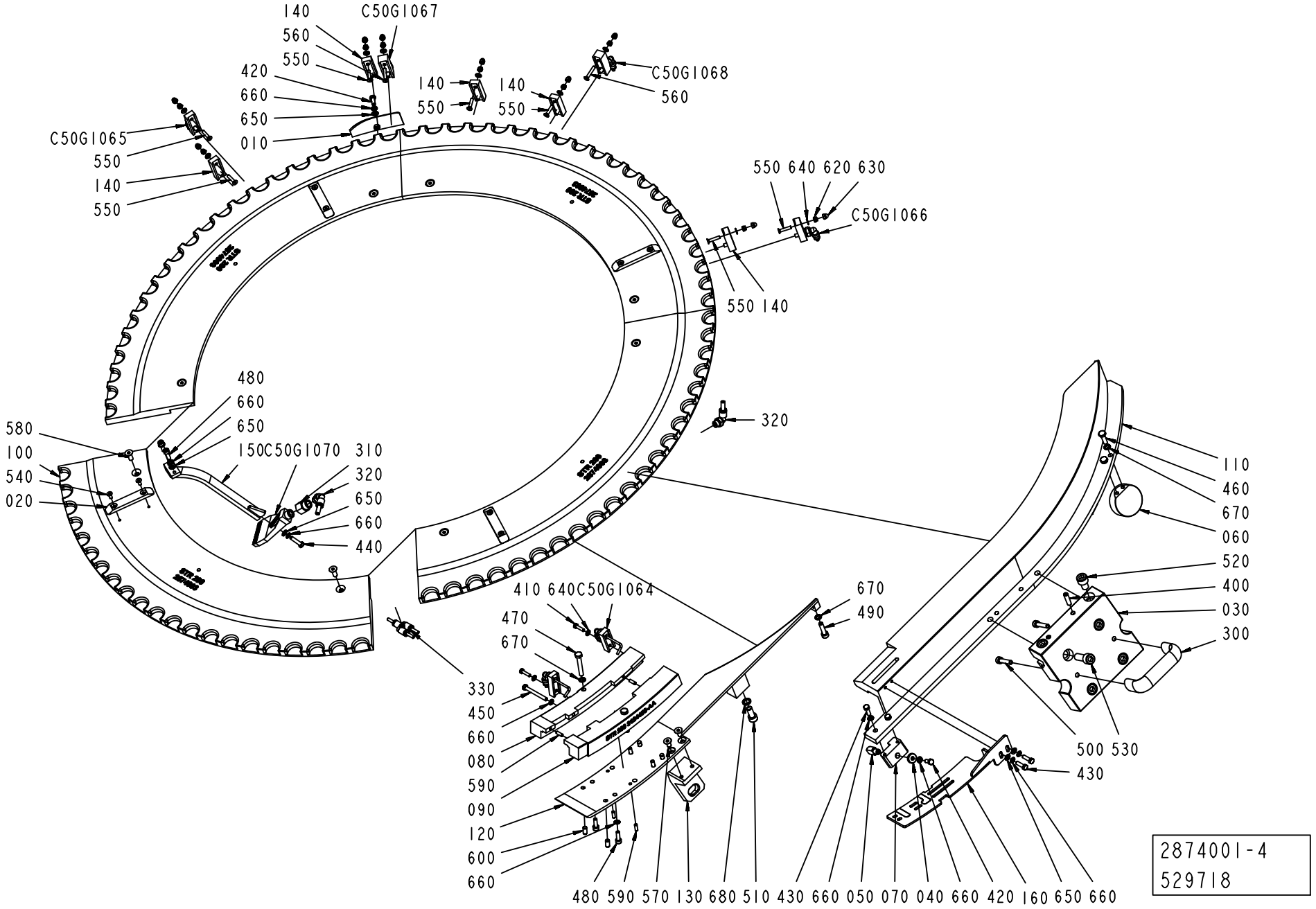
140
C50G1067
560
550
420
660
650
010
140
550
140
550
C50G1068
560
C50G1065
550
140
550
550 640 620 630
C50G1066
550 140
480
660
650
150C50G1070
310
320
650
660
440
580
100
540
020
320
110
460
670
060
520
400
030
300
410 640C50G1064
470
670
330
450
660
080
590
090
120
600
660
670
490
500 530
430
480 590 570 130 680 510 430 660 050 070 040 660 420 160 650 660
2874001-4
529718

ECM: 532647 - 20120401
Group number: 2874001-0300
Assembly Drawing: 2874001-4_1_AA

Pos	Part No	UN	Qty	Description	Page No
-					
010	2981409-0000		1	CAM	
020	3115346-0000		4	CARRIER	
030	3115347-0000		1	PLATE	
040	3115348-0000		1	WASHER	
050	3115349-0000		1	PIN	
060	3115350-0000		1	PIN	
070	3115351-0000		1	PIN	
080	3124449-0000		1	GUIDE	
090	3124450-0000		1	GUIDE	
100	2874003-0000		4	GUIDE	
110	3115367-0000		1	PULLER	
120	3115368-0000		1	BASE	
130	3115356-0000		1	CENTERING	
140	2981406-0000		5	AIR BLOW REGULATOR	
150	2981418-0000		1	AIR NOZZLE	
160	3124443-0000		1	SUPPORT	
300	3115300-0000		1	HANDLE	
310	3124360-0000		1	REDUCTION SLEEVE	
320	350002-0006		2	PUSH-IN L-FITTING QSL-F-G1/8-6	
330	90458-0745		1	Y-CONNECTION	
400	3108463-0000		2	TAPER PIN	
410	312105-0293		2	SCREW, M6S ISO 4017 M4X16 A4 70	
420	312105-0327		2	SCREW, M6S ISO 4017 M5X12 A4 80	
430	312105-0329		4	SCREW, M6S ISO 4017 M5X16 A4 80	
440	312105-0331		1	SCREW, M6S ISO 4017 M5X20 A4 80	
450	312109-0340		1	SCREW, M6S ISO 4017 M5X45 A4 80	
460	312105-0370		2	SCREW, M6S ISO 4017 M6X20 A4 80	
470	312109-0378		2	SCREW, M6S ISO 4017 M6X40 A4 80	
480	312115-0329		6	SCREW ISO4762 M5X16 A4 80	
490	312115-0372		1	SCREW ISO4762 M6X25 A4 80	
500	312115-0374		2	SCREW ISO4762 M6X30 A4 80	
510	312115-0451		1	SCREW ISO4762 M8X20 A4 80	
520	312115-0489		2	SCREW ISO4762 M10X16 A4 80	
530	312115-0495		4	SCREW ISO4762 M10X30 A4 80	
540	312155-0289		8	SCREW DIN 7991 MF6S M4X10 A4 70	
550	312155-0295		7	SCREW DIN 7991 MF6S M4X20 A4 70	
560	312155-0297		2	SCREW DIN 7991 MF6S M4X25 A4 70	
570	312155-0366		2	SCREW DIN 7991 MF6S M6X12 A4 70	
580	312155-0368		8	SCREW DIN 7991 MF6S M6X16 A4 70	
590	311103-0268		4	PARALLEL PIN ISO 2338 4M6X12 A1	
600	311103-0349		4	PARALLEL PIN ISO 2338 6M6X12 A1	
620	312810-0312		9	HEXAGON NUT, NY-LOCK M4 FZB	
630	312705-0312		9	NUT HEX. DOMED CAP MHM-6 M4 A280	
640	315103-0136		11	WASHER PLAIN, 4,3X8X0,8 BR NI PL	
650	315103-0146		6	WASHER PLAIN, 5,3X10X1 BR NI PL	
660	3108452-0000		14	WASHER	
670	3108453-0000		5	WASHER	
680	3108454-0000		1	WASHER	
C50G1064	3115358-0000		2	AIR NOZZLE	
C50G1065	2930228-0000		1	AIR NOZZLE	
C50G1066	2930229-0000		1	AIR NOZZLE	
C50G1067	2981405-0000		1	AIR NOZZLE	
C50G1068	2981405-0000		1	AIR NOZZLE	
C50G1070	2981418-0000		1	AIR NOZZLE	

Machine Type	Group Description	Used-In	Group Number	Page No

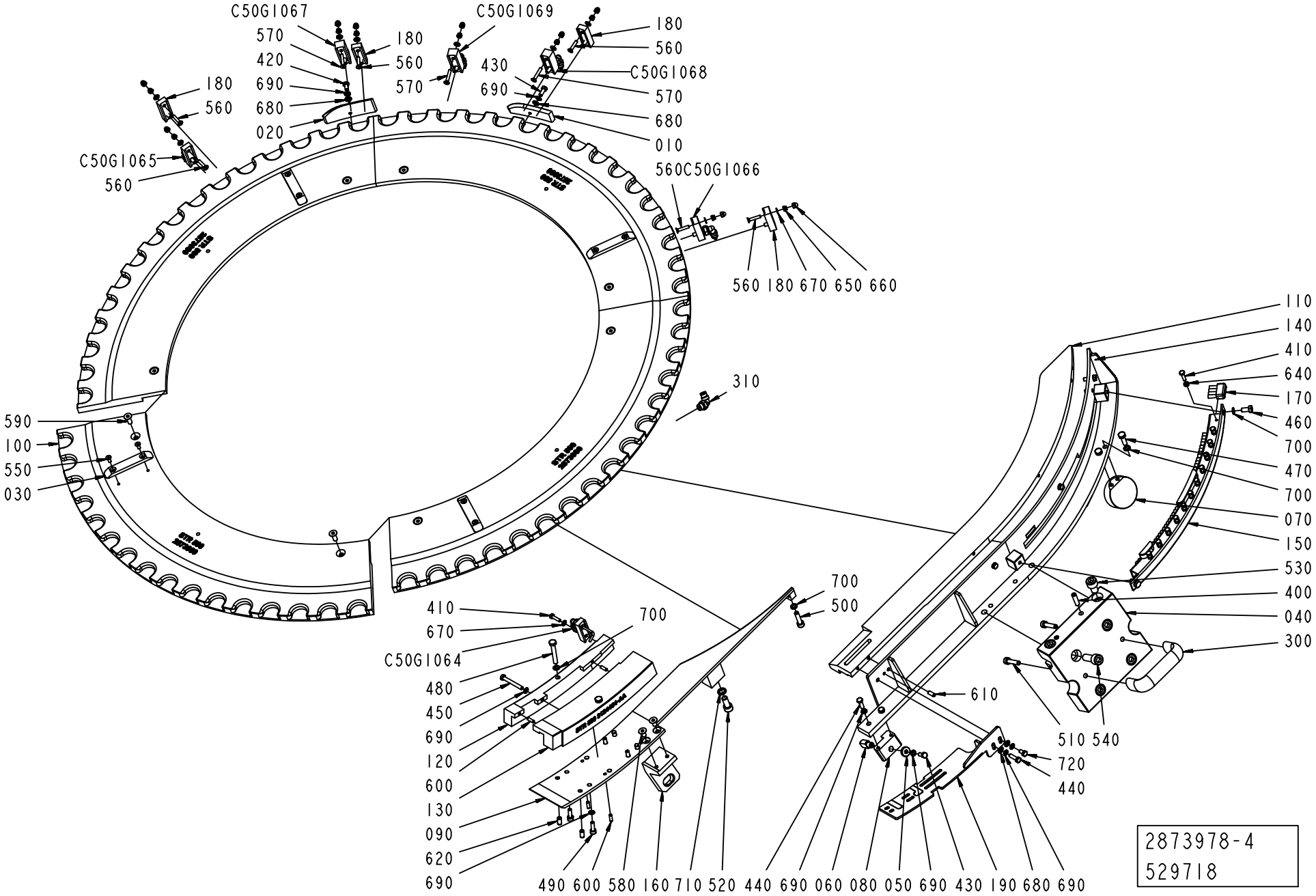
C50G1067
570
420
690
680
020
180
560
570
C50G1069
180
560
430
690
C50G1068
570
680
010
180
560
C50G1065
560
560C50G1066
560 180 670 650 660
310
590
100
550
030
110
140
410
640
170
460
700
470
700
070
150
530
400
040
300
700
500
410
670
C50G1064
480
450
690
120
600
130
090
620
690
700
610
510 540
720
440
490 600 580 160 710 520 440 690 060 080 050 690 430 190 680 690
2873978-4
529718

ECM: 560469 - 20120701
Group number: 2873978-0300
Assembly Drawing: 2873978-4_1_AA

Pos	Part No	UN	Qty	Description	Page No
-					
010	2981410-0000		1	CAM	
020	2981411-0000		1	CAM	
030	3115346-0000		4	CARRIER	
040	3115347-0000		1	PLATE	
050	3115348-0000		1	WASHER	
060	3115349-0000		1	PIN	
070	3115350-0000		1	PIN	
080	3115351-0000		1	PIN	
090	3115368-0000		1	BASE	
100	2873980-0000		4	GUIDE	
110	3124361-0000		1	PULLER	
120	3124453-0000		1	GUIDE	
130	3124454-0000		1	GUIDE	
140	3124364-0000		1	PLATE	
150	3124365-0000		1	BOX	
160	3115356-0000		1	CENTERING	
170	2857743-0000		12	BRUSH	
180	2981406-0000		4	AIR BLOW REGULATOR	
190	3124443-0000		1	SUPPORT	
300	3115300-0000		1	HANDLE	
310	350002-0005		1	PUSH-IN L-FITTING QSL-F-G1/8-4	
400	3108463-0000		2	TAPER PIN	
410	312105-0293		13	SCREW, M6S ISO 4017 M4X16 A4 70	
420	312105-0325		1	SCREW, M6S ISO 4017 M5X10 A4 80	
430	312105-0327		2	SCREW, M6S ISO 4017 M5X12 A4 80	
440	312105-0329		6	SCREW, M6S ISO 4017 M5X16 A4 80	
450	312109-0339		1	SCREW, M6S ISO 4017 M5X40 A4 80	
460	312105-0366		2	SCREW, M6S ISO 4017 M6X12 A4 80	
470	312105-0370		2	SCREW, M6S ISO 4017 M6X20 A4 80	
480	312109-0378		2	SCREW, M6S ISO 4017 M6X40 A4 80	
490	312115-0329		4	SCREW ISO4762 M5X16 A4 80	
500	312115-0372		1	SCREW ISO4762 M6X25 A4 80	
510	312115-0374		2	SCREW ISO4762 M6X30 A4 80	
520	312115-0451		1	SCREW ISO4762 M8X20 A4 80	
530	312115-0489		2	SCREW ISO4762 M10X16 A4 80	
540	312115-0495		4	SCREW ISO4762 M10X30 A4 80	
550	312155-0289		8	SCREW DIN 7991 MF6S M4X10 A4 70	
560	312155-0295		6	SCREW DIN 7991 MF6S M4X20 A4 70	
570	312155-0297		3	SCREW DIN 7991 MF6S M4X25 A4 70	
580	312155-0366		2	SCREW DIN 7991 MF6S M6X12 A4 70	
590	312155-0368		8	SCREW DIN 7991 MF6S M6X16 A4 70	
600	311103-0268		4	PARALLEL PIN ISO 2338 4M6X12 A1	
610	311103-0306		2	PARALLEL PIN ISO 2338 5M6X12 A1	
620	311103-0349		4	PARALLEL PIN ISO 2338 6M6X12 A1	
640	312605-0312		12	HEXAGON NUT, M6M M4 A280	
650	312810-0312		9	HEXAGON NUT, NY-LOCK M4 FZB	
660	312705-0312		9	NUT HEX. DOMED CAP MHM-6 M4 A280	
670	315103-0136		10	WASHER PLAIN, 4,3X8X0,8 BR NI PL	
680	315103-0146		4	WASHER PLAIN, 5,3X10X1 BR NI PL	
690	3108452-0000		15	WASHER	
700	3108453-0000		7	WASHER	
710	3108454-0000		1	WASHER	
720	312105-0323		1	SCREW, M6S ISO 4017 M5X8 A4 80	
C50G1064	3115358-0000		1	AIR NOZZLE	
C50G1065	2930228-0000		1	AIR NOZZLE	
C50G1066	2930229-0000		1	AIR NOZZLE	
C50G1067	2930230-0000		1	AIR NOZZLE	
C50G1068	2930230-0000		1	AIR NOZZLE	
C50G1069	2981405-0000		1	AIR NOZZLE	

Machine Type	Group Description	Used-In	Group Number	Page No

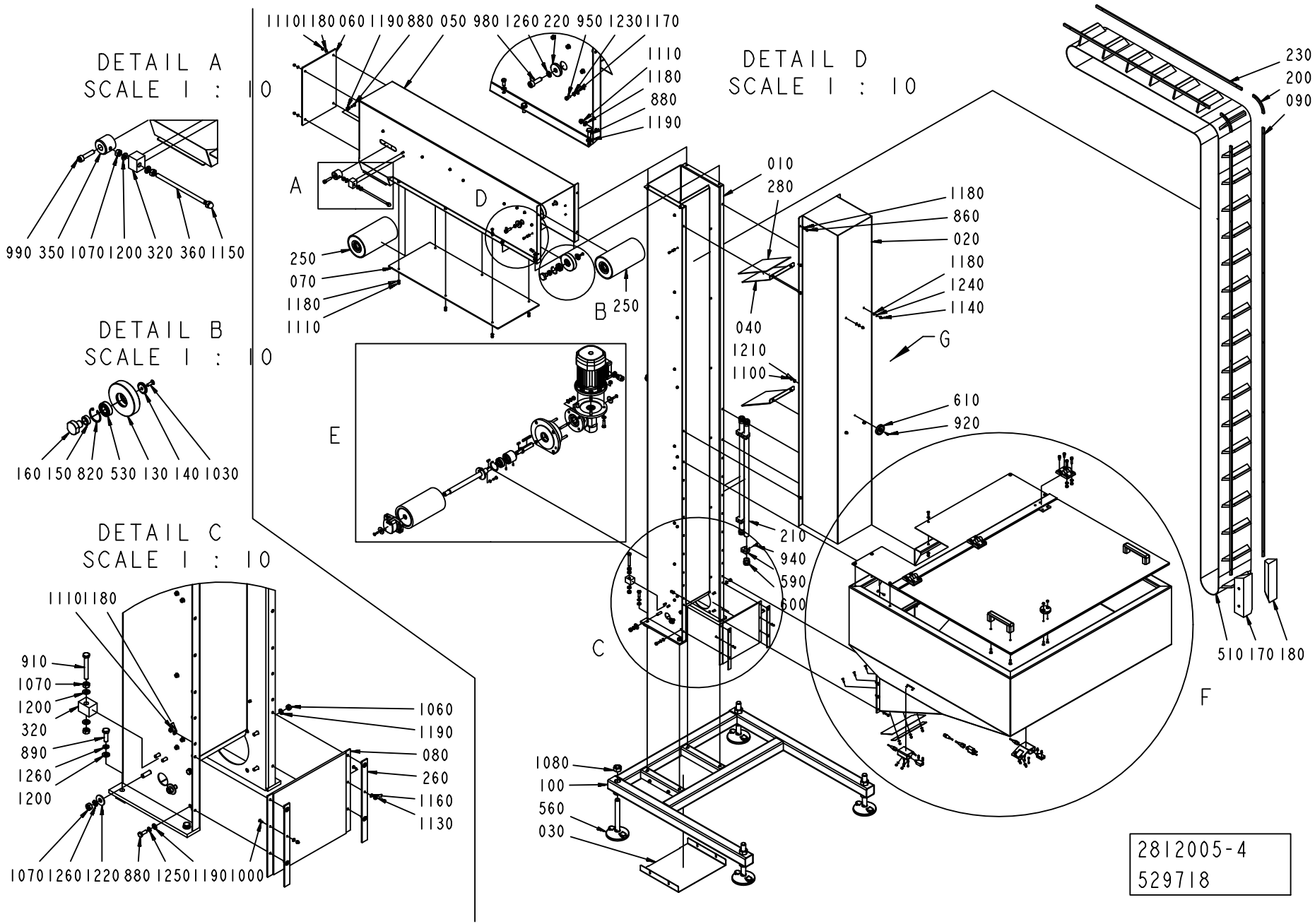
DETAIL A
SCALE 1 : 10
990 350 1070 1200 320 360 1150
DETAIL B
SCALE 1 : 10
160 150 820 530 130 140 1030
DETAIL C
SCALE 1 : 10
1110 1180
910
1070
1200
320
890
1260
1200
1060
1190
080
260
1160
1130
1070 1260 1220 880 1250 1190 1000
1110 1180 060 1190 880 050 980 1260 220 950 1230 1170
1110
1180
880
1190
A
D
250
070
1180
1110
B 250
E
DETAIL D
SCALE 1 : 10
010
280
040
1210
1100
1180
860
020
1180
1240
1140
G
610
920
210
940
590
600
C
1080
100
560
030
230
200
090
510 170 180
F
2812005-4
529718

ECM: 529724 - 20120401
Group number: 2812005-0300
Assembly Drawing: 2812005-4_1_AA

This list covers pages from 4-42 to 4-45

Pos	Part No	UN	Qty	Description	Page No
-					
0010	3108472-0000		1	SUPPORT	
0020	3108473-0000		1	COVER	
0030	3108474-0000		1	COVER	
0040	3108475-0000		2	PLATE	
0050	3108476-0000		1	CARRIER	
0060	3108477-0000		1	COVER	
0070	3108478-0000		1	COVER	
0080	3108479-0000		1	COVER	
0090	3108480-0000		2	PLATE	
0100	3108481-0000		1	BED	
0110	3108482-0000		1	UNIT CONVERGER	
0120	3108483-0000		1	COVER	
0130	3108484-0000		2	WASHER	
0140	3108485-0000		2	WASHER	
0150	3108486-0000		2	SPACER	
0160	3108487-0000		2	PIN	
0170	3108488-0000		1	GUIDE	
0180	3108489-0000		1	GUIDE	
0190	3108490-0000		1	COVER	
0200	3108491-0000		2	PLATE	
0210	3108492-0000		2	CABLE CONDUIT	
0220	3108493-0000		2	WASHER	
0230	3108494-0000		2	PLATE	
0240	3058564-0000		1	ROLLER	
0250	3108495-0000		2	ROLLER	
0260	3108496-0000		2	PLATE	
0270	3108497-0000		1	GASKET	
0280	3108498-0000		2	GASKET	
0290	3108499-0000		1	ANCHOR	
0300	3058565-0000		1	SHAFT	
0310	3108500-0000		1	SHAFT	
0320	3108501-0000		3	PLUG	
0330	3115224-0000		1	FLANGE	
0340	3115225-0000		1	PLATE	
0350	3115226-0000		2	THREADED ROD	
0360	3115227-0000		2	BAR	
0370	3115228-0000		1	COUPLING	
380	3124525-0000		1	SUPPORT	
390	3124526-0000		1	SUPPORT	
0400	3124527-0100		1	SUPPORT	**4-47**
0500	3115229-0000		2	WASHER	
0510	3124436-0000		1	BELT	
0520	90603-2979		1	WORM GEAR W20045027100006	
0530	344224-0202		2	BALL BEARING 15/32X9	
0540	344224-0204		1	BALL BEARING 20/42X12	
0560	3115230-0000		4	FOOT	
0570	3115231-0000		2	HANDLE	
0580	3115232-0000		3	HINGE	
0590	3115233-0000		4	CLAMP	
0600	3115234-0000		4	CAP	
0610	3115235-0000		1	MAGNET	
0620	90458-0322		1	NUT, M16X1,5	
0630	90458-0306		1	CABLE GLAND, M16X1,5, 5311 1010	
0640	3115237-0000		4	CABLE	
0650	90459-1458		1	HOOD, SIDE ENTRY, HAN6E, 19 30 006 1540	
0660	90458-0430		4	GLAND FITTING, VK 22054YUL16	
0670	90458-0322		3	NUT, M16X1,5	
0680	353249-0012		4	INSERT, SINGLE HOLE, EK154 11	
0690	90152-0051	M	7.5	HOSE, SPIRAL CONDUIT, 25X18, UL 1816	
0800	3108461-0000		2	KEY	
0810	315701-0241		1	PARALLEL KEY W. ROUND ENDS, 6X6X50 MM	
0820	315753-0123		2	RETAINING RING FOR BORE DIN 472 32 SS	
0830	90141-0020		1	RETAINING RING FOR BORE DIN 472 42 SS	
0840	312318-0323		2	SET SCREW, CUP END ISO4029 M5X8 A4	
0850	3108464-0000		4	STUD BOLT	
0860	312105-0327		20	SCREW, M6S ISO 4017 M5X12 A4 80	
0870	312105-0329		6	SCREW, M6S ISO 4017 M5X16 A4 80	
0880	312105-0368		16	SCREW, M6S ISO 4017 M6X16 A4 80	
0890	312105-0453		4	SCREW, M6S ISO 4017 M8X25 A4 80	
0900	312105-0455		4	SCREW, M6S ISO 4017 M8X30 A4 80	
0910	312109-0463		1	SCREW, M6S ISO 4017 M8X60 A4 80	
0920	312115-0291		1	SCREW ISO4762 M4X12 A4 80	
0930	312115-0230		4	SCREW ISO4762 M3X20 A4 80	
0940	312115-0293		4	SCREW ISO4762 M4X16 A4 80	
0950	312115-0287		24	SCREW ISO4762 M4X8 A4 80	
0960	312115-0366		6	SCREW ISO4762 M6X12 A4 80	
0970	312115-0372		6	SCREW ISO4762 M6X25 A4 80	
0980	312115-0453		2	SCREW ISO4762 M8X25 A4 80	
0990	312115-0457		2	SCREW ISO4762 M8X35 A4 80	
1000	3108462-0000		2	SCREW	
1010	312155-0289		12	SCREW DIN 7991 MF6S M4X10 A4 70	
1020	312155-0293		3	SCREW DIN 7991 MF6S M4X16 A4 70	
1030	312155-0329		4	SCREW DIN 7991 MF6S M5X16 A4 70	

Machine Type | Group Description | Used-In | Group Number | Page No

DETAIL E
SCALE 1 : 10

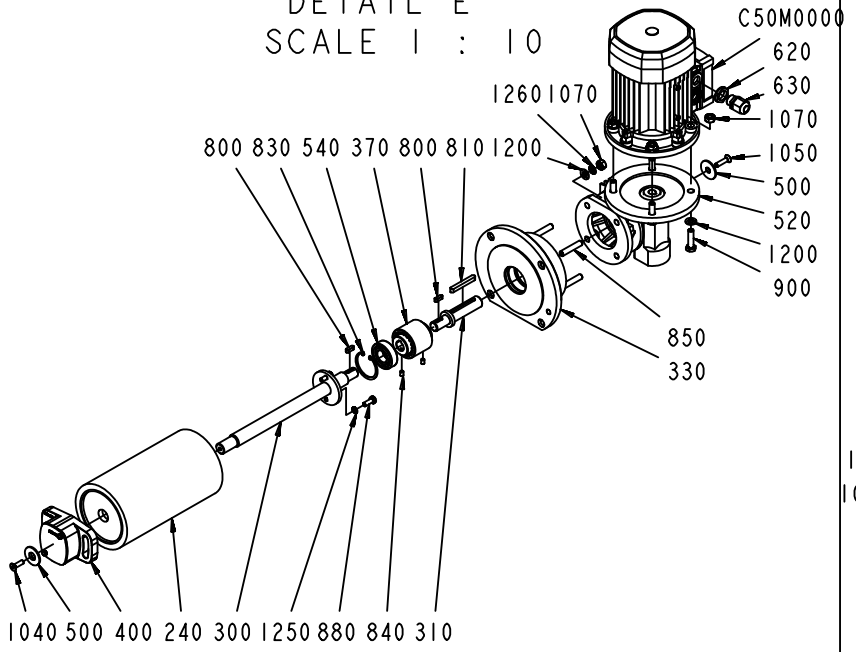

VIEW FROM G

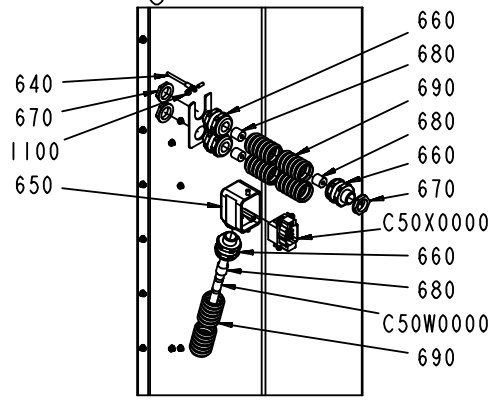

DETAIL F
SCALE 1 : 10

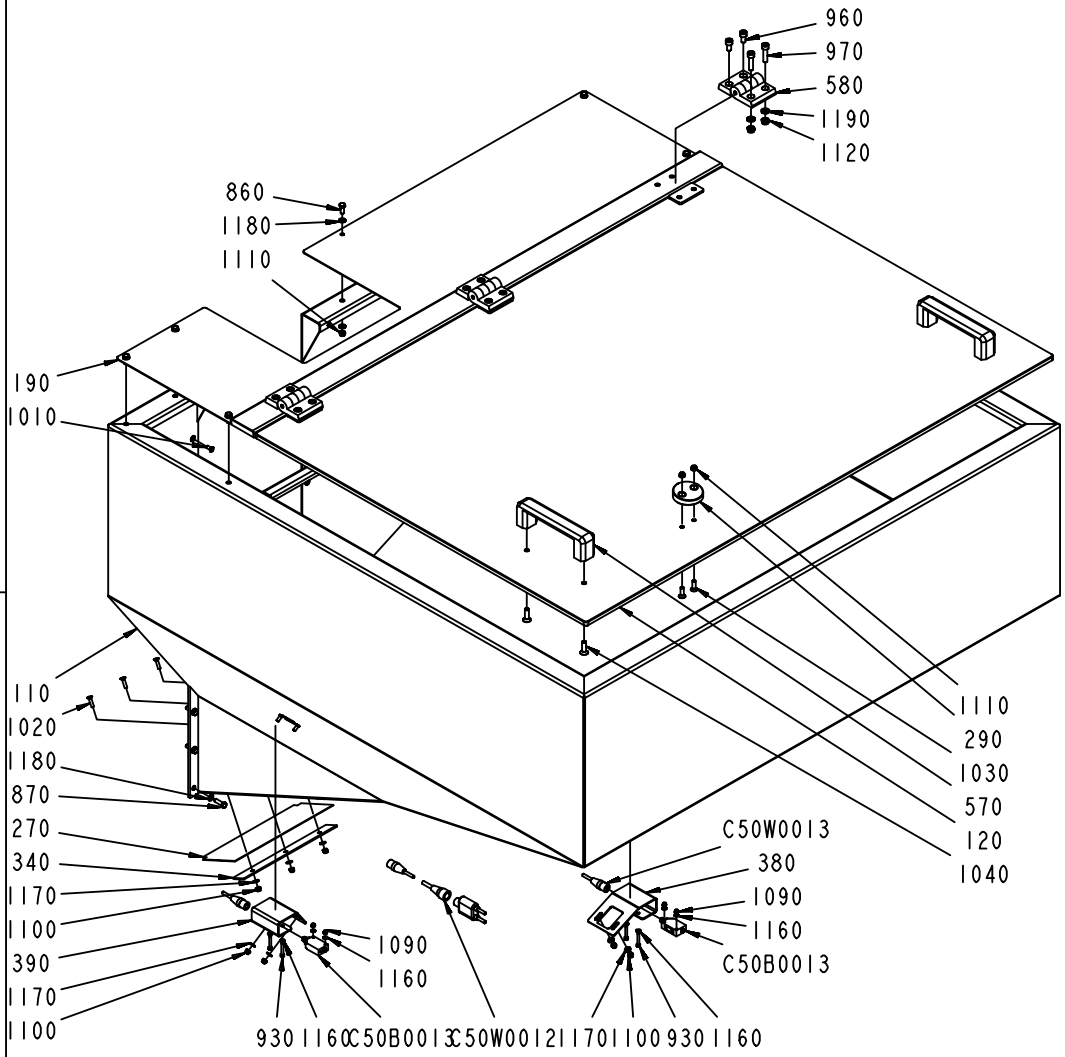

2812005-4
529718

Pos	Part No	UN	Qty	Description	Page No
- (Cont'd)					
1040	312155-0370		5	SCREW DIN 7991 MF6S M6X20 A4 70	
1050	312155-0372		1	SCREW DIN 7991 MF6S M6X25 A4 70	
1060	312605-0316		4	HEXAGON NUT, M6M M6 A280	
1070	312605-0318		16	HEXAGON NUT, M6M M8 A280	
1080	312605-0326		4	HEXAGON NUT, M6M M20 A280	
1090	312810-0310		4	HEXAGON NUT, NY-LOCK M3 FZB	
1100	312810-0312		21	HEXAGON NUT, NY-LOCK M4 FZB	
1110	312810-0314		36	HEXAGON NUT, NY-LOCK M5 FZB	
1120	312810-0316		10	HEXAGON NUT, NY-LOCK M6 FZB	
1130	312705-0310		2	NUT HEX. DOMED CAP MHM-6 M3 A2	
1140	312705-0314		4	NUT HEX. DOMED CAP MHM-6 M5 A280	
1150	312705-0318		2	NUT HEX. DOMED CAP MHM-6 M8 A280	
1160	315103-0124		10	WASHER PLAIN, 3,2X/6X0,5 BR NI PL	
1170	315103-0136		43	WASHER PLAIN, 4,3X8X0,8 BR NI PL	
1180	315103-0146		64	WASHER PLAIN, 5,3X10X1 BR NI PL	
1190	315103-0153		28	WASHER PLAIN, 6,4X12X1,5 BR NI PL	
1200	315103-0165		18	WASHER PLAIN, 8,4X15X1,5 BR NI PL	
1210	3108458-0000		1	WASHER	
1220	3108460-0000		2	WASHER	
1230	3108451-0000		24	WASHER	
1240	3108452-0000		4	WASHER	
1250	3108453-0000		14	WASHER	
1260	3108454-0000		12	WASHER	
C50B0013	90459-5529		1	PHOTOCELL E3Z-T86A, SENDER+RECIEVER	
C50M0000	90458-2483		1	MOTOR 3GVA062002-BSB	
C50W0000	315743-0009	M	6	ÖLFLEX CONTROL TM 4G1,5, 281604	
C50W0012	344261-0050		1	SENSOR CABLE, EVT216	
C50W0013	90603-3979		1	SENSOR Y-CABLE, EVT339	
C50X0000	90110-0052		1	MALE INSERT, HAN E06, 0933 0062 601	

Pos	Part No	UN	Qty	Description	Page No

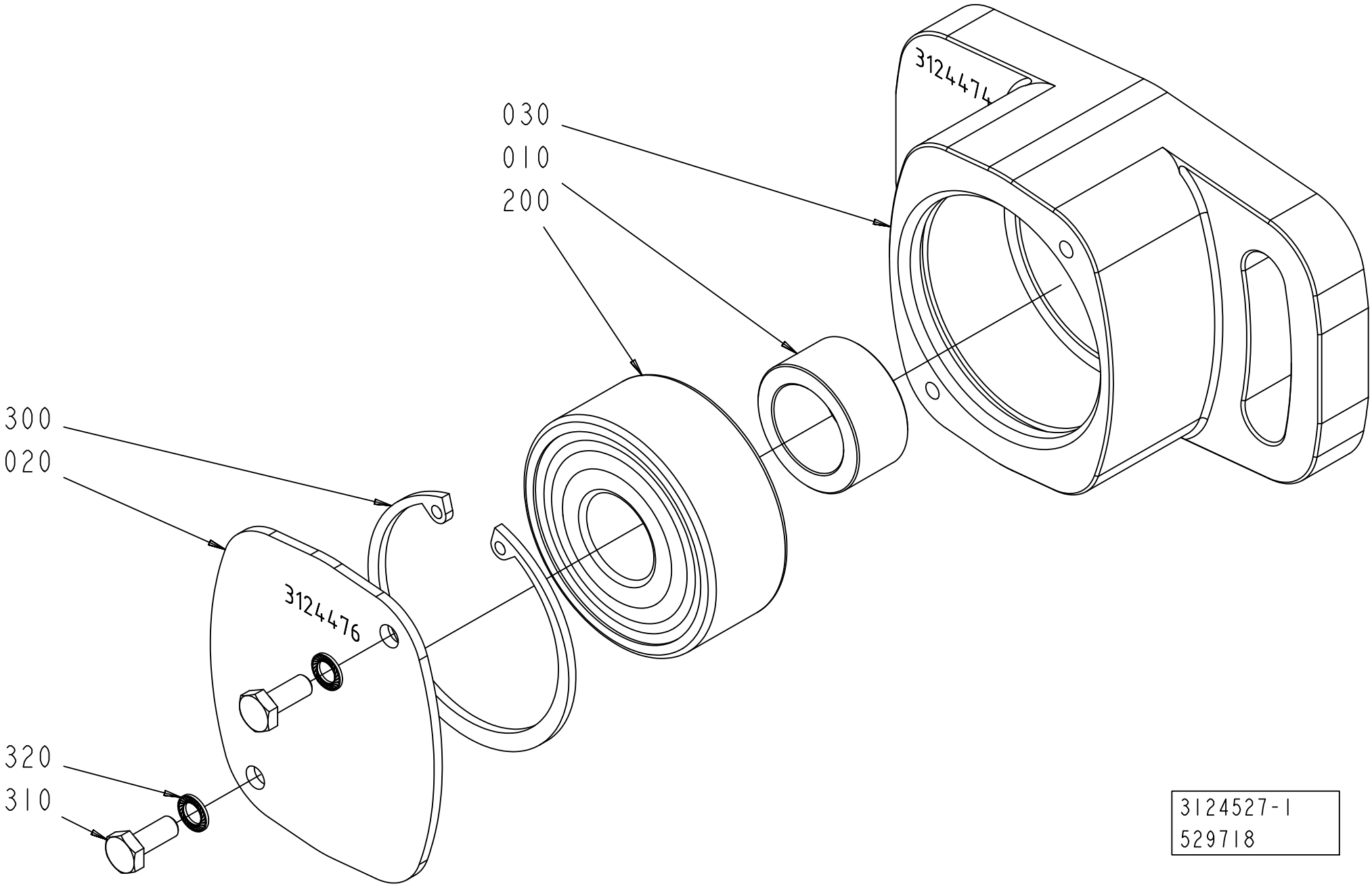
030
010
200
3124474
300
020
3124476
320
310
3124527-1
529718

ECM: 532841 - 20120401
Group number: 3124527-0100
Assembly Drawing: 3124527-1_1_AA

Pos	Part No	UN	Qty	Description	Page No
-					
010	3124475-0000		1	SPACER	
020	3124476-0000		1	COVER	
030	3124474-0000		1	FLANGE	
200	90603-9715		1	SPHERICAL BALL BEARING 17/47X19	
300	315753-0130		1	RETAINING RING FOR BORE DIN 472 47 SS	
310	312105-0289		2	SCREW, M6S ISO 4017 M4X10 A4 70	
320	3108451-0000		2	WASHER	

Pos	Part No	UN	Qty	Description	Page No

Tetra Pak

SPC
Spare Parts Catalogue

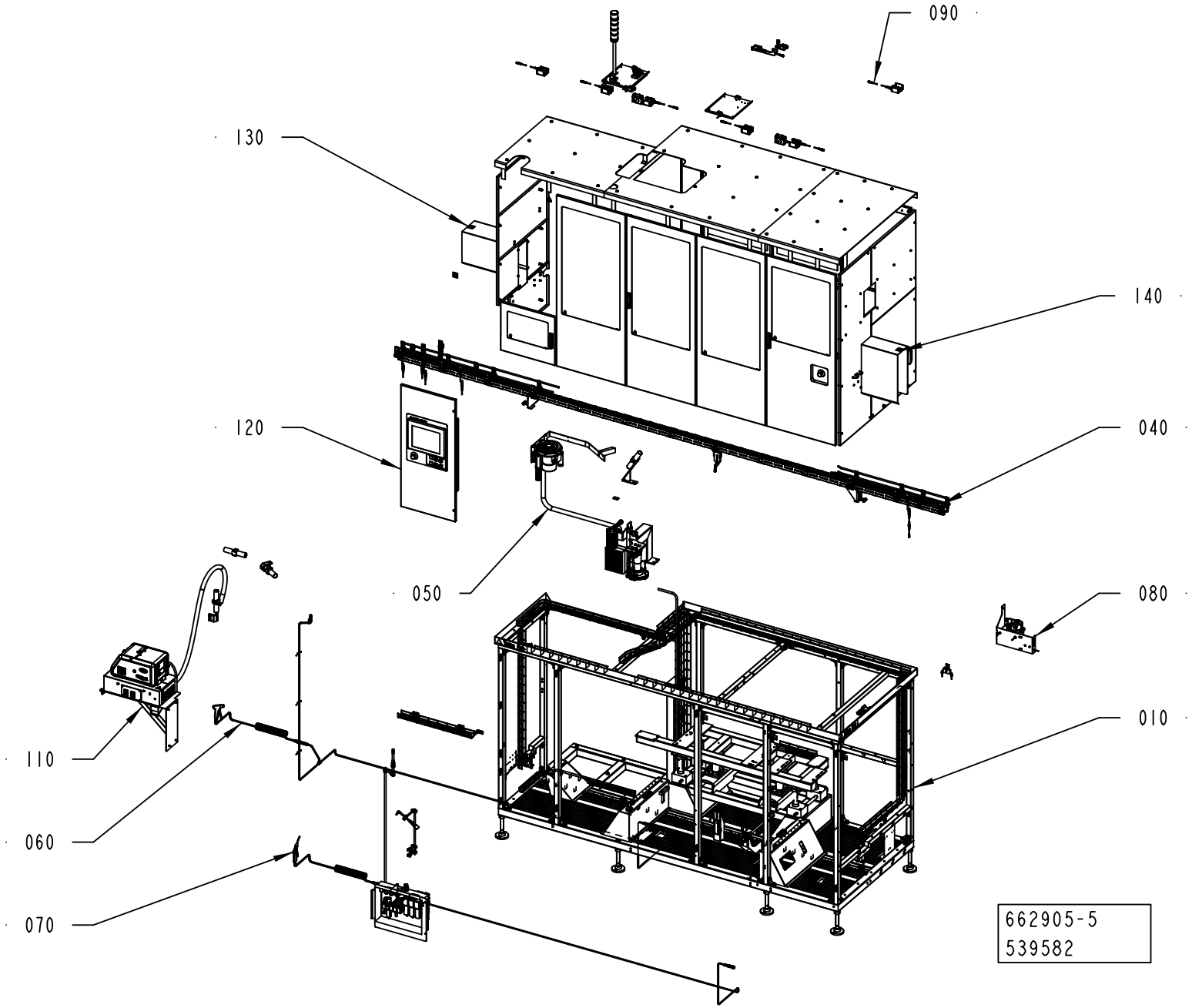
090
130
140
120
040
050
080
010
110
060
070
662905-5
539582

ECM: 539582 - 20120402
Group number: 662905-0300
Assembly Drawing: 662905-5_1_AB

Pos	Part No	UN	Qty	Description	Page No
-					
010	2758505-0300		1	MACHINE BODY	**5-5**
040	2758507-0300		1	PACKAGE CONVEYOR	**5-23, 5-25, 5-27, 5-29**
050	2773622-0200		1	LINE HEATER	**5-49**
060	2758514-0200		1	WATER CONNECTION	**5-63**
070	2758513-0200		1	AIR SUPPLY	**5-65**
080	3208664-0100		1	CENTRAL LUBRICATION	**5-81**
090	2769754-0300		1	ELECTRIC EQUIPMENT	**5-83**
110	2758511-0200		1	HOTMELT EQUIPMENT	**5-99, 5-101**
120	2779070-0300		1	OPERATOR INTERFACE	**5-113**
130	2826741-0300		1	DOORS AND COVERS	**5-123**
140	3217567-0100		1	WARNING SIGN	**5-163**

Pos	Part No	UN	Qty	Description	Page No

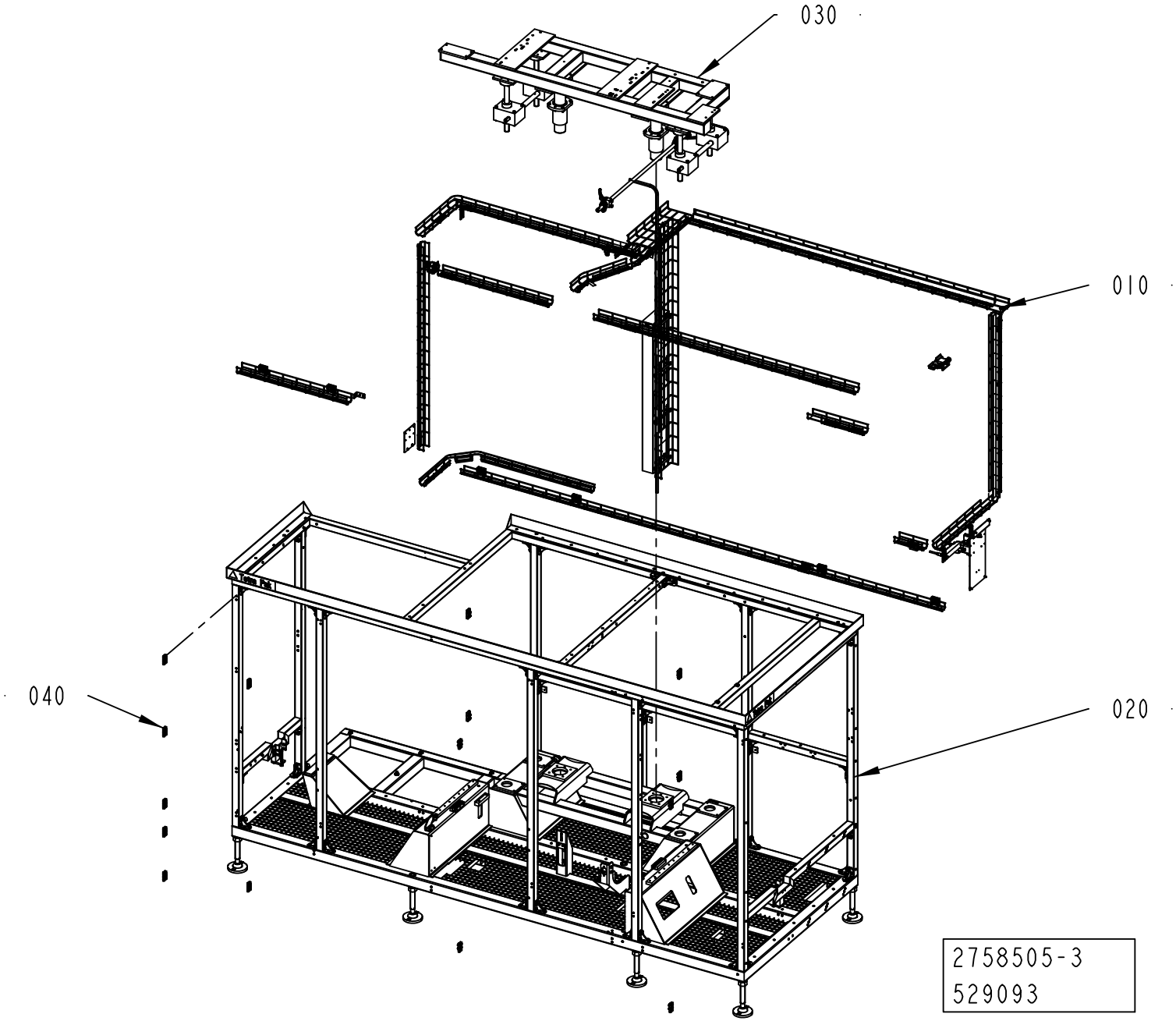
030
010
040
020
2758505-3
529093

ECM: 529695 - 20120401
Group number: 2758505-0300
Assembly Drawing: 2758505-3_1_AA

Pos	Part No	UN	Qty	Description	Page No
-					
010	2758515-0300		1	CABLE DUCT	**5-7, 5-9**
020	2769761-0300		1	MACHINE BODY	**5-11, 5-13**
030	2769738-0100		1	HEIGHT ADJUSTMENT	**5-17**
040	3217565-0100		1	DOOR HINGE	**5-21**

Pos	Part No	UN	Qty	Description	Page No

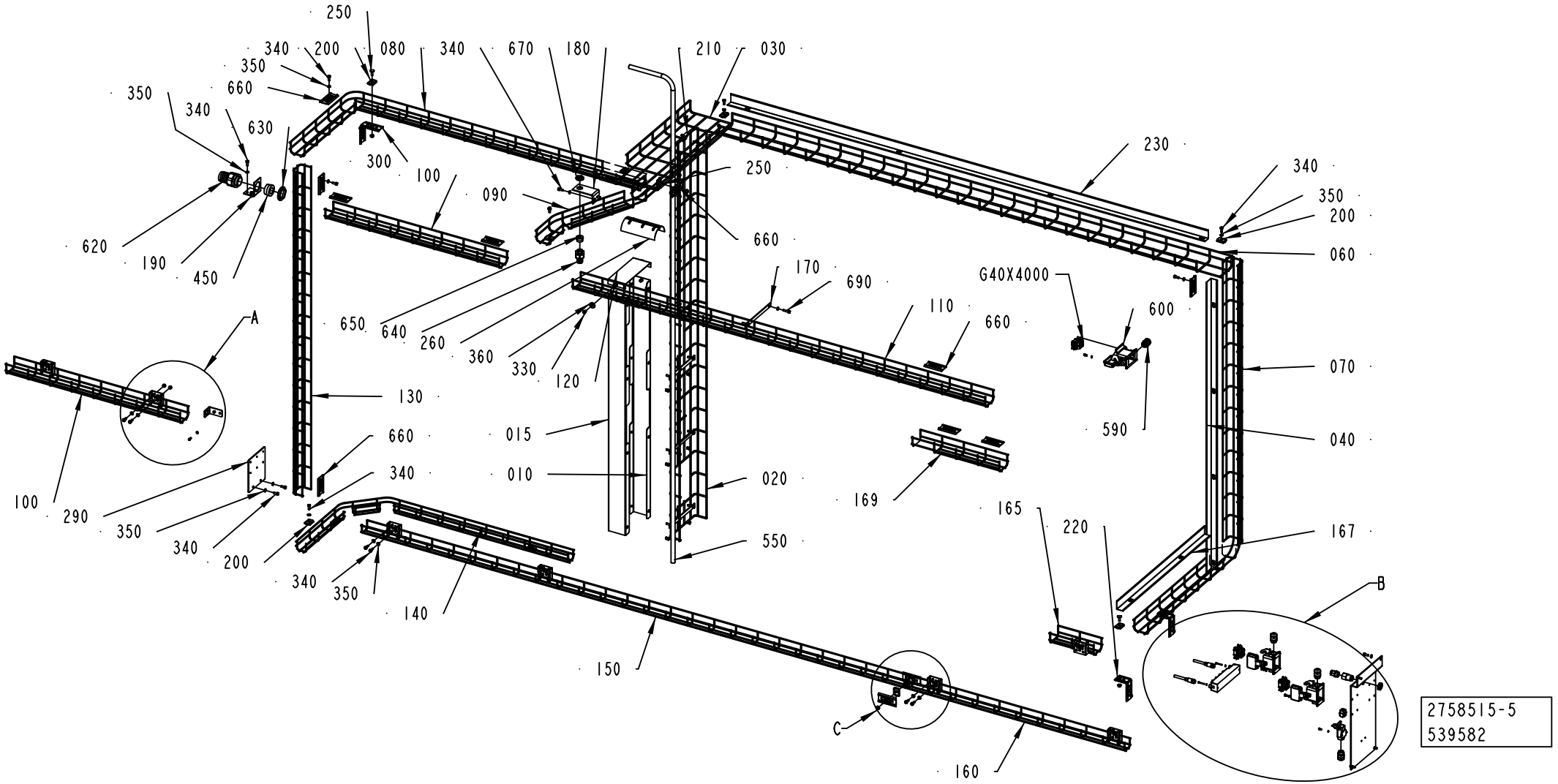
250
340
200
080
340
670
180
210
030
350
350
660
340
630
300
100
090
230
340
350
200
060
250
660
620
190
450
170
690
G40X4000
600
110
660
650
640
260
360
330
120
A
130
070
660
015
590
040
340
010
020
169
165
220
167
100
290
350
340
200
340
350
140
550
150
B
C
160
2758515-5
539582

ECM: 543040 - 20120402
Group number: 2758515-0300
Assembly Drawing: 2758515-5_1_AB

This list covers pages from 5-6 to 5-9

Pos	Part No	UN	Qty	Description	Page No
STREAMCAP500, STREAMCAP1000, SLIMCAP 2000, SLIMCAP 1000, STREAMCAP200, HELICAP2 23, HELICAP 27 (See drawing on pages: 5-6, 5-8)					
100	2931775-0000		2	CABLE DUCT	
169	2931782-0000		1	CABLE DUCT	
240	90181-0190		7	CABLE DUCT, WALL BRACKET, B4 MINI	
320	312125-0232		2	SLOTTED HEAD SCREW, ISO1207 M3X25 A4	
340	312105-0368		45	SCREW, M6S ISO 4017 M6X16 A4 80	
350	315105-0153		53	WASHER PLAIN, 6,4X12X1,5 A4 BRB	
390	315105-0124		4	WASHER PLAIN, 3,2X6X0,5 A4 BRB	
410	312115-0222		2	SCREW ISO4762 M3X8 A4 80	
Common Parts					
010	2746903-0000		1	CABLE DUCT	
015	2873928-0000		1	CABLE DUCT	
020	2931768-0000		1	CABLE DUCT	
030	2931769-0000		1	CABLE DUCT	
040	2931770-0000		1	DIVIDER	
050	3047341-0000		1	ANGLE BRACKET	
060	2931771-0000		1	CABLE DUCT	
070	2931772-0000		1	CABLE DUCT	
080	2931773-0000		1	CABLE DUCT	
090	2931774-0000		1	CABLE DUCT	
110	2931776-0000		1	CABLE DUCT	
120	2779800-0000		1	PLATE	
130	2931777-0000		1	CABLE DUCT	
140	2931778-0000		1	CABLE DUCT	
150	2931779-0000		1	CABLE DUCT	
160	2931780-0000		1	CABLE DUCT	
165	2931781-0000		1	CABLE DUCT	
167	2931784-0000		1	DIVIDER	
170	2931783-0000		4	PLATE	
180	2931785-0000		1	ANGLE	
190	2931786-0000		1	ANGLE	
200	90181-0183		13	CABLE DUCT, FITTING, B2	
210	90181-0184		1	CABLE TRENCH PARTS	
220	2931787-0000		2	ANGLE	
230	2931788-0000		1	DIVIDER	
250	90181-0314		6	CABLE TRENCH PARTS	
260	2934904-0000		1	RAIL BRACKET	
285	2802417-0000		1	PLATE	
290	2802423-0000		1	PLATE	
300	90181-0186		1	CABLE DUCT, ELBOW BRACKET, B27	
310	312115-0289		2	SCREW ISO4762 M4X10 A4 80	
330	312105-0366		2	SCREW, M6S ISO 4017 M6X12 A4 80	
360	315125-0153		2	WASHER HIGH, TBRSB 6,4X22X4 A4	
400	315105-0136		14	WASHER PLAIN, 4,3X9X0,8 A4 BRB	
420	312115-0287		12	SCREW ISO4762 M4X8 A4 80	
430	312605-0316		6	HEXAGON NUT, M6M M6 A280	
450	353249-0054		1	INSERT, SINGLE HOLE, EK156 25	
550	90166-0113	MM	2500	HOSE	
570	90459-2133		1	PUSH-IN FITTING QSSF-1/2-12-B	
580	350001-0016		1	PUSH-IN FITTING QS-F-G1/2-12	
590	90458-0307		4	CABLE GLAND, M20X1,5, 5311 1020	
600	90459-1461		3	HOUSING, 19 30 006 1255	
610	90459-3081		1	HOUSING, 19 20 003 1250	
620	90458-0434		1	GLAND FITTING, VK 24056YUL29	
630	90458-0326		1	NUT, M40X1,5	
640	90458-0430		1	GLAND FITTING, VK 22054YUL16	
650	353249-0012		1	INSERT, SINGLE HOLE, EK154 11	
660	90181-0182		14	BRACKET, 1149354	
670	90458-0323		1	NUT, M20X1,5	
690	312105-0372		8	SCREW, M6S ISO 4017 M6X25 A4 80	
A81W4004	344295-0100		1	DEVICENET CAB.,SAC-5P- 10,0-927/M12FS VA	
A81W4120	344253-0100		1	SENSOR CABLE, EVT002	
C50X0000	90110-0053		1	FEMALE INSERT, HAN 6 E 09 33 006 2701	
C50X1000	90110-0053		1	FEMALE INSERT, HAN 6 E 09 33 006 2701	
C50X1004	90459-6820		1	FEMALE INSERT, HAN 4 A, 09 20 004 2711	
G40M4000	90110-0053		1	FEMALE INSERT, HAN 6 E 09 33 006 2701	
W81K4120	90459-6062		1	ARMORBLOCK DIGITAL CONFIGURABLE I/O	

Machine Type | Group Description | Used-In | Group Number | Page No

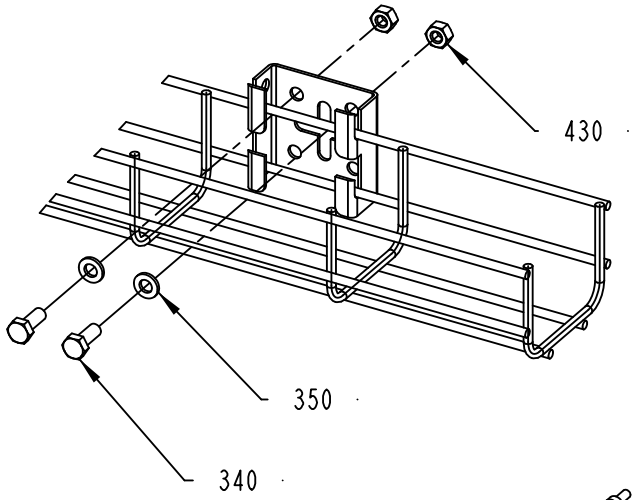

DETAIL: A
SCALE: 2:5

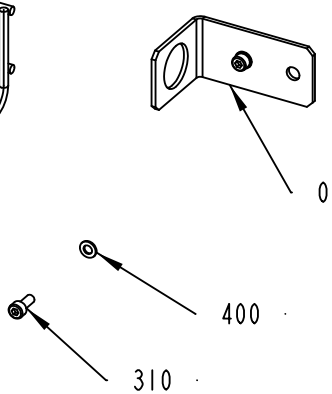

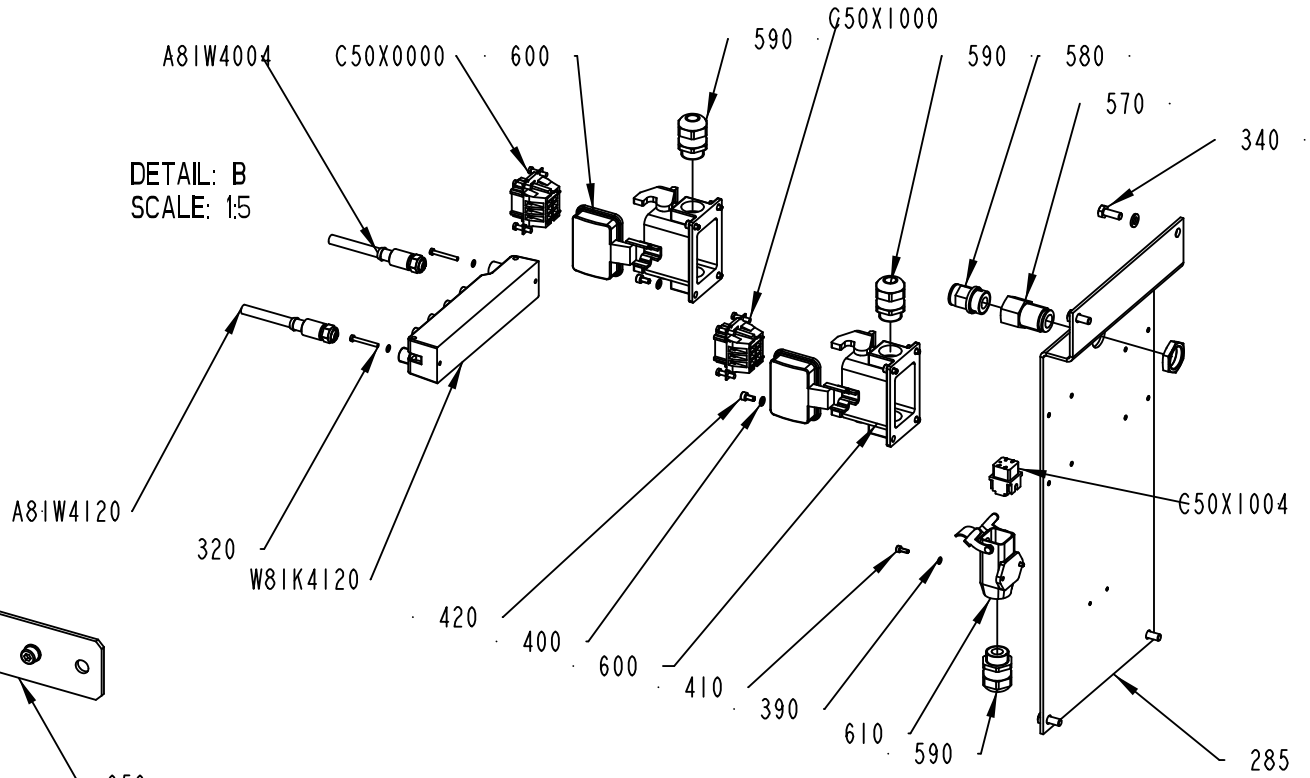

DETAIL: B
SCALE: 1:5

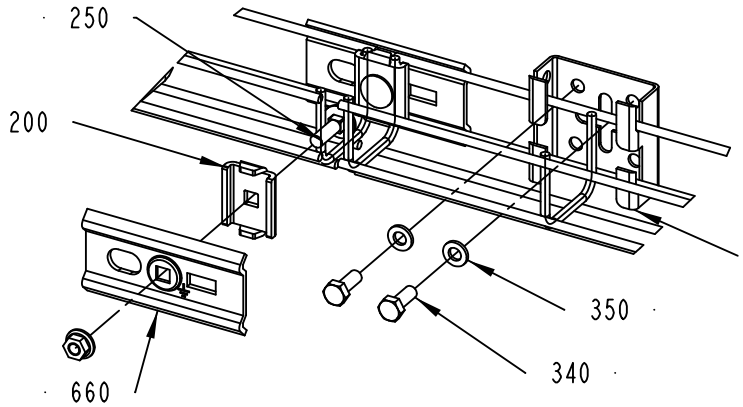

DETAIL: C
SCALE: 2:5

2758515-5
539582

ECM: 543040 - 20120402
Group number: 2758515-0300
Assembly Drawing: 2758515-5_2_AB

This list covers pages from 5-6 to 5-9

Pos	Part No	UN	Qty	Description	Page No
STREAMCAP500, STREAMCAP1000, SLIMCAP 2000, SLIMCAP 1000, STREAMCAP200, HELICAP2 23, HELICAP 27 (See drawing on pages: 5-6, 5-8)					
100	2931775-0000		2	CABLE DUCT	
169	2931782-0000		1	CABLE DUCT	
240	90181-0190		7	CABLE DUCT, WALL BRACKET, B4 MINI	
320	312125-0232		2	SLOTTED HEAD SCREW, ISO1207 M3X25 A4	
340	312105-0368		45	SCREW, M6S ISO 4017 M6X16 A4 80	
350	315105-0153		53	WASHER PLAIN, 6,4X12X1,5 A4 BRB	
390	315105-0124		4	WASHER PLAIN, 3,2X6X0,5 A4 BRB	
410	312115-0222		2	SCREW ISO4762 M3X8 A4 80	
Common Parts					
010	2746903-0000		1	CABLE DUCT	
015	2873928-0000		1	CABLE DUCT	
020	2931768-0000		1	CABLE DUCT	
030	2931769-0000		1	CABLE DUCT	
040	2931770-0000		1	DIVIDER	
050	3047341-0000		1	ANGLE BRACKET	
060	2931771-0000		1	CABLE DUCT	
070	2931772-0000		1	CABLE DUCT	
080	2931773-0000		1	CABLE DUCT	
090	2931774-0000		1	CABLE DUCT	
110	2931776-0000		1	CABLE DUCT	
120	2779800-0000		1	PLATE	
130	2931777-0000		1	CABLE DUCT	
140	2931778-0000		1	CABLE DUCT	
150	2931779-0000		1	CABLE DUCT	
160	2931780-0000		1	CABLE DUCT	
165	2931781-0000		1	CABLE DUCT	
167	2931784-0000		1	DIVIDER	
170	2931783-0000		4	PLATE	
180	2931785-0000		1	ANGLE	
190	2931786-0000		1	ANGLE	
200	90181-0183		13	CABLE DUCT, FITTING, B2	
210	90181-0184		1	CABLE TRENCH PARTS	
220	2931787-0000		2	ANGLE	
230	2931788-0000		1	DIVIDER	
250	90181-0314		6	CABLE TRENCH PARTS	
260	2934904-0000		1	RAIL BRACKET	
285	2802417-0000		1	PLATE	
290	2802423-0000		1	PLATE	
300	90181-0186		1	CABLE DUCT, ELBOW BRACKET, B27	
310	312115-0289		2	SCREW ISO4762 M4X10 A4 80	
330	312105-0366		2	SCREW, M6S ISO 4017 M6X12 A4 80	
360	315125-0153		2	WASHER HIGH, TBRSB 6,4X22X4 A4	
400	315105-0136		14	WASHER PLAIN, 4,3X9X0,8 A4 BRB	
420	312115-0287		12	SCREW ISO4762 M4X8 A4 80	
430	312605-0316		6	HEXAGON NUT, M6M M6 A280	
450	353249-0054		1	INSERT, SINGLE HOLE, EK156 25	
550	90166-0113	MM	2500	HOSE	
570	90459-2133		1	PUSH-IN FITTING QSSF-1/2-12-B	
580	350001-0016		1	PUSH-IN FITTING QS-F-G1/2-12	
590	90458-0307		4	CABLE GLAND, M20X1,5, 5311 1020	
600	90459-1461		3	HOUSING, 19 30 006 1255	
610	90459-3081		1	HOUSING, 19 20 003 1250	
620	90458-0434		1	GLAND FITTING, VK 24056YUL29	
630	90458-0326		1	NUT, M40X1,5	
640	90458-0430		1	GLAND FITTING, VK 22054YUL16	
650	353249-0012		1	INSERT, SINGLE HOLE, EK154 11	
660	90181-0182		14	BRACKET, 1149354	
670	90458-0323		1	NUT, M20X1,5	
690	312105-0372		8	SCREW, M6S ISO 4017 M6X25 A4 80	
A81W4004	344295-0100		1	DEVICENET CAB.,SAC-5P- 10,0-927/M12FS VA	
A81W4120	344253-0100		1	SENSOR CABLE, EVT002	
C50X0000	90110-0053		1	FEMALE INSERT, HAN 6 E 09 33 006 2701	
C50X1000	90110-0053		1	FEMALE INSERT, HAN 6 E 09 33 006 2701	
C50X1004	90459-6820		1	FEMALE INSERT, HAN 4 A, 09 20 004 2711	
G40M4000	90110-0053		1	FEMALE INSERT, HAN 6 E 09 33 006 2701	
W81K4120	90459-6062		1	ARMORBLOCK DIGITAL CONFIGURABLE I/O	

Machine Type | Group Description | Used-In | Group Number | Page No

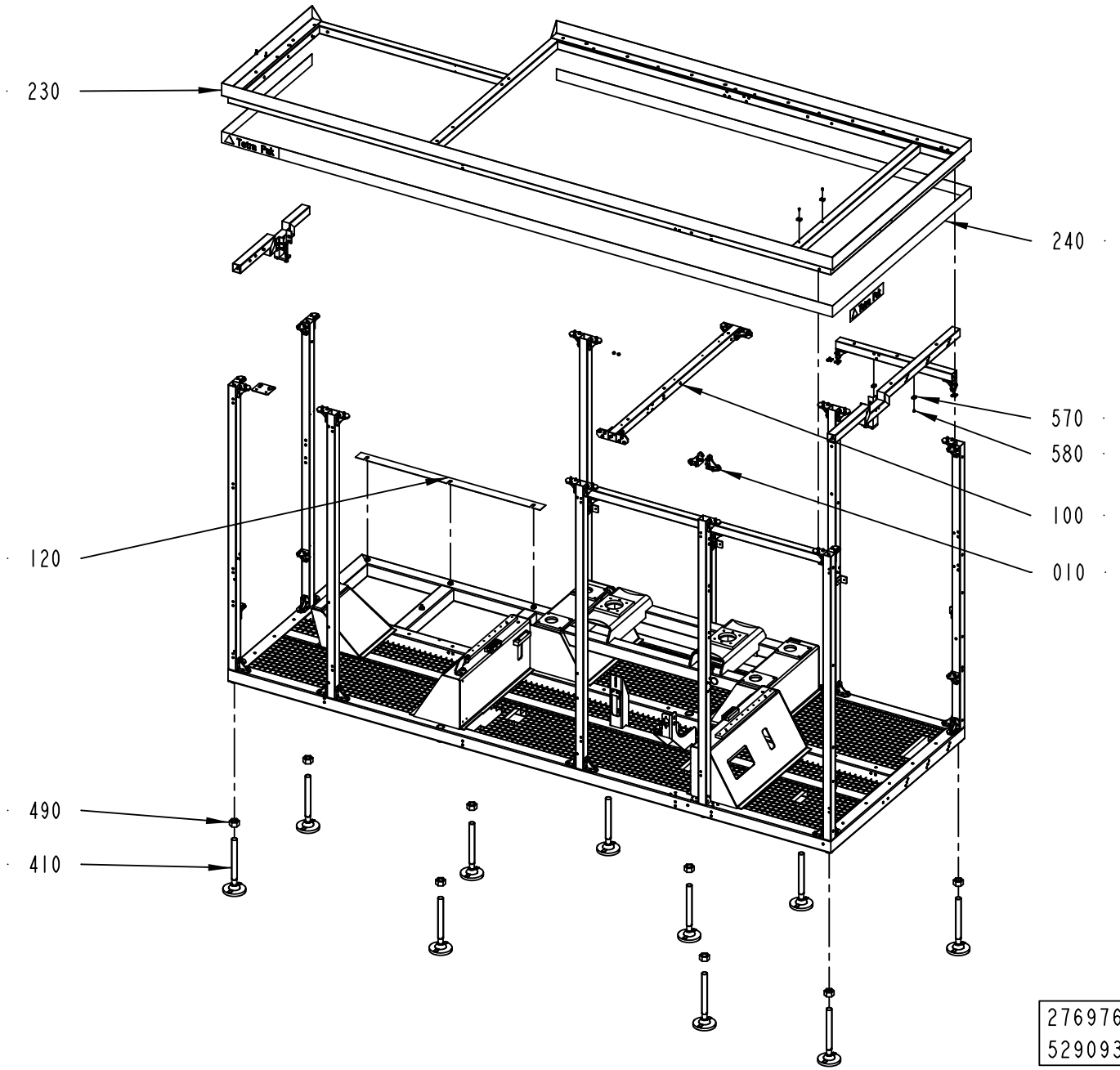
230
240
570
580
100
120
010
490
410
2769761-5
529093

ECM: 538111 - 20120401
Group number: 2769761-0300
Assembly Drawing: 2769761-5_1_AA

This list covers pages from 5-10 to 5-13

Pos	Part No	UN	Qty	Description	Page No
STREAMCAP500, STREAMCAP1000, SLIMCAP 2000, SLIMCAP 1000, STREAMCAP200, HELICAP2 23, HELICAP 27 (See drawing on pages: 5-10, 5-12)					
010	2778595-0100		49	ANGLE	**5-15**
280	2805697-0000		6	SUPPORT	
290	2805696-0000		6	SUPPORT	
450	315105-0156		12	WASHER PLAIN, 6,7X14X1,5 A4 BRB	
530	312105-0368		14	SCREW, M6S ISO 4017 M6X16 A4 80	
540	312105-0370		14	SCREW, M6S ISO 4017 M6X20 A4 80	
560	315105-0153		24	WASHER PLAIN, 6,4X12X1,5 A4 BRB	
570	352113-0204		12	ANCHOR PLATES FOR STRIPS, TM3S25-M	
580	312125-0323		12	SLOTTED HEAD SCREW, ISO1207 M5X8 A4	
620	312812-0316		1	HEXAGON NUT, NY-LOCK M6 A4 80	
Common Parts					
030	2807095-0000		1	BEAM	
040	2778576-0000		1	BEAM	
050	2964293-0000		1	BEAM	
060	2964292-0000		1	BEAM	
070	2779009-0000		2	BEAM	
080	2779011-0000		1	BEAM	
090	2779012-0000		1	BEAM	
100	2830220-0000		1	BEAM	
110	2779811-0000		1	BEAM	
120	3039040-0000		1	SPACER	
130	2778567-0000		1	BEAM	
150	2766975-0000		1	FRAME	
190	2775447-0000		2	BRACKET	
200	2779776-0000		2	PLATE	
210	2779786-0000		1	PLATE	
220	90511-0145		4	LOGOTYPE "TETRA PAK" FOR STRIPE 70MM	
230	2778568-0000		1	FRAME UPPER	
240	90511-8563	M	10	STRIPE HEIGHT 70MM, ROLL LENGTH 25M	
250	2805686-0000		1	BEAM	
260	2805698-0000		1	BEAM	
270	3058859-0000		1	BEAM	
300	2807104-0000		1	BEAM	
320	2788155-0000		4	ANGLE	
330	3177654-0000		1	BLOCK	
340	3039027-0000		2	PLATE	
380	2873941-0000		1	SIGN	
400	90347-0011		2	VIBRATION DAMPER MEGI 781056	
410	90600-1002		10	FOOT 50000N, HPA125-30-325	
420	312812-0318		6	HEXAGON NUT, NY-LOCK M8 A4 80	
430	312115-0455		6	SCREW ISO4762 M8X30 A4 80	
440	315125-0165		12	WASHER HIGH, TBRSB 8,4X26X5 A4	
480	90287-0154		6	SET SCREW, DOGPOINT M6X10 A4	
490	312607-0332		10	HEXAGON NUT, EN 24032 M6M M30 A480	
500	311103-0351		4	PARALLEL PIN ISO 2338 6M6X16 A1	
510	312105-0366		2	SCREW, M6S ISO 4017 M6X12 A4 80	
550	312115-0540		1	SCREW ISO4762 M12X40 A4 80	
590	312115-0230		4	SCREW ISO4762 M3X20 A4 80	
600	90600-0971		2	RACK, ZRR2-100	
630	90287-0175		2	SCREW M6S M3X12 A480	
640	312605-0310		2	HEXAGON NUT, M6M M3 A280	
650	312105-0388		4	SCREW, M6S ISO 4014 M6X90 A4 80	
660	312109-0552		2	SCREW M6S M12X100H A480	
680	312605-0316		2	HEXAGON NUT, M6M M6 A280	

Machine Type | Group Description | Used-In | Group Number | Page No

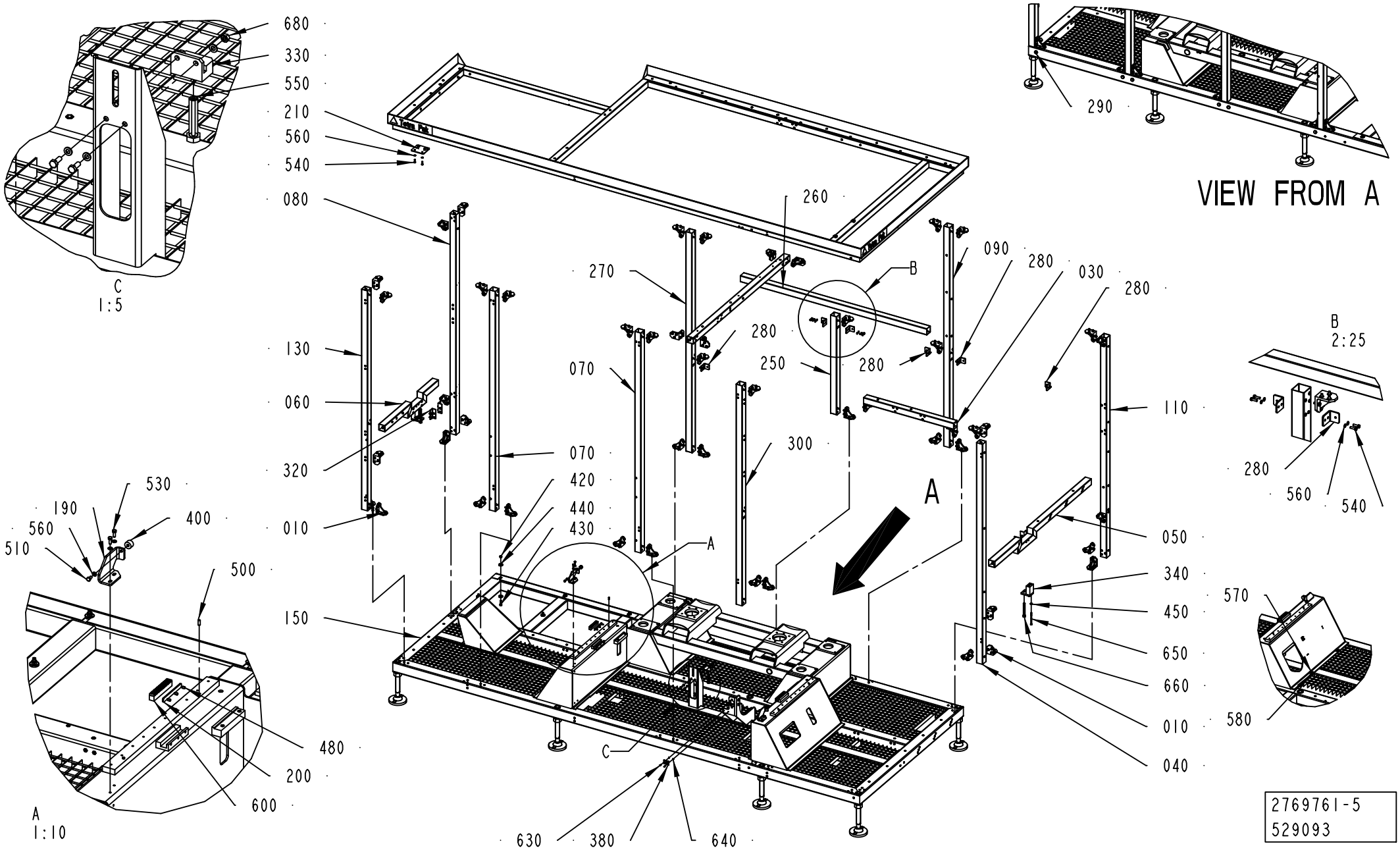
680
330
550
210
560
540
080
260
290
VIEW FROM A
C
1:5
270
B
090
280
030
280
280
250
280
070
130
060
320
010
070
420
440
430
A
300
110
050
340
450
650
660
010
040
B
2:25
280
560
540
570
580
530
190
560
510
400
500
150
480
200
600
A
1:10
630
380
640
2769761-5
529093

ECM: 538111 - 20120401
Group number: 2769761-0300
Assembly Drawing: 2769761-5_2_AA

This list covers pages from 5-10 to 5-13

Pos	Part No	UN	Qty	Description	Page No
STREAMCAP500, STREAMCAP1000, SLIMCAP 2000, SLIMCAP 1000, STREAMCAP200, HELICAP2 23, HELICAP 27 (See drawing on pages: 5-10, 5-12)					
010	2778595-0100		49	ANGLE	**5-15**
280	2805697-0000		6	SUPPORT	
290	2805696-0000		6	SUPPORT	
450	315105-0156		12	WASHER PLAIN, 6,7X14X1,5 A4 BRB	
530	312105-0368		14	SCREW, M6S ISO 4017 M6X16 A4 80	
540	312105-0370		14	SCREW, M6S ISO 4017 M6X20 A4 80	
560	315105-0153		24	WASHER PLAIN, 6,4X12X1,5 A4 BRB	
570	352113-0204		12	ANCHOR PLATES FOR STRIPS, TM3S25-M	
580	312125-0323		12	SLOTTED HEAD SCREW, ISO1207 M5X8 A4	
620	312812-0316		1	HEXAGON NUT, NY-LOCK M6 A4 80	
Common Parts					
030	2807095-0000		1	BEAM	
040	2778576-0000		1	BEAM	
050	2964293-0000		1	BEAM	
060	2964292-0000		1	BEAM	
070	2779009-0000		2	BEAM	
080	2779011-0000		1	BEAM	
090	2779012-0000		1	BEAM	
100	2830220-0000		1	BEAM	
110	2779811-0000		1	BEAM	
120	3039040-0000		1	SPACER	
130	2778567-0000		1	BEAM	
150	2766975-0000		1	FRAME	
190	2775447-0000		2	BRACKET	
200	2779776-0000		2	PLATE	
210	2779786-0000		1	PLATE	
220	90511-0145		4	LOGOTYPE "TETRA PAK" FOR STRIPE 70MM	
230	2778568-0000		1	FRAME UPPER	
240	90511-8563	M	10	STRIPE HEIGHT 70MM, ROLL LENGTH 25M	
250	2805686-0000		1	BEAM	
260	2805698-0000		1	BEAM	
270	3058859-0000		1	BEAM	
300	2807104-0000		1	BEAM	
320	2788155-0000		4	ANGLE	
330	3177654-0000		1	BLOCK	
340	3039027-0000		2	PLATE	
380	2873941-0000		1	SIGN	
400	90347-0011		2	VIBRATION DAMPER MEGI 781056	
410	90600-1002		10	FOOT 50000N, HPA125-30-325	
420	312812-0318		6	HEXAGON NUT, NY-LOCK M8 A4 80	
430	312115-0455		6	SCREW ISO4762 M8X30 A4 80	
440	315125-0165		12	WASHER HIGH, TBRSB 8,4X26X5 A4	
480	90287-0154		6	SET SCREW, DOGPOINT M6X10 A4	
490	312607-0332		10	HEXAGON NUT, EN 24032 M6M M30 A480	
500	311103-0351		4	PARALLEL PIN ISO 2338 6M6X16 A1	
510	312105-0366		2	SCREW, M6S ISO 4017 M6X12 A4 80	
550	312115-0540		1	SCREW ISO4762 M12X40 A4 80	
590	312115-0230		4	SCREW ISO4762 M3X20 A4 80	
600	90600-0971		2	RACK, ZRR2-100	
630	90287-0175		2	SCREW M6S M3X12 A480	
640	312605-0310		2	HEXAGON NUT, M6M M3 A280	
650	312105-0388		4	SCREW, M6S ISO 4014 M6X90 A4 80	
660	312109-0552		2	SCREW M6S M12X100H A480	
680	312605-0316		2	HEXAGON NUT, M6M M6 A280	

Machine Type | Group Description | Used-In | Group Number | Page No

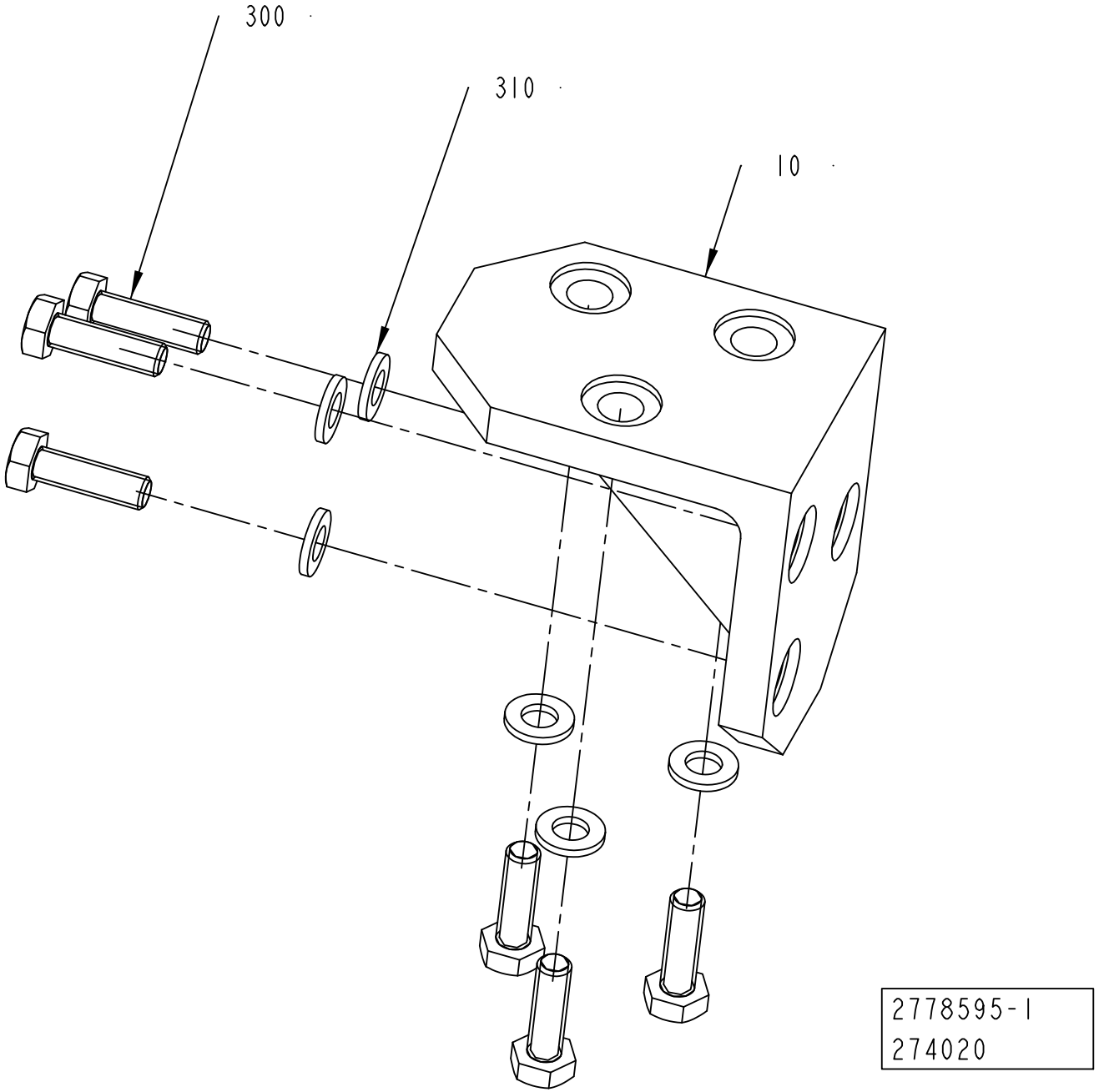
300
310
10
2778595-1
274020

ECM: 274440 - 20060921
Group number: 2778595-0100
Assembly Drawing: 2778595-1_1_AA

Pos	Part No	UN	Qty	Description	Page No
-					
010	2779008-0000		1	BRACKET	
300	312105-0370		6	SCREW, M6S ISO 4017 M6X20 A4 80	
310	315105-0153		6	WASHER PLAIN, 6,4X12X1,5 A4 BRB	

Pos	Part No	UN	Qty	Description	Page No

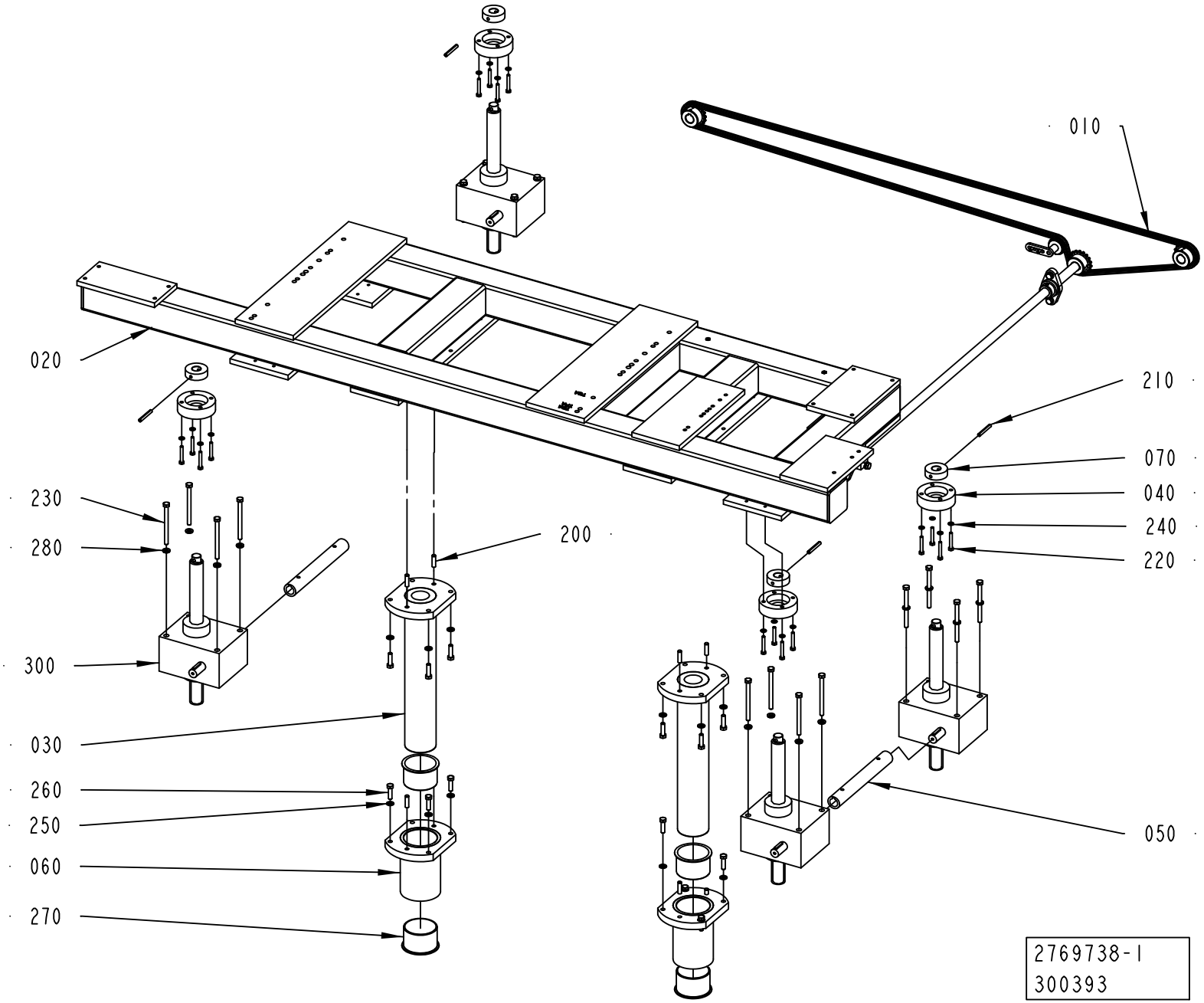
010
020
210
070
040
240
220
230
280
200
300
030
260
250
060
270
050
2769738-1
300393

ECM: 303510 - 20070517
Group number: 2769738-0100
Assembly Drawing: 2769738-1_1_AB

Pos	Part No	UN	Qty	Description	Page No
-					
010	2766973-0100		1	TRANSMISSION	**5-19**
020	2769709-0000		1	FRAME	
030	2769713-0000		2	CYLINDRICAL PIN	
040	2766964-0000		4	FLANGE	
050	2766968-0000		2	SHAFT	
060	2769717-0000		2	FLANGE	
070	2769739-0000		4	DISC	
200	311103-0405		8	PARALLEL PIN ISO 2338 8M6X30 A1	
210	311112-0349		4	SPRING PIN, ISO 8752 6X50 A2	
220	312105-0378		16	SCREW, M6S ISO 4014 M6X40 A4 80	
230	312105-0471		16	SCREW, M6S ISO 4014 M8X100 A4 80	
240	315105-0153		16	WASHER PLAIN, 6,4X12X1,5 A4 BRB	
250	315105-0165		16	WASHER PLAIN, 8,4X16X1,6 A4 BRB	
260	312105-0455		16	SCREW, M6S ISO 4017 M8X30 A4 80	
270	321153-0500		4	FLANGE BUSHING, IGLIDUR G 70X75X50	
280	315115-0165		16	WASHER PLAIN, TBRB 8,4/16 H=3	
300	90600-0658		4	WORM GEAR SCREW JACK, TP00063000130	

Pos	Part No	UN	Qty	Description	Page No

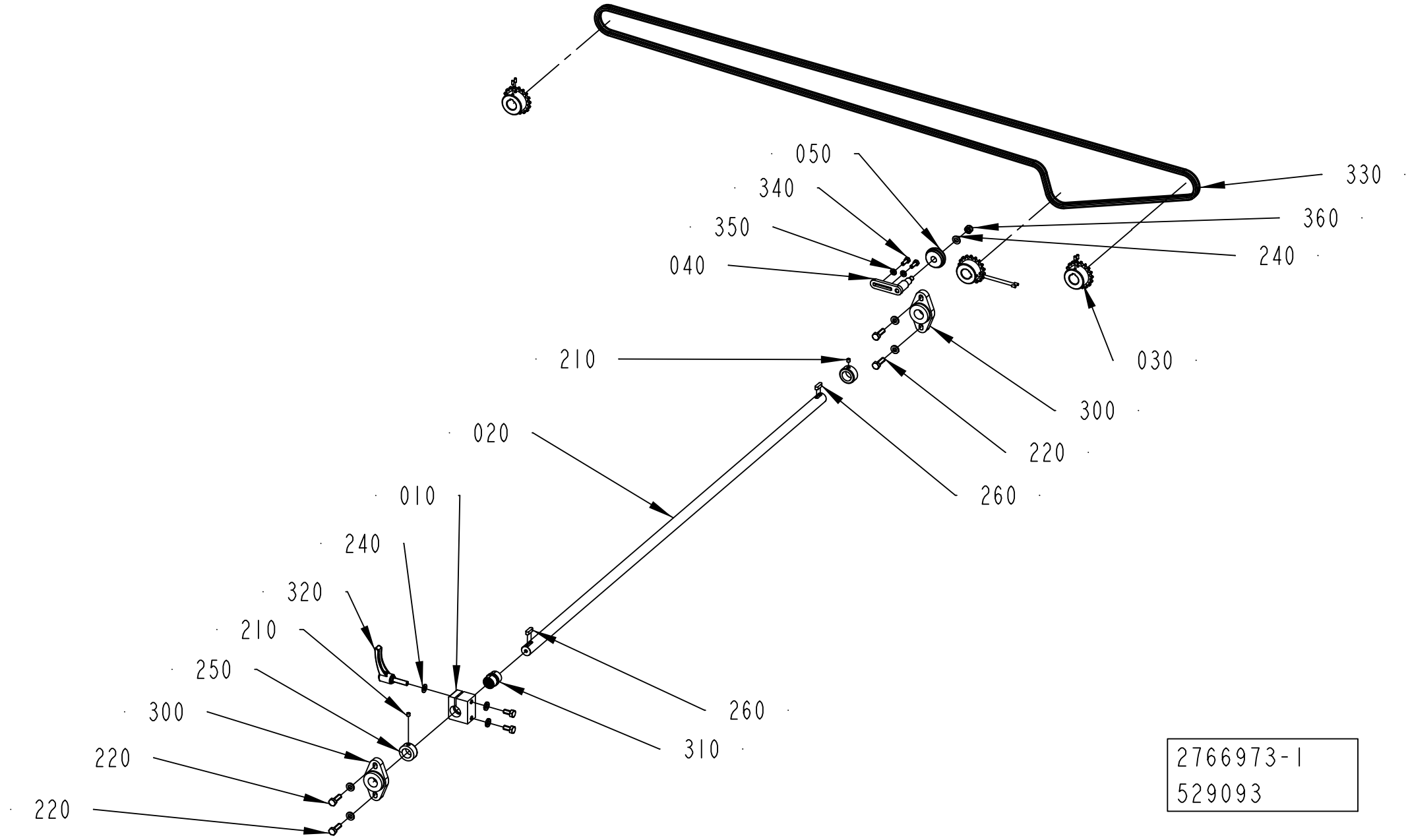
050
340
350
040
330
360
240
030
210
300
220
260
020
010
240
320
210
250
300
220
220
260
310
2766973-1
529093

ECM: 538110 - 20120401
Group number: 2766973-0100
Assembly Drawing: 2766973-1_1_AC

Pos	Part No	UN	Qty	Description	Page No
-					
010	2769726-0000		1	BRACKET	
020	2766972-0000		1	SHAFT	
030	2779769-0000		3	SPROCKET	
040	2846405-0000		1	PIVOT ARM	
050	2846403-0000		1	ROLLER	
200	312318-0287		6	SET SCREW, CUP END ISO4029 M4X8 A4	
210	312318-0360		2	SET SCREW, CUP END ISO4029 M6X6 A4	
220	312105-0453		4	SCREW, M6S ISO 4017 M8X25 A4 80	
230	312105-0449		2	SCREW, M6S ISO 4017 M8X16 A4 80	
240	315105-0165		2	WASHER PLAIN, 8,4X16X1,6 A4 BRB	
250	315741-0216		2	RETAINING RING, DIN 705 A4 20	
260	315705-0232		2	PARALLEL KEY W. ROUND ENDS, 6X6X20 MM	
270	315115-0165		6	WASHER PLAIN, TBRB 8,4/16 H=3	
300	90600-0800		2	FLANGE BEARING 20X89X20 MM	
310	90458-2932		1	PLAIN BEARING, JUM-02-20	
320	90017-0029		1	LOCKING LEVER, NO. KR8X30-SUS	
330	90600-1159		1	ROLLER CHAIN, SIMPLEX 3/8 -290, SS	
340	312105-0368		2	SCREW, M6S ISO 4017 M6X16 A4 80	
350	315105-0153		2	WASHER PLAIN, 6,4X12X1,5 A4 BRB	
360	312812-0318		1	HEXAGON NUT, NY-LOCK M8 A4 80	

Pos	Part No	UN	Qty	Description	Page No

Machine Type | Group Description | Used-In | Group Number | Page No

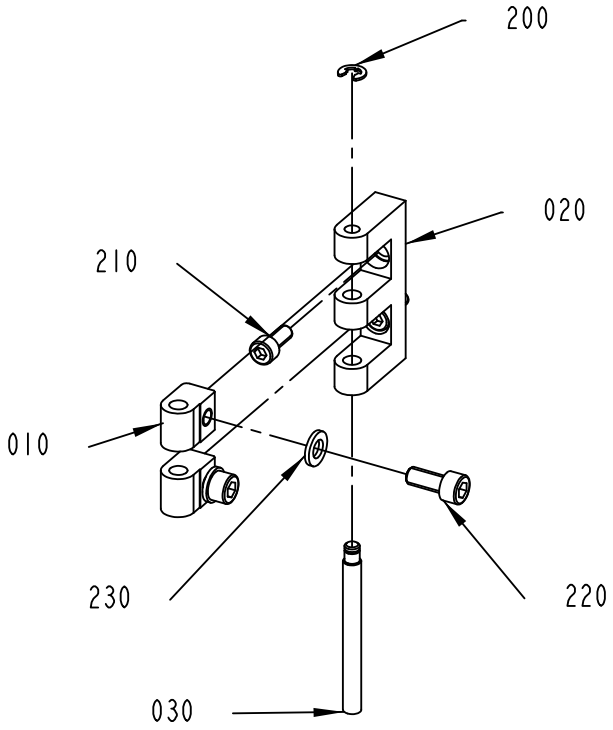

A
1:2

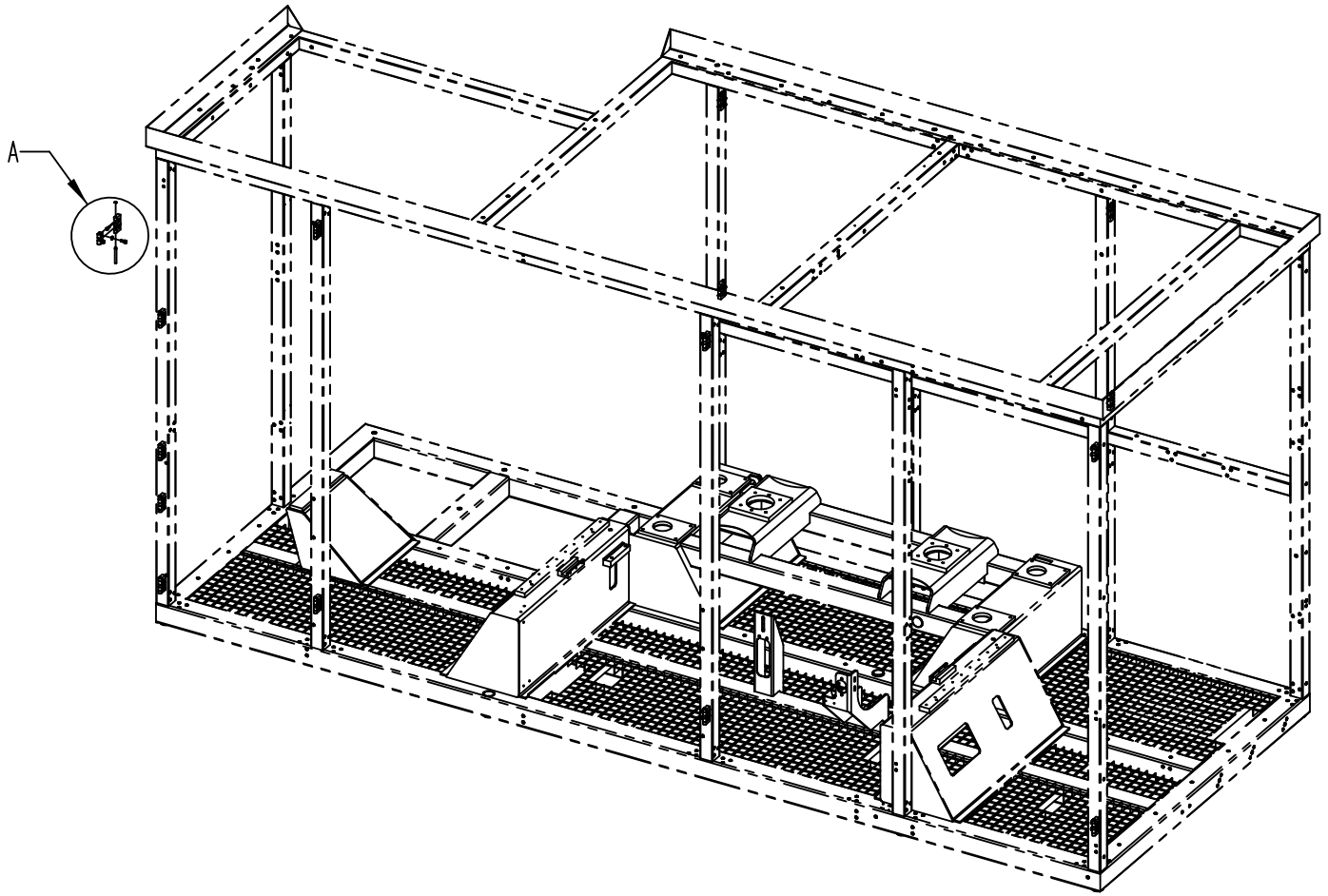

3217565-1
529093

ECM: 538828 - 20120401
Group number: 3217565-0100
Assembly Drawing: 3217565-1_1_AA

Pos	Part No	UN	Qty	Description	Page No
-					
010	1129770-0000		30	BLOCKING PIECE	
020	1035792-0000		15	E-HINGE	
030	1036329-0000		15	PIN	
200	315755-0106		15	RETAINING RING SHAFT DIN 6799 4 SS	
210	312115-0327		30	SCREW ISO4762 M5X12 A4 80	
220	312115-0367		30	SCREW ISO4762 M6X14 A4 80	
230	315105-0153		30	WASHER PLAIN, 6,4X12X1,5 A4 BRB	

Pos	Part No	UN	Qty	Description	Page No

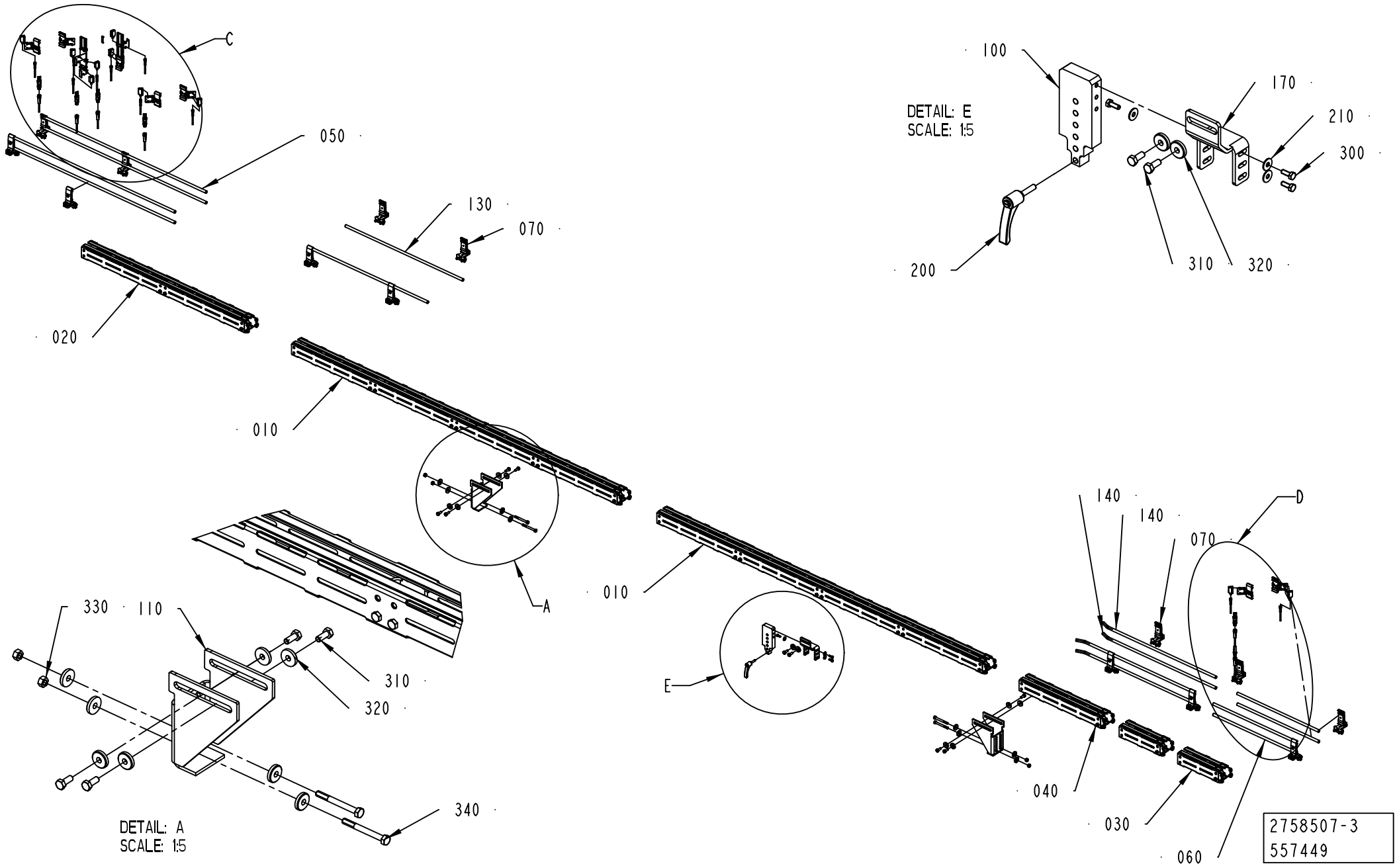
C
050
130
070
020
010
A
330
110
310
320
340
DETAIL: A
SCALE: 1:5
100
170
210
300
DETAIL: E
SCALE: 1:5
200
310
320
010
E
140
140
070
D
040
030
060
2758507-3
557449

ECM: 563429 - 20120702
Group number: 2758507-0300
Assembly Drawing: 2758507-3_1_AB

This list covers pages from 5-22 to 5-29

Pos	Part No	UN	Qty	Description	Page No
TBA 0200E, TBA 0250E (See drawing on pages: 5-26, 5-28)					
040	2763616-0102		2	CONVEYOR BODY	**5-31**
060	2561274-0102		2	RAILING	**5-33**
400	90600-2375		4	LENS, E39-S65C	
TBA 0200SQ, TBA 0500S, TBA 0500SQ, TBA 1000B, TBA 1000SQ, TBA 1000S, TBA 1500S, TPA 0330SQ, TPA 1000SQ, TPA 0500SQ, TBA 1890S, TBA 2000S, TPA 0750SQ, TBA 0250SQ, TGA 1000SQ, TGA 0750SQ, TGA 0500SQ, TGA 1500SQ, TGA 1000CR, TGA 1000LF (See drawing on pages: 5-22, 5-24)					
020	2763616-0103		1	CONVEYOR BODY	**5-37**
040	2763616-0102		1	CONVEYOR BODY	**5-31**
050	2561274-0103		1	RAILING	**5-39**
060	2561274-0102		1	RAILING	**5-33**
Common Parts					
010	2763616-0104		2	CONVEYOR BODY	**5-41**
030	2763616-0101		1	CONVEYOR BODY	**5-43**
070	1550743-0200		8	RAIL HOLDER	**5-35**
080	2778586-0100		3	SENSOR	**5-45, 12-21**
090	2778587-0100		1	SENSOR	**5-47**
100	2930211-0000		1	PLATE	
110	2965155-0000		2	SUPPORT	
130	2779831-0000		2	PIPE	
140	3216180-0000		4	PIPE	
170	2930210-0000		1	PLATE	
200	90017-0029		1	LOCKING LEVER, NO. KR8X30-SUS	
210	90457-0192		4	WASHER PLAIN ROUND, 6,5/18, H=1,5	
300	312105-0368		4	SCREW, M6S ISO 4017 M6X16 A4 80	
310	312105-0451		10	SCREW, M6S ISO 4017 M8X20 A4 80	
320	315125-0165		18	WASHER HIGH, TBRSB 8,4X26X5 A4	
330	312607-0318		4	HEXAGON NUT, EN 24032 M6M M8 A480	
340	312105-0466		4	SCREW, M6S ISO 4014 M8X75 A4 80	
350	344267-0050		1	SENSOR CABLE, EVT044	
W21B4002	90459-5529		1	PHOTOCELL E3Z-T86A, SENDER+RECIEVER	
W21B4004	90459-5529		1	PHOTOCELL E3Z-T86A, SENDER+RECIEVER	
W21B4006	90459-5529		1	PHOTOCELL E3Z-T86A, SENDER+RECIEVER	
W21B4008	90459-5529		1	PHOTOCELL E3Z-T86A, SENDER+RECIEVER	
W21B6002	90459-5529		1	PHOTOCELL E3Z-T86A, SENDER+RECIEVER	
W21W4002	90603-3979		1	SENSOR Y-CABLE, EVT339	
W21W4004	90603-3979		1	SENSOR Y-CABLE, EVT339	
W21W4006	90603-3979		1	SENSOR Y-CABLE, EVT339	
W21W4008	90603-3979		1	SENSOR Y-CABLE, EVT339	
W21W4012	344253-0050		1	SENSOR CABLE, EVT001	
W21W4014	344253-0050		1	SENSOR CABLE, EVT001	
W21W4016	344253-0050		1	SENSOR CABLE, EVT001	
W21W4018	344253-0100		1	SENSOR CABLE, EVT002	
W21W6002	90603-3979		1	SENSOR Y-CABLE, EVT339	
W21W6012	344261-0050		1	SENSOR CABLE, EVT216	

Machine Type | Group Description | Used-In | Group Number | Page No

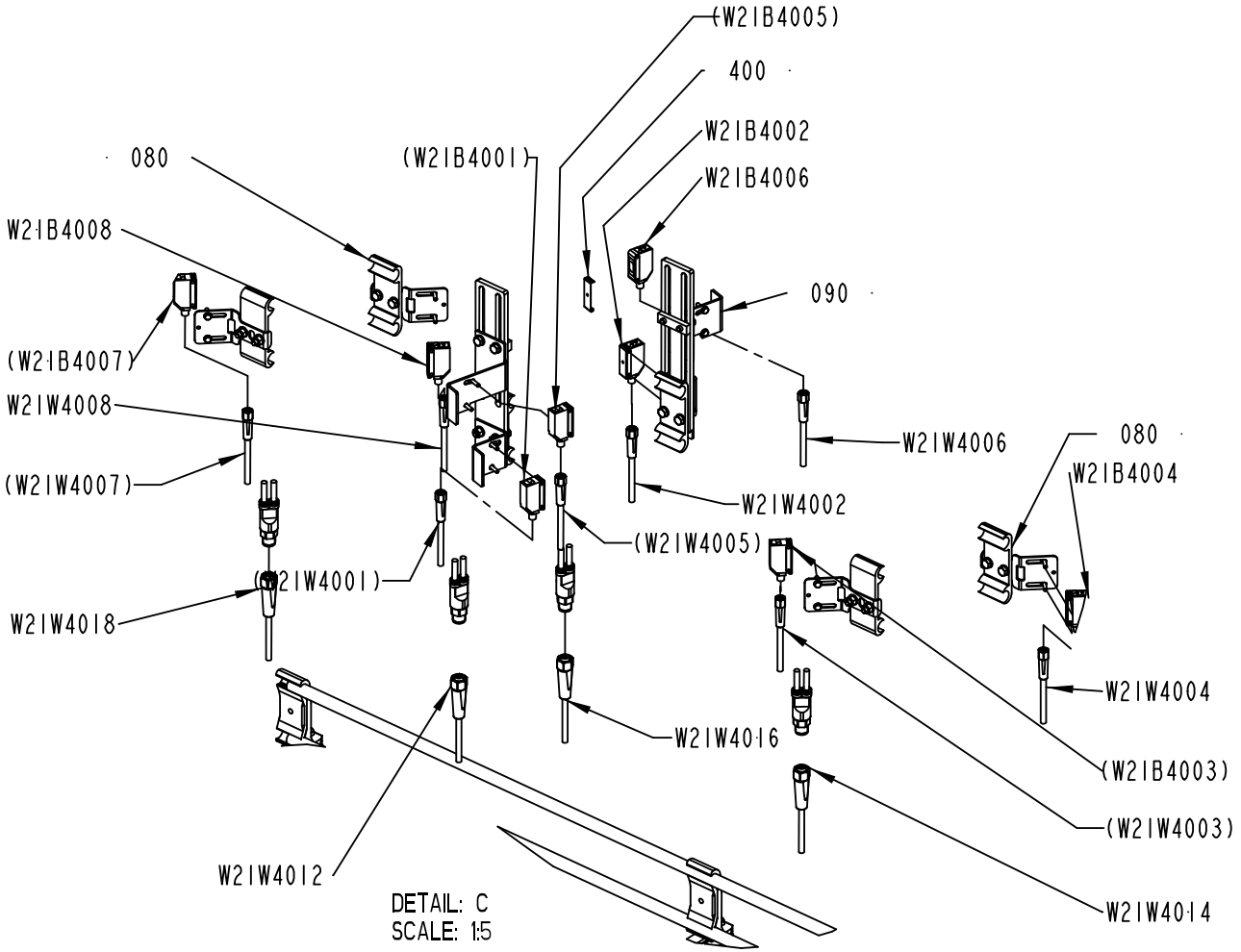
(W2IB4005)
400
W2IB4002
W2IB4006
080
(W2IB4001)
W2IB4008
090
(W2IB4007)
W2IW4008
W2IW4006
080
W2IB4004
(W2IW4007)
W2IW4002
(W2IW4005)
(W2IW4001)
W2IW4018
W2IW4004
W2IW4016
(W2IB4003)
(W2IW4003)
W2IW4012
W2IW4014
DETAIL: C
SCALE: 1:5

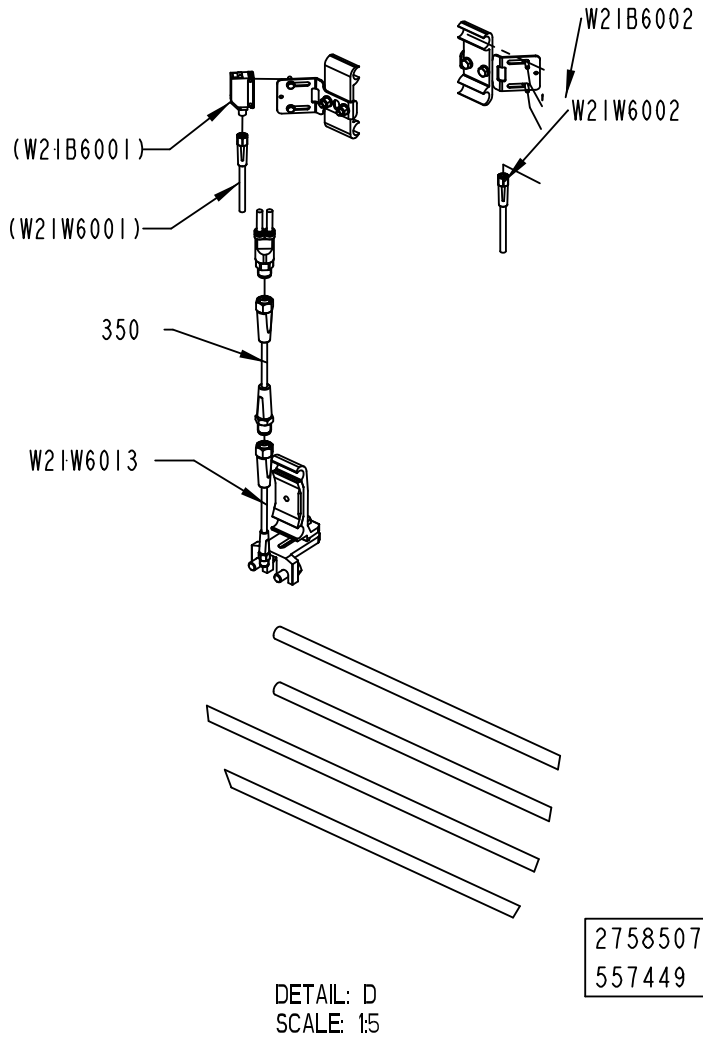
W2IB6002
W2IW6002
(W2IB6001)
(W2IW6001)
350
W2IW6013
2758507-3
557449
DETAIL: D
SCALE: 1:5

ECM: 563429 - 20120702
Group number: 2758507-0300
Assembly Drawing: 2758507-3_2_AB

This list covers pages from 5-22 to 5-29

Pos	Part No	UN	Qty	Description	Page No
TBA 0200E, TBA 0250E (See drawing on pages: 5-26, 5-28)					
040	2763616-0102		2	CONVEYOR BODY	**5-31**
060	2561274-0102		2	RAILING	**5-33**
400	90600-2375		4	LENS, E39-S65C	
TBA 0200SQ, TBA 0500S, TBA 0500SQ, TBA 1000B, TBA 1000SQ, TBA 1000S, TBA 1500S, TPA 0330SQ, TPA 1000SQ, TPA 0500SQ, TBA 1890S, TBA 2000S, TPA 0750SQ, TBA 0250SQ, TGA 1000SQ, TGA 0750SQ, TGA 0500SQ, TGA 1500SQ, TGA 1000CR, TGA 1000LF (See drawing on pages: 5-22, 5-24)					
020	2763616-0103		1	CONVEYOR BODY	**5-37**
040	2763616-0102		1	CONVEYOR BODY	**5-31**
050	2561274-0103		1	RAILING	**5-39**
060	2561274-0102		1	RAILING	**5-33**
Common Parts					
010	2763616-0104		2	CONVEYOR BODY	**5-41**
030	2763616-0101		1	CONVEYOR BODY	**5-43**
070	1550743-0200		8	RAIL HOLDER	**5-35**
080	2778586-0100		3	SENSOR	**5-45, 12-21**
090	2778587-0100		1	SENSOR	**5-47**
100	2930211-0000		1	PLATE	
110	2965155-0000		2	SUPPORT	
130	2779831-0000		2	PIPE	
140	3216180-0000		4	PIPE	
170	2930210-0000		1	PLATE	
200	90017-0029		1	LOCKING LEVER, NO. KR8X30-SUS	
210	90457-0192		4	WASHER PLAIN ROUND, 6,5/18, H=1,5	
300	312105-0368		4	SCREW, M6S ISO 4017 M6X16 A4 80	
310	312105-0451		10	SCREW, M6S ISO 4017 M8X20 A4 80	
320	315125-0165		18	WASHER HIGH, TBRSB 8,4X26X5 A4	
330	312607-0318		4	HEXAGON NUT, EN 24032 M6M M8 A480	
340	312105-0466		4	SCREW, M6S ISO 4014 M8X75 A4 80	
350	344267-0050		1	SENSOR CABLE, EVT044	
W21B4002	90459-5529		1	PHOTOCELL E3Z-T86A, SENDER+RECIEVER	
W21B4004	90459-5529		1	PHOTOCELL E3Z-T86A, SENDER+RECIEVER	
W21B4006	90459-5529		1	PHOTOCELL E3Z-T86A, SENDER+RECIEVER	
W21B4008	90459-5529		1	PHOTOCELL E3Z-T86A, SENDER+RECIEVER	
W21B6002	90459-5529		1	PHOTOCELL E3Z-T86A, SENDER+RECIEVER	
W21W4002	90603-3979		1	SENSOR Y-CABLE, EVT339	
W21W4004	90603-3979		1	SENSOR Y-CABLE, EVT339	
W21W4006	90603-3979		1	SENSOR Y-CABLE, EVT339	
W21W4008	90603-3979		1	SENSOR Y-CABLE, EVT339	
W21W4012	344253-0050		1	SENSOR CABLE, EVT001	
W21W4014	344253-0050		1	SENSOR CABLE, EVT001	
W21W4016	344253-0050		1	SENSOR CABLE, EVT001	
W21W4018	344253-0100		1	SENSOR CABLE, EVT002	
W21W6002	90603-3979		1	SENSOR Y-CABLE, EVT339	
W21W6012	344261-0050		1	SENSOR CABLE, EVT216	

Machine Type | Group Description | Used-In | Group Number | Page No

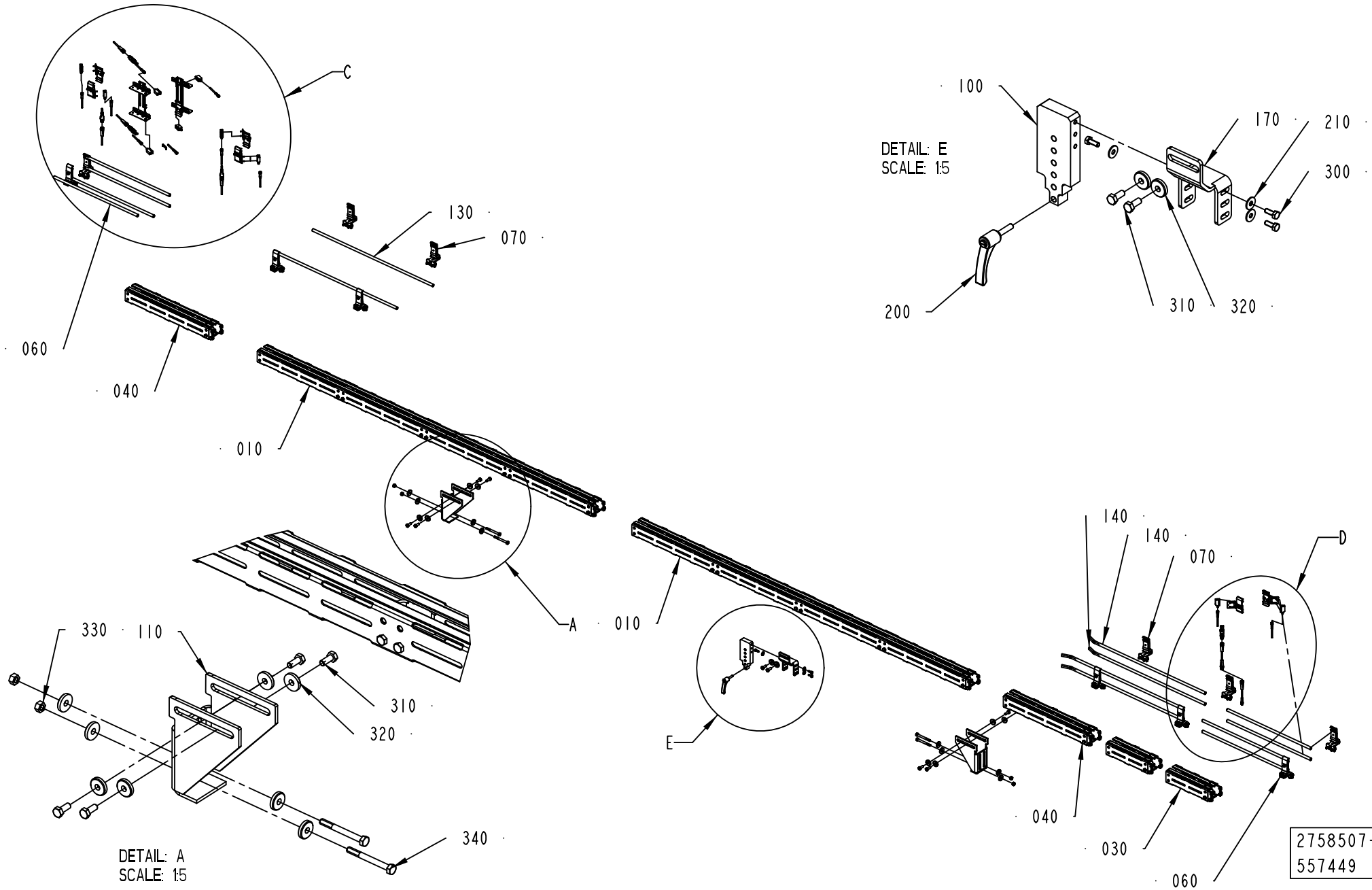
C
060
040
130
070
010
A
330
110
310
320
340
DETAIL: A
SCALE: 1:5
100
170
210
300
200
310
320
DETAIL: E
SCALE: 1:5
E
010
140
140
070
D
040
030
060
2758507-4
557449

ECM: 563429 - 20120702
Group number: 2758507-0300
Assembly Drawing: 2758507-4_1_AA

This list covers pages from 5-22 to 5-29

Pos	Part No	UN	Qty	Description	Page No
TBA 0200E, TBA 0250E (See drawing on pages: 5-26, 5-28)					
040	2763616-0102		2	CONVEYOR BODY	**5-31**
060	2561274-0102		2	RAILING	**5-33**
400	90600-2375		4	LENS, E39-S65C	
TBA 0200SQ, TBA 0500S, TBA 0500SQ, TBA 1000B, TBA 1000SQ, TBA 1000S, TBA 1500S, TPA 0330SQ, TPA 1000SQ, TPA 0500SQ, TBA 1890S, TBA 2000S, TPA 0750SQ, TBA 0250SQ, TGA 1000SQ, TGA 0750SQ, TGA 0500SQ, TGA 1500SQ, TGA 1000CR, TGA 1000LF (See drawing on pages: 5-22, 5-24)					
020	2763616-0103		1	CONVEYOR BODY	**5-37**
040	2763616-0102		1	CONVEYOR BODY	**5-31**
050	2561274-0103		1	RAILING	**5-39**
060	2561274-0102		1	RAILING	**5-33**
Common Parts					
010	2763616-0104		2	CONVEYOR BODY	**5-41**
030	2763616-0101		1	CONVEYOR BODY	**5-43**
070	1550743-0200		8	RAIL HOLDER	**5-35**
080	2778586-0100		3	SENSOR	**5-45, 12-21**
090	2778587-0100		1	SENSOR	**5-47**
100	2930211-0000		1	PLATE	
110	2965155-0000		2	SUPPORT	
130	2779831-0000		2	PIPE	
140	3216180-0000		4	PIPE	
170	2930210-0000		1	PLATE	
200	90017-0029		1	LOCKING LEVER, NO. KR8X30-SUS	
210	90457-0192		4	WASHER PLAIN ROUND, 6,5/18, H=1,5	
300	312105-0368		4	SCREW, M6S ISO 4017 M6X16 A4 80	
310	312105-0451		10	SCREW, M6S ISO 4017 M8X20 A4 80	
320	315125-0165		18	WASHER HIGH, TBRSB 8,4X26X5 A4	
330	312607-0318		4	HEXAGON NUT, EN 24032 M6M M8 A480	
340	312105-0466		4	SCREW, M6S ISO 4014 M8X75 A4 80	
350	344267-0050		1	SENSOR CABLE, EVT044	
W21B4002	90459-5529		1	PHOTOCELL E3Z-T86A, SENDER+RECIEVER	
W21B4004	90459-5529		1	PHOTOCELL E3Z-T86A, SENDER+RECIEVER	
W21B4006	90459-5529		1	PHOTOCELL E3Z-T86A, SENDER+RECIEVER	
W21B4008	90459-5529		1	PHOTOCELL E3Z-T86A, SENDER+RECIEVER	
W21B6002	90459-5529		1	PHOTOCELL E3Z-T86A, SENDER+RECIEVER	
W21W4002	90603-3979		1	SENSOR Y-CABLE, EVT339	
W21W4004	90603-3979		1	SENSOR Y-CABLE, EVT339	
W21W4006	90603-3979		1	SENSOR Y-CABLE, EVT339	
W21W4008	90603-3979		1	SENSOR Y-CABLE, EVT339	
W21W4012	344253-0050		1	SENSOR CABLE, EVT001	
W21W4014	344253-0050		1	SENSOR CABLE, EVT001	
W21W4016	344253-0050		1	SENSOR CABLE, EVT001	
W21W4018	344253-0100		1	SENSOR CABLE, EVT002	
W21W6002	90603-3979		1	SENSOR Y-CABLE, EVT339	
W21W6012	344261-0050		1	SENSOR CABLE, EVT216	

Machine Type | Group Description | Used-In | Group Number | Page No

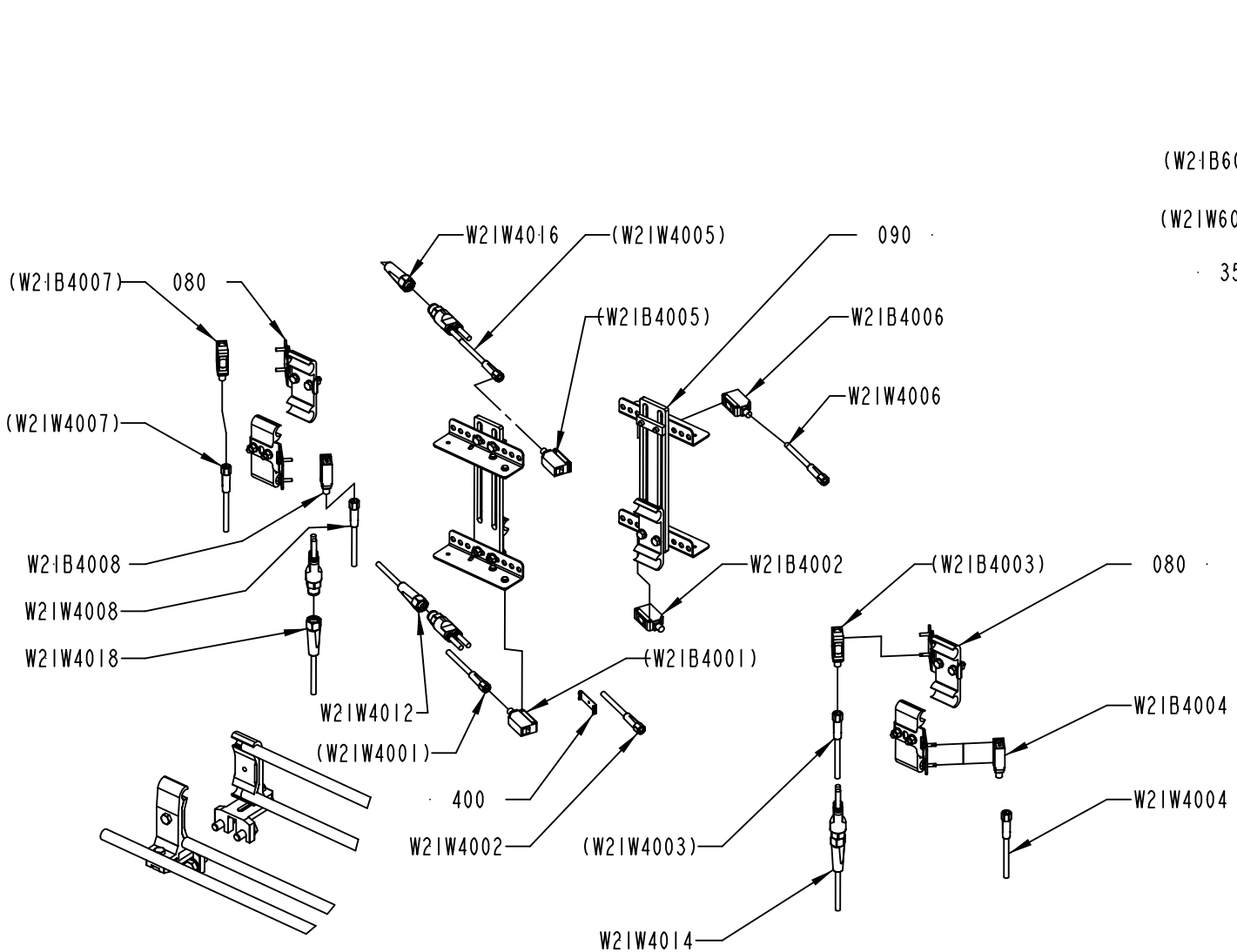

DETAIL: C
SCALE: 1:5

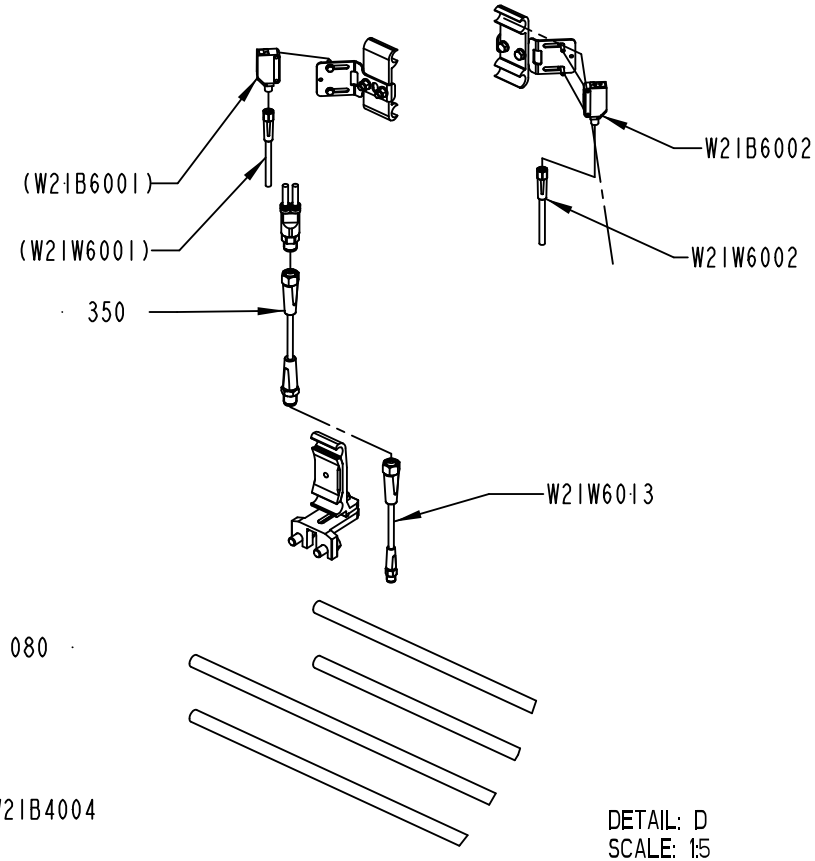

DETAIL: D
SCALE: 1:5

2758507-4
557449

ECM: 563429 - 20120702
Group number: 2758507-0300
Assembly Drawing: 2758507-4_2_AA

This list covers pages from 5-22 to 5-29

Pos	Part No	UN	Qty	Description	Page No
TBA 0200E, TBA 0250E (See drawing on pages: 5-26, 5-28)					
040	2763616-0102		2	CONVEYOR BODY	**5-31**
060	2561274-0102		2	RAILING	**5-33**
400	90600-2375		4	LENS, E39-S65C	
TBA 0200SQ, TBA 0500S, TBA 0500SQ, TBA 1000B, TBA 1000SQ, TBA 1000S, TBA 1500S, TPA 0330SQ, TPA 1000SQ, TPA 0500SQ, TBA 1890S, TBA 2000S, TPA 0750SQ, TBA 0250SQ, TGA 1000SQ, TGA 0750SQ, TGA 0500SQ, TGA 1500SQ, TGA 1000CR, TGA 1000LF (See drawing on pages: 5-22, 5-24)					
020	2763616-0103		1	CONVEYOR BODY	**5-37**
040	2763616-0102		1	CONVEYOR BODY	**5-31**
050	2561274-0103		1	RAILING	**5-39**
060	2561274-0102		1	RAILING	**5-33**
Common Parts					
010	2763616-0104		2	CONVEYOR BODY	**5-41**
030	2763616-0101		1	CONVEYOR BODY	**5-43**
070	1550743-0200		8	RAIL HOLDER	**5-35**
080	2778586-0100		3	SENSOR	**5-45, 12-21**
090	2778587-0100		1	SENSOR	**5-47**
100	2930211-0000		1	PLATE	
110	2965155-0000		2	SUPPORT	
130	2779831-0000		2	PIPE	
140	3216180-0000		4	PIPE	
170	2930210-0000		1	PLATE	
200	90017-0029		1	LOCKING LEVER, NO. KR8X30-SUS	
210	90457-0192		4	WASHER PLAIN ROUND, 6,5/18, H=1,5	
300	312105-0368		4	SCREW, M6S ISO 4017 M6X16 A4 80	
310	312105-0451		10	SCREW, M6S ISO 4017 M8X20 A4 80	
320	315125-0165		18	WASHER HIGH, TBRSB 8,4X26X5 A4	
330	312607-0318		4	HEXAGON NUT, EN 24032 M6M M8 A480	
340	312105-0466		4	SCREW, M6S ISO 4014 M8X75 A4 80	
350	344267-0050		1	SENSOR CABLE, EVT044	
W21B4002	90459-5529		1	PHOTOCELL E3Z-T86A, SENDER+RECIEVER	
W21B4004	90459-5529		1	PHOTOCELL E3Z-T86A, SENDER+RECIEVER	
W21B4006	90459-5529		1	PHOTOCELL E3Z-T86A, SENDER+RECIEVER	
W21B4008	90459-5529		1	PHOTOCELL E3Z-T86A, SENDER+RECIEVER	
W21B6002	90459-5529		1	PHOTOCELL E3Z-T86A, SENDER+RECIEVER	
W21W4002	90603-3979		1	SENSOR Y-CABLE, EVT339	
W21W4004	90603-3979		1	SENSOR Y-CABLE, EVT339	
W21W4006	90603-3979		1	SENSOR Y-CABLE, EVT339	
W21W4008	90603-3979		1	SENSOR Y-CABLE, EVT339	
W21W4012	344253-0050		1	SENSOR CABLE, EVT001	
W21W4014	344253-0050		1	SENSOR CABLE, EVT001	
W21W4016	344253-0050		1	SENSOR CABLE, EVT001	
W21W4018	344253-0100		1	SENSOR CABLE, EVT002	
W21W6002	90603-3979		1	SENSOR Y-CABLE, EVT339	
W21W6012	344261-0050		1	SENSOR CABLE, EVT216	

Machine Type | Group Description | Used-In | Group Number | Page No

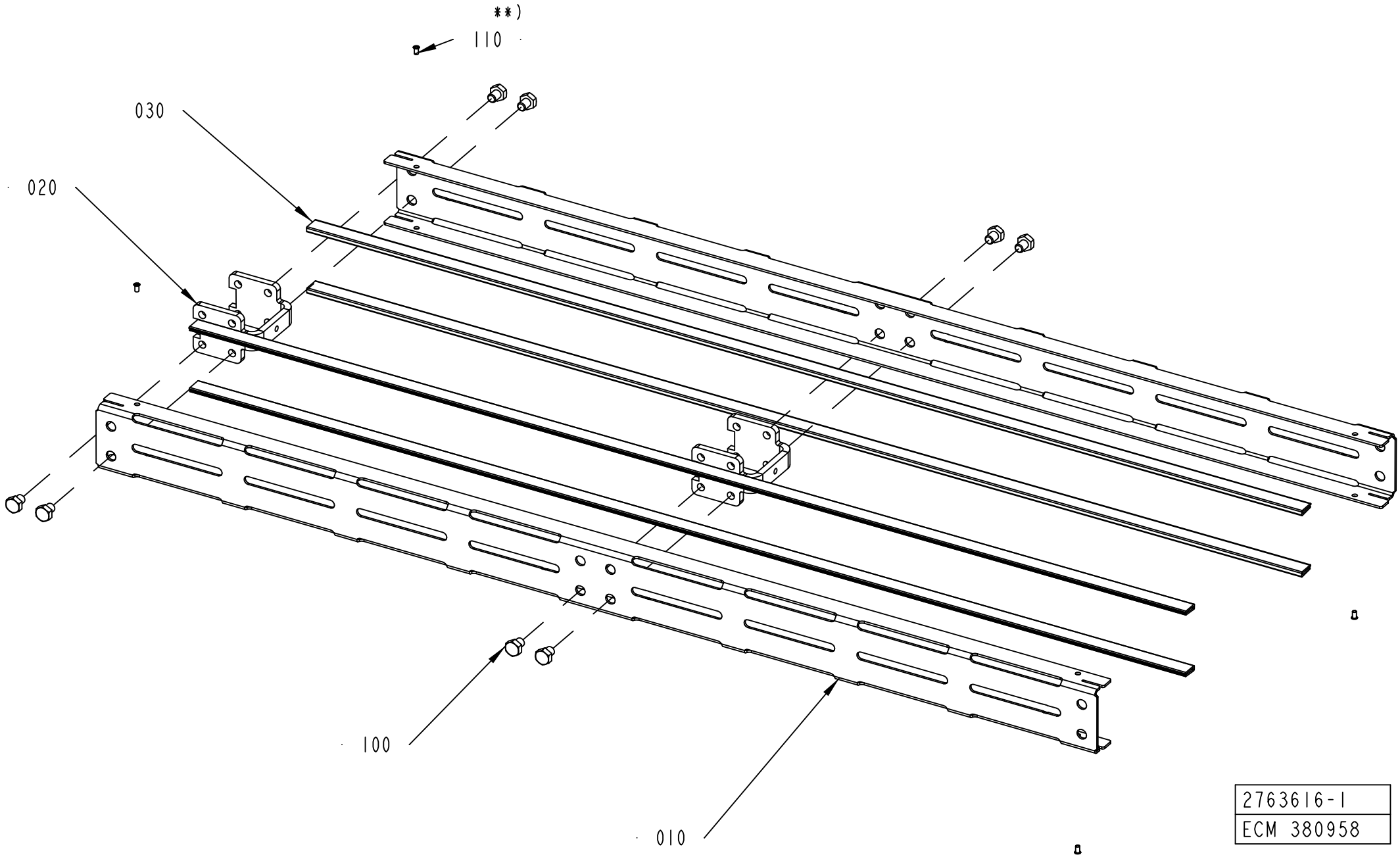

2763616-1
ECM 380958

ECM: 380958 -
Group number: 2763616-0102
Assembly Drawing: 2763616-1_1_AB

Pos	Part No	UN	Qty	Description	Page No
L 0250					
010	2763617-0001		2	SIDE PLATE	
020	2561206-0000		1	SPACER	
030	1550595-2460		4	SLIDING STRIP	
100	90459-4735		4	SCREW, M6S ISO 4017 M8X10 A4 80	
L 0500					
010	2763617-0002		2	SIDE PLATE	
020	2561206-0000		1	SPACER	
030	1550595-4960		4	SLIDING STRIP	
100	90459-4735		4	SCREW, M6S ISO 4017 M8X10 A4 80	
Common Parts					
010	2763617-0004		2	SIDE PLATE	
010	2763617-0003		2	SIDE PLATE	
020	2561206-0000		2	SPACER	
030	2699305-1996		4	SLIDING STRIP	
030	1550595-9960		4	SLIDING STRIP	
100	90459-4735		16	SCREW, M6S ISO 4017 M8X10 A4 80	
110	90600-6183		4	TUBULAR RIVET 3,5X6,2	

Pos	Part No	UN	Qty	Description	Page No

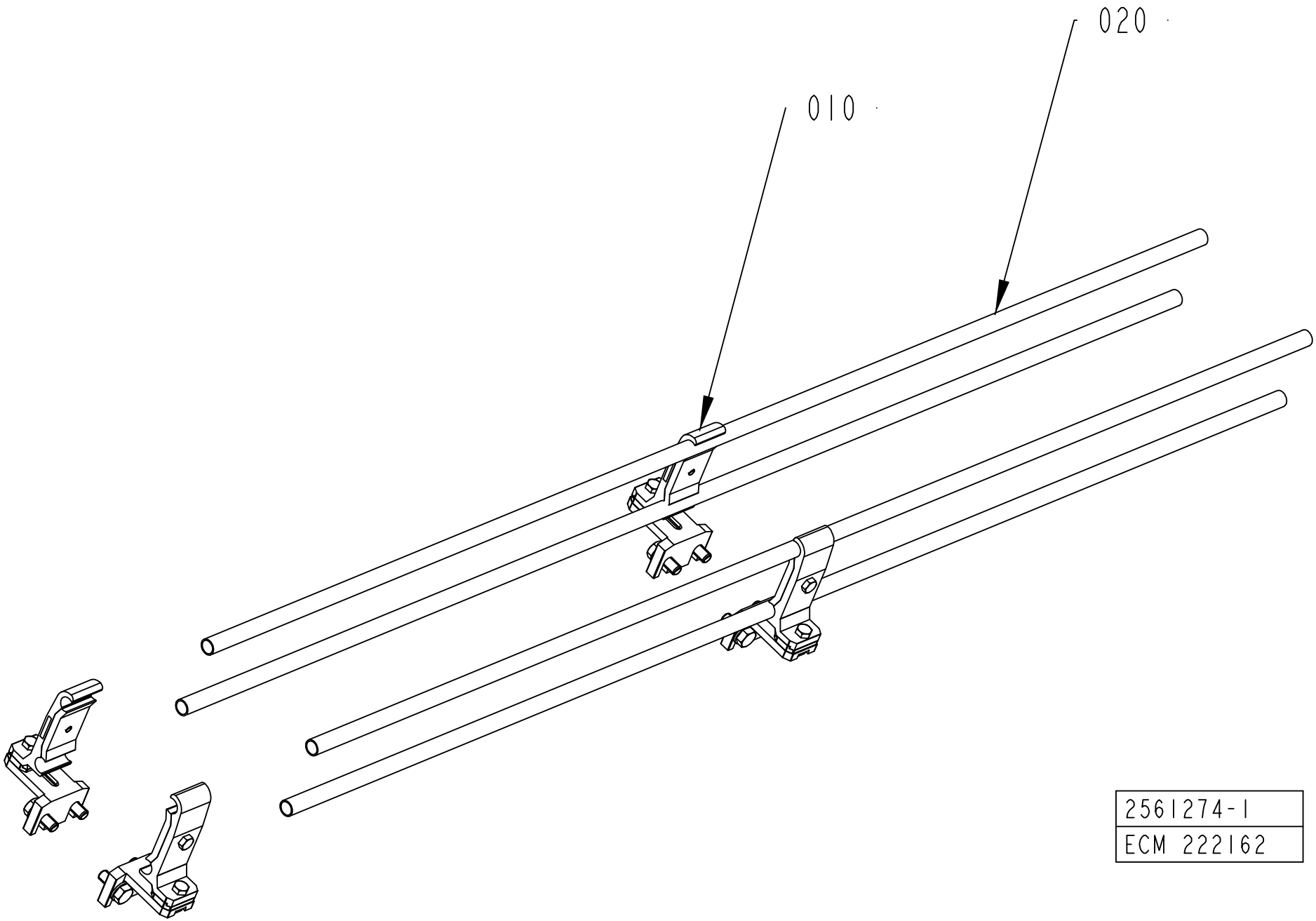
020
010
2561274-1
ECM 222162

ECM: 222162 -
Group number: 2561274-0102
Assembly Drawing: 2561274-1_1_AB

Pos	Part No	UN	Qty	Description	Page No
L 0250					
010	1550743-0200		2	RAIL HOLDER	**5-35**
L 0500					
010	1550743-0200		2	RAIL HOLDER	**5-35**
020	476221-0002		4	PIPE	
Common Parts					
010	1550743-0200		4	RAIL HOLDER	**5-35**
020	476221-0003		4	PIPE	

Pos	Part No	UN	Qty	Description	Page No

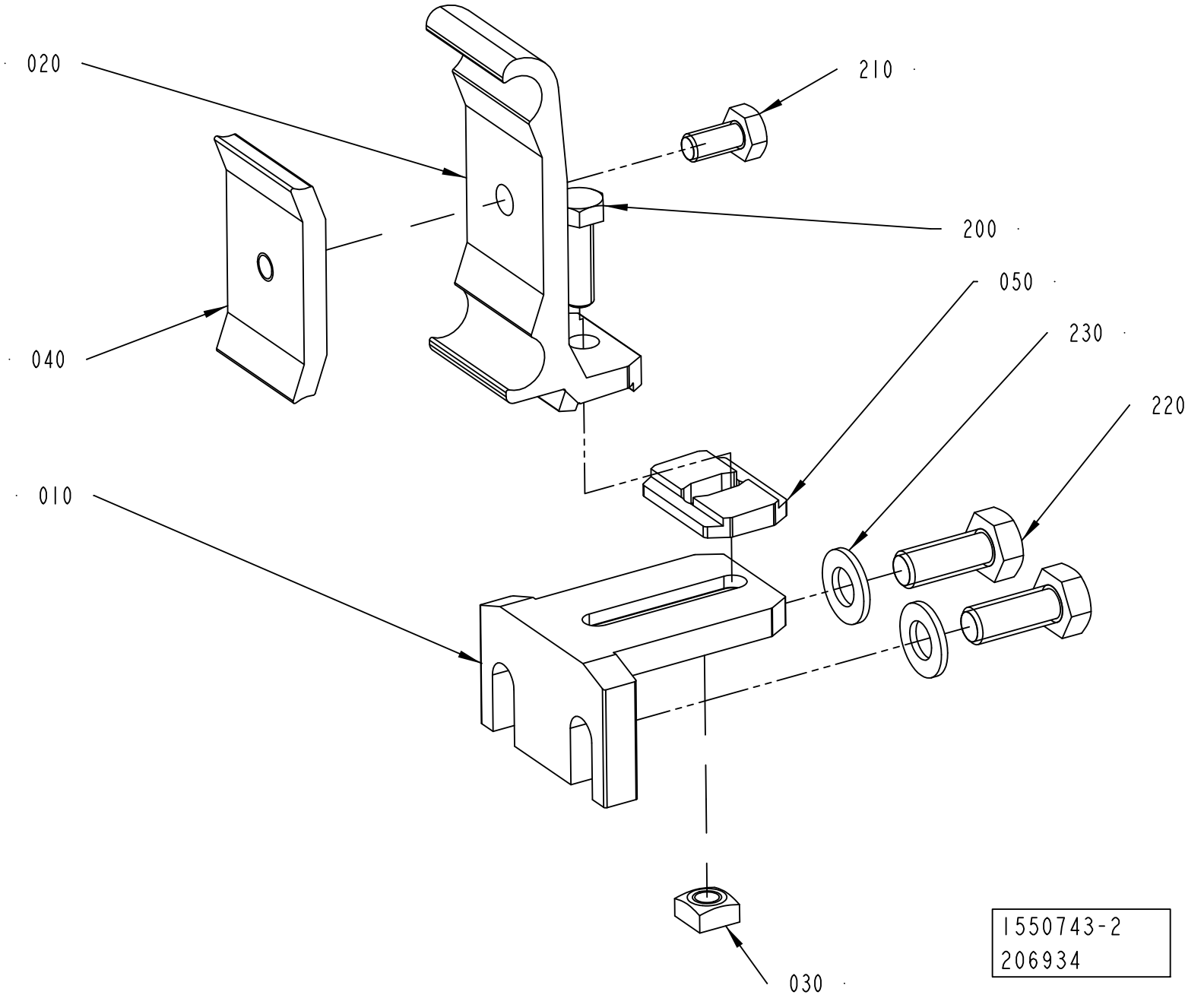
020
210
200
040
050
230
220
010
030
1550743-2
206934

ECM: 429045 - 20091201
Group number: 1550743-0200
Assembly Drawing: 1550743-2_1_AA

Pos	Part No	UN	Qty	Description	Page No
-					
010	1550772-0000		1	HOLDER	
020	2699437-0000		1	RAIL HOLDER	
030	1359565-0000		1	NUT	
040	1366727-0000		1	CLAMP	
050	2699436-0000		1	SPACER	
200	312105-0370		1	SCREW, M6S ISO 4017 M6X20 A4 80	
210	312105-0366		1	SCREW, M6S ISO 4017 M6X12 A4 80	
220	312105-0451		2	SCREW, M6S ISO 4017 M8X20 A4 80	
230	315105-0165		2	WASHER PLAIN, 8,4X16X1,6 A4 BRB	

Pos	Part No	UN	Qty	Description	Page No

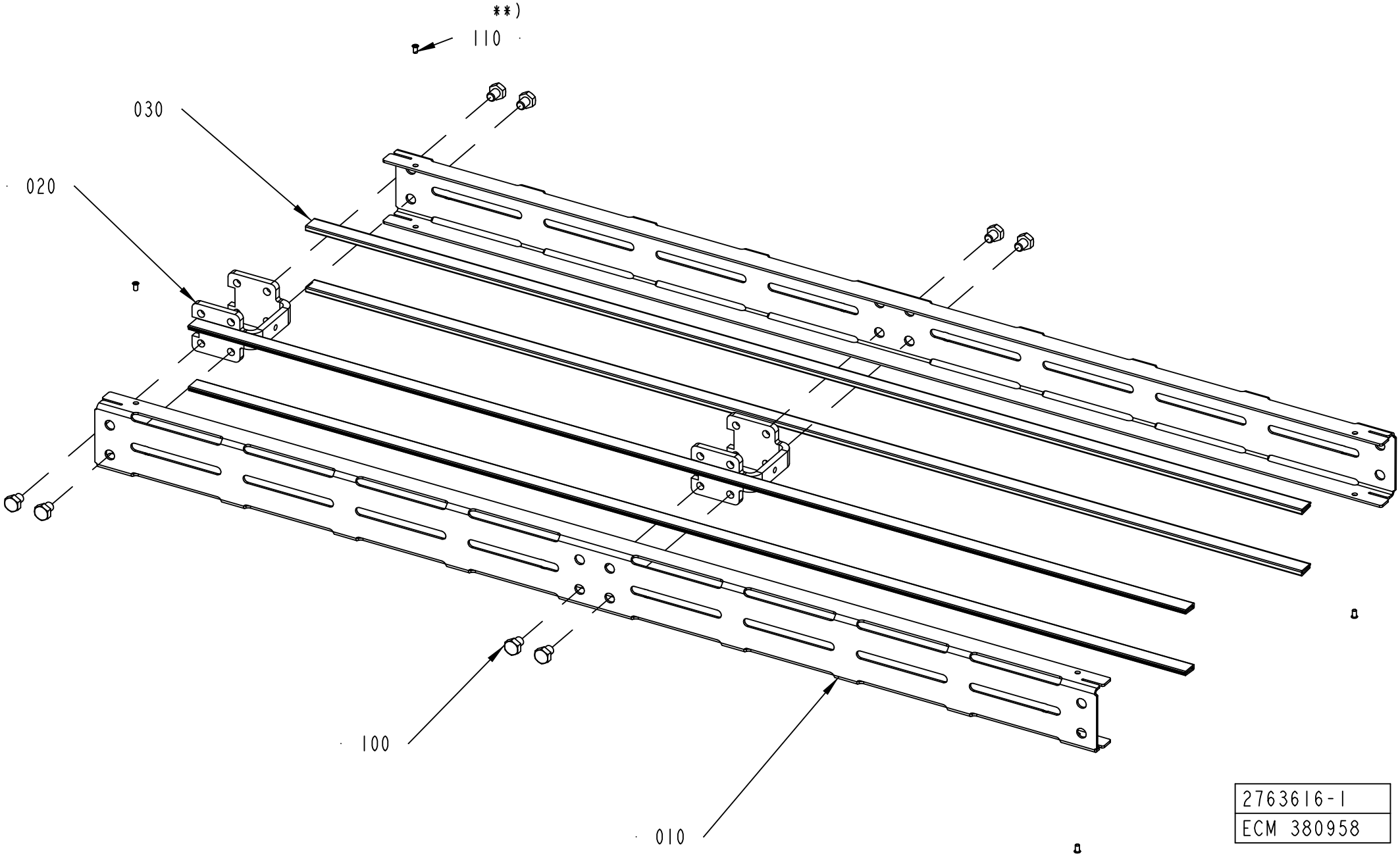
**)
110
030
020
100
010
2763616-1
ECM 380958

ECM: 380958 -
Group number: 2763616-0103
Assembly Drawing: 2763616-1_1_AB

Pos	Part No	UN	Qty	Description	Page No
L 1000					
010	2763617-0003		2	SIDE PLATE	
020	2561206-0000		2	SPACER	
030	1550595-9960		4	SLIDING STRIP	
100	90459-4735		8	SCREW, M6S ISO 4017 M8X10 A4 80	
Common Parts					
010	2763617-0001		2	SIDE PLATE	
010	2763617-0004		2	SIDE PLATE	
010	2763617-0002		2	SIDE PLATE	
020	2561206-0000		1	SPACER	
030	2699305-1996		4	SLIDING STRIP	
030	1550595-4960		4	SLIDING STRIP	
030	1550595-2460		4	SLIDING STRIP	
100	90459-4735		16	SCREW, M6S ISO 4017 M8X10 A4 80	
110	90600-6183		4	TUBULAR RIVET 3,5X6,2	

Pos	Part No	UN	Qty	Description	Page No

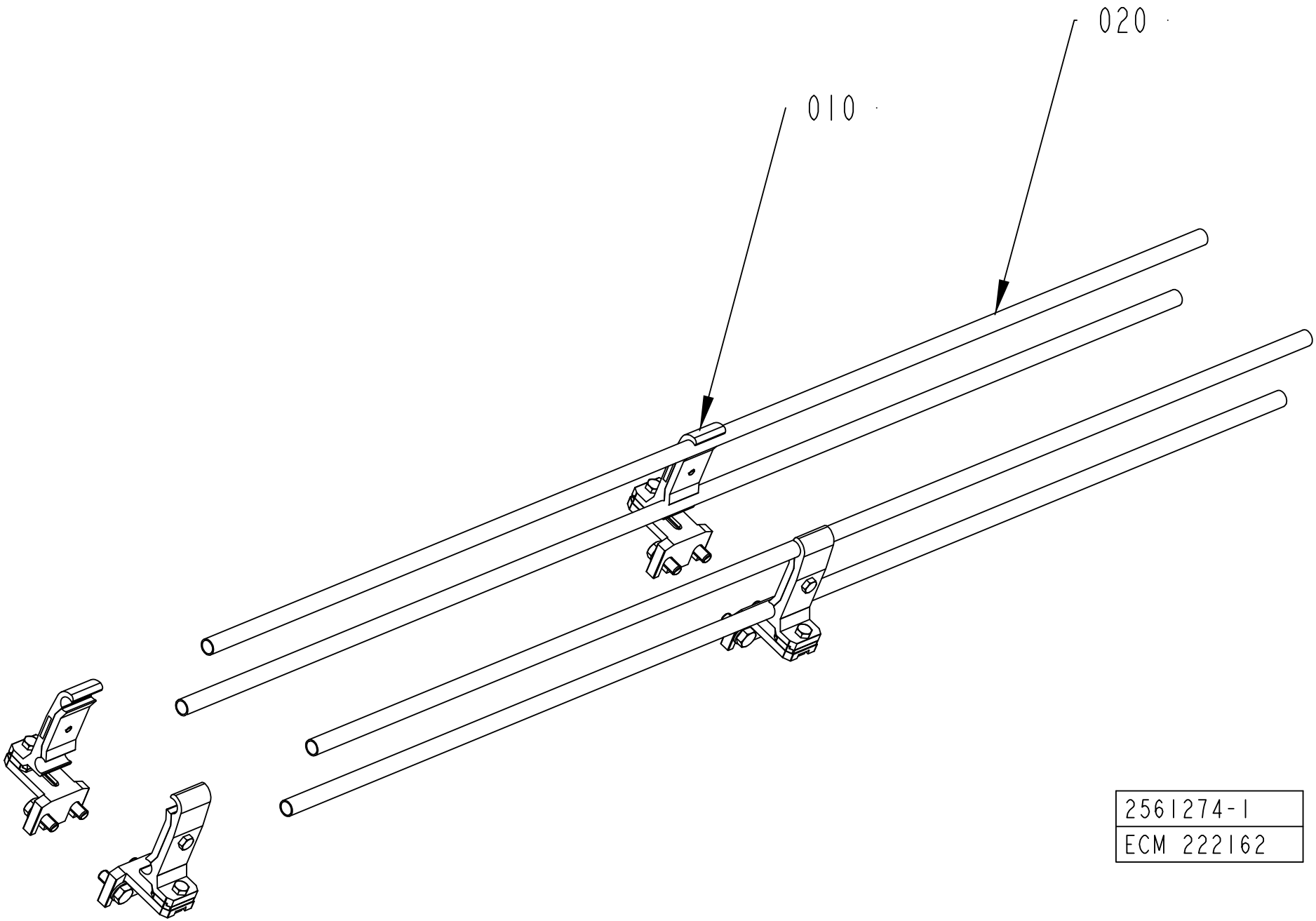
020
010
2561274-1
ECM 222162

ECM: 222162 -
Group number: 2561274-0103
Assembly Drawing: 2561274-1_1_AB

Pos	Part No	UN	Qty	Description	Page No
L 1000					
010	1550743-0200		4	RAIL HOLDER	**5-35**
020	476221-0003		4	PIPE	
Common Parts					
010	1550743-0200		2	RAIL HOLDER	**5-35**
020	476221-0002		4	PIPE	

Pos	Part No	UN	Qty	Description	Page No

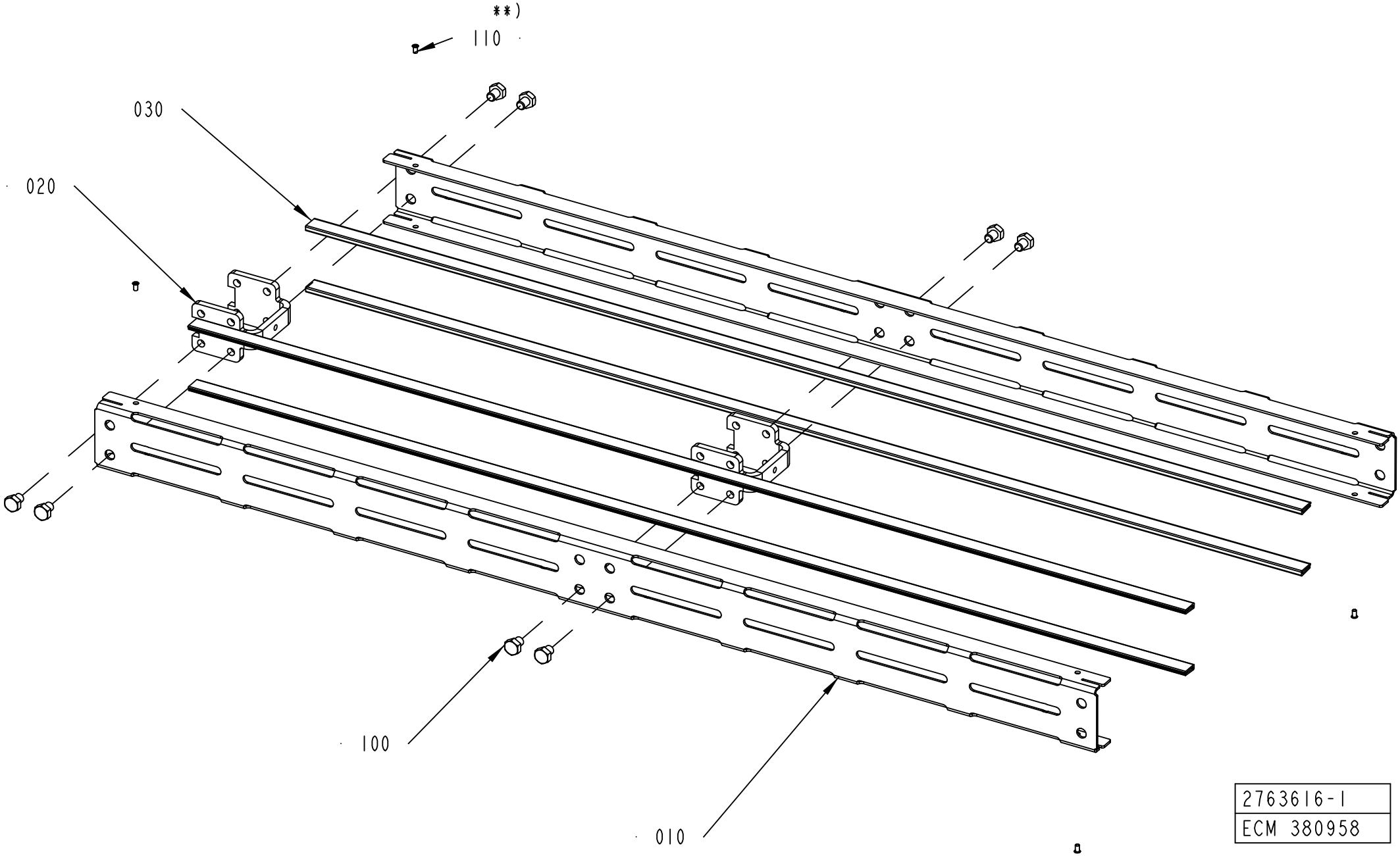
**)
110
030
020
100
010
2763616-1
ECM 380958

ECM: 380958 -
Group number: 2763616-0104
Assembly Drawing: 2763616-1_1_AB

Pos	Part No	UN	Qty	Description	Page No
L 2000					
010	2763617-0004		2	SIDE PLATE	
020	2561206-0000		4	SPACER	
030	2699305-1996		4	SLIDING STRIP	
100	90459-4735		16	SCREW, M6S ISO 4017 M8X10 A4 80	
Common Parts					
010	2763617-0001		2	SIDE PLATE	
010	2763617-0002		2	SIDE PLATE	
010	2763617-0003		2	SIDE PLATE	
020	2561206-0000		1	SPACER	
030	1550595-2460		4	SLIDING STRIP	
030	1550595-4960		4	SLIDING STRIP	
030	1550595-9960		4	SLIDING STRIP	
100	90459-4735		8	SCREW, M6S ISO 4017 M8X10 A4 80	
110	90600-6183		4	TUBULAR RIVET 3,5X6,2	

Pos	Part No	UN	Qty	Description	Page No

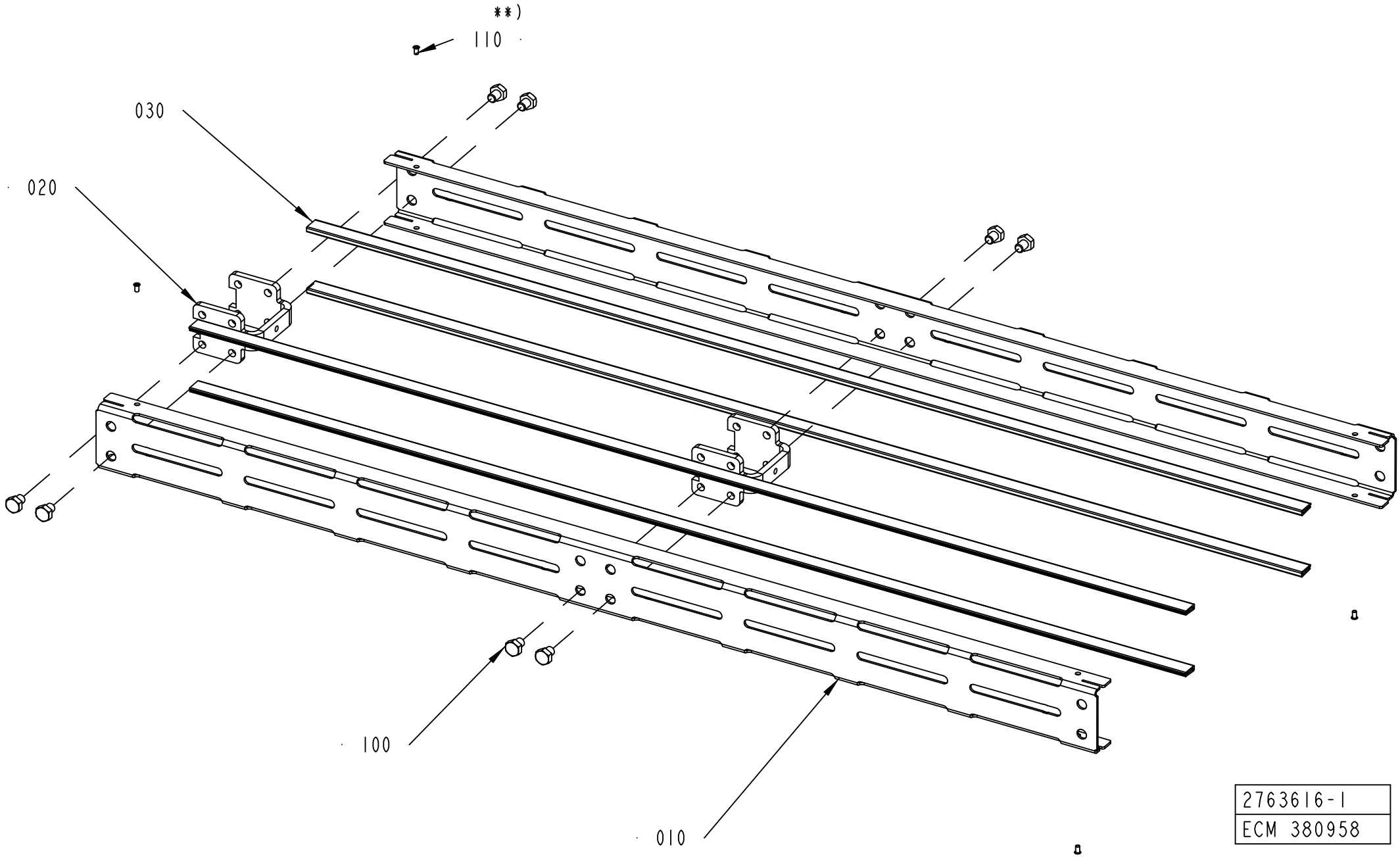
**)
110
030
020
100
010
2763616-1
ECM 380958

ECM: 380958 -
Group number: 2763616-0101
Assembly Drawing: 2763616-1_1_AB

Pos	Part No	UN	Qty	Description	Page No
L 0250					
010	2763617-0001		2	SIDE PLATE	
020	2561206-0000		1	SPACER	
030	1550595-2460		4	SLIDING STRIP	
100	90459-4735		4	SCREW, M6S ISO 4017 M8X10 A4 80	
L 0500					
010	2763617-0002		2	SIDE PLATE	
020	2561206-0000		1	SPACER	
030	1550595-4960		4	SLIDING STRIP	
100	90459-4735		4	SCREW, M6S ISO 4017 M8X10 A4 80	
Common Parts					
010	2763617-0004		2	SIDE PLATE	
010	2763617-0003		2	SIDE PLATE	
020	2561206-0000		2	SPACER	
030	2699305-1996		4	SLIDING STRIP	
030	1550595-9960		4	SLIDING STRIP	
100	90459-4735		8	SCREW, M6S ISO 4017 M8X10 A4 80	
110	90600-6183		4	TUBULAR RIVET 3,5X6,2	

Pos	Part No	UN	Qty	Description	Page No

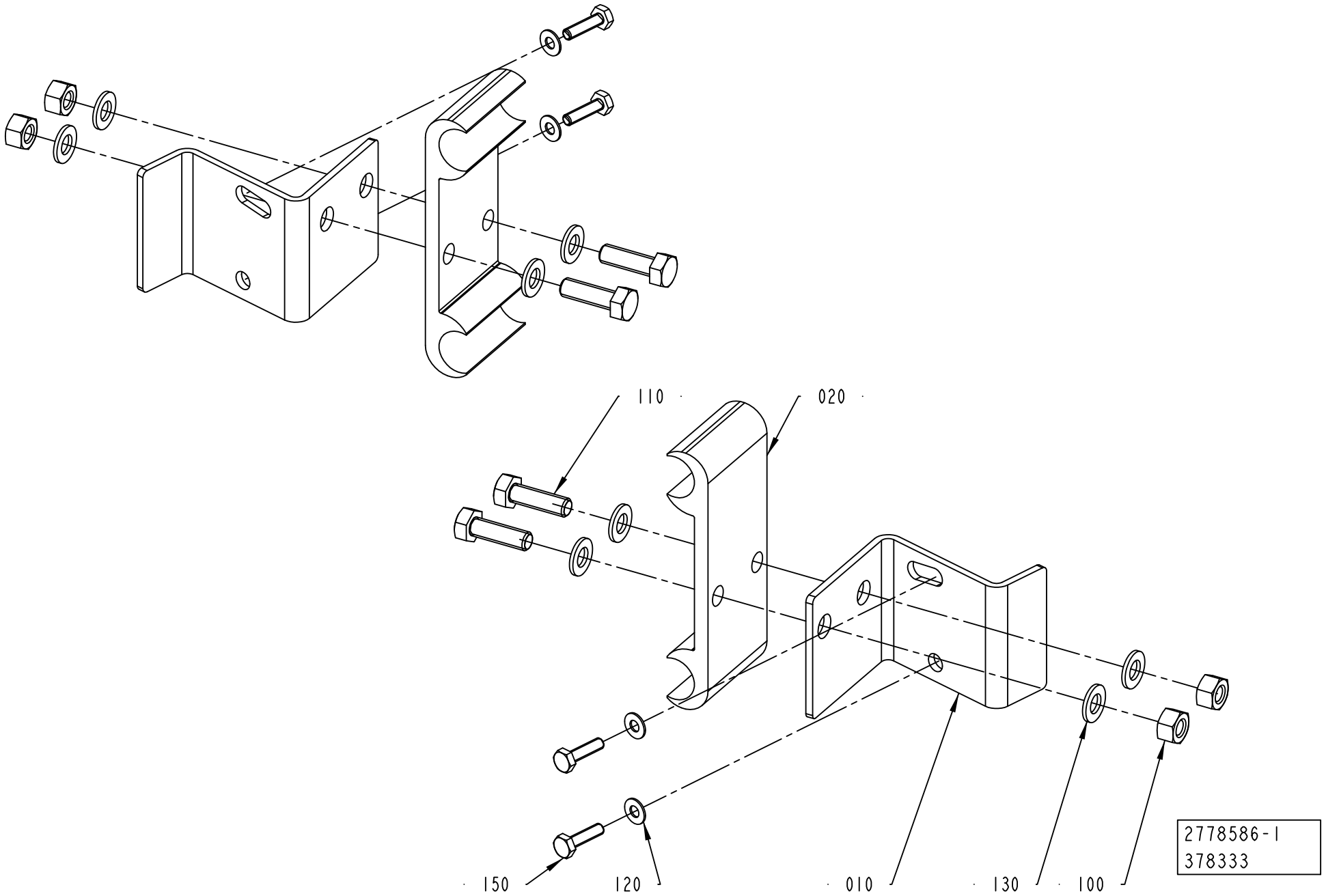
110
020
150
120
010
130
100
2778586-1
378333

ECM: 378333 - 20090406
Group number: 2778586-0100
Assembly Drawing: 2778586-1_1_AB

Pos	Part No	UN	Qty	Description	Page No
-					
010	2778580-0000		2	BRACKET	
020	1020637-0000		2	HOLDER	
100	312605-0314		4	HEXAGON NUT, M6M M5 A280	
110	312105-0329		4	SCREW, M6S ISO 4017 M5X16 A4 80	
120	315106-0124		4	WASHER PLAIN, M3 ISO7089-3-200 HV A4	
130	315105-0146		8	WASHER PLAIN, 5,3X10X1 A4 BRB	
150	90287-0175		4	SCREW M6S M3X12 A480	

Pos	Part No	UN	Qty	Description	Page No

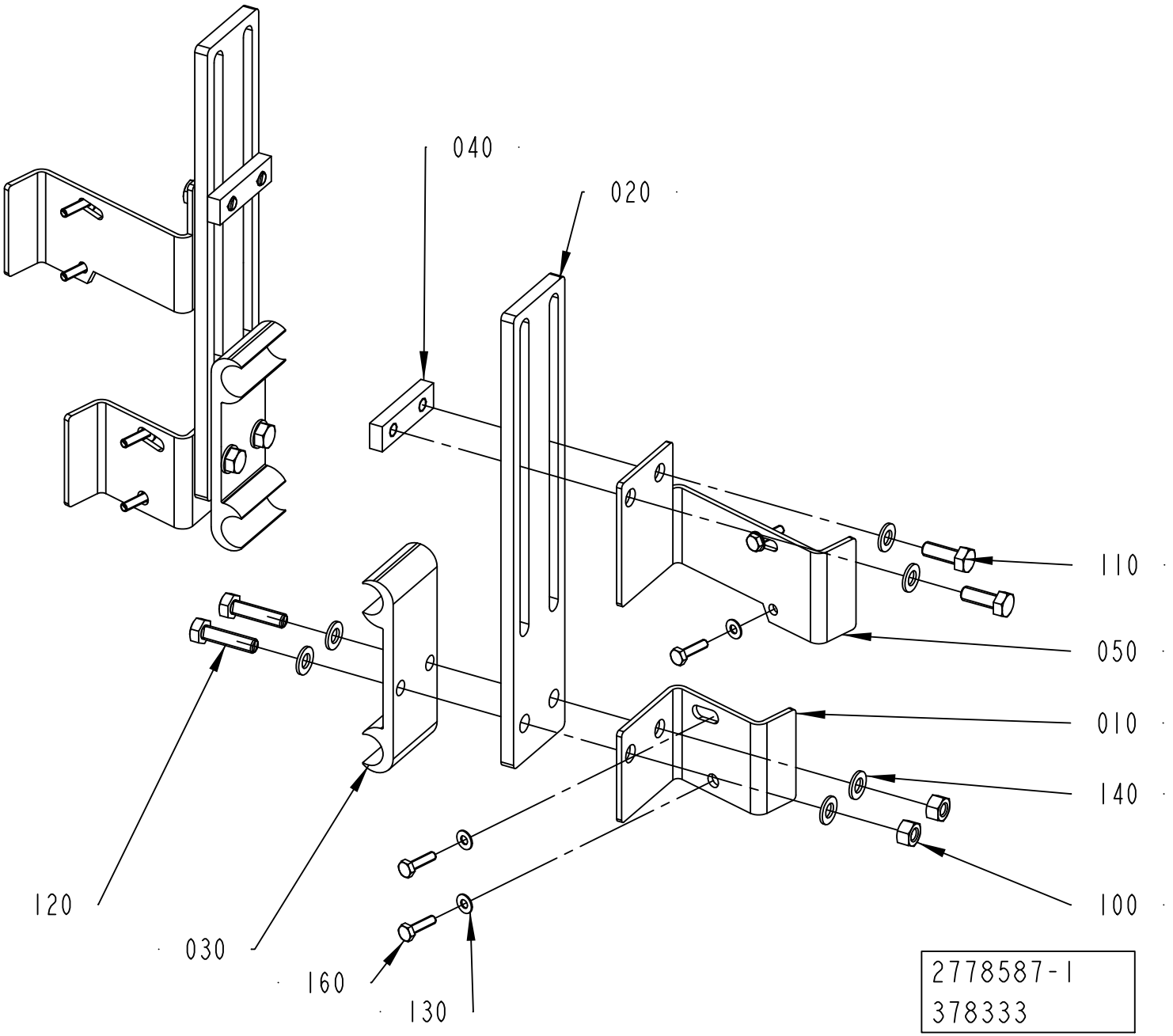
040
020
110
050
010
140
100
120
030
160
130
2778587-1
378333

ECM: 378333 - 20090406
Group number: 2778587-0100
Assembly Drawing: 2778587-1_1_AB

Pos	Part No	UN	Qty	Description	Page No
-					
010	2778580-0000		2	BRACKET	
020	2778584-0000		2	BRACKET	
030	1020637-0000		2	HOLDER	
040	2504290-0000		2	PLATE	
050	2985773-0000		2	BRACKET	
100	312605-0314		4	HEXAGON NUT, M6M M5 A280	
110	312105-0328		4	SCREW M6S ISO 4017 M5X14 A4 80	
120	312105-0331		4	SCREW, M6S ISO 4017 M5X20 A4 80	
130	315106-0124		8	WASHER PLAIN, M3 ISO7089-3-200 HV A4	
140	315105-0146		12	WASHER PLAIN, 5,3X10X1 A4 BRB	
160	90287-0175		8	SCREW M6S M3X12 A480	

Pos	Part No	UN	Qty	Description	Page No

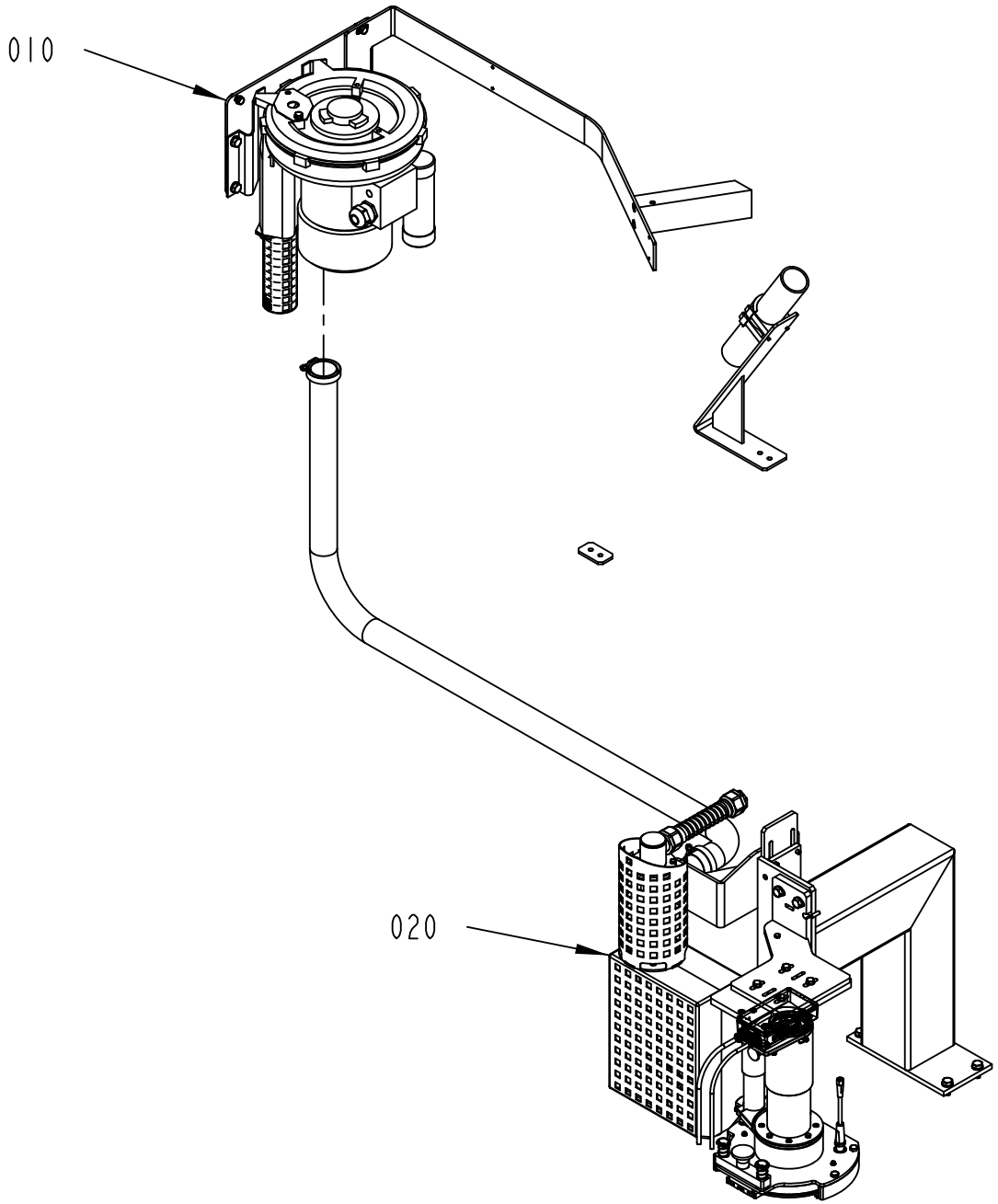

2773622-4
529093

ECM: 538444 - 20120401
Group number: 2773622-0200
Assembly Drawing: 2773622-4_1_AA

Pos	Part No	UN	Qty	Description	Page No
-					
010	2773623-0200		1	FAN SYSTEM	**5-51**
020	3203761-0100		1	HEATER	**5-53, 5-55**

Pos	Part No	UN	Qty	Description	Page No

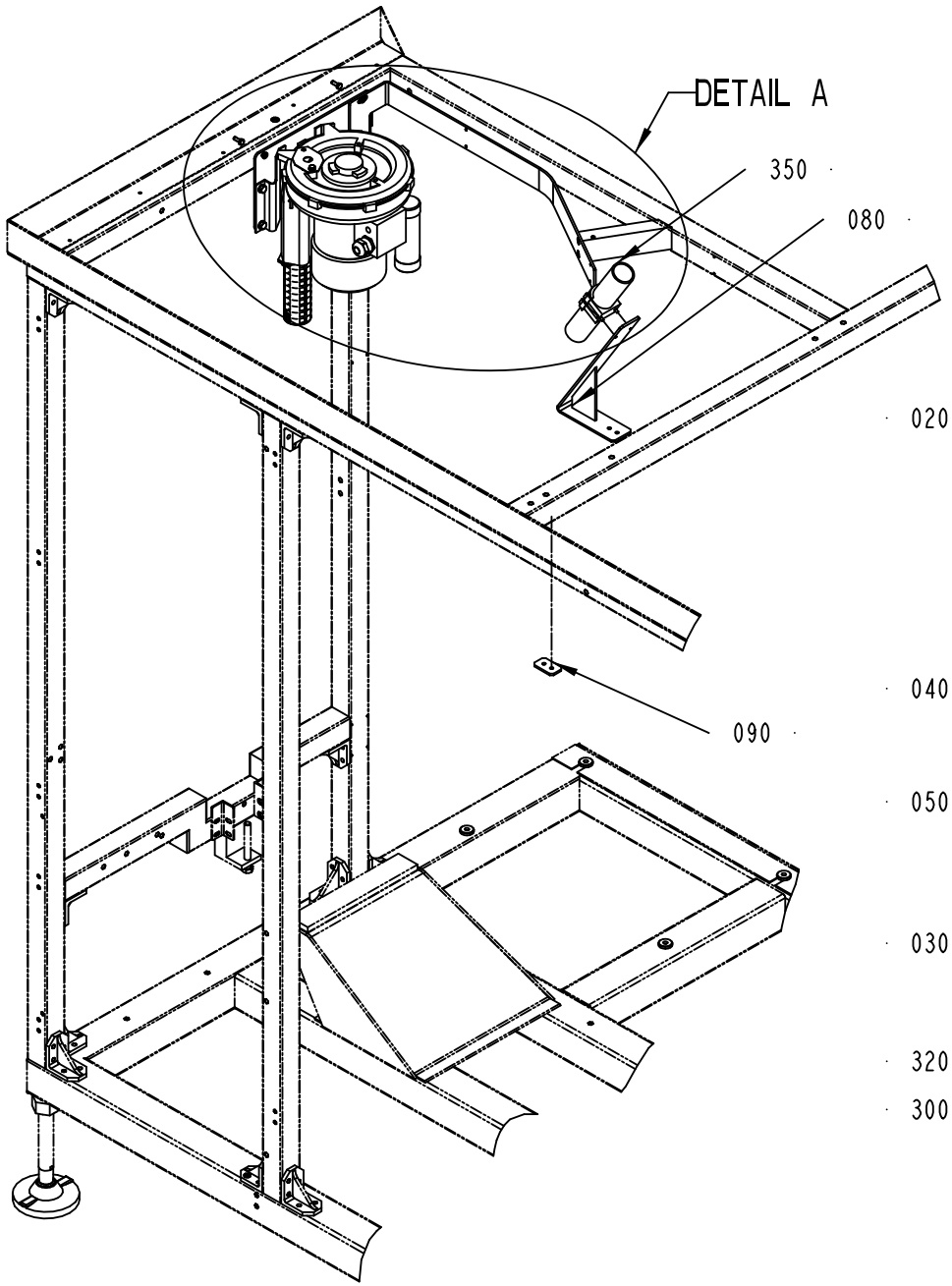

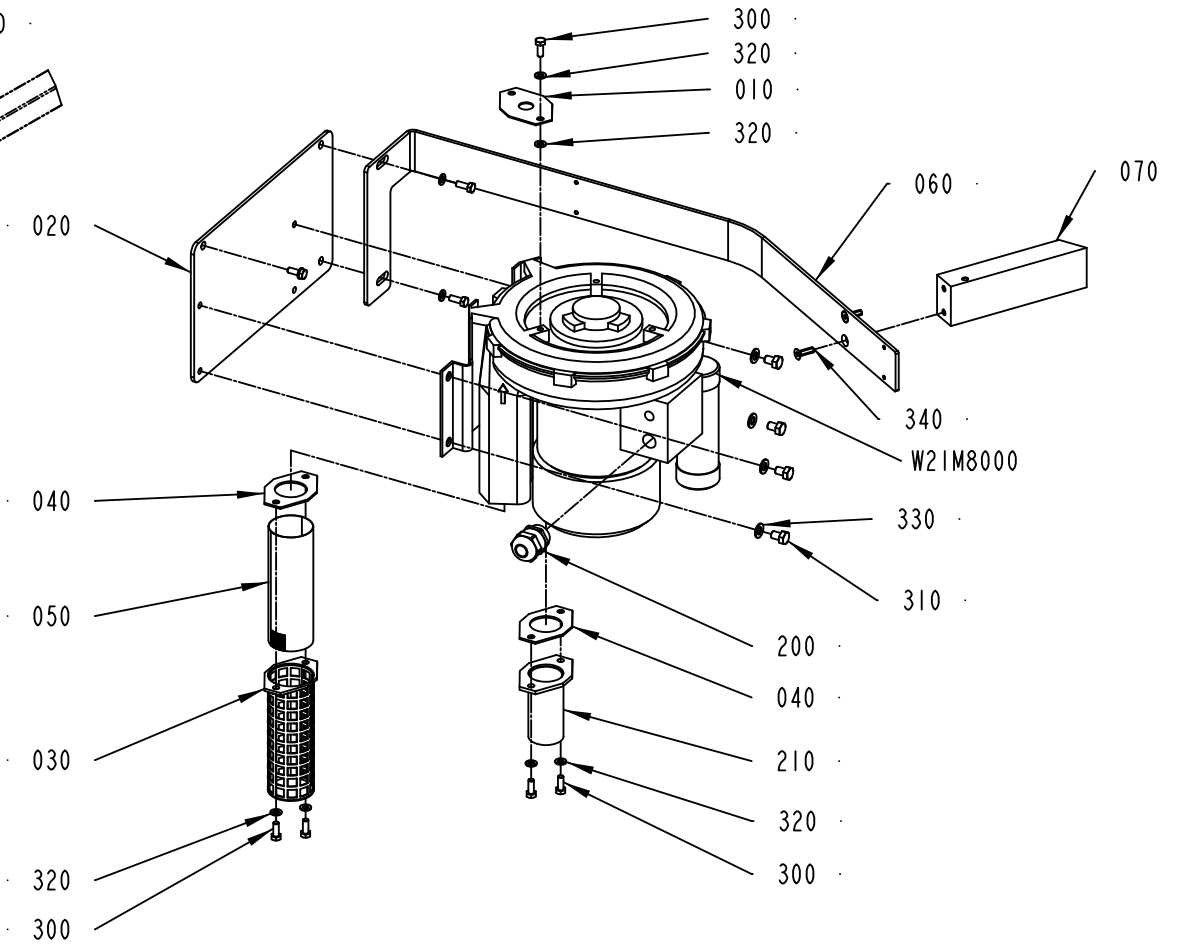

2773623-3
529093

DETAIL A

ECM: 538445 - 20120401
Group number: 2773623-0200
Assembly Drawing: 2773623-3_1_AA

Pos	Part No	UN	Qty	Description	Page No
TPA, TGA, TBA STREAMCAP1000, TBA SLIMCAP 2000, TBA STREAMCAP200, TBA HELICAP2 23, TBA HELICAP 27, TBA SLIMCAP1000					
060	3170034-0000		1	PLATE	
070	3170032-0000		1	SPACER	
080	3170035-0000		1	BRACKET	
090	3170036-0000		1	PLATE	
340	312155-0370		2	SCREW DIN 7991 MF6S M6X20 A4 70	
350	90439-0295		1	SERVICE KIT, NO. 111940	
Common Parts					
010	1030874-0000		1	THROTTLE WASHER	
020	2779772-0000		1	BRACKET	
030	1030335-0000		1	FILTER HOLDER	
040	1030878-0000		2	GASKET	
050	1030338-0000		1	NET	
200	90458-0316		1	CABLE GLAND, M25X1,5, 5311 1130	
210	2663999-0000		1	NIPPLE	
300	312105-0368		8	SCREW, M6S ISO 4017 M6X16 A4 80	
310	312105-0447		4	SCREW, M6S ISO 4017 M8X12 A4 80	
320	315105-0153		9	WASHER PLAIN, 6,4X12X1,5 A4 BRB	
330	315105-0165		4	WASHER PLAIN, 8,4X16X1,6 A4 BRB	
W21M8000	90604-3589		1	FAN 2BH1300-7AV15-K41	

Pos	Part No	UN	Qty	Description	Page No

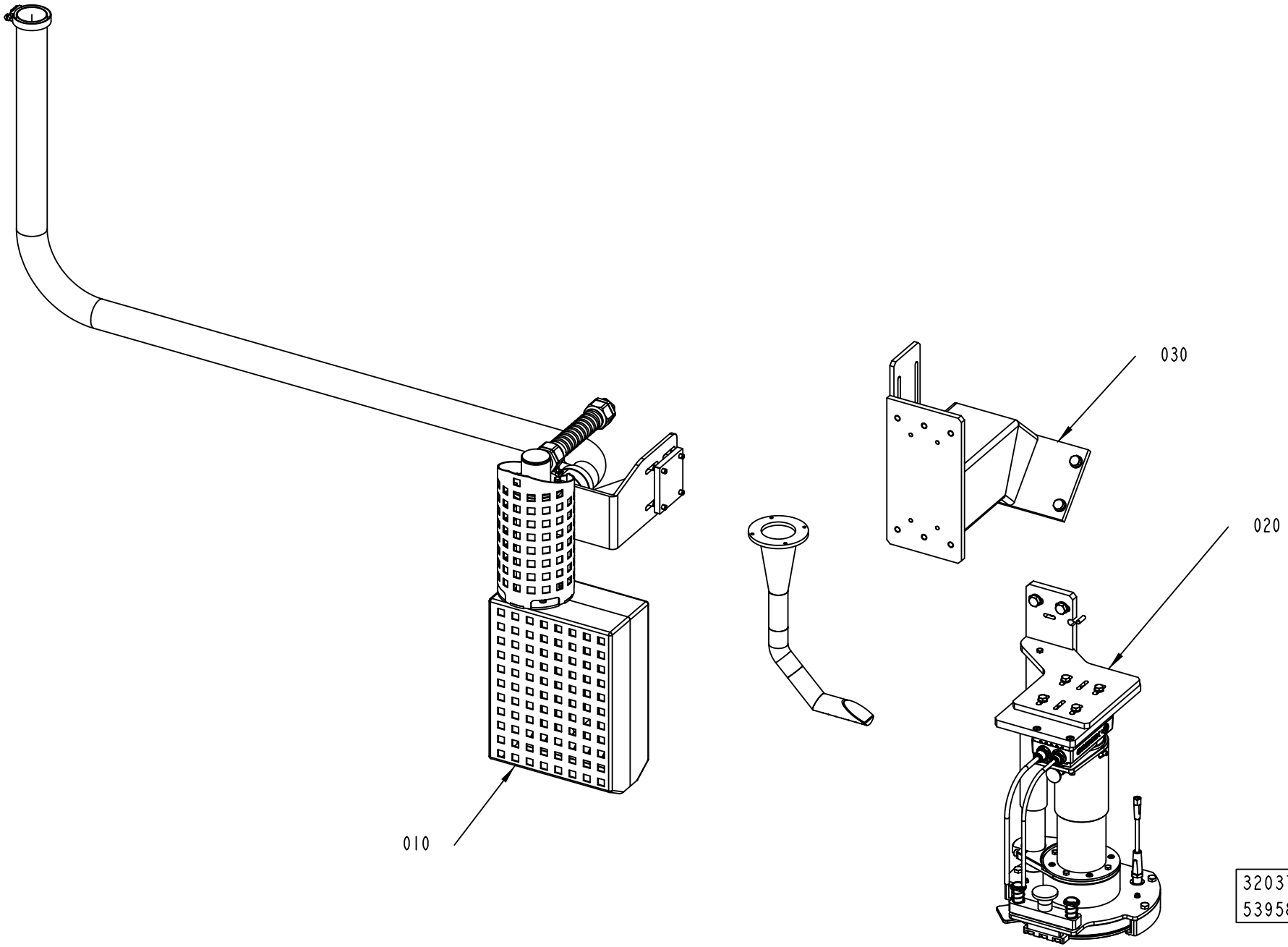
010
020
030
3203761-1
539582

ECM: 555500 - 20120403
Group number: 3203761-0100
Assembly Drawing: 3203761-1_1_AB

This list covers pages from 5-52 to 5-55

Pos	Part No	UN	Qty	Description	Page No
TPA, TGA, TBA 0200E (See drawing on pages: 5-52, 5-54)					
020	3203763-0100		1	VISION SYSTEM	**5-57, 12-25**
Common Parts					
010	3203764-0100		1	HEATING ELEMENT	**5-59**
030	3203766-0100		1	CONVERSION KIT	**5-61**

Pos	Part No	UN	Qty	Description	Page No

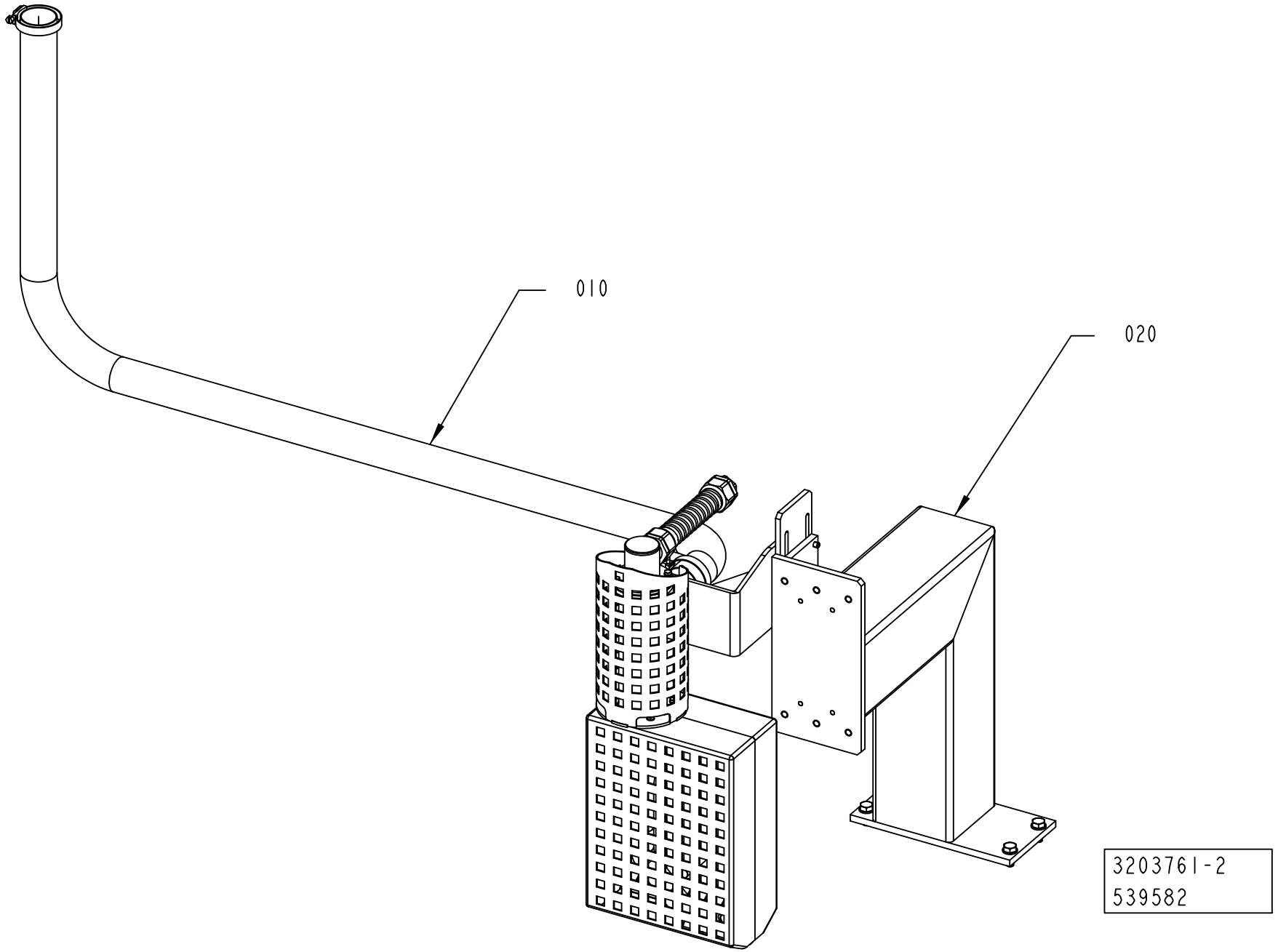
010
020
3203761-2
539582

ECM: 555500 - 20120403
Group number: 3203761-0100
Assembly Drawing: 3203761-2_1_AA

This list covers pages from 5-52 to 5-55

Pos	Part No	UN	Qty	Description	Page No
TPA, TGA, TBA 0200E (See drawing on pages: 5-52, 5-54)					
020	3203763-0100		1	VISION SYSTEM	**5-57, 12-25**
Common Parts					
010	3203764-0100		1	HEATING ELEMENT	**5-59**
030	3203766-0100		1	CONVERSION KIT	**5-61**

Pos	Part No	UN	Qty	Description	Page No

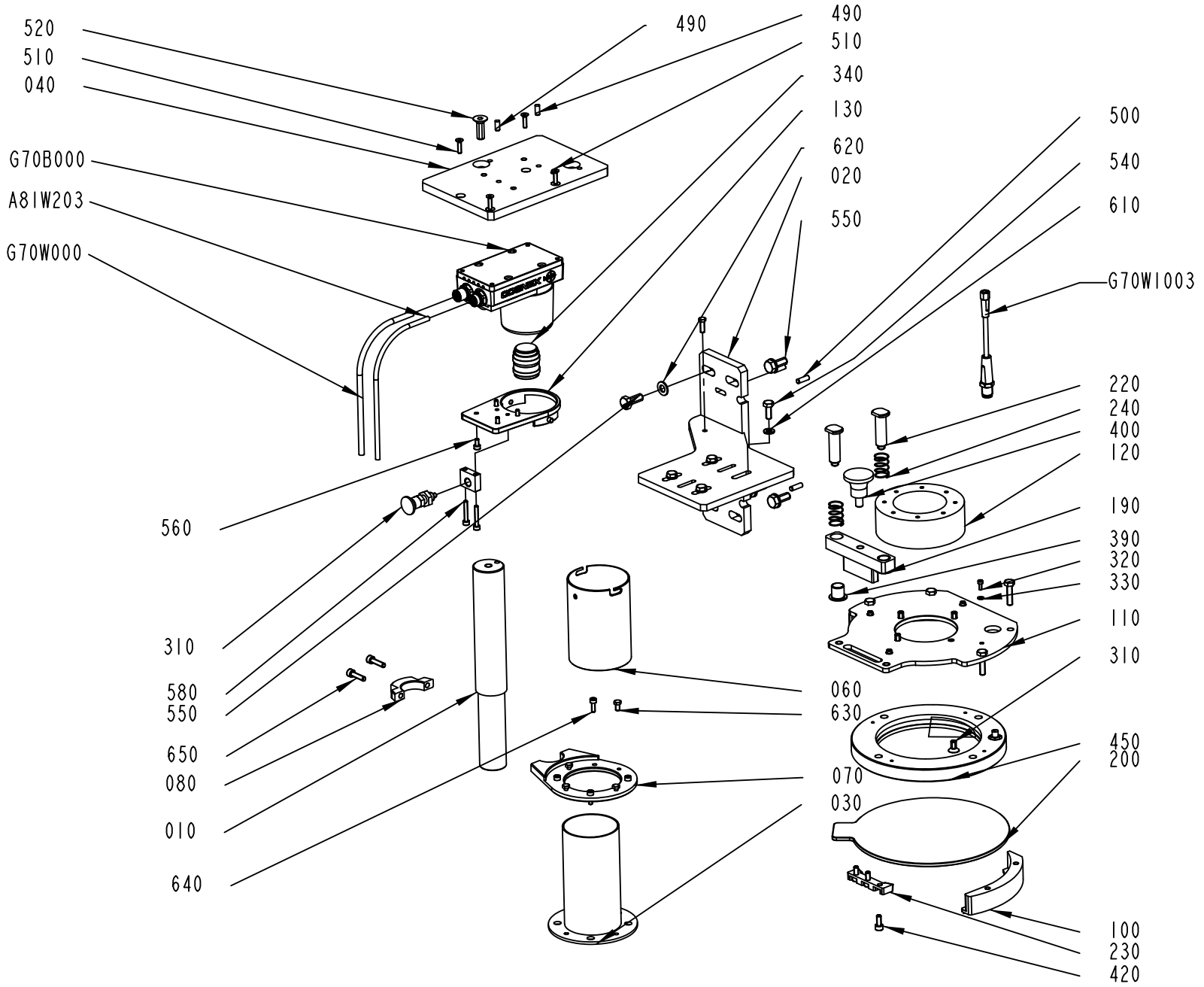
520
510
040
490
490
510
340
130
620
020
550
500
540
610
G70B000
A81W203
G70W000
G70W1003
220
240
400
120
190
390
320
330
110
310
560
310
580
550
650
080
010
640
060
630
070
030
450
200
100
230
420
3203763-1
529093

ECM: 529713 - 20120401
Group number: 3203763-0100
Assembly Drawing: 3203763-1_1_AA

Pos	Part No	UN	Qty	Description	Page No
-					
010	2985768-0000		1	COLUMN	
020	2792664-0000		1	BRACKET	
030	2557544-0000		1	PROTECTION	
040	3203752-0000		1	BRACKET	
050	2794721-0000		1	BLOCK	
060	2792879-0000		1	TUBE	
070	2794790-0000		1	CLAMP	
080	2873943-0000		1	CLAMP	
100	3095796-0000		1	HOLDER	
110	3095791-0000		1	PLATE	
120	3031442-0000		1	SPACER	
130	2792848-0000		1	SUPPORT	
190	3053477-0000		1	BRACKET	
200	3052393-0000		1	GLASS COVER	
210	3095790-0000		1	HOLDER	
220	3053471-0000		2	PIN	
230	3053478-0000		1	PUSHER	
240	3060116-0000		2	COMPRESSION SPRING	
300	311103-0308		1	PARALLEL PIN ISO 2338 5M6X16 A1	
310	312155-0366		4	SCREW DIN 7991 MF6S M6X12 A4 70	
310	90051-0112		1	LOCK KNOB, NO. GN 617 NIK5	
320	312115-0222		4	SCREW ISO4762 M3X8 A4 80	
330	315106-0124		4	WASHER PLAIN, M3 ISO7089-3-200 HV A4	
340	90459-1180		1	LENS 16MM IN-SIGHT 4100, HF16HA-1B	
390	321156-0188		2	FLANGE BUSHING, IGLIDUR H370 12X14X15	
400	318871-0105		1	KNOB CIRCULAR, EXT THREAD, NO. 8302-6150	
410	312105-0372		4	SCREW, M6S ISO 4017 M6X25 A4 80	
420	312115-0327		3	SCREW ISO4762 M5X12 A4 80	
450	90602-3985		1	RING LIGHT ILLUMINATOR, TLD-150-617-C	
490	311103-0306		2	PARALLEL PIN ISO 2338 5M6X12 A1	
500	311103-0308		4	PARALLEL PIN ISO 2338 5M6X16 A1	
510	312155-0293		4	SCREW DIN 7991 MF6S M4X16 A4 70	
520	312155-0453		1	SCREW DIN 7991 MF6S M8X25 A4 70	
540	312105-0368		4	SCREW, M6S ISO 4017 M6X16 A4 80	
550	312105-0451		4	SCREW, M6S ISO 4017 M8X20 A4 80	
560	312115-0287		4	SCREW ISO4762 M4X8 A4 80	
580	312115-0297		2	SCREW ISO4762 M4X25 A4 80	
610	315105-0153		4	WASHER PLAIN, 6,4X12X1,5 A4 BRB	
620	315105-0165		4	WASHER PLAIN, 8,4X16X1,6 A4 BRB	
630	312105-0287		4	SCREW, M6S ISO 4017 M4X8 A4 70	
640	312115-0291		4	SCREW ISO4762 M4X12 A4 80	
650	312115-0331		2	SCREW ISO4762 M5X20 A4 80	
A81W0203	90600-2103		1	ETHERNET CABLE, CCB-84901-1004-10	
G70B0000	90600-1096		1	PROCESSOR UNIT IN-SIGHT 5100, IS-5100-00	
G70W0000	90600-2102		1	POWER I/O CABLE, CCB-84901-0103-10	
G70W1003	344263-0020		1	SENSOR CABLE, EVT239	

Machine Type	Group Description	Used-In	Group Number	Page No

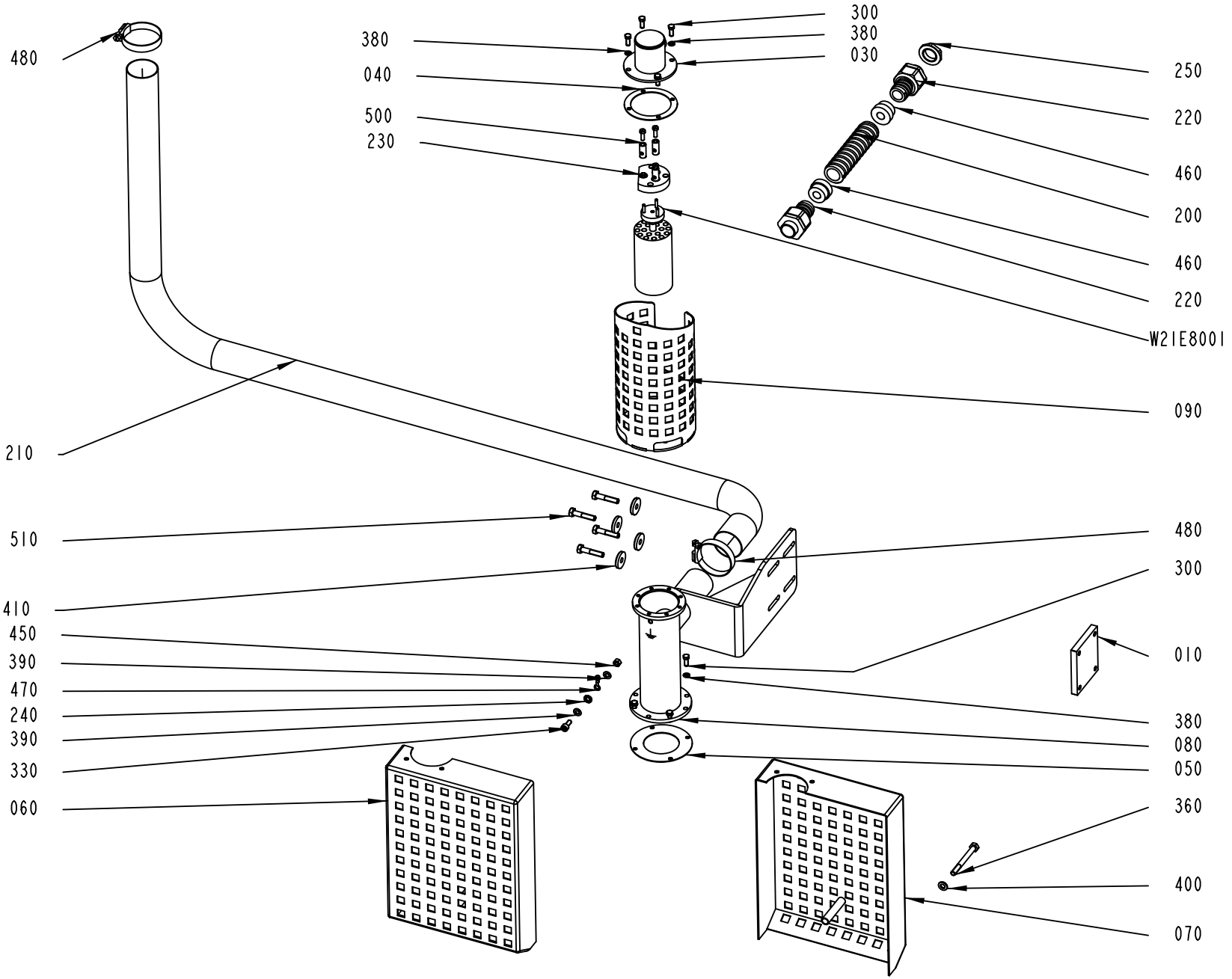

3203764-1
529093

ECM: 543046 - 20120402
Group number: 3203764-0100
Assembly Drawing: 3203764-1_1_AA

Pos	Part No	UN	Qty	Description	Page No
-					
010	2873867-0000		1	PLATE	
030	2710819-0000		1	LID	
040	1188609-0000		1	FLANGE SEAL	
050	1188610-0000		1	FLANGE SEAL	
060	2773627-0000		1	HEAT GUARD	
070	2773630-0000		1	HEAT GUARD	
080	2873865-0000		1	PRE-HEATER	
090	2836263-0000		1	HEAT GUARD	
200	90152-0051	M	1	HOSE, SPIRAL CONDUIT, 25X18, UL 1816	
210	90152-0075	M	2.35	HOSE	
220	90458-0430		2	GLAND FITTING, VK 22054YUL16	
230	90125-0020		1	PLATE COMPLETE(BOM)	
	294464-0000		*1*	*BASE PLATE*	
	270927-0000		*3*	*SCREW*	
	270926-0000		*6*	*NUT*	
240	90062-0060		1	LOCK WASHER 5,3/10 H=0,6 FZB	
250	90458-0323		1	NUT, M20X1,5	
300	312105-0291		8	SCREW, M6S ISO 4017 M4X12 A4 70	
330	312115-0327		1	SCREW ISO4762 M5X12 A4 80	
340	312122-0291		3	SCREW ISO 1207 M4X12 NI PL BRASS	
360	312105-0382		1	SCREW, M6S ISO 4014 M6X60 A4 80	
380	315105-0136		8	WASHER PLAIN, 4,3X9X0,8 A4 BRB	
390	315105-0146		2	WASHER PLAIN, 5,3X10X1 A4 BRB	
400	315105-0153		1	WASHER PLAIN, 6,4X12X1,5 A4 BRB	
410	315125-0153		4	WASHER HIGH, TBRSB 6,4X22X4 A4	
450	312605-0314		1	HEXAGON NUT, M6M M5 A280	
460	353249-0012		2	INSERT, SINGLE HOLE, EK154 11	
470	353101-0122		1	CABLE SHOE 0,5-1,5MM2 M5 RED	
480	342991-0108		2	HOSE CLIP,WORM DRIVE TYPE (38)-50	
500	205438-0000		3	CABLE GLAND	
510	312105-0374		4	SCREW, M6S ISO 4014 M6X30 A4 80	
W21E8001	90206-0124		1	HEATING ELEMENT 2X1500W 230V	

Pos	Part No	UN	Qty	Description	Page No

Machine Type	Group Description	Used-In	Group Number	Page No

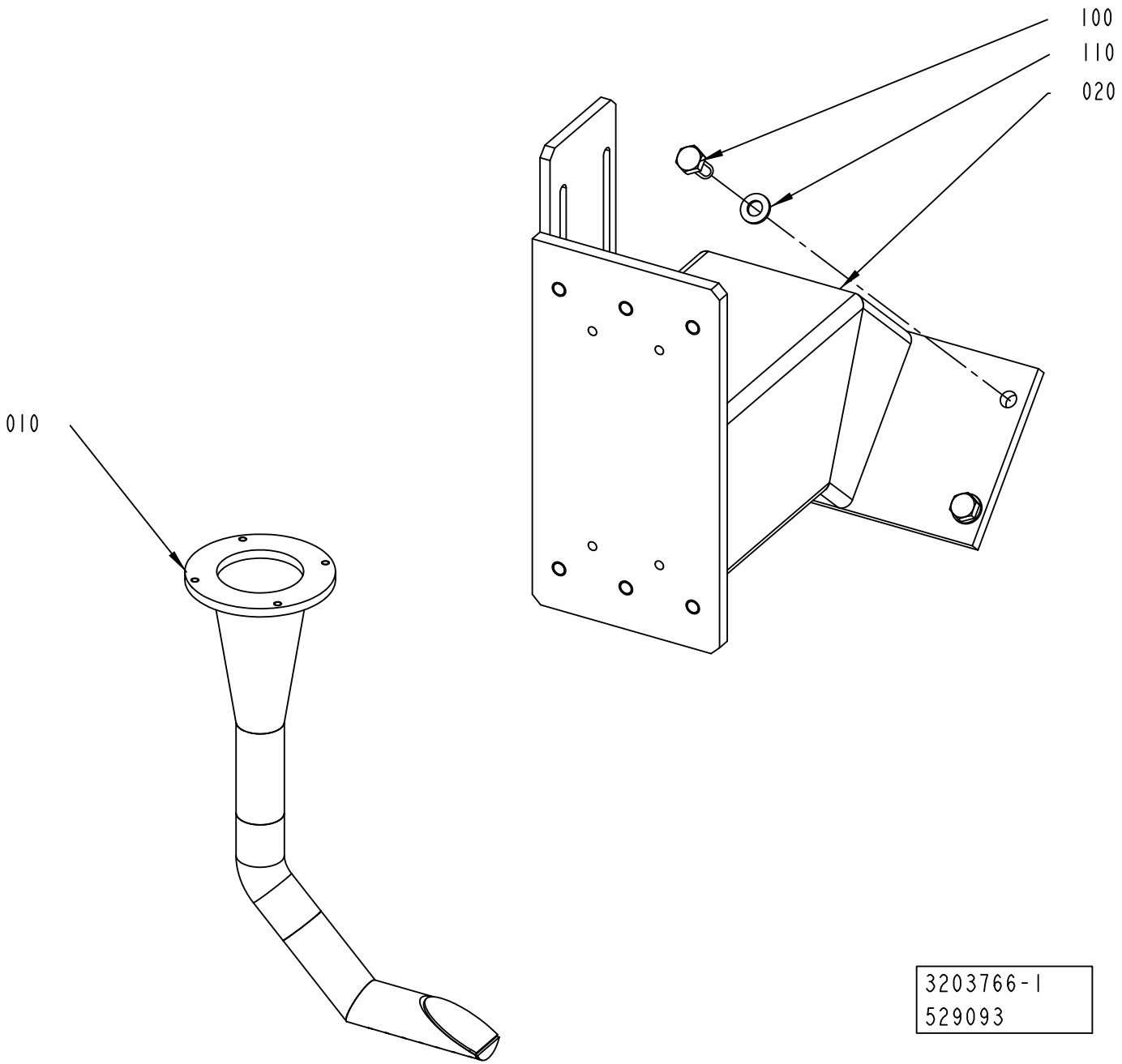
100
110
020
010
3203766-1
529093

ECM: 529715 - 20120401
Group number: 3203766-0100
Assembly Drawing: 3203766-1_1_AA

Pos	Part No	UN	Qty	Description	Page No
CAP 30/FLEX TBA 0200E HELICAP 23					
010	2662760-0000		1	HEATING CHAMBER	
020	3073396-0000		1	SUPPORT	
CAP 30/FLEX SLIMCAP1000, CAP 30/FLEX SLIMCAP2000					
010	2547915-0000		1	HEATING CHAMBER	
020	2934905-0000		1	SUPPORT	
CAP 30/FLEX STREAMCAP500, CAP 30/FLEX TBA STREAMCAP1000, CAP 30/FLEX TPA STREAMCAP1000, CAP 30/FLEX STREAMCAP200, CAP 30/FLEX HELICAP 27, CAP 30/FLEX TBA 1000S HELICAP 23					
010	2662760-0000		1	HEATING CHAMBER	
020	2934905-0000		1	SUPPORT	
CAP 30/FLEX TGA					
010	2662760-0000		1	HEATING CHAMBER	
020	3203753-0000		1	SUPPORT	
Common Parts					
100	312105-0451		4	SCREW, M6S ISO 4017 M8X20 A4 80	
110	315106-0165		4	WASHER PLAIN, M8 ISO7089-8-200 HV A4	

Pos	Part No	UN	Qty	Description	Page No

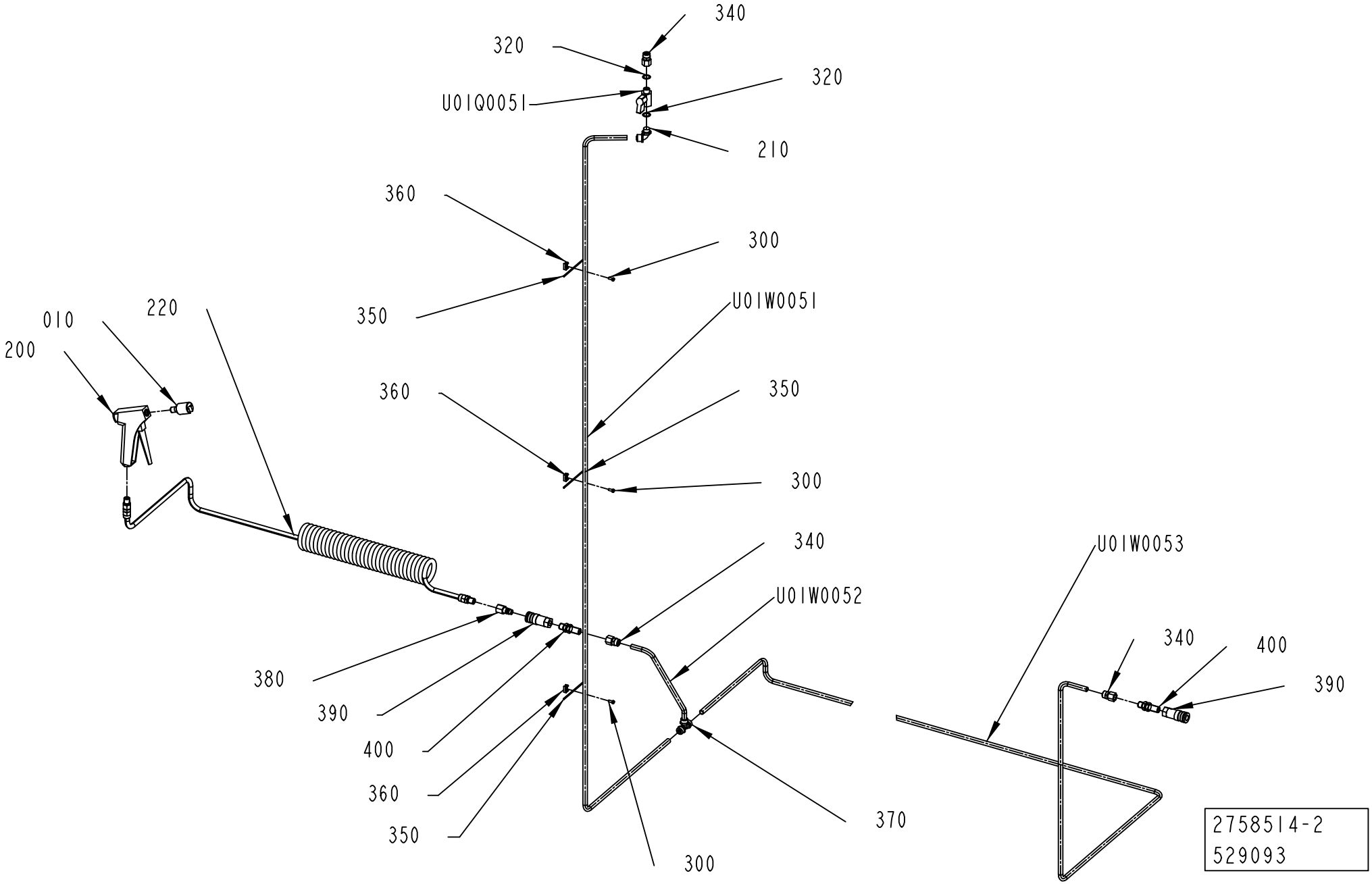
340
320
320
U01Q0051
210
360
300
350
U01W0051
010
220
200
360
350
300
340
U01W0052
380
390
400
360
350
300
370
U01W0053
340
400
390
2758514-2
529093

ECM: 529706 - 20120401
Group number: 2758514-0200
Assembly Drawing: 2758514-2_1_AA

Pos	Part No	UN	Qty	Description	Page No
-					
010	2506940-0000		1	NOZZLE	
200	90458-1483		1	SPRAY GUN, WATER G1/4	
210	90224-0325		1	ELBOW 90 COUPL., EXT. THREAD 10/8-G1/4"	
220	90458-1741		1	HOSE ASSEMBLY, CEJN 19 958 9669	
300	312125-0289		3	SCREW ISO 1207 M4X10 A4	
320	315239-0110		2	NYLON WASHER G1/4, 1/4RRP	
340	342923-0132		1	STRAIGHT COUPL.,INT.THREADED 10/8-G1/4"	
350	352113-0101		3	CABLE TIE, BLACK 92X2,5 MM	
360	352113-0205		3	ANCHOR PLATES FOR STRIPS, TM2S8-C100	
370	342946-0133		1	T-COUPLING,UNION 10/8	
380	90459-2254		1	QUICK COUPLING, (M) 10 320 5202	
390	90459-7374		2	QUICK COUPLING, (F) 10 320 1202	
400	3219669-0000		2	NIPPLE	
U01Q0051	90187-0045		1	BALL VALVE, G1/4 CR PL	
U01W0051	315400-0009	MM	2800	TUBE PUN-H-10X1,5-SW	
U01W0052	315400-0009	MM	2800	TUBE PUN-H-10X1,5-SW	
U01W0053	315400-0009	MM	2800	TUBE PUN-H-10X1,5-SW	

Pos	Part No	UN	Qty	Description	Page No

Machine Type | Group Description | Used-In | Group Number | Page No

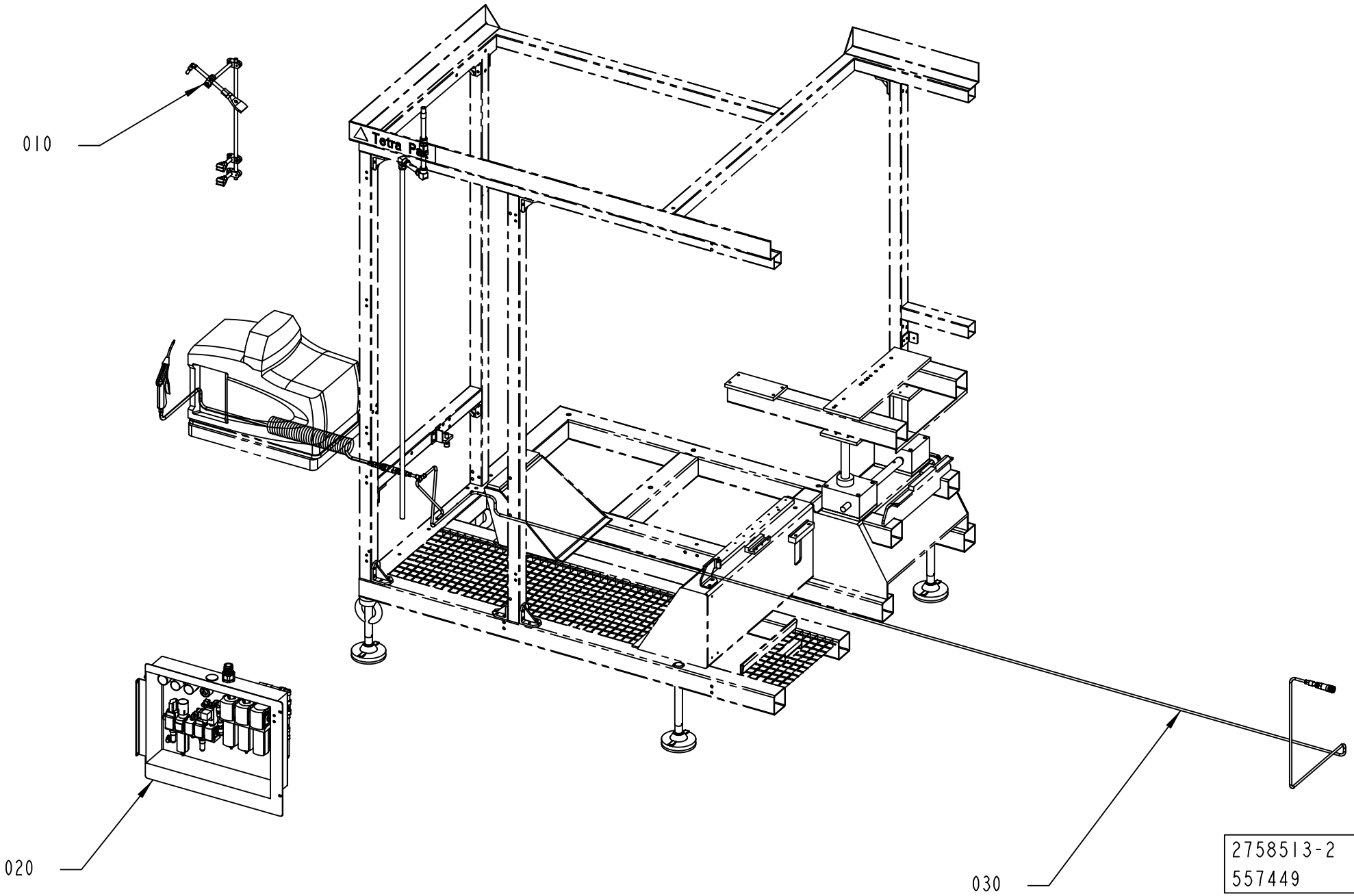
010
020
030
2758513-2
557449

ECM: 557449 - 20120702
Group number: 2758513-0200
Assembly Drawing: 2758513-2_1_AB

Pos	Part No	UN	Qty	Description	Page No
-					
010	2758512-0200		1	BLOWING SYSTEM	**5-67**
020	2838672-0200		1	PNEUMATIC PANEL	**5-69, 5-71, 5-73**
030	2838686-0200		1	AIR JET GUN	**5-79**

Pos	Part No	UN	Qty	Description	Page No

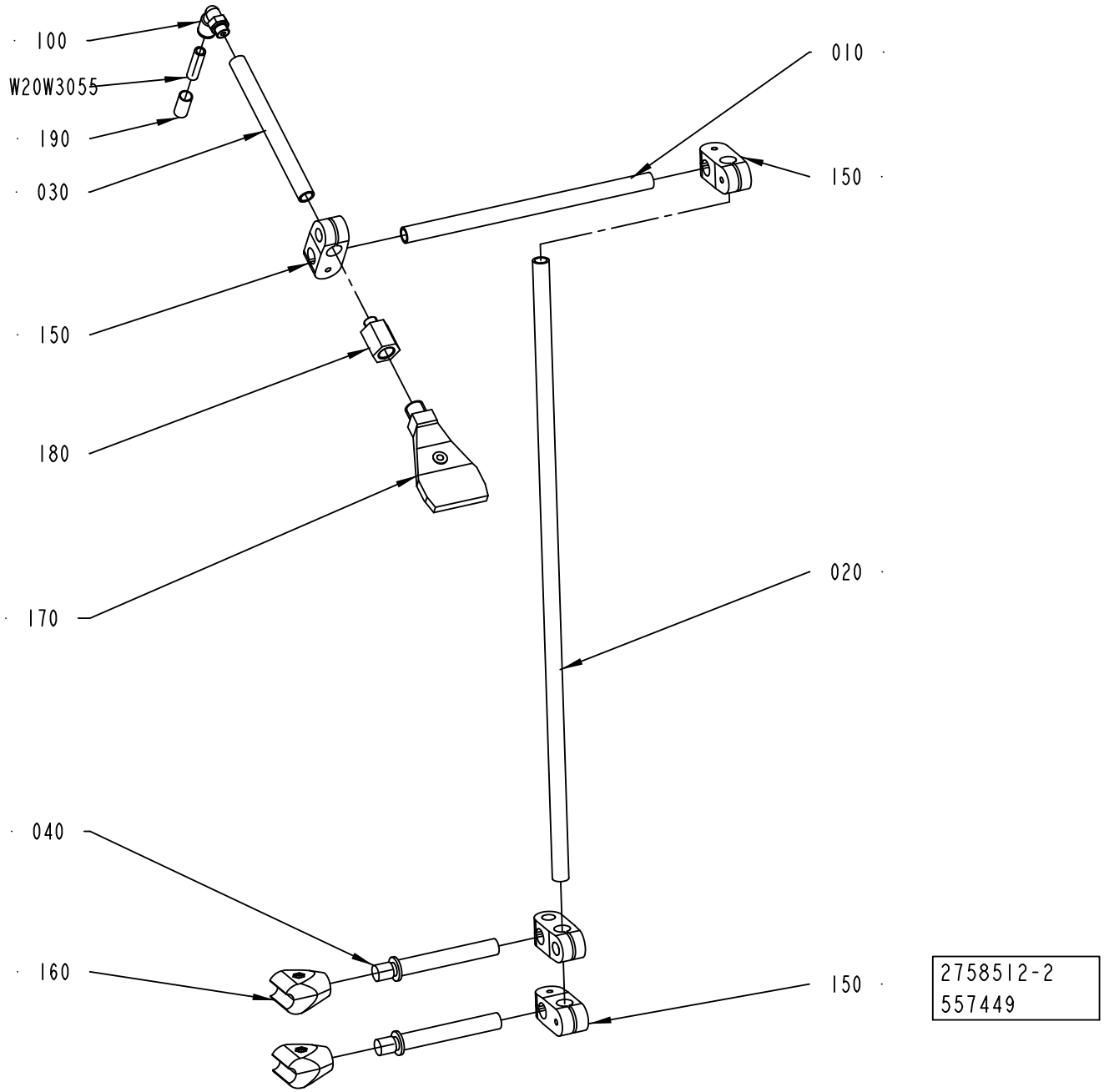
100
W20W3055
190
030
150
180
170
040
160
010
150
020
150
2758512-2
557449

ECM: 557449 - 20120702
Group number: 2758512-0200
Assembly Drawing: 2758512-2_1_AA

Pos	Part No	UN	Qty	Description	Page No
-					
010	2775403-0000		1	PIPE	
020	2775404-0000		1	PIPE	
030	2788176-0000		1	PIPE	
040	2838679-0000		2	SHAFT	
100	350002-0007		1	PUSH-IN L-FITTING QSL-F-G1/8-8	
150	90600-1001		4	CROSS CLAMP, 340/68385	
160	90458-0499		2	HOLDER 12 MM NO. 82 66861	
170	90424-0089		1	AIR NOZZLE, BSPT1/4, AAB727-1/4-15	
180	90330-0134		1	REDUCING NIPPLE, G1/8EXT-G1/4INT	
190	90459-7370		1	MARKING FOR PNEUM. TUBING, PRZ08	
W20W3055	315400-0004	MM	3000	TUBE PUN-H-8X1,25-BL	

Pos	Part No	UN	Qty	Description	Page No

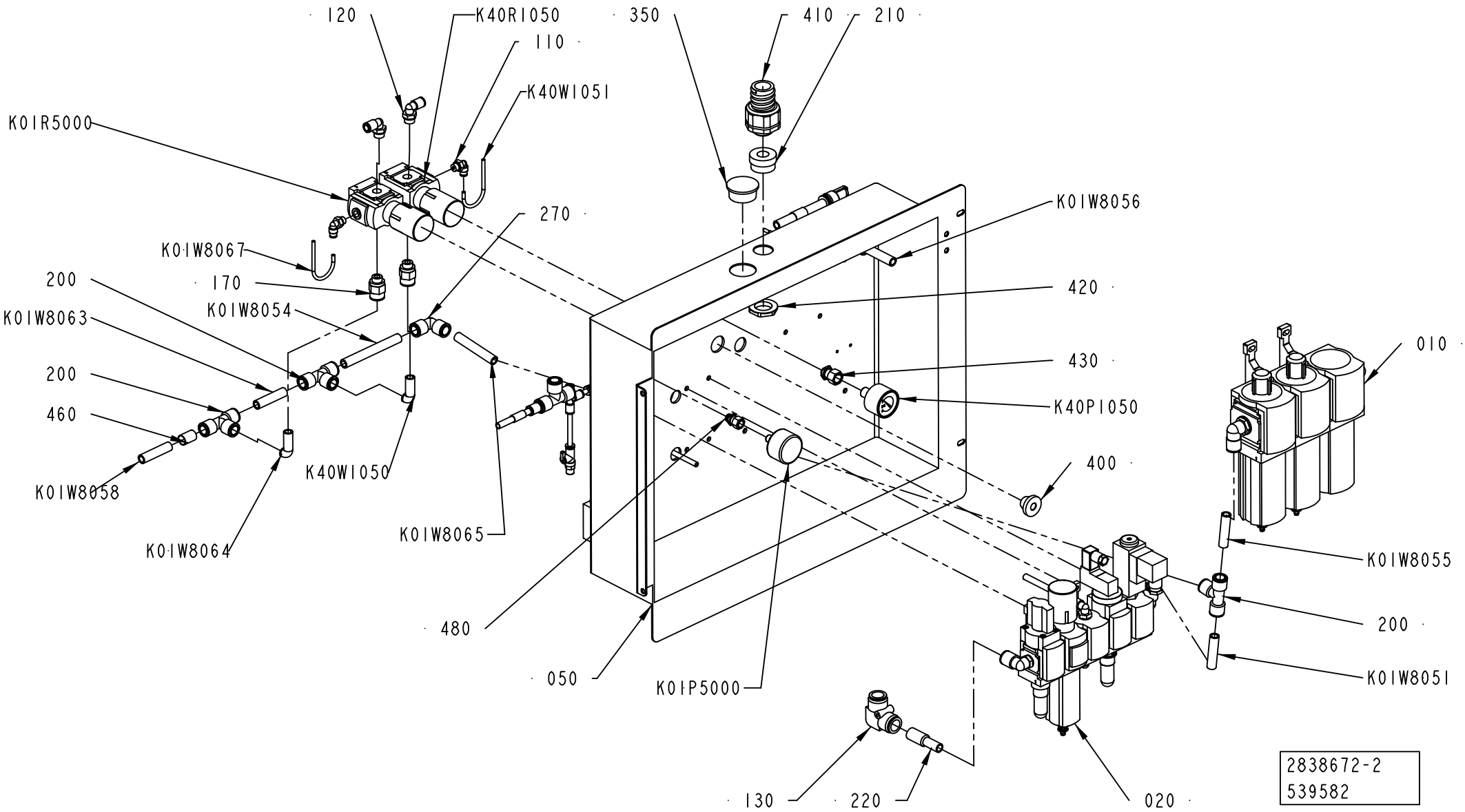
120
K40R1050
110
K40W1051
K01R5000
270
K01W8067
170
200
K01W8063
K01W8054
200
460
K01W8058
K40W1050
K01W8064
K01W8065
480
050
K01P5000
350
410
210
K01W8056
420
430
K40P1050
400
010
K01W8055
200
K01W8051
130
220
020
2838672-2
539582

ECM: 543042 - 20120402
Group number: 2838672-0200
Assembly Drawing: 2838672-2_1_AB

This list covers pages from 5-68 to 5-73

Pos	Part No	UN	Qty	Description	Page No
-					
010	2838673-0200		1	SERVICE UNIT	5-75
020	2838674-0200		1	SERVICE UNIT	5-77
050	2838676-0000		1	BRACKET	
100	2838701-0000		1	HOLDER	
110	350002-0005		3	PUSH-IN L-FITTING QSL-F-G1/8-4	
120	350002-0009		2	PUSH-IN L-FITTING QSL-F-G1/4-8	
130	90459-2553		1	PUSH-IN L-FITTING QSL 16	
140	350005-0002		4	PUSH-IN T-FITTING QST-F-6	
150	350006-0008		2	PUSH-IN FITTING QS-F-12H-8	
160	350005-0003		1	PUSH-IN T-FITTING QST-F-8	
170	350001-0011		2	PUSH-IN FITTING QS-F-G1/4-12	
180	350002-0007		4	PUSH-IN L-FITTING QSL-F-G1/8-8	
190	353250-0020		1	GLAND LOCK NUT, M20X1,5	
200	350005-0005		5	PUSH-IN T-FITTING QST-F-12	
210	353249-0015		1	INSERT, SINGLE HOLE, EK155 16	
220	90459-7107		1	SLEEVE QSH-16-12	
230	350001-0007		1	PUSH-IN FITTING QS-F-G1/8-8	
240	350002-0002		2	PUSH-IN L-FITTING QSL-F-M5-6	
250	350001-0006		2	PUSH-IN FITTING QS-F-G1/8-6	
260	350011-0002		1	PUSH-IN T-FITTING QST-F-8-6	
270	350004-0005		1	PUSH-IN L-FITTING QSL-F-12	
350	90261-0025		1	PLUG, BLIND, PLASTIC GPN300F28	
400	90015-0021		1	LEAD-IN, TET 10-14, E1458023	
410	90458-0432		1	GLAND FITTING, VK 22555YUL21	
420	90458-0324		1	NUT, M25X1,5	
430	90459-7333		1	PUSH-IN FITTING QSSF-1/4-4-B	
440	90459-7369		3	MARKING FOR PNEUM. TUBING, PRZ06	
450	90459-7370		3	MARKING FOR PNEUM. TUBING, PRZ08	
460	90459-7372		2	MARKING FOR PNEUM. TUBING, PRZ12	
480	90459-7332		1	PUSH-IN FITTING QSSF-1/8-4-B	
490	90055-0222		2	ELBOW WITH TAILPIECE 6/6 MM	
500	90459-1825		1	ELBOW WITH TAILPIECE 12/12 MM	
510	90459-7368		1	MARKING FOR PNEUM. TUBING, PRZ04	
520	90600-1175		1	ELBOW WITH TAILPIECE 8/8 MM	
530	350013-0001		1	PLUG QSC-4H	
K21K0000	90458-1202		1	VALVES 2X3/2, CLOSED	
K40K2003	90458-1202		1	VALVES 2X3/2, CLOSED	
K01P5000	90459-3603		1	PRESSURE GAUGE, MAP-40-6-1/8-EN	
K40P1050	90459-7344		1	PRESSURE GAUGE, MA-40-6-R1/4-EN	
K20Q0051	90459-0290		1	NON-RETURN VALVE, H-QS-6	
K20Q0052	90187-0191		1	BALL VALVE, R1/8 - HOSE 6 MM	
K01R5000	90459-5817		1	REGULATOR, MS4-LR-1/4-D6-A8-AS	
K01R9051	90328-0047		1	SILENCER, G1/8"	
K01R9053	90328-0047		1	SILENCER, G1/8"	
K01R9054	90328-0029		1	SILENCER, M5	
K01R9055	90328-0029		1	SILENCER, M5	
K20R3052	90328-0047		1	SILENCER, G1/8"	
K20R3053	90328-0047		1	SILENCER, G1/8"	
K20R3054	90328-0029		1	SILENCER, M5	
K20R3055	90328-0029		1	SILENCER, M5	
K21R0054	90459-3604		1	FLOW CONTROL VALVE, GR-QS-6	
K21R3054	90235-0748		1	THROTTLE CHECK VALVE, GRA-1/4-B	
K40R1050	90459-5817		1	REGULATOR, MS4-LR-1/4-D6-A8-AS	
K01U9050	90459-2591		1	SINGLE VALVE SUB-BASE CDSV5.0-AS-1/8	
K20U3050	90459-2591		1	SINGLE VALVE SUB-BASE CDSV5.0-AS-1/8	
K01W8051	315400-0010	MM	300	TUBE PUN-H-12X2-BL	
K01W8053	315400-0001	MM	300	TUBE PUN-H-6X1-BL	
K01W8054	315400-0010	MM	300	TUBE PUN-H-12X2-BL	
K01W8055	315400-0010	MM	300	TUBE PUN-H-12X2-BL	
K01W8056	315400-0010	MM	300	TUBE PUN-H-12X2-BL	
K01W8057	315400-0004	MM	300	TUBE PUN-H-8X1,25-BL	
K01W8058	315400-0010	MM	300	TUBE PUN-H-12X2-BL	
K01W8059	315400-0001	MM	300	TUBE PUN-H-6X1-BL	
K01W8061	315400-0004	MM	300	TUBE PUN-H-8X1,25-BL	
K01W8062	315400-0010	MM	300	TUBE PUN-H-12X2-BL	
K01W8063	315400-0010	MM	300	TUBE PUN-H-12X2-BL	
K01W8064	315400-0010	MM	300	TUBE PUN-H-12X2-BL	
K01W8065	315400-0010	MM	300	TUBE PUN-H-12X2-BL	
K01W8067	315400-0016	MM	300	TUBE PUN-H-4X0,75-BL	
K01W8068	315400-0001	MM	300	TUBE PUN-H-6X1-BL	
K01W8071	315400-0004	MM	300	TUBE PUN-H-8X1,25-BL	
K01W9054	315400-0001	MM	300	TUBE PUN-H-6X1-BL	
K01W9056	315400-0001	MM	300	TUBE PUN-H-6X1-BL	
K20W0050	315400-0001	MM	300	TUBE PUN-H-6X1-BL	
K20W0052	315400-0001	MM	300	TUBE PUN-H-6X1-BL	
K20W0053	315400-0001	MM	300	TUBE PUN-H-6X1-BL	
K20W3051	315400-0004	MM	300	TUBE PUN-H-8X1,25-BL	
K20W3054	315400-0004	MM	300	TUBE PUN-H-8X1,25-BL	
K20W3055	315400-0004	MM	300	TUBE PUN-H-8X1,25-BL	
K20W3056	315400-0001	MM	300	TUBE PUN-H-6X1-BL	
K21W0051	315400-0004	MM	300	TUBE PUN-H-8X1,25-BL	
K21W0054	315400-0001	MM	300	TUBE PUN-H-6X1-BL	
K21W0055	315400-0001	MM	300	TUBE PUN-H-6X1-BL	

Machine Type | Group Description | Used-In | Group Number | Page No

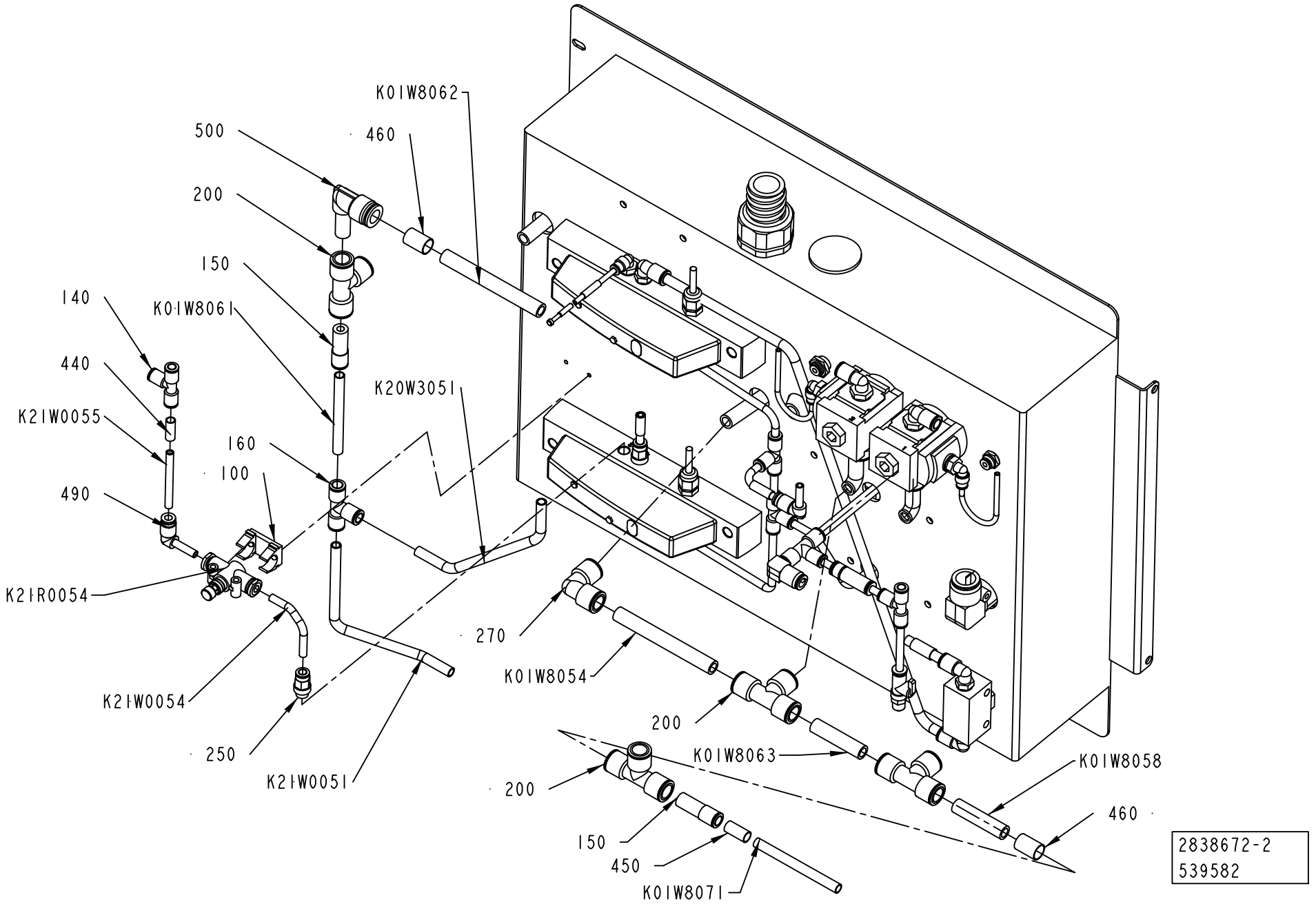
K01W8062
500
460
200
150
140
K01W8061
440
K20W3051
K21W0055
160
100
490
K21R0054
270
K01W8054
K21W0054
200
K01W8063
K01W8058
250
K21W0051
200
460
150
450
K01W8071
2838672-2
539582

Pos	Part No	UN	Qty	Description	Page No
- (Cont'd)					
K40W1050	315400-0010	MM	300	TUBE PUN-H-12X2-BL	
K40W1051	315400-0016	MM	300	TUBE PUN-H-4X0,75-BL	
K40W2054	315400-0016	MM	300	TUBE PUN-H-4X0,75-BL	

Pos	Part No	UN	Qty	Description	Page No

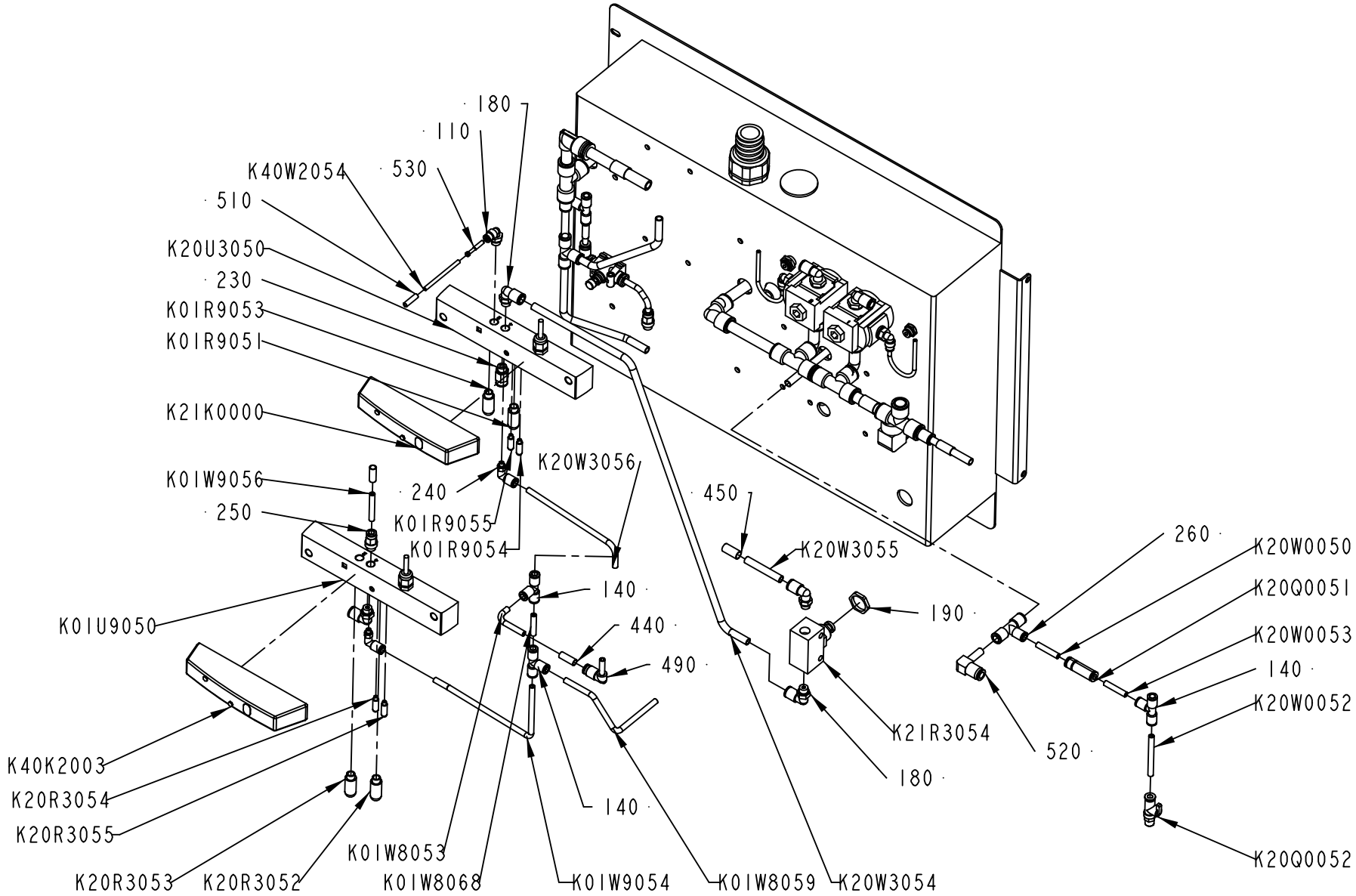

2838672-2
539582

Pos	Part No	UN	Qty	Description	Page No	Pos	Part No	UN	Qty	Description	Page No

SEE PREVIOUS LISTS PAGES: 5-69, 5-71.

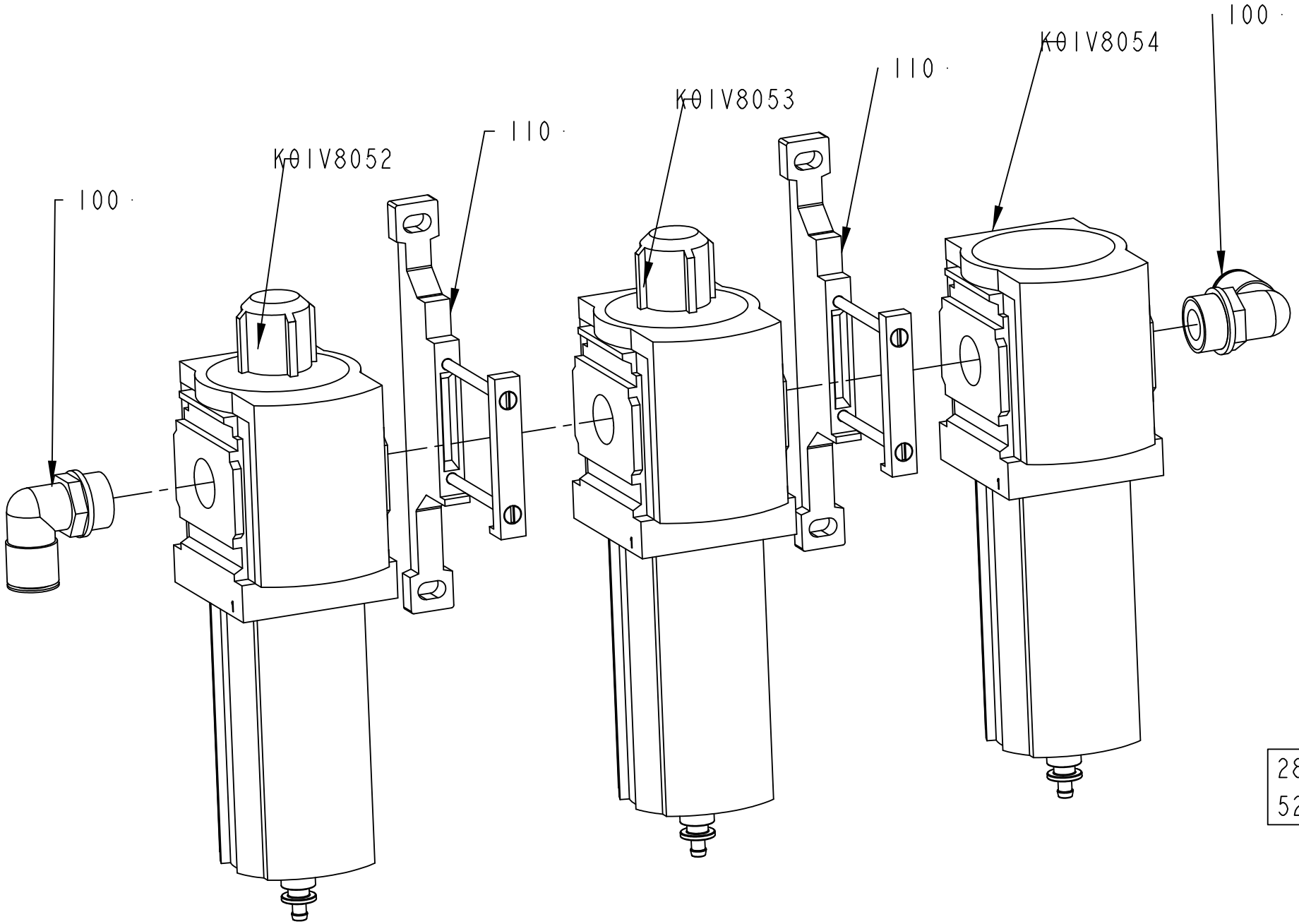

2838673-2
529093

ECM: 536116 - 20120401
Group number: 2838673-0200
Assembly Drawing: 2838673-2_1_AA

Pos	Part No	UN	Qty	Description	Page No
-					
100	350002-0016		2	PUSH-IN L-FITTING QSL-F-G1/2-12	
110	90459-1858		2	BRACKET, MS6-WP	
K01V8052	90603-4699		1	FILTER, MS6-LFM-1/2-B-R-V-DA	
	90459-3812		*1*	*FILTER CARTRIDGE, MS6-LFM-B*	
K01V8053	90603-4698		1	FILTER, MS6-LFM-1/2-ARV-DA	
	90459-3811		*1*	*FILTER CARTRIDGE MS6-LFM-A*	
K01V8054	90459-2771		1	FILTER, MS6-LFX-1/2-R	
	90459-3810		*1*	*FILTER CARTRIDGE, MS6-LFX*	

Pos	Part No	UN	Qty	Description	Page No

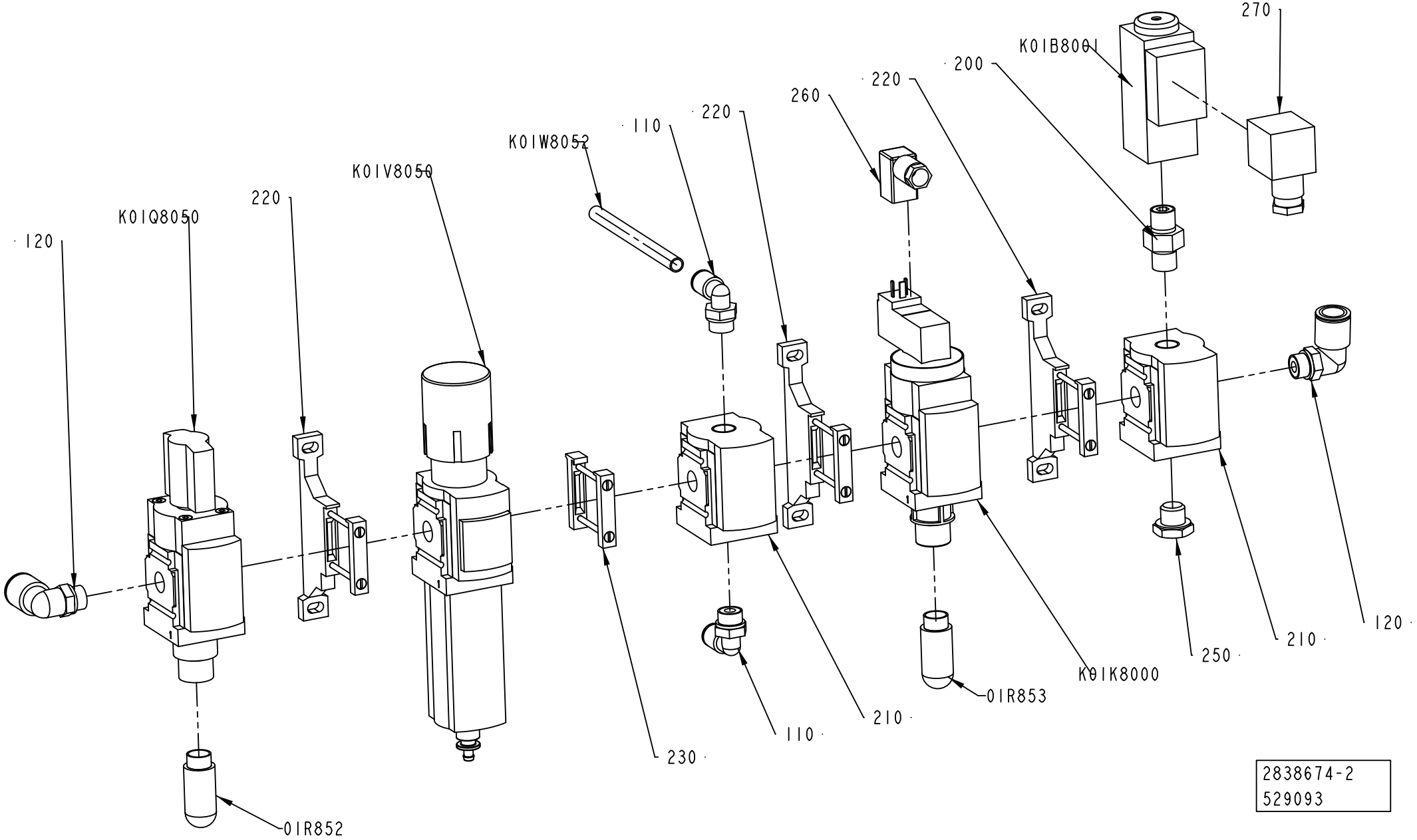
270
K01B8001
200
220
260
220
110
K01W8052
K01V8050
220
K01Q8050
120
01R852
230
110
210
01R853
K01K8000
250
210
120
2838674-2
529093

ECM: 536117 - 20120401
Group number: 2838674-0200
Assembly Drawing: 2838674-2_1_AA

Pos	Part No	UN	Qty	Description	Page No
-					
110	350002-0009		2	PUSH-IN L-FITTING QSL-F-G1/4-8	
120	350002-0011		2	PUSH-IN L-FITTING QSL-F-G1/4-12	
200	90224-0372		1	NIPPLE, EXT.THREAD, HEXAGON, R1/4-R1/4	
210	90459-2245		2	DISTRIBUTOR, MS4-FRM-1/4	
220	90459-2247		3	BRACKET, MS4-WP	
230	90459-2248		1	BRACKET, MS4-MV	
240	90224-0372		1	NIPPLE, EXT.THREAD, HEXAGON, R1/4-R1/4	
250	90330-0026		1	PLUG, EXT. G-THREAD, G1/4	
260	90458-2837		1	CONNECTING CABLE KMEB-1-24-5-LED	
270	90110-0095		1	CONNECTOR, PLUG SOCKET, MSSD-C-4P	
K01B8001	90459-6426		1	PRESSURE GUARD PEV-1/4-B-OD	
K01K8000	90459-2243		1	SHUT OFF VALVE, MS4-EE-1/4-10V24	
K01Q8050	90459-2337		1	SHUT OFF VALVE, MS4-EM1-1/4	
K01R8052	90328-0026		1	SILENCER, G1/4"	
K01R8053	90328-0026		1	SILENCER, G1/4"	
K01V8050	90459-2339		1	FILTER REGULATOR, MS4-LFR-1/4-D7-ERV-AS	
	90459-3814		*1*	*FILTER CARTRIDGE, MS4-LFP-E*	
K01W8052	315400-0004	MM	1000	TUBE PUN-H-8X1,25-BL	

Pos	Part No	UN	Qty	Description	Page No

Machine Type | Group Description | Used-In | Group Number | Page No

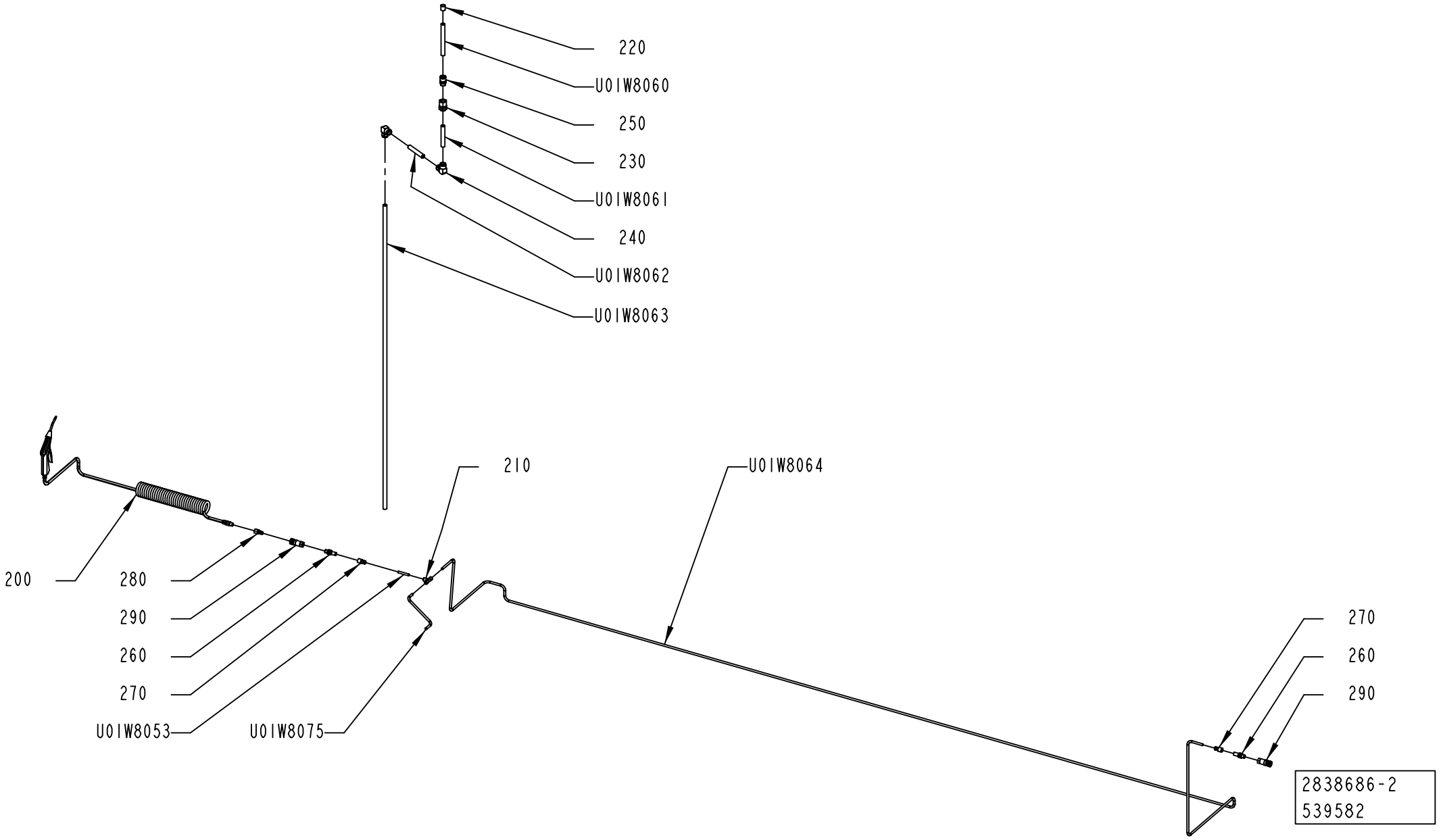
220
U01W8060
250
230
U01W8061
240
U01W8062
U01W8063
210
U01W8064
200
280
290
260
270
U01W8053
U01W8075
270
260
290
2838686-2
539582

ECM: 543043 - 20120402
Group number: 2838686-0200
Assembly Drawing: 2838686-2_1_AB

Pos	Part No	UN	Qty	Description	Page No
CAP 30/FLEX					
U01W8060	315400-0013	MM	650	TUBE PUN-H-16-2,5-BL	
U01W8064	315400-0004	MM	6500	TUBE PUN-H-8X1,25-BL	
U01W8075	315400-0004	MM	2000	TUBE PUN-H-8X1,25-BL	
Common Parts					
200	90458-1740		1	AIR GUN ASSEMBLY, CEJN 199589668	
210	350005-0003		1	PUSH-IN T-FITTING QST-F-8	
220	90459-7373		1	MARKING FOR PNEUM. TUBING, PRZ16	
230	90459-0864		1	BULKHEAD CONNECTOR, 12 MM/M27X1,5	
240	90459-2553		2	PUSH-IN L-FITTING QSL 16	
250	90459-2215		1	STRAIGHT COUPLING, D=16 MM - G1/2"	
260	3219669-0000		2	NIPPLE	
270	350008-0006		2	PUSH-IN FITTING QSF-F-G1/4-8	
280	90459-2254		1	QUICK COUPLING, (M) 10 320 5202	
290	90459-7374		2	QUICK COUPLING, (F) 10 320 1202	
U01W8053	315400-0004	MM	500	TUBE PUN-H-8X1,25-BL	
U01W8061	315400-0013	MM	500	TUBE PUN-H-16-2,5-BL	
U01W8062	315400-0013	MM	500	TUBE PUN-H-16-2,5-BL	
U01W8063	315400-0013	MM	2000	TUBE PUN-H-16-2,5-BL	

Pos	Part No	UN	Qty	Description	Page No

CENTRAL LUBRICATION

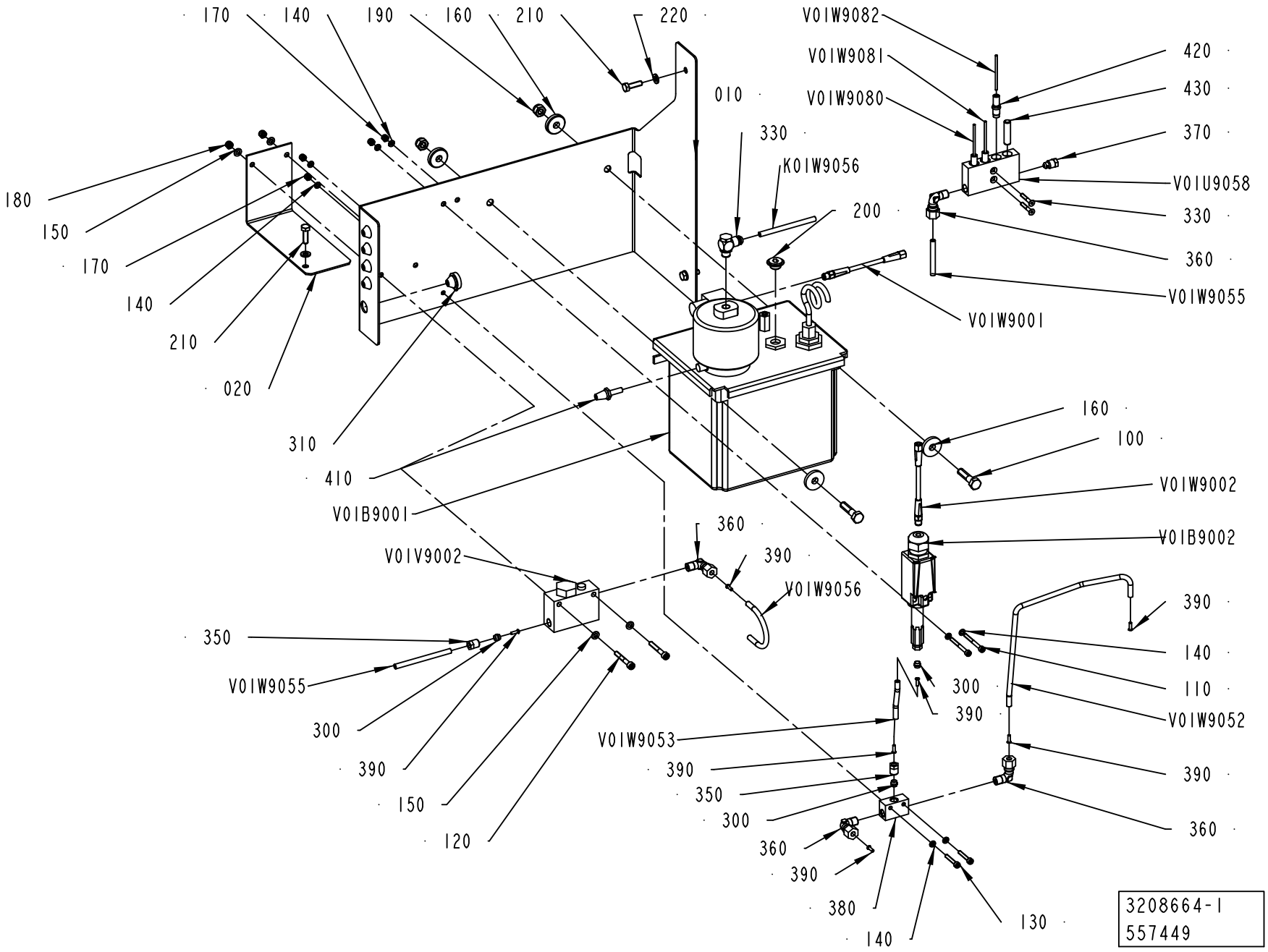

ECM: 559247 - 20120702
Group number: 3208664-0100
Assembly Drawing: 3208664-1_1_AC

Pos	Part No	UN	Qty	Description	Page No
-					
010	3214100-0000		1	BRACKET	
100	312105-0457		2	SCREW, M6S ISO 4014 M8X35 A4 80	
110	312115-0303		2	SCREW ISO4762 M4X40 A4 80	
120	312115-0337		2	SCREW ISO4762 M5X35 A4 80	
130	312115-0297		2	SCREW ISO4762 M4X25 A4 80	
140	315105-0136		8	WASHER PLAIN, 4,3X9X0,8 A4 BRB	
150	315105-0146		4	WASHER PLAIN, 5,3X10X1 A4 BRB	
160	315125-0165		4	WASHER HIGH, TBRSB 8,4X26X5 A4	
170	312812-0312		4	HEXAGON NUT, NY-LOCK M4 A4 80	
180	312812-0314		2	HEXAGON NUT, NY-LOCK M5 A4 80	
190	312812-0318		2	HEXAGON NUT, NY-LOCK M8 A4 80	
200	90604-6027		1	PLUG, EXT. THREAD HEX. SOCKET. G1/4	
210	312105-0370		3	SCREW, M6S ISO 4017 M6X20 A4 80	
220	315105-0153		3	WASHER PLAIN, 6,4X12X1,5 A4 BRB	
300	90028-0022		3	CONE TUBE 6 MM	
310	90015-0020		5	LEAD-IN, TET5-7, E-1458016	
330	90459-5522		1	CONN. BANJO, COR8PB6M10	
330	312155-0297		2	SCREW DIN 7991 MF6S M4X25 A4 70	
350	90134-0055		2	BUSHING/NUT INLET/OUTLET 6 MM	
360	90030-0200		4	CONN. ELBOW, WE06LM71	
370	90087-0019		1	PLUG M10X1 STAINLESS	
380	90032-0043		1	DISTRIBUTION BLOCK 3 WAYS	
390	90134-0030		7	SLEEVE FOR PLASTIC TUBE	
410	90328-0017		1	SILENCER, D=6 MM	
420	90092-0054		3	METERING VALVE 50 MM3	
430	90134-0052		1	PLUG DOSING BLOCK	
K01W9056	315400-0001	MM	1000	TUBE PUN-H-6X1-BL	
V01B9001	90459-5481		1	OIL PUMP 3L, 10P-P3	
	90274-0052		*1*	*LEVEL GUARD, 2.855432.1*	
	90048-0450		*1*	*SPARE PARTS KIT*	
V01B9002	90603-1938		1	PRESSURE SWITCH, 1800 KPA, 28545-251-2	
V01U9058	90032-0039		1	BLOCK 4 WAYS	
V01V9002	90415-0030		1	OIL FILTER PN 100 ORD.NO 2.77 10 70.1	
	90415-0326		*1*	*FILTER INSERT*	
V01W9001	344257-0050		1	SENSOR CABLE, EVT146	
V01W9002	344257-0050		1	SENSOR CABLE, EVT146	
V01W9052	90166-0108	MM	200	TUBE 6 MM PA TRANSP.	
V01W9053	90166-0108	MM	200	TUBE 6 MM PA TRANSP.	
V01W9055	90166-0108	MM	1000	TUBE 6 MM PA TRANSP.	
V01W9056	90166-0108	MM	200	TUBE 6 MM PA TRANSP.	
V01W9080	90166-0143	MM	3000	TUBE 2,5 MM PA TRANSP.	
V01W9081	90166-0143	MM	3000	TUBE 2,5 MM PA TRANSP.	
V01W9082	90166-0143	MM	3000	TUBE 2,5 MM PA TRANSP.	

Machine Type | Group Description | Used-In | Group Number | Page No

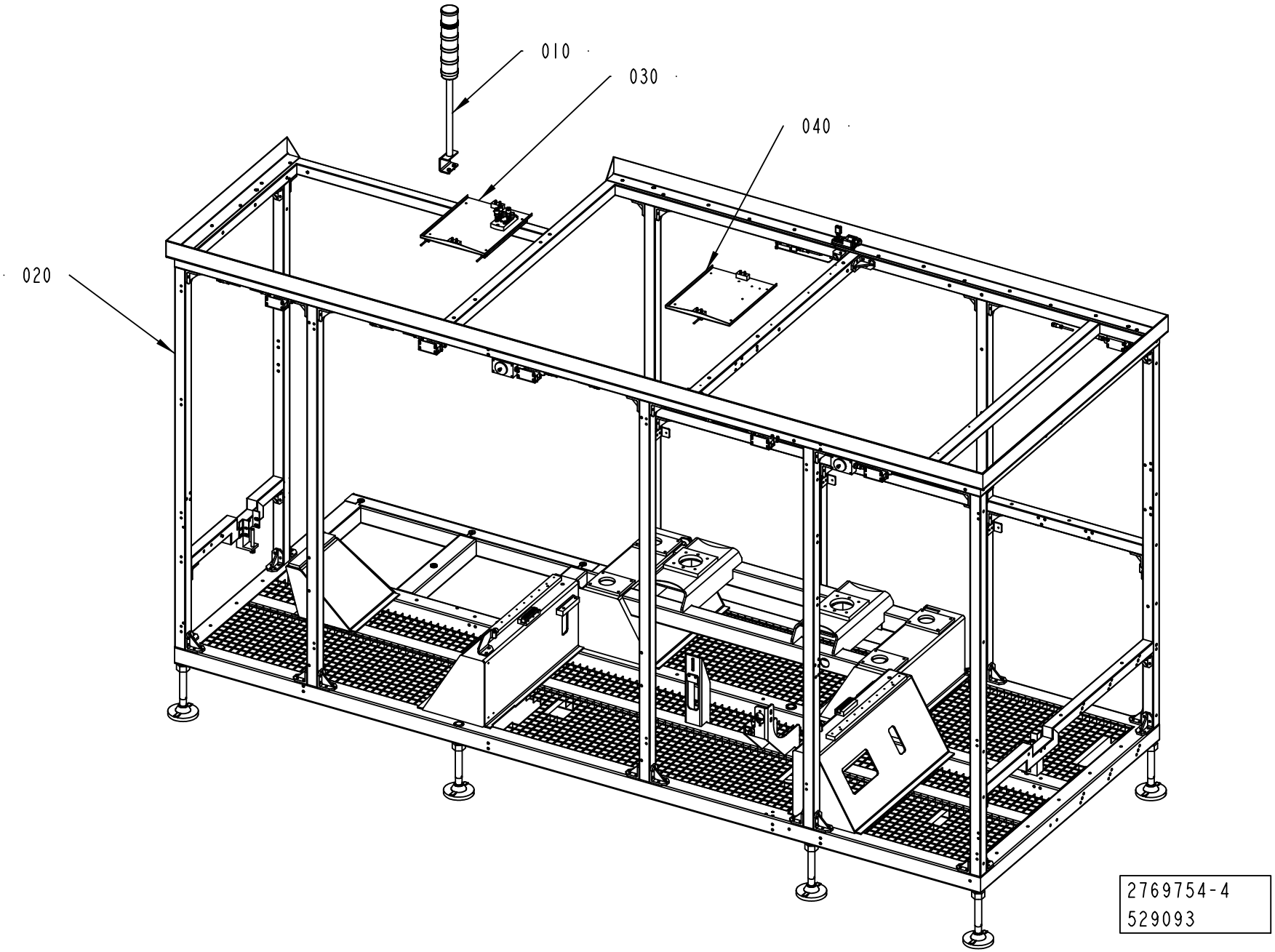
010
030
040
020
2769754-4
529093

ECM: 529694 - 20120401
Group number: 2769754-0300
Assembly Drawing: 2769754-4_1_AA

Pos	Part No	UN	Qty	Description	Page No
TGA					
060	2873922-0200		1	CABLE	**5-85, 12-29**
Common Parts					
010	2779764-0300		1	WARNING LAMP	**5-87**
020	2805700-0300		1	DOOR SAFETY SWITCH	**5-89, 5-91**
030	3210206-0100		1	LAMP	**5-93**
040	3210207-0100		1	LAMP	**5-95**
050	2873950-0200		1	CABLE SET	**5-97**

Pos	Part No	UN	Qty	Description	Page No

This page is intentionally left blank.

ECM: 529698 - 20120401
Group number: 2873922-0200
Assembly Drawing:

Pos	Part No	UN	Qty	Description	Page No
-					
G70W1000	351429-1609		1	MOTOR POWER CABLE 2090-CPWM7DF-16AA09	
G70W1001	351428-0009		1	MOTOR FEEDBACK CABLE 2090-CFBM7DF-CEAA09	
G70X1001	90459-2551		1	CONNECTOR, MOTOR FEEDBACK 15 PIN MALE	

Pos	Part No	UN	Qty	Description	Page No

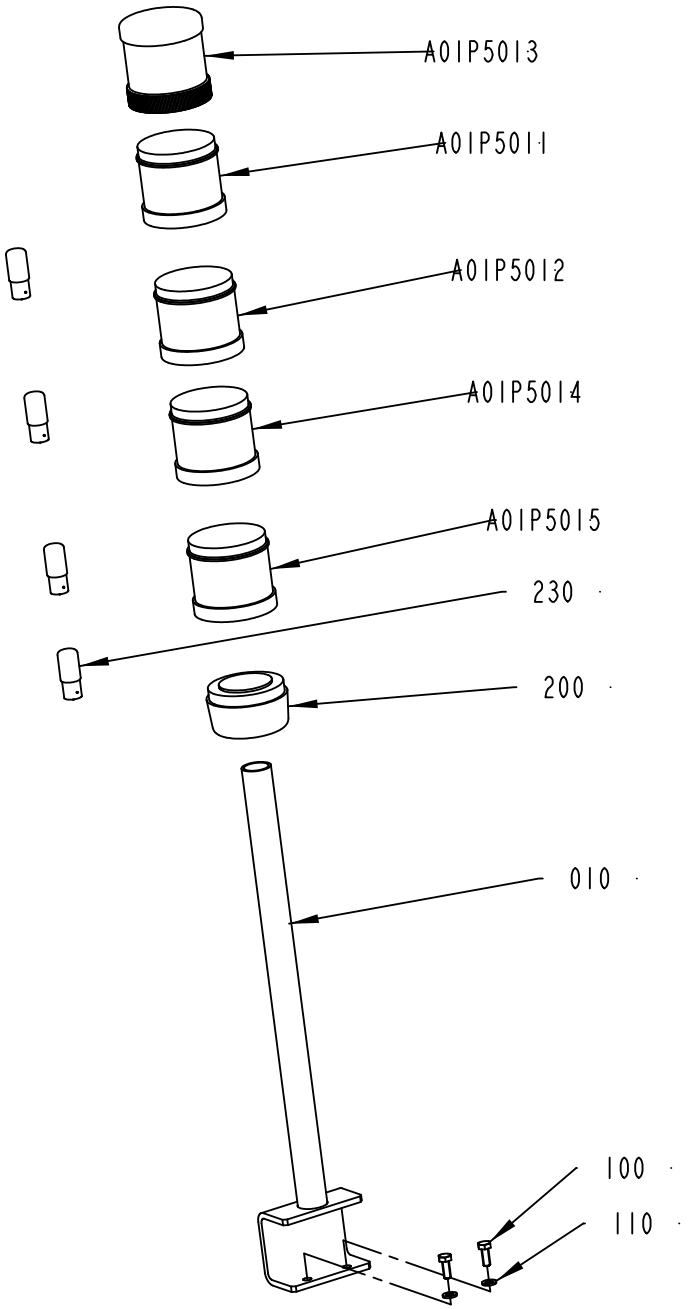

2779764-3
529093

ECM: 529696 - 20120401
Group number: 2779764-0300
Assembly Drawing: 2779764-3_1_AA

Pos	Part No	UN	Qty	Description	Page No
-					
010	2779765-0000		1	BRACKET	
100	312105-0368		2	SCREW, M6S ISO 4017 M6X16 A4 80	
110	315105-0153		2	WASHER PLAIN, 6,4X12X1,5 A4 BRB	
200	90602-4627		1	TERMINAL ELEMENT, PSD-S CE-TM SPRING	
230	90036-0068		4	BULB 5W 24V, SL-L24 205348	
A01P5011	90602-4062		1	LIGHT ELEMENT, RED, PSD-S OE LED RD	
A01P5012	90602-4063		1	LIGHT ELEMENT, YELLOW, PSD-S OE LED YE	
A01P5013	90602-4631		1	SIREN 100DB, PSD-S AE SM8-5 100DB/1	
A01P5014	90602-4060		1	LIGHT ELEMENT, BLUE, PSD-S OE LED BU	
A01P5015	90602-4061		1	LIGHT ELEMENT, GREEN, PSD-S OE LED GN	

Pos	Part No	UN	Qty	Description	Page No

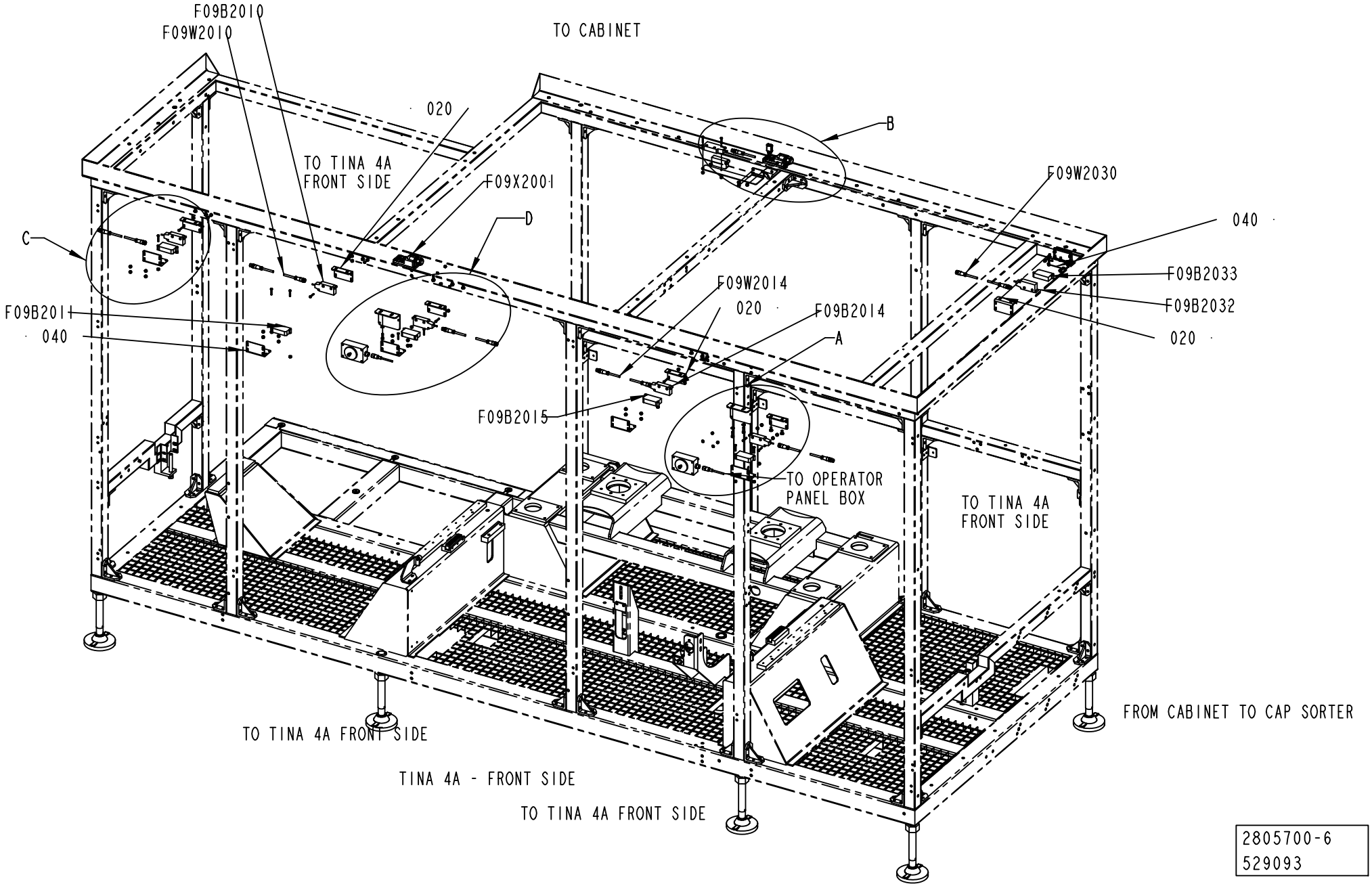
F09B2010
F09W2010
TO CABINET
020
TO TINA 4A
FRONT SIDE
F09X2001
B
F09W2030
040
C
D
F09B2033
F09W2014
F09B2032
F09B2011
020
F09B2014
040
A
020
F09B2015
TO OPERATOR
PANEL BOX
TO TINA 4A
FRONT SIDE
FROM CABINET TO CAP SORTER
TO TINA 4A FRONT SIDE
TINA 4A - FRONT SIDE
TO TINA 4A FRONT SIDE
2805700-6
529093

ECM: 548799 - 20120403
Group number: 2805700-0300
Assembly Drawing: 2805700-6_1_AA

This list covers pages from 5-88 to 5-91

Pos	Part No	UN	Qty	Description	Page No
STREAMCAP500, SLIMCAP 2000, SLIMCAP 1000, STREAMCAP200, HELICAP2 23, HELICAP 27, STREAMCAP1000 (See drawing on pages: 5-88, 5-90)					
300	1539391-0000		52	ROUND NUT	
310	90459-4165		26	SAFETY SCREW, SM4X25	
330	312105-0370		4	SCREW, M6S ISO 4017 M6X20 A4 80	
350	315105-0153		4	WASHER PLAIN, 6,4X12X1,5 A4 BRB	
380	90600-2563		12	SCREW PANHEAD SNAKE EYE SPANNER, M6X12	
F09W2034	90459-4876		1	FOCUS JUMPER CABLE M12 5P 3M, 20-056-21	
Common Parts					
010	2781283-0000		2	BRACKET	
020	2817774-0000		6	SUPPORT	
030	2817775-0000		1	SUPPORT	
040	3054997-0000		6	SUPPORT	
320	312605-0314		4	HEXAGON NUT, M6M M5 A280	
360	315105-0146		4	WASHER PLAIN, 5,3X10X1 A4 BRB	
390	575034-0000		3	ROUND NUT	
F09B2010	90459-6961		1	SAFETY SENSOR, ADAM E 0,5 M12	
F09B2011	90459-4089		1	SAFETY SENSOR, EVA E, 20-046-06	
F09B2012	90459-6961		1	SAFETY SENSOR, ADAM E 0,5 M12	
F09B2013	90459-4089		1	SAFETY SENSOR, EVA E, 20-046-06	
F09B2014	90459-6961		1	SAFETY SENSOR, ADAM E 0,5 M12	
F09B2015	90459-4089		1	SAFETY SENSOR, EVA E, 20-046-06	
F09B2016	90459-6961		1	SAFETY SENSOR, ADAM E 0,5 M12	
F09B2017	90459-4089		1	SAFETY SENSOR, EVA E, 20-046-06	
F09B2030	90459-6961		1	SAFETY SENSOR, ADAM E 0,5 M12	
F09B2031	90459-4089		1	SAFETY SENSOR, EVA E, 20-046-06	
F09B2034	90459-6961		1	SAFETY SENSOR, ADAM E 0,5 M12	
F09B2035	90459-4089		1	SAFETY SENSOR, EVA E, 20-046-06	
F09B2036	90459-5627		1	CONNECTION, TINA 1-A	
F09B2041	90459-6913		1	MAGNETIC LOCK, JSD-ZH-EM1-K	
F09B2042	90459-6913		1	MAGNETIC LOCK, JSD-ZH-EM1-K	
F09W2014	90459-4876		1	FOCUS JUMPER CABLE M12 5P 3M, 20-056-21	
F09W2016	90459-4876		1	FOCUS JUMPER CABLE M12 5P 3M, 20-056-21	
F09W2030	90459-4876		1	FOCUS JUMPER CABLE M12 5P 3M, 20-056-21	
F09W2032	90459-4876		1	FOCUS JUMPER CABLE M12 5P 3M, 20-056-21	
F09W2041	344253-0100		1	SENSOR CABLE, EVT002	
F09W2042	344253-0100		1	SENSOR CABLE, EVT002	
F09X2001	90604-0093		1	CONNECTION BLOCK, TINA4A 2TLJ020054R0300	
F09X2002	90604-0093		1	CONNECTION BLOCK, TINA4A 2TLJ020054R0300	
F09X2010	90459-6961		1	SAFETY SENSOR, ADAM E 0,5 M12	
F09X2011	90459-4089		1	SAFETY SENSOR, EVA E, 20-046-06	
F09X2012	90459-6961		1	SAFETY SENSOR, ADAM E 0,5 M12	
F09X2013	90459-4089		1	SAFETY SENSOR, EVA E, 20-046-06	
F09X2014	90459-6961		1	SAFETY SENSOR, ADAM E 0,5 M12	
F09X2015	90459-4089		1	SAFETY SENSOR, EVA E, 20-046-06	
F09X2016	90459-6961		1	SAFETY SENSOR, ADAM E 0,5 M12	
F09X2017	90459-4089		1	SAFETY SENSOR, EVA E, 20-046-06	
F09X2030	90459-6961		1	SAFETY SENSOR, ADAM E 0,5 M12	
F09X2031	90459-4089		1	SAFETY SENSOR, EVA E, 20-046-06	
F09X2032	90459-6961		1	SAFETY SENSOR, ADAM E 0,5 M12	
F09X2033	90459-4089		1	SAFETY SENSOR, EVA E, 20-046-06	
F09X2036	90459-5627		1	CONNECTION, TINA 1-A	

Machine Type | Group Description | Used-In | Group Number | Page No

DETAIL: A
SCALE: 1:5

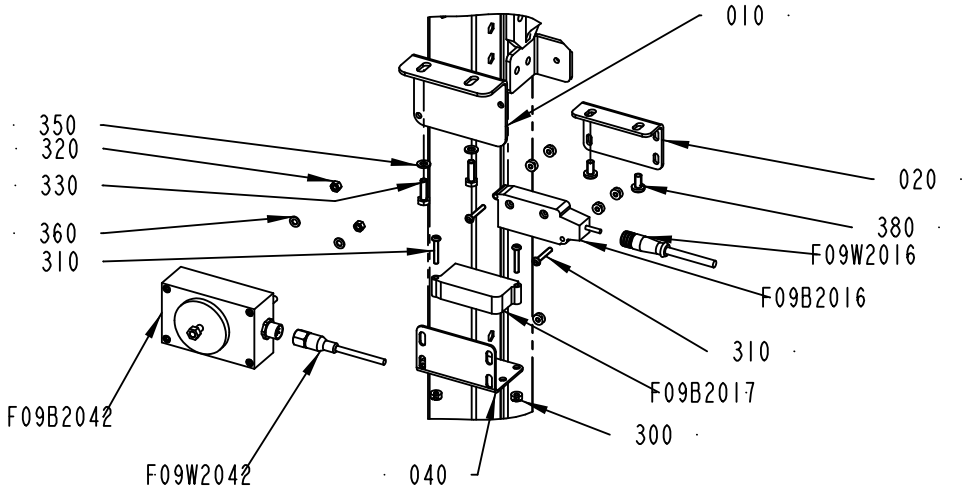

DETAIL: B
SCALE: 1:5

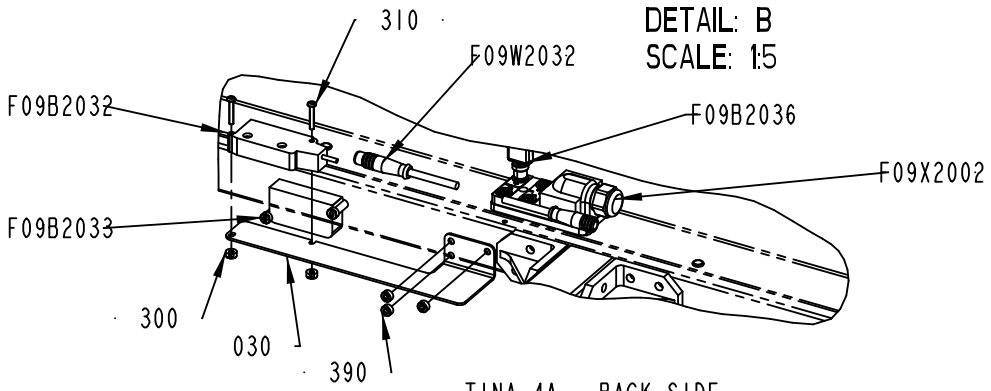

TINA 4A - BACK SIDE
TO CABLE DUCT (BACK SIDE)

DETAIL: C
SCALE: 1:5

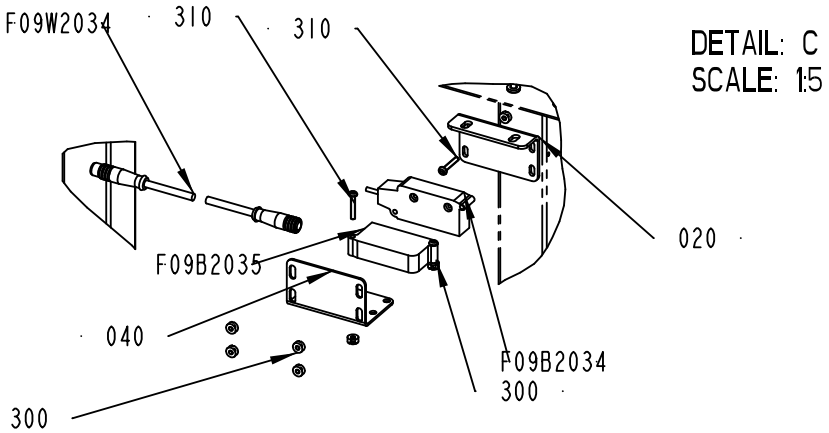

TO TINA 4A BACK SIDE

DETAIL: D
SCALE: 1:5

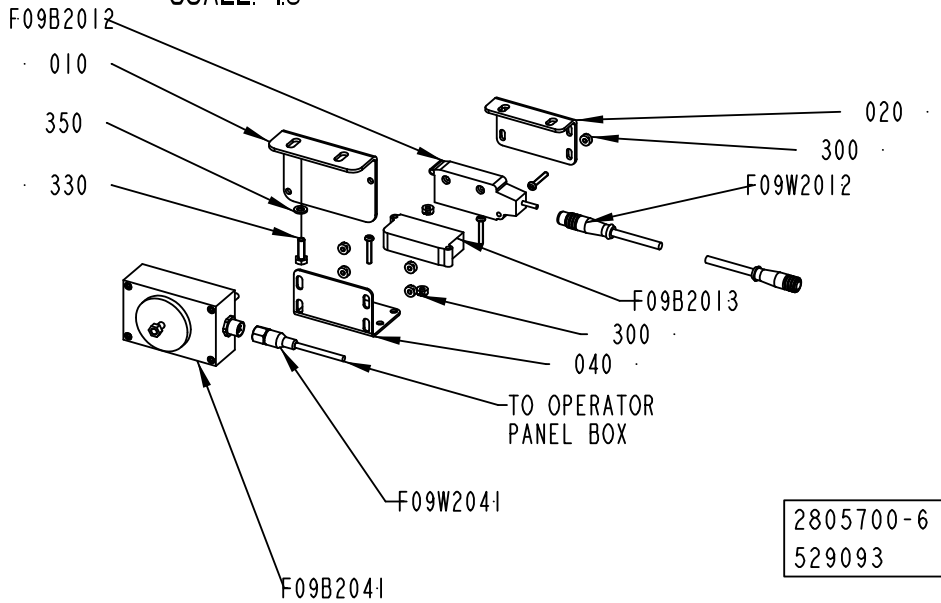

2805700-6
529093

Pos	Part No	UN	Qty	Description	Page No
STREAMCAP500, SLIMCAP 2000, SLIMCAP 1000, STREAMCAP200, HELICAP2 23, HELICAP 27, STREAMCAP1000 (See drawing on pages: 5-88, 5-90)					
300	1539391-0000		52	ROUND NUT	
310	90459-4165		26	SAFETY SCREW, SM4X25	
330	312105-0370		4	SCREW, M6S ISO 4017 M6X20 A4 80	
350	315105-0153		4	WASHER PLAIN, 6,4X12X1,5 A4 BRB	
380	90600-2563		12	SCREW PANHEAD SNAKE EYE SPANNER, M6X12	
F09W2034	90459-4876		1	FOCUS JUMPER CABLE M12 5P 3M, 20-056-21	
Common Parts					
010	2781283-0000		2	BRACKET	
020	2817774-0000		6	SUPPORT	
030	2817775-0000		1	SUPPORT	
040	3054997-0000		6	SUPPORT	
320	312605-0314		4	HEXAGON NUT, M6M M5 A280	
360	315105-0146		4	WASHER PLAIN, 5,3X10X1 A4 BRB	
390	575034-0000		3	ROUND NUT	
F09B2010	90459-6961		1	SAFETY SENSOR, ADAM E 0,5 M12	
F09B2011	90459-4089		1	SAFETY SENSOR, EVA E, 20-046-06	
F09B2012	90459-6961		1	SAFETY SENSOR, ADAM E 0,5 M12	
F09B2013	90459-4089		1	SAFETY SENSOR, EVA E, 20-046-06	
F09B2014	90459-6961		1	SAFETY SENSOR, ADAM E 0,5 M12	
F09B2015	90459-4089		1	SAFETY SENSOR, EVA E, 20-046-06	
F09B2016	90459-6961		1	SAFETY SENSOR, ADAM E 0,5 M12	
F09B2017	90459-4089		1	SAFETY SENSOR, EVA E, 20-046-06	
F09B2030	90459-6961		1	SAFETY SENSOR, ADAM E 0,5 M12	
F09B2031	90459-4089		1	SAFETY SENSOR, EVA E, 20-046-06	
F09B2034	90459-6961		1	SAFETY SENSOR, ADAM E 0,5 M12	
F09B2035	90459-4089		1	SAFETY SENSOR, EVA E, 20-046-06	
F09B2036	90459-5627		1	CONNECTION, TINA 1-A	
F09B2041	90459-6913		1	MAGNETIC LOCK, JSD-ZH-EM1-K	
F09B2042	90459-6913		1	MAGNETIC LOCK, JSD-ZH-EM1-K	
F09W2014	90459-4876		1	FOCUS JUMPER CABLE M12 5P 3M, 20-056-21	
F09W2016	90459-4876		1	FOCUS JUMPER CABLE M12 5P 3M, 20-056-21	
F09W2030	90459-4876		1	FOCUS JUMPER CABLE M12 5P 3M, 20-056-21	
F09W2032	90459-4876		1	FOCUS JUMPER CABLE M12 5P 3M, 20-056-21	
F09W2041	344253-0100		1	SENSOR CABLE, EVT002	
F09W2042	344253-0100		1	SENSOR CABLE, EVT002	
F09X2001	90604-0093		1	CONNECTION BLOCK, TINA4A 2TLJ020054R0300	
F09X2002	90604-0093		1	CONNECTION BLOCK, TINA4A 2TLJ020054R0300	
F09X2010	90459-6961		1	SAFETY SENSOR, ADAM E 0,5 M12	
F09X2011	90459-4089		1	SAFETY SENSOR, EVA E, 20-046-06	
F09X2012	90459-6961		1	SAFETY SENSOR, ADAM E 0,5 M12	
F09X2013	90459-4089		1	SAFETY SENSOR, EVA E, 20-046-06	
F09X2014	90459-6961		1	SAFETY SENSOR, ADAM E 0,5 M12	
F09X2015	90459-4089		1	SAFETY SENSOR, EVA E, 20-046-06	
F09X2016	90459-6961		1	SAFETY SENSOR, ADAM E 0,5 M12	
F09X2017	90459-4089		1	SAFETY SENSOR, EVA E, 20-046-06	
F09X2030	90459-6961		1	SAFETY SENSOR, ADAM E 0,5 M12	
F09X2031	90459-4089		1	SAFETY SENSOR, EVA E, 20-046-06	
F09X2032	90459-6961		1	SAFETY SENSOR, ADAM E 0,5 M12	
F09X2033	90459-4089		1	SAFETY SENSOR, EVA E, 20-046-06	
F09X2036	90459-5627		1	CONNECTION, TINA 1-A	

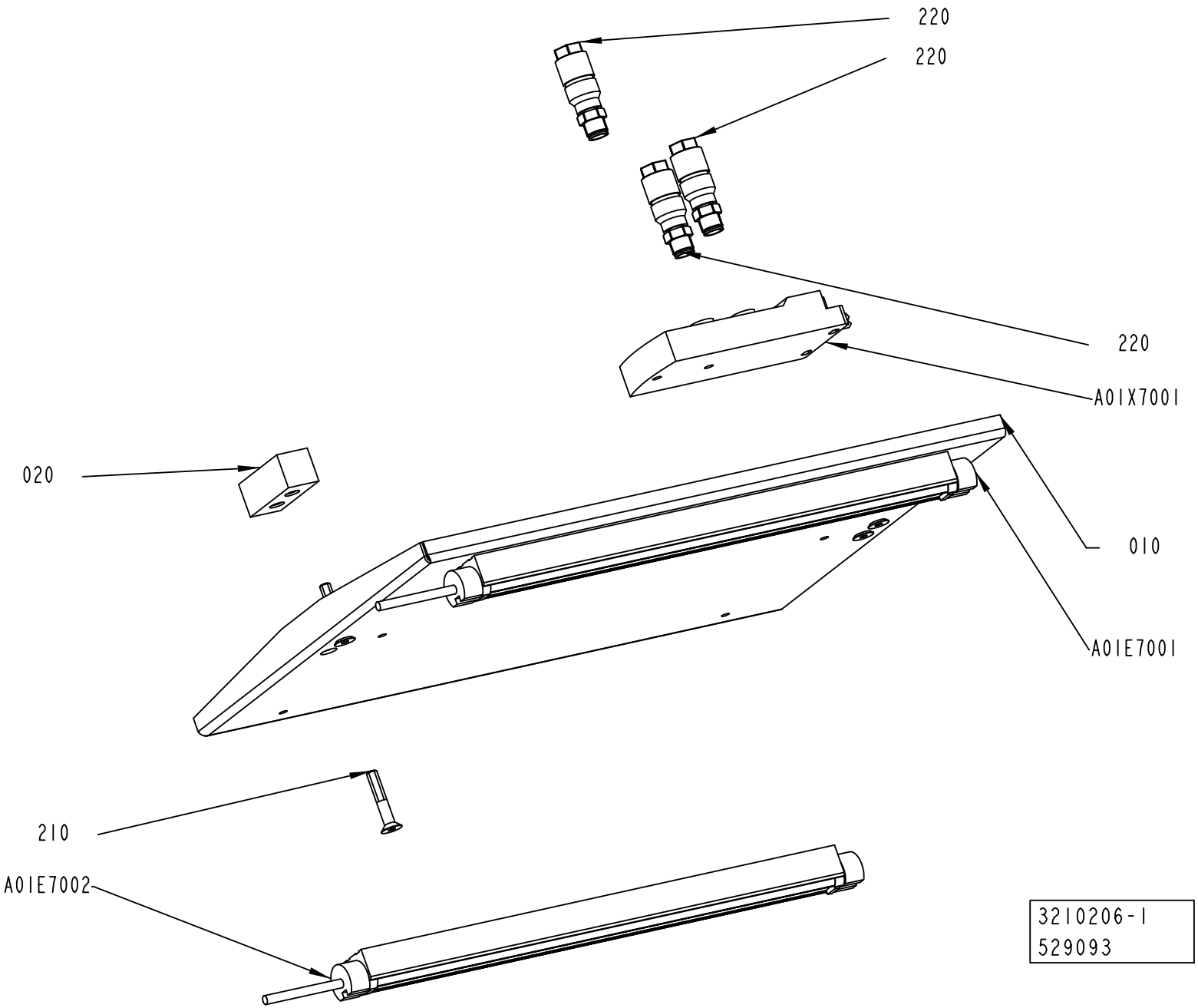
220
220
220
A01X7001
020
010
A01E7001
210
A01E7002
3210206-1
529093

ECM: 536118 - 20120401
Group number: 3210206-0100
Assembly Drawing: 3210206-1_1_AA

Pos	Part No	UN	Qty	Description	Page No
-					
010	3210209-0000		1	COVER	
020	3210208-0000		2	SPACER	
210	312155-0376		4	SCREW DIN 7991 MF6S M6X35 A4 70	
220	90603-5569		3	CONNECTOR, SACC-M12MS-4QO-0,75-VA	
A01E7001	90602-1250		1	LIGHT FIXTURE, SLIM LED 112-544-001	
A01E7002	90602-1250		1	LIGHT FIXTURE, SLIM LED 112-544-001	
A01X7001	90603-3972		1	SPLITTER BOX, EBC026	

Pos	Part No	UN	Qty	Description	Page No

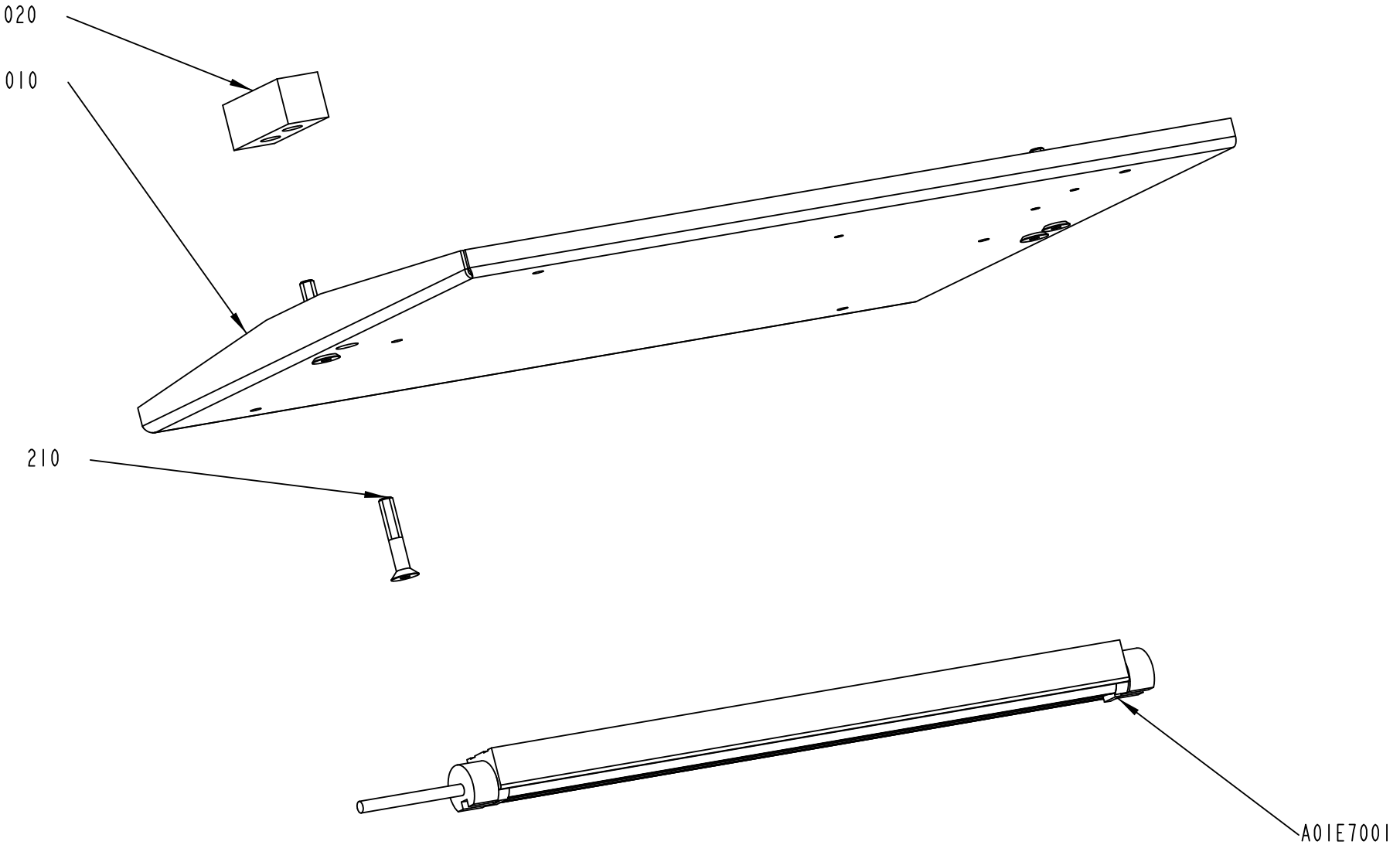

3210207-1
529093

ECM: 536119 - 20120401
Group number: 3210207-0100
Assembly Drawing: 3210207-1_1_AA

Pos	Part No	UN	Qty	Description	Page No
-					
010	3210209-0000		1	COVER	
020	3210208-0000		2	SPACER	
210	312155-0376		4	SCREW DIN 7991 MF6S M6X35 A4 70	
A01E7001	90602-1250		1	LIGHT FIXTURE, SLIM LED 112-544-001	

Pos	Part No	UN	Qty	Description	Page No

This page is intentionally left blank.

ECM: 543044 - 20120402
Group number: 2873950-0200
Assembly Drawing:

Pos	Part No	UN	Qty	Description	Page No
TGA, TBA SLIMCAP1000, TBA STREAMCAP1000, TBA SLIMCAP 2000, TBA STREAMCAP200, TBA HELICAP2 23, TBA HELICAP 27					
C50W0004	351150-0405	M	10	CABLE OLFLEX 5X0,75 MM2 LIGHT/GREY	
C50W0010	315743-0009	M	9	ÖLFLEX CONTROL TM 4G1,5, 281604	
C50W1010	315756-0009	M	9	ÖLFLEX CONTROL TM CY 4G1,5, 281604CY	
F09W2030	90459-4252		1	CABLE M12-C101, 20-056-10	
G40W0000	351429-1609		1	MOTOR POWER CABLE 2090-CPWM7DF-16AA09	
G40W0001	351428-0009		1	MOTOR FEEDBACK CABLE 2090-CFBM7DF-CEAA09	
G40W0002	351429-1609		1	MOTOR POWER CABLE 2090-CPWM7DF-16AA09	
G40W0003	351428-0009		1	MOTOR FEEDBACK CABLE 2090-CFBM7DF-CEAA09	
G40W3000	351429-1609		1	MOTOR POWER CABLE 2090-CPWM7DF-16AA09	
G40W3001	351428-0009		1	MOTOR FEEDBACK CABLE 2090-CFBM7DF-CEAA09	
G40W4010	315743-0009	M	7	ÖLFLEX CONTROL TM 4G1,5, 281604	
G40X0001	90459-2551		1	CONNECTOR, MOTOR FEEDBACK 15 PIN MALE	
G40X0003	90459-2551		1	CONNECTOR, MOTOR FEEDBACK 15 PIN MALE	
G40X3001	90459-2551		1	CONNECTOR, MOTOR FEEDBACK 15 PIN MALE	
TPA					
C50W0004	351150-0405	M	10	CABLE OLFLEX 5X0,75 MM2 LIGHT/GREY	
C50W0010	315743-0009	M	9	ÖLFLEX CONTROL TM 4G1,5, 281604	
C50W1010	315756-0009	M	9	ÖLFLEX CONTROL TM CY 4G1,5, 281604CY	
F09W2030	90459-4252		1	CABLE M12-C101, 20-056-10	
G40W0000	351429-1609		1	MOTOR POWER CABLE 2090-CPWM7DF-16AA09	
G40W0001	351428-0009		1	MOTOR FEEDBACK CABLE 2090-CFBM7DF-CEAA09	
G40W0002	351429-1609		1	MOTOR POWER CABLE 2090-CPWM7DF-16AA09	
G40W0003	351428-0009		1	MOTOR FEEDBACK CABLE 2090-CFBM7DF-CEAA09	
G40W3000	351429-1609		1	MOTOR POWER CABLE 2090-CPWM7DF-16AA09	
G40W3001	351428-0009		1	MOTOR FEEDBACK CABLE 2090-CFBM7DF-CEAA09	
G40W4010	315743-0009	M	7	ÖLFLEX CONTROL TM 4G1,5, 281604	
G40X0001	90459-2551		1	CONNECTOR, MOTOR FEEDBACK 15 PIN MALE	
G40X0003	90459-2551		1	CONNECTOR, MOTOR FEEDBACK 15 PIN MALE	
G40X3001	90459-2551		1	CONNECTOR, MOTOR FEEDBACK 15 PIN MALE	
W21W4010	315756-0009	M	11	ÖLFLEX CONTROL TM CY 4G1,5, 281604CY	
Common Parts					
A01W5001	351150-0406	M	2	CABLE OLFLEX 7X0,75 MM2 LIGHT/GREY	
A01W5010	351150-0406	M	5.5	CABLE OLFLEX 7X0,75 MM2 LIGHT/GREY	
A01W7001	351150-0403	M	5	CABLE OLFLEX 3X0,75 MM2 LIGHT/GREY	
A01W7002	351150-0403	M	9	CABLE OLFLEX 3X0,75 MM2 LIGHT/GREY	
F09W1003	351150-0405	M	11	CABLE OLFLEX 5X0,75 MM2 LIGHT/GREY	
F09W2001	351423-0006	M	8	CABLE UNITRONIC LICY 5X0,34	
F09W2002	351423-0006	M	5	CABLE UNITRONIC LICY 5X0,34	
G30W0001	351428-0009		1	MOTOR FEEDBACK CABLE 2090-CFBM7DF-CEAA09	
G30W3000	351429-1609		1	MOTOR POWER CABLE 2090-CPWM7DF-16AA09	
G30W4000	351429-1609		1	MOTOR POWER CABLE 2090-CPWM7DF-16AA09	
G30W4001	351428-0009		1	MOTOR FEEDBACK CABLE 2090-CFBM7DF-CEAA09	
G30X0001	90459-2551		1	CONNECTOR, MOTOR FEEDBACK 15 PIN MALE	
G30X4001	90459-2551		1	CONNECTOR, MOTOR FEEDBACK 15 PIN MALE	
K01W8000	351150-0403	M	2	CABLE OLFLEX 3X0,75 MM2 LIGHT/GREY	
K01W8001	351150-0403	M	2	CABLE OLFLEX 3X0,75 MM2 LIGHT/GREY	
P01W4000	351150-0403	M	8	CABLE OLFLEX 3X0,75 MM2 LIGHT/GREY	
P01W4001	351150-0407	M	8	CABLE OLFLEX 12X0,75 MM2 LIGHT/GREY	
V01W5000	315743-0024	M	8	ÖLFLEX CONTROL TM 5G6, 281005	
W20W0000	315756-0009	M	10	ÖLFLEX CONTROL TM CY 4G1,5, 281604CY	
W21W1000	351429-1609		1	MOTOR POWER CABLE 2090-CPWM7DF-16AA09	
W21W1001	351428-0009		1	MOTOR FEEDBACK CABLE 2090-CFBM7DF-CEAA09	
W21W2000	351429-1609		1	MOTOR POWER CABLE 2090-CPWM7DF-16AA09	
W21W2001	351428-0009		1	MOTOR FEEDBACK CABLE 2090-CFBM7DF-CEAA09	
W21W4000	315756-0009	M	18	ÖLFLEX CONTROL TM CY 4G1,5, 281604CY	
W21W8000	315743-0008	M	6	ÖLFLEX CONTROL TM 3G1,5, 281603	
W21W8001	351424-0017	M	5	CABLE ÖLFLEX HEAT 180 4G4 466343	
W21X1001	90459-2551		1	CONNECTOR, MOTOR FEEDBACK 15 PIN MALE	
W21X2001	90459-2551		1	CONNECTOR, MOTOR FEEDBACK 15 PIN MALE	

Machine Type | Group Description | Used-In | Group Number | Page No

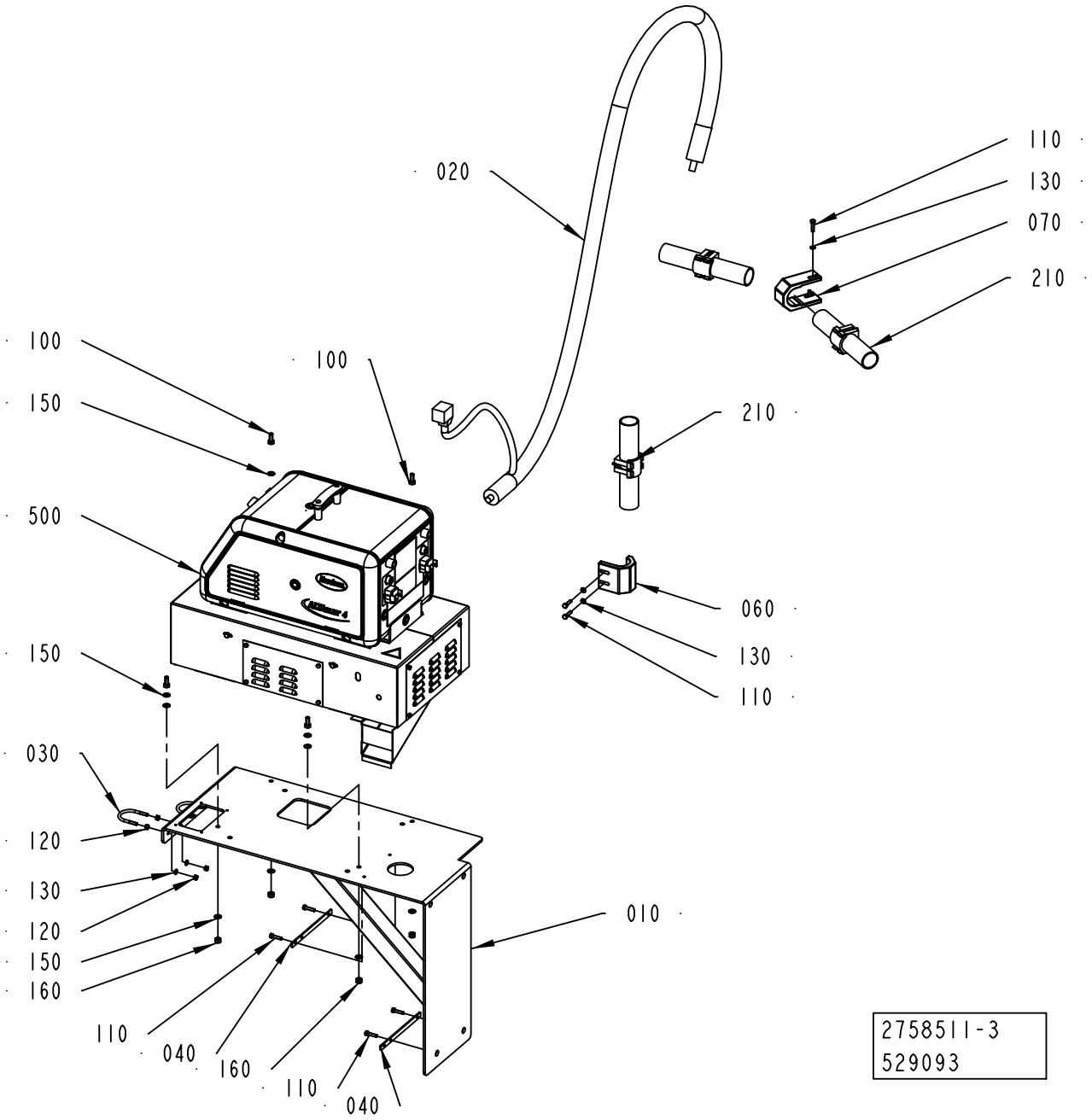
020
110
130
070
210
100
100
150
210
500
060
130
110
150
030
120
130
120
150
160
010
110
040
160
110
040
2758511-3
529093

ECM: 536120 - 20120401
Group number: 2758511-0200
Assembly Drawing: 2758511-3_1_AA

This list covers pages from 5-98 to 5-101

Pos	Part No	UN	Qty	Description	Page No
ADHESIVE HENKEL CAPFIX 100 (See drawing on page: 5-98)					
500	3220124-0100		1	HOTMELT UNIT	**5-103**
ADHESIVE HENKEL NATIONAL 134-135B (See drawing on page: 5-98)					
500	3220125-0100		1	HOTMELT UNIT	**5-105**
ADHESIVE JOWAT 250.00 (See drawing on page: 5-98)					
500	3220122-0100		1	HOTMELT UNIT	**5-107**
ADHESIVE JOWAT 250.80 (See drawing on page: 5-98)					
500	3220123-0100		1	HOTMELT UNIT	**5-109**
ADHESIVE LUEUENBERGER PS880 (See drawing on page: 5-100)					
500	3220121-0100		1	HOTMELT UNIT	**5-111**
Common Parts					
010	2766939-0000		1	SUPPORT	
020	90600-0773		1	RTD HOT MELT HOSE BLUE SERIES, 104008	
030	531616-0000		2	HOLDER	
040	2874024-0000		2	BRACKET	
060	3216184-0000		1	TIGHTENING CLAMP	
070	3217564-0000		1	TIGHTENING CLAMP	
100	312105-0451		4	SCREW, M6S ISO 4017 M8X20 A4 80	
110	312105-0372		4	SCREW, M6S ISO 4017 M6X25 A4 80	
120	312605-0316		8	HEXAGON NUT, M6M M6 A280	
130	315105-0153		4	WASHER PLAIN, 6,4X12X1,5 A4 BRB	
150	315105-0165		8	WASHER PLAIN, 8,4X16X1,6 A4 BRB	
160	312812-0318		4	HEXAGON NUT, NY-LOCK M8 A4 80	
210	90439-0295		3	SERVICE KIT, NO. 111940	

Pos	Part No	UN	Qty	Description	Page No

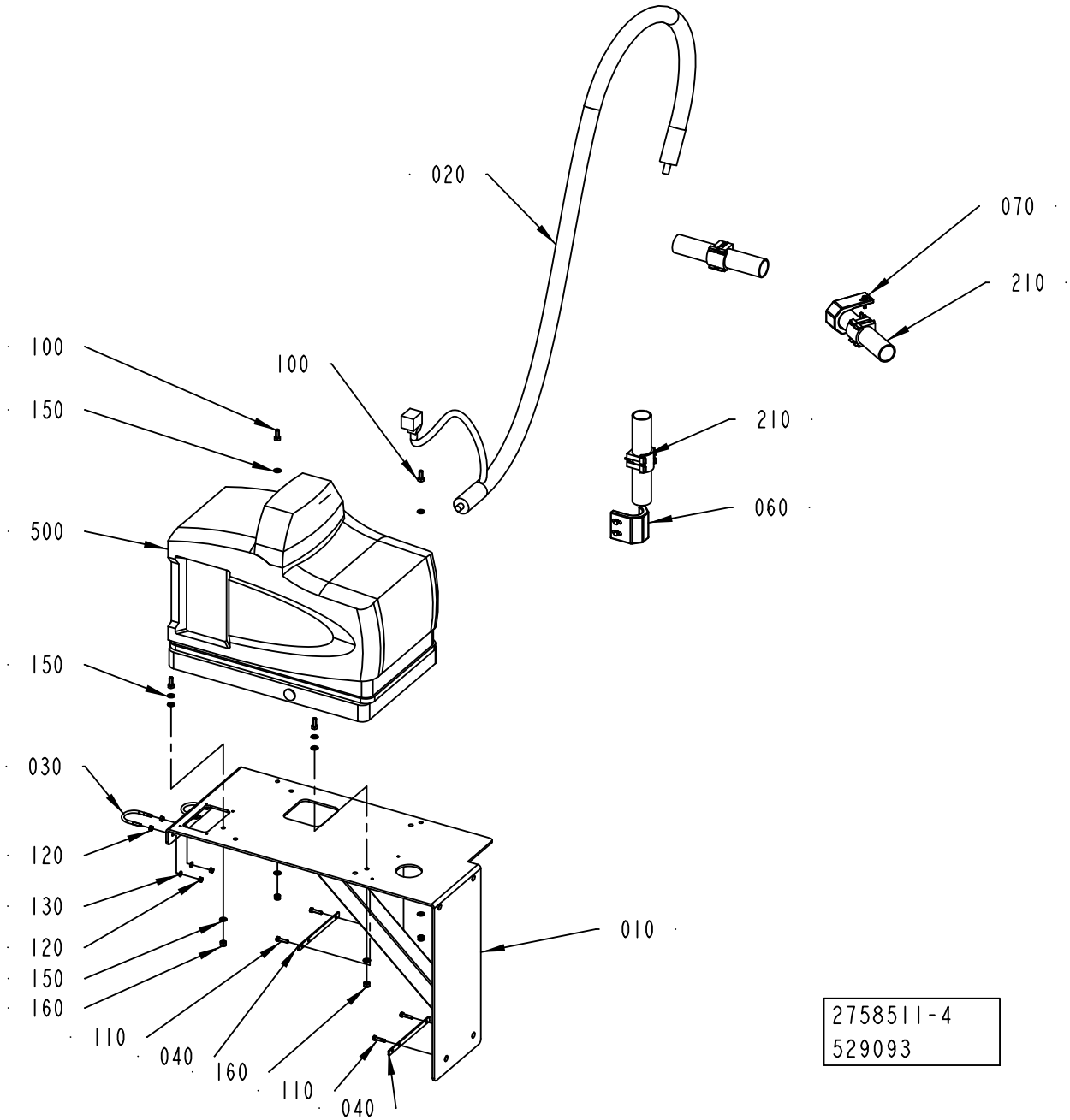
020
070
210
100
100
150
210
060
500
150
030
120
130
120
150
160
010
110
040
160
110
040
2758511-4
529093

ECM: 536120 - 20120401
Group number: 2758511-0200
Assembly Drawing: 2758511-4_1_AA

This list covers pages from 5-98 to 5-101

Pos	Part No	UN	Qty	Description	Page No
ADHESIVE HENKEL CAPFIX 100 (See drawing on page: 5-98)					
500	3220124-0100		1	HOTMELT UNIT	**5-103**
ADHESIVE HENKEL NATIONAL 134-135B (See drawing on page: 5-98)					
500	3220125-0100		1	HOTMELT UNIT	**5-105**
ADHESIVE JOWAT 250.00 (See drawing on page: 5-98)					
500	3220122-0100		1	HOTMELT UNIT	**5-107**
ADHESIVE JOWAT 250.80 (See drawing on page: 5-98)					
500	3220123-0100		1	HOTMELT UNIT	**5-109**
ADHESIVE LUEUENBERGER PS880 (See drawing on page: 5-100)					
500	3220121-0100		1	HOTMELT UNIT	**5-111**
Common Parts					
010	2766939-0000		1	SUPPORT	
020	90600-0773		1	RTD HOT MELT HOSE BLUE SERIES, 104008	
030	531616-0000		2	HOLDER	
040	2874024-0000		2	BRACKET	
060	3216184-0000		1	TIGHTENING CLAMP	
070	3217564-0000		1	TIGHTENING CLAMP	
100	312105-0451		4	SCREW, M6S ISO 4017 M8X20 A4 80	
110	312105-0372		4	SCREW, M6S ISO 4017 M6X25 A4 80	
120	312605-0316		8	HEXAGON NUT, M6M M6 A280	
130	315105-0153		4	WASHER PLAIN, 6,4X12X1,5 A4 BRB	
150	315105-0165		8	WASHER PLAIN, 8,4X16X1,6 A4 BRB	
160	312812-0318		4	HEXAGON NUT, NY-LOCK M8 A4 80	
210	90439-0295		3	SERVICE KIT, NO. 111940	

Pos	Part No	UN	Qty	Description	Page No

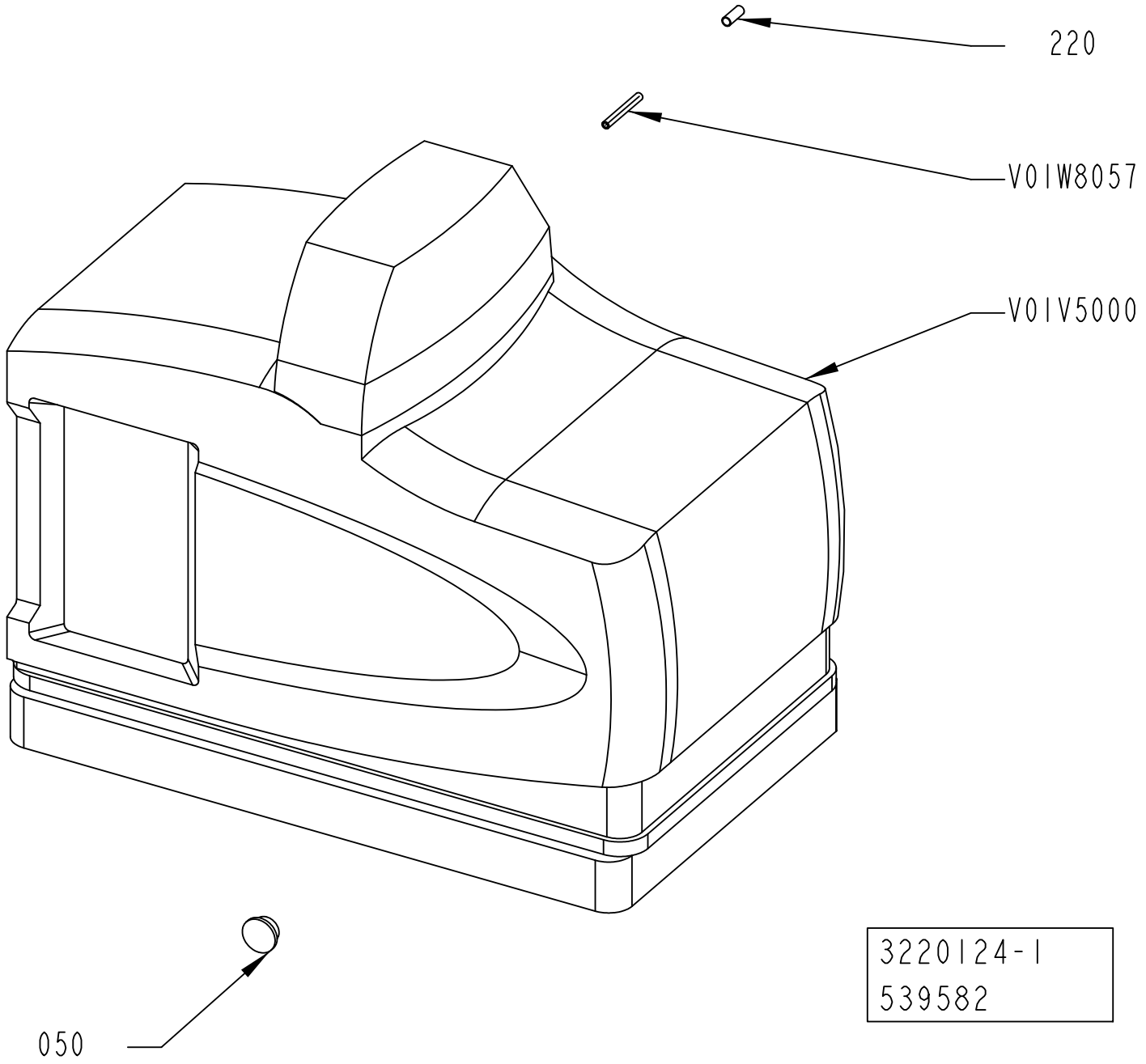
220
V01W8057
V01V5000
050
3220124-1
539582

ECM: 543051 - 20120402
Group number: 3220124-0100
Assembly Drawing: 3220124-1_1_AB

Pos	Part No	UN	Qty	Description	Page No
HELICAP2 23 (See drawing on page: 5-102)					
050	3117867-0000		1	PLASTIC PLUG	
220	90459-7369		1	MARKING FOR PNEUM. TUBING, PRZ06	
K01W8057	315400-0001	MM	3000	TUBE PUN-H-6X1-BL	
V01V5000	90604-3319		1	HOT MELT UNIT PROBLUE 4, 108 0419 H1	
	90459-1971		*1*	*HOSE/GUN MODULE KIT, 1028328*	
	90459-1972		*1*	*FUSE KIT, HOSE/GUN, 1028331*	
	90459-1973		*1*	*MAIN PCA SERV.KIT, 1028322*	
	90459-1974		*1*	*FUSE KIT, MAIN CIRC.BOARD, 1028329*	
	90459-1975		*1*	*DISPLAY, CPU BOARD SERV. KIT, 1028325*	
	90459-1976		*1*	*KIT, OPERATOR PANEL/ ENCLOSURE, 1028326*	
	90459-1977		*1*	*SERVICE KIT, TANK P4, 1051033*	
	90459-1978		*1*	*KIT, RTD TEMP. SENSOR, 1028320*	
	90459-1979		*1*	*SERV. KIT, THERMOSTAT, 1028321*	
	90459-1980		*1*	*SERVICE KIT, MANIFOLD ASSY, 106 4651*	
	90459-1981		*1*	*SERVICE KIT, MANIFOLD ASSY, 1028309*	
	90459-1982		*1*	*SERVICE KIT, PRESS. DISC. VALVE, 1028308*	
	90459-1983		*1*	*HEATER BLOCK KIT, 1064649*	
	90459-1985		*1*	*SERVICE KIT, PUMP PISTON, 1028304*	
	90459-1986		*1*	*FILTER ASSY, 100 MESH, 1028305*	
	90459-1987		*1*	*SERVICE KIT, PNEUM. PANEL ASSY, 1028307*	
	90459-1988		*1*	*SUB BASE P4, 1021661*	
	90459-1989		*1*	*CHASSIS, P4, 1021660*	
	90602-5787		*1*	*KIT, SVCE, PUMP 6:1, PROBLUE, 108 8212*	
SLIMCAP 2000, SLIMCAP 1000 (See drawing on page: 5-102)					
050	3117867-0000		1	PLASTIC PLUG	
220	90459-7369		1	MARKING FOR PNEUM. TUBING, PRZ06	
K01W8057	315400-0001	MM	3000	TUBE PUN-H-6X1-BL	
V01V5000	90604-3320		1	HOT MELT UNIT PROBLUE 4, 104 9296 H1	
	90459-1977		*1*	*SERVICE KIT, TANK P4, 1051033*	
	90459-1976		*1*	*KIT, OPERATOR PANEL/ ENCLOSURE, 1028326*	
	90459-1978		*1*	*KIT, RTD TEMP. SENSOR, 1028320*	
	90459-1979		*1*	*SERV. KIT, THERMOSTAT, 1028321*	
	90459-1980		*1*	*SERVICE KIT, MANIFOLD ASSY, 106 4651*	
	90459-1975		*1*	*DISPLAY, CPU BOARD SERV. KIT, 1028325*	
	90459-1974		*1*	*FUSE KIT, MAIN CIRC.BOARD, 1028329*	
	90459-1973		*1*	*MAIN PCA SERV.KIT, 1028322*	
	90459-1972		*1*	*FUSE KIT, HOSE/GUN, 1028331*	
	90459-1971		*1*	*HOSE/GUN MODULE KIT, 1028328*	
	90459-1981		*1*	*SERVICE KIT, MANIFOLD ASSY, 1028309*	
	90459-1982		*1*	*SERVICE KIT, PRESS. DISC. VALVE, 1028308*	
	90459-1983		*1*	*HEATER BLOCK KIT, 1064649*	
	90459-1984		*1*	*KIT, PUMP PISTON, 1028303*	
	90459-1985		*1*	*SERVICE KIT, PUMP PISTON, 1028304*	
	90459-1986		*1*	*FILTER ASSY, 100 MESH, 1028305*	
	90459-1987		*1*	*SERVICE KIT, PNEUM. PANEL ASSY, 1028307*	
	90459-1988		*1*	*SUB BASE P4, 1021661*	
	90459-1989		*1*	*CHASSIS, P4, 1021660*	
	90602-5788		*1*	*REBUILING KIT, PUMP 1:6, 110 0297*	

Machine Type | Group Description | Used-In | Group Number | Page No

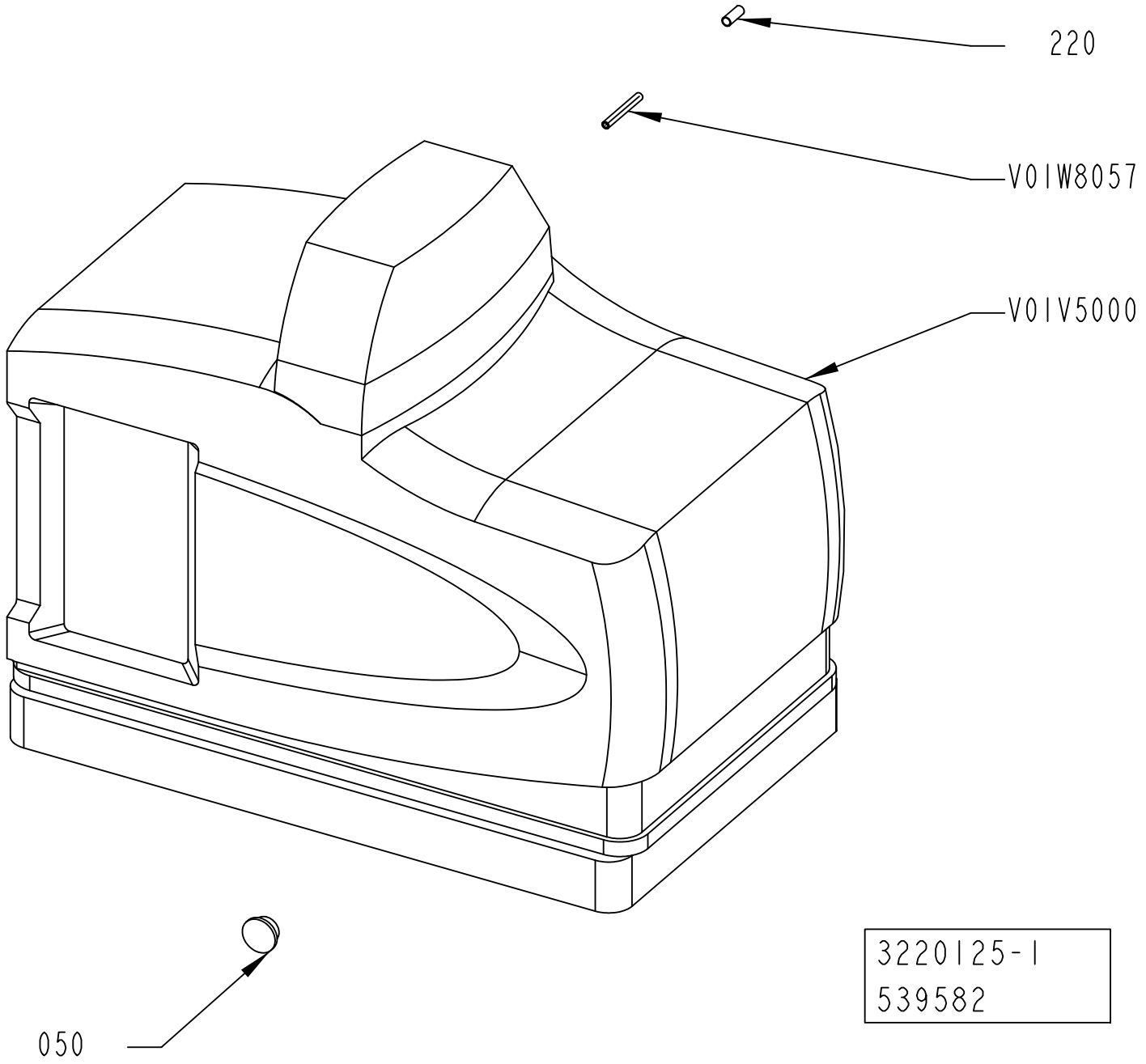
220
V01W8057
V01V5000
050
3220125-1
539582

ECM: 543052 - 20120402
Group number: 3220125-0100
Assembly Drawing: 3220125-1_1_AB

Pos	Part No	UN	Qty	Description	Page No
HELICAP2 23 (See drawing on page: 5-104)					
050	3117867-0000		1	PLASTIC PLUG	
220	90459-7369		1	MARKING FOR PNEUM. TUBING, PRZ06	
K01W8057	315400-0001	MM	3000	TUBE PUN-H-6X1-BL	
V01V5000	90604-3319		1	HOT MELT UNIT PROBLUE 4, 108 0419 H1	
	90459-1971		*1*	*HOSE/GUN MODULE KIT, 1028328*	
	90459-1972		*1*	*FUSE KIT, HOSE/GUN, 1028331*	
	90459-1973		*1*	*MAIN PCA SERV.KIT, 1028322*	
	90459-1974		*1*	*FUSE KIT, MAIN CIRC.BOARD, 1028329*	
	90459-1975		*1*	*DISPLAY, CPU BOARD SERV. KIT, 1028325*	
	90459-1976		*1*	*KIT, OPERATOR PANEL/ ENCLOSURE, 1028326*	
	90459-1977		*1*	*SERVICE KIT, TANK P4, 1051033*	
	90459-1978		*1*	*KIT, RTD TEMP. SENSOR, 1028320*	
	90459-1979		*1*	*SERV. KIT, THERMOSTAT, 1028321*	
	90459-1980		*1*	*SERVICE KIT, MANIFOLD ASSY, 106 4651*	
	90459-1981		*1*	*SERVICE KIT, MANIFOLD ASSY, 1028309*	
	90459-1982		*1*	*SERVICE KIT, PRESS. DISC. VALVE, 1028308*	
	90459-1983		*1*	*HEATER BLOCK KIT, 1064649*	
	90459-1985		*1*	*SERVICE KIT, PUMP PISTON, 1028304*	
	90459-1986		*1*	*FILTER ASSY, 100 MESH, 1028305*	
	90459-1987		*1*	*SERVICE KIT, PNEUM. PANEL ASSY, 1028307*	
	90459-1988		*1*	*SUB BASE P4, 1021661*	
	90459-1989		*1*	*CHASSIS, P4, 1021660*	
	90602-5787		*1*	*KIT, SVCE, PUMP 6:1, PROBLUE, 108 8212*	
SLIMCAP 2000, SLIMCAP 1000 (See drawing on page: 5-104)					
050	3117867-0000		1	PLASTIC PLUG	
220	90459-7369		1	MARKING FOR PNEUM. TUBING, PRZ06	
K01W8057	315400-0001	MM	3000	TUBE PUN-H-6X1-BL	
V01V5000	90604-3320		1	HOT MELT UNIT PROBLUE 4, 104 9296 H1	
	90459-1977		*1*	*SERVICE KIT, TANK P4, 1051033*	
	90459-1976		*1*	*KIT, OPERATOR PANEL/ ENCLOSURE, 1028326*	
	90459-1978		*1*	*KIT, RTD TEMP. SENSOR, 1028320*	
	90459-1979		*1*	*SERV. KIT, THERMOSTAT, 1028321*	
	90459-1980		*1*	*SERVICE KIT, MANIFOLD ASSY, 106 4651*	
	90459-1975		*1*	*DISPLAY, CPU BOARD SERV. KIT, 1028325*	
	90459-1974		*1*	*FUSE KIT, MAIN CIRC.BOARD, 1028329*	
	90459-1973		*1*	*MAIN PCA SERV.KIT, 1028322*	
	90459-1972		*1*	*FUSE KIT, HOSE/GUN, 1028331*	
	90459-1971		*1*	*HOSE/GUN MODULE KIT, 1028328*	
	90459-1981		*1*	*SERVICE KIT, MANIFOLD ASSY, 1028309*	
	90459-1982		*1*	*SERVICE KIT, PRESS. DISC. VALVE, 1028308*	
	90459-1983		*1*	*HEATER BLOCK KIT, 1064649*	
	90459-1984		*1*	*KIT, PUMP PISTON, 1028303*	
	90459-1985		*1*	*SERVICE KIT, PUMP PISTON, 1028304*	
	90459-1986		*1*	*FILTER ASSY, 100 MESH, 1028305*	
	90459-1987		*1*	*SERVICE KIT, PNEUM. PANEL ASSY, 1028307*	
	90459-1988		*1*	*SUB BASE P4, 1021661*	
	90459-1989		*1*	*CHASSIS, P4, 1021660*	
	90602-5788		*1*	*REBUILING KIT, PUMP 1:6, 110 0297*	

Machine Type | Group Description | Used-In | Group Number | Page No

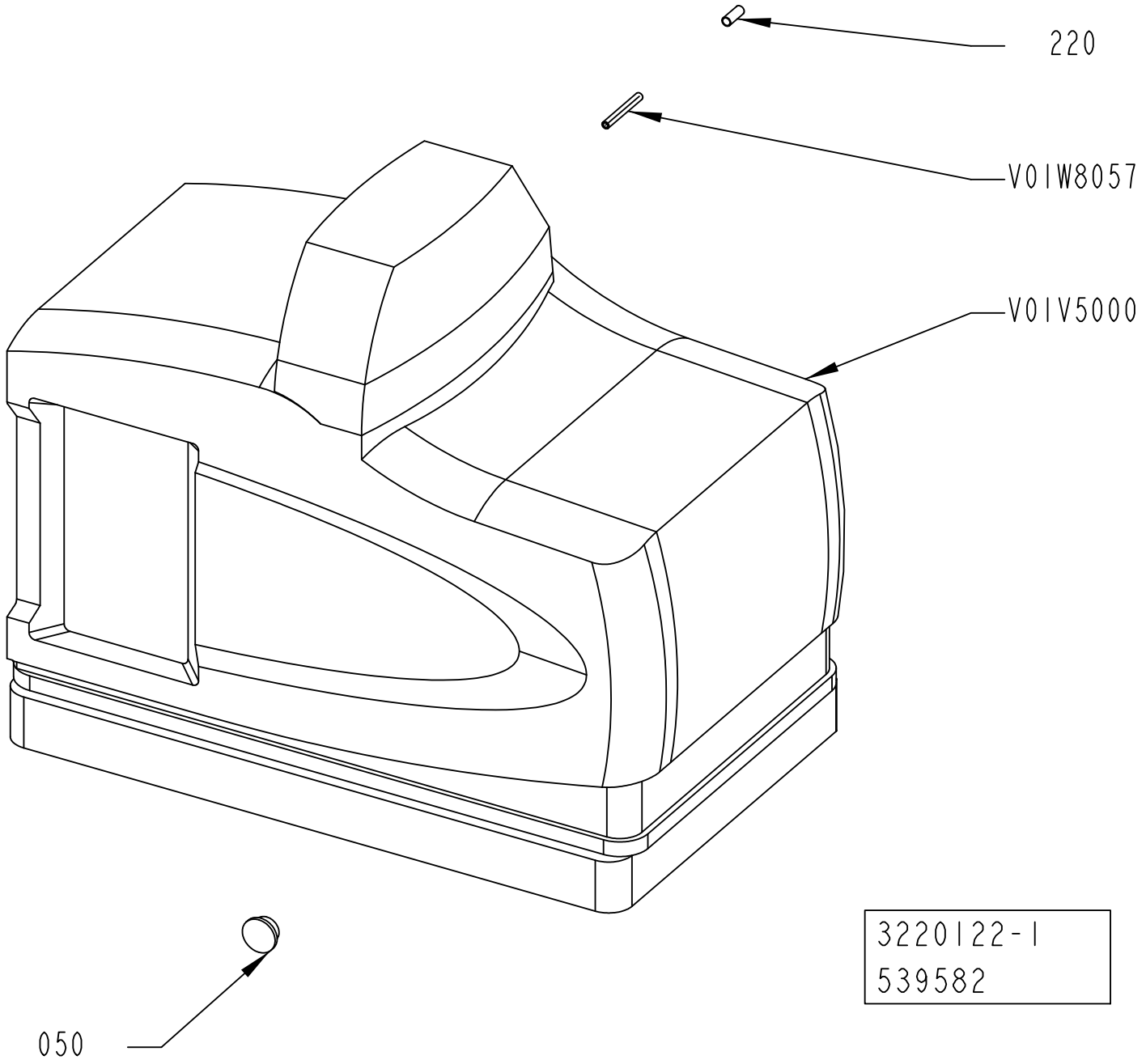
220
V01W8057
V01V5000
050
3220122-1
539582

ECM: 543049 - 20120402
Group number: 3220122-0100
Assembly Drawing: 3220122-1_1_AB

Pos	Part No	UN	Qty	Description	Page No
STREAMCAP500, STREAMCAP1000, STREAMCAP200, HELICAP 27					
050	3117867-0000		1	PLASTIC PLUG	
220	90459-7369		1	MARKING FOR PNEUM. TUBING, PRZ06	
K01W8057	315400-0001	MM	3000	TUBE PUN-H-6X1-BL	
V01V5000	90604-3320		1	HOT MELT UNIT PROBLUE 4, 104 9296 H1	
	90459-1977		*1*	*SERVICE KIT, TANK P4, 1051033*	
	90459-1976		*1*	*KIT, OPERATOR PANEL/ ENCLOSURE, 1028326*	
	90459-1978		*1*	*KIT, RTD TEMP. SENSOR, 1028320*	
	90459-1979		*1*	*SERV. KIT, THERMOSTAT, 1028321*	
	90459-1980		*1*	*SERVICE KIT, MANIFOLD ASSY, 106 4651*	
	90459-1975		*1*	*DISPLAY, CPU BOARD SERV. KIT, 1028325*	
	90459-1974		*1*	*FUSE KIT, MAIN CIRC.BOARD, 1028329*	
	90459-1973		*1*	*MAIN PCA SERV.KIT, 1028322*	
	90459-1972		*1*	*FUSE KIT, HOSE/GUN, 1028331*	
	90459-1971		*1*	*HOSE/GUN MODULE KIT, 1028328*	
	90459-1981		*1*	*SERVICE KIT, MANIFOLD ASSY, 1028309*	
	90459-1982		*1*	*SERVICE KIT, PRESS. DISC. VALVE, 1028308*	
	90459-1983		*1*	*HEATER BLOCK KIT, 1064649*	
	90459-1984		*1*	*KIT, PUMP PISTON, 1028303*	
	90459-1985		*1*	*SERVICE KIT, PUMP PISTON, 1028304*	
	90459-1986		*1*	*FILTER ASSY, 100 MESH, 1028305*	
	90459-1987		*1*	*SERVICE KIT, PNEUM. PANEL ASSY, 1028307*	
	90459-1988		*1*	*SUB BASE P4, 1021661*	
	90459-1989		*1*	*CHASSIS, P4, 1021660*	
	90602-5788		*1*	*REBUILING KIT, PUMP 1:6, 110 0297*	

Pos	Part No	UN	Qty	Description	Page No

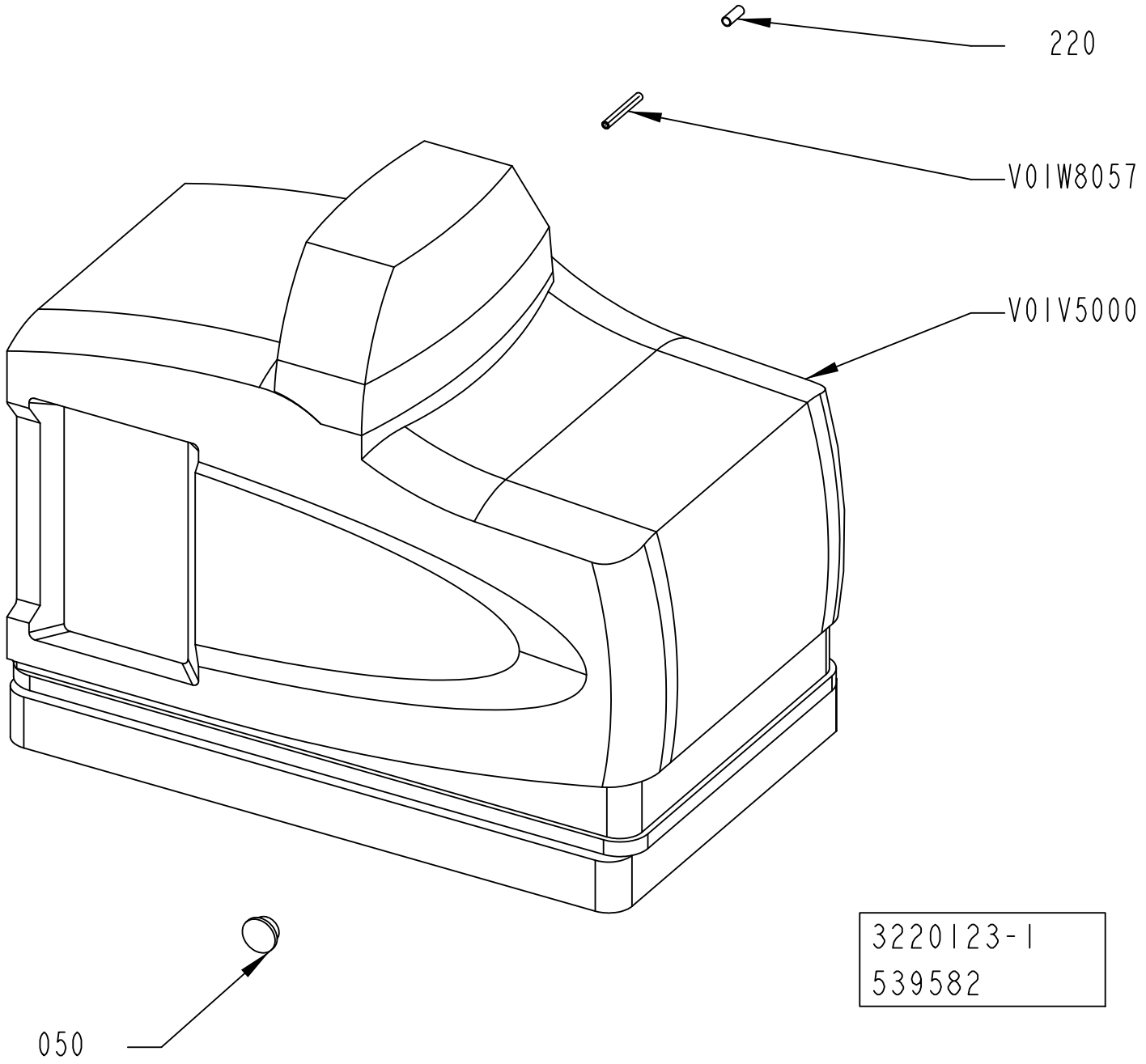
220
V01W8057
V01V5000
050
3220123-1
539582

ECM: 543050 - 20120402
Group number: 3220123-0100
Assembly Drawing: 3220123-1_1_AB

Pos	Part No	UN	Qty	Description	Page No
STREAMCAP500, STREAMCAP1000, STREAMCAP200					
050	3117867-0000		1	PLASTIC PLUG	
220	90459-7369		1	MARKING FOR PNEUM. TUBING, PRZ06	
K01W8057	315400-0001	MM	3000	TUBE PUN-H-6X1-BL	
V01V5000	90604-3320		1	HOT MELT UNIT PROBLUE 4, 104 9296 H1	
	90459-1977		*1*	*SERVICE KIT, TANK P4, 1051033*	
	90459-1976		*1*	*KIT, OPERATOR PANEL/ ENCLOSURE, 1028326*	
	90459-1978		*1*	*KIT, RTD TEMP. SENSOR, 1028320*	
	90459-1979		*1*	*SERV. KIT, THERMOSTAT, 1028321*	
	90459-1980		*1*	*SERVICE KIT, MANIFOLD ASSY, 106 4651*	
	90459-1975		*1*	*DISPLAY, CPU BOARD SERV. KIT, 1028325*	
	90459-1974		*1*	*FUSE KIT, MAIN CIRC.BOARD, 1028329*	
	90459-1973		*1*	*MAIN PCA SERV.KIT, 1028322*	
	90459-1972		*1*	*FUSE KIT, HOSE/GUN, 1028331*	
	90459-1971		*1*	*HOSE/GUN MODULE KIT, 1028328*	
	90459-1981		*1*	*SERVICE KIT, MANIFOLD ASSY, 1028309*	
	90459-1982		*1*	*SERVICE KIT, PRESS. DISC. VALVE, 1028308*	
	90459-1983		*1*	*HEATER BLOCK KIT, 1064649*	
	90459-1984		*1*	*KIT, PUMP PISTON, 1028303*	
	90459-1985		*1*	*SERVICE KIT, PUMP PISTON, 1028304*	
	90459-1986		*1*	*FILTER ASSY, 100 MESH, 1028305*	
	90459-1987		*1*	*SERVICE KIT, PNEUM. PANEL ASSY, 1028307*	
	90459-1988		*1*	*SUB BASE P4, 1021661*	
	90459-1989		*1*	*CHASSIS, P4, 1021660*	
	90602-5788		*1*	*REBUILING KIT, PUMP 1:6, 110 0297*	

Pos	Part No	UN	Qty	Description	Page No

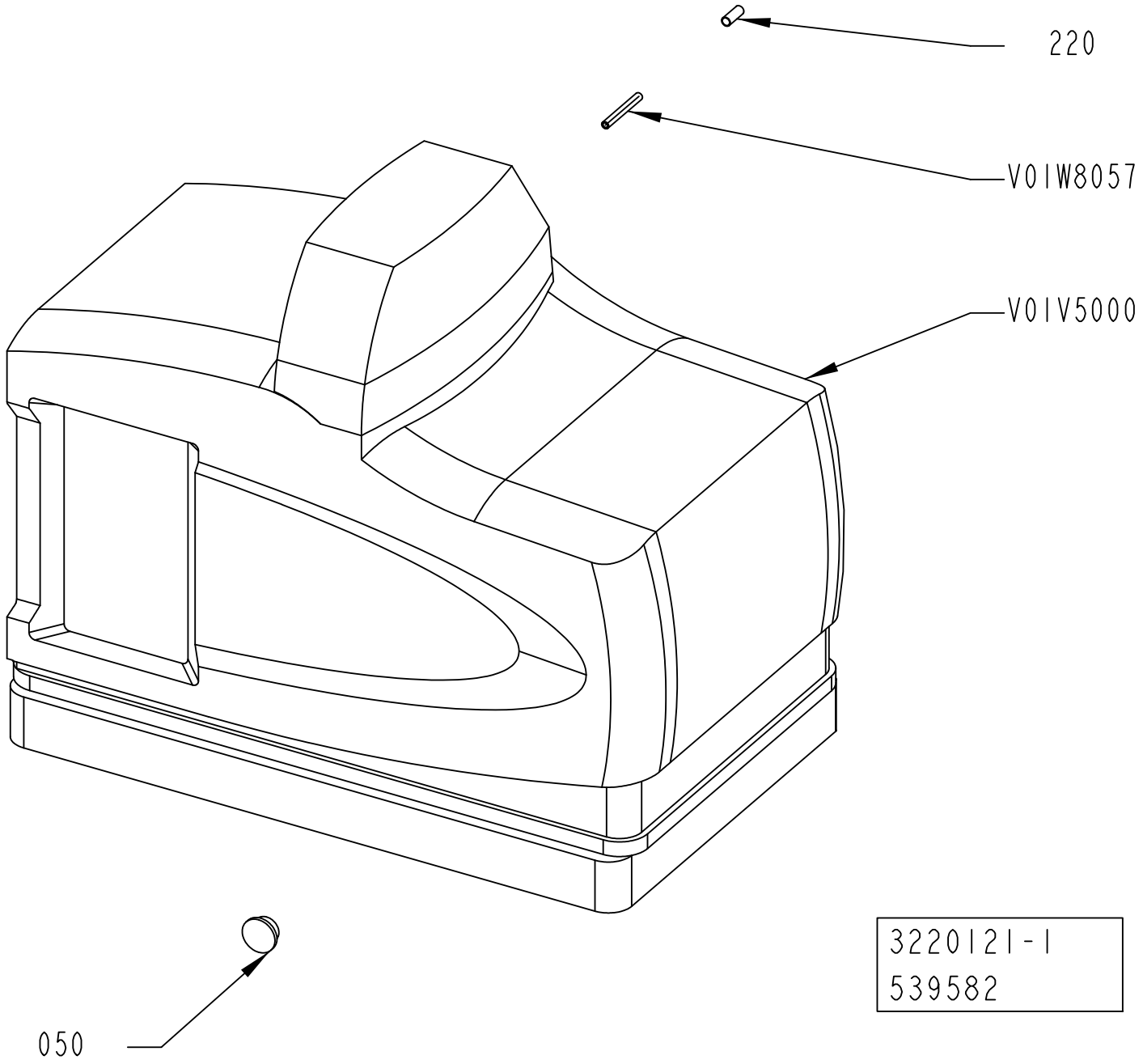
220
V01W8057
V01V5000
050
3220121-1
539582

ECM: 543048 - 20120402
Group number: 3220121-0100
Assembly Drawing: 3220121-1_1_AB

Pos	Part No	UN	Qty	Description	Page No
HELICAP 27 (See drawing on page: 5-110)					
050	3117867-0000		1	PLASTIC PLUG	
220	90459-7369		1	MARKING FOR PNEUM. TUBING, PRZ06	
K01W8057	315400-0001	MM	3000	TUBE PUN-H-6X1-BL	
V01V5000	90604-3319		1	HOT MELT UNIT PROBLUE 4, 108 0419 H1	
	90459-1971		*1*	*HOSE/GUN MODULE KIT, 1028328*	
	90459-1972		*1*	*FUSE KIT, HOSE/GUN, 1028331*	
	90459-1973		*1*	*MAIN PCA SERV.KIT, 1028322*	
	90459-1974		*1*	*FUSE KIT, MAIN CIRC.BOARD, 1028329*	
	90459-1975		*1*	*DISPLAY, CPU BOARD SERV. KIT, 1028325*	
	90459-1976		*1*	*KIT, OPERATOR PANEL/ ENCLOSURE, 1028326*	
	90459-1977		*1*	*SERVICE KIT, TANK P4, 1051033*	
	90459-1978		*1*	*KIT, RTD TEMP. SENSOR, 1028320*	
	90459-1979		*1*	*SERV. KIT, THERMOSTAT, 1028321*	
	90459-1980		*1*	*SERVICE KIT, MANIFOLD ASSY, 106 4651*	
	90459-1981		*1*	*SERVICE KIT, MANIFOLD ASSY, 1028309*	
	90459-1982		*1*	*SERVICE KIT, PRESS. DISC. VALVE, 1028308*	
	90459-1983		*1*	*HEATER BLOCK KIT, 1064649*	
	90459-1985		*1*	*SERVICE KIT, PUMP PISTON, 1028304*	
	90459-1986		*1*	*FILTER ASSY, 100 MESH, 1028305*	
	90459-1987		*1*	*SERVICE KIT, PNEUM. PANEL ASSY, 1028307*	
	90459-1988		*1*	*SUB BASE P4, 1021661*	
	90459-1989		*1*	*CHASSIS, P4, 1021660*	
	90602-5787		*1*	*KIT, SVCE, PUMP 6:1, PROBLUE, 108 8212*	
STREAMCAP500, STREAMCAP1000, STREAMCAP200 (See drawing on page: 5-110)					
050	3117867-0000		1	PLASTIC PLUG	
220	90459-7369		1	MARKING FOR PNEUM. TUBING, PRZ06	
K01W8057	315400-0001	MM	3000	TUBE PUN-H-6X1-BL	
V01V5000	90604-3320		1	HOT MELT UNIT PROBLUE 4, 104 9296 H1	
	90459-1977		*1*	*SERVICE KIT, TANK P4, 1051033*	
	90459-1976		*1*	*KIT, OPERATOR PANEL/ ENCLOSURE, 1028326*	
	90459-1978		*1*	*KIT, RTD TEMP. SENSOR, 1028320*	
	90459-1979		*1*	*SERV. KIT, THERMOSTAT, 1028321*	
	90459-1980		*1*	*SERVICE KIT, MANIFOLD ASSY, 106 4651*	
	90459-1975		*1*	*DISPLAY, CPU BOARD SERV. KIT, 1028325*	
	90459-1974		*1*	*FUSE KIT, MAIN CIRC.BOARD, 1028329*	
	90459-1973		*1*	*MAIN PCA SERV.KIT, 1028322*	
	90459-1972		*1*	*FUSE KIT, HOSE/GUN, 1028331*	
	90459-1971		*1*	*HOSE/GUN MODULE KIT, 1028328*	
	90459-1981		*1*	*SERVICE KIT, MANIFOLD ASSY, 1028309*	
	90459-1982		*1*	*SERVICE KIT, PRESS. DISC. VALVE, 1028308*	
	90459-1983		*1*	*HEATER BLOCK KIT, 1064649*	
	90459-1984		*1*	*KIT, PUMP PISTON, 1028303*	
	90459-1985		*1*	*SERVICE KIT, PUMP PISTON, 1028304*	
	90459-1986		*1*	*FILTER ASSY, 100 MESH, 1028305*	
	90459-1987		*1*	*SERVICE KIT, PNEUM. PANEL ASSY, 1028307*	
	90459-1988		*1*	*SUB BASE P4, 1021661*	
	90459-1989		*1*	*CHASSIS, P4, 1021660*	
	90602-5788		*1*	*REBUILING KIT, PUMP 1:6, 110 0297*	

Machine Type | Group Description | Used-In | Group Number | Page No

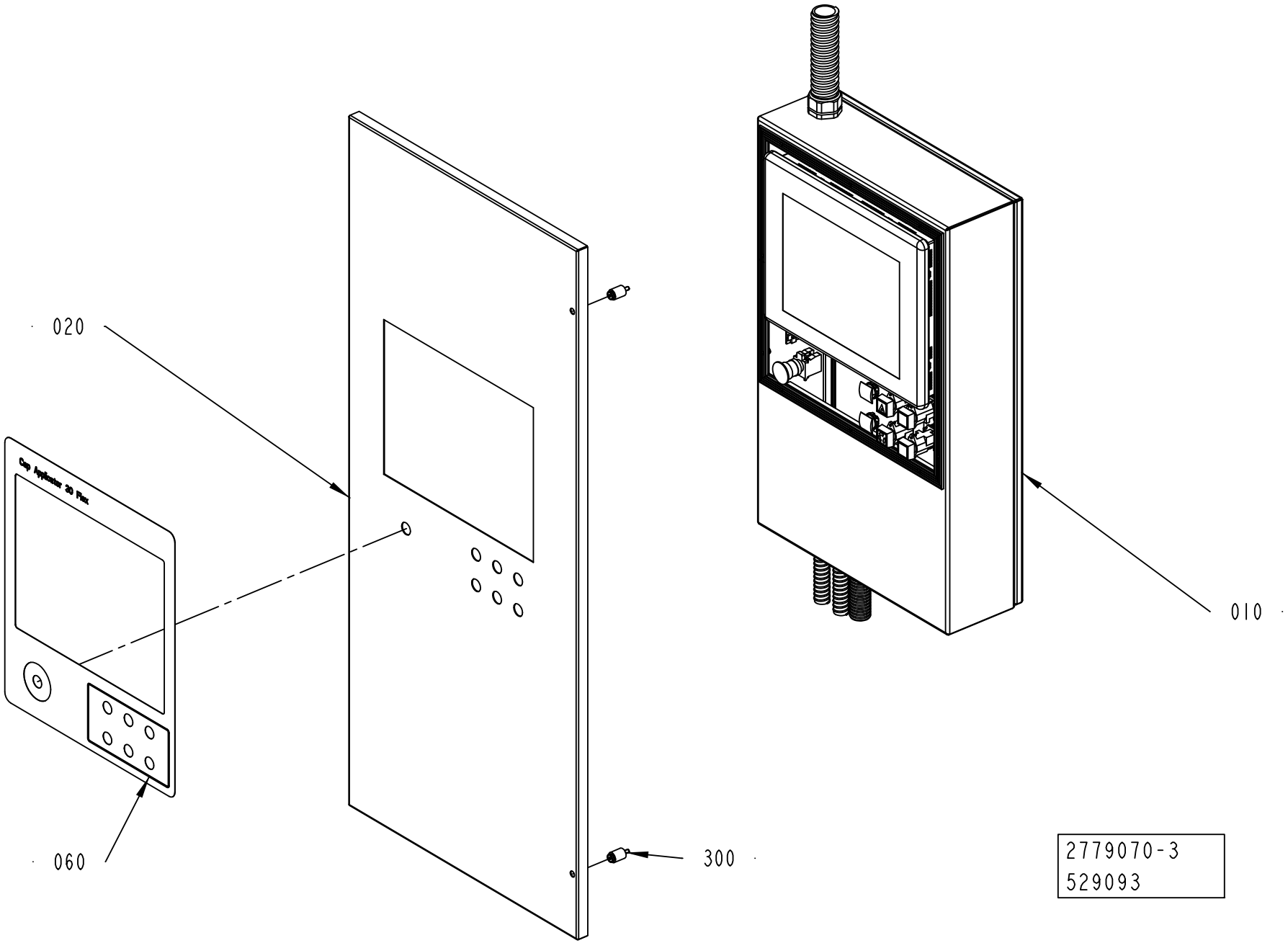
020
060
300
010
2779070-3
529093

ECM: 529701 - 20120401
Group number: 2779070-0300
Assembly Drawing: 2779070-3_1_AA

Pos	Part No	UN	Qty	Description	Page No
CAP 30/FLEX					
060	2746920-0000		1	FOIL	
Common Parts					
010	2802386-0300		1	OPERATOR INTERFACE	**5-115**
020	2779768-0000		1	DOOR	
250	3218060-0100		1	WARNING SIGN	**5-121**
300	90226-0458		2	MOUNTING SCREW	

Pos	Part No	UN	Qty	Description	Page No

Machine Type | Group Description | Used-In | Group Number | Page No

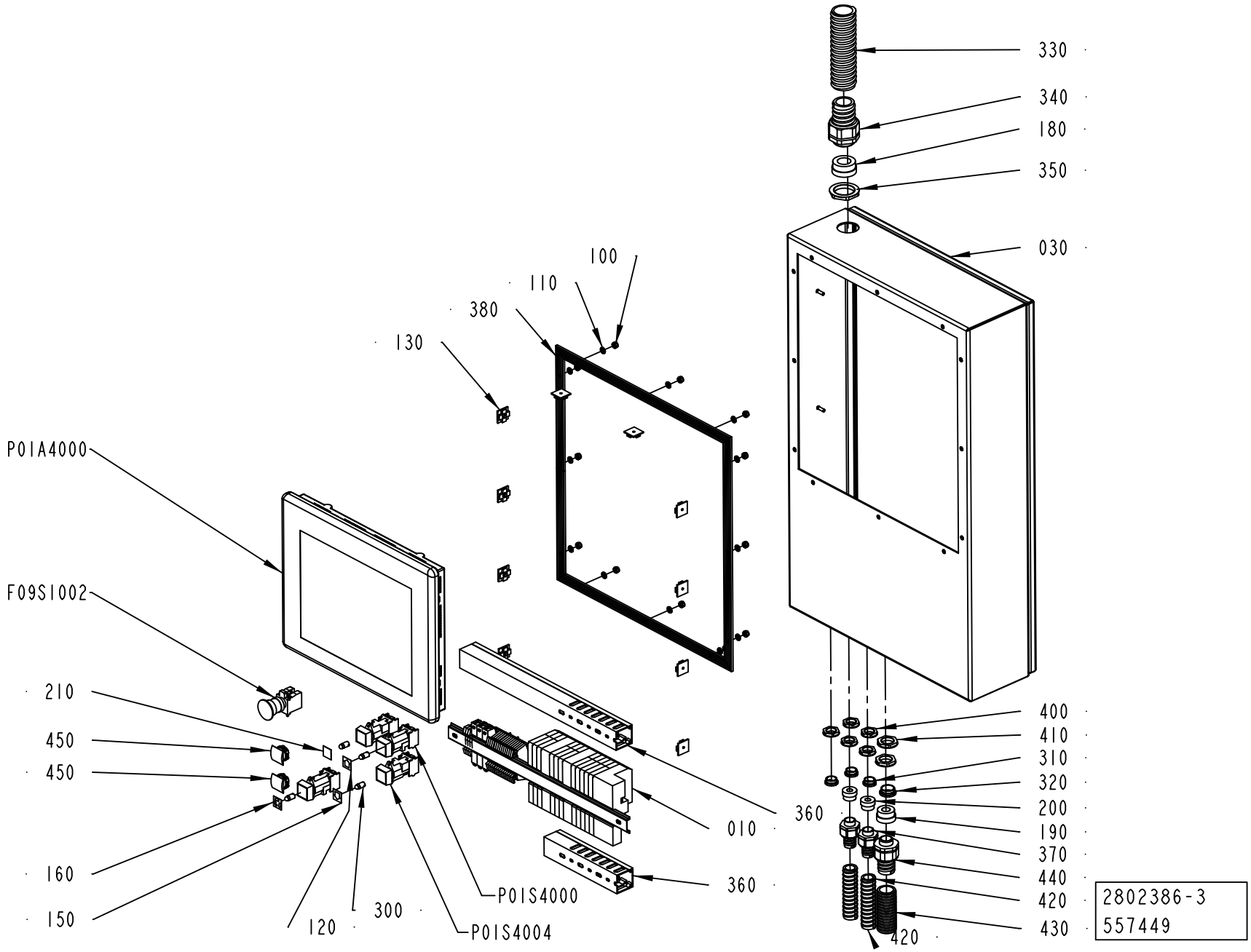
330
340
180
350
030
100
110
380
130
P01A4000
F09S1002
210
450
450
160
150
120
300
P01S4004
P01S4000
010
360
360
400
410
310
320
200
190
370
440
420
430
420
2802386-3
557449

ECM: 557449 - 20120702
Group number: 2802386-0300
Assembly Drawing: 2802386-3_1_AC

Pos	Part No	UN	Qty	Description	Page No
-					
010	2817783-0200		1	PLINTH	**5-117, 5-119**
030	2746904-0000		1	BOX	
100	312812-0316		12	HEXAGON NUT, NY-LOCK M6 A4 80	
110	315105-0153		12	WASHER PLAIN, 6,4X12X1,5 A4 BRB	
120	359301-0001		1	BUTTON SIGN, UP	
130	352113-0206		10	ANCHOR PLATES FOR STRIPS, ABM100-AT	
150	359301-0005		1	BUTTON SIGN, DOWN	
160	359301-0090		1	BUTTON SIGN, INCHING	
180	353249-0054		1	INSERT, SINGLE HOLE, EK156 25	
190	353249-0015		1	INSERT, SINGLE HOLE, EK155 16	
200	353249-0012		2	INSERT, SINGLE HOLE, EK154 11	
210	359301-0504		1	BUTTON SIGN, RESET	
300	90036-0057		4	LIGHT BULB, BA9S 28V	
310	90458-1308		3	BLIND PLUG CIRCULAR, M20X1,5 514GFK/220	
320	90458-1309		1	BLIND PLUG CIRCULAR, M25X1,5 514GFK/225	
330	90152-0060	MM	1000	HOSE, SPIRAL CONDUIT, 42X35, UL3529	
340	90458-0434		1	GLAND FITTING, VK 24056YUL29	
350	90458-0326		1	NUT, M40X1,5	
360	90181-0038	MM	1100	CABLE DUCT, PLASTIC, 40X40	
370	90458-0430		2	GLAND FITTING, VK 22054YUL16	
380	90143-0071	MM	2000	RUBBER STRIP 4X20MM	
390	90152-0051	MM	1800	HOSE, SPIRAL CONDUIT, 25X18, UL 1816	
400	90458-0323		5	NUT, M20X1,5	
410	90458-0324		2	NUT, M25X1,5	
420	90152-0051	MM	1500	HOSE, SPIRAL CONDUIT, 25X18, UL 1816	
430	90152-0070	MM	700	HOSE, SPIRAL CONDUIT, 32,5X26, UL 2621	
440	90458-0432		1	GLAND FITTING, VK 22555YUL21	
450	90459-3279		3	BLANK PLUG, BLACK SQUARE, PLASTIC ZB5SZ5	
F09S1002	90458-1651		1	EMERGENCY STOP, ZB4-BS-844 ZB4-BZ-104	
P01A4000	90604-3805		1	OPER. PANEL 15" , 2711P-T15C4D8TP, SER A	
P01S4000	90064-0093		1	PUSH BUTTON, GREEN	
	90036-0057		*1*	*LIGHT BULB, BA9S 28V*	
P01S4001	90064-0098		1	PUSH BUTTON, WHITE	
P01S4002	90064-0093		1	PUSH BUTTON, GREEN	
	90036-0057		*1*	*LIGHT BULB, BA9S 28V*	
P01S4004	90064-0098		1	PUSH BUTTON, WHITE	

Pos	Part No	UN	Qty	Description	Page No

Machine Type	Group Description	Used-In	Group Number	Page No

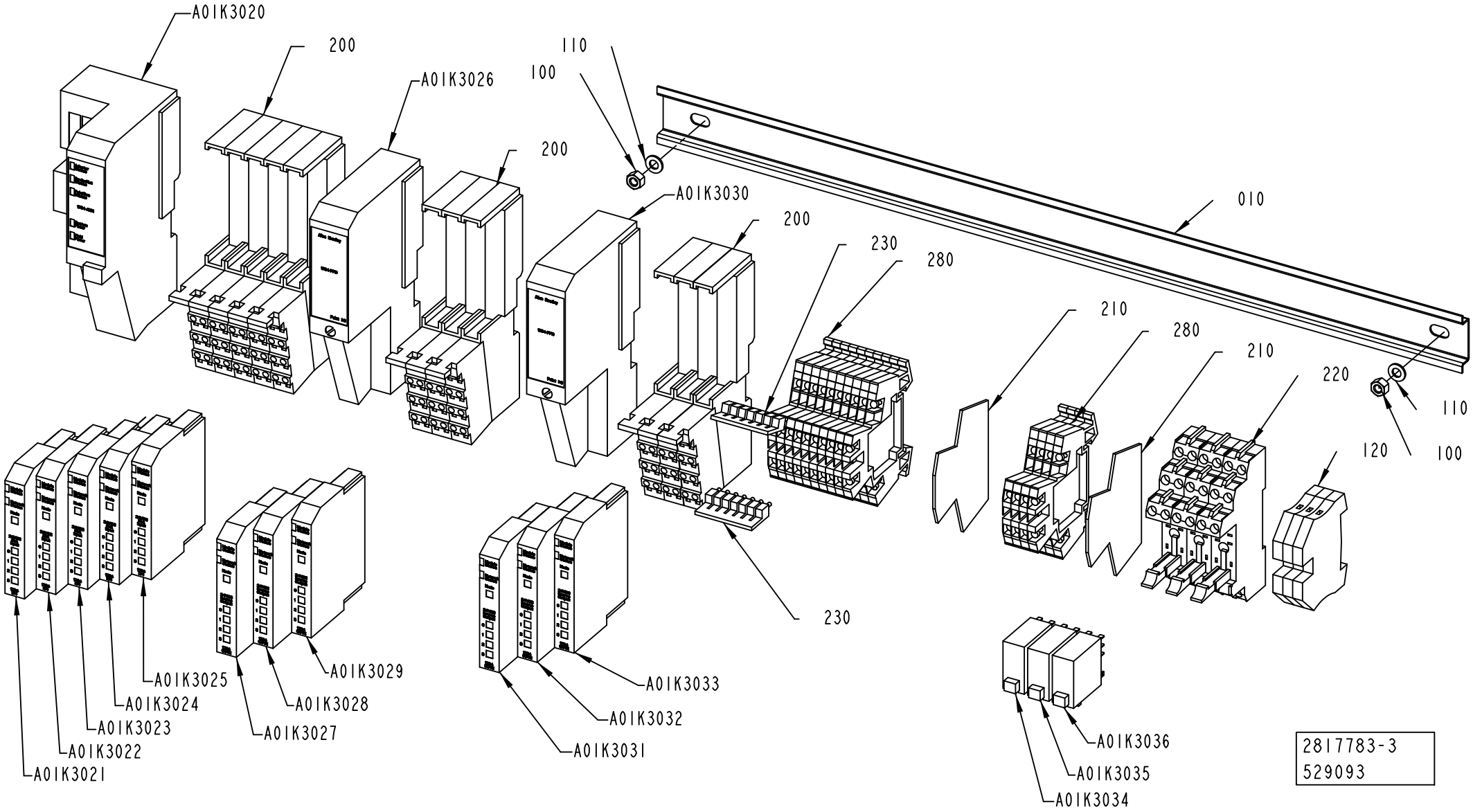
A01K3020
200
A01K3026
110
100
200
A01K3030
200
230
280
010
210
280
210
220
110
120
100
230
A01K3025
A01K3024
A01K3023
A01K3022
A01K3021
A01K3029
A01K3028
A01K3027
A01K3033
A01K3032
A01K3031
A01K3036
A01K3035
A01K3034
2817783-3
529093

ECM: 529703 - 20120401
Group number: 2817783-0200
Assembly Drawing: 2817783-3_1_AA

This list covers pages from 5-116 to 5-119

Pos	Part No	UN	Qty	Description	Page No
CAP 30/FLEX (See drawing on pages: 5-116, 5-118)					
200	90459-2526		11	REMOTE I/O BASE MODULE 8 POINTS, 1734-TB	
210	90077-0114		2	END PLATE, WAP WDK 2.5 1059100000	
220	90129-0018		3	BASE, P2RF-08-E	
280	90077-0113		14	TERMINAL BLOCK WDK 2.5	
A01K3025	90459-2503		1	DIGITAL INPUT 4 PTS SINK, 1734-IB4	
A01K3033	90459-2505		1	DIGITAL OUTPUT 4 PTS, 1734-OB4E	
A01K3035	90119-0108		1	RELAY OMRON G2R-2-SNI-24DC	
	90129-0018		*1*	*BASE, P2RF-08-E*	
A01K3036	90119-0108		1	RELAY OMRON G2R-2-SNI-24DC	
	90129-0018		*1*	*BASE, P2RF-08-E*	
Common Parts					
010	2746909-0000		1	RAIL	
100	312605-0314		2	HEXAGON NUT, M6M M5 A280	
110	315105-0146		2	WASHER PLAIN, 5,3X10X1 A4 BRB	
120	353024-0205		3	EARTH TERMINAL WPE 4	
230	353034-0030		2	BRIDGE CONNECTOR WQV 2,5/10	
A01K3020	90459-2494		1	DEVICENET I/O ADAPTER MODULE, 1734-ADN	
A01K3021	90459-2503		1	DIGITAL INPUT 4 PTS SINK, 1734-IB4	
A01K3022	90459-2503		1	DIGITAL INPUT 4 PTS SINK, 1734-IB4	
A01K3023	90459-2503		1	DIGITAL INPUT 4 PTS SINK, 1734-IB4	
A01K3024	90459-2503		1	DIGITAL INPUT 4 PTS SINK, 1734-IB4	
A01K3026	90459-2501		1	FIELD POWER DISTRIBUTOR, 1734-FPD	
A01K3027	90459-2505		1	DIGITAL OUTPUT 4 PTS, 1734-OB4E	
A01K3028	90459-2505		1	DIGITAL OUTPUT 4 PTS, 1734-OB4E	
A01K3029	90459-2505		1	DIGITAL OUTPUT 4 PTS, 1734-OB4E	
A01K3030	90459-2501		1	FIELD POWER DISTRIBUTOR, 1734-FPD	
A01K3031	90459-2505		1	DIGITAL OUTPUT 4 PTS, 1734-OB4E	
A01K3032	90459-2505		1	DIGITAL OUTPUT 4 PTS, 1734-OB4E	
A01K3034	90119-0108		1	RELAY OMRON G2R-2-SNI-24DC	
	90129-0018		*1*	*BASE, P2RF-08-E*	

Pos	Part No	UN	Qty	Description	Page No

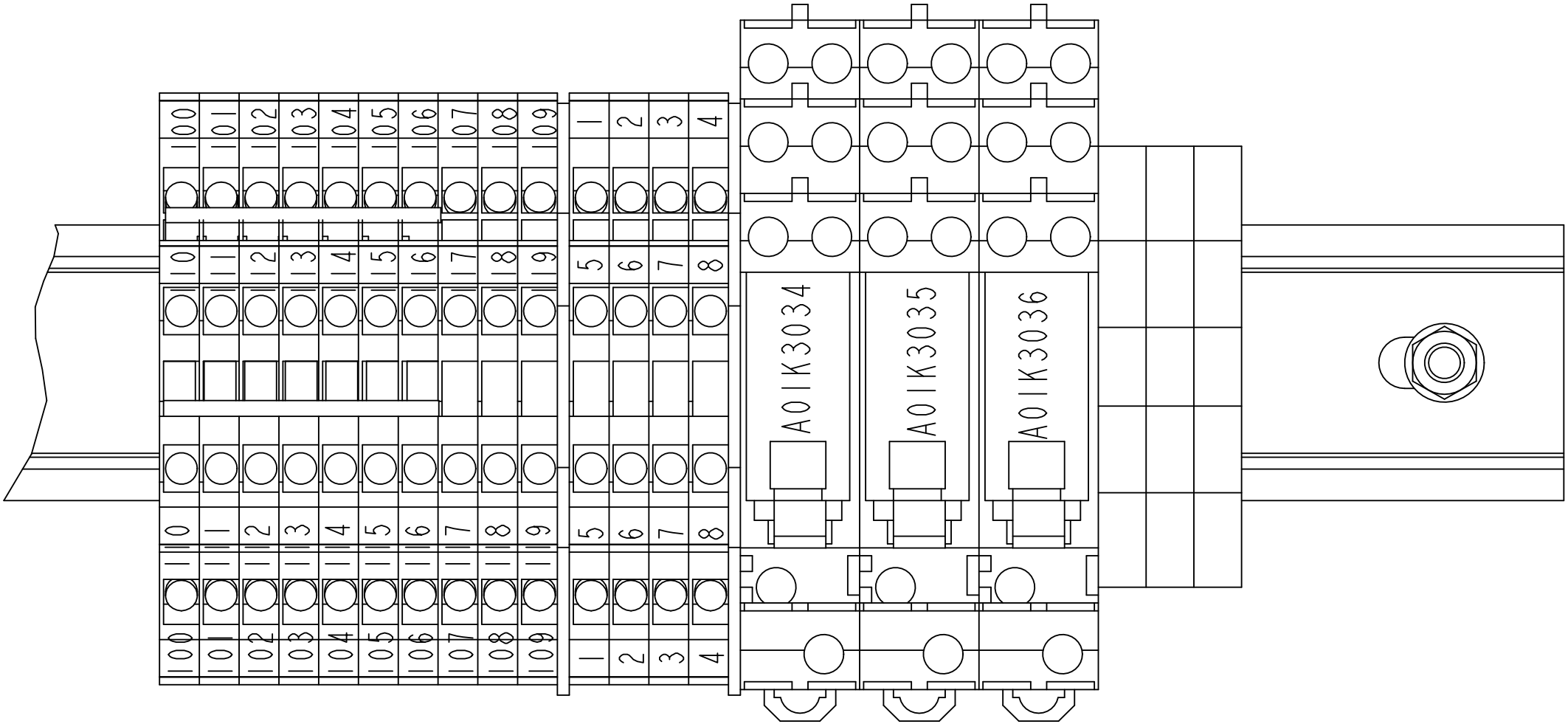

SCALE 1:1

2817783-3
529093

ECM: 529703 - 20120401
Group number: 2817783-0200
Assembly Drawing: 2817783-3_2_AA

This list covers pages from 5-116 to 5-119

Pos	Part No	UN	Qty	Description	Page No
CAP 30/FLEX (See drawing on pages: 5-116, 5-118)					
200	90459-2526		11	REMOTE I/O BASE MODULE 8 POINTS, 1734-TB	
210	90077-0114		2	END PLATE, WAP WDK 2.5 1059100000	
220	90129-0018		3	BASE, P2RF-08-E	
280	90077-0113		14	TERMINAL BLOCK WDK 2.5	
A01K3025	90459-2503		1	DIGITAL INPUT 4 PTS SINK, 1734-IB4	
A01K3033	90459-2505		1	DIGITAL OUTPUT 4 PTS, 1734-OB4E	
A01K3035	90119-0108		1	RELAY OMRON G2R-2-SNI-24DC	
	90129-0018		*1*	*BASE, P2RF-08-E*	
A01K3036	90119-0108		1	RELAY OMRON G2R-2-SNI-24DC	
	90129-0018		*1*	*BASE, P2RF-08-E*	
Common Parts					
010	2746909-0000		1	RAIL	
100	312605-0314		2	HEXAGON NUT, M6M M5 A280	
110	315105-0146		2	WASHER PLAIN, 5,3X10X1 A4 BRB	
120	353024-0205		3	EARTH TERMINAL WPE 4	
230	353034-0030		2	BRIDGE CONNECTOR WQV 2,5/10	
A01K3020	90459-2494		1	DEVICENET I/O ADAPTER MODULE, 1734-ADN	
A01K3021	90459-2503		1	DIGITAL INPUT 4 PTS SINK, 1734-IB4	
A01K3022	90459-2503		1	DIGITAL INPUT 4 PTS SINK, 1734-IB4	
A01K3023	90459-2503		1	DIGITAL INPUT 4 PTS SINK, 1734-IB4	
A01K3024	90459-2503		1	DIGITAL INPUT 4 PTS SINK, 1734-IB4	
A01K3026	90459-2501		1	FIELD POWER DISTRIBUTOR, 1734-FPD	
A01K3027	90459-2505		1	DIGITAL OUTPUT 4 PTS, 1734-OB4E	
A01K3028	90459-2505		1	DIGITAL OUTPUT 4 PTS, 1734-OB4E	
A01K3029	90459-2505		1	DIGITAL OUTPUT 4 PTS, 1734-OB4E	
A01K3030	90459-2501		1	FIELD POWER DISTRIBUTOR, 1734-FPD	
A01K3031	90459-2505		1	DIGITAL OUTPUT 4 PTS, 1734-OB4E	
A01K3032	90459-2505		1	DIGITAL OUTPUT 4 PTS, 1734-OB4E	
A01K3034	90119-0108		1	RELAY OMRON G2R-2-SNI-24DC	
	90129-0018		*1*	*BASE, P2RF-08-E*	

Pos	Part No	UN	Qty	Description	Page No

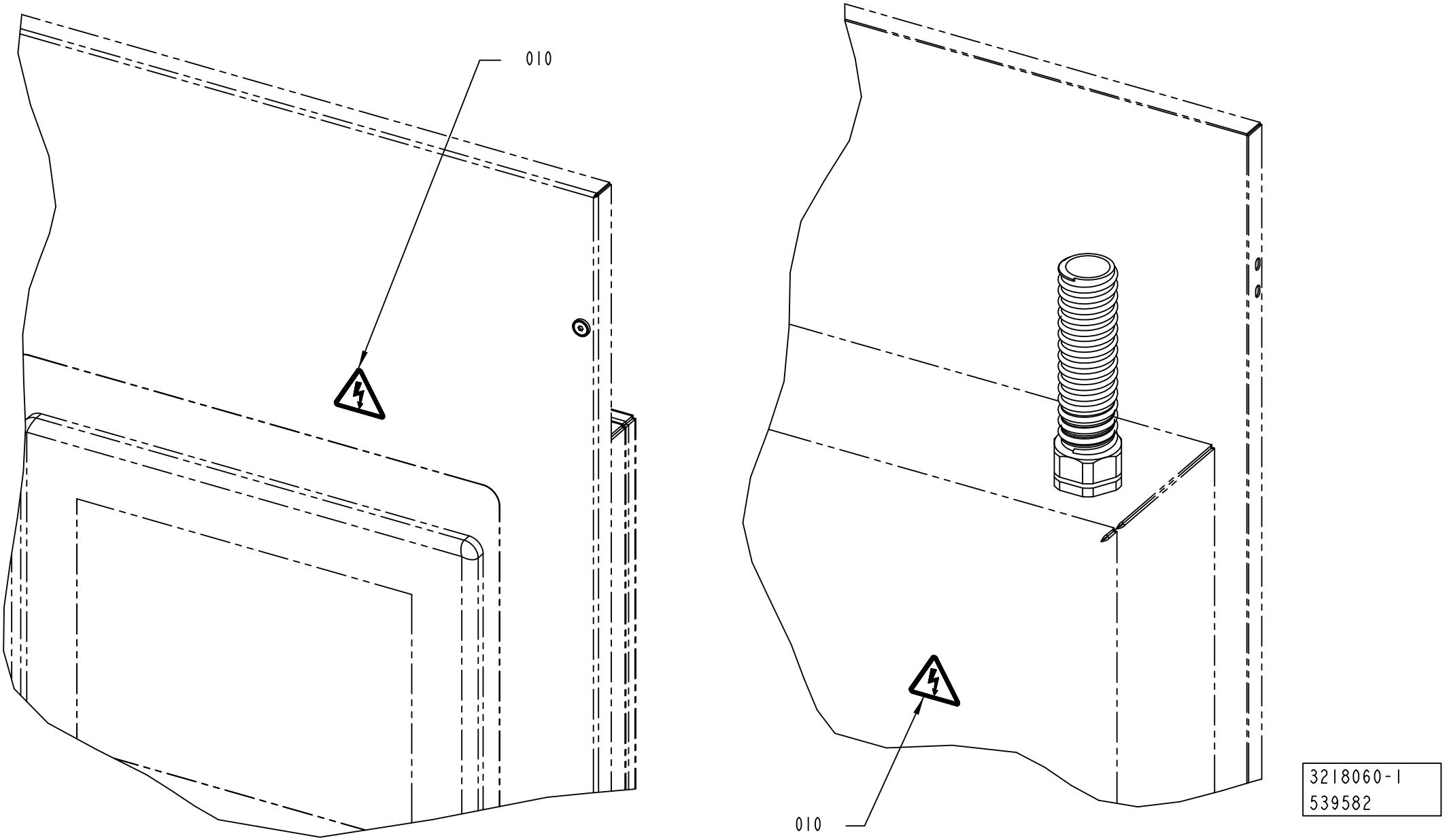
010
010
3218060-1
539582

ECM: 543047 - 20120402
Group number: 3218060-0100
Assembly Drawing: 3218060-1_1_AB

Pos	Part No	UN	Qty	Description	Page No
ANSI					
010	359715-0100		2	WARNING SIGN ANSI (H), ELECTRIC SHOCK	
ISO					
010	359705-0015		2	WARNING SIGN ISO, RISK OF ELECTRIC SHOCK	

Pos	Part No	UN	Qty	Description	Page No

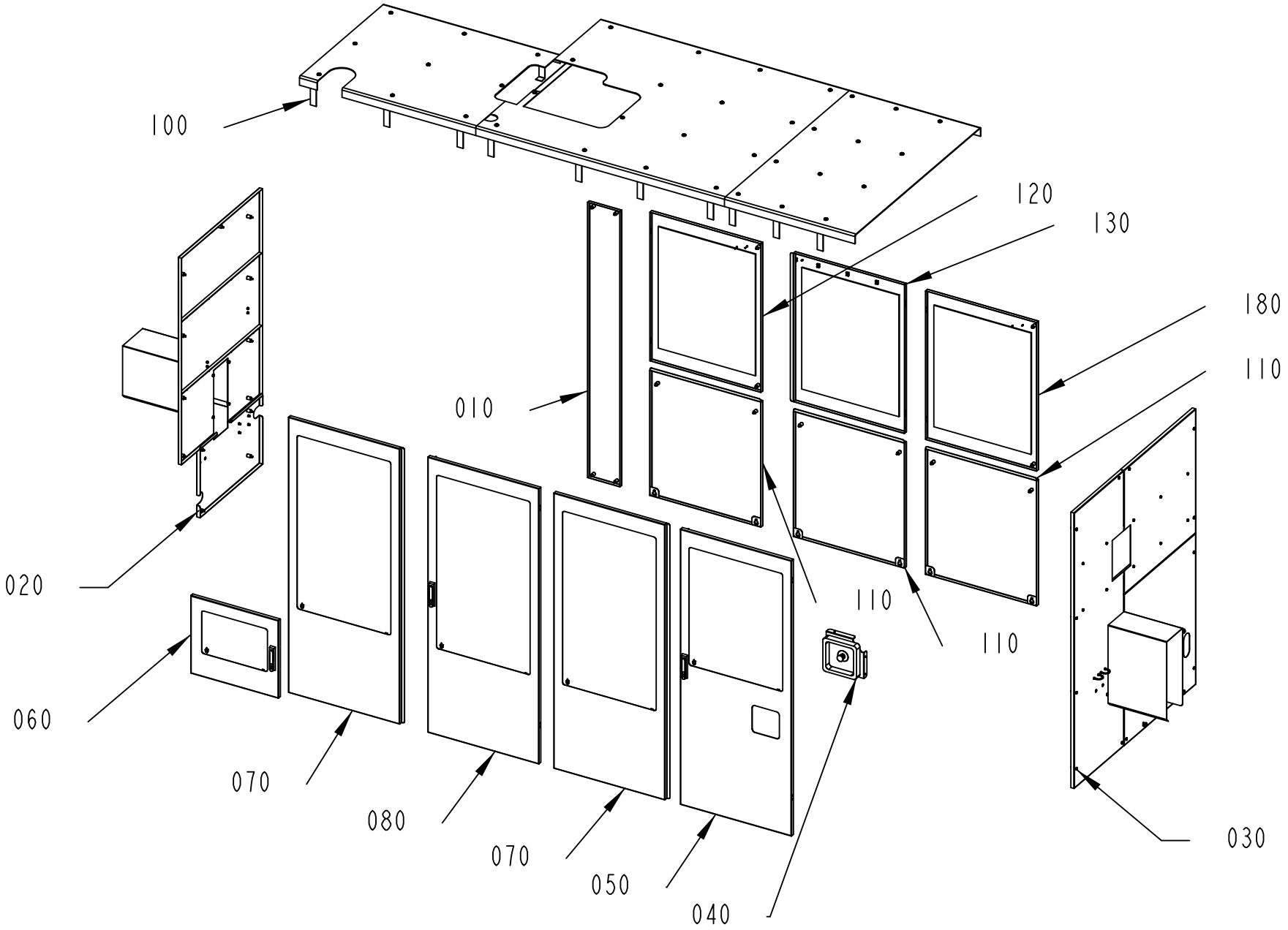

2826741-5
529093

ECM: 529717 - 20120401
Group number: 2826741-0300
Assembly Drawing: 2826741-5_1_AA

Pos	Part No	UN	Qty	Description	Page No
STREAMCAP500, STREAMCAP1000, SLIMCAP 2000, SLIMCAP 1000, STREAMCAP200, HELICAP2 23, HELICAP 27					
030	2826743-0300		1	COVER	**5-125**
050	2779748-0100		1	GLASS DOOR	**5-135**
070	2779833-0100		2	GLASS DOOR	**5-137**
Common Parts					
010	2779835-0200		1	DOOR	**5-139**
020	2826742-0300		1	COVER	**5-141**
040	2769760-0200		1	EMERGENCY STOP	**5-147**
060	2779832-0100		1	GLASS DOOR	**5-149**
080	2779834-0100		1	GLASS DOOR	**5-151**
100	2787230-0100		1	TOP SECTION	**5-153**
110	2805693-0100		3	DOOR	**5-155**
120	2805687-0100		1	GLASS DOOR	**5-157**
130	2805694-0100		1	GLASS DOOR	**5-159**
180	3047348-0100		1	GLASS DOOR	**5-161**

Pos	Part No	UN	Qty	Description	Page No

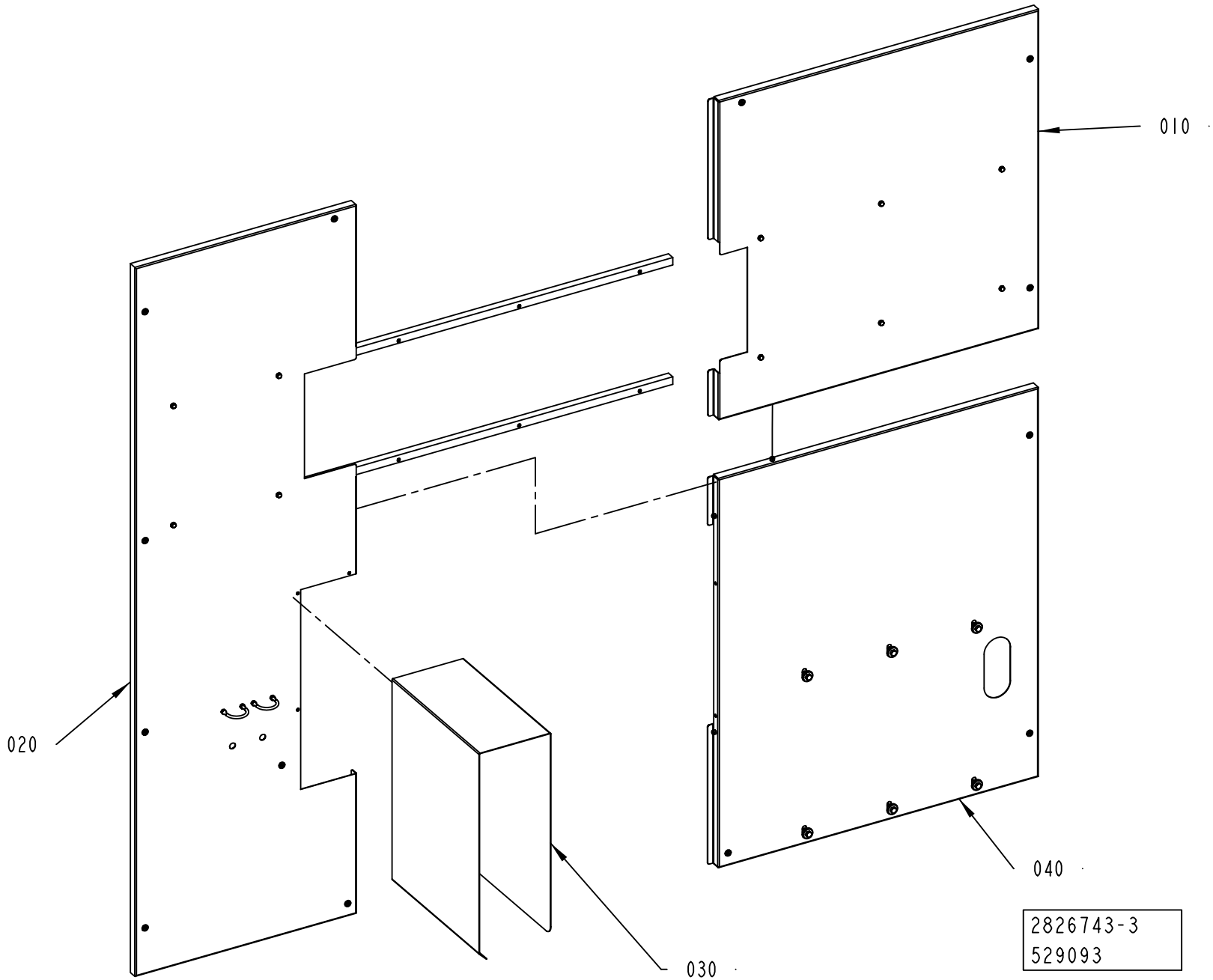
010
020
030
040
2826743-3
529093

ECM: 537709 - 20120401
Group number: 2826743-0300
Assembly Drawing: 2826743-3_1_AA

Pos	Part No	UN	Qty	Description	Page No
-					
010	2842795-0100		1	COVER	**5-127**
020	2842794-0300		1	COVER	**5-129**
030	2846399-0300		1	TUNNEL	**5-131**
040	2842807-0200		1	COVER	**5-133**

Pos	Part No	UN	Qty	Description	Page No

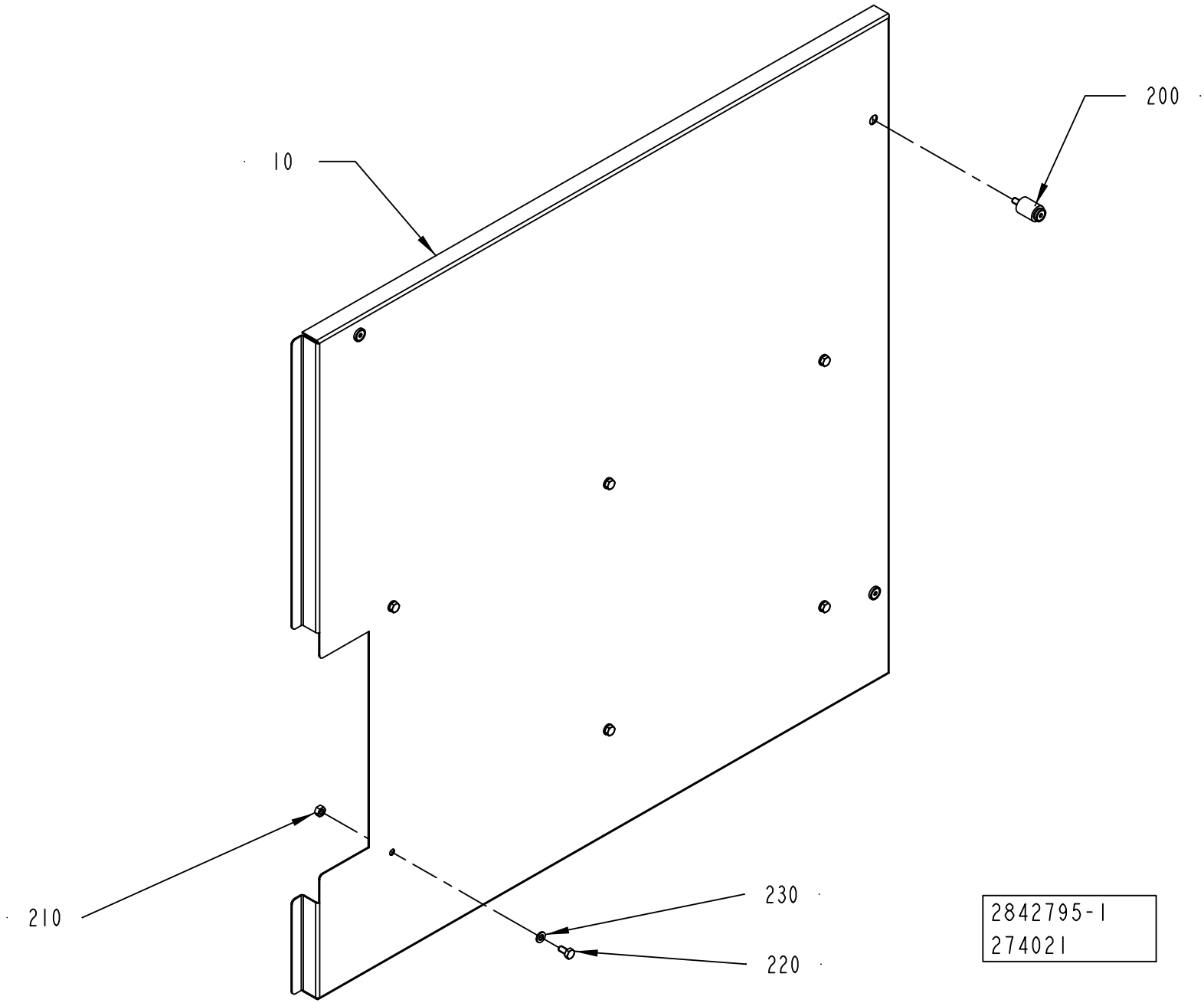
10
200
210
230
220
2842795-1
274021

ECM: 350261 - 20080701
Group number: 2842795-0100
Assembly Drawing: 2842795-1_1_AA

Pos	Part No	UN	Qty	Description	Page No
-					
010	2842799-0000		1	COVER	
200	90226-0458		3	MOUNTING SCREW	
210	312605-0316		6	HEXAGON NUT, M6M M6 A280	
220	312105-0366		6	SCREW, M6S ISO 4017 M6X12 A4 80	
230	315105-0153		6	WASHER PLAIN, 6,4X12X1,5 A4 BRB	

Pos	Part No	UN	Qty	Description	Page No

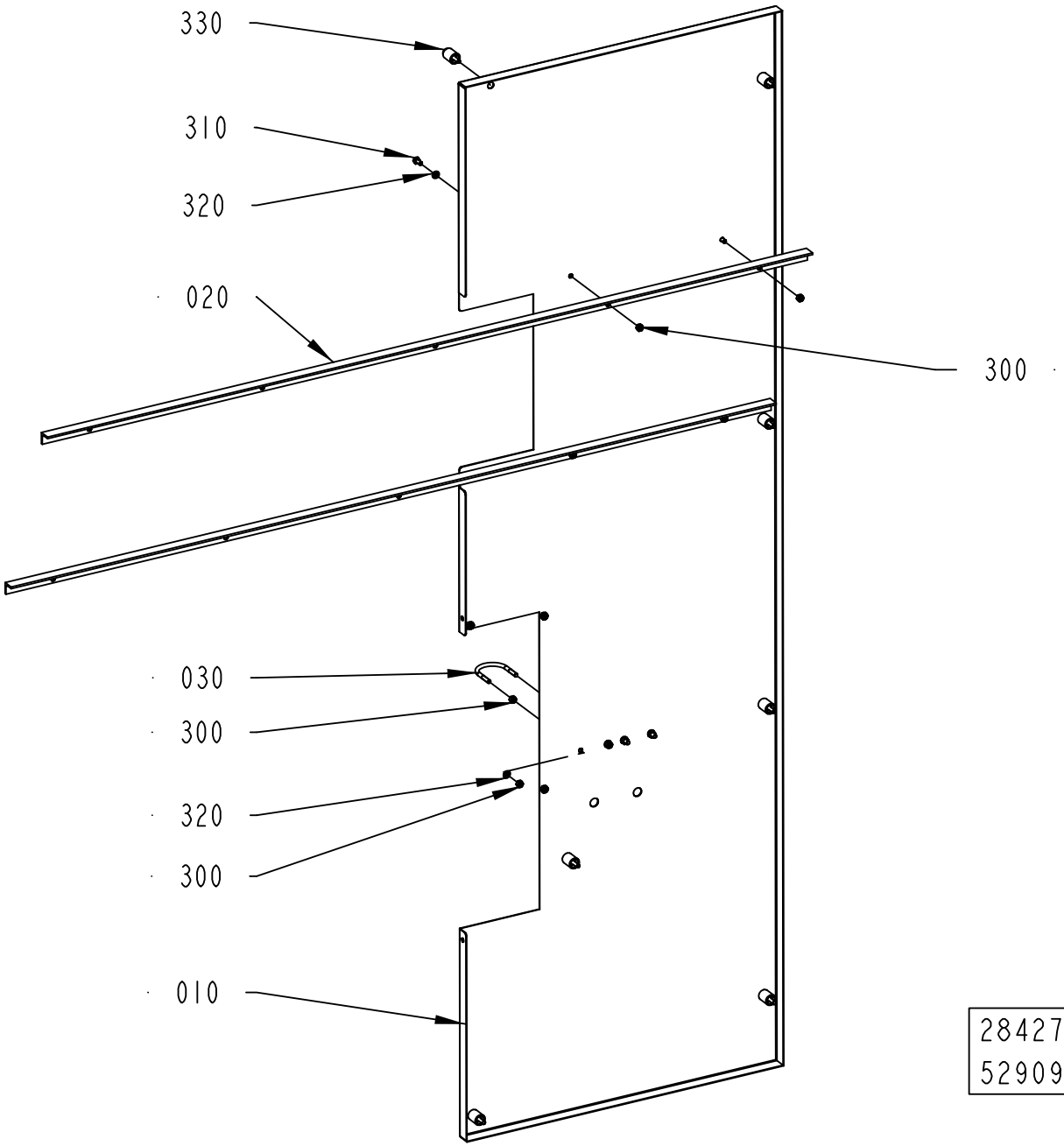
330
310
320
020
300
030
300
320
300
010
2842794-3
529093

ECM: 537710 - 20120401
Group number: 2842794-0300
Assembly Drawing: 2842794-3_1_AA

Pos	Part No	UN	Qty	Description	Page No
-					
010	3212199-0000		1	COVER	
020	2844501-0000		2	PROFILE	
030	531616-0000		2	HOLDER	
300	312605-0316		12	HEXAGON NUT, M6M M6 A280	
310	312105-0366		4	SCREW, M6S ISO 4017 M6X12 A4 80	
320	315105-0153		8	WASHER PLAIN, 6,4X12X1,5 A4 BRB	
330	90226-0458		7	MOUNTING SCREW	

Pos	Part No	UN	Qty	Description	Page No

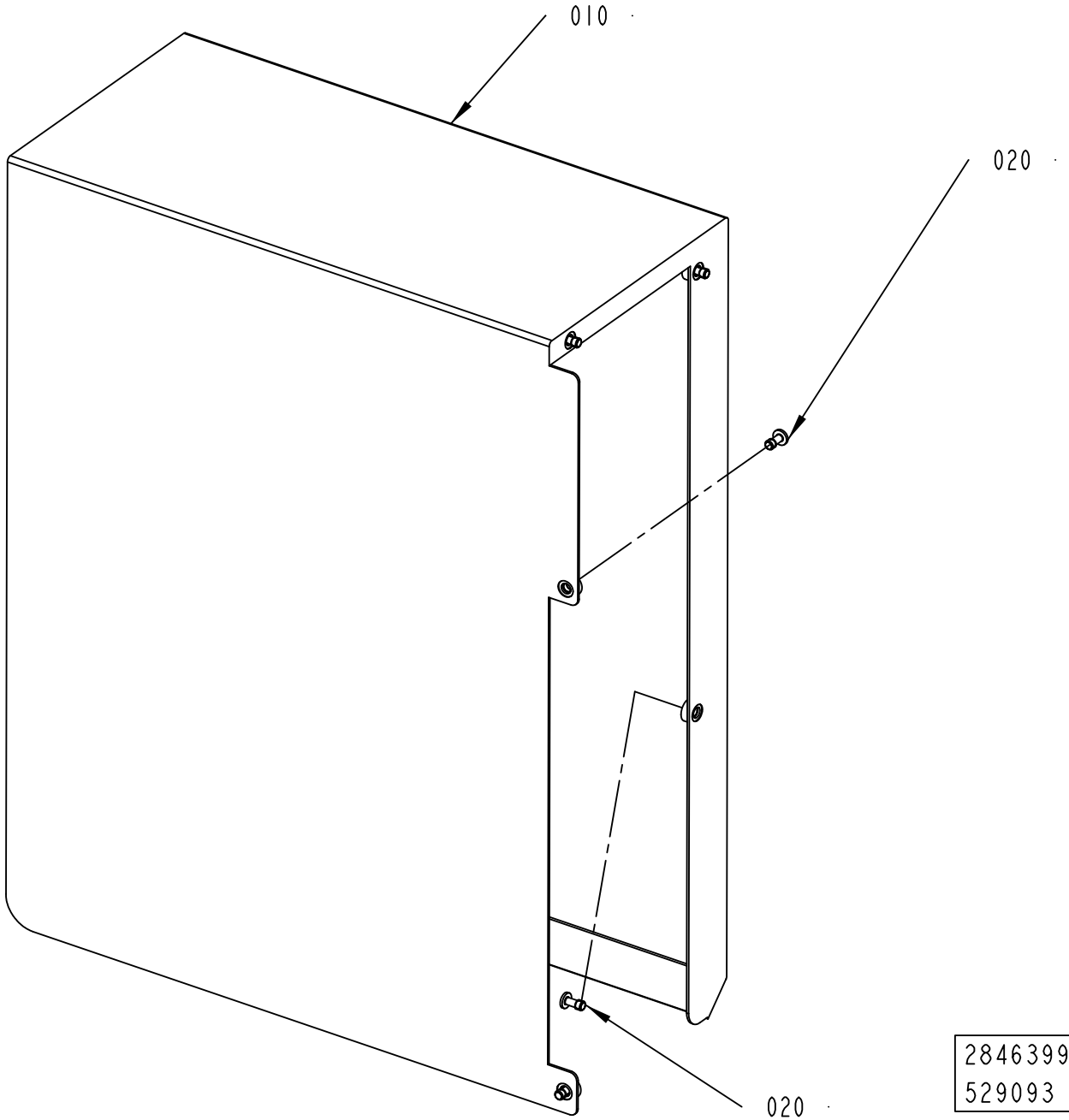

2846399-3
529093

ECM: 537713 - 20120401
Group number: 2846399-0300
Assembly Drawing: 2846399-3_1_AA

Pos	Part No	UN	Qty	Description	Page No
-					
010	2985842-0000		1	TUNNEL	
020	90601-2046		4	CAPTIVE SCREW M6, GUTBG 6-4-12	

Pos	Part No	UN	Qty	Description	Page No

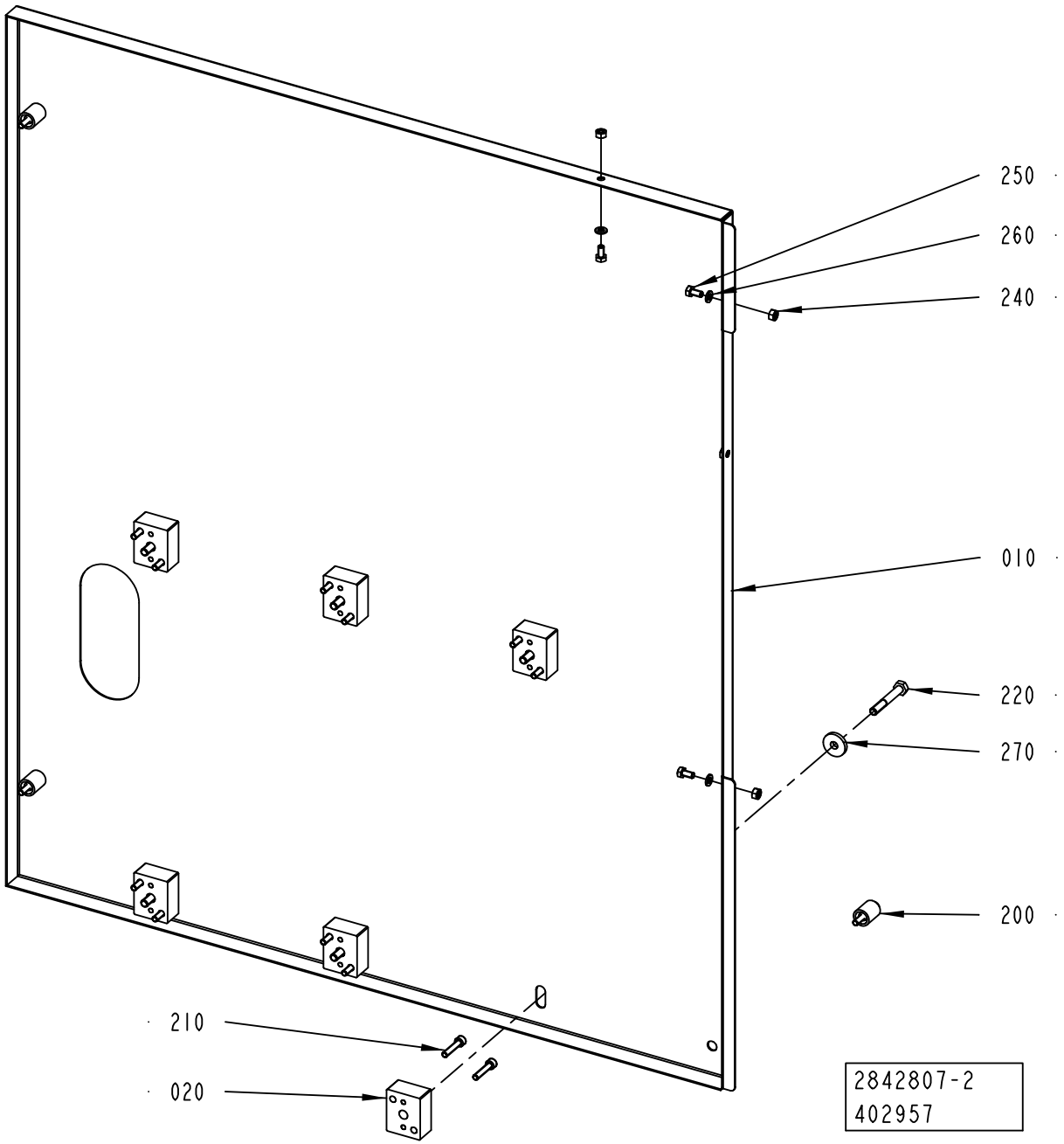
250
260
240
010
220
270
200
210
020
2842807-2
402957

ECM: 407745 - 20091001
Group number: 2842807-0200
Assembly Drawing: 2842807-2_1_AA

Pos	Part No	UN	Qty	Description	Page No
-					
010	2985843-0000		1	COVER	
020	2842805-0000		6	SPACER	
200	90226-0458		3	MOUNTING SCREW	
210	312115-0374		12	SCREW ISO4762 M6X30 A4 80	
220	312105-0462		6	SCREW, M6S ISO 4014 M8X55 A4 80	
240	312605-0316		3	HEXAGON NUT, M6M M6 A280	
250	312105-0366		3	SCREW, M6S ISO 4017 M6X12 A4 80	
260	315105-0153		3	WASHER PLAIN, 6,4X12X1,5 A4 BRB	
270	315125-0165		6	WASHER HIGH, TBRSB 8,4X26X5 A4	

Pos	Part No	UN	Qty	Description	Page No

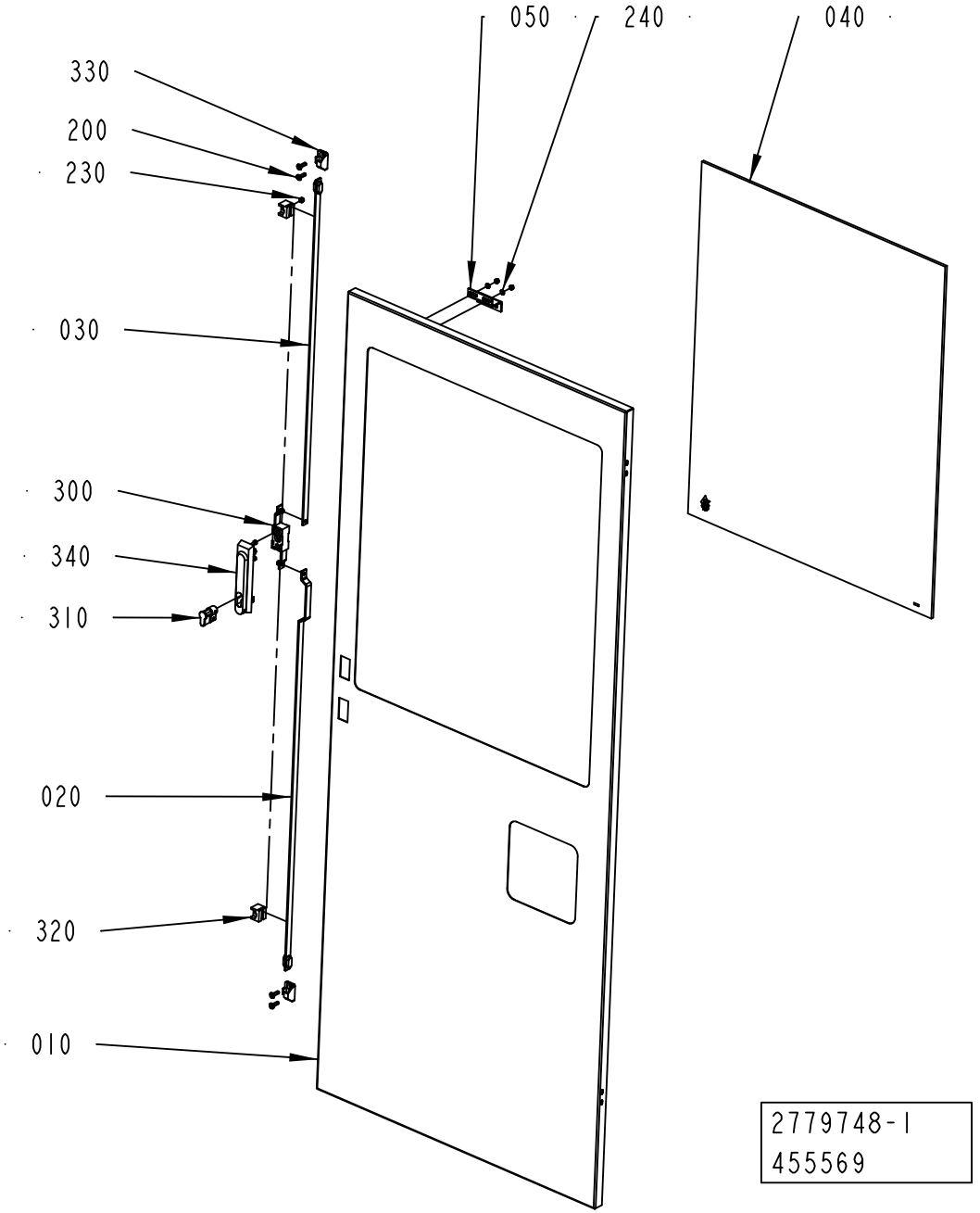
050
240
040
330
200
230
030
300
340
310
020
320
010
2779748-1
455569

ECM: 458827 - 20101001
Group number: 2779748-0100
Assembly Drawing: 2779748-1_1_AB

Pos	Part No	UN	Qty	Description	Page No
-					
010	2779749-0000		1	DOOR	
020	2551030-0000		1	STRUT	
030	2551031-0000		1	STRUT	
040	2805691-0000		1	GLASS	
050	2595618-0000		1	BRACKET	
200	312155-0370		4	SCREW DIN 7991 MF6S M6X20 A4 70	
230	312812-0314		4	HEXAGON NUT, NY-LOCK M5 A4 80	
240	315105-0146		2	WASHER PLAIN, 5,3X10X1 A4 BRB	
300	90237-0123		1	LOCK, 1121-U10C	
310	90237-0128		1	LOCK CYLINDER, 1109-SU125	
320	90237-0144		2	GUIDE, 1121-SU540	
330	90237-0147		2	LOCKING LUG, NO. 1121-53-0P	
340	90237-0175		1	TURNING HANDLE, 1125-U185-0A	
360	90157-0041		1	SEALING COMPOUND, RHODORSEAL 5651	

Pos	Part No	UN	Qty	Description	Page No

GLASS DOOR

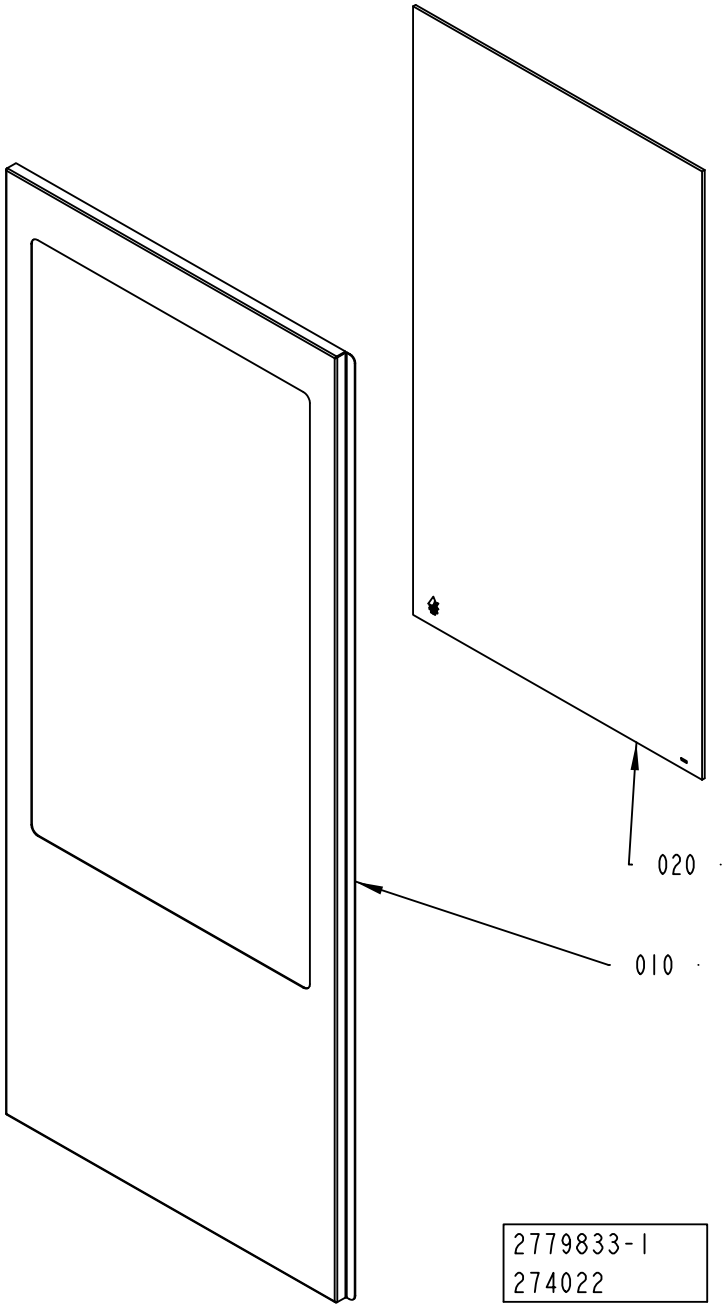

ECM: 305564 - 20070517
Group number: 2779833-0100
Assembly Drawing: 2779833-1_1_AA

Pos	Part No	UN	Qty	Description	Page No
-					
010	2779840-0000		1	DOOR	
020	2781278-0000		1	GLASS	
110	90157-0041		1	SEALING COMPOUND, RHODORSEAL 5651	

Pos	Part No	UN	Qty	Description	Page No

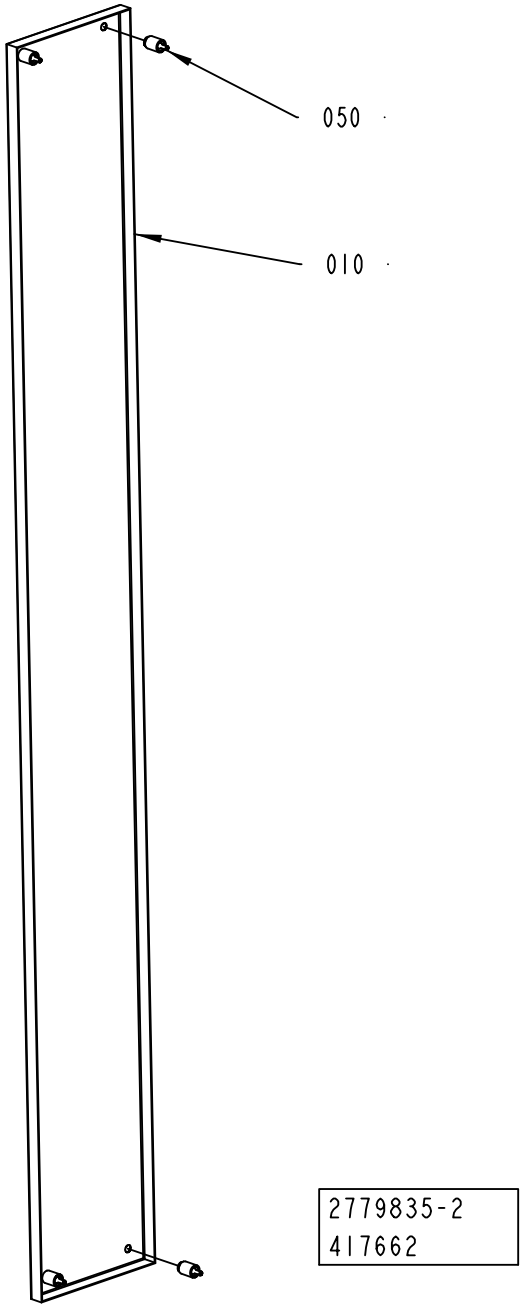
050
010
2779835-2
417662

ECM: 419448 - 20100110
Group number: 2779835-0200
Assembly Drawing: 2779835-2_1_AA

Pos	Part No	UN	Qty	Description	Page No
-					
010	3058858-0000		1	DOOR	
050	90226-0458		4	MOUNTING SCREW	

Pos	Part No	UN	Qty	Description	Page No

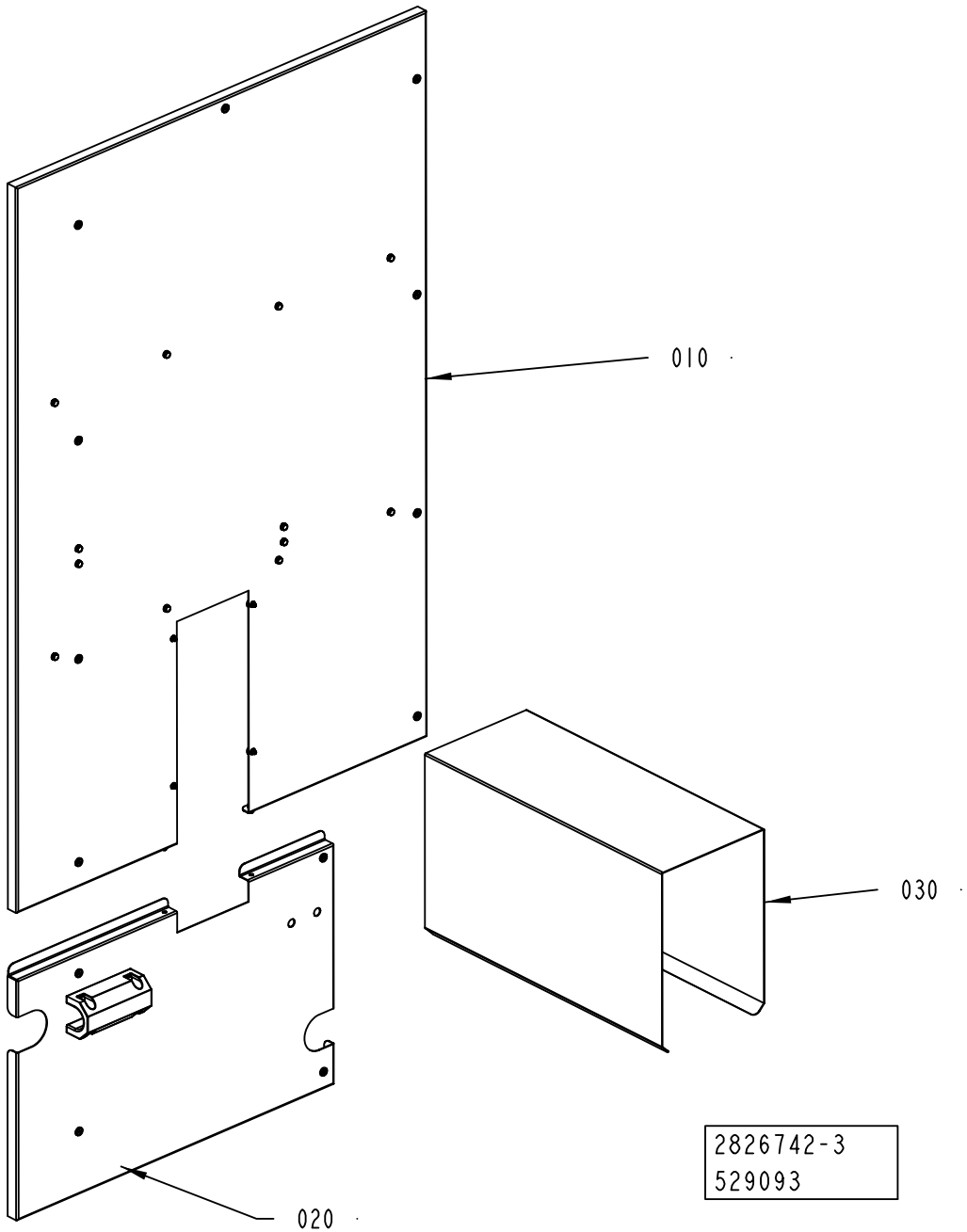
010
030
020
2826742-3
529093

ECM: 537707 - 20120401
Group number: 2826742-0300
Assembly Drawing: 2826742-3_1_AA

Pos	Part No	UN	Qty	Description	Page No
-					
010	2826744-0200		1	COVER	**5-143**
020	2842793-0300		1	DOOR	**5-145**
030	2985804-0000		1	TUNNEL	

Pos	Part No	UN	Qty	Description	Page No

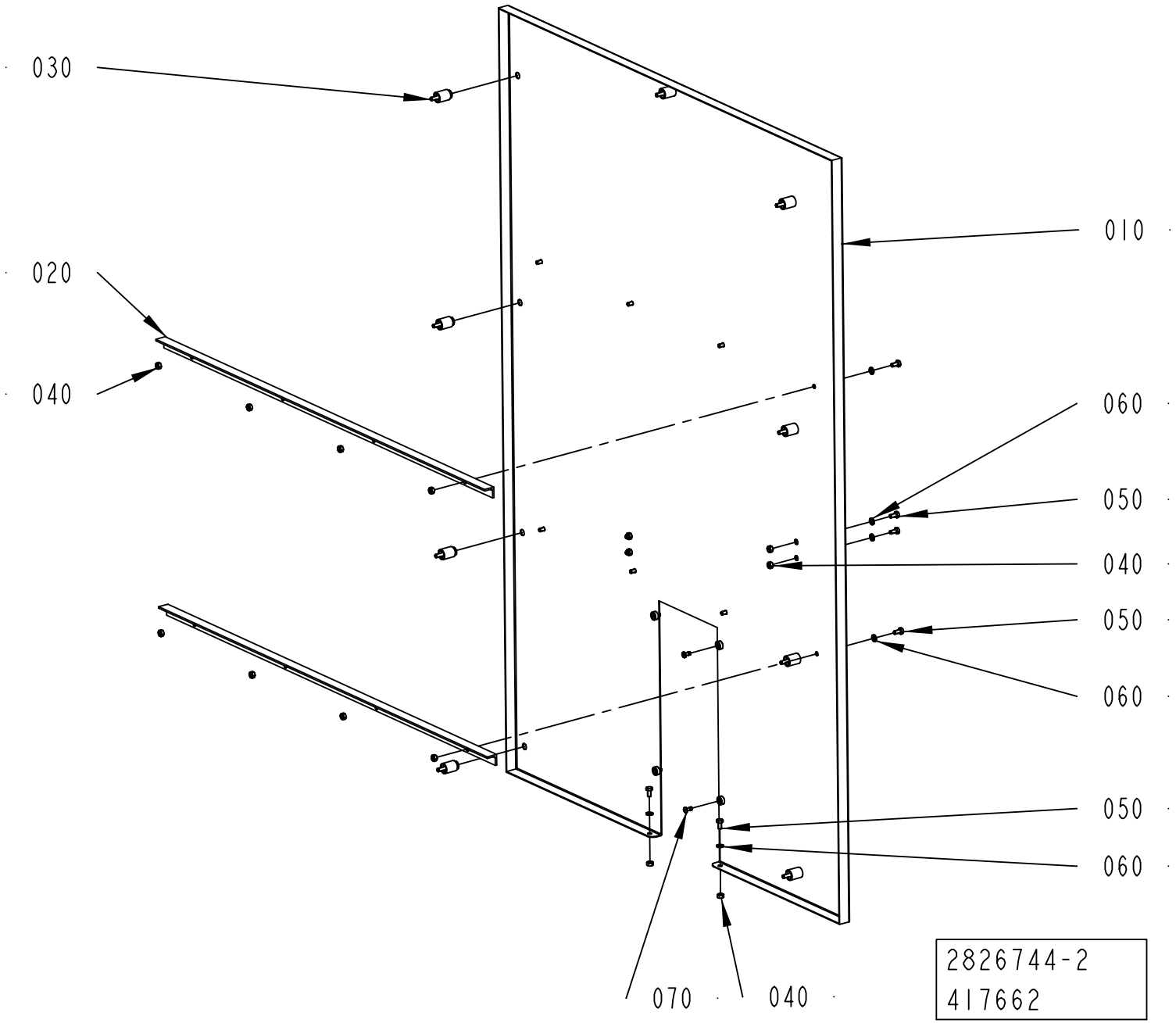
030
020
040
010
060
050
040
050
060
050
060
070
040
2826744-2
417662

ECM: 428929 - 20100401
Group number: 2826744-0200
Assembly Drawing: 2826744-2_1_AA

Pos	Part No	UN	Qty	Description	Page No
-					
010	3056497-0000		1	DOOR	
020	2842801-0000		2	COVER	
030	90226-0458		9	MOUNTING SCREW	
040	312605-0316		14	HEXAGON NUT, M6M M6 A280	
050	312105-0366		14	SCREW, M6S ISO 4017 M6X12 A4 80	
060	315105-0153		14	WASHER PLAIN, 6,4X12X1,5 A4 BRB	
070	90601-2046		4	CAPTIVE SCREW M6, GUTBG 6-4-12	

Pos	Part No	UN	Qty	Description	Page No

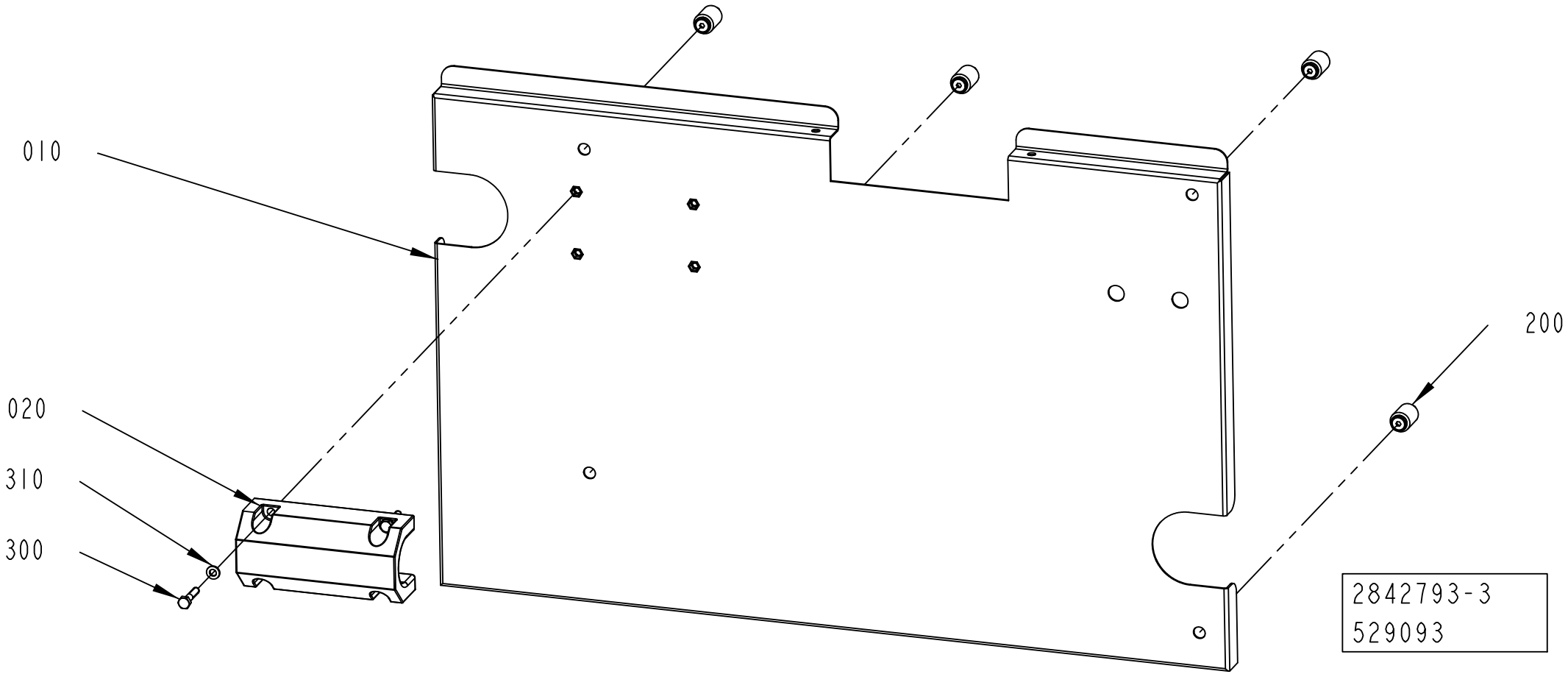
010
020
310
300
200
2842793-3
529093

ECM: 537722 - 20120401
Group number: 2842793-0300
Assembly Drawing: 2842793-3_1_AA

Pos	Part No	UN	Qty	Description	Page No
-					
010	3212197-0000		1	COVER	
020	3212201-0000		1	TUBE HOLDER	
200	90226-0458		4	MOUNTING SCREW	
300	312105-0374		4	SCREW, M6S ISO 4014 M6X30 A4 80	
310	315106-0153		4	WASHER PLAIN, M6 ISO7089-6-200 HV A4	

Pos	Part No	UN	Qty	Description	Page No

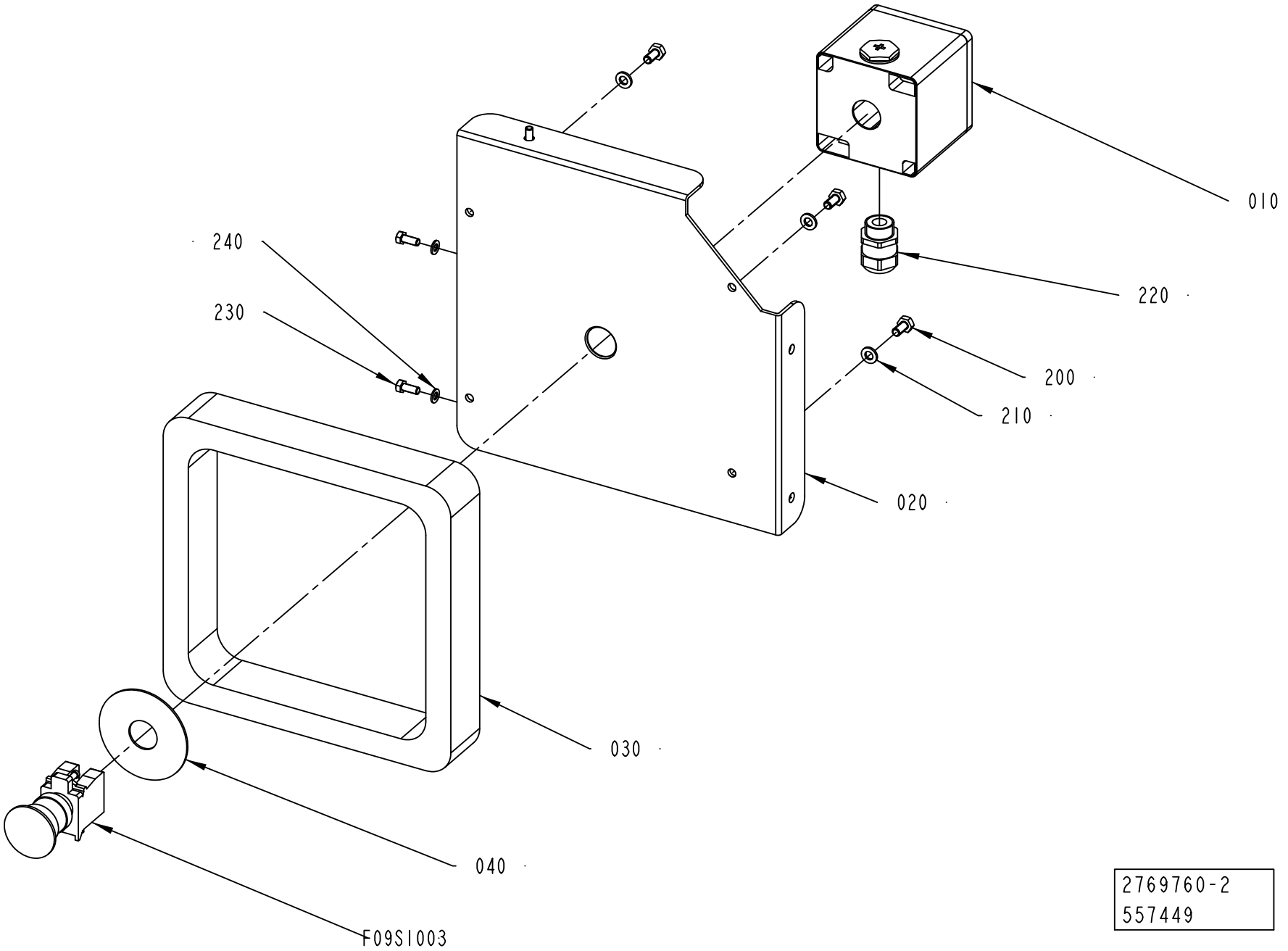
010
220
240
230
200
210
020
030
040
F09S1003
2769760-2
557449

ECM: 566093 - 20120702
Group number: 2769760-0200
Assembly Drawing: 2769760-2_1_AB

Pos	Part No	UN	Qty	Description	Page No
-					
010	3257112-0000		1	PUSH BUTTON BOX	
020	2779763-0000		1	COVER	
030	2779771-0000		1	SPACER	
040	486826-0001		1	SIGN "EMERGENCY STOP"	
200	312105-0366		4	SCREW, M6S ISO 4017 M6X12 A4 80	
210	315105-0153		4	WASHER PLAIN, 6,4X12X1,5 A4 BRB	
220	90458-0315		1	CABLE GLAND, M20X1,5, 5311 1120	
230	312105-0327		3	SCREW, M6S ISO 4017 M5X12 A4 80	
240	315105-0146		3	WASHER PLAIN, 5,3X10X1 A4 BRB	
F09S1003	90458-1651		1	EMERGENCY STOP, ZB4-BS-844 ZB4-BZ-104	

Pos	Part No	UN	Qty	Description	Page No

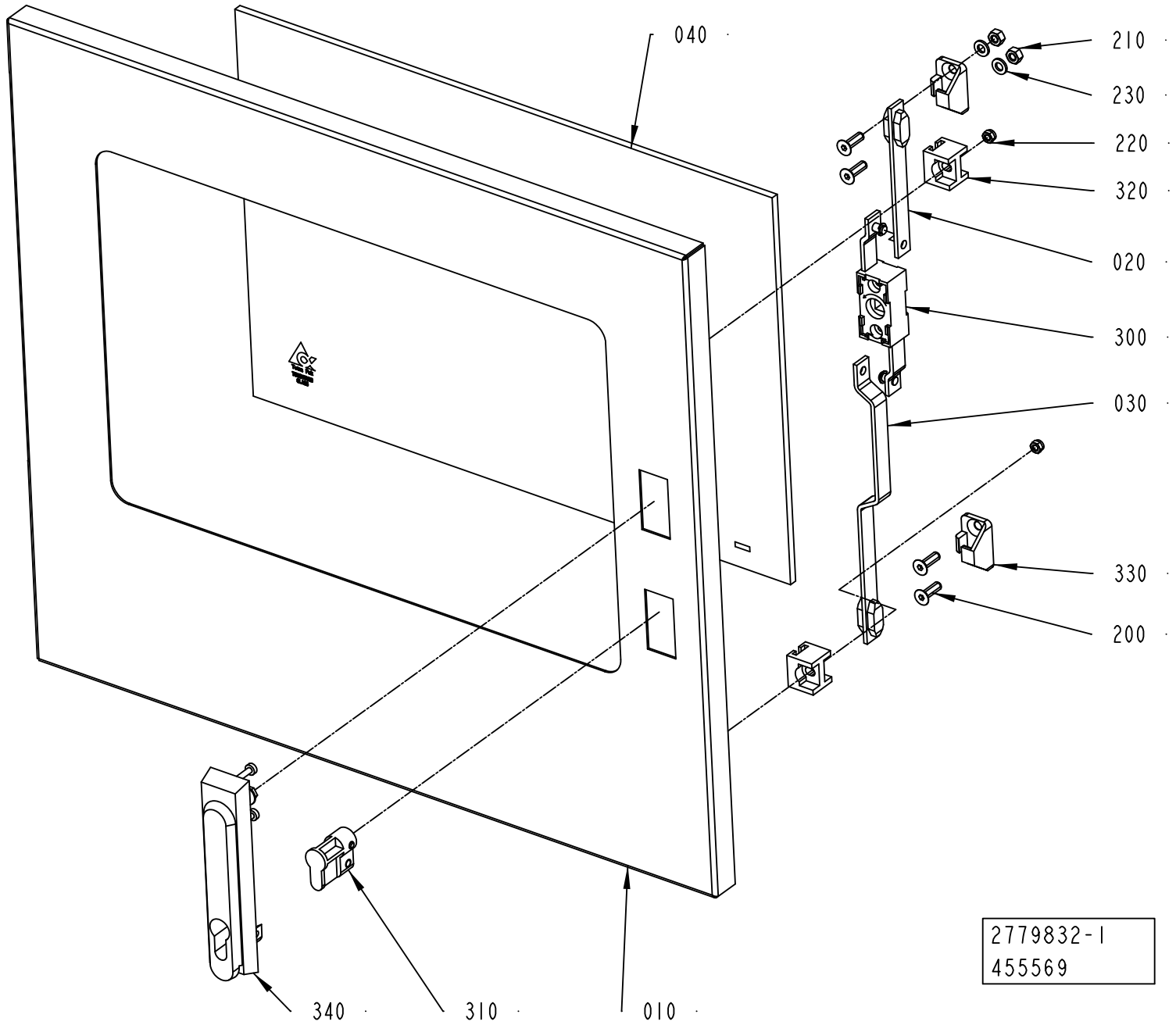
040
210
230
220
320
020
300
030
330
200
340
310
010
2779832-1
455569

ECM: 458829 - 20101001
Group number: 2779832-0100
Assembly Drawing: 2779832-1_1_AB

Pos	Part No	UN	Qty	Description	Page No
-					
010	2779838-0000		1	DOOR	
020	2563891-0000		1	STRUT	
030	2563892-0000		1	STRUT	
040	2779839-0000		1	GLASS	
200	312155-0370		4	SCREW DIN 7991 MF6S M6X20 A4 70	
210	312605-0316		2	HEXAGON NUT, M6M M6 A280	
220	312812-0314		2	HEXAGON NUT, NY-LOCK M5 A4 80	
230	315105-0153		2	WASHER PLAIN, 6,4X12X1,5 A4 BRB	
300	90237-0123		1	LOCK, 1121-U10C	
310	90237-0128		1	LOCK CYLINDER, 1109-SU125	
320	90237-0144		2	GUIDE, 1121-SU540	
330	90237-0147		2	LOCKING LUG, NO. 1121-53-0P	
340	90237-0175		1	TURNING HANDLE, 1125-U185-0A	
360	90157-0041		1	SEALING COMPOUND, RHODORSEAL 5651	

Pos	Part No	UN	Qty	Description	Page No

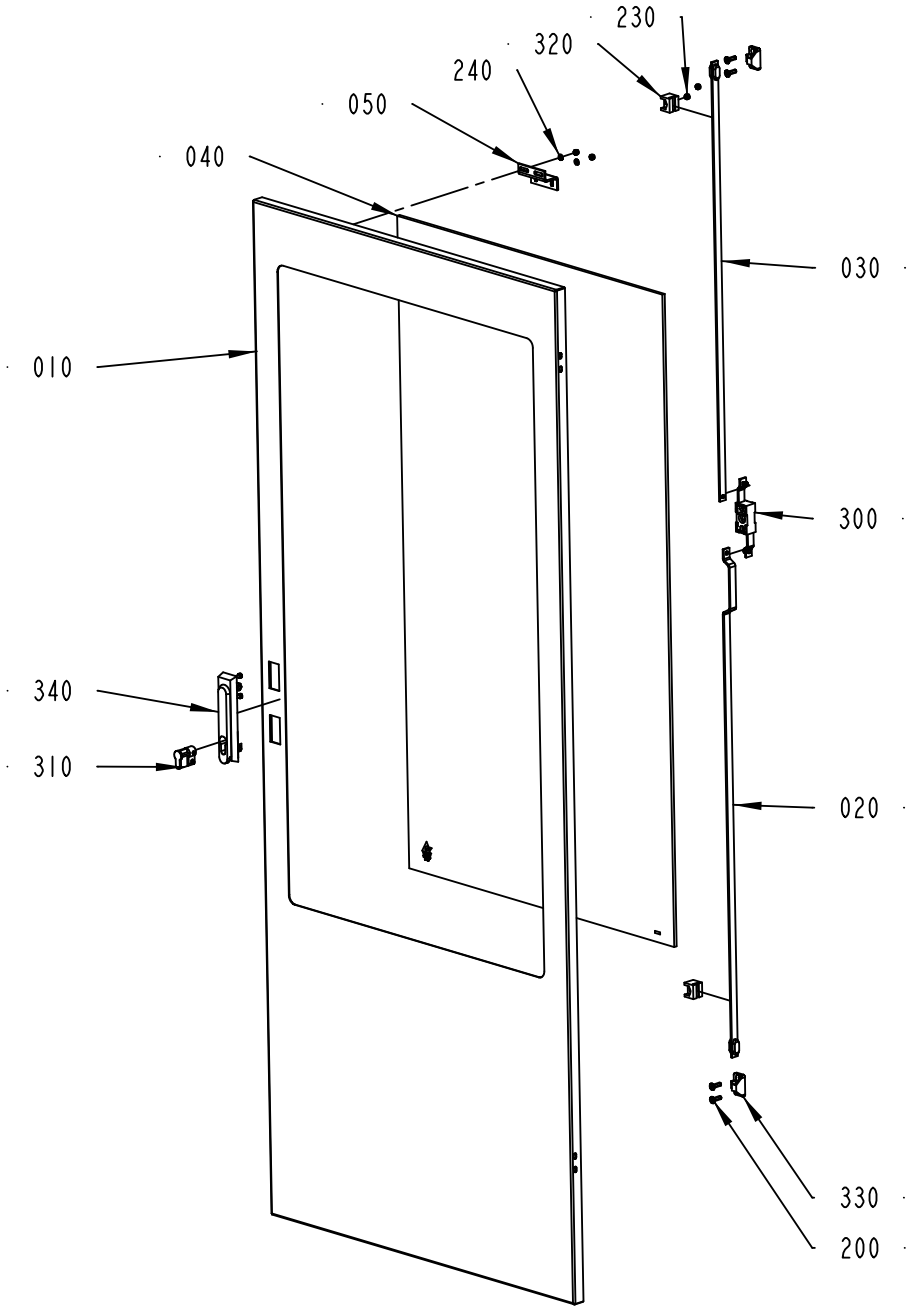
230
320
240
050
040
030
010
300
340
310
020
330
200
2779834-1
455569

ECM: 458830 - 20101001
Group number: 2779834-0100
Assembly Drawing: 2779834-1_1_AB

Pos	Part No	UN	Qty	Description	Page No
-					
010	2781279-0000		1	DOOR	
020	2551030-0000		1	STRUT	
030	2781285-0000		1	STRUT	
040	2781278-0000		1	GLASS	
050	2595618-0000		1	BRACKET	
200	312155-0370		4	SCREW DIN 7991 MF6S M6X20 A4 70	
230	312812-0314		4	HEXAGON NUT, NY-LOCK M5 A4 80	
240	315105-0146		2	WASHER PLAIN, 5,3X10X1 A4 BRB	
300	90237-0123		1	LOCK, 1121-U10C	
310	90237-0128		1	LOCK CYLINDER, 1109-SU125	
320	90237-0144		2	GUIDE, 1121-SU540	
330	90237-0147		2	LOCKING LUG, NO. 1121-53-0P	
340	90237-0175		1	TURNING HANDLE, 1125-U185-0A	
360	90157-0041		1	SEALING COMPOUND, RHODORSEAL 5651	

Pos	Part No	UN	Qty	Description	Page No

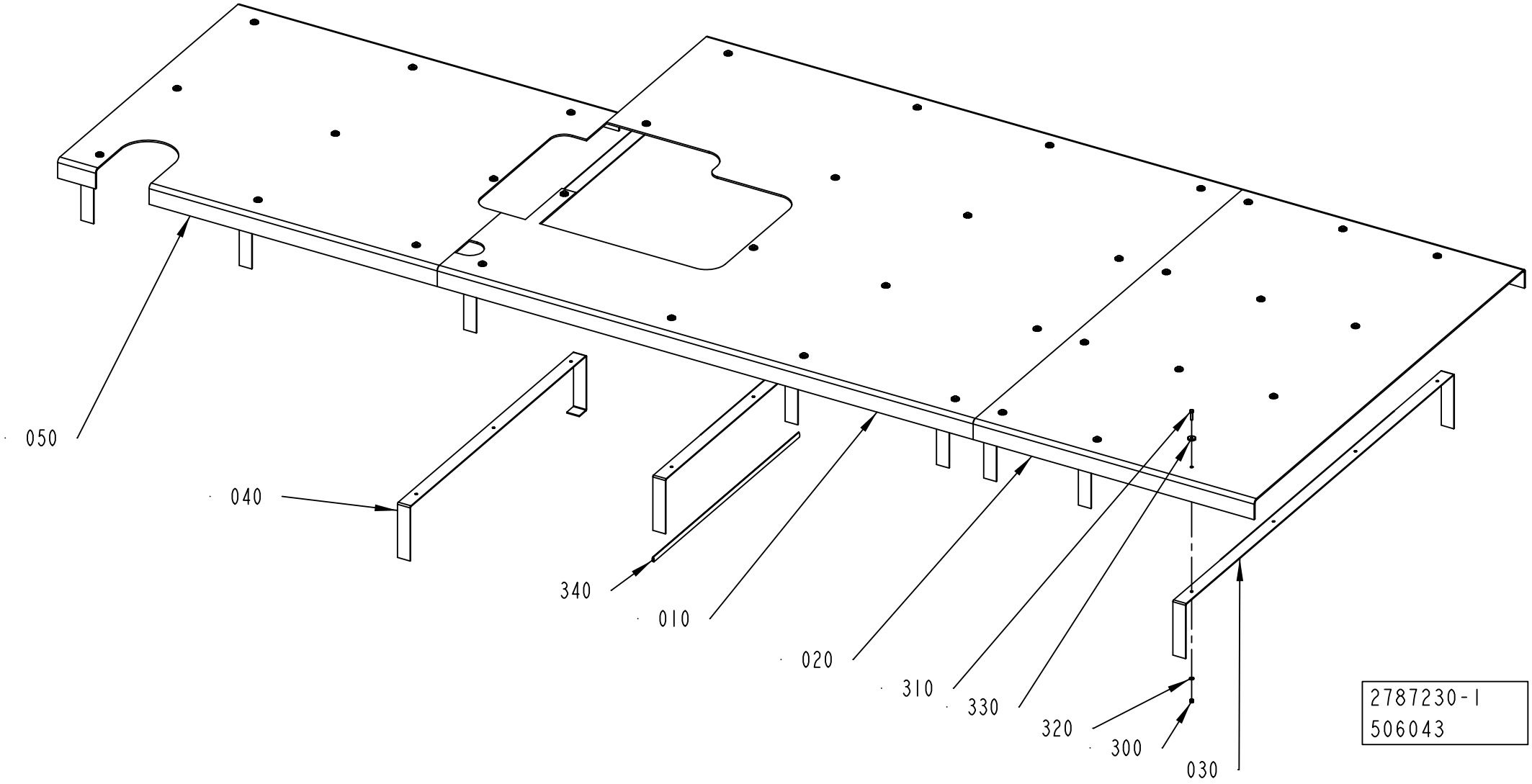
050
040
340
010
020
310
330
320
300
030
2787230-1
506043

ECM: 507816 - 20111003
Group number: 2787230-0100
Assembly Drawing: 2787230-1_1_AC

Pos	Part No	UN	Qty	Description	Page No
STREAMCAP500, STREAMCAP1000, SLIMCAP 2000, SLIMCAP 1000, STREAMCAP200, HELICAP2 23, HELICAP 27					
010	3170037-0000		1	PLATE	
020	2787232-0000		1	PLATE	
300	312812-0316		37	HEXAGON NUT, NY-LOCK M6 A4 80	
310	312105-0372		37	SCREW, M6S ISO 4017 M6X25 A4 80	
320	315105-0153		37	WASHER PLAIN, 6,4X12X1,5 A4 BRB	
330	315125-0153		37	WASHER HIGH, TBRSB 6,4X22X4 A4	
340	90143-0098	MM	800	RUBBER STRIP, CLAMPING, NO. 1038-02	
Common Parts					
030	2779823-0000		7	BRACKET	
040	2779824-0000		3	BRACKET	
050	3172144-0000		1	PLATE	

Pos	Part No	UN	Qty	Description	Page No

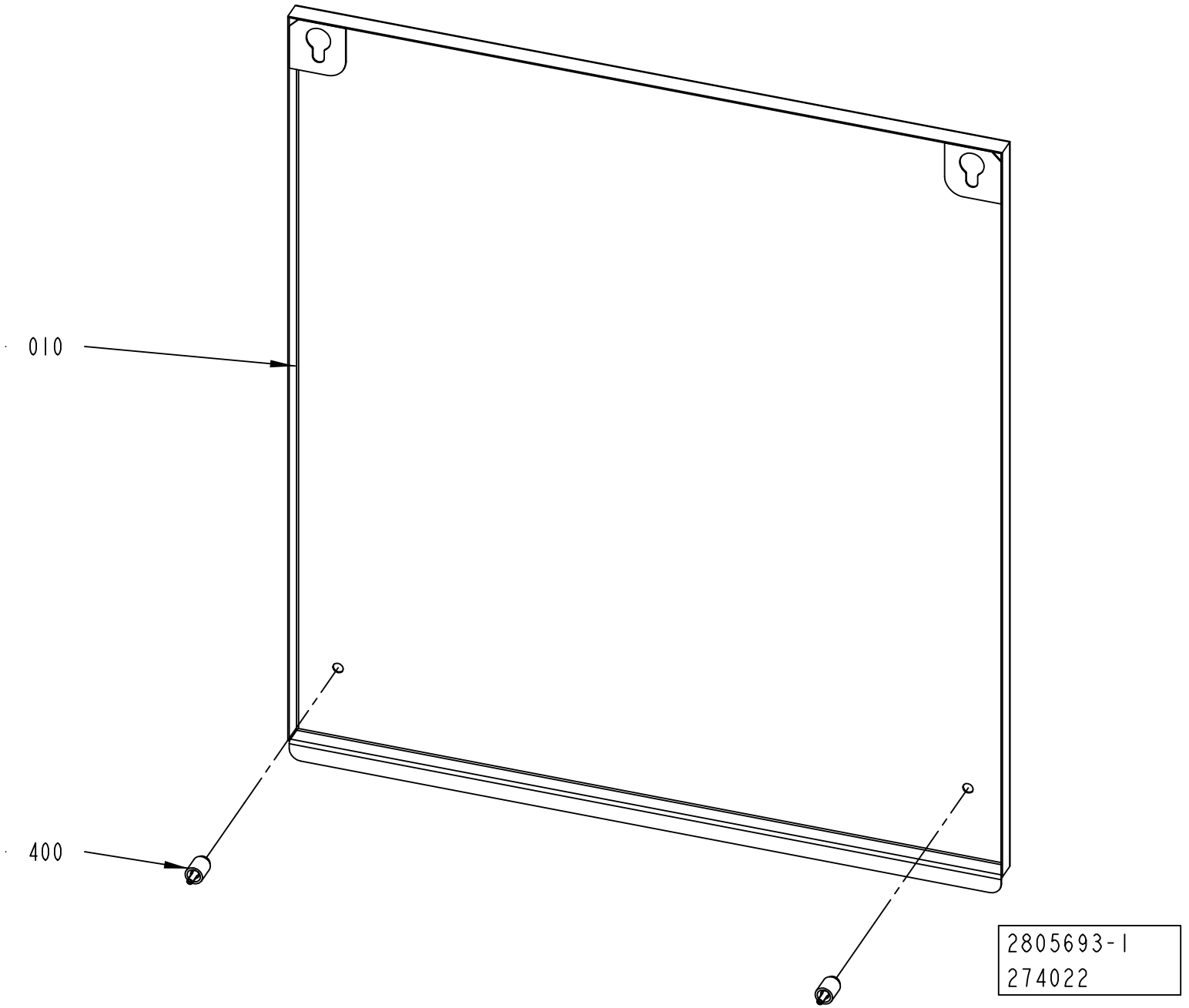
010
400
2805693-1
274022

ECM: 274542 - 20060921
Group number: 2805693-0100
Assembly Drawing: 2805693-1_1_AA

Pos	Part No	UN	Qty	Description	Page No
-					
010	2805692-0000		1	COVER	
400	90226-0458		2	MOUNTING SCREW	

Pos	Part No	UN	Qty	Description	Page No

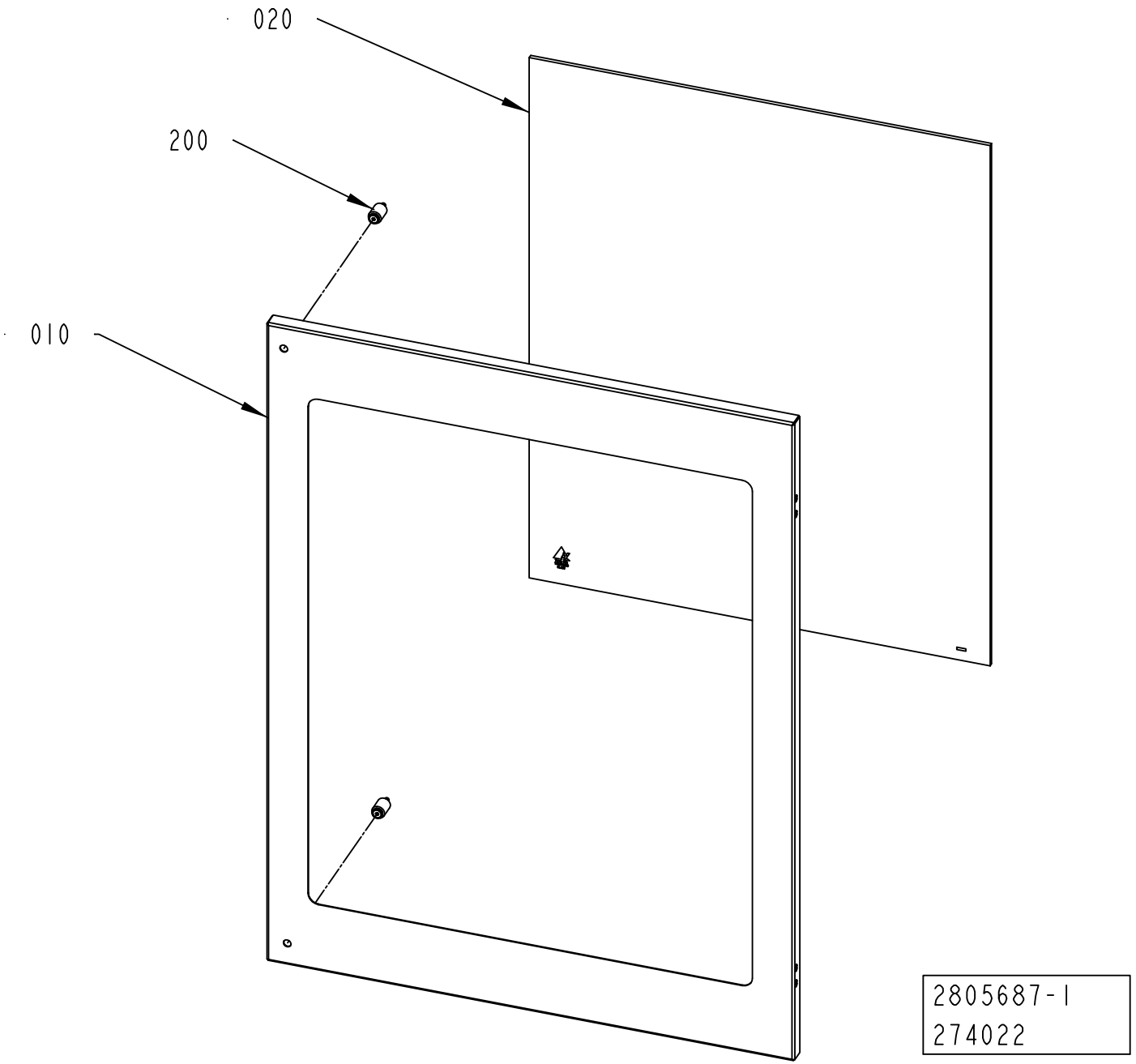
020
200
010
2805687-1
274022

ECM: 274543 - 20060921
Group number: 2805687-0100
Assembly Drawing: 2805687-1_1_AA

Pos	Part No	UN	Qty	Description	Page No
-					
010	2805688-0000		1	DOOR	
020	2805691-0000		1	GLASS	
200	90226-0458		2	MOUNTING SCREW	
220	90157-0041		1	SEALING COMPOUND, RHODORSEAL 5651	

Pos	Part No	UN	Qty	Description	Page No

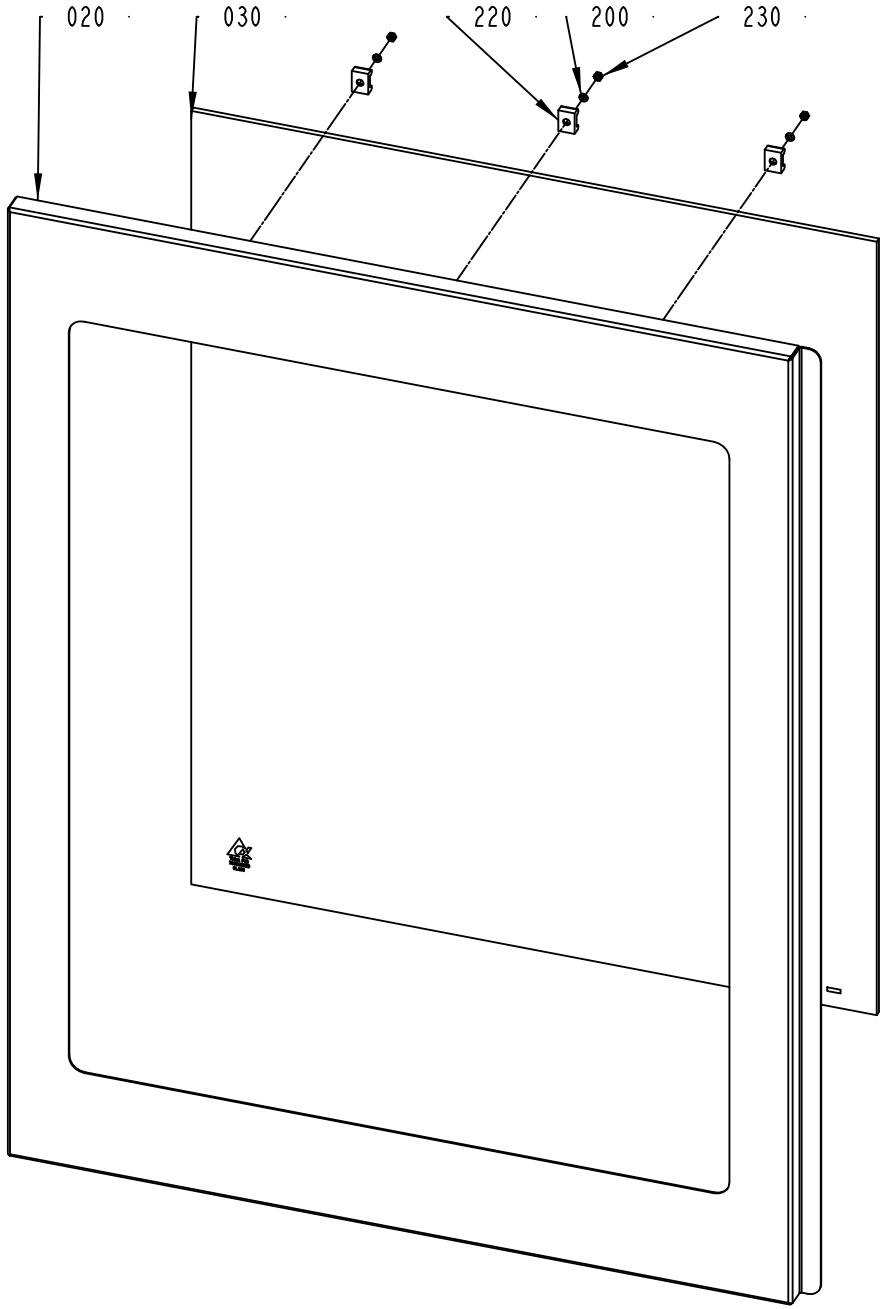
020
030
220
200
230
2805694-1
300393

ECM: 303484 - 20070517
Group number: 2805694-0100
Assembly Drawing: 2805694-1_1_AB

Pos	Part No	UN	Qty	Description	Page No
-					
020	2805695-0000		1	DOOR	
030	2805691-0000		1	GLASS	
110	90157-0041		1	SEALING COMPOUND, RHODORSEAL 5651	
200	315105-0136		3	WASHER PLAIN, 4,3X9X0,8 A4 BRB	
220	352113-0204		3	ANCHOR PLATES FOR STRIPS, TM3S25-M	
230	312605-0312		3	HEXAGON NUT, M6M M4 A280	

Pos	Part No	UN	Qty	Description	Page No

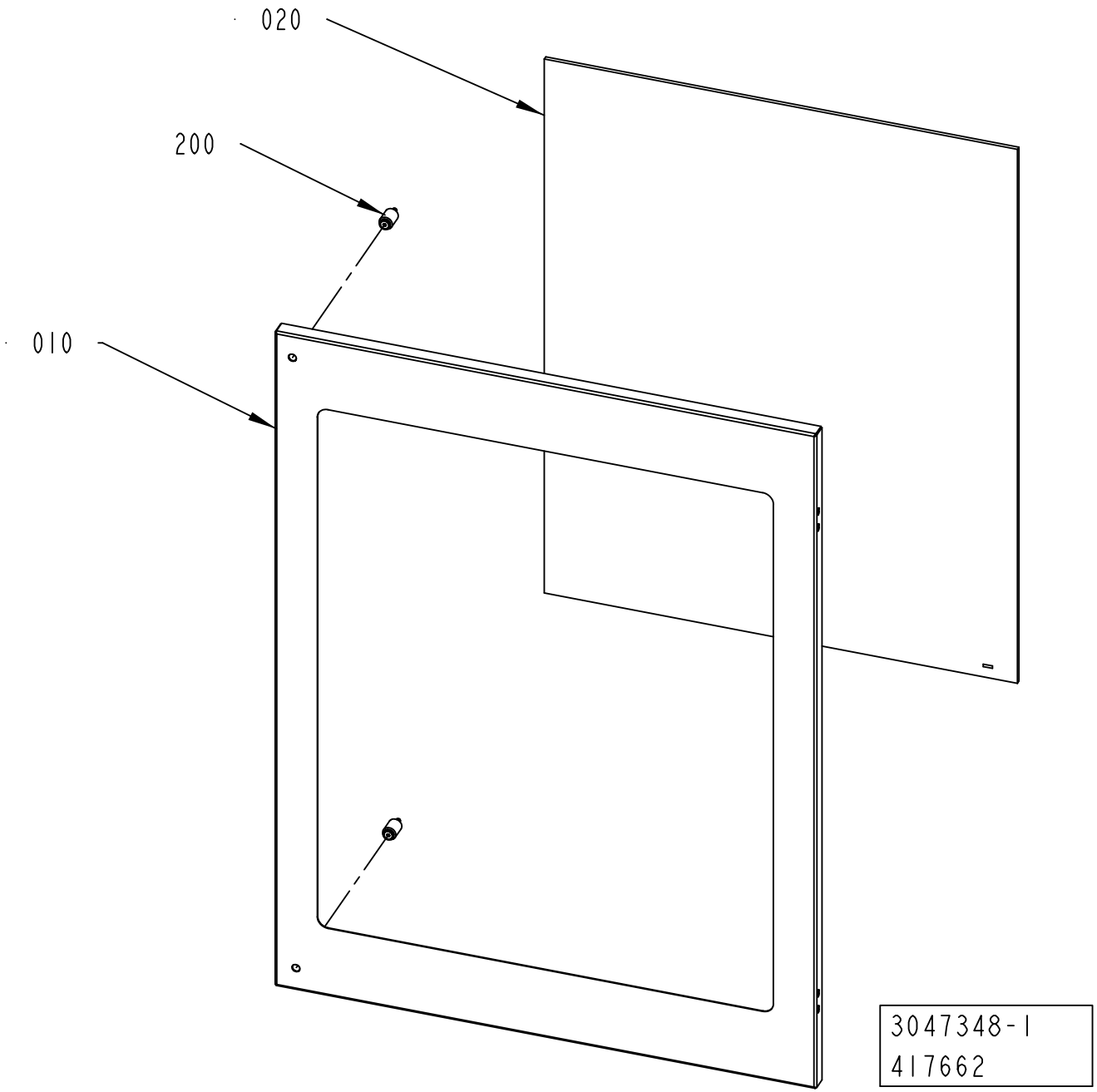
020
200
010
3047348-1
417662

ECM: 419452 - 20100110
Group number: 3047348-0100
Assembly Drawing: 3047348-1_1_AA

Pos	Part No	UN	Qty	Description	Page No
-					
010	3047349-0000		1	DOOR	
020	2805691-0000		1	GLASS	
200	90226-0458		2	MOUNTING SCREW	
220	90157-0041		1	SEALING COMPOUND, RHODORSEAL 5651	

Pos	Part No	UN	Qty	Description	Page No

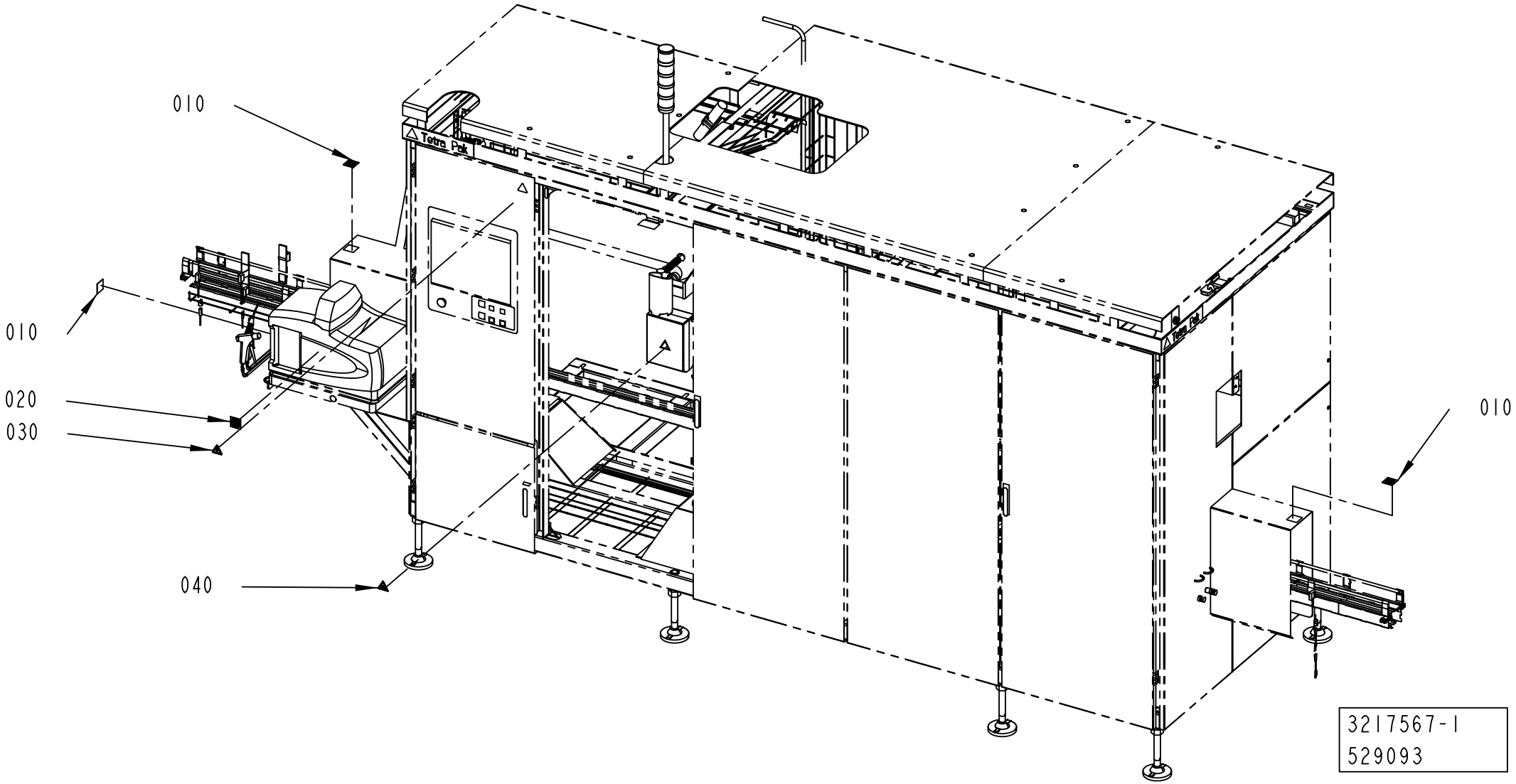
010
010
020
030
040
010
3217567-1
529093

ECM: 538829 - 20120401
Group number: 3217567-0100
Assembly Drawing: 3217567-1_1_AA

Pos	Part No	UN	Qty	Description	Page No
ANSI					
010	90458-1263		3	WARNING SIGN ANSI (H), DO NOT TOUCH	
020	90459-2232		1	WARNING SIGN ANSI (H), DO NOT WASH	
030	359715-0100		1	WARNING SIGN ANSI (H), ELECTRIC SHOCK	
040	90459-7458		1	WARNING SIGN ANSI (H), HOT SURFACE	
ISO					
010	1128856-0000		3	PROHIBITION SIGN	
020	90459-2265		1	PROHIBITION SIGN ISO, DO NOT WASH	
030	359705-0015		1	WARNING SIGN ISO, RISK OF ELECTRIC SHOCK	
040	359710-0001		1	WARNING SIGN ISO, HOT SURFACE	

Pos	Part No	UN	Qty	Description	Page No

Tetra Pak

SPC
Spare Parts Catalogue

APPLICATOR UNIT

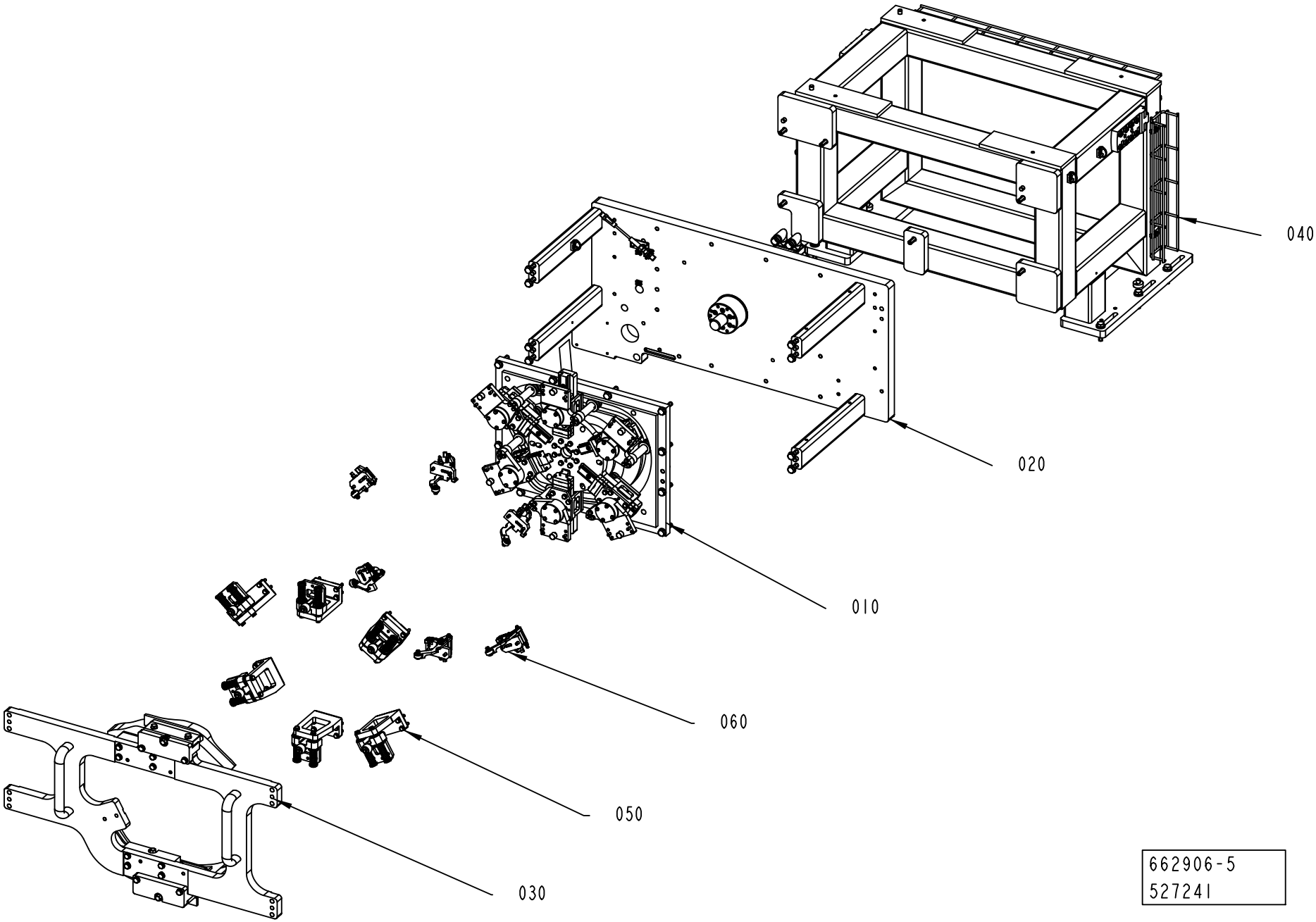

ECM: 527257 - 20120401
Group number: 662906-0300
Assembly Drawing: 662906-5_1_AA

Pos	Part No	UN	Qty	Description	Page No
-					
010	2746938-0200		1	TRANSFER UNIT	**6-5**
020	2837072-0200		1	DRIVE UNIT	**6-15**
030	2839315-0200		1	CAMMODULE	**6-21, 6-23, 6-25, 6-27**
040	2751664-0300		1	FRAME	**6-63**
050	2746939-0200		1	CAP CARRIER GROUP	**6-65**
060	2746941-0200		1	CAP HOLDERS GROUP	**6-73**

Pos	Part No	UN	Qty	Description	Page No

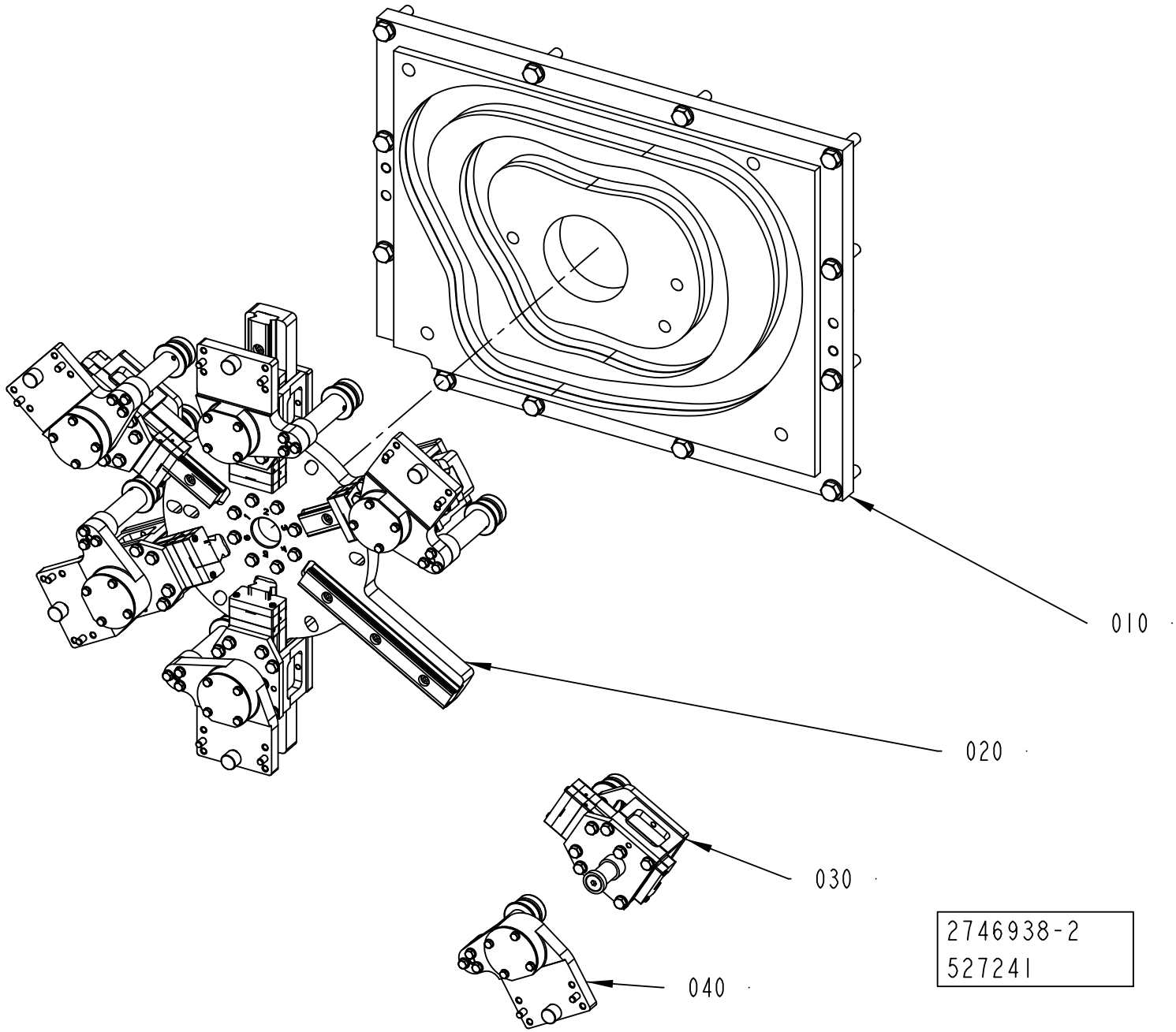
010
020
030
040
2746938-2
527241

ECM: 527260 - 20120401
Group number: 2746938-0200
Assembly Drawing: 2746938-2_1_AA

Pos	Part No	UN	Qty	Description	Page No
-					
010	2751655-0100		1	CAM	**6-7**
020	2751656-0100		1	STAR WHEEL	**6-9**
030	2751657-0200		6	SLIDER	**6-11**
040	2751658-0200		6	FOLLOWER CAM	**6-13**

Pos	Part No	UN	Qty	Description	Page No

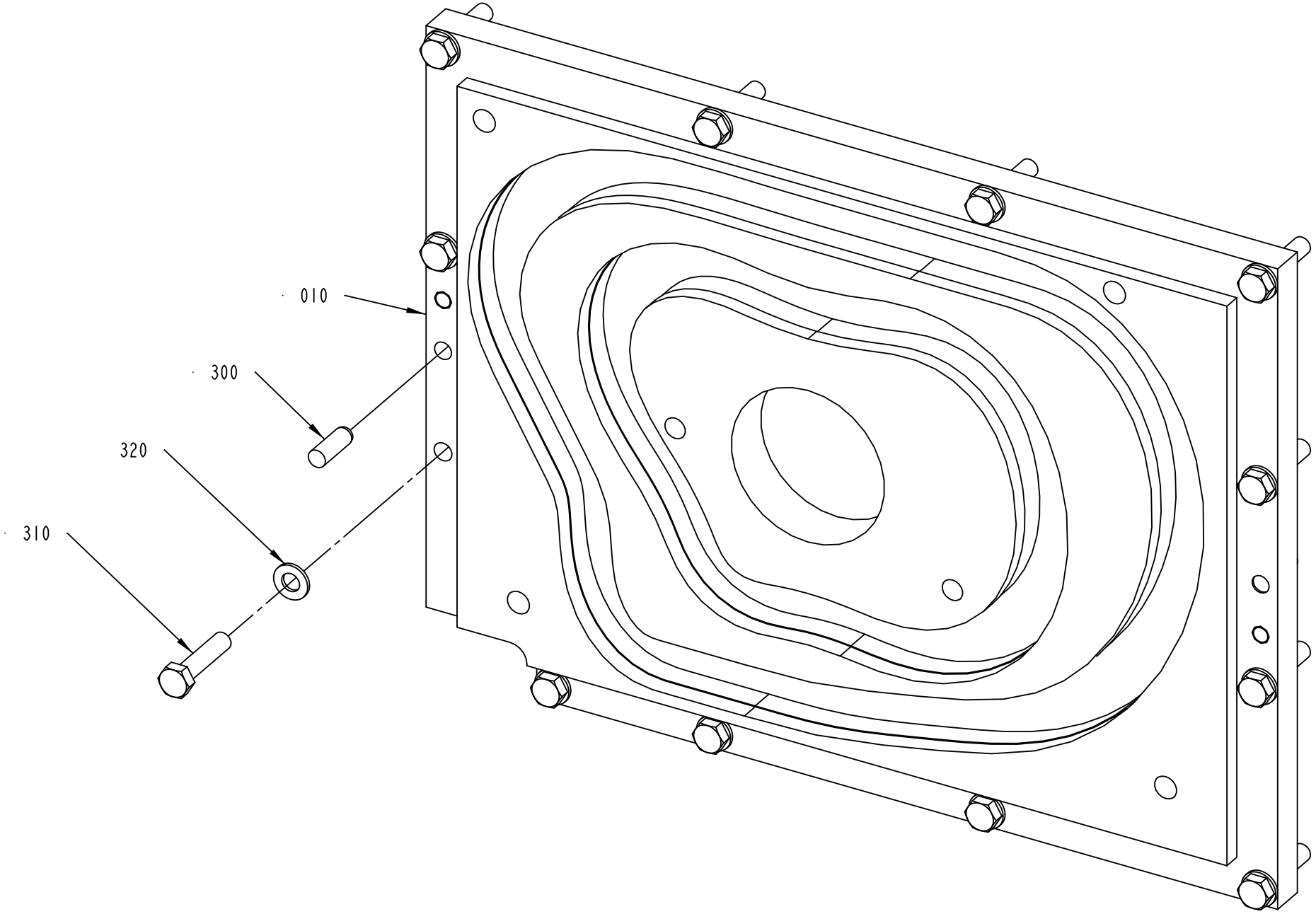

2751655-1
272630

ECM: 272706 - 20060921
Group number: 2751655-0100
Assembly Drawing: 2751655-1_1_AA

Pos	Part No	UN	Qty	Description	Page No
-					
010	2716116-0000		1	CAM	
300	311103-0458		2	PARALLEL PIN ISO 2338 10M6X30 A1	
310	312105-0500		12	SCREW, M6S ISO 4014 M10X45 A4 80	
320	315106-0173		12	WASHER PLAIN, M10 ISO7089-10-200 HV A4	

Pos	Part No	UN	Qty	Description	Page No

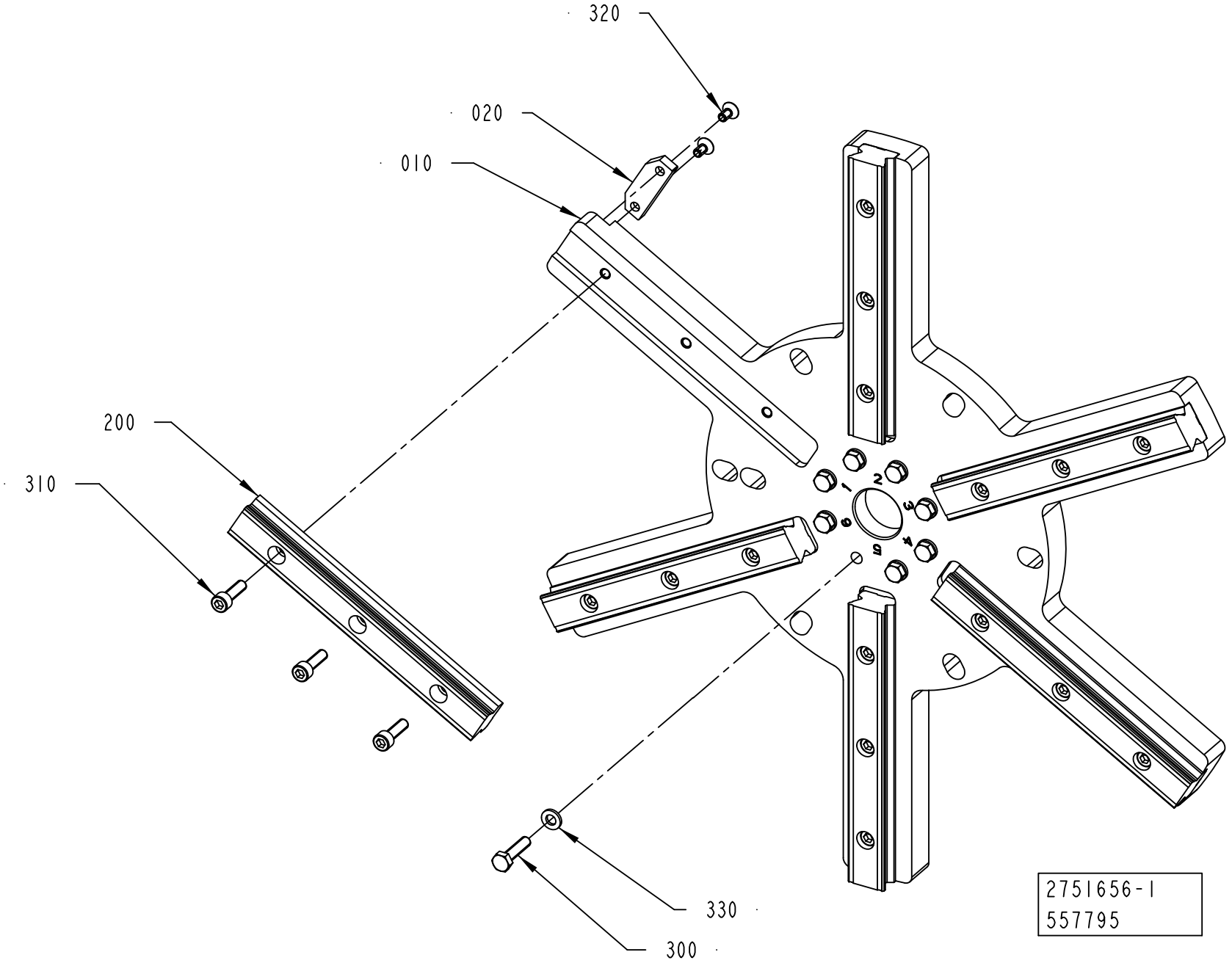
320
020
010
200
310
330
300
2751656-1
557795

ECM: 558785 - 20120701
Group number: 2751656-0100
Assembly Drawing: 2751656-1_1_AB

Pos	Part No	UN	Qty	Description	Page No
-					
010	2751702-0000		1	STAR WHEEL	
020	2751706-0000		1	FLAG	
200	90600-0434		6	GUIDE BAR, SSR25-180L-YM G30/30	
300	312105-0372		8	SCREW, M6S ISO 4017 M6X25 A4 80	
310	312115-0370		18	SCREW ISO4762 M6X20 A4 80	
320	312155-0325		2	SCREW DIN 7991 MF6S M5X10 A4 70	
330	315106-0153		8	WASHER PLAIN, M6 ISO7089-6-200 HV A4	

Pos	Part No	UN	Qty	Description	Page No

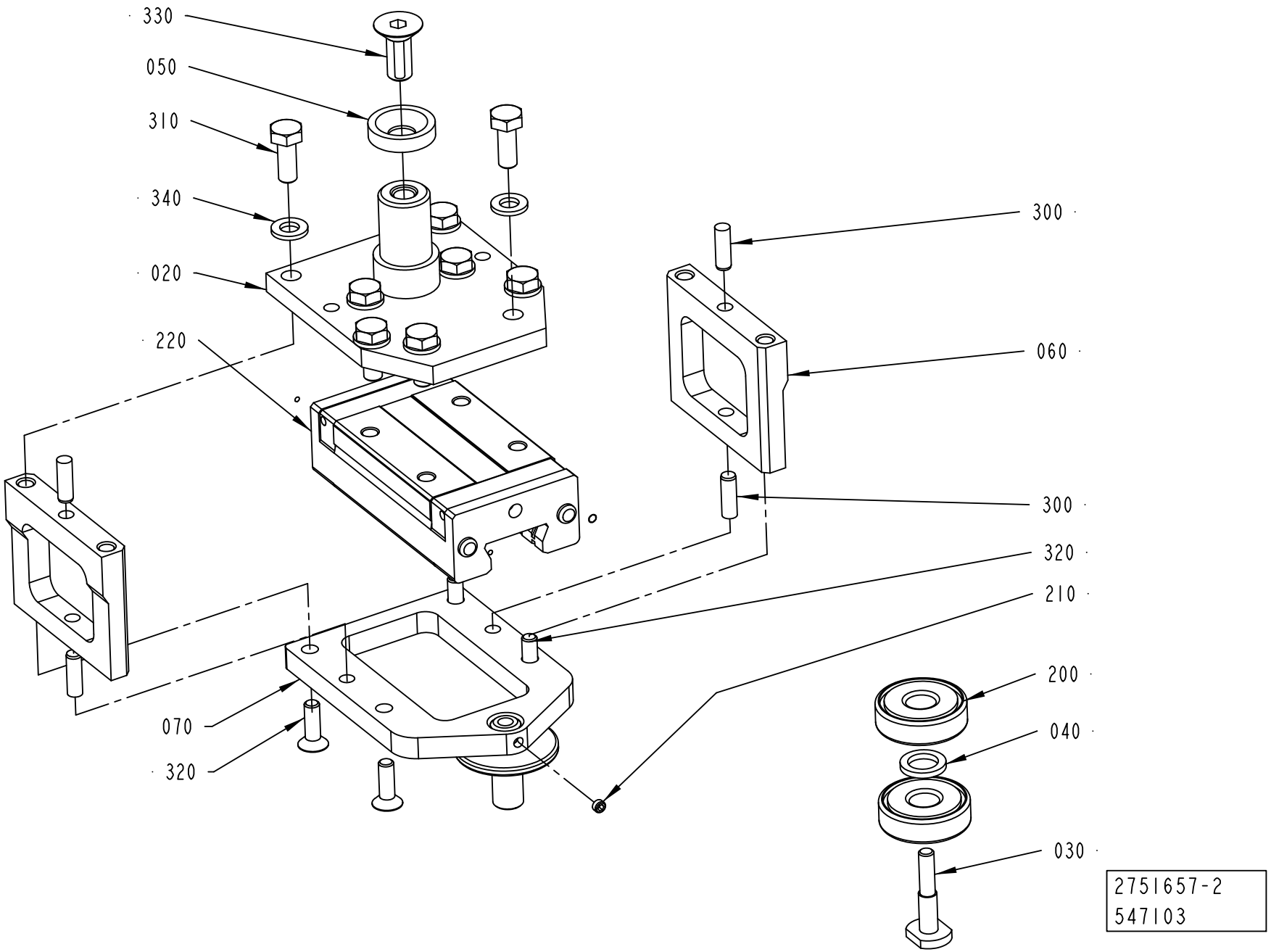
330
050
310
340
020
220
300
060
300
320
210
200
040
030
070
320
2751657-2
547103

ECM: 550839 - 20120402
Group number: 2751657-0200
Assembly Drawing: 2751657-2_1_AB

Pos	Part No	UN	Qty	Description	Page No
-					
020	2751739-0000		1	BRACKET	
030	2699680-0000		1	SCREW	
040	2699681-0000		1	SPACER	
050	2699683-0000		1	WASHER	
060	2703697-0000		2	SIDE	
070	2751703-0000		1	BRACKET	
200	90603-2378		2	BALL BEARING, 10X30X9 MM	
210	90459-1395		1	SCREW HEX.SOCK.SET CONEPT.MS6SS M4X4 A2	
220	90604-3338		1	CARRIAGE, SSR25XWSSHHME(C) BLOCK WITH FO	
300	311103-0308		4	PARALLEL PIN ISO 2338 5M6X16 A1	
310	312105-0368		8	SCREW, M6S ISO 4017 M6X16 A4 80	
320	312155-0329		4	SCREW DIN 7991 MF6S M5X16 A4 70	
330	312155-0451		1	SCREW DIN 7991 MF6S M8X20 A4 70	
340	315105-0153		8	WASHER PLAIN, 6,4X12X1,5 A4 BRB	

Pos	Part No	UN	Qty	Description	Page No

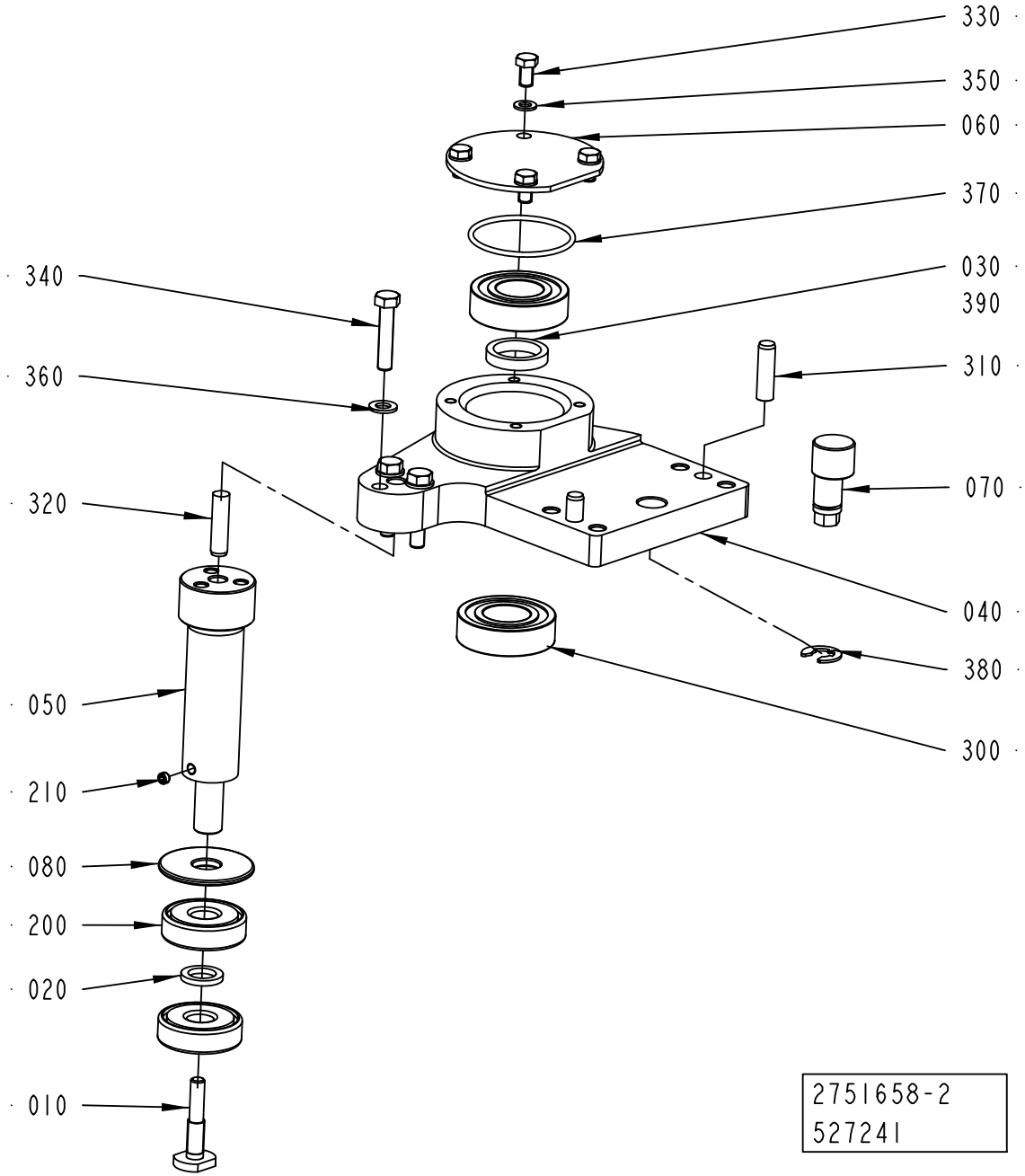
330
350
060
370
030
390
310
070
040
380
300
340
360
320
050
210
080
200
020
010
2751658-2
527241

ECM: 527262 - 20120401
Group number: 2751658-0200
Assembly Drawing: 2751658-2_1_AA

Pos	Part No	UN	Qty	Description	Page No
-					
010	2699680-0000		1	SCREW	
020	2699681-0000		1	SPACER	
030	2699682-0000		1	SPACER	
040	2751704-0000		1	PIVOT BRACKET	
050	2751705-0000		1	SHAFT	
060	2703696-0000		1	PROTECTIVE COVER	
070	3103670-0000		1	ECCENTRIC SHAFT	
080	2751699-0000		1	WASHER	
200	90603-2378		2	BALL BEARING, 10X30X9 MM	
210	90459-1395		1	SCREW HEX.SOCK.SET CONEPT.MS6SS M4X4 A2	
300	344224-0203		2	BALL BEARING 17/35X10	
310	311103-0354		2	PARALLEL PIN ISO 2338 6M6X22 A1	
320	311103-1355		1	PARALLEL PIN ISO 2338 6M6X24 A1	
330	312105-0287		4	SCREW, M6S ISO 4017 M4X8 A4 70	
340	312105-0333		3	SCREW, M6S ISO 4017 M5X25 A4 80	
350	315105-0136		4	WASHER PLAIN, 4,3X9X0,8 A4 BRB	
360	315105-0146		3	WASHER PLAIN, 5,3X10X1 A4 BRB	
370	315202-0716		1	O-RING 34,65X1,78 MM	
380	315755-0109		1	RETAINING RING SHAFT DIN 6799 7 SS	
390	90603-6233		1	KLüBERSYNTH UH1 14-151, ONLY IN BOM	
	90603-6253		*1*	*KLüBERSYNTH UH1 14-151, 1 KG TIN*	
	90603-6234		*1*	*KLüBERSYNTH UH1 14-151, 400G CARTRIDGE*	

Pos	Part No	UN	Qty	Description	Page No

Machine Type | Group Description | Used-In | Group Number | Page No

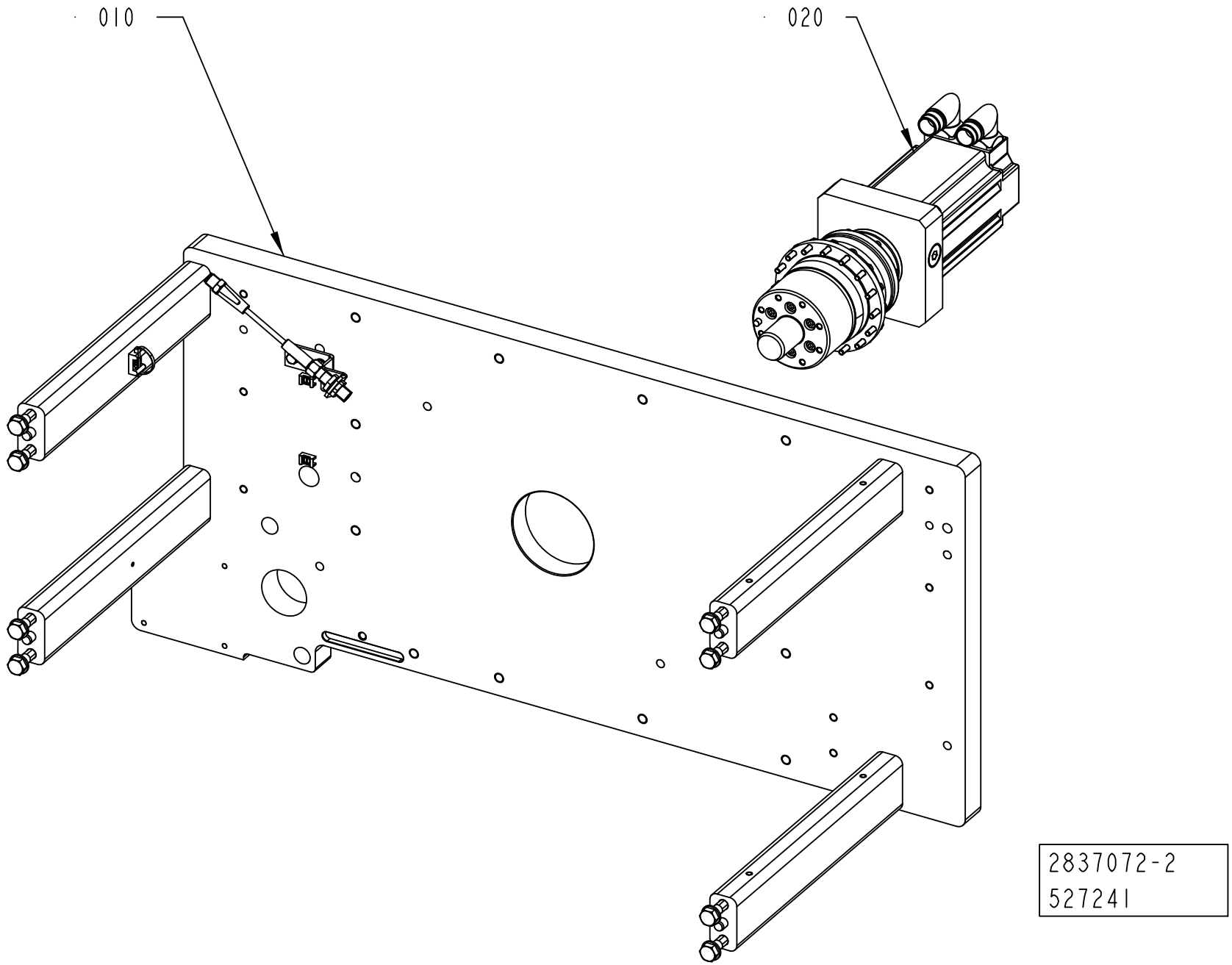
010
020
2837072-2
527241

ECM: 527267 - 20120401
Group number: 2837072-0200
Assembly Drawing: 2837072-2_1_AA

Pos	Part No	UN	Qty	Description	Page No
-					
010	2837073-0200		1	PLATE	**6-17**
020	2836507-0200		1	DRIVE MOTOR	**6-19**

Pos	Part No	UN	Qty	Description	Page No

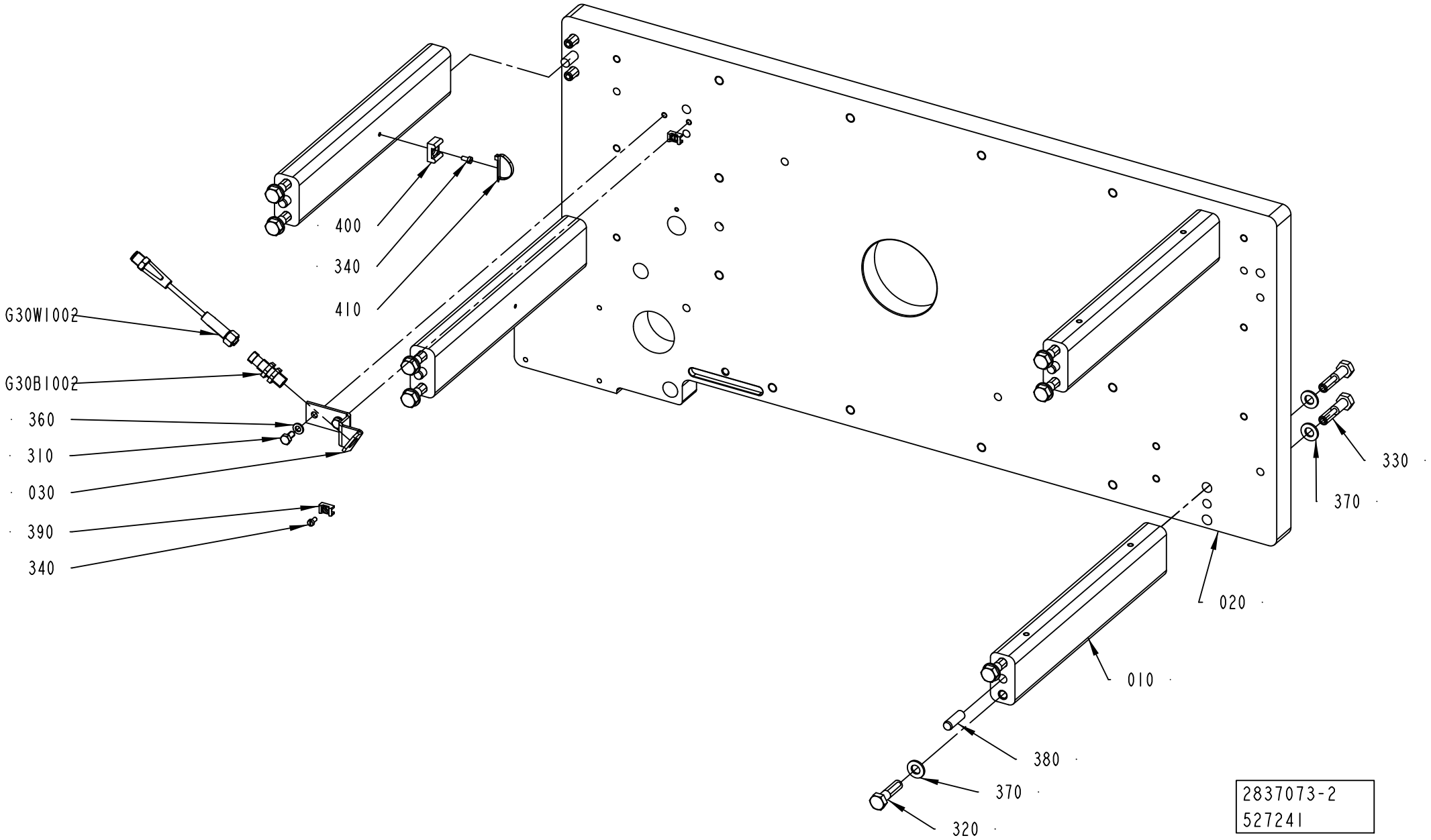
400
340
410
G30W1002
G30B1002
360
310
030
390
340
330
370
020
010
380
370
320
2837073-2
527241

ECM: 527268 - 20120401
Group number: 2837073-0200
Assembly Drawing: 2837073-2_1_AA

Pos	Part No	UN	Qty	Description	Page No
-					
010	2703704-0000		4	SPACER STRUT	
020	2835939-0000		1	PLATE	
030	2751741-0000		1	BRACKET	
310	312105-0366		2	SCREW, M6S ISO 4017 M6X12 A4 80	
320	312105-0499		8	SCREW, M6S ISO 4014 M10X40 A4 80	
330	312105-0500		8	SCREW, M6S ISO 4014 M10X45 A4 80	
340	312125-0287		3	SLOTTED HEAD SCREW, ISO1207 M4X8 A4	
360	315105-0153		2	WASHER PLAIN, 6,4X12X1,5 A4 BRB	
370	315106-0173		16	WASHER PLAIN, M10 ISO7089-10-200 HV A4	
380	311103-0458		8	PARALLEL PIN ISO 2338 10M6X30 A1	
390	352113-0205		2	ANCHOR PLATES FOR STRIPS, TM2S8-C100	
400	352113-0203		1	ANCHOR PLATES FOR STRIPS, TM3S8-M0	
410	352113-0104		1	CABLE TIE, BLACK 300X4,8 MM	
G30B1002	90458-2907		1	PROX.SWITCH IFS204	
G30W1002	344267-0010		1	SENSOR CABLE, EVT042	

Pos	Part No	UN	Qty	Description	Page No

Machine Type | Group Description | Used-In | Group Number | Page No

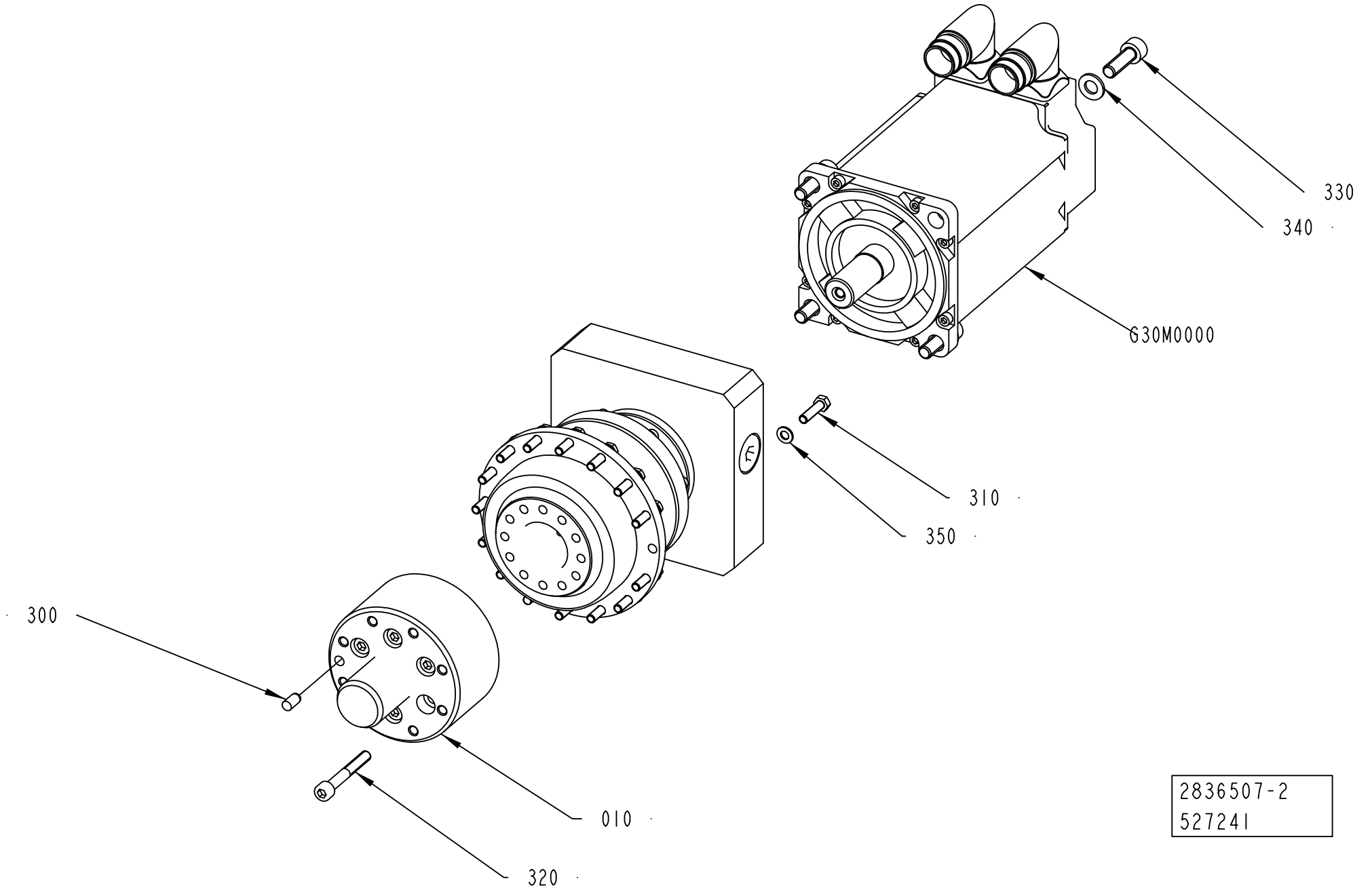
330
340
G30M0000
310
350
300
010
320
2836507-2
527241

ECM: 527266 - 20120401
Group number: 2836507-0200
Assembly Drawing: 2836507-2_1_AA

Pos	Part No	UN	Qty	Description	Page No
-					
010	2834311-0000		1	HUB	
020	90603-2476		1	GEARS,PLANETARY TP010F-MA3-66-OE1/MPL B4	
300	311103-0349		1	PARALLEL PIN ISO 2338 6M6X12 A1	
310	312105-0331		16	SCREW, M6S ISO 4017 M5X20 A4 80	
320	312115-0379		6	SCREW ISO4762 M6X45 A4 80	
330	312115-0453		4	SCREW ISO4762 M8X25 A4 80	
340	315106-0165		4	WASHER PLAIN, M8 ISO7089-8-200 HV A4	
350	315105-0146		16	WASHER PLAIN, 5,3X10X1 A4 BRB	
G30M0000	90601-1926		1	SERVO MOTOR, MPL-B430P-MK72AA SERIES A	

Pos	Part No	UN	Qty	Description	Page No

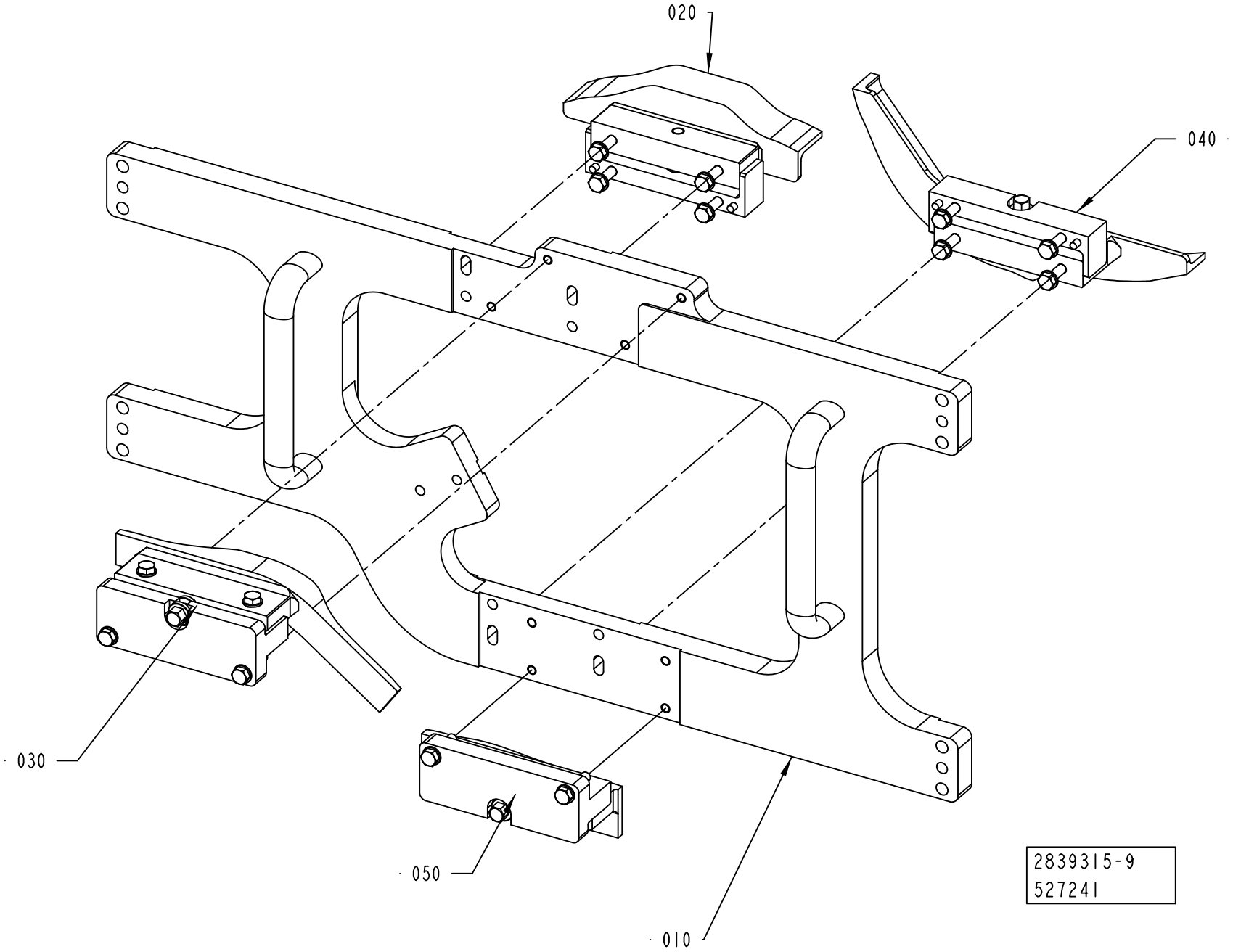
020
040
030
050
010
2839315-9
527241

ECM: 562840 - 20120701
Group number: 2839315-0200
Assembly Drawing: 2839315-9_1_AA

This list covers pages from 6-20 to 6-27

Pos	Part No	UN	Qty	Description	Page No
TBA 0200E HELICAP 23 POSDEVICE, TBA 0250E HELICAP 23 POSDEVICE (See drawing on page: 6-24)					
070	2873914-0100		1	CAMMODULE	**6-29, 6-31**
080	2873915-0100		1	CAMMODULE	**6-33, 6-35**
090	2873916-0100		1	CAMMODULE	**6-37, 6-39**
100	2873917-0100		1	CAMMODULE	**6-41**
110	2780425-0100		1	CAM	**6-43**
120	2780560-0200		1	DRIVE	**6-45, 6-47, 6-49**
TBA STREAMCAP 1000 NO POSITIONING DEVICE, TBA SLIMCAP 1000 NO POSITIONING DEVICE, TBA SLIMCAP 2000 NO POSITIONING DEVICE, TBA STREAMCAP 200 NO POSDEVICE (See drawing on page: 6-20)					
040	2839385-0100		1	CAM	**6-51**
050	2839386-0100		1	CAM	**6-53**
TBA STREAMCAP 1000 POSITIONING DEVICE, TBA 1000S HELICAP 23 POSDEVICE, TBA HELICAP 27 POSITIONING DEVICE, TBA STREAMCAP 200 POSDEVICE (See drawing on page: 6-26)					
110	2780425-0100		1	CAM	**6-43**
120	2780560-0200		1	DRIVE	**6-45, 6-47, 6-49**
TGA (See drawing on page: 6-22)					
070	2873914-0100		1	CAMMODULE	**6-29, 6-31**
080	2873915-0100		1	CAMMODULE	**6-33, 6-35**
090	2873916-0100		1	CAMMODULE	**6-37, 6-39**
100	2873917-0100		1	CAMMODULE	**6-41**
110	2780425-0100		1	CAM	**6-43**
120	2780560-0200		1	DRIVE	**6-45, 6-47, 6-49**
TPA STREAMCAP 1000 POSITIONING DEVICE, TPA STREAMCAP 500 POSITIONING DEVICE, TPA HELICAP 27 POSITIONING DEVICE (See drawing on page: 6-24)					
070	2873914-0100		1	CAMMODULE	**6-29, 6-31**
080	2873915-0100		1	CAMMODULE	**6-33, 6-35**
090	2873916-0100		1	CAMMODULE	**6-37, 6-39**
100	2873917-0100		1	CAMMODULE	**6-41**
110	2780425-0100		1	CAM	**6-43**
120	2780560-0200		1	DRIVE	**6-45, 6-47, 6-49**
Common Parts					
010	2839382-0100		1	MOUNTING PLATE	**6-55, 6-57**
020	2839383-0100		1	CAM	**6-59**
030	2839384-0100		1	CAM	**6-61**

Pos	Part No	UN	Qty	Description	Page No

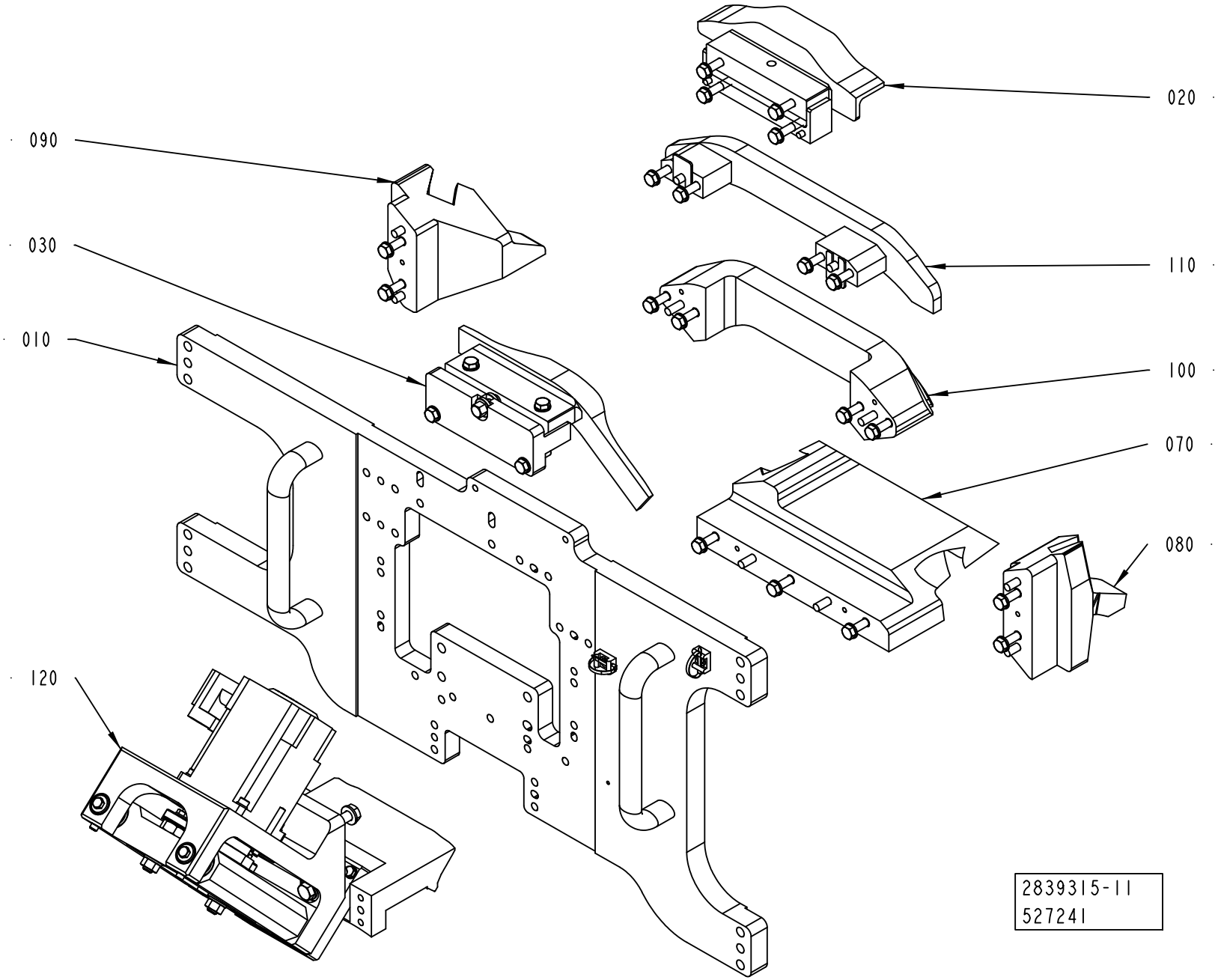
020
090
110
030
010
100
070
080
120
2839315-11
527241

ECM: 562840 - 20120701
Group number: 2839315-0200
Assembly Drawing: 2839315-11_1_AA

This list covers pages from 6-20 to 6-27

Pos	Part No	UN	Qty	Description	Page No
TBA 0200E HELICAP 23 POSDEVICE, TBA 0250E HELICAP 23 POSDEVICE (See drawing on page: 6-24)					
070	2873914-0100		1	CAMMODULE	**6-29, 6-31**
080	2873915-0100		1	CAMMODULE	**6-33, 6-35**
090	2873916-0100		1	CAMMODULE	**6-37, 6-39**
100	2873917-0100		1	CAMMODULE	**6-41**
110	2780425-0100		1	CAM	**6-43**
120	2780560-0200		1	DRIVE	**6-45, 6-47, 6-49**
TBA STREAMCAP 1000 NO POSITIONING DEVICE, TBA SLIMCAP 1000 NO POSITIONING DEVICE, TBA SLIMCAP 2000 NO POSITIONING DEVICE, TBA STREAMCAP 200 NO POSDEVICE (See drawing on page: 6-20)					
040	2839385-0100		1	CAM	**6-51**
050	2839386-0100		1	CAM	**6-53**
TBA STREAMCAP 1000 POSITIONING DEVICE, TBA 1000S HELICAP 23 POSDEVICE, TBA HELICAP 27 POSITIONING DEVICE, TBA STREAMCAP 200 POSDEVICE (See drawing on page: 6-26)					
110	2780425-0100		1	CAM	**6-43**
120	2780560-0200		1	DRIVE	**6-45, 6-47, 6-49**
TGA (See drawing on page: 6-22)					
070	2873914-0100		1	CAMMODULE	**6-29, 6-31**
080	2873915-0100		1	CAMMODULE	**6-33, 6-35**
090	2873916-0100		1	CAMMODULE	**6-37, 6-39**
100	2873917-0100		1	CAMMODULE	**6-41**
110	2780425-0100		1	CAM	**6-43**
120	2780560-0200		1	DRIVE	**6-45, 6-47, 6-49**
TPA STREAMCAP 1000 POSITIONING DEVICE, TPA STREAMCAP 500 POSITIONING DEVICE, TPA HELICAP 27 POSITIONING DEVICE (See drawing on page: 6-24)					
070	2873914-0100		1	CAMMODULE	**6-29, 6-31**
080	2873915-0100		1	CAMMODULE	**6-33, 6-35**
090	2873916-0100		1	CAMMODULE	**6-37, 6-39**
100	2873917-0100		1	CAMMODULE	**6-41**
110	2780425-0100		1	CAM	**6-43**
120	2780560-0200		1	DRIVE	**6-45, 6-47, 6-49**
Common Parts					
010	2839382-0100		1	MOUNTING PLATE	**6-55, 6-57**
020	2839383-0100		1	CAM	**6-59**
030	2839384-0100		1	CAM	**6-61**

Pos	Part No	UN	Qty	Description	Page No

Machine Type | Group Description | Used-In | Group Number | Page No

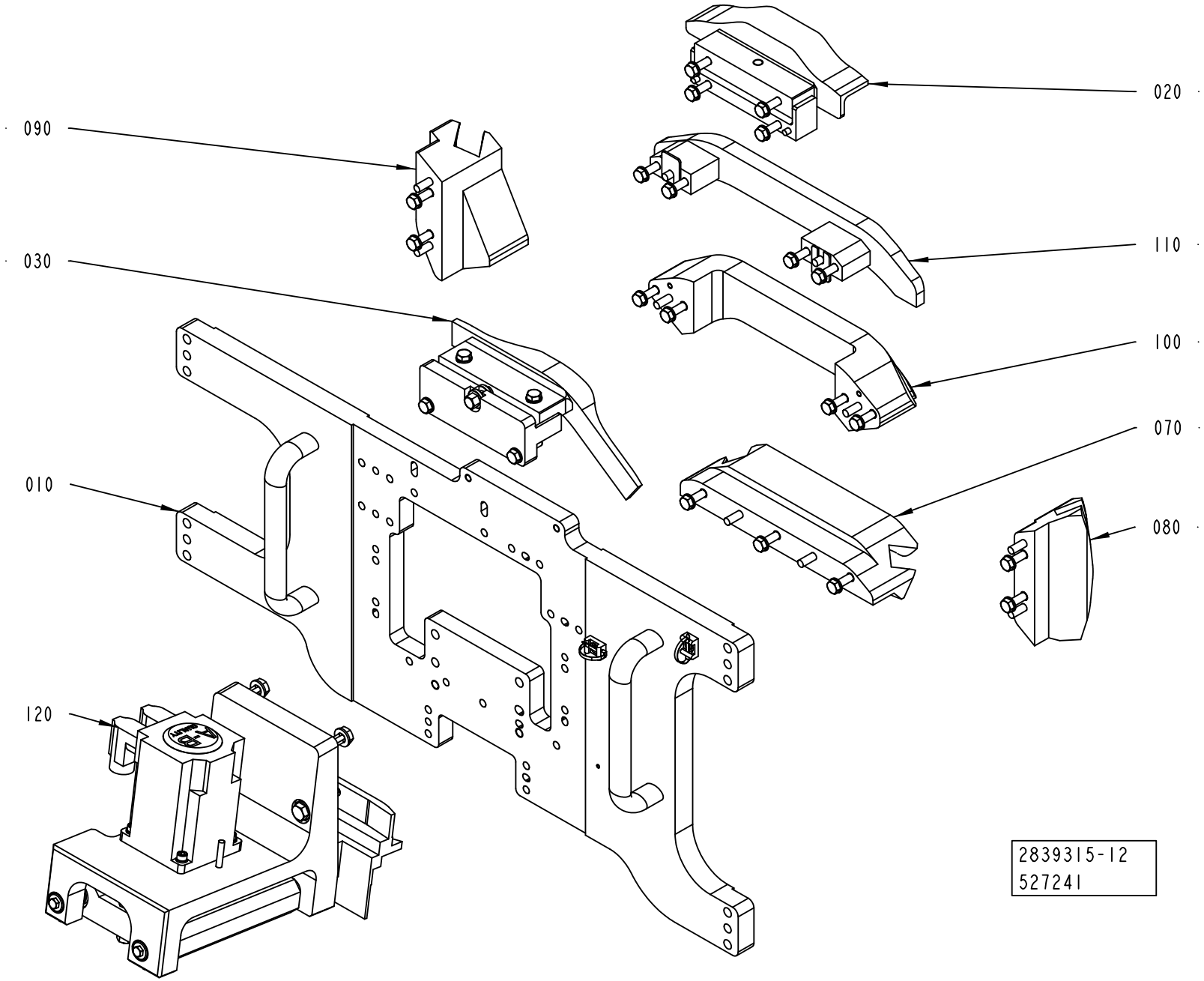
020
090
110
030
100
070
010
080
120
2839315-12
527241

ECM: 562840 - 20120701
Group number: 2839315-0200
Assembly Drawing: 2839315-12_1_AA

This list covers pages from 6-20 to 6-27

Pos	Part No	UN	Qty	Description	Page No
TBA 0200E HELICAP 23 POSDEVICE, TBA 0250E HELICAP 23 POSDEVICE (See drawing on page: 6-24)					
070	2873914-0100		1	CAMMODULE	**6-29, 6-31**
080	2873915-0100		1	CAMMODULE	**6-33, 6-35**
090	2873916-0100		1	CAMMODULE	**6-37, 6-39**
100	2873917-0100		1	CAMMODULE	**6-41**
110	2780425-0100		1	CAM	**6-43**
120	2780560-0200		1	DRIVE	**6-45, 6-47, 6-49**
TBA STREAMCAP 1000 NO POSITIONING DEVICE, TBA SLIMCAP 1000 NO POSITIONING DEVICE, TBA SLIMCAP 2000 NO POSITIONING DEVICE, TBA STREAMCAP 200 NO POSDEVICE (See drawing on page: 6-20)					
040	2839385-0100		1	CAM	**6-51**
050	2839386-0100		1	CAM	**6-53**
TBA STREAMCAP 1000 POSITIONING DEVICE, TBA 1000S HELICAP 23 POSDEVICE, TBA HELICAP 27 POSITIONING DEVICE, TBA STREAMCAP 200 POSDEVICE (See drawing on page: 6-26)					
110	2780425-0100		1	CAM	**6-43**
120	2780560-0200		1	DRIVE	**6-45, 6-47, 6-49**
TGA (See drawing on page: 6-22)					
070	2873914-0100		1	CAMMODULE	**6-29, 6-31**
080	2873915-0100		1	CAMMODULE	**6-33, 6-35**
090	2873916-0100		1	CAMMODULE	**6-37, 6-39**
100	2873917-0100		1	CAMMODULE	**6-41**
110	2780425-0100		1	CAM	**6-43**
120	2780560-0200		1	DRIVE	**6-45, 6-47, 6-49**
TPA STREAMCAP 1000 POSITIONING DEVICE, TPA STREAMCAP 500 POSITIONING DEVICE, TPA HELICAP 27 POSITIONING DEVICE (See drawing on page: 6-24)					
070	2873914-0100		1	CAMMODULE	**6-29, 6-31**
080	2873915-0100		1	CAMMODULE	**6-33, 6-35**
090	2873916-0100		1	CAMMODULE	**6-37, 6-39**
100	2873917-0100		1	CAMMODULE	**6-41**
110	2780425-0100		1	CAM	**6-43**
120	2780560-0200		1	DRIVE	**6-45, 6-47, 6-49**
Common Parts					
010	2839382-0100		1	MOUNTING PLATE	**6-55, 6-57**
020	2839383-0100		1	CAM	**6-59**
030	2839384-0100		1	CAM	**6-61**

Pos	Part No	UN	Qty	Description	Page No

Machine Type | Group Description | Used-In | Group Number | Page No

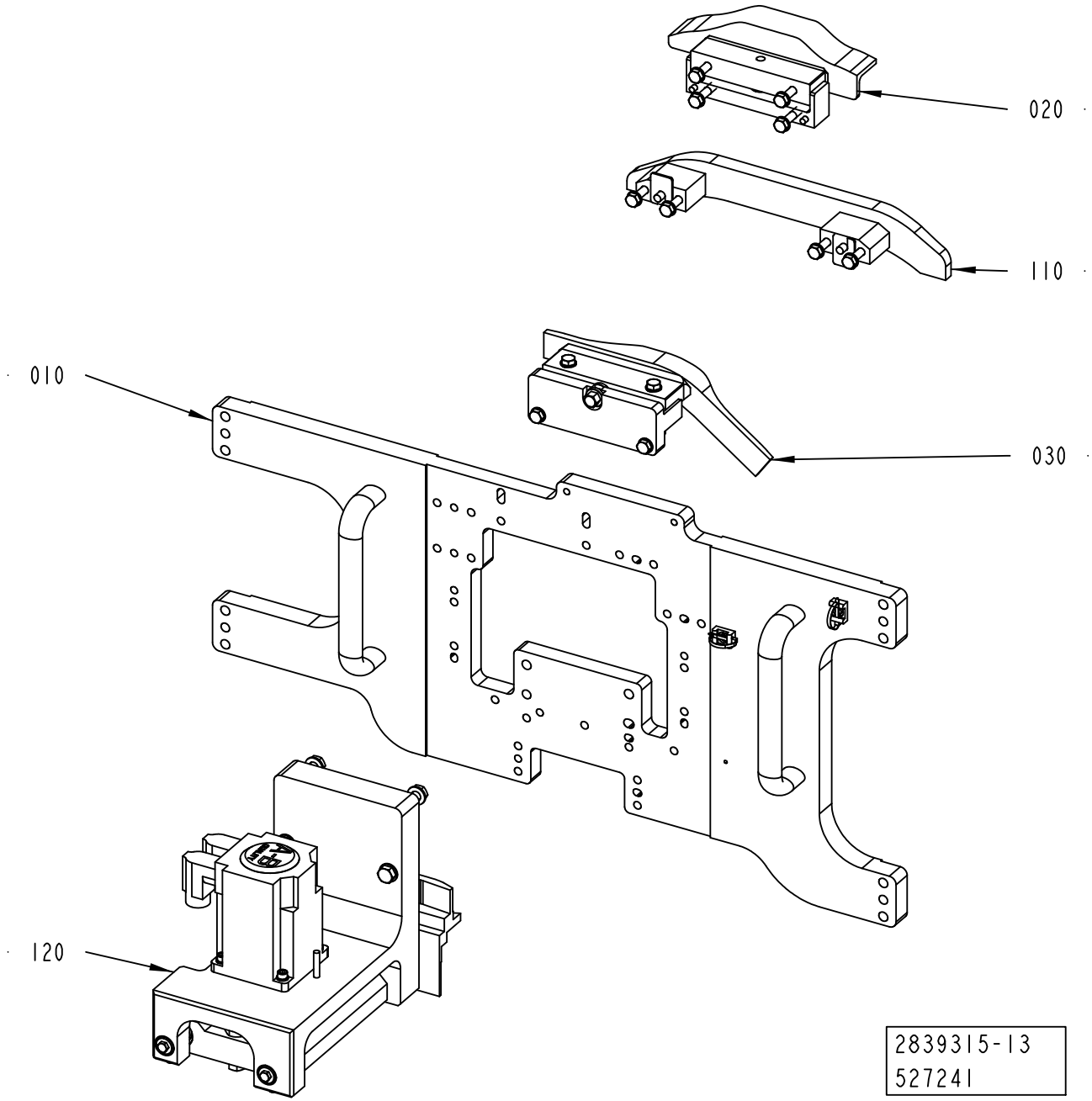
020
110
010
030
120
2839315-13
527241

ECM: 562840 - 20120701
Group number: 2839315-0200
Assembly Drawing: 2839315-13_1_AA

This list covers pages from 6-20 to 6-27

Pos	Part No	UN	Qty	Description	Page No
TBA 0200E HELICAP 23 POSDEVICE, TBA 0250E HELICAP 23 POSDEVICE (See drawing on page: 6-24)					
070	2873914-0100		1	CAMMODULE	**6-29, 6-31**
080	2873915-0100		1	CAMMODULE	**6-33, 6-35**
090	2873916-0100		1	CAMMODULE	**6-37, 6-39**
100	2873917-0100		1	CAMMODULE	**6-41**
110	2780425-0100		1	CAM	**6-43**
120	2780560-0200		1	DRIVE	**6-45, 6-47, 6-49**
TBA STREAMCAP 1000 NO POSITIONING DEVICE, TBA SLIMCAP 1000 NO POSITIONING DEVICE, TBA SLIMCAP 2000 NO POSITIONING DEVICE, TBA STREAMCAP 200 NO POSDEVICE (See drawing on page: 6-20)					
040	2839385-0100		1	CAM	**6-51**
050	2839386-0100		1	CAM	**6-53**
TBA STREAMCAP 1000 POSITIONING DEVICE, TBA 1000S HELICAP 23 POSDEVICE, TBA HELICAP 27 POSITIONING DEVICE, TBA STREAMCAP 200 POSDEVICE (See drawing on page: 6-26)					
110	2780425-0100		1	CAM	**6-43**
120	2780560-0200		1	DRIVE	**6-45, 6-47, 6-49**
TGA (See drawing on page: 6-22)					
070	2873914-0100		1	CAMMODULE	**6-29, 6-31**
080	2873915-0100		1	CAMMODULE	**6-33, 6-35**
090	2873916-0100		1	CAMMODULE	**6-37, 6-39**
100	2873917-0100		1	CAMMODULE	**6-41**
110	2780425-0100		1	CAM	**6-43**
120	2780560-0200		1	DRIVE	**6-45, 6-47, 6-49**
TPA STREAMCAP 1000 POSITIONING DEVICE, TPA STREAMCAP 500 POSITIONING DEVICE, TPA HELICAP 27 POSITIONING DEVICE (See drawing on page: 6-24)					
070	2873914-0100		1	CAMMODULE	**6-29, 6-31**
080	2873915-0100		1	CAMMODULE	**6-33, 6-35**
090	2873916-0100		1	CAMMODULE	**6-37, 6-39**
100	2873917-0100		1	CAMMODULE	**6-41**
110	2780425-0100		1	CAM	**6-43**
120	2780560-0200		1	DRIVE	**6-45, 6-47, 6-49**
Common Parts					
010	2839382-0100		1	MOUNTING PLATE	**6-55, 6-57**
020	2839383-0100		1	CAM	**6-59**
030	2839384-0100		1	CAM	**6-61**

Pos	Part No	UN	Qty	Description	Page No

Machine Type | Group Description | Used-In | Group Number | Page No

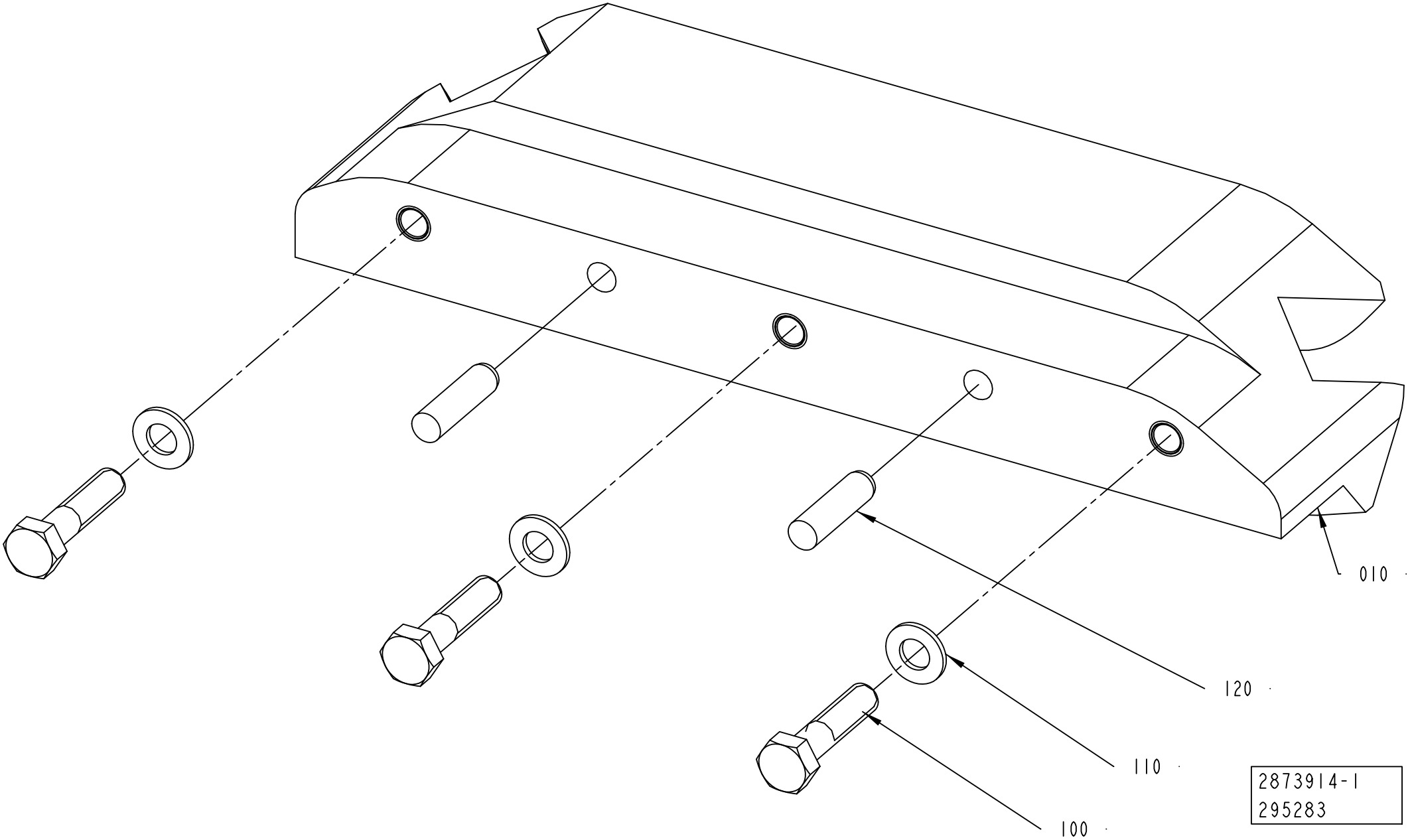
010
120
110
100
2873914-1
295283

ECM: 562841 - 20120701
Group number: 2873914-0100
Assembly Drawing: 2873914-1_1_AA

This list covers pages from 6-28 to 6-31

Pos	Part No	UN	Qty	Description	Page No
TBA 0200E HELICAP 23, TBA 0250E HELICAP 23 (See drawing on page: 6-28)					
010	3077715-0000		1	CAM	
TGA (See drawing on page: 6-30)					
010	2746982-0000		1	CAM	
TPA STREAMCAP 1000, TPA STREAMCAP 500, TPA HELICAP 27 (See drawing on page: 6-28)					
010	2746950-0000		1	CAM	
Common Parts					
100	312105-0457		3	SCREW, M6S ISO 4014 M8X35 A4 80	
110	315106-0165		3	WASHER PLAIN, M8 ISO7089-8-200 HV A4	
120	311103-0405		2	PARALLEL PIN ISO 2338 8M6X30 A1	

Pos	Part No	UN	Qty	Description	Page No

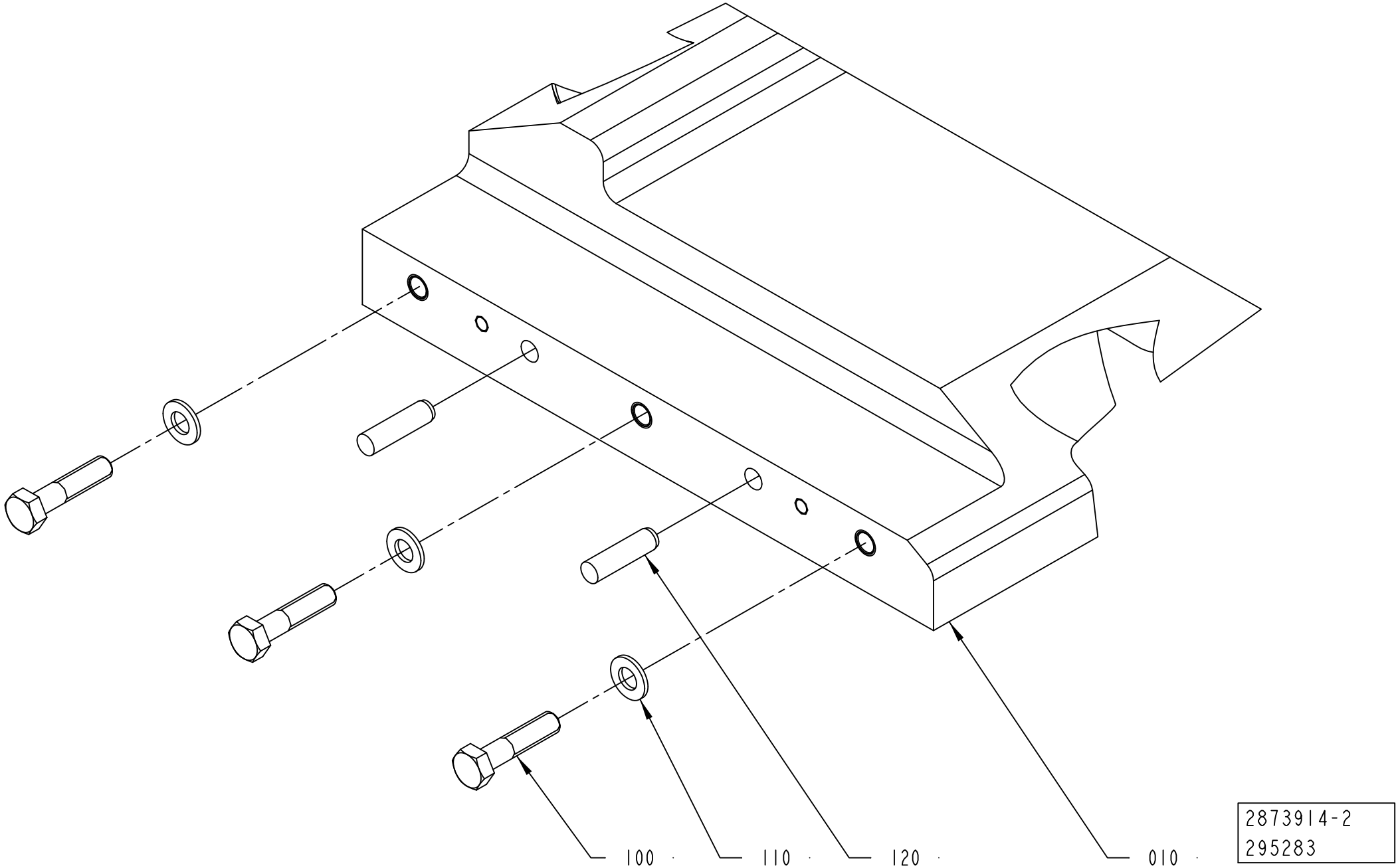
100
110
120
010
2873914-2
295283

ECM: 562841 - 20120701
Group number: 2873914-0100
Assembly Drawing: 2873914-2_1_AA

This list covers pages from 6-28 to 6-31

Pos	Part No	UN	Qty	Description	Page No
TBA 0200E HELICAP 23, TBA 0250E HELICAP 23 (See drawing on page: 6-28)					
010	3077715-0000		1	CAM	
TGA (See drawing on page: 6-30)					
010	2746982-0000		1	CAM	
TPA STREAMCAP 1000, TPA STREAMCAP 500, TPA HELICAP 27 (See drawing on page: 6-28)					
010	2746950-0000		1	CAM	
Common Parts					
100	312105-0457		3	SCREW, M6S ISO 4014 M8X35 A4 80	
110	315106-0165		3	WASHER PLAIN, M8 ISO7089-8-200 HV A4	
120	311103-0405		2	PARALLEL PIN ISO 2338 8M6X30 A1	

Pos	Part No	UN	Qty	Description	Page No

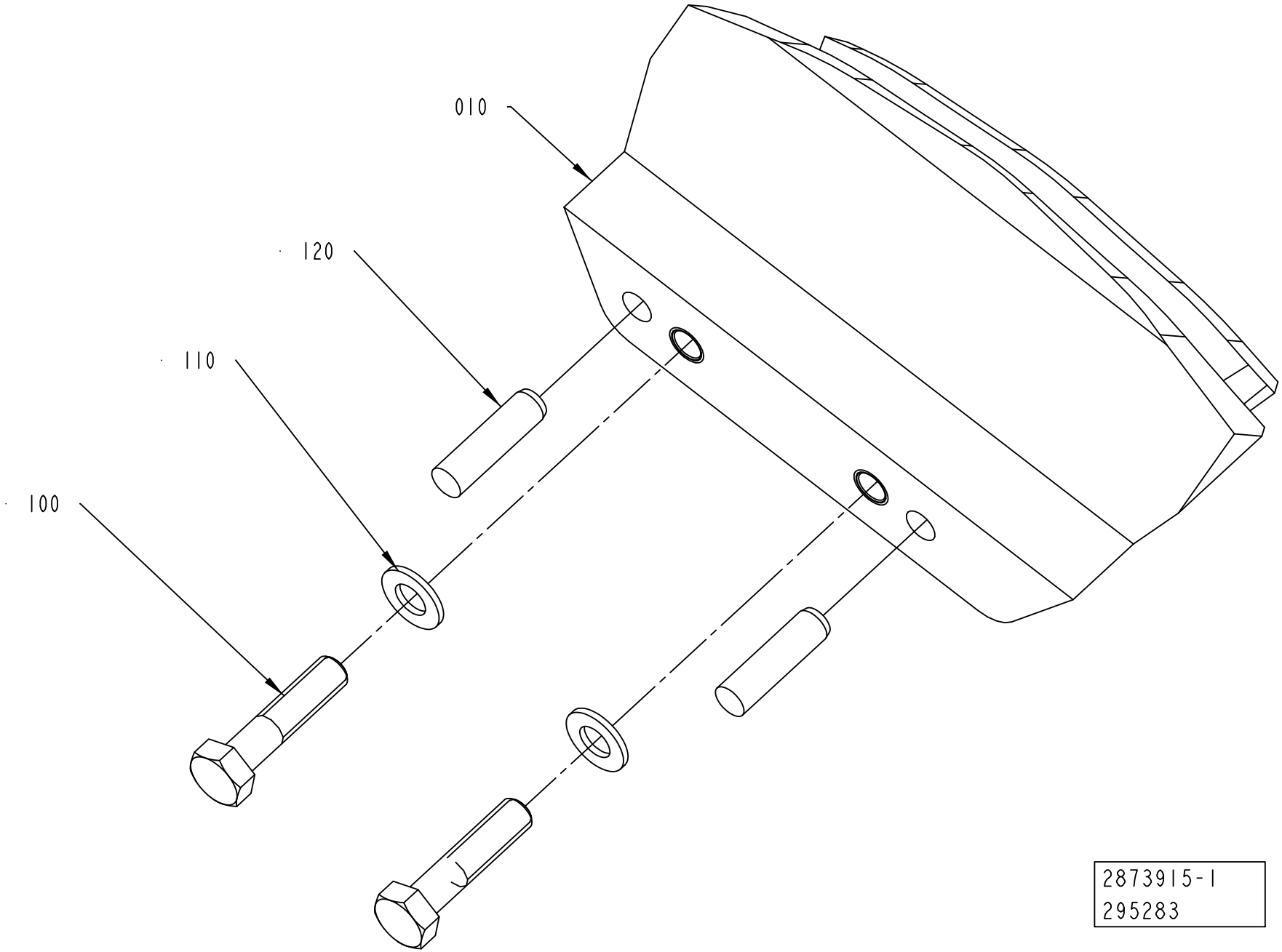
010
120
110
100
2873915-1
295283

ECM: 562842 - 20120701
Group number: 2873915-0100
Assembly Drawing: 2873915-1_1_AA

This list covers pages from 6-32 to 6-35

Pos	Part No	UN	Qty	Description	Page No
TGA (See drawing on page: 6-34)					
010	2746985-0000		1	CAM	
TPA STREAMCAP 1000, TPA STREAMCAP 500, TPA HELICAP 27, TBA 0200E HELICAP 23, TBA 0250E HELICAP 23 (See drawing on page: 6-32)					
010	2746951-0000		1	CAM	
Common Parts					
100	312105-0457		2	SCREW, M6S ISO 4014 M8X35 A4 80	
110	315106-0165		2	WASHER PLAIN, M8 ISO7089-8-200 HV A4	
120	311103-0405		2	PARALLEL PIN ISO 2338 8M6X30 A1	

Pos	Part No	UN	Qty	Description	Page No

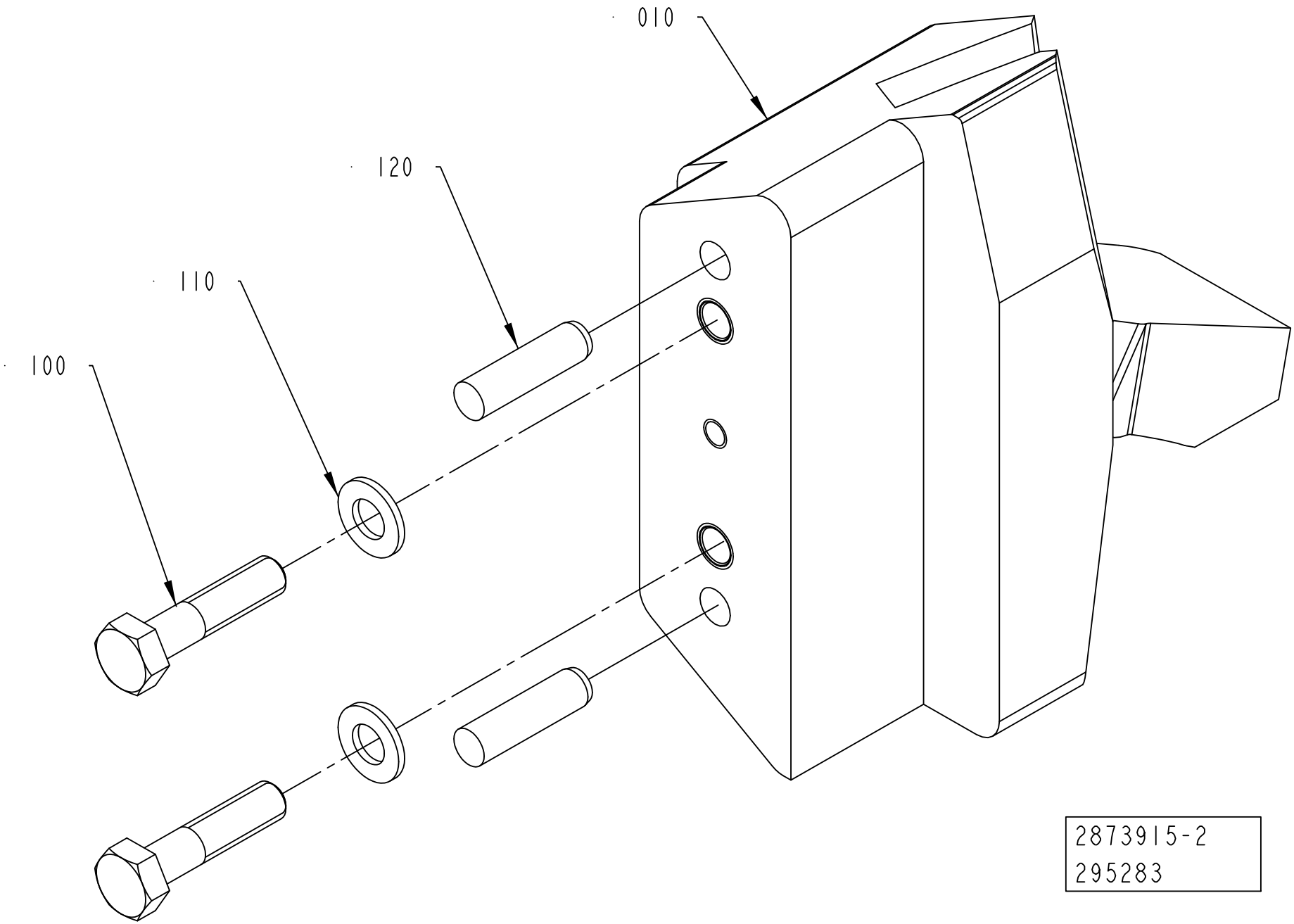
010
120
110
100
2873915-2
295283

Pos	Part No	UN	Qty	Description	Page No
TGA (See drawing on page: 6-34)					
010	2746985-0000		1	CAM	
TPA STREAMCAP 1000, TPA STREAMCAP 500, TPA HELICAP 27, TBA 0200E HELICAP 23, TBA 0250E HELICAP 23 (See drawing on page: 6-32)					
010	2746951-0000		1	CAM	
Common Parts					
100	312105-0457		2	SCREW, M6S ISO 4014 M8X35 A4 80	
110	315106-0165		2	WASHER PLAIN, M8 ISO7089-8-200 HV A4	
120	311103-0405		2	PARALLEL PIN ISO 2338 8M6X30 A1	

Pos	Part No	UN	Qty	Description	Page No

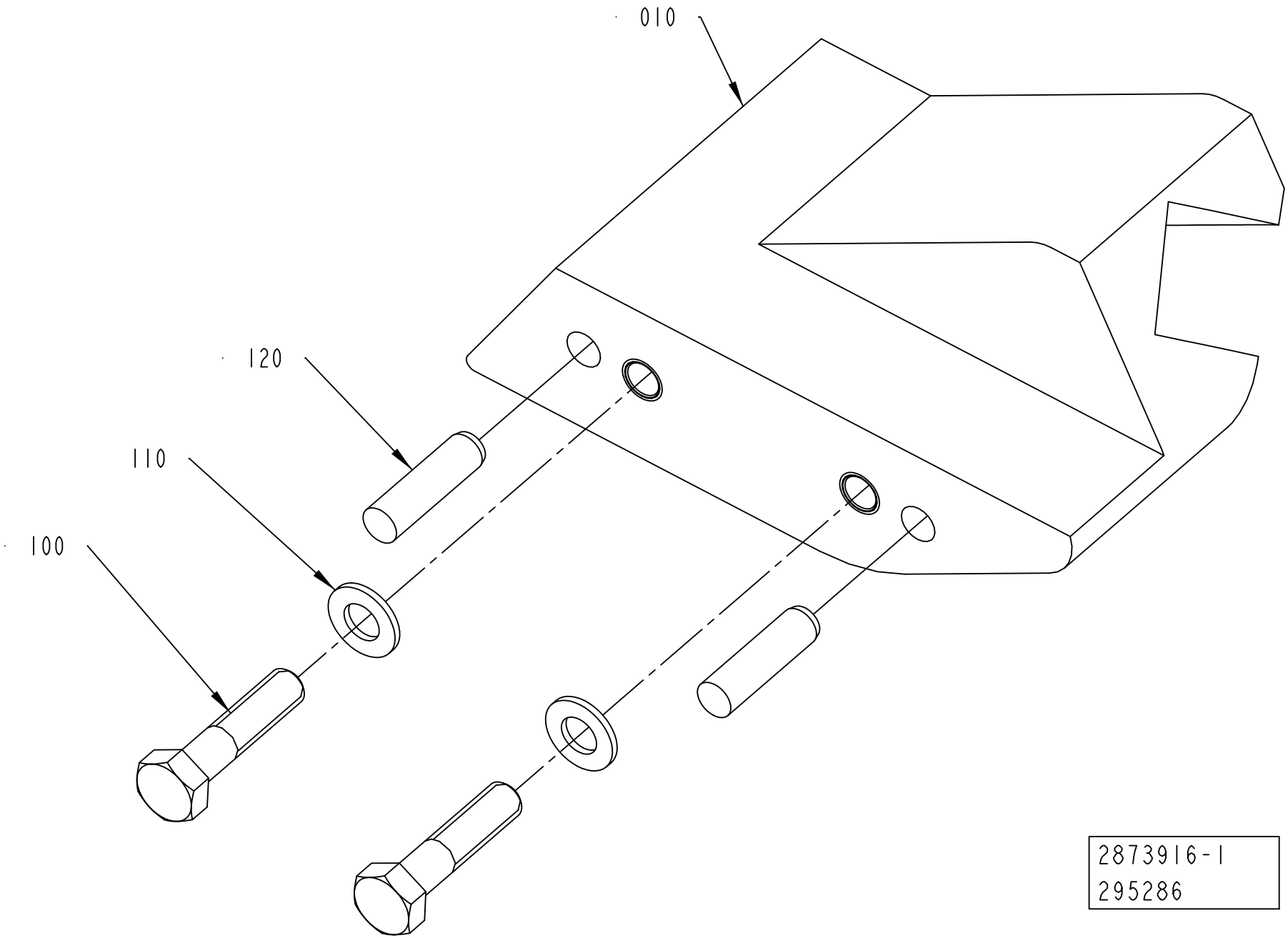
010
120
110
100
2873916-1
295286

ECM: 562843 - 20120701
Group number: 2873916-0100
Assembly Drawing: 2873916-1_1_AA

This list covers pages from 6-36 to 6-39

Pos	Part No	UN	Qty	Description	Page No
TGA (See drawing on page: 6-38)					
010	2746987-0000		1	CAM	
TPA STREAMCAP 1000, TPA STREAMCAP 500, TPA HELICAP 27, TBA 0200E HELICAP 23, TBA 0250E HELICAP 23 (See drawing on page: 6-36)					
010	2746953-0000		1	CAM	
Common Parts					
100	312105-0457		2	SCREW, M6S ISO 4014 M8X35 A4 80	
110	315106-0165		2	WASHER PLAIN, M8 ISO7089-8-200 HV A4	
120	311103-0405		2	PARALLEL PIN ISO 2338 8M6X30 A1	

Pos	Part No	UN	Qty	Description	Page No

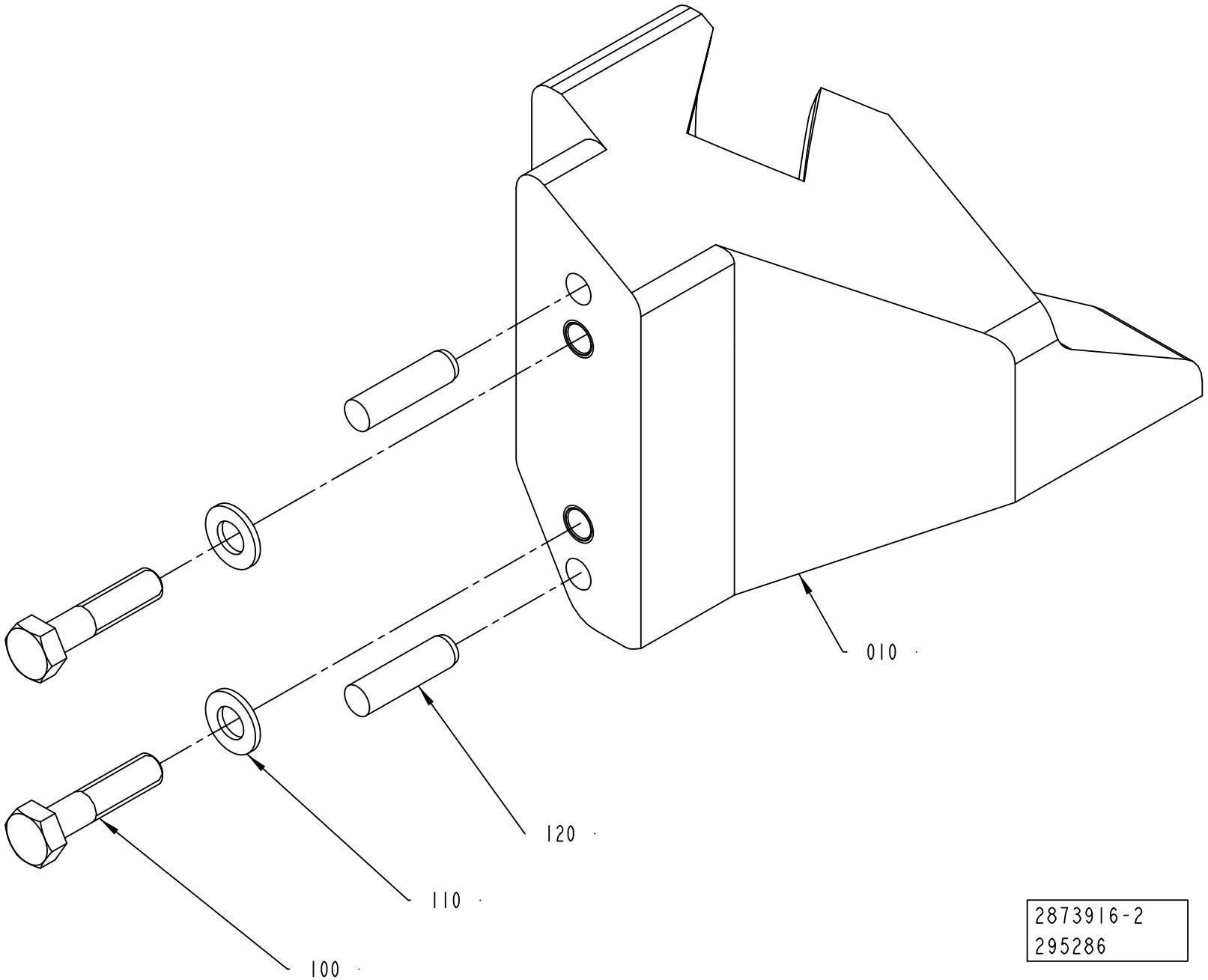
010
120
110
100
2873916-2
295286

ECM: 562843 - 20120701
Group number: 2873916-0100
Assembly Drawing: 2873916-2_1_AA

This list covers pages from 6-36 to 6-39

Pos	Part No	UN	Qty	Description	Page No
TGA (See drawing on page: 6-38)					
010	2746987-0000		1	CAM	
TPA STREAMCAP 1000, TPA STREAMCAP 500, TPA HELICAP 27, TBA 0200E HELICAP 23, TBA 0250E HELICAP 23 (See drawing on page: 6-36)					
010	2746953-0000		1	CAM	
Common Parts					
100	312105-0457		2	SCREW, M6S ISO 4014 M8X35 A4 80	
110	315106-0165		2	WASHER PLAIN, M8 ISO7089-8-200 HV A4	
120	311103-0405		2	PARALLEL PIN ISO 2338 8M6X30 A1	

Pos	Part No	UN	Qty	Description	Page No

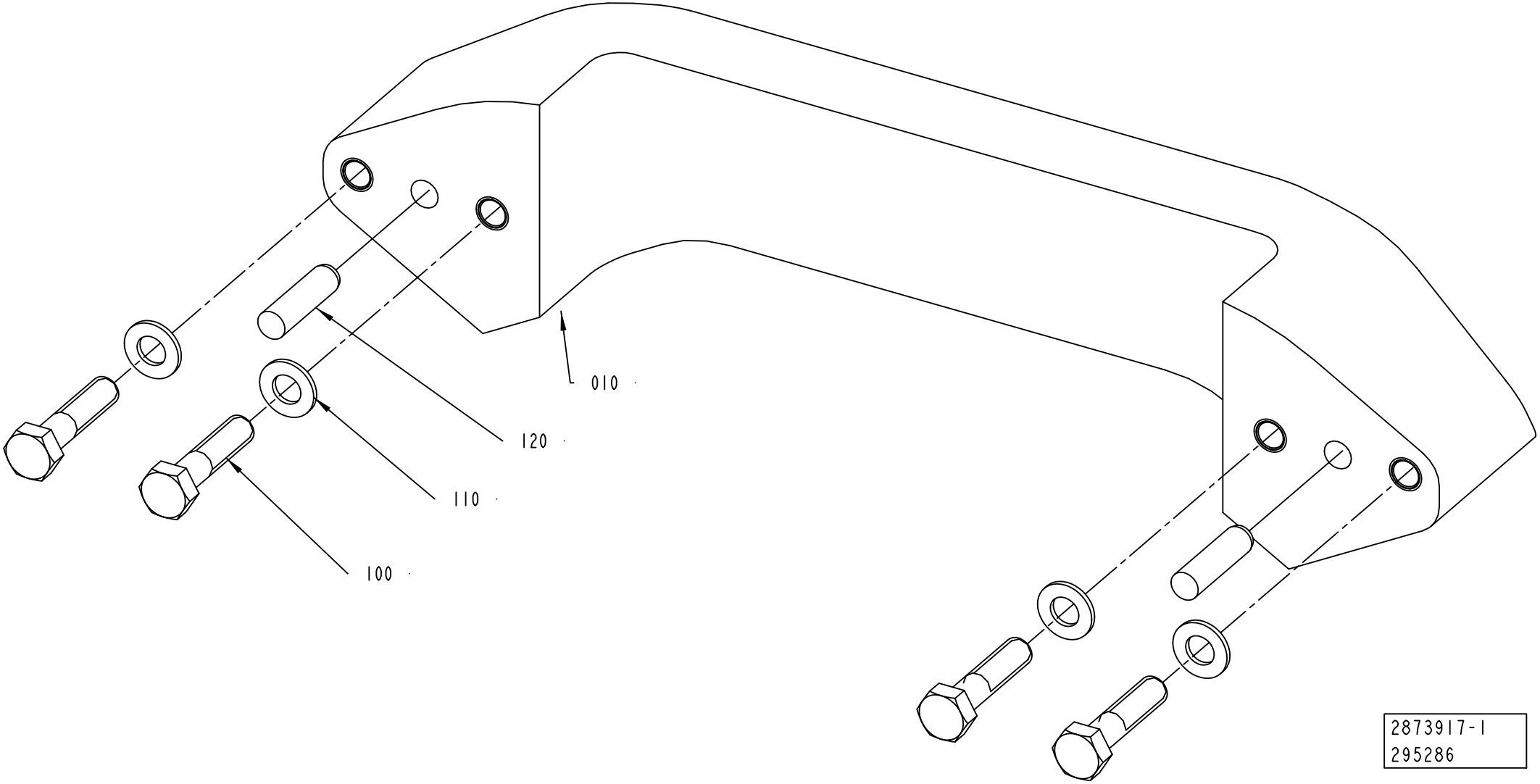
010
120
110
100
2873917-1
295286

ECM: 298771 - 20070323
Group number: 2873917-0100
Assembly Drawing: 2873917-1_1_AA

Pos	Part No	UN	Qty	Description	Page No
-					
010	2746952-0000		1	CAM	
100	312105-0457		4	SCREW, M6S ISO 4014 M8X35 A4 80	
110	315106-0165		4	WASHER PLAIN, M8 ISO7089-8-200 HV A4	
120	311103-0405		2	PARALLEL PIN ISO 2338 8M6X30 A1	

Pos	Part No	UN	Qty	Description	Page No

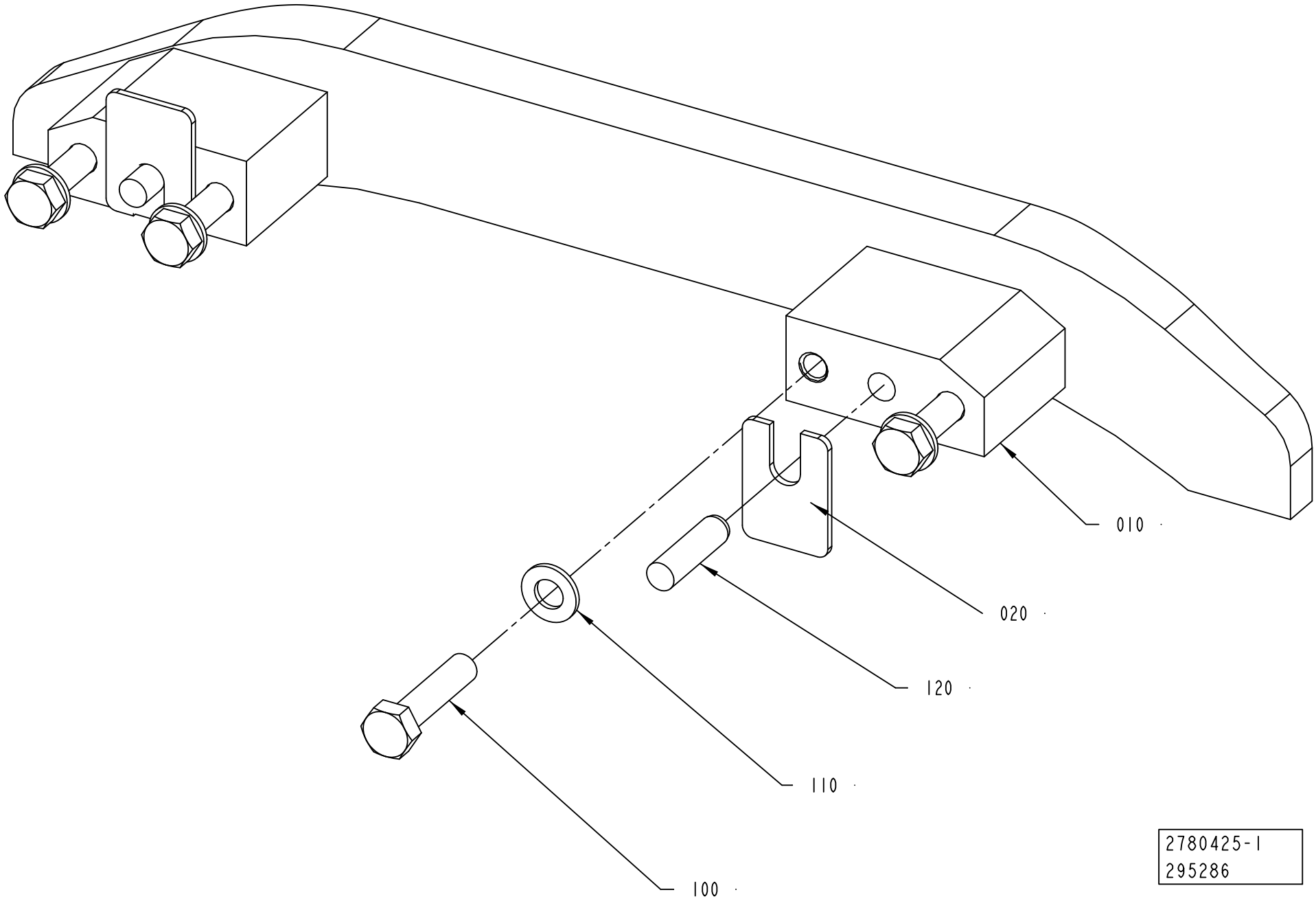
010
020
120
110
100
2780425-1
295286

ECM: 349995 - 20080701
Group number: 2780425-0100
Assembly Drawing: 2780425-1_1_AA

Pos	Part No	UN	Qty	Description	Page No
-					
010	2801048-0000		1	CAM	
020	2873892-0000		2	SHIM	
100	312105-0457		4	SCREW, M6S ISO 4014 M8X35 A4 80	
110	315106-0165		4	WASHER PLAIN, M8 ISO7089-8-200 HV A4	
120	311103-0405		2	PARALLEL PIN ISO 2338 8M6X30 A1	

Pos	Part No	UN	Qty	Description	Page No

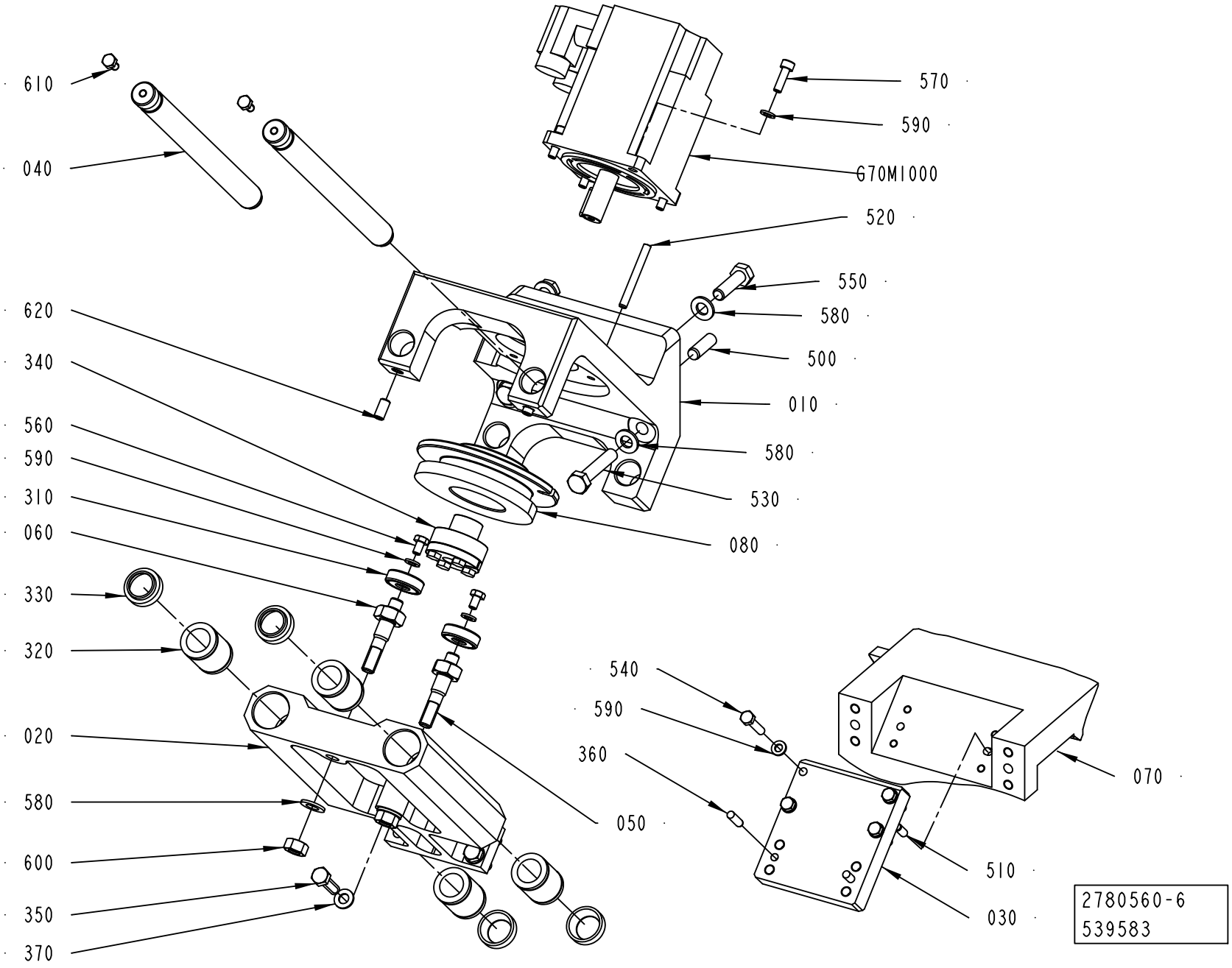
610
040
620
340
560
590
310
060
330
320
020
580
600
350
370
570
590
G70M1000
520
550
580
500
010
580
530
080
540
590
360
050
070
510
030
2780560-6
539583

Pos	Part No	UN	Qty	Description	Page No
TBA 0200E HELICAP 23, TBA 0250E HELICAP 23 (See drawing on page: 6-46)					
010	3073397-0000		1	BRACKET	
070	3073409-0000		1	CAM	
590	315106-0153		6	WASHER PLAIN, M6 ISO7089-6-200 HV A4	
TBA STREAMCAP1000, TBA STREAMCAP200, TBA 1000S HELICAP2 23, TBA HELICAP 27 (See drawing on page: 6-48)					
010	2838722-0000		1	BRACKET	
070	2783479-0000		1	CAM	
590	315106-0153		6	WASHER PLAIN, M6 ISO7089-6-200 HV A4	
TGA (See drawing on page: 6-44)					
010	2780526-0000		1	BRACKET	
030	2780529-0000		1	BRACKET	
070	2780521-0000		1	CAM	
510	311103-0351		2	PARALLEL PIN ISO 2338 6M6X16 A1	
540	312105-0374		4	SCREW, M6S ISO 4014 M6X30 A4 80	
590	315106-0153		10	WASHER PLAIN, M6 ISO7089-6-200 HV A4	
TPA STREAMCAP 1000, TPA STREAMCAP 500, TPA HELICAP 27 (See drawing on page: 6-46)					
010	2859960-0000		1	BRACKET	
070	2783479-0000		1	CAM	
590	315106-0153		6	WASHER PLAIN, M6 ISO7089-6-200 HV A4	
Common Parts					
020	2780527-0000		1	CARRIAGE	
040	2783477-0000		2	GUIDE SHAFT	
050	2780531-0000		1	AXLE PIN	
060	2780532-0000		1	AXLE PIN	
080	2780533-0000		1	CAM	
310	90603-2378		2	BALL BEARING, 10X30X9 MM	
320	90189-0019		4	BALL BUSHING, 20X30X30 MM	
330	90091-0038		4	SCRAPER 20X30X10 MM	
340	90600-0454		1	CLAMPING ELEMENT, 16X24 L=16	
350	312105-0455		4	SCREW, M6S ISO 4017 M8X30 A4 80	
360	311103-0354		2	PARALLEL PIN ISO 2338 6M6X22 A1	
370	315105-0165		4	WASHER PLAIN, 8,4X16X1,6 A4 BRB	
500	311103-0458		2	PARALLEL PIN ISO 2338 10M6X30 A1	
520	311103-0367		1	PARALLEL PIN ISO 2338 6M6X55 A1	
530	312105-0501		2	SCREW, M6S ISO 4014 M10X50 A4 80	
550	312105-0497		2	SCREW, M6S ISO 4017 M10X35 A4 80	
560	312105-0364		2	SCREW, M6S ISO 4017 M6X10 A4 80	
570	312115-0370		4	SCREW ISO4762 M6X20 A4 80	
580	315106-0173		6	WASHER PLAIN, M10 ISO7089-10-200 HV A4	
600	312605-0320		2	HEXAGON NUT, M6M M10 A280	
610	312105-0366		2	SCREW, M6S ISO 4017 M6X12 A4 80	
620	312318-0449		2	SET SCREW, CUP END ISO4029 M8X16 A4	
G70M1000	90601-5090		1	SERVO MOTOR, MPL-B310P-MK72AA SERIES A	

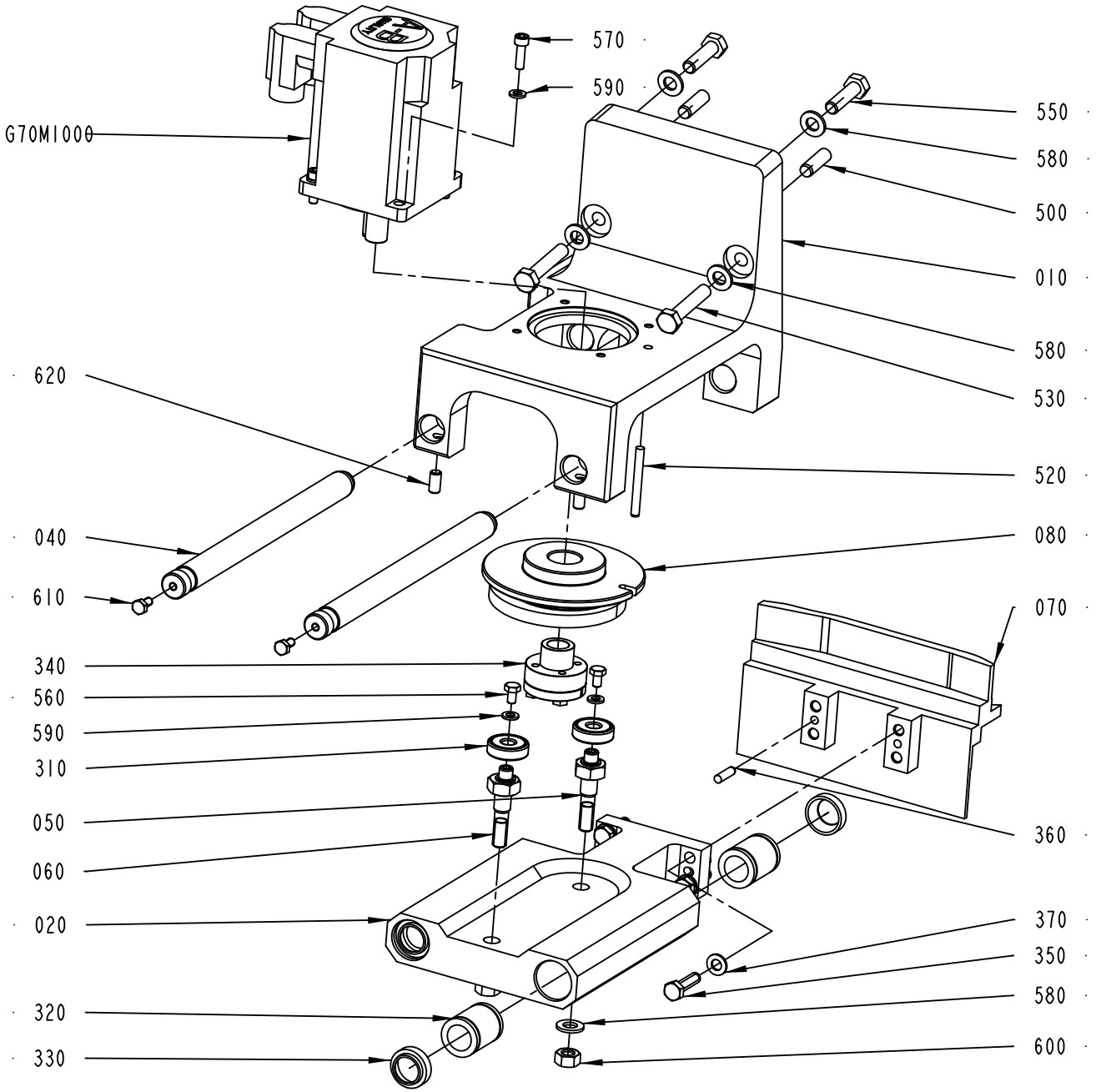
570
590
G70M1000
550
580
500
010
580
530
620
520
040
080
610
070
340
560
590
310
050
360
060
020
370
350
580
320
600
330
2780560-7
539583

Pos	Part No	UN	Qty	Description	Page No
TBA 0200E HELICAP 23, TBA 0250E HELICAP 23 (See drawing on page: 6-46)					
010	3073397-0000		1	BRACKET	
070	3073409-0000		1	CAM	
590	315106-0153		6	WASHER PLAIN, M6 ISO7089-6-200 HV A4	
TBA STREAMCAP1000, TBA STREAMCAP200, TBA 1000S HELICAP2 23, TBA HELICAP 27 (See drawing on page: 6-48)					
010	2838722-0000		1	BRACKET	
070	2783479-0000		1	CAM	
590	315106-0153		6	WASHER PLAIN, M6 ISO7089-6-200 HV A4	
TGA (See drawing on page: 6-44)					
010	2780526-0000		1	BRACKET	
030	2780529-0000		1	BRACKET	
070	2780521-0000		1	CAM	
510	311103-0351		2	PARALLEL PIN ISO 2338 6M6X16 A1	
540	312105-0374		4	SCREW, M6S ISO 4014 M6X30 A4 80	
590	315106-0153		10	WASHER PLAIN, M6 ISO7089-6-200 HV A4	
TPA STREAMCAP 1000, TPA STREAMCAP 500, TPA HELICAP 27 (See drawing on page: 6-46)					
010	2859960-0000		1	BRACKET	
070	2783479-0000		1	CAM	
590	315106-0153		6	WASHER PLAIN, M6 ISO7089-6-200 HV A4	
Common Parts					
020	2780527-0000		1	CARRIAGE	
040	2783477-0000		2	GUIDE SHAFT	
050	2780531-0000		1	AXLE PIN	
060	2780532-0000		1	AXLE PIN	
080	2780533-0000		1	CAM	
310	90603-2378		2	BALL BEARING, 10X30X9 MM	
320	90189-0019		4	BALL BUSHING, 20X30X30 MM	
330	90091-0038		4	SCRAPER 20X30X10 MM	
340	90600-0454		1	CLAMPING ELEMENT, 16X24 L=16	
350	312105-0455		4	SCREW, M6S ISO 4017 M8X30 A4 80	
360	311103-0354		2	PARALLEL PIN ISO 2338 6M6X22 A1	
370	315105-0165		4	WASHER PLAIN, 8,4X16X1,6 A4 BRB	
500	311103-0458		2	PARALLEL PIN ISO 2338 10M6X30 A1	
520	311103-0367		1	PARALLEL PIN ISO 2338 6M6X55 A1	
530	312105-0501		2	SCREW, M6S ISO 4014 M10X50 A4 80	
550	312105-0497		2	SCREW, M6S ISO 4017 M10X35 A4 80	
560	312105-0364		2	SCREW, M6S ISO 4017 M6X10 A4 80	
570	312115-0370		4	SCREW ISO4762 M6X20 A4 80	
580	315106-0173		6	WASHER PLAIN, M10 ISO7089-10-200 HV A4	
600	312605-0320		2	HEXAGON NUT, M6M M10 A280	
610	312105-0366		2	SCREW, M6S ISO 4017 M6X12 A4 80	
620	312318-0449		2	SET SCREW, CUP END ISO4029 M8X16 A4	
G70M1000	90601-5090		1	SERVO MOTOR, MPL-B310P-MK72AA SERIES A	

Machine Type | Group Description | Used-In | Group Number | Page No

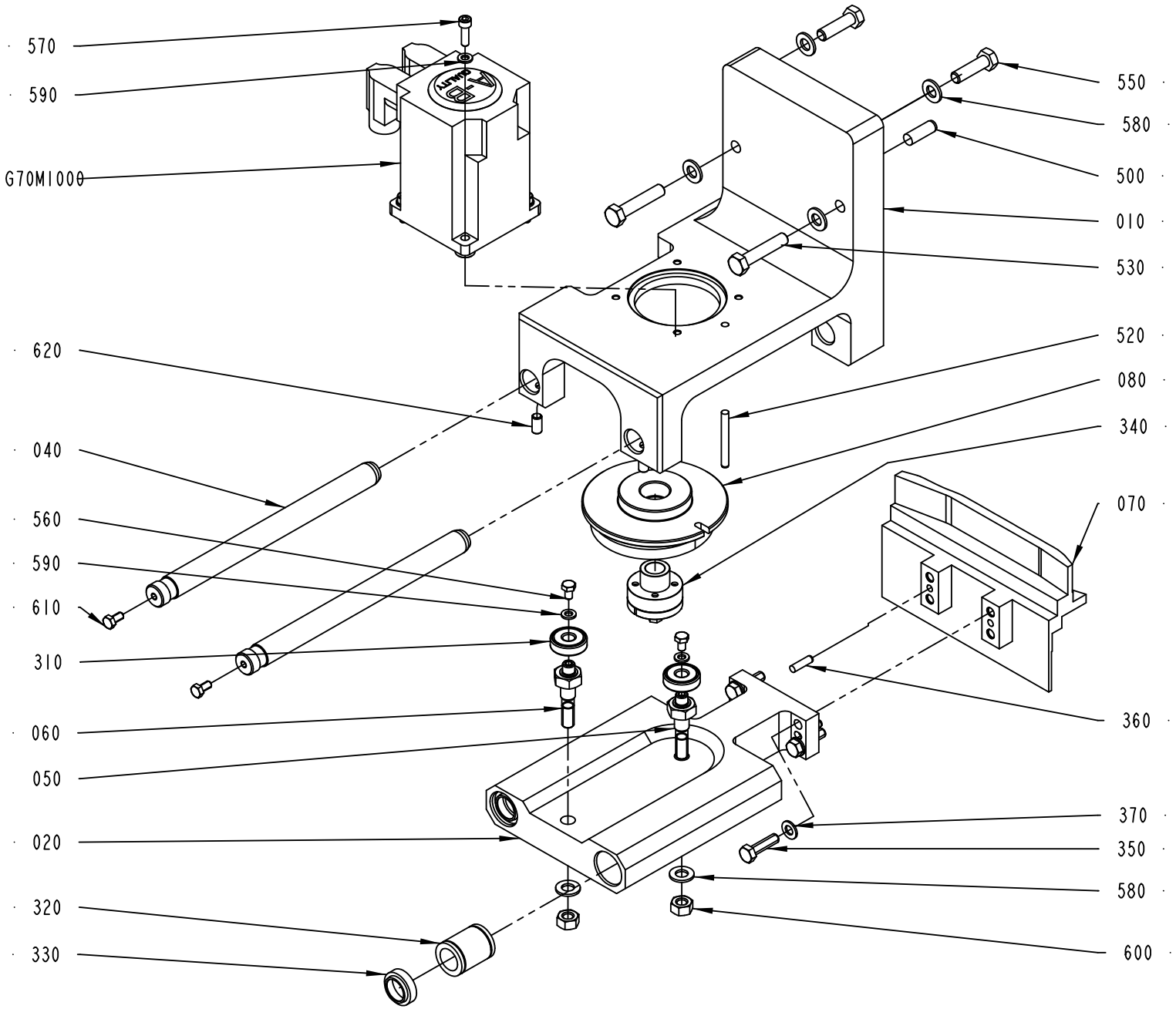
570
590
G70M1000
620
040
560
590
610
310
060
050
020
320
330
550
580
500
010
530
520
080
340
070
360
370
350
580
600
2780560-8
539583

ECM: 562839 - 20120701
Group number: 2780560-0200
Assembly Drawing: 2780560-8_1_AB

This list covers pages from 6-44 to 6-49

Pos	Part No	UN	Qty	Description	Page No
TBA 0200E HELICAP 23, TBA 0250E HELICAP 23 (See drawing on page: 6-46)					
010	3073397-0000		1	BRACKET	
070	3073409-0000		1	CAM	
590	315106-0153		6	WASHER PLAIN, M6 ISO7089-6-200 HV A4	
TBA STREAMCAP1000, TBA STREAMCAP200, TBA 1000S HELICAP2 23, TBA HELICAP 27 (See drawing on page: 6-48)					
010	2838722-0000		1	BRACKET	
070	2783479-0000		1	CAM	
590	315106-0153		6	WASHER PLAIN, M6 ISO7089-6-200 HV A4	
TGA (See drawing on page: 6-44)					
010	2780526-0000		1	BRACKET	
030	2780529-0000		1	BRACKET	
070	2780521-0000		1	CAM	
510	311103-0351		2	PARALLEL PIN ISO 2338 6M6X16 A1	
540	312105-0374		4	SCREW, M6S ISO 4014 M6X30 A4 80	
590	315106-0153		10	WASHER PLAIN, M6 ISO7089-6-200 HV A4	
TPA STREAMCAP 1000, TPA STREAMCAP 500, TPA HELICAP 27 (See drawing on page: 6-46)					
010	2859960-0000		1	BRACKET	
070	2783479-0000		1	CAM	
590	315106-0153		6	WASHER PLAIN, M6 ISO7089-6-200 HV A4	
Common Parts					
020	2780527-0000		1	CARRIAGE	
040	2783477-0000		2	GUIDE SHAFT	
050	2780531-0000		1	AXLE PIN	
060	2780532-0000		1	AXLE PIN	
080	2780533-0000		1	CAM	
310	90603-2378		2	BALL BEARING, 10X30X9 MM	
320	90189-0019		4	BALL BUSHING, 20X30X30 MM	
330	90091-0038		4	SCRAPER 20X30X10 MM	
340	90600-0454		1	CLAMPING ELEMENT, 16X24 L=16	
350	312105-0455		4	SCREW, M6S ISO 4017 M8X30 A4 80	
360	311103-0354		2	PARALLEL PIN ISO 2338 6M6X22 A1	
370	315105-0165		4	WASHER PLAIN, 8,4X16X1,6 A4 BRB	
500	311103-0458		2	PARALLEL PIN ISO 2338 10M6X30 A1	
520	311103-0367		1	PARALLEL PIN ISO 2338 6M6X55 A1	
530	312105-0501		2	SCREW, M6S ISO 4014 M10X50 A4 80	
550	312105-0497		2	SCREW, M6S ISO 4017 M10X35 A4 80	
560	312105-0364		2	SCREW, M6S ISO 4017 M6X10 A4 80	
570	312115-0370		4	SCREW ISO4762 M6X20 A4 80	
580	315106-0173		6	WASHER PLAIN, M10 ISO7089-10-200 HV A4	
600	312605-0320		2	HEXAGON NUT, M6M M10 A280	
610	312105-0366		2	SCREW, M6S ISO 4017 M6X12 A4 80	
620	312318-0449		2	SET SCREW, CUP END ISO4029 M8X16 A4	
G70M1000	90601-5090		1	SERVO MOTOR, MPL-B310P-MK72AA SERIES A	

Machine Type	Group Description	Used-In	Group Number	Page No

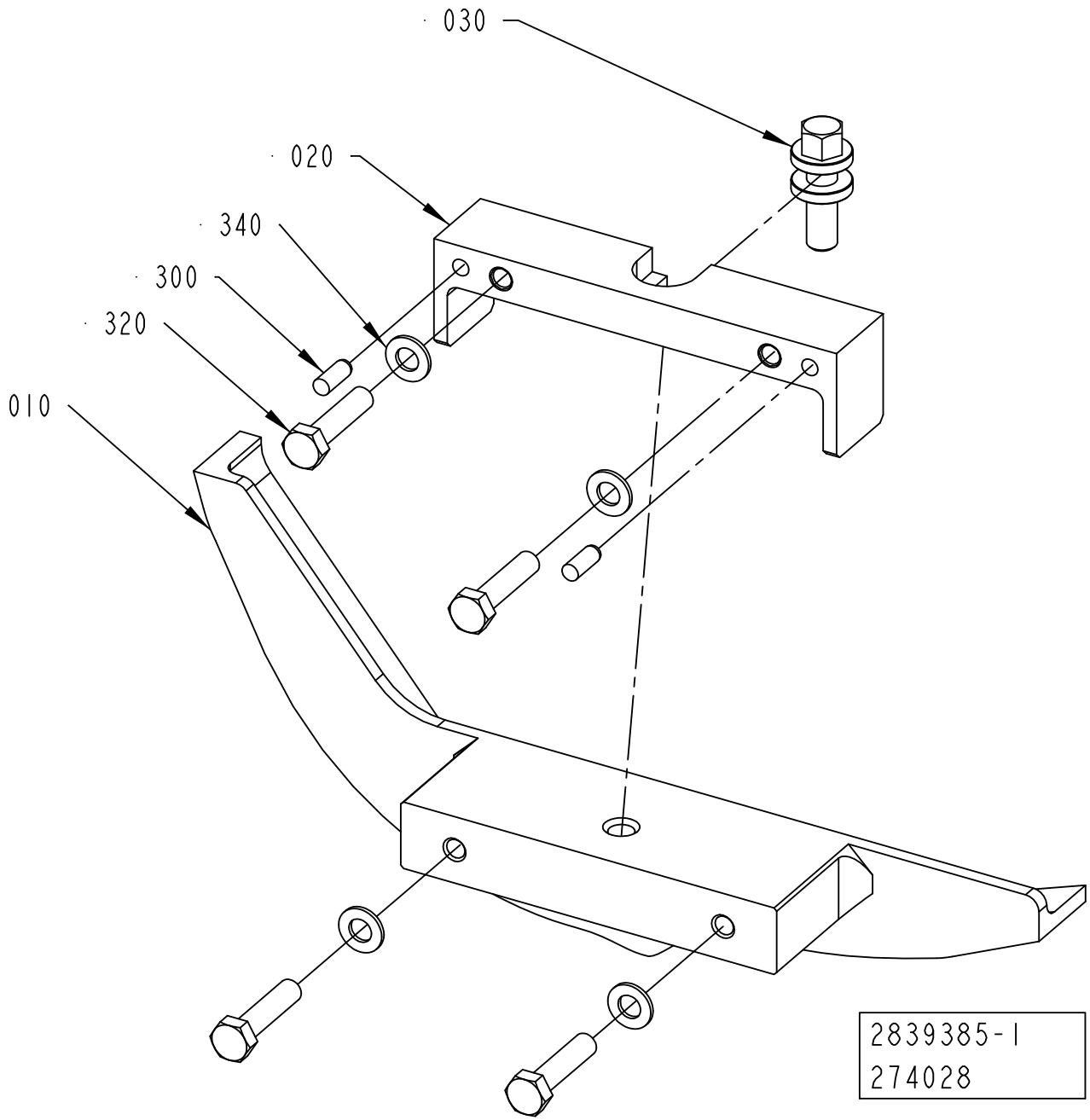
030
020
340
300
320
010
2839385-1
274028

ECM: 494343 - 20110701
Group number: 2839385-0100
Assembly Drawing: 2839385-1_1_AA

Pos	Part No	UN	Qty	Description	Page No
STREAMCAP1000, SLIMCAP 2000, SLIMCAP 1000, STREAMCAP200					
010	2839393-0000		1	CAM	
Common Parts					
020	2838277-0000		1	BRACKET	
030	2703842-0000		1	ADJUSTING SCREW	
300	311103-0351		2	PARALLEL PIN ISO 2338 6M6X16 A1	
320	312105-0457		4	SCREW, M6S ISO 4014 M8X35 A4 80	
340	315105-0165		4	WASHER PLAIN, 8,4X16X1,6 A4 BRB	

Pos	Part No	UN	Qty	Description	Page No

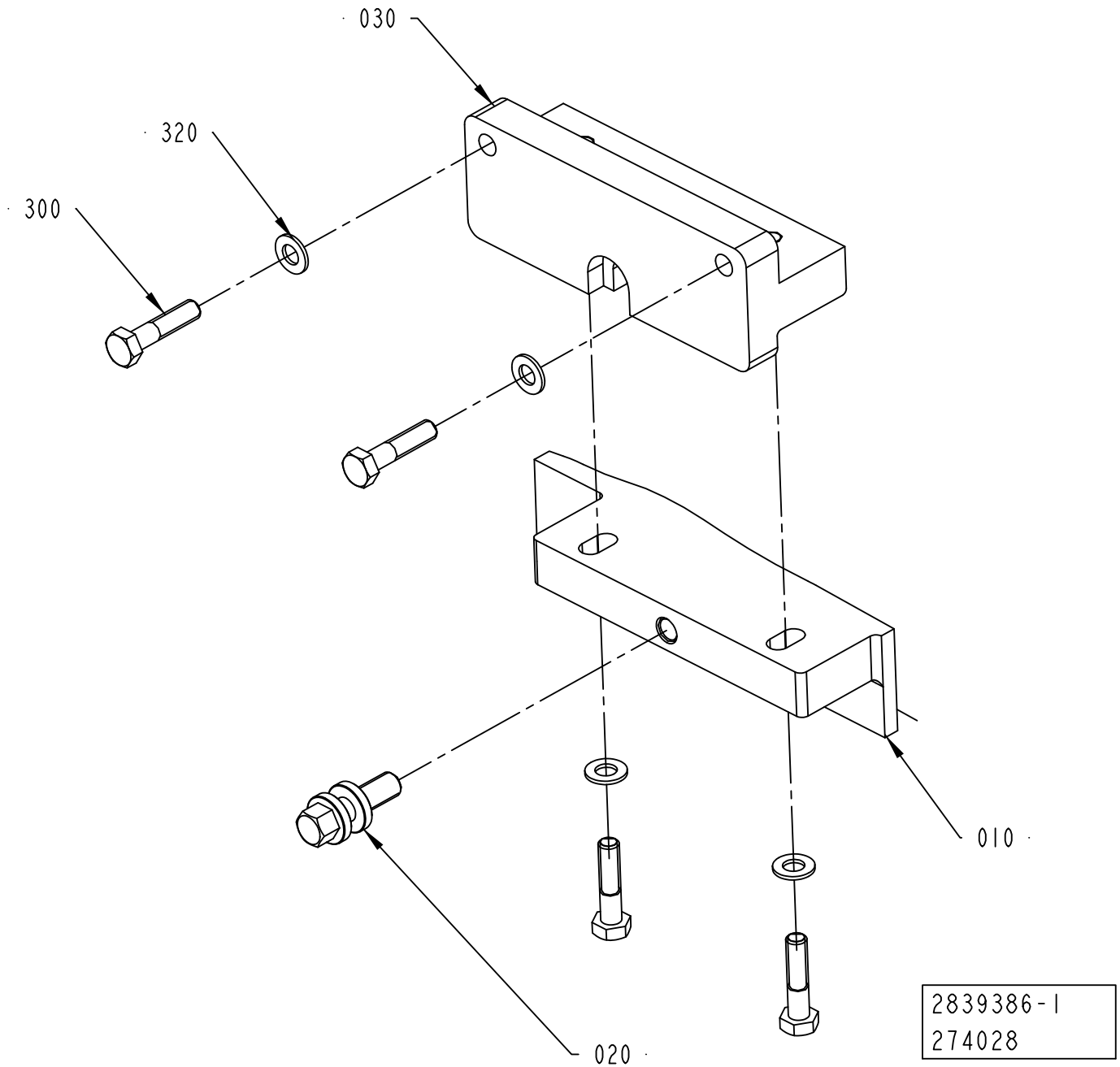
030
320
300
010
020
2839386-1
274028

ECM: 494344 - 20110701
Group number: 2839386-0100
Assembly Drawing: 2839386-1_1_AA

Pos	Part No	UN	Qty	Description	Page No
STREAMCAP1000, SLIMCAP 2000, SLIMCAP 1000, STREAMCAP200					
010	2839409-0000		1	CAM	
030	2838156-0000		1	BRACKET	
Common Parts					
020	2703842-0000		1	ADJUSTING SCREW	
300	312105-0457		4	SCREW, M6S ISO 4014 M8X35 A4 80	
320	315105-0165		4	WASHER PLAIN, 8,4X16X1,6 A4 BRB	

Pos	Part No	UN	Qty	Description	Page No

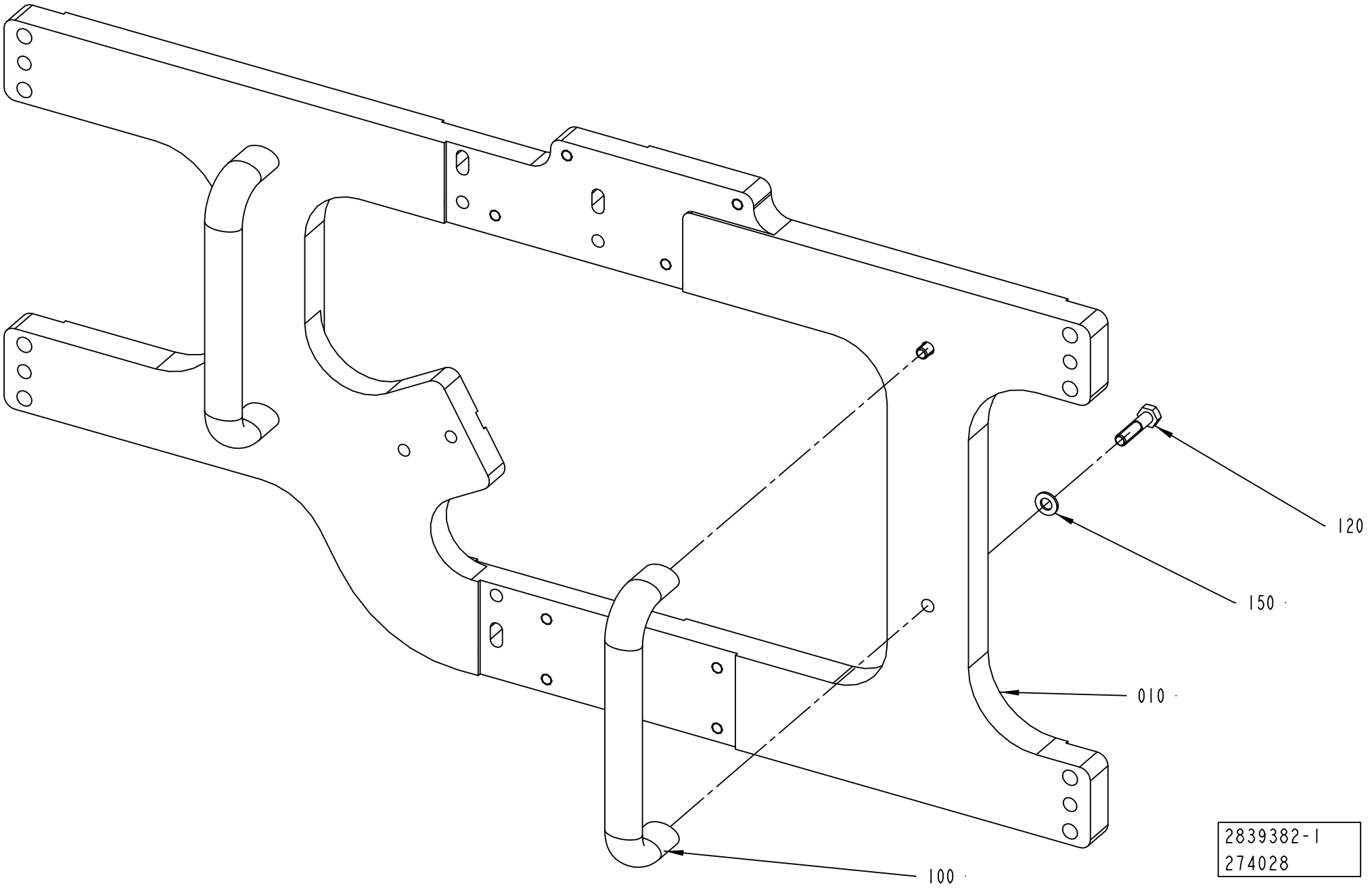
120
150
010
100
2839382-1
274028

Pos	Part No	UN	Qty	Description	Page No
TBA STREAMCAP 1000 NO POSITIONING DEVICE, TBA SLIMCAP 1000 NO POSITIONING DEVICE, TBA SLIMCAP 2000 NO POSITIONING DEVICE, TBA STREAMCAP 200 NO POSDEVICE (See drawing on page: 6-54)					
010	2780379-0000		1	PLATE	
TPA, TGA, TBA STREAMCAP 1000 POSITIONING DEVICE, TBA STREAMCAP 200 POSDEVICE, TBA HELICAP 27 POSITIONING DEVICE, TBA HELICAP2 23 POSITIONING DEVICE (See drawing on page: 6-56)					
010	2780523-0000		1	PLATE	
130	312125-0287		2	SLOTTED HEAD SCREW, ISO1207 M4X8 A4	
160	352113-0203		2	ANCHOR PLATES FOR STRIPS, TM3S8-M0	
170	352113-0104		2	CABLE TIE, BLACK 300X4,8 MM	
Common Parts					
100	90459-3779		2	HANDLE, GN565 SW 192-M8	
120	312105-0457		4	SCREW, M6S ISO 4014 M8X35 A4 80	
150	315105-0165		4	WASHER PLAIN, 8,4X16X1,6 A4 BRB	

Pos	Part No	UN	Qty	Description	Page No

MOUNTING PLATE

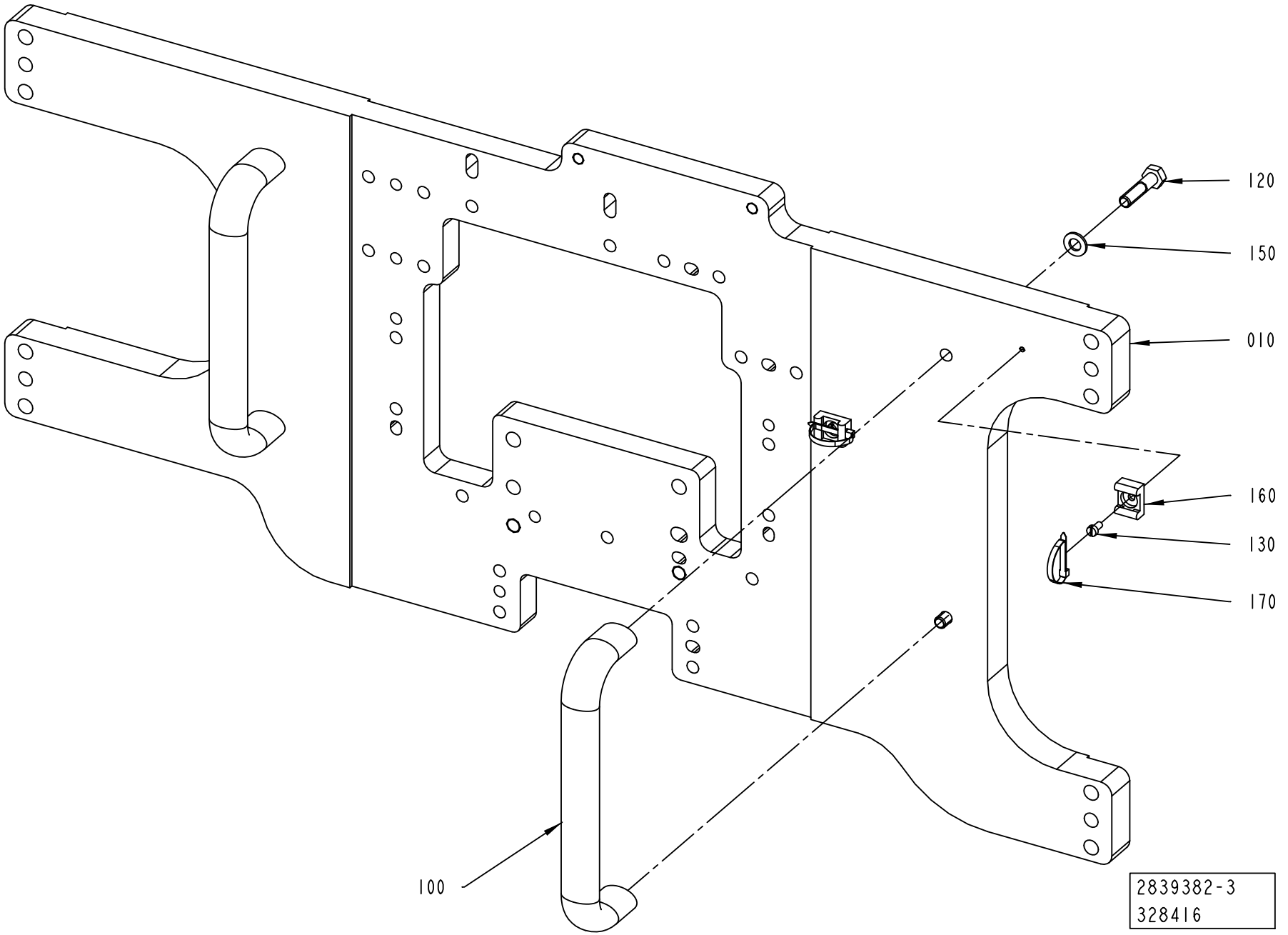

Pos	Part No	UN	Qty	Description	Page No
TBA STREAMCAP 1000 NO POSITIONING DEVICE, TBA SLIMCAP 1000 NO POSITIONING DEVICE, TBA SLIMCAP 2000 NO POSITIONING DEVICE, TBA STREAMCAP 200 NO POSDEVICE (See drawing on page: 6-54)					
010	2780379-0000		1	PLATE	
TPA, TGA, TBA STREAMCAP 1000 POSITIONING DEVICE, TBA STREAMCAP 200 POSDEVICE, TBA HELICAP 27 POSITIONING DEVICE, TBA HELICAP2 23 POSITIONING DEVICE (See drawing on page: 6-56)					
010	2780523-0000		1	PLATE	
130	312125-0287		2	SLOTTED HEAD SCREW, ISO1207 M4X8 A4	
160	352113-0203		2	ANCHOR PLATES FOR STRIPS, TM3S8-M0	
170	352113-0104		2	CABLE TIE, BLACK 300X4,8 MM	
Common Parts					
100	90459-3779		2	HANDLE, GN565 SW 192-M8	
120	312105-0457		4	SCREW, M6S ISO 4014 M8X35 A4 80	
150	315105-0165		4	WASHER PLAIN, 8,4X16X1,6 A4 BRB	

Pos	Part No	UN	Qty	Description	Page No

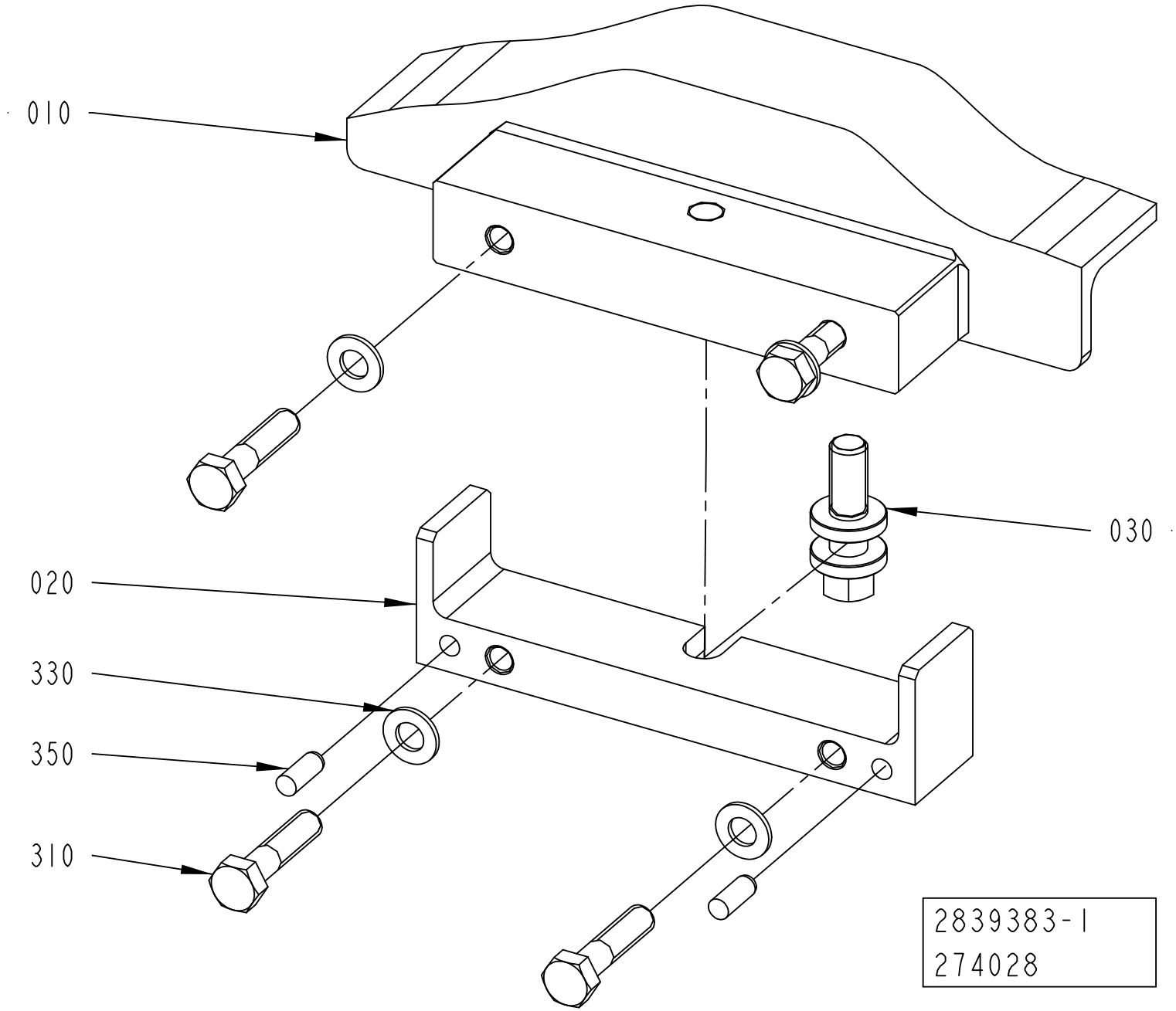
010
020
030
330
350
310
2839383-1
274028

ECM: 274028 - 20060921
Group number: 2839383-0100
Assembly Drawing: 2839383-1_1_AA

Pos	Part No	UN	Qty	Description	Page No
-					
010	2839392-0000		1	CAM	
020	2838277-0000		1	BRACKET	
030	2703842-0000		1	ADJUSTING SCREW	
310	312105-0457		4	SCREW, M6S ISO 4014 M8X35 A4 80	
330	315105-0165		4	WASHER PLAIN, 8,4X16X1,6 A4 BRB	
350	311103-0351		2	PARALLEL PIN ISO 2338 6M6X16 A1	

Pos	Part No	UN	Qty	Description	Page No

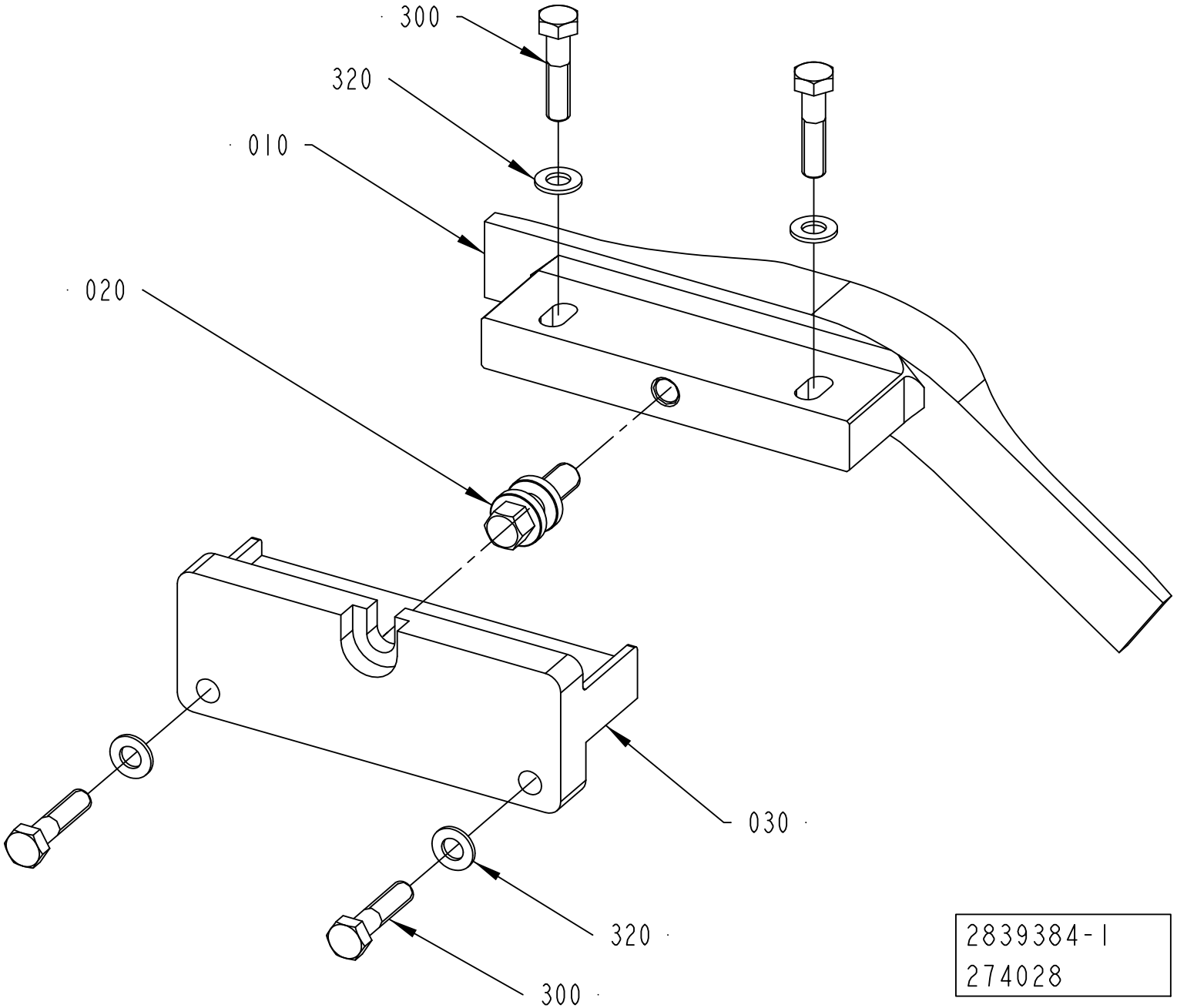
300
320
010
020
030
320
300
2839384-1
274028

ECM: 492980 - 20110701
Group number: 2839384-0100
Assembly Drawing: 2839384-1_1_AA

Pos	Part No	UN	Qty	Description	Page No
STREAMCAP500, STREAMCAP1000, SLIMCAP 2000, SLIMCAP 1000, STREAMCAP200, HELICAP2 23, HELICAP 27					
010	2839412-0000		1	CAM	
030	2838156-0000		1	BRACKET	
Common Parts					
020	2703842-0000		1	ADJUSTING SCREW	
300	312105-0457		4	SCREW, M6S ISO 4014 M8X35 A4 80	
320	315105-0165		4	WASHER PLAIN, 8,4X16X1,6 A4 BRB	

Pos	Part No	UN	Qty	Description	Page No

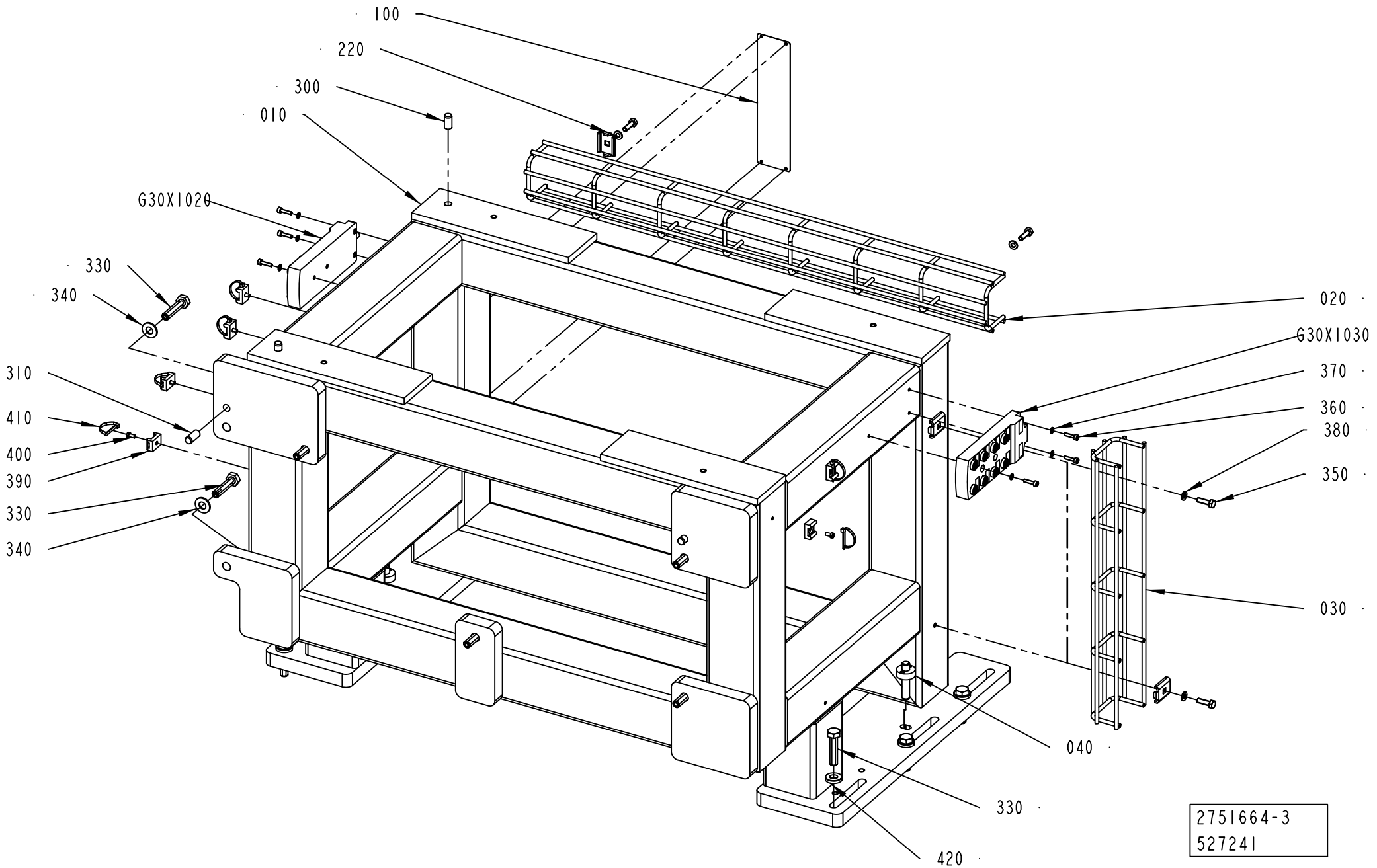
100
220
300
010
G30X1020
330
340
310
410
400
390
330
340
020
G30X1030
370
360
380
350
030
040
330
420
2751664-3
527241

ECM: 527263 - 20120401
Group number: 2751664-0300
Assembly Drawing: 2751664-3_1_AA

Pos	Part No	UN	Qty	Description	Page No
-					
010	3039024-0000		1	FRAME	
020	2838731-0000		1	CABLE	
030	2838732-0000		1	CABLE	
040	2944175-0000		2	PIN	
100	580923-0000		1	MACHINE SIGN CE	
220	90181-0183		4	CABLE DUCT, FITTING, B2	
300	311103-0454		2	PARALLEL PIN ISO 2338 10M6X20 A1	
310	311103-1456		2	PARALLEL PIN ISO 2338 10M6X24 A1	
330	312109-0500		12	SCREW, M6S ISO 4017 M10X45 A4 80	
340	315105-0173		6	WASHER PLAIN, 10,5X22X2 A4 BRB	
350	312105-0370		4	SCREW, M6S ISO 4017 M6X20 A4 80	
360	312115-0293		6	SCREW ISO4762 M4X16 A4 80	
370	315105-0136		6	WASHER PLAIN, 4,3X9X0,8 A4 BRB	
380	315105-0153		4	WASHER PLAIN, 6,4X12X1,5 A4 BRB	
390	352113-0203		6	ANCHOR PLATES FOR STRIPS, TM3S8-M0	
400	312125-0287		6	SLOTTED HEAD SCREW, ISO1207 M4X8 A4	
410	352113-0104		6	CABLE TIE, BLACK 300X4,8 MM	
420	315115-0173		6	WASHER PLAIN, TBRB 10,5/22 H=4	
G30X1020	90603-3971		1	SPLITTER BOX, EBC034	
G30X1030	90603-3971		1	SPLITTER BOX, EBC034	

Pos	Part No	UN	Qty	Description	Page No

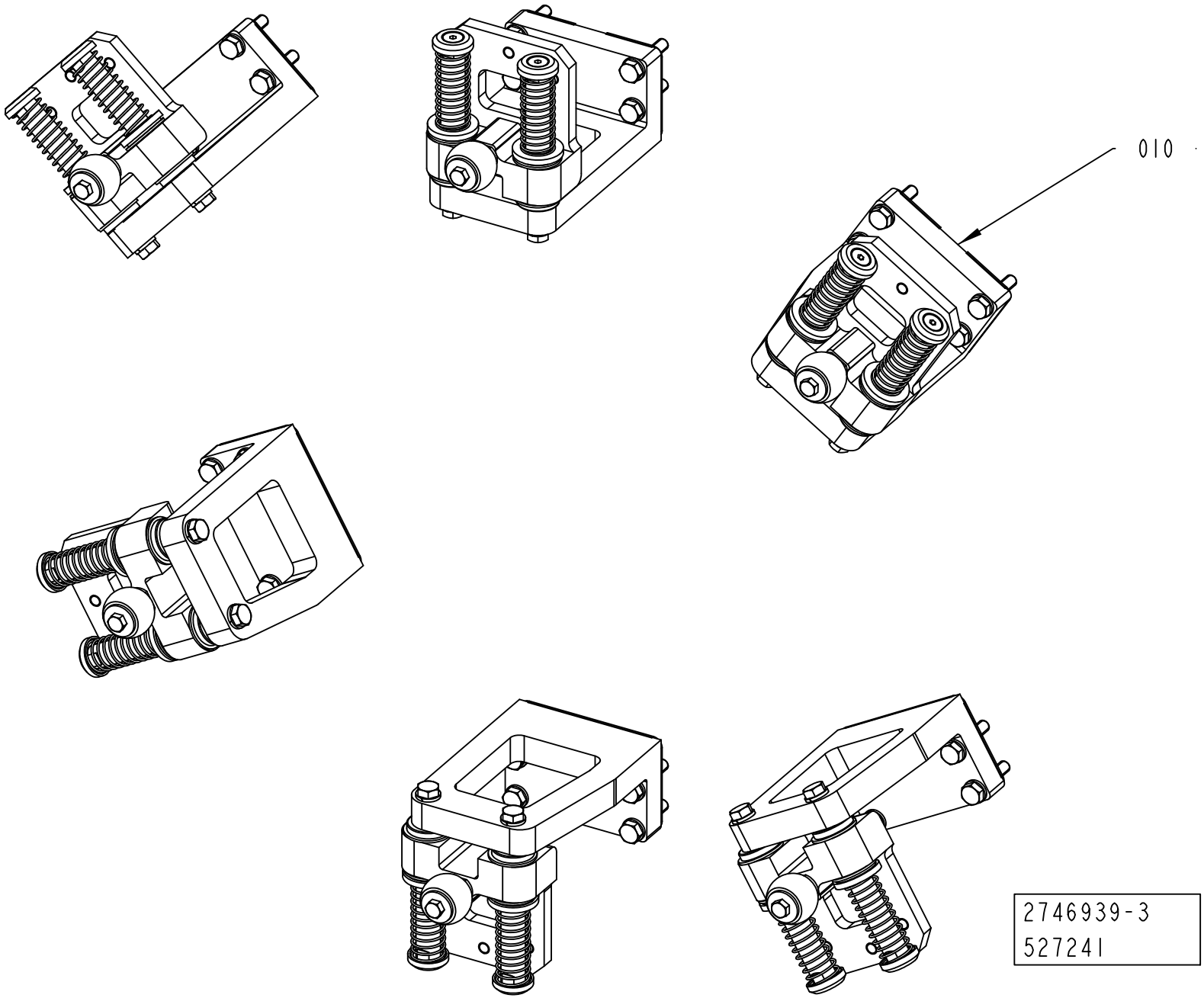
010
2746939-3
527241

ECM: 528925 - 20120401
Group number: 2746939-0200
Assembly Drawing: 2746939-3_1_AA

Pos	Part No	UN	Qty	Description	Page No
-					
010	2703700-0200		6	GUIDE BRACKET	**6-67, 6-69, 6-71**

Pos	Part No	UN	Qty	Description	Page No

GUIDE BRACKET

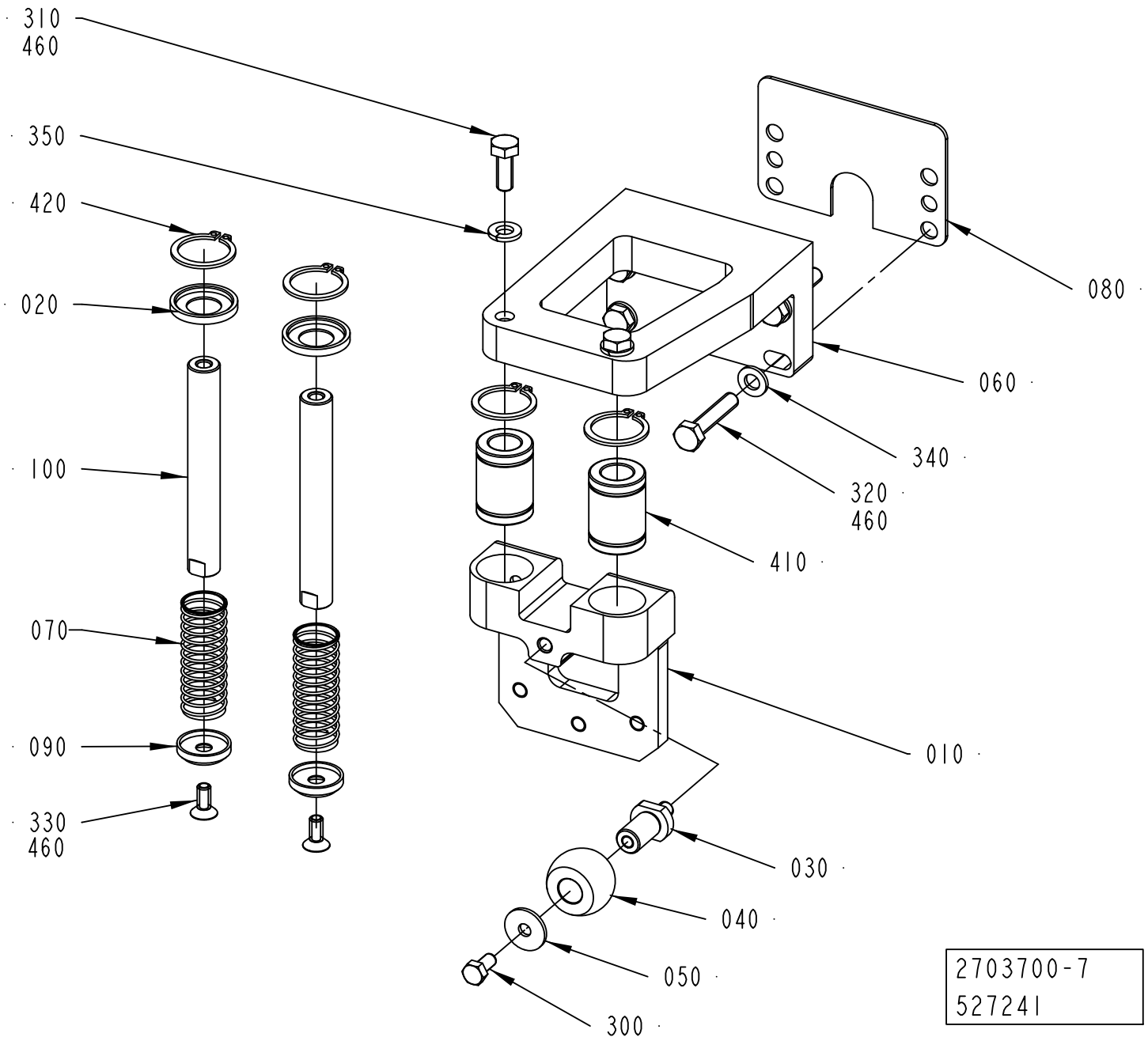

ECM: 562838 - 20120701
Group number: 2703700-0200
Assembly Drawing: 2703700-7_1_AA

This list covers pages from 6-66 to 6-71

Pos	Part No	UN	Qty	Description	Page No
TBA STREAMCAP 1000 NO POSITIONING DEVICE, TBA SLIMCAP 1000 NO POSITIONING DEVICE, TBA SLIMCAP 2000 NO POSITIONING DEVICE, TBA STREAMCAP 200 NO POSDEVICE (See drawing on page: 6-66)					
020	2751686-0000		2	WASHER	
030	2703683-0000		1	SHAFT	
040	1556630-0000		1	WHEEL	
050	1556643-0000		1	WASHER	
060	2703692-0000		1	HOLDER	
080	2703702-0000		1	SHIM	
300	312105-0325		1	SCREW, M6S ISO 4017 M5X10 A4 80	
310	312105-0368		2	SCREW, M6S ISO 4017 M6X16 A4 80	
320	312109-0374		4	SCREW, M6S ISO 4017 M6X30 A4 80	
350	315402-0156		2	LOCK WASHER, DIN127B 6,5 A4, 1/4	
410	90600-0375		2	BALL BUSHING, 12X21X30 MM	
420	90600-0373		4	RETAINING RING FOR SHAFT DIN 471 21 SS	
TBA STREAMCAP 1000 POSITIONING DEVICE, TBA STREAMCAP 200 POSDEVICE, TBA 1000S HELICAP 23 POSDEVICE, TBA HELICAP 27 POSITIONING DEVICE (See drawing on page: 6-70)					
020	2751686-0000		4	WASHER	
040	1556630-0000		2	WHEEL	
050	1556643-0000		1	WASHER	
060	3144497-0000		1	HOLDER	
080	2780431-0000		1	SHIM	
120	3150919-0000		1	BRACKET	
170	2783465-0000		2	SHAFT	
180	3014020-0000		2	COMPRESSION SPRING	
200	2613995-0000		1	SPACER	
220	2746978-0000		1	SHAFT	
230	2811453-0000		2	SCREW	
260	3151006-0000		1	SCREW	
270	3150924-0000		1	BLOCK	
280	3150922-0000		1	BRACKET	
300	312105-0325		1	SCREW, M6S ISO 4017 M5X10 A4 80	
320	312105-0372		4	SCREW, M6S ISO 4017 M6X25 A4 80	
360	312105-0335		1	SCREW, M6S ISO 4014 M5X30 A4 80	
370	312115-0366		4	SCREW ISO4762 M6X12 A4 80	
400	315105-0146		1	WASHER PLAIN, 5,3X10X1 A4 BRB	
410	90600-0375		4	BALL BUSHING, 12X21X30 MM	
420	90600-0373		4	RETAINING RING FOR SHAFT DIN 471 21 SS	
470	312105-0323		1	SCREW, M6S ISO 4017 M5X8 A4 80	
480	312105-0285		1	SCREW, M6S ISO 4017 M4X6 A4 70	
TGA, TPA STREAMCAP 1000 POSITIONING DEVICE, TPA STREAMCAP 500 POSITIONING DEVICE, TBA 0200E HELICAP 23 POSDEVICE, TPA HELICAP 27 POSITIONING DEVICE, TBA 0250E HELICAP 23 POSDEVICE (See drawing on page: 6-68)					
020	2751686-0000		4	WASHER	
030	2703683-0000		1	SHAFT	
040	1556630-0000		3	WHEEL	
050	1556643-0000		2	WASHER	
060	3143919-0000		1	HOLDER	
080	2780431-0000		1	SHIM	
110	2783460-0000		1	GUIDE BRACKET	
120	3150919-0000		1	BRACKET	
130	2783462-0000		1	AXLE PIN	
140	2715701-0000		1	AXLE PIN	
150	2715704-0000		1	SLEEVE	
160	2715885-0000		1	TORSION SPRING	
170	2783465-0000		2	SHAFT	
180	3014020-0000		2	COMPRESSION SPRING	
190	2715826-0000		1	DAMPER	
200	2613995-0000		1	SPACER	
210	3158206-0000		1	ROLLER BRACKET	
220	2746978-0000		1	SHAFT	
230	2811453-0000		2	SCREW	
260	3151006-0000		1	SCREW	
270	3150924-0000		1	BLOCK	
280	3150922-0000		1	BRACKET	
300	312105-0325		2	SCREW, M6S ISO 4017 M5X10 A4 80	
320	312105-0372		4	SCREW, M6S ISO 4017 M6X25 A4 80	
360	312105-0335		1	SCREW, M6S ISO 4014 M5X30 A4 80	
370	312115-0366		6	SCREW ISO4762 M6X12 A4 80	
380	312318-0285		2	SET SCREW, CUP END ISO4029 M4X6 A4	
390	311103-0268		2	PARALLEL PIN ISO 2338 4M6X12 A1	
400	315105-0146		1	WASHER PLAIN, 5,3X10X1 A4 BRB	
410	90600-0375		4	BALL BUSHING, 12X21X30 MM	
420	90600-0373		8	RETAINING RING FOR SHAFT DIN 471 21 SS	
430	321154-0180		2	FLANGE BUSHING, IGLIDUR W300 12X14X12	
440	311112-0255		1	SPRING PIN, ISO 8752 4X18 A2	
450	90153-0023		1	ADHESIVE, SILICON 251470 TUB 90CC(UN1993	
470	312105-0323		1	SCREW, M6S ISO 4017 M5X8 A4 80	
480	312105-0285		1	SCREW, M6S ISO 4017 M4X6 A4 70	
Common Parts					
010	2716127-0000		1	SLIDER	
070	2703708-0000		2	SPRING	
090	2751687-0000		2	WASHER	
100	90600-0376		2	SHAFT, LM SHAFT 12 G6 89L M	

Machine Type | Group Description | Used-In | Group Number | Page No

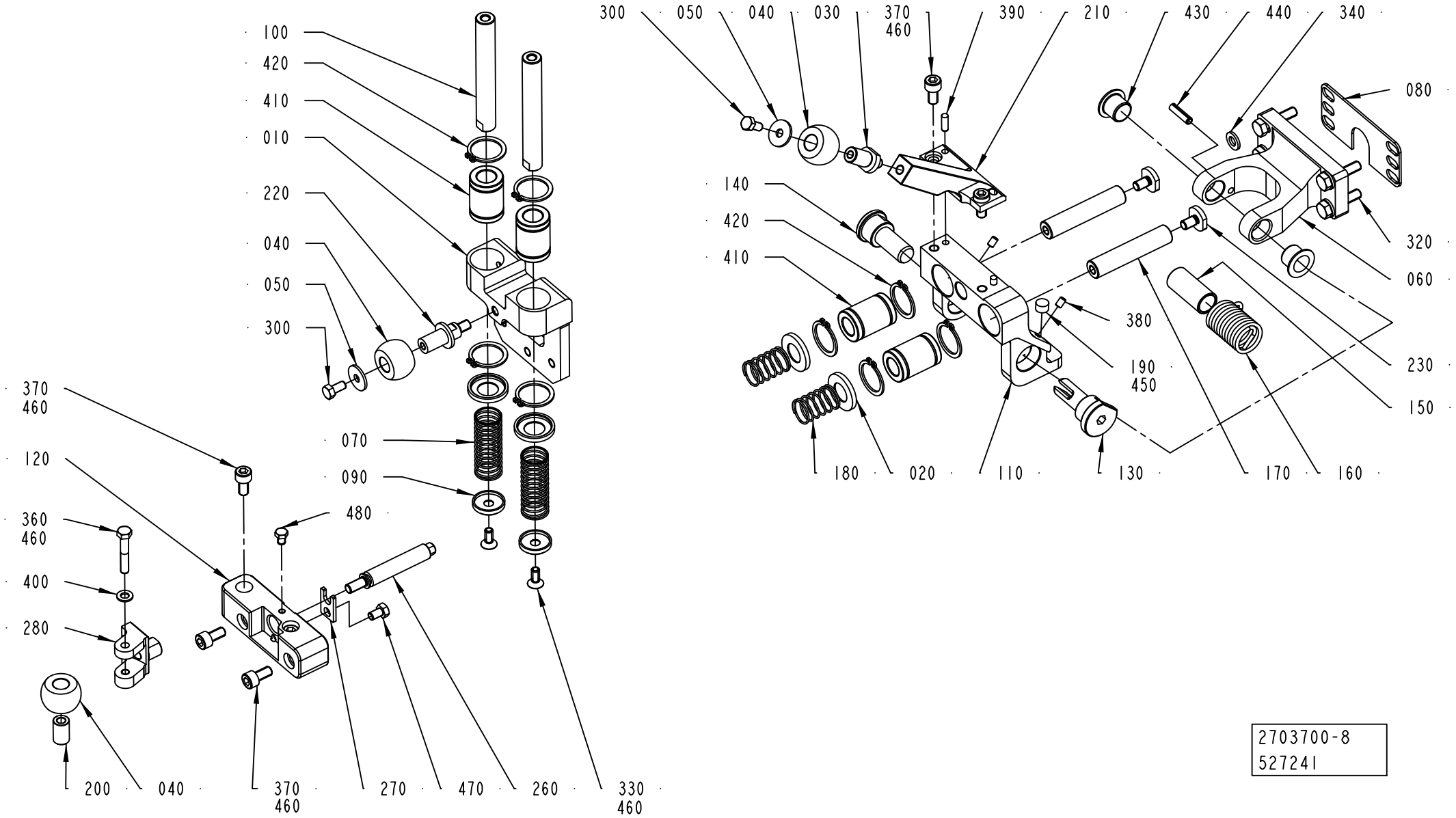
100
420
410
010
220
040
050
300
370
460
120
360
460
400
280
200
040
370
460
070
090
480
270
470
260
330
460
300
050
040
030
370
460
390
210
430
440
340
080
140
420
410
320
060
380
190
450
230
150
180
020
110
130
170
160
2703700-8
527241

Pos	Part No	UN	Qty	Description	Page No
Common Parts (Cont'd)					
330	312155-0327		2	SCREW DIN 7991 MF6S M5X12 A4 70	
340	315105-0153		4	WASHER PLAIN, 6,4X12X1,5 A4 BRB	

Pos	Part No	UN	Qty	Description	Page No

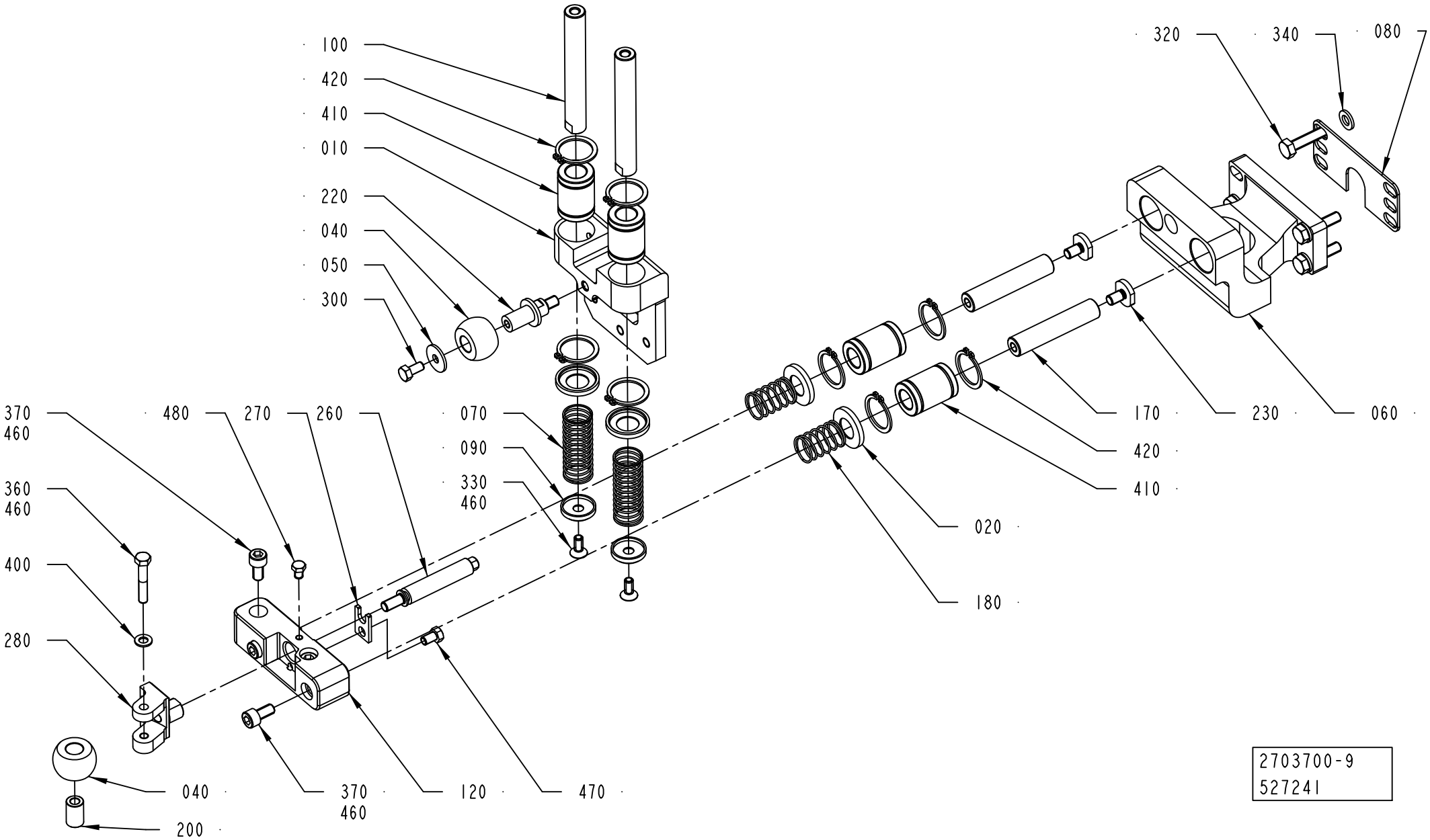
100
420
410
010
220
040
050
300
320
340
080
370
460
480
270
260
070
090
330
460
360
460
400
280
040
200
370
460
120
470
170
230
060
420
410
020
180
2703700-9
527241

Pos	Part No	UN	Qty	Description	Page No	Pos	Part No	UN	Qty	Description	Page No

SEE PREVIOUS LISTS PAGES: 6-67, 6-69.

CAP HOLDERS GROUP

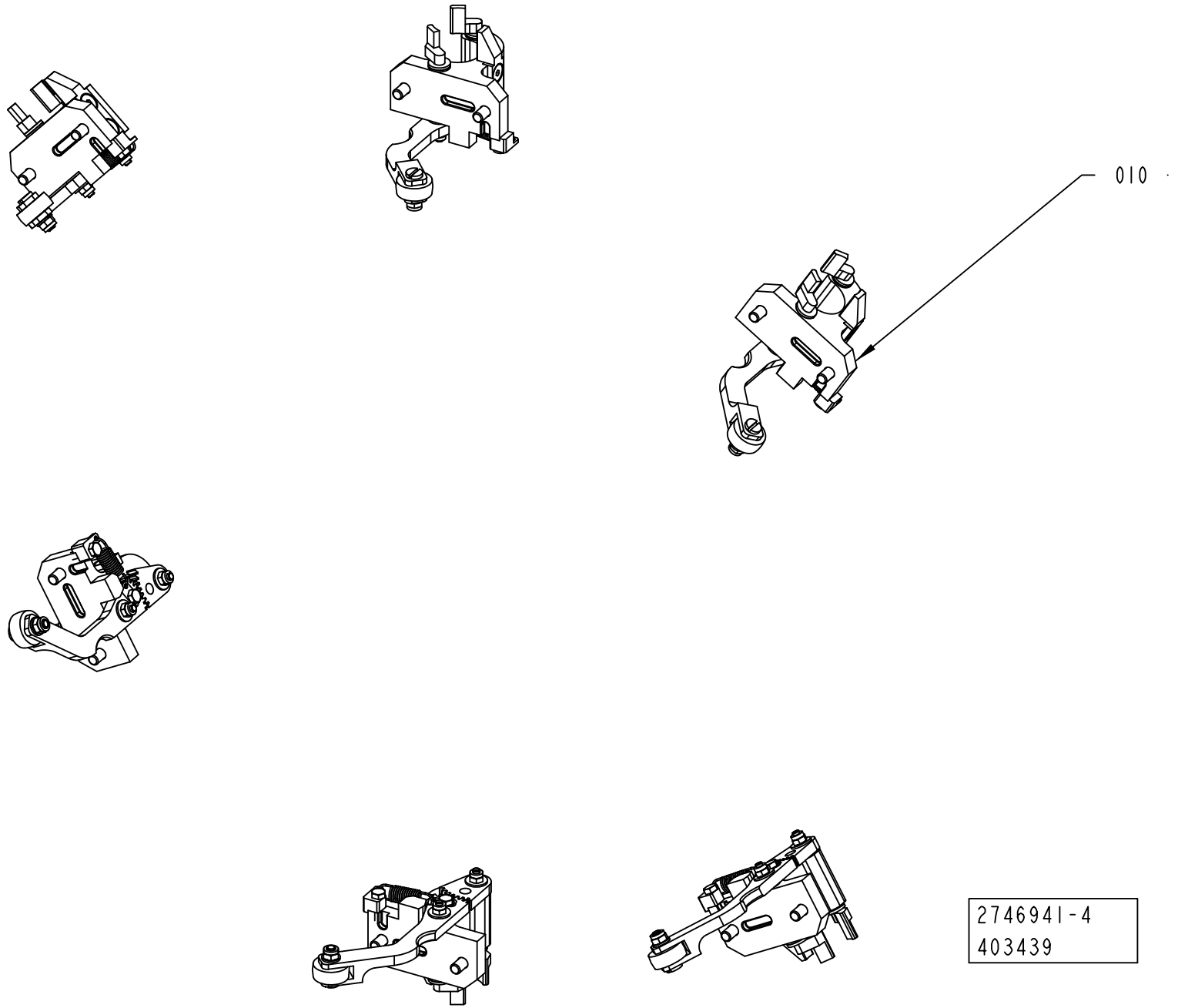

ECM: 492976 - 20110701
Group number: 2746941-0200
Assembly Drawing: 2746941-4_1_AA

Pos	Part No	UN	Qty	Description	Page No
STREAMCAP500, STREAMCAP1000, SLIMCAP 2000, SLIMCAP 1000, STREAMCAP200, HELICAP2 23, HELICAP 27					
010	2703670-0100		6	CAP HOLDERS GROUP	**6-75**

Pos	Part No	UN	Qty	Description	Page No

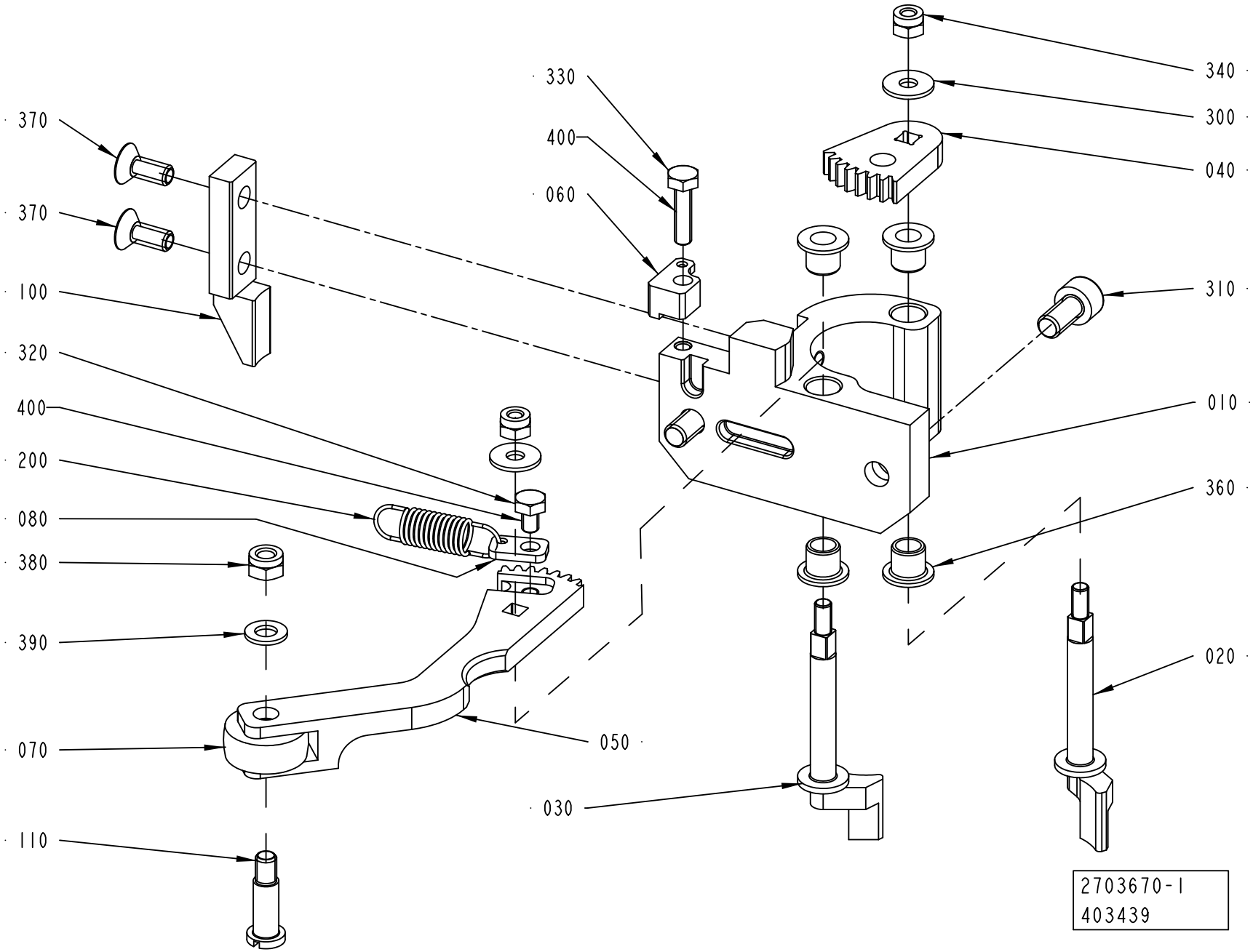
370
370
100
320
400
200
080
380
390
070
110
330
400
060
340
300
040
310
010
360
020
050
030
2703670-1
403439

ECM: 492973 - 20110701
Group number: 2703670-0100
Assembly Drawing: 2703670-1_1_AB

Pos	Part No	UN	Qty	Description	Page No
HELICAP 27					
020	3077750-0000		1	CLAW	
030	3077749-0000		1	CLAW	
100	3077728-0000		1	PULLER	
HELICAP2 23					
020	2930214-0000		1	CLAW	
030	2930215-0000		1	CLAW	
100	2930216-0000		1	PULLER	
SLIMCAP 1000					
020	2703671-0000		1	CLAW	
030	2703672-0000		1	CLAW	
100	2715887-0000		1	PULLER	
SLIMCAP 2000					
020	2838711-0000		1	CLAW	
030	2838712-0000		1	CLAW	
100	2838713-0000		1	PULLER	
STREAMCAP1000					
020	2715828-0000		1	CLAW	
030	2715829-0000		1	CLAW	
100	2768157-0000		1	PULLER	
STREAMCAP200					
020	2873973-0000		1	CLAW	
030	2873974-0000		1	CLAW	
100	2873975-0000		1	PULLER	
STREAMCAP500					
020	2838715-0000		1	CLAW	
030	2838714-0000		1	LAW	
100	2838716-0000		1	PULLER	
Common Parts					
010	2715827-0000		1	HOLDER	
040	2703673-0000		1	TOOTHED DISC	
050	2983297-0000		1	FOLLOWER ARM	
060	2987971-0000		1	SPRING HOLDER	
070	1556626-0000		1	WHEEL	
080	2987967-0000		1	SPRING HOLDER	
110	2746922-0000		1	SHAFT	
200	3034434-0000		1	TENSION SPRING	
300	90005-0082		2	WASHER PLAIN ROUND 4,3(M4)/12,H=1	
310	312115-0366		2	SCREW ISO4762 M6X12 A4 80	
320	312105-0285		1	SCREW, M6S ISO 4017 M4X6 A4 70	
330	312105-0293		1	SCREW, M6S ISO 4017 M4X16 A4 70	
340	312812-0312		2	HEXAGON NUT, NY-LOCK M4 A4 80	
360	321155-0062		4	FLANGE BUSHING, IGLIDUR X 6X8X8	
370	312155-0327		2	SCREW DIN 7991 MF6S M5X12 A4 70	
380	312812-0314		1	HEXAGON NUT, NY-LOCK M5 A4 80	
390	315105-0146		1	WASHER PLAIN, 5,3X10X1 A4 BRB	
400	90600-0685		1	THREAD LOCKING, LOCTITE 2701 50 ML	

Machine Type | Group Description | Used-In | Group Number | Page No

Tetra Pak

SPC
Spare Parts Catalogue

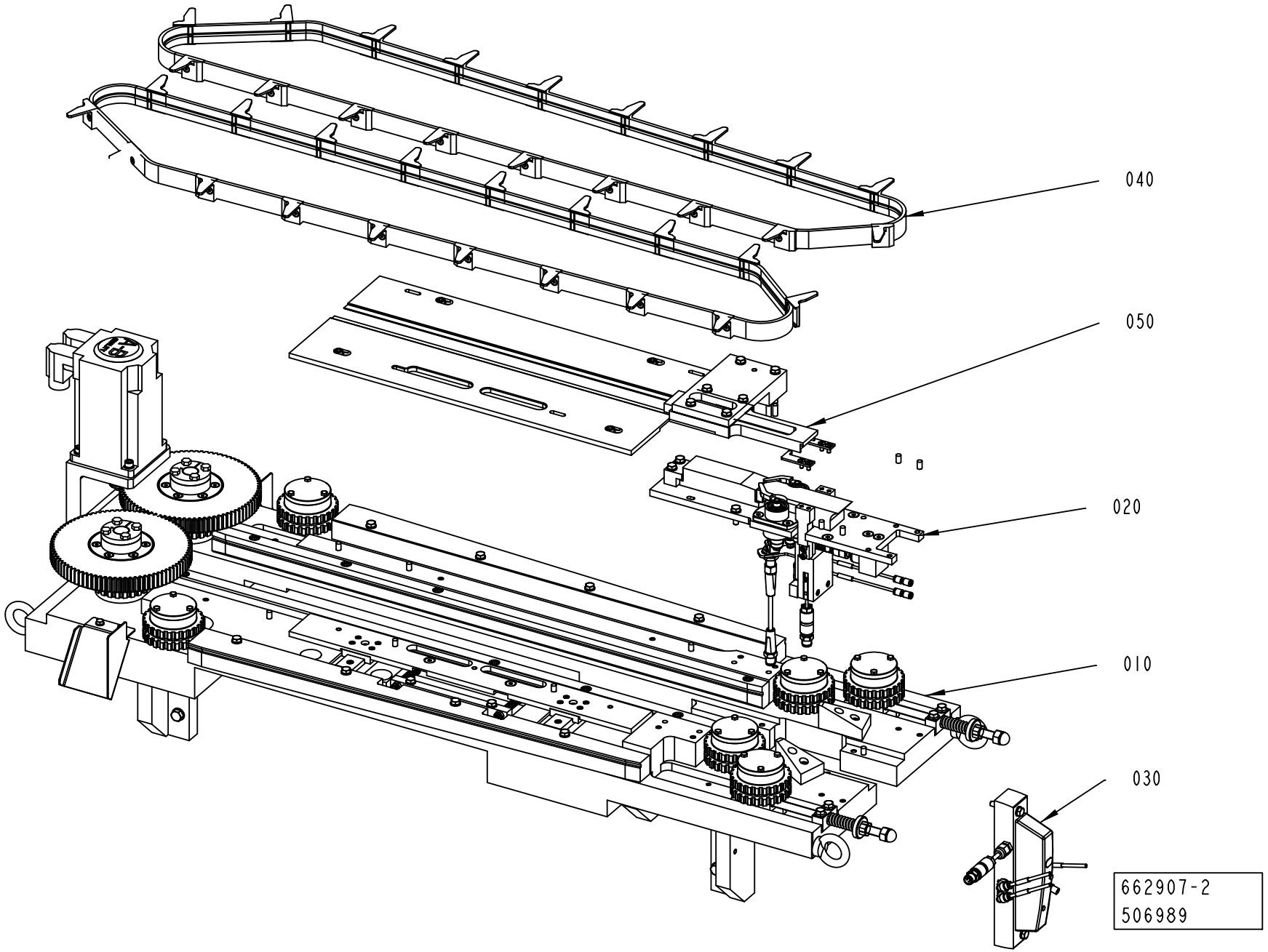
040
050
020
010
030
662907-2
506989

ECM: 506989 - 20120401
Group number: 662907-0200
Assembly Drawing: 662907-2_1_AA

Pos	Part No	UN	Qty	Description	Page No
-					
010	2746933-0200		1	BASE UNIT	**7-5**
020	2746934-0200		1	FEED UNIT	**7-19**
030	2746932-0200		1	PNEUMATIC UNIT	**7-29**
040	2746929-0100		1	CARRIER BELT	**7-31**
050	2746928-0200		1	CAP LINE	**7-37, 7-39, 7-41**

Pos	Part No	UN	Qty	Description	Page No

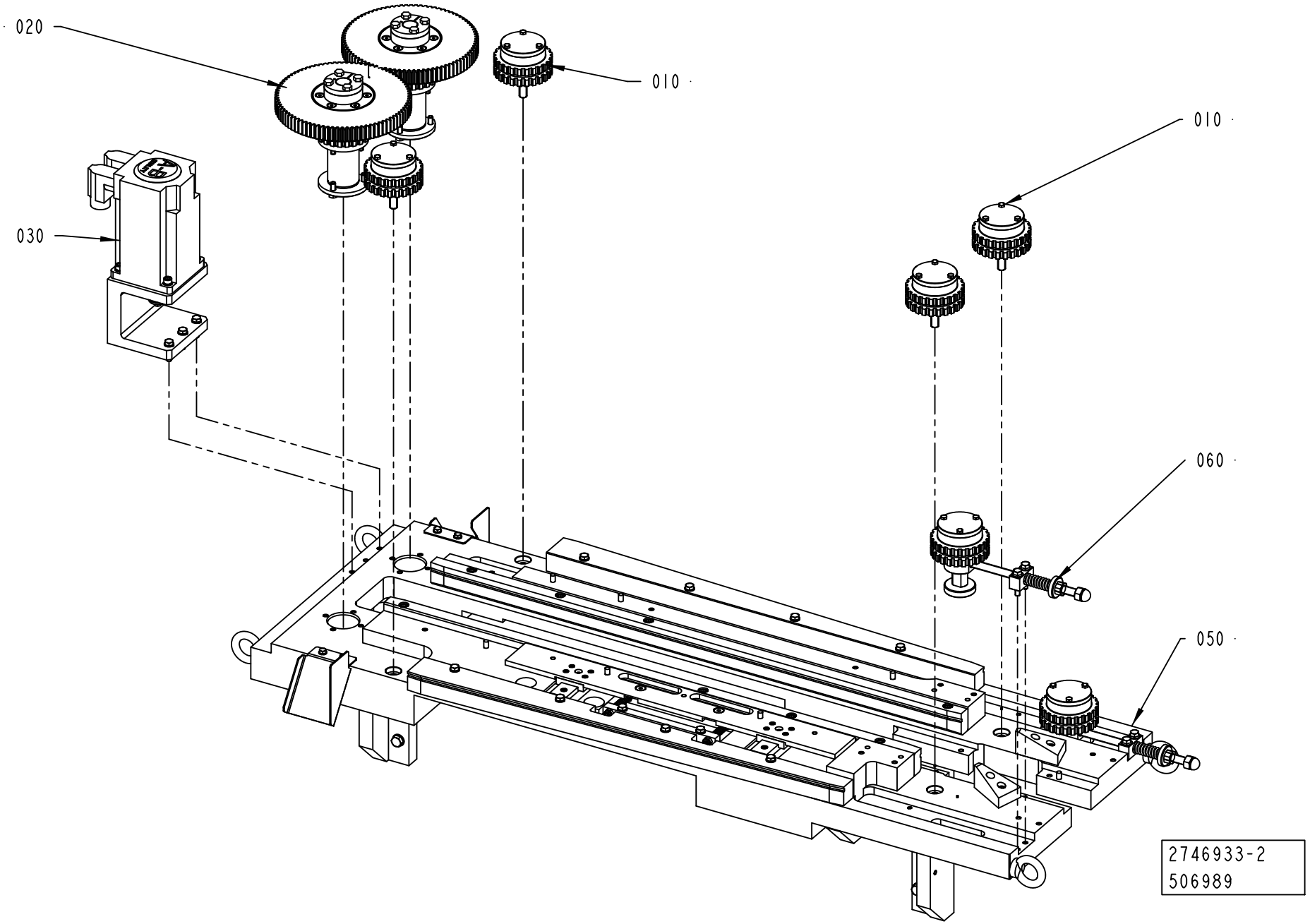
020
010
010
030
060
050
2746933-2
506989

ECM: 527291 - 20120401
Group number: 2746933-0200
Assembly Drawing: 2746933-2_1_AA

Pos	Part No	UN	Qty	Description	Page No
-					
010	2715669-0200		4	TOOTHED PULLEY	7-7
020	2715976-0200		2	TOOTHED PULLEY	7-9
030	2727407-0200		1	DRIVE PULLEY	7-11
050	2716049-0200		1	CAP LINE	7-13
060	3034438-0200		2	TOOTHED PULLEY	7-17

Pos	Part No	UN	Qty	Description	Page No

TOOTHED PULLEY

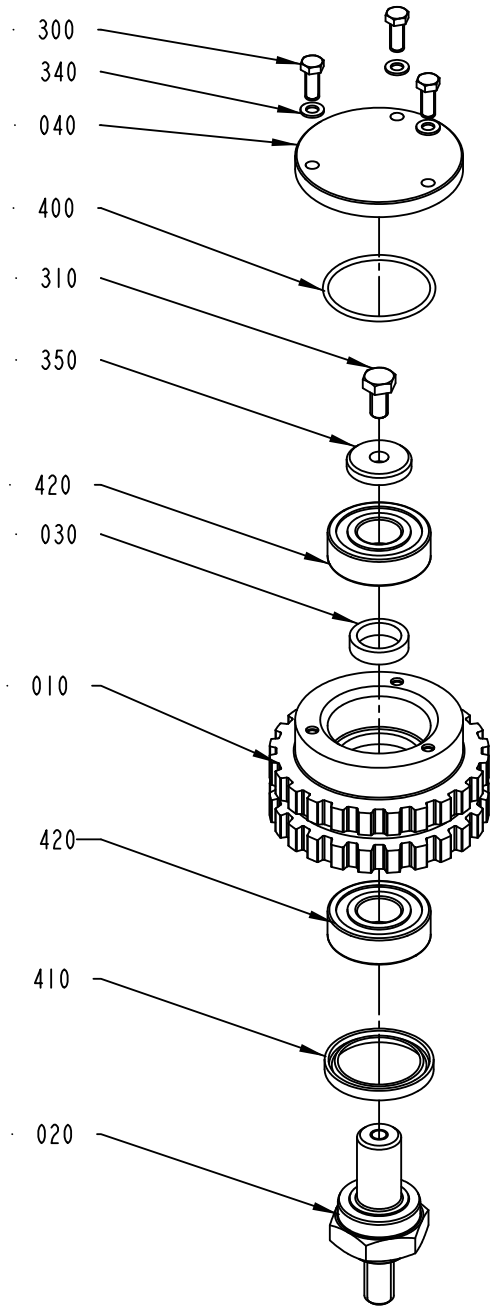

2715669-2
558537

ECM: 558540 - 20121001
Group number: 2715669-0200
Assembly Drawing: 2715669-2_1_AB

Pos	Part No	UN	Qty	Description	Page No
-					
010	2780452-0000		1	TOOTHED PULLEY	
020	2715978-0000		1	SHAFT	
030	2736447-0000		1	SPACER	
040	2736449-0000		1	COVER	
300	312105-0291		3	SCREW, M6S ISO 4017 M4X12 A4 70	
310	312105-0366		1	SCREW, M6S ISO 4017 M6X12 A4 80	
340	315105-0136		3	WASHER PLAIN, 4,3X9X0,8 A4 BRB	
350	315125-0153		1	WASHER HIGH, TBRSB 6,4X22X4 A4	
400	315202-0716		1	O-RING 34,65X1,78 MM	
410	315230-0330		1	SEAL RING G 28X37X4	
420	321309-0102		2	BALL BEARING 15/35X11	
430	90603-6233	G	1	KLüBERSYNTH UH1 14-151, ONLY IN BOM	
	90603-6253		*1*	*KLüBERSYNTH UH1 14-151, 1 KG TIN*	
	90603-6234		*1*	*KLüBERSYNTH UH1 14-151, 400G CARTRIDGE*	

Pos	Part No	UN	Qty	Description	Page No

Machine Type	Group Description	Used-In	Group Number	Page No

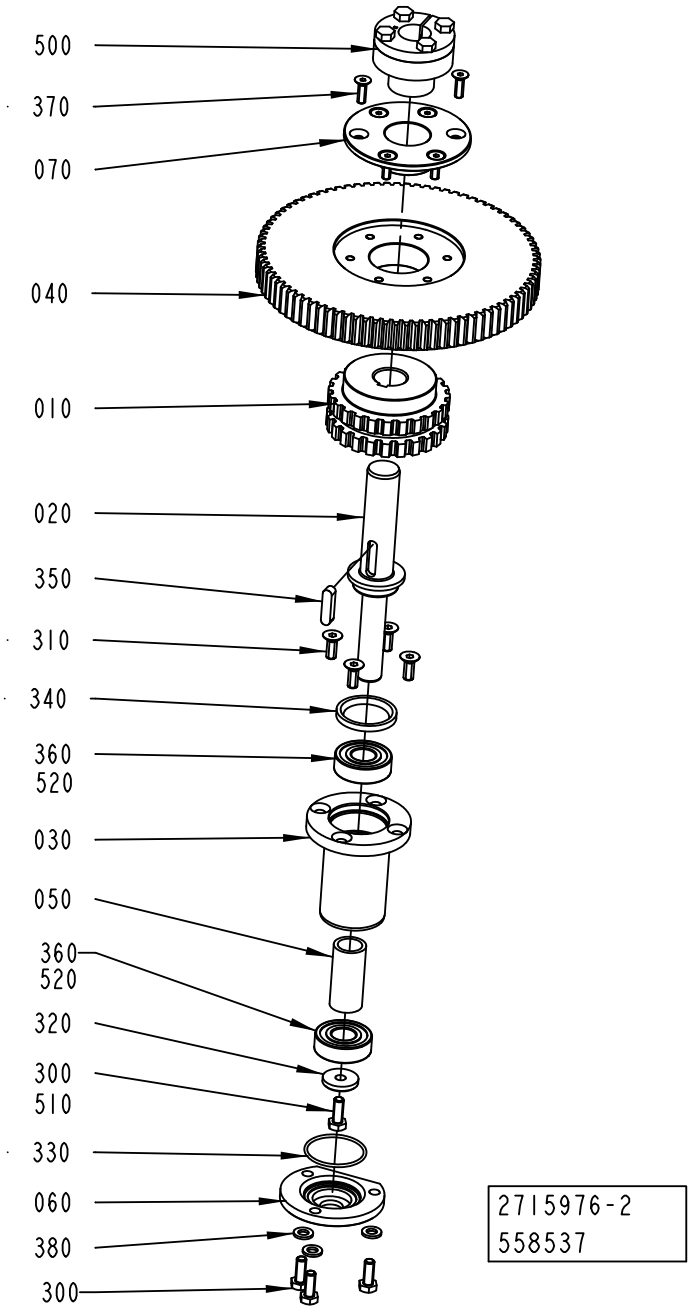
500
370
070
040
010
020
350
310
340
360
520
030
050
360
520
320
300
510
330
060
380
300
2715976-2
558537

ECM: 558541 - 20121001
Group number: 2715976-0200
Assembly Drawing: 2715976-2_1_AB

Pos	Part No	UN	Qty	Description	Page No
-					
010	2780453-0000		1	TOOTHED PULLEY	
020	2727414-0000		1	SHAFT	
030	2715977-0000		1	LOCKING HUB	
040	2727426-0000		1	GEAR WHEEL	
050	2736446-0000		1	SPACER	
060	2736448-0000		1	COVER	
070	2856622-0000		1	BUSHING	
300	312105-0368		4	SCREW, M6S ISO 4017 M6X16 A4 80	
310	312155-0368		4	SCREW DIN 7991 MF6S M6X16 A4 70	
320	315125-0153		1	WASHER HIGH, TBRSB 6,4X22X4 A4	
330	315202-0716		1	O-RING 34,65X1,78 MM	
340	315230-0330		1	SEAL RING G 28X37X4	
350	315705-0234		1	PARALLEL KEY W. ROUND ENDS, 6X6X25 MM	
360	321309-0102		2	BALL BEARING 15/35X11	
370	312155-0329		6	SCREW DIN 7991 MF6S M5X16 A4 70	
380	315105-0153		3	WASHER PLAIN, 6,4X12X1,5 A4 BRB	
500	90208-0078		1	CLAMPING ELEMENT, 20X28 L=18	
510	90600-0685		1	THREAD LOCKING, LOCTITE 2701 50 ML	
520	90603-6233	G	1	KLüBERSYNTH UH1 14-151, ONLY IN BOM	
	90603-6253		*1*	*KLüBERSYNTH UH1 14-151, 1 KG TIN*	
	90603-6234		*1*	*KLüBERSYNTH UH1 14-151, 400G CARTRIDGE*	

Pos	Part No	UN	Qty	Description	Page No

Machine Type | Group Description | Used-In | Group Number | Page No

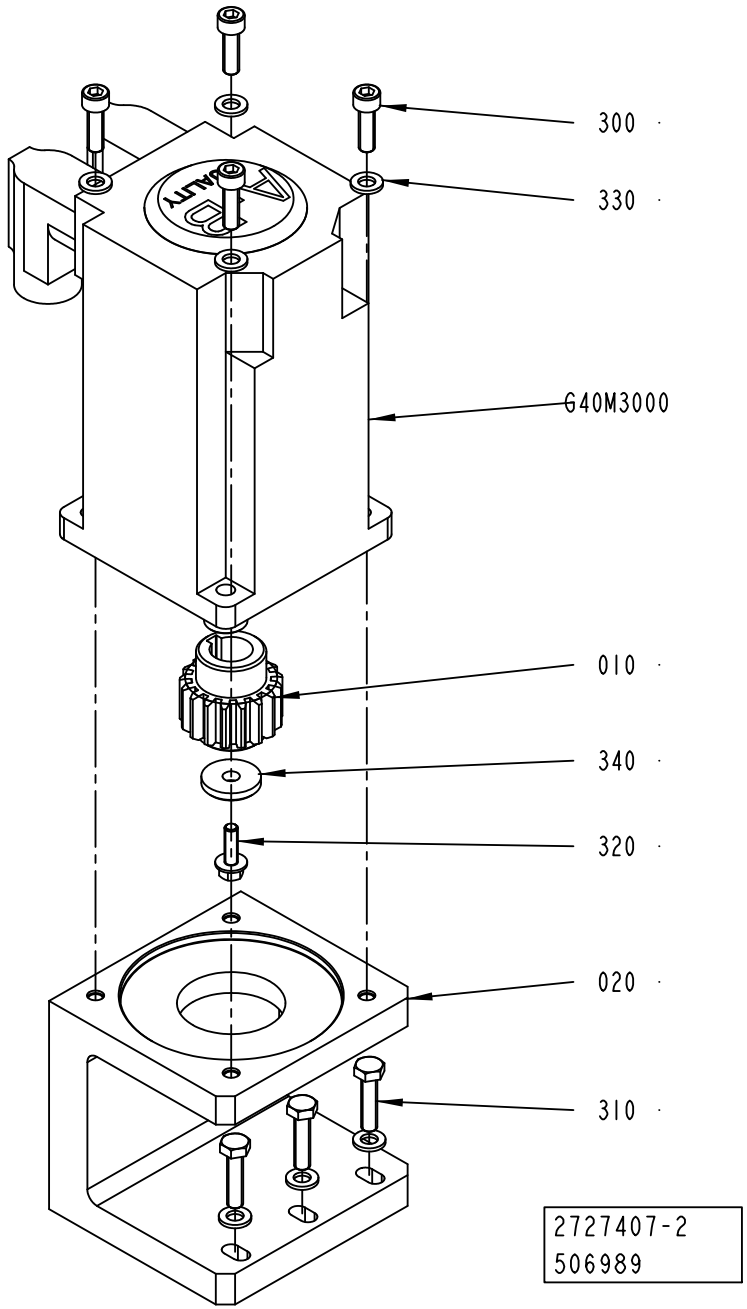
300
330
G40M3000
010
340
320
020
310
2727407-2
506989

ECM: 527288 - 20120401
Group number: 2727407-0200
Assembly Drawing: 2727407-2_1_AA

Pos	Part No	UN	Qty	Description	Page No
-					
010	2727427-0000		1	GEAR WHEEL	
020	2727408-0000		1	MOTOR BRACKET	
300	312115-0370		4	SCREW ISO4762 M6X20 A4 80	
310	312105-0372		3	SCREW, M6S ISO 4017 M6X25 A4 80	
320	312108-0329		1	SCREW EN 1665 TYPE F M5X16 A270	
330	315105-0153		7	WASHER PLAIN, 6,4X12X1,5 A4 BRB	
340	315125-0153		1	WASHER HIGH, TBRSB 6,4X22X4 A4	
G40M3000	90601-4430		1	SERVO MOTOR, MPL-B320P-MJ72AA, SERIES A	

Pos	Part No	UN	Qty	Description	Page No

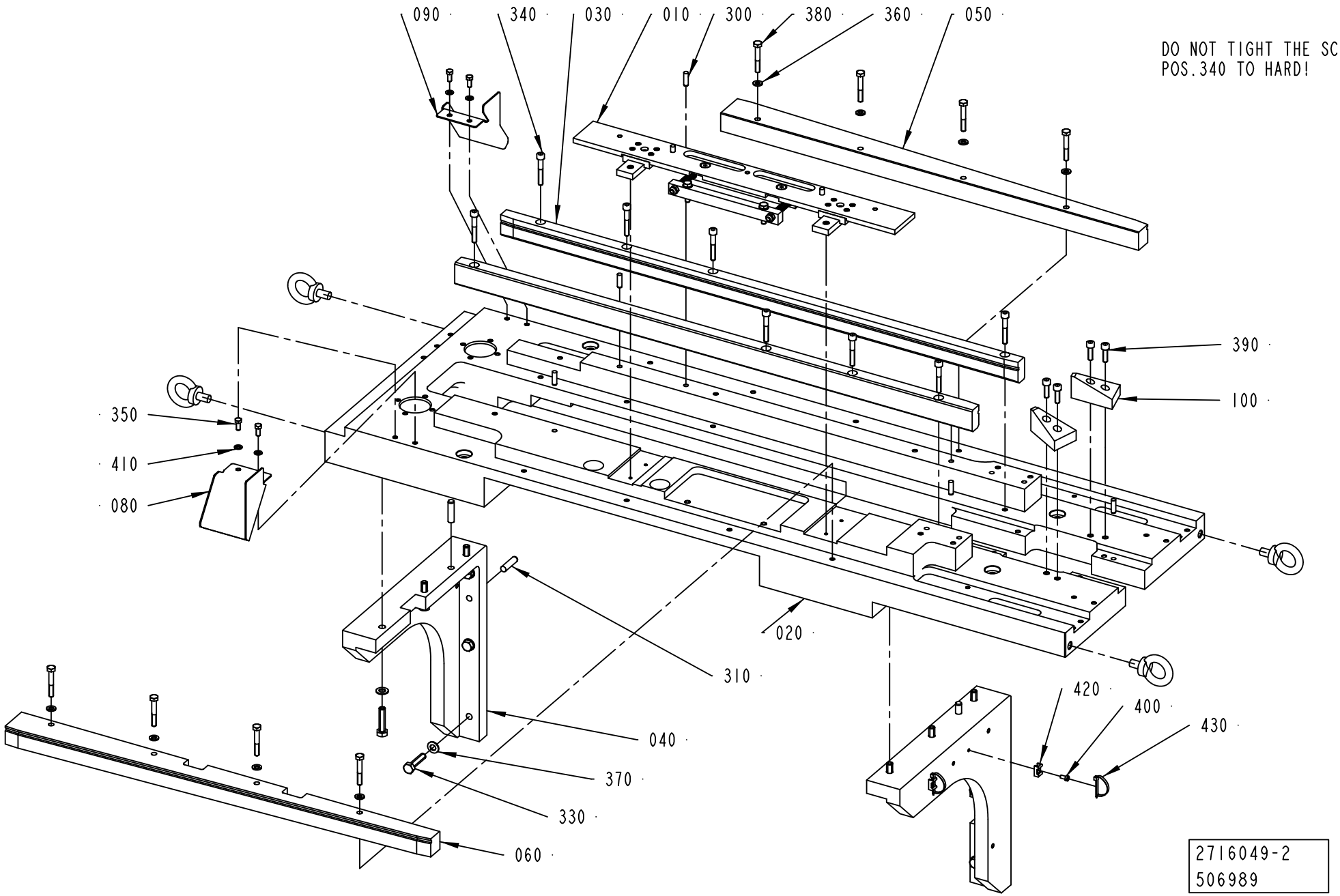
090
340
030
010
300
380
360
050
DO NOT TIGHT THE SCREW
POS.340 TO HARD!
390
100
350
410
080
020
310
420
400
430
040
370
330
060
2716049-2
506989

ECM: 527286 - 20120401
Group number: 2716049-0200
Assembly Drawing: 2716049-2_1_AF

Pos	Part No	UN	Qty	Description	Page No
-					
010	2716149-0200		1	STEERING DEVICE	**7-15**
020	2716015-0000		1	BRACKET	
030	2780454-0000		2	SLIDE RAIL	
040	2727420-0000		2	BRACKET	
050	2780455-0000		1	SLIDE RAIL	
060	2780456-0000		1	SLIDE RAIL	
080	2918904-0000		1	PLATE	
090	2918905-0000		1	PLATE	
100	3095787-0000		2	SLIDE	
300	311103-0353		6	PARALLEL PIN ISO 2338 6M6X20 A1	
310	311103-0406		4	PARALLEL PIN ISO 2338 8M6X32 A1	
330	312109-0457		12	SCREW, M6S ISO 4017 M8X35 A4 80	
340	312115-0378		8	SCREW ISO4762 M6X40 A4 80	
350	312105-0327		4	SCREW, M6S ISO 4017 M5X12 A4 80	
360	315105-0153		8	WASHER PLAIN, 6,4X12X1,5 A4 BRB	
370	315105-0165		12	WASHER PLAIN, 8,4X16X1,6 A4 BRB	
380	312105-0378		8	SCREW, M6S ISO 4014 M6X40 A4 80	
390	312115-0370		4	SCREW ISO4762 M6X20 A4 80	
400	312125-0287		2	SLOTTED HEAD SCREW, ISO1207 M4X8 A4	
410	315105-0146		4	WASHER PLAIN, 5,3X10X1 A4 BRB	
420	352113-0205		2	ANCHOR PLATES FOR STRIPS, TM2S8-C100	
430	352113-0104		2	CABLE TIE, BLACK 300X4,8 MM	

Pos	Part No	UN	Qty	Description	Page No

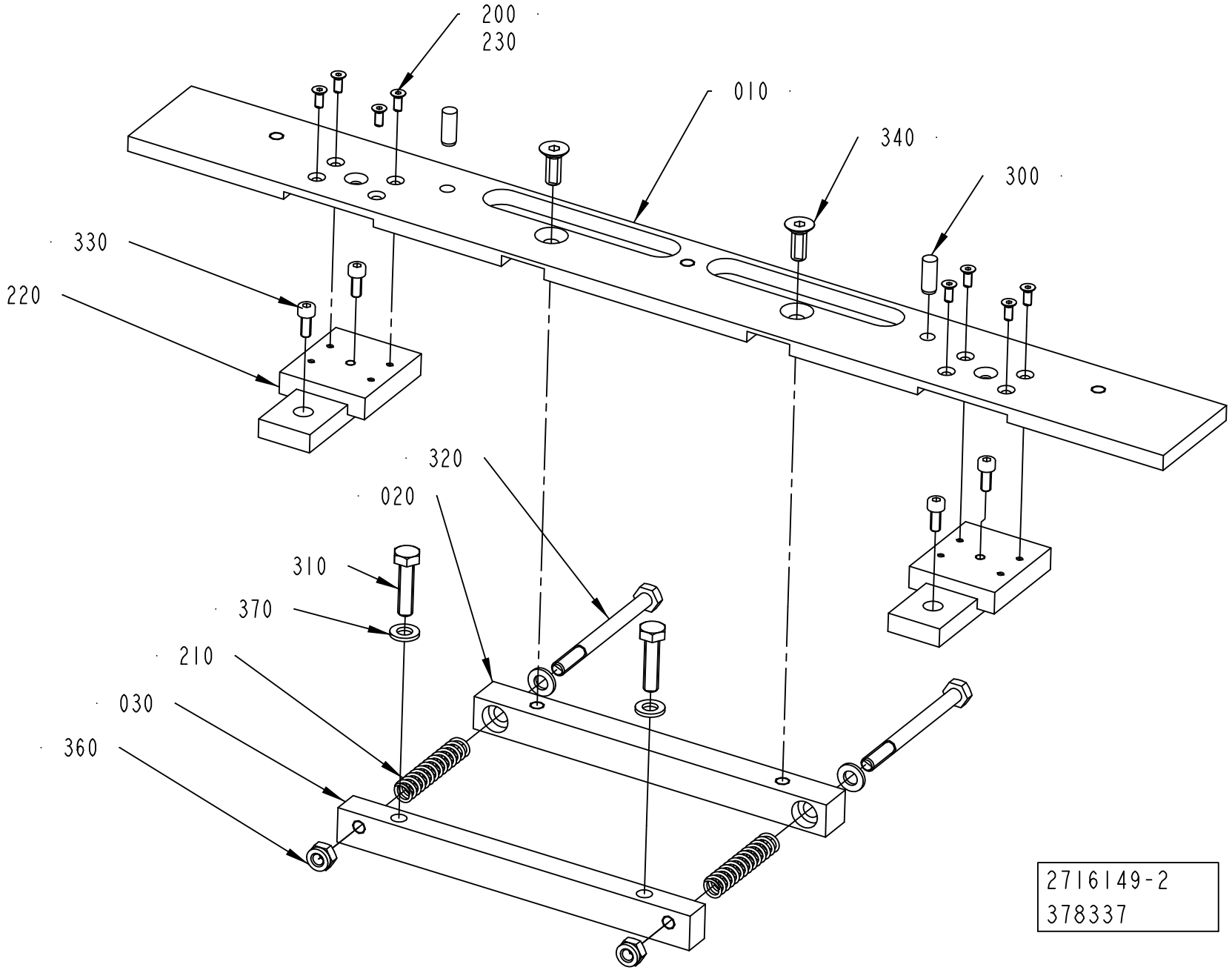
200
230
010
340
300
330
220
320
020
310
370
210
030
360
2716149-2
378337

ECM: 378337 - 20090406
Group number: 2716149-0200
Assembly Drawing: 2716149-2_1_AB

Pos	Part No	UN	Qty	Description	Page No
-					
010	2716152-0000		1	PLATE	
020	2716156-0000		1	BRACKET	
030	2716157-0000		1	BRACKET	
200	90287-0295		8	SCREW HEX.SOCK.COUNT.MF6S M3X8 A280	
210	90335-0082		2	COMP. SPRING, 22180, 1,25X9,25X47,5	
220	90600-0350		2	LINEAR GUIDE, RSR12WVMUU+80LM G15/G25	
230	90600-0685		1	THREAD LOCKING, LOCTITE 2701 50 ML	
300	311103-0351		2	PARALLEL PIN ISO 2338 6M6X16 A1	
310	312105-0372		2	SCREW, M6S ISO 4017 M6X25 A4 80	
320	312105-0384		2	SCREW, M6S ISO 4014 M6X70 A4 80	
330	312115-0289		4	SCREW ISO4762 M4X10 A4 80	
340	312155-0368		2	SCREW DIN 7991 MF6S M6X16 A4 70	
360	312812-0316		2	HEXAGON NUT, NY-LOCK M6 A4 80	
370	315105-0153		4	WASHER PLAIN, 6,4X12X1,5 A4 BRB	

Pos	Part No	UN	Qty	Description	Page No

Machine Type | Group Description | Used-In | Group Number | Page No

TOOTHED PULLEY

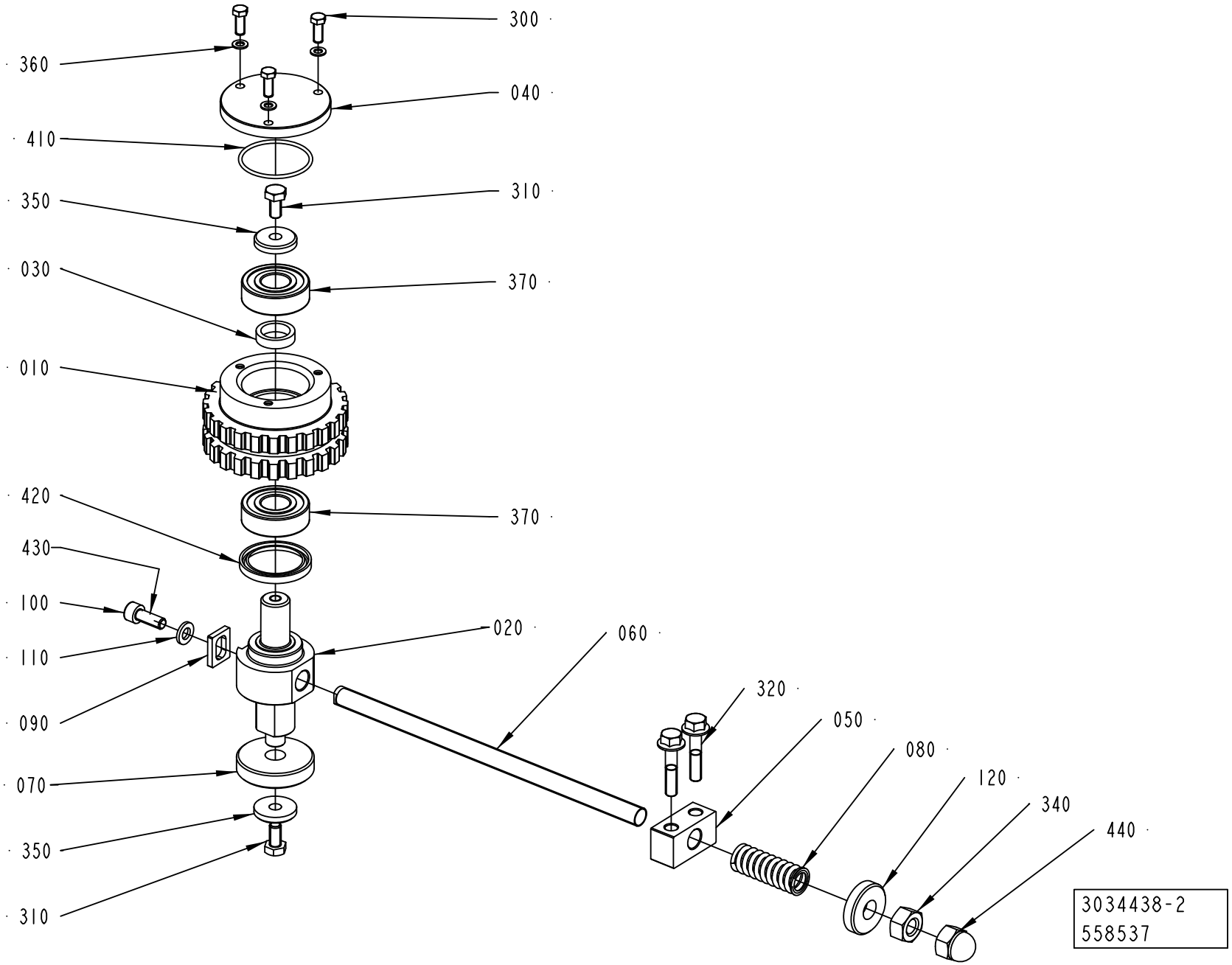

ECM: 558543 - 20121001
Group number: 3034438-0200
Assembly Drawing: 3034438-2_1_AB

Pos	Part No	UN	Qty	Description	Page No
-					
010	2780452-0000		1	TOOTHED PULLEY	
020	2716019-0000		1	SHAFT	
030	2736447-0000		1	SPACER	
040	2736449-0000		1	COVER	
050	3024866-0000		1	SUPPORT	
060	2974857-0000		1	SCREW	
070	2716024-0000		1	WASHER	
080	2716021-0000		1	SPRING	
090	2974858-0000		1	NUT	
100	312115-0368		1	SCREW ISO4762 M6X16 A4 80	
110	315106-0153		1	WASHER PLAIN, M6 ISO7089-6-200 HV A4	
120	315125-0173		1	WASHER HIGH, TBRSB 10,5X28X6 A4	
300	312105-0291		3	SCREW, M6S ISO 4017 M4X12 A4 70	
310	312105-0366		2	SCREW, M6S ISO 4017 M6X12 A4 80	
320	312108-0374		2	SCREW EN 1665 TYPE F M6X30 A270	
340	312605-0320		1	HEXAGON NUT, M6M M10 A280	
350	315125-0153		2	WASHER HIGH, TBRSB 6,4X22X4 A4	
360	315105-0136		3	WASHER PLAIN, 4,3X9X0,8 A4 BRB	
370	321309-0102		2	BALL BEARING 15/35X11	
410	315202-0716		1	O-RING 34,65X1,78 MM	
420	315230-0330		1	SEAL RING G 28X37X4	
430	90157-0012	G	10	LOCKING FLUID LOCTITE 242 50 ML	
440	312705-0320		1	NUT HEX. DOMED CAP MHM-6 M10 A280	
450	90603-6233	G	1	KLüBERSYNTH UH1 14-151, ONLY IN BOM	
	90603-6253		*1*	*KLüBERSYNTH UH1 14-151, 1 KG TIN*	
	90603-6234		*1*	*KLüBERSYNTH UH1 14-151, 400G CARTRIDGE*	

Pos	Part No	UN	Qty	Description	Page No

Machine Type | Group Description | Used-In | Group Number | Page No

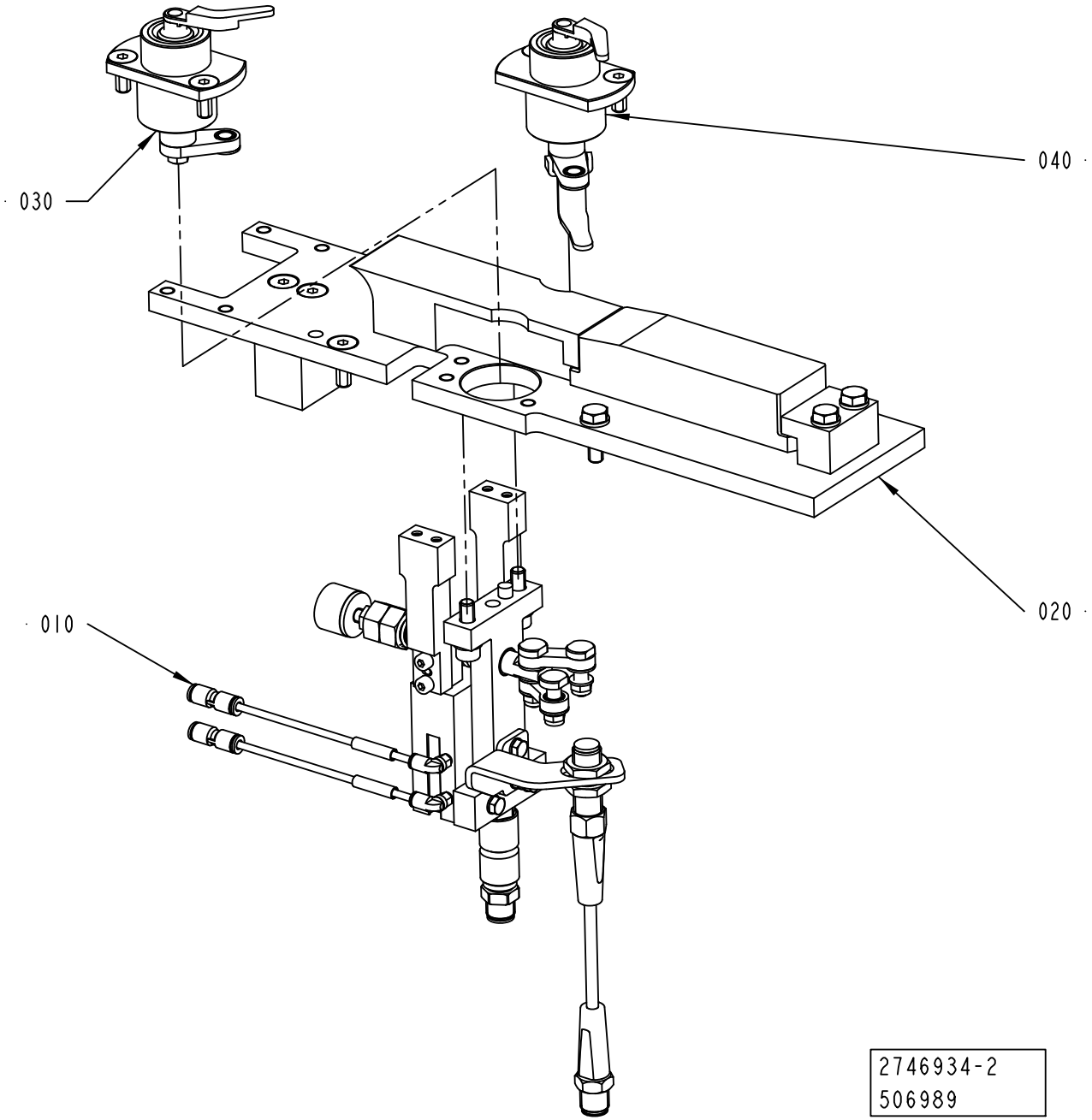
030
040
020
010
2746934-2
506989

ECM: 527292 - 20120401
Group number: 2746934-0200
Assembly Drawing: 2746934-2_1_AA

Pos	Part No	UN	Qty	Description	Page No
-					
010	2716046-0200		1	CLAMP UNIT	**7-21**
020	2716047-0100		1	HEIGHT ADJUSTMENT	**7-23**
030	2740299-0200		1	FINGER	**7-25**
040	2740371-0200		1	FINGER	**7-27**

Pos	Part No	UN	Qty	Description	Page No

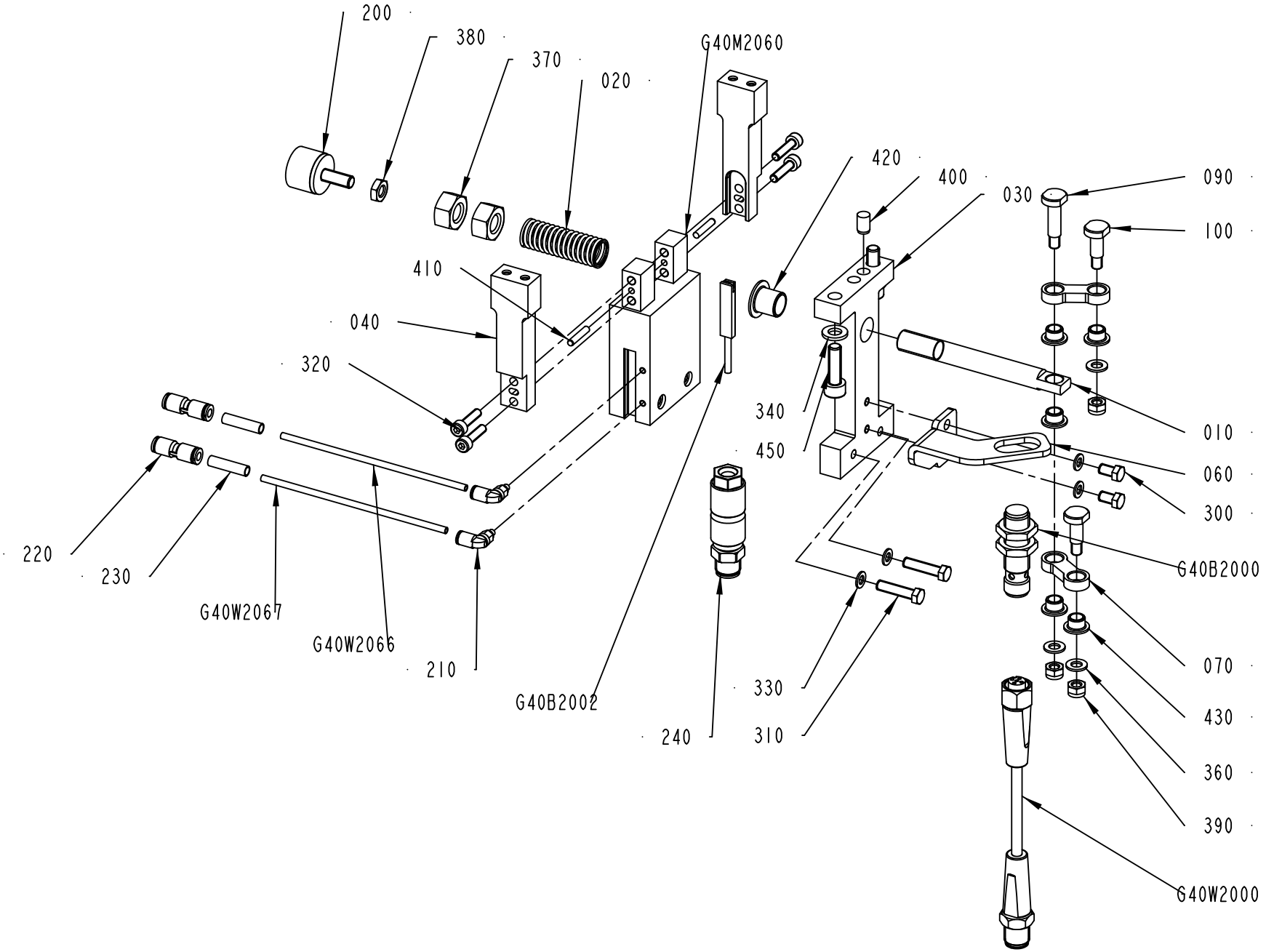

2716046-3
558537

ECM: 558542 - 20121001
Group number: 2716046-0200
Assembly Drawing: 2716046-3_1_AB

Pos	Part No	UN	Qty	Description	Page No
-					
010	2838763-0000		1	SHAFT	
020	3020132-0000		1	SPRING	
030	2740373-0000		1	BRACKET	
040	2740375-0000		2	BRACKET	
060	2973942-0000		1	BRACKET	
070	2730989-0000		2	LEVER	
090	2780361-0000		1	PIN	
100	2780362-0000		2	PIN	
200	90600-5547		1	VIBRATION DAMPER, D-TYPE 20X15 M6X15 NBR	
210	90459-7426		2	PUSH-IN L-FITTING QSML-M3-3	
220	90459-7427		2	PUSH-IN FITTING QSM-4-3	
230	90459-7368		2	MARKING FOR PNEUM. TUBING, PRZ04	
240	90603-5568		1	CONNECTOR, SACC-M12MS-4QO-0,34-VA	
300	312105-0287		2	SCREW, M6S ISO 4017 M4X8 A4 70	
310	312105-0295		2	SCREW, M6S ISO 4017 M4X20 A4 70	
320	312115-0293		4	SCREW ISO4762 M4X16 A4 80	
330	315105-0136		4	WASHER PLAIN, 4,3X9X0,8 A4 BRB	
340	315105-0153		2	WASHER PLAIN, 6,4X12X1,5 A4 BRB	
360	315106-0146		3	WASHER PLAIN, M5 ISO7089-5-200 HV A4	
370	312635-0320		2	NUT M6M 10X1 STAINLESS A2 80	
380	312625-0316		1	HEXAGON THIN NUT, EN 24035 ML6M M6 A4	
390	312812-0314		3	HEXAGON NUT, NY-LOCK M5 A4 80	
400	311103-0348		1	PARALLEL PIN ISO 2338 6M6X10 A1	
410	311103-0236		2	PARALLEL PIN ISO 2338 3M6X16 A1	
420	321158-0142		1	FLANGE BUSHING, IGLIDUR J 10X12X12	
430	321158-0060		5	FLANGE BUSHING, IGLIDUR J 6X8X6	
450	312115-0370		2	SCREW ISO4762 M6X20 A4 80	
G40B2000	90459-6948		1	INDUCTIVE SENSOR, IFS 206	
G40B2002	90600-3272		1	PROX. SENSOR, SMT-8M-PS-24V-K-5,0-OE	
G40M2060	90604-3142		1	CYLINDER, GRIPPER DHPS-16-A-H1-SA	
G40W2000	344267-0010		1	SENSOR CABLE, EVT042	
G40W2066	90459-7428	M	1	TUBE PUN-H-3X0,5-BL	
G40W2067	90459-7428	M	1	TUBE PUN-H-3X0,5-BL	

Pos	Part No	UN	Qty	Description	Page No

Machine Type	Group Description	Used-In	Group Number	Page No

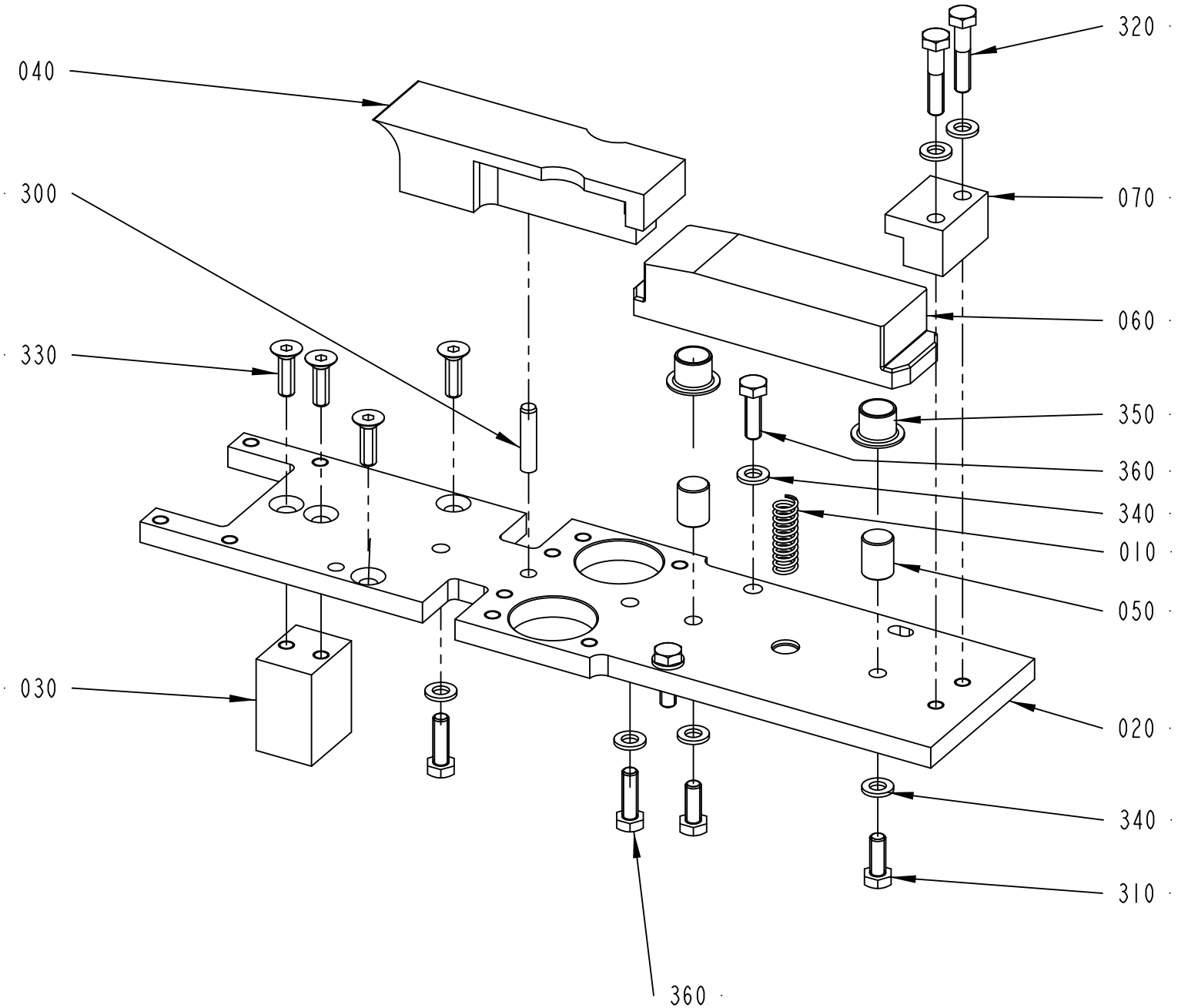
040
300
330
030
320
070
060
350
360
340
010
050
020
340
310
360
2716047-1
558537

ECM: 558751 - 20121001
Group number: 2716047-0100
Assembly Drawing: 2716047-1_1_AD

Pos	Part No	UN	Qty	Description	Page No
-					
010	90600-0351		1	COMP. SPRING, 2489, 1,2X9,4X30	
020	2838765-0000		1	PLATE	
030	2838764-0000		1	BLOCK	
040	2727431-0000		1	SLIDE PLATE	
050	2727432-0000		2	SHAFT	
060	2727434-0000		1	SLIDE PLATE	
070	2727440-0000		1	END SUPPORT	
300	311103-0356		1	PARALLEL PIN ISO 2338 6M6X28 A1	
310	312105-0368		2	SCREW, M6S ISO 4017 M6X16 A4 80	
320	312105-0374		2	SCREW, M6S ISO 4014 M6X30 A4 80	
330	312155-0370		4	SCREW DIN 7991 MF6S M6X20 A4 70	
340	315105-0153		8	WASHER PLAIN, 6,4X12X1,5 A4 BRB	
350	321158-0180		2	FLANGE BUSHING, IGLIDUR J 12X14X12	
360	312105-0370		4	SCREW, M6S ISO 4017 M6X20 A4 80	

Pos	Part No	UN	Qty	Description	Page No

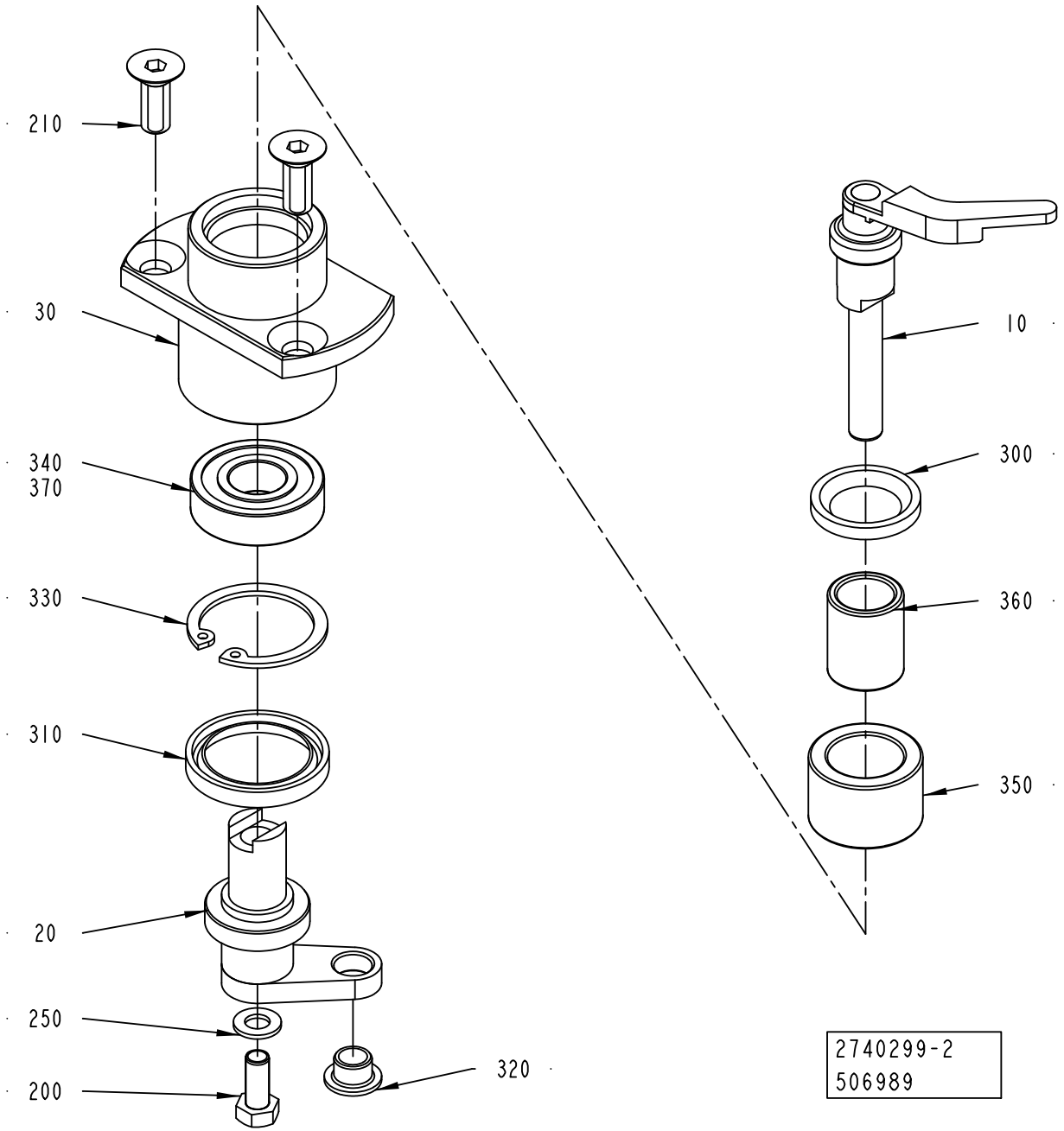
210
30
340
370
330
310
20
250
200
320
10
300
360
350
2740299-2
506989

ECM: 530406 - 20120401
Group number: 2740299-0200
Assembly Drawing: 2740299-2_1_AA

Pos	Part No	UN	Qty	Description	Page No
-					
010	2740300-0000		1	FINGER	
020	2470301-0000		1	LEVER	
030	2470302-0000		1	HUB	
200	312105-0327		1	SCREW, M6S ISO 4017 M5X12 A4 80	
210	312155-0368		2	SCREW DIN 7991 MF6S M6X16 A4 70	
250	315105-0146		1	WASHER PLAIN, 5,3X10X1 A4 BRB	
300	315230-0193		1	BEARING SEAL G15X23X3 MM	
310	315230-0274		1	BEARING SEAL G22X30X4 MM	
320	321158-0060		1	FLANGE BUSHING, IGLIDUR J 6X8X6	
330	315753-0121		1	RETAINING RING FOR BORE DIN 472 28 SS	
340	321308-0101		1	BALL BEARING 12/28X8	
350	90600-0347		1	NEEDLE BEARING W/O CONE, 16X24X16MM	
360	90600-0349		1	INNER RING, IR12X16X20	
370	90603-6233	G	1	KLüBERSYNTH UH1 14-151, ONLY IN BOM	
	90603-6253		*1*	*KLüBERSYNTH UH1 14-151, 1 KG TIN*	
	90603-6234		*1*	*KLüBERSYNTH UH1 14-151, 400G CARTRIDGE*	

Pos	Part No	UN	Qty	Description	Page No

Machine Type	Group Description	Used-In	Group Number	Page No

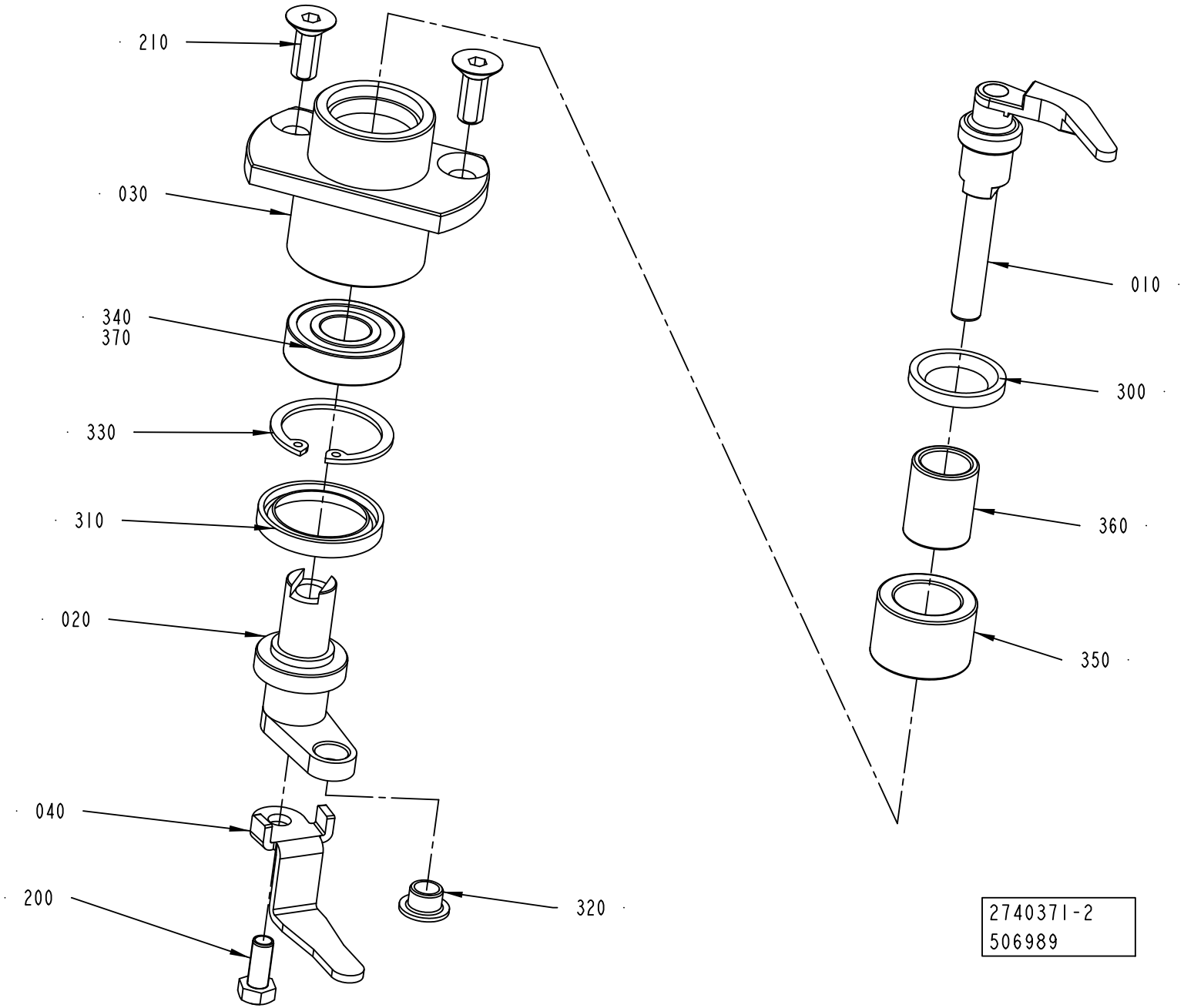
210
030
340
370
330
310
020
040
200
320
010
300
360
350
2740371-2
506989

ECM: 530407 - 20120401
Group number: 2740371-0200
Assembly Drawing: 2740371-2_1_AA

Pos	Part No	UN	Qty	Description	Page No
-					
010	2740372-0000		1	FINGER	
020	2470373-0000		1	LEVER	
030	2470302-0000		1	HUB	
040	2973943-0000		1	PLATE	
200	312105-0327		1	SCREW, M6S ISO 4017 M5X12 A4 80	
210	312155-0368		2	SCREW DIN 7991 MF6S M6X16 A4 70	
300	315230-0193		1	BEARING SEAL G15X23X3 MM	
310	315230-0274		1	BEARING SEAL G22X30X4 MM	
320	321158-0060		1	FLANGE BUSHING, IGLIDUR J 6X8X6	
330	315753-0121		1	RETAINING RING FOR BORE DIN 472 28 SS	
340	321308-0101		1	BALL BEARING 12/28X8	
350	90600-0347		1	NEEDLE BEARING W/O CONE, 16X24X16MM	
360	90600-0349		1	INNER RING, IR12X16X20	
370	90603-6233	G	1	KLüBERSYNTH UH1 14-151, ONLY IN BOM	
	90603-6253		*1*	*KLüBERSYNTH UH1 14-151, 1 KG TIN*	
	90603-6234		*1*	*KLüBERSYNTH UH1 14-151, 400G CARTRIDGE*	

Pos	Part No	UN	Qty	Description	Page No

Machine Type	Group Description	Used-In	Group Number	Page No

PNEUMATIC UNIT

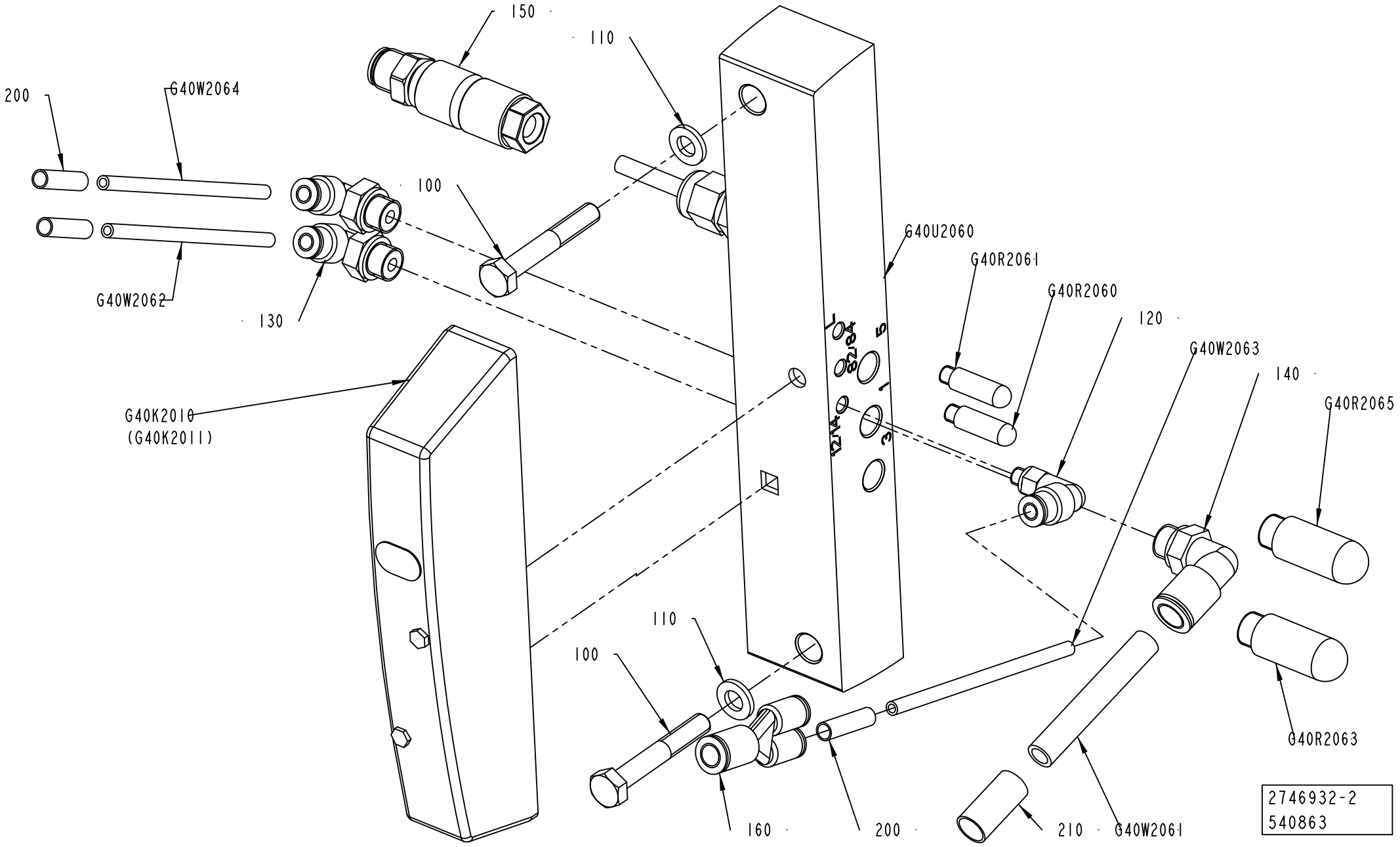

ECM: 543071 - 20120402
Group number: 2746932-0200
Assembly Drawing: 2746932-2_1_AB

Pos	Part No	UN	Qty	Description	Page No
-					
100	312105-0378		2	SCREW, M6S ISO 4014 M6X40 A4 80	
110	315106-0153		2	WASHER PLAIN, M6 ISO7089-6-200 HV A4	
120	350002-0001		1	PUSH-IN L-FITTING QSL-F-M5-4	
130	350002-0005		2	PUSH-IN L-FITTING QSL-F-G1/8-4	
140	350002-0007		1	PUSH-IN L-FITTING QSL-F-G1/8-8	
150	90603-5568		1	CONNECTOR, SACC-M12MS-4QO-0,34-VA	
160	350015-0002		1	PUSH-IN Y-CONNECTOR QSY-F-6-4	
200	90459-7368		3	MARKING FOR PNEUM. TUBING, PRZ04	
210	90459-7370		1	MARKING FOR PNEUM. TUBING, PRZ08	
G40K2010	90458-1197		1	VALVE, 5/2 BISTABLE	
G40R2060	90328-0029		1	SILENCER, M5	
G40R2061	90328-0029		1	SILENCER, M5	
G40R2063	90328-0047		1	SILENCER, G1/8"	
G40R2065	90328-0047		1	SILENCER, G1/8"	
G40U2060	90459-2591		1	SINGLE VALVE SUB-BASE CDSV5.0-AS-1/8	
G40W2061	315400-0004	M	1	TUBE PUN-H-8X1,25-BL	
G40W2062	315400-0016	M	10	TUBE PUN-H-4X0,75-BL	
G40W2063	315400-0016	M	10	TUBE PUN-H-4X0,75-BL	
G40W2064	315400-0016	M	10	TUBE PUN-H-4X0,75-BL	

Pos	Part No	UN	Qty	Description	Page No

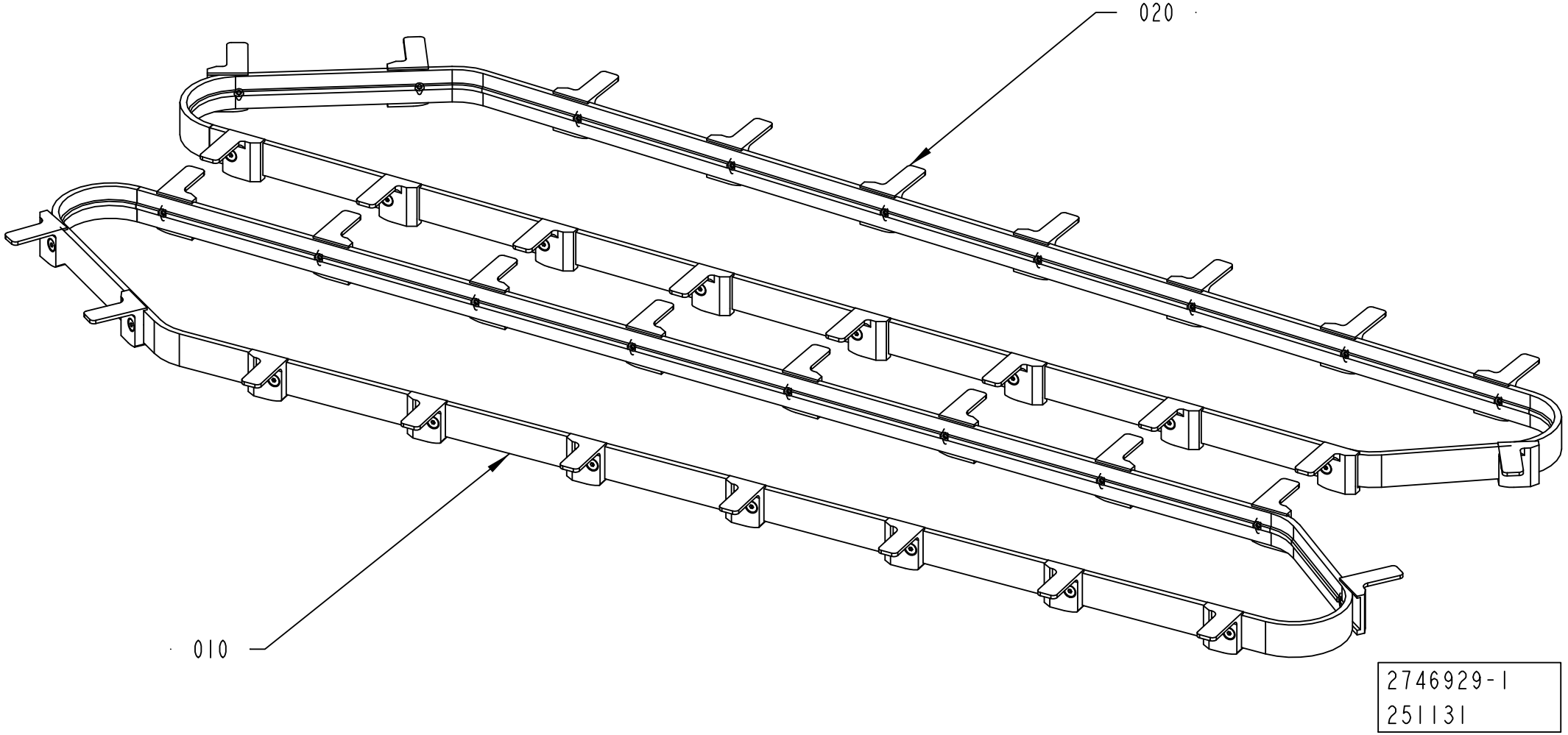
020
010
2746929-1
251131

ECM: 297333 - 20070323
Group number: 2746929-0100
Assembly Drawing: 2746929-1_1_AA

Pos	Part No	UN	Qty	Description	Page No
-					
010	2780509-0100		1	TIMING BELT	**7-33**
020	2780497-0100		1	TIMING BELT	**7-35**

Pos	Part No	UN	Qty	Description	Page No

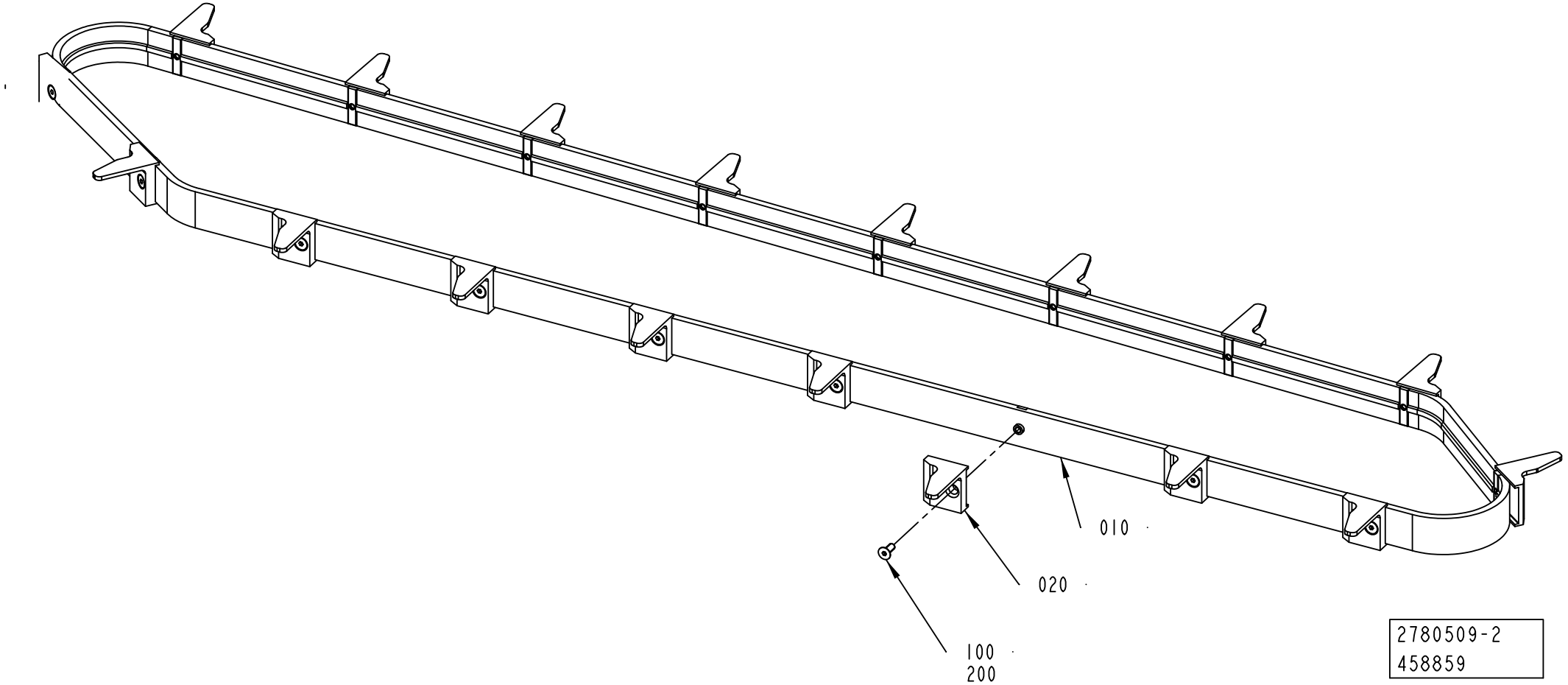
010
020
100
200
2780509-2
458859

ECM: 462612 - 20101001
Group number: 2780509-0100
Assembly Drawing: 2780509-2_1_AC

Pos	Part No	UN	Qty	Description	Page No
CAP 30/FLEX					
010	3117845-0000		1	TIMING BELT	
	90602-9237		*18*	*INSERT NUT, 101/04.04.3*	
	90603-0831		*1*	*TIMING BELT 25ATK10/2160 PU*	
020	2715975-0000		18	FINGER	
100	312155-0289		18	SCREW DIN 7991 MF6S M4X10 A4 70	
Common Parts					
200	90602-4847		1	THREAD LOCKING, LOCTITE 243 50 ML	

Pos	Part No	UN	Qty	Description	Page No

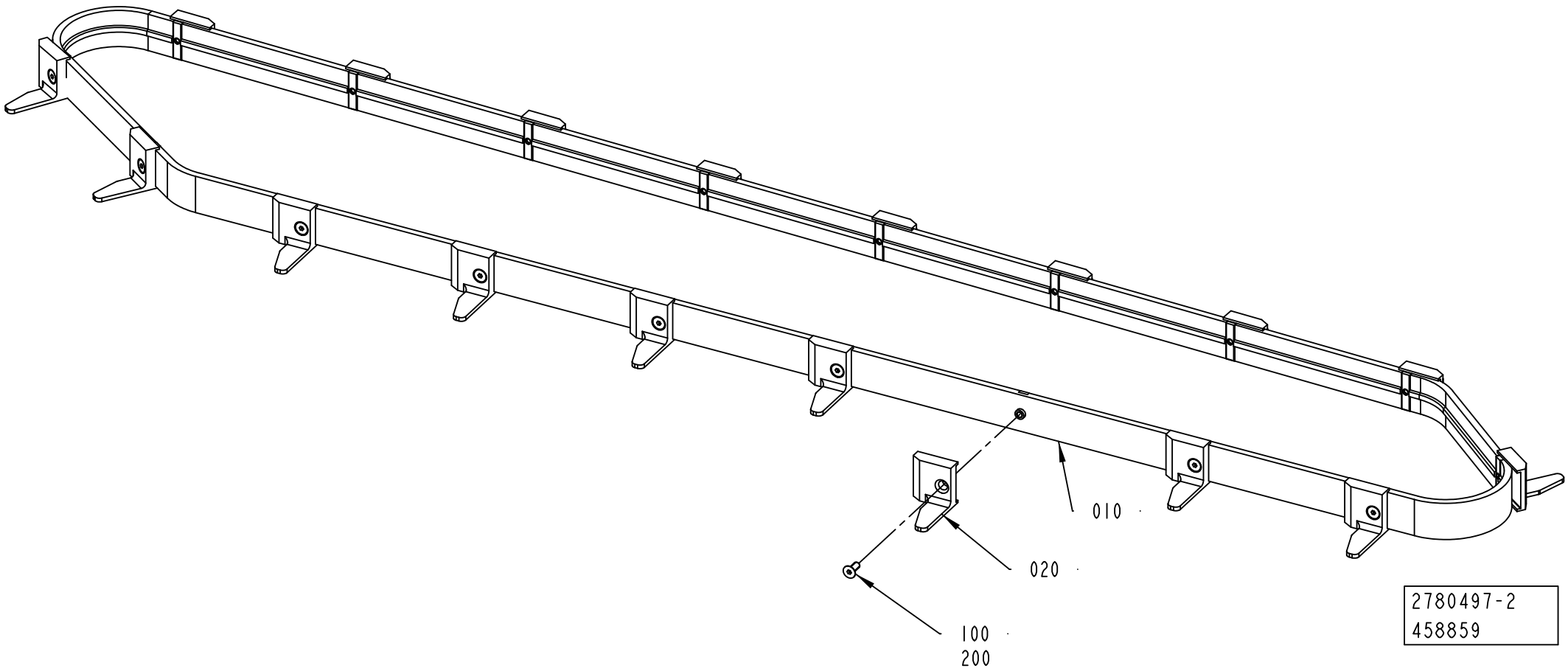
010
020
100
200
2780497-2
458859

ECM: 462611 - 20101001
Group number: 2780497-0100
Assembly Drawing: 2780497-2_1_AC

Pos	Part No	UN	Qty	Description	Page No
CAP 30/FLEX					
010	3117845-0000		1	TIMING BELT	
	90602-9237		*18*	*INSERT NUT, 101/04.04.3*	
	90603-0831		*1*	*TIMING BELT 25ATK10/2160 PU*	
020	2715889-0000		18	FINGER	
100	312155-0289		18	SCREW DIN 7991 MF6S M4X10 A4 70	
Common Parts					
200	90602-4847		1	THREAD LOCKING, LOCTITE 243 50 ML	

Pos	Part No	UN	Qty	Description	Page No

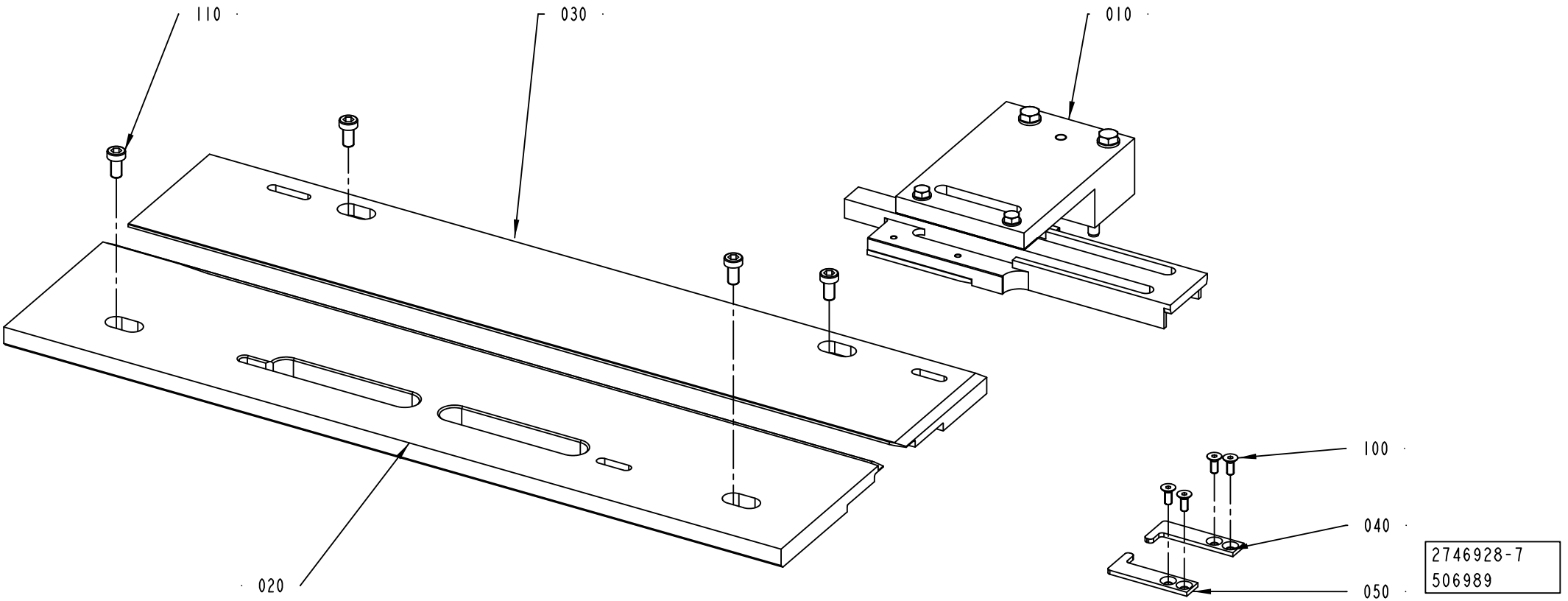
110
030
010
020
100
040
050
2746928-7
506989

Pos	Part No	UN	Qty	Description	Page No
HELICAP 27 (See drawing on page: 7-36)					
020	3137424-0000		1	GUIDE	
030	3137425-0000		1	GUIDE	
040	3077722-0000		1	CLAMPING PART	
050	3077721-0000		1	CLAMPING PART	
HELICAP2 23 (See drawing on page: 7-40)					
020	3077731-0000		1	GUIDE	
030	3077732-0000		1	GUIDE	
040	2970138-0000		1	CLAMPING PART	
050	2970139-0000		1	CLAMPING PART	
070	3141446-0000		2	GUIDE	
120	312105-0285		4	SCREW, M6S ISO 4017 M4X6 A4 70	
130	315105-0136		4	WASHER PLAIN, 4,3X9X0,8 A4 BRB	
SLIMCAP 1000 (See drawing on page: 7-38)					
020	2716139-0000		1	GUIDE	
030	2716138-0000		1	GUIDE	
040	2727447-0000		1	CLAMPING PART	
050	2727446-0000		1	CLAMPING PART	
SLIMCAP 2000 (See drawing on page: 7-38)					
020	2867644-0000		1	GUIDE	
030	2867645-0000		1	GUIDE	
040	2893414-0000		1	CLAMPING PART	
050	2893415-0000		1	CLAMPING PART	
STREAMCAP1000 (See drawing on page: 7-36)					
020	2716067-0000		1	GUIDE	
030	2716068-0000		1	GUIDE	
040	2752107-0000		1	CLAMPING PART	
050	2752108-0000		1	CLAMPING PART	
STREAMCAP200 (See drawing on page: 7-36)					
020	2893416-0000		1	GUIDE	
030	2893417-0000		1	GUIDE	
040	2893420-0000		1	CLAMPING PART	
050	2893421-0000		1	CLAMPING PART	
STREAMCAP500 (See drawing on page: 7-36)					
020	2875596-0000		1	GUIDE	
030	2875597-0000		1	GUIDE	
040	2752107-0000		1	CLAMPING PART	
050	2752108-0000		1	CLAMPING PART	
Common Parts					
010	2716069-0200		1	GUIDE RAIL	**7-43, 7-45**
100	312155-0289		4	SCREW DIN 7991 MF6S M4X10 A4 70	
110	90600-1772		4	SCREW DIN7984 M6X12 AISI 304	

Pos	Part No	UN	Qty	Description	Page No

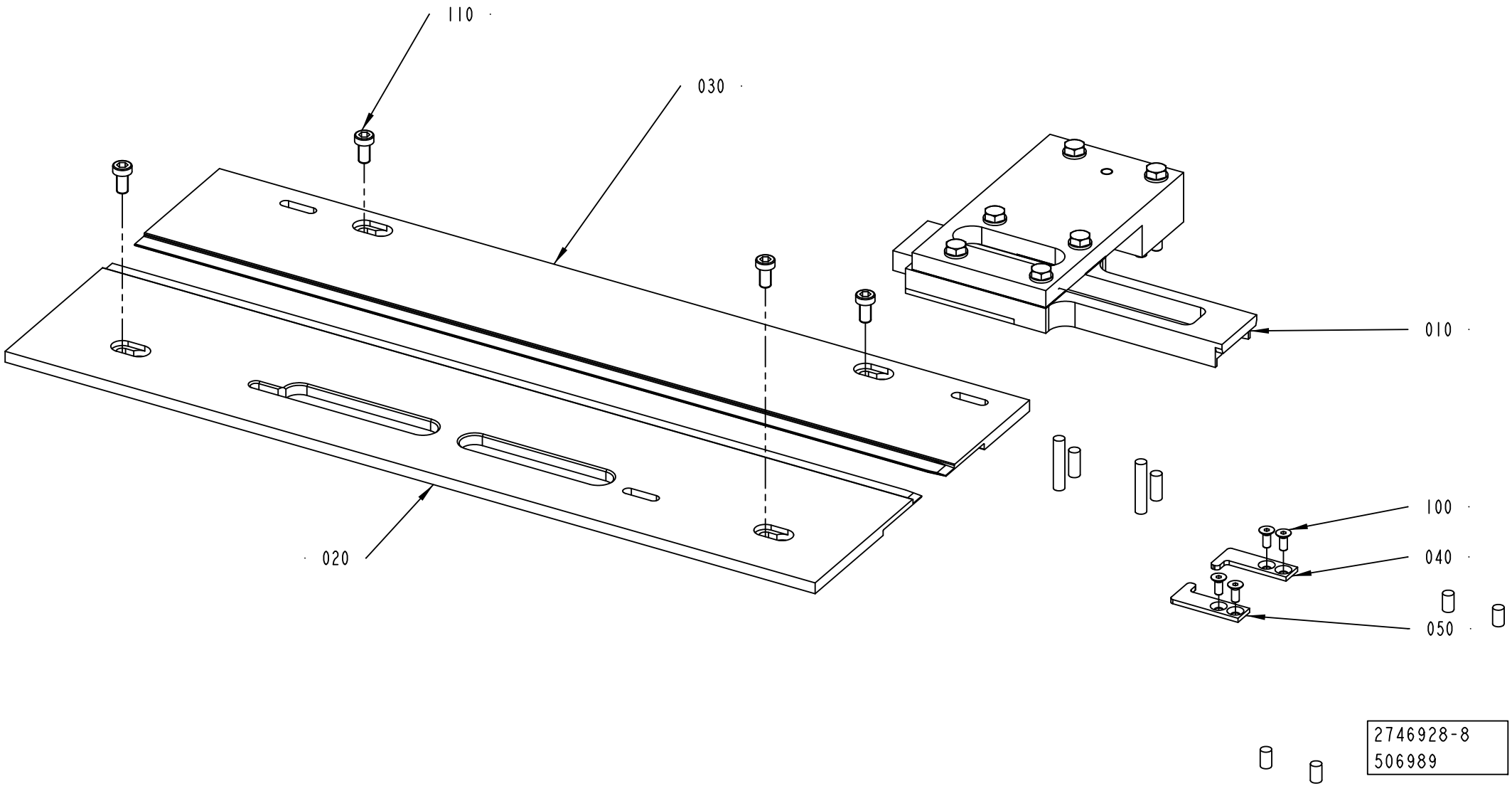
110
030
010
020
100
040
050
2746928-8
506989

Pos	Part No	UN	Qty	Description	Page No
HELICAP 27 (See drawing on page: 7-36)					
020	3137424-0000		1	GUIDE	
030	3137425-0000		1	GUIDE	
040	3077722-0000		1	CLAMPING PART	
050	3077721-0000		1	CLAMPING PART	
HELICAP2 23 (See drawing on page: 7-40)					
020	3077731-0000		1	GUIDE	
030	3077732-0000		1	GUIDE	
040	2970138-0000		1	CLAMPING PART	
050	2970139-0000		1	CLAMPING PART	
070	3141446-0000		2	GUIDE	
120	312105-0285		4	SCREW, M6S ISO 4017 M4X6 A4 70	
130	315105-0136		4	WASHER PLAIN, 4,3X9X0,8 A4 BRB	
SLIMCAP 1000 (See drawing on page: 7-38)					
020	2716139-0000		1	GUIDE	
030	2716138-0000		1	GUIDE	
040	2727447-0000		1	CLAMPING PART	
050	2727446-0000		1	CLAMPING PART	
SLIMCAP 2000 (See drawing on page: 7-38)					
020	2867644-0000		1	GUIDE	
030	2867645-0000		1	GUIDE	
040	2893414-0000		1	CLAMPING PART	
050	2893415-0000		1	CLAMPING PART	
STREAMCAP1000 (See drawing on page: 7-36)					
020	2716067-0000		1	GUIDE	
030	2716068-0000		1	GUIDE	
040	2752107-0000		1	CLAMPING PART	
050	2752108-0000		1	CLAMPING PART	
STREAMCAP200 (See drawing on page: 7-36)					
020	2893416-0000		1	GUIDE	
030	2893417-0000		1	GUIDE	
040	2893420-0000		1	CLAMPING PART	
050	2893421-0000		1	CLAMPING PART	
STREAMCAP500 (See drawing on page: 7-36)					
020	2875596-0000		1	GUIDE	
030	2875597-0000		1	GUIDE	
040	2752107-0000		1	CLAMPING PART	
050	2752108-0000		1	CLAMPING PART	
Common Parts					
010	2716069-0200		1	GUIDE RAIL	**7-43, 7-45**
100	312155-0289		4	SCREW DIN 7991 MF6S M4X10 A4 70	
110	90600-1772		4	SCREW DIN7984 M6X12 AISI 304	

Pos	Part No	UN	Qty	Description	Page No

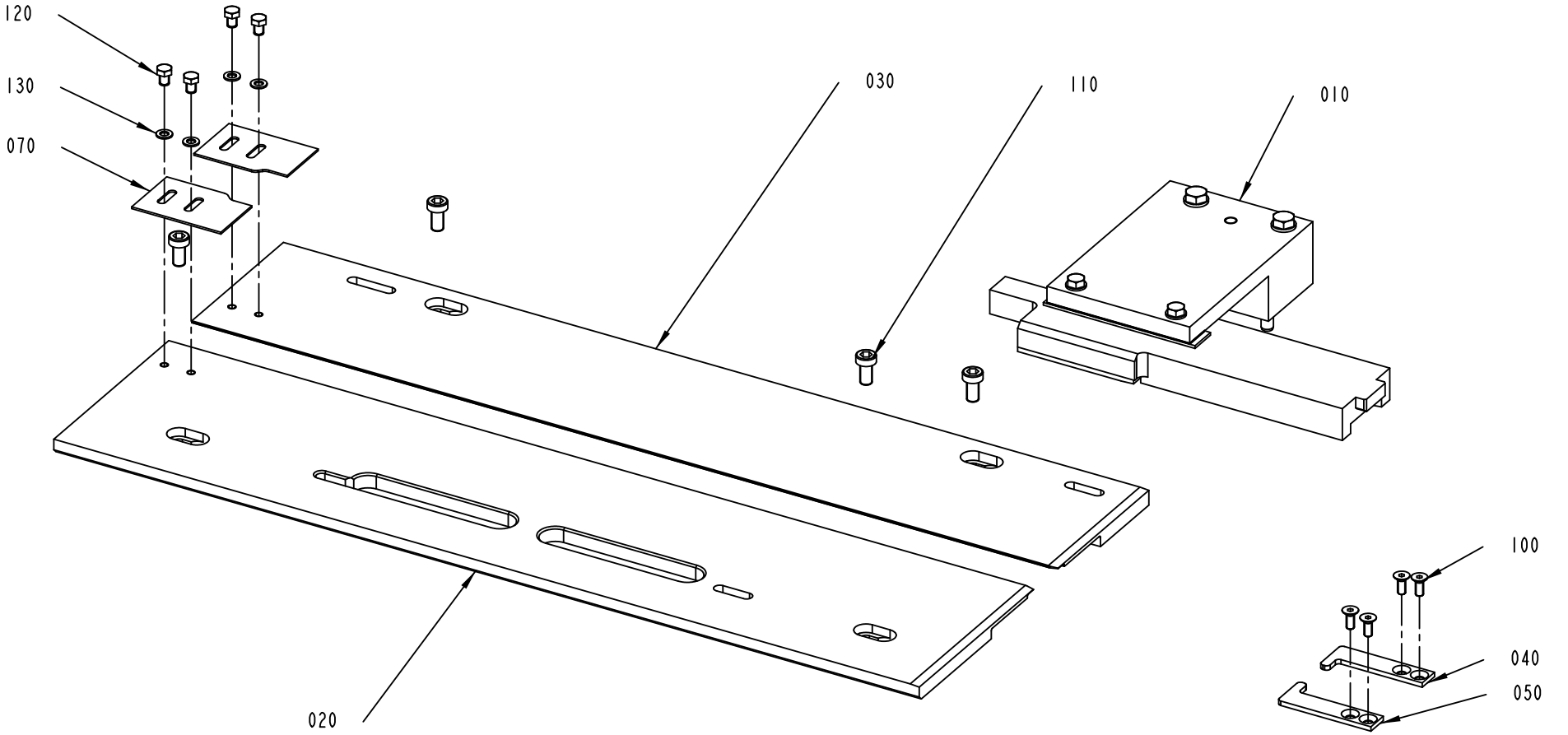
120
130
070
030
110
010
020
100
040
050
2746928-9
506989

Pos	Part No	UN	Qty	Description	Page No
HELICAP 27 (See drawing on page: 7-36)					
020	3137424-0000		1	GUIDE	
030	3137425-0000		1	GUIDE	
040	3077722-0000		1	CLAMPING PART	
050	3077721-0000		1	CLAMPING PART	
HELICAP2 23 (See drawing on page: 7-40)					
020	3077731-0000		1	GUIDE	
030	3077732-0000		1	GUIDE	
040	2970138-0000		1	CLAMPING PART	
050	2970139-0000		1	CLAMPING PART	
070	3141446-0000		2	GUIDE	
120	312105-0285		4	SCREW, M6S ISO 4017 M4X6 A4 70	
130	315105-0136		4	WASHER PLAIN, 4,3X9X0,8 A4 BRB	
SLIMCAP 1000 (See drawing on page: 7-38)					
020	2716139-0000		1	GUIDE	
030	2716138-0000		1	GUIDE	
040	2727447-0000		1	CLAMPING PART	
050	2727446-0000		1	CLAMPING PART	
SLIMCAP 2000 (See drawing on page: 7-38)					
020	2867644-0000		1	GUIDE	
030	2867645-0000		1	GUIDE	
040	2893414-0000		1	CLAMPING PART	
050	2893415-0000		1	CLAMPING PART	
STREAMCAP1000 (See drawing on page: 7-36)					
020	2716067-0000		1	GUIDE	
030	2716068-0000		1	GUIDE	
040	2752107-0000		1	CLAMPING PART	
050	2752108-0000		1	CLAMPING PART	
STREAMCAP200 (See drawing on page: 7-36)					
020	2893416-0000		1	GUIDE	
030	2893417-0000		1	GUIDE	
040	2893420-0000		1	CLAMPING PART	
050	2893421-0000		1	CLAMPING PART	
STREAMCAP500 (See drawing on page: 7-36)					
020	2875596-0000		1	GUIDE	
030	2875597-0000		1	GUIDE	
040	2752107-0000		1	CLAMPING PART	
050	2752108-0000		1	CLAMPING PART	
Common Parts					
010	2716069-0200		1	GUIDE RAIL	**7-43, 7-45**
100	312155-0289		4	SCREW DIN 7991 MF6S M4X10 A4 70	
110	90600-1772		4	SCREW DIN7984 M6X12 AISI 304	

Pos	Part No	UN	Qty	Description	Page No

Machine Type | Group Description | Used-In | Group Number | Page No

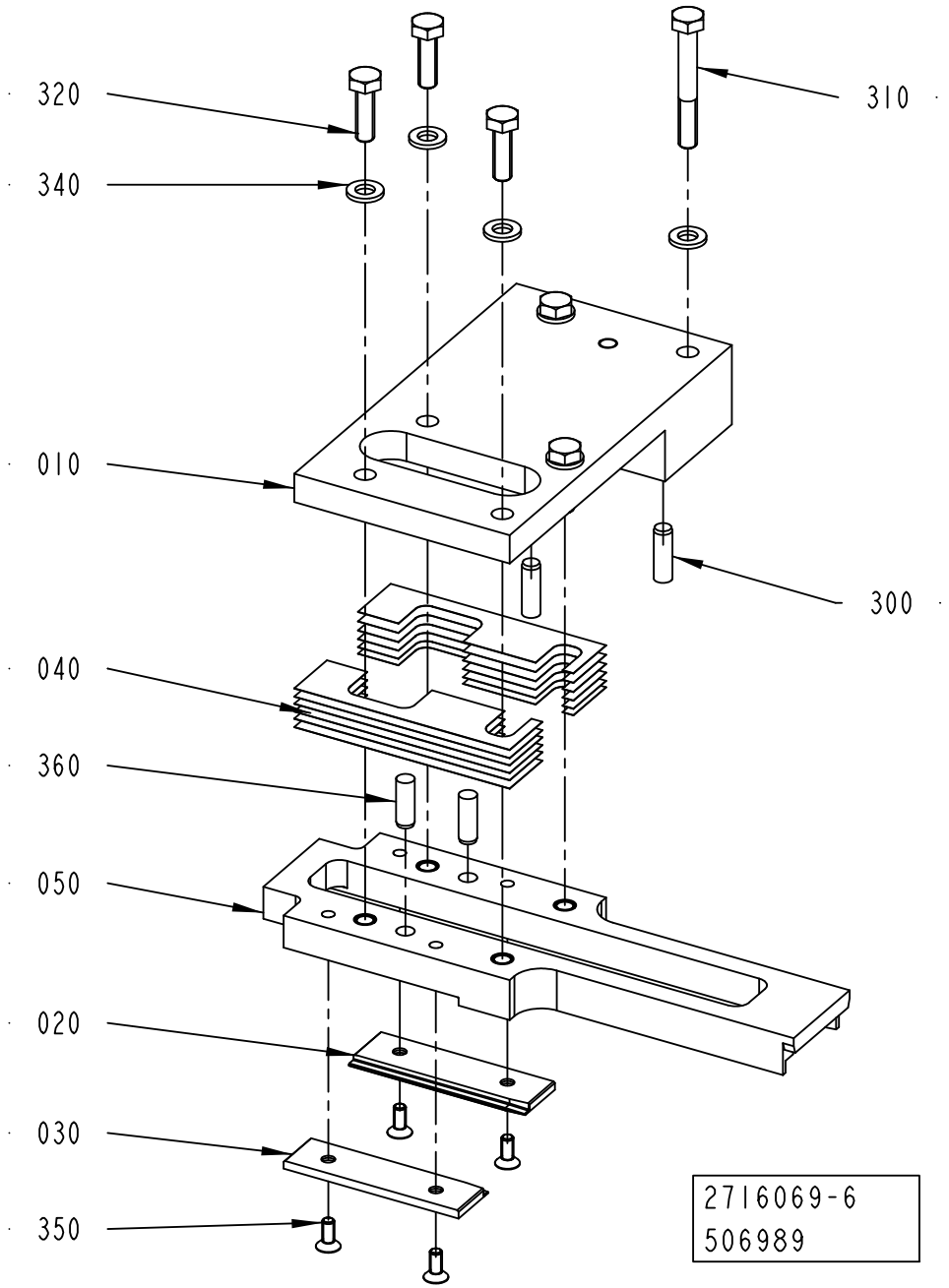
320
340
010
040
360
050
020
030
350
310
300
2716069-6
506989

Pos	Part No	UN	Qty	Description	Page No
HELICAP 27 (See drawing on page: 7-44)					
010	2751685-0000		1	BRACKET	
020	3077724-0000		1	GUIDE	
030	3077723-0000		1	GUIDE	
040	2751690-0000		6	SHIM	
050	3024869-0000		1	STEERING RAIL	
320	312105-0331		2	SCREW, M6S ISO 4017 M5X20 A4 80	
330	315105-0146		2	WASHER PLAIN, 5,3X10X1 A4 BRB	
340	315105-0153		2	WASHER PLAIN, 6,4X12X1,5 A4 BRB	
360	311103-0349		2	PARALLEL PIN ISO 2338 6M6X12 A1	
HELICAP2 23 (See drawing on page: 7-44)					
010	3077733-0000		1	BRACKET	
020	2970130-0000		1	GUIDE	
030	2970129-0000		1	GUIDE	
040	2751690-0000		6	SHIM	
050	2970131-0000		1	STEERING RAIL	
320	312105-0331		2	SCREW, M6S ISO 4017 M5X20 A4 80	
330	315105-0146		2	WASHER PLAIN, 5,3X10X1 A4 BRB	
340	315105-0153		2	WASHER PLAIN, 6,4X12X1,5 A4 BRB	
360	311103-0349		2	PARALLEL PIN ISO 2338 6M6X12 A1	
SLIMCAP 1000 (See drawing on page: 7-42)					
010	2780458-0000		1	BRACKET	
020	2727448-0000		1	GUIDE	
030	2727442-0000		1	GUIDE	
040	2780459-0000		12	SHIM	
050	2727438-0000		1	STEERING RAIL	
320	312105-0370		4	SCREW, M6S ISO 4017 M6X20 A4 80	
340	315105-0153		6	WASHER PLAIN, 6,4X12X1,5 A4 BRB	
360	311103-0352		2	PARALLEL PIN ISO 2338 6M6X18 A1	
SLIMCAP 2000 (See drawing on page: 7-42)					
010	2867648-0000		1	BRACKET	
020	2867647-0000		1	GUIDE	
030	2867649-0000		1	GUIDE	
040	2864281-0000		12	SHIM	
050	2867646-0000		1	STEERING RAIL	
320	312105-0370		4	SCREW, M6S ISO 4017 M6X20 A4 80	
340	315105-0153		6	WASHER PLAIN, 6,4X12X1,5 A4 BRB	
360	311103-0352		2	PARALLEL PIN ISO 2338 6M6X18 A1	
STREAMCAP1000 (See drawing on page: 7-44)					
010	2751685-0000		1	BRACKET	
020	2752105-0000		1	GUIDE	
030	2752106-0000		1	GUIDE	
040	2751690-0000		6	SHIM	
050	2797440-0000		1	STEERING RAIL	
320	312105-0331		2	SCREW, M6S ISO 4017 M5X20 A4 80	
330	315105-0146		2	WASHER PLAIN, 5,3X10X1 A4 BRB	
340	315105-0153		2	WASHER PLAIN, 6,4X12X1,5 A4 BRB	
360	311103-0349		2	PARALLEL PIN ISO 2338 6M6X12 A1	
STREAMCAP200 (See drawing on page: 7-44)					
010	2893418-0000		1	BRACKET	
020	2893423-0000		1	GUIDE	
030	2893422-0000		1	GUIDE	
040	2751690-0000		6	SHIM	
050	2893419-0000		1	STEERING RAIL	
320	312105-0331		2	SCREW, M6S ISO 4017 M5X20 A4 80	
330	315105-0146		2	WASHER PLAIN, 5,3X10X1 A4 BRB	
340	315105-0153		2	WASHER PLAIN, 6,4X12X1,5 A4 BRB	
360	311103-0349		2	PARALLEL PIN ISO 2338 6M6X12 A1	
STREAMCAP500 (See drawing on page: 7-44)					
010	2751685-0000		1	BRACKET	
020	2875598-0000		1	GUIDE	
030	2875599-0000		1	GUIDE	
040	2751690-0000		6	SHIM	
050	2875600-0000		1	STEERING RAIL	
320	312105-0331		2	SCREW, M6S ISO 4017 M5X20 A4 80	
330	315105-0146		2	WASHER PLAIN, 5,3X10X1 A4 BRB	
340	315105-0153		2	WASHER PLAIN, 6,4X12X1,5 A4 BRB	
360	311103-0349		2	PARALLEL PIN ISO 2338 6M6X12 A1	
Common Parts					
300	311103-0353		2	PARALLEL PIN ISO 2338 6M6X20 A1	
310	312105-0379		2	SCREW, M6S ISO 4014 M6X45 A4 80	
350	312155-0289		4	SCREW DIN 7991 MF6S M4X10 A4 70	

Machine Type | Group Description | Used-In | Group Number | Page No

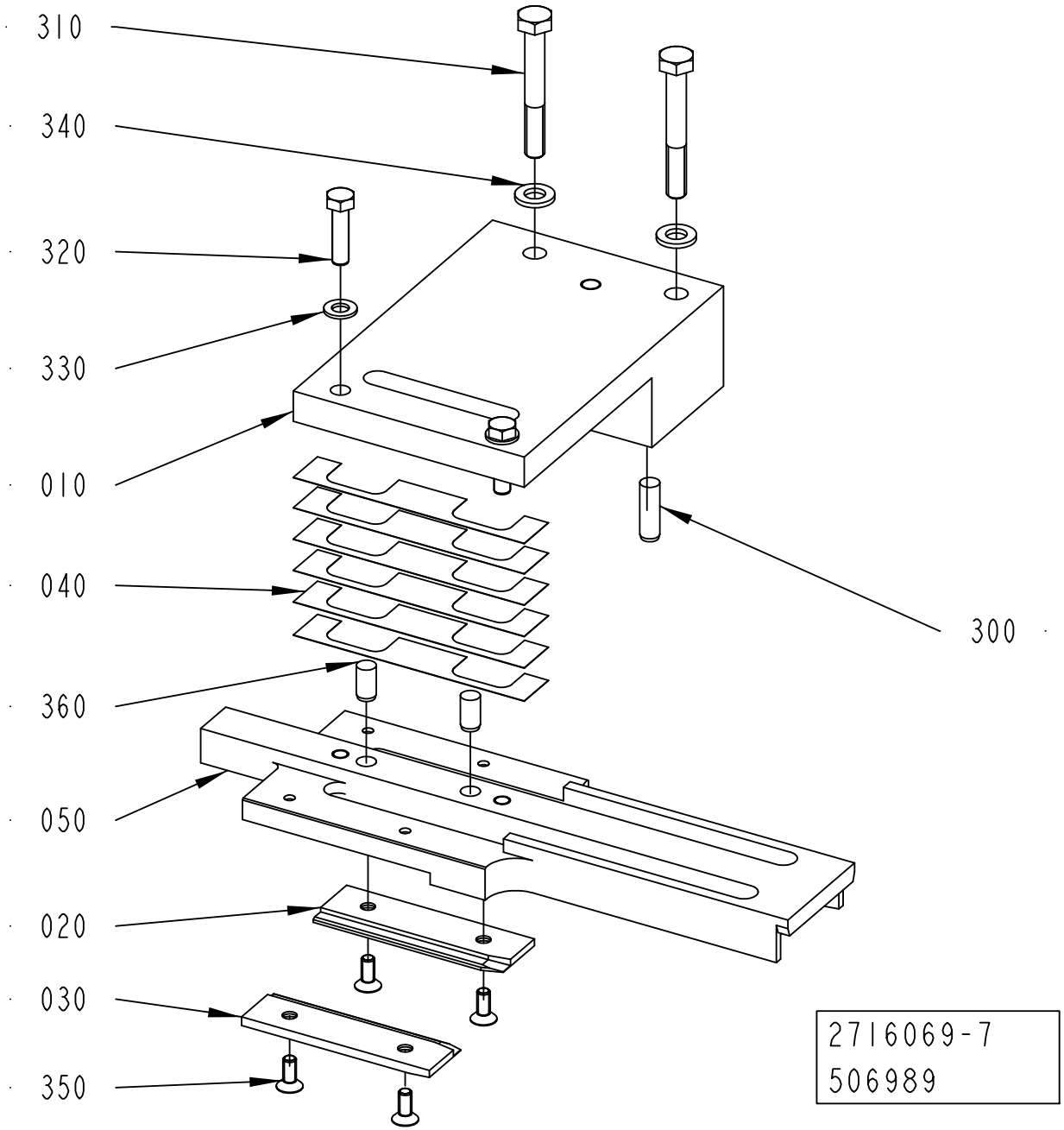
310
340
320
330
010
040
360
050
020
030
350
300
2716069-7
506989

Pos	Part No	UN	Qty	Description	Page No
HELICAP 27 (See drawing on page: 7-44)					
010	2751685-0000		1	BRACKET	
020	3077724-0000		1	GUIDE	
030	3077723-0000		1	GUIDE	
040	2751690-0000		6	SHIM	
050	3024869-0000		1	STEERING RAIL	
320	312105-0331		2	SCREW, M6S ISO 4017 M5X20 A4 80	
330	315105-0146		2	WASHER PLAIN, 5,3X10X1 A4 BRB	
340	315105-0153		2	WASHER PLAIN, 6,4X12X1,5 A4 BRB	
360	311103-0349		2	PARALLEL PIN ISO 2338 6M6X12 A1	
HELICAP2 23 (See drawing on page: 7-44)					
010	3077733-0000		1	BRACKET	
020	2970130-0000		1	GUIDE	
030	2970129-0000		1	GUIDE	
040	2751690-0000		6	SHIM	
050	2970131-0000		1	STEERING RAIL	
320	312105-0331		2	SCREW, M6S ISO 4017 M5X20 A4 80	
330	315105-0146		2	WASHER PLAIN, 5,3X10X1 A4 BRB	
340	315105-0153		2	WASHER PLAIN, 6,4X12X1,5 A4 BRB	
360	311103-0349		2	PARALLEL PIN ISO 2338 6M6X12 A1	
SLIMCAP 1000 (See drawing on page: 7-42)					
010	2780458-0000		1	BRACKET	
020	2727448-0000		1	GUIDE	
030	2727442-0000		1	GUIDE	
040	2780459-0000		12	SHIM	
050	2727438-0000		1	STEERING RAIL	
320	312105-0370		4	SCREW, M6S ISO 4017 M6X20 A4 80	
340	315105-0153		6	WASHER PLAIN, 6,4X12X1,5 A4 BRB	
360	311103-0352		2	PARALLEL PIN ISO 2338 6M6X18 A1	
SLIMCAP 2000 (See drawing on page: 7-42)					
010	2867648-0000		1	BRACKET	
020	2867647-0000		1	GUIDE	
030	2867649-0000		1	GUIDE	
040	2864281-0000		12	SHIM	
050	2867646-0000		1	STEERING RAIL	
320	312105-0370		4	SCREW, M6S ISO 4017 M6X20 A4 80	
340	315105-0153		6	WASHER PLAIN, 6,4X12X1,5 A4 BRB	
360	311103-0352		2	PARALLEL PIN ISO 2338 6M6X18 A1	
STREAMCAP1000 (See drawing on page: 7-44)					
010	2751685-0000		1	BRACKET	
020	2752105-0000		1	GUIDE	
030	2752106-0000		1	GUIDE	
040	2751690-0000		6	SHIM	
050	2797440-0000		1	STEERING RAIL	
320	312105-0331		2	SCREW, M6S ISO 4017 M5X20 A4 80	
330	315105-0146		2	WASHER PLAIN, 5,3X10X1 A4 BRB	
340	315105-0153		2	WASHER PLAIN, 6,4X12X1,5 A4 BRB	
360	311103-0349		2	PARALLEL PIN ISO 2338 6M6X12 A1	
STREAMCAP200 (See drawing on page: 7-44)					
010	2893418-0000		1	BRACKET	
020	2893423-0000		1	GUIDE	
030	2893422-0000		1	GUIDE	
040	2751690-0000		6	SHIM	
050	2893419-0000		1	STEERING RAIL	
320	312105-0331		2	SCREW, M6S ISO 4017 M5X20 A4 80	
330	315105-0146		2	WASHER PLAIN, 5,3X10X1 A4 BRB	
340	315105-0153		2	WASHER PLAIN, 6,4X12X1,5 A4 BRB	
360	311103-0349		2	PARALLEL PIN ISO 2338 6M6X12 A1	
STREAMCAP500 (See drawing on page: 7-44)					
010	2751685-0000		1	BRACKET	
020	2875598-0000		1	GUIDE	
030	2875599-0000		1	GUIDE	
040	2751690-0000		6	SHIM	
050	2875600-0000		1	STEERING RAIL	
320	312105-0331		2	SCREW, M6S ISO 4017 M5X20 A4 80	
330	315105-0146		2	WASHER PLAIN, 5,3X10X1 A4 BRB	
340	315105-0153		2	WASHER PLAIN, 6,4X12X1,5 A4 BRB	
360	311103-0349		2	PARALLEL PIN ISO 2338 6M6X12 A1	
Common Parts					
300	311103-0353		2	PARALLEL PIN ISO 2338 6M6X20 A1	
310	312105-0379		2	SCREW, M6S ISO 4014 M6X45 A4 80	
350	312155-0289		4	SCREW DIN 7991 MF6S M4X10 A4 70	

Tetra Pak

SPC
Spare Parts Catalogue

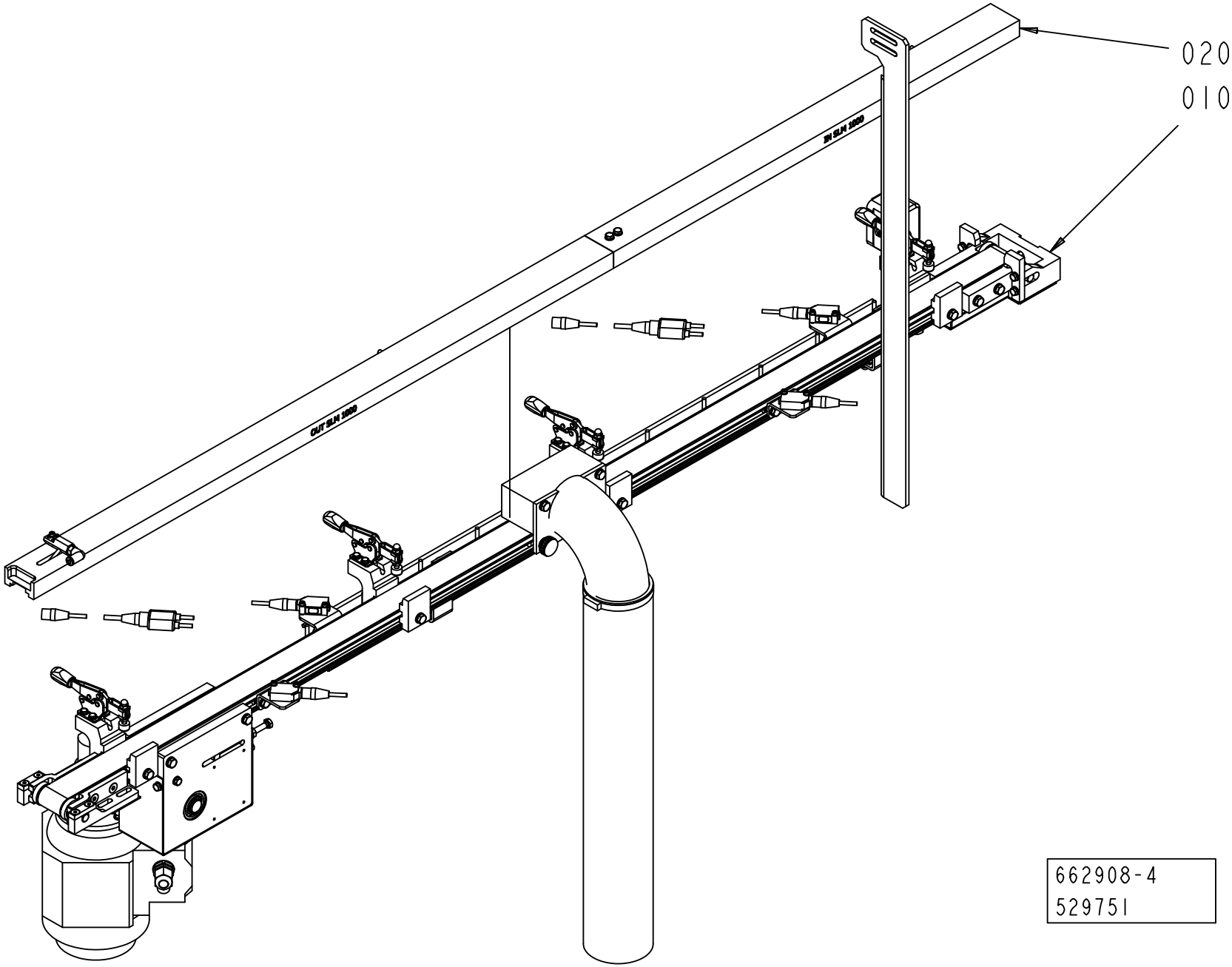
020
010
662908-4
529751

ECM: 529761 - 20120401
Group number: 662908-0300
Assembly Drawing: 662908-4_1_AA

Pos	Part No	UN	Qty	Description	Page No
HELICAP 27					
010	2846413-0300		1	CONVEYOR BELT	**8-5, 8-7**
020	3102969-0100		1	GUIDE RAIL	**8-11**
HELICAP2 23					
010	2846413-0300		1	CONVEYOR BELT	**8-5, 8-7**
020	3147222-0100		1	GUIDE RAIL	**8-13**
SLIMCAP 1000					
010	2846413-0300		1	CONVEYOR BELT	**8-5, 8-7**
020	3147216-0100		1	GUIDE RAIL	**8-15**
SLIMCAP 2000					
010	2846413-0300		1	CONVEYOR BELT	**8-5, 8-7**
020	3147217-0100		1	GUIDE RAIL	**8-17**
STREAMCAP1000					
010	2846413-0300		1	CONVEYOR BELT	**8-5, 8-7**
020	3147221-0100		1	GUIDE RAIL	**8-19**
STREAMCAP200					
010	3034439-0200		1	CONVEYOR BELT	**8-21, 8-23**
020	3147218-0100		1	GUIDE RAIL	**8-25**
STREAMCAP500					
010	2846413-0300		1	CONVEYOR BELT	**8-5, 8-7**
020	3147220-0100		1	GUIDE RAIL	**8-27**

Pos	Part No	UN	Qty	Description	Page No

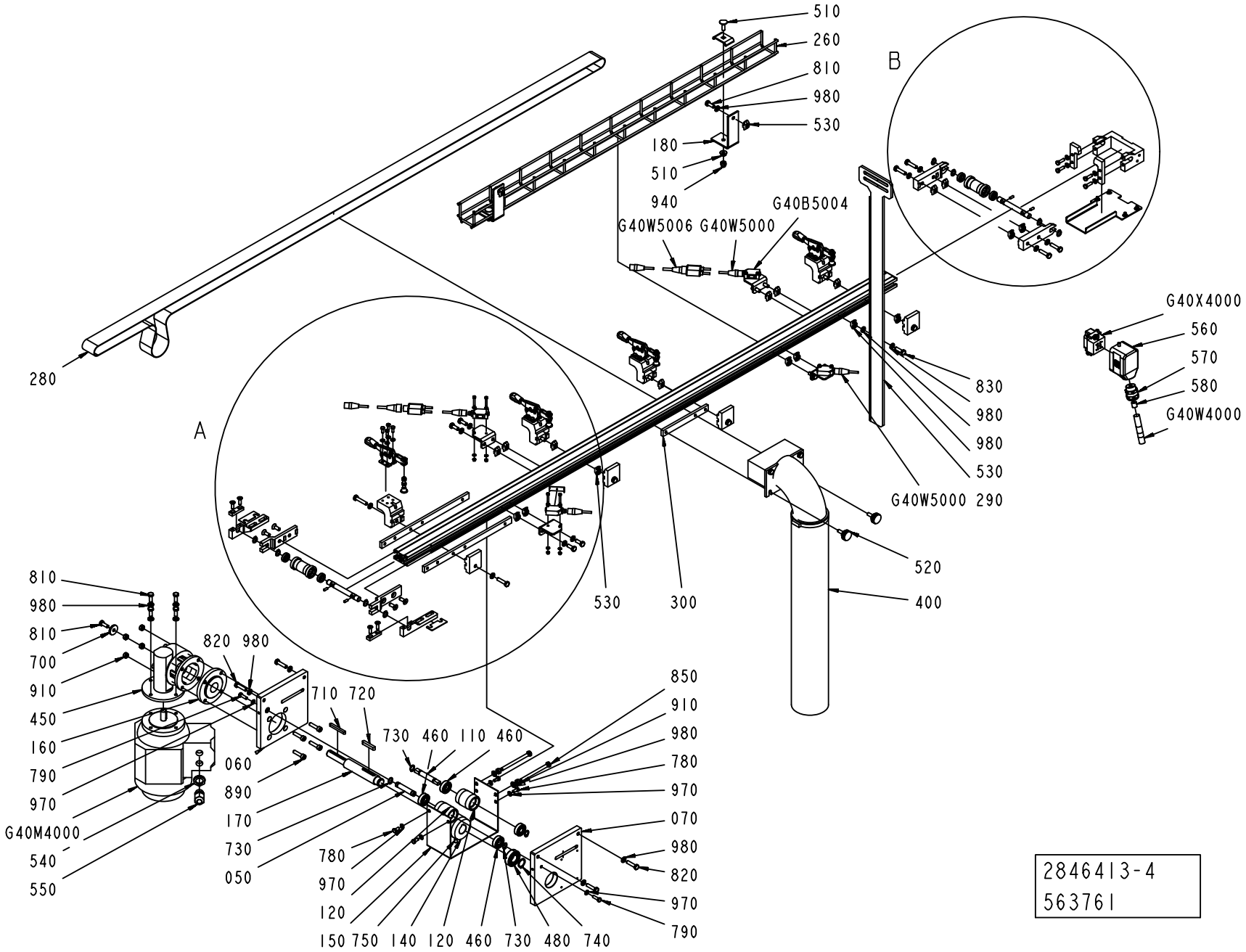
510
260
810
980
530
180
510
940
G40B5004
G40W5006 G40W5000
B
G40X4000
560
570
580
G40W4000
280
A
830
980
980
530
G40W5000 290
520
400
530
300
810
980
810
700
910
450
160
790
970
G40M4000
540
550
820 980
710 720
730 460 110 460
060
890
170
730
050
780
970
120
150 750 140 120 460 730 480 740
850
910
980
780
970
070
980
820
970
790
2846413-4
563761

ECM: 563761 - 20120702
Group number: 2846413-0300
Assembly Drawing: 2846413-4_1_AC

This list covers pages from 8-4 to 8-7

Pos	Part No	UN	Qty	Description	Page No
-					
010	3108404-0000		2	SHAFT	
020	3108405-0000		2	ROLLER	
030	3108406-0000		4	BRACKET	
040	3108407-0000		2	BRACKET	
050	3108408-0000		1	SHAFT	
060	3108409-0000		1	PLATE	
070	3108410-0000		1	PLATE	
080	3108411-0000		1	PLATE	
090	3108412-0000		1	PLATE	
100	2885916-0000		2	PLATE	
110	3108414-0000		1	SHAFT	
120	3108415-0000		2	IDLER ROLLER	
130	3108416-0000		2	BRACKET	
140	3108417-0000		1	ROLLER	
150	3108418-0000		1	COVER	
160	3108419-0000		1	FLANGE	
170	3108420-0000		1	SHAFT	
180	3108421-0000		2	BRACKET	
190	3108422-0000		2	PLATE	
200	3108423-0000		2	BRACKET	
210	3108424-0000		1	BRACKET	
220	3108425-0000		4	ANCHOR	
230	3108426-0000		4	ANCHOR	
240	3108427-0000		2	PLATE	
250	3108428-0000		1	COVER	
260	3108429-0000		1	CABLE CONDUIT	
270	3108430-0000		1	PROFILE	
280	2852917-0000		1	BELT	
290	3108431-0000		1	BRACKET	
300	3108432-0000		1	BRACKET	
400	3108433-0100		1	DISCHARGE DEVICE	**8-9**
450	90603-2978		1	WORM GEAR W20035003800003	
460	344224-0200		4	BALL BEARING 10/26X8	
470	90603-2322		4	BALL BEARING 10/19X5	
480	344224-0203		1	BALL BEARING 17/35X10	
490	3108434-0000		4	LOCKING LEVER	
500	3115261-0000		4	STOP SCREW	
510	3108436-0000		2	CLAMP	
520	3108437-0000		2	HANDLE	
530	90013-0035		20	NUT GROOVE, HAMMER-HEAD M6 FE	
540	90458-0322		1	NUT, M16X1,5	
550	90458-0306		1	CABLE GLAND, M16X1,5, 5311 1010	
560	90459-1458		1	HOOD, SIDE ENTRY, HAN6E, 19 30 006 1540	
570	90458-0406		1	CABLE GLAND, VK 22052Y	
580	353249-0004		1	INSERT, SINGLE HOLE, E152 13	
590	90600-2375		1	LENS, E39-S65C	
700	315125-0153		1	WASHER HIGH, TBRSB 6,4X22X4 A4	
710	315701-0209		1	PARALLEL KEY W. ROUND ENDS, 5X5X45 MM	
720	315701-0238		1	PARALLEL KEY W. ROUND ENDS, 6X6X36 MM	
730	90141-0016		12	RETAINING RING FOR SHAFT DIN 471 10 SS	
740	90141-0017		1	RETAINING RING FOR SHAFT DIN 471 17 SS	
750	90459-5152		1	SCREW HEX.SOCK.SET CONEPT. MS6SS M6X10 A	
760	312318-0289		4	SET SCREW, CUP END ISO4029 M4X10 A4	
770	312105-0289		16	SCREW, M6S ISO 4017 M4X10 A4 70	
780	312105-0325		4	SCREW, M6S ISO 4017 M5X10 A4 80	
790	312105-0329		6	SCREW, M6S ISO 4017 M5X16 A4 80	
810	312105-0368		15	SCREW, M6S ISO 4017 M6X16 A4 80	
820	312105-0372		12	SCREW, M6S ISO 4017 M6X25 A4 80	
830	312105-0370		1	SCREW, M6S ISO 4017 M6X20 A4 80	
840	312109-0374		4	SCREW, M6S ISO 4017 M6X30 A4 80	
850	312109-0386		2	SCREW, M6S ISO 4017 M6X80 A4 80	
860	312155-0329		4	SCREW DIN 7991 MF6S M5X16 A4 70	
870	312155-0368		4	SCREW DIN 7991 MF6S M6X16 A4 70	
880	312115-0230		8	SCREW ISO4762 M3X20 A4 80	
890	312115-0372		4	SCREW ISO4762 M6X25 A4 80	
910	312605-0316		6	HEXAGON NUT, M6M M6 A280	
920	312810-0310		8	HEXAGON NUT, NY-LOCK M3 FZB	
930	312705-0314		4	NUT HEX. DOMED CAP MHM-6 M5 A280	
940	312705-0316		2	HEX. DOMED CAP MHM-6 M6 A280	
950	315103-0124		16	WASHER PLAIN, 3,2X/6X0,5 BR NI PL	
960	315103-0136		16	WASHER PLAIN, 4,3X8X0,8 BR NI PL	
970	315103-0146		10	WASHER PLAIN, 5,3X10X1 BR NI PL	
980	315103-0153		34	WASHER PLAIN, 6,4X12X1,5 BR NI PL	
G40B5000	90459-5529		1	PHOTOCELL E3Z-T86A, SENDER+RECIEVER	
G40B5004	90459-5529		1	PHOTOCELL E3Z-T86A, SENDER+RECIEVER	
G40M4000	90603-2676		1	MOTOR 3GAA052002-CSA	
G40W4000	315743-0009	M	2.5	ÖLFLEX CONTROL TM 4G1,5, 281604	
G40W5000	90603-3979		2	SENSOR Y-CABLE, EVT339	
G40W5002	344261-0020		1	SENSOR CABLE, EVT263	
G40W5006	344261-0010		1	SENSOR CABLE, EVT262	
G40X4000	90110-0052		1	MALE INSERT, HAN E06, 0933 0062 601	

Machine Type | Group Description | Used-In | Group Number | Page No

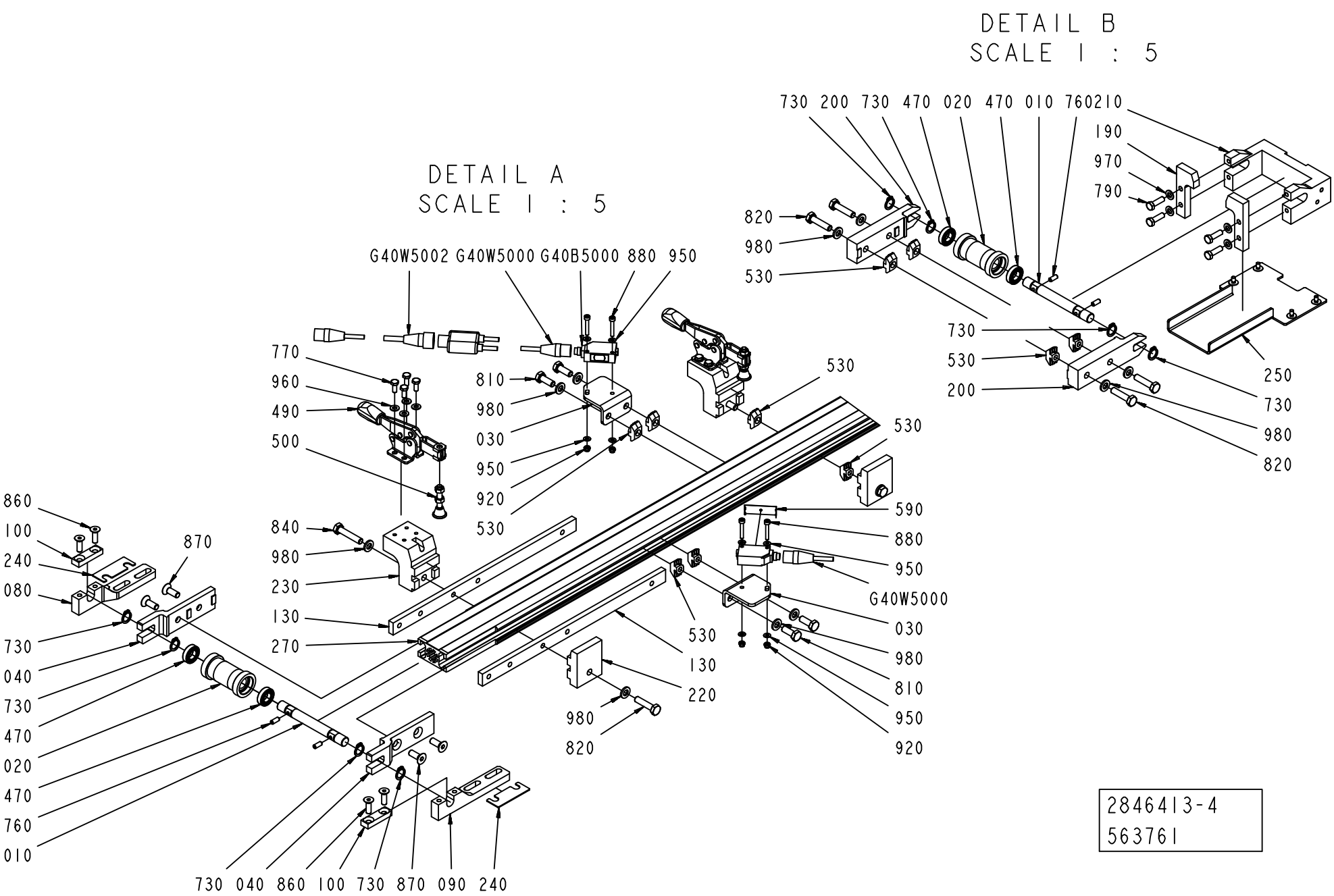
DETAIL B
SCALE 1 : 5
730 200 730 470 020 470 010 760210
190
970
790
820
980
530
730
530
200
250
730
980
820
DETAIL A
SCALE 1 : 5
G40W5002 G40W5000 G40B5000 880 950
770
960
490
500
810
980
030
950
920
530
530
530
590
880
950
G40W5000
030
980
810
950
920
530
130
220
980
820
860
100
240
080
870
730
040
730
470
020
470
760
010
840
980
230
130
270
730 040 860 100 730 870 090 240
2846413-4
563761

ECM: 563761 - 20120702
Group number: 2846413-0300
Assembly Drawing: 2846413-4_2_AC

This list covers pages from 8-4 to 8-7

Pos	Part No	UN	Qty	Description	Page No
-					
010	3108404-0000		2	SHAFT	
020	3108405-0000		2	ROLLER	
030	3108406-0000		4	BRACKET	
040	3108407-0000		2	BRACKET	
050	3108408-0000		1	SHAFT	
060	3108409-0000		1	PLATE	
070	3108410-0000		1	PLATE	
080	3108411-0000		1	PLATE	
090	3108412-0000		1	PLATE	
100	2885916-0000		2	PLATE	
110	3108414-0000		1	SHAFT	
120	3108415-0000		2	IDLER ROLLER	
130	3108416-0000		2	BRACKET	
140	3108417-0000		1	ROLLER	
150	3108418-0000		1	COVER	
160	3108419-0000		1	FLANGE	
170	3108420-0000		1	SHAFT	
180	3108421-0000		2	BRACKET	
190	3108422-0000		2	PLATE	
200	3108423-0000		2	BRACKET	
210	3108424-0000		1	BRACKET	
220	3108425-0000		4	ANCHOR	
230	3108426-0000		4	ANCHOR	
240	3108427-0000		2	PLATE	
250	3108428-0000		1	COVER	
260	3108429-0000		1	CABLE CONDUIT	
270	3108430-0000		1	PROFILE	
280	2852917-0000		1	BELT	
290	3108431-0000		1	BRACKET	
300	3108432-0000		1	BRACKET	
400	3108433-0100		1	DISCHARGE DEVICE	**8-9**
450	90603-2978		1	WORM GEAR W20035003800003	
460	344224-0200		4	BALL BEARING 10/26X8	
470	90603-2322		4	BALL BEARING 10/19X5	
480	344224-0203		1	BALL BEARING 17/35X10	
490	3108434-0000		4	LOCKING LEVER	
500	3115261-0000		4	STOP SCREW	
510	3108436-0000		2	CLAMP	
520	3108437-0000		2	HANDLE	
530	90013-0035		20	NUT GROOVE, HAMMER-HEAD M6 FE	
540	90458-0322		1	NUT, M16X1,5	
550	90458-0306		1	CABLE GLAND, M16X1,5, 5311 1010	
560	90459-1458		1	HOOD, SIDE ENTRY, HAN6E, 19 30 006 1540	
570	90458-0406		1	CABLE GLAND, VK 22052Y	
580	353249-0004		1	INSERT, SINGLE HOLE, E152 13	
590	90600-2375		1	LENS, E39-S65C	
700	315125-0153		1	WASHER HIGH, TBRSB 6,4X22X4 A4	
710	315701-0209		1	PARALLEL KEY W. ROUND ENDS, 5X5X45 MM	
720	315701-0238		1	PARALLEL KEY W. ROUND ENDS, 6X6X36 MM	
730	90141-0016		12	RETAINING RING FOR SHAFT DIN 471 10 SS	
740	90141-0017		1	RETAINING RING FOR SHAFT DIN 471 17 SS	
750	90459-5152		1	SCREW HEX.SOCK.SET CONEPT. MS6SS M6X10 A	
760	312318-0289		4	SET SCREW, CUP END ISO4029 M4X10 A4	
770	312105-0289		16	SCREW, M6S ISO 4017 M4X10 A4 70	
780	312105-0325		4	SCREW, M6S ISO 4017 M5X10 A4 80	
790	312105-0329		6	SCREW, M6S ISO 4017 M5X16 A4 80	
810	312105-0368		15	SCREW, M6S ISO 4017 M6X16 A4 80	
820	312105-0372		12	SCREW, M6S ISO 4017 M6X25 A4 80	
830	312105-0370		1	SCREW, M6S ISO 4017 M6X20 A4 80	
840	312109-0374		4	SCREW, M6S ISO 4017 M6X30 A4 80	
850	312109-0386		2	SCREW, M6S ISO 4017 M6X80 A4 80	
860	312155-0329		4	SCREW DIN 7991 MF6S M5X16 A4 70	
870	312155-0368		4	SCREW DIN 7991 MF6S M6X16 A4 70	
880	312115-0230		8	SCREW ISO4762 M3X20 A4 80	
890	312115-0372		4	SCREW ISO4762 M6X25 A4 80	
910	312605-0316		6	HEXAGON NUT, M6M M6 A280	
920	312810-0310		8	HEXAGON NUT, NY-LOCK M3 FZB	
930	312705-0314		4	NUT HEX. DOMED CAP MHM-6 M5 A280	
940	312705-0316		2	HEX. DOMED CAP MHM-6 M6 A280	
950	315103-0124		16	WASHER PLAIN, 3,2X/6X0,5 BR NI PL	
960	315103-0136		16	WASHER PLAIN, 4,3X8X0,8 BR NI PL	
970	315103-0146		10	WASHER PLAIN, 5,3X10X1 BR NI PL	
980	315103-0153		34	WASHER PLAIN, 6,4X12X1,5 BR NI PL	
G40B5000	90459-5529		1	PHOTOCELL E3Z-T86A, SENDER+RECIEVER	
G40B5004	90459-5529		1	PHOTOCELL E3Z-T86A, SENDER+RECIEVER	
G40M4000	90603-2676		1	MOTOR 3GAA052002-CSA	
G40W4000	315743-0009	M	2.5	ÖLFLEX CONTROL TM 4G1,5, 281604	
G40W5000	90603-3979		2	SENSOR Y-CABLE, EVT339	
G40W5002	344261-0020		1	SENSOR CABLE, EVT263	
G40W5006	344261-0010		1	SENSOR CABLE, EVT262	
G40X4000	90110-0052		1	MALE INSERT, HAN E06, 0933 0062 601	

Machine Type	Group Description	Used-In	Group Number	Page No

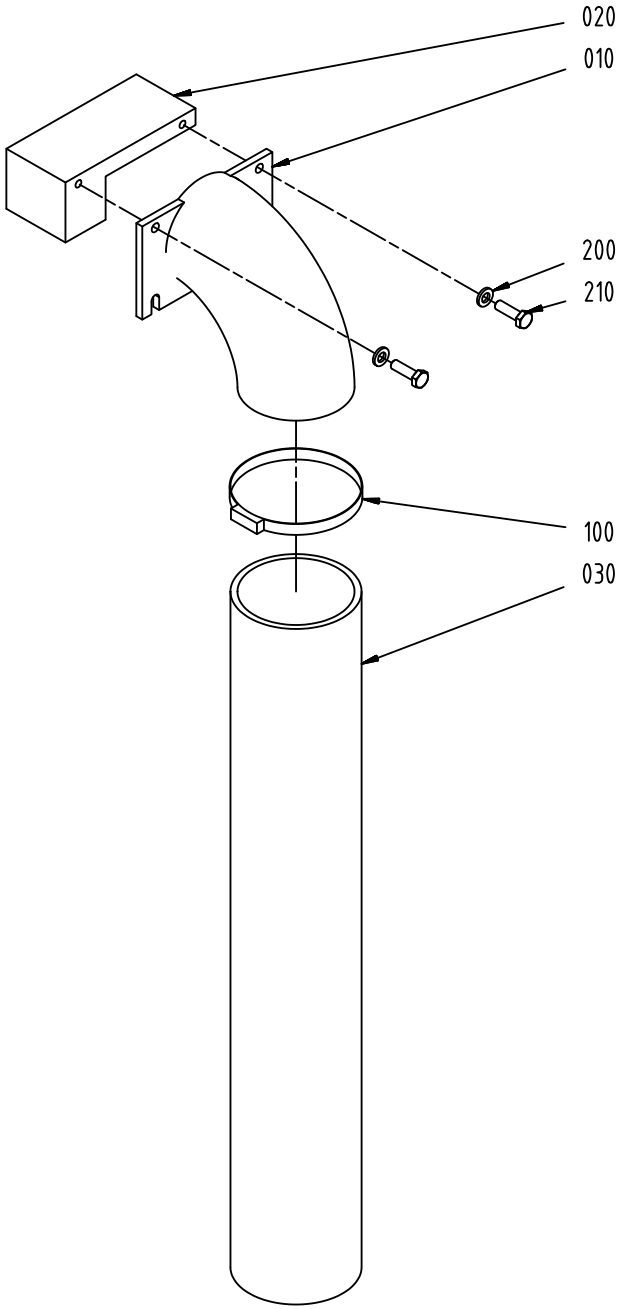
020
010
200
210
100
030

ECM: 482216 - 20110401
Group number: 3108433-0100
Assembly Drawing: 3108433-1_1_AA

Pos	Part No	UN	Qty	Description	Page No
-					
010	3108438-0000		1	CURVE	
020	3108439-0000		1	SUPPORT	
030	3108440-0000		1	TUBE	
100	3108441-0000		1	TIE	
200	315103-0153		2	WASHER PLAIN, 6,4X12X1,5 BR NI PL	
210	312105-0370		2	SCREW, M6S ISO 4017 M6X20 A4 80	

Pos	Part No	UN	Qty	Description	Page No

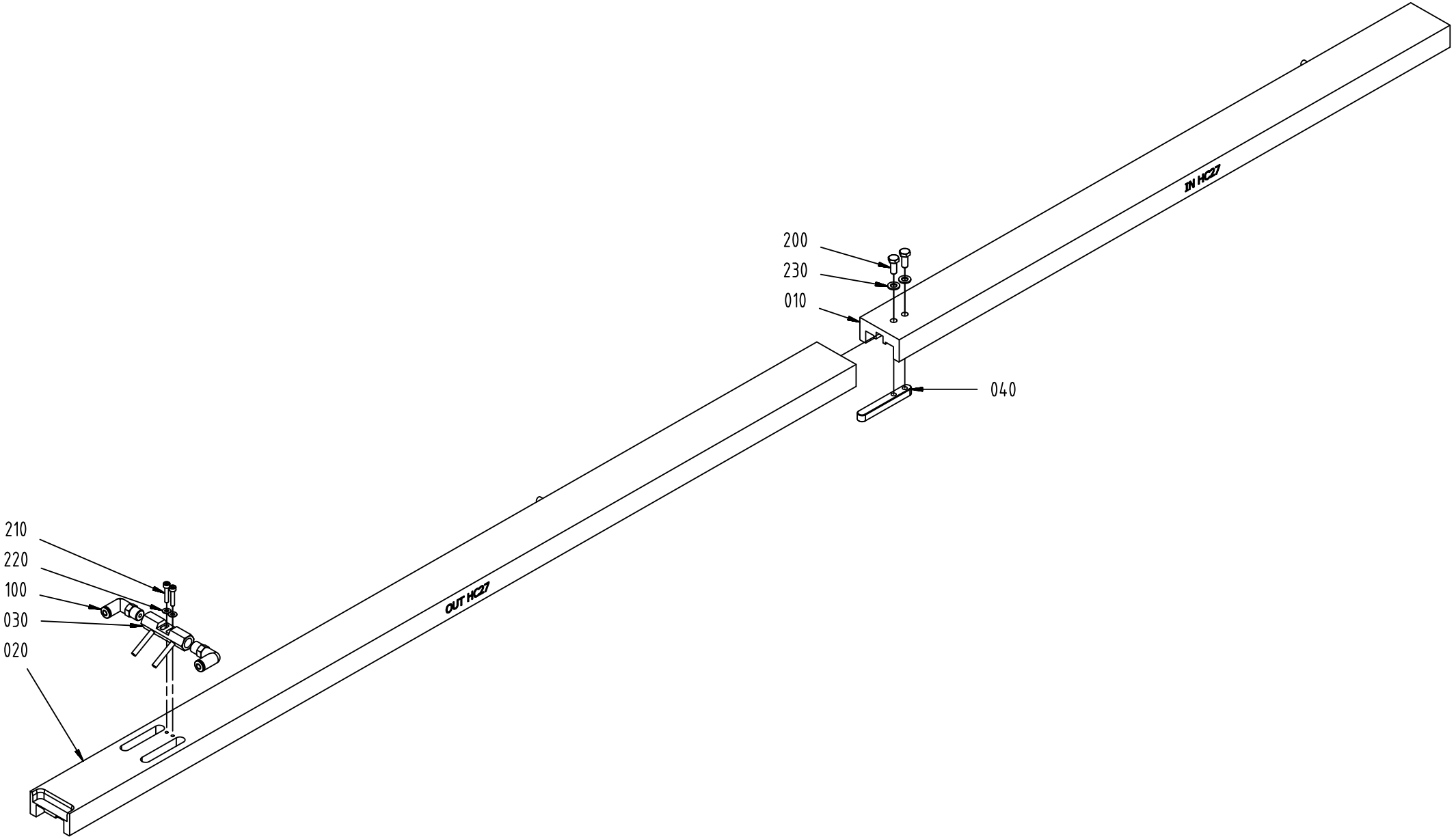
200
230
010
040
IN HC27
210
220
100
030
020
OUT HC27

ECM: 493490 - 20110701
Group number: 3102969-0100
Assembly Drawing: 3102969-1_1_AA

Pos	Part No	UN	Qty	Description	Page No
-					
010	3124468-0000		1	COVER	
020	3124469-0000		1	COVER	
030	3124470-0000		1	AIR NOZZLE	
040	3124377-0000		1	FLAP	
100	3124379-0000		2	FITTING	
200	312105-0327		2	SCREW, M6S ISO 4017 M5X12 A4 80	
210	312115-0228		2	SCREW ISO4762 M3X16 A4 80	
220	315103-0124		2	WASHER PLAIN, 3,2X/6X0,5 BR NI PL	
230	315103-0146		2	WASHER PLAIN, 5,3X10X1 BR NI PL	

Pos	Part No	UN	Qty	Description	Page No

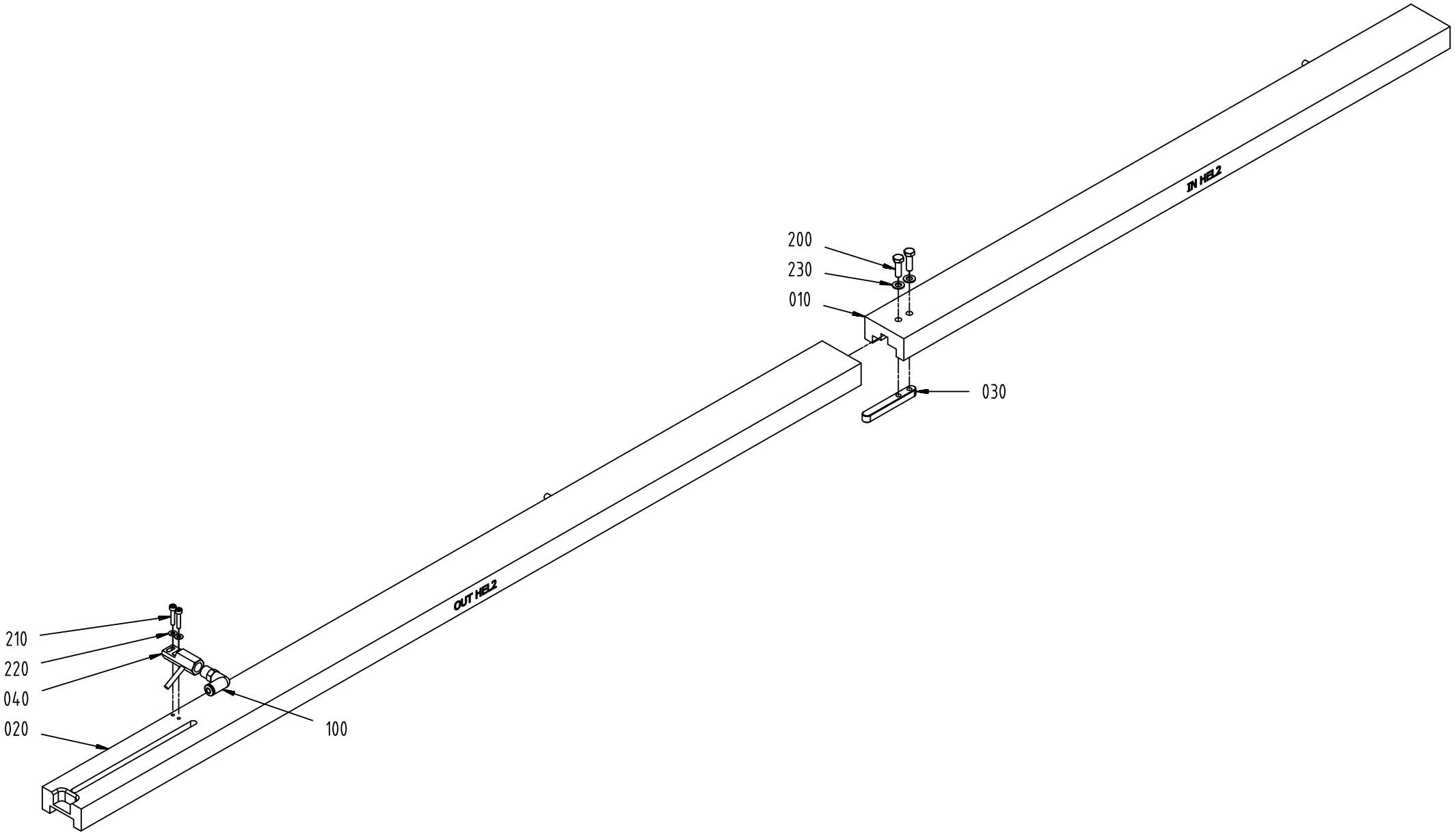
200
230
010
030
IN HEL2
210
220
040
020
100
OUT HEL2

ECM: 482329 - 20110401
Group number: 3147222-0100
Assembly Drawing: 3147222-1_1_AA

Pos	Part No	UN	Qty	Description	Page No
-					
010	3124375-0000		1	COVER	
020	3124376-0000		1	COVER	
030	3124377-0000		1	FLAP	
040	3124378-0000		1	AIR NOZZLE	
100	3124379-0000		1	FITTING	
200	312105-0329		2	SCREW, M6S ISO 4017 M5X16 A4 80	
210	312115-0228		2	SCREW ISO4762 M3X16 A4 80	
220	315103-0124		2	WASHER PLAIN, 3,2X/6X0,5 BR NI PL	
230	315103-0146		2	WASHER PLAIN, 5,3X10X1 BR NI PL	

Pos	Part No	UN	Qty	Description	Page No

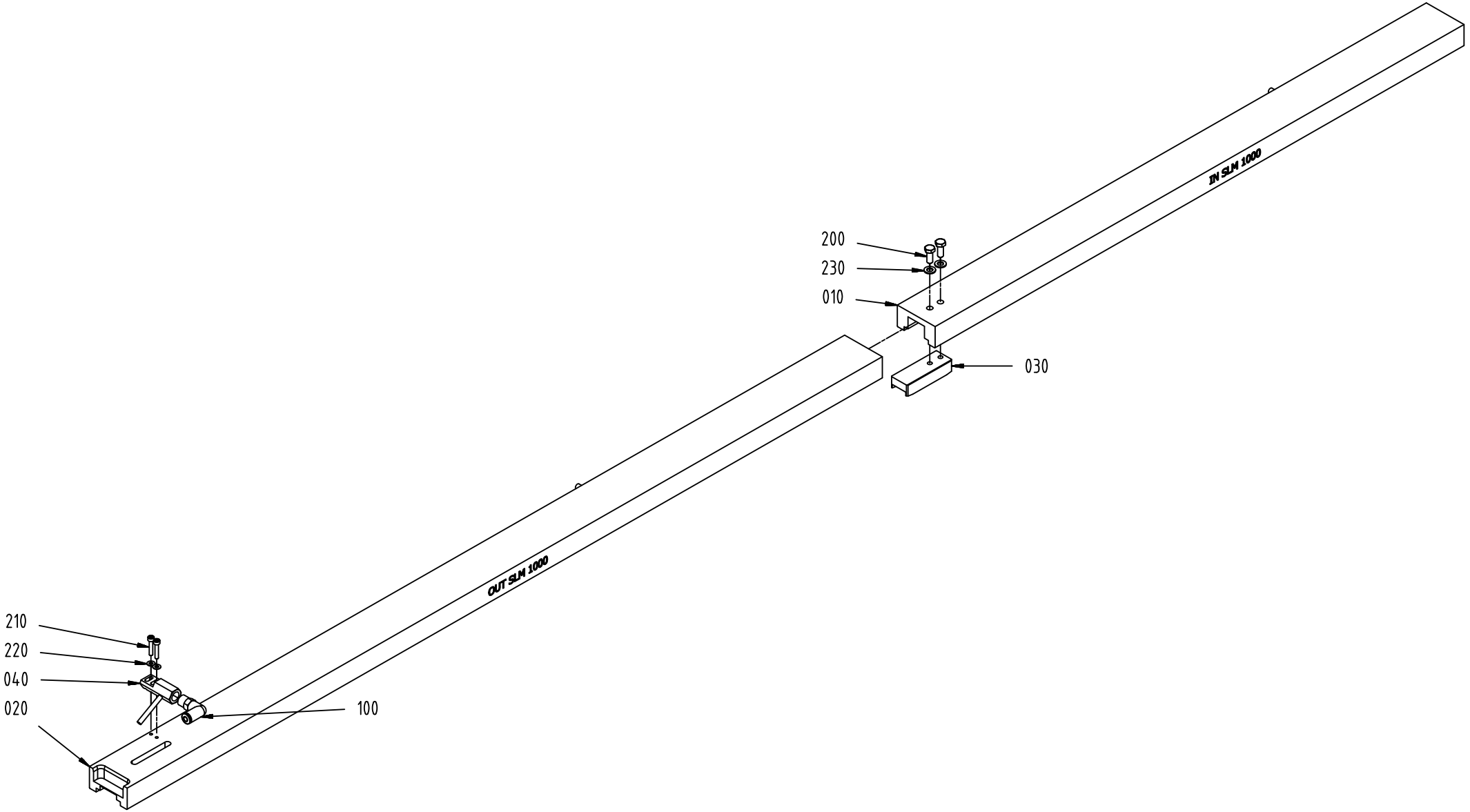
IN SLM 1000
OUT SLM 1000
200
230
010
030
210
220
040
020
100

ECM: 482323 - 20110401
Group number: 3147216-0100
Assembly Drawing: 3147216-1_1_AA

Pos	Part No	UN	Qty	Description	Page No
-					
010	3124380-0000		1	COVER	
020	3124381-0000		1	COVER	
030	3124382-0000		1	FLAP	
040	3124383-0000		1	AIR NOZZLE	
100	3124379-0000		1	FITTING	
200	312105-0327		2	SCREW, M6S ISO 4017 M5X12 A4 80	
210	312115-0228		2	SCREW ISO4762 M3X16 A4 80	
220	315103-0124		2	WASHER PLAIN, 3,2X/6X0,5 BR NI PL	
230	315103-0146		2	WASHER PLAIN, 5,3X10X1 BR NI PL	

Pos	Part No	UN	Qty	Description	Page No

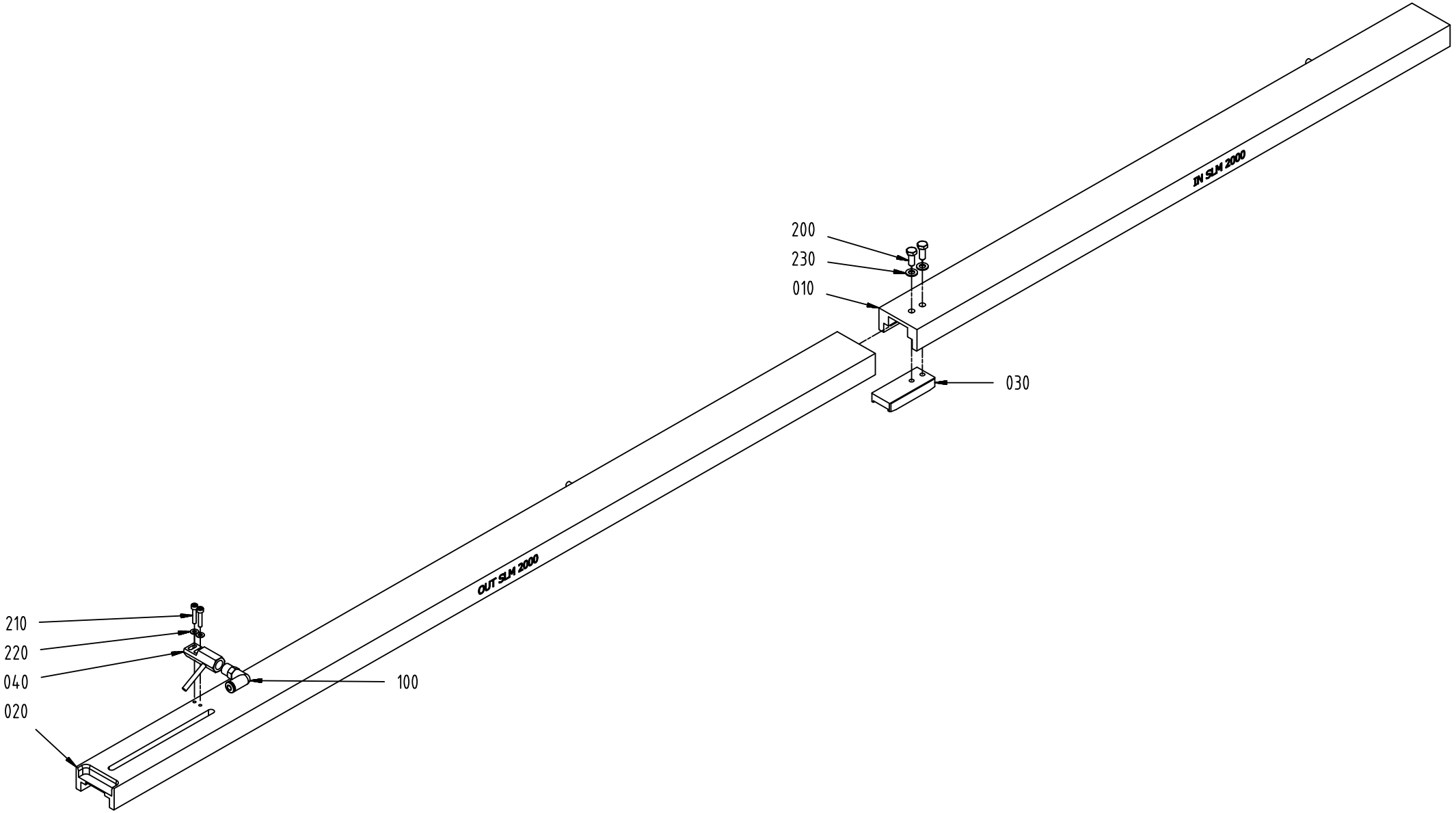
200
230
010
030
IN SLM 2000
210
220
040
020
100
OUT SLM 2000

ECM: 482324 - 20110401
Group number: 3147217-0100
Assembly Drawing: 3147217-1_1_AA

Pos	Part No	UN	Qty	Description	Page No
-					
010	3124384-0000		1	COVER	
020	3124385-0000		1	COVER	
030	3124386-0000		1	FLAP	
040	3124387-0000		1	AIR NOZZLE	
100	3124379-0000		1	FITTING	
200	312105-0327		2	SCREW, M6S ISO 4017 M5X12 A4 80	
210	312115-0228		2	SCREW ISO4762 M3X16 A4 80	
220	315103-0124		2	WASHER PLAIN, 3,2X/6X0,5 BR NI PL	
230	315103-0146		2	WASHER PLAIN, 5,3X10X1 BR NI PL	

Pos	Part No	UN	Qty	Description	Page No

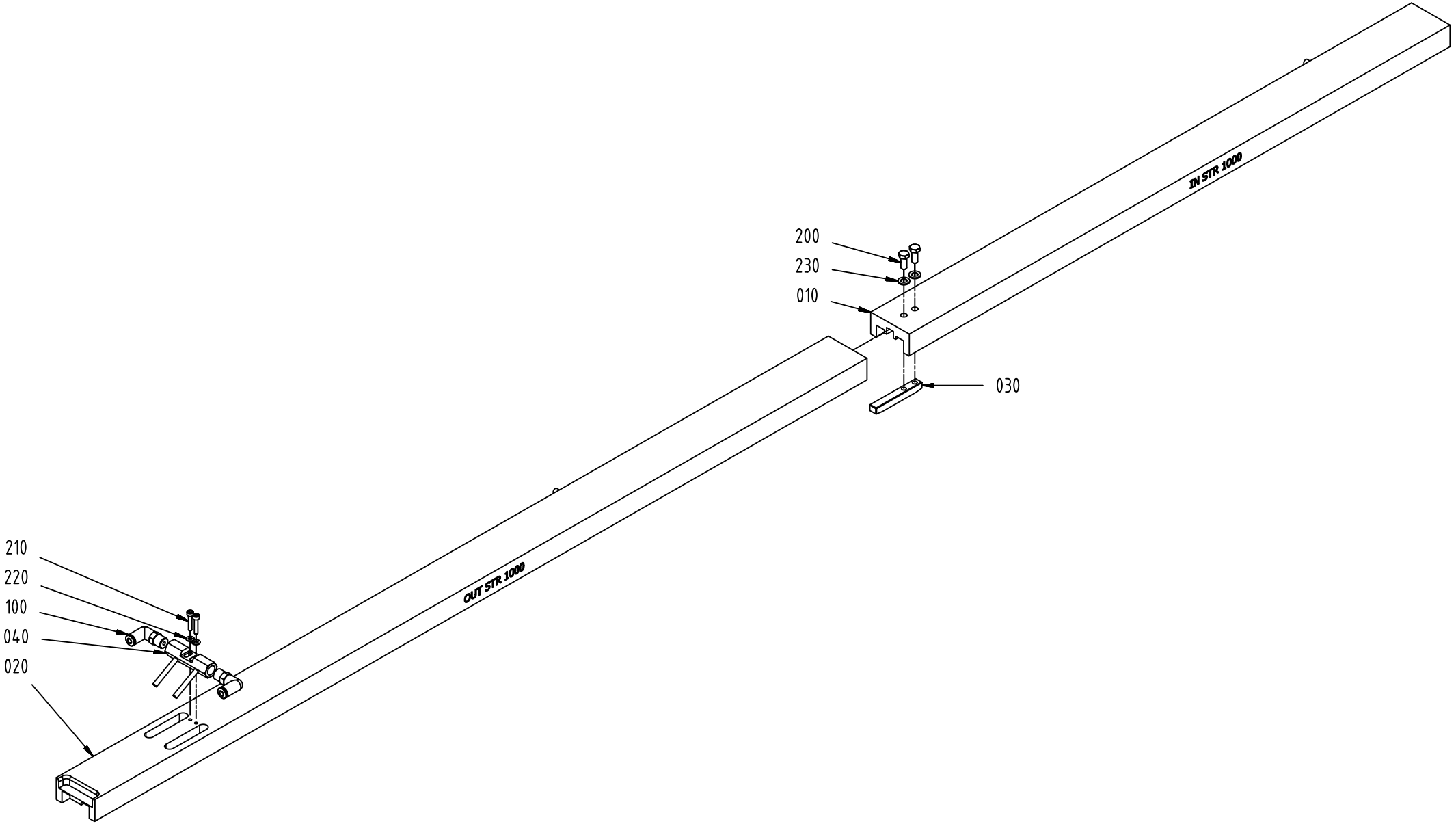
200
230
010
030
IN STR 1000
210
220
100
040
020
OUT STR 1000

ECM: 482328 - 20110401
Group number: 3147221-0100
Assembly Drawing: 3147221-1_1_AA

Pos	Part No	UN	Qty	Description	Page No
-					
010	3124398-0000		1	COVER	
020	3124399-0000		1	COVER	
030	3124400-0000		1	FLAP	
040	3124401-0000		1	AIR NOZZLE	
100	3124379-0000		2	FITTING	
200	312105-0327		2	SCREW, M6S ISO 4017 M5X12 A4 80	
210	312115-0228		2	SCREW ISO4762 M3X16 A4 80	
220	315103-0124		2	WASHER PLAIN, 3,2X/6X0,5 BR NI PL	
230	315103-0146		2	WASHER PLAIN, 5,3X10X1 BR NI PL	

Pos	Part No	UN	Qty	Description	Page No

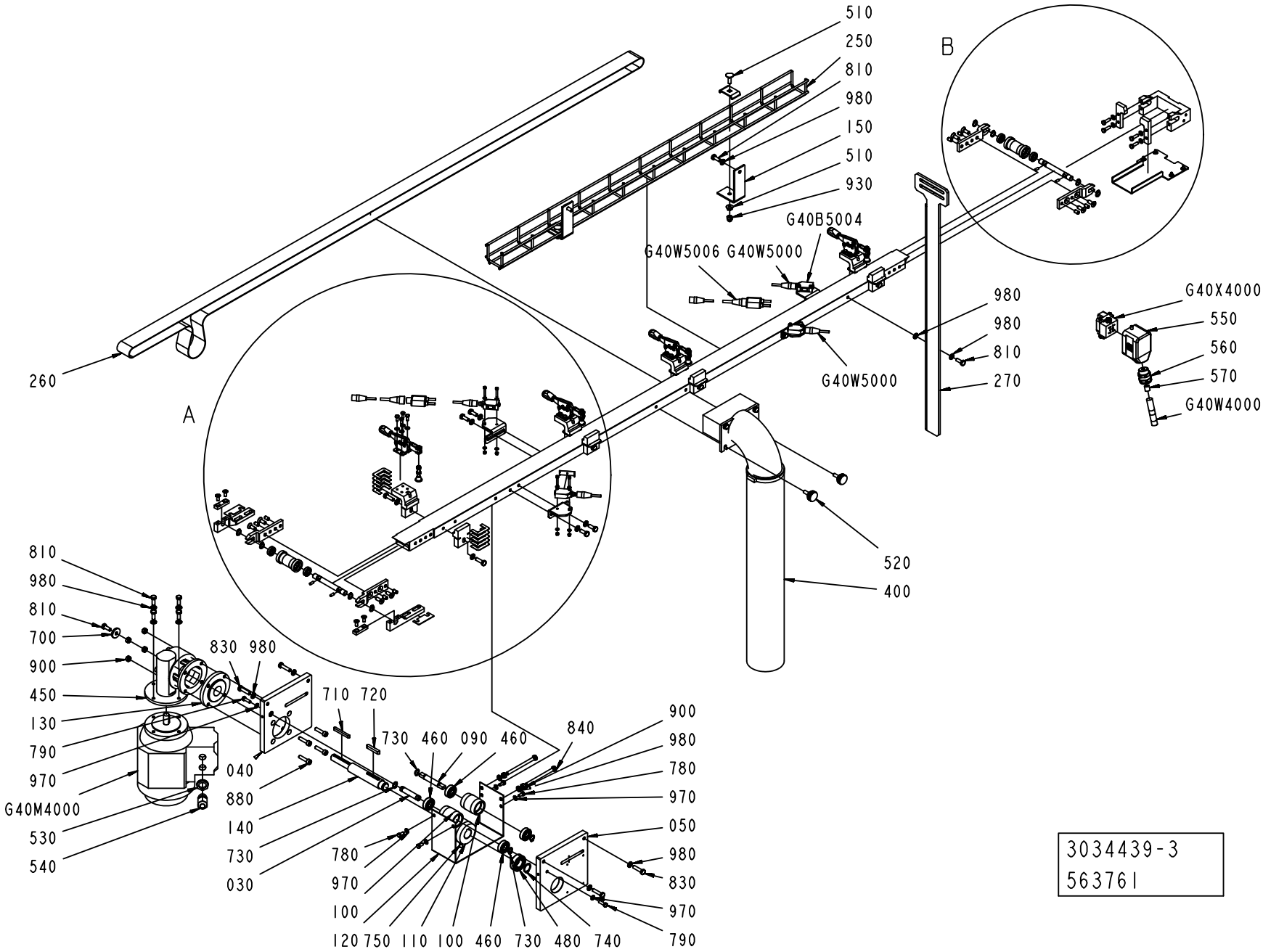
510
250
810
980
150
510
930
G40B5004
G40W5006
G40W5000
260
A
B
980
980
810
270
G40W5000
G40X4000
550
560
570
G40W4000
520
400
810
980
810
700
900
450
130
790
970
G40M4000
530
540
830
980
710
720
730
460
090
460
840
040
880
140
730
030
780
970
100
120
750
110
100
460
730
480
740
900
980
780
970
050
980
830
970
790
3034439-3
563761

ECM: 563761 - 20120702
Group number: 3034439-0200
Assembly Drawing: 3034439-3_1_AC

This list covers pages from 8-20 to 8-23

Pos	Part No	UN	Qty	Description	Page No
-					
010	3108404-0000		2	SHAFT	
020	3108405-0000		2	ROLLER	
030	3108408-0000		1	SHAFT	
040	3108409-0000		1	PLATE	
050	3108410-0000		1	PLATE	
060	3108411-0000		1	PLATE	
070	3108412-0000		1	PLATE	
080	2885916-0000		2	PLATE	
090	3108414-0000		1	SHAFT	
100	3108415-0000		2	IDLER ROLLER	
110	3108417-0000		1	ROLLER	
120	3108418-0000		1	COVER	
130	3108419-0000		1	FLANGE	
140	3108420-0000		1	SHAFT	
150	3108421-0000		2	BRACKET	
160	3108422-0000		2	PLATE	
170	3108424-0000		1	BRACKET	
180	3108427-0000		2	PLATE	
190	3108428-0000		1	COVER	
200	2940040-0000		4	SUPPORT	
210	2940041-0000		4	LOCK HOLDER	
220	2940042-0000		80	SHIM	
230	2985757-0000		4	PHOTOCELL BRACKET	
240	2985759-0000		4	HOLDER	
250	3108429-0000		1	CABLE CONDUIT	
260	2852917-0000		1	BELT	
270	3108431-0000		1	BRACKET	
280	2987983-0000		1	PLATE	
400	3108433-0100		1	DISCHARGE DEVICE	**8-9**
450	90603-3671		1	WORM GEAR W20035015800002	
460	344224-0200		4	BALL BEARING 10/26X8	
470	90603-2322		4	BALL BEARING 10/19X5	
480	344224-0203		1	BALL BEARING 17/35X10	
490	3108434-0000		4	LOCKING LEVER	
500	3115261-0000		4	STOP SCREW	
510	3108436-0000		2	CLAMP	
520	3108437-0000		2	HANDLE	
530	90458-0322		1	NUT, M16X1,5	
540	90458-0306		1	CABLE GLAND, M16X1,5, 5311 1010	
550	90459-1458		1	HOOD, SIDE ENTRY, HAN6E, 19 30 006 1540	
560	90458-0406		1	CABLE GLAND, VK 22052Y	
570	353249-0004		1	INSERT, SINGLE HOLE, E152 13	
580	90600-2375		1	LENS, E39-S65C	
700	315125-0153		1	WASHER HIGH, TBRSB 6,4X22X4 A4	
710	315701-0209		1	PARALLEL KEY W. ROUND ENDS, 5X5X45 MM	
720	315701-0238		1	PARALLEL KEY W. ROUND ENDS, 6X6X36 MM	
730	90141-0016		12	RETAINING RING FOR SHAFT DIN 471 10 SS	
740	90141-0017		1	RETAINING RING FOR SHAFT DIN 471 17 SS	
750	90459-5152		1	SCREW HEX.SOCK.SET CONEPT. MS6SS M6X10 A	
760	312318-0289		4	SET SCREW, CUP END ISO4029 M4X10 A4	
770	312105-0289		16	SCREW, M6S ISO 4017 M4X10 A4 70	
780	312105-0325		4	SCREW, M6S ISO 4017 M5X10 A4 80	
790	312105-0329		6	SCREW, M6S ISO 4017 M5X16 A4 80	
810	312105-0368		16	SCREW, M6S ISO 4017 M6X16 A4 80	
820	312105-0370		8	SCREW, M6S ISO 4017 M6X20 A4 80	
830	312105-0372		4	SCREW, M6S ISO 4017 M6X25 A4 80	
840	312109-0386		2	SCREW, M6S ISO 4017 M6X80 A4 80	
850	312155-0327		4	SCREW DIN 7991 MF6S M5X12 A4 70	
860	312155-0368		8	SCREW DIN 7991 MF6S M6X16 A4 70	
870	312115-0230		8	SCREW ISO4762 M3X20 A4 80	
880	312115-0372		4	SCREW ISO4762 M6X25 A4 80	
900	312605-0316		6	HEXAGON NUT, M6M M6 A280	
910	312810-0310		8	HEXAGON NUT, NY-LOCK M3 FZB	
920	312705-0314		4	NUT HEX. DOMED CAP MHM-6 M5 A280	
930	312705-0316		2	HEX. DOMED CAP MHM-6 M6 A280	
940	311103-0348		8	PARALLEL PIN ISO 2338 6M6X10 A1	
950	315103-0124		16	WASHER PLAIN, 3,2X/6X0,5 BR NI PL	
960	315103-0136		16	WASHER PLAIN, 4,3X8X0,8 BR NI PL	
970	315103-0146		10	WASHER PLAIN, 5,3X10X1 BR NI PL	
980	315103-0153		30	WASHER PLAIN, 6,4X12X1,5 BR NI PL	
G40B5000	90459-5529		1	PHOTOCELL E3Z-T86A, SENDER+RECIEVER	
G40B5004	90459-5529		1	PHOTOCELL E3Z-T86A, SENDER+RECIEVER	
G40M4000	90603-2676		1	MOTOR 3GAA052002-CSA	
G40W4000	315743-0009	M	2.5	ÖLFLEX CONTROL TM 4G1,5, 281604	
G40W5000	90603-3979		2	SENSOR Y-CABLE, EVT339	
G40W5002	344261-0020		1	SENSOR CABLE, EVT263	
G40W5006	344261-0010		1	SENSOR CABLE, EVT262	
G40X4000	90110-0052		1	MALE INSERT, HAN E06, 0933 0062 601	

Machine Type	Group Description	Used-In	Group Number	Page No

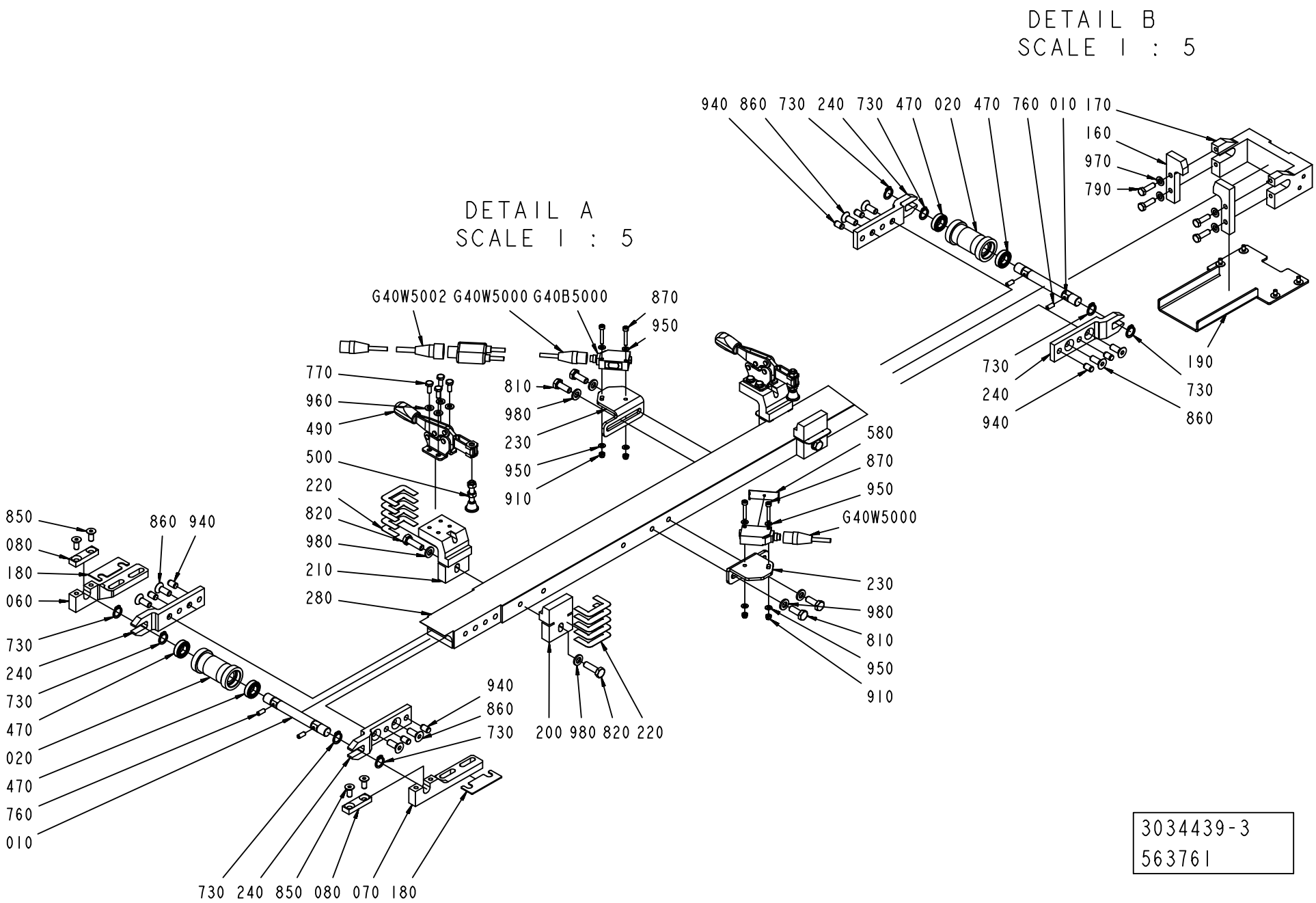

3034439-3
563761

ECM: 563761 - 20120702
Group number: 3034439-0200
Assembly Drawing: 3034439-3_2_AC

This list covers pages from 8-20 to 8-23

Pos	Part No	UN	Qty	Description	Page No
-					
010	3108404-0000		2	SHAFT	
020	3108405-0000		2	ROLLER	
030	3108408-0000		1	SHAFT	
040	3108409-0000		1	PLATE	
050	3108410-0000		1	PLATE	
060	3108411-0000		1	PLATE	
070	3108412-0000		1	PLATE	
080	2885916-0000		2	PLATE	
090	3108414-0000		1	SHAFT	
100	3108415-0000		2	IDLER ROLLER	
110	3108417-0000		1	ROLLER	
120	3108418-0000		1	COVER	
130	3108419-0000		1	FLANGE	
140	3108420-0000		1	SHAFT	
150	3108421-0000		2	BRACKET	
160	3108422-0000		2	PLATE	
170	3108424-0000		1	BRACKET	
180	3108427-0000		2	PLATE	
190	3108428-0000		1	COVER	
200	2940040-0000		4	SUPPORT	
210	2940041-0000		4	LOCK HOLDER	
220	2940042-0000		80	SHIM	
230	2985757-0000		4	PHOTOCELL BRACKET	
240	2985759-0000		4	HOLDER	
250	3108429-0000		1	CABLE CONDUIT	
260	2852917-0000		1	BELT	
270	3108431-0000		1	BRACKET	
280	2987983-0000		1	PLATE	
400	3108433-0100		1	DISCHARGE DEVICE	**8-9**
450	90603-3671		1	WORM GEAR W20035015800002	
460	344224-0200		4	BALL BEARING 10/26X8	
470	90603-2322		4	BALL BEARING 10/19X5	
480	344224-0203		1	BALL BEARING 17/35X10	
490	3108434-0000		4	LOCKING LEVER	
500	3115261-0000		4	STOP SCREW	
510	3108436-0000		2	CLAMP	
520	3108437-0000		2	HANDLE	
530	90458-0322		1	NUT, M16X1,5	
540	90458-0306		1	CABLE GLAND, M16X1,5, 5311 1010	
550	90459-1458		1	HOOD, SIDE ENTRY, HAN6E, 19 30 006 1540	
560	90458-0406		1	CABLE GLAND, VK 22052Y	
570	353249-0004		1	INSERT, SINGLE HOLE, E152 13	
580	90600-2375		1	LENS, E39-S65C	
700	315125-0153		1	WASHER HIGH, TBRSB 6,4X22X4 A4	
710	315701-0209		1	PARALLEL KEY W. ROUND ENDS, 5X5X45 MM	
720	315701-0238		1	PARALLEL KEY W. ROUND ENDS, 6X6X36 MM	
730	90141-0016		12	RETAINING RING FOR SHAFT DIN 471 10 SS	
740	90141-0017		1	RETAINING RING FOR SHAFT DIN 471 17 SS	
750	90459-5152		1	SCREW HEX.SOCK.SET CONEPT. MS6SS M6X10 A	
760	312318-0289		4	SET SCREW, CUP END ISO4029 M4X10 A4	
770	312105-0289		16	SCREW, M6S ISO 4017 M4X10 A4 70	
780	312105-0325		4	SCREW, M6S ISO 4017 M5X10 A4 80	
790	312105-0329		6	SCREW, M6S ISO 4017 M5X16 A4 80	
810	312105-0368		16	SCREW, M6S ISO 4017 M6X16 A4 80	
820	312105-0370		8	SCREW, M6S ISO 4017 M6X20 A4 80	
830	312105-0372		4	SCREW, M6S ISO 4017 M6X25 A4 80	
840	312109-0386		2	SCREW, M6S ISO 4017 M6X80 A4 80	
850	312155-0327		4	SCREW DIN 7991 MF6S M5X12 A4 70	
860	312155-0368		8	SCREW DIN 7991 MF6S M6X16 A4 70	
870	312115-0230		8	SCREW ISO4762 M3X20 A4 80	
880	312115-0372		4	SCREW ISO4762 M6X25 A4 80	
900	312605-0316		6	HEXAGON NUT, M6M M6 A280	
910	312810-0310		8	HEXAGON NUT, NY-LOCK M3 FZB	
920	312705-0314		4	NUT HEX. DOMED CAP MHM-6 M5 A280	
930	312705-0316		2	HEX. DOMED CAP MHM-6 M6 A280	
940	311103-0348		8	PARALLEL PIN ISO 2338 6M6X10 A1	
950	315103-0124		16	WASHER PLAIN, 3,2X/6X0,5 BR NI PL	
960	315103-0136		16	WASHER PLAIN, 4,3X8X0,8 BR NI PL	
970	315103-0146		10	WASHER PLAIN, 5,3X10X1 BR NI PL	
980	315103-0153		30	WASHER PLAIN, 6,4X12X1,5 BR NI PL	
G40B5000	90459-5529		1	PHOTOCELL E3Z-T86A, SENDER+RECIEVER	
G40B5004	90459-5529		1	PHOTOCELL E3Z-T86A, SENDER+RECIEVER	
G40M4000	90603-2676		1	MOTOR 3GAA052002-CSA	
G40W4000	315743-0009	M	2.5	ÖLFLEX CONTROL TM 4G1,5, 281604	
G40W5000	90603-3979		2	SENSOR Y-CABLE, EVT339	
G40W5002	344261-0020		1	SENSOR CABLE, EVT263	
G40W5006	344261-0010		1	SENSOR CABLE, EVT262	
G40X4000	90110-0052		1	MALE INSERT, HAN E06, 0933 0062 601	

Machine Type	Group Description	Used-In	Group Number	Page No

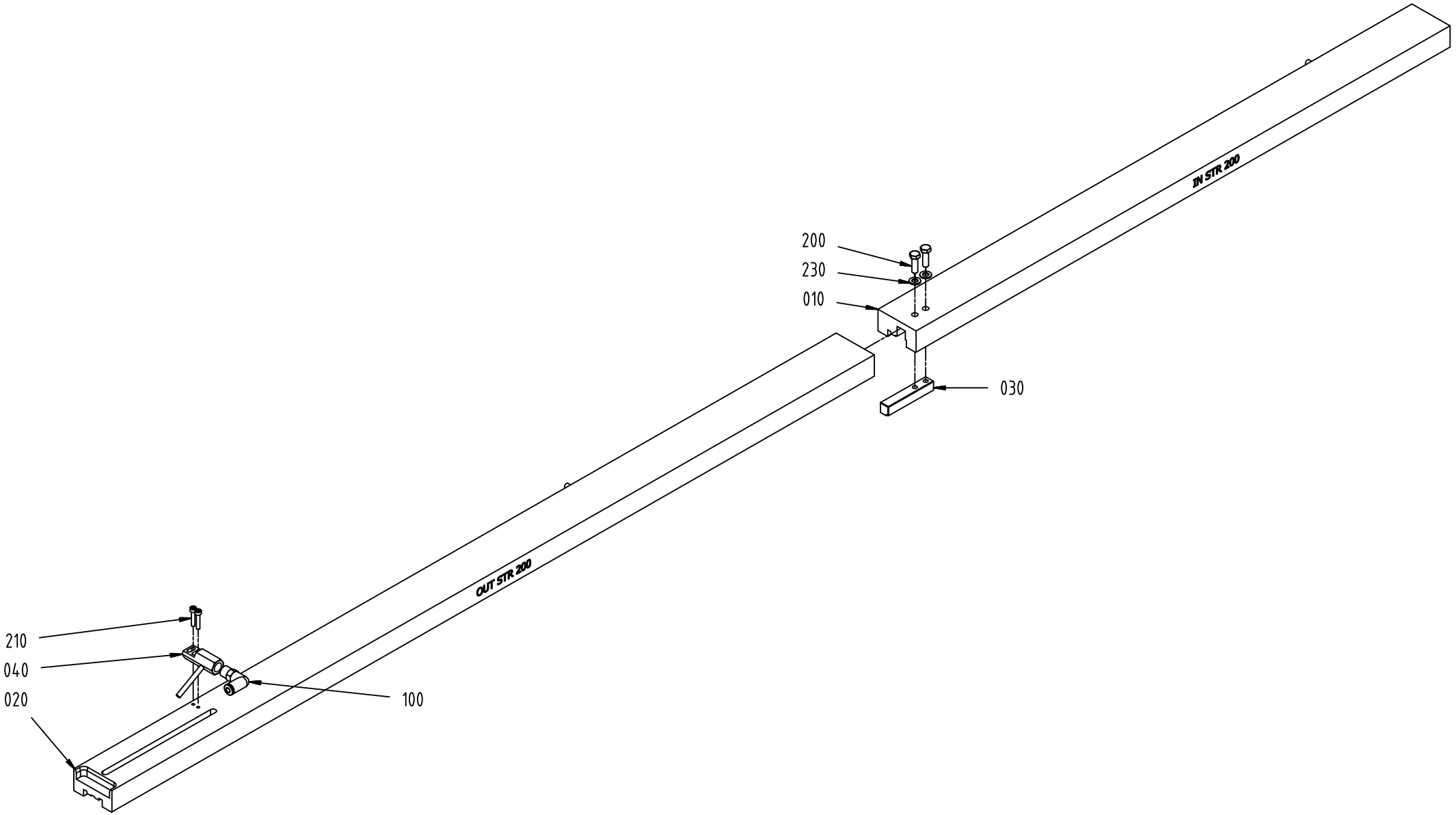
IN STR 200
OUT STR 200
200
230
010
030
210
040
020
100

ECM: 482325 - 20110401
Group number: 3147218-0100
Assembly Drawing: 3147218-1_1_AA

Pos	Part No	UN	Qty	Description	Page No
-					
010	3124388-0000		1	COVER	
020	3124389-0000		1	COVER	
030	3124390-0000		1	FLAP	
040	3124391-0000		1	AIR NOZZLE	
100	3124379-0000		1	FITTING	
200	312105-0329		2	SCREW, M6S ISO 4017 M5X16 A4 80	
210	312115-0228		2	SCREW ISO4762 M3X16 A4 80	
230	315103-0146		2	WASHER PLAIN, 5,3X10X1 BR NI PL	

Pos	Part No	UN	Qty	Description	Page No

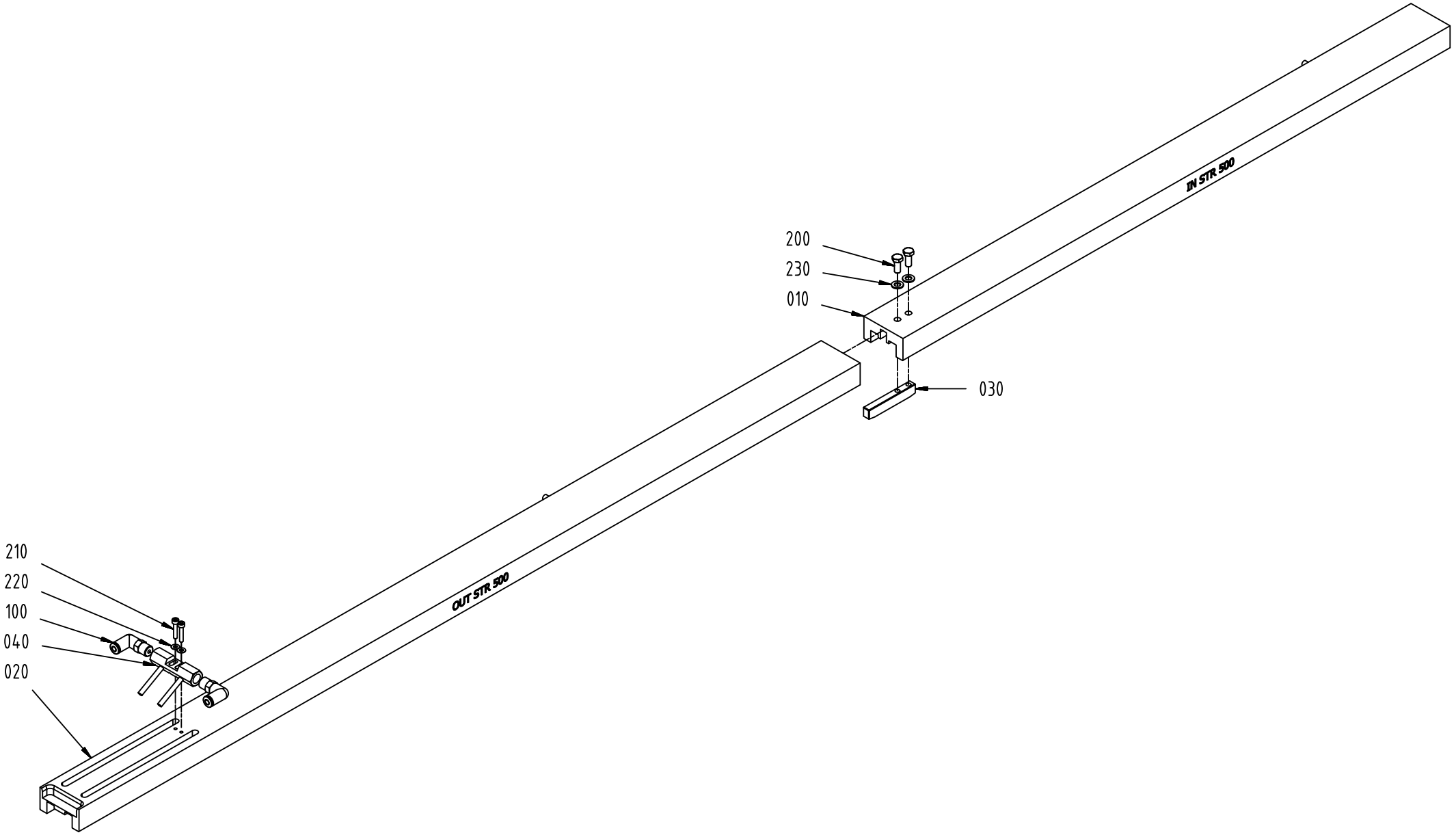
200
230
010
030
IN STR 500
210
220
100
040
020
OUT STR 500

ECM: 482327 - 20110401
Group number: 3147220-0100
Assembly Drawing: 3147220-1_1_AA

Pos	Part No	UN	Qty	Description	Page No
-					
010	3124394-0000		1	COVER	
020	3124395-0000		1	COVER	
030	3124396-0000		1	FLAP	
040	3124397-0000		1	AIR NOZZLE	
100	3124379-0000		2	FITTING	
200	312105-0327		2	SCREW, M6S ISO 4017 M5X12 A4 80	
210	312115-0228		2	SCREW ISO4762 M3X16 A4 80	
220	315103-0124		2	WASHER PLAIN, 3,2X/6X0,5 BR NI PL	
230	315103-0146		2	WASHER PLAIN, 5,3X10X1 BR NI PL	

Pos	Part No	UN	Qty	Description	Page No

Tetra Pak

SPC
Spare Parts Catalogue

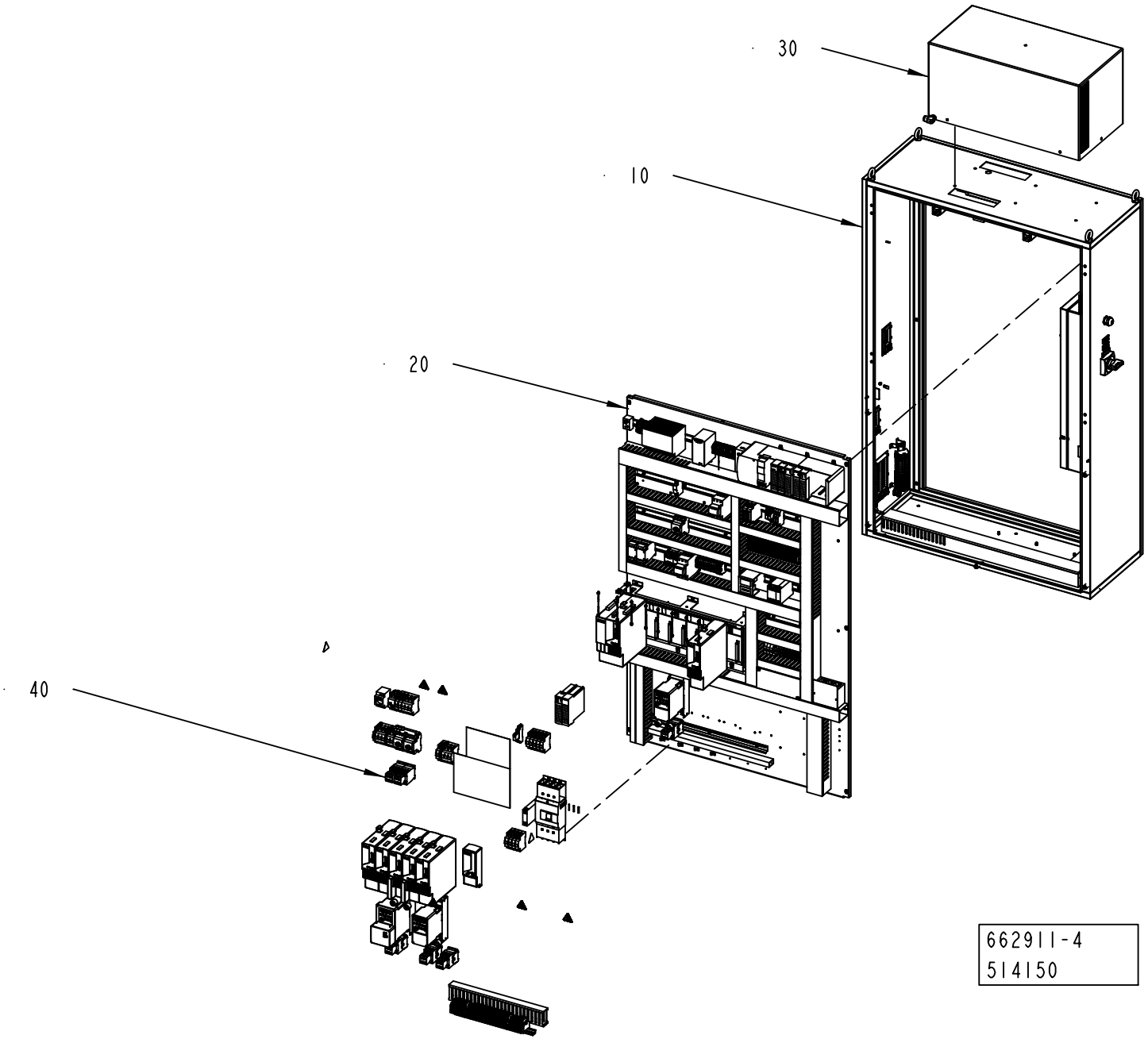
30
10
20
40
662911-4
514150

ECM: 520270 - 20120401
Group number: 662911-0300
Assembly Drawing: 662911-4_1_AA

Pos	Part No	UN	Qty	Description	Page No
CE					
030	2833408-0200		1	COOLING UNIT	**9-5**
040	2841404-0300		1	ELECTRICAL CONVERSION	**9-7, 9-9, 9-11, 9-13, 9-15, 9-17**
UL, CSA					
030	3199707-0100		1	COOLING UNIT	**9-27**
040	3190285-0100		1	ELECTRICAL CONVERSION	**9-29, 9-31, 9-33, 9-35, 9-37, 9-39**
Common Parts					
010	2833406-0300		1	CABINET	**9-41**
020	2833407-0300		1	CONTROL BOARD	**9-47**
050	2833409-0200		1	CABLE SET	**9-93**

Pos	Part No	UN	Qty	Description	Page No

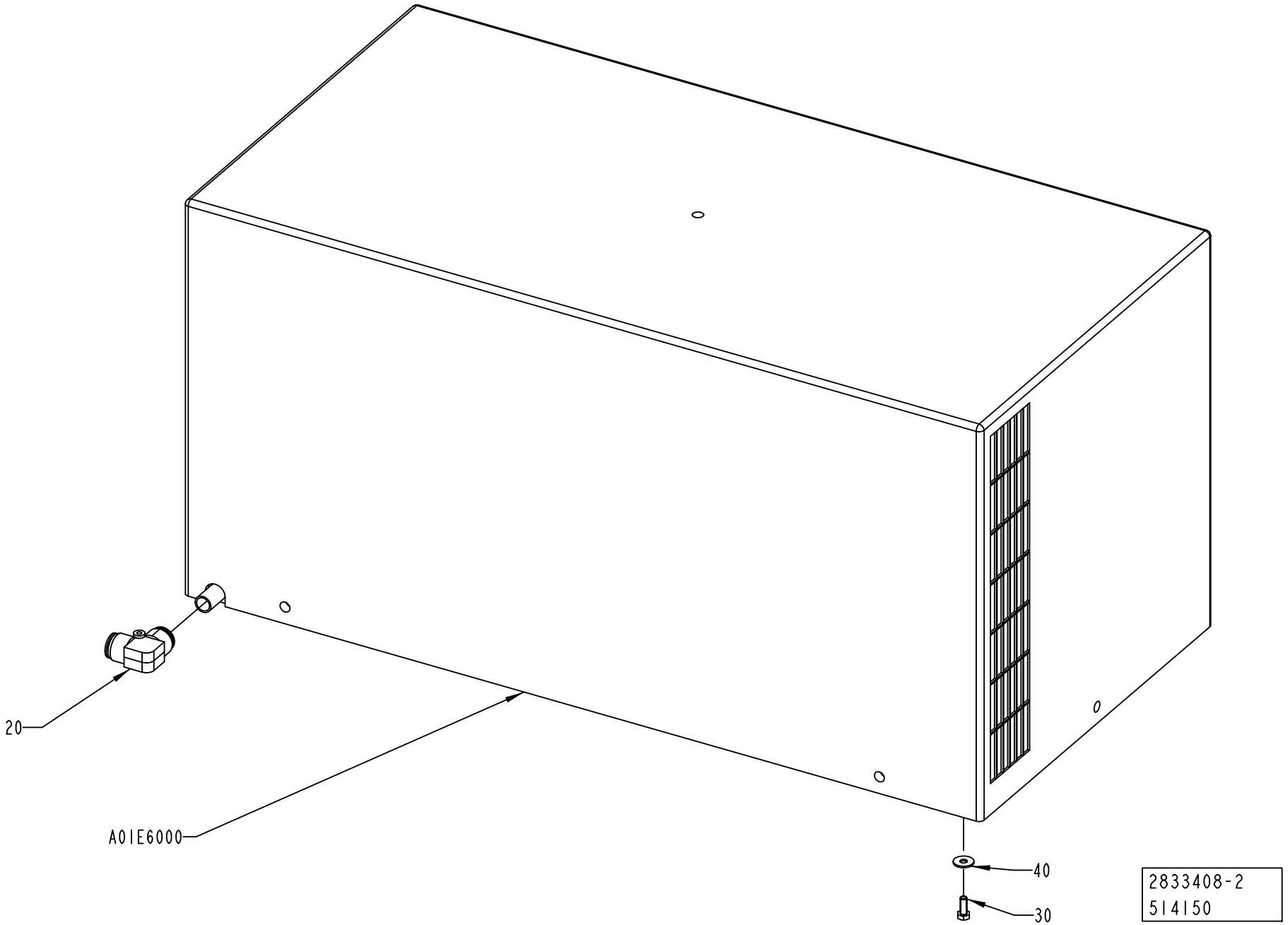
20
A01E6000
40
30
2833408-2
514150

ECM: 521628 - 20120401
Group number: 2833408-0200
Assembly Drawing: 2833408-2_1_AA

Pos	Part No	UN	Qty	Description	Page No
-					
020	90459-2553		1	PUSH-IN L-FITTING QSL 16	
030	312105-0368		6	SCREW, M6S ISO 4017 M6X16 A4 80	
040	90005-0060		6	WASHER PLAIN, RBS 6,4/M6)/18,H=1,5	
A01E6000	90459-0813		1	COOLING UNIT, KB20A619.01	
	90600-2822		*1*	*THERMOSTAT, TMI0000216*	
	90600-0676		*1*	*GRID, DISA1880AA*	
	90600-0675		*1*	*GASKET, A6411AA*	
	90600-0673		*1*	*THERMOSTAT, KELVIN TMI0000218*	
	90600-0672		*2*	*FAN, VBA0001499 , 50HZ_3UF , 60HZ_2UF*	
	90459-0364		*1*	*FILTER KB20/30/40 POLYURETH. FILTER 2001*	

Pos	Part No	UN	Qty	Description	Page No

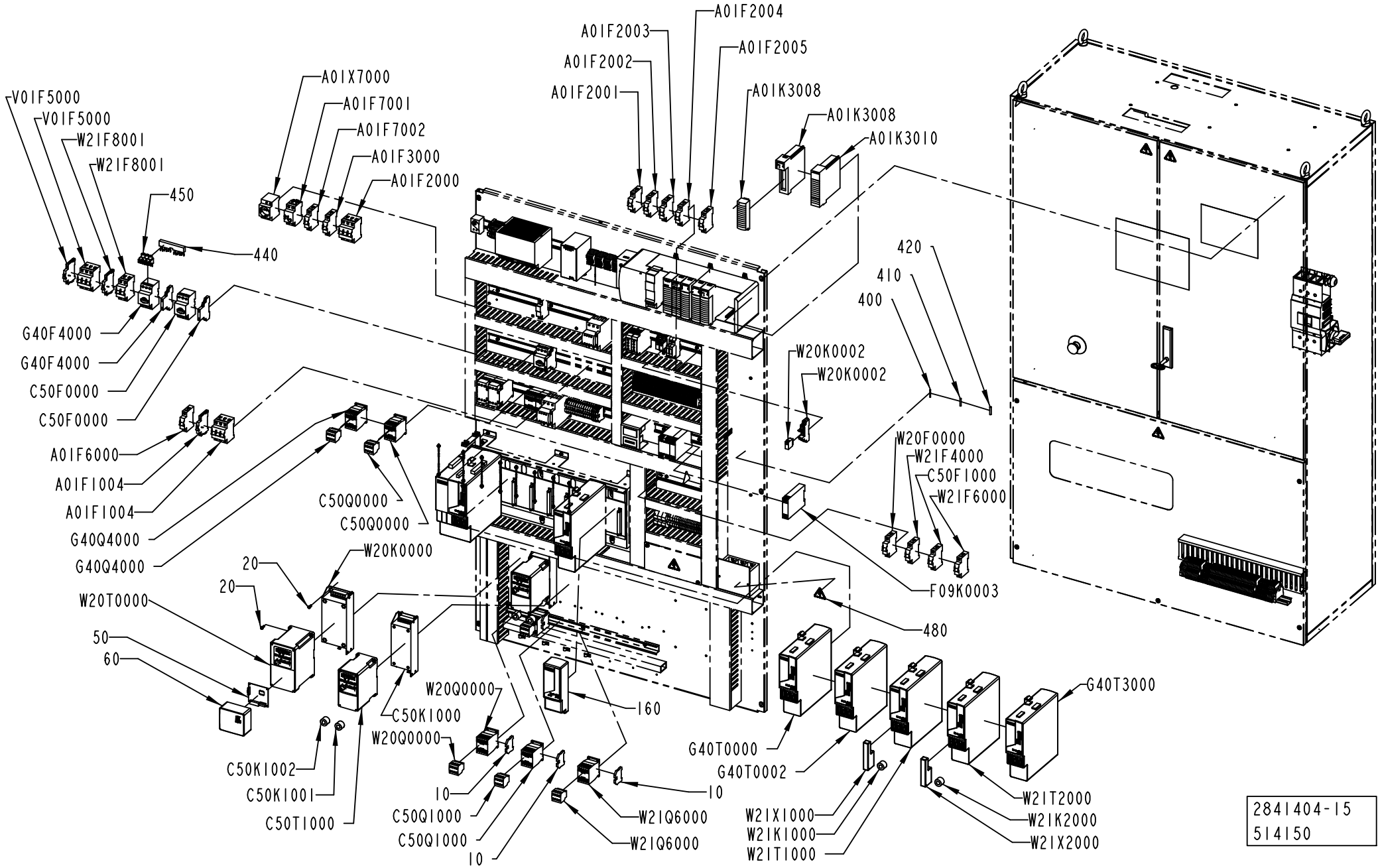

2841404-15
514150

ECM: 540555 - 20120402
Group number: 2841404-0300
Assembly Drawing: 2841404-15_1_AA

This list covers pages from 9-6 to 9-17

Pos	Part No	UN	Qty	Description	Page No
CAP 30/FLEX TGA 0500SQ, CAP 30/FLEX TGA 0750SQ, CAP 30/FLEX TGA 1000SQ, CAP 30/FLEX TGA 1500SQ (See drawing on pages: 9-14, 9-16)					
010	353024-0205		3	EARTH TERMINAL WPE 4	
020	312115-0327		16	SCREW ISO4762 M5X12 A4 80	
110	3199127-0000		1	FUSE PANEL LABEL	
300	2890014-0300		1	POSITIONING UNIT	**9-19, 12-31**
400	351160-0102	M	458	WIRE AWM 1X0,75 MM2 DARKBLUE	
410	351164-0105	M	65	WIRE AWM 1X2,5 MM2 BLACK	
420	351164-0107	M	39	WIRE AWM 1X6 MM2 BLACK	
440	90259-0315		1	CIRCUIT BREAKER , B3.1/2-PKZ0	
450	90600-1461		1	INCOMING TERMINAL, BK25/3-PKZ0-E	
A01K3008	90459-2488		1	REMOVABLE TERMINAL BLOCK 36 POINTS	
A01K3008	90600-4033		1	DIGITAL OUTPUT MODULE, 1756-OB16IS	
A01K3010	90459-2480		1	8-AXIS SERCOS MOTION MODULE	
C50F0000	90459-5323		1	OVERLOAD PROTECTION, PKZM0-1	
C50F0000	90259-0313		1	AUXILIARY SWITCH, NHI21-PKZ0	
C50F1000	354000-0060		1	MINIATURE CIRCUIT BREAKER, FAZ-C6/1	
C50K1000	90459-3460		1	FOOTPRINT FILTER 1 PHASE 10A	
C50K1001	90600-5249		1	FERRITE, B64290L616X38	
C50K1002	90600-5249		1	FERRITE, B64290L616X38	
C50Q0000	90459-5308		1	CONTACTOR 4KW 24VDC, DILM9-10	
C50Q0000	90459-6852		1	AUXILIARY CONTACT, DILA-XHI22	
C50Q1000	90459-6852		1	AUXILIARY CONTACT, DILA-XHI22	
C50Q1000	90459-5308		1	CONTACTOR 4KW 24VDC, DILM9-10	
C50T1000	90459-3449		1	FREQ. CONV., 22A-A2P3N104	
F09K0003	90459-2291		1	SAFETY RELAY, E1T	
G40F4000	90259-0313		1	AUXILIARY SWITCH, NHI21-PKZ0	
G40F4000	90459-5321		1	OVERLOAD PROTECTION, PKZM0-0,4	
G40Q4000	90459-6852		1	AUXILIARY CONTACT, DILA-XHI22	
G40Q4000	90459-5308		1	CONTACTOR 4KW 24VDC, DILM9-10	
G40T0000	90600-5216		1	AXIS MOD. KINETIX 6000,2094-BM02-S SER.B	
G40T0002	90600-5216		1	AXIS MOD. KINETIX 6000,2094-BM02-S SER.B	
G40T3000	90600-5214		1	AXIS MOD. KINETIX 6000,2094-BM01-S SER.B	
W20F0000	354000-0060		1	MINIATURE CIRCUIT BREAKER, FAZ-C6/1	
W20K0000	90459-3454		1	FOOTPRINT FILTER 1 PHASE 18A	
W20K0002	90129-0018		1	BASE, P2RF-08-E	
W20K0002	90119-0108		1	RELAY OMRON G2R-2-SNI-24DC	
	90129-0018		*1*	*BASE, P2RF-08-E*	
W21K1000	90600-5249		1	FERRITE, B64290L616X38	
W21K2000	90600-5249		1	FERRITE, B64290L616X38	
W20Q0000	90459-5308		1	CONTACTOR 4KW 24VDC, DILM9-10	
W20Q0000	90459-6852		1	AUXILIARY CONTACT, DILA-XHI22	
W20T0000	90459-3441		1	FREQ. CONV., 22B-A2P3N104	
W21X1000	90459-2550		1	I/O CONNECTOR 26 PIN MALE, 2090-K6CK-D26	
W21X2000	90459-2550		1	I/O CONNECTOR 26 PIN MALE, 2090-K6CK-D26	
CAP30/FLEX TPA STREAMCAP 1000, CAP30/FLEX TPA STREAMCAP 500, CAP 30/FLEX TPA HELICAP 27 (See drawing on pages: 9-10, 9-12)					
010	353024-0205		3	EARTH TERMINAL WPE 4	
020	312115-0327		16	SCREW ISO4762 M5X12 A4 80	
110	3199131-0000		1	FUSE PANEL LABEL	
200	2895147-0200		1	PACKAGE ALIGNER	**9-21, 9-23**
300	2890014-0300		1	POSITIONING UNIT	**9-19, 12-31**
400	351160-0102	M	458	WIRE AWM 1X0,75 MM2 DARKBLUE	
410	351164-0105	M	65	WIRE AWM 1X2,5 MM2 BLACK	
420	351164-0107	M	39	WIRE AWM 1X6 MM2 BLACK	
440	90259-0315		1	CIRCUIT BREAKER , B3.1/2-PKZ0	
450	90600-1461		1	INCOMING TERMINAL, BK25/3-PKZ0-E	
A01K3008	90600-4033		1	DIGITAL OUTPUT MODULE, 1756-OB16IS	
A01K3008	90459-2488		1	REMOVABLE TERMINAL BLOCK 36 POINTS	
A01K3010	90459-2480		1	8-AXIS SERCOS MOTION MODULE	
C50F0000	90459-5323		1	OVERLOAD PROTECTION, PKZM0-1	
C50F0000	90259-0313		1	AUXILIARY SWITCH, NHI21-PKZ0	
C50F1000	354000-0060		1	MINIATURE CIRCUIT BREAKER, FAZ-C6/1	
C50K1000	90459-3460		1	FOOTPRINT FILTER 1 PHASE 10A	
C50K1001	90600-5249		1	FERRITE, B64290L616X38	
C50K1002	90600-5249		1	FERRITE, B64290L616X38	
C50Q0000	90459-5308		1	CONTACTOR 4KW 24VDC, DILM9-10	
C50Q0000	90459-6852		1	AUXILIARY CONTACT, DILA-XHI22	
C50Q1000	90459-6852		1	AUXILIARY CONTACT, DILA-XHI22	
C50Q1000	90459-5308		1	CONTACTOR 4KW 24VDC, DILM9-10	
C50T1000	90459-3449		1	FREQ. CONV., 22A-A2P3N104	
F09K0003	90459-2291		1	SAFETY RELAY, E1T	
G40F4000	90459-5321		1	OVERLOAD PROTECTION, PKZM0-0,4	
G40F4000	90259-0313		1	AUXILIARY SWITCH, NHI21-PKZ0	
G40Q4000	90459-6852		1	AUXILIARY CONTACT, DILA-XHI22	
G40Q4000	90459-5308		1	CONTACTOR 4KW 24VDC, DILM9-10	
G40T0000	90600-5216		1	AXIS MOD. KINETIX 6000,2094-BM02-S SER.B	
G40T0002	90600-5216		1	AXIS MOD. KINETIX 6000,2094-BM02-S SER.B	
G40T3000	90600-5214		1	AXIS MOD. KINETIX 6000,2094-BM01-S SER.B	
W20F0000	354000-0060		1	MINIATURE CIRCUIT BREAKER, FAZ-C6/1	
W20K0000	90459-3454		1	FOOTPRINT FILTER 1 PHASE 18A	
W20K0002	90129-0018		1	BASE, P2RF-08-E	
W20K0002	90119-0108		1	RELAY OMRON G2R-2-SNI-24DC	
	90129-0018		*1*	*BASE, P2RF-08-E*	

Machine Type | Group Description | Used-In | Group Number | Page No

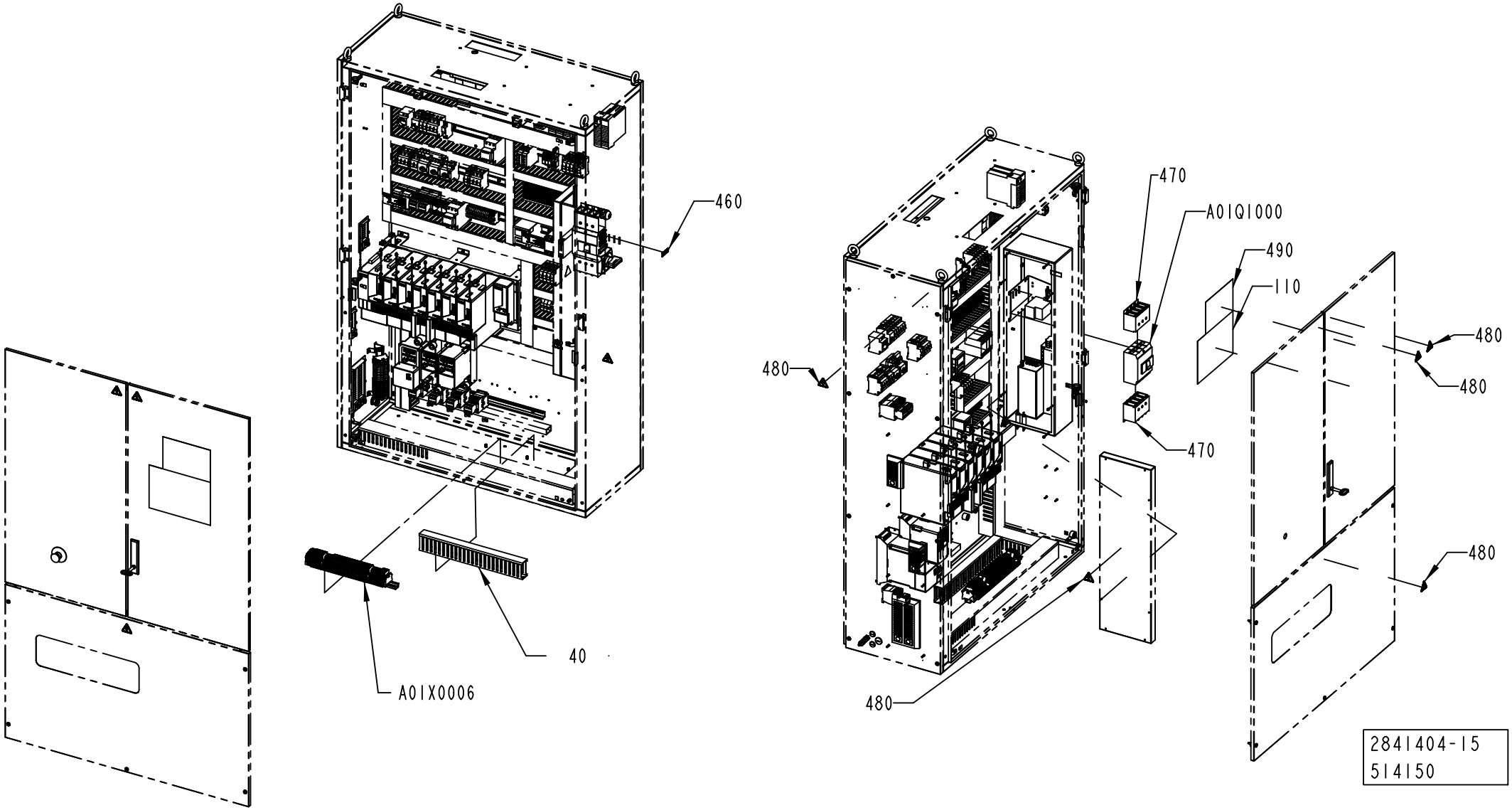
460
40
A01X0006
470
A01Q1000
490
110
480
480
480
470
480
480
2841404-15
514150

Pos	Part No	UN	Qty	Description	Page No
CAP30/FLEX TPA STREAMCAP 1000, CAP30/FLEX TPA STREAMCAP 500, CAP 30/FLEX TPA HELICAP 27 (Cont'd) (See drawing on pages: 9-10, 9-12)					
W21K1000	90600-5249		1	FERRITE, B64290L616X38	
W21K2000	90600-5249		1	FERRITE, B64290L616X38	
W20Q0000	90459-5308		1	CONTACTOR 4KW 24VDC, DILM9-10	
W20Q0000	90459-6852		1	AUXILIARY CONTACT, DILA-XHI22	
W20T0000	90459-3441		1	FREQ. CONV., 22B-A2P3N104	
W21X1000	90459-2550		1	I/O CONNECTOR 26 PIN MALE, 2090-K6CK-D26	
W21X2000	90459-2550		1	I/O CONNECTOR 26 PIN MALE, 2090-K6CK-D26	
CAP 30/FLEX TBA STREAMCAP1000, CAP 30/FLEX TBA SLIMCAP1000, CAP 30/FLEX TBA SLIMCAP2000, CAP 30/FLEX TBA STREAMCAP200, CAP 30/FLEX TBA HELICAP2 23, CAP 30/FLEX TBA HELICAP 27 (See drawing on pages: 9-6, 9-8)					
010	353024-0205		3	EARTH TERMINAL WPE 4	
020	312115-0327		16	SCREW ISO4762 M5X12 A4 80	
110	3199127-0000		1	FUSE PANEL LABEL	
160	90459-2547		1	POWER RAIL SLOT FILLER, 2094-PRF	
400	351160-0102	M	458	WIRE AWM 1X0,75 MM2 DARKBLUE	
410	351164-0105	M	65	WIRE AWM 1X2,5 MM2 BLACK	
420	351164-0107	M	39	WIRE AWM 1X6 MM2 BLACK	
440	90259-0315		1	CIRCUIT BREAKER , B3.1/2-PKZ0	
450	90600-1461		1	INCOMING TERMINAL, BK25/3-PKZ0-E	
A01K3008	90459-2488		1	REMOVABLE TERMINAL BLOCK 36 POINTS	
A01K3008	90600-4033		1	DIGITAL OUTPUT MODULE, 1756-OB16IS	
A01K3010	90459-2480		1	8-AXIS SERCOS MOTION MODULE	
C50F0000	90259-0313		1	AUXILIARY SWITCH, NHI21-PKZ0	
C50F0000	90459-5323		1	OVERLOAD PROTECTION, PKZM0-1	
C50F1000	354000-0060		1	MINIATURE CIRCUIT BREAKER, FAZ-C6/1	
C50K1000	90459-3460		1	FOOTPRINT FILTER 1 PHASE 10A	
C50K1001	90600-5249		1	FERRITE, B64290L616X38	
C50K1002	90600-5249		1	FERRITE, B64290L616X38	
C50Q0000	90459-6852		1	AUXILIARY CONTACT, DILA-XHI22	
C50Q0000	90459-5308		1	CONTACTOR 4KW 24VDC, DILM9-10	
C50Q1000	90459-6852		1	AUXILIARY CONTACT, DILA-XHI22	
C50Q1000	90459-5308		1	CONTACTOR 4KW 24VDC, DILM9-10	
C50T1000	90459-3449		1	FREQ. CONV., 22A-A2P3N104	
F09K0003	90459-2291		1	SAFETY RELAY, E1T	
G40F4000	90459-5321		1	OVERLOAD PROTECTION, PKZM0-0,4	
G40F4000	90259-0313		1	AUXILIARY SWITCH, NHI21-PKZ0	
G40Q4000	90459-5308		1	CONTACTOR 4KW 24VDC, DILM9-10	
G40Q4000	90459-6852		1	AUXILIARY CONTACT, DILA-XHI22	
G40T0000	90600-5216		1	AXIS MOD. KINETIX 6000,2094-BM02-S SER.B	
G40T0002	90600-5216		1	AXIS MOD. KINETIX 6000,2094-BM02-S SER.B	
G40T3000	90600-5214		1	AXIS MOD. KINETIX 6000,2094-BM01-S SER.B	
W20F0000	354000-0060		1	MINIATURE CIRCUIT BREAKER, FAZ-C6/1	
W20K0000	90459-3454		1	FOOTPRINT FILTER 1 PHASE 18A	
W20K0002	90129-0018		1	BASE, P2RF-08-E	
W20K0002	90119-0108		1	RELAY OMRON G2R-2-SNI-24DC	
	90129-0018		*1*	*BASE, P2RF-08-E*	
W21K1000	90600-5249		1	FERRITE, B64290L616X38	
W21K2000	90600-5249		1	FERRITE, B64290L616X38	
W20Q0000	90459-6852		1	AUXILIARY CONTACT, DILA-XHI22	
W20Q0000	90459-5308		1	CONTACTOR 4KW 24VDC, DILM9-10	
W20T0000	90459-3441		1	FREQ. CONV., 22B-A2P3N104	
W21X1000	90459-2550		1	I/O CONNECTOR 26 PIN MALE, 2090-K6CK-D26	
W21X2000	90459-2550		1	I/O CONNECTOR 26 PIN MALE, 2090-K6CK-D26	
Common Parts					
040	2890590-0000		1	CABLE DUCT	
050	90459-2614		1	DEVICENET ADAPTER POWERFLEX 40 22-COMM-D	
060	90459-2795		1	FRONT LID FOR POWERFLEX 40, 22B-CCB	
460	90600-5823		1	SIGN, MAIN POWER MACHINE LABEL	
470	90459-6617		2	COVER 4-POLE, NZM1-4-XKSA	
480	359705-0015		7	WARNING SIGN ISO, RISK OF ELECTRIC SHOCK	
490	90600-2068		1	DELIVERED DESIGN SIGN, 90600-2068	
A01F1004	354002-0250		1	MINIATURE CIRCUIT BREAKER, FAZ-C25/3	
A01F1004	90459-5813		1	AUXILIARY CONTACT, FAZ-XHIN11	
A01F2000	354002-0060		1	MINIATURE CIRCUIT BREAKER, FAZ-C6/3	
A01F2001	354000-0040		1	MINIATURE CIRCUIT BREAKER, FAZ-C4/1	
A01F2002	354000-0040		1	MINIATURE CIRCUIT BREAKER, FAZ-C4/1	
A01F2003	354000-0040		1	MINIATURE CIRCUIT BREAKER, FAZ-C4/1	
A01F2004	354000-0040		1	MINIATURE CIRCUIT BREAKER, FAZ-C4/1	
A01F2005	354000-0040		1	MINIATURE CIRCUIT BREAKER, FAZ-C4/1	
A01F3000	354000-0040		1	MINIATURE CIRCUIT BREAKER, FAZ-C4/1	
A01F6000	354000-0060		1	MINIATURE CIRCUIT BREAKER, FAZ-C6/1	
A01F7001	90459-5811		1	RESIDUAL CURRENT DEVICE, FI-25/2/003-A	
A01F7002	354000-0100		1	MINIATURE CIRCUIT BREAKER, FAZ-C10/1	
A01Q1000	90600-5543		1	CIRCUIT BREAKER, NZMB1-4-A32	
A01X0006	2841403-0300		1	PLINTH	**9-25**
A01X7000	90459-3845		1	WALL SOCKET, Z-SD230	
V01F5000	354002-0200		1	MINIATURE CIRCUIT BREAKER, FAZ-C20/3	
V01F5000	90459-5813		1	AUXILIARY CONTACT, FAZ-XHIN11	
W21F4000	354000-0100		1	MINIATURE CIRCUIT BREAKER, FAZ-C10/1	
W21F6000	354000-0100		1	MINIATURE CIRCUIT BREAKER, FAZ-C10/1	
W21F8001	354001-0100		1	MINIATURE CIRCUIT BREAKER, FAZ-C10/2	
W21F8001	90459-5813		1	AUXILIARY CONTACT, FAZ-XHIN11	

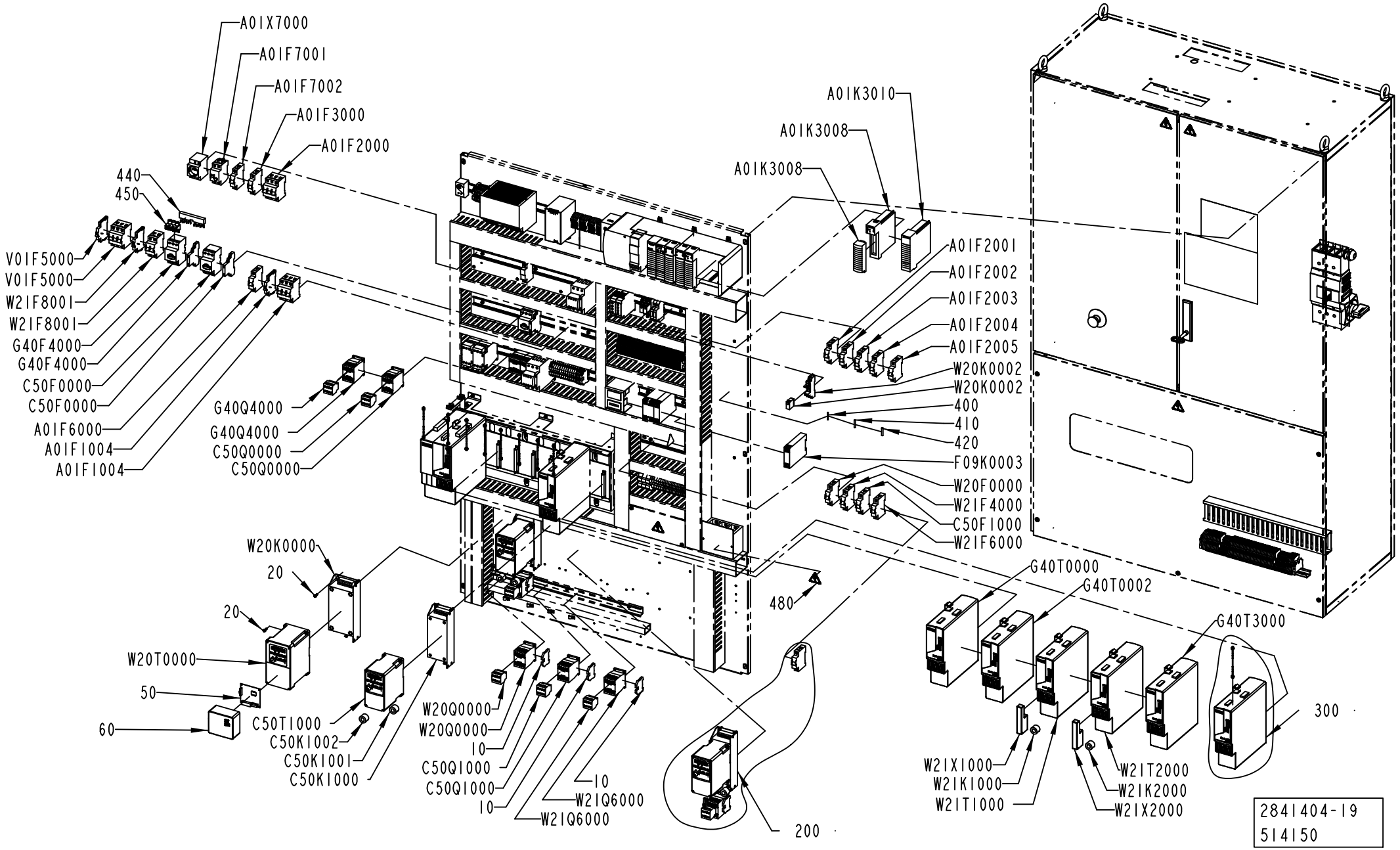
A01X7000
A01F7001
A01F7002
A01F3000
A01F2000
440
450
V01F5000
V01F5000
W21F8001
W21F8001
G40F4000
G40F4000
C50F0000
C50F0000
A01F6000
A01F1004
A01F1004
G40Q4000
G40Q4000
C50Q0000
C50Q0000
A01K3010
A01K3008
A01K3008
A01F2001
A01F2002
A01F2003
A01F2004
A01F2005
W20K0002
W20K0002
400
410
420
F09K0003
W20F0000
W21F4000
C50F1000
W21F6000
480
W20K0000
20
20
W20T0000
50
60
C50T1000
C50K1002
C50K1001
C50K1000
W20Q0000
W20Q0000
10
C50Q1000
C50Q1000
10
10
W21Q6000
W21Q6000
200
G40T0000
G40T0002
G40T3000
300
W21X1000
W21K1000
W21T1000
W21T2000
W21K2000
W21X2000
2841404-19
514150

Pos	Part No	UN	Qty	Description	Page No
Common Parts (Cont'd)					
W21Q6000	90459-6852		1	AUXILIARY CONTACT, DILA-XHI22	
W21Q6000	90459-5308		1	CONTACTOR 4KW 24VDC, DILM9-10	
W21T1000	90600-5216		1	AXIS MOD. KINETIX 6000,2094-BM02-S SER.B	
W21T2000	90600-5216		1	AXIS MOD. KINETIX 6000,2094-BM02-S SER.B	

Pos	Part No	UN	Qty	Description	Page No

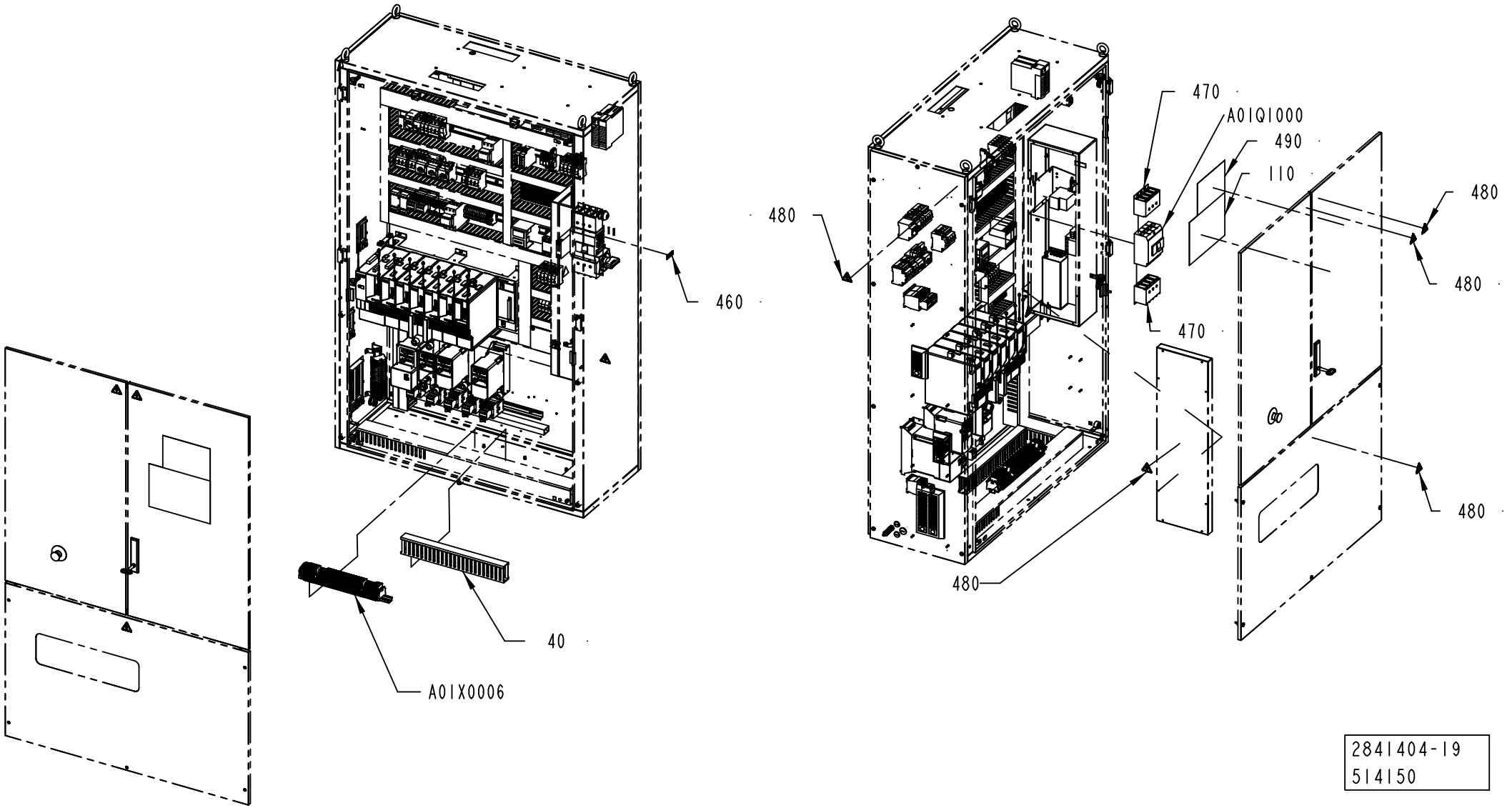

2841404-19
514150

Pos	Part No	UN	Qty	Description	Page No	Pos	Part No	UN	Qty	Description	Page No

SEE PREVIOUS LISTS PAGES: 9-7, 9-9, 9-11.

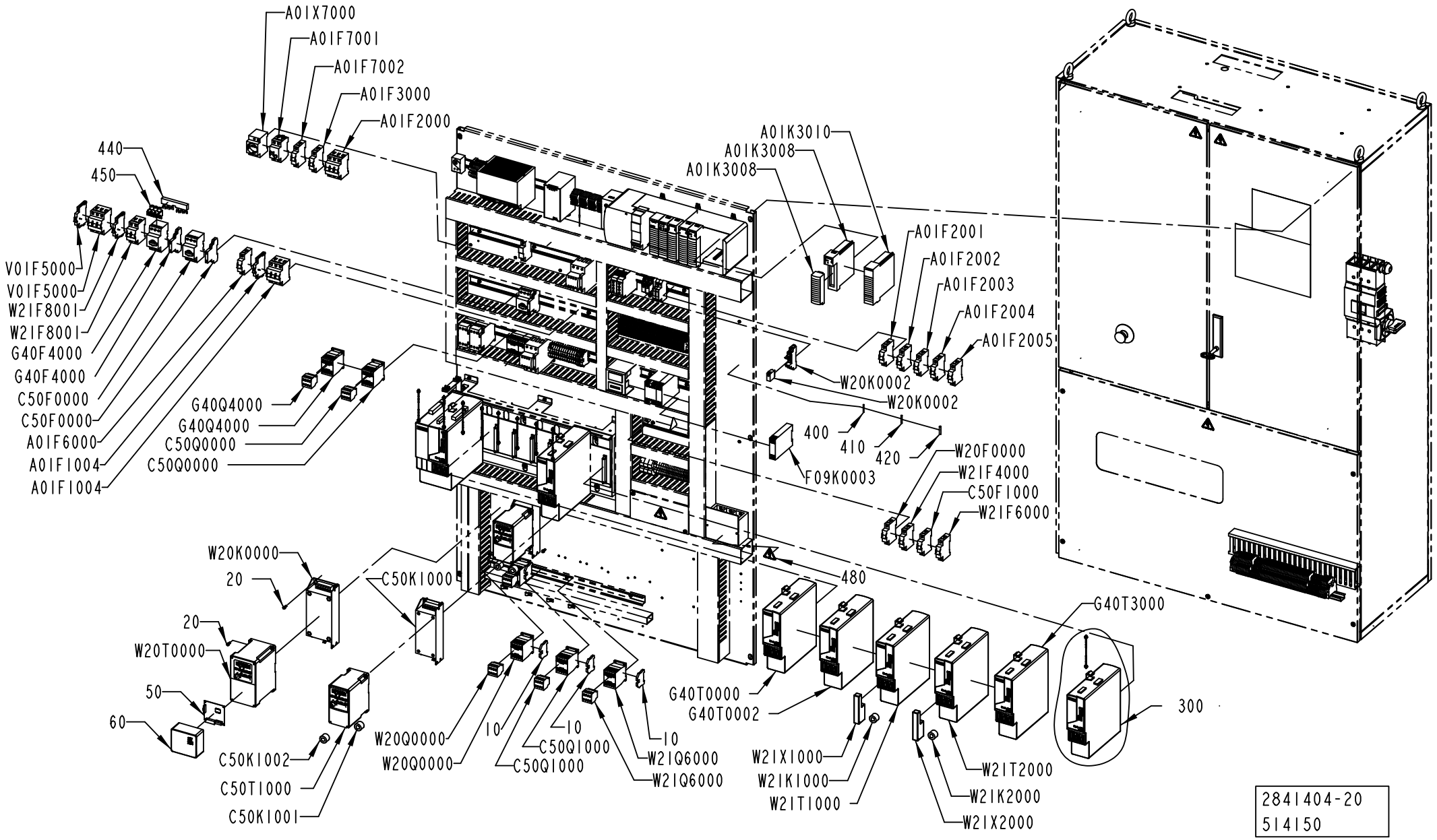
A01X7000
A01F7001
A01F7002
A01F3000
A01F2000
440
450
V01F5000
V01F5000
W21F8001
W21F8001
G40F4000
G40F4000
C50F0000
C50F0000
A01F6000
A01F1004
A01F1004
G40Q4000
G40Q4000
C50Q0000
C50Q0000
A01K3010
A01K3008
A01K3008
A01F2001
A01F2002
A01F2003
A01F2004
A01F2005
W20K0002
W20K0002
400
410
420
F09K0003
W20F0000
W21F4000
C50F1000
W21F6000
480
W20K0000
20
C50K1000
20
W20T0000
50
60
C50K1002
C50T1000
C50K1001
W20Q0000
W20Q0000
10
C50Q1000
C50Q1000
10
W21Q6000
W21Q6000
10
G40T0000
G40T0002
W21X1000
W21K1000
W21T1000
G40T3000
300
W21T2000
W21K2000
W21X2000
2841404-20
514150

Pos	Part No	UN	Qty	Description	Page No	Pos	Part No	UN	Qty	Description	Page No

SEE PREVIOUS LISTS PAGES: 9-7, 9-9, 9-11.

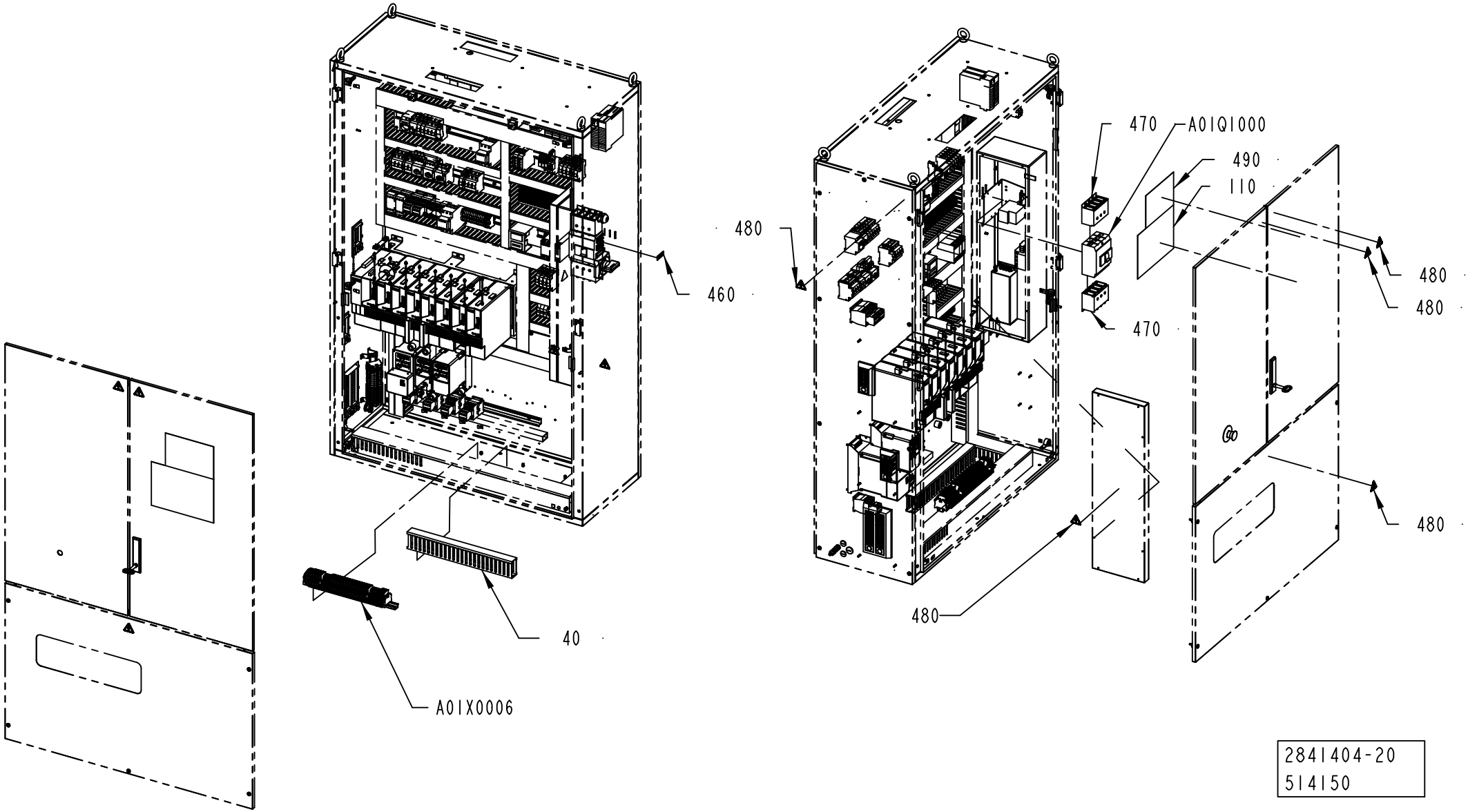

2841404-20
514150

Pos	Part No	UN	Qty	Description	Page No	Pos	Part No	UN	Qty	Description	Page No

SEE PREVIOUS LISTS PAGES: 9-7, 9-9, 9-11.

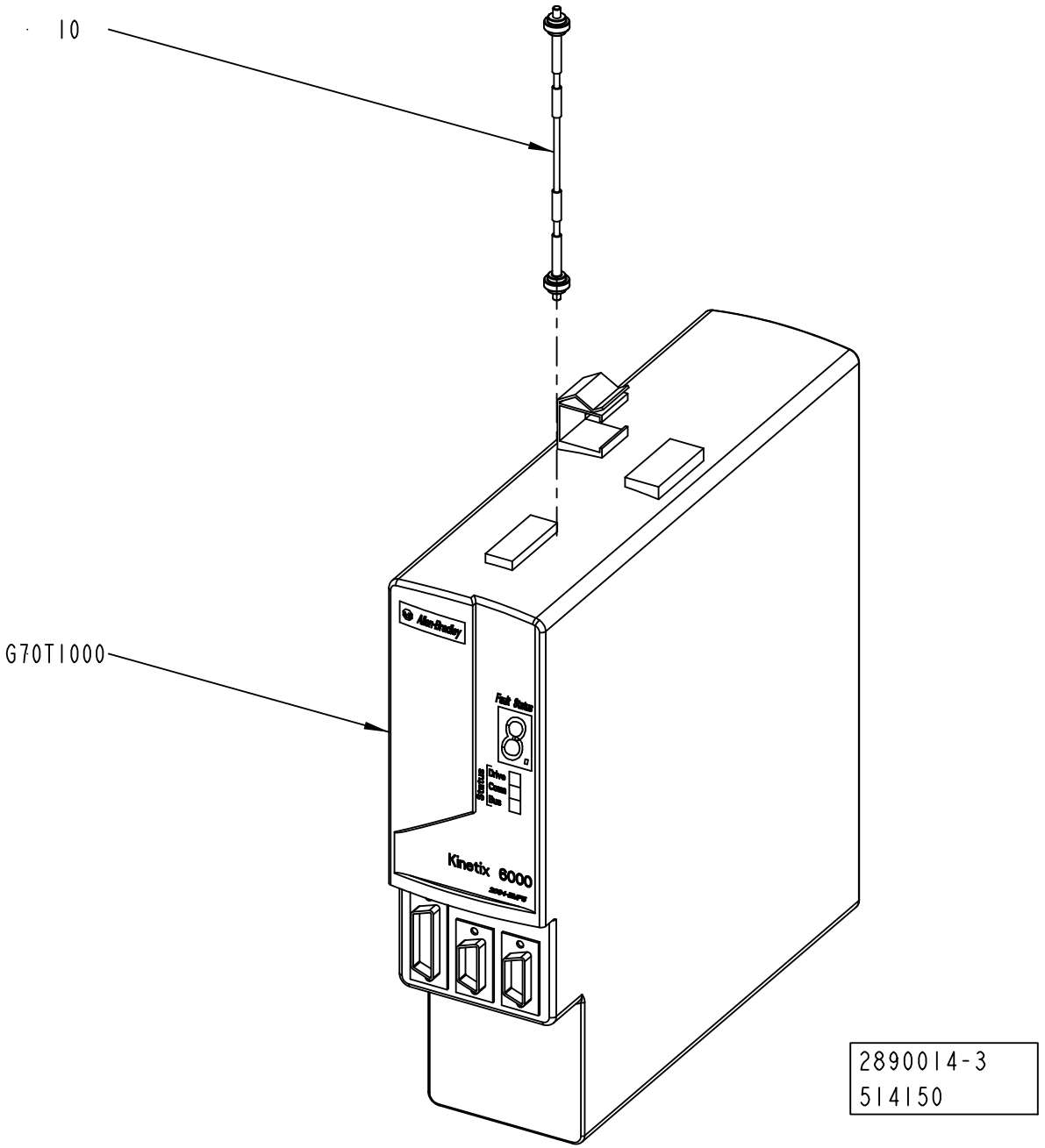
10
G70T1000
Kinetix 6000
2890014-3
514150

ECM: 521635 - 20120401
Group number: 2890014-0300
Assembly Drawing: 2890014-3_1_AA

Pos	Part No	UN	Qty	Description	Page No
-					
010	90459-2536		1	SERCOS CABLE 0.1M, 2090-SCEP0-1	
G70T1000	90600-5214		1	AXIS MOD. KINETIX 6000,2094-BM01-S SER.B	

Pos	Part No	UN	Qty	Description	Page No

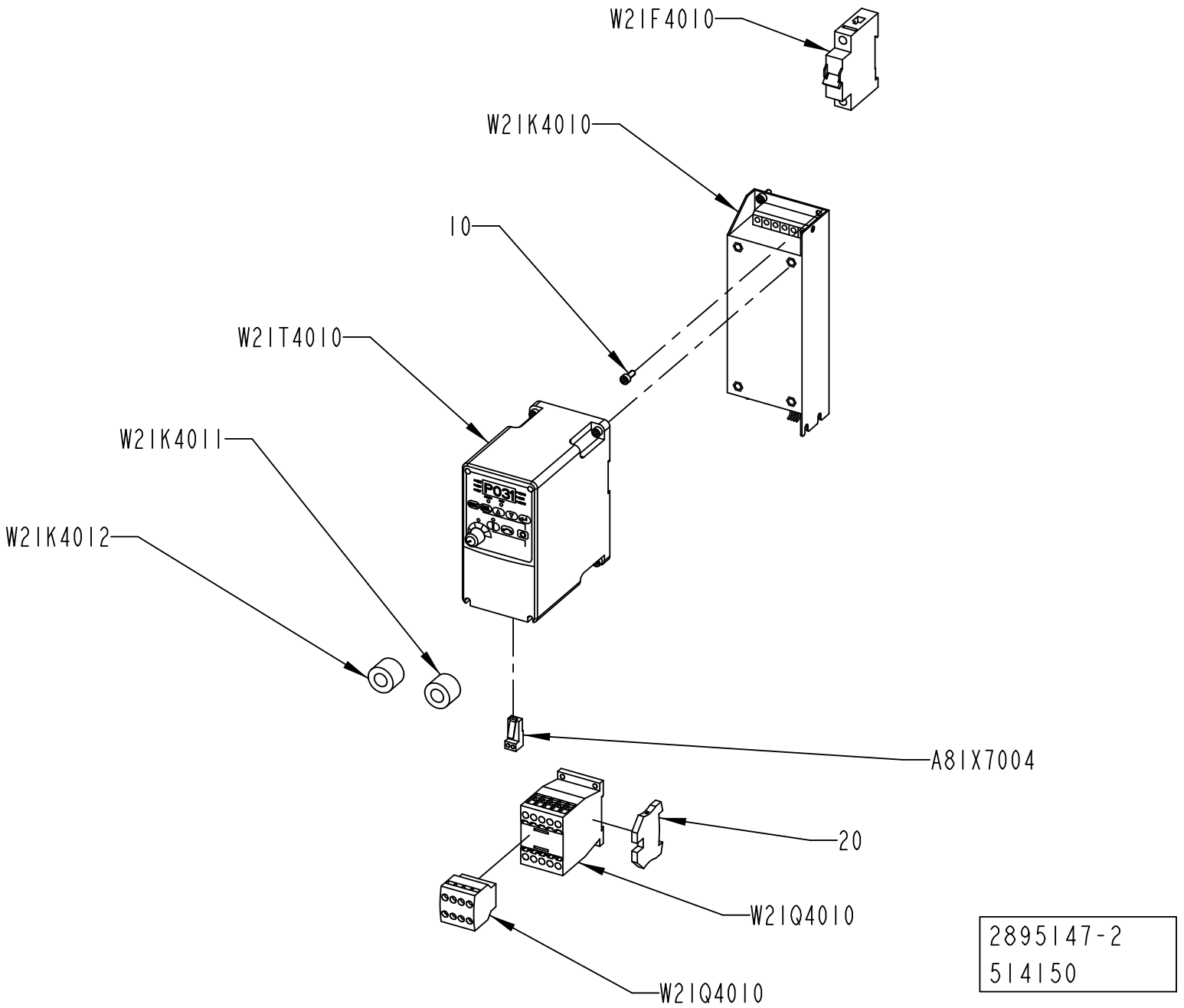
W2IF4010
W2IK4010
10
W2IT4010
W2IK4011
W2IK4012
P031
A8IX7004
20
W2IQ4010
W2IQ4010
2895147-2
514150

Pos	Part No	UN	Qty	Description	Page No
CE (See drawing on page: 9-20)					
W21F4010	354000-0060		1	MINIATURE CIRCUIT BREAKER, FAZ-C6/1	
UL, CSA (See drawing on page: 9-22)					
W21F4010	315744-0060		1	MINIATURE CIRCUIT BREAKER, FAZ-C6/1-NA	
Common Parts					
010	312115-0327		8	SCREW ISO4762 M5X12 A4 80	
020	353024-0205		1	EARTH TERMINAL WPE 4	
A81X7004	90459-6470		1	CONNECTOR RJ45 TER. BL., AK-U0-RJ45-TB2P	
	90459-2523		*2*	*TERMINATOR, OPEN STYLE, 1485A-C2*	
W21K4010	90459-3460		1	FOOTPRINT FILTER 1 PHASE 10A	
W21K4011	90600-5249		1	FERRITE, B64290L616X38	
W21K4012	90600-5249		1	FERRITE, B64290L616X38	
W21Q4010	90459-6852		1	AUXILIARY CONTACT, DILA-XHI22	
W21Q4010	90459-5308		1	CONTACTOR 4KW 24VDC, DILM9-10	
W21T4010	90459-3449		1	FREQ. CONV., 22A-A2P3N104	

Pos	Part No	UN	Qty	Description	Page No

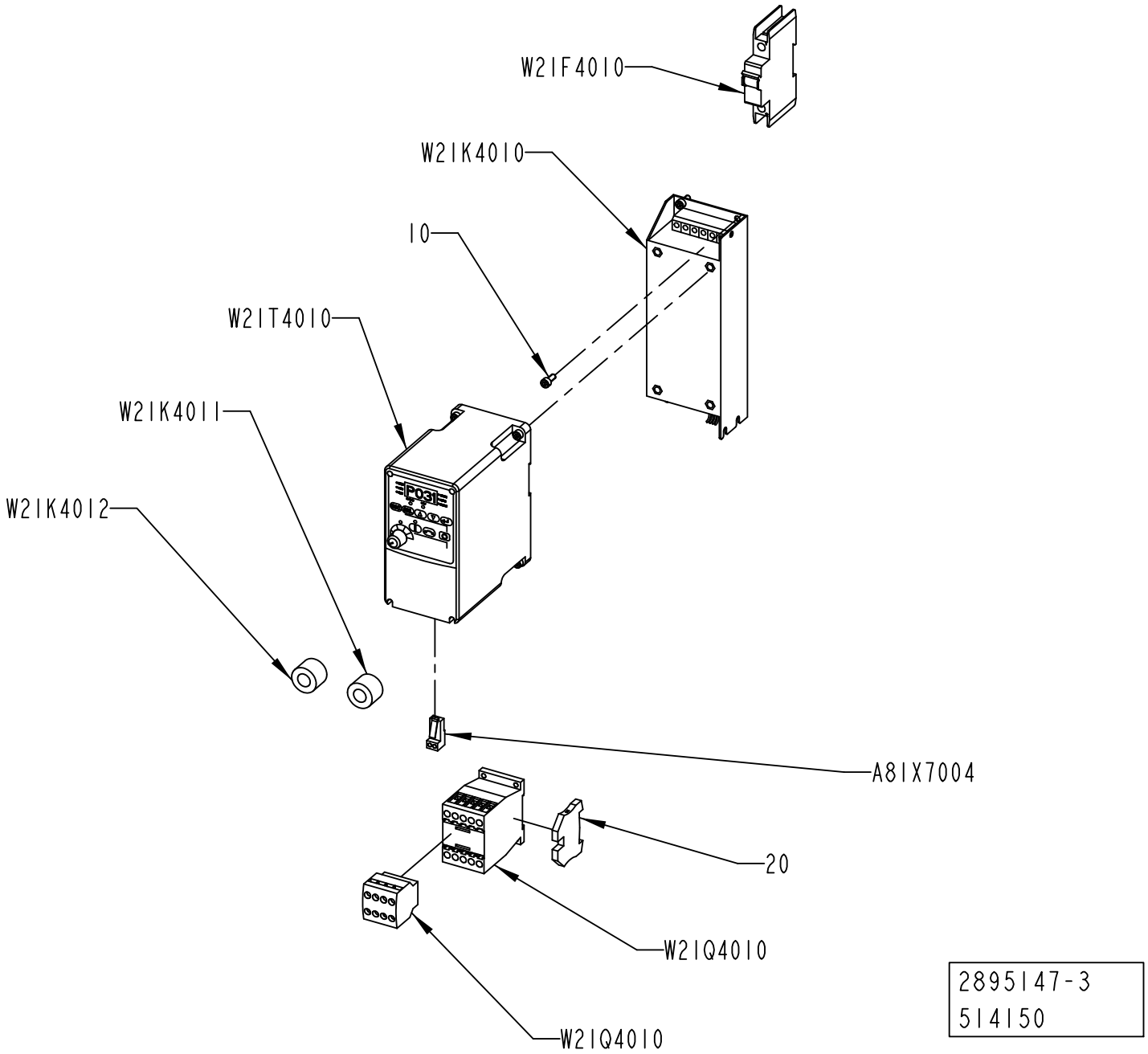
W21F4010
W21K4010
10
W21T4010
W21K4011
W21K4012
A81X7004
20
W21Q4010
W21Q4010
2895147-3
514150

Pos	Part No	UN	Qty	Description	Page No
CE (See drawing on page: 9-20)					
W21F4010	354000-0060		1	MINIATURE CIRCUIT BREAKER, FAZ-C6/1	
UL, CSA (See drawing on page: 9-22)					
W21F4010	315744-0060		1	MINIATURE CIRCUIT BREAKER, FAZ-C6/1-NA	
Common Parts					
010	312115-0327		8	SCREW ISO4762 M5X12 A4 80	
020	353024-0205		1	EARTH TERMINAL WPE 4	
A81X7004	90459-6470		1	CONNECTOR RJ45 TER. BL., AK-U0-RJ45-TB2P	
	90459-2523		*2*	*TERMINATOR, OPEN STYLE, 1485A-C2*	
W21K4010	90459-3460		1	FOOTPRINT FILTER 1 PHASE 10A	
W21K4011	90600-5249		1	FERRITE, B64290L616X38	
W21K4012	90600-5249		1	FERRITE, B64290L616X38	
W21Q4010	90459-6852		1	AUXILIARY CONTACT, DILA-XHI22	
W21Q4010	90459-5308		1	CONTACTOR 4KW 24VDC, DILM9-10	
W21T4010	90459-3449		1	FREQ. CONV., 22A-A2P3N104	

Pos	Part No	UN	Qty	Description	Page No

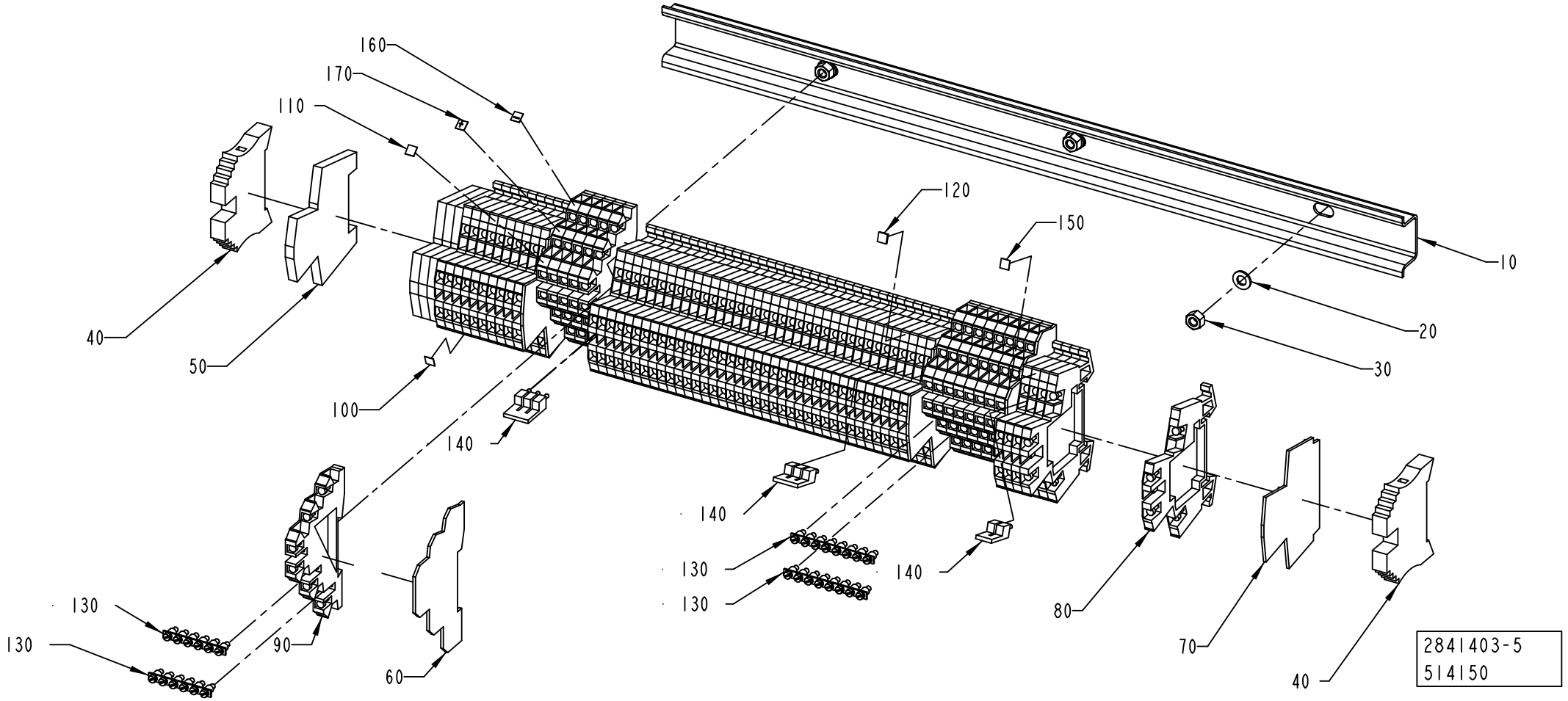
160
170
110
120
150
10
20
30
40
50
100
140
140
130
130
140
130
130
90
60
80
70
40
2841403-5
514150

ECM: 535619 - 20120401
Group number: 2841403-0300
Assembly Drawing: 2841403-5_1_AA

Pos	Part No	UN	Qty	Description	Page No
STREAMCAP500, STREAMCAP1000, SLIMCAP 2000, SLIMCAP 1000, STREAMCAP200, HELICAP2					**23**
060	353032-0302		2	END PLATE, AP DLD2,5 DB	
070	353032-0009		3	END PLATE, WAP WDK 2,5	
080	90077-0113		52	TERMINAL BLOCK WDK 2.5	
090	353021-0302		14	TERMINAL, DLD 2,5/35	
100	359011-0807		2	MARKING, DEK 5 FW 1-50	
110	359011-0809		2	MARKING, DEK 5 FW 101-150	
130	353034-0404		4	BRIDGE CONNECTOR Q 10 DLI	
140	353034-0030		3	BRIDGE CONNECTOR WQV 2,5/10	
160	359011-0818		1	MARKING, DEK 5GW (-)	
170	359011-0817		1	MARKING, DEK 5GW (+)	
Common Parts					
010	2890015-0000		1	RAIL	
020	315105-0146		3	WASHER PLAIN, 5,3X10X1 A4 BRB	
030	312605-0314		3	HEXAGON NUT, M6M M5 A280	
040	353031-0203		2	END BRACKET, WEW 35/2	
050	353024-0212		4	EARTH TERMINAL WDK 2,5 PE	
120	359011-0806		2	MARKING, DEK 5 FW 1-200	
150	359011-0811		2	MARKING, DEK 5 FW 201-250	

Pos	Part No	UN	Qty	Description	Page No

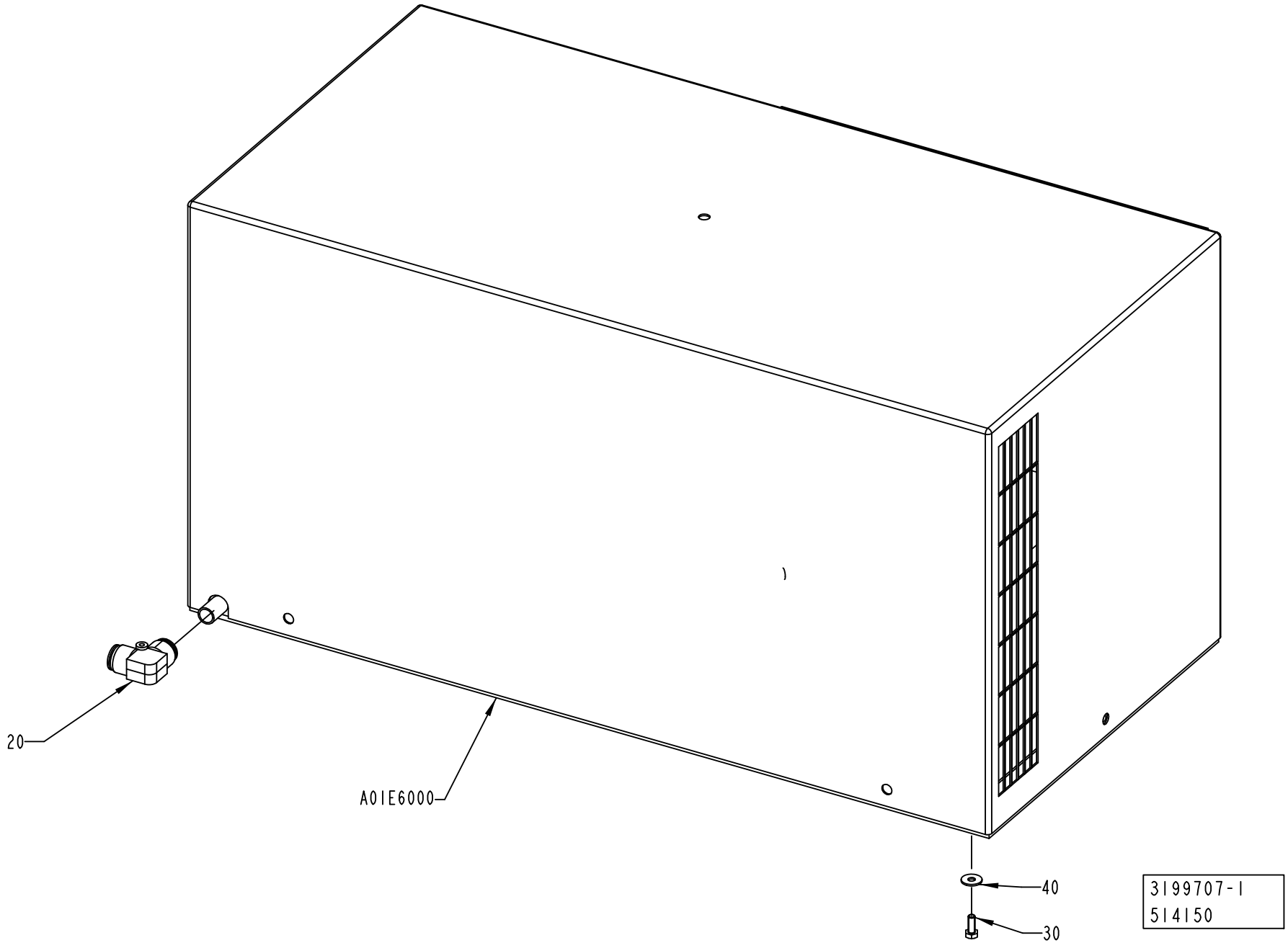
20
A01E6000
40
30
3199707-1
514150

ECM: 521637 - 20120401
Group number: 3199707-0100
Assembly Drawing: 3199707-1_1_AA

Pos	Part No	UN	Qty	Description	Page No
-					
020	90459-2553		1	PUSH-IN L-FITTING QSL 16	
030	312105-0368		6	SCREW, M6S ISO 4017 M6X16 A4 80	
040	90005-0060		6	WASHER PLAIN, RBS 6,4/M6)/18,H=1,5	
A01E6000	90600-5815		1	COOLING UNIT, KB20A21341.03	
	90459-0364		*1*	*FILTER KB20/30/40 POLYURETH. FILTER 2001*	
	90600-0673		*2*	*THERMOSTAT, KELVIN TMI0000218*	
	90600-0675		*1*	*GASKET, A6411AA*	
	90600-0676		*1*	*GRID, DISA1880AA*	
	90600-5817		*2*	*FAN, VBH0001558*	

Pos	Part No	UN	Qty	Description	Page No

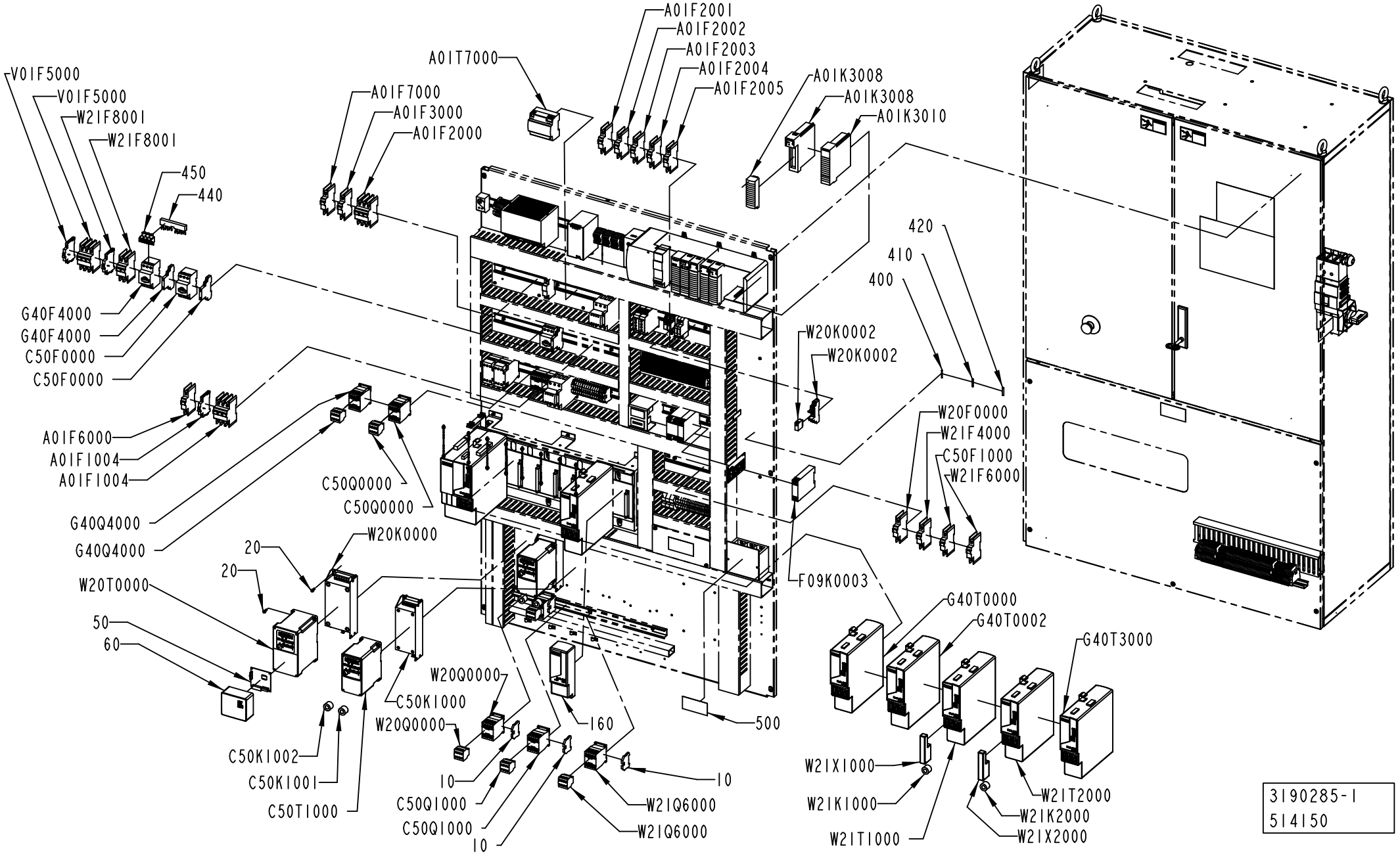
A01F2001
A01F2002
A01F2003
A01F2004
A01F2005
A01T7000
A01F7000
A01F3000
A01F2000
A01K3008
A01K3008
A01K3010
V01F5000
V01F5000
W21F8001
W21F8001
450
440
420
410
400
G40F4000
G40F4000
C50F0000
C50F0000
W20K0002
W20K0002
W20F0000
W21F4000
C50F1000
W21F6000
A01F6000
A01F1004
A01F1004
C50Q0000
C50Q0000
G40Q4000
G40Q4000
20
20
W20K0000
W20T0000
50
60
F09K0003
G40T0000
G40T0002
G40T3000
W20Q0000
C50K1000
W20Q0000
160
500
C50K1002
C50K1001
C50T1000
10
C50Q1000
C50Q1000
10
W21Q6000
W21Q6000
10
W21X1000
W21K1000
W21T1000
W21T2000
W21K2000
W21X2000
3190285-1
514150

Pos	Part No	UN	Qty	Description	Page No
CAP 30/FLEX TGA 0500SQ, CAP 30/FLEX TGA 0750SQ, CAP 30/FLEX TGA 1000SQ, CAP 30/FLEX TGA 1500SQ (See drawing on pages: 9-36, 9-38)					
010	353024-0205		3	EARTH TERMINAL WPE 4	
020	312115-0327		16	SCREW ISO4762 M5X12 A4 80	
110	3199178-0000		1	FUSE PANEL LABEL	
300	2890014-0300		1	POSITIONING UNIT	**9-19, 12-31**
400	351160-0102	M	458	WIRE AWM 1X0,75 MM2 DARKBLUE	
410	351164-0105	M	65	WIRE AWM 1X2,5 MM2 BLACK	
420	351164-0107	M	39	WIRE AWM 1X6 MM2 BLACK	
440	90259-0315		1	CIRCUIT BREAKER , B3.1/2-PKZ0	
450	90600-1461		1	INCOMING TERMINAL, BK25/3-PKZ0-E	
A01K3008	90459-2488		1	REMOVABLE TERMINAL BLOCK 36 POINTS	
A01K3008	90600-4033		1	DIGITAL OUTPUT MODULE, 1756-OB16IS	
A01K3010	90459-2480		1	8-AXIS SERCOS MOTION MODULE	
C50F0000	90459-5323		1	OVERLOAD PROTECTION, PKZM0-1	
C50F0000	90259-0313		1	AUXILIARY SWITCH, NHI21-PKZ0	
C50F1000	315744-0060		1	MINIATURE CIRCUIT BREAKER, FAZ-C6/1-NA	
C50K1000	90459-3460		1	FOOTPRINT FILTER 1 PHASE 10A	
C50K1001	90600-5249		1	FERRITE, B64290L616X38	
C50K1002	90600-5249		1	FERRITE, B64290L616X38	
C50Q0000	90459-5308		1	CONTACTOR 4KW 24VDC, DILM9-10	
C50Q0000	90459-6852		1	AUXILIARY CONTACT, DILA-XHI22	
C50Q1000	90459-5308		1	CONTACTOR 4KW 24VDC, DILM9-10	
C50Q1000	90459-6852		1	AUXILIARY CONTACT, DILA-XHI22	
C50T1000	90459-3449		1	FREQ. CONV., 22A-A2P3N104	
F09K0003	90459-2291		1	SAFETY RELAY, E1T	
G40F4000	90459-5321		1	OVERLOAD PROTECTION, PKZM0-0,4	
G40F4000	90259-0313		1	AUXILIARY SWITCH, NHI21-PKZ0	
G40Q4000	90459-6852		1	AUXILIARY CONTACT, DILA-XHI22	
G40Q4000	90459-5308		1	CONTACTOR 4KW 24VDC, DILM9-10	
G40T0000	90600-5216		1	AXIS MOD. KINETIX 6000,2094-BM02-S SER.B	
G40T0002	90600-5216		1	AXIS MOD. KINETIX 6000,2094-BM02-S SER.B	
G40T3000	90600-5214		1	AXIS MOD. KINETIX 6000,2094-BM01-S SER.B	
W20F0000	315744-0060		1	MINIATURE CIRCUIT BREAKER, FAZ-C6/1-NA	
W20K0000	90459-3454		1	FOOTPRINT FILTER 1 PHASE 18A	
W20K0002	90119-0108		1	RELAY OMRON G2R-2-SNI-24DC	
	90129-0018		*1*	*BASE, P2RF-08-E*	
W20K0002	90129-0018		1	BASE, P2RF-08-E	
W21K1000	90600-5249		1	FERRITE, B64290L616X38	
W21K2000	90600-5249		1	FERRITE, B64290L616X38	
W20Q0000	90459-6852		1	AUXILIARY CONTACT, DILA-XHI22	
W20Q0000	90459-5308		1	CONTACTOR 4KW 24VDC, DILM9-10	
W20T0000	90459-3441		1	FREQ. CONV., 22B-A2P3N104	
W21X1000	90459-2550		1	I/O CONNECTOR 26 PIN MALE, 2090-K6CK-D26	
W21X2000	90459-2550		1	I/O CONNECTOR 26 PIN MALE, 2090-K6CK-D26	
CAP30/FLEX TPA STREAMCAP 1000, CAP30/FLEX TPA STREAMCAP 500, CAP 30/FLEX TPA HELICAP 27 (See drawing on pages: 9-32, 9-34)					
010	353024-0205		3	EARTH TERMINAL WPE 4	
020	312115-0327		16	SCREW ISO4762 M5X12 A4 80	
110	3199182-0000		1	FUSE PANEL LABEL	
200	2895147-0200		1	PACKAGE ALIGNER	**9-21, 9-23**
300	2890014-0300		1	POSITIONING UNIT	**9-19, 12-31**
400	351160-0102	M	458	WIRE AWM 1X0,75 MM2 DARKBLUE	
410	351164-0105	M	65	WIRE AWM 1X2,5 MM2 BLACK	
420	351164-0107	M	39	WIRE AWM 1X6 MM2 BLACK	
440	90259-0315		1	CIRCUIT BREAKER , B3.1/2-PKZ0	
450	90600-1461		1	INCOMING TERMINAL, BK25/3-PKZ0-E	
A01K3008	90459-2488		1	REMOVABLE TERMINAL BLOCK 36 POINTS	
A01K3008	90600-4033		1	DIGITAL OUTPUT MODULE, 1756-OB16IS	
A01K3010	90459-2480		1	8-AXIS SERCOS MOTION MODULE	
C50F0000	90459-5323		1	OVERLOAD PROTECTION, PKZM0-1	
C50F0000	90259-0313		1	AUXILIARY SWITCH, NHI21-PKZ0	
C50F1000	315744-0060		1	MINIATURE CIRCUIT BREAKER, FAZ-C6/1-NA	
C50K1000	90459-3460		1	FOOTPRINT FILTER 1 PHASE 10A	
C50K1001	90600-5249		1	FERRITE, B64290L616X38	
C50K1002	90600-5249		1	FERRITE, B64290L616X38	
C50Q0000	90459-6852		1	AUXILIARY CONTACT, DILA-XHI22	
C50Q0000	90459-5308		1	CONTACTOR 4KW 24VDC, DILM9-10	
C50Q1000	90459-6852		1	AUXILIARY CONTACT, DILA-XHI22	
C50Q1000	90459-5308		1	CONTACTOR 4KW 24VDC, DILM9-10	
C50T1000	90459-3449		1	FREQ. CONV., 22A-A2P3N104	
F09K0003	90459-2291		1	SAFETY RELAY, E1T	
G40F4000	90459-5321		1	OVERLOAD PROTECTION, PKZM0-0,4	
G40F4000	90259-0313		1	AUXILIARY SWITCH, NHI21-PKZ0	
G40Q4000	90459-6852		1	AUXILIARY CONTACT, DILA-XHI22	
G40Q4000	90459-5308		1	CONTACTOR 4KW 24VDC, DILM9-10	
G40T0000	90600-5216		1	AXIS MOD. KINETIX 6000,2094-BM02-S SER.B	
G40T0002	90600-5216		1	AXIS MOD. KINETIX 6000,2094-BM02-S SER.B	
G40T3000	90600-5214		1	AXIS MOD. KINETIX 6000,2094-BM01-S SER.B	
W20F0000	315744-0060		1	MINIATURE CIRCUIT BREAKER, FAZ-C6/1-NA	
W20K0000	90459-3454		1	FOOTPRINT FILTER 1 PHASE 18A	
W20K0002	90129-0018		1	BASE, P2RF-08-E	
W20K0002	90119-0108		1	RELAY OMRON G2R-2-SNI-24DC	
	90129-0018		*1*	*BASE, P2RF-08-E*	

Machine Type | Group Description | Used-In | Group Number | Page No

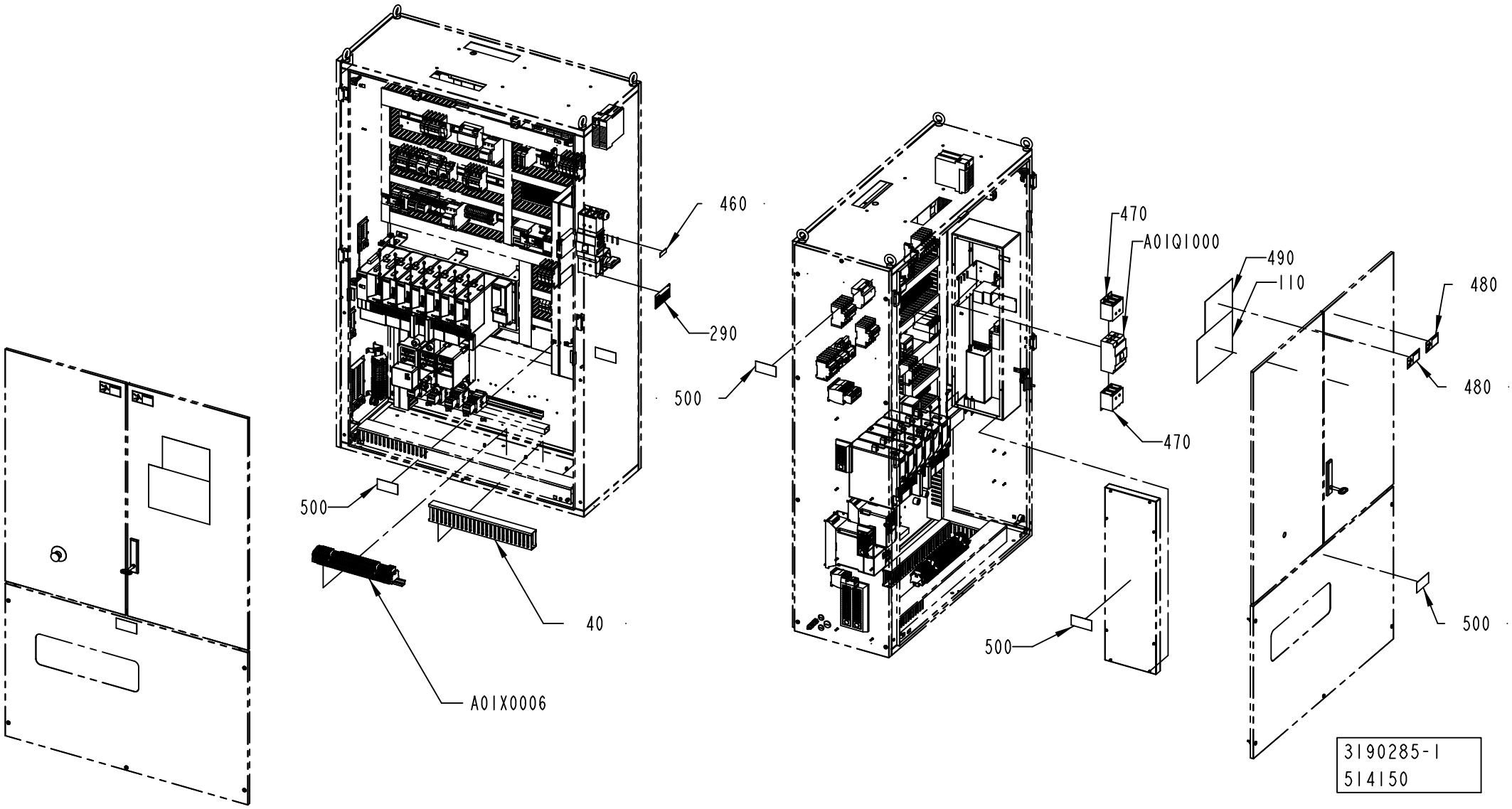
460
290
500
40
A01X0006
470
A01Q1000
500
470
500
490
110
480
480
500
3190285-1
514150

Pos	Part No	UN	Qty	Description	Page No
CAP30/FLEX TPA STREAMCAP 1000, CAP30/FLEX TPA STREAMCAP 500, CAP 30/FLEX TPA HELICAP 27 (Cont'd) (See drawing on pages: 9-32, 9-34)					
W21K1000	90600-5249		1	FERRITE, B64290L616X38	
W21K2000	90600-5249		1	FERRITE, B64290L616X38	
W20Q0000	90459-6852		1	AUXILIARY CONTACT, DILA-XHI22	
W20Q0000	90459-5308		1	CONTACTOR 4KW 24VDC, DILM9-10	
W20T0000	90459-3441		1	FREQ. CONV., 22B-A2P3N104	
W21X1000	90459-2550		1	I/O CONNECTOR 26 PIN MALE, 2090-K6CK-D26	
W21X2000	90459-2550		1	I/O CONNECTOR 26 PIN MALE, 2090-K6CK-D26	
CAP 30/FLEX TBA STREAMCAP1000, CAP 30/FLEX TBA SLIMCAP1000, CAP 30/FLEX TBA SLIMCAP2000, CAP 30/FLEX TBA STREAMCAP200, CAP 30/FLEX TBA HELICAP2 23, CAP 30/FLEX TBA HELICAP 27 (See drawing on pages: 9-28, 9-30)					
010	353024-0205		3	EARTH TERMINAL WPE 4	
020	312115-0327		16	SCREW ISO4762 M5X12 A4 80	
110	3199178-0000		1	FUSE PANEL LABEL	
160	90459-2547		1	POWER RAIL SLOT FILLER, 2094-PRF	
400	351160-0102	M	458	WIRE AWM 1X0,75 MM2 DARKBLUE	
410	351164-0105	M	65	WIRE AWM 1X2,5 MM2 BLACK	
420	351164-0107	M	39	WIRE AWM 1X6 MM2 BLACK	
440	90259-0315		1	CIRCUIT BREAKER , B3.1/2-PKZ0	
450	90600-1461		1	INCOMING TERMINAL, BK25/3-PKZ0-E	
A01K3008	90600-4033		1	DIGITAL OUTPUT MODULE, 1756-OB16IS	
A01K3008	90459-2488		1	REMOVABLE TERMINAL BLOCK 36 POINTS	
A01K3010	90459-2480		1	8-AXIS SERCOS MOTION MODULE	
C50F0000	90459-5323		1	OVERLOAD PROTECTION, PKZM0-1	
C50F0000	90259-0313		1	AUXILIARY SWITCH, NHI21-PKZ0	
C50F1000	315744-0060		1	MINIATURE CIRCUIT BREAKER, FAZ-C6/1-NA	
C50K1000	90459-3460		1	FOOTPRINT FILTER 1 PHASE 10A	
C50K1001	90600-5249		1	FERRITE, B64290L616X38	
C50K1002	90600-5249		1	FERRITE, B64290L616X38	
C50Q0000	90459-6852		1	AUXILIARY CONTACT, DILA-XHI22	
C50Q0000	90459-5308		1	CONTACTOR 4KW 24VDC, DILM9-10	
C50Q1000	90459-6852		1	AUXILIARY CONTACT, DILA-XHI22	
C50Q1000	90459-5308		1	CONTACTOR 4KW 24VDC, DILM9-10	
C50T1000	90459-3449		1	FREQ. CONV., 22A-A2P3N104	
F09K0003	90459-2291		1	SAFETY RELAY, E1T	
G40F4000	90259-0313		1	AUXILIARY SWITCH, NHI21-PKZ0	
G40F4000	90459-5321		1	OVERLOAD PROTECTION, PKZM0-0,4	
G40Q4000	90459-6852		1	AUXILIARY CONTACT, DILA-XHI22	
G40Q4000	90459-5308		1	CONTACTOR 4KW 24VDC, DILM9-10	
G40T0000	90600-5216		1	AXIS MOD. KINETIX 6000,2094-BM02-S SER.B	
G40T0002	90600-5216		1	AXIS MOD. KINETIX 6000,2094-BM02-S SER.B	
G40T3000	90600-5214		1	AXIS MOD. KINETIX 6000,2094-BM01-S SER.B	
W20F0000	315744-0060		1	MINIATURE CIRCUIT BREAKER, FAZ-C6/1-NA	
W20K0000	90459-3454		1	FOOTPRINT FILTER 1 PHASE 18A	
W20K0002	90129-0018		1	BASE, P2RF-08-E	
W20K0002	90119-0108		1	RELAY OMRON G2R-2-SNI-24DC	
	90129-0018		*1*	*BASE, P2RF-08-E*	
W21K1000	90600-5249		1	FERRITE, B64290L616X38	
W21K2000	90600-5249		1	FERRITE, B64290L616X38	
W20Q0000	90459-6852		1	AUXILIARY CONTACT, DILA-XHI22	
W20Q0000	90459-5308		1	CONTACTOR 4KW 24VDC, DILM9-10	
W20T0000	90459-3441		1	FREQ. CONV., 22B-A2P3N104	
W21X1000	90459-2550		1	I/O CONNECTOR 26 PIN MALE, 2090-K6CK-D26	
W21X2000	90459-2550		1	I/O CONNECTOR 26 PIN MALE, 2090-K6CK-D26	
Common Parts					
040	2890590-0000		1	CABLE DUCT	
050	90459-2614		1	DEVICENET ADAPTER POWERFLEX 40 22-COMM-D	
060	90459-2795		1	FRONT LID FOR POWERFLEX 40, 22B-CCB	
290	90459-7228		1	ELECTRICAL EQUIPMENT SIGN, TEMPLATE	
460	359240-0001		1	SIGN, NOT ENGRAVED	
470	90600-5270		2	COVER 3-POLE, NZM1-XKSA	
480	359715-0100		2	WARNING SIGN ANSI (H), ELECTRIC SHOCK	
490	90600-5812		1	LABEL	
500	90603-2736		5	WARNING SIGN ANSI(H),HAZ.VOLT.DISCONNECT	
A01F1004	315746-0250		1	MINIATURE CIRCUIT BREAKER, FAZ-C25/3-NA	
A01F1004	90459-5813		1	AUXILIARY CONTACT, FAZ-XHIN11	
A01F2000	315746-0060		1	MINIATURE CIRCUIT BREAKER, FAZ-C6/3-NA	
A01F2001	315744-0040		1	MINIATURE CIRCUIT BREAKER, FAZ-C4/1-NA	
A01F2002	315744-0040		1	MINIATURE CIRCUIT BREAKER, FAZ-C4/1-NA	
A01F2003	315744-0040		1	MINIATURE CIRCUIT BREAKER, FAZ-C4/1-NA	
A01F2004	315744-0040		1	MINIATURE CIRCUIT BREAKER, FAZ-C4/1-NA	
A01F2005	315744-0040		1	MINIATURE CIRCUIT BREAKER, FAZ-C4/1-NA	
A01F3000	315744-0040		1	MINIATURE CIRCUIT BREAKER, FAZ-C4/1-NA	
A01F6000	315744-0060		1	MINIATURE CIRCUIT BREAKER, FAZ-C6/1-NA	
A01F7000	315744-0040		1	MINIATURE CIRCUIT BREAKER, FAZ-C4/1-NA	
A01Q1000	90600-5544		1	CIRCUIT BREAKER, NZMB1-A32-NA	
A01T7000	90603-1115		1	POWER SUPPLY, STEP-PS/1AC/24DC/3,8/C2LPS	
A01X0006	2841403-0300		1	PLINTH	**9-25**
V01F5000	315746-0200		1	MINIATURE CIRCUIT BREAKER, FAZ-C20/3-NA	
V01F5000	90459-5813		1	AUXILIARY CONTACT, FAZ-XHIN11	
W21F4000	315744-0100		1	MINIATURE CIRCUIT BREAKER, FAZ-C10/1-NA	
W21F6000	315744-0100		1	MINIATURE CIRCUIT BREAKER, FAZ-C10/1-NA	
W21F8001	315745-0100		1	MINIATURE CIRCUIT BREAKER, FAZ-C10/2-NA	

Machine Type | Group Description | Used-In | Group Number | Page No

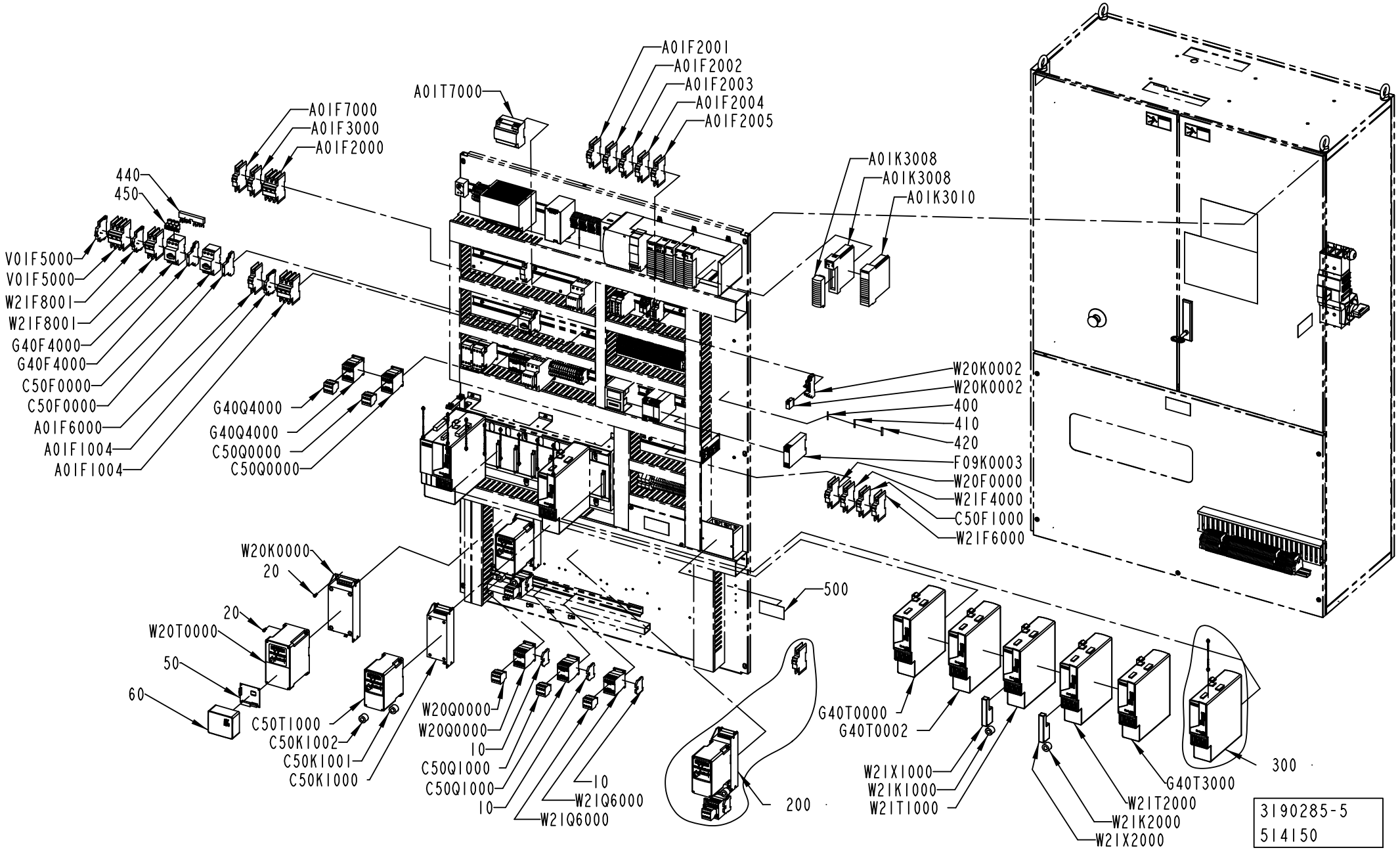
A01F2001
A01F2002
A01F2003
A01F2004
A01F2005
A01T7000
A01F7000
A01F3000
A01F2000
440
450
V01F5000
V01F5000
W21F8001
W21F8001
G40F4000
G40F4000
C50F0000
C50F0000
A01F6000
A01F1004
A01F1004
G40Q4000
G40Q4000
C50Q0000
C50Q0000
A01K3008
A01K3008
A01K3010
W20K0002
W20K0002
400
410
420
F09K0003
W20F0000
W21F4000
C50F1000
W21F6000
W20K0000
20
20
W20T0000
50
60
C50T1000
C50K1002
C50K1001
C50K1000
W20Q0000
W20Q0000
10
C50Q1000
C50Q1000
10
10
W21Q6000
W21Q6000
500
200
G40T0000
G40T0002
W21X1000
W21K1000
W21T1000
W21T2000
W21K2000
W21X2000
G40T3000
300
3190285-5
514150

Pos	Part No	UN	Qty	Description	Page No
Common Parts (Cont'd)					
W21F8001	90459-5813		1	AUXILIARY CONTACT, FAZ-XHIN11	
W21Q6000	90459-5308		1	CONTACTOR 4KW 24VDC, DILM9-10	
W21Q6000	90459-6852		1	AUXILIARY CONTACT, DILA-XHI22	
W21T1000	90600-5216		1	AXIS MOD. KINETIX 6000,2094-BM02-S SER.B	
W21T2000	90600-5216		1	AXIS MOD. KINETIX 6000,2094-BM02-S SER.B	

Pos	Part No	UN	Qty	Description	Page No

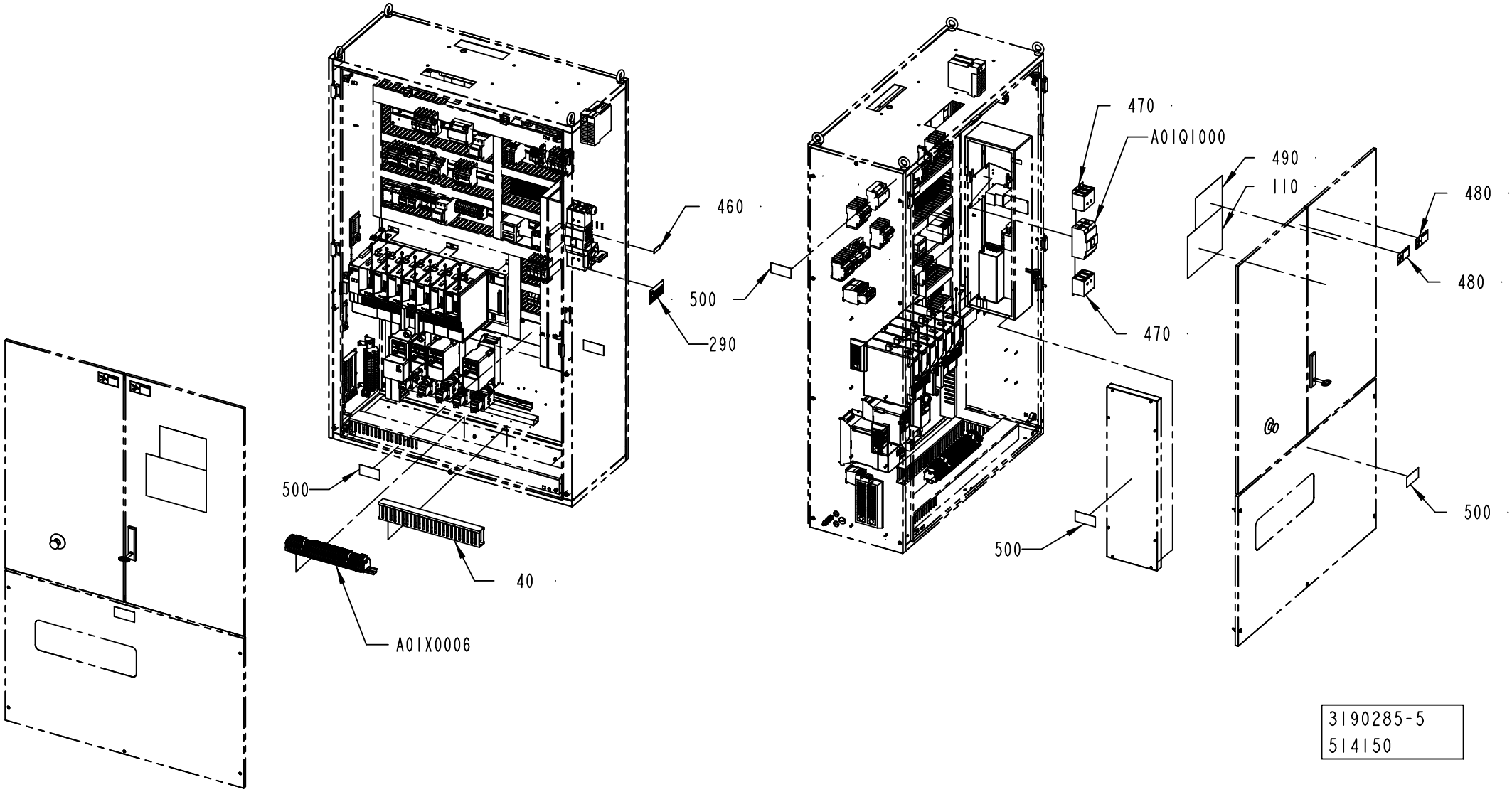
460
500
290
500
40
A01X0006
470
A01Q1000
470
500
490
110
480
480
500
3190285-5
514150

Pos	Part No	UN	Qty	Description	Page No	Pos	Part No	UN	Qty	Description	Page No

SEE PREVIOUS LISTS PAGES: 9-29, 9-31, 9-33.

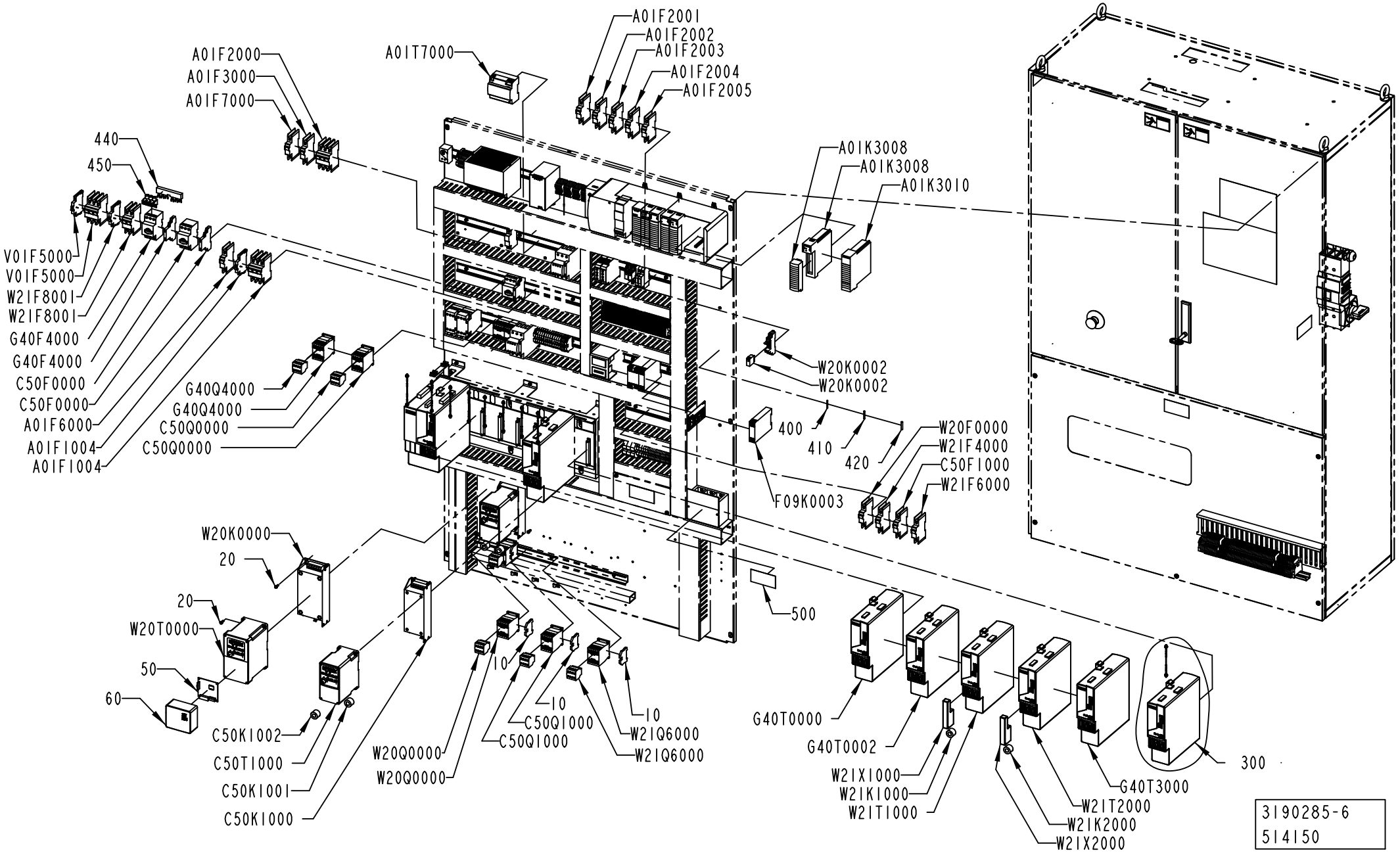
A01F2001
A01F2002
A01F2003
A01F2004
A01F2005
A01T7000
A01F2000
A01F3000
A01F7000
440
450
V01F5000
V01F5000
W21F8001
W21F8001
G40F4000
G40F4000
C50F0000
C50F0000
A01F6000
A01F1004
A01F1004
G40Q4000
G40Q4000
C50Q0000
C50Q0000
A01K3008
A01K3008
A01K3010
W20K0002
W20K0002
400
410
420
W20F0000
W21F4000
C50F1000
W21F6000
F09K0003
W20K0000
20
20
W20T0000
50
60
C50K1002
C50T1000
C50K1001
C50K1000
W20Q0000
W20Q0000
10
C50Q1000
C50Q1000
10
W21Q6000
W21Q6000
10
500
G40T0000
G40T0002
W21X1000
W21K1000
W21T1000
G40T3000
W21T2000
W21K2000
W21X2000
300
3190285-6
514150

Pos	Part No	UN	Qty	Description	Page No
SEE PREVIOUS LISTS PAGES: 9-29, 9-31, 9-33.					

Pos	Part No	UN	Qty	Description	Page No

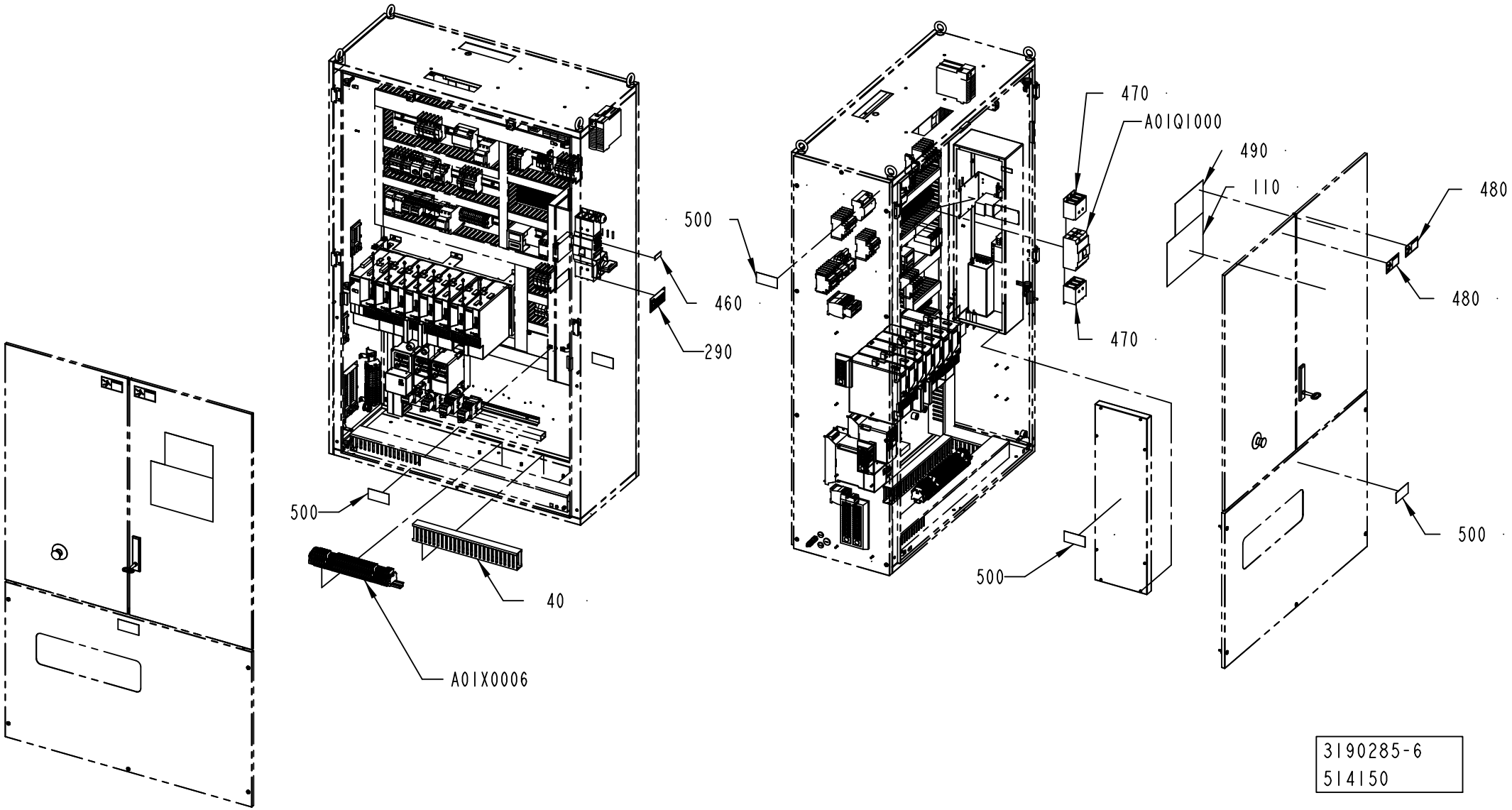

3190285-6
514150

Pos	Part No	UN	Qty	Description	Page No
SEE PREVIOUS LISTS PAGES: 9-29, 9-31, 9-33.					

Pos	Part No	UN	Qty	Description	Page No

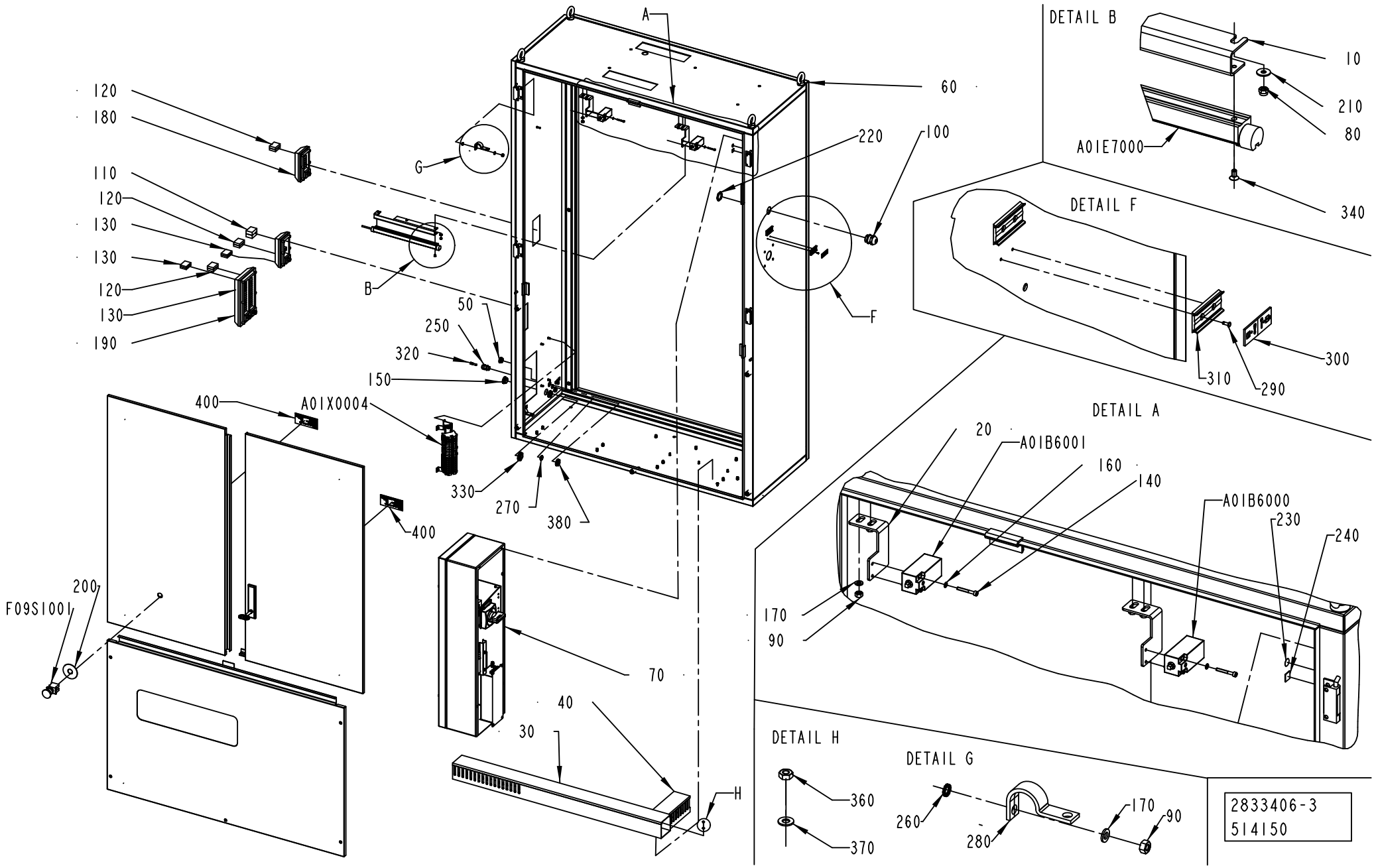
A
60
220
100
G
F
B
120
180
110
120
130
130
120
130
190
50
250
320
150
400
A01X0004
330
270
380
400
200
F09S1001
70
40
30
H
DETAIL B
10
210
80
A01E7000
340
DETAIL F
300
310
290
DETAIL A
20
A01B6001
160
140
A01B6000
230
240
170
90
DETAIL H
360
370
DETAIL G
260
280
170
90
2833406-3
514150

ECM: 520271 - 20120401
Group number: 2833406-0300
Assembly Drawing: 2833406-3_1_AA

Pos	Part No	UN	Qty	Description	Page No
-					
010	3062041-0000		1	SUPPORT	
020	2839225-0000		2	BRACKET	
030	2838459-0000		1	CABLE DUCT	
040	2838460-0000		1	CABLE DUCT	
050	90458-1308		2	BLIND PLUG CIRCULAR, M20X1,5 514GFK/220	
060	3190282-0000		1	WELDED CABINET	
070	2833410-0200		1	BOX	**9-43**
080	312812-0312		3	HEXAGON NUT, NY-LOCK M4 A4 80	
090	312605-0316		24	HEXAGON NUT, M6M M6 A280	
100	90458-0309		1	CABLE GLAND, M32X1,5, 5311 1040	
110	90458-1173		1	MULTI DIAMETER MODULE, CM 30W40	
120	90458-1174		18	MULTI DIAMETER MODULE, CM 20W40	
130	90458-1175		6	MULTI DIAMETER MODULE, CM 15W40	
140	312115-0299		4	SCREW ISO4762 M4X30 A4 80	
150	90458-1309		1	BLIND PLUG CIRCULAR, M25X1,5 514GFK/225	
160	315105-0136		4	WASHER PLAIN, 4,3X9X0,8 A4 BRB	
170	315105-0153		24	WASHER PLAIN, 6,4X12X1,5 A4 BRB	
180	90458-1178		2	FRAME, CF 8	
190	90458-1179		1	FRAME, CF 32	
200	486826-0001		1	SIGN "EMERGENCY STOP"	
210	90005-0082		3	WASHER PLAIN ROUND 4,3(M4)/12,H=1	
220	353250-0032		1	GLAND LOCK NUT, M32X1,5	
230	2608177-0000		20	SIGN	
240	90194-0152		20	SIGN, EARTH	
250	90458-0314		2	CABLE GLAND, M16X1,5, 5311 1110	
260	90062-0015		20	LOCK WASHER SERRAT.EXT.GEAR,6,4/11 H=0,7	
270	353250-0016		2	GLAND LOCK NUT, M16X1,5	
280	90600-2904		11	EARTH BRAID, 250/16/8,5	
290	311520-0320		4	RIVET, BLANK 2,4X6	
300	359241-0124		1	SIGN: MAIN SWITCH	
310	359240-0100		2	SIGN HOLDER FOR 359240-0001	
320	342715-0102		2	BLIND PLUG 6 MM	
330	90458-0324		1	NUT, M25X1,5	
340	312155-0287		2	SCREW DIN 7991 MF6S M4X8 A4 70	
360	90099-0191		46	HEXAGON NYLON NUT, M4X0,7	
370	90005-0064		15	WASHER PL.RND.NYL.4,3/9, H=0,8	
380	90458-0323		2	NUT, M20X1,5	
400	90459-7229		2	IDENTIF. OF SINGLE CONDUCTORS, TEMPLATE	
A01B6000	90602-8807		1	LIMIT SW. SZ 2586.010	
A01B6001	90602-8807		1	LIMIT SW. SZ 2586.010	
A01E7000	90602-1250		1	LIGHT FIXTURE, SLIM LED 112-544-001	
A01X0004	2840918-0200		1	PLINTH	**9-45**
F09S1001	90458-1651		1	EMERGENCY STOP, ZB4-BS-844 ZB4-BZ-104	

Machine Type | Group Description | Used-In | Group Number | Page No

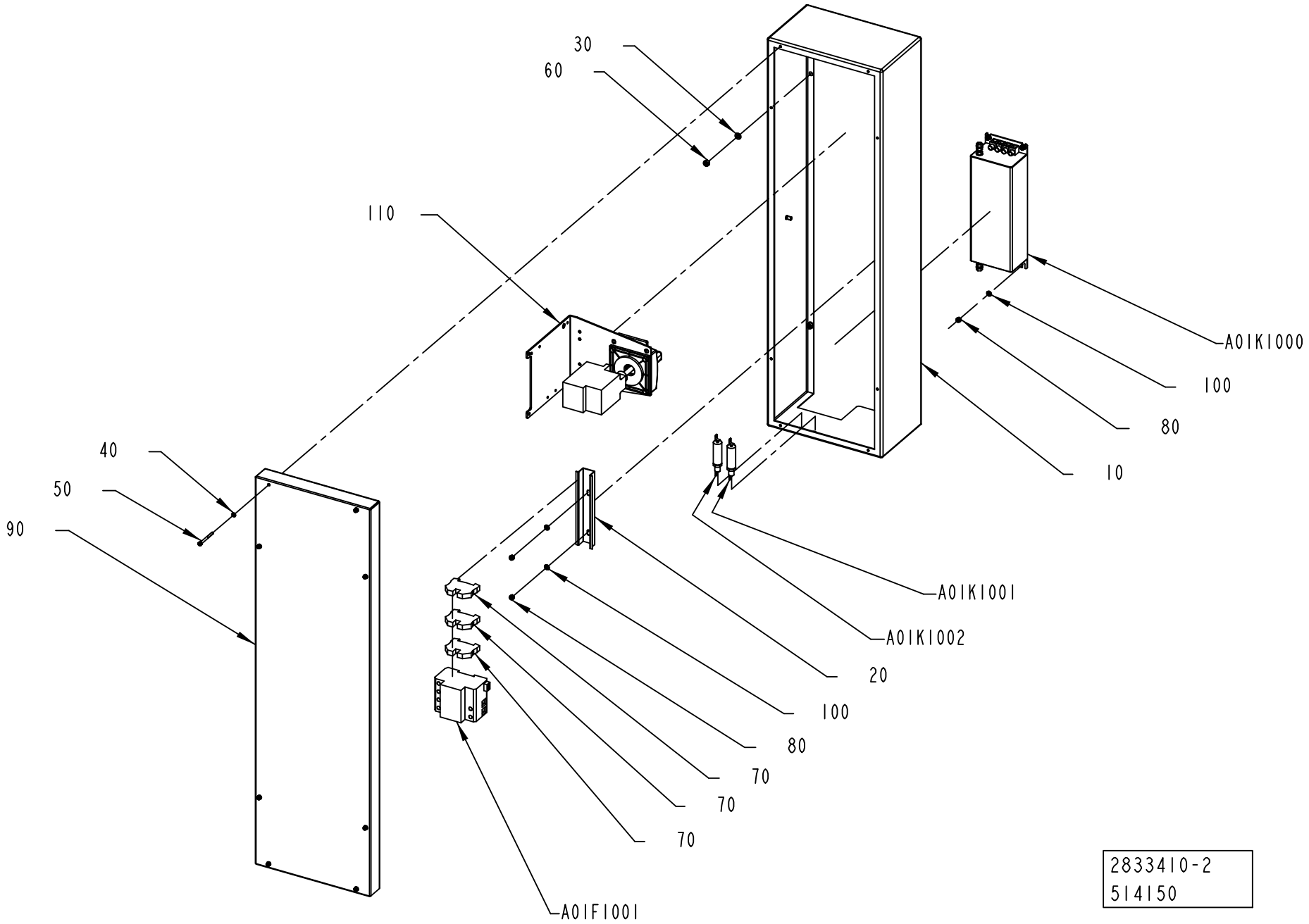
30
60
110
40
50
90
A01K1000
100
80
10
A01K1001
A01K1002
20
100
80
70
70
70
A01F1001
2833410-2
514150

ECM: 521270 - 20120401
Group number: 2833410-0200
Assembly Drawing: 2833410-2_1_AA

Pos	Part No	UN	Qty	Description	Page No
-					
010	3190281-0000		1	BOX	
020	2835456-0000		1	RAIL	
030	315105-0153		6	WASHER PLAIN, 6,4X12X1,5 A4 BRB	
040	315105-0136		8	WASHER PLAIN, 4,3X9X0,8 A4 BRB	
050	312115-0304		8	SCREW ISO4762 M4X45 A4 80	
060	312605-0316		6	HEXAGON NUT, M6M M6 A280	
070	353024-0207		3	EARTH TERMINAL WPE 10	
080	312812-0314		6	HEXAGON NUT, NY-LOCK M5 A4 80	
090	2835450-0000		1	COVER	
100	315105-0146		6	WASHER PLAIN, 5,3X10X1 A4 BRB	
110	90600-1198		1	MAIN SWITCH ASSY.,RIGHT SIDE, NZM1-XSM-R	
A01F1001	90600-7487		1	SURGE PROTECTION DEV., VAL-MS 230/3+1 FM	
	90600-7489		*1*	*SURGE PROTECTION DEV., SP, F-MS 12 ST*	
	90600-7488		*1*	*SURGE PROTECTION DEV., SP, VAL-MS 230 ST*	
A01K1000	90600-5262		1	LINE FILTER, B84144A36R120	
A01K1001	90600-5266		1	FEED THROUGH FILTER, B85321A2502W160	
A01K1002	90600-5266		1	FEED THROUGH FILTER, B85321A2502W160	

Pos	Part No	UN	Qty	Description	Page No

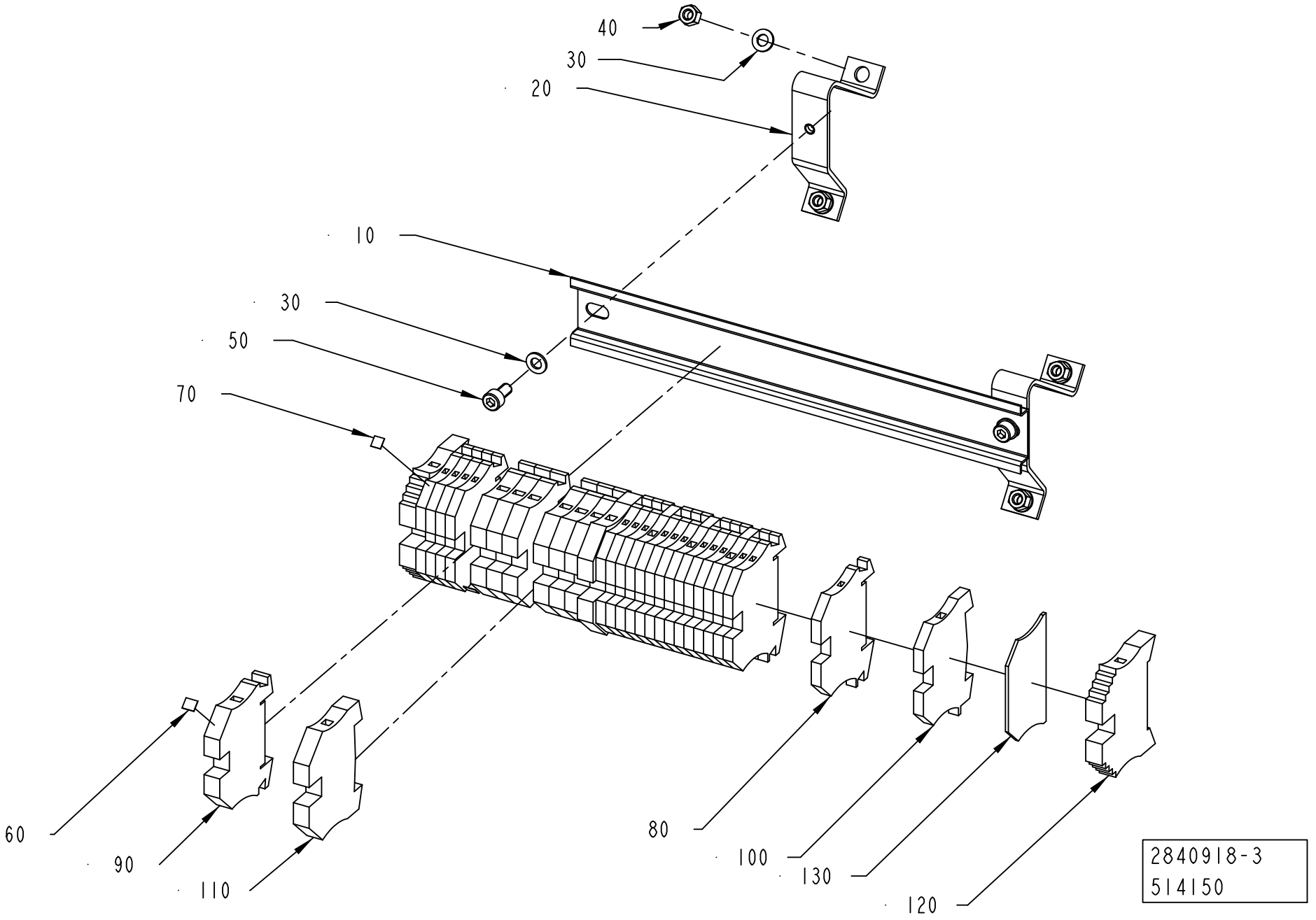
40
30
20
10
30
50
70
60
90
110
80
100
130
120
2840918-3
514150

ECM: 528932 - 20120401
Group number: 2840918-0200
Assembly Drawing: 2840918-3_1_AA

Pos	Part No	UN	Qty	Description	Page No
-					
010	2841402-0000		1	RAIL	
020	90099-0005		2	MOUNTING RAIL SUPPORT, TSTW 5/M5	
030	315105-0146		6	WASHER PLAIN, 5,3X10X1 A4 BRB	
040	312605-0314		4	HEXAGON NUT, M6M M5 A280	
050	312115-0325		2	SCREW ISO4762 M5X10 A4 80	
060	359011-0821		2	MARKING, DEK 6 FW 1-50	
070	359011-0807		1	MARKING, DEK 5 FW 1-50	
080	353021-0212		16	FEED THROUGH TERMINAL, WDU 2,5	
090	353021-0214		7	FEED THROUGH TERMINAL, WDU 6	
100	353024-0204		4	EARTH TERMINAL WPE 2,5	
110	353024-0206		2	EARTH TERMINAL WPE 6	
120	353031-0203		2	END BRACKET, WEW 35/2	
130	353032-0004		1	END PLATE, WAP 2,5-10, BEIGE	

Pos	Part No	UN	Qty	Description	Page No

CONTROL BOARD

Drawing file: 2833407-3_1_AB.hpgl

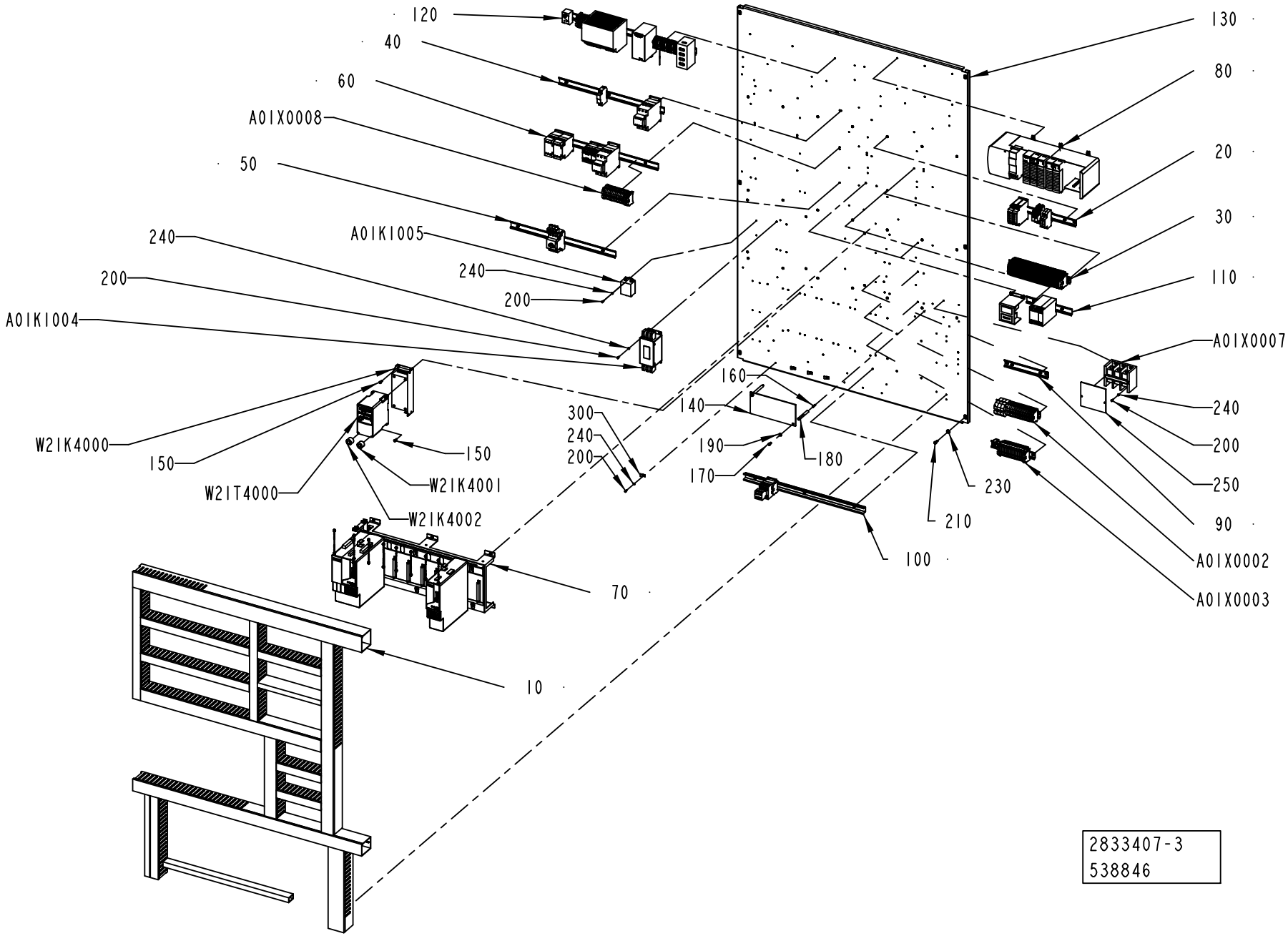

ECM: 540551 - 20120402
Group number: 2833407-0300
Assembly Drawing: 2833407-3_1_AB

Pos	Part No	UN	Qty	Description	Page No
-					
010	2833412-0100		1	CABLE DUCT	**9-49**
020	2835464-0300		1	DISTRIBUTION TERMINAL	**9-51**
030	2839229-0200		1	DISTRIBUTION TERMINAL	**9-53**
040	2835459-0300		1	FUSE BOARD 1	**9-67**
050	2835460-0200		1	FUSE BOARD 2	**9-69**
060	2835461-0200		1	FUSE BOARD 3	**9-71**
070	2835462-0300		1	MOTOR DRIVE CONTROL	**9-73**
080	2835458-0300		1	PLC	**9-75**
090	2839222-0200		1	PLINTH	**9-77**
100	2835463-0200		1	PLINTH	**9-79**
110	2839221-0200		1	PLINTH	**9-81**
120	2835457-0200		1	POWER SUPPLY UNIT	**9-83**
130	2833404-0000		1	MOUNTING PLATE	
140	2845320-0000		1	PROTECTION	
150	312115-0327		8	SCREW ISO4762 M5X12 A4 80	
160	312318-0370		2	SET SCREW, CUP END ISO4029 M6X20 A4	
170	312125-0366		2	SLOTTED HEAD SCREW, ISO1207 M6X12 A4	
180	1038275-0012		2	SPACER	
190	315105-0153		2	WASHER PLAIN, 6,4X12X1,5 A4 BRB	
200	312125-0289		14	SCREW ISO 1207 M4X10 A4	
210	312115-0368		6	SCREW ISO4762 M6X16 A4 80	
230	315105-0165		6	WASHER PLAIN, 8,4X16X1,6 A4 BRB	
240	315105-0136		14	WASHER PLAIN, 4,3X9X0,8 A4 BRB	
250	3047311-0000		1	PROTECTION	
300	90165-0007		4	PIPE CLIP FOR TUBE D=8 MM	
A01K1004	90600-5258		1	LINE FILTER, B84143A35R106	
A01K1005	90600-5253		1	LINE FILTER, B84113HB60	
A01X0002	2839223-0200		1	PLINTH	**9-87**
A01X0003	2839224-0200		1	PLINTH	**9-89**
A01X0007	90459-0959		1	DISTRIBUTOR BLOCK 1492-PD3163	
A01X0008	3046886-0200		1	DISTRIBUTION TERMINAL	**9-91**
W21K4000	90459-3460		1	FOOTPRINT FILTER 1 PHASE 10A	
W21K4001	90600-5249		1	FERRITE, B64290L616X38	
W21K4002	90600-5249		1	FERRITE, B64290L616X38	
W21T4000	90459-3450		1	FREQ. CONV., 22A-A4P5N104	

Pos	Part No	UN	Qty	Description	Page No

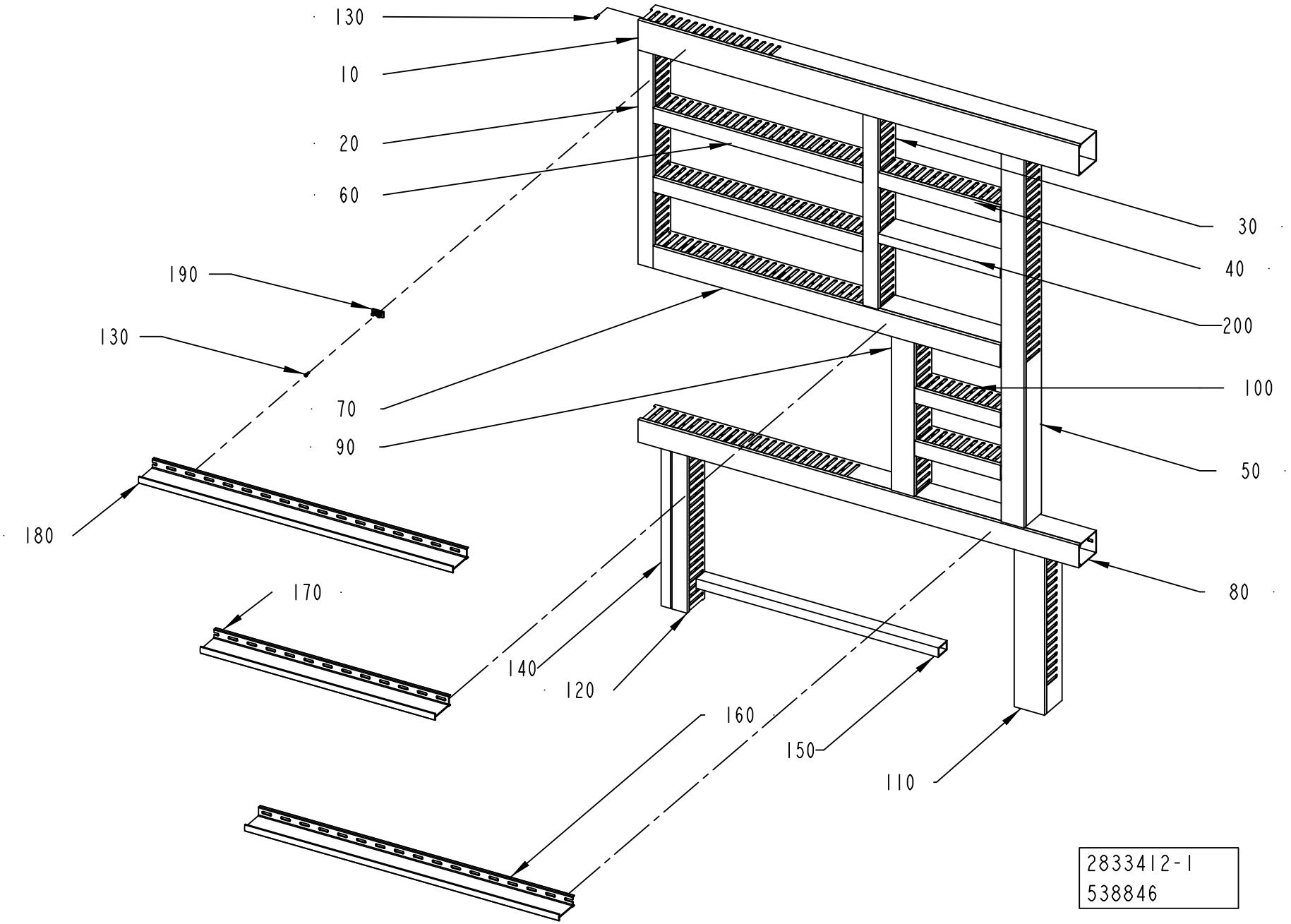
130
10
20
60
190
130
70
90
180
170
140
120
160
150
110
30
40
200
100
50
80
2833412-1
538846

ECM: 540549 - 20120402
Group number: 2833412-0100
Assembly Drawing: 2833412-1_1_AC

Pos	Part No	UN	Qty	Description	Page No
-					
010	2838462-0000		1	CABLE DUCT	
020	2838463-0000		1	CABLE DUCT	
030	2838464-0000		1	CABLE DUCT	
040	2838465-0000		1	CABLE DUCT	
050	2838466-0000		1	CABLE DUCT	
060	2838467-0000		2	CABLE DUCT	
070	2838468-0000		1	CABLE DUCT	
080	2838469-0000		1	CABLE DUCT	
090	2838470-0000		1	CABLE DUCT	
100	2838471-0000		2	CABLE DUCT	
110	2838472-0000		1	CABLE DUCT	
120	2838473-0000		1	CABLE DUCT	
130	90287-0124		67	SCREW PAN HEAD MSCS M4X12 NYLON	
140	2838474-0000		1	CABLE DUCT	
150	2838475-0000		1	CABLE DUCT	
160	2841405-0000		1	DIVIDER	
170	2841406-0000		1	DIVIDER	
180	2921902-0000		1	DIVIDER	
190	90600-2830		8	FASTENING ELEMENT, BLOCKSEP-E 01026	
200	3223674-0000		1	CABLE DUCT	

Pos	Part No	UN	Qty	Description	Page No

DISTRIBUTION TERMINAL

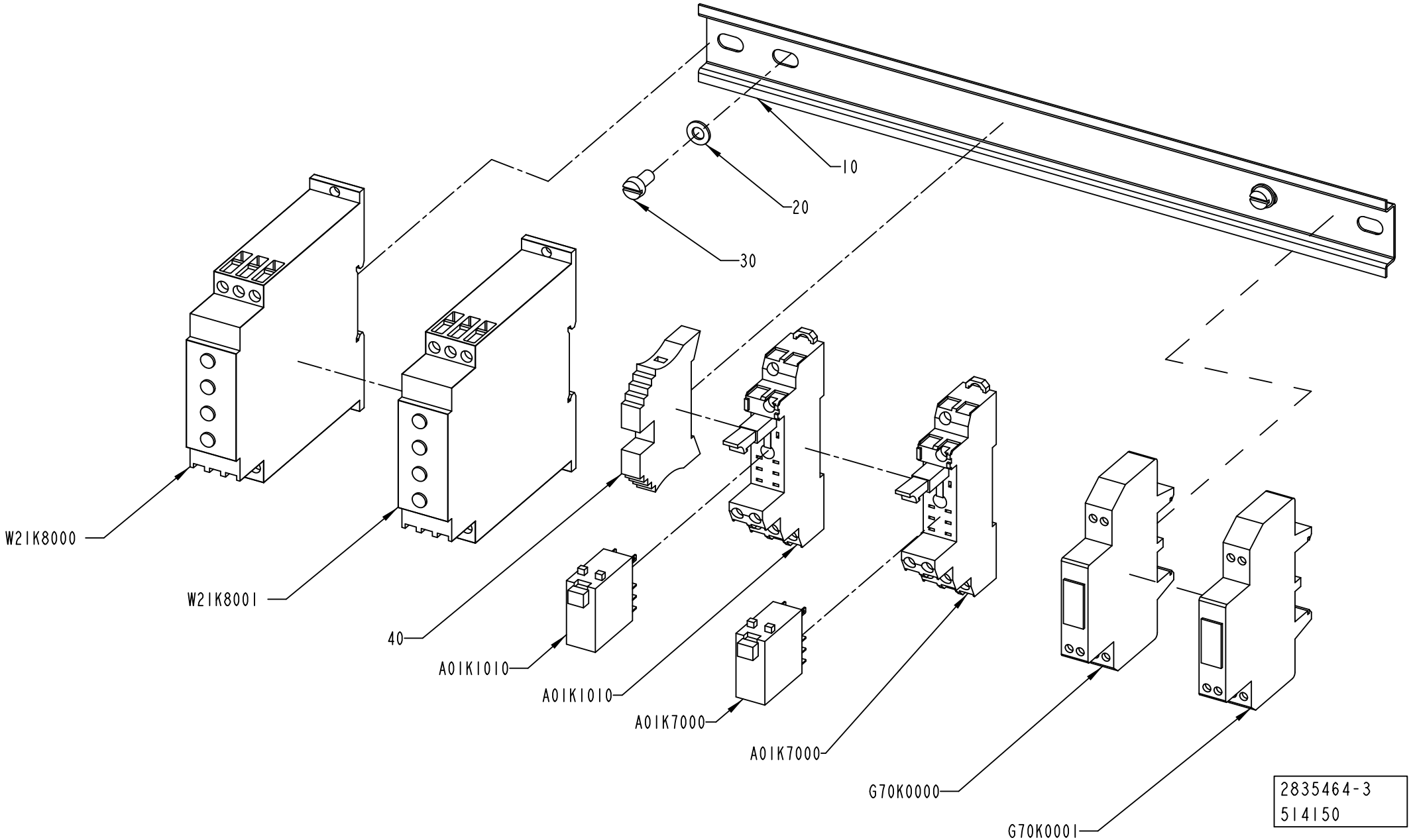

ECM: 520273 - 20120401
Group number: 2835464-0300
Assembly Drawing: 2835464-3_1_AA

Pos	Part No	UN	Qty	Description	Page No
-					
010	2838478-0000		1	RAIL	
020	315105-0146		2	WASHER PLAIN, 5,3X10X1 A4 BRB	
030	312125-0325		2	SCREW ISO 1207 M5X10 A4	
040	353031-0203		1	END BRACKET, WEW 35/2	
A01K1010	90129-0018		1	BASE, P2RF-08-E	
A01K1010	90119-0108		1	RELAY OMRON G2R-2-SNI-24DC	
	90129-0018		*1*	*BASE, P2RF-08-E*	
A01K7000	90119-0108		1	RELAY OMRON G2R-2-SNI-24DC	
	90129-0018		*1*	*BASE, P2RF-08-E*	
A01K7000	90129-0018		1	BASE, P2RF-08-E	
G70K0000	90459-2739		1	OPTO-RELAY 50085, IN / OUT 4-53VDC 1A	
G70K0001	90459-2739		1	OPTO-RELAY 50085, IN / OUT 4-53VDC 1A	
W21K8000	90600-4731		1	CURRENT CONTROL RELAY, K8AB-AS2 200-230	
W21K8001	90600-4731		1	CURRENT CONTROL RELAY, K8AB-AS2 200-230	

Pos	Part No	UN	Qty	Description	Page No

DISTRIBUTION TERMINAL

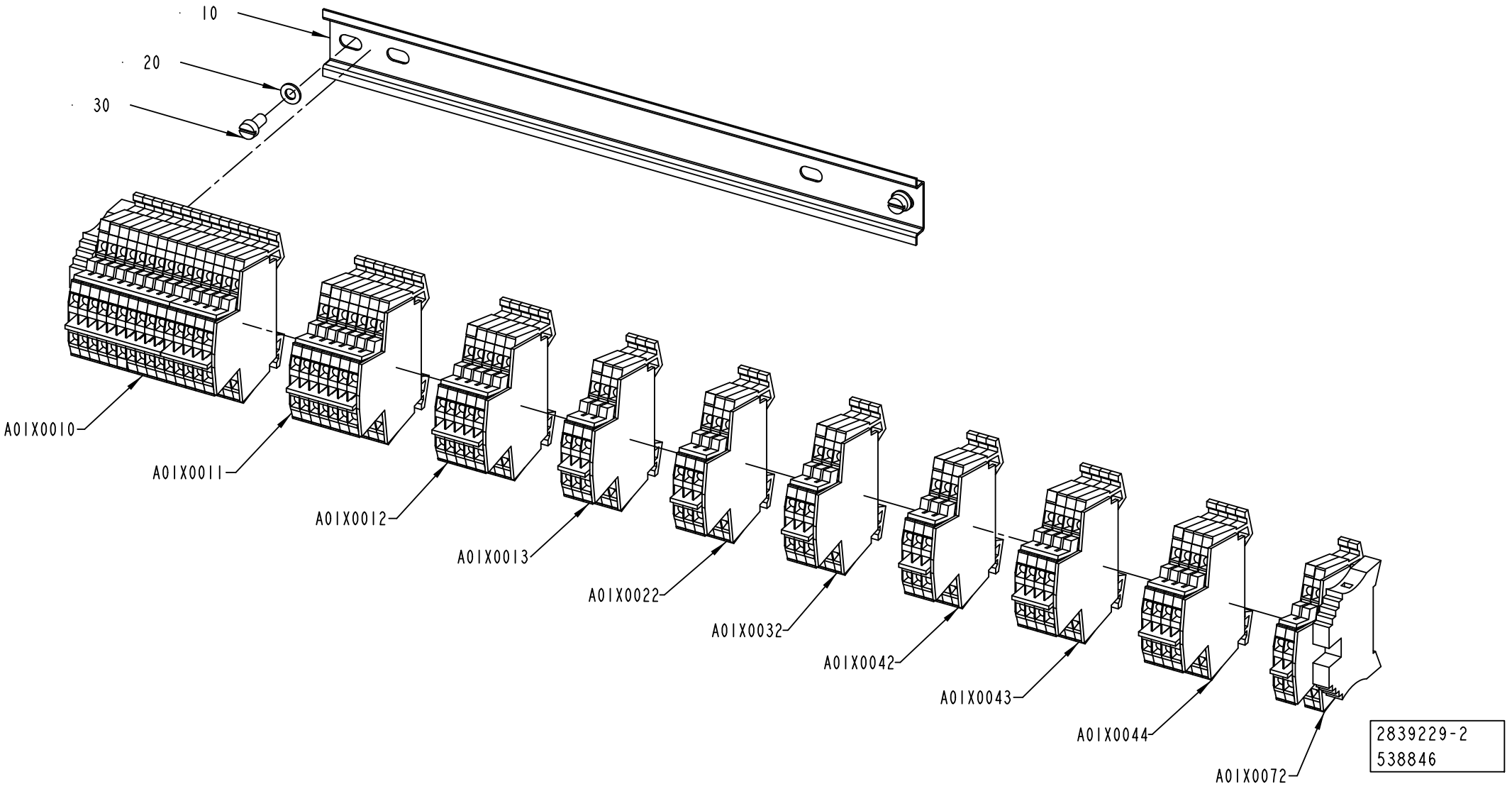

ECM: 540550 - 20120402
Group number: 2839229-0200
Assembly Drawing: 2839229-2_1_AB

Pos	Part No	UN	Qty	Description	Page No
-					
010	2838478-0000		1	RAIL	
020	315105-0146		2	WASHER PLAIN, 5,3X10X1 A4 BRB	
030	312125-0325		2	SCREW ISO 1207 M5X10 A4	
A01X0010	2839230-0100		1	PLINTH	**9-55**
A01X0011	2840909-0100		1	PLINTH	**9-57**
A01X0012	2840910-0100		1	PLINTH	**9-59**
A01X0013	2840911-0100		1	PLINTH	**9-61**
A01X0022	2840911-0100		1	PLINTH	**9-61**
A01X0032	2840911-0100		1	PLINTH	**9-61**
A01X0042	2840911-0100		1	PLINTH	**9-61**
A01X0043	2840915-0100		1	PLINTH	**9-63**
A01X0044	2840915-0100		1	PLINTH	**9-63**
A01X0072	2840917-0100		1	PLINTH	**9-65**

Pos	Part No	UN	Qty	Description	Page No

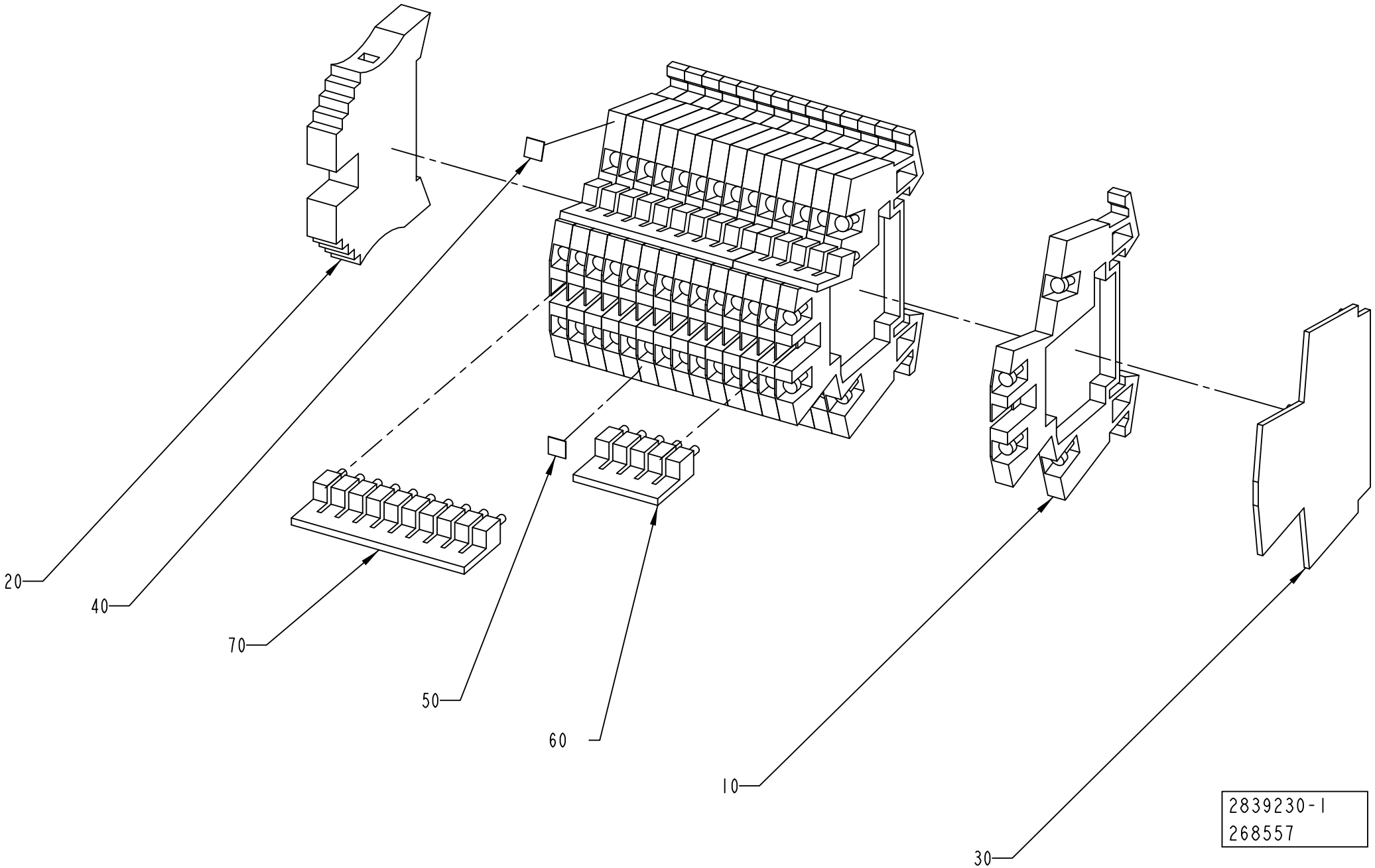
20
40
70
50
60
10
30
2839230-1
268557

ECM: 272043 - 20060925
Group number: 2839230-0100
Assembly Drawing: 2839230-1_1_AA

Pos	Part No	UN	Qty	Description	Page No
-					
010	90077-0113		15	TERMINAL BLOCK WDK 2.5	
020	353031-0203		1	END BRACKET, WEW 35/2	
030	353032-0009		1	END PLATE, WAP WDK 2,5	
040	359011-0807		1	MARKING, DEK 5 FW 1-50	
050	359011-0808		1	MARKING, DEK 5FW 51-100	
060	353034-0030		2	BRIDGE CONNECTOR WQV 2,5/10	
070	353034-0030		2	BRIDGE CONNECTOR WQV 2,5/10	

Pos	Part No	UN	Qty	Description	Page No

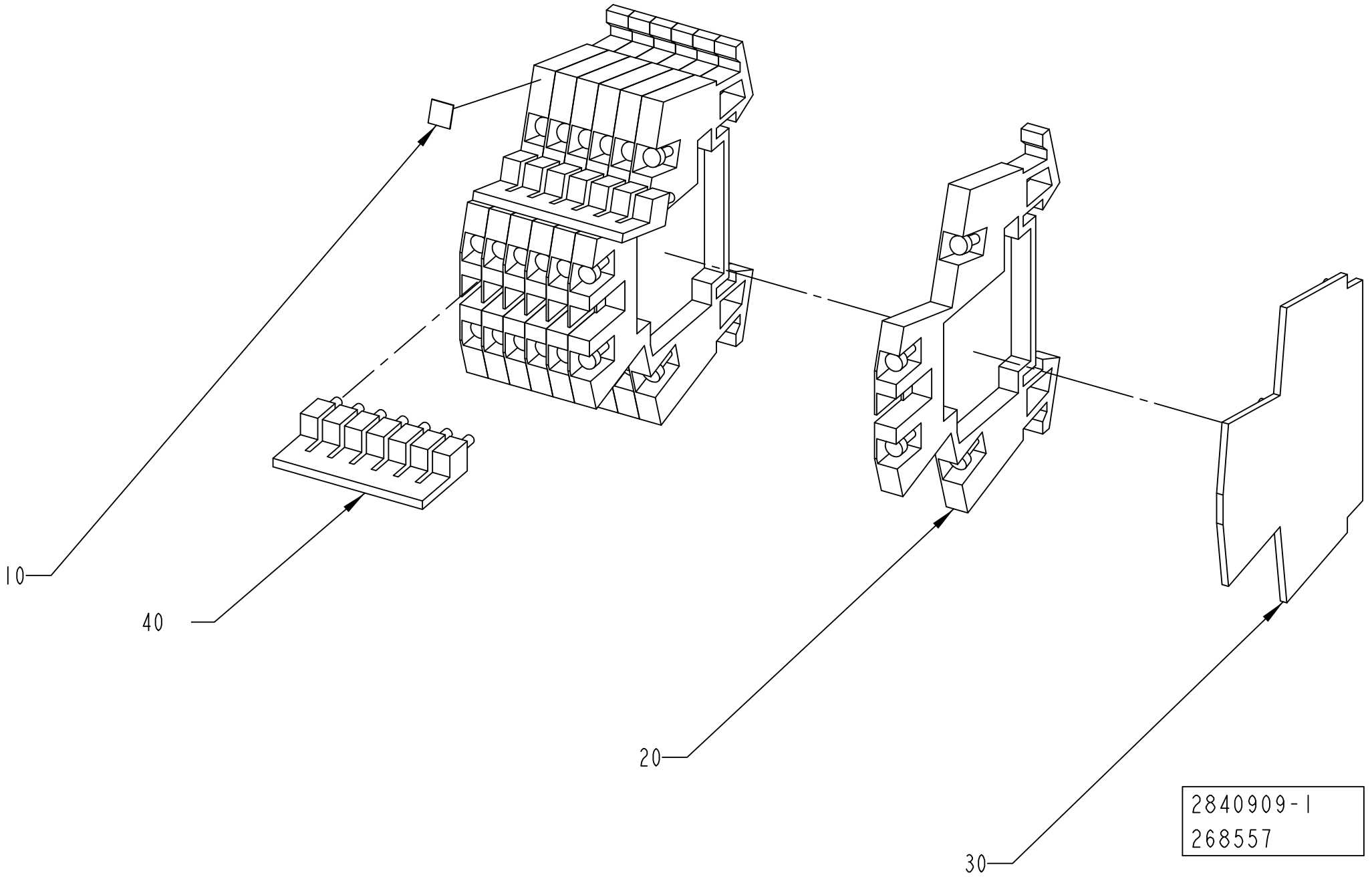
10
40
20
30
2840909-1
268557

ECM: 272044 - 20060925
Group number: 2840909-0100
Assembly Drawing: 2840909-1_1_AA

Pos	Part No	UN	Qty	Description	Page No
-					
010	359011-0807		1	MARKING, DEK 5 FW 1-50	
020	90077-0113		7	TERMINAL BLOCK WDK 2.5	
030	353032-0009		1	END PLATE, WAP WDK 2,5	
040	353034-0030		2	BRIDGE CONNECTOR WQV 2,5/10	

Pos	Part No	UN	Qty	Description	Page No

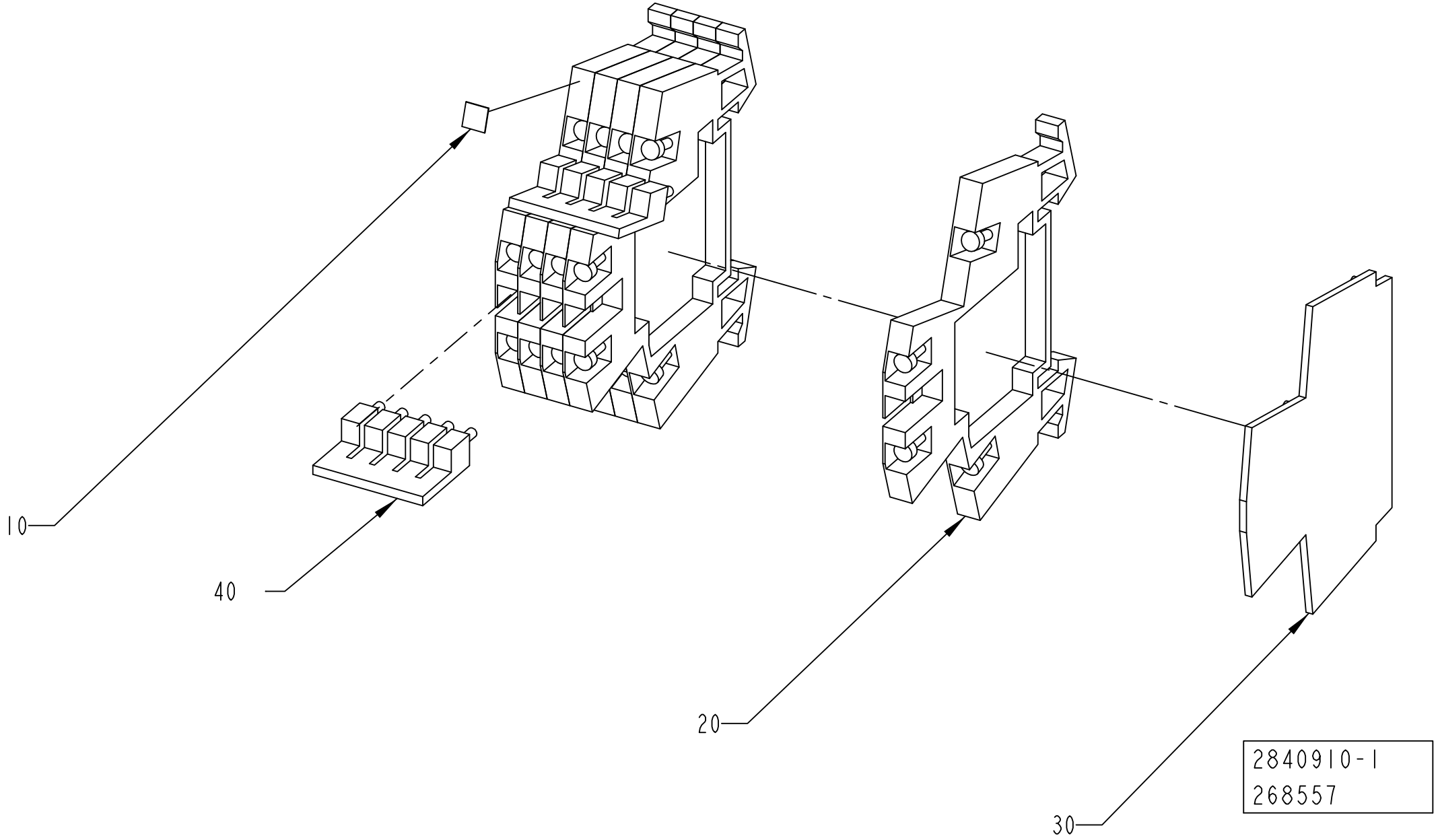
10
40
20
30
2840910-1
268557

ECM: 272045 - 20060925
Group number: 2840910-0100
Assembly Drawing: 2840910-1_1_AA

Pos	Part No	UN	Qty	Description	Page No
-					
010	359011-0807		1	MARKING, DEK 5 FW 1-50	
020	90077-0113		5	TERMINAL BLOCK WDK 2.5	
030	353032-0009		1	END PLATE, WAP WDK 2,5	
040	353034-0030		2	BRIDGE CONNECTOR WQV 2,5/10	

Pos	Part No	UN	Qty	Description	Page No

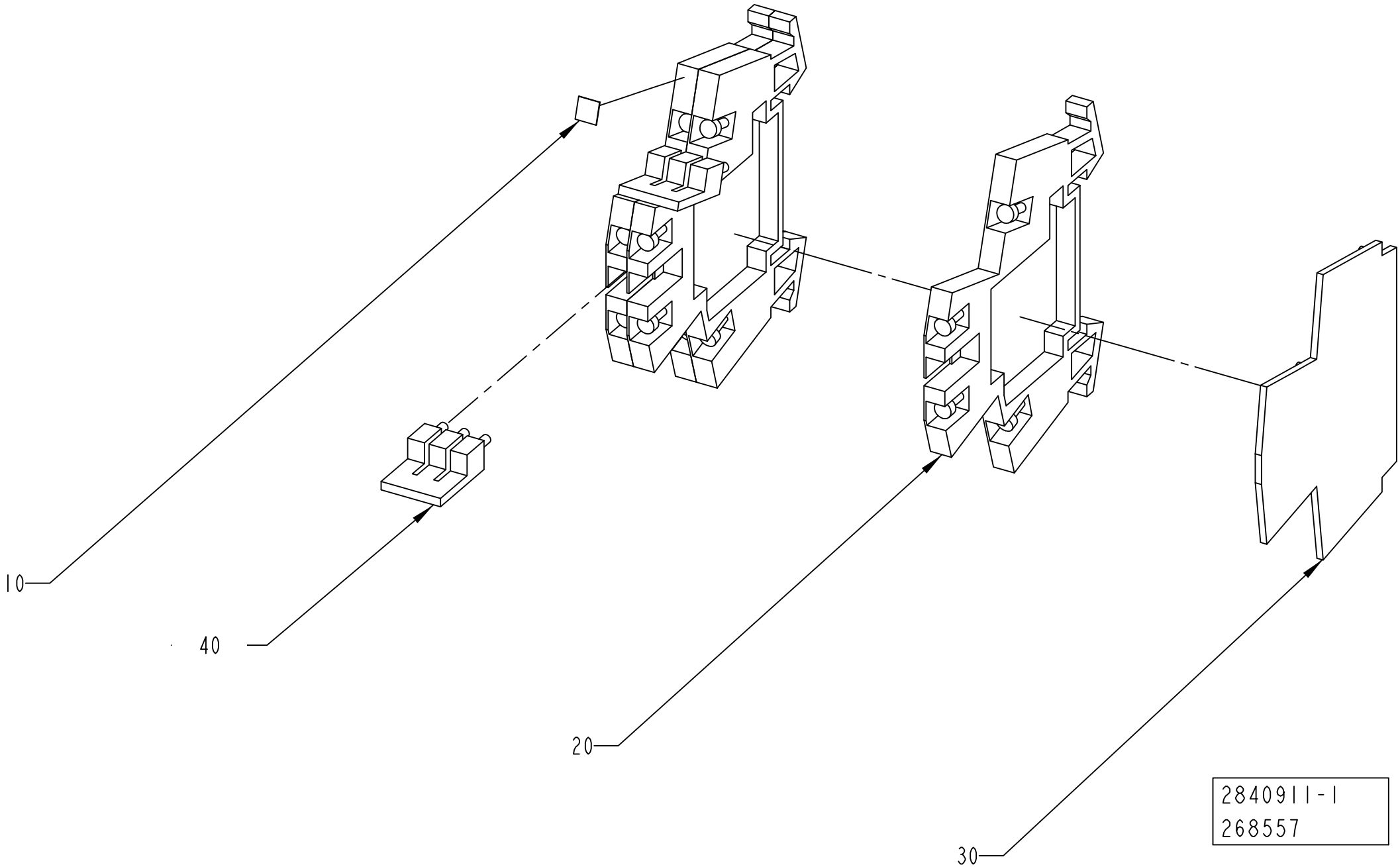
10
40
20
30
2840911-1
268557

ECM: 272046 - 20060925
Group number: 2840911-0100
Assembly Drawing: 2840911-1_1_AA

Pos	Part No	UN	Qty	Description	Page No
-					
010	359011-0807		1	MARKING, DEK 5 FW 1-50	
020	90077-0113		3	TERMINAL BLOCK WDK 2.5	
030	353032-0009		1	END PLATE, WAP WDK 2,5	
040	353034-0030		2	BRIDGE CONNECTOR WQV 2,5/10	

Pos	Part No	UN	Qty	Description	Page No

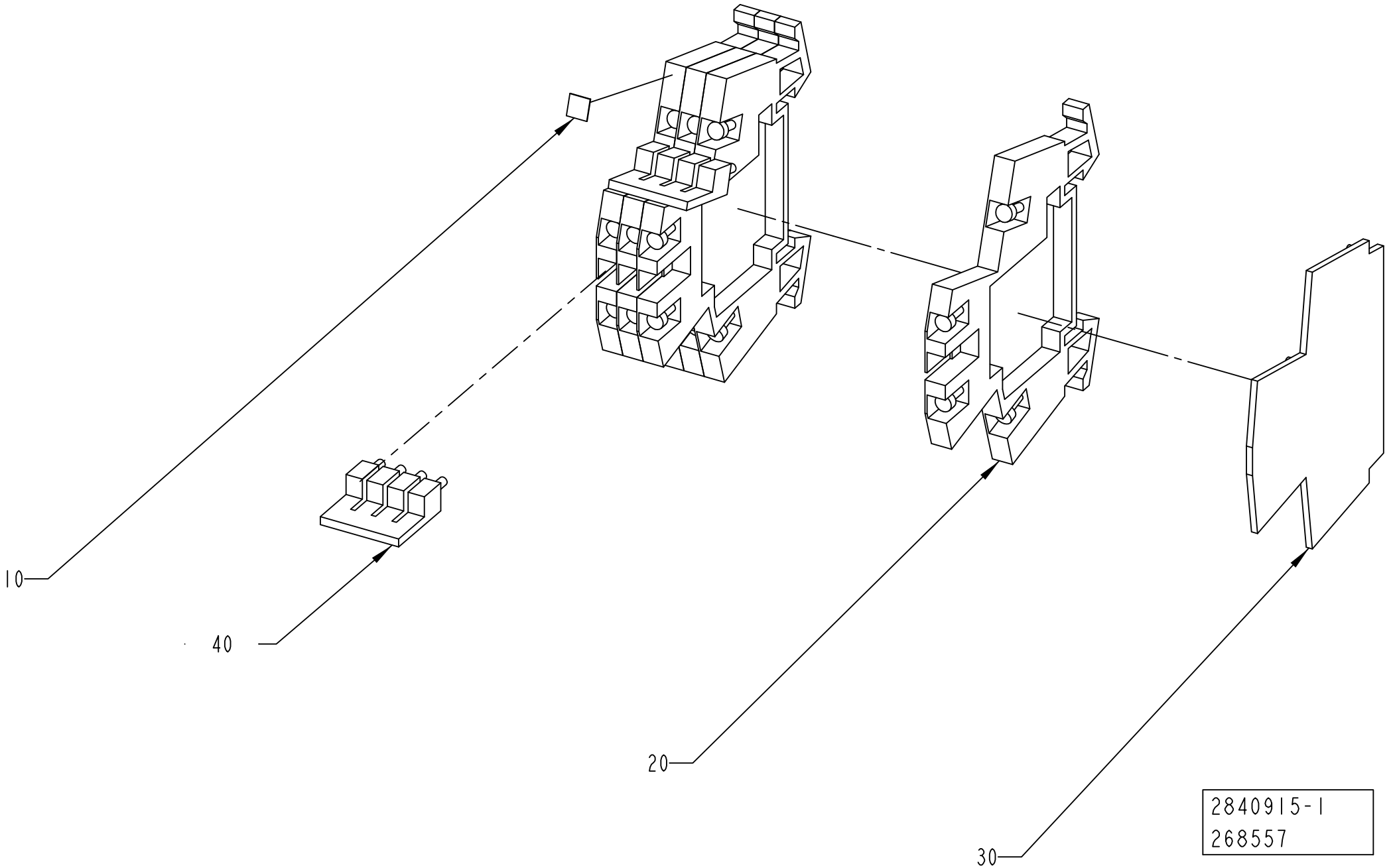
10
40
20
30
2840915-1
268557

ECM: 272047 - 20060925
Group number: 2840915-0100
Assembly Drawing: 2840915-1_1_AA

Pos	Part No	UN	Qty	Description	Page No
-					
010	359011-0807		1	MARKING, DEK 5 FW 1-50	
020	90077-0113		4	TERMINAL BLOCK WDK 2.5	
030	353032-0009		1	END PLATE, WAP WDK 2,5	
040	353034-0030		2	BRIDGE CONNECTOR WQV 2,5/10	

Pos	Part No	UN	Qty	Description	Page No

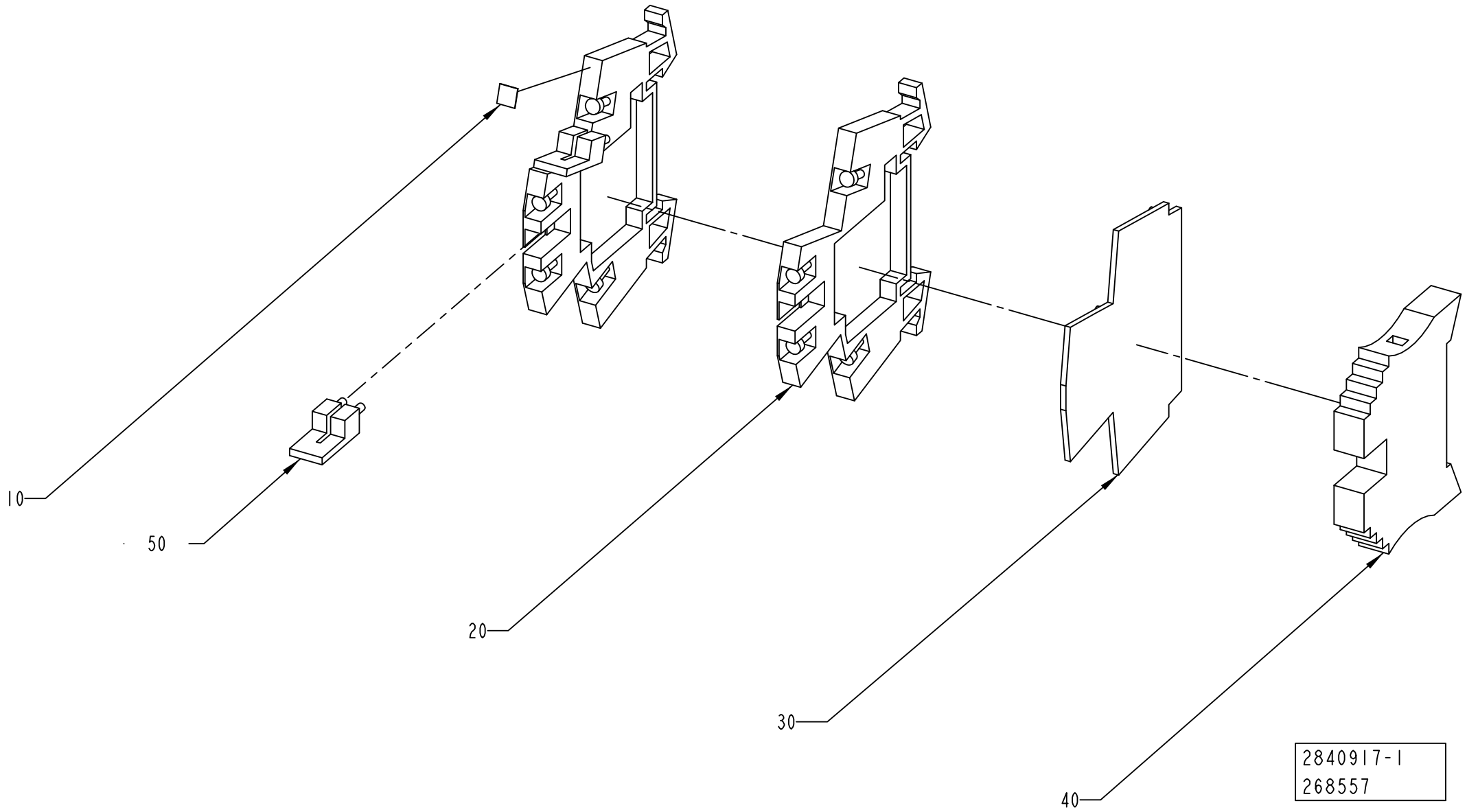
10
50
20
30
40
2840917-1
268557

ECM: 272048 - 20060925
Group number: 2840917-0100
Assembly Drawing: 2840917-1_1_AA

Pos	Part No	UN	Qty	Description	Page No
-					
010	359011-0807		1	MARKING, DEK 5 FW 1-50	
020	90077-0113		2	TERMINAL BLOCK WDK 2.5	
030	353032-0009		1	END PLATE, WAP WDK 2,5	
040	353031-0203		1	END BRACKET, WEW 35/2	
050	353034-0030		2	BRIDGE CONNECTOR WQV 2,5/10	

Pos	Part No	UN	Qty	Description	Page No

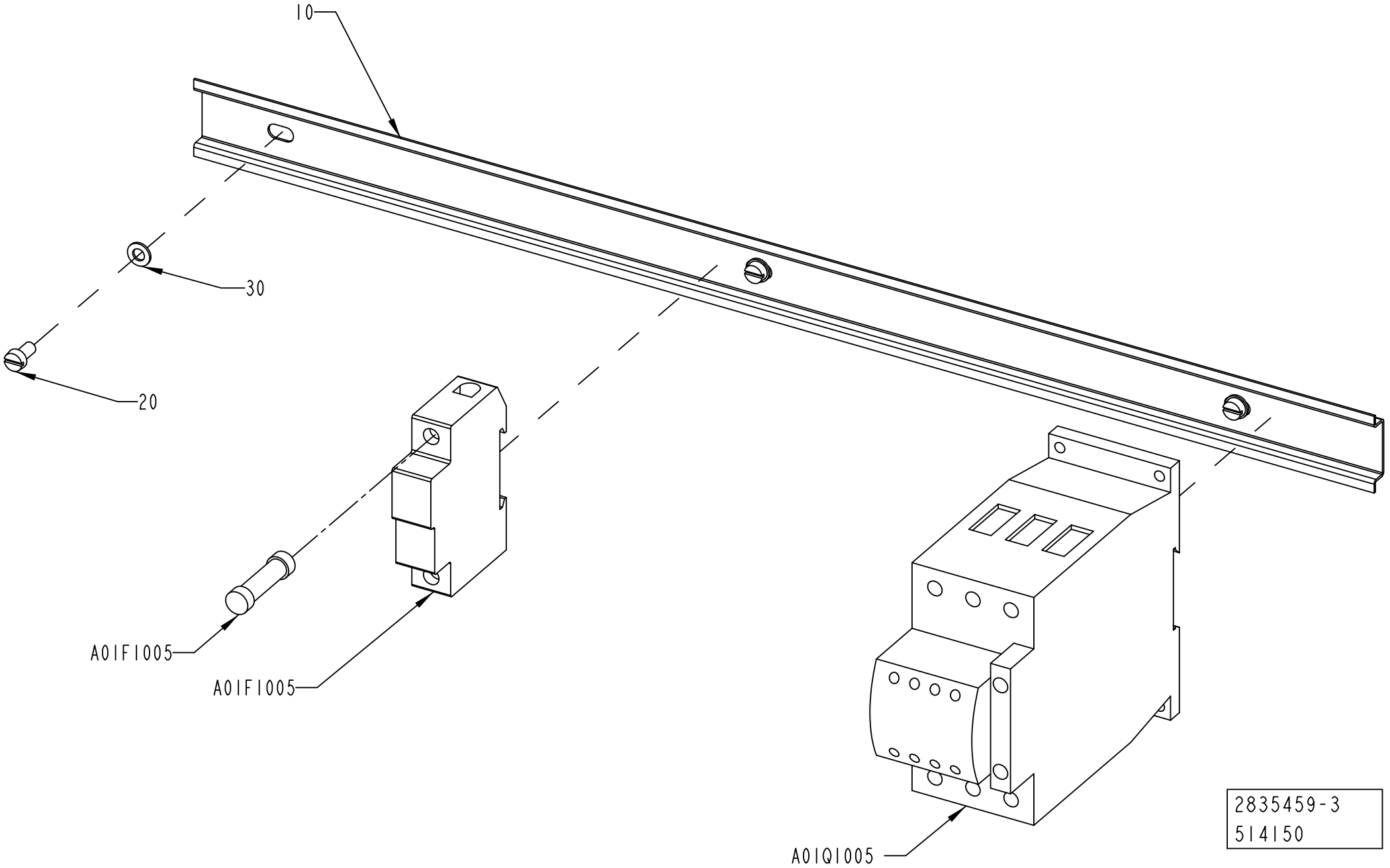
10
30
20
A01F1005
A01F1005
A01Q1005
2835459-3
514150

ECM: 520275 - 20120401
Group number: 2835459-0300
Assembly Drawing: 2835459-3_1_AA

Pos	Part No	UN	Qty	Description	Page No
-					
010	2835452-0000		1	RAIL	
020	312125-0325		3	SCREW ISO 1207 M5X10 A4	
030	315105-0146		3	WASHER PLAIN, 5,3X10X1 A4 BRB	
A01F1005	90458-2507		1	FUSE HOLDER, USBCC1	
A01F1005	90458-2510		1	FUSE, ATDR6	
A01Q1005	90600-1759		1	CONTACTOR22KW24VDCDILM50-22+DILM65-XIP2X	

Pos	Part No	UN	Qty	Description	Page No

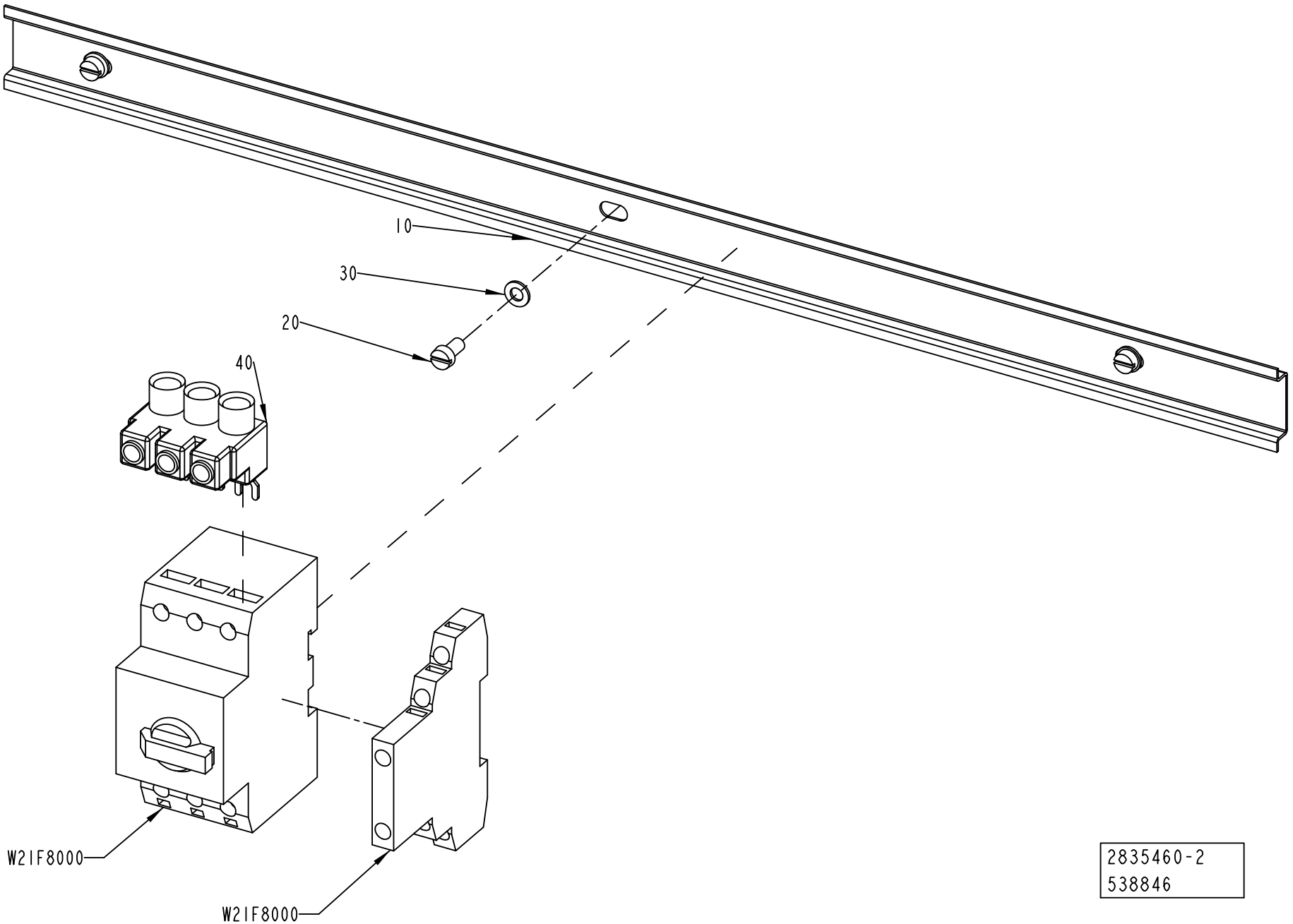

2835460-2
538846

ECM: 540553 - 20120402
Group number: 2835460-0200
Assembly Drawing: 2835460-2_1_AB

Pos	Part No	UN	Qty	Description	Page No
-					
010	2835452-0000		1	RAIL	
020	312125-0325		3	SCREW ISO 1207 M5X10 A4	
030	315105-0146		3	WASHER PLAIN, 5,3X10X1 A4 BRB	
040	90600-1461		1	INCOMING TERMINAL, BK25/3-PKZ0-E	
W21F8000	90259-0313		1	AUXILIARY SWITCH, NHI21-PKZ0	
W21F8000	90459-5326		1	OVERLOAD PROTECTION, PKZM0-4	

Pos	Part No	UN	Qty	Description	Page No

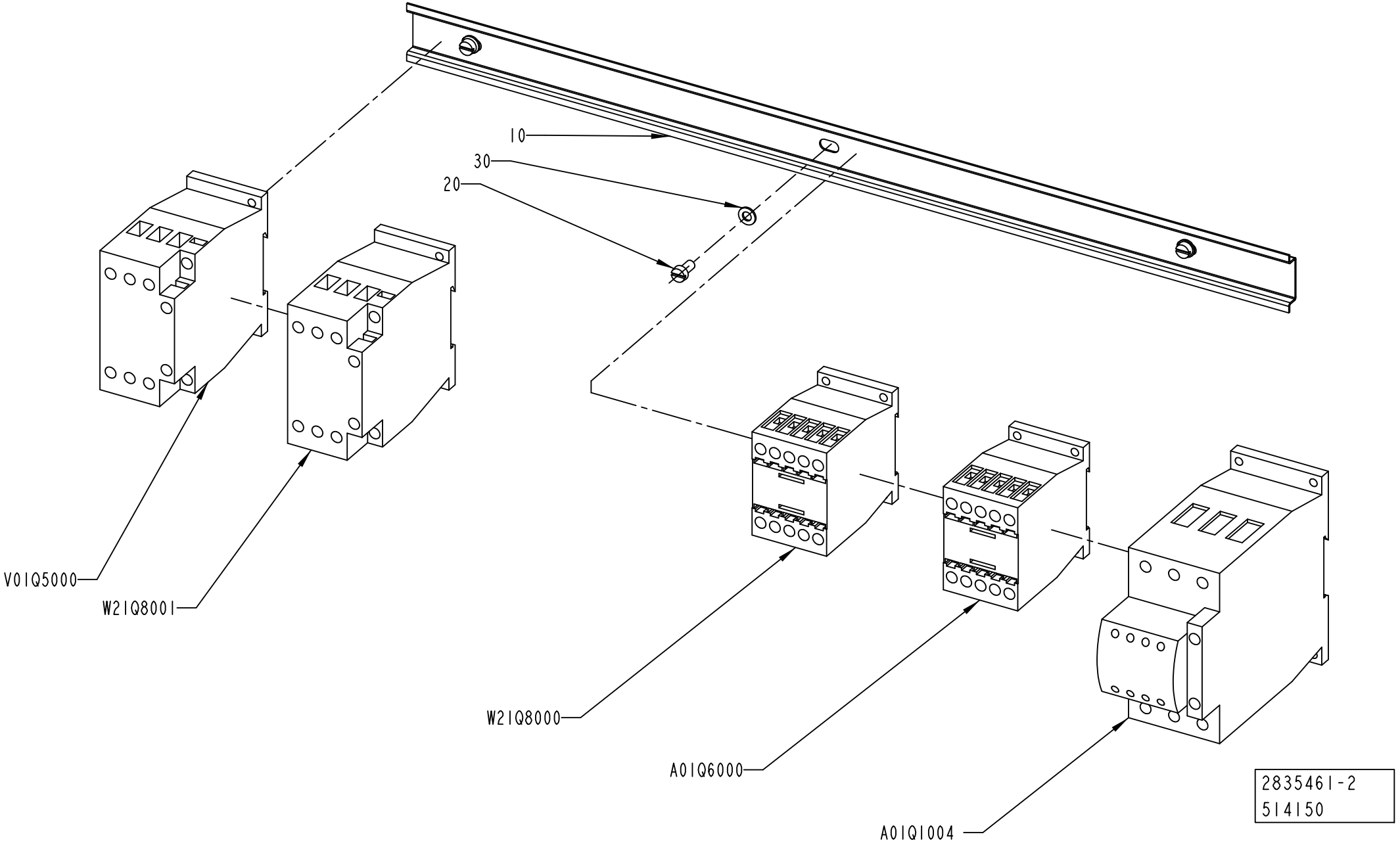
10
30
20
V01Q5000
W21Q8001
W21Q8000
A01Q6000
A01Q1004
2835461-2
514150

ECM: 521632 - 20120401
Group number: 2835461-0200
Assembly Drawing: 2835461-2_1_AA

Pos	Part No	UN	Qty	Description	Page No
-					
010	2835452-0000		1	RAIL	
020	312125-0325		3	SCREW ISO 1207 M5X10 A4	
030	315105-0146		3	WASHER PLAIN, 5,3X10X1 A4 BRB	
A01Q1004	90600-1759		1	CONTACTOR22KW24VDCDILM50-22+DILM65-XIP2X	
A01Q6000	90459-5308		1	CONTACTOR 4KW 24VDC, DILM9-10	
V01Q5000	90459-5311		1	CONTACTOR 15KW 24VDC, DILM32-10	
W21Q8000	90459-5308		1	CONTACTOR 4KW 24VDC, DILM9-10	
W21Q8001	90459-5309		1	CONTACTOR 7,5KW 24VDC, DILM17-10	

Pos	Part No	UN	Qty	Description	Page No

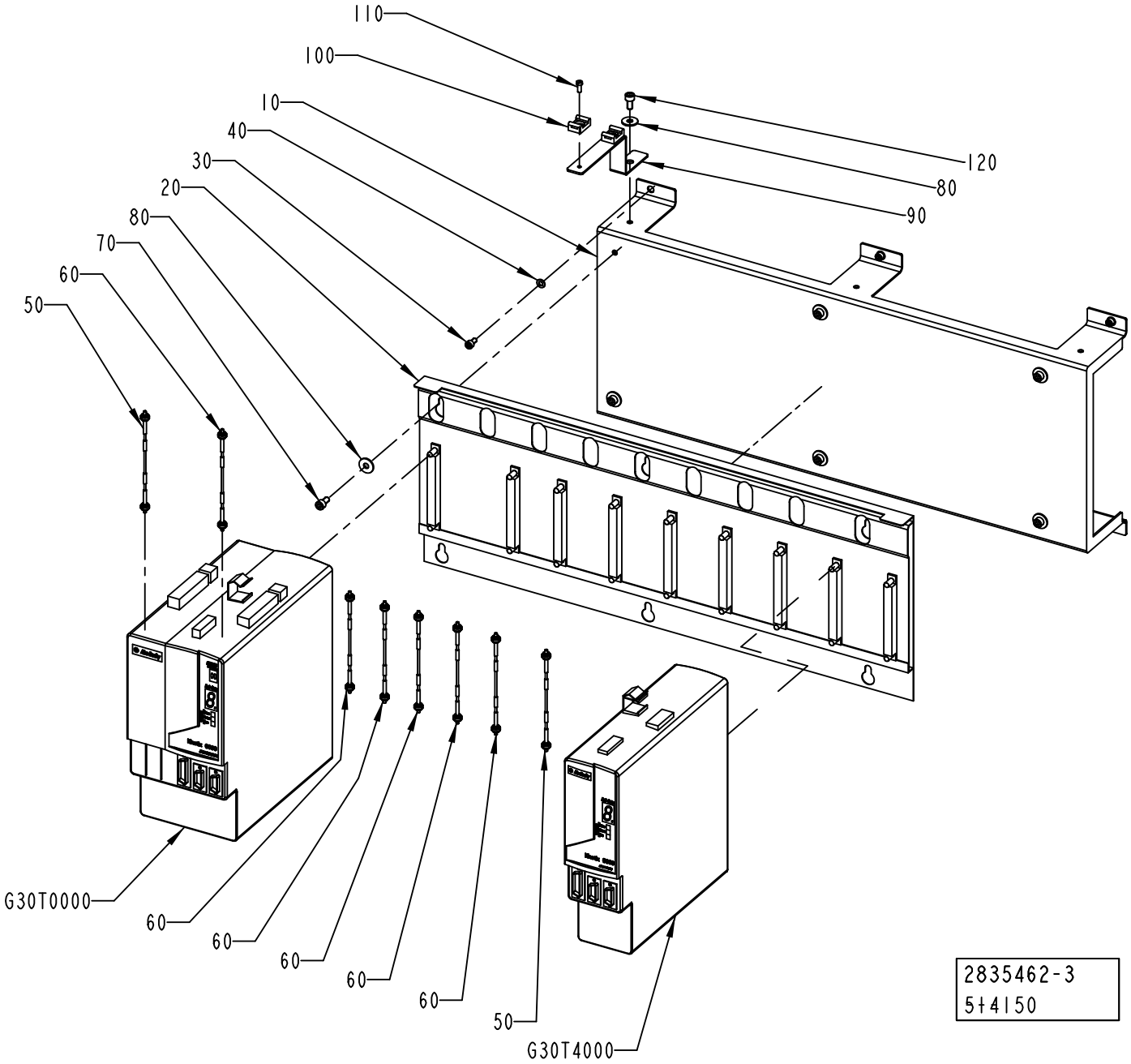
110
100
10
40
30
20
80
70
60
50
120
80
90
G30T0000
60
60
60
60
60
50
G30T4000
2835462-3
5+4150

ECM: 520279 - 20120401
Group number: 2835462-0300
Assembly Drawing: 2835462-3_1_AA

Pos	Part No	UN	Qty	Description	Page No
-					
010	2790710-0000		1	BRACKET	
020	90459-5195		1	SLIM POWER RAIL,KINETIX,8 AXIS,2094-PRS8	
030	312115-0325		6	SCREW ISO4762 M5X10 A4 80	
040	315105-0146		6	WASHER PLAIN, 5,3X10X1 A4 BRB	
050	90459-2540		2	SERCOS CABLE 3.0M, 2090-SCEP3-0	
060	90459-2536		6	SERCOS CABLE 0.1M, 2090-SCEP0-1	
070	312115-0366		6	SCREW ISO4762 M6X12 A4 80	
080	90005-0060		7	WASHER PLAIN, RBS 6,4/M6)/18,H=1,5	
090	2839226-0000		1	FLANGE	
100	352113-0203		2	ANCHOR PLATES FOR STRIPS, TM3S8-M0	
110	312125-0289		2	SCREW ISO 1207 M4X10 A4	
120	312115-0366		1	SCREW ISO4762 M6X12 A4 80	
G30T0000	90600-5212		1	AXIS MOD. W. PS,2094-BC02-M02-S SERIES B	
G30T4000	90600-5214		1	AXIS MOD. KINETIX 6000,2094-BM01-S SER.B	

Pos	Part No	UN	Qty	Description	Page No

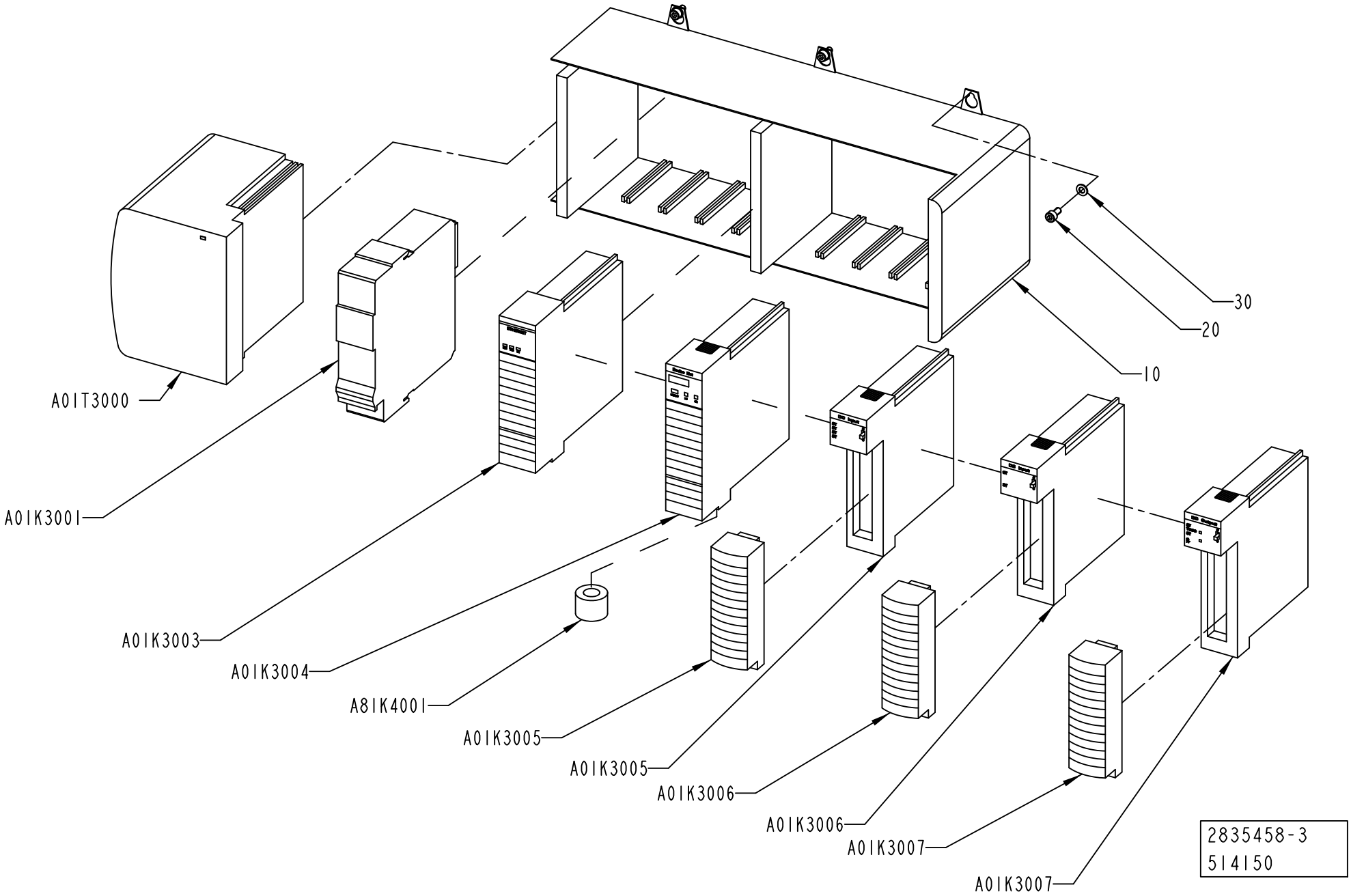
A01T3000
A01K3001
A01K3003
A01K3004
A8IK4001
A01K3005
A01K3005
A01K3006
A01K3006
A01K3007
A01K3007
10
20
30
2835458-3
514150

ECM: 520277 - 20120401
Group number: 2835458-0300
Assembly Drawing: 2835458-3_1_AA

Pos	Part No	UN	Qty	Description	Page No
-					
010	90459-2458		1	BASEPLATE, 10 SLOT CONTROLLOGIX CHASSIS	
020	312115-0325		6	SCREW ISO4762 M5X10 A4 80	
030	315105-0146		6	WASHER PLAIN, 5,3X10X1 A4 BRB	
A01K3001	90603-5366		1	PROCESSOR L72, SERIES A,, 1756-L72/A	
A01K3003	90459-2477		1	ETHERNET I/P BRIDGE MODULE, 1756-ENBT	
A01K3004	90600-5840		1	PLC DEVICEN. BR./SCAN MOD, 1756-DNB, D	
A01K3005	90459-6556		1	PLC DIGITAL INPUT 32PTS, 1756-IB32/B	
A01K3005	90459-2488		1	REMOVABLE TERMINAL BLOCK 36 POINTS	
A01K3006	90459-2487		1	REMOVABLE TERMINAL BLOCK 20 POINTS	
A01K3006	90459-2413		1	PLC DIGITAL INPUT MODULE16 POINTS	
A01K3007	90459-2474		1	PLC,DIGIT. OUTPUT MODULE 16 PTS 10-31VDC	
A01K3007	90459-2487		1	REMOVABLE TERMINAL BLOCK 20 POINTS	
A81K4001	90600-5249		1	FERRITE, B64290L616X38	
A01T3000	90459-7267		1	POWER SUPPLY 24VDC, 1756-PB75/B	

Pos	Part No	UN	Qty	Description	Page No

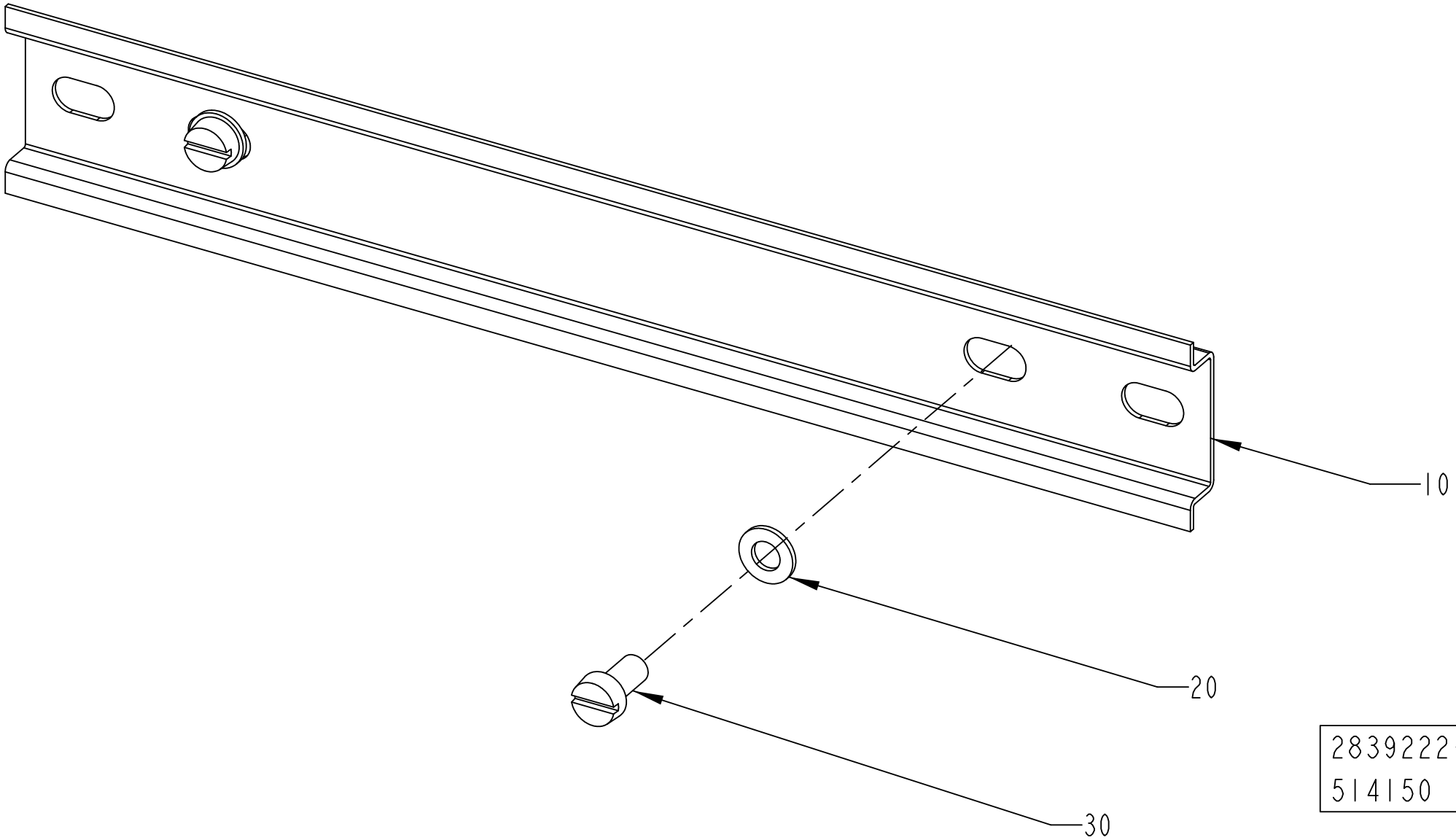
10
20
30
2839222-2
514150

ECM: 520274 - 20120401
Group number: 2839222-0200
Assembly Drawing: 2839222-2_1_AA

Pos	Part No	UN	Qty	Description	Page No
-					
010	2835454-0000		1	RAIL	
020	315105-0146		2	WASHER PLAIN, 5,3X10X1 A4 BRB	
030	312125-0325		2	SCREW ISO 1207 M5X10 A4	

Pos	Part No	UN	Qty	Description	Page No

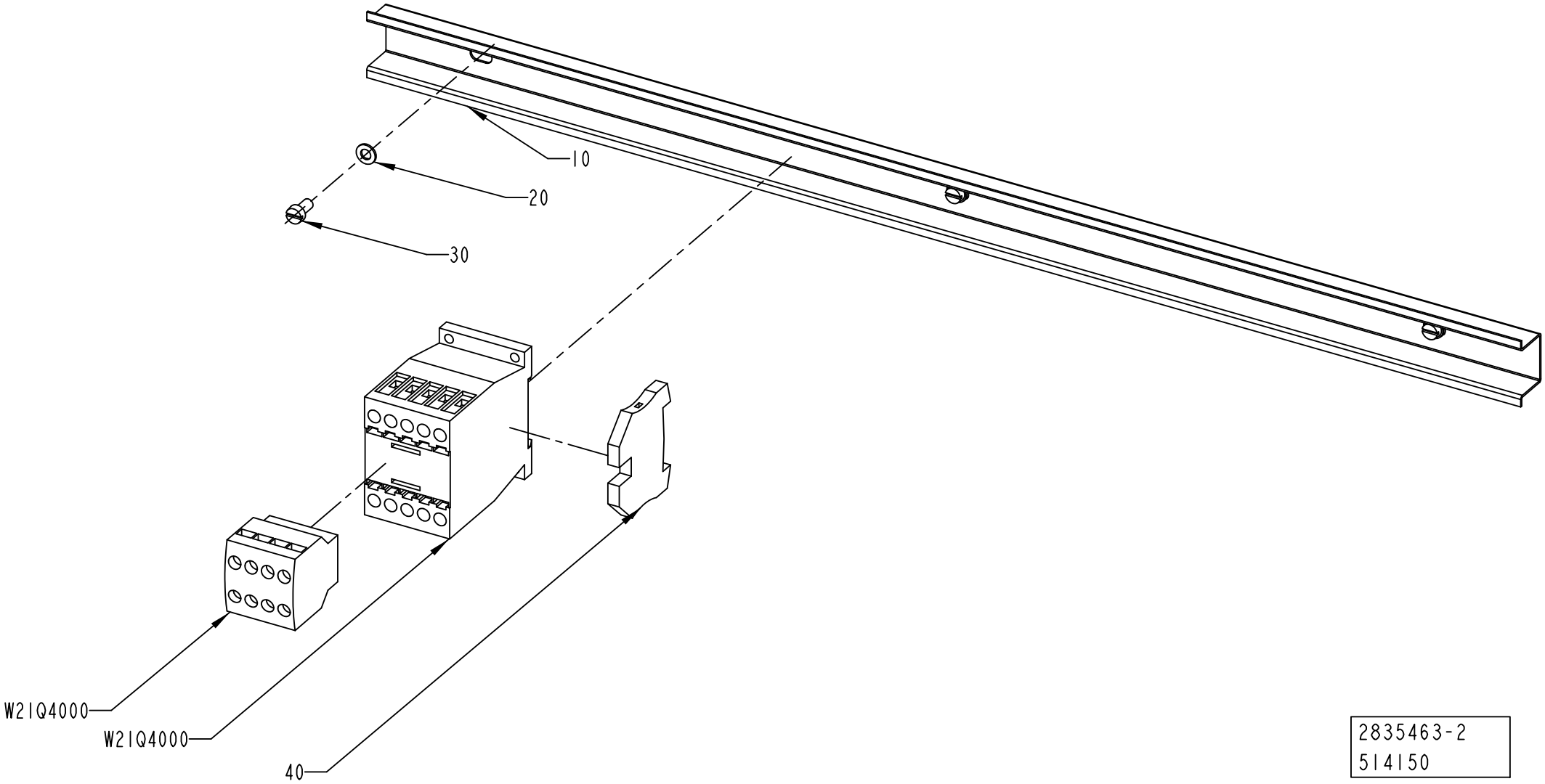

2835463-2
514150

ECM: 521633 - 20120401
Group number: 2835463-0200
Assembly Drawing: 2835463-2_1_AA

Pos	Part No	UN	Qty	Description	Page No
-					
010	2835455-0000		1	RAIL	
020	315105-0146		3	WASHER PLAIN, 5,3X10X1 A4 BRB	
030	312125-0325		3	SCREW ISO 1207 M5X10 A4	
040	353024-0205		1	EARTH TERMINAL WPE 4	
W21Q4000	90459-6852		1	AUXILIARY CONTACT, DILA-XHI22	
W21Q4000	90459-5308		1	CONTACTOR 4KW 24VDC, DILM9-10	

Pos	Part No	UN	Qty	Description	Page No

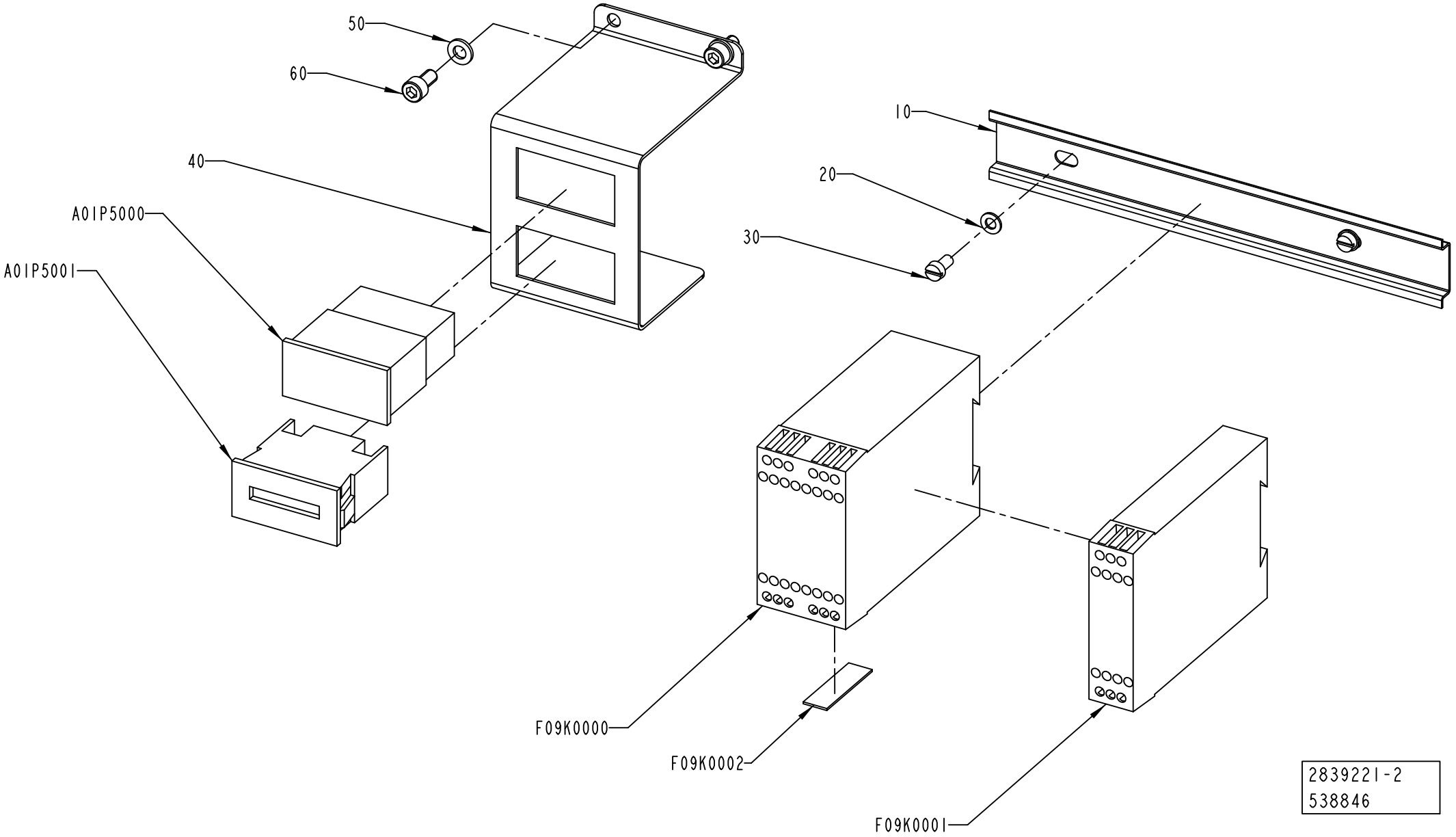
50
60
40
A01P5000
A01P5001
10
20
30
F09K0000
F09K0002
F09K0001
2839221-2
538846

ECM: 540609 - 20120402
Group number: 2839221-0200
Assembly Drawing: 2839221-2_1_AB

Pos	Part No	UN	Qty	Description	Page No
-					
010	2835453-0000		1	RAIL	
020	315105-0146		2	WASHER PLAIN, 5,3X10X1 A4 BRB	
030	312125-0325		2	SCREW ISO 1207 M5X10 A4	
040	2839227-0000		1	SUPPORT	
050	315105-0153		2	WASHER PLAIN, 6,4X12X1,5 A4 BRB	
060	312115-0366		2	SCREW ISO4762 M6X12 A4 80	
A01P5000	90053-0029		1	COUNTER, F524.800FA3C 24VDC	
A01P5001	90053-0031		1	HOUR COUNTER, B 609.10 10-50VDC	
F09K0000	90459-6692		1	SAFETY PLC, PLUTO B20 20-070-06	
F09K0001	90459-2291		1	SAFETY RELAY, E1T	
F09K0002	90459-4891		1	IDENTIFIER, ID-FIX RW	

Pos	Part No	UN	Qty	Description	Page No

POWER SUPPLY UNIT

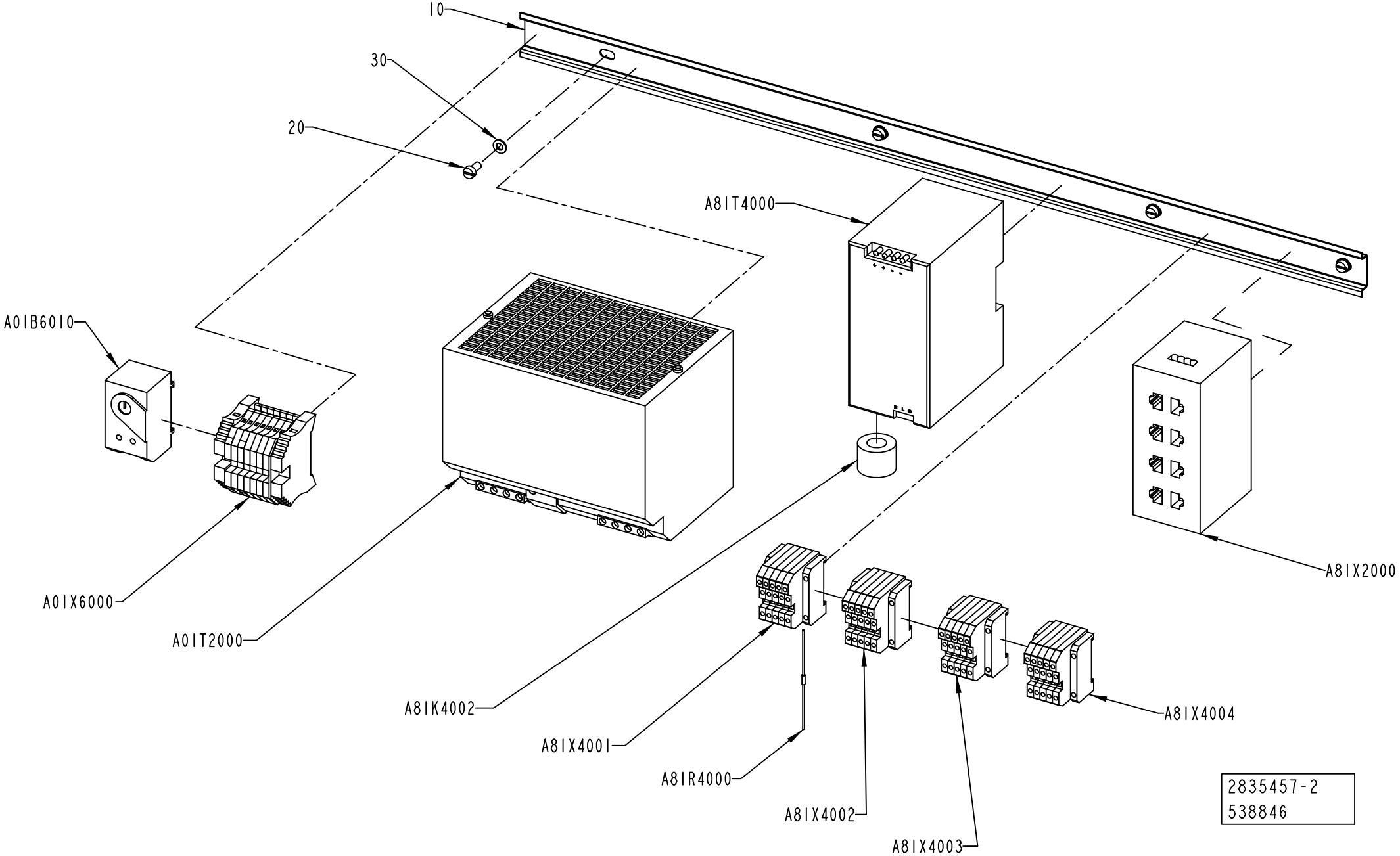

ECM: 540552 - 20120402
Group number: 2835457-0200
Assembly Drawing: 2835457-2_1_AB

Pos	Part No	UN	Qty	Description	Page No
-					
010	2838476-0000		1	RAIL	
020	312125-0325		4	SCREW ISO 1207 M5X10 A4	
030	315105-0146		4	WASHER PLAIN, 5,3X10X1 A4 BRB	
A01B6010	90458-1114		1	BIMET. ELECTROMECH. THERMOSTAT K7H.020	
A81K4002	90600-5249		1	FERRITE, B64290L616X38	
A81R4000	90459-2523		1	TERMINATOR, OPEN STYLE, 1485A-C2	
A01T2000	90459-4133		1	POWER SUPPLY UNIT 6EP1 436-3BA00	
A81T4000	90459-5886		1	POWER SUPPLY UNIT 115-230 VAC/24VDC100W	
A01X6000	2890591-0200		1	PLINTH	**9-85**
A81X2000	90600-1848		1	ETHERNET SW, FL SWITCH SFN 8TX	
A81X4001	90459-2519		1	TAP, OPEN STYLE	
A81X4002	90459-2519		1	TAP, OPEN STYLE	
A81X4003	90459-2519		1	TAP, OPEN STYLE	
A81X4004	90459-2519		1	TAP, OPEN STYLE	

Pos	Part No	UN	Qty	Description	Page No

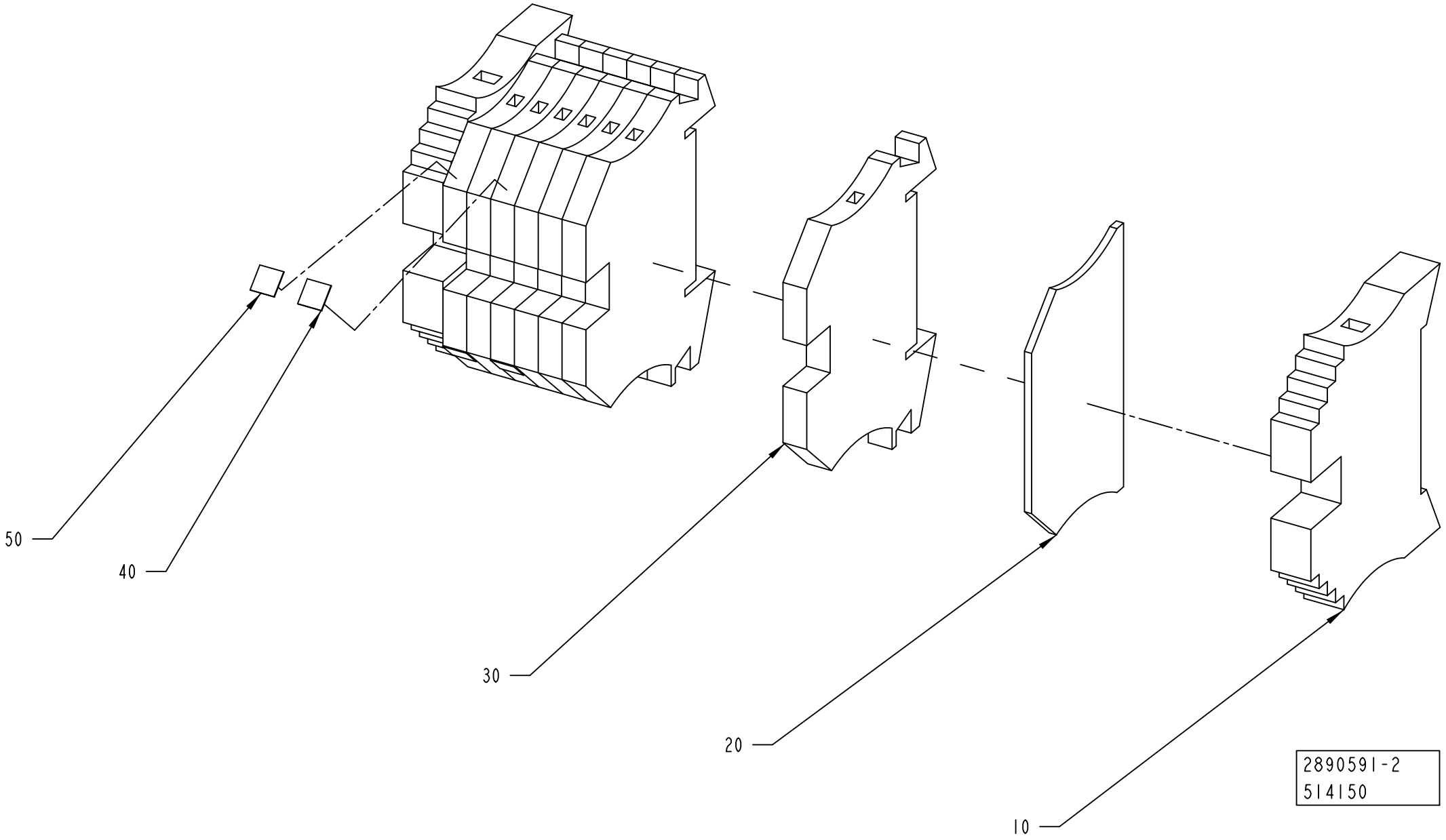
50
40
30
20
10
2890591-2
514150

ECM: 533135 - 20120401
Group number: 2890591-0200
Assembly Drawing: 2890591-2_1_AA

Pos	Part No	UN	Qty	Description	Page No
-					
010	353031-0203		2	END BRACKET, WEW 35/2	
020	353032-0004		1	END PLATE, WAP 2,5-10, BEIGE	
030	353021-0212		7	FEED THROUGH TERMINAL, WDU 2,5	
040	359011-0819		2	MARKING, EARTH, DEK 5 GW ERDE I.KR.	
050	359011-0807		2	MARKING, DEK 5 FW 1-50	

Pos	Part No	UN	Qty	Description	Page No

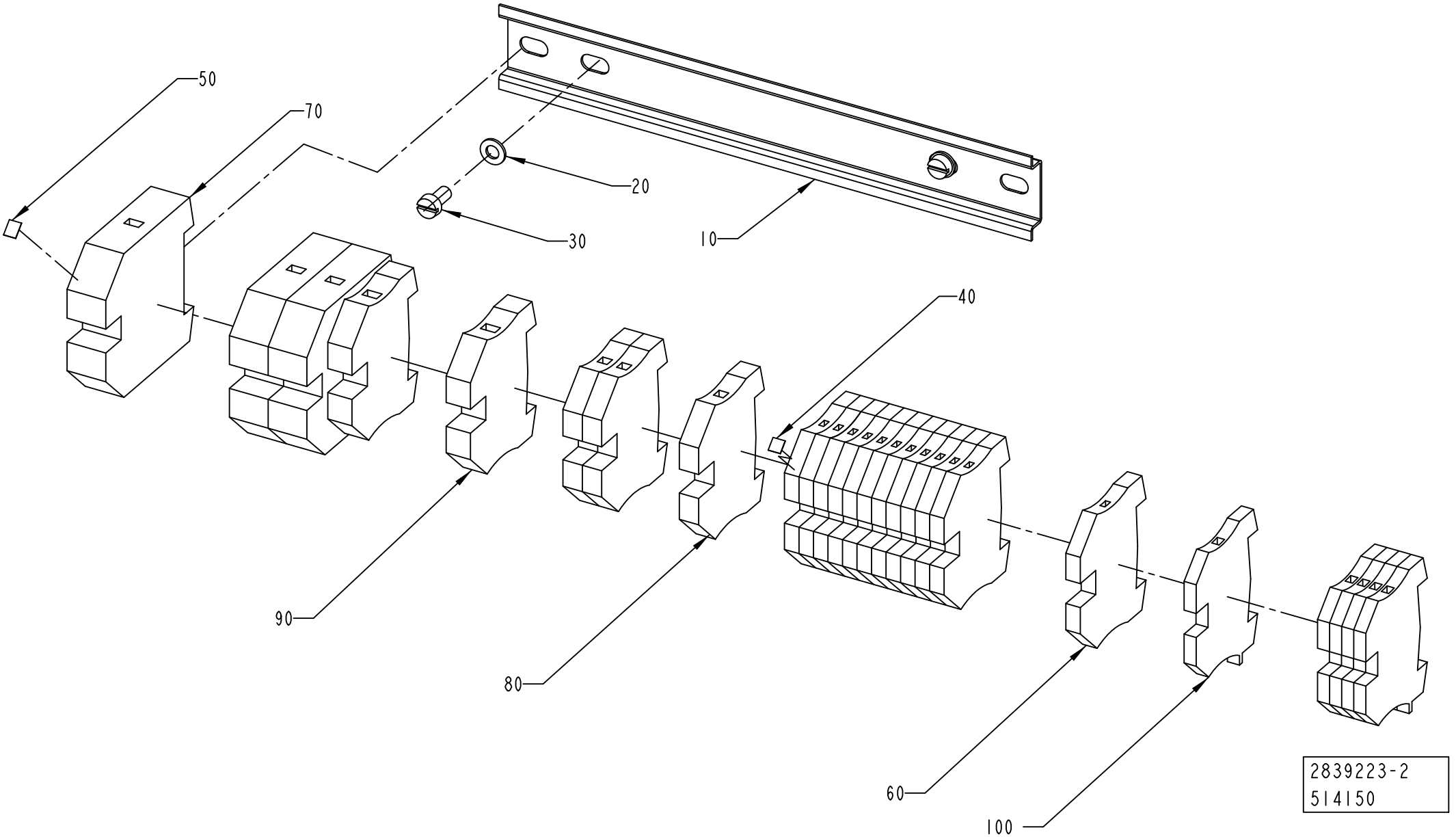
50
70
20
30
10
40
90
80
60
100
2839223-2
514150

ECM: 521630 - 20120401
Group number: 2839223-0200
Assembly Drawing: 2839223-2_1_AA

Pos	Part No	UN	Qty	Description	Page No
-					
010	2835454-0000		1	RAIL	
020	315105-0146		2	WASHER PLAIN, 5,3X10X1 A4 BRB	
030	312125-0325		2	SCREW ISO 1207 M5X10 A4	
040	359011-0807		1	MARKING, DEK 5 FW 1-50	
050	359011-0821		1	MARKING, DEK 6 FW 1-50	
060	353024-0205		12	EARTH TERMINAL WPE 4	
070	353024-0209		3	EARTH TERMINAL WPE 35	
080	353024-0206		3	EARTH TERMINAL WPE 6	
090	353024-0207		2	EARTH TERMINAL WPE 10	
100	353024-0204		5	EARTH TERMINAL WPE 2,5	

Pos	Part No	UN	Qty	Description	Page No

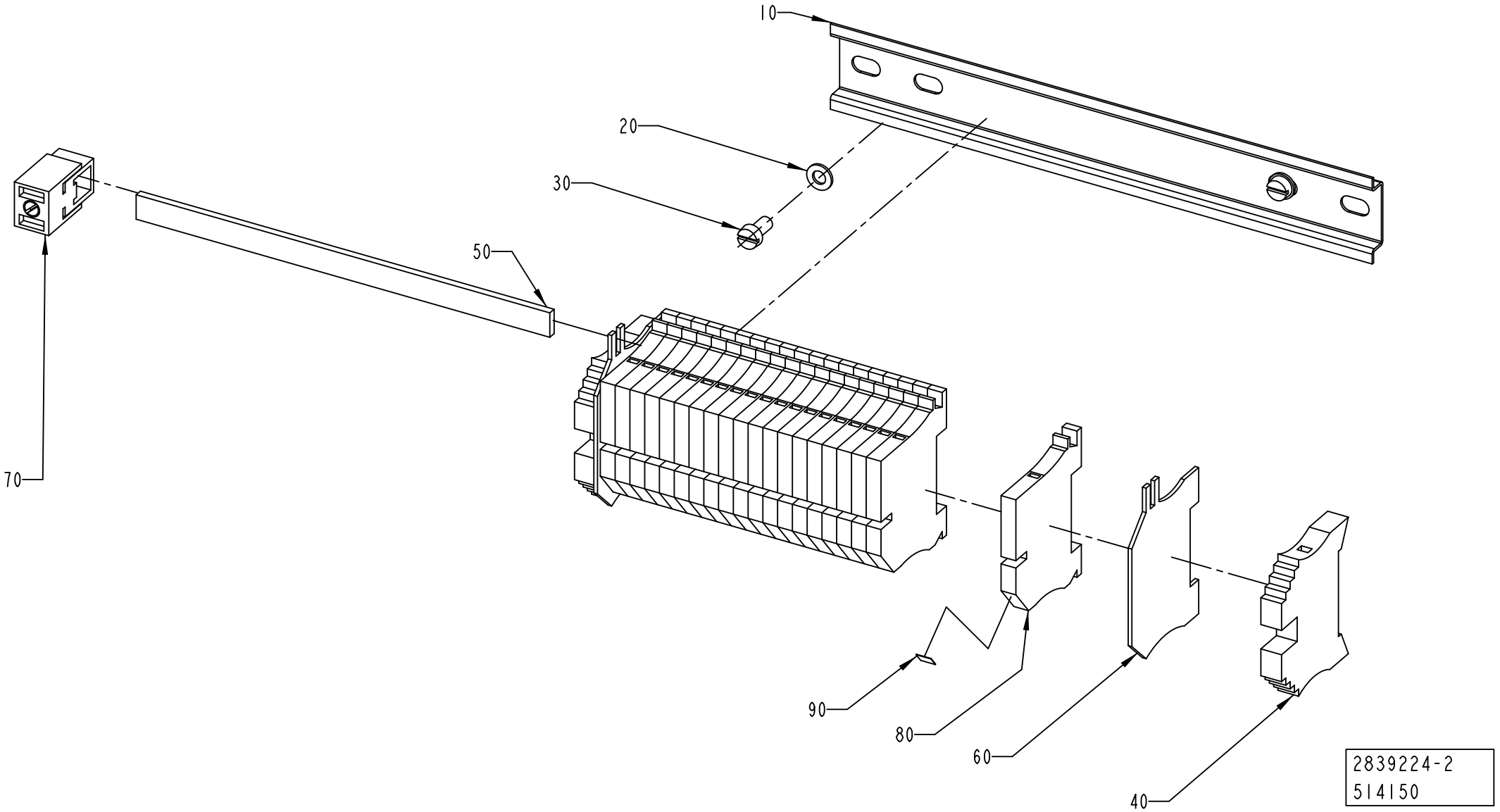
10
20
30
50
70
90
80
60
40
2839224-2
514150

ECM: 521631 - 20120401
Group number: 2839224-0200
Assembly Drawing: 2839224-2_1_AA

Pos	Part No	UN	Qty	Description	Page No
-					
010	2835454-0000		1	RAIL	
020	315105-0146		2	WASHER PLAIN, 5,3X10X1 A4 BRB	
030	312125-0325		2	SCREW ISO 1207 M5X10 A4	
040	353031-0203		2	END BRACKET, WEW 35/2	
050	353041-0001	MM	165	BUS BAR RAIL 10X3MM SSCH	
060	353033-0104		2	END PLATE, WHP2,5-35N/10X3 BL	
070	353041-0106		1	HOLDER ZB35 K 5026.8	
080	353022-0002		20	TERMINAL WNT 4 10X3	
090	359011-0821		1	MARKING, DEK 6 FW 1-50	

Pos	Part No	UN	Qty	Description	Page No

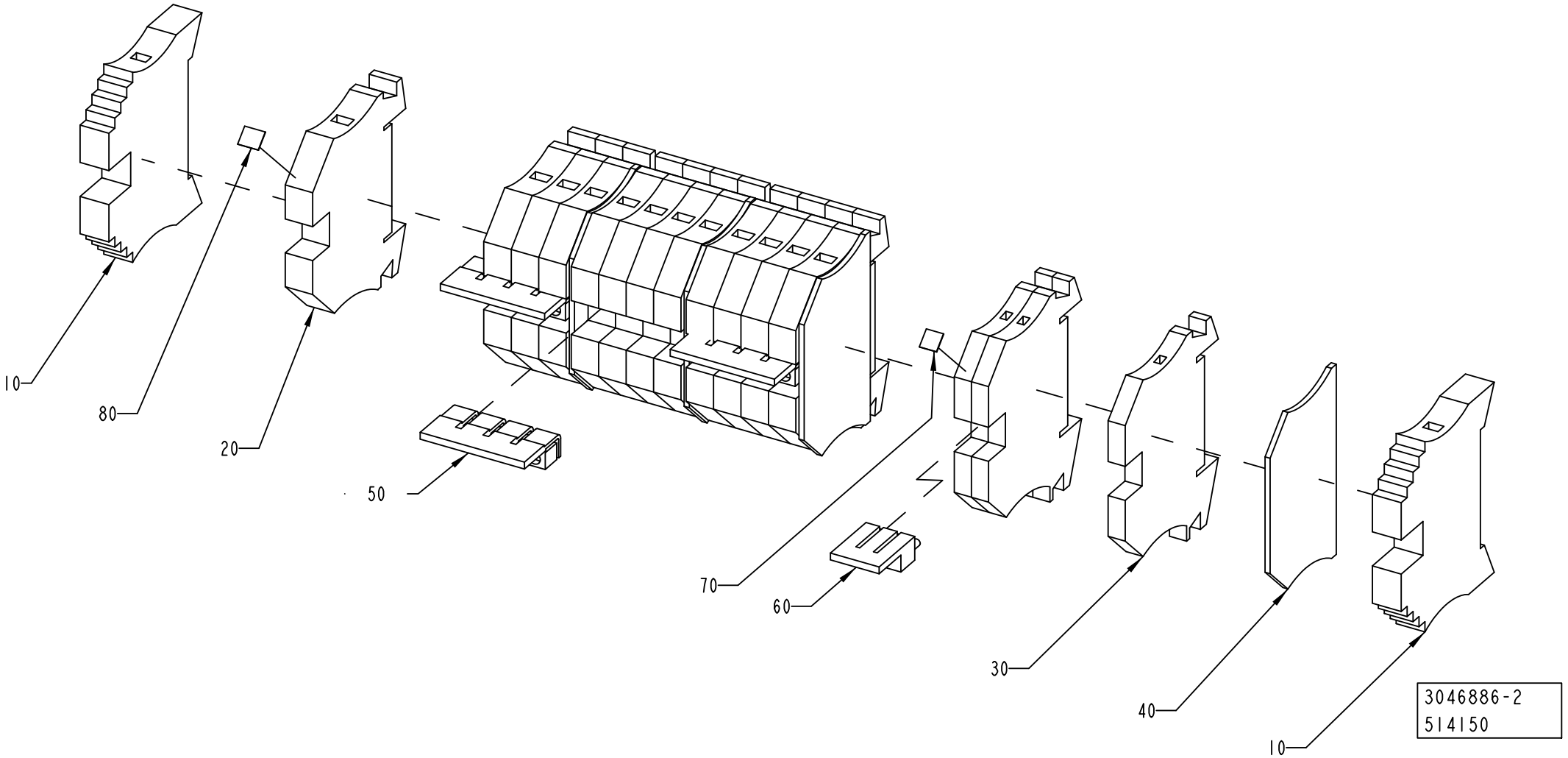
10
80
20
50
70
60
30
40
10
3046886-2
514150

ECM: 521634 - 20120401
Group number: 3046886-0200
Assembly Drawing: 3046886-2_1_AA

Pos	Part No	UN	Qty	Description	Page No
-					
010	353031-0203		2	END BRACKET, WEW 35/2	
020	353021-0214		12	FEED THROUGH TERMINAL, WDU 6	
030	353021-0212		3	FEED THROUGH TERMINAL, WDU 2,5	
040	353032-0004		4	END PLATE, WAP 2,5-10, BEIGE	
050	353034-0032		3	BRIDGE CONNECTOR WQV 6/10	
060	353034-0042		1	BRIDGE CONNECTOR WQV 2,5/3	
070	359011-0807		1	MARKING, DEK 5 FW 1-50	
080	359011-0821		1	MARKING, DEK 6 FW 1-50	

Pos	Part No	UN	Qty	Description	Page No

This page is intentionally left blank.

ECM: 521625 - 20120401
Group number: 2833409-0200
Assembly Drawing:

Pos	Part No	UN	Qty	Description	Page No
-					
010	351160-0105	M	4	WIRE AWM 1X2,5 MM2 DARKBLUE	
020	351160-0106	M	5	WIRE AWM 1X4 MM2 DARKBLUE	
030	351161-0104	M	13	WIRE AWM 1X1,5 MM2 LIGHTBLUE	
040	351161-0105	M	20	WIRE AWM 1X2,5 MM2 LIGHTBLUE	
050	351161-0106	M	2.6	WIRE AWM 1X4 MM2 LIGHTBLUE	
060	351161-0107	M	2.6	WIRE AWM 1X6 MM2 LIGHTBLUE	
070	351161-0109	M	2.6	WIRE AWM 1X16 MM2 LIGHTBLUE	
080	351162-0102	M	26	WIRE AWM 1X0,75 MM2 YELLOW-GREEN	
090	351162-0104	M	13	WIRE AWM 1X1,5 MM2 YELLOW-GREEN	
100	351162-0105	M	29	WIRE AWM 1X2,5 MM2 YELLOW-GREEN	
110	351162-0106	M	6.5	WIRE AWM 1X4 MM2 YELLOW-GREEN	
120	351162-0107	M	2.6	WIRE AWM 1X6 MM2 YELLOW-GREEN	
130	351162-0108	M	3.9	WIRE AWM 1X10 MM2 YELLOW-GREEN	
140	351162-0109	M	3.9	WIRE AWM 1X16 MM2 YELLOW-GREEN	
150	351164-0104	M	32	WIRE AWM 1X1,5 MM2 BLACK	
160	351164-0106	M	13	WIRE AWM 1X4 MM2 BLACK	
170	351164-0108	M	29	WIRE AWM 1X10 MM2 BLACK	
180	351164-0109	M	4	WIRE AWM 1X16 MM2 BLACK	
A81W2000	90459-1621		1	CABLE, ETHERNET RJ 45 CONNECT. 1 M	
A81W2001	90459-6395		1	CABLE, ETHERNET RJ 45 STRAIGHT.10M	
A81W4000	90459-2530	MM	325	DEVICENET CABLE THIN	
A81W4001	90459-2530	M	1.3	DEVICENET CABLE THIN	
A81W4002	90459-2530	M	4.5	DEVICENET CABLE THIN	
A81W4003	90459-2530	M	13	DEVICENET CABLE THIN	
A81W4005	90459-2530	MM	260	DEVICENET CABLE THIN	
A81W4006	90459-2530	MM	260	DEVICENET CABLE THIN	
A81W4007	90459-2530	MM	260	DEVICENET CABLE THIN	
A81W7000	351423-0004	MM	325	CABLE UNITRONIC LICY 2X0,34	
A81W7001	351423-0004	MM	325	CABLE UNITRONIC LICY 2X0,34	
A81W7002	351423-0004	MM	325	CABLE UNITRONIC LICY 2X0,34	

Pos	Part No	UN	Qty	Description	Page No

Tetra Pak

SPC
Spare Parts Catalogue

This page is intentionally left blank.

ECM: 551255 - 20120403
Group number: 662913-0300
Assembly Drawing:

Pos	Part No	UN	Qty	Description	Page No
-					
010	2853706-0300		1	SETTING TOOL	**10-5**
020	2838693-0200		1	START-UP KIT	**10-13**
030	2986247-0200		1	CAP DETECTOR	**10-25**
040	3227565-0000		1	PNEUMATIC DIAGRAM	
050	3228275-0000		1	LUBRICATION DIAGRAM	
060	3228191-0000		1	WATER DIAGRAM	
070	2873923-0200		1	POSITION TEMPLATE	**10-39**
080	2873953-0200		1	CAP	**10-43**
090	3243398-0100		1	HOSE	**10-45**
100	3243399-0100		1	OIL GUN	**10-47**

Pos	Part No	UN	Qty	Description	Page No

Machine Type | Group Description | Used-In | Group Number | Page No

This page is intentionally left blank.

ECM: 543074 - 20120402
Group number: 2853706-0300
Assembly Drawing:

Pos	Part No	UN	Qty	Description	Page No
TBA SLIMCAP1000, TBA STREAMCAP1000, TBA SLIMCAP 2000, TBA HELICAP2 23, TGA 0500SQ HELICAP 27, TGA 0750SQ HELICAP 27, TGA 1000SQ HELICAP 27, TGA 1500SQ HELICAP 27, TGA 0500SQ STREAMCAP 1000, TGA 0750SQ STREAMCAP 1000, TGA 1000SQ STREAMCAP 1000, TGA 1500SQ STREAMCAP 1000					
040	2736458-0000		1	TEMPLATE	
070	2788137-0000		1	TEMPLATE	
110	3047353-0000		1	GUIDE	
TBA STREAMCAP200					
040	2736458-0000		1	TEMPLATE	
060	2939208-0100		1	SETTING TOOL	**10-7**
100	3034465-0000		1	SETTING TOOL	
110	3047353-0000		1	GUIDE	
TPA STREAMCAP 1000, TPA STREAMCAP 500, TPA HELICAP 27, TGA 1000CR HELICAP 27					
040	2736458-0000		1	TEMPLATE	
070	2873935-0000		1	TEMPLATE	
110	3047353-0000		1	GUIDE	
Common Parts					
010	2715750-0100		1	TEMPLATE	**10-9**
020	2716125-0100		1	SETTING TOOL	**10-11**
030	3044285-0000		2	TEMPLATE	

Pos	Part No	UN	Qty	Description	Page No

Machine Type | Group Description | Used-In | Group Number | Page No

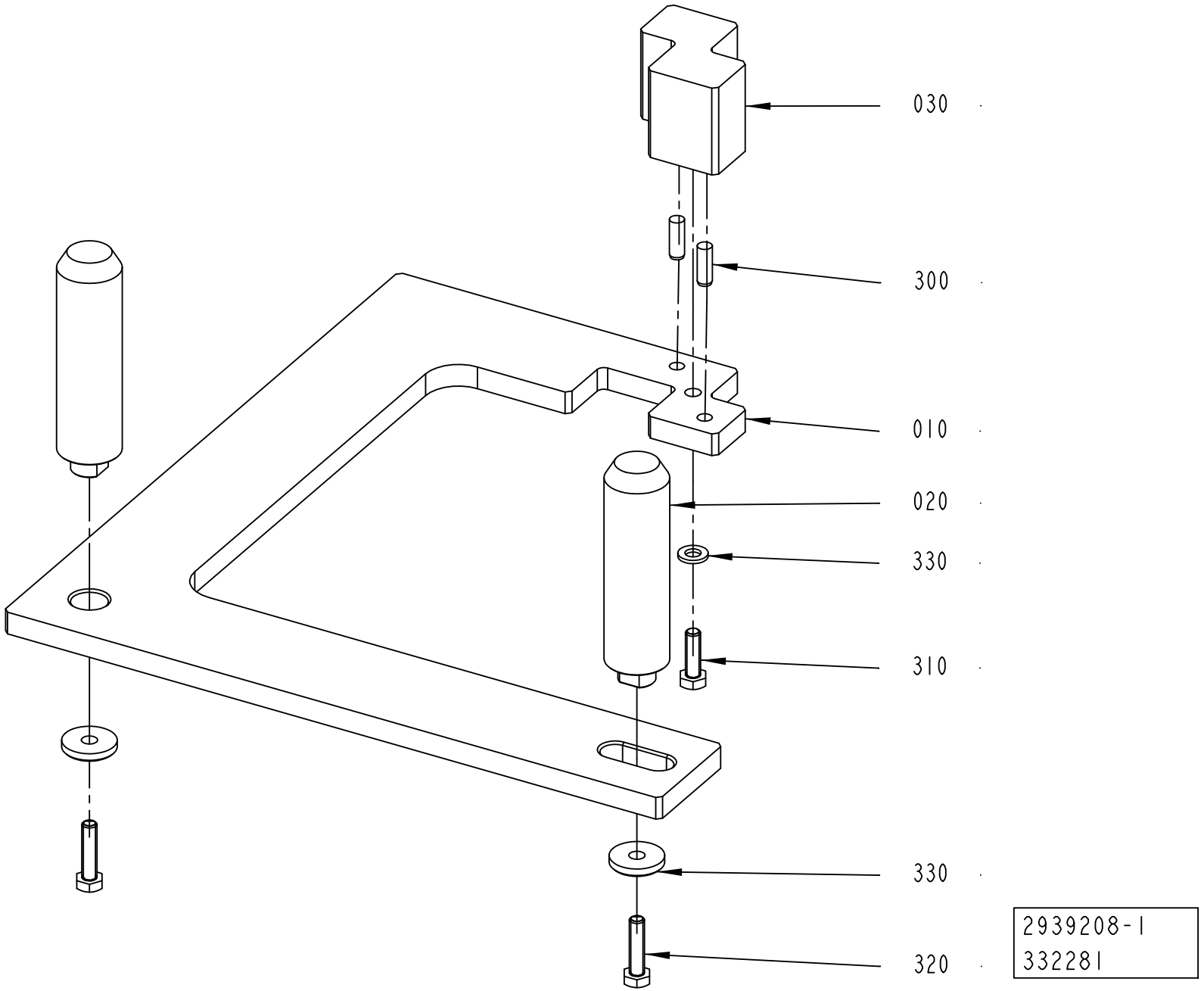
030
300
010
020
330
310
330
320
2939208-1
332281

ECM: 349976 - 20080701
Group number: 2939208-0100
Assembly Drawing: 2939208-1_1_AA

Pos	Part No	UN	Qty	Description	Page No
-					
010	2939164-0000		1	SETTING TOOL	
020	2939165-0000		2	SHAFT	
030	2939331-0000		1	TOOL	
300	311103-0352		2	PARALLEL PIN ISO 2338 6M6X18 A1	
310	312105-0370		1	SCREW, M6S ISO 4017 M6X20 A4 80	
320	312105-0372		2	SCREW, M6S ISO 4017 M6X25 A4 80	
330	315105-0153		1	WASHER PLAIN, 6,4X12X1,5 A4 BRB	
340	315121-0153		2	WASHER PLAIN, TBRSB 6,4/22 H=4	

Pos	Part No	UN	Qty	Description	Page No

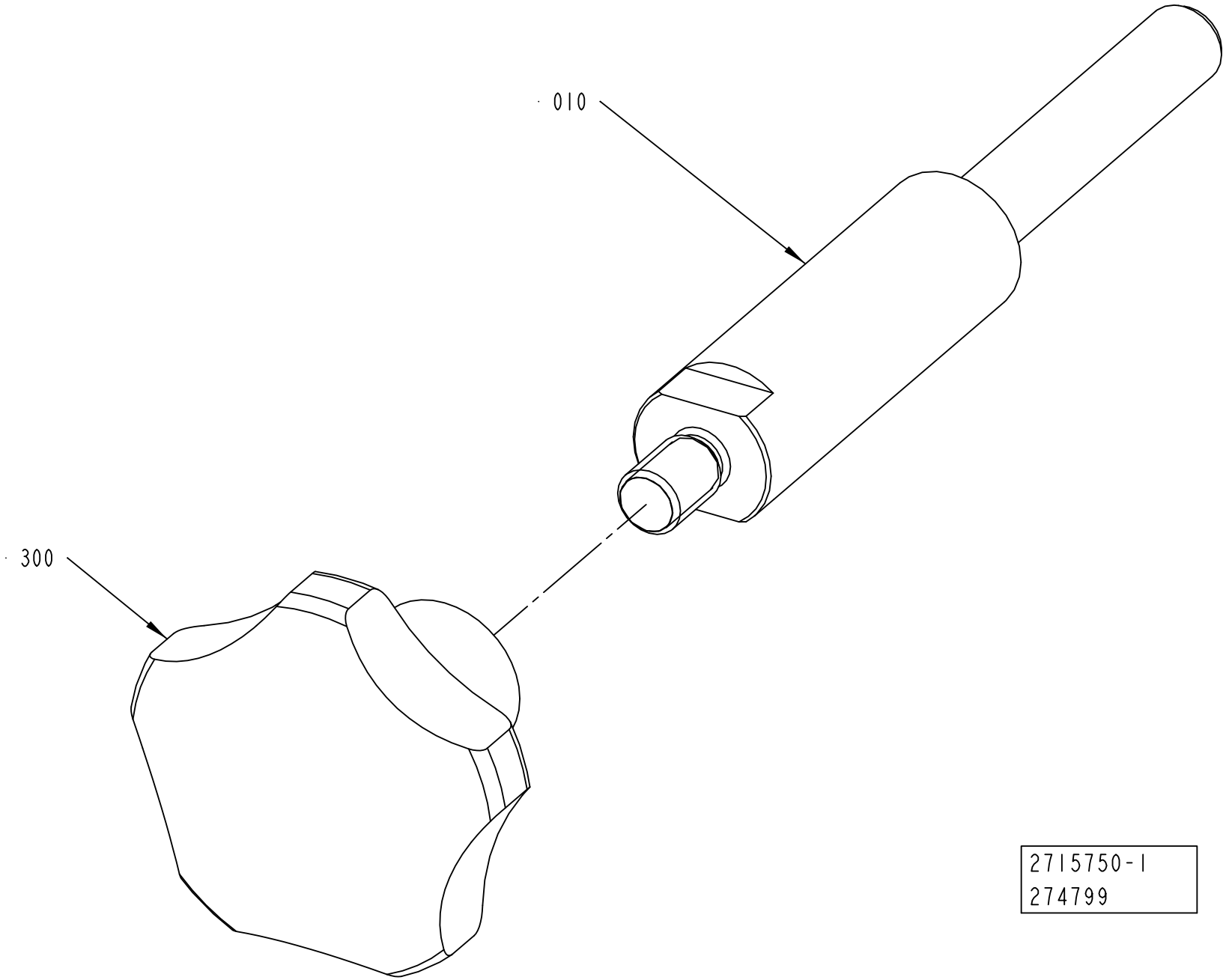
010
300
2715750-1
274799

ECM: 444700 - 20100701
Group number: 2715750-0100
Assembly Drawing: 2715750-1_1_AA

Pos	Part No	UN	Qty	Description	Page No
-					
010	2715751-0000		1	SHAFT	
300	90051-0054		1	STELLAR KNOB, INT. THREAD, NO. 8306-0340	

Pos	Part No	UN	Qty	Description	Page No

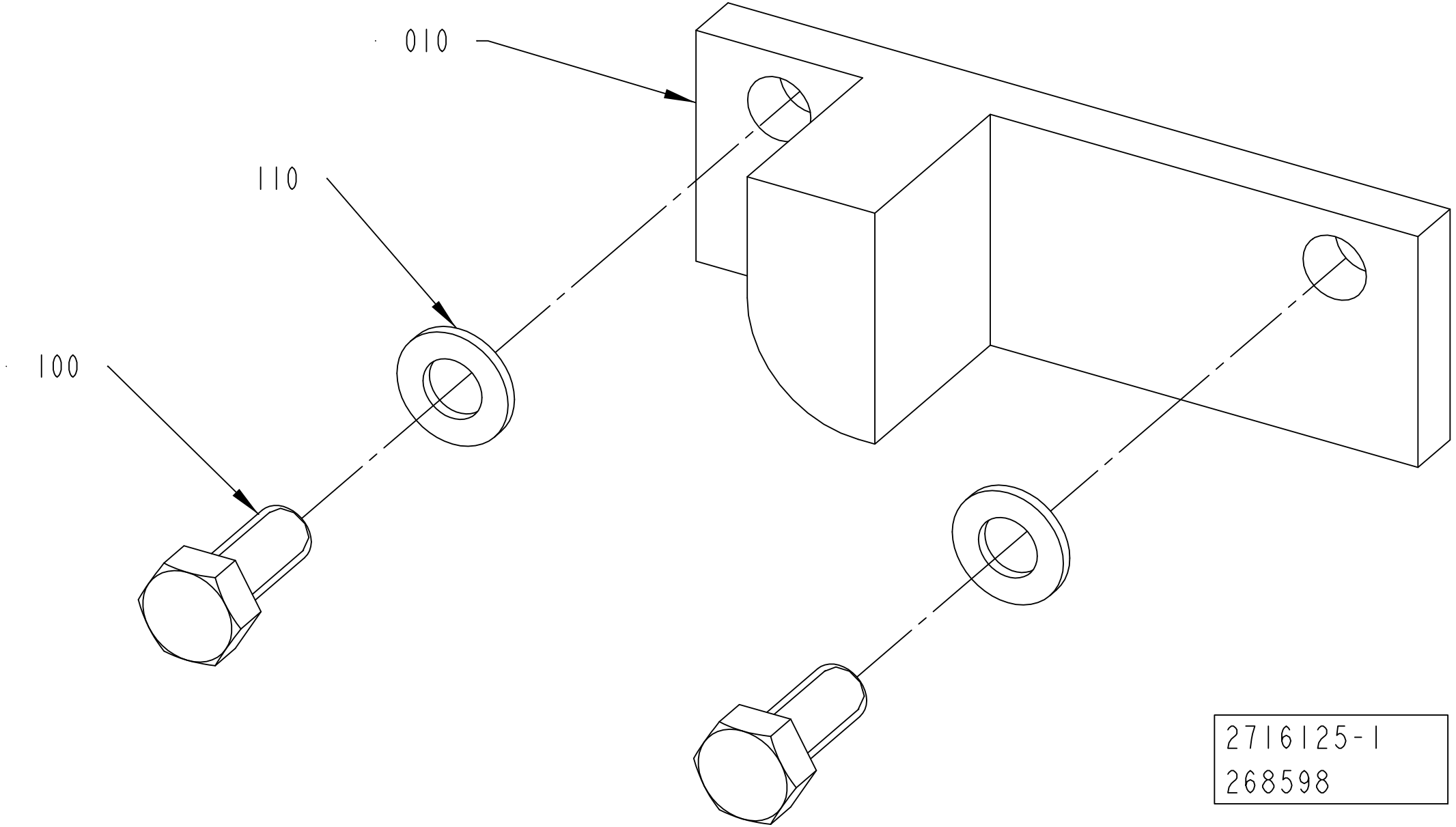
010
110
100
2716125-1
268598

ECM: 269065 - 20060920
Group number: 2716125-0100
Assembly Drawing: 2716125-1_1_AA

Pos	Part No	UN	Qty	Description	Page No
-					
010	2716154-0000		1	SETTING TEMPLATE	
100	312105-0327		2	SCREW, M6S ISO 4017 M5X12 A4 80	
110	315105-0146		2	WASHER PLAIN, 5,3X10X1 A4 BRB	

Pos	Part No	UN	Qty	Description	Page No

This page is intentionally left blank.

ECM: 534840 - 20120401
Group number: 2838693-0200
Assembly Drawing:

Pos	Part No	UN	Qty	Description	Page No
ADHESIVE HENKEL CAPFIX 100					
100	3220230-0100		1	START-UP KIT	**10-15**
ADHESIVE HENKEL NATIONAL 134-135B					
100	3220231-0100		1	START-UP KIT	**10-17**
ADHESIVE JOWAT 250.00					
100	3220228-0100		1	START-UP KIT	**10-19**
ADHESIVE JOWAT 250.80					
100	3220229-0100		1	START-UP KIT	**10-21**
ADHESIVE LUEUENBERGER PS880					
100	3220227-0100		1	START-UP KIT	**10-23**

Pos	Part No	UN	Qty	Description	Page No

This page is intentionally left blank.

ECM: 537934 - 20120401
Group number: 3220230-0100
Assembly Drawing:

Pos	Part No	UN	Qty	Description	Page No
CAP 30/FLEX HELICAP2 23					
030	90459-3197		6	SATURN SINGLE-ORIFICE NOZZLE, 322014	
CAP 30/FLEX SLIMCAP1000					
030	90439-0155		6	NOZZLE, 322 012	
CAP 30/FLEX SLIMCAP2000					
030	90458-0651		6	SATURN SINGLE-ORIFICE NOZZLE, 322010	
Common Parts					
020	A100000027	KG	1	HOT-MELT CAP FIX 100, HENKEL	
040	3034434-0000		20	TENSION SPRING	
070	2985810-0000		1	BRUSH	
080	90458-2510		3	FUSE, ATDR6	

Pos	Part No	UN	Qty	Description	Page No

This page is intentionally left blank.

ECM: 537935 - 20120401
Group number: 3220231-0100
Assembly Drawing:

Pos	Part No	UN	Qty	Description	Page No
CAP 30/FLEX HELICAP2 23					
030	90459-3197		6	SATURN SINGLE-ORIFICE NOZZLE, 322014	
CAP 30/FLEX SLIMCAP1000					
030	90439-0155		6	NOZZLE, 322 012	
CAP 30/FLEX SLIMCAP2000					
030	90458-0651		6	SATURN SINGLE-ORIFICE NOZZLE, 322010	
Common Parts					
020	90459-4083	KG	1	ADHESIVE, NATIONAL 134-135B 12 KG	
040	3034434-0000		20	TENSION SPRING	
070	2985810-0000		1	BRUSH	
080	90458-2510		3	FUSE, ATDR6	

Pos	Part No	UN	Qty	Description	Page No

This page is intentionally left blank.

ECM: 537932 - 20120401
Group number: 3220228-0100
Assembly Drawing:

Pos	Part No	UN	Qty	Description	Page No
CAP 30/FLEX STREAMCAP1000, CAP 30/FLEX STREAMCAP500, CAP 30/FLEX HELICAP 27					
030	90459-3197		6	SATURN SINGLE-ORIFICE NOZZLE, 322014	
040	3034434-0000		20	TENSION SPRING	
070	2985810-0000		1	BRUSH	
CAP 30/FLEX STREAMCAP200					
030	90439-0155		6	NOZZLE, 322 012	
040	3034434-0000		20	TENSION SPRING	
070	2985810-0000		1	BRUSH	
Common Parts					
020	90153-0059	KG	1	250.0 ADHESIVE, HOTMELT RECAP 12 KG	
080	90458-2510		3	FUSE, ATDR6	

Pos	Part No	UN	Qty	Description	Page No

This page is intentionally left blank.

ECM: 537933 - 20120401
Group number: 3220229-0100
Assembly Drawing:

Pos	Part No	UN	Qty	Description	Page No
CAP 30/FLEX STREAMCAP1000, CAP 30/FLEX STREAMCAP500					
030	90439-0155		6	NOZZLE, 322 012	
CAP 30/FLEX STREAMCAP200					
030	90459-3197		9	SATURN SINGLE-ORIFICE NOZZLE, 322014	
Common Parts					
020	90600-9726	KG	1	ADHESIVE, HOTMELT 25080 12KG	
040	3034434-0000		20	TENSION SPRING	
070	2985810-0000		1	BRUSH	
080	90458-2510		3	FUSE, ATDR6	

Pos	Part No	UN	Qty	Description	Page No

This page is intentionally left blank.

ECM: 537931 - 20120401
Group number: 3220227-0100
Assembly Drawing:

Pos	Part No	UN	Qty	Description	Page No
CAP 30/FLEX STREAMCAP1000, CAP 30/FLEX HELICAP 27					
030	90439-0155		6	NOZZLE, 322 012	
CAP 30/FLEX STREAMCAP500					
030	90458-0651		6	SATURN SINGLE-ORIFICE NOZZLE, 322010	
Common Parts					
020	90602-3996		1	ADHESIVE, HOTM. TERMOMELT PS880 12KG	
040	3034434-0000		20	TENSION SPRING	
070	2985810-0000		1	BRUSH	
080	90458-2510		3	FUSE, ATDR6	

Pos	Part No	UN	Qty	Description	Page No

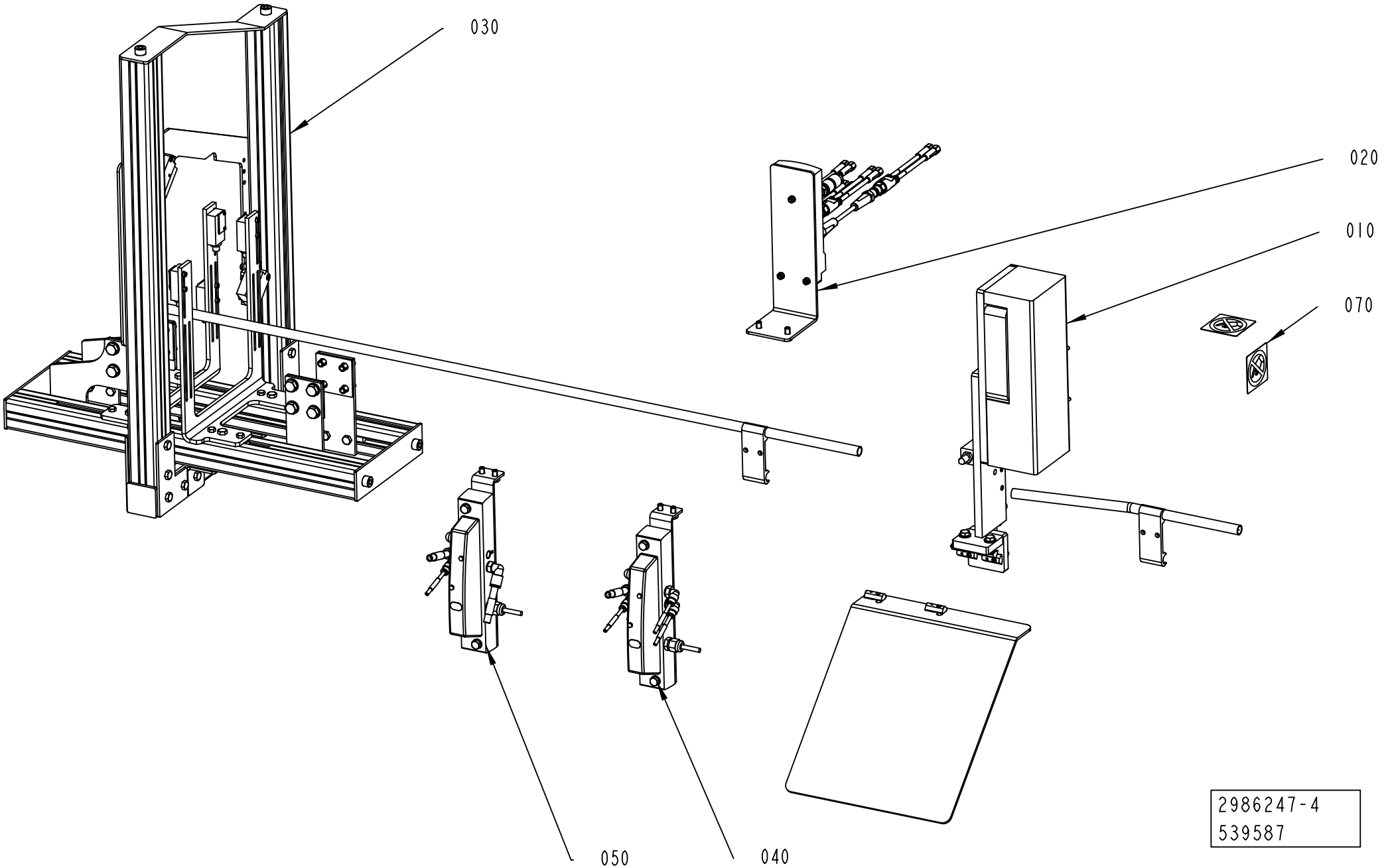
030
020
010
070
050
040
2986247-4
539587

ECM: 543077 - 20120402
Group number: 2986247-0200
Assembly Drawing: 2986247-4_1_AB

Pos	Part No	UN	Qty	Description	Page No
TPA 0330SQ, TPA 1000SQ, TPA 0500SQ, TPA 0750SQ, TBA 2000S SLIMCAP2000, TBA 1890S SLIMCAP2000, TGA, TBA 1000S SLIMCAP1000, TBA 1000SQ STREAMCAP1000, TBA 1000S HELICAP2 23, TBA 0200SQ STREAMCAP200, TBA 0250SQ STREAMCAP200, TBA 0500SQ STREAMCAP1000, TBA 1500S SLIMCAP 1000, TBA 0500SQ HELICAP 27, TBA 1000SQ HELICAP 27					
010	3210219-0100		1	EJECTOR	**10-27**
030	3210232-0100		1	PHOTOCELL BRACKET	**10-29**
Common Parts					
020	2839195-0200		1	DISTRIBUTOR	**10-31**
040	2839074-0200		1	PNEUMATIC UNIT	**10-33**
050	2839194-0200		1	PNEUMATIC UNIT	**10-35**
070	3227417-0100		1	WARNING SIGN	**10-37**

Pos	Part No	UN	Qty	Description	Page No

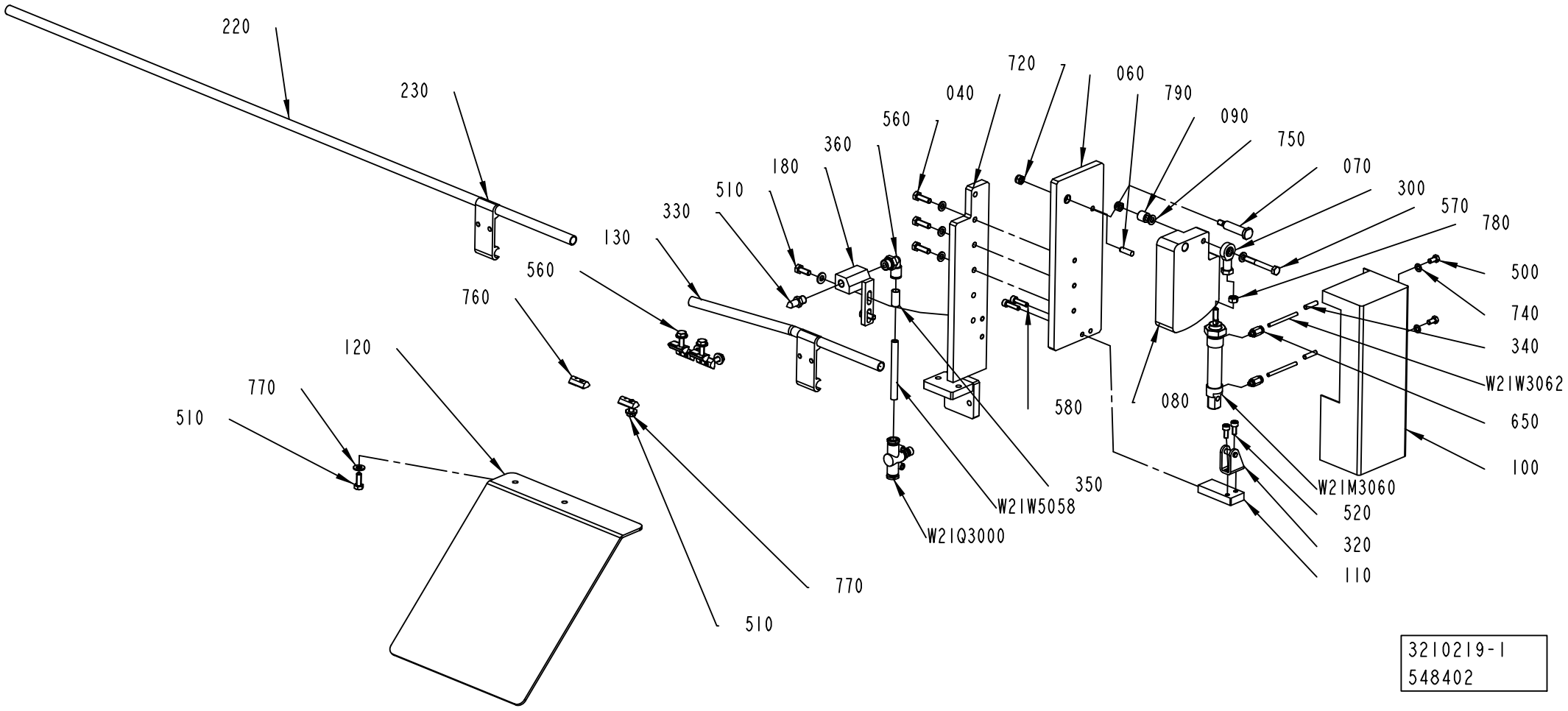
220
230
130
560
760
120
770
510
330
510
180
360
560
040
720
060
790
090
750
070
300
570
780
500
740
340
W21W3062
650
100
W21M3060
520
320
110
080
580
350
W21W5058
W21Q3000
770
510
3210219-1
548402

ECM: 548407 - 20120403
Group number: 3210219-0100
Assembly Drawing: 3210219-1_1_AC

Pos	Part No	UN	Qty	Description	Page No
-					
040	3210228-0000		1	BRACKET	
060	2873876-0000		1	PLATE	
070	3210237-0000		1	SHAFT	
080	3210235-0000		1	PUSHER	
090	2817573-0000		1	SPACER	
100	3210234-0000		1	COVER	
110	3210236-0000		1	SUPPORT	
120	3210229-0000		1	SLIDE PLATE	
130	2818738-0000		1	RAILING	
180	2873866-0000		1	SUPPORT	
220	476221-0013		1	PIPE	
230	1020637-0000		2	HOLDER	
300	90115-0163		1	ROD END, ID=6 MM, M6X1	
320	90459-3655		1	REAR CLEVIS FOOT MOUNTING, LBN-12/16	
330	90424-0087		1	AIR NOZZLE	
340	90459-7368		2	MARKING FOR PNEUM. TUBING, PRZ04	
350	90459-7370		1	MARKING FOR PNEUM. TUBING, PRZ08	
360	350002-0009		1	PUSH-IN L-FITTING QSL-F-G1/4-8	
500	312105-0325		3	SCREW, M6S ISO 4017 M5X10 A4 80	
510	312105-0368		4	SCREW, M6S ISO 4017 M6X16 A4 80	
520	312115-0327		2	SCREW ISO4762 M5X12 A4 80	
560	312105-0370		7	SCREW, M6S ISO 4017 M6X20 A4 80	
570	312105-0380		1	SCREW, M6S ISO 4014 M6X50 A4 80	
580	312115-0331		2	SCREW ISO4762 M5X20 A4 80	
650	350001-0001		2	PUSH-IN FITTING QS-F-M5-4	
720	312812-0316		2	HEXAGON NUT, NY-LOCK M6 A4 80	
740	315105-0146		3	WASHER PLAIN, 5,3X10X1 A4 BRB	
750	315105-0153		5	WASHER PLAIN, 6,4X12X1,5 A4 BRB	
760	90459-5134		6	NUT, T-SLOT M6	
770	315105-0156		8	WASHER PLAIN, 6,7X14X1,5 A4 BRB	
780	312605-0316		1	HEXAGON NUT, M6M M6 A280	
790	311103-0353		1	PARALLEL PIN ISO 2338 6M6X20 A1	
W21M3060	90604-3129		1	DOUBLE ACTING, MINI-ISO, CYL. 16-25	
W21Q3000	90459-2777		1	FLOW CONTROL VALVE, GR-QS-8	
W21W3062	315400-0016	MM	500	TUBE PUN-H-4X0,75-BL	
W21W3064	315400-0016	MM	500	TUBE PUN-H-4X0,75-BL	
W21W5058	315400-0004	MM	150	TUBE PUN-H-8X1,25-BL	

Pos	Part No	UN	Qty	Description	Page No

Machine Type	Group Description	Used-In	Group Number	Page No

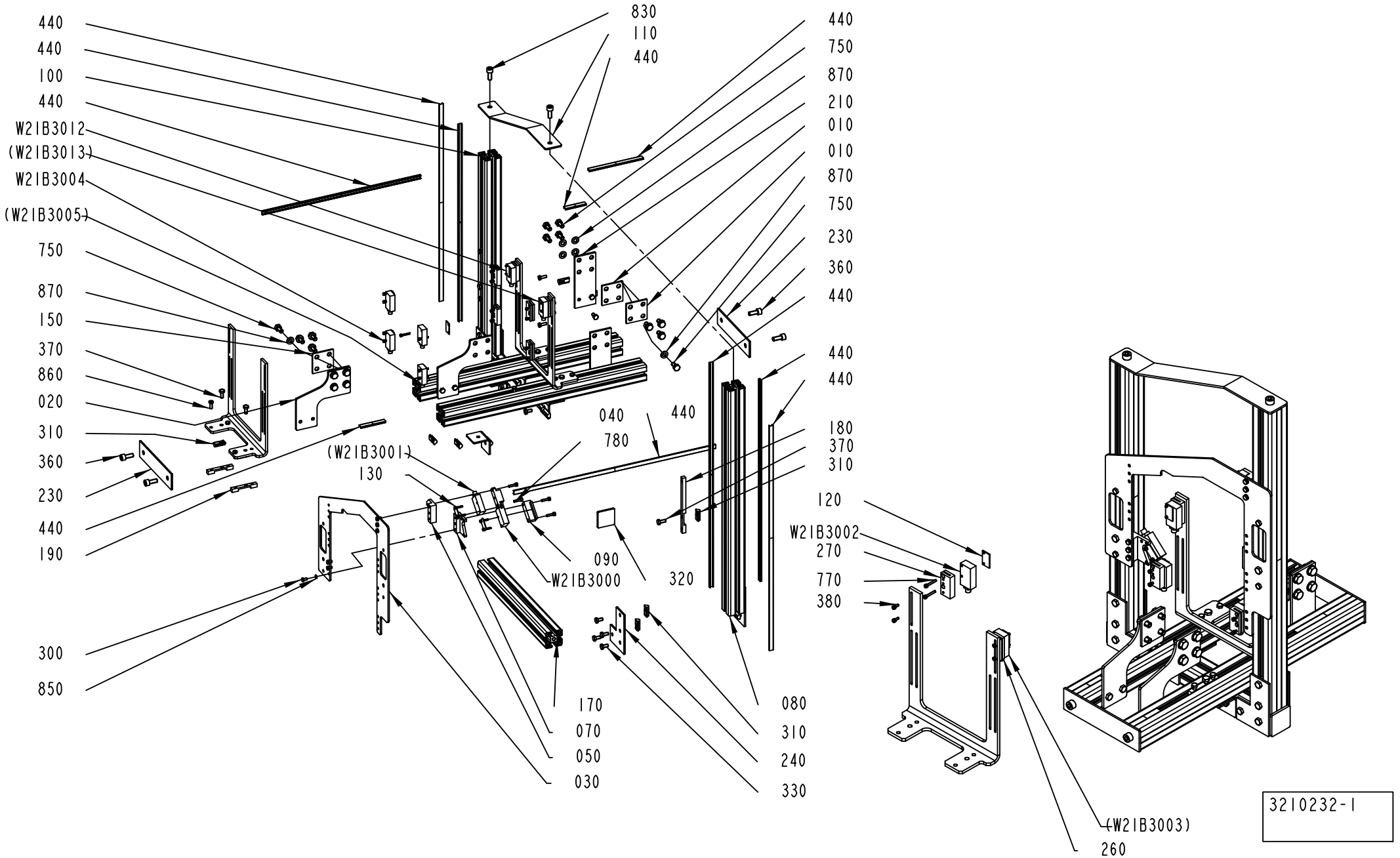
440
440
100
440
W21B3012
(W21B3013)
W21B3004
(W21B3005)
750
870
150
370
860
020
310
360
230
440
190
300
850
830
110
440
440
750
870
210
010
010
870
750
230
360
440
440
440
180
370
310
120
W21B3002
270
770
380
040
780
440
(W21B3001)
130
090
W21B3000
320
170
070
050
030
080
310
240
330
(W21B3003)
260
3210232-1

ECM: 550255 - 20120403
Group number: 3210232-0100
Assembly Drawing: 3210232-1_1_AB

Pos	Part No	UN	Qty	Description	Page No
-					
010	2815585-0000		2	SPACER	
020	3210222-0000		1	SPACER	
030	3159870-0000		1	BRACKET	
040	3159885-0000		1	BRACKET	
050	3159886-0000		1	BRACKET	
060	3152710-0000		2	BRACKET	
070	3159887-0000		1	BRACKET	
080	3156384-0000		1	PROFILE	
090	3159893-0000		1	BRACKET	
100	3156385-0000		1	PROFILE	
110	3156411-0000		1	PLATE	
120	3159895-0000		6	PLATE	
130	3159896-0000		2	PLATE	
150	2815585-0000		2	SPACER	
160	3210220-0000		2	PROFILE	
170	3210223-0000		1	PROFILE	
180	3210225-0000		2	PLATE	
190	3210226-0000		4	PLATE	
210	3210221-0000		2	SPACER	
220	3210222-0000		1	SPACER	
230	3210227-0000		2	SPACER	
240	3210230-0000		4	SPACER	
250	3210231-0000		4	SPACER	
300	312105-0287		6	SCREW, M6S ISO 4017 M4X8 A4 70	
310	90459-5134		38	NUT, T-SLOT M6	
320	90600-1996		2	CAP 8 40X40 MM, 0.0.026.01	
330	312105-0366		32	SCREW, M6S ISO 4017 M6X12 A4 80	
340	312105-0328		1	SCREW M6S ISO 4017 M5X14 A4 80	
350	312115-0230		4	SCREW ISO4762 M3X20 A4 80	
360	312115-0451		4	SCREW ISO4762 M8X20 A4 80	
370	312105-0367		6	SCREW, M6S ISO 4017 M6X14 A4 80	
440	90600-1972	M	5	COVER PROFILE 8 AL, 0.0.265.50	
750	312105-0449		16	SCREW, M6S ISO 4017 M8X16 A4 80	
760	312115-0228		4	SCREW ISO4762 M3X16 A4 80	
770	312115-0230		8	SCREW ISO4762 M3X20 A4 80	
780	312115-0293		4	SCREW ISO4762 M4X16 A4 80	
830	312115-0451		2	SCREW ISO4762 M8X20 A4 80	
850	315105-0136		6	WASHER PLAIN, 4,3X9X0,8 A4 BRB	
860	312105-0328		11	SCREW M6S ISO 4017 M5X14 A4 80	
870	315105-0165		16	WASHER PLAIN, 8,4X16X1,6 A4 BRB	
W21B3000	90600-4732		1	LASER SENSOR, WS/WE9L-P330	
W21B3002	90600-4732		1	LASER SENSOR, WS/WE9L-P330	
W21B3004	90600-4732		1	LASER SENSOR, WS/WE9L-P330	
W21B3012	90600-4732		1	LASER SENSOR, WS/WE9L-P330	

Machine Type	Group Description	Used-In	Group Number	Page No

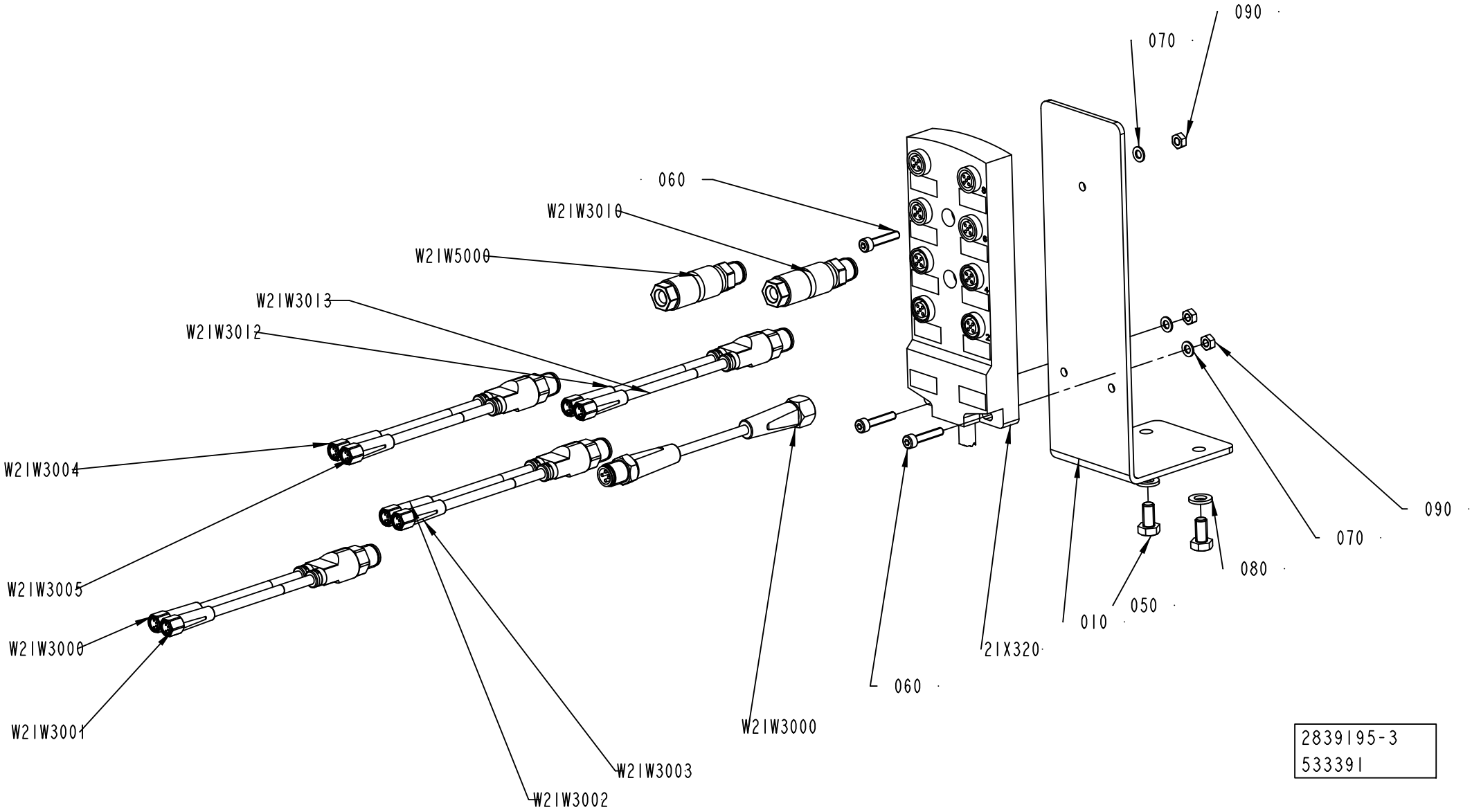
090
070
060
W2IW3010
W2IW5000
W2IW3013
W2IW3012
W2IW3004
W2IW3005
W2IW3006
W2IW3001
W2IW3000
W2IW3003
W2IW3002
060
21X320
010
050
080
070
090
2839195-3
533391

ECM: 534779 - 20120401
Group number: 2839195-0200
Assembly Drawing: 2839195-3_1_AA

Pos	Part No	UN	Qty	Description	Page No
TPA, TGA, TBA SLIMCAP1000, TBA STREAMCAP1000, TBA SLIMCAP 2000, TBA STREAMCAP200, TBA HELICAP2 23					
010	3156383-0000		1	BRACKET	
050	312105-0366		2	SCREW, M6S ISO 4017 M6X12 A4 80	
080	315105-0153		2	WASHER PLAIN, 6,4X12X1,5 A4 BRB	
W21W3000	344267-0006		1	SENSOR CABLE, EVT041	
W21W3000	90603-3979		1	SENSOR Y-CABLE, EVT339	
W21W3012	90603-3979		1	SENSOR Y-CABLE, EVT339	
Common Parts					
060	312115-0295		3	SCREW ISO4762 M4X20 A4 80	
070	315105-0136		3	WASHER PLAIN, 4,3X9X0,8 A4 BRB	
090	312607-0312		3	HEXAGON NUT, EN 24032 M6M M4 A480	
W21W3002	90603-3979		1	SENSOR Y-CABLE, EVT339	
W21W3004	90603-3979		1	SENSOR Y-CABLE, EVT339	
W21W3010	90603-5568		1	CONNECTOR, SACC-M12MS-4QO-0,34-VA	
W21W5000	90603-5568		1	CONNECTOR, SACC-M12MS-4QO-0,34-VA	
W21X3020	90603-3971		1	SPLITTER BOX, EBC034	

Pos	Part No	UN	Qty	Description	Page No

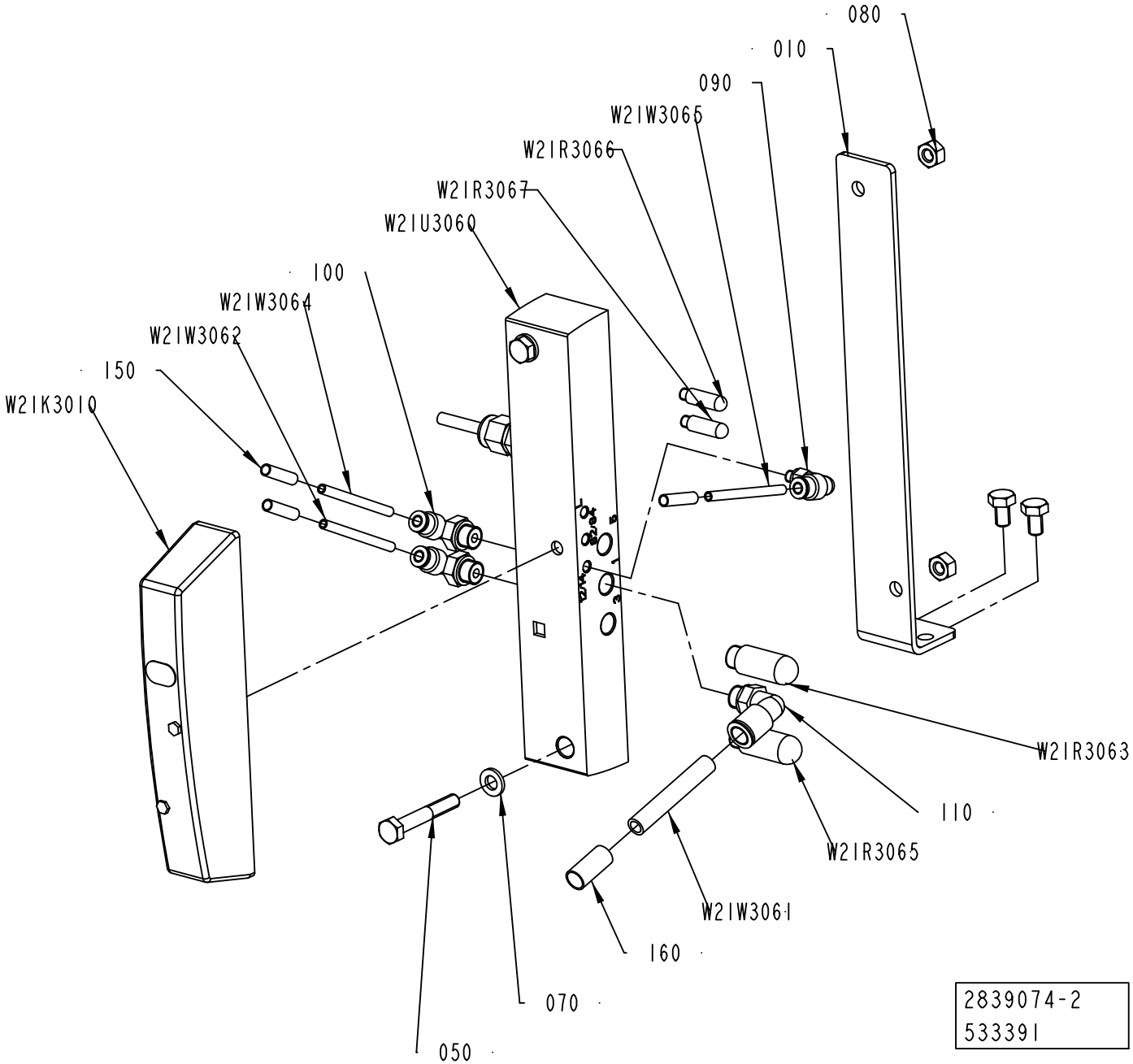
080
010
090
W2IW3065
W2IR3066
W2IR3067
W2IU3060
100
W2IW3064
W2IW3062
150
W2IK3010
W2IR3063
110
W2IR3065
W2IW3061
160
070
050
2839074-2
533391

ECM: 534777 - 20120401
Group number: 2839074-0200
Assembly Drawing: 2839074-2_1_AA

Pos	Part No	UN	Qty	Description	Page No
-					
010	2839073-0000		1	BRACKET	
050	312105-0378		2	SCREW, M6S ISO 4014 M6X40 A4 80	
060	312105-0364		2	SCREW, M6S ISO 4017 M6X10 A4 80	
070	315106-0153		2	WASHER PLAIN, M6 ISO7089-6-200 HV A4	
080	312605-0316		2	HEXAGON NUT, M6M M6 A280	
090	350002-0001		1	PUSH-IN L-FITTING QSL-F-M5-4	
100	350002-0005		2	PUSH-IN L-FITTING QSL-F-G1/8-4	
110	350002-0007		1	PUSH-IN L-FITTING QSL-F-G1/8-8	
150	90459-7368		3	MARKING FOR PNEUM. TUBING, PRZ04	
160	90459-7370		1	MARKING FOR PNEUM. TUBING, PRZ08	
W21K3010	90458-1197		1	VALVE, 5/2 BISTABLE	
W21R3063	90328-0047		1	SILENCER, G1/8"	
W21R3065	90328-0047		1	SILENCER, G1/8"	
W21R3066	90328-0029		1	SILENCER, M5	
W21R3067	90328-0029		1	SILENCER, M5	
W21U3060	90459-2591		1	SINGLE VALVE SUB-BASE CDSV5.0-AS-1/8	
W21W3061	315400-0004	M	4	TUBE PUN-H-8X1,25-BL	
W21W3062	315400-0016	M	0.5	TUBE PUN-H-4X0,75-BL	
W21W3064	315400-0016	M	0.5	TUBE PUN-H-4X0,75-BL	
W21W3065	315400-0016	M	0.5	TUBE PUN-H-4X0,75-BL	

Pos	Part No	UN	Qty	Description	Page No

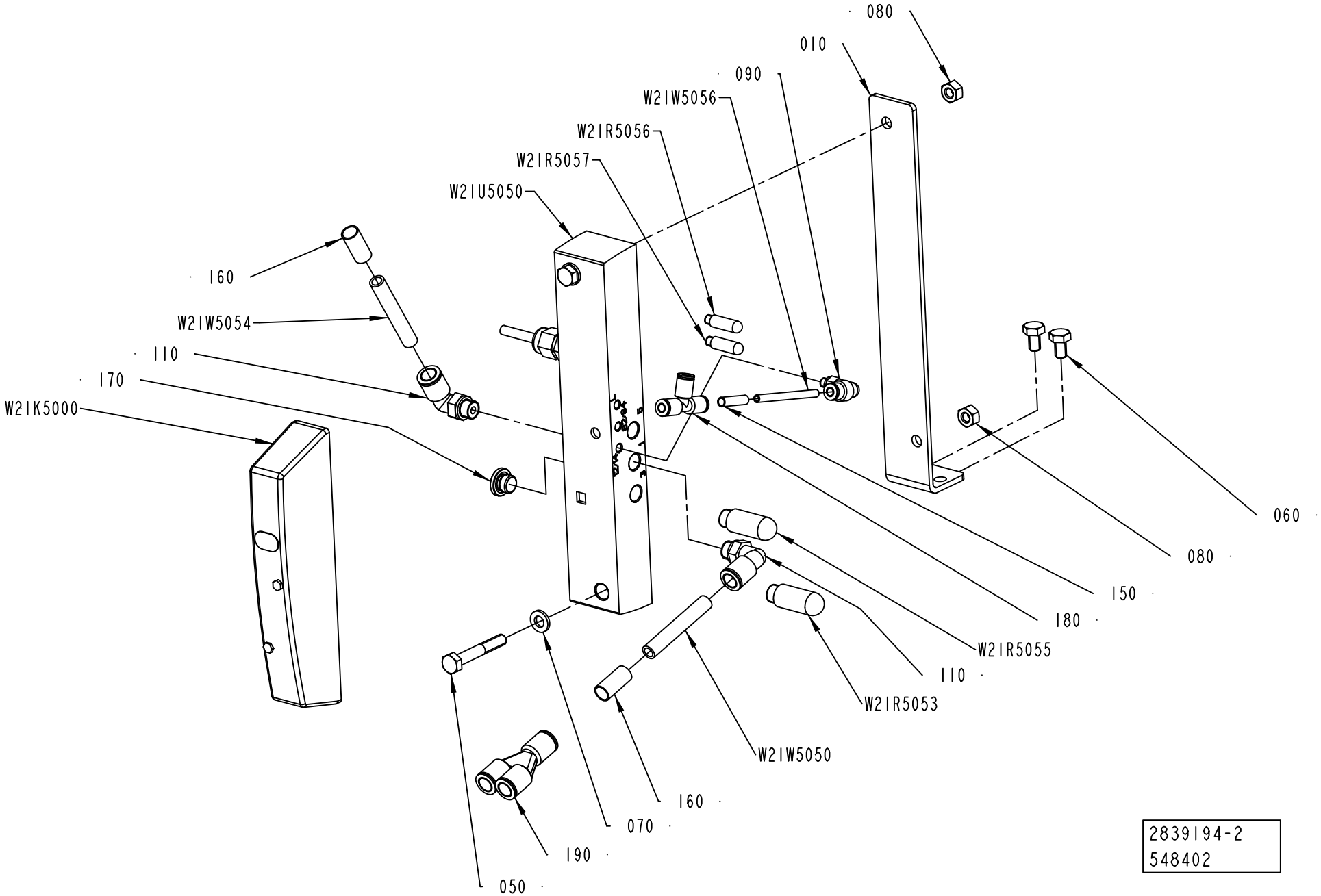
080
010
090
W21W5056
W21R5056
W21R5057
W21U5050
160
W21W5054
110
170
W21K5000
060
080
150
180
W21R5055
110
W21R5053
W21W5050
160
070
190
050
2839194-2
548402

ECM: 550254 - 20120403
Group number: 2839194-0200
Assembly Drawing: 2839194-2_1_AC

Pos	Part No	UN	Qty	Description	Page No
-					
010	2839073-0000		1	BRACKET	
050	312105-0378		2	SCREW, M6S ISO 4014 M6X40 A4 80	
060	312105-0364		2	SCREW, M6S ISO 4017 M6X10 A4 80	
070	315106-0153		2	WASHER PLAIN, M6 ISO7089-6-200 HV A4	
080	312605-0316		2	HEXAGON NUT, M6M M6 A280	
090	350002-0001		1	PUSH-IN L-FITTING QSL-F-M5-4	
110	350002-0007		2	PUSH-IN L-FITTING QSL-F-G1/8-8	
150	90459-7368		1	MARKING FOR PNEUM. TUBING, PRZ04	
160	90459-7370		2	MARKING FOR PNEUM. TUBING, PRZ08	
170	90604-6028		1	PLUG, EXT. THREAD HEX. SOCKET. G1/8	
180	350005-0001		1	PUSH-IN T-FITTING QST-F-4	
190	350015-0003		1	PUSH-IN Y-CONNECTOR QSY-F-8	
W21K5000	90458-1203		1	VALVE 2X3/2 1X OPEN 1X CLOSED	
W21R5053	90328-0047		1	SILENCER, G1/8"	
W21R5055	90328-0047		1	SILENCER, G1/8"	
W21R5056	90328-0029		1	SILENCER, M5	
W21R5057	90328-0029		1	SILENCER, M5	
W21U5050	90459-2591		1	SINGLE VALVE SUB-BASE CDSV5.0-AS-1/8	
W21W5050	315400-0004	M	0.5	TUBE PUN-H-8X1,25-BL	
W21W5054	315400-0004	M	0.5	TUBE PUN-H-8X1,25-BL	
W21W5056	315400-0016	M	0.5	TUBE PUN-H-4X0,75-BL	

Pos	Part No	UN	Qty	Description	Page No

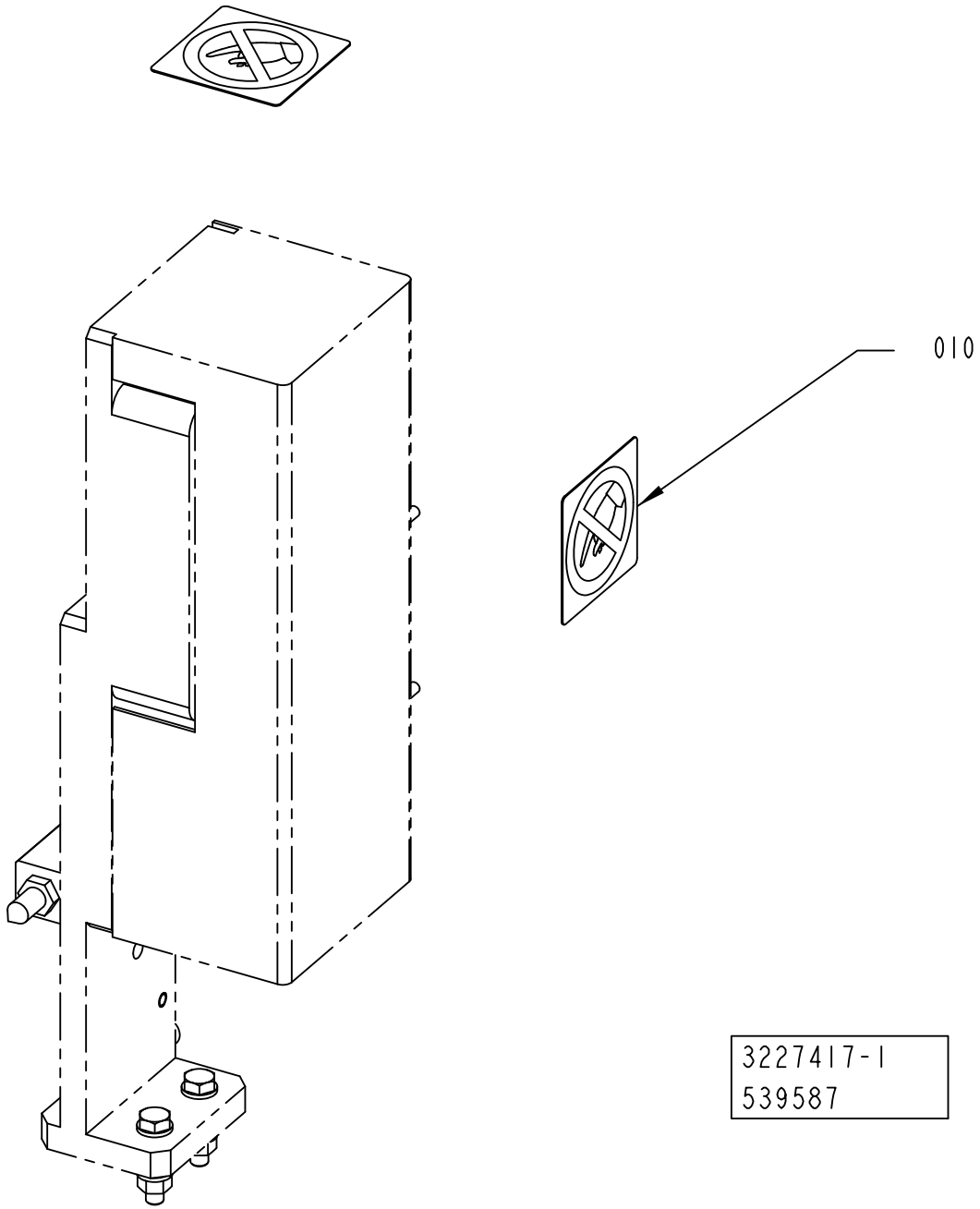
010
3227417-1
539587

ECM: 543079 - 20120402
Group number: 3227417-0100
Assembly Drawing: 3227417-1_1_AA

Pos	Part No	UN	Qty	Description	Page No
ANSI					
010	90458-1263		2	WARNING SIGN ANSI (H), DO NOT TOUCH	
ISO					
010	1128856-0000		2	PROHIBITION SIGN	

Pos	Part No	UN	Qty	Description	Page No

This page is intentionally left blank.

ECM: 555360 - 20120403
Group number: 2873923-0200
Assembly Drawing:

Pos	Part No	UN	Qty	Description	Page No
TGA 1500SQ STREAMCAP 1000					
020	3039015-0000		1	TEMPLATE	
TPA HELICAP 27					
020	2579622-0000		1	TEMPLATE	
030	90459-4931		1	LENS WITH SCALE OF LENGTHS 10X	
040	3047350-0100		1	TOOL	**10-41**
TPA STREAMCAP 1000					
010	2562134-0000		1	TEMPLATE	
020	2579622-0000		1	TEMPLATE	
TPA STREAMCAP 500					
010	2579623-0000		1	TEMPLATE	
020	2579624-0000		1	TEMPLATE	
TBA 0200E HELICAP 23					
020	3102974-0000		1	TEMPLATE	
030	90459-4931		1	LENS WITH SCALE OF LENGTHS 10X	
040	3047350-0100		1	TOOL	**10-41**
TBA 1000S HELICAP2 23					
010	2985813-0000		1	TEMPLATE	
030	90459-4931		1	LENS WITH SCALE OF LENGTHS 10X	
040	3047350-0100		1	TOOL	**10-41**
TBA HELICAP 27					
010	2506887-0000		1	TEMPLATE	
030	90459-4931		1	LENS WITH SCALE OF LENGTHS 10X	
040	3047350-0100		1	TOOL	**10-41**
TBA SLIMCAP1000					
010	2547954-0000		1	TEMPLATE	
TBA STREAMCAP200					
010	1548365-0000		1	TEMPLATE	
TBA STREAMCAP1000					
010	2506887-0000		1	TEMPLATE	
TBA SLIMCAP 2000					
010	2612679-0000		1	TEMPLATE	
TGA 0500SQ HELICAP 27, TGA 0750SQ HELICAP 27, TGA 1000SQ HELICAP 27					
020	3131674-0000		1	TEMPLATE	
030	90459-4931		1	LENS WITH SCALE OF LENGTHS 10X	
040	3047350-0100		1	TOOL	**10-41**
TGA 0500SQ STREAMCAP 1000, TGA 0750SQ STREAMCAP 1000, TGA 1000SQ STREAMCAP 1000					
020	3131674-0000		1	TEMPLATE	
TGA 1000CR HELICAP 27					
020	3193665-0000		1	TEMPLATE	
030	90459-4931		1	LENS WITH SCALE OF LENGTHS 10X	
040	3047350-0100		1	TOOL	**10-41**

Pos	Part No	UN	Qty	Description	Page No
TGA 1500SQ HELICAP 27					
020	3039015-0000		1	TEMPLATE	
030	90459-4931		1	LENS WITH SCALE OF LENGTHS 10X	
040	3047350-0100		1	TOOL	**10-41**

Machine Type | Group Description | Used-In | Group Number | Page No

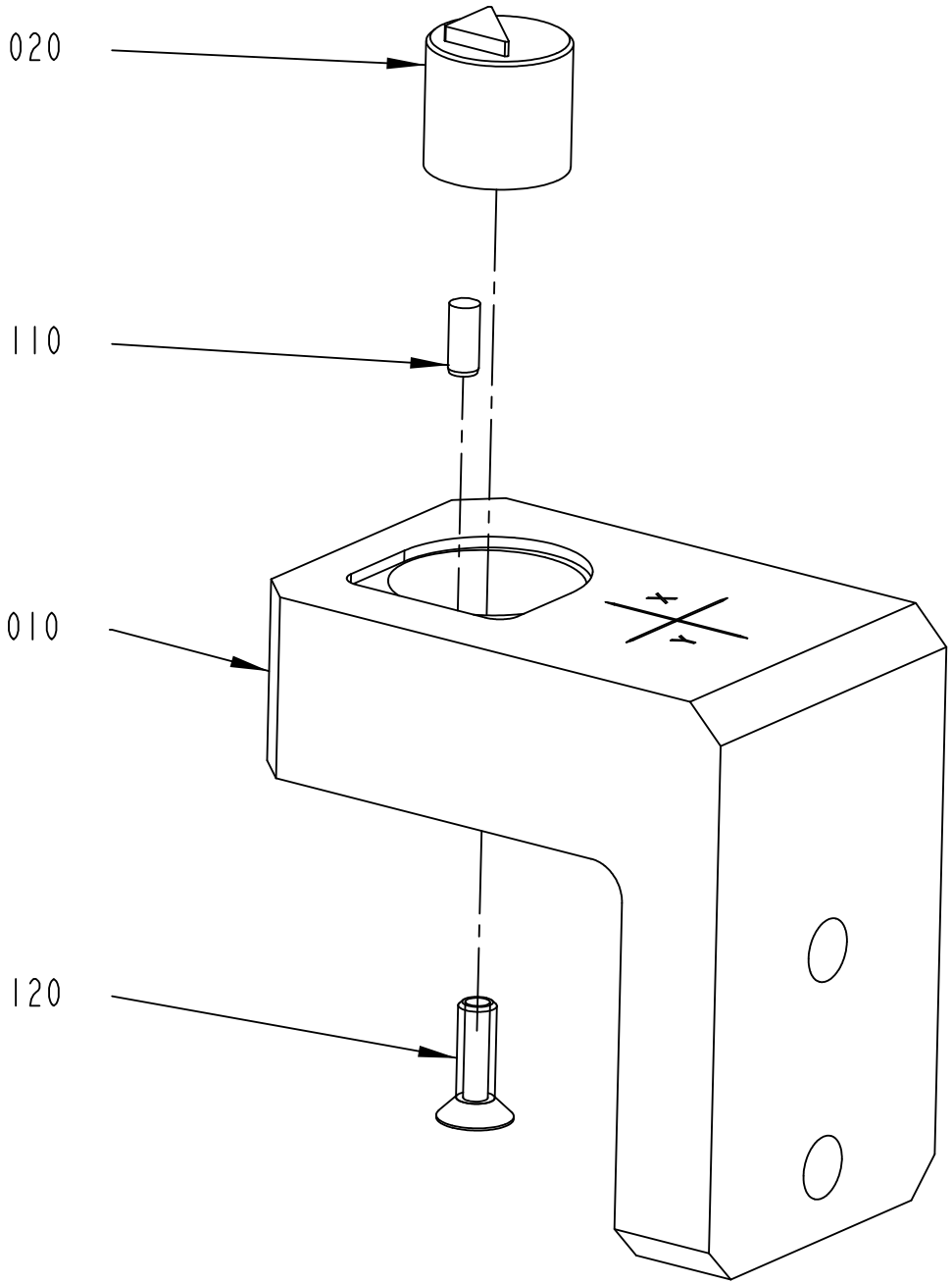

3047350-1
434659

ECM: 518981 - 20120102
Group number: 3047350-0100
Assembly Drawing: 3047350-1_1_AA

Pos	Part No	UN	Qty	Description	Page No
HELICAP 27					
010	3077736-0000		1	TEMPLATE	
020	3077737-0000		1	TEMPLATE	
HELICAP2 23					
010	3077734-0000		1	TEMPLATE	
020	3047352-0000		1	TEMPLATE	
Common Parts					
110	311103-0267		1	PARALLEL PIN ISO 2338 4M6X10 A1	
120	312155-0329		1	SCREW DIN 7991 MF6S M5X16 A4 70	

Pos	Part No	UN	Qty	Description	Page No

This page is intentionally left blank.

ECM: 534843 - 20120401
Group number: 2873953-0200
Assembly Drawing:

Pos	Part No	UN	Qty	Description	Page No
HELICAP 27					
010	A100000222	KPC	3.89	TEST HELICAP3 27 MM WHITE	
HELICAP2 23					
010	A100000036	KPC	4.3	HELICAP2 23 MM WHITE	
040	2594996-0000		1	PLASTIC BAG	
SLIMCAP 1000					
010	A894400101	KPC	3.6	SLIMCAP1 A1 WHITE	
020	2529719-0005		1	BOX SLIMCAP 1000	
030	2529720-0037		4	LABEL	
040	2594996-0000		1	PLASTIC BAG	
SLIMCAP 2000					
010	A894400201	KPC	2	SLIMCAP1 A2 WHITE	
020	2529719-0006		1	BOX SLIMCAP 2000	
030	2529720-0044		4	LABEL	
040	2594996-0000		1	PLASTIC BAG	
STREAMCAP1000					
010	A895800101	KPC	3	STREAMCAP 1W A1 WHITE	
020	2529719-0004		1	BOX STREAMCAP 1000	
030	2529720-0024		4	LABEL	
040	2594996-0000		1	PLASTIC BAG	
STREAMCAP200					
010	A896809301	KPC	5	STREAMCAP2.1 A3 WHITE	
020	2529719-0001		1	BOX STREAMCAP 200	
030	2529720-0001		1	LABEL	
040	2594996-0000		1	PLASTIC BAG	
STREAMCAP500					
010	A100000063	KPC	3.5	STREAMCAP5 A2 WHITE	
020	2529719-0003		1	BOX STREAMCAP 500	
030	2529720-0016		4	LABEL	
040	2594996-0000		1	PLASTIC BAG	

Pos	Part No	UN	Qty	Description	Page No

This page is intentionally left blank.

ECM: 555361 - 20120403
Group number: 3243398-0100
Assembly Drawing:

Pos	Part No	UN	Qty	Description	Page No
-					
100	90166-0121	M	8	HOSE	
110	342991-0102		2	HOSE CLIP,WORM DRIVE TYPE (13)-20	
120	90163-0075		1	QUICK COUPLING, (F) LP-006-O-SL013	
130	90163-0064		1	QUICK COUPLING, (M) LP-006-2-WR517	
140	90163-0041		2	HOSE NIPPLE, EXT.THR. G3/8-12 MM	

Pos	Part No	UN	Qty	Description	Page No

This page is intentionally left blank.

ECM: 555362 - 20120403
Group number: 3243399-0100
Assembly Drawing:

Pos	Part No	UN	Qty	Description	Page No
-					
010	3241149-0000		1	OIL GUN	
100	90459-4996		1	NEEDLE VALVE 345 BAR, 9N400S	
110	342700-0203		1	NIPPLE, EXT.THREAD, HEXAGON, G3/8-G1/4	
120	342700-0110		1	NIPPLE, EXT.THREAD, HEXAGON, G1/4-G1/4	

Pos	Part No	UN	Qty	Description	Page No

Tetra Pak

SPC
Spare Parts Catalogue

This page is intentionally left blank.

ECM: 560355 - 20120402
Group number: 662914-0300
Assembly Drawing:

Pos	Part No	UN	Qty	Description	Page No
-					
0010	2879015-0300		1	ELECTRICAL DOCUMENT	**11-5**
0020	2861166-0300		1	SOFTWARE	**11-7**

Pos	Part No	UN	Qty	Description	Page No

Machine Type | Group Description | Used-In | Group Number | Page No

This page is intentionally left blank.

ECM: 534801 - 20120401
Group number: 2879015-0300
Assembly Drawing:

Pos	Part No	UN	Qty	Description	Page No
CAP 30/FLEX SLIMCAP1000, CAP 30/FLEX STREAMCAP1000, CAP 30/FLEX SLIMCAP2000, CAP 30/FLEX STREAMCAP500, CAP 30/FLEX STREAMCAP200, CAP 30/FLEX HELICAP2 23					
0010	2861169-0300		1	ELECTRICAL DOCUMENT	

Pos	Part No	UN	Qty	Description	Page No

This page is intentionally left blank.

ECM: 567994 - 20120706
Group number: 2861166-0300
Assembly Drawing:

Pos	Part No	UN	Qty	Description	Page No
CAP 30/FLEX SLIMCAP1000, CAP 30/FLEX STREAMCAP1000, CAP 30/FLEX SLIMCAP2000, CAP 30/FLEX STREAMCAP500, CAP 30/FLEX STREAMCAP200, CAP 30/FLEX HELICAP2 23, CAP 30/FLEX HELICAP 27					
010	3247228-0002		1	SOFTWARE CD	
040	3009327-0002		1	SOFTWARE CD	

Pos	Part No	UN	Qty	Description	Page No

Tetra Pak

SPC
Spare Parts Catalogue

This page is intentionally left blank.

ECM: 551965 - 20120402
Group number: 662916-0300
Assembly Drawing:

Pos	Part No	UN	Qty	Description	Page No
BARCODE SCANNER					
100	3134551-0200		1	BARCODE SCANNER	**12-5**
CONVEYOR CONTROL					
040	2873874-0200		1	AUTOMATION CONVEYOR CONTROL	**12-7**
LINE COMMUNICATION ETHERNET (ROCKWELL)					
030	2890013-0200		1	COMMUNICATION UNIT	**12-9**
GLUE SHELF					
010	2842806-0100		1	SHELF	**12-11**
PHOTOCELL UNIT					
080	2930179-0200		1	CONVEYOR CONTROL ACCESSORIES	**12-13**
POSITIONING DEVICE					
050	2873924-0300		1	POSITIONING DEVICE	**12-23**
POWER SUPPLY DEVICE					
090	2930182-0200		1	POWER SUPPLY DEVICE	**12-33**
LINE COMMUNICATION SNP					
020	2873925-0200		1	COMMUNICATION UNIT	**12-35**

Pos	Part No	UN	Qty	Description	Page No

Machine Type | Group Description | Used-In | Group Number | Page No

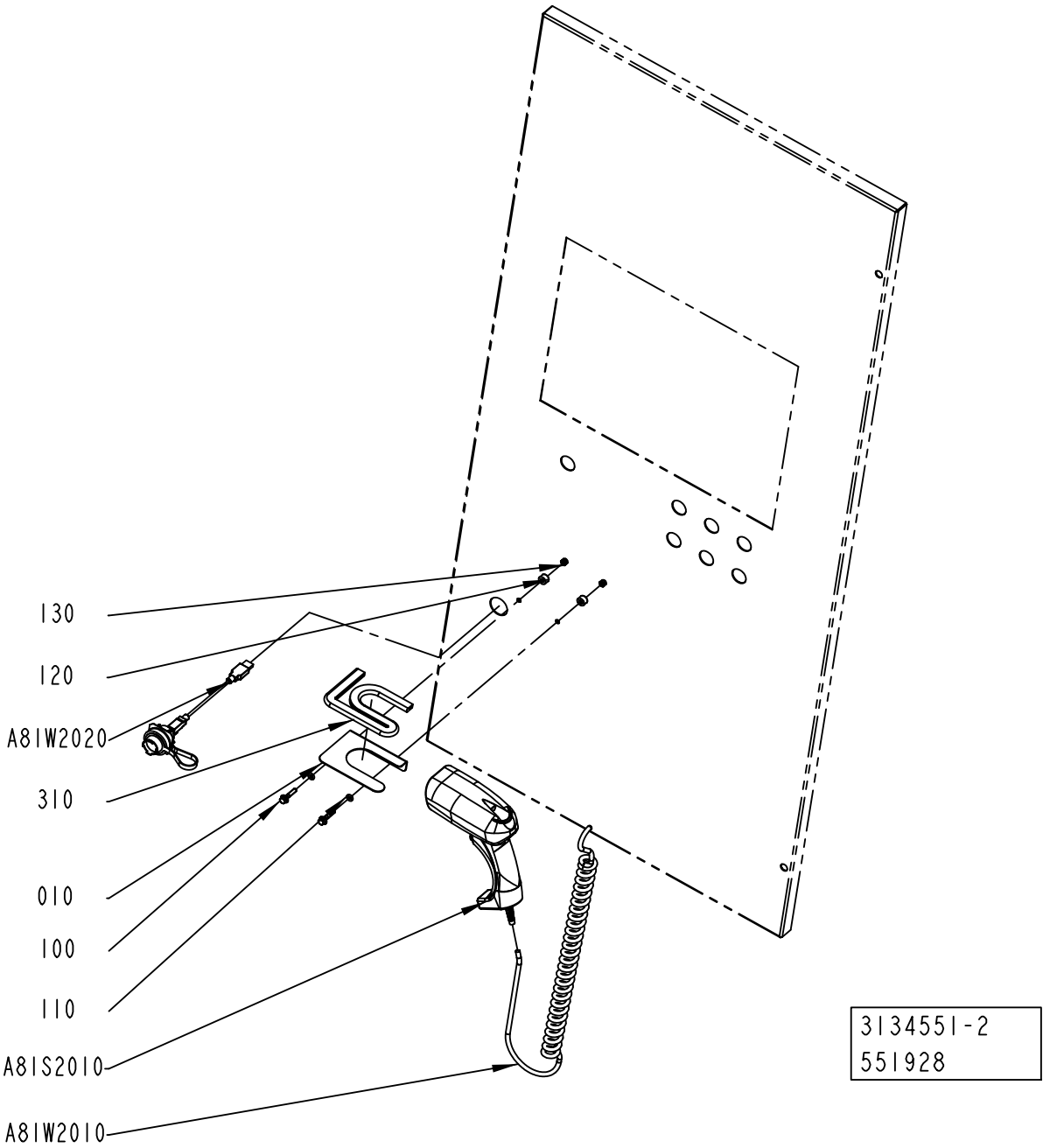
130
120
A81W2020
310
010
100
110
A81S2010
A81W2010
3134551-2
551928

ECM: 551929 - 20120402
Group number: 3134551-0200
Assembly Drawing: 3134551-2_1_AA

Pos	Part No	UN	Qty	Description	Page No
-					
010	3096014-0000		1	BRACKET	
100	312108-0333		2	SCREW EN 1665 TYPE F M5X25 A270	
110	315202-0204		2	O-RING 5,3X2,4 MM	
120	315741-0102		2	RETAINING RING, DIN 705 A2 6	
130	312812-0314		2	HEXAGON NUT, NY-LOCK M5 A4 80	
310	90143-0097	MM	370	SELF GRIPPING GASKET, 1011-24	
A81S2010	90603-5602		1	BAR CODE READER, D8330 SR-902151265+CAB-	
A81W2010	90601-6430		1	USB CABLE, 90601-6430	
A81W2020	90600-4778		1	USB CABLE SET, 5A9000.54	

Pos	Part No	UN	Qty	Description	Page No

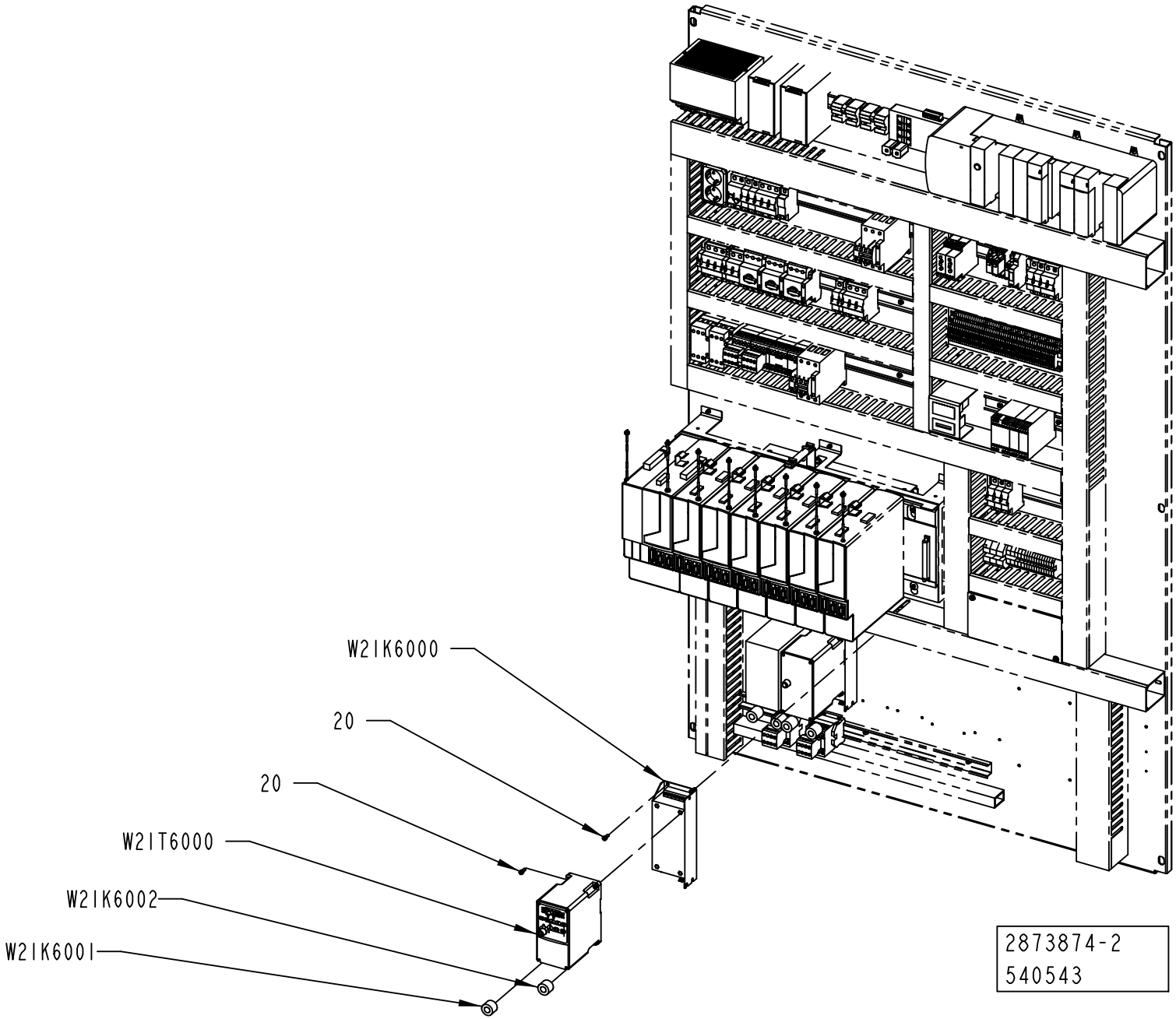
W2IK6000
20
20
W2IT6000
W2IK6002
W2IK6001
2873874-2
540543

ECM: 541022 - 20120402
Group number: 2873874-0200
Assembly Drawing: 2873874-2_1_AB

Pos	Part No	UN	Qty	Description	Page No
-					
020	312115-0327		8	SCREW ISO4762 M5X12 A4 80	
W21K6000	90459-3460		1	FOOTPRINT FILTER 1 PHASE 10A	
W21K6001	90600-5249		1	FERRITE, B64290L616X38	
W21K6002	90600-5249		1	FERRITE, B64290L616X38	
W21T6000	90459-3450		1	FREQ. CONV., 22A-A4P5N104	

Pos	Part No	UN	Qty	Description	Page No

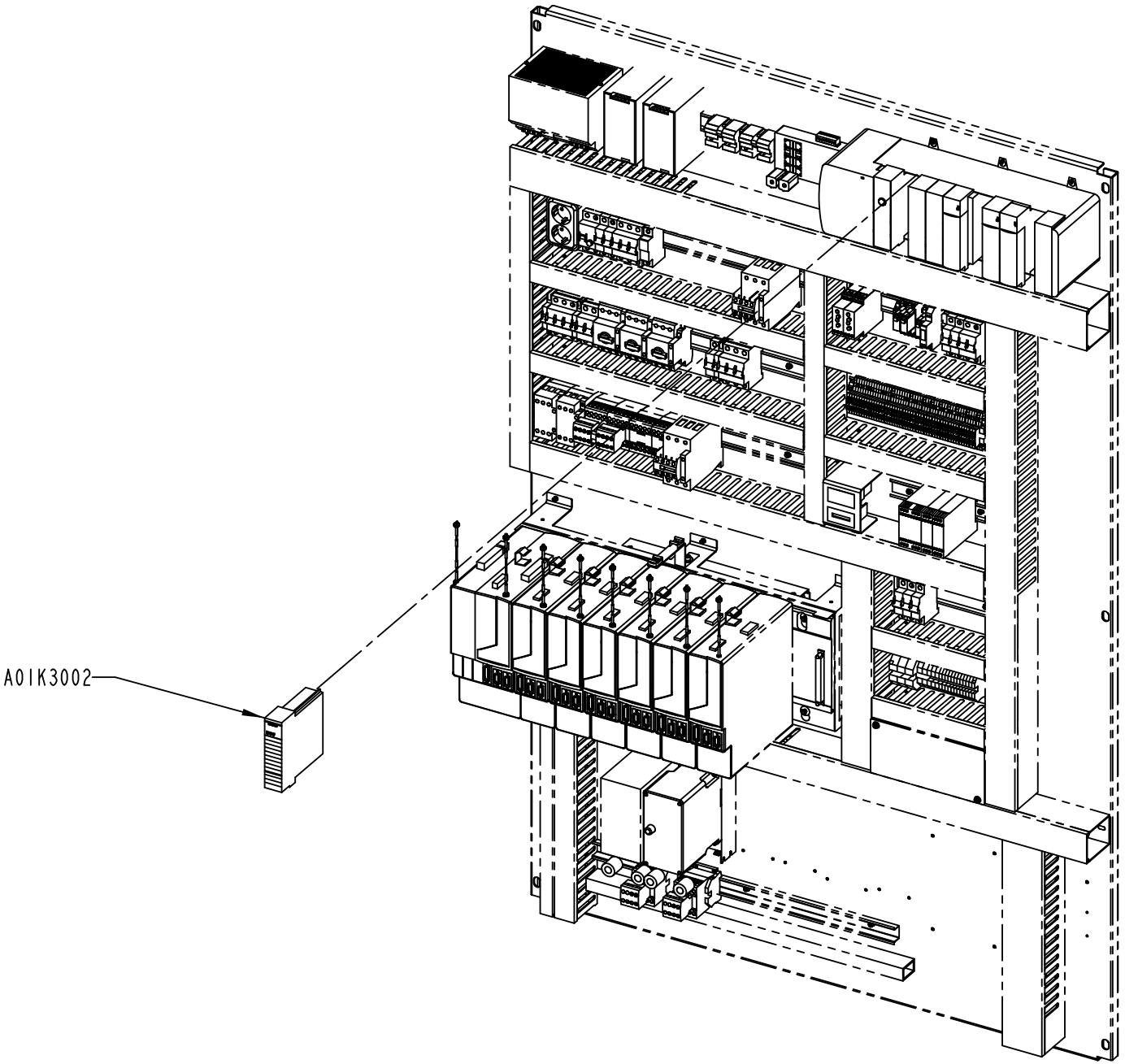

2890013-2
535115

ECM: 535121 - 20120401
Group number: 2890013-0200
Assembly Drawing: 2890013-2_1_AA

Pos	Part No	UN	Qty	Description	Page No	Pos	Part No	UN	Qty	Description	Page No
-											
A01K3002	90459-2477		1	ETHERNET I/P BRIDGE MODULE, 1756-ENBT							

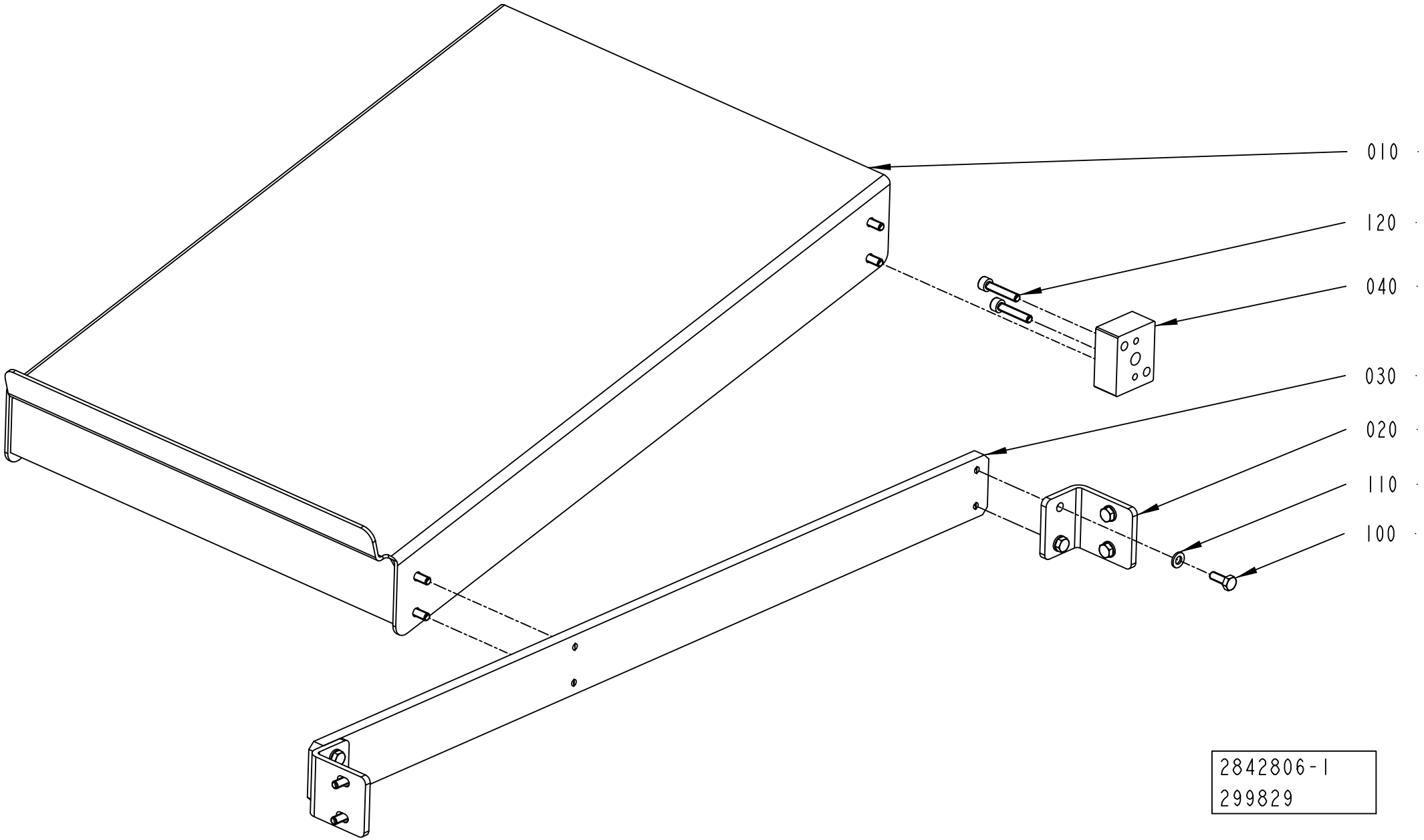
010
120
040
030
020
110
100
2842806-1
299829

ECM: 310549 - 20070528
Group number: 2842806-0100
Assembly Drawing: 2842806-1_1_AB

Pos	Part No	UN	Qty	Description	Page No
-					
010	2842800-0000		1	SHELF	
020	2842804-0000		2	BRACKET	
030	2842803-0000		1	PLATE	
040	2842805-0000		1	SPACER	
100	312105-0368		12	SCREW, M6S ISO 4017 M6X16 A4 80	
110	315105-0153		12	WASHER PLAIN, 6,4X12X1,5 A4 BRB	
120	312115-0374		2	SCREW ISO4762 M6X30 A4 80	

Pos	Part No	UN	Qty	Description	Page No

This page is intentionally left blank.

ECM: 534045 - 20120401
Group number: 2930179-0200
Assembly Drawing:

Pos	Part No	UN	Qty	Description	Page No
-					
010	2930176-0200		1	SENSOR GROUP	**12-15**
020	2930177-0200		1	CABLE MARKING SET	**12-17**
030	2930178-0200		1	SENSOR GROUP	**12-19**

Pos	Part No	UN	Qty	Description	Page No

Machine Type | Group Description | Used-In | Group Number | Page No

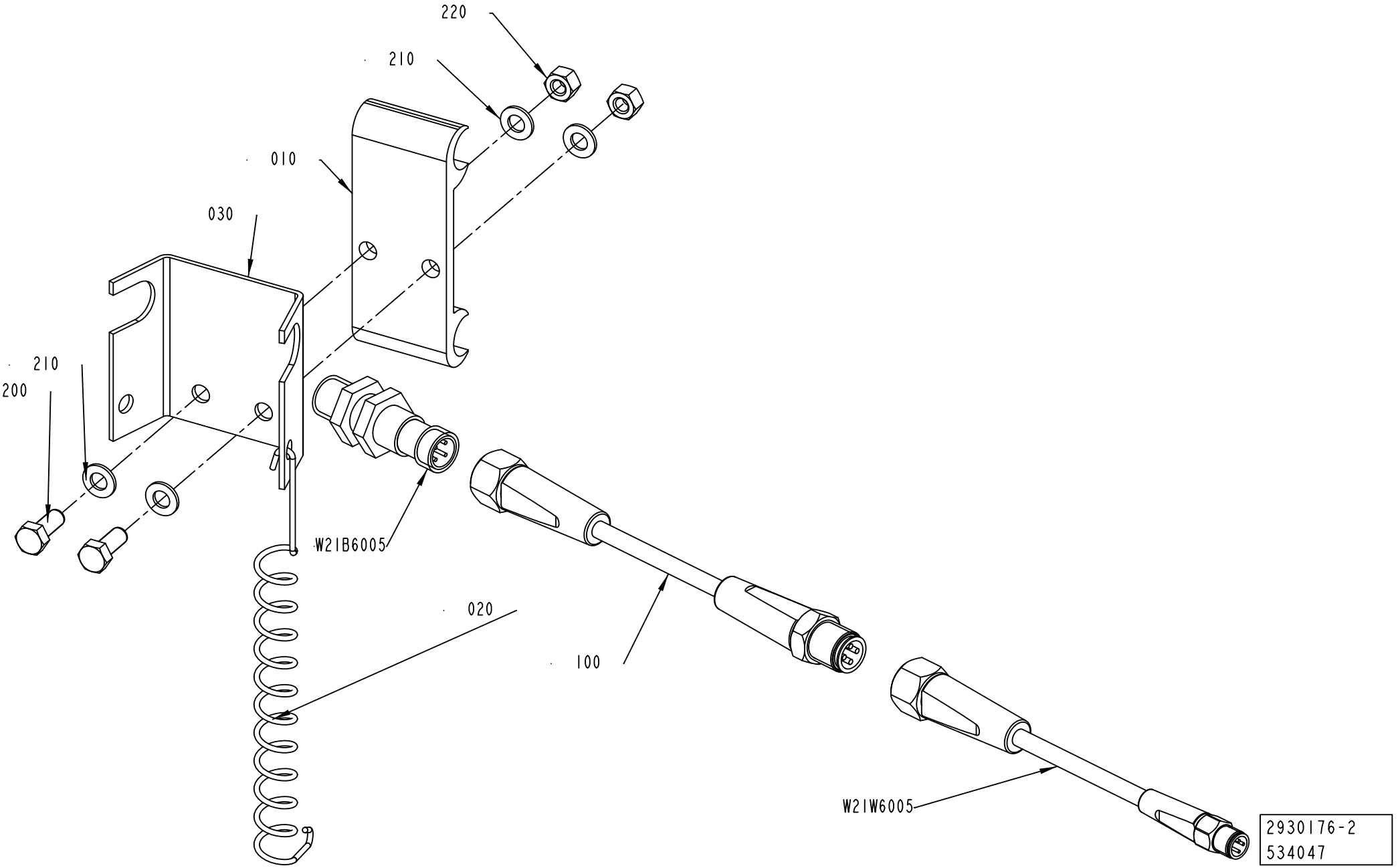
220
210
010
030
210
200
W21B6005
020
100
W21W6005
2930176-2
534047

ECM: 534047 - 20120401
Group number: 2930176-0200
Assembly Drawing: 2930176-2_1_AA

Pos	Part No	UN	Qty	Description	Page No
-					
010	1020637-0000		1	HOLDER	
020	532412-0000		1	SPRING	
030	545897-0000		1	BRACKET	
100	344267-0050		1	SENSOR CABLE, EVT044	
200	312105-0327		2	SCREW, M6S ISO 4017 M5X12 A4 80	
210	315105-0146		4	WASHER PLAIN, 5,3X10X1 A4 BRB	
220	312605-0314		2	HEXAGON NUT, M6M M5 A280	
W21B6005	90458-2907		1	PROX.SWITCH IFS204	
W21W6005	344261-0050		1	SENSOR CABLE, EVT216	

Pos	Part No	UN	Qty	Description	Page No

This page is intentionally left blank.

ECM: 534658 - 20120401
Group number: 2930177-0200
Assembly Drawing:

Pos	Part No	UN	Qty	Description	Page No
-					
010	1497932-0000		1	SET OF SIGNS	
100	359009-0100		10	CABLE MARKING, YELLOW, PK2/4"0"	
110	359009-0101		10	CABLE MARKING, YELLOW, PK 2/4"1"	
120	359009-0102		10	CABLE MARKING, YELLOW, PK 2/4"2"	
130	359009-0103		10	CABLE MARKING, YELLOW, PK 2/4"3"	
140	359009-0104		10	CABLE MARKING, YELLOW, PK 2/4"4"	
150	359009-0105		10	CABLE MARKING, YELLOW, PK 2/4"5"	
160	359009-0106		10	CABLE MARKING, YELLOW, PK 2/4"6"	
170	359009-0107		10	CABLE MARKING, YELLOW, PK 2/4"7"	
180	359009-0108		10	CABLE MARKING, YELLOW, PK 2/4"8"	
190	359009-0109		10	CABLE MARKING, YELLOW, PK 2/4"9"	
200	359009-0222		10	CABLE MARKING, YELLOW, PK 2/4" W"	
210	352113-0101		10	CABLE TIE, BLACK 92X2,5 MM	
220	359009-0200		10	CABLE MARKING, YELLOW, PK 2/4" A"	
240	359009-0201		10	CABLE MARKING, YELLOW, PK 2/4" B"	
250	359009-0202		10	CABLE MARKING, YELLOW, PK 2/4" C"	
260	359009-0203		10	CABLE MARKING, YELLOW, PK 2/4" D"	
270	359009-0204		10	CABLE MARKING, YELLOW, PK 2/4" E"	
280	359009-0205		10	CABLE MARKING, YELLOW, PK 2/4" F"	
290	359009-0206		10	CABLE MARKING, YELLOW, PK 2/4" G"	
300	359009-0207		10	CABLE MARKING, YELLOW, PK 2/4" H"	
310	359009-0208		10	CABLE MARKING, YELLOW, PK 2/4" I"	
320	359009-0211		10	CABLE MARKING, YELLOW, PK 2/4" L"	
330	359009-0212		10	CABLE MARKING, YELLOW, PK 2/4" M"	
340	359009-0213		10	CABLE MARKING, YELLOW, PK 2/4" N"	
350	359009-0214		10	CABLE MARKING, YELLOW, PK2/4" O"	
360	359009-0215		10	CABLE MARKING, YELLOW, PK 2/4" P"	
370	359009-0216		10	CABLE MARKING, YELLOW, PK 2/4" Q"	
380	359009-0217		10	CABLE MARKING, YELLOW, PK 2/4" R"	
390	359009-0218		10	CABLE MARKING, YELLOW, PK 2/4" S"	
400	359009-0219		10	CABLE MARKING, YELLOW, PK 2/4" T"	
410	359009-0220		10	CABLE MARKING, YELLOW, PK 2/4" U"	
420	359009-0221		10	CABLE MARKING, YELLOW, PK 2/4" V"	
430	359009-0225		10	CABLE MARKING, YELLOW, PK 2/4" Z"	
440	359009-0224		10	CABLE MARKING, YELLOW, PK 2/4" Y"	
450	359009-0223		10	CABLE MARKING, YELLOW, PK 2/4" X"	
460	359009-0210		10	CABLE MARKING, YELLOW, PK 2/4" K"	

Pos	Part No	UN	Qty	Description	Page No

Machine Type	Group Description	Used-In	Group Number	Page No

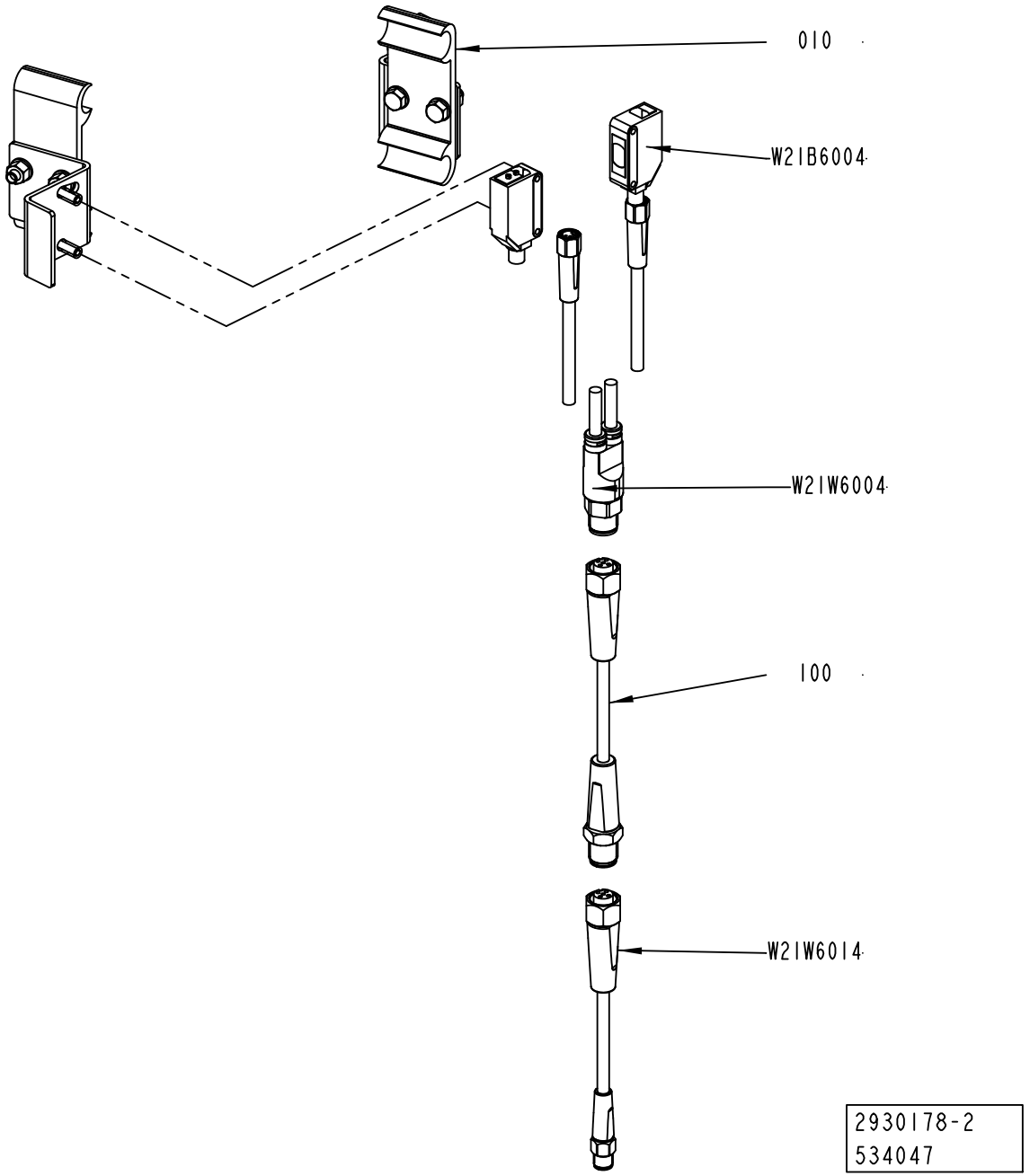
010
W21B6004
W21W6004
100
W21W6014
2930178-2
534047

ECM: 534047 - 20120401
Group number: 2930178-0200
Assembly Drawing: 2930178-2_1_AA

Pos	Part No	UN	Qty	Description	Page No
-					
010	2778586-0100		1	SENSOR	**5-45, 12-21**
100	344267-0050		1	SENSOR CABLE, EVT044	
W21B6004	90459-5529		1	PHOTOCELL E3Z-T86A, SENDER+RECIEVER	
W21W6004	90603-3979		1	SENSOR Y-CABLE, E12227	
W21W6014	344261-0050		1	SENSOR CABLE, EVT216	

Pos	Part No	UN	Qty	Description	Page No

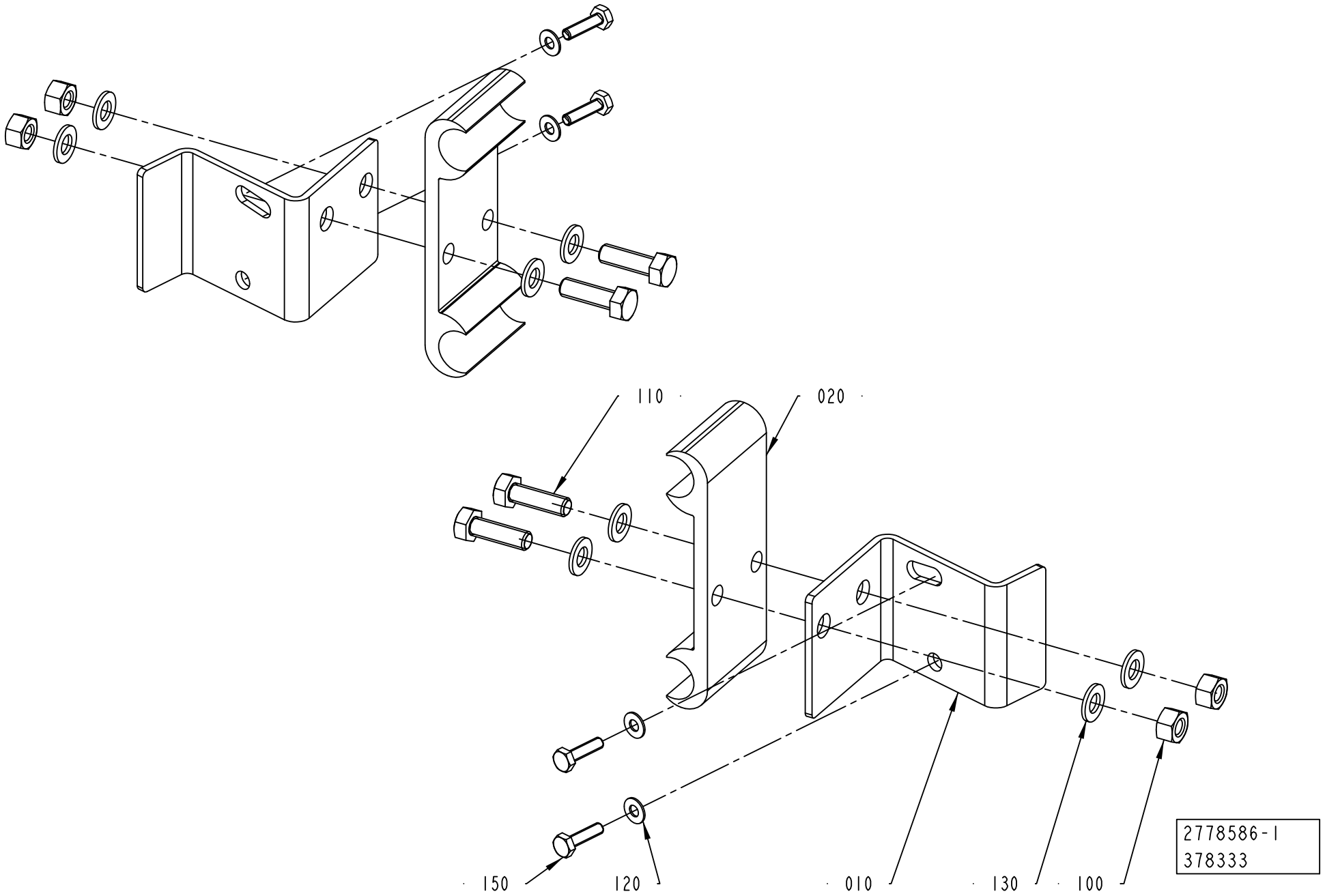
110
020
150
120
010
130
100
2778586-1
378333

ECM: 378333 - 20090406
Group number: 2778586-0100
Assembly Drawing: 2778586-1_1_AB

Pos	Part No	UN	Qty	Description	Page No
-					
010	2778580-0000		2	BRACKET	
020	1020637-0000		2	HOLDER	
100	312605-0314		4	HEXAGON NUT, M6M M5 A280	
110	312105-0329		4	SCREW, M6S ISO 4017 M5X16 A4 80	
120	315106-0124		4	WASHER PLAIN, M3 ISO7089-3-200 HV A4	
130	315105-0146		8	WASHER PLAIN, 5,3X10X1 A4 BRB	
150	90287-0175		4	SCREW M6S M3X12 A480	

Pos	Part No	UN	Qty	Description	Page No

This page is intentionally left blank.

ECM: 543601 - 20120402
Group number: 2873924-0300
Assembly Drawing:

Pos	Part No	UN	Qty	Description	Page No
TBA					
010	3203763-0100		1	VISION SYSTEM	**5-57, 12-25**
Common Parts					
020	3087823-0100		1	TOOL	**12-27**
040	2873922-0200		1	CABLE	**5-85, 12-29**
050	2890014-0300		1	POSITIONING UNIT	**9-19, 12-31**

Pos	Part No	UN	Qty	Description	Page No

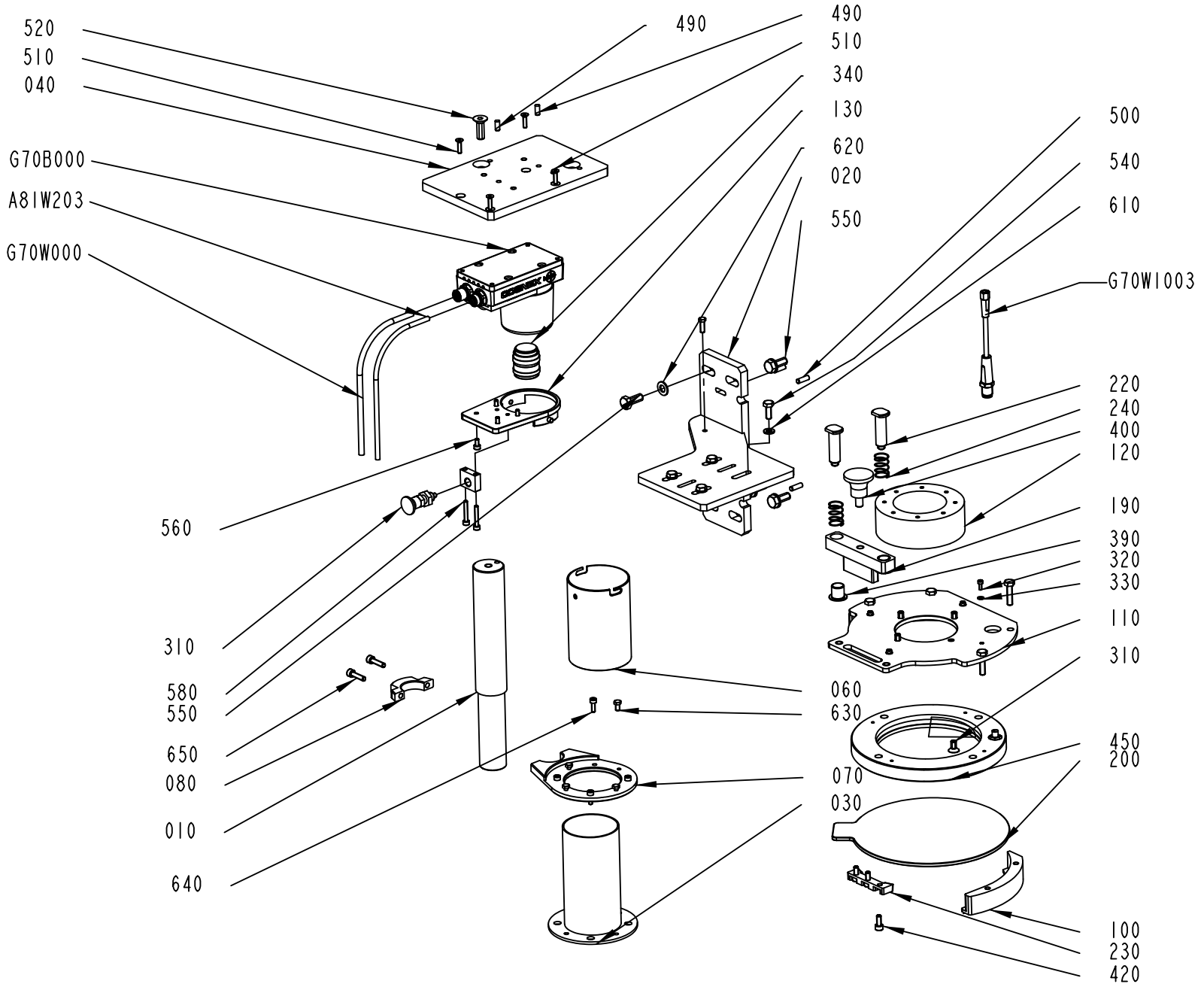
520
510
040
490
G70B000
A81W203
G70W000
560
310
580
550
650
080
010
640
490
510
340
130
620
020
550
500
540
610
G70W1003
220
240
400
120
190
390
320
330
110
310
060
630
070
030
450
200
100
230
420
3203763-1
529093

ECM: 529713 - 20120401
Group number: 3203763-0100
Assembly Drawing: 3203763-1_1_AA

Pos	Part No	UN	Qty	Description	Page No
-					
010	2985768-0000		1	COLUMN	
020	2792664-0000		1	BRACKET	
030	2557544-0000		1	PROTECTION	
040	3203752-0000		1	BRACKET	
050	2794721-0000		1	BLOCK	
060	2792879-0000		1	TUBE	
070	2794790-0000		1	CLAMP	
080	2873943-0000		1	CLAMP	
100	3095796-0000		1	HOLDER	
110	3095791-0000		1	PLATE	
120	3031442-0000		1	SPACER	
130	2792848-0000		1	SUPPORT	
190	3053477-0000		1	BRACKET	
200	3052393-0000		1	GLASS COVER	
210	3095790-0000		1	HOLDER	
220	3053471-0000		2	PIN	
230	3053478-0000		1	PUSHER	
240	3060116-0000		2	COMPRESSION SPRING	
300	311103-0308		1	PARALLEL PIN ISO 2338 5M6X16 A1	
310	312155-0366		4	SCREW DIN 7991 MF6S M6X12 A4 70	
310	90051-0112		1	LOCK KNOB, NO. GN 617 NIK5	
320	312115-0222		4	SCREW ISO4762 M3X8 A4 80	
330	315106-0124		4	WASHER PLAIN, M3 ISO7089-3-200 HV A4	
340	90459-1180		1	LENS 16MM IN-SIGHT 4100, HF16HA-1B	
390	321156-0188		2	FLANGE BUSHING, IGLIDUR H370 12X14X15	
400	318871-0105		1	KNOB CIRCULAR, EXT THREAD, NO. 8302-6150	
410	312105-0372		4	SCREW, M6S ISO 4017 M6X25 A4 80	
420	312115-0327		3	SCREW ISO4762 M5X12 A4 80	
450	90602-3985		1	RING LIGHT ILLUMINATOR, TLD-150-617-C	
490	311103-0306		2	PARALLEL PIN ISO 2338 5M6X12 A1	
500	311103-0308		4	PARALLEL PIN ISO 2338 5M6X16 A1	
510	312155-0293		4	SCREW DIN 7991 MF6S M4X16 A4 70	
520	312155-0453		1	SCREW DIN 7991 MF6S M8X25 A4 70	
540	312105-0368		4	SCREW, M6S ISO 4017 M6X16 A4 80	
550	312105-0451		4	SCREW, M6S ISO 4017 M8X20 A4 80	
560	312115-0287		4	SCREW ISO4762 M4X8 A4 80	
580	312115-0297		2	SCREW ISO4762 M4X25 A4 80	
610	315105-0153		4	WASHER PLAIN, 6,4X12X1,5 A4 BRB	
620	315105-0165		4	WASHER PLAIN, 8,4X16X1,6 A4 BRB	
630	312105-0287		4	SCREW, M6S ISO 4017 M4X8 A4 70	
640	312115-0291		4	SCREW ISO4762 M4X12 A4 80	
650	312115-0331		2	SCREW ISO4762 M5X20 A4 80	
A81W0203	90600-2103		1	ETHERNET CABLE, CCB-84901-1004-10	
G70B0000	90600-1096		1	PROCESSOR UNIT IN-SIGHT 5100, IS-5100-00	
G70W0000	90600-2102		1	POWER I/O CABLE, CCB-84901-0103-10	
G70W1003	344263-0020		1	SENSOR CABLE, EVT239	

Machine Type	Group Description	Used-In	Group Number	Page No

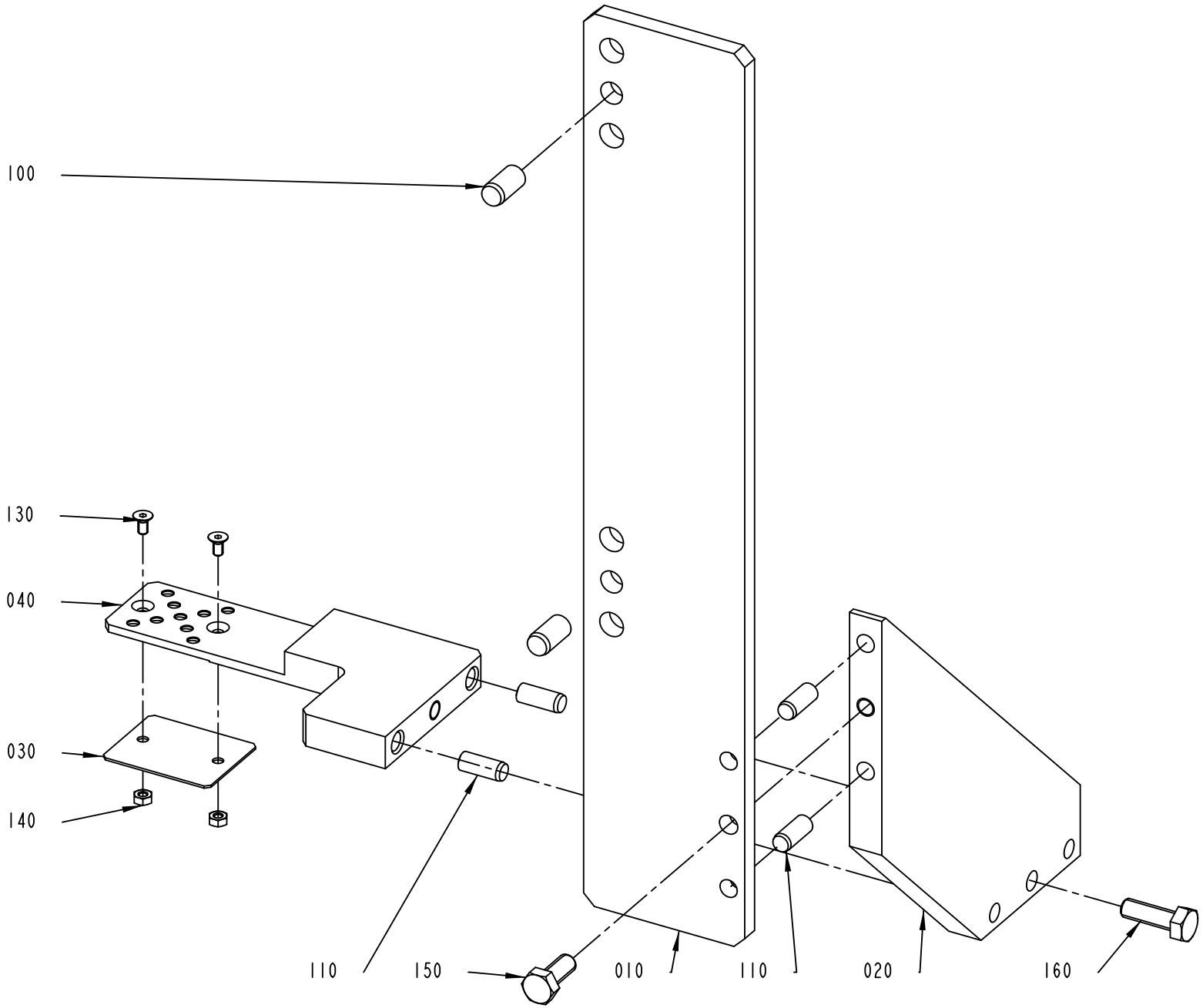
100
130
040
030
140
110
150
010
110
020
160
3087823-1
465123

ECM: 505466 - 20111003
Group number: 3087823-0100
Assembly Drawing: 3087823-1_1_AA

Pos	Part No	UN	Qty	Description	Page No
TBA 0200E HELICAP 23					
020	3161466-0000		1	PLATE	
TBA 1000S HELICAP2 23, TBA SLIMCAP1000, TBA STREAMCAP1000, TBA SLIMCAP 2000, TBA STREAMCAP200, TBA HELICAP 27					
020	3123927-0000		1	PLATE	
TGA					
020	3143918-0000		1	PLATE	
TPA STREAMCAP 1000, TPA STREAMCAP 500, TPA HELICAP 27					
020	3089906-0000		1	PLATE	
Common Parts					
010	3087822-0000		1	PLATE	
030	2838782-0000		1	PLATE	
040	3087821-0000		1	TOOL	
100	311103-0454		2	PARALLEL PIN ISO 2338 10M6X20 A1	
110	311103-0401		4	PARALLEL PIN ISO 2338 8M6X20 A1	
130	312155-0287		2	SCREW DIN 7991 MF6S M4X8 A4 70	
140	312605-0312		2	HEXAGON NUT, M6M M4 A280	
150	312105-0451		1	SCREW, M6S ISO 4017 M8X20 A4 80	
160	312105-0453		1	SCREW, M6S ISO 4017 M8X25 A4 80	

Pos	Part No	UN	Qty	Description	Page No

This page is intentionally left blank.

ECM: 529698 - 20120401
Group number: 2873922-0200
Assembly Drawing:

Pos	Part No	UN	Qty	Description	Page No
-					
G70W1000	351429-1609		1	MOTOR POWER CABLE 2090-CPWM7DF-16AA09	
G70W1001	351428-0009		1	MOTOR FEEDBACK CABLE 2090-CFBM7DF-CEAA09	
G70X1001	90459-2551		1	CONNECTOR, MOTOR FEEDBACK 15 PIN MALE	

Pos	Part No	UN	Qty	Description	Page No

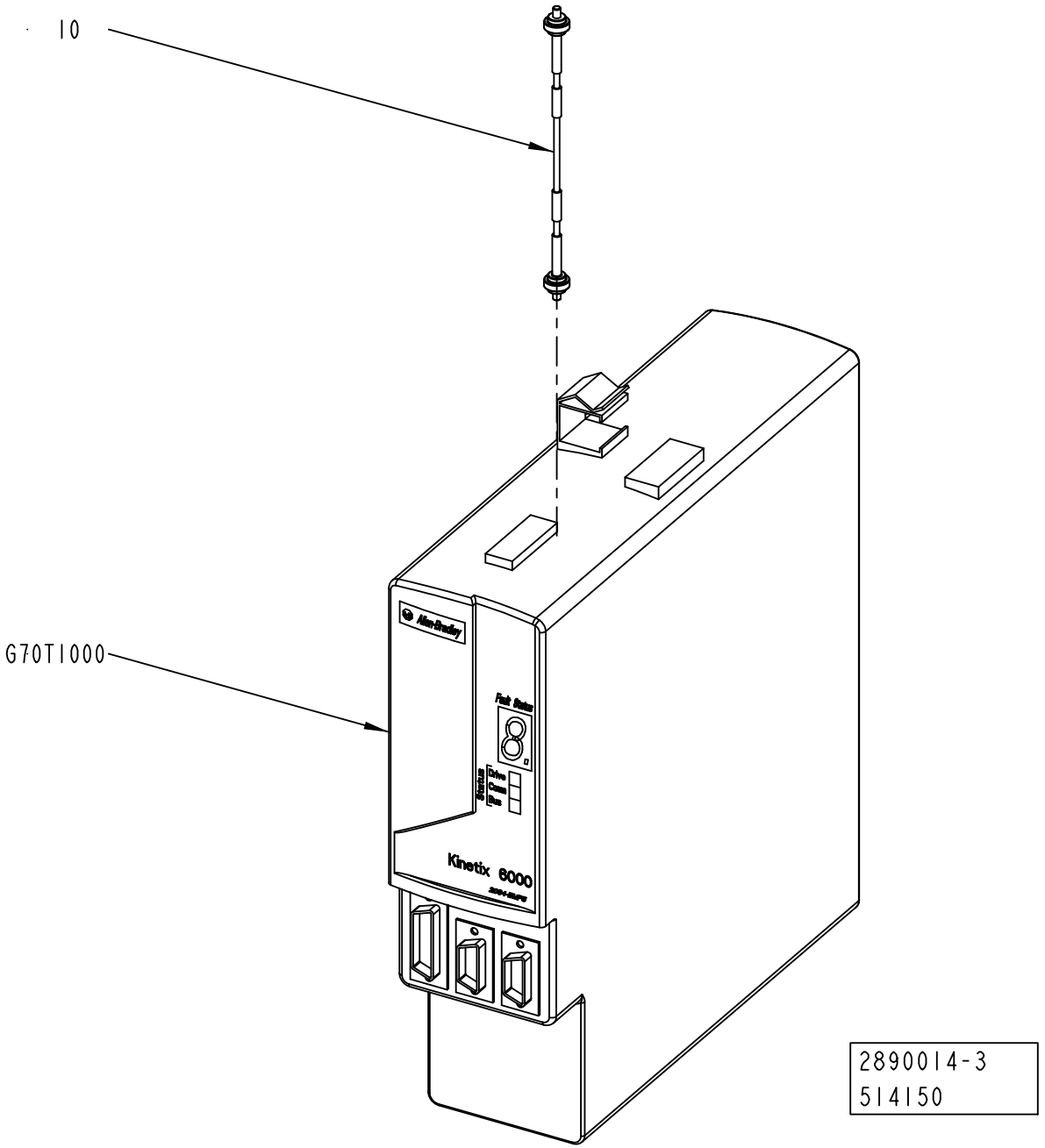
10
G70T1000
Kinetix 6000
2890014-3
514150

ECM: 521635 - 20120401
Group number: 2890014-0300
Assembly Drawing: 2890014-3_1_AA

Pos	Part No	UN	Qty	Description	Page No
-					
010	90459-2536		1	SERCOS CABLE 0.1M, 2090-SCEP0-1	
G70T1000	90600-5214		1	AXIS MOD. KINETIX 6000,2094-BM01-S SER.B	

Pos	Part No	UN	Qty	Description	Page No

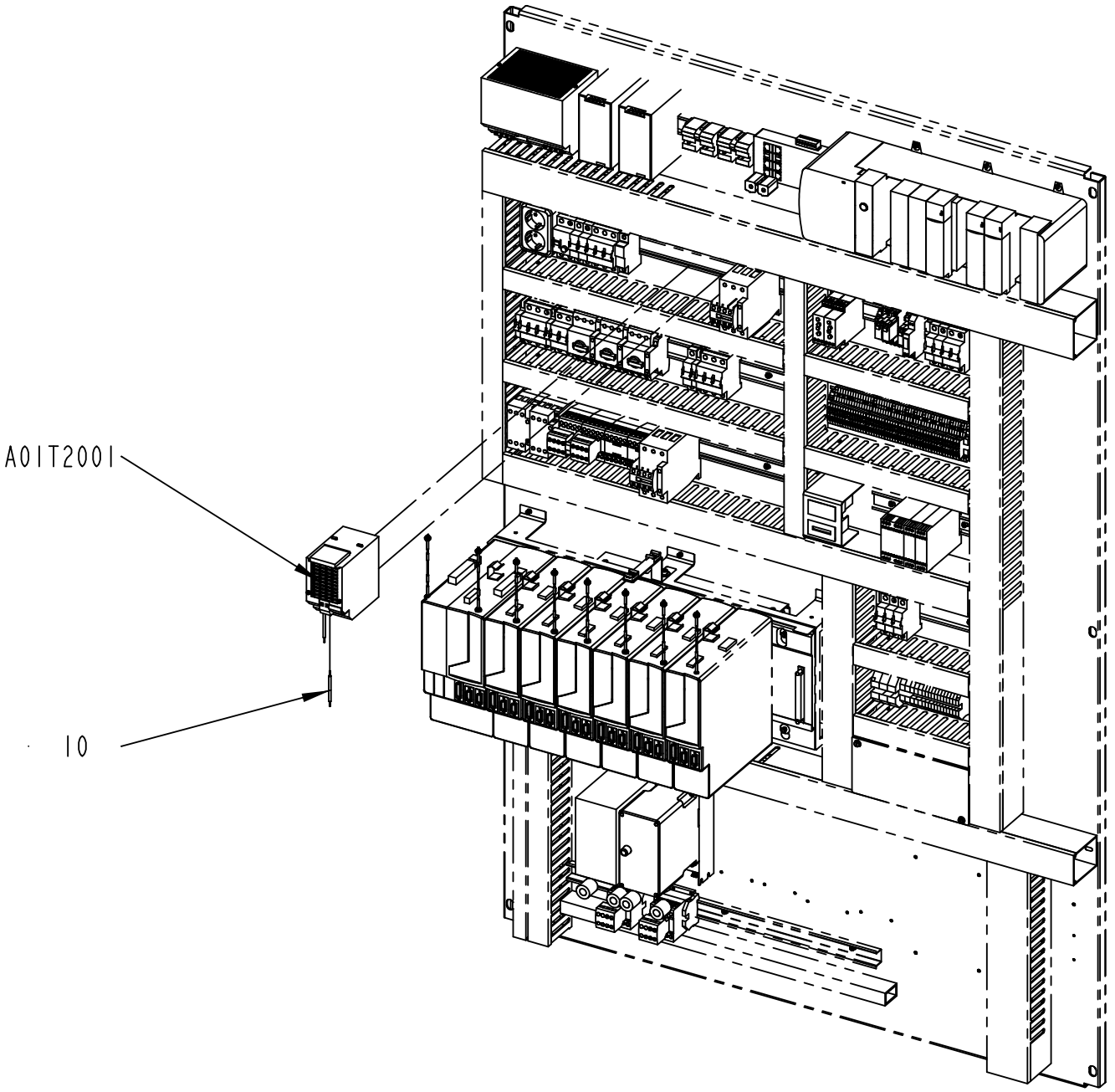

2930182-2
535115

ECM: 535123 - 20120401
Group number: 2930182-0200
Assembly Drawing: 2930182-2_1_AA

Pos	Part No	UN	Qty	Description	Page No
-					
010	351160-0105	M	1	WIRE AWM 1X2,5 MM2 DARKBLUE	
100	353001-0115		10	END SLEEVE 2,5/14	
110	359000-0013		10	WIRE MARKING, YELLOW, PA1/3"+"	
120	359000-0023		10	WIRE MARKING, YELLOW, PA1/3"-"	
130	359000-0300		10	WIRE MARKING, YELLOW, PA1/3"0"	
140	359000-0301		10	WIRE MARKING, YELLOW, PA1/3"1"	
150	359000-0302		10	WIRE MARKING, YELLOW, PA1/3"2"	
160	359000-0303		10	WIRE MARKING, YELLOW, PA1/3"3"	
170	359000-0304		10	WIRE MARKING, YELLOW, PA1/3"4"	
180	359000-0305		10	WIRE MARKING, YELLOW, PA1/3"5"	
190	359000-0306		10	WIRE MARKING, YELLOW, PA1/3"6"	
200	359000-0307		10	WIRE MARKING, YELLOW, PA1/3"7"	
210	359000-0308		10	WIRE MARKING, YELLOW, PA1/3"8"	
220	359000-0309		10	WIRE MARKING, YELLOW, PA1/3"9"	
A01T2001	90459-2939		1	BUFFER UNIT, 6EP1961-3BA01	

Pos	Part No	UN	Qty	Description	Page No

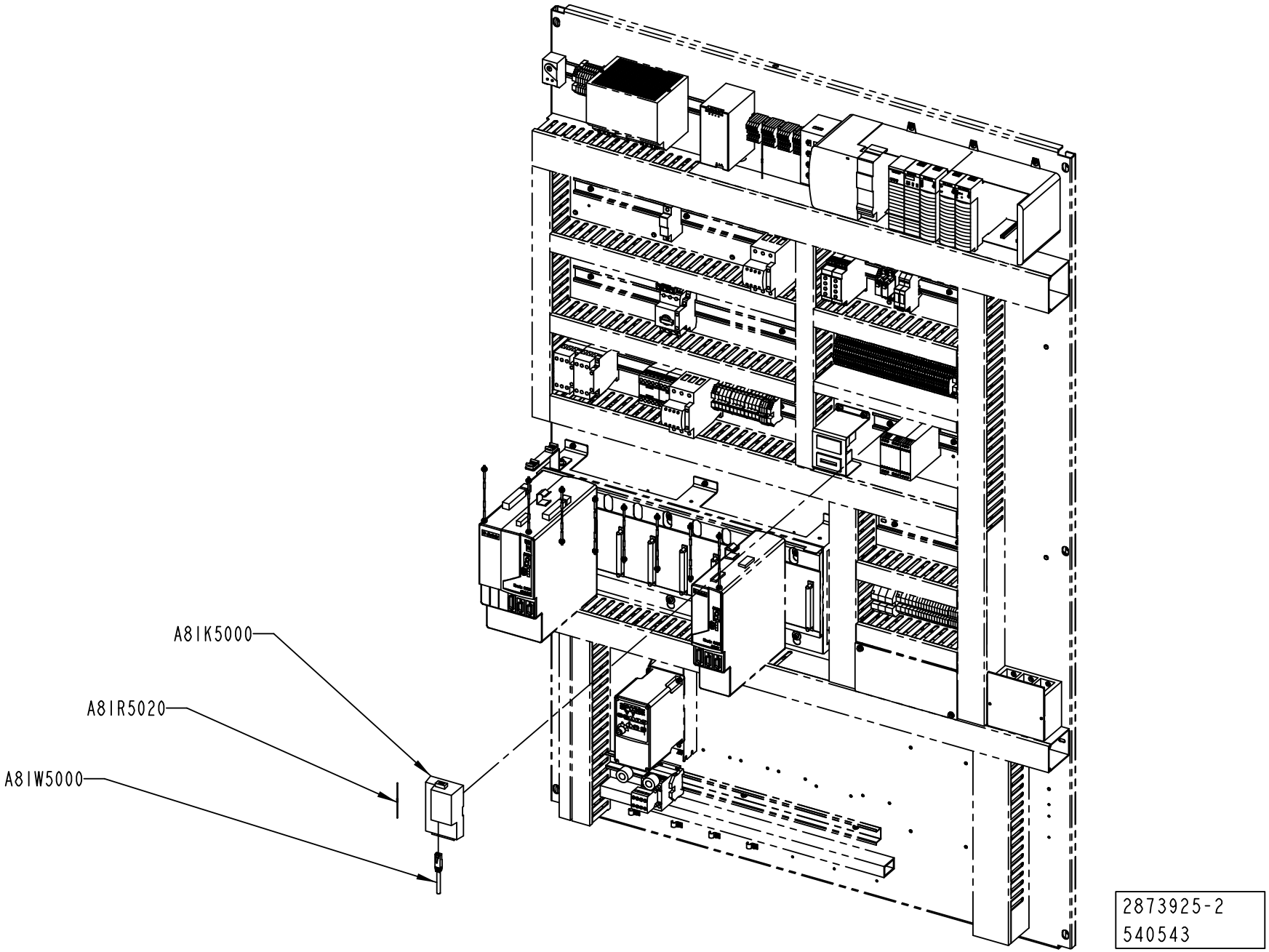
A8IK5000
A8IR5020
A8IW5000
2873925-2
540543

ECM: 540781 - 20120402
Group number: 2873925-0200
Assembly Drawing: 2873925-2_1_AB

Pos	Part No	UN	Qty	Description	Page No
-					
A81K5000	90604-5464		1	QUICKSERVER GATEWAY, FS-QS-1230-0705	
A81R5020	90459-2523		1	TERMINATOR, OPEN STYLE, 1485A-C2	
A81W5000	351501-0020		1	ETHERNET PATCH CABLE, FL CAT5 PATCH 2,0	

Pos	Part No	UN	Qty	Description	Page No

Tetra Pak

SPC
Spare Parts Catalogue

Part No	Description	Page No
A100000027 ...	HOT-MELT CAP FIX 100, HENKEL	10-15, 10-43
6-4000 0006 08	SCREW M6S 10 X 110	4-5
90005-0060	WASHER PLAIN, RBS 6,4/M6)/18,H=1,5	9-5, 9-27, 9-73
90005-0064	WASHER PL.RND.NYL.4,3/9, H=0,8	9-41
90005-0082	WASHER PLAIN ROUND 4,3(M4)/12,H=1	6-75, 9-41
90005-0139	WASHER PLAIN ROUND 5,2(M5)/15, H=1,6	1-37
90013-0035	NUT GROOVE, HAMMER-HEAD M6 FE	8-5, 8-7
90015-0020	LEAD-IN, TET5-7, E-1458016	5-81
90015-0021	LEAD-IN, TET 10-14, E1458023	5-69, 5-71
90017-0029	LOCKING LEVER, NO. KR8X30-SUS	1-25, 1-63, 5-19, 5-23, 5-25, 5-27, 5-29
90028-0022	CONE TUBE 6 MM	5-81
90030-0200	CONN. ELBOW, WE06LM71	5-81
90032-0039	BLOCK 4 WAYS	5-81
90032-0043	DISTRIBUTION BLOCK 3 WAYS	5-81
90036-0057	LIGHT BULB, BA9S 28V	5-115
90036-0068	BULB 5W 24V, SL-L24 205348	5-87
90051-0054	STELLAR KNOB, INT. THREAD, NO. 8306-0340	10-9
90051-0112	LOCK KNOB, NO. GN 617 NIK5	5-57, 12-25
90053-0029	COUNTER, F524.800FA3C 24VDC	9-81
90053-0031	HOUR COUNTER, B 609.10 10-50VDC	9-81
90055-0222	ELBOW WITH TAILPIECE 6/6 MM	5-69, 5-71
90062-0015	LOCK WASHER SERRAT.EXT.GEAR,6,4/11 H=0,7	9-41
90062-0060	LOCK WASHER 5,3/10 H=0,6 FZB	5-59
90064-0093	PUSH BUTTON, GREEN	5-115
90064-0098	PUSH BUTTON, WHITE	5-115
90077-0113	TERMINAL BLOCK WDK 2.5	5-117, 5-119, 9-25, 9-55, 9-57, 9-59, 9-61, 9-63, 9-65
90077-0114	END PLATE, WAP WDK 2.5 1059100000	5-117, 5-119
90087-0019	PLUG M10X1 STAINLESS	5-81
90091-0038	SCRAPER 20X30X10 MM	6-45, 6-47, 6-49
90091-0304	RADIAL SEAL 45X65X8 MM DUST LIP	1-15, 1-49, 1-57
90091-0322	RADIAL SEAL 25X42X7 MM DUST LIP	1-31, 1-33
90092-0054	METERING VALVE 50 MM3	5-81
90099-0005	MOUNTING RAIL SUPPORT, TSTW 5/M5	9-45
90099-0187	HEXAGON NUT, LOCK, M14, DIN985	4-9, 4-11
90099-0191	HEXAGON NYLON NUT, M4X0,7	9-41
90110-0052	MALE INSERT, HAN E06, 0933 0062 601	1-91, 4-9, 4-11, 4-43, 4-45, 8-5, 8-7, 8-21, 8-23
90110-0053	FEMALE INSERT, HAN 6 E 09 33 006 2701	1-91, 5-7, 5-9
90110-0095	CONNECTOR, PLUG SOCKET, MSSD-C-4P	5-77
90115-0134	ROD END, ID=10 MM, M10X1,25	1-37
90115-0137	ROD END, ID=6 MM, M6X1	3-15
90115-0163	ROD END, ID=6 MM, M6X1	10-27
90119-0108	RELAY OMRON G2R-2-SNI-24DC	5-117, 5-119, 9-7, 9-9, 9-11, 9-29, 9-31, 9-33, 9-51
90125-0020	PLATE COMPLETE(BOM)	5-59
90129-0018	BASE, P2RF-08-E	5-117, 5-119, 9-7, 9-9, 9-11, 9-29, 9-31, 9-33, 9-51
90134-0030	SLEEVE FOR PLASTIC TUBE	5-81
90134-0052	PLUG DOSING BLOCK	5-81
90134-0055	BUSHING/NUT INLET/OUTLET 6 MM	5-81
90134-0058	CONNECTION	2-17
90141-0016	RETAINING RING FOR SHAFT DIN 471 10 SS	8-5, 8-7, 8-21, 8-23
90141-0017	RETAINING RING FOR SHAFT DIN 471 17 SS	8-5, 8-7, 8-21, 8-23
90141-0020	RETAINING RING FOR BORE DIN 472 42 SS	4-43, 4-45
90143-0071	RUBBER STRIP 4X20MM	5-115
90143-0097	SELF GRIPPING GASKET, 1011-24	12-5
90143-0098	RUBBER STRIP, CLAMPING, NO. 1038-02	5-153
90152-0051	HOSE, SPIRAL CONDUIT, 25X18, UL 1816	4-43, 4-45, 5-59, 5-115
90152-0060	HOSE, SPIRAL CONDUIT, 42X35, UL3529	5-115
90152-0070	HOSE, SPIRAL CONDUIT, 32,5X26, UL 2621	5-115
90152-0075	HOSE	5-59
90153-0023	ADHESIVE, SILICON 251470 TUB 90CC(UN1993	6-67, 6-69
90153-0059	250.0 ADHESIVE, HOTMELT RECAP 12 KG	10-19
90157-0012	LOCKING FLUID LOCTITE 242 50 ML	7-17
90157-0037	THREAD SEALANT LOCTITE 542	1-13, 1-21, 1-31, 1-33, 1-45, 1-55
90157-0041	SEALING COMPOUND, RHODORSEAL 5651	5-135, 5-137, 5-149, 5-151, 5-157, 5-159, 5-161
90163-0041	HOSE NIPPLE, EXT.THR. G3/8-12 MM	10-45
90163-0064	QUICK COUPLING, (M) LP-006-2-WR517	10-45
90163-0075	QUICK COUPLING, (F) LP-006-O-SL013	10-45
90165-0007	PIPE CLIP FOR TUBE D=8 MM	9-47
90166-0108	TUBE 6 MM PA TRANSP.	5-81
90166-0113	HOSE	5-7, 5-9
90166-0121	HOSE	10-45
90166-0143	TUBE 2,5 MM PA TRANSP.	5-81
90181-0038	CABLE DUCT, PLASTIC, 40X40	5-115
90181-0182	BRACKET, 1149354	5-7, 5-9
90181-0183	CABLE DUCT, FITTING, B2	3-27, 5-7, 5-9, 6-63
90181-0184	CABLE TRENCH PARTS	5-7, 5-9
90181-0186	CABLE DUCT, ELBOW BRACKET, B27	5-7, 5-9
90181-0190	CABLE DUCT, WALL BRACKET, B4 MINI	5-7, 5-9
90181-0314	CABLE TRENCH PARTS	5-7, 5-9
90187-0045	BALL VALVE, G1/4 CR PL	5-63
90187-0191	BALL VALVE, R1/8 - HOSE 6 MM	4-31, 5-69, 5-71
90189-0019	BALL BUSHING, 20X30X30 MM	6-45, 6-47, 6-49
90194-0152	SIGN, EARTH	9-41
90206-0124	HEATING ELEMENT 2X1500W 230V	5-59
90208-0078	CLAMPING ELEMENT, 20X28 L=18	7-9

Part No	Description	Page No
90214-0186	BALL BEARING 30/42X7	1-31, 1-33
90224-0031	CONN. ELBOW, ART.NO 3814	4-31
90224-0289	BUSHING, INT.EXT. THR. R1/8-R1/4	4-21
90224-0314	DISTRIBUTOR BLOCK, FR-4-1/8-B	4-21
90224-0325	ELBOW 90 COUPL., EXT. THREAD 10/8-G1/4"	5-63
90224-0372	NIPPLE, EXT.THREAD, HEXAGON, R1/4-R1/4	5-77
90226-0458	MOUNTING SCREW	5-113, 5-127, 5-129, 5-133, 5-139, 5-143, 5-145, 5-155, 5-157, 5-161
90235-0748	THROTTLE CHECK VALVE, GRA-1/4-B	5-69, 5-71
90237-0123	LOCK, 1121-U10C	5-135, 5-149, 5-151
90237-0128	LOCK CYLINDER, 1109-SU125	5-135, 5-149, 5-151
90237-0144	GUIDE, 1121-SU540	5-135, 5-149, 5-151
90237-0147	LOCKING LUG, NO. 1121-53-0P	5-135, 5-149, 5-151
90237-0175	TURNING HANDLE, 1125-U185-0A	5-135, 5-149, 5-151
90240-0262	FLANGE BUSHING, IGLIDUR X 12X14X12	2-11
90259-0313	AUXILIARY SWITCH, NHI21-PKZ0	9-7, 9-9, 9-11, 9-29, 9-31, 9-33, 9-69
90259-0315	CIRCUIT BREAKER , B3.1/2-PKZ0	9-7, 9-9, 9-11, 9-29, 9-31, 9-33
90261-0025	PLUG, BLIND, PLASTIC GPN300F28	5-69, 5-71
90261-0060	PLUG, BLIND, PLASTIC, NO. IKPK25X1, 5	3-27
90261-0064	PLUG, BLIND, PLASTIC, NO. SFL42	1-11, 1-19
90286-0012	GREASE NIPPLE 45 DEG. M6X1, 2107	1-31, 1-33, 2-15
90286-0013	GREASE NIPPLE STRAIGHT, H1 M6X1 2346	1-13, 1-15, 1-21, 1-45, 1-49, 1-55, 1-57
90287-0124	SCREW PAN HEAD MSCS M4X12 NYLON	9-49
90287-0154	SET SCREW, DOGPOINT M6X10 A4	5-11, 5-13
90287-0175	SCREW M6S M3X12 A480	1-25, 5-11, 5-13, 5-45, 5-47, 12-21
90287-0230	SHOULDER SCREW, 6X4/M5 SS	1-47, 1-53
90287-0239	SHOULDER SCREW, 6X30/M5 SS	3-15
90287-0295	SCREW HEX.SOCK.COUNT.MF6S M3X8 A280	7-15
90328-0013	SILENCER U-1/4, 2316	4-21
90328-0017	SILENCER, D=6 MM	1-37, 5-81
90328-0026	SILENCER, G1/4"	5-77
90328-0029	SILENCER, M5	5-69, 5-71, 7-29, 10-33, 10-35
90328-0047	SILENCER, G1/8"	1-67, 1-69, 5-69, 5-71, 7-29, 10-33, 10-35
90330-0026	PLUG, EXT. G-THREAD, G1/4	5-77
90330-0134	REDUCING NIPPLE, G1/8EXT-G1/4INT	5-67
90335-0082	COMP. SPRING, 22180, 1,25X9,25X47,5	7-15
90347-0011	VIBRATION DAMPER MEGI 781056	5-11, 5-13
90415-0030	OIL FILTER PN 100 ORD.NO 2.77 10 70.1	5-81
90424-0087	AIR NOZZLE	10-27
90424-0089	AIR NOZZLE, BSPT1/4, AAB727-1/4-15	5-67
90439-0155	NOZZLE, 322 012	10-15, 10-17, 10-19, 10-21, 10-23
90439-0295	SERVICE KIT, NO. 111940	5-51, 5-99, 5-101
90457-0192	WASHER PLAIN ROUND, 6,5/18, H=1,5	5-23, 5-25, 5-27, 5-29
90458-0048	RETAINING RING FOR BORE DIN 472 62 SS	4-9, 4-11
90458-0181	RETAINING RING FOR BORE DIN 472 80 SS	1-45, 1-55
90458-0306	CABLE GLAND, M16X1,5, 5311 1010	4-43, 4-45, 8-5, 8-7, 8-21, 8-23
90458-0307	CABLE GLAND, M20X1,5, 5311 1020	1-91, 5-7, 5-9
90458-0309	CABLE GLAND, M32X1,5, 5311 1040	9-41
90458-0314	CABLE GLAND, M16X1,5, 5311 1110	9-41
90458-0315	CABLE GLAND, M20X1,5, 5311 1120	5-147
90458-0316	CABLE GLAND, M25X1,5, 5311 1130	5-51
90458-0322	NUT, M16X1,5	4-43, 4-45, 8-5, 8-7, 8-21, 8-23
90458-0323	NUT, M20X1,5	5-7, 5-9, 5-59, 5-115, 9-41
90458-0324	NUT, M25X1,5	5-69, 5-71, 5-115, 9-41
90458-0326	NUT, M40X1,5	5-7, 5-9, 5-115
90458-0406	CABLE GLAND, VK 22052Y	4-9, 4-11, 8-5, 8-7, 8-21, 8-23
90458-0430	GLAND FITTING, VK 22054YUL16	4-43, 4-45, 5-7, 5-9, 5-59, 5-115
90458-0432	GLAND FITTING, VK 22555YUL21	5-69, 5-71, 5-115
90458-0434	GLAND FITTING, VK 24056YUL29	5-7, 5-9, 5-115
90458-0460	GLAND, LOCK NUT, M16X1,5	4-9, 4-11
90458-0499	HOLDER 12 MM NO. 82 66861	5-67
90458-0507	PARALLEL KEY W. ROUND ENDS 6X6X60 MM	1-31, 1-33
90458-0651	SATURN SINGLE-ORIFICE NOZZLE, 322010	10-15, 10-17, 10-23
90458-0745	Y-CONNECTION	4-29, 4-31, 4-39
90458-1114	BIMET. ELECTROMECH. THERMOSTAT K7H.020	9-83
90458-1173	MULTI DIAMETER MODULE, CM 30W40	9-41
90458-1174	MULTI DIAMETER MODULE, CM 20W40	9-41
90458-1175	MULTI DIAMETER MODULE, CM 15W40	9-41
90458-1178	FRAME, CF 8	9-41
90458-1179	FRAME, CF 32	9-41
90458-1197	VALVE, 5/2 BISTABLE	7-29, 10-33
90458-1202	VALVES 2X3/2, CLOSED	5-69, 5-71
90458-1203	VALVE 2X3/2 1X OPEN 1X CLOSED	10-35
90458-1263	WARNING SIGN ANSI (H), DO NOT TOUCH	5-163, 10-37
90458-1308	BLIND PLUG CIRCULAR, M20X1,5 514GFK/220	5-115, 9-41
90458-1309	BLIND PLUG CIRCULAR, M25X1,5 514GFK/225	5-115, 9-41
90458-1483	SPRAY GUN, WATER G1/4	5-63
90458-1651	EMERGENCY STOP, ZB4-BS-844 ZB4-BZ-104	5-115, 5-147, 9-41
90458-1740	AIR GUN ASSEMBLY, CEJN 199589668	5-79
90458-1741	HOSE ASSEMBLY, CEJN 19 958 9669	5-63
90458-2483	MOTOR 3GVA062002-BSB	4-9, 4-11, 4-43, 4-45
90458-2507	FUSE HOLDER, USBCC1	9-67
90458-2510	FUSE, ATDR6	9-67, 10-15, 10-17, 10-19, 10-21, 10-23
90458-2837	CONNECTING CABLE KMEB-1-24-5-LED	5-77
90458-2907	PROX.SWITCH IFS204	1-61, 4-9, 4-11, 4-23, 6-17, 12-15

Part No	Description	Page No
90458-2932	PLAIN BEARING, JUM-02-20	1-25, 1-63, 5-19
90459-0290	NON-RETURN VALVE, H-QS-6	5-69, 5-71
90459-0813	COOLING UNIT, KB20A619.01	9-5
90459-0864	BULKHEAD CONNECTOR, 12 MM/M27X1,5	5-79
90459-0959	DISTRIBUTOR BLOCK 1492-PD3163	9-47
90459-1018	ROD END, BALL JOINT EYE M10X1,25	1-67, 1-69
90459-1180	LENS 16MM IN-SIGHT 4100, HF16HA-1B	5-57, 12-25
90459-1395	SCREW HEX.SOCK.SET CONEPT.MS6SS M4X4 A2	6-11, 6-13
90459-1458	HOOD, SIDE ENTRY, HAN6E, 19 30 006 1540	1-91, 4-9, 4-11, 4-43, 4-45, 8-5, 8-7, 8-21, 8-23
90459-1461	HOUSING, 19 30 006 1255	1-91, 5-7, 5-9
90459-1621	CABLE, ETHERNET RJ 45 CONNECT. 1 M	9-93
90459-1825	ELBOW WITH TAILPIECE 12/12 MM	5-69, 5-71
90459-1858	BRACKET, MS6-WP	5-75
90459-2133	PUSH-IN FITTING QSSF-1/2-12-B	5-7, 5-9
90459-2215	STRAIGHT COUPLING, D=16 MM - G1/2"	5-79
90459-2232	WARNING SIGN ANSI (H), DO NOT WASH	5-163
90459-2243	SHUT OFF VALVE, MS4-EE-1/4-10V24	5-77
90459-2245	DISTRIBUTOR, MS4-FRM-1/4	5-77
90459-2247	BRACKET, MS4-WP	5-77
90459-2248	BRACKET, MS4-MV	4-21, 5-77
90459-2254	QUICK COUPLING, (M) 10 320 5202	5-63, 5-79
90459-2265	PROHIBITION SIGN ISO, DO NOT WASH	5-163
90459-2291	SAFETY RELAY, E1T	9-7, 9-9, 9-11, 9-29, 9-31, 9-33, 9-81
90459-2337	SHUT OFF VALVE, MS4-EM1-1/4	5-77
90459-2339	FILTER REGULATOR, MS4-LFR-1/4-D7-ERV-AS	5-77
90459-2389	BRACKET, MS4-LR-WR	4-21
90459-2413	PLC DIGITAL INPUT MODULE16 POINTS	9-75
90459-2458	BASEPLATE, 10 SLOT CONTROLLOGIX CHASSIS	9-75
90459-2474	PLC,DIGIT. OUTPUT MODULE 16 PTS 10-31VDC	9-75
90459-2477	ETHERNET I/P BRIDGE MODULE, 1756-ENBT	9-75, 12-9
90459-2480	8-AXIS SERCOS MOTION MODULE	9-7, 9-9, 9-11, 9-29, 9-31, 9-33
90459-2487	REMOVABLE TERMINAL BLOCK 20 POINTS	9-75
90459-2488	REMOVABLE TERMINAL BLOCK 36 POINTS	9-7, 9-9, 9-11, 9-29, 9-31, 9-33, 9-75
90459-2494	DEVICENET I/O ADAPTER MODULE, 1734-ADN	5-117, 5-119
90459-2501	FIELD POWER DISTRIBUTOR, 1734-FPD	5-117, 5-119
90459-2503	DIGITAL INPUT 4 PTS SINK, 1734-IB4	5-117, 5-119
90459-2505	DIGITAL OUTPUT 4 PTS, 1734-OB4E	5-117, 5-119
90459-2519	TAP, OPEN STYLE	9-83
90459-2523	TERMINATOR, OPEN STYLE, 1485A-C2	9-83, 12-35
90459-2526	REMOTE I/O BASE MODULE 8 POINTS, 1734-TB	5-117, 5-119
90459-2530	DEVICENET CABLE THIN	9-93
90459-2536	SERCOS CABLE 0.1M, 2090-SCEP0-1	9-19, 9-73, 12-31
90459-2540	SERCOS CABLE 3.0M, 2090-SCEP3-0	9-73
90459-2547	POWER RAIL SLOT FILLER, 2094-PRF	9-7, 9-9, 9-11, 9-29, 9-31, 9-33
90459-2550	I/O CONNECTOR 26 PIN MALE, 2090-K6CK-D26	9-7, 9-9, 9-11, 9-29, 9-31, 9-33
90459-2551	CONNECTOR, MOTOR FEEDBACK 15 PIN MALE	5-85, 5-97, 12-29
90459-2553	PUSH-IN L-FITTING QSL 16	5-69, 5-71, 5-79, 9-5, 9-27
90459-2591	SINGLE VALVE SUB-BASE CDSV5.0-AS-1/8	5-69, 5-71, 7-29, 10-33, 10-35
90459-2614	DEVICENET ADAPTER POWERFLEX 40 22-COMM-D	9-7, 9-9, 9-11, 9-29, 9-31, 9-33
90459-2644	NUT ROUND WITH SLOTS M30X1,5 SS	1-31, 1-33
90459-2739	OPTO-RELAY 50085, IN / OUT 4-53VDC 1A	9-51
90459-2771	FILTER, MS6-LFX-1/2-R	5-75
90459-2777	FLOW CONTROL VALVE, GR-QS-8	10-27
90459-2795	FRONT LID FOR POWERFLEX 40, 22B-CCB	9-7, 9-9, 9-11, 9-29, 9-31, 9-33
90459-2939	BUFFER UNIT, 6EP1961-3BA01	12-33
90459-3081	HOUSING, 19 20 003 1250	5-7, 5-9
90459-3115	BRACKET, REAR, CLEVIS, ROUND, BORE 32	1-67, 1-69
90459-3197	SATURN SINGLE-ORIFICE NOZZLE, 322014	10-15, 10-17, 10-19, 10-21
90459-3279	BLANK PLUG, BLACK SQUARE, PLASTIC ZB5SZ5	5-115
90459-3441	FREQ. CONV., 22B-A2P3N104	9-7, 9-9, 9-11, 9-29, 9-31, 9-33
90459-3449	FREQ. CONV., 22A-A2P3N104	9-7, 9-9, 9-11, 9-21, 9-23, 9-29, 9-31, 9-33
90459-3450	FREQ. CONV., 22A-A4P5N104	9-47, 12-7
90459-3454	FOOTPRINT FILTER 1 PHASE 18A	9-7, 9-9, 9-11, 9-29, 9-31, 9-33
90459-3460	FOOTPRINT FILTER 1 PHASE 10A	9-7, 9-9, 9-11, 9-21, 9-23, 9-29, 9-31, 9-33, 9-47, 12-7
90459-3603	PRESSURE GAUGE, MAP-40-6-1/8-EN	5-69, 5-71
90459-3604	FLOW CONTROL VALVE, GR-QS-6	5-69, 5-71
90459-3655	REAR CLEVIS FOOT MOUNTING, LBN-12/16	10-27
90459-3670	HOOD, HAN3A, 19 20 003 1440	4-9, 4-11
90459-3779	HANDLE, GN565 SW 192-M8	6-55, 6-57
90459-3845	WALL SOCKET, Z-SD230	9-7, 9-9, 9-11
90459-4083	ADHESIVE, NATIONAL 134-135B 12 KG	10-17
90459-4089	SAFETY SENSOR, EVA E, 20-046-06	4-13, 4-15, 5-89, 5-91
90459-4133	POWER SUPPLY UNIT 6EP1 436-3BA00	9-83
90459-4165	SAFETY SCREW, SM4X25	4-13, 4-19, 5-89, 5-91
90459-4252	CABLE M12-C101, 20-056-10	5-97
90459-4588	RADIAL SEAL 60X85X8 MM DUST LIP	1-45, 1-55
90459-4727	STANDING BEARING, KSTM-20	1-63
90459-4735	SCREW, M6S ISO 4017 M8X10 A4 80	4-9, 4-11, 5-31, 5-37, 5-41, 5-43
90459-4876	FOCUS JUMPER CABLE M12 5P 3M, 20-056-21	5-89, 5-91
90459-4891	IDENTIFIER, ID-FIX RW	9-81
90459-4931	LENS WITH SCALE OF LENGTHS 10X	10-39
90459-4996	NEEDLE VALVE 345 BAR, 9N400S	10-47
90459-5134	NUT, T-SLOT M6	10-27, 10-29
90459-5152	SCREW HEX.SOCK.SET CONEPT. MS6SS M6X10 A	8-5, 8-7, 8-21, 8-23

Part No	Description	Page No
90459-5195	SLIM POWER RAIL,KINETIX,8 AXIS,2094-PRS8	9-73
90459-5308	CONTACTOR 4KW 24VDC, DILM9-10	9-7, 9-9, 9-11, 9-21, 9-23, 9-29, 9-31, 9-33, 9-71, 9-79
90459-5309	CONTACTOR 7,5KW 24VDC, DILM17-10	9-71
90459-5311	CONTACTOR 15KW 24VDC, DILM32-10	9-71
90459-5321	OVERLOAD PROTECTION, PKZM0-0,4	9-7, 9-9, 9-11, 9-29, 9-31, 9-33
90459-5323	OVERLOAD PROTECTION, PKZM0-1	9-7, 9-9, 9-11, 9-29, 9-31, 9-33
90459-5326	OVERLOAD PROTECTION, PKZM0-4	9-69
90459-5481	OIL PUMP 3L, 10P-P3	5-81
90459-5522	CONN. BANJO, COR8PB6M10	5-81
90459-5529	PHOTOCELL E3Z-T86A, SENDER+RECIEVER	1-71, 4-43, 4-45, 5-23, 5-25, 5-27, 5-29, 8-5, 8-7, 8-21, 8-23, 12-19
90459-5627	CONNECTION, TINA 1-A	5-89, 5-91
90459-5811	RESIDUAL CURRENT DEVICE, FI-25/2/003-A	9-7, 9-9, 9-11
90459-5813	AUXILIARY CONTACT, FAZ-XHIN11	9-7, 9-9, 9-11, 9-29, 9-31, 9-33
90459-5817	REGULATOR, MS4-LR-1/4-D6-A8-AS	5-69, 5-71
90459-5886	POWER SUPPLY UNIT 115-230 VAC/24VDC100W	9-83
90459-5949	REAR CLEVIS FOOT MOUNTING, CRLBN-32	1-67, 1-69
90459-6062	ARMORBLOCK DIGITAL CONFIGURABLE I/O	4-9, 4-11, 5-7, 5-9
90459-6280	NUT GUK 5 M25 X 1.5 FZB	1-13, 1-15, 1-21, 1-31, 1-33, 1-49, 1-57
90459-6395	CABLE, ETHERNET RJ 45 STRAIGHT.10M	9-93
90459-6426	PRESSURE GUARD PEV-1/4-B-OD	5-77
90459-6470	CONNECTOR RJ45 TER. BL., AK-U0-RJ45-TB2P	9-21, 9-23
90459-6556	PLC DIGITAL INPUT 32PTS, 1756-IB32/B	9-75
90459-6617	COVER 4-POLE, NZM1-4-XKSA	9-7, 9-9, 9-11
90459-6692	SAFETY PLC, PLUTO B20 20-070-06	9-81
90459-6820	FEMALE INSERT, HAN 4 A, 09 20 004 2711	5-7, 5-9
90459-6821	MALE INSERT HAN 4A, 0920 0042 611	4-9, 4-11
90459-6852	AUXILIARY CONTACT, DILA-XHI22	9-7, 9-9, 9-11, 9-21, 9-23, 9-29, 9-31, 9-33, 9-79
90459-6913	MAGNETIC LOCK, JSD-ZH-EM1-K	5-89, 5-91
90459-6947	PHOTOCELL, WF 225-B4150	1-89
90459-6948	INDUCTIVE SENSOR, IFS 206	3-25, 3-27, 7-21
90459-6961	SAFETY SENSOR, ADAM E 0,5 M12	4-13, 4-19, 5-89, 5-91
90459-7107	SLEEVE QSH-16-12	5-69, 5-71
90459-7228	ELECTRICAL EQUIPMENT SIGN, TEMPLATE	9-29, 9-31, 9-33
90459-7229	IDENTIF. OF SINGLE CONDUCTORS, TEMPLATE	9-41
90459-7267	POWER SUPPLY 24VDC, 1756-PB75/B	9-75
90459-7332	PUSH-IN FITTING QSSF-1/8-4-B	5-69, 5-71
90459-7333	PUSH-IN FITTING QSSF-1/4-4-B	5-69, 5-71
90459-7344	PRESSURE GAUGE, MA-40-6-R1/4-EN	5-69, 5-71
90459-7366	PHOTOCELL, WTB4-3P3161 F20	4-27
90459-7368	MARKING FOR PNEUM. TUBING, PRZ04	5-69, 5-71, 7-21, 7-29, 10-27, 10-33, 10-35
90459-7369	MARKING FOR PNEUM. TUBING, PRZ06	1-37, 1-67, 1-69, 5-69, 5-71, 5-103, 5-105, 5-107
		5-109, 5-111
90459-7370	MARKING FOR PNEUM. TUBING, PRZ08	3-5, 5-67, 5-69, 5-71, 7-29, 10-27, 10-33, 10-35
90459-7372	MARKING FOR PNEUM. TUBING, PRZ12	5-69, 5-71
90459-7373	MARKING FOR PNEUM. TUBING, PRZ16	5-79
90459-7374	QUICK COUPLING, (F) 10 320 1202	5-63, 5-79
90459-7426	PUSH-IN L-FITTING QSML-M3-3	7-21
90459-7427	PUSH-IN FITTING QSM-4-3	7-21
90459-7428	TUBE PUN-H-3X0,5-BL	7-21
90459-7458	WARNING SIGN ANSI (H), HOT SURFACE	5-163
90511-0145	LOGOTYPE "TETRA PAK" FOR STRIPE 70MM	5-11, 5-13
90511-8563	STRIPE HEIGHT 70MM, ROLL LENGTH 25M	5-11, 5-13
90600-0347	NEEDLE BEARING W/O CONE, 16X24X16MM	7-25, 7-27
90600-0349	INNER RING, IR12X16X20	7-25, 7-27
90600-0350	LINEAR GUIDE, RSR12WVMUU+80LM G15/G25	7-15
90600-0351	COMP. SPRING, 2489, 1,2X9,4X30	7-23
90600-0373	RETAINING RING FOR SHAFT DIN 471 21 SS	6-67, 6-69
90600-0375	BALL BUSHING, 12X21X30 MM	6-67, 6-69
90600-0376	SHAFT, LM SHAFT 12 G6 89L M	6-67, 6-69
90600-0434	GUIDE BAR, SSR25-180L-YM G30/30	6-9
90600-0454	CLAMPING ELEMENT, 16X24 L=16	6-45, 6-47, 6-49
90600-0482	GUIDE BAR, SSR 25 305 LYM G32.5/32.5	3-13, 3-15, 3-25
90600-0483	GUIDE BAR, SSR 25-430LYM G35/35	3-13
90600-0484	GUIDE BAR, SSR 25 253L-YM G36.5/36.5	3-5, 3-23
90600-0485	GUIDE BAR, SSR25 385L YM G42.5/42.5	3-15
90600-0486	TIMING BELT 50AT10/1120 PU	3-23
90600-0487	TIMING BELT 50AT10/1410 PU	3-13
90600-0656	COMP. SPRING, 6777, 4X36X120 DIN2098	2-19
90600-0658	WORM GEAR SCREW JACK, TP00063000130	4-5, 5-17
90600-0683	COMP. SPRING, 2496, 1,2X10,4X45	2-11
90600-0685	THREAD LOCKING, LOCTITE 2701 50 ML	6-75, 7-9, 7-15
90600-0773	RTD HOT MELT HOSE BLUE SERIES, 104008	5-99, 5-101
90600-0798	BUSHING INSERT, JUM-02-30	1-47, 1-53
90600-0799	STANDING BEARING, KSTM-25	1-61
90600-0800	FLANGE BEARING 20X89X20 MM	1-63, 5-19
90600-0812	GEAR BOX, TP00042000110	1-25
90600-0814	TIMING BELT AT10 5250X25 MM+35236050	1-73, 1-75, 1-77, 1-79, 1-81
90600-0815	TIMING BELT 25AT10/4800 +32 2. 3.6.050	1-73, 1-75, 1-77, 1-79, 1-81
90600-0892	NEEDLE ROLLER BEARING, 50X80X28 MM	1-45, 1-55
90600-0961	ROLLER CHAIN, SIMPLEX 3/8 -159, SS	1-25
90600-0962	ROLLER CHAIN, SIMPLEX 3/8 -243, SS	1-25
90600-0964	ROLLER CHAIN, SIMPLEX 3/8 -333, SS	1-25
90600-0971	RACK, ZRR2-100	5-11, 5-13

Part No	Description	Page No
90600-1001	CROSS CLAMP, 340/68385	5-67
90600-1002	FOOT 50000N, HPA125-30-325	4-5, 5-11, 5-13
90600-1005	WORM GEAR SCREW JACK, TR00042000130	1-63
90600-1096	PROCESSOR UNIT IN-SIGHT 5100, IS-5100-00	5-57, 12-25
90600-1159	ROLLER CHAIN, SIMPLEX 3/8 -290, SS	5-19
90600-1167	PLUG, EXT. R-THREAD, R1/4	4-21
90600-1175	ELBOW WITH TAILPIECE 8/8 MM	5-69, 5-71
90600-1198	MAIN SWITCH ASSY.,RIGHT SIDE, NZM1-XSM-R	9-43
90600-1420	REGULATOR, MS4-LRB-1/4-D6-AS	4-21
90600-1461	INCOMING TERMINAL, BK25/3-PKZ0-E	9-7, 9-9, 9-11, 9-29, 9-31, 9-33, 9-69
90600-1759	CONTACTOR22KW24VDCDILM50-22+DILM65-XIP2X	9-67, 9-71
90600-1772	SCREW DIN7984 M6X12 AISI 304	7-37, 7-39, 7-41
90600-1848	ETHERNET SW, FL SWITCH SFN 8TX	9-83
90600-1972	COVER PROFILE 8 AL, 0.0.265.50	10-29
90600-1996	CAP 8 40X40 MM, 0.0.026.01	10-29
90600-2068	DELIVERED DESIGN SIGN, 90600-2068	9-7, 9-9, 9-11
90600-2102	POWER I/O CABLE, CCB-84901-0103-10	5-57, 12-25
90600-2103	ETHERNET CABLE, CCB-84901-1004-10	5-57, 12-25
90600-2375	LENS, E39-S65C	5-23, 5-25, 5-27, 5-29, 8-5, 8-7, 8-21, 8-23
90600-2560	COUPLING 14X20 MM, 727-38-4838	4-5
90600-2563	SCREW PANHEAD SNAKE EYE SPANNER, M6X12	5-89, 5-91
90600-2830	FASTENING ELEMENT, BLOCKSEP-E 01026	9-49
90600-2904	EARTH BRAID, 250/16/8,5	9-41
90600-3011	CONVEYOR BELT, -25 AT10/5250 +35 2.3.7.3	1-73, 1-75, 1-77, 1-79, 1-81
90600-3012	TIMING BELT 25AT10/4800 PU	1-73, 1-75, 1-77, 1-79, 1-81
90600-3272	PROX. SENSOR, SMT-8M-PS-24V-K-5,0-OE	7-21
90600-3573	SOCKET CONN. CABLE, KMEB-2-24-M12-0,5-LE	4-21
90600-4033	DIGITAL OUTPUT MODULE, 1756-OB16IS	9-7, 9-9, 9-11, 9-29, 9-31, 9-33
90600-4731	CURRENT CONTROL RELAY, K8AB-AS2 200-230	9-51
90600-4732	LASER SENSOR, WS/WE9L-P330	1-33, 10-29
90600-4778	USB CABLE SET, 5A9000.54	12-5
90600-4821	TIMING BELT 25AT10/4800 PU	1-73, 1-75, 1-77, 1-79, 1-81
90600-4822	TIMING BELT 25AT10/5250+35 2.3.7.358	1-73, 1-75, 1-77, 1-79, 1-81
90600-5135	BUSHING, 12X14X8 MM	2-11
90600-5212	AXIS MOD. W. PS,2094-BC02-M02-S SERIES B	9-73
90600-5214	AXIS MOD. KINETIX 6000,2094-BM01-S SER.B	9-7, 9-9, 9-11, 9-19, 9-29, 9-31, 9-33, 9-73, 12-31
90600-5216	AXIS MOD. KINETIX 6000,2094-BM02-S SER.B	9-7, 9-9, 9-11, 9-29, 9-31, 9-33
90600-5249	FERRITE, B64290L616X38	9-7, 9-9, 9-11, 9-21, 9-23, 9-29, 9-31, 9-33, 9-47, 9-75, 9-83, 12-7
90600-5253	LINE FILTER, B84113HB60	9-47
90600-5258	LINE FILTER, B84143A35R106	9-47
90600-5262	LINE FILTER, B84144A36R120	9-43
90600-5266	FEED THROUGH FILTER, B85321A2502W160	9-43
90600-5270	COVER 3-POLE, NZM1-XKSA	9-29, 9-31, 9-33
90600-5543	CIRCUIT BREAKER, NZMB1-4-A32	9-7, 9-9, 9-11
90600-5544	CIRCUIT BREAKER, NZMB1-A32-NA	9-29, 9-31, 9-33
90600-5547	VIBRATION DAMPER, D-TYPE 20X15 M6X15 NBR	7-21
90600-5812	LABEL	9-29, 9-31, 9-33
90600-5813	SOLENOID VALVE, CPE18-M1H-3GL-1/4	4-21
90600-5815	COOLING UNIT, KB20A21341.03	9-27
90600-5823	SIGN, MAIN POWER MACHINE LABEL	9-7, 9-9, 9-11
90600-5840	PLC DEVICEN. BR./SCAN MOD, 1756-DNB, D	9-75
90600-6183	TUBULAR RIVET 3,5X6,2	5-31, 5-37, 5-41, 5-43
90600-7487	SURGE PROTECTION DEV., VAL-MS 230/3+1 FM	9-43
90600-9726	ADHESIVE, HOTMELT 25080 12KG	10-21
90601-0668	SERVO MOTOR, MPL-B420P-MK72AA SERIES A	1-45, 1-55, 2-13
90601-1926	SERVO MOTOR, MPL-B430P-MK72AA SERIES A	3-17, 3-19, 6-19
90601-2046	CAPTIVE SCREW M6, GUTBG 6-4-12	5-131, 5-143
90601-4430	SERVO MOTOR, MPL-B320P-MJ72AA, SERIES A	7-11
90601-5090	SERVO MOTOR, MPL-B310P-MK72AA SERIES A	6-45, 6-47, 6-49
90601-6430	USB CABLE, 90601-6430	12-5
90602-1250	LIGHT FIXTURE, SLIM LED 112-544-001	5-93, 5-95, 9-41
90602-3985	RING LIGHT ILLUMINATOR, TLD-150-617-C	5-57, 12-25
90602-3996	ADHESIVE, HOTM. TERMOMELT PS880 12KG	10-23
90602-4060	LIGHT ELEMENT, BLUE, PSD-S OE LED BU	5-87
90602-4061	LIGHT ELEMENT, GREEN, PSD-S OE LED GN	5-87
90602-4062	LIGHT ELEMENT, RED, PSD-S OE LED RD	5-87
90602-4063	LIGHT ELEMENT, YELLOW, PSD-S OE LED YE	5-87
90602-4627	TERMINAL ELEMENT, PSD-S CE-TM SPRING	5-87
90602-4631	SIREN 100DB, PSD-S AE SM8-5 100DB/1	5-87
90602-4674	TIMING BELT 25T10/1150-DL PU	1-35
90602-4686	TIMING BELT 32TK5K6/780 PU + MINIGRIP	1-31, 1-33
90602-4847	THREAD LOCKING, LOCTITE 243 50 ML	1-85, 1-87, 7-33, 7-35
90602-8807	LIMIT SW. SZ 2586.010	9-41
90603-1115	POWER SUPPLY, STEP-PS/1AC/24DC/3,8/C2LPS	9-29, 9-31, 9-33
90603-1938	PRESSURE SWITCH, 1800 KPA, 28545-251-2	5-81
90603-2066	CLAMP.ELEMENT, WITHOUT SLEEVE, 32X60	3-17, 3-19
90603-2322	BALL BEARING 10/19X5	8-5, 8-7, 8-21, 8-23
90603-2323	BALL BEARING 20/52X15	3-11
90603-2378	BALL BEARING, 10X30X9 MM	6-11, 6-13, 6-45, 6-47, 6-49
90603-2476	GEARS,PLANETARY TP010F-MA3-66-OE1/MPL B4	6-19
90603-2676	MOTOR 3GAA052002-CSA	8-5, 8-7, 8-21, 8-23
90603-2736	WARNING SIGN ANSI(H),HAZ.VOLT.DISCONNECT	9-29, 9-31, 9-33
90603-2978	WORM GEAR W20035003800003	8-5, 8-7
90603-2979	WORM GEAR W20045027100006	4-43, 4-45

Part No	Description	Page No
90603-2980	WORM GEAR W2003500390018	1-91
90603-3670	WORM GEAR W23986027004	4-9, 4-11
90603-3671	WORM GEAR W20035015800002	8-21, 8-23
90603-3971	SPLITTER BOX, EBC034	6-63, 10-31
90603-3972	SPLITTER BOX, EBC026	5-93
90603-3979	SENSOR Y-CABLE, EVT339	1-33, 1-71, 4-43, 4-45, 5-23, 5-25, 5-27, 5-29, 8-5, 8-7, 8-21, 8-23, 10-31, 12-19
90603-4698	FILTER, MS6-LFM-1/2-ARV-DA	5-75
90603-4699	FILTER, MS6-LFM-1/2-B-R-V-DA	5-75
90603-5339	KLüBEROIL 4 UH1 320 N, ONLY IN BOM	1-13, 1-15, 1-21, 1-31, 1-33, 1-37, 1-45, 1-49, 1-55, 1-57, 2-15, 4-5
90603-5366	PROCESSOR L72, SERIES A,, 1756-L72/A	9-75
90603-5560	CONNECTOR, SACC-M12MS-5CON-PG 7-VA	4-9, 4-11
90603-5568	CONNECTOR, SACC-M12MS-4QO-0,34-VA	3-5, 7-21, 7-29, 10-31
90603-5569	CONNECTOR, SACC-M12MS-4QO-0,75-VA	5-93
90603-5602	BAR CODE READER, D8330 SR-902151265+CAB-	12-5
90603-6233	KLüBERSYNTH UH1 14-151, ONLY IN BOM	1-65, 3-13, 6-13, 7-7, 7-9, 7-17, 7-25, 7-27
90603-9715	SPHERICAL BALL BEARING 17/47X19	4-47
90604-0093	CONNECTION BLOCK, TINA4A 2TLJ020054R0300	4-9, 4-11, 5-89, 5-91
90604-3129	DOUBLE ACTING, MINI-ISO, CYL. 16-25	10-27
90604-3137	DOUBLE ACTING, ROUND, CYL 32-80	1-37
90604-3142	CYLINDER, GRIPPER DHPS-16-A-H1-SA	7-21
90604-3143	DOUBLE ACTING, ROUND, CYL 32-150	1-67, 1-69
90604-3317	GUN,TP EASYC. SBLA2T 120 1A, 1099064H1	3-5
90604-3319	HOT MELT UNIT PROBLUE 4, 108 0419 H1	5-103, 5-105, 5-111
90604-3320	HOT MELT UNIT PROBLUE 4, 104 9296 H1	5-103, 5-105, 5-107, 5-109, 5-111
90604-3324	COMP. SPRING, 5443, ?X31,2X115	1-15, 1-49, 1-57
90604-3329	NON-RETURN VALVE, RVA-M6	1-13, 1-15, 1-21, 1-31, 1-33, 1-45, 1-49, 1-55, 1-57, 2-15
90604-3333	GUIDE RAIL, 15X20X580	1-65
90604-3338	CARRIAGE, SSR25XWSSHHME(C) BLOCK WITH FO	3-5, 3-13, 3-15, 3-23, 6-11
90604-3589	FAN 2BH1300-7AV15-K41	5-51
90604-3805	OPER. PANEL 15" , 2711P-T15C4D8TP, SER A	5-115
90604-4247	GEARS, WORM MOTOR MR V 32 UO3A - 63 B 4	1-39
90604-4254	WORM GEAR MR V 63 UO3A-80B4 … B5/35 H1 F	1-45, 1-55
90604-4255	WORM GEAR MR V 63 UO3A-80B4 … B5/140 H1	2-13
90604-4259	GEARS, PLAN. MR 112 EC FO2C 00 / I=10 H1	3-17, 3-19
90604-5464	QUICKSERVER GATEWAY, FS-QS-1230-0705	12-35
90604-6027	PLUG, EXT. THREAD HEX. SOCKET. G1/4	5-81
90604-6028	PLUG, EXT. THREAD HEX. SOCKET. G1/8	10-35
205438-0000	CABLE GLAND	5-59
290027-0000	WASHER	1-31, 1-33
311103-0236	PARALLEL PIN ISO 2338 3M6X16 A1	7-21
311103-0267	PARALLEL PIN ISO 2338 4M6X10 A1	10-41
311103-0268	PARALLEL PIN ISO 2338 4M6X12 A1	4-29, 4-31, 4-33, 4-35, 4-37, 4-39, 4-41, 6-67, 6-69
311103-0278	PARALLEL PIN ISO 2338 4M6X35 A1	4-23
311103-0306	PARALLEL PIN ISO 2338 5M6X12 A1	4-29, 4-31, 4-33, 4-35, 4-37, 4-41, 5-57, 12-25
311103-0308	PARALLEL PIN ISO 2338 5M6X16 A1	5-57, 6-11, 12-25
311103-0348	PARALLEL PIN ISO 2338 6M6X10 A1	7-21, 8-21, 8-23
311103-0349	PARALLEL PIN ISO 2338 6M6X12 A1	4-29, 4-31, 4-33, 4-35, 4-37, 4-39, 4-41, 6-19, 7-43, 7-45
311103-0351	PARALLEL PIN ISO 2338 6M6X16 A1	1-19, 5-11, 5-13, 6-45, 6-47, 6-49, 6-51, 6-59, 7-15
311103-0352	PARALLEL PIN ISO 2338 6M6X18 A1	7-43, 7-45, 10-7
311103-0353	PARALLEL PIN ISO 2338 6M6X20 A1	1-45, 1-47, 1-49, 1-53, 1-55, 1-57, 1-65, 3-5, 7-13, 7-43, 7-45, 10-27
311103-0354	PARALLEL PIN ISO 2338 6M6X22 A1	6-13, 6-45, 6-47, 6-49
311103-0356	PARALLEL PIN ISO 2338 6M6X28 A1	7-23
311103-0357	PARALLEL PIN ISO 2338 6M6X30 A1	4-9, 4-11
311103-0365	PARALLEL PIN ISO 2338 6M6X50 A1	4-5
311103-0367	PARALLEL PIN ISO 2338 6M6X55 A1	6-45, 6-47, 6-49
311103-0400	PARALLEL PIN ISO 2338 8M6X18 A	1-91
311103-0401	PARALLEL PIN ISO 2338 8M6X20 A1	3-15, 12-27
311103-0405	PARALLEL PIN ISO 2338 8M6X30 A1	5-17, 6-29, 6-31, 6-33, 6-35, 6-37, 6-39, 6-41, 6-43
311103-0406	PARALLEL PIN ISO 2338 8M6X32 A1	7-13
311103-0454	PARALLEL PIN ISO 2338 10M6X20 A1	6-63, 12-27
311103-0458	PARALLEL PIN ISO 2338 10M6X30 A1	6-7, 6-17, 6-45, 6-47, 6-49
311103-0464	PARALLEL PIN ISO 2338 10M6X45 A1	3-21
311103-1274	PARALLEL PIN ISO 2338 4M6X24 A1	4-9, 4-11
311103-1355	PARALLEL PIN ISO 2338 6M6X24 A1	1-61, 6-13
311103-1456	PARALLEL PIN ISO 2338 10M6X24 A1	3-27, 6-63
311112-0208	SPRING PIN, ISO 8752 3X16 A2	2-11
311112-0255	SPRING PIN, ISO 8752 4X18 A2	6-67, 6-69
311112-0256	SPRING PIN, ISO 8752 4X20 A2	2-11
311112-0312	SPRING PIN, ISO 8752 5X28 A2	1-63
311112-0345	SPRING PIN, ISO 8752 6X32 A2	1-27
311112-0347	SPRING PIN, ISO 8752 6X40 A2	1-61
311112-0349	SPRING PIN, ISO 8752 6X50 A2	5-17
311520-0320	RIVET, BLANK 2,4X6	9-41
312104-0379	SCREW M6S M6X45H FZB	1-13, 1-21
312105-0285	SCREW, M6S ISO 4017 M4X6 A4 70	1-71, 6-67, 6-69, 6-75, 7-37, 7-39, 7-41
312105-0287	SCREW, M6S ISO 4017 M4X8 A4 70	1-35, 4-33, 4-35, 5-57, 6-13, 7-21, 10-29, 12-25
312105-0289	SCREW, M6S ISO 4017 M4X10 A4 70	1-31, 1-33, 4-9, 4-11, 4-33, 4-35, 4-47, 8-5, 8-7, 8-21, 8-23
312105-0291	SCREW, M6S ISO 4017 M4X12 A4 70	1-89, 2-11, 2-13, 4-23, 4-27, 5-59, 7-7, 7-17
312105-0293	SCREW, M6S ISO 4017 M4X16 A4 70	4-29, 4-31, 4-33, 4-35, 4-37, 4-39, 4-41, 6-75
312105-0295	SCREW, M6S ISO 4017 M4X20 A4 70	1-83, 1-89, 7-21
312105-0297	SCREW, M6S ISO 4017 M4X25 A4 70	4-21

Part No	Description	Page No
312105-0323 ..	SCREW, M6S ISO 4017 M5X8 A4 80	4-9, 4-11, 4-29, 4-33, 4-35, 4-37, 4-41, 6-67, 6-69
312105-0325 ..	SCREW, M6S ISO 4017 M5X10 A4 80	1-11, 1-65, 4-29, 4-31, 4-33, 4-35, 4-37, 4-41, 6-67, 6-69, 8-5, 8-7, 8-21, 8-23, 10-27
312105-0327 ..	SCREW, M6S ISO 4017 M5X12 A4 80	1-31, 1-33, 1-61, 2-5, 2-7, 4-9, 4-11, 4-19, 4-21, 4-29, 4-31, 4-33, 4-35, 4-37, 4-39, 4-41, 4-43, 4-45, 5-147, 7-13, 7-25, 7-27, 8-11, 8-15, 8-17, 8-19, 8-27, 10-11, 12-15
312105-0328 ..	SCREW M6S ISO 4017 M5X14 A4 80	5-47, 10-29
312105-0329 ..	SCREW, M6S ISO 4017 M5X16 A4 80	1-31, 1-33, 1-93, 1-95, 2-5, 2-7, 3-27, 4-13, 4-21, 4-29, 4-31, 4-33, 4-35, 4-37, 4-39, 4-41, 4-43, 4-45, 5-45, 8-5, 8-7, 8-13, 8-21, 8-23, 8-25, 12-21
312105-0331 ..	SCREW, M6S ISO 4017 M5X20 A4 80	2-5, 2-7, 2-15, 3-23, 4-9, 4-11, 4-13, 4-31, 4-39, 5-47, 6-19, 7-43, 7-45
312105-0332 ..	SCREW, M6S ISO 4017 M5X22 A4 70	4-5
312105-0333 ..	SCREW, M6S ISO 4017 M5X25 A4 80	4-5, 4-15, 6-13
312105-0335 ..	SCREW, M6S ISO 4014 M5X30 A4 80	6-67, 6-69
312105-0339 ..	SCREW, M6S ISO 4014 M5X40 A4 80	2-5, 2-7
312105-0343 ..	SCREW, M6S ISO 4014 M5X60 A4 80	1-37
312105-0364 ..	SCREW, M6S ISO 4017 M6X10 A4 80	1-13, 1-21, 1-31, 1-33, 6-45, 6-47, 6-49, 10-33, 10-35
312105-0366 ..	SCREW, M6S ISO 4017 M6X12 A4 80	1-11, 1-19, 1-23, 1-71, 1-91, 1-93, 2-11, 3-25, 4-29, 4-31, 4-33, 4-35, 4-37, 4-41, 5-7, 5-9, 5-11, 5-13, 5-35, 5-127, 5-129, 5-133, 5-143, 5-147, 6-17, 6-45, 6-47, 6-49, 7-7, 7-17, 10-29, 10-31
312105-0367 ..	SCREW, M6S ISO 4017 M6X14 A4 80	10-29
312105-0368 ..	SCREW, M6S ISO 4017 M6X16 A4 80	1-33, 1-35, 1-71, 1-91, 2-15, 2-17, 3-13, 4-9, 4-11, 4-19, 4-43, 4-45, 5-7, 5-9, 5-11, 5-13, 5-19, 5-23, 5-25, 5-27, 5-29, 5-51, 5-57, 5-87, 6-11, 6-67, 6-69, 7-9, 7-23, 8-5, 8-7, 8-21, 8-23, 9-5, 9-27, 10-27, 12-11, 12-25
312105-0370 ..	SCREW, M6S ISO 4017 M6X20 A4 80	1-31, 1-33, 1-47, 1-53, 1-57, 1-61, 1-63, 1-67, 1-69, 1-91, 1-95, 2-5, 2-7, 2-15, 2-17, 3-5, 3-11, 3-13, 3-23, 4-9, 4-11, 4-29, 4-31, 4-33, 4-35, 4-37, 4-39, 4-41, 5-11, 5-13, 5-15, 5-35, 5-81, 5-89, 5-91, 6-63, 7-23, 7-43, 7-45, 8-5, 8-7, 8-9, 8-21, 8-23, 10-7, 10-27
312105-0372 ..	SCREW, M6S ISO 4017 M6X25 A4 80	1-31, 1-61, 1-91, 2-5, 2-7, 2-15, 3-7, 3-13, 3-23, 3-25, 3-27, 5-7, 5-9, 5-57, 5-99, 5-101, 5-153, 6-9, 6-67, 6-69, 7-11, 7-15, 8-5, 8-7, 8-21, 8-23, 10-7, 12-25
312105-0374 ..	SCREW, M6S ISO 4014 M6X30 A4 80	1-15, 1-49, 1-57, 3-7, 3-9, 3-21, 5-59, 5-145, 6-45, 6-47, 6-49, 7-23
312105-0378 ..	SCREW, M6S ISO 4014 M6X40 A4 80	2-5, 2-7, 2-15, 5-17, 7-13, 7-29, 10-33, 10-35
312105-0379 ..	SCREW, M6S ISO 4014 M6X45 A4 80	1-61, 7-43, 7-45
312105-0380 ..	SCREW, M6S ISO 4014 M6X50 A4 80	10-27
312105-0382 ..	SCREW, M6S ISO 4014 M6X60 A4 80	5-59
312105-0384 ..	SCREW, M6S ISO 4014 M6X70 A4 80	7-15
312105-0388 ..	SCREW, M6S ISO 4014 M6X90 A4 80	5-11, 5-13
312105-0390 ..	SCREW, M6S ISO 4014 M6X100 A4 80	4-5
312105-0447 ..	SCREW, M6S ISO 4017 M8X12 A4 80	5-51
312105-0449 ..	SCREW, M6S ISO 4017 M8X16 A4 80	3-29, 5-19, 10-29
312105-0451 ..	SCREW, M6S ISO 4017 M8X20 A4 80	1-13, 1-35, 1-45, 1-47, 1-55, 1-91, 2-13, 2-15, 3-9, 3-29, 5-23, 5-25, 5-27, 5-29, 5-35, 5-57, 5-61, 5-99, 5-101, 12-25, 12-27
312105-0453 ..	SCREW, M6S ISO 4017 M8X25 A4 80	1-25, 1-31, 1-47, 1-53, 1-91, 2-13, 3-9, 3-13, 3-15, 3-21, 3-25, 4-5, 4-43, 4-45, 5-19, 12-27
312105-0455 ..	SCREW, M6S ISO 4017 M8X30 A4 80	1-21, 1-31, 1-45, 1-55, 1-61, 1-63, 2-13, 3-9, 3-23, 3-27, 4-5, 4-43, 4-45, 5-17, 6-45, 6-47, 6-49
312105-0457 ..	SCREW, M6S ISO 4014 M8X35 A4 80	1-15, 1-31, 1-49, 1-57, 5-81, 6-29, 6-31, 6-33, 6-35, 6-37, 6-39, 6-41, 6-43, 6-51, 6-53, 6-55, 6-57, 6-59, 6-61
312105-0459 ..	SCREW, M6S ISO 4014 M8X40 A4 80	1-13, 1-15, 1-21, 1-45, 1-55, 1-61, 2-15, 3-21
312105-0460 ..	SCREW, M6S ISO 4014 M8X45 A4 80	1-15, 2-17
312105-0462 ..	SCREW, M6S ISO 4014 M8X55 A4 80	1-67, 1-69, 5-133
312105-0466 ..	SCREW, M6S ISO 4014 M8X75 A4 80	5-23, 5-25, 5-27, 5-29
312105-0469 ..	SCREW, M6S ISO 4014 M8X90 A4 80	1-25, 1-63
312105-0471 ..	SCREW, M6S ISO 4014 M8X100 A4 80	5-17
312105-0473 ..	SCREW, M6S ISO 4014 M8X110 A4 80	1-31, 1-33
312105-0475 ..	SCREW, M6S ISO 4014 M8X120 A4 80	1-61
312105-0495 ..	SCREW, M6S ISO 4017 M10X30 A4 80	4-9, 4-11
312105-0497 ..	SCREW, M6S ISO 4017 M10X35 A4 80	6-45, 6-47, 6-49
312105-0499 ..	SCREW, M6S ISO 4014 M10X40 A4 80	6-17
312105-0500 ..	SCREW, M6S ISO 4014 M10X45 A4 80	6-7, 6-17
312105-0501 ..	SCREW, M6S ISO 4014 M10X50 A4 80	6-45, 6-47, 6-49
312105-0515 ..	SCREW, M6S ISO 4014 M10X120 A4 80	2-13, 2-15
312105-0519 ..	SCREW, M6S ISO 4014 M10X150 A4 80	4-5
312108-0327 ..	SCREW EN 1665 TYPE F M5X12 A270	1-83
312108-0329 ..	SCREW EN 1665 TYPE F M5X16 A270	7-11
312108-0333 ..	SCREW EN 1665 TYPE F M5X25 A270	12-5
312108-0370 ..	SCREW EN 1665 TYPE F M6X20 A270	3-7
312108-0372 ..	SCREW EN 1665 TYPE F M6X25 A270	3-7
312108-0374 ..	SCREW EN 1665 TYPE F M6X30 A270	7-17
312108-0455 ..	SCREW EN 1665 TYPE F M8X30 A270	3-7
312109-0335 ..	SCREW, M6S ISO 4017 M5X30 A4 80	4-9, 4-11, 4-29, 4-37
312109-0339 ..	SCREW, M6S ISO 4017 M5X40 A4 80	4-31, 4-33, 4-35, 4-41
312109-0340 ..	SCREW, M6S ISO 4017 M5X45 A4 80	1-85, 1-87, 4-39
312109-0374 ..	SCREW, M6S ISO 4017 M6X30 A4 80	1-61, 3-27, 6-67, 6-69, 8-5, 8-7
312109-0376 ..	SCREW, M6S ISO 4017 M6X35 A4 80	2-5, 2-7, 2-15
312109-0378 ..	SCREW, M6S ISO 4017 M6X40 A4 80	4-5, 4-29, 4-31, 4-33, 4-35, 4-37, 4-39, 4-41
312109-0380 ..	SCREW, M6S ISO 4017 M6X50 A4 80	3-21, 4-5
312109-0386 ..	SCREW, M6S ISO 4017 M6X80 A4 80	8-5, 8-7, 8-21, 8-23
312109-0457 ..	SCREW, M6S ISO 4017 M8X35 A4 80	2-13, 7-13
312109-0459 ..	SCREW, M6S ISO 4017 M8X40 A4 80	1-33, 2-13, 2-17
312109-0461 ..	SCREW, M6S ISO 4017 M8X50 A4 80	3-9
312109-0463 ..	SCREW, M6S ISO 4017 M8X60 A4 80	2-13, 3-21, 4-43, 4-45
312109-0467 ..	SCREW, M6S ISO 4017 M8X80 A4 80	1-31, 1-33, 4-9, 4-11
312109-0500 ..	SCREW, M6S ISO 4017 M10X45 A4 80	6-63

Part No	Description	Page No
312109-0542 ..	SCREW M6S ISO 4017 M12X50 A280	1-49, 1-57
312109-0552 ..	SCREW M6S M12X100H A480	5-11, 5-13
312115-0222 ..	SCREW ISO4762 M3X8 A4 80	1-71, 4-23, 5-7, 5-9, 5-57, 12-25
312115-0228 ..	SCREW ISO4762 M3X16 A4 80	1-31, 1-33, 4-27, 8-11, 8-13, 8-15, 8-17, 8-19, 8-25, 8-27, 10-29
312115-0230 ..	SCREW ISO4762 M3X20 A4 80	4-43, 4-45, 5-11, 5-13, 8-5, 8-7, 8-21, 8-23, 10-29
312115-0232 ..	SCREW ISO4762 M3X25 A4 80	4-9, 4-11
312115-0287 ..	SCREW ISO4762 M4X8 A4 80	4-33, 4-35, 4-43, 4-45, 5-7, 5-9, 5-57, 12-25
312115-0289 ..	SCREW ISO4762 M4X10 A4 80	5-7, 5-9, 7-15
312115-0291 ..	SCREW ISO4762 M4X12 A4 80	2-11, 2-13, 4-43, 4-45, 5-57, 12-25
312115-0293 ..	SCREW ISO4762 M4X16 A4 80	1-65, 4-9, 4-11, 4-43, 4-45, 6-63, 7-21, 10-29
312115-0295 ..	SCREW ISO4762 M4X20 A4 80	4-23, 10-31
312115-0297 ..	SCREW ISO4762 M4X25 A4 80	3-5, 4-9, 4-11, 5-57, 5-81, 12-25
312115-0299 ..	SCREW ISO4762 M4X30 A4 80	4-9, 4-11, 9-41
312115-0303 ..	SCREW ISO4762 M4X40 A4 80	5-81
312115-0304 ..	SCREW ISO4762 M4X45 A4 80	9-43
312115-0325 ..	SCREW ISO4762 M5X10 A4 80	1-13, 1-21, 1-45, 1-55, 9-45, 9-73, 9-75
312115-0327 ..	SCREW ISO4762 M5X12 A4 80	1-65, 4-29, 4-31, 5-21, 5-57, 5-59, 9-7, 9-9, 9-11, 9-21, 9-23, 9-29, 9-31, 9-33, 9-47, 10-27, 12-7, 12-25
312115-0329 ..	SCREW ISO4762 M5X16 A4 80	4-9, 4-11, 4-15, 4-29, 4-31, 4-33, 4-35, 4-37, 4-39, 4-41
312115-0331 ..	SCREW ISO4762 M5X20 A4 80	4-5, 4-9, 4-11, 5-57, 10-27, 12-25
312115-0337 ..	SCREW ISO4762 M5X35 A4 80	5-81
312115-0364 ..	SCREW ISO4762 M6X10 A4 80	1-33, 1-91
312115-0366 ..	SCREW ISO4762 M6X12 A4 80	1-11, 1-19, 1-47, 1-53, 1-67, 1-69, 1-91, 4-43, 4-45, 6-67, 6-69, 6-75, 9-73, 9-81
312115-0367 ..	SCREW ISO4762 M6X14 A4 80	5-21
312115-0368 ..	SCREW ISO4762 M6X16 A4 80	3-5, 3-13, 3-15, 3-25, 4-9, 4-11, 4-15, 4-23, 7-17, 9-47
312115-0370 ..	SCREW ISO4762 M6X20 A4 80	2-13, 3-15, 3-23, 6-9, 6-45, 6-47, 6-49, 7-11, 7-13, 7-21
312115-0372 ..	SCREW ISO4762 M6X25 A4 80	1-45, 1-55, 4-29, 4-31, 4-33, 4-35, 4-37, 4-39, 4-41, 4-43, 4-45, 8-5, 8-7, 8-21, 8-23
312115-0374 ..	SCREW ISO4762 M6X30 A4 80	1-103, 1-21, 3-15, 4-29, 4-31, 4-33, 4-35, 4-37, 4-39, 4-41, 5-133, 12-11
312115-0376 ..	SCREW ISO4762 M6X35 A4 80	1-71
312115-0378 ..	SCREW ISO4762 M6X40 A4 80	7-13
312115-0379 ..	SCREW ISO4762 M6X45 A4 80	6-19
312115-0447 ..	SCREW ISO4762 M8X12 A4 80	1-57
312115-0451 ..	SCREW ISO4762 M8X20 A4 80	1-45, 1-55, 4-5, 4-9, 4-11, 4-29, 4-31, 4-33, 4-35, 4-37, 4-39, 4-41, 10-29
312115-0453 ..	SCREW ISO4762 M8X25 A4 80	1-45, 1-55, 3-17, 3-19, 4-43, 4-45, 6-19
312115-0455 ..	SCREW ISO4762 M8X30 A4 80	2-17, 5-11, 5-13
312115-0457 ..	SCREW ISO4762 M8X35 A4 80	1-45, 1-55, 4-43, 4-45
312115-0459 ..	SCREW ISO4762 M8X40 A4 80	1-49, 1-57
312115-0460 ..	SCREW ISO4762 M8X45 A4 80	2-13
312115-0461 ..	SCREW ISO4762 M8X50 A4 80	1-49, 1-57
312115-0467 ..	SCREW ISO4762 M8X80 A4 80	1-63
312115-0489 ..	SCREW ISO4762 M10X16 A4 80	1-49, 1-57, 4-29, 4-31, 4-33, 4-35, 4-37, 4-39, 4-41
312115-0493 ..	SCREW ISO4762 M10X25 A4 80	4-9, 4-11
312115-0495 ..	SCREW ISO4762 M10X30 A4 80	4-29, 4-31, 4-33, 4-35, 4-37, 4-39, 4-41
312115-0540 ..	SCREW ISO4762 M12X40 A4 80	5-11, 5-13
312122-0291 ..	SCREW ISO 1207 M4X12 NI PL BRASS	5-59
312125-0232 ..	SLOTTED HEAD SCREW, ISO1207 M3X25 A4	5-7, 5-9
312125-0287 ..	SLOTTED HEAD SCREW, ISO1207 M4X8 A4	2-17, 3-21, 3-25, 3-27, 6-17, 6-55, 6-57, 6-63, 7-13
312125-0289 ..	SCREW ISO 1207 M4X10 A4	5-63, 9-47, 9-73
312125-0291 ..	SLOTTED HEAD SCREW, ISO1207 M4X12 A4	4-5
312125-0323 ..	SLOTTED HEAD SCREW, ISO1207 M5X8 A4	1-15, 5-11, 5-13
312125-0325 ..	SCREW ISO 1207 M5X10 A4	9-51, 9-53, 9-67, 9-69, 9-71, 9-77, 9-79, 9-81, 9-83, 9-87, 9-89
312125-0331 ..	SLOTTED HEAD SCREW, ISO1207 M5X20 A4	2-17
312125-0366 ..	SLOTTED HEAD SCREW, ISO1207 M6X12 A4	1-13, 9-47
312155-0285 ..	SCREW DIN 7991 MF6S M4X6 A4 70	1-93, 1-95
312155-0287 ..	SCREW DIN 7991 MF6S M4X8 A4 70	9-41, 12-27
312155-0289 ..	SCREW DIN 7991 MF6S M4X10 A4 70	4-29, 4-31, 4-33, 4-35, 4-37, 4-39, 4-41, 4-43, 4-45, 7-33, 7-35, 7-37, 7-39, 7-41, 7-43, 7-45
312155-0291 ..	SCREW DIN 7991 MF6S M4X12 A4 70	4-9, 4-11
312155-0293 ..	SCREW DIN 7991 MF6S M4X16 A4 70	4-43, 4-45, 5-57, 12-25
312155-0295 ..	SCREW DIN 7991 MF6S M4X20 A4 70	4-29, 4-31, 4-33, 4-35, 4-37, 4-39, 4-41
312155-0297 ..	SCREW DIN 7991 MF6S M4X25 A4 70	4-31, 4-33, 4-35, 4-37, 4-39, 4-41, 5-81
312155-0325 ..	SCREW DIN 7991 MF6S M5X10 A4 70	6-9
312155-0327 ..	SCREW DIN 7991 MF6S M5X12 A4 70	1-39, 2-5, 2-7, 6-67, 6-69, 6-75, 8-21, 8-23
312155-0329 ..	SCREW DIN 7991 MF6S M5X16 A4 70	2-17, 4-25, 4-43, 4-45, 6-11, 7-9, 8-5, 8-7, 10-41
312155-0331 ..	SCREW DIN 7991 MF6S M5X20 A4 70	4-15
312155-0335 ..	SCREW DIN 7991 MF6S M5X30 A4 70	4-25
312155-0366 ..	SCREW DIN 7991 MF6S M6X12 A4 70	4-15, 4-29, 4-31, 4-33, 4-35, 4-37, 4-39, 4-41, 5-57, 12-25
312155-0368 ..	SCREW DIN 7991 MF6S M6X16 A4 70	1-91, 4-15, 4-17, 4-29, 4-31, 4-33, 4-35, 4-37, 4-39, 4-41, 7-9, 7-15, 7-25, 7-27, 8-5, 8-7, 8-21, 8-23
312155-0370 ..	SCREW DIN 7991 MF6S M6X20 A4 70	2-5, 2-7, 4-15, 4-43, 4-45, 5-51, 5-135, 5-149, 5-151, 7-23
312155-0372 ..	SCREW DIN 7991 MF6S M6X25 A4 70	4-43, 4-45
312155-0374 ..	SCREW DIN 7991 MF6S M6X30 A4 70	1-91
312155-0376 ..	SCREW DIN 7991 MF6S M6X35 A4 70	5-93, 5-95
312155-0449 ..	SCREW DIN 7991 MF6S M8X16 A4 70	1-35
312155-0451 ..	SCREW DIN 7991 MF6S M8X20 A4 70	6-11
312155-0453 ..	SCREW DIN 7991 MF6S M8X25 A4 70	3-13, 3-23, 5-57, 12-25
312155-0491 ..	SCREW DIN 7991 MF6S M10X20 A4 70	4-9, 4-11
312155-0501 ..	SCREW DIN 7991 MF6S M10X50A4 70	4-9, 4-11
312318-0283 ..	SET SCREW, CUP END ISO4029 M4X4 A4	1-63
312318-0285 ..	SET SCREW, CUP END ISO4029 M4X6 A4	1-25, 6-67, 6-69
312318-0287 ..	SET SCREW, CUP END ISO4029 M4X8 A4	4-23, 5-19

Part No	Description	Page No
312318-0289 ..	SET SCREW, CUP END ISO4029 M4X10 A4	8-5, 8-7, 8-21, 8-23
312318-0323 ..	SET SCREW, CUP END ISO4029 M5X8 A4	4-43, 4-45
312318-0360 ..	SET SCREW, CUP END ISO4029 M6X6 A4	1-63, 5-19
312318-0370 ..	SET SCREW, CUP END ISO4029 M6X20 A4	9-47
312318-0447 ..	SET SCREW, CUP END ISO4029 M8X12 A4	1-47, 1-53
312318-0449 ..	SET SCREW, CUP END ISO4029 M8X16 A4	6-45, 6-47, 6-49
312605-0310 ..	HEXAGON NUT, M6M M3 A280	1-25, 5-11, 5-13
312605-0312 ..	HEXAGON NUT, M6M M4 A280	1-89, 4-29, 4-31, 4-33, 4-35, 4-37, 4-41, 5-159, 12-27
312605-0314 ..	HEXAGON NUT, M6M M5 A280	4-5, 4-15, 5-45, 5-47, 5-59, 5-89, 5-91, 5-117, 5-119, 9-25, 9-45, 12-15, 12-21
312605-0316 ..	HEXAGON NUT, M6M M6 A280	1-61, 1-95, 3-7, 3-15, 4-43, 4-45, 5-7, 5-9, 5-11, 5-13, 5-99, 5-101, 5-127, 5-129, 5-133, 5-143, 5-149, 8-5, 8-7, 8-21, 8-23, 9-41, 9-43, 10-27, 10-33, 10-35
312605-0318 ..	HEXAGON NUT, M6M M8 A280	1-63, 3-9, 4-9, 4-11, 4-43, 4-45
312605-0320 ..	HEXAGON NUT, M6M M10 A280	4-5, 4-9, 4-11, 6-45, 6-47, 6-49, 7-17
312605-0322 ..	HEXAGON NUT, M6M M12 A280	4-9, 4-11
312605-0326 ..	HEXAGON NUT, M6M M20 A280	4-43, 4-45
312607-0312 ..	HEXAGON NUT, EN 24032 M6M M4 A480	10-31
312607-0314 ..	HEXAGON NUT, EN 24032 M6M M5 A480	3-23
312607-0316 ..	HEXAGON NUT, EN 24032 M6M M6 A480	4-5
312607-0318 ..	HEXAGON NUT, EN 24032 M6M M8 A480	3-21, 3-29, 5-23, 5-25, 5-27, 5-29
312607-0326 ..	HEXAGON NUT, EN 24032 M6M M20 A480	1-57
312607-0332 ..	HEXAGON NUT, EN 24032 M6M M30 A480	4-5, 5-11, 5-13
312625-0316 ..	HEXAGON THIN NUT, EN 24035 ML6M M6 A4	7-21
312625-0318 ..	HEXAGON THIN NUT, EN 24035 ML6M M8 A4	1-31
312625-0326 ..	HEXAGON THIN NUT, EN 24035 ML6M M20 A4	1-39
312625-0330 ..	HEXAGON THIN NUT, EN 24035 ML6M M27 A4	1-45, 1-55
312635-0320 ..	NUT M6M 10X1 STAINLESS A2 80	7-21
312705-0310 ..	NUT HEX. DOMED CAP MHM-6 M3 A2	4-43, 4-45
312705-0312 ..	NUT HEX. DOMED CAP MHM-6 M4 A280	4-29, 4-31, 4-33, 4-35, 4-37, 4-39, 4-41
312705-0314 ..	NUT HEX. DOMED CAP MHM-6 M5 A280	4-9, 4-11, 4-19, 4-43, 4-45, 8-5, 8-7, 8-21, 8-23
312705-0316 ..	HEX. DOMED CAP MHM-6 M6 A280	8-5, 8-7, 8-21, 8-23
312705-0318 ..	NUT HEX. DOMED CAP MHM-6 M8 A280	1-31, 1-67, 1-69, 4-43, 4-45
312705-0320 ..	NUT HEX. DOMED CAP MHM-6 M10 A280	7-17
312810-0310 ..	HEXAGON NUT, NY-LOCK M3 FZB	4-43, 4-45, 8-5, 8-7, 8-21, 8-23
312810-0312 ..	HEXAGON NUT, NY-LOCK M4 FZB	4-15, 4-27, 4-29, 4-31, 4-33, 4-35, 4-37, 4-39, 4-41, 4-43, 4-45
312810-0314 ..	HEXAGON NUT, NY-LOCK M5 FZB	4-15, 4-17, 4-19, 4-21, 4-43, 4-45
312810-0316 ..	HEXAGON NUT, NY-LOCK M6 FZB	4-15, 4-43, 4-45
312812-0312 ..	HEXAGON NUT, NY-LOCK M4 A4 80	5-81, 6-75, 9-41
312812-0314 ..	HEXAGON NUT, NY-LOCK M5 A4 80	2-5, 2-7, 2-11, 2-17, 5-81, 5-135, 5-149, 5-151, 6-75, 7-21, 9-43, 12-5
312812-0316 ..	HEXAGON NUT, NY-LOCK M6 A4 80	2-5, 2-7, 2-15, 3-15, 5-11, 5-13, 5-115, 5-153, 7-15, 10-27
312812-0318 ..	HEXAGON NUT, NY-LOCK M8 A4 80	1-37, 1-45, 1-55, 5-11, 5-13, 5-19, 5-81, 5-99, 5-101
312812-0320 ..	HEXAGON NUT, NY-LOCK M10 A4 80	1-37
312812-0322 ..	HEXAGON NUT, NY-LOCK M12 A4 80	2-19
315103-0124 ..	WASHER PLAIN, 3,2X/6X0,5 BR NI PL	4-27, 4-43, 4-45, 8-5, 8-7, 8-11, 8-13, 8-15, 8-17, 8-19, 8-21, 8-23, 8-27
315103-0136 ..	WASHER PLAIN, 4,3X8X0,8 BR NI PL	4-9, 4-11, 4-13, 4-21, 4-23, 4-27, 4-29, 4-31, 4-33, 4-35, 4-37, 4-39, 4-41, 4-43, 4-45, 8-5, 8-7, 8-21, 8-23
315103-0146 ..	WASHER PLAIN, 5,3X10X1 BR NI PL	4-9, 4-11, 4-13, 4-15, 4-19, 4-21, 4-29, 4-31, 4-33, 4-35, 4-37, 4-39, 4-41, 4-43, 4-45, 8-5, 8-7, 8-11, 8-13, 8-15, 8-17, 8-19, 8-21, 8-23, 8-25, 8-27
315103-0153 ..	WASHER PLAIN, 6,4X12X1,5 BR NI PL	4-9, 4-11, 4-15, 4-19, 4-43, 4-45, 8-5, 8-7, 8-9, 8-21, 8-23
315103-0165 ..	WASHER PLAIN, 8,4X15X1,5 BR NI PL	4-9, 4-11, 4-43, 4-45
315103-0173 ..	WASHER PLAIN, 10,5X22X2 BR NI PL	4-9, 4-11
315105-0124 ..	WASHER PLAIN, 3,2X6X0,5 A4 BRB	1-31, 1-33, 1-71, 5-7, 5-9
315105-0136 ..	WASHER PLAIN, 4,3X9X0,8 A4 BRB	1-31, 1-33, 1-35, 1-71, 1-83, 2-11, 2-13, 3-5, 5-7, 5-9, 5-59, 5-81, 5-159, 6-13, 6-63, 7-7, 7-17, 7-21, 7-37, 7-39, 7-41, 9-41, 9-43, 9-47, 10-29, 10-31
315105-0146 ..	WASHER PLAIN, 5,3X10X1 A4 BRB	1-11, 1-13, 1-21, 1-31, 1-33, 1-45, 1-55, 1-61, 1-65, 2-5, 2-7, 2-11, 2-15, 2-17, 3-27, 4-5, 5-45, 5-47, 5-59, 5-81, 5-89, 5-91, 5-117, 5-119, 5-135, 5-147, 5-151, 6-13, 6-19, 6-67, 6-69, 6-75, 7-13, 7-25, 7-43, 7-45, 9-25, 9-43, 9-45, 9-51, 9-53, 9-67, 9-69, 9-71, 9-73, 9-75, 9-77, 9-79, 9-81, 9-83, 9-87, 9-89, 10-11, 10-27, 12-15, 12-21
315105-0153 ..	WASHER PLAIN, 6,4X12X1,5 A4 BRB	1-11, 1-13, 1-15, 1-19, 1-21, 1-23, 1-31, 1-33, 1-35, 1-47, 1-49, 1-53, 1-57, 1-61, 1-63, 1-67, 1-69, 1-71, 1-91, 1-93, 1-95, 2-5, 2-7, 2-15, 2-17, 3-5, 3-9, 3-23, 3-25, 3-27, 4-5, 5-7, 5-9, 5-11, 5-13, 5-15, 5-17, 5-19, 5-21, 5-51, 5-57, 5-59, 5-81, 5-87, 5-89, 5-91, 5-99, 5-101, 5-115, 5-127, 5-129, 5-133, 5-143, 5-147, 5-149, 5-153, 6-11, 6-17, 6-63, 6-67, 6-69, 7-9, 7-11, 7-13, 7-15, 7-21, 7-23, 7-43, 7-45, 9-41, 9-43, 9-47, 9-81, 10-7, 10-27, 10-31, 12-11, 12-25
315105-0156 ..	WASHER PLAIN, 6,7X14X1,5 A4 BRB	5-11, 5-13, 10-27
315105-0165 ..	WASHER PLAIN, 8,4X16X1,6 A4 BRB	1-13, 1-15, 1-21, 1-25, 1-31, 1-35, 1-37, 1-45, 1-49, 1-55, 1-57, 1-61, 1-63, 1-91, 2-13, 2-17, 3-9, 3-13, 3-21, 3-23, 3-25, 3-27, 3-29, 4-5, 5-17, 5-19, 5-35, 5-51, 5-57, 5-99, 5-101, 6-45, 6-47, 6-49, 6-51, 6-53, 6-55, 6-57, 6-59, 6-61, 7-13, 9-47, 10-29, 12-25
315105-0173 ..	WASHER PLAIN, 10,5X22X2 A4 BRB	1-37, 2-13, 6-63
315105-0178 ..	WASHER PLAIN, 13X24X2,5 A4 BRB	1-15, 1-49, 1-57, 2-19, 3-21
315105-0186 ..	WASHER PLAIN, 17X30X3 A4 BRB	1-15
315105-0192 ..	WASHER PLAIN, 21X36X3 A4 BRB	1-57
315105-0203 ..	WASHER PLAIN, 30X52X4 A4 BRB	1-45, 1-55
315106-0124 ..	WASHER PLAIN, M3 ISO7089-3-200 HV A4	5-45, 5-47, 5-57, 12-21, 12-25
315106-0136 ..	WASHER PLAIN, M4 ISO7089-4-200 HV A4	1-89
315106-0146 ..	WASHER PLAIN, M5 ISO7089-5-200 HV A4	1-85, 1-87, 1-93, 1-95, 7-21
315106-0153 ..	WASHER PLAIN, M6 ISO7089-6-200 HV A4	3-7, 3-11, 3-13, 3-15, 5-145, 6-9, 6-45, 6-47, 6-49, 7-17, 7-29, 10-33, 10-35
315106-0165 ..	WASHER PLAIN, M8 ISO7089-8-200 HV A4	1-47, 1-53, 3-15, 5-61, 6-19, 6-29, 6-31, 6-33, 6-35, 6-37, 6-39, 6-41, 6-43
315106-0173 ..	WASHER PLAIN, M10 ISO7089-10-200 HV A4	6-7, 6-17, 6-45, 6-47, 6-49
315106-0192 ..	WASHER PLAIN, M20 ISO7089-20-200 HV A4	1-39

Part No	Description	Page No
315115-0165 ..	WASHER PLAIN, TBRB 8,4/16 H=3	1-45, 1-55, 1-61, 1-63, 2-17, 5-17, 5-19
315115-0173 ..	WASHER PLAIN, TBRB 10,5/22 H=4	2-15, 6-63
315121-0153 ..	WASHER PLAIN, TBRSB 6,4/22 H=4	10-7
315125-0146 ..	WASHER HIGH, TBRSB 5.3X15X1 A4	4-9, 4-11, 4-17, 4-19
315125-0153 ..	WASHER HIGH, TBRSB 6,4X22X4 A4	1-91, 2-5, 2-7, 2-11, 5-7, 5-9, 5-59, 5-153, 7-7, 7-9, 7-11, 7-17, 8-5, 8-7, 8-21, 8-23
315125-0165 ..	WASHER HIGH, TBRSB 8,4X26X5 A4	1-31, 1-33, 2-15, 3-21, 4-5, 5-11, 5-13, 5-23, 5-25, 5-27, 5-29, 5-81, 5-133
315125-0173 ..	WASHER HIGH, TBRSB 10,5X28X6 A4	1-49, 1-57, 7-17
315202-0204 ..	O-RING 5,3X2,4 MM	12-5
315202-0602 ..	O-RING 44,04X3,53 MM	1-45, 1-55
315202-0702 ..	O-RING 12,42X1,78 MM	2-17
315202-0705 ..	O-RING 17,17X1,78 MM	1-31, 1-33, 1-91
315202-0710 ..	O-RING 25,12X1,78 MM	2-15
315202-0713 ..	O-RING 29,87X1,78 MM	1-31, 1-33
315202-0716 ..	O-RING 34,65X1,78 MM	6-13, 7-7, 7-9, 7-17
315202-0717 ..	O-RING 20,29X2,62 MM	1-13, 1-21
315202-0732 ..	O-RING 44,12X2,62 MM	1-47, 1-53
315202-0733 ..	O-RING 45,69X2,62 MM	1-31, 1-33
315202-0741 ..	O-RING 58,42X2,62 MM	1-13, 1-21
315221-0169 ..	RADIAL SEAL 30X47X7 MM	2-15
315221-0175 ..	RADIAL SEAL 35X47X7 MM	2-15
315221-0192 ..	RADIAL SEAL 45X62X8 MM	1-31, 1-33
315221-0196 ..	RADIAL SEAL 48X62X8 MM	1-31, 1-33
315221-0198 ..	RADIAL SEAL 50X65X8 MM	1-13, 1-21
315230-0193 ..	BEARING SEAL G15X23X3 MM	7-25, 7-27
315230-0274 ..	BEARING SEAL G22X30X4 MM	7-25, 7-27
315230-0330 ..	SEAL RING G 28X37X4	7-7, 7-9, 7-17
315230-0353 ..	BEARING SEAL G30X40X4 MM	1-91
315239-0110 ..	NYLON WASHER G1/4, 1/4RRP	5-63
315400-0001 ..	TUBE PUN-H-6X1-BL	1-37, 1-67, 1-69, 5-69, 5-71, 5-81, 5-103, 5-105, 5-107, 5-109, 5-111
315400-0004 ..	TUBE PUN-H-8X1,25-BL	3-5, 4-21, 5-67, 5-69, 5-71, 5-77, 5-79, 7-29, 10-27, 10-33, 10-35
315400-0009 ..	TUBE PUN-H-10X1,5-SW	5-63
315400-0010 ..	TUBE PUN-H-12X2-BL	4-21, 5-69, 5-71
315400-0013 ..	TUBE PUN-H-16-2,5-BL	5-79
315400-0016 ..	TUBE PUN-H-4X0,75-BL	4-21, 5-69, 5-71, 7-29, 10-27, 10-33, 10-35
315402-0156 ..	LOCK WASHER, DIN127B 6,5 A4, 1/4	6-67, 6-69
315701-0198 ..	PARALLEL KEY W. ROUND ENDS, 5X5X14 MM	1-91
315701-0208 ..	PARALLEL KEY W. ROUND ENDS, 5X5X40 MM	1-91
315701-0209 ..	PARALLEL KEY W. ROUND ENDS, 5X5X45 MM	8-5, 8-7, 8-21, 8-23
315701-0238 ..	PARALLEL KEY W. ROUND ENDS, 6X6X36 MM	8-5, 8-7, 8-21, 8-23
315701-0241 ..	PARALLEL KEY W. ROUND ENDS, 6X6X50 MM	4-43, 4-45
315701-0267 ..	PARALLEL KEY W. ROUND ENDS, 8X7X30 MM	4-9, 4-11
315701-0371 ..	PARALLEL KEY W. ROUND ENDS, 14X9X90 MM	1-49, 1-57
315705-0232 ..	PARALLEL KEY W. ROUND ENDS, 6X6X20 MM	1-31, 1-33, 5-19
315705-0234 ..	PARALLEL KEY W. ROUND ENDS, 6X6X25 MM	1-39, 7-9
315705-0237 ..	PARALLEL KEY W. ROUND ENDS, 6X6X32 MM	4-5
315705-0239 ..	PARALLEL KEY W. ROUND ENDS, 6X6X40 MM	1-25, 1-47, 1-53, 1-63
315705-0267 ..	PARALLEL KEY W. ROUND ENDS, 8X7X30 MM	1-61
315705-0296 ..	PARALLEL KEY W. ROUND ENDS, 10X8X25 MM	1-21
315705-0303 ..	PARALLEL KEY W. ROUND ENDS, 10X8X50 MM	1-13, 1-15
315705-0307 ..	PARALLEL KEY W. ROUND ENDS, 10X8X70 MM	1-45, 1-55, 2-13
315741-0102 ..	RETAINING RING, DIN 705 A2 6	12-5
315741-0216 ..	RETAINING RING, DIN 705 A4 20	1-63, 5-19
315743-0008 ..	ÖLFLEX CONTROL TM 3G1,5, 281603	5-97
315743-0009 ..	ÖLFLEX CONTROL TM 4G1,5, 281604	4-43, 4-45, 5-97, 8-5, 8-7, 8-21, 8-23
315743-0024 ..	ÖLFLEX CONTROL TM 5G6, 281005	5-97
315744-0040 ..	MINIATURE CIRCUIT BREAKER, FAZ-C4/1-NA	9-29, 9-31, 9-33
315744-0060 ..	MINIATURE CIRCUIT BREAKER, FAZ-C6/1-NA	9-21, 9-23, 9-29, 9-31, 9-33
315744-0100 ..	MINIATURE CIRCUIT BREAKER, FAZ-C10/1-NA	9-29, 9-31, 9-33
315745-0100 ..	MINIATURE CIRCUIT BREAKER, FAZ-C10/2-NA	9-29, 9-31, 9-33
315746-0060 ..	MINIATURE CIRCUIT BREAKER, FAZ-C6/3-NA	9-29, 9-31, 9-33
315746-0200 ..	MINIATURE CIRCUIT BREAKER, FAZ-C20/3-NA	9-29, 9-31, 9-33
315746-0250 ..	MINIATURE CIRCUIT BREAKER, FAZ-C25/3-NA	9-29, 9-31, 9-33
315751-0116 ..	RETAINING RING FOR SHAFT DIN 471 20 SS	1-37, 1-39, 3-11
315751-0130 ..	RETAINING RING FOR SHAFT DIN 471 50 SS	1-45, 1-55
315752-0136 ..	RETAINING RING FOR BORE DIN 472 62	1-15, 1-49, 1-57
315753-0121 ..	RETAINING RING FOR BORE DIN 472 28 SS	7-25, 7-27
315753-0123 ..	RETAINING RING FOR BORE DIN 472 32 SS	4-43, 4-45
315753-0130 ..	RETAINING RING FOR BORE DIN 472 47 SS	2-15, 4-47
315755-0106 ..	RETAINING RING SHAFT DIN 6799 4 SS	2-5, 2-7, 5-21
315755-0109 ..	RETAINING RING SHAFT DIN 6799 7 SS	6-13
315756-0009 ..	ÖLFLEX CONTROL TM CY 4G1,5, 281604CY	4-9, 4-11, 5-97
318871-0105 ..	KNOB CIRCULAR, EXT THREAD, NO. 8302-6150	5-57, 12-25
321133-0260 ..	BUSHING IGLIDUR G 20X23X20	4-5
321133-0420 ..	BUSHING IGLIDUR G 40X44X40	4-5
321153-0500 ..	FLANGE BUSHING, IGLIDUR G 70X75X50	5-17
321154-0180 ..	FLANGE BUSHING, IGLIDUR W300 12X14X12	6-67, 6-69
321155-0062 ..	FLANGE BUSHING, IGLIDUR X 6X8X8	6-75
321156-0188 ..	FLANGE BUSHING, IGLIDUR H370 12X14X15	5-57, 12-25
321158-0060 ..	FLANGE BUSHING, IGLIDUR J 6X8X6	7-21, 7-25, 7-27
321158-0142 ..	FLANGE BUSHING, IGLIDUR J 10X12X12	7-21
321158-0180 ..	FLANGE BUSHING, IGLIDUR J 12X14X12	7-23
321306-0104 ..	BALL BEARING 20/42X12	1-31, 1-33

Part No	Description	Page No
321306-0105 ..	BALL BEARING 25/47X12	2-15
321308-0101 ..	BALL BEARING 12/28X8	7-25, 7-27
321309-0102 ..	BALL BEARING 15/35X11	7-7, 7-9, 7-17
321309-0105 ..	BALL BEARING 25/52X15	1-15, 1-49, 1-57
321314-0105 ..	BALL BEARING 25/62X17	1-15, 1-49, 1-57
321330-0105 ..	ANG. BALL BEAR 25/52X20,6	1-13, 1-21
342700-0109 ..	NIPPLE, EXT.THREAD, HEXAGON, G1/8-G1/8	4-21
342700-0110 ..	NIPPLE, EXT.THREAD, HEXAGON, G1/4-G1/4	10-47
342700-0203 ..	NIPPLE, EXT.THREAD, HEXAGON, G3/8-G1/4	10-47
342713-0209 ..	PLUG, EXT THREAD HEX SOCKET 8638-00-180	4-33
342715-0102 ..	BLIND PLUG 6 MM	9-41
342923-0132 ..	STRAIGHT COUPL.,INT.THREADED 10/8-G1/4"	5-63
342946-0133 ..	T-COUPLING,UNION 10/8	5-63
342991-0102 ..	HOSE CLIP,WORM DRIVE TYPE (13)-20	10-45
342991-0108 ..	HOSE CLIP,WORM DRIVE TYPE (38)-50	5-59
344202-0003 ..	CABLE GLAND; MS-SC-M, 7-12,5MM, M20X1,5	1-39, 1-91, 4-9, 4-11
344224-0200 ..	BALL BEARING 10/26X8	8-5, 8-7, 8-21, 8-23
344224-0202 ..	BALL BEARING 15/32X9	4-43, 4-45
344224-0203 ..	BALL BEARING 17/35X10	6-13, 8-5, 8-7, 8-21, 8-23
344224-0204 ..	BALL BEARING 20/42X12	1-37, 4-43, 4-45
344224-0207 ..	BALL BEARING 35/62X14	4-9, 4-11
344253-0050 ..	SENSOR CABLE, EVT001	4-9, 4-11, 5-23, 5-25, 5-27, 5-29
344253-0100 ..	SENSOR CABLE, EVT002	1-33, 5-7, 5-9, 5-23, 5-25, 5-27, 5-29, 5-89, 5-91
344257-0006 ..	SENSOR CABLE, EVT143	4-9, 4-11
344257-0050 ..	SENSOR CABLE, EVT146	5-81
344261-0006 ..	SENSOR CABLE, EVT261	1-71, 4-9, 4-11
344261-0010 ..	SENSOR CABLE, EVT262	8-5, 8-7, 8-21, 8-23
344261-0020 ..	SENSOR CABLE, EVT263	8-5, 8-7, 8-21, 8-23
344261-0050 ..	SENSOR CABLE, EVT216	1-61, 4-43, 4-45, 5-23, 5-25, 5-27, 5-29, 12-15, 12-19
344262-0015 ..	SENSOR CABLE, EVT271	4-9, 4-11
344263-0020 ..	SENSOR CABLE, EVT239	5-57, 12-25
344266-0020 ..	SENSOR CABLE, EVT256	1-89
344267-0006 ..	SENSOR CABLE, EVT041	10-31
344267-0010 ..	SENSOR CABLE, EVT042	3-27, 6-17, 7-21
344267-0050 ..	SENSOR CABLE, EVT044	5-23, 5-25, 5-27, 5-29, 12-15, 12-19
344268-0015 ..	SENSOR CABLE, EVT120	3-25
344293-0030 ..	DEVICEN CAB.SAC-5P-M12MS/3,0-927/M12FSVA	4-9, 4-11
344295-0100 ..	DEVICENET CAB.,SAC-5P- 10,0-927/M12FS VA	5-7, 5-9
350001-0001 ..	PUSH-IN FITTING QS-F-M5-4	10-27
350001-0006 ..	PUSH-IN FITTING QS-F-G1/8-6	5-69, 5-71
350001-0007 ..	PUSH-IN FITTING QS-F-G1/8-8	5-69, 5-71
350001-0009 ..	PUSH-IN FITTING QS-F-G1/4-8	4-21
350001-0011 ..	PUSH-IN FITTING QS-F-G1/4-12	4-21, 5-69, 5-71
350001-0016 ..	PUSH-IN FITTING QS-F-G1/2-12	5-7, 5-9
350002-0001 ..	PUSH-IN L-FITTING QSL-F-M5-4	7-29, 10-33, 10-35
350002-0002 ..	PUSH-IN L-FITTING QSL-F-M5-6	5-69, 5-71
350002-0005 ..	PUSH-IN L-FITTING QSL-F-G1/8-4	4-21, 4-29, 4-35, 4-37, 4-41, 5-69, 5-71, 7-29, 10-33
350002-0006 ..	PUSH-IN L-FITTING QSL-F-G1/8-6	1-37, 1-67, 1-69, 4-31, 4-39
350002-0007 ..	PUSH-IN L-FITTING QSL-F-G1/8-8	5-67, 5-69, 5-71, 7-29, 10-33, 10-35
350002-0009 ..	PUSH-IN L-FITTING QSL-F-G1/4-8	5-69, 5-71, 5-77, 10-27
350002-0011 ..	PUSH-IN L-FITTING QSL-F-G1/4-12	4-21, 5-77
350002-0016 ..	PUSH-IN L-FITTING QSL-F-G1/2-12	5-75
350003-0007 ..	USH-IN FITTING QS-F-G1/4-8-I	3-5
350004-0005 ..	PUSH-IN L-FITTING QSL-F-12	5-69, 5-71
350005-0001 ..	PUSH-IN T-FITTING QST-F-4	10-35
350005-0002 ..	PUSH-IN T-FITTING QST-F-6	5-69, 5-71
350005-0003 ..	PUSH-IN T-FITTING QST-F-8	5-69, 5-71, 5-79
350005-0005 ..	PUSH-IN T-FITTING QST-F-12	5-69, 5-71
350006-0008 ..	PUSH-IN FITTING QS-F-12H-8	5-69, 5-71
350007-0005 ..	PUSH-IN T-FITTING QST-F-G1/8-4	4-21
350008-0006 ..	PUSH-IN FITTING QSF-F-G1/4-8	5-79
350011-0002 ..	PUSH-IN T-FITTING QST-F-8-6	5-69, 5-71
350013-0001 ..	PLUG QSC-4H	5-69, 5-71
350015-0002 ..	PUSH-IN Y-CONNECTOR QSY-F-6-4	7-29
350015-0003 ..	PUSH-IN Y-CONNECTOR QSY-F-8	3-5, 10-35
351150-0403 ..	CABLE OLFLEX 3X0,75 MM2 LIGHT/GREY	3-5, 5-97
351150-0405 ..	CABLE OLFLEX 5X0,75 MM2 LIGHT/GREY	5-97
351150-0406 ..	CABLE OLFLEX 7X0,75 MM2 LIGHT/GREY	5-97
351150-0407 ..	CABLE OLFLEX 12X0,75 MM2 LIGHT/GREY	5-97
351160-0102 ..	WIRE AWM 1X0,75 MM2 DARKBLUE	9-7, 9-9, 9-11, 9-29, 9-31, 9-33
351160-0105 ..	WIRE AWM 1X2,5 MM2 DARKBLUE	9-93, 12-33
351160-0106 ..	WIRE AWM 1X4 MM2 DARKBLUE	9-93
351161-0104 ..	WIRE AWM 1X1,5 MM2 LIGHTBLUE	9-93
351161-0105 ..	WIRE AWM 1X2,5 MM2 LIGHTBLUE	9-93
351161-0106 ..	WIRE AWM 1X4 MM2 LIGHTBLUE	9-93
351161-0107 ..	WIRE AWM 1X6 MM2 LIGHTBLUE	9-93
351161-0109 ..	WIRE AWM 1X16 MM2 LIGHTBLUE	9-93
351162-0102 ..	WIRE AWM 1X0,75 MM2 YELLOW-GREEN	9-93
351162-0104 ..	WIRE AWM 1X1,5 MM2 YELLOW-GREEN	9-93
351162-0105 ..	WIRE AWM 1X2,5 MM2 YELLOW-GREEN	9-93
351162-0106 ..	WIRE AWM 1X4 MM2 YELLOW-GREEN	9-93
351162-0107 ..	WIRE AWM 1X6 MM2 YELLOW-GREEN	9-93
351162-0108 ..	WIRE AWM 1X10 MM2 YELLOW-GREEN	9-93
351162-0109 ..	WIRE AWM 1X16 MM2 YELLOW-GREEN	9-93

Part No	Description	Page No
351164-0104 ..	WIRE AWM 1X1,5 MM2 BLACK	9-93
351164-0105 ..	WIRE AWM 1X2,5 MM2 BLACK	9-7, 9-9, 9-11, 9-29, 9-31, 9-33
351164-0106 ..	WIRE AWM 1X4 MM2 BLACK	9-93
351164-0107 ..	WIRE AWM 1X6 MM2 BLACK	9-7, 9-9, 9-11, 9-29, 9-31, 9-33
351164-0108 ..	WIRE AWM 1X10 MM2 BLACK	9-93
351164-0109 ..	WIRE AWM 1X16 MM2 BLACK	9-93
351423-0004 ..	CABLE UNITRONIC LICY 2X0,34	9-93
351423-0006 ..	CABLE UNITRONIC LICY 5X0,34	5-97
351424-0017 ..	CABLE ÖLFLEX HEAT 180 4G4 466343	5-97
351428-0009 ..	MOTOR FEEDBACK CABLE 2090-CFBM7DF-CEAA09	5-85, 5-97, 12-29
351429-1609 ..	MOTOR POWER CABLE 2090-CPWM7DF-16AA09	5-85, 5-97, 12-29
351501-0020 ..	ETHERNET PATCH CABLE, FL CAT5 PATCH 2,0	12-35
352113-0101 ..	CABLE TIE, BLACK 92X2,5 MM	5-63, 12-17
352113-0102 ..	CABLE TIE, BLACK 188X4,8 MM	4-5
352113-0104 ..	CABLE TIE, BLACK 300X4,8 MM	2-17, 3-21, 3-25, 3-27, 6-17, 6-55, 6-57, 6-63, 7-13
352113-0203 ..	ANCHOR PLATES FOR STRIPS, TM3S8-M	2-17, 3-21, 3-25, 3-27, 4-5, 6-17, 6-55, 6-57, 6-63, 9-73
352113-0204 ..	ANCHOR PLATES FOR STRIPS, TM3S25-M	5-11, 5-13, 5-159
352113-0205 ..	ANCHOR PLATES FOR STRIPS, TM2S8-C100	5-63, 6-17, 7-13
352113-0206 ..	ANCHOR PLATES FOR STRIPS, ABM100-AT	5-115
353001-0115 ..	END SLEEVE 2,5/14	12-33
353021-0212 ..	FEED THROUGH TERMINAL, WDU 2,5	9-45, 9-85, 9-91
353021-0214 ..	FEED THROUGH TERMINAL, WDU 6	9-45, 9-91
353021-0302 ..	TERMINAL, DLD 2,5/35	9-25
353022-0002 ..	TERMINAL WNT 4 10X3	9-89
353024-0204 ..	EARTH TERMINAL WPE 2,5	9-45, 9-87
353024-0205 ..	EARTH TERMINAL WPE 4	5-117, 5-119, 9-7, 9-9, 9-11, 9-21, 9-23, 9-29, 9-31, 9-33, 9-79, 9-87
353024-0206 ..	EARTH TERMINAL WPE 6	9-45, 9-87
353024-0207 ..	EARTH TERMINAL WPE 10	9-43, 9-87
353024-0209 ..	EARTH TERMINAL WPE 35	9-87
353024-0212 ..	EARTH TERMINAL WDK 2,5 PE	9-25
353031-0203 ..	END BRACKET, WEW 35/2	9-25, 9-45, 9-51, 9-55, 9-65, 9-85, 9-89, 9-91
353032-0004 ..	END PLATE, WAP 2,5-10, BEIGE	9-45, 9-85, 9-91
353032-0009 ..	END PLATE, WAP WDK 2,5	9-25, 9-55, 9-57, 9-59, 9-61, 9-63, 9-65
353032-0302 ..	END PLATE, AP DLD2,5 DB	9-25
353033-0104 ..	END PLATE, WHP2,5-35N/10X3 BL	9-89
353034-0030 ..	BRIDGE CONNECTOR WQV 2,5/10	5-117, 5-119, 9-25, 9-55, 9-57, 9-59, 9-61, 9-63, 9-65
353034-0032 ..	BRIDGE CONNECTOR WQV 6/10	9-91
353034-0042 ..	BRIDGE CONNECTOR WQV 2,5/3	9-91
353034-0404 ..	BRIDGE CONNECTOR Q 10 DLI	9-25
353041-0001 ..	BUS BAR RAIL 10X3MM SSCH	9-89
353041-0106 ..	HOLDER ZB35 K 5026.8	9-89
353101-0122 ..	CABLE SHOE 0,5-1,5MM2 M5 RED	5-59
353249-0004 ..	INSERT, SINGLE HOLE, E152 13	4-9, 4-11, 8-5, 8-7, 8-21, 8-23
353249-0012 ..	INSERT, SINGLE HOLE, EK154 11	4-43, 4-45, 5-7, 5-9, 5-59, 5-115
353249-0015 ..	INSERT, SINGLE HOLE, EK155 16	5-69, 5-71, 5-115
353249-0041 ..	INSERT, SOLID, E151 G	4-9, 4-11
353249-0054 ..	INSERT, SINGLE HOLE, EK156 25	5-7, 5-9, 5-115
353250-0016 ..	GLAND LOCK NUT, M16X1,5	9-41
353250-0020 ..	GLAND LOCK NUT, M20X1,5	5-69, 5-71
353250-0032 ..	GLAND LOCK NUT, M32X1,5	9-41
354000-0040 ..	MINIATURE CIRCUIT BREAKER, FAZ-C4/1	9-7, 9-9, 9-11
354000-0060 ..	MINIATURE CIRCUIT BREAKER, FAZ-C6/1	9-7, 9-9, 9-11, 9-21, 9-23
354000-0100 ..	MINIATURE CIRCUIT BREAKER, FAZ-C10/1	9-7, 9-9, 9-11
354001-0100 ..	MINIATURE CIRCUIT BREAKER, FAZ-C10/2	9-7, 9-9, 9-11
354002-0060 ..	MINIATURE CIRCUIT BREAKER, FAZ-C6/3	9-7, 9-9, 9-11
354002-0200 ..	MINIATURE CIRCUIT BREAKER, FAZ-C20/3	9-7, 9-9, 9-11
354002-0250 ..	MINIATURE CIRCUIT BREAKER, FAZ-C25/3	9-7, 9-9, 9-11
359000-0013 ..	WIRE MARKING, YELLOW, PA1/3"+"	12-33
359000-0023 ..	WIRE MARKING, YELLOW, PA1/3"-"	12-33
359000-0300 ..	WIRE MARKING, YELLOW, PA1/3"0"	12-33
359000-0301 ..	WIRE MARKING, YELLOW, PA1/3"1"	12-33
359000-0302 ..	WIRE MARKING, YELLOW, PA1/3"2"	12-33
359000-0303 ..	WIRE MARKING, YELLOW, PA1/3"3"	12-33
359000-0304 ..	WIRE MARKING, YELLOW, PA1/3"4"	12-33
359000-0305 ..	WIRE MARKING, YELLOW, PA1/3"5"	12-33
359000-0306 ..	WIRE MARKING, YELLOW, PA1/3"6"	12-33
359000-0307 ..	WIRE MARKING, YELLOW, PA1/3"7"	12-33
359000-0308 ..	WIRE MARKING, YELLOW, PA1/3"8"	12-33
359000-0309 ..	WIRE MARKING, YELLOW, PA1/3"9"	12-33
359009-0100 ..	CABLE MARKING, YELLOW, PK2/4"0"	12-17
359009-0101 ..	CABLE MARKING, YELLOW, PK 2/4"1"	12-17
359009-0102 ..	CABLE MARKING, YELLOW, PK 2/4"2"	12-17
359009-0103 ..	CABLE MARKING, YELLOW, PK 2/4"3"	12-17
359009-0104 ..	CABLE MARKING, YELLOW, PK 2/4"4"	12-17
359009-0105 ..	CABLE MARKING, YELLOW, PK 2/4"5"	12-17
359009-0106 ..	CABLE MARKING, YELLOW, PK 2/4"6"	12-17
359009-0107 ..	CABLE MARKING, YELLOW, PK 2/4"7"	12-17
359009-0108 ..	CABLE MARKING, YELLOW, PK 2/4"8"	12-17
359009-0109 ..	CABLE MARKING, YELLOW, PK 2/4"9"	12-17
359009-0200 ..	CABLE MARKING, YELLOW, PK 2/4" A"	12-17
359009-0201 ..	CABLE MARKING, YELLOW, PK 2/4" B"	12-17
359009-0202 ..	CABLE MARKING, YELLOW, PK 2/4" C"	12-17
359009-0203 ..	CABLE MARKING, YELLOW, PK 2/4" D"	12-17
359009-0204 ..	CABLE MARKING, YELLOW, PK 2/4" E"	12-17

Part No	Description	Page No
359009-0205 ..	CABLE MARKING, YELLOW, PK 2/4" F"	12-17
359009-0206 ..	CABLE MARKING, YELLOW, PK 2/4" G"	12-17
359009-0207 ..	CABLE MARKING, YELLOW, PK 2/4" H"	12-17
359009-0208 ..	CABLE MARKING, YELLOW, PK 2/4" I"	12-17
359009-0210 ..	CABLE MARKING, YELLOW, PK 2/4" K"	12-17
359009-0211 ..	CABLE MARKING, YELLOW, PK 2/4" L"	12-17
359009-0212 ..	CABLE MARKING, YELLOW, PK 2/4" M"	12-17
359009-0213 ..	CABLE MARKING, YELLOW, PK 2/4" N"	12-17
359009-0214 ..	CABLE MARKING, YELLOW, PK2/4" O"	12-17
359009-0215 ..	CABLE MARKING, YELLOW, PK 2/4" P"	12-17
359009-0216 ..	CABLE MARKING, YELLOW, PK 2/4" Q"	12-17
359009-0217 ..	CABLE MARKING, YELLOW, PK 2/4" R"	12-17
359009-0218 ..	CABLE MARKING, YELLOW, PK 2/4" S"	12-17
359009-0219 ..	CABLE MARKING, YELLOW, PK 2/4" T"	12-17
359009-0220 ..	CABLE MARKING, YELLOW, PK 2/4" U"	12-17
359009-0221 ..	CABLE MARKING, YELLOW, PK 2/4" V"	12-17
359009-0222 ..	CABLE MARKING, YELLOW, PK 2/4" W"	12-17
359009-0223 ..	CABLE MARKING, YELLOW, PK 2/4" X"	12-17
359009-0224 ..	CABLE MARKING, YELLOW, PK 2/4" Y"	12-17
359009-0225 ..	CABLE MARKING, YELLOW, PK 2/4" Z"	12-17
359011-0806 ..	MARKING, DEK 5 FW 1-200	9-25
359011-0807 ..	MARKING, DEK 5 FW 1-50	9-25, 9-45, 9-55, 9-57, 9-59, 9-61, 9-63, 9-65, 9-85, 9-87, 9-91
359011-0808 ..	MARKING, DEK 5FW 51-100	9-55
359011-0809 ..	MARKING, DEK 5 FW 101-150	9-25
359011-0811 ..	MARKING, DEK 5 FW 201-250	9-25
359011-0817 ..	MARKING, DEK 5GW (+)	9-25
359011-0818 ..	MARKING, DEK 5GW (-)	9-25
359011-0819 ..	MARKING, EARTH, DEK 5 GW ERDE I.KR.	9-85
359011-0821 ..	MARKING, DEK 6 FW 1-50	9-45, 9-87, 9-89, 9-91
359240-0001 ..	SIGN, NOT ENGRAVED	9-29, 9-31, 9-33
359240-0100 ..	SIGN HOLDER FOR 359240-0001	9-41
359241-0124 ..	SIGN: MAIN SWITCH	9-41
359301-0001 ..	BUTTON SIGN, UP	5-115
359301-0005 ..	BUTTON SIGN, DOWN	5-115
359301-0090 ..	BUTTON SIGN, INCHING	5-115
359301-0504 ..	BUTTON SIGN, RESET	5-115
359705-0015 ..	WARNING SIGN ISO, RISK OF ELECTRIC SHOCK	5-121, 5-163, 9-7, 9-9, 9-11
359705-0021 ..	WARNING SIGN ISO, PNEUMATIC ENERGY	1-97
359710-0001 ..	WARNING SIGN ISO, HOT SURFACE	3-7, 5-163
359715-0100 ..	WARNING SIGN ANSI (H), ELECTRIC SHOCK	5-121, 5-163, 9-29, 9-31, 9-33
359725-0125 ..	WARNING SIGN ANSI (V), PNEUMATIC ENERGY	1-97
476221-0002 ..	PIPE	5-33, 5-39
476221-0003 ..	PIPE	5-33, 5-39
476221-0013 ..	PIPE	10-27
486826-0001 ..	SIGN "EMERGENCY STOP"	5-147, 9-41
531616-0000 ..	HOLDER	5-99, 5-101, 5-129
532412-0000 ..	SPRING	12-15
545897-0000 ..	BRACKET	12-15
575034-0000 ..	ROUND NUT	4-19, 5-89, 5-91
580923-0000 ..	MACHINE SIGN CE	6-63
1020637-0000 .	HOLDER	5-45, 5-47, 10-27, 12-15, 12-21
1030335-0000 .	FILTER HOLDER	5-51
1030338-0000 .	NET	5-51
1030874-0000 .	THROTTLE WASHER	5-51
1030878-0000 .	GASKET	5-51
1035792-0000 .	E-HINGE	5-21
1036329-0000 .	PIN	5-21
1038275-0012 .	SPACER	9-47
1128856-0000 .	PROHIBITION SIGN	5-163, 10-37
1129770-0000 .	BLOCKING PIECE	5-21
1188609-0000 .	FLANGE SEAL	5-59
1188610-0000 .	FLANGE SEAL	5-59
1258624-0000 .	HOSE HOLDER	3-29
1359565-0000 .	NUT	5-35
1366727-0000 .	CLAMP	5-35
1497932-0000 .	SET OF SIGNS	12-17
1539391-0000 .	ROUND NUT	4-15, 4-19, 5-89, 5-91
1548365-0000 .	TEMPLATE	10-39
1550595-2460 .	SLIDING STRIP	5-31, 5-37, 5-41, 5-43
1550595-4960 .	SLIDING STRIP	5-31, 5-37, 5-41, 5-43
1550595-9960 .	SLIDING STRIP	5-31, 5-37, 5-41, 5-43
1550743-0200 .	RAIL HOLDER	5-23, 5-25, 5-27, 5-29, 5-33, 5-39
1550772-0000 .	HOLDER	5-35
1556626-0000 .	WHEEL	6-75
1556630-0000 .	WHEEL	6-67, 6-69
1556643-0000 .	WASHER	6-67, 6-69
2470301-0000 .	LEVER	7-25
2470302-0000 .	HUB	7-25, 7-27
2470373-0000 .	LEVER	7-27
2504290-0000 .	PLATE	5-47
2506887-0000 .	TEMPLATE	10-39
2506940-0000 .	NOZZLE	5-63
2529719-0001 .	BOX STREAMCAP 200	10-43
2529719-0003 .	BOX STREAMCAP 500	10-43

Part No	Description	Page No
2529719-0004	.BOX STREAMCAP 1000	10-43
2529719-0005	.BOX SLIMCAP 1000	10-43
2529719-0006	.BOX SLIMCAP 2000	10-43
2529720-0001	.LABEL	10-43
2529720-0016	.LABEL	10-43
2529720-0024	.LABEL	10-43
2529720-0037	.LABEL	10-43
2529720-0044	.LABEL	10-43
2547915-0000	.HEATING CHAMBER	5-61
2547954-0000	.TEMPLATE	10-39
2551030-0000	.STRUT	5-135, 5-151
2551031-0000	.STRUT	5-135
2557544-0000	.PROTECTION	5-57, 12-25
2561206-0000	.SPACER	5-31, 5-37, 5-41, 5-43
2561274-0102	.RAILING	5-23, 5-25, 5-27, 5-29
2561274-0103	.RAILING	5-23, 5-25, 5-27, 5-29
2562134-0000	.TEMPLATE	10-39
2563891-0000	.STRUT	5-149
2563892-0000	.STRUT	5-149
2579622-0000	.TEMPLATE	10-39
2579623-0000	.TEMPLATE	10-39
2579624-0000	.TEMPLATE	10-39
2594996-0000	.PLASTIC BAG	10-43
2595618-0000	.BRACKET	5-135, 5-151
2608177-0000	.SIGN	9-41
2612679-0000	.TEMPLATE	10-39
2613995-0000	.SPACER	6-67, 6-69
2662760-0000	.HEATING CHAMBER	5-61
2663999-0000	.NIPPLE	5-51
2684864-0000	.SHAFT	2-11
2695133-0000	.TOOTHED PULLEY	3-11
2695134-0000	.SHAFT	3-11
2695135-0200	.PULLEY	3-3
2695610-0000	.CLAMP BRACKET	3-13
2695629-0000	.BRACKET	3-25
2696481-0000	.BLOCK	3-9
2699305-1996	.SLIDING STRIP	5-31, 5-37, 5-41, 5-43
2699436-0000	.SPACER	5-35
2699437-0000	.RAIL HOLDER	5-35
2699680-0000	.SCREW	6-11, 6-13
2699681-0000	.SPACER	6-11, 6-13
2699682-0000	.SPACER	6-13
2699683-0000	.WASHER	6-11
2703670-0100	.CAP HOLDERS GROUP	6-73
2703671-0000	.CLAW	6-75
2703672-0000	.CLAW	6-75
2703673-0000	.TOOTHED DISC	6-75
2703683-0000	.SHAFT	6-67, 6-69
2703692-0000	.HOLDER	6-67, 6-69
2703696-0000	.PROTECTIVE COVER	6-13
2703697-0000	.SIDE	6-11
2703700-0200	.GUIDE BRACKET	6-65
2703702-0000	.SHIM	6-67, 6-69
2703704-0000	.SPACER STRUT	6-17
2703708-0000	.SPRING	6-67, 6-69
2703711-0000	.HOLDER	2-13
2703714-0000	.HOLDER	2-11
2703715-0000	.SHAFT	2-11
2703725-0000	.ROLLER	2-11
2703842-0000	.ADJUSTING SCREW	2-15, 2-17, 6-51, 6-53, 6-59, 6-61
2710819-0000	.LID	5-59
2712603-0000	.PLATE	1-63
2715666-0000	.BRACKET	2-5, 2-7
2715669-0200	.TOOTHED PULLEY	7-5
2715671-0000	.BRACKET	2-5, 2-7
2715695-0000	.SLEEVE	2-11
2715701-0000	.AXLE PIN	6-67, 6-69
2715704-0000	.SLEEVE	6-67, 6-69
2715750-0100	.TEMPLATE	10-5
2715751-0000	.SHAFT	10-9
2715794-0000	.ARM	2-11
2715797-0000	.BUSHING	2-11
2715798-0000	.TURN SPRING	2-11
2715804-0000	.SCREW	2-5, 2-7
2715807-0000	.SPACER	2-5, 2-7
2715813-0000	.BRACKET	2-11
2715826-0000	.DAMPER	6-67, 6-69
2715827-0000	.HOLDER	6-75
2715828-0000	.CLAW	6-75
2715829-0000	.CLAW	6-75
2715837-0000	.KEY	2-13
2715885-0000	.TORSION SPRING	6-67, 6-69
2715887-0000	.PULLER	6-75
2715889-0000	.FINGER	7-35

Part No	Description	Page No
2715975-0000	.FINGER	7-33
2715976-0200	.TOOTHED PULLEY	7-5
2715977-0000	.LOCKING HUB	7-9
2715978-0000	.SHAFT	7-7
2716015-0000	.BRACKET	7-13
2716019-0000	.SHAFT	7-17
2716021-0000	.SPRING	7-17
2716024-0000	.WASHER	7-17
2716041-0000	.BRACKET	2-13
2716046-0200	.CLAMP UNIT	7-19
2716047-0100	.HEIGHT ADJUSTMENT	7-19
2716049-0200	.CAP LINE	7-5
2716056-0000	.ARM	2-11
2716067-0000	.GUIDE	7-37, 7-39, 7-41
2716068-0000	.GUIDE	7-37, 7-39, 7-41
2716069-0200	.GUIDE RAIL	7-37, 7-39, 7-41
2716073-0000	.BELT HOLDER	3-13, 3-23
2716074-0000	.BRACKET	3-13, 3-23
2716075-0000	.COUNTERWEIGHT	3-13, 3-23
2716083-0000	.BRACKET	3-13
2716085-0000	.COUNTERWEIGHT	3-13, 3-23
2716089-0000	.FASTENING BRACKET	3-15
2716090-0200	.MOTION CONTROL	3-3
2716091-0400	.HOTMELT GUN	3-3
2716092-0200	.TRANSMISSION RAIL	3-3
2716097-0200	.MOTION CONTROL	3-3
2716112-0000	.BRACKET	3-27
2716116-0000	.CAM	6-7
2716125-0100	.SETTING TOOL	10-5
2716127-0000	.SLIDER	6-67, 6-69
2716138-0000	.GUIDE	7-37, 7-39, 7-41
2716139-0000	.GUIDE	7-37, 7-39, 7-41
2716149-0200	.STEERING DEVICE	7-13
2716152-0000	.PLATE	7-15
2716154-0000	.SETTING TEMPLATE	10-11
2716156-0000	.BRACKET	7-15
2716157-0000	.BRACKET	7-15
2727407-0200	.DRIVE PULLEY	7-5
2727408-0000	.MOTOR BRACKET	7-11
2727414-0000	.SHAFT	7-9
2727420-0000	.BRACKET	7-13
2727426-0000	.GEAR WHEEL	7-9
2727427-0000	.GEAR WHEEL	7-11
2727431-0000	.SLIDE PLATE	7-23
2727432-0000	.SHAFT	7-23
2727434-0000	.SLIDE PLATE	7-23
2727438-0000	.STEERING RAIL	7-43, 7-45
2727440-0000	.END SUPPORT	7-23
2727442-0000	.GUIDE	7-43, 7-45
2727446-0000	.CLAMPING PART	7-37, 7-39, 7-41
2727447-0000	.CLAMPING PART	7-37, 7-39, 7-41
2727448-0000	.GUIDE	7-43, 7-45
2730989-0000	.LEVER	7-21
2736446-0000	.SPACER	7-9
2736447-0000	.SPACER	7-7, 7-17
2736448-0000	.COVER	7-9
2736449-0000	.COVER	7-7, 7-17
2736458-0000	.TEMPLATE	10-5
2740299-0200	.FINGER	7-19
2740300-0000	.FINGER	7-25
2740371-0200	.FINGER	7-19
2740372-0000	.FINGER	7-27
2740373-0000	.BRACKET	7-21
2740375-0000	.BRACKET	7-21
2746903-0000	.CABLE DUCT	5-7, 5-9
2746904-0000	.BOX	5-115
2746909-0000	.RAIL	5-117, 5-119
2746920-0000	.FOIL	5-113
2746922-0000	.SHAFT	6-75
2746928-0200	.CAP LINE	7-3
2746929-0100	.CARRIER BELT	7-3
2746932-0200	.PNEUMATIC UNIT	7-3
2746933-0200	.BASE UNIT	7-3
2746934-0200	.FEED UNIT	7-3
2746938-0200	.TRANSFER UNIT	6-3
2746939-0200	.CAP CARRIER GROUP	6-3
2746941-0200	.CAP HOLDERS GROUP	6-3
2746950-0000	.CAM	6-29, 6-31
2746951-0000	.CAM	6-33, 6-35
2746952-0000	.CAM	6-41
2746953-0000	.CAM	6-37, 6-39
2746978-0000	.SHAFT	6-67, 6-69
2746982-0000	.CAM	6-29, 6-31
2746985-0000	.CAM	6-33, 6-35

Part No	Description	Page No
2746987-0000	.CAM	6-37, 6-39
2751655-0100	.CAM	6-5
2751656-0100	.STAR WHEEL	6-5
2751657-0200	.SLIDER	6-5
2751658-0200	.FOLLOWER CAM	6-5
2751664-0300	.FRAME	6-3
2751667-0200	.PRESSURE FINGER	2-5, 2-7
2751685-0000	.BRACKET	7-43, 7-45
2751686-0000	.WASHER	6-67, 6-69
2751687-0000	.WASHER	6-67, 6-69
2751690-0000	.SHIM	7-43, 7-45
2751692-0000	.BRACKET	2-15
2751693-0000	.STEERING	2-15
2751695-0000	.STEERING	2-5, 2-7
2751699-0000	.WASHER	6-13
2751700-0000	.BOW CLAMP	2-13
2751702-0000	.STAR WHEEL	6-9
2751703-0000	.BRACKET	6-11
2751704-0000	.PIVOT BRACKET	6-13
2751705-0000	.SHAFT	6-13
2751706-0000	.FLAG	6-9
2751708-0000	.CURVE	2-5, 2-7
2751710-0000	.SUPPORT PLATE	2-13
2751712-0000	.TOOTHED PULLEY	2-15
2751714-0000	.SUPPORT PLATE	2-15
2751721-0000	.SPACER	2-5, 2-7
2751722-0000	.CURVE	2-5, 2-7
2751725-0000	.BOW CLAMP	2-15
2751732-0000	.BRACKET	2-11
2751733-0000	.CURVE	2-5, 2-7
2751739-0000	.BRACKET	6-11
2751741-0000	.BRACKET	6-17
2751742-0000	.BRACKET	2-5, 2-7
2751747-0000	.SPACER	2-15
2751748-0000	.SLEEVE	2-15
2752105-0000	.GUIDE	7-43, 7-45
2752106-0000	.GUIDE	7-43, 7-45
2752107-0000	.CLAMPING PART	7-37, 7-39, 7-41
2752108-0000	.CLAMPING PART	7-37, 7-39, 7-41
2758505-0300	.MACHINE BODY	5-3
2758507-0300	.PACKAGE CONVEYOR	5-3
2758511-0200	.HOTMELT EQUIPMENT	5-3
2758512-0200	.BLOWING SYSTEM	5-65
2758513-0200	.AIR SUPPLY	5-3
2758514-0200	.WATER CONNECTION	5-3
2758515-0300	.CABLE DUCT	5-5
2763616-0101	.CONVEYOR BODY	5-23, 5-25, 5-27, 5-29
2763616-0102	.CONVEYOR BODY	5-23, 5-25, 5-27, 5-29
2763616-0103	.CONVEYOR BODY	5-23, 5-25, 5-27, 5-29
2763616-0104	.CONVEYOR BODY	5-23, 5-25, 5-27, 5-29
2763617-0001	.SIDE PLATE	5-31, 5-37, 5-41, 5-43
2763617-0002	.SIDE PLATE	5-31, 5-37, 5-41, 5-43
2763617-0003	.SIDE PLATE	5-31, 5-37, 5-41, 5-43
2763617-0004	.SIDE PLATE	5-31, 5-37, 5-41, 5-43
2766927-0000	.PILLAR	1-11, 1-19
2766939-0000	.SUPPORT	5-99, 5-101
2766944-0000	.BRACKET	1-61
2766950-0000	.SHAFT	1-63
2766953-0000	.PLATE	1-15
2766954-0200	.BELT TENSIONER	1-9, 1-17
2766958-0000	.SHAFT	1-15, 1-49, 1-57
2766959-0000	.SPACER	1-15, 1-49, 1-57
2766962-0000	.BLOCK	1-15
2766963-0000	.BRACKET	1-15
2766964-0000	.FLANGE	4-5, 5-17
2766968-0000	.SHAFT	5-17
2766972-0000	.SHAFT	5-19
2766973-0100	.TRANSMISSION	5-17
2766974-0000	.SLEEVE	1-47, 1-53
2766975-0000	.FRAME	5-11, 5-13
2766976-0000	.FLANGE	1-47, 1-53
2766980-0200	.BELT TENSIONER	1-51
2766981-0000	.TOOTHED PULLEY	1-15, 1-49, 1-57
2766989-0000	.BRACKET	1-49, 1-57
2766990-0200	.BRAKE UNIT	1-29
2766991-0200	.BRAKE UNIT	1-29
2766994-0300	.ACCELERATION PUSHER	1-29
2768157-0000	.PULLER	6-75
2769686-0000	.COVER	1-31, 1-33
2769695-0000	.BRACKET	1-61
2769709-0000	.FRAME	5-17
2769713-0000	.CYLINDRICAL PIN	5-17
2769717-0000	.FLANGE	5-17
2769718-0200	.PNEUMATIC CYLINDER	1-59

Part No	Description	Page No
2769726-0000	.BRACKET	1-25, 1-63, 5-19
2769729-0000	.SHAFT	1-25, 1-63
2769738-0100	.HEIGHT ADJUSTMENT	5-5
2769739-0000	.DISC	4-5, 5-17
2769741-0000	.SPACER	1-31, 1-33
2769743-0200	.BELT TENSIONER	1-43
2769746-0000	.FRAME	1-57
2769754-0300	.ELECTRIC EQUIPMENT	5-3
2769760-0200	.EMERGENCY STOP	5-123
2769761-0300	.MACHINE BODY	5-5
2769773-0000	.SPACER	1-35
2773600-0000	.SPACER	1-31, 1-33
2773601-0000	.SPACER	1-35
2773604-0000	.PLATE	1-37
2773615-0000	.ROLLER	1-37
2773622-0200	.LINE HEATER	5-3
2773623-0200	.FAN SYSTEM	5-49
2773627-0000	.HEAT GUARD	5-59
2773630-0000	.HEAT GUARD	5-59
2773632-0000	.SPACER	1-61
2773636-0200	.BELT TENSIONER	1-35
2773637-0000	.BRACKET	1-37
2773638-0000	.PLATE	1-37
2773639-0000	.SHAFT	1-37
2775398-0000	.PIN	1-37
2775403-0000	.PIPE	5-67
2775404-0000	.PIPE	5-67
2775412-0000	.PLATE	1-35
2775417-0000	.BRACKET	1-49, 1-57
2775418-0000	.SHAFT	1-31
2775420-0000	.SLIDE	1-57
2775421-0000	.SCREW	1-57
2775423-0000	.PLATE	1-57
2775427-0000	.BRACKET	1-31
2775437-0000	.TOOTHED PULLEY	1-45, 1-55
2775438-0000	.PLATE	1-45, 1-55
2775439-0000	.BUSHING	1-45, 1-55
2775442-0000	.TOOTHED PULLEY	1-13, 1-21
2775443-0000	.SPACER	1-13, 1-21
2775445-0000	.SPACER	1-13, 1-21
2775446-0000	.SHAFT	1-13, 1-21
2775447-0000	.BRACKET	5-11, 5-13
2778564-0000	.WASHER	1-31, 1-33
2778566-0000	.BELLOWS	1-13, 1-21
2778567-0000	.BEAM	5-11, 5-13
2778568-0000	.FRAME UPPER	5-11, 5-13
2778571-0000	.FRAME	1-49
2778576-0000	.BEAM	5-11, 5-13
2778580-0000	.BRACKET	5-45, 5-47, 12-21
2778584-0000	.BRACKET	5-47
2778585-0000	.PILLAR	1-25
2778586-0100	.SENSOR	5-23, 5-25, 5-27, 5-29, 12-19
2778587-0100	.SENSOR	5-23, 5-25, 5-27, 5-29
2778592-0000	.PLATE	1-47
2778594-0000	.PLATE	1-25, 1-63
2778595-0100	.ANGLE	5-11, 5-13
2779008-0000	.BRACKET	5-15
2779009-0000	.BEAM	5-11, 5-13
2779011-0000	.BEAM	5-11, 5-13
2779012-0000	.BEAM	5-11, 5-13
2779013-0000	.CAM	1-63
2779014-0000	.PLATE	1-63
2779057-0000	.PLATE	1-61
2779062-0000	.SPROCKET	1-25
2779063-0000	.PLATE	1-25
2779070-0300	.OPERATOR INTERFACE	5-3
2779748-0100	.GLASS DOOR	5-123
2779749-0000	.DOOR	5-135
2779756-0000	.SHAFT	1-25
2779759-0000	.PLATE	1-25
2779763-0000	.COVER	5-147
2779764-0300	.WARNING LAMP	5-83
2779765-0000	.BRACKET	5-87
2779768-0000	.DOOR	5-113
2779769-0000	.SPROCKET	5-19
2779771-0000	.SPACER	5-147
2779772-0000	.BRACKET	5-51
2779776-0000	.PLATE	5-11, 5-13
2779786-0000	.PLATE	5-11, 5-13
2779800-0000	.PLATE	5-7, 5-9
2779811-0000	.BEAM	5-11, 5-13
2779823-0000	.BRACKET	5-153
2779824-0000	.BRACKET	5-153
2779831-0000	.PIPE	1-73, 1-75, 1-77, 1-79, 1-81, 5-23, 5-25, 5-27, 5-29

Part No	Description	Page No
2779832-0100	.GLASS DOOR	5-123
2779833-0100	.GLASS DOOR	5-123
2779834-0100	.GLASS DOOR	5-123
2779835-0200	.DOOR	5-123
2779838-0000	.DOOR	5-149
2779839-0000	.GLASS	5-149
2779840-0000	.DOOR	5-137
2780337-0000	.CURVE	2-5, 2-7
2780338-0000	.BRACKET	2-5, 2-7
2780339-0000	.BRACKET	2-5, 2-7
2780341-0000	.CURVE	2-5, 2-7
2780342-0000	.CURVE	2-5, 2-7
2780343-0000	.CURVE	2-5, 2-7
2780344-0000	.BRACKET	2-5, 2-7
2780346-0000	.ARM	2-11
2780352-0000	.HOLDER	2-11
2780353-0000	.BRACKET	2-11
2780361-0000	.PIN	7-21
2780362-0000	.PIN	7-21
2780379-0000	.PLATE	6-55, 6-57
2780391-0000	.HOLDER	2-11
2780393-0000	.SHAFT	2-11
2780394-0000	.ARM	2-11
2780425-0100	.CAM	6-21, 6-23, 6-25, 6-27
2780431-0000	.SHIM	6-67, 6-69
2780452-0000	.TOOTHED PULLEY	7-7, 7-17
2780453-0000	.TOOTHED PULLEY	7-9
2780454-0000	.SLIDE RAIL	7-13
2780455-0000	.SLIDE RAIL	7-13
2780456-0000	.SLIDE RAIL	7-13
2780458-0000	.BRACKET	7-43, 7-45
2780459-0000	.SHIM	7-43, 7-45
2780469-0000	.BRACKET	2-5, 2-7
2780497-0100	.TIMING BELT	7-31
2780509-0100	.TIMING BELT	7-31
2780521-0000	.CAM	6-45, 6-47, 6-49
2780523-0000	.PLATE	6-55, 6-57
2780526-0000	.BRACKET	6-45, 6-47, 6-49
2780527-0000	.CARRIAGE	6-45, 6-47, 6-49
2780529-0000	.BRACKET	6-45, 6-47, 6-49
2780531-0000	.AXLE PIN	6-45, 6-47, 6-49
2780532-0000	.AXLE PIN	6-45, 6-47, 6-49
2780533-0000	.CAM	6-45, 6-47, 6-49
2780560-0200	.DRIVE	6-21, 6-23, 6-25, 6-27
2781278-0000	.GLASS	5-137, 5-151
2781279-0000	.DOOR	5-151
2781283-0000	.BRACKET	5-89, 5-91
2781285-0000	.STRUT	5-151
2781286-0000	.HAND WHEEL	1-27
2781292-0000	.SHAFT	1-37
2783460-0000	.GUIDE BRACKET	6-67, 6-69
2783462-0000	.AXLE PIN	6-67, 6-69
2783465-0000	.SHAFT	6-67, 6-69
2783477-0000	.GUIDE SHAFT	6-45, 6-47, 6-49
2783479-0000	.CAM	6-45, 6-47, 6-49
2787230-0100	.TOP SECTION	5-123
2787232-0000	.PLATE	5-153
2788134-0000	.COVER	1-11, 1-19
2788137-0000	.TEMPLATE	10-5
2788144-0000	.SHAFT	1-27
2788155-0000	.ANGLE	5-11, 5-13
2788168-0000	.PLATE	1-65
2788169-0000	.PLATE	1-47, 1-53
2788174-0000	.LEVER	1-61
2788176-0000	.PIPE	5-67
2790710-0000	.BRACKET	9-73
2792664-0000	.BRACKET	5-57, 12-25
2792848-0000	.SUPPORT	5-57, 12-25
2792879-0000	.TUBE	5-57, 12-25
2794721-0000	.BLOCK	5-57, 12-25
2794790-0000	.CLAMP	5-57, 12-25
2796055-0000	.BRACKET	3-25
2797440-0000	.STEERING RAIL	7-43, 7-45
2801048-0000	.CAM	6-43
2802386-0300	.OPERATOR INTERFACE	5-113
2802392-0000	.PILLAR	1-13, 1-21
2802404-0100	.HANDLE	1-25
2802405-0000	.STOP ARM	1-63
2802417-0000	.PLATE	5-7, 5-9
2802423-0000	.PLATE	5-7, 5-9
2802629-0000	.BRACKET	2-15
2802635-0000	.SUPPORT	2-15, 2-17
2802637-0000	.MOUNTING SHEET	2-17
2802644-0000	.SPACER	2-17

Part No	Description	Page No
2802645-0200	.BELT STRETCHER	2-3
2802646-0200	.FRAME SECTION	2-3
2802647-0200	.DRIVE UNIT	2-3
2802648-0200	.CAP HOLDERS GROUP	2-3
2805461-0000	.GUIDE	1-73, 1-75, 1-77, 1-79, 1-81
2805467-0000	.SCREW	1-49, 1-57
2805468-0000	.SCREW	1-31
2805686-0000	.BEAM	5-11, 5-13
2805687-0100	.GLASS DOOR	5-123
2805688-0000	.DOOR	5-157
2805691-0000	.GLASS	5-135, 5-157, 5-159, 5-161
2805692-0000	.COVER	5-155
2805693-0100	.DOOR	5-123
2805694-0100	.GLASS DOOR	5-123
2805695-0000	.DOOR	5-159
2805696-0000	.SUPPORT	5-11, 5-13
2805697-0000	.SUPPORT	5-11, 5-13
2805698-0000	.BEAM	5-11, 5-13
2805700-0300	.DOOR SAFETY SWITCH	5-83
2807095-0000	.BEAM	5-11, 5-13
2807104-0000	.BEAM	5-11, 5-13
2811453-0000	.SCREW	6-67, 6-69
2812005-0300	.ELEVATOR	4-3
2815585-0000	.SPACER	10-29
2817573-0000	.SPACER	10-27
2817774-0000	.SUPPORT	5-89, 5-91
2817775-0000	.SUPPORT	5-89, 5-91
2817783-0200	.PLINTH	5-115
2817784-0000	.SCREW	1-15
2818738-0000	.RAILING	10-27
2826729-0000	.PULLEY	1-31, 1-33
2826737-0000	.GUIDE	1-31, 1-33
2826741-0300	.DOORS AND COVERS	5-3
2826742-0300	.COVER	5-123
2826743-0300	.COVER	5-123
2826744-0200	.COVER	5-141
2830220-0000	.BEAM	5-11, 5-13
2833404-0000	.MOUNTING PLATE	9-47
2833406-0300	.CABINET	9-3
2833407-0300	.CONTROL BOARD	9-3
2833408-0200	.COOLING UNIT	9-3
2833409-0200	.CABLE SET	9-3
2833410-0200	.BOX	9-41
2833412-0100	.CABLE DUCT	9-47
2834311-0000	.HUB	6-19
2835450-0000	.COVER	9-43
2835452-0000	.RAIL	9-67, 9-69, 9-71
2835453-0000	.RAIL	9-81
2835454-0000	.RAIL	9-77, 9-87, 9-89
2835455-0000	.RAIL	9-79
2835456-0000	.RAIL	9-43
2835457-0200	.POWER SUPPLY UNIT	9-47
2835458-0300	.PLC	9-47
2835459-0300	.FUSE BOARD 1	9-47
2835460-0200	.FUSE BOARD 2	9-47
2835461-0200	.FUSE BOARD 3	9-47
2835462-0300	.MOTOR DRIVE CONTROL	9-47
2835463-0200	.PLINTH	9-47
2835464-0300	.DISTRIBUTION TERMINAL	9-47
2835939-0000	.PLATE	6-17
2836263-0000	.HEAT GUARD	5-59
2836507-0200	.DRIVE MOTOR	6-15
2837072-0200	.DRIVE UNIT	6-3
2837073-0200	.PLATE	6-15
2837175-0000	.BEARING HALF	2-13
2837191-0000	.TOOTHED PULLEY	2-13
2837255-0000	.WASHER	2-13, 2-15
2837623-0000	.BRACKET	1-45, 1-55
2837624-0000	.SHAFT	1-45, 1-55
2837625-0000	.COVER	1-45
2837627-0000	.FLANGE	1-45, 1-55
2837628-0000	.SPACER	1-45, 1-55
2837630-0000	.COVER	1-55
2837631-0000	.SPACER	2-17
2838156-0000	.BRACKET	6-53, 6-61
2838277-0000	.BRACKET	6-51, 6-59
2838459-0000	.CABLE DUCT	9-41
2838460-0000	.CABLE DUCT	9-41
2838462-0000	.CABLE DUCT	9-49
2838463-0000	.CABLE DUCT	9-49
2838464-0000	.CABLE DUCT	9-49
2838465-0000	.CABLE DUCT	9-49
2838466-0000	.CABLE DUCT	9-49
2838467-0000	.CABLE DUCT	9-49

Part No	Description	Page No
2838468-0000	.CABLE DUCT	9-49
2838469-0000	.CABLE DUCT	9-49
2838470-0000	.CABLE DUCT	9-49
2838471-0000	.CABLE DUCT	9-49
2838472-0000	.CABLE DUCT	9-49
2838473-0000	.CABLE DUCT	9-49
2838474-0000	.CABLE DUCT	9-49
2838475-0000	.CABLE DUCT	9-49
2838476-0000	.RAIL	9-83
2838478-0000	.RAIL	9-51, 9-53
2838647-0200	.SLIDING RACK	1-3, 1-5
2838650-0200	.SLIDING RACK	1-41
2838653-0200	.GUIDE RAIL	1-59
2838654-0300	.BELT BRAKE	1-3, 1-5
2838669-0200	.SETTING ARM	1-59
2838672-0200	.PNEUMATIC PANEL	5-65
2838673-0200	.SERVICE UNIT	5-69, 5-71
2838674-0200	.SERVICE UNIT	5-69, 5-71
2838676-0000	.BRACKET	5-69, 5-71
2838679-0000	.SHAFT	5-67
2838683-0000	.PLATE	1-61
2838686-0200	.AIR JET GUN	5-65
2838690-0000	.WHEEL	1-63
2838693-0200	.START-UP KIT	10-3
2838701-0000	.HOLDER	5-69, 5-71
2838710-0300	.WORM GEAR MOTOR	1-35
2838711-0000	.CLAW	6-75
2838712-0000	.CLAW	6-75
2838713-0000	.PULLER	6-75
2838714-0000	.LAW	6-75
2838715-0000	.CLAW	6-75
2838716-0000	.PULLER	6-75
2838721-0000	.SHAFT	2-13
2838722-0000	.BRACKET	6-45, 6-47, 6-49
2838727-0000	.CURVE	2-5, 2-7
2838728-0000	.ADJUSTMENT BRACKET	2-5, 2-7
2838731-0000	.CABLE	6-63
2838732-0000	.CABLE	6-63
2838737-0000	.CURVE	2-5, 2-7
2838753-0000	.FRAME	3-27
2838763-0000	.SHAFT	7-21
2838764-0000	.BLOCK	7-23
2838765-0000	.PLATE	7-23
2838781-0000	.STEERING	2-5, 2-7
2838782-0000	.PLATE	12-27
2838783-0000	.PLATE	2-17
2838784-0000	.SLIDING STRIP	2-17
2839073-0000	.BRACKET	10-33, 10-35
2839074-0200	.PNEUMATIC UNIT	10-25
2839194-0200	.PNEUMATIC UNIT	10-25
2839195-0200	.DISTRIBUTOR	10-25
2839221-0200	.PLINTH	9-47
2839222-0200	.PLINTH	9-47
2839223-0200	.PLINTH	9-47
2839224-0200	.PLINTH	9-47
2839225-0000	.BRACKET	9-41
2839226-0000	.FLANGE	9-73
2839227-0000	.SUPPORT	9-81
2839229-0200	.DISTRIBUTION TERMINAL	9-47
2839230-0100	.PLINTH	9-53
2839315-0200	.CAMMODULE	6-3
2839382-0100	.MOUNTING PLATE	6-21, 6-23, 6-25, 6-27
2839383-0100	.CAM	6-21, 6-23, 6-25, 6-27
2839384-0100	.CAM	6-21, 6-23, 6-25, 6-27
2839385-0100	.CAM	6-21, 6-23, 6-25, 6-27
2839386-0100	.CAM	6-21, 6-23, 6-25, 6-27
2839392-0000	.CAM	6-59
2839393-0000	.CAM	6-51
2839409-0000	.CAM	6-53
2839412-0000	.CAM	6-61
2840143-0200	.SERVO MOTOR	3-3
2840144-0200	.SERVO MOTOR	3-3
2840145-0100	.MOTOR BRACKET	3-3
2840146-0100	.MOTOR BRACKET	3-3
2840147-0200	.FASTENING BRACKET	3-3
2840680-0000	.ASSEMBLY PLATE	3-25
2840851-0000	.BLOCK	3-21
2840909-0100	.PLINTH	9-53
2840910-0100	.PLINTH	9-53
2840911-0100	.PLINTH	9-53
2840915-0100	.PLINTH	9-53
2840917-0100	.PLINTH	9-53
2840918-0200	.PLINTH	9-41
2841344-0000	.PLATE	3-9

Part No	Description	Page No
2841345-0000	.COLUMN	3-9
2841346-0000	.BLOCK	3-9
2841402-0000	.RAIL	9-45
2841403-0300	.PLINTH	9-7, 9-9, 9-11, 9-29, 9-31, 9-33
2841404-0300	.ELECTRICAL CONVERSION	9-3
2841405-0000	.DIVIDER	9-49
2841406-0000	.DIVIDER	9-49
2841501-0200	.FRAME	3-3
2842793-0300	.DOOR	5-141
2842794-0300	.COVER	5-125
2842795-0100	.COVER	5-125
2842799-0000	.COVER	5-127
2842800-0000	.SHELF	12-11
2842801-0000	.COVER	5-143
2842803-0000	.PLATE	12-11
2842804-0000	.BRACKET	12-11
2842805-0000	.SPACER	5-133, 12-11
2842806-0100	.SHELF	12-3
2842807-0200	.COVER	5-125
2842830-0100	.SUPPORT	4-3
2842831-0000	.ROD	4-5
2842832-0000	.BRACKET	4-5
2842834-0000	.FLANGE	4-5
2842835-0000	.COLUMN	4-5
2842837-0000	.PLATE	4-5
2842838-0000	.BLOCK	4-5
2843157-0100	.CLAMPING ELEMENT	2-3
2843158-0000	.FLANGE	2-19
2843159-0000	.SHAFT	2-19
2844501-0000	.PROFILE	5-129
2844525-0000	.CABLE DUCT	4-5
2844526-0000	.PLATE	4-5
2844527-0000	.PLATE	4-5
2845097-0000	.SPACER	4-5
2845127-0200	.SETTING ARM	1-59
2845320-0000	.PROTECTION	9-47
2846399-0300	.TUNNEL	5-125
2846403-0000	.ROLLER	5-19
2846405-0000	.PIVOT ARM	5-19
2846406-0300	.CAP SORTER	4-7
2846407-0300	.VOLUME KIT	4-7
2846408-0300	.VOLUME KIT	4-7
2846413-0300	.CONVEYOR BELT	8-3
2846416-0300	.FEEDER	4-3
2852912-0000	.CONNECTION PIPE	4-3
2852913-0000	.CONNECTION PIPE	4-3
2852917-0000	.BELT	8-5, 8-7, 8-21, 8-23
2853706-0300	.SETTING TOOL	10-3
2856622-0000	.BUSHING	7-9
2857743-0000	.BRUSH	4-29, 4-31, 4-33, 4-35, 4-37, 4-41
2857744-0000	.GUIDE	4-33
2857745-0000	.GUIDE	4-37
2859960-0000	.BRACKET	6-45, 6-47, 6-49
2861166-0300	.SOFTWARE	11-3
2861169-0300	.ELECTRICAL DOCUMENT	11-5
2864281-0000	.SHIM	7-43, 7-45
2867644-0000	.GUIDE	7-37, 7-39, 7-41
2867645-0000	.GUIDE	7-37, 7-39, 7-41
2867646-0000	.STEERING RAIL	7-43, 7-45
2867647-0000	.GUIDE	7-43, 7-45
2867648-0000	.BRACKET	7-43, 7-45
2867649-0000	.GUIDE	7-43, 7-45
2873857-0000	.CAM	2-5, 2-7
2873859-0000	.BRACKET	2-5, 2-7
2873860-0000	.CURVE	2-5, 2-7
2873864-0000	.CAM	2-5, 2-7
2873865-0000	.PRE-HEATER	5-59
2873866-0000	.SUPPORT	10-27
2873867-0000	.PLATE	5-59
2873868-0000	.BRACKET	2-5, 2-7
2873869-0000	.CURVE	2-5, 2-7
2873870-0000	.ADJUSTMENT BRACKET	2-5, 2-7
2873871-0000	.BRACKET	2-5, 2-7
2873874-0200	.AUTOMATION CONVEYOR CONTROL	12-3
2873876-0000	.PLATE	10-27
2873892-0000	.SHIM	6-43
2873895-0000	.CURVE	2-5, 2-7
2873896-0000	.CABLE TRAY	3-27
2873914-0100	.CAMMODULE	6-21, 6-23, 6-25, 6-27
2873915-0100	.CAMMODULE	6-21, 6-23, 6-25, 6-27
2873916-0100	.CAMMODULE	6-21, 6-23, 6-25, 6-27
2873917-0100	.CAMMODULE	6-21, 6-23, 6-25, 6-27
2873921-0000	.BLOCK	3-9
2873922-0200	.CABLE	5-83, 12-23

Part No	Description	Page No
2873923-0200	.POSITION TEMPLATE	10-3
2873924-0300	.POSITIONING DEVICE	12-3
2873925-0200	.COMMUNICATION UNIT	12-3
2873928-0000	.CABLE DUCT	5-7, 5-9
2873935-0000	.TEMPLATE	10-5
2873941-0000	.SIGN	1-25, 5-11, 5-13
2873943-0000	.CLAMP	5-57, 12-25
2873950-0200	.CABLE SET	5-83
2873951-0000	.COVER	1-85, 1-87
2873952-0100	.COVER	1-73, 1-75, 1-77, 1-79, 1-81
2873953-0200	.CAP	10-3
2873966-0000	.COVER	1-85, 1-87
2873973-0000	.CLAW	6-75
2873974-0000	.CLAW	6-75
2873975-0000	.PULLER	6-75
2873977-0300	.VOLUME KIT	4-7
2873978-0300	.VOLUME KIT	4-7
2873979-0000	.GUIDE	4-35
2873980-0000	.GUIDE	4-41
2874001-0300	.VOLUME KIT	4-7
2874003-0000	.GUIDE	4-39
2874024-0000	.BRACKET	5-99, 5-101
2875596-0000	.GUIDE	7-37, 7-39, 7-41
2875597-0000	.GUIDE	7-37, 7-39, 7-41
2875598-0000	.GUIDE	7-43, 7-45
2875599-0000	.GUIDE	7-43, 7-45
2875600-0000	.STEERING RAIL	7-43, 7-45
2879015-0300	.ELECTRICAL DOCUMENT	11-3
2885916-0000	.PLATE	8-5, 8-7, 8-21, 8-23
2890013-0200	.COMMUNICATION UNIT	12-3
2890014-0300	.POSITIONING UNIT	9-7, 9-9, 9-11, 9-29, 9-31, 9-33, 12-23
2890015-0000	.RAIL	9-25
2890590-0000	.CABLE DUCT	9-7, 9-9, 9-11, 9-29, 9-31, 9-33
2890591-0200	.PLINTH	9-83
2893414-0000	.CLAMPING PART	7-37, 7-39, 7-41
2893415-0000	.CLAMPING PART	7-37, 7-39, 7-41
2893416-0000	.GUIDE	7-37, 7-39, 7-41
2893417-0000	.GUIDE	7-37, 7-39, 7-41
2893418-0000	.BRACKET	7-43, 7-45
2893419-0000	.STEERING RAIL	7-43, 7-45
2893420-0000	.CLAMPING PART	7-37, 7-39, 7-41
2893421-0000	.CLAMPING PART	7-37, 7-39, 7-41
2893422-0000	.GUIDE	7-43, 7-45
2893423-0000	.GUIDE	7-43, 7-45
2895147-0200	.PACKAGE ALIGNER	9-7, 9-9, 9-11, 9-29, 9-31, 9-33
2901694-0000	.MOTOR	1-91
2901708-0100	.SUPPORT TUBE	3-3
2907981-0000	.NUT	1-73, 1-75, 1-77, 1-79, 1-81
2909473-0000	.PLATE	3-21
2911985-0000	.LOCKING LEVER	3-7
2918904-0000	.PLATE	7-13
2918905-0000	.PLATE	7-13
2921902-0000	.DIVIDER	9-49
2930176-0200	.SENSOR GROUP	12-13
2930177-0200	.CABLE MARKING SET	12-13
2930178-0200	.SENSOR GROUP	12-13
2930179-0200	.CONVEYOR CONTROL ACCESSORIES	12-3
2930182-0200	.POWER SUPPLY DEVICE	12-3
2930210-0000	.PLATE	5-23, 5-25, 5-27, 5-29
2930211-0000	.PLATE	5-23, 5-25, 5-27, 5-29
2930214-0000	.CLAW	6-75
2930215-0000	.CLAW	6-75
2930216-0000	.PULLER	6-75
2930228-0000	.AIR NOZZLE	4-29, 4-31, 4-33, 4-35, 4-37, 4-39, 4-41
2930229-0000	.AIR NOZZLE	4-31, 4-33, 4-35, 4-37, 4-39, 4-41
2930230-0000	.AIR NOZZLE	4-35, 4-37, 4-41
2931768-0000	.CABLE DUCT	5-7, 5-9
2931769-0000	.CABLE DUCT	5-7, 5-9
2931770-0000	.DIVIDER	5-7, 5-9
2931771-0000	.CABLE DUCT	5-7, 5-9
2931772-0000	.CABLE DUCT	5-7, 5-9
2931773-0000	.CABLE DUCT	5-7, 5-9
2931774-0000	.CABLE DUCT	5-7, 5-9
2931775-0000	.CABLE DUCT	5-7, 5-9
2931776-0000	.CABLE DUCT	5-7, 5-9
2931777-0000	.CABLE DUCT	5-7, 5-9
2931778-0000	.CABLE DUCT	5-7, 5-9
2931779-0000	.CABLE DUCT	5-7, 5-9
2931780-0000	.CABLE DUCT	5-7, 5-9
2931781-0000	.CABLE DUCT	5-7, 5-9
2931782-0000	.CABLE DUCT	5-7, 5-9
2931783-0000	.PLATE	5-7, 5-9
2931784-0000	.DIVIDER	5-7, 5-9
2931785-0000	.ANGLE	5-7, 5-9

Part No	Description	Page No
2931786-0000	.ANGLE	5-7, 5-9
2931787-0000	.ANGLE	5-7, 5-9
2931788-0000	.DIVIDER	5-7, 5-9
2934904-0000	.RAIL BRACKET	5-7, 5-9
2934905-0000	.SUPPORT	5-61
2936120-0000	.BRACKET	1-31
2936506-0000	.BRACKET	1-33
2936740-0000	.BRACKET	1-31
2937337-0000	.SPACER	1-49, 1-57
2939164-0000	.SETTING TOOL	10-7
2939165-0000	.SHAFT	10-7
2939208-0100	.SETTING TOOL	10-5
2939331-0000	.TOOL	10-7
2940040-0000	.SUPPORT	8-21, 8-23
2940041-0000	.LOCK HOLDER	8-21, 8-23
2940042-0000	.SHIM	8-21, 8-23
2940569-0000	.GUIDE	1-73, 1-75, 1-77, 1-79, 1-81
2940677-0000	.GUIDE	1-73, 1-75, 1-77, 1-79, 1-81
2943597-0000	.PLATE	1-33
2944164-0000	.PLATE	1-33
2944175-0000	.PIN	6-63
2964292-0000	.BEAM	5-11, 5-13
2964293-0000	.BEAM	5-11, 5-13
2965155-0000	.SUPPORT	5-23, 5-25, 5-27, 5-29
2970129-0000	.GUIDE	7-43, 7-45
2970130-0000	.GUIDE	7-43, 7-45
2970131-0000	.STEERING RAIL	7-43, 7-45
2970138-0000	.CLAMPING PART	7-37, 7-39, 7-41
2970139-0000	.CLAMPING PART	7-37, 7-39, 7-41
2973942-0000	.BRACKET	7-21
2973943-0000	.PLATE	7-27
2974857-0000	.SCREW	7-17
2974858-0000	.NUT	7-17
2981405-0000	.AIR NOZZLE	4-33, 4-35, 4-37, 4-39, 4-41
2981406-0000	.AIR BLOW REGULATOR	4-29, 4-31, 4-33, 4-35, 4-37, 4-39, 4-41
2981407-0000	.SCRAPER	4-33, 4-35
2981409-0000	.CAM	4-39
2981410-0000	.CAM	4-29, 4-31, 4-33, 4-35, 4-37, 4-41
2981411-0000	.CAM	4-29, 4-31, 4-33, 4-35, 4-37, 4-41
2981418-0000	.AIR NOZZLE	4-31, 4-39
2983297-0000	.FOLLOWER ARM	6-75
2985757-0000	.PHOTOCELL BRACKET	8-21, 8-23
2985759-0000	.HOLDER	8-21, 8-23
2985768-0000	.COLUMN	5-57, 12-25
2985770-0000	.FLANGE	3-21
2985771-0000	.PLATE	3-27
2985772-0000	.BRACKET	3-23
2985773-0000	.BRACKET	5-47
2985781-0000	.PLATE	1-45, 1-55
2985804-0000	.TUNNEL	5-141
2985809-0000	.HOUSING	1-61
2985810-0000	.BRUSH	10-15, 10-17, 10-19, 10-21, 10-23
2985813-0000	.TEMPLATE	10-39
2985832-0000	.COVER	1-35
2985842-0000	.TUNNEL	5-131
2985843-0000	.COVER	5-133
2985847-0000	.PLATE	1-35
2986247-0200	.CAP DETECTOR	10-3
2987967-0000	.SPRING HOLDER	6-75
2987971-0000	.SPRING HOLDER	6-75
2987983-0000	.PLATE	8-21, 8-23
2991257-0000	.COVER	1-85, 1-87
3009327-0002	.SOFTWARE CD	11-7
3010622-0000	.CANTILEVER	1-31
3010624-0000	.CANTILEVER	1-33
3014020-0000	.COMPRESSION SPRING	6-67, 6-69
3016909-0000	.DRIVE SHAFT	1-39
3017287-0000	.PLATE	1-35
3017300-0000	.FLANGE	1-39
3018761-0000	.TOOTHED PULLEY	3-17
3018762-0000	.TOOTHED PULLEY	3-19
3020132-0000	.SPRING	7-21
3021525-0000	.PLATE	1-61
3022021-0000	.HOUSING	1-61
3022022-0000	.SHAFT	1-61
3022023-0000	.SHAFT	1-61
3022488-0000	.CAM	1-61
3022796-0000	.BELLOWS	1-15, 1-49, 1-57
3024866-0000	.SUPPORT	7-17
3024869-0000	.STEERING RAIL	7-43, 7-45
3031442-0000	.SPACER	5-57, 12-25
3034434-0000	.TENSION SPRING	6-75, 10-15, 10-17, 10-19, 10-21, 10-23
3034438-0200	.TOOTHED PULLEY	7-5
3034439-0200	.CONVEYOR BELT	8-3

Part No	Description	Page No
3034454-0000	.ADJUSTING SCREW	3-7
3034455-0000	.SUPPORT	3-7
3034465-0000	.SETTING TOOL	10-5
3039015-0000	.TEMPLATE	10-39
3039024-0000	.FRAME	6-63
3039027-0000	.PLATE	5-11, 5-13
3039030-0000	.TOOTHED PULLEY	1-31, 1-33, 1-39
3039032-0000	.LINK ATTACHMENT	3-15
3039040-0000	.SPACER	5-11, 5-13
3044285-0000	.TEMPLATE	10-5
3046886-0200	.DISTRIBUTION TERMINAL	9-47
3047311-0000	.PROTECTION	9-47
3047341-0000	.ANGLE BRACKET	5-7, 5-9
3047348-0100	.GLASS DOOR	5-123
3047349-0000	.DOOR	5-161
3047350-0100	.TOOL	10-39
3047352-0000	.TEMPLATE	10-41
3047353-0000	.GUIDE	10-5
3051110-0000	.WASHER	1-91
3052393-0000	.GLASS COVER	5-57, 12-25
3053471-0000	.PIN	5-57, 12-25
3053477-0000	.BRACKET	5-57, 12-25
3053478-0000	.PUSHER	5-57, 12-25
3054997-0000	.SUPPORT	5-89, 5-91
3056497-0000	.DOOR	5-143
3058564-0000	.ROLLER	4-43, 4-45
3058565-0000	.SHAFT	4-43, 4-45
3058858-0000	.DOOR	5-139
3058859-0000	.BEAM	5-11, 5-13
3058864-0000	.COMPRESSION SPRING	2-11
3060116-0000	.COMPRESSION SPRING	5-57, 12-25
3062041-0000	.SUPPORT	9-41
3068593-0000	.SCREW	4-5
3068594-0000	.BLOCK	4-5
3068595-0000	.BLOCK	4-5
3068596-0000	.COVER	4-5
3068597-0000	.PLATE	4-5
3068598-0000	.FRAME	4-5
3068635-0200	.VOLUME KIT	4-7
3068636-0000	.GUIDE	4-31
3073387-0000	.PLATE	3-7
3073391-0000	.COVER	3-7
3073395-0100	.ADJUSTMENT BRACKET	3-5
3073396-0000	.SUPPORT	5-61
3073397-0000	.BRACKET	6-45, 6-47, 6-49
3073401-0000	.CURVE	2-5, 2-7
3073402-0000	.CURVE	2-5, 2-7
3073403-0000	.CURVE	2-5, 2-7
3073404-0000	.CURVE	2-5, 2-7
3073405-0000	.BRACKET	2-5, 2-7
3073406-0000	.HOLDER	2-11
3073407-0000	.CURVE	2-5, 2-7
3073408-0000	.BRACKET	2-11
3073409-0000	.CAM	6-45, 6-47, 6-49
3077715-0000	.CAM	6-29, 6-31
3077721-0000	.CLAMPING PART	7-37, 7-39, 7-41
3077722-0000	.CLAMPING PART	7-37, 7-39, 7-41
3077723-0000	.GUIDE	7-43, 7-45
3077724-0000	.GUIDE	7-43, 7-45
3077728-0000	.PULLER	6-75
3077731-0000	.GUIDE	7-37, 7-39, 7-41
3077732-0000	.GUIDE	7-37, 7-39, 7-41
3077733-0000	.BRACKET	7-43, 7-45
3077734-0000	.TEMPLATE	10-41
3077736-0000	.TEMPLATE	10-41
3077737-0000	.TEMPLATE	10-41
3077749-0000	.CLAW	6-75
3077750-0000	.CLAW	6-75
3086231-0000	.SCREW	1-61
3086233-0000	.BRACKET	1-61
3087821-0000	.TOOL	12-27
3087822-0000	.PLATE	12-27
3087823-0100	.TOOL	12-23
3089906-0000	.PLATE	12-27
3095787-0000	.SLIDE	7-13
3095790-0000	.HOLDER	5-57, 12-25
3095791-0000	.PLATE	5-57, 12-25
3095793-0000	.PLATE	2-17
3095794-0000	.ANGLE BRACKET	2-17
3095795-0000	.SLIDING STRIP	2-17
3095796-0000	.HOLDER	5-57, 12-25
3096014-0000	.BRACKET	12-5
3096118-0000	.PLATE	3-7
3102968-0200	.VOLUME KIT	4-7

Part No	Description	Page No
3102969-0100	.GUIDE RAIL	8-3
3102974-0000	.TEMPLATE	10-39
3103326-0000	.GUIDE	1-83
3103328-0000	.BRACKET	1-83
3103670-0000	.ECCENTRIC SHAFT	6-13
3108404-0000	.SHAFT	8-5, 8-7, 8-21, 8-23
3108405-0000	.ROLLER	8-5, 8-7, 8-21, 8-23
3108406-0000	.BRACKET	8-5, 8-7
3108407-0000	.BRACKET	8-5, 8-7
3108408-0000	.SHAFT	8-5, 8-7, 8-21, 8-23
3108409-0000	.PLATE	8-5, 8-7, 8-21, 8-23
3108410-0000	.PLATE	8-5, 8-7, 8-21, 8-23
3108411-0000	.PLATE	8-5, 8-7, 8-21, 8-23
3108412-0000	.PLATE	8-5, 8-7, 8-21, 8-23
3108413-0200	.PULLER	4-9, 4-11
3108414-0000	.SHAFT	8-5, 8-7, 8-21, 8-23
3108415-0000	.IDLER ROLLER	8-5, 8-7, 8-21, 8-23
3108416-0000	.BRACKET	8-5, 8-7
3108417-0000	.ROLLER	8-5, 8-7, 8-21, 8-23
3108418-0000	.COVER	8-5, 8-7, 8-21, 8-23
3108419-0000	.FLANGE	8-5, 8-7, 8-21, 8-23
3108420-0000	.SHAFT	8-5, 8-7, 8-21, 8-23
3108421-0000	.BRACKET	8-5, 8-7, 8-21, 8-23
3108422-0000	.PLATE	8-5, 8-7, 8-21, 8-23
3108423-0000	.BRACKET	8-5, 8-7
3108424-0000	.BRACKET	8-5, 8-7, 8-21, 8-23
3108425-0000	.ANCHOR	8-5, 8-7
3108426-0000	.ANCHOR	8-5, 8-7
3108427-0000	.PLATE	8-5, 8-7, 8-21, 8-23
3108428-0000	.COVER	8-5, 8-7, 8-21, 8-23
3108429-0000	.CABLE CONDUIT	8-5, 8-7, 8-21, 8-23
3108430-0000	.PROFILE	8-5, 8-7
3108431-0000	.BRACKET	8-5, 8-7, 8-21, 8-23
3108432-0000	.BRACKET	8-5, 8-7
3108433-0100	.DISCHARGE DEVICE	8-5, 8-7, 8-21, 8-23
3108434-0000	.LOCKING LEVER	8-5, 8-7, 8-21, 8-23
3108436-0000	.CLAMP	8-5, 8-7, 8-21, 8-23
3108437-0000	.HANDLE	8-5, 8-7, 8-21, 8-23
3108438-0000	.CURVE	8-9
3108439-0000	.SUPPORT	8-9
3108440-0000	.TUBE	8-9
3108441-0000	.TIE	8-9
3108442-0200	.COVER	4-9, 4-11
3108443-0100	.RAKE	4-9, 4-11
3108444-0200	.BODY	4-9, 4-11
3108445-0200	.PNEUMATIC COMPONENT	4-9, 4-11
3108446-0200	.SENSOR	4-9, 4-11
3108447-0100	.HARD DISK	4-9, 4-11
3108448-0200	.PHOTOCELL UNIT	4-9, 4-11
3108449-0000	.WASHER	4-9, 4-11
3108450-0000	.WASHER	4-23, 4-27
3108451-0000	.WASHER	4-9, 4-11, 4-13, 4-21, 4-23, 4-29, 4-31, 4-33, 4-35, 4-43, 4-45, 4-47
3108452-0000	.WASHER	4-9, 4-11, 4-13, 4-19, 4-21, 4-29, 4-31, 4-33, 4-35, 4-37, 4-39, 4-41, 4-43, 4-45
3108453-0000	.WASHER	4-9, 4-11, 4-19, 4-29, 4-31, 4-33, 4-35, 4-37, 4-39, 4-41, 4-43, 4-45
3108454-0000	.WASHER	4-9, 4-11, 4-29, 4-31, 4-33, 4-35, 4-37, 4-39, 4-41, 4-43, 4-45
3108455-0000	.WASHER	4-9, 4-11
3108456-0000	.SCREW	4-15
3108457-0000	.SCREW	4-17
3108458-0000	.WASHER	4-15, 4-43, 4-45
3108460-0000	.WASHER	4-43, 4-45
3108461-0000	.KEY	4-43, 4-45
3108462-0000	.SCREW	4-19, 4-43, 4-45
3108463-0000	.TAPER PIN	4-29, 4-31, 4-33, 4-35, 4-37, 4-39, 4-41
3108464-0000	.STUD BOLT	4-25, 4-43, 4-45
3108465-0000	.SECTOR	4-25
3108466-0000	.RING	4-25
3108471-0000	.PROTECTION RING	4-9, 4-11, 4-19
3108472-0000	.SUPPORT	4-43, 4-45
3108473-0000	.COVER	4-43, 4-45
3108474-0000	.COVER	4-43, 4-45
3108475-0000	.PLATE	4-43, 4-45
3108476-0000	.CARRIER	4-43, 4-45
3108477-0000	.COVER	4-43, 4-45
3108478-0000	.COVER	4-43, 4-45
3108479-0000	.COVER	4-43, 4-45
3108480-0000	.PLATE	4-43, 4-45
3108481-0000	.BED	4-43, 4-45
3108482-0000	.UNIT CONVERGER	4-43, 4-45
3108483-0000	.COVER	4-43, 4-45
3108484-0000	.WASHER	4-43, 4-45
3108485-0000	.WASHER	4-43, 4-45
3108486-0000	.SPACER	4-43, 4-45
3108487-0000	.PIN	4-43, 4-45
3108488-0000	.GUIDE	4-43, 4-45

Part No	Description	Page No
3108489-0000	.GUIDE	4-43, 4-45
3108490-0000	.COVER	4-43, 4-45
3108491-0000	.PLATE	4-43, 4-45
3108492-0000	.CABLE CONDUIT	4-43, 4-45
3108493-0000	.WASHER	4-43, 4-45
3108494-0000	.PLATE	4-43, 4-45
3108495-0000	.ROLLER	4-43, 4-45
3108496-0000	.PLATE	4-43, 4-45
3108497-0000	.GASKET	4-43, 4-45
3108498-0000	.GASKET	4-43, 4-45
3108499-0000	.ANCHOR	4-43, 4-45
3108500-0000	.SHAFT	4-43, 4-45
3108501-0000	.PLUG	4-43, 4-45
3108987-0000	.DRIVE SHAFT	1-31, 1-33
3114082-0000	.BRACKET	1-93
3114083-0000	.AXLE PIN	1-93, 1-95
3114084-0000	.ROLL	1-93, 1-95
3114692-0000	.PLATE	1-93
3114810-0100	.ROLLER	1-91
3115079-0000	.DRIVE PULLEY	1-31, 1-33
3115080-0000	.FLANGE	1-31, 1-33
3115081-0000	.SPACER	1-31, 1-33
3115097-0000	.FLANGE BUSHING	1-91
3115098-0000	.SHAFT	1-91
3115099-0200	.PACKAGE ALIGNER	1-73, 1-75, 1-77, 1-79, 1-81
3115101-0000	.WASHER	1-91
3115103-0000	.SHAFT	1-91
3115224-0000	.FLANGE	4-43, 4-45
3115225-0000	.PLATE	4-43, 4-45
3115226-0000	.THREADED ROD	4-43, 4-45
3115227-0000	.BAR	4-43, 4-45
3115228-0000	.COUPLING	4-43, 4-45
3115229-0000	.WASHER	4-43, 4-45
3115230-0000	.FOOT	4-43, 4-45
3115231-0000	.HANDLE	4-43, 4-45
3115232-0000	.HINGE	4-15, 4-43, 4-45
3115233-0000	.CLAMP	4-9, 4-11, 4-43, 4-45
3115234-0000	.CAP	4-9, 4-11, 4-43, 4-45
3115235-0000	.MAGNET	4-43, 4-45
3115237-0000	.CABLE	4-43, 4-45
3115238-0000	.AIR NOZZLE	4-31
3115239-0000	.SHAFT	4-9, 4-11
3115240-0000	.REDUCER	4-9, 4-11
3115241-0000	.CAP	4-9, 4-11
3115242-0000	.BUSHING	4-9, 4-11
3115243-0000	.SCREW	4-9, 4-11
3115244-0000	.PROTECTIVE COVER	4-9, 4-11
3115245-0000	.SUPPORT	4-9, 4-11
3115246-0000	.BRACKET	4-9, 4-11
3115247-0000	.ARM	4-9, 4-11
3115248-0000	.CENTERING	4-9, 4-11
3115249-0000	.CONNECTION BOX	4-9, 4-11
3115250-0000	.BLOCK	4-9, 4-11
3115251-0000	.BRACKET	4-9, 4-11
3115252-0000	.CAP	4-9, 4-11
3115253-0000	.SUPPORT	4-9, 4-11
3115254-0000	.SUPPORT	4-9, 4-11
3115255-0000	.BASE	4-9, 4-11
3115256-0000	.BASE	4-9, 4-11
3115257-0000	.CONNECTION	4-9, 4-11
3115258-0000	.CONNECTION	4-9, 4-11
3115259-0000	.COVER	4-9, 4-11
3115260-0000	.LOCKING LEVER	4-9, 4-11
3115261-0000	.STOP SCREW	4-9, 4-11, 8-5, 8-7, 8-21, 8-23
3115263-0000	.CLAMP	4-9, 4-11, 4-23
3115264-0000	.CABLE	4-9, 4-11
3115265-0000	.CABLE	4-9, 4-11
3115266-0000	.REDUCTION	4-9, 4-11
3115267-0000	.PHOTOCELL	4-27
3115268-0000	.BUSHING	4-13
3115269-0000	.WASHER	4-13
3115270-0000	.PIN	4-13
3115271-0000	.SPRING	4-13
3115272-0000	.PLATE	4-13
3115273-0000	.GUIDE	4-13
3115274-0000	.SCREW	4-13, 4-19
3115275-0000	.COVER	4-19
3115276-0000	.BRACKET	4-19
3115277-0000	.SUPPORT	4-19
3115278-0000	.PLATE	4-19
3115279-0000	.COVERING	4-19
3115280-0000	.STRIP	4-19
3115281-0000	.LABEL TAPE	4-19
3115282-0000	.FOOT	4-19

Part No	Description	Page No
3115283-0000	.CLAMP	4-19
3115284-0000	.RING	4-17
3115285-0000	.PLATE	4-17
3115286-0000	.PLATE	4-17
3115287-0000	.PLATE	4-15
3115288-0000	.CLAMP	4-15
3115289-0000	.FUNNEL	4-15
3115290-0000	.DAMPING ELEMENT	4-15
3115291-0000	.PLATE	4-9, 4-11
3115292-0000	.PLATE	4-15
3115293-0000	.CROSS BAR	4-15
3115294-0000	.CROSS BAR	4-15
3115295-0000	.CROSS BAR	4-15
3115296-0000	.PANEL	4-15
3115297-0000	.PANEL	4-15
3115298-0000	.PANEL	4-15
3115299-0000	.PANEL	4-15
3115300-0000	.HANDLE	4-15, 4-29, 4-31, 4-33, 4-35, 4-37, 4-39, 4-41
3115301-0000	.SCREW	4-15
3115302-0000	.BRACKET	4-23
3115303-0000	.DIP STICK	4-23
3115304-0000	.PIPE	4-23
3115305-0000	.BRACKET	4-23
3115306-0000	.PIN	4-23
3115307-0000	.CLAMP	4-23
3115308-0000	.PLATE	4-23
3115309-0000	.BEARING	4-23
3115345-0000	.SUPPORT	4-33, 4-35
3115346-0000	.CARRIER	4-29, 4-31, 4-33, 4-35, 4-37, 4-39, 4-41
3115347-0000	.PLATE	4-29, 4-31, 4-33, 4-35, 4-37, 4-39, 4-41
3115348-0000	.WASHER	4-29, 4-31, 4-33, 4-35, 4-37, 4-39, 4-41
3115349-0000	.PIN	4-29, 4-31, 4-33, 4-35, 4-37, 4-39, 4-41
3115350-0000	.PIN	4-29, 4-31, 4-33, 4-35, 4-37, 4-39, 4-41
3115351-0000	.PIN	4-29, 4-31, 4-33, 4-35, 4-37, 4-39, 4-41
3115352-0000	.BASE	4-33
3115353-0000	.PULLER	4-33
3115354-0000	.PLATE	4-31, 4-33
3115355-0000	.BRUSH	4-31, 4-33
3115356-0000	.CENTERING	4-29, 4-31, 4-33, 4-35, 4-37, 4-39, 4-41
3115357-0000	.SCRAPER	4-33, 4-35
3115358-0000	.AIR NOZZLE	4-29, 4-31, 4-33, 4-35, 4-37, 4-39, 4-41
3115360-0000	.BASE	4-35
3115361-0000	.PULLER	4-35
3115362-0000	.PLATE	4-35
3115363-0000	.HOLDER	4-35
3115367-0000	.PULLER	4-39
3115368-0000	.BASE	4-29, 4-31, 4-37, 4-39, 4-41
3117136-0000	.WASHER	1-91
3117145-0000	.ANGLE	1-23
3117146-0000	.GUIDE	1-23
3117151-0000	.PLATE	1-91
3117152-0000	.PLATE	1-91
3117153-0000	.PLATE	1-91
3117845-0000	.TIMING BELT	7-33, 7-35
3117862-0000	.TIMING BELT	2-13
3117867-0000	.PLASTIC PLUG	5-103, 5-105, 5-107, 5-109, 5-111
3120838-0000	.GUIDE	1-23
3120839-0000	.PLATE	1-71
3120840-0000	.PLATE	1-71
3120841-0000	.ANGLE	1-71
3120842-0000	.GUIDE	1-71
3123206-0000	.PLATE	3-5
3123924-0000	.COVER	1-85, 1-87
3123927-0000	.PLATE	12-27
3123928-0000	.BRACKET	1-93
3123929-0000	.BRACKET	1-93
3124360-0000	.REDUCTION SLEEVE	4-31, 4-39
3124361-0000	.PULLER	4-41
3124364-0000	.PLATE	4-37, 4-41
3124365-0000	.BOX	4-37, 4-41
3124368-0000	.PULLER	4-37
3124373-0000	.PULLER	4-31
3124375-0000	.COVER	8-13
3124376-0000	.COVER	8-13
3124377-0000	.FLAP	8-11, 8-13
3124378-0000	.AIR NOZZLE	8-13
3124379-0000	.FITTING	8-11, 8-13, 8-15, 8-17, 8-19, 8-25, 8-27
3124380-0000	.COVER	8-15
3124381-0000	.COVER	8-15
3124382-0000	.FLAP	8-15
3124383-0000	.AIR NOZZLE	8-15
3124384-0000	.COVER	8-17
3124385-0000	.COVER	8-17
3124386-0000	.FLAP	8-17

Part No	Description	Page No
3124387-0000	.AIR NOZZLE	8-17
3124388-0000	.COVER	8-25
3124389-0000	.COVER	8-25
3124390-0000	.FLAP	8-25
3124391-0000	.AIR NOZZLE	8-25
3124394-0000	.COVER	8-27
3124395-0000	.COVER	8-27
3124396-0000	.FLAP	8-27
3124397-0000	.AIR NOZZLE	8-27
3124398-0000	.COVER	8-19
3124399-0000	.COVER	8-19
3124400-0000	.FLAP	8-19
3124401-0000	.AIR NOZZLE	8-19
3124420-0000	.BRACKET	4-21
3124436-0000	.BELT	4-43, 4-45
3124443-0000	.SUPPORT	4-29, 4-33, 4-35, 4-37, 4-39, 4-41
3124444-0000	.AIR NOZZLE	4-29, 4-31
3124445-0000	.GUIDE	4-33
3124446-0000	.GUIDE	4-33
3124447-0000	.GUIDE	4-35
3124448-0000	.GUIDE	4-35
3124449-0000	.GUIDE	4-39
3124450-0000	.GUIDE	4-39
3124453-0000	.GUIDE	4-41
3124454-0000	.GUIDE	4-41
3124455-0000	.GUIDE	4-29, 4-37
3124456-0000	.GUIDE	4-29, 4-37
3124457-0000	.GUIDE	4-31
3124458-0000	.GUIDE	4-31
3124459-0000	.PULLER	4-29
3124460-0000	.GUIDE	4-29
3124461-0000	.PLATE	4-29
3124462-0000	.BOX	4-29
3124463-0000	.PLATE	4-29
3124468-0000	.COVER	8-11
3124469-0000	.COVER	8-11
3124470-0000	.AIR NOZZLE	8-11
3124472-0000	.SHIM	4-9, 4-11
3124474-0000	.FLANGE	4-47
3124475-0000	.SPACER	4-47
3124476-0000	.COVER	4-47
3124524-0000	.AIR NOZZLE	4-29
3124525-0000	.SUPPORT	4-43, 4-45
3124526-0000	.SUPPORT	4-43, 4-45
3124527-0100	.SUPPORT	4-43, 4-45
3124528-0000	.GUIDE	4-9, 4-11
3124529-0000	.PIN	4-9, 4-11
3124530-0000	.PLATE	4-9, 4-11
3131674-0000	.TEMPLATE	10-39
3134551-0200	.BARCODE SCANNER	12-3
3137424-0000	.GUIDE	7-37, 7-39, 7-41
3137425-0000	.GUIDE	7-37, 7-39, 7-41
3139123-0100	.INFEED GUIDE	1-73, 1-75, 1-77, 1-79, 1-81
3139124-0000	.BRACKET	1-83
3139125-0000	.BRACKET	1-83
3141446-0000	.GUIDE	7-37, 7-39, 7-41
3143918-0000	.PLATE	12-27
3143919-0000	.HOLDER	6-67, 6-69
3144497-0000	.HOLDER	6-67, 6-69
3147216-0100	.GUIDE RAIL	8-3
3147217-0100	.GUIDE RAIL	8-3
3147218-0100	.GUIDE RAIL	8-3
3147220-0100	.GUIDE RAIL	8-3
3147221-0100	.GUIDE RAIL	8-3
3147222-0100	.GUIDE RAIL	8-3
3147226-0000	.ADAPTER	1-13, 1-15, 1-21, 1-31, 1-33, 1-45, 1-49, 1-55, 1-57, 2-15
3149900-0000	.FLANGE	1-91
3149901-0000	.PLATE	1-91
3149902-0000	.SHAFT	1-91
3149906-0000	.PLATE	1-91
3149907-0000	.SPACER	1-91
3149908-0000	.GUIDE	1-91
3149910-0000	.COVER	1-91
3149911-0000	.SPACER	1-91
3149912-0000	.SHAFT	1-91
3150919-0000	.BRACKET	6-67, 6-69
3150922-0000	.BRACKET	6-67, 6-69
3150924-0000	.BLOCK	6-67, 6-69
3151006-0000	.SCREW	6-67, 6-69
3152710-0000	.BRACKET	10-29
3152722-0000	.WHEEL	1-91
3152724-0000	.WHEEL	1-91
3152725-0000	.WHEEL	1-91
3156383-0000	.BRACKET	10-31

Part No	Description	Page No
3156384-0000	.PROFILE	10-29
3156385-0000	.PROFILE	10-29
3156411-0000	.PLATE	10-29
3158206-0000	.ROLLER BRACKET	6-67, 6-69
3159870-0000	.BRACKET	10-29
3159885-0000	.BRACKET	10-29
3159886-0000	.BRACKET	10-29
3159887-0000	.BRACKET	10-29
3159893-0000	.BRACKET	10-29
3159895-0000	.PLATE	10-29
3159896-0000	.PLATE	10-29
3161464-0000	.BRACKET	1-13, 1-21, 1-45, 1-55
3161465-0000	.BRACKET	1-13, 1-21, 1-45, 1-55
3161466-0000	.PLATE	12-27
3162977-0000	.GUIDE	1-73, 1-75, 1-77, 1-79, 1-81
3166547-0000	.BRACKET	1-89
3170032-0000	.SPACER	5-51
3170034-0000	.PLATE	5-51
3170035-0000	.BRACKET	5-51
3170036-0000	.PLATE	5-51
3170037-0000	.PLATE	5-153
3172144-0000	.PLATE	5-153
3177603-0000	.PLATE	1-91
3177654-0000	.BLOCK	5-11, 5-13
3178061-0000	.BELT	1-91
3186487-0000	.PROTECTION PLUG	1-13, 1-21, 1-45, 1-55
3190281-0000	.BOX	9-43
3190282-0000	.WELDED CABINET	9-41
3190285-0100	.ELECTRICAL CONVERSION	9-3
3193665-0000	.TEMPLATE	10-39
3193666-0000	.SUPPORT	1-71
3193669-0000	.SUPPORT	1-89
3193670-0000	.SUPPORT	1-89
3199127-0000	.FUSE PANEL LABEL	9-7, 9-9, 9-11
3199131-0000	.FUSE PANEL LABEL	9-7, 9-9, 9-11
3199178-0000	.FUSE PANEL LABEL	9-29, 9-31, 9-33
3199182-0000	.FUSE PANEL LABEL	9-29, 9-31, 9-33
3199707-0100	.COOLING UNIT	9-3
3199873-0100	.DRIVE	1-43
3199874-0100	.DRIVE	1-51
3199886-0100	.SIDE FRAME	1-41
3199887-0100	.SIDE FRAME	1-41
3199889-0100	.SIDE ADJUSTER	1-7
3199890-0100	.SIDE ADJUSTER	1-7
3199891-0100	.DRIVE	1-9
3199892-0100	.PACKAGE POSITIONER	1-3, 1-5
3199893-0100	.PACKAGE POSITIONER	1-3, 1-5
3199894-0100	.ADJUSTABLE GUIDE	1-41
3199895-0100	.PACKAGE HANDLING	1-3, 1-5
3199896-0100	.PNEUMATIC CYLINDER	1-59
3199898-0100	.ROLLER	1-73, 1-75, 1-77, 1-79, 1-81
3199899-0000	.SCREW	1-31, 1-33
3199900-0000	.BRACKET	1-11
3200713-0000	.COVER	1-85, 1-87
3202908-0000	.SCREW	1-11, 1-19, 1-47, 1-53
3203258-0000	.GUIDE	1-11, 1-53
3203260-0000	.GUIDE	1-19, 1-47
3203747-0000	.PLATE	1-13
3203752-0000	.BRACKET	5-57, 12-25
3203753-0000	.SUPPORT	5-61
3203761-0100	.HEATER	5-49
3203763-0100	.VISION SYSTEM	5-53, 5-55, 12-23
3203764-0100	.HEATING ELEMENT	5-53, 5-55
3203766-0100	.CONVERSION KIT	5-53, 5-55
3208104-0000	.SHAFT	2-15
3208122-0100	.PHOTOCELL BRACKET	1-73, 1-75, 1-77, 1-79, 1-81
3208157-0100	.ADJUSTABLE GUIDE	1-7
3208664-0100	.CENTRAL LUBRICATION	5-3
3209472-0000	.SPACER	1-67, 1-69
3209473-0000	.SHIM	1-95
3209474-0000	.BRACKET	1-95
3209475-0000	.COVER	1-65
3209476-0000	.COVER	1-65
3209477-0000	.PLATE	1-95
3209478-0000	.BRACKET	1-95
3209479-0000	.BELLOWS	1-65
3209480-0100	.FRAME UPPER	1-9
3209481-0100	.FRAME UPPER	1-17
3209482-0100	.FRAME BOTTOM	1-51
3209483-0100	.FRAME BOTTOM	1-43
3210206-0100	.LAMP	5-83
3210207-0100	.LAMP	5-83
3210208-0000	.SPACER	5-93, 5-95
3210209-0000	.COVER	5-93, 5-95

Part No	Description	Page No
3210219-0100	.EJECTOR	10-25
3210220-0000	.PROFILE	10-29
3210221-0000	.SPACER	10-29
3210222-0000	.SPACER	10-29
3210223-0000	.PROFILE	10-29
3210225-0000	.PLATE	10-29
3210226-0000	.PLATE	10-29
3210227-0000	.SPACER	10-29
3210228-0000	.BRACKET	10-27
3210229-0000	.SLIDE PLATE	10-27
3210230-0000	.SPACER	10-29
3210231-0000	.SPACER	10-29
3210232-0100	.PHOTOCELL BRACKET	10-25
3210234-0000	.COVER	10-27
3210235-0000	.PUSHER	10-27
3210236-0000	.SUPPORT	10-27
3210237-0000	.SHAFT	10-27
3212197-0000	.COVER	5-145
3212199-0000	.COVER	5-129
3212201-0000	.TUBE HOLDER	5-145
3214100-0000	.BRACKET	5-81
3216180-0000	.PIPE	5-23, 5-25, 5-27, 5-29
3216184-0000	.TIGHTENING CLAMP	5-99, 5-101
3217276-0100	.DRIVE	1-17
3217277-0000	.PLATE	1-11
3217278-0100	.WARNING SIGN	1-3, 1-5
3217280-0000	.SHAFT	1-31, 1-33
3217564-0000	.TIGHTENING CLAMP	5-99, 5-101
3217565-0100	.DOOR HINGE	5-5
3217567-0100	.WARNING SIGN	5-3
3217906-0000	.GUIDE	1-11
3217907-0000	.GUIDE	1-19
3217908-0000	.GUIDE	1-47
3217909-0000	.GUIDE	1-53
3217910-0000	.FRAME	1-53
3217911-0000	.FRAME	1-11
3217912-0000	.FRAME	1-47
3217913-0000	.FRAME	1-19
3217924-0000	.PLATE	1-21
3218060-0100	.WARNING SIGN	5-113
3219669-0000	.NIPPLE	5-63, 5-79
3220121-0100	.HOTMELT UNIT	5-99, 5-101
3220122-0100	.HOTMELT UNIT	5-99, 5-101
3220123-0100	.HOTMELT UNIT	5-99, 5-101
3220124-0100	.HOTMELT UNIT	5-99, 5-101
3220125-0100	.HOTMELT UNIT	5-99, 5-101
3220227-0100	.START-UP KIT	10-13
3220228-0100	.START-UP KIT	10-13
3220229-0100	.START-UP KIT	10-13
3220230-0100	.START-UP KIT	10-13
3220231-0100	.START-UP KIT	10-13
3223674-0000	.CABLE DUCT	9-49
3223764-0000	.BRACKET	3-29
3223765-0000	.PLATE	3-29
3227417-0100	.WARNING SIGN	10-25
3227565-0000	.PNEUMATIC DIAGRAM	10-3
3228191-0000	.WATER DIAGRAM	10-3
3228275-0000	.LUBRICATION DIAGRAM	10-3
3241149-0000	.OIL GUN	10-47
3243398-0100	.HOSE	10-3
3243399-0100	.OIL GUN	10-3
3247228-0002	.SOFTWARE CD	11-7
3257112-0000	.PUSH BUTTON BOX	5-147

Tetra Pak

SPC
Spare Parts Catalogue

Pos	Part No	Description	Page No
A			
P01A4000	90604-3805	OPER. PANEL 15" , 2711P-T15C4D8TP, SER A	5-115
B			
A01B6000	90602-8807	LIMIT SW. SZ 2586.010	9-41
A01B6001	90602-8807	LIMIT SW. SZ 2586.010	9-41
A01B6010	90458-1114	BIMET. ELECTROMECH. THERMOSTAT K7H.020	9-83
C50B0013	90459-5529	PHOTOCELL E3Z-T86A, SENDER+RECIEVER	4-43, 4-45
C50B1001	90458-2907	PROX.SWITCH IFS204	4-9, 4-11
C50B1002	90458-2907	PROX.SWITCH IFS204	4-9, 4-11
C50B2000	90459-7366	PHOTOCELL, WTB4-3P3161 F20	4-27
F09B2010	90459-6961	SAFETY SENSOR, ADAM E 0,5 M12	5-89, 5-91
F09B2011	90459-4089	SAFETY SENSOR, EVA E, 20-046-06	5-89, 5-91
F09B2012	90459-6961	SAFETY SENSOR, ADAM E 0,5 M12	5-89, 5-91
F09B2013	90459-4089	SAFETY SENSOR, EVA E, 20-046-06	5-89, 5-91
F09B2014	90459-6961	SAFETY SENSOR, ADAM E 0,5 M12	5-89, 5-91
F09B2015	90459-4089	SAFETY SENSOR, EVA E, 20-046-06	5-89, 5-91
F09B2016	90459-6961	SAFETY SENSOR, ADAM E 0,5 M12	5-89, 5-91
F09B2017	90459-4089	SAFETY SENSOR, EVA E, 20-046-06	5-89, 5-91
F09B2030	90459-6961	SAFETY SENSOR, ADAM E 0,5 M12	5-89, 5-91
F09B2031	90459-4089	SAFETY SENSOR, EVA E, 20-046-06	5-89, 5-91
F09B2034	90459-6961	SAFETY SENSOR, ADAM E 0,5 M12	5-89, 5-91
F09B2035	90459-4089	SAFETY SENSOR, EVA E, 20-046-06	5-89, 5-91
F09B2036	90459-5627	CONNECTION, TINA 1-A	5-89, 5-91
F09B2041	90459-6913	MAGNETIC LOCK, JSD-ZH-EM1-K	5-89, 5-91
F09B2042	90459-6913	MAGNETIC LOCK, JSD-ZH-EM1-K	5-89, 5-91
F09B3010	90459-6961	SAFETY SENSOR, ADAM E 0,5 M12	4-19
F09B3011	90459-4089	SAFETY SENSOR, EVA E, 20-046-06	4-15
F09B3012	90459-6961	SAFETY SENSOR, ADAM E 0,5 M12	4-19
F09B3013	90459-4089	SAFETY SENSOR, EVA E, 20-046-06	4-15
F09B3014	90459-6961	SAFETY SENSOR, ADAM E 0,5 M12	4-19
F09B3015	90459-4089	SAFETY SENSOR, EVA E, 20-046-06	4-15
F09B3016	90459-6961	SAFETY SENSOR, ADAM E 0,5 M12	4-13
F09B3017	90459-4089	SAFETY SENSOR, EVA E, 20-046-06	4-13
G30B1001	90459-6947	PHOTOCELL, WF 225-B4150	1-89
G30B1002	90458-2907	PROX.SWITCH IFS204	6-17
G40B0010	90459-6948	INDUCTIVE SENSOR, IFS 206	3-27
G40B0011	90459-6948	INDUCTIVE SENSOR, IFS 206	3-27
G40B0012	90459-6948	INDUCTIVE SENSOR, IFS 206	3-25
G40B0013	90459-6948	INDUCTIVE SENSOR, IFS 206	3-25
G40B2000	90459-6948	INDUCTIVE SENSOR, IFS 206	7-21
G40B2002	90600-3272	PROX. SENSOR, SMT-8M-PS-24V-K-5,0-OE	7-21
G40B5000	90459-5529	PHOTOCELL E3Z-T86A, SENDER+RECIEVER	8-5, 8-7, 8-21, 8-23
G40B5004	90459-5529	PHOTOCELL E3Z-T86A, SENDER+RECIEVER	8-5, 8-7, 8-21, 8-23
G50B1005	90458-2907	PROX.SWITCH IFS204	4-23
G70B0000	90600-1096	PROCESSOR UNIT IN-SIGHT 5100, IS-5100-00	5-57, 12-25
K01B8001	90459-6426	PRESSURE GUARD PEV-1/4-B-OD	5-77
V01B9001	90459-5481	OIL PUMP 3L, 10P-P3	5-81
V01B9002	90603-1938	PRESSURE SWITCH, 1800 KPA, 28545-251-2	5-81
W20B0003	90600-4732	LASER SENSOR, WS/WE9L-P330	1-33
W21B0000	90458-2907	PROX.SWITCH IFS204	1-61
W21B3000	90600-4732	LASER SENSOR, WS/WE9L-P330	10-29
W21B3002	90600-4732	LASER SENSOR, WS/WE9L-P330	10-29
W21B3004	90600-4732	LASER SENSOR, WS/WE9L-P330	10-29
W21B3012	90600-4732	LASER SENSOR, WS/WE9L-P330	10-29
W21B4002	90459-5529	PHOTOCELL E3Z-T86A, SENDER+RECIEVER	5-23, 5-25, 5-27, 5-29
W21B4004	90459-5529	PHOTOCELL E3Z-T86A, SENDER+RECIEVER	5-23, 5-25, 5-27, 5-29
W21B4006	90459-5529	PHOTOCELL E3Z-T86A, SENDER+RECIEVER	5-23, 5-25, 5-27, 5-29
W21B4008	90459-5529	PHOTOCELL E3Z-T86A, SENDER+RECIEVER	5-23, 5-25, 5-27, 5-29
W21B4023	90459-5529	PHOTOCELL E3Z-T86A, SENDER+RECIEVER	1-71
W21B6002	90459-5529	PHOTOCELL E3Z-T86A, SENDER+RECIEVER	5-23, 5-25, 5-27, 5-29
W21B6004	90459-5529	PHOTOCELL E3Z-T86A, SENDER+RECIEVER	12-19
W21B6005	90458-2907	PROX.SWITCH IFS204	12-15
E			
A01E6000	90459-0813	COOLING UNIT, KB20A619.01	9-5
A01E6000	90600-5815	COOLING UNIT, KB20A21341.03	9-27
A01E7000	90602-1250	LIGHT FIXTURE, SLIM LED 112-544-001	9-41
A01E7001	90602-1250	LIGHT FIXTURE, SLIM LED 112-544-001	5-93, 5-95
A01E7002	90602-1250	LIGHT FIXTURE, SLIM LED 112-544-001	5-93
W21E8001	90206-0124	HEATING ELEMENT 2X1500W 230V	5-59
F			
A01F1001	90600-7487	SURGE PROTECTION DEV., VAL-MS 230/3+1 FM	9-43
A01F1004	90459-5813	AUXILIARY CONTACT, FAZ-XHIN11	9-7, 9-9, 9-11, 9-29, 9-31, 9-33
A01F1004	315746-0250	MINIATURE CIRCUIT BREAKER, FAZ-C25/3-NA	9-29, 9-31, 9-33
A01F1004	354002-0250	MINIATURE CIRCUIT BREAKER, FAZ-C25/3	9-7, 9-9, 9-11
A01F1005	90458-2507	FUSE HOLDER, USBCC1	9-67
A01F1005	90458-2510	FUSE, ATDR6	9-67
A01F2000	315746-0060	MINIATURE CIRCUIT BREAKER, FAZ-C6/3-NA	9-29, 9-31, 9-33
A01F2000	354002-0060	MINIATURE CIRCUIT BREAKER, FAZ-C6/3	9-7, 9-9, 9-11
A01F2001	315744-0040	MINIATURE CIRCUIT BREAKER, FAZ-C4/1-NA	9-29, 9-31, 9-33
A01F2001	354000-0040	MINIATURE CIRCUIT BREAKER, FAZ-C4/1	9-7, 9-9, 9-11
A01F2002	315744-0040	MINIATURE CIRCUIT BREAKER, FAZ-C4/1-NA	9-29, 9-31, 9-33
A01F2002	354000-0040	MINIATURE CIRCUIT BREAKER, FAZ-C4/1	9-7, 9-9, 9-11
A01F2003	315744-0040	MINIATURE CIRCUIT BREAKER, FAZ-C4/1-NA	9-29, 9-31, 9-33

Pos	Part No	Description	Page No
F			
A01F2003	354000-0040	MINIATURE CIRCUIT BREAKER, FAZ-C4/1	9-7, 9-9, 9-11
A01F2004	315744-0040	MINIATURE CIRCUIT BREAKER, FAZ-C4/1-NA	9-29, 9-31, 9-33
A01F2004	354000-0040	MINIATURE CIRCUIT BREAKER, FAZ-C4/1	9-7, 9-9, 9-11
A01F2005	315744-0040	MINIATURE CIRCUIT BREAKER, FAZ-C4/1-NA	9-29, 9-31, 9-33
A01F2005	354000-0040	MINIATURE CIRCUIT BREAKER, FAZ-C4/1	9-7, 9-9, 9-11
A01F3000	315744-0040	MINIATURE CIRCUIT BREAKER, FAZ-C4/1-NA	9-29, 9-31, 9-33
A01F3000	354000-0040	MINIATURE CIRCUIT BREAKER, FAZ-C4/1	9-7, 9-9, 9-11
A01F6000	315744-0060	MINIATURE CIRCUIT BREAKER, FAZ-C6/1-NA	9-29, 9-31, 9-33
A01F6000	354000-0060	MINIATURE CIRCUIT BREAKER, FAZ-C6/1	9-7, 9-9, 9-11
A01F7000	315744-0040	MINIATURE CIRCUIT BREAKER, FAZ-C4/1-NA	9-29, 9-31, 9-33
A01F7001	90459-5811	RESIDUAL CURRENT DEVICE, FI-25/2/003-A	9-7, 9-9, 9-11
A01F7002	354000-0100	MINIATURE CIRCUIT BREAKER, FAZ-C10/1	9-7, 9-9, 9-11
C50F0000	90259-0313	AUXILIARY SWITCH, NHI21-PKZ0	9-7, 9-9, 9-11, 9-29, 9-31, 9-33
C50F0000	90459-5323	OVERLOAD PROTECTION, PKZM0-1	9-7, 9-9, 9-11, 9-29, 9-31, 9-33
C50F1000	315744-0060	MINIATURE CIRCUIT BREAKER, FAZ-C6/1-NA	9-29, 9-31, 9-33
C50F1000	354000-0060	MINIATURE CIRCUIT BREAKER, FAZ-C6/1	9-7, 9-9, 9-11
G40F4000	90259-0313	AUXILIARY SWITCH, NHI21-PKZ0	9-7, 9-9, 9-11, 9-29, 9-31, 9-33
G40F4000	90459-5321	OVERLOAD PROTECTION, PKZM0-0,4	9-7, 9-9, 9-11, 9-29, 9-31, 9-33
V01F5000	90459-5813	AUXILIARY CONTACT, FAZ-XHIN11	9-7, 9-9, 9-11, 9-29, 9-31, 9-33
V01F5000	315746-0200	MINIATURE CIRCUIT BREAKER, FAZ-C20/3-NA	9-29, 9-31, 9-33
V01F5000	354002-0200	MINIATURE CIRCUIT BREAKER, FAZ-C20/3	9-7, 9-9, 9-11
W20F0000	315744-0060	MINIATURE CIRCUIT BREAKER, FAZ-C6/1-NA	9-29, 9-31, 9-33
W20F0000	354000-0060	MINIATURE CIRCUIT BREAKER, FAZ-C6/1	9-7, 9-9, 9-11
W21F4000	315744-0100	MINIATURE CIRCUIT BREAKER, FAZ-C10/1-NA	9-29, 9-31, 9-33
W21F4000	354000-0100	MINIATURE CIRCUIT BREAKER, FAZ-C10/1	9-7, 9-9, 9-11
W21F4010	315744-0060	MINIATURE CIRCUIT BREAKER, FAZ-C6/1-NA	9-21, 9-23
W21F4010	354000-0060	MINIATURE CIRCUIT BREAKER, FAZ-C6/1	9-21, 9-23
W21F6000	315744-0100	MINIATURE CIRCUIT BREAKER, FAZ-C10/1-NA	9-29, 9-31, 9-33
W21F6000	354000-0100	MINIATURE CIRCUIT BREAKER, FAZ-C10/1	9-7, 9-9, 9-11
W21F8000	90259-0313	AUXILIARY SWITCH, NHI21-PKZ0	9-69
W21F8000	90459-5326	OVERLOAD PROTECTION, PKZM0-4	9-69
W21F8001	90459-5813	AUXILIARY CONTACT, FAZ-XHIN11	9-7, 9-9, 9-11, 9-29, 9-31, 9-33
W21F8001	315745-0100	MINIATURE CIRCUIT BREAKER, FAZ-C10/2-NA	9-29, 9-31, 9-33
W21F8001	354001-0100	MINIATURE CIRCUIT BREAKER, FAZ-C10/2	9-7, 9-9, 9-11
G			
C50G1064	3115358-0000	AIR NOZZLE	4-29, 4-31, 4-33, 4-35, 4-37, 4-39, 4-41
C50G1065	2930228-0000	AIR NOZZLE	4-29, 4-31, 4-33, 4-35, 4-37, 4-39, 4-41
C50G1066	2930229-0000	AIR NOZZLE	4-31, 4-33, 4-35, 4-37, 4-39, 4-41
C50G1066	3124524-0000	AIR NOZZLE	4-29
C50G1067	2930228-0000	AIR NOZZLE	4-29
C50G1067	2930230-0000	AIR NOZZLE	4-35, 4-37, 4-41
C50G1067	2981405-0000	AIR NOZZLE	4-33, 4-39
C50G1067	3115238-0000	AIR NOZZLE	4-31
C50G1068	2930228-0000	AIR NOZZLE	4-29
C50G1068	2930230-0000	AIR NOZZLE	4-35, 4-37, 4-41
C50G1068	2981405-0000	AIR NOZZLE	4-33, 4-39
C50G1068	3115238-0000	AIR NOZZLE	4-31
C50G1069	2981405-0000	AIR NOZZLE	4-35, 4-37, 4-41
C50G1069	3124524-0000	AIR NOZZLE	4-29
C50G1070	2981418-0000	AIR NOZZLE	4-31, 4-39
C50G1072	3124444-0000	AIR NOZZLE	4-29, 4-31
K			
A01K1000	90600-5262	LINE FILTER, B84144A36R120	9-43
A01K1001	90600-5266	FEED THROUGH FILTER, B85321A2502W160	9-43
A01K1002	90600-5266	FEED THROUGH FILTER, B85321A2502W160	9-43
A01K1004	90600-5258	LINE FILTER, B84143A35R106	9-47
A01K1005	90600-5253	LINE FILTER, B84113HB60	9-47
A01K1010	90119-0108	RELAY OMRON G2R-2-SNI-24DC	9-51
A01K1010	90129-0018	BASE, P2RF-08-E	9-51
A01K3001	90603-5366	PROCESSOR L72, SERIES A,, 1756-L72/A	9-75
A01K3002	90459-2477	ETHERNET I/P BRIDGE MODULE, 1756-ENBT	12-9
A01K3003	90459-2477	ETHERNET I/P BRIDGE MODULE, 1756-ENBT	9-75
A01K3004	90600-5840	PLC DEVICEN. BR./SCAN MOD, 1756-DNB, D	9-75
A01K3005	90459-2488	REMOVABLE TERMINAL BLOCK 36 POINTS	9-75
A01K3005	90459-6556	PLC DIGITAL INPUT 32PTS, 1756-IB32/B	9-75
A01K3006	90459-2413	PLC DIGITAL INPUT MODULE16 POINTS	9-75
A01K3006	90459-2487	REMOVABLE TERMINAL BLOCK 20 POINTS	9-75
A01K3007	90459-2474	PLC,DIGIT. OUTPUT MODULE 16 PTS 10-31VDC	9-75
A01K3007	90459-2487	REMOVABLE TERMINAL BLOCK 20 POINTS	9-75
A01K3008	90459-2488	REMOVABLE TERMINAL BLOCK 36 POINTS	9-7, 9-9, 9-11, 9-29, 9-31, 9-33
A01K3008	90600-4033	DIGITAL OUTPUT MODULE, 1756-OB16IS	9-7, 9-9, 9-11, 9-29, 9-31, 9-33
A01K3010	90459-2480	8-AXIS SERCOS MOTION MODULE	9-7, 9-9, 9-11, 9-29, 9-31, 9-33
A01K3020	90459-2494	DEVICENET I/O ADAPTER MODULE, 1734-ADN	5-117, 5-119
A01K3021	90459-2503	DIGITAL INPUT 4 PTS SINK, 1734-IB4	5-117, 5-119
A01K3022	90459-2503	DIGITAL INPUT 4 PTS SINK, 1734-IB4	5-117, 5-119
A01K3023	90459-2503	DIGITAL INPUT 4 PTS SINK, 1734-IB4	5-117, 5-119
A01K3024	90459-2503	DIGITAL INPUT 4 PTS SINK, 1734-IB4	5-117, 5-119
A01K3025	90459-2503	DIGITAL INPUT 4 PTS SINK, 1734-IB4	5-117, 5-119
A01K3026	90459-2501	FIELD POWER DISTRIBUTOR, 1734-FPD	5-117, 5-119
A01K3027	90459-2505	DIGITAL OUTPUT 4 PTS, 1734-OB4E	5-117, 5-119
A01K3028	90459-2505	DIGITAL OUTPUT 4 PTS, 1734-OB4E	5-117, 5-119
A01K3029	90459-2505	DIGITAL OUTPUT 4 PTS, 1734-OB4E	5-117, 5-119

Pos	Part No	Description	Page No
K			
A01K3030	90459-2501	FIELD POWER DISTRIBUTOR, 1734-FPD	5-117, 5-119
A01K3031	90459-2505	DIGITAL OUTPUT 4 PTS, 1734-OB4E	5-117, 5-119
A01K3032	90459-2505	DIGITAL OUTPUT 4 PTS, 1734-OB4E	5-117, 5-119
A01K3033	90459-2505	DIGITAL OUTPUT 4 PTS, 1734-OB4E	5-117, 5-119
A01K3034	90119-0108	RELAY OMRON G2R-2-SNI-24DC	5-117, 5-119
A01K3035	90119-0108	RELAY OMRON G2R-2-SNI-24DC	5-117, 5-119
A01K3036	90119-0108	RELAY OMRON G2R-2-SNI-24DC	5-117, 5-119
A01K7000	90119-0108	RELAY OMRON G2R-2-SNI-24DC	9-51
A01K7000	90129-0018	BASE, P2RF-08-E	9-51
A81K4001	90600-5249	FERRITE, B64290L616X38	9-75
A81K4002	90600-5249	FERRITE, B64290L616X38	9-83
A81K5000	90604-5464	QUICKSERVER GATEWAY, FS-QS-1230-0705	12-35
C50K1000	90459-3460	FOOTPRINT FILTER 1 PHASE 10A	9-7, 9-9, 9-11, 9-29, 9-31, 9-33
C50K1001	90600-5249	FERRITE, B64290L616X38	9-7, 9-9, 9-11, 9-29, 9-31, 9-33
C50K1002	90600-5249	FERRITE, B64290L616X38	9-7, 9-9, 9-11, 9-29, 9-31, 9-33
C81K4130	90459-6062	ARMORBLOCK DIGITAL CONFIGURABLE I/O	4-9, 4-11
F09K0000	90459-6692	SAFETY PLC, PLUTO B20 20-070-06	9-81
F09K0001	90459-2291	SAFETY RELAY, E1T	9-81
F09K0002	90459-4891	IDENTIFIER, ID-FIX RW	9-81
F09K0003	90459-2291	SAFETY RELAY, E1T	9-7, 9-9, 9-11, 9-29, 9-31, 9-33
F09K3016	90604-0093	CONNECTION BLOCK, TINA4A 2TLJ020054R0300	4-9, 4-11
G40K1000	90604-3317	GUN,TP EASYC. SBLA2T 120 1A, 1099064H1	3-5
G40K2010	90458-1197	VALVE, 5/2 BISTABLE	7-29
G70K0000	90459-2739	OPTO-RELAY 50085, IN / OUT 4-53VDC 1A	9-51
G70K0001	90459-2739	OPTO-RELAY 50085, IN / OUT 4-53VDC 1A	9-51
K01K8000	90459-2243	SHUT OFF VALVE, MS4-EE-1/4-10V24	5-77
K21K0000	90458-1202	VALVES 2X3/2, CLOSED	5-69, 5-71
K40K2003	90458-1202	VALVES 2X3/2, CLOSED	5-69, 5-71
W20K0000	90459-3454	FOOTPRINT FILTER 1 PHASE 18A	9-7, 9-9, 9-11, 9-29, 9-31, 9-33
W20K0002	90119-0108	RELAY OMRON G2R-2-SNI-24DC	9-7, 9-9, 9-11, 9-29, 9-31, 9-33
W20K0002	90129-0018	BASE, P2RF-08-E	9-7, 9-9, 9-11, 9-29, 9-31, 9-33
W21K1000	90600-5249	FERRITE, B64290L616X38	9-7, 9-9, 9-11, 9-29, 9-31, 9-33
W21K2000	90600-5249	FERRITE, B64290L616X38	9-7, 9-9, 9-11, 9-29, 9-31, 9-33
W21K3010	90458-1197	VALVE, 5/2 BISTABLE	10-33
W21K4000	90459-3460	FOOTPRINT FILTER 1 PHASE 10A	9-47
W21K4001	90600-5249	FERRITE, B64290L616X38	9-47
W21K4002	90600-5249	FERRITE, B64290L616X38	9-47
W21K4010	90459-3460	FOOTPRINT FILTER 1 PHASE 10A	9-21, 9-23
W21K4011	90600-5249	FERRITE, B64290L616X38	9-21, 9-23
W21K4012	90600-5249	FERRITE, B64290L616X38	9-21, 9-23
W21K5000	90458-1203	VALVE 2X3/2 1X OPEN 1X CLOSED	10-35
W21K6000	90459-3460	FOOTPRINT FILTER 1 PHASE 10A	12-7
W21K6001	90600-5249	FERRITE, B64290L616X38	12-7
W21K6002	90600-5249	FERRITE, B64290L616X38	12-7
W21K8000	90600-4731	CURRENT CONTROL RELAY, K8AB-AS2 200-230	9-51
W21K8001	90600-4731	CURRENT CONTROL RELAY, K8AB-AS2 200-230	9-51
W81K4120	90459-6062	ARMORBLOCK DIGITAL CONFIGURABLE I/O	5-7, 5-9
M			
C50M0000	90458-2483	MOTOR 3GVA062002-BSB	4-43, 4-45
C50M1000	90458-2483	MOTOR 3GVA062002-BSB	4-9, 4-11
G30M0000	90601-1926	SERVO MOTOR, MPL-B430P-MK72AA SERIES A	6-19
G30M4000	90601-0668	SERVO MOTOR, MPL-B420P-MK72AA SERIES A	2-13
G40M0000	90601-1926	SERVO MOTOR, MPL-B430P-MK72AA SERIES A	3-17
G40M0002	90601-1926	SERVO MOTOR, MPL-B430P-MK72AA SERIES A	3-19
G40M2060	90604-3142	CYLINDER, GRIPPER DHPS-16-A-H1-SA	7-21
G40M3000	90601-4430	SERVO MOTOR, MPL-B320P-MJ72AA, SERIES A	7-11
G40M4000	90110-0053	FEMALE INSERT, HAN 6 E 09 33 006 2701	5-7, 5-9
G40M4000	90603-2676	MOTOR 3GAA052002-CSA	8-5, 8-7, 8-21, 8-23
G70M1000	90601-5090	SERVO MOTOR, MPL-B310P-MK72AA SERIES A	6-45, 6-47, 6-49
W20M0000	90604-4247	GEARS, WORM MOTOR MR V 32 UO3A - 63 B 4	1-39
W20M0050	90604-3137	DOUBLE ACTING, ROUND, CYL 32-80	1-37
W20M0060	90604-3143	DOUBLE ACTING, ROUND, CYL 32-150	1-67
W20M0063	90604-3143	DOUBLE ACTING, ROUND, CYL 32-150	1-69
W21M1000	90601-0668	SERVO MOTOR, MPL-B420P-MK72AA SERIES A	1-55
W21M2000	90601-0668	SERVO MOTOR, MPL-B420P-MK72AA SERIES A	1-45
W21M3060	90604-3129	DOUBLE ACTING, MINI-ISO, CYL. 16-25	10-27
W21M4010	2901694-0000	MOTOR	1-91
W21M8000	90604-3589	FAN 2BH1300-7AV15-K41	5-51
P			
A01P5000	90053-0029	COUNTER, F524.800FA3C 24VDC	9-81
A01P5001	90053-0031	HOUR COUNTER, B 609.10 10-50VDC	9-81
A01P5011	90602-4062	LIGHT ELEMENT, RED, PSD-S OE LED RD	5-87
A01P5012	90602-4063	LIGHT ELEMENT, YELLOW, PSD-S OE LED YE	5-87
A01P5013	90602-4631	SIREN 100DB, PSD-S AE SM8-5 100DB/1	5-87
A01P5014	90602-4060	LIGHT ELEMENT, BLUE, PSD-S OE LED BU	5-87
A01P5015	90602-4061	LIGHT ELEMENT, GREEN, PSD-S OE LED GN	5-87
C50P1050	90600-1420	REGULATOR, MS4-LRB-1/4-D6-AS	4-21
C50P1053	90600-1420	REGULATOR, MS4-LRB-1/4-D6-AS	4-21
C50P1054	90600-1420	REGULATOR, MS4-LRB-1/4-D6-AS	4-21
K01P5000	90459-3603	PRESSURE GAUGE, MAP-40-6-1/8-EN	5-69, 5-71
K40P1050	90459-7344	PRESSURE GAUGE, MA-40-6-R1/4-EN	5-69, 5-71

Pos	Part No	Description	Page No
Q			
A01Q1000	90600-5543	CIRCUIT BREAKER, NZMB1-4-A32	9-7, 9-9, 9-11
A01Q1000	90600-5544	CIRCUIT BREAKER, NZMB1-A32-NA	9-29, 9-31, 9-33
A01Q1004	90600-1759	CONTACTOR22KW24VDCDILM50-22+DILM65-XIP2X	9-71
A01Q1005	90600-1759	CONTACTOR22KW24VDCDILM50-22+DILM65-XIP2X	9-67
A01Q6000	90459-5308	CONTACTOR 4KW 24VDC, DILM9-10	9-71
C50Q0000	90459-5308	CONTACTOR 4KW 24VDC, DILM9-10	9-7, 9-9, 9-11, 9-29, 9-31, 9-33
C50Q0000	90459-6852	AUXILIARY CONTACT, DILA-XHI22	9-7, 9-9, 9-11, 9-29, 9-31, 9-33
C50Q1000	90459-5308	CONTACTOR 4KW 24VDC, DILM9-10	9-7, 9-9, 9-11, 9-29, 9-31, 9-33
C50Q1000	90459-6852	AUXILIARY CONTACT, DILA-XHI22	9-7, 9-9, 9-11, 9-29, 9-31, 9-33
G40Q4000	90459-5308	CONTACTOR 4KW 24VDC, DILM9-10	9-7, 9-9, 9-11, 9-29, 9-31, 9-33
G40Q4000	90459-6852	AUXILIARY CONTACT, DILA-XHI22	9-7, 9-9, 9-11, 9-29, 9-31, 9-33
K01Q8050	90459-2337	SHUT OFF VALVE, MS4-EM1-1/4	5-77
K20Q0051	90459-0290	NON-RETURN VALVE, H-QS-6	5-69, 5-71
K20Q0052	90187-0191	BALL VALVE, R1/8 - HOSE 6 MM	5-69, 5-71
U01Q0051	90187-0045	BALL VALVE, G1/4 CR PL	5-63
V01Q5000	90459-5311	CONTACTOR 15KW 24VDC, DILM32-10	9-71
W20Q0000	90459-5308	CONTACTOR 4KW 24VDC, DILM9-10	9-7, 9-9, 9-11, 9-29, 9-31, 9-33
W20Q0000	90459-6852	AUXILIARY CONTACT, DILA-XHI22	9-7, 9-9, 9-11, 9-29, 9-31, 9-33
W21Q3000	90459-2777	FLOW CONTROL VALVE, GR-QS-8	10-27
W21Q4000	90459-5308	CONTACTOR 4KW 24VDC, DILM9-10	9-79
W21Q4000	90459-6852	AUXILIARY CONTACT, DILA-XHI22	9-79
W21Q4010	90459-5308	CONTACTOR 4KW 24VDC, DILM9-10	9-21, 9-23
W21Q4010	90459-6852	AUXILIARY CONTACT, DILA-XHI22	9-21, 9-23
W21Q6000	90459-5308	CONTACTOR 4KW 24VDC, DILM9-10	9-7, 9-9, 9-11, 9-29, 9-31, 9-33
W21Q6000	90459-6852	AUXILIARY CONTACT, DILA-XHI22	9-7, 9-9, 9-11, 9-29, 9-31, 9-33
W21Q8000	90459-5308	CONTACTOR 4KW 24VDC, DILM9-10	9-71
W21Q8001	90459-5309	CONTACTOR 7,5KW 24VDC, DILM17-10	9-71
R			
A81R4000	90459-2523	TERMINATOR, OPEN STYLE, 1485A-C2	9-83
A81R5020	90459-2523	TERMINATOR, OPEN STYLE, 1485A-C2	12-35
C50R1000	90328-0013	SILENCER U-1/4, 2316	4-21
C81R4130	90603-5560	CONNECTOR, SACC-M12MS-5CON-PG 7-VA	4-9, 4-11
G40R2060	90328-0029	SILENCER, M5	7-29
G40R2061	90328-0029	SILENCER, M5	7-29
G40R2063	90328-0047	SILENCER, G1/8"	7-29
G40R2065	90328-0047	SILENCER, G1/8"	7-29
K01R5000	90459-5817	REGULATOR, MS4-LR-1/4-D6-A8-AS	5-69, 5-71
K01R8052	90328-0026	SILENCER, G1/4"	5-77
K01R8053	90328-0026	SILENCER, G1/4"	5-77
K01R9051	90328-0047	SILENCER, G1/8"	5-69, 5-71
K01R9053	90328-0047	SILENCER, G1/8"	5-69, 5-71
K01R9054	90328-0029	SILENCER, M5	5-69, 5-71
K01R9055	90328-0029	SILENCER, M5	5-69, 5-71
K20R3052	90328-0047	SILENCER, G1/8"	5-69, 5-71
K20R3053	90328-0047	SILENCER, G1/8"	5-69, 5-71
K20R3054	90328-0029	SILENCER, M5	5-69, 5-71
K20R3055	90328-0029	SILENCER, M5	5-69, 5-71
K21R0054	90459-3604	FLOW CONTROL VALVE, GR-QS-6	5-69, 5-71
K21R3054	90235-0748	THROTTLE CHECK VALVE, GRA-1/4-B	5-69, 5-71
K40R1050	90459-5817	REGULATOR, MS4-LR-1/4-D6-A8-AS	5-69, 5-71
W20R0051	90328-0017	SILENCER, D=6 MM	1-37
W20R0061	90328-0047	SILENCER, G1/8"	1-67
W20R0064	90328-0047	SILENCER, G1/8"	1-69
W21R3063	90328-0047	SILENCER, G1/8"	10-33
W21R3065	90328-0047	SILENCER, G1/8"	10-33
W21R3066	90328-0029	SILENCER, M5	10-33
W21R3067	90328-0029	SILENCER, M5	10-33
W21R5053	90328-0047	SILENCER, G1/8"	10-35
W21R5055	90328-0047	SILENCER, G1/8"	10-35
W21R5056	90328-0029	SILENCER, M5	10-35
W21R5057	90328-0029	SILENCER, M5	10-35
S			
A81S2010	90603-5602	BAR CODE READER, D8330 SR-902151265+CAB-	12-5
F09S1001	90458-1651	EMERGENCY STOP, ZB4-BS-844 ZB4-BZ-104	9-41
F09S1002	90458-1651	EMERGENCY STOP, ZB4-BS-844 ZB4-BZ-104	5-115
F09S1003	90458-1651	EMERGENCY STOP, ZB4-BS-844 ZB4-BZ-104	5-147
P01S4000	90064-0093	PUSH BUTTON, GREEN	5-115
P01S4001	90064-0098	PUSH BUTTON, WHITE	5-115
P01S4002	90064-0093	PUSH BUTTON, GREEN	5-115
P01S4004	90064-0098	PUSH BUTTON, WHITE	5-115
T			
A01T2000	90459-4133	POWER SUPPLY UNIT 6EP1 436-3BA00	9-83
A01T2001	90459-2939	BUFFER UNIT, 6EP1961-3BA01	12-33
A01T3000	90459-7267	POWER SUPPLY 24VDC, 1756-PB75/B	9-75
A01T7000	90603-1115	POWER SUPPLY, STEP-PS/1AC/24DC/3,8/C2LPS	9-29, 9-31, 9-33
A81T4000	90459-5886	POWER SUPPLY UNIT 115-230 VAC/24VDC100W	9-83
C50T1000	90459-3449	FREQ. CONV., 22A-A2P3N104	9-7, 9-9, 9-11, 9-29, 9-31, 9-33
G30T0000	90600-5212	AXIS MOD. W. PS,2094-BC02-M02-S SERIES B	9-73
G30T4000	90600-5214	AXIS MOD. KINETIX 6000,2094-BM01-S SER.B	9-73
G40T0000	90600-5216	AXIS MOD. KINETIX 6000,2094-BM02-S SER.B	9-7, 9-9, 9-11, 9-29, 9-31, 9-33
G40T0002	90600-5216	AXIS MOD. KINETIX 6000,2094-BM02-S SER.B	9-7, 9-9, 9-11, 9-29, 9-31, 9-33
G40T3000	90600-5214	AXIS MOD. KINETIX 6000,2094-BM01-S SER.B	9-7, 9-9, 9-11, 9-29, 9-31, 9-33

Pos	Part No	Description	Page No
T			
G70T1000	90600-5214	AXIS MOD. KINETIX 6000,2094-BM01-S SER.B	9-19, 12-31
W20T0000	90459-3441	FREQ. CONV., 22B-A2P3N104	9-7, 9-9, 9-11, 9-29, 9-31, 9-33
W21T1000	90600-5216	AXIS MOD. KINETIX 6000,2094-BM02-S SER.B	9-7, 9-9, 9-11, 9-29, 9-31, 9-33
W21T2000	90600-5216	AXIS MOD. KINETIX 6000,2094-BM02-S SER.B	9-7, 9-9, 9-11, 9-29, 9-31, 9-33
W21T4000	90459-3450	FREQ. CONV., 22A-A4P5N104	9-47
W21T4010	90459-3449	FREQ. CONV., 22A-A2P3N104	9-21, 9-23
W21T6000	90459-3450	FREQ. CONV., 22A-A4P5N104	12-7
U			
C50U1003	90600-5813	SOLENOID VALVE, CPE18-M1H-3GL-1/4	4-21
G40U2060	90459-2591	SINGLE VALVE SUB-BASE CDSV5.0-AS-1/8	7-29
K01U9050	90459-2591	SINGLE VALVE SUB-BASE CDSV5.0-AS-1/8	5-69, 5-71
K20U3050	90459-2591	SINGLE VALVE SUB-BASE CDSV5.0-AS-1/8	5-69, 5-71
V01U9058	90032-0039	BLOCK 4 WAYS	5-81
W21U3060	90459-2591	SINGLE VALVE SUB-BASE CDSV5.0-AS-1/8	10-33
W21U5050	90459-2591	SINGLE VALVE SUB-BASE CDSV5.0-AS-1/8	10-35
V			
K01V8050	90459-2339	FILTER REGULATOR, MS4-LFR-1/4-D7-ERV-AS	5-77
K01V8052	90603-4699	FILTER, MS6-LFM-1/2-B-R-V-DA	5-75
K01V8053	90603-4698	FILTER, MS6-LFM-1/2-ARV-DA	5-75
K01V8054	90459-2771	FILTER, MS6-LFX-1/2-R	5-75
V01V5000	90604-3319	HOT MELT UNIT PROBLUE 4, 108 0419 H1	5-103, 5-105, 5-111
V01V5000	90604-3320	HOT MELT UNIT PROBLUE 4, 104 9296 H1	5-103, 5-105, 5-107, 5-109, 5-111
V01V9002	90415-0030	OIL FILTER PN 100 ORD.NO 2.77 10 70.1	5-81
W			
A01W5001	351150-0406	CABLE OLFLEX 7X0,75 MM2 LIGHT/GREY	5-97
A01W5010	351150-0406	CABLE OLFLEX 7X0,75 MM2 LIGHT/GREY	5-97
A01W7001	351150-0403	CABLE OLFLEX 3X0,75 MM2 LIGHT/GREY	5-97
A01W7002	351150-0403	CABLE OLFLEX 3X0,75 MM2 LIGHT/GREY	5-97
A81W0203	90600-2103	ETHERNET CABLE, CCB-84901-1004-10	5-57, 12-25
A81W2000	90459-1621	CABLE, ETHERNET RJ 45 CONNECT. 1 M	9-93
A81W2001	90459-6395	CABLE, ETHERNET RJ 45 STRAIGHT.10M	9-93
A81W2010	90601-6430	USB CABLE, 90601-6430	12-5
A81W2020	90600-4778	USB CABLE SET, 5A9000.54	12-5
A81W4000	90459-2530	DEVICENET CABLE THIN	9-93
A81W4001	90459-2530	DEVICENET CABLE THIN	9-93
A81W4002	90459-2530	DEVICENET CABLE THIN	9-93
A81W4003	90459-2530	DEVICENET CABLE THIN	9-93
A81W4004	344295-0100	DEVICENET CAB.,SAC-5P- 10,0-927/M12FS VA	5-7, 5-9
A81W4005	90459-2530	DEVICENET CABLE THIN	9-93
A81W4006	90459-2530	DEVICENET CABLE THIN	9-93
A81W4007	90459-2530	DEVICENET CABLE THIN	9-93
A81W4120	344253-0100	SENSOR CABLE, EVT002	5-7, 5-9
A81W4121	344293-0030	DEVICEN CAB.SAC-5P-M12MS/3,0-927/M12FSVA	4-9, 4-11
A81W4130	344253-0050	SENSOR CABLE, EVT001	4-9, 4-11
A81W5000	351501-0020	ETHERNET PATCH CABLE, FL CAT5 PATCH 2,0	12-35
A81W7000	351423-0004	CABLE UNITRONIC LICY 2X0,34	9-93
A81W7001	351423-0004	CABLE UNITRONIC LICY 2X0,34	9-93
A81W7002	351423-0004	CABLE UNITRONIC LICY 2X0,34	9-93
C01W1053	315400-0004	TUBE PUN-H-8X1,25-BL	4-21
C01W1054	315400-0010	TUBE PUN-H-12X2-BL	4-21
C01W8062	315400-0010	TUBE PUN-H-12X2-BL	4-21
C50W0000	315743-0009	ÖLFLEX CONTROL TM 4G1,5, 281604	4-43, 4-45
C50W0004	351150-0405	CABLE OLFLEX 5X0,75 MM2 LIGHT/GREY	5-97
C50W0010	315743-0009	ÖLFLEX CONTROL TM 4G1,5, 281604	5-97
C50W0012	344261-0050	SENSOR CABLE, EVT216	4-43, 4-45
C50W0013	90603-3979	SENSOR Y-CABLE, EVT339	4-43, 4-45
C50W1000	315756-0009	ÖLFLEX CONTROL TM CY 4G1,5, 281604CY	4-9, 4-11
C50W1001	344261-0006	SENSOR CABLE, EVT261	4-9, 4-11
C50W1002	344261-0006	SENSOR CABLE, EVT261	4-9, 4-11
C50W1004	90600-3573	SOCKET CONN. CABLE, KMEB-2-24-M12-0,5-LE	4-21
C50W1004	344253-0050	SENSOR CABLE, EVT001	4-9, 4-11
C50W1005	344262-0015	SENSOR CABLE, EVT271	4-9, 4-11
C50W1010	315756-0009	ÖLFLEX CONTROL TM CY 4G1,5, 281604CY	5-97
C50W1064	315400-0016	TUBE PUN-H-4X0,75-BL	4-21
C50W1065	315400-0016	TUBE PUN-H-4X0,75-BL	4-21
C50W1066	315400-0016	TUBE PUN-H-4X0,75-BL	4-21
C50W1067	315400-0016	TUBE PUN-H-4X0,75-BL	4-21
C50W1068	315400-0016	TUBE PUN-H-4X0,75-BL	4-21
C50W1069	315400-0016	TUBE PUN-H-4X0,75-BL	4-21
C50W2000	344257-0006	SENSOR CABLE, EVT143	4-9, 4-11
F09W1003	351150-0405	CABLE OLFLEX 5X0,75 MM2 LIGHT/GREY	5-97
F09W2001	351423-0006	CABLE UNITRONIC LICY 5X0,34	5-97
F09W2002	351423-0006	CABLE UNITRONIC LICY 5X0,34	5-97
F09W2003	3115264-0000	CABLE	4-9, 4-11
F09W2014	90459-4876	FOCUS JUMPER CABLE M12 5P 3M, 20-056-21	5-89, 5-91
F09W2016	90459-4876	FOCUS JUMPER CABLE M12 5P 3M, 20-056-21	5-89, 5-91
F09W2030	90459-4252	CABLE M12-C101, 20-056-10	5-97
F09W2030	90459-4876	FOCUS JUMPER CABLE M12 5P 3M, 20-056-21	5-89, 5-91
F09W2032	90459-4876	FOCUS JUMPER CABLE M12 5P 3M, 20-056-21	5-89, 5-91
F09W2034	90459-4876	FOCUS JUMPER CABLE M12 5P 3M, 20-056-21	5-89, 5-91
F09W2041	344253-0100	SENSOR CABLE, EVT002	5-89, 5-91
F09W2042	344253-0100	SENSOR CABLE, EVT002	5-89, 5-91

Pos	Part No	Description	Page No
W			
F09W3012	3115265-0000	CABLE	4-9, 4-11
F09W3014	3115265-0000	CABLE	4-9, 4-11
F09W3016	3115265-0000	CABLE	4-9, 4-11
G30W0001	351428-0009	MOTOR FEEDBACK CABLE 2090-CFBM7DF-CEAA09	5-97
G30W1001	344266-0020	SENSOR CABLE, EVT256	1-89
G30W1002	344267-0010	SENSOR CABLE, EVT042	6-17
G30W3000	351429-1609	MOTOR POWER CABLE 2090-CPWM7DF-16AA09	5-97
G30W4000	351429-1609	MOTOR POWER CABLE 2090-CPWM7DF-16AA09	5-97
G30W4001	351428-0009	MOTOR FEEDBACK CABLE 2090-CFBM7DF-CEAA09	5-97
G40W0000	351429-1609	MOTOR POWER CABLE 2090-CPWM7DF-16AA09	5-97
G40W0001	351428-0009	MOTOR FEEDBACK CABLE 2090-CFBM7DF-CEAA09	5-97
G40W0002	351429-1609	MOTOR POWER CABLE 2090-CPWM7DF-16AA09	5-97
G40W0003	351428-0009	MOTOR FEEDBACK CABLE 2090-CFBM7DF-CEAA09	5-97
G40W0010	344267-0010	SENSOR CABLE, EVT042	3-27
G40W0011	344267-0010	SENSOR CABLE, EVT042	3-27
G40W0012	344268-0015	SENSOR CABLE, EVT120	3-25
G40W0013	344268-0015	SENSOR CABLE, EVT120	3-25
G40W1000	351150-0403	CABLE OLFLEX 3X0,75 MM2 LIGHT/GREY	3-5
G40W1001	351150-0403	CABLE OLFLEX 3X0,75 MM2 LIGHT/GREY	3-5
G40W1051	315400-0004	TUBE PUN-H-8X1,25-BL	3-5
G40W1052	315400-0004	TUBE PUN-H-8X1,25-BL	3-5
G40W1061	315400-0004	TUBE PUN-H-8X1,25-BL	3-5
G40W2000	344267-0010	SENSOR CABLE, EVT042	7-21
G40W2061	315400-0004	TUBE PUN-H-8X1,25-BL	7-29
G40W2062	315400-0016	TUBE PUN-H-4X0,75-BL	7-29
G40W2063	315400-0016	TUBE PUN-H-4X0,75-BL	7-29
G40W2064	315400-0016	TUBE PUN-H-4X0,75-BL	7-29
G40W2066	90459-7428	TUBE PUN-H-3X0,5-BL	7-21
G40W2067	90459-7428	TUBE PUN-H-3X0,5-BL	7-21
G40W3000	351429-1609	MOTOR POWER CABLE 2090-CPWM7DF-16AA09	5-97
G40W3001	351428-0009	MOTOR FEEDBACK CABLE 2090-CFBM7DF-CEAA09	5-97
G40W4000	315743-0009	ÖLFLEX CONTROL TM 4G1,5, 281604	8-5, 8-7, 8-21, 8-23
G40W4010	315743-0009	ÖLFLEX CONTROL TM 4G1,5, 281604	5-97
G40W5000	90603-3979	SENSOR Y-CABLE, EVT339	8-5, 8-7, 8-21, 8-23
G40W5002	344261-0020	SENSOR CABLE, EVT263	8-5, 8-7, 8-21, 8-23
G40W5006	344261-0010	SENSOR CABLE, EVT262	8-5, 8-7, 8-21, 8-23
G70W0000	90600-2102	POWER I/O CABLE, CCB-84901-0103-10	5-57, 12-25
G70W1000	351429-1609	MOTOR POWER CABLE 2090-CPWM7DF-16AA09	5-85, 12-29
G70W1001	351428-0009	MOTOR FEEDBACK CABLE 2090-CFBM7DF-CEAA09	5-85, 12-29
G70W1003	344263-0020	SENSOR CABLE, EVT239	5-57, 12-25
K01W8000	351150-0403	CABLE OLFLEX 3X0,75 MM2 LIGHT/GREY	5-97
K01W8001	351150-0403	CABLE OLFLEX 3X0,75 MM2 LIGHT/GREY	5-97
K01W8051	315400-0010	TUBE PUN-H-12X2-BL	5-69, 5-71
K01W8052	315400-0004	TUBE PUN-H-8X1,25-BL	5-77
K01W8053	315400-0001	TUBE PUN-H-6X1-BL	5-69, 5-71
K01W8054	315400-0010	TUBE PUN-H-12X2-BL	5-69, 5-71
K01W8055	315400-0010	TUBE PUN-H-12X2-BL	5-69, 5-71
K01W8056	315400-0010	TUBE PUN-H-12X2-BL	5-69, 5-71
K01W8057	315400-0001	TUBE PUN-H-6X1-BL	5-103, 5-105, 5-107, 5-109, 5-111
K01W8057	315400-0004	TUBE PUN-H-8X1,25-BL	5-69, 5-71
K01W8058	315400-0010	TUBE PUN-H-12X2-BL	5-69, 5-71
K01W8059	315400-0001	TUBE PUN-H-6X1-BL	5-69, 5-71
K01W8061	315400-0004	TUBE PUN-H-8X1,25-BL	5-69, 5-71
K01W8062	315400-0010	TUBE PUN-H-12X2-BL	5-69, 5-71
K01W8063	315400-0010	TUBE PUN-H-12X2-BL	5-69, 5-71
K01W8064	315400-0010	TUBE PUN-H-12X2-BL	5-69, 5-71
K01W8065	315400-0010	TUBE PUN-H-12X2-BL	5-69, 5-71
K01W8067	315400-0016	TUBE PUN-H-4X0,75-BL	5-69, 5-71
K01W8068	315400-0001	TUBE PUN-H-6X1-BL	5-69, 5-71
K01W8071	315400-0004	TUBE PUN-H-8X1,25-BL	5-69, 5-71
K01W9054	315400-0001	TUBE PUN-H-6X1-BL	5-69, 5-71
K01W9056	315400-0001	TUBE PUN-H-6X1-BL	5-69, 5-71, 5-81
K20W0050	315400-0001	TUBE PUN-H-6X1-BL	5-69, 5-71
K20W0052	315400-0001	TUBE PUN-H-6X1-BL	5-69, 5-71
K20W0053	315400-0001	TUBE PUN-H-6X1-BL	5-69, 5-71
K20W3051	315400-0004	TUBE PUN-H-8X1,25-BL	5-69, 5-71
K20W3054	315400-0004	TUBE PUN-H-8X1,25-BL	5-69, 5-71
K20W3055	315400-0004	TUBE PUN-H-8X1,25-BL	5-69, 5-71
K20W3056	315400-0001	TUBE PUN-H-6X1-BL	5-69, 5-71
K21W0051	315400-0004	TUBE PUN-H-8X1,25-BL	5-69, 5-71
K21W0054	315400-0001	TUBE PUN-H-6X1-BL	5-69, 5-71
K21W0055	315400-0001	TUBE PUN-H-6X1-BL	5-69, 5-71
K40W1050	315400-0010	TUBE PUN-H-12X2-BL	5-69, 5-71
K40W1051	315400-0016	TUBE PUN-H-4X0,75-BL	5-69, 5-71
K40W2054	315400-0016	TUBE PUN-H-4X0,75-BL	5-69, 5-71
P01W4000	351150-0403	CABLE OLFLEX 3X0,75 MM2 LIGHT/GREY	5-97
P01W4001	351150-0407	CABLE OLFLEX 12X0,75 MM2 LIGHT/GREY	5-97
U01W0051	315400-0009	TUBE PUN-H-10X1,5-SW	5-63
U01W0052	315400-0009	TUBE PUN-H-10X1,5-SW	5-63
U01W0053	315400-0009	TUBE PUN-H-10X1,5-SW	5-63
U01W8053	315400-0004	TUBE PUN-H-8X1,25-BL	5-79
U01W8060	315400-0013	TUBE PUN-H-16-2,5-BL	5-79

Pos	Part No	Description	Page No
W			
U01W8061	315400-0013	TUBE PUN-H-16-2,5-BL	5-79
U01W8062	315400-0013	TUBE PUN-H-16-2,5-BL	5-79
U01W8063	315400-0013	TUBE PUN-H-16-2,5-BL	5-79
U01W8064	315400-0004	TUBE PUN-H-8X1,25-BL	5-79
U01W8075	315400-0004	TUBE PUN-H-8X1,25-BL	5-79
V01W5000	315743-0024	ÖLFLEX CONTROL TM 5G6, 281005	5-97
V01W9001	344257-0050	SENSOR CABLE, EVT146	5-81
V01W9002	344257-0050	SENSOR CABLE, EVT146	5-81
V01W9052	90166-0108	TUBE 6 MM PA TRANSP.	5-81
V01W9053	90166-0108	TUBE 6 MM PA TRANSP.	5-81
V01W9055	90166-0108	TUBE 6 MM PA TRANSP.	5-81
V01W9056	90166-0108	TUBE 6 MM PA TRANSP.	5-81
V01W9080	90166-0143	TUBE 2,5 MM PA TRANSP.	5-81
V01W9081	90166-0143	TUBE 2,5 MM PA TRANSP.	5-81
V01W9082	90166-0143	TUBE 2,5 MM PA TRANSP.	5-81
W20W0000	315756-0009	ÖLFLEX CONTROL TM CY 4G1,5, 281604CY	5-97
W20W0003	90603-3979	SENSOR Y-CABLE, EVT339	1-33
W20W0030	344253-0100	SENSOR CABLE, EVT002	1-33
W20W0051	315400-0001	TUBE PUN-H-6X1-BL	1-37
W20W0062	315400-0001	TUBE PUN-H-6X1-BL	1-67
W20W0065	315400-0001	TUBE PUN-H-6X1-BL	1-69
W20W3055	315400-0004	TUBE PUN-H-8X1,25-BL	5-67
W21W0000	344261-0050	SENSOR CABLE, EVT216	1-61
W21W1000	351429-1609	MOTOR POWER CABLE 2090-CPWM7DF-16AA09	5-97
W21W1001	351428-0009	MOTOR FEEDBACK CABLE 2090-CFBM7DF-CEAA09	5-97
W21W2000	351429-1609	MOTOR POWER CABLE 2090-CPWM7DF-16AA09	5-97
W21W2001	351428-0009	MOTOR FEEDBACK CABLE 2090-CFBM7DF-CEAA09	5-97
W21W3000	90603-3979	SENSOR Y-CABLE, EVT339	10-31
W21W3000	344267-0006	SENSOR CABLE, EVT041	10-31
W21W3002	90603-3979	SENSOR Y-CABLE, EVT339	10-31
W21W3004	90603-3979	SENSOR Y-CABLE, EVT339	10-31
W21W3010	90603-5568	CONNECTOR, SACC-M12MS-4QO-0,34-VA	10-31
W21W3012	90603-3979	SENSOR Y-CABLE, EVT339	10-31
W21W3061	315400-0004	TUBE PUN-H-8X1,25-BL	10-33
W21W3062	315400-0016	TUBE PUN-H-4X0,75-BL	10-27, 10-33
W21W3064	315400-0016	TUBE PUN-H-4X0,75-BL	10-27, 10-33
W21W3065	315400-0016	TUBE PUN-H-4X0,75-BL	10-33
W21W4000	315756-0009	ÖLFLEX CONTROL TM CY 4G1,5, 281604CY	5-97
W21W4002	90603-3979	SENSOR Y-CABLE, EVT339	5-23, 5-25, 5-27, 5-29
W21W4004	90603-3979	SENSOR Y-CABLE, EVT339	5-23, 5-25, 5-27, 5-29
W21W4006	90603-3979	SENSOR Y-CABLE, EVT339	5-23, 5-25, 5-27, 5-29
W21W4008	90603-3979	SENSOR Y-CABLE, EVT339	5-23, 5-25, 5-27, 5-29
W21W4010	315756-0009	ÖLFLEX CONTROL TM CY 4G1,5, 281604CY	5-97
W21W4012	344253-0050	SENSOR CABLE, EVT001	5-23, 5-25, 5-27, 5-29
W21W4014	344253-0050	SENSOR CABLE, EVT001	5-23, 5-25, 5-27, 5-29
W21W4016	344253-0050	SENSOR CABLE, EVT001	5-23, 5-25, 5-27, 5-29
W21W4018	344253-0100	SENSOR CABLE, EVT002	5-23, 5-25, 5-27, 5-29
W21W4022	344261-0006	SENSOR CABLE, EVT261	1-71
W21W4023	90603-3979	SENSOR Y-CABLE, EVT339	1-71
W21W5000	90603-5568	CONNECTOR, SACC-M12MS-4QO-0,34-VA	10-31
W21W5050	315400-0004	TUBE PUN-H-8X1,25-BL	10-35
W21W5054	315400-0004	TUBE PUN-H-8X1,25-BL	10-35
W21W5056	315400-0016	TUBE PUN-H-4X0,75-BL	10-35
W21W5058	315400-0004	TUBE PUN-H-8X1,25-BL	10-27
W21W6002	90603-3979	SENSOR Y-CABLE, EVT339	5-23, 5-25, 5-27, 5-29
W21W6004	90603-3979	SENSOR Y-CABLE, E12227	12-19
W21W6005	344261-0050	SENSOR CABLE, EVT216	12-15
W21W6012	344261-0050	SENSOR CABLE, EVT216	5-23, 5-25, 5-27, 5-29
W21W6014	344261-0050	SENSOR CABLE, EVT216	12-19
W21W8000	315743-0008	ÖLFLEX CONTROL TM 3G1,5, 281603	5-97
W21W8001	351424-0017	CABLE ÖLFLEX HEAT 180 4G4 466343	5-97
X			
A01X0002	2839223-0200	PLINTH	9-47
A01X0003	2839224-0200	PLINTH	9-47
A01X0004	2840918-0200	PLINTH	9-41
A01X0006	2841403-0300	PLINTH	9-7, 9-9, 9-11, 9-29, 9-31, 9-33
A01X0007	90459-0959	DISTRIBUTOR BLOCK 1492-PD3163	9-47
A01X0008	3046886-0200	DISTRIBUTION TERMINAL	9-47
A01X0010	2839230-0100	PLINTH	9-53
A01X0011	2840909-0100	PLINTH	9-53
A01X0012	2840910-0100	PLINTH	9-53
A01X0013	2840911-0100	PLINTH	9-53
A01X0022	2840911-0100	PLINTH	9-53
A01X0032	2840911-0100	PLINTH	9-53
A01X0042	2840911-0100	PLINTH	9-53
A01X0043	2840915-0100	PLINTH	9-53
A01X0044	2840915-0100	PLINTH	9-53
A01X0072	2840917-0100	PLINTH	9-53
A01X6000	2890591-0200	PLINTH	9-83
A01X7000	90459-3845	WALL SOCKET, Z-SD230	9-7, 9-9, 9-11
A01X7001	90603-3972	SPLITTER BOX, EBC026	5-93
A81X2000	90600-1848	ETHERNET SW, FL SWITCH SFN 8TX	9-83

Pos	Part No	Description	Page No
X			
A81X4001	90459-2519	TAP, OPEN STYLE	9-83
A81X4002	90459-2519	TAP, OPEN STYLE	9-83
A81X4003	90459-2519	TAP, OPEN STYLE	9-83
A81X4004	90459-2519	TAP, OPEN STYLE	9-83
A81X7004	90459-6470	CONNECTOR RJ45 TER. BL., AK-U0-RJ45-TB2P	9-21, 9-23
C50X0000	90110-0052	MALE INSERT, HAN E06, 0933 0062 601	4-43, 4-45
C50X0000	90110-0053	FEMALE INSERT, HAN 6 E 09 33 006 2701	5-7, 5-9
C50X0001	90459-6821	MALE INSERT HAN 4A, 0920 0042 611	4-9, 4-11
C50X1000	90110-0053	FEMALE INSERT, HAN 6 E 09 33 006 2701	5-7, 5-9
C50X1004	90459-6820	FEMALE INSERT, HAN 4 A, 09 20 004 2711	5-7, 5-9
C50X1010	90110-0052	MALE INSERT, HAN E06, 0933 0062 601	4-9, 4-11
F09X2001	90604-0093	CONNECTION BLOCK, TINA4A 2TLJ020054R0300	5-89, 5-91
F09X2002	90604-0093	CONNECTION BLOCK, TINA4A 2TLJ020054R0300	5-89, 5-91
F09X2010	90459-6961	SAFETY SENSOR, ADAM E 0,5 M12	5-89, 5-91
F09X2011	90459-4089	SAFETY SENSOR, EVA E, 20-046-06	5-89, 5-91
F09X2012	90459-6961	SAFETY SENSOR, ADAM E 0,5 M12	5-89, 5-91
F09X2013	90459-4089	SAFETY SENSOR, EVA E, 20-046-06	5-89, 5-91
F09X2014	90459-6961	SAFETY SENSOR, ADAM E 0,5 M12	5-89, 5-91
F09X2015	90459-4089	SAFETY SENSOR, EVA E, 20-046-06	5-89, 5-91
F09X2016	90459-6961	SAFETY SENSOR, ADAM E 0,5 M12	5-89, 5-91
F09X2017	90459-4089	SAFETY SENSOR, EVA E, 20-046-06	5-89, 5-91
F09X2030	90459-6961	SAFETY SENSOR, ADAM E 0,5 M12	5-89, 5-91
F09X2031	90459-4089	SAFETY SENSOR, EVA E, 20-046-06	5-89, 5-91
F09X2032	90459-6961	SAFETY SENSOR, ADAM E 0,5 M12	5-89, 5-91
F09X2033	90459-4089	SAFETY SENSOR, EVA E, 20-046-06	5-89, 5-91
F09X2036	90459-5627	CONNECTION, TINA 1-A	5-89, 5-91
G30X0001	90459-2551	CONNECTOR, MOTOR FEEDBACK 15 PIN MALE	5-97
G30X1020	90603-3971	SPLITTER BOX, EBC034	6-63
G30X1030	90603-3971	SPLITTER BOX, EBC034	6-63
G30X4001	90459-2551	CONNECTOR, MOTOR FEEDBACK 15 PIN MALE	5-97
G40X0001	90459-2551	CONNECTOR, MOTOR FEEDBACK 15 PIN MALE	5-97
G40X0003	90459-2551	CONNECTOR, MOTOR FEEDBACK 15 PIN MALE	5-97
G40X3001	90459-2551	CONNECTOR, MOTOR FEEDBACK 15 PIN MALE	5-97
G40X4000	90110-0052	MALE INSERT, HAN E06, 0933 0062 601	8-5, 8-7, 8-21, 8-23
G70X1001	90459-2551	CONNECTOR, MOTOR FEEDBACK 15 PIN MALE	5-85, 12-29
W21X1000	90459-2550	I/O CONNECTOR 26 PIN MALE, 2090-K6CK-D26	9-7, 9-9, 9-11, 9-29, 9-31, 9-33
W21X1001	90459-2551	CONNECTOR, MOTOR FEEDBACK 15 PIN MALE	5-97
W21X2000	90459-2550	I/O CONNECTOR 26 PIN MALE, 2090-K6CK-D26	9-7, 9-9, 9-11, 9-29, 9-31, 9-33
W21X3020	90603-3971	SPLITTER BOX, EBC034	10-31

Tetra Pak

Label for 80 mm binder **Note!** *This page is generated* **automatically.**

CAP 30/Flex ScrewCap 030V
662950-0300 Issue 2012-08
Doc No. SPC-3202357-0103

CAP 30/Flex ScrewCap 030V
662950-0300 Issue 2012-08
Doc No. SPC-3202357-0103

CAP 30/Flex ScrewCap 030V
662950-0300 Issue 2012-08
Doc No. SPC-3202357-0103

CAP 30/Flex ScrewCap 030V 1(3)
662950-0300 Issue 2012-08
Doc No. SPC-3202357-0103

CAP 30/Flex ScrewCap 030V 1(2)
662950-0300 Issue 2012-08
Doc No. SPC-3202357-0103

CAP 30/Flex ScrewCap 030V 2(3)
662950-0300 Issue 2012-08
Doc No. SPC-3202357-0103

CAP 30/Flex ScrewCap 030V 2(2)
662950-0300 Issue 2012-08
Doc No. SPC-3202357-0103

CAP 30/Flex ScrewCap 030V 3(3)
662950-0300 Issue 2012-08
Doc No. SPC-3202357-0103

Label for 55 mm binder **Note!** *This page is generated* **automatically.**

CAP 30/Flex ScrewCap 030V
662950-0300 Issue 2012-08
Doc No. SPC-3202357-0103

CAP 30/Flex ScrewCap 030V 1(2)
662950-0300 Issue 2012-08
Doc No. SPC-3202357-0103

CAP 30/Flex ScrewCap 030V
662950-0300 Issue 2012-08
Doc No. SPC-3202357-0103

CAP 30/Flex ScrewCap 030V 2(2)
662950-0300 Issue 2012-08
Doc No. SPC-3202357-0103

CAP 30/Flex ScrewCap 030V
662950-0300 Issue 2012-08
Doc No. SPC-3202357-0103

CAP 30/Flex ScrewCap 030V 1(3)
662950-0300 Issue 2012-08
Doc No. SPC-3202357-0103

CAP 30/Flex ScrewCap 030V
662950-0300 Issue 2012-08
Doc No. SPC-3202357-0103

CAP 30/Flex ScrewCap 030V 2(3)
662950-0300 Issue 2012-08
Doc No. SPC-3202357-0103

CAP 30/Flex ScrewCap 030V
662950-0300 Issue 2012-08
Doc No. SPC-3202357-0103

CAP 30/Flex ScrewCap 030V 3(3)
662950-0300 Issue 2012-08
Doc No. SPC-3202357-0103

CAP 30/Flex ScrewCap 030V
662950-0300 Issue 2012-08
Doc No. SPC-3202357-0103

CAP 30/Flex ScrewCap 030V 3(3)
662950-0300 Issue 2012-08
Doc No. SPC-3202357-0103

Label for 40 mm binder **Note!** *This page is generated* **automatically.**

CAP 30/Flex ScrewCap 030V
662950-0300 Issue 2012-08
Doc No. SPC-3202357-0103

CAP 30/Flex ScrewCap 030V 1(2)
662950-0300 Issue 2012-08
Doc No. SPC-3202357-0103

CAP 30/Flex ScrewCap 030V
662950-0300 Issue 2012-08
Doc No. SPC-3202357-0103

CAP 30/Flex ScrewCap 030V 2(2)
662950-0300 Issue 2012-08
Doc No. SPC-3202357-0103

CAP 30/Flex ScrewCap 030V
662950-0300 Issue 2012-08
Doc No. SPC-3202357-0103

CAP 30/Flex ScrewCap 030V 1(2)
662950-0300 Issue 2012-08
Doc No. SPC-3202357-0103

CAP 30/Flex ScrewCap 030V
662950-0300 Issue 2012-08
Doc No. SPC-3202357-0103

CAP 30/Flex ScrewCap 030V 2(2)
662950-0300 Issue 2012-08
Doc No. SPC-3202357-0103

CAP 30/Flex ScrewCap 030V
662950-0300 Issue 2012-08
Doc No. SPC-3202357-0103

CAP 30/Flex ScrewCap 030V 1(3)
662950-0300 Issue 2012-08
Doc No. SPC-3202357-0103

CAP 30/Flex ScrewCap 030V
662950-0300 Issue 2012-08
Doc No. SPC-3202357-0103

CAP 30/Flex ScrewCap 030V 2(3)
662950-0300 Issue 2012-08
Doc No. SPC-3202357-0103

CAP 30/Flex ScrewCap 030V
662950-0300 Issue 2012-08
Doc No. SPC-3202357-0103

CAP 30/Flex ScrewCap 030V 3(3)
662950-0300 Issue 2012-08
Doc No. SPC-3202357-0103

CAP 30/Flex ScrewCap 030V
662950-0300 Issue 2012-08
Doc No. SPC-3202357-0103

CAP 30/Flex ScrewCap 030V 3(3)
662950-0300 Issue 2012-08
Doc No. SPC-3202357-0103