SPC

Spare Parts Catalogue

CAP 30/Flex DreamCap 030V

662950-0300

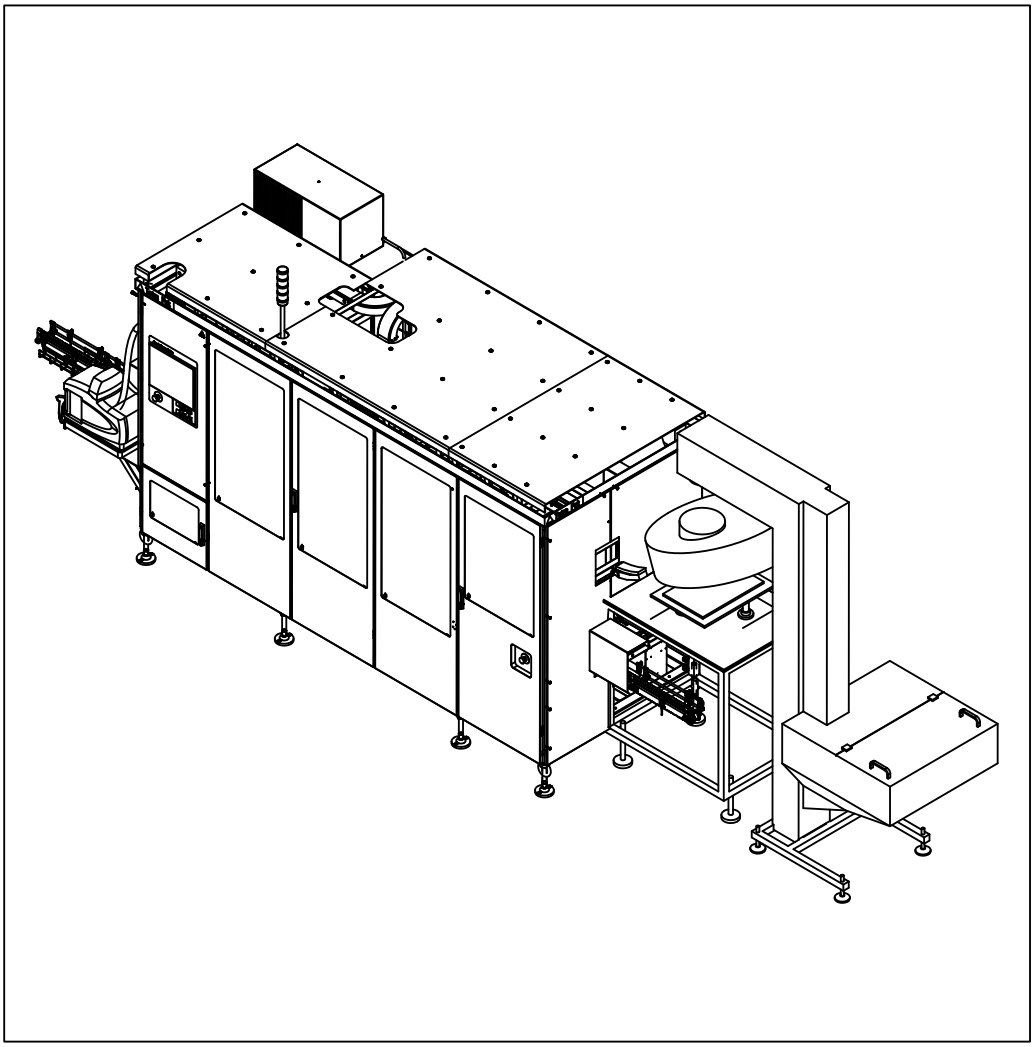

Tetra Pak®

Doc. No: SPC-3202371-0113

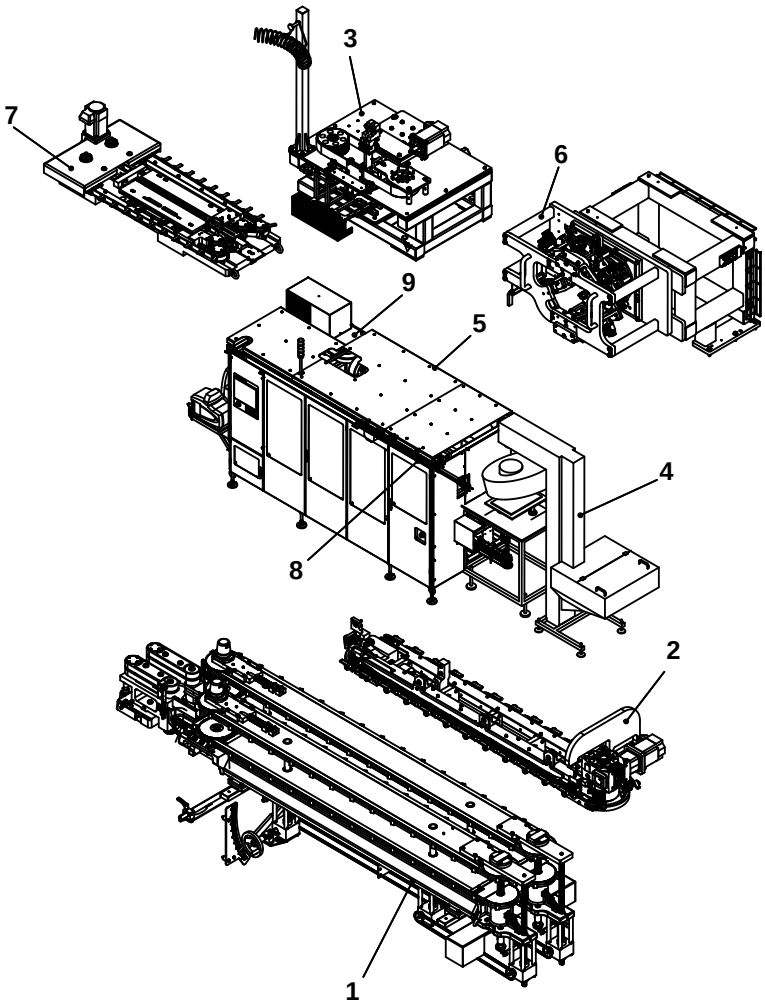

The position numbers in the illustration correspond with the chapter numbers listed on the next page.

Copyright © 2015 Tetra Pak International SA

All rights reserved. No part of this document may be reproduced or copied in any form or by any means without written permission from Tetra Pak Packaging Solutions

, Tetra Pak, and all other trademarks displayed in this document are the property of the Tetra Pak International SA. Tetra Pak Packaging Solutions together with Tetra Pak International SA form part of 'the Tetra Pak Group'. The content of this manual is in accordance with the design and construction of the machine or equipment at the time of publishing. Tetra Pak Group reserves the right to introduce design modifications without prior notice.

This document was produced and printed by:

Tetra Pak Packaging Solutions
Via Delfini 1
41123 Modena
ITALY

Doc. No. SPC-3202371-0113

Issue 2015-02

This document is valid for:

Series No. / Machine No.
Year of Manufacture Sign.

SPC

Spare Parts Catalogue

CAP 30/Flex DreamCap 030V
662950-0300

i Introduction
1 Package Line
2 Push Down
3 Screw Cap Hot Melt Appl.
4 Cap Sorter
5 Machine Body
6 Applicator Unit
7 Cap Sequencer
8 Cap Conveyor
9 Electrical Cabinet
10 Regular Accessories
11 Electric Equipment
12 Optional Equipment
ii Part Number Index
iii Ref. Des. Parts Index

Machine or equipment configurations that this catalogue is valid for are described on the next page.

Doc. No: SPC-3202371-0113

Issue 2015-02

Tetra Pak®
Tetra Pak Packaging Solutions

Valid for:

Name	Drawing Specification and Development Step	Additional Information
CAP 30/Flex DreamCap 030V	662950-0300	Valid from T-order: 75757/00555

Update Log for Doc. No. SPC-3202371-0113

This table shows all changes made to this catalogue, including installed rebuilding kits, added or removed pages. Page numbering on added pages begins with UP.

Date	Installed Kit	Added Pages (Doc. No.)	Removed Pages	Signature

Date	Installed Kit	Added Pages (Doc. No.)	Removed Pages	Signature

i Introduction

en About the Introduction Chapter
This chapter contains basic information about this catalogue and related Tetra Pak® equipment.

bg За уводната глава
Тази глава съдържа основна информация за този каталог и приложимото Tetra Pak® оборудване.

cs O kapitole Úvod
Tato kapitola obsahuje základní informace o této příručce a souvisejícím zařízení Tetra Pak®.

da Om indledningen
Kapitlet indeholder grundlæggende oplysninger om dette katalog og tilhørende Tetra Pak®-udstyr.

de Über das Einleitungskapitel
Diese Kapitel enthält grundlegende Informationen über diesen Katalog und die zugehörige Tetra Pak®-Ausrüstung.

el Σχετικά με το Κεφάλαιο 'Εισαγωγή'
Αυτό το κεφάλαιο περιέχει βασικές πληροφορίες για τον παρόντα κατάλογο και τον σχετικό εξοπλισμό της Tetra Pak®.

es Acerca del capítulo Introducción
Este capítulo contiene información básica sobre este catálogo y el equipo Tetra Pak® relacionado.

et Sissejuhatava peatüki kohta
See peatükk sisaldab teavet käesoleva kataloogi ja sellega seonduva Tetra Pak®i seadme kohta.

fi Tietoja Johdanto-luvusta
Tässä luvussa on perustietoja tästä luettelosta ja Tetra Pak®-laitteesta.

fr À propos du chapitre Introduction
Ce chapitre contient les informations de base à propos de ce catalogue et de l'équipement Tetra Pak® concerné.

hr O uvodnom poglavlju
Ovo poglavlje sadrži osnovne informacije o ovome Katalogu i o povezanoj Tetra Pak® opremi.

hu A Bevezetés fejezetről
Ez a fejezet alapvető információkat tartalmaz a katalógusról és a hozzá tartozó Tetra Pak® berendezésről.

is Um inngangskaflann
Þessi kafli inniheldur grundvallarupplýsingar um þennan vörulista og tengdan Tetra Pak® búnað.

it Informazioni sul capitolo Introduzione
Questo capitolo contiene informazioni generali sul presente catalogo e sulla relativa macchina Tetra Pak®.

lt Apie įvadinį skyrių
Šiame skyriuje pateikta pagrindinė informacija apie šį katalogą ir su juo susijusią "Tetra Pak®" įrangą.

lv Par Ievada nodaļu
Šī nodaļa ietver galveno informāciju par šo katalogu un saistītajām Tetra Pak® iekārtām.

nl Over de inleiding
Dit hoofdstuk bevat basisinformatie omtrent deze catalogus en aanverwante Tetra Pak®-installatie.

no Om kapitlet Introduksjon
Dette kapitlet inneholder grunnleggende informasjon om denne katalogen og relatert Tetra Pak®-ustyr.

pl Informacje na temat rozdziału wprowadzającego
Rozdział wprowadzający zawiera podstawowe informacje dotyczące niniejszego katalogu i związanej z nim maszyny Tetra Pak®.

pt Acerca do Capítulo de Introdução
Este capítulo contém informações básicas sobre este catálogo e os equipamentos relacionados da Tetra Pak®.

pt-br Sobre o capítulo Introdução
Este capítulo contém as informações básicas sobre este manual e o relativo equipamento Tetra Pak®.

ro Despre capitolul introductiv
Acest capitol conţine informaţii de bază despre acest catalog şi despre echipamentul Tetra Pak® corelat.

sk O kapitole Úvod
Táto kapitola obsahuje základné informácie o tomto návode a informácie súvisiace so zariadením Tetra Pak®.

sl O uvodnem poglavju
To poglavje vsebuje osnovne informacije o tem katalogu in opremi Tetra Pak®.

sv Om inledningskapitlet
Det här kapitlet innehåller grundläggande information om katalogen och Tetra Pak®-utrustningen.

This page intentionally left blank

Manual Information

Illustrations . . . . . i - 9

English Text . . . . . i - 11

Информация за ръководството

Илюстрации . . . . . i - 9

Текст на български език . . . . . i - 17

Informace o příručce

Obrázky . . . . . i - 9

Český text . . . . . i - 23

Oplysninger om vejledninger

Illustrationer . . . . . i - 9

Dansk tekst . . . . . i - 29

Handbuch-Informationen

Abbildungen . . . . . i - 9

Deutscher Text . . . . . i - 35

Πληροφορίες εγχειριδίου

Εικόνες . . . . . i - 9

Ελληνικό Κείμενο . . . . . i - 41

Información del manual

Ilustraciones . . . . . i - 9

Texto en español . . . . . i - 47

Manuaali informatsioon

Joonised . . . . . i - 9

Eestikeelne tekst . . . . . i - 53

Tiedot käsikirjasta

Kuvat . . . . . i - 9

Suomenkielinen teksti . . . . . i - 59

Information sur le manuel

Illustrations . . . . . i - 9

Texte français . . . . . i - 65

Informacije o priručnicima

Ilustracije . . . . . i - 9

Hrvatska tekst . . . . . i - 71

Kézikönyv információ

Ábrák . . . . . i - 9

Magyar szöveg . . . . . i - 77

Handbókaupplýsingar

Skýringarmyndir . . . . . i - 9

Íslenskur texti . . . . . i - 83

Informazioni sul manuale

Figure . . . . . i - 9

Testo in italiano . . . . . i - 89

Vadovo informacija

Paveikslėliai . . . . . i - 9

Lietuviškas tekstas . . . . . i - 95

Informācija par instrukciju

Ilustrācijas . . . . . i - 9

Teksts latviešu valodā . . . . . i - 101

Handboekinformatie

Afbeeldingen . . . . . i - 9

Nederlands tekst . . . . . i - 107

Informasjon om manualen

Illustrasjoner . . . . . i - 9

Norsk tekst . . . . . i - 113

Informacje na temat instrukcji

Rysunki . . . . . i - 9

Tekst polski . . . . . i - 119

Informação do Manual

Ilustrações . . . . . i - 9

Texto em português . . . . . i - 125

Informações sobre os manuais

Ilustrações . . . . . i - 9

Texto Brasileiro-Português . . . . . i - 131

Informaţiile de manual

Ilustraţii . . . . . i - 9

Text în limba română . . . . . i - 137

Informácie o príručke

Ilustrácie . . . . . i - 9

Slovenský text . . . . . i - 143

Informacije o navodilu

Slike . . . . . i - 9

Slovensko besedilo . . . . . i - 149

Information om handboken

Bilder . . . . . i - 9

Svensk text . . . . . i - 155

This page intentionally left blank

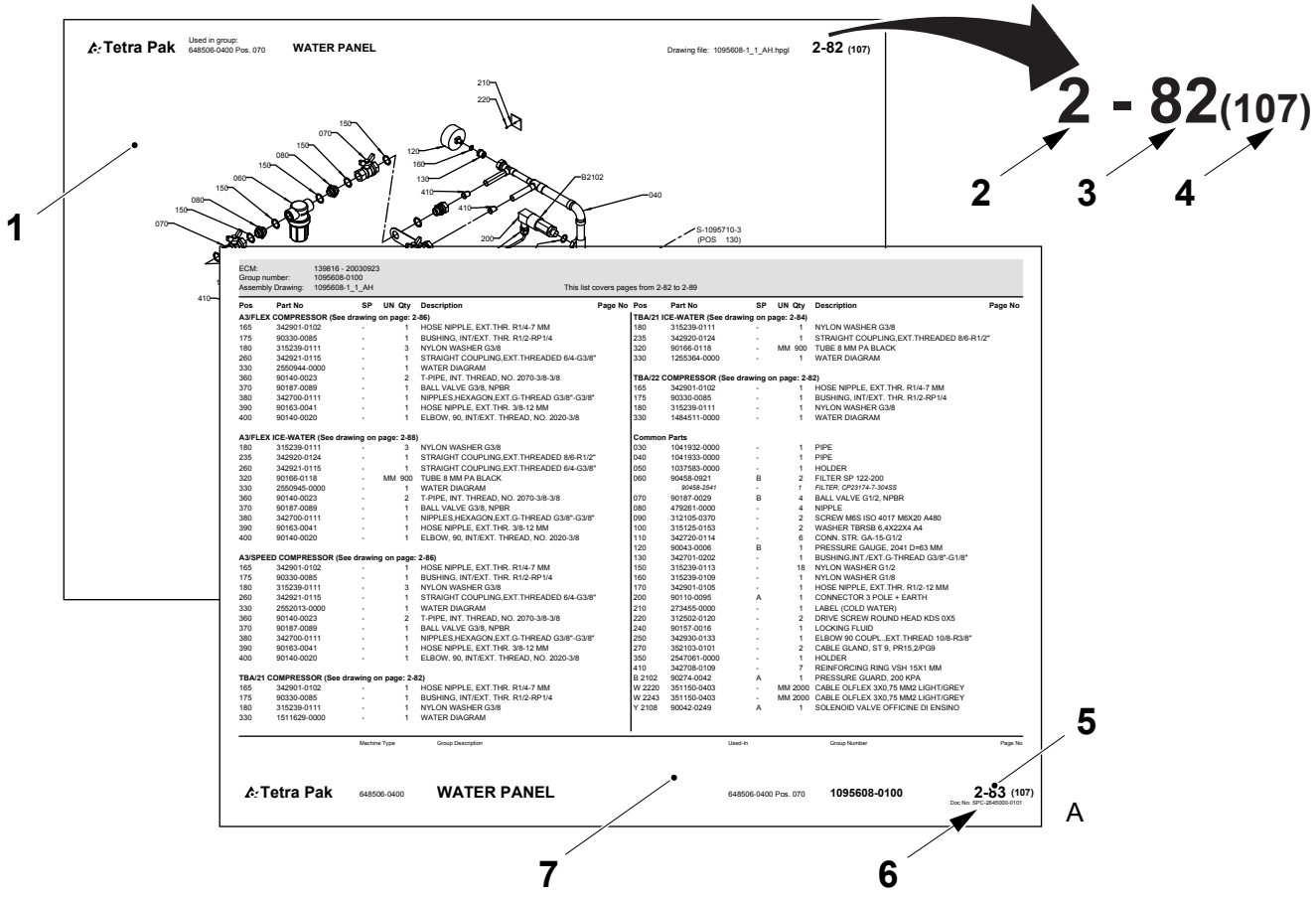
Tetra Pak
Used in group:
648506-0400 Pos. 070
WATER PANEL
Drawing file: 1095608-1_1_AH.hpgl
2-82 (107)
2 - 82(107)
2
3
4
1
S-1095710-3
(POS 130)
ECM: 139816 - 20030923
Group number: 1095608-0100
Assembly Drawing: 1095608-1_1_AH
This list covers pages from 2-82 to 2-89
Pos Part No SP UN Qty Description Page No
A3/FLEX COMPRESSOR (See drawing on page: 2-86)
165 342901-0102 - 1 HOSE NIPPLE, EXT.THR. R1/4-7 MM
175 90330-0085 - 1 BUSHING, INT/EXT. THR. R1/2-RP1/4
180 315239-0111 - 3 NYLON WASHER G3/8
260 342921-0115 - 1 STRAIGHT COUPLING,EXT.THREADED 6/4-G3/8"
330 2550944-0000 - 1 WATER DIAGRAM
360 90140-0023 - 2 T-PIPE, INT. THREAD, NO. 2070-3/8-3/8
370 90187-0089 - 1 BALL VALVE G3/8, NPBR
380 342700-0111 - 1 NIPPLES,HEXAGON,EXT.G-THREAD G3/8"-G3/8"
390 90163-0041 - 1 HOSE NIPPLE, EXT.THR. 3/8-12 MM
400 90140-0020 - 1 ELBOW, 90, INT/EXT. THREAD, NO. 2020-3/8
A3/FLEX ICE-WATER (See drawing on page: 2-88)
180 315239-0111 - 3 NYLON WASHER G3/8
235 342920-0124 - 1 STRAIGHT COUPLING,EXT.THREADED 8/6-R1/2"
260 342921-0115 - 1 STRAIGHT COUPLING,EXT.THREADED 6/4-G3/8"
320 90166-0118 - MM 900 TUBE 8 MM PA BLACK
330 2550945-0000 - 1 WATER DIAGRAM
360 90140-0023 - 2 T-PIPE, INT. THREAD, NO. 2070-3/8-3/8
370 90187-0089 - 1 BALL VALVE G3/8, NPBR
380 342700-0111 - 1 NIPPLES,HEXAGON,EXT.G-THREAD G3/8"-G3/8"
390 90163-0041 - 1 HOSE NIPPLE, EXT.THR. 3/8-12 MM
400 90140-0020 - 1 ELBOW, 90, INT/EXT. THREAD, NO. 2020-3/8
A3/SPEED COMPRESSOR (See drawing on page: 2-86)
165 342901-0102 - 1 HOSE NIPPLE, EXT.THR. R1/4-7 MM
175 90330-0085 - 1 BUSHING, INT/EXT. THR. R1/2-RP1/4
180 315239-0111 - 3 NYLON WASHER G3/8
260 342921-0115 - 1 STRAIGHT COUPLING,EXT.THREADED 6/4-G3/8"
360 90140-0023 - 2 T-PIPE, INT. THREAD, NO. 2070-3/8-3/8
370 90187-0089 - 1 BALL VALVE G3/8, NPBR
380 342700-0111 - 1 NIPPLES,HEXAGON,EXT.G-THREAD G3/8"-G3/8"
390 90163-0041 - 1 HOSE NIPPLE, EXT.THR. 3/8-12 MM
400 90140-0020 - 1 ELBOW, 90, INT/EXT. THREAD, NO. 2020-3/8
TBA/21 COMPRESSOR (See drawing on page: 2-82)
165 342901-0102 - 1 HOSE NIPPLE, EXT.THR. R1/4-7 MM
175 90330-0085 - 1 BUSHING, INT/EXT. THR. R1/2-RP1/4
180 315239-0111 - 1 NYLON WASHER G3/8
330 1511629-0000 - 1 WATER DIAGRAM
Pos Part No SP UN Qty Description Page No
TBA/21 ICE-WATER (See drawing on page: 2-84)
180 315239-0111 - 1 NYLON WASHER G3/8
235 342920-0124 - 1 STRAIGHT COUPLING,EXT.THREADED 8/6-R1/2"
320 90166-0118 - MM 900 TUBE 8 MM PA BLACK
330 1255364-0000 - 1 WATER DIAGRAM
TBA/22 COMPRESSOR (See drawing on page: 2-82)
165 342901-0102 - 1 HOSE NIPPLE, EXT.THR. R1/4-7 MM
175 90330-0085 - 1 BUSHING, INT/EXT. THR. R1/2-RP1/4
180 315239-0111 - 1 NYLON WASHER G3/8
330 1484511-0000 - 1 WATER DIAGRAM
Common Parts
030 1041932-0000 - 1 PIPE
040 1041933-0000 - 1 PIPE
050 1037583-0000 - 1 HOLDER
060 90458-0921 B 2 FILTER SP 122-200
90458-2541 - 1 FILTER, CP23174-7-304SS
070 90187-0029 B 4 BALL VALVE G1/2, NPBR
080 479261-0000 - 4 NIPPLE
090 312105-0370 - 2 SCREW M6S ISO 4017 M6X20 A480
100 315125-0153 - 2 WASHER TBRSB 6,4X22X4 A4
110 342720-0114 - 6 CONN. STR. GA.-15-G1/2
120 90043-0006 B 1 PRESSURE GAUGE, 2041 D=63 MM
130 342701-0202 - 1 BUSHING,INT./EXT.G-THREAD G3/8"-G1/8"
150 315239-0113 - 18 NYLON WASHER G1/2
160 315239-0109 - 1 NYLON WASHER G1/8
170 342901-0105 - 1 HOSE NIPPLE, EXT.THR. R1/2-12 MM
200 90110-0095 A 1 CONNECTOR 3 POLE + EARTH
210 273455-0000 - 1 LABEL (COLD WATER)
220 312502-0120 - 2 DRIVE SCREW ROUND HEAD KDS 0X5
240 90157-0016 - 1 LOCKING FLUID
250 342930-0133 - 1 ELBOW 90 COUPL_,EXT.THREAD 10/8-R3/8"
270 352103-0101 - 2 CABLE GLAND, ST 9, PR15,2/PG9
350 2547061-0000 - 1 HOLDER
410 342708-0109 - 7 REINFORCING RING VSH 15X1 MM
B 2102 90274-0042 A 1 PRESSURE GUARD, 200 KPA
W 2220 351150-0403 - MM 2000 CABLE OLFLEX 3X0,75 MM2 LIGHT/GREY
W 2243 351150-0403 - MM 2000 CABLE OLFLEX 3X0,75 MM2 LIGHT/GREY
Y 2108 90042-0249 A 1 SOLENOID VALVE OFFICINE DI ENSINO
Machine Type
Group Description
Used-In
Group Number
Page No
Tetra Pak
648506-0400
WATER PANEL
648506-0400 Pos. 070
1095608-0100
2-83 (107)
Doc No: SPC-20405000-0101
5
A
7
6

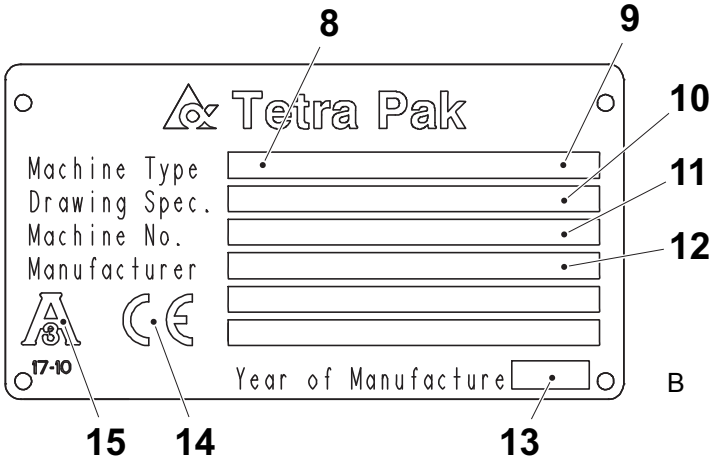
8
9
10
11
12
Tetra Pak
Machine Type
Drawing Spec.
Machine No.
Manufacturer
17-10
Year of Manufacture
B
15
14
13

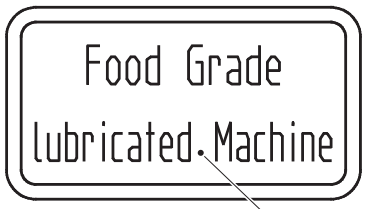
Food Grade
lubricated. Machine
16
C

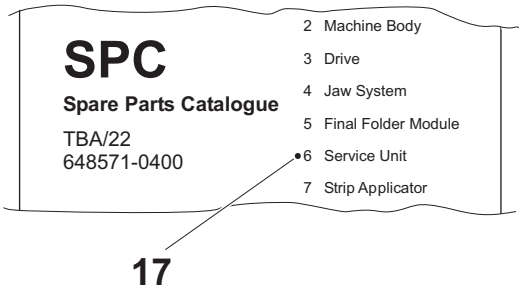
SPC
Spare Parts Catalogue
TBA/22
648571-0400
2 Machine Body
3 Drive
4 Jaw System
5 Final Folder Module
6 Service Unit
7 Strip Applicator
17
D

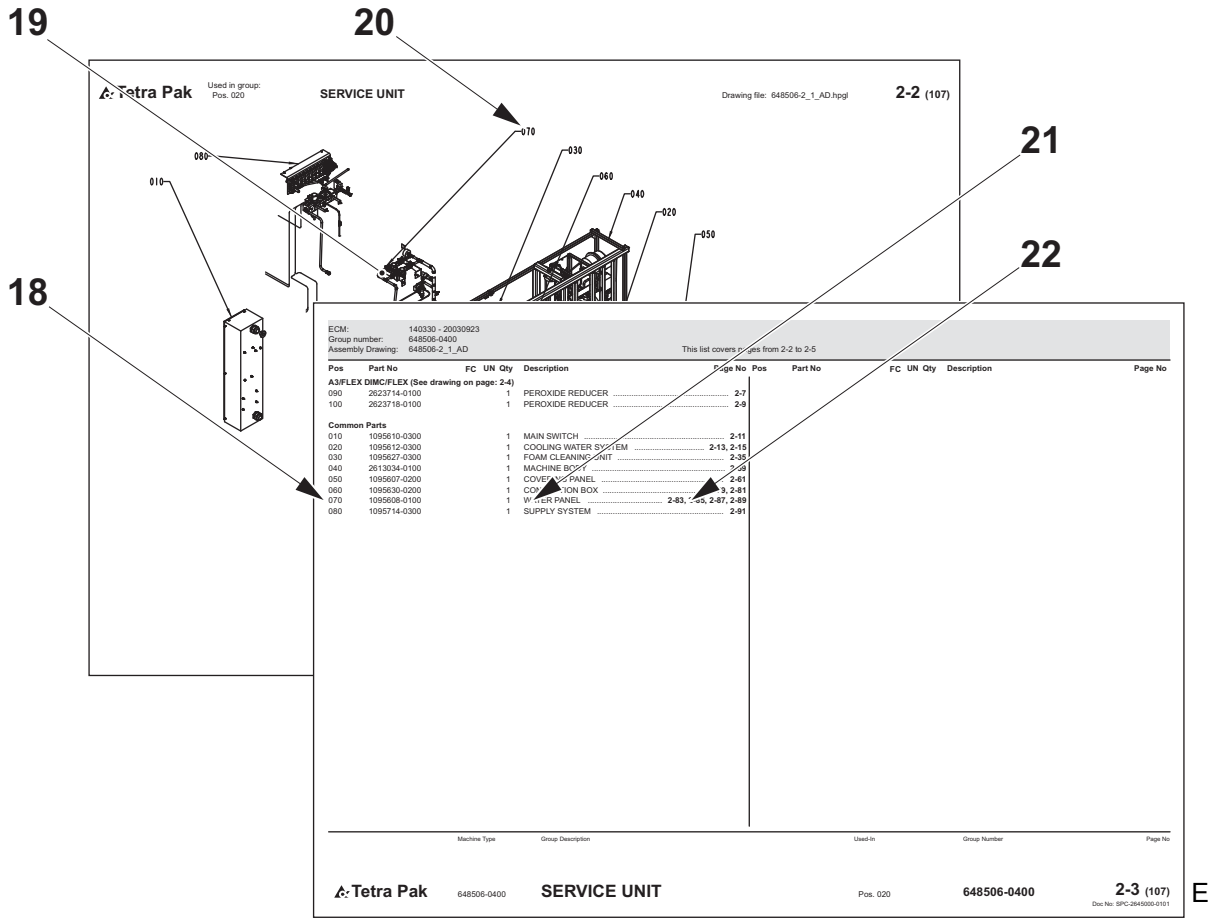
19
20
21
22
18
Tetra Pak
Used in group:
Pos. 020
SERVICE UNIT
Drawing file: 648506-2_1_AD.hpgl
2-2 (107)
070
030
060
040
020
050
080
010
ECM: 140330 - 20030923
Group number: 648506-0400
Assembly Drawing: 648506-2_1_AD
This list covers pages from 2-2 to 2-5
Pos Part No FC UN Qty Description Page No
A3/FLEX DIMC/FLEX (See drawing on page: 2-4)
090 2623714-0100 1 PEROXIDE REDUCER 2-7
100 2623718-0100 1 PEROXIDE REDUCER 2-9
Common Parts
010 1095610-0300 1 MAIN SWITCH 2-11
020 1095612-0300 1 COOLING WATER SYSTEM 2-13, 2-15
030 1095627-0300 1 FOAM CLEANING UNIT 2-35
040 2613034-0100 1 MACHINE BODY 2-59
050 1095607-0200 1 COVER, SIDE PANEL 2-61
060 1095630-0200 1 CONNECTION BOX 2-79, 2-81
070 1095608-0100 1 WATER PANEL 2-83, 2-85, 2-87, 2-89
080 1095714-0300 1 SUPPLY SYSTEM 2-91
Machine Type
Group Description
Used-In
Group Number
Page No
Tetra Pak
648506-0400
SERVICE UNIT
Pos. 020
648506-0400
2-3 (107)
Doc No: SPC-2645000-0101
E

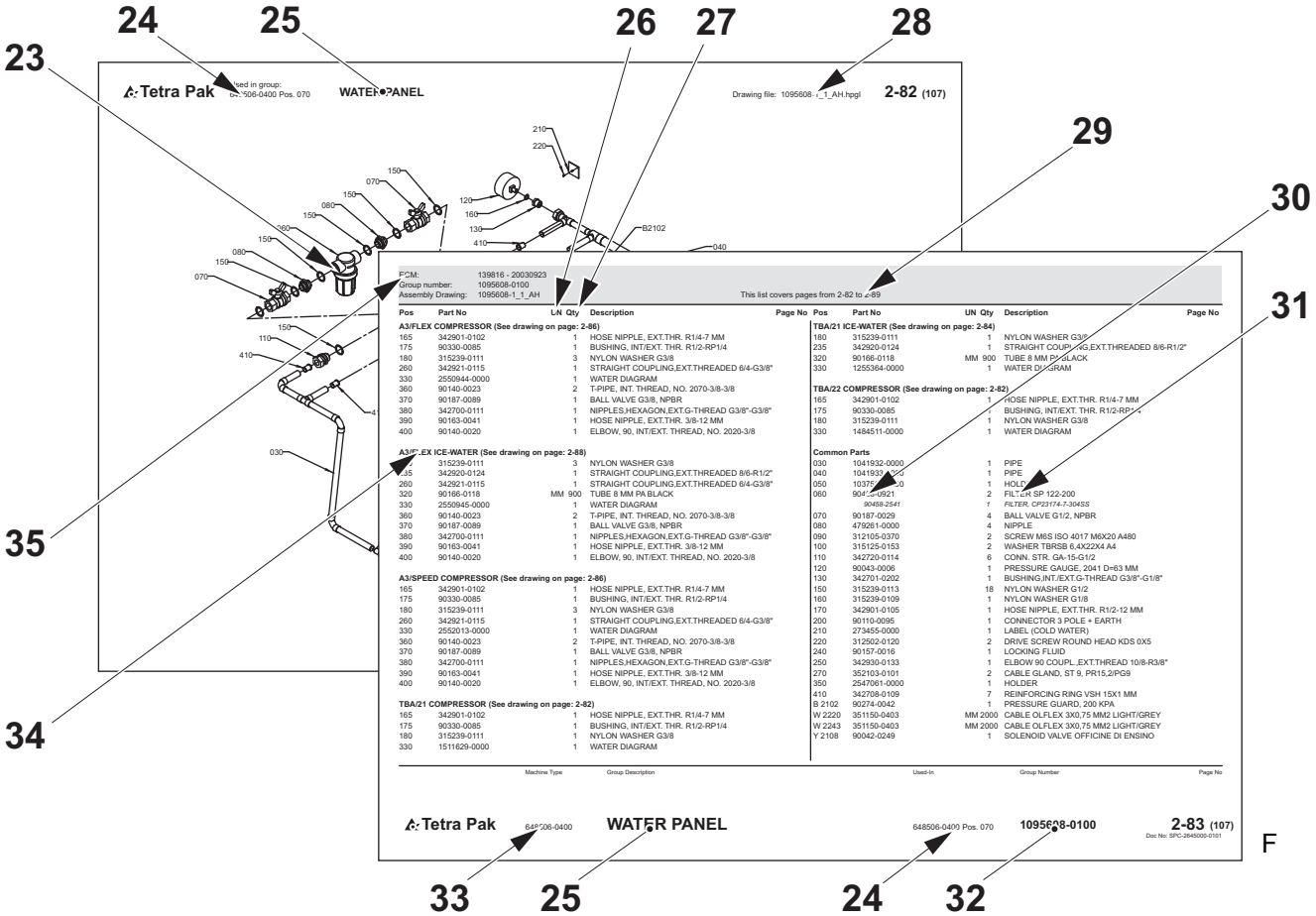
24
25
26
27
28
23
29
30
31
35
34
Tetra Pak
Used in group:
Pos. 070
WATER PANEL
Drawing file: 1095608-1_1_AH.hpgl
2-82 (107)
210
220
150
070
080
160
120
130
410
B2102
040
030
110
ECM: 139816 - 20030923
Group number: 1095608-0100
Assembly Drawing: 1095608-1_1_AH
This list covers pages from 2-82 to 2-89
Pos Part No LN Qty Description Page No
A3/FLEX COMPRESSOR (See drawing on page: 2-86)
165 342901-0102 1 HOSE NIPPLE, EXT.THR. R1/4-7 MM
175 90330-0085 1 BUSHING, INT/EXT. THR. R1/2-RP1/4
180 315239-0111 3 NYLON WASHER G3/8
260 342921-0115 1 STRAIGHT COUPLING,EXT.THREADED 6/4-G3/8"
330 2550944-0000 1 WATER DIAGRAM
360 90140-0023 2 T-PIPE, INT. THREAD, NO. 2070-3/8-3/8
370 90187-0089 1 BALL VALVE G3/8, NPBR
380 342700-0111 1 NIPPLES,HEXAGON,EXT.G-THREAD G3/8"-G3/8"
390 90163-0041 1 HOSE NIPPLE, EXT.THR. 3/8-12 MM
400 90140-0020 1 ELBOW, 90, INT/EXT. THREAD, NO. 2020-3/8
A3/FLEX ICE-WATER (See drawing on page: 2-88)
235 315239-0111 3 NYLON WASHER G3/8
235 342920-0124 1 STRAIGHT COUPLING,EXT.THREADED 8/6-R1/2"
260 342921-0115 1 STRAIGHT COUPLING,EXT.THREADED 6/4-G3/8"
320 90166-0118 MM 900 TUBE 8 MM PA BLACK
330 2550945-0000 1 WATER DIAGRAM
360 90140-0023 2 T-PIPE, INT. THREAD, NO. 2070-3/8-3/8
370 90187-0089 1 BALL VALVE G3/8, NPBR
380 342700-0111 1 NIPPLES,HEXAGON,EXT.G-THREAD G3/8"-G3/8"
390 90163-0041 1 HOSE NIPPLE, EXT.THR. 3/8-12 MM
400 90140-0020 1 ELBOW, 90, INT/EXT. THREAD, NO. 2020-3/8
A3/SPEED COMPRESSOR (See drawing on page: 2-86)
165 342901-0102 1 HOSE NIPPLE, EXT.THR. R1/4-7 MM
175 90330-0085 1 BUSHING, INT/EXT. THR. R1/2-RP1/4
180 315239-0111 3 NYLON WASHER G3/8
260 342921-0115 1 STRAIGHT COUPLING,EXT.THREADED 6/4-G3/8"
330 2552013-0000 1 WATER DIAGRAM
360 90140-0023 2 T-PIPE, INT. THREAD, NO. 2070-3/8-3/8
370 90187-0089 1 BALL VALVE G3/8, NPBR
380 342700-0111 1 NIPPLES,HEXAGON,EXT.G-THREAD G3/8"-G3/8"
390 90163-0041 1 HOSE NIPPLE, EXT.THR. 3/8-12 MM
400 90140-0020 1 ELBOW, 90, INT/EXT. THREAD, NO. 2020-3/8
TBA/21 COMPRESSOR (See drawing on page: 2-82)
165 342901-0102 1 HOSE NIPPLE, EXT.THR. R1/4-7 MM
175 90330-0085 1 BUSHING, INT/EXT. THR. R1/2-RP1/4
180 315239-0111 1 NYLON WASHER G3/8
330 1511629-0000 1 WATER DIAGRAM
TBA/21 ICE-WATER (See drawing on page: 2-84)
180 315239-0111 1 NYLON WASHER G3/8
235 342920-0124 1 STRAIGHT COUPLING,EXT.THREADED 8/6-R1/2"
320 90166-0118 MM 900 TUBE 8 MM PA BLACK
330 1255364-0000 1 WATER DIAGRAM
TBA/22 COMPRESSOR (See drawing on page: 2-82)
165 342901-0102 1 HOSE NIPPLE, EXT.THR. R1/4-7 MM
175 90330-0085 1 BUSHING, INT/EXT. THR. R1/2-RP1/4
180 315239-0111 1 NYLON WASHER G3/8
330 1484511-0000 1 WATER DIAGRAM
Common Parts
030 1041932-0000 1 PIPE
040 1041933-0000 1 PIPE
050 1037[illegible]-0 1 HOLDER
060 904[illegible]-0921 2 FILTER SP 122-200
90458-2641 1 FILTER, CP23174-7-3045S
070 90187-0029 4 BALL VALVE G1/2, NPBR
080 479261-0000 4 NIPPLE
090 312105-0370 2 SCREW M6S ISO 4017 M6X20 A480
100 315125-0153 2 WASHER TBRSB 6,4X22X4 A4
110 342720-0114 6 CONN. STR. GA-15-G1/2
120 90043-0006 1 PRESSURE GAUGE, 2041 D=63 MM
130 342701-0202 1 BUSHING,INT./EXT.G-THREAD G3/8"-G1/8"
150 315239-0113 18 NYLON WASHER G1/2
160 315239-0109 1 NYLON WASHER G1/8
170 342901-0105 1 HOSE NIPPLE, EXT.THR. R1/2-12 MM
200 90110-0095 1 CONNECTOR 3 POLE + EARTH
210 273455-0000 1 LABEL (COLD WATER)
220 312502-0120 2 DRIVE SCREW ROUND HEAD KDS 0X5
240 90157-0016 1 LOCKING FLUID
250 342930-0133 1 ELBOW 90 COUPL.,EXT.THREAD 10/8-R3/8"
270 352103-0101 2 CABLE GLAND, ST 9, PR15,2/PG9
350 2547061-0000 1 HOLDER
410 342708-0109 7 REINFORCING RING VSH 15X1 MM
B 2102 90274-0042 1 PRESSURE GUARD, 200 KPA
W 2220 351150-0403 MM 2000 CABLE OLFLEX 3X0,75 MM2 LIGHT/GREY
W 2243 351150-0403 MM 2000 CABLE OLFLEX 3X0,75 MM2 LIGHT/GREY
Y 2108 90042-0249 1 SOLENOID VALVE OFFICINE DI ENSINO
Machine Type
Group Description
Used-In
Group Number
Page No
Tetra Pak
648506-0400
WATER PANEL
648506-0400 Pos. 070
1095608-0100
2-83 (107)
Doc No: SPC-2645000-0101
F
33
25
24
32

Manual Information

The Tetra Pak Group recommends reading all delivered manuals carefully. Make sure that the delivered manuals are available to personnel who operate or maintain the equipment.

It is important to keep this catalogue for the lifetime of the equipment and to pass the catalogue on to any subsequent holder or user.

The Tetra Pak Group will not be held responsible for any damage, loss, injury, or death caused by not following the instructions in the manuals that accompany this equipment.

Delivered Manuals

Manuals delivered with this equipment:

CM

The Conversion Manual provides technicians with information on converting the equipment between different production modes.

EM

The Electrical Manual provides technicians with information about the equipment's electrical system.

IM

The Installation Manual provides technicians with information required to safely install the equipment.

MaSP

The Maintenance & Spare Parts Manual provides information on how to maintain the component. It also provides the information necessary to order spare parts from the Tetra Pak Group for the component.

MM

The Maintenance Manual provides technicians with information on maintaining the equipment.

OM

The Operation Manual provides the operator with information on handling and operating the equipment before, during, and after production.

RM

The Rebuilding Manual provides technicians with information required to safely install a kit to an installed machine or equipment.

(Cont'd)

(Cont'd)

SPC

The Spare Parts Catalogue provides the information necessary to order spare parts from the Tetra Pak Group.

TeM

The Technical Manual provides technicians with information which can be:

- information required to safely install the equipment
- information required to maintaining the equipment
- information about the machine's/equipment's electrical system
- information necessary to order spare parts from the Tetra Pak Group
- other technical information

UP

The Update Pages provides new pages to update existing machine manuals.

Page Layout

Refer to the illustration (A) on page i-9: The main pages in a Spare Parts Catalogue consist of an illustration page (1) and a corresponding list page (7). The page number (5) is shown in the header of an illustration page and in the footer of a list page. The document number (6) is shown in the footer of a list page.

Page Numbering

Refer to the illustration (A) on page i-9: A page number (5) has three parts:

- chapter number (2)
- consecutive page number within the chapter (3)
- total number of pages in the chapter (4)

Note! The letters UP may replace the chapter number (2) if the manual includes update pages. The consecutive page number (3) and the total number of pages (4) of update pages do not follow the existing sequential page numbering of the chapter.

Machine Introduction

Manufacturer

For the manufacturer’s name and address, see the second page of this catalogue.

Service

The Tetra Pak Group does not accept responsibility for any damages or any injuries to equipment, staff or consumers that is caused by spare parts that are not genuine Tetra Pak® spare parts.

To order genuine Tetra Pak spare parts for this machine contact the nearest Tetra Pak office.

Identification

CE Classification

This equipment complies with the basic health and safety regulations of the European Economic Area (EEA).

(Cont'd)

(Cont'd)

3-A Compliance

If the machine plate contains the 3-A mark (15) (see illustration (B) on page i-9), this equipment complies with the 3-A Sanitary Standards for Formers, Fillers, and Sealers of Containers for Fluid Milk and Fluid Milk Products, Number 17-XX.

Machine Plate

The illustration (B) on page i-9 shows an example of a machine plate.
An illustration of the valid machine plate and its location on the equipment is shown in the Introduction chapter of the manuals delivered with this equipment. The machine plate contains the data listed below, needed when contacting the Tetra Pak Group concerning this specific equipment.

- Machine type (8)
- Volume (9)
- Drawing specifications (10)
- Machine serial number (11)
- Manufacturer (12)
- Year of manufacture (13)
- CE mark (14)
- 3-A mark (if applicable) (15)

Make sure that the equipment data in the front pages of this manual corresponds to the machine plate data and the machine specification.

Food Grade Lubricated Machine Plate

If the equipment is equipped with a Food Grade Lubricated Machine plate (16) (see illustration (C) on page i-9), this indicates that lubricants used in this equipment are of food grade quality.

How to Use This Spare Parts Catalogue

Locate a Spare Part Number

a) Refer to the illustration (D) on page i-9: Go to the chapter number (17) indicated beside the main group that contains the part you want to locate.

Items b) and c) refer to the illustration (E) on page i-10.

b) On the main group illustration, look for the machine subgroup (19) that contains the part or subgroup you are looking for. Note the position number (20) and go to the list page that follows the illustration.

c) Look for the position number/reference designation (18) or the subgroup name (21). Go to the corresponding page number (22) listed in the right-hand column. The Tetra Pak Group has chosen to always use the function oriented structure for reference designation. The prefix indicating function oriented structure (=) is not shown in the reference designation

(Cont'd)

(Cont'd)

Items d) and e) refer to the illustration (F) on page i-10.

d) Locate the part (23) that you are looking for on the subgroup illustration and note the part's position number.

e) The part number (31) and part description (32) are listed beside the position number on the list page.

Information Listed in a Spare Parts Catalogue

The list below refers to the illustration (F) on page i-10. A Spare Parts Catalogue contains the following information about groups, subgroups, and spare parts for the equipment:

- Group structure reference (24). Indicates the next higher group in the equipment list structure.
- Group name (25)
- Unit of measure (26)
- Quantity (27)
- Assembly drawing number (28)
- List page range (29). Included if there are multiple pages in the group illustration or list.
- Part or subgroup number (30)
- Subgroup name or part description (31)
- Group number (32)
- Equipment number (33)
- Group information heading (34). Indicates if the section below the heading is for a specific machine variant or if it is a list of common parts. If a list has more than one variant and each variant has its own assembly drawing, a page reference to the variant's assembly drawing is shown.
- Internal information (35)

Assistance and Inquiries

For assistance when operating this equipment, or other inquiries, comments, or suggestions, submit the questions or give feedback by using the QuTI-P tool. Type QuTI-P in the address field of your browser. If access to QuTI-P is not available, request access by contacting the Global Service Desk.

If access to the Tetra Pak® intranet is not available, contact the nearest Tetra Pak representative.

Информация за ръководството

Tetra Pak Group препоръчва внимателното прочитане на всички доставени ръководства. Уверете се, че всички доставени ръководства са достъпни за персонала, който работи с оборудването или го поддържа.

Важно е да съхранявате това ръководство през целия експлоатационен срок на оборудването и да го предадете на всеки следващ собственик или ползвател.

Tetra Pak Group няма да носи отговорност за никакви повреди на оборудването, предизвикани от неспазването на инструкциите, дадени в ръководството, което придружава това оборудване.

Доставени ръководства

Ръководства, доставени с това оборудване:

CM

Ръководството за преустройство предоставя на техниците информация за преустройство на оборудването за различните производствени режими.

EM

Електрическият наръчник осигурява на техниците информация за електрическата система на оборудването.

IM

Наръчникът за инсталацията осигурява на техниците информация за безопасно инсталиране на оборудването.

MaSP

Ръководството за техническо обслужване и резервни части предоставя информация относно техническото обслужване на компонента. То предоставя и необходимата информация за заявка на резервни части за компонента от Tetra Pak Group.

MM

Наръчникът за поддръжка осигурява на техниците информация за поддържане на оборудването.

OM

Ръководството за експлоатация предоставя на оператора информацията, която му е необходима за работата и експлоатацията на оборудването, преди, по време на и след производство.

RM

Ръководството за възстановяване предоставя на техниците информация, необходима за безопасно монтиране на .принадлежности на инсталирана машина или оборудване.

(Продължение)

(Продължение)

SPC

Каталогът за резервни части осигурява информация за поръчка на резервни части от Tetra Pak Group.

TeM

Техническите ръководства, осигуряват на техниците информация, която може да бъде:

- информация, необходима за безопасното инсталиране на оборудването
- информация, необходима за поддръжката на оборудването
- информацията за електрическата система на оборудването/машината
- предоставя информацията необходима за поръчката на резервни части от Tetra Pak Group
- друга техническа информация.

UP

Страниците с актуализации предоставят нови страници за актуализиране на вече съществуващите ръководства за машината.

Разположение на страниците

Вижте илюстрация (A) на страница i-9: Основните страници на Каталога с резервни части съдържат страница с илюстрация (1) и страница със съответен списък (7). Номерът на страницата (5) е даден в горната част на илюстрованата страница и в долната част на страницата със списък.. Номерът на документа (6) е даден в долната част на списъчната страница.

Номериране на страниците

Вижте илюстрация (A) на страница i-9: Номерът на страница (5) има три части:

- номер на глава (2)
- пореден номер на страница (3) в рамките на главата
- общ брой страници (4) в главата.

Забележка! Буквите UP може да заместват номера на главата (2), ако ръководството включва страници с актуализации. Поредният номер на страница (3) и общият брой страници (4) на страниците с актуализации не следват съществуващата поредност в номерата на страниците на главата.

Въведение на машината

Производител

За името на производителя и адреса му, виж на втора страница от този каталог.

Обслужване

Tetra Pak Group не носи отговорност за щети или наранявания на оборудване, персонал или клиенти, които са причинени от резервни части, които не са оригинални резервни части Tetra Pak®.

За да поръчате оригинални резервни части Tetra Pak за тази машина, свържете се с най-близкия офис на Tetra Pak.

Идентификация

CE Класификация

Това оборудване съответства на основните разпоредби за опазване на здравето и безопасност на Европейската Икономическа Зона (EEA).

(Продължение)

(Продължение)

3-A Съответствие

Ако табелката на машината съдържа означението 3-A (15) (виж илюстрация (B) на страница i-9), оборудването съответства на 3-A Санитарните стандарти за формоващи, пълнещи и запечатващи устройства за контейнери за течно мляко и течни млечни продукти, номер 17-XX.

Табела с технически данни на машината

Илюстрация (B) на страница i-9 показва примерна табела с технически данни на машината.
Илюстрация на реална табела с технически данни на машината и нейното местоположение върху оборудването е дадена в глава Въведение на ръководството, придружаващо оборудването. Табелата с технически данни за машината съдържа данните, описани по-долу, необходими, когато се свързвате с Tetra Pak Group относно това оборудване.

- Тип на машината (8)
- Обем (9)
- Спецификации (10)
- Сериен номер на машината (11)
- Производител (12)
- Година на производство (13)
- CE маркировка (14)
- 3-A маркировка (ако е приложимо) (15)

Уверете се, че данните за оборудването, дадени на първите страници на това ръководство съответстват на данните върху табелата с технически спецификации, и спецификацията на машината.

Табелка за използваща смазки машина от клас „Хранителна индустрия“

Ако оборудването е обозначено с табелка за използваща смазки машина от клас „Хранителна индустрия“ (16) (вижте илюстрация (C) на стр. i-9), това означава, че използваните в оборудването смазки са с клас на качество за хранителната индустрия.

Как да ползвате Каталога за резервни части

Откриване номер на резервна част

a) Вижте илюстрация (D) на страница i-9: Преминете на глава номер (17), посочена .до основната група, която съдържа частта, която желаете да откриете.

Позиции b) и c) вижте на илюстрации (E) на страница i-10.

b) На главната илюстрация на група, потърсете машинната подгрупа (19), която съдържа частта или подгрупата, която търсите. Отбележете номера на позицията (20) и отидете на страницата със списъка, който следва илюстрацията.

c) Потърсете номера на позиция/вижте обозначението (18) или наименованието на подгрупата (21). Преминете на съответния номер на страница (22), вписан в дясната колона.
От Tetra Pak Group са избрали, винаги да се използва функционално ориентирана структура за обозначение препратка.
Представката посочва функционално ориентирана структура (=) не се показва в обозначението препратка.

(Продължение)

(Продължение)

Позиции d) и e) вижте на илюстрация (F) на страница i-10.

d) Открийте частта (23), която търсите на илюстрацията с подгрупи и отбележете номера на позицията на частта.

e) Номерът на частта (31) и описанието на частта (32) са вписани до номера на позицията на страницата със списъка.

Информация в Каталога за резервни части

Списъкът по-долу се отнася за илюстрация (F) на страница i-10. Каталогът за резервни части съдържа следната информация за групи, подгрупи и резервни части за оборудването:

- Препратка към структура на групата (24). Посочва по-горната група в структурата на оборудването.
- Наименование на групата (25)
- Мерна единица (26)
- Количество (27)
- Номер от сборния чертеж (28)
- Серия страници със списък (29). Включен, ако има няколко страници в групова илюстрация или списък
- Част или номер на подгрупа (30)
- Наименование на подгрупа или описание на част(31)
- Номер на група (32)
- Номер на оборудването (33)
- Информационен надпис за група (34). Индицира, че раздела под заглавието е за определен модел машина или че е списък на унифицирани части. Ако списъкът има повече от един вариант и всеки вариант има своя монтажна схема, е показана препратка към страница със сборния чертеж.
- Международна информация (35)

Помощ и съдействие

За помощ при експлоатация на оборудването, запитвания, коментари или предложения, отправяйте вашите въпроси или предоставяйте обратна информация, като използвате инструмента QuTI-P. Въведете QuTI-P в адресното поле на вашия браузер. Ако няма достъп до QuTI-P, направете искане за такъв достъп от Гишето за глобална техническа помощ.

Ако няма достъп до интранет мрежата на Tetra Pak®, свържете се с най-близкия представител на Tetra Pak.

Informace o příručce

Skupina Tetra Pak Group doporučuje se důkladně seznámit se všemi dodanými příručkami. Dodané příručky musí být k dispozici pracovníkům, kteří provádějí obsluhu nebo údržbu zařízení.

Tento katalog je třeba uchovávat po celou dobu životnosti zařízení a předat jej každému dalšímu vlastníkovi nebo uživateli.

Skupina Tetra Pak Group nezodpovídá za škody na zařízení způsobené nedodržováním pokynů uvedených v příručkách, které doprovází toto zařízení.

Dodané příručky

Příručky dodávané s tímto zařízením:

CM

Příručka pro konverzi poskytuje technikům informace o konverzi zařízení mezi různými produkčními režimy.

EM

Příručka elektrického zařízení (EM) poskytuje technikům informace o elektrickém systému zařízení.

IM

Montážní příručka (IM) poskytuje technikům informace nutné pro bezpečné provedení montáže zařízení.

MaSP

Příručka pro údržbu a náhradní díly poskytuje informace o způsobu údržby komponent. Podává také informace, potřebné pro objednání náhradních dílů daných komponent u společnosti Tetra Pak Group.

MM

Příručky údržby (MM) poskytuje technikům informace o údržbě zařízení.

OM

Návod k obsluze poskytuje technikům informace o manipulaci a provozu zařízení před, během a po ukončení výroby.

RM

Příručka pro rekonstrukci poskytuje technikům informace požadované pro bezpečnou instalaci soupravy na nainstalovaný stroj nebo zařízení.

(Pokračování)

(Pokračování)

SPC

Katalog náhradních dílů (SPC) obsahuje informace nezbytné pro objednávání náhradních dílů od Tetra Pak Group.

TeM

Technická příručka poskytuje technikům informace, kterými mohou být:

- potřebné informace pro bezpečnou instalaci zařízení
- potřebné pro údržbu zařízení
- informace o elektrickém systému zařízení/stroje
- informace nezbytné pro objednávání náhradních dílů od Tetra Pak Group
- ostatní technické informace

UP

Aktualizované stránky poskytují nové stránky k existujícím příručkám k zařízení.

Vzhled stránky

Podívejte se na obrázek (A) na straně i-9: hlavní stránky v Katalogu náhradních dílů tvoří stránky s ilustracemi (1) a odpovídající stránka se seznamem (7). Číslo stránky (5) je uvedeno v záhlaví stránky s ilustrací a v zápatí stránky se seznamem. Číslo dokumentu (6) je uvedeno v zápatí stránky se seznamem.

Číslování stránek

Podívejte se na obrázek (A) na straně i-9: číslo stránky (5) má tři části:

- číslo kapitoly (2)
- číslo další stránky v rámci kapitoly (3),
- celkového počtu stránek v kapitole (4)

Poznámka! Písmena UP mohou nahradit číslo kapitoly (2) v případě, že manuál obsahuje aktualizované stránky. Následující číslo stránky (3) a celkový počet stran (4) aktualizovaných stránek se nedrží existujícího sekvenčního číslování stránek v této kapitole.

Seznámení se zařízením

Výrobce

Jméno a adresu výrobce najdete na druhé straně tohoto katalogu.

Servis

Skupina Tetra Pak Group nepřebírá odpovědnost za jakékoli škody na zařízení nebo za zranění zaměstnance nebo spotřebitele, které budou způsobeny tím, že se nepoužijí originální náhradní díly Tetra Pak®.

Chcete-li pro tento stroj objednat originální náhradní díly Tetra Pak, kontaktujte nejbližší kancelář společnosti Tetra Pak.

Označení

Klasifikace CE

Toto zařízení vyhovuje základním zdravotním a bezpečnostním směrnicím EU.

(Pokračování)

(Pokračování)

3-A Soulad

Pokud štítek stroje obsahuje označení 3-A (15) (viz obrázek (B) na straně i-7), pak je toto zařízení v souladu s hygienickými normami 3-A pro formování, plnění a uzavírání obalů pro tekuté mléko a tekuté mléčné výrobky, číslo 17-XX.

Typový štítek

Obrázek (B) na straně i-9 ukazuje příklad typového štítku.
Obrázek platného typového štítku a jeho umístění na zařízení je uvedeno v úvodní kapitole příruček dodaných s tímto zařízením.
Typový štítek obsahuje údaje uvedené níže, tyto údaje jsou zapotřebí, když kontaktujete Tetra Pak Group ve věci týkající se tohoto specifického vybavení.

- Typ stroje (8)
- Objem (9)
- Specifikace výkresů (10)
- Sériové číslo stroje (11)
- Výrobce (12)
- Rok výroby (13)
- Symbol CE (14)
- Symbol 3-A (pokud se používá) (15)

Údaje o zařízení uvedené na předních stránkách této příručky musí souhlasit s údaji na typovém štítku a specifikacím zařízení.

Štítek o použití maziva pro potravinářství

Pokud je zařízení označeno štítkem o mazivu pro potravinářství (16) (viz obrázek (C) na straně i-9), prohlašuje se tím, že maziva používaná na tomto zařízení splňují kvalitu pro potravinářský průmysl.

Jak používat tento katalog náhradních dílů

Vyhledat číslo náhradního dílu

a) Viz obrázek (C) na straně i-9: Přejít na číslo kapitoly (17) uvedené vedle hlavní skupiny, která obsahuje díl, který chcete najít.

Položky b) a c) se vztahují k obrázku (E) na straně i-10.

b) Na obrázku hlavní skupiny se podívejte na podskupinu stroje (19), která obsahuje díly nebo podskupiny, které hledáte. Poznamenejte si číslo pozice (20) a přejděte na stránku seznamu, který následuje za obrázkem.

c) Podívejte se na číslo pozice/označení reference (18) nebo na název podskupiny (21). Přejděte na odpovídající číslo strany (22) uvedené v seznamu ve sloupci na pravé straně. Skupina Tetra Pak Group si pro referenční označení zvolila vždy používat funkčně orientovanou strukturu. Předpona označující funkčně orientovanou strukturu (=) není uvedena v referenčním označení.

(Pokračování)

(Pokračování)

Položky d) a e) se vztahují k obrázku (F) na straně i-10.

d) Lokalizujte díl (23), který hledáte, na obrázku podskupiny a poznamenejte si číslo pozice dílu.

e) Číslo dílu (32) a popis dílu (32) jsou uvedeny vedle čísla pozice na stránce se seznamem.

Informace uvedené v katalogu náhradních dílů

Níže uvedený seznam se odkazuje na obrázek (F) na stránce i-10.
Katalog náhradních dílů obsahuje následující informace o skupinách, podskupinách a náhradních dílech pro zařízení:

- Reference struktury skupiny (24). Označuje následující vyšší skupinu ve struktuře seznamu výbavy.
- Název skupiny (25)
- Měrná jednotka (26)
- Množství (27)
- Číslo montážního výkresu (28)
- Rozsah stránek se seznamem (29). Zahrnuty, pokud existuje více stránek ve skupině obrázků nebo seznamu.
- Číslo dílu nebo podskupiny (30)
- Název podskupiny nebo popis dílu (31)
- Číslo skupiny (32)
- Číslo výbavy (33)
- Záhlaví informací o skupině (34). Označuje, zdali se část pod záhlavím týká konkrétní varianty stroje, nebo zdali se jedná o seznam společných dílů. Pokud seznam obsahuje více než jednu variantu a každá varianta má své vlastní montážní výkresy, je zobrazen odkaz na stránku s montážním výkresem varianty.
- Vnitřní informace (35)

Podpora a zpětná vazba

Vyžadujete-li pomoc s činností tohoto zařízení, nebo máte jiné požadavky, poznámky nebo návrhy, položte otázku, nebo získejte zpětnou vazbu pomocí nástroje QuTI-P. Do adresního řádku svého prohlížeče napište QuTI-P. Pokud přístup k QuTI-P není dostupný, vyžádejte si přístup kontaktováním Global Service Desk.

Pokud nemáte přístup na intranet Tetra Pak®, kontaktujte nejbližšího zástupce Tetra Pak.

Oplysninger om vejledninger

Tetra Pak Group anbefaler, at alle leverede vejledninger læses grundigt.
Sørg for, at de leverede vejledninger er til rådighed for det personale, som betjener eller vedligeholder udstyret.

Det er vigtigt, at dette katalog opbevares i hele udstyrets levetid og overdrages til en efterfølgende ejer eller bruger.

Tetra Pak Group kan ikke holdes ansvarlig for skader, tab, kvæstelser eller dødsfald forårsaget af, at anvisningerne i de vejledninger, der følger med dette udstyr, ikke overholdes.

Leverede vejledninger

Vejledninger, der leveres sammen med dette udstyr:

CM

Konverteringsvejledningen forsyner teknikere med oplysninger om konvertering af udstyret mellem forskellige produktionstilstande.

EM

Den elektriske vejledning forsyner teknikere med oplysninger om udstyrets elektriske system.

IM

Installationsvejledningen forsyner teknikere med oplysninger, som er nødvendige til sikker installation af udstyret.

MaSP

Vedligeholdelses- og reservedelsvejledningen giver oplysninger om vedligeholdelse af komponenter. Den giver også oplysninger, der er nødvendige til bestilling af reservedele fra Tetra Pak Group.

MM

Vedligeholdelsesvejledningen forsyner teknikere med oplysninger om vedligeholdelsen af udstyret.

OM

Driftsvejledningen forsyner operatøren med oplysninger om håndteringen og betjeningen af udstyret før, under og efter produktion.

RM

Ombygningsvejledningen forsyner teknikere med oplysninger, der er nødvendige til sikker installation af et sæt på en installeret maskine eller installeret udstyr.

(Forts.)

(Forts.)

SPC

Reservedelskataloget indeholder de oplysninger, som er nødvendige til at bestille reservedele fra Tetra Pak Group.

TeM

Den Tekniske vejledning forsyner tekniker med oplysninger, der kan være:

- nødvendige oplysninger til sikker installation af udstyret
- nødvendige oplysninger til vedligeholdelse af udstyret
- oplysninger om maskinens/udstyrets elektriske system
- oplysninger, som er nødvendige til bestilling af reservedele fra Tetra Pak Group
- andre tekniske oplysninger

UP

Opdateringssiderne indeholder nye sider til opdatering af eksisterende maskinvejledninger.

Sidelayout

Se illustrationen (A) på side i-9: Hovedsiden i et reservedelskatalog består af en illustrationsside (1) og en tilsvarende listeside (7). Sidetallet (5) vises i overskriften på en illustrationsside og i fodteksten på en listeside. Dokumentnumret (6) vises i fodteksten på en listeside.

Sidenummerering

Se illustrationen (A) på side i-9: Et sidetal (5) har tre dele:

- kapitelnummer (2)
- fortløbende sidetal inden for kapitlet (3)
- det samlede antal sider i kapitlet (4)

Bemærk! Bogstaverne UP kan erstatte kapitelnumret (2), hvis vejledningen inkluderer opdateringssider. Det fortløbende sidetal (3) og det samlede antal sider (4) af opdateringssider følger ikke kapitlets eksisterende fortløbende sidenummerering.

Præsentation af maskinen

Producent

For producentens navn og adresse se anden side i dette katalog.

Service

Tetra Pak Group påtager sig intet ansvar for skader på udstyret eller kvæstelser af personale eller forbrugere, som forårsages af reservedele, der ikke er ægte reservedele fra Tetra Pak®.

For at bestille ægte reservedele fra Tetra Pak til denne maskine kontakt det nærmeste Tetra Pak-kontor.

Identifikation

CE-klassificering

Dette udstyr overholder det Europæiske Økonomiske Samarbejdsområdes (EØS) grundlæggende sundheds- og sikkerhedsbestemmelser.

(Forts.)

(Forts.)

3-A overholdelse

Hvis typeskiltet indeholder 3-A-mærket (15) (se illustration (B) på side i-7), overholder dette udstyr 3-A-sanitetsstandarderne for formnings-, fylde- og forseglingsmaskiner for beholdere til flydende mælk og flydende mælkeprodukter, nummer 17-XX.

Maskinens typeskilt

Illustration (B) på side i-9 viser et eksempel på et typeskilt.
En illustration af maskinens gældende typeskilt og dens placering på udstyret vises i kapitlet Indledning af de vejledninger, der leveres sammen med dette udstyr.
Maskinens typeskilt indeholder de data, der opføres nedenfor og om der er brug for, hvis der rettes henvendelse til Tetra Pak Group vedrørende det specifikke udstyr.

- Maskintype (8)
- Volumen (9)
- Tegningsspecifikationer (10)
- Maskinens serienummer (11)
- Producent (12)
- Fremstillingsår (13)
- CE-mærke (14)
- 3-A mærke (i givet fald) (15)

Kontrollér, at udstyrsdataene på de første sider i denne vejledning svarer til dataene på typeskiltet og maskinens specifikation.

Typeskilt for smøremidler af levnedsmiddelkvalitet

Hvis udstyret er forsynet med et typeskilt for smøremidler af levnedsmiddelkvalitet (16) (se illustration (C) på side i-9), angiver det, at de smøremidler, der bruges i dette udstyr, er af levnedsmiddelkvalitet.

Sådan bruges dette reservedelskatalog

Sådan finder men et reservedelsnummer

a) Se illustrationen (D) på side i-9: Gå til kapitelnumret (17), der vises ved siden af hovedgruppen, som indeholder den del, der skal findes.

Punkterne b) og c) refererer til illustrationen (E) på side i-10.

b) På hovedgruppens illustration søg efter den maskinundergruppe (19), der indeholder den del eller undergruppe, der ledes efter.
Notér positionsnumret (20) og gå til den listeside, der følger illustrationen.

c) Søg efter positionsnumret/henvisningsbetegnelsen (18) eller undergruppens navn (21). Gå til det tilsvarende sidetal (22), der er opført i højre spalte.
Tetra Pak Group har valgt altid at bruge funktionen orienteret struktur til henvisningsbetegnelse. Det præfiks, der angiver funktionsorienteret struktur (=) vises ikke i henvisningsbetegnelsen.

(Forts.)

(Forts.)

Punkterne d) og e) refererer til illustrationen (F) på side i-10.

d) Find den del (23), der ledes efter, på undergruppens illustration og notér delens positionsnummer.

e) Delnumret (31) og delbeskrivelsen (32) er opført ved siden af positionsnumret på listesiden.

Oplysninger, der er opført i et reservedelskatalog

Listen nedenfor refererer til illustrationen (F) på side i-10.
Et reservedelskatalog indeholder følgende oplysninger om grupper, undergrupper og reservedele for udstyret:

- Gruppens strukturhenvisning (24). Viser den næste højere gruppe i udstyrets listestruktur.
- Gruppenavn (25)
- Måleenhed (26)
- Mængde (27)
- Monteringstegningens nummer (28)
- Listesideområde (29). Inkluderet, hvis gruppeillustrationen eller listen har flere sider.
- Del- eller undergruppenummer (30)
- Undergruppenavn eller delbeskrivelse (31)
- Gruppenummer (32)
- Udstyrsnummer (33)
- Gruppeinformationsoverskrift (34). Angiver, om afsnittet under overskriften gælder for en bestemt maskinversion eller om det er en liste over fælles dele. Hvis en liste har mere end en version og hver version har en egen monteringstegning, vises der en sidehenvisning til versionens monteringstegning.
- Interne oplysninger (35)

Hjælp og forespørgsler

Hvis man har brug for hjælp med betjeningen af dette udstyr eller har andre forespørgsler, kommentarer eller forslag, kan man stille spørgsmål eller give feedback ved hjælp af værktøjet QuTI-P. Indtast QuTI-P i browserens adressefelt. Hvis man ikke har adgang til QuTI-P, kan man bede om adgang ved at kontakte den globale Service Desk.

Hvis adgang til Tetra Pak® intranet ikke er til rådighed, kontakt den nærmeste Tetra Pak®-repræsentant.

Handbuch-Informationen

Die Tetra Pak Group empfiehlt, alle gelieferten Handbücher sorgfältig zu lesen. Es muss sichergestellt werden, dass die gelieferten Handbücher dem Bediener- oder Wartungspersonal der Ausrüstung verfügbar sind.

Es ist wichtig, diesen Katalog während der Lebensdauer der Ausrüstung vorzuhalten und an nachfolgende Halter oder Benutzer weiterzugeben.

Die Tetra Pak Group übernimmt keine Verantwortung für Schäden, Verluste, erletzungen oder Todesfälle, die sich aus der Nichteinhaltung der Anweisungen in den dieser Ausrüstung beigefügten Handbüchern ergeben.

Gelieferte Handbücher

Mit dieser Ausrüstung gelieferte Handbücher

CM

Das Umbauhandbuch liefert den Technikern Informationen über den Umbau der Ausrüstung zwischen den verschiedenen Produktionsweisen.

EM

Das Elektrohandbuch liefert den Technikern Informationen zum Elektrosystem der Ausrüstung.

IM

Das Installationshandbuch liefert den Technikern Informationen für die sichere Installation der Ausrüstung.

MaSP

Das Wartungs- und Ersatzteilhandbuch liefert Informationen über die Wartung der Bauteile. Darüber hinaus enthält es die notwendigen Daten zur Bestellung von Ersatzteilen für die betreffenden Bauteile bei Tetra Pak Group.

MM

Das Wartungshandbuch liefert den Technikern Informationen über die Wartung der Ausrüstung.

OM

Das Betriebshandbuch enthält Informationen für den Bediener zu Handhabung und Betrieb der Ausrüstung vor, während und nach der Produktion.

RM

Das Umbauhandbuchliefert Informationen an die Techniker, die diese benötigen, um die Ausrüstung aus dem Kit sicher zu installieren.

(Forts.)

(Forts.)

SPC

Der Ersatzteilkatalog liefert die für die Bestellung von Ersatzteilen bei die Tetra Pak Group erforderlichen Informationen.

TeM

Das Technische Handbuch liefert den Technikern folgende Informationen:

- Informationen für die sichere Installation der Ausrüstung
- Informationen für die Wartung der Ausrüstung
- Informationen über das Elektrosystem der Maschine/Ausrüstung.
- Notwendige Informationen für die Bestellung von Ersatzteilen bei die Tetra Pak Group.
- andere technische Informationen

UP

Die Aktualisierungsseiten sind neu, um die Maschinenhandbücher zu aktualisieren.

Seitenlayout

Siehe die Abbildung (A) auf Seite i-9: Die Hauptseiten in einem Ersatzteilkatalog bestehen auf dem Abbildungsseite (1) und einer entsprechenden Listenseite (7). Die Seitennummer (5) ist im Kopf einer Abbildungsseite und im Fuß einer Listenseite aufgeführt.
Die Dokumentennummer (6) ist im Fuß einer Listenseite angegeben.

Seitennummerierung

Siehe die Abbildung (A) auf Seite i-9: Eine Seitennummer (5) hat drei Teile

- Kapitel Nummer (2)
- Fortlaufende Seitennummer (2) innerhalb des Kapitels (3)
- Gesamtanzahl der Seiten im Kapitel (4)

Hinweis! Die Buchstaben UP können die Kapitelnummer (2) ersetzen, wenn das Handbuch aktualisierte Seiten enthält. Die fortlaufende Seitennummer (3) und die Gesamtanzahl der Seiten (4) der aktualisierten Seiten folgen nicht der laufenden Seitennummerierung des Kapitels.

Einführung in die Maschine

Hersteller

Die zweite Seite des Katalogs enthält Name und Anschrift des Herstellers.

Service

Die Tetra Pak Group übernimmt keine Verantwortung für Schäden an Ausrüstungen und Verletzungen von Personen, verursacht durch Ersatzteile, die keine echten Tetra Pak®-Ersatzteile sind.

Für die Bestellung echter Tetra Pak-Ersatzteile für die Maschine wende man sich an die nächstgelegene Tetra Pak-Stelle.

Identifizierung

CE-Klassifizierung

Diese Ausrüstung entspricht den grundlegenden Gesundheits- und Sicherheitsvorschriften des Europäischen Wirtschaftsraumes (EWR).

(Forts.)

(Forts.)

3-A Erfüllung

Wenn die Maschinenplatte eine 3-A Markierung (15) enthält (siehe Abbildung (B) auf Seite i-7), entspricht diese Ausrüstung den 3-A Sanitärnormen für Former, Füller und Versiegler von Containern für lose Milch und Milchprodukte Nummer 17-XX.

Maschinenschild

Die Abbildung (B) auf Seite i-9 zeigt ein Beispiel eines Maschinenschildes.
Eine Abbildung eines gültigen Maschinenschildes und dessen Lage an der Ausrüstung finden Sie in der Einleitung zu dem mit der Ausrüstung gelieferten Handbuch. Das Maschinenschild enthält die nachstehenden Daten, erforderlich für die Kontaktnahme mit die Tetra Pak Group bezüglich dieser spezifischen Ausrüstung.

- Maschinentyp (8)
- Volumen (9)
- Zeichnungsspezifikationen (10)
- Serien-Nummer der Maschine (11)
- Hersteller (12)
- Baujahr (13)
- CE-Markierung (14)
- 3-A Markierung (falls zutreffend) (15)

Es muss sichergestellt sein, dass die in den Frontseiten dieses Handbuchs aufgeführten Ausrüstungsdaten mit den Daten des Maschinenschildes und der Maschinenspezifikation übereinstimmen.

Schild „Mit lebensmittelechtem Schmierfett geschmierte Maschine

Wenn die Ausrüstung mit dem Schild „Mit lebensmittelechtem Schmierfett geschmierte Maschine" (16) ausgestattet ist (siehe Abbildung (C) auf Seite i-9), bedeutet dies, dass die in dieser Ausrüstung verwendeten Schmiermittel Lebensmittelgüte besitzen.

Benutzung dieses Ersatzteilkatalogs

Lokalisieren einer Teilenummer

a) Bezugnahme auf Abbildung (D) auf Seite i-9: Weiter zu Kapitel Nummer (17) neben der Hauptgruppe, die das entsprechende Teil enthält.

Pos. b) und c) beziehen sich auf die Abb. (E) auf Seite i-10.

b) Auf der Abbildung der Hauptgruppe die Untergruppe (19) der Maschine suchen, welche das Teil oder die Untergruppe enthält, das/die Sie suchen. Die Positionsnummer (20) notieren und zu der Listenseite gehen, die auf die Abbildung folgt.

c) Suchen Sie die Positionsnummer/Referenzbezeichnung (18) oder den Untergruppennamen (21). Weiter zur entsprechenden Seitennummer (22) in der rechten Spalte. Die Tetra Pak Group verwendet die funktionsorientierte Struktur für die Referenzbezeichnung. Präfix zur funktionsorientierten Struktur (=) ist in der Referenzbezeichnung nicht dargestellt.

(Forts.)

(Forts.)

Pos. d) und e) beziehen sich auf die Abbildung (F) auf Seite i-10.

d) Das gesuchte Teil (23) auf der Untergruppen-Abbildung suchen und die Positionsnummer des Teils notieren.

e) Die Teilenummer (31) und die Beschreibung (32) des Teils sind neben der Positionsnummer auf der Listenseite angegeben.

Information in einem Ersatzteilkatalog

Nachstehende Liste bezieht sich auf die Abbildung (F) auf Seite i-10.
Ein Ersatzteilkatalog enthält folgende Informationen zu Gruppen, Untergruppen und Ersatzteile der Ausrüstung.

- Verweis auf Gruppenstruktur (24). zeigt die nächsthöhere Gruppe in der Listenstruktur.
- Gruppenbezeichnung (25)
- Maßeinheit (26)
- Menge (27)
- Nummer der Montagezeichnung (28)
- Liste Seitenbereich (29). vorhanden, wenn mehrere Seiten in der Gruppenabbildung oder Liste vorhanden sind.
- Teile- oder Untergruppen-Nummer (30)
- Untergruppenbezeichnung oder Beschreibung des Teils (31)
- Gruppennummer (32)
- Gerätenummer (33)
- Gruppeninformations-Überschrift (34). erläutert, ob der Abschnitt unter der Überschrift für eine spezifische Maschinenvariante gilt oder ob es sich um eine Liste allgemeiner Teile handelt. Hat eine Liste mehr als eine Variante und ist jeder Variante eine eigene Montagezeichnung zugeordnet, wird ein Seiten-Querverweis auf die Montagezeichnung der Variante angegeben.
- Interne Informationen (35)

Unterstützung und Nachfragen

Für Unterstützung beim Betrieb dieser Ausrüstung oder Nachfragen, Kommentare oder Anregungen verwenden Sie bitte das QuTI-P Tool. Geben Sie hierzu QuTI-P in das Adressfeld Ihres Browsers ein. Wenn kein Zugang zu QuTI-P verfügbar ist, wenden Sie sich hierzu bitte an den Global Service Desk.

Wenn kein Zugang zum Tetra Pak® Intranet verfügbar ist, wenden Sie sich an den Tetra Pak Vertreter in Ihrer Nähe.

Πληροφορίες εγχειριδίου

Ο Όμιλος Tetra Pak συνιστά να διαβάζετε προσεκτικά όλα τα παρεχόμενα εγχειρίδια. Βεβαιωθείτε ότι τα παρεχόμενα εγχειρίδια είναι διαθέσιμα στο προσωπικό που χειρίζεται ή συντηρεί τον εξοπλισμό.

Είναι σημαντικό να διατηρήσετε το εγχειρίδιο αυτό καθ' όλη τη διάρκεια ζωής του εξοπλισμού και να το μεταβιβάσετε σε οποιονδήποτε επακόλουθο κάτοχο ή χρήστη.

Ο Όμιλος Tetra Pak δεν μπορεί να καταστεί υπεύθυνη για οποιαδήποτε ζημιά στον εξοπλισμό που οφείλεται σε μη τήρηση των οδηγιών που παρατίθενται στα εγχειρίδια που συνοδεύουν τον εξοπλισμό.

Παρεχόμενα εγχειρίδια

Τα εγχειρίδια παρέχονται μαζί με αυτό τον εξοπλισμό:

CM

Το Εγχειρίδιο Μετατροπών (CM) παρέχει πληροφορίες στους τεχνικούς σχετικά με τη μετατροπή του εξοπλισμού για τους διαφορετικούς τρόπους παραγωγής.

EM

Το Ηλεκτρολογικό Εγχειρίδιο (EM) παρέχει στους τεχνικούς τις πληροφορίες για το ηλεκτρικό σύστημα του εξοπλισμού.

IM

Το Εγχειρίδιο Εγκατάστασης (IM) παρέχει στους τεχνικούς τις πληροφορίες που απαιτούνται για την ασφαλή τοποθέτηση του εξοπλισμού.

MaSP

Το εγχειρίδιο συντήρησης & ανταλλακτικών παρέχει πληροφορίες για τον τρόπο συντήρησης του στοιχείου. Παρέχει επίσης τος πληροφορίες που απαιτούνται για την παραγγελία ανταλλακτικών για το στοιχείο από τον Όμιλο Tetra Pak.

MM

Το Εγχειρίδιο Συντήρησης (MM) παρέχει στους τεχνικούς πληροφορίες σχετικά με τη συντήρηση του εξοπλισμού.

OM

Το Εγχειρίδιο Χειρισμού (OM) παρέχει στο χειριστή πληροφορίες σχετικά με το χειρισμό και τη λειτουργία του εξοπλισμού πριν, κατά και μετά την παραγωγή.

RM

Το Εγχειρίδιο Μετασκευής (RM) παρέχει πληροφορίες στους τεχνικούς σχετικά με την ασφαλή εγκατάσταση ενός κιτ σε μια εγκατεστημένη μηχανή ή εξοπλισμό.

(Συνέχεια)

(Συνέχεια)

SPC

Ο Κατάλογος Ανταλλακτικών (SPC) παρέχει πληροφορίες που είναι απαραίτητες για την παραγγελία ανταλλακτικών από την Ο Όμιλος Tetra Pak.

TeM

Το Τεχνικό Εγχειρίδιο (TeM) παρέχει στους τεχνικούς πληροφορίες που μπορεί να είναι:

- πληροφορίες που είναι απαραίτητες για την ασφαλή εγκατάσταση του εξοπλισμού
- πληροφορίες που απαιτούνται για τη συντήρηση του εξοπλισμού
- πληροφορίες σχετικά με το ηλεκτρικό σύστημα της μηχανής/εξοπλισμού.
- απαραίτητες πληροφορίες για να παραγγείλετε ανταλλακτικά από την Ο Όμιλος Tetra Pak.
- άλλες τεχνικές πληροφορίες

UP

Οι Σελίδες Ενημέρωσης παρέχουν νέες σελίδες για την ενημέρωση των υφιστάμενων εγχειριδίων της μηχανής.

Διάταξη σελίδας

Βλέπε εικόνα (A) στη σελίδα i-9: Οι κύριες σελίδες του Καταλόγου Ανταλλακτικών αποτελούνται από μία σελίδα με εικόνα (1) και μια σελίδα με αντίστοιχη λίστα (7). Ο αριθμός σελίδας (5) αναγράφεται στο πάνω μέρος της σελίδας με την εικόνα και στο κάτω μέρος της σελίδες με τη λίστα.
Ο αριθμός εγγράφου (6) αναγράφεται στο κάτω μέρος της σελίδας με τη λίστα.

Αρίθμηση σελίδων

Βλέπε εικόνα (A) στη σελίδα i-9: Ο αριθμός σελίδας (5) αποτελείται από τρία μέρη:

- τον αριθμό κεφαλαίου (2)
- τον αύξοντα αριθμό σελίδας (3) εντός του κεφαλαίου
- τον συνολικό αριθμό σελίδων (4) στο κεφάλαιο

Σημειωση! Αν το εγχειρίδιο περιέχει σελίδες ενημέρωσης, ο αριθμός κεφαλαίου (2) μπορεί να αντικαθίσταται με τα γράμματα «UP».
Ο αύξων αριθμός σελίδας (3) και ο συνολικός αριθμός σελίδων (4) των σελίδων ενημέρωσης δεν ακολουθούν την αρχική αύξουσα αρίθμηση σελίδων του κεφαλαίου.

Εισαγωγικές πληροφορίες για τη μηχανή

Κατασκευαστής

Για το όνομα και τη διεύθυνση του κατασκευαστή, βλέπε τη δεύτερη σελίδα αυτού του καταλόγου.

Τεχνική εξυπηρέτηση

Ο Όμιλος Tetra Pak δεν αναλαμβάνει καμία ευθύνη για οποιαδήποτε ζημιά στον εξοπλισμό ή τραυματισμό του προσωπικού ή των καταναλωτών που οφείλεται σε χρήση ανταλλακτικών που δεν είναι γνήσια ανταλλακτικά της Tetra Pak®.

Για να παραγγείλετε γνήσια ανταλλακτικά της Tetra Pak για αυτή τη μηχανή, επικοινωνήστε με το πλησιέστερο γραφείο Tetra Pak.

Αναγνώριση

Ταξινόμηση CE

Ο εξοπλισμός αυτός συμμορφώνεται με τους βασικούς κανονισμούς υγείας και ασφάλειας του Ευρωπαϊκού Οικονομικού Χώρου (EEA).

(Συνέχεια)

(Συνέχεια)

Συμμόρφωση 3-A

Αν η πλάκα μηχανής περιλαμβάνει το σήμα 3-A (15) (βλέπε απεικόνιση (B) στη σελίδα i-7), ο εξοπλισμός αυτός συμμορφώνεται με τα υγειονομικά πρότυπα για διαμορφωτές, γεμιστικές μηχανές και διατάξεις σφράγισης των περιεκτών για υγρό γάλα και προϊόντα υγρού γάλακτος, αριθμός 17-XX.

Πινακίδα χαρακτηριστικών μηχανής

Η εικόνα (B) στη σελίδα i-9 δείχνει ένα παράδειγμα μιας πινακίδας τύπου.
Για μια εικόνα της πινακίδας τύπου της συγκεκριμένης μηχανής και της θέσης της πάνω στον εξοπλισμό, βλέπε το κεφάλαιο «Εισαγωγή» των εγχειριδίων που παραδίδονται μαζί με τον εξοπλισμό. Η πινακίδα τύπου περιέχει τα παρακάτω στοιχεία, τα οποία θα χρειάζεστε όταν επικοινωνείτε με την Ο Όμιλος Tetra Pak σχετικά με τον συγκεκριμένο εξοπλισμό.

- Τύπος μηχανής (8)
- Όγκος (9)
- Στοιχεία σχεδίου (10)
- Αριθμός σειράς μηχανής (11)
- Κατασκευαστής (12)
- Έτος κατασκευής (13)
- Σήμανση CE (14)
- Σήμανση 3-A (εάν εφαρμόζεται) (15)

Βεβαιωθείτε ότι τα δεδομένα εξοπλισμού στις μπροστινές σελίδες αυτού του εγχειριδίου αντιστοιχούν στην πινακίδα χαρακτηριστικών της μηχανής και τις προδιαγραφής αυτής.

Πινακίδα μηχανής "Λίπανση κατάλληλη για τρόφιμα"

Αν ο εξοπλισμός διαθέτει μία πινακίδα μηχανής "Λίπανση κατάλληλη για τρόφιμα" (16) (βλ. εικόνα (C) στη σελίδα i-9), σημαίνει ότι τα λιπαντικά που χρησιμοποιούνται σε αυτό τον εξοπλισμό έχουν ποιότητα κατάλληλη για επαφή με τρόφιμα.

Πως να χρησιμοποιήσετε αυτό τον Κατάλογο Ανταλλακτικών

Παράδειγμα: Εντοπισμός αριθμού ανταλλακτικού

a) Βλέπε εικόνα (D) στη σελίδα i-9: Ανοίξτε το κεφάλαιο (17) που αναφέρεται δίπλα στην κυρίως ομάδα που περιέχει το εξάρτημα που θέλετε να εντοπίσετε.

Τα στοιχεία b) και c) αναφέρονται στην εικόνα (E) στη σελίδα i-10.

b) Στην απεικόνιση της k;yriaw ομάδας αναζητήστε την υποομάδα της μηχανής (19) που περιλαμβάνει το εξάρτημα ή την υποομάδα που αναζητάτε. Σημειώστε τον αριθμό θέσης (20) και μεταβείτε στη σελίδα λίστας που ακολουθεί την απεικόνιση.

c) Αναζητήστε τον αριθμό θέσης / χαρακτηρισμό αναφοράς (18) ή το όνομα της υπο-ομάδας (21). Ανοίξτε την αντίστοιχη σελίδα (22) που αναφέρεται στη δεξιά στήλη. Ο Όμιλος Tetra Pak έχει επιλέξει να χρησιμοποιεί πάντα τη διάρθρωση που προσανατολίζεται στη λειτουργία για τον ορισμό αναφοράς. Το πρόθεμα που υποδεικνύει διάρθρωση που προσανατολίζεται στη λειτουργία (=) δεν εμφανίζεται στον ορισμό αναφοράς.

(Συνέχεια)

(Συνέχεια)

Τα στοιχεία d) και e) αναφέρονται στην εικόνα (F) στη σελίδα i-10.

d) Εντοπίστε το εξάρτημα (23) που αναζητάτε στην απεικόνιση της υποομάδας και σημειώστε τον αριθμο θέσης του εξαρτήματος.

e) Ο αριθμός εξαρτήματος (31) και η περιγραφή εξαρτήματος (32) παρατίθενται δίπλα στον αριθμό θέσης στη σελίδα λίστας.

Πληροφορίες που αναφέρονται στον Κατάλογο ανταλλακτικών

Η λίστα που ακολουθεί παραπέμπει στην εικόνα (F) στη σελίδα i-10.
Ο Κατάλογος Ανταλλακτικών περιέχει τις εξής πληροφορίες σχετικά με ομάδες, υπο-ομάδες και ανταλλακτικά για τον εξοπλισμό:

- Αναφορά στη δομή της ομάδας (24). Δείχνει την αμέσως μεγαλύτερη ομάδα στη δομή του καταλόγου του εξοπλισμού.
- Όνομα ομάδας (25)
- Μονάδα μέτρησης (26)
- Ποσότητα (27)
- Αριθμός σχεδίου συναρμολόγησης (28)
- Εύρος σελίδων της λίστας (29). Περιλαμβάνεται όταν υπάρχουν πολλαπλές σελίδες στην ομάδα ή στη λίστα.
- Αριθμός εξαρτήματος ή υποομάδας (30)
- Όνομα υποομάδας ή περιγραφή εξαρτήματος (31)
- Αριθμός ομάδας (32)
- Αριθμός εξοπλισμού (33)
- Επικεφαλίδα πληροφοριών ομάδας (34). Δείχνει αν το τμήμα της λίστας κάτω από την επικεφαλίδα ισχύει για συγκεκριμένη παραλλαγή της μηχανής ή αν πρόκειται για κατάλογο κοινών εξαρτημάτων.
  Αν μια λίστα αναφέρεται σε περισσότερες από μία παραλλαγές και κάθε παραλλαγή έχει το δικό της σχέδιο συναρμολόγησης, υπάρχει εδώ μια παραμπομπή στη σελίδα που δείχνει το σχέδιο συναρμολόγησης της παραλλαγής.
- Εσωτερικές πληροφορίες (35)

Βοήθεια και απορίες

Για βοήθεια κατά τη χρήση αυτού του εξοπλισμού ή άλλα ερωτήματα, σχόλια ή προτάσεις, υποβάλλετε τα ερωτήματα ή τα σχόλια μέσω του εργαλείου QuTI-P. Πληκτρολογήστε QuTI-P στη γραμμή διεύθυνσης του προγράμματος περιήγησης. Αν η πρόσβαση στο QuTI-P δεν είναι διαθέσιμη, κάντε αίτηση πρόσβασης επικοινωνώντας με το Γραφείο Παγκόσμιας Εξυπηρέτησης.

Αν δεν έχετε πρόσβαση στο Intranet της Tetra Pak® επικοινωνήστε με τον πλησιέστερο αντιπρόσωπο της Tetra Pak.

Información del manual

Tetra Pak Group recomienda que se lean cuidadosamente todos los manuales entregados. Comprobar que todos los manuales entregados estén disponibles para el personal que efectúe la operación o el mantenimiento del equipo.

Es importante conservar este manual durante la vida útil del equipo, así como facilitárselo a cualquier propietario o usuario posterior.

Tetra Pak Group no será responsable de cualquier daño, pérdida, lesión o muerte causada por no seguir las instrucciones en los manuales que acompañan a este equipo.

Manuales entregados

Manuales entregados con este equipo:

CM

El Manual de conversión proporciona a los técnicos información sobre cómo convertir el equipo entre diferentes modos de producción.

EM

El Manual eléctrico proporciona a los técnicos información acerca del sistema eléctrico del equipo.

IM

El Manual de instalación proporciona a los técnicos la información requerida para instalar el equipo con seguridad.

MaSP

El Manual de Mantenimiento y Piezas de Recambio proporciona información sobre el mantenimiento del componente específico. Además, proporciona información necesaria para pedir piezas de recambio del componente específico a Tetra Pak Group.

MM

El Manual de mantenimiento proporciona a los técnicos información sobre el mantenimiento del equipo.

OM

El Manual de servicio proporciona a los operadores información sobre la manipulación y operación del equipo antes, durante y después de la producción.

RM

El Manual de Modificación provee la información necesaria a los técnicos para instalar con seguridad un kit en una máquina o equipo ya instalado.

(Continúa)

(Continuación)

SPC

El Catálogo de piezas de recambio proporciona la información necesaria para pedir piezas de recambio de Tetra Pak Group.

TeM

El Manual técnico proporciona información a los técnicos, que puede ser:

- la información requerida para instalar el equipo con seguridad
- información requerida para el mantenimiento del equipo
- información acerca del sistema eléctrico de la máquina/del equipo
- la información necesaria para pedir piezas de recambio a Tetra Pak Group
- otras informaciones técnicas

UP

Las Páginas de Actualización suministran nuevas páginas para actualizar los manuales de máquinas ya existentes.

Organización de las páginas

Remitirse a la ilustración (A) en la página i-9: Las páginas principales en un Catálogo de piezas de recambio se componen de una página de ilustración (1) y una página de lista correspondiente (7). El número de la página (5) se muestra en el encabezado de una página de ilustración y en el pie de página de una página de lista. El número del documento (6) se muestra en el pie de página de una página de lista.

Numeración de las páginas

Remitirse a la ilustración (A) en la página i-9:
Un número de página (5) se compone de tres partes:

- Número de capítulo (2)
- número de página consecutivo dentro del capítulo (3)
- número total de páginas del capítulo (4).

¡Nota! Las letras UP pueden reemplazar el número del capítulo (2) si el manual incluye páginas de actualización. El número de página consecutivo (3) y el número total de páginas (4) de páginas de actualización no siguen la numeración secuencial de páginas del capítulo.

Introducción a la máquina

Fabricante

Para el nombre y la dirección del fabricante, ver la segunda página de este catálogo.

Servicio

Tetra Pak Group no se hace responsable de cualquier daño o lesión al equipo, personal o consumidores que sea causado por piezas de recambio que no sean piezas Tetra Pak® genuinas.

Para pedir piezas de recambio Tetra Pak genuinas para esta máquina, comunicarse con la oficina de Tetra Pak más cercana.

Identificación

Clasificación de la CE

Este equipo cumple los requisitos esenciales relativos a la salud y la seguridad del Área Económica Europea (EEA).

(Continúa)

(Continuación)

Conformidad con 3-A

Si la placa de la máquina contiene la marca 3-A (15) (consultar la ilustración (B) en la página i-7), este equipo cumple con las Normas sanitarias 3-A para formadoras, llenadoras y selladoras de envases para para leche fluida y productos de leche fluida 17-XX.

Placa de la máquina

La ilustración (B) en la página i-9 muestra un ejemplo de placa de máquina.
En la Introducción del capítulo de los manuales entregados con este equipo se muestra una ilustración de la placa de máquina válida y su ubicación en el equipo
La placa de máquina contiene los datos listados a continuación requeridos al contactar con Tetra Pak Group en relación a este equipo específico.

- Tipo de máquina (8)
- Volumen (9)
- Especificaciones de plano (10)
- Número de serie de la máquina (11)
- Fabricante (12)
- Año de fabricación (13)
- Marca de la CE (14)
- Marca 3-A (si procede) (15)

Asegúrese que los datos de equipo listados en las páginas de cubierta de este manual corresponden a los datos de la placa de máquina y a la especificación máquina.

Placa de Máquina lubricada para calidad alimentaria

Si el equipo está provisto de una placa de Máquina lubricada para calidad alimentaria (16) (véase la figura (C) en la página i-9), significa que los lubricantes utilizados en el equipo son de calidad alimentaria.

Cómo utilizar este Catálogo de piezas de recambio

Localizar un número de pieza de recambio

a) Remitirse a la ilustración (D) en la página i-9: Ir al número de capítulo (17) indicado al lado del grupo principal que contiene la pieza que usted desea localizar.

Los items b) y c) se refieren a la ilustración (E) en la página i-10.

b) En la ilustración del grupo principal, buscar el subgrupo máquina (19) que contiene la pieza o subgrupo que usted busca.
Anote el número de posición (20) y vaya a la página de lista que sigue a la ilustración.

c) Buscar el número de posición/designación de referencia (18) o el nombre del subgrupo (21). Vaya al número de página correspondiente (22) listado en la columna de la derecha. Tetra Pak Group ha elegido utilizar siempre la estructura orientada a la función para la designación de referencia. El prefijo que indica la estructura orientada a la función (=) no se muestra en la designación de referencia

(Continúa)

(Continuación)

Los Items d) y e) se refieren a la ilustración (F) en la página i-10.

d) Localizar la pieza (23) que busca en la ilustración del subgrupo y anotar el número de posición de la pieza.

e) El número de la pieza (31) y la descripción de la pieza (32) están listados al lado del número de posición en la página de lista.

Información listada en un Catálogo de piezas de recambio

La lista a continuación remite a la ilustración (F) en la página i-10.
Un Catálogo de piezas de recambio contiene la siguiente información sobre grupos, subgrupos y piezas de recambio para el equipo:

- Referencia de estructura de grupo (24). Indica el siguiente grupo más alto en la estructura de lista del equipo.
- Nombre de grupo (25)
- Unidad de medida (26)
- Cantidad (27)
- Número de plano de montaje (28)
- Rango de la página de lista (29). Incluida si hay páginas múltiples en la ilustración o lista de grupo.
- Número de pieza o subgrupo (30)
- Nombre del subgrupo o descripción de la pieza (31)
- Número de grupo (32)
- Número de equipo (33)
- Encabezado de información de grupo (34). Indica si la sección debajo del encabezado es para una variante máquina específica o si es una lista de piezas comunes. Si la lista tiene más de una variante y cada variante tiene su propio plano de conjunto, se muestra una referencia página para el plano de conjunto de la variante.
- Información interna (35)

Asistencia y consultas

Para obtener asistencia al trabajar con este equipo, o para otras consultas, comentarios o sugerencias, envíe las preguntas o los comentarios utilizando la herramienta QuTI-P. Escriba QuTI-P en el campo de la dirección del navegador. Si el acceso a QuTI-P no estuviera disponible, solicite el acceso poniéndose en contacto con Global Service Desk.

Si el acceso a la intranet de Tetra Pak® no estuviera disponible, póngase en contacto con el representante de Tetra Pak más cercano.

Manuaali informatsioon

Tetra Pak Group soovitab kõiki saadetud manuaale hoolikalt lugeda.
Kindlustage saadetud manuaalide kättesaadavus seadmetega töötavale või neid hooldavale personalile.

Kataloog tuleb seadmete eluea jooksul alles hoida ning anda üle seadmete järgmisele omanikule või kasutajale.

Tetra Pak Group ei vastuta seadmete kahjustuste eest, mis on tekkinud seadmetega kaasapandud juhendites antud juhiste eiramise tagajärjel.

Kättetoimetatud manuaalid

Antud seadmega kaasasolevad manuaalid:

CM

Muutmise juhend annab tehnikutele informatsiooni seadmete muutmiseks vastavalt erinevatele tootmisrežiimidele.

EM

Elektrialane kasutusjuhend annab tehnikutele informatsiooni seadmete elektrisüsteemi kohta.

IM

Paigaldusjuhend annab tehnikutele seadmete turvaliseks paigaldamiseks vajalikku informatsiooni.

MaSP

Hoolduse ja varuosade juhendist saate teavet komponendi hoolduse kohta. Sealt leiate ka vajalikku infot selle kohta kuidas Tetra Pak Grouplit komponendile varuosasid tellida.

MM

Hooldusjuhend annab tehnikutele informatsiooni seadmete hooldamiseks.

OM

Kasutusjuhend annab operaatorile informatsiooni seadmete käsitsemiseks ja nendega töötamiseks enne tootmise alustamist, tootmise ajal ja pärast selle lõpetamist.

RM

Ümberehituse juhend annab tehnikutele vajalikku informatsiooni komplekti ohutuks paigaldamiseks eelnevalt paigaldatud masinale või seadmetele.

(Jätkub)

(Jätkub)

SPC

Varuosade kataloog annab vajalikku informatsiooni Tetra Pak Group varuosade tellimiseks.

TeM

Tehniline juhend annab tehnikutele informatsiooni, mis võib olla näiteks:

- vajalik informatsioon seadmete ohutuks paigaldamiseks
- vajalik informatsioon seadmete hooldamiseks
- informatsioon masina/seadmestiku elektrisüsteemi kohta
- vajalik informatsioon tagavaraosade tellimiseks Tetra Pak Group
- muu tehniline informatsioon

UP

Ajakohastatud leheküljed sisaldavad uusi lehekülgi olemasolevate masina juhendite ajakohastamiseks.

Lehekülje kujundus

Vaadake joonist (A) leheküljel i-9: varuosade kataloogi põhileheküljed koosnevad joonise leheküljest (1) ja vastava loendi leheküljest (7).
Lehekülje number (5) näidatakse joonise lehekülje päises ja loendi lehekülje jaluses. Dokumendi number (6) näidatakse loendi lehekülje jaluses.

Lehekülgede nummerdamine

Vaadake joonist (A) leheküljel i-9: lehekülje numbril (5) on kolm osa:

- peatüki number (2)
- järjestikune lehekülje number peatükis (3)
- lehekülgede koguarv (4) peatükis

Pange tähele! Kui juhend sisaldab ajakohastatud lehekülgi, võivad peatüki numbrit (2) asendada tähed UP. Ajakohastatud lehekülgede järjestikune lehekülje number (3) ja lehekülgede koguarv (4) ei järgi peatüki olemasolevat järjestikust lehekülgede nummerdamist.

Masina sissejuhatus

Tootja

Tootja nime ja aadressi leiate kataloogi teiselt leheküljelt.

Teenindus

Tetra Pak Group ei vastuta seadmetele, töötajatele või tarbijatele põhjustatud kahjustuste või kehavigastuste eest, mis on tekkinud selliste varuosade kasutamise tagajärjel, mis ei ole Tetra Paki originaalvaruosad.

Tetra Pak®i originaalvaruosade tellimiseks käesoleva masina jaoks pöörduge lähimasse Tetra Paki kontorisse.

Identifikatsioon

CE klassifikatsioon

Need seadmed on vastavuses Euroopa Majanduspiirkonna (EEA) tervisekaitse ja ohutusmeetmete põhireeglitega.

(Jätkub)

(Jätkub)

3-A vastavus

Kui masina andmeplaadil on märk "3-A" (15) (vt joonist (B) lk i-7), vastab käesolev seadmestik piima- ja piimatoodete mahutite vormimis-, villimis- ja sulgemisseadmete sanitaarnormidele 3-A, number 17-XX.

Seadmeplaat

Masina andmeplaadi näidis on toodud leheküljel i-9 oleval joonisel (B).
Kehtiv andmeplaat ja selle asukoht seadmel on näidatud joonisel, mille leiate koos seadmestikuga tarnitud juhendite sissejuhatavast peatükist.
Masina andmeplaat sisaldab allpool loetletud andmeid, mida Te vajate antud seadme asjus Tetra Pak Group ühenduse võtmisel.

- Masina tüüp (8)
- Maht (9)
- Joonise spetsifikatsioonid (10)
- Masina seerianumber (11)
- Tootja (12)
- Valmistamise aasta (13)
- CE-märgistus (14)
- 3-A-märgistus (kui on asjakohane) (15)

Veenduge, et antud juhendi esilehtedel olevad andmed vastaksid masina andmesildil olevatele andmetele ja masina tehnilistele andmetele.

Toiduainetööstusele sobiva kvaliteediga (Food Grade) määritud masina silt

Kui seade on varustatud toiduainetööstusele sobiva kvaliteediga (Food Grade) masina sildiga (16) (vt joonis C, lk i-9), näitab see, et selles seadmes kasutatud määrded on toiduainetööstusele sobiva kvaliteediga.

Varuosade kataloogi kasutamine

Leidke varuosa number

a) Vaadake joonist (D) leheküljel i-9: minge peatüki juurde, mille number (17) on näidatud selle põhigrupi kõrval, mis sisaldab Teie poolt otsitavat varuosa.

Elemendid b) ja c) viitavad joonisele (E) leheküljel i-10.

b) Põhigrupi joonisel otsige masina alamgruppi (19), mis sisaldab Teie poolt otsitavat varuosa või alamgruppi. Märkige üles positsiooni number (20) ja minge loendi leheküljele, mis järgneb joonisele.

c) Otsige üles positsiooni number/viitetähis (18) või alamgrupi nimi (21). Minge vastavale leheküljele, mille numbri (22) leiate parempoolses veerus olevast loetelust. Tetra Pak Group kasutab viitetähistes alati funktsioonile orienteeritud struktuuri. Prefiksit, mis näitab funktsioonile orienteeritud struktuuri (=), viitetähises ei näidata.

(Jätkub)

(Jätkub)

Elemendid d) ja e) viitavad joonisele (F) leheküljel i-10.

d) Leidke alamgrupi jooniselt üles otsitav varuosa (23) ja pange kirja varuosa positsiooni number.

e) Varuosa numbri (31) ja varuosa kirjelduse (32) leiate loendi leheküljelt positsiooni numbri kõrvalt.

Varuosade kataloogis loetletud informatsioon

Allpool antud loend viitab joonisele (F) leheküljel i-10.
Varuosade kataloog sisaldab alljärgnevat informatsiooni seadmete gruppide, alamgruppide ja varuosade kohta:

- Grupi struktuuri viide (24). Näitab järgmist kõrgemat gruppi seadmete loetelu struktuuris.
- Grupi nimetus (25)
- Mõõtühik (26)
- Kogus (27)
- Koostejoonise number (28)
- Loendi lehekülgede vahemik (29). Lisatakse juhul, kui grupi joonis või loend paiknevad mitmel leheküljel.
- Varuosa või alamgrupi number (30)
- Alamgrupi nimetus või varuosa kirjeldus (31)
- Grupi number (32)
- Seadme number (33)
- Grupis sisalduva informatsiooni pealkiri (34). Näitab, kas pealkirja all olev lõik puudutab konkreetset masina varianti või sisaldab see üldiste varuosade loendit. Kui loendis on variante rohkem kui üks ning nendel kõigil on eraldi koostejoonised, siis näidatakse konkreetse variandi koostejoonise lehekülgede numbrid.
- Siseinformatsioon (35)

Abi ja päringud

Kui vajate selle seadmega töötamisel abi või soovite esitada muid küsimusi, kommentaare või soovitusi, saatke oma küsimused või tagasiside QuTI-Pi tööriista kaudu. Sisestage oma brauseri aadressiväljale QuTI-P. Kui juurdepääs üksusesse QuTI-P pole saadaval, paluge endale juurdepääs, pöördudes ülemaailmse teeninduse infolaua Global Service Desk poole.

Kui juurdepääs Tetra Pak®i intranetile puudub, võtke ühendust lähima Tetra Paki esindajaga.

Tiedot käsikirjasta

Tetra Pak Group suosittelee kaikkien toimitettujen käyttöohjeiden huolellista lukemista. Varmista että toimitetut käsikirjat ovat niiden henkilöiden käytettävissä, jotka käyttävät tai huoltavat laitetta.

On tärkeää, että käsikirjaa pidetään tallella koko laitteen käyttöiän ajan ja että käsikirja annetaan jokaiselle laitteen tulevalle omistajalle tai käyttäjälle.

Tetra Pak Group ei ole vastuussa mistään laitteille aiheutuneista vahingoista, jotka ovat johtuneet tämän käsikirjan ohjeiden noudattamatta jättämisestä.

Toimitetut käsikirjat

Laitteen mukana toimitetut käsikirjat:

CM

Muunnoskäsikirja (CM) palvelee teknikoita antamalla tiedot laitteen muuntamisesta erilaisiin tuotantotiloihin.

EM

Sähkökäsikirja (EM) palvelee teknikoita antamalla tiedot laitteen sähköjärjestelmästä.

IM

Asennuskäsikirja (IM) palvelee teknikoita antamalla tiedot laitteiden turvalliseksi asentamiseksi.

MaSP

Huolto - & varaosaoppaasta löytyvät tiedot komponentin huoltoa varten. Sieltä saa myös tarvittavat ohjeet komponetin varaosien tilaamista varten Tetra Pak Groupilta.

MM

Huoltokäsikirja (MM) palvelee teknikoita antamalla tiedot laitteiden huoltamisesta.

OM

Käyttäjän käsikirja (OM) palvelee käyttäjää antamalla tiedot laitteen käyttämisestä ennen tuotantoa, sen aikana ja sen jälkeen.

RM

Korjaus käsikirja antaa teknikoille vaadittavat tiedot turvallisesti asentaa rakennussarja valmiiseen koneeseen tai laitteeseen.

(Jatkuu)

(Jatkoa)

SPC

Varaosaluettelo antaa ne tarpeelliset tiedot, joiden avulla voi tilata varaosia Tetra Pak Group

TeM

Tekninen käsikirja antaa teknikoille tietoja, joka voi olla:

- tietoja laitteen turvallista asennusta varten
- tietoja, joita tarvitaan laitteita huollettaessa
- tietoja koneen/laitteen sähköjärjestelmästä
- tietoja, joita tarvitaan tilattaessa varaosia Tetra Pak Group
- muita teknisiä tietoja.

UP

Sivujen Päivitys tarjoaa uusia sivuja jo olemassa oleviin koneen käyttöohjeisiin.

Sivutaitto

Katso kuvaa (A) sivulla i-9: Varaosaluettelon pääsivut koostuvat kuvitetusta sivusta (1) ja sitä vastaavasta luettelo sivusta (7). Sivunumero (5) näkyy kuvasivun otsikossa ja luettelo sivun alatunnisteessa.
Dokumentin numero (6) näkyy luettelo sivun alatunnisteessa.

Sivunumerointi

Katso kuvaa (A) sivulla i-9: sivunumerossa (5) on kolme osaa:

- kappaleen numero (2)
- juokseva sivunumero kappaleessa (2)
- kappaleen kokonaissivumäärä (3)

Huom! Kirjaimet SP voivat korvata kappaleen numeron (2) jos sivujen päivitys sisältyy käyttöohjeisiin. Peräkkäisten sivujen numero (3) ja päivitys sivujen kokonaismäärä (4) eivät noudata käytössä olevaa kappaleiden juoksevaa sivunumerointia.

Koneen esittely

Valmistaja

Katso valmistajan nimi ja osoite tämän luettelon toiselta sivulta.

Huolto

Tetra Pak Group ei vastaa sellaisista vahingoista tai mistään työvälineiden, henkilöstön tai kuluttajien vaurioista, jotka johtuvat varaosista, jotka eivät ole aitoja Tetra Pak®in varaosia.

Aitoja Tetra Pakin tämän laitteen varaosia voi tilata ottamalla yhteys lähimpään Tetra Pak toimistoon.

Koneen tunnistaminen

CE-luokitus

Tämä laite täyttää Euroopan talousalueen (ETA) perus turvallisuus- ja terveysvaatimukset.

(Jatkuu)

(Jatkoa)

3-A Soveltuvuus

Jos konekilvessä on merkintä A-3 (15) (ks. kuvasta (B) sivulla i-7) se tarkoittaa, että laite täyttää A-3 -standardin puhtausvaatimukset muotoilimille, täyttimille ja tiivisteille astioissa, jotka on tarkoitettu maidolle ja maitotuotteille, numero 17-XX.

Konekilpi

Kuva (B) sivulla i-9 näyttää esimerkin konekilvestä.
Esimerkki voimassa olevasta konekilvestä ja sen sijainnista laitteessa näkyy tämän laitteen mukana toimitettujen käyttöohjeiden johdanto luvussa. Konekilpi sisältää alla luetellut tiedot, joita tarvitaan kun otetaan yhteyttä Tetra Pak Group koskien erityisesti tätä laitetta.

- Koneen tyyppi (8)
- Teho (9)
- Piirustus erittelyt (10)
- Koneen sarjanumero (11)
- Valmistaja (12)
- Valmistusvuosi (13)
- CE-merkintä (14)
- 3-A merkintä (tarvittaessa) (15)

Varmista, että tämän käsikirjan etusivuilla olevat tuotetiedot vastaavat konekilven tietoja ja laitteen teknistä erittelyä.

Elintarvikekäyttöön soveltuvalla voiteluaineella voidellun koneen kilpi

Jos laite on varustettu elintarvikkekäyttöön soveltuvalla voiteluaineella voidellun koneen kilvellä (16) (ks. kuva (C) sivulla i-9), tämä tarkoittaa, että tässä laitteessa käytetyt voiteluaineet soveltuvat elintarvikekäyttöön.

Kuinka tätä varaosaluetteloa käytetään

Löydä ensin varaosan numero

a) Katso kuvaa (D) sivulla i-9: Mene pääryhmän vieressä ilmoitettuun kappaleeseen (17), joka sisältää sen osan, jonka haluat löytää.

Osat b) ja c) katso kuvaa (E) sivulla i-10.

b) Pääryhmän kuvassa etsi sitä koneen alaryhmää (19), joka sisältää etsimäsi osan tai alaryhmän. Huomioi sijaintinumero (20) ja siirry kuvaa seuraavaa luettelosivulle.

c) Etsi sijaintinumeroa/viitenimitystä (18) tai alaryhmän nimeä (21). Siirry vastaavalle sivunumerolle (22), joka on mainittu oikeanpuoleisessa sarakkeessa. Tetra Pak Group käyttää aina viitteissä toiminnallisia rakenteita. Prefiksi ilmaisin toiminto rakenne (=) ei näy viitenimityksissä.

(Jatkuu)

(Jatkoa)

Osat d) ja e) katso kuvaa (F) sivulla i-10.

d) Paikanna etsimäsi osa (23) alaryhmän piirroksessa ja huomioi osan sijaintinumero.

e) Osanumero (31) ja osan kuvaus (32) on luetteloitu sijaintinumeron vieressä luettelosivulla.

Varaosaluettelossa luetellut tiedot

Seuraava luettelo viittaa kuvaan (F) sivulla i-10. Varaosaluettelo sisältää seuraavat tiedot ryhmistä, alaryhmistä ja varaosista laitteelle:

- Viite ryhmän rakenteeseen (24). Osoittaa seuraavan ylemmän ryhmän laiteluettelon rakenteessa.
- Ryhmän nimi (25)
- Mittayksikkö (26)
- Määrä (27)
- Kokoamispiirustus numero (28)
- Luettelon sivualue (29). Sisällytetty, jos ryhmän kuvissa tai luetteloisssa on useita sivuja.
- Osan tai alaryhmän numero (30)
- Alaryhmän nimi tai osan kuvaus (31)
- Ryhmän numero (32)
- Laitteen numero (33)
- Ryhmätietojen otsikko (34). Ilmoittaa, onko otsikon alla oleva kohta erityiselle konevaihtoehdolle vai onko se luettelo yhteisistä osista.
  Jos luettelossa on useampi kuin yksi muunnos ja kullakin muunnoksella on oma asennuspiirroksensa, näytetään sivuviite muunnoksen asennuspiirustukseen.
- Sisäinen tiedotus (35)

Tuki ja kysymykset

Jos tarvitset tukea laitteen käyttämiseen, sinulla on muuta kysyttävää tai haluat esittää kommentteja tai ehdotuksia, lähetä kysymykset tai anna palautetta käyttämällä QuTI-P työkalua. Kirjoita QuTI-P selaimesi osoitekenttään. Jos QuTI-P-sovellus ei ole käytettävissä, pyydä käyttöoikeutta ottamalla yhteyttä maailmanlaajuiseen tukipalveluun.

Jos Tetra Pakin intranet ei ole käytettävissä, ota yhteyttä lähimpään Tetra Pakin edustajaan.

Information sur le manuel

Le Groupe Tetra Pak recommande de lire attentivement tous les manuels fournis. S'assurer que les manuels fournis sont accessibles au personnel qui s'occupe du fonctionnement ou de la maintenance de l'équipement.

Il est important de conserver ce manuel pendant toute la durée d'utilisation de la machine et de le transmettre à tout détenteur ou utilisateur ultérieur.

Le Groupe Tetra Pak ne sera pas tenu pour responsable d'un dommage, d'une perte, d'une blessure ou d'un décès survenus à cause du non-respect des instructions contenues dans les manuels qui accompagnent cet équipement.

Manuels fournis

Manuels fournis avec l'équipement:

CM

Le Manuel de Conversion fournit aux techniciens les informations nécessaires pour convertir la machine en vue des différents modes de production.

EM

Ce manuel électrique fournit aux techniciens les informations sur le système électrique de la machine.

IM

Ce manuel de Mise en place fournit aux techniciens les informations nécessaires pour l'installation de la machine en toute sécurité.

MaSP

Le Manuel de Maintenance et de Pièces de Rechange fournit des informations sur la maintenance du composant. Il fournit également les informations nécessaires à la commande de pièces de rechange auprès de Tetra Pak Group pour le composant.

MM

Ce manuel de Maintenance fournit aux techniciens les informations pour la maintenance.

OM

Le Manuel d'Opérateur fournit à l'opérateur les informations sur la manutention et le fonctionnement de l'équipement avant, pendant et après la production.

RM

Le Manuel de Conversion fournit aux techniciens les renseignements nécessaires pour installer en toute sécurité un ensemble sur une machine ou un équipement mis en place.

(Suite à la page suivante)

(Suite de la page précédente)

SPC

Le Catalogue de pièces de rechange fournit les renseignements nécessaires pour commander les pièces de rechange chez le Groupe Tetra Pak.

TeM

Le Manuel technique offre aux techniciens des informations qui peuvent être:

- des informations nécessaires pour installer l'équipement en toute sécurité,
- des informations nécessaires pour entretenir l'équipement
- des informations concernant le système électrique de l'équipement/des machines.
- des informations nécessaires à la commande de pièces de rechange auprès de le Groupe Tetra Pak
- d'autres informations techniques.

UP

Les pages de Mise à Jour fournissent de nouvelles pages pour mettre à jour les manuels de machine existants.

Présentation d'une page

Se référer à la figure (A) à la page i-9: Les pages principales du Catalogue des Pièces de Rechange sont composées d'une page de figure (1) et d'une page de liste correspondante (7). Le numéro de page (5) est indiqué dans le titre de la page de figure et dans le bas de page d'une page de liste.
Le numéro de document (6) est indiqué dans le bas de page de la page de liste.

Numérotation de page

Se référer (A) à la page i-9: Un numéro de page (5) possède trois parties:

- Numéro de chapitre (2)
- numéro de page consécutif (2) à l'intérieur du chapitre (3)
- nombre total de pages dans le chapitre (4)

Remarque! Les lettres UP peuvent remplacer le numéro de chapitre (2), si le manuel comprend des pages de mise à jour. Le numéro de page consécutif (3) et le nombre total de pages (4) des pages de mise à jour ne suivent pas la pagination séquentielle du chapitre.

Présentation de la machine

Fabricant

Pour le nom et l'adresse du fabricant, voir la deuxième page de ce catalogue.

Assistance technique

Le Groupe Tetra Pak ne sera pas tenu responsable des dommages sur l'équipement ou des blessures au personnel ou aux consommateurs qui pourraient être causés par des pièces de rechange qui ne sont pas des pièces de rechange Tetra Pak® originales.

Pour commander les pièces de rechange originales de cette machine, prendre contact avec le bureau Tetra Pak le plus proche.

Identification

Certification CE

Cet équipement est conforme aux réglementations essentielles d'hygiène et de sécurité de la Communauté Économique Européenne (CEE).

(Suite à la page suivante)

(Suite de la page précédente)

3-A Conformité

Si la plaque de machine contient le repère 3-A (15) (voir la figure (B) à la page i-7), cet équipement est conforme aux Normes Sanitaires 3-A pour les moules, les remplisseuses et systèmes de soudure de conteneurs pour lait liquide et produits laitiers liquides, Numéro 17-XX.

Plaque signalétique de la machine

La figure (B) à la page i-9 montre un exemple d'une plaque signalétique de machine.
Une représentation de la plaque de machine valable et son emplacement sur l'équipement est indiquée au chapitre Introduction des manuels fournis avec l'équipement. La plaque de machine contient les caractéristiques figurant dans la liste ci-dessous, nécessaires pour prendre contact avec le Groupe Tetra Pak au sujet de cet équipement spécifique.

- Type de machine (8)
- Volume (9)
- Spécifications du plan (10)
- Numéro de série de la machine (11)
- Fabricant (12)
- Année de fabrication (13)
- Marquage CE (14)
- Repère 3-A (s'il y a lieu) (15)

S'assurer que les caractéristiques de l'équipement figurant dans la liste des pages de garde de ce manuel correspondent aux caractéristiques de la plaque signalétique de la machine et à ses spécifications.

Plaque Machine à lubrification de classe alimentaire

Si l'équipement est équipé d'une plaque Machine à lubrification de classe alimentaire (16) (voir figure (C) page i-9), cela indique que les lubrifiants utilisés pour cette machine sont de classe alimentaire.

Comment utiliser ce Catalogue de Pièces de Rechange

Localiser un Numéro de Pièce de rechange.

a) Se référer à la figure (D) à la page i-9: Aller au numéro de chapitre (17) indiqué à côté du groupe principal qui contient la pièce que vous souhaitez localiser.

Les articles b) et c) se réfèrent à la figure (E) à la page i-10.

b) Sur la figure du groupe principal, chercher la sous-groupe de machine (19) qui contient la pièce ou le sous-groupe que recherché. Noter le numéro de repère (20) et aller à la page de liste qui suit la figure.

c) Rechercher le numéro de repère/la désignation de référence (18) ou le nom de sous-groupe (21). Aller au numéro de page correspondant (22) figurant dans la liste de la colonne de droite. Le Groupe Tetra Pak a choisi de toujours utiliser la structure orientée vers la fonction pour la désignation de référence. Le préfixe indiquant la structure orientée vers la fonction (=) n'est pas indiquée dans la désignation de référence.

(Suite à la page suivante)

(Suite de la page précédente)

Les articles d) et e) se réfèrent à la figure (F) à la page i-10.

d) Localiser la pièce (23) recherchée sur la figure de sous-groupe et noter le numéro de repère de la pièce.

e) Le numéro de pièce (31) et la description de la pièce (32) figurent dans la liste à côté du numéro de repère sur la page de liste.

Informations figurant dans la Liste dans un Catalogue de Pièces de Rechange.

La liste ci-dessous se réfère à la figure (F) à la page i-10. Un Catalogue de Pièces de Rechange contient les renseignements suivants relatifs aux groupes, sous-groupes et pièces de rechange de l'équipement.

- Référence de structure de groupe (24). Indique le groupe supérieur suivant dans la structure de liste d'équipement.
- Nom du groupe (25)
- Unité de mesure (26)
- Quantité (27)
- Numéro de plan de montage (28)
- Gamme de la page de liste (29). Incluse s'il y a des pages multiples dans la figure de groupe ou dans la liste.
- Numéro de pièce ou de sous-groupe (30)
- Nom de sous-groupe ou description de la pièce (31)
- No. de groupe (32)
- Numéro de l'équipement (33)
- Titre des informations de groupe (34). Indique si la section sous le titre est pour une variante de machine spécifique ou s'il y a une liste de pièces communes. Si une liste comporte plus d'une variante et que chaque variante possède son propre plan de montage, une référence de page au plan de montage de la variante est alors indiqué.
- Informations internes (35)

Assistance et demandes

Pour toute assistance relative au fonctionnement de cet équipement, ou autres demandes, commentaires, ou suggestions, envoyez vos questions ou vos réactions par le biais de l'outil QuTI-P. Saisir QuTI-P dans le champ d'adresse de votre navigateur. Si l'accès à QuTI-P est indisponible, contactez le service après vente global pour solliciter un accès.

Si l'accès Intranet de Tetra Pak® est indisponible, contactez votre représentant Tetra Pak le plus proche.

Informacije o priručnicima

Grupa Tetra Pak preporučuje da temeljito pročitate sve isporučene priručnike. Osigurajte da su isporučeni priručnici na raspolaganju osobama koje će rukovati ili održavati uređaj.

Sačuvajte ovaj priručnik do isteka radnog vijeka opreme te ga predajte budućim vlasnicima ili korisnicima.

Grupa Tetra Pak ne prihvaća odgovornost za štetu, gubitke, ozljede ili smrtne slučajeve nastale zbog nepridržavanja uputa u priručnicima uz opremu.

Isporučeni priručnici

Priručnici isporučeni uz ovu opremu:

CM

Priručnik pruža tehničarima informacije o načinu prebacivanja opreme u različite načine rada.

EM

Priručnik pruža tehničarima informacije o električnom sustavu opreme.

IM

Priručnik pruža tehničarima informacije potrebne za sigurnu ugradnju opreme.

MaSP

Priručnik za održavanje i rezervne dijelove pruža informacije o održavanju komponenti. Također pruža informacije potrebne za naručivanje rezervnih dijelova komponenti od tvrtke Tetra Pak Group.

MM

Priručnik pruža tehničarimainformacije potrebne za održavanje opreme.

OM

Priručnik za rukovanje pruža rukovateljima informacije o rukovanju i radu opreme prije, za vrijeme i nakon proizvodnje.

RM

Pruža tehničarima informacije potrebne za sigurnu montažu novih komponenti na već instalirani stroj ili opremu.

(nastavak)

(nastavak)

SPC

Daje informacije potrebne za naručivanje rezervnih dijelova od tvrtke Grupa Tetra Pak.

TeM

Daje tehničarima informacije koje mogu biti sljedeće naravi:

- informacije potrebne za sigurno instaliranje opreme
- informacije potrebne za održavanje opreme
- informacije o električnom sustavu stroja/opreme
- informacije potrebne za naručivanje rezervnih dijelova od tvrtke Grupa Tetra Pak
- ostale tehničke informacije

UP

Sadrži nove stranice za ažuriranje postojećih priručnika uz stroj.

Izgled stranica

Pogledajte sliku (A) na stranici i-9: glavne stranice Kataloga rezervnih dijelova sastoje se od stranice s ilustracijom (1) i stranice s odgovarajućim popisom (7). Broj stranice (5) prikazan je u zaglavlju ilustracijske stranice i u podnožju stranice s popisom. Broj dokumenta (6) nalazi se u podnožju stranice s popisom.

Numeriranje stranica

Pogledajte sliku (A) na strani i-9: broj stranice (5) sastoji se od tri dijela:

- broja poglavlja (2)
- rednog broja stranice (3) u poglavlju
- ukupnog broja stranica (4) u poglavlju

Napomena! Slova UP mogu zamijeniti broj poglavlja (2) ako priručnik sadrži ažurirane stranice. Redni broj stranice (3) i ukupni broj stranica (4) ažuriranih stranica ne prate uzastopnu numeraciju poglavlja.

Uvodno o stroju

Proizvođač

Za naziv i adresu proizvođača vidjeti drugu stranicu ovog priručnika.

Rad

Grupa Tetra Pak ne preuzima odgovornost za bilo kakove štete ili ozljede nastale po opremu, osoblje ili potrošače zbog nekorištenja originalnih rezervnih dijelova proizvođača Tetra Pak®.

Za nabavu originalnih Tetra Pak rezervnih dijelova za ovaj stroj obratite se najbližem uredu Tetra Pak.

Identifikacija

CE klasifikacija

Ovaj uređaj usklađen je s osnovnim propisima za zdravlje i sigurnost Europske ekonomske zone (EEZ).

(nastavak)

(nastavak)

3-A usklađenost

Ako se na natpisnoj pločici stroja nalazi oznaka 3-A (15) (vidjeti sliku (B) na stranici i-9), oprema je sukladna s 3-A Sanitarnim normama za proizvođače, punitelje i zatvaratelje ambalaže za tekuće mlijeko i tekuće mliječne proizvode, broj 17-XX.

Natpisna pločica

Ilustracija (B) na stranici i-9 prikazuje primjer natpisne pločice.
Ilustracija valjane natpisne pločice i njenog smještaja na opremi nalazi se u uvodnim poglavljima priručnika isporučenih uz ovu opremu.
Natpisna pločica sadrži dolje navedene podatke, potrebne za kontakt s tvrtkom Grupa Tetra Pak u vezi s konkretnom opremom.

- Tip stroja (8)
- Volumen (9)
- Specifikacija tehničkog crteža (10)
- Serijski broj stroja (11)
- Proizvođač (12)
- Godina proizvodnje (13)
- CE oznaka (14)
- 3-A oznaka (ako je primjenjivo) (15)

Provjerite da li podaci o uređaju na početnim stranicama ovoga priručnika odgovaraju podacima na natpisnoj pločici stroja i tehničkim karakteristikama stroja.

Oznaka stroja s mazivom za korištenje u proizvodnji hrane

Ako oprema sadrži oznaku stroja s mazivom za korištenje u proizvodnji hrane (16) (vidi sliku (C) na str. i-9), to znači da su maziva korištena na ovoj opremi odgovarajuće kvalitete za korištenje u proizvodnji hrane.

Kako se koristiti ovim Katalogom rezervnih dijelova

Pronađite broj rezervnog dijela

a) Pogledajte ilustraciju (D) na stranici i-9: idite na broj poglavlja (17) naveden uz glavnu skupinu koja sadrži dio koji želite pronaći.

Stavci b) i c) odnose se na ilustraciju (E) na stranici i-10.

b) Na prikazu glavne skupine pronađite podskupinu stroja (19) koja sadrži dio ili podgrupu koju tražite. Zabilježite broj pozicije (20) i pogledajte stranicu s popisom koja se nalazi iza stranice s ilustracijom.

c) Potražite broj pozicije/referentnu oznaku (18) ili naziv podskupine (21). Otiđite na odgovarajući broj stranice (22) naveden u desnom stupcu. Grupa Tetra Pak uvijek koristi funkcijski usmjereno strukturiranje referentnih oznaka. Prefiks koji pokazuje funkcijski usmjerenu strukturu (=) nije sadržan u referentnoj oznaci.

(nastavak)

(nastavak)

Stavci d) i e) odnose se na ilustraciju (F) na stranici i-10.

d) Na ilustraciji podskupine pronađite dio (23) koji tražite i zabilježite njegov broj pozicije.

e) Broj dijela (31) i opis (32) nalaze se uz broj pozicije na stranici s popisom.

Informacije navedene u Katalogu rezervnih dijelova

Donji popis odnosi se na sliku (F) na stranici i-10. U Katalogu rezervnih dijelova nalaze se sljedeći podaci o skupinama, podskupinama i rezervnim dijelovima opreme:

- Strukturna referenca skupine (24).
  Označava sljedeću višu skupinu u strukturi popisa opreme.
- Naziv skupine (25)
- Jedinica mjere (26)
- Količina (27)
- Broj konstrukcijskog crteža (28)
- Slijed stranice s popisom (29).
  Naveden je ako se u ilustraciji skupine ili popisu nalazi više stranica.
- Broj dijela ili podskupine (30)
- Naziv podskupine ili opis dijela (31)
- Broj skupine (32)
- Broj opreme (33)
- Naslov informacije o skupini (34). Ukazuje odnosi li se odjeljak ispod naslova na određeni tip stroja ili je to popis zajedničkih dijelova.
  Ako se na popisu nalazi više tipova i svaki ima svoj vlastiti konstrukcijski crtež, navedena je uputa na stranicu na kojoj je prikazan konstrukcijski crtež.
- Interne informacije (35)

Pomoć i upiti

Za pomoć u radu s ovom opremom ili za druge upite, komentare i prijedloge, pošaljite pitanja ili pružite povratne informacije korištenjem alata QuTI-P. Upišite QuTI-P u polje za adresu na svom pregledniku. Ako nemate pristup za QuTI-P, zatražite ga kontaktiranjem globalne servisne službe.

Ako nemate pristup intranetu tvrtke Tetra Pak®, obratite se najbližem predstavniku tvrtke Tetra Pak.

Kézikönyv információ

A Tetra Pak Group az összes leszállított kézikönyv alapos átolvasását javasolja. Gondoskodjon arról, hogy a készüléket üzemeltető és karbantartó személyzet számára elérhetőek legyenek a leszállított kézikönyvek.

Fontos, hogy a kézikönyvet a berendezés teljes élettartama alatt megőrizzék, és továbbadják azt minden későbbi tulajdonosnak és felhasználónak.

A Tetra Pak Group nem felel semmilyen kárért, veszteségért vagy sérülésért, melyek jelen berendezéshez mellékelt kézikönyvben lévő utasítások be nem tartásának következménye.

Leszállított kézikönyvek

A berendezéssel leszállított kézikönyvek:

CM

A CM Átállítási kézikönyv ellátja a szakembereket a különböző gyártási üzemmódokra való átállításról szóló információkkal.

EM

Az EM Elektromossági kézikönyv ellátja a szakembereket a készülék elektromos rendszerével kapcsolatos információkkal.

IM

Az IM Telepítési kézikönyv a készülék biztonságos telepítéséhez szolgáltat információkat a szakemberek számára.

MaSP

A Karbantartás és pótalkatrészek kézikönyv tájékoztatást nyújt a gépegység karbantartásáról. Emellett tartalmazza azokat az információkat is, amelyek ahhoz szükségesek, hogy pótalkatrészeket rendeljen a gépegységhez a Tetra Pak Csoporttól.

MM

Az MM Karbantartási kézikönyv a készülék karbantartásával kapcsolatosan szolgáltat információkat a szakemberek számára.

OM

Az OM Üzemeltetési kézikönyv a kezelők részére szolgáltat információkat a berendezés kezeléséről és működtetéséről a gyártás előtt, alatt és után.

RM

Az RM újraépítési kézikönyv ellátja a szakembereket azokkal az információkkal, amelyek egy készletnek a már telepített gépre való biztonságos felszereléséhez szükségesek.

(Folyt.)

(Folyt.)

SPC

Az SPC Alkatrész-katalógus a Tetra Pak Group megrendelhető alkatrészek megrendeléséhez szükséges információkat tartalmazza.

TeM

A TeM Műszaki útmutató az alábbi információkkal látja el a technikusokat:

- a berendezés biztonságos felszereléséhez szükséges információkkal,
- a berendezés karbantartásához szükséges információkkal,
- a gép/berendezés elektromos rendszerével kapcsolatos információkkal,
- A Tetra Pak Group történő cserealkatrész rendeléshez szükséges információkkal,
- egyéb műszaki információkkal.

UP

A UP Termékfrissítési oldalak új oldalakkal frissíti a gépkönyveket.

Oldal elrendezés

Lásd az (A) ábrát a(z) i-9 oldalon: Az Alkatrész-katalógus fő oldalai egy ábrákat tartalmazó oldalból (1) és a megfelelő listát tartalmazó oldalból (7) állnak. Az oldalszám (5) az ábrákat tartalmazó oldal fejlécében és a listát tartalmazó oldal láblécében jelenik meg. A dokumentumszám a listát tartalmazó oldal (6) láblécében jelenik meg.

Oldalszámozás

Lásd az ábrát (A) a(z) i-9 oldalon: Az oldalszám (5) három részből áll:

- fejezetszám (2)
- fejezeten belüli egymást követő oldalak száma (3)
- a fejezet összoldalszáma (4)

Megjegyzés! A UP betűk helyettesíthetik a fejezetszámot (2), ha a kézikönyv termékfrissítési oldalakat tartalmaz. A termékfrissítési oldalak egymást követő oldalai (3) és összoldalszáma (4) nem igazodik a fejezet egymást követő oldalszámozásához.

Gép bevezetés

Gyártó

A gyártó neve és címe a katalógus második oldalán található.

Szerviz

A Tetra Pak Group nem vállal felelősséget a berendezés, személyzet vagy fogyasztók olyan sérüléseiért, amelyet nem eredeti Tetra Pak® pótalkatrészek használata okozott.

Eredeti Tetra Pak pótalkatrészeket a legközelebbi Tetra Pak irodából rendelhet.

Azonosítás

CE besorolás

A berendezés megfelel az Európai Gazdasági Térség (EEA) alapvető egészségügyi és biztonsági előírásainak.

(Folyt.)

(Folyt.)

3-A megfelelőség

Ha a gép adattáblája tartalmazza a 3-A jelzést (15) (lásd (B) ábra az i-7 oldalon), akkor ez a berendezés megfelelő a 3-A Egészségügyi szabványok folyékony tej és folyékony tejtermékek csomagolásának alakító, töltő és lezáró eszközeire, 17-XX. sz.

Géptábla

A (B) ábra a(z) i-9 oldalon egy példa a géptáblára.
Az érvényes géptáblát és annak a gépen elfoglalt helyét bemutató ábra a berendezéshez mellékelt kézikönyvek bevezető fejezetében található. A géptábla az alább felsorolt adatokat tartalmazza, amelyekre akkor van szükség, amikor felveszi a kapcsolatot a Tetra Pak Group ezzel a sajátos berendezéssel kapcsolatban.

- Géptípus (8)
- Térfogat (9)
- Tervrajz specifikációk (10)
- Gép gyártási száma (11)
- Gyártó (12)
- Gyártási év (13)
- CE jelölés (14)
- 3-A jelölés (ha van ilyen) (15)

Bizonyosodjon meg arról, hogy a kézikönyv első oldalán található berendezés-adatok megfelelnek a géptábla adatainak és a gép specifikációinak.

Élelmiszeripari kenőanyaggal kent gép tájékoztató tábla

Ha a berendezésen elhelyezik az "Élelmiszeripari kenőanyaggal kent gép" táblát (16) (lásd a (C) ábrát az i-9. oldalon), az azt jelzi, hogy az adott berendezésben alkalmazott kenőanyagok élelmiszeripari minőségűek.

Az Alkatrész-katalógus használata

Keresse meg az alkatrész-számot

a) Lásd a (D) ábrát a(z) i-9 oldalon: Ugorjon a fejezetszámra (17), amely a keresett alkatrészt tartalmazó fő csoport mellett található.

A(z) b) és c) adatok a(z) i-10 oldalon található (E) ábrára vonatkoznak.

b) A főcsoport ábráját lásd a gép alcsoportban (19), amely a keresett alkatrészt vagy alcsoportot tartalmazza. Jegyezze fel a pozíció számot (20) és ugorjon az illusztrációt követő lista oldalra.

c) Keresse a pozíció számot/referencia elnevezést (18) vagy az alcsoport nevét (21). Ugorjon a jobboldali oszlopban feltüntetett megfelelő oldalszámra (22). A Tetra Pak Group úgy döntött, hogy referencia elnevezésre mindig a funkcióorientált szerkezetet alkalmazza. A funkcióorientált szerkezetet jelző előtag (=) nem jelenik meg a referencia elnevezésben.

(Folyt.)

(Folyt.)

A(z) d) és e) adatok a(z) i-10 oldalon található (F) ábrára vonatkoznak.

d) Keresse meg az alkatrészt (23) az alcsoport ábrán és jegyezze fel az alkatrész pozíció számát.

e) Az alkatrész-szám (31) és az alkatrész leírása (32) a lista oldalon a pozíció szám mellett van feltüntetve.

Az Alkatrész-katalógusban feltüntetett információk

Az alábbi lista a(z) i-10 oldalon lévő (F) ábrára vonatkozik.
Az Alkatrész-katalógus a következő információkat tartalmazza a berendezés alcsoportokról, csoportokról és alkatrészekről.

- Csoportszerkezet referencia (24). A következő nagyobb csoportot jelzi a berendezés listaszerkezetében.
- Csoportnév (25)
- Mértékegység (26)
- Mennyiség (27)
- Szerelési rajz száma (28)
- Listaoldal tartomány (29). Akkor található meg, ha több oldalt tartalmaz a csoportábrában vagy a listában.
- Alkatrész vagy alcsoport szám (30)
- Alcsoport név vagy alkatrész leírás (31)
- Csoportszám (32)
- Berendezés szám (33)
- Csoportinformáció címsor (34). Azt jelzi, hogy az alábbi szakaszban a címsor egy bizonyos gépváltozatra vonatkozik, vagy általános alkatrészek egy listája Ha egy lista egynél több változattal rendelkezik, és mindegyik változatnak saját összeszerelési rajza van, a változatok szerelési rajzának egy oldal-hivatkozása jelenik meg.
- Belső információk (35)

Segítség és tájékoztatás

Jelen berendezés használata során a QuTI-P eszköz segítségével kérhet segítséget, illetve más tájékoztatást, valamint feltehet kérdéseket és visszajelzést is adhat. Böngészőjén a címmezőbe írja be a QuTI-P szöveget. Ha a QuTI-P nem elérhető, a hozzáférést a globális internetes ügyfélszolgálattól (Global Service Desk) kérheti.

Ha a Tetra Pak® intranet nem érhető el, forduljon a legközelebbi Tetra Pak képviselethez.

Handbókaupplýsingar

Tetra Pak Group mælir með því að allar handbækur séu lesnar vandlega. Gangið úr skugga um að afhentar handbækur séu tiltækar starfsmönnum sem reka tækin eða viðhalda þeim.

Mikilvægt er geyma þessa handbók á endingartíma búnaðarins og afhenda hana arftökum eða öðrum notendum.

Tetra Pak Group ber ekki ábyrgð á neinu tjóni á tækjunum sem stafar af því að ekki var farið eftir leiðbeiningum í þessari handbók.

Afhentar handbækur

Handbækur sem afhentar voru með þessum tækjum:

CM

Breytingahandbók veitir tæknimönnum upplýsingar um breytingar á tækjunum svo að þau hæfi hinum ýmsu framleiðsluháttum.

EM

Raftækjahandbók veitir tæknimönnum upplýsingar um rafkerfi tækjanna.

IM

Uppsetningarhandbók veitir tæknimönnum nauðsynlegar upplýsingar um örugga uppsetningu tækjanna.

MaSP

Handbækur um viðhald og varahluti veita upplýsingar um hvernig eigi að viðhalda íhlutnum. Þær veita líka nauðsynlegar upplýsingar um hvernig skuli panta varahluti frá Tetra Pak Group fyrir íhlutinn.

MM

Viðhaldshandbók veitir tæknimönnum upplýsingar um viðhald tækjanna.

OM

Rekstrarhandbók veitir stjórnanda upplýsingar um meðhöndlun og rekstur tækjanna fyrir og eftir framleiðslu.

RM

Endurbyggingarhandbók veitir tæknimönnum nauðsynlegar upplýsingar um örugga uppsetningu viðbótarbúnaðar við þegar uppsetta vél eða tæki.

(frh.)

(frh.)

SPC

Varahlutalisti veitir upplýsingar sem nauðsynlegar eru til að panta varahluti frá Tetra Pak Group.

TeM

Í Tæknihandbókinni eru tæknimönnum veittar upplýsingar, svo sem:

- upplýsingar um örugga uppsetningu tækjanna
- upplýsingar um viðhald tækjanna
- upplýsingar um rafkerfi vélarinnar/búnaðarins
- nauðsynlegar upplýsingar um pantanir varahluta frá Tetra Pak Group
- aðrar tæknilegar upplýsingar

UP

Uppfærslublaðsíður eru nýjar blaðsíður til að uppfæra eldri vélahandbækur.

Umbrot

Vísað er til myndar (A) á bls. i-9: Meginblaðsíður í Varahlutalistanum eru myndablaðsíða (1) og samsvarandi listablaðsíða (7). Blaðsíða númer (5) er sýnd í fyrirsögn myndablaðsíðu og neðst á listablaðsíðu. Skjalsnúmer (6) er neðst á listablaðsíðu.

Blaðsíðunúmer

Vísað er til myndar (A) á blaðsíðu i-9: Blaðsíðunúmer (5) skiptist í þrjá hluta:

- kaflanúmer (2)
- raðnúmer (3) innan kaflans
- heildarfjölda blaðsíðna (4) í kaflanum.

Ath.! Stafirnir UP kunna að koma í stað kaflanúmers (2) ef uppfærslublaðsíður eru í handbókinni. Raðnúmer blaðsíðu (3) og heildarfjöldi síðna (4) af uppfærslublaðsíðum sýna ekki eldri raðnúmer í kaflanum.

Inngangur um vélina

Framleiðandi

Nafn og heimilisfang framleiðanda er birt á 2. bls. þessa vörulista.

Þjónusta

Tetra Pak Group ber enga ábyrgð á tjóni eða slysum á tækjum, starfsmönnum eða neytendum af völdum varahluta sem eru ekki ekta Tetra Pak®-varahlutir.

Pantanir á ekta Tetra Pak-varahlutum í þessa vél skulu sendar næstu skrifstofu Tetra Pak.

Auðkenni

CE flokkun

Þessi tæki fullnægja grundvallarheilbrigðis- og öryggisreglugerðum Evrópska efnahagssvæðisins (EES).

(frh.)

(frh.)

3-A samræmi

Ef vélarplatan inniheldur 3-A merkingu (15) (sjá mynd (B) á bls. i-7) er þessi búnaður í samræmi við 3-A hreinlætisstaðla fyrir mótara, áfyllara og lokara íláta fyrir mjólkurvökva og mjólkurvökvavörur, nr. 17-XX.

Vélarskilti

Myndin (B) á bls. i-9 sýnir dæmi um vélarskilti.
Mynd af gildandi vélarskilti og staðsetning þess á búnaðinun er birt í inngangskafla handbókanna sem afhentar eru með þessum búnaði.
Á vélarskiltinu er að finna þau gögn sem talin eru upp hér að neðan og þörf er fyrir þegar haft er samband við Tetra Pak Group vegna þessa sérstaka búnaðar.

- Vélargerð (8)
- Magn (9)
- Tækniteikningar (10)
- Raðnúmer vélar (11)
- Framleiðandi vélar (12)
- Framleiðsluár(13)
- CE-merki (14)
- 3-A-merki (ef við á) (15)

Gangið úr skugga um að gögn um búnaðinn á fyrstu blaðsíðum þessarar handbókar komi heim og saman við vélarskiltið og tæknilýsingu vélarinnar.

Smurð vélarplata sem hægt er að nota til matvinnslu

Ef þessi búnaður er með smurða vélarplötu sem hægt er að nota til matvinnslu (16) (sjá skilti (C) á blaðsíðu i-9), gefur það til kynna að smurefnið sem notað er í þessum búnaði er af þeim gæðum sem notað er í matvinnslu

Notkun þessa varahlutalista

Finna ber númer varahlutar

a) Vísað er til myndar (D) á bls. i-9: Fletta skal upp á kafla (17) sem birtist við hlið meginhópsins sem hefur að geyma þann hlut sem ætlunin er að finna.

Atriði b) og c) vísa til myndar (E) á bls. i-10.

b) Á mynd af meginhópnum ber að gá að undirflokki (19) vélar sem hefur að geyma hlut eða undirflokk sem leitað er að.
Aðgæta skal staðsetningarnúmerið (20) og fletta upp á listablaðsíðu sem fylgir myndinni.

c) Finna ber staðsetningarnúmer/tilvísaða skilgreiningu (18) eða heiti undirhóps (20). Aðgæta skal viðeigandi blaðsíðunúmer (22) sem birt er í dálkinum hægra megin. Tetra Pak Group hefur valið að nota ávallt virkniform sem skilgreiningarhlut. Forskeytið, sem bendir til virkniformsins (=), er ekki sýnt í skilgreiningarhlutnum

(frh.)

(frh.)

Atriði d) og e) eiga við um mynd (F) á bls. i-10.

d) Finna ber hlutinn (23) sem leitað er að í undirhópsmyndinni og aðgæta hvert er staðsetningarnúmer hlutarins.

e) Hlutarnúmerið (31) og lýsing hlutarins (32) eru listuð við hlið staðsetningarnúmersins á listablaðsíðunni.

Upplýsingar sem birtar eru í Varahlutalistanum

Listinn hér að neðan á við um mynd (F) á bls. i-10. Í Varahlutalista er að finna eftirfarandi upplýsingar um hópa, undirhópa og varahluti fyrir tækin:

- Skilgreining uppbyggingar hóps (24). Bendir til næsta hóps fyrir ofan í uppbyggingu hlutalistans.
- Heiti hóps (25)
- Mælieiningar (26)
- Magn (27)
- Númer á samsetningarteikningu (28)
- Svið listablaðsíðu (29). Fylgir með ef um er að ræða margar blaðsíður á hópmyndninni eða listanum.
- Númer hlutar eða undirflokks (30)
- Heiti undirhóps eða lýsing hlutar (31)
- Hópnúmer (32)
- Númer búnaðar (33)
- Fyrirsögn upplýsingar um hóp (34). Bendir til þess hvort kaflinn undir fyrirsögninni fjalli um sérstaka gerð vélar eða í honum sé listi yfir almenna hluti. Ef í listanum er að finna fleiri en einn frábrugðinn hlut og birt er samsetningarteikning fyrir sérhvern frábrugðinn hlut er vísað til blaðsíðunnar með samsetningarteikningu hins frábrugðna hlutar.
- Innri upplýsingar (35)

Aðstoð og fyrirspurnir

Þegar þörf er á aðstoð þegar þessi búnaður er notaður eða aðstoð vegna fyrirspurna, athugasemda eða tillagna, sendið spurningar eða athugasemdir með því að nota QuTI-P-tækið. Skráið QuTI-P í reitinn fyrir vistfang í vafrann þinn. Ef aðgangur að QuTI-P er ekki í boði skal óska eftir aðgangi með því að hafa samband við Global Service Desk (þjónustuborð).

Ef ekki er um að ræða aðgang að Tetra Pak® heimasíðunni ber að hafa samband við næsta umboðsmann Tetra Pak.

Informazioni sul manuale

Tetra Pak Group raccomanda di leggere con attenzione tutti i manuali forniti. Assicurarsi che i manuali forniti siano disponibili per il personale che opera o mantiene in efficienza l'equipaggiamento.

E' importante conservare questo catalogo per tutta la durata dell'equipaggiamento e consegnarlo ad ogni successivo possessore o utilizzatore.

Tetra Pak Group non si assume alcuna responsabilità per eventuali danni, perdite, lesioni o morte causati dall'inosservanza delle istruzioni contenute nei manuali forniti con questo equipaggiamento.

Manuali forniti

Manuali forniti con questo equipaggiamento:

CM

Il Manuale di Conversione fornisce ai tecnici le informazioni sulla conversione dell'equipaggiamento tra i diversi modi di produzione.

EM

Il Manuale Elettrico fornisce ai tecnici le informazioni sul sistema elettrico dell'equipaggiamento.

IM

Il Manuale d'Installazione fornisce ai tecnici le informazioni necessarie per installare facilmente l'equipaggiamento.

MaSP

Il Manuale di Manutenzione e Parti di ricambio fornisce informazioni su come effettuare la manutenzione del componente. Inoltre fornisce le informazioni necessarie per ordinare al Gruppo Tetra Pak pezzi di ricambio per il componente.

MM

Il Manuale di Manutenzione fornisce ai tecnici le informazioni sulla manutenzione dell'equipaggiamento.

OM

Il Manuale Operativo fornisce all'operatore informazioni su come movimentare ed azionare l'equipaggiamento prima, durante e dopo la produzione.

RM

Il Manuale di modifica fornisce ai tecnici le informazioni necessarie per installare facilmente un kit ad una macchina o ad un equipaggiamento.

(Continua)

(Continuazione)

SPC

Il Catalogo parti di ricambio fornisce informazioni necessarie per ordinare le parti di ricambio da Tetra Pak Group.

TeM

Il Manuale Tecnico fornisce le informazioni ai tecnici che possono essere:

- informazioni necessarie per installare in modo sicuro l'equipaggiamento
- informazioni necessarie per la manutenzione dell'equipaggiamento
- informazioni sul sistema elettrico della macchina/equipaggiamento
- informazioni necessarie per ordinare le parti di ricambio a Tetra Pak Group.
- altre informazioni tecniche

UP

Le pagine di aggiornamento forniscono nuove pagine per aggiornare i manuali delle macchine esistenti.

Schema pagina

Fare riferimento alla figura (A) a pagina i-9: Le pagine principali in un catalogo parti di ricambio consistono di una pagina di illustrazione (1) ed una corrispondente pagina della lista (7). Il numero di pagina (5) è indicato nell'intestazione di una pagina di illustrazione e nel piè di pagina di una pagina della lista. Il numero di documento (6) è indicato nel piè di pagina di una pagina della lista.

Numerazione pagina

Fare riferimento alla figura (A) a pagina i-9: Un numero di pagina (5) ha tre parti:

- numero capitolo (2)
- numero pagina consecutivo nel capitolo (3)
- numero totale di pagine nel capitolo (4)

Nota! Le lettere UP possono sostituire il numero del capitolo (2) se il manuale include le pagine di aggiornamento. Il numero di pagina consecutivo (3) ed il numero totale di pagine (4) delle pagine di aggiornamento non seguono la numerazione esistente sequenziale delle pagine del capitolo.

Introduzione macchina

Fabbricante

Per il nome e l'indirizzo del fabbricante, vedere la seconda pagina di questo catalogo.

Assistenza

Tetra Pak Group non si assume alcuna responsabilità per qualsiasi danno all'equipaggiamento, o lesioni al personale o ai clienti che sia stato causato da parti di ricambio non originali Tetra Pak®.

Per ordinare le parti di ricambio originali Tetra Pak per questa macchina, contattare l'ufficio Tetra Pak più vicino.

Identificazione

Classificazione CE

Questa macchina è conforme alle norme sanitarie e di sicurezza dell'Area Economica Europea (EEA).

(Continua)

(Continuazione)

Conformità 3-A

Se la targhetta macchina contiene il marchio 3-A (15) (vedere la figura (B) a pagina i-7), questo equipaggiamento è conforme alle norme sanitarie 3-A per formatrici, riempitrici e saldatori di contenitori per latte liquido e prodotti lattiero-caseari liquidi, numero 17-XX.

Targhetta macchina

La figura (B) a pagina i-9 mostra un esempio della targhetta della macchina. Una figura della targhetta della macchina valida e la relativa posizione sull'equipaggiamento è mostrata nel capitolo Introduzione dei manuali forniti con questo equipaggiamento. La targhetta della macchina contiene i dati elencati in basso, necessari quando si contatta Tetra Pak® in merito a questo specifico equipaggiamento.

- Tipo di macchina (8)
- Volume (9)
- Specifiche disegni (10)
- Numero di serie della macchina (11)
- Fabbricante (12)
- Anno di fabbricazione (13)
- Sigla CE (14)
- Marcatura 3-A (se applicabile) (15)

Assicurarsi che i dati dell'equipaggiamento nelle pagine anteriori di questo manuale corrispondano alla targhetta della macchina ed alle specifiche della macchina stessa.

Targhetta macchina Lubrificata con prodotti per uso alimentare

Se l'apparecchiatura è provvista di una targhetta macchina (16) Lubrificata con prodotti per uso alimentare (vedere la figura (C) a pagina i-9), significa che i lubrificanti usati nella macchina sono idonei per uso alimentare.

Come usare questo catalogo parti di ricambio

Individuazione di un numero di parte di ricambio

a) Fare riferimento alla figura (D) a pagina i-9: Passare al numero del capitolo (17) indicato accanto al gruppo principale che contiene la parte che si vuole individuare.

Punti b) e c) fare riferimento alla figura (E) a pagina i-10.

b) Sulla figura del gruppo principale, cercare il sottogruppo della macchina (19) che contiene la parte o il sottogruppo che si sta cercando. Annotare il numero di posizione (20) e passare alla pagina della lista che segue la figura.

c) Cercare il numero di posizione/denominazione di riferimento (18) o il nome del sottogruppo (21). Passare al numero di pagina corrispondente (22) elencato nella colonna destra. Tetra Pak Group ha scelto di utilizzare sempre la funzione della struttura orientata per la denominazione di riferimento. Il prefisso che indica la funzione della struttura orientata (=) non è mostrato nella denominazione di riferimento

(Continua)

(Continuazione)

Punti d) e e) fare riferimento alla figura (F) a pagina i-10 .

d) Individuare la parte (23) che si sta cercando sulla figura del sottogruppo ed annotare il numero di posizione della parte.

e) Il numero della parte (31) e la descrizione della parte (32) sono elencati accanto al numero di posizione nella pagina della lista.

Informazioni elencate nel catalogo parti di ricambio

La lista in basso si riferisce alla figura (F) a pagina i-10. Un catalogo parti di ricambio contiene le seguenti informazioni sui gruppi, sottogruppi e parti di ricambio per l'equipaggiamento:

- Riferimento struttura gruppo (24). Indica il gruppo successivo superiore nella struttura della lista dell'equipaggiamento.
- Nome del gruppo (25)
- Unità di misura (26)
- Quantità (27)
- Numero disegno di montaggio (28)
- Gamma di pagine della lista (29). Inclusa se ci sono pagine multiple nella figura del gruppo o della lista.
- Numero della parte o del sottogruppo (30)
- Nome del sottogruppo o descrizione della parte (31)
- Numero gruppo (32)
- Numero dell'equipaggiamento (33)
- Sezione informazioni del gruppo (34). Indica se la sezione sotto l'intestazione è per una variante macchina specifica o se è una lista di parti comuni. Se una lista ha più di una variante e ogni variante ha il proprio disegno di montaggio, un riferimento della pagina è indicato nel disegno di montaggio della variante.
- Informazioni interne (35)

Assistenza e richieste di informazioni

Per ricevere assistenza durante l'utilizzo della macchina o formulare altre richieste, commenti o suggerimenti, utilizzare lo strumento QuTI-P. Digitare QuTI-P nel campo dell'indirizzo del browser. Se l'accesso a QuTI-P non è disponibile, richiederlo contattando il servizio di assistenza globale.

Se l'accesso all'intranet Tetra Pak® non è disponibile, contattare il rappresentante Tetra Pak più vicino.

Vadovo informacija

Tetra Pak Group rekomenduoja atidžiai perskaityti visus pristatomus vadovus. Įsitikinkite, kad pristatomi vadovai yra prieinami personalui, kuris dirba su įranga arba ją prižiūri.

Svarbu saugoti šį vadovą visam įrangos gyvavimo laikotarpiui ir perduoti vadovą kiekvienam sekančiam savininkui arba naudotojui.

Tetra Pak Group neatsako už bet kokius įrangos gedimus, atsiradusius nesilaikant šią įrangą lydinčiuose vadovuose pateiktų instrukcijų.

Pristatomi vadovai

Kartu su šia įranga pristatomi vadovai:

CM

Perjungimų vadove specialistams suteikiama informacija apie įrangos perjungimą tarp įvairių gamybos režimų.

EM

Elektrinės dalies vadove pateikiama informacija specialistams apie įrangos elektros sistemą.

IM

Montavimo vadove pateikiama specialistams informacija, reikalinga saugiam įrangos montavimui.

MaSP

Techninės priežiūros ir atsarginių dalių vadove pateikiama informacija, kaip prižiūrėti komponentą. Jame taip pat pateikiama informacija, reikalinga norint iš „Tetra Pak Group“ užsisakyti komponento atsarginių dalių.

MM

Priežiūros vadove pateikiama specialistams informacija, reikalinga prižiūrint įrangą.

OM

Darbo vadove pateikiama informacija operatoriams apie darbą su įranga ir įrangos valdymą prieš gamybą, gamybos metu ir po gamybos.

RM

Restauravimo vadove pateikiama specialistams informacija, reikalinga saugiai sumontuoti komplektą dalių į sumontuotą mašiną ar įrangą.

(Tęsiama)

(Tęsiama)

SPC

Atsarginių dalių kataloge pateikiama informacija, reikalinga užsakant atsargines dalis iš Tetra Pak Group.

TeM

Techniniame vadove pateikiama specialistams informacija, kuri gali būti:

- informacija, reikalinga saugiam įrangos montavimui
- informacija, reikalinga atliekant techninę įrangos priežiūrą
- informacija apie mašinos / įrangos elektros sistemą
- informacija, reikalinga užsakant atsargines dalis iš Tetra Pak Group
- kitokia techninė informacija

UP

Nauji puslapiai skirti esamų mašinos vadovų atnaujinimui naujais puslapiais.

Puslapio išdėstymas

Vadovaukitės (A) paveikslėliu i-9 puslapyje: atsarginių dalių katalogo pagrindinius puslapius sudaro paveikslėlių puslapis (1) ir atitinkamo sąrašo puslapis (7). Puslapio numeris (5) nurodytas paveikslėlių puslapio antraštėje ir apatinėje sąrašo puslapio poraštėje. Dokumento numeris (6) nurodytas apatinėje sąrašo puslapio poraštėje.

Puslapių numeravimas

Vadovaukitės (A) paveikslėliu i-9 puslapyje: puslapio numerį (5) sudaro trys dalys:

- skyriaus numeris (2)
- puslapio eilės numeris (3) skyriuje
- bendras puslapių skaičius (4) skyriuje

Pastaba! Jei vadove yra atnaujinimų puslapiai, UP raidės gali būti vietoje skyriaus numerio (2). Atnaujinimo puslapio eilės numeris (3) ir bendras atnaujinimo puslapių skaičius (4) neatitinka nuoseklios skyriaus puslapių numeracijos.

Mašinos įvadas

Gamintojas

Apie gamintojo įmonės pavadinimą ir adresą skaitykite antrame šio katalogo puslapyje.

Aptarnavimas

Tetra Pak Group neprisiims jokios atsakomybės už žalą ir įrangos gedimus ar darbuotojų arba vartotojų traumas, patirtas naudojant atsargines dalis, kurios nėra originalios Tetra Pak® atsarginės dalys.

Norėdami užsakyti originalias Tetra Pak atsargines dalis susisiekite su artimiausia Tetra Pak įstaiga.

Identifikacija

CE klasifikacija

Ši įranga tenkina pagrindines Europos Ekonominės Zonos (EEA) sveikatos ir saugumo taisykles.

(Tęsiama)

(Tęsiama)

3-A atitiktis

Jei mašinos lentelėje yra ženklas 3-A (15) (žr. (B) iliustraciją i-7 puslapyje), ši įranga atitinka 3-A higienos standartus skysto pieno ir skysto prieno produktų talpyklų formuotojams, pripildytojams ir sandarikliams, numeris 17-XX.

Mašinos plokštė

Paveikslėlyje (B), esančiame i-9 puslapyje, pavaizduotas įrenginio kortelės pavyzdys.
Mašinos galiojančios kortelės paveikslėlis ir kortelės vieta ant įrangos nurodyta kartu su įranga tiekiamų vadovų įžanginiame skyriuje. Įrangos kortelėje pateikiami išvardinti duomenys, kurių reikia kreipiantis į Tetra Pak Group dėl konkrečios įrangos.

- Mašinos tipas (8)
- Tūris (9)
- Brėžinio specifikacijos (10)
- Mašinos serijos numeris (11)
- Gamintojas (12)
- Pagaminimo metai (13)
- CE ženklas (14)
- 3-A ženklas (jei taikomas) (15)

Įsitikinkite, kad šio vadovo pirmuose puslapiuose pateikti įrangos duomenis atitinka duomenis pateiktus mašinos informacinėje lentelėje ir mašinos specifikacijoje.

Maistinėmis tepimo priemonėmis tepamų staklių plokštelė

Jei įrangoje sumontuota maistinėmis tepimo priemonėmis tepamų staklių plokštelė (16) (žr. pav. (C) iš p. i-9), tai reiškia, kad šioje įrangoje naudojamos maistinės tepimo priemonės.

Kaip naudotis šiuo atsarginių dalių katalogu?

Nustatykite atsarginės dalies numerį

a) Vadovaukitės (D) paveikslėliu, esančiu i-9 puslapyje: atsiverskite skyrių, kurio numeris (17) nurodytas prieš pagrindinę grupę, kurioje yra reikiama surasti dalis.

Elementai b) ir c) atitinka (E) paveikslėlį, esantį i-10 puslapyje.

b) Pagrindinės grupės paveikslėlyje ieškokite mašinos dalinės grupės (19), kurioje yra ieškoma dalis ar dalinė grupė. Įsidėmėkite pozicijos numerį (20) ir atsiverskite už paveikslėlio esantį sąrašo puslapį.

c) Suraskite pozicijos numerio / nuorodos aprašymą (18) ar dalinės grupės pavadinimą (21). Atsiverskite atitinkamą puslapio numerį (22), nurodytą dešiniajame stulpelyje. Tetra Pak Group nuorodų aprašymams pasirinko visuomet naudoti su atliekama funkcija susietą struktūrą. Nuorodos aprašyme nenaudojamas priešdėlis, pažymintis su atliekama funkciją susietą struktūrą (=)

(Tęsiama)

(Tęsiama)

Elementai d) ir e) atitinka (F) paveikslėlį, esantį i-10 puslapyje.

d) Ieškomą dalį (23) suraskite dalinės grupės paveikslėlyje ir įsidėmėkite dalies pozicijos numerį.

e) Dalies numeris (31) ir dalies aprašymas (32) nurodyti sąrašo puslapyje prie pozicijos numerio.

Atsarginių dalių kataloge pateikiama informacija

Pateiktas sąrašas atitinka (F) paveikslėlį, esantį i-10 puslapyje. Atsarginių dalių kataloge pateikiama tokia informacija apie įrangos grupes, dalines grupes ir atsargines dalis:

- Grupės struktūros apibūdinimas (24). Nurodo kitą aukščiausią grupę įrangos sąrašo struktūroje.
- Grupės pavadinimas (25)
- Mato vienetas (26)
- Kiekis (27)
- Surinkimo brėžinio numeris (28)
- Sąrašo puslapių intervalas (29). Nurodomas tuomet, kai grupės paveikslėlį ar sąrašą sudaro keli puslapiai.
- Dalies ar dalinės grupės numeris (30)
- Dalinės grupės pavadinimas arba dalies aprašymas (31)
- Grupės numeris (32)
- Įrangos numeris (33)
- Grupės informacijos antraštė (34). Pažymi, ar po antrašte esantis skyrius skirtas konkrečiam mašinos variantui, ar tai bendrų dalių sąrašas. Jei sąrašą sudaro daugiau kaip vienas variantas ir kiekvienas iš jų atitinka skirtingą surinkimo numerį, pateikiama varianto surinkimo brėžinio puslapio nuoroda.
- Vidinė informacija (35)

Pagalba ir užklausos

Jei reikia pagalbos dėl šios įrangos eksploatacijos arba turite kitų užklausų, komentarų ar pasiūlymų, pateikite klausimus arba atsiliepimus naudodamiesi priemone „QuTI-P“. Įveskite „QuTI-P“ į savo naršyklės adreso lauką. Jei „QuTI-P“ prieigos neturite, paprašykite jos susisiekę su Pasauliniu aptarnavimo centru.

Jei neturite prieigos prie „Tetra Pak®“ intraneto, susisiekite su artimiausiu „Tetra Pak“ atstovu.

Informācija par instrukciju

Tetra Pak Group iesaka uzmanīgi izlasīt visas piegādātās instrukcijas. Nodrošiniet, lai piegādātās instrukcijas būtu pieejamas personālam, kurš ekspluatē un apkalpo iekārtu.

Ir svarīgi saglabāt šo katalogu visā ierīces kalpošanas laikā un nodot to jebkuram sekojošam īpašniekam vai lietotājam.

Tetra Pak Group neuzņemas atbildību par jebkādiem šīs iekārtas bojājumiem, ko izraisa šim aprīkojumam pievienotajās rokasgrāmatās sniegto instrukciju neievērošana.

Piegādātās instrukcijas

Ar iekārtu piegādātās instrukcijas:

CM

Šī Maiņas instrukcija (CM) nodrošina tehnisko personālu ar informāciju par iekārtas pārvēršanu dažādiem ražošanas režīmiem.

EM

Elektrisko savienojumu instrukcija (EM) nodrošina tehniķus ar informāciju par iekārtas elektrisko sistēmu.

IM

Instalācijas instrukcija (IM) nodrošina tehniķus ar informāciju, kas ir nepieciešama drošai iekārtas instalācijai.

MaSP

Apkopes un rezerves daļu rokasgrāmatā sniegta informācija, kā uzturēt komponentu labā tehniskā stāvoklī. Šajā rokasgrāmatā sniegta arī informācija, kas nepieciešama komponenta rezerves daļu pasūtīšanai no Tetra Pak Group.

MM

Tehniskās apkopes instrukcija (MM) sniedz tehniķiem informāciju par aprīkojuma tehnisko apkopi.

OM

Ekspluatācijas instrukcija (OM) nodrošina operatorus ar informāciju par rīcību ar iekārtu un tās ekspluatāciju pirms un pēc ražošanas procesa, kā arī tā laikā.

RM

Pārveidošanas instrukcija (RM) sniedz tehniķiem informāciju, kas nepieciešama, lai uz uzstādītas iekārtas vai aprīkojuma droši uzstādītu komplektu.

(Turpinājums seko)

(Turpinājums seko)

SPC

Rezerves daļu katalogs (SPC) sniedz informāciju, kas ir nepieciešama rezerves daļu pasūtīšanai no Tetra Pak Group.

TeM

Tehniskā instrukcija (TeM) sniedz tehniķiem informāciju, kas var būt:

- informācija, kura nepieciešama, lai droši uzstādītu aprīkojumu;
- informācija, kura nepieciešama, lai veiktu aprīkojuma tehnisko apkopi;
- informācija par iekārtas/ aprīkojuma elektrosistēmu;
- informācija, kura nepieciešama rezerves daļu pasūtīšanai no Tetra Pak Group;
- cita tehniskā informācija.

UP

Atjauninājuma lappuses ir jaunas lapas, kas nepieciešamas, lai atjauninātu iekārtas esošās rokasgrāmatas.

Lappuses formāts

Skatiet attēlu (A) lappusē i-9: Rezerves daļu kataloga (SPC) galvenās lapas iekļauj ilustrāciju lapu (1) un attiecīgo saraksta lapu (7). Lappuses numurs (5) ir attēlots ilustrācijas lapas galvenes daļā un saraksta lapas kājenes daļā. Dokumenta numurs (6) ir attēlots saraksta lapas kājenes daļā.

Lappušu numerācija

Skatiet attēlu (A) lappusē i-9: lappuses numuram (5) ir trīs daļas:

- sadaļas numurs (2);
- lappuses kārtas numurs (2) sadaļā;
- kopējais lappušu skaits (3) sadaļā.

Piezīme! Burti UP var aizvietot sadaļas numuru (2), ja rokasgrāmata iekļauj atjauninājumu lappuses. Lappuses kārtas numurs (3) un atjauninājumu lappušu kopējais lappušu skaits (4) neatbilst sadaļas esošajai secīgajai lappušu numerācijai.

Ievads par ierīci

Ražotājs

Ražotāja nosaukumu un adresi skatiet šī kataloga otrajā lappusē.

Serviss

Tetra Pak Group neuzņemas atbildību par bojājumiem vai kaitējumu aprīkojumam, personālam vai klientiem, ko rada tādu rezerves daļu izmantošana, kas nav oriģinālas Tetra Pak® rezerves daļas.

Lai pasūtītu oriģinālas Tetra Pak rezerves daļas šai iekārtai, sazinieties ar tuvāko Tetra Pak biroju.

Identifikācija

CE klasifikācija

Šī iekārta atbilst Eiropas Ekonomiskās Telpas (EEA) galvenajiem veselības un drošības noteikumiem.

(Turpinājums seko)

(Turpinājums seko)

3-A atbilstība

Ja uz iekārtas datu plāksnītes ir 3-A marķējums (15) (skatīt attēlu (B) lappusē i-7), šāds aprīkojums atbilst 3-A Šķidrā piena un šķidro piena produktu iepakojuma formētāju, pildītāju un sakausētāju sanitārajām normām Nr. 17-XX.

Iekārtas datu plāksne

Attēlā (B) lappusē i-9 ir attēlots iekārtas datu plāksnes piemērs.
Iekārtas datu plāksnes attēls, kā arī šīs plāksnes atrašanās vieta uz aprīkojuma ir attēlota līdz ar šo iekārtu piegādāto rokasgrāmatu ievada sadaļā. Iekārtas datu plāksnē ir iekļauti tālāk norādītie dati, kas ir nepieciešami, sazinoties ar Tetra Pak Group jautājumos, kuri saistīti ar šo specifisko aprīkojumu.

- Iekārtas tips (8)
- Tilpums (9)
- Rasējuma specifikācijas (10)
- Iekārtas sērijas numurs (11)
- Ražotājs (12)
- Ražošanas gads (13)
- CE marķējums (14)
- 3-A marķējums (ja piemērojams) (15)

Pārliecinieties, vai iekārtas dati šīs instrukcijas pirmajā lappusē atbilst datiem iekārtas datu plāksnē un iekārtas specifikācijai.

Saeļļotā aparāta plātne pārtikas produktu kategorijai

Ja iekārta ir aprīkota ar saeļļoto aparāta plātni (16) (skatīt (C) zīmējumu i-9 lapā), tas norāda, ka šai iekārtai tiek izmantotas pārtikas produktu kategorijas smērvielas.

Kā lietot šo Rezerves daļu katalogu

Atrodiet rezerves daļas numuru

a) Skatiet attēlu (D) lappusē i-9: atrodiet sadaļas numuru (17), kas norādīts līdzās galvenajai grupai, kur atrodas meklējamā detaļa.

Punkti b) un c) attiecas uz attēlu (E) lappusē i-10.

b) Galvenās grupas attēlā atrodiet iekārtas apakšgrupu (19), kur atrodas meklējamā detaļa vai apakšgrupa. Atcerieties pozīcijas numuru (20) un skatiet sarakstu, kas seko pēc šī attēla.

c) Atrodiet pozīcijas numuru/ atsauces apzīmējumu (18) vai apakšgrupas nosaukumu (21). Atšķiriet attiecīgo lappusi (22), kas norādīta labajā ailē. Atsauču apzīmējumiem Tetra Pak Group vienmēr izvēlas lietot uz funkciju orientētu struktūru. Prefikss, kas apzīmē uz funkciju orientēto struktūru (=), atsauču apzīmējumos nav norādīts.

(Turpinājums seko)

(Turpinājums seko)

Punkti d) un e) attiecas uz attēlu (F) lappusē i-10.

d) Apakšgrupas attēlā atrodiet meklēto detaļu (23) un atcerieties detaļas pozīcijas numuru.

e) Detaļas numurs (31) un detaļas apraksts (32) ir sniegts saraksta lapā blakus pozīcijas numuram.

Informācija, kas sniegta Rezerves daļu katalogā

Tālāk sniegtais saraksts attiecas uz attēlu (F) lappusē i-10.
Rezerves daļu katalogs satur šādu informāciju par grupām, apakšgrupām un aprīkojuma rezerves daļām:

- grupas struktūras atsauci (24). Norāda uz aprīkojuma saraksta struktūras nākamo augstāko grupu.
- Grupas nosaukumu (25)
- Mērvienība (26)
- Daudzums (27)
- Montāžas rasējuma numurs (28)
- Saraksta lappušu diapazons (29). Ja grupas attēli vai saraksts iekļauj vairākas lappuses.
- Detaļas vai apakšgrupas numurs (30)
- Apakšgrupas nosaukums vai detaļas apraksts (31)
- Grupas numurs (32)
- Aprīkojuma numurs (33)
- Grupas informācijas virsraksts (34). Ja sadaļa, kas seko pēc virsraksta, attiecas uz specifisku iekārtas versiju, vai kopēju detaļu saraksta gadījumā. Ja sarakstā ir vairāk nekā viena versija un katrai versijai ir savs montāžas rasējums, ir sniegta atsauce uz konkrētās versijas montāžas rasējuma lappusi.
- Iekšējā informācija (35)

Palīdzība un jautājumi

Lai šīs iekārtas izmantošanas laikā saņemtu palīdzību vai ja radušies citi jautājumi, komentāri vai ierosinājumi, iesniedziet jautājumus vai sniedziet atsauksmes, izmantojot QuTI-P rīku. Pārlūkprogrammas adreses laukā ierakstiet QuTI-P. Ja QuTI-P nav pieejams, pieprasiet tam piekļuvi, sazinoties ar vispasaules klientu apkalpošanas daļu.

Ja piekļuve Tetra Pak® iekštīklam nav iespējama, sazinieties ar tuvāko Tetra Pak pārstāvniecību.

Handboekinformatie

De Tetra Pak Groep raadt aan alle geleverde documentatie zorgvuldig te lezen. Ga na of de geleverde documentatie ter beschikking is van het personeel dat de machine moet bedienen of servicewerkzaamheden moet uitvoeren.

Het is belangrijk deze catalogus voor de duur van de machine te bewaren en de catalogus door te geven aan elke volgende eigenaar of gebruiker.

De Tetra Pak Groep aanvaardt geen verantwoordelijkheid voor om het even welke soort beschadiging aan de machine als gevolg van het niet opvolgen van de in dit handboek gegeven instructies.

Meegeleverde handboeken

Met deze apparatuur meegeleverde handboeken:

CM

Dit conversiehandboek geeft technici informatie over het ombouwen van de apparatuur tussen verschillende productiemodi.

EM

Het Elektrisch Handboek geeft technici informatie betreffende het elektrisch systeem van de apparatuur.

IM

Het Installatiehandboek geeft technici informatie om op veilige wijze de apparatuur te installeren.

MaSP

Het Onderhouds- en reserveonderdelenhandboek geeft informatie over het onderhoud van de component. Verder geeft het informatie die nodig is om reserveonderdelen voor de component te bestellen bij de Tetra Pak Group.

MM

Het Onderhoudshandboek geeft technici informatie over het onderhoud van de apparatuur.

OM

Het Bedieningshandboek geeft operators informatie over hoe de machine moet worden bediend en hoe ermee moet worden omgegaan voor, tijdens en na productie.

RM

Het Ombouwhandboek bevat de nodige informatie voor technici om een kit veilig aan een geïnstalleerde machine of apparatuur te installeren.

(Zie volg. blz.)

(Vervolg)

SPC

De Catalogus Reservedelen geeft informatie die nodig is om reserveonderdelen bij de Tetra Pak Groep bestellen.

TeM

Het Technische Handboek bevat informatie voor technici betreffende:

- het veilig installeren van de apparatuur
- het onderhoud van de apparatuur
- het elektrische systeem van de machine/apparatuur.
- het bestellen van reserveonderdelen bij de Tetra Pak Groep
- andere technische informatie

UP

De Update Pages bevat nieuwe bladzijden voor het updaten van de bestaande machinehandboeken.

Pagina lay-out

Zie de illustratie (A) op bladzijde i-9: De belangrijkste bladzijden van een Catalogus Reserveonderdelen bestaan uit een bladzijde met een illustratie (1) en een corresponderende bladzijde met een lijst (7).
Het bladzijdenummer (5) is te vinden in de kop van een illustratiebladzijde en in de voetnoot van de lijstbladzijde. Het documentnummer (6) is te vinden in de voetnoot van een lijstbladzijde.

Bladzijdenummering

Zie de illustratie (A) op bladzijde i-9: een bladzijdenummer (5) bestaat uit drie delen.

- hoofdstuknummer (2)
- opeenvolgende bladzijdenummer in het hoofdstuk (3)
- totaal aantal bladzijden in het hoofdstuk (4)

N.B.! De letters UP kunnen het hoofdstuknummer (2) vervangen als het handboek update-bladzijden omvat. Het opeenvolgende bladzijdenummer (3) en het totale aantal bladzijden (4) van de updatebladzijden volgen niet de bestaande volgordenummering van het hoofdstuk.

Introductie van de machine

Fabrikant

Voor naam en adres van de fabrikant, zie de tweede bladzijde van deze catalogus.

Service

De Tetra Pak Groep wijst elke verantwoordelijkheid af voor schade aan machines of letsels aan personeel of consumenten die zijn veroorzaakt door reserveonderdelen die geen originele Tetra Pak®-reserveonderdelen zijn.

Neem voor het bestellen van originele Tetra Pak-reserveonderdelen voor deze machine contact op met het dichtstbijzijnde Tetra Pak-kantoor.

Identificatie

CE-classificatie

Deze apparatuur voldoet aan de basiseisen voor gezondheid en veiligheid voor de Europese Economische Ruimte (EEA).

(Zie volg. blz.)

(Vervolg)

3-A Naleving

Als het machineplaatje het 3-A merkteken bevat (15) (zie illustratie (B) op bladzijde i-7), voldoet deze apparatuur aan de 3-A hygiënenormen voor vorm-, vul- en sluitmachines van containers voor vloeibare melk en vloeibare melkproducten, nummer 17-XX.

Machineplaatje

De illustratie (B) op bladzijde i-9 toont een voorbeeld van een machineplaatje. Een illustratie van het wettige machineplaatje en de plaatsing ervan wordt getoond in het hoofdstuk Introductie van de handboeken, meegeleverd met deze apparatuur. Het machineplaatje bevat onderstaande gegevens die nodig zijn wanneer de Tetra Pak Groep moet worden gecontacteerd betreffende deze apparatuur.

- Machinetype (8)
- Volume (9)
- Tekeningspecificaties (10)
- Serienummer machine (11)
- Fabrikant (12)
- Fabricagejaar (13)
- CE-markering (14)
- Markering 3-A (indien van toepassing) (15)

Controleer of de gegevens betreffende de apparatuur in de voorste bladzijden van dit handboek overeenkomen met de gegevens op het machineplaatje en de machinespecificatie.

Machineplaat voor met voedselveilige smeermiddelen gesmeerde machines

Als de apparatuur is voorzien van een machineplaat voor met voedselveilige smeermiddelen gesmeerde machines (16) (zie afbeelding (C) op pagina i-9), betekent dit dat de smeermiddelen die in deze apparatuur worden gebruikt van voedselveilige kwaliteit zijn.

Hoe dient deze catalogus reserveonderdelen te worden gebruikt.

Lokaliseren van een nummer van een reserveonderdeel

a) Zie de illustratie (D) op bladzijde i-9: ga naar het hoofdstuknummer (16), naast de hoofdgroep die het gewenste deel bevat.

Items b) en c) refereren naar de illustratie (E) op bladzijde i-10.

b) Zoek in de illustratie van de hoofdgroep de machinesubgroep (19) op die het deel van de gewenste subgroep bevat. Noteer het positienummer (20) en ga naar de lijstbladzijde die op de illustratie volgt.

c) Zoek het positienummer/referentiebenaming (18) of de naam van de subgroep (21). Ga naar het corresponderende bladzijdenummer (22), aangegeven in de rechterkolom. De Tetra Pak Groep heeft altijd gekozen voor een functiegerichte structuur voor referentiebenaming. Het prefix dat de functiegerichte structuur aangeeft (=) wordt niet getoond in de referentiebenaming.

(Zie volg. blz.)

(Vervolg)

Items d) en e) refereren naar de illustratie (F) op bladzijde i-10.

d) Lokaliseer het gewenste onderdeel (23) in de illustratie van de subgroep en noteer het positienummer van het onderdeel.

e) Het onderdeelnummer (31) en de beschrijving ervan (32) worden naast het positienummer op de lijstbladzijde weergegeven.

Informatie die in een Catalogus reserveonderdelen wordt gegeven

Onderstaande lijst verwijst naar de illustratie (F) op bladzijde i-10.
Een Catalogus reserveonderdelen bevat de volgende informatie betreffende groepen, subgroepen en reserveonderdelen voor de apparatuur.

- Referentie groepsstructuur (24). Geeft de volgende hoogste groep in de structuur van de apparatuur aan.
- Groepsnaam (25)
- Meeteenheid (26)
- Hoeveelheid (27)
- Nummer montagetekening (28)
- Bereik lijstbladzijde (29). Inclusief indien er meerdere bladzijden in de groepsillustratie of lijst voorkomen.
- Onderdeel of subgroepsnummer (30)
- Naam subgroep of beschrijving onderdeel (31)
- Groepsnummer (32)
- Apparatuurnummer (33)
- Kopregel groepsinformatie (34). Geeft aan of het deel onder de titel bedoeld is voor een specifieke machinevariant dan wel of het een lijst is met algemene onderdelen. Indien een lijst meer dan één variant bevat en elke variant heeft zijn eigen montagetekening, wordt een bladzijdereferentie naar de montagetekening van de variant gegeven.
- Interne informatie (35)

Ondersteuning en vragen

Voor ondersteuning bij het gebruik van deze apparatuur, of voor andere vragen, commentaar of suggesties, kunt u de vragen stellen of feedback geven met behulp van het QuTI-P-instrument. Typ QuTI-P in het adresveld van uw browser. Vraag, als toegang tot QuTI-P niet beschikbaar is, toegang aan door contact op te nemen met de Global Service Desk.

Neem contact op met de dichtstbijzijnde vertegenwoordiger van Tetra Pak® als het intranet van Tetra Pak niet beschikbaar is.

Informasjon om manualen

Tetra Pak Group anbefaler at du leser alle medfølgende manualer nøye. Kontroller at personalet som bruker eller vedlikeholder utstyret har adgang til de medfølgende manualene.

Det er viktig at denne manualen oppbevares trygt gjennom hele utstyrets levetid, og at den gis videre til senere eiere eller brukere av utstyret.

Tetra Pak Group kan ikke holdes ansvarlig for skader på utstyr som skyldes at instruksjonene i manualene som følger dette utstyret ikke er fulgt.

Medfølgende manualer

Manualer som følger med dette utstyret:

CM

Konverteringsmanualen gir teknikere opplysninger om konvertering av utstyret mellom forskjellige produksjonsmodus.

EM

Denne manualen gir teknikere opplysninger om utstyrets elektriske system.

IM

Denne manualen gir teknikere informasjonen som trengs for sikker installasjon av utstyret.

MaSP

Vedlikeholds- og reservedelshåndboken gir informasjon om vedlikehold av komponenten. Her finner du også nødvendig informasjon om bestilling av reservedeler til komponenten fra Tetra Pak Group.

MM

Denne manualen gir teknikere informasjon om vedlikehold av utstyret.

OM

Driftsmanualen gir operatørene informasjon om håndtering og drift av utstyret før, under og etter produksjon.

RM

Ombyggingsmanualen gir teknikere informasjon som kreves for å installere et sett trygt på en installert maskin eller et utstyr.

(Forts.)

(Forts.)

SPC

Reservedelskatalogen gir nødvendige opplysninger for å kunne bestille reservedeler fra Tetra Pak Group.

TeM

Den tekniske manualen gir teknikerne informasjon som kan være:

- informasjon som kreves for en trygg installering av utstyret
- informasjon som kreves for vedlikehold av utstyret
- informasjon om maskinens/utstyrets elektriske system
- nødvendig informasjon for å bestille reservedeler fra Tetra Pak Group.
- annen teknisk informasjon

UP

Oppdateringssidene har nye sider for å oppdatere eksisterende maskinmanualer.

Sideoppsett

Gå til illustrasjonen (A) på side i-9: Hovedsidene i en reservedelskatalog består av en illustrasjonsside (1) og en korresponderende oversiktsside (7). Sidenummeret (5) vises i overskriften på en illustrasjonsside og i fotnoten på en oversiktsside. Dokumentnummeret (6) vises i fotnoten på en oversiktsside.

Sidenummerering

Gå til illustrasjon (A) på side i-9: Et sidenummer (5) har tre deler:

- kapittelnummer (2)
- neste sidenummer innen kapitlet (3)
- totalt antall sider i kapitlet (4)

Merk! Bokstavene UP kan erstatte kapittelnummer (2) hvis manualen inkluderer oppdateringssidene. Følgende sidenummer (3) og totalt antall sider (4) på oppdateringssidene følger ikke eksisterende sekvensnummerering av sidene i kapitlet.

Innføring i maskinen

Produsent

For produsentens navn og adresse, se andre siden i denne katalogen.

Service

Tetra Pak Group aksepter ikke ansvar for skader eller personskader på utstyr, ansatte eller brukere forårsaket av reservedeler som ikke er originale Tetra Pak® reservedeler.

For å bestille originale Tetra Pak reservedeler til denne maskinen, kontakt nærmeste Tetra Pak kontor.

Identifikasjon

CE-klassifisering

Dette utstyret tilfredsstiller grunnleggende helse- og sikkerhetskrav i Det europeiske økonomiske samarbeidsområde (EØS).

(Forts.)

(Forts.)

3-A samsvar

Hvis maskinplaten er 3-A-merket (15) (se illustrasjon (B) på side i-7), er dette utstyret i samsvar med 3-A Sanitærstandarder for formings-, påfyllings-, og tetningssystemer for beholdere for flytende melkeprodukter, nummer 17-XX.

Merkeplate

Illustrasjonen (B) på side i-9 viser et eksempel på en maskinplate.
En illustrasjon av gyldig maskinplate og dennes plassering på utstyret vises i introduksjonskapitlet i manualene som følger dette utstyret.
Maskinplaten inneholder dataen som er oppført under, som er nødvendig når du kontakter Tetra Pak Group om dette spesifikke utstyret.

- Maskintype (8)
- Volum (9)
- Tegnespesifikasjoner (10)
- Maskinens serienummer (11)
- Produsent (12)
- Produksjonsår (13)
- CE merke (14)
- 3-A merke (hvis relevant) (15)

Pass på at utstyrsdataen på forsidene i denne manualen stemmer overens med merkeplaten og maskinspesifikasjonen.

Maskinskilt for smøremidler som er godkjent for næringsmiddelindustrien

Hvis utstyret har et maskinskilt for smøremidler som er godkjent for næringsmiddelindustrien (16) (se illustrasjon (C) på side i-9), indikerer dette at smøremidlene som brukes i dette utstyret er godkjent for næringsmiddelindustrien.

Hvordan bruke denne reservedelskatalogen

Finn et reservedelsnummer

a) Gå til illustrasjonen (D) på side i-9: Gå til kapittelnummer (17) som er indikert ved siden av hovedgruppen som inneholder delen du ønsker å lokalisere.

Deler b) og c) viser til illustrasjonen (E) på side i-10.

b) På hovedgruppeillustrasjonen, se etter maskinundergruppen (19) som inneholder delen eller undergruppen du ser etter.
Merk posisjonsnummeret (20) og gå til oversiktssiden som følger illustrasjonen.

c) Se etter posisjonsnummer /referanseanvisning (18) eller undergruppenavnet (21). Gå til korresponderende sidenummer (22) oppført i søylen på høyre hånd. Tetra Pak Group har valgt alltid å bruke funksjonsorientert struktur for referansebestemmelse.
Forinnstilt indikering av funksjonsorientert struktur (=) vises ikke i referansehenvisningen

(Forts.)

(Forts.)

Deler d) og e) viser til illustrasjonen (F) på side i-10.

d) Finn delen (23) som du leter etter i undergruppeillustrasjonen og merk delens posisjonsnummer.

e) Delenummeret (31) og delebeskrivelsen (32) er oppført ved siden av posisjonsnummeret på listesiden.

Informasjon oppført i en reservedelskatalog

Listen under viser til illustrasjonen (F) på side i-10. En reservedelskatalog inneholder følgende informasjon om grupper, undergrupper og reservedeler for utstyret:

- Gruppestrukturreferanse (24). Indikerer den neste gruppen over i utstyrslistestrukturen.
- Gruppenavn (25)
- Måleenhet (26)
- Antall (27)
- Monteringstegningens nummer (28)
- Oversiktssideomfang (29). Inkludert hvis det er mange sider i gruppeillustrasjonen eller listen.
- Delenummer eller undergruppenummer (30)
- Undergruppenavn eller delebeskrivelse (31)
- Gruppenavn (32)
- Utstyrsnummer (33)
- Gruppeinformasjon overskrift (34). Indikerer om seksjonen under overskriften er for en spesiell maskinvariant eller om det er en liste med fellesdeler. Hvis en liste har mer enn en variant og hver variant har sin egen monteringstegning, vil det vises en sidereferanse til denne variantens monteringstegning.
- Intern informasjon (35)

Assistanse og spørsmål

For hjelp ved drift av dette utstyret eller for andre spørsmål, kommentarer eller forslag, send spørsmålene eller kom med tilbakemeldinger ved å bruke QuTI-P-verktøyet. Skriv inn QuTI-P i din nettlesers adressefelt. Hvis du ikke har tilgang til QuTI-P, be om tilgang ved å ta kontakt med det internasjonale servicekontoret (Global Service Desk).

Hvis du ikke har tilgang til Tetra Pak® intranett, ta kontakt med din nærmeste Tetra Pak-representant.

Informacje na temat instrukcji

Tetra Pak Group zaleca, aby uważnie przeczytano dostarczone instrukcje. Należy dopilnować, aby instrukcje zostały udostępnione pracownikom, którzy obsługują lub wykonują przeglądy urządzenia.

Ważne jest, aby zachować niniejszy katalog przez okres użytkowania maszyny i przekazać go kolejnemu właścicielowi lub użytkownikowi.

Tetra Pak Group nie ponosi odpowiedzialności za uszkodzenia maszyny spowodowane nieprzestrzeganiem wskazówek podanych w niniejszej instrukcji dołączonej do maszyny.

Dostarczone instrukcje

Instrukcje dostarczone w raz z maszyną:

CM

Instrukcja przestawienia dostarcza technikom informacji na temat przestawiania maszyny między różnymi trybami produkcji.

EM

Instrukcja elektryczna dostarcza technikom informacji na temat układu elektrycznego maszyny.

IM

Instrukcja instalacyjna dostarcza technikom informacji niezbędnych do bezpiecznej instalacji maszyny.

MaSP

Instrukcja konserwacji i części zapasowych przedstawia informacje na temat serwisowania podzespołów. Zawiera także informacje niezbędne do zamawiania części zamiennych do podzespołu w firmie Tetra Pak Group.

MM

Instrukcja serwisowa dostarcza technikom informacji na temat przeglądów i napraw maszyny.

OM

Instrukcja obsługi dostarcza operatorowi informacji na temat obsługi maszyny przed, w trakcie i po zakończeniu produkcji.

RM

Instrukcja przebudowy dostarcza technikom informacji niezbędnych do wykonania bezpiecznej instalacji zestawu do przebudowy w zainstalowanej maszynie lub wyposażeniu.

(Ciąg dalszy)

(Ciąg dalszy)

SPC

Katalog części zamiennych dostarcza informacji niezbędnych do zamawiania części zamiennych w Tetra Pak Group.

TeM

Instrukcja techniczna dostarcza technikom informacji, które mogą być:

- informacjami wymaganymi do bezpiecznej instalacji wyposażenia
- informacjami wymaganymi do wykonywania przeglądów i napraw wyposażenia
- informacjami o systemie elektrycznym maszyny/wyposażenia.
- informacjami niezbędnymi do zamawiania części zamiennych w Tetra Pak Group.
- innymi informacjami technicznymi

UP

Rozdział Strony aktualizacji zawiera nowe strony użyte do aktualizacji istniejących instrukcji maszyny.

Układ strony

Zapoznaj się z rysunkiem (A) na stronie i-9: Główne strony w Katalogu Części Zamiennych zawierają stronę z rysunkiem (1) i odpowiednią stronę z wykazem (7). Numer strony (5) znajduje się w nagłówku strony z rysunkiem oraz w stopce strony z wykazem.
Numer dokumentu (6) znajduje się w stopce strony z wykazem.

Numeracja stron

Zapoznaj się z rysunkiem (A) na stronie i-9: Numer strony (5) składa się z trzech części:

- numer rozdziału (2)
- kolejny numer strony (3) w danym rozdziale
- całkowita ilość stron (4) w rozdziale

Uwaga! Litery UP mogą zastępować numer rozdziału (2) jeśli instrukcja zawiera strony aktualizacji. Kolejny numer strony (3) i całkowita ilość stron (4) aktualizacji nie odpowiada istniejącej numeracji stron rozdziału.

Informacje na temat maszyny

Producent

Nazwa i adres producenta, patrz druga strona niniejszego katalogu.

Serwis

Tetra Pak Group nie odpowiada za wszelkie uszkodzenia wyposażenia, obrażenia personelu lub konsumentów spowodowane przez części zamienne, które nie są oryginalnymi częściami zamiennymi Tetra Pak®.

W celu zamówienia oryginalnych części zamiennych Tetra Pak dla maszyny, skontaktuj się z najbliższym biurem Tetra Pak.

Identyfikacja

Znak CE

Oznacza on, iż urządzenie spełnia wymagania określone w podstawowych przepisach dotyczących bezpieczeństwa i zdrowia, obowiązujących w Europejskiej Strefie Ekonomicznej (EEA).

(Ciąg dalszy)

(Ciąg dalszy)

Zgodność z normą 3-A

Jeśli tabliczka znamionowa maszyny zawiera znak 3-A (15) (patrz rysunek (B) na stronie i-7), oznacza to, że wyposażenie jest zgodne z normami sanitarnymi 3-A dla jednostek formowania, maszyn napełniających i zgrzewarek pojemników dla mleka płynnego i płynnych produktów mlecznych, numer 17-XX.

Tabliczka znamionowa

Na rysunku (B) na stronie i-9 pokazano przykład tabliczki znamionowej.
Rysunek tabliczki znamionowej i jej lokalizacja na wyposażeniu znajduje się w rozdziale Wstęp instrukcji dostarczonych wraz z wyposażeniem. Tabliczka znamionowa zawiera dane przedstawione poniżej, które trzeba podać kontaktując się z Tetra Pak Group w sprawach dotyczących określonego wyposażenia.

- Typ maszyny (8)
- Pojemność (9)
- Specyfikacje rysunkowe (10)
- Numer seryjny maszyny (11)
- Producent (12)
- Rok produkcji (13)
- Znak CE (14)
- Znak 3-A (jeśli ma zastosowanie) (15)

Upewnij się, czy dane wyposażenia na pierwszych stronach niniejszej instrukcji odpowiadają danym przedstawionym na tabliczce znamionowej maszyny i specyfikacji maszyny.

Tabliczka znamionowa urządzenia „Użyto smarów do kontaktu ze środkami spożywczymi”

Jeśli na urządzeniu znajduje się tabliczka znamionowa „Użyto smarów do kontaktu ze środkami spożywczymi” (16) (patrz Rysunek (C) na stronie i-9), oznacza to, że użyto środków smarnych do zastosowania w przemyśle spożywczym.

Jak korzystać z Katalogu Części Zamiennych

Lokalizacja numeru części zamiennej

a) Zapoznaj się z rysunkiem (D) na stronie i-9: Przejdź do numeru rozdziału (17) wskazanego obok głównej grupy, która zawiera część, którą chcesz zlokalizować.

Pozycje b) i c) dotyczą rysunku (E) na stronie i-10.

b) Na rysunku głównej grupy, poszukaj podgrupy maszyny (19), która zawiera część lub podgrupę, której szukasz. Zanotuj numer pozycji (20) i przejdź na stronę z wykazem odpowiadającym rysunkowi.

c) Poszukaj numeru pozycji/oznaczenia referencyjnego (18) lub nazwy podgrupy (20). Przejdź na odpowiedni numer strony (22) podany w prawej kolumnie. Do oznaczania referencyjnego firma Tetra Pak Group zdecydowała się zawsze wykorzystywać strukturę zorientowaną na funkcję. Przedrostek wskazujący strukturę zorientowaną na funkcję (=) nie jest uwzględniony w oznaczeniu referencyjnym.

(Ciąg dalszy)

(Ciąg dalszy)

Pozycje d) i e) dotyczą rysunku (F) na stronie i-10.

d) Zlokalizuj część (23), której szukasz na rysunku podgrupy i zanotuj jej numer pozycji.

e) Numer części (31) i opis części (32) znajdują się obok numeru pozycji na stronie z wykazem.

Informacje podane w Katalogu Części Zamiennych

Poniższy wykaz dotyczy rysunku (F) na stronie i-10.
Katalog Części Zamiennych zawiera następujące informacje o grupach, podgrupach i częściach zamiennych wyposażenia.

- Odnośnik struktury grupy (24). Wskazuje następną wyższą grupę w strukturze wykazu wyposażenia.
- Nazwa grupy (25)
- Jednostka miary (26)
- Ilość (27)
- Numer rysunku zespołu (28)
- Zakres stron (29). Dołączony, jeśli na wykazie lub rysunku grupy znajdują się strony o numerach wieloczęściowych.
- Numer części lub podgrupy (30)
- Nazwa podgrupy lub opis części (31)
- Numer grupy (32)
- Numer wyposażenia (33)
- Nagłówek z informacją o grupie (34). Wskazuje czy sekcja poniżej nagłówka przynależy do określonej wersji maszyny, lub czy jest wykazem części. Jeśli wykaz ma więcej niż jedną wersję i każda wersja ma swój własny rysunek montażowy, podany będzie numer strony z rysunkiem montażowym danej wersji.
- Informacje wewnętrzne (35)

Pomoc i pytania

Pomoc w zakresie obsługi tego sprzętu lub inne zapytania, komentarze czy sugestie można przekazywać za pośrednictwem narzędzia QuTI-P. Wpisz QuTI-P w pasku adresu przeglądarki internetowej. W przypadku braku dostępu do QuTI-P prosimy o kontakt za pośrednictwem globalnego działu obsługi.

W przypadku braku dostępu do sieci intranet firmy Tetra Pak®, prosimy o kontakt z najbliższym przedstawicielem firmy Tetra Pak.

Informação do Manual

O Grupo Tetra Pak recomenda ler cuidadosamente todos os manuais fornecidos. Verificar se os manuais fornecidos estão ao dispor do pessoal que trabalha com o equipamento ou que faz a manutenção do mesmo.

É importante guardar este catálogo durante o tempo útil de vida da máquina ou do equipamento e de entregar o catálogo a qualquer proprietário ou utilizador subsequente.

O Grupo Tetra Pak não toma a responsabilidade por quaisquer danos no equipamento causados devido ao facto de que as instruções dadas nos manuais que acompanham este equipamento não foram seguidas.

Manuais fornecidos

Manuais fornecidos com este equipamento:

CM

O Manual de conversão fornece aos técnicos as informações sobre a conversão do equipamento entre os diferentes modos de produção.

EM

Este Manual Eléctrico fornece aos técnicos as informações sobre o sistema eléctrico do equipamento.

IM

Este Manual de Instalação fornece aos técnicos as informações necessárias para instalar seguramente o equipamento.

MaSP

O Manual de Manutenção e Peças Sobresselentes fornece informações sobre como realizar a manutenção do componente. Também fornece as informações necessárias para encomendar peças sobresselentes à Tetra Pak Group para o componente em questão.

MM

Este Manual de Manutenção fornece aos técnicos as informações para a manutenção do equipamento.

OM

O Manual de Operação fornece ao operador as informações que ele necessita para manusear e accionar o equipamento antes, durante e depois da produção.

RM

O Manual de Remodelação fornece aos técnicos as informações necessárias para instalar seguramente um conjunto numa máquina ou equipamento instalado.

(Cont.)

(Cont.)

SPC

O Catálogo de Peças Sobressalentes fornece as informações necessárias para se encomendar peças sobressalentes o Grupo Tetra Pak.

TeM

O Manual Técnico fornece os técnicos com informações que podem ser:

- informações necessárias para instalar seguramente o equipamento,
- informações necessárias para a manutenção do equipamento
- informações sobre o sistema eléctrico da máquina/do equipamento.
- informações necessárias para encomendar peças sobressalentes o Grupo Tetra Pak.
- outras informações técnicas

UP

As Páginas de Actualização fornecem novas páginas para actualizar os manuais existentes da máquina.

Disposição da página

Referência à ilustração (A) na página i-9: As páginas principais num Catálogo de Peças Sobressalentes consistem numa página ilustrada (1) e numa página com a lista correspondente (7). O número da página (5) é mostrado no cabeçalho de uma página ilustrada e no rodapé de uma página com lista. O número do documento (6) é mostrado no rodapé de uma página com lista.

Numeração da página

Referência à ilustração (A) na página i-9: Um número de página (5) tem três partes:

- Número do capítulo (2)
- número consecutivo da página dentro do capítulo (3)
- número total de páginas no capítulo (4)

Nota! As letras UP podem substituir o número do capítulo (2) se o manual incluir páginas de actualização. O número consecutivo da página (3) e o número total de páginas (4) das páginas de actualização não seguem a numeração sequente das páginas do capítulo.

Introdução da máquina

Fabricante

Para o nome e morada do fabricante, ver a segunda página deste catálogo.

Assistência técnica

O Grupo Tetra Pak não aceita responsabilidade por quaisquer danos ou prejuízos no equipamento, equipa ou consumidores que sejam causados por peças sobressalentes não originais da Tetra Pak®.

Para encomendar as peças sobressalentes originais para esta máquina, contactar o representante Tetra Pak mais próximo.

Identificação

Classificação CE

Este equipamento está de acordo com os regulamentos de segurança e saúde da Área Económica Europeia (EEA).

(Cont.)

(Cont.)

3-A Concordância

Se a placa da máquina conter a marca 3-A (15) (ver a ilustração (B) na página i-7), este equipamento cumpre com as Normas Sanitárias 3-A para Formadores, Enchedores e Vedadores de Recipientes para Leite Líquido e Produtos de Leite Líquido, Número 17-XX.

Placa da máquina

A ilustração (B) na página i-9 mostra um exemplo de uma placa da máquina. Uma ilustração da placa da máquina válida e a sua localização no equipamento é mostrada no capítulo Introdução dos manuais fornecidos com este equipamento. A placa da máquina contem os dados alistados em baixo, necessários quando se contactar o Grupo Tetra Pak relacionando-se a este equipamento em específico.

- Tipo da máquina (8)
- Volume (9)
- Especificações dos desenhos (10)
- Número de série da máquina (11)
- Fabricante (12)
- Ano de construção (13)
- Marca CE (14)
- Marca 3-A (se aplicável) (15)

Verificar se os dados do equipamento indicados nas páginas da frente deste manual correspondem aos dados na placa da máquina e à especificação da máquina.

Placa de Máquina lubrificada com qualidade alimentar

Se a máquina estiver equipada com um placa de Máquina lubrificada com qualidade alimentar (16) (ver ilustração (C) na página i-9), tal indica que os lubrificantes utilizados neste equipamento são de qualidade alimentar.

Como usar este Catálogo de Peças Sobressalentes

Localizar um Número da peça sobressalente

a) Referência à ilustração (D) na página i-9: Para o número do capítulo (17) indicado ao lado do grupo principal que contem a peça que quer localizar.

Itens b) e c) referem-se à ilustração (E) na página i-10.

b) Na ilustração do grupo principal, procurar o subgrupo da máquina (19) que contem a peça ou subgrupo que está à procura. Anotar o número da posição (20) e passar para a página da lista que segue a ilustração.

c) Procurar o número/referência da posição (18) ou o nome do subgrupo (21). Passar para o número da página correspondente (22) alistado na coluna do lado direito. O Grupo Tetra Pak escolheu para usar sempre a estrutura orientada na função para a designação da referência.
O prefixo indicando a estrutura orientada na função (=) não está mostrada na designação de referência.

(Cont.)

(Cont.)

Itens d) e e) referem-se à ilustração (F) na página i-10.

d) Localizar a peça (23) que está à procura na ilustração do subgrupo e anotar o número da posição da peça.

e) O número da peça (31) e a descrição da peça (32) estão alistados ao lado do número da posição na página da lista.

Informações indicadas num Catálogo de Peças Sobressalentes

A lista em baixo refere-se à ilustração (F) na página i-10.
Um Catálogo de Peças Sobressalentes contem as seguintes informações sobre grupos, subgrupos e peças sobressalentes para o equipamento:

- Referência da estrutura do grupo (24). Indica o grupo a seguir mais elevado na estrutura da lista do equipamento.
- Nome do grupo (25)
- Unidade de medição (26)
- Quantidade (27)
- Número do desenho de montagem (28)
- Gama da página de lista (29). Incluída se houver páginas múltiplas na ilustração do grupo ou lista.
- Número da peça ou do subgrupo (30)
- Nome do subgrupo ou descrição da peça (31)
- Número do grupo (32)
- Número do equipamento (33)
- Título da informação do grupo (34). Indica se a secção abaixo do título é para uma variante de máquina específica ou se é uma lista de peças comuns. Se uma lista tiver mais do que uma variante e cada variante tiver o seu próprio desenho de montagem, é mostrada uma referência para a página do desenho de montagem da variante.
- Informação interna (35)

Assistência e apoio

Para assistência durante a utilização deste equipamento ou outras questões, comentários ou sugestões, enviar as perguntas ou transmitir informações utilizando a ferramenta QuTI-P. Digitar QuTI-P no campo de endereço do seu navegador. Se o acesso a QuTI-P não estiver disponível, contactar o Global Service Desk para pedir o acesso.

Se o acesso à intranet da Tetra Pak® não estiver disponível, contactar o representante Tetra Pak mais próximo.

Informações sobre os manuais

O Grupo Tetra Pak recomenda a leitura atenta de todos os manuais fornecidos. Certificar-se de que todos os manuais fornecidos estejam disponíveis ao pessoal que trabalha com o equipamento ou que realiza a sua manutenção.

É muito importante conservar este catálogo durante toda a vida útil do equipamento e entregá-lo a qualquer proprietário ou usuário subsequente do equipamento.

O Grupo A Tetra Pak declina toda e qualquer responsabilidade por danos, perdas, ferimentos ou morte decorrentes do descumprimento das instruções fornecidas nos manuais que acompanham o equipamento.

Manuais fornecidos

Manuais fornecidos com este equipamento:

CM

O Manual de Conversão fornece aos técnicos as informações acerca da possibilidade de conversão do equipamento para diferentes modos de produção.

EM

O Manual Elétrico fornece aos técnicos as informações sobre o sistema elétrico do equipamento.

IM

O Manual de Instalação fornece aos técnicos as informações necessárias para instalar o equipamento em condições de segurança.

MaSP

O Manual de Manutenção e Peças de reposição fornece informações sobre como efetuar a manutenção do componente. Além disso, fornece as informações necessárias para a encomenda de peças de reposição ao Grupo Tetra Pak.

MM

O Manual de Manutenção fornece aos técnicos as informações sobre como realizar a manutenção do equipamento.

OM

O Manual de Operação fornece ao operador as informações que ele necessita para gerenciar e trabalhar com o equipamento antes, durante e depois da produção.

RM

O Manual de Reforma fornece aos técnicos as informações necessárias para instalar um kit em uma máquina ou um equipamento instalado, em condições de segurança.

(Cont.)

(Cont'd)

SPC

O Catálogo de Peças de Reposição fornece as informações necessárias para encomenda de peças de reposição ao Grupo Tetra Pak.

TeM

O Manual Técnico fornece aos técnicos informações que podem ser:

- as informações necessárias para instalar o equipamento em condições de segurança
- as informações necessárias para fazer a manutenção do equipamento
- as informações acerca do sistema elétrico da máquina/equipamento
- as informações necessárias para encomendar peças de reposição ao Grupo Tetra Pak
- outras informações técnicas

UP

As Páginas de atualização fornecem as novas páginas para atualizar os manuais existentes da máquina.

Esquema das páginas

Consultar a figura (A) na página i-9: As páginas principais em um Catálogo de Peças Sobressalentes (SPC) consistem de uma página de ilustração (1) e de uma página com a lista correspondente (7). O número da página (5) é exibido no cabeçalho da página de ilustração e no rodapé da página de lista. O número do documento (6) é exibido no rodapé da página de lista.

Numeração das páginas

Consultar a figura (A) na página i-9: Um número das página (5) é composto por três partes:

- número do capítulo (2)
- número consecutivo da página dentro do capítulo (3)
- número total de páginas (4) no capítulo.

Nota! As letras UP podem substituir o número do capítulo (2) caso o manual inclua páginas de atualização. O número consecutivo da página (3) e o número total de páginas (4) das páginas de atualização não seguem a numeração sequencial existente das páginas do capítulo.

Introdução relativa à máquina

Fabricante

Para ver o nome e endereço do fabricante, consultar a segunda página deste catálogo.

Serviço

O Grupo Tetra Pak não aceita a responsabilidade por quaisquer danos ou lesões causadas ao equipamento, equipe ou consumidores, causadas por peças de reposição que não sejam peças de reposição originais Tetra Pak®.

Para encomendar peças de reposição originais Tetra Pak para este equipamento, entrar em contato com o escritório mais próximo da Tetra Pak.

Identificação

Classificação CE

Este equipamento está em conformidade com os regulamentos básicos de segurança e saúde da Área Econômica Europeia (AEE).

(Cont.)

(Cont'd)

Conformidade com as normas 3-A

Se a placa de identificação da máquina apresentar a marca 3-A (15) (ver a figura (B) na página i-9), este equipamento cumpre os requisitos das normas sanitárias 3-A para máquinas de formar, encher e soldar recipientes para leite líquido e para produtos lácteos líquidos, número 17-XX.

Placa de identificação da máquina

A ilustração (B) na página i-9 mostra um exemplo de uma placa de identificação da máquina.
Uma ilustração da placa de identificação válida da máquina e a sua localização no equipamento é mostrada no capítulo Introdução dos manuais fornecidos com este equipamento. A placa de identificação da máquina contém os dados necessários quando contatar a Tetra Pak referindo-se especificamente a este equipamento.

- Tipo de máquina (8)
- Volume (9)
- Especificações dos desenhos (10)
- Número de série da máquina (11)
- Fabricante (12)
- Ano de fabricação (13)
- Marca CE (14)
- Marca 3-A (se aplicável) (15)

Certificar-se de que os dados do equipamento, indicados nas páginas frontais deste manual, coincidam com os dados indicados na placa de identificação da máquina e com a especificação da máquina.

Placa da máquina lubrificada para qualidade alimentar

Se o equipamento possuir uma placa da máquina lubrificada para qualidade alimentar (16) (ver figura (c) na página i-9), isso significa que os lubrificantes usados neste equipamento estão em conformidade com as normas de qualidade alimentar.

Como usar este Catálogo de Peças de Reposição

Localizar um número de peça de reposição

a) Consultar a ilustração (D) na página i-9: Ir para o número do capítulo (17) indicado ao lado do grupo principal que contém a peça sendo procurado.

Os itens b) e c) referem-se à ilustração (E) na página i-10:

b) Na ilustração do grupo principal, procurar o subgrupo da máquina (19) que contém a peça ou o subgrupo sendo procurado. Anotar o número da posição (20) e passar para a página da lista que segue a figura.

c) Procurara o número de posição/designação de referência (18) ou o nome do subgrupo (21). Ir para o número de página correspondente (22) listado na coluna da direita. O Grupo Tetra Pak optou por utilizar sempre uma estrutura baseada em funções para a designação de referência. O prefixo que indica a estrutura baseada em funções (=) não é mostrado na designação de referência.

(Cont.)

(Cont'd)

Os itens d) e e) referem-se à ilustração (F) na página i-10:

d) Localizar a peça (23) sendo procurada na ilustração do subgrupo e anotar o número de posição da peça.

e) O número da peça (31) e a descrição da peça (32) estão indicadas ao lado do número de posição na página da lista.

Informações listadas no Catálogo de Peças de Reposição

A lista abaixo refere-se à ilustração (F) na página i-10: Um Catálogo de Peças de Reposição contém as seguintes informações sobre grupos, subgrupos e peças de reposição para a equipamento:

- Referência da estrutura do grupo (24). Indica o grupo seguinte mais elevado na estrutura da lista do equipamento.
- Nome do grupo (25)
- Unidade de medida (26)
- Quantidade (27)
- Número do desenho de montagem (28)
- Gama da página de lista (29). Incluída se houver páginas múltiplas na ilustração do grupo ou na lista.
- Número da peça ou do subgrupo (30)
- Nome do subgrupo ou descrição da peça (31)
- Número do grupo (32)
- Número do equipamento (33)
- Cabeçalho de informações do grupo (34) Indica se a seção abaixo do cabeçalho é para uma variante de máquina específica ou se é uma lista de peças comuns. Se uma lista tiver mais do que uma variante e cada variante tiver o seu próprio desenho de montagem, uma referência da página para o desenho de montagem da variante é mostrada.
- Informações internas (35)

Assistência e consultas

Para obter assistência ao trabalhar com este equipamento ou para quaisquer outras necessidades, comentários ou sugestões, formular as perguntas ou fornecer o feedback usando a ferramenta QuTI-P. Digitar QuTI-P no campo de endereço do seu navegador. Se o acesso a QuTI-P não estiver disponível, pedir acesso entrando em contato com Global Service Desk.

Se o acesso à intranet da Tetra Pak® não estiver disponível, entrar em contato com o representante Tetra Pak mais próximo.

Informaţiile de manual

Tetra Pak Group recomandă citirea cu atenţie a tuturor manualelor livrate. Asiguraţi-vă că manuale livrate sunt adecvate pentru personalul ce manipulează sau întreţine instalaţia.

Este important să păstraţi acest catalog pe tot parcursul funcţionării instalaţiei şi să-l transmiteţi următorului utilizator sau proprietar.

Tetra Pak Group nu îşi asumă nicio responsabilitate pentru nicio defecţiune a instalaţiei cauzată de nerespectarea instrucţiunilor din manualul care însoţeşte instalaţia.

Manuale livrate

Manualele livrate împreună cu instalaţia

CM

Manualul de conversie (CM) furnizează tehnicienilor informaţii pentru conversia (adaptarea) echipamentului la diferite moduri de producţie.

EM

Manualul electric oferă technicienilor informaţii despre sistemul electric al instalaţiei.

IM

Manualul de instalare oferă tehnicienilor informaţii legate de montarea în siguranţă a instalaţiei.

MaSP

Manualul de întreţinere şi piese de schimb oferă informaţii despre întreţinerea componentei. De asemenea, manualul oferă informaţiile necesare pentru a comanda piese de schimb de la Tetra Pak Group pentru această componentă.

MM

Manualul de întreţinere oferă tehnicienilor informaţii privind întreţinerea instalaţiei.

OM

Manualul de funcţionare (OM) oferă operatorului informaţii despre manipularea şi funcţionarea echipamentului înainte, în timpul şi după procesul tehnologic.

RM

Manualul de reconstrucţie oferă tehnicienilor informaţii necesare pentru montarea în siguranţă a unui set pe un utilaj sau echipament montat.

(se continuă)

(se continuă)

SPC

Catalogul cu piese de schimb oferă informaţii necesare pentru comandarea pieselor de schimb de la Tetra Pak Group.

TeM

Manualul tehnic furnizează informaţii tehnicienilor ca de exemplu:

- informaţii necesare pentru a instala în condiţii de siguranţă echipamentul
- informaţii necesare pentru a întreţine echipamentul
- informaţii privind sistemul electric al utilajului/echipamentului
- informaţiile necesare pentru a comanda piesele de schimb de la Tetra Pak Group.
- alte informaţii tehnice

UP

Paginile pentru actualizare furnizează pagini noi pentru actualizarea manualelor existente ale utilajelor.

Configuraţia paginii

Consultaţi ilustraţia (A) de la pagina i-9: Paginile principale din Catalogul pieselor de schimb sunt formate dintr-o pagină a ilustraţiilor (1) şi o pagină a listei corespunzătoare (7). Numărul paginii (5) este prezentat în antetul unei pagini cu ilustraţii şi în subsolul unei pagini cu lista.
Numărul documentului (6) este prezentat în subsolul unei pagini cu lista.

Numerotarea paginilor

Consultaţi ilustraţia (A) de la pagina i-9: Numărul paginii (5) are trei părţi:

- numărul capitolului (2)
- numărul consecutiv al paginii din cadrul capitolului (3)
- numărul total de pagini din capitol (4)

Notă! Literele UP pot înlocui numărul capitolului (2) dacă manualul include pagini actualizate. Numărul consecutiv al paginii (3) şi numărul total de pagini (4) al paginilor actualizate nu urmează numerotarea existentă, secvenţială a paginilor din cadrul capitolului.

Prezentarea aparatului

Producător

Pentru numele şi adresa producătorului, vezi pagina a doua a acestui catalog.

Service

Tetra Pak Group nu îşi asumă responsabilitatea pentru nicio avarie sau rănire asupra echipamentului, personalului sau clienţilor, produsă de piese de schimb care nu sunt piese de schimb originale Tetra Pak®.

Pentru a comanda piese de schimb originale Tetra Pak pentru acest utilaj, adresaţi-vă celui mai apropiat birou Tetra Pak.

Identificare

Clasificare CE

Acest echipament este în conformitate cu regulamentele de bază sanitare şi de protecţie ale Agenţie Europene de Mediu (EEA).

(se continuă)

(se continuă)

Conformitatea 3-A

Dacă plăcuţa cu numele utilajului conţine marcajul 3-A (15) (vezi ilustraţia (B) de la pagina i-7), acest echipament respectă standardele sanitare 3-A pentru dispozitive de formare, umplere şi etanşare a containerelor pentru lapte lichid şi produse lactate lichide, numărul 17-XX.

Plăcuţa maşinii

Ilustraţia (B) de la pagina i-9 prezintă un exemplu al plăcuţei maşinii.
O ilustraţie a plăcuţei valabile a maşinii şi a amplasării sale pe echipament este prezentată în capitolul Introducere al manualelor livrate cu acest echipament.
Plăcuţa maşinii conţine datele prezentate mai jos, necesare când vă adresaţi Tetra Pak Group referitor la acest echipament.

- Tipul utilajului (8)
- Volum (9)
- Specificaţiile desenului (10)
- Numărul de serie al utilajului (11)
- Producător (12)
- Anul de fabricaţie (13)
- Marcaj CE (14)
- Marcaj 3-A (dacă este cazul) (15)

Verificaţi dacă datele instalaţiei din primele pagini ale acestui manual corespund cu datele de pe plăcuţa maşinii şi cu specificaţia maşinii.

Plăcuţă de identificare cu specificaţia „Maşină lubrifiată cu lubrifianţi pentru industria alimentară”

Dacă maşina este dotată cu o plăcuţă de identificare cu specificaţia „Maşină lubrifiată cu lubrifianţi pentru industria alimentară” (16) (vezi imaginea (C) de la pagina i-9), aceasta indică faptul că lubrifianţii folosiţi la acest echipament sunt pentru industria alimentară.

Cum să folosiţi acest catalog pentru piese de schimb

Localizaţi numărul piesei de schimb

a) Consultaţi ilustraţia (D) de la pagina i-9: Mergeţi la numărul capitolului (17) indicat lângă grupul principal care conţine piesa pe care doriţi să o localizaţi.

Elementele b) şi c) se referă la ilustraţia (E) de la pagina i-10.

b) Pe ilustraţia grupului principal, căutaţi subgrupul maşinii (19) care conţine piesa sau subgrupul pe care îl căutaţi. Notaţi numărul poziţiei (20) şi mergeţi la pagina listei de după ilustraţie.

c) Căutaţi numărul poziţiei/denumirea referinţei (18) sau numele subgrupului (21). Mergeţi la numărul corespunzător al paginii (22) precizat în coloana din dreapta. Tetra Pak Group a ales să utilizeze întotdeuana structura orientată pe funcţii pentru denumirea referinţei. Prefixul care indică structura orientată pe funcţii (=) nu este prezentat în denumirea referinţei.

(se continuă)

(se continuă)

Elementele d) şi e) se referă la ilustraţia (F) de la pagina i-10.

d) Localizaţi piesa (23) pe care o căutaţi în ilustraţia subgrupului şi notaţi numărul poziţiei piesei.

e) Numărul piesei (31) şi descrierea piesei (32) sunt listate lângă numărul poziţiei de pe pagina listei.

Informaţiile enumerate în catalogul pentru piese de schimb

Lista de mai jos se referă la ilustraţia (F) de la pagina i-10.
Un Catalog cu piese de schimb conţine următoarele informaţii despre grupuri, subgrupuri şi piese de schimb pentru echipament.

- Referinţa structurii grupului (24). Indică următorul grup superior din structura listei echipamentului.
- Numele grupului (25)
- Unitate de măsură (26)
- Cantitate (27)
- Numărul desenului de ansamblu (28)
- Domeniul paginii listei (29). Inclus dacă există mai multe pagini în ilustraţia sau lista grupului.
- Numărul piesei sau subgrupului (30)
- Numele subgrupului sau descrierea piesei (31)
- Numărul grupului (32)
- Numărul echipamentului (33)
- Titlul cu informaţiile grupului (34). Indică dacă secţiunea de sub titlu este pentru o anumită variantă de maşină sau este o listă de piese comune. Dacă o maşină are mai mult de o variantă şi fiecare variantă îşi are propriul desen de ansamblu, este prezentată o referinţă a paginii la desenul de ansamblu al variantei.
- Informaţii interne (35)

Asistenţă şi întrebări

Pentru asistenţă în timpul operării acestui echipament sau alte întrebări, comentarii ori sugestii, trimiteţi întrebările sau feedback-ul utilizând unealta QuTI-P. Tastaţi QuTI-P în câmpul pentru adresă al browserului dvs. Dacă nu este disponibil accesul la QuTI-P, solicitaţi accesul contactând Reprezentanţa tehnică globală.

Dacă nu este disponibil accesul la intranetul Tetra Pak®, adresaţi-vă celui mai apropiat reprezentant Tetra Pak.

Informácie o príručke

Tetra Pak Group odporúča, aby ste si pozorne prečítali všetky dodané príručky. Presvedčite sa, či sú dodané príručky k dispozícii personálu, ktorý obsluhuje alebo vykonáva údržbu zariadenia.

Je dôležité, aby ste uchovávali tento katalóg po celý čas životnosti zariadenia, a odovzdali katalóg každému ďalšiemu vlastníkovi alebo užívateľovi zariadenia.

Spoločnosť Tetra Pak Group nezodpovedá za škody na zariadení spôsobené nedodržaním pokynov uvedených v príručkách, ktoré doprevádzajú toto zariadenie.

Dodané príručky

Príručky dodávané s týmto zariadením:

CM

Príručka na adaptáciu poskytuje technikom informácie o adaptácii zariadenia medzi rôznymi výrobnými režimami.

EM

Táto Elektrická príručka poskytuje technikom informácie o elektrickom systéme zariadenia.

IM

Táto Inštalačná príručka poskytuje technikom informácie potrebné pre bezpečnú inštaláciu zariadenia.

MaSP

Príručka o údržbe a náhradných dieloch poskytuje informácie o údržbe komponentu zariadenia. Okrem toho poskytuje informácie potrebné pri objednávaní náhradných dielov komponentu od spoločnosti Tetra Pak Group.

MM

Táto Údržbárska príručka poskytuje technikom informácie o vykonávaní údržby zariadenia.

OM

Tento Návod na obsluhu poskytuje operátorovi informácie o tom, ako treba manipulovať so strojom a obsluhovať ho pred, počas a po výrobe.

RM

Príručka na prestavbu poskytuje technikom informácie potrebné pre bezpečnú inštaláciu súpravy na nainštalovaný stroj alebo zariadenie.

(Pokrač.)

(Pokrač.)

SPC

Katalóg náhradných dielov poskytuje informácie potrebné pre objednanie náhradných dielov od Tetra Pak Group.

TeM

Technická príručka poskytuje technikom informácie, ktorými môžu byť:

- potrebné informácie pre bezpečnú inštaláciu zariadenia
- potrebné informácie pre údržbu zariadenia
- informácie o elektrickom systéme stroja/zariadenia.
- poskytuje informácie potrebné na objednanie náhradných dielov od firmy Tetra Pak Group
- ostatné technické informácie

UP

Aktualizované stránky poskytujú nové stránky k existujúcim príručkám na zariadenie.

Usporiadanie strany

Pozrite sa na obrázok (A) na strane i-9: hlavné stránky v Katalógu náhradných dielov tvorí stránky s ilustráciami (1) a odpovedajúca stránka so zoznamom (7). Číslo stránky (5) je uvedené v záhlaví stránky s obrázkom a v zápätí stránky so zoznamom. Číslo dokumentu (6) je uvedené v zápätí stránky so zoznamom.

Číslovanie strán

Pozrite sa na obrázok (A) na strane i-9: číslo stránky (5) má tri časti:

- číslo kapitoly (2)
- číslo ďalšej stránky v rámci kapitoly (3),
- celkový počet stránok v kapitole (4)

Poznámka! Písmena UP môžu nahradiť číslo kapitoly (2) v prípade, že manuál obsahuje aktualizované stránky. Nasledujúce číslo stránky (3) a celkový počet strán (4) aktualizovaných stránok sa nedrží existujúceho sekvenčného číslovania stránok v tejto kapitole.

Úvod k zariadeniu

Výrobca

Meno a adresu výrobcu nájdete na druhej strane tohto katalógu.

Servis

Tetra Pak Group nepreberá zodpovednosť za akúkoľvek škodu na zariadení alebo za zranení zamestnanca alebo spotrebiteľa, ktoré budú spôsobené tým, že sa nepoužijú originálne náhradné diele Tetra Pak®.

Ak chcete pre tento stroj objednať originálne náhradné diely Tetra Pak, kontaktujte najbližšiu kanceláriu spoločnosti Tetra Pak.

Identifikácia

Klasifikácia CE

Toto zariadenie vyhovuje základným zdravotným a bezpečnostným predpisom Európskej hospodárskej oblasti (EEA).

(Pokrač.)

(Pokrač.)

3-A Súlad

Ak štítok stroja obsahuje označenie 3-A (15) (pozri obrázok (B) na strane i-7), potom je toto zariadenie v súlade s hygienickými normami 3-A pre formovanie, plnenie a uzatváranie obalov na tekuté mlieko a tekuté mliečne výrobky, číslo 17-XX.

Štítok zariadenia

Obrázok (B) na strane i-9 ukazuje príklad typového štítku.
Obrázok platného typového štítku a jeho umiestnenia na zariadení je uvedený v úvodnej kapitole príručiek dodaných s týmto zariadením.
Typový štítok obsahuje údaje uvedené niže, tieto údaje sú treba, keď kontaktujete spoločnosť Tetra Pak Group vo veci týkajúcej sa tohto špecifického vybavenia.

- Typ stroja (8)
- Objem (9)
- Špecifikácie výkresov (10)
- Sériové číslo stroja (11)
- Výrobca (12)
- Rok výroby (13)
- Symbol CE (14)
- Symbol 3-A (ak sa používa) (15)

Presvedčte sa, či dáta uvedené na čelnej strane tohoto manuálu korešpondujú s údajmi na identifikačnom typovom štítku stroja a so špecifikáciou stroja.

Štítok o mazaní mazivom pre potravinárske stroje

Pokiaľ je na zariadení štítok o mazaní mazivom pre potravinárske stroje (16) (pozri obrázok (C) na strane i-9), znamená to, že kvalita mazív použitých na tomto zariadení zodpovedá kvalite na mazanie potravinárskych strojov.

Ako používať tento katalóg náhradných dielov

Vyhľadať číslo náhradného dielu

a) Pozrite obrázok (D) na strane i-9: Prejsť na číslo kapitoly (17) uvedené vedľa hlavnej skupiny, ktorá obsahuje diel, ktorý chcete nájsť.

Položky b) a c) sa vzťahujú na obrázok (E) na strane i-10.

b) Na obrázku hlavnej skupiny sa pozrite na podskupinu stroja (19), ktorá obsahuje diely alebo podskupiny, ktoré hľadáte. Poznamenajte si číslo pozície (20) a prejdite na stránku zoznamu, ktorý nasleduje za obrázkom.

c) Pozrite sa na číslo pozície/označenie referencie (18) alebo na názov podskupiny (21). Prejdite na odpovedajúce číslo strany (22) uvedené v zozname v stĺpci na pravej strane. Spoločnosť Tetra Pak Group si zvolila vždy používať pre referenčné označenie štruktúru zameranú na funkciu. Predpona označujúca funkčne orientovanú štruktúru (=) nie je uvedená v referenčnom označení.

(Pokrač.)

(Pokrač.)

Položky d) a e) sa vzťahujú na obrázok (F) na strane i-10.

d) Lokalizujte diel (23), ktorý hľadáte, na obrázku podskupiny a poznamenajte si číslo pozície dielu.

e) Číslo dielu (31) a popis dielu (32) sú uvedené vedľa čísla pozície na stránke so zoznamom.

Informácie uvedené v katalógu náhradných dielov

Niže uvedený zoznam sa odkazuje na obrázok (F) na stránke i-10.
Katalóg náhradných dielov obsahuje nasledujúce informácie o skupinách, podskupinách a náhradných dieloch pre zariadenie:

- Referencia štruktúry skupiny (24). Označuje nasledujúcu vyššiu skupinu vo štruktúre zoznamu výbavy.
- Názov skupiny (25)
- Merná jednotka (26)
- Množstvo (27)
- Číslo montážneho výkresu (28)
- Rozsah stránok so zoznamom (29). Zahrnuté, ak existuje viac stránok v skupine obrázkov alebo v zozname.
- Číslo dielu alebo podskupiny (30)
- Názov podskupiny alebo popis dielu (31)
- Číslo skupiny (32)
- Číslo výbavy (33)
- Záhlavie informácií o skupine (34). Označuje, či sa časť pod záhlavím týka konkrétneho variantu stroja, alebo či sa jedná o zoznam spoločných dielov. Ak zoznam obsahuje viac ako jeden variant a každý variant má svoje vlastné montážne výkresy, je zobrazený odkaz na stránku s montážnym výkresom variantu.
- Vnútorné informácie (35)

Pomoc a otázky

Ak potrebujete pomoc pri obsluhe tohto zariadenia, ak máte ďalšie otázky, pripomienky alebo odporúčania, alebo ak chcete položiť otázky či poskytnúť svoj vlastný názor, použite nástroj QuTI-P. V poli svojho prehliadača pre adresu zadajte QuTI-P. Ak nemáte prístup ku QuTI-P, požiadajte o prístup kontaktovaním Global Service Desk (Globálne servisné oddelenie).

Ak nemáte prístup na internú sieť Tetra Pak®, kontaktujte najbližšieho zástupcu spoločnosti Tetra Pak.

Informacije o navodilu

Tetra Pak Group priporoča, da vsa dobavljena navodila pazljivo prebrete. Prepričajte se, da so dobavljena navodila na razpolagu osebju, ki dela s strojem ali pa izvaja vzdrževalna dela na opremi.

Ta navodila je potrebno shraniti do konca življenjske dobe opreme in navodilo predati vsakemu naslednjemu imetniku ali uporabniku.

Tetra Pak Group ne nosi odgovornosti za poškodbo na opremi, do katere je prišlo zaradi neupoštevanja teh navodilih.

Dobavljena navodila

Navodila, ki se dobavljajo s to opremo:

CM

Navodila za spremembo (CM) oskrbujejo tehnike z informacijami glede zamenjav opreme med različnimi načini proizvodnje.

EM

Električna navodila oskrbujejo tehnike z informacijami glede električnega sistema opreme.

IM

Navodila za inštalacijo oskrbujejo tehnike z informacijami, ki so potrebne za varno inštalacijo opreme.

MaSP

Priročnik z navodili za vzdrževanje in naročanje nadomestnih delov vsebuje informacije o načinu vzdrževanja komponente. Poleg tega vsebuje tudi podatke, ki so potrebni za naročanje nadomestnih delov komponente pri družbi Tetra Pak Group.

MM

Navodila za vzdrževanje oskrbujejo tehnika z informacijami glede vzdrževanja opreme.

OM

Navodila za delovanje (OM) oskrbijo strojnike z informacijami glede rokovanja z opremo in delovanjem le-te pred, med in po proizvodnji.

RM

Navodila za predelavo (RM) oskrbujejo tehnike z informacijami, ki so potrebne za varno inštalacijo opreme na inštalirani stroj ali opremo.

(Obrnite)

(Obrnite)

SPC

Katalog rezervnih delov prinaša informacije, ki so potrebne za naročanje rezervnih delov iz podjetja Tetra Pak Group.

TeM

Tehnološka navodila tehnikom podajo informacije, ki so lahko:

- potrebne za varno inštalacijo opreme
- potrebne za vzdževanje opreme
- vezane na električni sistem stroja/opreme
- ponujajo informacije, ki so potrebna za naročanje nadomestnih delov pri Tetra Pak Group
- druge tehnične informacije

UP

Strani za posodobitev podajo nove strani za posodabljanje obstoječih navodil stroja.

Ureditev strani

Sklicujte se na ilustracijo (A) na strani i-9: Glavne strani v katalogu rezervnih delov so sestavljene iz strani z ilustracijami (1) in stranjo s seznamom (7). Številka strani (5) je prikazana v glavi strani z ilustracijo in v nogi strani s seznamom. Številka dokumenta (6) je prikazana v nogi strani s seznamom.

Oštevilčenje strani

Sklicujte se na ilustracijo (A) na strani i-9: Številka strani (5) ima tri dele:

- številko poglavja (2)
- zaporedno številko strani (2) znotraj poglavja (3)
- skupno število strani v poglavju (4)

Opomba! Črke UP lahko zamenjajo številko poglavja (2), če so v navodilih vključene posodobljene strani. Zaporedna številka strani (3) in skupno število strani (4) posodobljenih strani se ne ujemajo z obstoječim zaporedjem strani v poglavju.

Predstavitev stroja

Proizvajalec

Ime in naslov proizvajalca se nahajata na drugi strani tega kataloga.

Servisiranje

Tetra Pak Group ne prevzema odgovornosti za okvare ali poškodbe opreme, osebja ali potrošnikov, ki ga povzročijo rezervni deli, ki niso originalni Tetra Pak® rezervni deli.

Za naročanje originalnih Tetra Pak rezervnih delov kontaktirajte najbližjo pisarno Tetra Pak.

Identifikacija

CE klasifikacija

Ta oprema izpolnjuje osnovne zdravstvene in varnostne ukrepe Evropskega ekonomskega prostora (EEA).

(Obrnite)

(Obrnite)

3-A Skladnost

Če ploščica stroja vsebuje oznako 3-A (15) (glejte ilustracijo (B) na strani i-7), ta oprema ustreza sanitetnim standardom 3-A za kalupe, polnilce in tesnila zbiralnikov za tekoče mleko in izdelke iz tekočega mleka, številka 17-XX.

Strojna plošča

Ilustracija (B) na strani i-9 prikazuje primer ploščice za identifikacijo stroja. Ilustracija veljavne ploščice za identifikacijo stroja in njene lokacije na opremi je prikazana v uvodnem poglavju navodil, ki so bila dostavljena s to opremo. Ploščica za identifikacijo stroja vsebuje spodaj navedene podatke, ki so potrebni ob kontaktiranju podjetja 9 glede te specifične opreme.

- Tip stroja (8)
- Prostornina (9)
- Specifikacije skice (10)
- Serijska številka stroja (11)
- Proizvajalec (12)
- Leto izdelave (13)
- CE oznaka (14)
- 3-A oznaka (če obstaja) (15)

Prepričajte se, da se podatki o opremi, ki se nahajajo na sprednjih straneh teh navodil, v skladu s podatki strojne plošče in specifikacije stroja.

Strojna plošča, podmazana z mazivom, primernim za stik z živili

Če je stroj opremljen s strojno ploščo, ki je podmazana z mazivom, primernim za stik z živili (16) (glejte sliko(C) na strani i-9), pomeni, da so maziva, ki so uporabljena na tem stroju, primerna za stik z živili.

Kako uporabljati ta katalog rezrevnih delov

Poiščite številko rezervnega dela

a) Sklicujte se na ilustracijo (D) na strani i-9: Pojdite na številko poglavja (17), ki se nahaja poleg glavne skupine in ki vsebuje del, ki ga želite poiskati.

Predmeti b) in c) se nanašajo na ilustracijo (E) na strani i-10.

b) Na ilustraciji glavne skupine poiščite podskupino stroja (19), ki vsebuje del ali podskupino, ki jo iščete. Opazite položaj številke (20) in pojdite na stran seznama, ki sledi ilustraciji.

c) Poiščite številko lokacije/referenco (18) ali pa ime podskupine (21). Pojdite na ustrezno številko strani (22), ki je navedena v stolpcu na desni strani. Tetra Pak Group se je odločil za to, da vedno uporablja funkcijsko naravnano strukturo kot referenco. Predpona, ki nakazuje funkcijsko naravnano strukturo (=), ni prikazana v referenci.

(Obrnite)

(Obrnite)

Predmeti d) in e) se nanašajo na ilustracijo (F) na strani i-10.

d) Poiščite del (23), ki ga iščete, na ilustraciji podskupine in zabeležite številko lokacije dela.

e) Številka dela (31) in opis dela (32) sta navedena poleg lokacije številke na strani s seznamom.

Informacije, ki so navedene v katalogu rezervnih delov

Spodnji seznam se nanaša na ilustracijo (F) na strani i-10. Katalog rezervnih delov vsebuje naslednje informacije o skupinah, podskupinah in rezervnih delih za opremo.

- Referenca strukture skupine (24). Določa naslednjo višjo skupino v strukturi seznama opreme.
- Ime skupine (25)
- Enota merjenja (26)
- Količina (27)
- Številka skice sistema (28)
- Razpon seznama strani (29). Vključeno, če obstaja več strani v ilustraciji skupine ali na seznamu.
- Del ali številka podskupine (30)
- Ime podskupine ali opis dela (31)
- Številka skupine (32)
- Številka opreme (33)
- Naslov informacije o skupini (34). Nakazuje ali je spodnji odsek naslov specifične različice stroja ali pa če gre za seznam splošnih delov.
  Če ima seznam več kot eno različico in ima vsaka različica svojo skico sistema, je prikazana referenca strani na skici sistema vsake različice.
- Notranje informacije (35)

Pomoč in poizvedbe

Če potrebujete pomoč pri delu s to opremo ali imate kakršne koli druge zahteve, pripombe ali predloge, lahko vprašanja ali povratne informacije posredujete s pomočjo orodja QuTI-P. Vstipkajte QuTI-P v naslovno vrstico vašega brskalnika Če dostop do QuTI-P ni na voljo, stopite v stik z oddelkom za pomoč in zaprosite za dostop.

Če dostop do intraneta Tetra Pak® ni na voljo, stopite v stik z najbližjim zastopnikom podjetja Tetra Pak.

Information om handboken

Tetra Pak Group rekommenderar att alla handböcker läses noggrant.
Se till att handböckerna är tillgängliga för personalen som använder eller underhåller utrustningen.

Det är viktigt att denna katalog behålls under utrustningens livslängd, och att katalogen överlämnas till varje efterföljande innehavare eller användare.

Tetra Pak Group kan inte hållas ansvarig för eventuell egendomsskada, förlust, personskada eller dödsfall som orsakas av man inte följer de instruktioner som ges i de handböcker som medföljer denna utrustning.

Medföljande handböcker

Handböcker som levereras tillsammans med denna utrustning:

CM

Konverteringshandboken ger tekniker information om konvertering av utrustningen mellan olika produktionssätt.

EM

Den elektriska handboken ger teknikerna information om utrustningens elektriska system.

IM

Installationshandboken ger teknikerna information som krävs för att kunna installera utrustningen säkert.

MaSP

I underhålls- & reservdelsmanualen finns information om underhåll av komponenten. Den innehåller också information om hur man beställer reservdelar för komponenten från Tetra Pak Group.

MM

Underhållshandboken ger teknikerna information om hur utrustningen ska underhållas.

OM

Drifthandboken ger operatören information om hur utrustningen ska hanteras före, under och efter produktion.

RM

Ombyggnadshandboken ger teknikerna den information som krävs för att säkert installera en sats på en installerad maskin eller utrustning.

(Forts.)

(Forts.)

SPC

Reservdelskatalogen (SPC) ger den information som krävs för att kunna beställa reservdelar från Tetra Pak Group.

TeM

Teknisk handbok ger tekniker information i form av:

- information som krävs för att säkert kunna installera utrustningen
- information som krävs för att underhålla utrustningen
- information om maskinens/utrustningens elsystem
- information som krävs för beställning av reservdelar från Tetra Pak Group
- annan teknisk information

UP

Uppdateringssidorna innehåller nya sidor för att uppdatera befintliga maskinhandböcker.

Sidlayout

Se illustration (A) på sidan i-9: Huvudsidorna i en Reservdelskatalog består av en illustrationssida (1) och en tillhörande listsida (7).
Sidnumret (5) visas i sidhuvudet på en illustrationssida och i sidfoten på en listsida.
Dokumentnumret (6) visas i sidfoten på listsidan.

Sidnumrering

Se illustration (A) på sidan i-9: Ett sidnummer (5) har tre delar:

- kapitelnummer (2)
- löpande sidnummer inom kapitlet (3)
- totalt sidantal i kapitlet (4)

OBS! Bokstäverna UP kan ersätta kapitelnumret (2) om handboken innehåller uppdateringssidor. Det löpande sidnumret (3) och det totala antalet sidor (4) för uppdateringssidor följer inte den befintliga löpande sidnumreringen av kapitlet.

Introduktion till maskinen

Tillverkare

För tillverkarens namn och adress, se andra sidan i denna katalog.

Service

Tetra Pak Group tar inte något ansvar för eventuella skador eller eventuella personskador på utrustning, personal eller konsumenter som orsakas av att reservdelarna inte är original Tetra Pak® reservdelar.

Vid beställning av original Tetra Pak reservdelar för denna maskin, kontakta närmaste Tetra Pak-kontor.

Identifiering

CE-klassificering

Denna utrustning uppfyller de grundläggande hälso- och säkerhetskraven inom European Economic Area (EEA).

(Forts.)

(Forts.)

3-A överensstämmelse

Om maskinskylten är märkt med 3-A (15) (se bild (B) på sidan i-7), uppfyller denna utrustning 3-A Hygienstandarder för resare, fyllare och förseglare av behållare för flytande mjölk och flytande mjölkprodukter, Nummer 17-XX.

Maskinskylt

Illustration (B) på sidan i-9 visar ett exempel på en maskinskylt.
En illustration av gällande maskinskylt och dess placering på utrustningen visas i Introduktion-kapitlet i de handböcker som levereras med denna utrustning.
Maskinskylten innehåller data som listas nedan, vilken behövs för att kontakta Tetra Pak Group rörande denna specifika utrustning.

- Maskintyp (8)
- Volym (9)
- Ritningsspecifikationer (10)
- Maskinnummer (11)
- Tillverkare (12)
- Tillverkningsår (13)
- CE-märkning (14)
- 3A-märke (om tillämpligt) (15)

Kontrollera att utrustningsdata som finns på de inledande sidorna i denna handbok överensstämmer med maskinskyltens data och maskinspecifikationen.

Skylt för maskin smord med smörjmedel av livsmedelskvalitet

Om utrustningen är försedd med skylt för maskin smord med smörjmedel av livsmedelskvalitet (16) (se bild (C) på sidan i-9), innebär det att de smörjmedel som används in denna utrustning är av livsmedelskvalitet.

Hur man använder denna reservdelskatalog

Hitta ett reservdelsnummer

a) Se illustration (D) på sidan i-9: Gå till det kapitelnummer (17) som anges bredvid huvudgruppen som innehåller delen du vill lokalisera.

Punkterna b) och c) refererar till illustration (E) på sidan i-10.

b) Leta på huvudgruppens bild upp den undergrupp (19) i maskinen som innehåller delen eller undergruppen du letar efter. Notera positionsnumret (20) och gå till listsidan som följer på bilden.

c) Leta upp positionsnummer/referensbeteckning (18) eller undergruppens namn (21). Gå till motsvarande sidnummer (22) som anges i den högra kolumnen. Tetra Pak Group har valt att alltid använda en funktionsorienterad struktur för referensbeteckning. Prefix som anger funktionsorienterad struktur (=) visas inte i referensbeteckningen.

(Forts.)

(Forts.)

Punkterna d) och e) refererar till illustration (F) på sidan i-10.

d) Leta upp den del (23) som du letar efter på undergruppens bild och notera delens positionsnummer.

e) Artikelnumret (31) och artikelbeskrivningen (32) anges bredvid positionsnumret på listsidan.

Information som anges i en Reservdelskatalog

Listan nedan refererar till illustration (F) på sidan i-10. En Reservdelskatalog innehåller följande information om grupper, undergrupper och reservdelar för utrustningen:

- Gruppstrukturreferens (24). Anger närmast högre grupp i utrustningens liststruktur.
- Gruppnamn (25)
- Måttenhet (26)
- Antal (27)
- Sammanställningsritningens nummer (28)
- Listans sidomfång (29). Anges om det finns flera sidor i gruppens bild eller lista.
- Artikel- eller undergruppnummer (30)
- Undergruppens namn eller beskrivning av delen (31)
- Gruppnummer (32)
- Utrustningsnummer (33)
- Gruppinformationsrubrik (34). Anger om avsnittet under rubriken gäller för en specifik maskinvariant eller om det är en lista över gemensamma delar. Om en lista har mer än en variant och varje variant har sin egen sammanställningsritning, visas en sidreferens till variantens sammanställningsritning.
- Intern information (35)

Assistans och förfrågningar

För assistans vid användning av denna utrustning, eller för andra förfrågningar, kommentarer eller förslag, kan ni ställa frågor eller ge feedback genom att använda QuTI-P verktyget. Skriv QuTI-P din webbläsares adressfält. Om tillgång till QuTI-P inte föreligger, begär tillgång genom att kontakta Global Service Desk.

Om tillgång till Tetra Pak® intranät inte föreligger, kontakta närmaste Tetra Pak-representant.

SPC
Spare Parts Catalogue

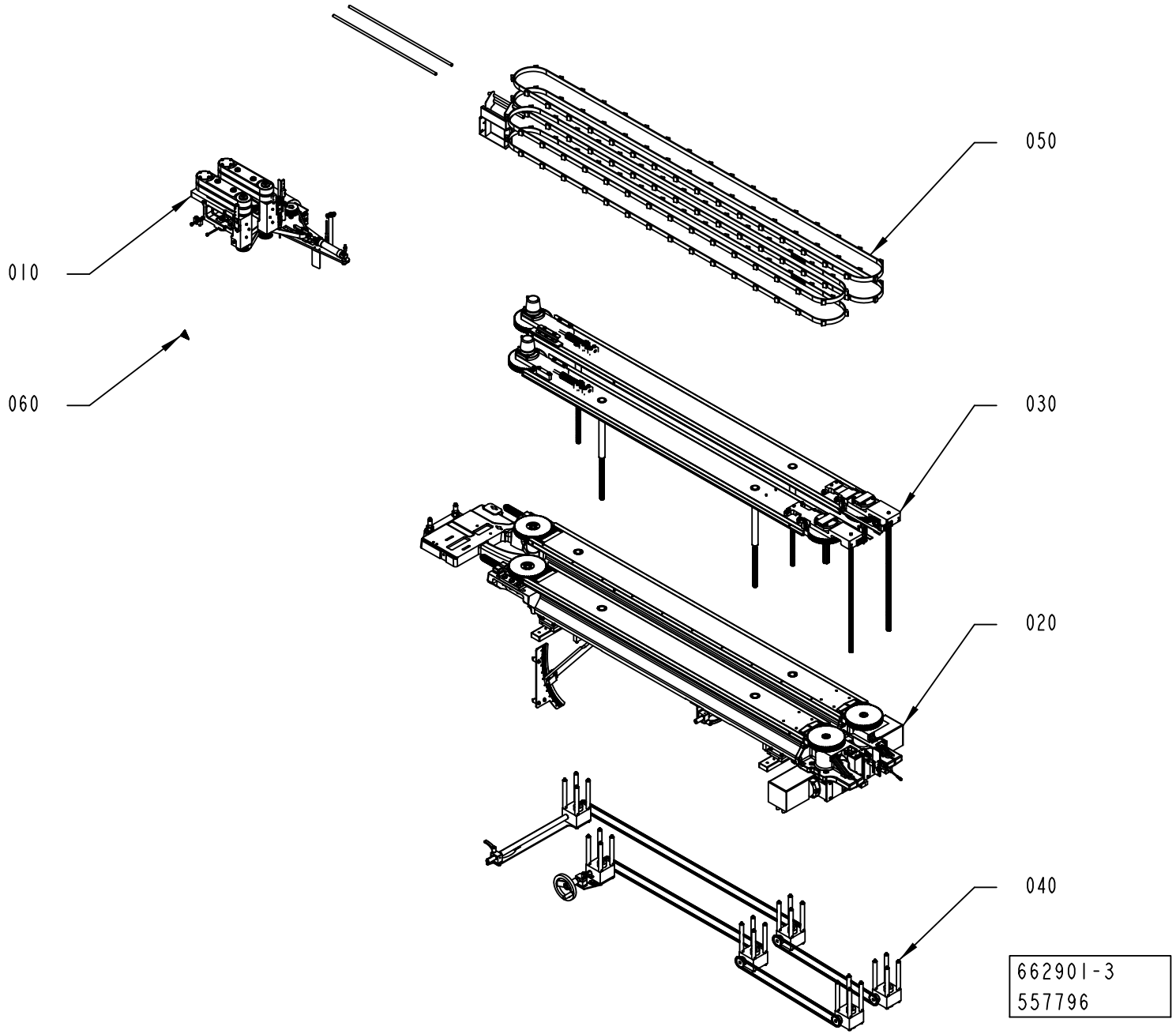
050
010
060
030
020
040
662901-3
557796

ECM: 557796 - 20120701
Group number: 662901-0300
Assembly Drawing: 662901-3_1_AB

Pos	Part No	UN	Qty	Description	Page No
TPA					
030	3199893-0100		1	PACKAGE POSITIONER	**1-5**
040	2838647-0200		1	SLIDING RACK	**1-23**
Common Parts					
010	2838654-0300		1	BELT BRAKE	**1-27**
020	3199892-0100		1	PACKAGE POSITIONER	**1-39**
050	3199895-0100		1	PACKAGE HANDLING	**1-71, 1-73**
060	3217278-0100		1	WARNING SIGN	**1-87**

Pos	Part No	UN	Qty	Description	Page No

PACKAGE POSITIONER

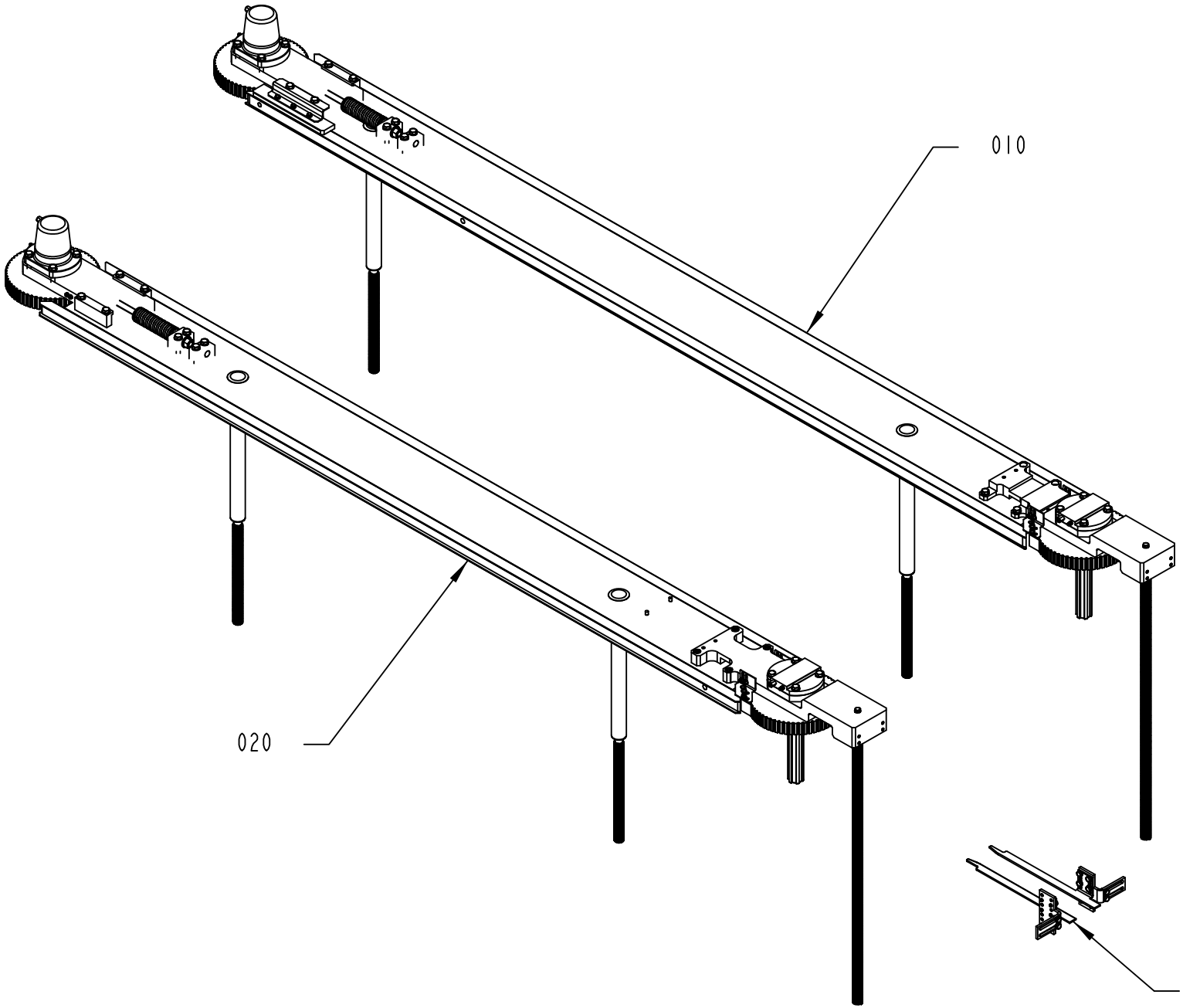

3199893-1
529087

ECM: 529609 - 20120401
Group number: 3199893-0100
Assembly Drawing: 3199893-1_1_AA

Pos	Part No	UN	Qty	Description	Page No
-					
010	3199889-0100		1	SIDE ADJUSTER	**1-7**
020	3199890-0100		1	SIDE ADJUSTER	**1-15**
030	3208157-0100		1	ADJUSTABLE GUIDE	**1-21**

Pos	Part No	UN	Qty	Description	Page No

Machine Type | Group Description | Used-In | Group Number | Page No

SIDE ADJUSTER

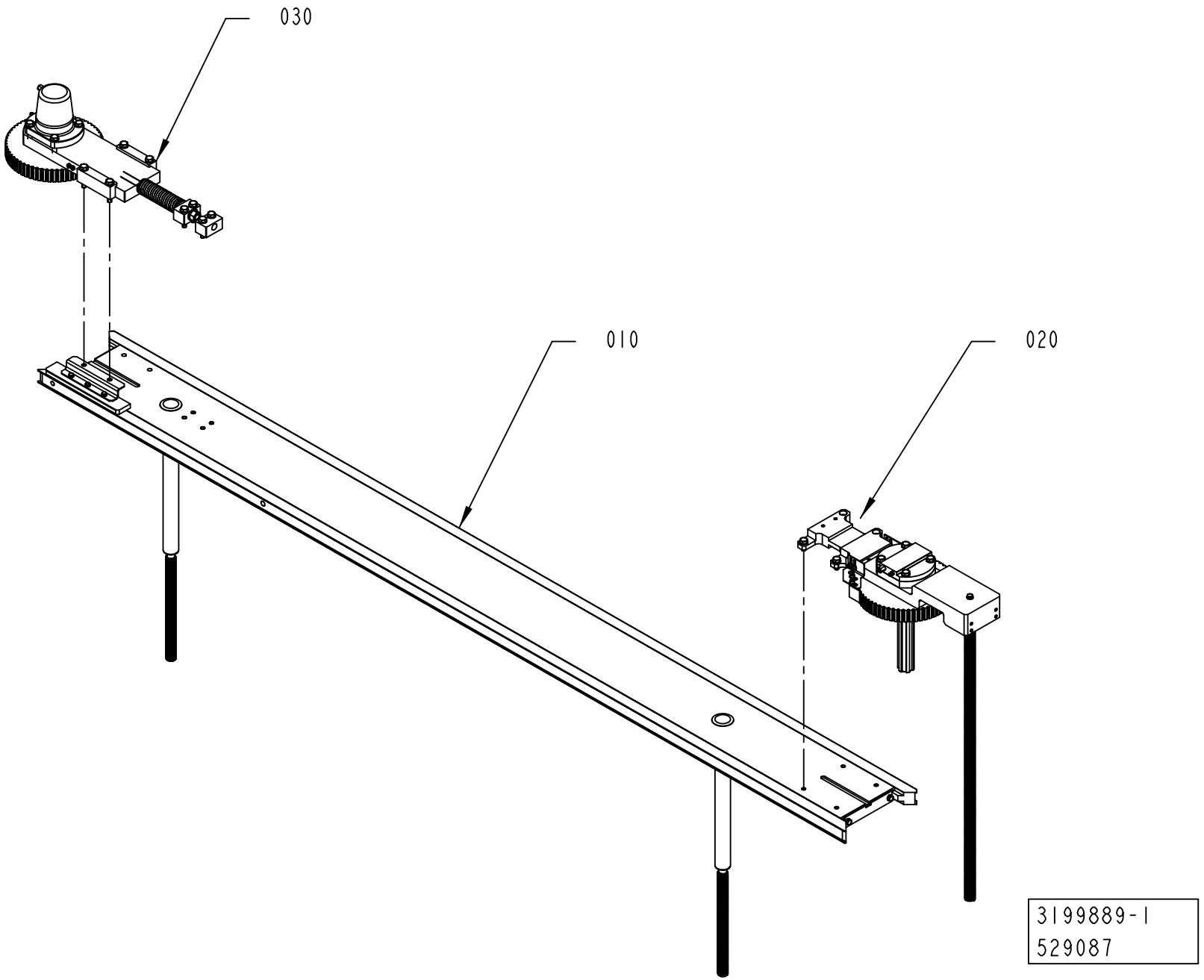

ECM: 529605 - 20120401
Group number: 3199889-0100
Assembly Drawing: 3199889-1_1_AA

Pos	Part No	UN	Qty	Description	Page No
-					
010	3209480-0100		1	FRAME UPPER	**1-9**
020	3199891-0100		1	DRIVE	**1-11**
030	2766954-0200		1	BELT TENSIONER	**1-13**

Pos	Part No	UN	Qty	Description	Page No

Machine Type | Group Description | Used-In | Group Number | Page No

FRAME UPPER

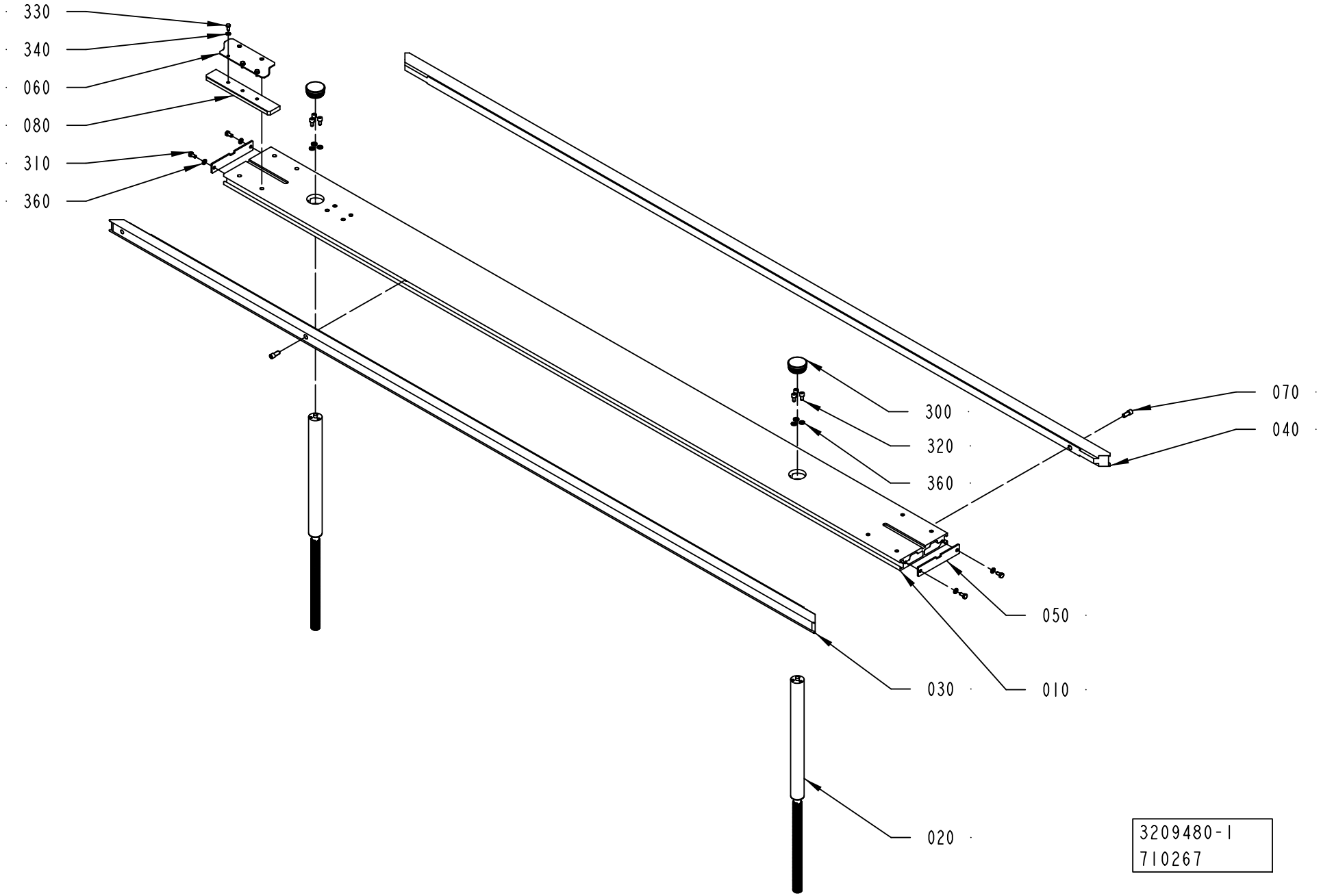
330
340
060
080
310
360
300
320
360
070
040
050
030
010
020
3209480-1
710267

ECM: 714098 - 20150401
Group number: 3209480-0100
Assembly Drawing: 3209480-1_1_AB

Pos	Part No	UN	Qty	Description	Page No
-					
010	3217911-0000		1	FRAME	
020	2766927-0000		2	PILLAR	
030	3217906-0000		1	GUIDE	
040	3203258-0000		1	GUIDE	
050	2788134-0000		2	COVER	
060	3199900-0000		1	BRACKET	
070	3202908-0000		2	SCREW	
080	3217277-0000		1	PLATE	
300	344353-0421		2	FINNED PLUG PE, GPN 320 GL42 1-2	
310	312105-0366		4	SCREW, M6S ISO 4017 M6X12 A4 80	
320	312115-0366		6	SCREW ISO4762 M6X12 A4 80	
330	312105-0325		3	SCREW, M6S ISO 4017 M5X10 A4 80	
340	315105-0146		3	WASHER PLAIN, 5,3X10X1 A4 BRB	
360	315105-0153		10	WASHER PLAIN, 6,4X12X1,5 A4 BRB	

Pos	Part No	UN	Qty	Description	Page No

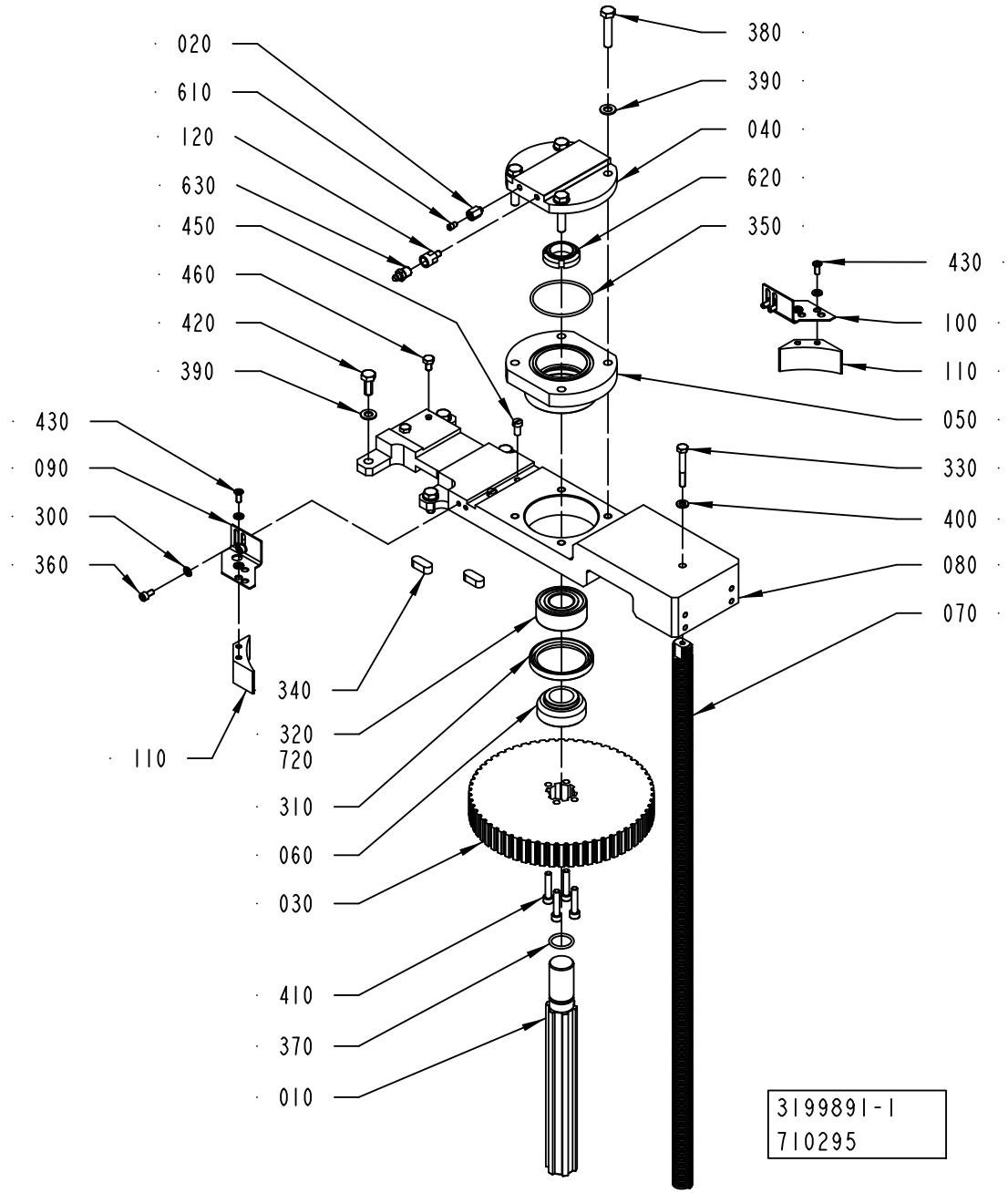
020
610
120
630
450
460
420
390
430
090
300
360
110
340
320
720
310
060
030
410
370
010
380
390
040
620
350
430
100
110
050
330
400
080
070
3199891-1
710295

ECM: 713769 - 20150401
Group number: 3199891-0100
Assembly Drawing: 3199891-1_1_AE

Pos	Part No	UN	Qty	Description	Page No
-					
010	2775446-0000		1	SHAFT	
020	3147226-0000		1	ADAPTER	
030	2775442-0000		1	TOOTHED PULLEY	
040	2778566-0000		1	BELLOWS	
050	2775445-0000		1	SPACER	
060	2775443-0000		1	SPACER	
070	2802392-0000		1	PILLAR	
080	3203747-0000		1	PLATE	
090	3161464-0000		1	BRACKET	
100	3161465-0000		1	BRACKET	
110	3186487-0000		2	PROTECTION PLUG	
120	3326956-0000		1	JUNCTION NIPPLE	
300	315105-0146		8	WASHER PLAIN, 5,3X10X1 A4 BRB	
310	315221-0198		1	RADIAL SEAL 50X65X8 MM	
320	321330-0105		1	ANG. BALL BEAR 25/52X20,6	
330	312105-0379		1	SCREW, M6S ISO 4014 M6X45 A4 80	
340	315705-0296		2	PARALLEL KEY W. ROUND ENDS, 10X8X25 MM	
350	315202-0741		1	O-RING 58,42X2,62 MM	
360	312115-0325		4	SCREW ISO4762 M5X10 A4 80	
370	315202-0717		1	O-RING 20,29X2,62 MM	
380	312105-0459		4	SCREW, M6S ISO 4014 M8X40 A4 80	
390	315105-0165		8	FWAS080G0-0S, WASHER PLAIN	
400	315105-0153		1	WASHER PLAIN, 6,4X12X1,5 A4 BRB	
410	312115-0374		4	SCREW ISO4762 M6X30 A4 80	
420	312105-0451		4	SCREW, M6S ISO 4017 M8X20 A4 80	
430	90606-4924		4	SCREW, CBSTSR5-12	
450	312125-0366		2	SLOTTED HEAD SCREW, ISO1207 M6X12 A4	
460	312105-0364		2	"SCREW, M6S ISO 4017 M6X10 A4 80"	
600	344447-0000		1	THREAD SEALANT LOCTITE 542, ONLY IN BOM	
	344447-0050		*1*	*THREAD SEALANT LOCTITE 542, 50ML*	
610	90604-3329		1	NON-RETURN VALVE, RVA-M6	
620	90459-6280		1	NUT GUK 5 M25 X 1.5 FZB	
630	90606-2351		1	GREASE NIPPLE STR. M10X1, 996-001-890-S3	
720	344414-0000	L	1	KLüBEROIL 4 UH1-320N, ONLY IN BOM	
	344414-0335		*1*	*KLüBEROIL 4 UH1-320N, 200 L DRUM*	
	344414-0766		*1*	*KLüBEROIL 4 UH1-320N, 20 L CAN*	
	344414-0764		*1*	*KLüBEROIL 4 UH1-320N, 5 L CAN*	

Pos	Part No	UN	Qty	Description	Page No

Machine Type	Group Description	Used-In	Group Number	Page No

BELT TENSIONER

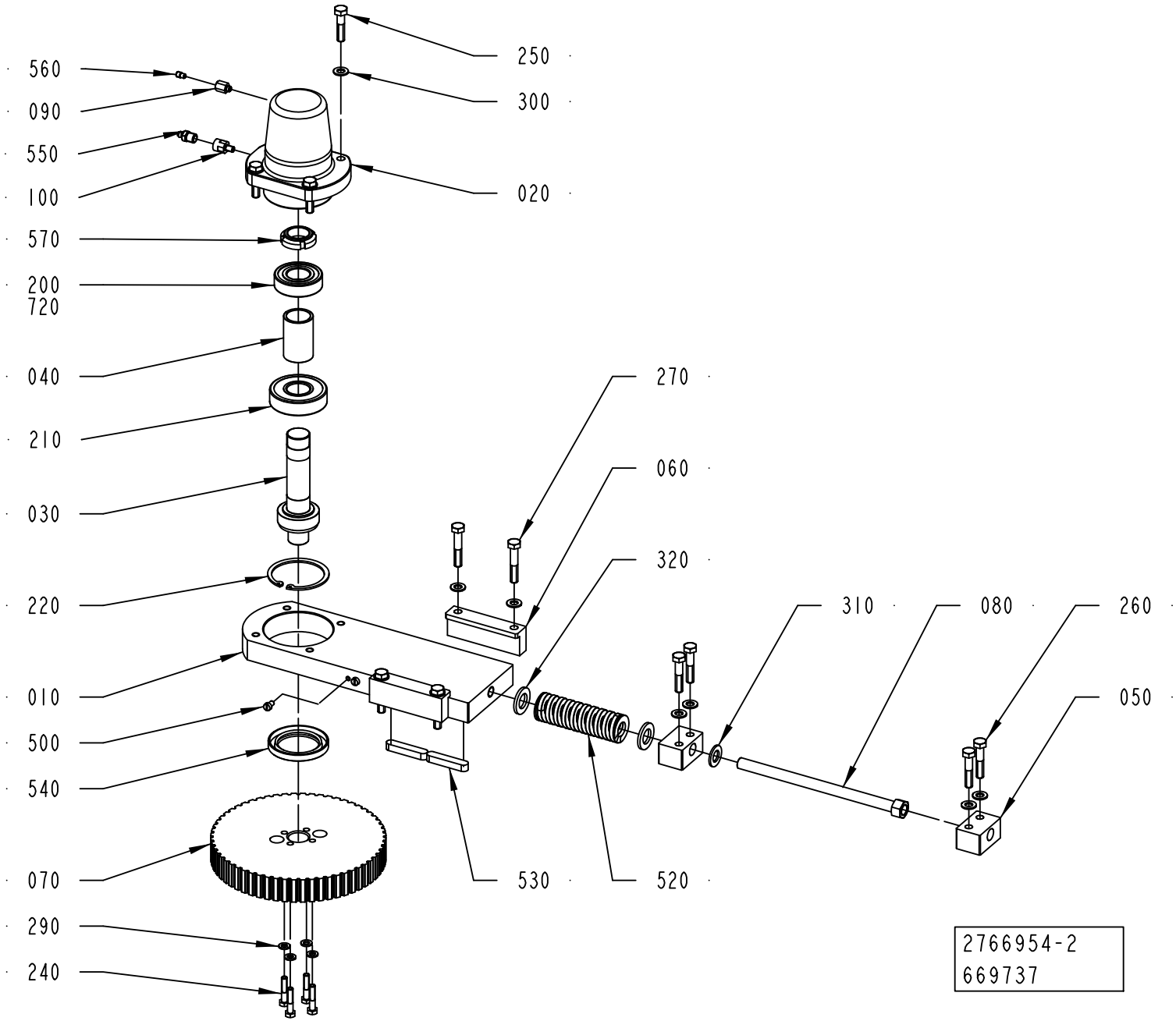

ECM: 679474 - 20141001
Group number: 2766954-0200
Assembly Drawing: 2766954-2_1_AC

Pos	Part No	UN	Qty	Description	Page No
-					
010	2766953-0000		1	PLATE	
020	3022796-0000		1	BELLOWS	
030	2766958-0000		1	SHAFT	
040	2766959-0000		1	SPACER	
050	2766962-0000		2	BLOCK	
060	2766963-0000		2	BRACKET	
070	2766981-0000		1	TOOTHED PULLEY	
080	2817784-0000		1	SCREW	
090	3147226-0000		1	ADAPTER	
100	3326956-0000		1	JUNCTION NIPPLE	
200	321309-0105		1	BALL BEARING 25/52X15	
210	321314-0105		1	BALL BEARING 25/62X17	
220	315752-0136		1	RETAINING RING FOR BORE DIN 472 62	
240	312105-0374		4	SCREW, M6S ISO 4014 M6X30 A4 80	
250	312105-0457		4	SCREW, M6S ISO 4014 M8X35 A4 80	
260	312105-0459		4	SCREW, M6S ISO 4014 M8X40 A4 80	
270	312105-0460		4	SCREW, M6S ISO 4014 M8X45 A4 80	
290	315105-0153		4	WASHER PLAIN, 6,4X12X1,5 A4 BRB	
300	315105-0165		12	FWAS080G0-0S, WASHER PLAIN	
310	315105-0178		1	WASHER PLAIN, 13X24X2,5 A4 BRB	
320	315105-0186		2	WASHER PLAIN, 17X30X3 A4 BRB	
500	312125-0323		4	SLOTTED HEAD SCREW, ISO1207 M5X8 A4	
520	90604-3324		1	COMP. SPRING, 5443, ?X31,2X115	
530	315705-0303		2	PARALLEL KEY W. ROUND ENDS, 10X8X50 MM	
540	90091-0304		1	RADIAL SEAL 45X65X8 MM DUST LIP	
550	90606-2351		1	GREASE NIPPLE STR. M10X1, 996-001-890-S3	
560	90604-3329		1	NON-RETURN VALVE, RVA-M6	
570	90459-6280		1	NUT GUK 5 M25 X 1.5 FZB	
720	344414-0000		1	KLüBEROIL 4 UH1-320N, ONLY IN BOM	
	344414-0335		*1*	*KLüBEROIL 4 UH1-320N, 200 L DRUM*	
	344414-0766		*1*	*KLüBEROIL 4 UH1-320N, 20 L CAN*	
	344414-0764		*1*	*KLüBEROIL 4 UH1-320N, 5 L CAN*	

Pos	Part No	UN	Qty	Description	Page No

Machine Type | Group Description | Used-In | Group Number | Page No

SIDE ADJUSTER

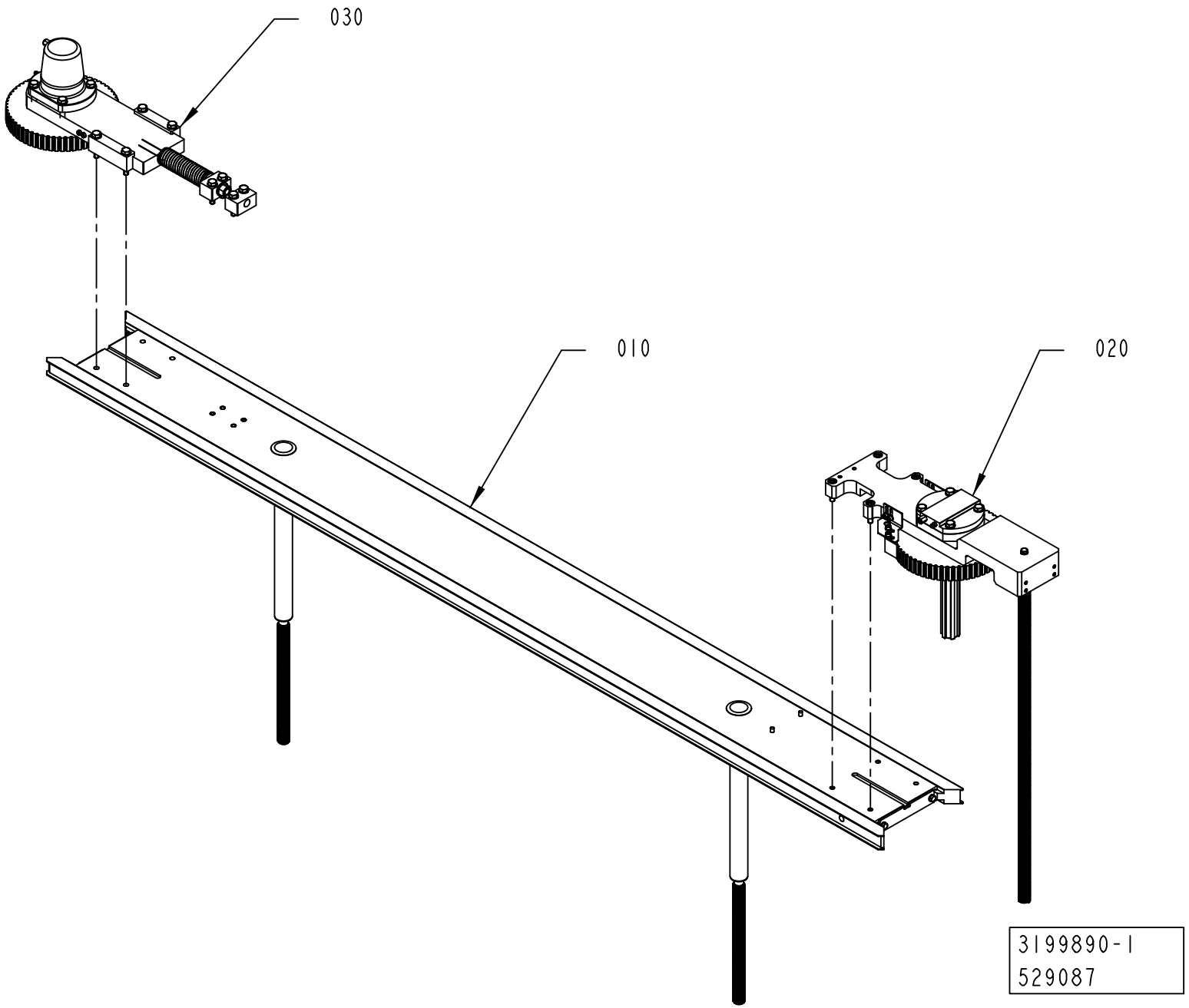

ECM: 529606 - 20120401
Group number: 3199890-0100
Assembly Drawing: 3199890-1_1_AA

Pos	Part No	UN	Qty	Description	Page No
-					
010	3209481-0100		1	FRAME UPPER	**1-17**
020	3217276-0100		1	DRIVE	**1-19**
030	2766954-0200		1	BELT TENSIONER	**1-13**

Pos	Part No	UN	Qty	Description	Page No

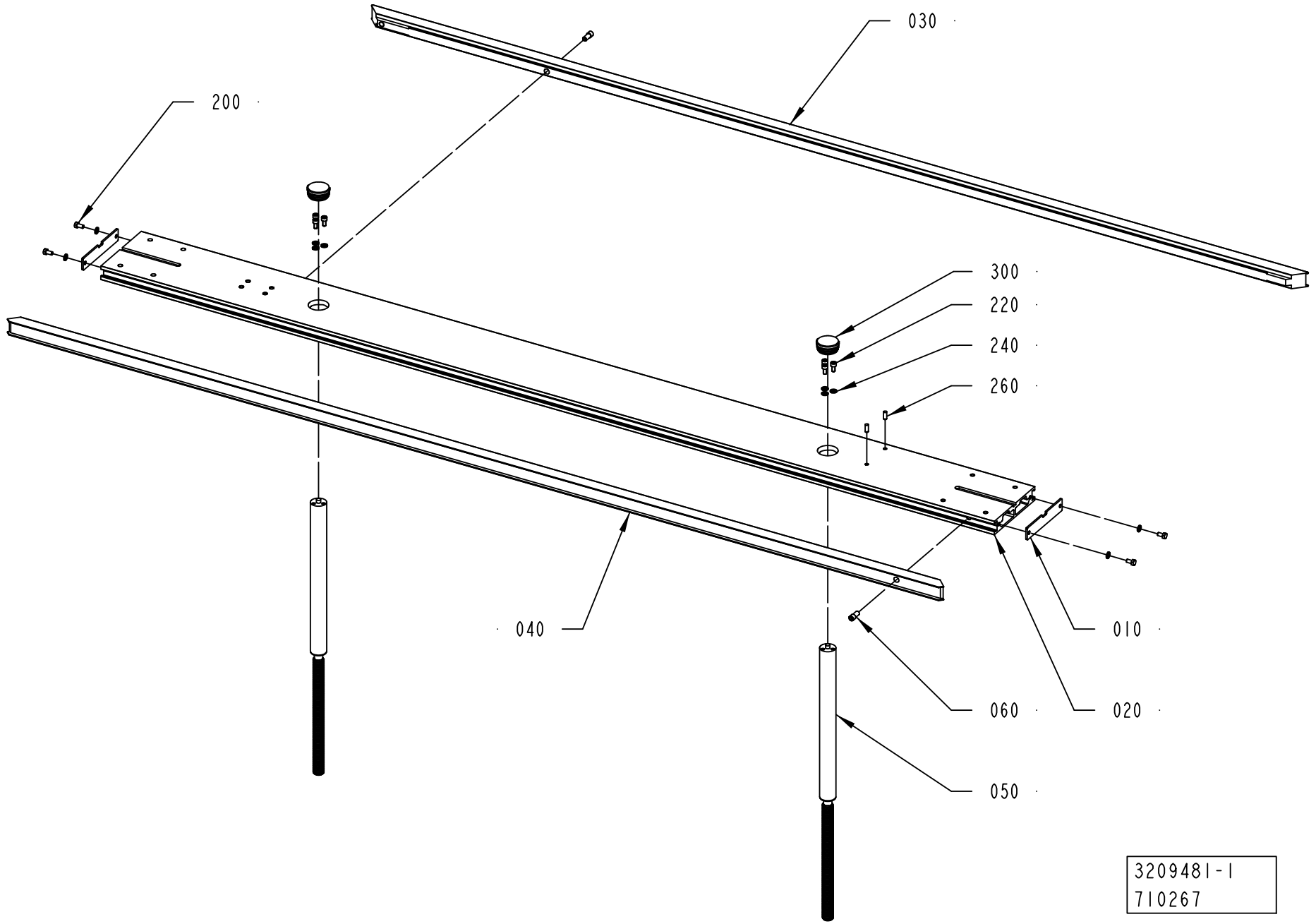
030
200
300
220
240
260
040
010
060
020
050
3209481-1
710267

ECM: 714109 - 20150401
Group number: 3209481-0100
Assembly Drawing: 3209481-1_1_AB

Pos	Part No	UN	Qty	Description	Page No
-					
010	2788134-0000		2	COVER	
020	3217913-0000		1	FRAME	
030	3217907-0000		1	GUIDE	
040	3203260-0000		1	GUIDE	
050	2766927-0000		2	PILLAR	
060	3202908-0000		2	SCREW	
200	312105-0366		4	SCREW, M6S ISO 4017 M6X12 A4 80	
220	312115-0366		6	SCREW ISO4762 M6X12 A4 80	
240	315105-0153		10	WASHER PLAIN, 6,4X12X1,5 A4 BRB	
260	311103-0351		2	PARALLEL PIN ISO 2338 6M6X16 A1	
300	344353-0421		2	FINNED PLUG PE, GPN 320 GL42 1-2	

Pos	Part No	UN	Qty	Description	Page No

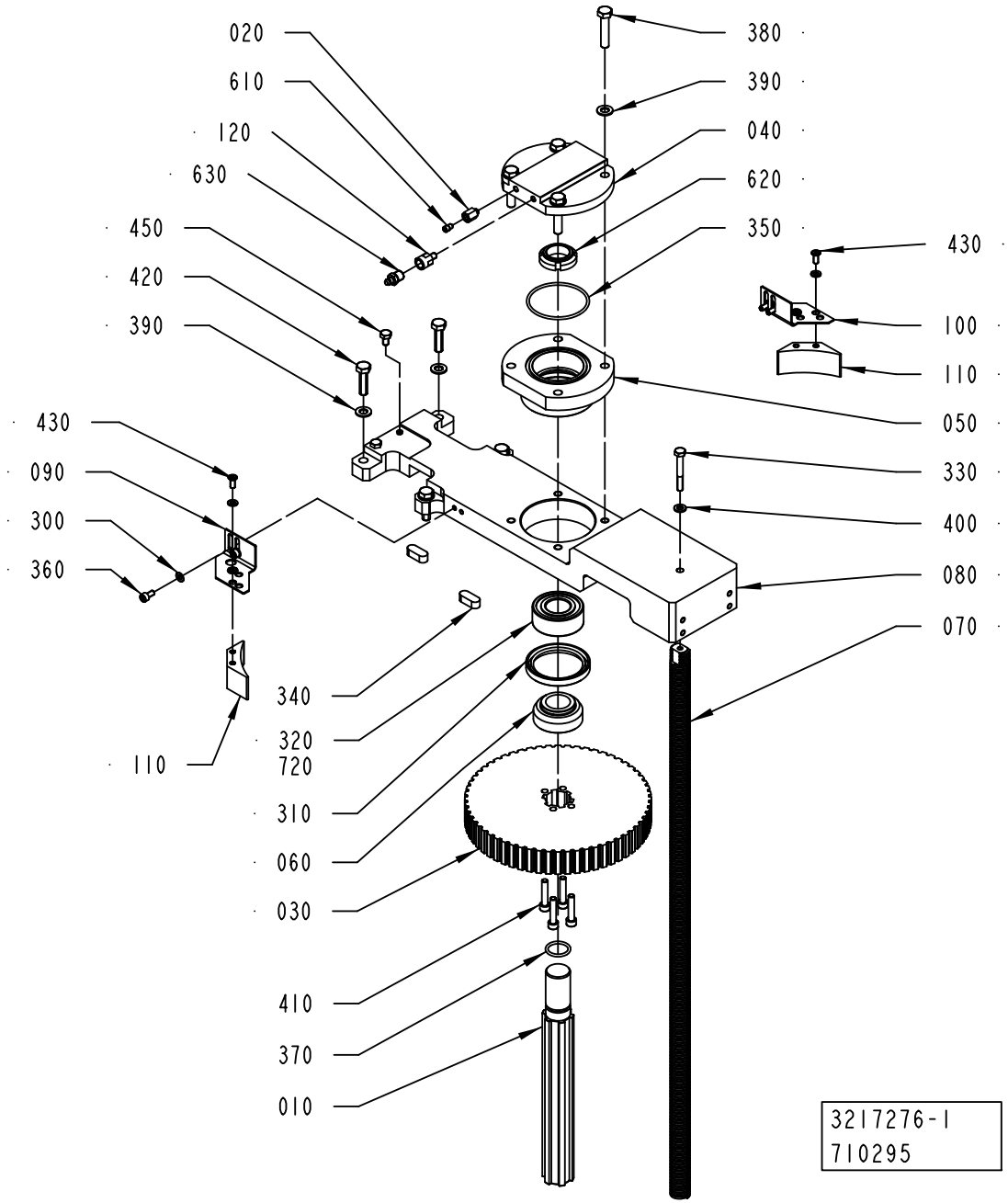
020
610
120
630
450
420
390
430
090
300
360
110
340
320
720
310
060
030
410
370
010
380
390
040
620
350
430
100
110
050
330
400
080
070
3217276-1
710295

ECM: 713770 - 20150401
Group number: 3217276-0100
Assembly Drawing: 3217276-1_1_AE

Pos	Part No	UN	Qty	Description	Page No
-					
010	2775446-0000		1	SHAFT	
020	3147226-0000		1	ADAPTER	
030	2775442-0000		1	TOOTHED PULLEY	
040	2778566-0000		1	BELLOWS	
050	2775445-0000		1	SPACER	
060	2775443-0000		1	SPACER	
070	2802392-0000		1	PILLAR	
080	3217924-0000		1	PLATE	
090	3161464-0000		1	BRACKET	
100	3161465-0000		1	BRACKET	
110	3186487-0000		2	PROTECTION PLUG	
120	3326956-0000		1	JUNCTION NIPPLE	
300	315105-0146		8	WASHER PLAIN, 5,3X10X1 A4 BRB	
310	315221-0198		1	RADIAL SEAL 50X65X8 MM	
320	321330-0105		1	ANG. BALL BEAR 25/52X20,6	
330	312105-0379		1	SCREW, M6S ISO 4014 M6X45 A4 80	
340	315705-0296		2	PARALLEL KEY W. ROUND ENDS, 10X8X25 MM	
350	315202-0741		1	O-RING 58,42X2,62 MM	
360	312115-0325		4	SCREW ISO4762 M5X10 A4 80	
370	315202-0717		1	O-RING 20,29X2,62 MM	
380	312105-0459		4	SCREW, M6S ISO 4014 M8X40 A4 80	
390	315105-0165		8	FWAS080G0-0S, WASHER PLAIN	
400	315105-0153		1	WASHER PLAIN, 6,4X12X1,5 A4 BRB	
410	312115-0374		4	SCREW ISO4762 M6X30 A4 80	
420	312105-0455		4	SCREW, M6S ISO 4017 M8X30 A4 80	
430	90606-4924		4	SCREW, CBSTSR5-12	
450	312105-0364		2	"SCREW, M6S ISO 4017 M6X10 A4 80"	
600	344447-0000		1	THREAD SEALANT LOCTITE 542, ONLY IN BOM	
	344447-0050		*1*	*THREAD SEALANT LOCTITE 542, 50ML*	
610	90604-3329		1	NON-RETURN VALVE, RVA-M6	
620	90459-6280		1	NUT GUK 5 M25 X 1.5 FZB	
630	90606-2351		1	GREASE NIPPLE STR. M10X1, 996-001-890-S3	
720	344414-0000	L	1	KLüBEROIL 4 UH1-320N, ONLY IN BOM	
	344414-0335		*1*	*KLüBEROIL 4 UH1-320N, 200 L DRUM*	
	344414-0766		*1*	*KLüBEROIL 4 UH1-320N, 20 L CAN*	
	344414-0764		*1*	*KLüBEROIL 4 UH1-320N, 5 L CAN*	

Pos	Part No	UN	Qty	Description	Page No

Machine Type	Group Description	Used-In	Group Number	Page No

ADJUSTABLE GUIDE

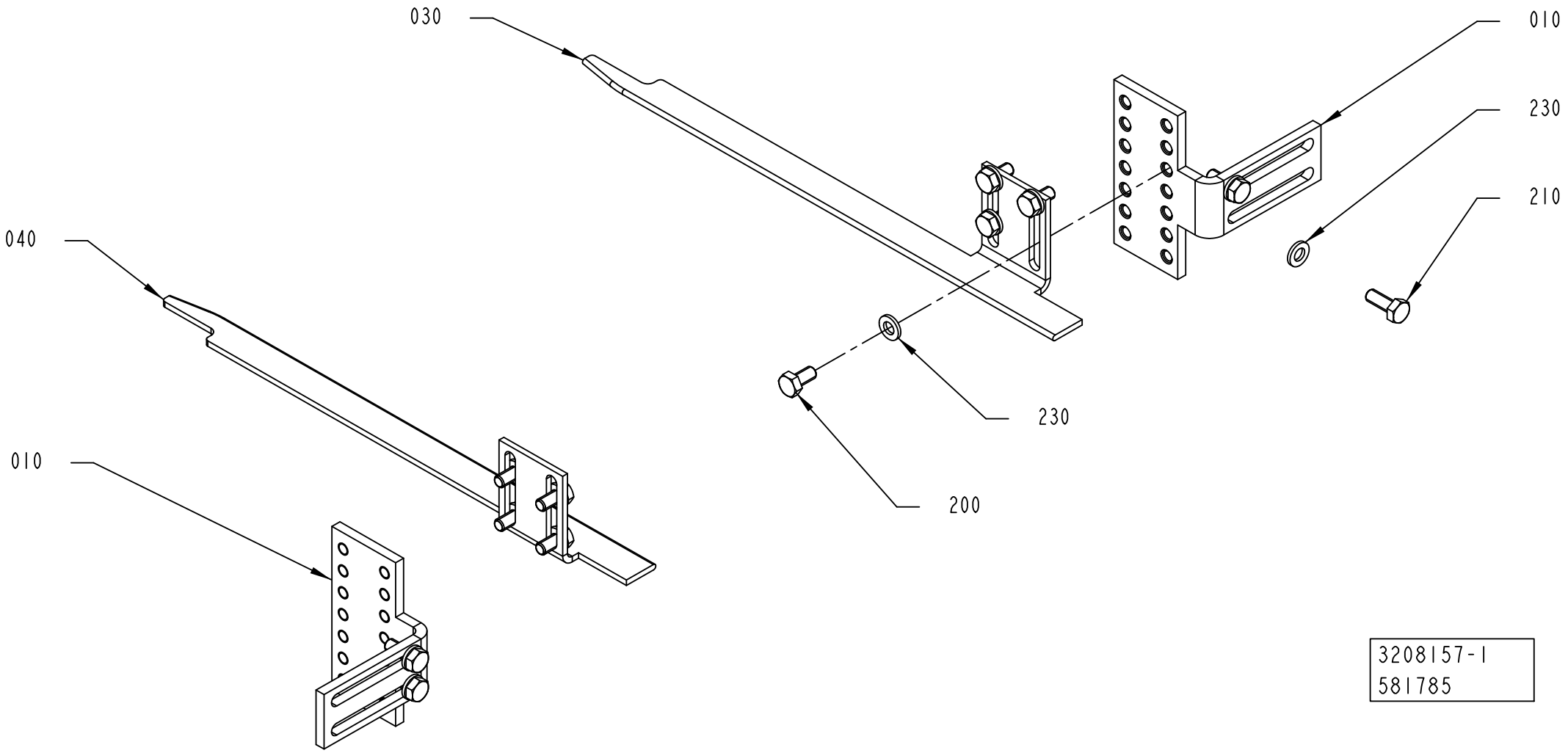

ECM: 581786 - 20130401
Group number: 3208157-0100
Assembly Drawing: 3208157-1_1_AB

Pos	Part No	UN	Qty	Description	Page No
-					
010	3117145-0000		2	ANGLE	
030	3117146-0000		1	GUIDE	
040	3120838-0000		1	GUIDE	
200	312105-0366		8	SCREW, M6S ISO 4017 M6X12 A4 80	
210	312105-0368		4	"SCREW, M6S ISO 4017 M6X16 A4 80"	
230	315106-0153		12	WASHER PLAIN, M6 ISO7089-6-200 HV A4	

Pos	Part No	UN	Qty	Description	Page No

SLIDING RACK

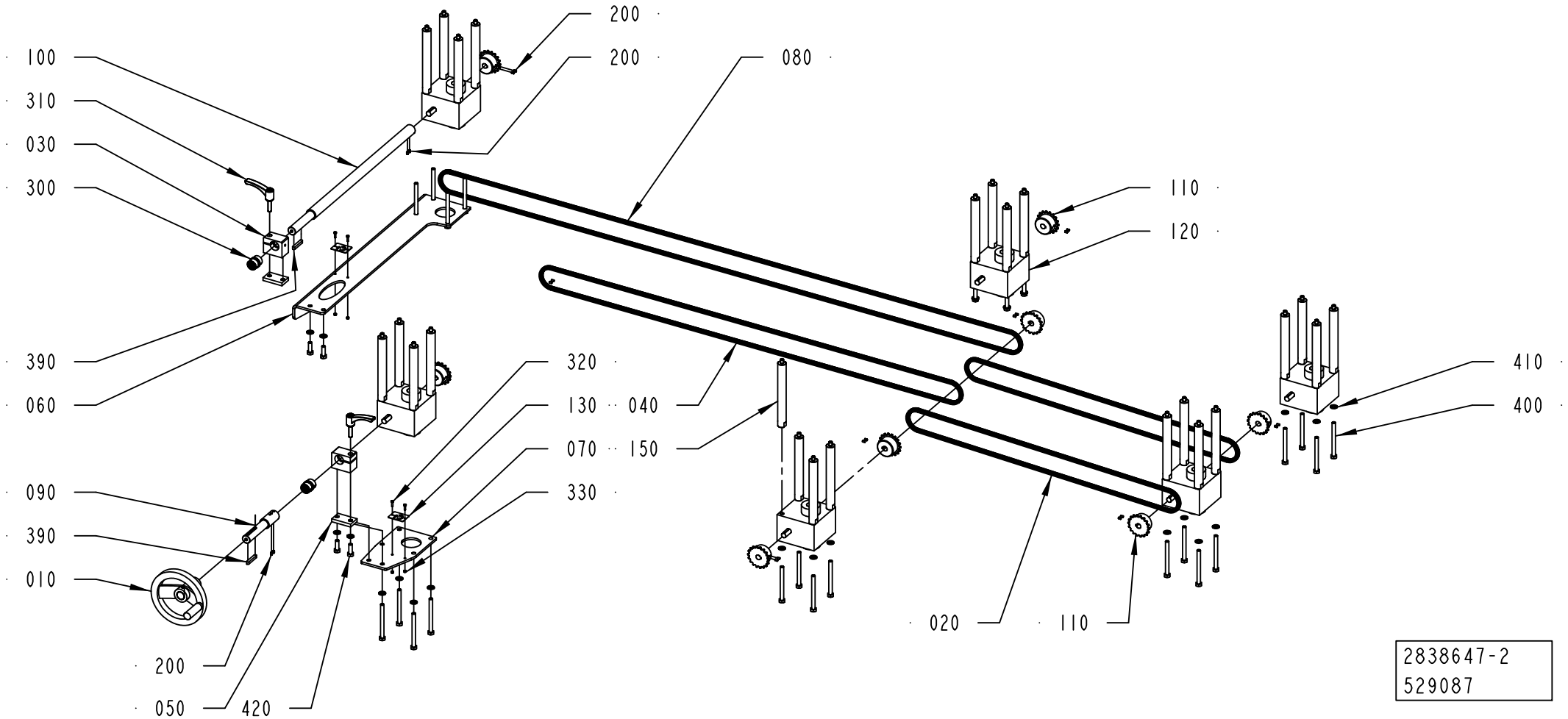

ECM: 529593 - 20120401
Group number: 2838647-0200
Assembly Drawing: 2838647-2_1_AA

Pos	Part No	UN	Qty	Description	Page No
-					
010	2802404-0100		1	HANDLE	**1-25**
020	90600-0961		2	ROLLER CHAIN, SIMPLEX 3/8 -159, SS	
030	2769726-0000		2	BRACKET	
040	90600-0962		1	ROLLER CHAIN, SIMPLEX 3/8 -243, SS	
050	2778594-0000		2	PLATE	
060	2779063-0000		1	PLATE	
070	2779759-0000		1	PLATE	
080	90600-0964		1	ROLLER CHAIN, SIMPLEX 3/8 -333, SS	
090	2769729-0000		1	SHAFT	
100	2779756-0000		1	SHAFT	
110	2779062-0000		8	SPROCKET	
120	90600-0812		6	GEAR BOX, TP00042000110	
130	2873941-0000		2	SIGN	
150	2778585-0000		24	PILLAR	
200	312318-0285		20	SET SCREW, CUP END ISO4029 M4X6 A4	
300	90458-2932		2	PLAIN BEARING, JUM-02-20	
310	90017-0029		2	LOCKING LEVER, NO. KR8X30-SUS	
320	90287-0175		4	SCREW M6S M3X12 A480	
330	312605-0310		4	HEXAGON NUT, M6M M3 A280	
390	315705-0239		2	PARALLEL KEY W. ROUND ENDS, 6X6X40 MM	
400	312105-0469		24	SCREW, M6S ISO 4014 M8X90 A4 80	
410	315105-0165		28	FWAS080G0-0S, WASHER PLAIN	
420	312105-0453		4	SCREW, M6S ISO 4017 M8X25 A4 80	

Pos	Part No	UN	Qty	Description	Page No

Machine Type | Group Description | Used-In | Group Number | Page No

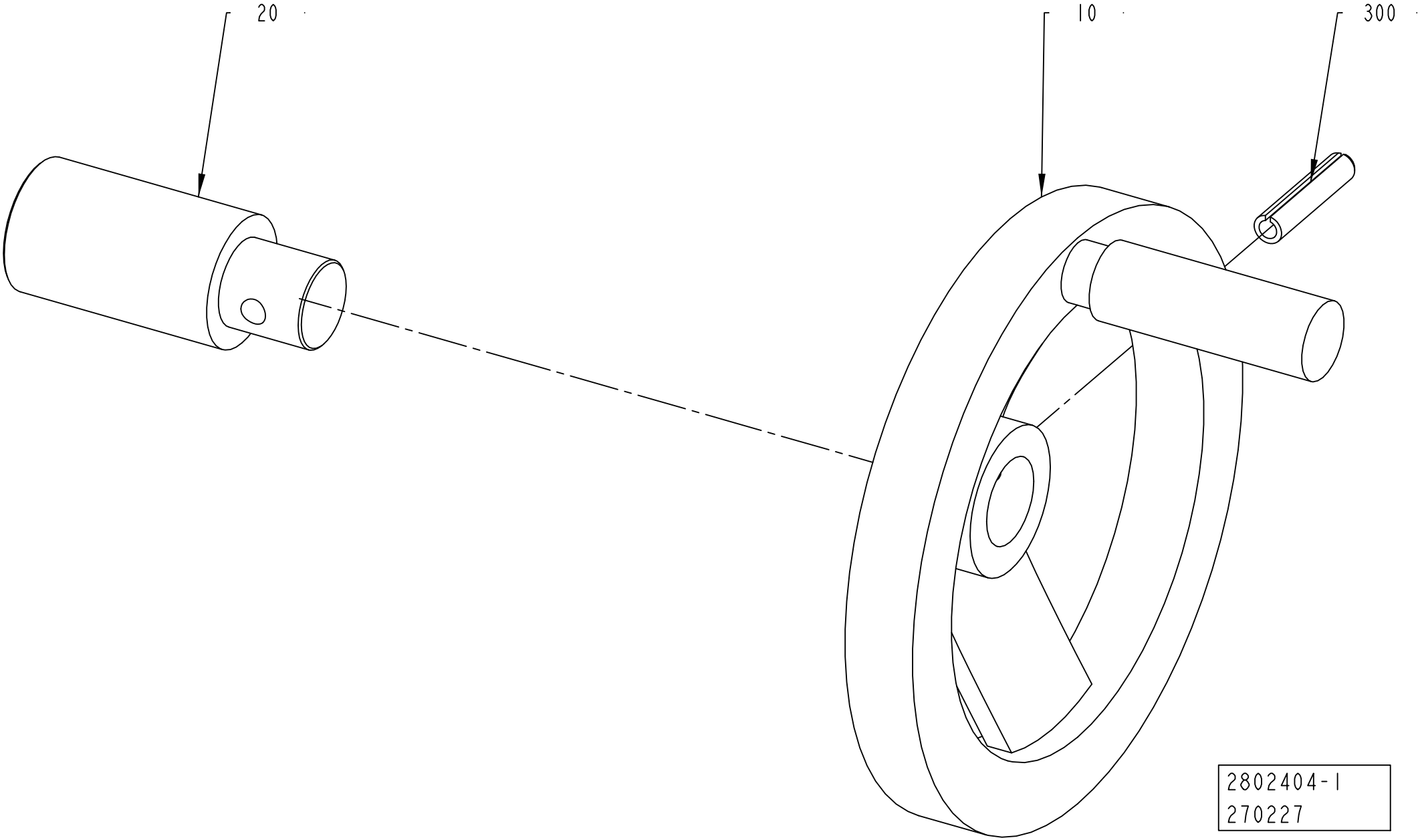
20
10
300
2802404-1
270227

ECM: 273295 - 20060921
Group number: 2802404-0100
Assembly Drawing: 2802404-1_1_AA

Pos	Part No	UN	Qty	Description	Page No
-					
010	2781286-0000		1	HAND WHEEL	
020	2788144-0000		1	SHAFT	
300	311112-0345		1	SPRING PIN, ISO 8752 6X32 A2	

Pos	Part No	UN	Qty	Description	Page No

BELT BRAKE

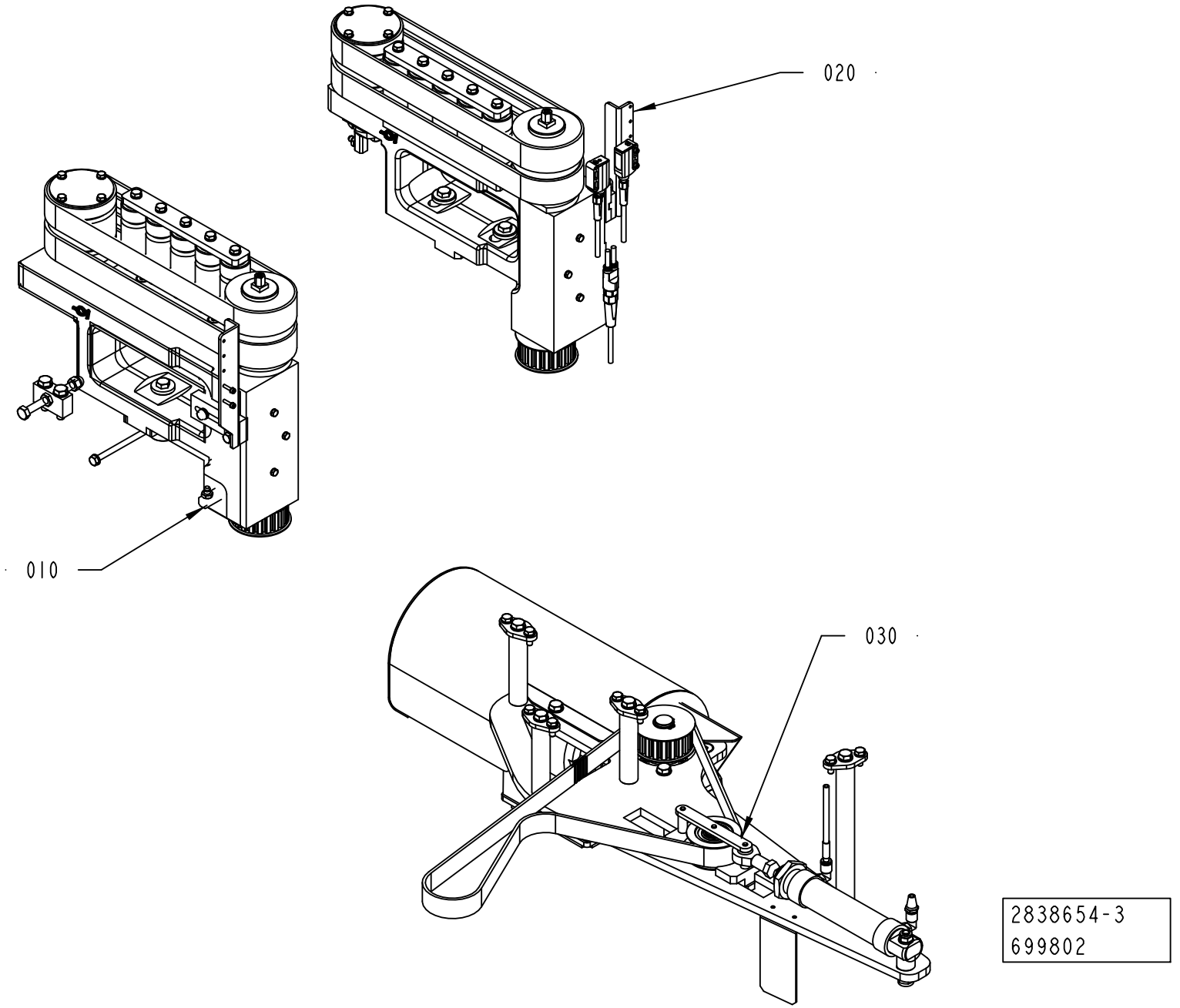

ECM: 699802 - 20150101
Group number: 2838654-0300
Assembly Drawing: 2838654-3_1_AB

Pos	Part No	UN	Qty	Description	Page No
-					
010	2766990-0200		1	BRAKE UNIT	**1-29**
020	2766991-0200		1	BRAKE UNIT	**1-31**
030	2766994-0400		1	ACCELERATION PUSHER	**1-33**

Pos	Part No	UN	Qty	Description	Page No

Machine Type | Group Description | Used-In | Group Number | Page No

BRAKE UNIT

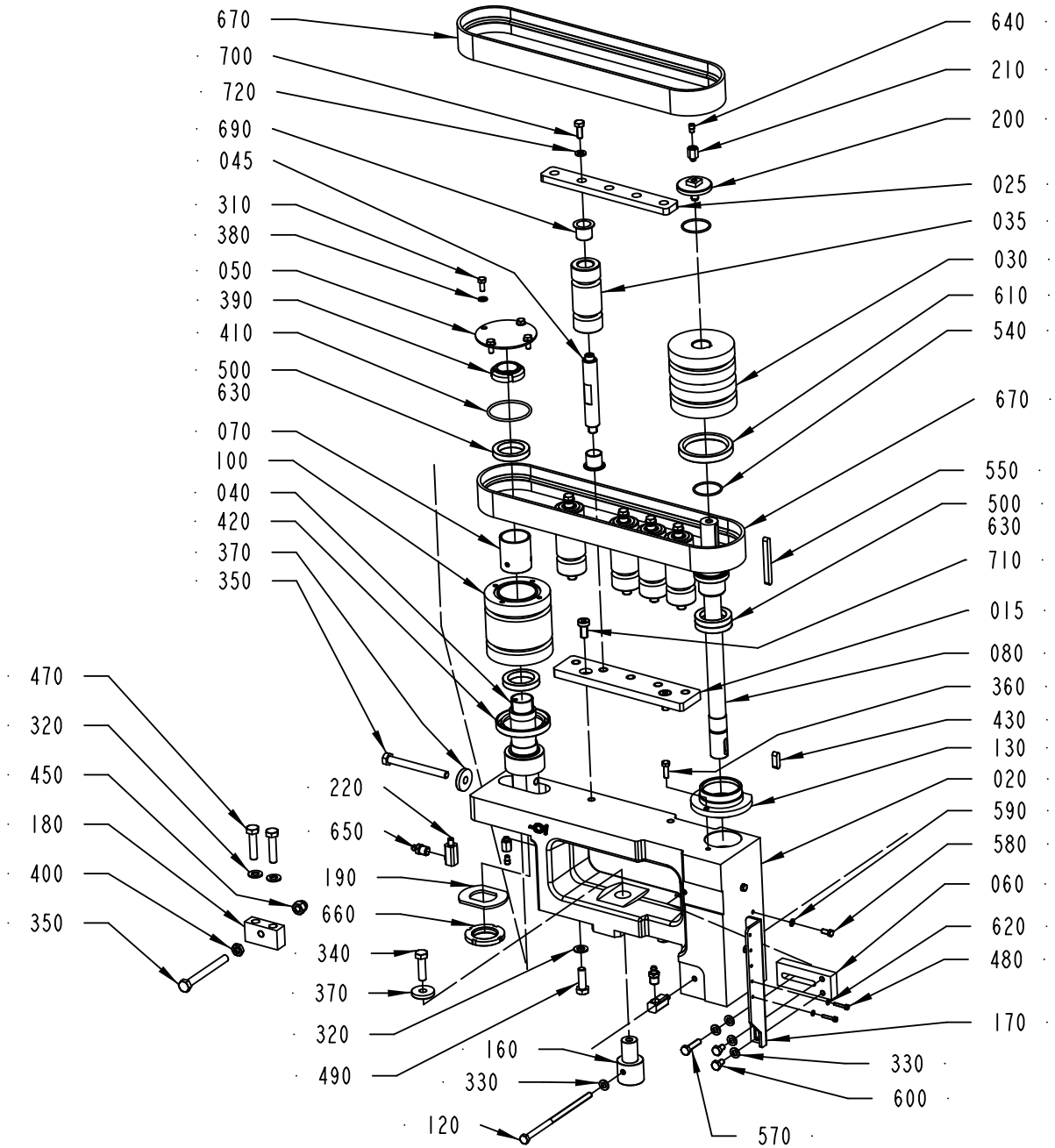

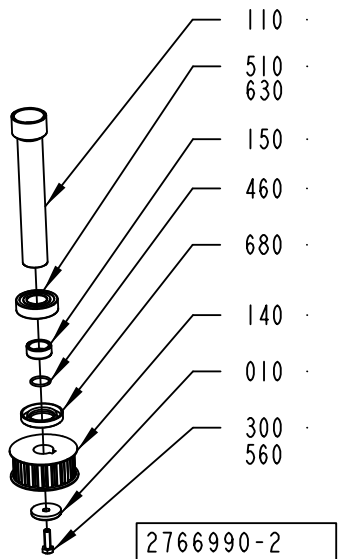

2766990-2
669737

ECM: 679476 - 20141001
Group number: 2766990-0200
Assembly Drawing: 2766990-2_1_AC

Pos	Part No	UN	Qty	Description	Page No
-					
010	290027-0000		1	WASHER	
015	3257421-0000		1	PLATE	
020	3010622-0000		1	CANTILEVER	
025	3257422-0000		1	PLATE	
030	3115079-0000		1	DRIVE PULLEY	
035	3225865-0000		5	PULLEY	
040	3217280-0000		1	SHAFT	
045	3227371-0000		5	SHAFT	
050	2769686-0000		1	COVER	
060	2936120-0000		1	BRACKET	
070	2769741-0000		1	SPACER	
080	3108987-0000		1	DRIVE SHAFT	
100	2826729-0000		1	PULLEY	
110	3115081-0000		1	SPACER	
120	2805468-0000		1	SCREW	
130	3115080-0000		1	FLANGE	
140	3039030-0000		1	TOOTHED PULLEY	
150	2773600-0000		1	SPACER	
160	2775418-0000		1	SHAFT	
170	2936740-0000		1	BRACKET	
180	2775427-0000		1	BRACKET	
190	2778564-0000		1	WASHER	
200	3199899-0000		1	SCREW	
210	3147226-0000		2	ADAPTER	
220	3326954-0000		2	JUNCTION NIPPLE	
300	312105-0370		1	SCREW, M6S ISO 4017 M6X20 A4 80	
310	312105-0327		4	"SCREW, M6S ISO 4017 M5X12 A4 80"	
320	315105-0165		4	FWAS080G0-0S, WASHER PLAIN	
330	315105-0153		5	WASHER PLAIN, 6,4X12X1,5 A4 BRB	
340	312105-0455		1	SCREW, M6S ISO 4017 M8X30 A4 80	
350	312109-0467		2	SCREW, M6S ISO 4017 M8X80 A4 80	
360	312105-0329		1	SCREW, M6S ISO 4017 M5X16 A4 80	
370	315125-0165		2	WASHER HIGH, TBRSB 8,4X26X5 A4	
380	315105-0146		4	WASHER PLAIN, 5,3X10X1 A4 BRB	
390	90459-6280		1	NUT GUK 5 M25 X 1.5 FZB	
400	312625-0318		1	HEXAGON THIN NUT, EN 24035 ML6M M8 A4	
410	315202-0733		1	O-RING 45,69X2,62 MM	
420	315221-0192		1	RADIAL SEAL 45X62X8 MM	
430	315705-0232		1	PARALLEL KEY W. ROUND ENDS, 6X6X20 MM	
450	312705-0318		1	NUT HEX. DOMED CAP MHM-6 M8 A280	
460	315202-0705		1	O-RING 17,17X1,78 MM	
470	312105-0457		2	SCREW, M6S ISO 4014 M8X35 A4 80	
480	312115-0228		2	SCREW ISO4762 M3X16 A4 80	
490	312105-0453		2	SCREW, M6S ISO 4017 M8X25 A4 80	
500	90214-0186		4	BALL BEARING 30/42X7	
510	321306-0104		1	BALL BEARING 20/42X12	
540	315202-0713		2	O-RING 29,87X1,78 MM	
550	90458-0507		1	PARALLEL KEY W. ROUND ENDS 6X6X60 MM	
560	344447-0000		1	THREAD SEALANT LOCTITE 542, ONLY IN BOM	
	344447-0050		*1*	*THREAD SEALANT LOCTITE 542, 50ML*	
570	312105-0372		1	SCREW, M6S ISO 4017 M6X25 A4 80	
580	312105-0289		3	SCREW, M6S ISO 4017 M4X10 A4 70	
590	315105-0136		3	WASHER PLAIN, 4,3X8X0,8 A4 BRB	
600	312105-0364		2	"SCREW, M6S ISO 4017 M6X10 A4 80"	
610	315221-0196		1	RADIAL SEAL 48X62X8 MM	
620	315105-0124		2	WASHER PLAIN, 3,2X6X0,5 A4 BRB	
630	344414-0000		1	KLüBEROIL 4 UH1-320N, ONLY IN BOM	
	344414-0335		*1*	*KLüBEROIL 4 UH1-320N, 200 L DRUM*	
	344414-0766		*1*	*KLüBEROIL 4 UH1-320N, 20 L CAN*	
	344414-0764		*1*	*KLüBEROIL 4 UH1-320N, 5 L CAN*	
640	90604-3329		2	NON-RETURN VALVE, RVA-M6	
650	90606-2351		2	GREASE NIPPLE STR. M10X1, 996-001-890-S3	
660	90459-2644		1	NUT ROUND WITH SLOTS M30X1,5 SS	
670	90602-4686		2	TIMING BELT 32TK5K6/780 PU + MINIGRIP	
680	90091-0322		1	RADIAL SEAL 25X42X7 MM DUST LIP	
690	321158-0221		10	FLANGE BUSHING, IGLIDUR J 16X18X17	
700	312105-0368		5	"SCREW, M6S ISO 4017 M6X16 A4 80"	
710	90600-2026		2	SCREW DIN7984 M8X16 AISI 304	
720	315106-0153		5	WASHER PLAIN, M6 ISO7089-6-200 HV A4	

Machine Type	Group Description	Used-In	Group Number	Page No

BRAKE UNIT

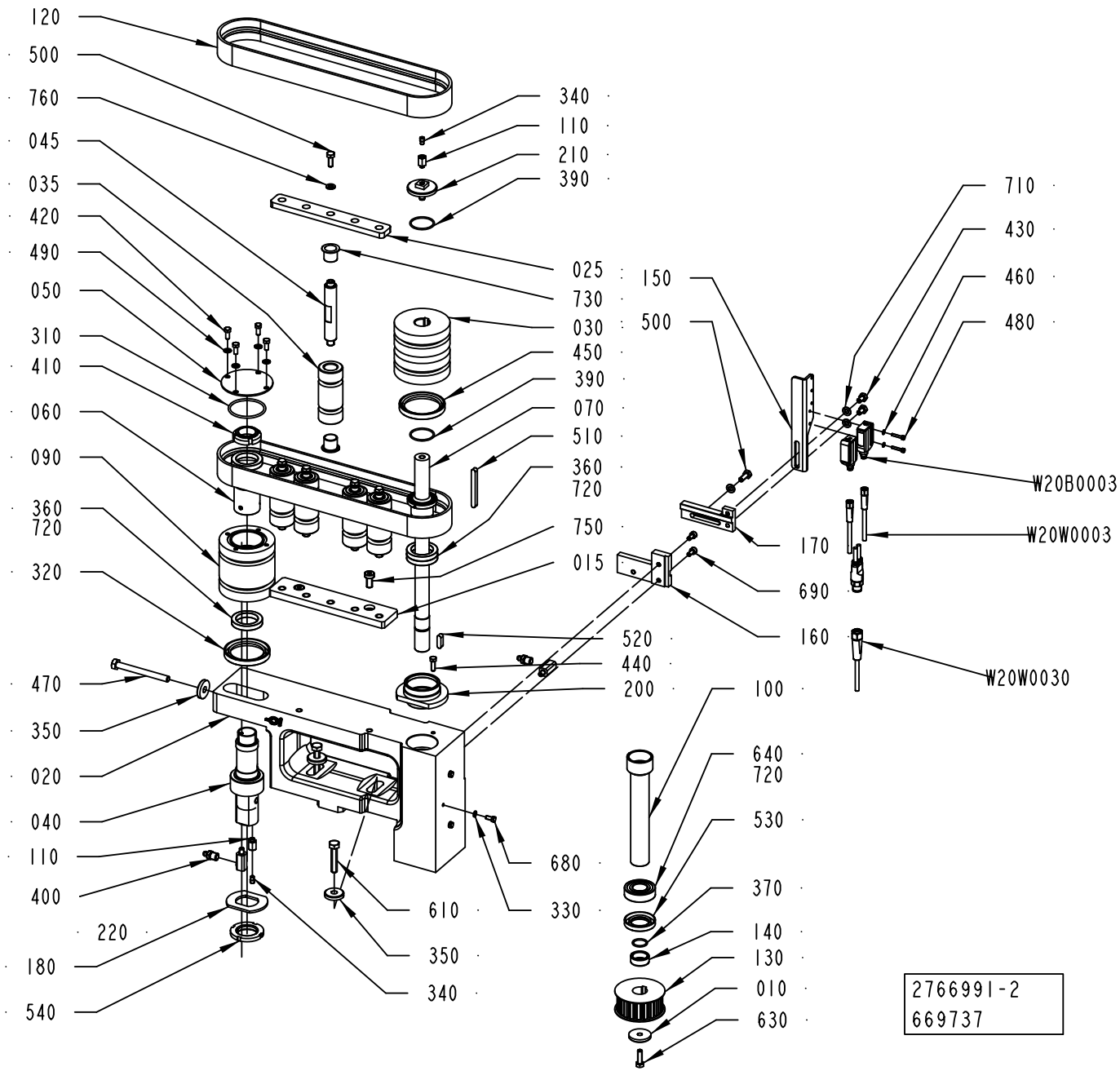
120
500
760
045
035
420
490
050
310
410
060
090
360
720
320
470
350
020
040
110
400
220
180
540
340
110
210
390
025
730
030
450
390
070
510
360
720
750
015
520
440
200
680
330
610
350
340
150
500
710
430
460
480
W20B0003
W20W0003
170
690
160
W20W0030
100
640
720
530
370
140
130
010
630
2766991-2
669737

ECM: 669746 - 20141001
Group number: 2766991-0200
Assembly Drawing: 2766991-2_1_AD

Pos	Part No	UN	Qty	Description	Page No
-					
010	290027-0000		2	WASHER	
015	3257421-0000		1	PLATE	
020	3010624-0000		1	CANTILEVER	
025	3257422-0000		1	PLATE	
030	3115079-0000		1	DRIVE PULLEY	
035	3225865-0000		5	PULLEY	
040	3217280-0000		1	SHAFT	
045	3227371-0000		5	SHAFT	
050	2769686-0000		1	COVER	
060	2769741-0000		1	SPACER	
070	3108987-0000		1	DRIVE SHAFT	
090	2826729-0000		1	PULLEY	
100	3115081-0000		1	SPACER	
110	3147226-0000		2	ADAPTER	
120	90602-4686		2	TIMING BELT 32TK5K6/780 PU + MINIGRIP	
130	3039030-0000		1	TOOTHED PULLEY	
140	2773600-0000		1	SPACER	
150	2936506-0000		1	BRACKET	
160	2943597-0000		1	PLATE	
170	2944164-0000		1	PLATE	
180	2778564-0000		1	WASHER	
200	3115080-0000		1	FLANGE	
210	3199899-0000		1	SCREW	
220	3326954-0000		2	JUNCTION NIPPLE	
310	315202-0733		1	O-RING 45,69X2,62 MM	
320	315221-0192		1	RADIAL SEAL 45X62X8 MM	
330	315105-0136		3	WASHER PLAIN, 4,3X8X0,8 A4 BRB	
340	90604-3329		2	NON-RETURN VALVE, RVA-M6	
350	315125-0165		3	WASHER HIGH, TBRSB 8,4X26X5 A4	
360	90214-0186		4	BALL BEARING 30/42X7	
370	315202-0705		1	O-RING 17,17X1,78 MM	
390	315202-0713		2	O-RING 29,87X1,78 MM	
400	90606-2351		2	GREASE NIPPLE STR. M10X1, 996-001-890-S3	
410	90459-6280		1	NUT GUK 5 M25 X 1.5 FZB	
420	312105-0327		4	"SCREW, M6S ISO 4017 M5X12 A4 80"	
430	312105-0364		2	"SCREW, M6S ISO 4017 M6X10 A4 80"	
440	312105-0329		1	SCREW, M6S ISO 4017 M5X16 A4 80	
450	315221-0196		1	RADIAL SEAL 48X62X8 MM	
460	315105-0124		2	WASHER PLAIN, 3,2X6X0,5 A4 BRB	
470	312109-0467		1	SCREW, M6S ISO 4017 M8X80 A4 80	
480	312115-0228		2	SCREW ISO4762 M3X16 A4 80	
490	315105-0146		4	WASHER PLAIN, 5,3X10X1 A4 BRB	
500	312105-0368		1	"SCREW, M6S ISO 4017 M6X16 A4 80"	
510	90458-0507		1	PARALLEL KEY W. ROUND ENDS 6X6X60 MM	
520	315705-0232		1	PARALLEL KEY W. ROUND ENDS, 6X6X20 MM	
530	90091-0322		1	RADIAL SEAL 25X42X7 MM DUST LIP	
540	90459-2644		1	NUT ROUND WITH SLOTS M30X1,5 SS	
610	312109-0459		2	SCREW, M6S ISO 4017 M8X40 A4 80	
630	312105-0370		1	SCREW, M6S ISO 4017 M6X20 A4 80	
640	321306-0104		1	BALL BEARING 20/42X12	
650	344447-0000		1	THREAD SEALANT LOCTITE 542, ONLY IN BOM	
	344447-0050		*1*	*THREAD SEALANT LOCTITE 542, 50ML*	
680	312105-0289		3	SCREW, M6S ISO 4017 M4X10 A4 70	
690	312115-0325		2	SCREW ISO4762 M5X10 A4 80	
710	315105-0153		3	WASHER PLAIN, 6,4X12X1,5 A4 BRB	
720	344414-0000		1	KLüBEROIL 4 UH1-320N, ONLY IN BOM	
	344414-0335		*1*	*KLüBEROIL 4 UH1-320N, 200 L DRUM*	
	344414-0766		*1*	*KLüBEROIL 4 UH1-320N, 20 L CAN*	
	344414-0764		*1*	*KLüBEROIL 4 UH1-320N, 5 L CAN*	
730	321158-0221		10	FLANGE BUSHING, IGLIDUR J 16X18X17	
750	90600-2026		2	SCREW DIN7984 M8X16 AISI 304	
760	315106-0153		5	WASHER PLAIN, M6 ISO7089-6-200 HV A4	
W20B0003	90606-4464		1	LASER SENSOR, WSE9L-3P2237	
W20W0003	90603-3979		1	SENSOR Y-CABLE, EVT339	
W20W0030	344253-0100		1	SENSOR CABLE, EVT002	

Machine Type	Group Description	Used-In	Group Number	Page No

ACCELERATION PUSHER

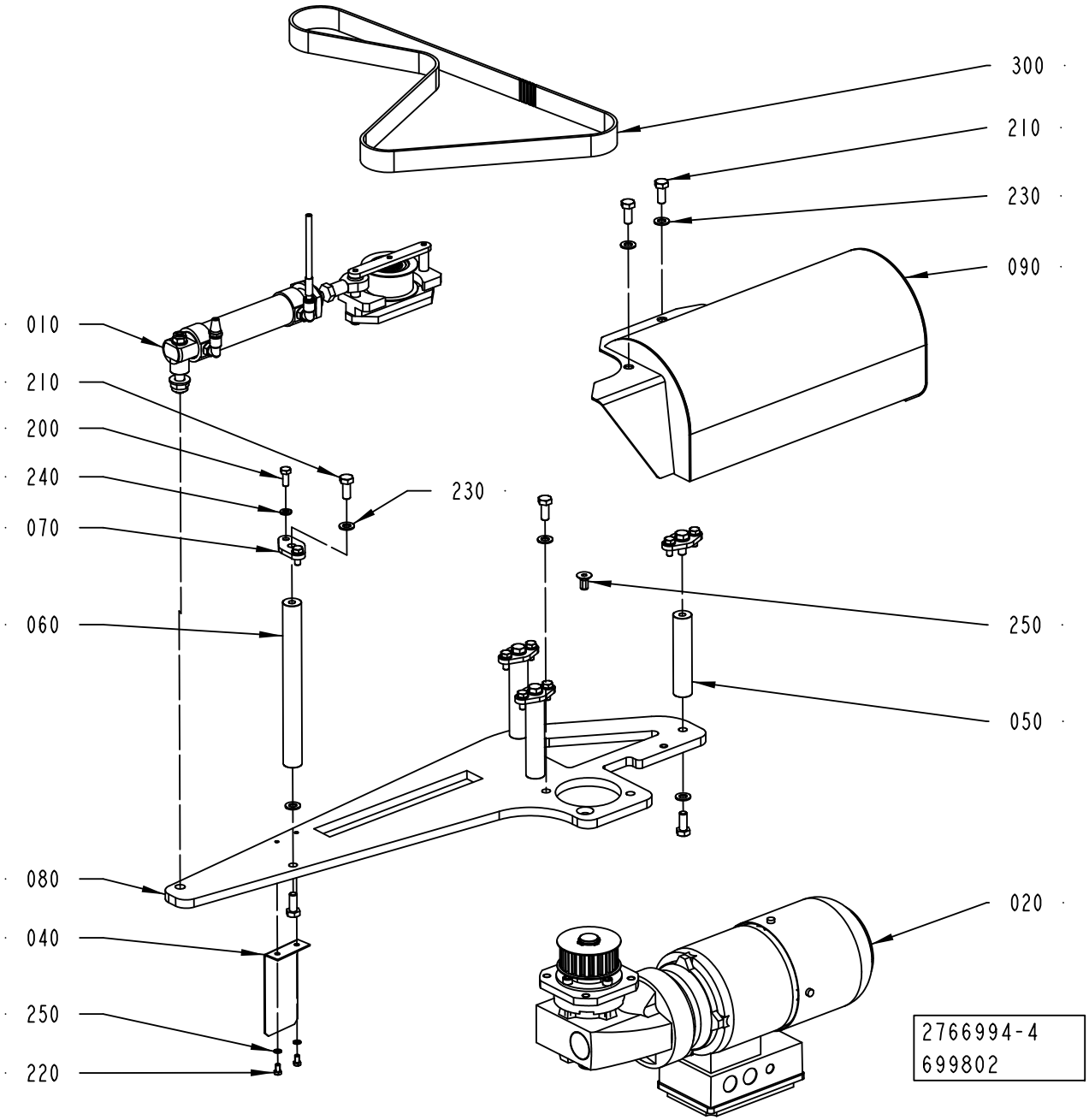

ECM: 699802 - 20150101
Group number: 2766994-0400
Assembly Drawing: 2766994-4_1_AA

Pos	Part No	UN	Qty	Description	Page No
-					
010	2773636-0200		1	BELT TENSIONER	**1-35**
020	2838710-0400		1	WORM GEAR MOTOR	**1-37**
040	2985847-0000		1	PLATE	
050	2769773-0000		3	SPACER	
060	2773601-0000		1	SPACER	
070	2775412-0000		4	PLATE	
080	3017287-0000		1	PLATE	
090	3298642-0000		1	COVER	
200	312105-0368		8	"SCREW, M6S ISO 4017 M6X16 A4 80"	
210	312105-0451		11	SCREW, M6S ISO 4017 M8X20 A4 80	
220	312105-0287		2	SCREW, M6S ISO 4017 M4X8 A4 70	
230	315105-0165		12	FWAS080G0-0S, WASHER PLAIN	
240	315105-0153		8	WASHER PLAIN, 6,4X12X1,5 A4 BRB	
250	315105-0136		2	WASHER PLAIN, 4,3X8X0,8 A4 BRB	
260	312155-0449		1	SCREW DIN 7991 MF6S M8X16 A4 70	
300	90602-4674		1	TIMING BELT 25T10/1150-DL PU	

Pos	Part No	UN	Qty	Description	Page No

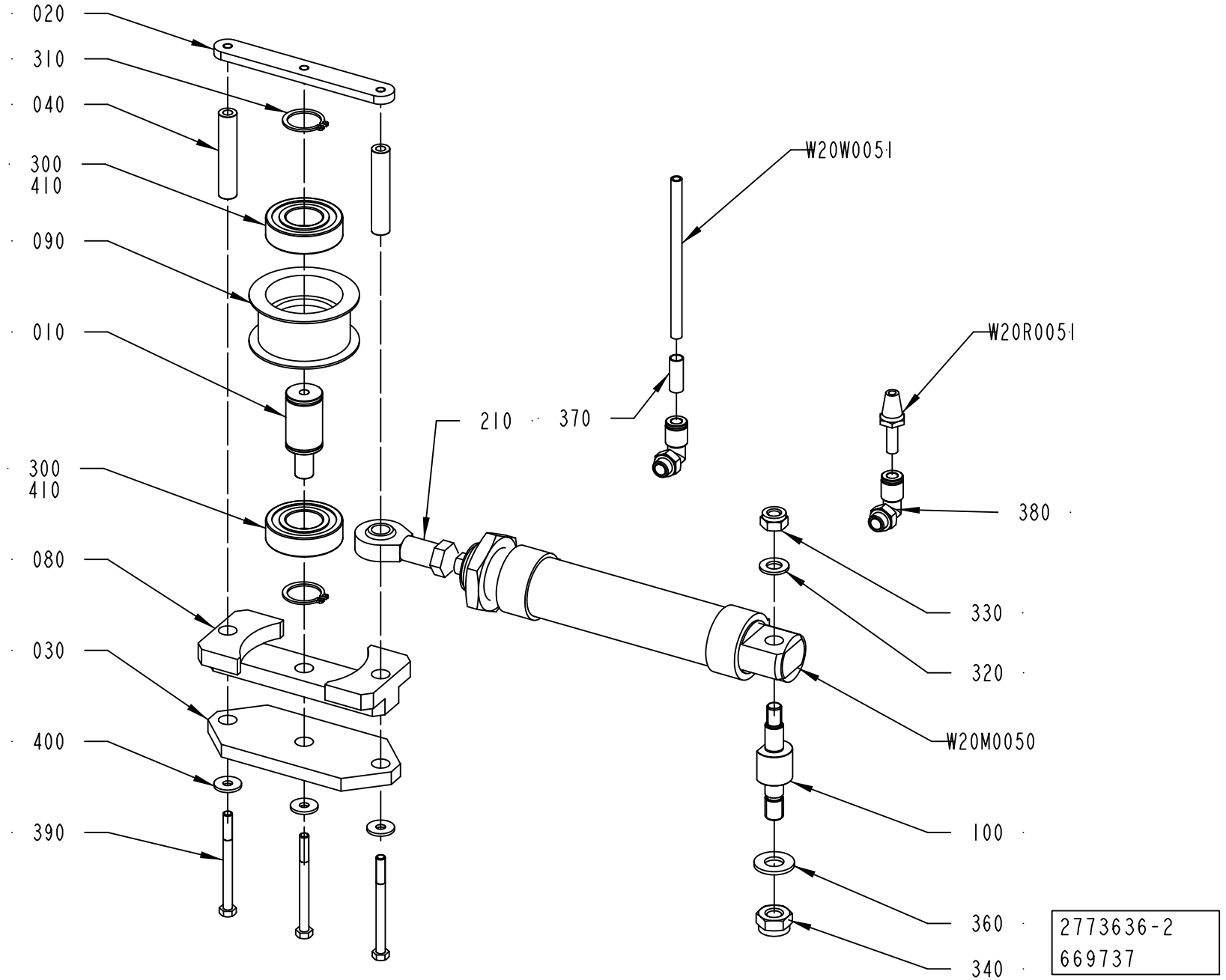
020
310
040
300
410
090
010
300
410
080
030
400
390
210
370
W20W0051
W20R0051
380
330
320
W20M0050
100
360
340
2773636-2
669737

ECM: 679490 - 20141001
Group number: 2773636-0200
Assembly Drawing: 2773636-2_1_AB

Pos	Part No	UN	Qty	Description	Page No
-					
010	2775398-0000		1	PIN	
020	2773604-0000		1	PLATE	
030	2773638-0000		1	PLATE	
040	2773639-0000		2	SHAFT	
080	2773637-0000		1	BRACKET	
090	2773615-0000		1	ROLLER	
100	2781292-0000		1	SHAFT	
210	90115-0134		1	ROD END, ID=10 MM, M10X1,25	
300	344224-0204		2	BALL BEARING 20/42X12	
310	315751-0116		2	RETAINING RING FOR SHAFT DIN 471 20 SS	
320	315105-0165		1	FWAS080G0-0S, WASHER PLAIN	
330	312812-0318		1	HEXAGON NUT, NY-LOCK M8 A4 80	
340	312812-0320		1	HEXAGON NUT, NY-LOCK M10 A4 80	
360	315105-0173		1	WASHER PLAIN, 10,5X22X2 A4 BRB	
370	90459-7369		1	MARKING FOR PNEUM. TUBING, PRZ06	
380	351456-3002		2	PUSH-IN L-FITTING NPQH-L-G18-Q6-P10	
390	312105-0343		3	SCREW, M6S ISO 4014 M5X60 A4 80	
400	90005-0139		3	WASHER PLAIN ROUND 5,2(M5)/15, H=1,6	
410	344414-0000		1	KLüBEROIL 4 UH1-320N, ONLY IN BOM	
	344414-0335		*1*	*KLüBEROIL 4 UH1-320N, 200 L DRUM*	
	344414-0766		*1*	*KLüBEROIL 4 UH1-320N, 20 L CAN*	
	344414-0764		*1*	*KLüBEROIL 4 UH1-320N, 5 L CAN*	
W20M0050	90604-3137		1	DOUBLE ACTING, MINI-ISO, CYL. 32-80	
W20R0051	90328-0017		1	SILENCER, D=6 MM74122000	
W20W0051	315400-0001	M	3	6-4E PUN-H-6X1-BL	

Pos	Part No	UN	Qty	Description	Page No

Machine Type | Group Description | Used-In | Group Number | Page No

WORM GEAR MOTOR

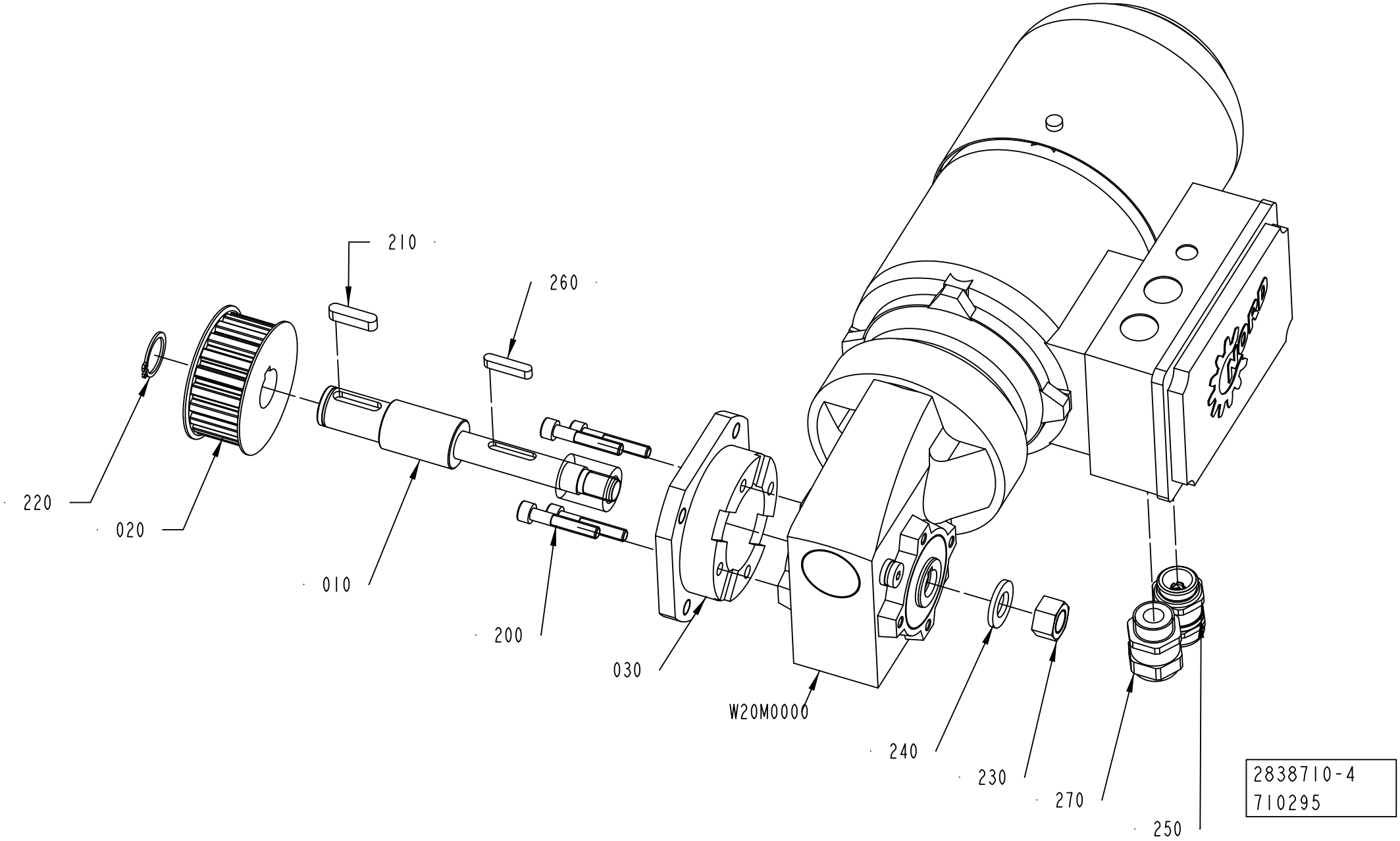

ECM: 713768 - 20150401
Group number: 2838710-0400
Assembly Drawing: 2838710-4_1_AB

Pos	Part No	UN	Qty	Description	Page No
-					
010	3289869-0000		1	DRIVE SHAFT	
020	3039030-0000		1	TOOTHED PULLEY	
030	3290004-0000		1	FLANGE	
200	312115-0376		4	SCREW ISO4762 M6X35 A4 80	
210	315705-0234		1	PARALLEL KEY W. ROUND ENDS, 6X6X25 MM	
220	315751-0116		1	RETAINING RING FOR SHAFT DIN 471 20 SS	
230	312607-0322		1	HEXAGON NUT, EN 24032 M6M M12 A480	
240	315106-0178		1	"WASHER PLAIN, M12 ISO7089-12-200 HV A4"	
250	344202-0003		1	CABLE GLAND; MS-SC-M, 7-12,5MM, M20X1,5	
260	315705-0202		1	PARALLEL KEY W. ROUND ENDS, 5X5X25MM	
270	90458-0307		1	CABLE GLAND, M20X1,5, 5311 1020	
W20M0000	90606-5324		1	GEARS, WORM MOTOR SK1SMI31AZ-IEC63-63L/4	

Pos	Part No	UN	Qty	Description	Page No

PACKAGE POSITIONER

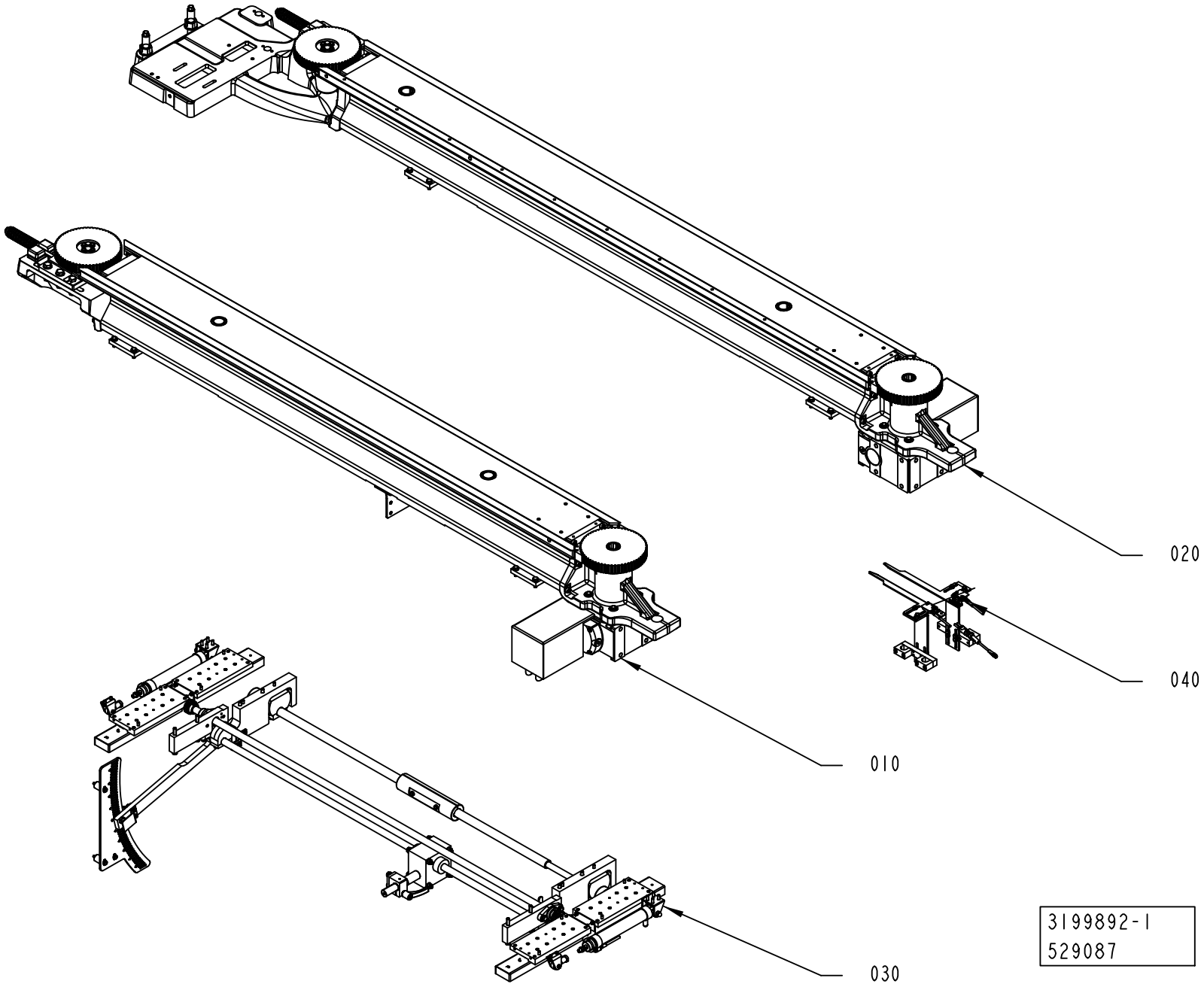

ECM: 529608 - 20120401
Group number: 3199892-0100
Assembly Drawing: 3199892-1_1_AA

Pos	Part No	UN	Qty	Description	Page No
-					
010	3199886-0100		1	SIDE FRAME	**1-41**
020	3199887-0100		1	SIDE FRAME	**1-49**
030	2838650-0200		1	SLIDING RACK	**1-57**
040	3199894-0100		1	ADJUSTABLE GUIDE	**1-69**

Pos	Part No	UN	Qty	Description	Page No

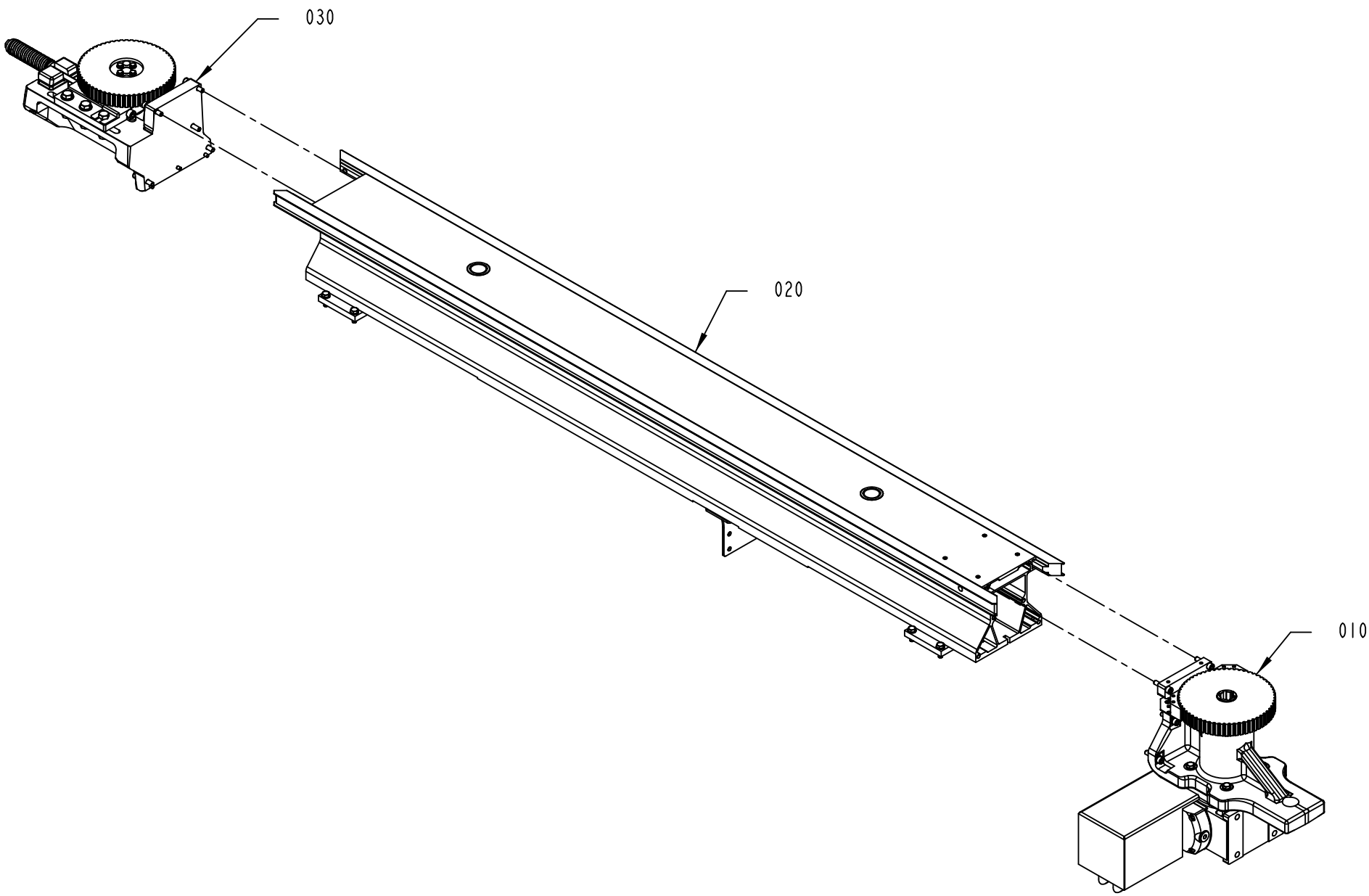
030
020
010
3199886-1
529087

ECM: 529603 - 20120401
Group number: 3199886-0100
Assembly Drawing: 3199886-1_1_AA

Pos	Part No	UN	Qty	Description	Page No
-					
010	3199873-0100		1	DRIVE	**1-43**
020	3209483-0100		1	FRAME BOTTOM	**1-45**
030	2769743-0200		1	BELT TENSIONER	**1-47**

Pos	Part No	UN	Qty	Description	Page No

Machine Type | Group Description | Used-In | Group Number | Page No

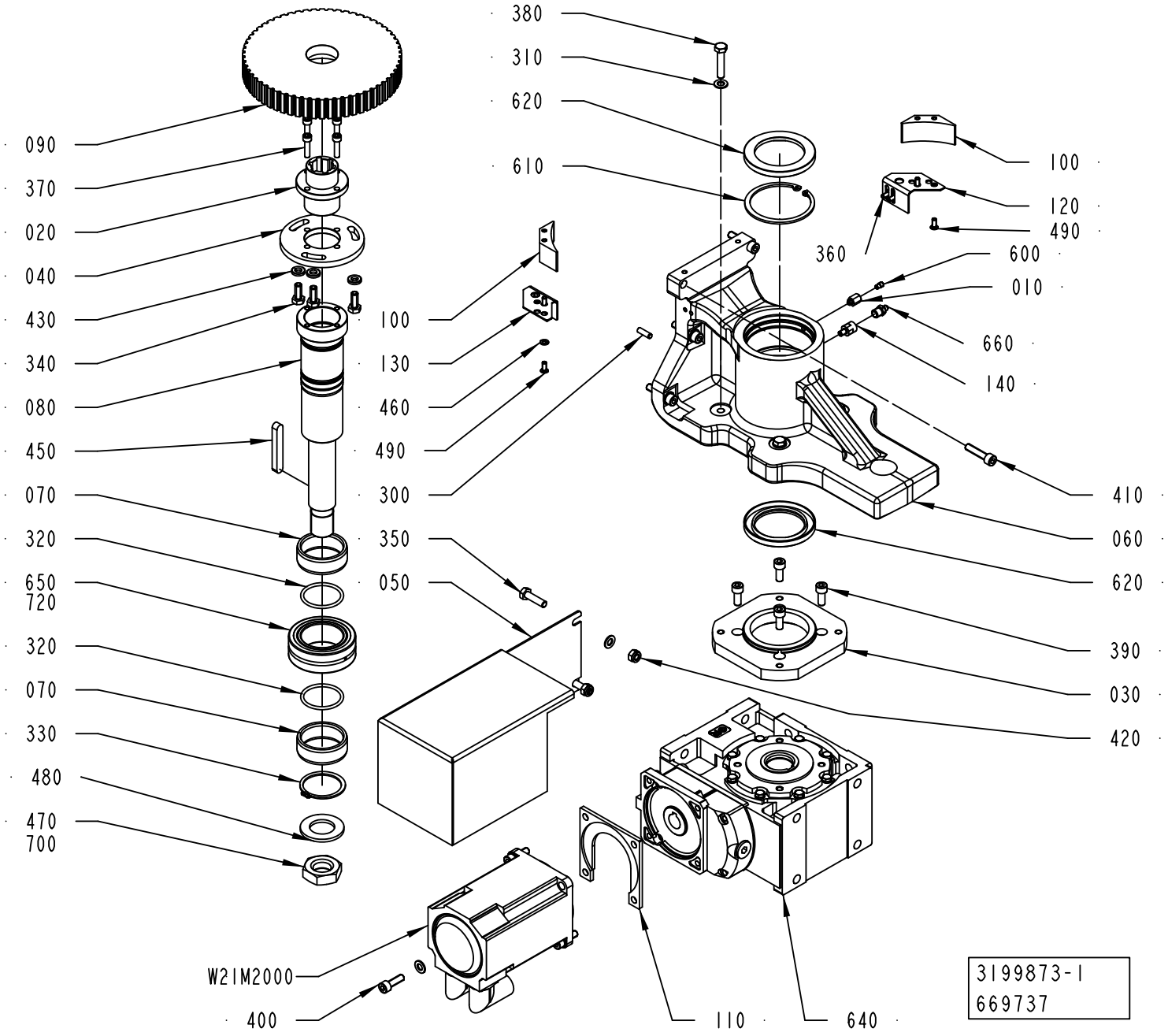
090
370
020
040
430
340
080
450
070
320
650
720
320
070
330
480
470
700
380
310
620
610
100
130
460
490
300
350
050
W21M2000
400
110
640
100
120
490
360
600
010
660
140
410
060
620
390
030
420
3199873-1
669737

ECM: 679481 - 20141001
Group number: 3199873-0100
Assembly Drawing: 3199873-1_1_AD

Pos	Part No	UN	Qty	Description	Page No
-					
010	3147226-0000		1	ADAPTER	
020	2775439-0000		1	BUSHING	
030	2837627-0000		1	FLANGE	
040	2775438-0000		1	PLATE	
050	2837625-0000		1	COVER	
060	2837623-0000		1	BRACKET	
070	2837628-0000		2	SPACER	
080	2837624-0000		1	SHAFT	
090	2775437-0000		1	TOOTHED PULLEY	
100	3186487-0000		2	PROTECTION PLUG	
110	2985781-0000		1	PLATE	
120	3161464-0000		1	BRACKET	
130	3161465-0000		1	BRACKET	
140	3326956-0000		1	JUNCTION NIPPLE	
300	311103-0353		3	PARALLEL PIN ISO 2338 6M6X20 A1	
310	315105-0165		15	FWAS080G0-0S, WASHER PLAIN	
320	315202-0602		2	O-RING 44,04X3,53 MM	
330	315751-0130		1	RETAINING RING FOR SHAFT DIN 471 50 SS	
340	312105-0451		3	SCREW, M6S ISO 4017 M8X20 A4 80	
350	312105-0455		3	SCREW, M6S ISO 4017 M8X30 A4 80	
360	312115-0325		4	SCREW ISO4762 M5X10 A4 80	
370	312115-0372		4	SCREW ISO4762 M6X25 A4 80	
380	312105-0459		4	SCREW, M6S ISO 4014 M8X40 A4 80	
390	312115-0451		4	SCREW ISO4762 M8X20 A4 80	
400	312115-0453		4	SCREW ISO4762 M8X25 A4 80	
410	312115-0457		6	SCREW ISO4762 M8X35 A4 80	
420	312812-0318		3	HEXAGON NUT, NY-LOCK M8 A4 80	
430	315115-0165		3	WASHER PLAIN, TBRB 8,4/16 H=3	
450	315705-0307		1	PARALLEL KEY W. ROUND ENDS, 10X8X70 MM	
460	315105-0146		8	WASHER PLAIN, 5,3X10X1 A4 BRB	
470	312625-0330		1	HEXAGON THIN NUT, EN 24035 ML6M M27 A4	
480	315105-0203		1	WASHER PLAIN, 30X52X4 A4 BRB	
490	90606-4924		4	SCREW, CBSTSR5-12	
600	90604-3329		1	NON-RETURN VALVE, RVA-M6	
610	90458-0181		1	RETAINING RING FOR BORE DIN 472 80 SS	
620	90459-4588		2	RADIAL SEAL 60X85X8 MM DUST LIP	
640	90604-4254		1	WORM GEAR MR V 63 UO3A-80B4 … B5/35 H1 F	
650	90600-0892		1	NEEDLE ROLLER BEARING, 50X80X28 MM	
660	90606-2351		1	GREASE NIPPLE STR. M10X1, 996-001-890-S3	
700	344447-0000		1	THREAD SEALANT LOCTITE 542, ONLY IN BOM	
	344447-0050		*1*	*THREAD SEALANT LOCTITE 542, 50ML*	
720	344414-0000		1	KLüBEROIL 4 UH1-320N, ONLY IN BOM	
	344414-0335		*1*	*KLüBEROIL 4 UH1-320N, 200 L DRUM*	
	344414-0766		*1*	*KLüBEROIL 4 UH1-320N, 20 L CAN*	
	344414-0764		*1*	*KLüBEROIL 4 UH1-320N, 5 L CAN*	
W21M2000	90601-0668		1	SERVO MOTOR, MPL-B420P-MK72AA SERIES A	

Machine Type	Group Description	Used-In	Group Number	Page No

FRAME BOTTOM

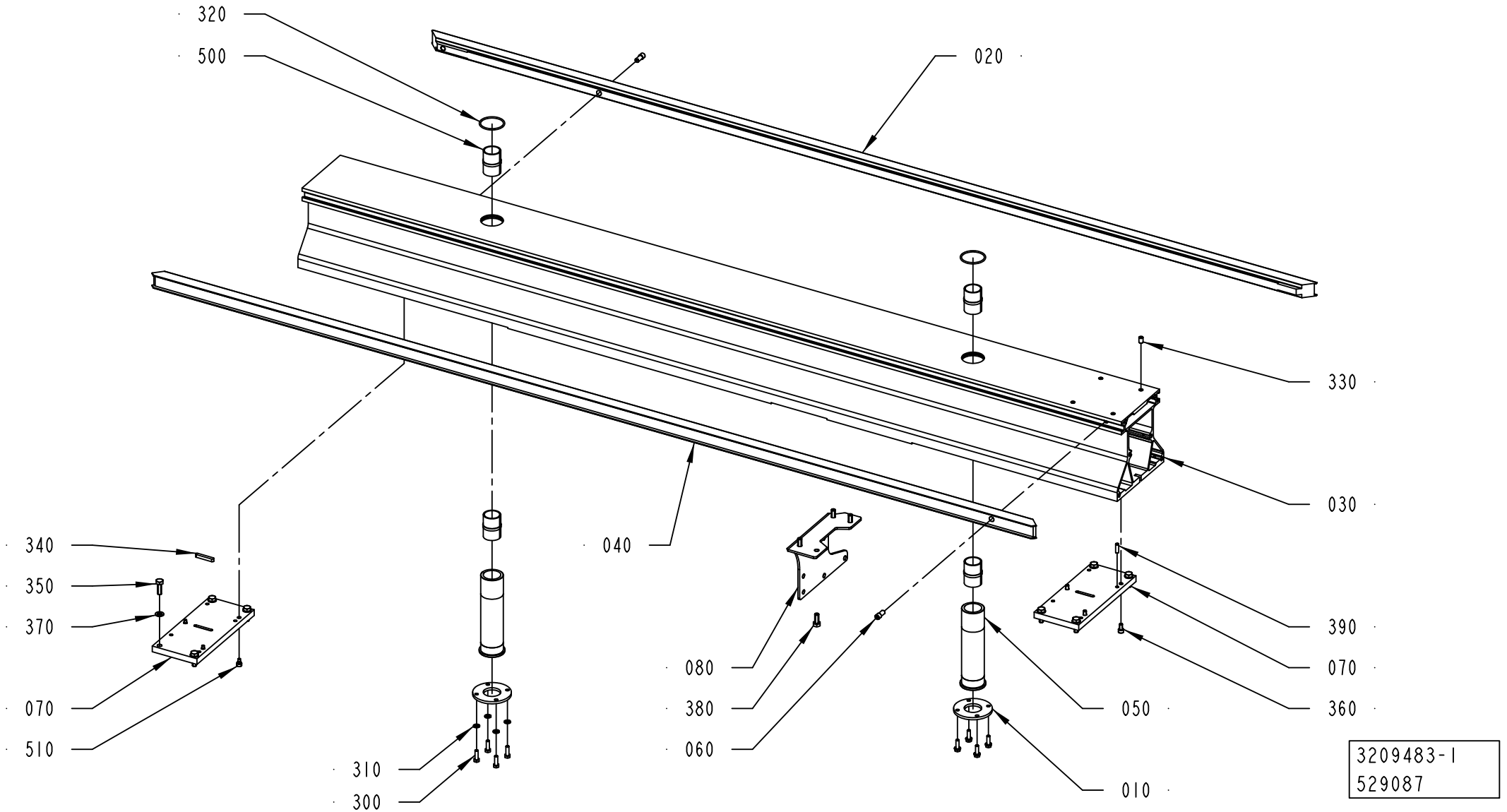

ECM: 529618 - 20120401
Group number: 3209483-0100
Assembly Drawing: 3209483-1_1_AA

Pos	Part No	UN	Qty	Description	Page No
-					
010	2766976-0000		2	FLANGE	
020	3217908-0000		1	GUIDE	
030	3217912-0000		1	FRAME	
040	3203260-0000		1	GUIDE	
050	2766974-0000		2	SLEEVE	
060	3202908-0000		2	SCREW	
070	2788169-0000		2	PLATE	
080	2778592-0000		1	PLATE	
300	312105-0370		8	SCREW, M6S ISO 4017 M6X20 A4 80	
310	315105-0153		8	WASHER PLAIN, 6,4X12X1,5 A4 BRB	
320	315202-0732		2	O-RING 44,12X2,62 MM	
330	312318-0447		4	SET SCREW, CUP END ISO4029 M8X12 A4	
340	315705-0239		1	PARALLEL KEY W. ROUND ENDS, 6X6X40 MM	
350	312105-0453		8	SCREW, M6S ISO 4017 M8X25 A4 80	
360	312115-0366		3	SCREW ISO4762 M6X12 A4 80	
370	315106-0165		8	WASHER PLAIN, M8 ISO7089-8-200 HV A4	
380	312105-0451		4	SCREW, M6S ISO 4017 M8X20 A4 80	
390	311103-0353		1	PARALLEL PIN ISO 2338 6M6X20 A1	
500	90600-0798		4	BUSHING INSERT, JUM-02-30	
510	90287-0230		1	SHOULDER SCREW, 6X4/M5 SS	

Pos	Part No	UN	Qty	Description	Page No

BELT TENSIONER

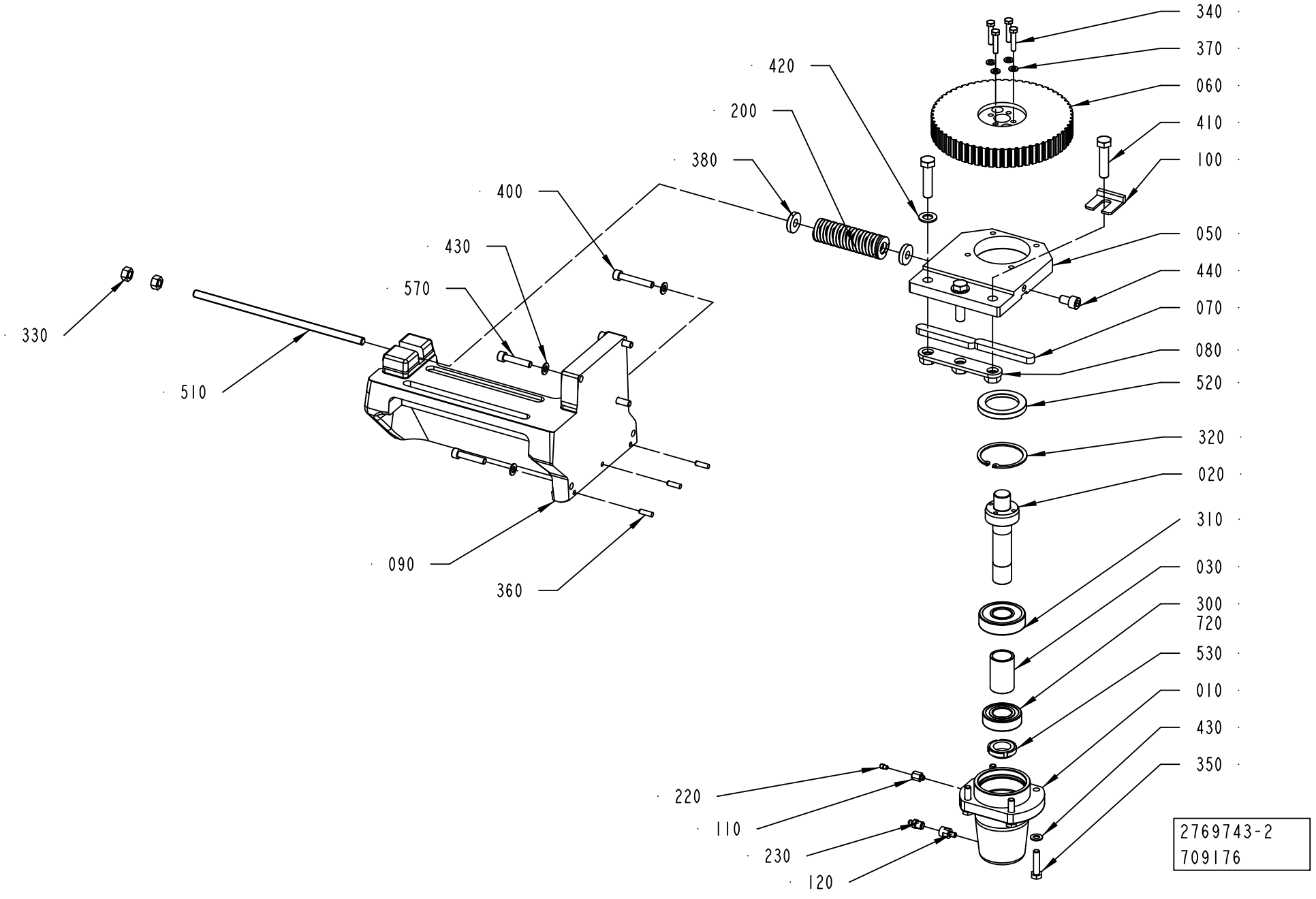

ECM: 709792 - 20141107
Group number: 2769743-0200
Assembly Drawing: 2769743-2_1_AD

Pos	Part No	UN	Qty	Description	Page No
-					
010	3022796-0000		1	BELLOWS	
020	2766958-0000		1	SHAFT	
030	2766959-0000		1	SPACER	
050	2766989-0000		1	BRACKET	
060	2766981-0000		1	TOOTHED PULLEY	
070	315701-0371		2	PARALLEL KEY W. ROUND ENDS, 14X9X90 MM	
080	2775417-0000		1	BRACKET	
090	2778571-0000		1	FRAME	
100	2937337-0000		1	SPACER	
110	3147226-0000		1	ADAPTER	
120	3326956-0000		1	JUNCTION NIPPLE	
200	90604-3324		1	COMP. SPRING, 5443, ?X31,2X115	
220	90604-3329		1	NON-RETURN VALVE, RVA-M6	
230	90606-2351		1	GREASE NIPPLE STR. M10X1, 996-001-890-S3	
300	321309-0105		1	BALL BEARING 25/52X15	
310	321314-0105		1	BALL BEARING 25/62X17	
320	315752-0136		1	RETAINING RING FOR BORE DIN 472 62	
330	312607-0320		1	HEXAGON NUT, EN 24032 M6M M10 A480	
340	312105-0374		4	SCREW, M6S ISO 4014 M6X30 A4 80	
350	312105-0457		4	SCREW, M6S ISO 4014 M8X35 A4 80	
360	311103-0353		3	PARALLEL PIN ISO 2338 6M6X20 A1	
370	315105-0153		4	WASHER PLAIN, 6,4X12X1,5 A4 BRB	
380	315125-0173		2	WASHER HIGH, TBRSB 10,5X28X6 A4	
400	312115-0461		2	SCREW ISO4762 M8X50 A4 80	
410	312109-0542		3	SCREW M6S ISO 4017 M12X50 A280	
420	315105-0178		2	WASHER PLAIN, 13X24X2,5 A4 BRB	
430	315105-0165		9	FWAS080G0-0S, WASHER PLAIN	
440	312115-0489		1	SCREW ISO4762 M10X16 A4 80	
510	3381527-0000		1	THREADED ROD	
520	90091-0304		1	RADIAL SEAL 45X65X8 MM DUST LIP	
530	90459-6280		1	NUT GUK 5 M25 X 1.5 FZB	
570	312115-0459		3	SCREW ISO4762 M8X40 A4 80	
720	344414-0000	L	1	KLüBEROIL 4 UH1-320N, ONLY IN BOM	
	344414-0335		*1*	*KLüBEROIL 4 UH1-320N, 200 L DRUM*	
	344414-0766		*1*	*KLüBEROIL 4 UH1-320N, 20 L CAN*	
	344414-0764		*1*	*KLüBEROIL 4 UH1-320N, 5 L CAN*	

Pos	Part No	UN	Qty	Description	Page No

Machine Type	Group Description	Used-In	Group Number	Page No

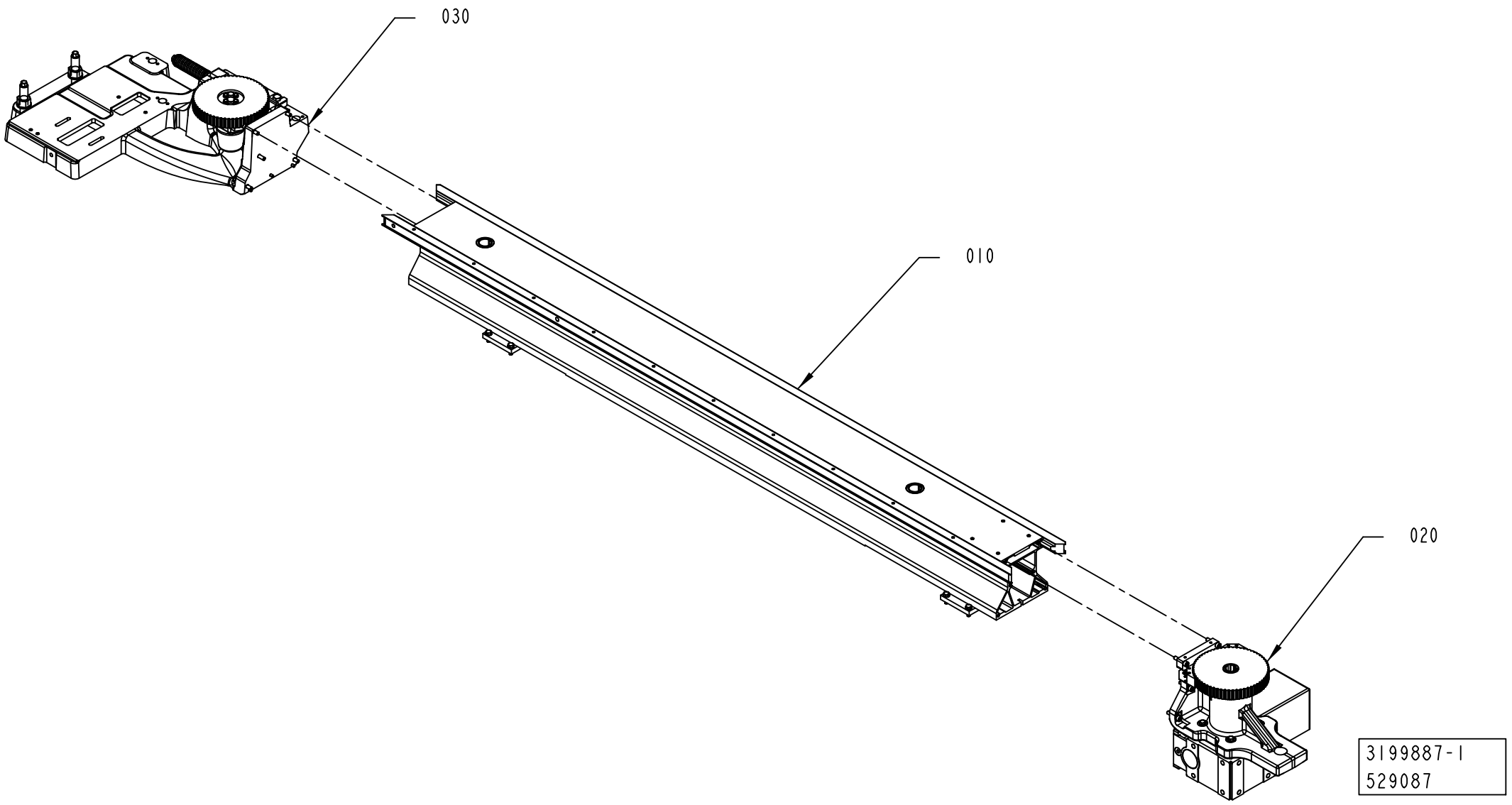
030
010
020
3199887-1
529087

ECM: 529604 - 20120401
Group number: 3199887-0100
Assembly Drawing: 3199887-1_1_AA

Pos	Part No	UN	Qty	Description	Page No
-					
010	3209482-0100		1	FRAME BOTTOM	**1-51**
020	3199874-0100		1	DRIVE	**1-53**
030	2766980-0200		1	BELT TENSIONER	**1-55**

Pos	Part No	UN	Qty	Description	Page No

FRAME BOTTOM

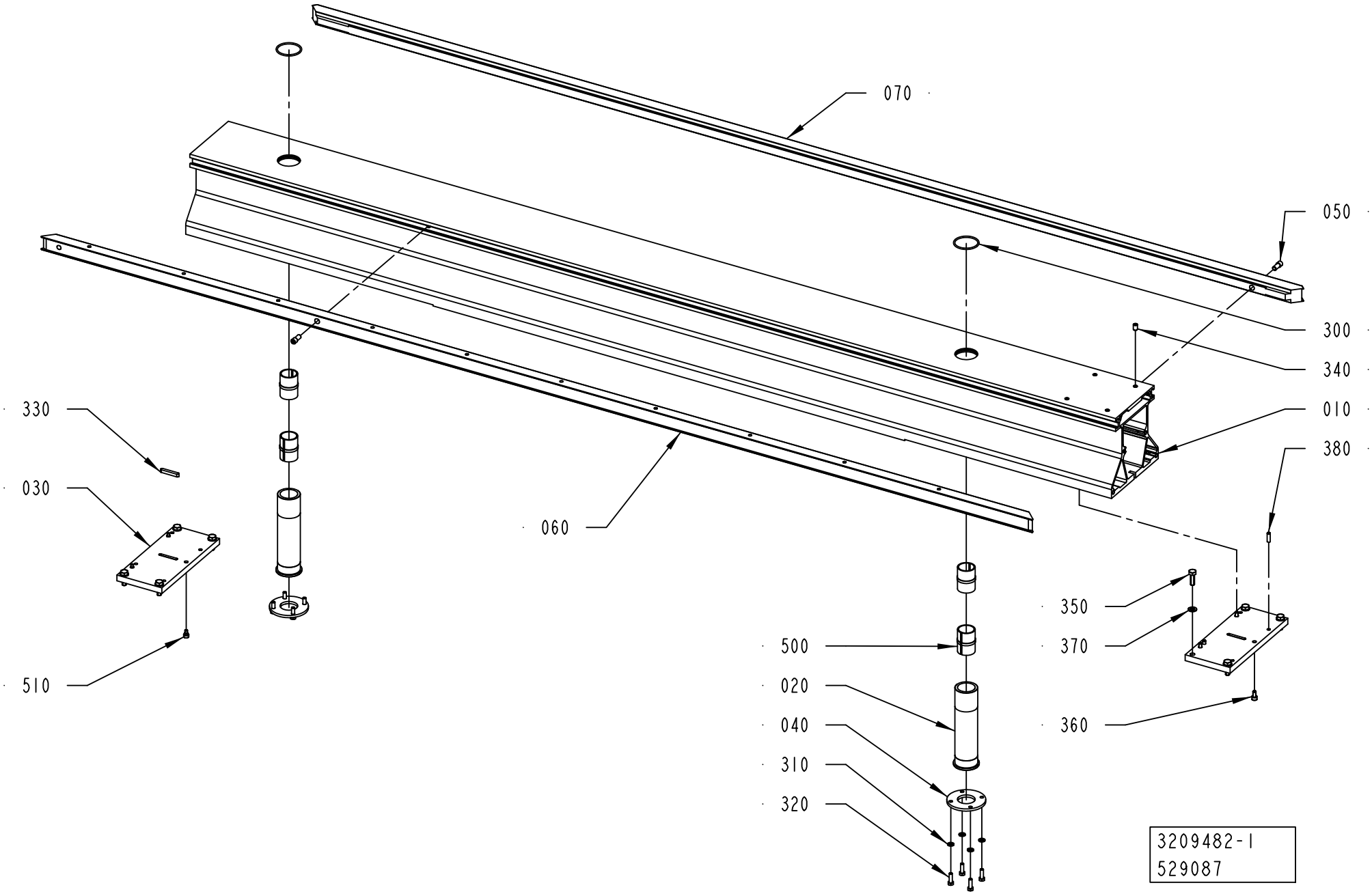

ECM: 529617 - 20120401
Group number: 3209482-0100
Assembly Drawing: 3209482-1_1_AA

Pos	Part No	UN	Qty	Description	Page No
-					
010	3217910-0000		1	FRAME	
020	2766974-0000		2	SLEEVE	
030	2788169-0000		2	PLATE	
040	2766976-0000		2	FLANGE	
050	3202908-0000		2	SCREW	
060	3217909-0000		1	GUIDE	
070	3203258-0000		1	GUIDE	
300	315202-0732		2	O-RING 44,12X2,62 MM	
310	315105-0153		8	WASHER PLAIN, 6,4X12X1,5 A4 BRB	
320	312105-0370		8	SCREW, M6S ISO 4017 M6X20 A4 80	
330	315705-0239		1	PARALLEL KEY W. ROUND ENDS, 6X6X40 MM	
340	312318-0447		4	SET SCREW, CUP END ISO4029 M8X12 A4	
350	312105-0453		8	SCREW, M6S ISO 4017 M8X25 A4 80	
360	312115-0366		3	SCREW ISO4762 M6X12 A4 80	
370	315106-0165		8	WASHER PLAIN, M8 ISO7089-8-200 HV A4	
380	311103-0353		2	PARALLEL PIN ISO 2338 6M6X20 A1	
500	90600-0798		4	BUSHING INSERT, JUM-02-30	
510	90287-0230		1	SHOULDER SCREW, 6X4/M5 SS	

Pos	Part No	UN	Qty	Description	Page No

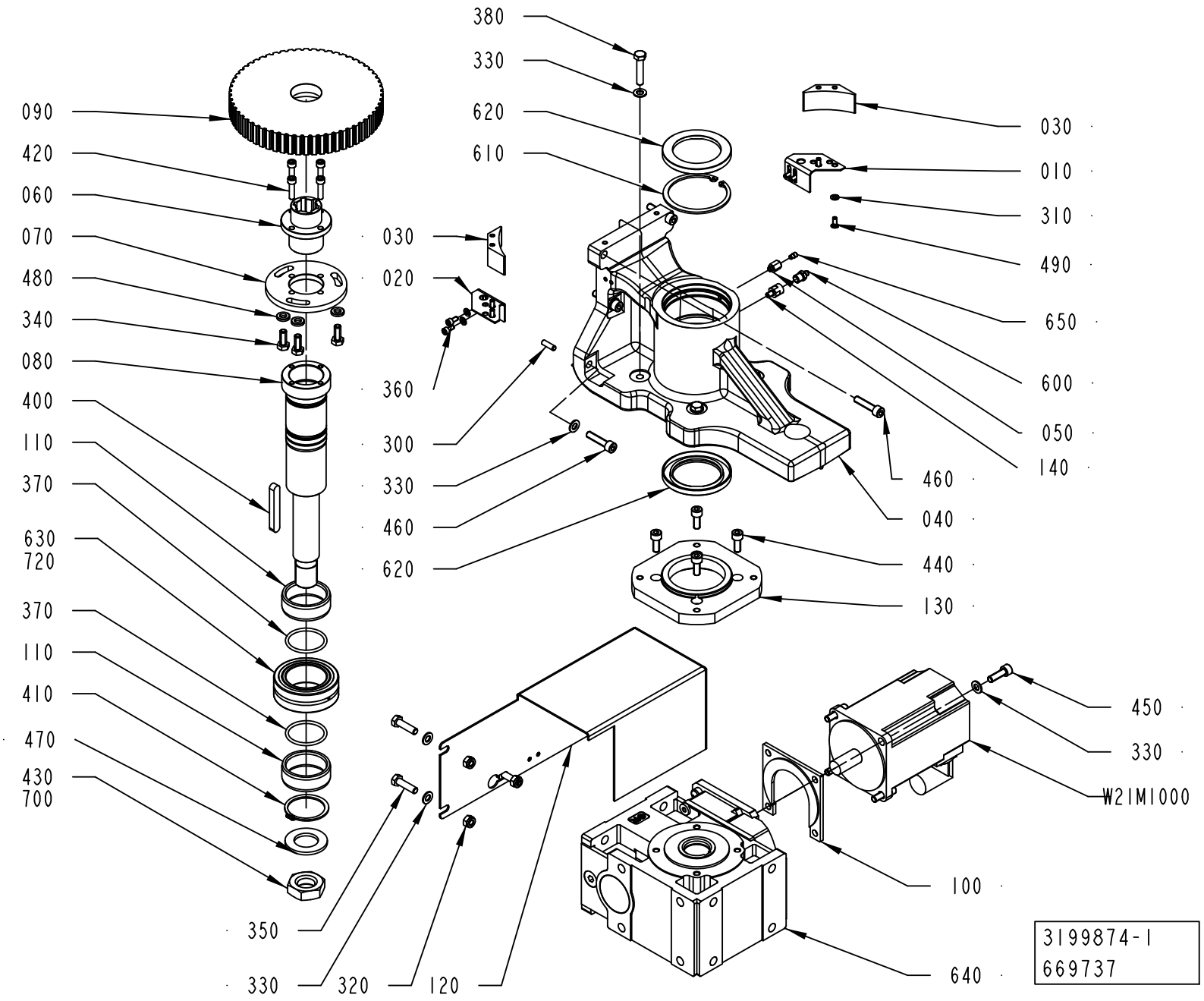
380
330
620
610
090
420
060
070
480
340
080
400
110
370
630
720
370
110
410
470
430
700
030
020
360
300
330
460
620
030
010
310
490
650
600
050
140
460
040
440
130
450
330
W2IM1000
100
640
350
330
320
120
3199874-1
669737

ECM: 679482 - 20141001
Group number: 3199874-0100
Assembly Drawing: 3199874-1_1_AC

Pos	Part No	UN	Qty	Description	Page No
-					
010	3161464-0000		1	BRACKET	
020	3161465-0000		1	BRACKET	
030	3186487-0000		2	PROTECTION PLUG	
040	2837623-0000		1	BRACKET	
050	3147226-0000		1	ADAPTER	
060	2775439-0000		1	BUSHING	
070	2775438-0000		1	PLATE	
080	2837624-0000		1	SHAFT	
090	2775437-0000		1	TOOTHED PULLEY	
100	2985781-0000		1	PLATE	
110	2837628-0000		2	SPACER	
120	2837630-0000		1	COVER	
130	2837627-0000		1	FLANGE	
140	3326956-0000		1	JUNCTION NIPPLE	
300	311103-0353		3	PARALLEL PIN ISO 2338 6M6X20 A1	
310	315105-0146		8	WASHER PLAIN, 5,3X10X1 A4 BRB	
320	312812-0318		3	HEXAGON NUT, NY-LOCK M8 A4 80	
330	315105-0165		15	FWAS080G0-0S, WASHER PLAIN	
340	312105-0451		3	SCREW, M6S ISO 4017 M8X20 A4 80	
350	312105-0455		3	SCREW, M6S ISO 4017 M8X30 A4 80	
360	312115-0325		4	SCREW ISO4762 M5X10 A4 80	
370	315202-0602		2	O-RING 44,04X3,53 MM	
380	312105-0459		4	SCREW, M6S ISO 4014 M8X40 A4 80	
400	315705-0307		1	PARALLEL KEY W. ROUND ENDS, 10X8X70 MM	
410	315751-0130		1	RETAINING RING FOR SHAFT DIN 471 50 SS	
420	312115-0372		4	SCREW ISO4762 M6X25 A4 80	
430	312625-0330		1	HEXAGON THIN NUT, EN 24035 ML6M M27 A4	
440	312115-0451		4	SCREW ISO4762 M8X20 A4 80	
450	312115-0453		4	SCREW ISO4762 M8X25 A4 80	
460	312115-0457		6	SCREW ISO4762 M8X35 A4 80	
470	315105-0203		1	WASHER PLAIN, 30X52X4 A4 BRB	
480	315115-0165		3	WASHER PLAIN, TBRB 8,4/16 H=3	
490	90606-4924		4	SCREW, CBSTSR5-12	
600	90606-2351		1	GREASE NIPPLE STR. M10X1, 996-001-890-S3	
610	90458-0181		1	RETAINING RING FOR BORE DIN 472 80 SS	
620	90459-4588		2	RADIAL SEAL 60X85X8 MM DUST LIP	
630	90600-0892		1	NEEDLE ROLLER BEARING, 50X80X28 MM	
640	90604-4254		1	WORM GEAR MR V 63 UO3A-80B4 … B5/35 H1 F	
650	90604-3329		1	NON-RETURN VALVE, RVA-M6	
700	344447-0000		1	THREAD SEALANT LOCTITE 542, ONLY IN BOM	
	344447-0050		*1*	*THREAD SEALANT LOCTITE 542, 50ML*	
720	344414-0000		1	KLüBEROIL 4 UH1-320N, ONLY IN BOM	
	344414-0335		*1*	*KLüBEROIL 4 UH1-320N, 200 L DRUM*	
	344414-0766		*1*	*KLüBEROIL 4 UH1-320N, 20 L CAN*	
	344414-0764		*1*	*KLüBEROIL 4 UH1-320N, 5 L CAN*	
W21M1000	90601-0668		1	SERVO MOTOR, MPL-B420P-MK72AA SERIES A	

Machine Type	Group Description	Used-In	Group Number	Page No

BELT TENSIONER

Drawing file: 2766980-2_1_AD.hpgl

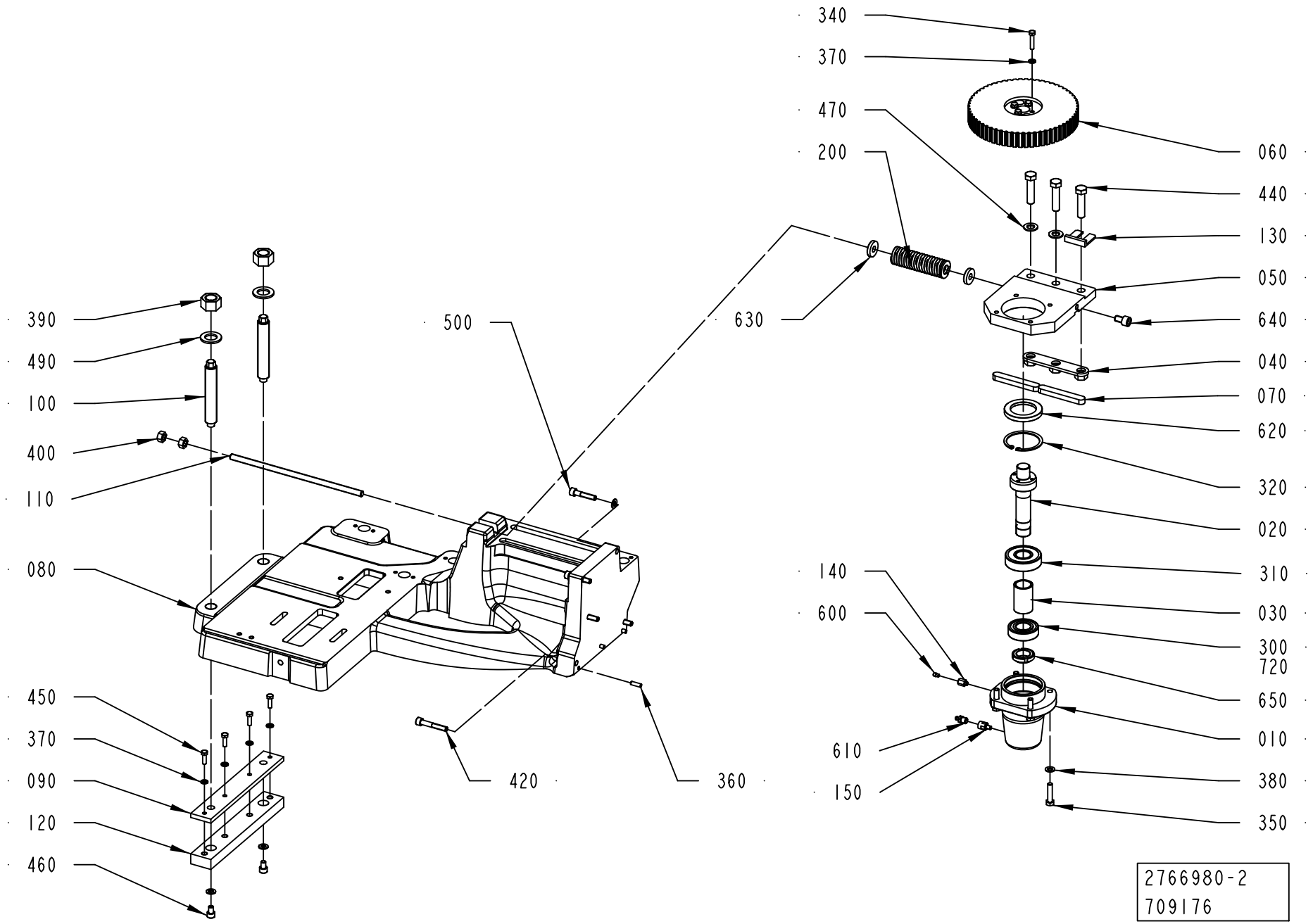

ECM: 709791 - 20141107
Group number: 2766980-0200
Assembly Drawing: 2766980-2_1_AD

Pos	Part No	UN	Qty	Description	Page No
-					
010	3022796-0000		1	BELLOWS	
020	2766958-0000		1	SHAFT	
030	2766959-0000		1	SPACER	
040	2775417-0000		1	BRACKET	
050	2766989-0000		1	BRACKET	
060	2766981-0000		1	TOOTHED PULLEY	
070	315701-0371		2	PARALLEL KEY W. ROUND ENDS, 14X9X90 MM	
080	2769746-0000		1	FRAME	
090	2775423-0000		1	PLATE	
100	2775421-0000		2	SCREW	
110	3381527-0000		1	THREADED ROD	
120	2775420-0000		1	SLIDE	
130	2937337-0000		1	SPACER	
140	3147226-0000		1	ADAPTER	
150	3326956-0000		1	JUNCTION NIPPLE	
200	90604-3324		1	COMP. SPRING, 5443, ?X31,2X115	
300	321309-0105		1	BALL BEARING 25/52X15	
310	321314-0105		1	BALL BEARING 25/62X17	
320	315752-0136		1	RETAINING RING FOR BORE DIN 472 62	
340	312105-0374		4	SCREW, M6S ISO 4014 M6X30 A4 80	
350	312105-0457		4	SCREW, M6S ISO 4014 M8X35 A4 80	
360	311103-0353		3	PARALLEL PIN ISO 2338 6M6X20 A1	
370	315105-0153		8	WASHER PLAIN, 6,4X12X1,5 A4 BRB	
380	315105-0165		11	FWAS080G0-0S, WASHER PLAIN	
390	312607-0326		2	HEXAGON NUT, EN 24032 M6M M20 A480	
400	312607-0320		2	HEXAGON NUT, EN 24032 M6M M10 A480	
420	312115-0461		2	SCREW ISO4762 M8X50 A4 80	
440	312109-0542		3	SCREW M6S ISO 4017 M12X50 A280	
450	312105-0370		4	SCREW, M6S ISO 4017 M6X20 A4 80	
460	312115-0447		2	SCREW ISO4762 M8X12 A4 80	
470	315105-0178		2	WASHER PLAIN, 13X24X2,5 A4 BRB	
490	315105-0192		2	WASHER PLAIN, 21X36X3 A4 BRB	
500	312115-0459		3	SCREW ISO4762 M8X40 A4 80	
600	90604-3329		1	NON-RETURN VALVE, RVA-M6	
610	90606-2351		1	GREASE NIPPLE STR. M10X1, 996-001-890-S3	
620	90091-0304		1	RADIAL SEAL 45X65X8 MM DUST LIP	
630	315125-0173		2	WASHER HIGH, TBRSB 10,5X28X6 A4	
640	312115-0489		1	SCREW ISO4762 M10X16 A4 80	
650	90459-6280		1	NUT GUK 5 M25 X 1.5 FZB	
720	344414-0000	L	1	KLüBEROIL 4 UH1-320N, ONLY IN BOM	
	344414-0335		*1*	*KLüBEROIL 4 UH1-320N, 200 L DRUM*	
	344414-0766		*1*	*KLüBEROIL 4 UH1-320N, 20 L CAN*	
	344414-0764		*1*	*KLüBEROIL 4 UH1-320N, 5 L CAN*	

Machine Type	Group Description	Used-In	Group Number	Page No

SLIDING RACK

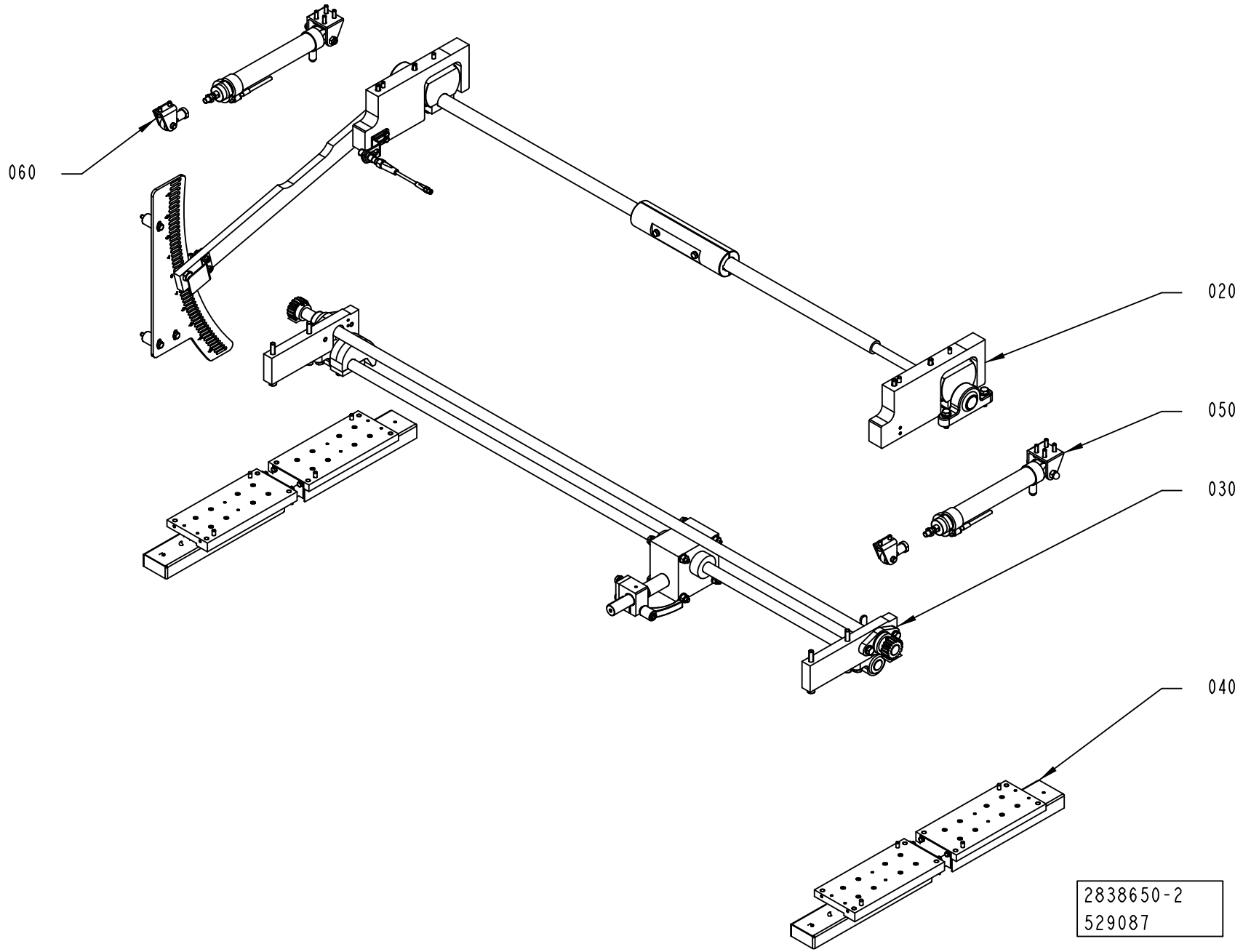

ECM: 529594 - 20120401
Group number: 2838650-0200
Assembly Drawing: 2838650-2_1_AA

Pos	Part No	UN	Qty	Description	Page No
-					
020	2838669-0200		1	SETTING ARM	**1-59**
030	2845127-0200		1	SETTING ARM	**1-61**
040	2838653-0200		1	GUIDE RAIL	**1-63**
050	2769718-0200		1	PNEUMATIC CYLINDER	**1-65**
060	3199896-0100		1	PNEUMATIC CYLINDER	**1-67**

Pos	Part No	UN	Qty	Description	Page No

SETTING ARM

Drawing file: 2838669-2_1_AA.hpgl

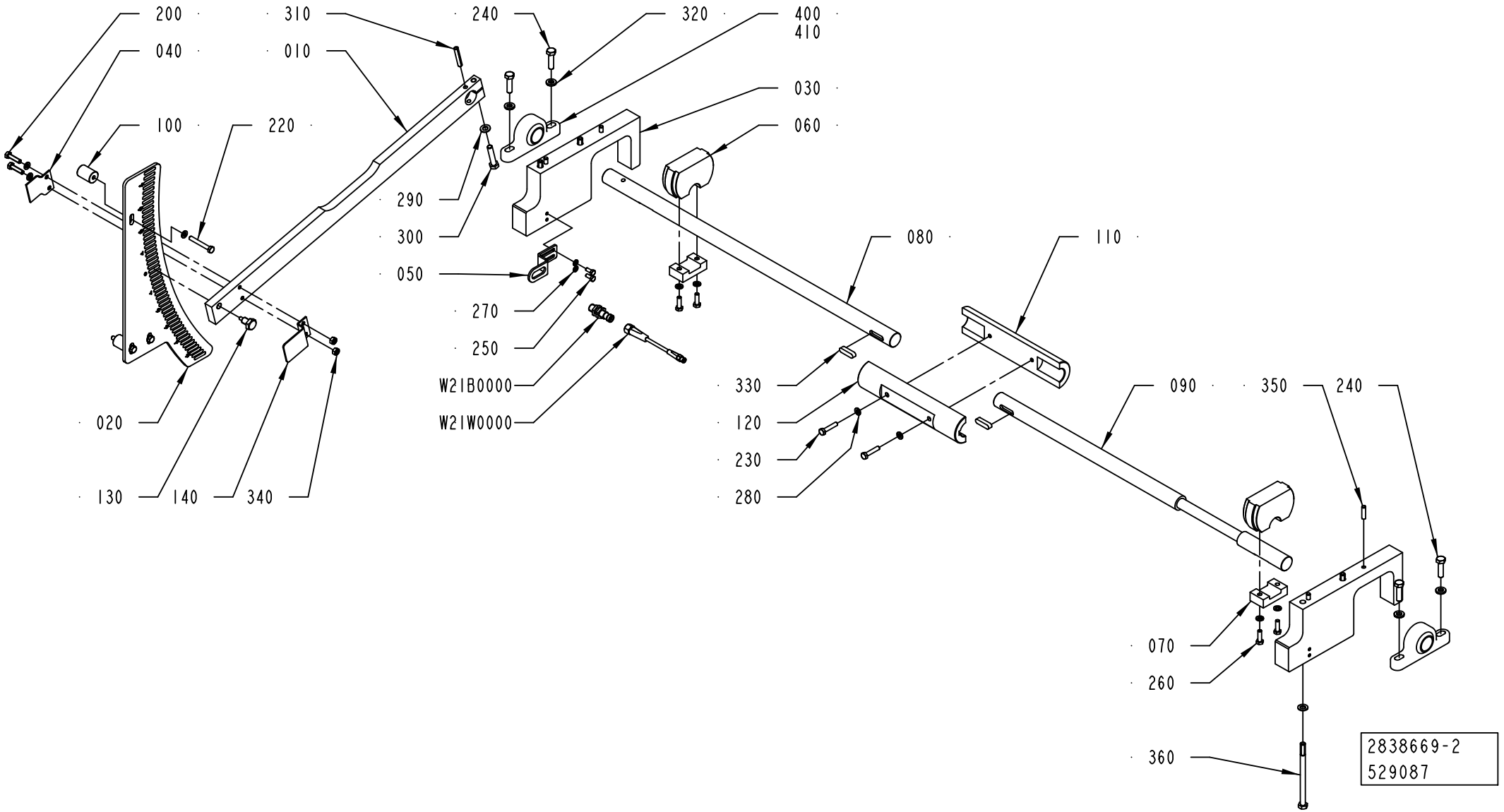

ECM: 529597 - 20120401
Group number: 2838669-0200
Assembly Drawing: 2838669-2_1_AA

Pos	Part No	UN	Qty	Description	Page No
-					
010	2788174-0000		1	LEVER	
020	3021525-0000		1	PLATE	
030	2766944-0000		2	BRACKET	
040	2769695-0000		1	BRACKET	
050	2779057-0000		1	PLATE	
060	3022488-0000		2	CAM	
070	2838683-0000		2	PLATE	
080	3022022-0000		1	SHAFT	
090	3022023-0000		1	SHAFT	
100	2773632-0000		3	SPACER	
110	2985809-0000		1	HOUSING	
120	3022021-0000		1	HOUSING	
130	3086231-0000		1	SCREW	
140	3086233-0000		1	BRACKET	
200	312105-0372		2	SCREW, M6S ISO 4017 M6X25 A4 80	
220	312105-0379		3	SCREW, M6S ISO 4014 M6X45 A4 80	
230	312109-0374		2	SCREW, M6S ISO 4017 M6X30 A4 80	
240	312105-0455		4	SCREW, M6S ISO 4017 M8X30 A4 80	
250	312105-0327		2	"SCREW, M6S ISO 4017 M5X12 A4 80"	
260	312105-0370		4	SCREW, M6S ISO 4017 M6X20 A4 80	
270	315105-0146		2	WASHER PLAIN, 5,3X10X1 A4 BRB	
280	315105-0153		11	WASHER PLAIN, 6,4X12X1,5 A4 BRB	
290	315105-0165		5	FWAS080G0-0S, WASHER PLAIN	
300	312105-0459		1	SCREW, M6S ISO 4014 M8X40 A4 80	
310	311112-0347		1	SPRING PIN, ISO 8752 6X40 A2	
320	315115-0165		4	WASHER PLAIN, TBRB 8,4/16 H=3	
330	315705-0267		2	PARALLEL KEY W. ROUND ENDS, 8X7X30 MM	
340	312605-0316		2	HEXAGON NUT, M6M M6 A280	
350	311103-1355		4	PARALLEL PIN ISO 2338 6M6X24 A1	
360	312105-0475		4	SCREW, M6S ISO 4014 M8X120 A4 80	
400	90600-0799		2	STANDING BEARING, KSTM-25	
W21B0000	90458-2907		1	PROX.SWITCH IFS204	
W21W0000	344261-0050		1	SENSOR CABLE, EVT216	

Pos	Part No	UN	Qty	Description	Page No

Machine Type	Group Description	Used-In	Group Number	Page No

SETTING ARM

Drawing file: 2845127-4_1_AA.hpgl

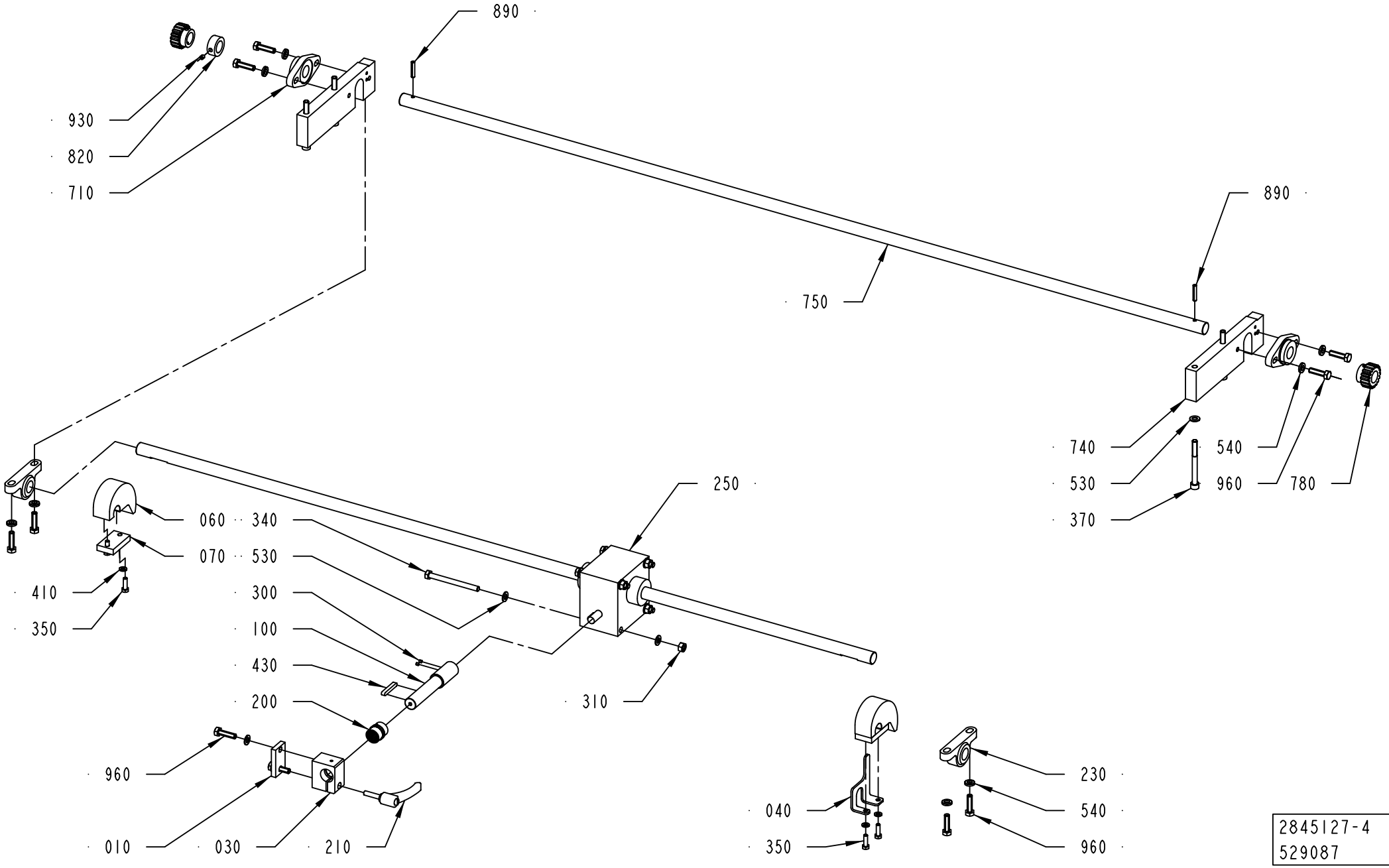

2845127-4
529087

ECM: 529599 - 20120401
Group number: 2845127-0200
Assembly Drawing: 2845127-4_1_AA

Pos	Part No	UN	Qty	Description	Page No
CAP 30/FLEX					
010	2778594-0000		1	PLATE	
030	2769726-0000		1	BRACKET	
040	2802405-0000		1	STOP ARM	
060	2779013-0000		2	CAM	
070	2712603-0000		2	PLATE	
100	2769729-0000		1	SHAFT	
200	90458-2932		1	PLAIN BEARING, JUM-02-20	
210	90017-0029		1	LOCKING LEVER, NO. KR8X30-SUS	
230	90459-4727		2	STANDING BEARING, KSTM-20	
250	90600-1005		1	WORM GEAR SCREW JACK, TR00042000130	
300	312318-0283		2	SET SCREW, CUP END ISO4029 M4X4 A4	
310	312605-0318		4	HEXAGON NUT, M6M M8 A280	
340	312105-0469		4	SCREW, M6S ISO 4014 M8X90 A4 80	
350	312105-0370		4	SCREW, M6S ISO 4017 M6X20 A4 80	
410	315105-0153		4	WASHER PLAIN, 6,4X12X1,5 A4 BRB	
430	315705-0239		1	PARALLEL KEY W. ROUND ENDS, 6X6X40 MM	
530	315105-0165		14	FWAS080G0-0S, WASHER PLAIN	
540	315115-0165		8	WASHER PLAIN, TBRB 8,4/16 H=3	
750	2766950-0000		1	SHAFT	
820	315741-0216		1	RETAINING RING, DIN 705 A4 20	
960	312105-0455		10	SCREW, M6S ISO 4017 M8X30 A4 80	
Common Parts					
370	312115-0467		4	SCREW ISO4762 M8X80 A4 80	
710	90600-0800		2	FLANGE BEARING 20X89X20 MM	
740	2779014-0000		2	PLATE	
780	2838690-0000		2	WHEEL	
890	311112-0312		2	SPRING PIN, ISO 8752 5X28 A2	
930	312318-0360		2	SET SCREW, CUP END ISO4029 M6X6 A4	

Pos	Part No	UN	Qty	Description	Page No

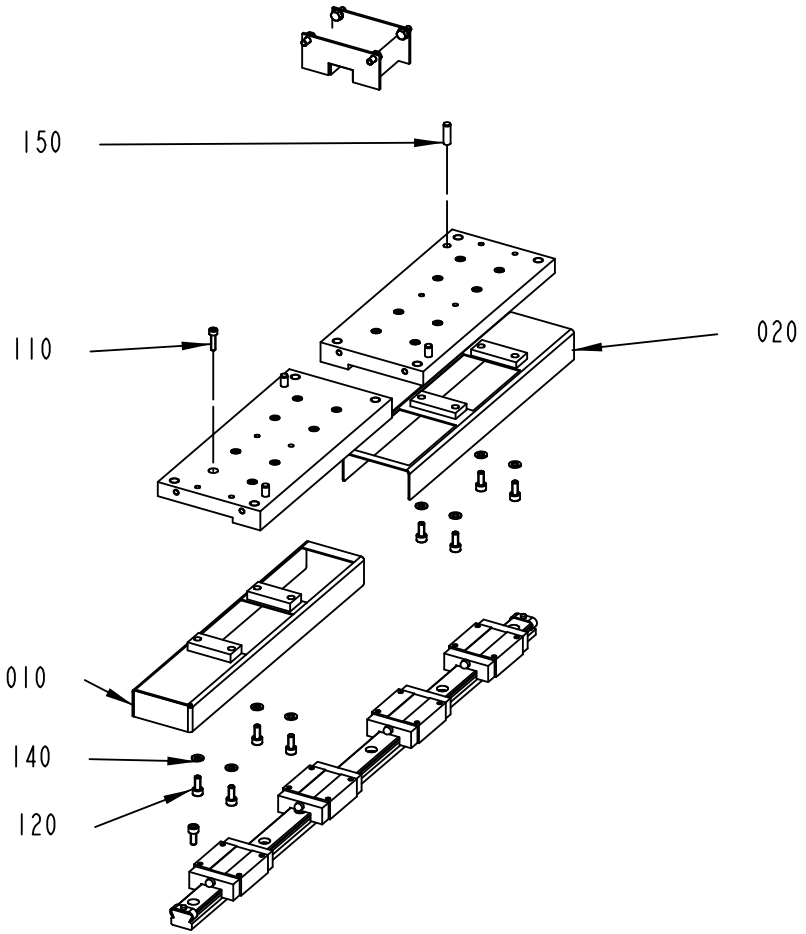

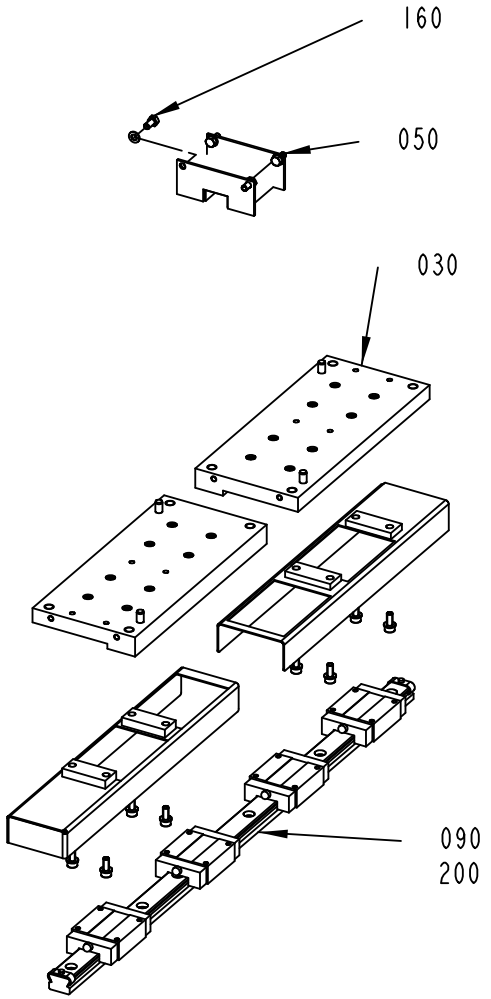

2838653-2
669737

ECM: 679492 - 20141001
Group number: 2838653-0200
Assembly Drawing: 2838653-2_1_AB

Pos	Part No	UN	Qty	Description	Page No
-					
010	3209476-0000		2	COVER	
020	3209475-0000		2	COVER	
030	2788168-0000		4	PLATE	
050	3209479-0000		2	BELLOWS	
090	90604-3333		2	GUIDE RAIL, 15X20X580	
110	312115-0293		32	SCREW ISO4762 M4X16 A4 80	
120	312115-0327		36	SCREW ISO4762 M5X12 A4 80	
140	315105-0146		16	WASHER PLAIN, 5,3X10X1 A4 BRB	
150	311103-0353		8	PARALLEL PIN ISO 2338 6M6X20 A1	
160	312105-0325		8	SCREW, M6S ISO 4017 M5X10 A4 80	
200	344407-0000		1	KLüBERSYNTH UH1 14-151, ONLY IN BOM	
	344407-0591		*1*	*KLüBERSYNTH UH1 14-151, 400G CARTRIDGE*	
	344407-0285		*1*	*KLüBERSYNTH UH1 14-151, 45G TUBE*	
	344407-0177		*1*	*KLüBERSYNTH UH1 14-151, 25KG BUCKET*	
	344407-0037		*1*	*KLüBERSYNTH UH1 14-151, 1KG CAN*	

Pos	Part No	UN	Qty	Description	Page No

Machine Type | Group Description | Used-In | Group Number | Page No

PNEUMATIC CYLINDER

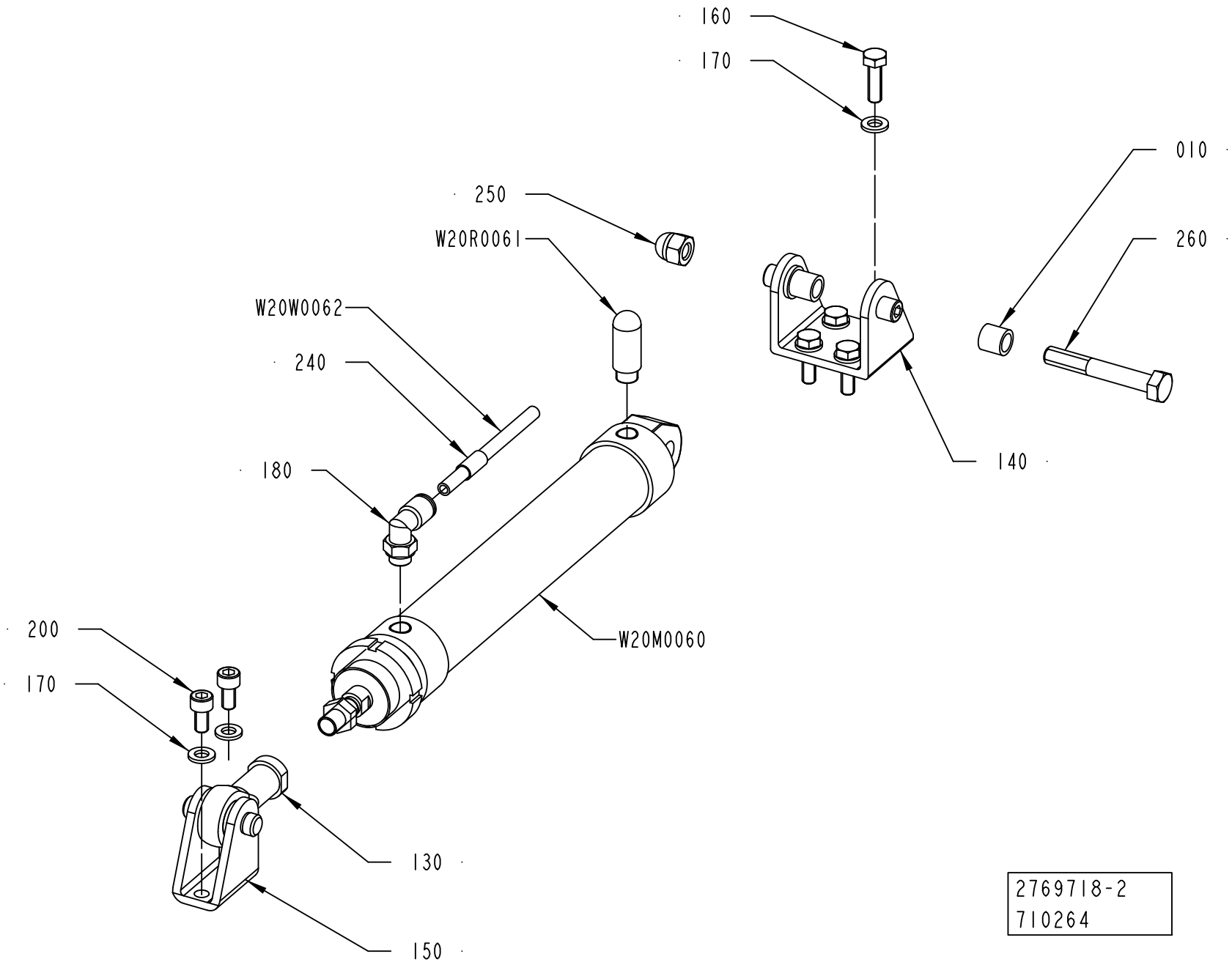

2769718-2
710264

ECM: 713559 - 20150401
Group number: 2769718-0200
Assembly Drawing: 2769718-2_1_AB

Pos	Part No	UN	Qty	Description	Page No
-					
010	3209472-0000		2	SPACER	
130	90459-1018		1	ROD END, BALL JOINT EYE M10X1,25	
140	90459-3115		1	BRACKET, REAR, CLEVIS, ROUND, BORE 32	
150	90459-5949		1	REAR CLEVIS FOOT MOUNTING, CRLBN-32	
160	312105-0370		4	SCREW, M6S ISO 4017 M6X20 A4 80	
170	315105-0153		6	WASHER PLAIN, 6,4X12X1,5 A4 BRB	
180	351456-3002		1	PUSH-IN L-FITTING NPQH-L-G18-Q6-P10	
200	312115-0366		2	SCREW ISO4762 M6X12 A4 80	
240	90459-7369		1	MARKING FOR PNEUM. TUBING, PRZ06	
250	312705-0318		1	NUT HEX. DOMED CAP MHM-6 M8 A280	
260	312105-0462		1	SCREW, M6S ISO 4014 M8X55 A4 8002	
W20M0060	90604-3143		1	DOUBLE ACTING, ROUND, CYL 32-150	
W20R0061	90328-0047		1	SILENCER, G1/8"	
W20W0062	315400-0001	MM	200	6-4E PUN-H-6X1-BL	

Pos	Part No	UN	Qty	Description	Page No

PNEUMATIC CYLINDER

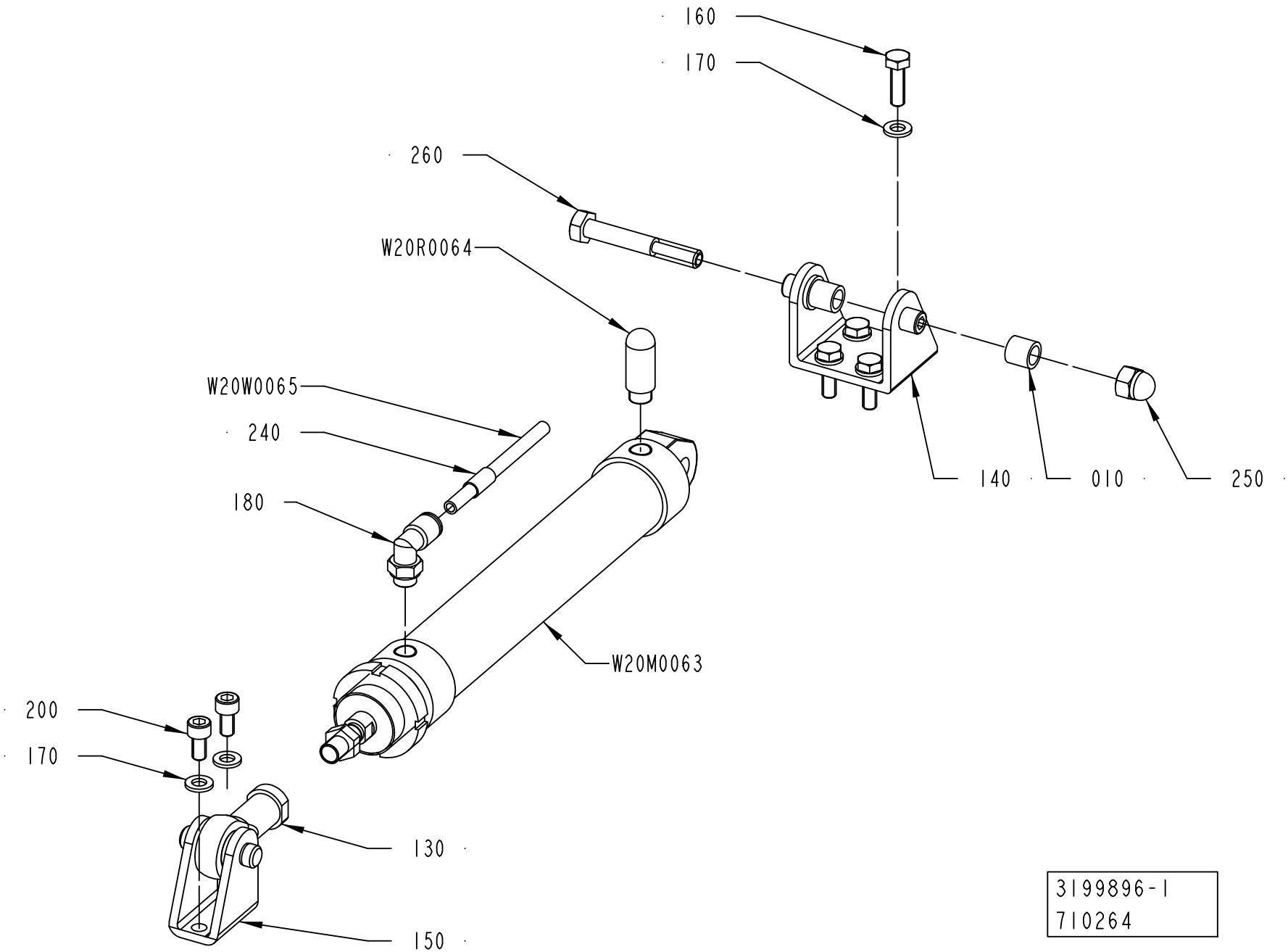

3199896-1
710264

ECM: 713555 - 20150401
Group number: 3199896-0100
Assembly Drawing: 3199896-1_1_AB

Pos	Part No	UN	Qty	Description	Page No
-					
010	3209472-0000		2	SPACER	
130	90459-1018		1	ROD END, BALL JOINT EYE M10X1,25	
140	90459-3115		1	BRACKET, REAR, CLEVIS, ROUND, BORE 32	
150	90459-5949		1	REAR CLEVIS FOOT MOUNTING, CRLBN-32	
160	312105-0370		4	SCREW, M6S ISO 4017 M6X20 A4 80	
170	315105-0153		6	WASHER PLAIN, 6,4X12X1,5 A4 BRB	
180	351456-3002		1	PUSH-IN L-FITTING NPQH-L-G18-Q6-P10	
200	312115-0366		2	SCREW ISO4762 M6X12 A4 80	
240	90459-7369		1	MARKING FOR PNEUM. TUBING, PRZ06	
250	312705-0318		1	NUT HEX. DOMED CAP MHM-6 M8 A280	
260	312105-0462		1	SCREW, M6S ISO 4014 M8X55 A4 8002	
W20M0063	90604-3143		1	DOUBLE ACTING, ROUND, CYL 32-150	
W20R0064	90328-0047		1	SILENCER, G1/8"	
W20W0065	315400-0001	MM	200	6-4E PUN-H-6X1-BL	

Pos	Part No	UN	Qty	Description	Page No

ADJUSTABLE GUIDE

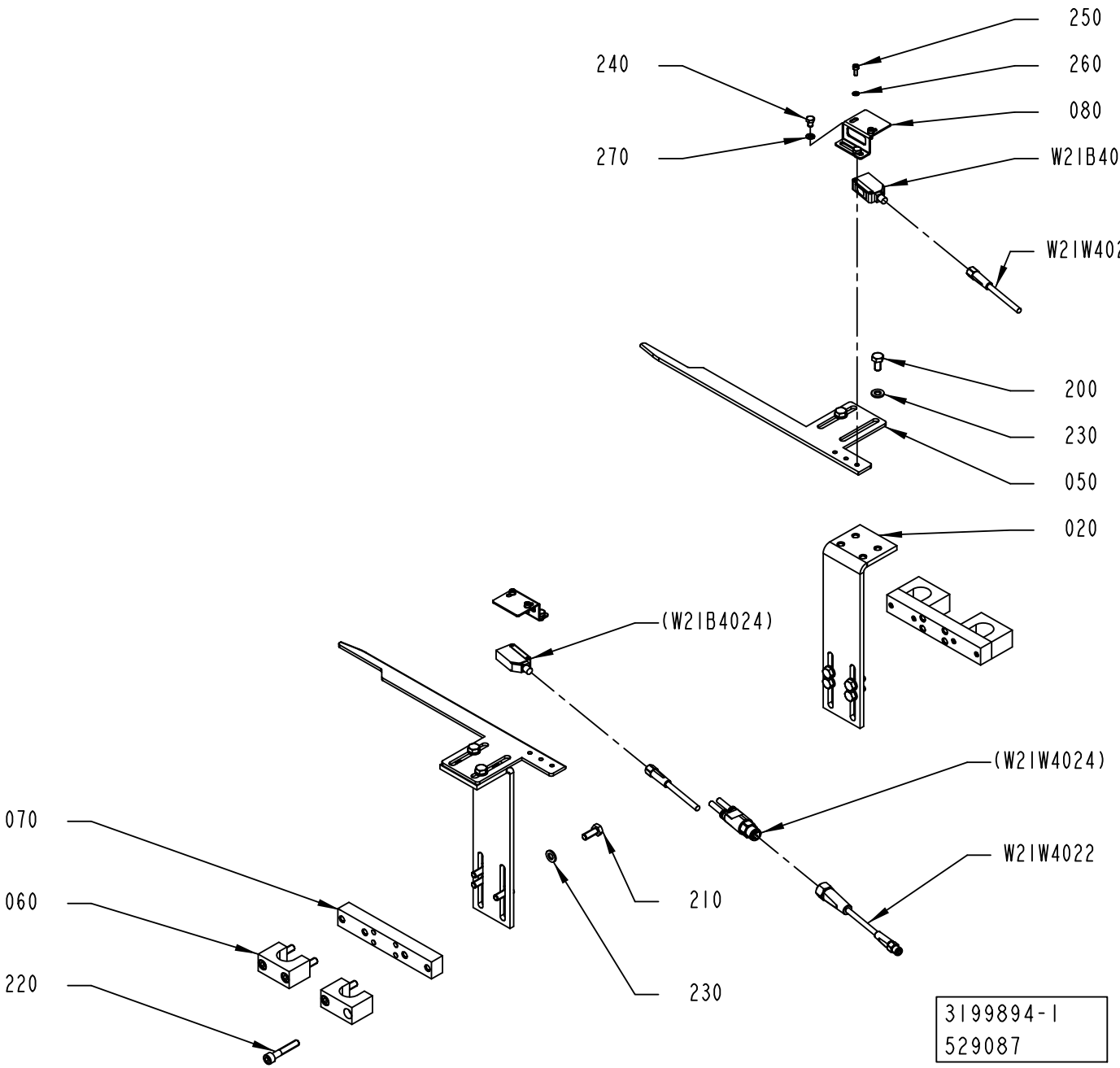

ECM: 529610 - 20120401
Group number: 3199894-0100
Assembly Drawing: 3199894-1_1_AA

Pos	Part No	UN	Qty	Description	Page No
-					
020	3120841-0000		2	ANGLE	
050	3120842-0000		2	GUIDE	
060	3120839-0000		4	PLATE	
070	3120840-0000		2	PLATE	
080	3193666-0000		2	SUPPORT	
200	312105-0366		4	SCREW, M6S ISO 4017 M6X12 A4 80	
210	312105-0368		8	"SCREW, M6S ISO 4017 M6X16 A4 80"	
220	312115-0376		8	SCREW ISO4762 M6X35 A4 80	
230	315105-0153		12	WASHER PLAIN, 6,4X12X1,5 A4 BRB	
240	312105-0285		4	SCREW, M6S ISO 4017 M4X6 A4 70	
250	312115-0222		4	SCREW ISO4762 M3X8 A4 80	
260	315105-0124		4	WASHER PLAIN, 3,2X6X0,5 A4 BRB	
270	315105-0136		4	WASHER PLAIN, 4,3X8X0,8 A4 BRB	
W21B4023	90459-5529		1	PHOTOCELL E3Z-T86A, SENDER+RECIEVER	
W21W4022	344261-0006		1	SENSOR CABLE, EVT261	
W21W4023	90603-3979		1	SENSOR Y-CABLE, EVT339	

Pos	Part No	UN	Qty	Description	Page No

Machine Type	Group Description	Used-In	Group Number	Page No

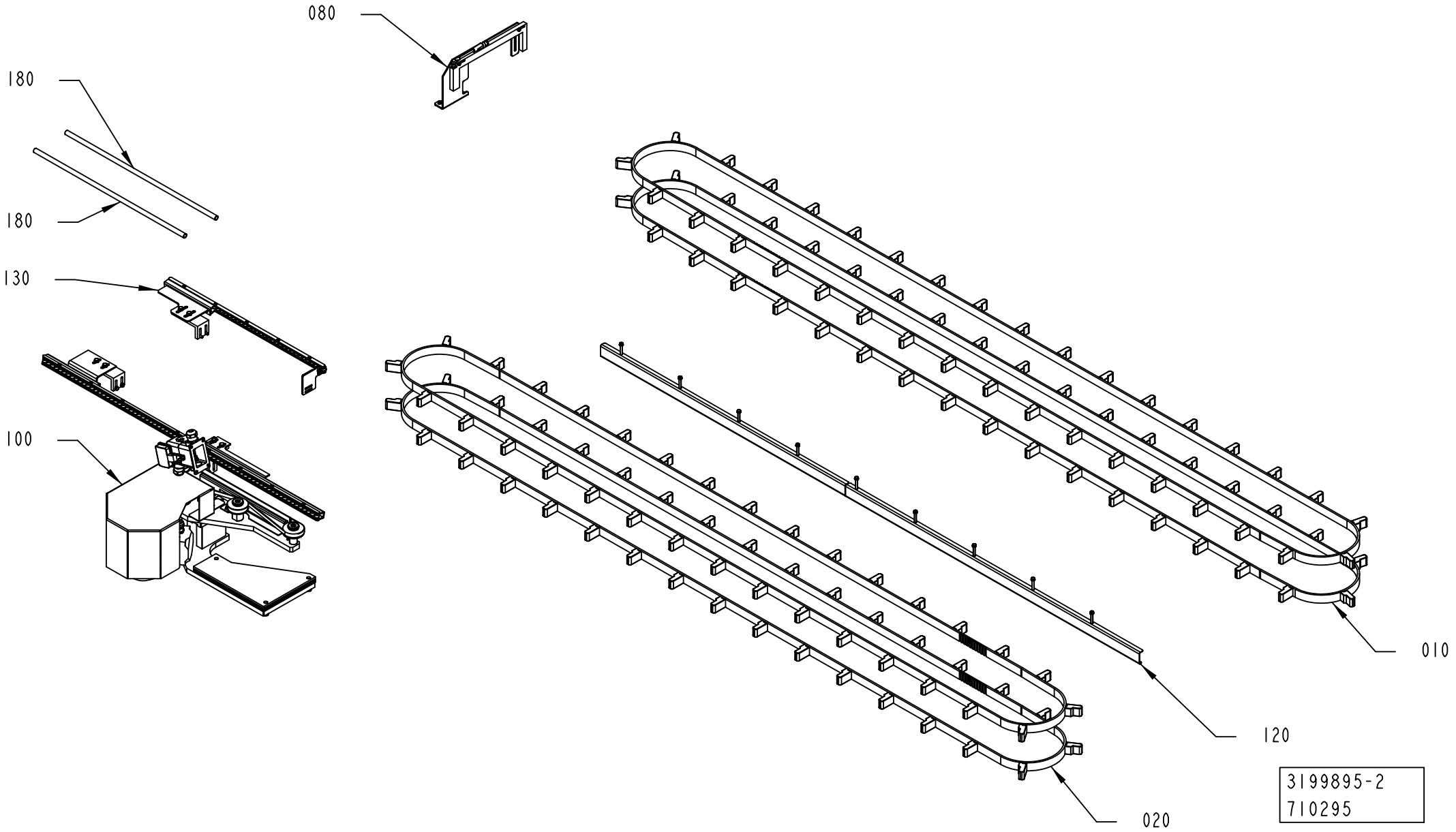
080
180
180
130
100
010
120
020
3199895-2
710295

Pos	Part No	UN	Qty	Description	Page No
TPA 0330SQ (See drawing on page: 1-72)					
010	90606-5094		2	TIMING BELT 25AT10/5250 PU+32 2.3.5.320	
020	90606-4926		2	TIMING BELT 25AT10/4810 PU	
070	3139123-0100		1	INFEED GUIDE	**1-75**
080	3208122-0100		1	PHOTOCELL BRACKET	**1-77**
120	2873952-0100		1	COVER	**1-79**
180	3162977-0000		2	GUIDE	
200	315106-0178		2	"WASHER PLAIN, M12 ISO7089-12-200 HV A4"	
210	90606-5192		2	WASHER ISO 7093 10,5X30X2,5 A2	
TPA 0500E (See drawing on page: 1-70)					
010	90600-4822		2	TIMING BELT 25AT10/5250 PU+35 2.3.7.358	
020	90600-4821		2	TIMING BELT 25AT10/4800 PU+32 2.3.7.358	
080	3208122-0100		1	PHOTOCELL BRACKET	**1-77**
100	3115099-0200		1	PACKAGE ALIGNER	**1-81**
120	2873952-0100		1	COVER	**1-79**
130	3199898-0100		1	ROLLER	**1-85**
180	3162977-0000		2	GUIDE	

Pos	Part No	UN	Qty	Description	Page No

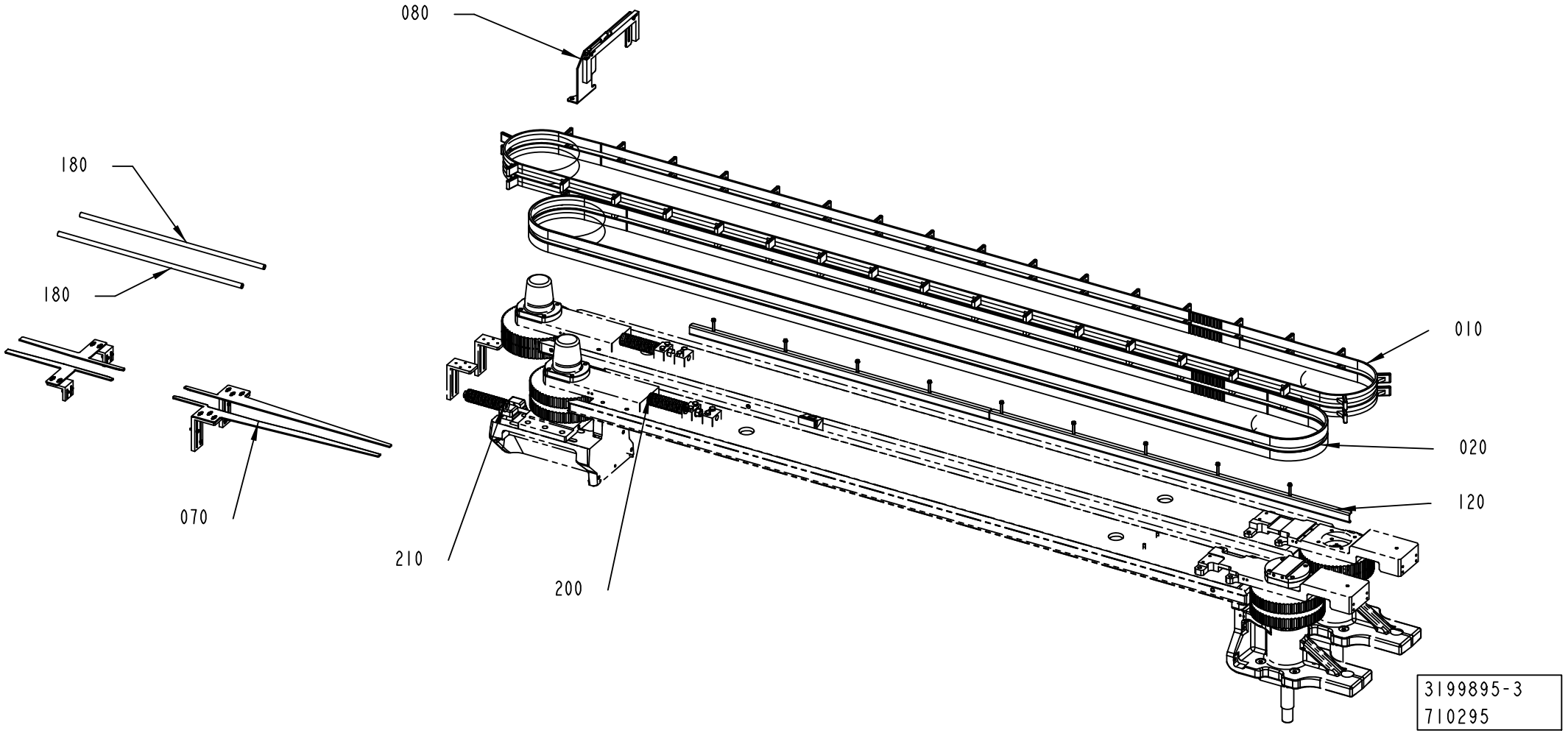
080
180
180
070
210
200
010
020
120
3199895-3
710295

ECM: 710295 - 20150401
Group number: 3199895-0100
Assembly Drawing: 3199895-3_1_AG

This list covers pages from 1-70 to 1-73

Pos	Part No	UN	Qty	Description	Page No
TPA 0330SQ (See drawing on page: 1-72)					
010	90606-5094		2	TIMING BELT 25AT10/5250 PU+32 2.3.5.320	
020	90606-4926		2	TIMING BELT 25AT10/4810 PU	
070	3139123-0100		1	INFEED GUIDE	**1-75**
080	3208122-0100		1	PHOTOCELL BRACKET	**1-77**
120	2873952-0100		1	COVER	**1-79**
180	3162977-0000		2	GUIDE	
200	315106-0178		2	"WASHER PLAIN, M12 ISO7089-12-200 HV A4"	
210	90606-5192		2	WASHER ISO 7093 10,5X30X2,5 A2	
TPA 0500E (See drawing on page: 1-70)					
010	90600-4822		2	TIMING BELT 25AT10/5250 PU+35 2.3.7.358	
020	90600-4821		2	TIMING BELT 25AT10/4800 PU+32 2.3.7.358	
080	3208122-0100		1	PHOTOCELL BRACKET	**1-77**
100	3115099-0200		1	PACKAGE ALIGNER	**1-81**
120	2873952-0100		1	COVER	**1-79**
130	3199898-0100		1	ROLLER	**1-85**
180	3162977-0000		2	GUIDE	

Pos	Part No	UN	Qty	Description	Page No

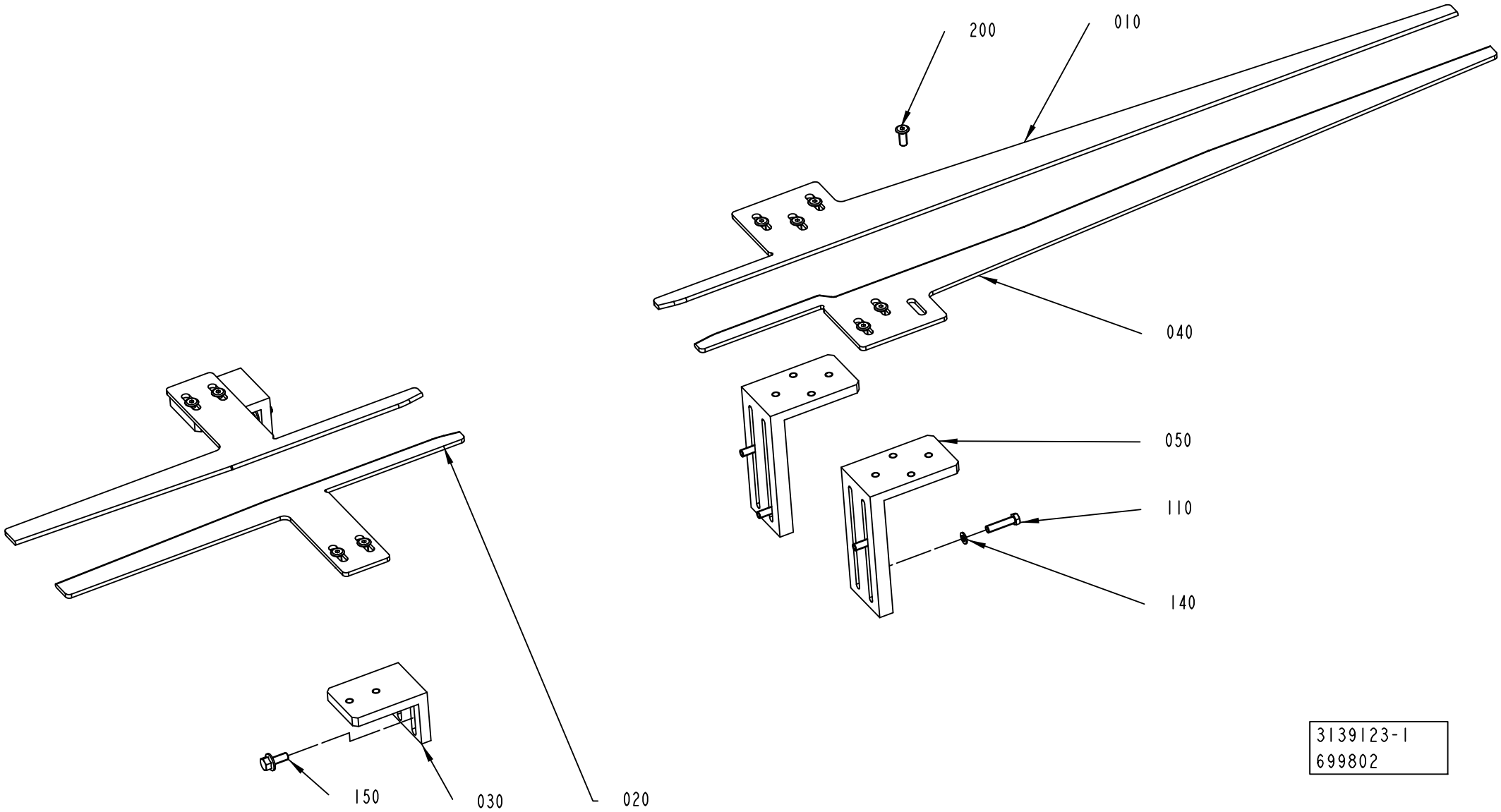
200
010
040
050
110
140
150
030
020
3139123-1
699802

ECM: 699802 - 20150101
Group number: 3139123-0100
Assembly Drawing: 3139123-1_1_AB

Pos	Part No	UN	Qty	Description	Page No
-					
010	3139124-0000		1	BRACKET	
020	3103326-0000		2	GUIDE	
030	3103328-0000		2	BRACKET	
040	3341018-0000		1	SLIDE RAIL	
050	3139125-0000		2	BRACKET	
110	312105-0295		4	SCREW, M6S ISO 4017 M4X20 A4 70	
140	315105-0136		4	WASHER PLAIN, 4,3X8X0,8 A4 BRB	
150	312108-0327		4	SCREW EN 1665 TYPE F M5X12 A270	
200	90606-4924		10	SCREW, CBSTSR5-12	

Pos	Part No	UN	Qty	Description	Page No

PHOTOCELL BRACKET

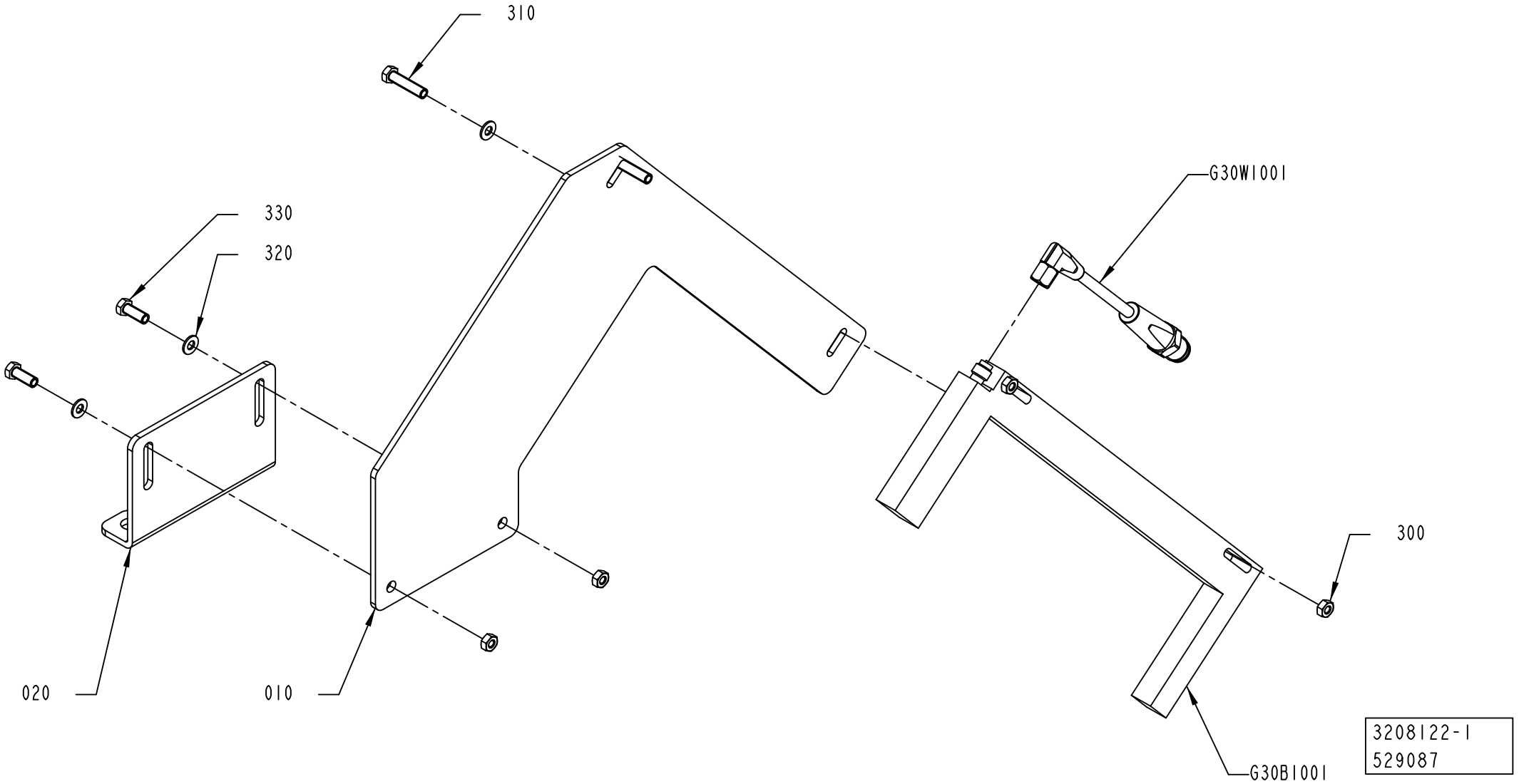

ECM: 560252 - 20120701
Group number: 3208122-0100
Assembly Drawing: 3208122-1_1_AA

Pos	Part No	UN	Qty	Description	Page No
TPA					
010	3166547-0000		1	BRACKET	
Common Parts					
300	312605-0312		4	HEXAGON NUT, M6M M4 A280	
310	312105-0295		2	SCREW, M6S ISO 4017 M4X20 A4 70	
320	315106-0136		4	WASHER PLAIN, M4 ISO7089-4-200 HV A4	
330	312105-0291		2	SCREW, M6S ISO 4017 M4X12 A4 70	
G30B1001	90459-6947		1	PHOTOCELL, WF 225-B4150	
G30W1001	344266-0020		1	SENSOR CABLE, EVT256	

Pos	Part No	UN	Qty	Description	Page No

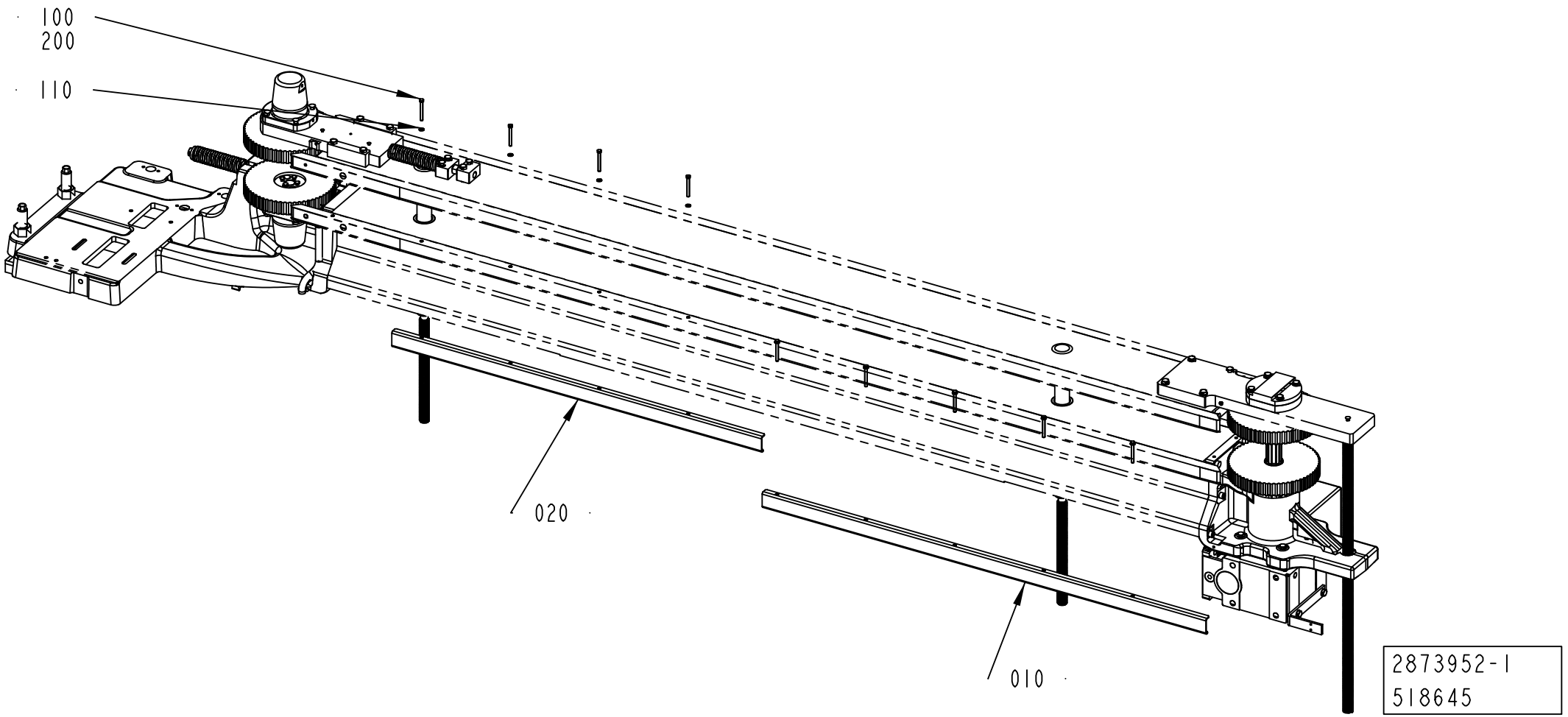
100
200
110
020
010
2873952-1
518645

ECM: 712857 - 20150401
Group number: 2873952-0100
Assembly Drawing: 2873952-1_1_AC

Pos	Part No	UN	Qty	Description	Page No
TPA 0330SQ, TPA 0500E					
010	2873966-0000		1	COVER	
020	3123924-0000		1	COVER	
100	312109-0340		9	SCREW, M6S ISO 4017 M5X45 A4 80	
110	315106-0146		9	"WASHER PLAIN, M5 ISO7089-5-200 HV A4"	
Common Parts					
200	344431-0000		1	THREADLOCKER LOCTITE 243, ONLY IN BOM	
	344431-0010		*1*	*THREADLOCKER LOCTITE 243, 10ML*	
	344431-0050		*1*	*THREADLOCKER LOCTITE 243, 50ML*	

Pos	Part No	UN	Qty	Description	Page No

PACKAGE ALIGNER

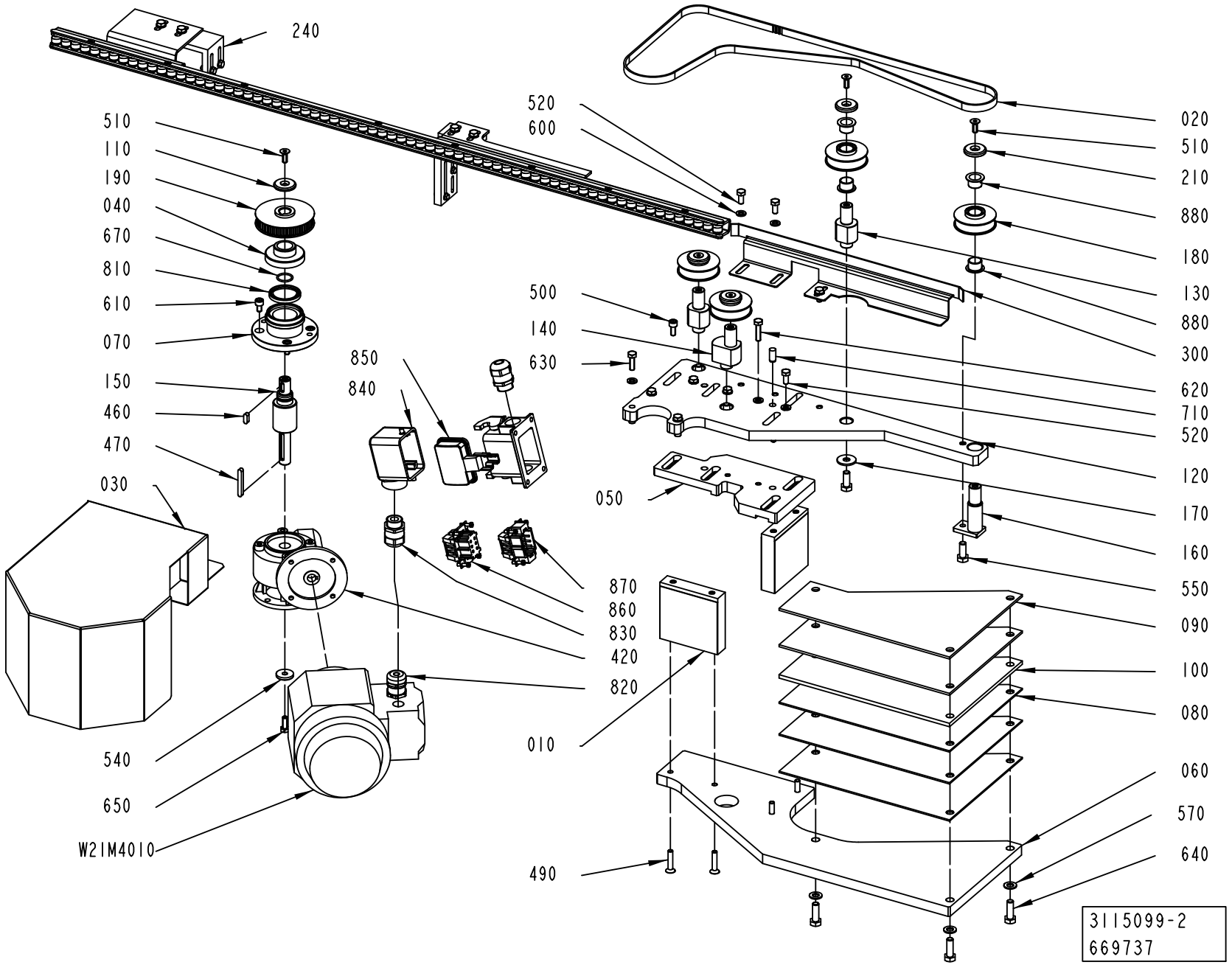

ECM: 676485 - 20141001
Group number: 3115099-0200
Assembly Drawing: 3115099-2_1_AD

Pos	Part No	UN	Qty	Description	Page No
-					
010	3149907-0000		2	SPACER	
020	90606-4344		1	TIMING BELT 10T5/1215 PU	
030	3149910-0000		1	COVER	
040	3149911-0000		1	SPACER	
050	3149906-0000		1	PLATE	
060	3149901-0000		1	PLATE	
070	3149900-0000		1	FLANGE	
080	3117151-0000		3	PLATE	
090	3117152-0000		2	PLATE	
100	3117153-0000		1	PLATE	
110	3117136-0000		1	WASHER	
120	3177603-0000		1	PLATE	
130	3115098-0000		2	SHAFT	
140	3115103-0000		1	SHAFT	
150	3149902-0000		1	SHAFT	
160	3149912-0000		1	SHAFT	
170	90005-0116		3	WASHER PLAIN ROUND 8,4(M8)/24, H=2	
180	3300287-0000		4	WHEEL	
190	3152724-0000		1	WHEEL	
210	3115101-0000		4	WASHER	
240	3114810-0100		1	ROLLER	**1-83**
300	3149908-0000		1	GUIDE	
420	90603-2980		1	WORM GEAR W2003500390018	
460	315701-0198		1	PARALLEL KEY W. ROUND ENDS, 5X5X14 MM	
470	315701-0208		1	PARALLEL KEY W. ROUND ENDS, 5X5X40 MM	
490	312155-0374		4	SCREW DIN 7991 MF6S M6X30 A4 70	
500	312115-0366		4	SCREW ISO4762 M6X12 A4 80	
510	312155-0368		6	SCREW DIN 7991 MF6S M6X16 A4 70	
520	312105-0366		6	SCREW, M6S ISO 4017 M6X12 A4 80	
540	315125-0153		1	WASHER HIGH, TBRSB 6,4X22X4 A4	
550	312105-0451		4	SCREW, M6S ISO 4017 M8X20 A4 80	
570	315105-0165		3	FWAS080G0-0S, WASHER PLAIN	
600	315105-0153		10	WASHER PLAIN, 6,4X12X1,5 A4 BRB	
610	312115-0364		4	SCREW ISO4762 M6X10 A4 80	
620	312105-0372		2	SCREW, M6S ISO 4017 M6X25 A4 80	
630	312105-0370		2	SCREW, M6S ISO 4017 M6X20 A4 80	
640	312105-0453		3	SCREW, M6S ISO 4017 M8X25 A4 80	
650	312105-0368		1	"SCREW, M6S ISO 4017 M6X16 A4 80"	
670	315202-0705		1	O-RING 17,17X1,78 MM	
710	311103-0400		2	PARALLEL PIN ISO 2338 8M6X18 A	
810	315230-0353		1	BEARING SEAL G30X40X4 MM	
820	344202-0003		1	CABLE GLAND; MS-SC-M, 7-12,5MM, M20X1,5	
830	90458-0307		2	CABLE GLAND, M20X1,5, 5311 1020	
840	90459-1458		1	HOOD, SIDE ENTRY, HAN6E, 19 30 006 1540	
850	90459-1461		1	HOUSING, 19 30 006 1255	
860	90110-0053		1	FEMALE INSERT, HAN 6 E 09 33 006 2701	
870	90110-0052		1	MALE INSERT, HAN E06, 0933 0062 601	
880	90605-3869		8	FLANGE BUSHING, IGLIDUR J 15X17X12	
W21M4010	2901694-0000		1	MOTOR	

Machine Type	Group Description	Used-In	Group Number	Page No

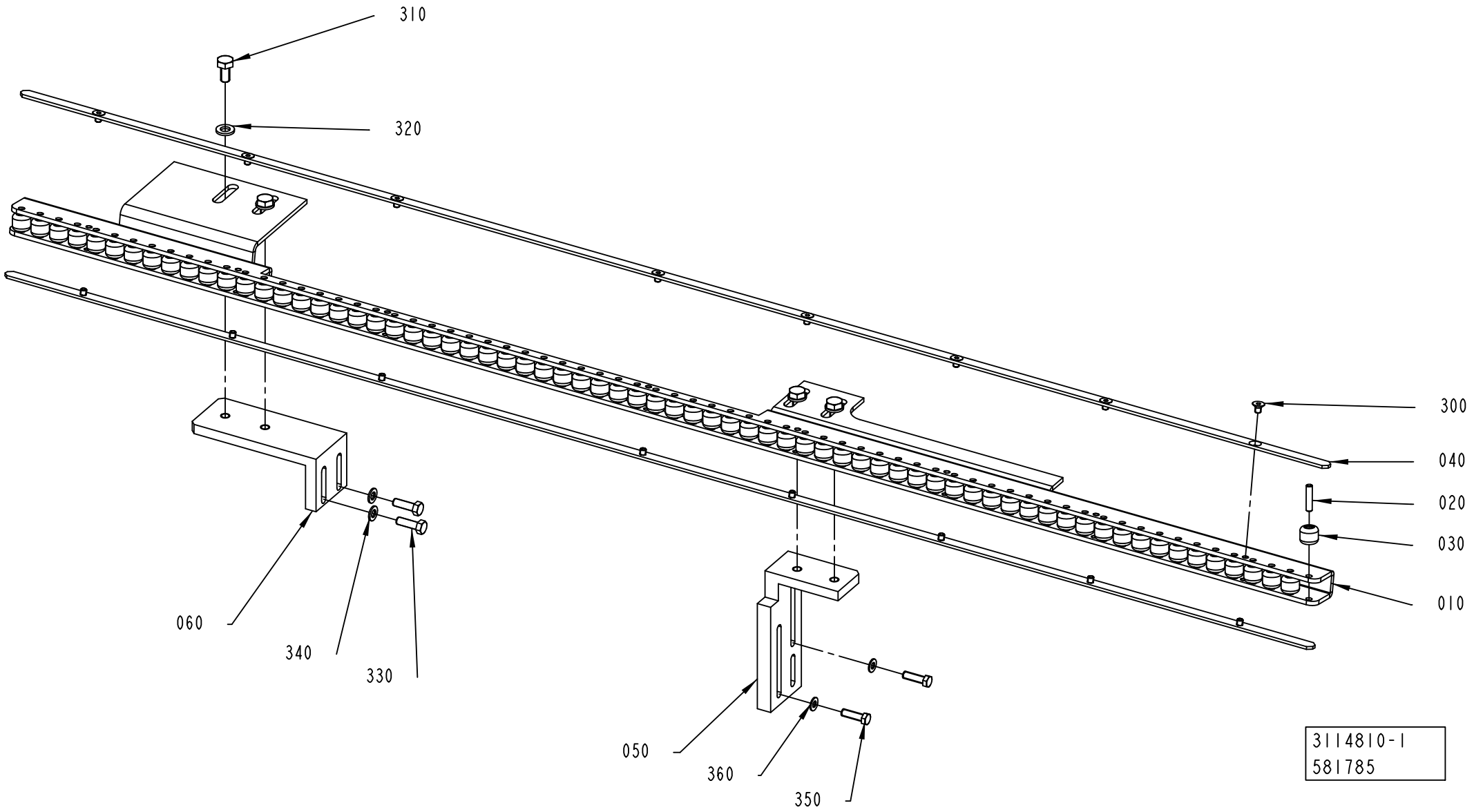
310
320
300
040
020
030
010
060
340
330
050
360
350
3114810-1
581785

ECM: 582103 - 20130401
Group number: 3114810-0100
Assembly Drawing: 3114810-1_1_AC

Pos	Part No	UN	Qty	Description	Page No
-					
010	3114082-0000		1	BRACKET	
020	3114083-0000		70	AXLE PIN	
030	3114084-0000		70	ROLL	
040	3114692-0000		2	PLATE	
050	3123928-0000		1	BRACKET	
060	3123929-0000		1	BRACKET	
300	312155-0285		16	SCREW DIN 7991 MF6S M4X6 A4 70	
310	312105-0366		4	SCREW, M6S ISO 4017 M6X12 A4 80	
320	315105-0153		4	WASHER PLAIN, 6,4X12X1,5 A4 BRB	
330	312105-0329		2	SCREW, M6S ISO 4017 M5X16 A4 80	
340	315106-0146		2	"WASHER PLAIN, M5 ISO7089-5-200 HV A4"	
350	312105-0293		2	SCREW, M6S ISO 4017 M4X16 A4 70	
360	315106-0136		2	WASHER PLAIN, M4 ISO7089-4-200 HV A4	

Pos	Part No	UN	Qty	Description	Page No

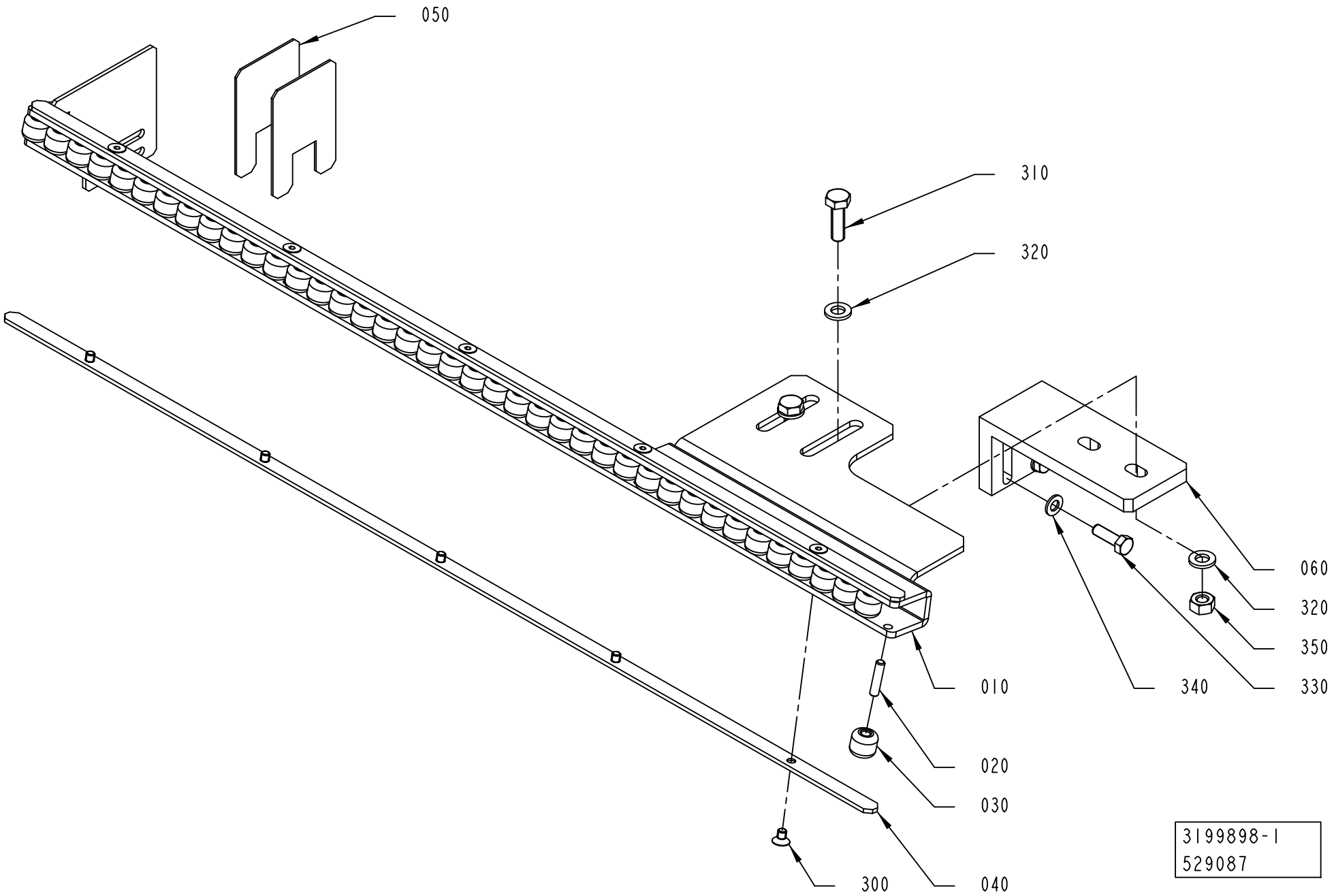
050
310
320
060
320
350
330
340
010
020
030
300
040
3199898-1
529087

ECM: 531667 - 20120401
Group number: 3199898-0100
Assembly Drawing: 3199898-1_1_AA

Pos	Part No	UN	Qty	Description	Page No
-					
010	3209478-0000		1	BRACKET	
020	3114083-0000		40	AXLE PIN	
030	3114084-0000		40	ROLL	
040	3209477-0000		2	PLATE	
050	3209473-0000		2	SHIM	
060	3209474-0000		1	BRACKET	
300	312155-0285		10	SCREW DIN 7991 MF6S M4X6 A4 70	
310	312105-0370		2	SCREW, M6S ISO 4017 M6X20 A4 80	
320	315105-0153		4	WASHER PLAIN, 6,4X12X1,5 A4 BRB	
330	312105-0329		2	SCREW, M6S ISO 4017 M5X16 A4 80	
340	315106-0146		2	"WASHER PLAIN, M5 ISO7089-5-200 HV A4"	
350	312605-0316		2	HEXAGON NUT, M6M M6 A280	

Pos	Part No	UN	Qty	Description	Page No

WARNING SIGN

Drawing file: 3217278-1_1_AA.hpgl

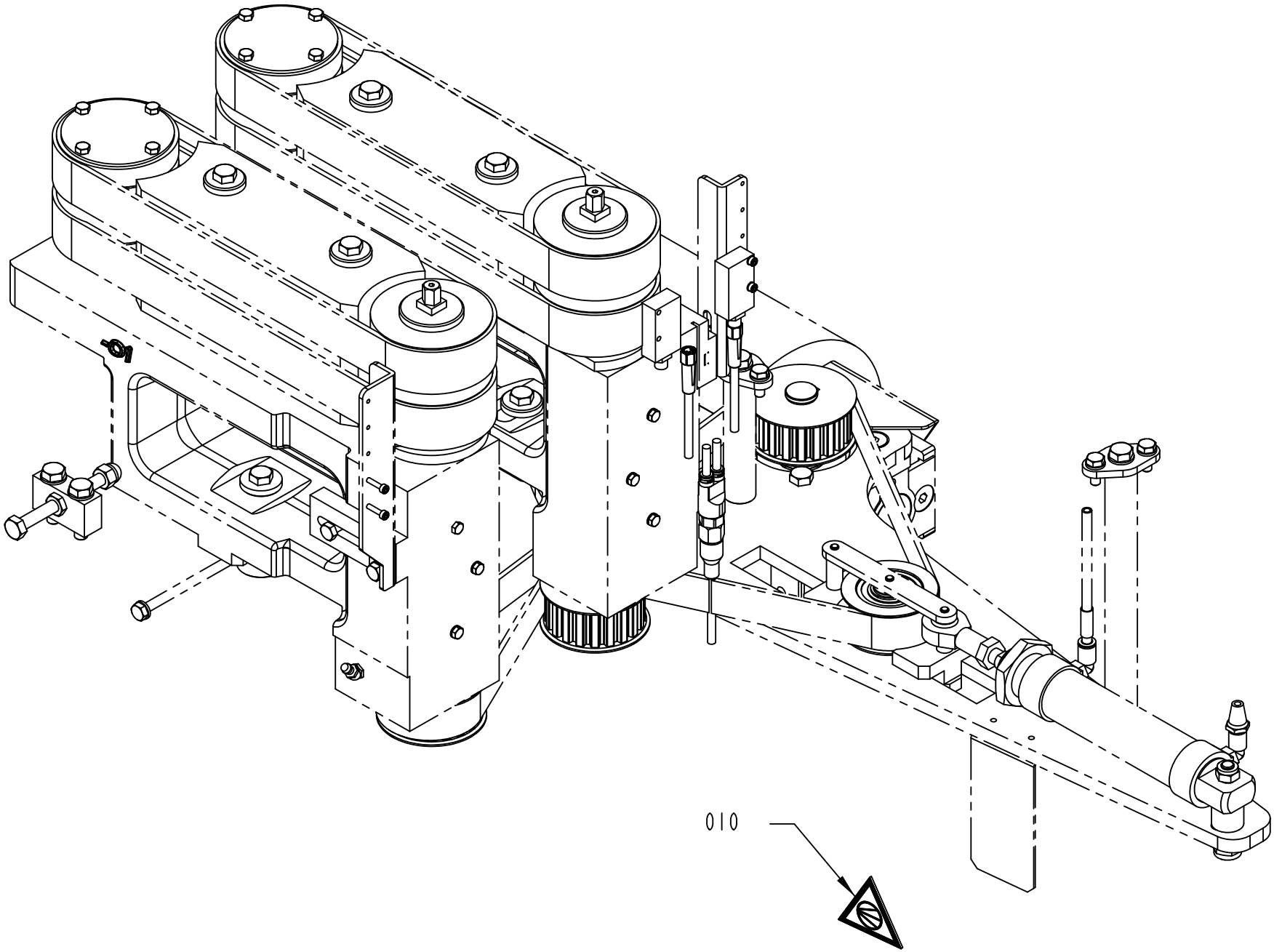

3217278-1
529087

ECM: 534705 - 20120401
Group number: 3217278-0100
Assembly Drawing: 3217278-1_1_AA

Pos	Part No	UN	Qty	Description	Page No
ANSI					
010	359725-0125		1	WARNING SIGN ANSI (V), PNEUMATIC ENERGY	
ISO					
010	359705-0021		1	WARNING SIGN ISO, PNEUMATIC ENERGY	

Pos	Part No	UN	Qty	Description	Page No

Machine Type | Group Description | Used-In | Group Number | Page No

Tetra Pak®

SPC
Spare Parts Catalogue

PUSH DOWN

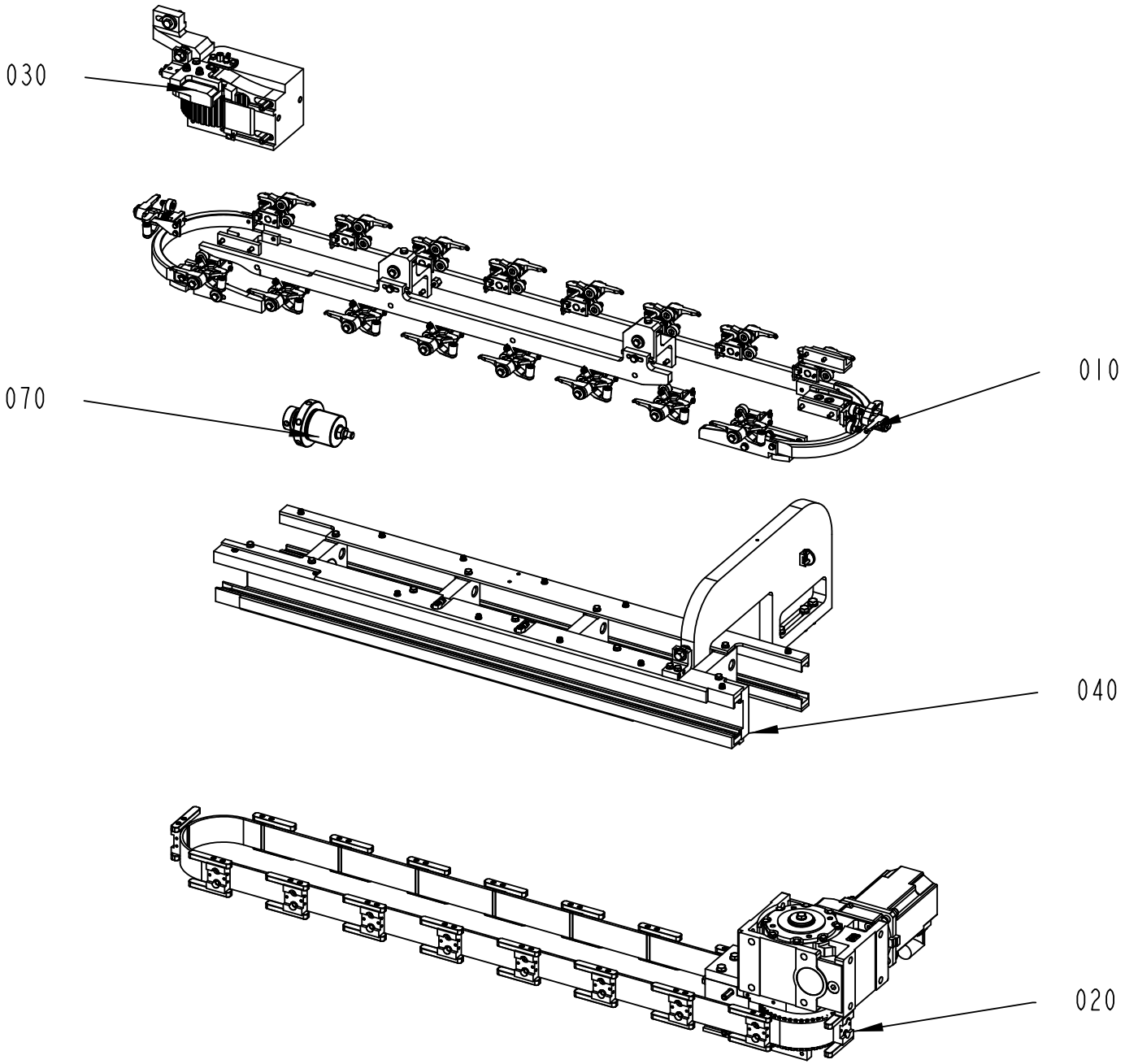

662902-3
527236

ECM: 527253 - 20120401
Group number: 662902-0200
Assembly Drawing: 662902-3_1_AA

Pos	Part No	UN	Qty	Description	Page No
-					
010	2802648-0200		1	CAP HOLDERS GROUP	**2-5, 2-7**
020	2802647-0200		1	DRIVE UNIT	**2-13**
030	2802645-0200		1	BELT STRETCHER	**2-15**
040	2802646-0200		1	FRAME SECTION	**2-17**
070	2843157-0100		1	CLAMPING ELEMENT	**2-21**

Pos	Part No	UN	Qty	Description	Page No

CAP HOLDERS GROUP

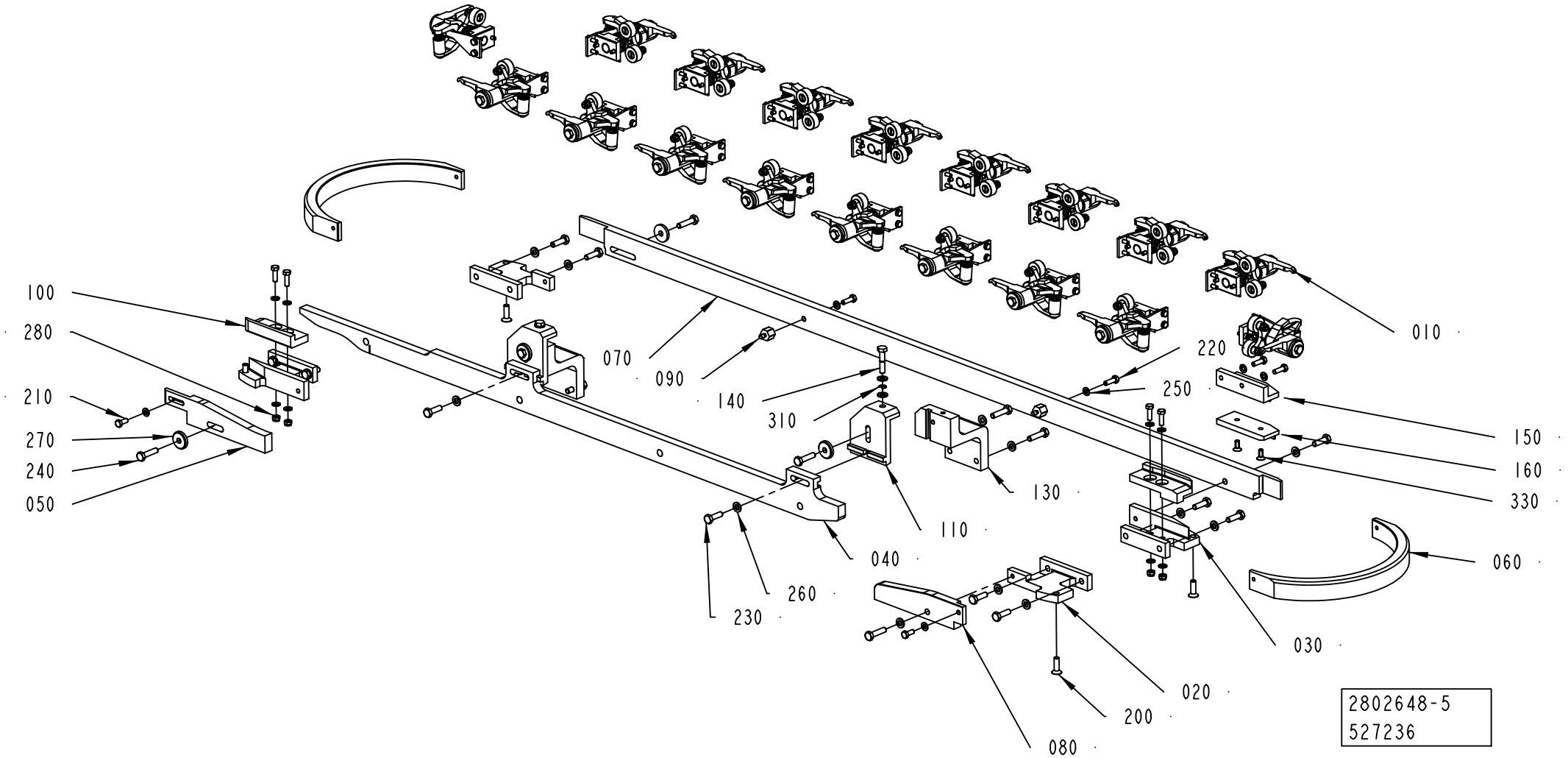

ECM: 699209 - 20150101
Group number: 2802648-0200
Assembly Drawing: 2802648-5_1_AA

This list covers pages from 2-4 to 2-7

Pos	Part No	UN	Qty	Description	Page No
TPA 0330SQ DREAMCAP 26 (See drawing on page: 2-6)					
020	2780339-0000		2	BRACKET	
030	2780338-0000		2	BRACKET	
040	2902669-0000		1	CURVE	
050	2902812-0000		1	CURVE	
060	2902666-0000		2	CURVE	
070	2902813-0000		1	CURVE	
080	2902668-0000		1	CURVE	
090	2715807-0000		2	SPACER	
110	2838728-0000		2	ADJUSTMENT BRACKET	
130	2902665-0000		2	BRACKET	
200	312155-0370		4	SCREW DIN 7991 MF6S M6X20 A4 70	
210	312105-0327		2	"SCREW, M6S ISO 4017 M5X12 A4 80"	
220	312105-0329		6	SCREW, M6S ISO 4017 M5X16 A4 80	
230	312105-0370		11	SCREW, M6S ISO 4017 M6X20 A4 80	
240	312105-0372		9	SCREW, M6S ISO 4017 M6X25 A4 80	
250	315105-0146		14	WASHER PLAIN, 5,3X10X1 A4 BRB	
260	315105-0153		20	WASHER PLAIN, 6,4X12X1,5 A4 BRB	
270	315125-0153		4	WASHER HIGH, TBRSB 6,4X22X4 A4	
320	312105-0331		2	SCREW, M6S ISO 4017 M5X20 A4 80	
TPA 0500E DREAMCAP 26 (See drawing on page: 2-4)					
020	2780339-0000		2	BRACKET	
030	2780338-0000		2	BRACKET	
040	3307591-0000		1	CURVE	
050	3305706-0000		1	CURVE	
060	2780337-0000		2	CURVE	
070	2780343-0000		1	CURVE	
080	2780342-0000		1	CURVE	
090	2715807-0000		2	SPACER	
110	2838728-0000		2	ADJUSTMENT BRACKET	
130	2780344-0000		2	BRACKET	
200	312155-0370		4	SCREW DIN 7991 MF6S M6X20 A4 70	
210	312105-0327		2	"SCREW, M6S ISO 4017 M5X12 A4 80"	
220	312105-0329		6	SCREW, M6S ISO 4017 M5X16 A4 80	
230	312105-0370		11	SCREW, M6S ISO 4017 M6X20 A4 80	
240	312105-0372		9	SCREW, M6S ISO 4017 M6X25 A4 80	
250	315105-0146		14	WASHER PLAIN, 5,3X10X1 A4 BRB	
260	315105-0153		20	WASHER PLAIN, 6,4X12X1,5 A4 BRB	
270	315125-0153		4	WASHER HIGH, TBRSB 6,4X22X4 A4	
320	312105-0331		2	SCREW, M6S ISO 4017 M5X20 A4 80	
Common Parts					
010	2751667-0200		18	PRESSURE FINGER	**2-9, 2-11**
100	2751695-0000		2	STEERING	
140	2715804-0000		2	SCREW	
150	2873871-0000		1	BRACKET	
160	2838781-0000		1	STEERING	
280	312812-0314		4	HEXAGON NUT, NY-LOCK M5 A4 80	
310	315755-0106		2	RETAINING RING SHAFT DIN 6799 4 SS	
330	312155-0327		2	SCREW DIN 7991 MF6S M5X12 A4 70	

Machine Type | Group Description | Used-In | Group Number | Page No

CAP HOLDERS GROUP

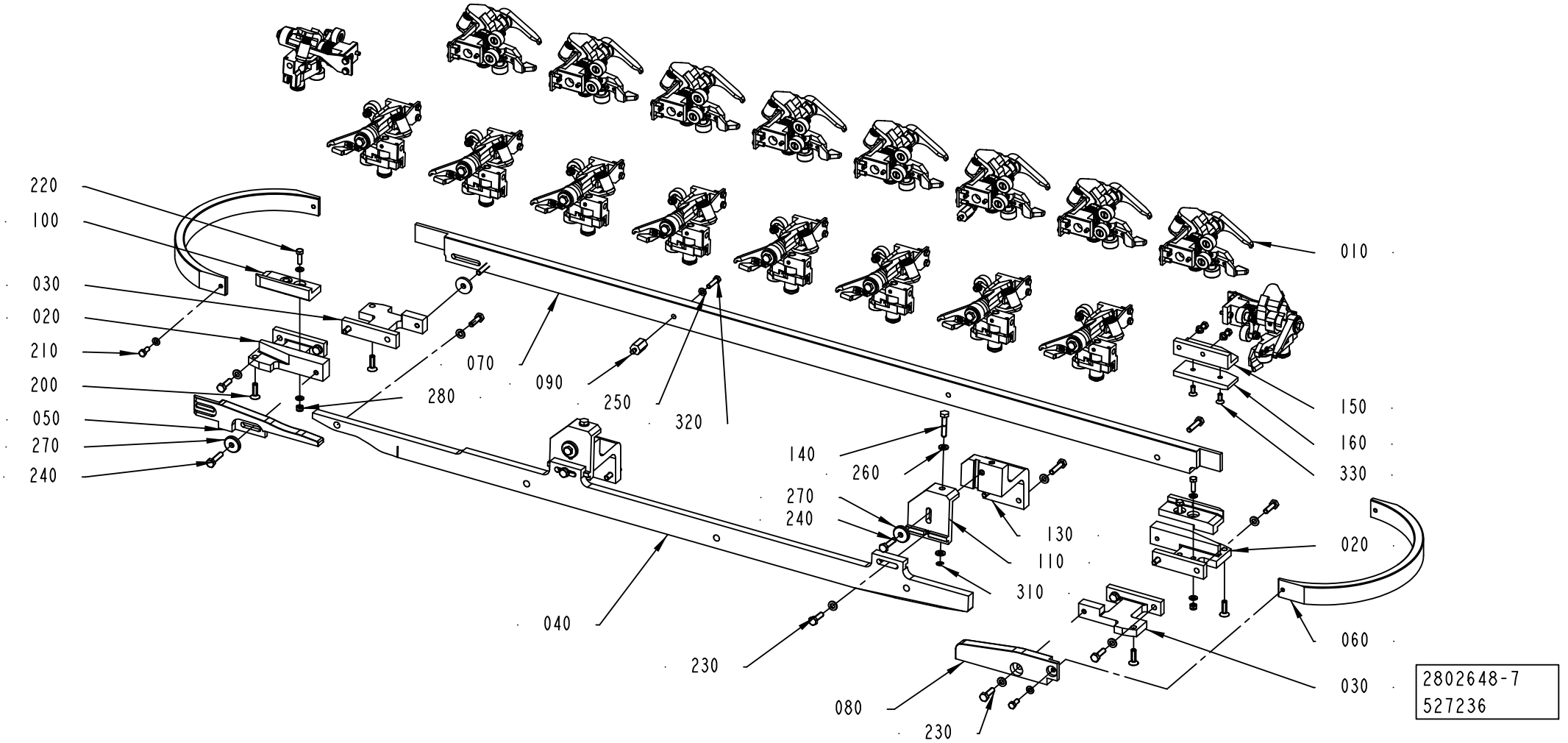

ECM: 699209 - 20150101
Group number: 2802648-0200
Assembly Drawing: 2802648-7_1_AA

This list covers pages from 2-4 to 2-7

Pos	Part No	UN	Qty	Description	Page No
TPA 0330SQ DREAMCAP 26 (See drawing on page: 2-6)					
020	2780339-0000		2	BRACKET	
030	2780338-0000		2	BRACKET	
040	2902669-0000		1	CURVE	
050	2902812-0000		1	CURVE	
060	2902666-0000		2	CURVE	
070	2902813-0000		1	CURVE	
080	2902668-0000		1	CURVE	
090	2715807-0000		2	SPACER	
110	2838728-0000		2	ADJUSTMENT BRACKET	
130	2902665-0000		2	BRACKET	
200	312155-0370		4	SCREW DIN 7991 MF6S M6X20 A4 70	
210	312105-0327		2	"SCREW, M6S ISO 4017 M5X12 A4 80"	
220	312105-0329		6	SCREW, M6S ISO 4017 M5X16 A4 80	
230	312105-0370		11	SCREW, M6S ISO 4017 M6X20 A4 80	
240	312105-0372		9	SCREW, M6S ISO 4017 M6X25 A4 80	
250	315105-0146		14	WASHER PLAIN, 5,3X10X1 A4 BRB	
260	315105-0153		20	WASHER PLAIN, 6,4X12X1,5 A4 BRB	
270	315125-0153		4	WASHER HIGH, TBRSB 6,4X22X4 A4	
320	312105-0331		2	SCREW, M6S ISO 4017 M5X20 A4 80	
TPA 0500E DREAMCAP 26 (See drawing on page: 2-4)					
020	2780339-0000		2	BRACKET	
030	2780338-0000		2	BRACKET	
040	3307591-0000		1	CURVE	
050	3305706-0000		1	CURVE	
060	2780337-0000		2	CURVE	
070	2780343-0000		1	CURVE	
080	2780342-0000		1	CURVE	
090	2715807-0000		2	SPACER	
110	2838728-0000		2	ADJUSTMENT BRACKET	
130	2780344-0000		2	BRACKET	
200	312155-0370		4	SCREW DIN 7991 MF6S M6X20 A4 70	
210	312105-0327		2	"SCREW, M6S ISO 4017 M5X12 A4 80"	
220	312105-0329		6	SCREW, M6S ISO 4017 M5X16 A4 80	
230	312105-0370		11	SCREW, M6S ISO 4017 M6X20 A4 80	
240	312105-0372		9	SCREW, M6S ISO 4017 M6X25 A4 80	
250	315105-0146		14	WASHER PLAIN, 5,3X10X1 A4 BRB	
260	315105-0153		20	WASHER PLAIN, 6,4X12X1,5 A4 BRB	
270	315125-0153		4	WASHER HIGH, TBRSB 6,4X22X4 A4	
320	312105-0331		2	SCREW, M6S ISO 4017 M5X20 A4 80	
Common Parts					
010	2751667-0200		18	PRESSURE FINGER	**2-9, 2-11**
100	2751695-0000		2	STEERING	
140	2715804-0000		2	SCREW	
150	2873871-0000		1	BRACKET	
160	2838781-0000		1	STEERING	
280	312812-0314		4	HEXAGON NUT, NY-LOCK M5 A4 80	
310	315755-0106		2	RETAINING RING SHAFT DIN 6799 4 SS	
330	312155-0327		2	SCREW DIN 7991 MF6S M5X12 A4 70	

Machine Type | Group Description | Used-In | Group Number | Page No

PRESSURE FINGER

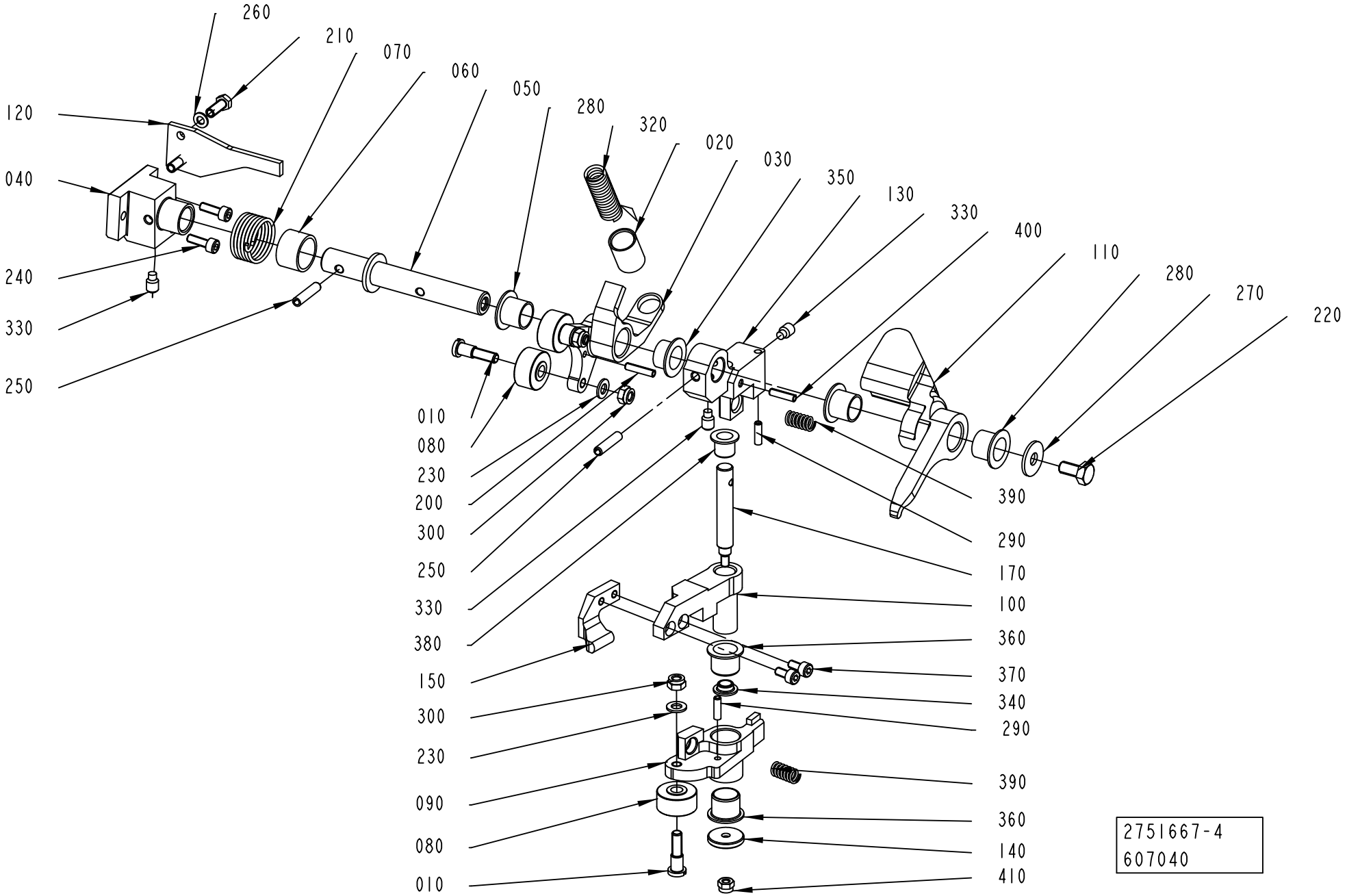

ECM: 712296 - 20150401
Group number: 2751667-0200
Assembly Drawing: 2751667-4_1_AB

This list covers pages from 2-8 to 2-11

Pos	Part No	UN	Qty	Description	Page No
TPA 0330SQ DREAMCAP 26 (See drawing on page: 2-8)					
010	2684864-0000		3	SHAFT	
040	2970142-0000		1	HOLDER	
050	3108977-0000		1	SHAFT	
080	2703725-0000		3	ROLLER	
090	3106999-0000		1	ARM	
100	3108975-0000		1	ARM	
110	2970144-0000		1	ARM	
120	2902652-0000		1	BRACKET	
130	3106998-0000		1	BRACKET	
140	3108978-0000		1	WASHER	
150	2973936-0000		1	ARM	
170	3163193-0000		1	PLATE	
200	311112-0208		2	SPRING PIN, ISO 8752 3X16 A2	
230	315105-0146		3	WASHER PLAIN, 5,3X10X1 A4 BRB	
250	311112-0256		2	SPRING PIN, ISO 8752 4X20 A2	
270	90005-0060		1	WASHER PLAIN, RBS 6,4/M6)/18,H=1,5	
280	90240-0262		3	FLANGE BUSHING, IGLIDUR X 12X14X12	
290	311112-0206		2	SPRING PIN, ISO 8752 3X12 A2	
300	312812-0314		3	HEXAGON NUT, NY-LOCK M5 A4 80	
320	90605-3923		1	COMP. SPRING, SF-TFR 2533, 1,5X11X40	
330	312311-0364		3	SET SCREW, DOG POINT ISO4028 M6X10 FZB	
340	321153-0058		1	FLANGE BUSHING, IGLIDUR G 6X8X4	
350	90240-0261		1	FLANGE BUSHING, IGLIDUR X 12X14X9	
360	321153-0180		2	FLANGE BUSHING, IGLIDUR G 12X14X12	
370	312115-0287		2	SCREW ISO4762 M4X8 A4 80	
380	321153-0102		1	FLANGE BUSHING, IGLIDUR G 8X10X10	
390	90605-3963		2	COMP. SPRING, 5988, 1X6,3X21,5	
400	311112-0207		1	SPRING PIN, ISO 8752 3X14 A2	
410	312812-0312		1	HEXAGON NUT, NY-LOCK M4 A4 80	
TPA 0500E DREAMCAP 26 (See drawing on page: 2-10)					
010	2684864-0000		1	SHAFT	
040	2780352-0000		1	HOLDER	
050	3324456-0000		1	SHAFT	
080	2703725-0000		1	ROLLER	
090	3106999-0000		1	ARM	
100	3108975-0000		1	ARM	
110	2970144-0000		1	ARM	
120	2780353-0000		1	BRACKET	
130	3106998-0000		1	BRACKET	
140	3108978-0000		1	WASHER	
150	3315497-0000		1	ARM	
170	3163193-0000		1	PLATE	
180	3311661-0000		2	SHAFT	
190	3311660-0000		2	ROLLER	
200	311112-0208		1	SPRING PIN, ISO 8752 3X16 A2	
230	315105-0146		3	WASHER PLAIN, 5,3X10X1 A4 BRB	
250	311112-0256		2	SPRING PIN, ISO 8752 4X20 A2	
270	90005-0060		1	WASHER PLAIN, RBS 6,4/M6)/18,H=1,5	
280	90240-0262		2	FLANGE BUSHING, IGLIDUR X 12X14X12	
290	311112-0206		2	SPRING PIN, ISO 8752 3X12 A2	
300	312812-0314		3	HEXAGON NUT, NY-LOCK M5 A4 80	
320	90605-3923		1	COMP. SPRING, SF-TFR 2533, 1,5X11X40	
330	312311-0364		3	SET SCREW, DOG POINT ISO4028 M6X10 FZB	
340	321153-0058		1	FLANGE BUSHING, IGLIDUR G 6X8X4	
350	90240-0261		1	FLANGE BUSHING, IGLIDUR X 12X14X9	
360	321153-0180		2	FLANGE BUSHING, IGLIDUR G 12X14X12	
370	312115-0287		2	SCREW ISO4762 M4X8 A4 80	
380	321153-0102		1	FLANGE BUSHING, IGLIDUR G 8X10X10	
390	90605-3963		2	COMP. SPRING, 5988, 1X6,3X21,5	
400	311112-0207		1	SPRING PIN, ISO 8752 3X14 A2	
410	312812-0312		1	HEXAGON NUT, NY-LOCK M4 A4 80	
420	311103-0239		1	PARALLEL PIN ISO 2338 3M6X22 A1	
Common Parts					
020	2715695-0000		1	SLEEVE	
030	2715794-0000		1	ARM	
060	2715797-0000		1	BUSHING	
070	2715798-0000		1	TURN SPRING	
210	312105-0291		2	SCREW, M6S ISO 4017 M4X12 A4 70	
220	312105-0366		1	SCREW, M6S ISO 4017 M6X12 A4 80	
240	312115-0291		2	SCREW ISO4762 M4X12 A4 80	
260	315105-0136		2	WASHER PLAIN, 4,3X8X0,8 A4 BRB	

Machine Type | Group Description | Used-In | Group Number | Page No

PRESSURE FINGER

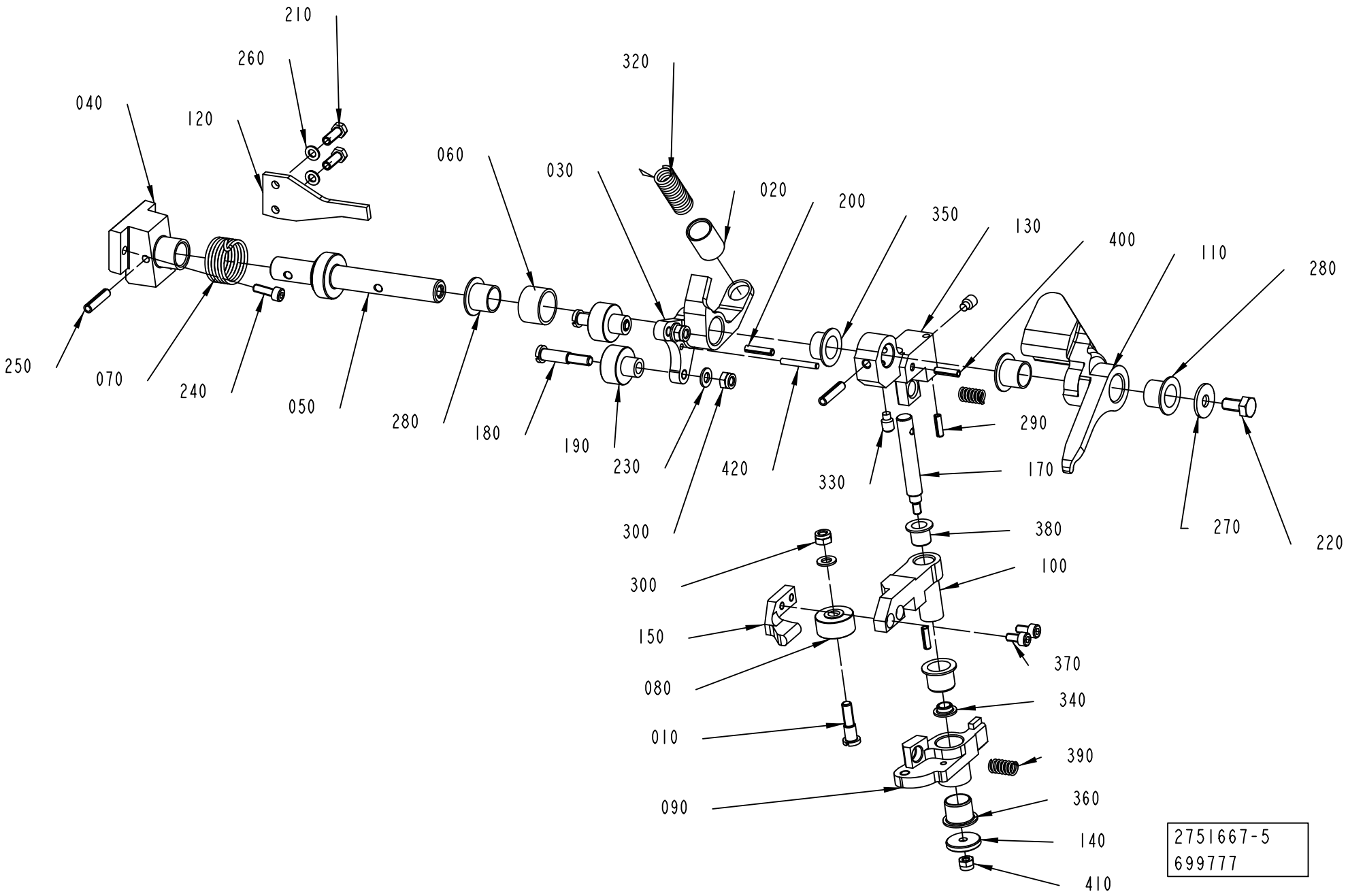

ECM: 712296 - 20150401
Group number: 2751667-0200
Assembly Drawing: 2751667-5_1_AA

This list covers pages from 2-8 to 2-11

Pos	Part No	UN	Qty	Description	Page No
TPA 0330SQ DREAMCAP 26 (See drawing on page: 2-8)					
010	2684864-0000		3	SHAFT	
040	2970142-0000		1	HOLDER	
050	3108977-0000		1	SHAFT	
080	2703725-0000		3	ROLLER	
090	3106999-0000		1	ARM	
100	3108975-0000		1	ARM	
110	2970144-0000		1	ARM	
120	2902652-0000		1	BRACKET	
130	3106998-0000		1	BRACKET	
140	3108978-0000		1	WASHER	
150	2973936-0000		1	ARM	
170	3163193-0000		1	PLATE	
200	311112-0208		2	SPRING PIN, ISO 8752 3X16 A2	
230	315105-0146		3	WASHER PLAIN, 5,3X10X1 A4 BRB	
250	311112-0256		2	SPRING PIN, ISO 8752 4X20 A2	
270	90005-0060		1	WASHER PLAIN, RBS 6,4/M6)/18,H=1,5	
280	90240-0262		3	FLANGE BUSHING, IGLIDUR X 12X14X12	
290	311112-0206		2	SPRING PIN, ISO 8752 3X12 A2	
300	312812-0314		3	HEXAGON NUT, NY-LOCK M5 A4 80	
320	90605-3923		1	COMP. SPRING, SF-TFR 2533, 1,5X11X40	
330	312311-0364		3	SET SCREW, DOG POINT ISO4028 M6X10 FZB	
340	321153-0058		1	FLANGE BUSHING, IGLIDUR G 6X8X4	
350	90240-0261		1	FLANGE BUSHING, IGLIDUR X 12X14X9	
360	321153-0180		2	FLANGE BUSHING, IGLIDUR G 12X14X12	
370	312115-0287		2	SCREW ISO4762 M4X8 A4 80	
380	321153-0102		1	FLANGE BUSHING, IGLIDUR G 8X10X10	
390	90605-3963		2	COMP. SPRING, 5988, 1X6,3X21,5	
400	311112-0207		1	SPRING PIN, ISO 8752 3X14 A2	
410	312812-0312		1	HEXAGON NUT, NY-LOCK M4 A4 80	
TPA 0500E DREAMCAP 26 (See drawing on page: 2-10)					
010	2684864-0000		1	SHAFT	
040	2780352-0000		1	HOLDER	
050	3324456-0000		1	SHAFT	
080	2703725-0000		1	ROLLER	
090	3106999-0000		1	ARM	
100	3108975-0000		1	ARM	
110	2970144-0000		1	ARM	
120	2780353-0000		1	BRACKET	
130	3106998-0000		1	BRACKET	
140	3108978-0000		1	WASHER	
150	3315497-0000		1	ARM	
170	3163193-0000		1	PLATE	
180	3311661-0000		2	SHAFT	
190	3311660-0000		2	ROLLER	
200	311112-0208		1	SPRING PIN, ISO 8752 3X16 A2	
230	315105-0146		3	WASHER PLAIN, 5,3X10X1 A4 BRB	
250	311112-0256		2	SPRING PIN, ISO 8752 4X20 A2	
270	90005-0060		1	WASHER PLAIN, RBS 6,4/M6)/18,H=1,5	
280	90240-0262		2	FLANGE BUSHING, IGLIDUR X 12X14X12	
290	311112-0206		2	SPRING PIN, ISO 8752 3X12 A2	
300	312812-0314		3	HEXAGON NUT, NY-LOCK M5 A4 80	
320	90605-3923		1	COMP. SPRING, SF-TFR 2533, 1,5X11X40	
330	312311-0364		3	SET SCREW, DOG POINT ISO4028 M6X10 FZB	
340	321153-0058		1	FLANGE BUSHING, IGLIDUR G 6X8X4	
350	90240-0261		1	FLANGE BUSHING, IGLIDUR X 12X14X9	
360	321153-0180		2	FLANGE BUSHING, IGLIDUR G 12X14X12	
370	312115-0287		2	SCREW ISO4762 M4X8 A4 80	
380	321153-0102		1	FLANGE BUSHING, IGLIDUR G 8X10X10	
390	90605-3963		2	COMP. SPRING, 5988, 1X6,3X21,5	
400	311112-0207		1	SPRING PIN, ISO 8752 3X14 A2	
410	312812-0312		1	HEXAGON NUT, NY-LOCK M4 A4 80	
420	311103-0239		1	PARALLEL PIN ISO 2338 3M6X22 A1	
Common Parts					
020	2715695-0000		1	SLEEVE	
030	2715794-0000		1	ARM	
060	2715797-0000		1	BUSHING	
070	2715798-0000		1	TURN SPRING	
210	312105-0291		2	SCREW, M6S ISO 4017 M4X12 A4 70	
220	312105-0366		1	SCREW, M6S ISO 4017 M6X12 A4 80	
240	312115-0291		2	SCREW ISO4762 M4X12 A4 80	
260	315105-0136		2	WASHER PLAIN, 4,3X8X0,8 A4 BRB	

Machine Type | Group Description | Used-In | Group Number | Page No

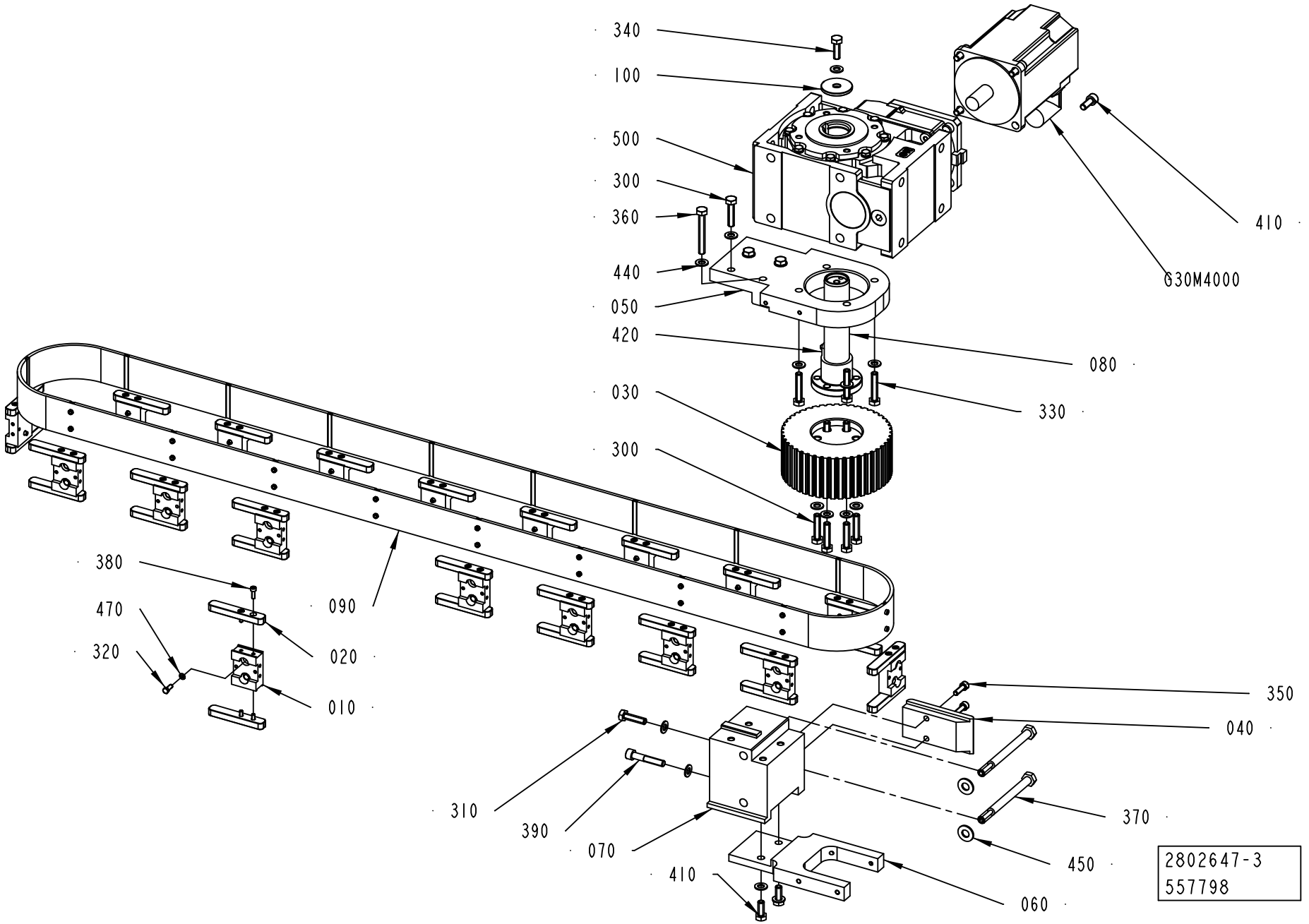
340
100
500
300
360
440
050
420
030
300
380
470
320
090
020
010
310
390
070
410
060
450
370
040
350
080
330
410
G30M4000
2802647-3
557798

ECM: 567280 - 20120701
Group number: 2802647-0200
Assembly Drawing: 2802647-3_1_AB

Pos	Part No	UN	Qty	Description	Page No
-					
010	2703711-0000		18	HOLDER	
020	2715837-0000		36	KEY	
030	2837191-0000		1	TOOTHED PULLEY	
040	2751710-0000		1	SUPPORT PLATE	
050	2837175-0000		1	BEARING HALF	
060	2716041-0000		1	BRACKET	
070	2751700-0000		1	BOW CLAMP	
080	2838721-0000		1	SHAFT	
090	3117862-0000		1	TIMING BELT	
010	*90603-1153*		*1*	*TIMING BELT 50AT10/2700-V PU*	
020	*90603-1154*		*18*	*INSERT NUT, 50 M4 X 50AT10-00*	
100	2837255-0000		1	WASHER	
300	312109-0457		8	SCREW, M6S ISO 4017 M8X35 A4 80	
310	312105-0455		1	SCREW, M6S ISO 4017 M8X30 A4 80	
320	312105-0291		36	SCREW, M6S ISO 4017 M4X12 A4 70	
330	312109-0459		4	SCREW, M6S ISO 4017 M8X40 A4 80	
340	312105-0453		1	SCREW, M6S ISO 4017 M8X25 A4 80	
350	312115-0370		2	SCREW ISO4762 M6X20 A4 80	
360	312109-0463		2	SCREW, M6S ISO 4017 M8X60 A4 80	
370	312105-0515		2	SCREW, M6S ISO 4014 M10X120 A4 80	
380	312115-0291		72	SCREW ISO4762 M4X12 A4 80	
390	312115-0460		1	SCREW ISO4762 M8X45 A4 80	
410	312105-0451		6	SCREW, M6S ISO 4017 M8X20 A4 80	
420	315705-0307		1	PARALLEL KEY W. ROUND ENDS, 10X8X70 MM	
440	315105-0165		19	FWAS080G0-0S, WASHER PLAIN	
450	315105-0173		2	WASHER PLAIN, 10,5X22X2 A4 BRB	
470	315105-0136		36	WASHER PLAIN, 4,3X8X0,8 A4 BRB	
500	90604-4255		1	WORM GEAR MR V 63 UO3A-80B4 # B5/140 H1	
G30M4000	90601-0668		1	SERVO MOTOR, MPL-B420P-MK72AA SERIES A	

Pos	Part No	UN	Qty	Description	Page No

BELT STRETCHER

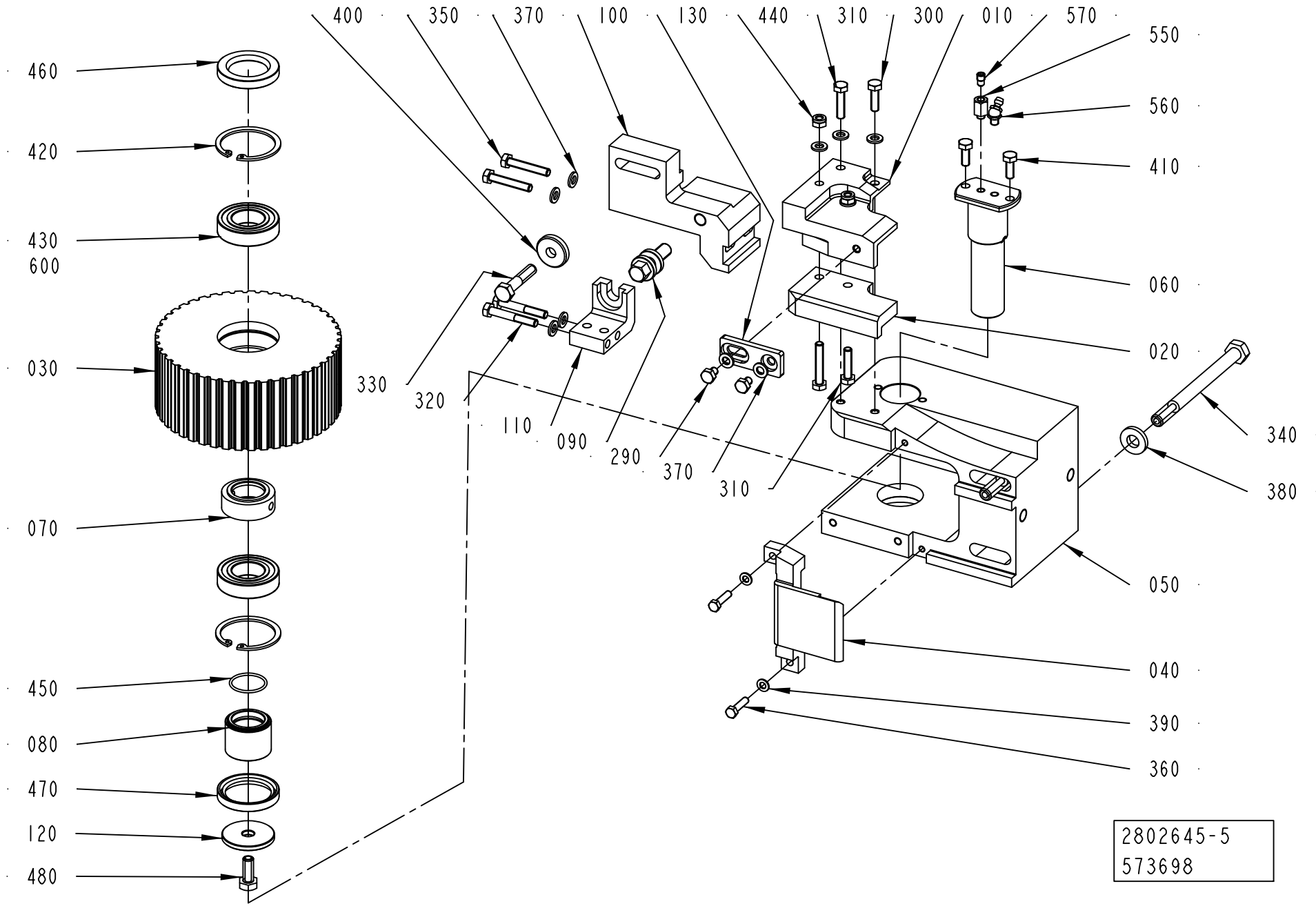

ECM: 685961 - 20141001
Group number: 2802645-0200
Assembly Drawing: 2802645-5_1_AC

Pos	Part No	UN	Qty	Description	Page No
DREAMCAP 26					
010	2902708-0000		1	BRACKET	
100	2902688-0000		1	BRACKET	
130	2902711-0000		1	BRACKET	
290	312105-0362		2	SCREW, M6S ISO 4017 M6X8 A4 80	
310	312105-0372		2	SCREW, M6S ISO 4017 M6X25 A4 80	
350	312109-0376		3	SCREW, M6S ISO 4017 M6X35 A4 80	
370	315105-0153		12	WASHER PLAIN, 6,4X12X1,5 A4 BRB	
Common Parts					
020	2751693-0000		1	STEERING	
030	2751712-0000		1	TOOTHED PULLEY	
040	2751714-0000		1	SUPPORT PLATE	
050	2751725-0000		1	BOW CLAMP	
060	3208104-0000		1	SHAFT	
070	2751747-0000		1	SPACER	
080	2751748-0000		1	SLEEVE	
090	2703842-0000		1	ADJUSTING SCREW	
110	2802635-0000		1	SUPPORT	
120	2837255-0000		1	WASHER	
300	312105-0370		1	SCREW, M6S ISO 4017 M6X20 A4 80	
320	312105-0378		2	SCREW, M6S ISO 4014 M6X40 A4 80	
330	312105-0459		1	SCREW, M6S ISO 4014 M8X40 A4 80	
340	312105-0515		2	SCREW, M6S ISO 4014 M10X120 A4 80	
360	312105-0331		2	SCREW, M6S ISO 4017 M5X20 A4 80	
380	315115-0173		2	WASHER PLAIN, TBRB 10,5/22 H=4	
390	315105-0146		2	WASHER PLAIN, 5,3X10X1 A4 BRB	
400	315125-0165		1	WASHER HIGH, TBRSB 8,4X26X5 A4	
410	312105-0368		2	"SCREW, M6S ISO 4017 M6X16 A4 80"	
420	315753-0130		2	RETAINING RING FOR BORE DIN 472 47 SS	
430	321306-0105		2	BALL BEARING 25/47X12	
440	312812-0316		2	HEXAGON NUT, NY-LOCK M6 A4 80	
450	315202-0710		1	O-RING 25,12X1,78 MM	
460	315221-0169		1	RADIAL SEAL 30X47X7 MM	
470	315221-0175		1	RADIAL SEAL 35X47X7 MM	
480	312105-0451		1	SCREW, M6S ISO 4017 M8X20 A4 80	
550	3147226-0000		1	ADAPTER	
560	90605-1284		1	GREASE NIPPLE 45 DEG. M6X1, 10606145RF	
570	90604-3329		1	NON-RETURN VALVE, RVA-M6	
600	344414-0000		1	KLüBEROIL 4 UH1-320N, ONLY IN BOM	
	344414-0335		*1*	*KLüBEROIL 4 UH1-320N, 200 L DRUM*	
	344414-0766		*1*	*KLüBEROIL 4 UH1-320N, 20 L CAN*	
	344414-0764		*1*	*KLüBEROIL 4 UH1-320N, 5 L CAN*	

Machine Type	Group Description	Used-In	Group Number	Page No

FRAME SECTION

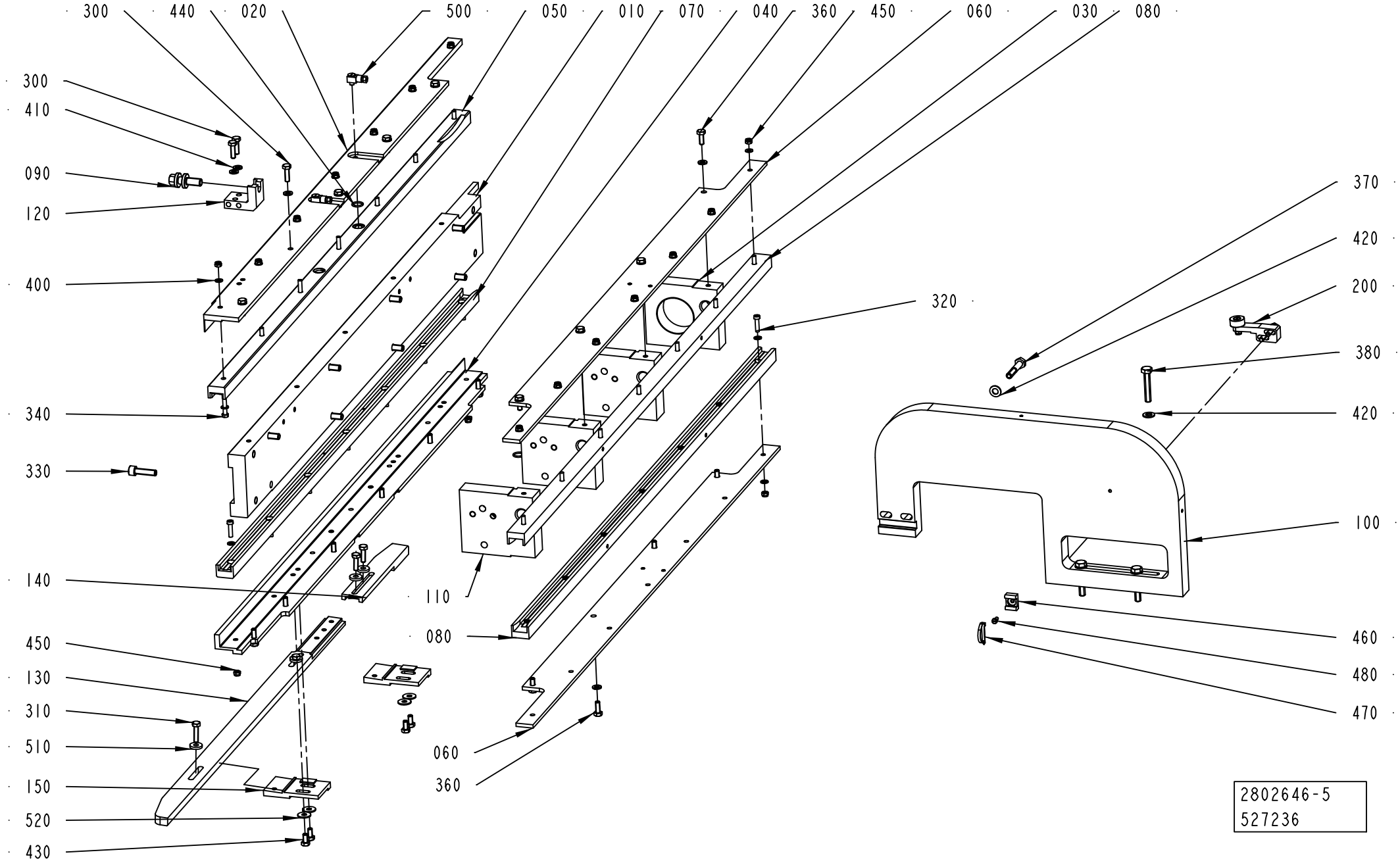

ECM: 699208 - 20150101
Group number: 2802646-0200
Assembly Drawing: 2802646-5_1_AA

Pos	Part No	UN	Qty	Description	Page No
TPA 0330SQ DREAMCAP 26 (See drawing on page: 2-16)					
010	2902707-0000		1	PLATE	
020	2902706-0000		1	ANGLE BRACKET	
040	2902811-0000		1	ANGLE BRACKET	
050	2902709-0000		1	SLIDING STRIP	
070	3095795-0000		1	SLIDING STRIP	
100	2902705-0000		1	MOUNTING SHEET	
130	2902809-0000		1	CURVE	
140	2902814-0000		1	CURVE	
150	2902810-0000		2	BRACKET	
200	3163113-0100		1	CAM	**2-19**
310	312105-0372		2	SCREW, M6S ISO 4017 M6X25 A4 80	
320	312125-0331		21	SLOTTED HEAD SCREW, ISO1207 M5X20 A4	
340	312125-0333		7	SLOTTED HEAD SCREW, ISO1207 M5X25 A4	
400	315105-0146		56	WASHER PLAIN, 5,3X10X1 A4 BRB	
410	315105-0153		21	WASHER PLAIN, 6,4X12X1,5 A4 BRB	
430	312105-0366		4	SCREW, M6S ISO 4017 M6X12 A4 80	
510	90459-7441		4	WASHER PLAIN, DIN 7349, 6,4/17 H=3	
520	90005-0060		4	WASHER PLAIN, RBS 6,4/M6)/18,H=1,5	
TPA 0500E DREAMCAP 26 (See drawing on page: 2-16)					
010	2902707-0000		1	PLATE	
020	2902706-0000		1	ANGLE BRACKET	
040	2902811-0000		1	ANGLE BRACKET	
050	2902709-0000		1	SLIDING STRIP	
070	3095795-0000		1	SLIDING STRIP	
100	2902705-0000		1	MOUNTING SHEET	
130	2902809-0000		1	CURVE	
140	2902814-0000		1	CURVE	
150	3302583-0000		2	BRACKET	
200	3163113-0100		1	CAM	**2-19**
310	312105-0372		2	SCREW, M6S ISO 4017 M6X25 A4 80	
320	312125-0331		21	SLOTTED HEAD SCREW, ISO1207 M5X20 A4	
340	312125-0333		7	SLOTTED HEAD SCREW, ISO1207 M5X25 A4	
400	315105-0146		56	WASHER PLAIN, 5,3X10X1 A4 BRB	
410	315105-0153		21	WASHER PLAIN, 6,4X12X1,5 A4 BRB	
430	312105-0366		4	SCREW, M6S ISO 4017 M6X12 A4 80	
510	90459-7441		4	WASHER PLAIN, DIN 7349, 6,4/17 H=3	
520	90005-0060		4	WASHER PLAIN, RBS 6,4/M6)/18,H=1,5	
Common Parts					
030	2837631-0000		1	SPACER	
060	2838783-0000		2	PLATE	
080	2838784-0000		2	SLIDING STRIP	
090	2703842-0000		1	ADJUSTING SCREW	
110	2802644-0000		3	SPACER	
120	2802635-0000		1	SUPPORT	
300	312105-0370		15	SCREW, M6S ISO 4017 M6X20 A4 80	
330	312115-0455		8	SCREW ISO4762 M8X30 A4 80	
360	312105-0368		8	"SCREW, M6S ISO 4017 M6X16 A4 80"	
370	312105-0460		2	SCREW, M6S ISO 4014 M8X45 A4 80	
380	312109-0459		3	SCREW, M6S ISO 4017 M8X40 A4 80	
420	315105-0165		2	FWAS080G0-0S, WASHER PLAIN	
440	315202-0702		4	O-RING 12,42X1,78 MM	
450	312812-0314		28	HEXAGON NUT, NY-LOCK M5 A4 80	
460	352113-0203		1	ANCHOR PLATES FOR STRIPS, TM3S8-M0	
470	352113-0104		1	CABLE TIE, BLACK 300X4,8 MM	
480	312125-0287		1	SLOTTED HEAD SCREW, ISO1207 M4X8 A4	
490	315115-0165		3	WASHER PLAIN, TBRB 8,4/16 H=3	
500	90134-0058		3	CONNECTION	

Machine Type | Group Description | Used-In | Group Number | Page No

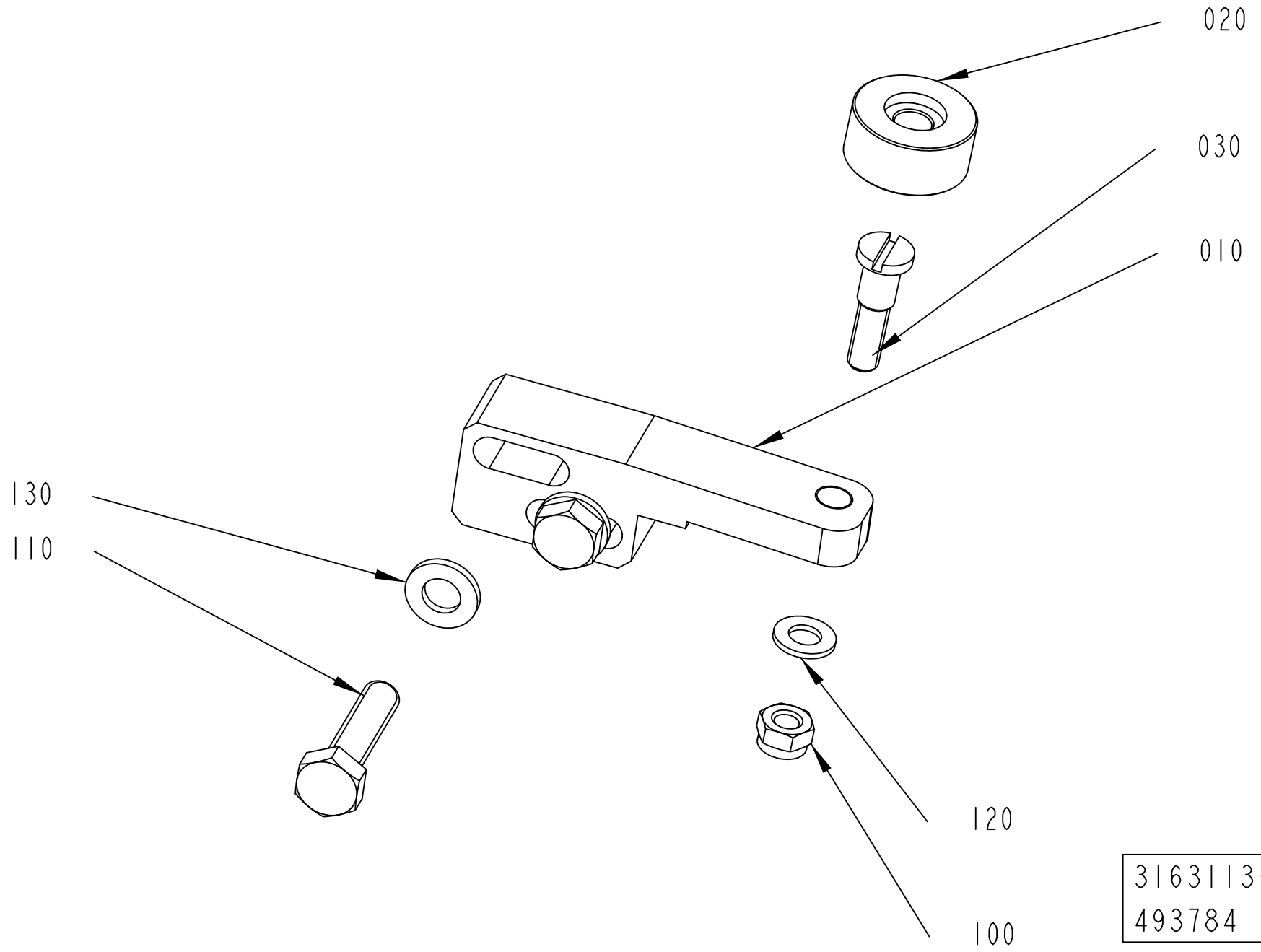
020
030
010
130
110
120
100
3163113-1
493784

ECM: 699210 - 20150101
Group number: 3163113-0100
Assembly Drawing: 3163113-1_1_AA

Pos	Part No	UN	Qty	Description	Page No
TPA 0330SQ					
010	3163112-0000		1	SHAFT	
TPA 0500E					
010	3326691-0000		1	PLATE	
Common Parts					
020	2703725-0000		1	ROLLER	
030	2684864-0000		1	SHAFT	
100	312812-0314		1	HEXAGON NUT, NY-LOCK M5 A4 80	
110	312105-0372		2	SCREW, M6S ISO 4017 M6X25 A4 80	
120	315105-0146		1	WASHER PLAIN, 5,3X10X1 A4 BRB	
130	315105-0153		2	WASHER PLAIN, 6,4X12X1,5 A4 BRB	

Pos	Part No	UN	Qty	Description	Page No

CLAMPING ELEMENT

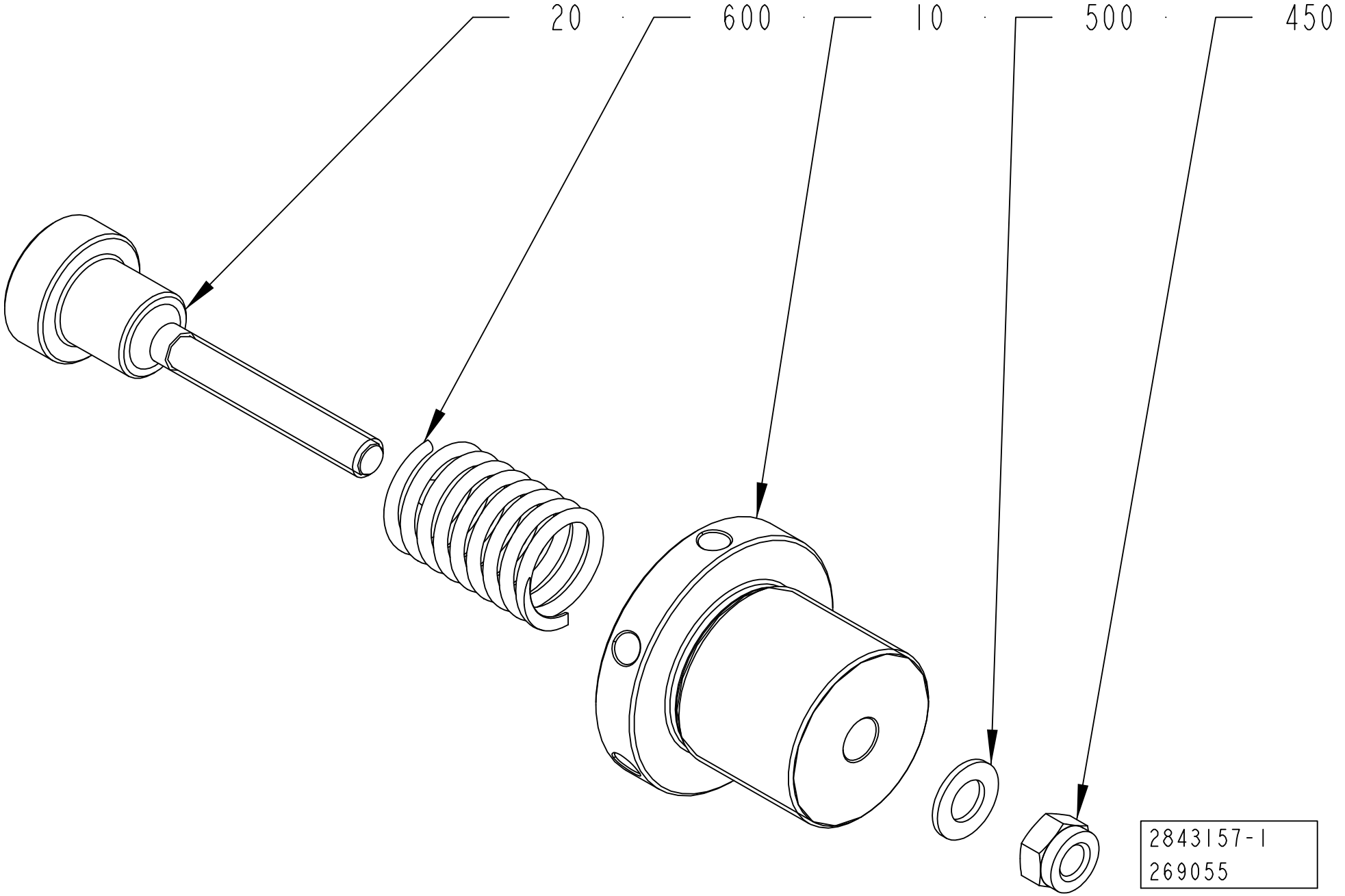

ECM: 350651 - 20080701
Group number: 2843157-0100
Assembly Drawing: 2843157-1_1_AA

Pos	Part No	UN	Qty	Description	Page No
-					
010	2843158-0000		1	FLANGE	
020	2843159-0000		1	SHAFT	
450	312812-0322		1	HEXAGON NUT, NY-LOCK M12 A4 80	
500	315105-0178		1	WASHER PLAIN, 13X24X2,5 A4 BRB	
600	90600-0656		1	COMP. SPRING, 6777, 4X36X120 DIN2098	

Pos	Part No	UN	Qty	Description	Page No

Tetra Pak®

SPC
Spare Parts Catalogue

Screw Cap Hot Melt Appl.

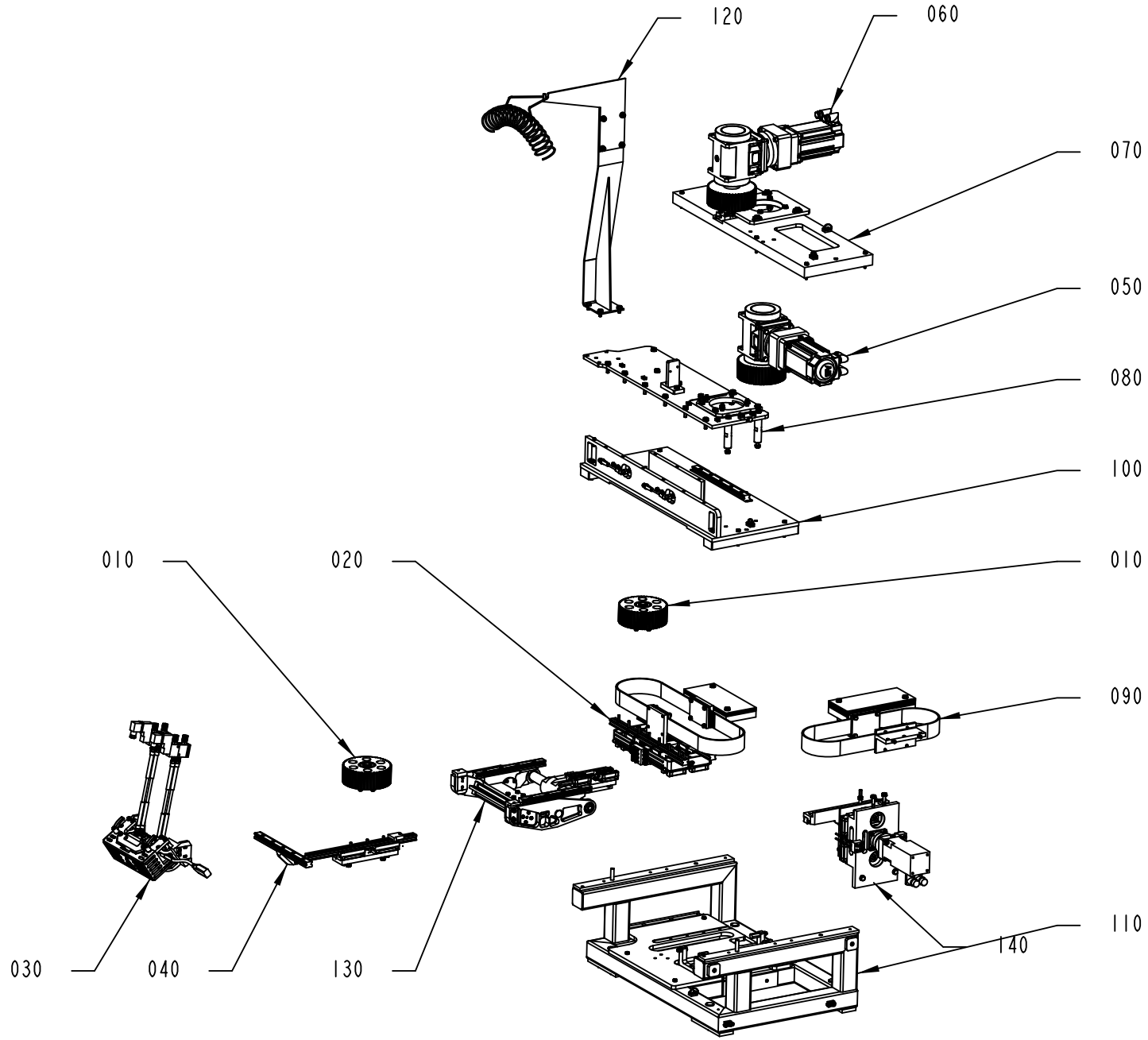

662903-7
645689

ECM: 645691 - 20140401
Group number: 662903-0300
Assembly Drawing: 662903-7_1_AB

Pos	Part No	UN	Qty	Description	Page No
CAP30/FLEX DREAMCAP 26					
030	3143905-0200		1	HOTMELT GUN	**3-5**
080	2902780-0100		1	MOTOR BRACKET	**3-7**
130	3141453-0200		1	LINK ARM	**3-9**
140	3141456-0200		1	SERVO MOTOR	**3-11**
Common Parts					
010	2695135-0200		2	PULLEY	**3-13**
020	2716090-0200		1	MOTION CONTROL	**3-15**
040	2716092-0200		1	TRANSMISSION RAIL	**3-17**
050	2840143-0200		1	SERVO MOTOR	**3-19**
060	2840144-0200		1	SERVO MOTOR	**3-21**
070	2840145-0100		1	MOTOR BRACKET	**3-23**
090	2716097-0200		1	MOTION CONTROL	**3-25**
100	2840147-0200		1	FASTENING BRACKET	**3-27**
110	2841501-0200		1	FRAME	**3-29**
120	2901708-0100		1	SUPPORT TUBE	**3-31**

Pos	Part No	UN	Qty	Description	Page No

HOTMELT GUN

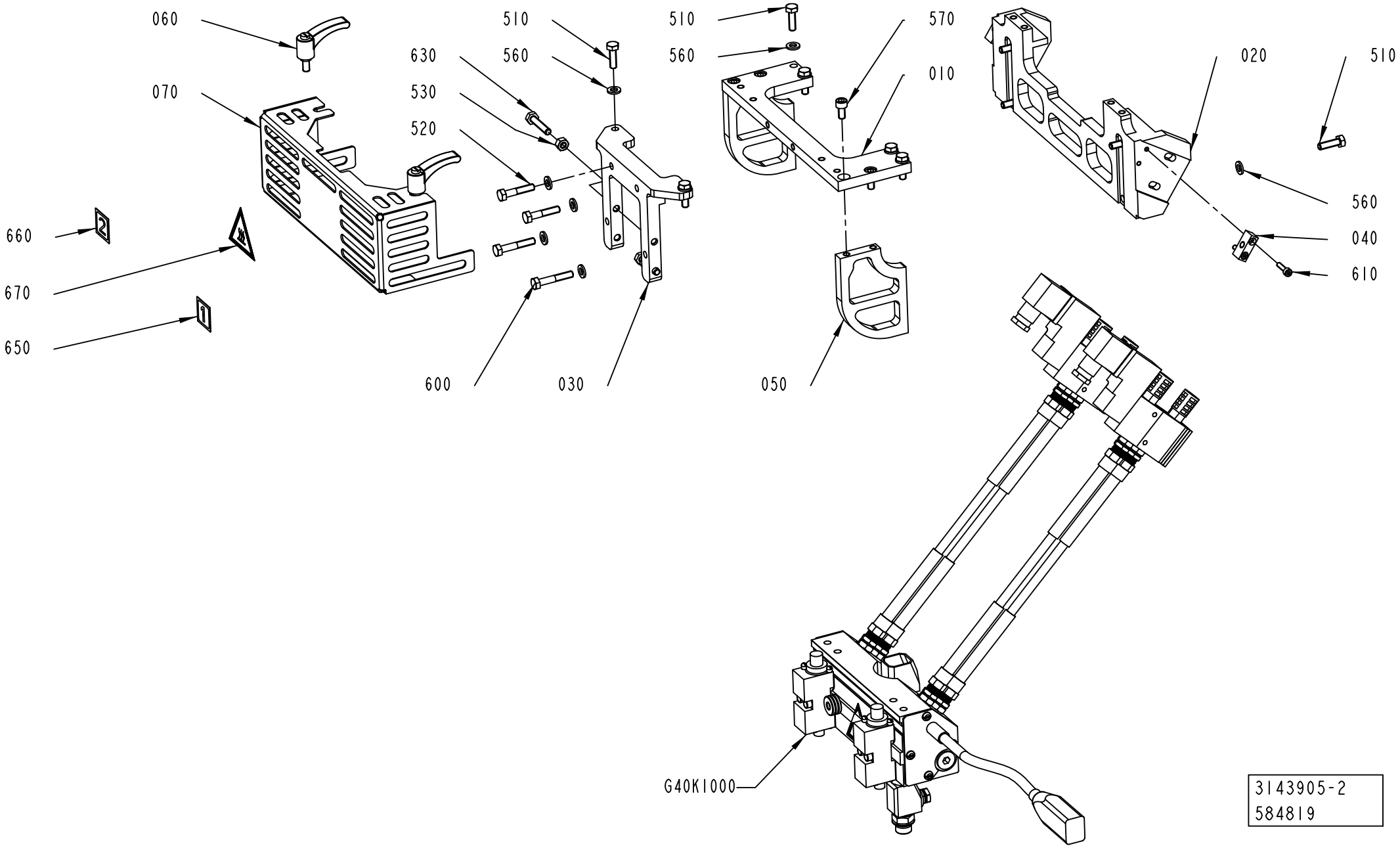
060
070
660
670
650
510
630
560
530
520
600
030
510
560
570
010
050
020
510
560
040
610
G40K1000
3143905-2
584819

ECM: 584874 - 20130401
Group number: 3143905-0200
Assembly Drawing: 3143905-2_1_AC

Pos	Part No	UN	Qty	Description	Page No
-					
010	3143912-0000		1	BRACKET	
020	3143906-0000		1	BRACKET	
030	3143911-0000		1	PLATE	
040	3143914-0000		2	PLATE	
050	3143915-0000		2	GABLE PART	
060	90604-8744		2	LOCKING HANDLE, M6X12M	
070	3143916-0000		1	COVER	
510	312105-0370		10	SCREW, M6S ISO 4017 M6X20 A4 80	
520	312105-0374		2	SCREW, M6S ISO 4014 M6X30 A4 80	
530	312605-0316		2	HEXAGON NUT, M6M M6 A280	
560	315106-0153		14	WASHER PLAIN, M6 ISO7089-6-200 HV A4	
570	312115-0366		4	SCREW ISO4762 M6X12 A4 80	
600	312105-0376		2	SCREW, M6S ISO 4014 M6X35 A4 80	
610	312115-0293		4	SCREW ISO4762 M4X16 A4 80	
630	312109-0374		2	SCREW, M6S ISO 4017 M6X30 A4 80	
650	3272544-0000		1	SIGN	
660	3272545-0000		1	SIGN	
670	359710-0001		1	WARNING SIGN ISO, HOT SURFACE	
G40K1000	90604-3317		1	GUN,TP EASYC. SBLA2T 120 1A, 1099064H1	
010	*90459-6327*		*2*	*SOLENOID VALVE, SOLIDBLUE, 1053894*	
	90459-6332		*1*	*MUFFLER, 1/8 INCH, 105 8058*	
	90042-0392		*1*	*CONTACT 2 POLE + EARTH*	
020	*90600-0684*		*6*	*SPACER 75ODX.328IDX.12THK, 102 8115*	
030	*90600-0550*		*4*	*STRAIGHT COUPLING,EXT.THREADED 8/6-R1/8"*	
040	*90600-0551*		*4*	*STRAIGHT COUPLING,EXT.THREADED 8/6-R1/4"*	
050	*342903-0121*		*8*	*NUT WITH SPRING, 1723 8/6-M12X1*	
060	*90600-0558*		*1*	*CERAMIC BLOCK CONNECTOR, #939586*	
070	*90605-2268*		*1*	*FILTER SATURN, 200 MESH, 1007035*	
	90605-2105		*1*	*FILTER SATURN, 200 MESH, 1007374*	
080	*90459-6329*		*2*	*MODULE SOLIDBLUE A, 1052927*	
090	*90600-0547*		*1*	*APPLICATOR UNIT, 1062257*	
100	*90439-0206*		*1*	*CORD SET 2300 W EYELET RTD-24.0, 223826*	
110	*90601-9670*		*1*	*HTR,CRTG, D.496, L8.18, 500W.., 105 4683*	
120	*90600-0553*	*M*	*4*	*TUBE, 8X1 MM PTFE*	

Pos	Part No	UN	Qty	Description	Page No

Machine Type | Group Description | Used-In | Group Number | Page No

MOTOR BRACKET

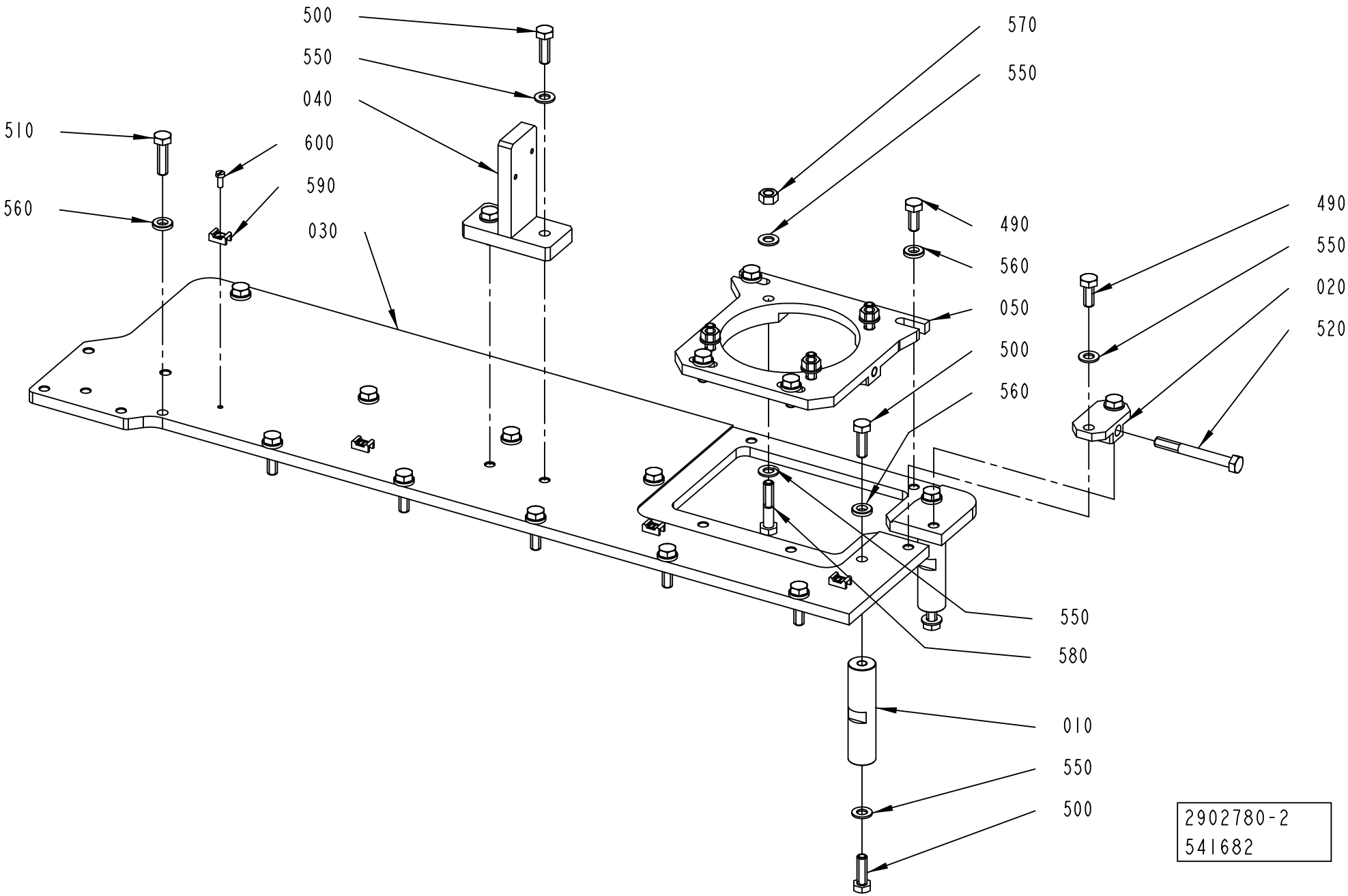

ECM: 544990 - 20120402
Group number: 2902780-0100
Assembly Drawing: 2902780-2_1_AB

Pos	Part No	UN	Qty	Description	Page No
-					
010	3094678-0000		3	COLUMN	
020	3094677-0000		1	HOLDER	
030	3094675-0000		1	PLATE	
040	2902816-0000		1	BRACKET	
050	3094676-0000		1	PLATE	
490	312105-0451		6	SCREW, M6S ISO 4017 M8X20 A4 80	
500	312105-0453		8	SCREW, M6S ISO 4017 M8X25 A4 80	
510	312105-0455		9	SCREW, M6S ISO 4017 M8X30 A4 80	
520	312105-0465		1	SCREW, M6S ISO 4014 M8X70 A4 80	
550	315105-0165		11	FWAS080G0-0S, WASHER PLAIN	
560	315115-0165		16	WASHER PLAIN, TBRB 8,4/16 H=3	
570	312607-0318		4	HEXAGON NUT, EN 24032 M6M M8 A480	
580	312105-0459		4	SCREW, M6S ISO 4014 M8X40 A4 80	
590	352113-0205		4	ANCHOR PLATES FOR STRIPS, TM2S8-C100	
600	312125-0289		4	SCREW	

Pos	Part No	UN	Qty	Description	Page No

LINK ARM

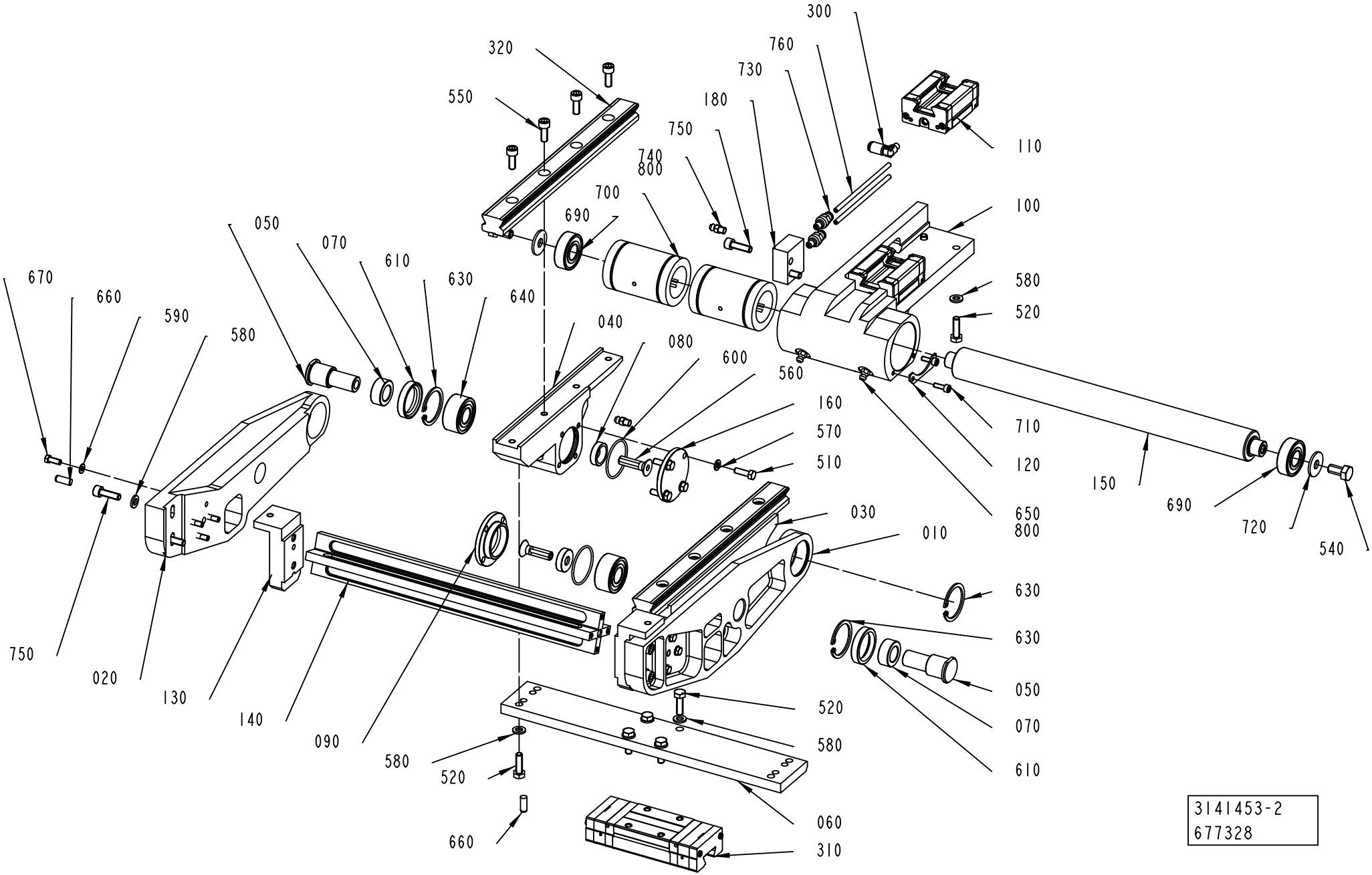

3141453-2
677328

ECM: 678271 - 20141001
Group number: 3141453-0200
Assembly Drawing: 3141453-2_1_AE

Pos	Part No	UN	Qty	Description	Page No
-					
010	3143899-0000		1	LINK ARM	
020	3143898-0000		1	LINK ARM	
030	3141468-0000		1	BEARING BRACKET	
040	3143893-0000		1	BEARING BRACKET	
050	2902686-0000		2	SHAFT	
060	3143900-0000		1	PLATE	
070	2902692-0000		2	SPACER	
080	2902695-0000		2	WASHER	
090	2902696-0000		1	SEAL HOLDER	
100	3141454-0000		1	BRACKET	
110	90604-3330		2	CARRIAGE, SSR25XV1SSM(B) (GK) BLOCK	
120	3143903-0000		2	PLATE	
130	3143913-0000		2	PLATE	
140	3143907-0000		1	PLATE	
150	90604-3327		1	SHAFT, LJMR 30 340 ESSC 10	
160	3163103-0000		1	SEAL HOLDER	
180	3163123-0000		1	DISTRIBUTOR BLOCK	
300	90606-0066		2	CONNECTION M6 TUBE 4 MM	
310	90604-8448		1	CARRIAGE, SSR25XW1QZSSHHM(GK)(B) BLOCK	
320	90600-0484		2	GUIDE BAR, SSR 25 253L-YM G36.5/36.5	
510	312105-0329		8	SCREW, M6S ISO 4017 M5X16 A4 80	
520	312105-0370		12	SCREW, M6S ISO 4017 M6X20 A4 80	
540	312105-0449		2	SCREW, M6S ISO 4017 M8X16 A4 80	
550	312115-0368		8	SCREW ISO4762 M6X16 A4 80	
560	312155-0455		2	SCREW DIN 7991 MF6S M8X30 A4 70	
570	315106-0146		8	WASHER PLAIN, M5 ISO7089-5-200 HV A4	
580	315106-0153		16	WASHER PLAIN, M6 ISO7089-6-200 HV A4	
590	315106-0136		8	WASHER PLAIN, M4 ISO7089-4-200 HV A4	
600	315206-0716		2	O-RING 34,65X1,78 MM	
610	315221-0156		2	RADIAL SEAL 25X35X7 MM	
630	315753-0124		3	RETAINING RING FOR BORE DIN 472 35 SS	
640	321330-0102		2	ANG. BALL BEAR 15/35X15,9	
650	344502-0021		2	GREASE NIPPLE STRAIGHT M6	
660	311103-0351		6	PARALLEL PIN ISO 2338 6M6X16 A1	
670	312105-0291		8	SCREW, M6S ISO 4017 M4X12 A4 70	
690	90458-1704		2	BALL BEARING 15/35X11	
700	90604-7285		2	BALL BUSHING, 30/47X68	
710	312115-0291		4	SCREW ISO4762 M4X12 A4 80	
720	90005-0116		2	WASHER PLAIN ROUND 8,4(M8)/24, H=2	
730	90603-3478		2	ADAPTER, 451-004-462-VS	
740	90605-1285		2	GREASE NIPPLE STRAIGHT M6X1, 106061RF	
750	312115-0370		6	SCREW ISO4762 M6X20 A4 80	
760	344342-0040	MM	250	TUBE 4 MM APA TRANSP	
800	344407-0000		1	KLüBERSYNTH UH1 14-151, ONLY IN BOM	
	344407-0591		*1*	*KLüBERSYNTH UH1 14-151, 400G CARTRIDGE*	
	344407-0285		*1*	*KLüBERSYNTH UH1 14-151, 45G TUBE*	
	344407-0177		*1*	*KLüBERSYNTH UH1 14-151, 25KG BUCKET*	
	344407-0037		*1*	*KLüBERSYNTH UH1 14-151, 1KG CAN*	

Machine Type	Group Description	Used-In	Group Number	Page No

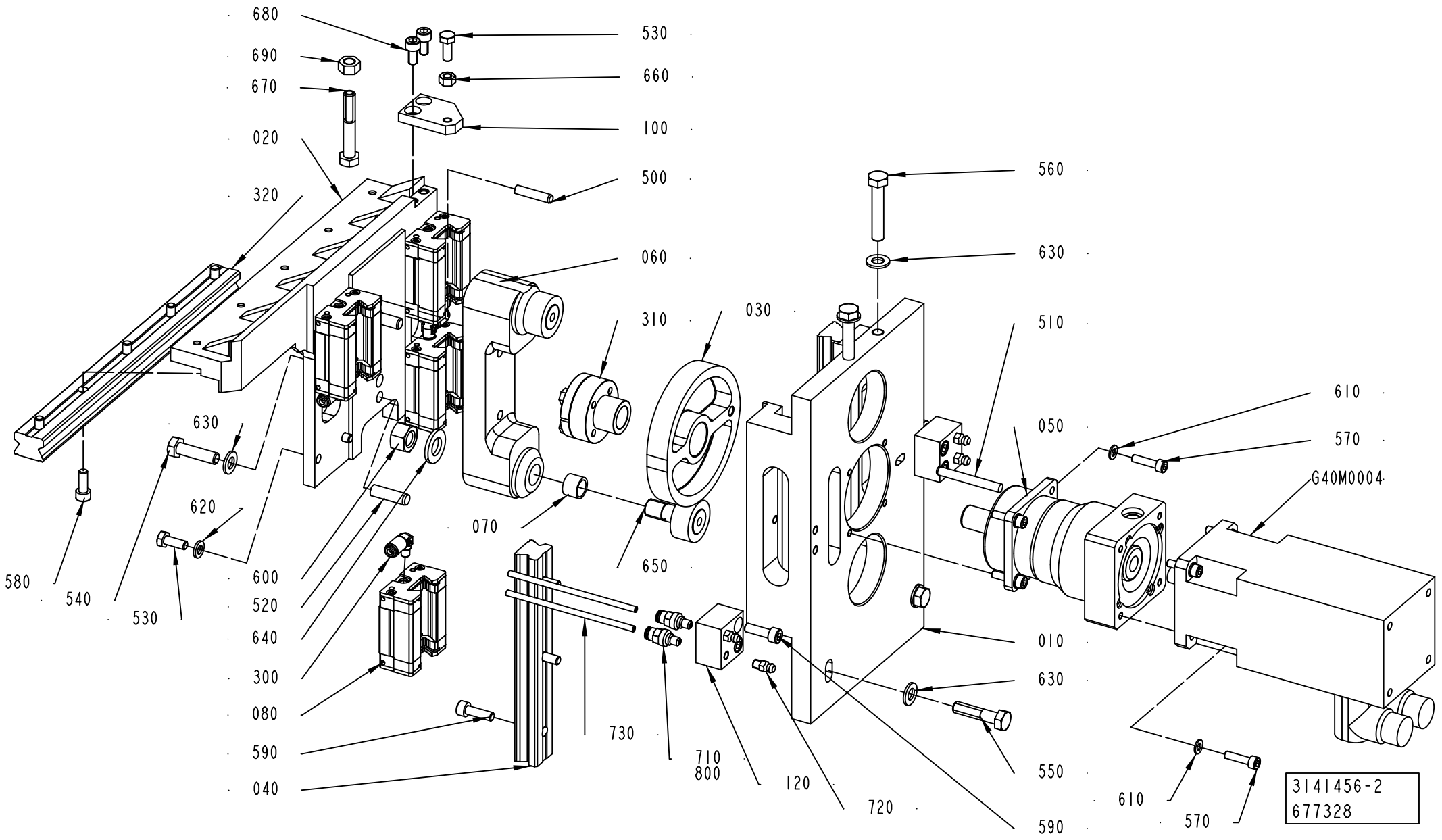
680
690
670
020
320
530
660
100
500
060
310
030
560
630
510
610
570
050
G40M0004
630
620
580
540
530
600
520
640
300
080
590
040
070
650
730
710
800
120
720
010
630
550
590
610
570
3141456-2
677328

ECM: 678719 - 20141001
Group number: 3141456-0200
Assembly Drawing: 3141456-2_1_AE

Pos	Part No	UN	Qty	Description	Page No
-					
010	3141458-0000		1	BEARING CONSOLE	
020	3141457-0000		1	GUIDE CONSOLE	
030	3163109-0000		1	CURVE	
040	3163104-0000		2	GUIDE	
050	90603-1838		1	GEARS, PLAN. SP060F-MF1-4-0B1/MBL-B230P	
060	2902754-0000		1	BRACKET	
070	90604-4904		1	ECCENTRIC SLEEVE, 12X15X11 MM	
080	90604-3330		4	CARRIAGE, SSR25XV1SSM(B) (GK) BLOCK	
100	3143910-0000		1	PLATE	
120	3171833-0000		2	DISTRIBUTOR BLOCK	
300	90606-0066		4	CONNECTION M6 TUBE 4 MM	
310	90600-0454		1	CLAMPING ELEMENT, 16X24 L=16	
320	90606-0065		1	GUIDE RAIL, SSR 25-269 LYM G 14.5/14.5	
500	311103-0356		1	PARALLEL PIN ISO 2338 6M6X28 A1	
510	311103-0365		1	PARALLEL PIN ISO 2338 6M6X50 A1	
520	311103-0404		1	PARALLEL PIN ISO 2338 8M6X28 A1	
530	312105-0368		9	SCREW, M6S ISO 4017 M6X16 A4 80	
540	312105-0455		2	SCREW, M6S ISO 4017 M8X30 A4 80	
550	312105-0457		2	SCREW, M6S ISO 4014 M8X35 A4 80	
560	312105-0460		2	SCREW, M6S ISO 4014 M8X45 A4 80	
570	312115-0331		8	SCREW ISO4762 M5X20 A4 80	
580	312115-0368		5	SCREW ISO4762 M6X16 A4 80	
590	312115-0370		10	SCREW ISO4762 M6X20 A4 80	
600	312631-0322		2	HEX.NUT FINE, EN 24032 M6M M12X1,5 FZB8	
610	315106-0146		8	WASHER PLAIN, M5 ISO7089-5-200 HV A4	
620	315106-0153		8	WASHER PLAIN, M6 ISO7089-6-200 HV A4	
630	315106-0165		6	WASHER PLAIN, M8 ISO7089-8-200 HV A4	
640	315106-0178		2	"WASHER PLAIN, M12 ISO7089-12-200 HV A4"	
650	344288-0165		2	CAM ROLLER, 12X30X40 MM	
660	312607-0316		1	HEXAGON NUT, EN 24032 M6M M6 A480	
670	312105-0461		1	SCREW, M6S ISO 4014 M8X50 A4 80	
680	312115-0366		2	SCREW ISO4762 M6X12 A4 80	
690	312607-0318		1	HEXAGON NUT, EN 24032 M6M M8 A480	
710	90603-3478		4	ADAPTER, 451-004-462-VS	
720	90605-1285		4	GREASE NIPPLE STRAIGHT M6X1, 106061RF	
730	344342-0040	MM	500	TUBE 4 MM APA TRANSP	
800	344407-0000		1	KLüBERSYNTH UH1 14-151, ONLY IN BOM	
	344407-0591		*1*	*KLüBERSYNTH UH1 14-151, 400G CARTRIDGE*	
	344407-0285		*1*	*KLüBERSYNTH UH1 14-151, 45G TUBE*	
	344407-0177		*1*	*KLüBERSYNTH UH1 14-151, 25KG BUCKET*	
	344407-0037		*1*	*KLüBERSYNTH UH1 14-151, 1KG CAN*	

Pos	Part No	UN	Qty	Description	Page No
G40M0004	90604-9664		1	SERVO MOTOR, MPL-B230P-VJ72AA, SERIE A	

Machine Type	Group Description	Used-In	Group Number	Page No

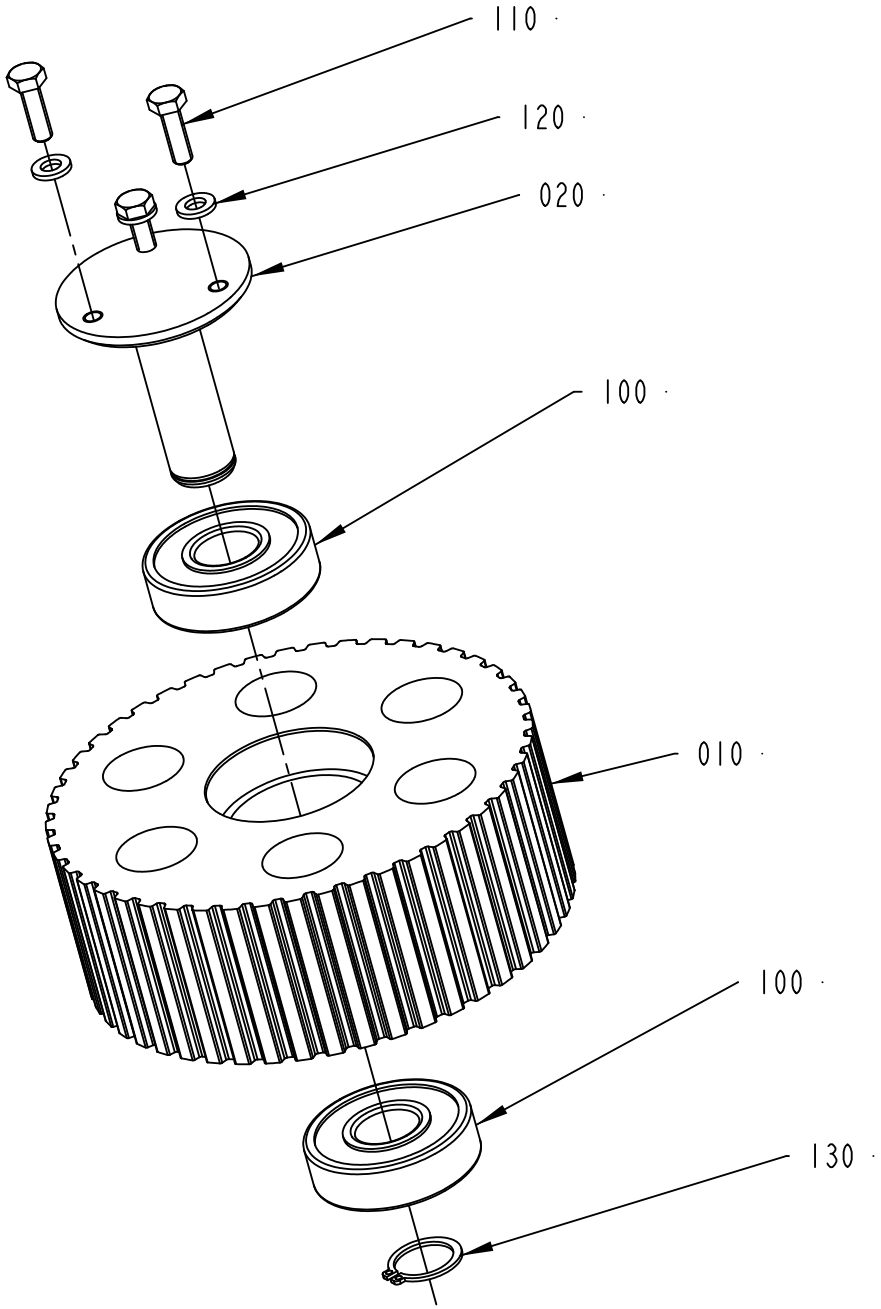

2695135-2
529090

ECM: 529637 - 20120401
Group number: 2695135-0200
Assembly Drawing: 2695135-2_1_AA

Pos	Part No	UN	Qty	Description	Page No
-					
010	2695133-0000		1	TOOTHED PULLEY	
020	2695134-0000		1	SHAFT	
100	90603-2323		2	BALL BEARING	
110	312105-0370		3	SCREW, M6S ISO 4017 M6X20 A4 80	
120	315106-0153		3	WASHER PLAIN, M6 ISO7089-6-200 HV A4	
130	315751-0116		1	RETAINING RING FOR SHAFT DIN 471 20 SS	

Pos	Part No	UN	Qty	Description	Page No

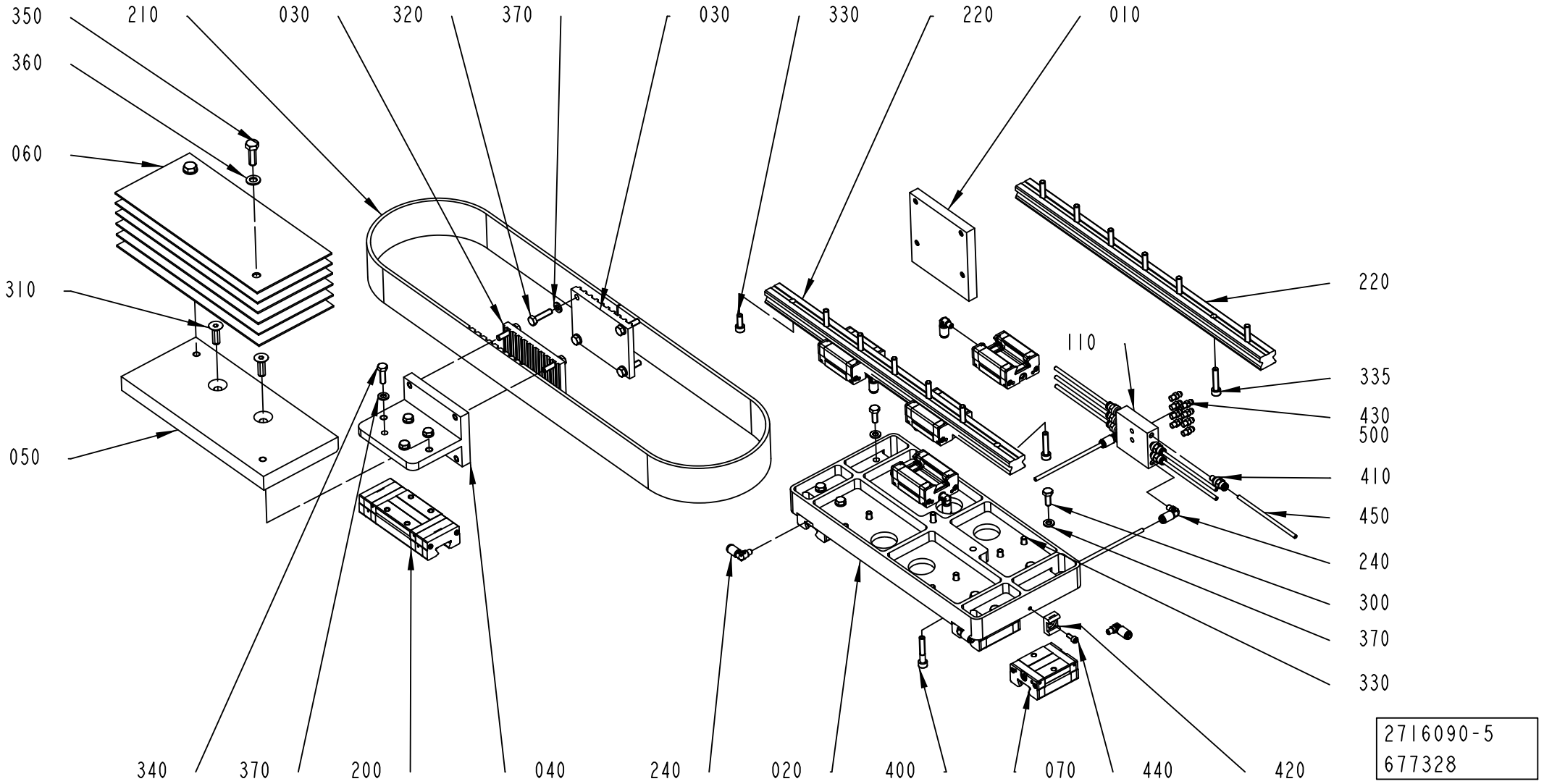
350
210
030
320
370
030
330
220
010
360
060
310
050
220
110
335
430
500
410
450
240
300
370
330
340
370
200
040
240
020
400
070
440
420
2716090-5
677328

ECM: 678267 - 20141001
Group number: 2716090-0200
Assembly Drawing: 2716090-5_1_AF

Pos	Part No	UN	Qty	Description	Page No
DREAMCAP 26					
010	3098053-0000		1	CLAMP BRACKET	
020	3141465-0000		1	PLATE	
070	90604-3330		8	CARRIAGE, SSR25XV1SSM(B) (GK) BLOCK	
110	3163122-0000		1	DISTRIBUTOR BLOCK	
200	90604-8448		1	CARRIAGE, SSR25XW1QZSSHHM(GK)(B) BLOCK	
220	90600-0483		2	GUIDE BAR, SSR 25-430LYM G35/35	
240	90606-0066		10	CONNECTION M6 TUBE 4 MM	
300	312105-0368		8	SCREW, M6S ISO 4017 M6X16 A4 80	
320	312105-0372		8	SCREW, M6S ISO 4017 M6X25 A4 80	
330	312115-0368		13	SCREW ISO4762 M6X16 A4 80	
335	312115-0374		13	SCREW ISO4762 M6X30 A4 80	
370	315106-0153		28	WASHER PLAIN, M6 ISO7089-6-200 HV A4	
400	312115-0376		2	SCREW ISO4762 M6X35 A4 80	
410	90603-3478		6	ADAPTER, 451-004-462-VS	
420	352113-0203		2	ANCHOR PLATES FOR STRIPS, TM3S8-M0	
430	90605-1285		8	GREASE NIPPLE STRAIGHT M6X1, 106061RF	
440	312115-0289		2	SCREW ISO4762 M4X10 A4 80	
450	344342-0040	MM	2000	TUBE 4 MM APA TRANSP	
Common Parts					
030	2716073-0000		2	BELT HOLDER	
040	2716074-0000		1	BRACKET	
050	2716085-0000		1	COUNTERWEIGHT	
060	2716075-0000		6	COUNTERWEIGHT	
210	90600-0487		1	TIMING BELT 50AT10/1410 PU	
310	312155-0453		2	SCREW DIN 7991 MF6S M8X25 A4 70	
340	312105-0370		4	SCREW, M6S ISO 4017 M6X20 A4 80	
350	312105-0453		2	SCREW, M6S ISO 4017 M8X25 A4 80	
360	315105-0165		2	FWAS080G0-0S, WASHER PLAIN	
500	344407-0000		1	KLüBERSYNTH UH1 14-151, ONLY IN BOM	
	344407-0591		*1*	*KLüBERSYNTH UH1 14-151, 400G CARTRIDGE*	
	344407-0285		*1*	*KLüBERSYNTH UH1 14-151, 45G TUBE*	
	344407-0177		*1*	*KLüBERSYNTH UH1 14-151, 25KG BUCKET*	
	344407-0037		*1*	*KLüBERSYNTH UH1 14-151, 1KG CAN*	

Pos	Part No	UN	Qty	Description	Page No

Machine Type | Group Description | Used-In | Group Number | Page No

TRANSMISSION RAIL

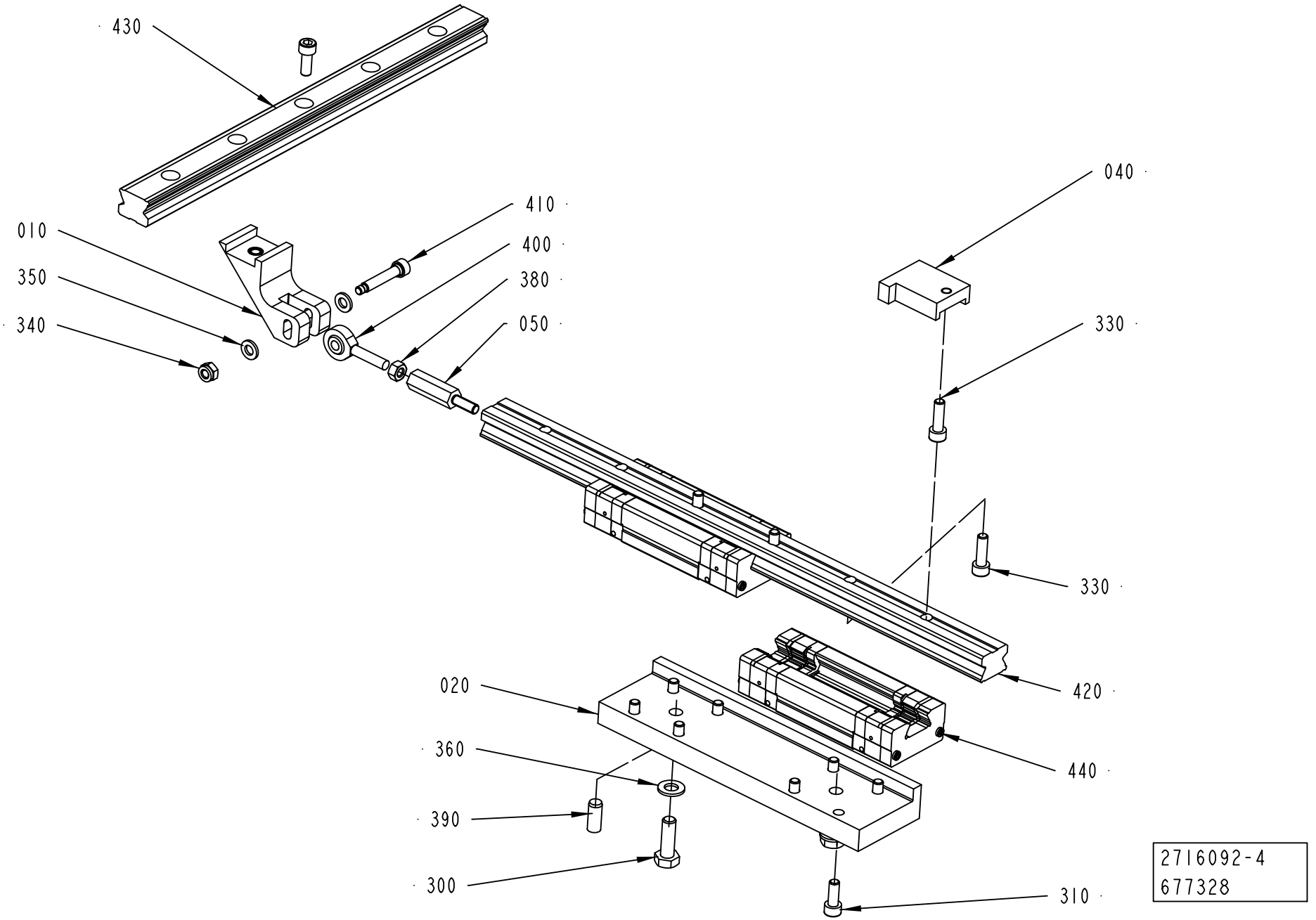

ECM: 678269 - 20141001
Group number: 2716092-0200
Assembly Drawing: 2716092-4_1_AC

Pos	Part No	UN	Qty	Description	Page No
DREAMCAP 26					
020	2902718-0000		1	FASTENING BRACKET	
040	3108979-0000		1	CAM	
050	3123914-0000		1	STUD	
310	312115-0368		9	SCREW ISO4762 M6X16 A4 80	
330	312115-0370		4	SCREW ISO4762 M6X20 A4 80	
420	90605-4026		1	GUIDE RAIL, SSR 25-394 LYM G 40/54	
Common Parts					
010	3039032-0000		1	LINK ATTACHMENT	
300	312105-0453		2	SCREW, M6S ISO 4017 M8X25 A4 80	
340	312812-0316		1	HEXAGON NUT, NY-LOCK M6 A4 80	
350	315106-0153		2	WASHER PLAIN, M6 ISO7089-6-200 HV A4	
360	315106-0165		2	WASHER PLAIN, M8 ISO7089-8-200 HV A4	
380	312605-0316		1	HEXAGON NUT, M6M M6 A280	
390	311103-0401		2	PARALLEL PIN ISO 2338 8M6X20 A1	
400	90115-0137		1	ROD END, ID=6 MM, M6X1	
410	90287-0239		1	SHOULDER SCREW, 6X30/M5 SS	
430	90600-0482		1	GUIDE BAR, SSR 25 305 LYM G32.5/32.5	
440	90604-8448		2	CARRIAGE, SSR25XW1QZSSHHM(GK)(B) BLOCK	

Pos	Part No	UN	Qty	Description	Page No

Machine Type | Group Description | Used-In | Group Number | Page No

SERVO MOTOR

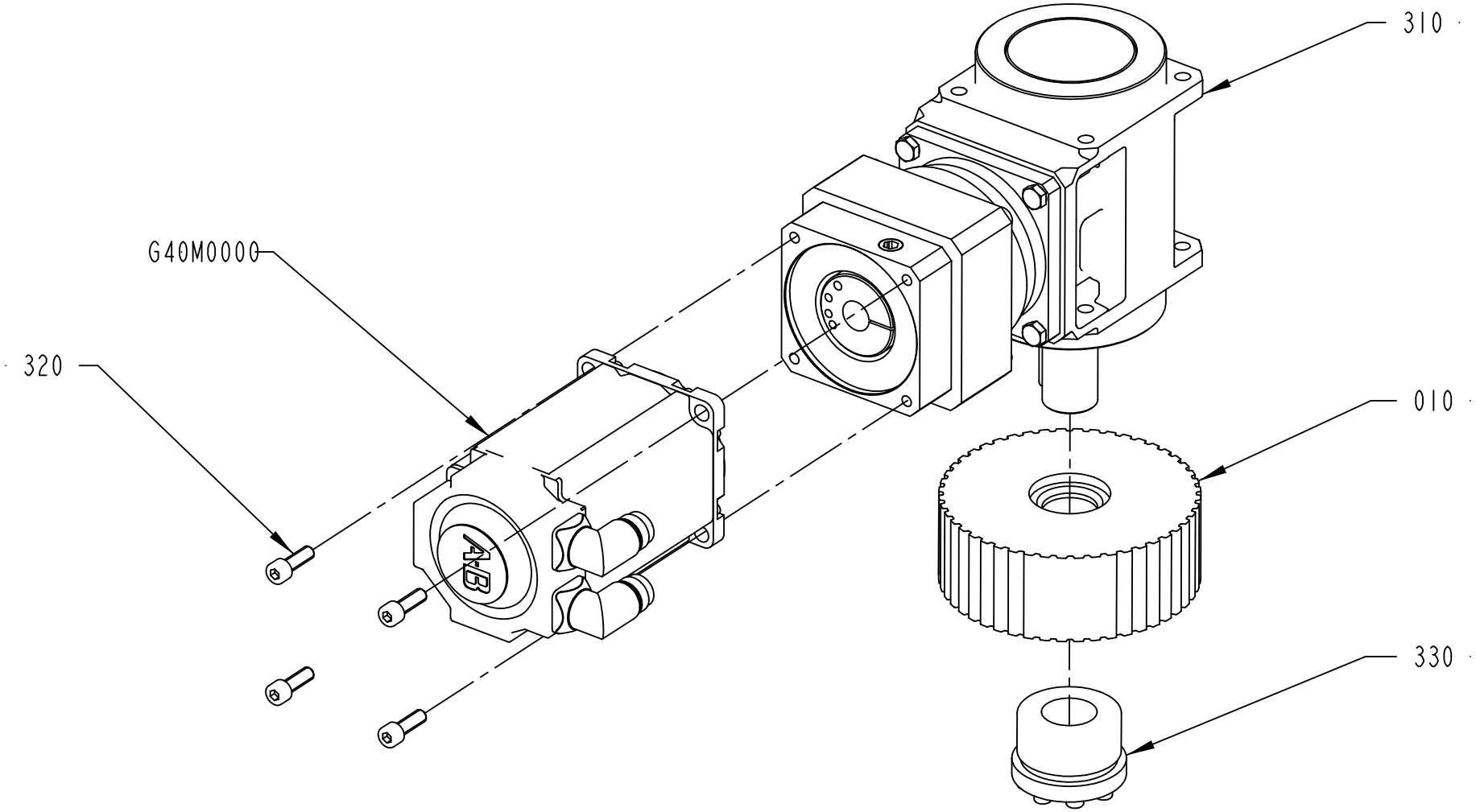

2840143-2
529090

ECM: 530956 - 20120401
Group number: 2840143-0200
Assembly Drawing: 2840143-2_1_AA

Pos	Part No	UN	Qty	Description	Page No
-					
010	3018761-0000		1	TOOTHED PULLEY	
310	90604-4259		1	GEARS, PLAN. MR 112 EC FO2C 00 / I=10 H1	
	90605-5544		*1*	*RADIAL SEAL 45X75X8 MM DUST LIP*	
320	312115-0453		4	SCREW ISO4762 M8X25 A4 80	
330	90603-2066		1	CLAMP.ELEMENT, WITHOUT SLEEVE, 32X60	
G40M0000	90601-1926		1	SERVO MOTOR, MPL-B430P-MK72AA SERIES A	

Pos	Part No	UN	Qty	Description	Page No

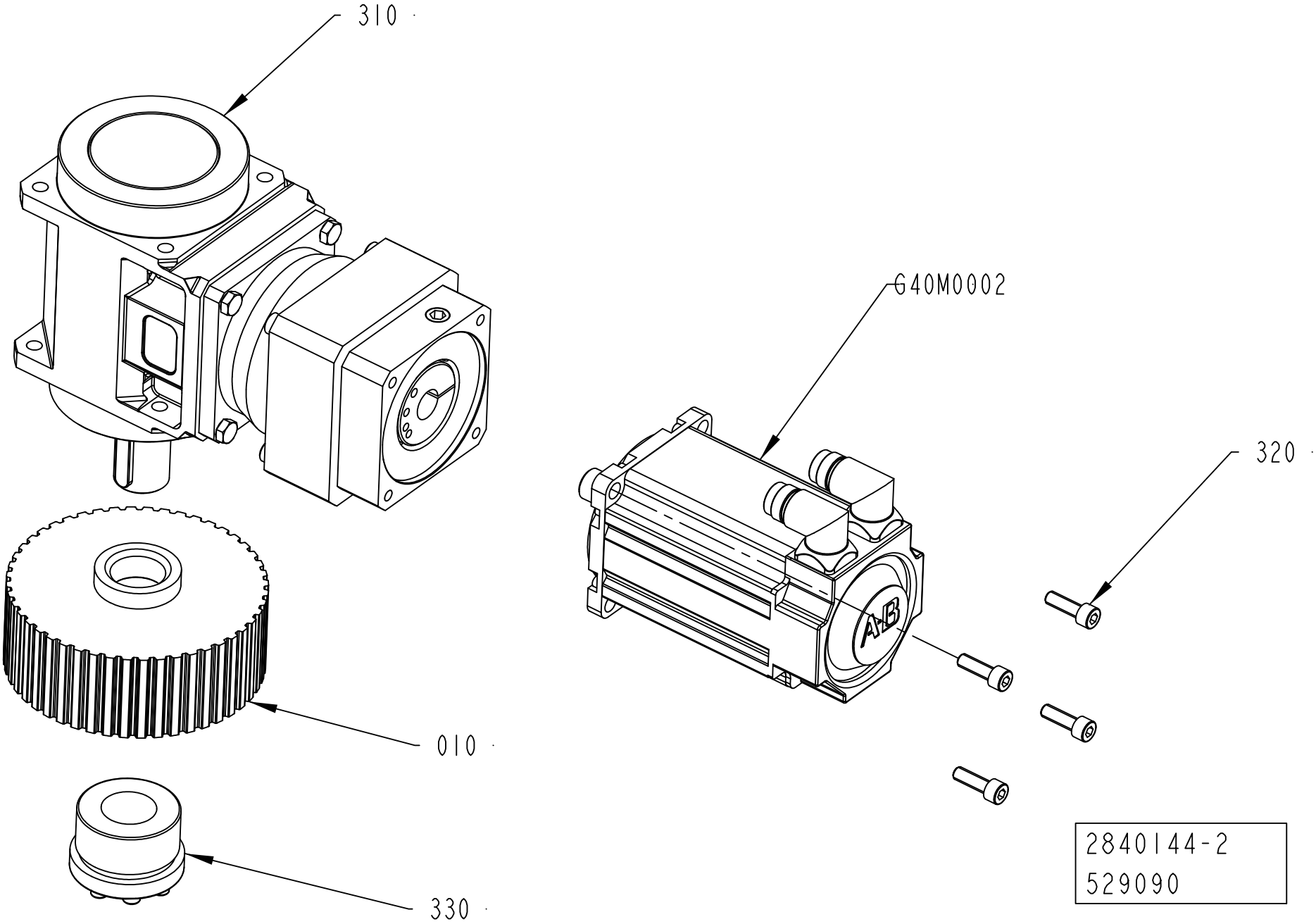
310
G40M0002
320
010
330
2840144-2
529090

ECM: 530957 - 20120401
Group number: 2840144-0200
Assembly Drawing: 2840144-2_1_AA

Pos	Part No	UN	Qty	Description	Page No
-					
010	3018762-0000		1	TOOTHED PULLEY	
310	90604-4259		1	GEARS, PLAN. MR 112 EC FO2C 00 / I=10 H1	
	90605-5544		*1*	*RADIAL SEAL 45X75X8 MM DUST LIP*	
320	312115-0453		4	SCREW ISO4762 M8X25 A4 80	
330	90603-2066		1	CLAMP.ELEMENT, WITHOUT SLEEVE, 32X60	
G40M0002	90601-1926		1	SERVO MOTOR, MPL-B430P-MK72AA SERIES A	

Pos	Part No	UN	Qty	Description	Page No

MOTOR BRACKET

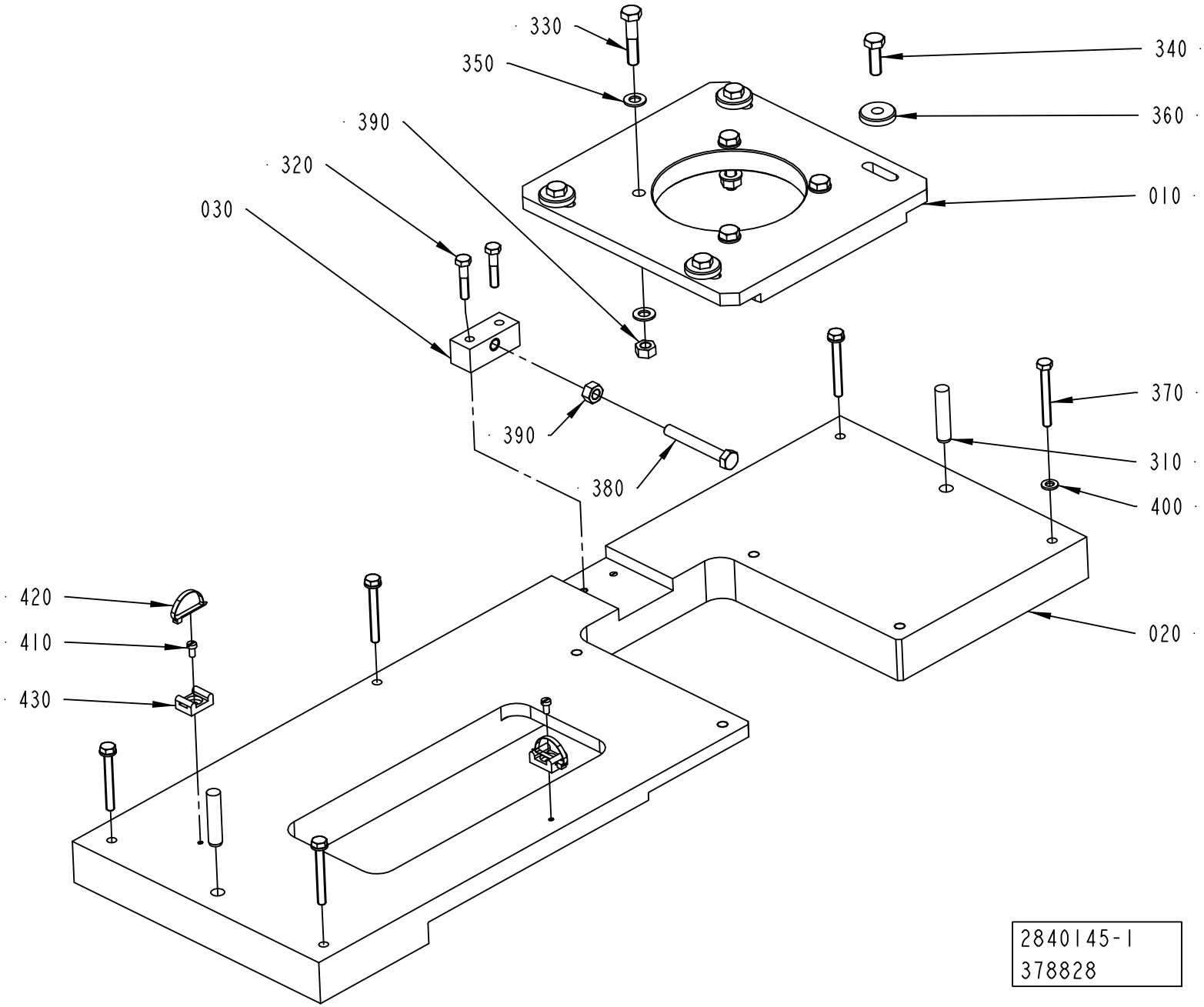

ECM: 378828 - 20090406
Group number: 2840145-0100
Assembly Drawing: 2840145-1_1_AC

Pos	Part No	UN	Qty	Description	Page No
-					
010	2985770-0000		1	FLANGE	
020	2909473-0000		1	PLATE	
030	2840851-0000		1	BLOCK	
310	311103-0464		2	PARALLEL PIN ISO 2338 10M6X45 A1	
320	312105-0374		2	SCREW, M6S ISO 4014 M6X30 A4 80	
330	312105-0459		4	SCREW, M6S ISO 4014 M8X40 A4 80	
340	312105-0453		4	SCREW, M6S ISO 4017 M8X25 A4 80	
350	315105-0165		8	FWAS080G0-0S, WASHER PLAIN	
360	315125-0165		4	WASHER HIGH, TBRSB 8,4X26X5 A4	
370	312109-0380		5	SCREW, M6S ISO 4017 M6X50 A4 80	
380	312109-0463		1	SCREW, M6S ISO 4017 M8X60 A4 80	
390	312607-0318		5	HEXAGON NUT, EN 24032 M6M M8 A480	
400	315105-0178		5	WASHER PLAIN, 13X24X2,5 A4 BRB	
410	312125-0287		2	SLOTTED HEAD SCREW, ISO1207 M4X8 A4	
420	352113-0104		2	CABLE TIE, BLACK 300X4,8 MM	
430	352113-0203		2	ANCHOR PLATES FOR STRIPS, TM3S8-M0	

Pos	Part No	UN	Qty	Description	Page No

Machine Type | Group Description | Used-In | Group Number | Page No

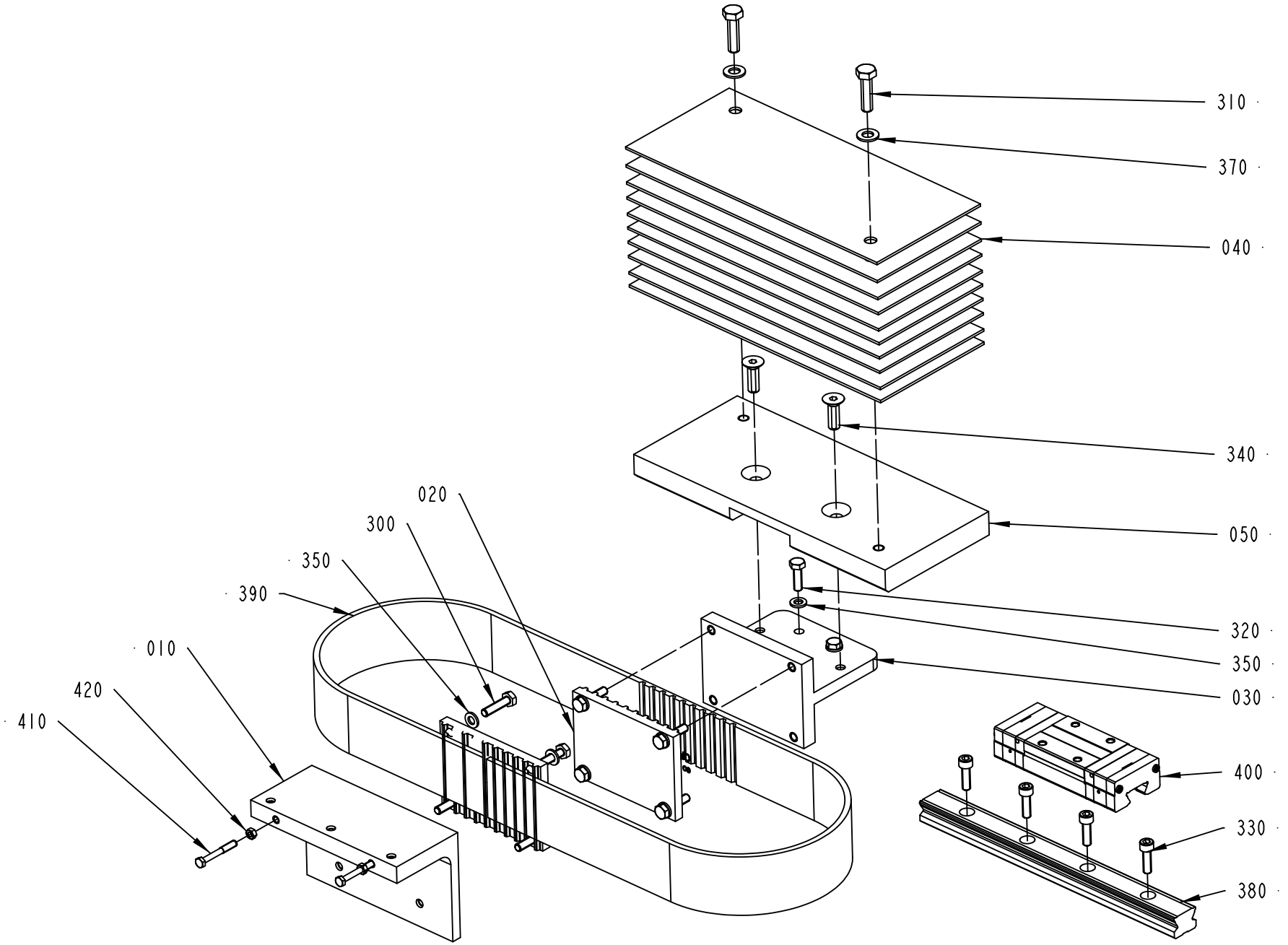

2716097-2
677328

ECM: 678270 - 20141001
Group number: 2716097-0200
Assembly Drawing: 2716097-2_1_AC

Pos	Part No	UN	Qty	Description	Page No
DREAMCAP 26					
010	3143896-0000		1	BRACKET	
030	2902768-0000		1	BRACKET	
050	3143894-0000		1	COUNTERWEIGHT	
Common Parts					
020	2716073-0000		2	BELT HOLDER	
040	2716075-0000		10	COUNTERWEIGHT	
300	312105-0372		8	SCREW, M6S ISO 4017 M6X25 A4 80	
310	312105-0455		2	SCREW, M6S ISO 4017 M8X30 A4 80	
320	312105-0370		4	SCREW, M6S ISO 4017 M6X20 A4 80	
330	312115-0370		4	SCREW ISO4762 M6X20 A4 80	
340	312155-0453		2	SCREW DIN 7991 MF6S M8X25 A4 70	
350	315105-0153		12	WASHER PLAIN, 6,4X12X1,5 A4 BRB	
370	315105-0165		2	FWAS080G0-0S, WASHER PLAIN	
380	90600-0484		1	GUIDE BAR, SSR 25 253L-YM G36.5/36.5	
390	90600-0486		1	TIMING BELT 50AT10/1120 PU	
400	90604-8448		1	CARRIAGE, SSR25XW1QZSSHHM(GK)(B) BLOCK	
410	312105-0331		2	SCREW, M6S ISO 4017 M5X20 A4 80	
420	312607-0314		2	HEXAGON NUT, EN 24032 M6M M5 A480	

Pos	Part No	UN	Qty	Description	Page No

FASTENING BRACKET

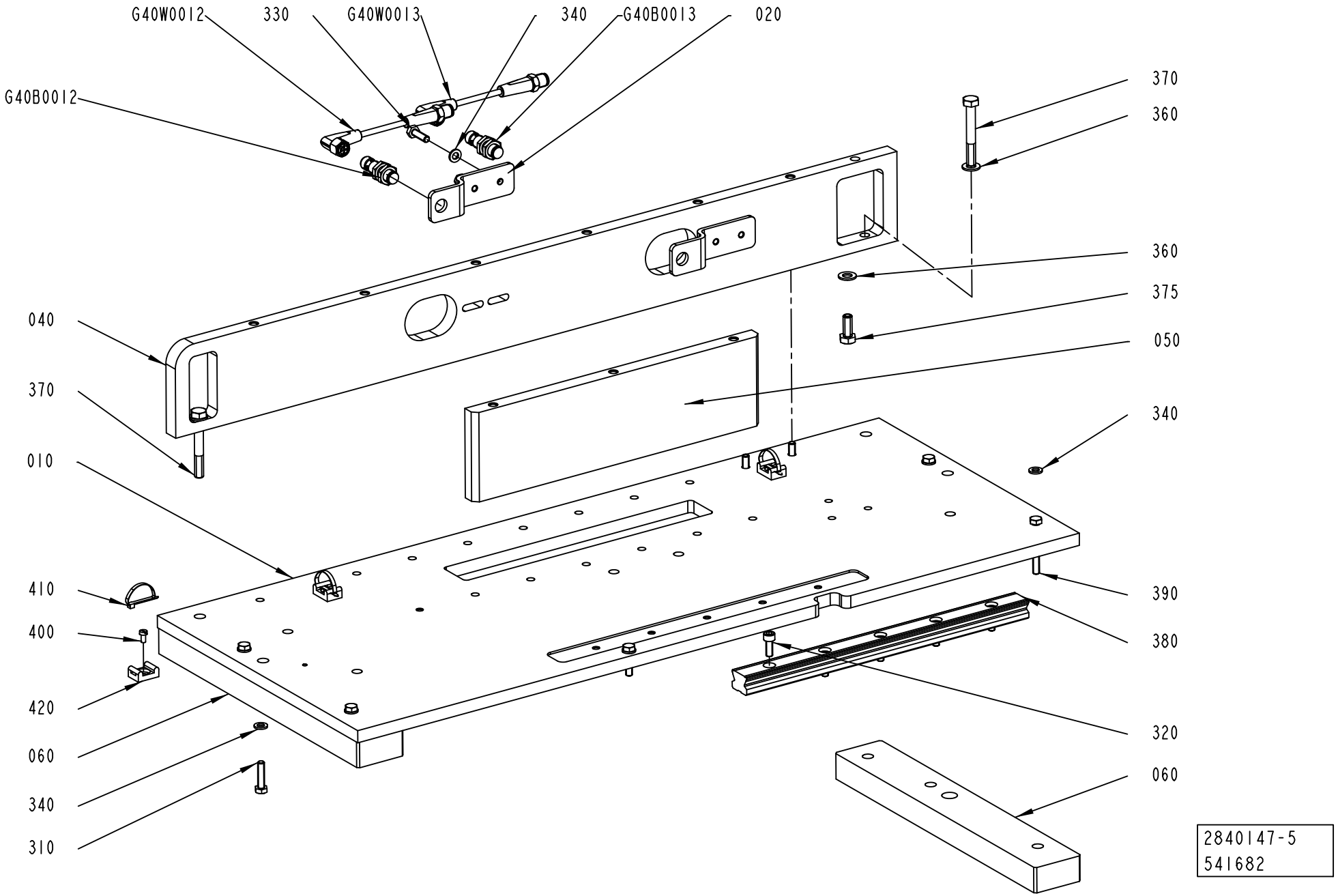

ECM: 543038 - 20120402
Group number: 2840147-0200
Assembly Drawing: 2840147-5_1_AB

Pos	Part No	UN	Qty	Description	Page No
DREAMCAP 26					
010	3143908-0000		1	ASSEMBLY PLATE	
020	2902815-0000		2	BRACKET	
040	3143909-0000		1	BAR	
050	3094829-0000		1	BAR	
060	3141467-0000		2	PLATE	
310	312105-0372		4	SCREW, M6S ISO 4017 M6X25 A4 80	
330	312105-0370		4	SCREW, M6S ISO 4017 M6X20 A4 80	
340	315105-0153		12	WASHER PLAIN, 6,4X12X1,5 A4 BRB	
360	315105-0165		3	FWAS080G0-0S, WASHER PLAIN	
370	312105-0463		2	SCREW, M6S ISO 4014 M8X60 A4 80	
375	312105-0451		1	SCREW, M6S ISO 4017 M8X20 A4 80	
390	312105-0380		4	SCREW, M6S ISO 4014 M6X50 A4 80	
Common Parts					
320	312115-0368		5	SCREW ISO4762 M6X16 A4 80	
380	90600-0482		1	GUIDE BAR, SSR 25 305 LYM G32.5/32.5	
400	312125-0287		3	SLOTTED HEAD SCREW, ISO1207 M4X8 A4	
410	352113-0104		3	CABLE TIE, BLACK 300X4,8 MM	
420	352113-0203		3	ANCHOR PLATES FOR STRIPS, TM3S8-M0	
G40B0012	90459-6948		1	INDUCTIVE SENSOR, IFS 206	
G40B0013	90459-6948		1	INDUCTIVE SENSOR, IFS 206	
G40W0012	344268-0015		1	SENSOR CABLE, EVT120	
G40W0013	344268-0015		1	SENSOR CABLE, EVT120	

Pos	Part No	UN	Qty	Description	Page No

Machine Type | Group Description | Used-In | Group Number | Page No

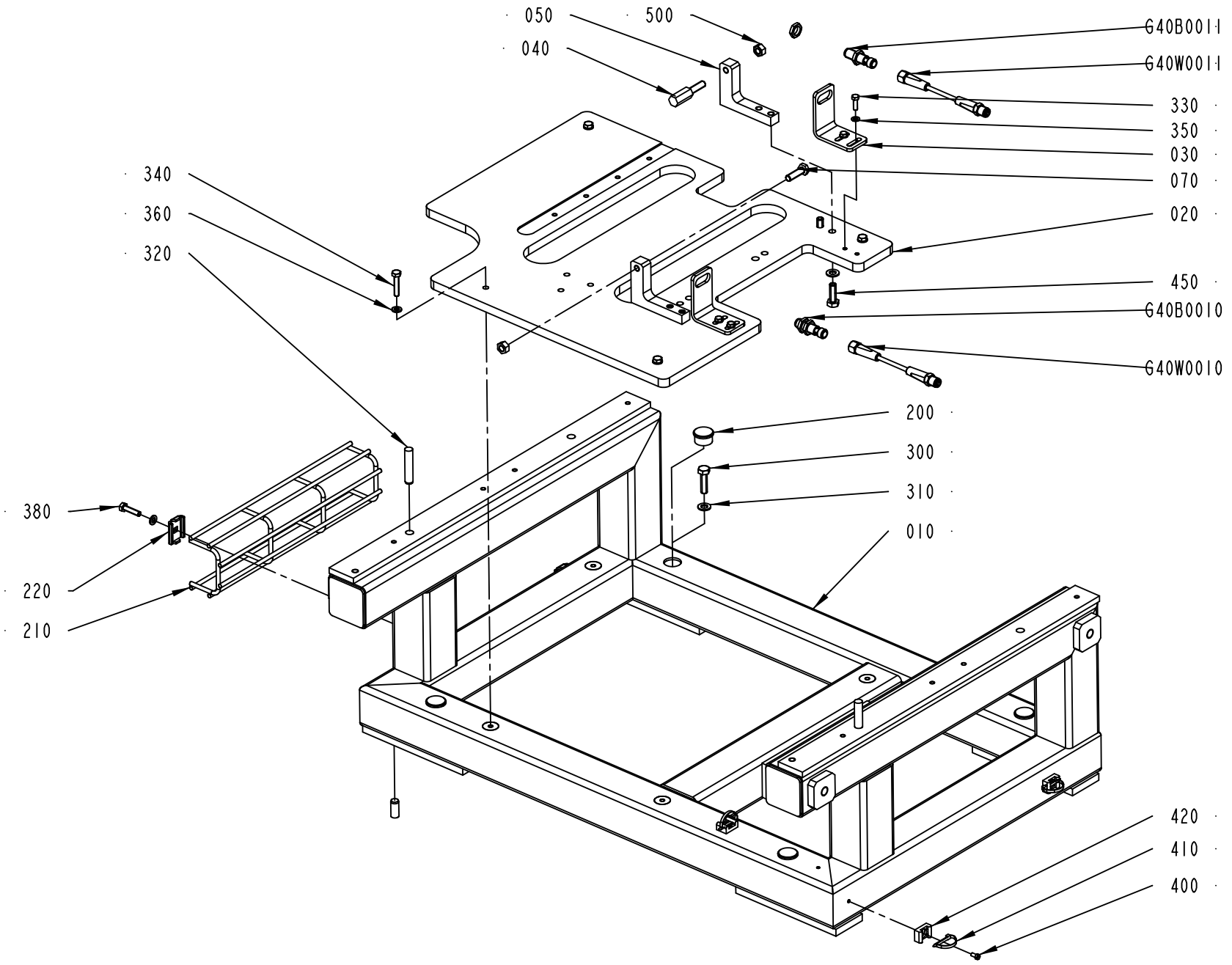

2841501-4
529090

ECM: 530686 - 20120401
Group number: 2841501-0200
Assembly Drawing: 2841501-4_1_AA

Pos	Part No	UN	Qty	Description	Page No
DREAMCAP 26					
010	2902766-0000		1	FRAME	
020	3143897-0000		1	PLATE	
030	2902771-0000		2	BRACKET	
040	3141464-0000		1	STOPPER	
050	2902822-0000		2	STOP BLOCK	
070	3163108-0000		1	STOPPER	
310	315105-0165		8	FWAS080G0-0S, WASHER PLAIN	
360	315105-0153		6	WASHER PLAIN, 6,4X12X1,5 A4 BRB	
400	312125-0287		4	SLOTTED HEAD SCREW, ISO1207 M4X8 A4	
410	352113-0104		4	CABLE TIE, BLACK 300X4,8 MM	
420	352113-0203		4	ANCHOR PLATES FOR STRIPS, TM3S8-M0	
450	312105-0453		4	SCREW, M6S ISO 4017 M8X25 A4 80	
500	312607-0318		2	HEXAGON NUT, EN 24032 M6M M8 A480	
Common Parts					
200	90261-0060		4	PLUG, BLIND, PLASTIC, NO. IKPK25X1, 5	
210	2873896-0000		1	CABLE TRAY	
220	90181-0183		2	CABLE DUCT, FITTING, SB-102-S	
300	312105-0455		4	SCREW, M6S ISO 4017 M8X30 A4 80	
320	311103-1456		4	PARALLEL PIN ISO 2338 10M6X24 A1	
330	312105-0329		4	SCREW, M6S ISO 4017 M5X16 A4 80	
340	312109-0374		4	SCREW, M6S ISO 4017 M6X30 A4 80	
350	315105-0146		4	WASHER PLAIN, 5,3X10X1 A4 BRB	
380	312105-0372		2	SCREW, M6S ISO 4017 M6X25 A4 80	
G40B0010	90459-6948		1	INDUCTIVE SENSOR, IFS 206	
G40B0011	90459-6948		1	INDUCTIVE SENSOR, IFS 206	
G40W0010	344267-0010		1	SENSOR CABLE, EVT042	
G40W0011	344267-0010		1	SENSOR CABLE, EVT042	

Pos	Part No	UN	Qty	Description	Page No

SUPPORT TUBE

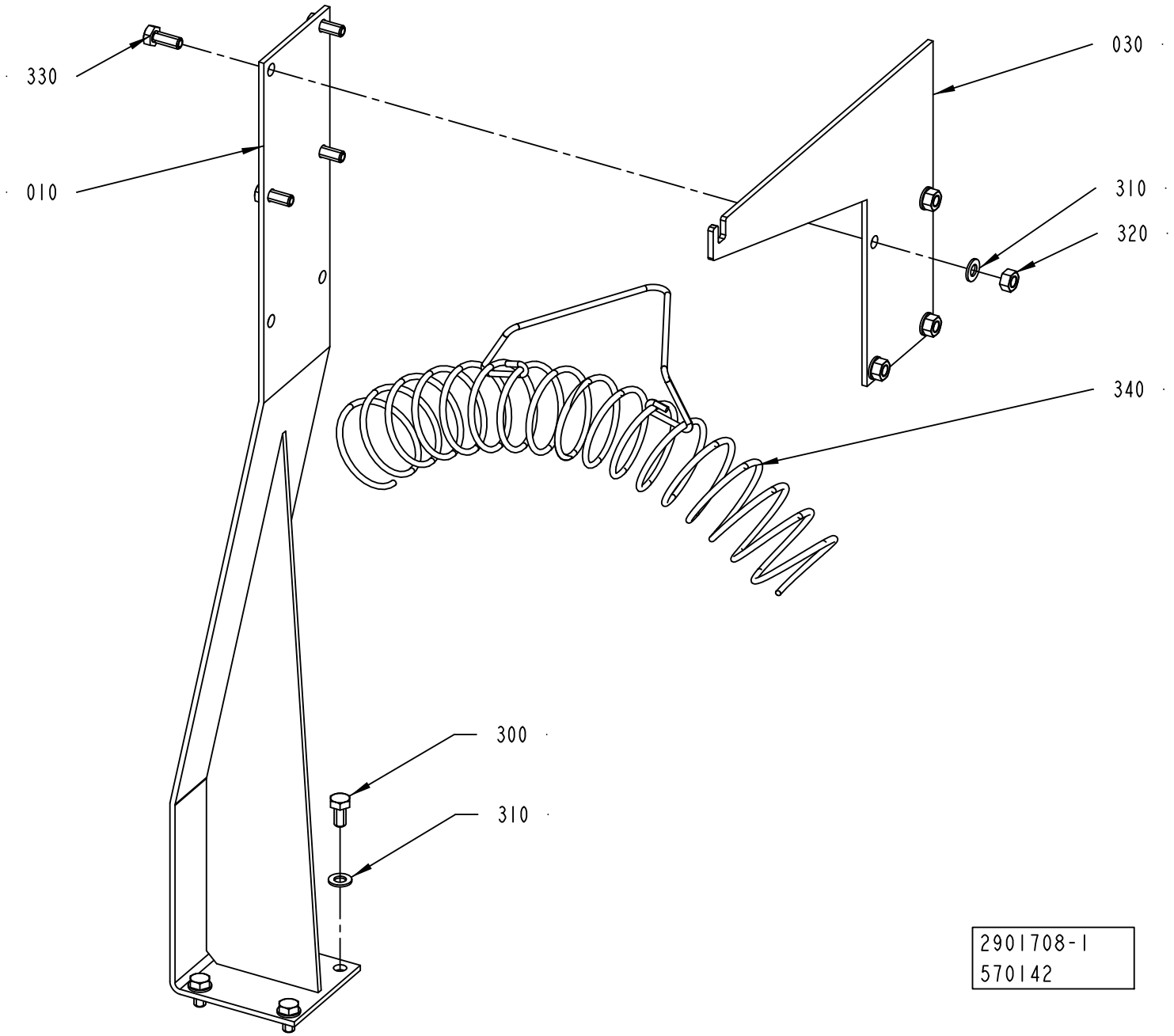

ECM: 573765 - 20121001
Group number: 2901708-0100
Assembly Drawing: 2901708-1_1_AD

Pos	Part No	UN	Qty	Description	Page No
-					
010	3223764-0000		1	BRACKET	
030	3223765-0000		1	PLATE	
300	312105-0449		4	SCREW, M6S ISO 4017 M8X16 A4 80	
310	315105-0165		8	FWAS080G0-0S, WASHER PLAIN	
320	312607-0318		4	HEXAGON NUT, EN 24032 M6M M8 A480	
330	312105-0451		4	SCREW, M6S ISO 4017 M8X20 A4 80	
340	90605-1044		1	HOSE HOLDER BLUE SERIES, 271486	

Pos	Part No	UN	Qty	Description	Page No

Tetra Pak®

SPC
Spare Parts Catalogue

CAP SORTER

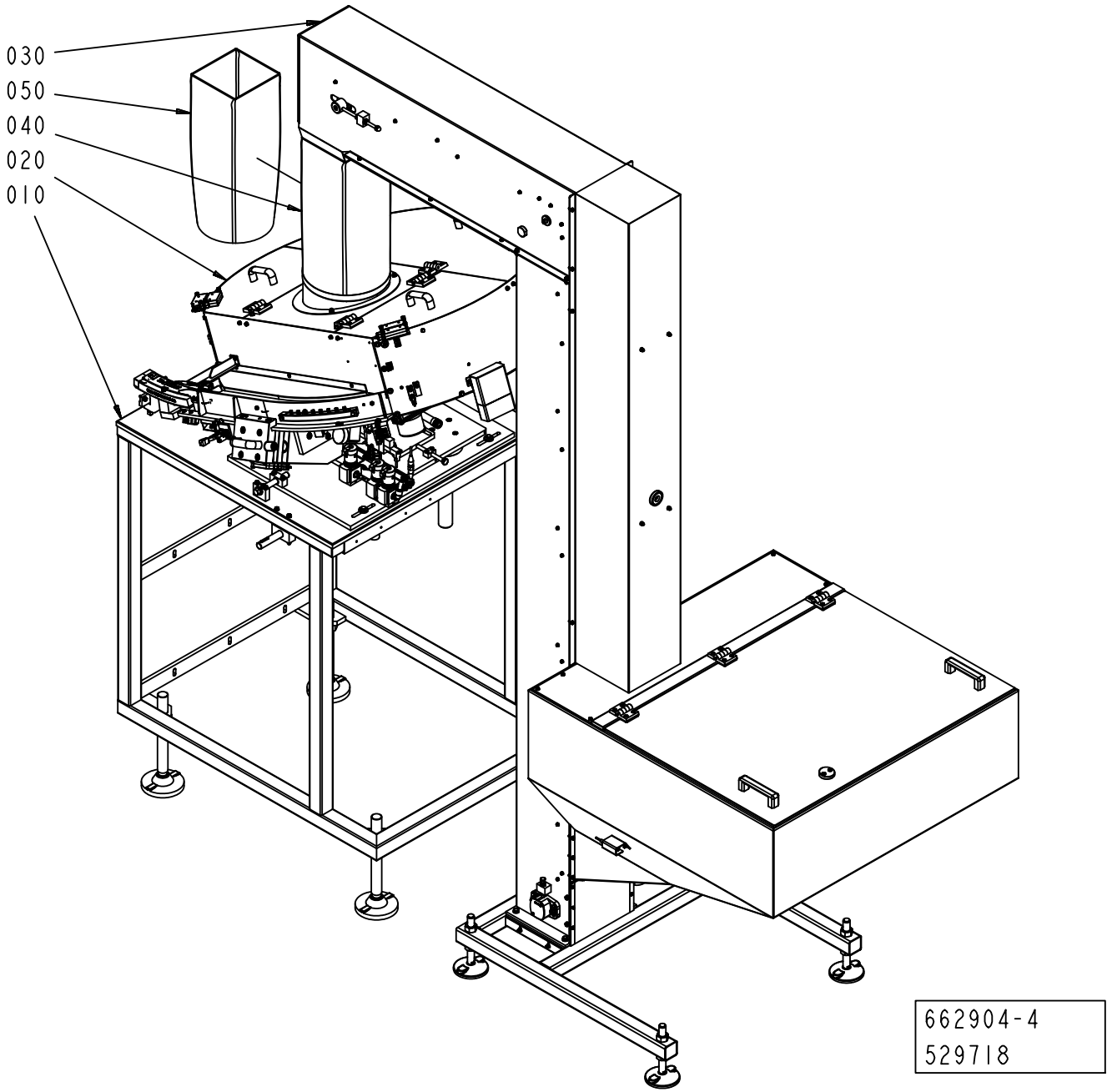

ECM: 701697 - 20150101
Group number: 662904-0300
Assembly Drawing: 662904-4_1_AA

Pos	Part No	UN	Qty	Description	Page No
-					
010	2842830-0100		1	SUPPORT	**4-5**
020	2846416-0300		1	FEEDER	**4-7**
030	2812005-0400		1	ELEVATOR	**4-29, 4-31**
040	2852912-0000		1	CONNECTION PIPE	
050	2852913-0000		1	CONNECTION PIPE	

Pos	Part No	UN	Qty	Description	Page No

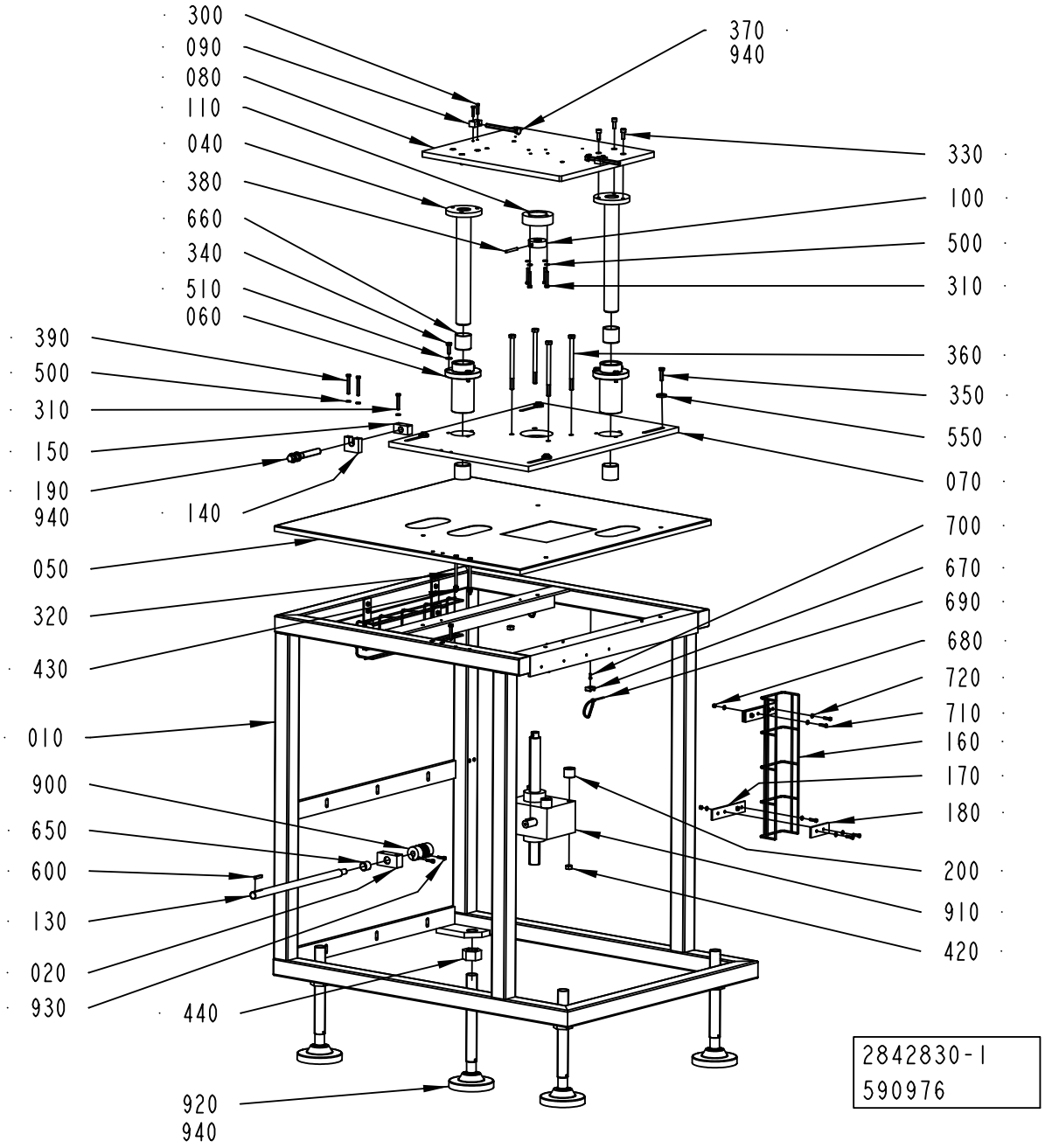
300
090
080
110
040
380
660
340
510
060
370
940
330
100
500
310
360
350
550
070
390
500
310
150
190
940
140
700
670
690
680
720
710
160
170
180
200
910
420
050
320
430
010
900
650
600
130
020
930
440
920
940
2842830-1
590976

ECM: 712854 - 20150401
Group number: 2842830-0100
Assembly Drawing: 2842830-1_1_AE

Pos	Part No	UN	Qty	Description	Page No
-					
010	3068598-0000		1	FRAME	
020	2842832-0000		1	BRACKET	
040	2842835-0000		2	COLUMN	
050	3068596-0000		1	COVER	
060	2842834-0000		2	FLANGE	
070	3068597-0000		1	PLATE	
080	2842837-0000		1	PLATE	
090	2842838-0000		2	BLOCK	
100	2769739-0000		1	DISC	
110	2766964-0000		1	FLANGE	
130	2842831-0000		1	ROD	
140	3068594-0000		1	BLOCK	
150	3068595-0000		1	BLOCK	
160	2844525-0000		2	CABLE DUCT	
170	2844526-0000		4	PLATE	
180	2844527-0000		4	PLATE	
190	3068593-0000		1	SCREW	
200	2845097-0000		4	SPACER	
300	312105-0333		4	SCREW, M6S ISO 4017 M5X25 A4 80	
310	312109-0378		6	SCREW, M6S ISO 4017 M6X40 A4 80	
320	312105-0390		2	SCREW, M6S ISO 4014 M6X100 A4 80	
330	312115-0451		6	SCREW ISO4762 M8X20 A4 80	
340	312105-0453		6	SCREW, M6S ISO 4017 M8X25 A4 80	
350	312105-0455		4	SCREW, M6S ISO 4017 M8X30 A4 80	
360	312105-0519		4	SCREW, M6S ISO 4014 M10X150 A4 80	
370	6-4000 0006 08		2	SCREW M6S 10 X 110	
380	311103-0365		1	PARALLEL PIN ISO 2338 6M6X50 A1	
390	312109-0380		2	SCREW, M6S ISO 4017 M6X50 A4 80	
420	312605-0320		4	HEXAGON NUT, M6M M10 A280	
430	312607-0316		2	HEXAGON NUT, EN 24032 M6M M6 A480	
440	312607-0332		4	HEXAGON NUT, EN 24032 M6M M30 A480	
500	315105-0153		10	WASHER PLAIN, 6,4X12X1,5 A4 BRB	
510	315105-0165		6	FWAS080G0-0S, WASHER PLAIN	
550	315125-0165		4	WASHER HIGH, TBRSB 8,4X26X5 A4	
600	315705-0237		1	PARALLEL KEY W. ROUND ENDS, 6X6X32 MM	
650	321133-0260		1	BUSHING IGLIDUR G 20X23X20	
660	321133-0420		4	BUSHING IGLIDUR G 40X44X40	
670	352113-0203		5	ANCHOR PLATES FOR STRIPS, TM3S8-M0	
680	312605-0314		8	HEXAGON NUT, M6M M5 A280	
690	352113-0102		5	CABLE TIE, BLACK 188X4,8 MM	
700	312125-0291		5	SLOTTED HEAD SCREW, ISO1207 M4X12 A4	
710	312105-0331		16	SCREW, M6S ISO 4017 M5X20 A4 80	
720	315105-0146		24	WASHER PLAIN, 5,3X10X1 A4 BRB	
900	90600-2560		1	COUPLING 14X20 MM, 727-38-4838	
910	90600-0658		1	WORM GEAR SCREW JACK, TP00063000130	
920	90600-1002		4	FOOT 50000N, HPA125-30-325	
930	312115-0331		2	SCREW ISO4762 M5X20 A4 80	
940	344414-0000	L	1	KLüBEROIL 4 UH1-320N, ONLY IN BOM	
	344414-0335		*1*	*KLüBEROIL 4 UH1-320N, 200 L DRUM*	
	344414-0766		*1*	*KLüBEROIL 4 UH1-320N, 20 L CAN*	
	344414-0764		*1*	*KLüBEROIL 4 UH1-320N, 5 L CAN*	

Machine Type	Group Description	Used-In	Group Number	Page No

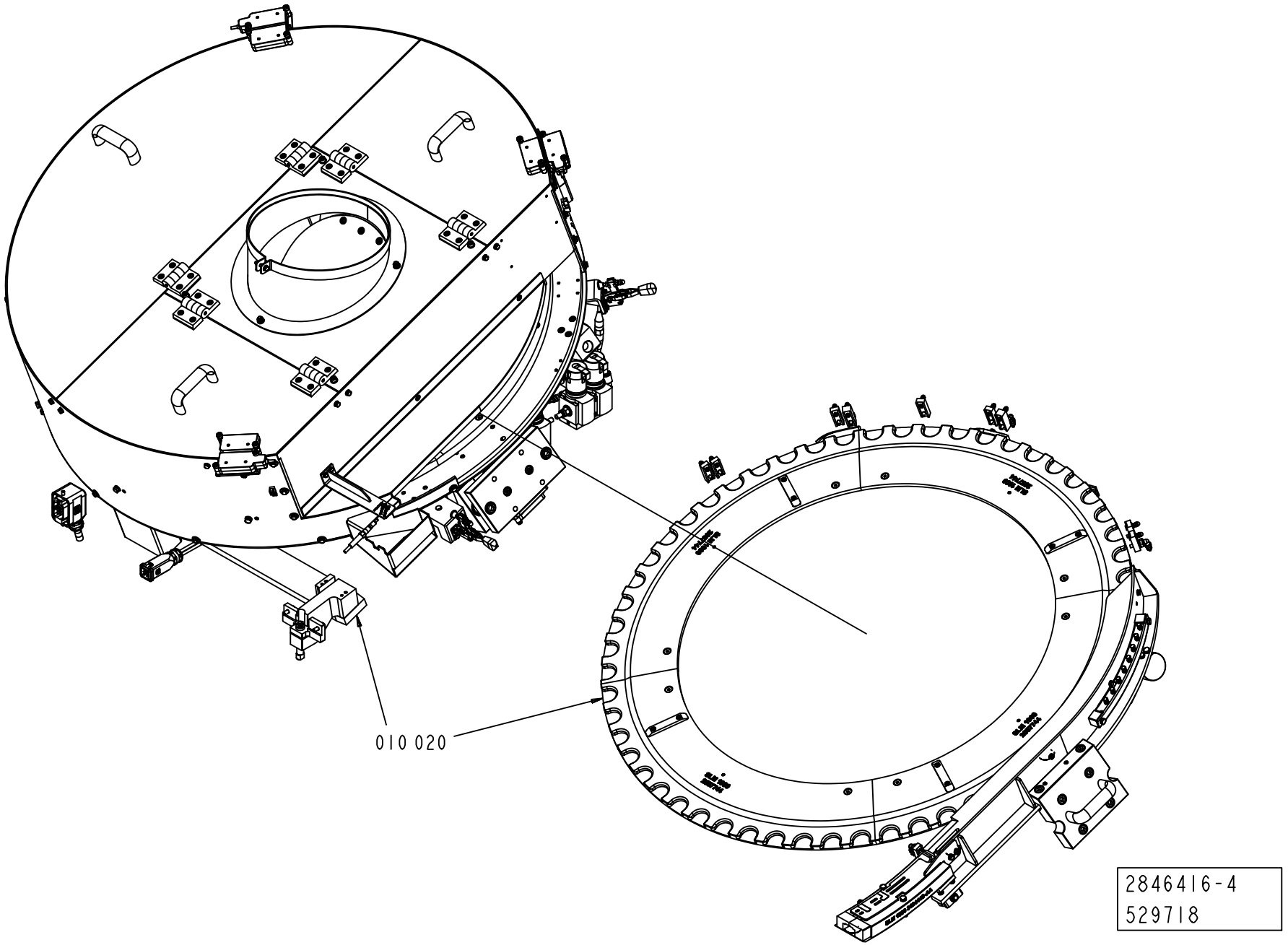
010 020
2846416-4
529718

ECM: 701694 - 20150101
Group number: 2846416-0300
Assembly Drawing: 2846416-4_1_AA

Pos	Part No	UN	Qty	Description	Page No
DREAMCAP 26					
010	3124423-0300		1	CAP SORTER	**4-9, 4-11**
020	3124424-0200		1	VOLUME KIT	**4-27**

Pos	Part No	UN	Qty	Description	Page No

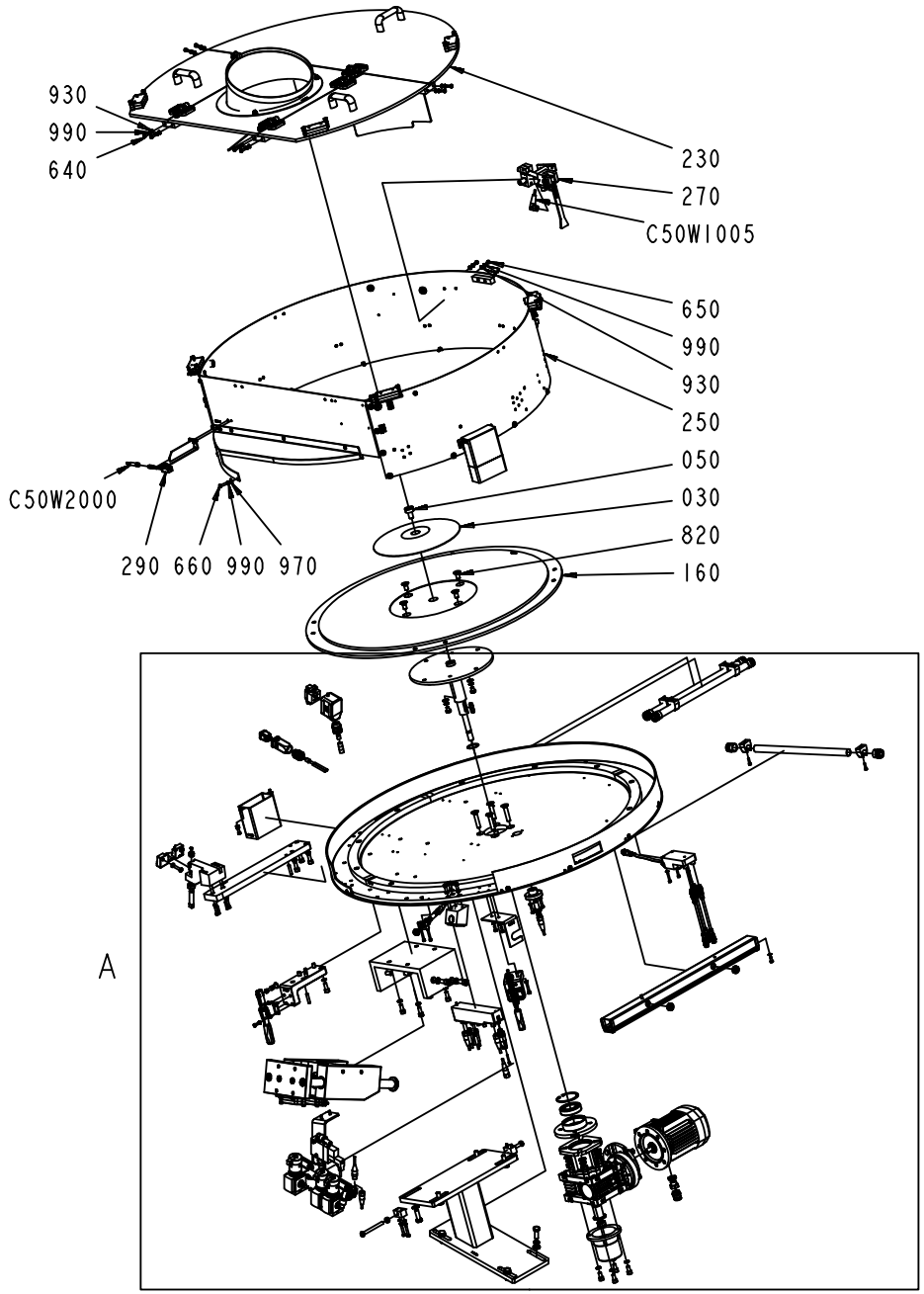

3124423-3
701688

ECM: 701693 - 20150101
Group number: 3124423-0300
Assembly Drawing: 3124423-3_1_AA

This list covers pages from 4-8 to 4-11

Pos	Part No	UN	Qty	Description	Page No
-					
0010	3115239-0000		1	SHAFT	
0020	3115240-0000		1	REDUCER	
0030	3115241-0000		1	CAP	
0040	3115242-0000		1	BUSHING	
0050	3115243-0000		1	SCREW	
0060	3115244-0000		1	PROTECTIVE COVER	
0070	3115245-0000		1	SUPPORT	
0080	3124536-0000		1	BRACKET	
0090	3115247-0000		1	ARM	
0100	3115248-0000		1	CENTERING	
0110	3115249-0000		1	CONNECTION BOX	
0120	3115250-0000		2	BLOCK	
0130	3115251-0000		1	BRACKET	
0140	3365197-0000		1	LID	
0150	3115253-0000		1	SUPPORT	
0160	3115254-0000		1	SUPPORT	
0170	3115255-0000		1	BASE	
0180	3124537-0000		1	BASE	
0190	3115257-0000		1	CONNECTION	
0200	3115258-0000		2	CONNECTION	
0210	3115259-0000		1	COVER	
0220	3108413-0200		1	PULLER	**4-13**
0230	3108442-0200		1	COVER	**4-15**
0250	3108444-0200		1	BODY	**4-17**
0260	3108445-0200		1	PNEUMATIC COMPONENT	**4-19**
0270	3108446-0200		1	SENSOR	**4-21**
0280	3108447-0100		1	HARD DISK	**4-23**
0290	3108448-0200		1	PHOTOCELL UNIT	**4-25**
0300	3124472-0000		1	SHIM	
0320	3124528-0000		1	GUIDE	
0330	3124529-0000		1	PIN	
0340	3124530-0000		1	PLATE	
0350	3365191-0000		1	BUSHING	
0400	3365192-0000		1	WORM GEAR	
0410	344224-0207		1	BALL BEARING 35/62X14	
0420	3124534-0000		2	LOCKING LEVER	
0430	3124535-0000		2	STOP SCREW	
0440	3115234-0000		6	CAP	
0450	3115233-0000		6	CLAMP	
0460	3115263-0000		1	CLAMP	
0470	3108471-0000		2	PROTECTION RING	
0480	90459-1458		1	HOOD, SIDE ENTRY, HAN6E, 19 30 006 1540	
0490	90458-0406		2	CABLE GLAND, VK 22052Y	
0500	353249-0004		1	INSERT, SINGLE HOLE, E152 13	
0510	344202-0003		1	CABLE GLAND; MS-SC-M, 7-12,5MM, M20X1,5	
0520	90459-3644		1	REDUCER, M20X1,5/M16X1,5	
0530	90458-0460		1	GLAND, LOCK NUT, M16X1,5	
0540	90459-3670		1	HOOD, HAN3A, 19 20 003 1440	
0550	353249-0041		1	INSERT, SOLID, E151 G	
0600	315701-0267		1	PARALLEL KEY W. ROUND ENDS, 8X7X30 MM	
0610	90458-0048		1	RETAINING RING FOR BORE DIN 472 62 SS	
0630	312115-0297		3	SCREW ISO4762 M4X25 A4 80	
0640	312105-0327		22	"SCREW, M6S ISO 4017 M5X12 A4 80"	
0650	312105-0323		2	"FSCR05080-10, SCREW, M6S"	
0660	312105-0331		14	SCREW, M6S ISO 4017 M5X20 A4 80	
0670	312109-0335		4	SCREW, M6S ISO 4017 M5X30 A4 80	
0690	312105-0368		5	"SCREW, M6S ISO 4017 M6X16 A4 80"	
0710	90459-4735		2	SCREW, M6S ISO 4017 M8X10 A4 80	
0720	312109-0467		2	SCREW, M6S ISO 4017 M8X80 A4 80	
0740	312105-0495		8	SCREW, M6S ISO 4017 M10X30 A4 80	
0750	312115-0232		2	SCREW ISO4762 M3X25 A4 80	
0760	312115-0293		6	SCREW ISO4762 M4X16 A4 80	
0770	312115-0299		2	SCREW ISO4762 M4X30 A4 80	
0780	312115-0331		2	SCREW ISO4762 M5X20 A4 80	
0790	312115-0368		3	SCREW ISO4762 M6X16 A4 80	
0800	312115-0451		11	SCREW ISO4762 M8X20 A4 80	
0810	312115-0493		4	SCREW ISO4762 M10X25 A4 80	
0820	312155-0491		4	SCREW DIN 7991 MF6S M10X20 A4 70	
0830	312155-0501		4	SCREW DIN 7991 MF6S M10X50A4 70	
0840	311103-1274		2	PARALLEL PIN ISO 2338 4M6X24 A1	
0850	311103-0357		4	PARALLEL PIN ISO 2338 6M6X30 A1	
0870	312605-0318		2	HEXAGON NUT, M6M M8 A280	
0880	312605-0320		4	HEXAGON NUT, M6M M10 A280	
0890	90099-0187		1	HEXAGON NUT, LOCK, M14, DIN985	
0920	315103-0136		3	WASHER PLAIN, 4,3X8X0,8 BR NI PL	
0930	315103-0146		18	WASHER PLAIN, 5,3X10X1 BR NI PL	
0940	315103-0153		7	WASHER PLAIN, 6,4X12X1,5 BR NI PL	
0950	315103-0165		2	WASHER PLAIN, 8,4X15X1,5 BR NI PL	
0960	315103-0173		12	WASHER PLAIN, 10,5X22X2 BR NI PL	
0970	315125-0146		12	WASHER HIGH, TBRSB 5.3X15X1 A4	
0990	3108452-0000		46	WASHER	
1000	3108453-0000		8	WASHER	
1010	3108454-0000		17	WASHER	

Machine Type | Group Description | Used-In | Group Number | Page No

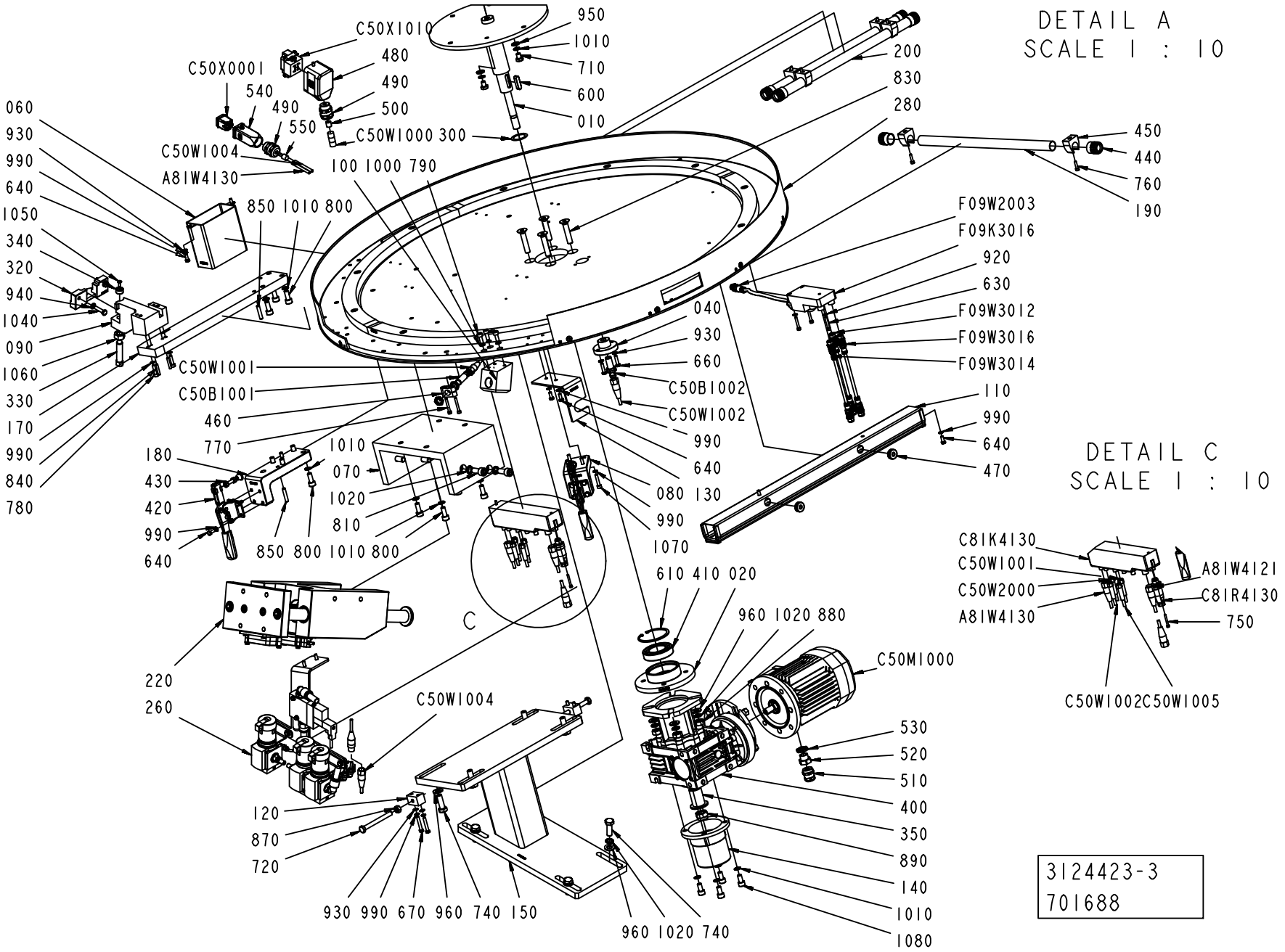

3124423-3
701688

Pos	Part No	UN	Qty	Description	Page No
- (Cont'd)					
1020	3108455-0000		12	WASHER	
1040	312105-0372		2	SCREW, M6S ISO 4017 M6X25 A4 80	
1050	312155-0291		1	SCREW DIN 7991 MF6S M4X12 A4 70	
1060	312605-0322		1	HEXAGON NUT, M6M M12 A280	
1070	312115-0333		4	SCREW ISO4762 M5X25 A4 80	
1080	312115-0449		4	SCREW ISO4762 M8X16 A4 80	
A81W4121	344293-0030		1	DEVICEN CAB.SAC-5P-M12MS/3,0-927/M12FSVA	
A81W4130	344253-0050		1	SENSOR CABLE, EVT001	
C50B1001	90458-2907		1	PROX.SWITCH IFS204	
C50B1002	90458-2907		1	PROX.SWITCH IFS204	
C81K4130	90459-6062		1	ARMORBLOCK DIGITAL CONFIGURABLE I/O	
C50M1000	90603-9718		1	MOTOR 3GAA 062 002-BSC	
C81R4130	90603-9676		1	TERMINATION M12,SAC	
C50W1000	315756-0009	M	3	OLFLEX CONTROL TM CY 4G1,5, 281604CY	
C50W1001	344261-0006		1	SENSOR CABLE, EVT261	
C50W1002	344261-0006		1	SENSOR CABLE, EVT261	
C50W1004	344253-0050		1	SENSOR CABLE, EVT001	
C50W1005	344262-0015		1	SENSOR CABLE, EVT271	
C50W2000	344257-0006		1	SENSOR CABLE, EVT143	
C50X0001	90459-6821		1	MALE INSERT HAN 4A, 0920 0042 611	
C50X1010	90110-0052		1	MALE INSERT, HAN E06, 0933 0062 601	
F09K3016	90604-0093		1	CONNECTION BLOCK, TINA4A 2TLJ020054R0300	
F09W2003	90600-0934		1	CABLE M12-C62 5 POLE MALE, 20-056-02	
F09W3012	90459-7095		1	FOCUS JUMPER CABLE M12 5P 1M, 20-056-20	
F09W3014	90459-7095		1	FOCUS JUMPER CABLE M12 5P 1M, 20-056-20	
F09W3016	90459-7095		1	FOCUS JUMPER CABLE M12 5P 1M, 20-056-20	

Pos	Part No	UN	Qty	Description	Page No

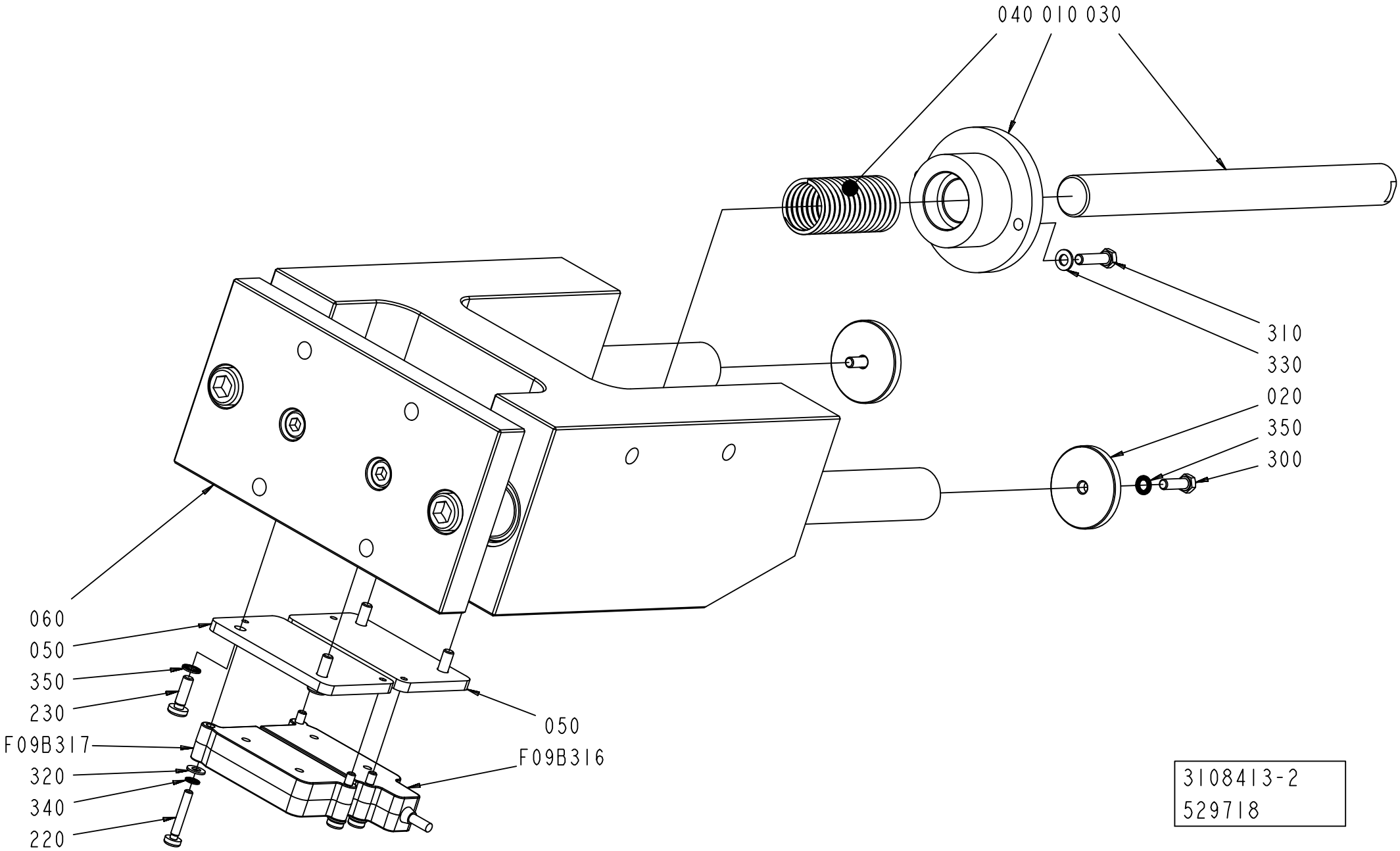
040 010 030
310
330
020
350
300
060
050
350
230
F09B317
320
340
220
050
F09B316
3108413-2
529718

ECM: 559242 - 20121001
Group number: 3108413-0200
Assembly Drawing: 3108413-2_1_AA

Pos	Part No	UN	Qty	Description	Page No
-					
010	3115268-0000		1	BUSHING	
020	3115269-0000		2	WASHER	
030	3115270-0000		1	PIN	
040	3115271-0000		1	SPRING	
050	3115272-0000		2	PLATE	
060	3115273-0000		1	GUIDE	
220	90459-4165		4	SAFETY SCREW, SM4X25	
230	3115274-0000		4	SCREW	
300	312105-0329		2	SCREW, M6S ISO 4017 M5X16 A4 80	
310	312105-0331		2	SCREW, M6S ISO 4017 M5X20 A4 80	
320	315103-0136		4	WASHER PLAIN, 4,3X8X0,8 BR NI PL	
330	315103-0146		2	WASHER PLAIN, 5,3X10X1 BR NI PL	
340	3108451-0000		4	WASHER	
350	3108452-0000		6	WASHER	
F09B3016	90459-6961		1	SAFETY SENSOR, ADAM E 0,5 M12	
F09B3017	90459-4089		1	SAFETY SENSOR, EVA E, 2TLA020046R0600	

Pos	Part No	UN	Qty	Description	Page No

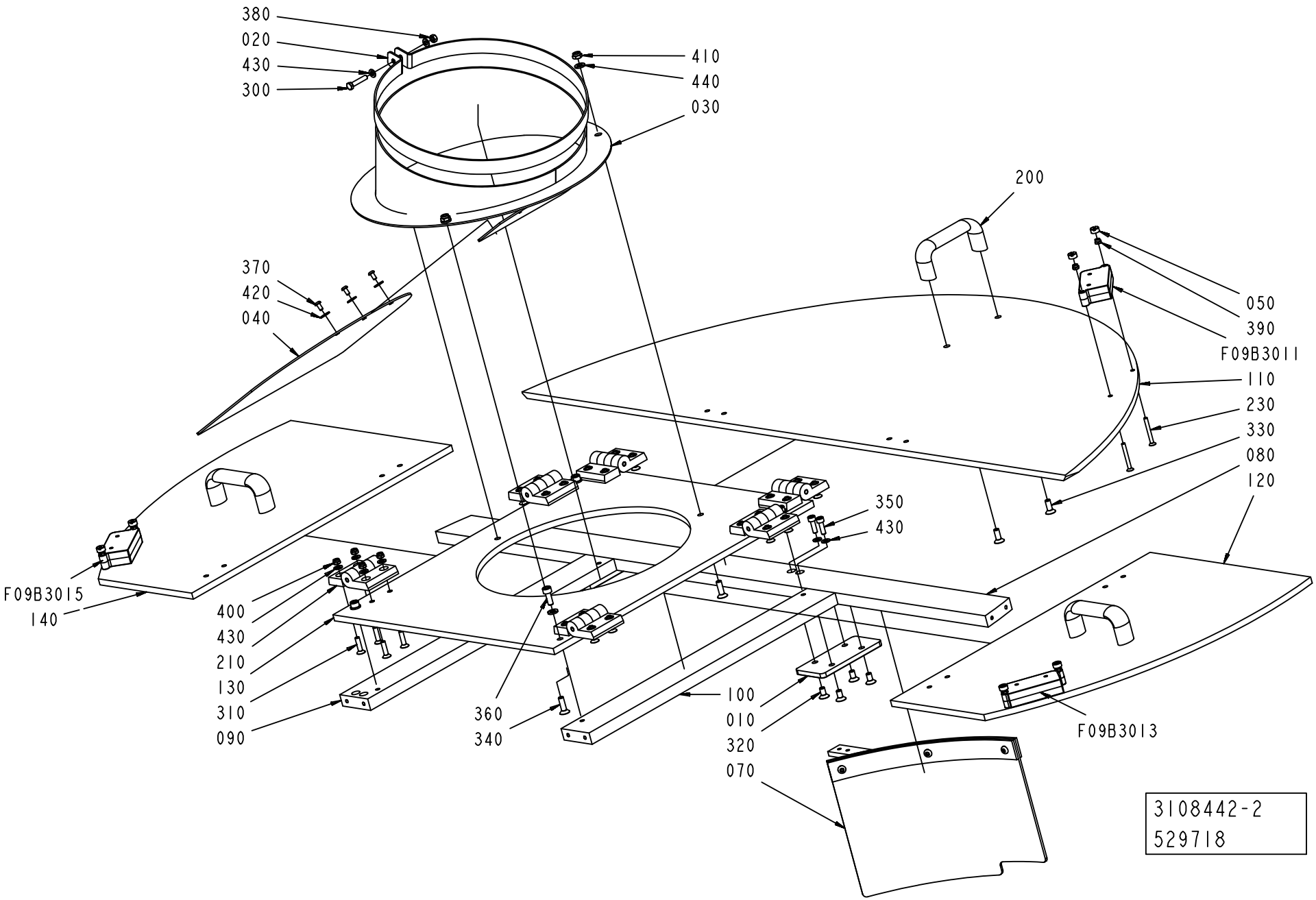
380
020
430
300
410
440
030
200
370
420
040
050
390
F09B3011
110
230
330
080
120
350
430
F09B3015
140
400
430
210
130
310
090
360
340
100
010
320
070
F09B3013
3108442-2
529718

ECM: 559243 - 20121001
Group number: 3108442-0200
Assembly Drawing: 3108442-2_1_AA

Pos	Part No	UN	Qty	Description	Page No
-					
010	3115287-0000		2	PLATE	
020	3115288-0000		1	CLAMP	
030	3115289-0000		1	FUNNEL	
040	3115290-0000		1	DAMPING ELEMENT	
050	1539391-0000		6	ROUND NUT	
070	3115292-0000		1	PLATE	
080	3115293-0000		1	CROSS BAR	
090	3115294-0000		1	CROSS BAR	
100	3115295-0000		1	CROSS BAR	
110	3115296-0000		1	PANEL	
120	3115297-0000		1	PANEL	
130	3115298-0000		1	PANEL	
140	3115299-0000		1	PANEL	
200	3115300-0000		3	HANDLE	
210	3115232-0000		6	HINGE	
230	3115301-0000		6	SCREW	
300	312105-0333		1	SCREW, M6S ISO 4017 M5X25 A4 80	
310	312155-0331		24	SCREW DIN 7991 MF6S M5X20 A4 70	
320	312155-0366		8	SCREW DIN 7991 MF6S M6X12 A4 70	
330	312155-0368		6	SCREW DIN 7991 MF6S M6X16 A4 70	
340	312155-0370		3	SCREW DIN 7991 MF6S M6X20 A4 70	
350	312115-0329		2	SCREW ISO4762 M5X16 A4 80	
360	312115-0368		4	SCREW ISO4762 M6X16 A4 80	
370	3108456-0000		3	SCREW	
380	312605-0314		1	HEXAGON NUT, M6M M5 A280	
390	312810-0312		6	HEXAGON NUT, NY-LOCK M4 FZB	
400	312810-0314		24	HEXAGON NUT, NY-LOCK M5 FZB	
410	312810-0316		3	HEXAGON NUT, NY-LOCK M6 FZB	
420	3108458-0000		3	WASHER	
430	315103-0146		28	WASHER PLAIN, 5,3X10X1 BR NI PL	
440	315103-0153		7	WASHER PLAIN, 6,4X12X1,5 BR NI PL	
F09B3011	90459-4089		1	SAFETY SENSOR, EVA E, 2TLA020046R0600	
F09B3013	90459-4089		1	SAFETY SENSOR, EVA E, 2TLA020046R0600	
F09B3015	90459-4089		1	SAFETY SENSOR, EVA E, 2TLA020046R0600	

Pos	Part No	UN	Qty	Description	Page No

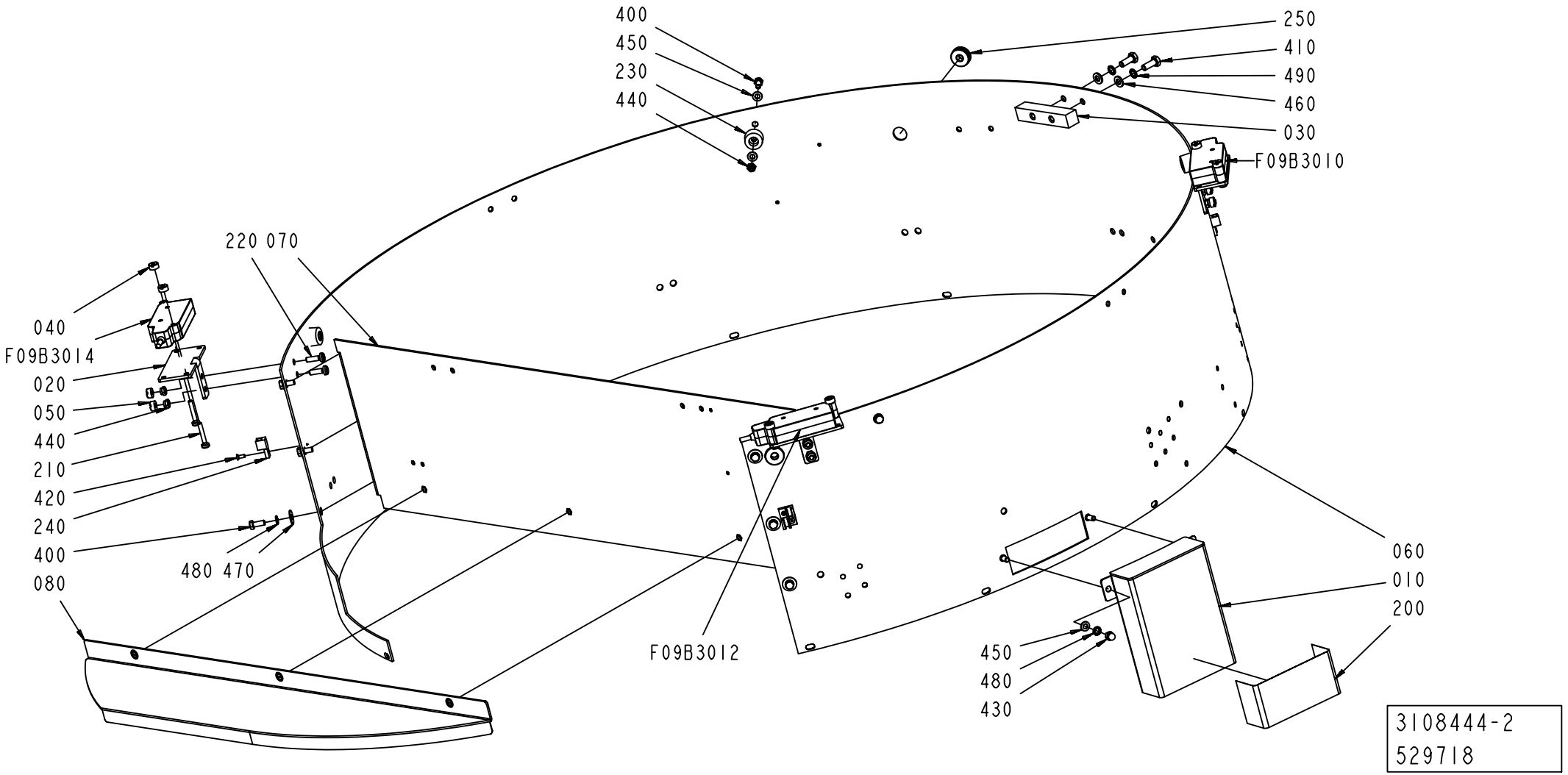
400
450
230
440
250
410
490
460
030
F09B3010
220 070
040
F09B3014
020
050
440
210
420
240
400
080
480 470
F09B3012
060
010
200
450
480
430
3108444-2
529718

ECM: 559245 - 20121001
Group number: 3108444-0200
Assembly Drawing: 3108444-2_1_AA

Pos	Part No	UN	Qty	Description	Page No
DREAMCAP 26					
060	3124435-0000		1	STRIP	
Common Parts					
010	3115275-0000		1	COVER	
020	3115276-0000		3	BRACKET	
030	3115277-0000		1	SUPPORT	
040	1539391-0000		6	ROUND NUT	
050	575034-0000		6	ROUND NUT	
070	3115278-0000		1	PLATE	
080	3115279-0000		1	COVERING	
200	3115281-0000		1	LABEL TAPE	
210	90459-4165		6	SAFETY SCREW, SM4X25	
220	3115274-0000		6	SCREW	
230	3115282-0000		4	FOOT	
240	3115283-0000		6	CLAMP	
250	3108471-0000		2	PROTECTION RING	
400	312105-0327		10	"SCREW, M6S ISO 4017 M5X12 A4 80"	
410	312105-0368		2	"SCREW, M6S ISO 4017 M6X16 A4 80"	
420	3108462-0000		5	SCREW	
430	312705-0314		2	NUT HEX. DOMED CAP MHM-6 M5 A280	
440	312810-0314		10	HEXAGON NUT, NY-LOCK M5 FZB	
450	315103-0146		16	WASHER PLAIN, 5,3X10X1 BR NI PL	
460	315103-0153		2	WASHER PLAIN, 6,4X12X1,5 BR NI PL	
470	315125-0146		6	WASHER HIGH, TBRSB 5.3X15X1 A4	
480	3108452-0000		8	WASHER	
490	3108453-0000		2	WASHER	
F09B3010	90459-6961		1	SAFETY SENSOR, ADAM E 0,5 M12	
F09B3012	90459-6961		1	SAFETY SENSOR, ADAM E 0,5 M12	
F09B3014	90459-6961		1	SAFETY SENSOR, ADAM E 0,5 M12	

Pos	Part No	UN	Qty	Description	Page No

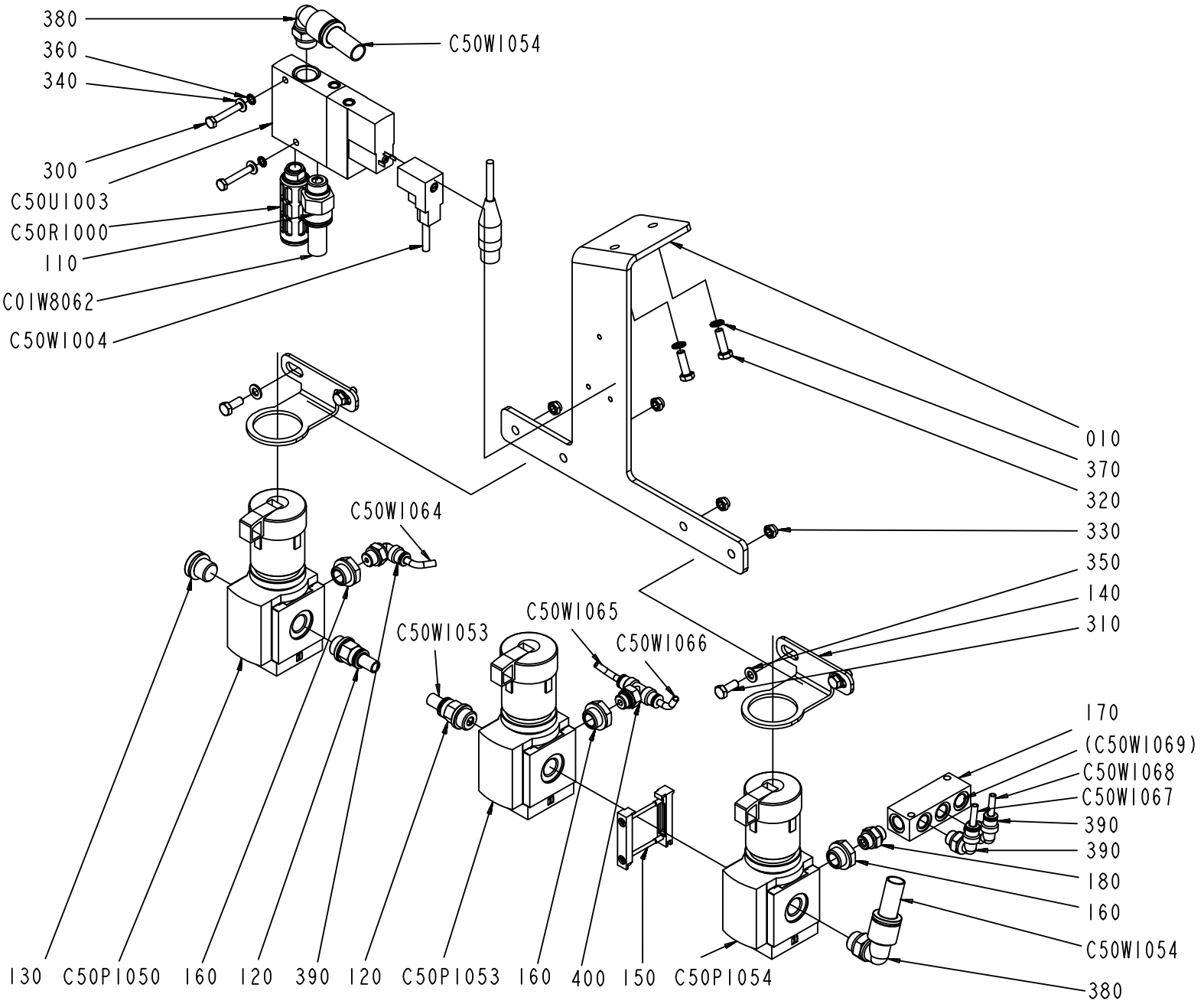

3108445-2
541792

ECM: 714067 - 20150401
Group number: 3108445-0200
Assembly Drawing: 3108445-2_1_AB

Pos	Part No	UN	Qty	Description	Page No
-					
010	3124420-0000		1	BRACKET	
110	351456-0105		1	PUSH-IN FITTING NPQH-D-G14-Q12-P10	
120	351456-0107		2	PUSH-IN FITTING NPQH-D-G14-Q8-P10	
130	90600-1167		1	PLUG, EXT. R-THREAD, R1/4	
140	90459-2389		2	B71800059TM, BRACKET, MS4-LR-WR	
150	90459-2248		1	BRACKET	
160	90224-0289		3	BUSHING, INT.EXT. THR. R1/8-R1/4	
170	90224-0314		1	DISTRIBUTOR BLOCK, FR-4-1/8-B	
180	342700-0109		1	NIPPLE, EXT.THREAD, HEXAGON, G1/8-G1/8	
300	312105-0297		2	SCREW, M6S ISO 4017 M4X25 A4 70	
310	312105-0327		4	"SCREW, M6S ISO 4017 M5X12 A4 80"	
320	312105-0329		2	SCREW, M6S ISO 4017 M5X16 A4 80	
330	312810-0314		4	HEXAGON NUT, NY-LOCK M5 FZB	
340	315103-0136		2	WASHER PLAIN, 4,3X8X0,8 BR NI PL	
350	315103-0146		4	WASHER PLAIN, 5,3X10X1 BR NI PL	
360	3108451-0000		2	WASHER	
370	3108452-0000		2	WASHER	
380	351456-3005		2	PUSH-IN L-FITTING NPQH-L-G14-Q12-P10	
390	351456-3001		1	PUSH-IN L-FITTING NPQH-L-G18-Q4-P10	
400	351456-5007		1	PUSH-IN T-FITTING NPQH-T-G18-Q4-P10	
C50P1050	90600-1420		1	REGULATOR, MS4-LRB-1/4-D6-AS	
C50P1053	90600-1420		1	REGULATOR, MS4-LRB-1/4-D6-AS	
C50P1054	90600-1420		1	REGULATOR, MS4-LRB-1/4-D6-AS	
C50R1000	90328-0026		1	SILENCER, G1/4"	
C50U1003	90600-5813		1	SOLENOID VALVE, CPE18-M1H-3GL-1/4	
C01W1053	315400-0004	M	1	TUBE PUN-H-8X1,25-BL	
C01W1054	315400-0010	M	1	TUBE PUN-H-12X2-BL	
C01W8062	315400-0010	M	1	TUBE PUN-H-12X2-BL	
C50W1004	90600-3573		1	SOCKET CONN. CABLE, KMEB-2-24-M12-0,5-LE	
C50W1064	315400-0016	M	1	TUBE PUN-H-4X0,75-BL	
C50W1065	315400-0016	M	1	TUBE PUN-H-4X0,75-BL	
C50W1066	315400-0016	M	1	TUBE PUN-H-4X0,75-BL	
C50W1067	315400-0016	M	1	TUBE PUN-H-4X0,75-BL	
C50W1068	315400-0016	M	1	TUBE PUN-H-4X0,75-BL	
C50W1069	315400-0016	M	1	TUBE PUN-H-4X0,75-BL	

Pos	Part No	UN	Qty	Description	Page No

Machine Type | Group Description | Used-In | Group Number | Page No

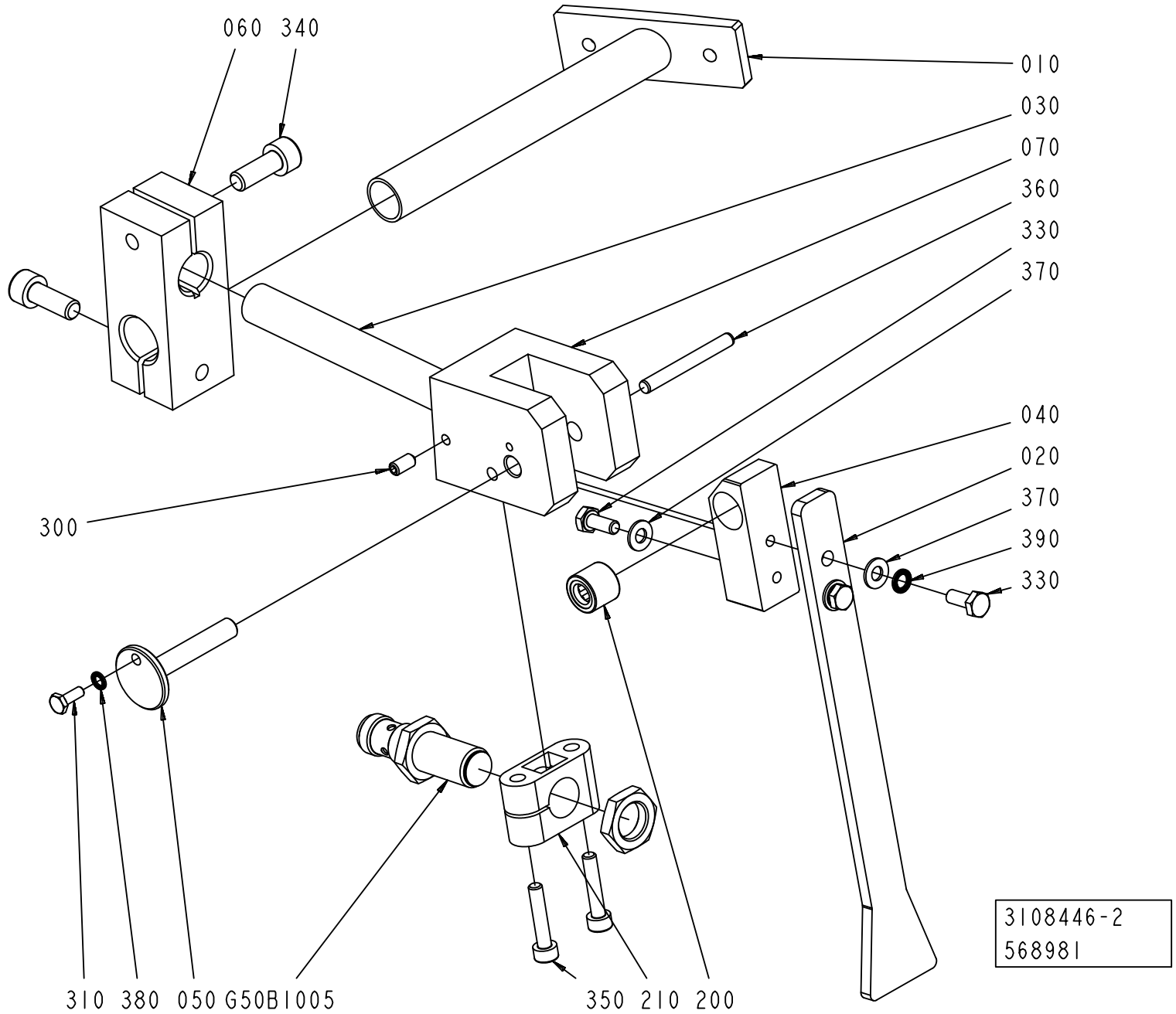
060 340
010
030
070
360
330
370
040
020
370
390
330
300
310 380 050 G50B1005
350 210 200
3108446-2
568981

ECM: 570297 - 20121002
Group number: 3108446-0200
Assembly Drawing: 3108446-2_1_AB

Pos	Part No	UN	Qty	Description	Page No
-					
010	3115302-0000		1	BRACKET	
020	3115303-0000		1	DIP STICK	
030	3115304-0000		1	PIPE	
040	3115305-0000		1	BRACKET	
050	3115306-0000		1	PIN	
060	3115307-0000		1	CLAMP	
070	3115308-0000		1	PLATE	
200	3115309-0000		1	BEARING	
210	3115263-0000		1	CLAMP	
300	312318-0287		1	SET SCREW, CUP END ISO4029 M4X8 A4	
310	312115-0222		1	SCREW ISO4762 M3X8 A4 80	
330	312105-0289		3	SCREW, M6S ISO 4017 M4X10 A4 70	
340	312115-0368		2	SCREW ISO4762 M6X16 A4 80	
350	312115-0295		2	SCREW ISO4762 M4X20 A4 80	
360	311103-0278		1	PARALLEL PIN ISO 2338 4M6X35 A1	
370	315103-0136		3	WASHER PLAIN, 4,3X8X0,8 BR NI PL	
380	3108450-0000		1	WASHER	
390	3108451-0000		2	WASHER	
G50B1005	90458-2907		1	PROX.SWITCH IFS204	

Pos	Part No	UN	Qty	Description	Page No

HARD DISK

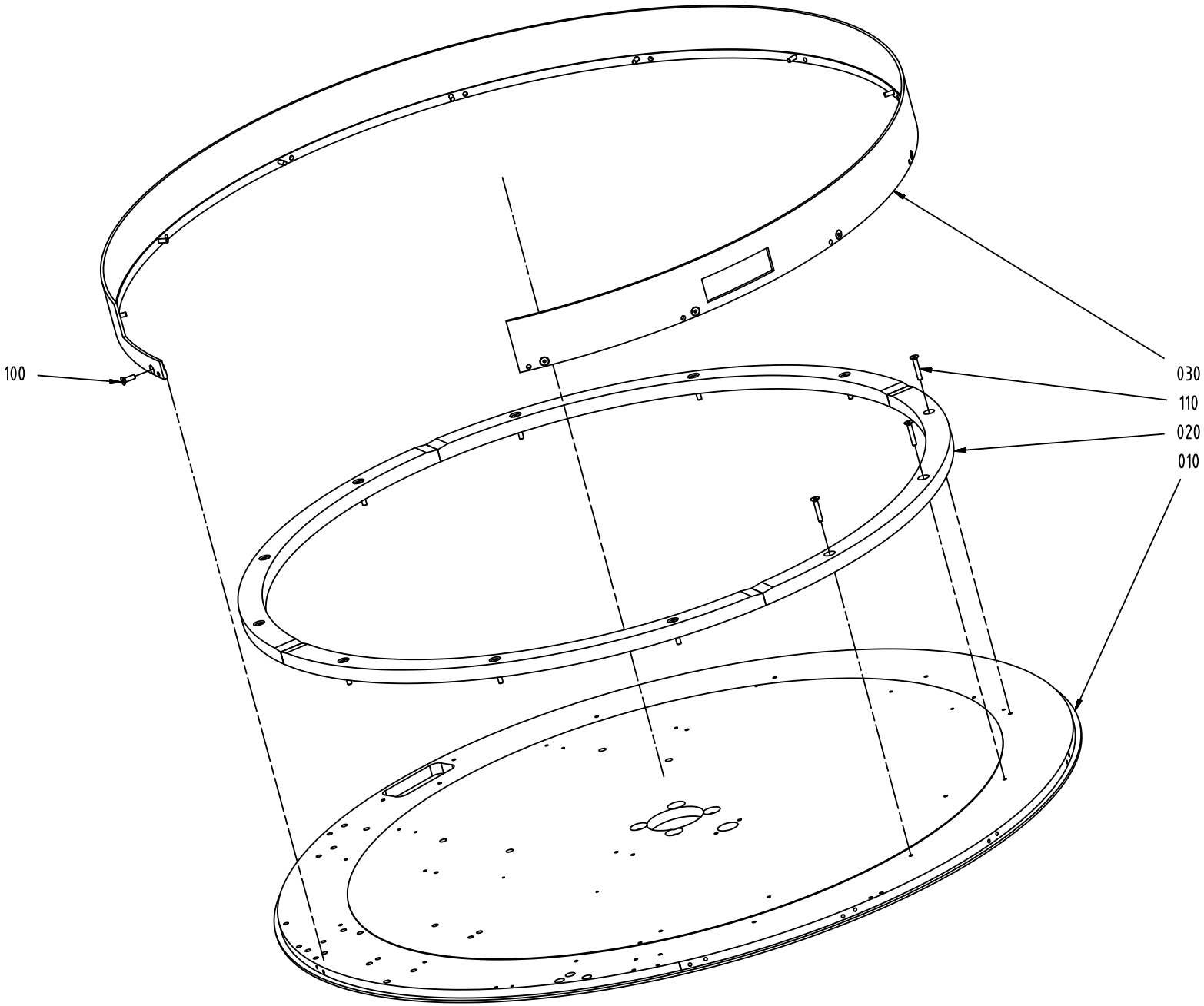

ECM: 481904 - 20110401
Group number: 3108447-0100
Assembly Drawing: 3108447-1_1_AA

Pos	Part No	UN	Qty	Description	Page No
-					
010	3108464-0000		1	STUD BOLT	
020	3108465-0000		4	SECTOR	
030	3108466-0000		1	RING	
100	312155-0329		12	SCREW DIN 7991 MF6S M5X16 A4 70	
110	312155-0335		12	SCREW DIN 7991 MF6S M5X30 A4 70	

Pos	Part No	UN	Qty	Description	Page No

PHOTOCELL UNIT

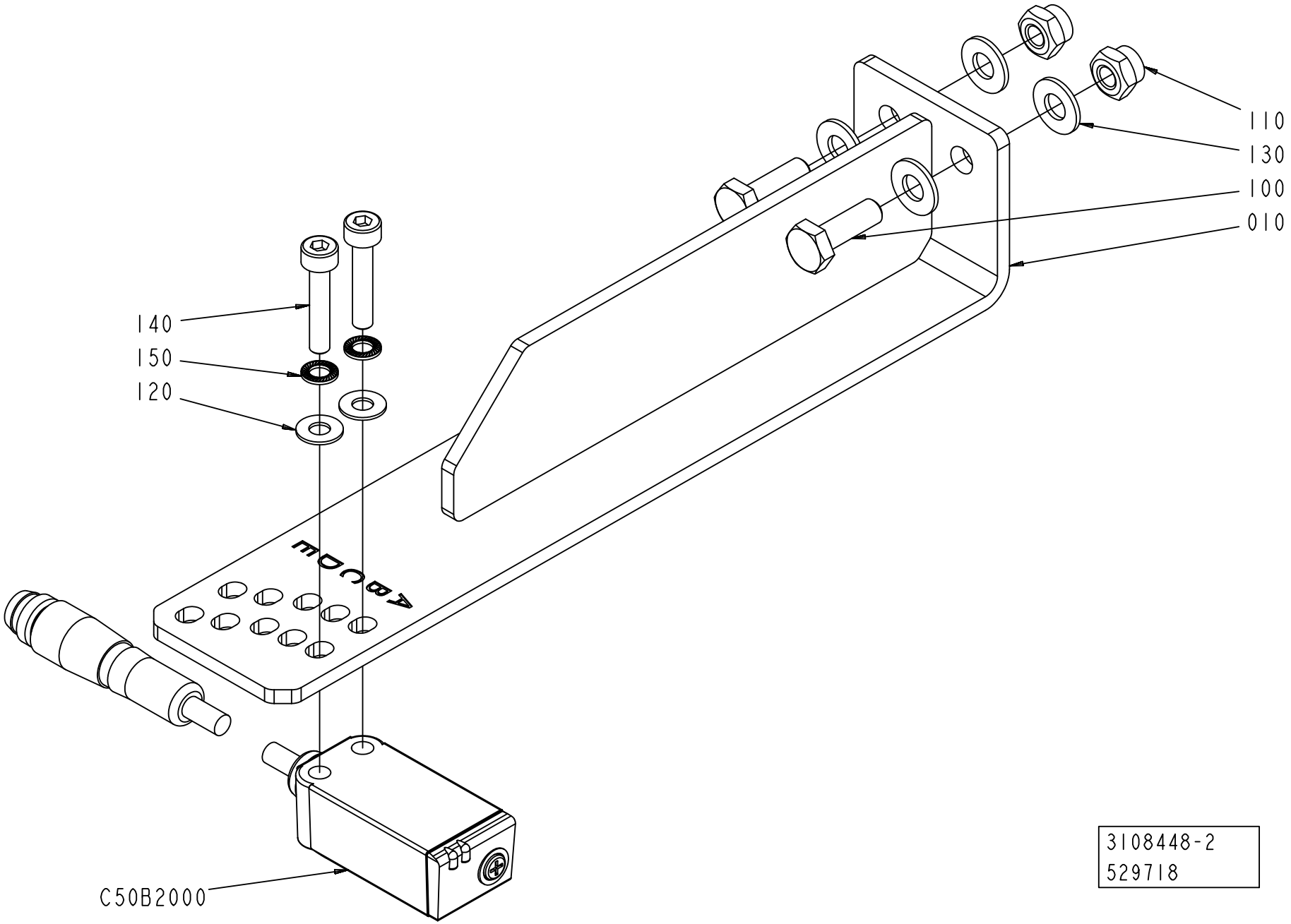

3108448-2
529718

ECM: 559248 - 20121001
Group number: 3108448-0200
Assembly Drawing: 3108448-2_1_AA

Pos	Part No	UN	Qty	Description	Page No
-					
010	3115267-0000		1	PHOTOCELL	
100	312105-0291		2	SCREW, M6S ISO 4017 M4X12 A4 70	
110	312810-0312		2	HEXAGON NUT, NY-LOCK M4 FZB	
120	315103-0124		2	WASHER PLAIN, 3,2X/6X0,5 BR NI PL	
130	315103-0136		4	WASHER PLAIN, 4,3X8X0,8 BR NI PL	
140	312115-0228		2	SCREW ISO4762 M3X16 A4 80	
150	3108450-0000		2	WASHER	
C50B2000	90459-7366		1	PHOTOCELL, WTB4-3P3161 F20	

Pos	Part No	UN	Qty	Description	Page No

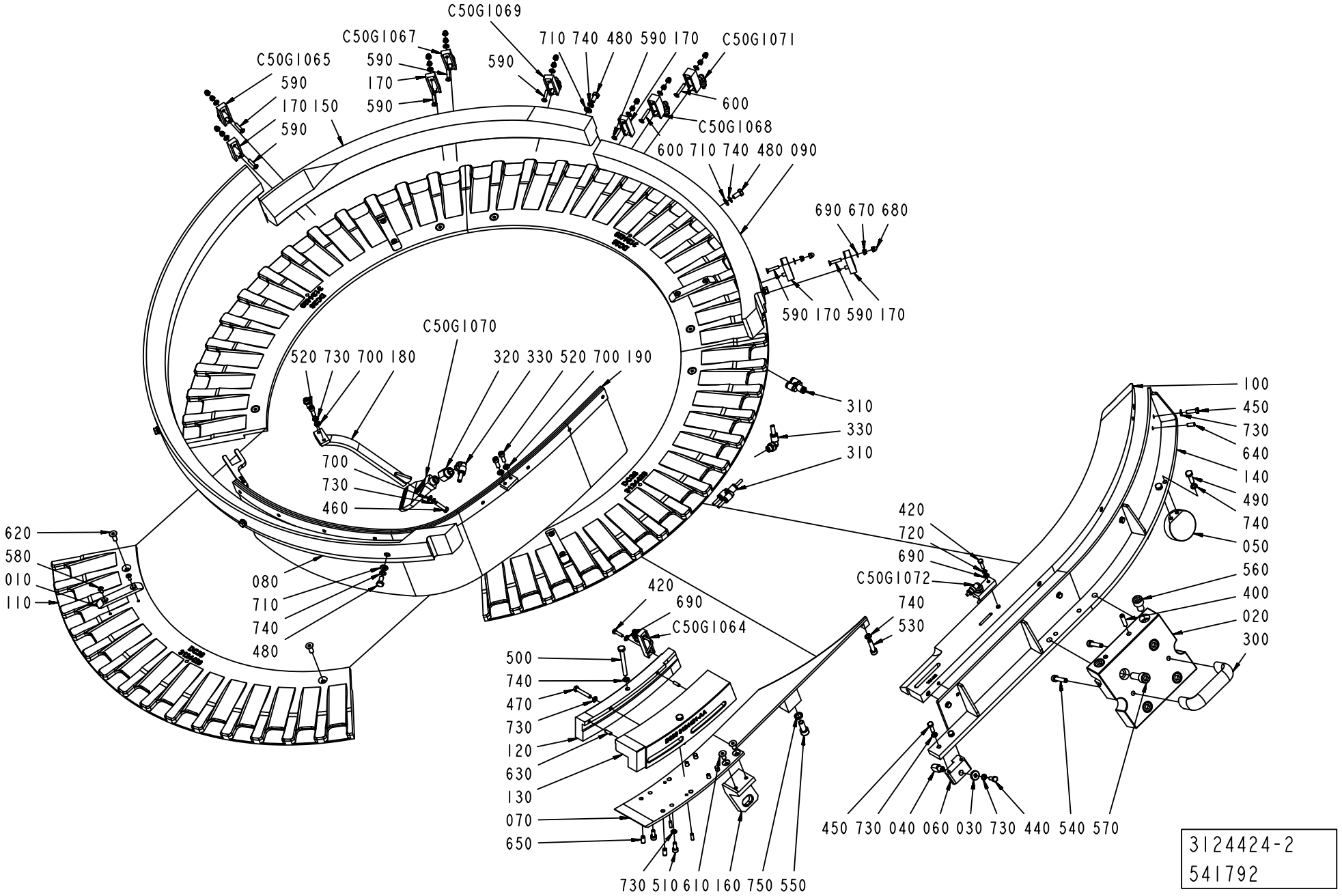
C50G1069
C50G1067
590
170
590
C50G1065
590
170 150
590
590
710 740 480 590 170
C50G1071
600
C50G1068
600 710 740 480 090
690 670 680
590 170 590 170
C50G1070
520 730 700 180
320 330 520 700 190
310
330
310
700
730
460
620
580
010
110
080
710
740
480
420
690
C50G1064
500
740
470
730
120
630
130
070
650
730 510 610 160 750 550
420
720
690
C50G1072
740
530
100
450
730
640
140
490
740
050
560
400
020
300
450 730 040 060 030 730 440 540 570
3124424-2
541792

ECM: 714080 - 20150401
Group number: 3124424-0200
Assembly Drawing: 3124424-2_1_AB

Pos	Part No	UN	Qty	Description	Page No
-					
010	3115346-0000		4	CARRIER	
020	3115347-0000		1	PLATE	
030	3115348-0000		1	WASHER	
040	3115349-0000		1	PIN	
050	3115350-0000		1	PIN	
060	3115351-0000		1	PIN	
070	3115368-0000		1	BASE	
080	3124425-0000		1	GUIDE	
090	3124426-0000		1	GUIDE	
100	3124428-0000		1	PULLER	
110	3124429-0000		4	GUIDE	
120	3124430-0000		1	GUIDE	
130	3124431-0000		1	GUIDE	
140	3124433-0000		1	PLATE	
150	3124434-0000		1	GUIDE	
160	3115356-0000		1	CENTERING	
170	2981406-0000		5	AIR BLOW REGULATOR	
180	2981418-0000		1	AIR NOZZLE	
190	3124477-0000		1	PLATE	
300	3115300-0000		1	HANDLE	
310	90458-0745		1	Y-CONNECTION	
320	3124360-0000		1	REDUCTION SLEEVE	
330	351456-3002		2	PUSH-IN L-FITTING NPQH-L-G18-Q6-P10	
400	3108463-0000		2	TAPER PIN	
420	312105-0293		2	SCREW, M6S ISO 4017 M4X16 A4 70	
440	312105-0327		1	"SCREW, M6S ISO 4017 M5X12 A4 80"	
450	312105-0329		6	SCREW, M6S ISO 4017 M5X16 A4 80	
460	312105-0331		1	SCREW, M6S ISO 4017 M5X20 A4 80	
470	312109-0335		1	SCREW, M6S ISO 4017 M5X30 A4 80	
480	312105-0366		11	SCREW, M6S ISO 4017 M6X12 A4 80	
490	312105-0370		2	SCREW, M6S ISO 4017 M6X20 A4 80	
500	312109-0381		2	SCREW, M6S ISO 4017 M6X55 A4 80	
510	312115-0327		4	SCREW ISO4762 M5X12 A4 80	
520	312115-0329		4	SCREW ISO4762 M5X16 A4 80	
530	312115-0372		1	SCREW ISO4762 M6X25 A4 80	
540	312115-0374		2	SCREW ISO4762 M6X30 A4 80	
550	312115-0451		1	SCREW ISO4762 M8X20 A4 80	
560	312115-0489		2	SCREW ISO4762 M10X16 A4 80	
570	312115-0495		4	SCREW ISO4762 M10X30 A4 80	
580	312155-0289		8	SCREW DIN 7991 MF6S M4X10 A4 70	
590	312155-0295		8	SCREW DIN 7991 MF6S M4X20 A4 70	
600	312155-0297		2	SCREW DIN 7991 MF6S M4X25 A4 70	
610	312155-0366		2	SCREW DIN 7991 MF6S M6X12 A4 70	
620	312155-0368		8	SCREW DIN 7991 MF6S M6X16 A4 70	
630	311103-0268		4	PARALLEL PIN ISO 2338 4M6X12 A1	
640	311103-0306		2	PARALLEL PIN ISO 2338 5M6X12 A1	
650	311103-0349		4	PARALLEL PIN ISO 2338 6M6X12 A1	
670	312810-0312		10	HEXAGON NUT, NY-LOCK M4 FZB	
680	312705-0312		10	NUT HEX. DOMED CAP MHM-6 M4 A280	
690	315103-0136		12	WASHER PLAIN, 4,3X8X0,8 BR NI PL	
700	315103-0146		5	WASHER PLAIN, 5,3X10X1 BR NI PL	
710	315103-0153		11	WASHER PLAIN, 6,4X12X1,5 BR NI PL	
720	3108451-0000		1	WASHER	
730	3108452-0000		15	WASHER	
740	3108453-0000		16	WASHER	
750	3108454-0000		1	WASHER	
C50G1064	3124432-0000		1	AIR NOZZLE	
C50G1065	2930228-0000		1	AIR NOZZLE	
C50G1067	2930228-0000		1	AIR NOZZLE	
C50G1068	3124427-0000		1	AIR NOZZLE	
C50G1069	2930228-0000		1	AIR NOZZLE	
C50G1070	3124541-0000		1	AIR NOZZLE	
C50G1071	2930230-0000		1	AIR NOZZLE	
C50G1072	3124444-0000		1	AIR NOZZLE	

Machine Type	Group Description	Used-In	Group Number	Page No

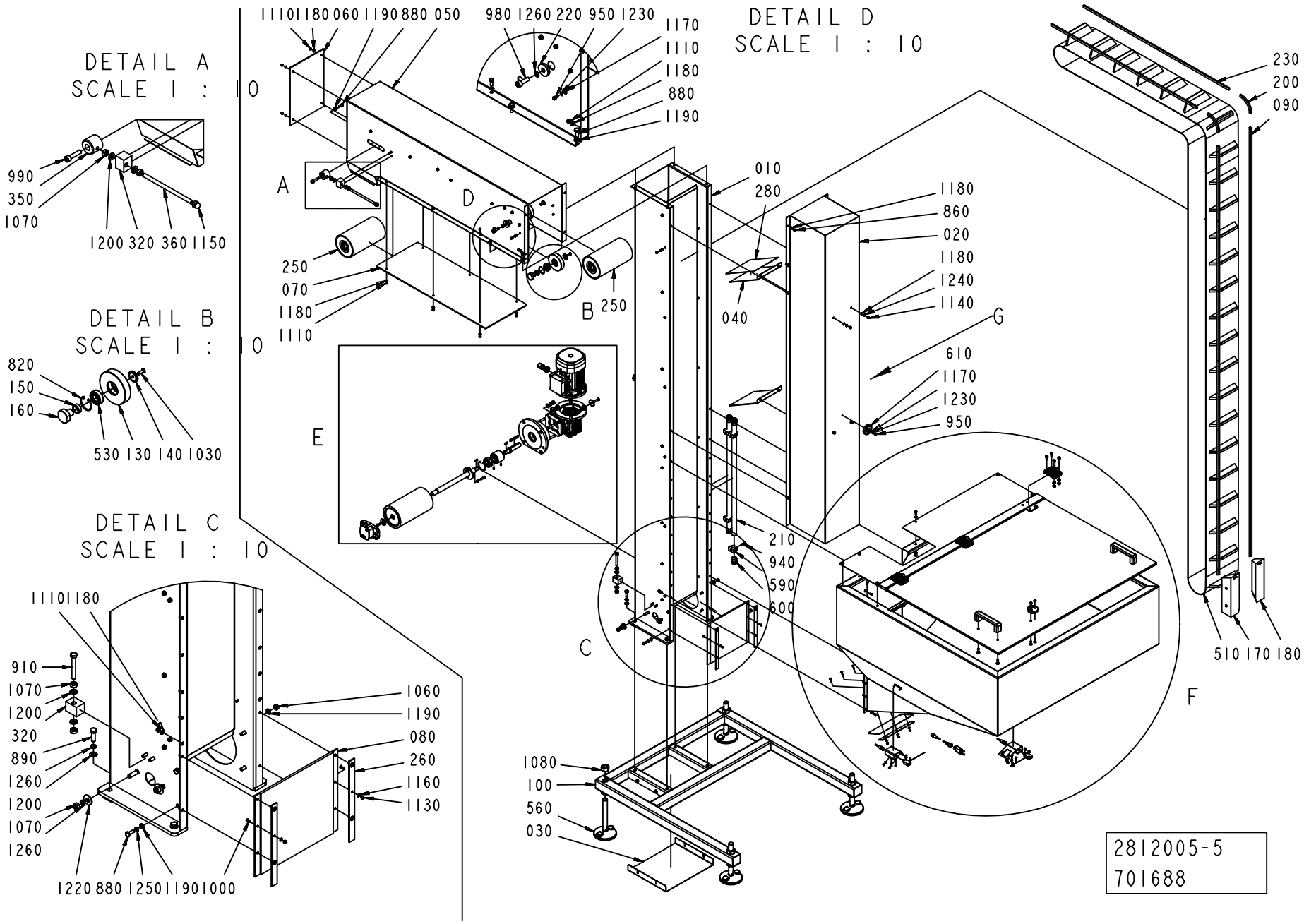
DETAIL A
SCALE 1 : 10
990
350
1070
1200 320 360 1150
DETAIL B
SCALE 1 : 10
820
150
160
530 130 140 1030
DETAIL C
SCALE 1 : 10
11101180
910
1070
1200
320
890
1260
1200
1070
1260
1220 880 1250 1190 1000
1060
1190
080
260
1160
1130
11101180 060 1190 880 050
980 1260 220 950 1230
1170
1110
1180
880
1190
A
D
250
070
1180
1110
B 250
E
010
280
040
DETAIL D
SCALE 1 : 10
1180
860
020
1180
1240
1140
G
610
1170
1230
950
210
940
590
600
C
1080
100
560
030
230
200
090
510 170 180
F
2812005-5
701688

ECM: 701690 - 20150101
Group number: 2812005-0400
Assembly Drawing: 2812005-5_1_AA

This list covers pages from 4-28 to 4-31

Pos	Part No	UN	Qty	Description	Page No
-					
0010	3108472-0000		1	SUPPORT	
0020	3108473-0000		1	COVER	
0030	3108474-0000		1	COVER	
0040	3108475-0000		2	PLATE	
0050	3108476-0000		1	CARRIER	
0060	3108477-0000		1	COVER	
0070	3108478-0000		1	COVER	
0080	3108479-0000		1	COVER	
0090	3108480-0000		2	PLATE	
0100	3108481-0000		1	BED	
0110	3108482-0000		1	UNIT CONVERGER	
0120	3108483-0000		1	COVER	
0130	3108484-0000		2	WASHER	
0140	3108485-0000		2	WASHER	
0150	3108486-0000		2	SPACER	
0160	3108487-0000		2	PIN	
0170	3108488-0000		1	GUIDE	
0180	3108489-0000		1	GUIDE	
0190	3108490-0000		1	COVER	
0200	3108491-0000		2	PLATE	
0210	3108492-0000		2	CABLE CONDUIT	
0220	3108493-0000		2	WASHER	
0230	3108494-0000		2	PLATE	
0240	3058564-0000		1	ROLLER	
0250	3108495-0000		2	ROLLER	
0260	3108496-0000		2	PLATE	
0270	3108497-0000		1	GASKET	
0280	3108498-0000		2	GASKET	
0290	3108499-0000		1	ANCHOR	
0300	3058565-0000		1	SHAFT	
0310	3108500-0000		1	SHAFT	
0320	3108501-0000		3	PLUG	
0330	3115224-0000		1	FLANGE	
0340	3115225-0000		1	PLATE	
0350	3115226-0000		2	THREADED ROD	
0360	3115227-0000		2	BAR	
0370	3115228-0000		1	COUPLING	
0380	3124525-0000		1	SUPPORT	
0390	3124526-0000		1	SUPPORT	
0400	3124527-0100		1	SUPPORT	**4-33**
0500	3115229-0000		2	WASHER	
0510	3124436-0000		1	BELT	
0520	3365194-0000		1	WORM GEAR	
0530	344224-0202		2	BALL BEARING 15/32X9	
0540	344224-0204		1	BALL BEARING 20/42X12	
0560	3115230-0000		4	FOOT	
0570	3115231-0000		2	HANDLE	
0580	3115232-0000		3	HINGE	
0590	3115233-0000		4	CLAMP	
0600	3115234-0000		4	CAP	
0610	3115235-0000		1	MAGNET	
0620	90458-0322		1	NUT, M16X1,5	
0630	90458-0306		1	CABLE GLAND, M16X1,5, 5311 1010	
0640	351162-0106	M	4	WIRE AWM 1X4 MM2 YELLOW-GREEN	
0650	90459-1458		1	HOOD, SIDE ENTRY, HAN6E, 19 30 006 1540	
0660	90458-0430		4	GLAND FITTING, VK 22054YUL16	
0670	90458-0322		3	NUT, M16X1,5	
0680	353249-0012		4	INSERT, SINGLE HOLE, EK154 11	
0690	90152-0051	M	7.5	HOSE, SPIRAL CONDUIT, 25X18, UL 1816	
0800	3108461-0000		2	KEY	
0810	315701-0241		1	PARALLEL KEY W. ROUND ENDS, 6X6X50 MM	
0820	315753-0123		2	RETAINING RING FOR BORE DIN 472 32 SS	
0830	90141-0020		1	RETAINING RING FOR BORE DIN 472 42 SS	
0840	312318-0323		2	SET SCREW, CUP END ISO4029 M5X8 A4	
0850	3108464-0000		4	STUD BOLT	
0860	312105-0327		20	"SCREW, M6S ISO 4017 M5X12 A4 80"	
0870	312105-0329		6	SCREW, M6S ISO 4017 M5X16 A4 80	
0880	312105-0368		16	"SCREW, M6S ISO 4017 M6X16 A4 80"	
0890	312105-0453		4	SCREW, M6S ISO 4017 M8X25 A4 80	
0910	312109-0463		1	SCREW, M6S ISO 4017 M8X60 A4 80	
0920	312115-0291		1	SCREW ISO4762 M4X12 A4 80	
0930	312115-0230		4	SCREW ISO4762 M3X20 A4 80	
0940	312115-0293		4	SCREW ISO4762 M4X16 A4 80	
0950	312115-0287		24	SCREW ISO4762 M4X8 A4 80	
0960	312115-0366		6	SCREW ISO4762 M6X12 A4 80	
0970	312115-0372		6	SCREW ISO4762 M6X25 A4 80	
0980	312115-0453		2	SCREW ISO4762 M8X25 A4 80	
0990	312115-0457		2	SCREW ISO4762 M8X35 A4 80	
1000	3108462-0000		2	SCREW	
1010	312155-0289		12	SCREW DIN 7991 MF6S M4X10 A4 70	
1020	312155-0293		3	SCREW DIN 7991 MF6S M4X16 A4 70	
1030	312155-0329		4	SCREW DIN 7991 MF6S M5X16 A4 70	
1040	312155-0370		5	SCREW DIN 7991 MF6S M6X20 A4 70	

Machine Type | Group Description | Used-In | Group Number | Page No

DETAIL E
SCALE 1 : 10

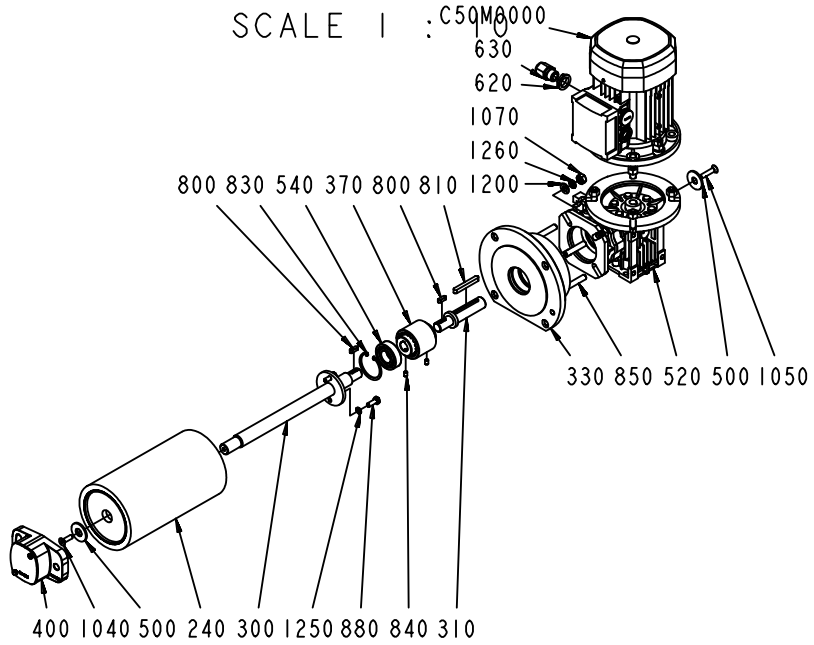

VIEW FROM
G

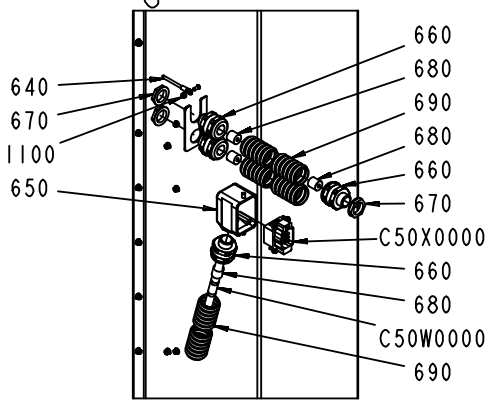

DETAIL F
SCALE 1 : 10

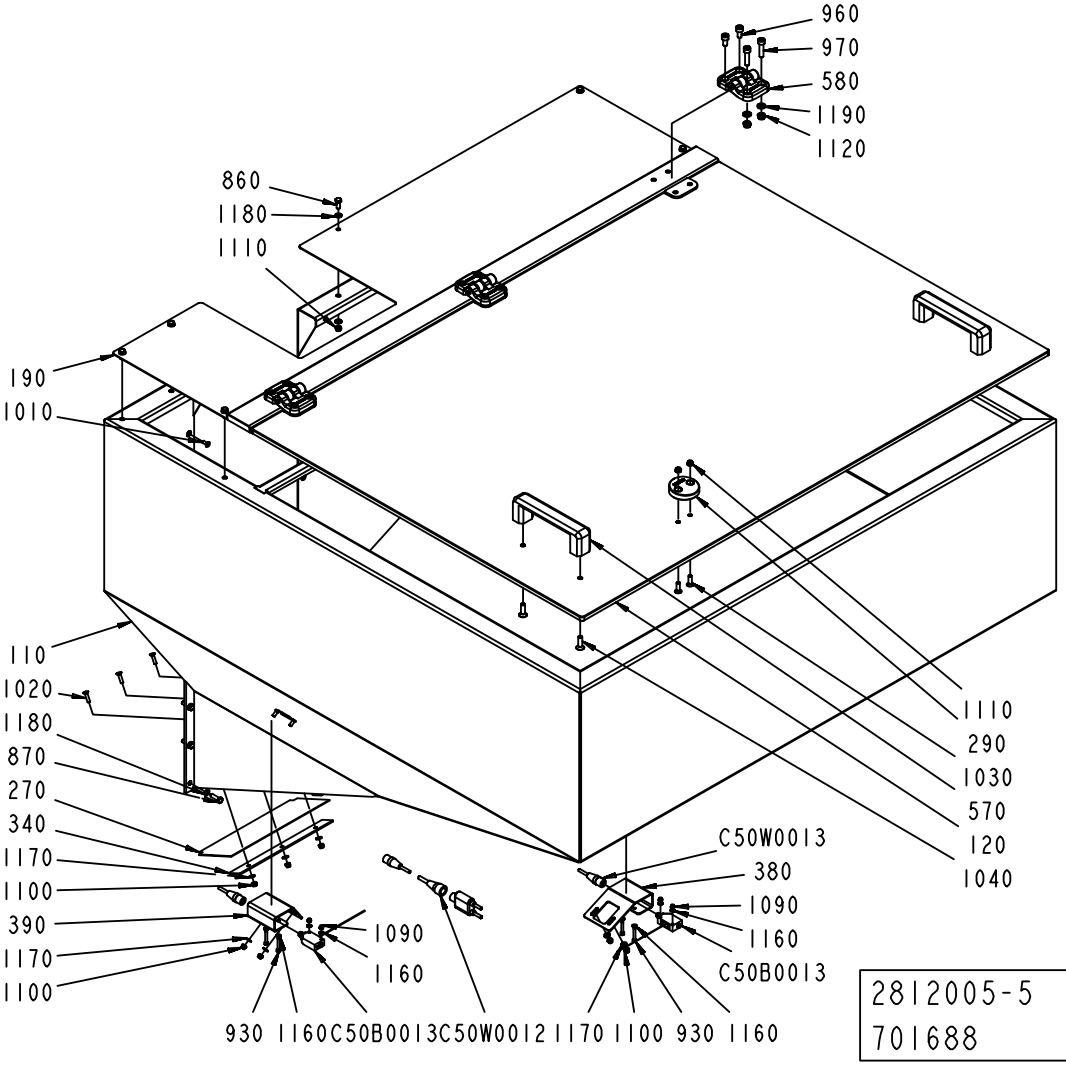

2812005-5
701688

Pos	Part No	UN	Qty	Description	Page No
- (Cont'd)					
1050	312155-0374		1	SCREW DIN 7991 MF6S M6X30 A4 70	
1060	312605-0316		4	HEXAGON NUT, M6M M6 A280	
1070	312605-0318		12	HEXAGON NUT, M6M M8 A280	
1080	312605-0326		4	HEXAGON NUT, M6M M20 A280	
1090	312810-0310		4	HEXAGON NUT, NY-LOCK M3 FZB	
1100	312810-0312		21	HEXAGON NUT, NY-LOCK M4 FZB	
1110	312810-0314		36	HEXAGON NUT, NY-LOCK M5 FZB	
1120	312810-0316		10	HEXAGON NUT, NY-LOCK M6 FZB	
1130	312705-0310		2	NUT HEX. DOMED CAP MHM-6 M3 A2	
1140	312705-0314		4	NUT HEX. DOMED CAP MHM-6 M5 A280	
1150	312705-0318		2	NUT HEX. DOMED CAP MHM-6 M8 A280	
1160	315103-0124		10	WASHER PLAIN, 3,2X/6X0,5 BR NI PL	
1170	315103-0136		43	WASHER PLAIN, 4,3X8X0,8 BR NI PL	
1180	315103-0146		64	WASHER PLAIN, 5,3X10X1 BR NI PL	
1190	315103-0153		28	WASHER PLAIN, 6,4X12X1,5 BR NI PL	
1200	315103-0165		14	WASHER PLAIN, 8,4X15X1,5 BR NI PL	
1210	3108458-0000		1	WASHER	
1220	3108460-0000		2	WASHER	
1230	3108451-0000		24	WASHER	
1240	3108452-0000		4	WASHER	
1250	3108453-0000		14	WASHER	
1260	3108454-0000		12	WASHER	
C50B0013	90459-5529		1	PHOTOCELL E3Z-T86A, SENDER+RECIEVER	
C50M0000	90603-9718		1	MOTOR 3GAA 062 002-BSC	
C50W0000	315743-0009	M	6	OLFLEX CONTROL TM 4G1,5, 281604	
C50W0012	344261-0050		1	SENSOR CABLE, EVT216	
C50W0013	90603-3979		1	SENSOR Y-CABLE, EVT339	
C50X0000	90110-0052		1	MALE INSERT, HAN E06, 0933 0062 601	

Pos	Part No	UN	Qty	Description	Page No

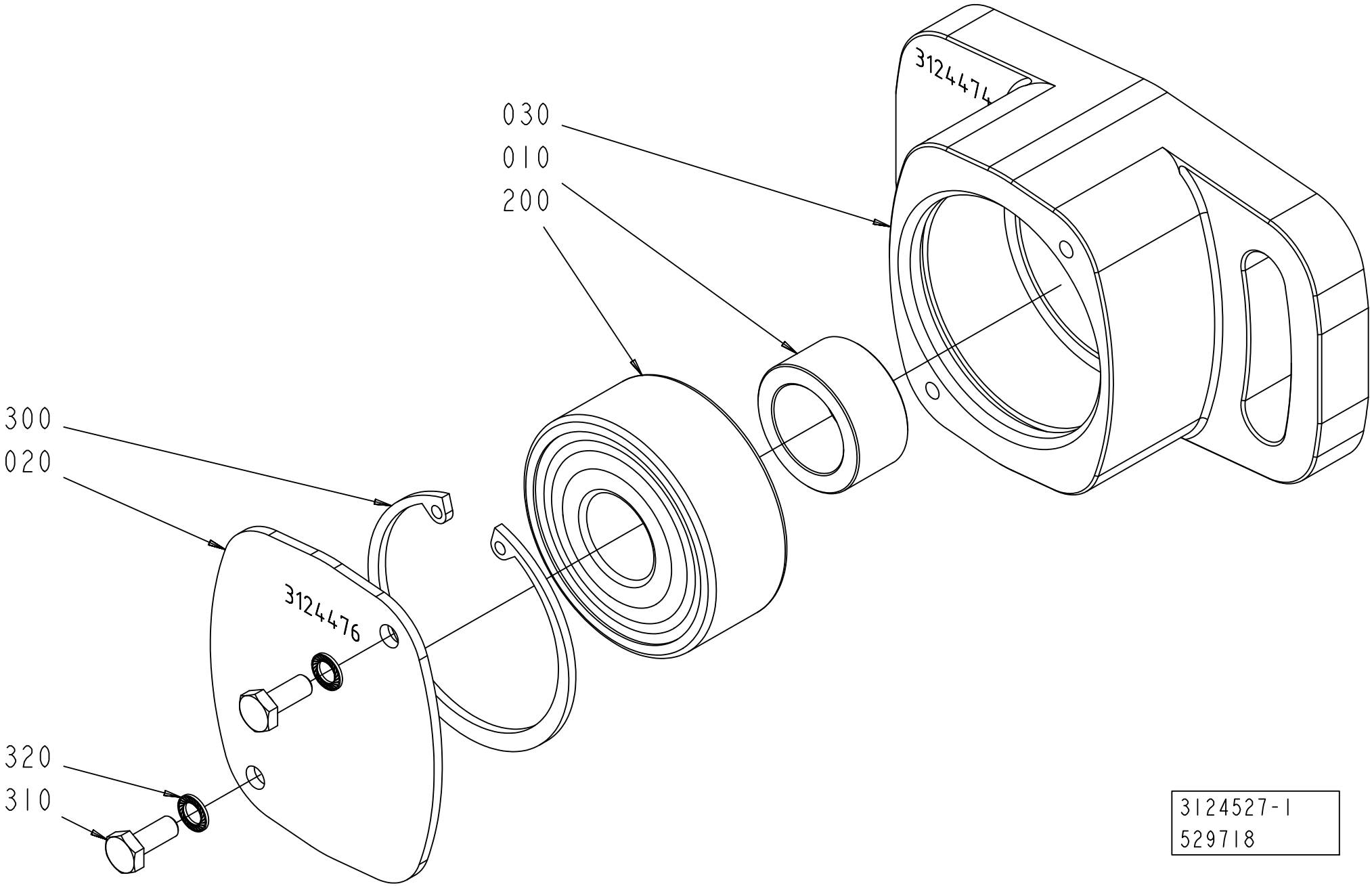
030
010
200
3124474
300
020
3124476
320
310
3124527-1
529718

ECM: 532841 - 20120401
Group number: 3124527-0100
Assembly Drawing: 3124527-1_1_AA

Pos	Part No	UN	Qty	Description	Page No
-					
010	3124475-0000		1	SPACER	
020	3124476-0000		1	COVER	
030	3124474-0000		1	FLANGE	
200	90603-9715		1	SPHERICAL BALL BEARING 17/47X19	
300	315753-0130		1	RETAINING RING FOR BORE DIN 472 47 SS	
310	312105-0289		2	SCREW, M6S ISO 4017 M4X10 A4 70	
320	3108451-0000		2	WASHER	

Pos	Part No	UN	Qty	Description	Page No

Tetra Pak®

SPC
Spare Parts Catalogue

MACHINE BODY

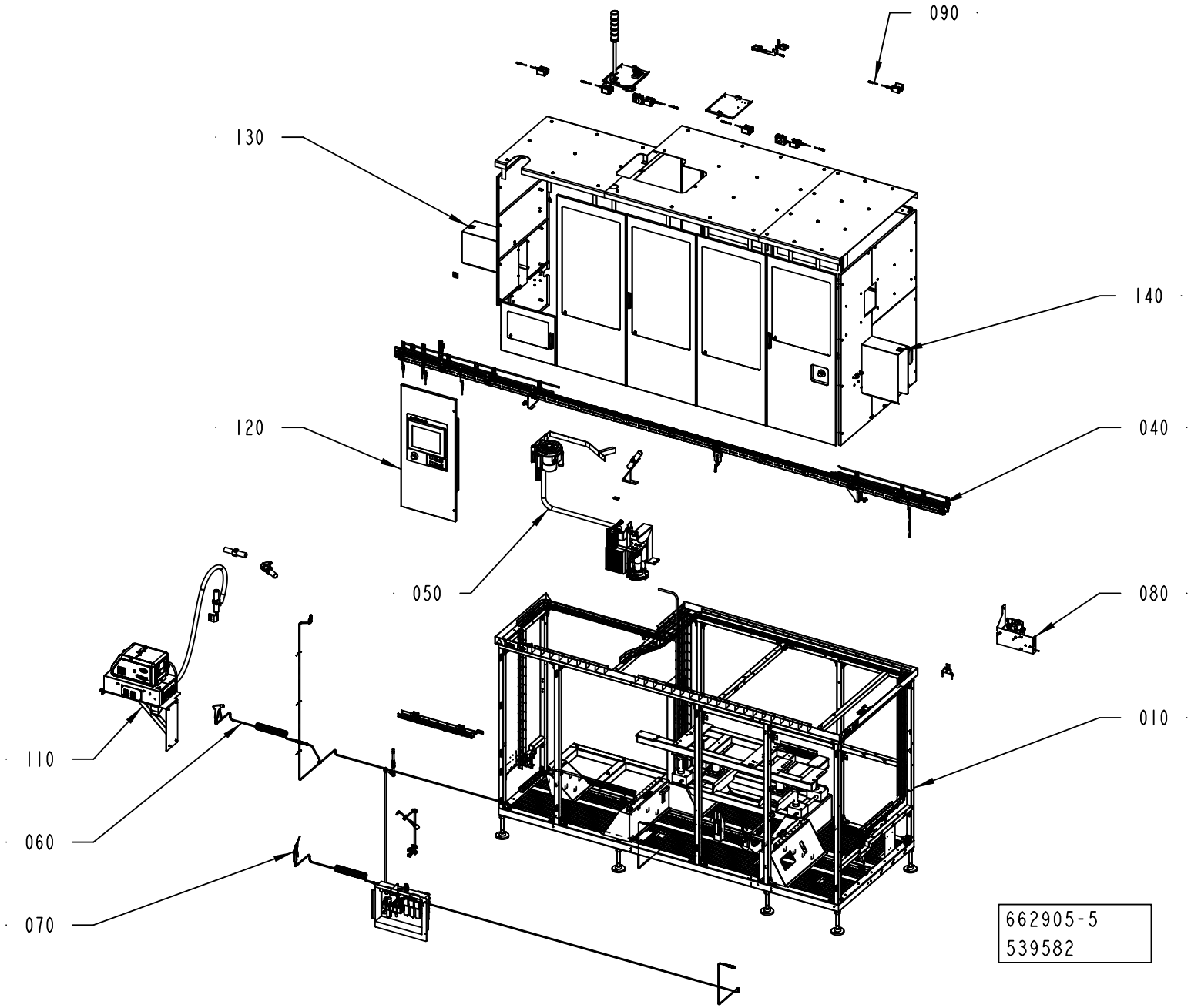

ECM: 581687 - 20130102
Group number: 662905-0300
Assembly Drawing: 662905-5_1_AB

Pos	Part No	UN	Qty	Description	Page No
-					
010	2758505-0300		1	MACHINE BODY	**5-5**
040	2758507-0300		1	PACKAGE CONVEYOR	**5-23, 5-25**
050	2773622-0200		1	LINE HEATER	**5-45**
060	2758514-0200		1	WATER CONNECTION	**5-57**
070	2758513-0200		1	AIR SUPPLY	**5-59**
080	3208664-0100		1	CENTRAL LUBRICATION	**5-75**
090	2769754-0300		1	ELECTRIC EQUIPMENT	**5-77**
110	2758511-0200		1	HOTMELT EQUIPMENT	**5-91, 5-93**
120	2779070-0300		1	OPERATOR INTERFACE	**5-99**
130	2826741-0300		1	DOORS AND COVERS	**5-109**
140	3217567-0100		1	WARNING SIGN	**5-147**

Pos	Part No	UN	Qty	Description	Page No

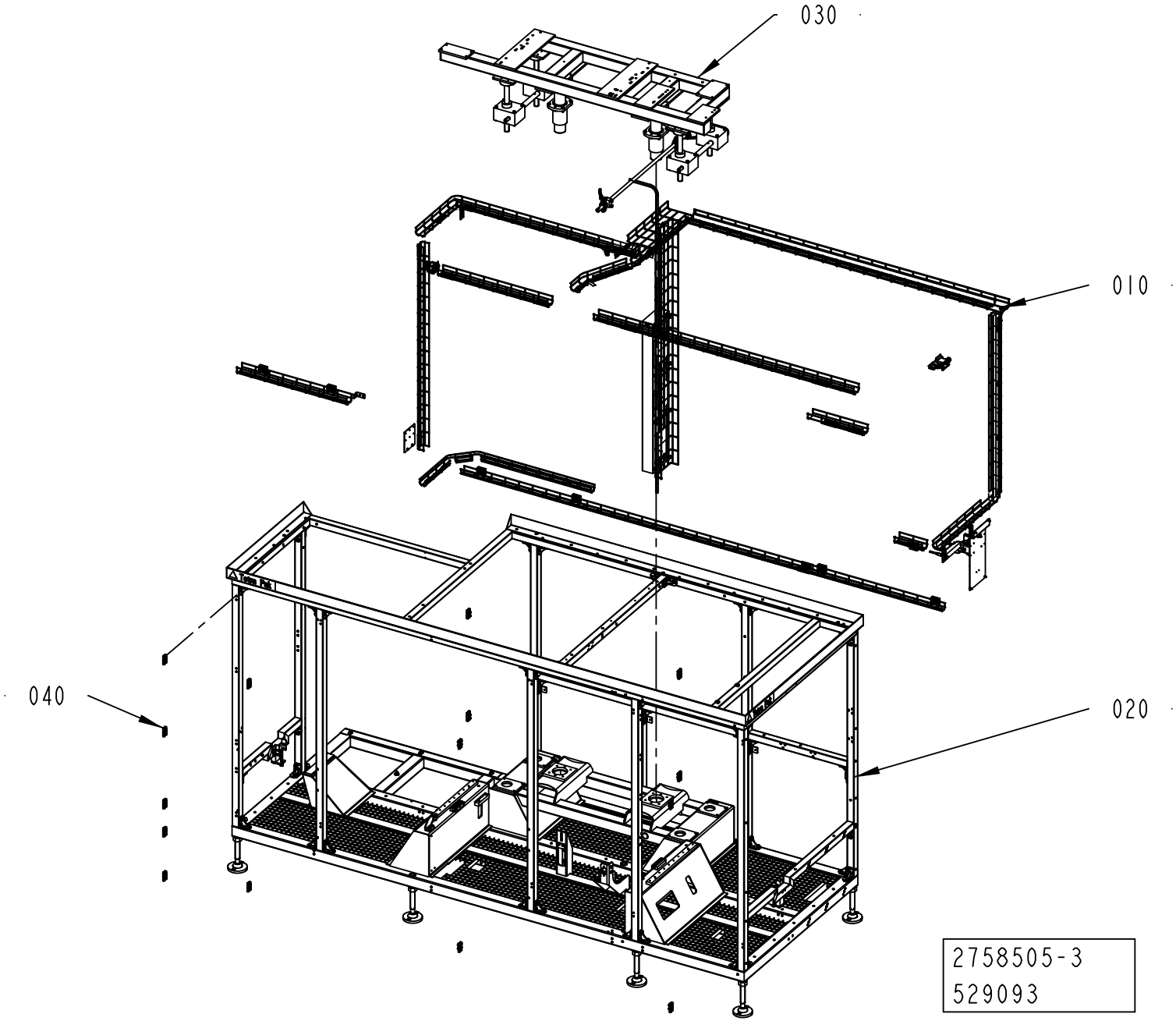
030
010
040
020
2758505-3
529093

ECM: 529695 - 20120401
Group number: 2758505-0300
Assembly Drawing: 2758505-3_1_AA

Pos	Part No	UN	Qty	Description	Page No
-					
010	2758515-0300		1	CABLE DUCT	**5-7, 5-9**
020	2769761-0300		1	MACHINE BODY	**5-11, 5-13**
030	2769738-0100		1	HEIGHT ADJUSTMENT	**5-17**
040	3217565-0100		1	DOOR HINGE	**5-21**

Pos	Part No	UN	Qty	Description	Page No

CABLE DUCT

Drawing file: 2758515-5_1_AD.hpgl

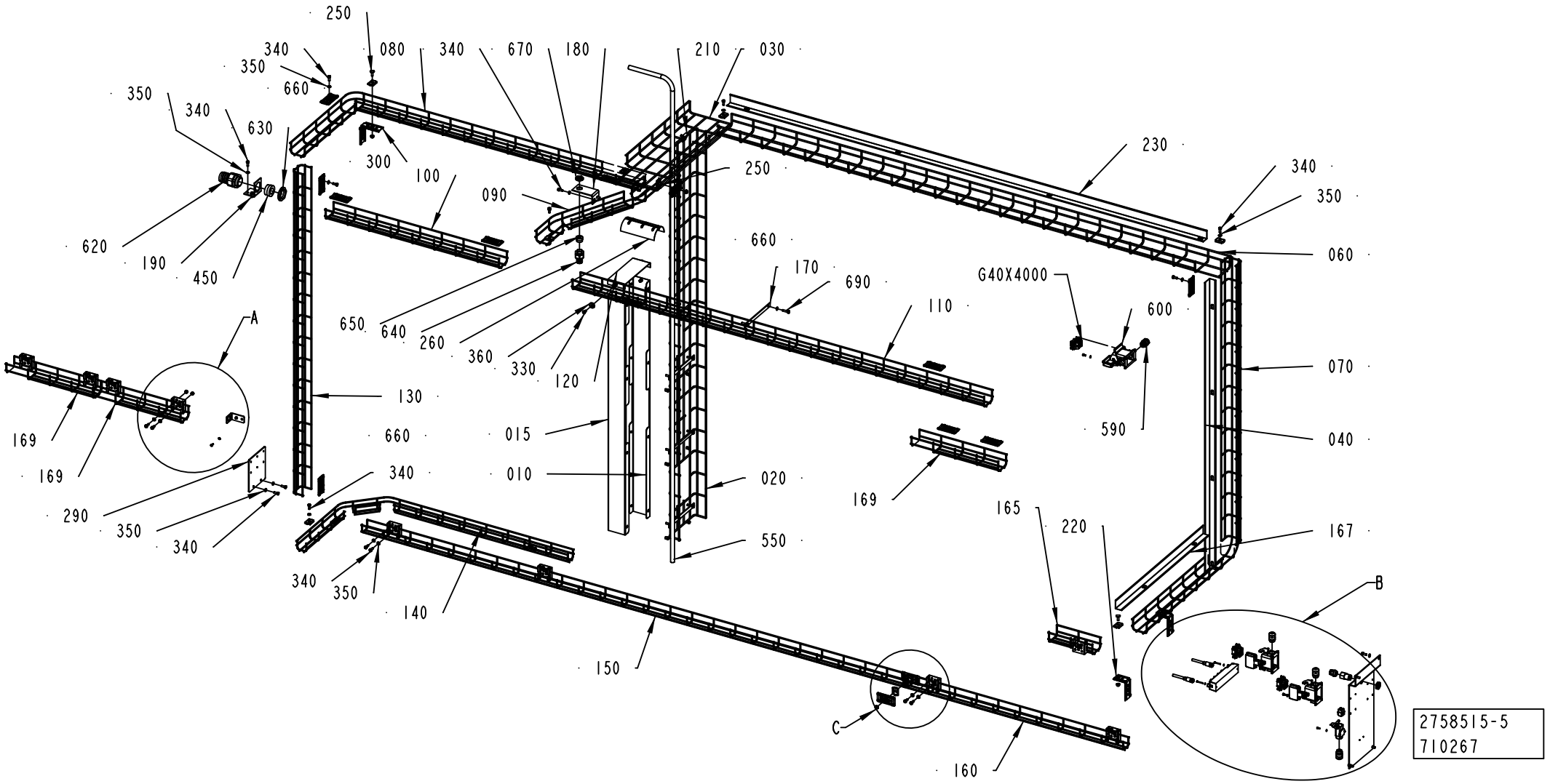

ECM: 714157 - 20150401
Group number: 2758515-0300
Assembly Drawing: 2758515-5_1_AD

This list covers pages from 5-6 to 5-9

Pos	Part No	UN	Qty	Description	Page No
DREAMCAP 26 (See drawing on pages: 5-6, 5-8)					
100	2931775-0000		1	CABLE DUCT	
169	2931782-0000		3	CABLE DUCT	
240	90181-0190		9	CABLE DUCT, WALL BRACKET, B4 MINI	
320	312125-0232		2	SLOTTED HEAD SCREW, ISO1207 M3X25 A4	
340	312105-0368		49	"SCREW, M6S ISO 4017 M6X16 A4 80"	
350	315105-0153		57	WASHER PLAIN, 6,4X12X1,5 A4 BRB	
390	315105-0124		4	WASHER PLAIN, 3,2X6X0,5 A4 BRB	
410	312115-0222		2	SCREW ISO4762 M3X8 A4 80	
Common Parts					
010	2746903-0000		1	CABLE DUCT	
015	2873928-0000		1	CABLE DUCT	
020	2931768-0000		1	CABLE DUCT	
030	2931769-0000		1	CABLE DUCT	
040	2931770-0000		1	DIVIDER	
050	3047341-0000		1	ANGLE BRACKET	
060	2931771-0000		1	CABLE DUCT	
070	2931772-0000		1	CABLE DUCT	
080	2931773-0000		1	CABLE DUCT	
	90181-0197	*M*	*1860*	*CABLE DUCT, WIRE, 65X48 MM, L=2500 MM*	
090	2931774-0000		1	CABLE DUCT	
110	2931776-0000		1	CABLE DUCT	
120	2779800-0000		1	PLATE	
130	2931777-0000		1	CABLE DUCT	
140	2931778-0000		1	CABLE DUCT	
150	2931779-0000		1	CABLE DUCT	
160	2931780-0000		1	CABLE DUCT	
165	2931781-0000		1	CABLE DUCT	
167	2931784-0000		1	DIVIDER	
170	2931783-0000		4	PLATE	
180	2931785-0000		1	ANGLE	
190	2931786-0000		1	ANGLE	
200	90181-0183		13	CABLE DUCT, FITTING, SB-102-S	
210	90181-0184		1	CABLE TRENCH PARTS	
220	2931787-0000		2	ANGLE	
230	2931788-0000		1	DIVIDER	
250	90181-0314		6	BOLT + NUT, SB-106-S	
260	2934904-0000		1	RAIL BRACKET	
285	2802417-0000		1	PLATE	
290	2802423-0000		1	PLATE	
300	90181-0186		1	CABLE DUCT, ELBOW BRACKET, B27	
310	312115-0289		2	SCREW ISO4762 M4X10 A4 80	
330	312105-0366		2	SCREW, M6S ISO 4017 M6X12 A4 80	
360	315125-0153		2	WASHER HIGH, TBRSB 6,4X22X4 A4	
400	315105-0136		14	WASHER PLAIN, 4,3X8X0,8 A4 BRB	
420	312115-0287		12	SCREW ISO4762 M4X8 A4 80	
430	312605-0316		10	HEXAGON NUT, M6M M6 A280	
450	353249-0054		1	INSERT, SINGLE HOLE, EK156 25	
550	90166-0113	MM	2500	HOSE	
570	90459-2133		1	PUSH-IN FITTING QSSF-1/2-12-B	
580	351456-0113		1	PUSH-IN FITTING NPQH-D-G12-Q12	
590	90458-0307		4	CABLE GLAND, M20X1,5, 5311 1020	
600	90459-1461		3	HOUSING, 19 30 006 1255	
610	90459-3081		1	HOUSING, 19 20 003 1250	
620	90458-0434		1	GLAND FITTING, VK 24056YUL29	
630	90458-0326		1	NUT M40X1,5	
640	90458-0430		1	GLAND FITTING, VK 22054YUL16	
650	353249-0012		1	INSERT, SINGLE HOLE, EK154 11	
660	90181-0182		14	BRACKET, 1149354	
670	90458-0323		1	NUT, M20X1,5	
690	312105-0372		8	SCREW, M6S ISO 4017 M6X25 A4 80	
A81W4004	344295-0100		1	DEVICENET CAB.,SAC-5P- 10,0-927/M12FS VA	
A81W4120	344253-0100		1	SENSOR CABLE, EVT002	
C50X0000	90110-0053		1	FEMALE INSERT, HAN 6 E 09 33 006 2701	
C50X1000	90110-0053		1	FEMALE INSERT, HAN 6 E 09 33 006 2701	
C50X1004	90459-6820		1	FEMALE INSERT, HAN 4 A, 09 20 004 2711	
G40M4000	90110-0053		1	FEMALE INSERT, HAN 6 E 09 33 006 2701	
W81K4120	90459-6062		1	ARMORBLOCK DIGITAL CONFIGURABLE I/O	

Machine Type | Group Description | Used-In | Group Number | Page No

CABLE DUCT

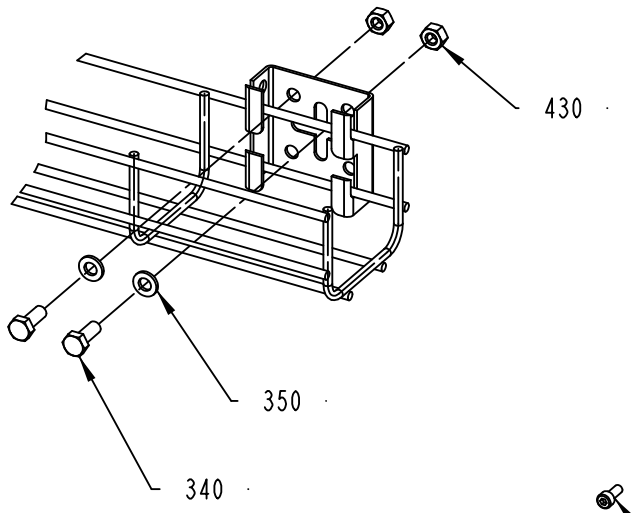

DETAIL: A
SCALE: 2:5

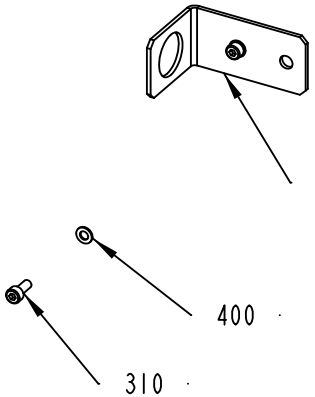

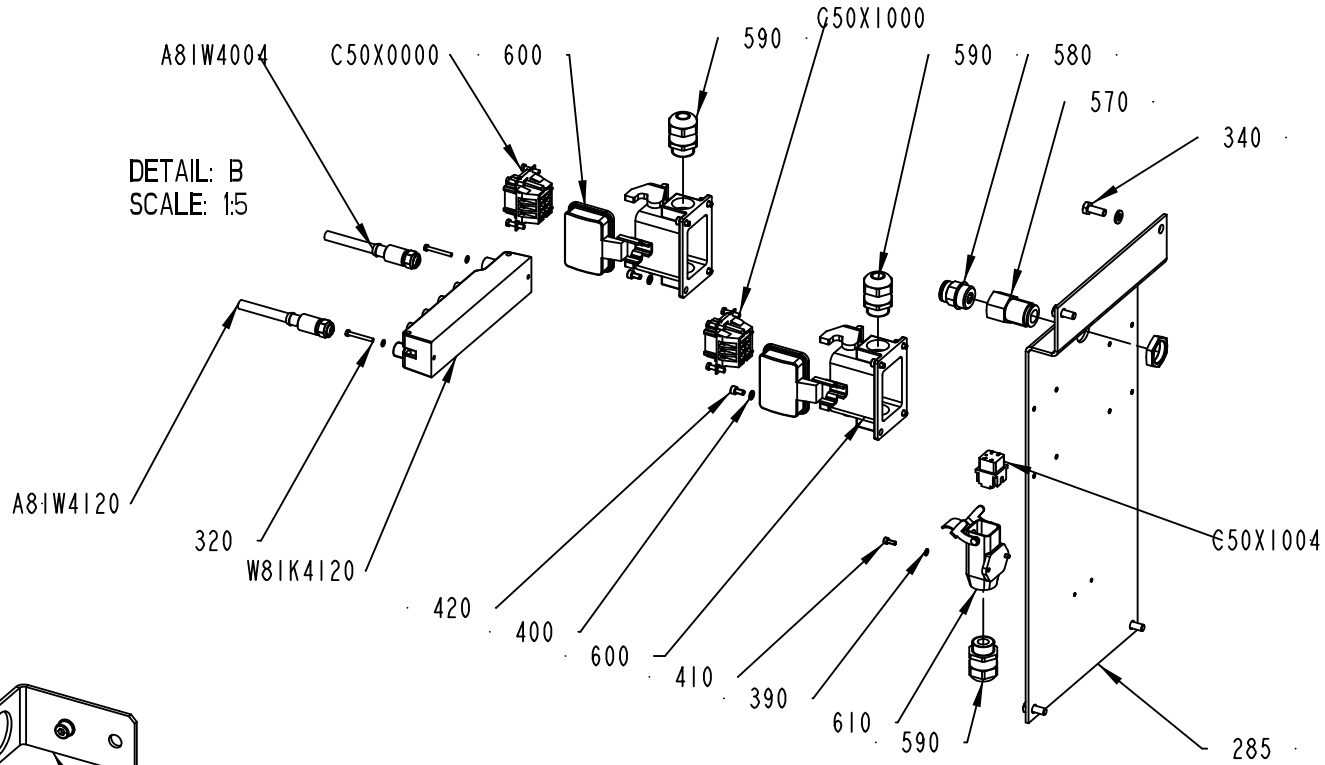

DETAIL: B
SCALE: 1:5

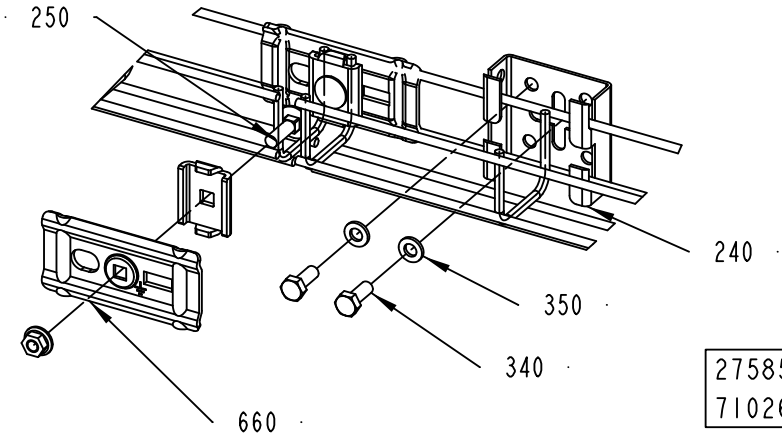

DETAIL: C
SCALE: 2:5

2758515-5
710267

ECM: 714157 - 20150401
Group number: 2758515-0300
Assembly Drawing: 2758515-5_2_AD

This list covers pages from 5-6 to 5-9

Pos	Part No	UN	Qty	Description	Page No
DREAMCAP 26 (See drawing on pages: 5-6, 5-8)					
100	2931775-0000		1	CABLE DUCT	
169	2931782-0000		3	CABLE DUCT	
240	90181-0190		9	CABLE DUCT, WALL BRACKET, B4 MINI	
320	312125-0232		2	SLOTTED HEAD SCREW, ISO1207 M3X25 A4	
340	312105-0368		49	"SCREW, M6S ISO 4017 M6X16 A4 80"	
350	315105-0153		57	WASHER PLAIN, 6,4X12X1,5 A4 BRB	
390	315105-0124		4	WASHER PLAIN, 3,2X6X0,5 A4 BRB	
410	312115-0222		2	SCREW ISO4762 M3X8 A4 80	
Common Parts					
010	2746903-0000		1	CABLE DUCT	
015	2873928-0000		1	CABLE DUCT	
020	2931768-0000		1	CABLE DUCT	
030	2931769-0000		1	CABLE DUCT	
040	2931770-0000		1	DIVIDER	
050	3047341-0000		1	ANGLE BRACKET	
060	2931771-0000		1	CABLE DUCT	
070	2931772-0000		1	CABLE DUCT	
080	2931773-0000		1	CABLE DUCT	
	90181-0197	*M*	*1860*	*CABLE DUCT, WIRE, 65X48 MM, L=2500 MM*	
090	2931774-0000		1	CABLE DUCT	
110	2931776-0000		1	CABLE DUCT	
120	2779800-0000		1	PLATE	
130	2931777-0000		1	CABLE DUCT	
140	2931778-0000		1	CABLE DUCT	
150	2931779-0000		1	CABLE DUCT	
160	2931780-0000		1	CABLE DUCT	
165	2931781-0000		1	CABLE DUCT	
167	2931784-0000		1	DIVIDER	
170	2931783-0000		4	PLATE	
180	2931785-0000		1	ANGLE	
190	2931786-0000		1	ANGLE	
200	90181-0183		13	CABLE DUCT, FITTING, SB-102-S	
210	90181-0184		1	CABLE TRENCH PARTS	
220	2931787-0000		2	ANGLE	
230	2931788-0000		1	DIVIDER	
250	90181-0314		6	BOLT + NUT, SB-106-S	
260	2934904-0000		1	RAIL BRACKET	
285	2802417-0000		1	PLATE	
290	2802423-0000		1	PLATE	
300	90181-0186		1	CABLE DUCT, ELBOW BRACKET, B27	
310	312115-0289		2	SCREW ISO4762 M4X10 A4 80	
330	312105-0366		2	SCREW, M6S ISO 4017 M6X12 A4 80	
360	315125-0153		2	WASHER HIGH, TBRSB 6,4X22X4 A4	
400	315105-0136		14	WASHER PLAIN, 4,3X8X0,8 A4 BRB	
420	312115-0287		12	SCREW ISO4762 M4X8 A4 80	
430	312605-0316		10	HEXAGON NUT, M6M M6 A280	
450	353249-0054		1	INSERT, SINGLE HOLE, EK156 25	
550	90166-0113	MM	2500	HOSE	
570	90459-2133		1	PUSH-IN FITTING QSSF-1/2-12-B	
580	351456-0113		1	PUSH-IN FITTING NPQH-D-G12-Q12	
590	90458-0307		4	CABLE GLAND, M20X1,5, 5311 1020	
600	90459-1461		3	HOUSING, 19 30 006 1255	
610	90459-3081		1	HOUSING, 19 20 003 1250	
620	90458-0434		1	GLAND FITTING, VK 24056YUL29	
630	90458-0326		1	NUT M40X1,5	
640	90458-0430		1	GLAND FITTING, VK 22054YUL16	
650	353249-0012		1	INSERT, SINGLE HOLE, EK154 11	
660	90181-0182		14	BRACKET, 1149354	
670	90458-0323		1	NUT, M20X1,5	
690	312105-0372		8	SCREW, M6S ISO 4017 M6X25 A4 80	
A81W4004	344295-0100		1	DEVICENET CAB.,SAC-5P- 10,0-927/M12FS VA	
A81W4120	344253-0100		1	SENSOR CABLE, EVT002	
C50X0000	90110-0053		1	FEMALE INSERT, HAN 6 E 09 33 006 2701	
C50X1000	90110-0053		1	FEMALE INSERT, HAN 6 E 09 33 006 2701	
C50X1004	90459-6820		1	FEMALE INSERT, HAN 4 A, 09 20 004 2711	
G40M4000	90110-0053		1	FEMALE INSERT, HAN 6 E 09 33 006 2701	
W81K4120	90459-6062		1	ARMORBLOCK DIGITAL CONFIGURABLE I/O	

Machine Type | Group Description | Used-In | Group Number | Page No

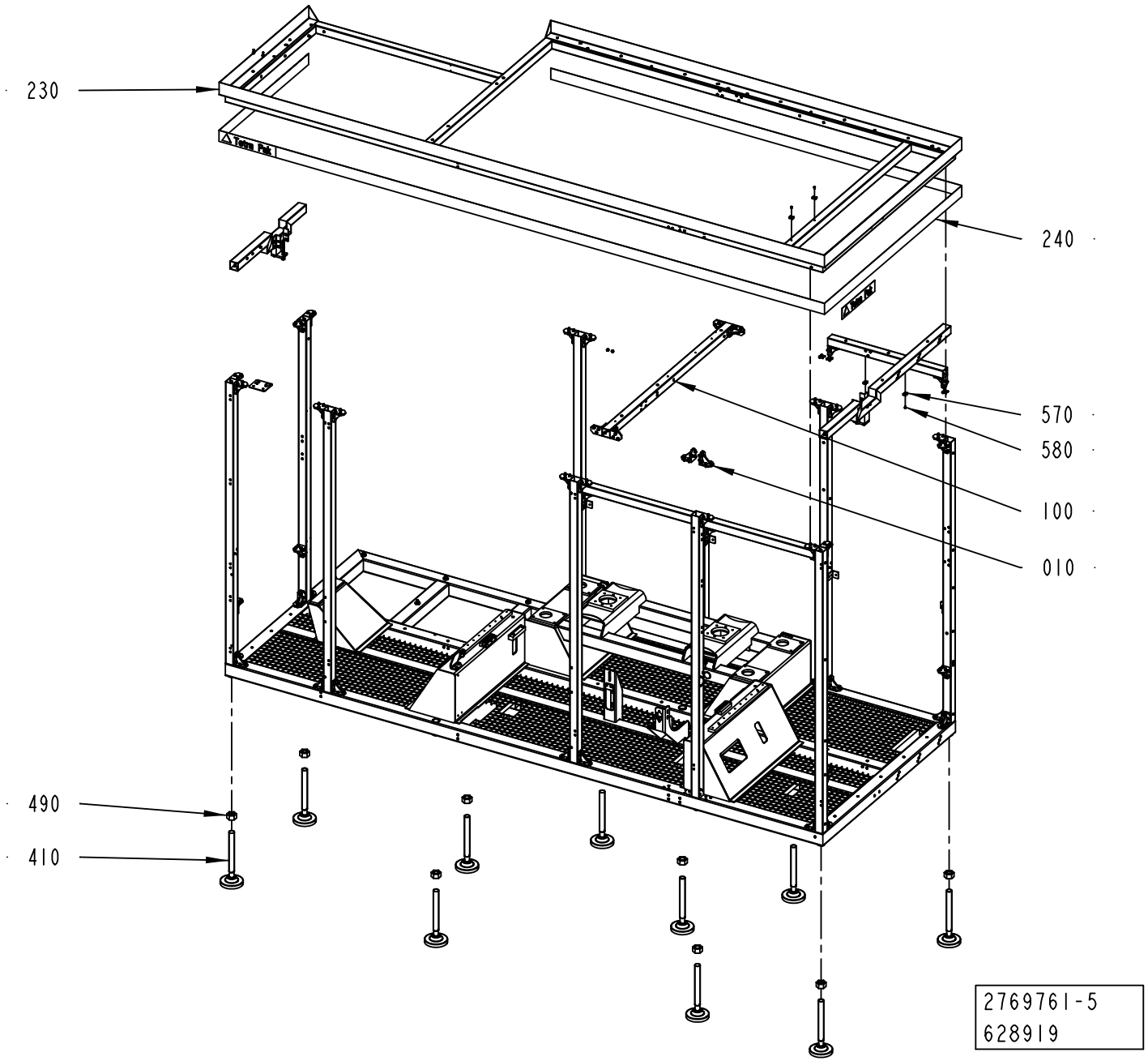
230
240
570
580
100
010
490
410
2769761-5
628919

ECM: 645678 - 20140401
Group number: 2769761-0300
Assembly Drawing: 2769761-5_1_AB

This list covers pages from 5-10 to 5-13

Pos	Part No	UN	Qty	Description	Page No
DREAMCAP 26 (See drawing on pages: 5-10, 5-12)					
010	2778595-0100		49	ANGLE	**5-15**
280	2805697-0000		6	SUPPORT	
290	2805696-0000		6	SUPPORT	
450	315105-0156		12	WASHER PLAIN, 6,7X14X1,5 A4 BRB	
530	312105-0368		14	"SCREW, M6S ISO 4017 M6X16 A4 80"	
540	312105-0370		14	SCREW, M6S ISO 4017 M6X20 A4 80	
560	315105-0153		24	WASHER PLAIN, 6,4X12X1,5 A4 BRB	
570	352113-0204		12	ANCHOR PLATES FOR STRIPS, TM3S25-M	
580	312125-0323		12	SLOTTED HEAD SCREW, ISO1207 M5X8 A4	
620	312812-0316		1	HEXAGON NUT, NY-LOCK M6 A4 80	
Common Parts					
030	2807095-0000		1	BEAM	
040	2778576-0000		1	BEAM	
050	2964293-0000		1	BEAM	
060	2964292-0000		1	BEAM	
070	2779009-0000		2	BEAM	
080	2779011-0000		1	BEAM	
090	2779012-0000		1	BEAM	
100	2830220-0000		1	BEAM	
110	2779811-0000		1	BEAM	
130	2778567-0000		1	BEAM	
150	2766975-0000		1	FRAME	
190	2775447-0000		2	BRACKET	
200	2779776-0000		2	PLATE	
210	2779786-0000		1	PLATE	
220	90511-0145		4	LOGOTYPE "TETRA PAK" FOR STRIPE 70MM	
230	2778568-0000		1	FRAME UPPER	
240	90511-8563	M	10	STRIPE HEIGHT 70MM, ROLL LENGTH 25M	
250	2805686-0000		1	BEAM	
260	2805698-0000		1	BEAM	
270	3058859-0000		1	BEAM	
300	2807104-0000		1	BEAM	
320	2788155-0000		4	ANGLE	
330	3177654-0000		1	BLOCK	
340	3039027-0000		2	PLATE	
380	2873941-0000		1	SIGN	
400	90347-0011		2	VIBRATION DAMPER MEGI 781056	
410	90600-1002		10	FOOT 50000N, HPA125-30-325	
420	312812-0318		6	HEXAGON NUT, NY-LOCK M8 A4 80	
430	312115-0455		6	SCREW ISO4762 M8X30 A4 80	
440	315125-0165		12	WASHER HIGH, TBRSB 8,4X26X5 A4	
480	90287-0154		6	SET SCREW, DOGPOINT M6X10 A4	
490	312607-0332		10	HEXAGON NUT, EN 24032 M6M M30 A480	
500	311103-0351		4	PARALLEL PIN ISO 2338 6M6X16 A1	
510	312105-0366		2	SCREW, M6S ISO 4017 M6X12 A4 80	
550	312115-0540		1	SCREW ISO4762 M12X40 A4 80	
590	312115-0230		4	SCREW ISO4762 M3X20 A4 80	
600	90600-0971		2	RACK, ZRR2-100	
630	90287-0175		2	SCREW M6S M3X12 A480	
640	312605-0310		2	HEXAGON NUT, M6M M3 A280	
650	312105-0388		4	SCREW, M6S ISO 4014 M6X90 A4 80	
660	312109-0552		2	SCREW M6S M12X100H A480	
680	312605-0316		2	HEXAGON NUT, M6M M6 A280	

Machine Type | Group Description | Used-In | Group Number | Page No

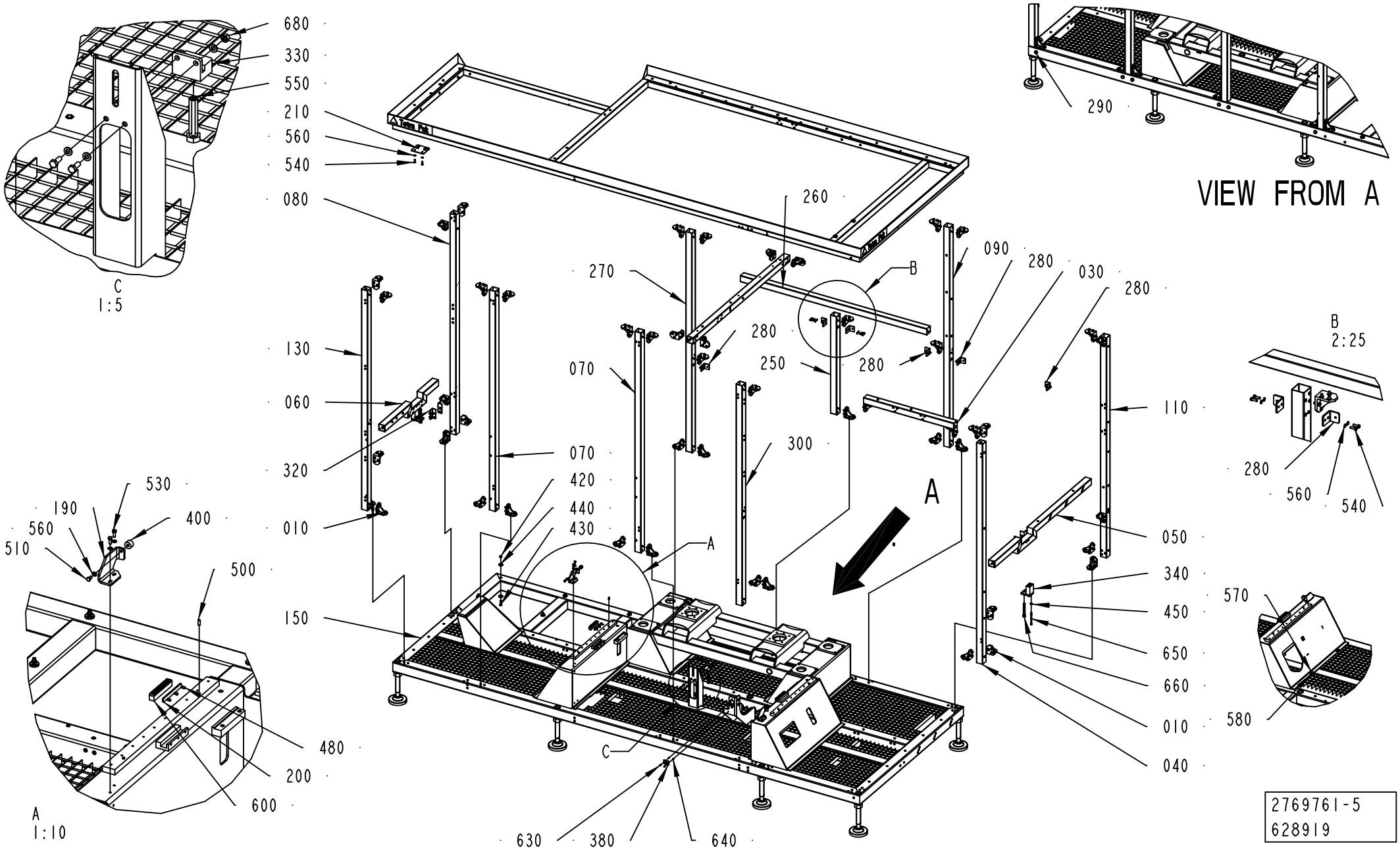
680
330
550
210
560
540
080
260
290
VIEW FROM A
C
1:5
270
B
090
280
030
280
280
250
280
070
130
060
320
010
070
420
440
430
300
110
050
340
450
650
660
010
040
530
190
560
510
400
500
150
480
200
600
A
1:10
630
380
640
B
2:25
280
560
540
570
580
2769761-5
628919

ECM: 645678 - 20140401
Group number: 2769761-0300
Assembly Drawing: 2769761-5_2_AB

This list covers pages from 5-10 to 5-13

Pos	Part No	UN	Qty	Description	Page No
DREAMCAP 26 (See drawing on pages: 5-10, 5-12)					
010	2778595-0100		49	ANGLE	**5-15**
280	2805697-0000		6	SUPPORT	
290	2805696-0000		6	SUPPORT	
450	315105-0156		12	WASHER PLAIN, 6,7X14X1,5 A4 BRB	
530	312105-0368		14	"SCREW, M6S ISO 4017 M6X16 A4 80"	
540	312105-0370		14	SCREW, M6S ISO 4017 M6X20 A4 80	
560	315105-0153		24	WASHER PLAIN, 6,4X12X1,5 A4 BRB	
570	352113-0204		12	ANCHOR PLATES FOR STRIPS, TM3S25-M	
580	312125-0323		12	SLOTTED HEAD SCREW, ISO1207 M5X8 A4	
620	312812-0316		1	HEXAGON NUT, NY-LOCK M6 A4 80	
Common Parts					
030	2807095-0000		1	BEAM	
040	2778576-0000		1	BEAM	
050	2964293-0000		1	BEAM	
060	2964292-0000		1	BEAM	
070	2779009-0000		2	BEAM	
080	2779011-0000		1	BEAM	
090	2779012-0000		1	BEAM	
100	2830220-0000		1	BEAM	
110	2779811-0000		1	BEAM	
130	2778567-0000		1	BEAM	
150	2766975-0000		1	FRAME	
190	2775447-0000		2	BRACKET	
200	2779776-0000		2	PLATE	
210	2779786-0000		1	PLATE	
220	90511-0145		4	LOGOTYPE "TETRA PAK" FOR STRIPE 70MM	
230	2778568-0000		1	FRAME UPPER	
240	90511-8563	M	10	STRIPE HEIGHT 70MM, ROLL LENGTH 25M	
250	2805686-0000		1	BEAM	
260	2805698-0000		1	BEAM	
270	3058859-0000		1	BEAM	
300	2807104-0000		1	BEAM	
320	2788155-0000		4	ANGLE	
330	3177654-0000		1	BLOCK	
340	3039027-0000		2	PLATE	
380	2873941-0000		1	SIGN	
400	90347-0011		2	VIBRATION DAMPER MEGI 781056	
410	90600-1002		10	FOOT 50000N, HPA125-30-325	
420	312812-0318		6	HEXAGON NUT, NY-LOCK M8 A4 80	
430	312115-0455		6	SCREW ISO4762 M8X30 A4 80	
440	315125-0165		12	WASHER HIGH, TBRSB 8,4X26X5 A4	
480	90287-0154		6	SET SCREW, DOGPOINT M6X10 A4	
490	312607-0332		10	HEXAGON NUT, EN 24032 M6M M30 A480	
500	311103-0351		4	PARALLEL PIN ISO 2338 6M6X16 A1	
510	312105-0366		2	SCREW, M6S ISO 4017 M6X12 A4 80	
550	312115-0540		1	SCREW ISO4762 M12X40 A4 80	
590	312115-0230		4	SCREW ISO4762 M3X20 A4 80	
600	90600-0971		2	RACK, ZRR2-100	
630	90287-0175		2	SCREW M6S M3X12 A480	
640	312605-0310		2	HEXAGON NUT, M6M M3 A280	
650	312105-0388		4	SCREW, M6S ISO 4014 M6X90 A4 80	
660	312109-0552		2	SCREW M6S M12X100H A480	
680	312605-0316		2	HEXAGON NUT, M6M M6 A280	

Machine Type | Group Description | Used-In | Group Number | Page No

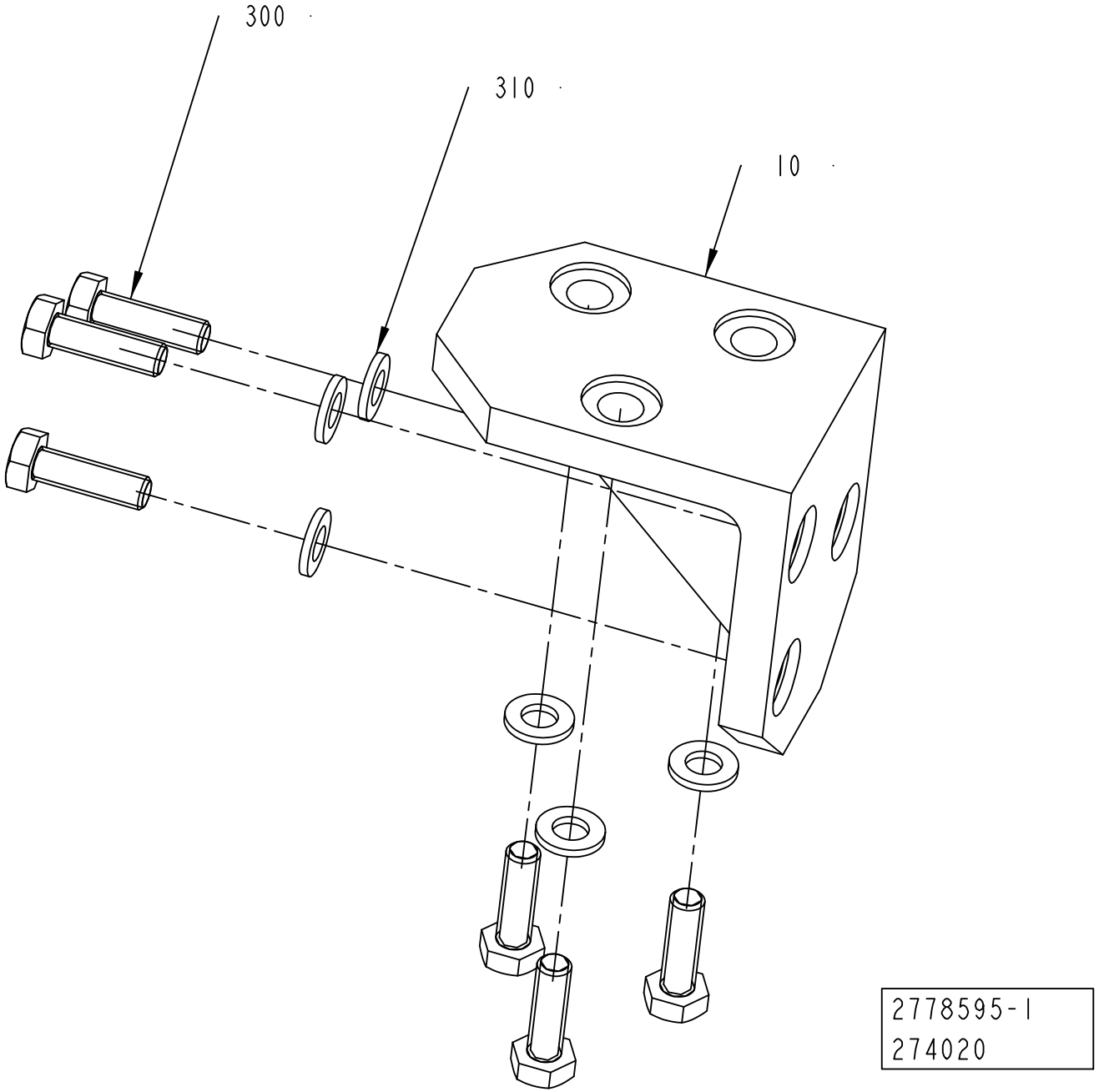
300
310
10
2778595-1
274020

ECM: 274440 - 20060921
Group number: 2778595-0100
Assembly Drawing: 2778595-1_1_AA

Pos	Part No	UN	Qty	Description	Page No
-					
010	2779008-0000		1	BRACKET	
300	312105-0370		6	SCREW, M6S ISO 4017 M6X20 A4 80	
310	315105-0153		6	WASHER PLAIN, 6,4X12X1,5 A4 BRB	

Pos	Part No	UN	Qty	Description	Page No

HEIGHT ADJUSTMENT

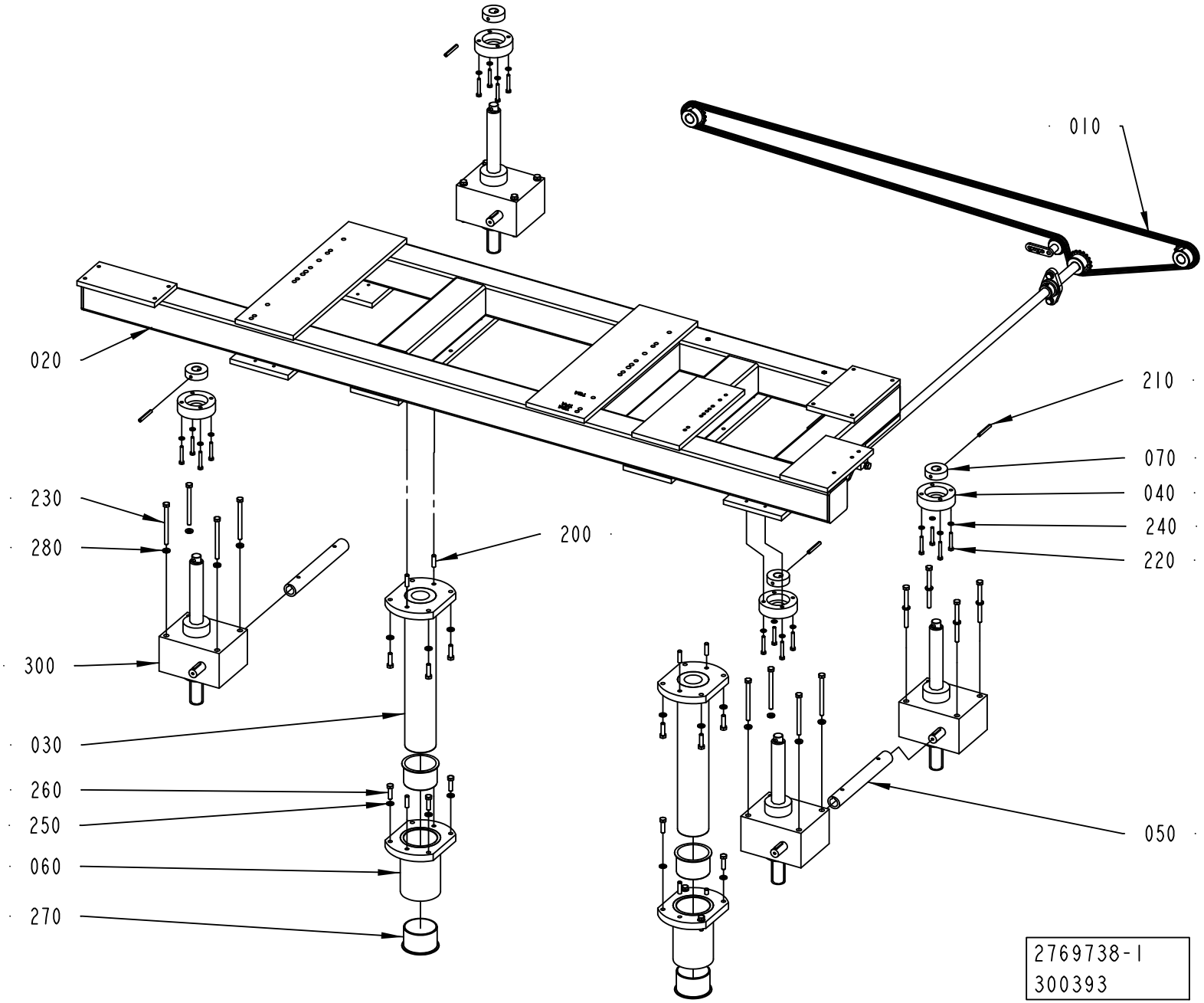

ECM: 303510 - 20070517
Group number: 2769738-0100
Assembly Drawing: 2769738-1_1_AB

Pos	Part No	UN	Qty	Description	Page No
-					
010	2766973-0100		1	TRANSMISSION	**5-19**
020	2769709-0000		1	FRAME	
030	2769713-0000		2	CYLINDRICAL PIN	
040	2766964-0000		4	FLANGE	
050	2766968-0000		2	SHAFT	
060	2769717-0000		2	FLANGE	
070	2769739-0000		4	DISC	
200	311103-0405		8	PARALLEL PIN ISO 2338 8M6X30 A1	
210	311112-0349		4	SPRING PIN, ISO 8752 6X50 A2	
220	312105-0378		16	SCREW, M6S ISO 4014 M6X40 A4 80	
230	312105-0471		16	SCREW, M6S ISO 4014 M8X100 A4 80	
240	315105-0153		16	WASHER PLAIN, 6,4X12X1,5 A4 BRB	
250	315105-0165		16	FWAS080G0-0S, WASHER PLAIN	
260	312105-0455		16	SCREW, M6S ISO 4017 M8X30 A4 80	
270	321153-0500		4	FLANGE BUSHING, IGLIDUR G 70X75X50	
280	315115-0165		16	WASHER PLAIN, TBRB 8,4/16 H=3	
300	90600-0658		4	WORM GEAR SCREW JACK, TP00063000130	

Pos	Part No	UN	Qty	Description	Page No

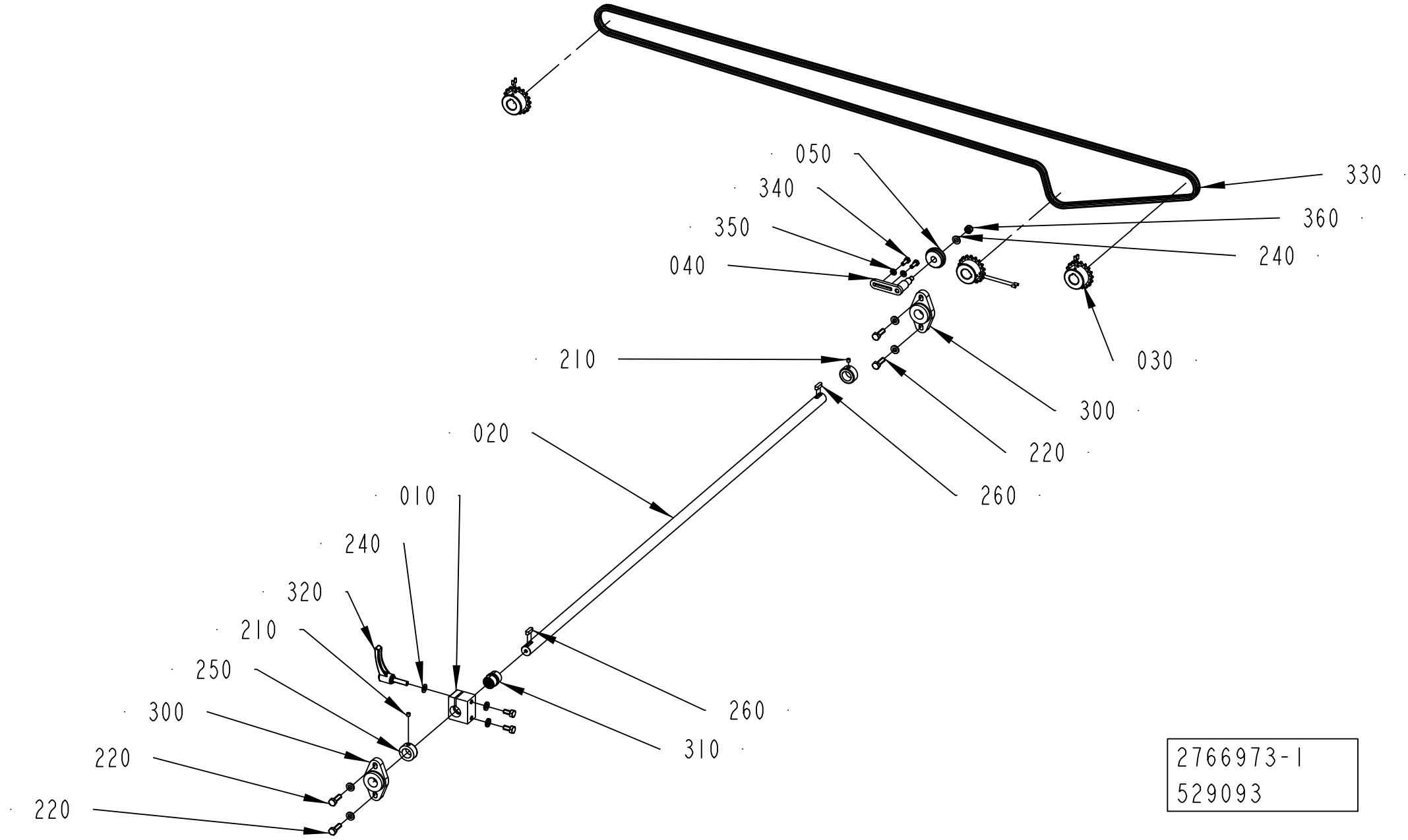
050
340
350
040
330
360
240
030
210
300
220
260
020
010
240
320
210
250
300
220
220
260
310
2766973-1
529093

ECM: 538110 - 20120401
Group number: 2766973-0100
Assembly Drawing: 2766973-1_1_AC

Pos	Part No	UN	Qty	Description	Page No
-					
010	2769726-0000		1	BRACKET	
020	2766972-0000		1	SHAFT	
030	2779769-0000		3	SPROCKET	
040	2846405-0000		1	PIVOT ARM	
050	2846403-0000		1	ROLLER	
200	312318-0287		6	SET SCREW, CUP END ISO4029 M4X8 A4	
210	312318-0360		2	SET SCREW, CUP END ISO4029 M6X6 A4	
220	312105-0453		4	SCREW, M6S ISO 4017 M8X25 A4 80	
230	312105-0449		2	SCREW, M6S ISO 4017 M8X16 A4 80	
240	315105-0165		2	FWAS080G0-0S, WASHER PLAIN	
250	315741-0216		2	RETAINING RING, DIN 705 A4 20	
260	315705-0232		2	PARALLEL KEY W. ROUND ENDS, 6X6X20 MM	
270	315115-0165		6	WASHER PLAIN, TBRB 8,4/16 H=3	
300	90600-0800		2	FLANGE BEARING 20X89X20 MM	
310	90458-2932		1	PLAIN BEARING, JUM-02-20	
320	90017-0029		1	LOCKING LEVER, NO. KR8X30-SUS	
330	90600-1159		1	ROLLER CHAIN, SIMPLEX 3/8 -290, SS	
340	312105-0368		2	"SCREW, M6S ISO 4017 M6X16 A4 80"	
350	315105-0153		2	WASHER PLAIN, 6,4X12X1,5 A4 BRB	
360	312812-0318		1	HEXAGON NUT, NY-LOCK M8 A4 80	

Pos	Part No	UN	Qty	Description	Page No

Machine Type | Group Description | Used-In | Group Number | Page No

DOOR HINGE

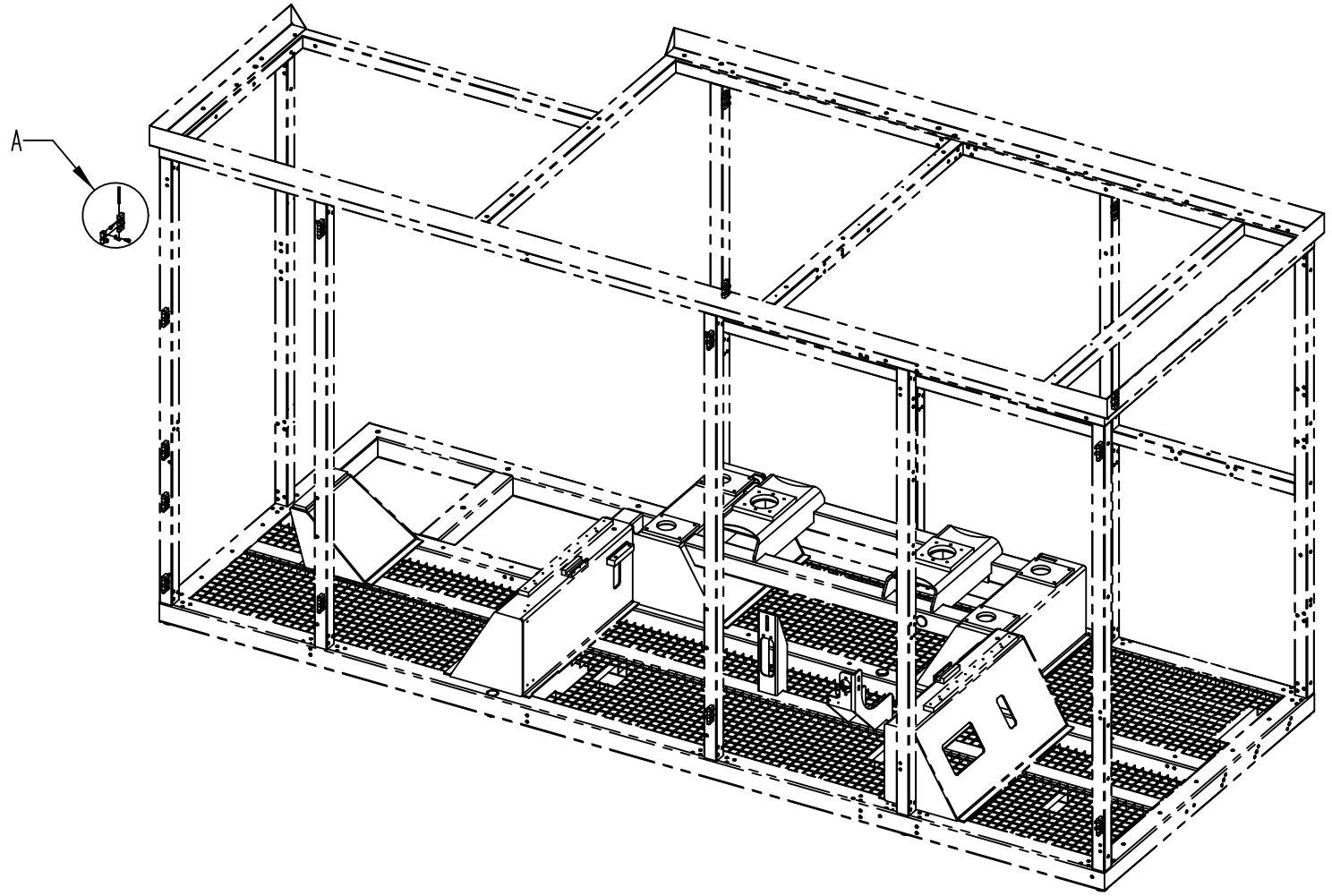

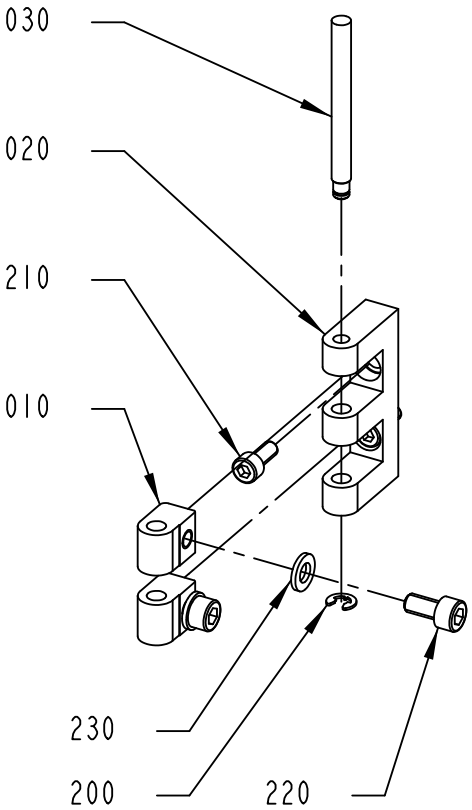

A
1:2

3217565-1
582045

ECM: 589042 - 20130401
Group number: 3217565-0100
Assembly Drawing: 3217565-1_1_AB

Pos	Part No	UN	Qty	Description	Page No
-					
010	1129770-0000		30	BLOCKING PIECE	
020	1035792-0000		15	E-HINGE	
030	1036329-0000		15	PIN	
200	315755-0106		15	RETAINING RING SHAFT DIN 6799 4 SS	
210	312115-0327		30	SCREW ISO4762 M5X12 A4 80	
220	312115-0366		30	SCREW ISO4762 M6X12 A4 80	
230	315105-0153		30	WASHER PLAIN, 6,4X12X1,5 A4 BRB	

Pos	Part No	UN	Qty	Description	Page No

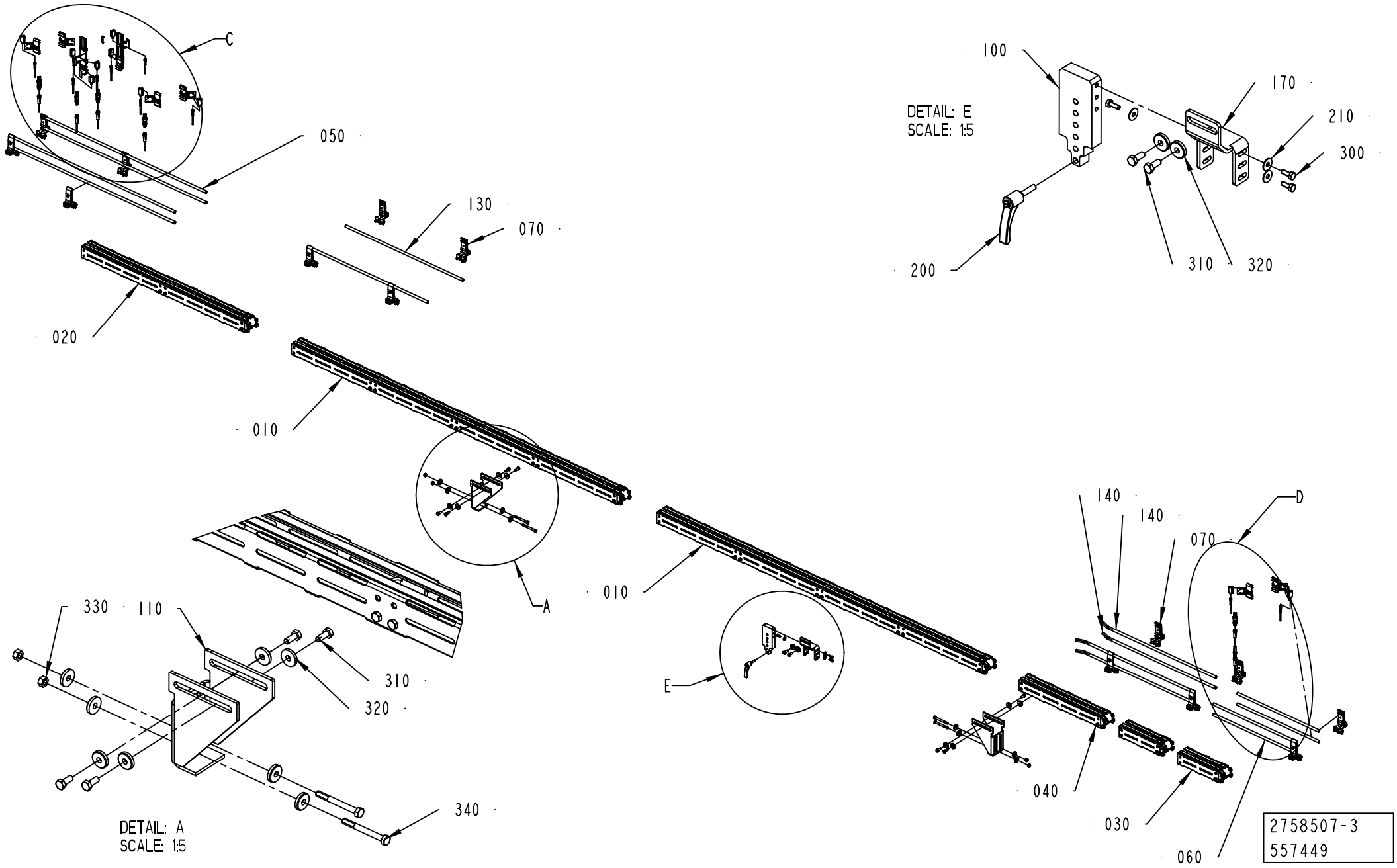
C
050
130
070
020
010
A
330
110
310
320
340
DETAIL: A
SCALE: 1:5
100
170
210
300
DETAIL: E
SCALE: 1:5
200
310
320
010
E
140
140
070
D
040
030
060
2758507-3
557449

ECM: 699212 - 20150101
Group number: 2758507-0300
Assembly Drawing: 2758507-3_1_AB

This list covers pages from 5-22 to 5-25

Pos	Part No	UN	Qty	Description	Page No
TPA 0330SQ, TPA 0500E (See drawing on pages: 5-22, 5-24)					
020	2763616-0103		1	CONVEYOR BODY	**5-27**
040	2763616-0102		1	CONVEYOR BODY	**5-29**
050	2561274-0103		1	RAILING	**5-31**
060	2561274-0102		1	RAILING	**5-35**
Common Parts					
010	2763616-0104		2	CONVEYOR BODY	**5-37**
030	2763616-0101		2	CONVEYOR BODY	**5-39**
070	1550743-0200		8	RAIL HOLDER	**5-33**
080	2778586-0100		3	SENSOR	**5-41, 12-71**
090	2778587-0100		1	SENSOR	**5-43**
100	2930211-0000		1	PLATE	
110	2965155-0000		2	SUPPORT	
130	2779831-0000		2	PIPE	
140	3216180-0000		4	PIPE	
170	2930210-0000		1	PLATE	
200	90017-0029		1	LOCKING LEVER, NO. KR8X30-SUS	
210	90457-0192		4	WASHER PLAIN ROUND, 6,5/18, H=1,5	
300	312105-0368		4	"SCREW, M6S ISO 4017 M6X16 A4 80"	
310	312105-0451		10	SCREW, M6S ISO 4017 M8X20 A4 80	
320	315125-0165		18	WASHER HIGH, TBRSB 8,4X26X5 A4	
330	312607-0318		4	HEXAGON NUT, EN 24032 M6M M8 A480	
340	312105-0466		4	SCREW, M6S ISO 4014 M8X75 A4 80	
350	344267-0050		1	SENSOR CABLE, EVT044	
W21B4002	90459-5529		1	PHOTOCELL E3Z-T86A, SENDER+RECIEVER	
W21B4004	90459-5529		1	PHOTOCELL E3Z-T86A, SENDER+RECIEVER	
W21B4006	90459-5529		1	PHOTOCELL E3Z-T86A, SENDER+RECIEVER	
W21B4008	90459-5529		1	PHOTOCELL E3Z-T86A, SENDER+RECIEVER	
W21B6002	90459-5529		1	PHOTOCELL E3Z-T86A, SENDER+RECIEVER	
W21W4002	90603-3979		1	SENSOR Y-CABLE, EVT339	
W21W4004	90603-3979		1	SENSOR Y-CABLE, EVT339	
W21W4006	90603-3979		1	SENSOR Y-CABLE, EVT339	
W21W4008	90603-3979		1	SENSOR Y-CABLE, EVT339	
W21W4012	344253-0050		1	SENSOR CABLE, EVT001	
W21W4014	344253-0050		1	SENSOR CABLE, EVT001	
W21W4016	344253-0050		1	SENSOR CABLE, EVT001	
W21W4018	344253-0100		1	SENSOR CABLE, EVT002	
W21W6002	90603-3979		1	SENSOR Y-CABLE, EVT339	
W21W6012	344261-0050		1	SENSOR CABLE, EVT216	

Pos	Part No	UN	Qty	Description	Page No

Machine Type | Group Description | Used-In | Group Number | Page No

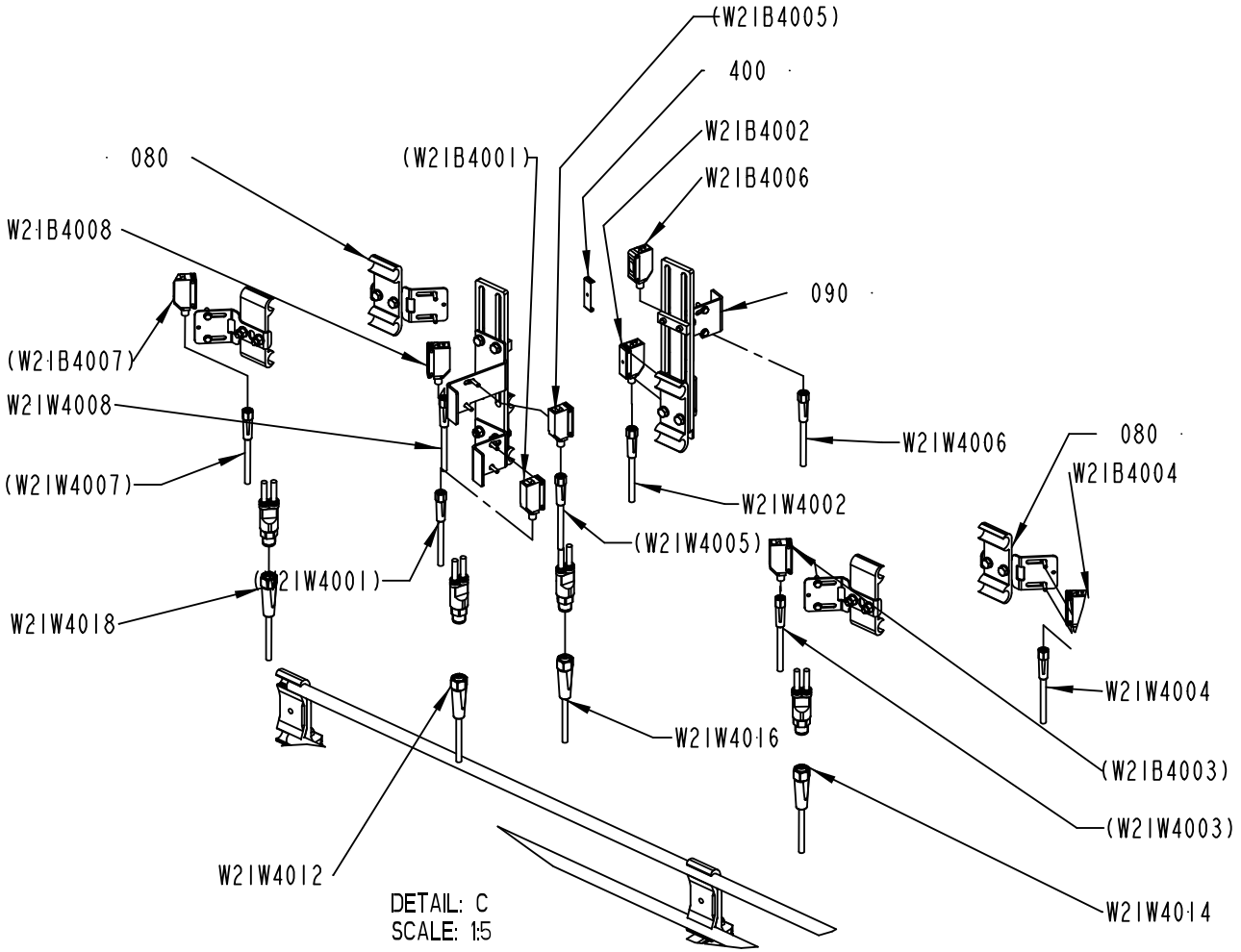

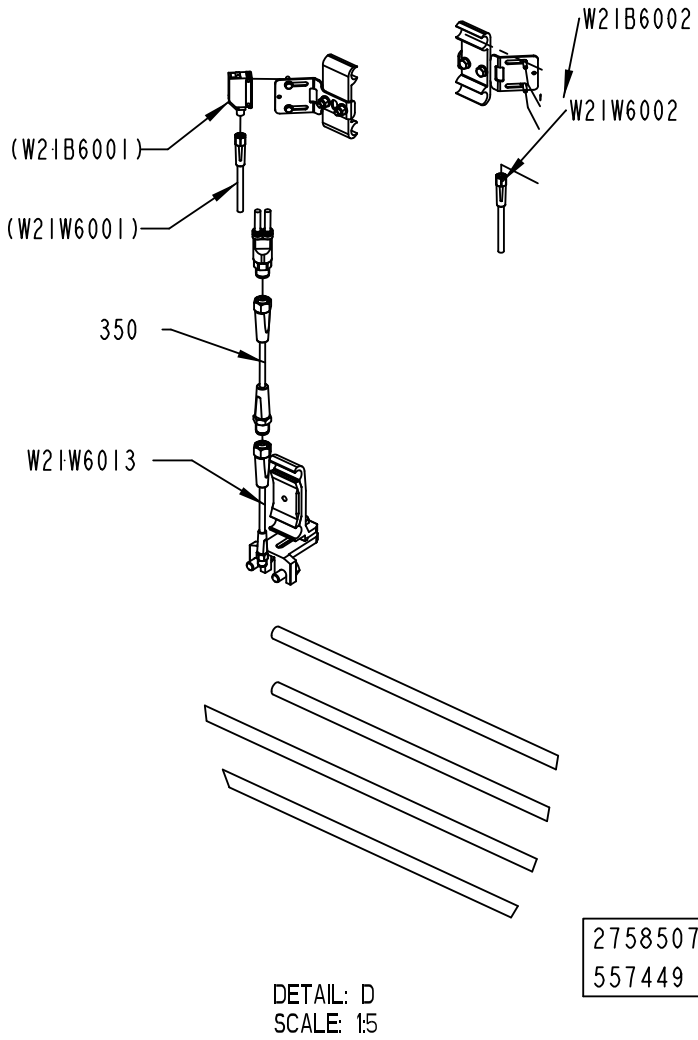

2758507-3
557449

ECM: 699212 - 20150101
Group number: 2758507-0300
Assembly Drawing: 2758507-3_2_AB

This list covers pages from 5-22 to 5-25

Pos	Part No	UN	Qty	Description	Page No
TPA 0330SQ, TPA 0500E (See drawing on pages: 5-22, 5-24)					
020	2763616-0103		1	CONVEYOR BODY	**5-27**
040	2763616-0102		1	CONVEYOR BODY	**5-29**
050	2561274-0103		1	RAILING	**5-31**
060	2561274-0102		1	RAILING	**5-35**
Common Parts					
010	2763616-0104		2	CONVEYOR BODY	**5-37**
030	2763616-0101		2	CONVEYOR BODY	**5-39**
070	1550743-0200		8	RAIL HOLDER	**5-33**
080	2778586-0100		3	SENSOR	**5-41, 12-71**
090	2778587-0100		1	SENSOR	**5-43**
100	2930211-0000		1	PLATE	
110	2965155-0000		2	SUPPORT	
130	2779831-0000		2	PIPE	
140	3216180-0000		4	PIPE	
170	2930210-0000		1	PLATE	
200	90017-0029		1	LOCKING LEVER, NO. KR8X30-SUS	
210	90457-0192		4	WASHER PLAIN ROUND, 6,5/18, H=1,5	
300	312105-0368		4	"SCREW, M6S ISO 4017 M6X16 A4 80"	
310	312105-0451		10	SCREW, M6S ISO 4017 M8X20 A4 80	
320	315125-0165		18	WASHER HIGH, TBRSB 8,4X26X5 A4	
330	312607-0318		4	HEXAGON NUT, EN 24032 M6M M8 A480	
340	312105-0466		4	SCREW, M6S ISO 4014 M8X75 A4 80	
350	344267-0050		1	SENSOR CABLE, EVT044	
W21B4002	90459-5529		1	PHOTOCELL E3Z-T86A, SENDER+RECIEVER	
W21B4004	90459-5529		1	PHOTOCELL E3Z-T86A, SENDER+RECIEVER	
W21B4006	90459-5529		1	PHOTOCELL E3Z-T86A, SENDER+RECIEVER	
W21B4008	90459-5529		1	PHOTOCELL E3Z-T86A, SENDER+RECIEVER	
W21B6002	90459-5529		1	PHOTOCELL E3Z-T86A, SENDER+RECIEVER	
W21W4002	90603-3979		1	SENSOR Y-CABLE, EVT339	
W21W4004	90603-3979		1	SENSOR Y-CABLE, EVT339	
W21W4006	90603-3979		1	SENSOR Y-CABLE, EVT339	
W21W4008	90603-3979		1	SENSOR Y-CABLE, EVT339	
W21W4012	344253-0050		1	SENSOR CABLE, EVT001	
W21W4014	344253-0050		1	SENSOR CABLE, EVT001	
W21W4016	344253-0050		1	SENSOR CABLE, EVT001	
W21W4018	344253-0100		1	SENSOR CABLE, EVT002	
W21W6002	90603-3979		1	SENSOR Y-CABLE, EVT339	
W21W6012	344261-0050		1	SENSOR CABLE, EVT216	

Pos	Part No	UN	Qty	Description	Page No

Machine Type | Group Description | Used-In | Group Number | Page No

CONVEYOR BODY

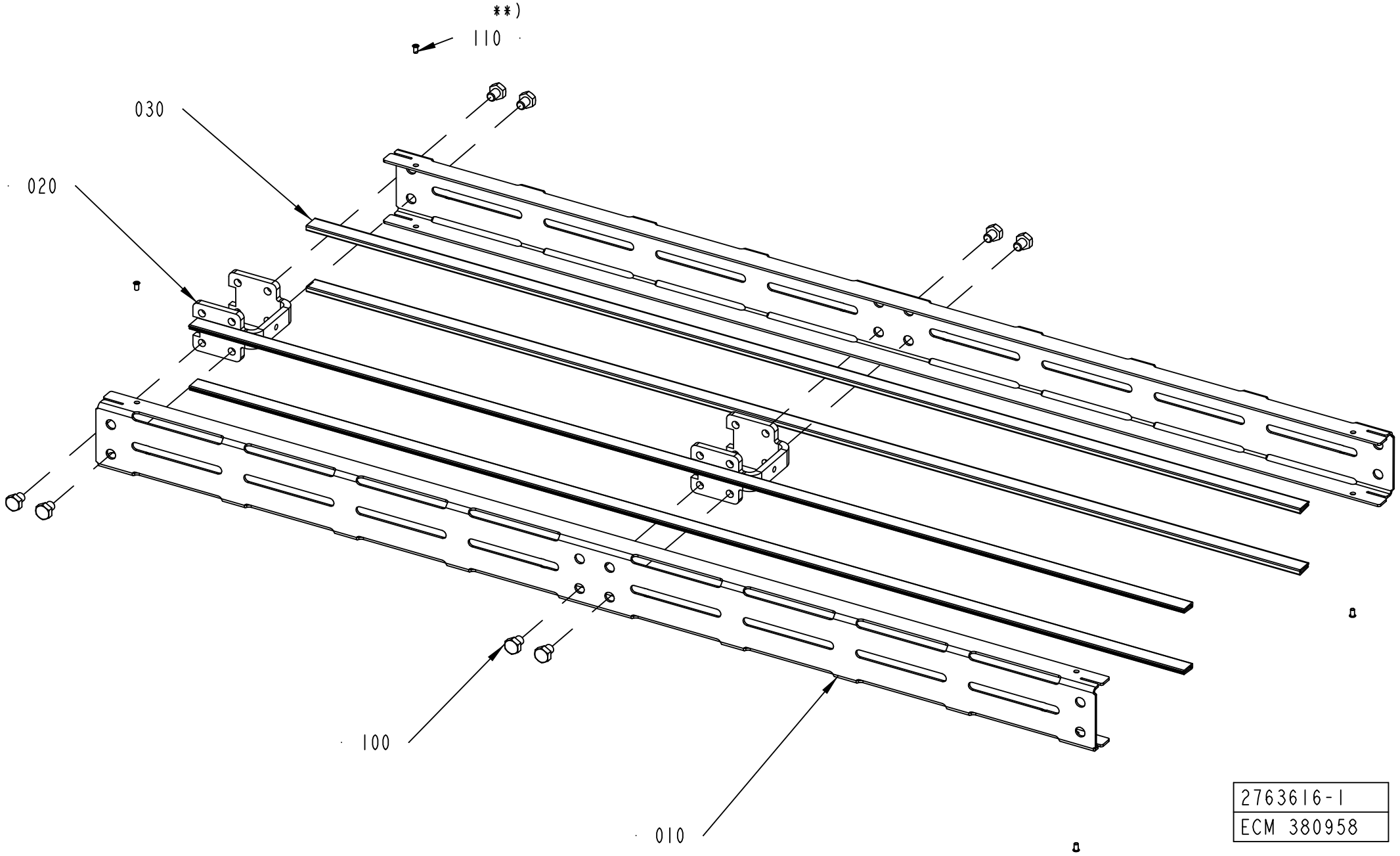

2763616-1
ECM 380958

ECM: 380958 -
Group number: 2763616-0103
Assembly Drawing: 2763616-1_1_AB

Pos	Part No	UN	Qty	Description	Page No
L 1000					
010	2763617-0003		2	SIDE PLATE	
020	2561206-0000		2	SPACER	
030	1550595-9960		4	SLIDING STRIP	
100	90459-4735		8	SCREW, M6S ISO 4017 M8X10 A4 80	
Common Parts					
010	2763617-0001		2	SIDE PLATE	
010	2763617-0002		2	SIDE PLATE	
010	2763617-0004		2	SIDE PLATE	
020	2561206-0000		1	SPACER	
030	2699305-1996		4	SLIDING STRIP	
030	1550595-4960		4	SLIDING STRIP	
030	1550595-2460		4	SLIDING STRIP	
100	90459-4735		16	SCREW, M6S ISO 4017 M8X10 A4 80	
110	90600-6183		4	TUBULAR RIVET 3,5X6,2	

Pos	Part No	UN	Qty	Description	Page No

CONVEYOR BODY

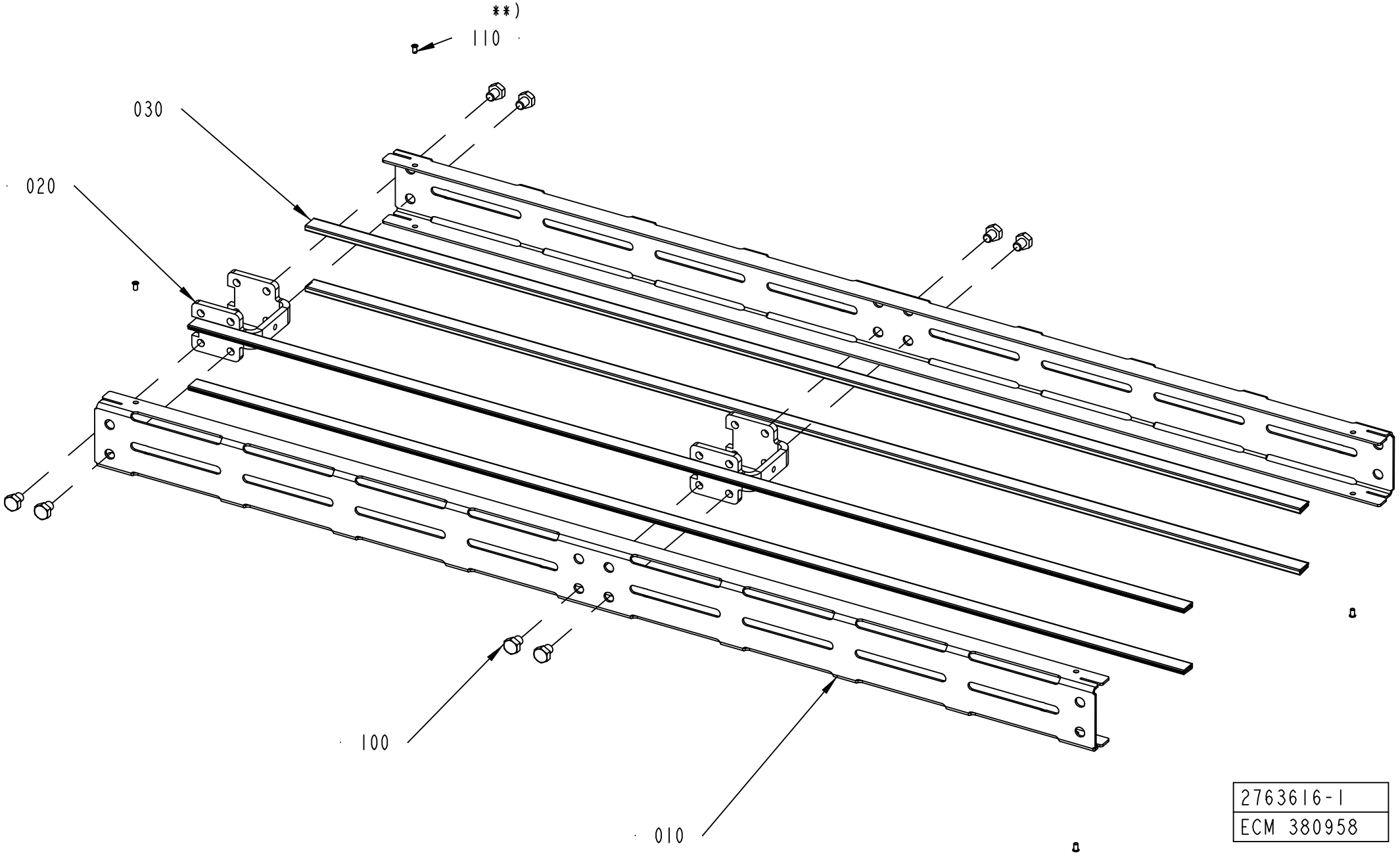

2763616-1
ECM 380958

ECM: 380958 -
Group number: 2763616-0102
Assembly Drawing: 2763616-1_1_AB

Pos	Part No	UN	Qty	Description	Page No
L 0250					
010	2763617-0001		2	SIDE PLATE	
020	2561206-0000		1	SPACER	
030	1550595-2460		4	SLIDING STRIP	
100	90459-4735		4	SCREW, M6S ISO 4017 M8X10 A4 80	
L 0500					
010	2763617-0002		2	SIDE PLATE	
020	2561206-0000		1	SPACER	
030	1550595-4960		4	SLIDING STRIP	
100	90459-4735		4	SCREW, M6S ISO 4017 M8X10 A4 80	
Common Parts					
010	2763617-0004		2	SIDE PLATE	
010	2763617-0003		2	SIDE PLATE	
020	2561206-0000		2	SPACER	
030	2699305-1996		4	SLIDING STRIP	
030	1550595-9960		4	SLIDING STRIP	
100	90459-4735		8	SCREW, M6S ISO 4017 M8X10 A4 80	
110	90600-6183		4	TUBULAR RIVET 3,5X6,2	

Pos	Part No	UN	Qty	Description	Page No

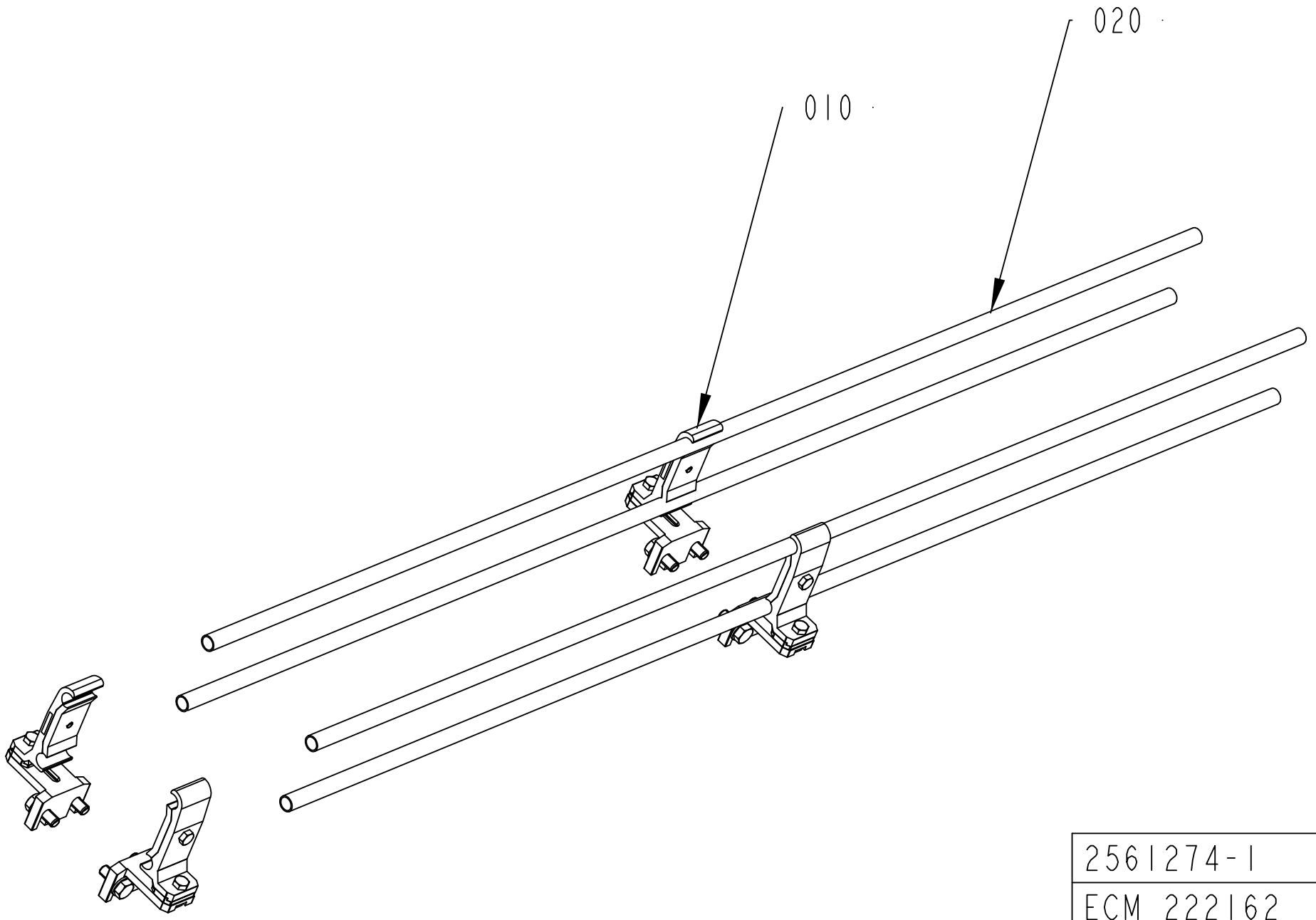

2561274-1
ECM 222162

ECM: 222162 -
Group number: 2561274-0103
Assembly Drawing: 2561274-1_1_AB

Pos	Part No	UN	Qty	Description	Page No
L 1000					
010	1550743-0200		4	RAIL HOLDER	**5-33**
020	476221-0003		4	PIPE	
Common Parts					
010	1550743-0200		2	RAIL HOLDER	**5-33**
020	476221-0002		4	PIPE	

Pos	Part No	UN	Qty	Description	Page No

RAIL HOLDER

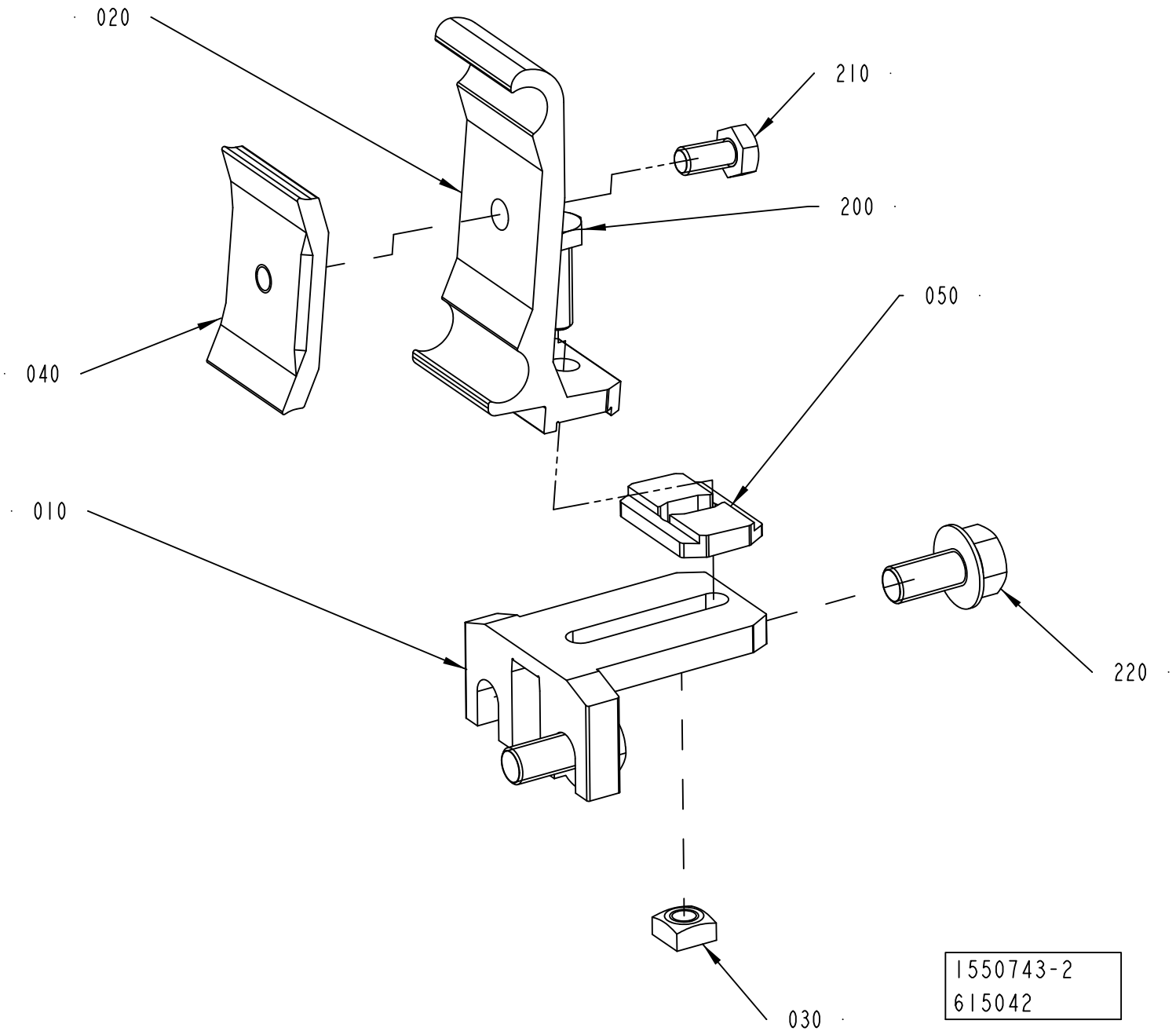

ECM: 626475 - 20140301
Group number: 1550743-0200
Assembly Drawing: 1550743-2_1_AB

Pos	Part No	UN	Qty	Description	Page No
-					
010	1550772-0000		1	HOLDER	
020	2699437-0000		1	RAIL HOLDER	
030	1359565-0000		1	NUT	
040	1366727-0000		1	CLAMP	
050	2699436-0000		1	SPACER	
200	312105-0370		1	SCREW, M6S ISO 4017 M6X20 A4 80	
210	312105-0366		1	SCREW, M6S ISO 4017 M6X12 A4 80	
220	312108-0449		2	SCREW EN 1665 TYPE F M8X16 A270	

Pos	Part No	UN	Qty	Description	Page No

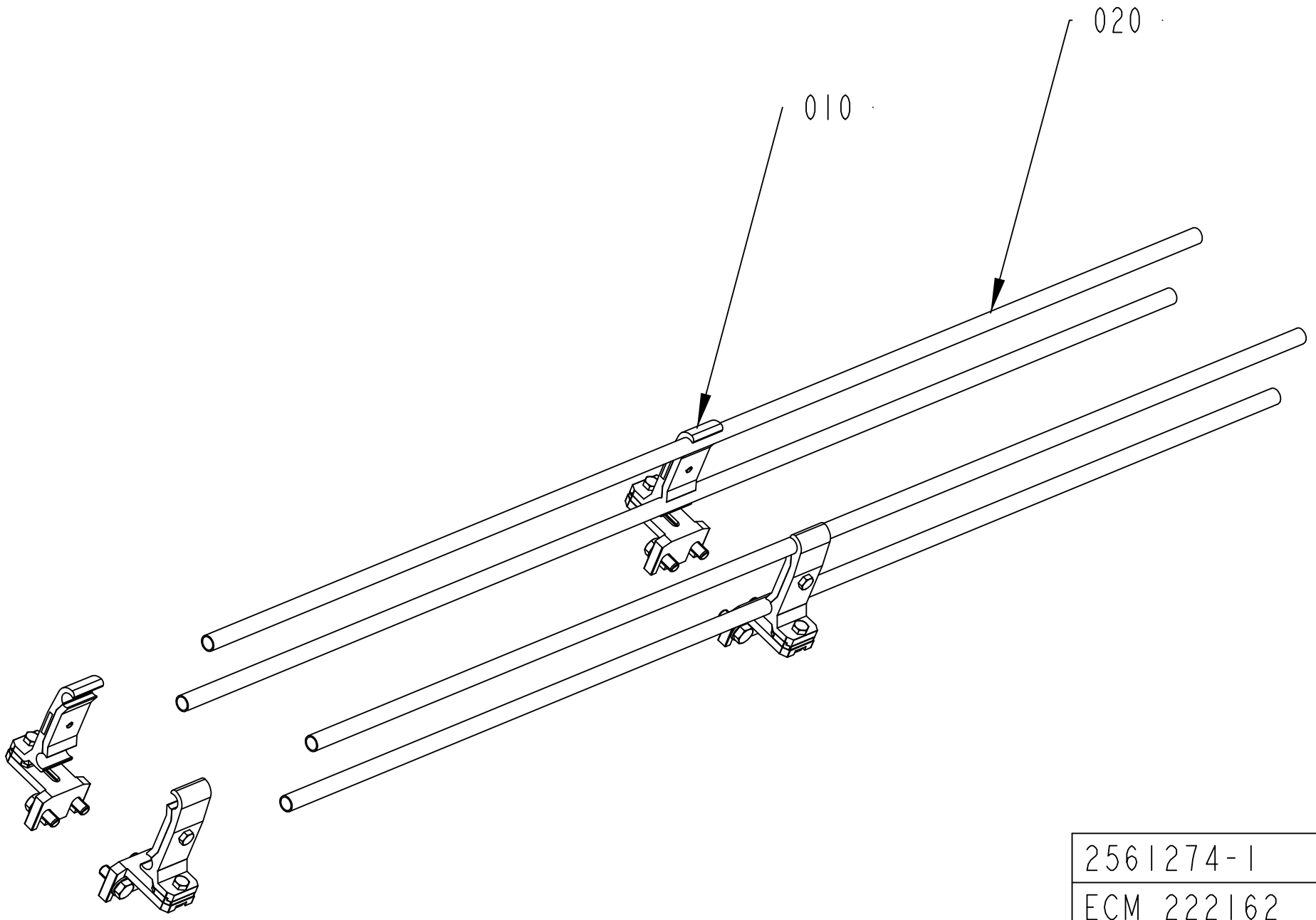

2561274-1
ECM 222162

ECM: 222162 -
Group number: 2561274-0102
Assembly Drawing: 2561274-1_1_AB

Pos	Part No	UN	Qty	Description	Page No
L 0250					
010	1550743-0200		2	RAIL HOLDER	**5-33**
L 0500					
010	1550743-0200		2	RAIL HOLDER	**5-33**
020	476221-0002		4	PIPE	
Common Parts					
010	1550743-0200		4	RAIL HOLDER	**5-33**
020	476221-0003		4	PIPE	

Pos	Part No	UN	Qty	Description	Page No

CONVEYOR BODY

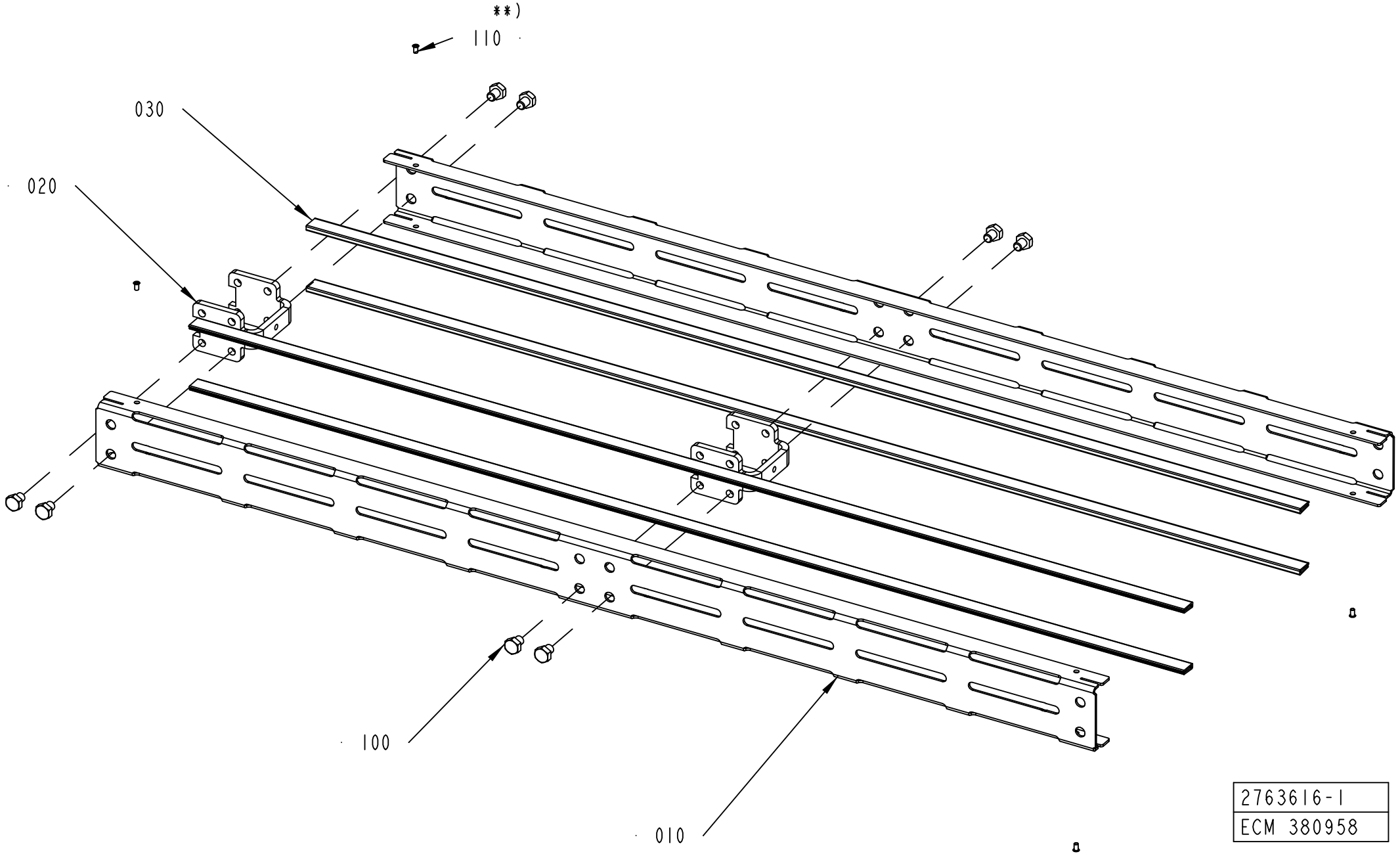

2763616-1
ECM 380958

ECM: 380958 -
Group number: 2763616-0104
Assembly Drawing: 2763616-1_1_AB

Pos	Part No	UN	Qty	Description	Page No
L 2000					
010	2763617-0004		2	SIDE PLATE	
020	2561206-0000		4	SPACER	
030	2699305-1996		4	SLIDING STRIP	
100	90459-4735		16	SCREW, M6S ISO 4017 M8X10 A4 80	
Common Parts					
010	2763617-0001		2	SIDE PLATE	
010	2763617-0002		2	SIDE PLATE	
010	2763617-0003		2	SIDE PLATE	
020	2561206-0000		1	SPACER	
030	1550595-2460		4	SLIDING STRIP	
030	1550595-4960		4	SLIDING STRIP	
030	1550595-9960		4	SLIDING STRIP	
100	90459-4735		8	SCREW, M6S ISO 4017 M8X10 A4 80	
110	90600-6183		4	TUBULAR RIVET 3,5X6,2	

Pos	Part No	UN	Qty	Description	Page No

CONVEYOR BODY

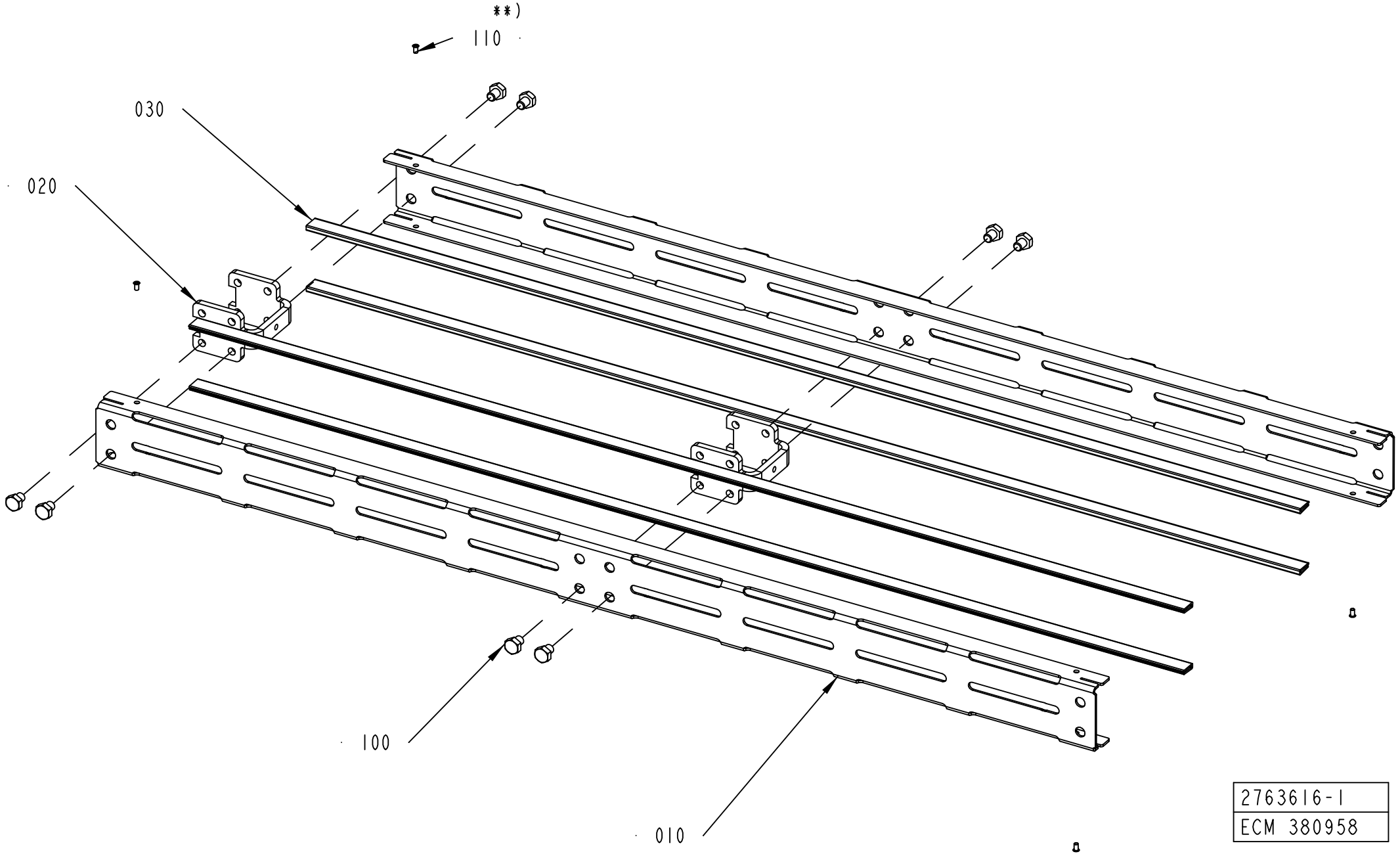

2763616-1
ECM 380958

ECM: 380958 -
Group number: 2763616-0101
Assembly Drawing: 2763616-1_1_AB

Pos	Part No	UN	Qty	Description	Page No
L 0250					
010	2763617-0001		2	SIDE PLATE	
020	2561206-0000		1	SPACER	
030	1550595-2460		4	SLIDING STRIP	
100	90459-4735		4	SCREW, M6S ISO 4017 M8X10 A4 80	
L 0500					
010	2763617-0002		2	SIDE PLATE	
020	2561206-0000		1	SPACER	
030	1550595-4960		4	SLIDING STRIP	
100	90459-4735		4	SCREW, M6S ISO 4017 M8X10 A4 80	
Common Parts					
010	2763617-0003		2	SIDE PLATE	
010	2763617-0004		2	SIDE PLATE	
020	2561206-0000		2	SPACER	
030	2699305-1996		4	SLIDING STRIP	
030	1550595-9960		4	SLIDING STRIP	
100	90459-4735		8	SCREW, M6S ISO 4017 M8X10 A4 80	
110	90600-6183		4	TUBULAR RIVET 3,5X6,2	

Pos	Part No	UN	Qty	Description	Page No

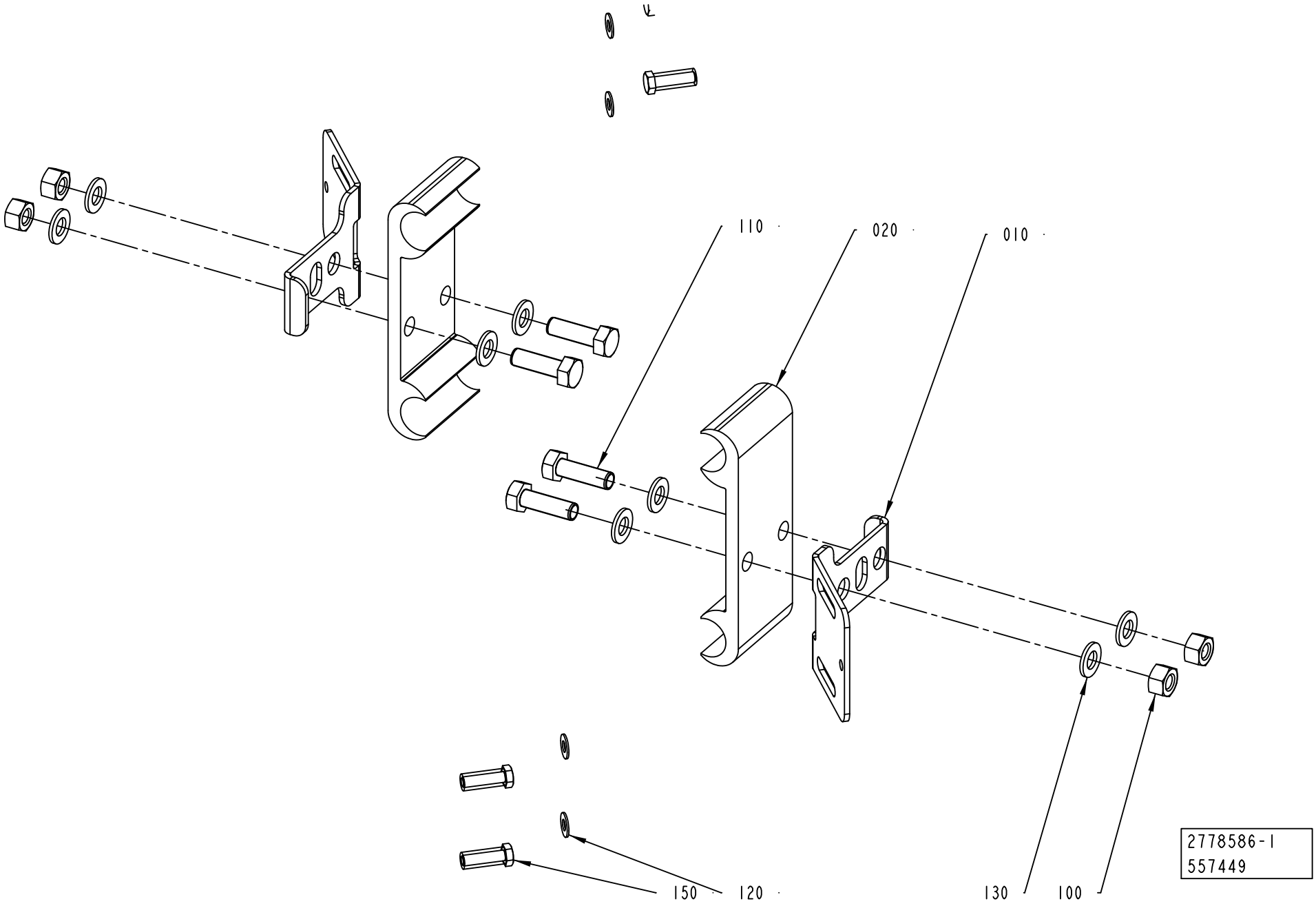
110
020
010
150
120
130
100
2778586-1
557449

ECM: 563430 - 20121001
Group number: 2778586-0100
Assembly Drawing: 2778586-1_1_AC

Pos	Part No	UN	Qty	Description	Page No
-					
010	3252696-0000		2	BRACKET	
020	1020637-0000		2	HOLDER	
100	312605-0314		4	HEXAGON NUT, M6M M5 A280	
110	312105-0329		4	SCREW, M6S ISO 4017 M5X16 A4 80	
120	315106-0124		4	WASHER PLAIN, M3 ISO7089-3-200 HV A4	
130	315105-0146		8	WASHER PLAIN, 5,3X10X1 A4 BRB	
150	90287-0175		4	SCREW M6S M3X12 A480	

Pos	Part No	UN	Qty	Description	Page No

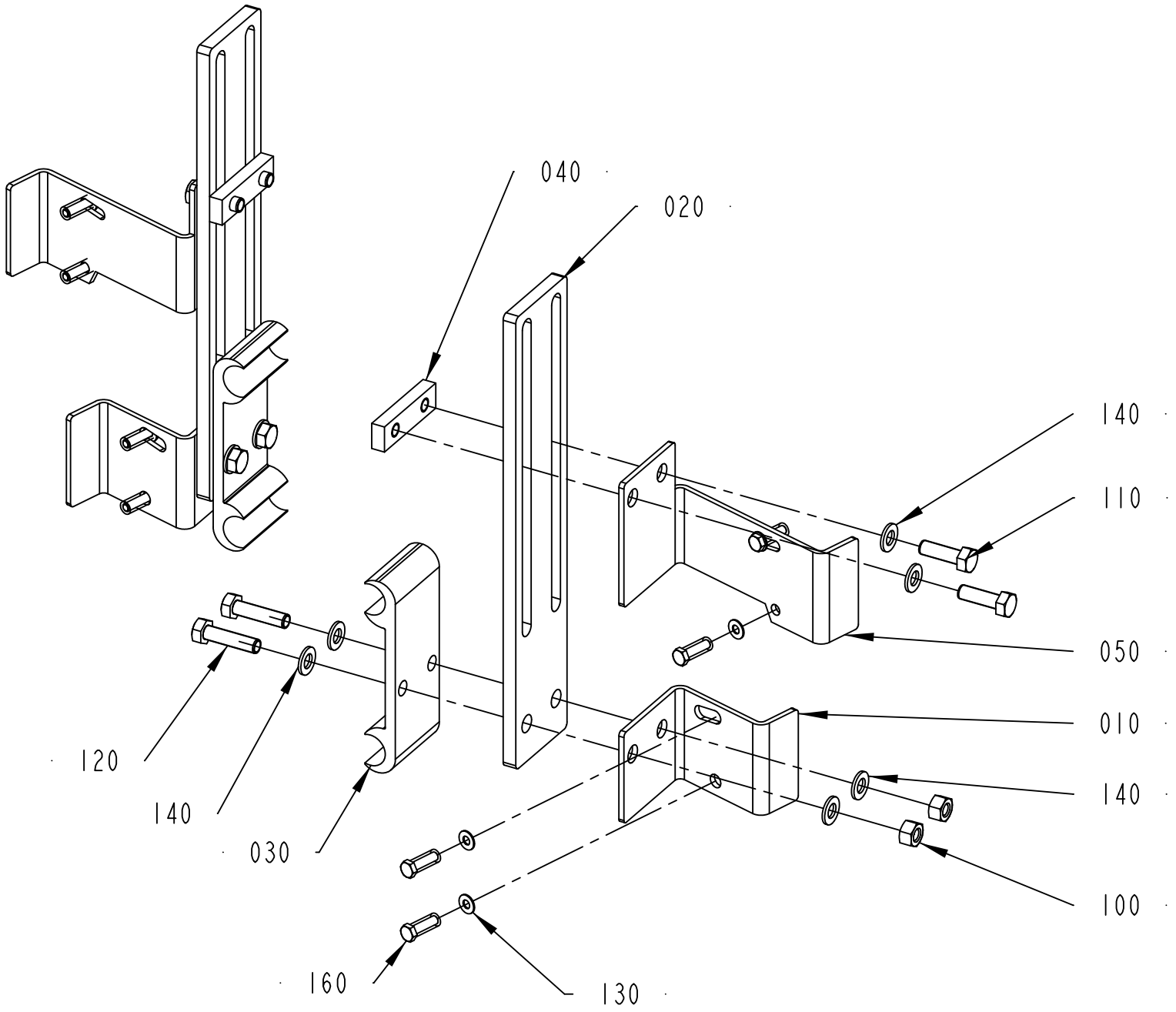

2778587-1
529093

ECM: 699213 - 20150101
Group number: 2778587-0100
Assembly Drawing: 2778587-1_1_AC

Pos	Part No	UN	Qty	Description	Page No
TPA 0330SQ, TPA 0500E					
010	2778580-0000		2	BRACKET	
050	2985773-0000		2	BRACKET	
Common Parts					
020	2778584-0000		2	BRACKET	
030	1020637-0000		2	HOLDER	
040	2504290-0000		2	PLATE	
100	312605-0314		4	HEXAGON NUT, M6M M5 A280	
110	312105-0329		4	SCREW, M6S ISO 4017 M5X16 A4 80	
120	312105-0331		4	SCREW, M6S ISO 4017 M5X20 A4 80	
130	315106-0124		8	WASHER PLAIN, M3 ISO7089-3-200 HV A4	
140	315105-0146		12	WASHER PLAIN, 5,3X10X1 A4 BRB	
160	90287-0175		8	SCREW M6S M3X12 A480	

Pos	Part No	UN	Qty	Description	Page No

LINE HEATER

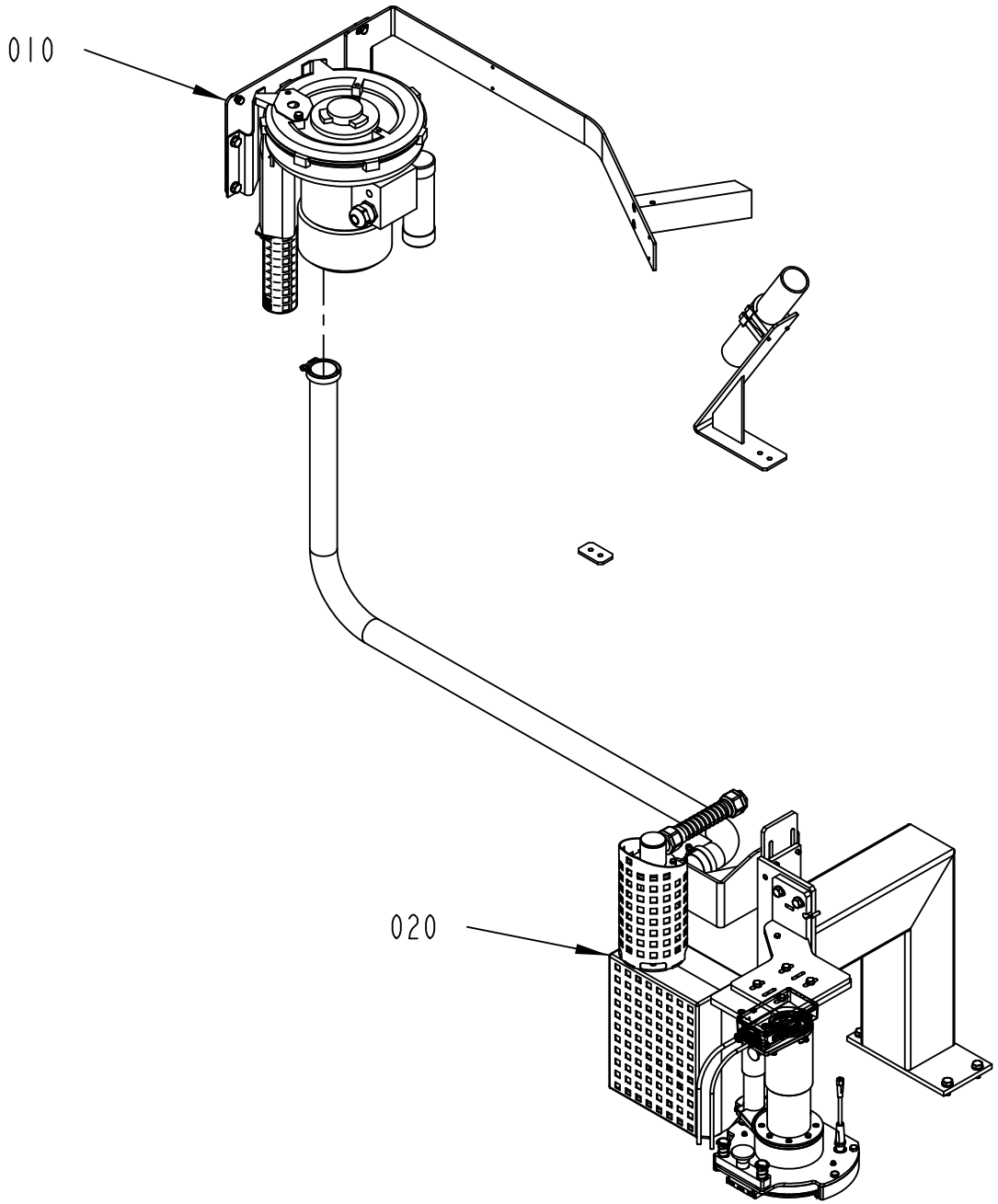

2773622-4
529093

ECM: 581688 - 20130102
Group number: 2773622-0200
Assembly Drawing: 2773622-4_1_AA

Pos	Part No	UN	Qty	Description	Page No
-					
010	2773623-0200		1	FAN SYSTEM	**5-47**
020	3203761-0100		1	HEATER	**5-49**

Pos	Part No	UN	Qty	Description	Page No

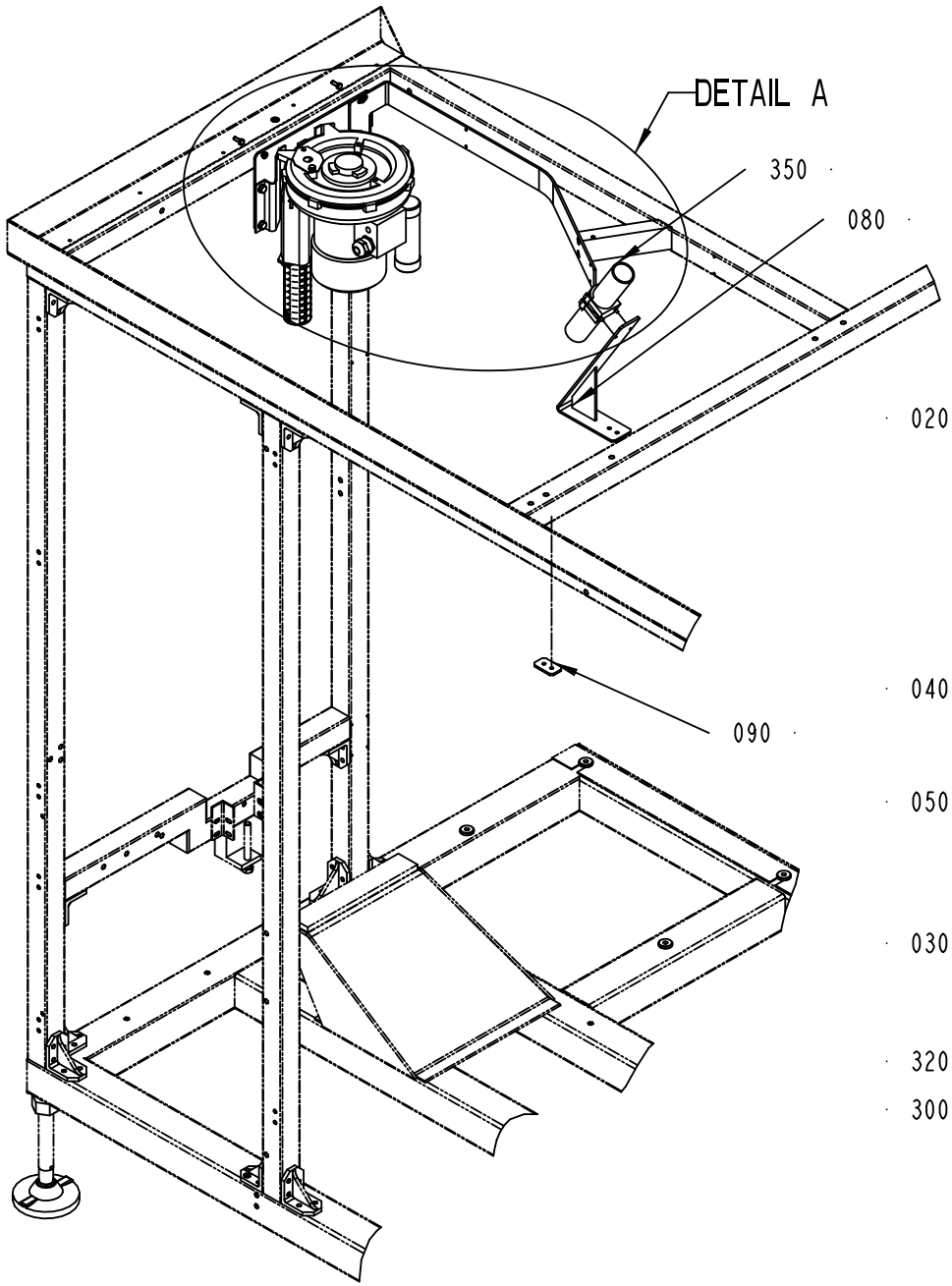

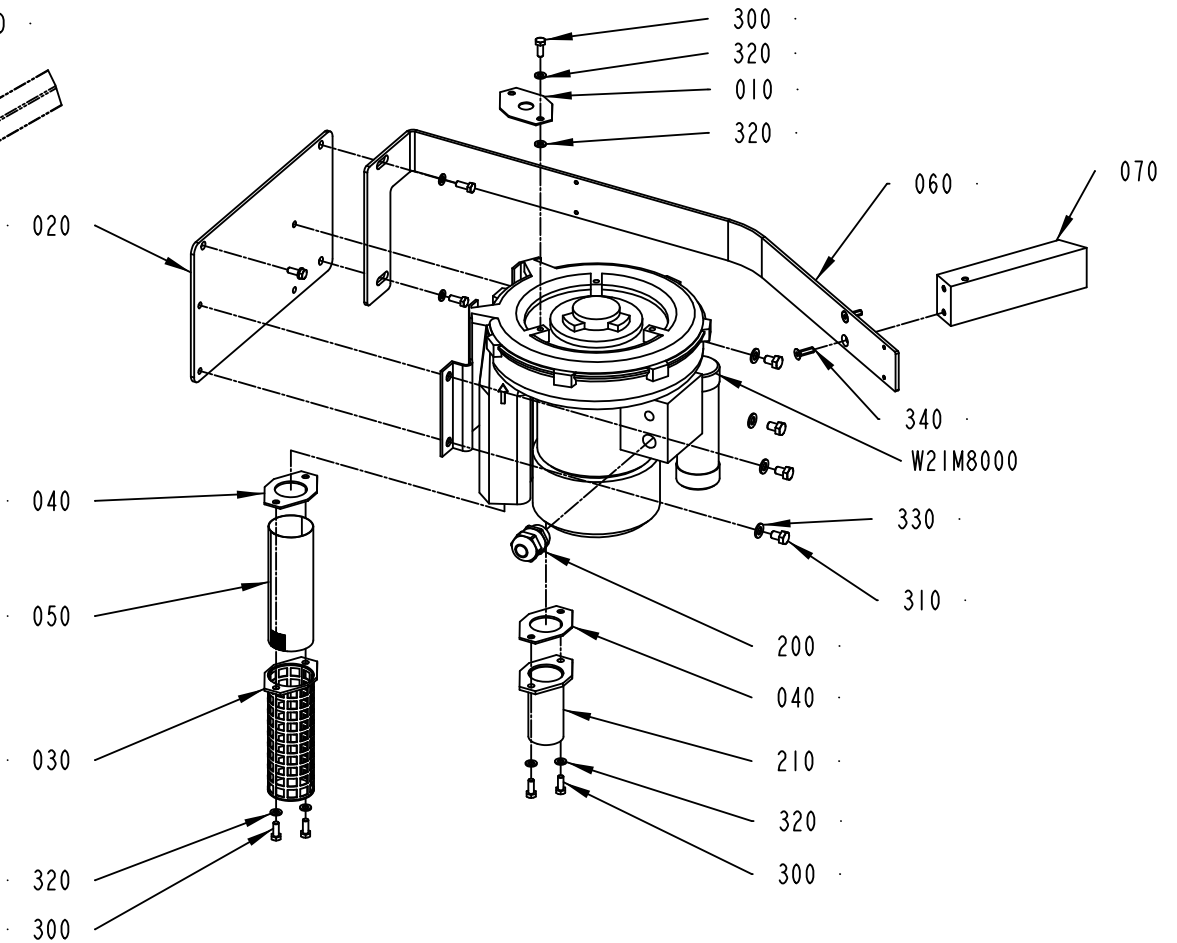

2773623-3
529093

DETAIL A

ECM: 538445 - 20120401
Group number: 2773623-0200
Assembly Drawing: 2773623-3_1_AA

Pos	Part No	UN	Qty	Description	Page No
TPA					
060	3170034-0000		1	PLATE	
070	3170032-0000		1	SPACER	
080	3170035-0000		1	BRACKET	
090	3170036-0000		1	PLATE	
340	312155-0370		2	SCREW DIN 7991 MF6S M6X20 A4 70	
350	90439-0295		1	SERVICE KIT, NO. 111940	
Common Parts					
010	1030874-0000		1	THROTTLE WASHER	
020	2779772-0000		1	BRACKET	
030	1030335-0000		1	FILTER HOLDER	
040	1030878-0000		2	GASKET	
050	1030338-0000		1	NET	
200	90458-0316		1	CABLE GLAND, M25X1,5, 5311 1130	
210	2663999-0000		1	NIPPLE	
300	312105-0368		8	"SCREW, M6S ISO 4017 M6X16 A4 80"	
310	312105-0447		4	SCREW M6S ISO 4017 M8X12 A480	
320	315105-0153		9	WASHER PLAIN, 6,4X12X1,5 A4 BRB	
330	315105-0165		4	FWAS080G0-0S, WASHER PLAIN	
W21M8000	90604-3589		1	FAN 2BH1300-7AV15-K41	

Pos	Part No	UN	Qty	Description	Page No

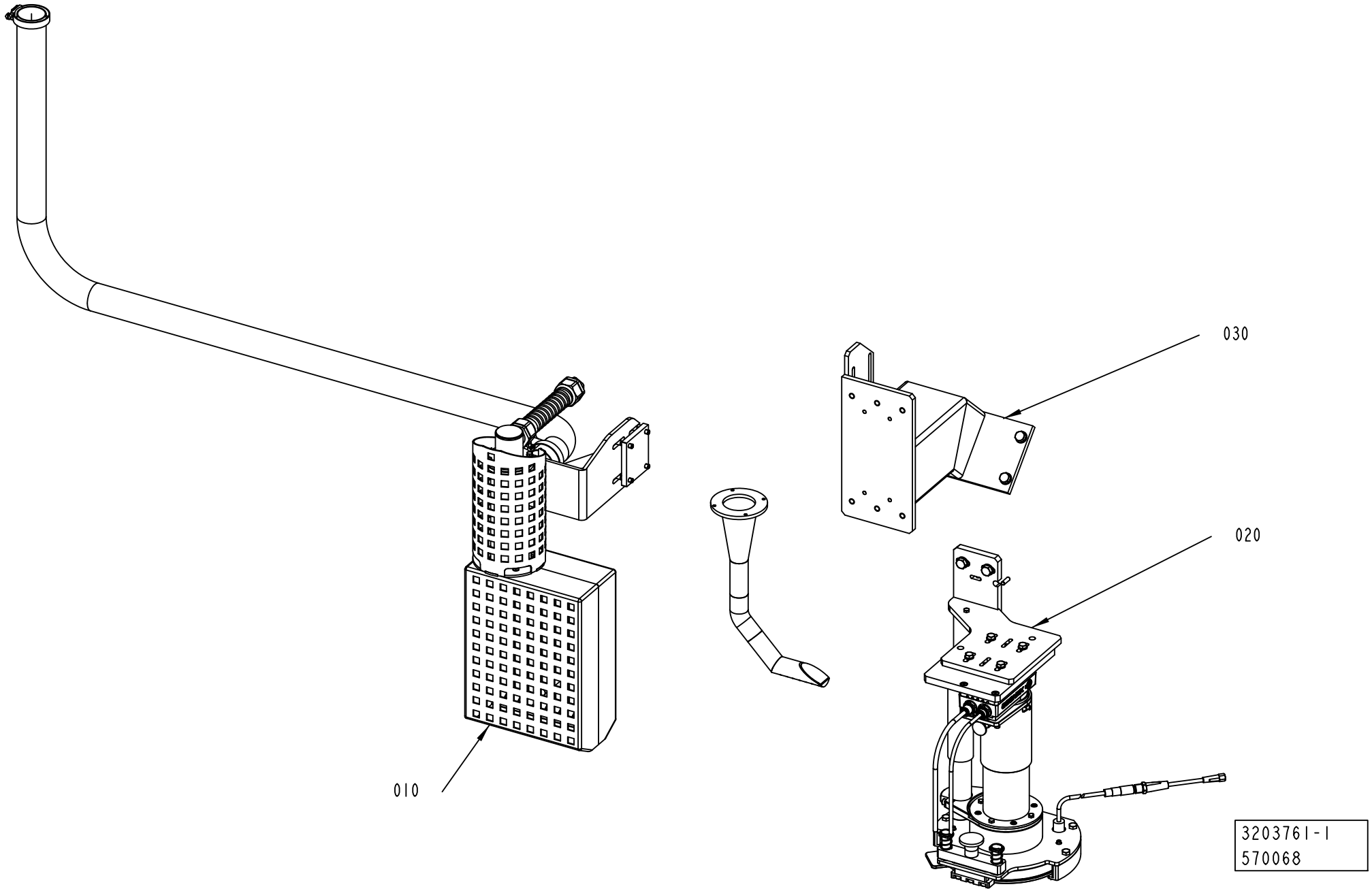
030
020
010
3203761-1
570068

ECM: 594648 - 20130701
Group number: 3203761-0100
Assembly Drawing: 3203761-1_1_AC

Pos	Part No	UN	Qty	Description	Page No
TPA					
020	3203763-0100		1	VISION SYSTEM	**5-51**
Common Parts					
010	3203764-0100		1	HEATING ELEMENT	**5-53**
030	3203766-0100		1	CONVERSION GROUP	**5-55**

Pos	Part No	UN	Qty	Description	Page No

Machine Type | Group Description | Used-In | Group Number | Page No

VISION SYSTEM

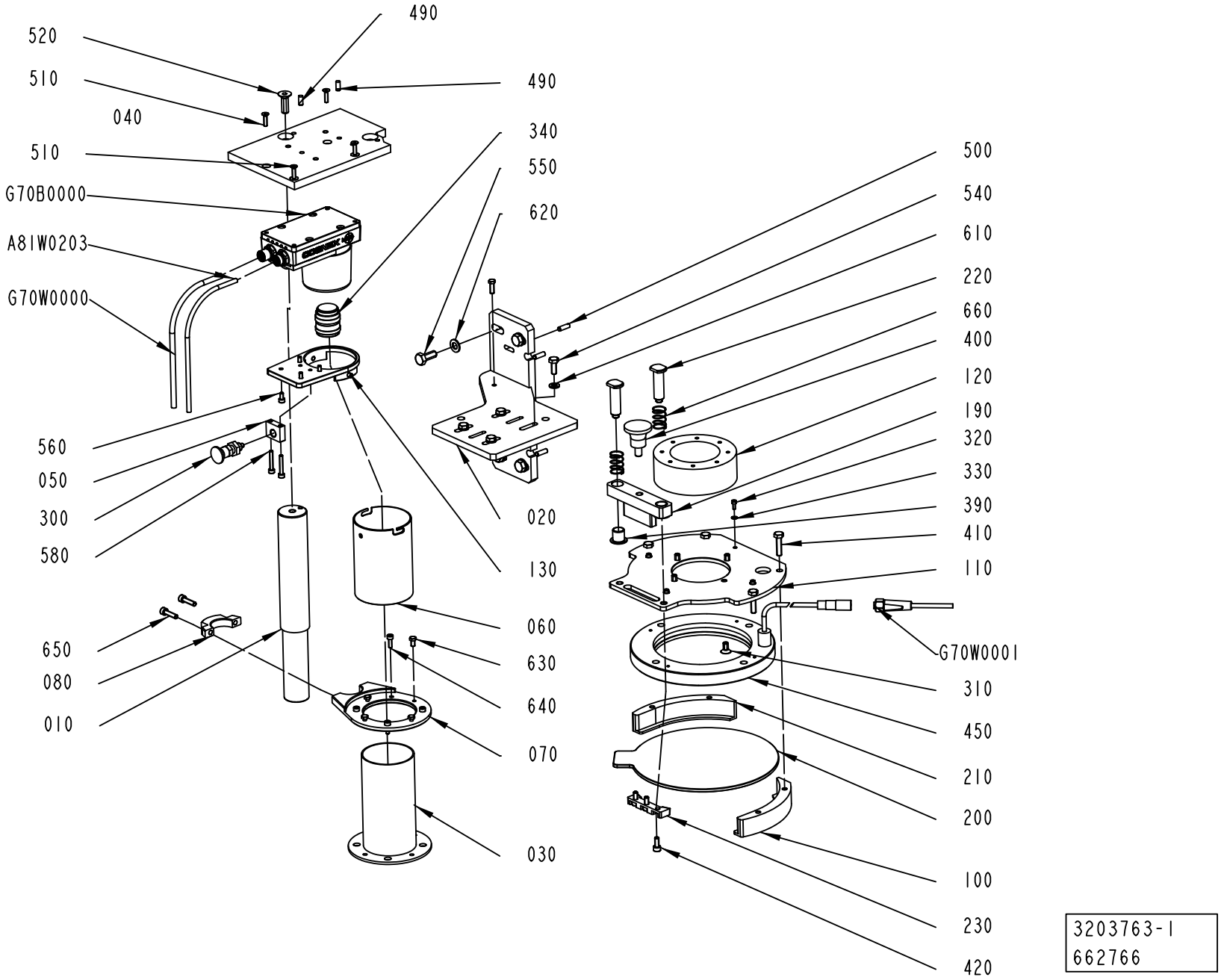

3203763-1
662766

ECM: 662773 - 20140701
Group number: 3203763-0100
Assembly Drawing: 3203763-1_1_AD

Pos	Part No	UN	Qty	Description	Page No
-					
010	2985768-0000		1	COLUMN	
020	2792664-0000		1	BRACKET	
030	2557544-0000		1	PROTECTION	
040	3203752-0000		1	BRACKET	
050	2794721-0000		1	BLOCK	
060	2792879-0000		1	TUBE	
070	2794790-0000		1	CLAMP	
080	2873943-0000		1	CLAMP	
100	3095796-0000		1	HOLDER	
110	3095791-0000		1	PLATE	
120	3031442-0000		1	SPACER	
130	2792848-0000		1	SUPPORT	
190	3053477-0000		1	BRACKET	
200	3052393-0000		1	GLASS COVER	
210	3095790-0000		1	HOLDER	
220	3053471-0000		2	PIN	
230	3053478-0000		1	PUSHER	
300	90051-0112		1	LOCK KNOB, NO. GN 617 NIK5	
310	312155-0366		4	SCREW DIN 7991 MF6S M6X12 A4 70	
320	312115-0222		4	SCREW ISO4762 M3X8 A4 80	
330	315106-0124		4	WASHER PLAIN, M3 ISO7089-3-200 HV A4	
340	90459-1180		1	LENS 16MM IN-SIGHT 4100, HF16HA-1B	
390	321156-0188		2	FLANGE BUSHING, IGLIDUR H370 12X14X15	
400	318871-0105		1	KNOB CIRCULAR, EXT THREAD, NO. 8302-6150	
410	312105-0372		4	SCREW, M6S ISO 4017 M6X25 A4 80	
420	312115-0327		3	SCREW ISO4762 M5X12 A4 80	
450	90605-2644		1	ILLUMINATION, LDR_-174RD2-LA-1TK	
490	311103-0306		2	PARALLEL PIN ISO 2338 5M6X12 A1	
500	311103-0308		5	PARALLEL PIN ISO 2338 5M6X16 A1	
510	312155-0293		4	SCREW DIN 7991 MF6S M4X16 A4 70	
520	312155-0453		1	SCREW DIN 7991 MF6S M8X25 A4 70	
540	312105-0368		4	"SCREW, M6S ISO 4017 M6X16 A4 80"	
550	312105-0451		4	SCREW, M6S ISO 4017 M8X20 A4 80	
560	312115-0287		4	SCREW ISO4762 M4X8 A4 80	
580	312115-0297		2	SCREW ISO4762 M4X25 A4 80	
610	315105-0153		4	WASHER PLAIN, 6,4X12X1,5 A4 BRB	
620	315105-0165		4	FWAS080G0-0S, WASHER PLAIN	
630	312105-0287		4	SCREW, M6S ISO 4017 M4X8 A4 70	
640	312115-0291		4	SCREW ISO4762 M4X12 A4 80	
650	312115-0331		2	SCREW ISO4762 M5X20 A4 80	
660	90605-3922		2	COMP. SPRING, 2477, 1X14X25	
A81W0203	90600-2103		1	ETHERNET CABLE, CCB-84901-1004-10	
G70B0000	90604-2784		1	IN-SIGHT 5100 CAMERA, IS5100-01	
G70W0000	90600-2102		1	POWER I/O CABLE, CCB-84901-0103-10	
G70W0001	344253-0100		1	SENSOR CABLE, EVT002	

Machine Type	Group Description	Used-In	Group Number	Page No

HEATING ELEMENT

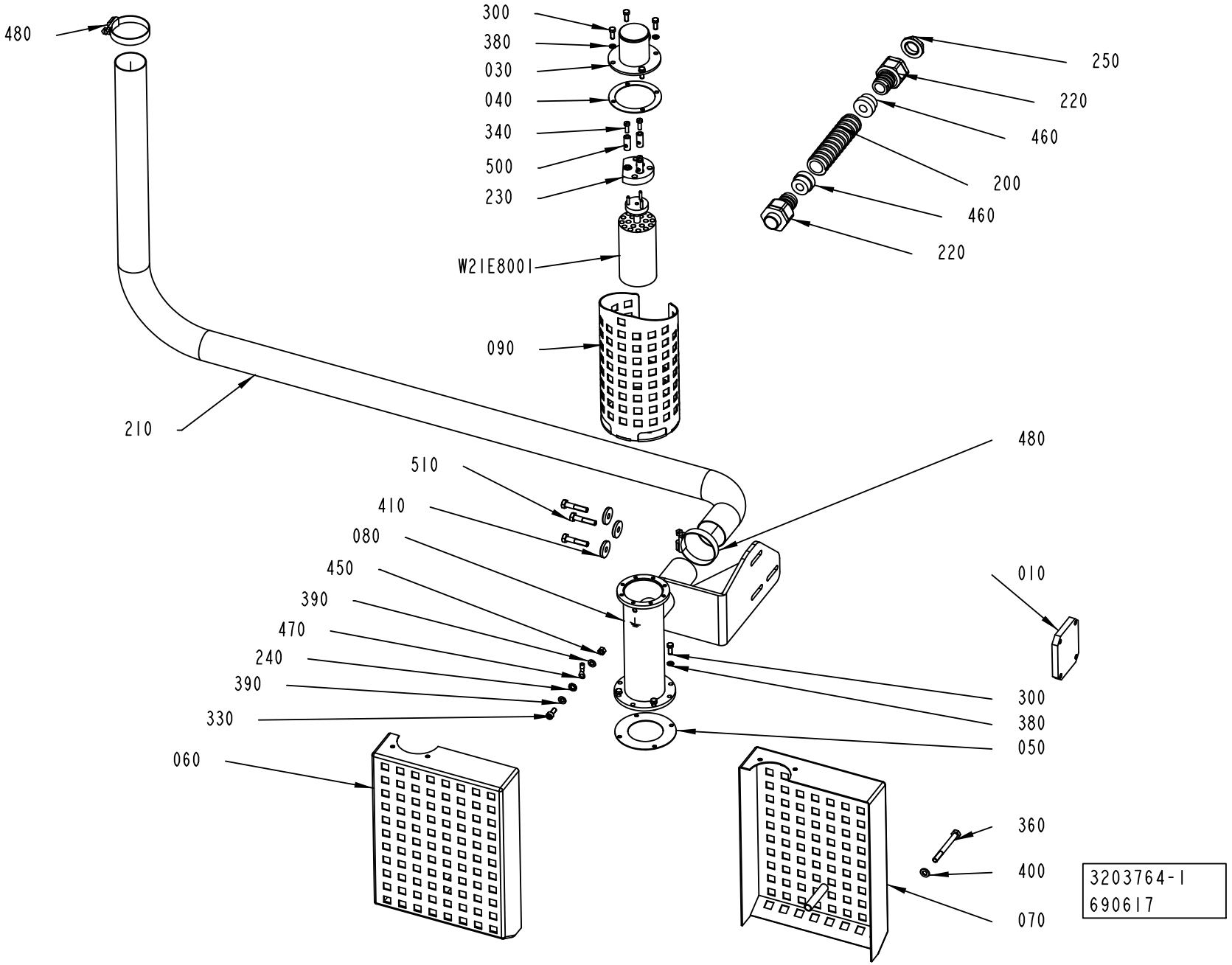

ECM: 690617 - 20150101
Group number: 3203764-0100
Assembly Drawing: 3203764-1_1_AC

Pos	Part No	UN	Qty	Description	Page No
-					
010	2873867-0000		1	PLATE	
030	2710819-0000		1	LID	
040	1188609-0000		1	FLANGE SEAL	
050	1188610-0000		1	FLANGE SEAL	
060	2773627-0000		1	HEAT GUARD	
070	2773630-0000		1	HEAT GUARD	
080	2873865-0000		1	PRE-HEATER	
090	2836263-0000		1	HEAT GUARD	
200	90152-0051	M	1	HOSE, SPIRAL CONDUIT, 25X18, UL 1816	
210	90152-0075	M	2.35	HOSE	
220	90458-0430		2	GLAND FITTING, VK 22054YUL16	
230	90125-0020		1	PLATE COMPLETE(BOM)	
	294464-0000		*1*	*BASE PLATE*	
	270927-0000		*3*	*SCREW*	
	270926-0000		*6*	*NUT*	
240	90062-0060		1	LOCK WASHER 5,3/10 H=0,6 FZB	
250	90458-0323		1	NUT, M20X1,5	
300	312105-0291		8	SCREW, M6S ISO 4017 M4X12 A4 70	
330	312115-0327		1	SCREW ISO4762 M5X12 A4 80	
340	312122-0291		3	SCREW ISO 1207 M4X12 NI PL BRASS	
360	312105-0382		1	SCREW, M6S ISO 4014 M6X60 A4 80	
380	315105-0136		8	WASHER PLAIN, 4,3X8X0,8 A4 BRB	
390	315105-0146		2	WASHER PLAIN, 5,3X10X1 A4 BRB	
400	315105-0153		1	WASHER PLAIN, 6,4X12X1,5 A4 BRB	
410	315125-0153		3	WASHER HIGH, TBRSB 6,4X22X4 A4	
450	312605-0314		1	HEXAGON NUT, M6M M5 A280	
460	353249-0012		2	INSERT, SINGLE HOLE, EK154 11	
470	344375-0004		1	CABLE SHOE RING, 0,5-1,5MM2 M5 RED	
480	342991-0108		2	"HOSE CLIP,WORM DRIVE TYPE (38)-50"	
500	205438-0000		3	CABLE GLAND	
510	312105-0374		3	SCREW, M6S ISO 4014 M6X30 A4 80	
W21E8001	90606-1840		1	CARTRIDGE HEATER, 3KW 230V	

Pos	Part No	UN	Qty	Description	Page No

Machine Type	Group Description	Used-In	Group Number	Page No

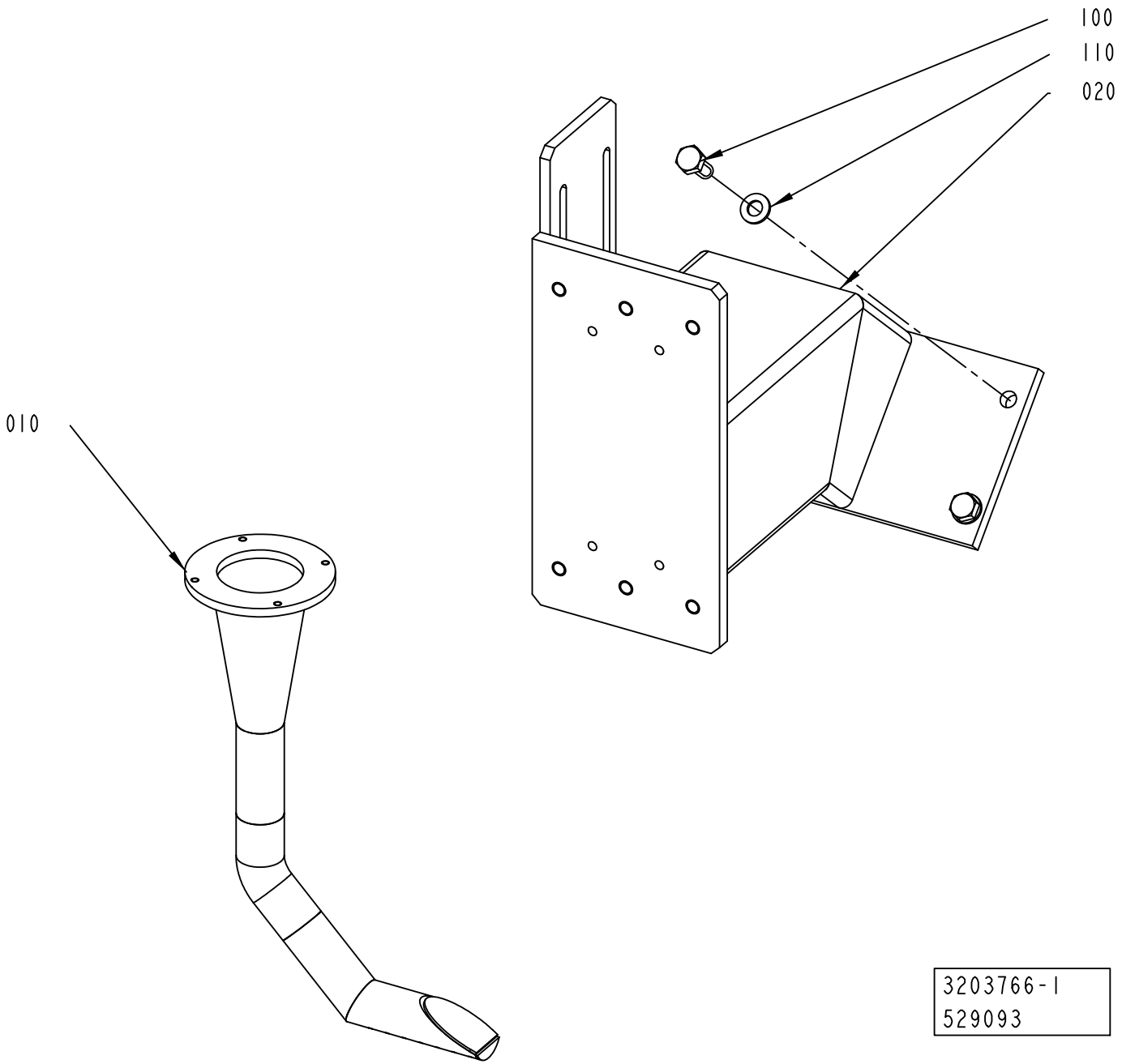
100
110
020
010
3203766-1
529093

ECM: 584736 - 20130401
Group number: 3203766-0100
Assembly Drawing: 3203766-1_1_AA

Pos	Part No	UN	Qty	Description	Page No
CAP30/FLEX DREAMCAP 26					
010	2662760-0000		1	HEATING CHAMBER	
020	2934905-0000		1	SUPPORT	
Common Parts					
100	312105-0451		4	SCREW, M6S ISO 4017 M8X20 A4 80	
110	315106-0165		4	WASHER PLAIN, M8 ISO7089-8-200 HV A4	

Pos	Part No	UN	Qty	Description	Page No

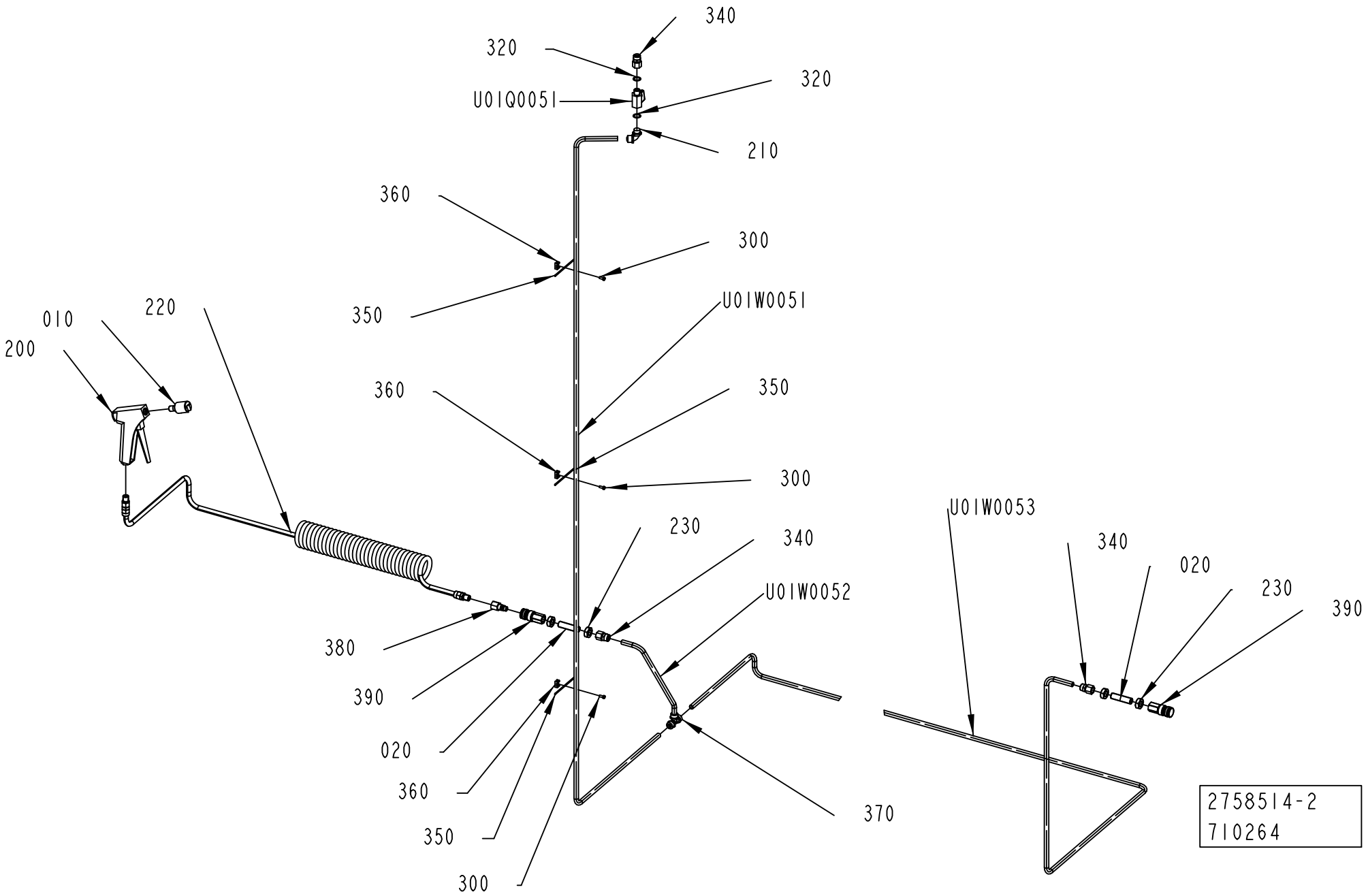
340
320
320
U01Q0051
210
360
300
350
U01W0051
010
220
200
360
350
300
230
340
U01W0052
380
390
020
360
350
300
370
U01W0053
340
020
230
390
2758514-2
710264

ECM: 713614 - 20150401
Group number: 2758514-0200
Assembly Drawing: 2758514-2_1_AC

Pos	Part No	UN	Qty	Description	Page No
-					
010	2506940-0000		1	NOZZLE	
020	3293084-0000		2	THREADED CONNECTION	
200	90458-1483		1	SPRAY GUN, WATER G1/4	
210	90224-0325		1	ELBOW 90 COUPL., EXT. THREAD 10/8-G1/4"	
220	90458-1741		1	HOSE ASSEMBLY, CEJN 19 958 9669	
230	6-526343 02		4	HEXAGON NUT DN8 RP1/4" 1.4404	
300	312125-0289		3	SCREW	
320	315239-0110		2	NYLON WASHER G1/4, 1/4RRP	
340	342923-0132		1	STRAIGHT COUPL.,INT.THREADED 10/8-G1/4"	
350	352113-0101		3	CABLE TIE,BLACK 92X	
360	352113-0205		3	ANCHOR PLATES FOR STRIPS, TM2S8-C100	
370	342946-0133		1	T-COUPLING,UNION 10/8	
380	90459-2254		1	QUICK COUPLING, (M) 10 320 5202	
390	90606-5416		2	QUICK COUPLING, (F) 25KAIW13SPN	
U01Q0051	90605-6942		1	BALL VALVE G1/4, 772117	
U01W0051	315400-0009	MM	2800	TUBE PUN-H-10X1,5-SW	
U01W0052	315400-0009	MM	2800	TUBE PUN-H-10X1,5-SW	
U01W0053	315400-0009	MM	2800	TUBE PUN-H-10X1,5-SW	

Pos	Part No	UN	Qty	Description	Page No

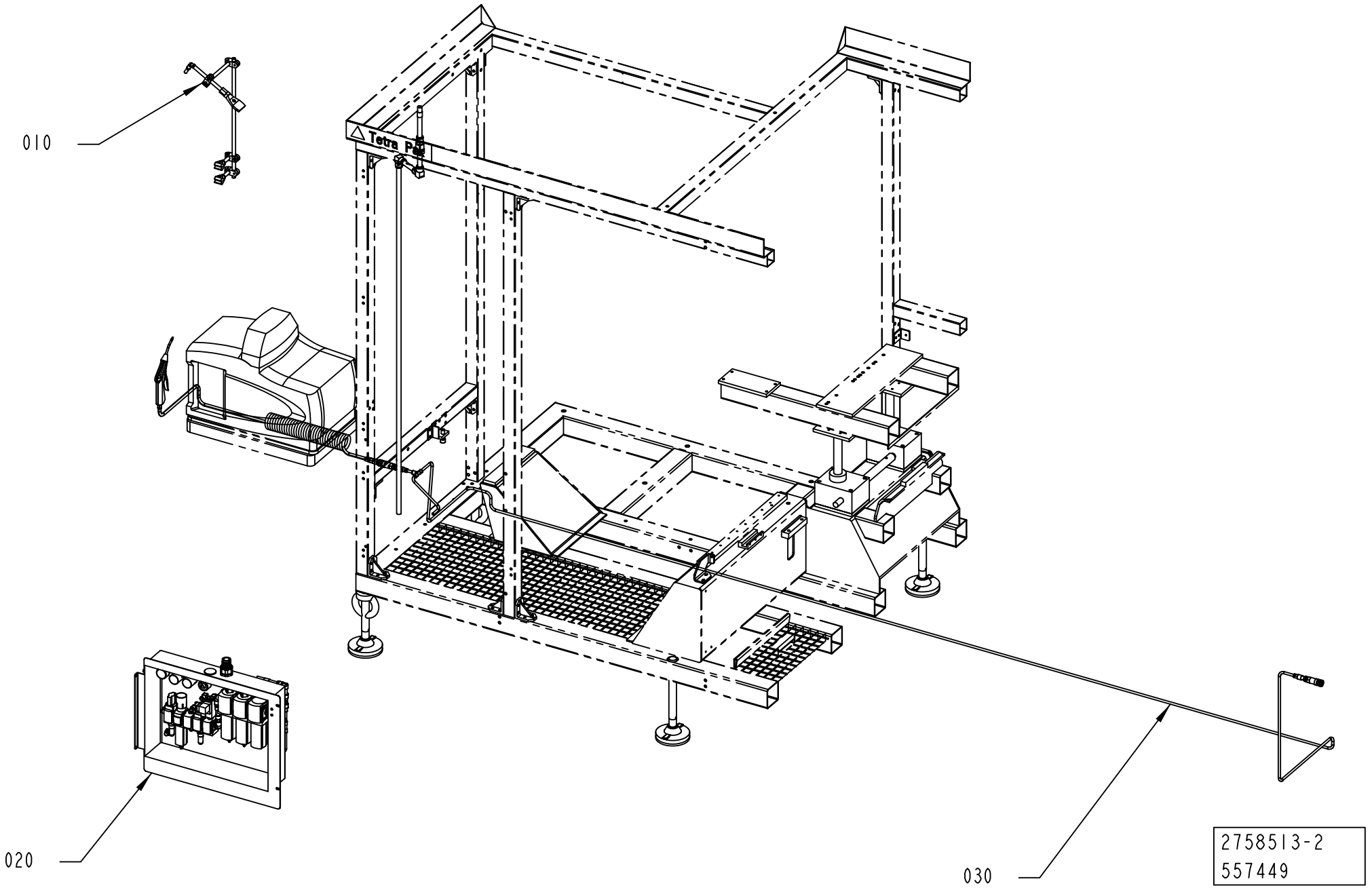
010
020
030
2758513-2
557449

ECM: 557449 - 20120702
Group number: 2758513-0200
Assembly Drawing: 2758513-2_1_AB

Pos	Part No	UN	Qty	Description	Page No
-					
010	2758512-0200		1	BLOWING SYSTEM	**5-61**
020	2838672-0200		1	PNEUMATIC PANEL	**5-63, 5-65, 5-67**
030	2838686-0200		1	AIR JET GUN	**5-73**

Pos	Part No	UN	Qty	Description	Page No

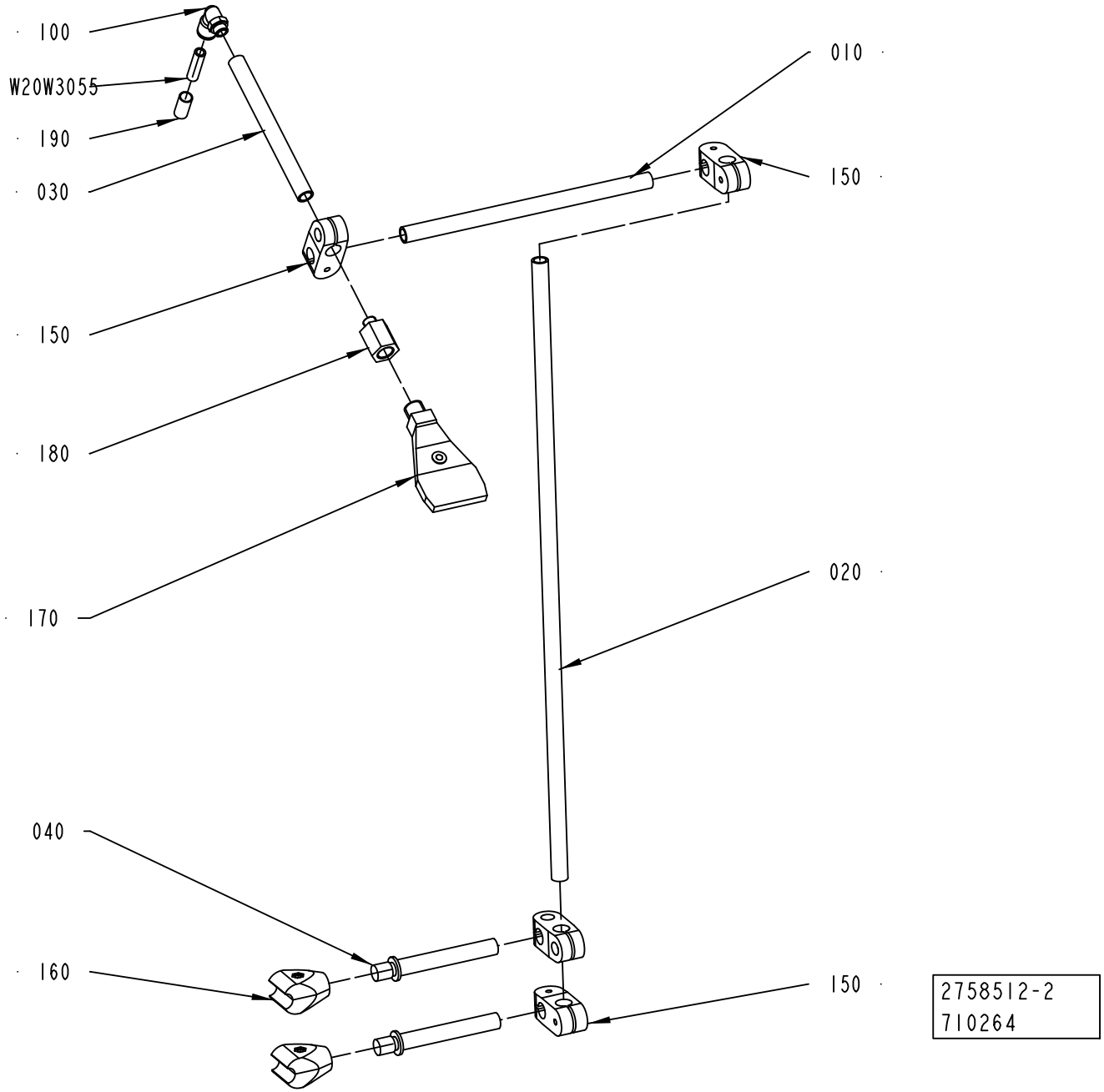
100
W20W3055
190
030
150
180
170
040
160
010
150
020
150
2758512-2
710264

ECM: 713618 - 20150401
Group number: 2758512-0200
Assembly Drawing: 2758512-2_1_AB

Pos	Part No	UN	Qty	Description	Page No
-					
010	2775403-0000		1	PIPE	
020	2775404-0000		1	PIPE	
030	2788176-0000		1	PIPE	
040	2838679-0000		2	SHAFT	
100	351456-3003		1	PUSH-IN L-FITTING NPQH-L-G18-Q8-P10	
150	90600-1001		4	CROSS CLAMP, 340/68385	
160	90458-0499		2	HOLDER 12 MM NO. 82 66861	
170	90424-0089		1	AIR NOZZLE, BSPT1/4, AAB727-1/4-15	
180	90330-0134		1	REDUCING NIPPLE, G1/8EXT-G1/4INT	
190	90459-7370		1	MARKING FOR PNEUM. TUBING, PRZ08	
W20W3055	315400-0004	MM	3000	TUBE PUN-H-8X1,25-BL	

Pos	Part No	UN	Qty	Description	Page No

PNEUMATIC PANEL

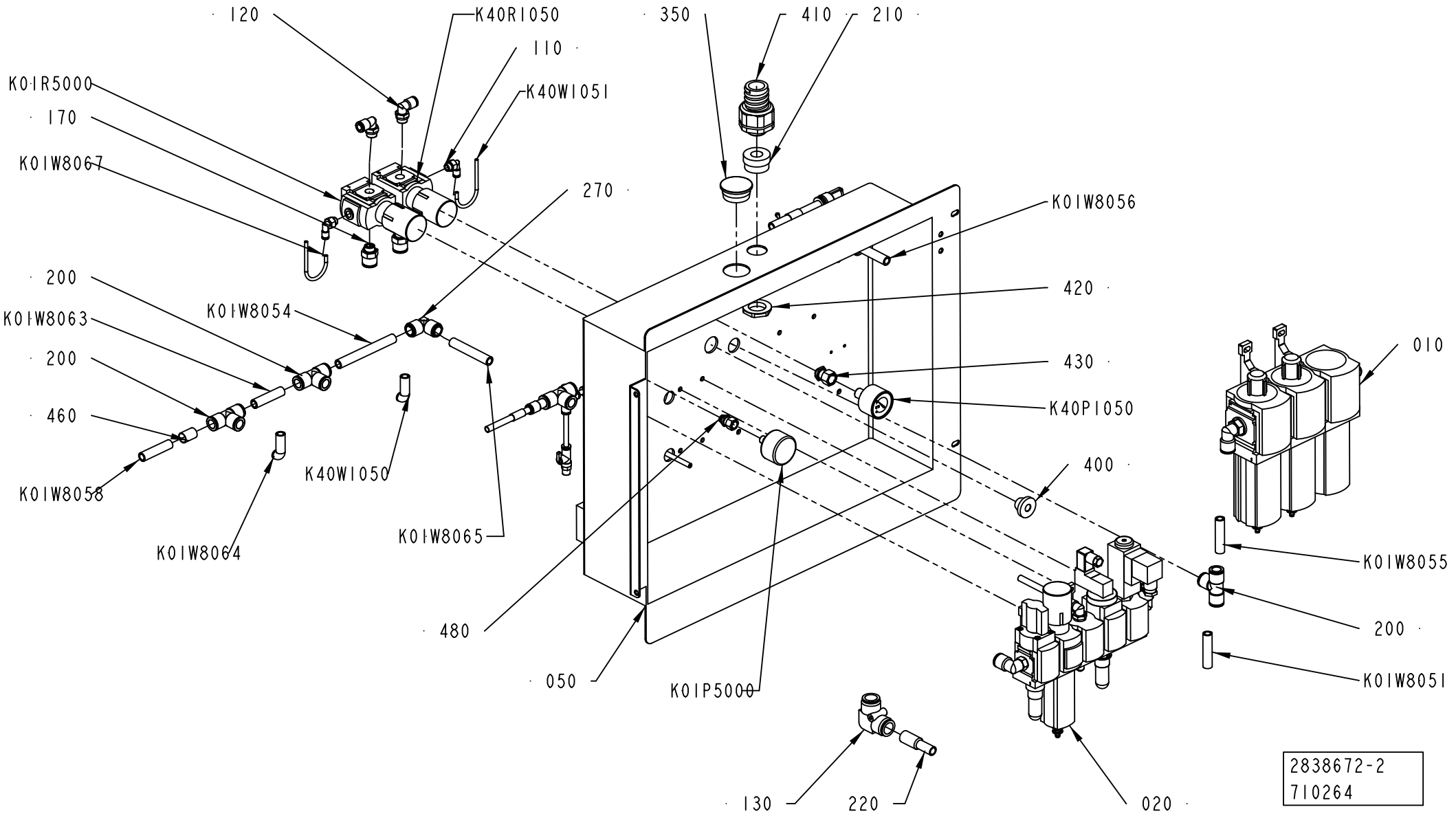

2838672-2
710264

ECM: 713784 - 20150401
Group number: 2838672-0200
Assembly Drawing: 2838672-2_1_AD

This list covers pages from 5-62 to 5-67

Pos	Part No	UN	Qty	Description	Page No
-					
010	2838673-0200		1	SERVICE UNIT	5-69
020	2838674-0200		1	SERVICE UNIT	5-71
050	2838676-0000		1	BRACKET	
100	2838701-0000		1	HOLDER	
110	351456-3001		3	PUSH-IN L-FITTING NPQH-L-G18-Q4-P10	
120	351456-3007		2	PUSH-IN L-FITTING NPQH-L-G14-Q8-P10	
130	90459-2553		1	PUSH-IN L-FITTING QSL 16	
140	351456-5107		4	PUSH-IN T-FITTING NPQH-T-Q6-E-P10	
150	351456-1109		2	PUSH-IN FITTING NPQH-D-S12-Q8-P10	
160	351456-5109		1	PUSH-IN T-FITTING NPQH-T-Q8-E-P10	
170	351456-0105		2	PUSH-IN FITTING NPQH-D-G14-Q12-P10	
180	351456-3003		4	PUSH-IN L-FITTING NPQH-L-G18-Q8-P10	
190	353250-0020		1	GLAND LOCK NUT, M20X1,5	
200	351456-5103		5	PUSH-IN T-FITTING NPQH-T-Q12-E-P10	
210	353249-0015		1	INSERT, SINGLE HOLE, EK155 16	
220	90459-7107		1	SLEEVE QSH-16-12	
230	351456-0103		1	PUSH-IN FITTING NPQH-D-G18-Q8-P10	
240	351456-3016		2	PUSH-IN L-FITTING NPQH-L-M5-Q6-P10	
250	351456-0102		2	PUSH-IN FITTING NPQH-D-G18-Q6-P10	
260	351456-5110		1	PUSH-IN T-FITTING NPQH-T-Q8-Q6-P10	
270	351456-3105		1	PUSH-IN L-FITTING NPQH-L-Q12-E-P10	
350	344351-0280		1	PROTECTIVE PLUG PE, GPN 300/F28	
400	90015-0021		1	LEAD-IN, TET 10-14, E1458023	
410	90458-0432		1	GLAND FITTING, VK 22555YUL21	
420	90458-0324		1	NUT, M25X1,5	
430	90459-7333		1	PUSH-IN FITTING QSSF-1/4-4-B	
440	90459-7369		3	MARKING FOR PNEUM. TUBING, PRZ06	
450	90459-7370		3	MARKING FOR PNEUM. TUBING, PRZ08	
460	90459-7372		2	MARKING FOR PNEUM. TUBING, PRZ12	
480	90459-7332		1	PUSH-IN FITTING QSSF-1/8-4-B	
490	90055-0222		2	ELBOW WITH TAILPIECE 6/6 MM	
500	90459-1825		1	ELBOW WITH TAILPIECE 12/12 MM	
510	90459-7368		1	MARKING FOR PNEUM. TUBING, PRZ04	
520	90600-1175		1	ELBOW WITH TAILPIECE 8/8 MM	
530	350013-0001		1	PLUG QSC-4H	
K21K0000	90458-1202		1	VALVES 2X3/2, CLOSED	
K40K2003	90458-1202		1	VALVES 2X3/2, CLOSED	
K01P5000	90459-3603		1	PRESSURE GAUGE, MAP-40-6-1/8-EN	
K40P1050	90459-7344		1	PRESSURE GAUGE, MA-40-6-R1/4-EN	
K20Q0051	90459-0290		1	NON-RETURN VALVE, H-QS-6	
K20Q0052	90187-0191		1	BALL VALVE, R1/8 - HOSE 6 MM	
K01R5000	90459-5817		1	REGULATOR, MS4-LR-1/4-D6-A8-AS	
K01R9051	90328-0047		1	SILENCER, G1/8"	
K01R9053	90328-0047		1	SILENCER, G1/8"	
K01R9054	90328-0029		1	SILENCER, M5	
K01R9055	90328-0029		1	SILENCER, M5	
K20R3052	90328-0047		1	SILENCER, G1/8"	
K20R3053	90328-0047		1	SILENCER, G1/8"	
K20R3054	90328-0029		1	SILENCER, M5	
K20R3055	90328-0029		1	SILENCER, M5	
K21R0054	90459-3604		1	FLOW CONTROL VALVE, GR-QS-6	
K21R3054	90235-0748		1	THROTTLE CHECK VALVE, GRA-1/4-B	
K40R1050	90459-5817		1	REGULATOR, MS4-LR-1/4-D6-A8-AS	
K01U9050	90459-2591		1	SINGLE VALVE SUB-BASE CDSV5.0-AS-1/8	
K20U3050	90459-2591		1	SINGLE VALVE SUB-BASE CDSV5.0-AS-1/8	
K01W8051	315400-0010	MM	300	TUBE PUN-H-12X2-BL	
K01W8053	315400-0001	MM	300	6-4E PUN-H-6X1-BL	
K01W8054	315400-0010	MM	300	TUBE PUN-H-12X2-BL	
K01W8055	315400-0010	MM	300	TUBE PUN-H-12X2-BL	
K01W8056	315400-0010	MM	300	TUBE PUN-H-12X2-BL	
K01W8057	315400-0004	MM	300	TUBE PUN-H-8X1,25-BL	
K01W8058	315400-0010	MM	300	TUBE PUN-H-12X2-BL	
K01W8059	315400-0001	MM	300	6-4E PUN-H-6X1-BL	
K01W8061	315400-0004	MM	300	TUBE PUN-H-8X1,25-BL	
K01W8062	315400-0010	MM	300	TUBE PUN-H-12X2-BL	
K01W8063	315400-0010	MM	300	TUBE PUN-H-12X2-BL	
K01W8064	315400-0010	MM	300	TUBE PUN-H-12X2-BL	
K01W8065	315400-0010	MM	300	TUBE PUN-H-12X2-BL	
K01W8067	315400-0016	MM	300	TUBE PUN-H-4X0,75-BL	
K01W8068	315400-0001	MM	300	6-4E PUN-H-6X1-BL	
K01W8071	315400-0004	MM	300	TUBE PUN-H-8X1,25-BL	
K01W9054	315400-0001	MM	300	6-4E PUN-H-6X1-BL	
K01W9056	315400-0001	MM	300	6-4E PUN-H-6X1-BL	
K20W0050	315400-0001	MM	300	6-4E PUN-H-6X1-BL	
K20W0052	315400-0001	MM	300	6-4E PUN-H-6X1-BL	
K20W0053	315400-0001	MM	300	6-4E PUN-H-6X1-BL	
K20W3051	315400-0004	MM	300	TUBE PUN-H-8X1,25-BL	
K20W3054	315400-0004	MM	300	TUBE PUN-H-8X1,25-BL	
K20W3055	315400-0004	MM	300	TUBE PUN-H-8X1,25-BL	
K20W3056	315400-0001	MM	300	6-4E PUN-H-6X1-BL	
K21W0051	315400-0004	MM	300	TUBE PUN-H-8X1,25-BL	
K21W0054	315400-0001	MM	300	6-4E PUN-H-6X1-BL	
K21W0055	315400-0001	MM	300	6-4E PUN-H-6X1-BL	

Machine Type | Group Description | Used-In | Group Number | Page No

PNEUMATIC PANEL

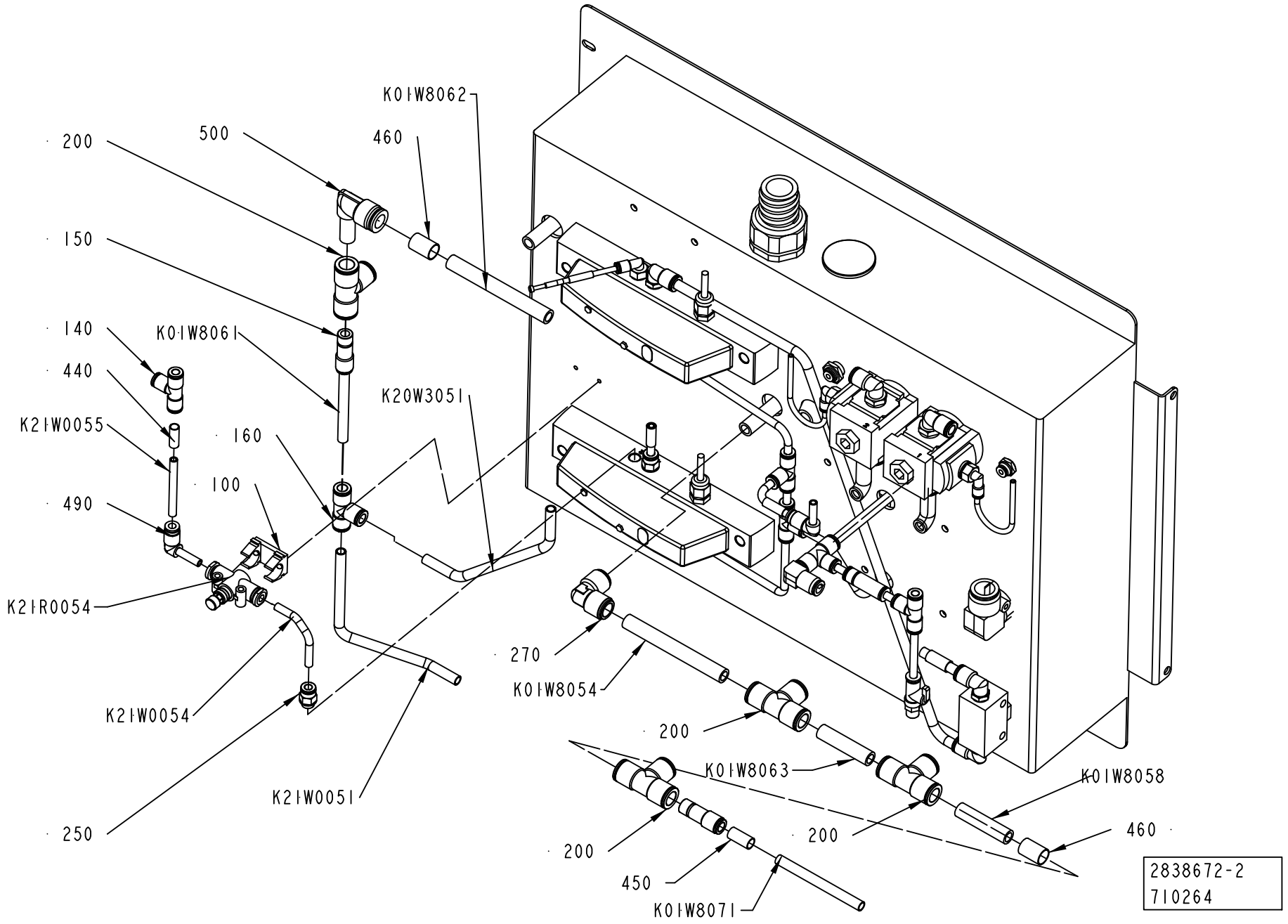

Pos	Part No	UN	Qty	Description	Page No
- (Cont'd)					
K40W1050	315400-0010	MM	300	TUBE PUN-H-12X2-BL	
K40W1051	315400-0016	MM	300	TUBE PUN-H-4X0,75-BL	
K40W2054	315400-0016	MM	300	TUBE PUN-H-4X0,75-BL	

Pos	Part No	UN	Qty	Description	Page No

PNEUMATIC PANEL

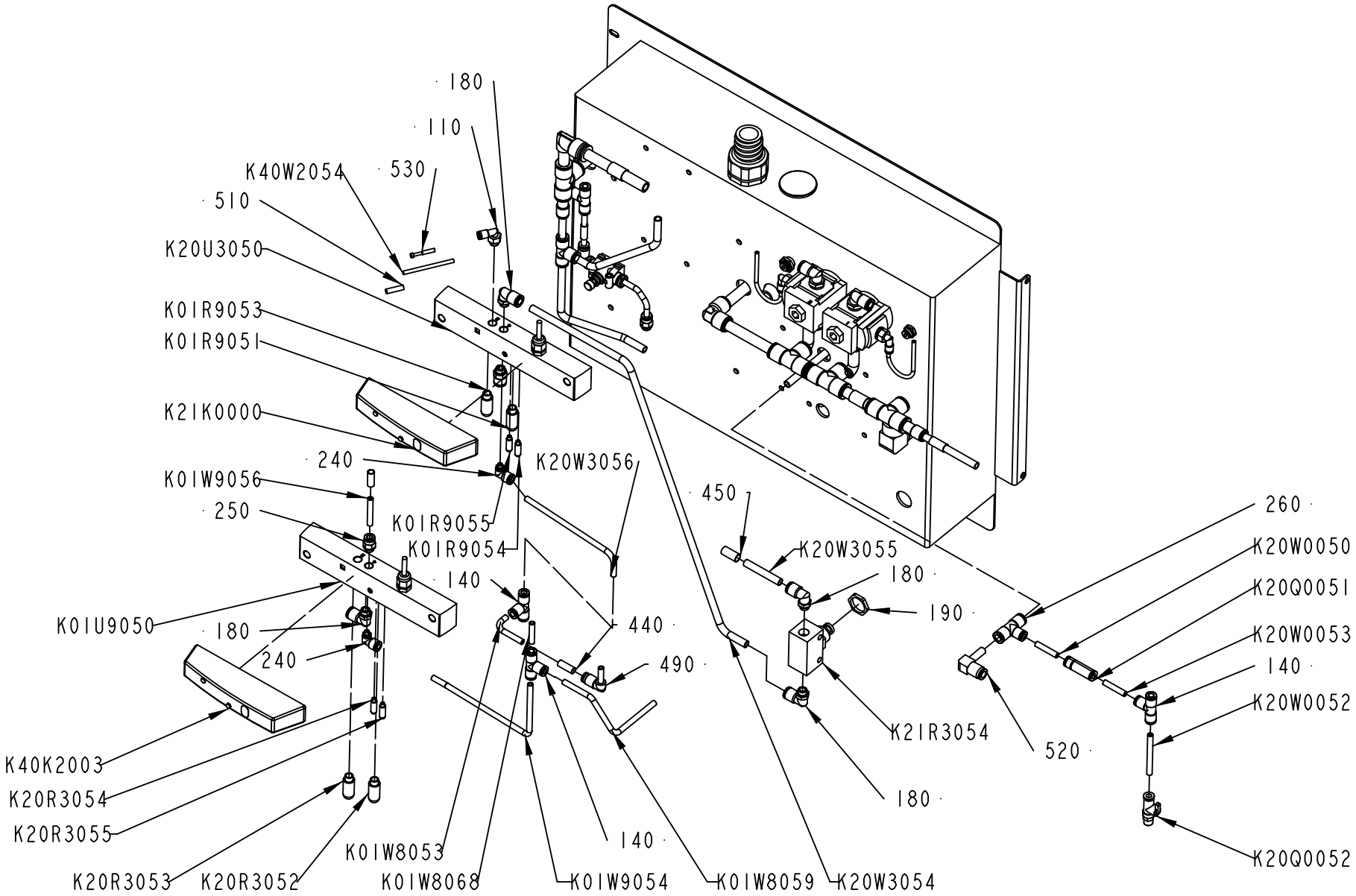

2838672-2
710264

Pos	Part No	UN	Qty	Description	Page No	Pos	Part No	UN	Qty	Description	Page No

SEE PREVIOUS LISTS PAGES: 5-63, 5-65.

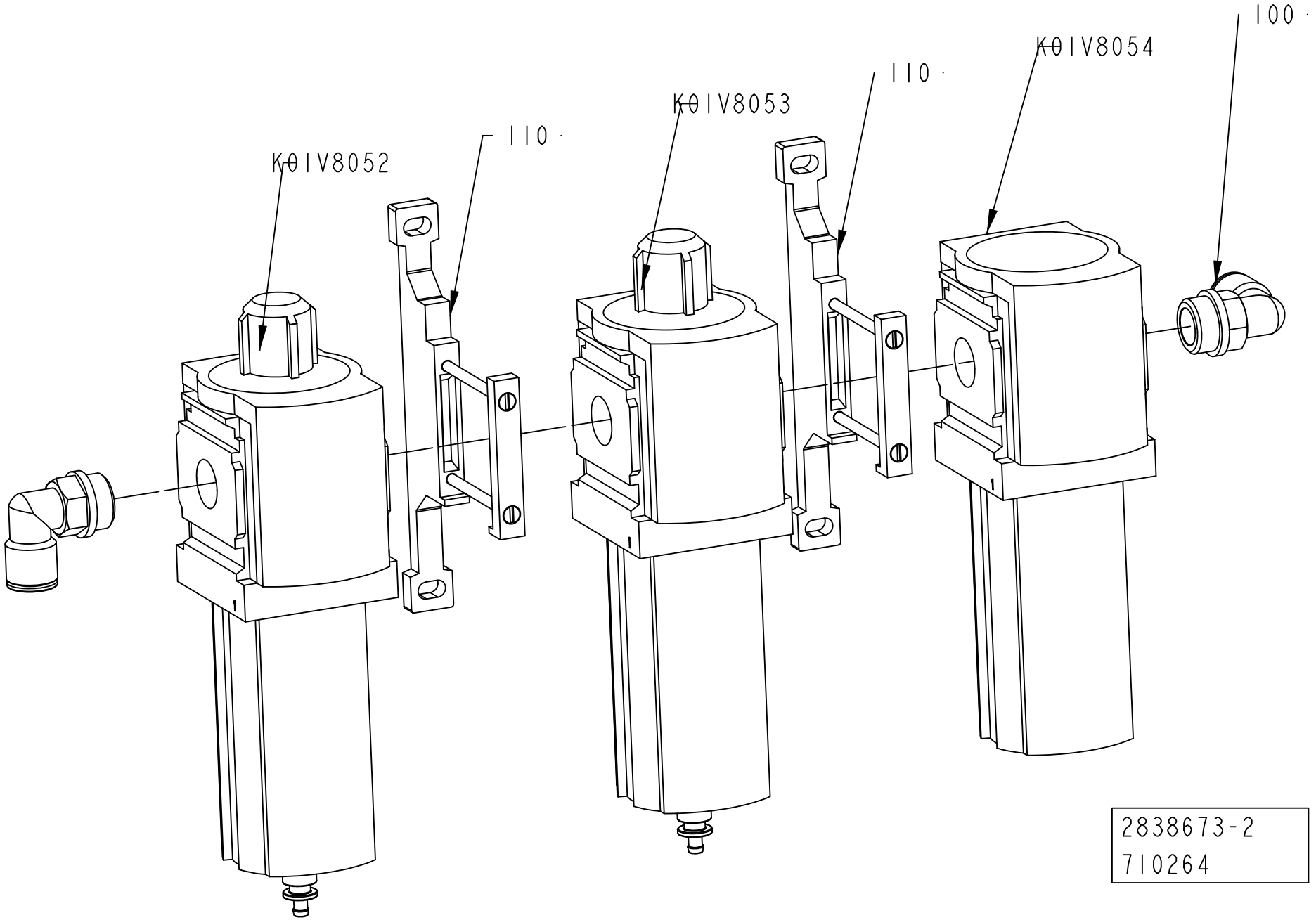
100
K01V8054
110
K01V8053
110
K01V8052
2838673-2
710264

ECM: 713802 - 20150401
Group number: 2838673-0200
Assembly Drawing: 2838673-2_1_AB

Pos	Part No	UN	Qty	Description	Page No
-					
100	351456-3013		2	PUSH-IN L-FITTING NPQH-L-G12-Q12	
110	90459-1858		2	BRACKET, MS6-WP	
K01V8052	90603-4699		1	FILTER, MS6-LFM-1/2-B-R-V-DA	
	90459-3812		*1*	*FILTER CARTRIDGE, MS6-LFM-B*	
K01V8053	90603-4698		1	FILTER, MS6-LFM-1/2-ARV-DA	
	90459-3811		*1*	*FILTER CARTRIDGE MS6-LFM-A*	
K01V8054	90459-2771		1	FILTER, MS6-LFX-1/2-R	
	90459-3810		*1*	*FILTER CARTRIDGE, MS6-LFX*	

Pos	Part No	UN	Qty	Description	Page No

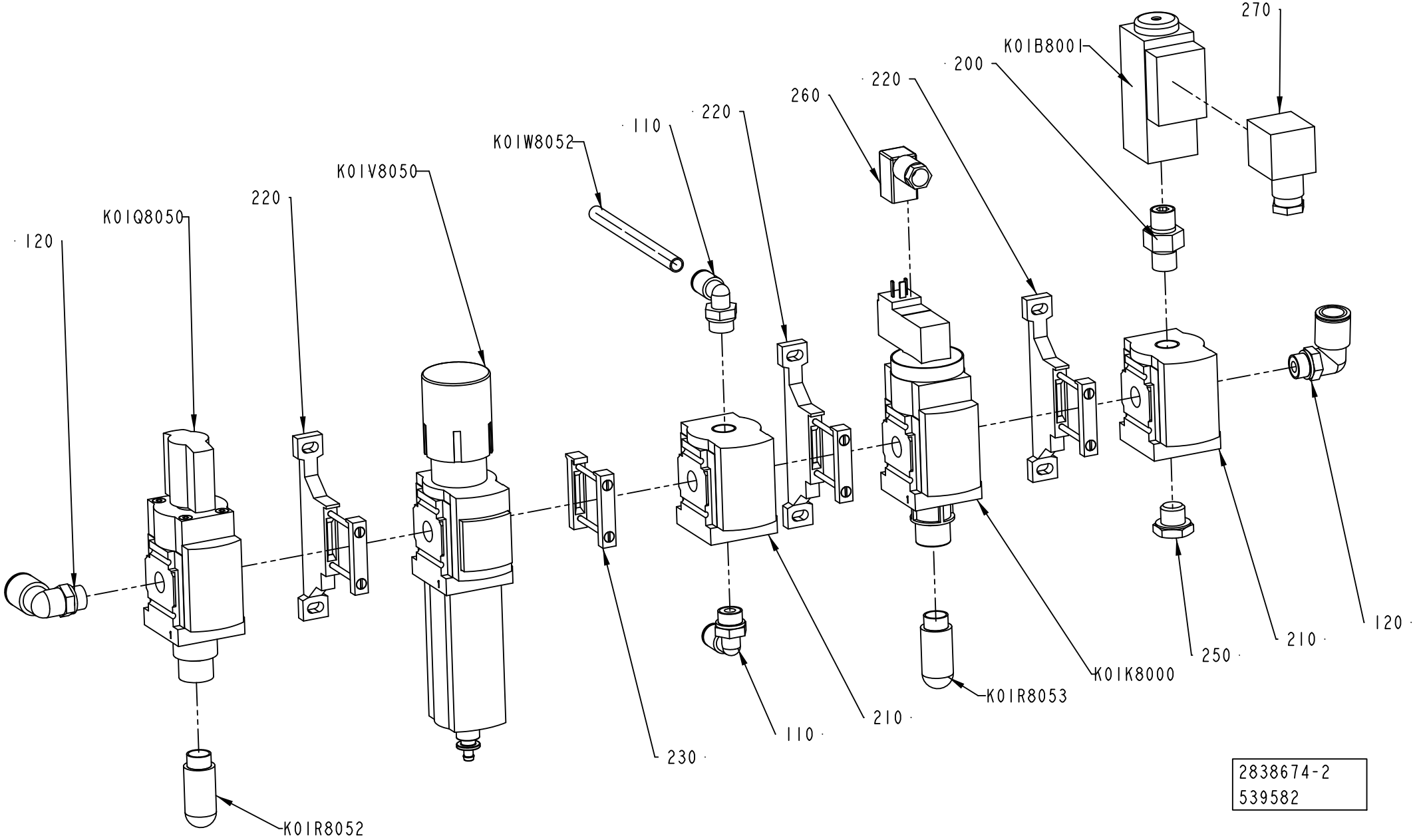
270
K01B8001
200
220
260
220
110
K01W8052
K01V8050
220
K01Q8050
120
K01R8052
230
110
210
K01R8053
K01K8000
250
210
120
2838674-2
539582

ECM: 713807 - 20150401
Group number: 2838674-0200
Assembly Drawing: 2838674-2_1_AB

Pos	Part No	UN	Qty	Description	Page No
-					
110	351456-3007		2	PUSH-IN L-FITTING NPQH-L-G14-Q8-P10	
120	351456-3005		2	PUSH-IN L-FITTING NPQH-L-G14-Q12-P10	
200	90224-0372		1	NIPPLE, EXT.THREAD, HEXAGON, R1/4-R1/4	
210	90459-2245		2	DISTRIBUTOR, MS4-FRM-1/4	
220	90459-2247		3	BRACKET, MS4-WP	
230	90459-2248		1	BRACKET	
240	90224-0372		1	NIPPLE, EXT.THREAD, HEXAGON, R1/4-R1/4	
250	90330-0026		1	PLUG, EXT. G-THREAD, G1/4	
260	90458-2837		1	CONNECTING CABLE KMEB-1-24-5-LED	
270	90110-0095		1	CONNECTOR, PLUG SOCKET, MSSD-C-4P	
K01B8001	90459-6426		1	PRESSURE GUARD PEV-1/4-B-OD	
K01K8000	90459-2243		1	VALVE, MS4-EE-1/4-10V24	
K01Q8050	90459-2337		1	SHUT OFF VALVE, MS4-EM1-1/4	
K01R8052	90328-0026		1	SILENCER, G1/4"	
K01R8053	90328-0026		1	SILENCER, G1/4"	
K01V8050	90459-2339		1	FILTER REGULATOR, MS4-LFR-1/4-D7-ERV-AS	
	90459-3814		*1*	*FILTER CARTRIDGE, MS4-LFP-E*	
K01W8052	315400-0004	MM	1000	TUBE PUN-H-8X1,25-BL	

Pos	Part No	UN	Qty	Description	Page No

Machine Type | Group Description | Used-In | Group Number | Page No

AIR JET GUN

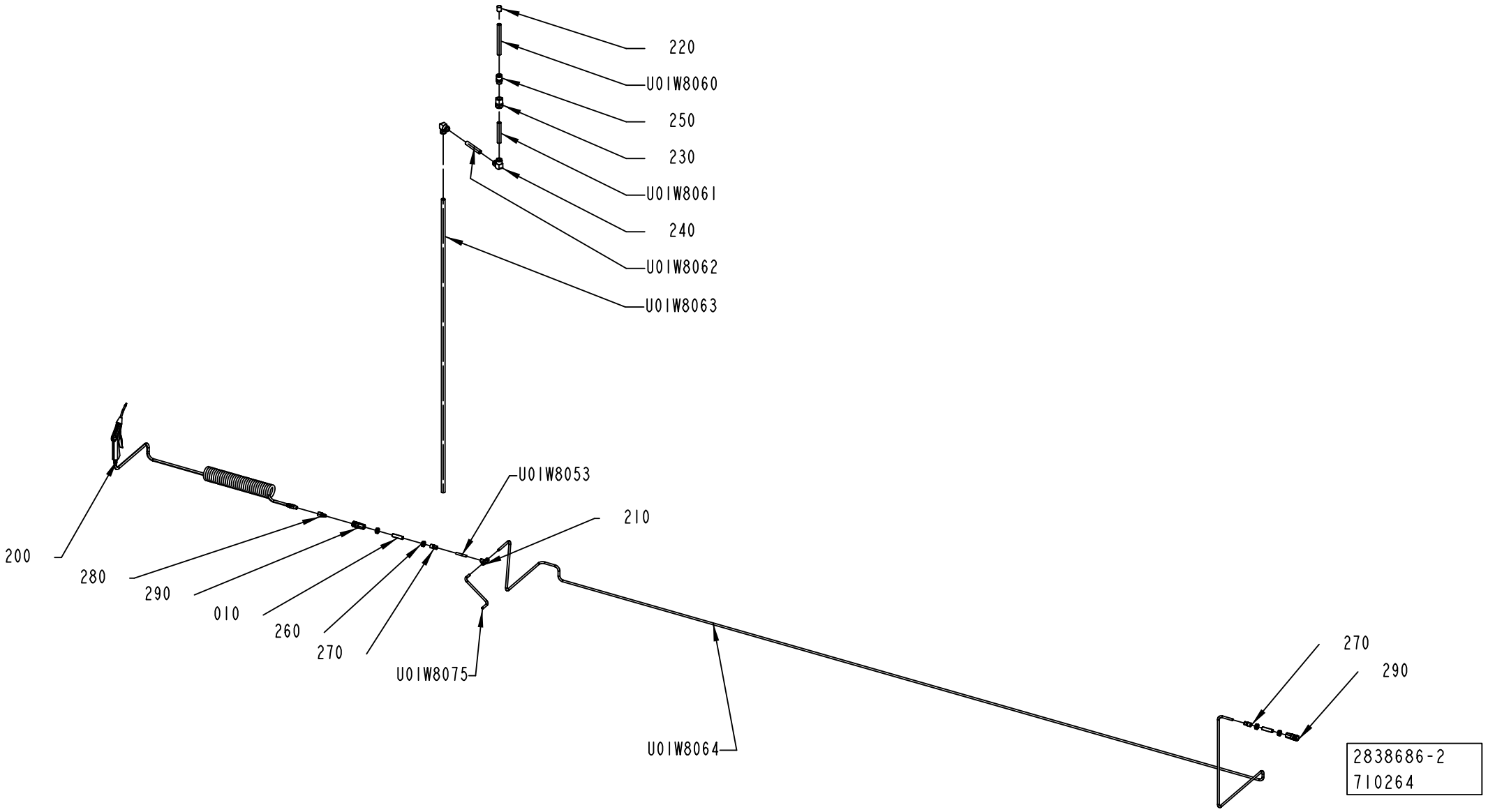
220
U01W8060
250
230
U01W8061
240
U01W8062
U01W8063
U01W8053
210
200
280
290
010
260
270
U01W8075
U01W8064
270
290
2838686-2
710264

ECM: 713926 - 20150401
Group number: 2838686-0200
Assembly Drawing: 2838686-2_1_AD

Pos	Part No	UN	Qty	Description	Page No
CAP 30/FLEX					
U01W8060	315400-0013	MM	650	TUBE PUN-H-16-2,5-BL	
U01W8064	315400-0004	MM	6500	TUBE PUN-H-8X1,25-BL	
U01W8075	315400-0004	MM	2000	TUBE PUN-H-8X1,25-BL	
Common Parts					
010	3293084-0000		2	THREADED CONNECTION	
200	90458-1740		1	AIR GUN ASSEMBLY, CEJN 199589668	
210	351456-5109		1	PUSH-IN T-FITTING NPQH-T-Q8-E-P10	
220	90459-7373		1	MARKING FOR PNEUM. TUBING, PRZ16	
230	90459-0864		1	BULKHEAD CONNECTOR, 12 MM/M27X1,5	
240	90459-2553		2	PUSH-IN L-FITTING QSL 16	
250	90459-2215		1	STRAIGHT COUPLING, D=16 MM - G1/2"	
260	6-526343 02		4	HEXAGON NUT DN8 RP1/4" 1.4404	
270	351456-0506		2	PUSH-IN FITTING NPQH-D-G14F-Q8-P10	
280	90459-2254		1	QUICK COUPLING, (M) 10 320 5202	
290	90606-5416		2	QUICK COUPLING, (F) 25KAIW13SPN	
U01W8053	315400-0004	MM	500	TUBE PUN-H-8X1,25-BL	
U01W8061	315400-0013	MM	500	TUBE PUN-H-16-2,5-BL	
U01W8062	315400-0013	MM	500	TUBE PUN-H-16-2,5-BL	
U01W8063	315400-0013	MM	2000	TUBE PUN-H-16-2,5-BL	

Pos	Part No	UN	Qty	Description	Page No

CENTRAL LUBRICATION

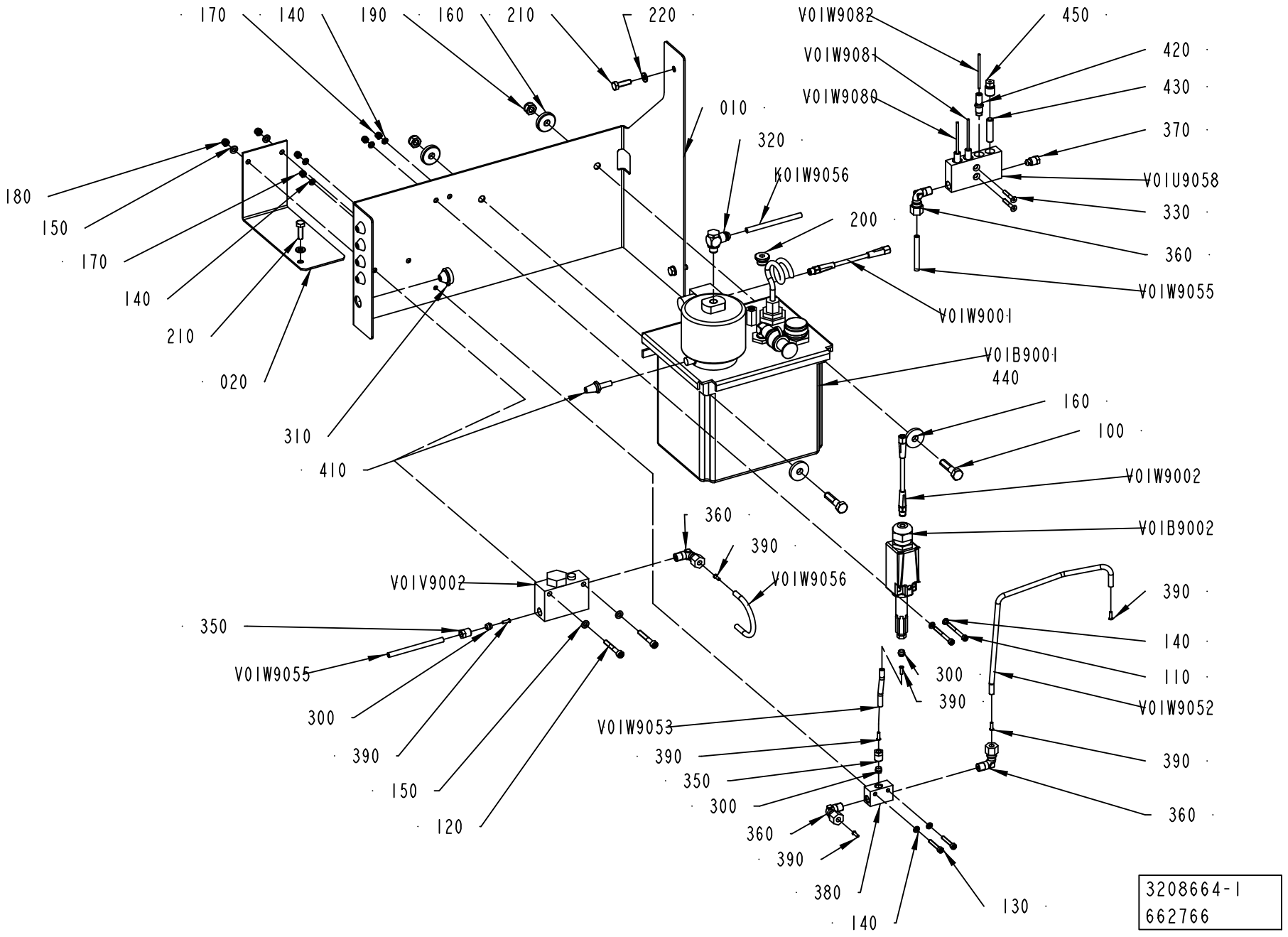

ECM: 666318 - 20140701
Group number: 3208664-0100
Assembly Drawing: 3208664-1_1_AF

Pos	Part No	UN	Qty	Description	Page No
-					
010	3214100-0000		1	BRACKET	
020	3246646-0000		1	BRACKET	
100	312105-0457		2	SCREW, M6S ISO 4014 M8X35 A4 80	
110	312115-0303		2	SCREW ISO4762 M4X40 A4 80	
120	312115-0337		2	SCREW ISO4762 M5X35 A4 80	
130	312115-0297		2	SCREW ISO4762 M4X25 A4 80	
140	315105-0136		8	WASHER PLAIN, 4,3X8X0,8 A4 BRB	
150	315105-0146		4	WASHER PLAIN, 5,3X10X1 A4 BRB	
160	315125-0165		4	WASHER HIGH, TBRSB 8,4X26X5 A4	
170	312812-0312		4	HEXAGON NUT, NY-LOCK M4 A4 80	
180	312812-0314		2	HEXAGON NUT, NY-LOCK M5 A4 80	
190	312812-0318		2	HEXAGON NUT, NY-LOCK M8 A4 80	
200	90604-6027		1	PLUG, EXT. THREAD HEX. SOCKET. G1/4	
210	312105-0370		3	SCREW, M6S ISO 4017 M6X20 A4 80	
220	315105-0153		3	WASHER PLAIN, 6,4X12X1,5 A4 BRB	
300	90028-0022		3	CONE TUBE 6 MM	
310	90015-0020		5	LEAD-IN, TET5-7, E-1458016	
320	90459-5522		1	CONN. BANJO, COR8PB6M10	
330	312155-0297		2	SCREW DIN 7991 MF6S M4X25 A4 70	
350	90134-0055		2	BUSHING/NUT INLET/OUTLET 6 MM	
360	90030-0200		4	CONN. ELBOW, WE06LM71	
370	90087-0019		1	PLUG M10X1 STAINLESS	
380	90032-0043		1	DISTRIBUTION BLOCK 3 WAYS	
390	90134-0030		7	SLEEVE FOR PLASTIC TUBE	
410	90328-0017		1	SILENCER, D=6 MM74122000	
420	90092-0054		3	METERING VALVE 50 MM3	
430	90134-0052		1	PLUG DOSING BLOCK	
440	90606-3683		1	DRY LUBRICANT PTFE RM2000T, 5 L BOTTLE	
450	90134-0039		1	BUSHING VALVE CONNECTION 2,5 MM	
K01W9056	315400-0001	MM	1000	6-4E PUN-H-6X1-BL	
V01B9001	90603-0408		1	LUBRICATION UNIT, 10P-P4-H1 LM12	
	90274-0052		*1*	*LEVEL GUARD, 2.855432.1*	
	90604-5445		*1*	*PISTON PUMP, 90048-041 H1*	
	90604-6566		*1*	*CAP, MTC/Z-1/2*	
	90604-6568		*1*	*AIR VENT, 90605-9354 LM12*	
V01B9002	90603-1938		1	PRESSURE SWITCH, 1800 KPA, 28545-251-2	
V01U9058	90032-0039		1	BLOCK 4 WAYS	
V01V9002	90415-0030		1	OIL FILTER PN 100 ORD.NO 2.77 10 70.1	
	90415-0326		*1*	*FILTER INSERT*	
V01W9001	344257-0050		1	SENSOR CABLE, EVT146	
V01W9002	344257-0050		1	SENSOR CABLE, EVT146	
V01W9052	90166-0108	MM	200	TUBE 6 MM PA TRANSP.	
V01W9053	90166-0108	MM	200	TUBE 6 MM PA TRANSP.	
V01W9055	90166-0108	MM	1000	TUBE 6 MM PA TRANSP.	
V01W9056	90166-0108	MM	200	TUBE 6 MM PA TRANSP.	
V01W9080	90166-0143	MM	3000	TUBE 2,5 MM PA TRANSP.	
V01W9081	90166-0143	MM	3000	TUBE 2,5 MM PA TRANSP.	
V01W9082	90166-0143	MM	3000	TUBE 2,5 MM PA TRANSP.	

Machine Type | Group Description | Used-In | Group Number | Page No

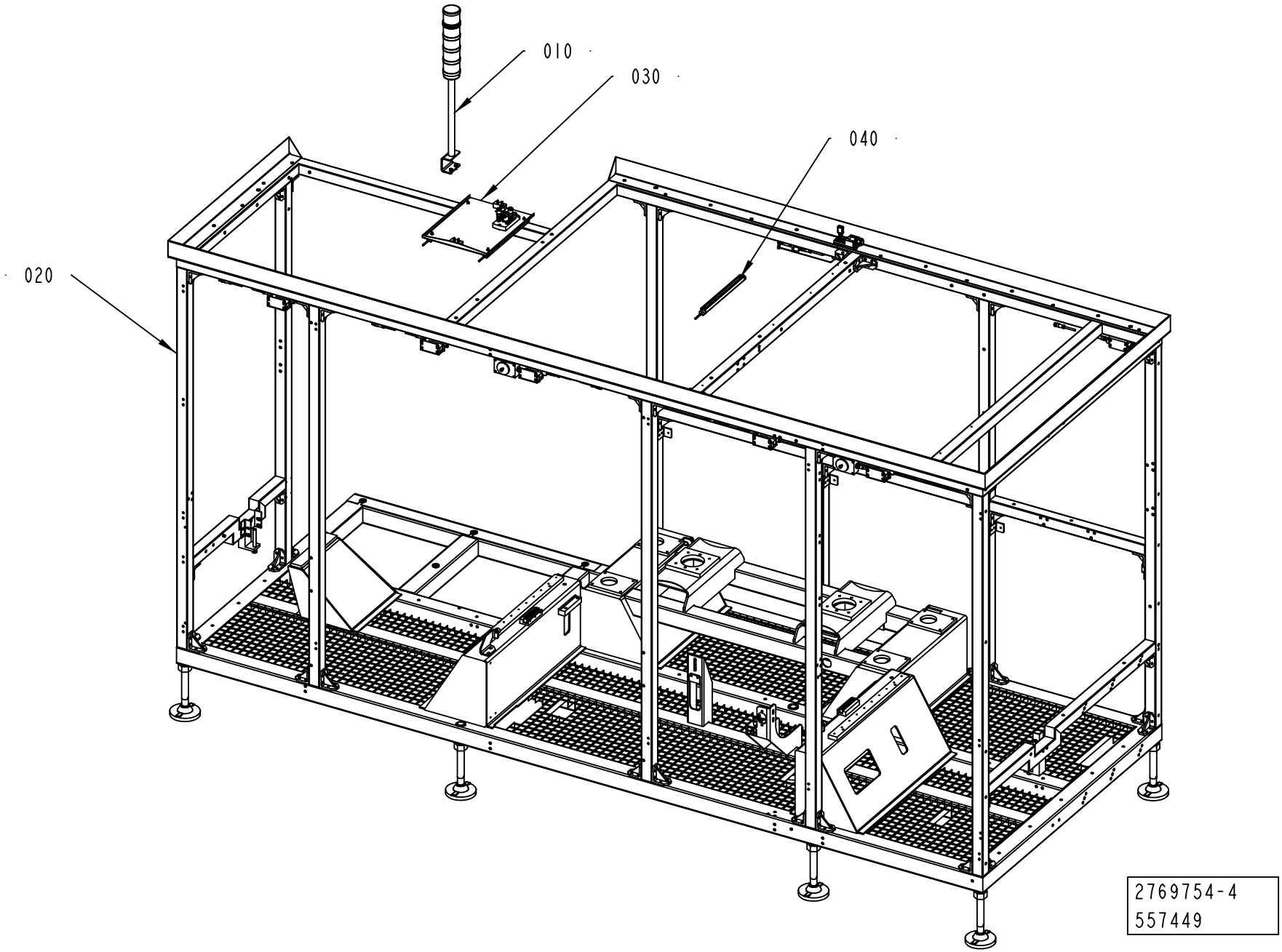
010
030
040
020
2769754-4
557449

ECM: 567930 - 20121001
Group number: 2769754-0300
Assembly Drawing: 2769754-4_1_AB

Pos	Part No	UN	Qty	Description	Page No
-					
010	2779764-0300		1	WARNING LAMP	**5-79**
020	2805700-0300		1	DOOR SAFETY SWITCH	**5-81, 5-83**
030	3210206-0100		1	LAMP	**5-85**
040	3210207-0100		1	LAMP	**5-87**
050	2873950-0200		1	CABLE SET	**5-89**

Pos	Part No	UN	Qty	Description	Page No

WARNING LAMP

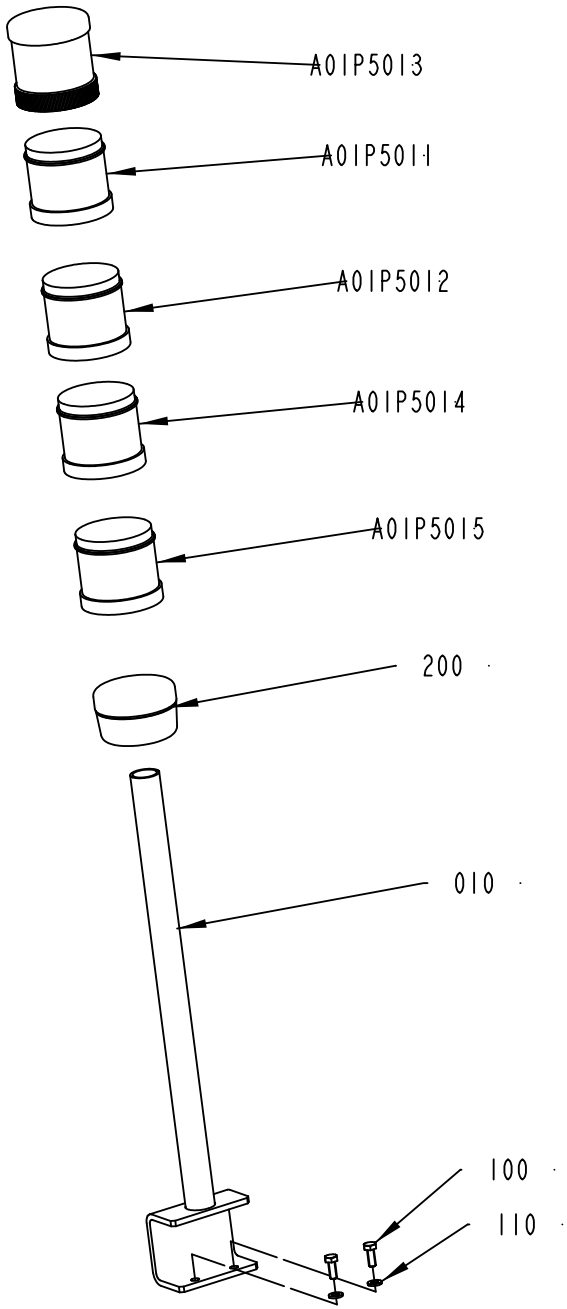

2779764-3
662766

ECM: 665327 - 20140701
Group number: 2779764-0300
Assembly Drawing: 2779764-3_1_AB

Pos	Part No	UN	Qty	Description	Page No
-					
010	2779765-0000		1	BRACKET	
100	312105-0368		2	"SCREW, M6S ISO 4017 M6X16 A4 80"	
110	315105-0153		2	WASHER PLAIN, 6,4X12X1,5 A4 BRB	
200	90602-4627		1	TERMINAL ELEMENT, PSD-S CE-TM SPRING	
A01P5011	90602-4062		1	LIGHT ELEMENT, RED, PSD-S OE LED RD	
A01P5012	90602-4063		1	LIGHT ELEMENT, YELLOW, PSD-S OE LED YE	
A01P5013	90602-4631		1	SIREN 100DB, PSD-S AE SM8-5 100DB/1	
A01P5014	90602-4060		1	LIGHT ELEMENT, BLUE, PSD-S OE LED BU	
A01P5015	90602-4061		1	LIGHT ELEMENT, GREEN, PSD-S OE LED GN	

Pos	Part No	UN	Qty	Description	Page No

DOOR SAFETY SWITCH

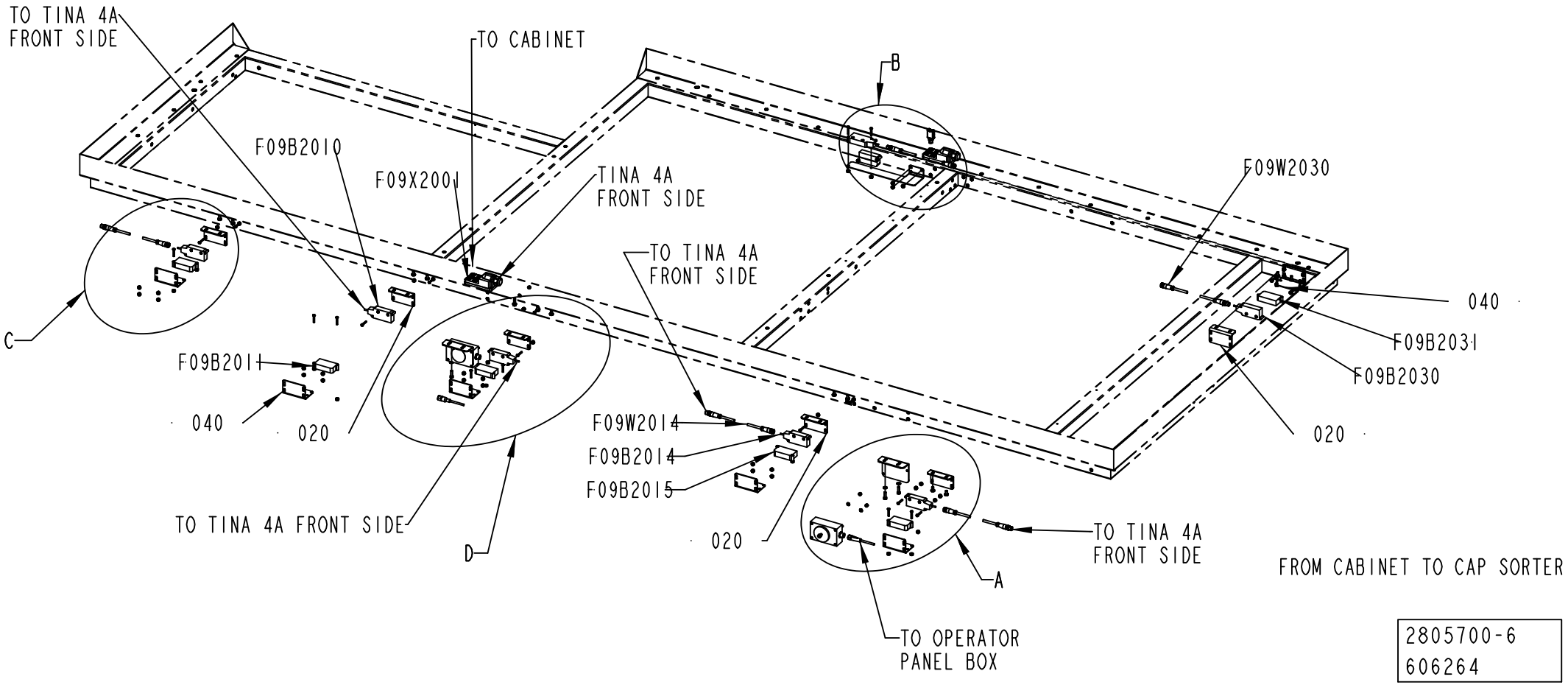

2805700-6
606264

Pos	Part No	UN	Qty	Description	Page No
DREAMCAP 26 (See drawing on pages: 5-80, 5-82)					
300	1539391-0000		52	ROUND NUT	
320	312605-0314		4	HEXAGON NUT, M6M M5 A280	
330	312105-0370		4	SCREW, M6S ISO 4017 M6X20 A4 80	
350	315105-0153		4	WASHER PLAIN, 6,4X12X1,5 A4 BRB	
360	315105-0146		4	WASHER PLAIN, 5,3X10X1 A4 BRB	
Common Parts					
010	2781283-0000		2	BRACKET	
020	2817774-0000		6	SUPPORT	
030	2817775-0000		1	SUPPORT	
040	3054997-0000		6	SUPPORT	
310	90459-4165		26	SAFETY SCREW, SM4X25	
380	90600-2563		12	SCREW SNAKE EYES® PAN HEAD M6X12 A2	
390	575034-0000		3	ROUND NUT	
F09B2010	90459-6961		1	SAFETY SENSOR, ADAM E 0,5 M12	
F09B2011	90459-4089		1	SAFETY SENSOR, EVA E, 20-046-06	
F09B2012	90459-6961		1	SAFETY SENSOR, ADAM E 0,5 M12	
F09B2013	90459-4089		1	SAFETY SENSOR, EVA E, 20-046-06	
F09B2014	90459-6961		1	SAFETY SENSOR, ADAM E 0,5 M12	
F09B2015	90459-4089		1	SAFETY SENSOR, EVA E, 20-046-06	
F09B2016	90459-6961		1	SAFETY SENSOR, ADAM E 0,5 M12	
F09B2017	90459-4089		1	SAFETY SENSOR, EVA E, 20-046-06	
F09B2030	90459-6961		1	SAFETY SENSOR, ADAM E 0,5 M12	
F09B2031	90459-4089		1	SAFETY SENSOR, EVA E, 20-046-06	
F09B2032	90459-6961		1	SAFETY SENSOR, ADAM E 0,5 M12	
F09B2033	90459-4089		1	SAFETY SENSOR, EVA E, 20-046-06	
F09B2034	90459-6961		1	SAFETY SENSOR, ADAM E 0,5 M12	
F09B2035	90459-4089		1	SAFETY SENSOR, EVA E, 20-046-06	
F09B2036	90459-5627		1	CONNECTION, TINA 1-A	
F09B2041	90459-6913		1	MAGNETIC LOCK, JSD-ZH-EM1-K	
F09B2042	90459-6913		1	MAGNETIC LOCK, JSD-ZH-EM1-K	
F09W2014	90459-4876		1	FOCUS JUMPER CABLE M12 5P 3M, 20-056-21	
F09W2016	90459-4876		1	FOCUS JUMPER CABLE M12 5P 3M, 20-056-21	
F09W2030	90459-4876		1	FOCUS JUMPER CABLE M12 5P 3M, 20-056-21	
F09W2032	90459-4876		1	FOCUS JUMPER CABLE M12 5P 3M, 20-056-21	
F09W2034	90459-4876		1	FOCUS JUMPER CABLE M12 5P 3M, 20-056-21	
F09W2041	344253-0100		1	SENSOR CABLE, EVT002	
F09W2042	344253-0100		1	SENSOR CABLE, EVT002	
F09X2001	90604-0093		1	CONNECTION BLOCK, TINA4A 2TLJ020054R0300	
F09X2002	90604-0093		1	CONNECTION BLOCK, TINA4A 2TLJ020054R0300	

Pos	Part No	UN	Qty	Description	Page No

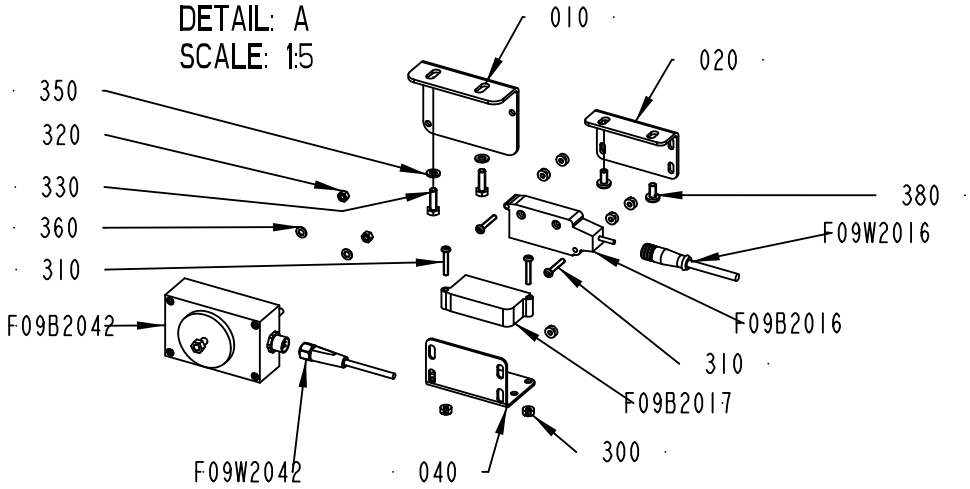

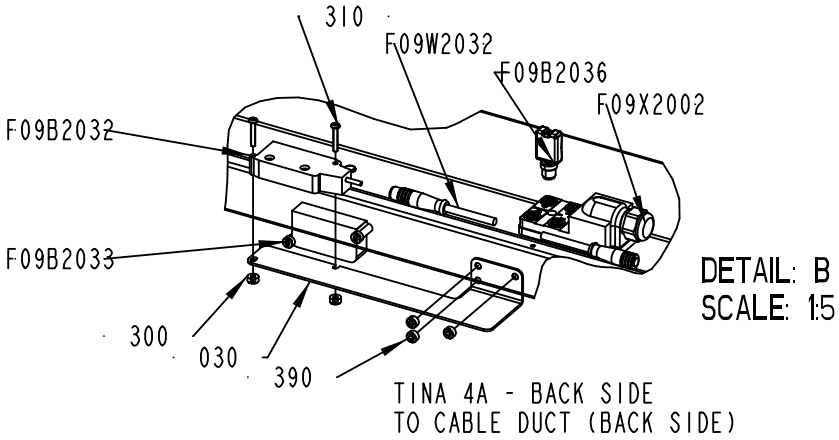

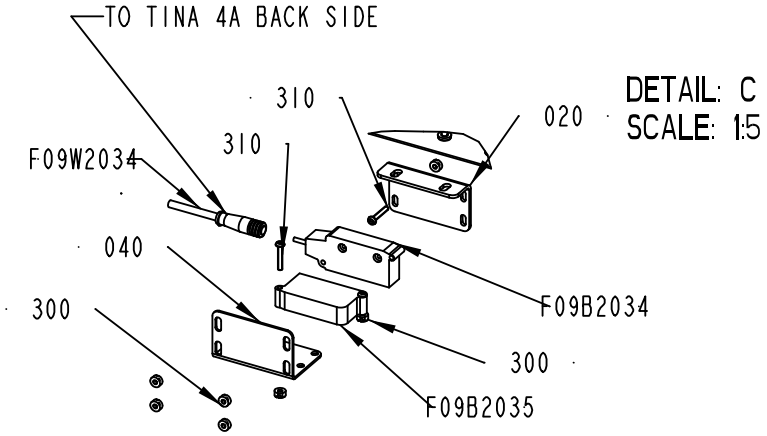

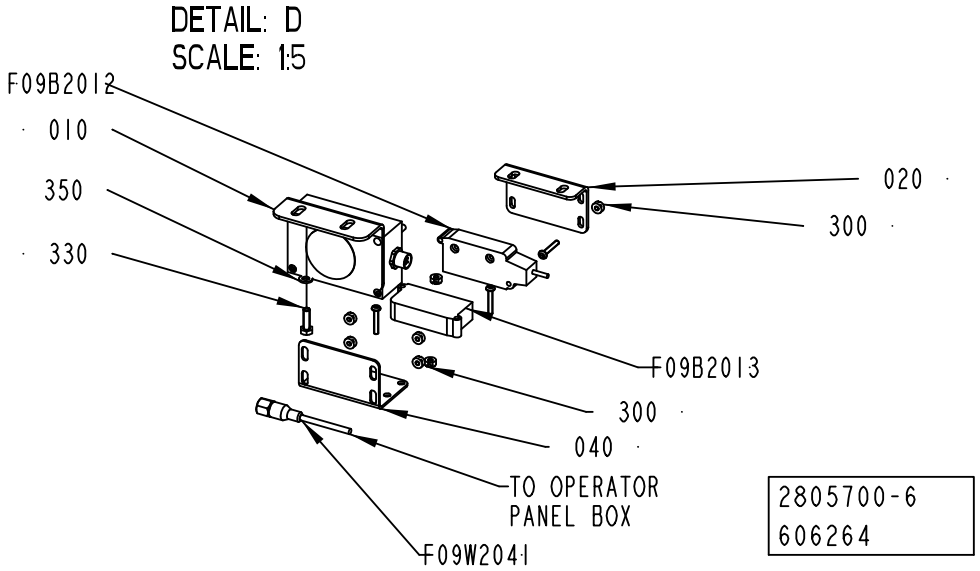

2805700-6
606264

Pos	Part No	UN	Qty	Description	Page No
DREAMCAP 26 (See drawing on pages: 5-80, 5-82)					
300	1539391-0000		52	ROUND NUT	
320	312605-0314		4	HEXAGON NUT, M6M M5 A280	
330	312105-0370		4	SCREW, M6S ISO 4017 M6X20 A4 80	
350	315105-0153		4	WASHER PLAIN, 6,4X12X1,5 A4 BRB	
360	315105-0146		4	WASHER PLAIN, 5,3X10X1 A4 BRB	
Common Parts					
010	2781283-0000		2	BRACKET	
020	2817774-0000		6	SUPPORT	
030	2817775-0000		1	SUPPORT	
040	3054997-0000		6	SUPPORT	
310	90459-4165		26	SAFETY SCREW, SM4X25	
380	90600-2563		12	SCREW SNAKE EYES® PAN HEAD M6X12 A2	
390	575034-0000		3	ROUND NUT	
F09B2010	90459-6961		1	SAFETY SENSOR, ADAM E 0,5 M12	
F09B2011	90459-4089		1	SAFETY SENSOR, EVA E, 20-046-06	
F09B2012	90459-6961		1	SAFETY SENSOR, ADAM E 0,5 M12	
F09B2013	90459-4089		1	SAFETY SENSOR, EVA E, 20-046-06	
F09B2014	90459-6961		1	SAFETY SENSOR, ADAM E 0,5 M12	
F09B2015	90459-4089		1	SAFETY SENSOR, EVA E, 20-046-06	
F09B2016	90459-6961		1	SAFETY SENSOR, ADAM E 0,5 M12	
F09B2017	90459-4089		1	SAFETY SENSOR, EVA E, 20-046-06	
F09B2030	90459-6961		1	SAFETY SENSOR, ADAM E 0,5 M12	
F09B2031	90459-4089		1	SAFETY SENSOR, EVA E, 20-046-06	
F09B2032	90459-6961		1	SAFETY SENSOR, ADAM E 0,5 M12	
F09B2033	90459-4089		1	SAFETY SENSOR, EVA E, 20-046-06	
F09B2034	90459-6961		1	SAFETY SENSOR, ADAM E 0,5 M12	
F09B2035	90459-4089		1	SAFETY SENSOR, EVA E, 20-046-06	
F09B2036	90459-5627		1	CONNECTION, TINA 1-A	
F09B2041	90459-6913		1	MAGNETIC LOCK, JSD-ZH-EM1-K	
F09B2042	90459-6913		1	MAGNETIC LOCK, JSD-ZH-EM1-K	
F09W2014	90459-4876		1	FOCUS JUMPER CABLE M12 5P 3M, 20-056-21	
F09W2016	90459-4876		1	FOCUS JUMPER CABLE M12 5P 3M, 20-056-21	
F09W2030	90459-4876		1	FOCUS JUMPER CABLE M12 5P 3M, 20-056-21	
F09W2032	90459-4876		1	FOCUS JUMPER CABLE M12 5P 3M, 20-056-21	
F09W2034	90459-4876		1	FOCUS JUMPER CABLE M12 5P 3M, 20-056-21	
F09W2041	344253-0100		1	SENSOR CABLE, EVT002	
F09W2042	344253-0100		1	SENSOR CABLE, EVT002	
F09X2001	90604-0093		1	CONNECTION BLOCK, TINA4A 2TLJ020054R0300	
F09X2002	90604-0093		1	CONNECTION BLOCK, TINA4A 2TLJ020054R0300	

Pos	Part No	UN	Qty	Description	Page No

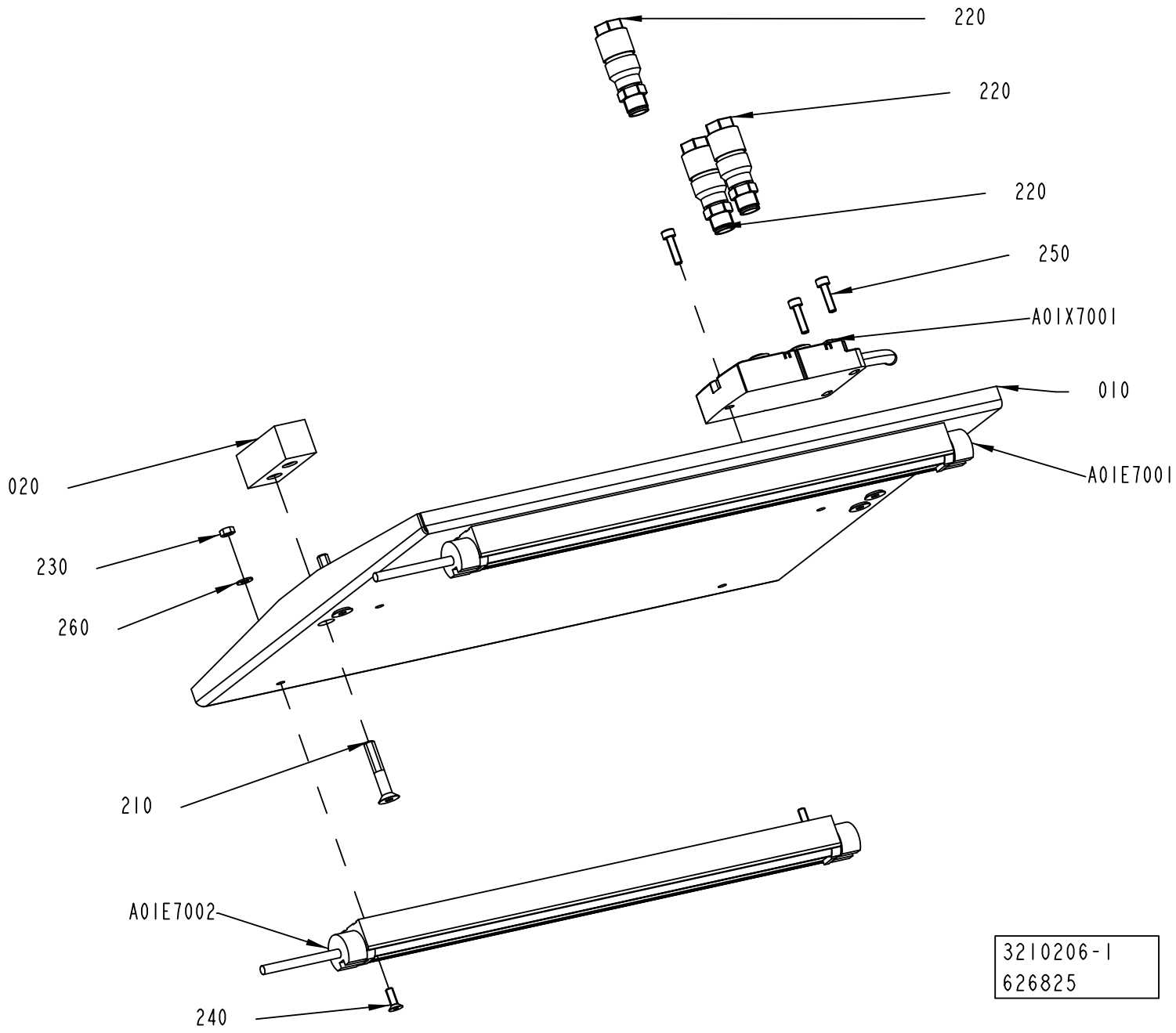
220
220
220
250
A01X7001
010
A01E7001
020
230
260
210
A01E7002
240
3210206-1
626825

ECM: 627395 - 20140101
Group number: 3210206-0100
Assembly Drawing: 3210206-1_1_AC

Pos	Part No	UN	Qty	Description	Page No
-					
010	3210209-0000		1	COVER	
020	3210208-0000		2	SPACER	
210	312155-0376		4	SCREW DIN 7991 MF6S M6X35 A4 70	
220	90603-5569		3	CONNECTOR, SACC-M12MS-4QO-0,75-VA	
230	312607-0312		4	HEXAGON NUT, EN 24032 M6M M4 A480	
240	312155-0291		4	SCREW DIN 7991 MF6S M4X12 A4 70	
250	312115-0293		3	SCREW ISO4762 M4X16 A4 80	
260	315106-0136		4	WASHER PLAIN, M4 ISO7089-4-200 HV A4	
A01E7001	90602-1250		1	LIGHT FIXTURE, SLIM LED 112-544-001	
A01E7002	90602-1250		1	LIGHT FIXTURE, SLIM LED 112-544-001	
A01X7001	90606-1698		1	SPLITTER BOX, EBC026	

Pos	Part No	UN	Qty	Description	Page No

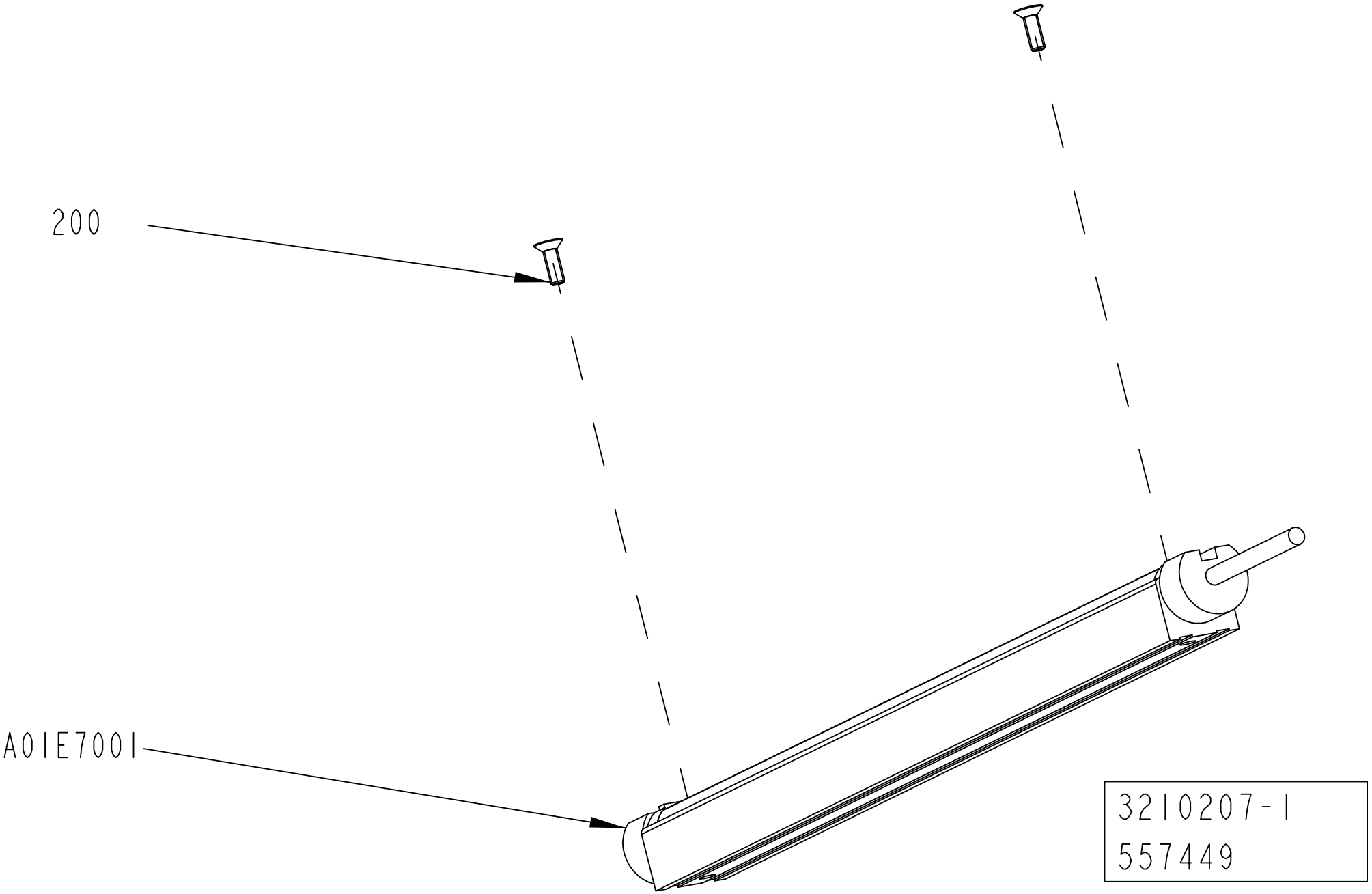
200
A01E7001
3210207-1
557449

ECM: 567013 - 20121001
Group number: 3210207-0100
Assembly Drawing: 3210207-1_1_AB

Pos	Part No	UN	Qty	Description	Page No
-					
200	312155-0291		2	SCREW DIN 7991 MF6S M4X12 A4 70	
A01E7001	90602-1250		1	LIGHT FIXTURE, SLIM LED 112-544-001	

Pos	Part No	UN	Qty	Description	Page No

This page is intentionally left blank.

ECM: 715099 - 20150401
Group number: 2873950-0200
Assembly Drawing:

Pos	Part No	UN	Qty	Description	Page No
TPA					
C50W0004	351150-0405	M	10	CABLE OLFLEX 5X0,75 MM2 LIGHT/GREY	
C50W0010	315743-0009	M	9	OLFLEX CONTROL TM 4G1,5, 281604	
C50W1010	315756-0009	M	9	OLFLEX CONTROL TM CY 4G1,5, 281604CY	
F09W2030	90459-4252		1	CABLE M12-C101, 20-056-10	
G40W0000	351429-1609		1	MOTOR POWER CABLE 2090-CPWM7DF-16AA09	
G40W0001	351428-0009		1	MOTOR FEEDBACK CABLE 2090-CFBM7DF-CEAA09	
G40W0002	351429-1609		1	MOTOR POWER CABLE 2090-CPWM7DF-16AA09	
G40W0003	351428-0009		1	MOTOR FEEDBACK CABLE 2090-CFBM7DF-CEAA09	
G40W3000	351429-1609		1	MOTOR POWER CABLE 2090-CPWM7DF-16AA09	
G40W3001	351428-0009		1	MOTOR FEEDBACK CABLE 2090-CFBM7DF-CEAA09	
G40W4010	315743-0009	M	7	OLFLEX CONTROL TM 4G1,5, 281604	
G40X0001	90604-8704		1	CONNECTOR, 2090-K6CK-D15M, SERIE B	
G40X0003	90604-8704		1	CONNECTOR, 2090-K6CK-D15M, SERIE B	
G40X3001	90604-8704		1	CONNECTOR, 2090-K6CK-D15M, SERIE B	
W21W4010	315756-0009	M	11	OLFLEX CONTROL TM CY 4G1,5, 281604CY	
Common Parts					
A01W5001	351150-0406	M	2	CABLE OLFLEX 7X0,75 MM2 LIGHT/GREY	
A01W5010	351150-0406	M	5.5	CABLE OLFLEX 7X0,75 MM2 LIGHT/GREY	
A01W7001	351150-0403	M	5	CABLE OLFLEX 3X0,75 MM2 LIGHT/GREY 35	
A01W7002	351150-0403	M	9	CABLE OLFLEX 3X0,75 MM2 LIGHT/GREY 35	
F09W1003	351150-0405	M	11	CABLE OLFLEX 5X0,75 MM2 LIGHT/GREY	
F09W2001	351423-0006	M	8	CABLE UNITRONIC LICY 5X0,34	
F09W2002	351423-0006	M	5	CABLE UNITRONIC LICY 5X0,34	
G30W0001	351428-0009		1	MOTOR FEEDBACK CABLE 2090-CFBM7DF-CEAA09	
G30W3000	351429-1609		1	MOTOR POWER CABLE 2090-CPWM7DF-16AA09	
G30W4000	351429-1609		1	MOTOR POWER CABLE 2090-CPWM7DF-16AA09	
G30W4001	351428-0009		1	MOTOR FEEDBACK CABLE 2090-CFBM7DF-CEAA09	
G30X0001	90604-8704		1	CONNECTOR, 2090-K6CK-D15M, SERIE B	
G30X4001	90604-8704		1	CONNECTOR, 2090-K6CK-D15M, SERIE B	
K01W8000	351150-0403	M	2	CABLE OLFLEX 3X0,75 MM2 LIGHT/GREY 35	
K01W8001	351150-0403	M	2	CABLE OLFLEX 3X0,75 MM2 LIGHT/GREY 35	
P01W4000	351150-0403	M	8	CABLE OLFLEX 3X0,75 MM2 LIGHT/GREY 35	
P01W4001	351150-0407	M	8	CABLE OLFLEX 12X0,75 MM2 LIGHT/GREY	
V01W5000	315743-0024	M	8	OLFLEX CONTROL TM 5G6, 281005	
W20W0000	315756-0009	M	10	OLFLEX CONTROL TM CY 4G1,5, 281604CY	
W20W0004	351150-0405	M	10	CABLE OLFLEX 5X0,75 MM2 LIGHT/GREY	
W21W1000	351429-1609		1	MOTOR POWER CABLE 2090-CPWM7DF-16AA09	
W21W1001	351428-0009		1	MOTOR FEEDBACK CABLE 2090-CFBM7DF-CEAA09	
W21W2000	351429-1609		1	MOTOR POWER CABLE 2090-CPWM7DF-16AA09	
W21W2001	351428-0009		1	MOTOR FEEDBACK CABLE 2090-CFBM7DF-CEAA09	
W21W4000	315756-0009	M	18	OLFLEX CONTROL TM CY 4G1,5, 281604CY	
W21W8000	315743-0008	M	6	OLFLEX CONTROL TM 3G1,5, 281603	
W21W8001	351424-0017	M	5	CABLE #LFLEX HEAT 180 4G4 466343	
W21X1001	90604-8704		1	CONNECTOR, 2090-K6CK-D15M, SERIE B	
W21X2001	90604-8704		1	CONNECTOR, 2090-K6CK-D15M, SERIE B	

Machine Type | Group Description | Used-In | Group Number | Page No

HOTMELT EQUIPMENT

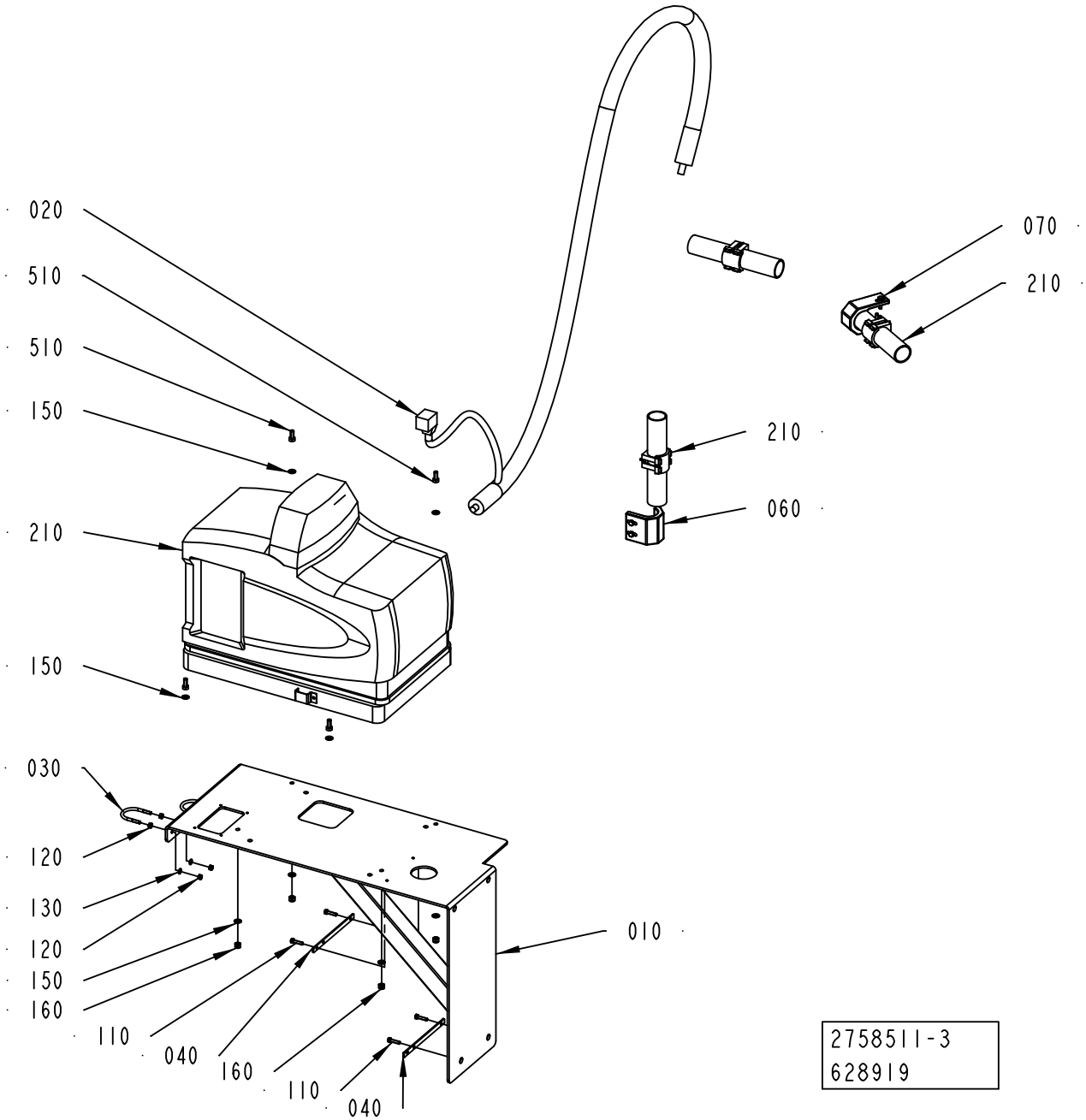

ECM: 653094 - 20140401
Group number: 2758511-0200
Assembly Drawing: 2758511-3_1_AC

This list covers pages from 5-90 to 5-93

Pos	Part No	UN	Qty	Description	Page No
ADHESIVE HENKEL CAPFIX 500 (See drawing on page: 5-90)					
500	3296408-0100		1	HOTMELT UNIT	**5-95**
ADHESIVE LUEUENBERGER PS880 (See drawing on page: 5-92)					
500	3220121-0100		1	HOTMELT UNIT	**5-97**
Common Parts					
010	2766939-0000		1	SUPPORT	
020	90606-0480		1	RTD HOT MELT HOSE BLUE, 150712+1043366	
030	531616-0000		2	HOLDER	
040	2874024-0000		2	BRACKET	
060	3216184-0000		1	TIGHTENING CLAMP	
070	3217564-0000		1	TIGHTENING CLAMP	
100	312105-0451		4	SCREW, M6S ISO 4017 M8X20 A4 80	
110	312105-0372		4	SCREW, M6S ISO 4017 M6X25 A4 80	
120	312605-0316		8	HEXAGON NUT, M6M M6 A280	
130	315105-0153		4	WASHER PLAIN, 6,4X12X1,5 A4 BRB	
150	315105-0165		8	FWAS080G0-0S, WASHER PLAIN	
160	312812-0318		4	HEXAGON NUT, NY-LOCK M8 A4 80	
210	90439-0295		3	SERVICE KIT, NO. 111940	

Pos	Part No	UN	Qty	Description	Page No

HOTMELT EQUIPMENT

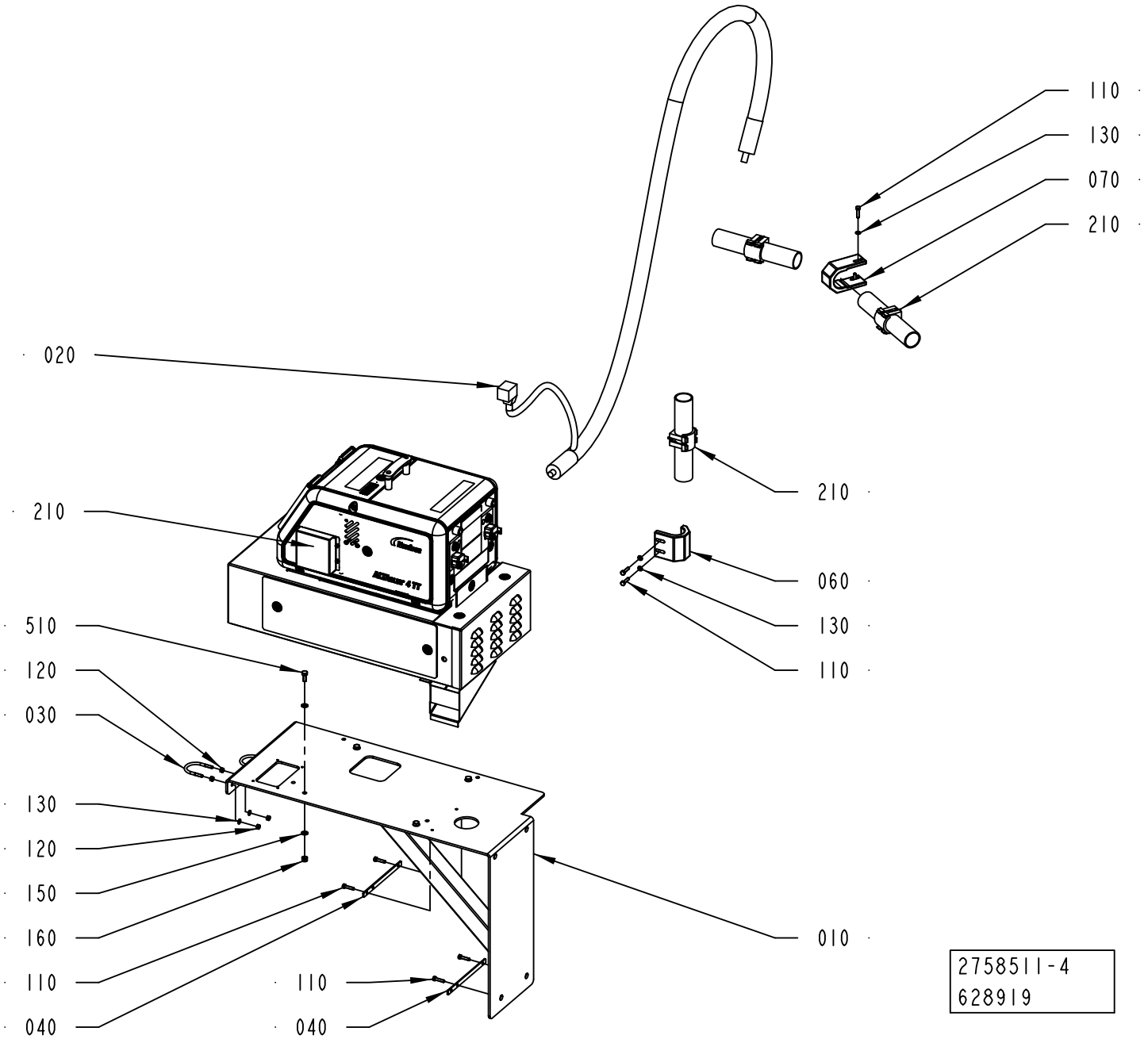

ECM: 653094 - 20140401
Group number: 2758511-0200
Assembly Drawing: 2758511-4_1_AC

This list covers pages from 5-90 to 5-93

Pos	Part No	UN	Qty	Description	Page No
ADHESIVE HENKEL CAPFIX 500 (See drawing on page: 5-90)					
500	3296408-0100		1	HOTMELT UNIT	**5-95**
ADHESIVE LUEUENBERGER PS880 (See drawing on page: 5-92)					
500	3220121-0100		1	HOTMELT UNIT	**5-97**
Common Parts					
010	2766939-0000		1	SUPPORT	
020	90606-0480		1	RTD HOT MELT HOSE BLUE, 150712+1043366	
030	531616-0000		2	HOLDER	
040	2874024-0000		2	BRACKET	
060	3216184-0000		1	TIGHTENING CLAMP	
070	3217564-0000		1	TIGHTENING CLAMP	
100	312105-0451		4	SCREW, M6S ISO 4017 M8X20 A4 80	
110	312105-0372		4	SCREW, M6S ISO 4017 M6X25 A4 80	
120	312605-0316		8	HEXAGON NUT, M6M M6 A280	
130	315105-0153		4	WASHER PLAIN, 6,4X12X1,5 A4 BRB	
150	315105-0165		8	FWAS080G0-0S, WASHER PLAIN	
160	312812-0318		4	HEXAGON NUT, NY-LOCK M8 A4 80	
210	90439-0295		3	SERVICE KIT, NO. 111940	

Pos	Part No	UN	Qty	Description	Page No

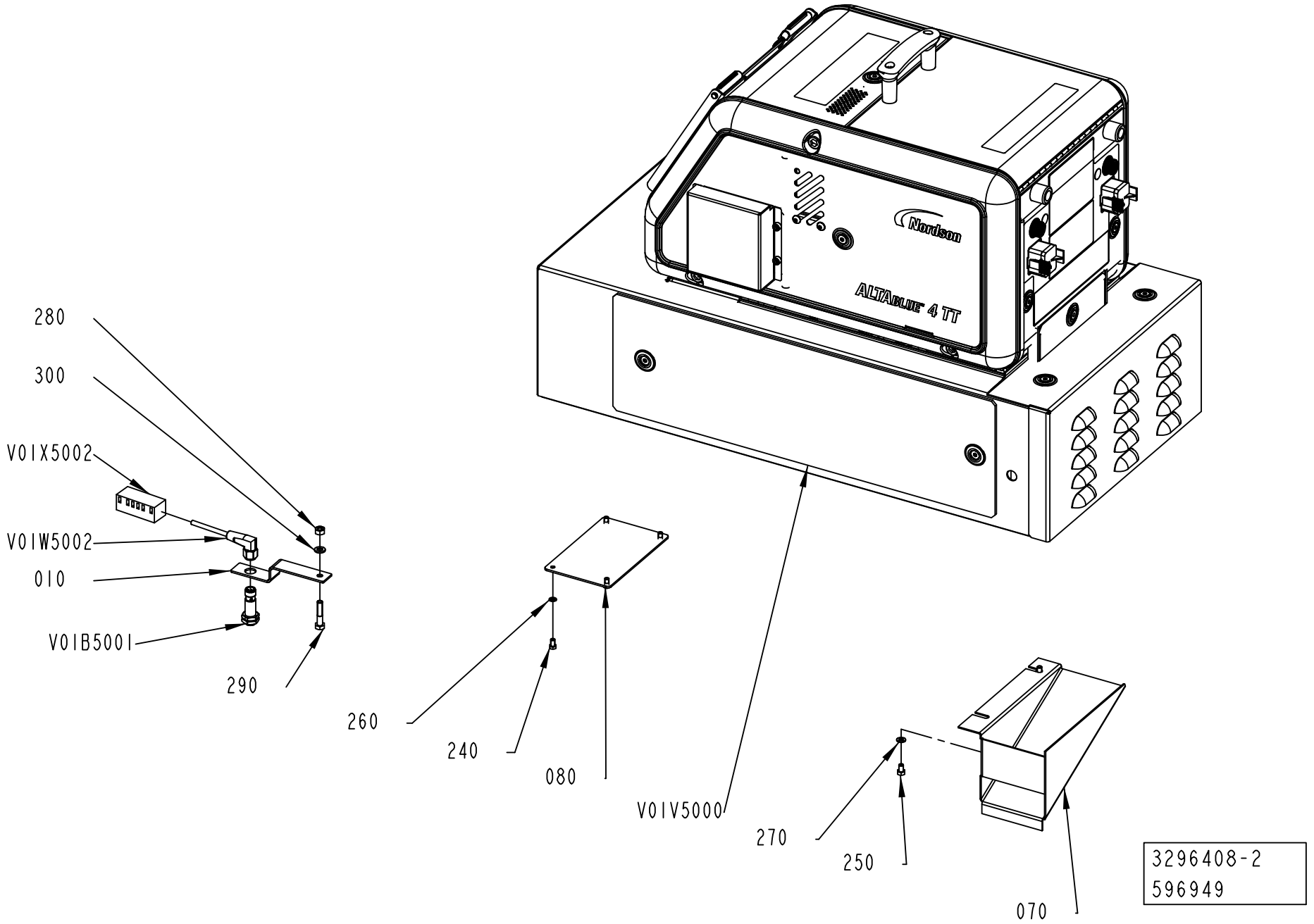
280
300
V01X5002
V01W5002
010
V01B5001
290
260
240
080
V01V5000
270
250
070
Nordson
ALTAblue 4 TT
3296408-2
596949

ECM: 600912 - 20130701
Group number: 3296408-0100
Assembly Drawing: 3296408-2_1_AA

Pos	Part No	UN	Qty	Description	Page No
DREAMCAP 26					
010	3272547-0000		1	BRACKET	
070	3123918-0000		1	COVER	
080	3171838-0000		1	PLATE	
240	312105-0287		4	SCREW, M6S ISO 4017 M4X8 A4 70	
250	312105-0323		2	"FSCR05080-10, SCREW, M6S"	
260	315105-0136		4	WASHER PLAIN, 4,3X8X0,8 A4 BRB	
270	315105-0146		2	WASHER PLAIN, 5,3X10X1 A4 BRB	
280	312605-0316		1	HEXAGON NUT, M6M M6 A280	
290	312105-0374		1	SCREW, M6S ISO 4014 M6X30 A4 80	
300	315105-0153		1	WASHER PLAIN, 6,4X12X1,5 A4 BRB	
V01B5001	90600-7888		1	INDUCTIVE SENSOR, IFT 203	
V01V5000	344319-0001		1	HOT MELT UNIT ALTABLUE, 1501757 H1	
	344319-0125		*1*	*GASKET, VITON 1/16" THK, D4TANK, 1037679*	
	344319-0124		*1*	*VALVE, PCV, 40 BAR, DURABLUE, 1031221*	
	344319-0123		*1*	*SVCE KIT, ALTABLUETT O-RING A4, 1063803*	
	344319-0122		*1*	*SVCE KIT, GEAR MOTOR, A4TP H1, 1121419*	
	344319-0121		*1*	*GEAR PUMP, SN0773, 729107*	
	344319-0112		*1*	*KIT, SERVICE, FUSES, A4, 1031203*	
	344319-0111		*1*	*LEVEL SENSOR, A4, 1091209*	
	344319-0110		*1*	*LEVEL BOX, A4, 1087922*	
	344319-0109		*1*	*KIT, SERVICE, RTD, TANK, A4, 1031234*	
	344319-0108		*1*	*KIT, SERVICE, RTD, PUMP, A4, 1031233*	
	344319-0107		*1*	*HEATER, TANK, A4, 1031226*	
	344319-0106		*1*	*KIT, SERVICE, HEATER, PUMP, A4, 1063156*	
	344319-0105		*1*	*SVCE KIT, ALTA TT, M D, 35KG/H, 1121782*	
	344319-0104		*1*	*KIT, PCA, MOTOR CONTR, ALTABLUE, 1099532*	
	344319-0103		*1*	*KIT, SERVICE, CPU BOARD, A4, 1028325*	
	344319-0102		*1*	*KIT, SERVICE, RELAY BOARD, A4, 1104490*	
	344319-0101		*1*	*SVCE KIT, DURABLUE, PCA BOARD, 1078624*	
	90605-1024		*1*	*KIT, I/O EXPANSION, 1036607*	
	90459-1986		*1*	*FILTER ASSY, 100 MESH, 1028305*	
	90459-1979		*1*	*SERV. KIT, THERMOSTAT, 1028321*	
V01W5002	344254-0020		1	CORDSET, FEMALE EVT067	
V01X5002	90195-0017		1	TERMINAL BLOCK, BK6 CRN, 6252 2200 00	

Pos	Part No	UN	Qty	Description	Page No

Machine Type | Group Description | Used-In | Group Number | Page No

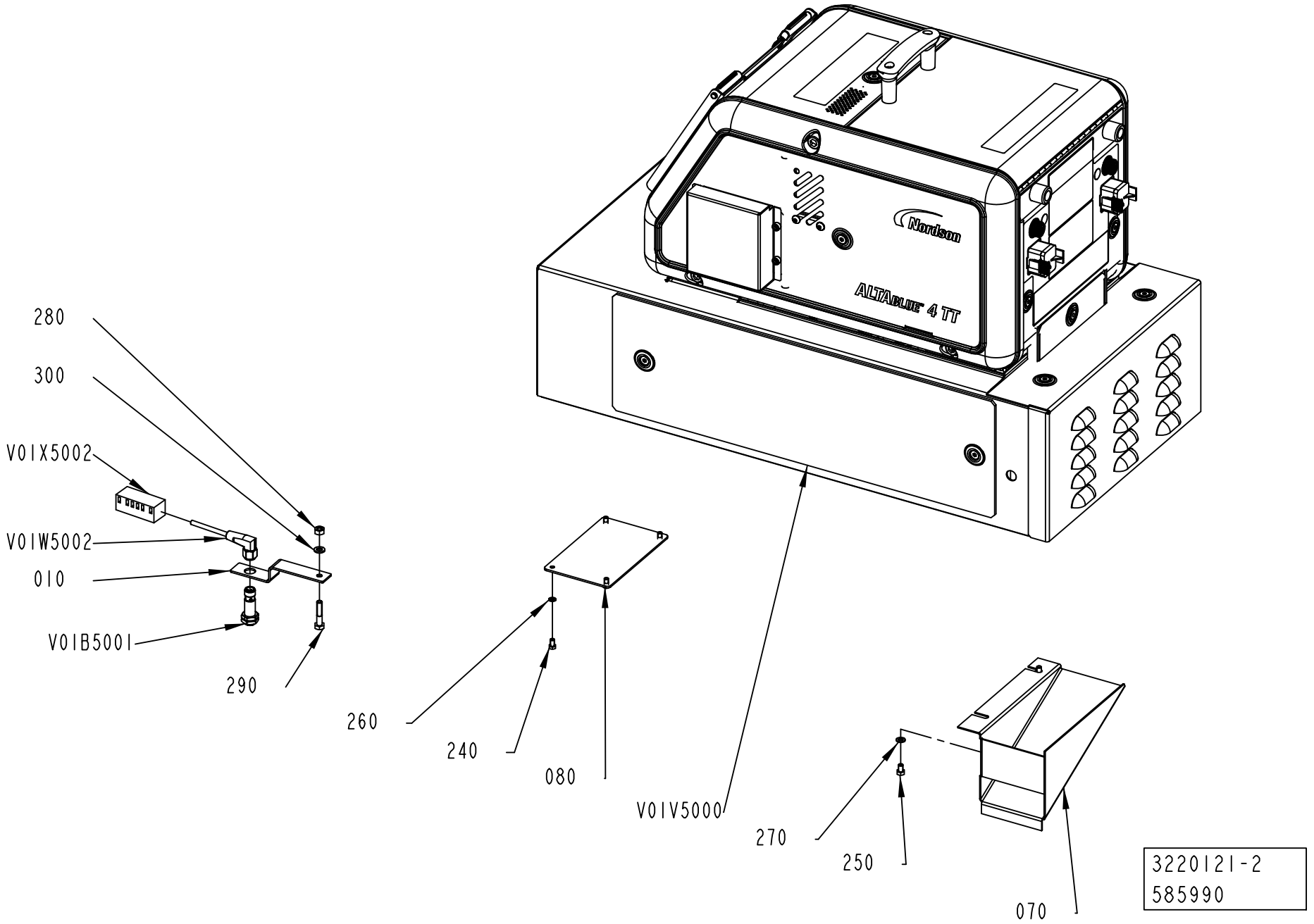
280
300
V01X5002
V01W5002
010
V01B5001
290
260
240
080
V01V5000
270
250
070
Nordson
ALTABLUE 4 TT
3220121-2
585990

ECM: 600774 - 20130701
Group number: 3220121-0100
Assembly Drawing: 3220121-2_1_AB

Pos	Part No	UN	Qty	Description	Page No
DREAMCAP 26					
010	3272547-0000		1	BRACKET	
070	3123918-0000		1	COVER	
080	3171838-0000		1	PLATE	
240	312105-0287		4	SCREW, M6S ISO 4017 M4X8 A4 70	
250	312105-0323		2	"FSCR05080-10, SCREW, M6S"	
260	315105-0136		4	WASHER PLAIN, 4,3X8X0,8 A4 BRB	
270	315105-0146		2	WASHER PLAIN, 5,3X10X1 A4 BRB	
280	312605-0316		1	HEXAGON NUT, M6M M6 A280	
290	312105-0374		1	SCREW, M6S ISO 4014 M6X30 A4 80	
300	315105-0153		1	WASHER PLAIN, 6,4X12X1,5 A4 BRB	
V01B5001	90600-7888		1	INDUCTIVE SENSOR, IFT 203	
V01V5000	344319-0001		1	HOT MELT UNIT ALTABLUE, 1501757 H1	
	344319-0125		*1*	*GASKET, VITON 1/16" THK, D4TANK, 1037679*	
	344319-0124		*1*	*VALVE, PCV, 40 BAR, DURABLUE, 1031221*	
	344319-0123		*1*	*SVCE KIT, ALTABLUETT O-RING A4, 1063803*	
	344319-0122		*1*	*SVCE KIT, GEAR MOTOR, A4TP H1, 1121419*	
	344319-0121		*1*	*GEAR PUMP, SN0773, 729107*	
	344319-0112		*1*	*KIT, SERVICE, FUSES, A4, 1031203*	
	344319-0111		*1*	*LEVEL SENSOR, A4, 1091209*	
	344319-0110		*1*	*LEVEL BOX, A4, 1087922*	
	344319-0109		*1*	*KIT, SERVICE, RTD, TANK, A4, 1031234*	
	344319-0108		*1*	*KIT, SERVICE, RTD, PUMP, A4, 1031233*	
	344319-0107		*1*	*HEATER, TANK, A4, 1031226*	
	344319-0106		*1*	*KIT, SERVICE, HEATER, PUMP, A4, 1063156*	
	344319-0105		*1*	*SVCE KIT, ALTA TT, M D, 35KG/H, 1121782*	
	344319-0104		*1*	*KIT, PCA, MOTOR CONTR, ALTABLUE, 1099532*	
	344319-0103		*1*	*KIT, SERVICE, CPU BOARD, A4, 1028325*	
	344319-0102		*1*	*KIT, SERVICE, RELAY BOARD, A4, 1104490*	
	344319-0101		*1*	*SVCE KIT, DURABLUE, PCA BOARD, 1078624*	
	90605-1024		*1*	*KIT, I/O EXPANSION, 1036607*	
	90459-1986		*1*	*FILTER ASSY, 100 MESH, 1028305*	
	90459-1979		*1*	*SERV. KIT, THERMOSTAT, 1028321*	
V01W5002	344254-0020		1	CORDSET, FEMALE EVT067	
V01X5002	90195-0017		1	TERMINAL BLOCK, BK6 CRN, 6252 2200 00	

Pos	Part No	UN	Qty	Description	Page No

Machine Type | Group Description | Used-In | Group Number | Page No

OPERATOR INTERFACE

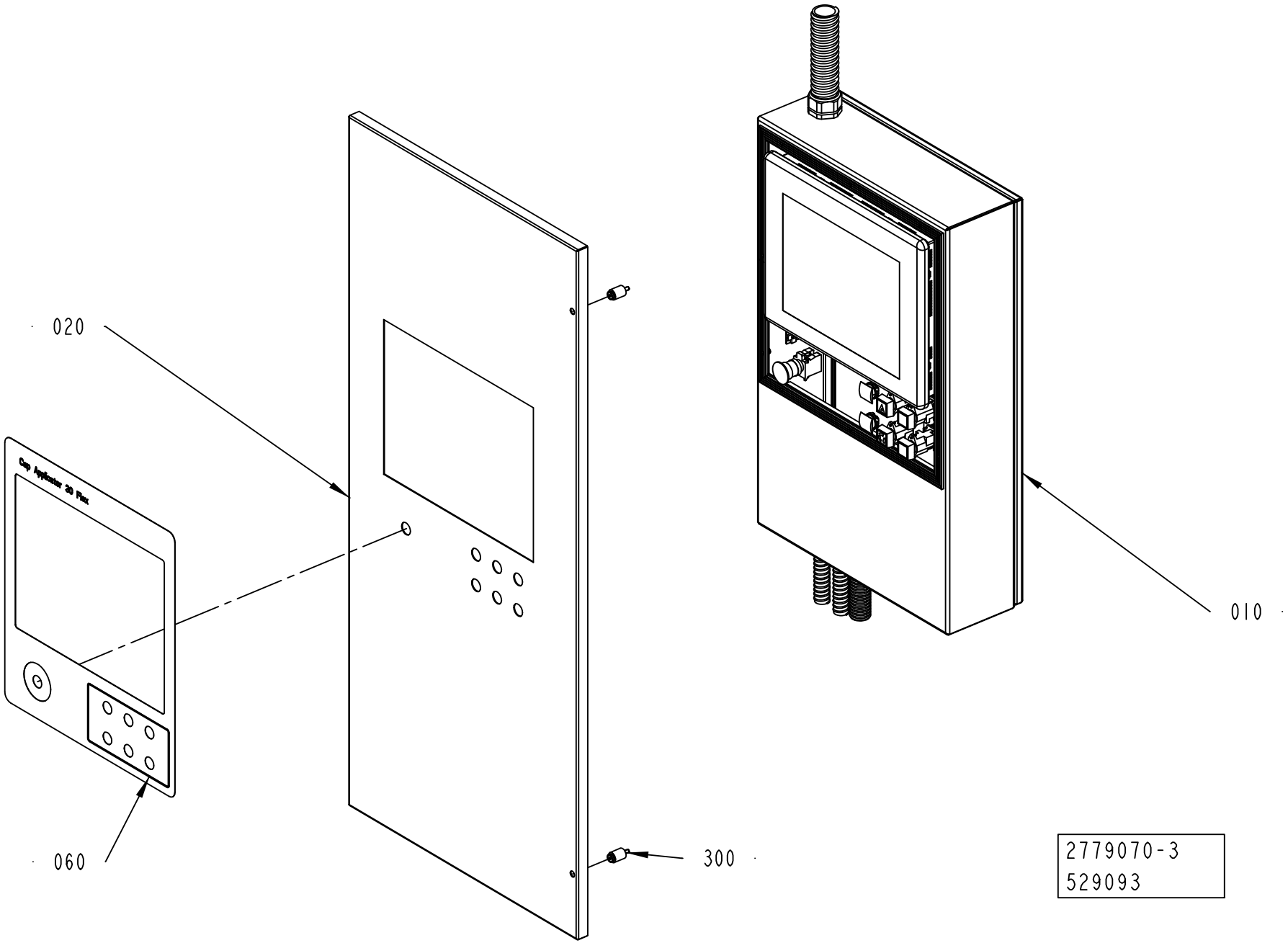

ECM: 529701 - 20120401
Group number: 2779070-0300
Assembly Drawing: 2779070-3_1_AA

Pos	Part No	UN	Qty	Description	Page No
CAP 30/FLEX					
060	2746920-0000		1	FOIL	
Common Parts					
010	2802386-0300		1	OPERATOR INTERFACE	**5-101**
020	2779768-0000		1	DOOR	
250	3218060-0100		1	WARNING SIGN	**5-107**
300	90226-0458		2	MOUNTING SCREW	

Pos	Part No	UN	Qty	Description	Page No

Machine Type | Group Description | Used-In | Group Number | Page No

OPERATOR INTERFACE

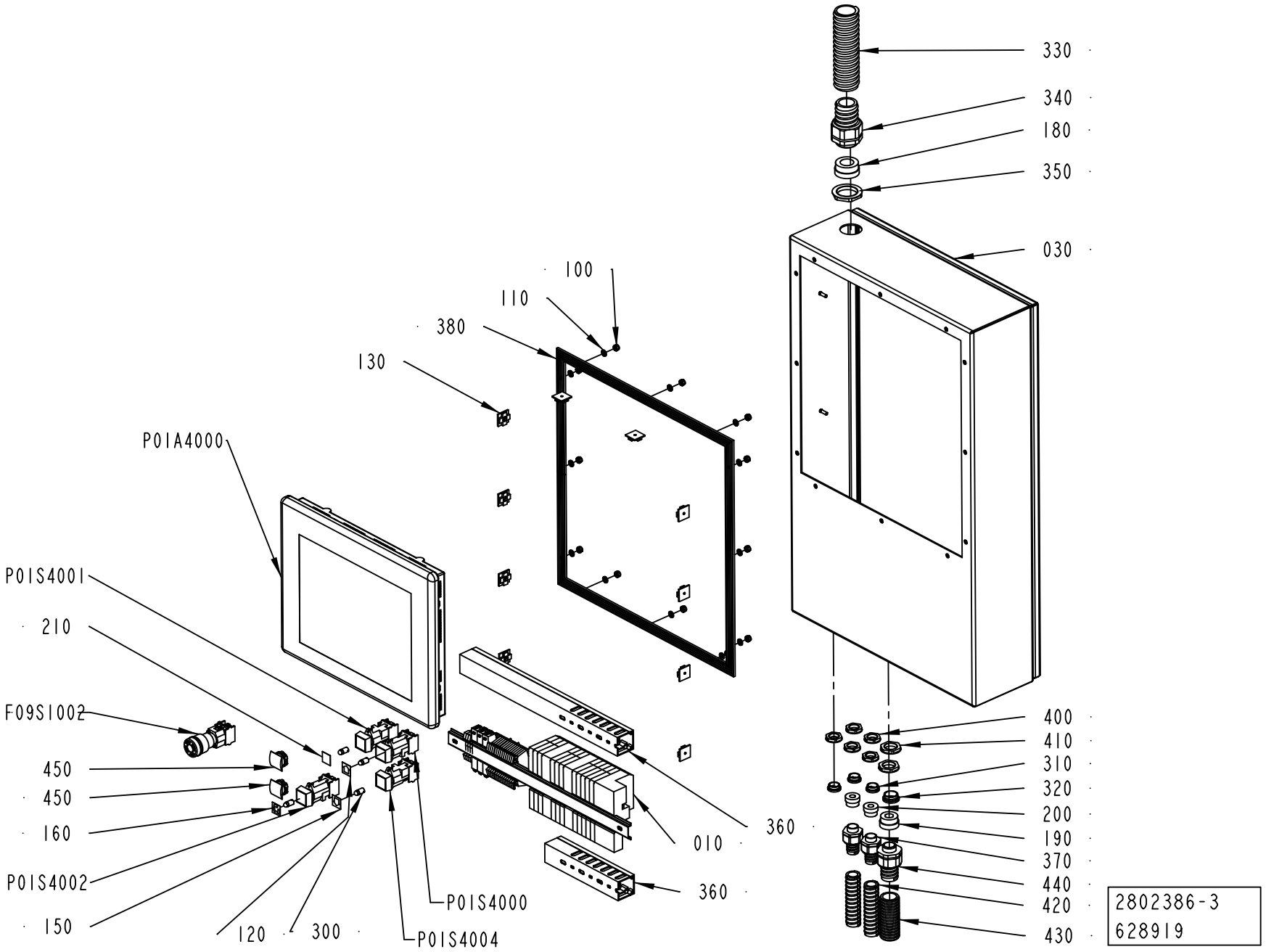

ECM: 713943 - 20150401
Group number: 2802386-0300
Assembly Drawing: 2802386-3_1_AD

Pos	Part No	UN	Qty	Description	Page No
-					
010	2817783-0200		1	PLINTH	**5-103, 5-105**
030	2746904-0000		1	BOX	
100	312812-0316		12	HEXAGON NUT, NY-LOCK M6 A4 80	
110	315105-0153		12	WASHER PLAIN, 6,4X12X1,5 A4 BRB	
120	359301-0001		1	BUTTON SIGN, UP	
130	352113-0206		10	ANCHOR PLATES FOR STRIPS, ABM100-AT	
150	359301-0005		1	BUTTON SIGN, DOWN	
160	359301-0090		1	BUTTON SIGN, INCHING	
180	353249-0054		1	INSERT, SINGLE HOLE, EK156 25	
190	353249-0015		1	INSERT, SINGLE HOLE, EK155 16	
200	353249-0012		2	INSERT, SINGLE HOLE, EK154 11	
210	359301-0504		1	BUTTON SIGN, RESET	
300	90036-0057		4	LIGHT BULB, BA9S 28V	
310	90458-1308		3	BLIND PLUG CIRCULAR, M20X1,5 514GFK/220	
320	90458-1309		1	BLIND PLUG CIRCULAR, M25X1,5 514GFK/225	
330	90152-0060	MM	1000	HOSE, SPIRAL CONDUIT, 42X35, UL3529	
340	90458-0434		1	GLAND FITTING, VK 24056YUL29	
350	90458-0326		1	NUT M40X1,5	
360	344366-1002	MM	1100	CABLE DUCT PVC 40X40, 4040T1-E	
370	90458-0430		2	GLAND FITTING, VK 22054YUL16	
380	90143-0071	MM	2000	RUBBER STRIP 4X20MM	
400	90458-0323		5	NUT, M20X1,5	
410	90458-0324		2	NUT, M25X1,5	
420	90152-0051	MM	3300	HOSE, SPIRAL CONDUIT, 25X18, UL 1816	
430	90152-0070	MM	700	FLEXIBLE CONDUIT, UL 2721	
440	90458-0432		1	GLAND FITTING, VK 22555YUL21	
450	90459-3279		3	BLANK PLUG, BLACK SQUARE, PLASTIC ZB5SZ5	
F09S1002	90605-9819		1	EMERG. STOP SWITCH, 704.064.2+704.910.4	
P01A4000	90604-3805		1	OPER. PANEL 15" , 2711P-T15C4D8TP, SER A	
P01S4000	90064-0093		1	PUSH BUTTON, GREEN	
	90036-0057		*1*	*LIGHT BULB, BA9S 28V*	
P01S4001	90064-0098		1	PUSH BUTTON, WHITE	
P01S4002	90064-0093		1	PUSH BUTTON, GREEN	
	90036-0057		*1*	*LIGHT BULB, BA9S 28V*	
P01S4004	90064-0098		1	PUSH BUTTON, WHITE	

Pos	Part No	UN	Qty	Description	Page No

Machine Type | Group Description | Used-In | Group Number | Page No

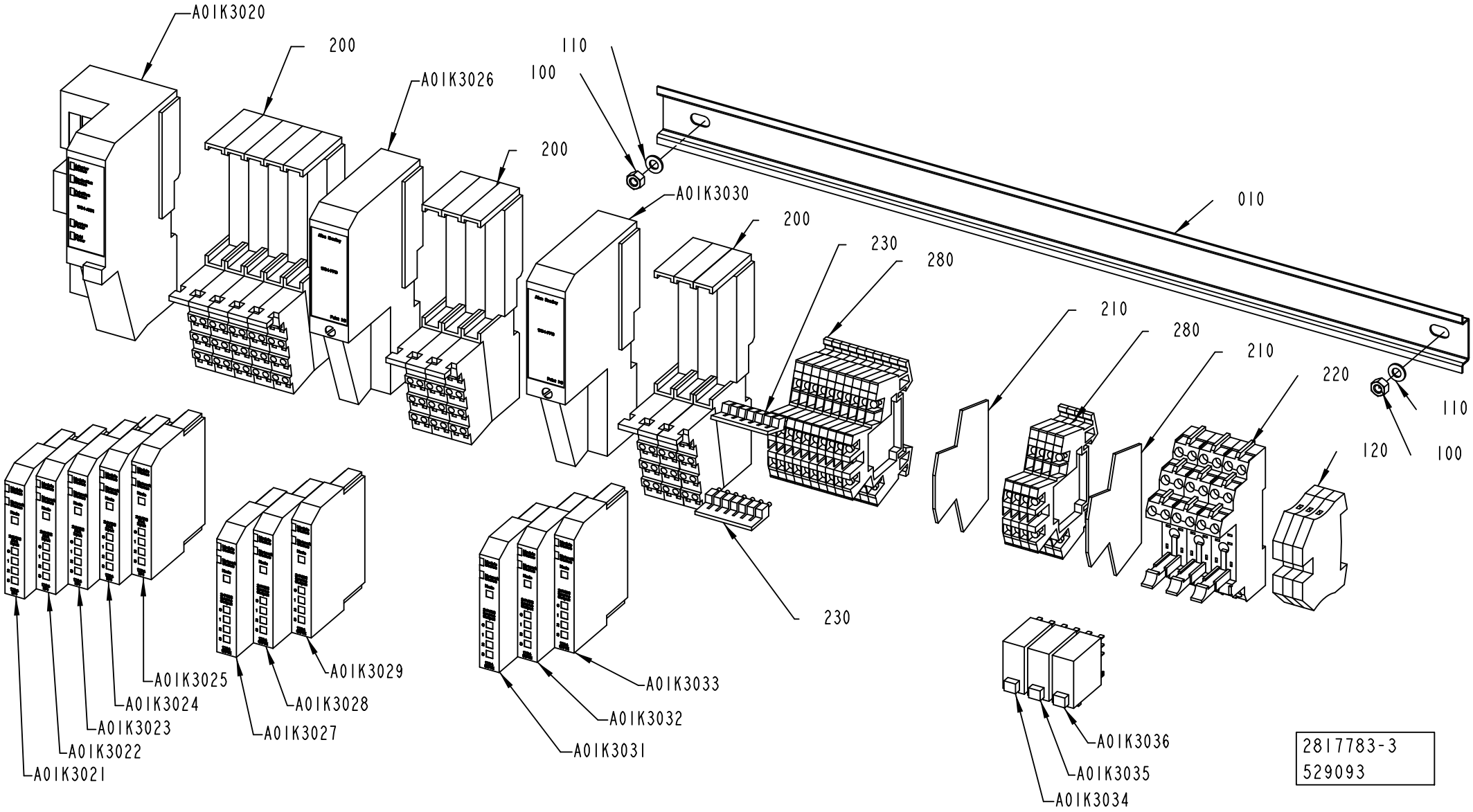
A01K3020
200
A01K3026
110
100
200
A01K3030
200
230
280
010
210
280
210
220
110
120
100
230
A01K3025
A01K3024
A01K3023
A01K3022
A01K3021
A01K3029
A01K3028
A01K3027
A01K3033
A01K3032
A01K3031
A01K3036
A01K3035
A01K3034
2817783-3
529093

ECM: 529703 - 20120401
Group number: 2817783-0200
Assembly Drawing: 2817783-3_1_AA

This list covers pages from 5-102 to 5-105

Pos	Part No	UN	Qty	Description	Page No
CAP 30/FLEX (See drawing on pages: 5-102, 5-104)					
200	90459-2526		11	REMOTE I/O BASE MODULE 8 POINTS, 1734-TB	
210	90077-0114		2	END PLATE, WAP WDK 2.5 1059100000	
220	90129-0018		3	BASE, P2RF-08-E	
280	90077-0113		14	TERMINAL BLOCK WDK 2.5	
A01K3025	90459-2503		1	DIGITAL INPUT 4 PTS SINK, 1734-IB4	
A01K3033	90459-2505		1	DIGITAL OUTPUT 4 PTS, 1734-OB4E SERIES C	
A01K3035	90119-0108		1	RELAY OMRON G2R-2-SNI-24DC	
	90129-0018		*1*	*BASE, P2RF-08-E*	
A01K3036	90119-0108		1	RELAY OMRON G2R-2-SNI-24DC	
	90129-0018		*1*	*BASE, P2RF-08-E*	
Common Parts					
010	2746909-0000		1	RAIL	
100	312605-0314		2	HEXAGON NUT, M6M M5 A280	
110	315105-0146		2	WASHER PLAIN, 5,3X10X1 A4 BRB	
120	353024-0205		3	EARTH TERMINAL WPE 4	
230	353034-0030		2	BRIDGE CONNECTOR WQV 2,5/10	
A01K3020	90459-2494		1	DEVICENET I/O ADAPTER MODULE, 1734-ADN	
A01K3021	90459-2503		1	DIGITAL INPUT 4 PTS SINK, 1734-IB4	
A01K3022	90459-2503		1	DIGITAL INPUT 4 PTS SINK, 1734-IB4	
A01K3023	90459-2503		1	DIGITAL INPUT 4 PTS SINK, 1734-IB4	
A01K3024	90459-2503		1	DIGITAL INPUT 4 PTS SINK, 1734-IB4	
A01K3026	90459-2501		1	5006526, 1734-FPD	
A01K3027	90459-2505		1	DIGITAL OUTPUT 4 PTS, 1734-OB4E SERIES C	
A01K3028	90459-2505		1	DIGITAL OUTPUT 4 PTS, 1734-OB4E SERIES C	
A01K3029	90459-2505		1	DIGITAL OUTPUT 4 PTS, 1734-OB4E SERIES C	
A01K3030	90459-2501		1	5006526, 1734-FPD	
A01K3031	90459-2505		1	DIGITAL OUTPUT 4 PTS, 1734-OB4E SERIES C	
A01K3032	90459-2505		1	DIGITAL OUTPUT 4 PTS, 1734-OB4E SERIES C	
A01K3034	90119-0108		1	RELAY OMRON G2R-2-SNI-24DC	
	90129-0018		*1*	*BASE, P2RF-08-E*	

Pos	Part No	UN	Qty	Description	Page No

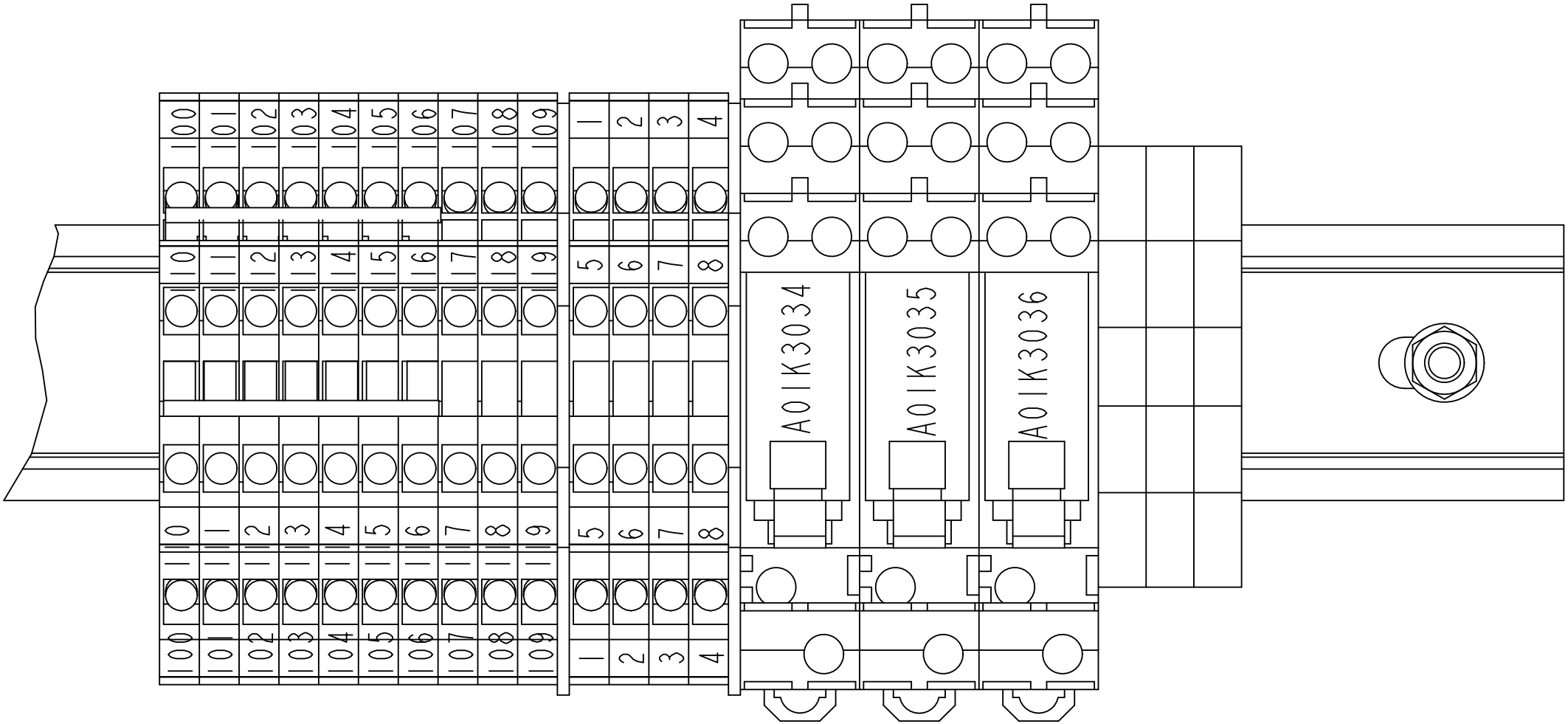

SCALE 1:1

2817783-3
529093

Pos	Part No	UN	Qty	Description	Page No
CAP 30/FLEX (See drawing on pages: 5-102, 5-104)					
200	90459-2526		11	REMOTE I/O BASE MODULE 8 POINTS, 1734-TB	
210	90077-0114		2	END PLATE, WAP WDK 2.5 1059100000	
220	90129-0018		3	BASE, P2RF-08-E	
280	90077-0113		14	TERMINAL BLOCK WDK 2.5	
A01K3025	90459-2503		1	DIGITAL INPUT 4 PTS SINK, 1734-IB4	
A01K3033	90459-2505		1	DIGITAL OUTPUT 4 PTS, 1734-OB4E SERIES C	
A01K3035	90119-0108		1	RELAY OMRON G2R-2-SNI-24DC	
	90129-0018		*1*	*BASE, P2RF-08-E*	
A01K3036	90119-0108		1	RELAY OMRON G2R-2-SNI-24DC	
	90129-0018		*1*	*BASE, P2RF-08-E*	
Common Parts					
010	2746909-0000		1	RAIL	
100	312605-0314		2	HEXAGON NUT, M6M M5 A280	
110	315105-0146		2	WASHER PLAIN, 5,3X10X1 A4 BRB	
120	353024-0205		3	EARTH TERMINAL WPE 4	
230	353034-0030		2	BRIDGE CONNECTOR WQV 2,5/10	
A01K3020	90459-2494		1	DEVICENET I/O ADAPTER MODULE, 1734-ADN	
A01K3021	90459-2503		1	DIGITAL INPUT 4 PTS SINK, 1734-IB4	
A01K3022	90459-2503		1	DIGITAL INPUT 4 PTS SINK, 1734-IB4	
A01K3023	90459-2503		1	DIGITAL INPUT 4 PTS SINK, 1734-IB4	
A01K3024	90459-2503		1	DIGITAL INPUT 4 PTS SINK, 1734-IB4	
A01K3026	90459-2501		1	5006526, 1734-FPD	
A01K3027	90459-2505		1	DIGITAL OUTPUT 4 PTS, 1734-OB4E SERIES C	
A01K3028	90459-2505		1	DIGITAL OUTPUT 4 PTS, 1734-OB4E SERIES C	
A01K3029	90459-2505		1	DIGITAL OUTPUT 4 PTS, 1734-OB4E SERIES C	
A01K3030	90459-2501		1	5006526, 1734-FPD	
A01K3031	90459-2505		1	DIGITAL OUTPUT 4 PTS, 1734-OB4E SERIES C	
A01K3032	90459-2505		1	DIGITAL OUTPUT 4 PTS, 1734-OB4E SERIES C	
A01K3034	90119-0108		1	RELAY OMRON G2R-2-SNI-24DC	
	90129-0018		*1*	*BASE, P2RF-08-E*	

Pos	Part No	UN	Qty	Description	Page No

WARNING SIGN

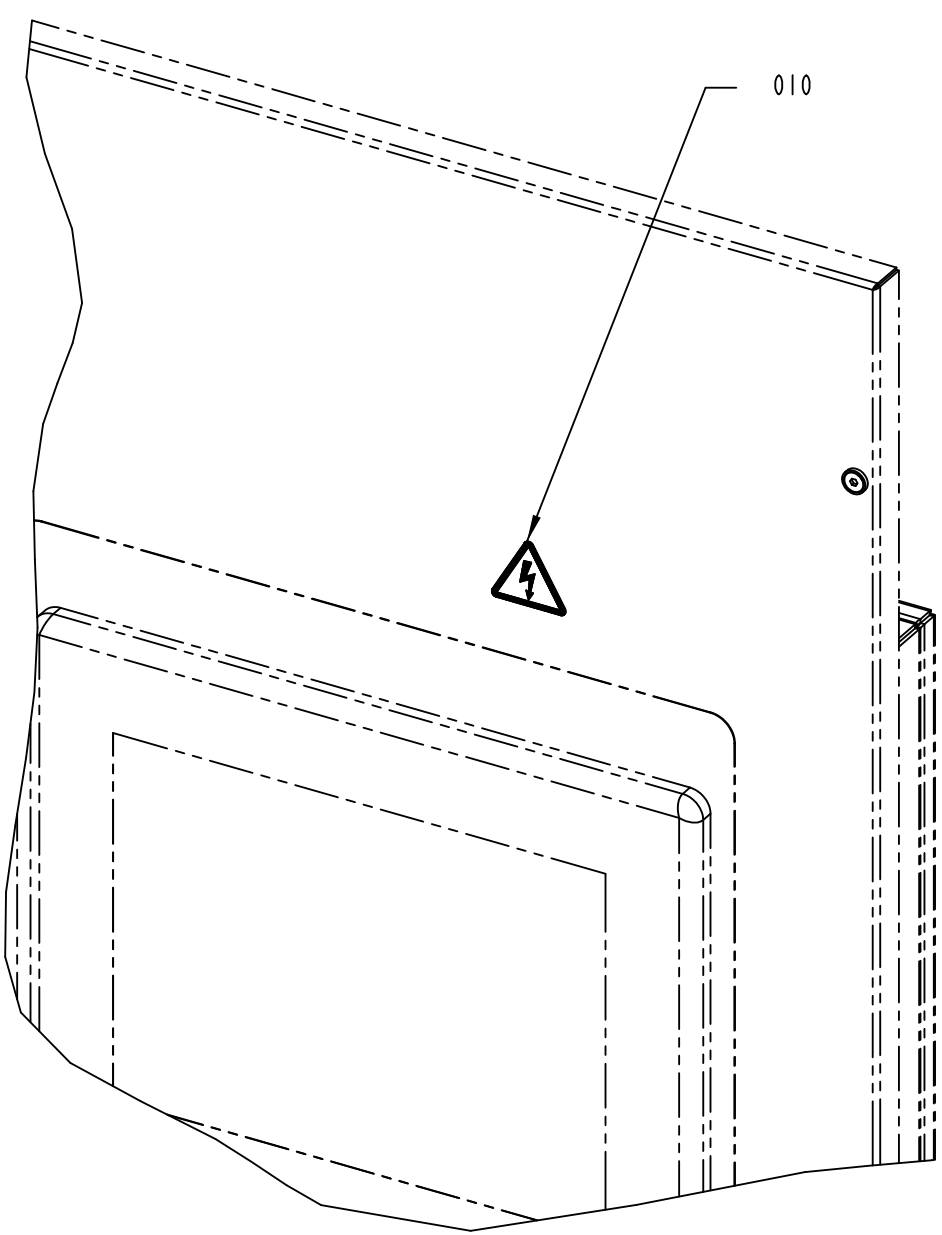

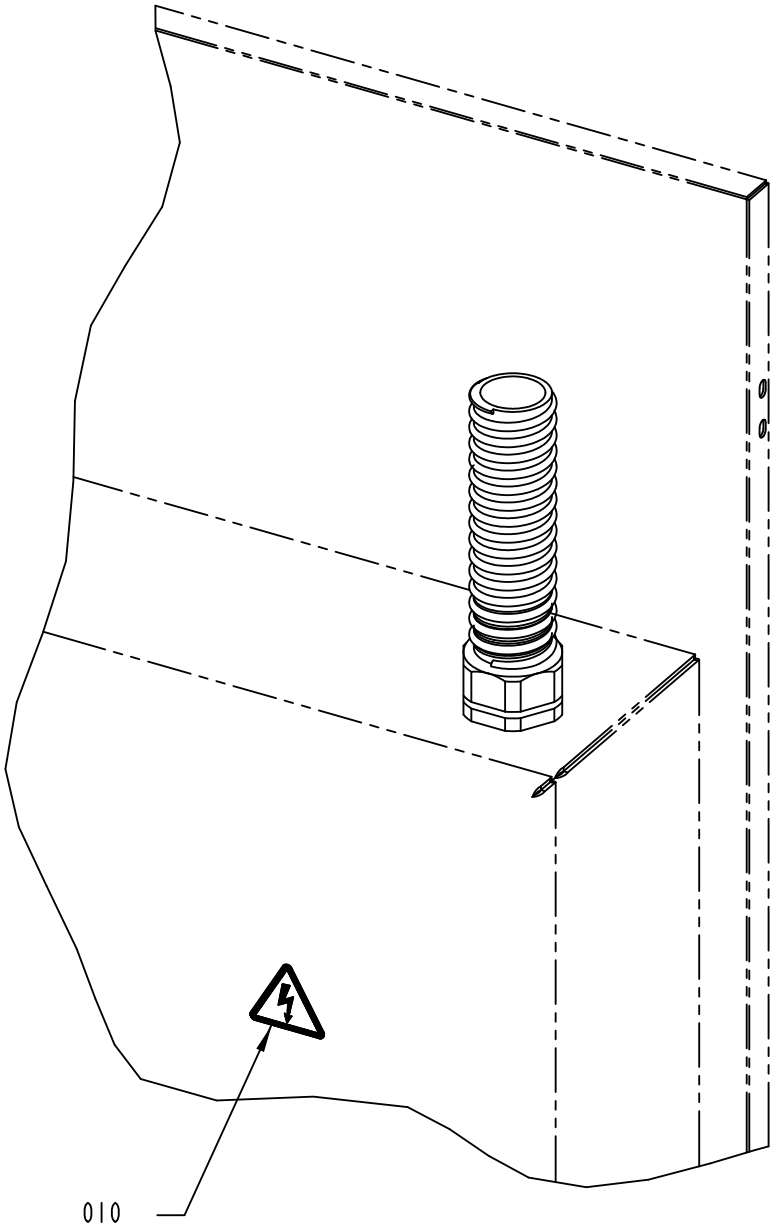

3218060-1
539582

ECM: 543047 - 20120402
Group number: 3218060-0100
Assembly Drawing: 3218060-1_1_AB

Pos	Part No	UN	Qty	Description	Page No
ANSI					
010	359715-0100		2	WARNING SIGN ANSI (H), ELECTRIC SHOCK	
ISO					
010	359705-0015		2	WARNING SIGN ISO, RISK OF ELECTRIC SHOCK	

Pos	Part No	UN	Qty	Description	Page No

Machine Type | Group Description | Used-In | Group Number | Page No

DOORS AND COVERS

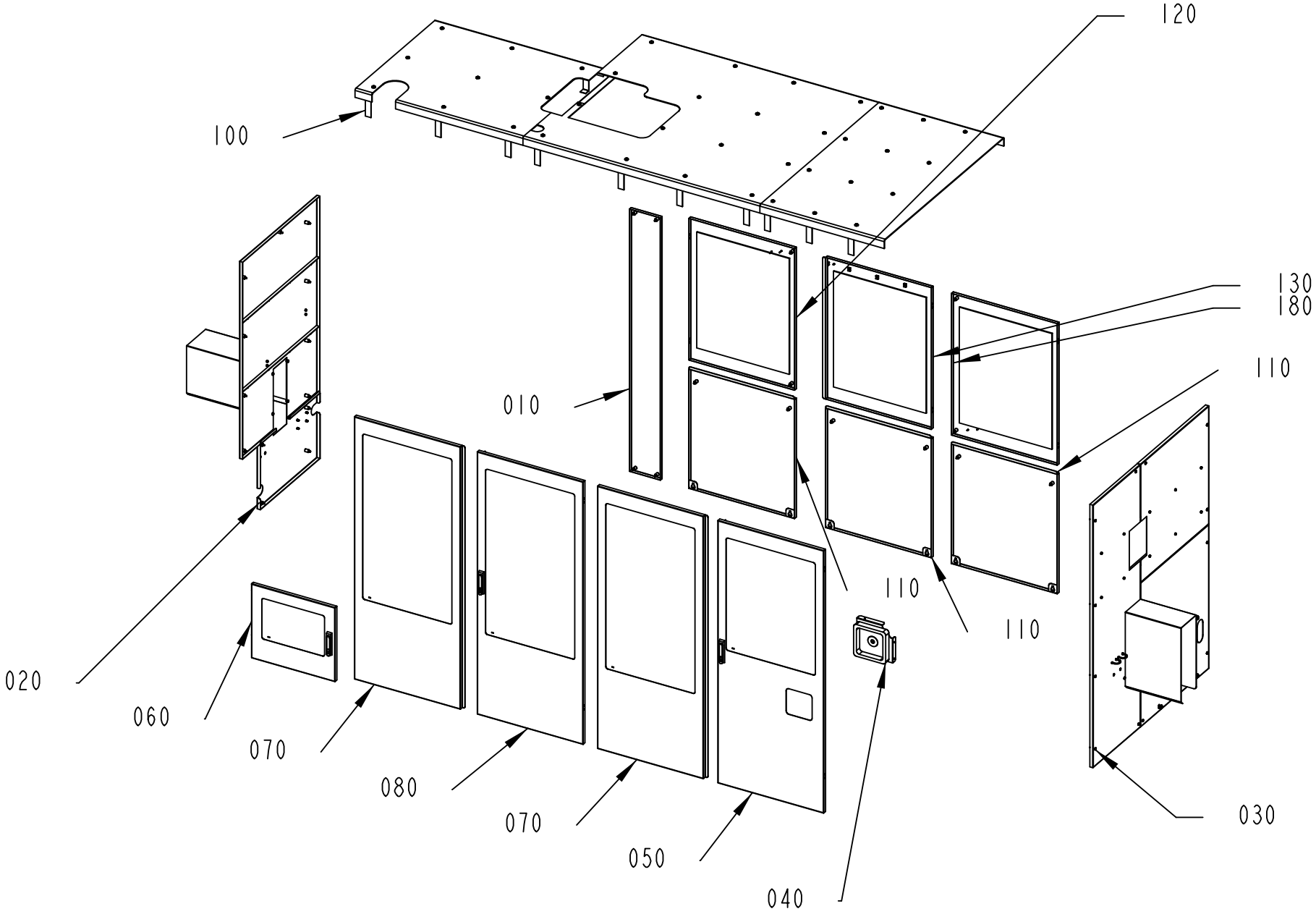

2826741-5
653734

ECM: 676486 - 20141001
Group number: 2826741-0300
Assembly Drawing: 2826741-5_1_AB

Pos	Part No	UN	Qty	Description	Page No
DREAMCAP 26					
030	2826743-0300		1	COVER	**5-111**
050	2779748-0100		1	GLASS DOOR	**5-121**
070	3329212-0000		2	GLASS DOOR	
Common Parts					
010	2779835-0200		1	DOOR	**5-123**
020	2826742-0300		1	COVER	**5-125**
040	2769760-0200		1	EMERGENCY STOP	**5-131**
060	2779832-0100		1	GLASS DOOR	**5-133**
080	2779834-0100		1	GLASS DOOR	**5-135**
100	2787230-0100		1	TOP SECTION	**5-137**
110	2805693-0100		3	DOOR	**5-139**
120	2805687-0100		1	GLASS DOOR	**5-141**
130	2805694-0100		1	GLASS DOOR	**5-143**
180	3047348-0100		1	GLASS DOOR	**5-145**

Pos	Part No	UN	Qty	Description	Page No

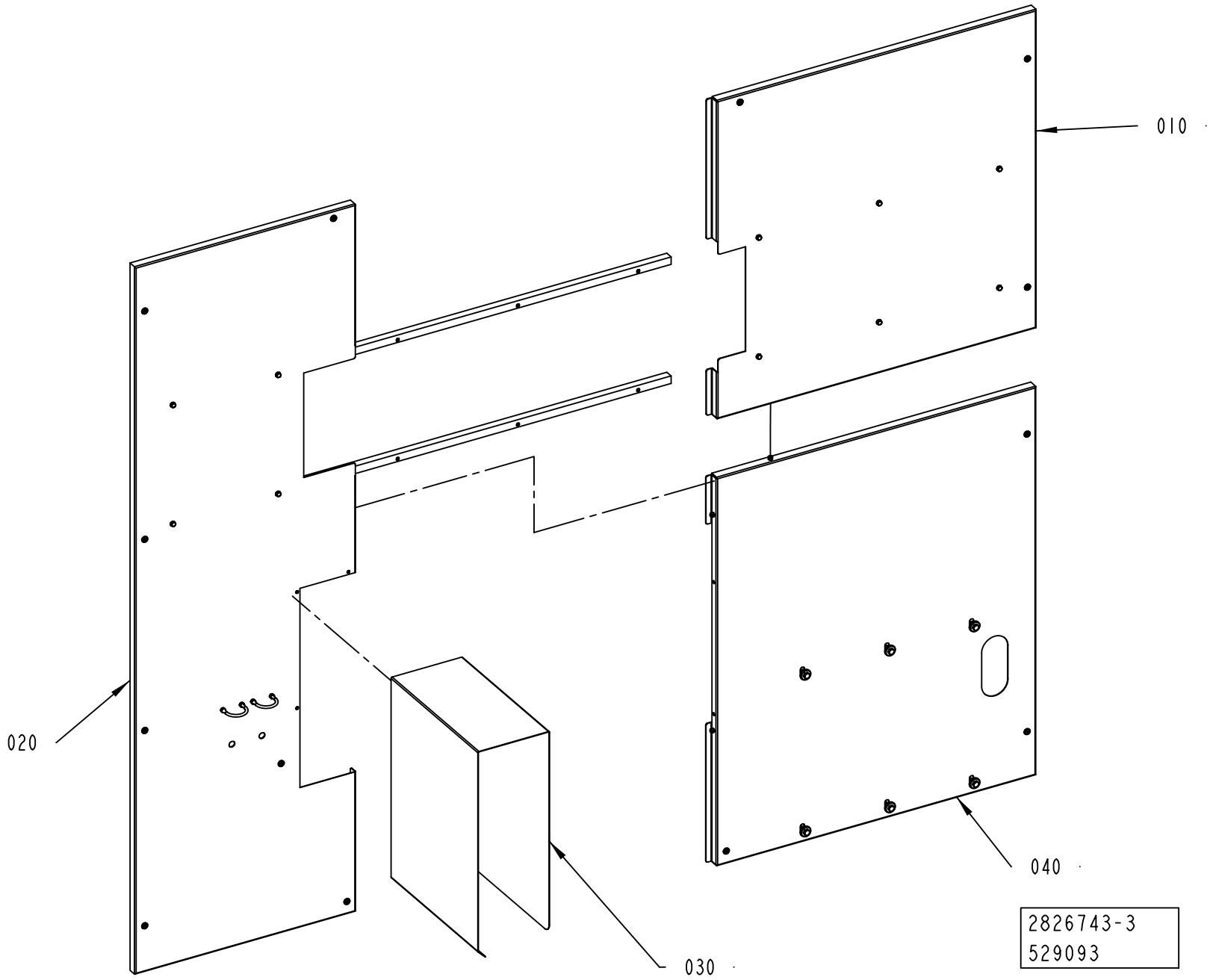
010
020
030
040
2826743-3
529093

ECM: 537709 - 20120401
Group number: 2826743-0300
Assembly Drawing: 2826743-3_1_AA

Pos	Part No	UN	Qty	Description	Page No
-					
010	2842795-0100		1	COVER	**5-113**
020	2842794-0300		1	COVER	**5-115**
030	2846399-0300		1	TUNNEL	**5-117**
040	2842807-0200		1	COVER	**5-119**

Pos	Part No	UN	Qty	Description	Page No

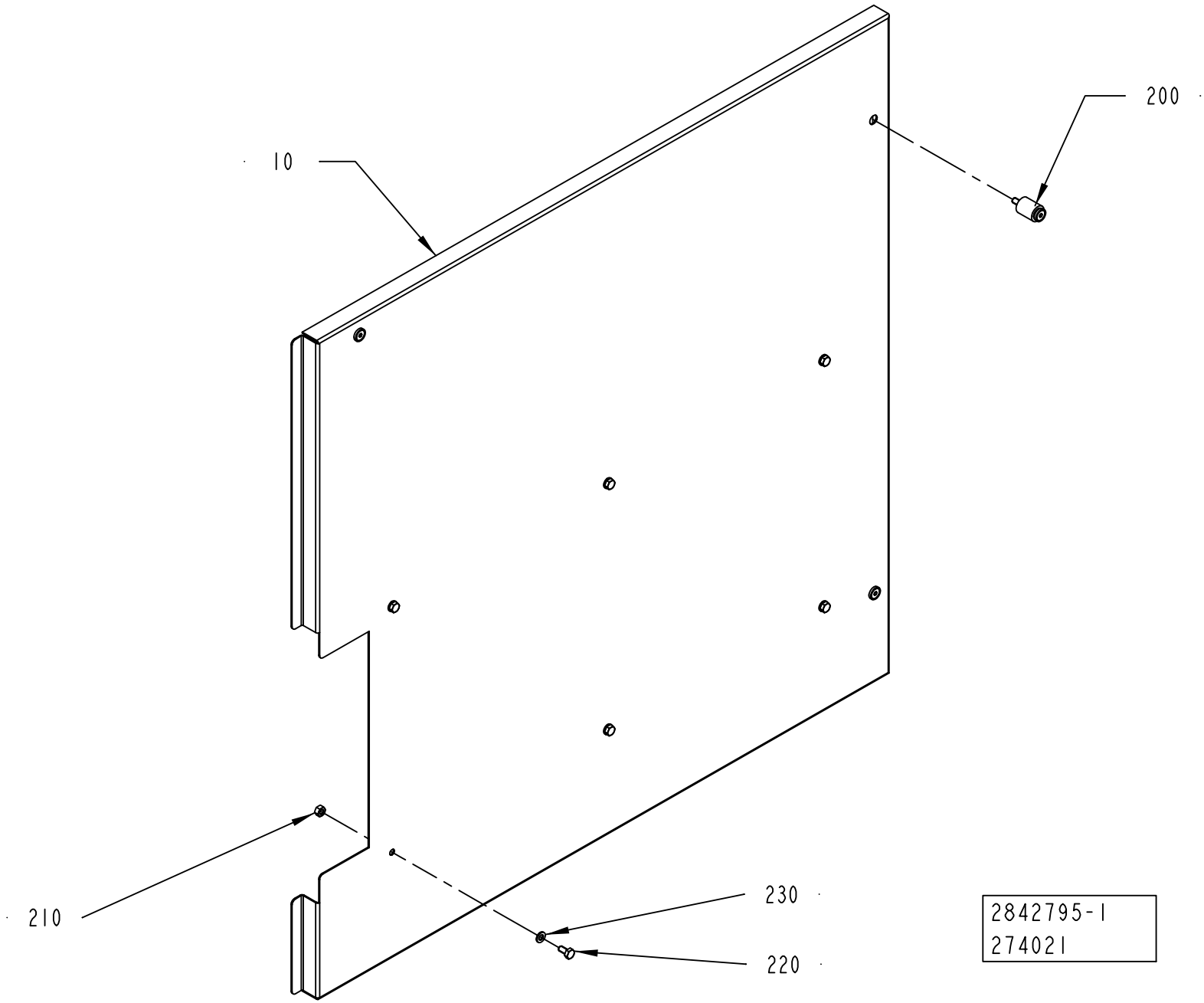
10
200
210
230
220
2842795-1
274021

ECM: 350261 - 20080701
Group number: 2842795-0100
Assembly Drawing: 2842795-1_1_AA

Pos	Part No	UN	Qty	Description	Page No
-					
010	2842799-0000		1	COVER	
200	90226-0458		3	MOUNTING SCREW	
210	312605-0316		6	HEXAGON NUT, M6M M6 A280	
220	312105-0366		6	SCREW, M6S ISO 4017 M6X12 A4 80	
230	315105-0153		6	WASHER PLAIN, 6,4X12X1,5 A4 BRB	

Pos	Part No	UN	Qty	Description	Page No

Machine Type | Group Description | Used-In | Group Number | Page No

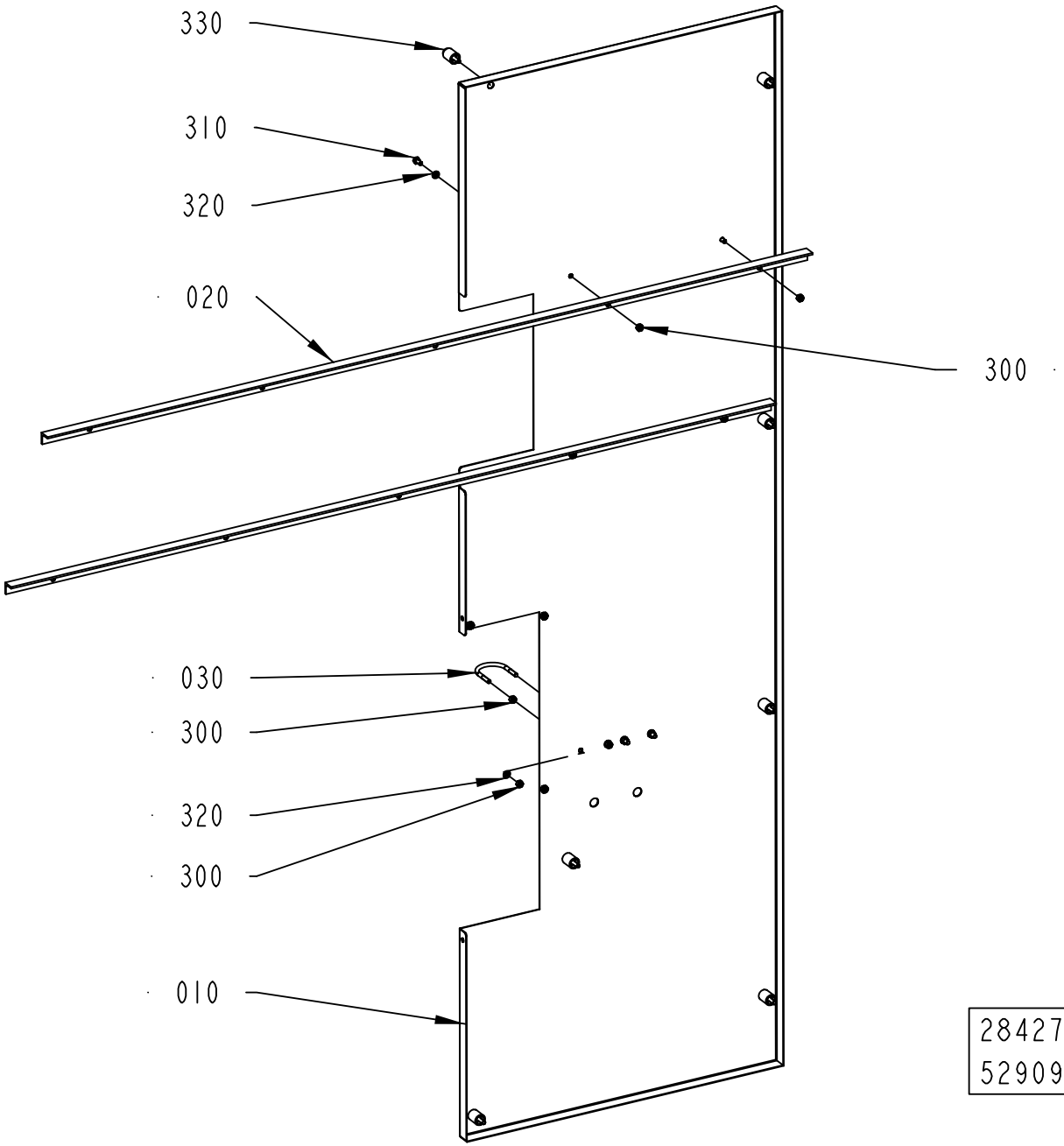

2842794-3
529093

ECM: 537710 - 20120401
Group number: 2842794-0300
Assembly Drawing: 2842794-3_1_AA

Pos	Part No	UN	Qty	Description	Page No
-					
010	3212199-0000		1	COVER	
020	2844501-0000		2	PROFILE	
030	531616-0000		2	HOLDER	
300	312605-0316		12	HEXAGON NUT, M6M M6 A280	
310	312105-0366		4	SCREW, M6S ISO 4017 M6X12 A4 80	
320	315105-0153		8	WASHER PLAIN, 6,4X12X1,5 A4 BRB	
330	90226-0458		7	MOUNTING SCREW	

Pos	Part No	UN	Qty	Description	Page No

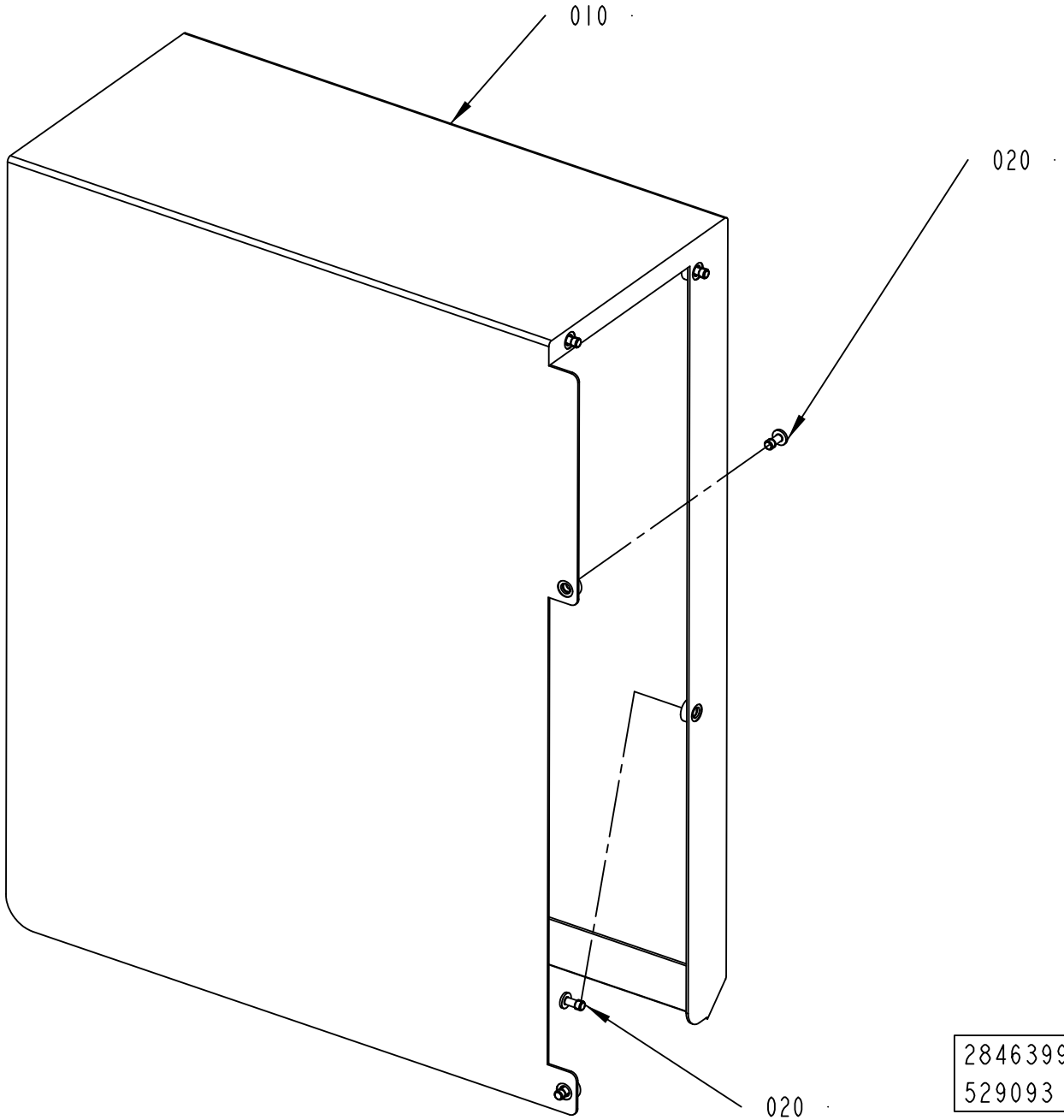

2846399-3
529093

ECM: 537713 - 20120401
Group number: 2846399-0300
Assembly Drawing: 2846399-3_1_AA

Pos	Part No	UN	Qty	Description	Page No
-					
010	2985842-0000		1	TUNNEL	
020	90601-2046		4	CAPTIVE SCREW M6, GUTBG 6-4-12	

Pos	Part No	UN	Qty	Description	Page No

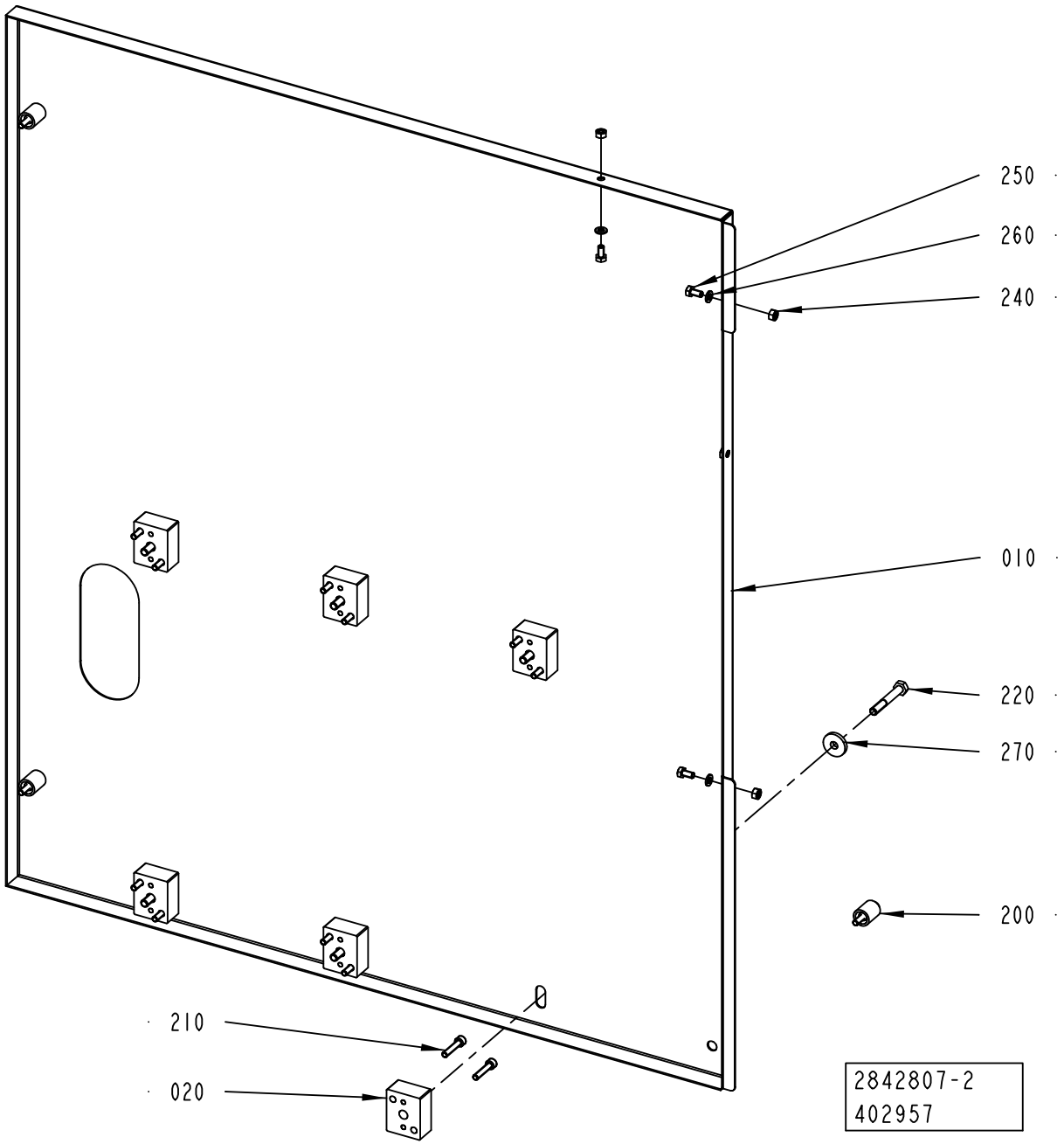
250
260
240
010
220
270
200
210
020
2842807-2
402957

ECM: 407745 - 20091001
Group number: 2842807-0200
Assembly Drawing: 2842807-2_1_AA

Pos	Part No	UN	Qty	Description	Page No
-					
010	2985843-0000		1	COVER	
020	2842805-0000		6	SPACER	
200	90226-0458		3	MOUNTING SCREW	
210	312115-0374		12	SCREW ISO4762 M6X30 A4 80	
220	312105-0462		6	SCREW, M6S ISO 4014 M8X55 A4 8002	
240	312605-0316		3	HEXAGON NUT, M6M M6 A280	
250	312105-0366		3	SCREW, M6S ISO 4017 M6X12 A4 80	
260	315105-0153		3	WASHER PLAIN, 6,4X12X1,5 A4 BRB	
270	315125-0165		6	WASHER HIGH, TBRSB 8,4X26X5 A4	

Pos	Part No	UN	Qty	Description	Page No

GLASS DOOR

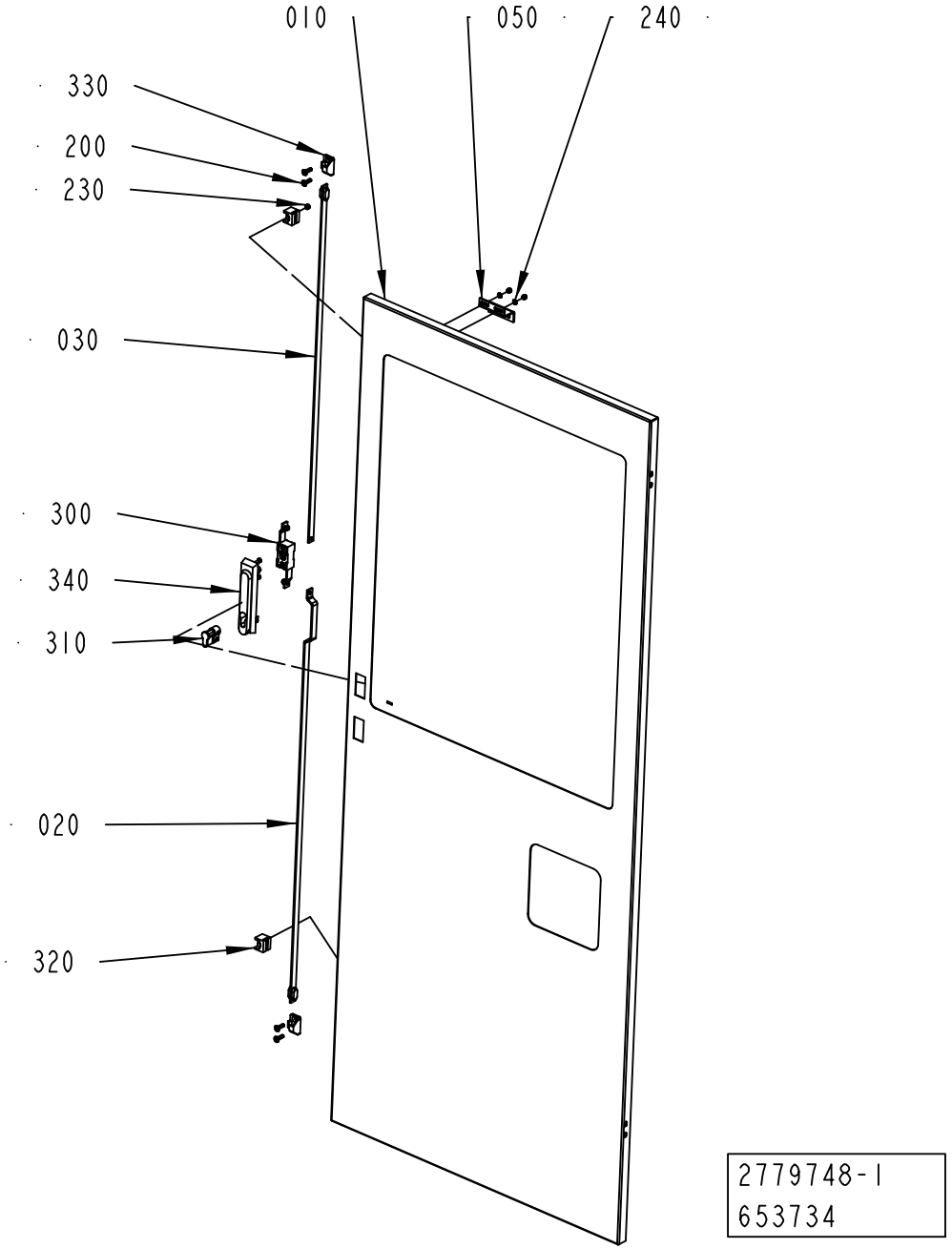
010
050
240
330
200
230
030
300
340
310
020
320
2779748-1
653734

ECM: 656695 - 20140701
Group number: 2779748-0100
Assembly Drawing: 2779748-1_1_AE

Pos	Part No	UN	Qty	Description	Page No
-					
010	3329210-0000		1	GLASS DOOR	
020	2551030-0000		1	STRUT	
030	2781285-0000		1	STRUT	
050	2595618-0000		1	BRACKET	
200	312155-0370		4	SCREW DIN 7991 MF6S M6X20 A4 70	
230	312812-0314		4	HEXAGON NUT, NY-LOCK M5 A4 80	
240	315105-0146		2	WASHER PLAIN, 5,3X10X1 A4 BRB	
300	90237-0123		1	LOCK, 1121-U10C	
310	90237-0128		1	LOCK CYLINDER, 1109-SU125	
320	90237-0144		2	GUIDE, 1121-SU540	
330	90237-0147		2	LOCKING LUG, NO. 1121-53-0P	
340	90237-0175		1	TURNING HANDLE, 1125-U185-0A	

Pos	Part No	UN	Qty	Description	Page No

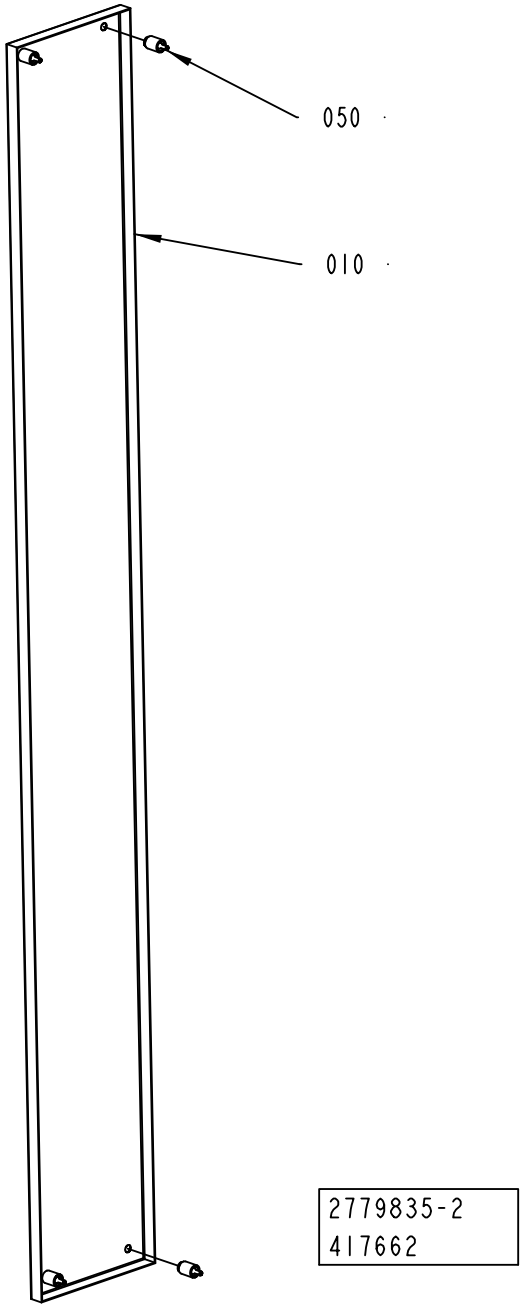
050
010
2779835-2
417662

ECM: 419448 - 20100110
Group number: 2779835-0200
Assembly Drawing: 2779835-2_1_AA

Pos	Part No	UN	Qty	Description	Page No
-					
010	3058858-0000		1	DOOR	
050	90226-0458		4	MOUNTING SCREW	

Pos	Part No	UN	Qty	Description	Page No

Machine Type	Group Description	Used-In	Group Number	Page No

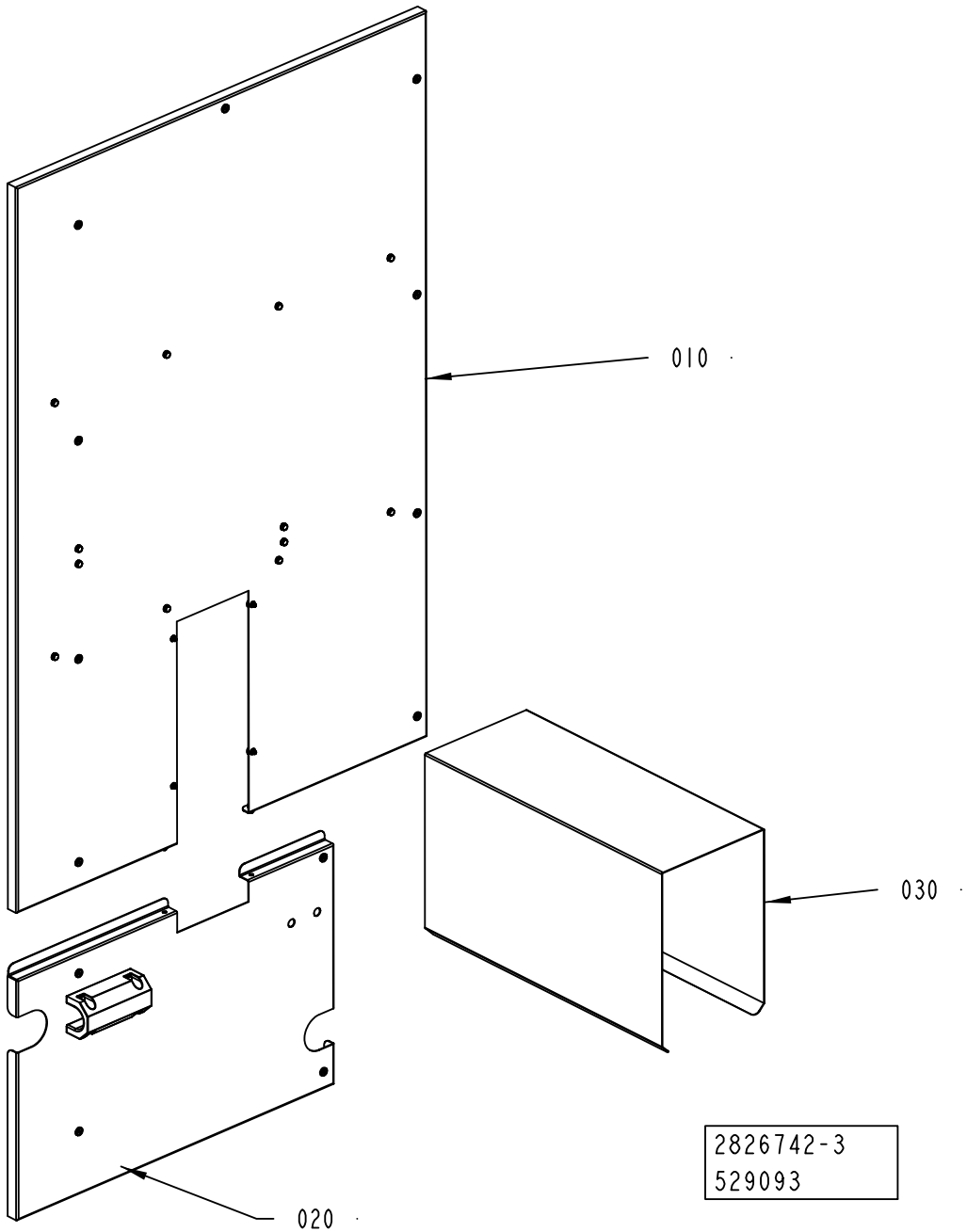
010
030
020
2826742-3
529093

ECM: 537707 - 20120401
Group number: 2826742-0300
Assembly Drawing: 2826742-3_1_AA

Pos	Part No	UN	Qty	Description	Page No
-					
010	2826744-0200		1	COVER	**5-127**
020	2842793-0300		1	DOOR	**5-129**
030	2985804-0000		1	TUNNEL	

Pos	Part No	UN	Qty	Description	Page No

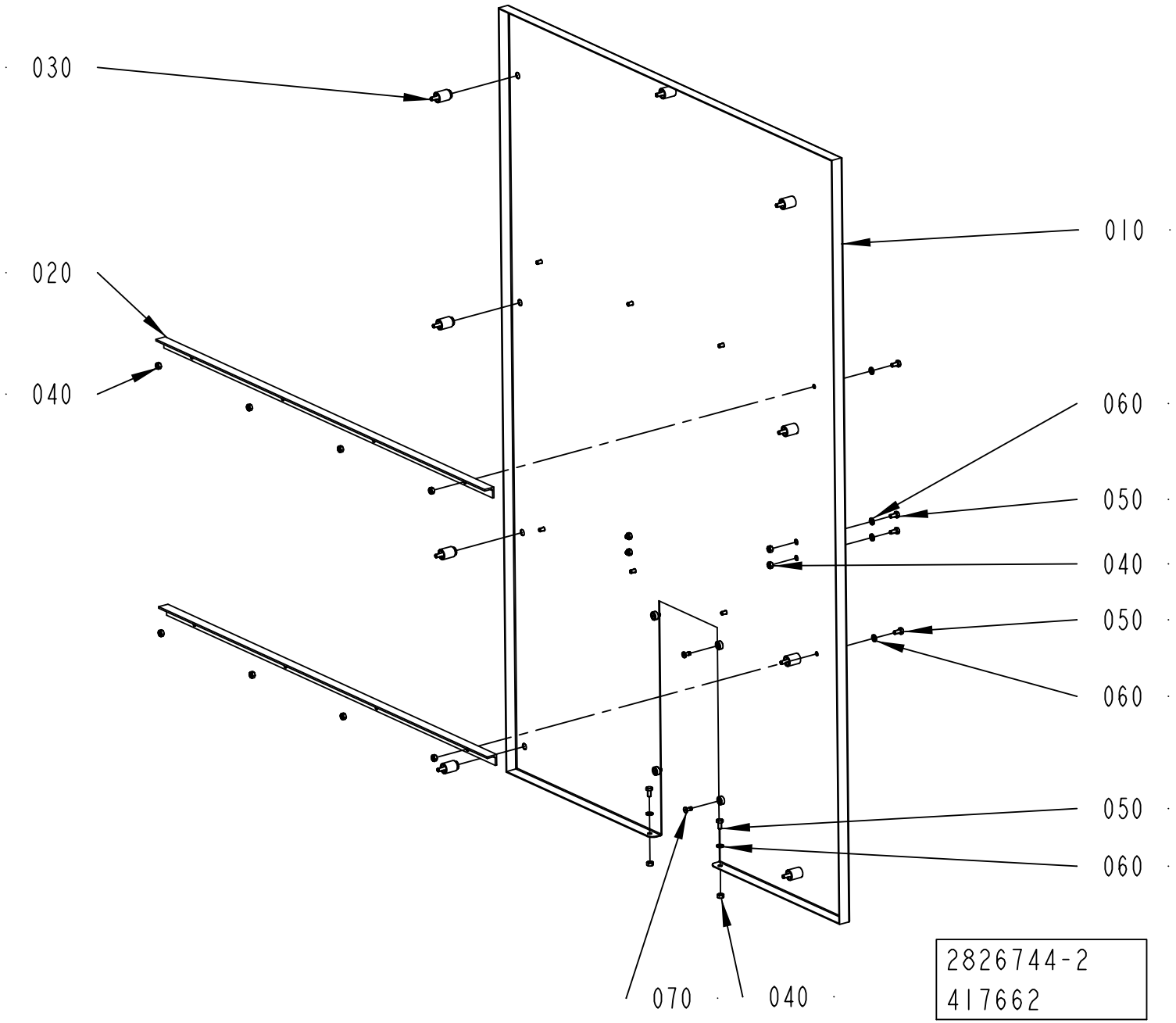
030
020
040
010
060
050
040
050
060
050
060
070
040
2826744-2
417662

ECM: 428929 - 20100401
Group number: 2826744-0200
Assembly Drawing: 2826744-2_1_AA

Pos	Part No	UN	Qty	Description	Page No
-					
010	3056497-0000		1	DOOR	
020	2842801-0000		2	COVER	
030	90226-0458		9	MOUNTING SCREW	
040	312605-0316		14	HEXAGON NUT, M6M M6 A280	
050	312105-0366		14	SCREW, M6S ISO 4017 M6X12 A4 80	
060	315105-0153		14	WASHER PLAIN, 6,4X12X1,5 A4 BRB	
070	90601-2046		4	CAPTIVE SCREW M6, GUTBG 6-4-12	

Pos	Part No	UN	Qty	Description	Page No

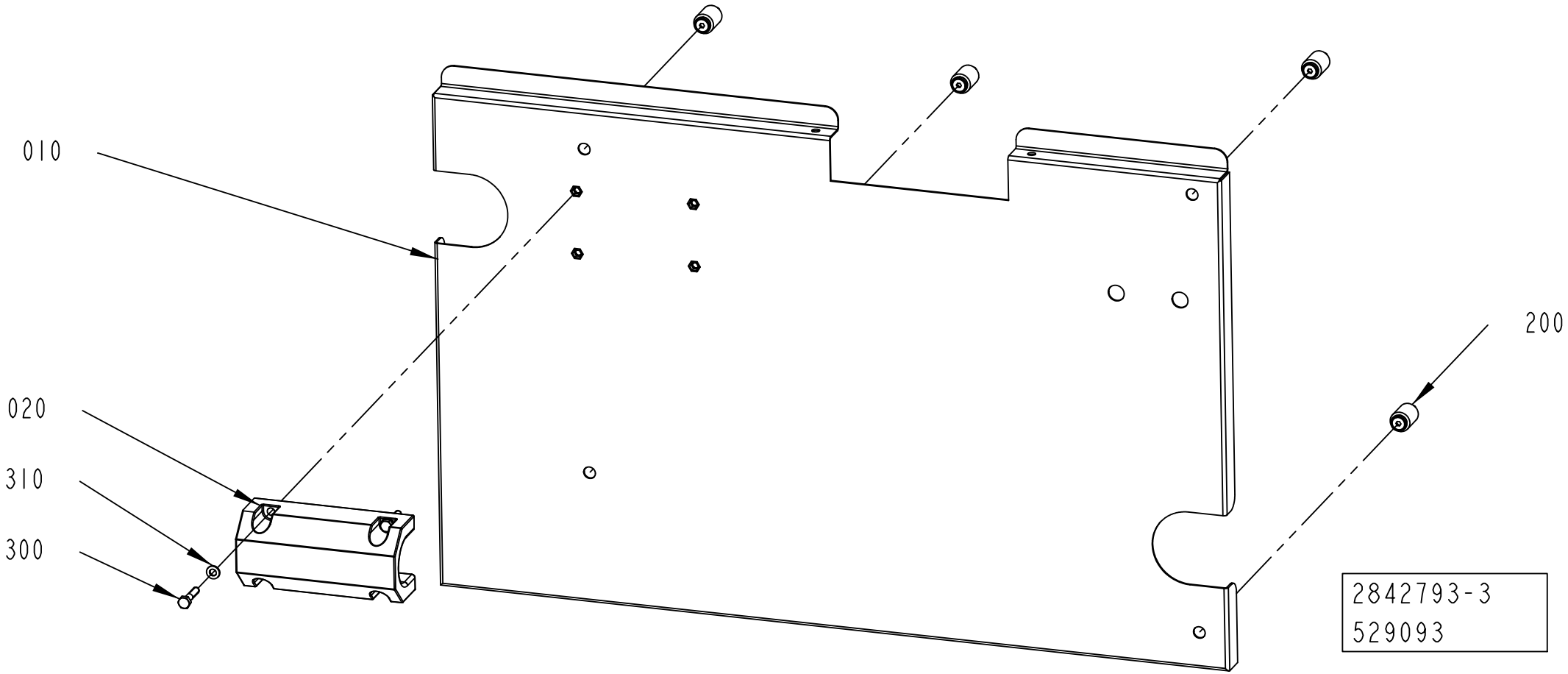
010
020
310
300
200
2842793-3
529093

ECM: 537722 - 20120401
Group number: 2842793-0300
Assembly Drawing: 2842793-3_1_AA

Pos	Part No	UN	Qty	Description	Page No
-					
010	3212197-0000		1	COVER	
020	3212201-0000		1	TUBE HOLDER	
200	90226-0458		4	MOUNTING SCREW	
300	312105-0374		4	SCREW, M6S ISO 4014 M6X30 A4 80	
310	315106-0153		4	WASHER PLAIN, M6 ISO7089-6-200 HV A4	

Pos	Part No	UN	Qty	Description	Page No

EMERGENCY STOP

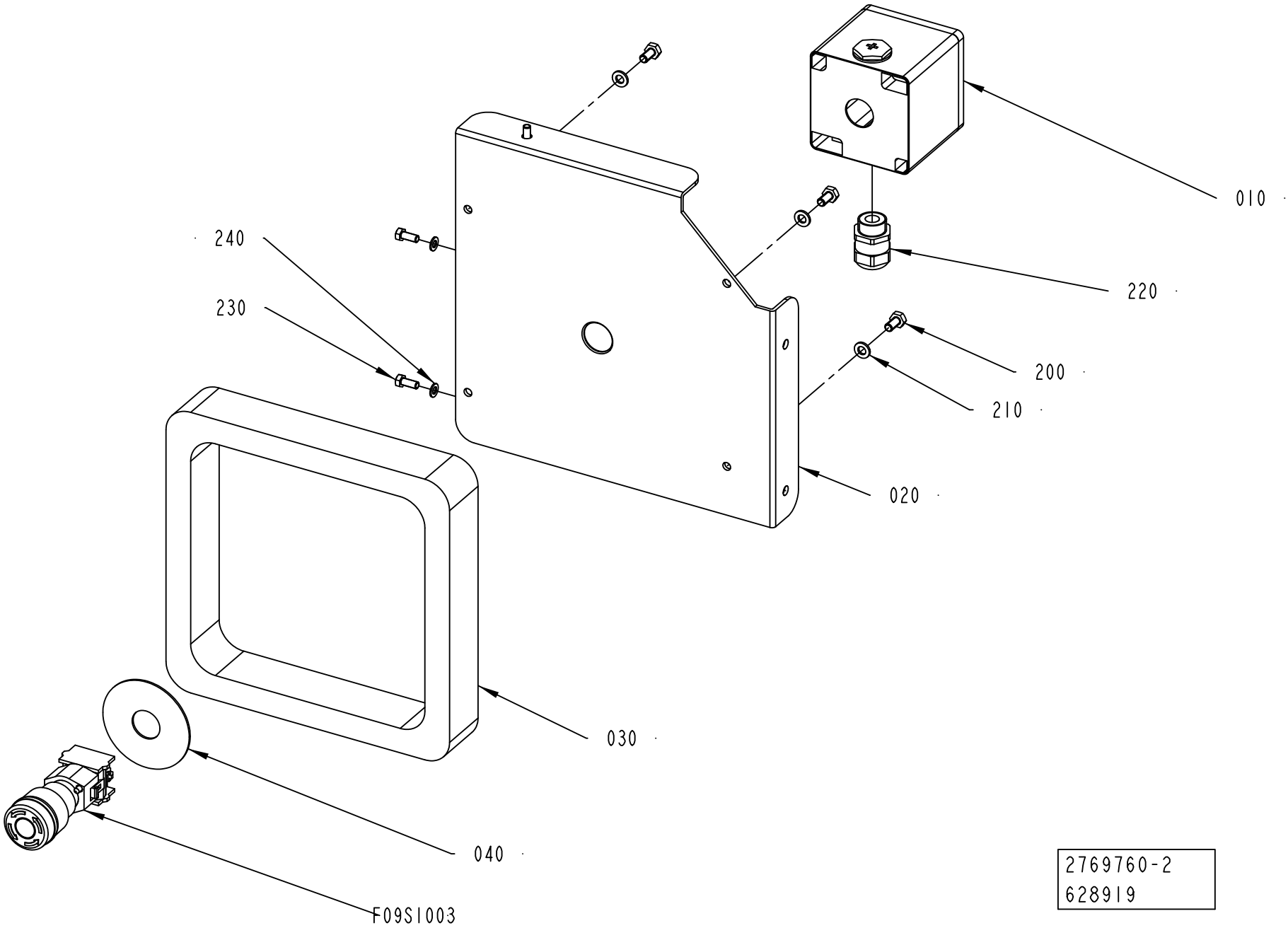

2769760-2
628919

ECM: 651425 - 20140401
Group number: 2769760-0200
Assembly Drawing: 2769760-2_1_AC

Pos	Part No	UN	Qty	Description	Page No
-					
010	3257112-0000		1	PUSH BUTTON BOX	
020	2779763-0000		1	COVER	
030	2779771-0000		1	SPACER	
040	486826-0001		1	SIGN "EMERGENCY STOP"	
200	312105-0366		4	SCREW, M6S ISO 4017 M6X12 A4 80	
210	315105-0153		4	WASHER PLAIN, 6,4X12X1,5 A4 BRB	
220	90458-0315		1	CABLE GLAND, M20X1,5, 5311 1120	
230	312105-0327		3	"SCREW, M6S ISO 4017 M5X12 A4 80"	
240	315105-0146		3	WASHER PLAIN, 5,3X10X1 A4 BRB	
F09S1003	90605-9819		1	EMERG. STOP SWITCH, 704.064.2+704.910.4	

Pos	Part No	UN	Qty	Description	Page No

GLASS DOOR

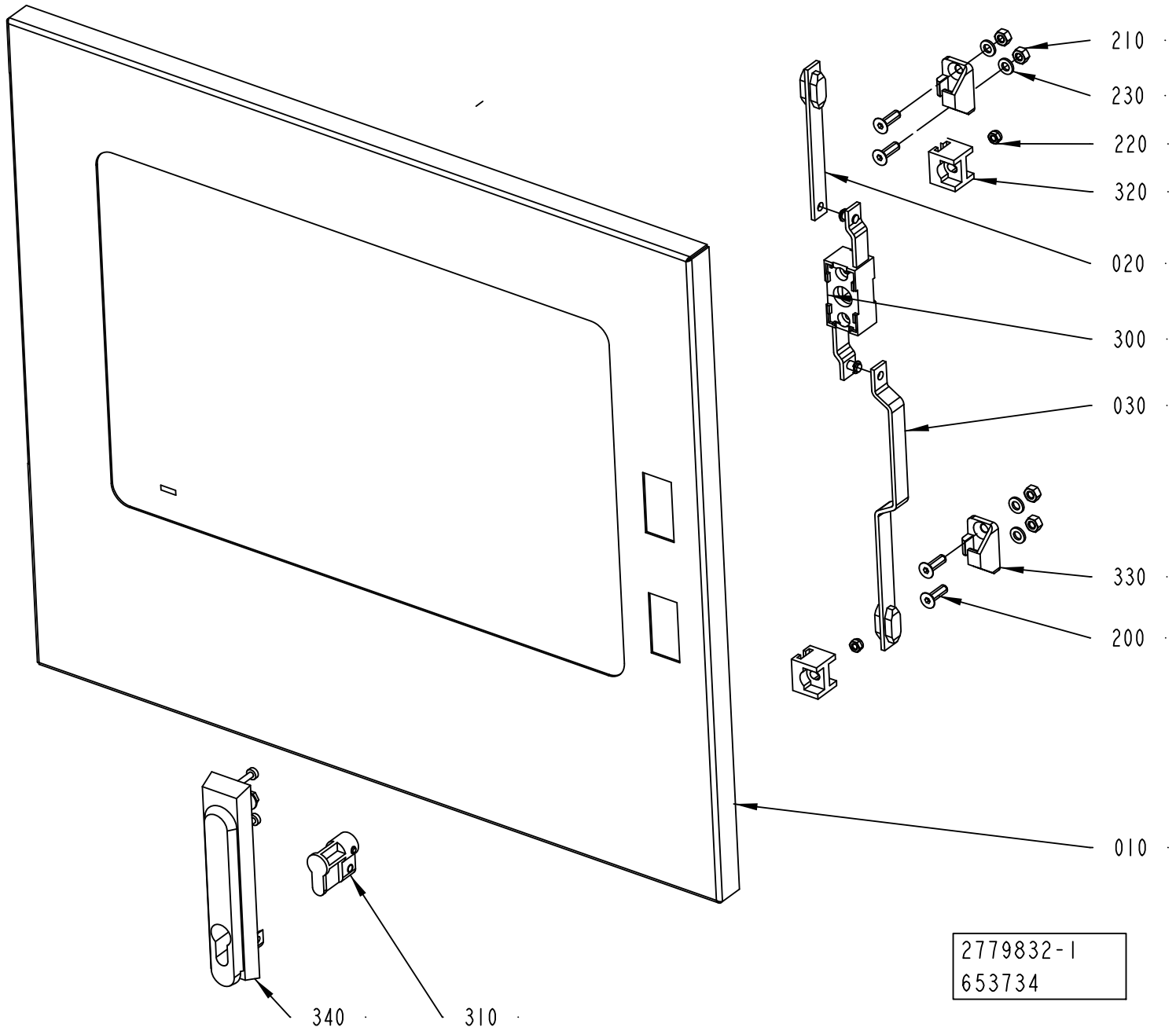
210
230
220
320
020
300
030
330
200
010
340
310
2779832-1
653734

ECM: 656696 - 20140701
Group number: 2779832-0100
Assembly Drawing: 2779832-1_1_AE

Pos	Part No	UN	Qty	Description	Page No
-					
010	3329211-0000		1	GLASS DOOR	
020	2563891-0000		1	STRUT	
030	2563892-0000		1	STRUT	
200	312155-0370		4	SCREW DIN 7991 MF6S M6X20 A4 70	
210	312605-0316		4	HEXAGON NUT, M6M M6 A280	
220	312812-0314		2	HEXAGON NUT, NY-LOCK M5 A4 80	
230	315105-0153		4	WASHER PLAIN, 6,4X12X1,5 A4 BRB	
300	90237-0123		1	LOCK, 1121-U10C	
310	90237-0128		1	LOCK CYLINDER, 1109-SU125	
320	90237-0144		2	GUIDE, 1121-SU540	
330	90237-0147		2	LOCKING LUG, NO. 1121-53-0P	
340	90237-0175		1	TURNING HANDLE, 1125-U185-0A	

Pos	Part No	UN	Qty	Description	Page No

Machine Type | Group Description | Used-In | Group Number | Page No

GLASS DOOR

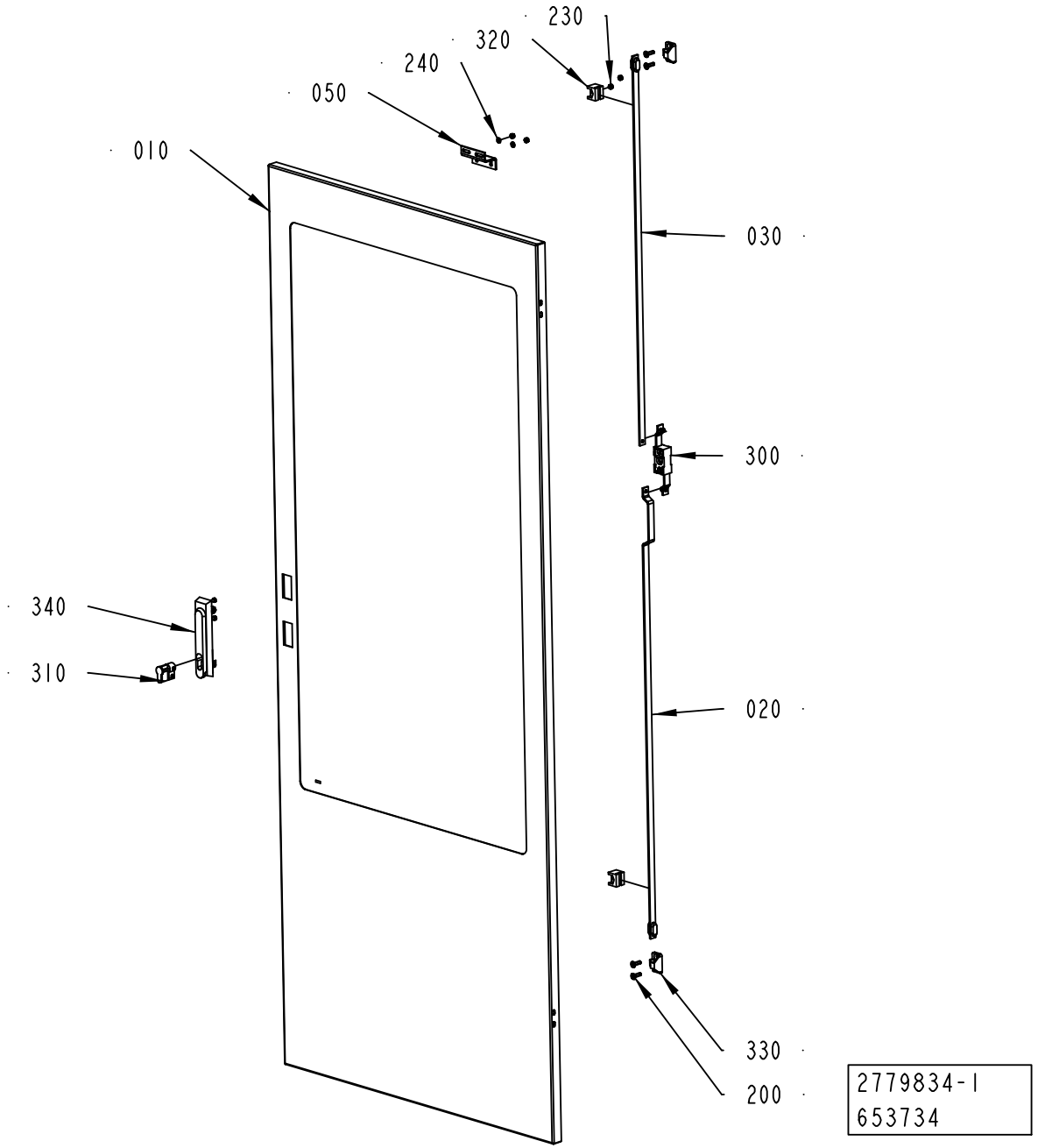
230
320
240
050
010
030
300
340
310
020
330
200
2779834-1
653734

ECM: 656697 - 20140701
Group number: 2779834-0100
Assembly Drawing: 2779834-1_1_AD

Pos	Part No	UN	Qty	Description	Page No
-					
010	3329213-0000		1	GLASS DOOR	
020	2551030-0000		1	STRUT	
030	2781285-0000		1	STRUT	
050	2595618-0000		1	BRACKET	
200	312155-0370		4	SCREW DIN 7991 MF6S M6X20 A4 70	
230	312812-0314		4	HEXAGON NUT, NY-LOCK M5 A4 80	
240	315105-0146		2	WASHER PLAIN, 5,3X10X1 A4 BRB	
300	90237-0123		1	LOCK, 1121-U10C	
310	90237-0128		1	LOCK CYLINDER, 1109-SU125	
320	90237-0144		2	GUIDE, 1121-SU540	
330	90237-0147		2	LOCKING LUG, NO. 1121-53-0P	
340	90237-0175		1	TURNING HANDLE, 1125-U185-0A	

Pos	Part No	UN	Qty	Description	Page No

TOP SECTION

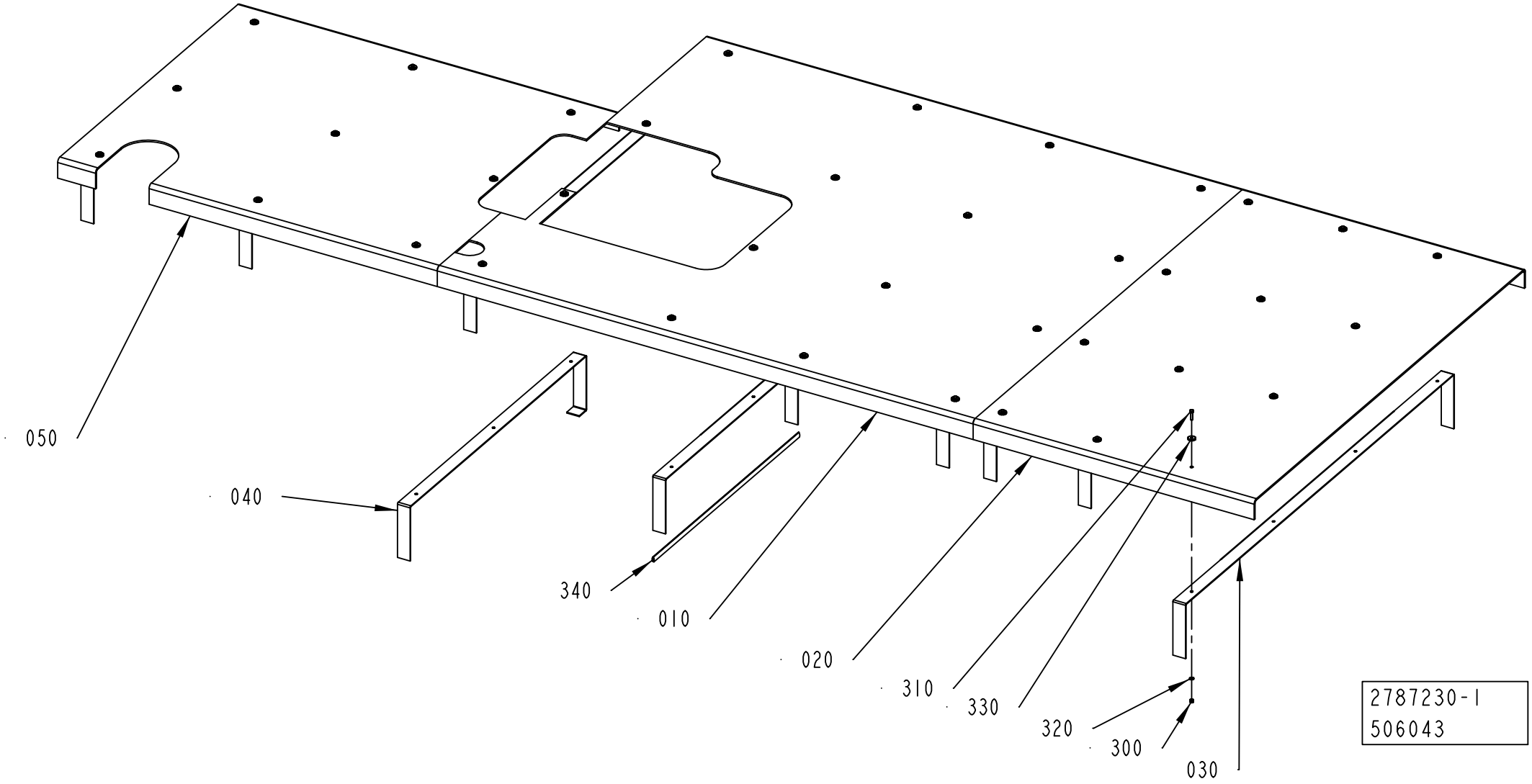

ECM: 507816 - 20111003
Group number: 2787230-0100
Assembly Drawing: 2787230-1_1_AC

Pos	Part No	UN	Qty	Description	Page No
DREAMCAP 26					
010	3170037-0000		1	PLATE	
020	2787232-0000		1	PLATE	
300	312812-0316		37	HEXAGON NUT, NY-LOCK M6 A4 80	
310	312105-0372		37	SCREW, M6S ISO 4017 M6X25 A4 80	
320	315105-0153		37	WASHER PLAIN, 6,4X12X1,5 A4 BRB	
330	315125-0153		37	WASHER HIGH, TBRSB 6,4X22X4 A4	
340	90143-0098	MM	800	RUBBER STRIP, CLAMPING, NO. 1038-02	
Common Parts					
030	2779823-0000		7	BRACKET	
040	2779824-0000		3	BRACKET	
050	3172144-0000		1	PLATE	

Pos	Part No	UN	Qty	Description	Page No

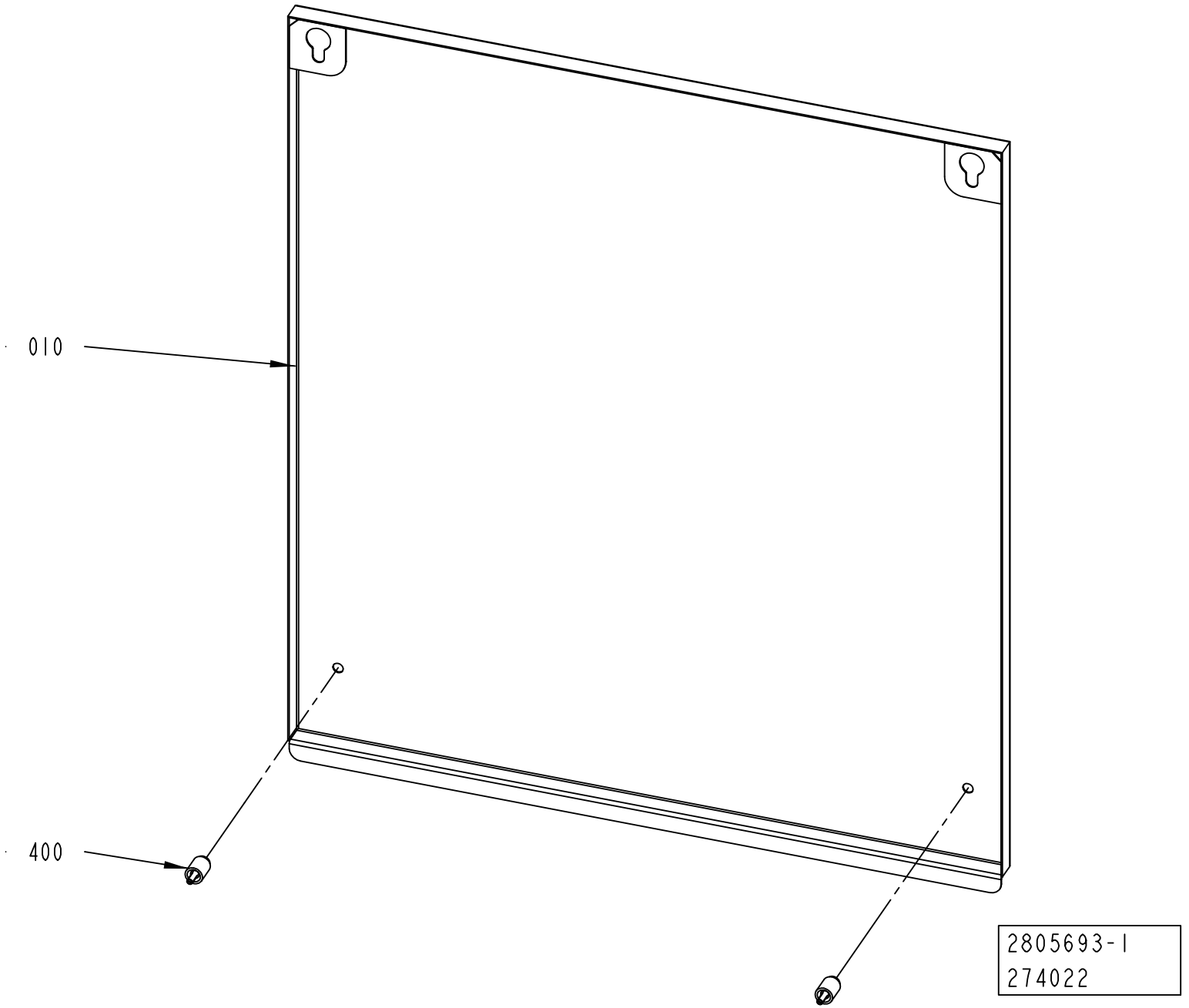
010
400
2805693-1
274022

ECM: 274542 - 20060921
Group number: 2805693-0100
Assembly Drawing: 2805693-1_1_AA

Pos	Part No	UN	Qty	Description	Page No
-					
010	2805692-0000		1	COVER	
400	90226-0458		2	MOUNTING SCREW	

Pos	Part No	UN	Qty	Description	Page No

GLASS DOOR

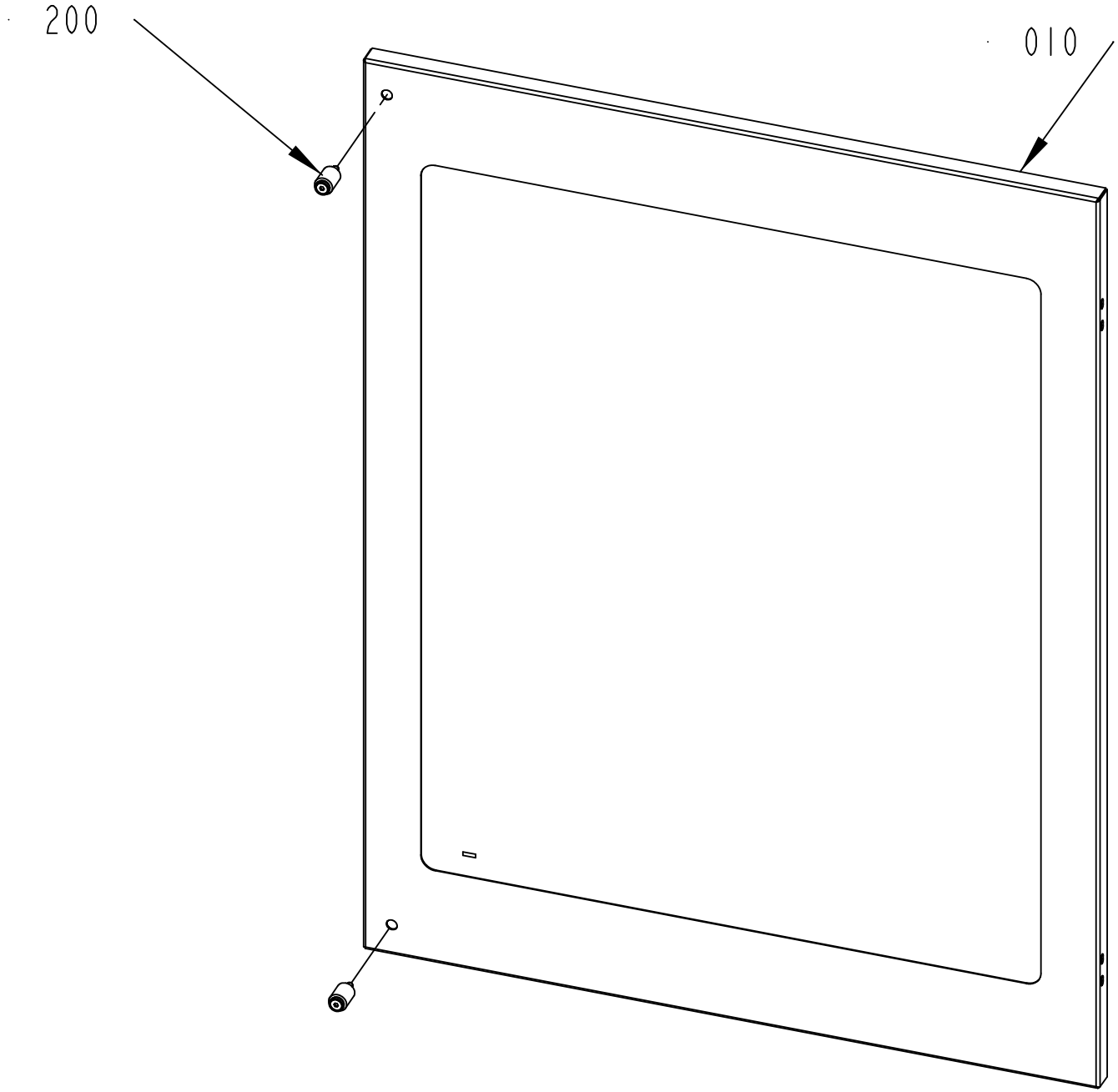

2805687-1
653734

ECM: 656698 - 20140701
Group number: 2805687-0100
Assembly Drawing: 2805687-1_1_AC

Pos	Part No	UN	Qty	Description	Page No
-					
010	3329214-0000		1	GLASS DOOR	
200	90226-0458		2	MOUNTING SCREW	

Pos	Part No	UN	Qty	Description	Page No

Machine Type | Group Description | Used-In | Group Number | Page No

GLASS DOOR

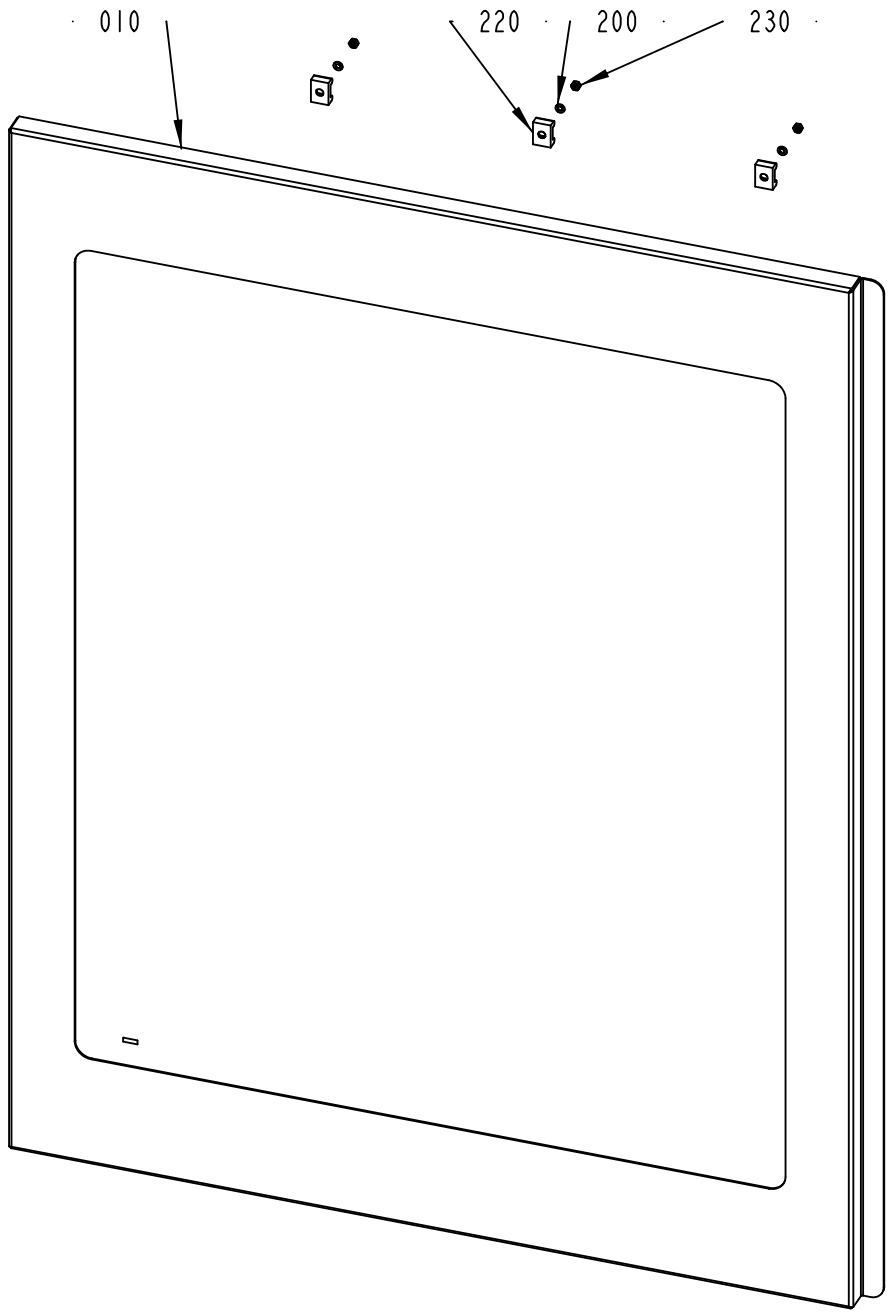

2805694-1
653734

ECM: 656699 - 20140701
Group number: 2805694-0100
Assembly Drawing: 2805694-1_1_AD

Pos	Part No	UN	Qty	Description	Page No
-					
010	3329215-0000		1	GLASS DOOR	
200	315105-0136		3	WASHER PLAIN, 4,3X8X0,8 A4 BRB	
220	352113-0204		3	ANCHOR PLATES FOR STRIPS, TM3S25-M	
230	312605-0312		3	HEXAGON NUT, M6M M4 A280	

Pos	Part No	UN	Qty	Description	Page No

Machine Type | Group Description | Used-In | Group Number | Page No

GLASS DOOR

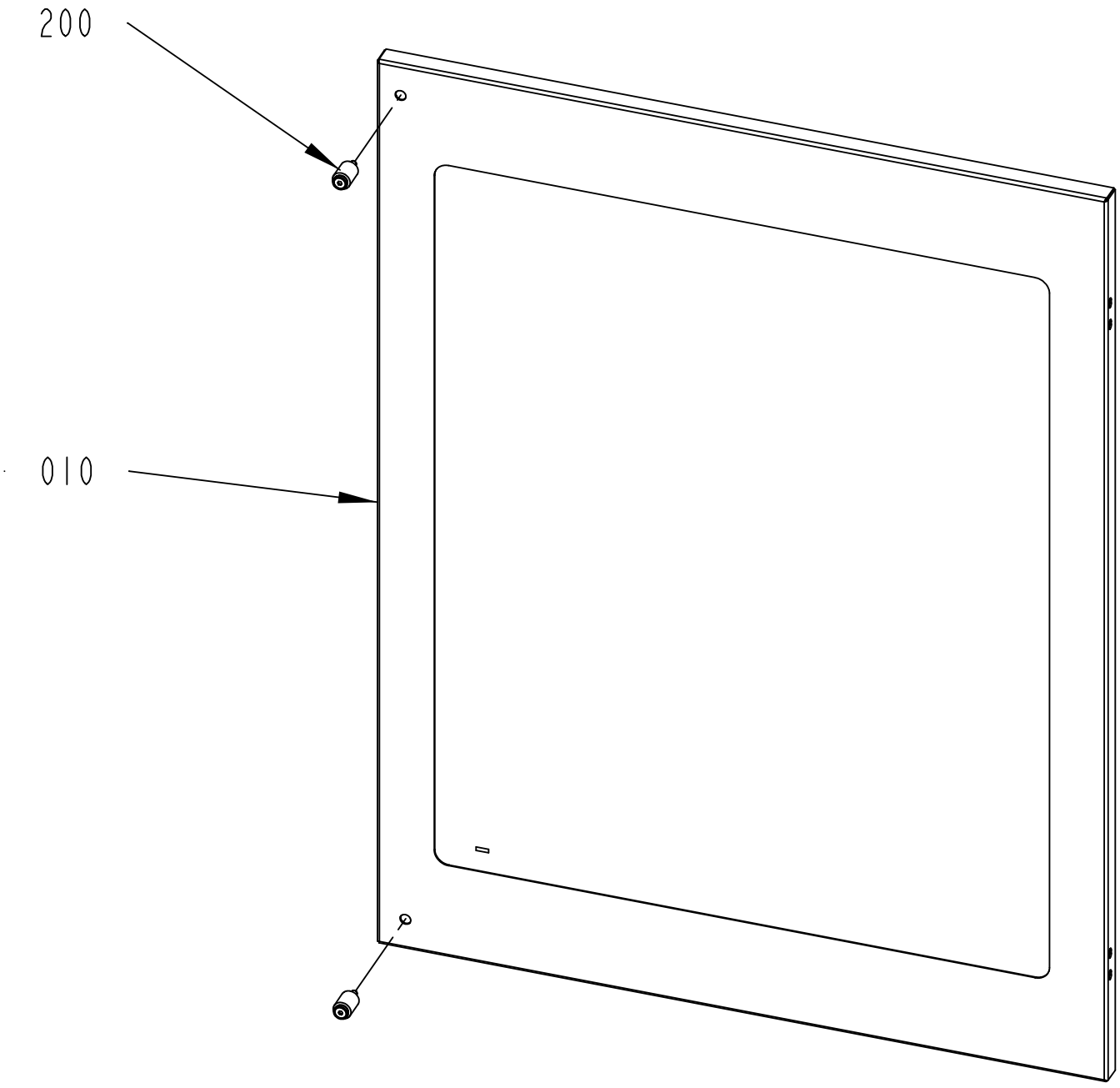

3047348-1
653734

ECM: 656702 - 20140701
Group number: 3047348-0100
Assembly Drawing: 3047348-1_1_AC

Pos	Part No	UN	Qty	Description	Page No
-					
010	3329217-0000		1	GLASS DOOR	
200	90226-0458		2	MOUNTING SCREW	

Pos	Part No	UN	Qty	Description	Page No

Machine Type | Group Description | Used-In | Group Number | Page No

WARNING SIGN

Drawing file: 3217567-1_1_AB.hpgl

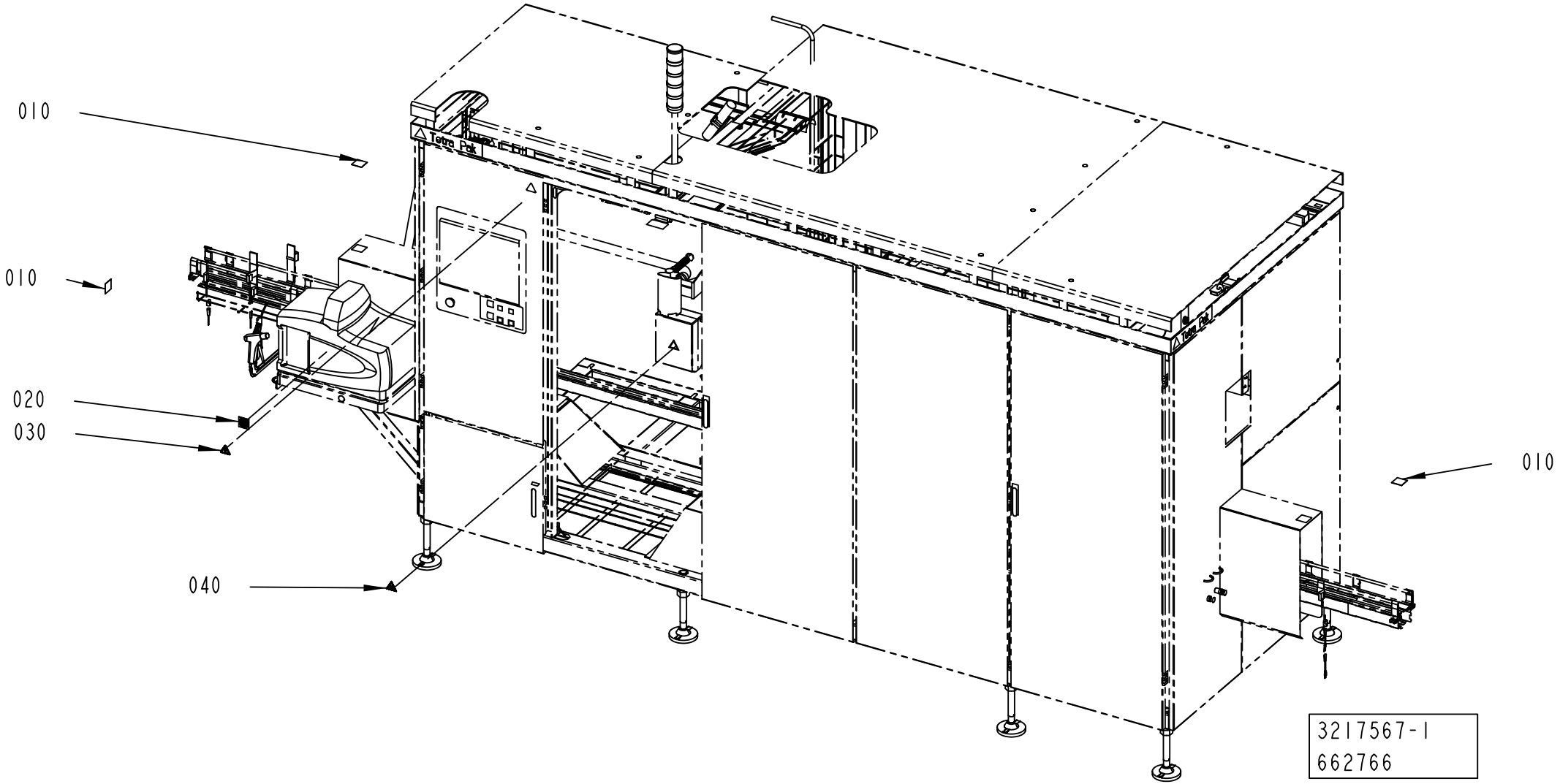

ECM: 664969 - 20140701
Group number: 3217567-0100
Assembly Drawing: 3217567-1_1_AB

Pos	Part No	UN	Qty	Description	Page No
ANSI					
010	90600-4040		3	CAUTION SIGN ANSI (H), DO NOT REACH IN	
020	90459-2232		1	WARNING SIGN ANSI (H), DO NOT WASH	
030	359715-0100		1	WARNING SIGN ANSI (H), ELECTRIC SHOCK	
040	90459-7458		1	WARNING SIGN ANSI (H), HOT SURFACE	
ISO					
010	90459-7584		3	PROHOBITION SIGN ISO, DO NOT REACH IN	
020	90459-2265		1	PROHIBITION SIGN ISO, DO NOT WASH	
030	359705-0015		1	WARNING SIGN ISO, RISK OF ELECTRIC SHOCK	
040	359710-0001		1	WARNING SIGN ISO, HOT SURFACE	

Pos	Part No	UN	Qty	Description	Page No

Tetra Pak®

SPC
Spare Parts Catalogue

APPLICATOR UNIT

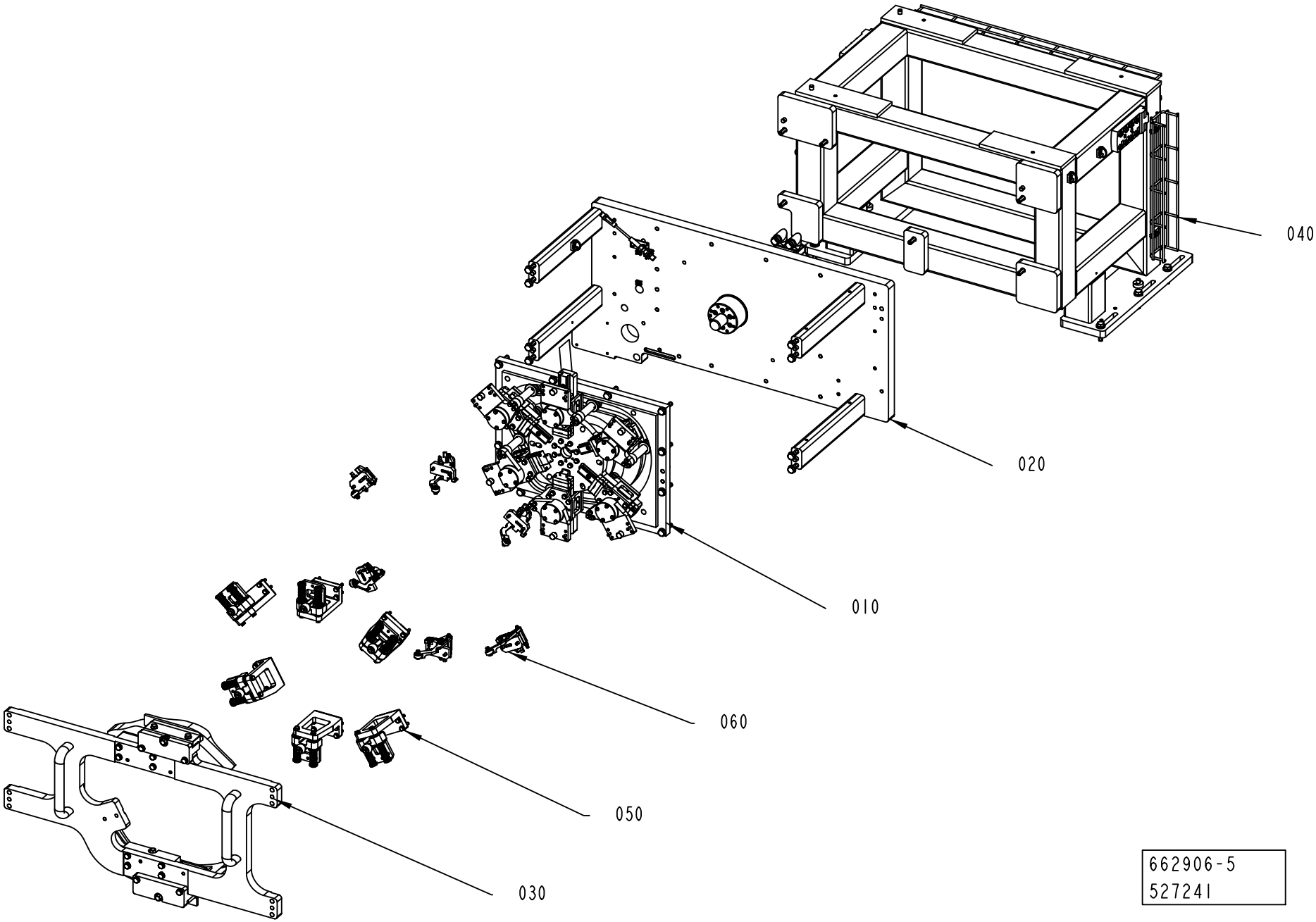

ECM: 527257 - 20120401
Group number: 662906-0300
Assembly Drawing: 662906-5_1_AA

Pos	Part No	UN	Qty	Description	Page No
-					
010	2746938-0200		1	TRANSFER UNIT	**6-5**
020	2837072-0200		1	DRIVE UNIT	**6-15**
030	2839315-0200		1	CAMMODULE	**6-21**
040	2751664-0300		1	FRAME	**6-39**
050	2746939-0200		1	CAP CARRIER GROUP	**6-41**
060	2746941-0200		1	CAP HOLDERS GROUP	**6-45**

Pos	Part No	UN	Qty	Description	Page No

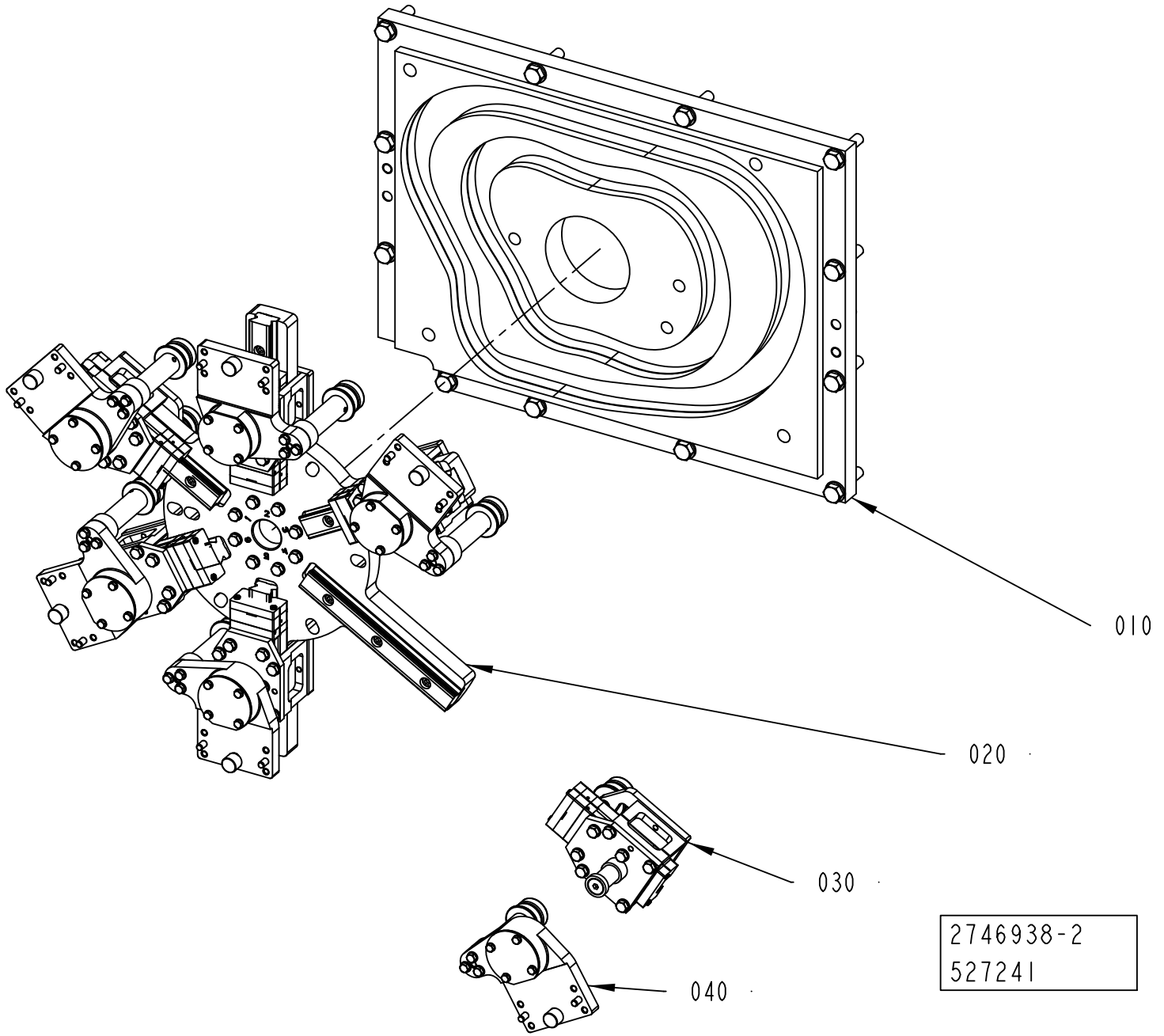
010
020
030
040
2746938-2
527241

ECM: 527260 - 20120401
Group number: 2746938-0200
Assembly Drawing: 2746938-2_1_AA

Pos	Part No	UN	Qty	Description	Page No
-					
010	2751655-0100		1	CAM	**6-7**
020	2751656-0100		1	STAR WHEEL	**6-9**
030	2751657-0200		6	SLIDER	**6-11**
040	2751658-0200		6	FOLLOWER CAM	**6-13**

Pos	Part No	UN	Qty	Description	Page No

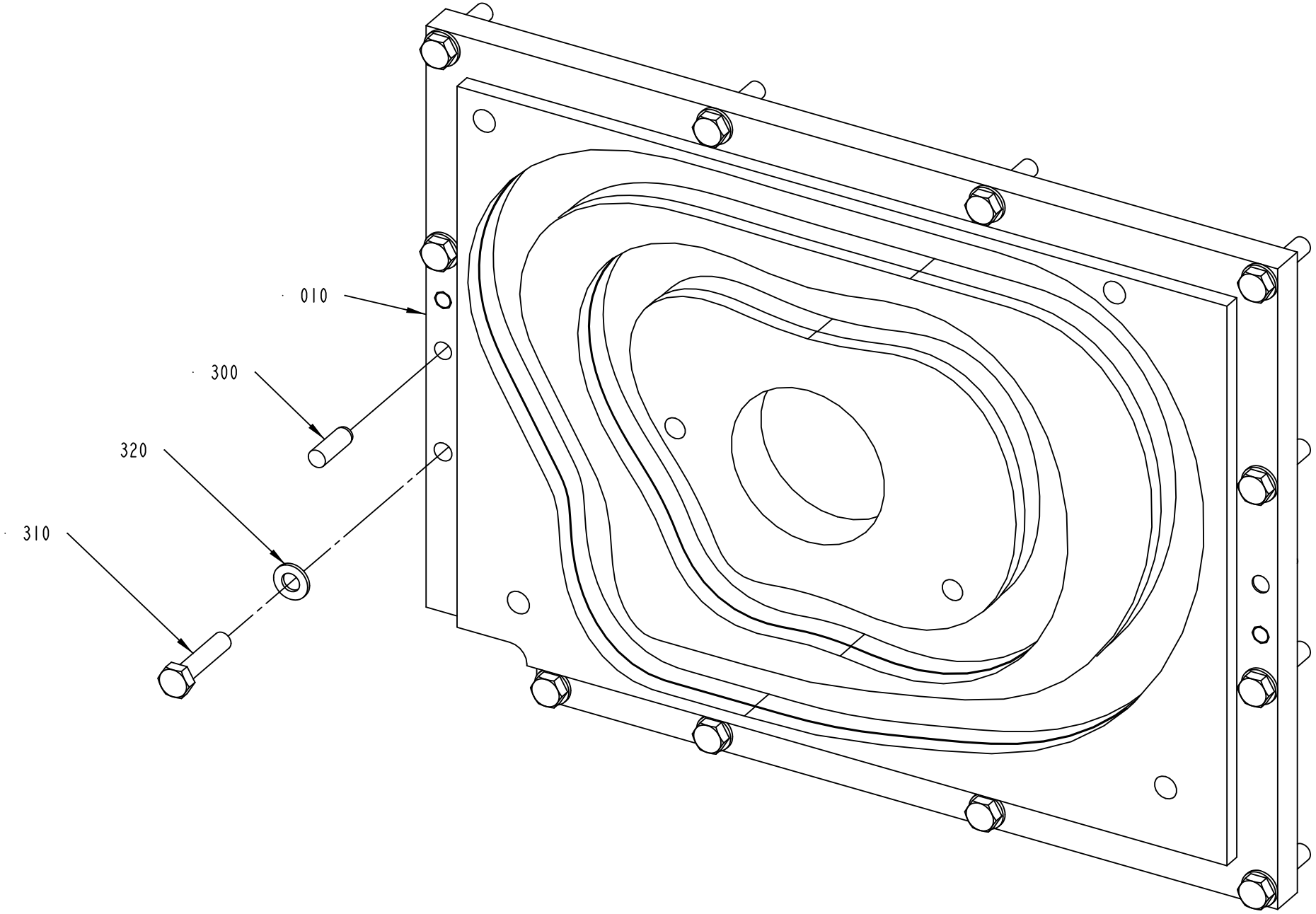

2751655-1
272630

ECM: 272706 - 20060921
Group number: 2751655-0100
Assembly Drawing: 2751655-1_1_AA

Pos	Part No	UN	Qty	Description	Page No
-					
010	2716116-0000		1	CAM	
300	311103-0458		2	PARALLEL PIN ISO 2338 10M6X30 A1	
310	312105-0500		12	SCREW, M6S ISO 4014 M10X45 A4 80	
320	315106-0173		12	"WASHER PLAIN, M10 ISO7089-10-200 HV A4"	

Pos	Part No	UN	Qty	Description	Page No

STAR WHEEL

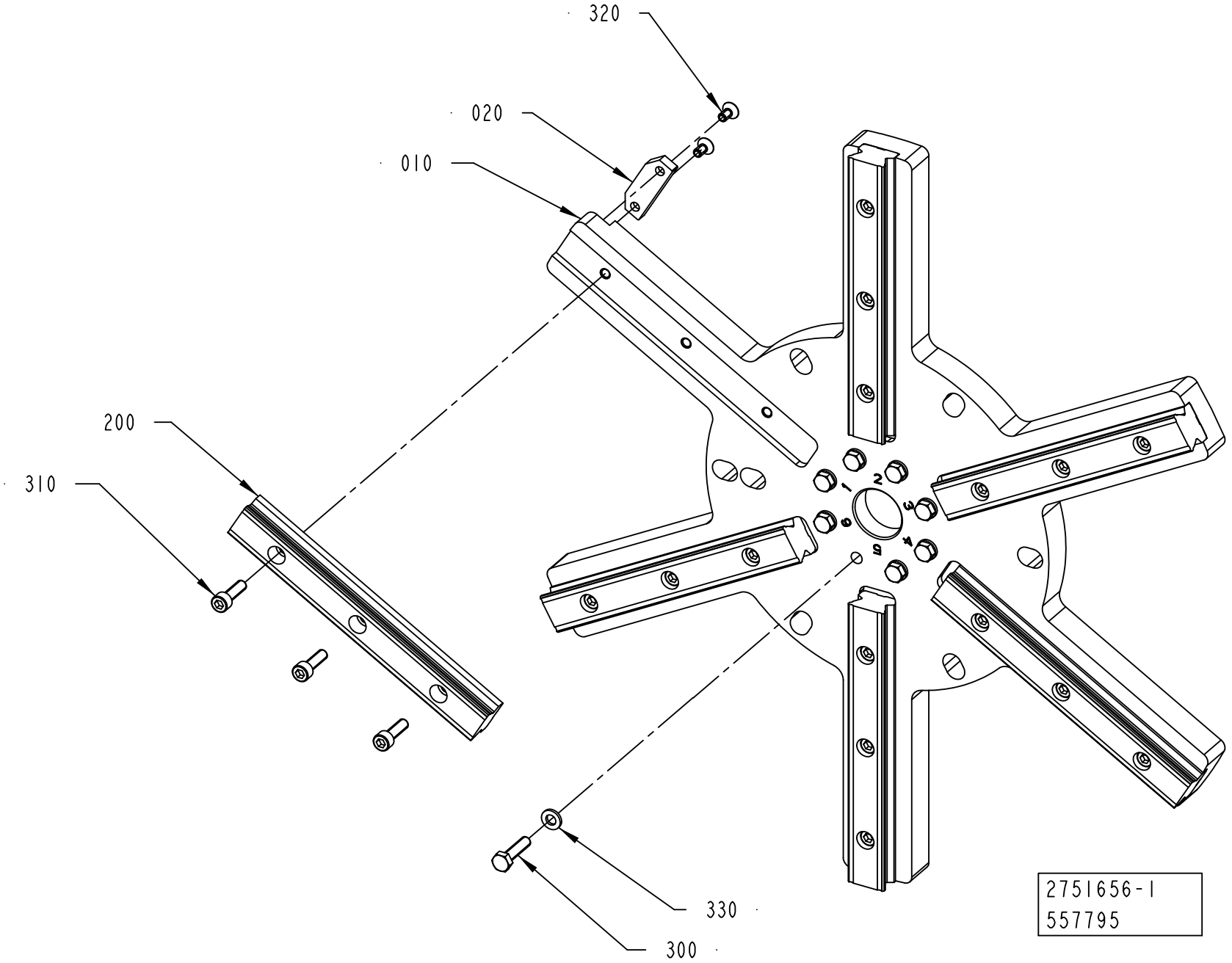

ECM: 558785 - 20120701
Group number: 2751656-0100
Assembly Drawing: 2751656-1_1_AB

Pos	Part No	UN	Qty	Description	Page No
-					
010	2751702-0000		1	STAR WHEEL	
020	2751706-0000		1	FLAG	
200	90600-0434		6	GUIDE BAR, SSR25-180L-YM G30/30	
300	312105-0372		8	SCREW, M6S ISO 4017 M6X25 A4 80	
310	312115-0370		18	SCREW ISO4762 M6X20 A4 80	
320	312155-0325		2	SCREW DIN 7991 MF6S M5X10 A4 70	
330	315106-0153		8	WASHER PLAIN, M6 ISO7089-6-200 HV A4	

Pos	Part No	UN	Qty	Description	Page No

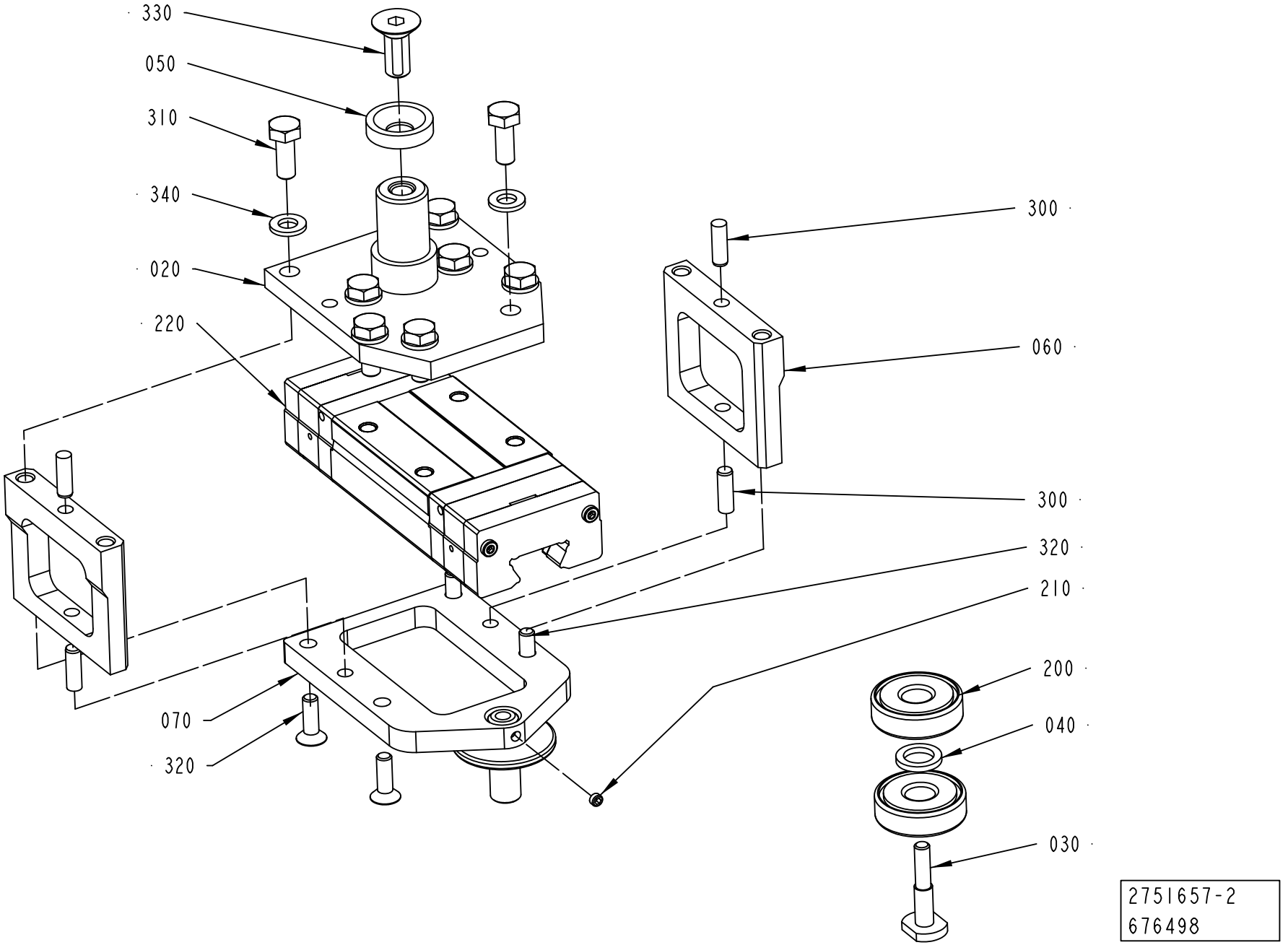
330
050
310
340
020
220
300
060
300
320
210
200
040
030
070
320
2751657-2
676498

ECM: 678265 - 20141001
Group number: 2751657-0200
Assembly Drawing: 2751657-2_1_AC

Pos	Part No	UN	Qty	Description	Page No
-					
020	2751739-0000		1	BRACKET	
030	2699680-0000		1	SCREW	
040	2699681-0000		1	SPACER	
050	2699683-0000		1	WASHER	
060	2703697-0000		2	SIDE	
070	2751703-0000		1	BRACKET	
200	90603-2378		2	BALL BEARING, 10X30X9 MM	
210	90459-1395		1	SCREW HEX.SOCK.SET CONEPT.MS6SS M4X4 A2	
220	90604-8448		1	CARRIAGE, SSR25XW1QZSSHHM(GK)(B) BLOCK	
300	311103-0308		4	PARALLEL PIN ISO 2338 5M6X16 A1	
310	312105-0368		8	SCREW, M6S ISO 4017 M6X16 A4 80	
320	312155-0329		4	SCREW DIN 7991 MF6S M5X16 A4 70	
330	312155-0451		1	SCREW DIN 7991 MF6S M8X20 A4 70	
340	315105-0153		8	WASHER PLAIN, 6,4X12X1,5 A4 BRB	

Pos	Part No	UN	Qty	Description	Page No

FOLLOWER CAM

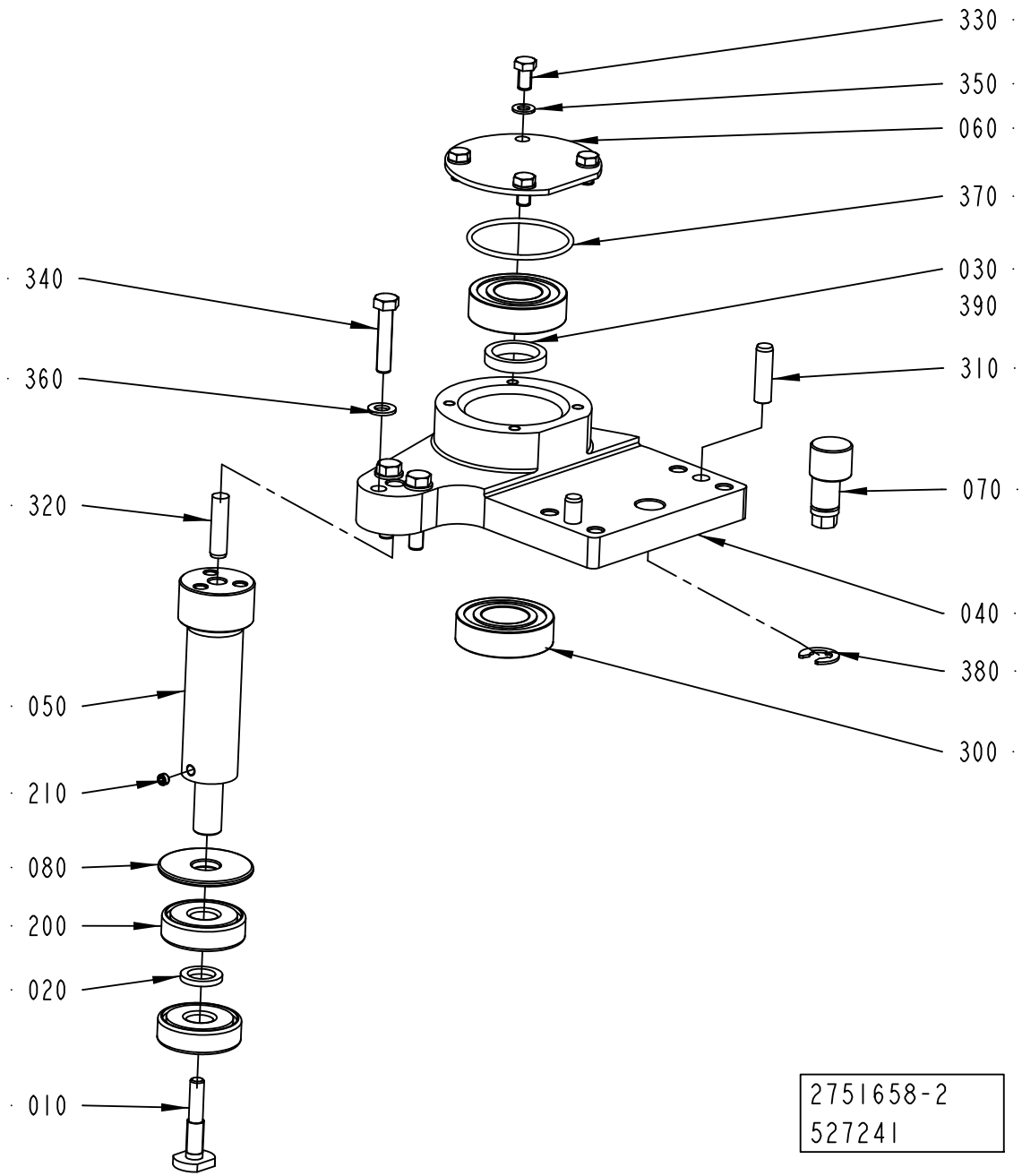

ECM: 527262 - 20120401
Group number: 2751658-0200
Assembly Drawing: 2751658-2_1_AA

Pos	Part No	UN	Qty	Description	Page No
-					
010	2699680-0000		1	SCREW	
020	2699681-0000		1	SPACER	
030	2699682-0000		1	SPACER	
040	2751704-0000		1	PIVOT BRACKET	
050	2751705-0000		1	SHAFT	
060	2703696-0000		1	PROTECTIVE COVER	
070	3103670-0000		1	ECCENTRIC SHAFT	
080	2751699-0000		1	WASHER	
200	90603-2378		2	BALL BEARING, 10X30X9 MM	
210	90459-1395		1	SCREW HEX.SOCK.SET CONEPT.MS6SS M4X4 A2	
300	344224-0203		2	BALL BEARING 17/35X10	
310	311103-0354		2	PARALLEL PIN ISO 2338 6M6X22 A1	
320	311103-1355		1	PARALLEL PIN ISO 2338 6M6X24 A1	
330	312105-0287		4	SCREW, M6S ISO 4017 M4X8 A4 70	
340	312105-0333		3	SCREW, M6S ISO 4017 M5X25 A4 80	
350	315105-0136		4	WASHER PLAIN, 4,3X8X0,8 A4 BRB	
360	315105-0146		3	WASHER PLAIN, 5,3X10X1 A4 BRB	
370	315202-0716		1	O-RING 34,65X1,78 MM	
380	315755-0109		1	RETAINING RING SHAFT DIN 6799 7 SS	
390	90603-6233		1	KLüBERSYNTH UH1 14-151, ONLY IN BOM	

Pos	Part No	UN	Qty	Description	Page No

Machine Type | Group Description | Used-In | Group Number | Page No

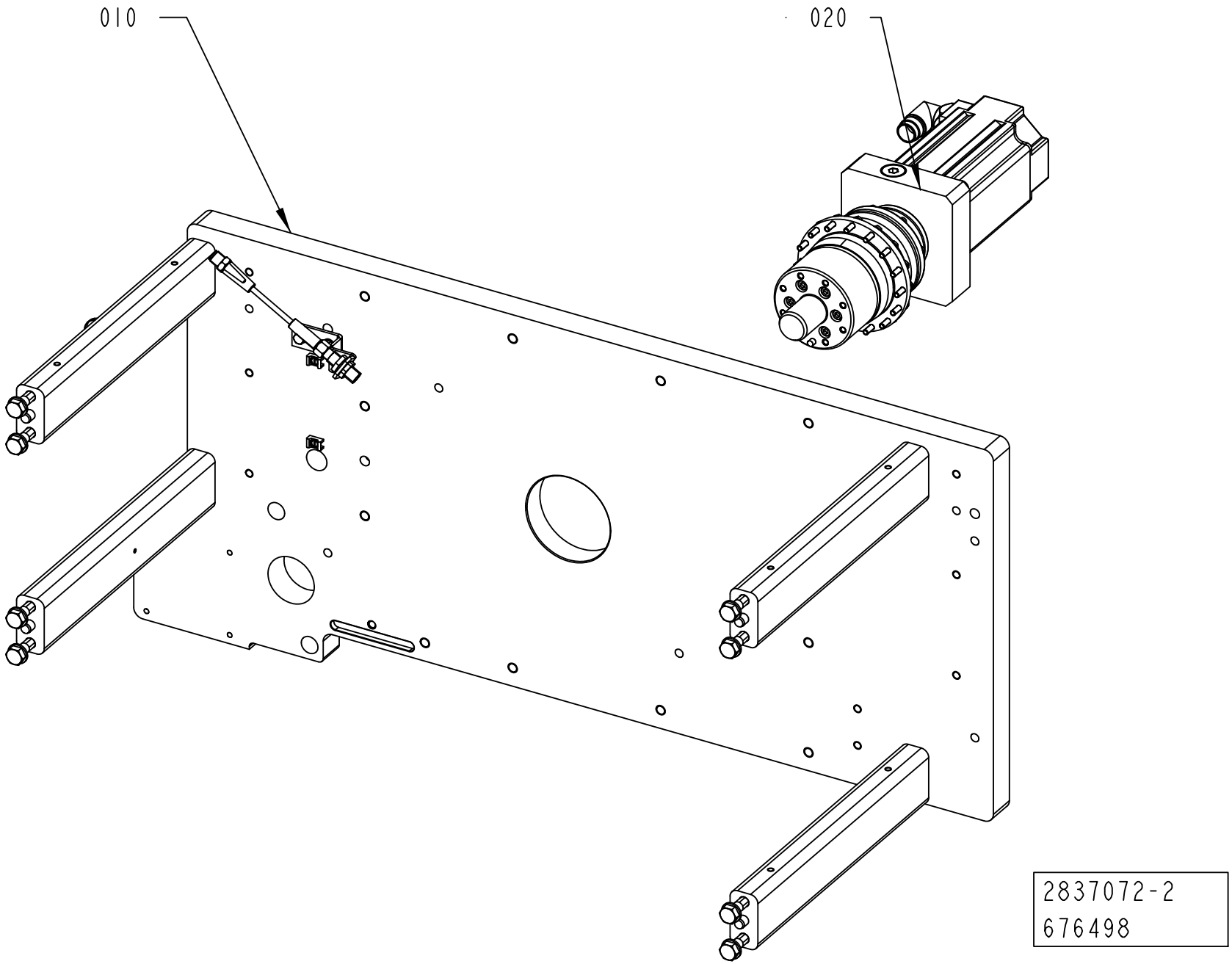
010
020
2837072-2
676498

ECM: 676773 - 20141001
Group number: 2837072-0200
Assembly Drawing: 2837072-2_1_AB

Pos	Part No	UN	Qty	Description	Page No
-					
010	2837073-0200		1	PLATE	**6-17**
020	2836507-0200		1	DRIVE MOTOR	**6-19**

Pos	Part No	UN	Qty	Description	Page No

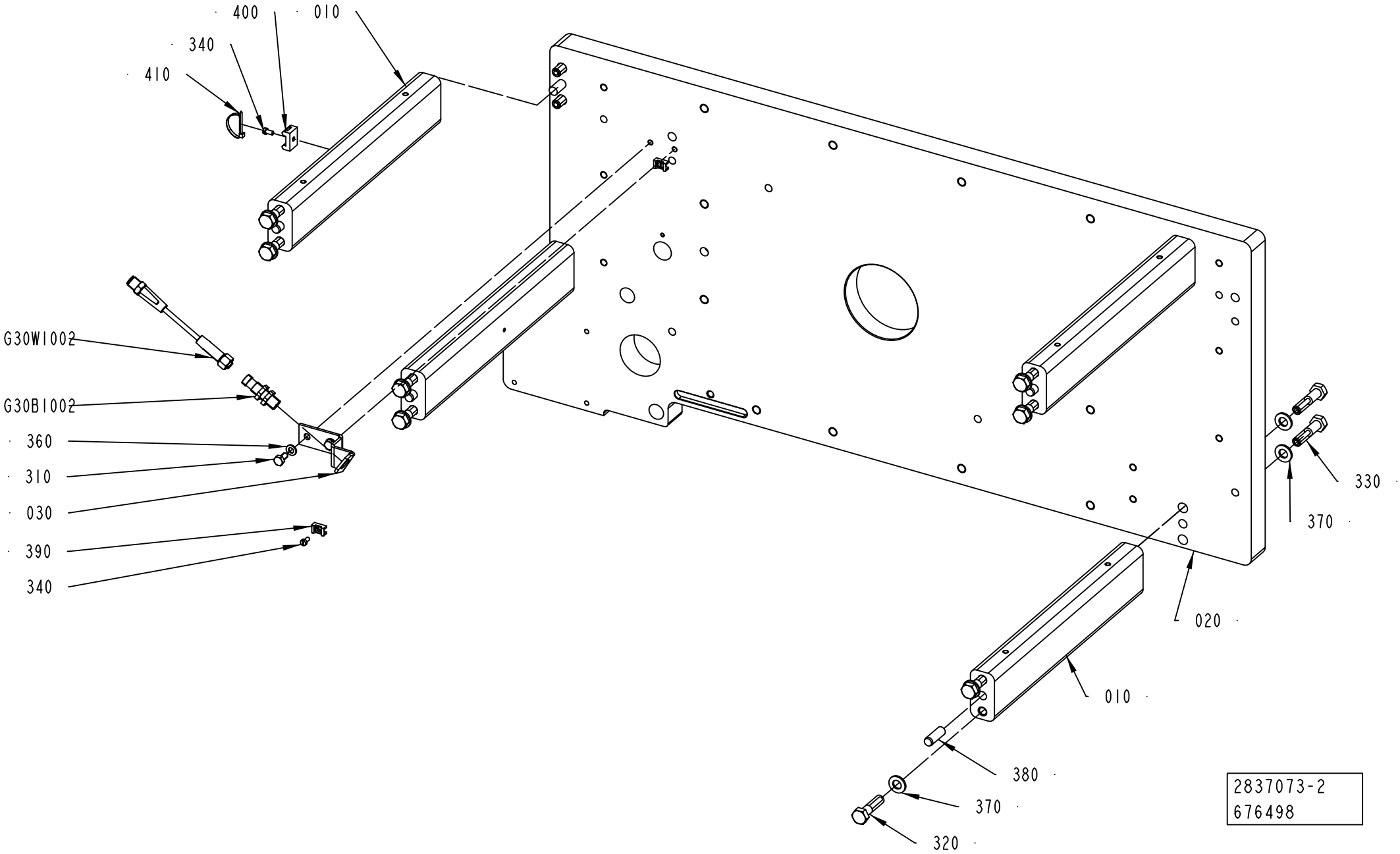
400
010
340
410
G30W1002
G30B1002
360
310
030
390
340
330
370
020
010
380
370
320
2837073-2
676498

ECM: 676774 - 20141001
Group number: 2837073-0200
Assembly Drawing: 2837073-2_1_AB

Pos	Part No	UN	Qty	Description	Page No
-					
010	2703704-0000		4	SPACER STRUT	
020	2835939-0000		1	PLATE	
030	2751741-0000		1	BRACKET	
310	312105-0366		2	SCREW, M6S ISO 4017 M6X12 A4 80	
320	312105-0499		8	SCREW, M6S ISO 4014 M10X40 A4 80	
330	312105-0500		8	SCREW, M6S ISO 4014 M10X45 A4 80	
340	312125-0287		3	SLOTTED HEAD SCREW, ISO1207 M4X8 A4	
360	315105-0153		2	WASHER PLAIN, 6,4X12X1,5 A4 BRB	
370	315106-0173		16	"WASHER PLAIN, M10 ISO7089-10-200 HV A4"	
380	311103-0458		8	PARALLEL PIN ISO 2338 10M6X30 A1	
390	352113-0205		2	ANCHOR PLATES FOR STRIPS, TM2S8-C100	
400	352113-0203		1	ANCHOR PLATES FOR STRIPS, TM3S8-M0	
410	352113-0104		1	CABLE TIE, BLACK 300X4,8 MM	
G30B1002	90458-2907		1	PROX.SWITCH IFS204	
G30W1002	344267-0010		1	SENSOR CABLE, EVT042	

Pos	Part No	UN	Qty	Description	Page No

Machine Type | Group Description | Used-In | Group Number | Page No

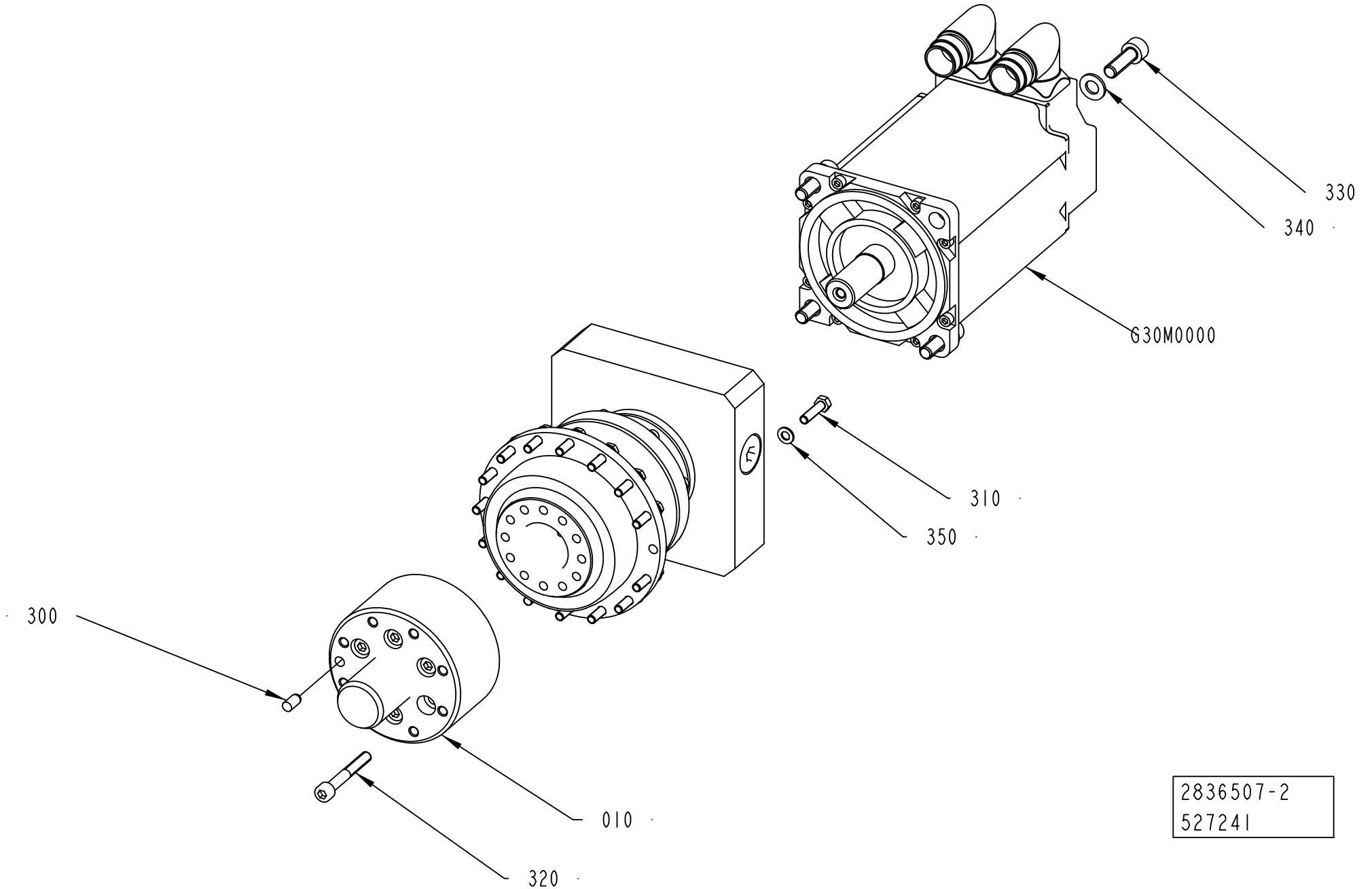
330
340
G30M0000
310
350
300
010
320
2836507-2
527241

ECM: 527266 - 20120401
Group number: 2836507-0200
Assembly Drawing: 2836507-2_1_AA

Pos	Part No	UN	Qty	Description	Page No
-					
010	2834311-0000		1	HUB	
020	90603-2476		1	GEARS,PLANETARY TP010F-MA3-66-OE1/MPL B4	
300	311103-0349		1	PARALLEL PIN ISO 2338 6M6X12 A1	
310	312105-0331		16	SCREW, M6S ISO 4017 M5X20 A4 80	
320	312115-0379		6	SCREW ISO4762 M6X45 A4 80	
330	312115-0453		4	SCREW ISO4762 M8X25 A4 80	
340	315106-0165		4	WASHER PLAIN, M8 ISO7089-8-200 HV A4	
350	315105-0146		16	WASHER PLAIN, 5,3X10X1 A4 BRB	
G30M0000	90601-1926		1	SERVO MOTOR, MPL-B430P-MK72AA SERIES A	

Pos	Part No	UN	Qty	Description	Page No

Machine Type | Group Description | Used-In | Group Number | Page No

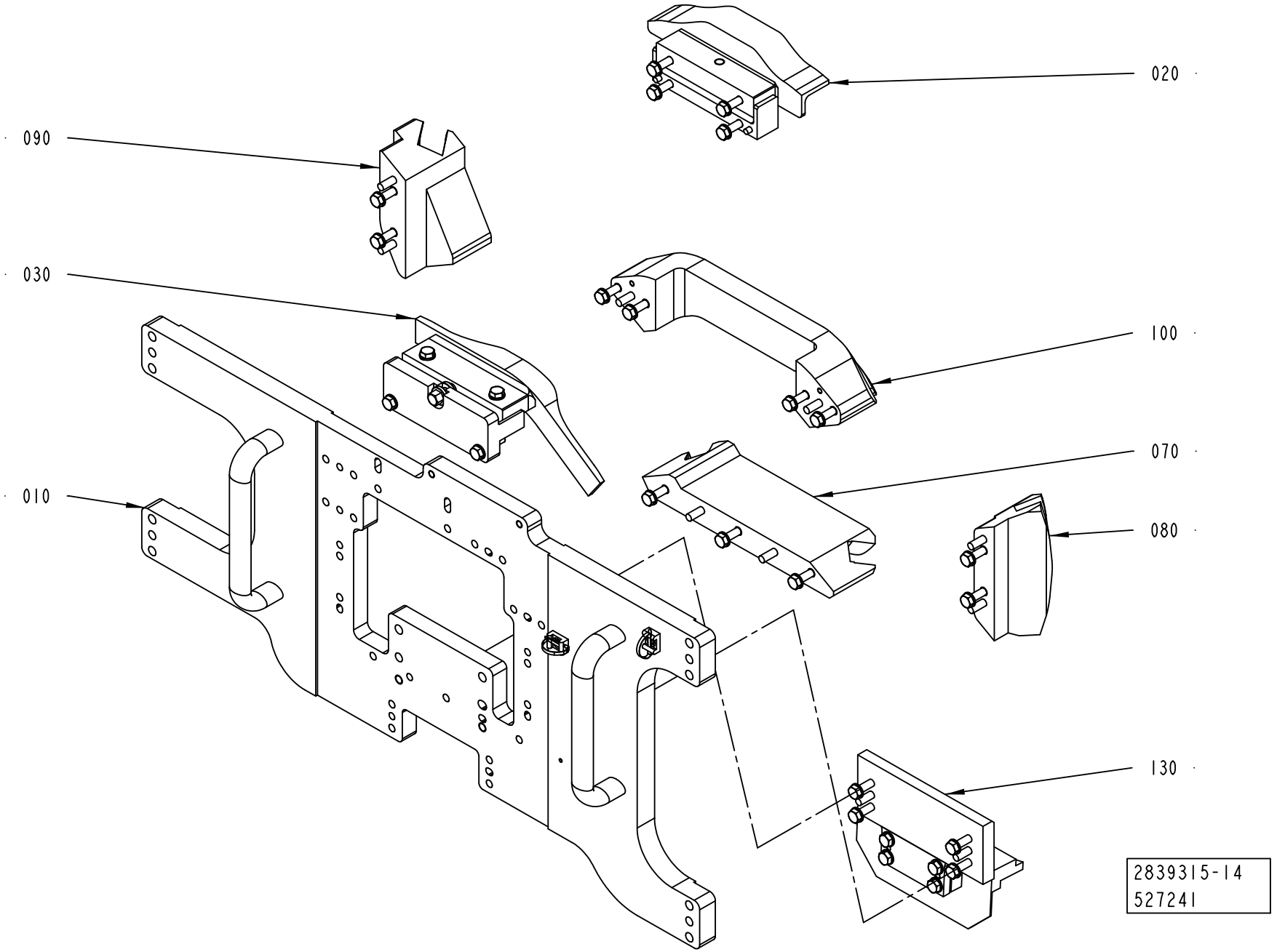
020
090
030
100
070
010
080
130
2839315-14
527241

ECM: 581694 - 20121026
Group number: 2839315-0200
Assembly Drawing: 2839315-14_1_AA

Pos	Part No	UN	Qty	Description	Page No
TPA DREAMCAP 26 POSITIONING DEVICE					
070	2873914-0100		1	CAMMODULE	**6-23**
080	2873915-0100		1	CAMMODULE	**6-25**
090	2873916-0100		1	CAMMODULE	**6-27**
100	2873917-0100		1	CAMMODULE	**6-29**
130	3088629-0100		1	CAMMODULE	**6-31**
Common Parts					
010	2839382-0100		1	MOUNTING PLATE	**6-33**
020	2839383-0100		1	CAM	**6-35**
030	2839384-0100		1	CAM	**6-37**

Pos	Part No	UN	Qty	Description	Page No

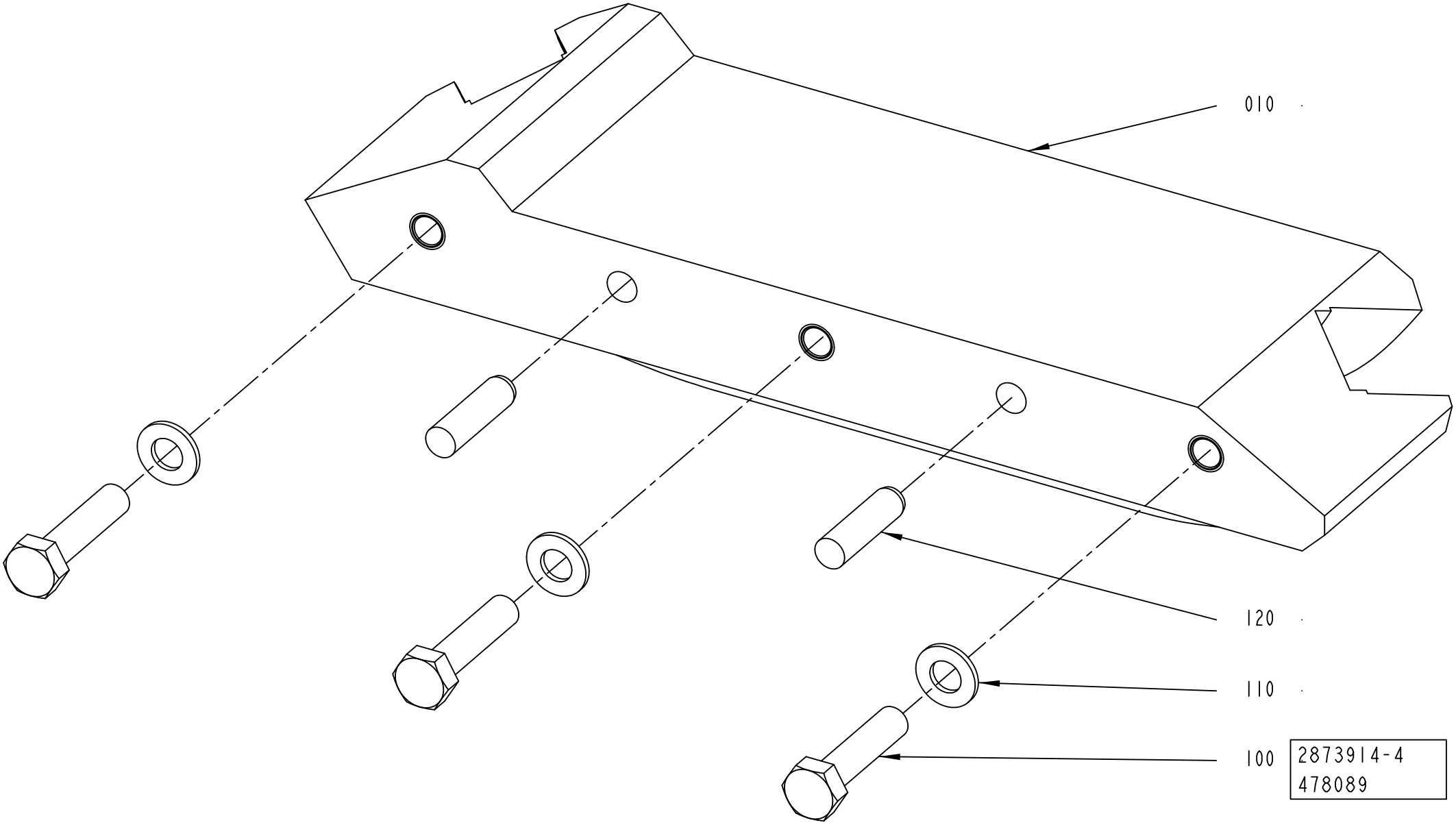
010
120
110
100
2873914-4
478089

ECM: 562841 - 20120701
Group number: 2873914-0100
Assembly Drawing: 2873914-4_1_AA

Pos	Part No	UN	Qty	Description	Page No
TPA DREAMCAP 26					
010	2902731-0000		1	CAM	
Common Parts					
100	312105-0457		3	SCREW, M6S ISO 4014 M8X35 A4 80	
110	315106-0165		3	WASHER PLAIN, M8 ISO7089-8-200 HV A4	
120	311103-0405		2	PARALLEL PIN ISO 2338 8M6X30 A1	

Pos	Part No	UN	Qty	Description	Page No

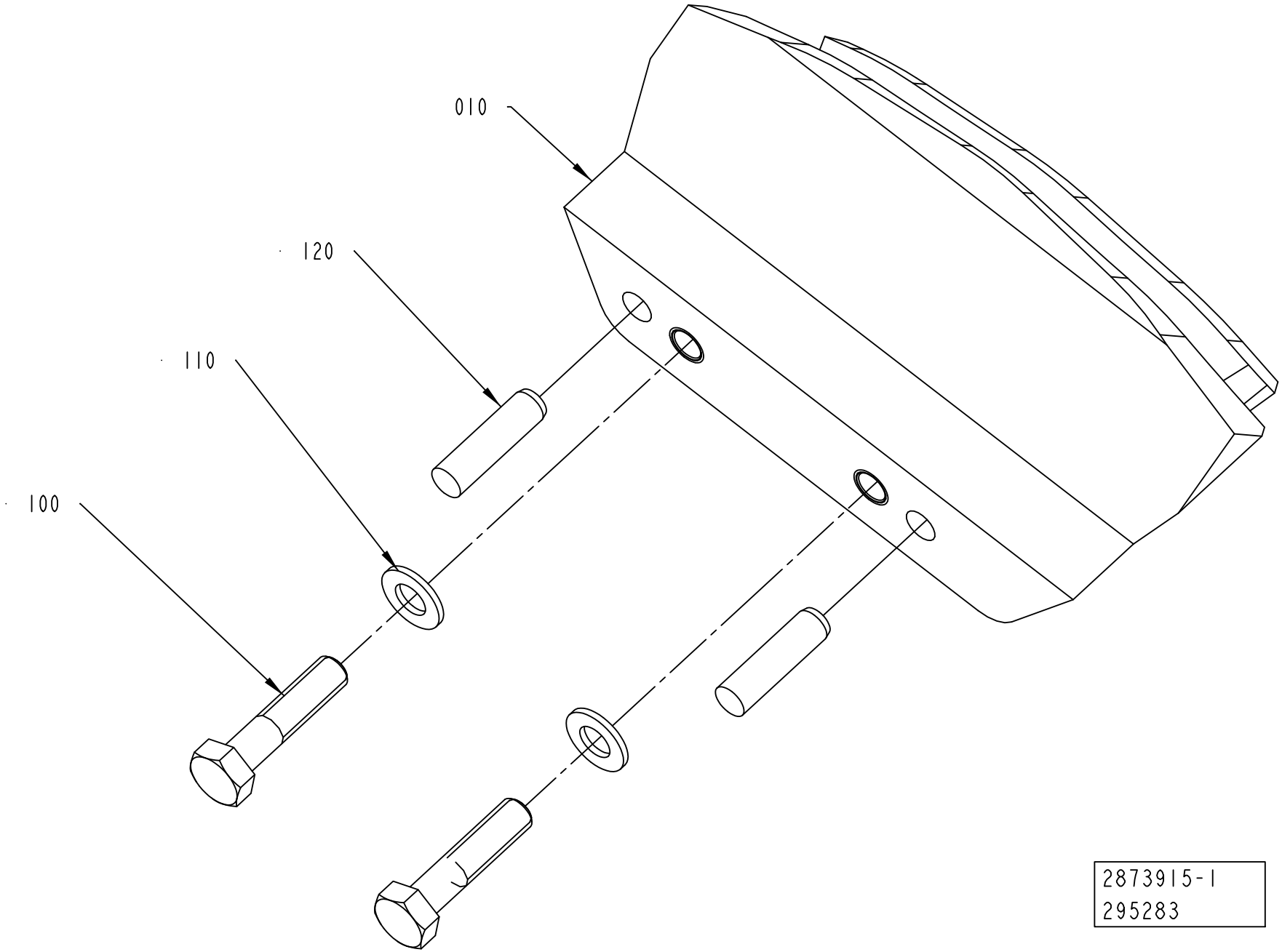
010
120
110
100
2873915-1
295283

ECM: 562842 - 20120701
Group number: 2873915-0100
Assembly Drawing: 2873915-1_1_AA

Pos	Part No	UN	Qty	Description	Page No
TPA DREAMCAP 26					
010	2746951-0000		1	CAM	
Common Parts					
100	312105-0457		2	SCREW, M6S ISO 4014 M8X35 A4 80	
110	315106-0165		2	WASHER PLAIN, M8 ISO7089-8-200 HV A4	
120	311103-0405		2	PARALLEL PIN ISO 2338 8M6X30 A1	

Pos	Part No	UN	Qty	Description	Page No

Machine Type | Group Description | Used-In | Group Number | Page No

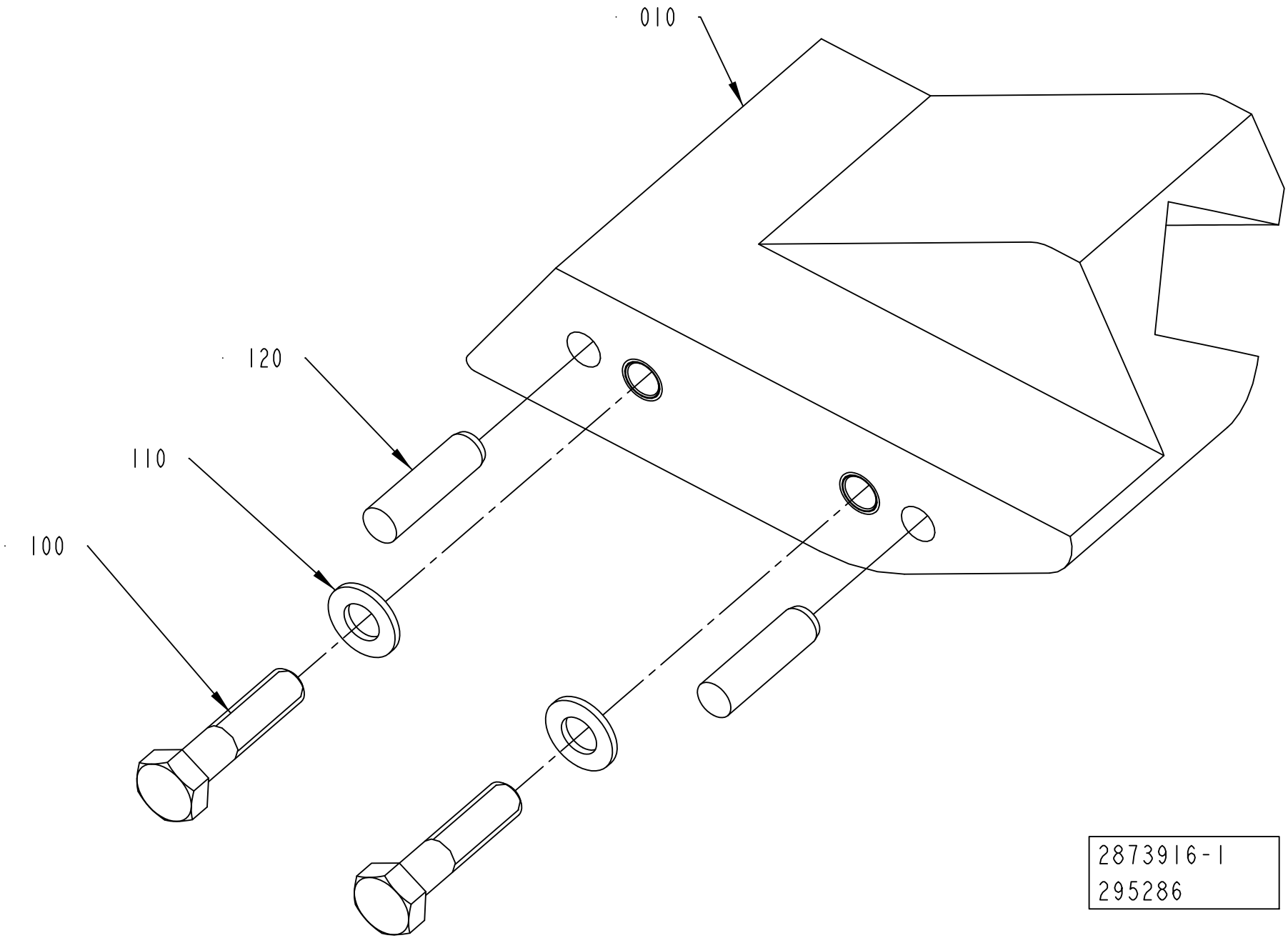
010
120
110
100
2873916-1
295286

ECM: 562843 - 20120701
Group number: 2873916-0100
Assembly Drawing: 2873916-1_1_AA

Pos	Part No	UN	Qty	Description	Page No
TPA DREAMCAP 26					
010	2746953-0000		1	CAM	
Common Parts					
100	312105-0457		2	SCREW, M6S ISO 4014 M8X35 A4 80	
110	315106-0165		2	WASHER PLAIN, M8 ISO7089-8-200 HV A4	
120	311103-0405		2	PARALLEL PIN ISO 2338 8M6X30 A1	

Pos	Part No	UN	Qty	Description	Page No

Machine Type | Group Description | Used-In | Group Number | Page No

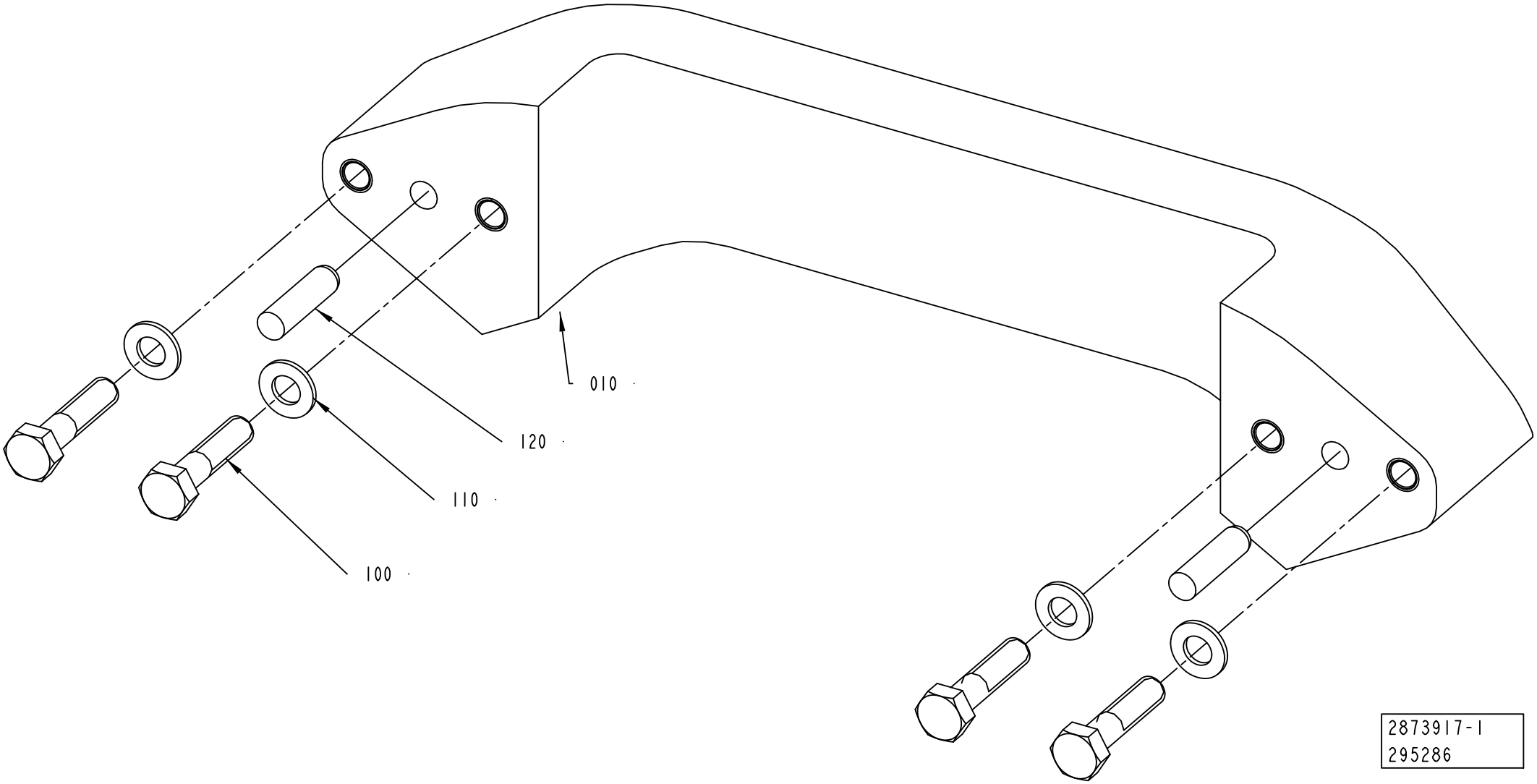
010
120
110
100
2873917-1
295286

ECM: 298771 - 20070323
Group number: 2873917-0100
Assembly Drawing: 2873917-1_1_AA

Pos	Part No	UN	Qty	Description	Page No
-					
010	2746952-0000		1	CAM	
100	312105-0457		4	SCREW, M6S ISO 4014 M8X35 A4 80	
110	315106-0165		4	WASHER PLAIN, M8 ISO7089-8-200 HV A4	
120	311103-0405		2	PARALLEL PIN ISO 2338 8M6X30 A1	

Pos	Part No	UN	Qty	Description	Page No

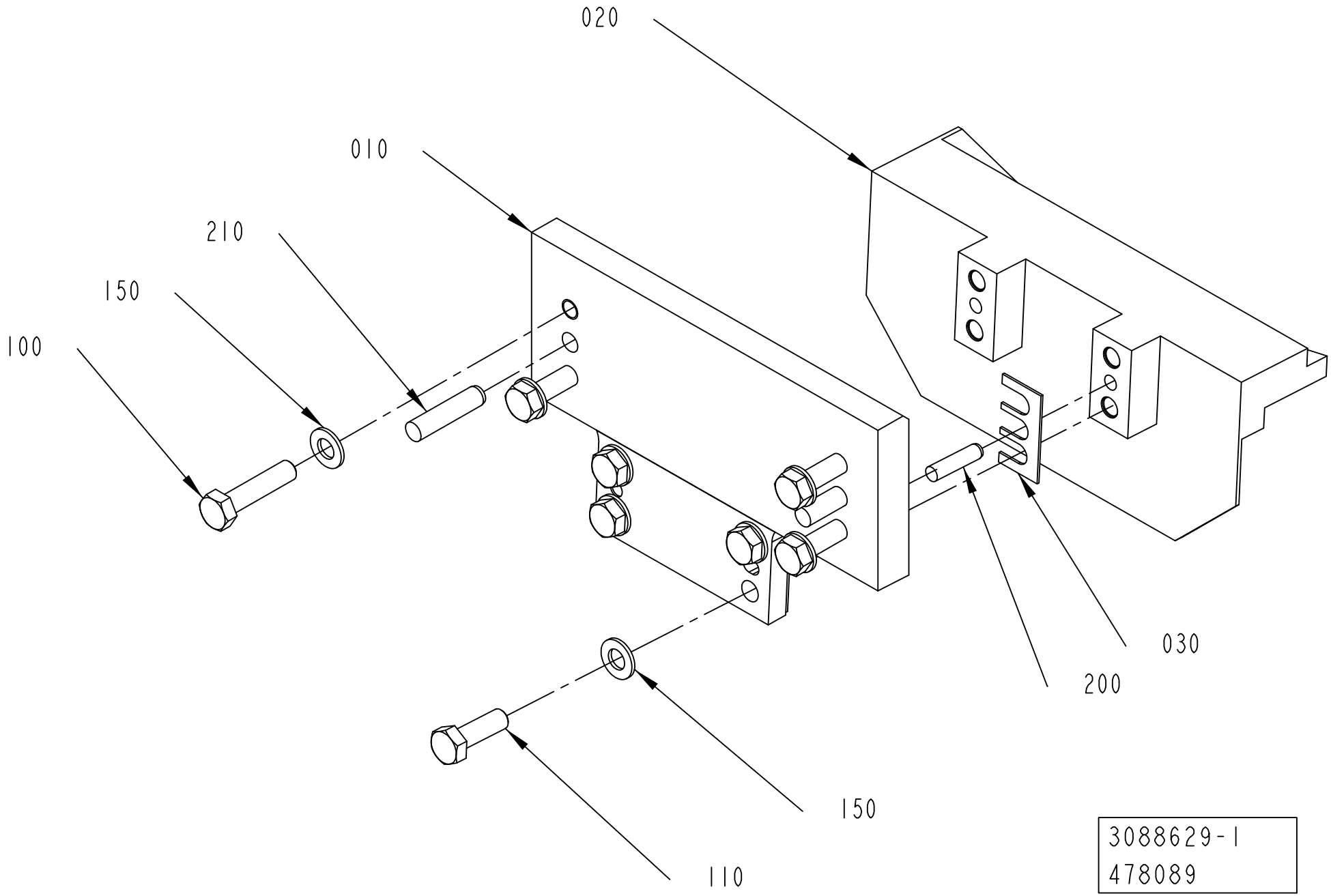
020
010
210
150
100
030
200
150
110
3088629-1
478089

ECM: 479896 - 20110401
Group number: 3088629-0100
Assembly Drawing: 3088629-1_1_AA

Pos	Part No	UN	Qty	Description	Page No
-					
010	3088841-0000		1	BRACKET	
020	3088630-0000		1	CAM	
030	3132972-0000		4	SHIM	
100	312109-0457		4	SCREW, M6S ISO 4017 M8X35 A4 80	
110	312105-0453		4	SCREW, M6S ISO 4017 M8X25 A4 80	
150	315105-0165		8	FWAS080G0-0S, WASHER PLAIN	
200	311103-1355		2	PARALLEL PIN ISO 2338 6M6X24 A1	
210	311103-0407		2	PARALLEL PIN ISO 2338 8M6X35 A1	

Pos	Part No	UN	Qty	Description	Page No

MOUNTING PLATE

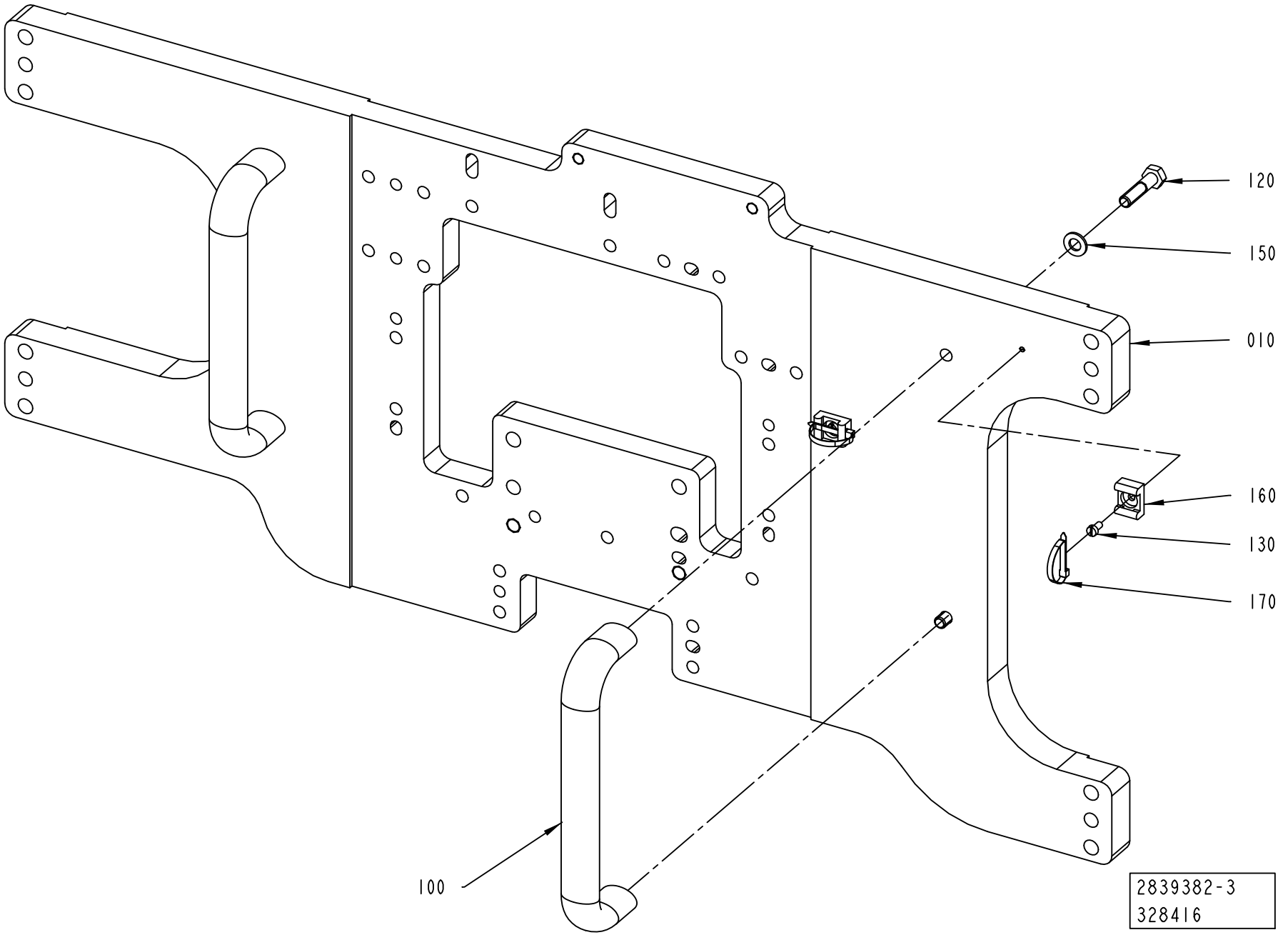

ECM: 505441 - 20111003
Group number: 2839382-0100
Assembly Drawing: 2839382-3_1_AA

Pos	Part No	UN	Qty	Description	Page No
TPA					
010	2780523-0000		1	PLATE	
130	312125-0287		2	SLOTTED HEAD SCREW, ISO1207 M4X8 A4	
160	352113-0203		2	ANCHOR PLATES FOR STRIPS, TM3S8-M0	
170	352113-0104		2	CABLE TIE, BLACK 300X4,8 MM	
Common Parts					
100	90459-3779		2	HANDLE, GN565 SW 192-M8	
120	312105-0457		4	SCREW, M6S ISO 4014 M8X35 A4 80	
150	315105-0165		4	FWAS080G0-0S, WASHER PLAIN	

Pos	Part No	UN	Qty	Description	Page No

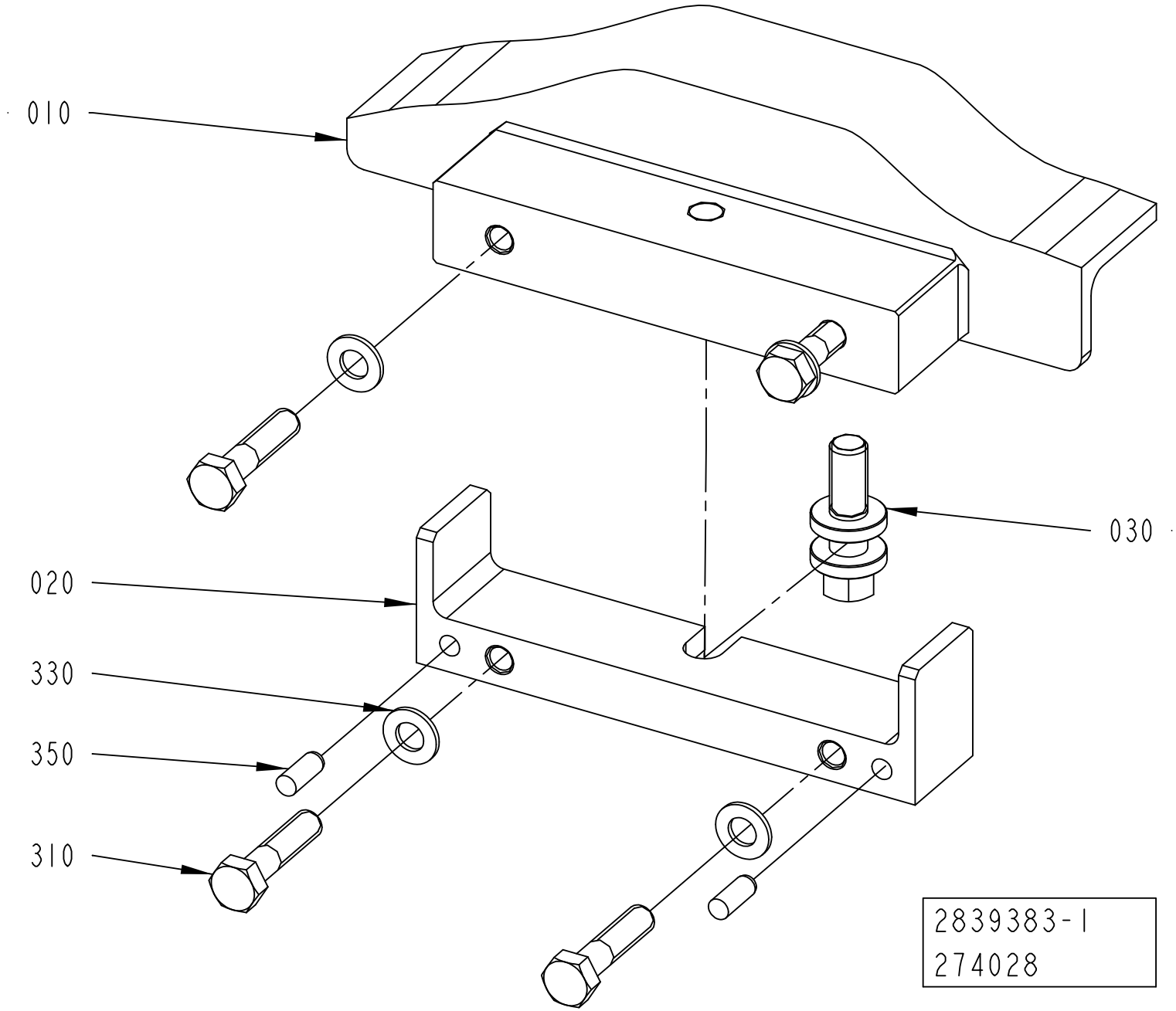
010
020
030
330
350
310
2839383-1
274028

ECM: 274028 - 20060921
Group number: 2839383-0100
Assembly Drawing: 2839383-1_1_AA

Pos	Part No	UN	Qty	Description	Page No
-					
010	2839392-0000		1	CAM	
020	2838277-0000		1	BRACKET	
030	2703842-0000		1	ADJUSTING SCREW	
310	312105-0457		4	SCREW, M6S ISO 4014 M8X35 A4 80	
330	315105-0165		4	FWAS080G0-0S, WASHER PLAIN	
350	311103-0351		2	PARALLEL PIN ISO 2338 6M6X16 A1	

Pos	Part No	UN	Qty	Description	Page No

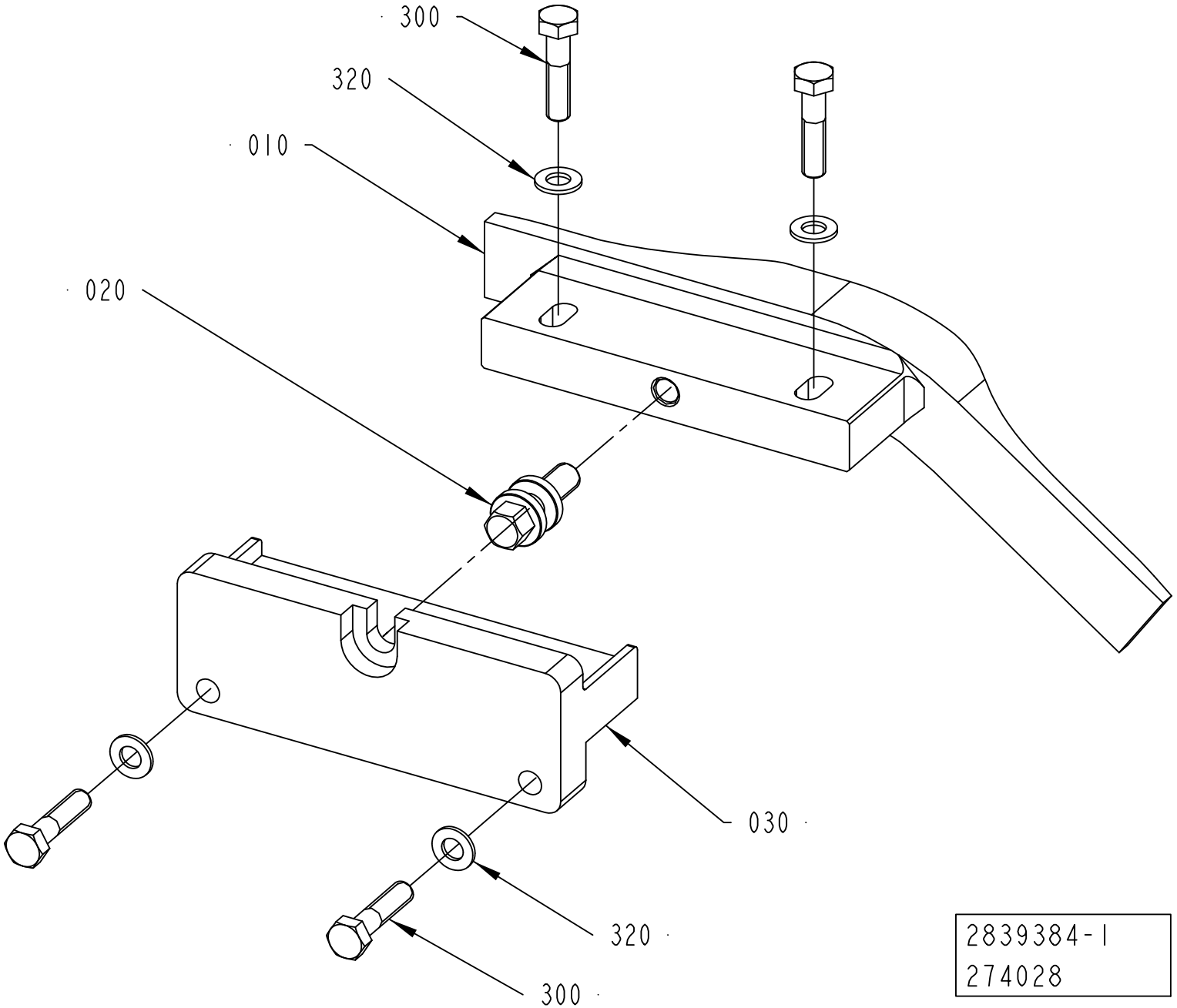
300
320
010
020
030
320
300
2839384-1
274028

ECM: 492980 - 20110701
Group number: 2839384-0100
Assembly Drawing: 2839384-1_1_AA

Pos	Part No	UN	Qty	Description	Page No
DREAMCAP 26					
010	2839412-0000		1	CAM	
030	2838156-0000		1	BRACKET	
Common Parts					
020	2703842-0000		1	ADJUSTING SCREW	
300	312105-0457		4	SCREW, M6S ISO 4014 M8X35 A4 80	
320	315105-0165		4	FWAS080G0-0S, WASHER PLAIN	

Pos	Part No	UN	Qty	Description	Page No

Machine Type | Group Description | Used-In | Group Number | Page No

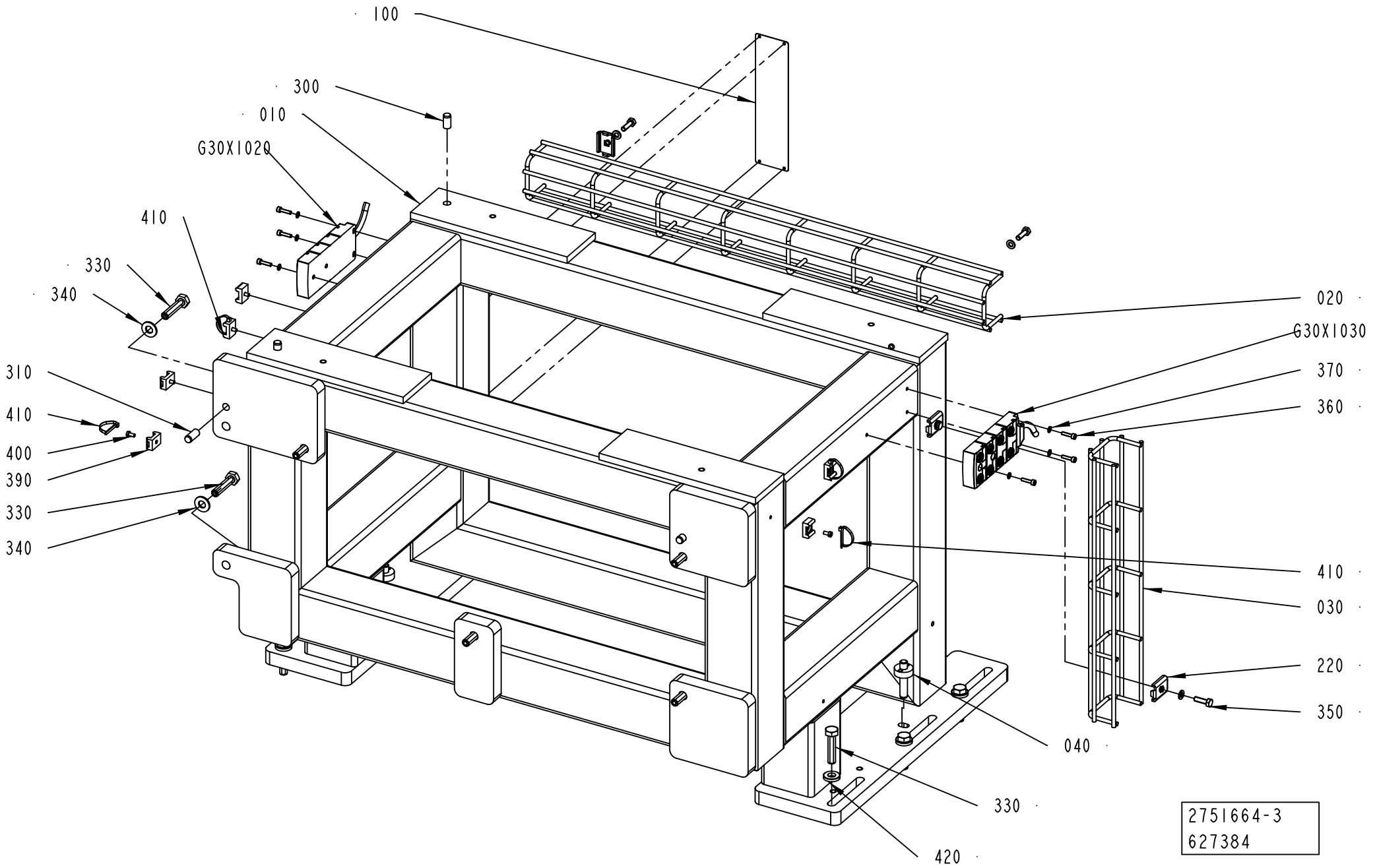
100
300
010
G30X1020
410
330
340
310
410
400
390
330
340
020
G30X1030
370
360
410
030
220
350
040
330
420
2751664-3
627384

ECM: 627394 - 20140101
Group number: 2751664-0300
Assembly Drawing: 2751664-3_1_AB

Pos	Part No	UN	Qty	Description	Page No
-					
010	3039024-0000		1	FRAME	
020	2838731-0000		1	CABLE	
030	2838732-0000		1	CABLE	
040	2944175-0000		2	PIN	
100	580923-0000		1	MACHINE SIGN CE	
220	90181-0183		4	CABLE DUCT, FITTING, SB-102-S	
300	311103-0454		2	PARALLEL PIN ISO 2338 10M6X20 A1	
310	311103-1456		2	PARALLEL PIN ISO 2338 10M6X24 A1	
330	312109-0500		12	SCREW, M6S ISO 4017 M10X45 A4 80	
340	315105-0173		6	WASHER PLAIN, 10,5X22X2 A4 BRB	
350	312105-0370		4	SCREW, M6S ISO 4017 M6X20 A4 80	
360	312115-0293		6	SCREW ISO4762 M4X16 A4 80	
370	315105-0136		6	WASHER PLAIN, 4,3X8X0,8 A4 BRB	
380	315105-0153		4	WASHER PLAIN, 6,4X12X1,5 A4 BRB	
390	352113-0203		6	ANCHOR PLATES FOR STRIPS, TM3S8-M0	
400	312125-0287		6	SLOTTED HEAD SCREW, ISO1207 M4X8 A4	
410	352113-0104		6	CABLE TIE, BLACK 300X4,8 MM	
420	315115-0173		6	WASHER PLAIN, TBRB 10,5/22 H=4	
G30X1020	90606-1697		1	SPLITTER BOX, EBC034	
G30X1030	90606-1697		1	SPLITTER BOX, EBC034	

Pos	Part No	UN	Qty	Description	Page No

CAP CARRIER GROUP

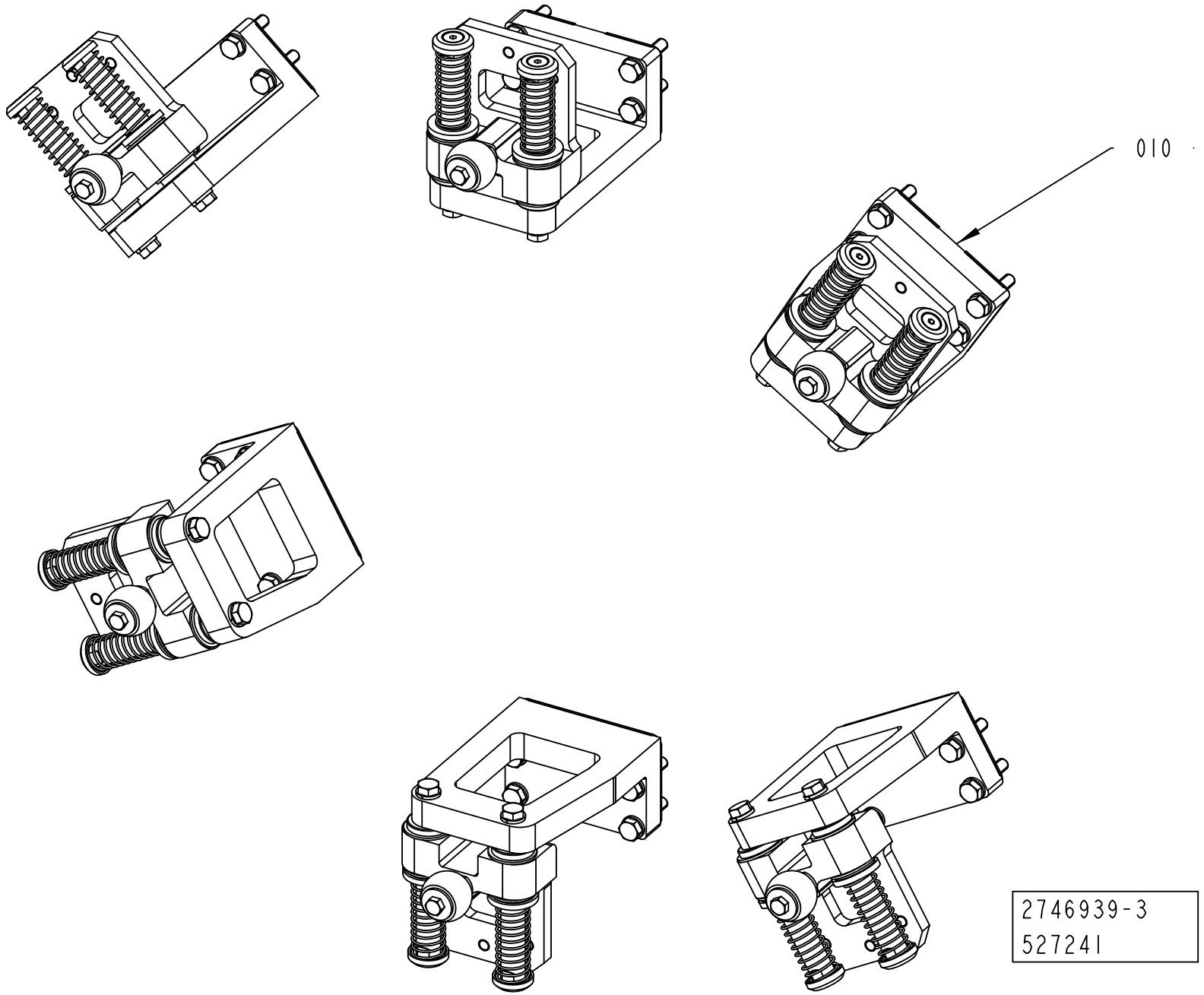

ECM: 528925 - 20120401
Group number: 2746939-0200
Assembly Drawing: 2746939-3_1_AA

Pos	Part No	UN	Qty	Description	Page No
-					
010	2703700-0200		6	GUIDE BRACKET	**6-43**

Pos	Part No	UN	Qty	Description	Page No

Machine Type | Group Description | Used-In | Group Number | Page No

GUIDE BRACKET

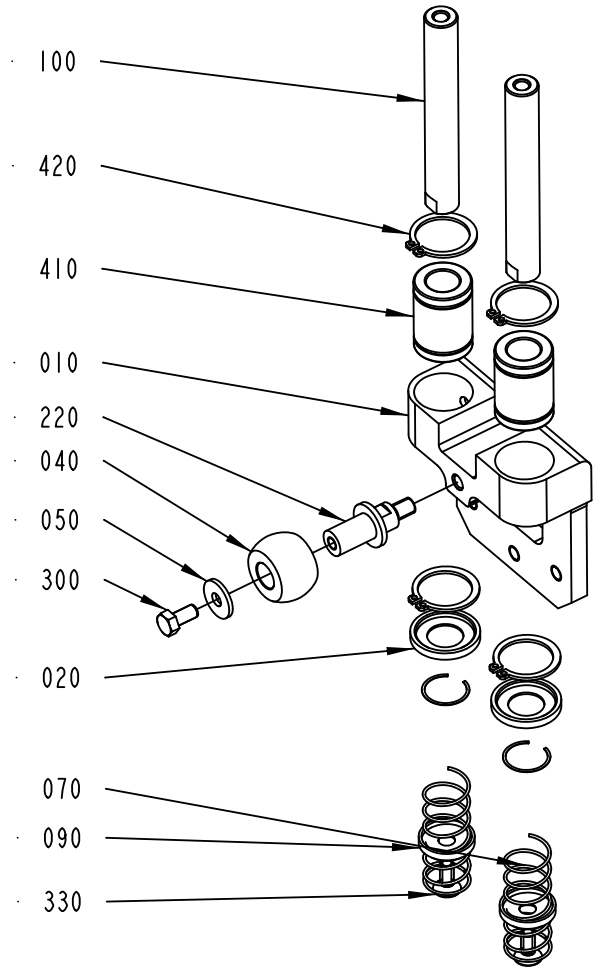

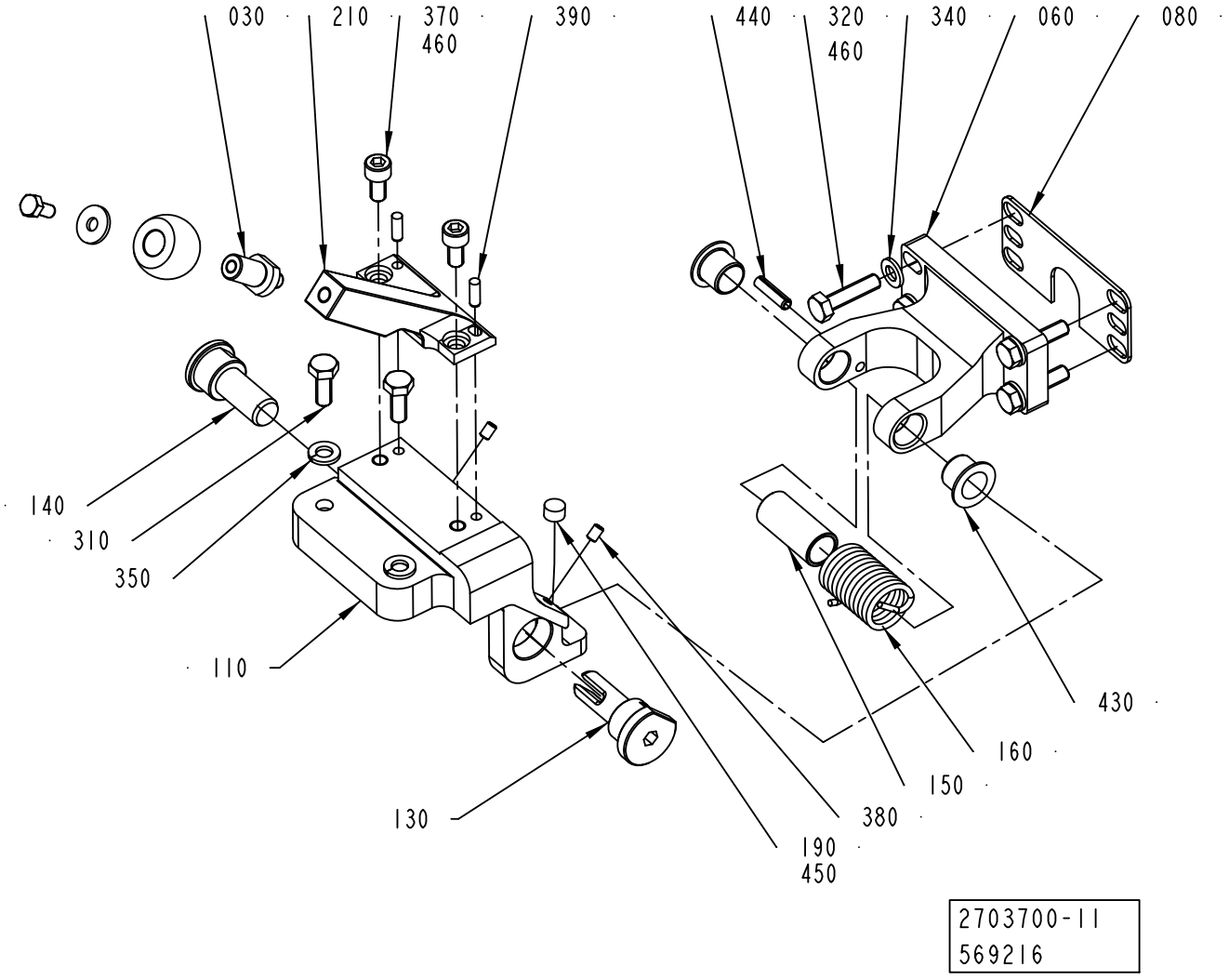

ECM: 636081 - 20140101
Group number: 2703700-0200
Assembly Drawing: 2703700-11_1_AB

Pos	Part No	UN	Qty	Description	Page No
TPA DREAMCAP 26 POSITIONING DEVICE					
020	2751686-0000		2	WASHER	
030	2703683-0000		1	SHAFT	
040	1556630-0000		2	WHEEL	
050	90005-0139		2	WASHER PLAIN ROUND 5,2(M5)/15, H=1,6	
060	2715699-0000		1	HOLDER	
080	2780431-0000		1	SHIM	
110	2811989-0000		1	GUIDE BRACKET	
130	2783462-0000		1	AXLE PIN	
140	2715701-0000		1	AXLE PIN	
150	2715704-0000		1	SLEEVE	
160	2715885-0000		1	TORSION SPRING	
190	2715826-0000		1	DAMPER	
210	3158206-0000		1	ROLLER BRACKET	
220	2746978-0000		1	SHAFT	
300	312105-0325		2	SCREW, M6S ISO 4017 M5X10 A4 80	
310	312105-0368		2	SCREW, M6S ISO 4017 M6X16 A4 80	
320	312105-0372		4	SCREW, M6S ISO 4017 M6X25 A4 80	
350	315402-0156		2	LOCK WASHER, DIN127B 6,5 A4, 1/4	
370	312115-0366		2	SCREW ISO4762 M6X12 A4 80	
380	312318-0285		2	SET SCREW, CUP END ISO4029 M4X6 A4	
390	311103-0268		2	PARALLEL PIN ISO 2338 4M6X12 A1	
410	90600-0375		2	BALL BUSHING, 12X21X30 MM	
420	90600-0373		4	RETAINING RING FOR SHAFT DIN 471 21 SS	
430	321154-0180		2	FLANGE BUSHING, IGLIDUR W300 12X14X12	
440	311112-0255		1	SPRING PIN, ISO 8752 4X18 A2	
450	90153-0023		1	ADHESIVE, SILICON 251470 TUB 90CC(UN1993	
460	90602-4847		1	THREADLOCKER LOCTITE 243, 50ML	
Common Parts					
010	2716127-0000		1	SLIDER	
070	2703708-0000		2	SPRING	
090	2751687-0000		2	WASHER	
100	90600-0376		2	SHAFT, LM SHAFT 12 G6 89L M	
330	312155-0327		2	SCREW DIN 7991 MF6S M5X12 A4 70	
340	315105-0153		4	WASHER PLAIN, 6,4X12X1,5 A4 BRB	

Pos	Part No	UN	Qty	Description	Page No

Machine Type | Group Description | Used-In | Group Number | Page No

CAP HOLDERS GROUP

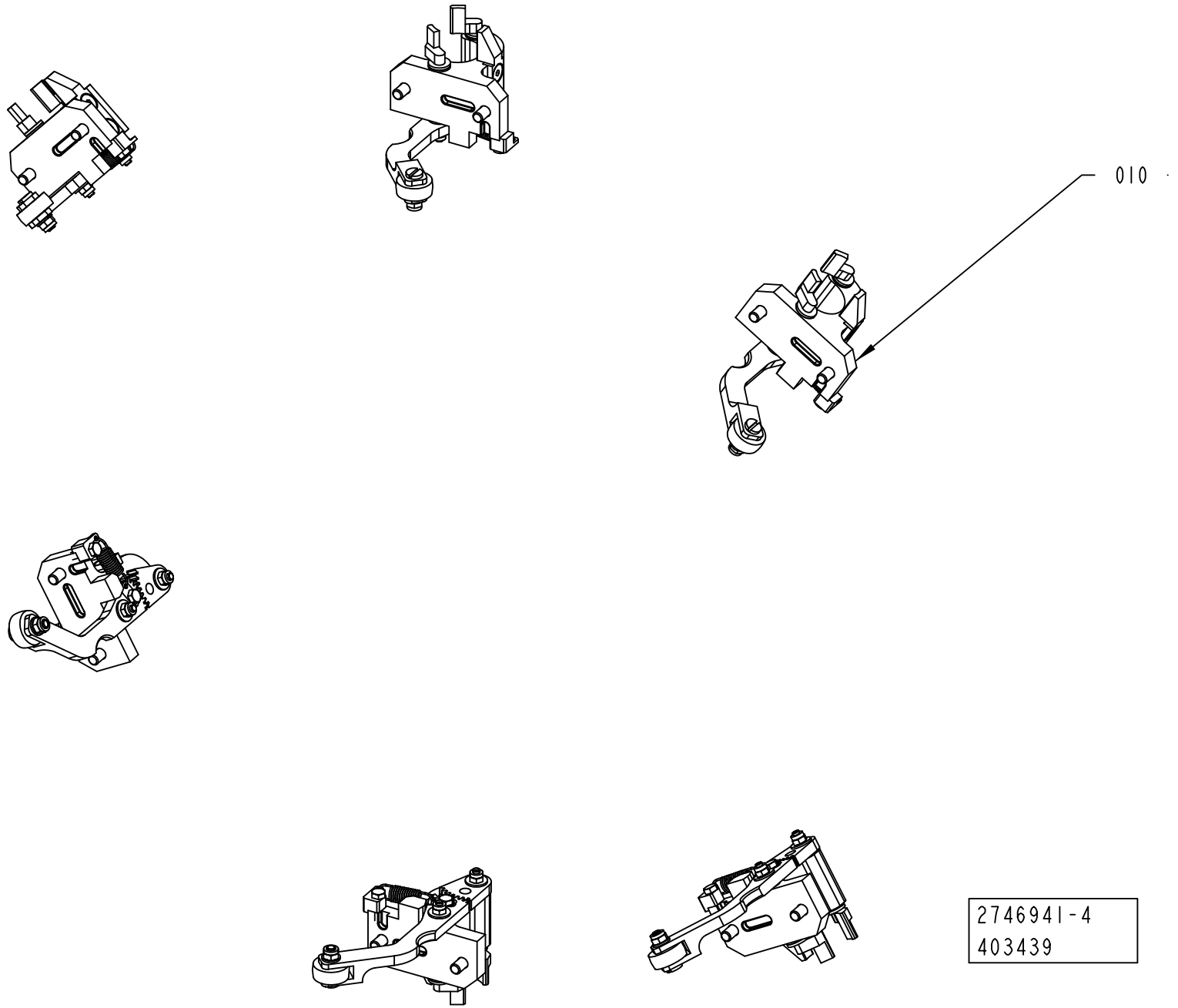

ECM: 492976 - 20110701
Group number: 2746941-0200
Assembly Drawing: 2746941-4_1_AA

Pos	Part No	UN	Qty	Description	Page No
DREAMCAP 26					
010	2703670-0100		6	CAP HOLDERS GROUP	**6-47**

Pos	Part No	UN	Qty	Description	Page No

Machine Type | Group Description | Used-In | Group Number | Page No

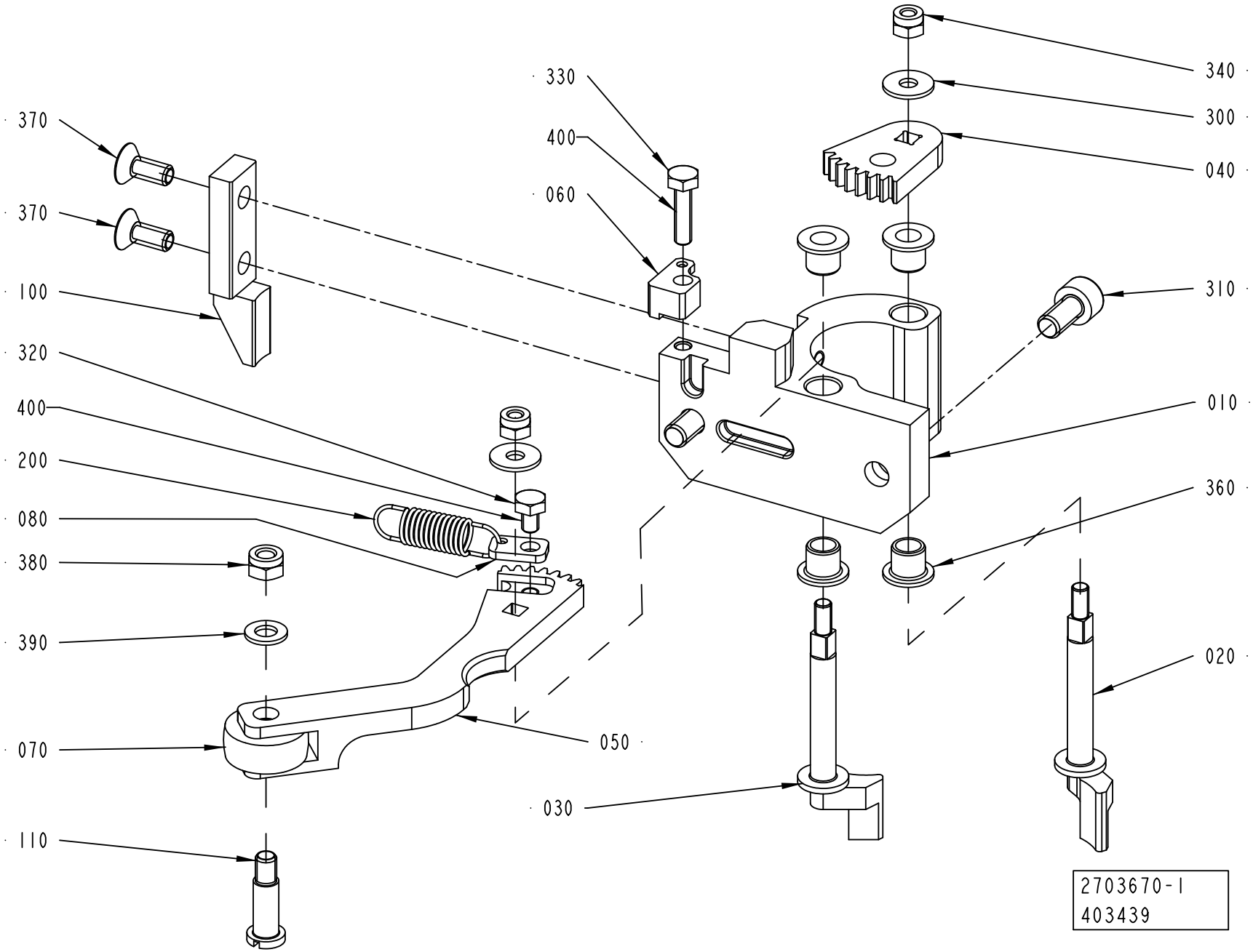
370
370
100
320
400
200
080
380
390
070
110
330
400
060
340
300
040
310
010
360
020
050
030
2703670-1
403439

ECM: 682670 - 20141001
Group number: 2703670-0100
Assembly Drawing: 2703670-1_1_AB

Pos	Part No	UN	Qty	Description	Page No
DREAMCAP 26					
020	2902761-0000		1	CLAW	
030	2902762-0000		1	CLAW	
100	2902760-0000		1	PULLER	
Common Parts					
010	2715827-0000		1	HOLDER	
040	2703673-0000		1	TOOTHED DISC	
050	2983297-0000		1	FOLLOWER ARM	
060	2987971-0000		1	SPRING HOLDER	
070	1556626-0000		1	WHEEL	
080	2987967-0000		1	SPRING HOLDER	
110	2746922-0000		1	SHAFT	
200	3034434-0000		1	TENSION SPRING	
300	90005-0082		2	WASHER PLAIN ROUND 4,3(M4)/12,H=1	
310	312115-0366		2	SCREW ISO4762 M6X12 A4 80	
320	312105-0285		1	SCREW, M6S ISO 4017 M4X6 A4 70	
330	312105-0293		1	SCREW, M6S ISO 4017 M4X16 A4 70	
340	312812-0312		2	HEXAGON NUT, NY-LOCK M4 A4 80	
360	321155-0062		4	FLANGE BUSHING, IGLIDUR X 6X8X8	
370	312155-0327		2	SCREW DIN 7991 MF6S M5X12 A4 70	
380	312812-0314		1	HEXAGON NUT, NY-LOCK M5 A4 80	
390	315105-0146		1	WASHER PLAIN, 5,3X10X1 A4 BRB	
400	90600-0685		1	THREADLOCKER LOCTITE 2701, 50ML	

Pos	Part No	UN	Qty	Description	Page No

Machine Type | Group Description | Used-In | Group Number | Page No

Tetra Pak®

SPC
Spare Parts Catalogue

CAP SEQUENCER

Drawing file: 662907-2_1_AB.hpgl

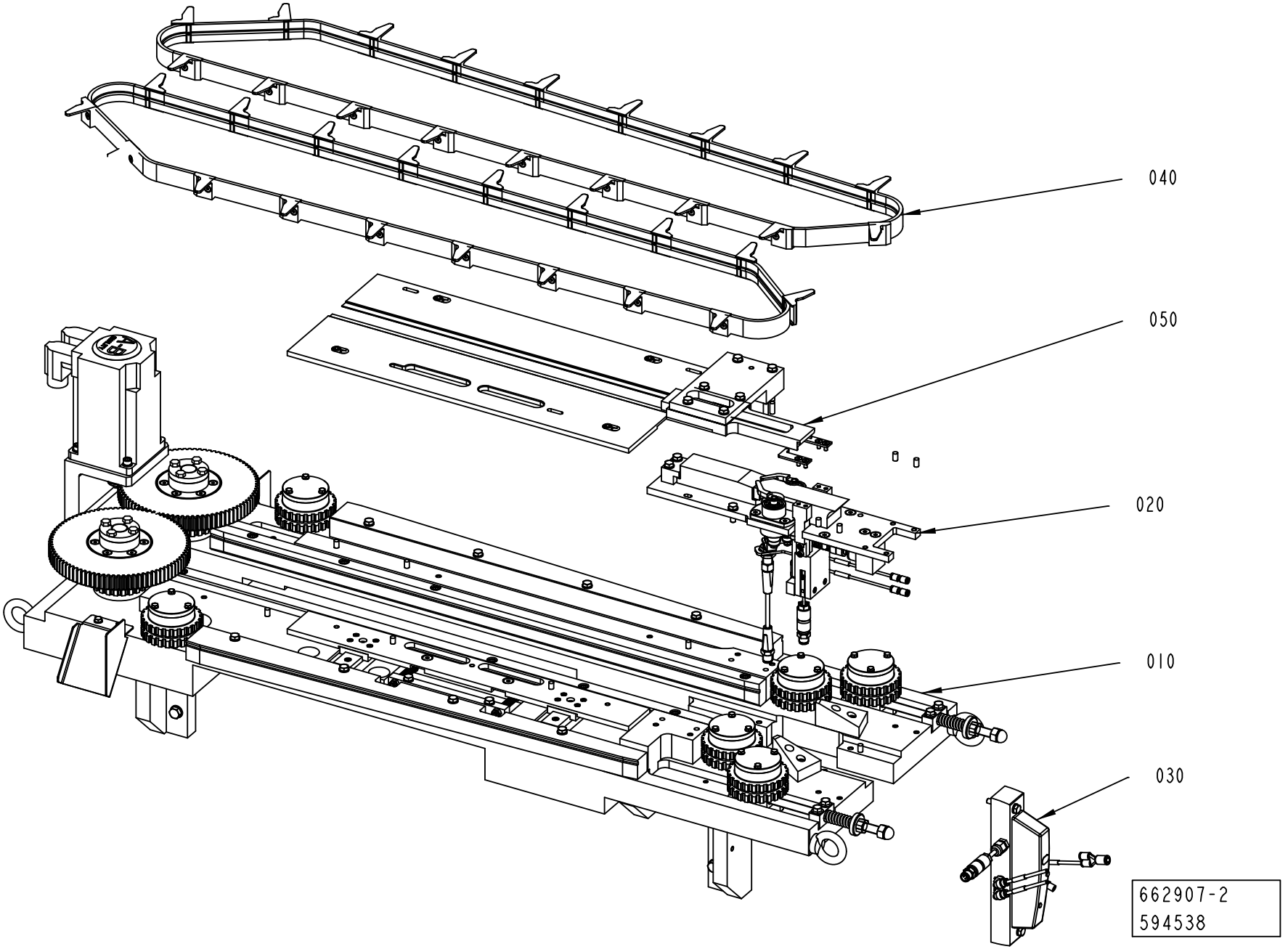

ECM: 594646 - 20130701
Group number: 662907-0200
Assembly Drawing: 662907-2_1_AB

Pos	Part No	UN	Qty	Description	Page No
-					
010	2746933-0200		1	BASE UNIT	**7-5**
020	2746934-0200		1	FEED UNIT	**7-19**
030	2746932-0200		1	PNEUMATIC UNIT	**7-29**
040	2746929-0100		1	CARRIER BELT	**7-31**
050	2746928-0200		1	CAP LINE	**7-37**

Pos	Part No	UN	Qty	Description	Page No

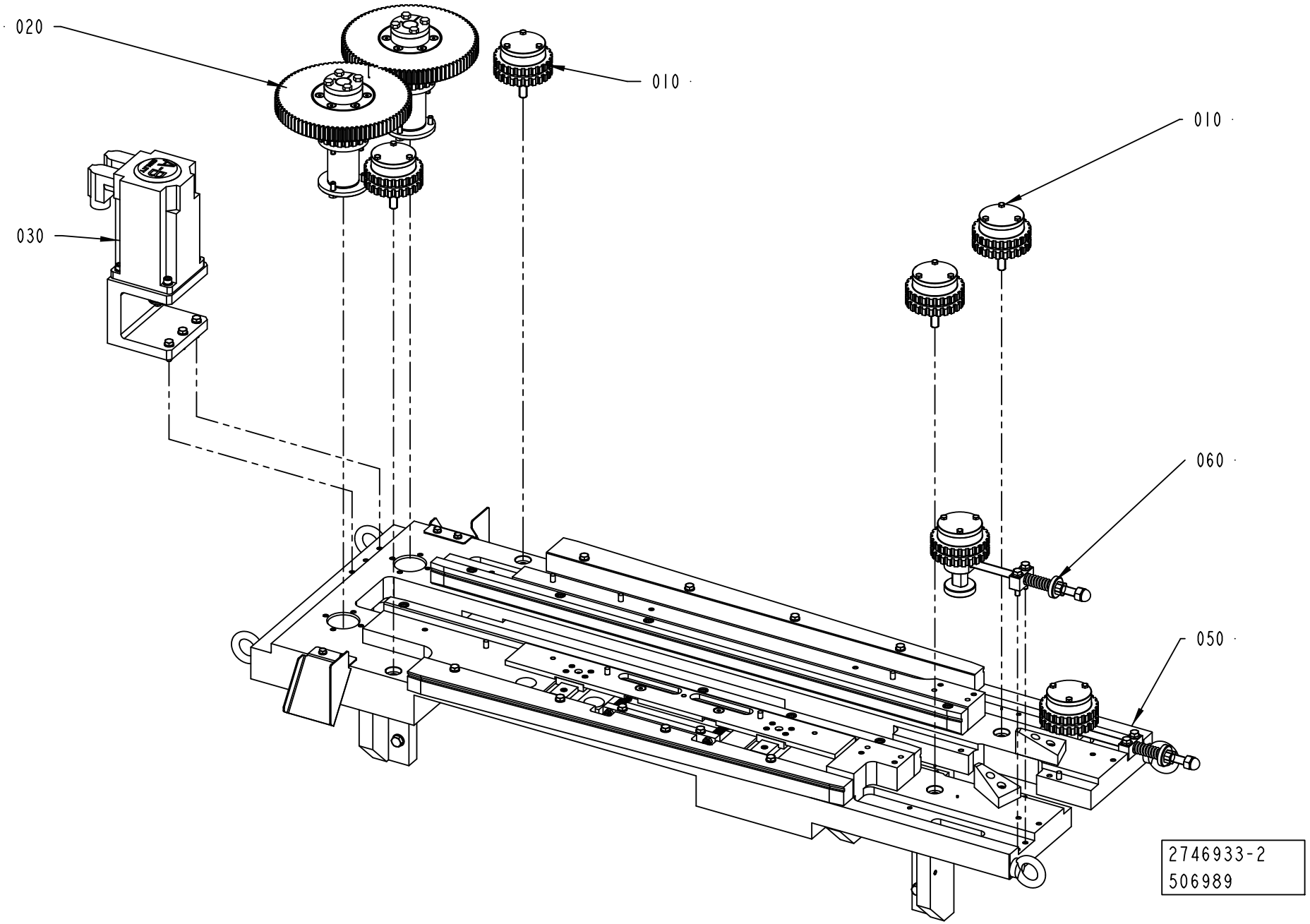
020
010
010
030
060
050
2746933-2
506989

ECM: 527291 - 20120401
Group number: 2746933-0200
Assembly Drawing: 2746933-2_1_AA

Pos	Part No	UN	Qty	Description	Page No
-					
010	2715669-0200		4	TOOTHED PULLEY	**7-7**
020	2715976-0200		2	TOOTHED PULLEY	**7-9**
030	2727407-0200		1	DRIVE PULLEY	**7-11**
050	2716049-0200		1	CAP LINE	**7-13**
060	3034438-0200		2	TOOTHED PULLEY	**7-17**

Pos	Part No	UN	Qty	Description	Page No

TOOTHED PULLEY

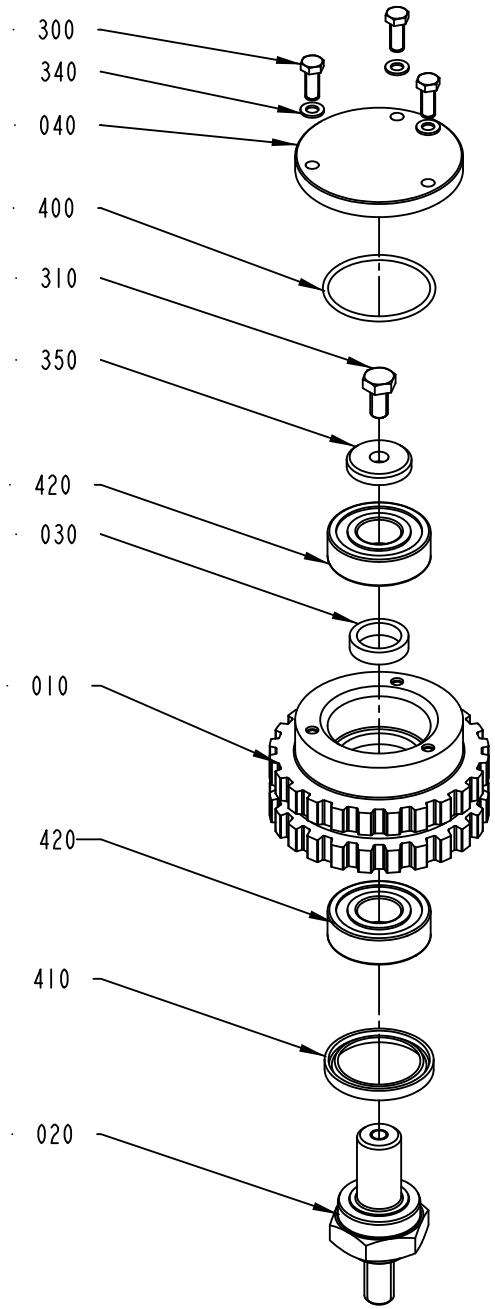

2715669-2
558537

ECM: 712652 - 20150401
Group number: 2715669-0200
Assembly Drawing: 2715669-2_1_AB

Pos	Part No	UN	Qty	Description	Page No
-					
010	2780452-0000		1	TOOTHED PULLEY	
020	2715978-0000		1	SHAFT	
030	2736447-0000		1	SPACER	
040	2736449-0000		1	COVER	
300	312105-0291		3	SCREW, M6S ISO 4017 M4X12 A4 70	
310	312105-0366		1	SCREW, M6S ISO 4017 M6X12 A4 80	
340	315105-0136		3	WASHER PLAIN, 4,3X8X0,8 A4 BRB	
350	315125-0153		1	WASHER HIGH, TBRSB 6,4X22X4 A4	
400	315202-0716		1	O-RING 34,65X1,78 MM	
410	315230-0330		1	SEAL RING G 28X37X4	
420	321309-0102		2	BALL BEARING 15/35X11	
430	344407-0000		1	KLüBERSYNTH UH1 14-151, ONLY IN BOM	
	344407-0591		*1*	*KLüBERSYNTH UH1 14-151, 400G CARTRIDGE*	
	344407-0285		*1*	*KLüBERSYNTH UH1 14-151, 45G TUBE*	
	344407-0177		*1*	*KLüBERSYNTH UH1 14-151, 25KG BUCKET*	
	344407-0037		*1*	*KLüBERSYNTH UH1 14-151, 1KG CAN*	

Pos	Part No	UN	Qty	Description	Page No

TOOTHED PULLEY

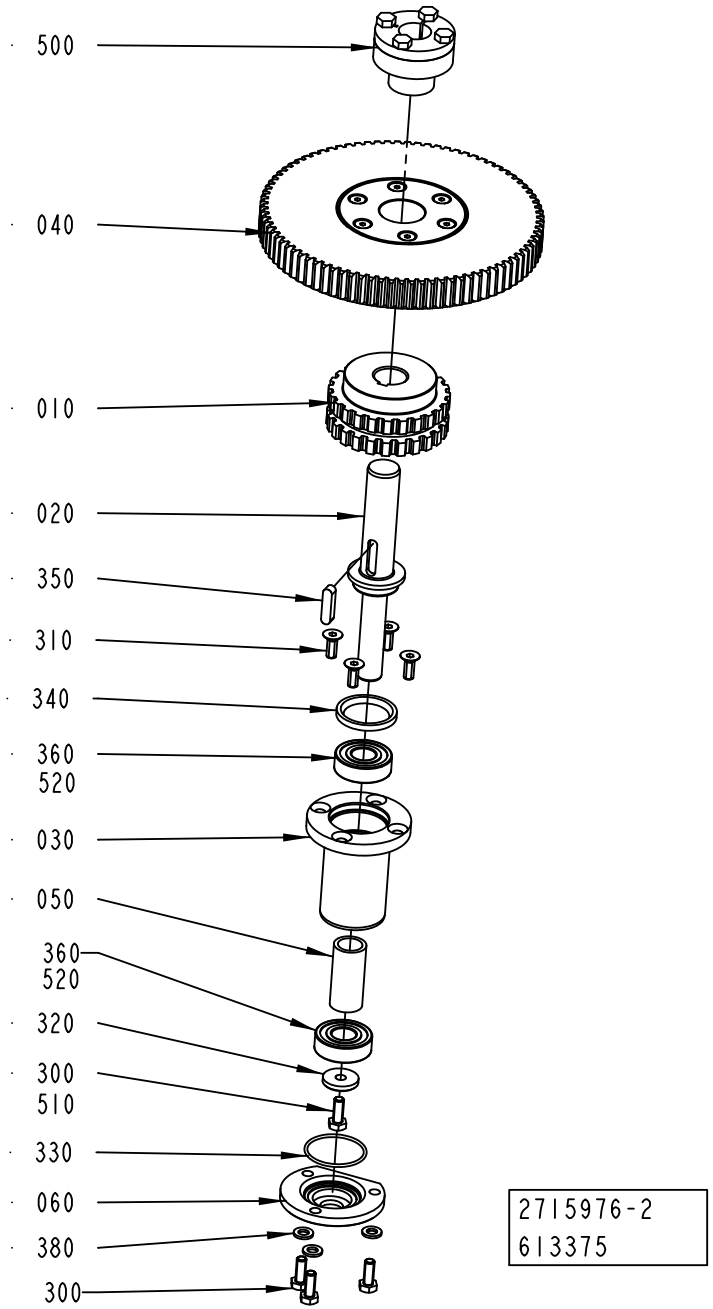

ECM: 712657 - 20150401
Group number: 2715976-0200
Assembly Drawing: 2715976-2_1_AC

Pos	Part No	UN	Qty	Description	Page No
-					
010	2780453-0000		1	TOOTHED PULLEY	
020	2727414-0000		1	SHAFT	
030	2715977-0000		1	LOCKING HUB	
040	3311662-0000		1	TOOTHED PULLEY	
050	2736446-0000		1	SPACER	
060	2736448-0000		1	COVER	
300	312105-0368		4	"SCREW, M6S ISO 4017 M6X16 A4 80"	
310	312155-0368		4	SCREW DIN 7991 MF6S M6X16 A4 70	
320	315125-0153		1	WASHER HIGH, TBRSB 6,4X22X4 A4	
330	315202-0716		1	O-RING 34,65X1,78 MM	
340	315230-0330		1	SEAL RING G 28X37X4	
350	315705-0234		1	PARALLEL KEY W. ROUND ENDS, 6X6X25 MM	
360	321309-0102		2	BALL BEARING 15/35X11	
380	315105-0153		3	WASHER PLAIN, 6,4X12X1,5 A4 BRB	
500	90208-0078		1	CLAMPING ELEMENT, 20X28 L=18	
510	344433-0000		1	THREADLOCKER LOCTITE 2701, ONLY IN BOM	
	344433-0050		*1*	*THREADLOCKER LOCTITE 2701, 50ML*	
520	344407-0000		1	KLüBERSYNTH UH1 14-151, ONLY IN BOM	
	344407-0591		*1*	*KLüBERSYNTH UH1 14-151, 400G CARTRIDGE*	
	344407-0285		*1*	*KLüBERSYNTH UH1 14-151, 45G TUBE*	
	344407-0177		*1*	*KLüBERSYNTH UH1 14-151, 25KG BUCKET*	
	344407-0037		*1*	*KLüBERSYNTH UH1 14-151, 1KG CAN*	

Pos	Part No	UN	Qty	Description	Page No

Machine Type | Group Description | Used-In | Group Number | Page No

DRIVE PULLEY

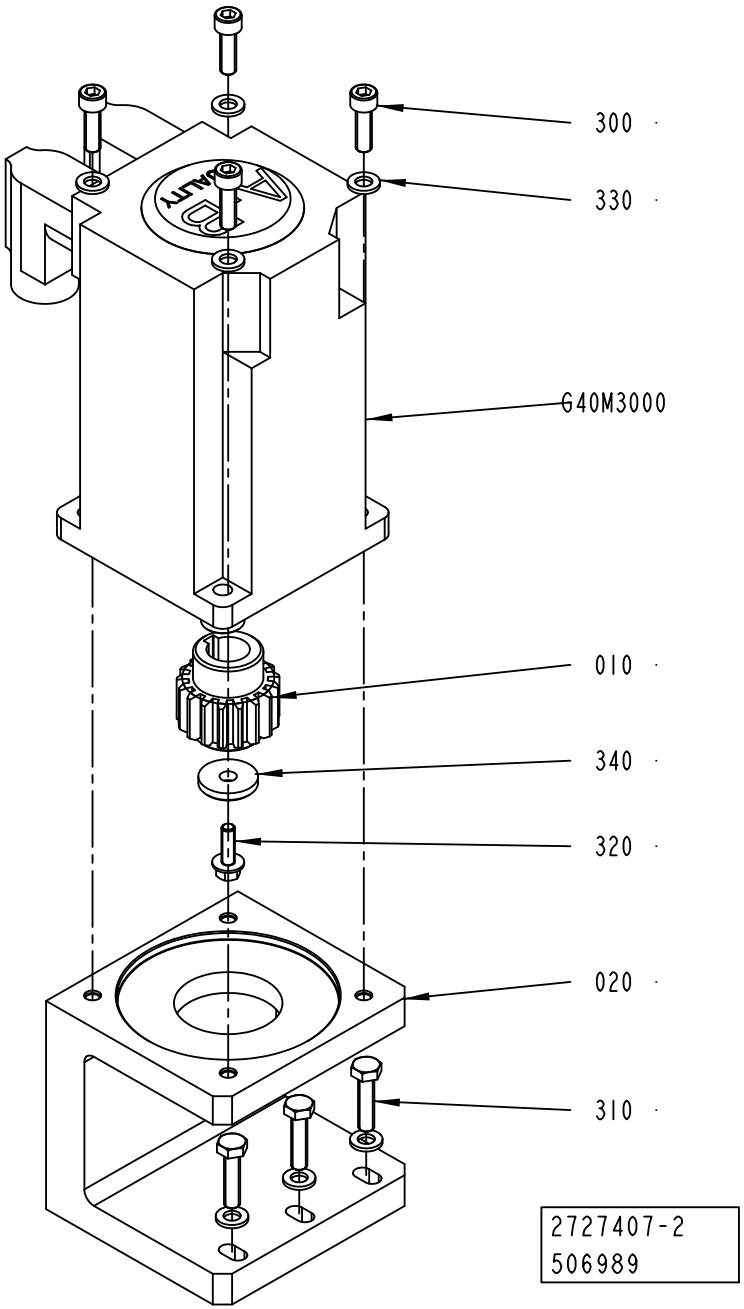

ECM: 527288 - 20120401
Group number: 2727407-0200
Assembly Drawing: 2727407-2_1_AA

Pos	Part No	UN	Qty	Description	Page No
-					
010	2727427-0000		1	GEAR WHEEL	
020	2727408-0000		1	MOTOR BRACKET	
300	312115-0370		4	SCREW ISO4762 M6X20 A4 80	
310	312105-0372		3	SCREW, M6S ISO 4017 M6X25 A4 80	
320	312108-0329		1	SCREW EN 1665 TYPE F M5X16 A270	
330	315105-0153		7	WASHER PLAIN, 6,4X12X1,5 A4 BRB	
340	315125-0153		1	WASHER HIGH, TBRSB 6,4X22X4 A4	
G40M3000	90601-4430		1	SERVO MOTOR, MPL-B320P-MJ72AA, SERIES A	

Pos	Part No	UN	Qty	Description	Page No

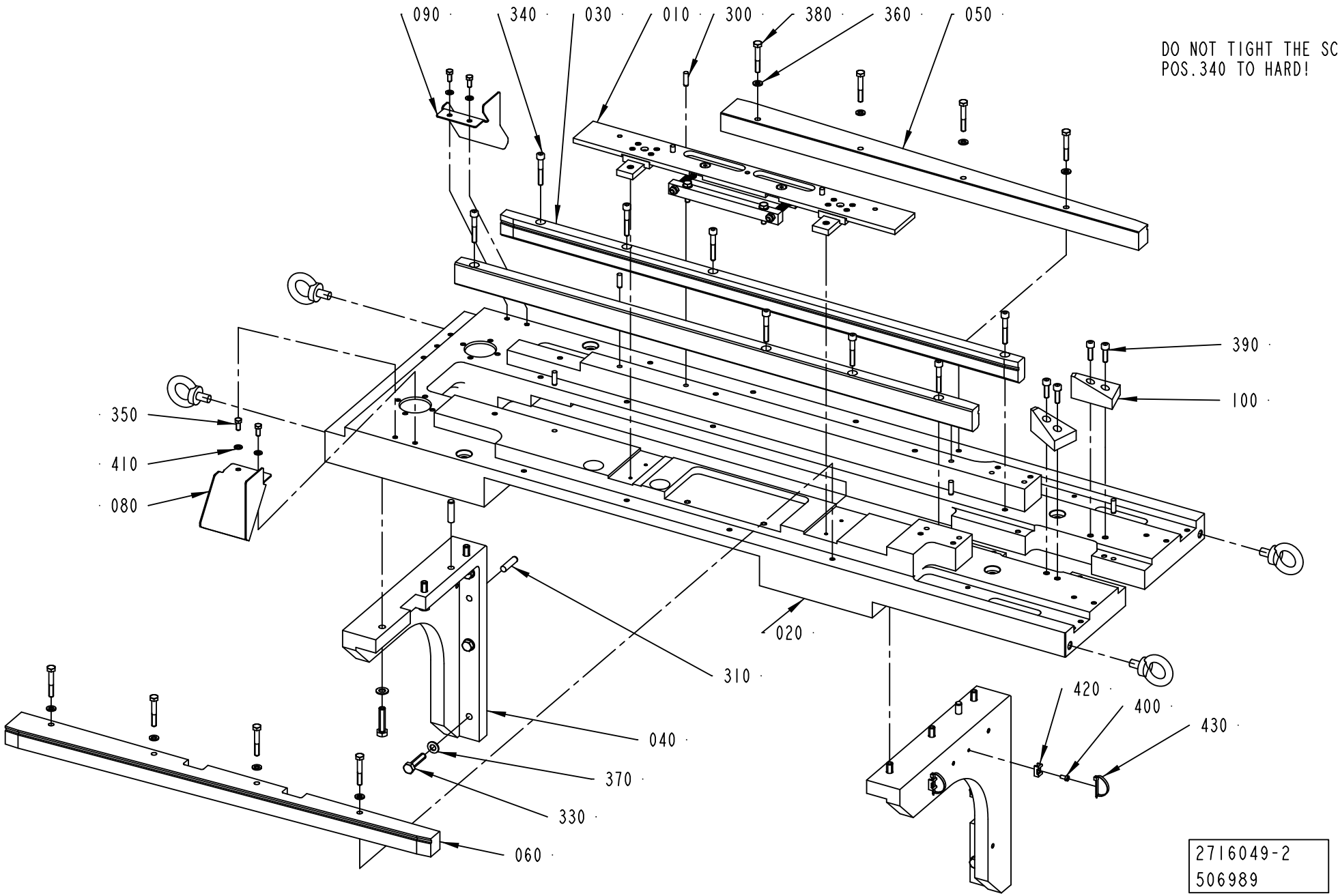
090
340
030
010
300
380
360
050
DO NOT TIGHT THE SCREW
POS.340 TO HARD!
390
100
350
410
080
020
310
040
370
330
060
420
400
430
2716049-2
506989

ECM: 527286 - 20120401
Group number: 2716049-0200
Assembly Drawing: 2716049-2_1_AF

Pos	Part No	UN	Qty	Description	Page No
-					
010	2716149-0200		1	STEERING DEVICE	**7-15**
020	2716015-0000		1	BRACKET	
030	2780454-0000		2	SLIDE RAIL	
040	2727420-0000		2	BRACKET	
050	2780455-0000		1	SLIDE RAIL	
060	2780456-0000		1	SLIDE RAIL	
080	2918904-0000		1	PLATE	
090	2918905-0000		1	PLATE	
100	3095787-0000		2	SLIDE	
300	311103-0353		6	PARALLEL PIN ISO 2338 6M6X20 A1	
310	311103-0406		4	PARALLEL PIN ISO 2338 8M6X32 A1	
330	312109-0457		12	SCREW, M6S ISO 4017 M8X35 A4 80	
340	312115-0378		8	SCREW ISO4762 M6X40 A4 80	
350	312105-0327		4	"SCREW, M6S ISO 4017 M5X12 A4 80"	
360	315105-0153		8	WASHER PLAIN, 6,4X12X1,5 A4 BRB	
370	315105-0165		12	FWAS080G0-0S, WASHER PLAIN	
380	312105-0378		8	SCREW, M6S ISO 4014 M6X40 A4 80	
390	312115-0370		4	SCREW ISO4762 M6X20 A4 80	
400	312125-0287		2	SLOTTED HEAD SCREW, ISO1207 M4X8 A4	
410	315105-0146		4	WASHER PLAIN, 5,3X10X1 A4 BRB	
420	352113-0205		2	ANCHOR PLATES FOR STRIPS, TM2S8-C100	
430	352113-0104		2	CABLE TIE, BLACK 300X4,8 MM	

Pos	Part No	UN	Qty	Description	Page No

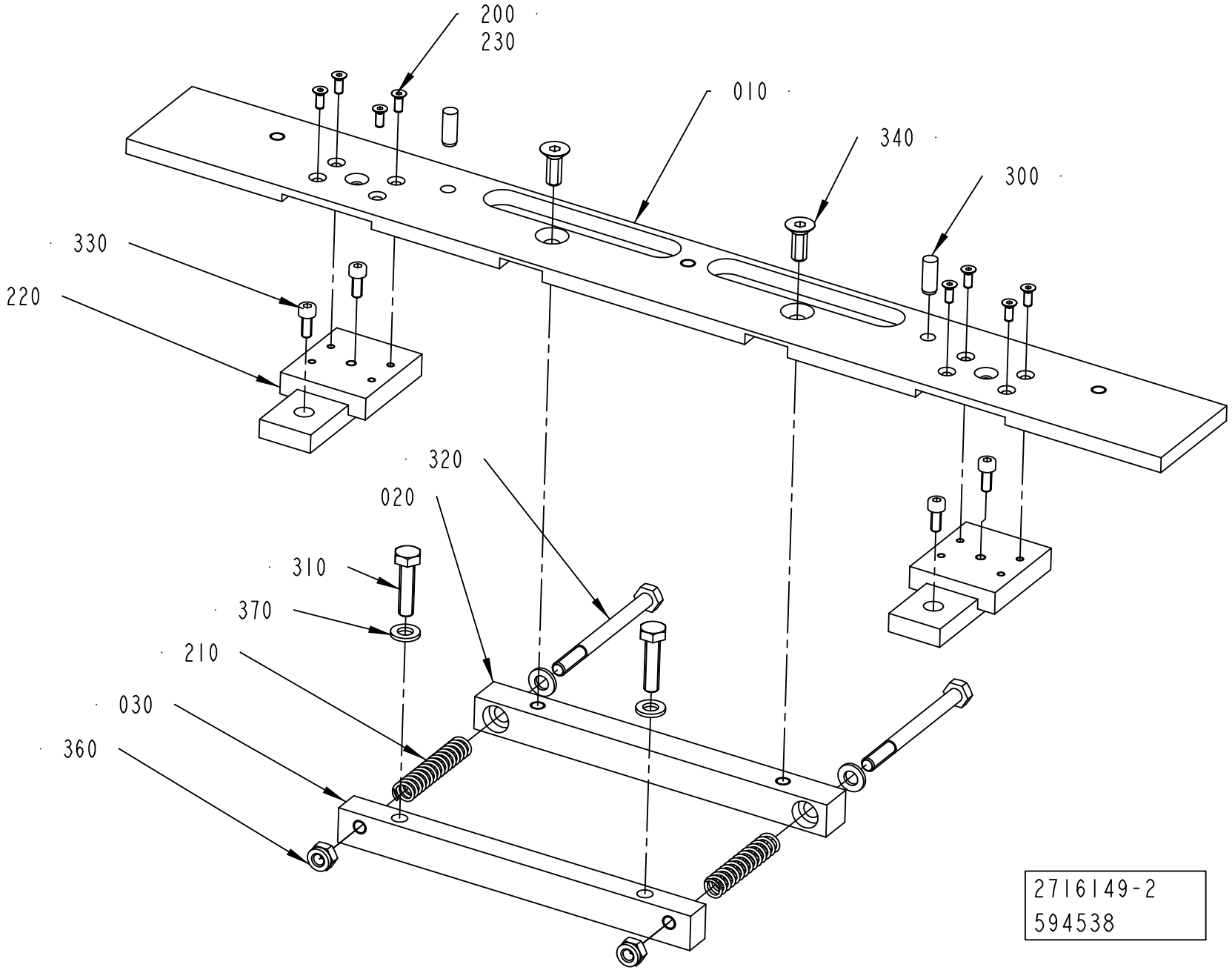
200
230
010
340
300
330
220
320
020
310
370
210
030
360
2716149-2
594538

ECM: 712660 - 20150401
Group number: 2716149-0200
Assembly Drawing: 2716149-2_1_AC

Pos	Part No	UN	Qty	Description	Page No
-					
010	2716152-0000		1	PLATE	
020	2716156-0000		1	BRACKET	
030	2716157-0000		1	BRACKET	
200	90287-0295		8	SCREW HEX.SOCK.COUNT.MF6S M3X8 A280	
210	90335-0082		2	COMP. SPRING, 22180, 1,25X9,25X47,5	
220	90600-0350		2	LINEAR GUIDE, RSR12WVMUU+80LM G15/G25	
230	344433-0000		1	THREADLOCKER LOCTITE 2701, ONLY IN BOM	
	344433-0050		*1*	*THREADLOCKER LOCTITE 2701, 50ML*	
300	311103-0351		2	PARALLEL PIN ISO 2338 6M6X16 A1	
310	312105-0372		2	SCREW, M6S ISO 4017 M6X25 A4 80	
320	312105-0384		2	SCREW, M6S ISO 4014 M6X70 A4 80	
330	312115-0289		4	SCREW ISO4762 M4X10 A4 80	
340	312155-0368		2	SCREW DIN 7991 MF6S M6X16 A4 70	
360	312812-0316		2	HEXAGON NUT, NY-LOCK M6 A4 80	
370	315105-0153		4	WASHER PLAIN, 6,4X12X1,5 A4 BRB	

Pos	Part No	UN	Qty	Description	Page No

Machine Type | Group Description | Used-In | Group Number | Page No

TOOTHED PULLEY

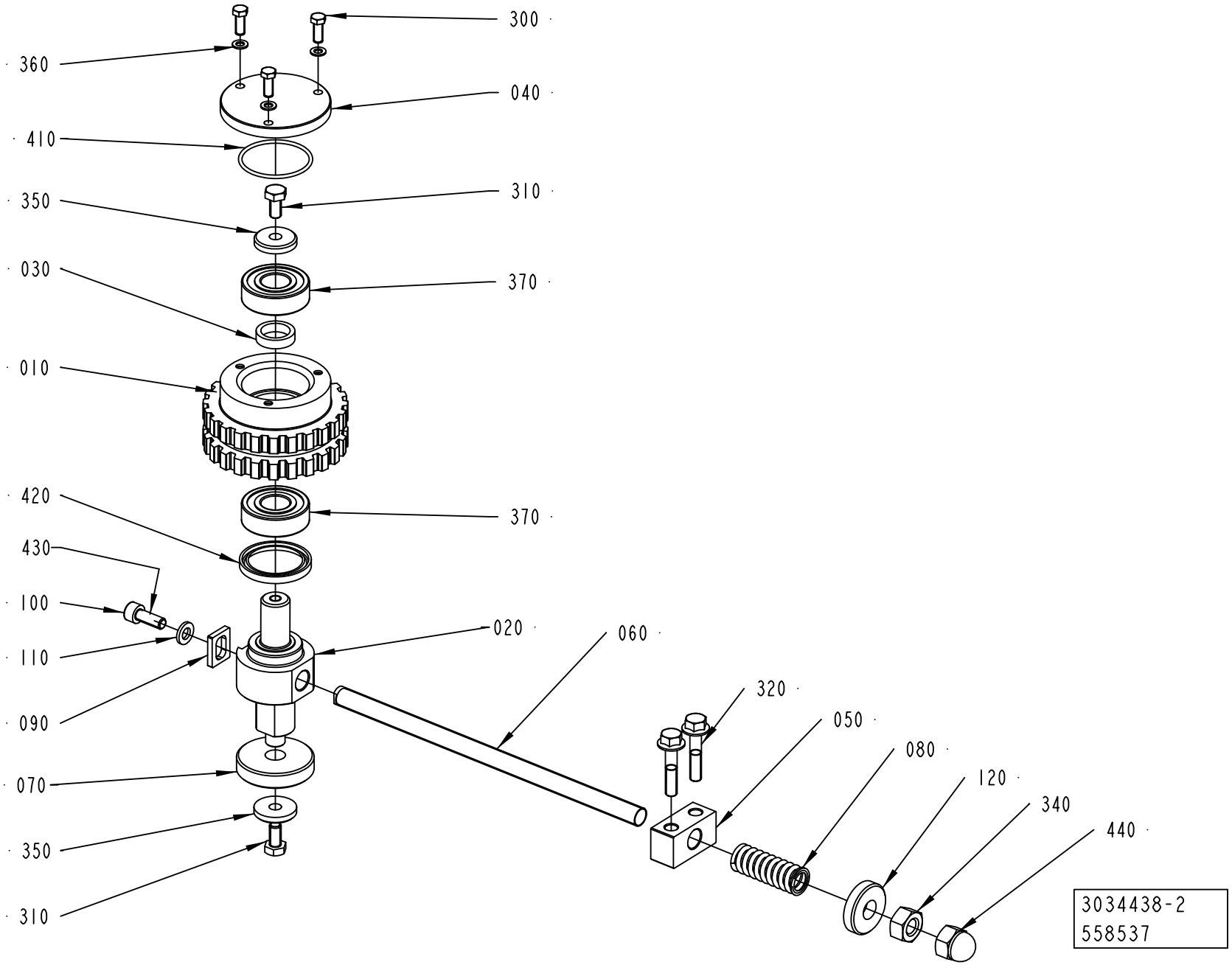

ECM: 712678 - 20150401
Group number: 3034438-0200
Assembly Drawing: 3034438-2_1_AB

Pos	Part No	UN	Qty	Description	Page No
-					
010	2780452-0000		1	TOOTHED PULLEY	
020	2716019-0000		1	SHAFT	
030	2736447-0000		1	SPACER	
040	2736449-0000		1	COVER	
050	3024866-0000		1	SUPPORT	
060	2974857-0000		1	SCREW	
070	2716024-0000		1	WASHER	
080	2716021-0000		1	SPRING	
090	2974858-0000		1	NUT	
100	312115-0368		1	SCREW ISO4762 M6X16 A4 80	
110	315106-0153		1	WASHER PLAIN, M6 ISO7089-6-200 HV A4	
120	315125-0173		1	WASHER HIGH, TBRSB 10,5X28X6 A4	
300	312105-0291		3	SCREW, M6S ISO 4017 M4X12 A4 70	
310	312105-0366		2	SCREW, M6S ISO 4017 M6X12 A4 80	
320	312108-0374		2	SCREW EN 1665 TYPE F M6X30 A270	
340	312605-0320		1	HEXAGON NUT, M6M M10 A280	
350	315125-0153		2	WASHER HIGH, TBRSB 6,4X22X4 A4	
360	315105-0136		3	WASHER PLAIN, 4,3X8X0,8 A4 BRB	
370	321309-0102		2	BALL BEARING 15/35X11	
410	315202-0716		1	O-RING 34,65X1,78 MM	
420	315230-0330		1	SEAL RING G 28X37X4	
430	344430-0000		1	THREADLOCKER LOCTITE 242, ONLY IN BOM	
	344430-0050		*1*	*THREADLOCKER LOCTITE 242, 50ML*	
440	312705-0320		1	NUT HEX. DOMED CAP MHM-6 M10 A280	
450	344407-0000		1	KLüBERSYNTH UH1 14-151, ONLY IN BOM	
	344407-0591		*1*	*KLüBERSYNTH UH1 14-151, 400G CARTRIDGE*	
	344407-0285		*1*	*KLüBERSYNTH UH1 14-151, 45G TUBE*	
	344407-0177		*1*	*KLüBERSYNTH UH1 14-151, 25KG BUCKET*	
	344407-0037		*1*	*KLüBERSYNTH UH1 14-151, 1KG CAN*	

Pos	Part No	UN	Qty	Description	Page No

Machine Type	Group Description	Used-In	Group Number	Page No

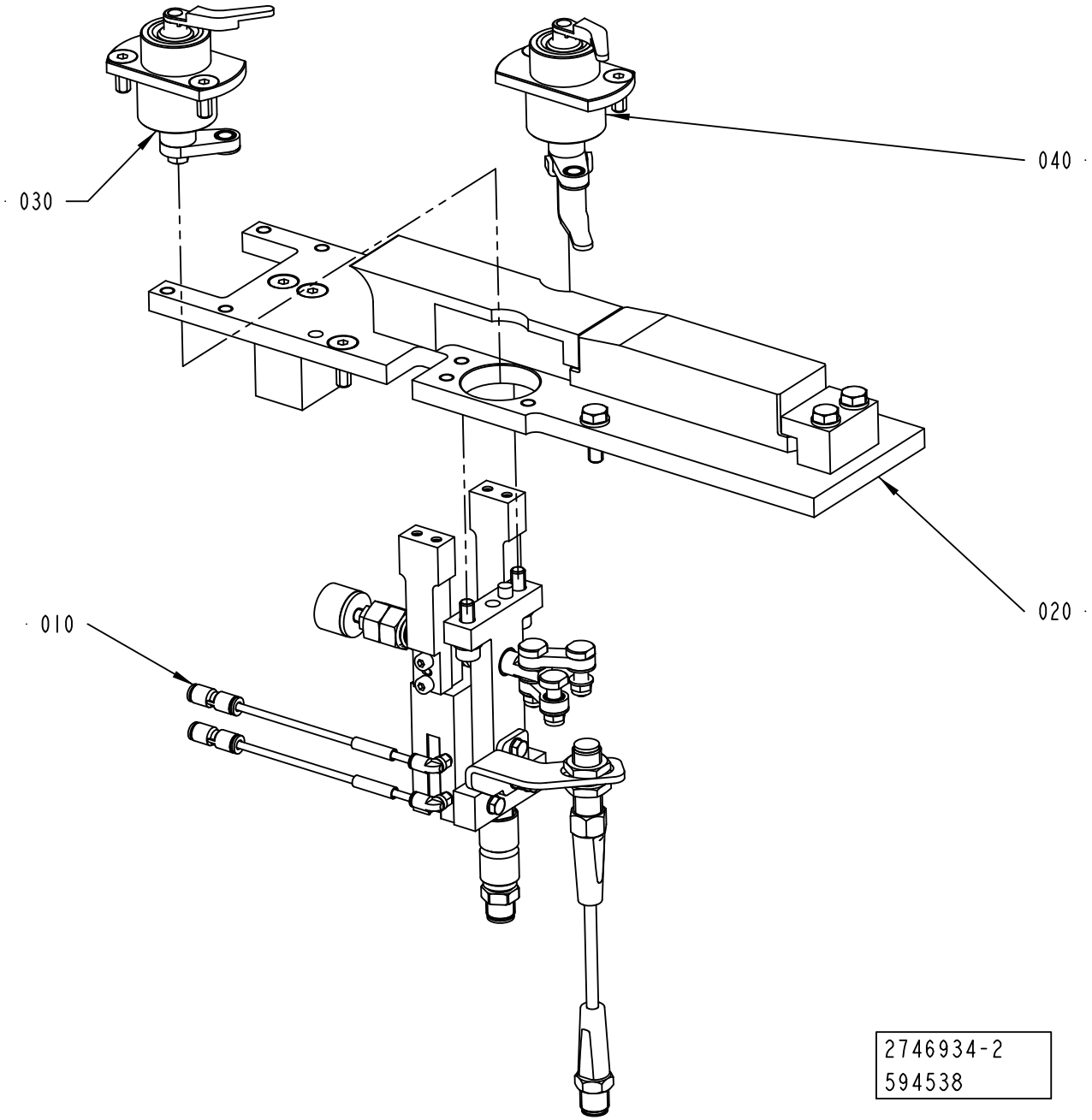
030
040
020
010
2746934-2
594538

ECM: 594644 - 20130701
Group number: 2746934-0200
Assembly Drawing: 2746934-2_1_AB

Pos	Part No	UN	Qty	Description	Page No
-					
010	2716046-0200		1	CLAMP UNIT	7-21
020	2716047-0100		1	HEIGHT ADJUSTMENT	7-23
030	2740299-0200		1	FINGER	7-25
040	2740371-0200		1	FINGER	7-27

Pos	Part No	UN	Qty	Description	Page No

Machine Type | Group Description | Used-In | Group Number | Page No

CLAMP UNIT

Drawing file: 2716046-3_1_AB.hpgl

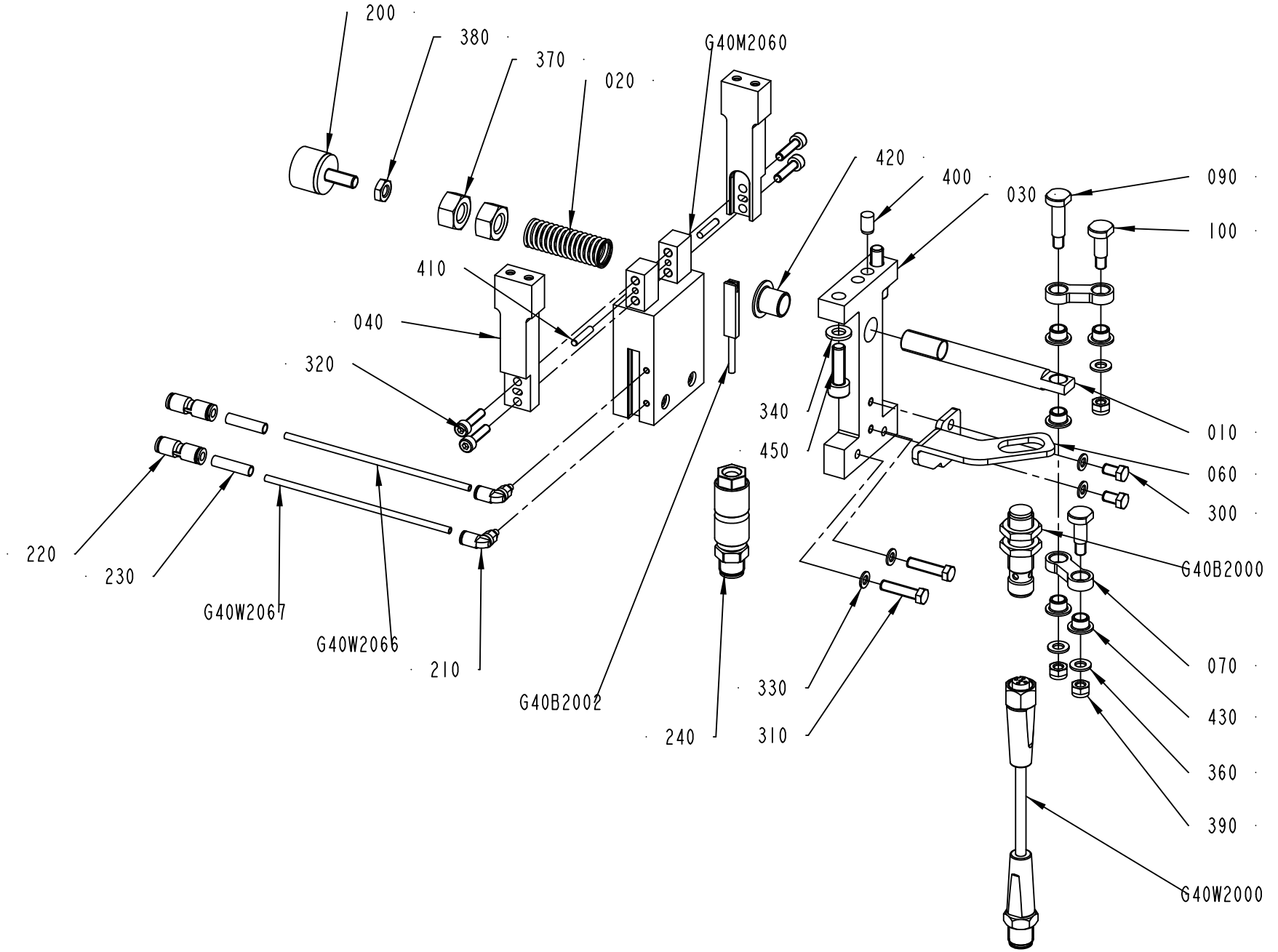

2716046-3
558537

ECM: 619218 - 20131001
Group number: 2716046-0200
Assembly Drawing: 2716046-3_1_AB

Pos	Part No	UN	Qty	Description	Page No
-					
010	2838763-0000		1	SHAFT	
020	3020132-0000		1	SPRING	
030	2740373-0000		1	BRACKET	
040	2740375-0000		2	BRACKET	
060	2973942-0000		1	BRACKET	
070	2730989-0000		2	LEVER	
090	2780361-0000		1	PIN	
100	2780362-0000		2	PIN	
200	90600-5547		1	VIBRATION DAMPER, D-TYPE 20X15 M6X15 NBR	
210	90459-7426		2	PUSH-IN L-FITTING QSML-M3-3	
220	90459-7427		2	PUSH-IN FITTING QSM-4-3	
230	90459-7368		2	MARKING FOR PNEUM. TUBING, PRZ04	
240	90603-5568		1	CONNECTOR, SACC-M12MS-4QO-0,34-VA	
300	312105-0287		2	SCREW, M6S ISO 4017 M4X8 A4 70	
310	312105-0295		2	SCREW, M6S ISO 4017 M4X20 A4 70	
320	312115-0293		4	SCREW ISO4762 M4X16 A4 80	
330	315105-0136		4	WASHER PLAIN, 4,3X8X0,8 A4 BRB	
340	315105-0153		2	WASHER PLAIN, 6,4X12X1,5 A4 BRB	
360	315106-0146		3	"WASHER PLAIN, M5 ISO7089-5-200 HV A4"	
370	312635-0320		2	NUT M6M 10X1 STAINLESS A2 80	
380	312625-0316		1	HEXAGON THIN NUT, EN 24035 ML6M M6 A4	
390	312812-0314		3	HEXAGON NUT, NY-LOCK M5 A4 80	
400	311103-0348		1	PARALLEL PIN ISO 2338 6M6X10 A1	
410	311103-0236		2	PARALLEL PIN ISO 2338 3M6X16 A1	
420	321158-0142		1	FLANGE BUSHING, IGLIDUR J 10X12X12	
430	321158-0060		5	FLANGE BUSHING, IGLIDUR J 6X8X6	
450	312115-0370		2	SCREW ISO4762 M6X20 A4 80	
G40B2000	90459-6948		1	INDUCTIVE SENSOR, IFS 206	
G40B2002	90600-3272		1	PROX. SENSOR, SMT-8M-PS-24V-K-5,0-OE	
G40M2060	90604-3142		1	CYLINDER, GRIPPER DHPS-16-A-H1-SA	
G40W2000	344267-0010		1	SENSOR CABLE, EVT042	
G40W2066	90459-7428	M	1	TUBE PUN-H-3X0,5-BL	
G40W2067	90459-7428	M	1	TUBE PUN-H-3X0,5-BL	

Pos	Part No	UN	Qty	Description	Page No

Machine Type	Group Description	Used-In	Group Number	Page No

HEIGHT ADJUSTMENT

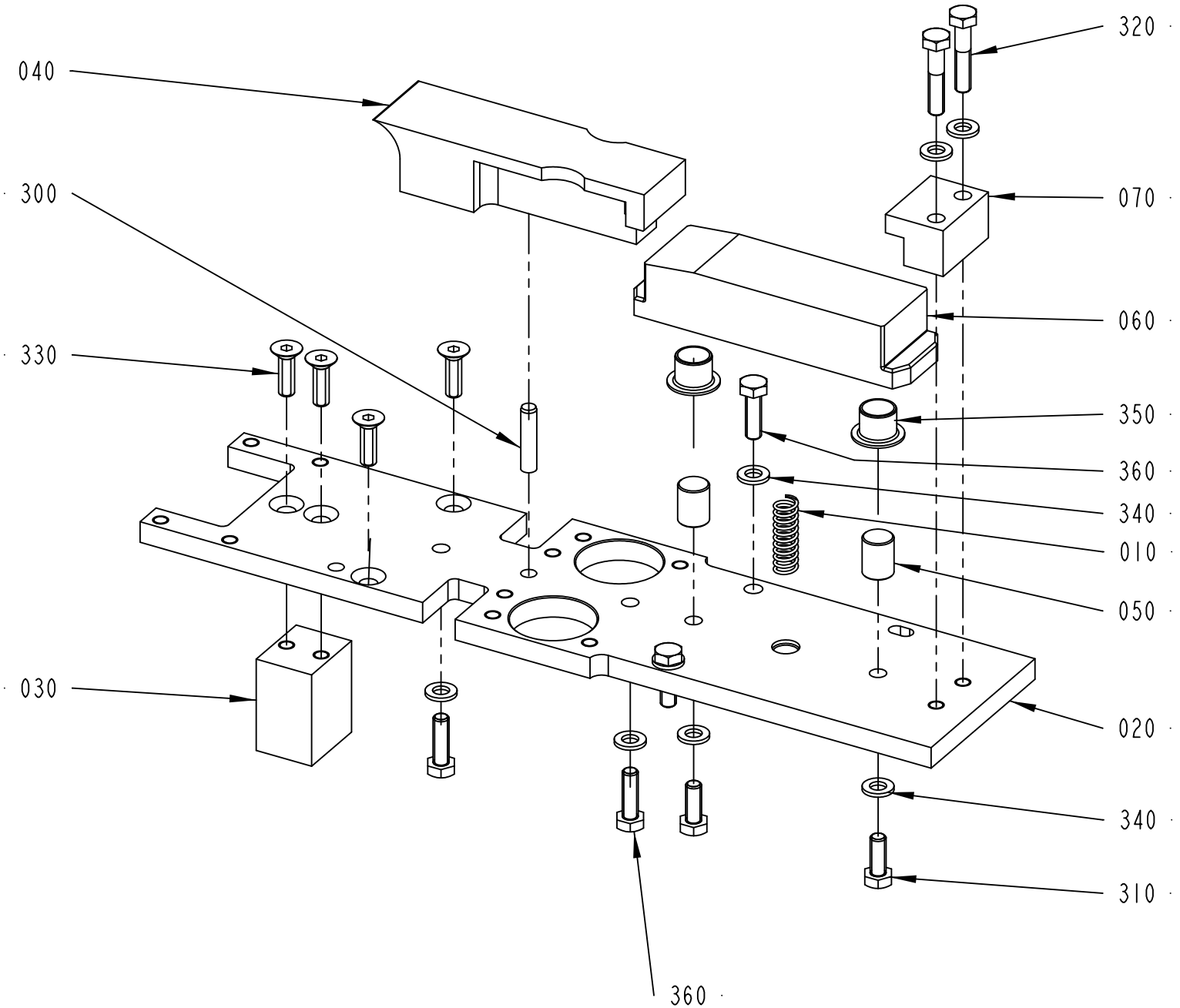

ECM: 558751 - 20121001
Group number: 2716047-0100
Assembly Drawing: 2716047-1_1_AD

Pos	Part No	UN	Qty	Description	Page No
-					
010	90600-0351		1	COMP. SPRING, 2489, 1,2X9,4X30	
020	2838765-0000		1	PLATE	
030	2838764-0000		1	BLOCK	
040	2727431-0000		1	SLIDE PLATE	
050	2727432-0000		2	SHAFT	
060	2727434-0000		1	SLIDE PLATE	
070	2727440-0000		1	END SUPPORT	
300	311103-0356		1	PARALLEL PIN ISO 2338 6M6X28 A1	
310	312105-0368		2	"SCREW, M6S ISO 4017 M6X16 A4 80"	
320	312105-0374		2	SCREW, M6S ISO 4014 M6X30 A4 80	
330	312155-0370		4	SCREW DIN 7991 MF6S M6X20 A4 70	
340	315105-0153		8	WASHER PLAIN, 6,4X12X1,5 A4 BRB	
350	321158-0180		2	FLANGE BUSHING, IGLIDUR J 12X14X12	
360	312105-0370		4	SCREW, M6S ISO 4017 M6X20 A4 80	

Pos	Part No	UN	Qty	Description	Page No

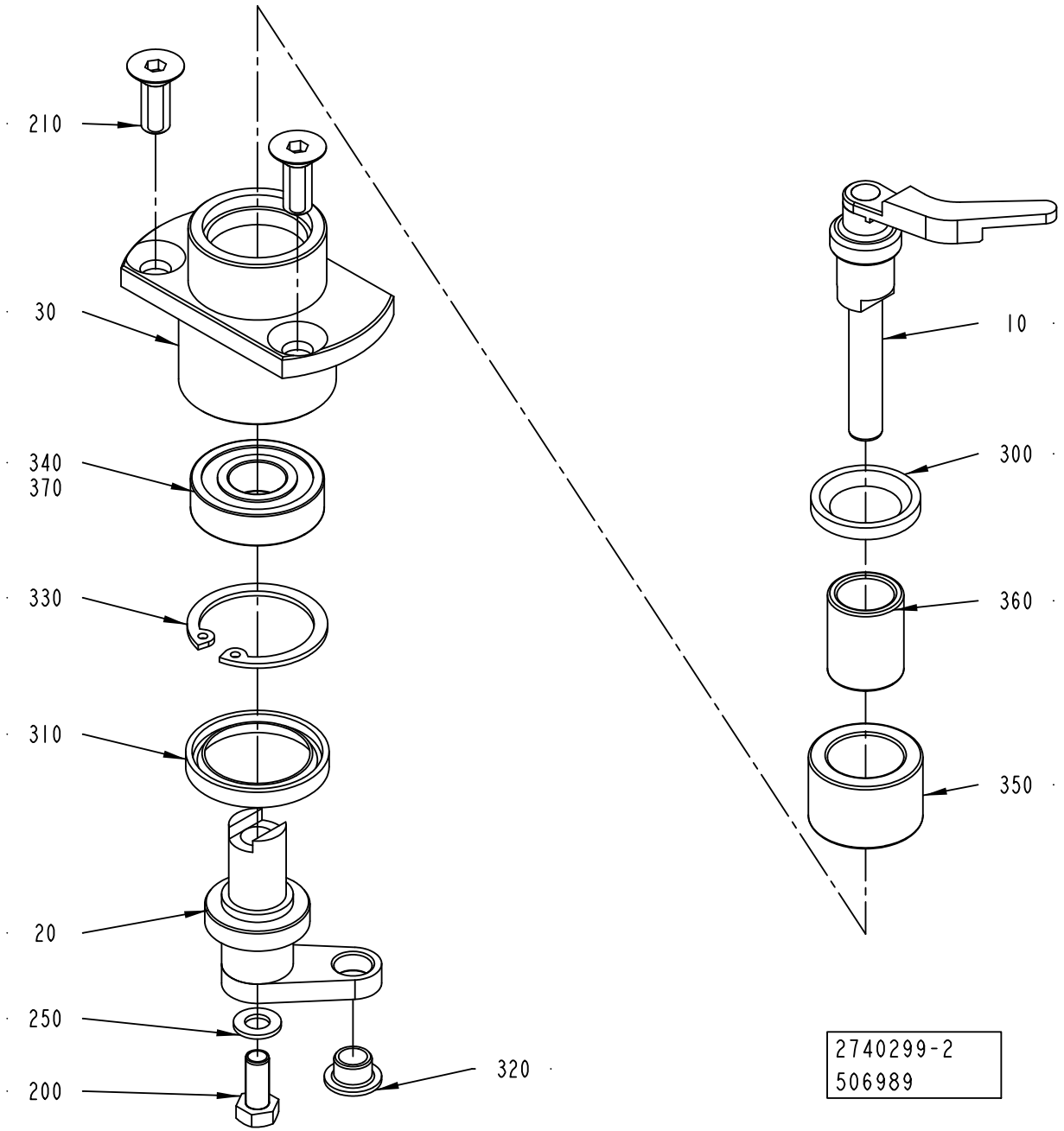
210
30
340
370
330
310
20
250
200
320
10
300
360
350
2740299-2
506989

ECM: 712680 - 20150401
Group number: 2740299-0200
Assembly Drawing: 2740299-2_1_AA

Pos	Part No	UN	Qty	Description	Page No
-					
010	2740300-0000		1	FINGER	
020	2470301-0000		1	LEVER	
030	2470302-0000		1	HUB	
200	312105-0327		1	"SCREW, M6S ISO 4017 M5X12 A4 80"	
210	312155-0368		2	SCREW DIN 7991 MF6S M6X16 A4 70	
250	315105-0146		1	WASHER PLAIN, 5,3X10X1 A4 BRB	
300	315230-0193		1	BEARING SEAL G15X23X3 MM	
310	315230-0274		1	BEARING SEAL G22X30X4 MM	
320	321158-0060		1	FLANGE BUSHING, IGLIDUR J 6X8X6	
330	315753-0121		1	RETAINING RING FOR BORE DIN 472 28 SS	
340	321308-0101		1	BALL BEARING 12/28X8	
350	90600-0347		1	NEEDLE BEARING W/O CONE, 16X24X16MM	
360	90600-0349		1	INNER RING, IR12X16X20	
370	344407-0000		1	KLüBERSYNTH UH1 14-151, ONLY IN BOM	
	344407-0591		*1*	*KLüBERSYNTH UH1 14-151, 400G CARTRIDGE*	
	344407-0285		*1*	*KLüBERSYNTH UH1 14-151, 45G TUBE*	
	344407-0177		*1*	*KLüBERSYNTH UH1 14-151, 25KG BUCKET*	
	344407-0037		*1*	*KLüBERSYNTH UH1 14-151, 1KG CAN*	

Pos	Part No	UN	Qty	Description	Page No

Machine Type | Group Description | Used-In | Group Number | Page No

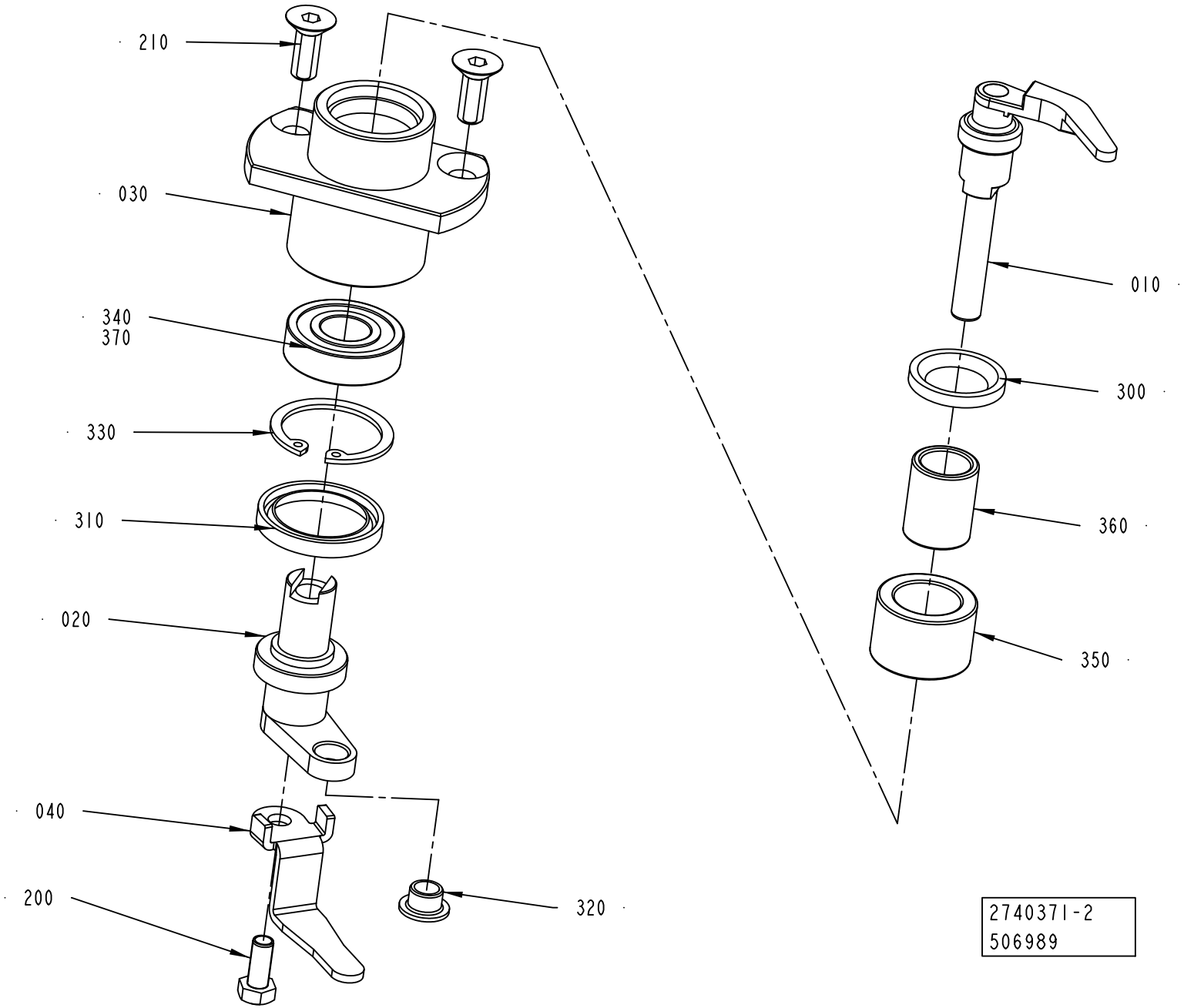
210
030
340
370
330
310
020
040
200
320
010
300
360
350
2740371-2
506989

ECM: 712683 - 20150401
Group number: 2740371-0200
Assembly Drawing: 2740371-2_1_AA

Pos	Part No	UN	Qty	Description	Page No
-					
010	2740372-0000		1	FINGER	
020	2470373-0000		1	LEVER	
030	2470302-0000		1	HUB	
040	2973943-0000		1	PLATE	
200	312105-0327		1	"SCREW, M6S ISO 4017 M5X12 A4 80"	
210	312155-0368		2	SCREW DIN 7991 MF6S M6X16 A4 70	
300	315230-0193		1	BEARING SEAL G15X23X3 MM	
310	315230-0274		1	BEARING SEAL G22X30X4 MM	
320	321158-0060		1	FLANGE BUSHING, IGLIDUR J 6X8X6	
330	315753-0121		1	RETAINING RING FOR BORE DIN 472 28 SS	
340	321308-0101		1	BALL BEARING 12/28X8	
350	90600-0347		1	NEEDLE BEARING W/O CONE, 16X24X16MM	
360	90600-0349		1	INNER RING, IR12X16X20	
370	344407-0000		1	KLüBERSYNTH UH1 14-151, ONLY IN BOM	
	344407-0591		*1*	*KLüBERSYNTH UH1 14-151, 400G CARTRIDGE*	
	344407-0285		*1*	*KLüBERSYNTH UH1 14-151, 45G TUBE*	
	344407-0177		*1*	*KLüBERSYNTH UH1 14-151, 25KG BUCKET*	
	344407-0037		*1*	*KLüBERSYNTH UH1 14-151, 1KG CAN*	

Pos	Part No	UN	Qty	Description	Page No

Machine Type | Group Description | Used-In | Group Number | Page No

PNEUMATIC UNIT

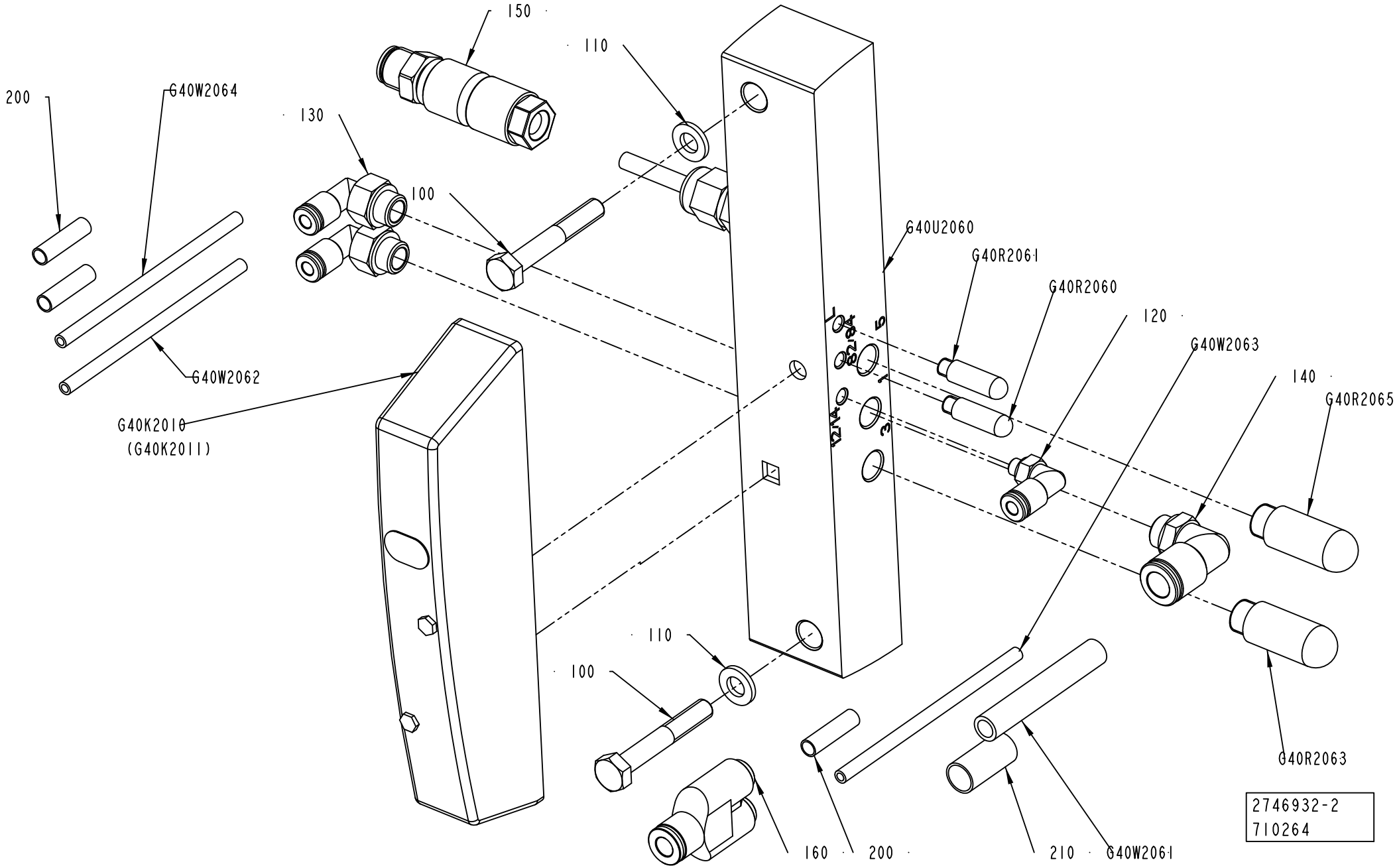

ECM: 713400 - 20150401
Group number: 2746932-0200
Assembly Drawing: 2746932-2_1_AC

Pos	Part No	UN	Qty	Description	Page No
-					
100	312105-0378		2	SCREW, M6S ISO 4014 M6X40 A4 80	
110	315106-0153		2	WASHER PLAIN, M6 ISO7089-6-200 HV A4	
120	351456-3015		1	PUSH-IN L-FITTING NPQH-L-M5-Q4-P10	
130	351456-3001		2	PUSH-IN L-FITTING NPQH-L-G18-Q4-P10	
140	351456-3003		1	PUSH-IN L-FITTING NPQH-L-G18-Q8-P10	
150	90603-5568		1	CONNECTOR, SACC-M12MS-4QO-0,34-VA	
160	351456-6004		1	PUSH-IN Y-CONNECTOR NPQH-Y-Q6-Q4-P10	
200	90459-7368		3	MARKING FOR PNEUM. TUBING, PRZ04	
210	90459-7370		1	MARKING FOR PNEUM. TUBING, PRZ08	
G40K2010	90458-1197		1	VALVE, 5/2 BISTABLE	
G40R2060	90328-0029		1	SILENCER, M5	
G40R2061	90328-0029		1	SILENCER, M5	
G40R2063	90328-0047		1	SILENCER, G1/8"	
G40R2065	90328-0047		1	SILENCER, G1/8"	
G40U2060	90459-2591		1	SINGLE VALVE SUB-BASE CDSV5.0-AS-1/8	
G40W2061	315400-0004	M	1	TUBE PUN-H-8X1,25-BL	
G40W2062	315400-0016	M	10	TUBE PUN-H-4X0,75-BL	
G40W2063	315400-0016	M	10	TUBE PUN-H-4X0,75-BL	
G40W2064	315400-0016	M	10	TUBE PUN-H-4X0,75-BL	

Pos	Part No	UN	Qty	Description	Page No

CARRIER BELT

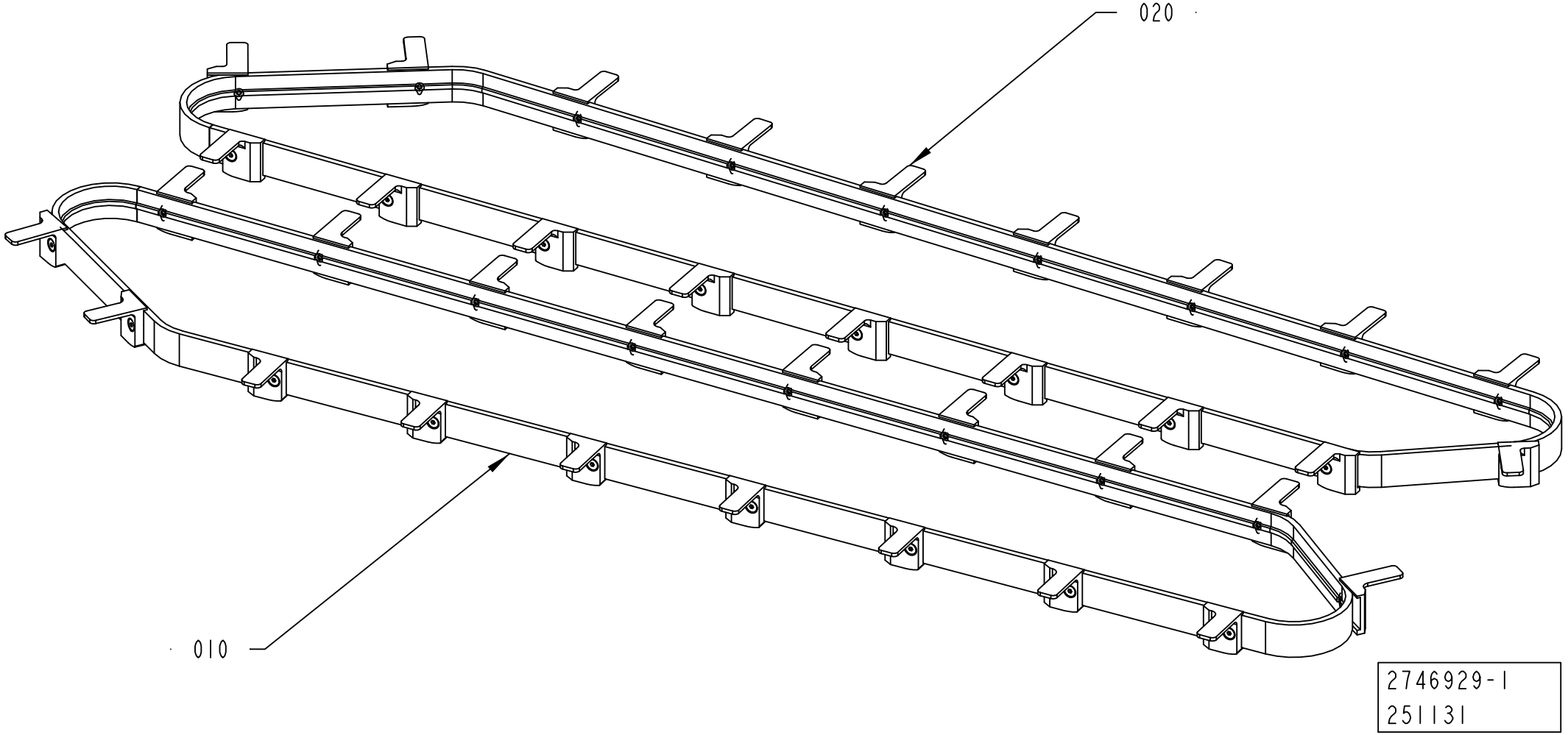

ECM: 297333 - 20070323
Group number: 2746929-0100
Assembly Drawing: 2746929-1_1_AA

Pos	Part No	UN	Qty	Description	Page No
-					
010	2780509-0100		1	TIMING BELT	**7-33**
020	2780497-0100		1	TIMING BELT	**7-35**

Pos	Part No	UN	Qty	Description	Page No

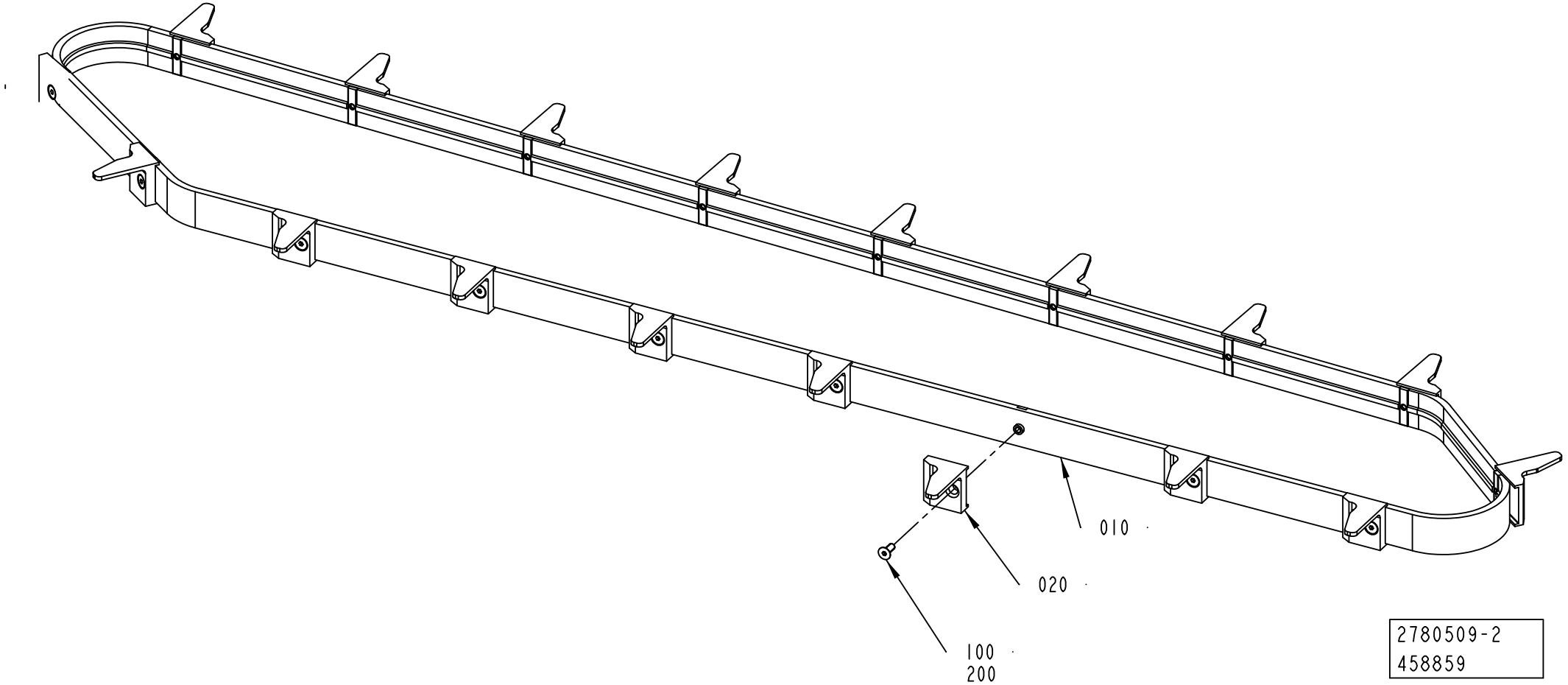
010
020
100
200
2780509-2
458859

ECM: 712685 - 20150401
Group number: 2780509-0100
Assembly Drawing: 2780509-2_1_AC

Pos	Part No	UN	Qty	Description	Page No
CAP 30/FLEX					
010	3117845-0000		1	TIMING BELT	
	90602-9237		*18*	*INSERT NUT, 101/04.04.3*	
	90603-0831		*1*	*TIMING BELT 25ATK10/2160 PU*	
020	2715975-0000		18	FINGER	
100	312155-0289		18	SCREW DIN 7991 MF6S M4X10 A4 70	
Common Parts					
200	344431-0000		1	THREADLOCKER LOCTITE 243, ONLY IN BOM	
	344431-0010		*1*	*THREADLOCKER LOCTITE 243, 10ML*	
	344431-0050		*1*	*THREADLOCKER LOCTITE 243, 50ML*	

Pos	Part No	UN	Qty	Description	Page No

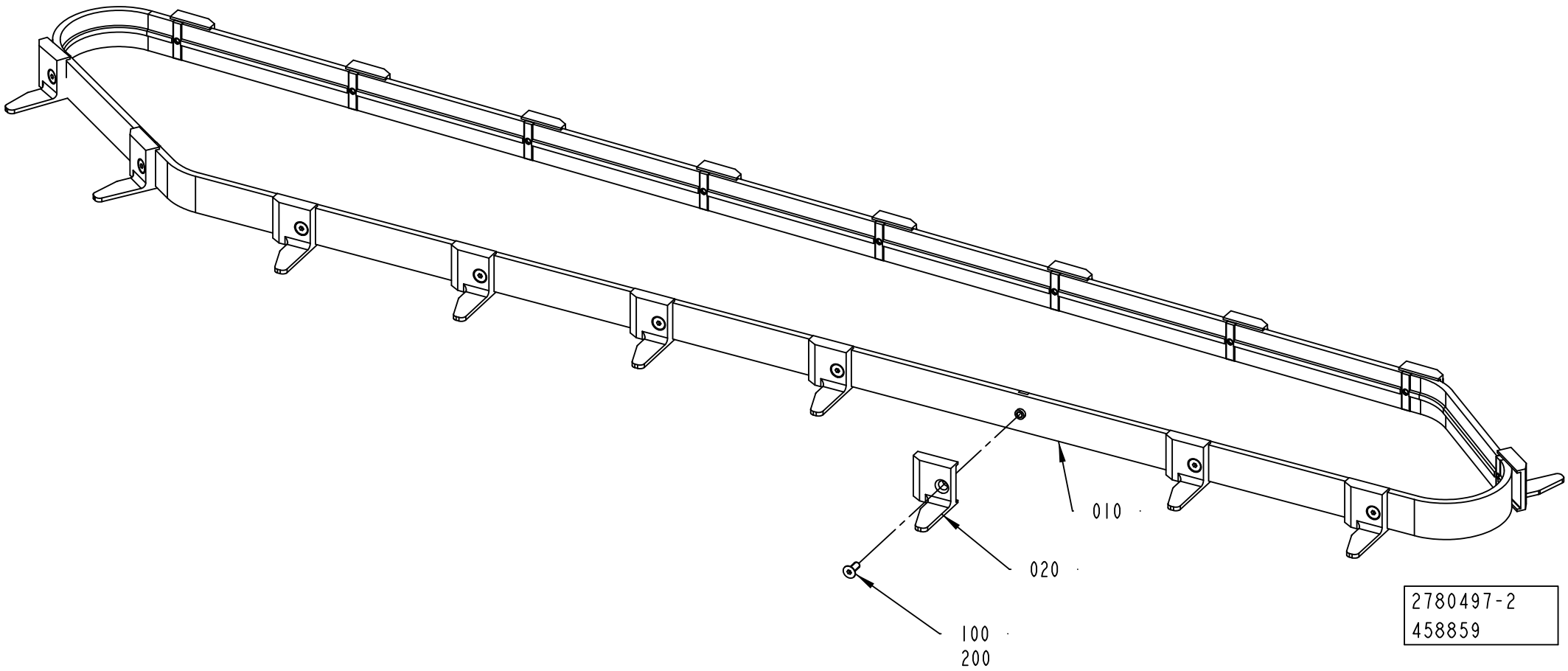
010
020
100
200
2780497-2
458859

ECM: 712688 - 20150401
Group number: 2780497-0100
Assembly Drawing: 2780497-2_1_AC

Pos	Part No	UN	Qty	Description	Page No
CAP 30/FLEX					
010	3117845-0000		1	TIMING BELT	
	90602-9237		*18*	*INSERT NUT, 101/04.04.3*	
	90603-0831		*1*	*TIMING BELT 25ATK10/2160 PU*	
020	2715889-0000		18	FINGER	
100	312155-0289		18	SCREW DIN 7991 MF6S M4X10 A4 70	
Common Parts					
200	344431-0000		1	THREADLOCKER LOCTITE 243, ONLY IN BOM	
	344431-0010		*1*	*THREADLOCKER LOCTITE 243, 10ML*	
	344431-0050		*1*	*THREADLOCKER LOCTITE 243, 50ML*	

Pos	Part No	UN	Qty	Description	Page No

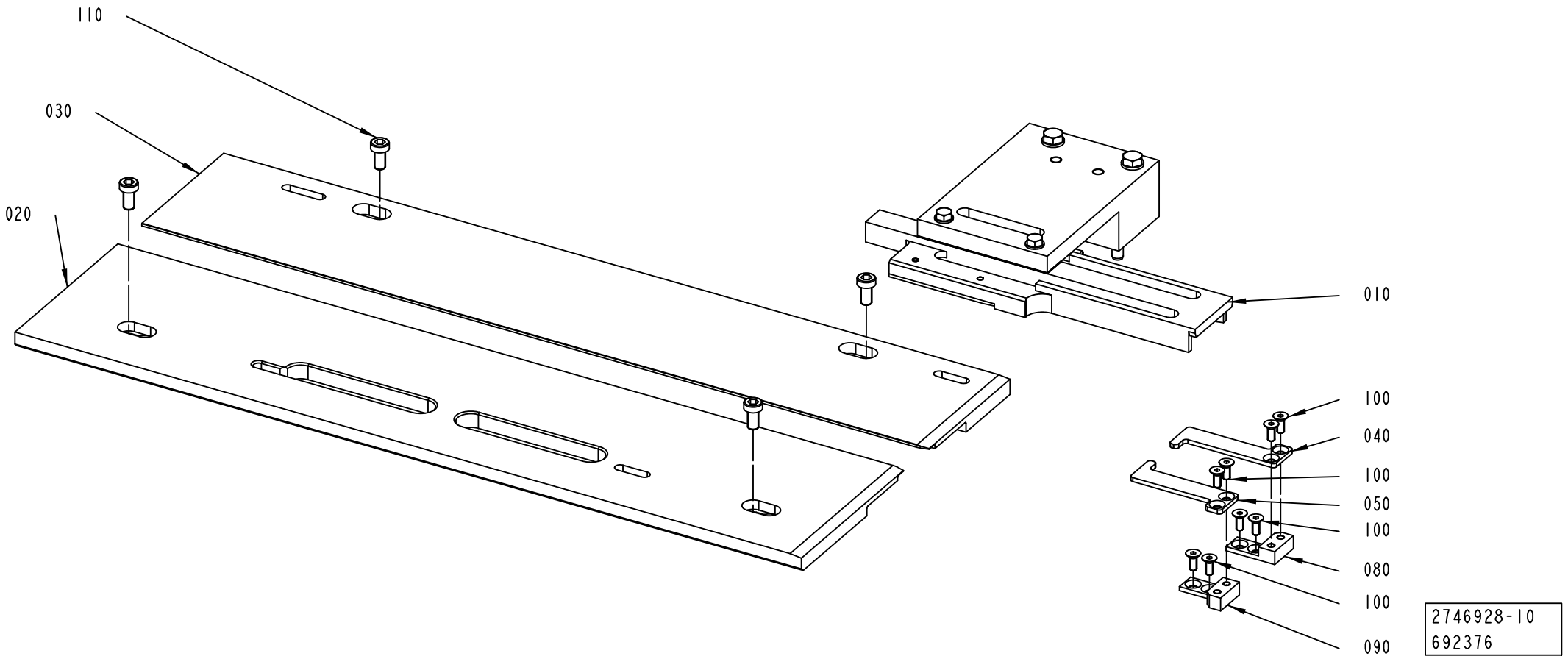
110
030
020
010
100
040
100
050
100
080
100
090
2746928-10
692376

ECM: 699222 - 20150101
Group number: 2746928-0200
Assembly Drawing: 2746928-10_1_AA

Pos	Part No	UN	Qty	Description	Page No
DREAMCAP 26					
020	3137424-0000		1	GUIDE	
030	3137425-0000		1	GUIDE	
040	3363225-0000		1	CLAMPING PART	
050	3347678-0000		1	CLAMPING PART	
080	3348220-0000		1	SPACER	
090	3348219-0000		1	SPACER	
Common Parts					
010	2716069-0200		1	GUIDE RAIL	**7-39**
100	312155-0289		4	SCREW DIN 7991 MF6S M4X10 A4 70	
110	90600-1772		4	SCREW DIN7984 M6X12 AISI 304	

Pos	Part No	UN	Qty	Description	Page No

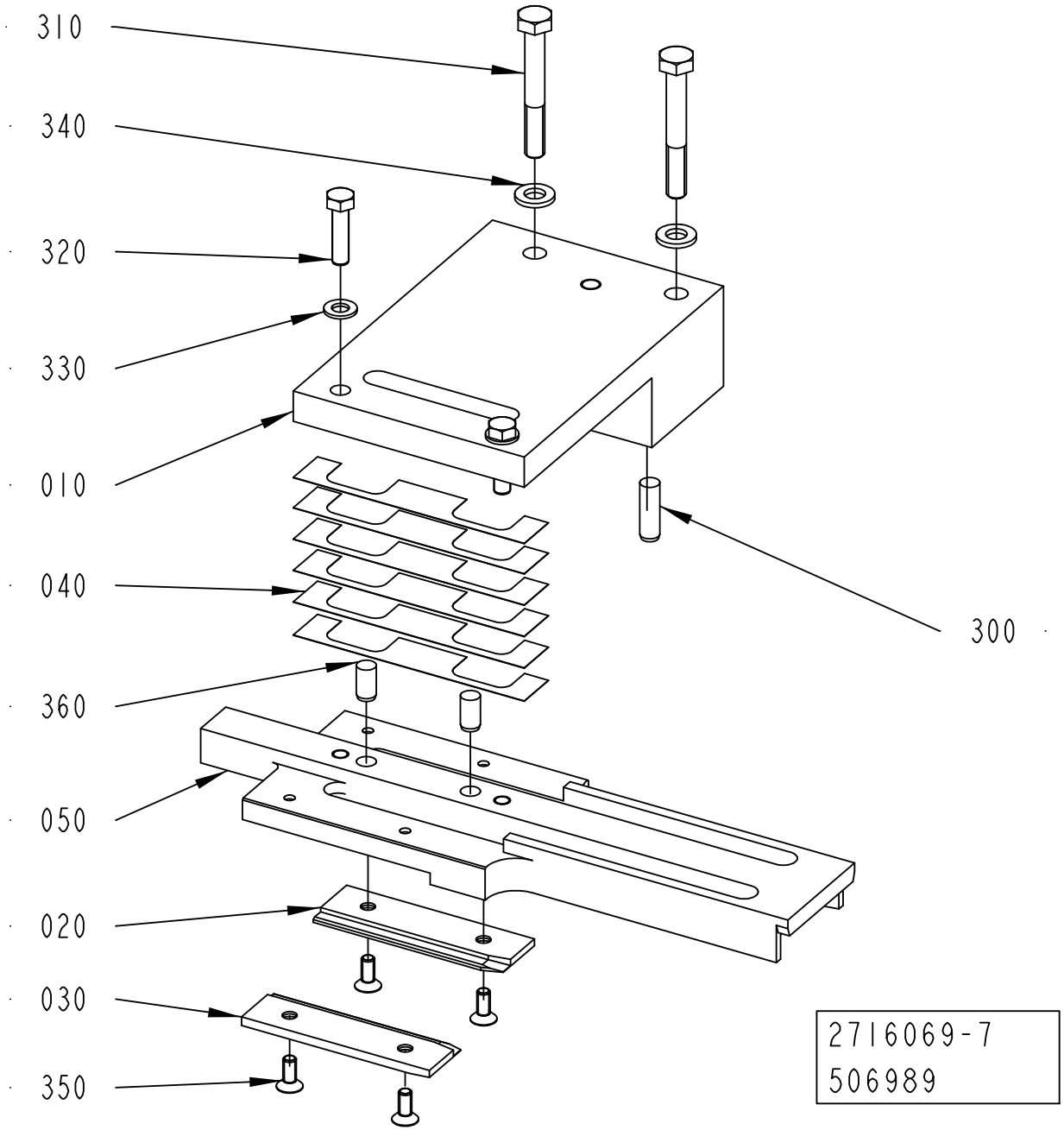
310
340
320
330
010
040
360
050
020
030
350
300
2716069-7
506989

ECM: 527287 - 20120401
Group number: 2716069-0200
Assembly Drawing: 2716069-7_1_AA

Pos	Part No	UN	Qty	Description	Page No
DREAMCAP 26					
010	2902675-0000		1	BRACKET	
020	3034444-0000		1	GUIDE	
030	3034443-0000		1	GUIDE	
040	2751690-0000		6	SHIM	
050	2902676-0000		1	STEERING RAIL	
310	312105-0381		2	SCREW, M6S ISO 4014 M6X55 A4 80	
320	312105-0331		2	SCREW, M6S ISO 4017 M5X20 A4 80	
330	315105-0146		2	WASHER PLAIN, 5,3X10X1 A4 BRB	
340	315105-0153		2	WASHER PLAIN, 6,4X12X1,5 A4 BRB	
360	311103-0349		2	PARALLEL PIN ISO 2338 6M6X12 A1	
Common Parts					
300	311103-0353		2	PARALLEL PIN ISO 2338 6M6X20 A1	
310	312105-0379		2	SCREW, M6S ISO 4014 M6X45 A4 80	
350	312155-0289		4	SCREW DIN 7991 MF6S M4X10 A4 70	

Pos	Part No	UN	Qty	Description	Page No

Tetra Pak®

SPC
Spare Parts Catalogue

CAP CONVEYOR

Drawing file: 662908-4_1_AA.hpgl

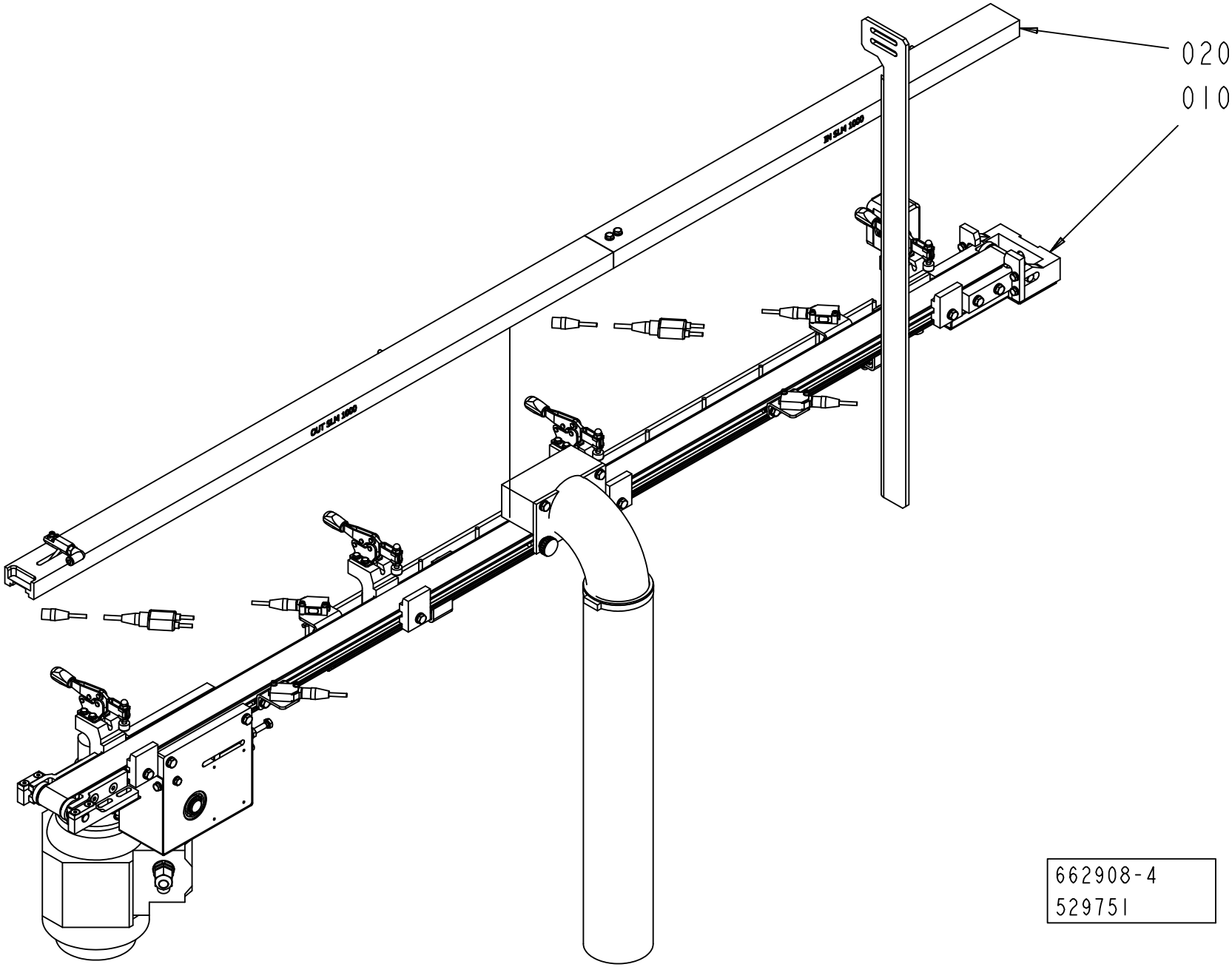

ECM: 714352 - 20150102
Group number: 662908-0300
Assembly Drawing: 662908-4_1_AA

Pos	Part No	UN	Qty	Description	Page No
DREAMCAP 26					
010	2846413-0300		1	CONVEYOR BELT	**8-5, 8-7**
020	3124437-0100		1	GUIDE RAIL	**8-11**

Pos	Part No	UN	Qty	Description	Page No

Machine Type | Group Description | Used-In | Group Number | Page No

CONVEYOR BELT

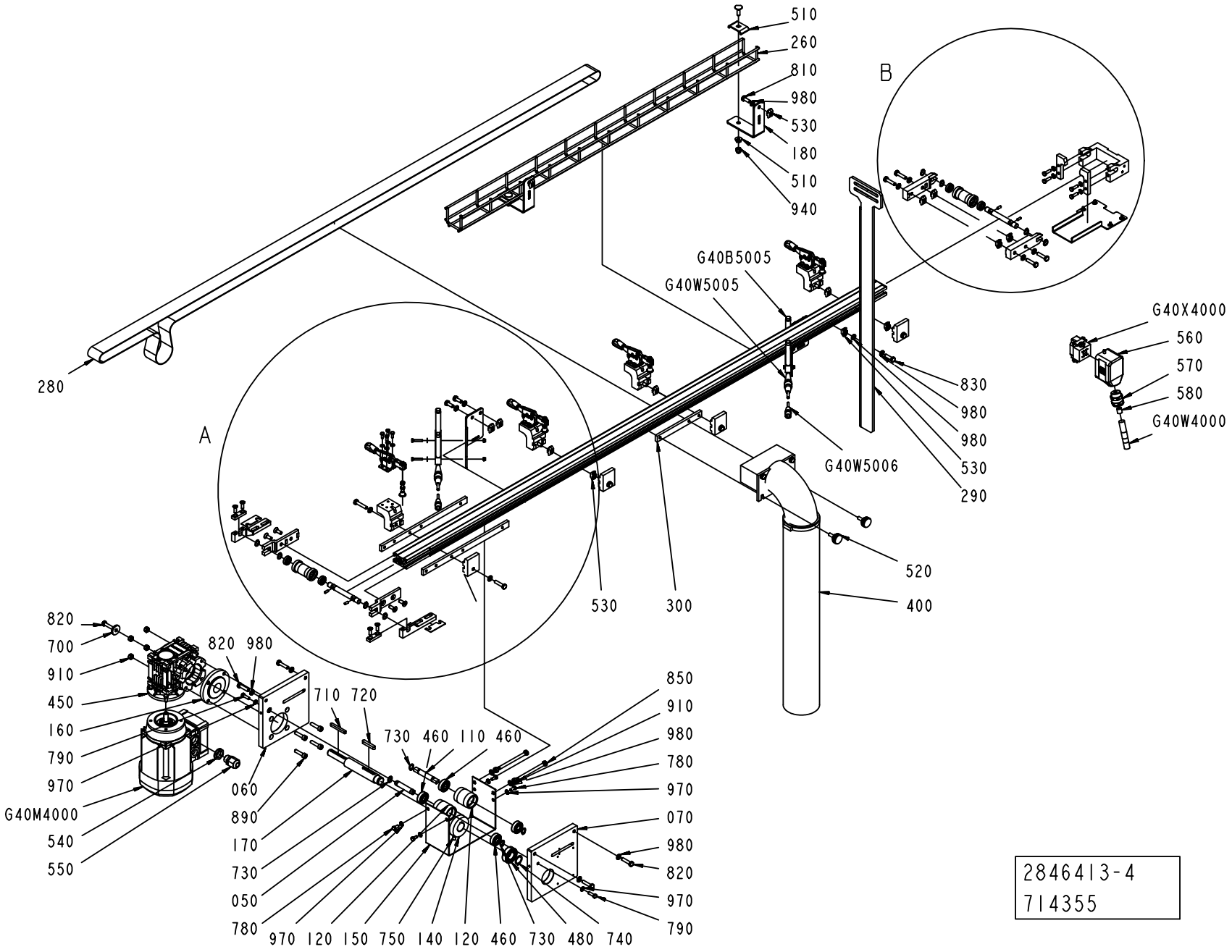

ECM: 714355 - 20150102
Group number: 2846413-0300
Assembly Drawing: 2846413-4_1_AE

This list covers pages from 8-4 to 8-7

Pos	Part No	UN	Qty	Description	Page No
-					
010	3108404-0000		2	SHAFT	
020	3108405-0000		2	ROLLER	
030	3353746-0000		2	BRACKET	
040	3108407-0000		2	BRACKET	
050	3108408-0000		1	SHAFT	
060	3108409-0000		1	PLATE	
070	3108410-0000		1	PLATE	
080	3108411-0000		1	PLATE	
090	3108412-0000		1	PLATE	
100	2885916-0000		2	PLATE	
110	3108414-0000		1	SHAFT	
120	3108415-0000		2	IDLER ROLLER	
130	3108416-0000		2	BRACKET	
140	3108417-0000		1	ROLLER	
150	3108418-0000		1	COVER	
160	3108419-0000		1	FLANGE	
170	3108420-0000		1	SHAFT	
180	3353745-0000		2	CANTILEVER	
190	3108422-0000		2	PLATE	
200	3108423-0000		2	BRACKET	
210	3108424-0000		1	BRACKET	
220	3108425-0000		4	ANCHOR	
230	3108426-0000		4	ANCHOR	
240	3108427-0000		2	PLATE	
250	3108428-0000		1	COVER	
260	3108429-0000		1	CABLE CONDUIT	
270	3108430-0000		1	PROFILE	
280	90605-4064		1	FLAT BELT 3223X35	
290	3108431-0000		1	BRACKET	
300	3108432-0000		1	BRACKET	
400	3108433-0100		1	DISCHARGE DEVICE	**8-9**
450	90603-2978		1	WORM GEAR W20035003800003	
460	344224-0200		4	BALL BEARING 10/26X8	
470	90603-2322		4	BALL BEARING 10/19X5	
480	344224-0203		1	BALL BEARING 17/35X10	
490	3108434-0000		4	LOCKING LEVER	
500	3124539-0000		4	STOP SCREW	
510	3108436-0000		2	CLAMP	
520	3108437-0000		2	HANDLE	
530	90013-0035		16	NUT GROOVE, HAMMER-HEAD M6 FE	
540	90458-0322		1	NUT, M16X1,5	
550	90458-0306		1	CABLE GLAND, M16X1,5, 5311 1010	
560	90459-1458		1	HOOD, SIDE ENTRY, HAN6E, 19 30 006 1540	
570	90458-0406		1	CABLE GLAND, VK 22052Y	
580	353249-0004		1	INSERT, SINGLE HOLE, E152 13	
590	90600-2375		1	LENS, E39-S65C	
700	315125-0153		1	WASHER HIGH, TBRSB 6,4X22X4 A4	
710	315701-0209		1	PARALLEL KEY W. ROUND ENDS, 5X5X45 MM	
720	315701-0238		1	PARALLEL KEY W. ROUND ENDS, 6X6X36 MM	
730	90141-0016		12	RETAINING RING FOR SHAFT DIN 471 10 SS	
740	90141-0017		1	RETAINING RING FOR SHAFT DIN 471 17 SS	
750	90459-5152		1	SCREW HEX.SOCK.SET CONEPT. MS6SS M6X10 A	
760	312318-0289		4	SET SCREW, CUP END ISO4029 M4X10 A4	
770	312105-0289		16	SCREW, M6S ISO 4017 M4X10 A4 70	
780	312105-0325		4	SCREW, M6S ISO 4017 M5X10 A4 80	
790	312105-0329		6	SCREW, M6S ISO 4017 M5X16 A4 80	
810	312105-0368		6	"SCREW, M6S ISO 4017 M6X16 A4 80"	
820	312105-0372		12	SCREW, M6S ISO 4017 M6X25 A4 80	
830	312105-0370		1	SCREW, M6S ISO 4017 M6X20 A4 80	
840	312109-0374		4	SCREW, M6S ISO 4017 M6X30 A4 80	
850	312109-0386		2	SCREW, M6S ISO 4017 M6X80 A4 80	
860	312155-0329		4	SCREW DIN 7991 MF6S M5X16 A4 70	
870	312155-0368		4	SCREW DIN 7991 MF6S M6X16 A4 70	
890	312115-0372		4	SCREW ISO4762 M6X25 A4 80	
910	312605-0316		6	HEXAGON NUT, M6M M6 A280	
920	312810-0310		8	HEXAGON NUT, NY-LOCK M3 FZB	
930	312705-0314		4	NUT HEX. DOMED CAP MHM-6 M5 A280	
940	312705-0316		2	HEX. DOMED CAP MHM-6 M6 A280	
950	315103-0124		8	WASHER PLAIN, 3,2X/6X0,5 BR NI PL	
960	315103-0136		20	WASHER PLAIN, 4,3X8X0,8 BR NI PL	
970	315103-0146		10	WASHER PLAIN, 5,3X10X1 BR NI PL	
980	315103-0153		26	WASHER PLAIN, 6,4X12X1,5 BR NI PL	
990	312105-0287		4	SCREW, M6S ISO 4017 M4X8 A4 70	
1000	312810-0312		4	HEXAGON NUT, NY-LOCK M4 FZB	
G40B5001	90606-2469		1	FORK SENSOR, WFM80-60P321	
G40B5005	90606-2469		1	FORK SENSOR, WFM80-60P321	
G40M4000	90603-2676		1	MOTOR 3GAA052002-CSA	
G40W4000	315743-0009	M	2.5	OLFLEX CONTROL TM 4G1,5, 281604	
G40W5001	344264-0006		1	SENSOR CABLE, EVT243	
G40W5002	344261-0020		1	SENSOR CABLE, EVT263	
G40W5005	344264-0006		1	SENSOR CABLE, EVT243	
G40W5006	344261-0010		1	SENSOR CABLE, EVT262	
G40X4000	90110-0052		1	MALE INSERT, HAN E06, 0933 0062 601	

Machine Type | Group Description | Used-In | Group Number | Page No

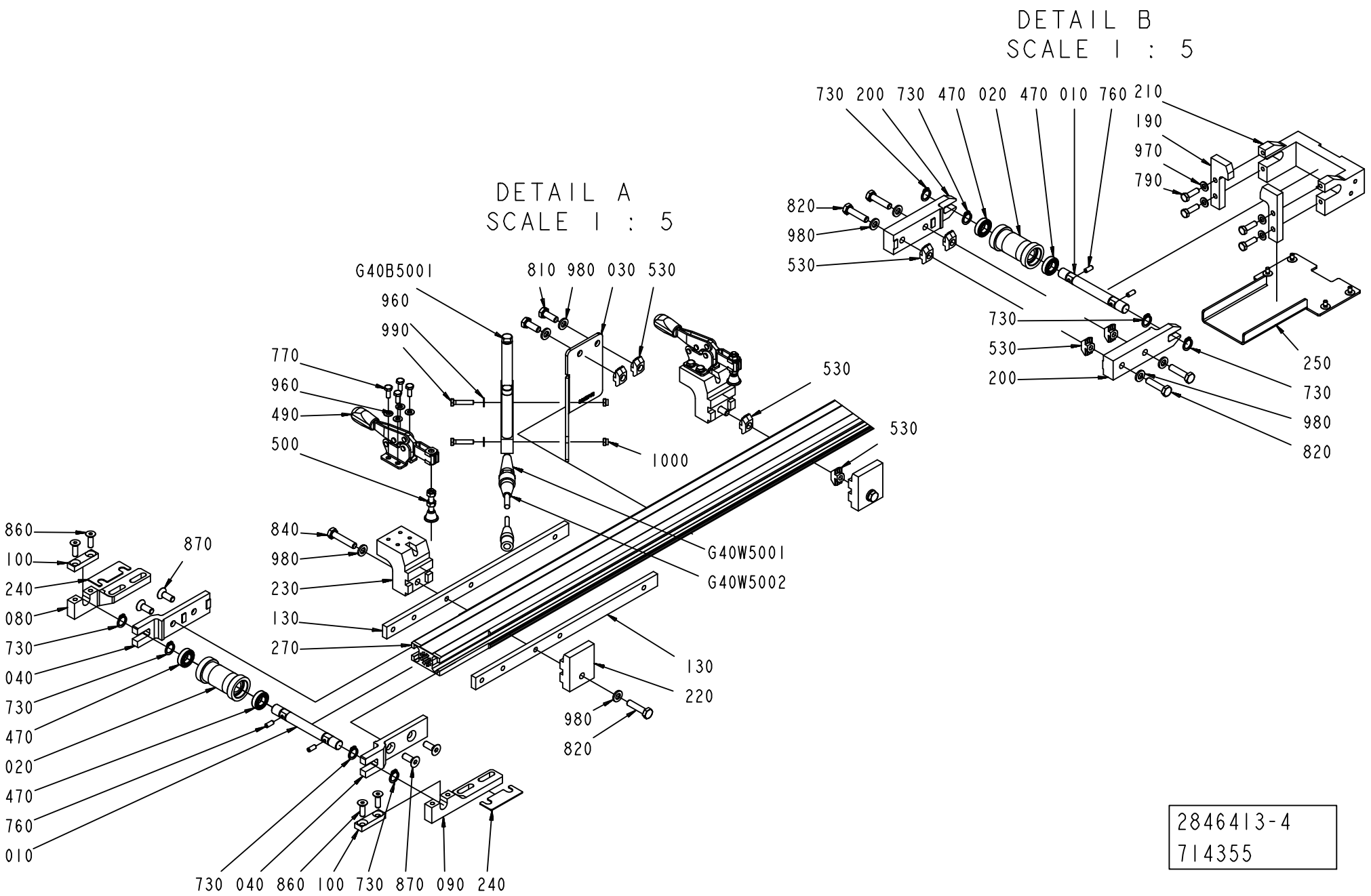

2846413-4
714355

ECM: 714355 - 20150102
Group number: 2846413-0300
Assembly Drawing: 2846413-4_2_AE

This list covers pages from 8-4 to 8-7

Pos	Part No	UN	Qty	Description	Page No
-					
010	3108404-0000		2	SHAFT	
020	3108405-0000		2	ROLLER	
030	3353746-0000		2	BRACKET	
040	3108407-0000		2	BRACKET	
050	3108408-0000		1	SHAFT	
060	3108409-0000		1	PLATE	
070	3108410-0000		1	PLATE	
080	3108411-0000		1	PLATE	
090	3108412-0000		1	PLATE	
100	2885916-0000		2	PLATE	
110	3108414-0000		1	SHAFT	
120	3108415-0000		2	IDLER ROLLER	
130	3108416-0000		2	BRACKET	
140	3108417-0000		1	ROLLER	
150	3108418-0000		1	COVER	
160	3108419-0000		1	FLANGE	
170	3108420-0000		1	SHAFT	
180	3353745-0000		2	CANTILEVER	
190	3108422-0000		2	PLATE	
200	3108423-0000		2	BRACKET	
210	3108424-0000		1	BRACKET	
220	3108425-0000		4	ANCHOR	
230	3108426-0000		4	ANCHOR	
240	3108427-0000		2	PLATE	
250	3108428-0000		1	COVER	
260	3108429-0000		1	CABLE CONDUIT	
270	3108430-0000		1	PROFILE	
280	90605-4064		1	FLAT BELT 3223X35	
290	3108431-0000		1	BRACKET	
300	3108432-0000		1	BRACKET	
400	3108433-0100		1	DISCHARGE DEVICE	8-9
450	90603-2978		1	WORM GEAR W20035003800003	
460	344224-0200		4	BALL BEARING 10/26X8	
470	90603-2322		4	BALL BEARING 10/19X5	
480	344224-0203		1	BALL BEARING 17/35X10	
490	3108434-0000		4	LOCKING LEVER	
500	3124539-0000		4	STOP SCREW	
510	3108436-0000		2	CLAMP	
520	3108437-0000		2	HANDLE	
530	90013-0035		16	NUT GROOVE, HAMMER-HEAD M6 FE	
540	90458-0322		1	NUT, M16X1,5	
550	90458-0306		1	CABLE GLAND, M16X1,5, 5311 1010	
560	90459-1458		1	HOOD, SIDE ENTRY, HAN6E, 19 30 006 1540	
570	90458-0406		1	CABLE GLAND, VK 22052Y	
580	353249-0004		1	INSERT, SINGLE HOLE, E152 13	
590	90600-2375		1	LENS, E39-S65C	
700	315125-0153		1	WASHER HIGH, TBRSB 6,4X22X4 A4	
710	315701-0209		1	PARALLEL KEY W. ROUND ENDS, 5X5X45 MM	
720	315701-0238		1	PARALLEL KEY W. ROUND ENDS, 6X6X36 MM	
730	90141-0016		12	RETAINING RING FOR SHAFT DIN 471 10 SS	
740	90141-0017		1	RETAINING RING FOR SHAFT DIN 471 17 SS	
750	90459-5152		1	SCREW HEX.SOCK.SET CONEPT. MS6SS M6X10 A	
760	312318-0289		4	SET SCREW, CUP END ISO4029 M4X10 A4	
770	312105-0289		16	SCREW, M6S ISO 4017 M4X10 A4 70	
780	312105-0325		4	SCREW, M6S ISO 4017 M5X10 A4 80	
790	312105-0329		6	SCREW, M6S ISO 4017 M5X16 A4 80	
810	312105-0368		6	"SCREW, M6S ISO 4017 M6X16 A4 80"	
820	312105-0372		12	SCREW, M6S ISO 4017 M6X25 A4 80	
830	312105-0370		1	SCREW, M6S ISO 4017 M6X20 A4 80	
840	312109-0374		4	SCREW, M6S ISO 4017 M6X30 A4 80	
850	312109-0386		2	SCREW, M6S ISO 4017 M6X80 A4 80	
860	312155-0329		4	SCREW DIN 7991 MF6S M5X16 A4 70	
870	312155-0368		4	SCREW DIN 7991 MF6S M6X16 A4 70	
890	312115-0372		4	SCREW ISO4762 M6X25 A4 80	
910	312605-0316		6	HEXAGON NUT, M6M M6 A280	
920	312810-0310		8	HEXAGON NUT, NY-LOCK M3 FZB	
930	312705-0314		4	NUT HEX. DOMED CAP MHM-6 M5 A280	
940	312705-0316		2	HEX. DOMED CAP MHM-6 M6 A280	
950	315103-0124		8	WASHER PLAIN, 3,2X/6X0,5 BR NI PL	
960	315103-0136		20	WASHER PLAIN, 4,3X8X0,8 BR NI PL	
970	315103-0146		10	WASHER PLAIN, 5,3X10X1 BR NI PL	
980	315103-0153		26	WASHER PLAIN, 6,4X12X1,5 BR NI PL	
990	312105-0287		4	SCREW, M6S ISO 4017 M4X8 A4 70	
1000	312810-0312		4	HEXAGON NUT, NY-LOCK M4 FZB	
G40B5001	90606-2469		1	FORK SENSOR, WFM80-60P321	
G40B5005	90606-2469		1	FORK SENSOR, WFM80-60P321	
G40M4000	90603-2676		1	MOTOR 3GAA052002-CSA	
G40W4000	315743-0009	M	2.5	OLFLEX CONTROL TM 4G1,5, 281604	
G40W5001	344264-0006		1	SENSOR CABLE, EVT243	
G40W5002	344261-0020		1	SENSOR CABLE, EVT263	
G40W5005	344264-0006		1	SENSOR CABLE, EVT243	
G40W5006	344261-0010		1	SENSOR CABLE, EVT262	
G40X4000	90110-0052		1	MALE INSERT, HAN E06, 0933 0062 601	

Machine Type | Group Description | Used-In | Group Number | Page No

DISCHARGE DEVICE

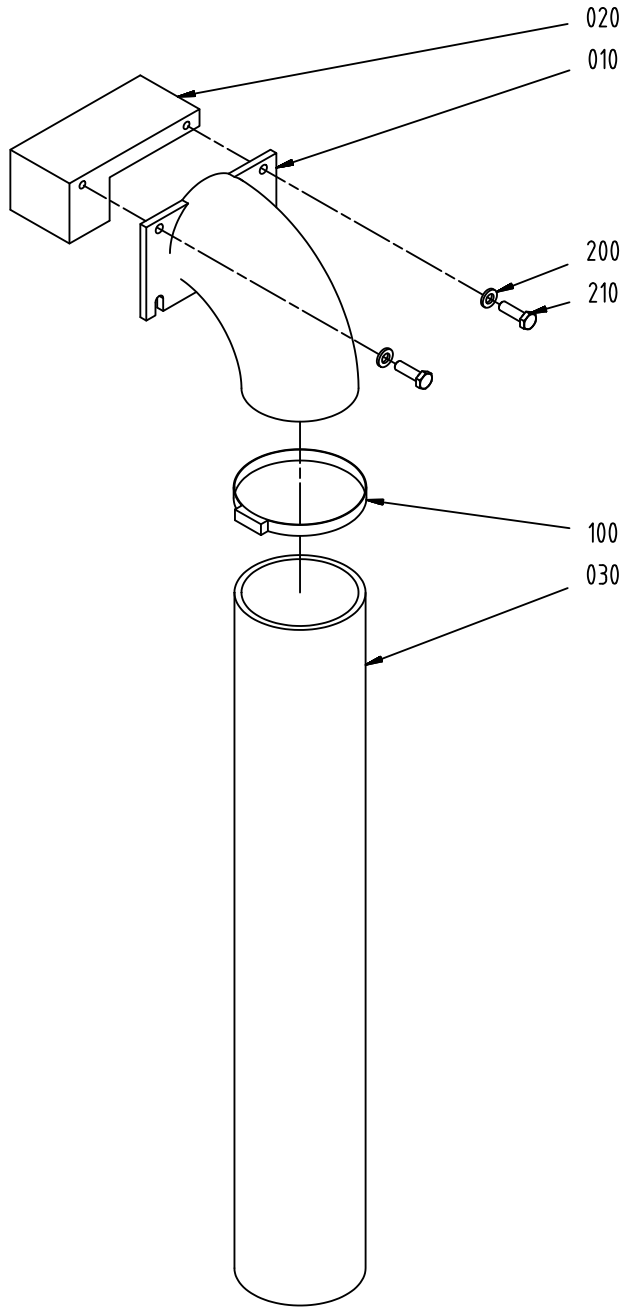

ECM: 482216 - 20110401
Group number: 3108433-0100
Assembly Drawing: 3108433-1_1_AA

Pos	Part No	UN	Qty	Description	Page No
-					
010	3108438-0000		1	CURVE	
020	3108439-0000		1	SUPPORT	
030	3108440-0000		1	TUBE	
100	3108441-0000		1	TIE	
200	315103-0153		2	WASHER PLAIN, 6,4X12X1,5 BR NI PL	
210	312105-0370		2	SCREW, M6S ISO 4017 M6X20 A4 80	

Pos	Part No	UN	Qty	Description	Page No

GUIDE RAIL

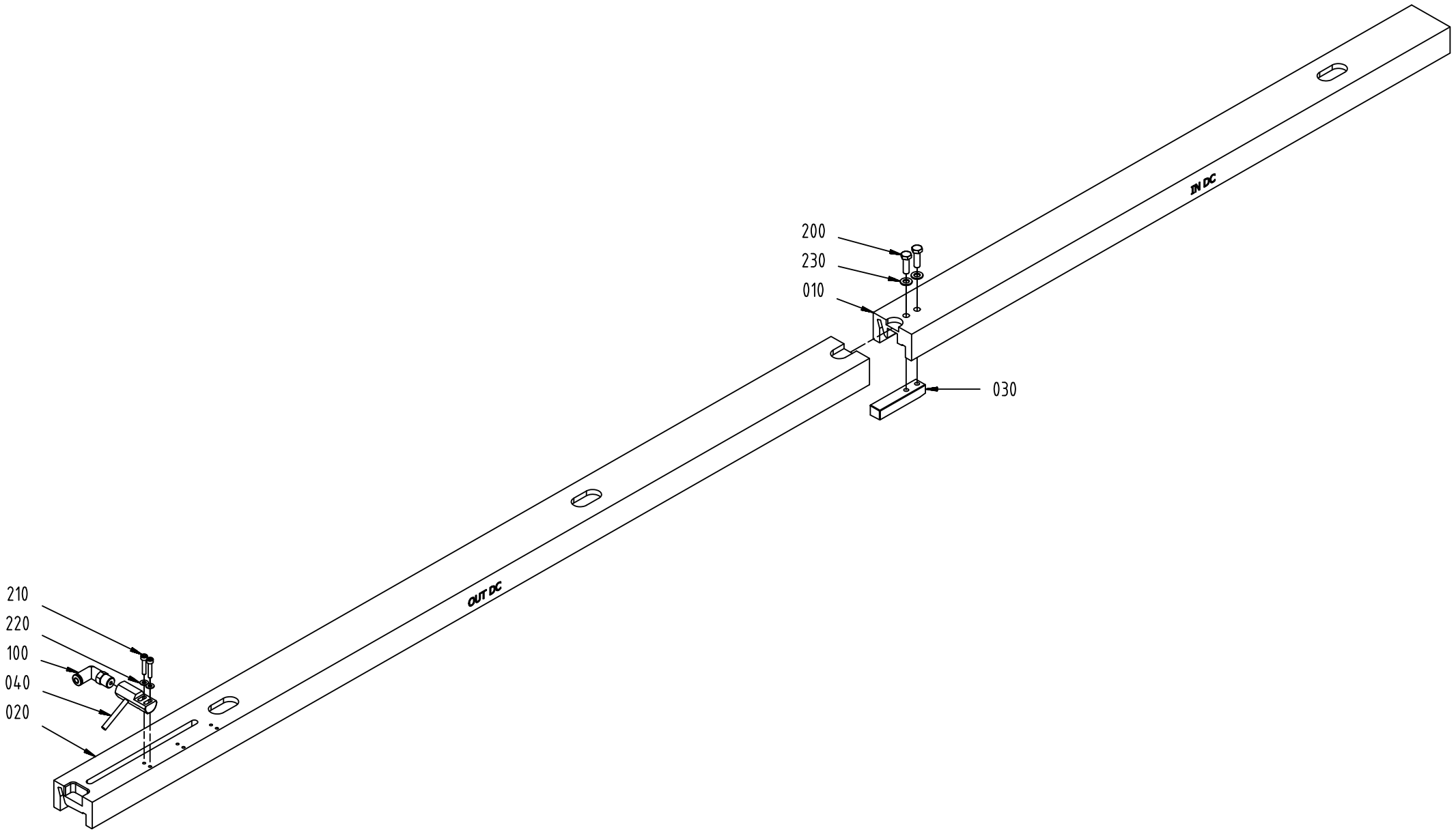

ECM: 483769 - 20110401
Group number: 3124437-0100
Assembly Drawing: 3124437-1_1_AA

Pos	Part No	UN	Qty	Description	Page No
-					
010	3124438-0000		1	COVER	
020	3124439-0000		1	COVER	
030	3124440-0000		1	FLAP	
040	3124441-0000		1	AIR NOZZLE	
100	3124379-0000		1	FITTING	
200	312105-0329		2	SCREW, M6S ISO 4017 M5X16 A4 80	
210	312115-0228		2	SCREW ISO4762 M3X16 A4 80	
220	315103-0124		2	WASHER PLAIN, 3,2X/6X0,5 BR NI PL	
230	315103-0146		2	WASHER PLAIN, 5,3X10X1 BR NI PL	

Pos	Part No	UN	Qty	Description	Page No

Tetra Pak®

SPC
Spare Parts Catalogue

ELECTRICAL CABINET

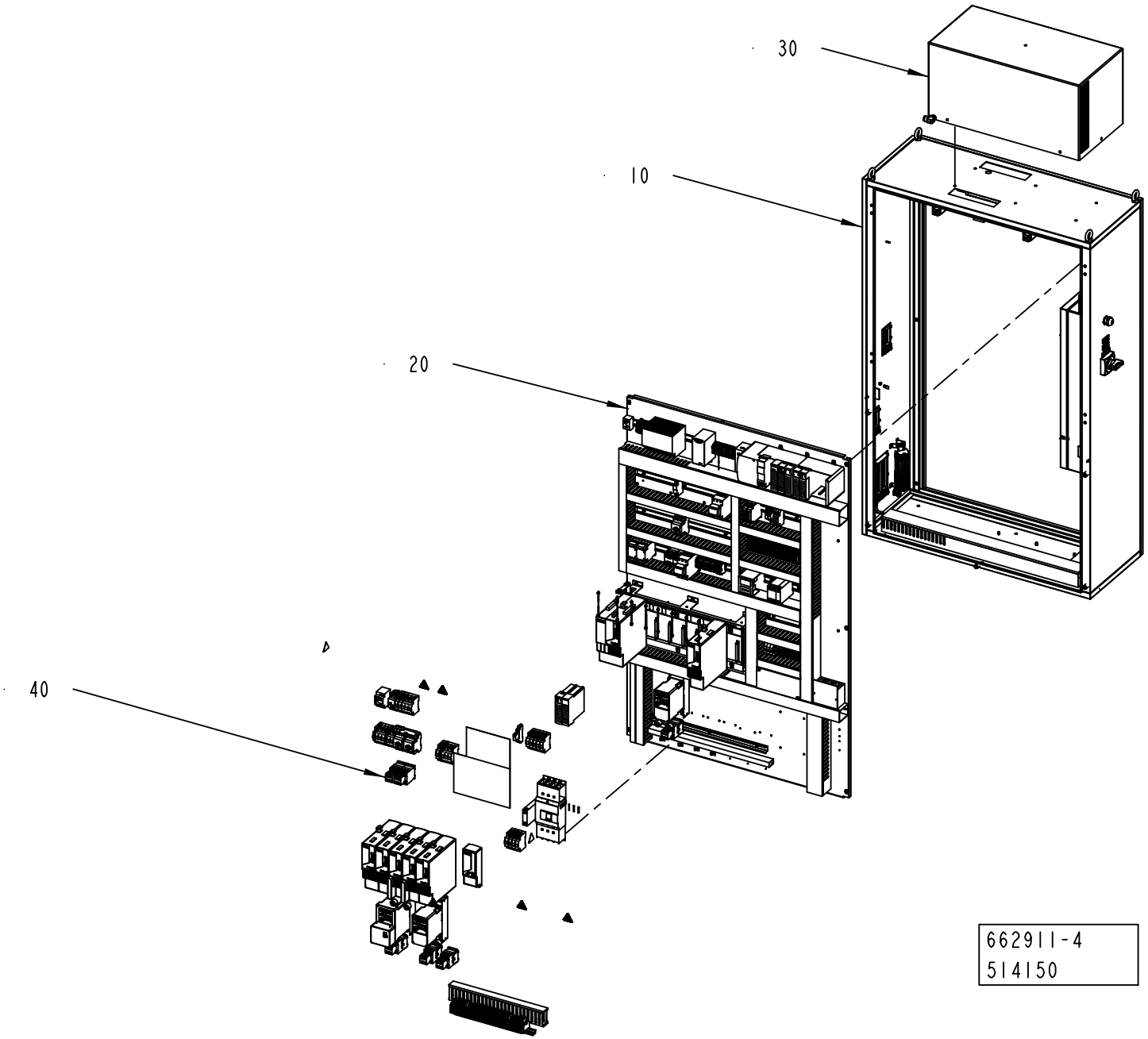

ECM: 520270 - 20120401
Group number: 662911-0300
Assembly Drawing: 662911-4_1_AA

Pos	Part No	UN	Qty	Description	Page No
CE					
030	2833408-0200		1	COOLING UNIT	**9-5**
040	2841404-0300		1	ELECTRICAL CONVERSION	**9-7, 9-9**
UL, CSA					
030	3199707-0100		1	COOLING UNIT	**9-19**
040	3190285-0100		1	ELECTRICAL CONVERSION	**9-21, 9-23**
Common Parts					
010	2833406-0300		1	CABINET	**9-25**
020	2833407-0300		1	CONTROL BOARD	**9-31**
050	2833409-0200		1	CABLE SET	**9-79**

Pos	Part No	UN	Qty	Description	Page No

COOLING UNIT

Drawing file: 2833408-2_1_AA.hpgl

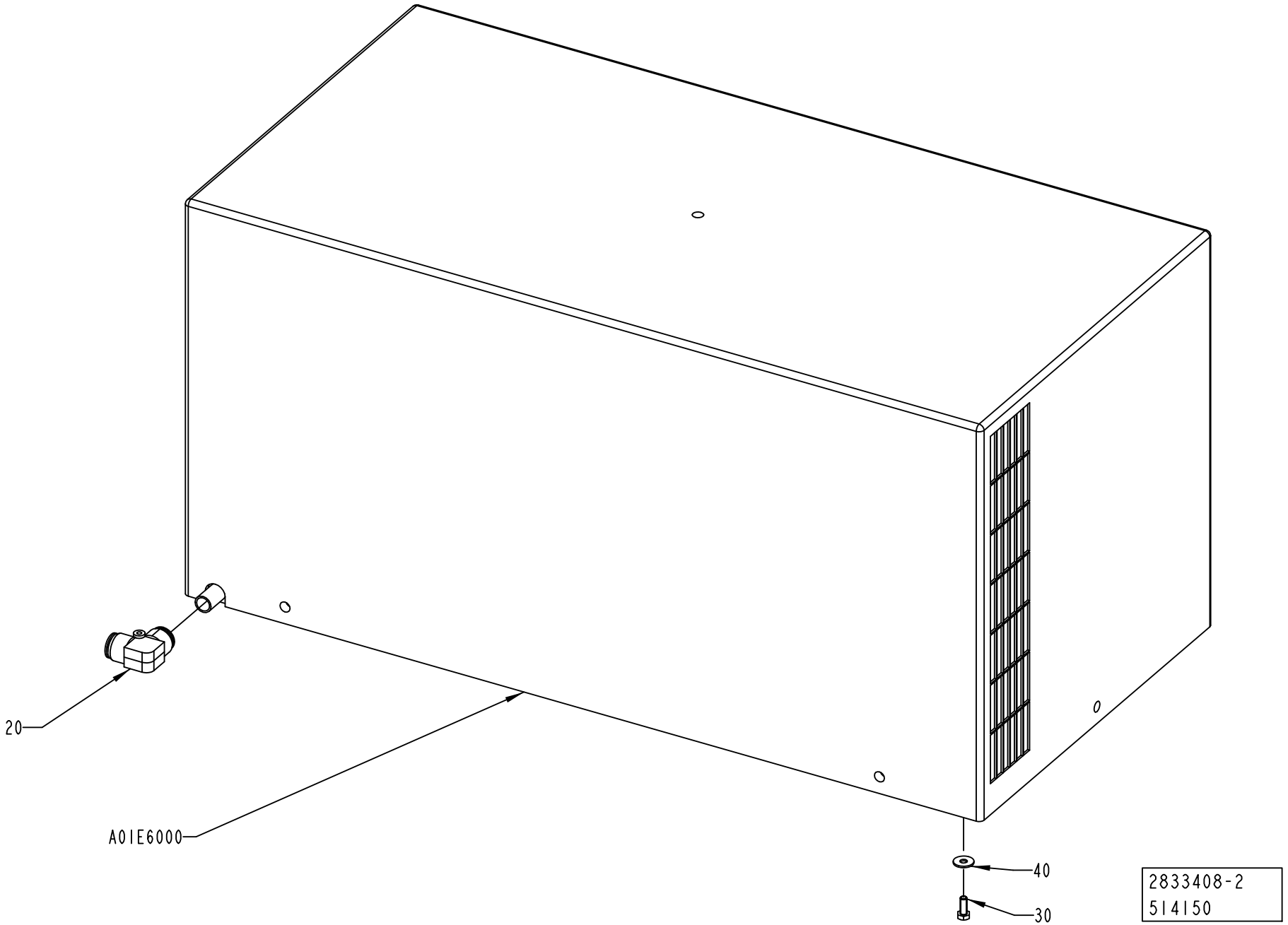

ECM: 521628 - 20120401
Group number: 2833408-0200
Assembly Drawing: 2833408-2_1_AA

Pos	Part No	UN	Qty	Description	Page No
-					
020	90459-2553		1	PUSH-IN L-FITTING QSL 16	
030	312105-0368		6	"SCREW, M6S ISO 4017 M6X16 A4 80"	
040	90005-0060		6	WASHER PLAIN, RBS 6,4/M6)/18,H=1,5	
A01E6000	90459-0813		1	COOLING UNIT, KB20A619.01	
	90603-1068		*1*	*THERMOSTAT, PRODIGY TR/86 D2077.1*	
	90600-2822		*1*	*THERMOSTAT, TMI0000216*	
	90600-0676		*1*	*GRID, DISA1880AA*	
	90600-0675		*1*	*GASKET, A6411AA*	
	90600-0672		*2*	*FAN, VBA0001499 , 50HZ_3UF , 60HZ_2UF*	
	90459-0364		*1*	*FILTER KB20/30/40 POLYURETH. FILTER 2001*	

Pos	Part No	UN	Qty	Description	Page No

Machine Type | Group Description | Used-In | Group Number | Page No

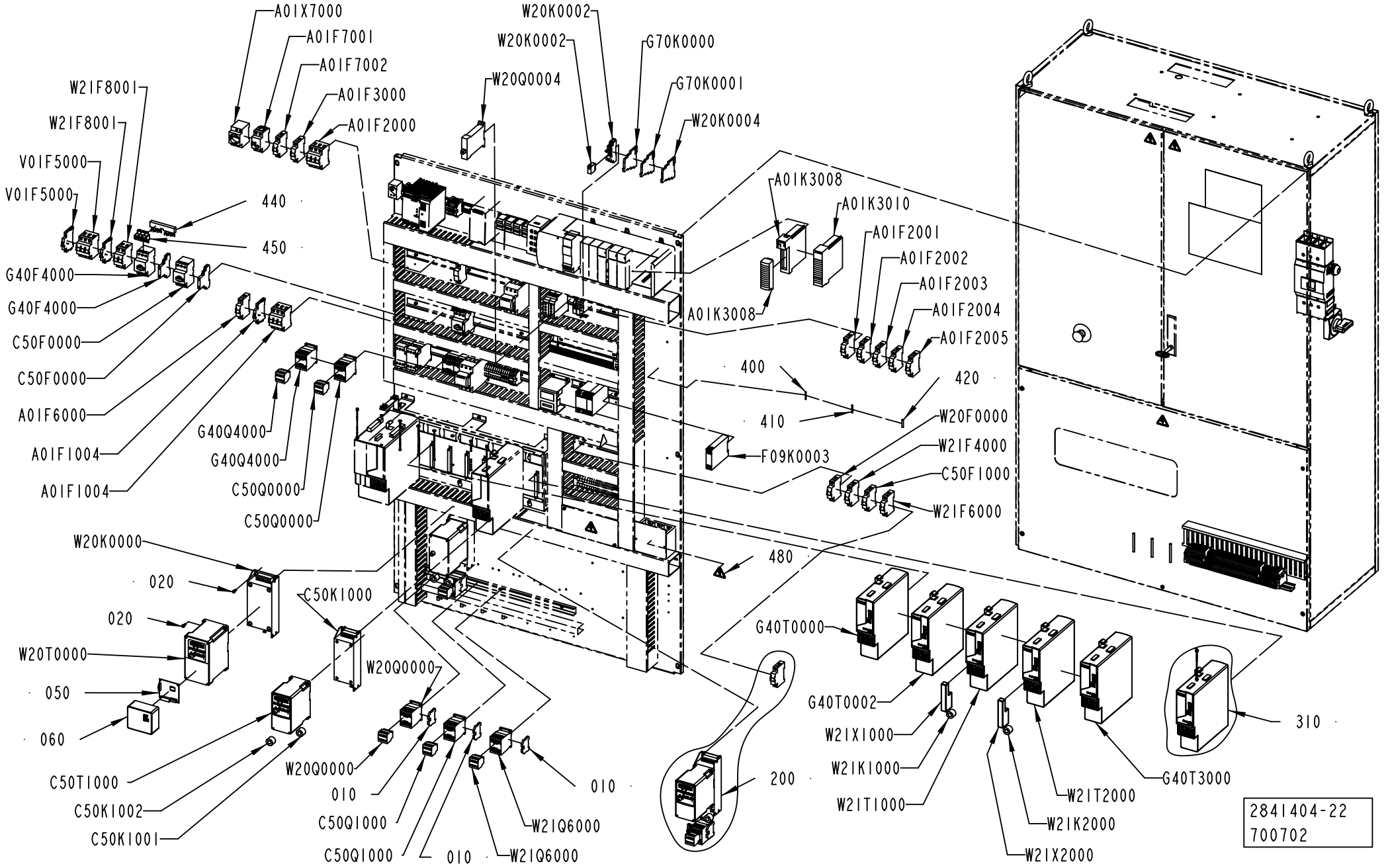
A01X7000
A01F7001
A01F7002
A01F3000
A01F2000
W20K0002
W20K0002
G70K0000
W20Q0004
G70K0001
W20K0004
W21F8001
W21F8001
V01F5000
V01F5000
440
450
G40F4000
G40F4000
C50F0000
C50F0000
A01F6000
A01F1004
A01F1004
G40Q4000
G40Q4000
C50Q0000
C50Q0000
A01K3008
A01K3010
A01F2001
A01F2002
A01F2003
A01F2004
A01F2005
A01K3008
400
420
410
W20F0000
W21F4000
C50F1000
W21F6000
F09K0003
480
W20K0000
020
020
C50K1000
W20T0000
050
060
C50T1000
C50K1002
C50K1001
W20Q0000
W20Q0000
010
C50Q1000
C50Q1000
010
W21Q6000
010
W21Q6000
200
G40T0000
G40T0002
W21X1000
W21K1000
W21T1000
W21T2000
W21K2000
W21X2000
G40T3000
310
2841404-22
700702

ECM: 701199 - 20150101
Group number: 2841404-0300
Assembly Drawing: 2841404-22_1_AD

This list covers pages from 9-6 to 9-9

Pos	Part No	UN	Qty	Description	Page No
CAP30/FLEX TPA DREAMCAP 26 (See drawing on pages: 9-6, 9-8)					
010	353024-0205		3	EARTH TERMINAL WPE 4	
020	312115-0327		16	SCREW ISO4762 M5X12 A4 80	
110	3199131-0000		1	FUSE PANEL LABEL	
200	2895147-0200		1	PACKAGE ALIGNER	**9-11, 9-13**
310	3117856-0200		1	AXIS Z HOTMELT GUN	**9-15**
400	351160-0102	M	458	ECAB01011-6L, WIRE AWM 1X0,75 MM2 DARKBL	
410	351164-0105	M	65	WIRE AWM 1X2,5 MM2 BLACK	
420	351164-0107	M	39	WIRE AWM 1X6 MM2 BLACK	
440	90259-0315		1	CIRCUIT BREAKER , B3.1/2-PKZ0	
450	90600-1461		1	INCOMING TERMINAL, BK25/3-PKZ0-E	
A01K3008	90600-4033		1	DIGITAL OUTPUT MODULE, 1756-OB16IS	
A01K3008	90459-2488		1	REMOVABLE TERMINAL BLOCK 36 POINTS	
A01K3010	90459-2480		1	8-AXIS SERCOS MOTION MODULE	
A01W3025	351423-0006	M	3.4	CABLE UNITRONIC LICY 5X0,34	
A01W3026	351423-0006	M	3	CABLE UNITRONIC LICY 5X0,34	
A01W3027	351423-0006	M	3	CABLE UNITRONIC LICY 5X0,34	
C50F0000	90259-0313		1	AUXILIARY SWITCH, NHI21-PKZ0	
C50F0000	90459-5323		1	OVERLOAD PROTECTION, PKZM0-1	
C50F1000	354000-0060		1	MINIATURE CIRCUIT BREAKER, FAZ-C6/1	
C50K1000	90459-3460		1	FOOTPRINT FILTER 1 PHASE 10A	
C50K1001	90600-5249		1	FERRITE, B64290L616X38	
C50K1002	90600-5249		1	FERRITE, B64290L616X38	
C50Q0000	90459-6852		1	AUXILIARY CONTACT, DILA-XHI22	
C50Q0000	90459-5308		1	CONTACTOR 4KW 24VDC, DILM9-10	
C50Q1000	90459-6852		1	AUXILIARY CONTACT, DILA-XHI22	
C50Q1000	90459-5308		1	CONTACTOR 4KW 24VDC, DILM9-10	
C50T1000	90459-3449		1	FREQ. CONV., 22A-A2P3N104	
F09K0003	90459-2291		1	SAFETY RELAY, E1T	
G40F4000	90259-0313		1	AUXILIARY SWITCH, NHI21-PKZ0	
G40F4000	90459-5321		1	OVERLOAD PROTECTION, PKZM0-0,4	
G70K0000	90601-6652		1	OPTOCOUPLER, PLC-OSC-24DC/24DC/2	
G70K0001	90601-6652		1	OPTOCOUPLER, PLC-OSC-24DC/24DC/2	
G40Q4000	90459-5308		1	CONTACTOR 4KW 24VDC, DILM9-10	
G40Q4000	90459-6852		1	AUXILIARY CONTACT, DILA-XHI22	
G40T0000	90606-2005		1	AXIS MOD. KINETIX 6000,2094-BM02-S SER C	
G40T0002	90606-2005		1	AXIS MOD. KINETIX 6000,2094-BM02-S SER C	
G40T3000	90606-2004		1	AXIS MOD. KINETIX 6000,2094-BM01-S SER.C	
W20F0000	354000-0060		1	MINIATURE CIRCUIT BREAKER, FAZ-C6/1	
W20K0000	90459-3454		1	FOOTPRINT FILTER 1 PHASE 18A	
W20K0002	90119-0108		1	RELAY OMRON G2R-2-SNI-24DC	
	90129-0018		*1*	*BASE, P2RF-08-E*	
W20K0002	90129-0018		1	BASE, P2RF-08-E	
W20K0004	90601-6650		1	RELAY, PLC-RSC-24DC/21	
W21K1000	90600-5249		1	FERRITE, B64290L616X38	
W21K2000	90600-5249		1	FERRITE, B64290L616X38	
W20Q0000	90459-5308		1	CONTACTOR 4KW 24VDC, DILM9-10	
W20Q0000	90459-6852		1	AUXILIARY CONTACT, DILA-XHI22	
W20Q0004	90600-0943		1	SOLID STATE RELAY, 3RF2320-1AA04	
W20T0000	90459-3441		1	FREQ. CONV., 22B-A2P3N104	
W21X1000	90459-2550		1	I/O CONNECTOR 26 PIN MALE, 2090-K6CK-D26	
W21X2000	90459-2550		1	I/O CONNECTOR 26 PIN MALE, 2090-K6CK-D26	
Common Parts					
040	2890590-0000		1	CABLE DUCT	
050	90459-2614		1	DEVICENET ADAPTER POWERFLEX 40 22-COMM-D	
060	90459-2795		1	FRONT LID FOR POWERFLEX 40, 22B-CCB	
460	90600-5823		1	SIGN, MAIN POWER MACHINE LABEL	
470	90459-6617		2	COVER 4-POLE, NZM1-4-XKSA	
480	359705-0015		7	WARNING SIGN ISO, RISK OF ELECTRIC SHOCK	
490	90600-2068		1	DELIVERED DESIGN SIGN, 90600-2068	
A01F1004	90459-5813		1	AUXILIARY CONTACT, FAZ-XHIN11	
A01F1004	354002-0250		1	MINIATURE CIRCUIT BREAKER, FAZ-C25/3	
A01F2000	354002-0060		1	MINIATURE CIRCUIT BREAKER, FAZ-C6/3	
A01F2001	354000-0040		1	MINIATURE CIRCUIT BREAKER, FAZ-C4/1	
A01F2002	354000-0040		1	MINIATURE CIRCUIT BREAKER, FAZ-C4/1	
A01F2003	354000-0040		1	MINIATURE CIRCUIT BREAKER, FAZ-C4/1	
A01F2004	354000-0040		1	MINIATURE CIRCUIT BREAKER, FAZ-C4/1	
A01F2005	354000-0040		1	MINIATURE CIRCUIT BREAKER, FAZ-C4/1	
A01F3000	354000-0040		1	MINIATURE CIRCUIT BREAKER, FAZ-C4/1	
A01F6000	354000-0060		1	MINIATURE CIRCUIT BREAKER, FAZ-C6/1	
A01F7001	90459-5811		1	RESIDUAL CURRENT DEVICE, FI-25/2/003-A	
A01F7002	354000-0100		1	MINIATURE CIRCUIT BREAKER, FAZ-C10/1	
A01Q1000	90600-5543		1	CIRCUIT BREAKER, NZMB1-4-A32	
A01X0006	2841403-0300		1	PLINTH	**9-17**
A01X7000	90459-3845		1	WALL SOCKET, Z-SD230	
V01F5000	90459-5813		1	AUXILIARY CONTACT, FAZ-XHIN11	
V01F5000	354002-0200		1	MINIATURE CIRCUIT BREAKER, FAZ-C20/3	
W21F4000	354000-0100		1	MINIATURE CIRCUIT BREAKER, FAZ-C10/1	
W21F6000	354000-0100		1	MINIATURE CIRCUIT BREAKER, FAZ-C10/1	
W21F8001	354001-0100		1	MINIATURE CIRCUIT BREAKER, FAZ-C10/2	
W21F8001	90459-5813		1	AUXILIARY CONTACT, FAZ-XHIN11	
W21Q6000	90459-5308		1	CONTACTOR 4KW 24VDC, DILM9-10	
W21Q6000	90459-6852		1	AUXILIARY CONTACT, DILA-XHI22	
W21T1000	90606-2005		1	AXIS MOD. KINETIX 6000,2094-BM02-S SER C	

Machine Type | Group Description | Used-In | Group Number | Page No

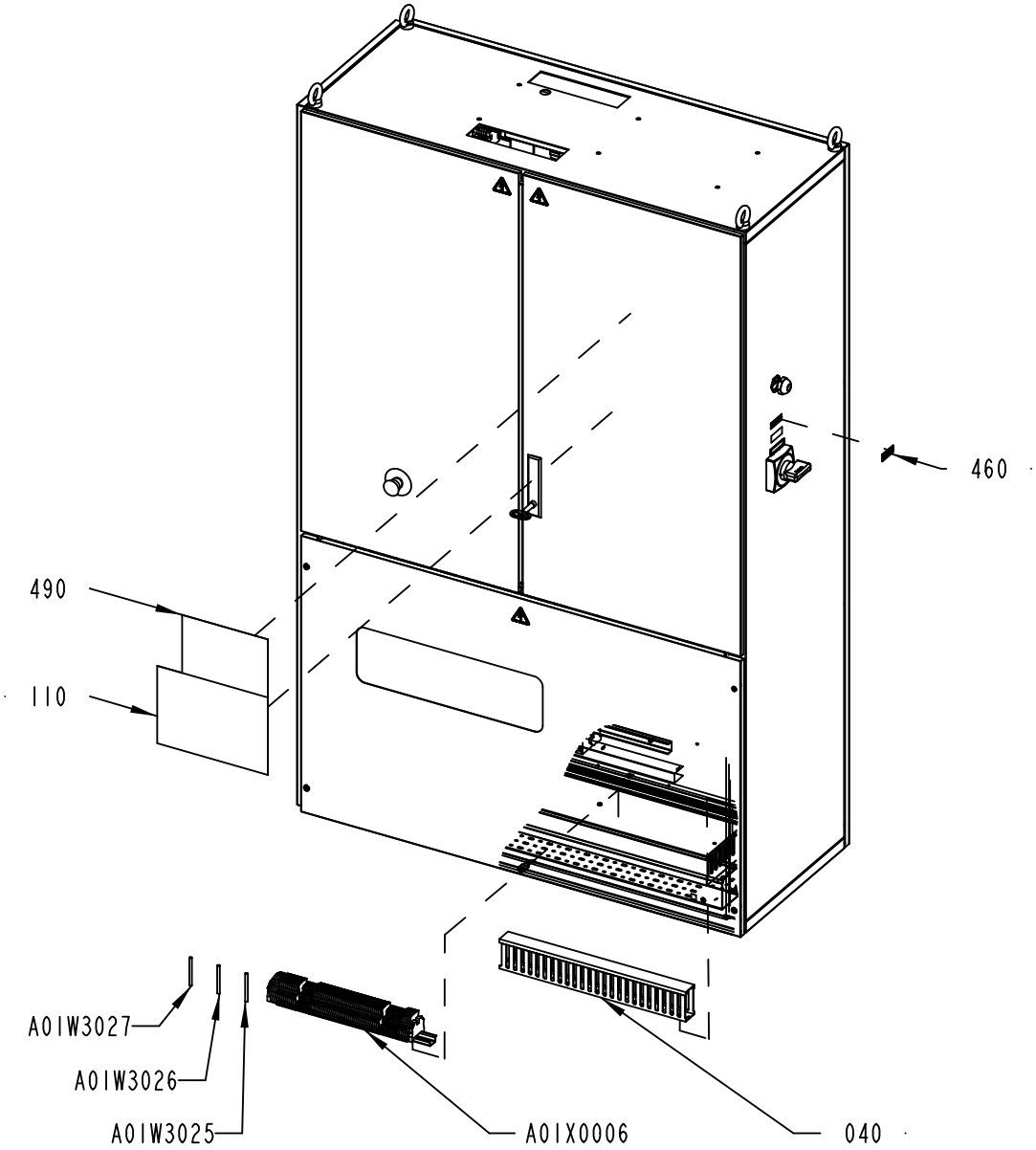
460
490
110
A01W3027
A01W3026
A01W3025
A01X0006
040

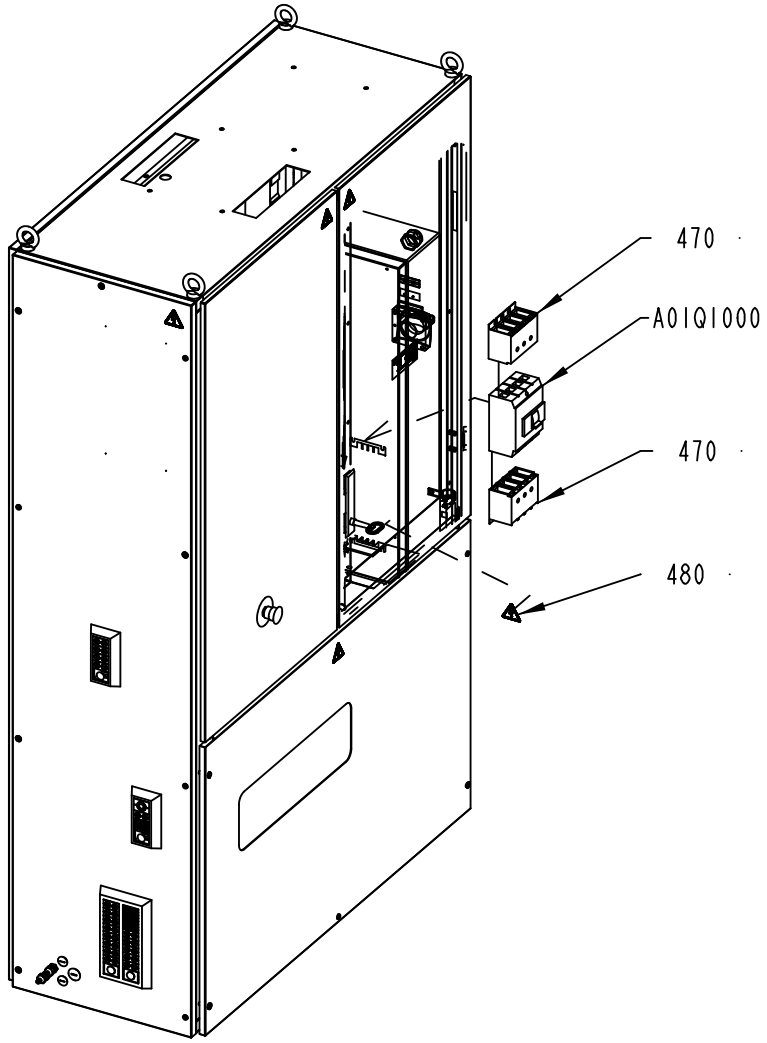
470
A01Q1000
470
480
2841404-22
700702

Pos	Part No	UN	Qty	Description	Page No	Pos	Part No	UN	Qty	Description	Page No
Common Parts (Cont'd)											
W21T2000	90606-2005		1	AXIS MOD. KINETIX 6000,2094-BM02-S SER C							

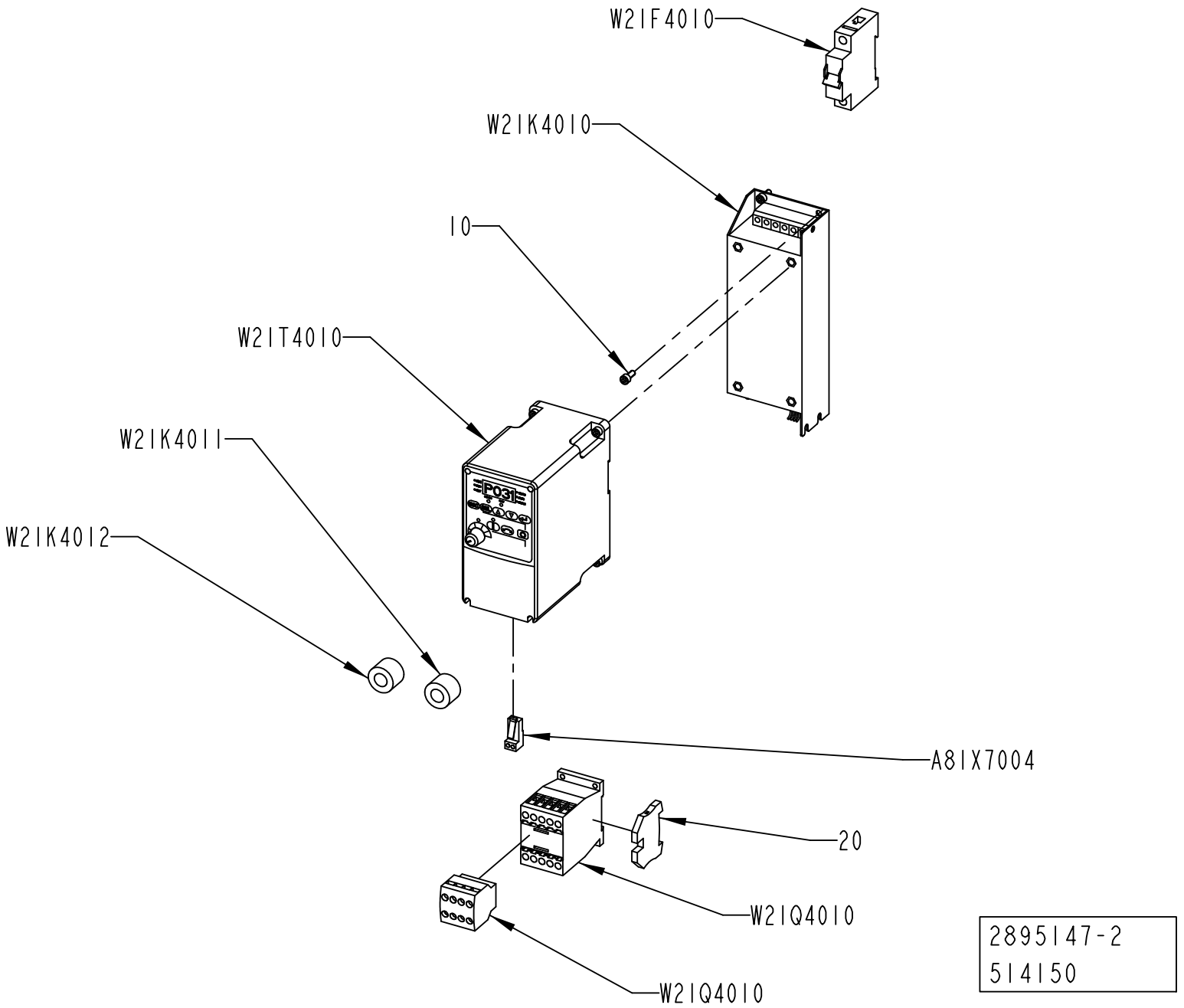
W2IF4010
W2IK4010
10
W2IT4010
W2IK4011
W2IK4012
A8IX7004
20
W2IQ4010
W2IQ4010
2895147-2
514150

Pos	Part No	UN	Qty	Description	Page No
CE (See drawing on page: 9-10)					
W21F4010	354000-0060		1	MINIATURE CIRCUIT BREAKER, FAZ-C6/1	
UL, CSA (See drawing on page: 9-12)					
W21F4010	315744-0060		1	MINIATURE CIRCUIT BREAKER, FAZ-C6/1-NA	
Common Parts					
010	312115-0327		8	SCREW ISO4762 M5X12 A4 80	
020	353024-0205		1	EARTH TERMINAL WPE 4	
A81X7004	90459-6470		1	CONNECTOR RJ45 TER. BL., AK-U0-RJ45-TB2P	
	90459-2523		*2*	*TERMINATOR, OPEN STYLE, 1485A-C2*	
W21K4010	90459-3460		1	FOOTPRINT FILTER 1 PHASE 10A	
W21K4011	90600-5249		1	FERRITE, B64290L616X38	
W21K4012	90600-5249		1	FERRITE, B64290L616X38	
W21Q4010	90459-6852		1	AUXILIARY CONTACT, DILA-XHI22	
W21Q4010	90459-5308		1	CONTACTOR 4KW 24VDC, DILM9-10	
W21T4010	90459-3449		1	FREQ. CONV., 22A-A2P3N104	

Pos	Part No	UN	Qty	Description	Page No

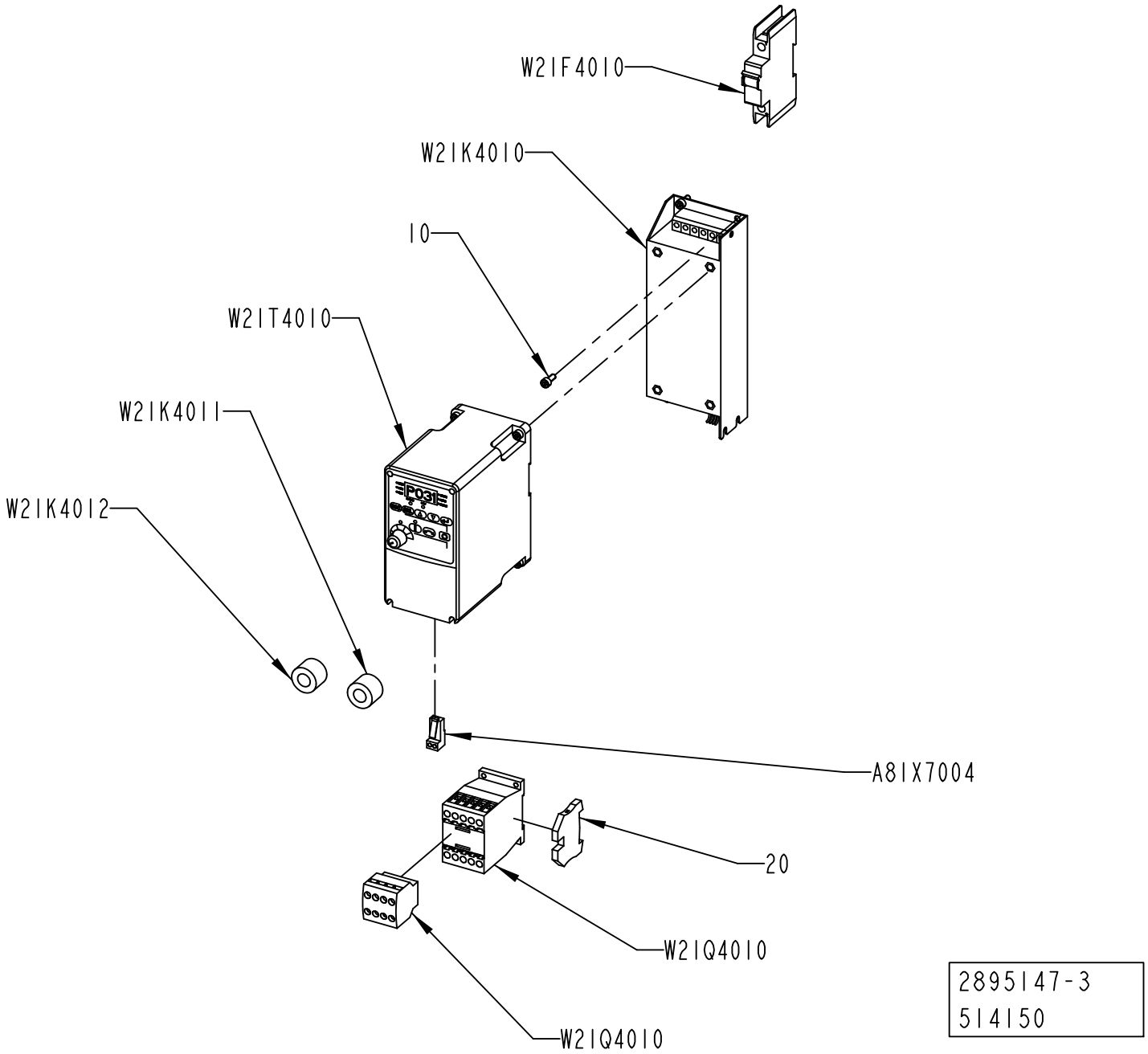

2895147-3
514150

Pos	Part No	UN	Qty	Description	Page No
CE (See drawing on page: 9-10)					
W21F4010	354000-0060		1	MINIATURE CIRCUIT BREAKER, FAZ-C6/1	
UL, CSA (See drawing on page: 9-12)					
W21F4010	315744-0060		1	MINIATURE CIRCUIT BREAKER, FAZ-C6/1-NA	
Common Parts					
010	312115-0327		8	SCREW ISO4762 M5X12 A4 80	
020	353024-0205		1	EARTH TERMINAL WPE 4	
A81X7004	90459-6470		1	CONNECTOR RJ45 TER. BL., AK-U0-RJ45-TB2P	
	90459-2523		*2*	*TERMINATOR, OPEN STYLE, 1485A-C2*	
W21K4010	90459-3460		1	FOOTPRINT FILTER 1 PHASE 10A	
W21K4011	90600-5249		1	FERRITE, B64290L616X38	
W21K4012	90600-5249		1	FERRITE, B64290L616X38	
W21Q4010	90459-6852		1	AUXILIARY CONTACT, DILA-XHI22	
W21Q4010	90459-5308		1	CONTACTOR 4KW 24VDC, DILM9-10	
W21T4010	90459-3449		1	FREQ. CONV., 22A-A2P3N104	

Pos	Part No	UN	Qty	Description	Page No

AXIS Z HOTMELT GUN

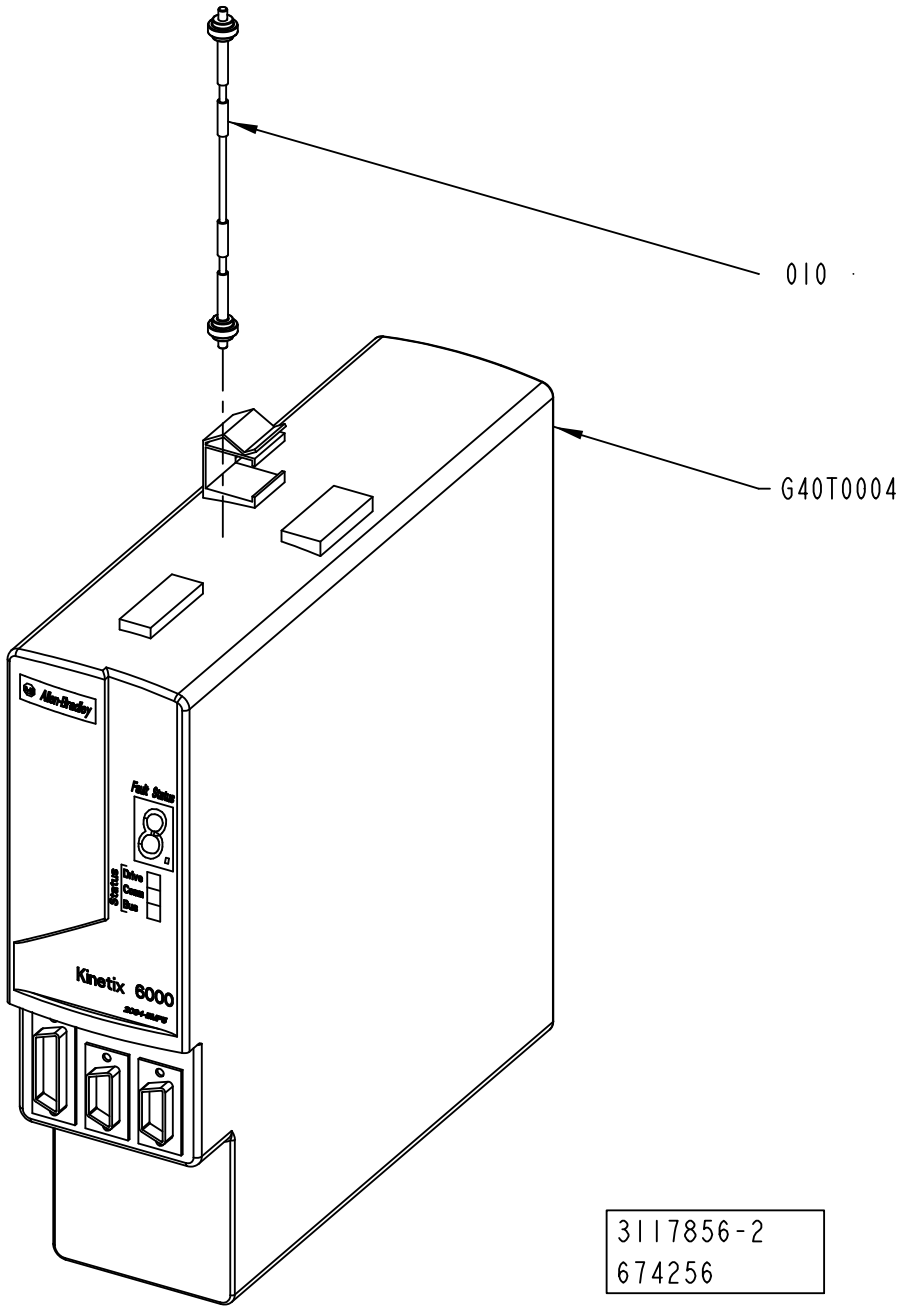

ECM: 681000 - 20141001
Group number: 3117856-0200
Assembly Drawing: 3117856-2_1_AB

Pos	Part No	UN	Qty	Description	Page No
-					
010	90459-2536		1	SERCOS CABLE 0.1M, 2090-SCEP0-1	
G40T0004	90606-2004		1	AXIS MOD. KINETIX 6000,2094-BM01-S SER.C	

Pos	Part No	UN	Qty	Description	Page No

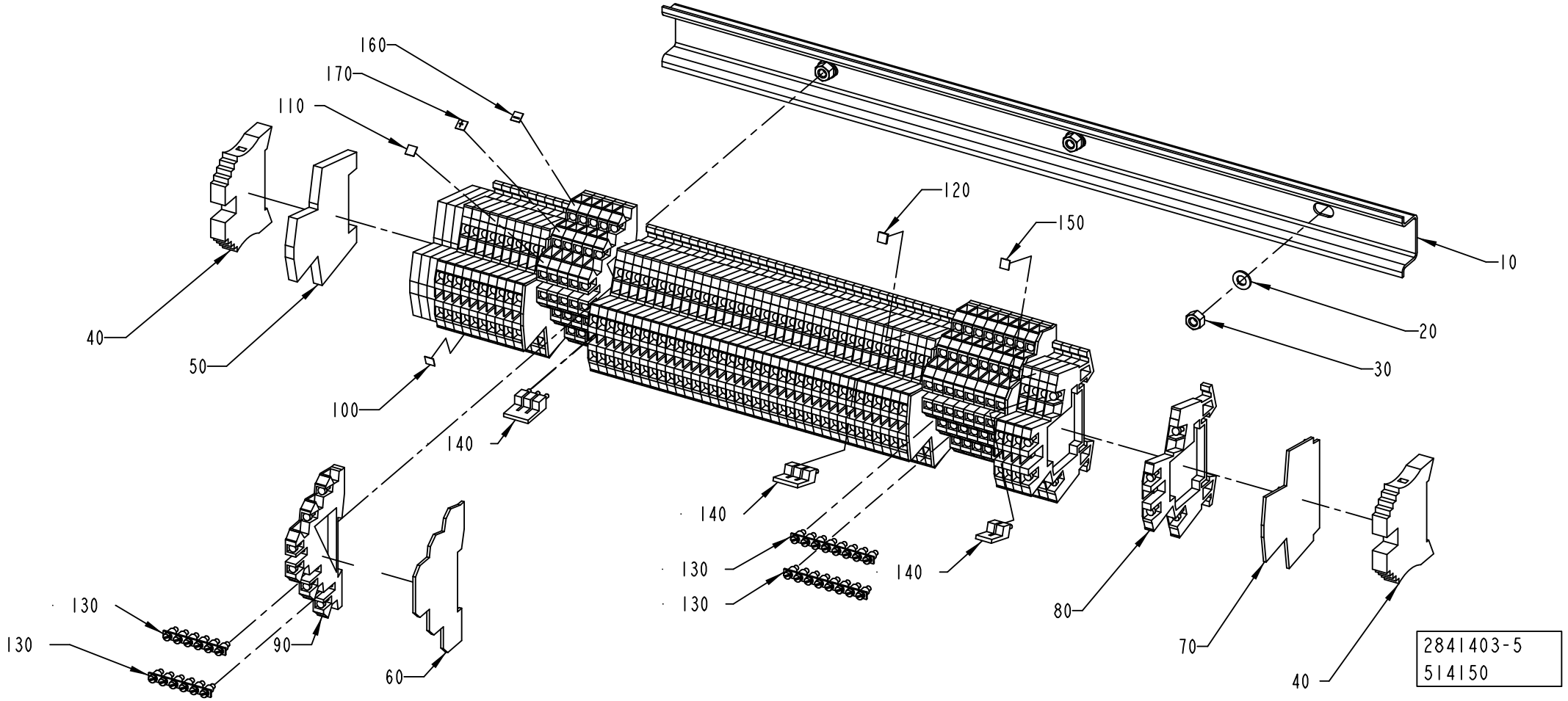
160
170
110
120
150
10
20
30
40
50
100
140
140
130
130
140
130
130
90
60
80
70
40
2841403-5
514150

ECM: 535619 - 20120401
Group number: 2841403-0300
Assembly Drawing: 2841403-5_1_AA

Pos	Part No	UN	Qty	Description	Page No
DREAMCAP 26					
060	353032-0302		2	END PLATE, AP DLD2,5 DB	
070	353032-0009		3	END PLATE, WAP WDK 2,5	
080	90077-0113		52	TERMINAL BLOCK WDK 2.5	
090	353021-0302		14	TERMINAL, DLD 2,5/35	
100	359011-0807		2	MARKING, DEK 5 FW 1-50	
110	359011-0809		2	MARKING, DEK 5 FW 101-150	
130	353034-0404		4	BRIDGE CONNECTOR Q 10 DLI	
140	353034-0030		3	BRIDGE CONNECTOR WQV 2,5/10	
160	359011-0818		1	MARKING, DEK 5GW (-)	
170	359011-0817		1	MARKING, DEK 5GW (+)	
Common Parts					
010	2890015-0000		1	RAIL	
020	315105-0146		3	WASHER PLAIN, 5,3X10X1 A4 BRB	
030	312605-0314		3	HEXAGON NUT, M6M M5 A280	
040	353031-0203		2	END BRACKET, WEW 35/2	
050	353024-0212		4	EARTH TERMINAL WDK 2,5 PE	
120	359011-0806		2	MARKING, DEK 5 FW 1-200	
150	359011-0811		2	MARKING, DEK 5 FW 201-250	

Pos	Part No	UN	Qty	Description	Page No

COOLING UNIT

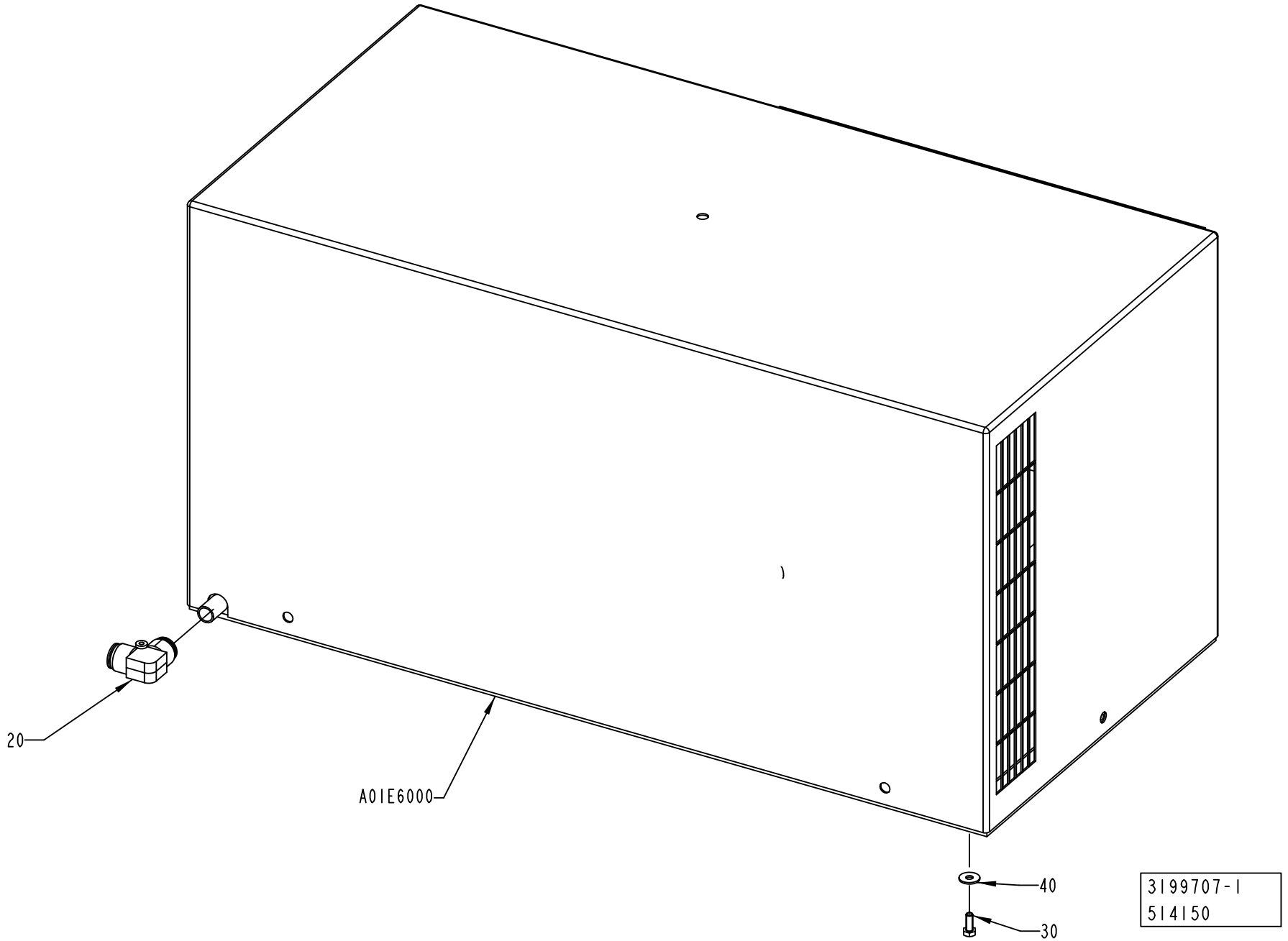

ECM: 521637 - 20120401
Group number: 3199707-0100
Assembly Drawing: 3199707-1_1_AA

Pos	Part No	UN	Qty	Description	Page No
-					
020	90459-2553		1	PUSH-IN L-FITTING QSL 16	
030	312105-0368		6	"SCREW, M6S ISO 4017 M6X16 A4 80"	
040	90005-0060		6	WASHER PLAIN, RBS 6,4/M6)/18,H=1,5	
A01E6000	90600-5815		1	COOLING UNIT, KB20A21341.03	
	90459-0364		*1*	*FILTER KB20/30/40 POLYURETH. FILTER 2001*	
	90600-0675		*1*	*GASKET, A6411AA*	
	90600-0676		*1*	*GRID, DISA1880AA*	
	90600-2822		*1*	*THERMOSTAT, TMI0000216*	
	90600-5817		*2*	*FAN, VBH0001558*	
	90603-1068		*1*	*THERMOSTAT, PRODIGY TR/86 D2077.1*	

Pos	Part No	UN	Qty	Description	Page No

ELECTRICAL CONVERSION

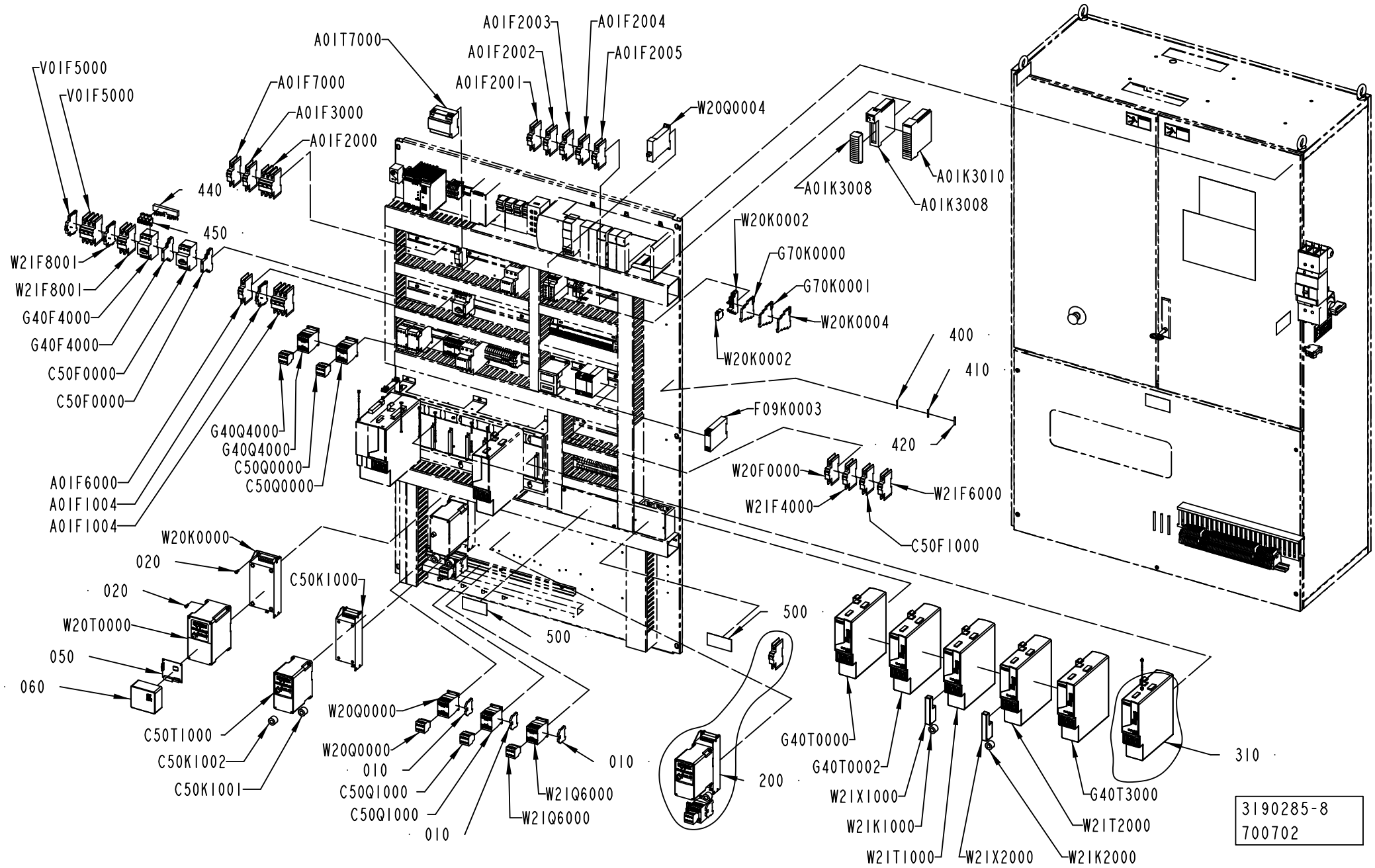

ECM: 701200 - 20150101
Group number: 3190285-0100
Assembly Drawing: 3190285-8_1_AD

This list covers pages from 9-20 to 9-23

Pos	Part No	UN	Qty	Description	Page No
CAP30/FLEX TPA DREAMCAP 26 (See drawing on pages: 9-20, 9-22)					
010	353024-0205		3	EARTH TERMINAL WPE 4	
020	312115-0327		16	SCREW ISO4762 M5X12 A4 80	
110	3199182-0000		1	FUSE PANEL LABEL	
200	2895147-0200		1	PACKAGE ALIGNER	**9-11, 9-13**
310	3117856-0200		1	AXIS Z HOTMELT GUN	**9-15**
400	351160-0102	M	458	ECAB01011-6L, WIRE AWM 1X0,75 MM2 DARKBL	
410	351164-0105	M	65	WIRE AWM 1X2,5 MM2 BLACK	
420	351164-0107	M	39	WIRE AWM 1X6 MM2 BLACK	
440	90259-0315		1	CIRCUIT BREAKER , B3.1/2-PKZ0	
450	90600-1461		1	INCOMING TERMINAL, BK25/3-PKZ0-E	
A01K3008	90600-4033		1	DIGITAL OUTPUT MODULE, 1756-OB16IS	
A01K3008	90459-2488		1	REMOVABLE TERMINAL BLOCK 36 POINTS	
A01K3010	90459-2480		1	8-AXIS SERCOS MOTION MODULE	
A01W3025	351423-0006	M	3.4	CABLE UNITRONIC LICY 5X0,34	
A01W3026	351423-0006	M	3	CABLE UNITRONIC LICY 5X0,34	
A01W3027	351423-0006	M	3	CABLE UNITRONIC LICY 5X0,34	
C50F0000	90259-0313		1	AUXILIARY SWITCH, NHI21-PKZ0	
C50F0000	90459-5323		1	OVERLOAD PROTECTION, PKZM0-1	
C50F1000	315744-0060		1	MINIATURE CIRCUIT BREAKER, FAZ-C6/1-NA	
C50K1000	90459-3460		1	FOOTPRINT FILTER 1 PHASE 10A	
C50K1001	90600-5249		1	FERRITE, B64290L616X38	
C50K1002	90600-5249		1	FERRITE, B64290L616X38	
C50Q0000	90459-5308		1	CONTACTOR 4KW 24VDC, DILM9-10	
C50Q0000	90459-6852		1	AUXILIARY CONTACT, DILA-XHI22	
C50Q1000	90459-6852		1	AUXILIARY CONTACT, DILA-XHI22	
C50Q1000	90459-5308		1	CONTACTOR 4KW 24VDC, DILM9-10	
C50T1000	90459-3449		1	FREQ. CONV., 22A-A2P3N104	
F09K0003	90459-2291		1	SAFETY RELAY, E1T	
G40F4000	90259-0313		1	AUXILIARY SWITCH, NHI21-PKZ0	
G40F4000	90459-5321		1	OVERLOAD PROTECTION, PKZM0-0,4	
G70K0000	90601-6652		1	OPTOCOUPLER, PLC-OSC-24DC/24DC/2	
G70K0001	90601-6652		1	OPTOCOUPLER, PLC-OSC-24DC/24DC/2	
G40Q4000	90459-5308		1	CONTACTOR 4KW 24VDC, DILM9-10	
G40Q4000	90459-6852		1	AUXILIARY CONTACT, DILA-XHI22	
G40T0000	90606-2005		1	AXIS MOD. KINETIX 6000,2094-BM02-S SER C	
G40T0002	90606-2005		1	AXIS MOD. KINETIX 6000,2094-BM02-S SER C	
G40T3000	90606-2004		1	AXIS MOD. KINETIX 6000,2094-BM01-S SER.C	
W20F0000	315744-0060		1	MINIATURE CIRCUIT BREAKER, FAZ-C6/1-NA	
W20K0000	90459-3454		1	FOOTPRINT FILTER 1 PHASE 18A	
W20K0002	90129-0018		1	BASE, P2RF-08-E	
W20K0002	90119-0108		1	RELAY OMRON G2R-2-SNI-24DC	
	90129-0018		*1*	*BASE, P2RF-08-E*	
W20K0004	90601-6650		1	RELAY, PLC-RSC-24DC/21	
W21K1000	90600-5249		1	FERRITE, B64290L616X38	
W21K2000	90600-5249		1	FERRITE, B64290L616X38	
W20Q0000	90459-5308		1	CONTACTOR 4KW 24VDC, DILM9-10	
W20Q0000	90459-6852		1	AUXILIARY CONTACT, DILA-XHI22	
W20Q0004	90600-0943		1	SOLID STATE RELAY, 3RF2320-1AA04	
W20T0000	90459-3441		1	FREQ. CONV., 22B-A2P3N104	
W21X1000	90459-2550		1	I/O CONNECTOR 26 PIN MALE, 2090-K6CK-D26	
W21X2000	90459-2550		1	I/O CONNECTOR 26 PIN MALE, 2090-K6CK-D26	
Common Parts					
040	2890590-0000		1	CABLE DUCT	
050	90459-2614		1	DEVICENET ADAPTER POWERFLEX 40 22-COMM-D	
060	90459-2795		1	FRONT LID FOR POWERFLEX 40, 22B-CCB	
290	90459-7228		1	ELECTRICAL EQUIPMENT SIGN, TEMPLATE	
460	359240-0001		1	SIGN, NOT ENGRAVED	
470	90600-5270		2	COVER 3-POLE, NZM1-XKSA	
480	359715-0100		2	WARNING SIGN ANSI (H), ELECTRIC SHOCK	
490	90600-5812		1	LABEL	
500	90603-2736		5	WARNING SIGN ANSI(H),HAZ.VOLT.DISCONNECT	
510	353034-0033		1	BRIDGE CONNECTOR WQV 10/10	
520	90459-3068		2	TERMINAL PLINTH, WDU 10	
530	359011-0807		1	MARKING, DEK 5 FW 1-50	
A01F1004	90459-5813		1	AUXILIARY CONTACT, FAZ-XHIN11	
A01F1004	315746-0250		1	MINIATURE CIRCUIT BREAKER, FAZ-C25/3-NA	
A01F2000	315746-0060		1	MINIATURE CIRCUIT BREAKER, FAZ-C6/3-NA	
A01F2001	315744-0040		1	MINIATURE CIRCUIT BREAKER, FAZ-C4/1-NA	
A01F2002	315744-0040		1	MINIATURE CIRCUIT BREAKER, FAZ-C4/1-NA	
A01F2003	315744-0040		1	MINIATURE CIRCUIT BREAKER, FAZ-C4/1-NA	
A01F2004	315744-0040		1	MINIATURE CIRCUIT BREAKER, FAZ-C4/1-NA	
A01F2005	315744-0040		1	MINIATURE CIRCUIT BREAKER, FAZ-C4/1-NA	
A01F3000	315744-0040		1	MINIATURE CIRCUIT BREAKER, FAZ-C4/1-NA	
A01F6000	315744-0060		1	MINIATURE CIRCUIT BREAKER, FAZ-C6/1-NA	
A01F7000	315744-0040		1	MINIATURE CIRCUIT BREAKER, FAZ-C4/1-NA	
A01Q1000	351436-0032		1	CIRCUIT BREAKER, NZMB1-A32-NA	
A01T7000	90603-1115		1	POWER SUPPLY, STEP-PS/1AC/24DC/3,8/C2LPS	
A01X0006	2841403-0300		1	PLINTH	**9-17**
V01F5000	315746-0200		1	MINIATURE CIRCUIT BREAKER, FAZ-C20/3-NA	
V01F5000	90459-5813		1	AUXILIARY CONTACT, FAZ-XHIN11	
W21F4000	315744-0100		1	MINIATURE CIRCUIT BREAKER, FAZ-C10/1-NA	
W21F6000	315744-0100		1	MINIATURE CIRCUIT BREAKER, FAZ-C10/1-NA	
W21F8001	315745-0100		1	MINIATURE CIRCUIT BREAKER, FAZ-C10/2-NA	

Machine Type | Group Description | Used-In | Group Number | Page No

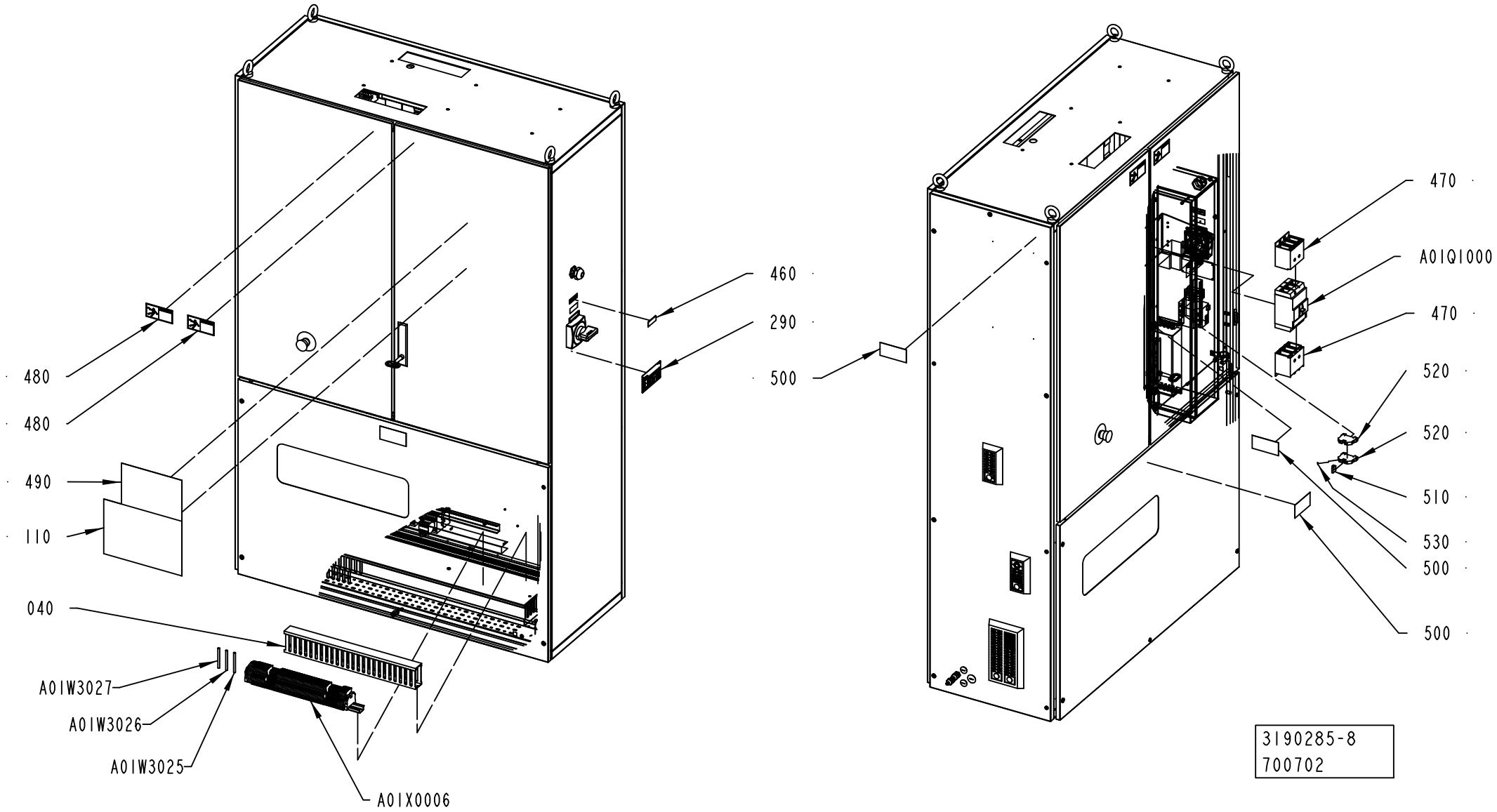
460
290
500
480
480
490
110
040
A01W3027
A01W3026
A01W3025
A01X0006
470
A01Q1000
470
520
520
510
530
500
500
3190285-8
700702

Pos	Part No	UN	Qty	Description	Page No
Common Parts (Cont'd)					
W21F8001	90459-5813		1	AUXILIARY CONTACT, FAZ-XHIN11	
W21Q6000	90459-6852		1	AUXILIARY CONTACT, DILA-XHI22	
W21Q6000	90459-5308		1	CONTACTOR 4KW 24VDC, DILM9-10	
W21T1000	90606-2005		1	AXIS MOD. KINETIX 6000,2094-BM02-S SER C	
W21T2000	90606-2005		1	AXIS MOD. KINETIX 6000,2094-BM02-S SER C	

Pos	Part No	UN	Qty	Description	Page No

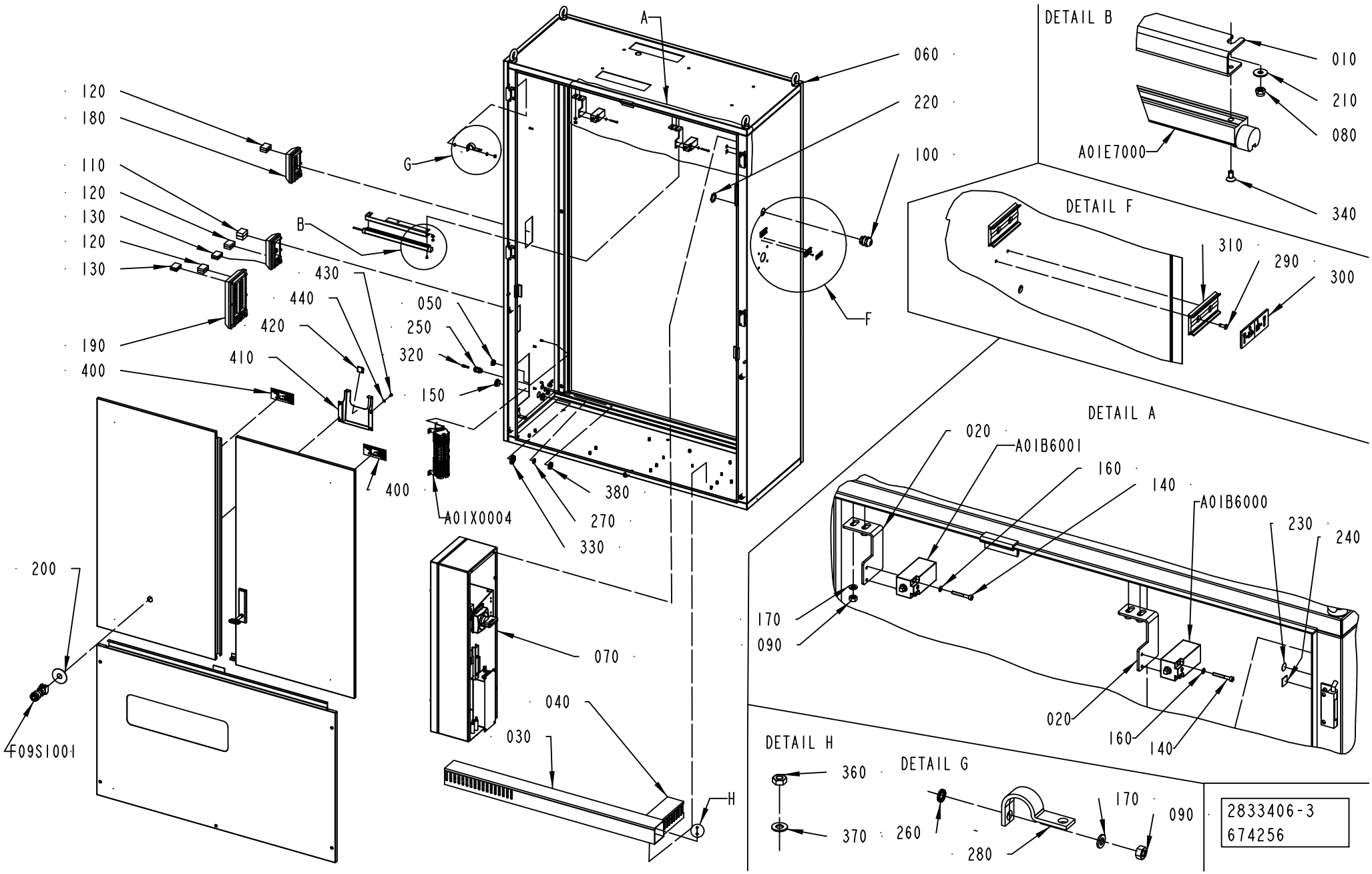
A
G
B
F
H
120
180
110
120
130
120
130
190
400
430
440
420
410
050
250
320
150
400
A01X0004
380
270
330
060
220
100
200
F09S1001
070
040
030
DETAIL B
010
210
080
A01E7000
340
DETAIL F
310
290
300
DETAIL A
020
A01B6001
160
140
A01B6000
230
240
170
090
020
160
140
DETAIL H
360
370
DETAIL G
260
280
170
090
2833406-3
674256

ECM: 685061 - 20141001
Group number: 2833406-0300
Assembly Drawing: 2833406-3_1_AD

Pos	Part No	UN	Qty	Description	Page No
-					
010	3062041-0000		1	SUPPORT	
020	2839225-0000		2	BRACKET	
030	2838459-0000		1	CABLE DUCT	
040	2838460-0000		1	CABLE DUCT	
050	90458-1308		2	BLIND PLUG CIRCULAR, M20X1,5 514GFK/220	
060	3190282-0000		1	WELDED CABINET	
070	2833410-0200		1	BOX	**9-27**
080	312812-0312		3	HEXAGON NUT, NY-LOCK M4 A4 80	
090	312605-0316		24	HEXAGON NUT, M6M M6 A280	
100	90458-0309		1	CABLE GLAND, M32X1,5, 5311 1040	
110	90458-1173		1	MULTI DIAMETER MODULE, CM 30W40	
120	90458-1174		18	MULTI DIAMETER MODULE, CM 20W40	
130	90458-1175		6	MULTI DIAMETER MODULE, CM 15W40	
140	312115-0299		4	SCREW ISO4762 M4X30 A4 80	
150	90458-1309		1	BLIND PLUG CIRCULAR, M25X1,5 514GFK/225	
160	315105-0136		4	WASHER PLAIN, 4,3X8X0,8 A4 BRB	
170	315105-0153		24	WASHER PLAIN, 6,4X12X1,5 A4 BRB	
180	90458-1178		2	FRAME, CF 8	
190	90458-1179		1	FRAME, CF 32	
200	486826-0001		1	SIGN "EMERGENCY STOP"	
210	90005-0082		3	WASHER PLAIN ROUND 4,3(M4)/12,H=1	
220	353250-0032		1	GLAND LOCK NUT, M32X1,5	
230	2608177-0000		20	SIGN	
240	90194-0152		20	SIGN, EARTH	
250	90458-0314		2	CABLE GLAND, M16X1,5, 5311 1110	
260	90062-0015		20	LOCK WASHER SERRAT.EXT.GEAR,6,4/11 H=0,7	
270	353250-0016		2	GLAND LOCK NUT, M16X1,5	
280	90600-2904		11	EARTH BRAID, 250/16/8,5	
290	311520-0320		4	RIVET, BLANK 2,4X6	
300	359241-0803		1	SIGN: "SUPPLY DISCONNECTING DEVICE"	
310	359240-0100		2	SIGN HOLDER FOR 359240-0001	
320	342715-0102		2	BLIND PLUG 6 MM	
330	90458-0324		1	NUT, M25X1,5	
340	312155-0287		2	SCREW DIN 7991 MF6S M4X8 A4 70	
360	90099-0191		46	HEXAGON NYLON NUT, M4X0,7	
370	90005-0064		15	WASHER PL.RND.NYL.4,3/9, H=0,8	
380	90458-0323		2	NUT, M20X1,5	
400	90459-7229		2	IDENTIF. OF SINGLE CONDUCTORS	
410	2837851-0000		1	CD BOX	
420	90604-3590		1	MEMORY CARD SD 1GB, 1784-SD1, SERIES A	
430	312125-0325		4	SCREW ISO 1207 M5X10 A4	
440	315105-0146		4	WASHER PLAIN, 5,3X10X1 A4 BRB	
A01B6000	90602-8807		1	LIMIT SW. SZ 2586.010	
A01B6001	90602-8807		1	LIMIT SW. SZ 2586.010	
A01E7000	90602-1250		1	LIGHT FIXTURE, SLIM LED 112-544-001	
A01X0004	2840918-0200		1	PLINTH	**9-29**
F09S1001	90605-9819		1	EMERG. STOP SWITCH, 704.064.2+704.910.4	

Machine Type	Group Description	Used-In	Group Number	Page No

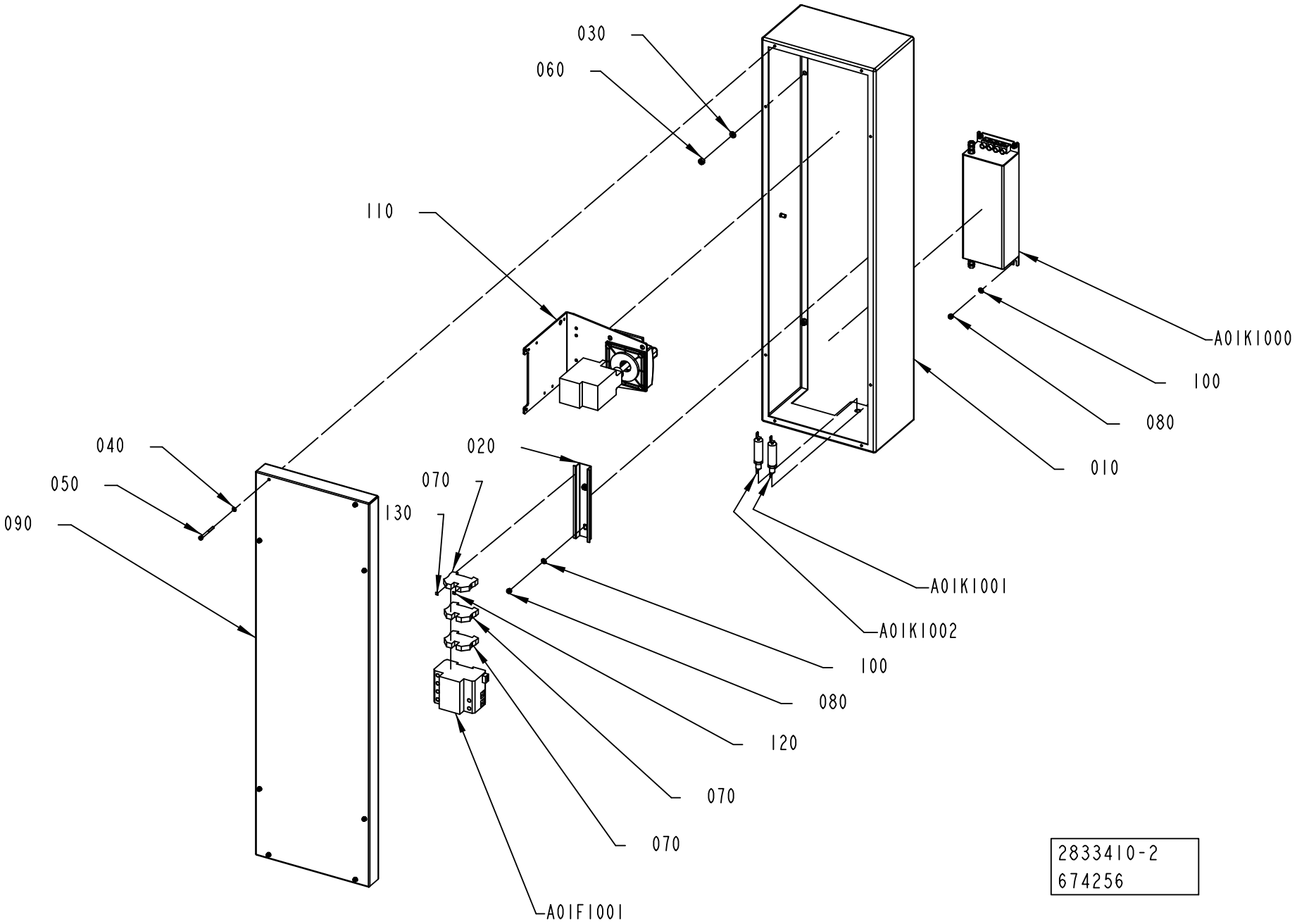
030
060
110
040
050
090
130
020
070
A01K1000
100
080
010
A01K1001
A01K1002
100
080
120
070
070
A01F1001
2833410-2
674256

ECM: 683736 - 20141001
Group number: 2833410-0200
Assembly Drawing: 2833410-2_1_AC

Pos	Part No	UN	Qty	Description	Page No
-					
010	3190281-0000		1	BOX	
020	2835456-0000		1	RAIL	
030	315105-0153		6	WASHER PLAIN, 6,4X12X1,5 A4 BRB	
040	315105-0136		8	WASHER PLAIN, 4,3X8X0,8 A4 BRB	
050	312115-0304		8	SCREW ISO4762 M4X45 A4 80	
060	312605-0316		6	HEXAGON NUT, M6M M6 A280	
070	353024-0207		3	EARTH TERMINAL WPE 10	
080	312812-0314		6	HEXAGON NUT, NY-LOCK M5 A4 80	
090	2835450-0000		1	COVER	
100	315105-0146		6	WASHER PLAIN, 5,3X10X1 A4 BRB	
110	90600-1198		1	MAIN SWITCH ASSY.,RIGHT SIDE, NZM1-XSM-R	
120	90601-6250		1	MARKING, DEK 5 GW PE	
130	359011-0819		1	MARKING, EARTH, DEK 5 GW ERDE I.KR.	
A01F1001	90600-7487		1	SURGE PROTECTION DEV., VAL-MS 230/3+1 FM	
	90600-7489		*1*	*SURGE PROTECTION DEV., SP, F-MS 12 ST*	
	90600-7488		*1*	*SURGE PROTECTION DEV., SP, VAL-MS 230 ST*	
A01K1000	90600-5262		1	LINE FILTER, B84144A36R120	
A01K1001	90600-5266		1	FEED THROUGH FILTER, B85321A2502W160	
A01K1002	90600-5266		1	FEED THROUGH FILTER, B85321A2502W160	

Pos	Part No	UN	Qty	Description	Page No

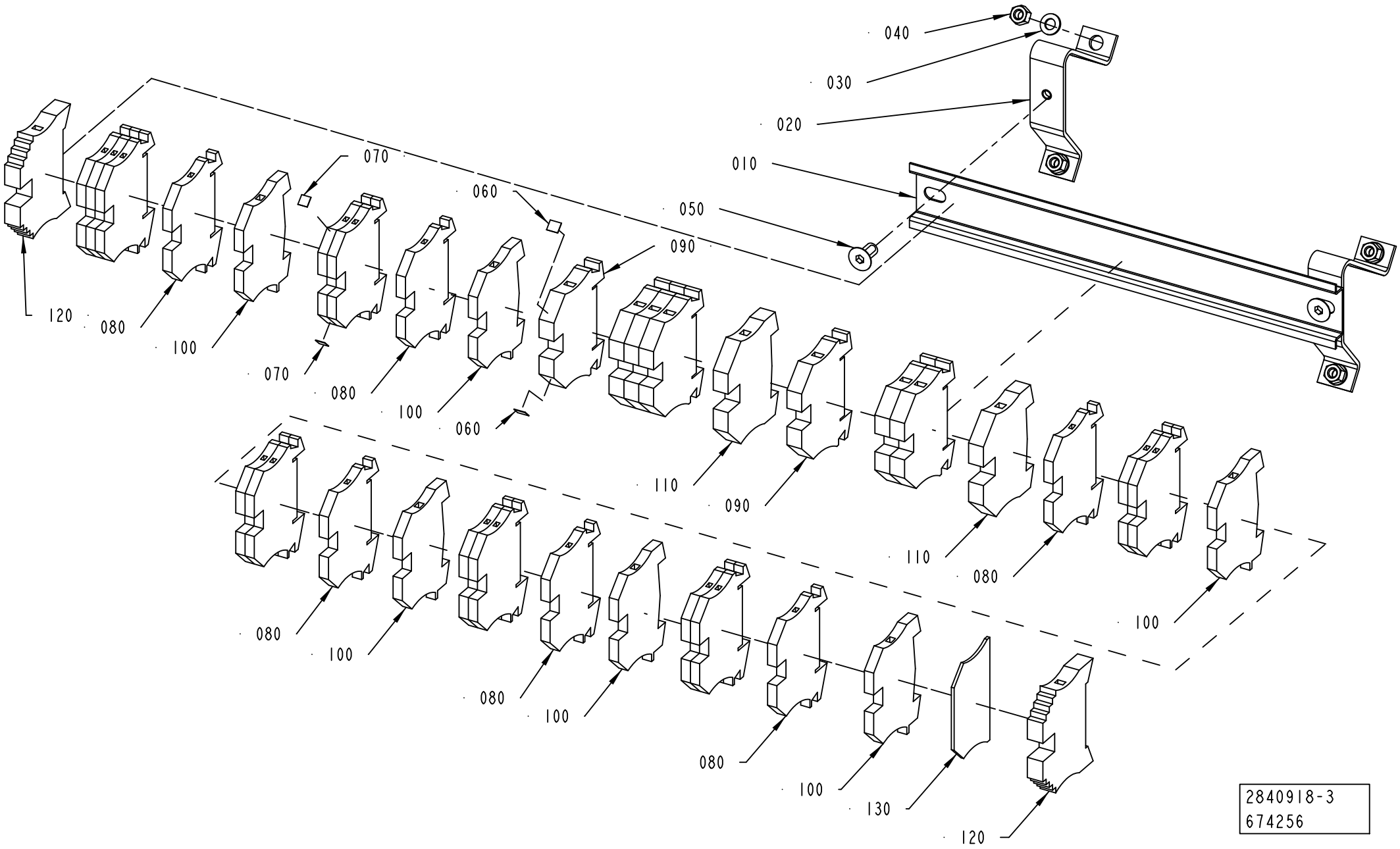
040
030
020
010
050
090
060
070
120
080
100
070
080
100
060
110
090
110
080
100
080
100
080
100
080
100
130
120
2840918-3
674256

ECM: 684879 - 20141001
Group number: 2840918-0200
Assembly Drawing: 2840918-3_1_AC

Pos	Part No	UN	Qty	Description	Page No
-					
010	2841402-0000		1	RAIL	
020	90099-0005		2	MOUNTING RAIL SUPPORT, TSTW 5/M5	
030	315105-0146		4	WASHER PLAIN, 5,3X10X1 A4 BRB	
040	312605-0314		4	HEXAGON NUT, M6M M5 A280	
050	312155-0366		2	SCREW DIN 7991 MF6S M6X12 A4 70	
060	359011-0821		2	MARKING, DEK 6 FW 1-50	
070	359011-0807		2	MARKING, DEK 5 FW 1-50	
080	353021-0212		19	FEED THROUGH TERMINAL, WDU 2,5	
090	353021-0214		7	FEED THROUGH TERMINAL, WDU 6	
100	353024-0204		6	EARTH TERMINAL WPE 2,5	
110	353024-0206		2	EARTH TERMINAL WPE 6	
120	353031-0203		2	END BRACKET, WEW 35/2	
130	353032-0004		1	END PLATE, WAP 2,5-10, BEIGE	

Pos	Part No	UN	Qty	Description	Page No

CONTROL BOARD

Drawing file: 2833407-3_1_AD.hpgl

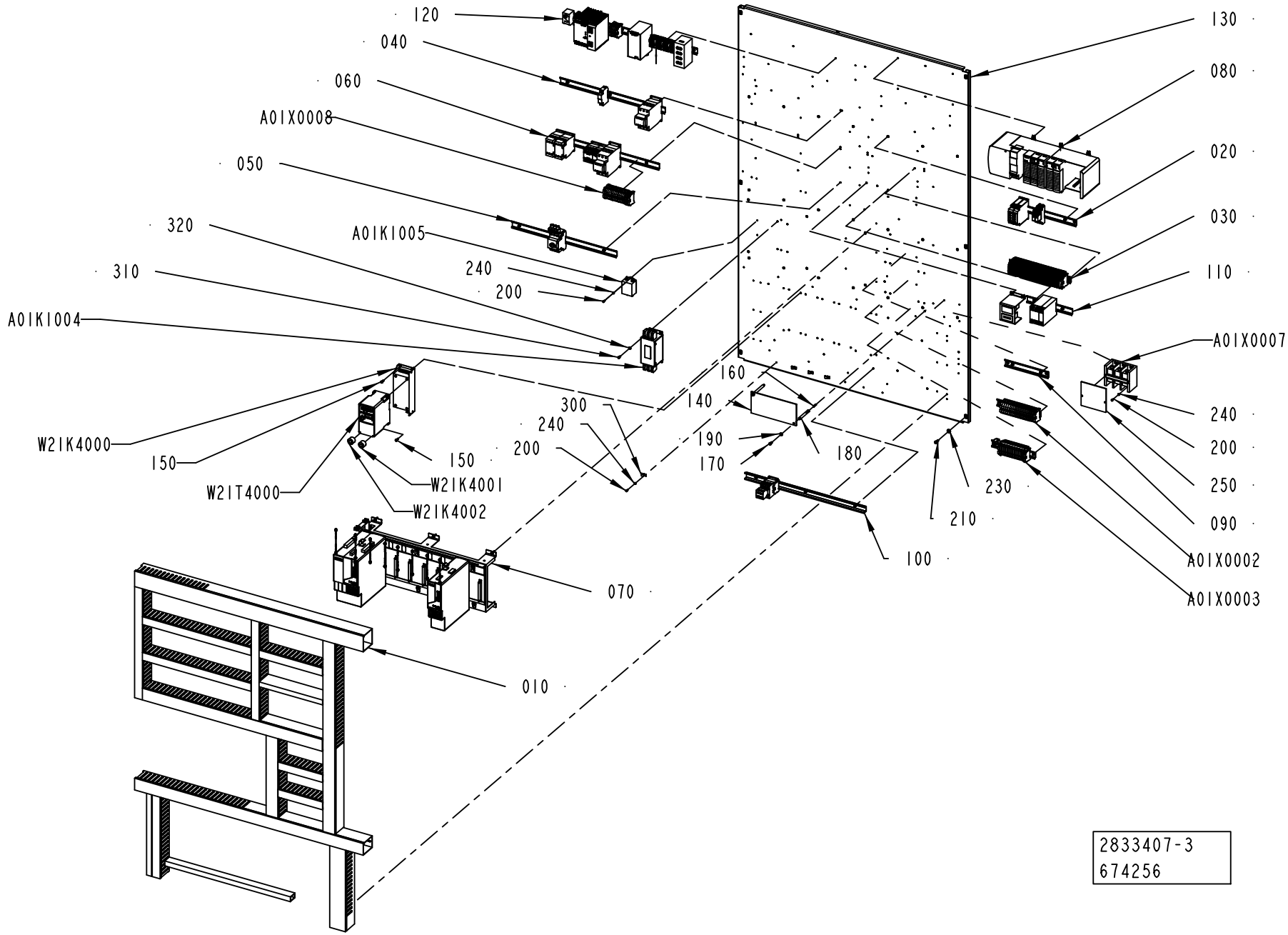

ECM: 683795 - 20141001
Group number: 2833407-0300
Assembly Drawing: 2833407-3_1_AD

Pos	Part No	UN	Qty	Description	Page No
-					
010	2833412-0100		1	CABLE DUCT	**9-33**
020	2835464-0300		1	DISTRIBUTION TERMINAL	**9-35**
030	2839229-0200		1	DISTRIBUTION TERMINAL	**9-37**
040	2835459-0300		1	FUSE BOARD 1	**9-51**
050	2835460-0200		1	FUSE BOARD 2	**9-53**
060	2835461-0200		1	FUSE BOARD 3	**9-55**
070	2835462-0300		1	MOTOR DRIVE CONTROL	**9-57**
080	2835458-0300		1	PLC	**9-59**
090	2839222-0200		1	PLINTH	**9-61**
100	2835463-0200		1	PLINTH	**9-63**
110	2839221-0200		1	PLINTH	**9-65**
120	2835457-0200		1	POWER SUPPLY UNIT	**9-67**
130	2833404-0000		1	MOUNTING PLATE	
140	2845320-0000		1	PROTECTION	
150	312115-0327		8	SCREW ISO4762 M5X12 A4 80	
160	312318-0370		2	SET SCREW, CUP END ISO4029 M6X20 A4	
170	312125-0366		2	SLOTTED HEAD SCREW, ISO1207 M6X12 A4	
180	1038275-0012		2	SPACER	
190	315105-0153		2	WASHER PLAIN, 6,4X12X1,5 A4 BRB	
200	312125-0289		10	SCREW	
210	312115-0368		6	SCREW ISO4762 M6X16 A4 80	
230	315105-0165		6	FWAS080G0-0S, WASHER PLAIN	
240	315105-0136		10	WASHER PLAIN, 4,3X8X0,8 A4 BRB	
250	3047311-0000		1	PROTECTION	
300	90165-0007		4	PIPE CLIP FOR TUBE D=8 MM	
310	312125-0325		4	SCREW ISO 1207 M5X10 A4	
320	315105-0146		4	WASHER PLAIN, 5,3X10X1 A4 BRB	
A01K1004	90600-5258		1	LINE FILTER, B84143A35R106	
A01K1005	90600-5253		1	LINE FILTER, B84113HB60	
A01X0002	2839223-0200		1	PLINTH	**9-73**
A01X0003	2839224-0200		1	PLINTH	**9-75**
A01X0007	90459-0959		1	DISTRIBUTOR BLOCK 1492-PD3163	
A01X0008	3046886-0200		1	DISTRIBUTION TERMINAL	**9-77**
W21K4000	90459-3460		1	FOOTPRINT FILTER 1 PHASE 10A	
W21K4001	90600-5249		1	FERRITE, B64290L616X38	
W21K4002	90600-5249		1	FERRITE, B64290L616X38	
W21T4000	90459-3450		1	FREQ. CONV., 22A-A4P5N104	

Pos	Part No	UN	Qty	Description	Page No

Machine Type | Group Description | Used-In | Group Number | Page No

CABLE DUCT

Drawing file: 2833412-1_1_AD.hpgl

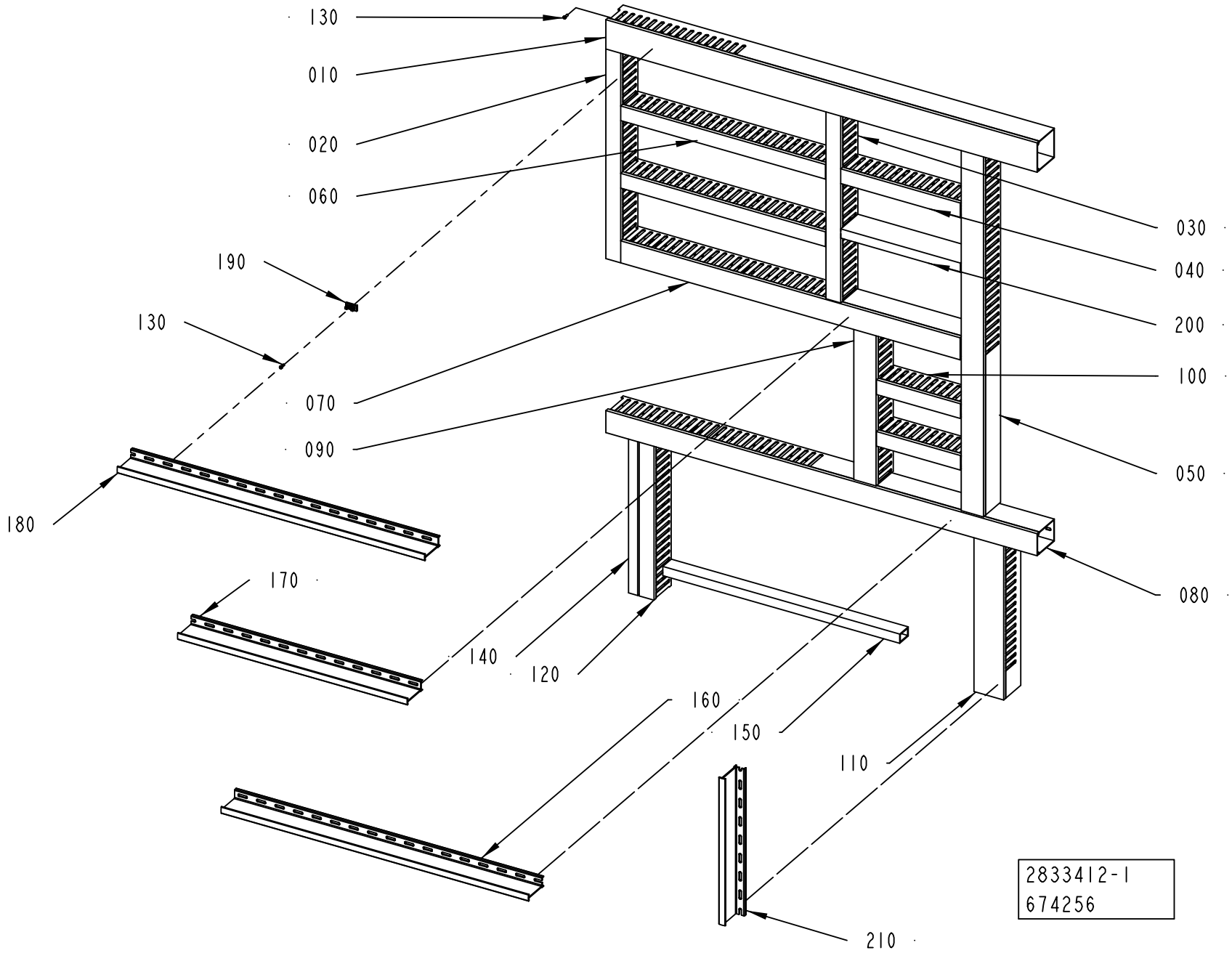

ECM: 685056 - 20141001
Group number: 2833412-0100
Assembly Drawing: 2833412-1_1_AD

Pos	Part No	UN	Qty	Description	Page No
-					
010	2838462-0000		1	CABLE DUCT	
020	2838463-0000		1	CABLE DUCT	
030	2838464-0000		1	CABLE DUCT	
040	2838465-0000		1	CABLE DUCT	
050	2838466-0000		1	CABLE DUCT	
060	2838467-0000		2	CABLE DUCT	
070	2838468-0000		1	CABLE DUCT	
080	2838469-0000		1	CABLE DUCT	
090	2838470-0000		1	CABLE DUCT	
100	2838471-0000		2	CABLE DUCT	
110	2838472-0000		1	CABLE DUCT	
120	2838473-0000		1	CABLE DUCT	
130	90287-0124		69	SCREW PAN HEAD MSCS M4X12 NYLON	
140	2838474-0000		1	CABLE DUCT	
150	2838475-0000		1	CABLE DUCT	
160	2841405-0000		1	DIVIDER	
170	2841406-0000		1	DIVIDER	
180	2921902-0000		1	DIVIDER	
190	90600-2830		10	FASTENING ELEMENT, BLOCKSEP-E 01026	
200	3223674-0000		1	CABLE DUCT	
210	3365221-0000		1	DIVIDER	

Pos	Part No	UN	Qty	Description	Page No

DISTRIBUTION TERMINAL

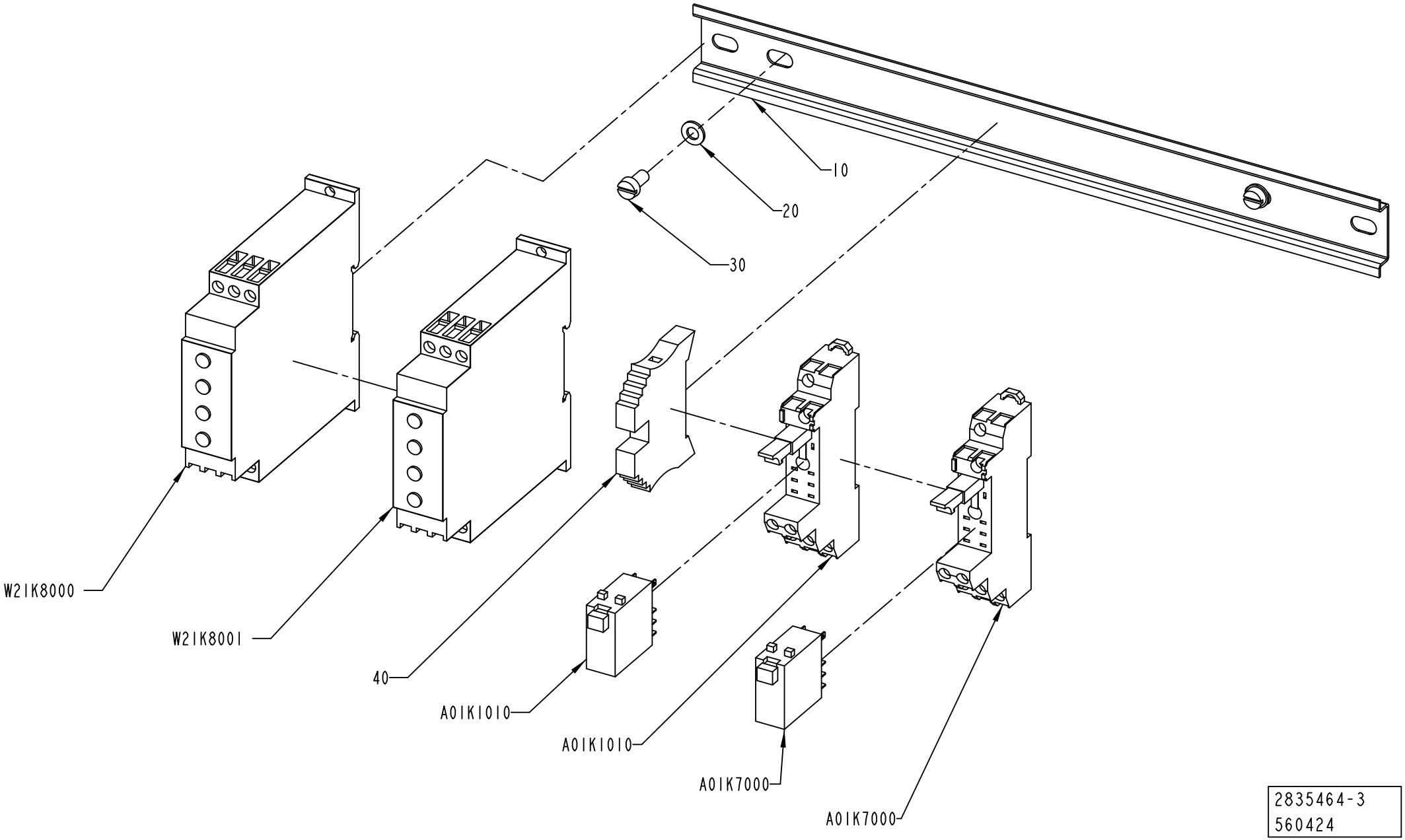

2835464-3
560424

ECM: 564104 - 20121001
Group number: 2835464-0300
Assembly Drawing: 2835464-3_1_AB

Pos	Part No	UN	Qty	Description	Page No
-					
010	2838478-0000		1	RAIL	
020	315105-0146		2	WASHER PLAIN, 5,3X10X1 A4 BRB	
030	312125-0325		2	SCREW ISO 1207 M5X10 A4	
040	353031-0203		1	END BRACKET, WEW 35/2	
A01K1010	90119-0108		1	RELAY OMRON G2R-2-SNI-24DC	
	90129-0018		*1*	*BASE, P2RF-08-E*	
A01K1010	90129-0018		1	BASE, P2RF-08-E	
A01K7000	90119-0108		1	RELAY OMRON G2R-2-SNI-24DC	
	90129-0018		*1*	*BASE, P2RF-08-E*	
A01K7000	90129-0018		1	BASE, P2RF-08-E	
W21K8000	90600-4731		1	CURRENT CONTROL RELAY, K8AB-AS2 200-230	
W21K8001	90600-4731		1	CURRENT CONTROL RELAY, K8AB-AS2 200-230	

Pos	Part No	UN	Qty	Description	Page No

DISTRIBUTION TERMINAL

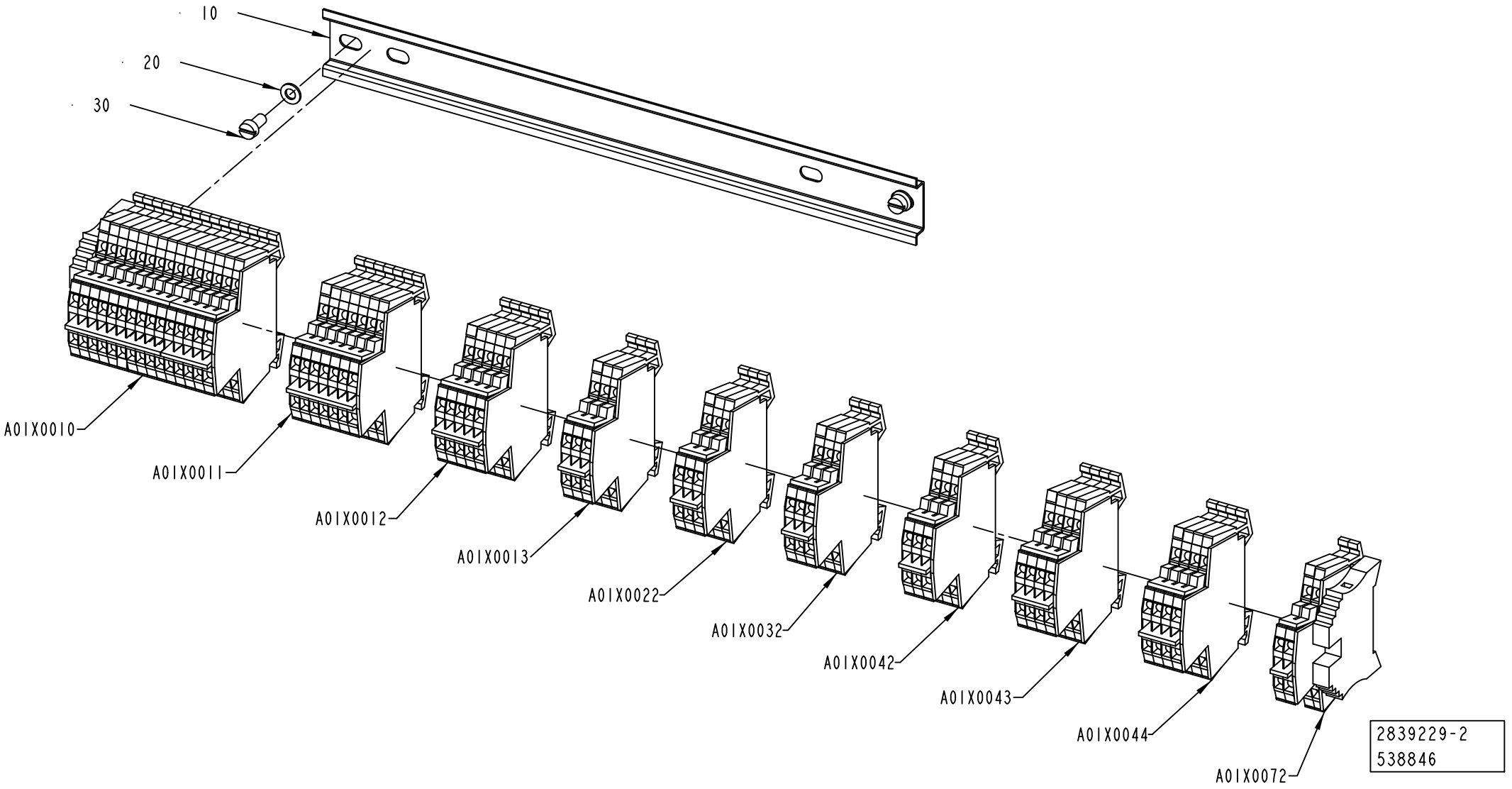

ECM: 540550 - 20120402
Group number: 2839229-0200
Assembly Drawing: 2839229-2_1_AB

Pos	Part No	UN	Qty	Description	Page No
-					
010	2838478-0000		1	RAIL	
020	315105-0146		2	WASHER PLAIN, 5,3X10X1 A4 BRB	
030	312125-0325		2	SCREW ISO 1207 M5X10 A4	
A01X0010	2839230-0100		1	PLINTH	**9-39**
A01X0011	2840909-0100		1	PLINTH	**9-41**
A01X0012	2840910-0100		1	PLINTH	**9-43**
A01X0013	2840911-0100		1	PLINTH	**9-45**
A01X0022	2840911-0100		1	PLINTH	**9-45**
A01X0032	2840911-0100		1	PLINTH	**9-45**
A01X0042	2840911-0100		1	PLINTH	**9-45**
A01X0043	2840915-0100		1	PLINTH	**9-47**
A01X0044	2840915-0100		1	PLINTH	**9-47**
A01X0072	2840917-0100		1	PLINTH	**9-49**

Pos	Part No	UN	Qty	Description	Page No

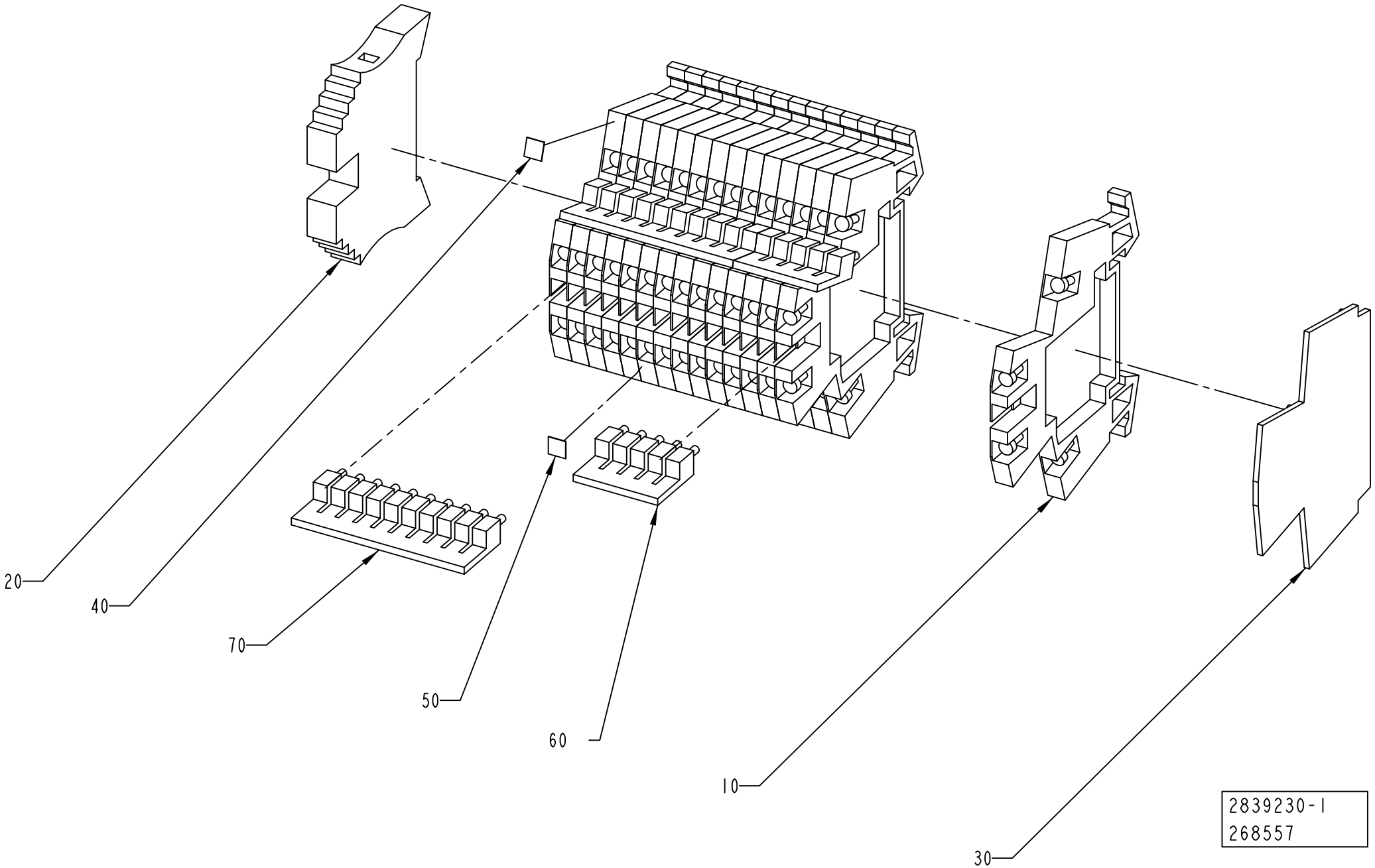
20
40
70
50
60
10
30
2839230-1
268557

ECM: 272043 - 20060925
Group number: 2839230-0100
Assembly Drawing: 2839230-1_1_AA

Pos	Part No	UN	Qty	Description	Page No
-					
010	90077-0113		15	TERMINAL BLOCK WDK 2.5	
020	353031-0203		1	END BRACKET, WEW 35/2	
030	353032-0009		1	END PLATE, WAP WDK 2,5	
040	359011-0807		1	MARKING, DEK 5 FW 1-50	
050	359011-0808		1	MARKING, DEK 5FW 51-100	
060	353034-0030		2	BRIDGE CONNECTOR WQV 2,5/10	
070	353034-0030		2	BRIDGE CONNECTOR WQV 2,5/10	

Pos	Part No	UN	Qty	Description	Page No

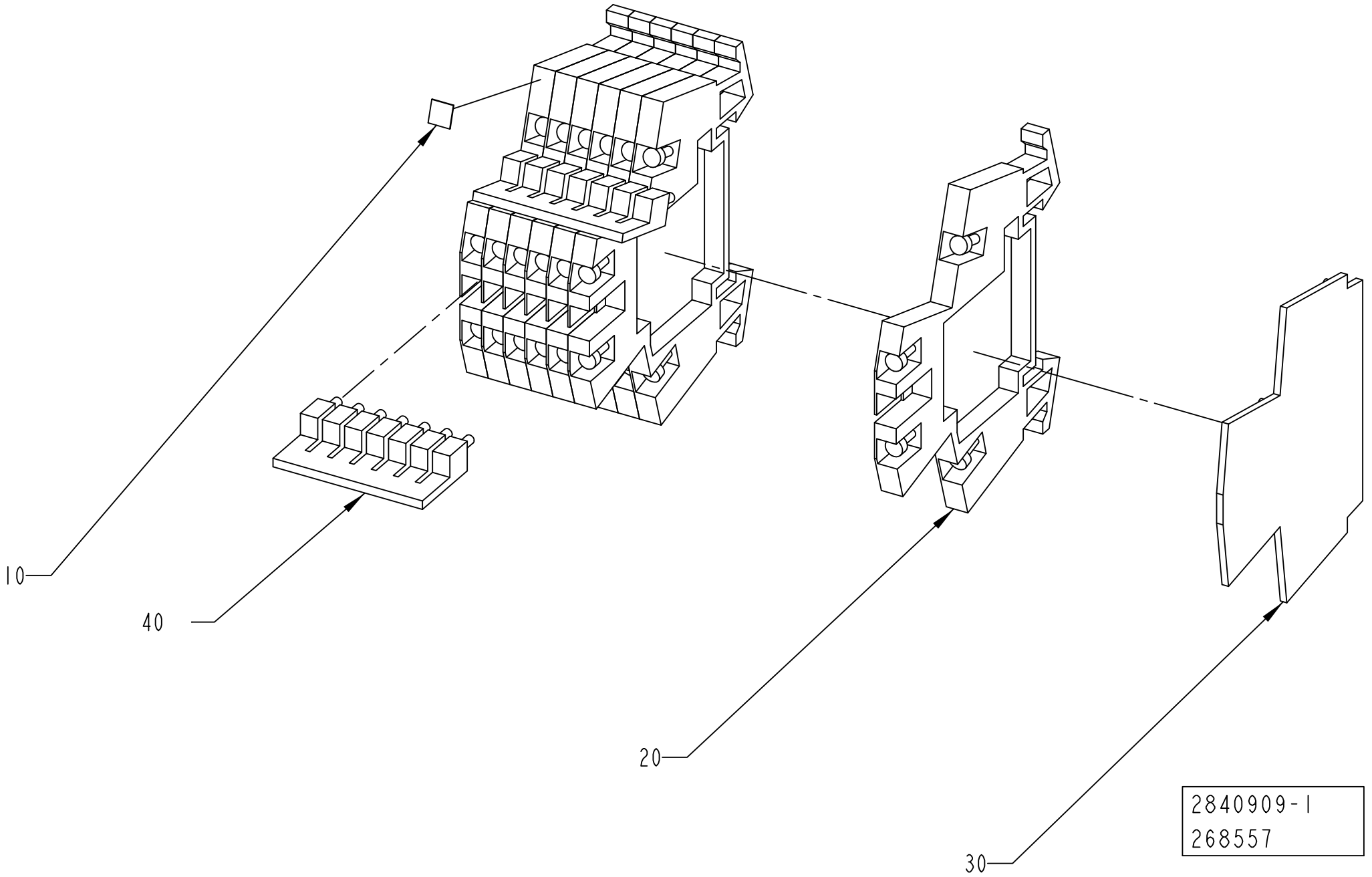
10
40
20
30
2840909-1
268557

ECM: 272044 - 20060925
Group number: 2840909-0100
Assembly Drawing: 2840909-1_1_AA

Pos	Part No	UN	Qty	Description	Page No
-					
010	359011-0807		1	MARKING, DEK 5 FW 1-50	
020	90077-0113		7	TERMINAL BLOCK WDK 2.5	
030	353032-0009		1	END PLATE, WAP WDK 2,5	
040	353034-0030		2	BRIDGE CONNECTOR WQV 2,5/10	

Pos	Part No	UN	Qty	Description	Page No

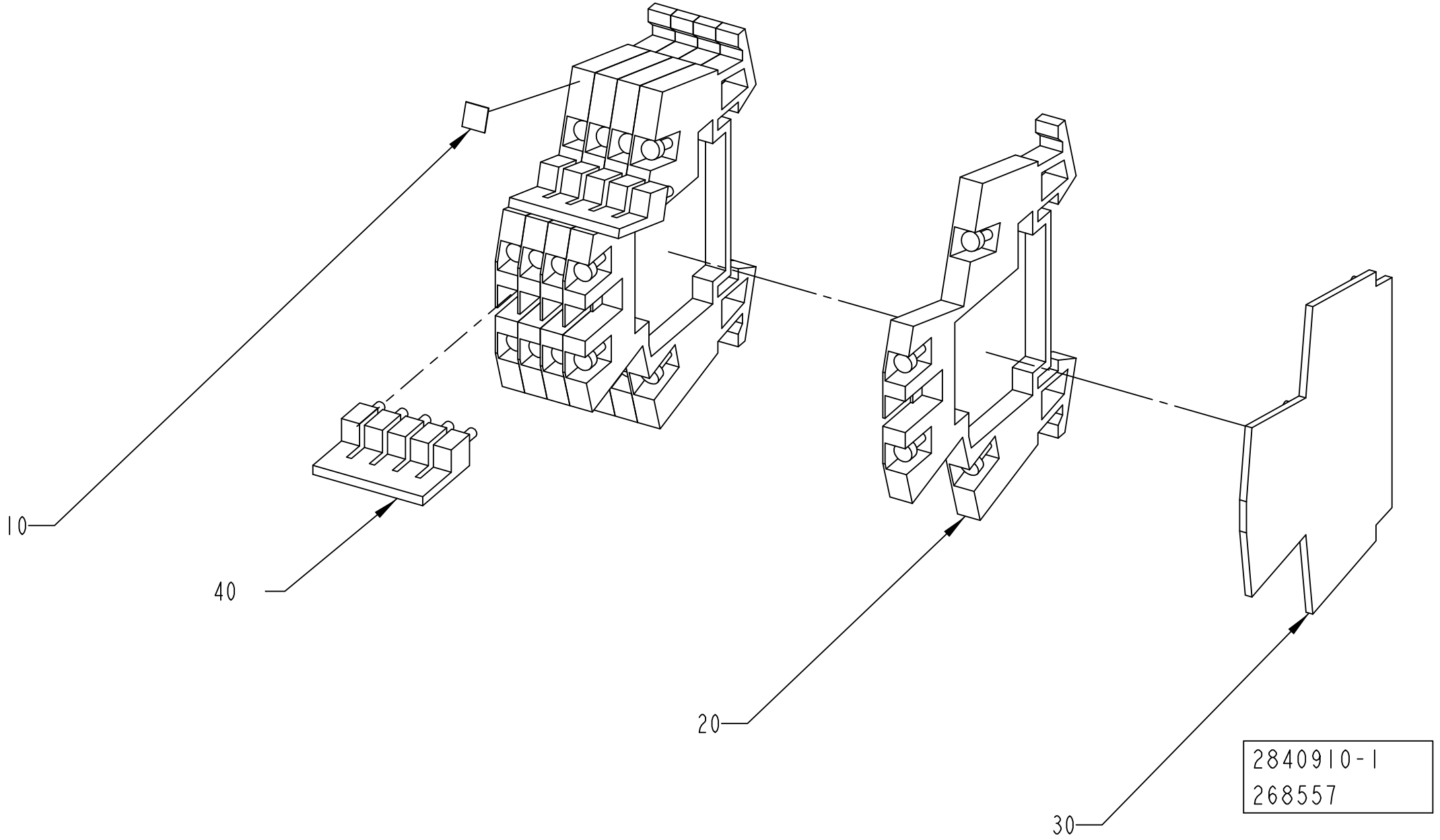
10
40
20
30
2840910-1
268557

ECM: 272045 - 20060925
Group number: 2840910-0100
Assembly Drawing: 2840910-1_1_AA

Pos	Part No	UN	Qty	Description	Page No
-					
010	359011-0807		1	MARKING, DEK 5 FW 1-50	
020	90077-0113		5	TERMINAL BLOCK WDK 2.5	
030	353032-0009		1	END PLATE, WAP WDK 2,5	
040	353034-0030		2	BRIDGE CONNECTOR WQV 2,5/10	

Pos	Part No	UN	Qty	Description	Page No

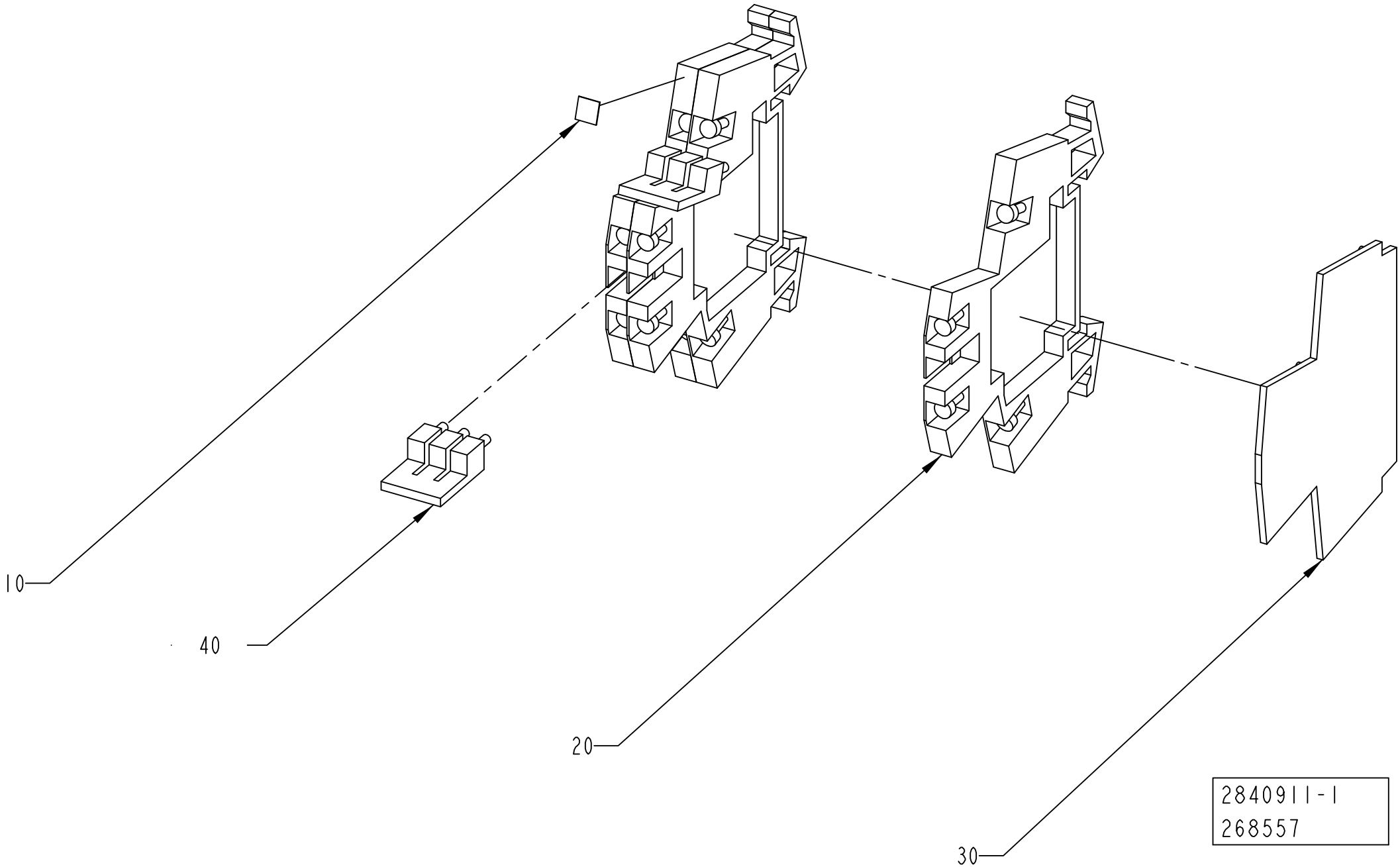
10
40
20
30
2840911-1
268557

ECM: 272046 - 20060925
Group number: 2840911-0100
Assembly Drawing: 2840911-1_1_AA

Pos	Part No	UN	Qty	Description	Page No
-					
010	359011-0807		1	MARKING, DEK 5 FW 1-50	
020	90077-0113		3	TERMINAL BLOCK WDK 2.5	
030	353032-0009		1	END PLATE, WAP WDK 2,5	
040	353034-0030		2	BRIDGE CONNECTOR WQV 2,5/10	

Pos	Part No	UN	Qty	Description	Page No

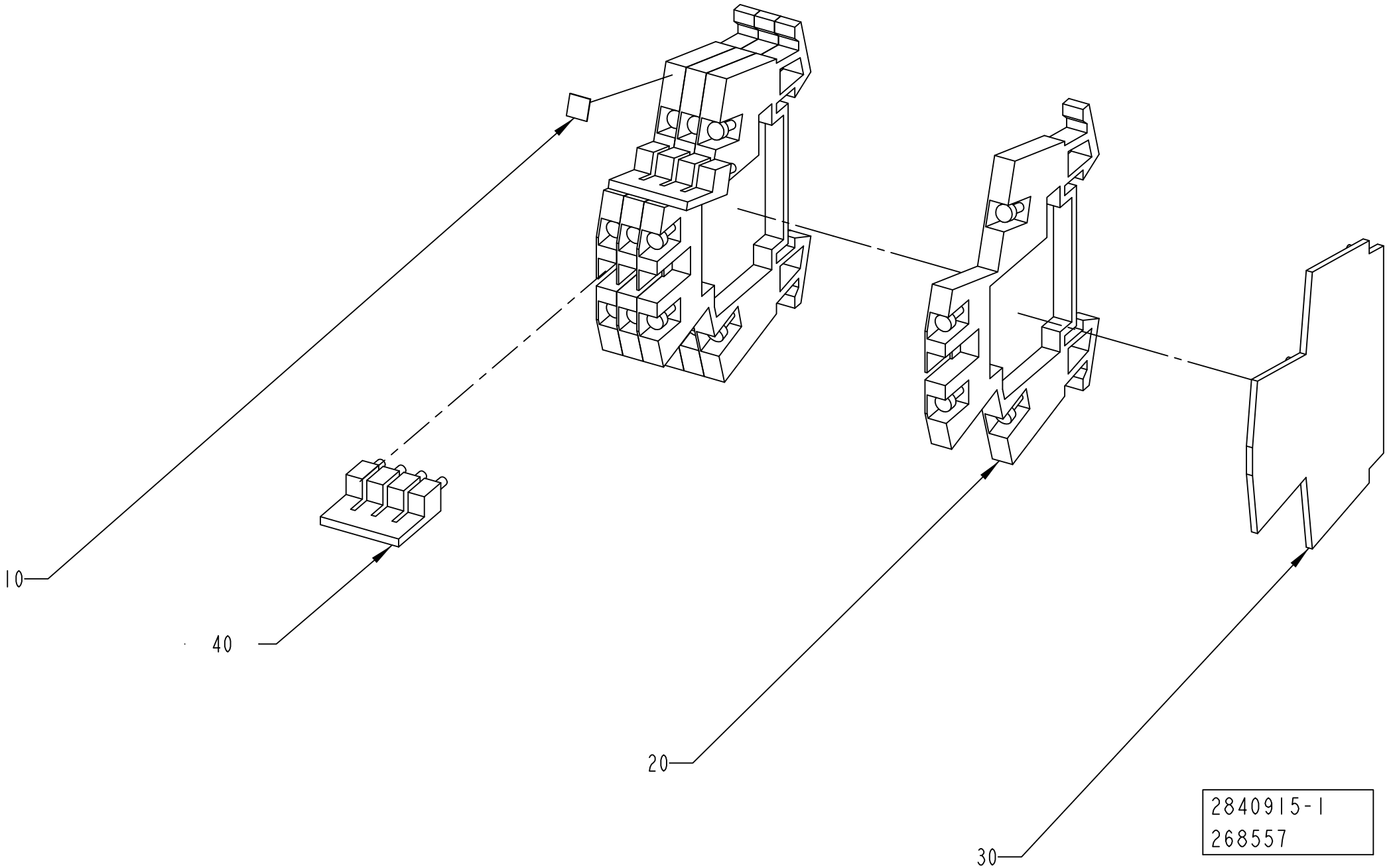
10
40
20
30
2840915-1
268557

ECM: 272047 - 20060925
Group number: 2840915-0100
Assembly Drawing: 2840915-1_1_AA

Pos	Part No	UN	Qty	Description	Page No
-					
010	359011-0807		1	MARKING, DEK 5 FW 1-50	
020	90077-0113		4	TERMINAL BLOCK WDK 2.5	
030	353032-0009		1	END PLATE, WAP WDK 2,5	
040	353034-0030		2	BRIDGE CONNECTOR WQV 2,5/10	

Pos	Part No	UN	Qty	Description	Page No

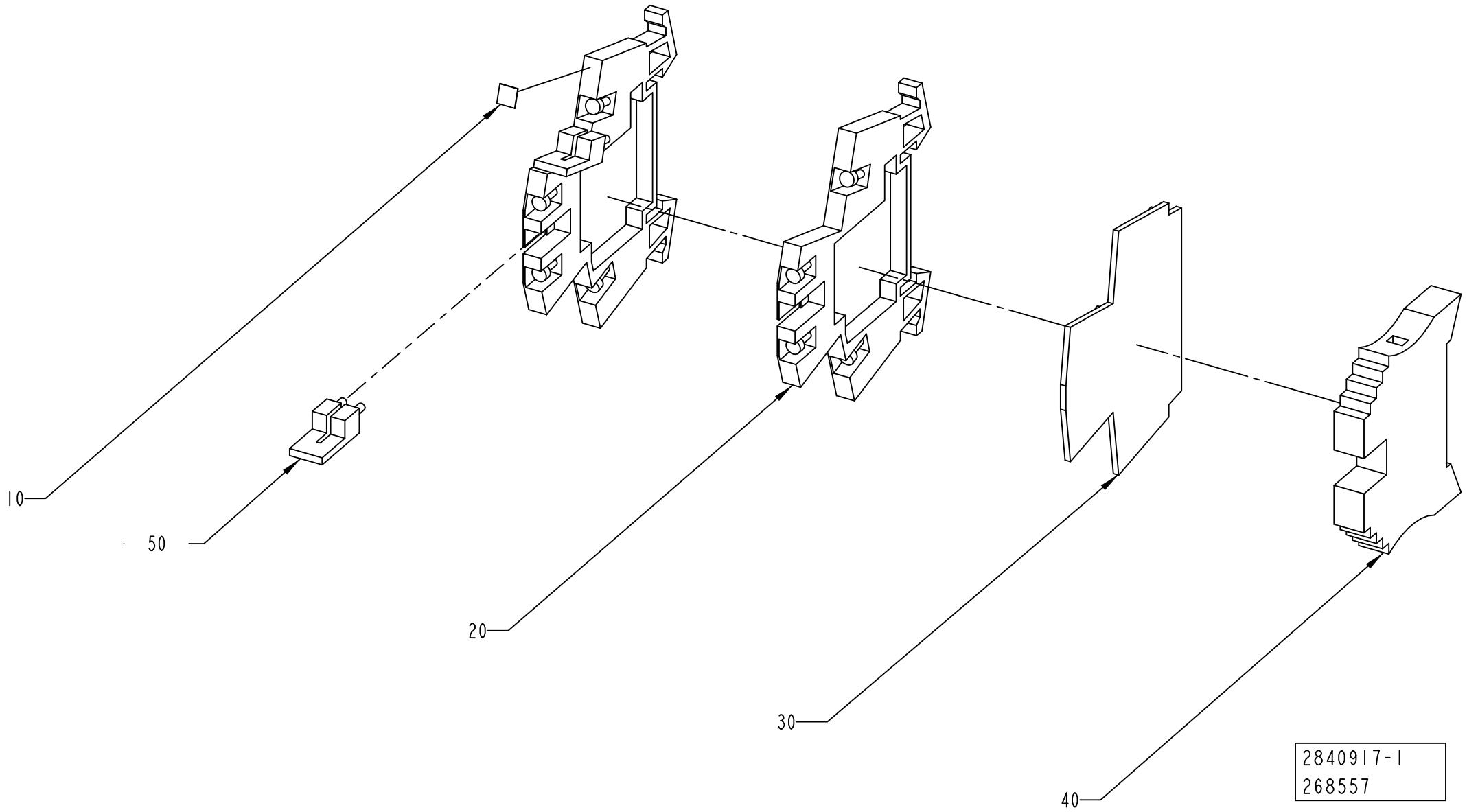
10
50
20
30
40
2840917-1
268557

ECM: 272048 - 20060925
Group number: 2840917-0100
Assembly Drawing: 2840917-1_1_AA

Pos	Part No	UN	Qty	Description	Page No
-					
010	359011-0807		1	MARKING, DEK 5 FW 1-50	
020	90077-0113		2	TERMINAL BLOCK WDK 2.5	
030	353032-0009		1	END PLATE, WAP WDK 2,5	
040	353031-0203		1	END BRACKET, WEW 35/2	
050	353034-0030		2	BRIDGE CONNECTOR WQV 2,5/10	

Pos	Part No	UN	Qty	Description	Page No

FUSE BOARD 1

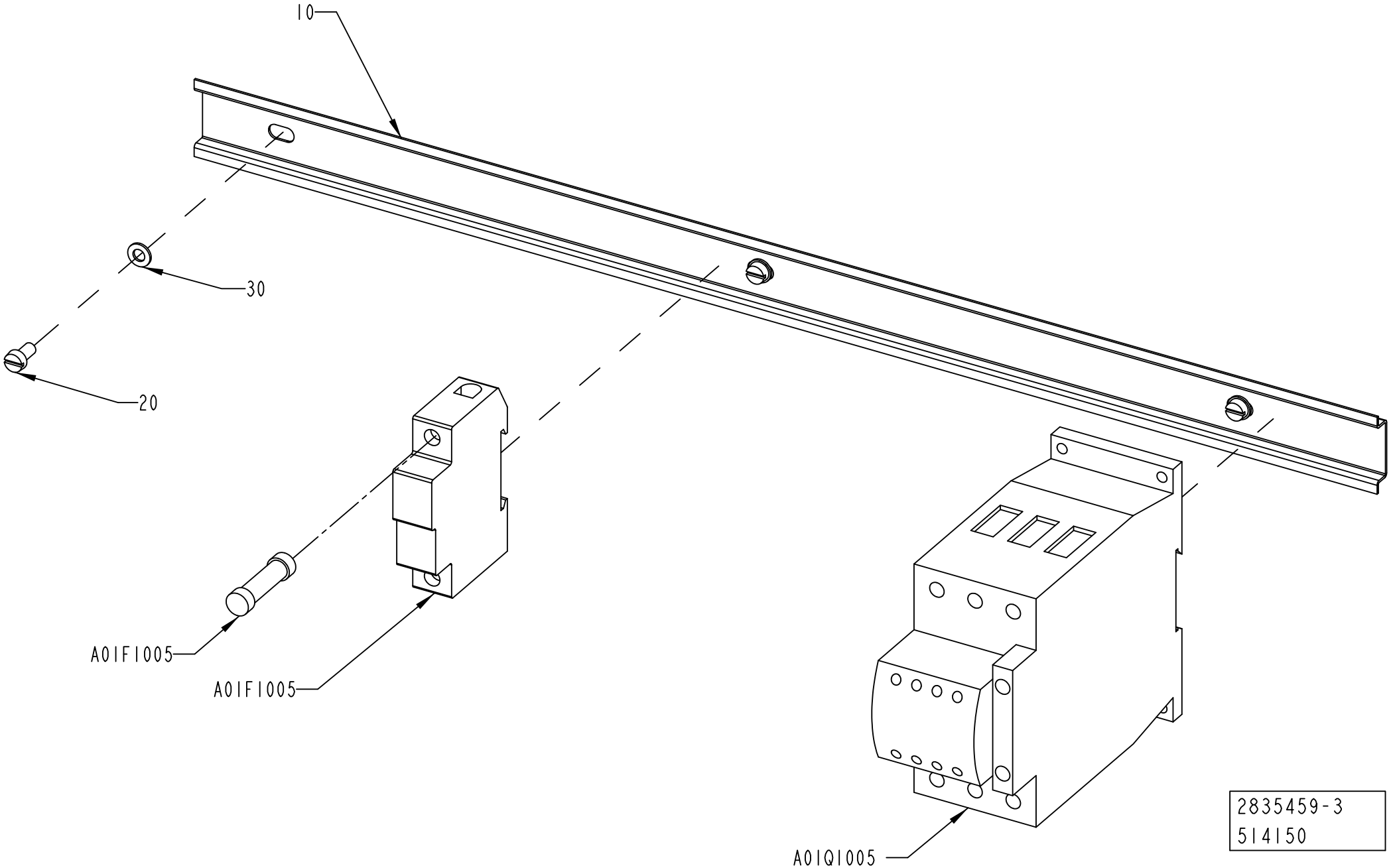

ECM: 520275 - 20120401
Group number: 2835459-0300
Assembly Drawing: 2835459-3_1_AA

Pos	Part No	UN	Qty	Description	Page No
-					
010	2835452-0000		1	RAIL	
020	312125-0325		3	SCREW ISO 1207 M5X10 A4	
030	315105-0146		3	WASHER PLAIN, 5,3X10X1 A4 BRB	
A01F1005	90458-2510		1	FUSE, ATDR6	
A01F1005	90458-2507		1	FUSE HOLDER, USBCC1	
A01Q1005	90600-1759		1	CONTACTOR22KW24VDCDILM50-22+DILM65-XIP2X	

Pos	Part No	UN	Qty	Description	Page No

FUSE BOARD 2

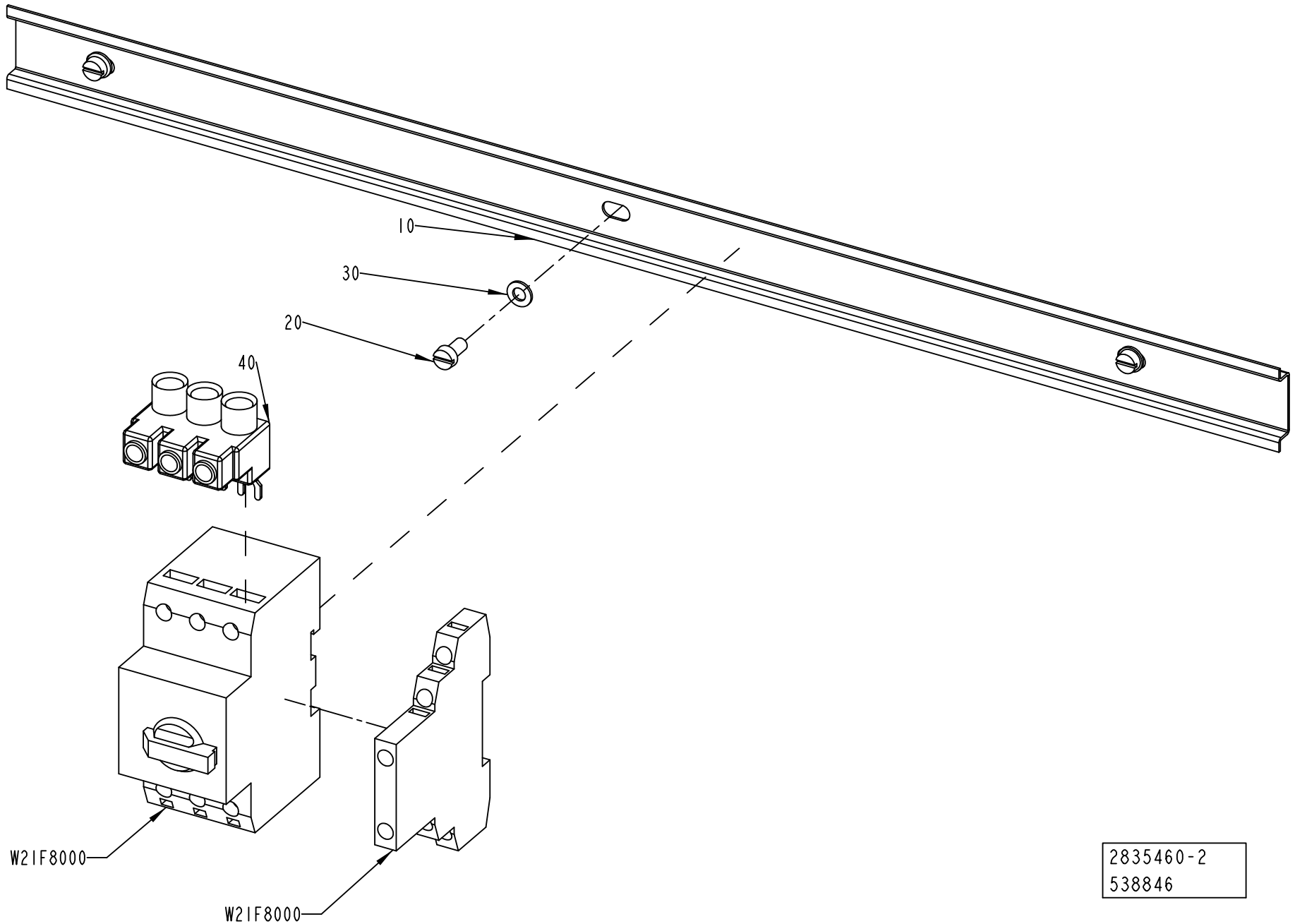

2835460-2
538846

ECM: 540553 - 20120402
Group number: 2835460-0200
Assembly Drawing: 2835460-2_1_AB

Pos	Part No	UN	Qty	Description	Page No
-					
010	2835452-0000		1	RAIL	
020	312125-0325		3	SCREW ISO 1207 M5X10 A4	
030	315105-0146		3	WASHER PLAIN, 5,3X10X1 A4 BRB	
040	90600-1461		1	INCOMING TERMINAL, BK25/3-PKZ0-E	
W21F8000	90259-0313		1	AUXILIARY SWITCH, NHI21-PKZ0	
W21F8000	90459-5326		1	OVERLOAD PROTECTION, PKZM0-4	

Pos	Part No	UN	Qty	Description	Page No

FUSE BOARD 3

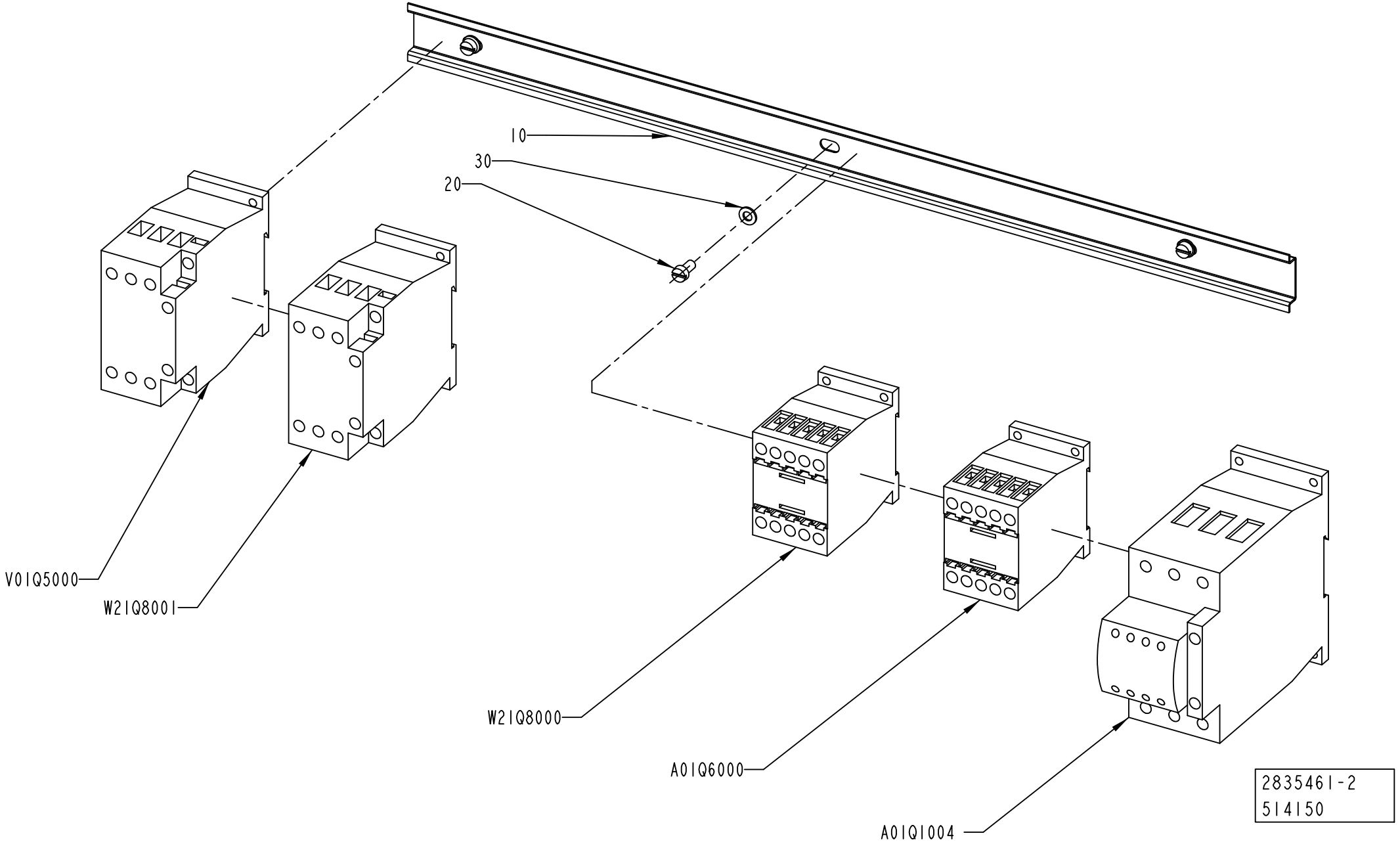
10
30
20
V01Q5000
W21Q8001
W21Q8000
A01Q6000
A01Q1004
2835461-2
514150

ECM: 521632 - 20120401
Group number: 2835461-0200
Assembly Drawing: 2835461-2_1_AA

Pos	Part No	UN	Qty	Description	Page No
-					
010	2835452-0000		1	RAIL	
020	312125-0325		3	SCREW ISO 1207 M5X10 A4	
030	315105-0146		3	WASHER PLAIN, 5,3X10X1 A4 BRB	
A01Q1004	90600-1759		1	CONTACTOR22KW24VDCDILM50-22+DILM65-XIP2X	
A01Q6000	90459-5308		1	CONTACTOR 4KW 24VDC, DILM9-10	
V01Q5000	90459-5311		1	CONTACTOR 15KW 24VDC, DILM32-10	
W21Q8000	90459-5308		1	CONTACTOR 4KW 24VDC, DILM9-10	
W21Q8001	90459-5309		1	CONTACTOR 7,5KW 24VDC, DILM17-10	

Pos	Part No	UN	Qty	Description	Page No

MOTOR DRIVE CONTROL

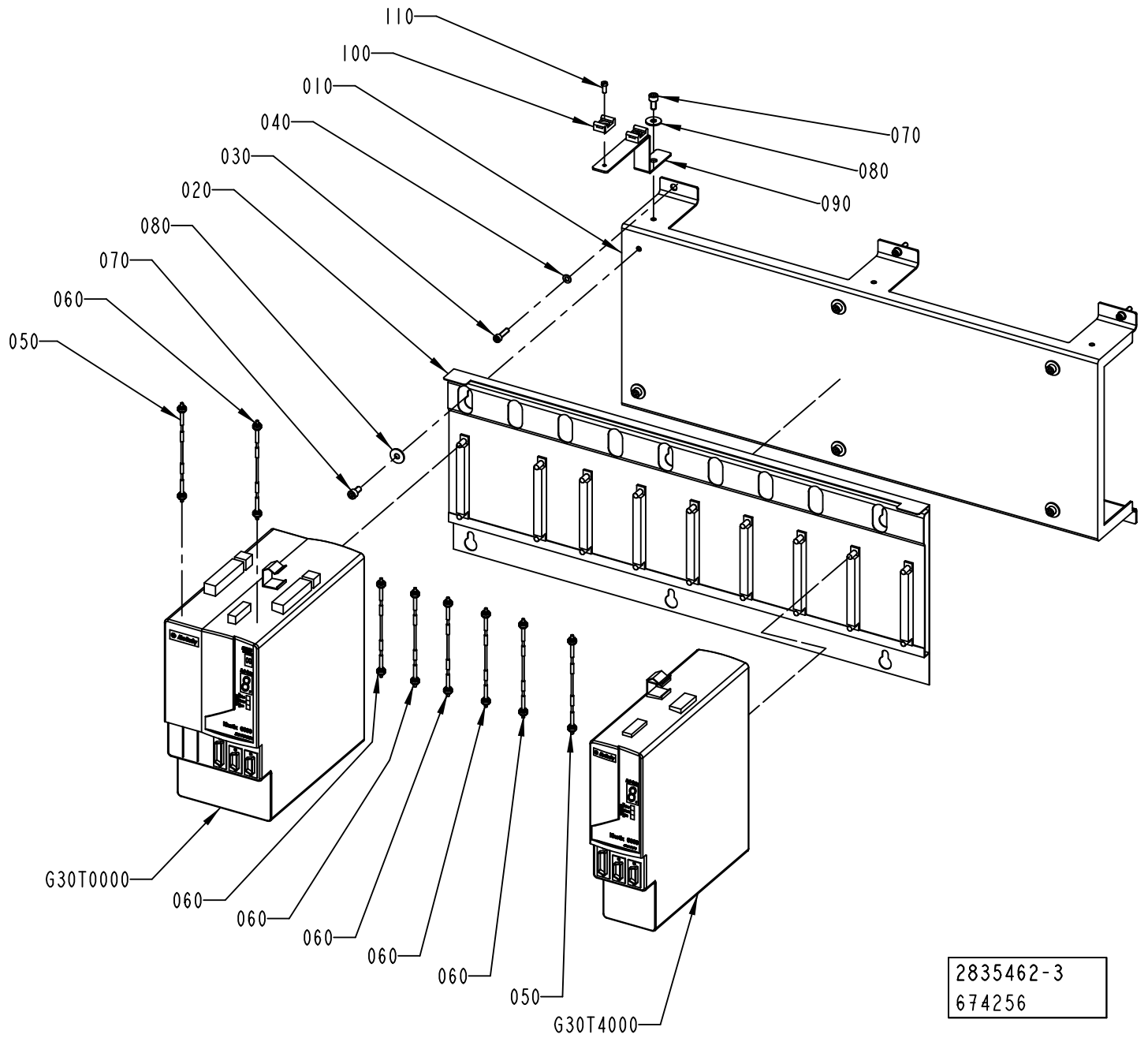

ECM: 680177 - 20141001
Group number: 2835462-0300
Assembly Drawing: 2835462-3_1_AB

Pos	Part No	UN	Qty	Description	Page No
-					
010	2790710-0000		1	BRACKET	
020	90459-5195		1	SLIM POWER RAIL,KINETIX,8 AXIS,2094-PRS8	
030	312115-0331		6	SCREW ISO4762 M5X20 A4 80	
040	315105-0146		6	WASHER PLAIN, 5,3X10X1 A4 BRB	
050	90459-2540		2	5008240, 2090-SCEP3-0	
060	90459-2536		6	SERCOS CABLE 0.1M, 2090-SCEP0-1	
070	312115-0366		6	SCREW ISO4762 M6X12 A4 80	
080	90005-0060		7	WASHER PLAIN, RBS 6,4/M6)/18,H=1,5	
090	2839226-0000		1	FLANGE	
100	352113-0203		2	ANCHOR PLATES FOR STRIPS, TM3S8-M0	
110	312125-0289		2	SCREW	
120	312115-0366		1	SCREW ISO4762 M6X12 A4 80	
G30T0000	90606-2001		1	AXIS MOD. W. PS,2094-BC02-M02-S SERIES C	
G30T4000	90606-2004		1	AXIS MOD. KINETIX 6000,2094-BM01-S SER.C	

Pos	Part No	UN	Qty	Description	Page No

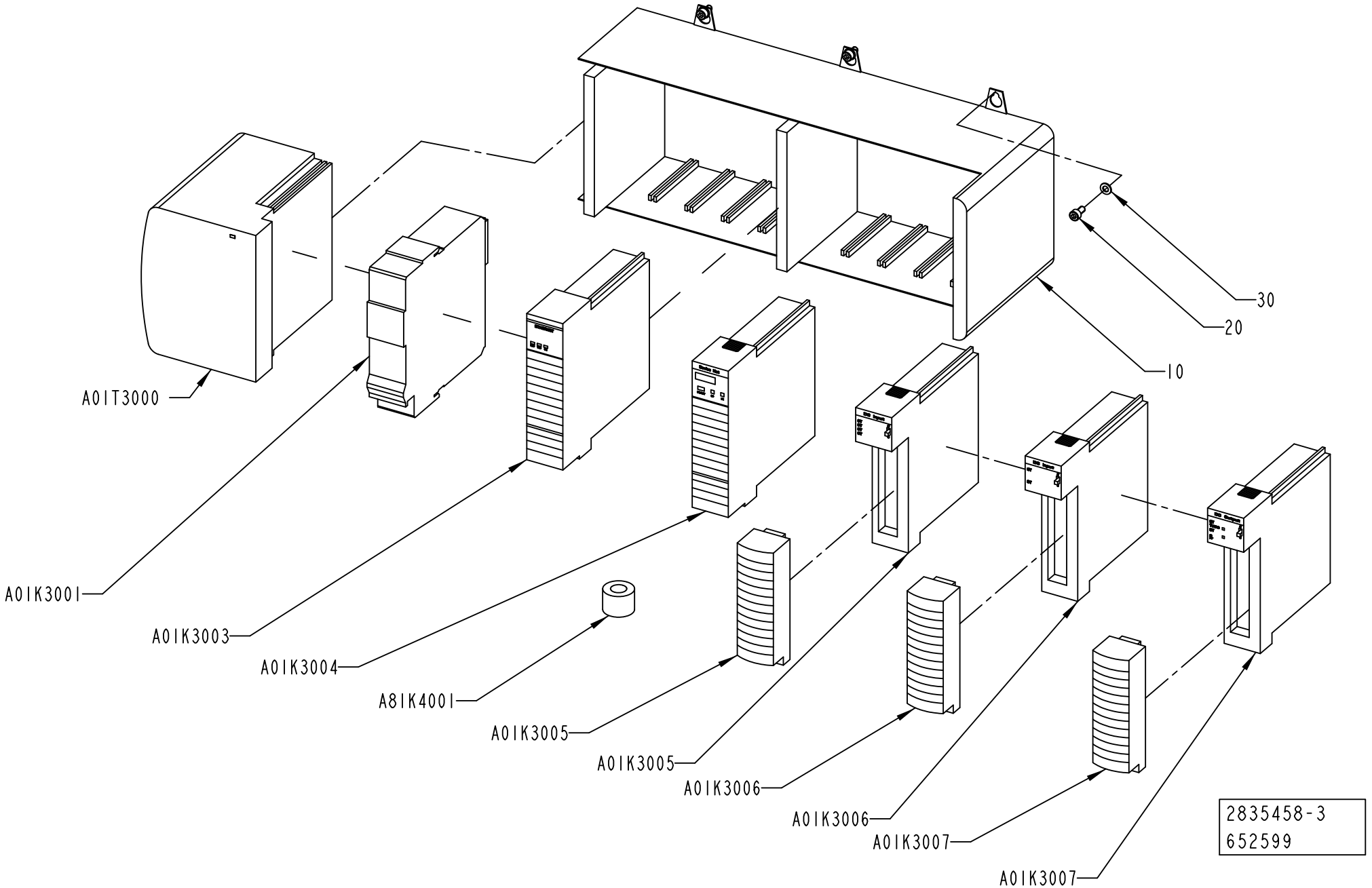
A01T3000
A01K3001
A01K3003
A01K3004
A81K4001
A01K3005
A01K3005
A01K3006
A01K3006
A01K3007
A01K3007
10
20
30
2835458-3
652599

ECM: 652605 - 20140401
Group number: 2835458-0300
Assembly Drawing: 2835458-3_1_AC

Pos	Part No	UN	Qty	Description	Page No
-					
010	90459-2458		1	SEPLATE, 10 SLOT CONTROLLOGIX CHASSIS	
020	312115-0325		6	SCREW ISO4762 M5X10 A4 80	
030	315105-0146		6	WASHER PLAIN, 5,3X10X1 A4 BRB	
A01K3001	90605-2744		1	PROCESSOR L72, SERIES B, 1756-L72/B	
A01K3003	90459-2477		1	5008206, 1756-ENBT	
A01K3004	90605-2064		1	DEVICENET SCANNER MOD., 1756-DNB, SER. E	
A01K3005	90459-6556		1	PLC DIGITAL INPUT 32PTS, 1756-IB32/B	
A01K3005	90459-2488		1	REMOVABLE TERMINAL BLOCK 36 POINTS	
A01K3006	90459-2413		1	PLC DIGITAL INPUT MODULE16 POINTS	
A01K3006	90459-2487		1	REMOVABLE TERMINAL BLOCK 20 POINTS	
A01K3007	90459-2487		1	REMOVABLE TERMINAL BLOCK 20 POINTS	
A01K3007	90459-2474		1	5008203, DIGIT. OUTPUT MODULE 16 PTS 10-	
A81K4001	90600-5249		1	FERRITE, B64290L616X38	
A01T3000	90459-7267		1	POWER SUPPLY 24VDC, 1756-PB75/B	

Pos	Part No	UN	Qty	Description	Page No

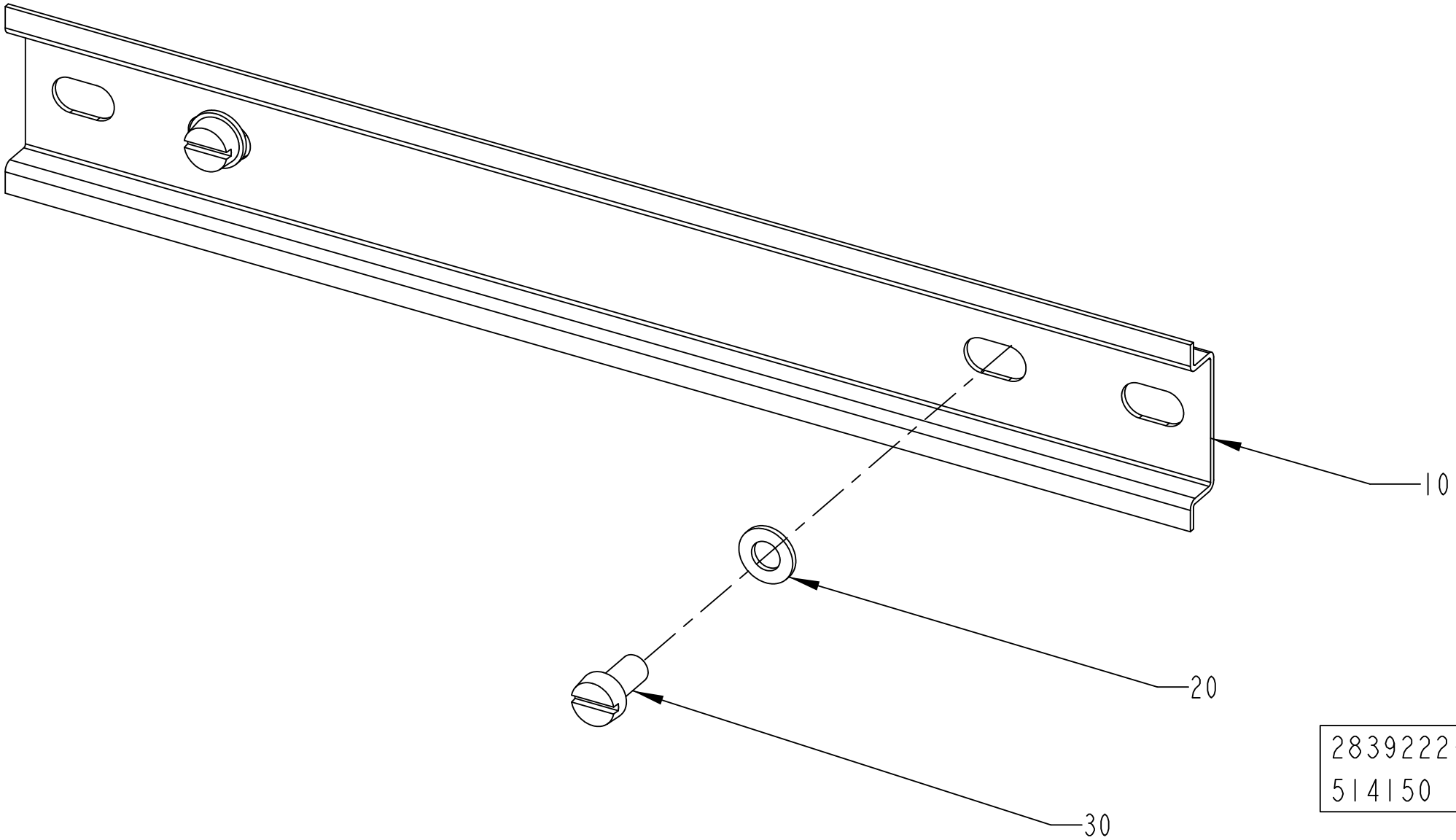

2839222-2
514150

ECM: 520274 - 20120401
Group number: 2839222-0200
Assembly Drawing: 2839222-2_1_AA

Pos	Part No	UN	Qty	Description	Page No
-					
010	2835454-0000		1	RAIL	
020	315105-0146		2	WASHER PLAIN, 5,3X10X1 A4 BRB	
030	312125-0325		2	SCREW ISO 1207 M5X10 A4	

Pos	Part No	UN	Qty	Description	Page No

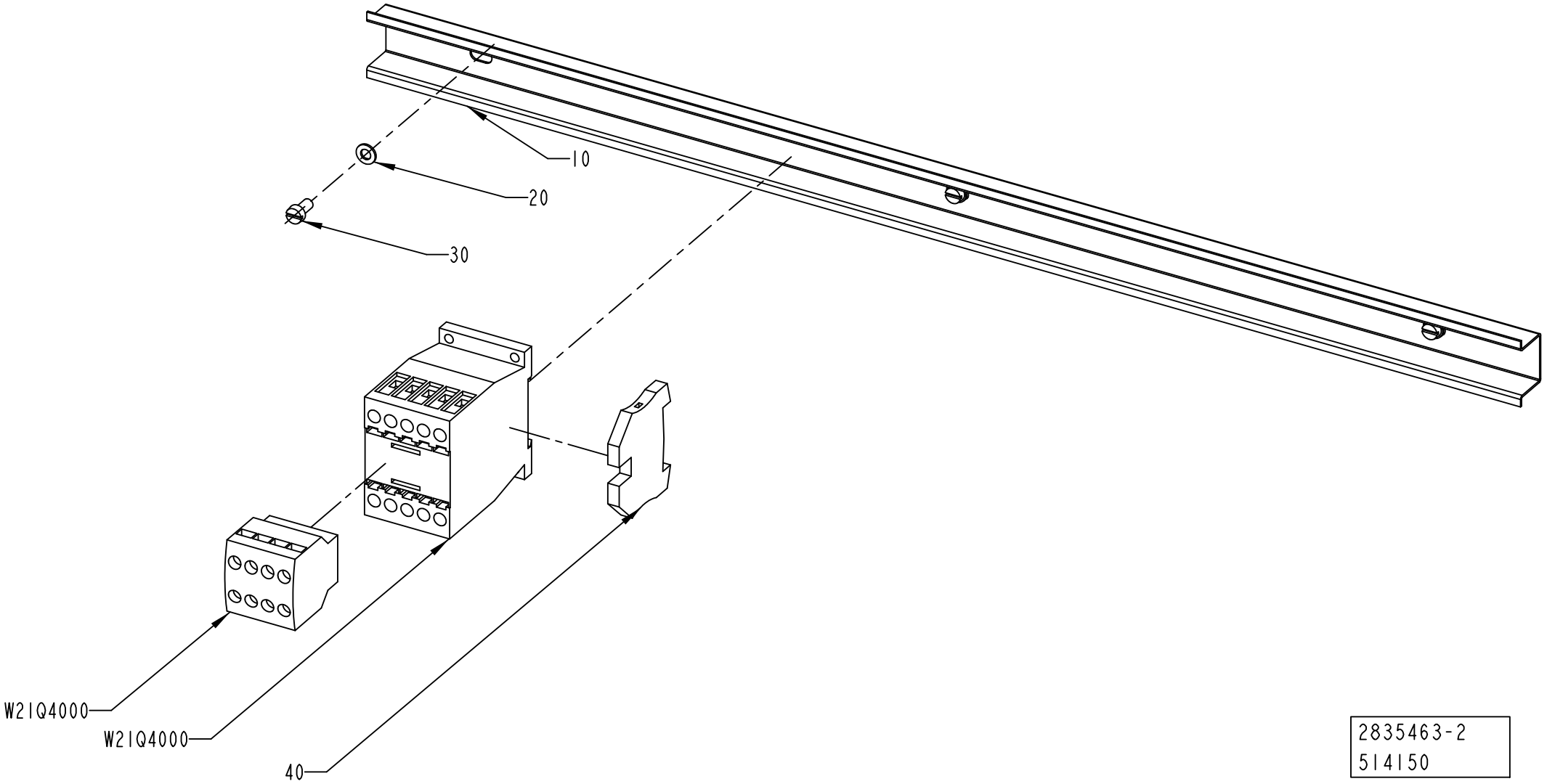

2835463-2
514150

ECM: 521633 - 20120401
Group number: 2835463-0200
Assembly Drawing: 2835463-2_1_AA

Pos	Part No	UN	Qty	Description	Page No
-					
010	2835455-0000		1	RAIL	
020	315105-0146		3	WASHER PLAIN, 5,3X10X1 A4 BRB	
030	312125-0325		3	SCREW ISO 1207 M5X10 A4	
040	353024-0205		1	EARTH TERMINAL WPE 4	
W21Q4000	90459-6852		1	AUXILIARY CONTACT, DILA-XHI22	
W21Q4000	90459-5308		1	CONTACTOR 4KW 24VDC, DILM9-10	

Pos	Part No	UN	Qty	Description	Page No

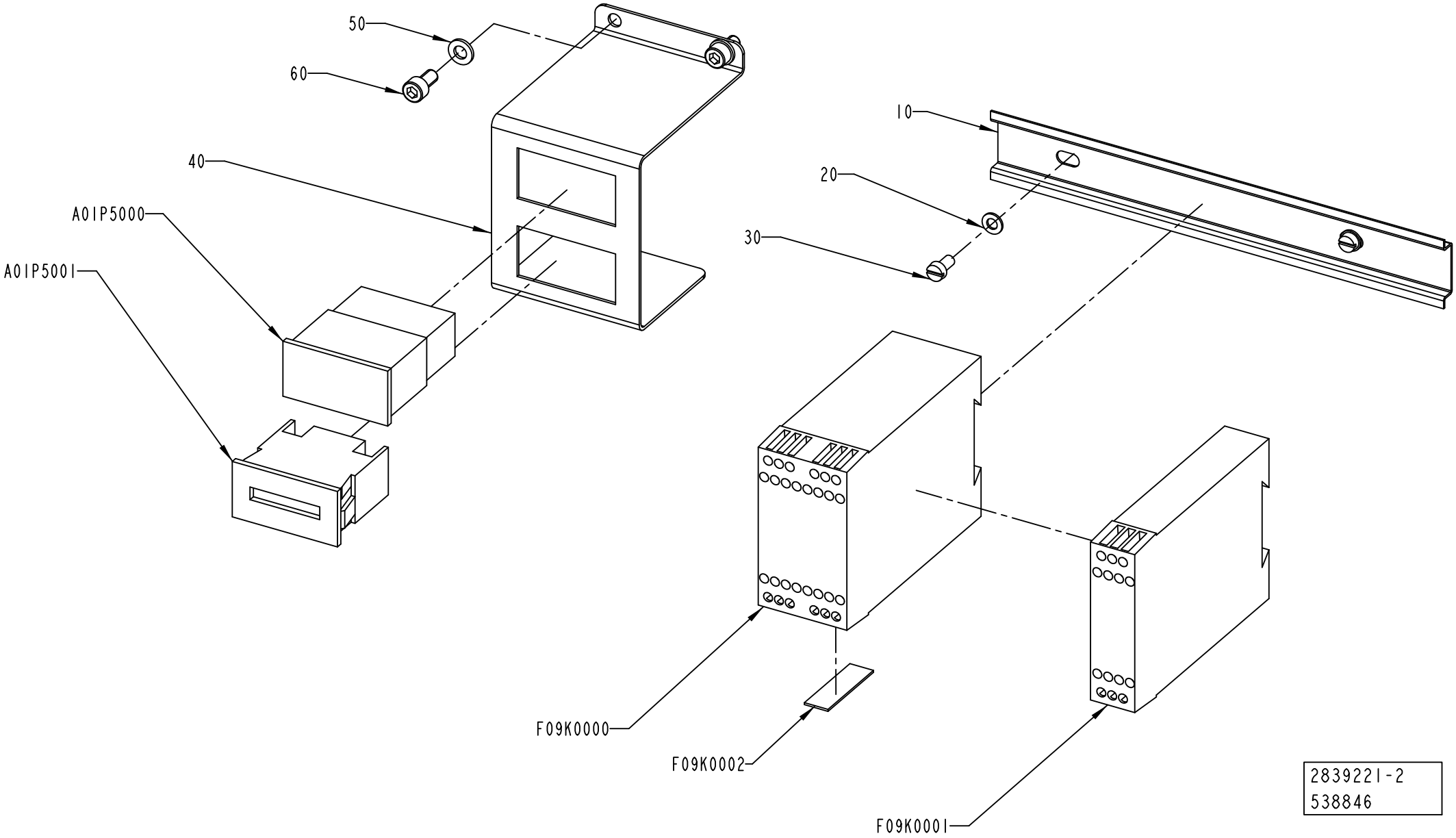
50
60
40
A01P5000
A01P5001
10
20
30
F09K0000
F09K0002
F09K0001
2839221-2
538846

ECM: 540609 - 20120402
Group number: 2839221-0200
Assembly Drawing: 2839221-2_1_AB

Pos	Part No	UN	Qty	Description	Page No
-					
010	2835453-0000		1	RAIL	
020	315105-0146		2	WASHER PLAIN, 5,3X10X1 A4 BRB	
030	312125-0325		2	SCREW ISO 1207 M5X10 A4	
040	2839227-0000		1	SUPPORT	
050	315105-0153		2	WASHER PLAIN, 6,4X12X1,5 A4 BRB	
060	312115-0366		2	SCREW ISO4762 M6X12 A4 80	
A01P5000	90053-0029		1	COUNTER, F524.800FA3C 24VDC	
A01P5001	90053-0031		1	HOUR COUNTER, B 609.10 10-50VDC	
F09K0000	90459-6692		1	SAFETY PLC, PLUTO B20 20-070-06	
F09K0001	90459-2291		1	SAFETY RELAY, E1T	
F09K0002	90459-4891		1	IDENTIFIER, ID-FIX RW	

Pos	Part No	UN	Qty	Description	Page No

POWER SUPPLY UNIT

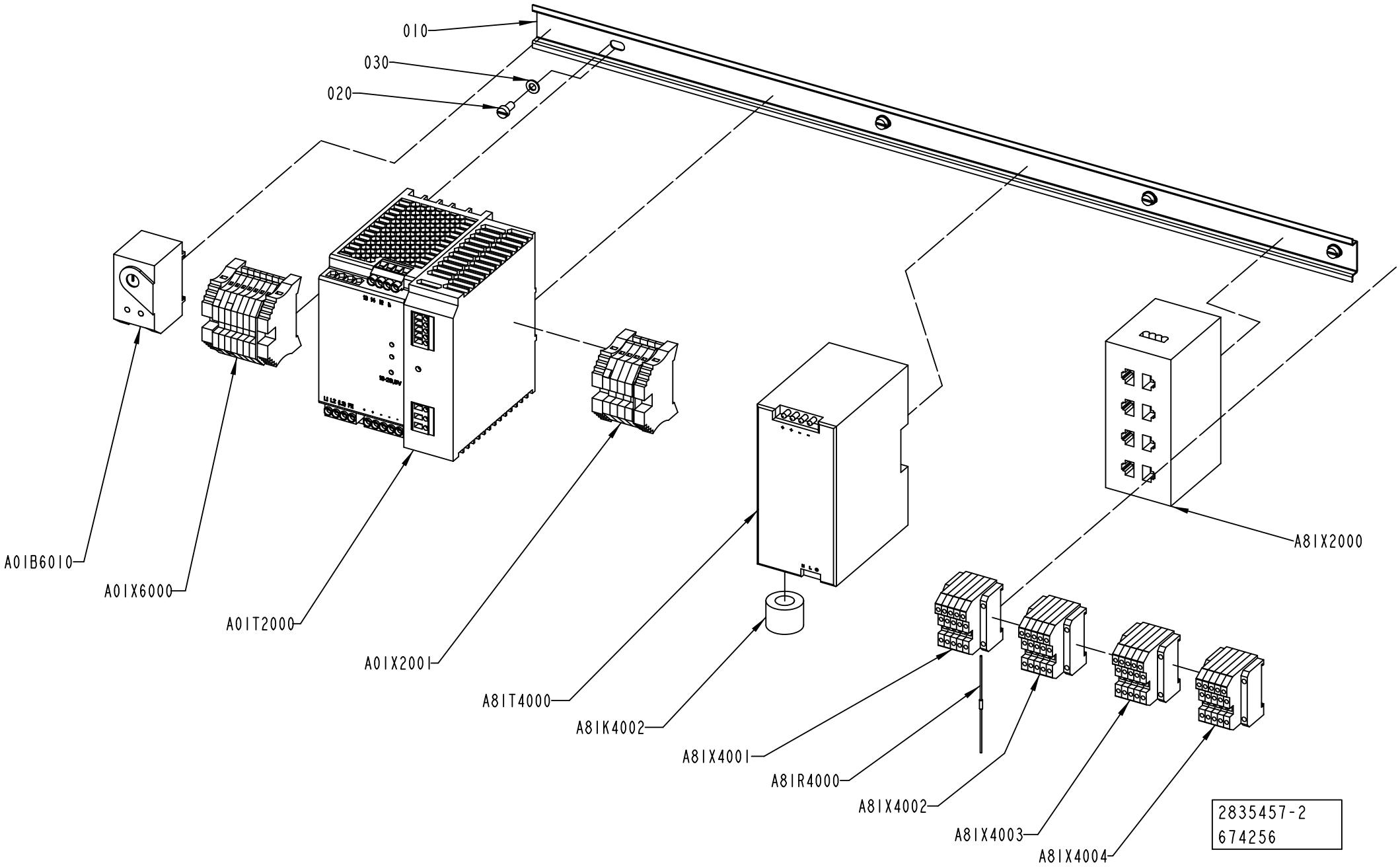

ECM: 680468 - 20141001
Group number: 2835457-0200
Assembly Drawing: 2835457-2_1_AC

Pos	Part No	UN	Qty	Description	Page No
-					
010	2838476-0000		1	RAIL	
020	312125-0325		4	SCREW ISO 1207 M5X10 A4	
030	315105-0146		4	WASHER PLAIN, 5,3X10X1 A4 BRB	
A01B6010	90606-0465		1	THERMOSTAT, XSEKTS011	
A81K4002	90600-5249		1	FERRITE, B64290L616X38	
A81R4000	90459-2523		1	TERMINATOR, OPEN STYLE, 1485A-C2	
A01T2000	90602-8988		1	POWER SUPPLY, QUINT-PS/ 3AC/24DC/20	
	90602-8987		*1*	*FILTER, TP-NEF/20A*	
	90602-8687		*1*	*POWER SUPPLY, QUINT-PS/ 3AC/24DC/20*	
A81T4000	90459-5886		1	POWER SUPPLY UNIT 115-230 VAC/24VDC100W	
A01X2001	3363694-0100		1	PLINTH	**9-69**
A01X6000	2890591-0200		1	PLINTH	**9-71**
A81X2000	90600-1848		1	ETHERNET SW, FL SWITCH SFN 8TX	
A81X4001	90459-2519		1	TAP, OPEN STYLE	
A81X4002	90459-2519		1	TAP, OPEN STYLE	
A81X4003	90459-2519		1	TAP, OPEN STYLE	
A81X4004	90459-2519		1	TAP, OPEN STYLE	

Pos	Part No	UN	Qty	Description	Page No

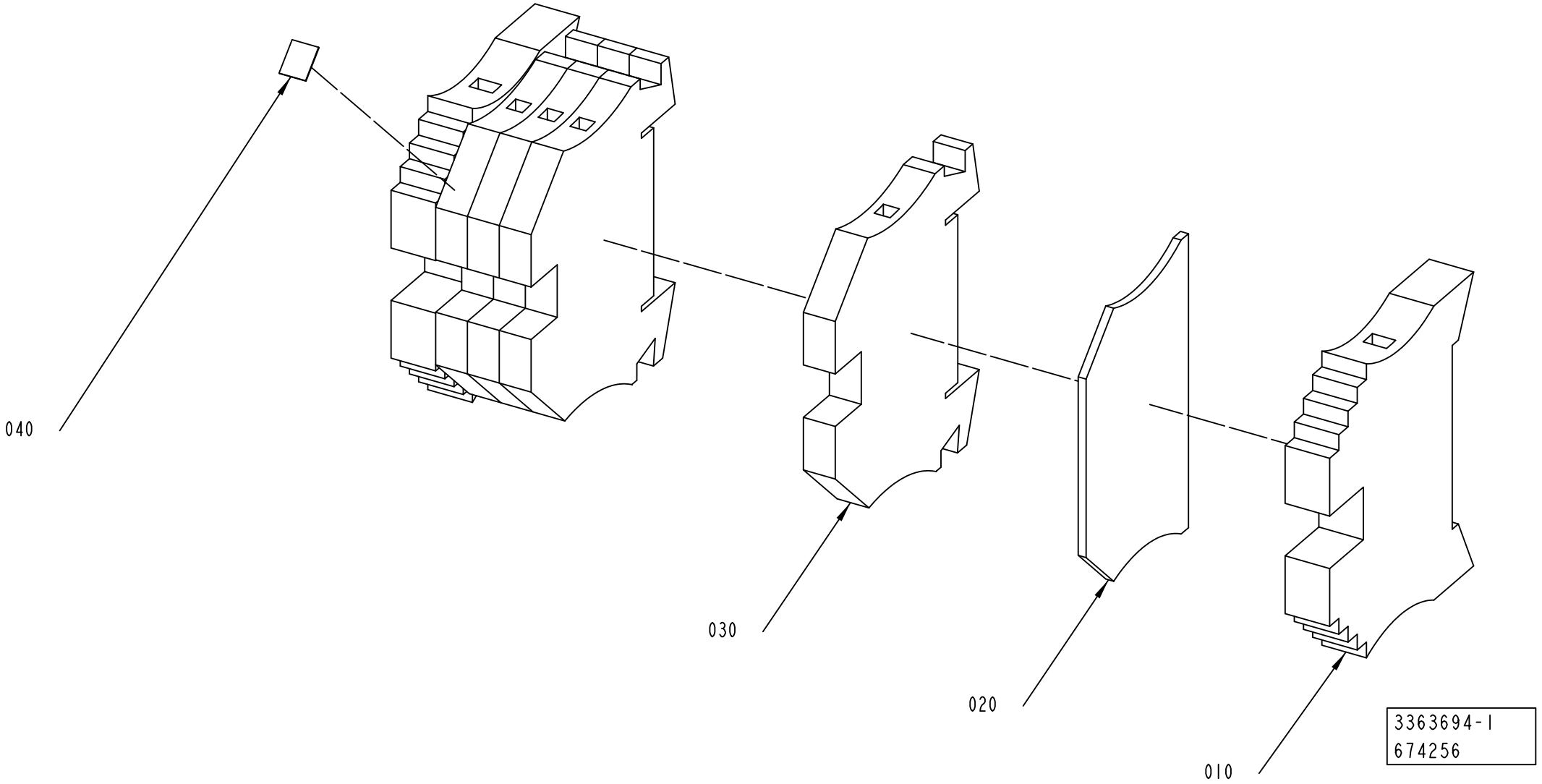
040
030
020
010
3363694-1
674256

ECM: 683470 - 20141001
Group number: 3363694-0100
Assembly Drawing: 3363694-1_1_AA

Pos	Part No	UN	Qty	Description	Page No
-					
010	353031-0203		2	END BRACKET, WEW 35/2	
020	353032-0004		1	END PLATE, WAP 2,5-10, BEIGE	
030	353021-0213		4	FEED THROUGH TERMINAL, WDU 4	
040	359011-0821		1	MARKING, DEK 6 FW 1-50	

Pos	Part No	UN	Qty	Description	Page No

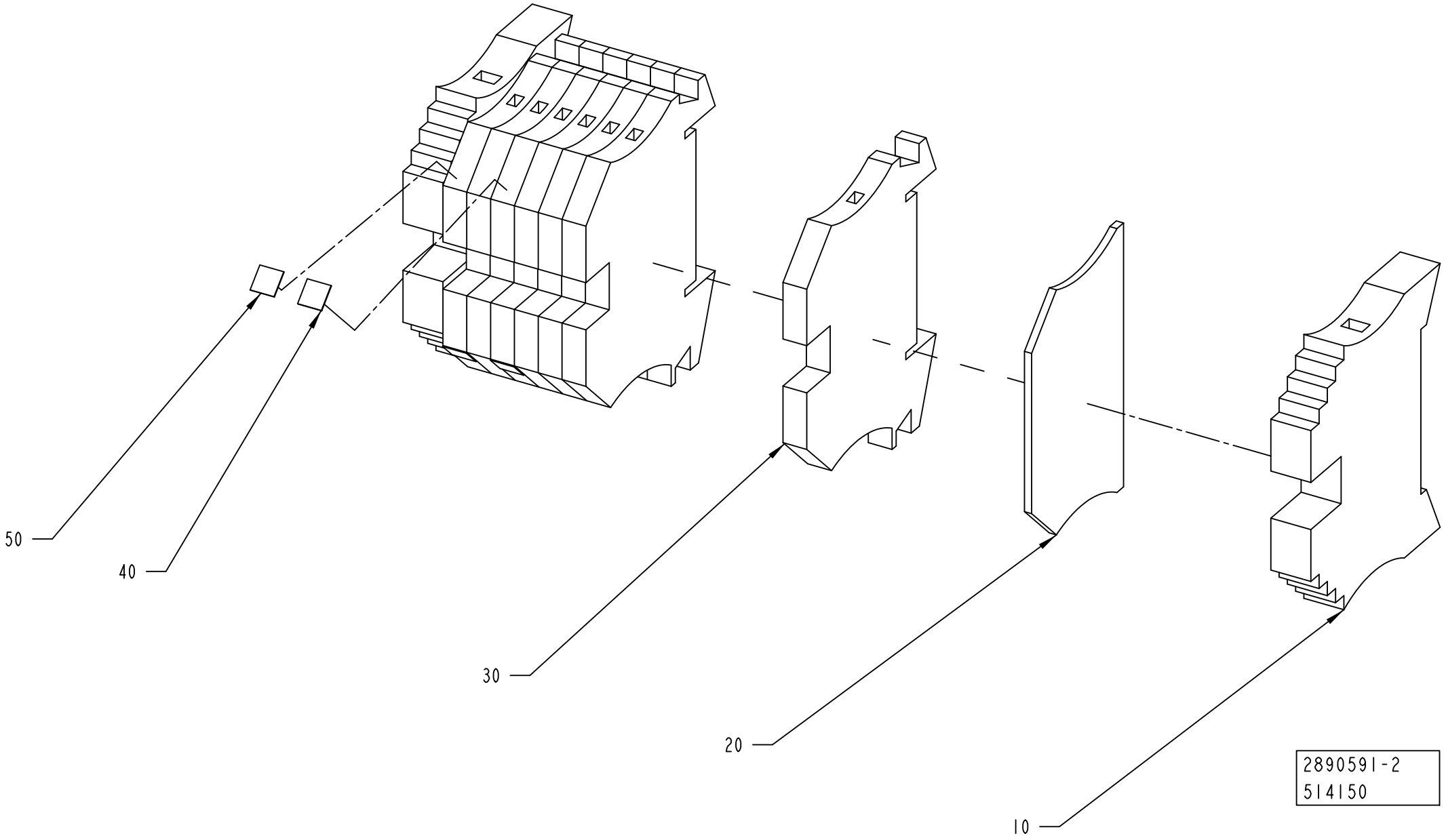
50
40
30
20
10
2890591-2
514150

ECM: 533135 - 20120401
Group number: 2890591-0200
Assembly Drawing: 2890591-2_1_AA

Pos	Part No	UN	Qty	Description	Page No
-					
010	353031-0203		2	END BRACKET, WEW 35/2	
020	353032-0004		1	END PLATE, WAP 2,5-10, BEIGE	
030	353021-0212		7	FEED THROUGH TERMINAL, WDU 2,5	
040	359011-0819		2	MARKING, EARTH, DEK 5 GW ERDE I.KR.	
050	359011-0807		2	MARKING, DEK 5 FW 1-50	

Pos	Part No	UN	Qty	Description	Page No

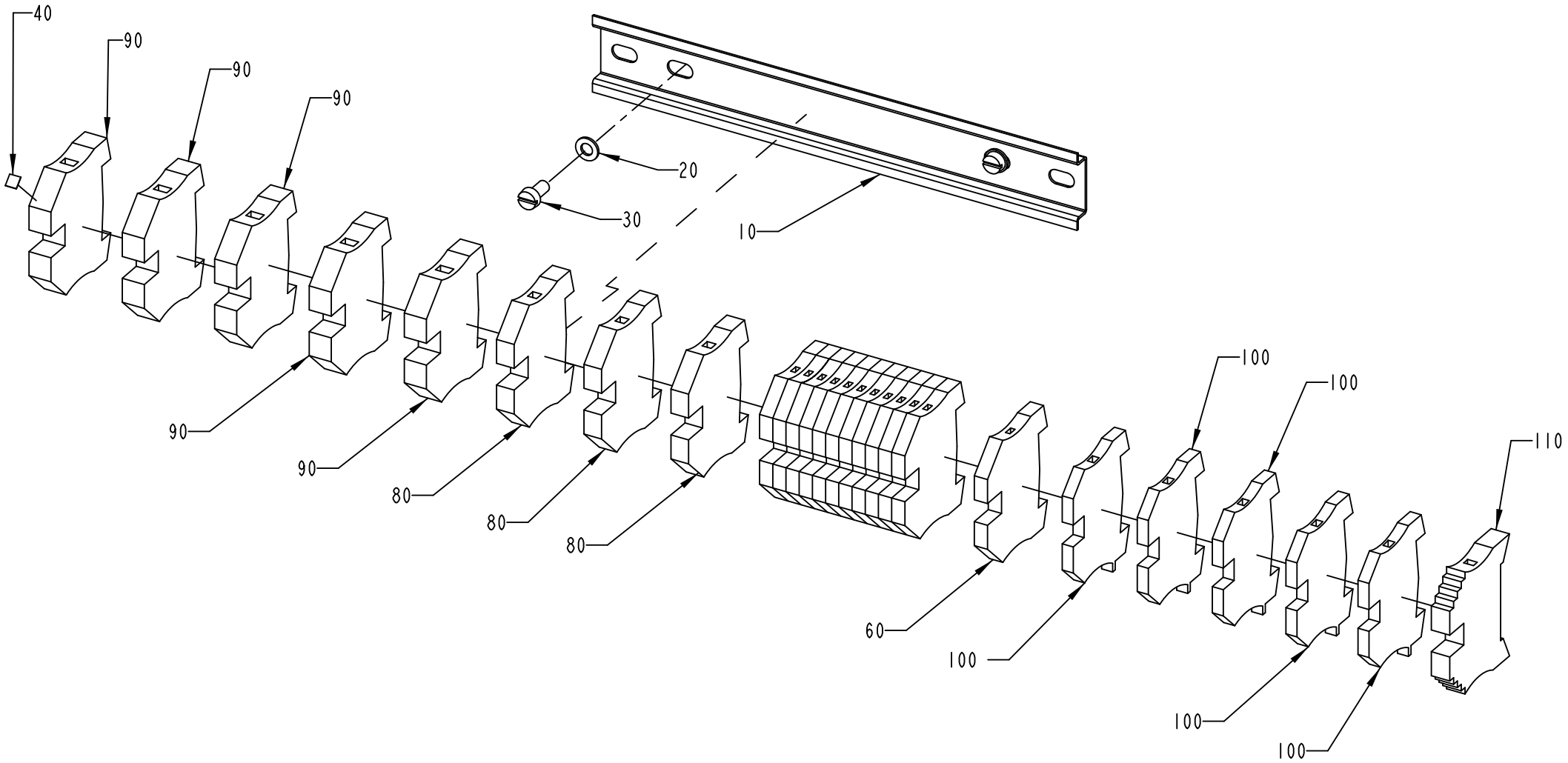

2839223-2
560424

ECM: 560740 - 20121001
Group number: 2839223-0200
Assembly Drawing: 2839223-2_1_AB

Pos	Part No	UN	Qty	Description	Page No
-					
010	2835454-0000		1	RAIL	
020	315105-0146		2	WASHER PLAIN, 5,3X10X1 A4 BRB	
030	312125-0325		2	SCREW ISO 1207 M5X10 A4	
040	359011-0807		1	MARKING, DEK 5 FW 1-50	
060	353024-0205		12	EARTH TERMINAL WPE 4	
080	353024-0206		3	EARTH TERMINAL WPE 6	
090	353024-0207		5	EARTH TERMINAL WPE 10	
100	353024-0204		5	EARTH TERMINAL WPE 2,5	
110	353031-0203		1	END BRACKET, WEW 35/2	

Pos	Part No	UN	Qty	Description	Page No

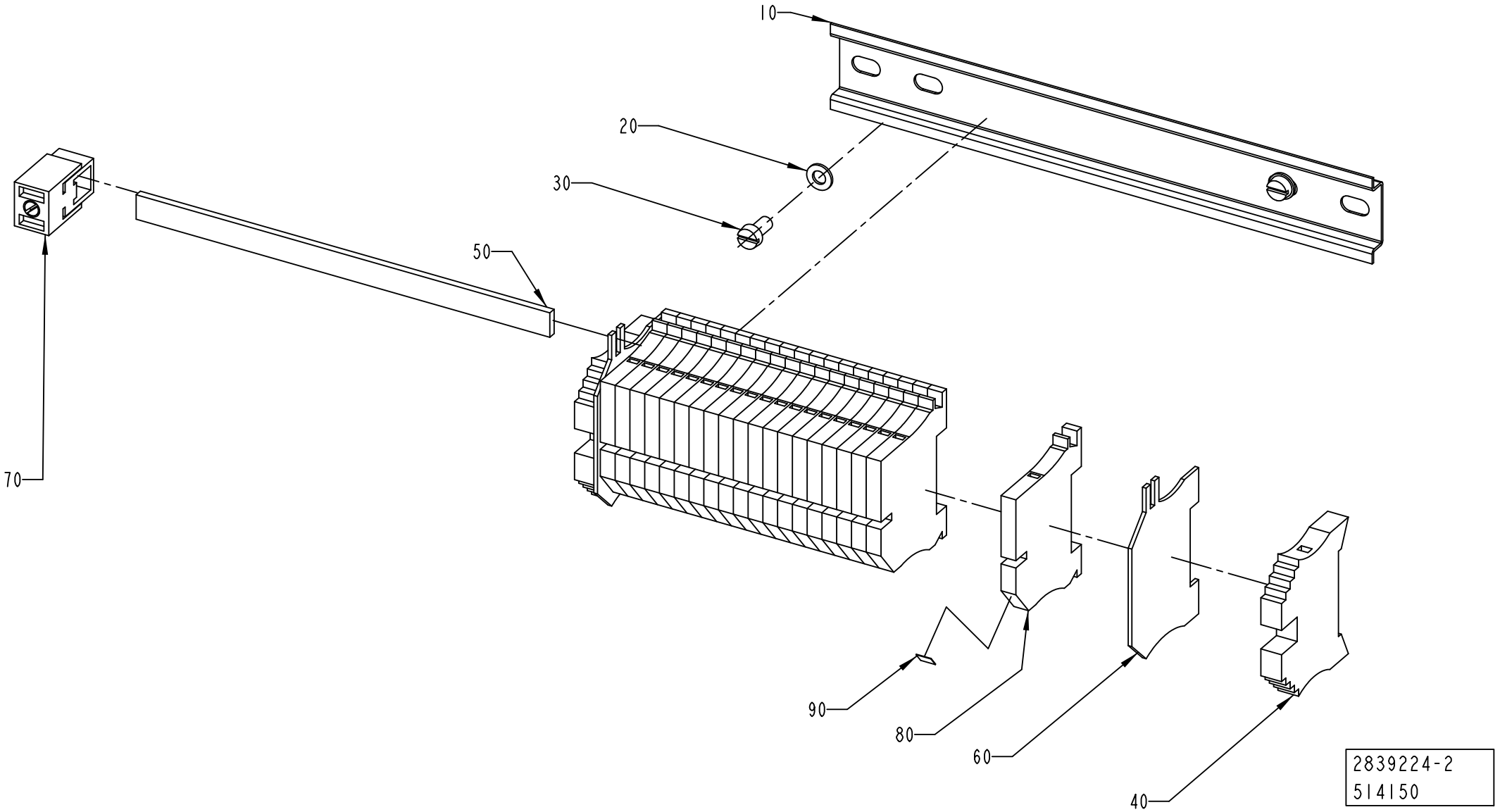
10
20
30
50
70
90
80
60
40
2839224-2
514150

ECM: 521631 - 20120401
Group number: 2839224-0200
Assembly Drawing: 2839224-2_1_AA

Pos	Part No	UN	Qty	Description	Page No
-					
010	2835454-0000		1	RAIL	
020	315105-0146		2	WASHER PLAIN, 5,3X10X1 A4 BRB	
030	312125-0325		2	SCREW ISO 1207 M5X10 A4	
040	353031-0203		2	END BRACKET, WEW 35/2	
050	353041-0001	MM	165	BUS BAR RAIL 10X3MM SSCH	
060	353033-0104		2	END PLATE, WHP2,5-35N/10X3 BL	
070	353041-0106		1	HOLDER ZB35 K 5026.8	
080	353022-0002		20	TERMINAL WNT 4 10X3	
090	359011-0821		1	MARKING, DEK 6 FW 1-50	

Pos	Part No	UN	Qty	Description	Page No

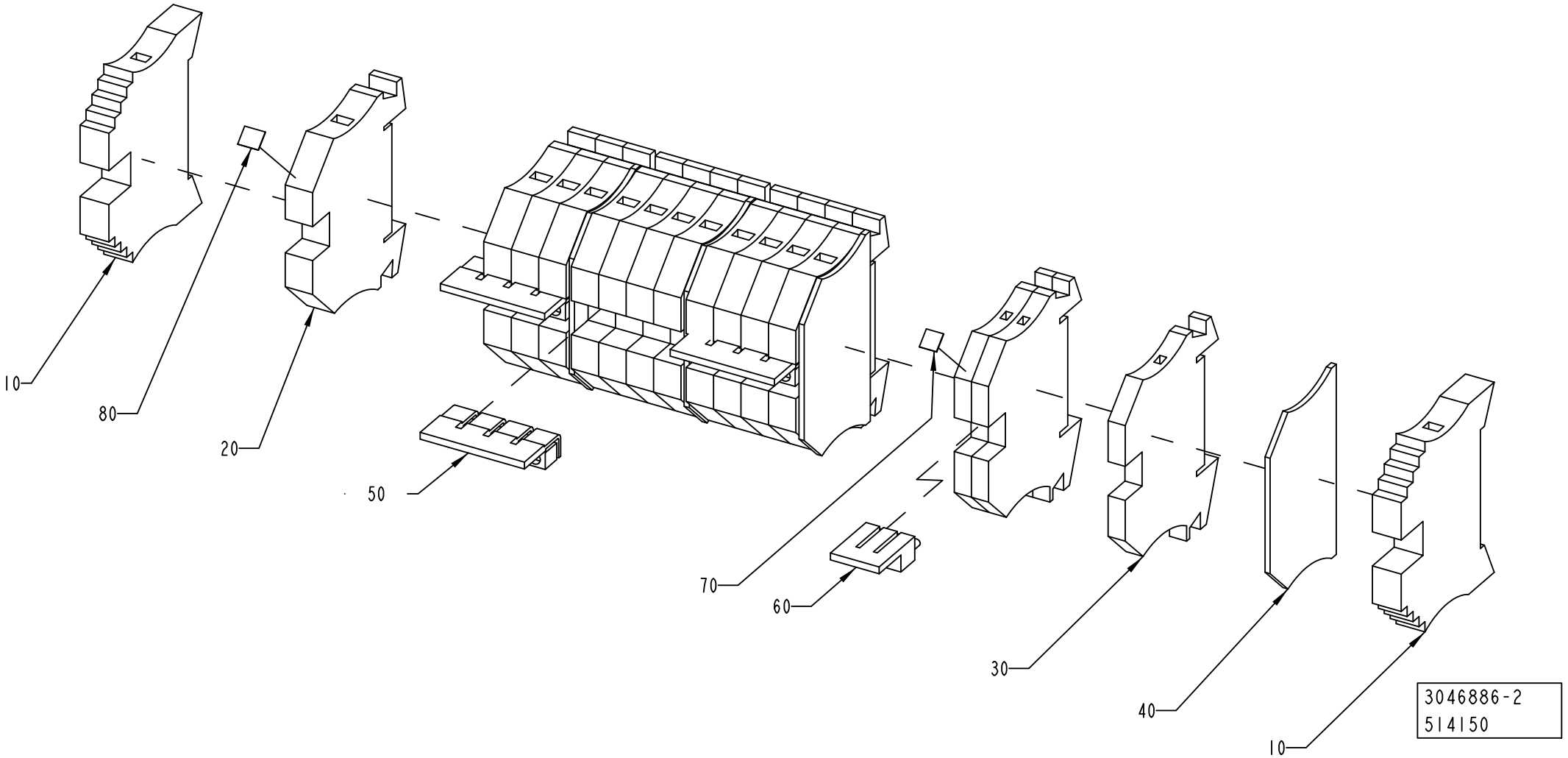
10
80
20
50
70
60
30
40
10
3046886-2
514150

ECM: 521634 - 20120401
Group number: 3046886-0200
Assembly Drawing: 3046886-2_1_AA

Pos	Part No	UN	Qty	Description	Page No
-					
010	353031-0203		2	END BRACKET, WEW 35/2	
020	353021-0214		12	FEED THROUGH TERMINAL, WDU 6	
030	353021-0212		3	FEED THROUGH TERMINAL, WDU 2,5	
040	353032-0004		4	END PLATE, WAP 2,5-10, BEIGE	
050	353034-0032		3	BRIDGE CONNECTOR WQV 6/10	
060	353034-0042		1	BRIDGE CONNECTOR WQV 2,5/3	
070	359011-0807		1	MARKING, DEK 5 FW 1-50	
080	359011-0821		1	MARKING, DEK 6 FW 1-50	

Pos	Part No	UN	Qty	Description	Page No

This page is intentionally left blank.

ECM: 563922 - 20121001
Group number: 2833409-0200
Assembly Drawing:

Pos	Part No	UN	Qty	Description	Page No
-					
010	351160-0105	M	4	WIRE AWM 1X2,5 MM2 DARKBLUE	
020	351160-0106	M	5	WIRE AWM 1X4 MM2 DARKBLUE	
030	351161-0104	M	13	WIRE AWM 1X1,5 MM2 LIGHTBLUE	
040	351161-0105	M	20	WIRE AWM 1X2,5 MM2 LIGHTBLUE	
050	351161-0106	M	2.6	WIRE AWM 1X4 MM2 LIGHTBLUE	
060	351161-0107	M	2.6	WIRE AWM 1X6 MM2 LIGHTBLUE	
070	351161-0109	M	2.6	WIRE AWM 1X16 MM2 LIGHTBLUE	
080	351162-0102	M	26	WIRE AWM 1X0,75 MM2 YELLOW-GREEN	
090	351162-0104	M	13	WIRE AWM 1X1,5 MM2 YELLOW-GREEN	
100	351162-0105	M	29	WIRE AWM 1X2,5 MM2 YELLOW-GREEN	
110	351162-0106	M	6.5	WIRE AWM 1X4 MM2 YELLOW-GREEN	
120	351162-0107	M	2.6	WIRE AWM 1X6 MM2 YELLOW-GREEN	
130	351162-0108	M	3.9	WIRE AWM 1X10 MM2 YELLOW-GREEN	
140	351162-0109	M	3.9	WIRE AWM 1X16 MM2 YELLOW-GREEN	
150	351164-0104	M	32	WIRE AWM 1X1,5 MM2 BLACK	
160	351164-0106	M	13	WIRE AWM 1X4 MM2 BLACK	
170	351164-0108	M	29	WIRE AWM 1X10 MM2 BLACK	
180	351164-0109	M	4	WIRE AWM 1X16 MM2 BLACK	
A81W2000	351501-0010		1	ETHERNET PATCH CABLE, FL CAT5 PATCH 1,0	
A81W2001	90459-6395		1	CABLE, ETHERNET RJ 45 STRAIGHT.10M	
A81W4000	90459-2530	MM	325	DEVICENET CABLE THIN	
A81W4001	90459-2530	M	1.3	DEVICENET CABLE THIN	
A81W4002	90459-2530	M	4.5	DEVICENET CABLE THIN	
A81W4003	90459-2530	M	13	DEVICENET CABLE THIN	
A81W4005	90459-2530	MM	260	DEVICENET CABLE THIN	
A81W4006	90459-2530	MM	260	DEVICENET CABLE THIN	
A81W4007	90459-2530	MM	260	DEVICENET CABLE THIN	
A81W7000	351423-0004	MM	325	CABLE UNITRONIC LICY 2X0,34	
A81W7001	351423-0004	MM	325	CABLE UNITRONIC LICY 2X0,34	
A81W7002	351423-0004	MM	325	CABLE UNITRONIC LICY 2X0,34	

Pos	Part No	UN	Qty	Description	Page No

Tetra Pak®

SPC
Spare Parts Catalogue

This page is intentionally left blank.

ECM: 609441 - 20131002
Group number: 662913-0300
Assembly Drawing:

Pos	Part No	UN	Qty	Description	Page No
-					
010	2853706-0300		1	SETTING TOOL	**10-5**
020	2838693-0200		1	START-UP KIT	**10-11**
030	2986247-0200		1	CAP DETECTOR	**10-17**
040	3227565-0000		1	PNEUMATIC DIAGRAM	
050	3228275-0000		1	LUBRICATION DIAGRAM	
060	3228191-0000		1	WATER DIAGRAM	
070	2873923-0200		1	POSITION TEMPLATE	**10-31**
080	2873953-0200		1	CAP	**10-35**

Pos	Part No	UN	Qty	Description	Page No

This page is intentionally left blank.

ECM: 560253 - 20120702
Group number: 2853706-0300
Assembly Drawing:

Pos	Part No	UN	Qty	Description	Page No
TPA DREAMCAP 26					
040	2736458-0000		1	TEMPLATE	
070	2873935-0000		1	TEMPLATE	
120	3180122-0000		2	TOOL	
130	3180130-0000		2	TOOL	
Common Parts					
010	2715750-0100		1	TEMPLATE	**10-7**
020	2716125-0100		1	SETTING TOOL	**10-9**
030	3044285-0000		2	TEMPLATE	

Pos	Part No	UN	Qty	Description	Page No

Machine Type | Group Description | Used-In | Group Number | Page No

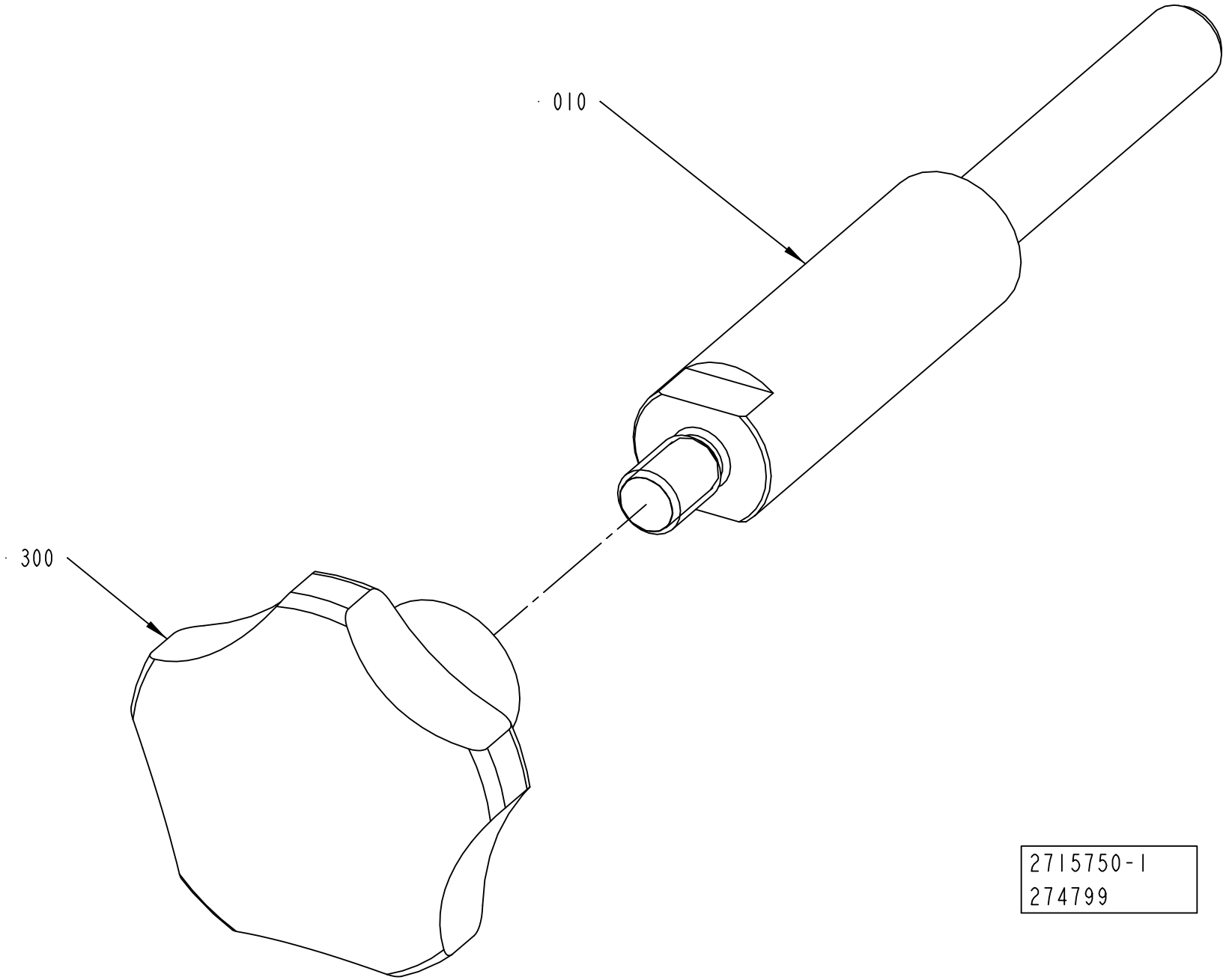
010
300
2715750-1
274799

ECM: 444700 - 20100701
Group number: 2715750-0100
Assembly Drawing: 2715750-1_1_AA

Pos	Part No	UN	Qty	Description	Page No
-					
010	2715751-0000		1	SHAFT	
300	90051-0054		1	STELLAR KNOB, INT. THREAD, NO. 8306-0340	

Pos	Part No	UN	Qty	Description	Page No

Machine Type | Group Description | Used-In | Group Number | Page No

SETTING TOOL

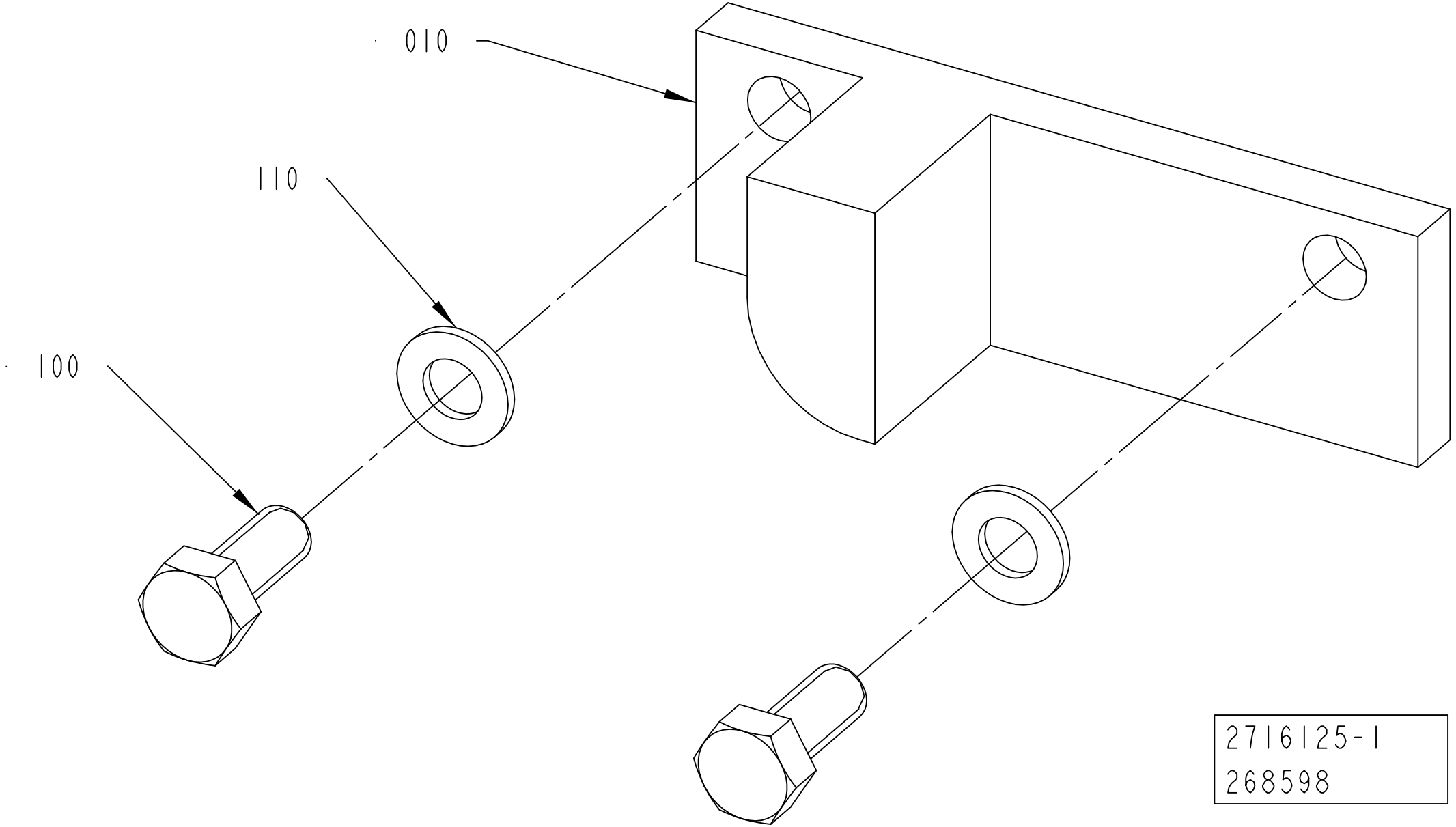

ECM: 269065 - 20060920
Group number: 2716125-0100
Assembly Drawing: 2716125-1_1_AA

Pos	Part No	UN	Qty	Description	Page No
-					
010	2716154-0000		1	SETTING TEMPLATE	
100	312105-0327		2	"SCREW, M6S ISO 4017 M5X12 A4 80"	
110	315105-0146		2	WASHER PLAIN, 5,3X10X1 A4 BRB	

Pos	Part No	UN	Qty	Description	Page No

This page is intentionally left blank.

ECM: 618547 - 20131001
Group number: 2838693-0200
Assembly Drawing:

Pos	Part No	UN	Qty	Description	Page No
ADHESIVE HENKEL CAPFIX 500					
100	3296413-0100		1	START-UP KIT	**10-13**
ADHESIVE LUEUENBERGER PS880					
100	3220227-0100		1	START-UP KIT	**10-15**

Pos	Part No	UN	Qty	Description	Page No

This page is intentionally left blank.

ECM: 663056 - 20140701
Group number: 3296413-0100
Assembly Drawing:

Pos	Part No	UN	Qty	Description	Page No
CAP30/FLEX DREAMCAP 26					
030	90439-0155		6	NOZZLE, 322 012	
Common Parts					
020	1606002-0000		1	TETRA PAK CAPFIX 500, ONLY IN BOM	
	1606002-8000	*KG*	*1*	*TETRA PAK CAPFIX 500*	
	1606002-0120		*1*	*TETRA PAK CAPFIX 500, PSC/STARTUP 12KG*	
040	3034434-0000		20	TENSION SPRING	
070	2985810-0000		1	BRUSH	
080	90458-2510		3	FUSE, ATDR6	

Pos	Part No	UN	Qty	Description	Page No

This page is intentionally left blank.

ECM: 685868 - 20141001
Group number: 3220227-0100
Assembly Drawing:

Pos	Part No	UN	Qty	Description	Page No
CAP30/FLEX DREAMCAP 26					
030	90439-0155		6	NOZZLE, 322 012	
Common Parts					
020	90606-3982		1	HOTMELT TERMOMELT PS880, 12 KG	
040	3034434-0000		20	TENSION SPRING	
070	2985810-0000		1	BRUSH	
080	90458-2510		3	FUSE, ATDR6	

Pos	Part No	UN	Qty	Description	Page No

CAP DETECTOR

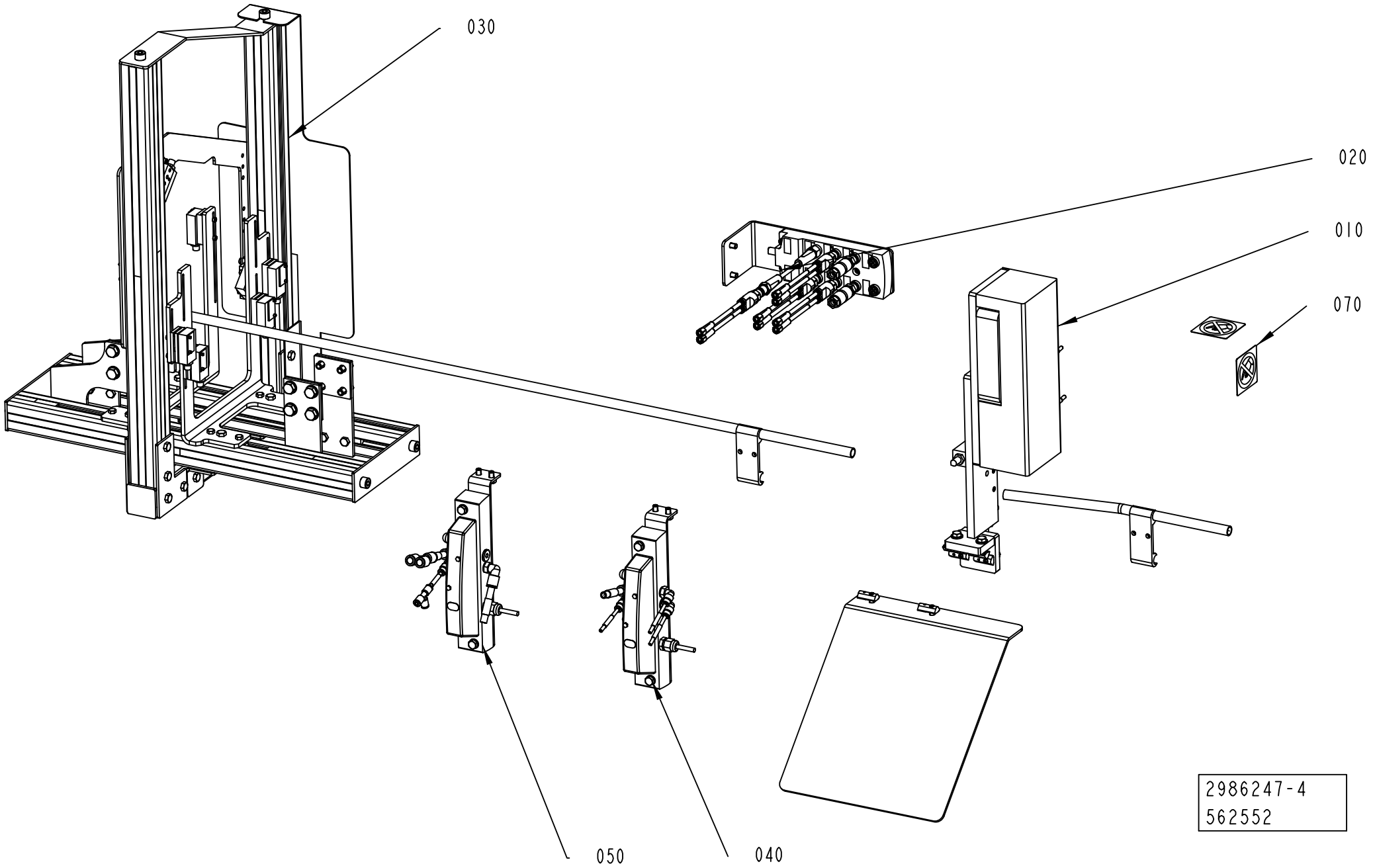

ECM: 699310 - 20150101
Group number: 2986247-0200
Assembly Drawing: 2986247-4_1_AC

Pos	Part No	UN	Qty	Description	Page No
TPA 0330SQ, TPA 0500E					
010	3210219-0100		1	EJECTOR	**10-19**
030	3210232-0100		1	PHOTOCELL BRACKET	**10-21**
Common Parts					
020	2839195-0200		1	DISTRIBUTOR	**10-23**
040	2839074-0200		1	PNEUMATIC UNIT	**10-25**
050	2839194-0200		1	PNEUMATIC UNIT	**10-27**
070	3227417-0100		1	WARNING SIGN	**10-29**

Pos	Part No	UN	Qty	Description	Page No

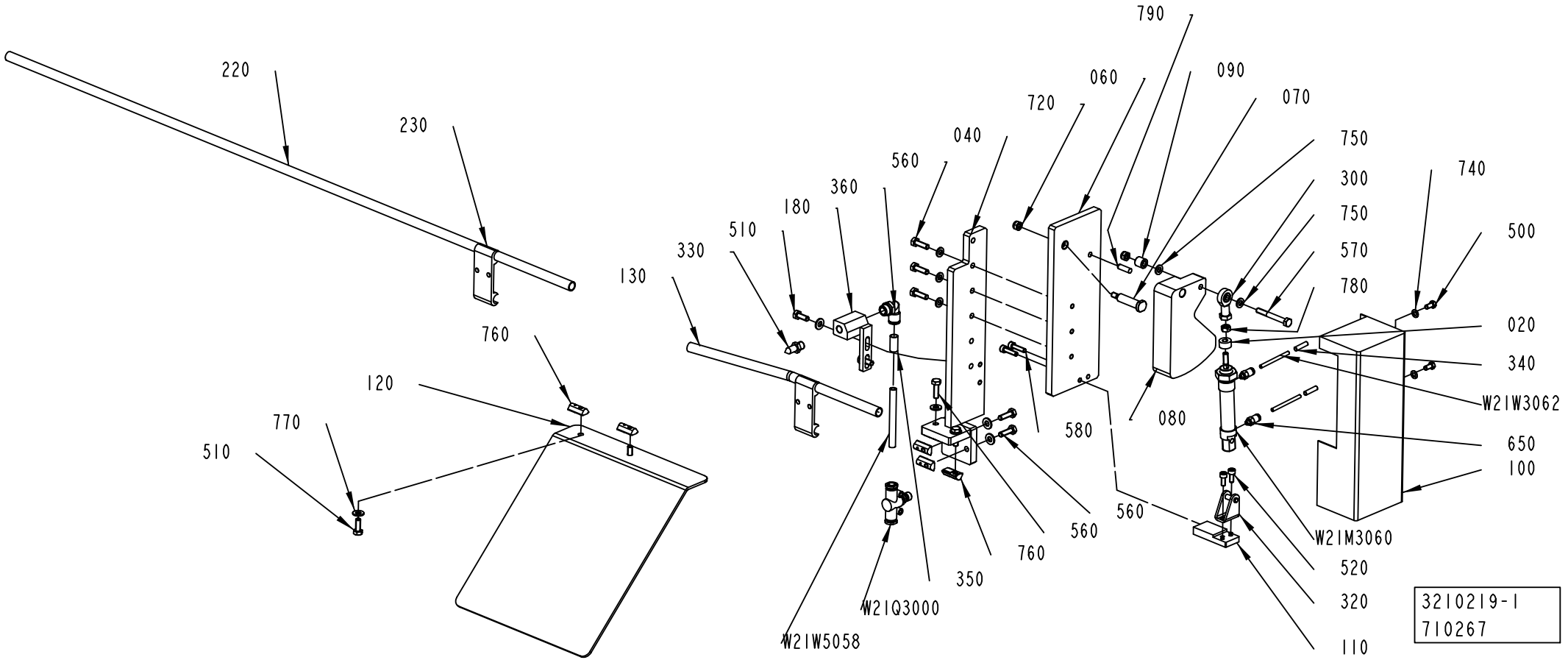
220
230
760
120
770
510
130
330
510
180
360
560
040
720
060
790
090
070
750
300
750
570
780
740
500
020
340
W21W3062
650
100
080
580
560
560
760
350
W21Q3000
W21W5058
W21M3060
520
320
110
3210219-1
710267

ECM: 714362 - 20150401
Group number: 3210219-0100
Assembly Drawing: 3210219-1_1_AE

Pos	Part No	UN	Qty	Description	Page No
-					
020	3249413-0000		1	SPACER	
040	3210228-0000		1	BRACKET	
060	2873876-0000		1	PLATE	
070	3210237-0000		1	SHAFT	
080	3210235-0000		1	PUSHER	
090	2817573-0000		1	SPACER	
100	3210234-0000		1	COVER	
110	3210236-0000		1	SUPPORT	
120	3210229-0000		1	SLIDE PLATE	
130	2818738-0000		1	RAILING	
180	2873866-0000		1	SUPPORT	
220	476221-0013		1	PIPE	
230	1020637-0000		2	HOLDER	
300	90115-0163		1	ROD END, ID=6 MM, M6X1	
320	90459-3655		1	REAR CLEVIS FOOT MOUNTING, LBN-12/16	
330	90424-0087		1	AIR NOZZLE	
340	90459-7368		2	MARKING FOR PNEUM. TUBING, PRZ04	
350	90459-7370		1	MARKING FOR PNEUM. TUBING, PRZ08	
360	351456-3007		1	PUSH-IN L-FITTING NPQH-L-G14-Q8-P10	
500	312105-0325		3	SCREW, M6S ISO 4017 M5X10 A4 80	
510	312105-0368		4	"SCREW, M6S ISO 4017 M6X16 A4 80"	
520	312115-0327		2	SCREW ISO4762 M5X12 A4 80	
560	312105-0370		7	SCREW, M6S ISO 4017 M6X20 A4 80	
570	312105-0380		1	SCREW, M6S ISO 4014 M6X50 A4 80	
580	312115-0331		2	SCREW ISO4762 M5X20 A4 80	
650	351456-0115		2	PUSH-IN FITTING NPQH-D-M5-Q4-P10	
720	312812-0316		2	HEXAGON NUT, NY-LOCK M6 A4 80	
740	315105-0146		3	WASHER PLAIN, 5,3X10X1 A4 BRB	
750	315105-0153		5	WASHER PLAIN, 6,4X12X1,5 A4 BRB	
760	90459-5134		6	NUT, T-SLOT M6	
770	315105-0156		8	WASHER PLAIN, 6,7X14X1,5 A4 BRB	
780	312605-0316		1	HEXAGON NUT, M6M M6 A280	
W21M3060	90604-3129		1	DOUBLE ACTING, MINI-ISO, CYL. 16-25	
W21Q3000	90459-2777		1	FLOW CONTROL VALVE, GR-QS-8	
W21W3062	315400-0016	MM	500	TUBE PUN-H-4X0,75-BL	
W21W3064	315400-0016	MM	500	TUBE PUN-H-4X0,75-BL	
W21W5058	315400-0004	MM	150	TUBE PUN-H-8X1,25-BL	

Pos	Part No	UN	Qty	Description	Page No

Machine Type | Group Description | Used-In | Group Number | Page No

PHOTOCELL BRACKET

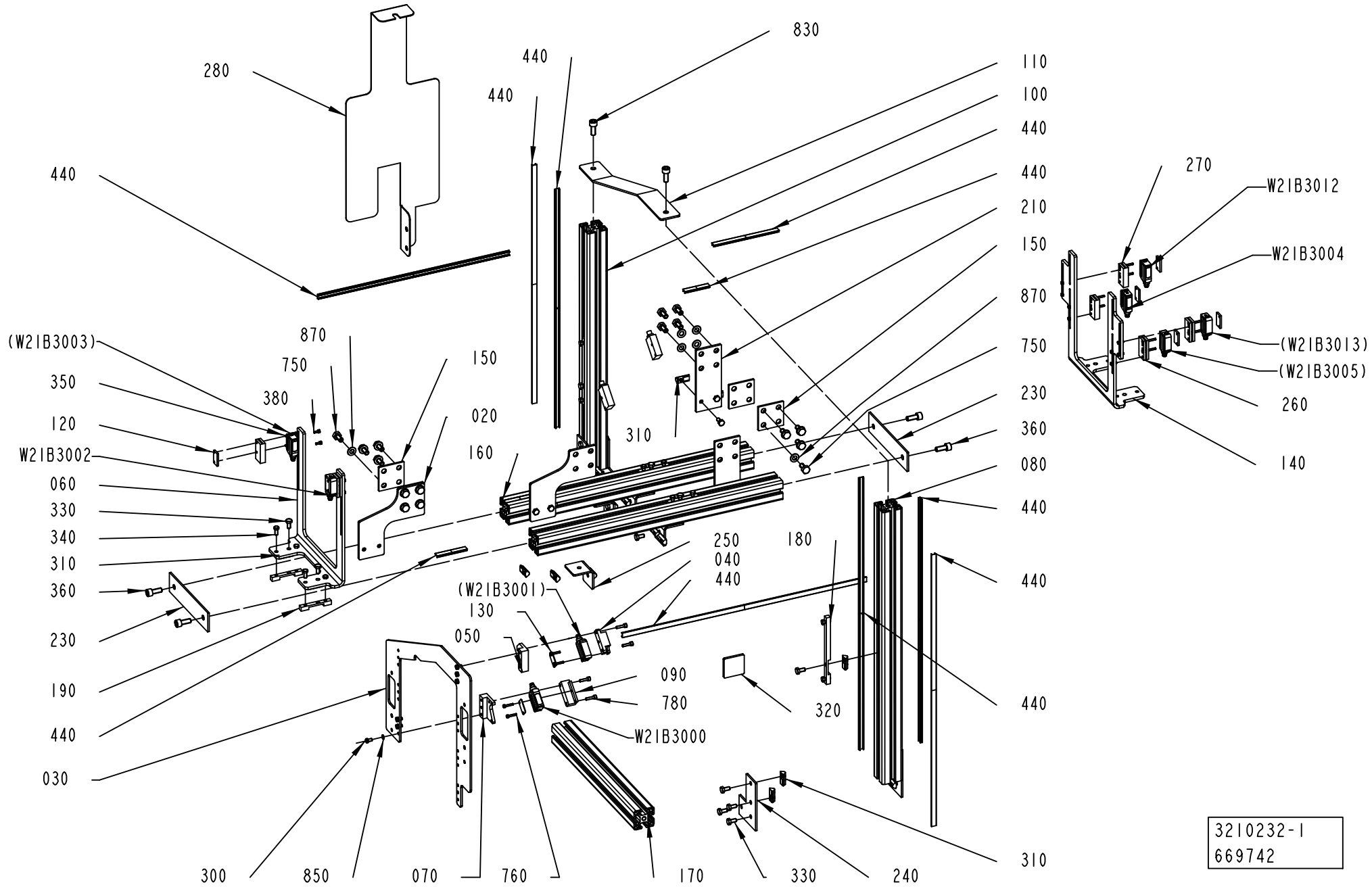

3210232-1
669742

ECM: 669751 - 20141001
Group number: 3210232-0100
Assembly Drawing: 3210232-1_1_AE

Pos	Part No	UN	Qty	Description	Page No
-					
010	2815585-0000		2	SPACER	
020	3210222-0000		2	SPACER	
030	3159870-0000		1	BRACKET	
040	3356197-0000		1	BRACKET	
050	3159886-0000		1	BRACKET	
060	3152710-0000		1	BRACKET	
070	3159887-0000		1	BRACKET	
080	3156384-0000		1	PROFILE	
090	3356198-0000		1	BRACKET	
100	3156385-0000		1	PROFILE	
110	3156411-0000		1	PLATE	
120	3159895-0000		6	PLATE	
130	3159896-0000		2	PLATE	
140	3249881-0000		1	COVER	
150	2815585-0000		2	SPACER	
160	3210220-0000		2	PROFILE	
170	3210223-0000		1	PROFILE	
180	3210225-0000		2	PLATE	
190	3210226-0000		4	PLATE	
210	3210221-0000		2	SPACER	
230	3210227-0000		2	SPACER	
240	3210230-0000		4	SPACER	
250	3210231-0000		4	SPACER	
260	3235825-0000		3	PLATE	
270	3235826-0000		3	PLATE	
280	3246705-0000		1	COVER	
300	312105-0287		6	SCREW, M6S ISO 4017 M4X8 A4 70	
310	90459-5134		38	NUT, T-SLOT M6	
320	90600-1996		2	CAP 8 40X40 MM, 0.0.026.01	
330	312105-0366		38	SCREW, M6S ISO 4017 M6X12 A4 80	
340	312105-0327		12	"SCREW, M6S ISO 4017 M5X12 A4 80"	
350	312115-0230		12	SCREW ISO4762 M3X20 A4 80	
360	312115-0451		4	SCREW ISO4762 M8X20 A4 80	
380	312115-0222		12	SCREW ISO4762 M3X8 A4 80	
440	90600-1972	M	5	COVER PROFILE 8 AL, 0.0.265.50	
750	312105-0449		16	SCREW, M6S ISO 4017 M8X16 A4 80	
760	312115-0228		4	SCREW ISO4762 M3X16 A4 80	
780	312115-0293		4	SCREW ISO4762 M4X16 A4 80	
830	312115-0451		2	SCREW ISO4762 M8X20 A4 80	
850	315105-0136		6	WASHER PLAIN, 4,3X8X0,8 A4 BRB	
870	315105-0165		16	FWAS080G0-0S, WASHER PLAIN	

Pos	Part No	UN	Qty	Description	Page No
W21B3000	90606-4464		1	LASER SENSOR, WSE9L-3P2237	
W21B3002	90606-4464		1	LASER SENSOR, WSE9L-3P2237	
W21B3004	90606-4464		1	LASER SENSOR, WSE9L-3P2237	
W21B3012	90606-4464		1	LASER SENSOR, WSE9L-3P2237	

Machine Type	Group Description	Used-In	Group Number	Page No

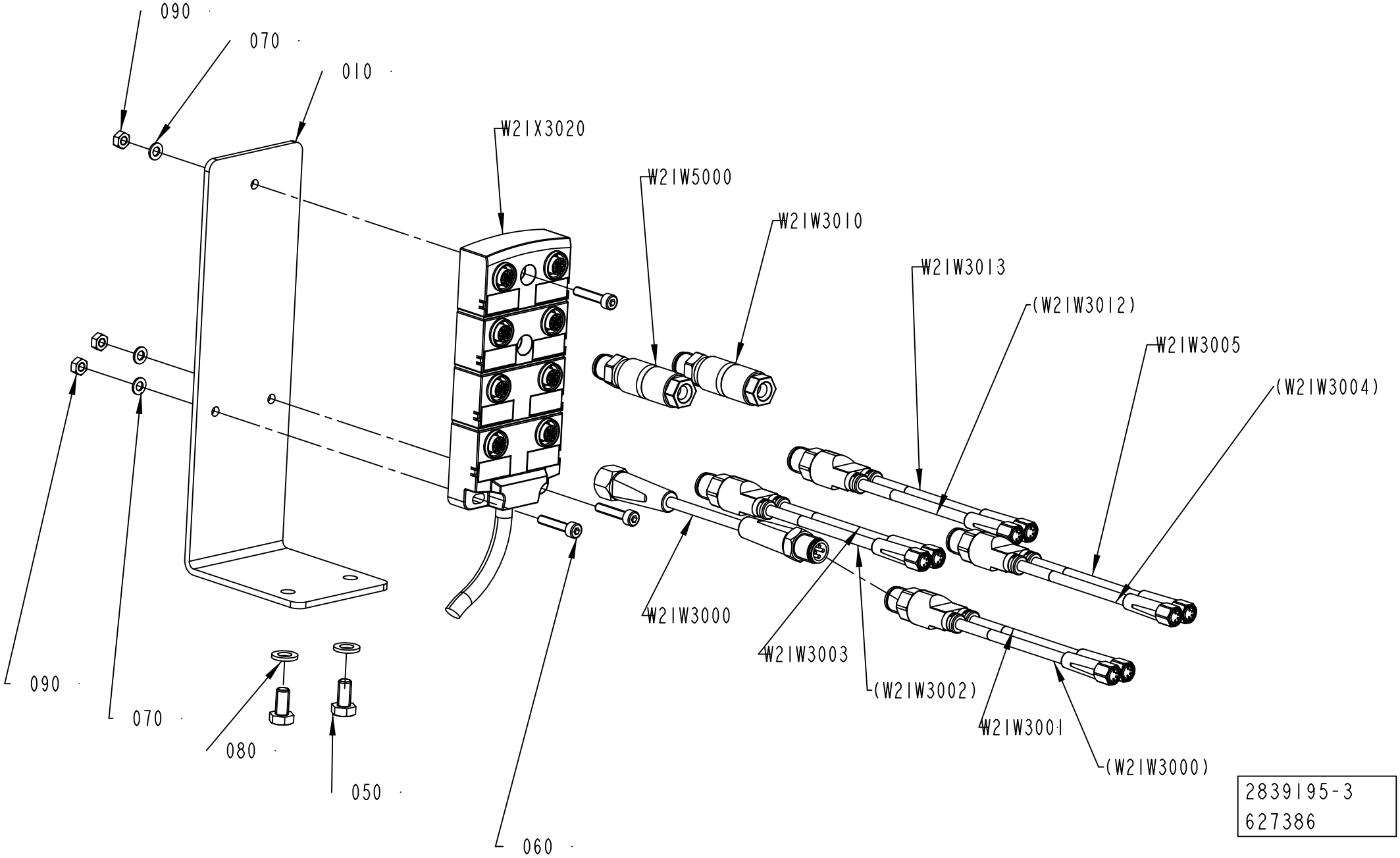
090
070
010
W2IX3020
W2IW5000
W2IW3010
W2IW3013
(W2IW3012)
W2IW3005
(W2IW3004)
W2IW3000
W2IW3003
(W2IW3002)
W2IW3001
(W2IW3000)
090
070
080
050
060
2839195-3
627386

ECM: 627389 - 20140101
Group number: 2839195-0200
Assembly Drawing: 2839195-3_1_AC

Pos	Part No	UN	Qty	Description	Page No
TPA					
010	3315733-0000		1	BRACKET	
050	312105-0366		2	SCREW, M6S ISO 4017 M6X12 A4 80	
080	315105-0153		2	WASHER PLAIN, 6,4X12X1,5 A4 BRB	
W21W3000	344267-0006		1	SENSOR CABLE, EVT041	
W21W3000	90603-3979		1	SENSOR Y-CABLE, EVT339	
W21W3012	90603-3979		1	SENSOR Y-CABLE, EVT339	
Common Parts					
060	312115-0295		3	SCREW ISO4762 M4X20 A4 80	
070	315105-0136		3	WASHER PLAIN, 4,3X8X0,8 A4 BRB	
090	312607-0312		3	HEXAGON NUT, EN 24032 M6M M4 A480	
W21W3002	90603-3979		1	SENSOR Y-CABLE, EVT339	
W21W3004	90603-3979		1	SENSOR Y-CABLE, EVT339	
W21W3010	90603-5568		1	CONNECTOR, SACC-M12MS-4QO-0,34-VA	
W21W5000	90603-5568		1	CONNECTOR, SACC-M12MS-4QO-0,34-VA	
W21X3020	90606-1697		1	SPLITTER BOX, EBC034	

Pos	Part No	UN	Qty	Description	Page No

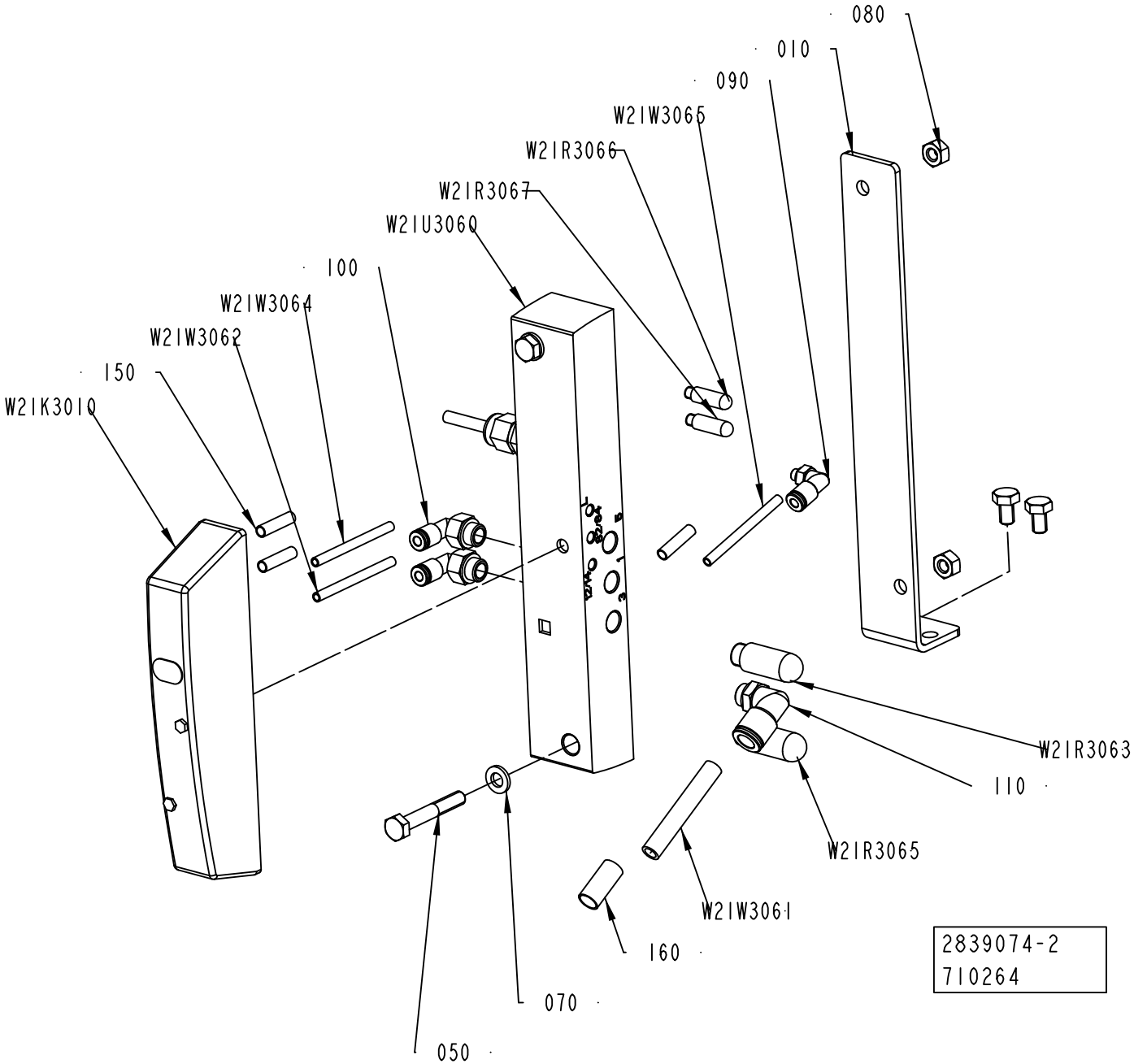
080
010
090
W2IW3065
W2IR3066
W2IR3067
W2IU3060
100
W2IW3064
W2IW3062
150
W2IK3010
W2IR3063
110
W2IR3065
W2IW3061
160
070
050
2839074-2
710264

ECM: 713983 - 20150401
Group number: 2839074-0200
Assembly Drawing: 2839074-2_1_AB

Pos	Part No	UN	Qty	Description	Page No
-					
010	2839073-0000		1	BRACKET	
050	312105-0378		2	SCREW, M6S ISO 4014 M6X40 A4 80	
060	312105-0364		2	"SCREW, M6S ISO 4017 M6X10 A4 80"	
070	315106-0153		2	WASHER PLAIN, M6 ISO7089-6-200 HV A4	
080	312605-0316		2	HEXAGON NUT, M6M M6 A280	
090	351456-3015		1	PUSH-IN L-FITTING NPQH-L-M5-Q4-P10	
100	351456-3001		2	PUSH-IN L-FITTING NPQH-L-G18-Q4-P10	
110	351456-3003		1	PUSH-IN L-FITTING NPQH-L-G18-Q8-P10	
150	90459-7368		3	MARKING FOR PNEUM. TUBING, PRZ04	
160	90459-7370		1	MARKING FOR PNEUM. TUBING, PRZ08	
W21K3010	90458-1197		1	VALVE, 5/2 BISTABLE	
W21R3063	90328-0047		1	SILENCER, G1/8"	
W21R3065	90328-0047		1	SILENCER, G1/8"	
W21R3066	90328-0029		1	SILENCER, M5	
W21R3067	90328-0029		1	SILENCER, M5	
W21U3060	90459-2591		1	SINGLE VALVE SUB-BASE CDSV5.0-AS-1/8	
W21W3061	315400-0004	M	4	TUBE PUN-H-8X1,25-BL	
W21W3062	315400-0016	M	0.5	TUBE PUN-H-4X0,75-BL	
W21W3064	315400-0016	M	0.5	TUBE PUN-H-4X0,75-BL	
W21W3065	315400-0016	M	0.5	TUBE PUN-H-4X0,75-BL	

Pos	Part No	UN	Qty	Description	Page No

PNEUMATIC UNIT

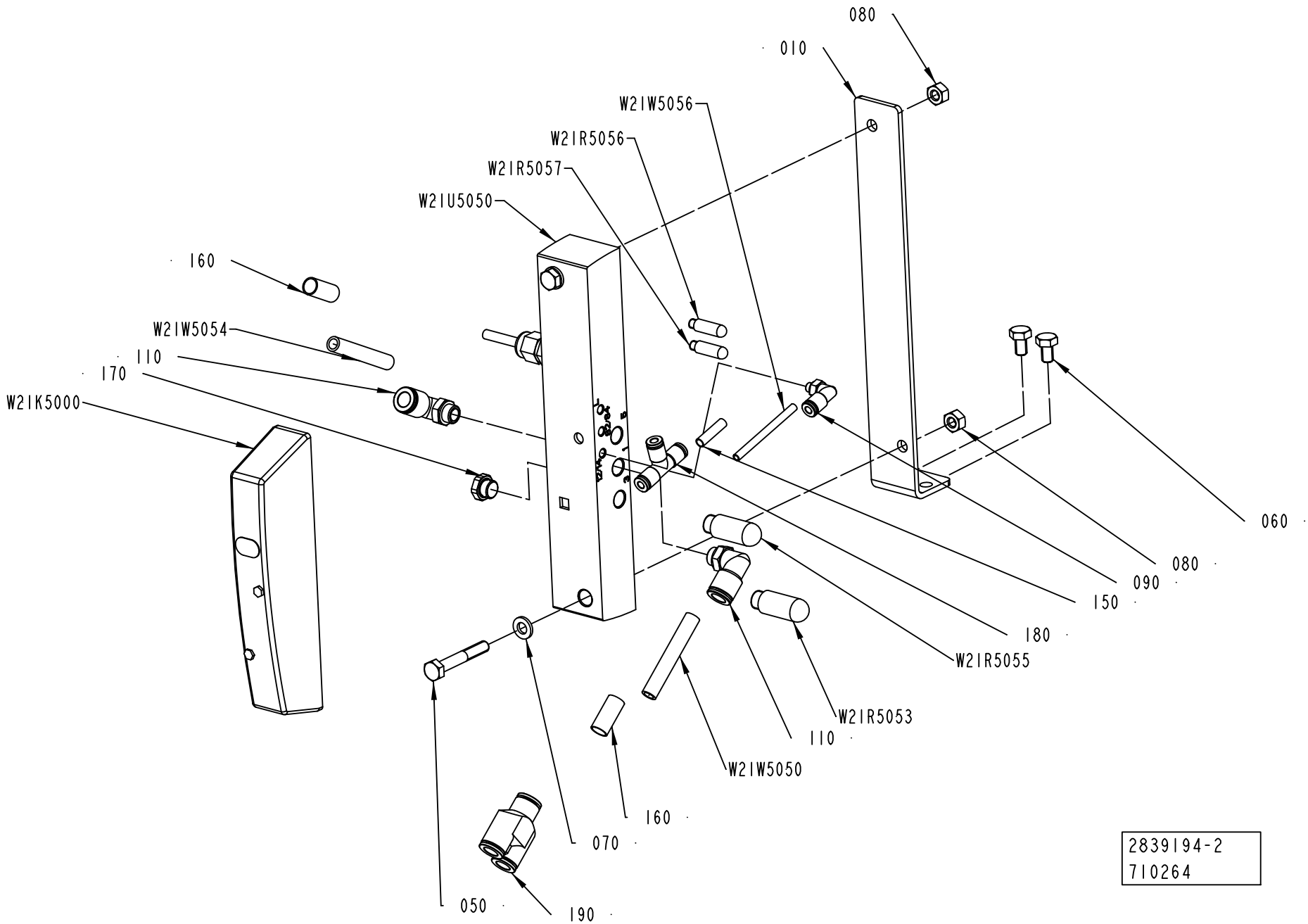

ECM: 714038 - 20150401
Group number: 2839194-0200
Assembly Drawing: 2839194-2_1_AD

Pos	Part No	UN	Qty	Description	Page No
-					
010	2839073-0000		1	BRACKET	
050	312105-0378		2	SCREW, M6S ISO 4014 M6X40 A4 80	
060	312105-0364		2	"SCREW, M6S ISO 4017 M6X10 A4 80"	
070	315106-0153		2	WASHER PLAIN, M6 ISO7089-6-200 HV A4	
080	312605-0316		2	HEXAGON NUT, M6M M6 A280	
090	351456-3015		1	PUSH-IN L-FITTING NPQH-L-M5-Q4-P10	
110	351456-3003		2	PUSH-IN L-FITTING NPQH-L-G18-Q8-P10	
150	90459-7368		1	MARKING FOR PNEUM. TUBING, PRZ04	
160	90459-7370		2	MARKING FOR PNEUM. TUBING, PRZ08	
170	90459-0380		1	PLUG, EXT THREAD HEX SOCKET 02221000 85	
180	351456-5106		1	PUSH-IN T-FITTING NPQH-T-Q4-E-P10	
190	351456-6005		1	PUSH-IN Y-CONNECTOR NPQH-Y-Q8-E-P10	
W21K5000	90458-1203		1	VALVE 2X3/2 1X OPEN 1X CLOSED	
W21R5053	90328-0047		1	SILENCER, G1/8"	
W21R5055	90328-0047		1	SILENCER, G1/8"	
W21R5056	90328-0029		1	SILENCER, M5	
W21R5057	90328-0029		1	SILENCER, M5	
W21U5050	90459-2591		1	SINGLE VALVE SUB-BASE CDSV5.0-AS-1/8	
W21W5050	315400-0004	M	0.5	TUBE PUN-H-8X1,25-BL	
W21W5054	315400-0004	M	0.5	TUBE PUN-H-8X1,25-BL	
W21W5056	315400-0016	M	0.5	TUBE PUN-H-4X0,75-BL	

Pos	Part No	UN	Qty	Description	Page No

Machine Type	Group Description	Used-In	Group Number	Page No

WARNING SIGN

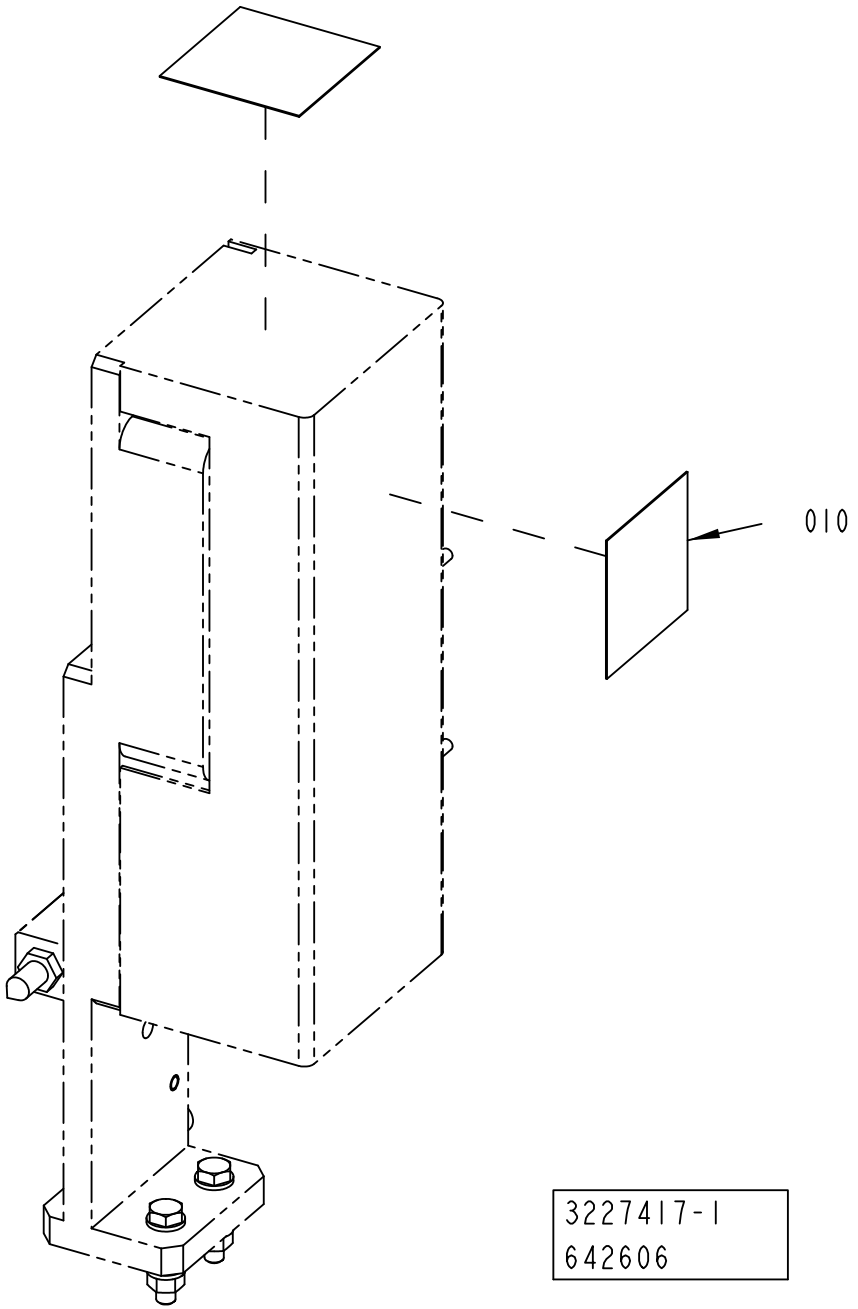

ECM: 653209 - 20140401
Group number: 3227417-0100
Assembly Drawing: 3227417-1_1_AB

Pos	Part No	UN	Qty	Description	Page No
ANSI					
010	90600-4040		2	CAUTION SIGN ANSI (H), DO NOT REACH IN	
ISO					
010	90459-7584		2	PROHOBITION SIGN ISO, DO NOT REACH IN	

Pos	Part No	UN	Qty	Description	Page No

Machine Type | Group Description | Used-In | Group Number | Page No

This page is intentionally left blank.

ECM: 692377 - 20150101
Group number: 2873923-0200
Assembly Drawing:

Pos	Part No	UN	Qty	Description	Page No
TPA 0330SQ DREAMCAP 26					
020	3098055-0000		1	TEMPLATE	
030	90459-4931		1	LENS WITH SCALE OF LENGTHS 10X	
040	3047350-0100		1	TOOL	**10-33**
TPA 0500E DREAMCAP 26					
020	3350177-0000		1	TEMPLATE	
030	90459-4931		1	LENS WITH SCALE OF LENGTHS 10X	
040	3047350-0100		1	TOOL	**10-33**

Pos	Part No	UN	Qty	Description	Page No

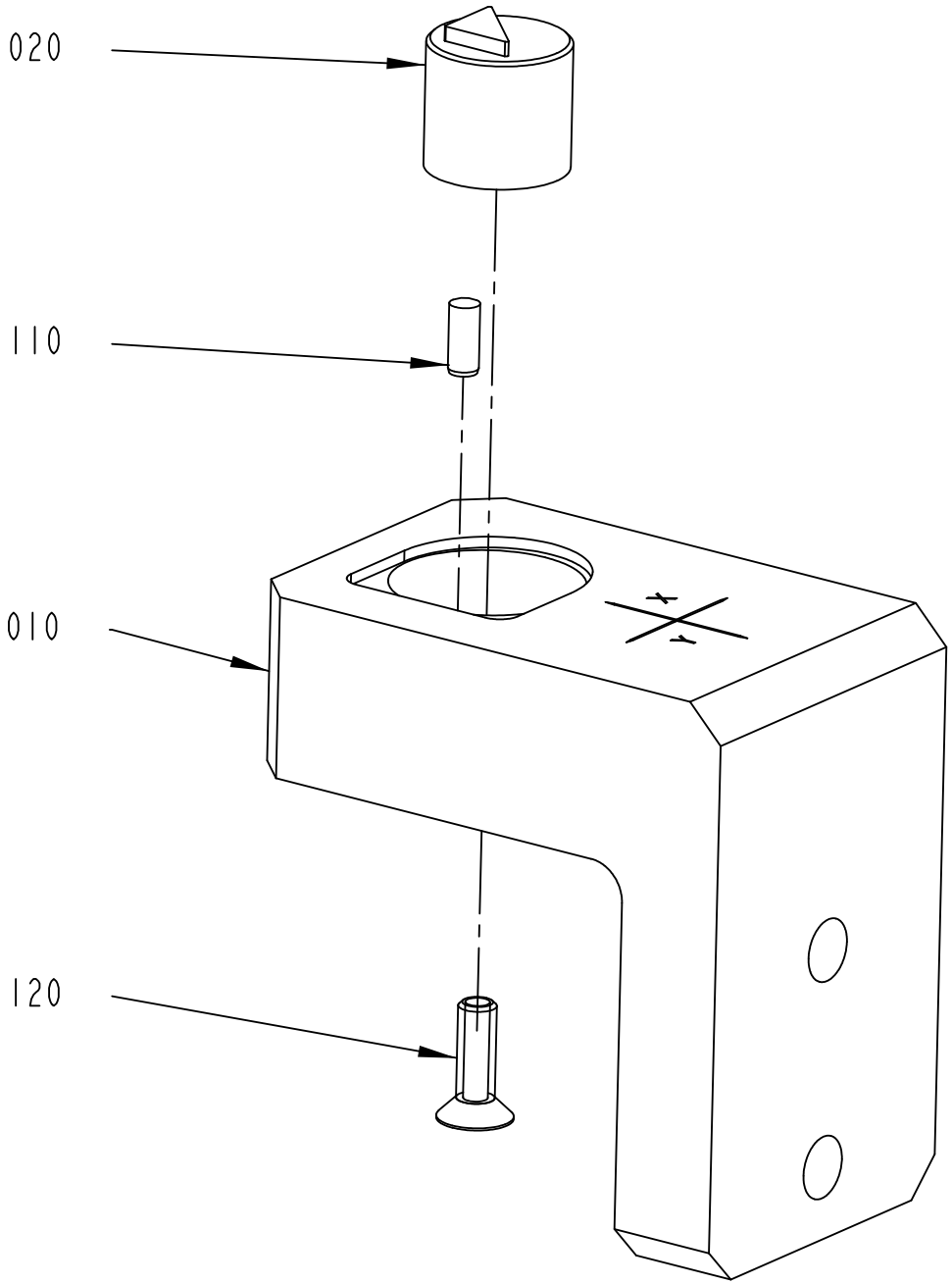

3047350-1
434659

ECM: 635693 - 20140101
Group number: 3047350-0100
Assembly Drawing: 3047350-1_1_AA

Pos	Part No	UN	Qty	Description	Page No
DREAMCAP 26					
010	3098044-0000		1	TEMPLATE	
020	3098043-0000		1	TEMPLATE	
Common Parts					
110	311103-0267		1	PARALLEL PIN ISO 2338 4M6X10 A1	
120	312155-0329		1	SCREW DIN 7991 MF6S M5X16 A4 70	

Pos	Part No	UN	Qty	Description	Page No

This page is intentionally left blank.

ECM: 534843 - 20120401
Group number: 2873953-0200
Assembly Drawing:

Pos	Part No	UN	Qty	Description	Page No
DREAMCAP 26					
010	A100000209	KPC	3.7	DREAMCAP1 26 MM WHITE	

Pos	Part No	UN	Qty	Description	Page No

Tetra Pak®

SPC
Spare Parts Catalogue

This page is intentionally left blank.

ECM: 560355 - 20120402
Group number: 662914-0300
Assembly Drawing:

Pos	Part No	UN	Qty	Description	Page No
-					
0010	2879015-0300		1	ELECTRICAL DOCUMENT	**11-5**
0020	2861166-0300		1	SOFTWARE	

Pos	Part No	UN	Qty	Description	Page No

This page is intentionally left blank.

ECM: 534801 - 20120401
Group number: 2879015-0300
Assembly Drawing:

Pos	Part No	UN	Qty	Description	Page No
CAP30/FLEX DREAMCAP 26					
0050	3132469-0200		1	ELECTRICAL DOCUMENT	

Pos	Part No	UN	Qty	Description	Page No

Machine Type | Group Description | Used-In | Group Number | Page No

Tetra Pak®

SPC
Spare Parts Catalogue

This page is intentionally left blank.

ECM: 681425 - 20141001
Group number: 662916-0300
Assembly Drawing:

Pos	Part No	UN	Qty	Description	Page No
ADHESIVE DETECTOR					
110	3321588-0200		1	ADHESIVE DETECTOR	**12-5**
BARCODE SCANNER					
100	3134551-0200		1	BARCODE SCANNER	**12-11**
CONVEYOR CONTROL					
040	2873874-0200		1	AUTOMATION CONVEYOR CONTROL	**12-13**
LINE COMMUNICATION ETHERNET (ROCKWELL)					
030	2890013-0200		1	COMMUNICATION UNIT	**12-15**
GLUE SHELF					
010	2842806-0100		1	SHELF	**12-17**
LIFTING UNIT					
060	3275970-0100		1	LIFTING DEVICE	**12-19**
PHOTOCELL UNIT					
080	2930179-0200		1	CONVEYOR CONTROL ACCESSORIES	**12-63**
POSITIONING DEVICE					
050	2873924-0300		1	POSITIONING DEVICE	**12-73**
POWER SUPPLY DEVICE					
090	2930182-0300		1	POWER SUPPLY DEVICE	**12-81**
LINE COMMUNICATION SNP					
020	2873925-0200		1	COMMUNICATION UNIT	**12-83**

Pos	Part No	UN	Qty	Description	Page No

ADHESIVE DETECTOR

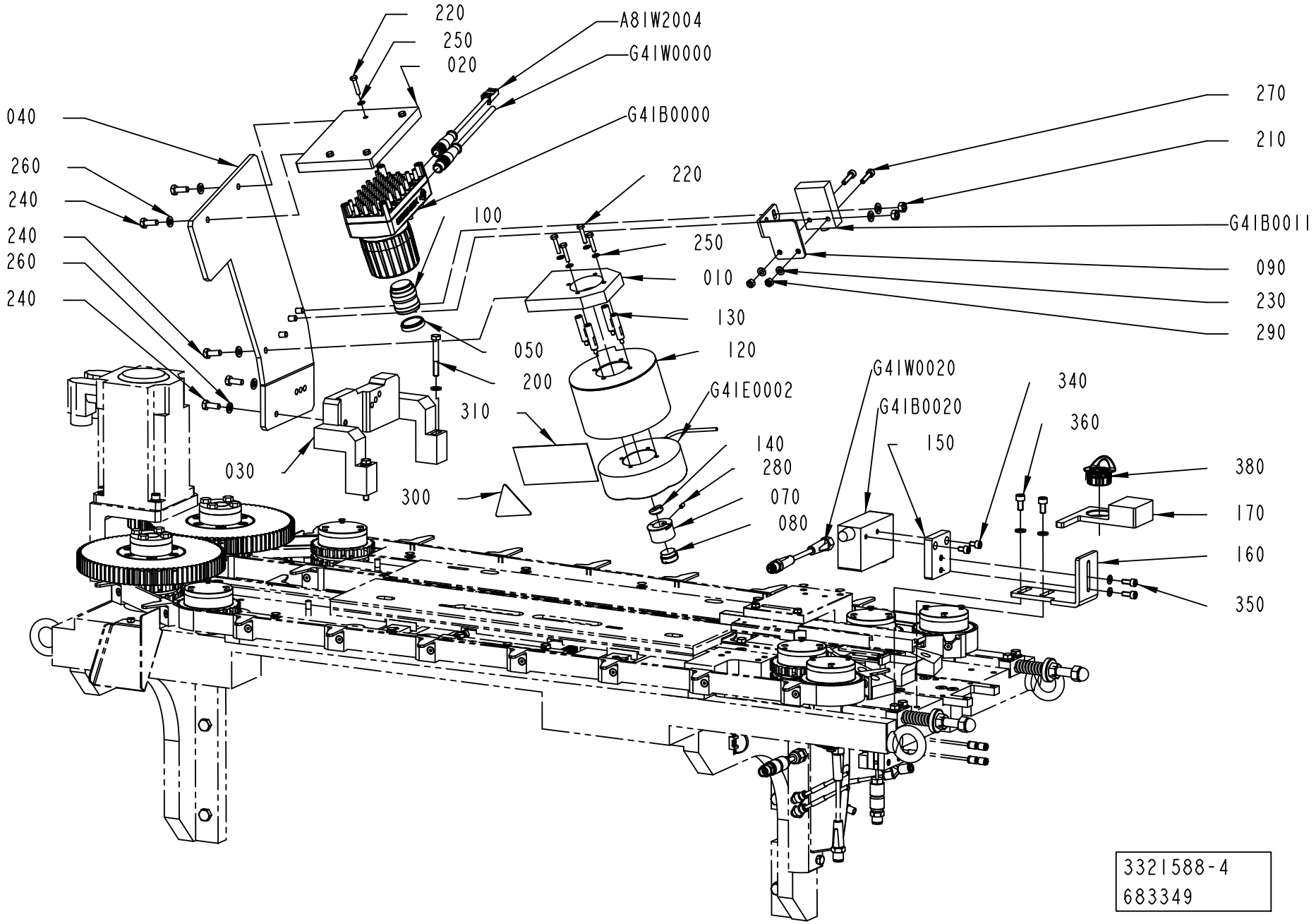

ECM: 714825 - 20150401
Group number: 3321588-0200
Assembly Drawing: 3321588-4_1_AA

Pos	Part No	UN	Qty	Description	Page No
DREAMCAP 26					
010	3248864-0000		1	BRACKET	
020	3248865-0000		1	SUPPORT	
030	3243907-0000		1	BRACKET	
040	3243908-0000		1	SUPPORT	
070	3260287-0000		1	CAP	
090	3273568-0000		1	BRACKET	
120	3247207-0000		1	COVER	
130	3243909-0000		4	SPACER	
140	3265772-0000		1	PLUG	
170	3357974-0000		1	TOOL	
210	312605-0316		2	HEXAGON NUT, M6M M6 A280	
220	312105-0295		8	SCREW, M6S ISO 4017 M4X20 A4 70	
230	315105-0146		4	WASHER PLAIN, 5,3X10X1 A4 BRB	
240	312105-0368		8	"SCREW, M6S ISO 4017 M6X16 A4 80"	
260	315105-0153		14	WASHER PLAIN, 6,4X12X1,5 A4 BRB	
270	312115-0331		2	SCREW ISO4762 M5X20 A4 80	
280	312318-0285		1	SET SCREW, CUP END ISO4029 M4X6 A4	
290	312605-0314		2	HEXAGON NUT, M6M M5 A280	
380	A100000209	KPC	1	DREAMCAP1 26 MM WHITE	
Common Parts					
050	90606-5311		1	FILTER, IMBF-BP470-25.5	
080	3203757-0000		1	SCREW PLUG	
100	90605-2647		1	LENS, HF25HA-1B	
150	3349861-0000		1	BRACKET	
160	3349862-0000		1	BRACKET	
200	312105-0379		2	SCREW, M6S ISO 4014 M6X45 A4 80	
250	315105-0136		8	WASHER PLAIN, 4,3X8X0,8 A4 BRB	
300	359705-0033		1	WARNING SIGN ISO, OPTICAL RADIATION	
310	90605-9772		1	WARNING SIGN ANSI (H), UV RADIATION HAZA	
340	312115-0323		2	SCREW ISO4762 M5X8 A4 80	
350	312115-0327		2	SCREW ISO4762 M5X12 A4 80	
360	312115-0366		2	SCREW ISO4762 M6X12 A4 80	
400	3297666-0100		1	JUNCTION BOX	**12-7**
410	3321595-0200		1	ELECTRICAL MATERIALS	**12-9**
A81W2004	90600-2103		1	ETHERNET CABLE, CCB-84901-1004-10	
G41B0000	90605-2649		1	IN-SIGHT 5600 CAMERA, IS5600-01	
G41B0011	90601-1027		1	LIMIT SWITCH, D4C-1G01 5M	
G41B0020	90606-2763		1	COLOUR SENSOR, CS81-P3612	
G41E0002	90605-9651		1	UV ILLUMINATION, LDR2-100UV365-IP	
G41W0000	90600-2102		1	POWER I/O CABLE, CCB-84901-0103-10	
G41W0020	344267-0010		1	SENSOR CABLE, EVT042	

Pos	Part No	UN	Qty	Description	Page No

Machine Type | Group Description | Used-In | Group Number | Page No

JUNCTION BOX

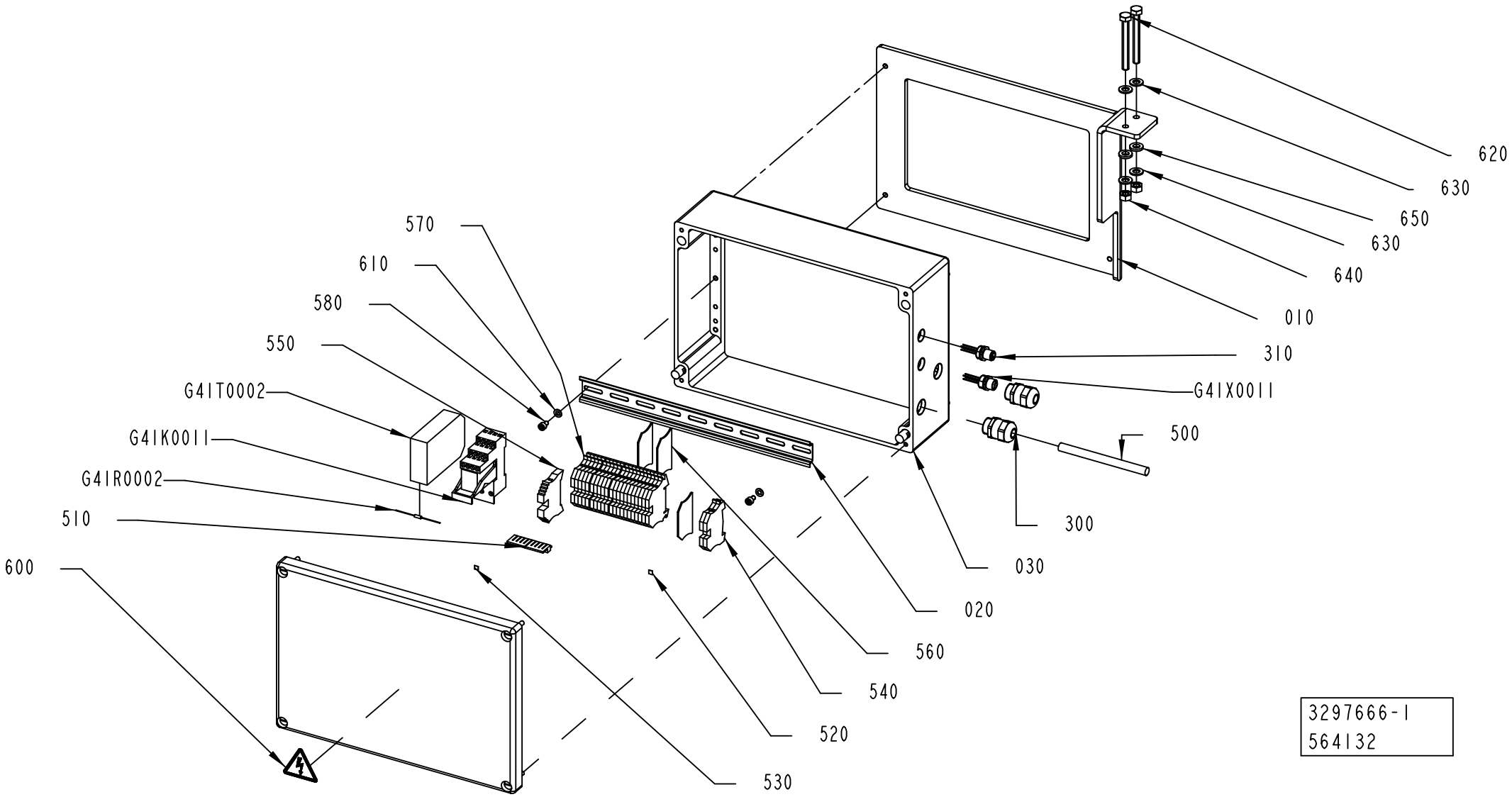

ECM: 663058 - 20141001
Group number: 3297666-0100
Assembly Drawing: 3297666-1_1_AA

Pos	Part No	UN	Qty	Description	Page No
-					
010	3311368-0000		1	SUPPORT	
020	3267572-0000		1	RAIL	
030	3267762-0000		1	CONNECTION BOX	
300	90458-0307		2	CABLE GLAND, M20X1,5, 5311 1020	
310	90603-4479		1	RECEPTACLE M12, SACC-E-M12MS-5CON-M16/..	
500	351150-0406	M	6	CABLE OLFLEX 7X0,75 MM2 LIGHT/GREY	
510	353034-0030		1	BRIDGE CONNECTOR WQV 2,5/10	
520	359011-0819		1	MARKING, EARTH, DEK 5 GW ERDE I.KR.	
530	359011-0809		1	MARKING, DEK 5 FW 101-150	
540	353024-0204		2	EARTH TERMINAL WPE 2,5	
550	353031-0203		1	END BRACKET, WEW 35/2	
560	353032-0004		3	END PLATE, WAP 2,5-10, BEIGE	
570	353021-0212		21	FEED THROUGH TERMINAL, WDU 2,5	
580	312115-0323		2	SCREW ISO4762 M5X8 A4 80	
590	312115-0372		4	SCREW ISO4762 M6X25 A4 80	
600	359705-0015		1	WARNING SIGN ISO, RISK OF ELECTRIC SHOCK	
600	359715-0100		1	WARNING SIGN ANSI (H), ELECTRIC SHOCK	
610	315106-0146		2	"WASHER PLAIN, M5 ISO7089-5-200 HV A4"	
620	312109-0465		2	SCREW, M6S ISO 4017 M8X70 A4 80	
630	315106-0165		4	WASHER PLAIN, M8 ISO7089-8-200 HV A4	
640	312605-0318		2	HEXAGON NUT, M6M M8 A280	
650	315115-0165		2	WASHER PLAIN, TBRB 8,4/16 H=3	
G41K0011	90601-6656		1	RELAY, PR2-RSC3-LDP-24DC/4X21AU	
G41R0002	90602-3851		1	RESISTANCE FIXED, 3,6 KOHM, 1/2 W	
G41T0002	90605-2645		1	POWER SUPPLY, LC400 LED LIGHTING CO	
G41X0011	90603-4478		1	RECEPTACLE M12, SACC-E-M12FS-4CON-M16/..	

Pos	Part No	UN	Qty	Description	Page No

Machine Type	Group Description	Used-In	Group Number	Page No

This page is intentionally left blank.

ECM: 716603 - 20150401
Group number: 3321595-0200
Assembly Drawing:

Pos	Part No	UN	Qty	Description	Page No
-					
0010	3389610-0000		1	SET OF SIGNS	
0020	3389611-0000		1	CABLE MARKING	
0100	351160-0102	M	15	ECAB01011-6L, WIRE AWM 1X0,75 MM2 DARKBL	
0110	359000-0200		20	WIRE MARKING, YELLOW, PA02/3"0"	
0120	359000-0201		30	WIRE MARKING, YELLOW, PA02/3"1"	
0130	359000-0202		20	WIRE MARKING, YELLOW, PA02/3"2"	
0140	359000-0203		20	YELLOW, PWIRE MARKING, YELLOW, PA02/3"3"	
0150	359000-0204		20	WIRE MARKING, YELLOW, PA02/3"4"	
0160	359000-0205		20	WIRE MARKING, YELLOW, PA02/3"5"	
0170	359000-0206		20	WIRE MARKING, YELLOW, PA02/3"6"	
0180	359000-0207		20	WIRE MARKING, YELLOW, PA02/3"7"	
0190	359000-0208		20	WIRE MARKING, YELLOW, PA02/3"8"	
0200	359000-0209		20	WIRE MARKING, YELLOW, PA02/3"9"	
0210	90603-5562		1	CONNECTOR, SACC-M12FS-5CON-PG 7-VA	
0220	90603-5561		1	CONNECTOR, SACC-M12MS-5CON-PG 9-VA	
0230	353001-0113		20	END SLEEVE 0,75MM2	
0240	353001-0116		20	END SLEEVE H0.5/14 ORANGE	
0250	352113-0102		10	CABLE TIE, BLACK 188X4,8 MM	
0260	352113-0103		10	CABLE TIE, BLACK 290X7,6 MM	

Pos	Part No	UN	Qty	Description	Page No

Machine Type | Group Description | Used-In | Group Number | Page No

BARCODE SCANNER

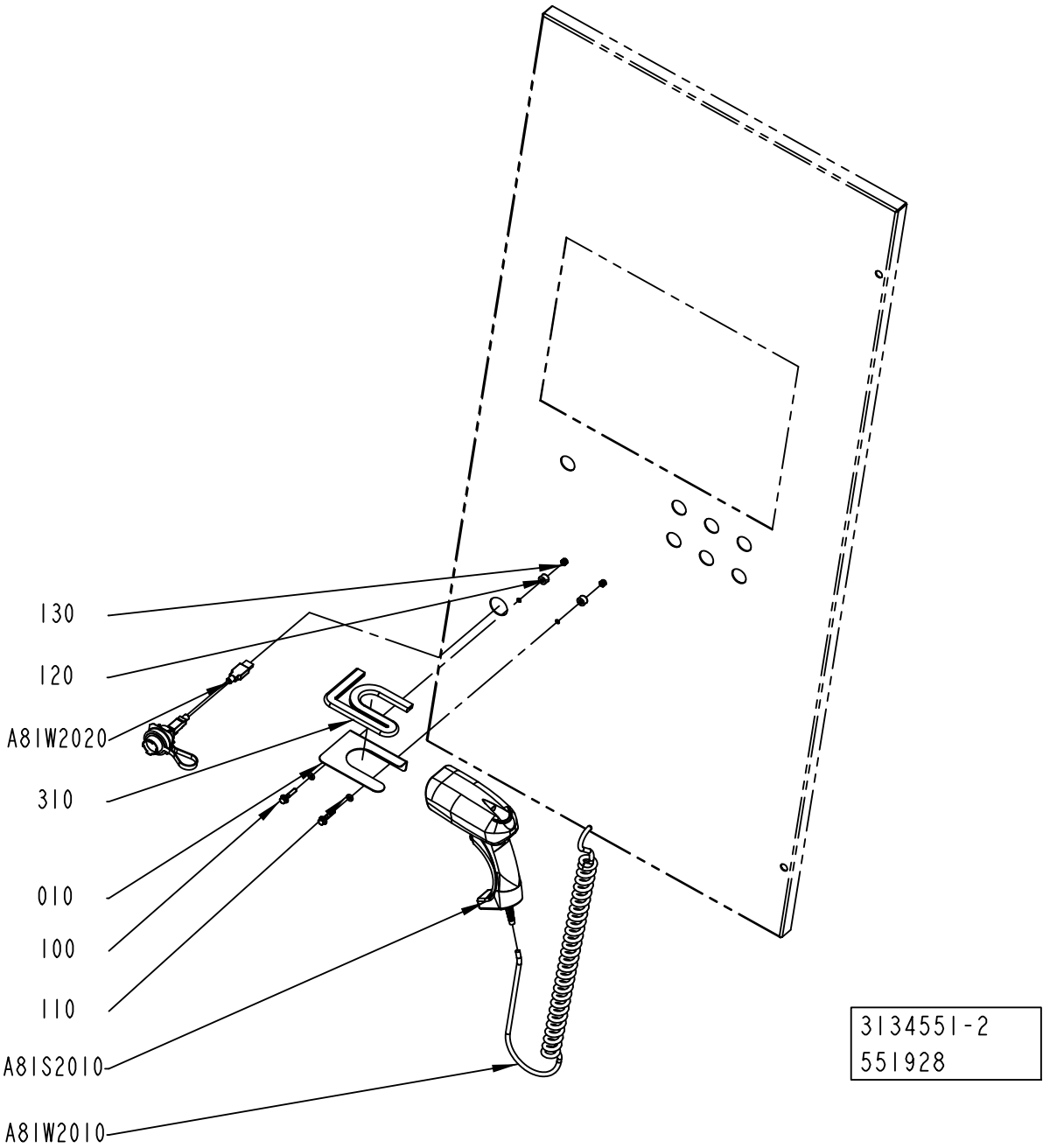

ECM: 551929 - 20120402
Group number: 3134551-0200
Assembly Drawing: 3134551-2_1_AA

Pos	Part No	UN	Qty	Description	Page No
-					
010	3096014-0000		1	BRACKET	
100	312108-0333		2	SCREW EN 1665 TYPE F M5X25 A270	
110	315202-0204		2	"O-RING 5,3X2,4 MM"	
120	315741-0102		2	RETAINING RING, DIN 705 A2 6	
130	312812-0314		2	HEXAGON NUT, NY-LOCK M5 A4 80	
310	90143-0097	MM	370	SELF GRIPPING GASKET, 1011-24	
A81S2010	90603-5602		1	BAR CODE READER, D8330 SR-902151265+CAB-	
A81W2010	90601-6430		1	USB CABLE, 90601-6430	
A81W2020	90600-4778		1	USB CABLE SET, 5A9000.54	

Pos	Part No	UN	Qty	Description	Page No

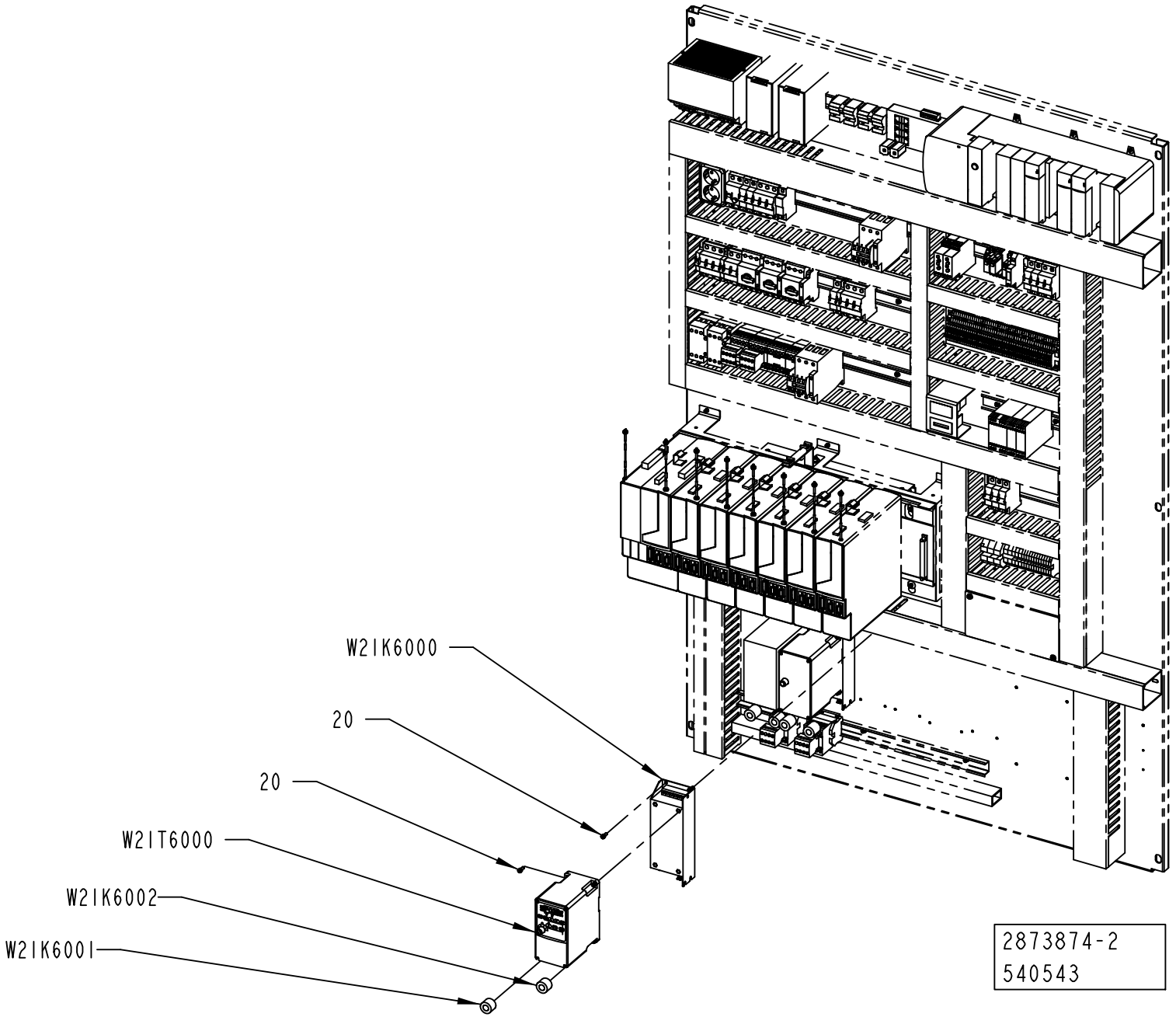
W2IK6000
20
20
W2IT6000
W2IK6002
W2IK6001
2873874-2
540543

ECM: 541022 - 20120402
Group number: 2873874-0200
Assembly Drawing: 2873874-2_1_AB

Pos	Part No	UN	Qty	Description	Page No	Pos	Part No	UN	Qty	Description	Page No
-											
020	312115-0327		8	SCREW ISO4762 M5X12 A4 80							
W21K6000	90459-3460		1	FOOTPRINT FILTER 1 PHASE 10A							
W21K6001	90600-5249		1	FERRITE, B64290L616X38							
W21K6002	90600-5249		1	FERRITE, B64290L616X38							
W21T6000	90459-3450		1	FREQ. CONV., 22A-A4P5N104							

COMMUNICATION UNIT

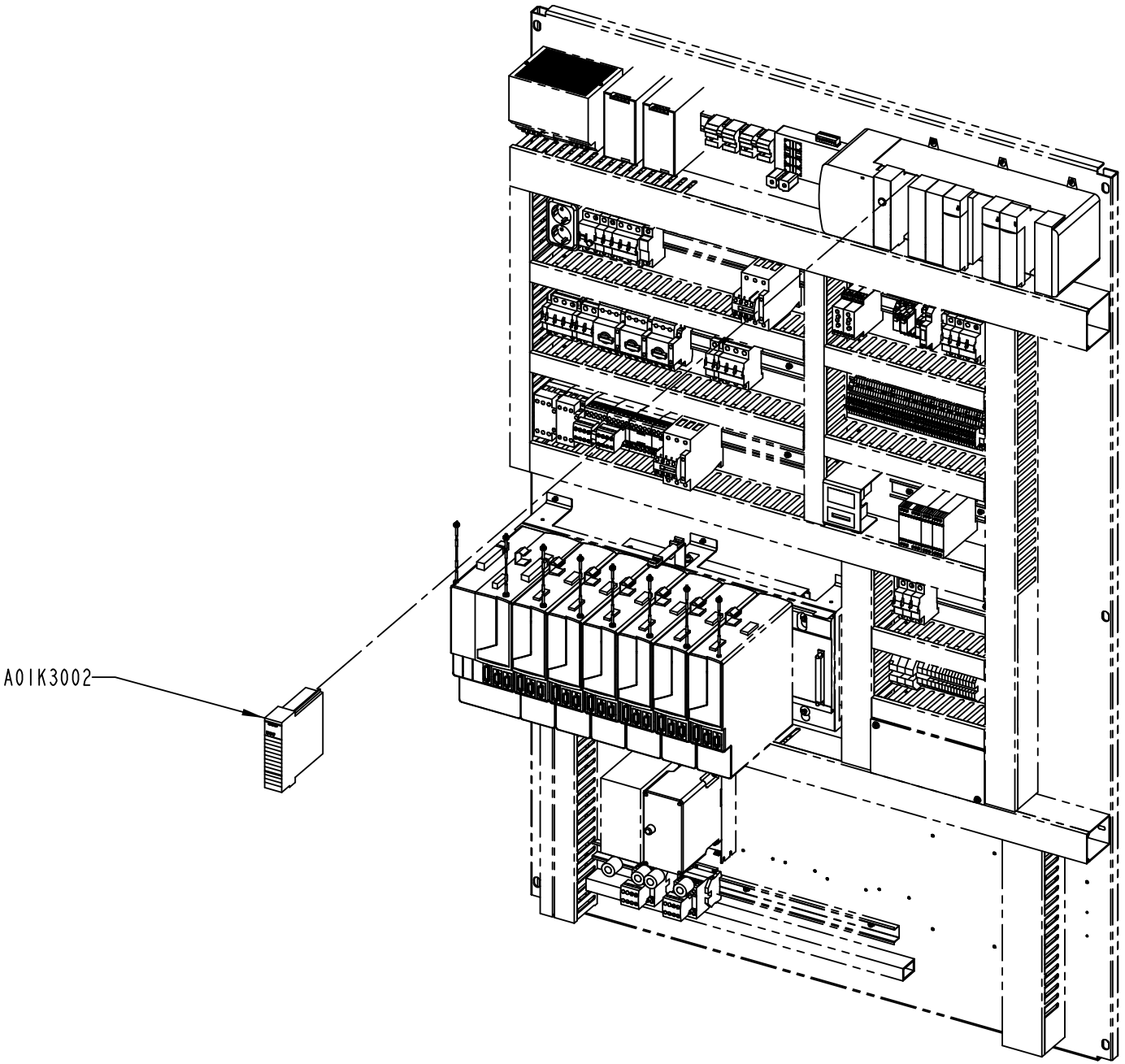

2890013-2
535115

ECM: 535121 - 20120401
Group number: 2890013-0200
Assembly Drawing: 2890013-2_1_AA

Pos	Part No	UN	Qty	Description	Page No
-					
A01K3002	90459-2477		1	5008206, 1756-ENBT	

Pos	Part No	UN	Qty	Description	Page No

Machine Type	Group Description	Used-In	Group Number	Page No

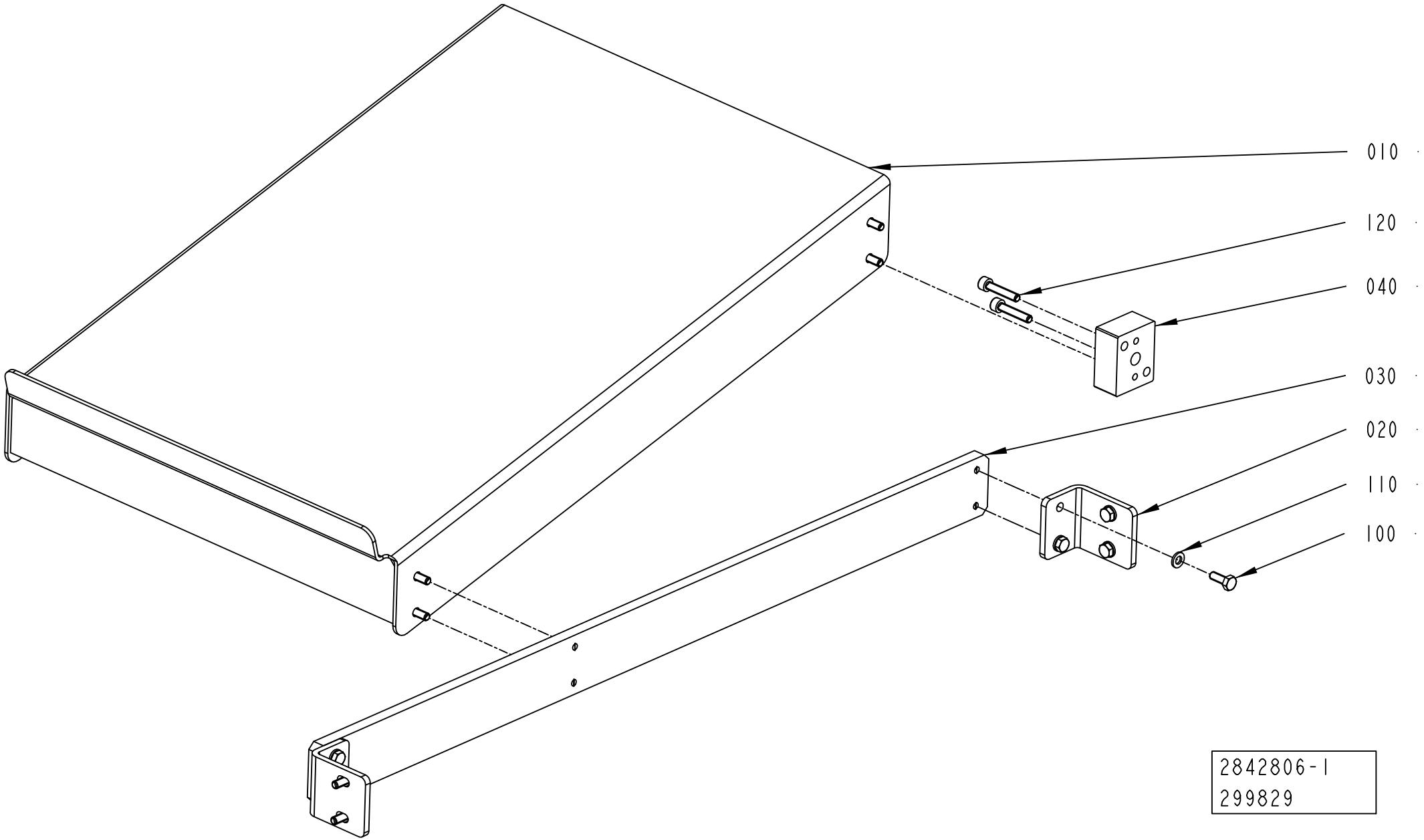
010
120
040
030
020
110
100
2842806-1
299829

ECM: 310549 - 20070528
Group number: 2842806-0100
Assembly Drawing: 2842806-1_1_AB

Pos	Part No	UN	Qty	Description	Page No
-					
010	2842800-0000		1	SHELF	
020	2842804-0000		2	BRACKET	
030	2842803-0000		1	PLATE	
040	2842805-0000		1	SPACER	
100	312105-0368		12	"SCREW, M6S ISO 4017 M6X16 A4 80"	
110	315105-0153		12	WASHER PLAIN, 6,4X12X1,5 A4 BRB	
120	312115-0374		2	SCREW ISO4762 M6X30 A4 80	

Pos	Part No	UN	Qty	Description	Page No

This page is intentionally left blank.

ECM: 585273 - 20121119
Group number: 3275970-0100
Assembly Drawing:

Pos	Part No	UN	Qty	Description	Page No
-					
010	3269873-0100		1	MOTOR UNIT	**12-21**
020	3269874-0100		1	MOTOR UNIT	**12-23**
030	3269875-0100		1	MOTOR UNIT	**12-25**
040	3269989-0100		1	PHOTOCELL BRACKET	**12-27**
060	3269876-0100		1	MOTOR UNIT	**12-29**
070	3269878-0100		1	FASTENING PLATE	**12-31**
080	3266607-0100		1	POWER SUPPLY UNIT	**12-37**
090	2913685-0100		1	NOZZLE BRACKET	**12-39**
100	3269877-0100		1	MOTOR UNIT	**12-41**
130	3269879-0100		1	SENSOR	**12-43**
140	3269880-0100		1	SENSOR	**12-45**
150	3269881-0100		1	SENSOR	**12-47**
160	3053485-0100		1	TOOL	**12-49**
170	3269882-0100		1	SENSOR	**12-57**
180	3269883-0100		1	SENSOR	**12-59**
190	3276599-0100		1	ELECTRICAL MATERIALS	**12-61**

Pos	Part No	UN	Qty	Description	Page No

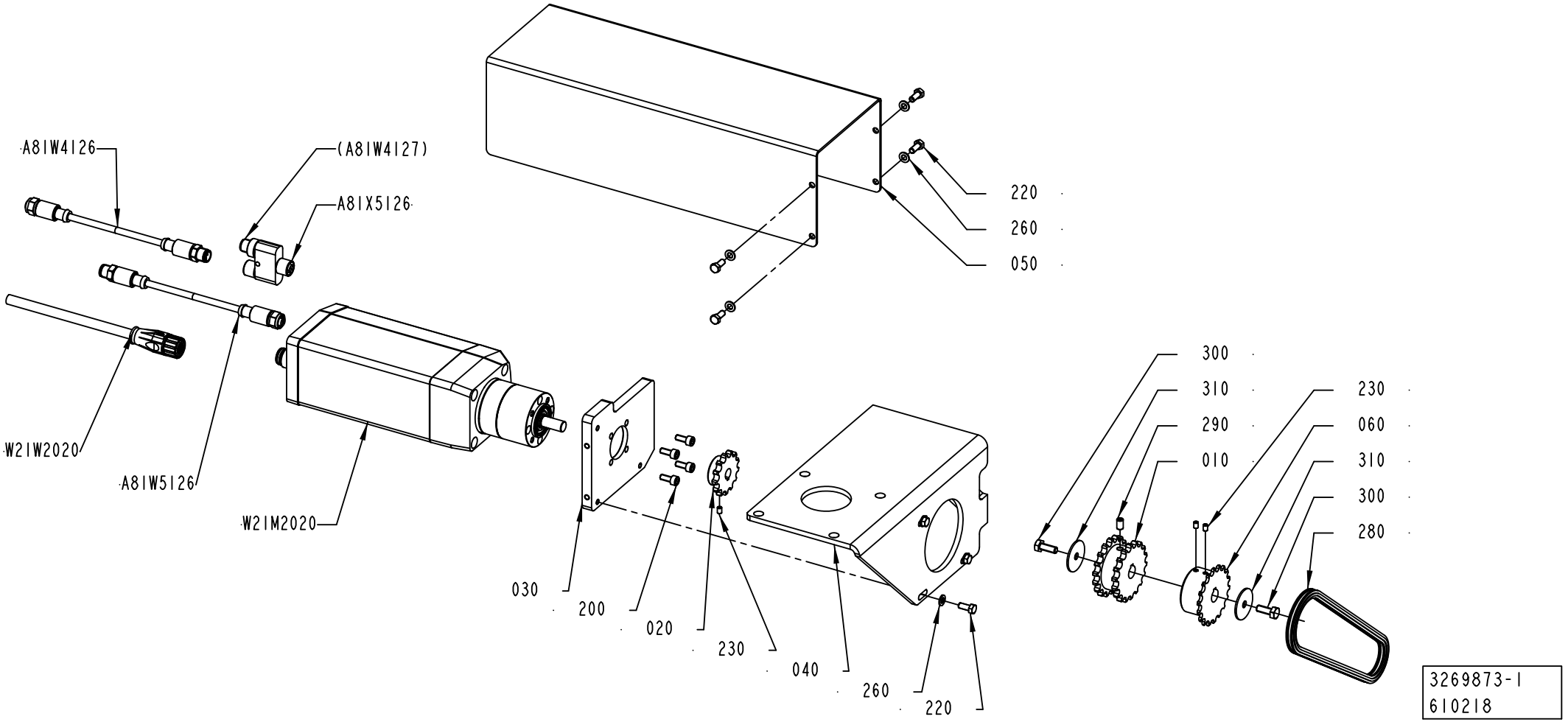
A81W4126
(A81W4127)
A81X5126
220
260
050
W21W2020
A81W5126
W21M2020
030
200
020
230
040
260
220
300
310
290
010
230
060
310
300
280
3269873-1
610218

ECM: 619786 - 20130619
Group number: 3269873-0100
Assembly Drawing: 3269873-1_1_AC

Pos	Part No	UN	Qty	Description	Page No
-					
010	2913643-0000		1	SPROCKET	
020	2913644-0000		1	SPROCKET	
030	3211822-0000		1	MOTOR BRACKET	
040	3211824-0000		1	BRACKET	
050	3212465-0000		1	COVER	
060	2779062-0000		1	SPROCKET	
200	312115-0327		4	SCREW ISO4762 M5X12 A4 80	
220	312105-0327		7	"SCREW, M6S ISO 4017 M5X12 A4 80"	
230	312318-0285		3	SET SCREW, CUP END ISO4029 M4X6 A4	
260	315105-0146		7	WASHER PLAIN, 5,3X10X1 A4 BRB	
280	318201-0048		1	ROLLER CHAIN, SIMPLEX 3/8 -48	
290	312318-0364		1	SET SCREW, CUP END ISO4029 M6X10 A4	
300	312105-0368		2	"SCREW, M6S ISO 4017 M6X16 A4 80"	
310	90458-0073		2	WASHER 6,4/30, H=1,5	
A81W4126	344293-0010		1	DEVICEN CAB.SAC-5P-M12MS/1,0-927/M12FSVA	
A81W5126	344293-0003		1	DEVICEN CAB.SAC-5P-M12MS/0,3-927/M12FSVA	
A81X5126	90603-9674		1	Y-CONNECTOR, SAC-5P-M12YF/M12FS-M12MS VP	
W21M2020	90605-6742		1	SERVO MOTOR, MTR-ECI-52R-MG25-R3DN-FG-SA	
W21W2020	90605-6768		1	CABLE, KPWR-MC-1-M16-3B-6	

Pos	Part No	UN	Qty	Description	Page No

Machine Type	Group Description	Used-In	Group Number	Page No

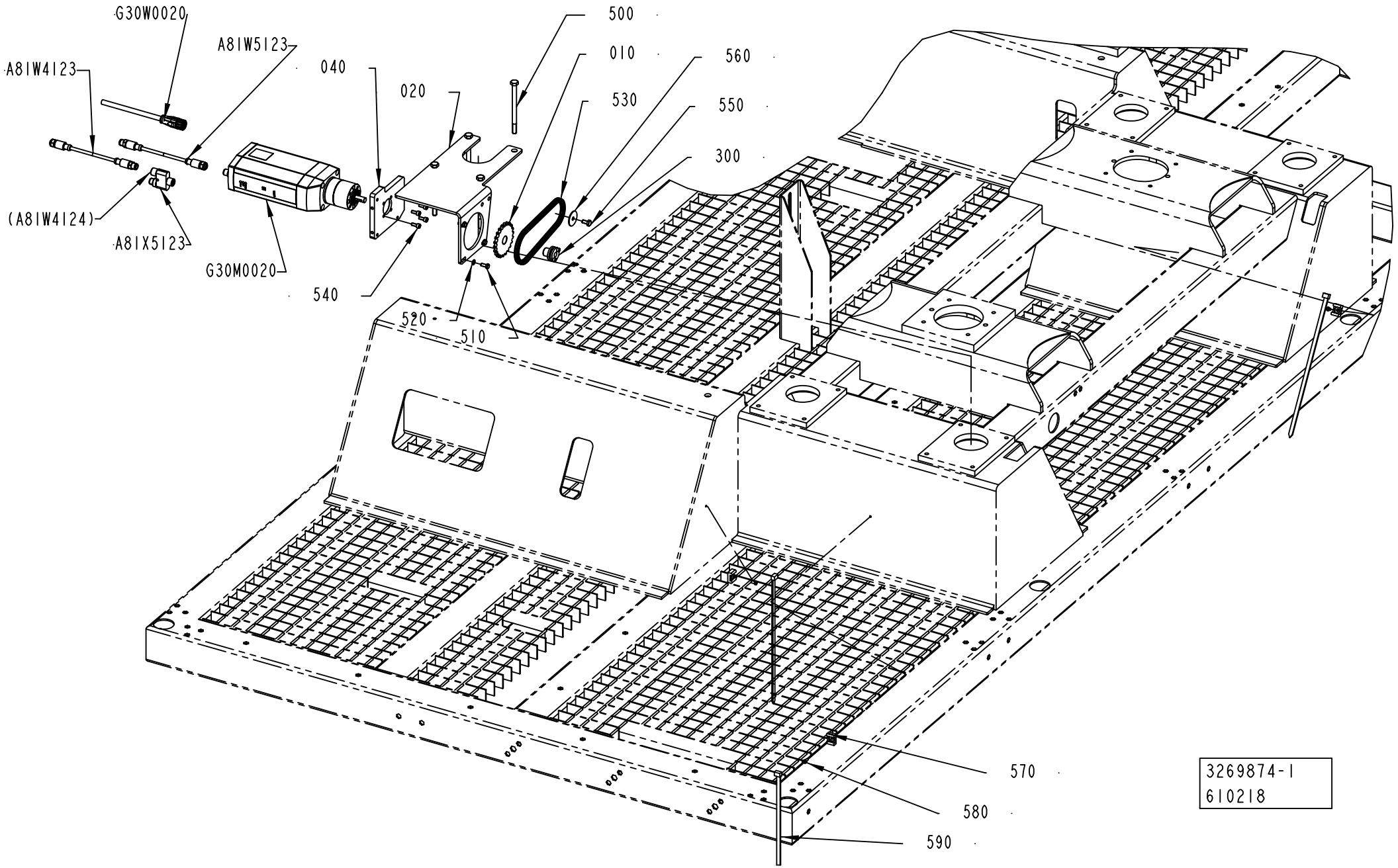
G30W0020
A8IW5123
A8IW4123
040
020
500
010
560
530
550
300
(A8IW4124)
A8IX5123
G30M0020
540
520
510
570
580
590
3269874-1
610218

ECM: 619628 - 20130619
Group number: 3269874-0100
Assembly Drawing: 3269874-1_1_AC

Pos	Part No	UN	Qty	Description	Page No
-					
010	3227546-0000		1	SPROCKET	
020	2930188-0000		1	BRACKET	
040	3211822-0000		1	MOTOR BRACKET	
300	90208-0059		1	CLAMPING ELEMENT WITH SLEEVE, 10X16 MM	
500	312105-0473		4	SCREW, M6S ISO 4014 M8X110 A4 80	
510	312105-0327		3	"SCREW, M6S ISO 4017 M5X12 A4 80"	
520	315105-0146		3	WASHER PLAIN, 5,3X10X1 A4 BRB	
530	318201-0047		1	ROLLER CHAIN, SIMPLEX 3/8 -47	
540	312115-0327		4	SCREW ISO4762 M5X12 A4 80	
550	312105-0366		1	SCREW, M6S ISO 4017 M6X12 A4 80	
560	90458-0073		1	WASHER 6,4/30, H=1,5	
570	352113-0203		3	ANCHOR PLATES FOR STRIPS, TM3S8-M0	
580	312125-0287		3	SLOTTED HEAD SCREW, ISO1207 M4X8 A4	
590	352113-0104		3	CABLE TIE, BLACK 300X4,8 MM	
A81W4123	344293-0020		1	DEVICEN CAB.SAC-5P-M12MS/2,0-927/M12FSVA	
A81W5123	344293-0003		1	DEVICEN CAB.SAC-5P-M12MS/0,3-927/M12FSVA	
A81X5123	90603-9674		1	Y-CONNECTOR, SAC-5P-M12YF/M12FS-M12MS VP	
G30M0020	90605-6742		1	SERVO MOTOR, MTR-ECI-52R-MG25-R3DN-FG-SA	
G30W0020	90605-6768		1	CABLE, KPWR-MC-1-M16-3B-6	

Pos	Part No	UN	Qty	Description	Page No

MOTOR UNIT

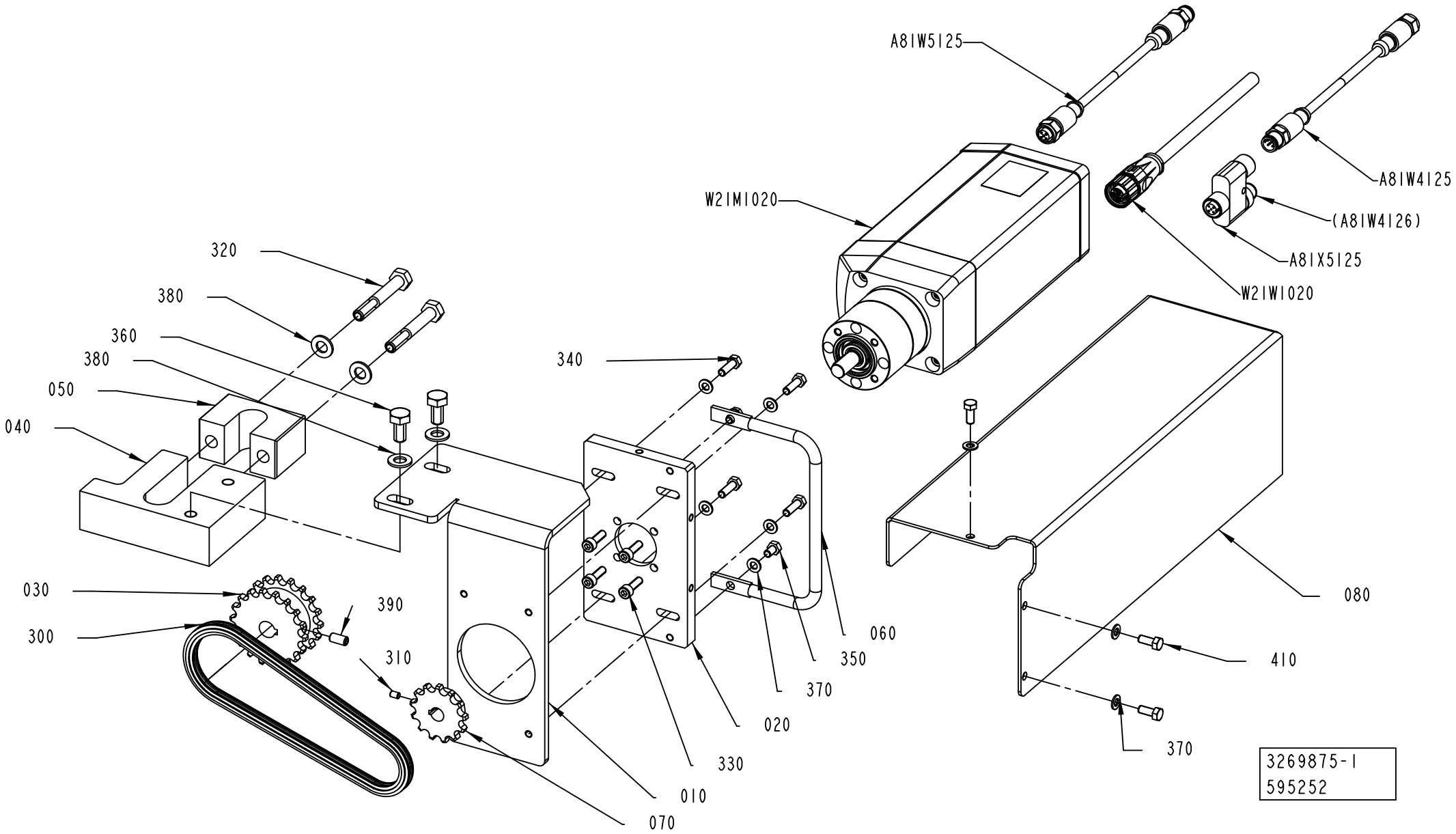
A81W5125
W21M1020
A81W4125
(A81W4126)
A81X5125
W21W1020
320
380
360
380
050
040
340
030
300
390
310
060
350
370
020
330
010
070
080
410
370
3269875-1
595252

ECM: 595672 - 20130401
Group number: 3269875-0100
Assembly Drawing: 3269875-1_1_AB

Pos	Part No	UN	Qty	Description	Page No
-					
010	3265768-0000		1	PLATE	
020	3211823-0000		1	FLANGE	
030	2913643-0000		1	SPROCKET	
040	3265769-0000		1	CLAMP	
050	3033726-0000		1	CLAMP	
060	3032335-0000		1	HANDLE	
070	2913644-0000		1	SPROCKET	
080	3225418-0000		1	COVER	
300	318201-0043		1	ROLLER CHAIN, SIMPLEX 3/8 -43	
310	312318-0285		1	SET SCREW, CUP END ISO4029 M4X6 A4	
320	312105-0462		2	SCREW, M6S ISO 4014 M8X55 A4 8002	
330	312115-0329		4	SCREW ISO4762 M5X16 A4 80	
340	312105-0329		4	SCREW, M6S ISO 4017 M5X16 A4 80	
350	312105-0323		2	"FSCR05080-10, SCREW, M6S"	
360	312105-0449		2	SCREW, M6S ISO 4017 M8X16 A4 80	
370	315105-0146		9	WASHER PLAIN, 5,3X10X1 A4 BRB	
380	315105-0165		4	FWAS080G0-0S, WASHER PLAIN	
390	312318-0366		1	SET SCREW, CUP END ISO4029 M6X12 A4	
410	312105-0327		3	"SCREW, M6S ISO 4017 M5X12 A4 80"	
A81W4125	344293-0020		1	DEVICEN CAB.SAC-5P-M12MS/2,0-927/M12FSVA	
A81W5125	344293-0003		1	DEVICEN CAB.SAC-5P-M12MS/0,3-927/M12FSVA	
A81X5125	90603-9674		1	Y-CONNECTOR, SAC-5P-M12YF/M12FS-M12MS VP	
W21M1020	90605-6742		1	SERVO MOTOR, MTR-ECI-52R-MG25-R3DN-FG-SA	
W21W1020	90605-6768		1	CABLE, KPWR-MC-1-M16-3B-6	

Pos	Part No	UN	Qty	Description	Page No

PHOTOCELL BRACKET

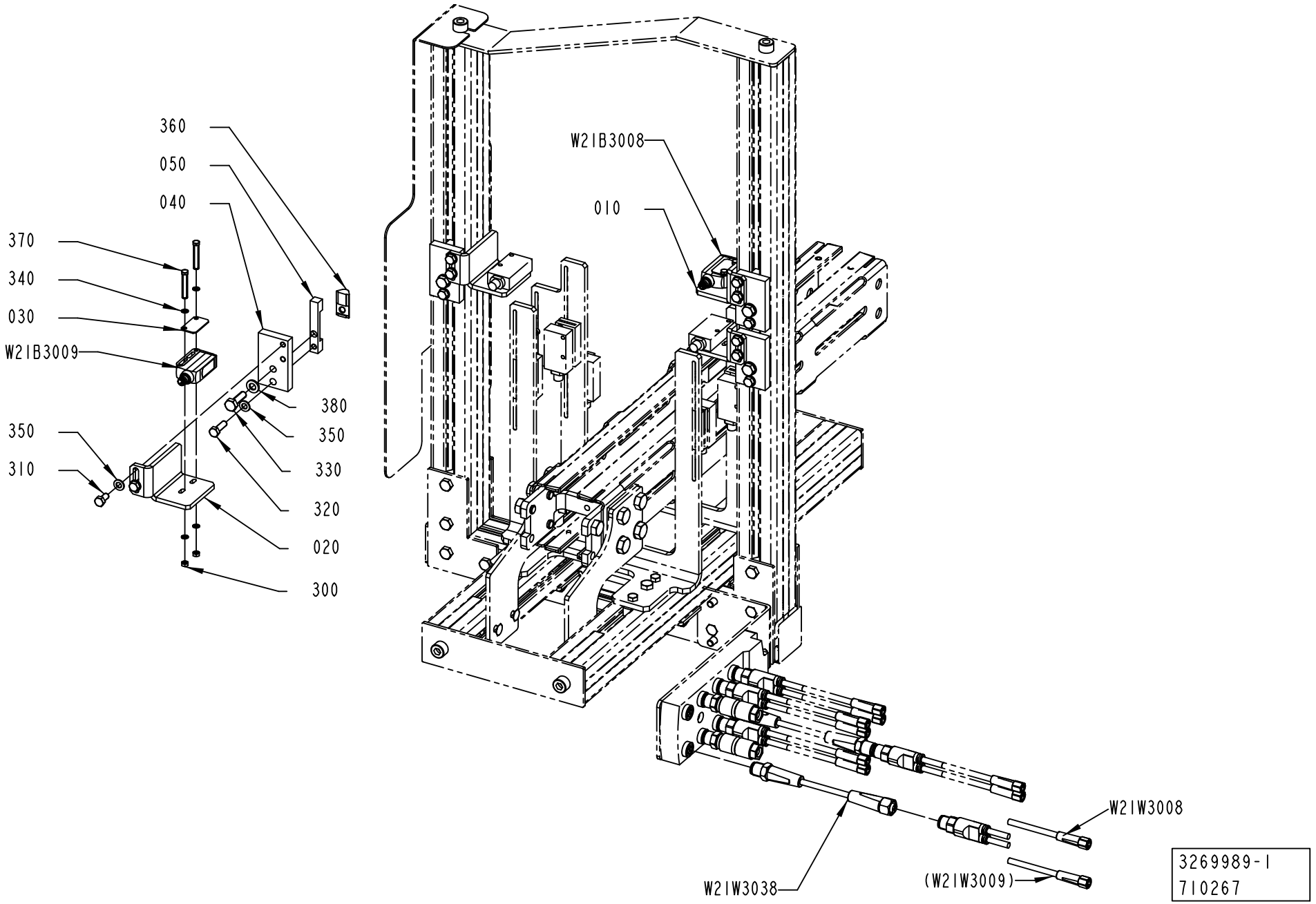

ECM: 714412 - 20150401
Group number: 3269989-0100
Assembly Drawing: 3269989-1_1_AC

Pos	Part No	UN	Qty	Description	Page No
TPA					
010	3269560-0000		2	BRACKET	
020	3276595-0000		2	BRACKET	
030	3159896-0000		2	PLATE	
040	3276593-0000		4	PLATE	
050	3276594-0000		4	PLATE	
300	312605-0310		4	HEXAGON NUT, M6M M3 A280	
310	312105-0325		8	SCREW, M6S ISO 4017 M5X10 A4 80	
330	312105-0370		4	SCREW, M6S ISO 4017 M6X20 A4 80	
340	315105-0124		8	WASHER PLAIN, 3,2X6X0,5 A4 BRB	
350	315105-0146		12	WASHER PLAIN, 5,3X10X1 A4 BRB	
360	90459-5134		4	NUT, T-SLOT M6	
370	90287-0176		4	SCREW M6S M3X25 A470	
380	315105-0153		4	WASHER PLAIN, 6,4X12X1,5 A4 BRB	
Common Parts					
320	312105-0329		4	SCREW, M6S ISO 4017 M5X16 A4 80	
W21B3008	90606-4464		1	LASER SENSOR, WSE9L-3P2237	
W21W3008	90603-3979		1	SENSOR Y-CABLE, EVT339	
W21W3038	344267-0006		1	SENSOR CABLE, EVT041	

Pos	Part No	UN	Qty	Description	Page No

MOTOR UNIT

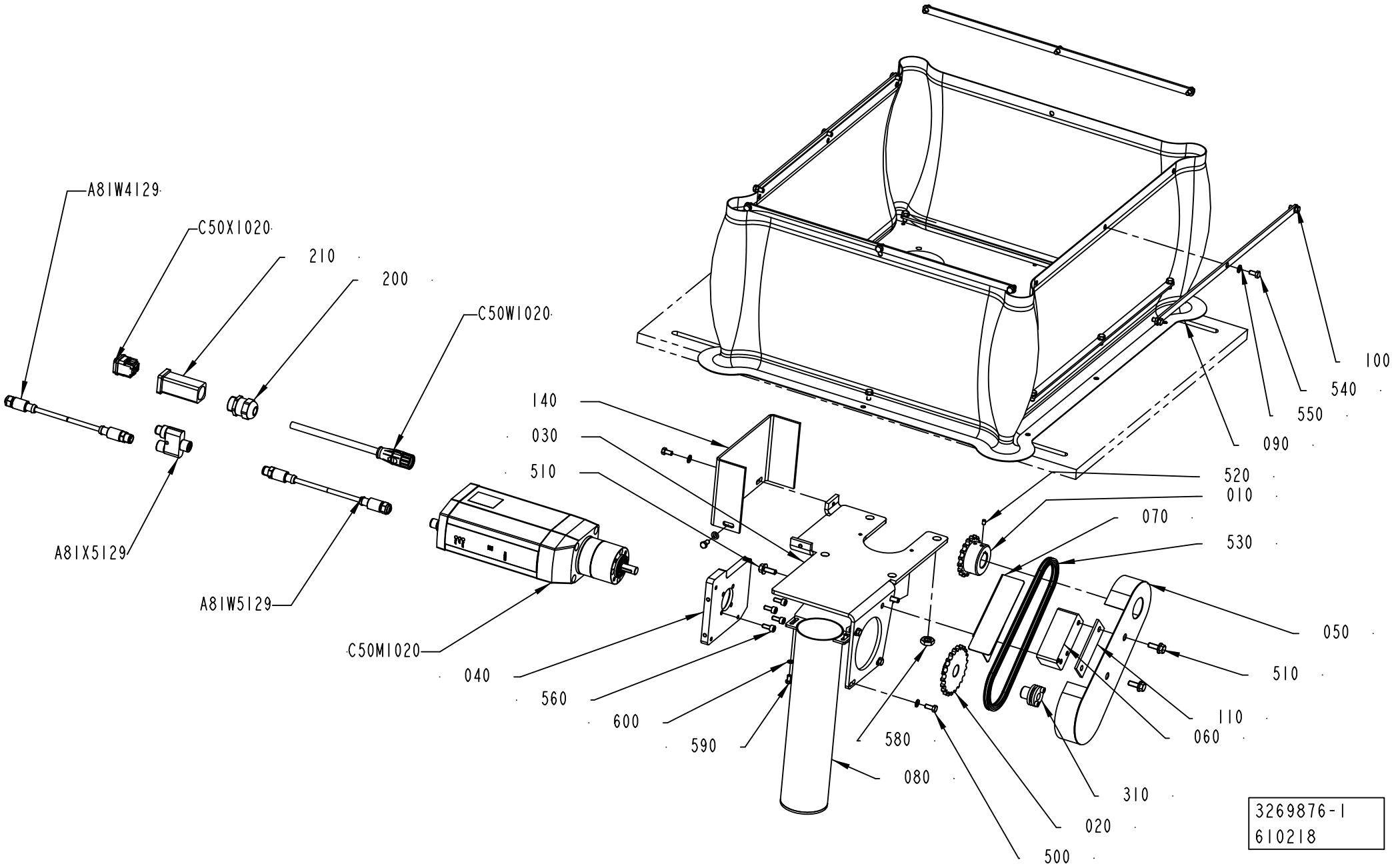
A81W4129
C50X1020
210
200
C50W1020
140
030
510
A81X5129
A81W5129
C50M1020
040
560
600
590
580
080
500
020
310
060
110
510
050
530
070
010
520
090
550
540
100
3269876-1
610218

ECM: 619629 - 20130619
Group number: 3269876-0100
Assembly Drawing: 3269876-1_1_AC

Pos	Part No	UN	Qty	Description	Page No
-					
010	2779769-0000		1	SPROCKET	
020	3227546-0000		1	SPROCKET	
030	2913646-0000		1	BRACKET	
040	3211822-0000		1	MOTOR BRACKET	
050	2913652-0000		1	CHAIN GUARD	
060	2913655-0000		1	MOUNTING BLOCK	
070	2913656-0000		1	PROTECTION	
080	2913659-0000		1	PROTECTION	
090	2913661-0000		1	PROTECTION	
100	2913662-0000		8	CLAMPING PLATE	
110	3117416-0000		1	SPACER	
140	2930189-0000		1	COVER	
200	90458-0307		1	CABLE GLAND, M20X1,5, 5311 1020	
210	90459-3670		1	HOOD, HAN3A, 19 20 003 1440	
310	90208-0059		1	CLAMPING ELEMENT WITH SLEEVE, 10X16 MM	
500	312105-0327		3	"SCREW, M6S ISO 4017 M5X12 A4 80"	
510	312108-0368		4	SCREW EN 1665 TYPE F M6X16 A270	
520	312318-0285		2	SET SCREW, CUP END ISO4029 M4X6 A4	
530	318201-0054		1	ROLLER CHAIN, SIMPLEX 3/8 -54	
540	312105-0325		26	SCREW, M6S ISO 4017 M5X10 A4 80	
550	315105-0146		29	WASHER PLAIN, 5,3X10X1 A4 BRB	
560	312115-0327		4	SCREW ISO4762 M5X12 A4 80	
580	312625-0320		4	HEXAGON THIN NUT, EN 24035 ML6M M10 A4	
590	312105-0287		2	SCREW, M6S ISO 4017 M4X8 A4 70	
600	315105-0136		2	WASHER PLAIN, 4,3X8X0,8 A4 BRB	
A81W4129	344293-0020		1	DEVICEN CAB.SAC-5P-M12MS/2,0-927/M12FSVA	
A81W5129	344293-0003		1	DEVICEN CAB.SAC-5P-M12MS/0,3-927/M12FSVA	
A81X5129	90603-9674		1	Y-CONNECTOR, SAC-5P-M12YF/M12FS-M12MS VP	
C50M1020	90605-6742		1	SERVO MOTOR, MTR-ECI-52R-MG25-R3DN-FG-SA	
C50W1020	90605-6768		1	CABLE, KPWR-MC-1-M16-3B-6	
C50X1020	90459-6821		1	MALE INSERT HAN 4A, 0920 0042 611	

Pos	Part No	UN	Qty	Description	Page No

FASTENING PLATE

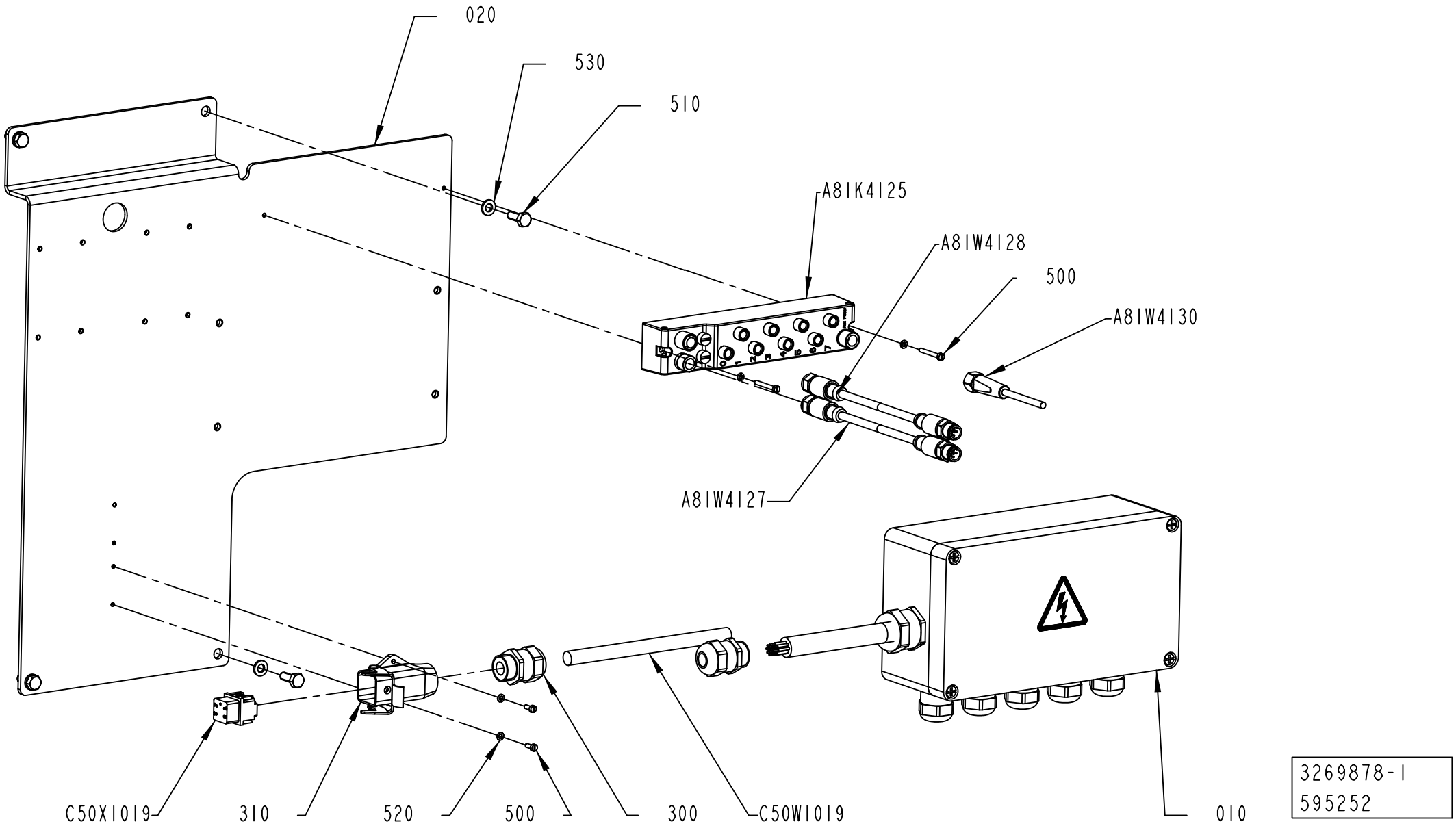

3269878-1
595252

ECM: 605677 - 20130401
Group number: 3269878-0100
Assembly Drawing: 3269878-1_1_AB

Pos	Part No	UN	Qty	Description	Page No
-					
010	3269884-0100		1	JUNCTION BOX	**12-33**
020	3266068-0000		1	BRACKET	
300	90458-0307		1	CABLE GLAND, M20X1,5, 5311 1020	
310	90459-3081		1	HOUSING, 19 20 003 1250	
500	312125-0232		2	SLOTTED HEAD SCREW, ISO1207 M3X25 A4	
500	312125-0222		2	SLOTTED HEAD SCREW, ISO1207 M3X8 A4	
510	312105-0368		4	"SCREW, M6S ISO 4017 M6X16 A4 80"	
520	315105-0124		4	WASHER PLAIN, 3,2X6X0,5 A4 BRB	
530	315105-0153		4	WASHER PLAIN, 6,4X12X1,5 A4 BRB	
A81K4125	90459-6062		1	ARMORBLOCK DIGITAL CONFIGURABLE I/O	
A81W4127	344293-0030		1	DEVICEN CAB.SAC-5P-M12MS/3,0-927/M12FSVA	
A81W4128	344293-0003		1	DEVICEN CAB.SAC-5P-M12MS/0,3-927/M12FSVA	
A81W4130	344253-0100		1	SENSOR CABLE, EVT002	
C50W1019	315756-0007	MM	500	ÖLFLEX CONTROL TM CY 2G1,5, 281602CY	
C50X1019	90459-6820		1	FEMALE INSERT, HAN 4 A, 09 20 004 2711	

Pos	Part No	UN	Qty	Description	Page No

JUNCTION BOX

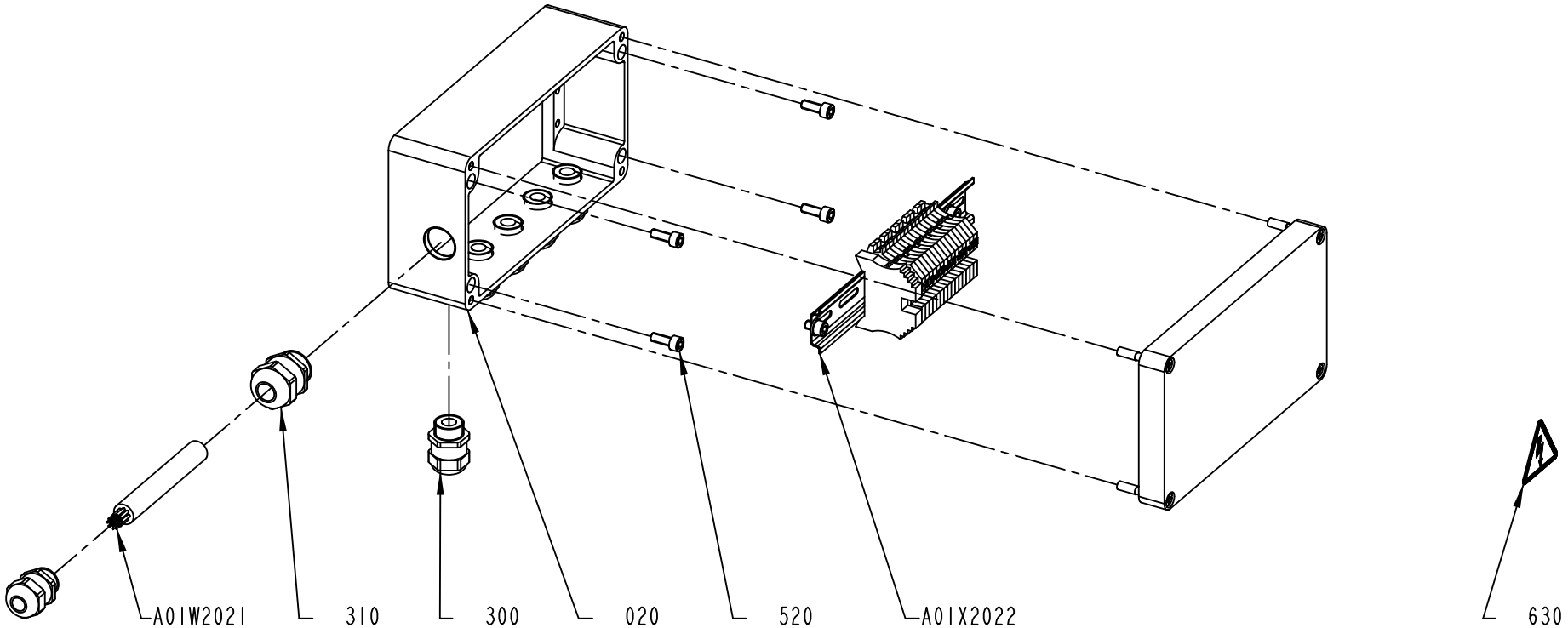

3269884-1
581205

ECM: 581253 - 20121120
Group number: 3269884-0100
Assembly Drawing: 3269884-1_1_AA

Pos	Part No	UN	Qty	Description	Page No
-					
020	3266321-0000		1	CONNECTION BOX	
300	90458-0307		6	CABLE GLAND, M20X1,5, 5311 1020	
310	90458-0308		1	CABLE GLAND, M25X1,5, 5311 1030	
520	312115-0368		4	SCREW ISO4762 M6X16 A4 80	
630	359705-0015		1	WARNING SIGN ISO, RISK OF ELECTRIC SHOCK	
A01W2021	351150-0416	M	9	CABLE OLFLEX 12X1,5 MM2 LIGHT/GREY	
A01X2022	3266683-0100		1	JUNCTION BOX	**12-35**

Pos	Part No	UN	Qty	Description	Page No

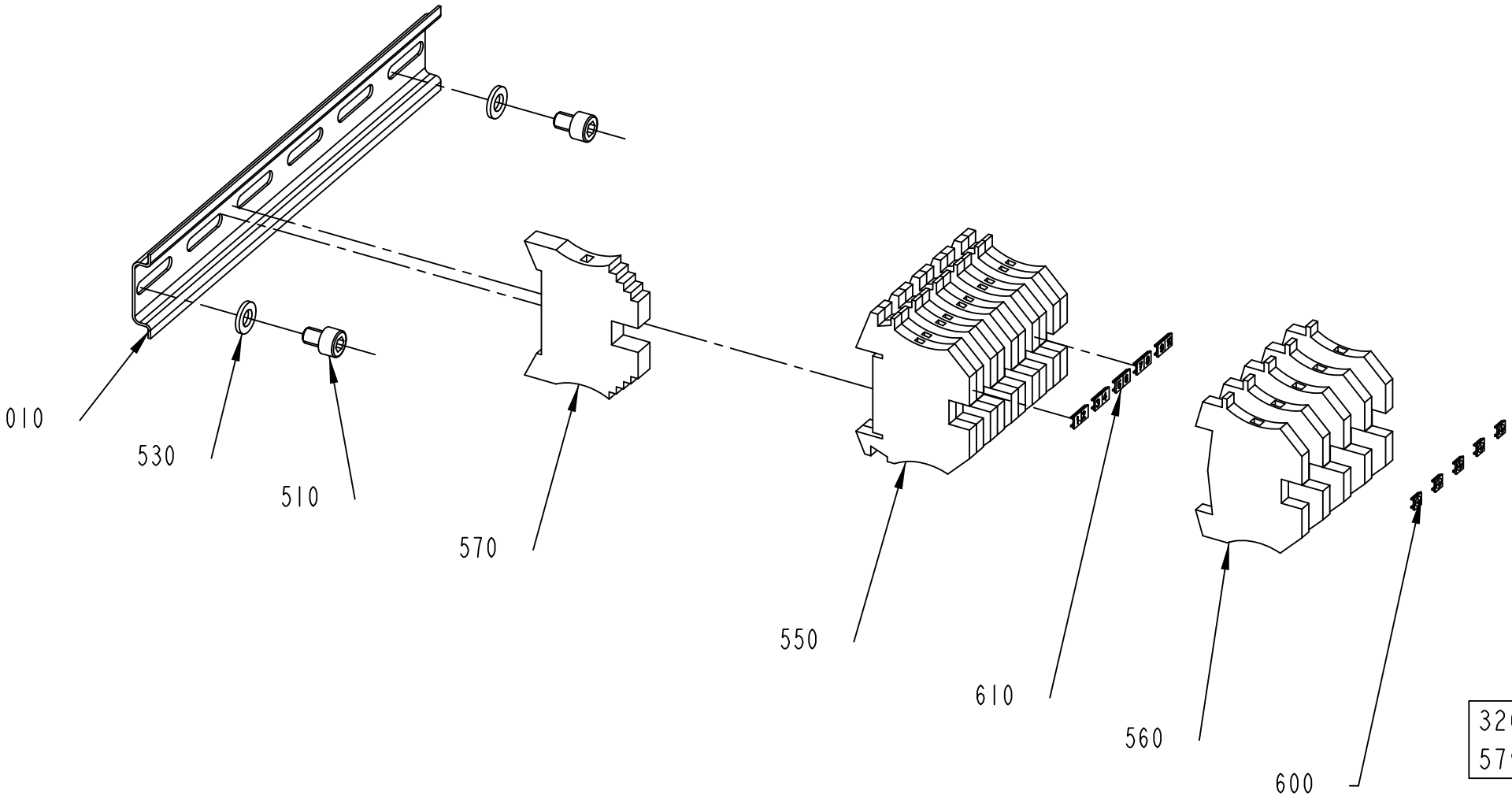
010
530
510
570
550
610
560
600
3266683-1
579330

ECM: 579882 - 20121120
Group number: 3266683-0100
Assembly Drawing: 3266683-1_1_AA

Pos	Part No	UN	Qty	Description	Page No
-					
010	2531417-0000		1	RAIL	
510	312115-0362		2	SCREW ISO4762 M6X8 A4 80	
530	315105-0153		2	WASHER PLAIN, 6,4X12X1,5 A4 BRB	
550	353021-0212		10	FEED THROUGH TERMINAL, WDU 2,5	
560	353024-0204		5	EARTH TERMINAL WPE 2,5	
570	353031-0203		1	END BRACKET, WEW 35/2	
600	359011-0819		1	MARKING, EARTH, DEK 5 GW ERDE I.KR.	
610	359011-0807		1	MARKING, DEK 5 FW 1-50	

Pos	Part No	UN	Qty	Description	Page No

POWER SUPPLY UNIT

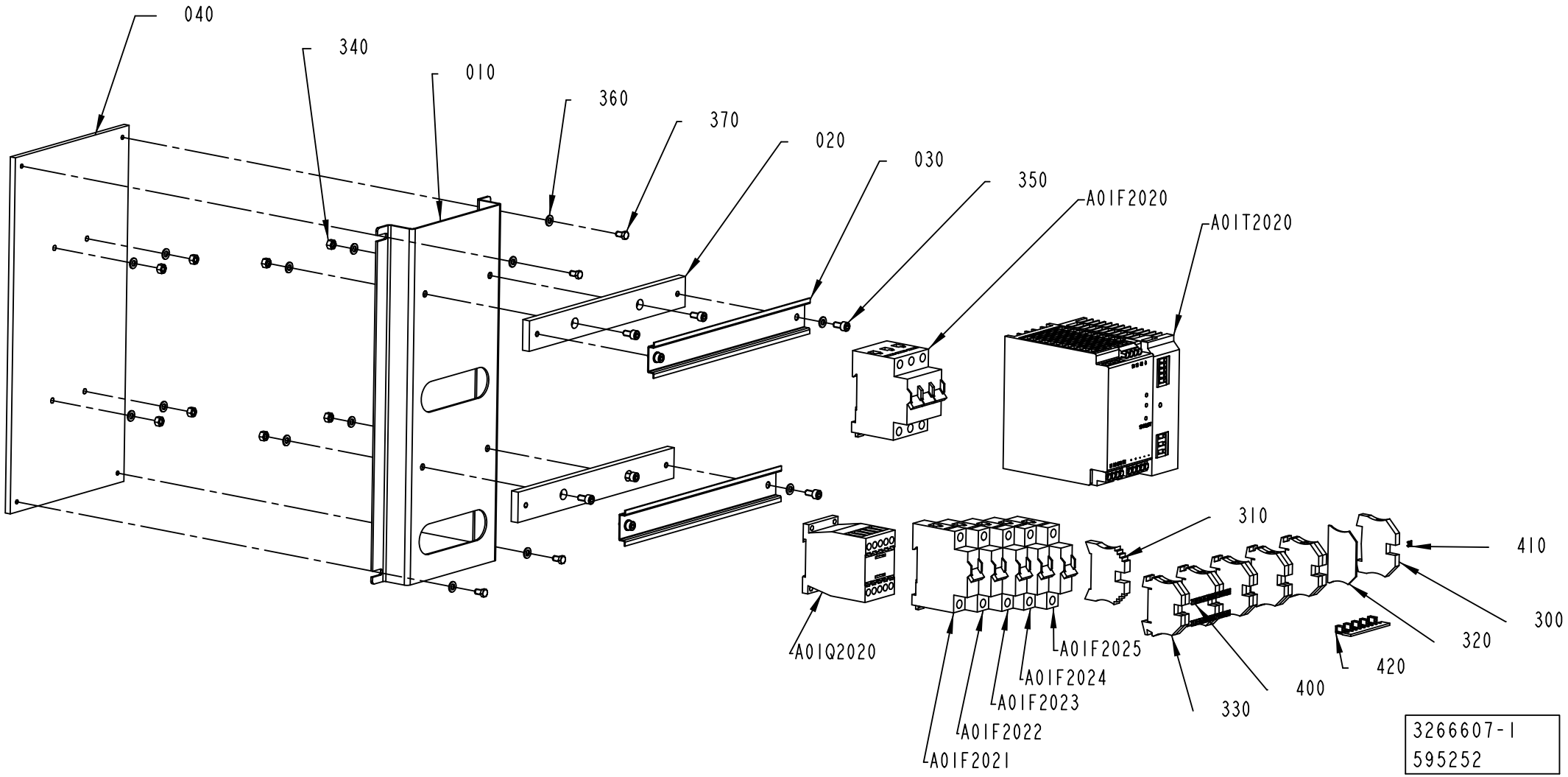

ECM: 605676 - 20130401
Group number: 3266607-0100
Assembly Drawing: 3266607-1_1_AB

Pos	Part No	UN	Qty	Description	Page No
-					
010	2913657-0000		1	MOUNTING SHEET	
020	3265919-0000		2	PLATE	
030	3265920-0000		2	RAIL	
040	3266503-0000		1	PLATE	
300	353024-0205		1	EARTH TERMINAL WPE 4	
310	353031-0203		1	END BRACKET, WEW 35/2	
320	353032-0004		1	END PLATE, WAP 2,5-10, BEIGE	
330	353021-0213		10	FEED THROUGH TERMINAL, WDU 4	
340	312605-0314		8	HEXAGON NUT, M6M M5 A280	
350	312115-0325		8	SCREW ISO4762 M5X10 A4 80	
360	315105-0146		16	WASHER PLAIN, 5,3X10X1 A4 BRB	
370	312105-0287		4	SCREW, M6S ISO 4017 M4X8 A4 70	
400	359011-0807		2	MARKING, DEK 5 FW 1-50	
410	359011-0819		1	MARKING, EARTH, DEK 5 GW ERDE I.KR.	
420	353034-0031		1	BRIDGE CONNECTOR WQV 4/10	
A01F2020	351418-0060		1	MINIATURE CIRC. BREAK., FAZ-D6/3 3-POLE	
A01F2021	351416-0100		1	MINIATURE CIRC. BREAK., FAZ -D10 1-POLE	
A01F2022	351416-0100		1	MINIATURE CIRC. BREAK., FAZ -D10 1-POLE	
A01F2023	351416-0100		1	MINIATURE CIRC. BREAK., FAZ -D10 1-POLE	
A01F2024	351416-0100		1	MINIATURE CIRC. BREAK., FAZ -D10 1-POLE	
A01F2025	351416-0100		1	MINIATURE CIRC. BREAK., FAZ -D10 1-POLE	
A01Q2020	90459-5440		1	CONTACTOR 4KW 24VDC, DILM9-01	
A01T2020	90602-8988		1	POWER SUPPLY, QUINT-PS/ 3AC/24DC/20	
	90602-8987		*1*	*FILTER, TP-NEF/20A*	
	90602-8687		*1*	*POWER SUPPLY, QUINT-PS/ 3AC/24DC/20*	

Pos	Part No	UN	Qty	Description	Page No

Machine Type | Group Description | Used-In | Group Number | Page No

NOZZLE BRACKET

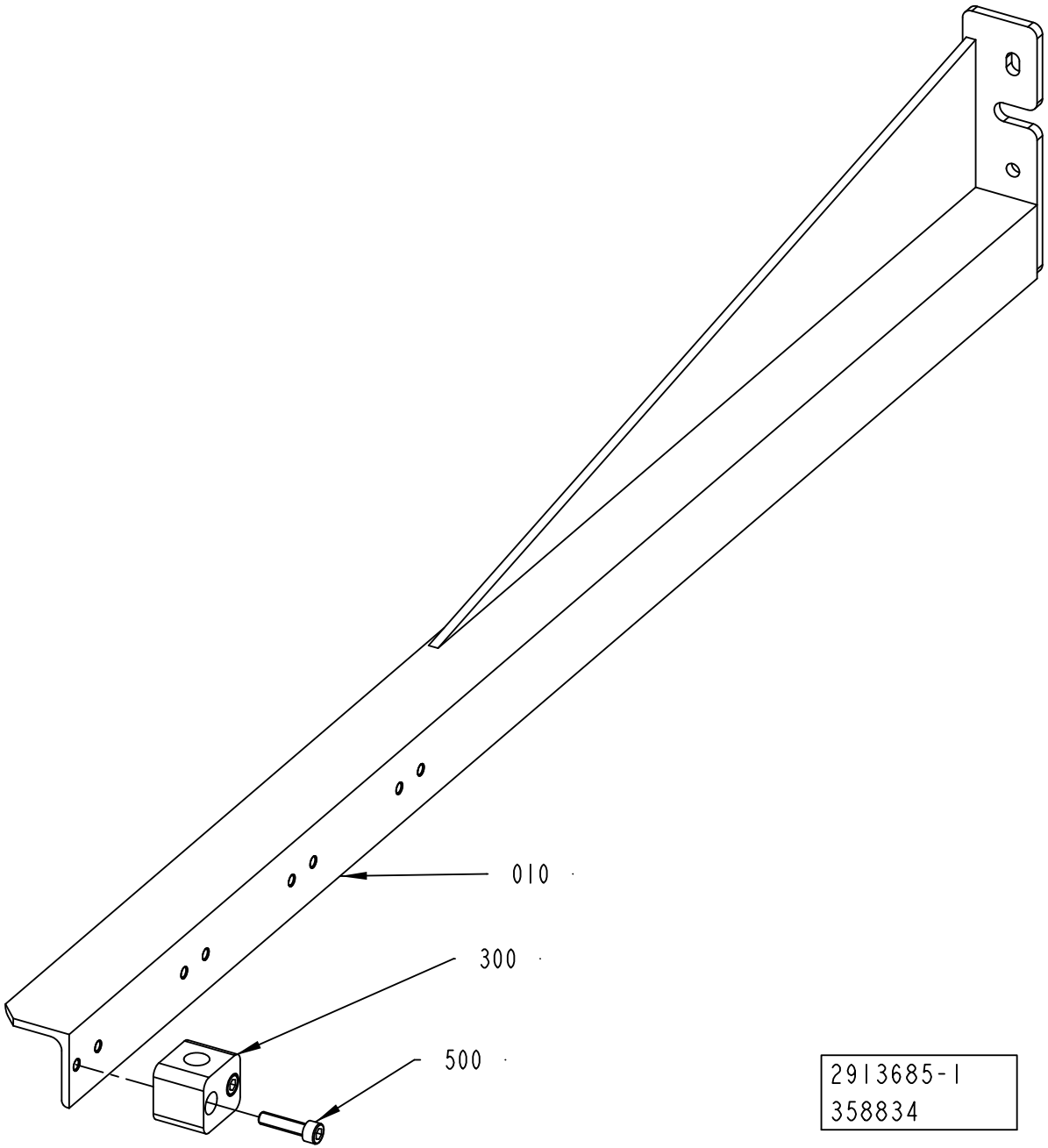

2913685-1
358834

ECM: 359096 - 20091113
Group number: 2913685-0100
Assembly Drawing: 2913685-1_1_AA

Pos	Part No	UN	Qty	Description	Page No
-					
010	2913651-0000		1	CANTILEVER	
300	90165-0051		2	PIPE CLAMP, D=12 MM, RAP112X	
500	312115-0372		2	SCREW ISO4762 M6X25 A4 80	

Pos	Part No	UN	Qty	Description	Page No

MOTOR UNIT

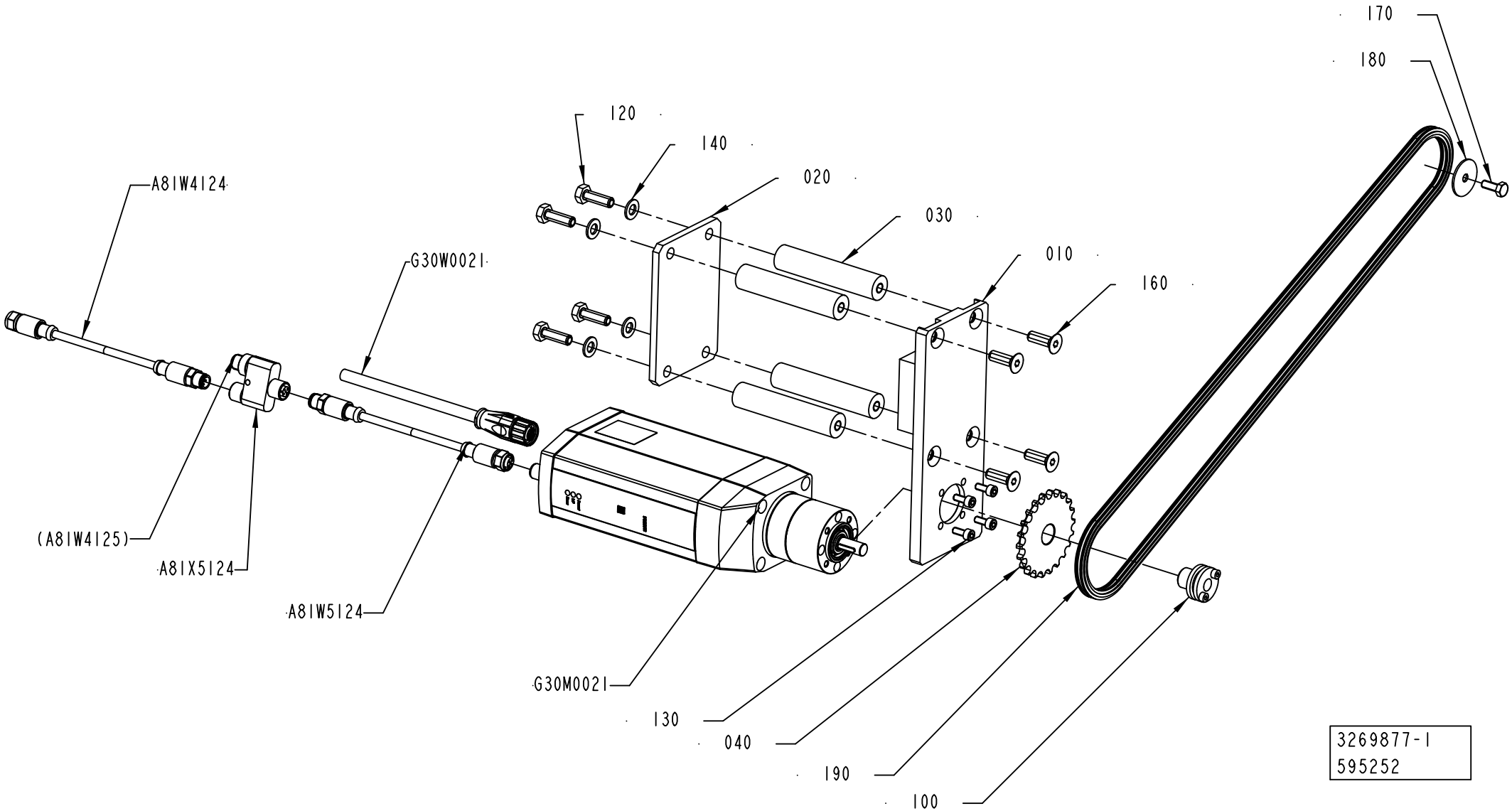
170
180
120
140
020
030
010
160
A81W4124
G30W0021
(A81W4125)
A81X5124
A81W5124
G30M0021
130
040
190
100
3269877-1
595252

ECM: 595674 - 20130401
Group number: 3269877-0100
Assembly Drawing: 3269877-1_1_AB

Pos	Part No	UN	Qty	Description	Page No
-					
010	3211821-0000		1	BRACKET	
020	2945854-0000		1	PLATE	
030	2945972-0000		4	SPACER	
040	3227546-0000		1	SPROCKET	
100	90208-0059		1	CLAMPING ELEMENT WITH SLEEVE, 10X16 MM	
120	312105-0453		4	SCREW, M6S ISO 4017 M8X25 A4 80	
130	312115-0327		4	SCREW ISO4762 M5X12 A4 80	
140	315105-0165		4	FWAS080G0-0S, WASHER PLAIN	
160	312155-0453		4	SCREW DIN 7991 MF6S M8X25 A4 70	
170	312105-0368		1	"SCREW, M6S ISO 4017 M6X16 A4 80"	
180	90458-0073		1	WASHER 6,4/30, H=1,5	
190	318201-0118		1	ROLLER CHAIN, SIMPLEX 3/8 -118	
A81W4124	344293-0020		1	DEVICEN CAB.SAC-5P-M12MS/2,0-927/M12FSVA	
A81W5124	344293-0003		1	DEVICEN CAB.SAC-5P-M12MS/0,3-927/M12FSVA	
A81X5124	90603-9674		1	Y-CONNECTOR, SAC-5P-M12YF/M12FS-M12MS VP	
G30M0021	90605-6742		1	SERVO MOTOR, MTR-ECI-52R-MG25-R3DN-FG-SA	
G30W0021	90605-6768		1	CABLE, KPWR-MC-1-M16-3B-6	

Pos	Part No	UN	Qty	Description	Page No

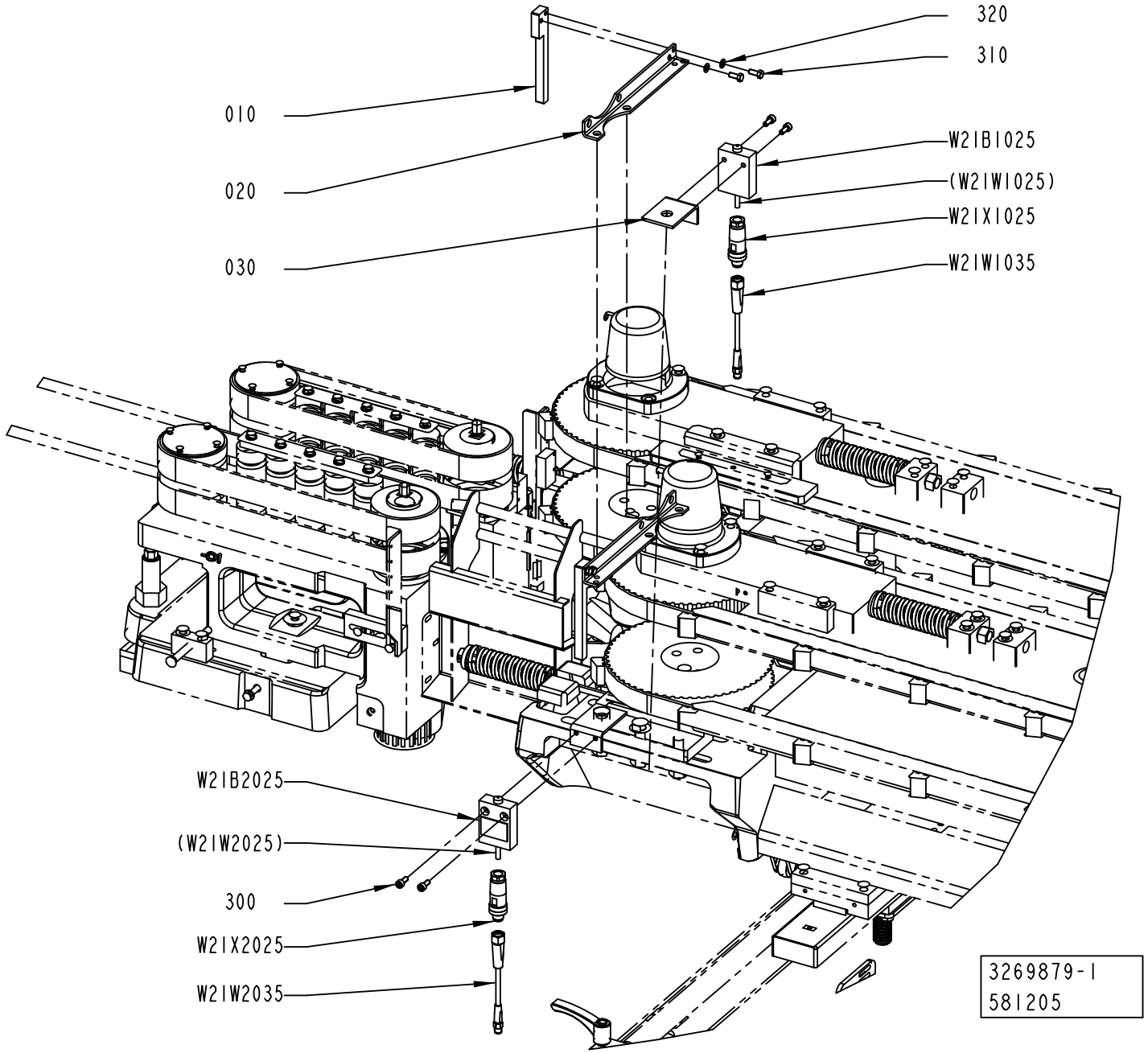
320
310
010
020
030
W2IB1025
(W2IW1025)
W2IX1025
W2IW1035
W2IB2025
(W2IW2025)
300
W2IX2025
W2IW2035
3269879-1
581205

ECM: 605779 - 20130401
Group number: 3269879-0100
Assembly Drawing: 3269879-1_1_AA

Pos	Part No	UN	Qty	Description	Page No
-					
010	2955386-0000		2	BAR	
020	2955385-0000		2	BRACKET	
030	3266431-0000		2	SUPPORT	
300	312115-0327		4	SCREW ISO4762 M5X12 A4 80	
310	312105-0327		4	"SCREW, M6S ISO 4017 M5X12 A4 80"	
320	315105-0146		4	WASHER PLAIN, 5,3X10X1 A4 BRB	
W21B1025	90601-1027		1	LIMIT SWITCH, D4C-1G01 5M	
W21B2025	90601-1027		1	LIMIT SWITCH, D4C-1G01 5M	
W21W1035	344261-0006		1	SENSOR CABLE, EVT261	
W21W2035	344261-0006		1	SENSOR CABLE, EVT261	
W21X1025	90603-5561		1	CONNECTOR, SACC-M12MS-5CON-PG 9-VA	
W21X2025	90603-5561		1	CONNECTOR, SACC-M12MS-5CON-PG 9-VA	

Pos	Part No	UN	Qty	Description	Page No

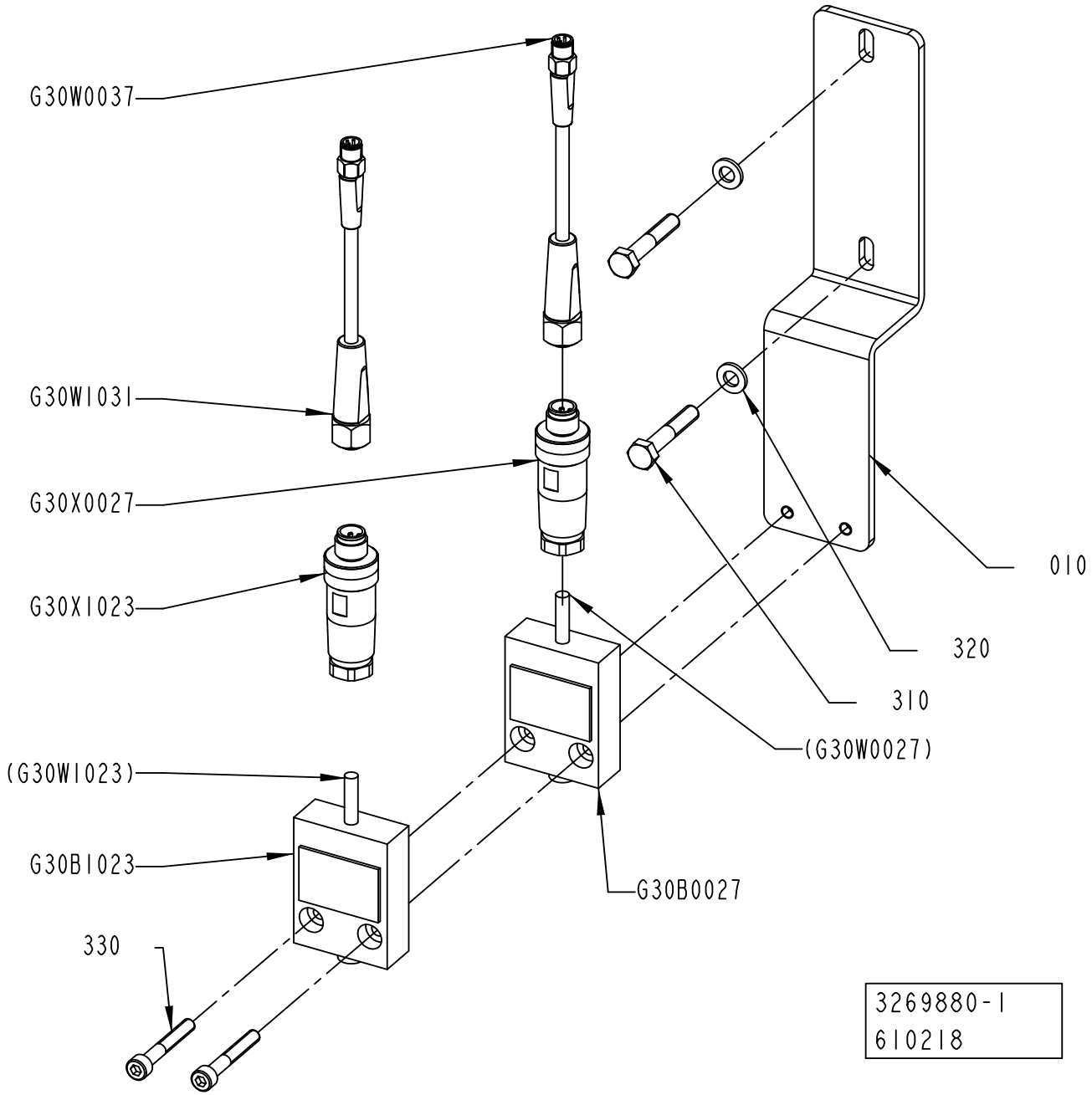
G30W0037
G30WI031
G30X0027
G30XI023
010
320
310
(G30W0027)
(G30WI023)
G30BI023
G30B0027
330
3269880-1
610218

ECM: 619630 - 20130619
Group number: 3269880-0100
Assembly Drawing: 3269880-1_1_AB

Pos	Part No	UN	Qty	Description	Page No
-					
010	2985711-0000		1	PLATE	
310	312105-0376		2	SCREW, M6S ISO 4014 M6X35 A4 80	
320	315105-0153		2	WASHER PLAIN, 6,4X12X1,5 A4 BRB	
330	312115-0337		2	SCREW ISO4762 M5X35 A4 80	
G30B0023	90601-1027		1	LIMIT SWITCH, D4C-1G01 5M	
G30B0027	90601-1027		1	LIMIT SWITCH, D4C-1G01 5M	
G30W0037	344261-0050		1	SENSOR CABLE, EVT216	
G30W1031	344261-0020		1	SENSOR CABLE, EVT263	
G30X0023	90603-5561		1	CONNECTOR, SACC-M12MS-5CON-PG 9-VA	
G30X0027	90603-5561		1	CONNECTOR, SACC-M12MS-5CON-PG 9-VA	

Pos	Part No	UN	Qty	Description	Page No

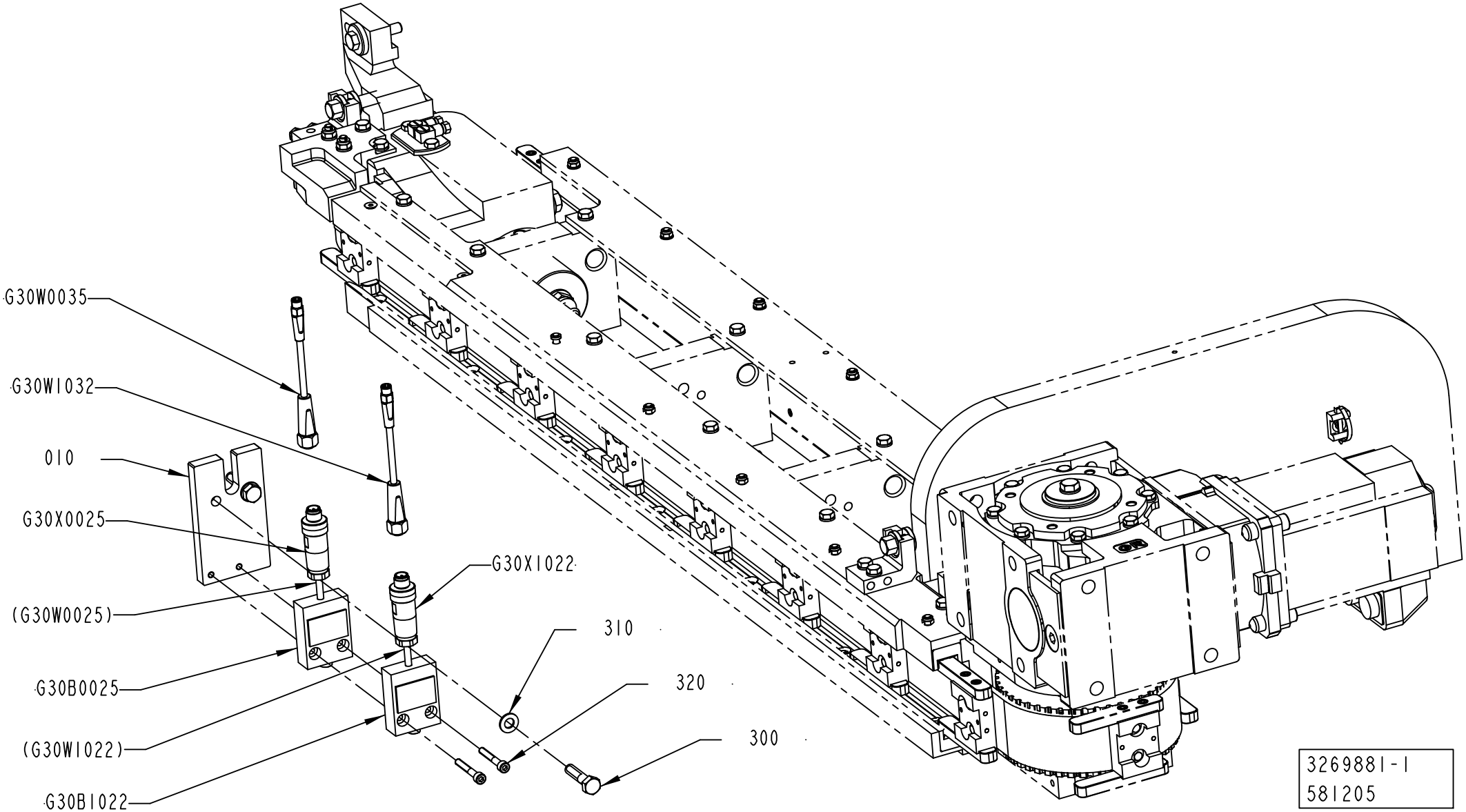
G30W0035
G30W1032
010
G30X0025
(G30W0025)
G30B0025
(G30W1022)
G30B1022
G30X1022
310
320
300
3269881-1
581205

ECM: 605781 - 20130401
Group number: 3269881-0100
Assembly Drawing: 3269881-1_1_AA

Pos	Part No	UN	Qty	Description	Page No
-					
010	2952734-0000		1	PLATE	
300	312105-0457		2	SCREW, M6S ISO 4014 M8X35 A4 80	
310	315105-0165		2	FWAS080G0-0S, WASHER PLAIN	
320	312115-0337		2	SCREW ISO4762 M5X35 A4 80	
G30B0025	90601-1027		1	LIMIT SWITCH, D4C-1G01 5M	
G30B1022	90601-1027		1	LIMIT SWITCH, D4C-1G01 5M	
G30W0035	344261-0050		1	SENSOR CABLE, EVT216	
G30W1032	344261-0020		1	SENSOR CABLE, EVT263	
G30X0025	90603-5561		1	CONNECTOR, SACC-M12MS-5CON-PG 9-VA	
G30X1022	90603-5561		1	CONNECTOR, SACC-M12MS-5CON-PG 9-VA	

Pos	Part No	UN	Qty	Description	Page No

This page is intentionally left blank.

ECM: 431905 - 20100401
Group number: 3053485-0100
Assembly Drawing:

Pos	Part No	UN	Qty	Description	Page No
-					
010	2930190-0100		1	TOOL	**12-51**
020	2983290-0100		1	SPACER	**12-53**
030	2983293-0100		2	SPACER	**12-55**

Pos	Part No	UN	Qty	Description	Page No

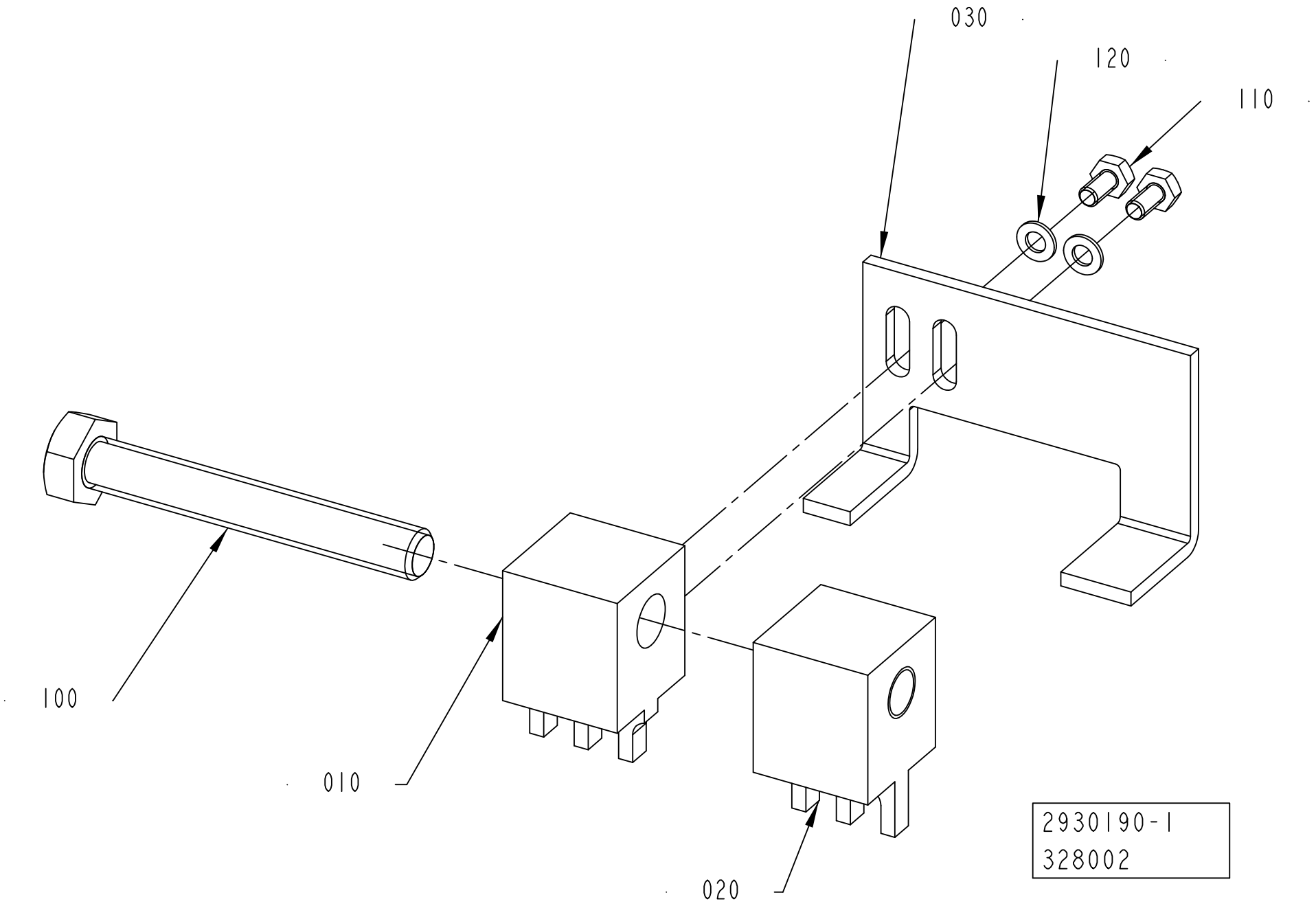
030
120
110
100
010
020
2930190-1
328002

ECM: 357569 - 20080623
Group number: 2930190-0100
Assembly Drawing: 2930190-1_1_AA

Pos	Part No	UN	Qty	Description	Page No
-					
010	2930191-0000		1	BLOCK	
020	2930192-0000		1	BLOCK	
030	2930193-0000		1	PLATE	
100	90287-0330		1	SCREW, M6S ISO 4017 M10X70 A4 80	
110	312105-0287		2	SCREW, M6S ISO 4017 M4X8 A4 70	
120	315105-0136		2	WASHER PLAIN, 4,3X8X0,8 A4 BRB	

Pos	Part No	UN	Qty	Description	Page No

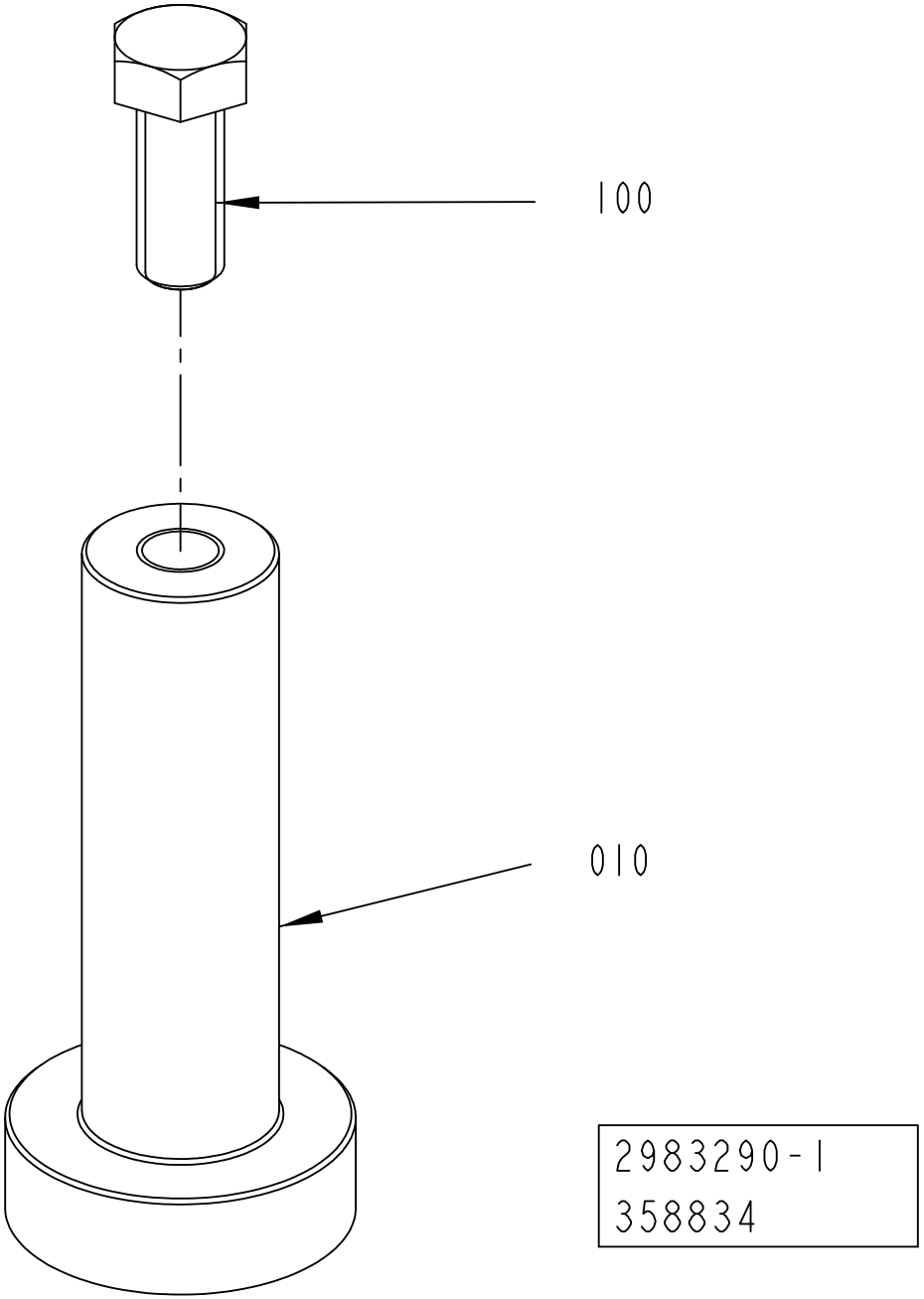
100
010
2983290-1
358834

ECM: 368303 - 20091113
Group number: 2983290-0100
Assembly Drawing: 2983290-1_1_AA

Pos	Part No	UN	Qty	Description	Page No
-					
010	2983291-0000		1	SUPPORT	
100	312105-0674		1	SCREW, M6S ISO 4017 M20X50 A4 80	

Pos	Part No	UN	Qty	Description	Page No

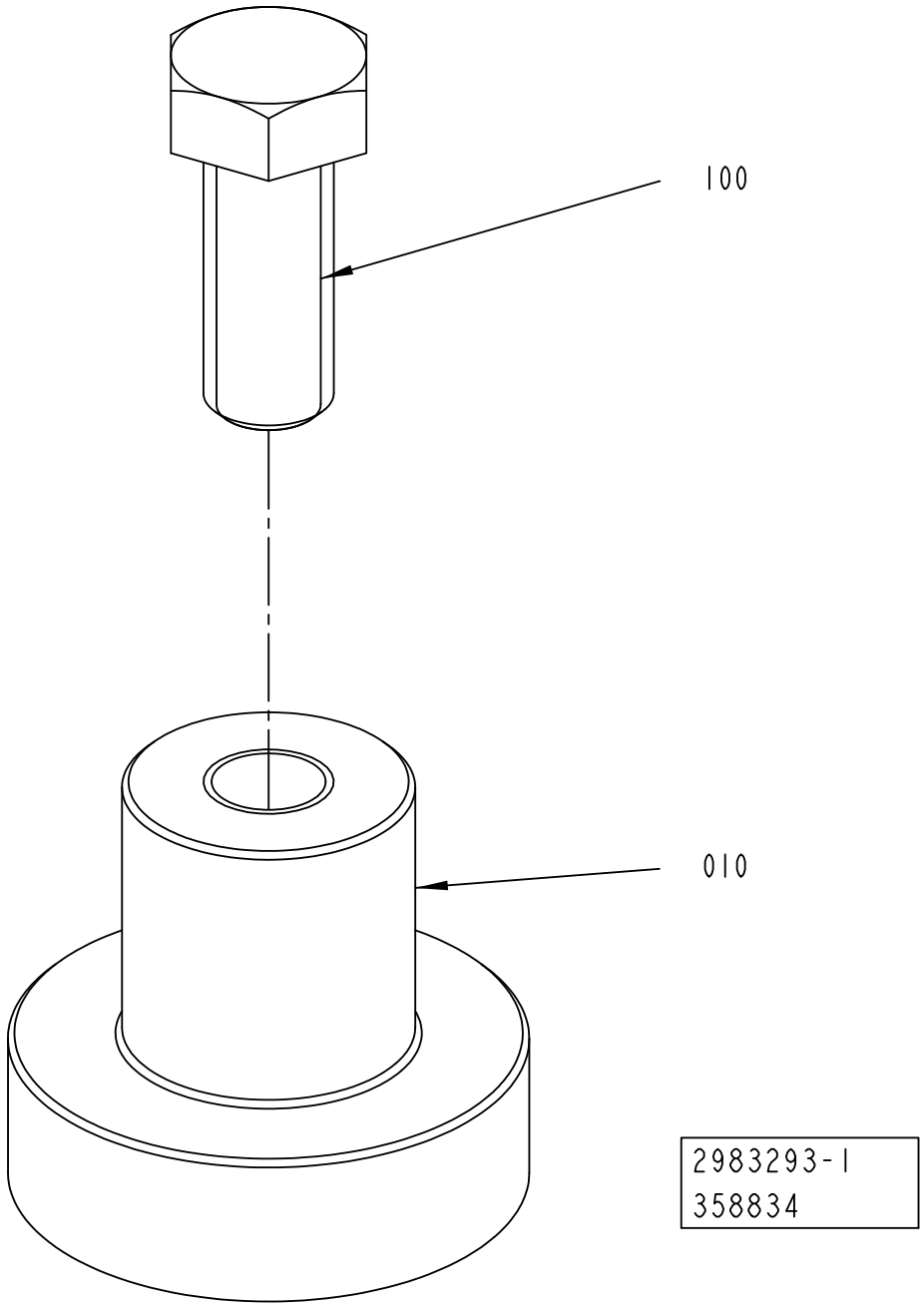
100
010
2983293-1
358834

ECM: 368304 - 20091113
Group number: 2983293-0100
Assembly Drawing: 2983293-1_1_AA

Pos	Part No	UN	Qty	Description	Page No
-					
010	2983294-0000		1	SUPPORT	
100	312105-0674		1	SCREW, M6S ISO 4017 M20X50 A4 80	

Pos	Part No	UN	Qty	Description	Page No

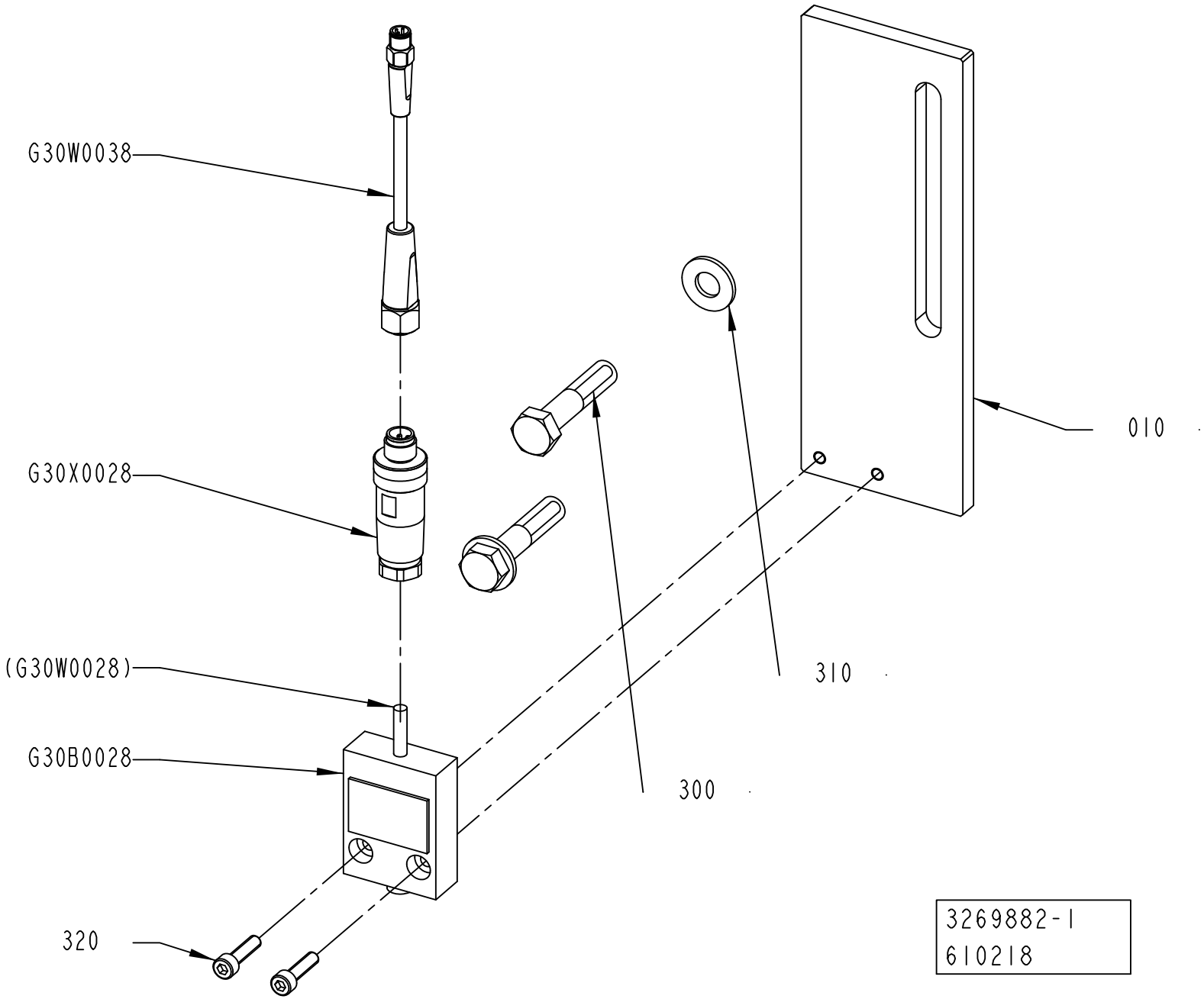
G30W0038
G30X0028
(G30W0028)
G30B0028
320
300
310
010
3269882-1
610218

ECM: 619631 - 20130619
Group number: 3269882-0100
Assembly Drawing: 3269882-1_1_AB

Pos	Part No	UN	Qty	Description	Page No
-					
010	3267568-0000		1	PLATE	
300	312105-0501		2	SCREW, M6S ISO 4014 M10X50 A4 80	
310	315105-0173		2	WASHER PLAIN, 10,5X22X2 A4 BRB	
320	312115-0331		2	SCREW ISO4762 M5X20 A4 80	
G30B0028	90601-1027		1	LIMIT SWITCH, D4C-1G01 5M	
G30W0038	344261-0050		1	SENSOR CABLE, EVT216	
G30X0028	90603-5561		1	CONNECTOR, SACC-M12MS-5CON-PG 9-VA	

Pos	Part No	UN	Qty	Description	Page No

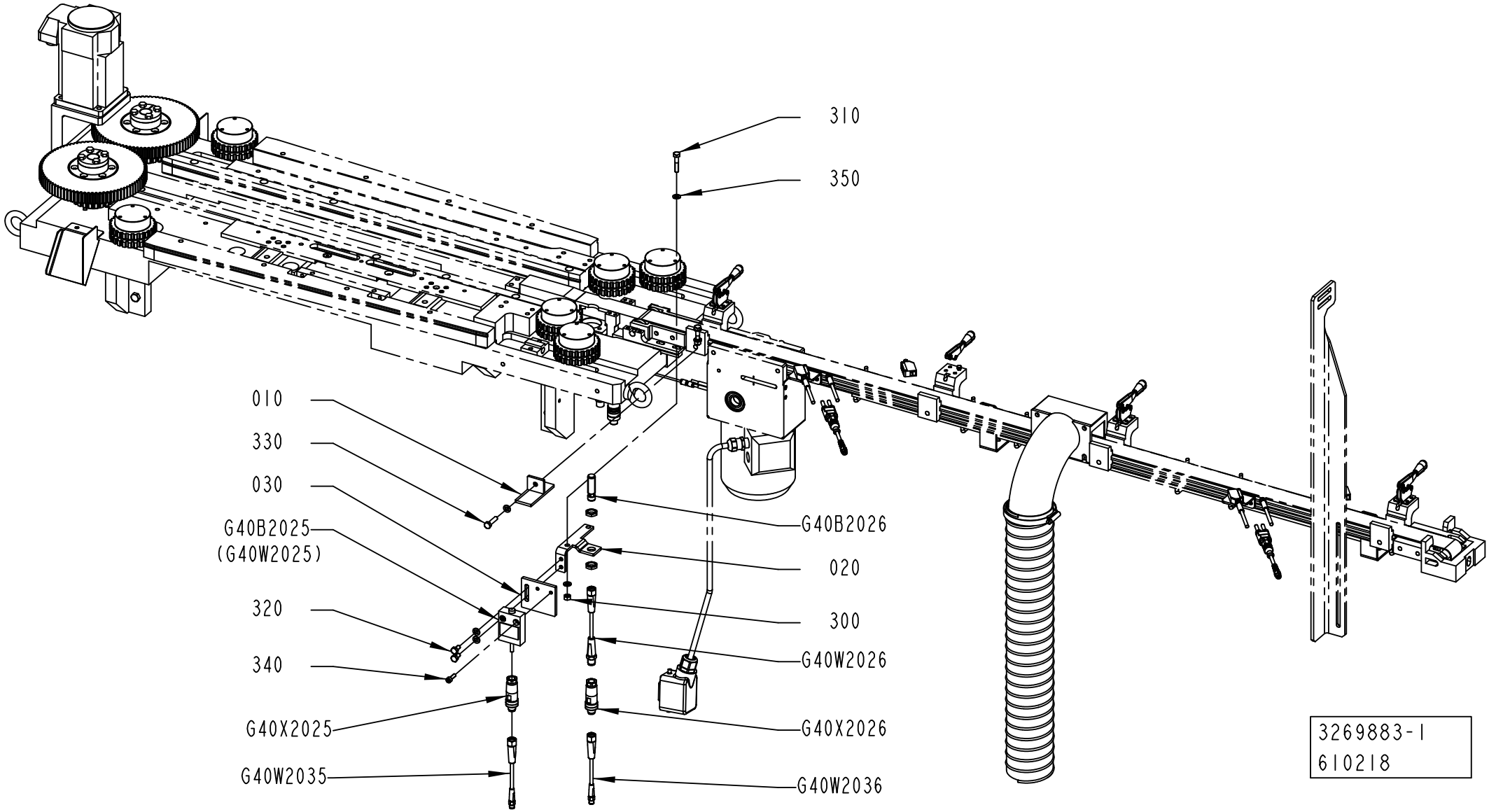
310
350
010
330
030
G40B2025
(G40W2025)
320
340
G40X2025
G40W2035
G40B2026
020
300
G40W2026
G40X2026
G40W2036
3269883-1
610218

ECM: 619632 - 20130619
Group number: 3269883-0100
Assembly Drawing: 3269883-1_1_AB

Pos	Part No	UN	Qty	Description	Page No
-					
010	3267696-0000		1	BRACKET	
020	3267662-0000		1	BRACKET	
030	3267663-0000		1	BRACKET	
300	312605-0316		2	HEXAGON NUT, M6M M6 A280	
310	312105-0374		2	SCREW, M6S ISO 4014 M6X30 A4 80	
320	312105-0366		2	SCREW, M6S ISO 4017 M6X12 A4 80	
330	312105-0372		1	SCREW, M6S ISO 4017 M6X25 A4 80	
340	312115-0329		2	SCREW ISO4762 M5X16 A4 80	
350	315105-0153		7	WASHER PLAIN, 6,4X12X1,5 A4 BRB	
G40B2025	90601-1027		1	LIMIT SWITCH, D4C-1G01 5M	
G40B2026	90459-6948		1	INDUCTIVE SENSOR, IFS 206	
G40W2026	344267-0010		1	SENSOR CABLE, EVT042	
G40W2035	344261-0020		1	SENSOR CABLE, EVT263	
G40W2036	344261-0050		1	SENSOR CABLE, EVT216	
G40X2025	90603-5561		1	CONNECTOR, SACC-M12MS-5CON-PG 9-VA	
G40X2026	90603-5561		1	CONNECTOR, SACC-M12MS-5CON-PG 9-VA	

Pos	Part No	UN	Qty	Description	Page No

This page is intentionally left blank.

ECM: 585483 - 20121119
Group number: 3276599-0100
Assembly Drawing:

Pos	Part No	UN	Qty	Description	Page No
-					
200	351164-0105	M	2	WIRE AWM 1X2,5 MM2 BLACK	
210	351164-0107	M	5	WIRE AWM 1X6 MM2 BLACK	
220	351160-0106	M	2	WIRE AWM 1X4 MM2 DARKBLUE	
230	351162-0105	M	2	WIRE AWM 1X2,5 MM2 YELLOW-GREEN	
240	351160-0102	M	5	ECAB01011-6L, WIRE AWM 1X0,75 MM2 DARKBL	
250	351162-0106	M	2	WIRE AWM 1X4 MM2 YELLOW-GREEN	

Pos	Part No	UN	Qty	Description	Page No

This page is intentionally left blank.

ECM: 534045 - 20120401
Group number: 2930179-0200
Assembly Drawing:

Pos	Part No	UN	Qty	Description	Page No
-					
010	2930176-0200		1	SENSOR GROUP	**12-65**
020	2930177-0200		1	CABLE MARKING SET	**12-67**
030	2930178-0200		1	SENSOR GROUP	**12-69**

Pos	Part No	UN	Qty	Description	Page No

Machine Type | Group Description | Used-In | Group Number | Page No

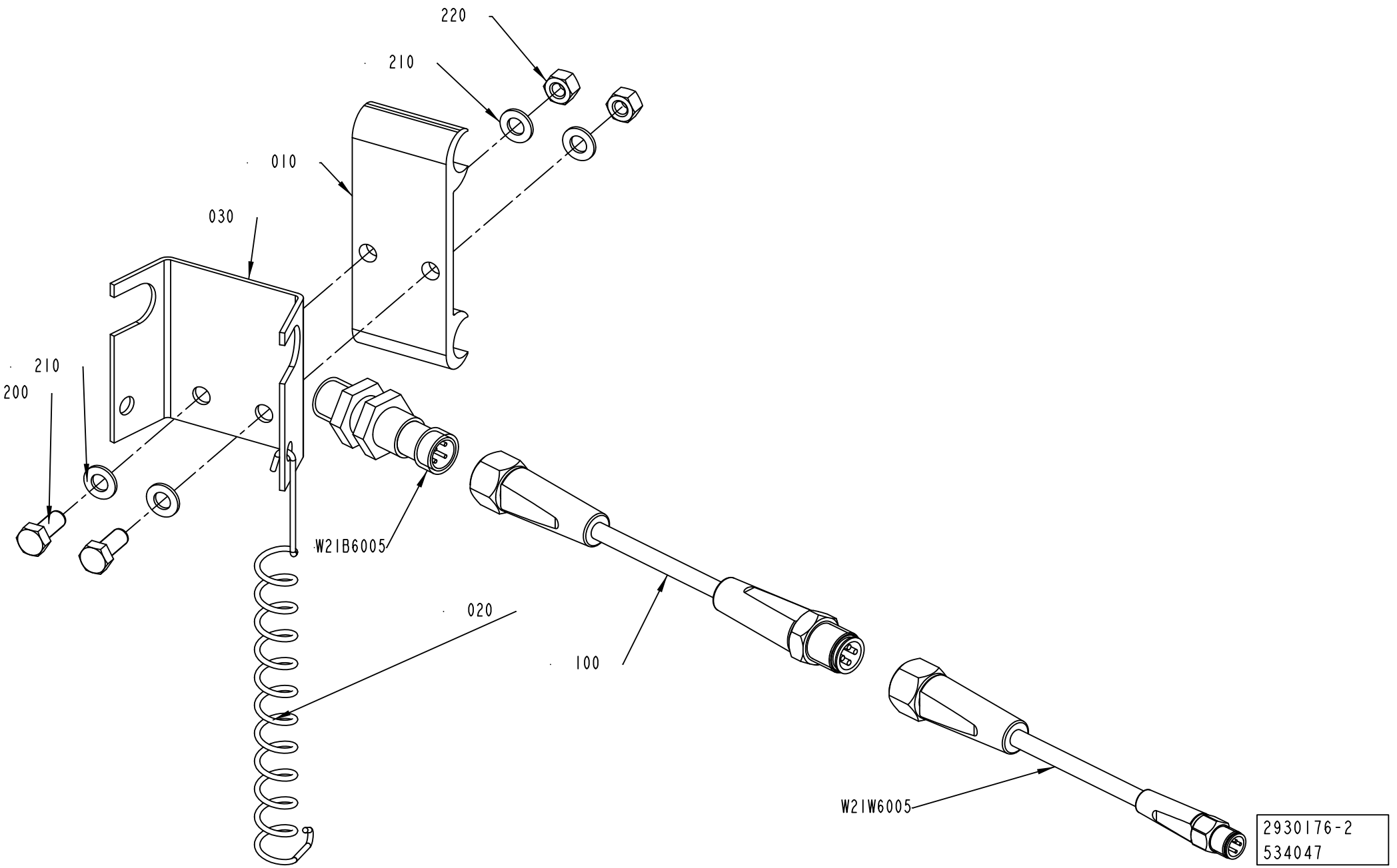
220
210
010
030
210
200
W21B6005
020
100
W21W6005
2930176-2
534047

ECM: 534047 - 20120401
Group number: 2930176-0200
Assembly Drawing: 2930176-2_1_AA

Pos	Part No	UN	Qty	Description	Page No
-					
010	1020637-0000		1	HOLDER	
020	532412-0000		1	SPRING	
030	545897-0000		1	BRACKET	
100	344267-0050		1	SENSOR CABLE, EVT044	
200	312105-0327		2	"SCREW, M6S ISO 4017 M5X12 A4 80"	
210	315105-0146		4	WASHER PLAIN, 5,3X10X1 A4 BRB	
220	312605-0314		2	HEXAGON NUT, M6M M5 A280	
W21B6005	90458-2907		1	PROX.SWITCH IFS204	
W21W6005	344261-0050		1	SENSOR CABLE, EVT216	

Pos	Part No	UN	Qty	Description	Page No

This page is intentionally left blank.

ECM: 534658 - 20120401
Group number: 2930177-0200
Assembly Drawing:

Pos	Part No	UN	Qty	Description	Page No
-					
010	1497932-0000		1	SET OF SIGNS	
100	359009-0100		10	CABLE MARKING, YELLOW, PK2/4"0"	
110	359009-0101		10	CABLE MARKING, YELLOW, PK 2/4"1"	
120	359009-0102		10	CABLE MARKING, YELLOW, PK 2/4"2"	
130	359009-0103		10	CABLE MARKING, YELLOW, PK 2/4"3"	
140	359009-0104		10	CABLE MARKING, YELLOW, PK 2/4"4"	
150	359009-0105		10	CABLE MARKING, YELLOW, PK 2/4"5"	
160	359009-0106		10	CABLE MARKING, YELLOW, PK 2/4"6"	
170	359009-0107		10	CABLE MARKING, YELLOW, PK 2/4"7"	
180	359009-0108		10	CABLE MARKING, YELLOW, PK 2/4"8"	
190	359009-0109		10	CABLE MARKING, YELLOW, PK 2/4"9"	
200	359009-0222		10	CABLE MARKING, YELLOW, PK 2/4" W"	
210	352113-0101		10	CABLE TIE,BLACK 92X	
220	359009-0200		10	CABLE MARKING, YELLOW, PK 2/4" A"	
240	359009-0201		10	CABLE MARKING, YELLOW, PK 2/4" B"	
250	359009-0202		10	CABLE MARKING, YELLOW, PK 2/4" C"	
260	359009-0203		10	CABLE MARKING, YELLOW, PK 2/4" D"	
270	359009-0204		10	CABLE MARKING, YELLOW, PK 2/4" E"	
280	359009-0205		10	CABLE MARKING, YELLOW, PK 2/4" F"	
290	359009-0206		10	CABLE MARKING, YELLOW, PK 2/4" G"	
300	359009-0207		10	CABLE MARKING, YELLOW, PK 2/4" H"	
310	359009-0208		10	CABLE MARKING, YELLOW, PK 2/4" I"	
320	359009-0211		10	CABLE MARKING, YELLOW, PK 2/4" L"	
330	359009-0212		10	CABLE MARKING, YELLOW, PK 2/4" M"	
340	359009-0213		10	CABLE MARKING, YELLOW, PK 2/4" N"	
350	359009-0214		10	CABLE MARKING, YELLOW, PK2/4" O"	
360	359009-0215		10	CABLE MARKING, YELLOW, PK 2/4" P"	
370	359009-0216		10	CABLE MARKING, YELLOW, PK 2/4" Q"	
380	359009-0217		10	CABLE MARKING, YELLOW, PK 2/4" R"	
390	359009-0218		10	CABLE MARKING, YELLOW, PK 2/4" S"	
400	359009-0219		10	CABLE MARKING, YELLOW, PK 2/4" T"	
410	359009-0220		10	CABLE MARKING, YELLOW, PK 2/4" U"	
420	359009-0221		10	CABLE MARKING, YELLOW, PK 2/4" V"	
430	359009-0225		10	CABLE MARKING, YELLOW, PK 2/4" Z"	
440	359009-0224		10	CABLE MARKING, YELLOW, PK 2/4" Y"	
450	359009-0223		10	CABLE MARKING, YELLOW, PK 2/4" X"	
460	359009-0210		10	CABLE MARKING, YELLOW, PK 2/4" K"	

Pos	Part No	UN	Qty	Description	Page No

Machine Type | Group Description | Used-In | Group Number | Page No

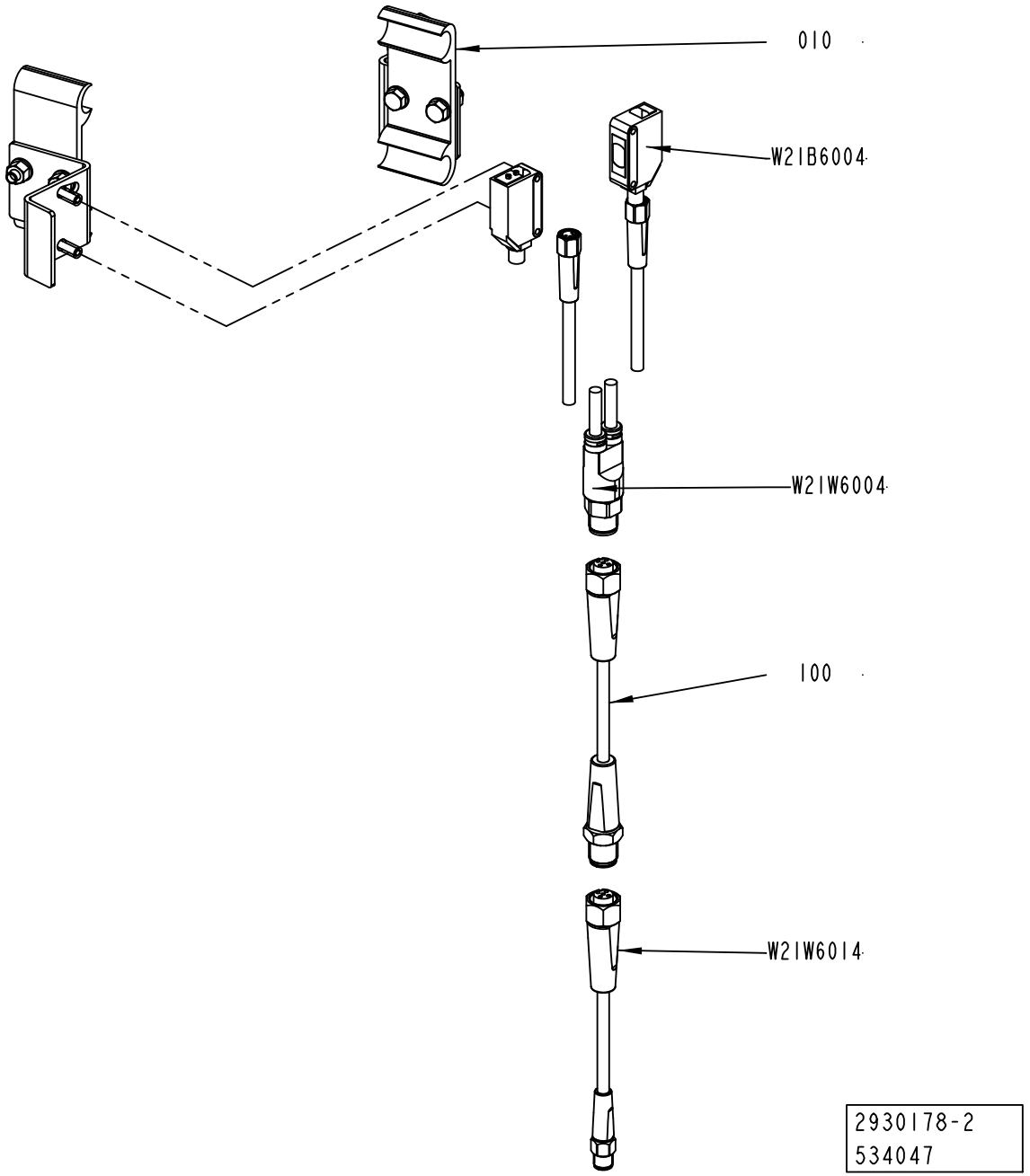
010
W21B6004
W21W6004
100
W21W6014
2930178-2
534047

ECM: 534047 - 20120401
Group number: 2930178-0200
Assembly Drawing: 2930178-2_1_AA

Pos	Part No	UN	Qty	Description	Page No
-					
010	2778586-0100		1	SENSOR	**5-41, 12-71**
100	344267-0050		1	SENSOR CABLE, EVT044	
W21B6004	90459-5529		1	PHOTOCELL E3Z-T86A, SENDER+RECIEVER	
W21W6004	90603-3979		1	SENSOR Y-CABLE, EVT339	
W21W6014	344261-0050		1	SENSOR CABLE, EVT216	

Pos	Part No	UN	Qty	Description	Page No

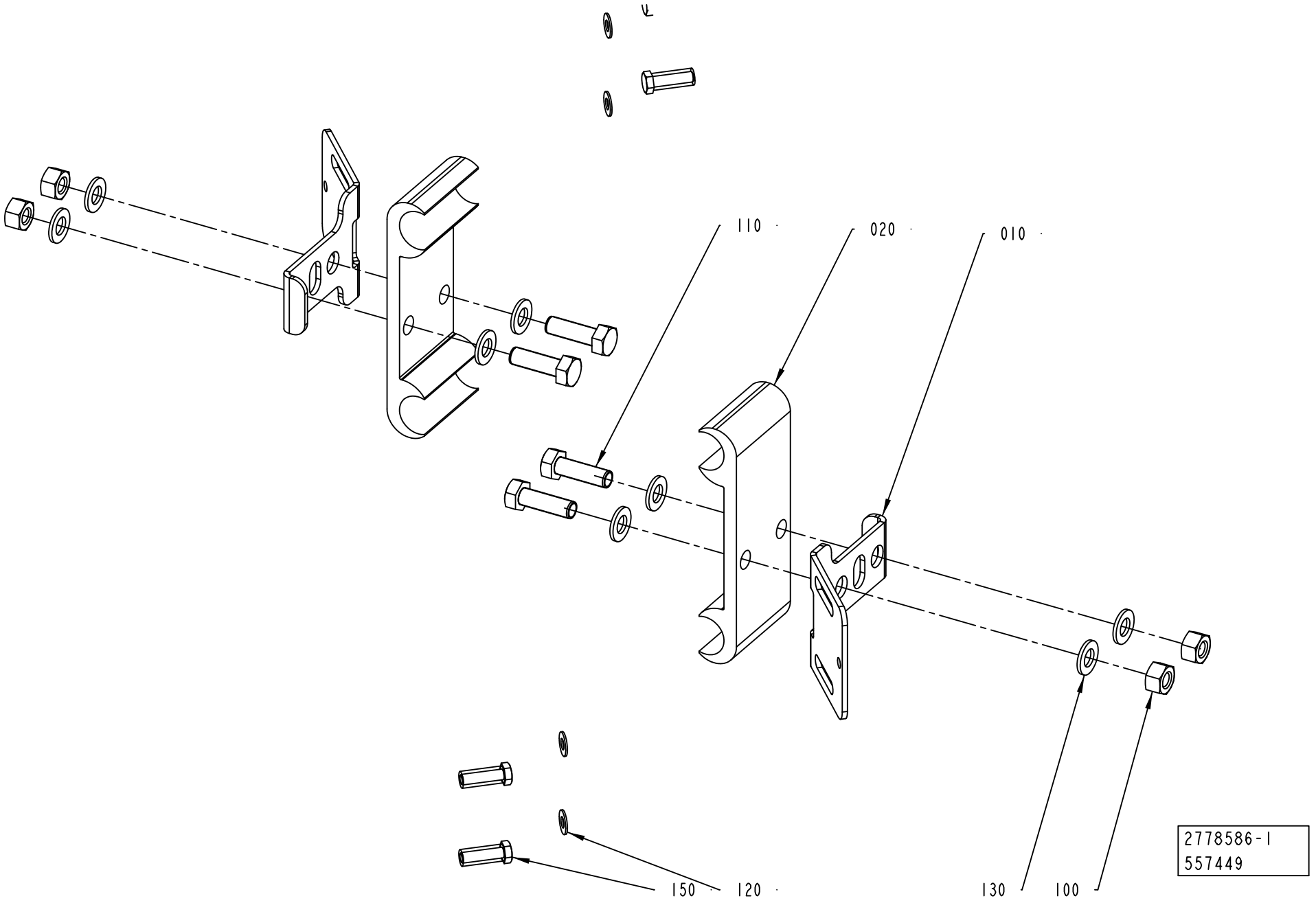
110
020
010
150
120
130
100
2778586-1
557449

ECM: 563430 - 20121001
Group number: 2778586-0100
Assembly Drawing: 2778586-1_1_AC

Pos	Part No	UN	Qty	Description	Page No
-					
010	3252696-0000		2	BRACKET	
020	1020637-0000		2	HOLDER	
100	312605-0314		4	HEXAGON NUT, M6M M5 A280	
110	312105-0329		4	SCREW, M6S ISO 4017 M5X16 A4 80	
120	315106-0124		4	WASHER PLAIN, M3 ISO7089-3-200 HV A4	
130	315105-0146		8	WASHER PLAIN, 5,3X10X1 A4 BRB	
150	90287-0175		4	SCREW M6S M3X12 A480	

Pos	Part No	UN	Qty	Description	Page No

This page is intentionally left blank.

ECM: 582153 - 20130401
Group number: 2873924-0300
Assembly Drawing:

Pos	Part No	UN	Qty	Description	Page No
-					
020	3087823-0100		1	TOOL	**12-75**
040	2873922-0200		1	CABLE	**12-77**
050	2890014-0300		1	POSITIONING UNIT	**12-79**

Pos	Part No	UN	Qty	Description	Page No

Machine Type | Group Description | Used-In | Group Number | Page No

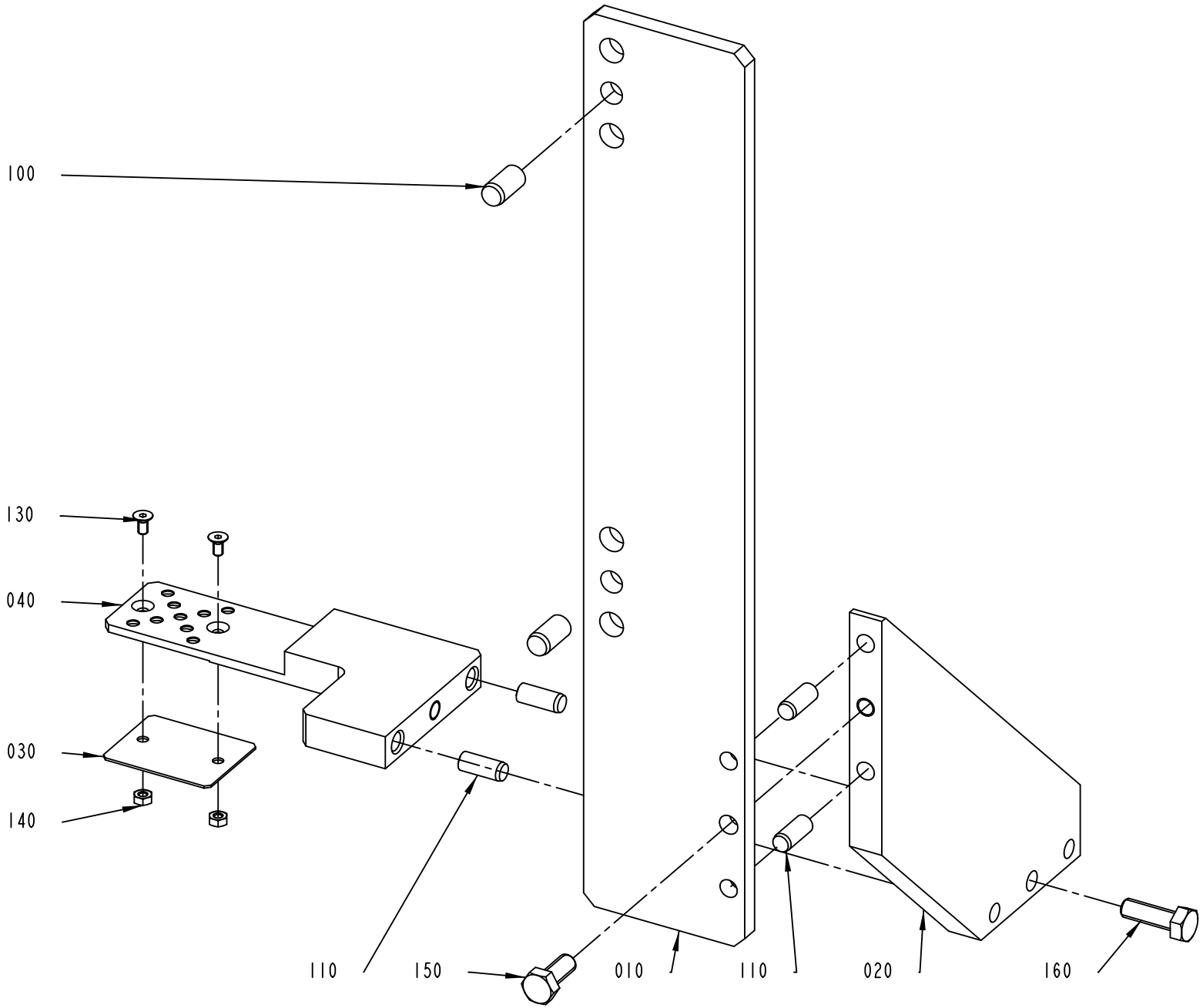

3087823-1
465123

ECM: 581701 - 20121026
Group number: 3087823-0100
Assembly Drawing: 3087823-1_1_AA

Pos	Part No	UN	Qty	Description	Page No
-					
010	3087822-0000		1	PLATE	
030	2838782-0000		1	PLATE	
040	3087821-0000		1	TOOL	
100	311103-0454		2	PARALLEL PIN ISO 2338 10M6X20 A1	
110	311103-0401		4	PARALLEL PIN ISO 2338 8M6X20 A1	
130	312155-0287		2	SCREW DIN 7991 MF6S M4X8 A4 70	
140	312605-0312		2	HEXAGON NUT, M6M M4 A280	
150	312105-0451		1	SCREW, M6S ISO 4017 M8X20 A4 80	
160	312105-0453		1	SCREW, M6S ISO 4017 M8X25 A4 80	

Pos	Part No	UN	Qty	Description	Page No

This page is intentionally left blank.

ECM: 663061 - 20140701
Group number: 2873922-0200
Assembly Drawing:

Pos	Part No	UN	Qty	Description	Page No
-					
G70W1000	351429-1609		1	MOTOR POWER CABLE 2090-CPWM7DF-16AA09	
G70W1001	351428-0009		1	MOTOR FEEDBACK CABLE 2090-CFBM7DF-CEAA09	
G70X1001	90604-8704		1	CONNECTOR, 2090-K6CK-D15M, SERIE B	

Pos	Part No	UN	Qty	Description	Page No

POSITIONING UNIT

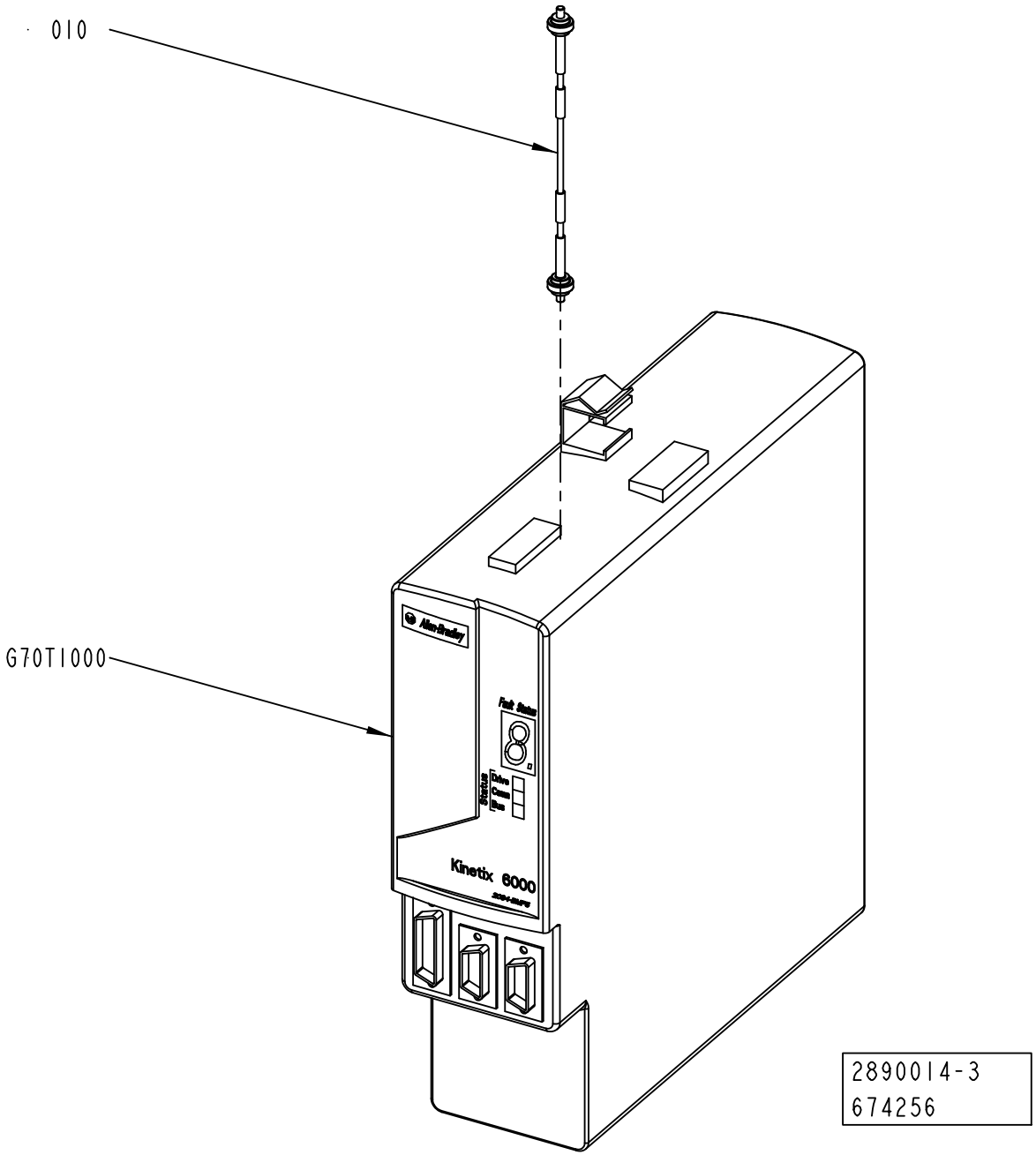

2890014-3
674256

ECM: 680453 - 20141001
Group number: 2890014-0300
Assembly Drawing: 2890014-3_1_AB

Pos	Part No	UN	Qty	Description	Page No
-					
010	90459-2536		1	SERCOS CABLE 0.1M, 2090-SCEP0-1	
G70T1000	90606-2004		1	AXIS MOD. KINETIX 6000,2094-BM01-S SER.C	

Pos	Part No	UN	Qty	Description	Page No

POWER SUPPLY DEVICE

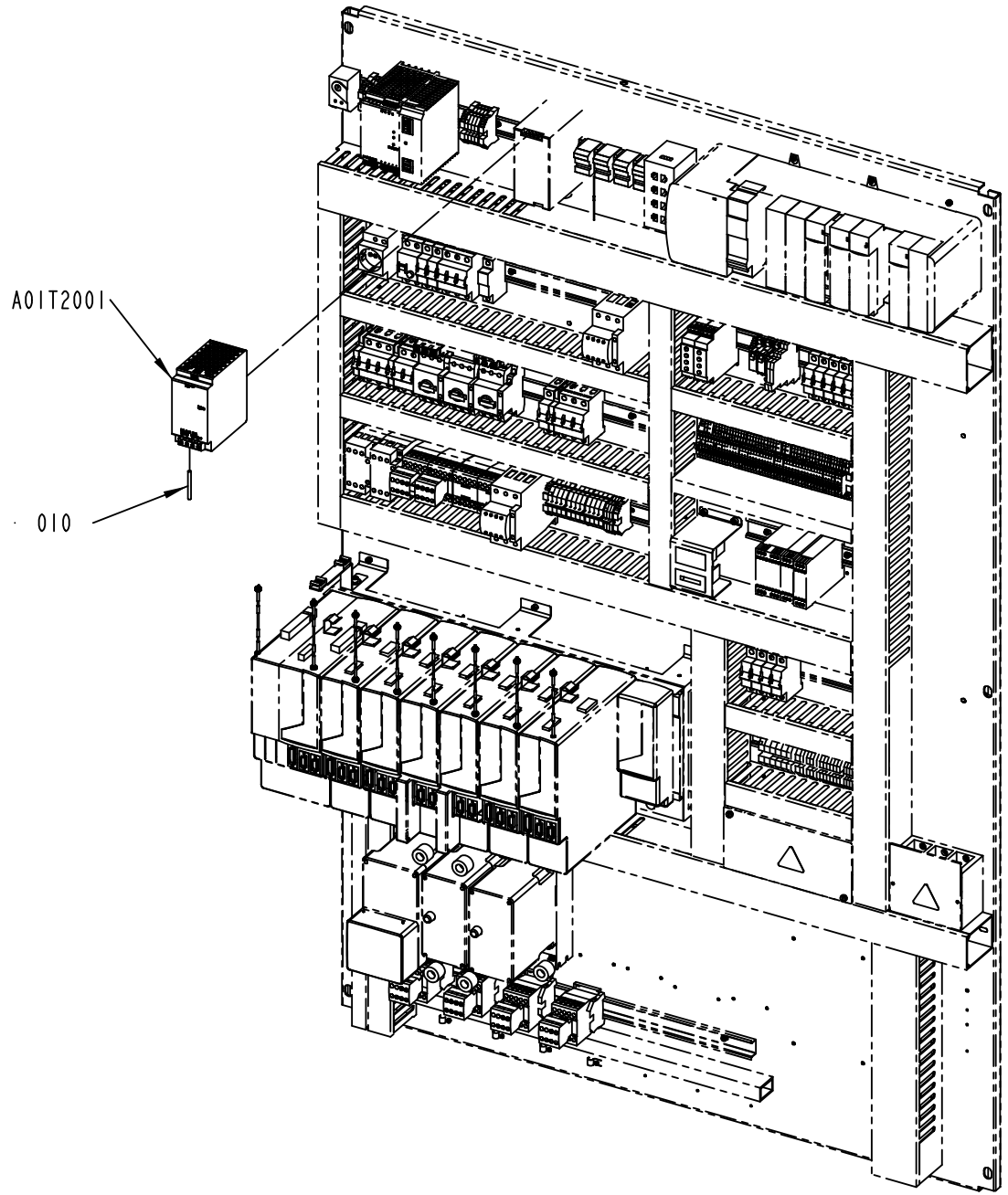

2930182-3
685354

ECM: 685354 - 20141001
Group number: 2930182-0300
Assembly Drawing: 2930182-3_1_AA

Pos	Part No	UN	Qty	Description	Page No
-					
010	351160-0106	M	2	WIRE AWM 1X4 MM2 DARKBLUE	
100	353001-0117		10	END SLEEVE H4.0/20 GREY	
110	359000-0013		10	WIRE MARKING, YELLOW, PA1/3"+"	
120	359000-0023		10	WIRE MARKING, YELLOW, PA1/3"-"	
130	359000-0300		10	WIRE MARKING, YELLOW, PA1/3"0"	
140	359000-0301		10	WIRE MARKING, YELLOW, PA1/3"1"	
150	359000-0302		10	WIRE MARKING, YELLOW, PA1/3"2"	
160	359000-0303		10	WIRE MARKING, YELLOW, PA1/3"3"	
170	359000-0304		10	WIRE MARKING, YELLOW, PA1/3"4"	
180	359000-0305		10	WIRE MARKING, YELLOW, PA1/3"5"	
190	359000-0306		10	WIRE MARKING, YELLOW, PA1/3"6"	
200	359000-0307		10	WIRE MARKING, YELLOW, PA1/3"7"	
210	359000-0308		10	WIRE MARKING, YELLOW, PA1/3"8"	
220	359000-0309		10	WIRE MARKING, YELLOW, PA1/3"9"	
A01T2001	90602-8707		1	BUFFER UNIT, QUINT-BUFFER/24DC/20	

Pos	Part No	UN	Qty	Description	Page No

COMMUNICATION UNIT

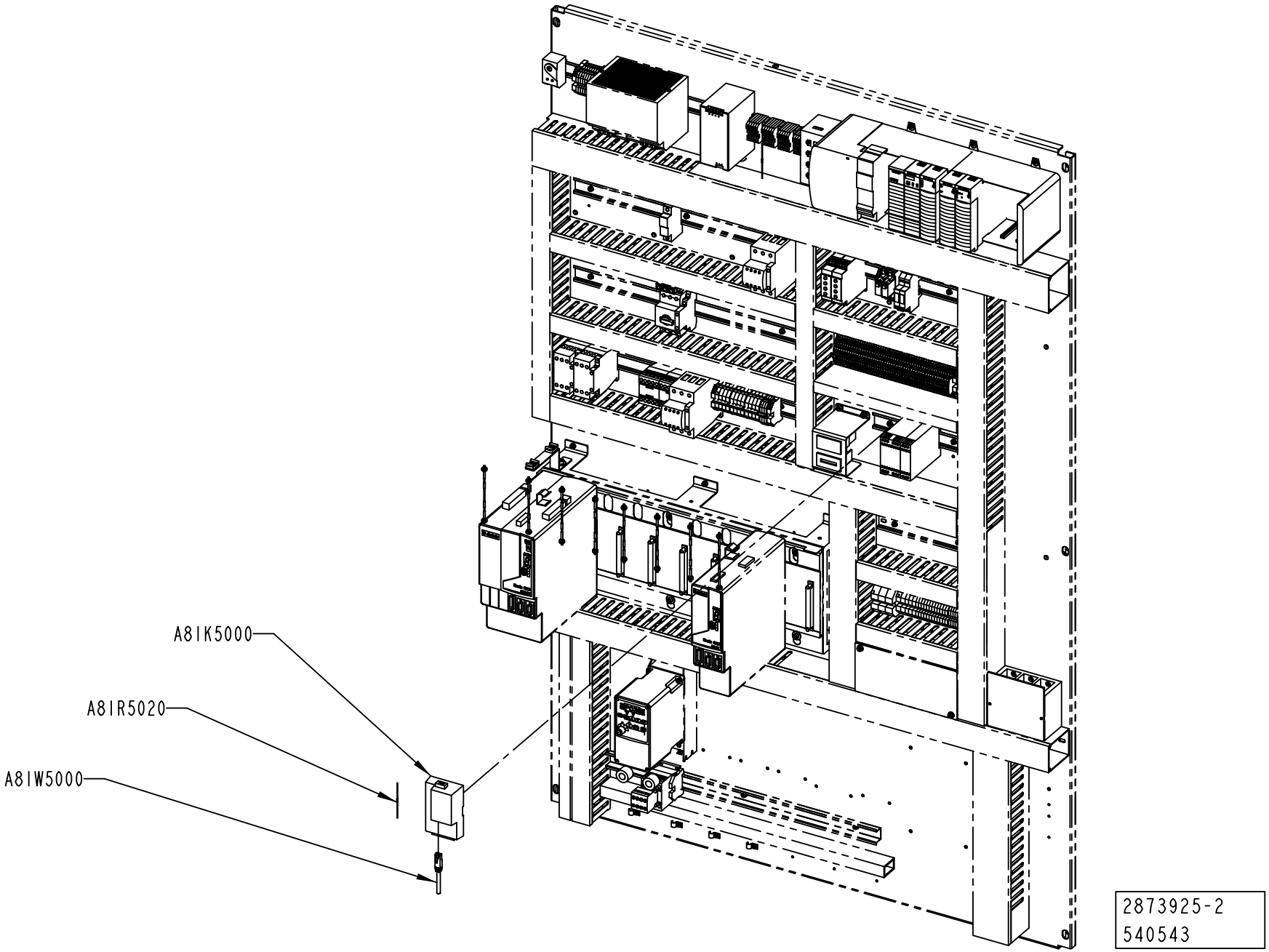

ECM: 540781 - 20120402
Group number: 2873925-0200
Assembly Drawing: 2873925-2_1_AB

Pos	Part No	UN	Qty	Description	Page No
-					
A81K5000	90604-5464		1	QUICKSERVER GATEWAY, FS-QS-1230-0705	
A81R5020	90459-2523		1	TERMINATOR, OPEN STYLE, 1485A-C2	
A81W5000	351501-0020		1	ETHERNET PATCH CABLE, FL CAT5 PATCH 2,0	

Pos	Part No	UN	Qty	Description	Page No

Tetra Pak®

SPC
Spare Parts Catalogue

Part No	Description	Page No
A100000209 ...	DREAMCAP1 26 MM WHITE	10-35, 12-5
6-4000 0006 08	SCREW M6S 10 X 110	4-5
6-526343 02 ...	HEXAGON NUT DN8 RP1/4" 1.4404	5-57, 5-73
90005-0060	WASHER PLAIN, RBS 6,4/M6)/18,H=1,5	2-9, 2-11, 2-17, 9-5, 9-19, 9-57
90005-0064	WASHER PL.RND.NYL.4,3/9, H=0,8	9-25
90005-0082	WASHER PLAIN ROUND 4,3(M4)/12,H=1	6-47, 9-25
90005-0116	WASHER PLAIN ROUND 8,4(M8)/24, H=2	1-81, 3-9
90005-0139	WASHER PLAIN ROUND 5,2(M5)/15, H=1,6	1-35, 6-43
90013-0035	NUT GROOVE, HAMMER-HEAD M6 FE	8-5, 8-7
90015-0020	LEAD-IN, TET5-7, E-1458016	5-75
90015-0021	LEAD-IN, TET 10-14, E1458023	5-63, 5-65
90017-0029	LOCKING LEVER, NO. KR8X30-SUS	1-23, 1-61, 5-19, 5-23, 5-25
90028-0022	CONE TUBE 6 MM	5-75
90030-0200	CONN. ELBOW, WE06LM71	5-75
90032-0039	BLOCK 4 WAYS	5-75
90032-0043	DISTRIBUTION BLOCK 3 WAYS	5-75
90036-0057	LIGHT BULB, BA9S 28V	5-101
90051-0054	STELLAR KNOB, INT. THREAD, NO. 8306-0340	10-7
90051-0112	LOCK KNOB, NO. GN 617 NIK5	5-51
90053-0029	COUNTER, F524.800FA3C 24VDC	9-65
90053-0031	HOUR COUNTER, B 609.10 10-50VDC	9-65
90055-0222	ELBOW WITH TAILPIECE 6/6 MM	5-63, 5-65
90062-0015	LOCK WASHER SERRAT.EXT.GEAR,6,4/11 H=0,7	9-25
90062-0060	LOCK WASHER 5,3/10 H=0,6 FZB	5-53
90064-0093	PUSH BUTTON, GREEN	5-101
90064-0098	PUSH BUTTON, WHITE	5-101
90077-0113	TERMINAL BLOCK WDK 2.5	5-103, 5-105, 9-17, 9-39, 9-41, 9-43, 9-45, 9-47, 9-49
90077-0114	END PLATE, WAP WDK 2.5 1059100000	5-103, 5-105
90087-0019	PLUG M10X1 STAINLESS	5-75
90091-0304	RADIAL SEAL 45X65X8 MM DUST LIP	1-13, 1-47, 1-55
90091-0322	RADIAL SEAL 25X42X7 MM DUST LIP	1-29, 1-31
90092-0054	METERING VALVE 50 MM3	5-75
90099-0005	MOUNTING RAIL SUPPORT, TSTW 5/M5	9-29
90099-0187	HEXAGON NUT, LOCK, M14, DIN985	4-9, 4-11
90099-0191	HEXAGON NYLON NUT, M4X0,7	9-25
90110-0052	MALE INSERT, HAN E06, 0933 0062 601	1-81, 4-9, 4-11, 4-29, 4-31, 8-5, 8-7
90110-0053	FEMALE INSERT, HAN 6 E 09 33 006 2701	1-81, 5-7, 5-9
90110-0095	CONNECTOR, PLUG SOCKET, MSSD-C-4P	5-71
90115-0134	ROD END, ID=10 MM, M10X1,25	1-35
90115-0137	ROD END, ID=6 MM, M6X1	3-17
90115-0163	ROD END, ID=6 MM, M6X1	10-19
90119-0108	RELAY OMRON G2R-2-SNI-24DC	5-103, 5-105, 9-7, 9-9, 9-21, 9-23, 9-35
90125-0020	PLATE COMPLETE(BOM)	5-53
90129-0018	BASE, P2RF-08-E	5-103, 5-105, 9-7, 9-9, 9-21, 9-23, 9-35
90134-0030	SLEEVE FOR PLASTIC TUBE	5-75
90134-0039	BUSHING VALVE CONNECTION 2,5 MM	5-75
90134-0052	PLUG DOSING BLOCK	5-75
90134-0055	BUSHING/NUT INLET/OUTLET 6 MM	5-75
90134-0058	CONNECTION	2-17
90141-0016	RETAINING RING FOR SHAFT DIN 471 10 SS	8-5, 8-7
90141-0017	RETAINING RING FOR SHAFT DIN 471 17 SS	8-5, 8-7
90141-0020	RETAINING RING FOR BORE DIN 472 42 SS	4-29, 4-31
90143-0071	RUBBER STRIP 4X20MM	5-101
90143-0097	SELF GRIPPING GASKET, 1011-24	12-11
90143-0098	RUBBER STRIP, CLAMPING, NO. 1038-02	5-137
90152-0051	HOSE, SPIRAL CONDUIT, 25X18, UL 1816	4-29, 4-31, 5-53, 5-101
90152-0060	HOSE, SPIRAL CONDUIT, 42X35, UL3529	5-101
90152-0070	FLEXIBLE CONDUIT, UL 2721	5-101
90152-0075	HOSE	5-53
90153-0023	ADHESIVE, SILICON 251470 TUB 90CC(UN1993	6-43
90165-0007	PIPE CLIP FOR TUBE D=8 MM	9-31
90165-0051	PIPE CLAMP, D=12 MM, RAP112X	12-39
90166-0108	TUBE 6 MM PA TRANSP.	5-75
90166-0113	HOSE	5-7, 5-9
90166-0143	TUBE 2,5 MM PA TRANSP.	5-75
90181-0182	BRACKET, 1149354	5-7, 5-9
90181-0183	CABLE DUCT, FITTING, SB-102-S	3-29, 5-7, 5-9, 6-39
90181-0184	CABLE TRENCH PARTS	5-7, 5-9
90181-0186	CABLE DUCT, ELBOW BRACKET, B27	5-7, 5-9
90181-0190	CABLE DUCT, WALL BRACKET, B4 MINI	5-7, 5-9
90181-0314	BOLT + NUT, SB-106-S	5-7, 5-9
90187-0191	BALL VALVE, R1/8 - HOSE 6 MM	5-63, 5-65
90194-0152	SIGN, EARTH	9-25
90195-0017	TERMINAL BLOCK, BK6 CRN, 6252 2200 00	5-95, 5-97
90208-0059	CLAMPING ELEMENT WITH SLEEVE, 10X16 MM	12-23, 12-29, 12-41
90208-0078	CLAMPING ELEMENT, 20X28 L=18	7-9
90214-0186	BALL BEARING 30/42X7	1-29, 1-31
90224-0289	BUSHING, INT.EXT. THR. R1/8-R1/4	4-19
90224-0314	DISTRIBUTOR BLOCK, FR-4-1/8-B	4-19
90224-0325	ELBOW 90 COUPL., EXT. THREAD 10/8-G1/4"	5-57
90224-0372	NIPPLE, EXT.THREAD, HEXAGON, R1/4-R1/4	5-71
90226-0458	MOUNTING SCREW	5-99, 5-113, 5-115, 5-119, 5-123, 5-127, 5-129, 5-139, 5-141, 5-145
90235-0748	THROTTLE CHECK VALVE, GRA-1/4-B	5-63, 5-65
90237-0123	LOCK, 1121-U10C	5-121, 5-133, 5-135

Part No	Description	Page No
90237-0128	LOCK CYLINDER, 1109-SU125	5-121, 5-133, 5-135
90237-0144	GUIDE, 1121-SU540	5-121, 5-133, 5-135
90237-0147	LOCKING LUG, NO. 1121-53-0P	5-121, 5-133, 5-135
90237-0175	TURNING HANDLE, 1125-U185-0A	5-121, 5-133, 5-135
90240-0261	FLANGE BUSHING, IGLIDUR X 12X14X9	2-9, 2-11
90240-0262	FLANGE BUSHING, IGLIDUR X 12X14X12	2-9, 2-11
90259-0313	AUXILIARY SWITCH, NHI21-PKZ0	9-7, 9-9, 9-21, 9-23, 9-53
90259-0315	CIRCUIT BREAKER , B3.1/2-PKZ0	9-7, 9-9, 9-21, 9-23
90261-0060	PLUG, BLIND, PLASTIC, NO. IKPK25X1, 5	3-29
90287-0124	SCREW PAN HEAD MSCS M4X12 NYLON	9-33
90287-0154	SET SCREW, DOGPOINT M6X10 A4	5-11, 5-13
90287-0175	SCREW M6S M3X12 A480	1-23, 5-11, 5-13, 5-41, 5-43, 12-71
90287-0176	SCREW M6S M3X25 A470	12-27
90287-0230	SHOULDER SCREW, 6X4/M5 SS	1-45, 1-51
90287-0239	SHOULDER SCREW, 6X30/M5 SS	3-17
90287-0295	SCREW HEX.SOCK.COUNT.MF6S M3X8 A280	7-15
90287-0330	SCREW, M6S ISO 4017 M10X70 A4 80	12-51
90328-0017	SILENCER, D=6 MM74122000	1-35, 5-75
90328-0026	SILENCER, G1/4"	4-19, 5-71
90328-0029	SILENCER, M5	5-63, 5-65, 7-29, 10-25, 10-27
90328-0047	SILENCER, G1/8"	1-65, 1-67, 5-63, 5-65, 7-29, 10-25, 10-27
90330-0026	PLUG, EXT. G-THREAD, G1/4	5-71
90330-0134	REDUCING NIPPLE, G1/8EXT-G1/4INT	5-61
90335-0082	COMP. SPRING, 22180, 1,25X9,25X47,5	7-15
90347-0011	VIBRATION DAMPER MEGI 781056	5-11, 5-13
90415-0030	OIL FILTER PN 100 ORD.NO 2.77 10 70.1	5-75
90424-0087	AIR NOZZLE	10-19
90424-0089	AIR NOZZLE, BSPT1/4, AAB727-1/4-15	5-61
90439-0155	NOZZLE, 322 012	10-13, 10-15
90439-0295	SERVICE KIT, NO. 111940	5-47, 5-91, 5-93
90457-0192	WASHER PLAIN ROUND, 6,5/18, H=1,5	5-23, 5-25
90458-0048	RETAINING RING FOR BORE DIN 472 62 SS	4-9, 4-11
90458-0073	WASHER 6,4/30, H=1,5	12-21, 12-23, 12-41
90458-0181	RETAINING RING FOR BORE DIN 472 80 SS	1-43, 1-53
90458-0306	CABLE GLAND, M16X1,5, 5311 1010	4-29, 4-31, 8-5, 8-7
90458-0307	CABLE GLAND, M20X1,5, 5311 1020	1-37, 1-81, 5-7, 5-9, 12-7, 12-29, 12-31, 12-33
90458-0308	CABLE GLAND, M25X1,5, 5311 1030	12-33
90458-0309	CABLE GLAND, M32X1,5, 5311 1040	9-25
90458-0314	CABLE GLAND, M16X1,5, 5311 1110	9-25
90458-0315	CABLE GLAND, M20X1,5, 5311 1120	5-131
90458-0316	CABLE GLAND, M25X1,5, 5311 1130	5-47
90458-0322	NUT, M16X1,5	4-29, 4-31, 8-5, 8-7
90458-0323	NUT, M20X1,5	5-7, 5-9, 5-53, 5-101, 9-25
90458-0324	NUT, M25X1,5	5-63, 5-65, 5-101, 9-25
90458-0326	NUT M40X1,5	5-7, 5-9, 5-101
90458-0406	CABLE GLAND, VK 22052Y	4-9, 4-11, 8-5, 8-7
90458-0430	GLAND FITTING, VK 22054YUL16	4-29, 4-31, 5-7, 5-9, 5-53, 5-101
90458-0432	GLAND FITTING, VK 22555YUL21	5-63, 5-65, 5-101
90458-0434	GLAND FITTING, VK 24056YUL29	5-7, 5-9, 5-101
90458-0460	GLAND, LOCK NUT, M16X1,5	4-9, 4-11
90458-0499	HOLDER 12 MM NO. 82 66861	5-61
90458-0507	PARALLEL KEY W. ROUND ENDS 6X6X60 MM	1-29, 1-31
90458-0745	Y-CONNECTION	4-27
90458-1173	MULTI DIAMETER MODULE, CM 30W40	9-25
90458-1174	MULTI DIAMETER MODULE, CM 20W40	9-25
90458-1175	MULTI DIAMETER MODULE, CM 15W40	9-25
90458-1178	FRAME, CF 8	9-25
90458-1179	FRAME, CF 32	9-25
90458-1197	VALVE, 5/2 BISTABLE	7-29, 10-25
90458-1202	VALVES 2X3/2, CLOSED	5-63, 5-65
90458-1203	VALVE 2X3/2 1X OPEN 1X CLOSED	10-27
90458-1308	BLIND PLUG CIRCULAR, M20X1,5 514GFK/220	5-101, 9-25
90458-1309	BLIND PLUG CIRCULAR, M25X1,5 514GFK/225	5-101, 9-25
90458-1483	SPRAY GUN, WATER G1/4	5-57
90458-1704	BALL BEARING 15/35X11	3-9
90458-1740	AIR GUN ASSEMBLY, CEJN 199589668	5-73
90458-1741	HOSE ASSEMBLY, CEJN 19 958 9669	5-57
90458-2507	FUSE HOLDER, USBCC1	9-51
90458-2510	FUSE, ATDR6	9-51, 10-13, 10-15
90458-2837	CONNECTING CABLE KMEB-1-24-5-LED	5-71
90458-2907	PROX.SWITCH IFS204	1-59, 4-9, 4-11, 4-21, 6-17, 12-65
90458-2932	PLAIN BEARING, JUM-02-20	1-23, 1-61, 5-19
90459-0290	NON-RETURN VALVE, H-QS-6	5-63, 5-65
90459-0380	PLUG, EXT THREAD HEX SOCKET 02221000 85	10-27
90459-0813	COOLING UNIT, KB20A619.01	9-5
90459-0864	BULKHEAD CONNECTOR, 12 MM/M27X1,5	5-73
90459-0959	DISTRIBUTOR BLOCK 1492-PD3163	9-31
90459-1018	ROD END, BALL JOINT EYE M10X1,25	1-65, 1-67
90459-1180	LENS 16MM IN-SIGHT 4100, HF16HA-1B	5-51
90459-1395	SCREW HEX.SOCK.SET CONEPT.MS6SS M4X4 A2	6-11, 6-13
90459-1458	HOOD, SIDE ENTRY, HAN6E, 19 30 006 1540	1-81, 4-9, 4-11, 4-29, 4-31, 8-5, 8-7
90459-1461	HOUSING, 19 30 006 1255	1-81, 5-7, 5-9
90459-1825	ELBOW WITH TAILPIECE 12/12 MM	5-63, 5-65
90459-1858	BRACKET, MS6-WP	5-69

Part No	Description	Page No
90459-2133	PUSH-IN FITTING QSSF-1/2-12-B	5-7, 5-9
90459-2215	STRAIGHT COUPLING, D=16 MM - G1/2"	5-73
90459-2232	WARNING SIGN ANSI (H), DO NOT WASH	5-147
90459-2243	VALVE, MS4-EE-1/4-10V24	5-71
90459-2245	DISTRIBUTOR, MS4-FRM-1/4	5-71
90459-2247	BRACKET, MS4-WP	5-71
90459-2248	BRACKET	4-19, 5-71
90459-2254	QUICK COUPLING, (M) 10 320 5202	5-57, 5-73
90459-2265	PROHIBITION SIGN ISO, DO NOT WASH	5-147
90459-2291	SAFETY RELAY, E1T	9-7, 9-9, 9-21, 9-23, 9-65
90459-2337	SHUT OFF VALVE, MS4-EM1-1/4	5-71
90459-2339	FILTER REGULATOR, MS4-LFR-1/4-D7-ERV-AS	5-71
90459-2389	B71800059TM, BRACKET, MS4-LR-WR	4-19
90459-2413	PLC DIGITAL INPUT MODULE16 POINTS	9-59
90459-2458	SEPLATE, 10 SLOT CONTROLLOGIX CHASSIS	9-59
90459-2474	5008203, DIGIT. OUTPUT MODULE 16 PTS 10-	9-59
90459-2477	5008206, 1756-ENBT	9-59, 12-15
90459-2480	8-AXIS SERCOS MOTION MODULE	9-7, 9-9, 9-21, 9-23
90459-2487	REMOVABLE TERMINAL BLOCK 20 POINTS	9-59
90459-2488	REMOVABLE TERMINAL BLOCK 36 POINTS	9-7, 9-9, 9-21, 9-23, 9-59
90459-2494	DEVICENET I/O ADAPTER MODULE, 1734-ADN	5-103, 5-105
90459-2501	5006526, 1734-FPD	5-103, 5-105
90459-2503	DIGITAL INPUT 4 PTS SINK, 1734-IB4	5-103, 5-105
90459-2505	DIGITAL OUTPUT 4 PTS, 1734-OB4E SERIES C	5-103, 5-105
90459-2519	TAP, OPEN STYLE	9-67
90459-2523	TERMINATOR, OPEN STYLE, 1485A-C2	9-67, 12-83
90459-2526	REMOTE I/O BASE MODULE 8 POINTS, 1734-TB	5-103, 5-105
90459-2530	DEVICENET CABLE THIN	9-79
90459-2536	SERCOS CABLE 0.1M, 2090-SCEP0-1	9-15, 9-57, 12-79
90459-2540	5008240, 2090-SCEP3-0	9-57
90459-2550	I/O CONNECTOR 26 PIN MALE, 2090-K6CK-D26	9-7, 9-9, 9-21, 9-23
90459-2553	PUSH-IN L-FITTING QSL 16	5-63, 5-65, 5-73, 9-5, 9-19
90459-2591	SINGLE VALVE SUB-BASE CDSV5.0-AS-1/8	5-63, 5-65, 7-29, 10-25, 10-27
90459-2614	DEVICENET ADAPTER POWERFLEX 40 22-COMM-D	9-7, 9-9, 9-21, 9-23
90459-2644	NUT ROUND WITH SLOTS M30X1,5 SS	1-29, 1-31
90459-2771	FILTER, MS6-LFX-1/2-R	5-69
90459-2777	FLOW CONTROL VALVE, GR-QS-8	10-19
90459-2795	FRONT LID FOR POWERFLEX 40, 22B-CCB	9-7, 9-9, 9-21, 9-23
90459-3068	TERMINAL PLINTH, WDU 10	9-21, 9-23
90459-3081	HOUSING, 19 20 003 1250	5-7, 5-9, 12-31
90459-3115	BRACKET, REAR, CLEVIS, ROUND, BORE 32	1-65, 1-67
90459-3279	BLANK PLUG, BLACK SQUARE, PLASTIC ZB5SZ5	5-101
90459-3441	FREQ. CONV., 22B-A2P3N104	9-7, 9-9, 9-21, 9-23
90459-3449	FREQ. CONV., 22A-A2P3N104	9-7, 9-9, 9-11, 9-13, 9-21, 9-23
90459-3450	FREQ. CONV., 22A-A4P5N104	9-31, 12-13
90459-3454	FOOTPRINT FILTER 1 PHASE 18A	9-7, 9-9, 9-21, 9-23
90459-3460	FOOTPRINT FILTER 1 PHASE 10A	9-7, 9-9, 9-11, 9-13, 9-21, 9-23, 9-31, 12-13
90459-3603	PRESSURE GAUGE, MAP-40-6-1/8-EN	5-63, 5-65
90459-3604	FLOW CONTROL VALVE, GR-QS-6	5-63, 5-65
90459-3644	REDUCER, M20X1,5/M16X1,5	4-9, 4-11
90459-3655	REAR CLEVIS FOOT MOUNTING, LBN-12/16	10-19
90459-3670	HOOD, HAN3A, 19 20 003 1440	4-9, 4-11, 12-29
90459-3779	HANDLE, GN565 SW 192-M8	6-33
90459-3845	WALL SOCKET, Z-SD230	9-7, 9-9
90459-4089	SAFETY SENSOR, EVA E, 2TLA020046R0600	4-13, 4-15, 5-81, 5-83
90459-4165	SAFETY SCREW, SM4X25	4-13, 4-17, 5-81, 5-83
90459-4252	CABLE M12-C101, 20-056-10	5-89
90459-4588	RADIAL SEAL 60X85X8 MM DUST LIP	1-43, 1-53
90459-4727	STANDING BEARING, KSTM-20	1-61
90459-4735	SCREW, M6S ISO 4017 M8X10 A4 80	4-9, 4-11, 5-27, 5-29, 5-37, 5-39
90459-4876	FOCUS JUMPER CABLE M12 5P 3M, 20-056-21	5-81, 5-83
90459-4891	IDENTIFIER, ID-FIX RW	9-65
90459-4931	LENS WITH SCALE OF LENGTHS 10X	10-31
90459-5134	NUT, T-SLOT M6	10-19, 10-21, 12-27
90459-5152	SCREW HEX.SOCK.SET CONEPT. MS6SS M6X10 A	8-5, 8-7
90459-5195	SLIM POWER RAIL,KINETIX,8 AXIS,2094-PRS8	9-57
90459-5308	CONTACTOR 4KW 24VDC, DILM9-10	9-7, 9-9, 9-11, 9-13, 9-21, 9-23, 9-55, 9-63
90459-5309	CONTACTOR 7,5KW 24VDC, DILM17-10	9-55
90459-5311	CONTACTOR 15KW 24VDC, DILM32-10	9-55
90459-5321	OVERLOAD PROTECTION, PKZM0-0,4	9-7, 9-9, 9-21, 9-23
90459-5323	OVERLOAD PROTECTION, PKZM0-1	9-7, 9-9, 9-21, 9-23
90459-5326	OVERLOAD PROTECTION, PKZM0-4	9-53
90459-5440	CONTACTOR 4KW 24VDC, DILM9-01	12-37
90459-5522	CONN. BANJO, COR8PB6M10	5-75
90459-5529	PHOTOCELL E3Z-T86A, SENDER+RECIEVER	1-69, 4-29, 4-31, 5-23, 5-25, 12-69
90459-5627	CONNECTION, TINA 1-A	5-81, 5-83
90459-5811	RESIDUAL CURRENT DEVICE, FI-25/2/003-A	9-7, 9-9
90459-5813	AUXILIARY CONTACT, FAZ-XHIN11	9-7, 9-9, 9-21, 9-23
90459-5817	REGULATOR, MS4-LR-1/4-D6-A8-AS	5-63, 5-65
90459-5886	POWER SUPPLY UNIT 115-230 VAC/24VDC100W	9-67
90459-5949	REAR CLEVIS FOOT MOUNTING, CRLBN-32	1-65, 1-67
90459-6062	ARMORBLOCK DIGITAL CONFIGURABLE I/O	4-9, 4-11, 5-7, 5-9, 12-31
90459-6280	NUT GUK 5 M25 X 1.5 FZB	1-11, 1-13, 1-19, 1-29, 1-31, 1-47, 1-55
90459-6395	CABLE, ETHERNET RJ 45 STRAIGHT.10M	9-79

Part No	Description	Page No
90459-6426	PRESSURE GUARD PEV-1/4-B-OD	5-71
90459-6470	CONNECTOR RJ45 TER. BL., AK-U0-RJ45-TB2P	9-11, 9-13
90459-6556	PLC DIGITAL INPUT 32PTS, 1756-IB32/B	9-59
90459-6617	COVER 4-POLE, NZM1-4-XKSA	9-7, 9-9
90459-6692	SAFETY PLC, PLUTO B20 20-070-06	9-65
90459-6820	FEMALE INSERT, HAN 4 A, 09 20 004 2711	5-7, 5-9, 12-31
90459-6821	MALE INSERT HAN 4A, 0920 0042 611	4-9, 4-11, 12-29
90459-6852	AUXILIARY CONTACT, DILA-XHI22	9-7, 9-9, 9-11, 9-13, 9-21, 9-23, 9-63
90459-6913	MAGNETIC LOCK, JSD-ZH-EM1-K	5-81, 5-83
90459-6947	PHOTOCELL, WF 225-B4150	1-77
90459-6948	INDUCTIVE SENSOR, IFS 206	3-27, 3-29, 7-21, 12-59
90459-6961	SAFETY SENSOR, ADAM E 0,5 M12	4-13, 4-17, 5-81, 5-83
90459-7095	FOCUS JUMPER CABLE M12 5P 1M, 20-056-20	4-9, 4-11
90459-7107	SLEEVE QSH-16-12	5-63, 5-65
90459-7228	ELECTRICAL EQUIPMENT SIGN, TEMPLATE	9-21, 9-23
90459-7229	IDENTIF. OF SINGLE CONDUCTORS	9-25
90459-7267	POWER SUPPLY 24VDC, 1756-PB75/B	9-59
90459-7332	PUSH-IN FITTING QSSF-1/8-4-B	5-63, 5-65
90459-7333	PUSH-IN FITTING QSSF-1/4-4-B	5-63, 5-65
90459-7344	PRESSURE GAUGE, MA-40-6-R1/4-EN	5-63, 5-65
90459-7366	PHOTOCELL, WTB4-3P3161 F20	4-25
90459-7368	MARKING FOR PNEUM. TUBING, PRZ04	5-63, 5-65, 7-21, 7-29, 10-19, 10-25, 10-27
90459-7369	MARKING FOR PNEUM. TUBING, PRZ06	1-35, 1-65, 1-67, 5-63, 5-65
90459-7370	MARKING FOR PNEUM. TUBING, PRZ08	5-61, 5-63, 5-65, 7-29, 10-19, 10-25, 10-27
90459-7372	MARKING FOR PNEUM. TUBING, PRZ12	5-63, 5-65
90459-7373	MARKING FOR PNEUM. TUBING, PRZ16	5-73
90459-7426	PUSH-IN L-FITTING QSML-M3-3	7-21
90459-7427	PUSH-IN FITTING QSM-4-3	7-21
90459-7428	TUBE PUN-H-3X0,5-BL	7-21
90459-7441	WASHER PLAIN, DIN 7349, 6,4/17 H=3	2-17
90459-7458	WARNING SIGN ANSI (H), HOT SURFACE	5-147
90459-7584	PROHOBITION SIGN ISO, DO NOT REACH IN	5-147, 10-29
90511-0145	LOGOTYPE "TETRA PAK" FOR STRIPE 70MM	5-11, 5-13
90511-8563	STRIPE HEIGHT 70MM, ROLL LENGTH 25M	5-11, 5-13
90600-0347	NEEDLE BEARING W/O CONE, 16X24X16MM	7-25, 7-27
90600-0349	INNER RING, IR12X16X20	7-25, 7-27
90600-0350	LINEAR GUIDE, RSR12WVMUU+80LM G15/G25	7-15
90600-0351	COMP. SPRING, 2489, 1,2X9,4X30	7-23
90600-0373	RETAINING RING FOR SHAFT DIN 471 21 SS	6-43
90600-0375	BALL BUSHING, 12X21X30 MM	6-43
90600-0376	SHAFT, LM SHAFT 12 G6 89L M	6-43
90600-0434	GUIDE BAR, SSR25-180L-YM G30/30	6-9
90600-0454	CLAMPING ELEMENT, 16X24 L=16	3-11
90600-0482	GUIDE BAR, SSR 25 305 LYM G32.5/32.5	3-17, 3-27
90600-0483	GUIDE BAR, SSR 25-430LYM G35/35	3-15
90600-0484	GUIDE BAR, SSR 25 253L-YM G36.5/36.5	3-9, 3-25
90600-0486	TIMING BELT 50AT10/1120 PU	3-25
90600-0487	TIMING BELT 50AT10/1410 PU	3-15
90600-0656	COMP. SPRING, 6777, 4X36X120 DIN2098	2-21
90600-0658	WORM GEAR SCREW JACK, TP00063000130	4-5, 5-17
90600-0685	THREADLOCKER LOCTITE 2701, 50ML	6-47
90600-0798	BUSHING INSERT, JUM-02-30	1-45, 1-51
90600-0799	STANDING BEARING, KSTM-25	1-59
90600-0800	FLANGE BEARING 20X89X20 MM	1-61, 5-19
90600-0812	GEAR BOX, TP00042000110	1-23
90600-0892	NEEDLE ROLLER BEARING, 50X80X28 MM	1-43, 1-53
90600-0934	CABLE M12-C62 5 POLE MALE, 20-056-02	4-9, 4-11
90600-0943	SOLID STATE RELAY, 3RF2320-1AA04	9-7, 9-9, 9-21, 9-23
90600-0961	ROLLER CHAIN, SIMPLEX 3/8 -159, SS	1-23
90600-0962	ROLLER CHAIN, SIMPLEX 3/8 -243, SS	1-23
90600-0964	ROLLER CHAIN, SIMPLEX 3/8 -333, SS	1-23
90600-0971	RACK, ZRR2-100	5-11, 5-13
90600-1001	CROSS CLAMP, 340/68385	5-61
90600-1002	FOOT 50000N, HPA125-30-325	4-5, 5-11, 5-13
90600-1005	WORM GEAR SCREW JACK, TR00042000130	1-61
90600-1159	ROLLER CHAIN, SIMPLEX 3/8 -290, SS	5-19
90600-1167	PLUG, EXT. R-THREAD, R1/4	4-19
90600-1175	ELBOW WITH TAILPIECE 8/8 MM	5-63, 5-65
90600-1198	MAIN SWITCH ASSY.,RIGHT SIDE, NZM1-XSM-R	9-27
90600-1420	REGULATOR, MS4-LRB-1/4-D6-AS	4-19
90600-1461	INCOMING TERMINAL, BK25/3-PKZ0-E	9-7, 9-9, 9-21, 9-23, 9-53
90600-1759	CONTACTOR22KW24VDCDILM50-22+DILM65-XIP2X	9-51, 9-55
90600-1772	SCREW DIN7984 M6X12 AISI 304	7-37
90600-1848	ETHERNET SW, FL SWITCH SFN 8TX	9-67
90600-1972	COVER PROFILE 8 AL, 0.0.265.50	10-21
90600-1996	CAP 8 40X40 MM, 0.0.026.01	10-21
90600-2026	SCREW DIN7984 M8X16 AISI 304	1-29, 1-31
90600-2068	DELIVERED DESIGN SIGN, 90600-2068	9-7, 9-9
90600-2102	POWER I/O CABLE, CCB-84901-0103-10	5-51, 12-5
90600-2103	ETHERNET CABLE, CCB-84901-1004-10	5-51, 12-5
90600-2375	LENS, E39-S65C	8-5, 8-7
90600-2560	COUPLING 14X20 MM, 727-38-4838	4-5
90600-2563	SCREW SNAKE EYES® PAN HEAD M6X12 A2	5-81, 5-83
90600-2830	FASTENING ELEMENT, BLOCKSEP-E 01026	9-33

Part No	Description	Page No
90600-2904	EARTH BRAID, 250/16/8,5	9-25
90600-3272	PROX. SENSOR, SMT-8M-PS-24V-K-5,0-OE	7-21
90600-3573	SOCKET CONN. CABLE, KMEB-2-24-M12-0,5-LE	4-19
90600-4033	DIGITAL OUTPUT MODULE, 1756-OB16IS	9-7, 9-9, 9-21, 9-23
90600-4040	CAUTION SIGN ANSI (H), DO NOT REACH IN	5-147, 10-29
90600-4731	CURRENT CONTROL RELAY, K8AB-AS2 200-230	9-35
90600-4778	USB CABLE SET, 5A9000.54	12-11
90600-4821	TIMING BELT 25AT10/4800 PU+32 2.3.7.358	1-71, 1-73
90600-4822	TIMING BELT 25AT10/5250 PU+35 2.3.7.358	1-71, 1-73
90600-5249	FERRITE, B64290L616X38	9-7, 9-9, 9-11, 9-13, 9-21, 9-23, 9-31, 9-59, 9-67, 12-13
90600-5253	LINE FILTER, B84113HB60	9-31
90600-5258	LINE FILTER, B84143A35R106	9-31
90600-5262	LINE FILTER, B84144A36R120	9-27
90600-5266	FEED THROUGH FILTER, B85321A2502W160	9-27
90600-5270	COVER 3-POLE, NZM1-XKSA	9-21, 9-23
90600-5543	CIRCUIT BREAKER, NZMB1-4-A32	9-7, 9-9
90600-5547	VIBRATION DAMPER, D-TYPE 20X15 M6X15 NBR	7-21
90600-5812	LABEL	9-21, 9-23
90600-5813	SOLENOID VALVE, CPE18-M1H-3GL-1/4	4-19
90600-5815	COOLING UNIT, KB20A21341.03	9-19
90600-5823	SIGN, MAIN POWER MACHINE LABEL	9-7, 9-9
90600-6183	TUBULAR RIVET 3,5X6,2	5-27, 5-29, 5-37, 5-39
90600-7487	SURGE PROTECTION DEV., VAL-MS 230/3+1 FM	9-27
90600-7888	INDUCTIVE SENSOR, IFT 203	5-95, 5-97
90601-0668	SERVO MOTOR, MPL-B420P-MK72AA SERIES A	1-43, 1-53, 2-13
90601-1027	LIMIT SWITCH, D4C-1G01 5M	12-5, 12-43, 12-45, 12-47, 12-57, 12-59
90601-1926	SERVO MOTOR, MPL-B430P-MK72AA SERIES A	3-19, 3-21, 6-19
90601-2046	CAPTIVE SCREW M6, GUTBG 6-4-12	5-117, 5-127
90601-4430	SERVO MOTOR, MPL-B320P-MJ72AA, SERIES A	7-11
90601-6250	MARKING, DEK 5 GW PE	9-27
90601-6430	USB CABLE, 90601-6430	12-11
90601-6650	RELAY, PLC-RSC-24DC/21	9-7, 9-9, 9-21, 9-23
90601-6652	OPTOCOUPLER, PLC-OSC-24DC/24DC/2	9-7, 9-9, 9-21, 9-23
90601-6656	RELAY, PR2-RSC3-LDP-24DC/4X21AU	12-7
90602-1250	LIGHT FIXTURE, SLIM LED 112-544-001	5-85, 5-87, 9-25
90602-3851	RESISTANCE FIXED, 3,6 KOHM, 1/2 W	12-7
90602-4060	LIGHT ELEMENT, BLUE, PSD-S OE LED BU	5-79
90602-4061	LIGHT ELEMENT, GREEN, PSD-S OE LED GN	5-79
90602-4062	LIGHT ELEMENT, RED, PSD-S OE LED RD	5-79
90602-4063	LIGHT ELEMENT, YELLOW, PSD-S OE LED YE	5-79
90602-4627	TERMINAL ELEMENT, PSD-S CE-TM SPRING	5-79
90602-4631	SIREN 100DB, PSD-S AE SM8-5 100DB/1	5-79
90602-4674	TIMING BELT 25T10/1150-DL PU	1-33
90602-4686	TIMING BELT 32TK5K6/780 PU + MINIGRIP	1-29, 1-31
90602-4847	THREADLOCKER LOCTITE 243, 50ML	6-43
90602-8707	BUFFER UNIT, QUINT-BUFFER/24DC/20	12-81
90602-8807	LIMIT SW. SZ 2586.010	9-25
90602-8988	POWER SUPPLY, QUINT-PS/ 3AC/24DC/20	9-67, 12-37
90603-0408	LUBRICATION UNIT, 10P-P4-H1 LM12	5-75
90603-1115	POWER SUPPLY, STEP-PS/1AC/24DC/3,8/C2LPS	9-21, 9-23
90603-1838	GEARS, PLAN. SP060F-MF1-4-0B1/MBL-B230P	3-11
90603-1938	PRESSURE SWITCH, 1800 KPA, 28545-251-2	5-75
90603-2066	CLAMP.ELEMENT, WITHOUT SLEEVE, 32X60	3-19, 3-21
90603-2322	BALL BEARING 10/19X5	8-5, 8-7
90603-2323	BALL BEARING	3-13
90603-2378	BALL BEARING, 10X30X9 MM	6-11, 6-13
90603-2476	GEARS,PLANETARY TP010F-MA3-66-OE1/MPL B4	6-19
90603-2676	MOTOR 3GAA052002-CSA	8-5, 8-7
90603-2736	WARNING SIGN ANSI(H),HAZ.VOLT.DISCONNECT	9-21, 9-23
90603-2978	WORM GEAR W20035003800003	8-5, 8-7
90603-2980	WORM GEAR W2003500390018	1-81
90603-3478	ADAPTER, 451-004-462-VS	3-9, 3-11, 3-15
90603-3979	SENSOR Y-CABLE, EVT339	1-31, 1-69, 4-29, 4-31, 5-23, 5-25, 10-23, 12-27, 12-69
90603-4478	RECEPTACLE M12, SACC-E-M12FS-4CON-M16/..	12-7
90603-4479	RECEPTACLE M12, SACC-E-M12MS-5CON-M16/..	12-7
90603-4698	FILTER, MS6-LFM-1/2-ARV-DA	5-69
90603-4699	FILTER, MS6-LFM-1/2-B-R-V-DA	5-69
90603-5561	CONNECTOR, SACC-M12MS-5CON-PG 9-VA	12-9, 12-43, 12-45, 12-47, 12-57, 12-59
90603-5562	CONNECTOR, SACC-M12FS-5CON-PG 7-VA	12-9
90603-5568	CONNECTOR, SACC-M12MS-4QO-0,34-VA	7-21, 7-29, 10-23
90603-5569	CONNECTOR, SACC-M12MS-4QO-0,75-VA	5-85
90603-5602	BAR CODE READER, D8330 SR-902151265+CAB-	12-11
90603-6233	KLüBERSYNTH UH1 14-151, ONLY IN BOM	6-13
90603-9674	Y-CONNECTOR, SAC-5P-M12YF/M12FS-M12MS VP	12-21, 12-23, 12-25, 12-29, 12-41
90603-9676	TERMINATION M12,SAC	4-9, 4-11
90603-9715	SPHERICAL BALL BEARING 17/47X19	4-33
90603-9718	MOTOR 3GAA 062 002-BSC	4-9, 4-11, 4-29, 4-31
90604-0093	CONNECTION BLOCK, TINA4A 2TLJ020054R0300	4-9, 4-11, 5-81, 5-83
90604-2784	IN-SIGHT 5100 CAMERA, IS5100-01	5-51
90604-3129	DOUBLE ACTING, MINI-ISO, CYL. 16-25	10-19
90604-3137	DOUBLE ACTING, MINI-ISO, CYL. 32-80	1-35
90604-3142	CYLINDER, GRIPPER DHPS-16-A-H1-SA	7-21
90604-3143	DOUBLE ACTING, ROUND, CYL 32-150	1-65, 1-67
90604-3317	GUN,TP EASYC. SBLA2T 120 1A, 1099064H1	3-5

Part No	Description	Page No
90604-3324	COMP. SPRING, 5443, ?X31,2X115	1-13, 1-47, 1-55
90604-3327	SHAFT, LJMR 30 340 ESSC 10	3-9
90604-3329	NON-RETURN VALVE, RVA-M6	1-11, 1-13, 1-19, 1-29, 1-31, 1-43, 1-47, 1-53, 1-55, 2-15
90604-3330	CARRIAGE, SSR25XV1SSM(B) (GK) BLOCK	3-9, 3-11, 3-15
90604-3333	GUIDE RAIL, 15X20X580	1-63
90604-3589	FAN 2BH1300-7AV15-K41	5-47
90604-3590	MEMORY CARD SD 1GB, 1784-SD1, SERIES A	9-25
90604-3805	OPER. PANEL 15" , 2711P-T15C4D8TP, SER A	5-101
90604-4254	WORM GEAR MR V 63 UO3A-80B4 … B5/35 H1 F	1-43, 1-53
90604-4255	WORM GEAR MR V 63 UO3A-80B4 # B5/140 H1	2-13
90604-4259	GEARS, PLAN. MR 112 EC FO2C 00 / I=10 H1	3-19, 3-21
90604-4904	ECCENTRIC SLEEVE, 12X15X11 MM	3-11
90604-5464	QUICKSERVER GATEWAY, FS-QS-1230-0705	12-83
90604-6027	PLUG, EXT. THREAD HEX. SOCKET. G1/4	5-75
90604-7285	BALL BUSHING, 30/47X68	3-9
90604-8448	CARRIAGE, SSR25XW1QZSSHHM(GK)(B) BLOCK	3-9, 3-15, 3-17, 3-25, 6-11
90604-8704	CONNECTOR, 2090-K6CK-D15M, SERIE B	5-89, 12-77
90604-8744	LOCKING HANDLE, M6X12M	3-5
90604-9664	SERVO MOTOR, MPL-B230P-VJ72AA, SERIE A	3-11
90605-1044	HOSE HOLDER BLUE SERIES, 271486	3-31
90605-1284	GREASE NIPPLE 45 DEG. M6X1, 10606145RF	2-15
90605-1285	GREASE NIPPLE STRAIGHT M6X1, 106061RF	3-9, 3-11, 3-15
90605-2064	DEVICENET SCANNER MOD., 1756-DNB, SER. E	9-59
90605-2644	ILLUMINATION, LDR_-174RD2-LA-1TK	5-51
90605-2645	POWER SUPPLY, LC400 LED LIGHTING CO	12-7
90605-2647	LENS, HF25HA-1B	12-5
90605-2649	IN-SIGHT 5600 CAMERA, IS5600-01	12-5
90605-2744	PROCESSOR L72, SERIES B, 1756-L72/B	9-59
90605-3869	FLANGE BUSHING, IGLIDUR J 15X17X12	1-81
90605-3922	COMP. SPRING, 2477, 1X14X25	5-51
90605-3923	COMP. SPRING, SF-TFR 2533, 1,5X11X40	2-9, 2-11
90605-3963	COMP. SPRING, 5988, 1X6,3X21,5	2-9, 2-11
90605-4026	GUIDE RAIL, SSR 25-394 LYM G 40/54	3-17
90605-4064	FLAT BELT 3223X35	8-5, 8-7
90605-6742	SERVO MOTOR, MTR-ECI-52R-MG25-R3DN-FG-SA	12-21, 12-23, 12-25, 12-29, 12-41
90605-6768	CABLE, KPWR-MC-1-M16-3B-6	12-21, 12-23, 12-25, 12-29, 12-41
90605-6942	BALL VALVE G1/4, 772117	5-57
90605-9651	UV ILLUMINATION, LDR2-100UV365-IP	12-5
90605-9772	WARNING SIGN ANSI (H), UV RADIATION HAZA	12-5
90605-9819	EMERG. STOP SWITCH, 704.064.2+704.910.4	5-101, 5-131, 9-25
90606-0065	GUIDE RAIL, SSR 25-269 LYM G 14.5/14.5	3-11
90606-0066	CONNECTION M6 TUBE 4 MM	3-9, 3-11, 3-15
90606-0465	THERMOSTAT, XSEKTS011	9-67
90606-0480	RTD HOT MELT HOSE BLUE, 150712+1043366	5-91, 5-93
90606-1697	SPLITTER BOX, EBC034	6-39, 10-23
90606-1698	SPLITTER BOX, EBC026	5-85
90606-1840	CARTRIDGE HEATER, 3KW 230V	5-53
90606-2001	AXIS MOD. W. PS,2094-BC02-M02-S SERIES C	9-57
90606-2004	AXIS MOD. KINETIX 6000,2094-BM01-S SER.C	9-7, 9-9, 9-15, 9-21, 9-23, 9-57, 12-79
90606-2005	AXIS MOD. KINETIX 6000,2094-BM02-S SER C	9-7, 9-9, 9-21, 9-23
90606-2351	GREASE NIPPLE STR. M10X1, 996-001-890-S3	1-11, 1-13, 1-19, 1-29, 1-31, 1-43, 1-47, 1-53, 1-55
90606-2469	FORK SENSOR, WFM80-60P321	8-5, 8-7
90606-2763	COLOUR SENSOR, CS81-P3612	12-5
90606-3683	DRY LUBRICANT PTFE RM2000T, 5 L BOTTLE	5-75
90606-3982	HOTMELT TERMOMELT PS880, 12 KG	10-15
90606-4344	TIMING BELT 10T5/1215 PU	1-81
90606-4464	LASER SENSOR, WSE9L-3P2237	1-31, 10-21, 12-27
90606-4924	SCREW, CBSTSR5-12	1-11, 1-19, 1-43, 1-53, 1-75
90606-4926	TIMING BELT 25AT10/4810 PU	1-71, 1-73
90606-5094	TIMING BELT 25AT10/5250 PU+32 2.3.5.320	1-71, 1-73
90606-5192	WASHER ISO 7093 10,5X30X2,5 A2	1-71, 1-73
90606-5311	FILTER, IMBF-BP470-25.5	12-5
90606-5324	GEARS, WORM MOTOR SK1SMI31AZ-IEC63-63L/4	1-37
90606-5416	QUICK COUPLING, (F) 25KAIW13SPN	5-57, 5-73
205438-0000	CABLE GLAND	5-53
290027-0000	WASHER	1-29, 1-31
311103-0236	PARALLEL PIN ISO 2338 3M6X16 A1	7-21
311103-0239	PARALLEL PIN ISO 2338 3M6X22 A1	2-9, 2-11
311103-0267	PARALLEL PIN ISO 2338 4M6X10 A1	10-33
311103-0268	PARALLEL PIN ISO 2338 4M6X12 A1	4-27, 6-43
311103-0278	PARALLEL PIN ISO 2338 4M6X35 A1	4-21
311103-0306	PARALLEL PIN ISO 2338 5M6X12 A1	4-27, 5-51
311103-0308	PARALLEL PIN ISO 2338 5M6X16 A1	5-51, 6-11
311103-0348	PARALLEL PIN ISO 2338 6M6X10 A1	7-21
311103-0349	PARALLEL PIN ISO 2338 6M6X12 A1	4-27, 6-19, 7-39
311103-0351	PARALLEL PIN ISO 2338 6M6X16 A1	1-17, 3-9, 5-11, 5-13, 6-35, 7-15
311103-0353	PARALLEL PIN ISO 2338 6M6X20 A1	1-43, 1-45, 1-47, 1-51, 1-53, 1-55, 1-63, 7-13, 7-39
311103-0354	PARALLEL PIN ISO 2338 6M6X22 A1	6-13
311103-0356	PARALLEL PIN ISO 2338 6M6X28 A1	3-11, 7-23
311103-0357	PARALLEL PIN ISO 2338 6M6X30 A1	4-9, 4-11
311103-0365	PARALLEL PIN ISO 2338 6M6X50 A1	3-11, 4-5
311103-0400	PARALLEL PIN ISO 2338 8M6X18 A	1-81
311103-0401	PARALLEL PIN ISO 2338 8M6X20 A1	3-17, 12-75
311103-0404	PARALLEL PIN ISO 2338 8M6X28 A1	3-11

Part No	Description	Page No
311103-0405 ..	PARALLEL PIN ISO 2338 8M6X30 A1	5-17, 6-23, 6-25, 6-27, 6-29
311103-0406 ..	PARALLEL PIN ISO 2338 8M6X32 A1	7-13
311103-0407 ..	PARALLEL PIN ISO 2338 8M6X35 A1	6-31
311103-0454 ..	PARALLEL PIN ISO 2338 10M6X20 A1	6-39, 12-75
311103-0458 ..	PARALLEL PIN ISO 2338 10M6X30 A1	6-7, 6-17
311103-0464 ..	PARALLEL PIN ISO 2338 10M6X45 A1	3-23
311103-1274 ..	PARALLEL PIN ISO 2338 4M6X24 A1	4-9, 4-11
311103-1355 ..	PARALLEL PIN ISO 2338 6M6X24 A1	1-59, 6-13, 6-31
311103-1456 ..	PARALLEL PIN ISO 2338 10M6X24 A1	3-29, 6-39
311112-0206 ..	SPRING PIN, ISO 8752 3X12 A2	2-9, 2-11
311112-0207 ..	SPRING PIN, ISO 8752 3X14 A2	2-9, 2-11
311112-0208 ..	SPRING PIN, ISO 8752 3X16 A2	2-9, 2-11
311112-0255 ..	SPRING PIN, ISO 8752 4X18 A2	6-43
311112-0256 ..	SPRING PIN, ISO 8752 4X20 A2	2-9, 2-11
311112-0312 ..	SPRING PIN, ISO 8752 5X28 A2	1-61
311112-0345 ..	SPRING PIN, ISO 8752 6X32 A2	1-25
311112-0347 ..	SPRING PIN, ISO 8752 6X40 A2	1-59
311112-0349 ..	SPRING PIN, ISO 8752 6X50 A2	5-17
311520-0320 ..	RIVET, BLANK 2,4X6	9-25
312105-0285 ..	SCREW, M6S ISO 4017 M4X6 A4 70	1-69, 6-47
312105-0287 ..	SCREW, M6S ISO 4017 M4X8 A4 70	1-33, 5-51, 5-95, 5-97, 6-13, 7-21, 8-5, 8-7, 10-21, 12-29 12-37, 12-51
312105-0289 ..	SCREW, M6S ISO 4017 M4X10 A4 70	1-29, 1-31, 4-21, 4-33, 8-5, 8-7
312105-0291 ..	SCREW, M6S ISO 4017 M4X12 A4 70	1-77, 2-9, 2-11, 2-13, 3-9, 4-25, 5-53, 7-7, 7-17
312105-0293 ..	SCREW, M6S ISO 4017 M4X16 A4 70	1-83, 4-27, 6-47
312105-0295 ..	SCREW, M6S ISO 4017 M4X20 A4 70	1-75, 1-77, 7-21, 12-5
312105-0297 ..	SCREW, M6S ISO 4017 M4X25 A4 70	4-19
312105-0323 ..	"FSCR05080-10, SCREW, M6S"	4-9, 4-11, 5-95, 5-97, 12-25
312105-0325 ..	SCREW, M6S ISO 4017 M5X10 A4 80	1-9, 1-63, 6-43, 8-5, 8-7, 10-19, 12-27, 12-29
312105-0327 ..	"SCREW, M6S ISO 4017 M5X12 A4 80"	1-29, 1-31, 1-59, 2-5, 2-7, 4-9, 4-11, 4-17, 4-19, 4-27 4-29, 4-31, 5-131, 7-13, 7-25, 7-27, 10-9, 10-21, 12-21, 12-23, 12-25, 12-29, 12-43, 12-65
312105-0329 ..	SCREW, M6S ISO 4017 M5X16 A4 80	1-29, 1-31, 1-83, 1-85, 2-5, 2-7, 3-9, 3-29, 4-13, 4-19 4-27, 4-29, 4-31, 5-41, 5-43, 8-5, 8-7, 8-11, 12-25, 12-27, 12-71
312105-0331 ..	SCREW, M6S ISO 4017 M5X20 A4 80	2-5, 2-7, 2-15, 3-25, 4-5, 4-9, 4-11, 4-13, 4-27, 5-43, 6-19, 7-39
312105-0333 ..	SCREW, M6S ISO 4017 M5X25 A4 80	4-5, 4-15, 6-13
312105-0343 ..	SCREW, M6S ISO 4014 M5X60 A4 80	1-35
312105-0362 ..	SCREW, M6S ISO 4017 M6X8 A4 80	2-15
312105-0364 ..	"SCREW, M6S ISO 4017 M6X10 A4 80"	1-11, 1-19, 1-29, 1-31, 10-25, 10-27
312105-0366 ..	SCREW, M6S ISO 4017 M6X12 A4 80	1-9, 1-17, 1-21, 1-69, 1-81, 1-83, 2-9, 2-11, 2-17, 4-27 5-7, 5-9, 5-11, 5-13, 5-33, 5-113, 5-115, 5-119, 5-127, 5-131, 6-17, 7-7, 7-17, 10-21, 10-23, 12-23, 12-59
312105-0368 ..	"SCREW, M6S ISO 4017 M6X16 A4 80"	1-21, 1-29, 1-31, 1-33, 1-69, 1-81, 2-15, 2-17, 3-11 3-15, 4-9, 4-11, 4-17, 4-29, 4-31, 5-7, 5-9, 5-11, 5-13, 5-19, 5-23, 5-25, 5-47, 5-51, 5-79, 6-11, 6-43
312105-0370 ..	SCREW, M6S ISO 4017 M6X20 A4 80	1-29, 1-31, 1-45, 1-51, 1-55, 1-59, 1-61, 1-65, 1-67, 1-81 1-85, 2-5, 2-7, 2-15, 2-17, 3-5, 3-9, 3-13, 3-15, 3-25, 3-27, 4-27, 5-11, 5-13, 5-15, 5-33, 5-75, 5-81 5-83, 6-39, 7-23, 8-5, 8-7, 8-9, 10-19, 12-27
312105-0372 ..	SCREW, M6S ISO 4017 M6X25 A4 80	1-29, 1-59, 1-81, 2-5, 2-7, 2-15, 2-17, 2-19, 3-15, 3-25 3-27, 3-29, 4-9, 4-11, 5-7, 5-9, 5-51, 5-91, 5-93, 5-137, 6-9, 6-43, 7-11, 7-15, 8-5, 8-7, 12-59
312105-0374 ..	SCREW, M6S ISO 4014 M6X30 A4 80	1-13, 1-47, 1-55, 3-5, 3-23, 5-53, 5-95, 5-97, 5-129, 7-23, 12-59
312105-0376 ..	SCREW, M6S ISO 4014 M6X35 A4 80	3-5, 12-45
312105-0378 ..	SCREW, M6S ISO 4014 M6X40 A4 80	2-15, 5-17, 7-13, 7-29, 10-25, 10-27
312105-0379 ..	SCREW, M6S ISO 4014 M6X45 A4 80	1-11, 1-19, 1-59, 7-39, 12-5
312105-0380 ..	SCREW, M6S ISO 4014 M6X50 A4 80	3-27, 10-19
312105-0381 ..	SCREW, M6S ISO 4014 M6X55 A4 80	7-39
312105-0382 ..	SCREW, M6S ISO 4014 M6X60 A4 80	5-53
312105-0384 ..	SCREW, M6S ISO 4014 M6X70 A4 80	7-15
312105-0388 ..	SCREW, M6S ISO 4014 M6X90 A4 80	5-11, 5-13
312105-0390 ..	SCREW, M6S ISO 4014 M6X100 A4 80	4-5
312105-0447 ..	SCREW M6S ISO 4017 M8X12 A480	5-47
312105-0449 ..	SCREW, M6S ISO 4017 M8X16 A4 80	3-9, 3-31, 5-19, 10-21, 12-25
312105-0451 ..	SCREW, M6S ISO 4017 M8X20 A4 80	1-11, 1-33, 1-43, 1-45, 1-53, 1-81, 2-13, 2-15, 3-7, 3-27 3-31, 5-23, 5-25, 5-51, 5-55, 5-91, 5-93, 12-75
312105-0453 ..	SCREW, M6S ISO 4017 M8X25 A4 80	1-23, 1-29, 1-45, 1-51, 1-81, 2-13, 3-7, 3-15, 3-17, 3-23 3-29, 4-5, 4-29, 4-31, 5-19, 6-31, 12-41, 12-75
312105-0455 ..	SCREW, M6S ISO 4017 M8X30 A4 80	1-19, 1-29, 1-43, 1-53, 1-59, 1-61, 2-13, 3-7, 3-11, 3-25 3-29, 4-5, 5-17
312105-0457 ..	SCREW, M6S ISO 4014 M8X35 A4 80	1-13, 1-29, 1-47, 1-55, 3-11, 5-75, 6-23, 6-25, 6-27, 6-29 6-33, 6-35, 6-37, 12-47
312105-0459 ..	SCREW, M6S ISO 4014 M8X40 A4 80	1-11, 1-13, 1-19, 1-43, 1-53, 1-59, 2-15, 3-7, 3-23
312105-0460 ..	SCREW, M6S ISO 4014 M8X45 A4 80	1-13, 2-17, 3-11
312105-0461 ..	SCREW, M6S ISO 4014 M8X50 A4 80	3-11
312105-0462 ..	SCREW, M6S ISO 4014 M8X55 A4 8002	1-65, 1-67, 5-119, 12-25
312105-0463 ..	SCREW, M6S ISO 4014 M8X60 A4 80	3-27
312105-0465 ..	SCREW, M6S ISO 4014 M8X70 A4 80	3-7
312105-0466 ..	SCREW, M6S ISO 4014 M8X75 A4 80	5-23, 5-25
312105-0469 ..	SCREW, M6S ISO 4014 M8X90 A4 80	1-23, 1-61
312105-0471 ..	SCREW, M6S ISO 4014 M8X100 A4 80	5-17
312105-0473 ..	SCREW, M6S ISO 4014 M8X110 A4 80	12-23
312105-0475 ..	SCREW, M6S ISO 4014 M8X120 A4 80	1-59
312105-0495 ..	SCREW, M6S ISO 4017 M10X30 A4 80	4-9, 4-11
312105-0499 ..	SCREW, M6S ISO 4014 M10X40 A4 80	6-17
312105-0500 ..	SCREW, M6S ISO 4014 M10X45 A4 80	6-7, 6-17
312105-0501 ..	SCREW, M6S ISO 4014 M10X50 A4 80	12-57
312105-0515 ..	SCREW, M6S ISO 4014 M10X120 A4 80	2-13, 2-15

Part No	Description	Page No
312105-0519 ..	SCREW, M6S ISO 4014 M10X150 A4 80	4-5
312105-0674 ..	SCREW, M6S ISO 4017 M20X50 A4 80	12-53, 12-55
312108-0327 ..	SCREW EN 1665 TYPE F M5X12 A270	1-75
312108-0329 ..	SCREW EN 1665 TYPE F M5X16 A270	7-11
312108-0333 ..	SCREW EN 1665 TYPE F M5X25 A270	12-11
312108-0368 ..	SCREW EN 1665 TYPE F M6X16 A270	12-29
312108-0374 ..	SCREW EN 1665 TYPE F M6X30 A270	7-17
312108-0449 ..	SCREW EN 1665 TYPE F M8X16 A270	5-33
312109-0335 ..	SCREW, M6S ISO 4017 M5X30 A4 80	4-9, 4-11, 4-27
312109-0340 ..	SCREW, M6S ISO 4017 M5X45 A4 80	1-79
312109-0374 ..	SCREW, M6S ISO 4017 M6X30 A4 80	1-59, 3-5, 3-29, 8-5, 8-7
312109-0376 ..	SCREW, M6S ISO 4017 M6X35 A4 80	2-15
312109-0378 ..	SCREW, M6S ISO 4017 M6X40 A4 80	4-5
312109-0380 ..	SCREW, M6S ISO 4017 M6X50 A4 80	3-23, 4-5
312109-0381 ..	SCREW, M6S ISO 4017 M6X55 A4 80	4-27
312109-0386 ..	SCREW, M6S ISO 4017 M6X80 A4 80	8-5, 8-7
312109-0457 ..	SCREW, M6S ISO 4017 M8X35 A4 80	2-13, 6-31, 7-13
312109-0459 ..	SCREW, M6S ISO 4017 M8X40 A4 80	1-31, 2-13, 2-17
312109-0463 ..	SCREW, M6S ISO 4017 M8X60 A4 80	2-13, 3-23, 4-29, 4-31
312109-0465 ..	SCREW, M6S ISO 4017 M8X70 A4 80	12-7
312109-0467 ..	SCREW, M6S ISO 4017 M8X80 A4 80	1-29, 1-31, 4-9, 4-11
312109-0500 ..	SCREW, M6S ISO 4017 M10X45 A4 80	6-39
312109-0542 ..	SCREW M6S ISO 4017 M12X50 A280	1-47, 1-55
312109-0552 ..	SCREW M6S M12X100H A480	5-11, 5-13
312115-0222 ..	SCREW ISO4762 M3X8 A4 80	1-69, 4-21, 5-7, 5-9, 5-51, 10-21
312115-0228 ..	SCREW ISO4762 M3X16 A4 80	1-29, 1-31, 4-25, 8-11, 10-21
312115-0230 ..	SCREW ISO4762 M3X20 A4 80	4-29, 4-31, 5-11, 5-13, 10-21
312115-0232 ..	SCREW ISO4762 M3X25 A4 80	4-9, 4-11
312115-0287 ..	SCREW ISO4762 M4X8 A4 80	2-9, 2-11, 4-29, 4-31, 5-7, 5-9, 5-51
312115-0289 ..	SCREW ISO4762 M4X10 A4 80	3-15, 5-7, 5-9, 7-15
312115-0291 ..	SCREW ISO4762 M4X12 A4 80	2-9, 2-11, 2-13, 3-9, 4-29, 4-31, 5-51
312115-0293 ..	SCREW ISO4762 M4X16 A4 80	1-63, 3-5, 4-9, 4-11, 4-29, 4-31, 5-85, 6-39, 7-21, 10-21
312115-0295 ..	SCREW ISO4762 M4X20 A4 80	4-21, 10-23
312115-0297 ..	SCREW ISO4762 M4X25 A4 80	4-9, 4-11, 5-51, 5-75
312115-0299 ..	SCREW ISO4762 M4X30 A4 80	4-9, 4-11, 9-25
312115-0303 ..	SCREW ISO4762 M4X40 A4 80	5-75
312115-0304 ..	SCREW ISO4762 M4X45 A4 80	9-27
312115-0323 ..	SCREW ISO4762 M5X8 A4 80	12-5, 12-7
312115-0325 ..	SCREW ISO4762 M5X10 A4 80	1-11, 1-19, 1-31, 1-43, 1-53, 9-59, 12-37
312115-0327 ..	SCREW ISO4762 M5X12 A4 80	1-63, 4-27, 5-21, 5-51, 5-53, 9-7, 9-9, 9-11, 9-13, 9-21, 9-23, 9-31, 10-19, 12-5, 12-13, 12-21, 12-23, 12-29, 12-41, 12-43
312115-0329 ..	SCREW ISO4762 M5X16 A4 80	4-15, 4-27, 12-25, 12-59
312115-0331 ..	SCREW ISO4762 M5X20 A4 80	3-11, 4-5, 4-9, 4-11, 5-51, 9-57, 10-19, 12-5, 12-57
312115-0333 ..	SCREW ISO4762 M5X25 A4 80	4-9, 4-11
312115-0337 ..	SCREW ISO4762 M5X35 A4 80	5-75, 12-45, 12-47
312115-0362 ..	SCREW ISO4762 M6X8 A4 80	12-35
312115-0364 ..	SCREW ISO4762 M6X10 A4 80	1-81
312115-0366 ..	SCREW ISO4762 M6X12 A4 80	1-9, 1-17, 1-45, 1-51, 1-65, 1-67, 1-81, 3-5, 3-11, 4-29, 4-31, 5-21, 6-43, 6-47, 9-57, 9-65, 12-5
312115-0368 ..	SCREW ISO4762 M6X16 A4 80	3-9, 3-11, 3-15, 3-17, 3-27, 4-9, 4-11, 4-15, 4-21, 7-17, 9-31, 12-33
312115-0370 ..	SCREW ISO4762 M6X20 A4 80	2-13, 3-9, 3-11, 3-17, 3-25, 6-9, 7-11, 7-13, 7-21
312115-0372 ..	SCREW ISO4762 M6X25 A4 80	1-43, 1-53, 4-27, 4-29, 4-31, 8-5, 8-7, 12-7, 12-39
312115-0374 ..	SCREW ISO4762 M6X30 A4 80	1-11, 1-19, 3-15, 4-27, 5-119, 12-17
312115-0376 ..	SCREW ISO4762 M6X35 A4 80	1-37, 1-69, 3-15
312115-0378 ..	SCREW ISO4762 M6X40 A4 80	7-13
312115-0379 ..	SCREW ISO4762 M6X45 A4 80	6-19
312115-0447 ..	SCREW ISO4762 M8X12 A4 80	1-55
312115-0449 ..	SCREW ISO4762 M8X16 A4 80	4-9, 4-11
312115-0451 ..	SCREW ISO4762 M8X20 A4 80	1-43, 1-53, 4-5, 4-9, 4-11, 4-27, 10-21
312115-0453 ..	SCREW ISO4762 M8X25 A4 80	1-43, 1-53, 3-19, 3-21, 4-29, 4-31, 6-19
312115-0455 ..	SCREW ISO4762 M8X30 A4 80	2-17, 5-11, 5-13
312115-0457 ..	SCREW ISO4762 M8X35 A4 80	1-43, 1-53, 4-29, 4-31
312115-0459 ..	SCREW ISO4762 M8X40 A4 80	1-47, 1-55
312115-0460 ..	SCREW ISO4762 M8X45 A4 80	2-13
312115-0461 ..	SCREW ISO4762 M8X50 A4 80	1-47, 1-55
312115-0467 ..	SCREW ISO4762 M8X80 A4 80	1-61
312115-0489 ..	SCREW ISO4762 M10X16 A4 80	1-47, 1-55, 4-27
312115-0493 ..	SCREW ISO4762 M10X25 A4 80	4-9, 4-11
312115-0495 ..	SCREW ISO4762 M10X30 A4 80	4-27
312115-0540 ..	SCREW ISO4762 M12X40 A4 80	5-11, 5-13
312122-0291 ..	SCREW ISO 1207 M4X12 NI PL BRASS	5-53
312125-0222 ..	SLOTTED HEAD SCREW, ISO1207 M3X8 A4	12-31
312125-0232 ..	SLOTTED HEAD SCREW, ISO1207 M3X25 A4	5-7, 5-9, 12-31
312125-0287 ..	SLOTTED HEAD SCREW, ISO1207 M4X8 A4	2-17, 3-23, 3-27, 3-29, 6-17, 6-33, 6-39, 7-13, 12-23
312125-0289 ..	SCREW	3-7, 5-57, 9-31, 9-57
312125-0291 ..	SLOTTED HEAD SCREW, ISO1207 M4X12 A4	4-5
312125-0323 ..	SLOTTED HEAD SCREW, ISO1207 M5X8 A4	1-13, 5-11, 5-13
312125-0325 ..	SCREW ISO 1207 M5X10 A4	9-25, 9-31, 9-35, 9-37, 9-51, 9-53, 9-55, 9-61, 9-63, 9-65, 9-67, 9-73, 9-75
312125-0331 ..	SLOTTED HEAD SCREW, ISO1207 M5X20 A4	2-17
312125-0333 ..	SLOTTED HEAD SCREW, ISO1207 M5X25 A4	2-17
312125-0366 ..	SLOTTED HEAD SCREW, ISO1207 M6X12 A4	1-11, 9-31
312155-0285 ..	SCREW DIN 7991 MF6S M4X6 A4 70	1-83, 1-85
312155-0287 ..	SCREW DIN 7991 MF6S M4X8 A4 70	9-25, 12-75

Part No	Description	Page No
312155-0289 ..	SCREW DIN 7991 MF6S M4X10 A4 70	4-27, 4-29, 4-31, 7-33, 7-35, 7-37, 7-39
312155-0291 ..	SCREW DIN 7991 MF6S M4X12 A4 70	4-9, 4-11, 5-85, 5-87
312155-0293 ..	SCREW DIN 7991 MF6S M4X16 A4 70	4-29, 4-31, 5-51
312155-0295 ..	SCREW DIN 7991 MF6S M4X20 A4 70	4-27
312155-0297 ..	SCREW DIN 7991 MF6S M4X25 A4 70	4-27, 5-75
312155-0325 ..	SCREW DIN 7991 MF6S M5X10 A4 70	6-9
312155-0327 ..	SCREW DIN 7991 MF6S M5X12 A4 70	2-5, 2-7, 6-43, 6-47
312155-0329 ..	SCREW DIN 7991 MF6S M5X16 A4 70	4-23, 4-29, 4-31, 6-11, 8-5, 8-7, 10-33
312155-0331 ..	SCREW DIN 7991 MF6S M5X20 A4 70	4-15
312155-0335 ..	SCREW DIN 7991 MF6S M5X30 A4 70	4-23
312155-0366 ..	SCREW DIN 7991 MF6S M6X12 A4 70	4-15, 4-27, 5-51, 9-29
312155-0368 ..	SCREW DIN 7991 MF6S M6X16 A4 70	1-81, 4-15, 4-27, 7-9, 7-15, 7-25, 7-27, 8-5, 8-7
312155-0370 ..	SCREW DIN 7991 MF6S M6X20 A4 70	2-5, 2-7, 4-15, 4-29, 4-31, 5-47, 5-121, 5-133, 5-135, 7-23
312155-0374 ..	SCREW DIN 7991 MF6S M6X30 A4 70	1-81, 4-29, 4-31
312155-0376 ..	SCREW DIN 7991 MF6S M6X35 A4 70	5-85
312155-0449 ..	SCREW DIN 7991 MF6S M8X16 A4 70	1-33
312155-0451 ..	SCREW DIN 7991 MF6S M8X20 A4 70	6-11
312155-0453 ..	SCREW DIN 7991 MF6S M8X25 A4 70	3-15, 3-25, 5-51, 12-41
312155-0455 ..	SCREW DIN 7991 MF6S M8X30 A4 70	3-9
312155-0491 ..	SCREW DIN 7991 MF6S M10X20 A4 70	4-9, 4-11
312155-0501 ..	SCREW DIN 7991 MF6S M10X50A4 70	4-9, 4-11
312311-0364 ..	SET SCREW, DOG POINT ISO4028 M6X10 FZB	2-9, 2-11
312318-0283 ..	SET SCREW, CUP END ISO4029 M4X4 A4	1-61
312318-0285 ..	SET SCREW, CUP END ISO4029 M4X6 A4	1-23, 6-43, 12-5, 12-21, 12-25, 12-29
312318-0287 ..	SET SCREW, CUP END ISO4029 M4X8 A4	4-21, 5-19
312318-0289 ..	SET SCREW, CUP END ISO4029 M4X10 A4	8-5, 8-7
312318-0323 ..	SET SCREW, CUP END ISO4029 M5X8 A4	4-29, 4-31
312318-0360 ..	SET SCREW, CUP END ISO4029 M6X6 A4	1-61, 5-19
312318-0364 ..	SET SCREW, CUP END ISO4029 M6X10 A4	12-21
312318-0366 ..	SET SCREW, CUP END ISO4029 M6X12 A4	12-25
312318-0370 ..	SET SCREW, CUP END ISO4029 M6X20 A4	9-31
312318-0447 ..	SET SCREW, CUP END ISO4029 M8X12 A4	1-45, 1-51
312605-0310 ..	HEXAGON NUT, M6M M3 A280	1-23, 5-11, 5-13, 12-27
312605-0312 ..	HEXAGON NUT, M6M M4 A280	1-77, 5-143, 12-75
312605-0314 ..	HEXAGON NUT, M6M M5 A280	4-5, 4-15, 5-41, 5-43, 5-53, 5-81, 5-83, 5-103, 5-105, 9-17, 9-29, 12-5, 12-37, 12-65, 12-71
312605-0316 ..	HEXAGON NUT, M6M M6 A280	1-59, 1-85, 3-5, 3-17, 4-29, 4-31, 5-7, 5-9, 5-11, 5-13, 5-91, 5-93, 5-95, 5-97, 5-113, 5-115, 5-119, 5-127, 5-133, 8-5, 8-7, 9-25, 9-27, 10-19, 10-25, 10-27, 12-5, 12-59
312605-0318 ..	HEXAGON NUT, M6M M8 A280	1-61, 4-9, 4-11, 4-29, 4-31, 12-7
312605-0320 ..	HEXAGON NUT, M6M M10 A280	4-5, 4-9, 4-11, 7-17
312605-0322 ..	HEXAGON NUT, M6M M12 A280	4-9, 4-11
312605-0326 ..	HEXAGON NUT, M6M M20 A280	4-29, 4-31
312607-0312 ..	HEXAGON NUT, EN 24032 M6M M4 A480	5-85, 10-23
312607-0314 ..	HEXAGON NUT, EN 24032 M6M M5 A480	3-25
312607-0316 ..	HEXAGON NUT, EN 24032 M6M M6 A480	3-11, 4-5
312607-0318 ..	HEXAGON NUT, EN 24032 M6M M8 A480	3-7, 3-11, 3-23, 3-29, 3-31, 5-23, 5-25
312607-0320 ..	HEXAGON NUT, EN 24032 M6M M10 A480	1-47, 1-55
312607-0322 ..	HEXAGON NUT, EN 24032 M6M M12 A480	1-37
312607-0326 ..	HEXAGON NUT, EN 24032 M6M M20 A480	1-55
312607-0332 ..	HEXAGON NUT, EN 24032 M6M M30 A480	4-5, 5-11, 5-13
312625-0316 ..	HEXAGON THIN NUT, EN 24035 ML6M M6 A4	7-21
312625-0318 ..	HEXAGON THIN NUT, EN 24035 ML6M M8 A4	1-29
312625-0320 ..	HEXAGON THIN NUT, EN 24035 ML6M M10 A4	12-29
312625-0330 ..	HEXAGON THIN NUT, EN 24035 ML6M M27 A4	1-43, 1-53
312631-0322 ..	HEX.NUT FINE, EN 24032 M6M M12X1,5 FZB8	3-11
312635-0320 ..	NUT M6M 10X1 STAINLESS A2 80	7-21
312705-0310 ..	NUT HEX. DOMED CAP MHM-6 M3 A2	4-29, 4-31
312705-0312 ..	NUT HEX. DOMED CAP MHM-6 M4 A280	4-27
312705-0314 ..	NUT HEX. DOMED CAP MHM-6 M5 A280	4-17, 4-29, 4-31, 8-5, 8-7
312705-0316 ..	HEX. DOMED CAP MHM-6 M6 A280	8-5, 8-7
312705-0318 ..	NUT HEX. DOMED CAP MHM-6 M8 A280	1-29, 1-65, 1-67, 4-29, 4-31
312705-0320 ..	NUT HEX. DOMED CAP MHM-6 M10 A280	7-17
312810-0310 ..	HEXAGON NUT, NY-LOCK M3 FZB	4-29, 4-31, 8-5, 8-7
312810-0312 ..	HEXAGON NUT, NY-LOCK M4 FZB	4-15, 4-25, 4-27, 4-29, 4-31, 8-5, 8-7
312810-0314 ..	HEXAGON NUT, NY-LOCK M5 FZB	4-15, 4-17, 4-19, 4-29, 4-31
312810-0316 ..	HEXAGON NUT, NY-LOCK M6 FZB	4-15, 4-29, 4-31
312812-0312 ..	HEXAGON NUT, NY-LOCK M4 A4 80	2-9, 2-11, 5-75, 6-47, 9-25
312812-0314 ..	HEXAGON NUT, NY-LOCK M5 A4 80	2-5, 2-7, 2-9, 2-11, 2-17, 2-19, 5-75, 5-121, 5-133, 5-135, 6-47, 7-21, 9-27, 12-11
312812-0316 ..	HEXAGON NUT, NY-LOCK M6 A4 80	2-15, 3-17, 5-11, 5-13, 5-101, 5-137, 7-15, 10-19
312812-0318 ..	HEXAGON NUT, NY-LOCK M8 A4 80	1-35, 1-43, 1-53, 5-11, 5-13, 5-19, 5-75, 5-91, 5-93
312812-0320 ..	HEXAGON NUT, NY-LOCK M10 A4 80	1-35
312812-0322 ..	HEXAGON NUT, NY-LOCK M12 A4 80	2-21
315103-0124 ..	WASHER PLAIN, 3,2X/6X0,5 BR NI PL	4-25, 4-29, 4-31, 8-5, 8-7, 8-11
315103-0136 ..	WASHER PLAIN, 4,3X8X0,8 BR NI PL	4-9, 4-11, 4-13, 4-19, 4-21, 4-25, 4-27, 4-29, 4-31, 8-5, 8-7
315103-0146 ..	WASHER PLAIN, 5,3X10X1 BR NI PL	4-9, 4-11, 4-13, 4-15, 4-17, 4-19, 4-27, 4-29, 4-31, 8-5, 8-7, 8-11
315103-0153 ..	WASHER PLAIN, 6,4X12X1,5 BR NI PL	4-9, 4-11, 4-15, 4-17, 4-27, 4-29, 4-31, 8-5, 8-7, 8-9
315103-0165 ..	WASHER PLAIN, 8,4X15X1,5 BR NI PL	4-9, 4-11, 4-29, 4-31
315103-0173 ..	WASHER PLAIN, 10,5X22X2 BR NI PL	4-9, 4-11
315105-0124 ..	WASHER PLAIN, 3,2X6X0,5 A4 BRB	1-29, 1-31, 1-69, 5-7, 5-9, 12-27, 12-31
315105-0136 ..	WASHER PLAIN, 4,3X8X0,8 A4 BRB	1-29, 1-31, 1-33, 1-69, 1-75, 2-9, 2-11, 2-13, 5-7, 5-9, 5-53, 5-75, 5-95, 5-97, 5-143, 6-13, 6-39, 7-7, 7-17, 7-21, 9-25, 9-27, 9-31, 10-21, 10-23, 12-5, 12-29, 12-51
315105-0146 ..	WASHER PLAIN, 5,3X10X1 A4 BRB	1-9, 1-11, 1-19, 1-29, 1-31, 1-43, 1-53, 1-59, 1-63, 2-5, 2-7

Part No	Description	Page No
		2-9, 2-11, 2-15, 2-17, 2-19, 3-29, 4-5, 5-41, 5-43, 5-53, 5-75, 5-81, 5-83, 5-95, 5-97, 5-103, 5-105
		5-121, 5-131, 5-135, 6-13, 6-19, 6-47, 7-13, 7-25, 7-39, 9-17, 9-25, 9-27, 9-29, 9-31, 9-35, 9-37
		9-51, 9-53, 9-55, 9-57, 9-59, 9-61, 9-63, 9-65, 9-67, 9-73, 9-75, 10-9, 10-19, 12-5, 12-21, 12-23
		12-25, 12-27, 12-29, 12-37, 12-43, 12-65, 12-71
315105-0153 ..	WASHER PLAIN, 6,4X12X1,5 A4 BRB	1-9, 1-11, 1-13, 1-17, 1-19, 1-29, 1-31, 1-33, 1-45, 1-47
		1-51, 1-55, 1-59, 1-61, 1-65, 1-67, 1-69, 1-81, 1-83, 1-85, 2-5, 2-7, 2-15, 2-17, 2-19, 3-25, 3-27
		3-29, 4-5, 5-7, 5-9, 5-11, 5-13, 5-15, 5-17, 5-19, 5-21, 5-47, 5-51, 5-53, 5-75, 5-79, 5-81, 5-83, 5-91
		5-93, 5-95, 5-97, 5-101, 5-113, 5-115, 5-119, 5-127, 5-131, 5-133, 5-137, 6-11, 6-17, 6-39, 6-43
		7-9, 7-11, 7-13, 7-15, 7-21, 7-23, 7-39, 9-25, 9-27, 9-31, 9-65, 10-19, 10-23, 12-5, 12-17, 12-27
		12-31, 12-35, 12-45, 12-59
315105-0156 ..	WASHER PLAIN, 6,7X14X1,5 A4 BRB	5-11, 5-13, 10-19
315105-0165 ..	FWAS080G0-0S, WASHER PLAIN	1-11, 1-13, 1-19, 1-23, 1-29, 1-33, 1-35, 1-43, 1-47, 1-53
		1-55, 1-59, 1-61, 1-81, 2-13, 2-17, 3-7, 3-15, 3-23, 3-25, 3-27, 3-29, 3-31, 4-5, 5-17, 5-19, 5-47
		5-51, 5-91, 5-93, 6-31, 6-33, 6-35, 6-37, 7-13, 9-31, 10-21, 12-25, 12-41, 12-47
315105-0173 ..	WASHER PLAIN, 10,5X22X2 A4 BRB	1-35, 2-13, 6-39, 12-57
315105-0178 ..	WASHER PLAIN, 13X24X2,5 A4 BRB	1-13, 1-47, 1-55, 2-21, 3-23
315105-0186 ..	WASHER PLAIN, 17X30X3 A4 BRB	1-13
315105-0192 ..	WASHER PLAIN, 21X36X3 A4 BRB	1-55
315105-0203 ..	WASHER PLAIN, 30X52X4 A4 BRB	1-43, 1-53
315106-0124 ..	WASHER PLAIN, M3 ISO7089-3-200 HV A4	5-41, 5-43, 5-51, 12-71
315106-0136 ..	WASHER PLAIN, M4 ISO7089-4-200 HV A4	1-77, 1-83, 3-9, 5-85
315106-0146 ..	"WASHER PLAIN, M5 ISO7089-5-200 HV A4"	1-79, 1-83, 1-85, 3-9, 3-11, 7-21, 12-7
315106-0153 ..	WASHER PLAIN, M6 ISO7089-6-200 HV A4	1-21, 1-29, 1-31, 3-5, 3-9, 3-11, 3-13, 3-15, 3-17
		5-129, 6-9, 7-17, 7-29, 10-25, 10-27
315106-0165 ..	WASHER PLAIN, M8 ISO7089-8-200 HV A4	1-45, 1-51, 3-11, 3-17, 5-55, 6-19, 6-23, 6-25, 6-27
		6-29, 12-7
315106-0173 ..	"WASHER PLAIN, M10 ISO7089-10-200 HV A4"	6-7, 6-17
315106-0178 ..	"WASHER PLAIN, M12 ISO7089-12-200 HV A4"	1-37, 1-71, 1-73, 3-11
315115-0165 ..	WASHER PLAIN, TBRB 8,4/16 H=3	1-43, 1-53, 1-59, 1-61, 2-17, 3-7, 5-17, 5-19, 12-7
315115-0173 ..	WASHER PLAIN, TBRB 10,5/22 H=4	2-15, 6-39
315125-0146 ..	WASHER HIGH, TBRSB 5.3X15X1 A4	4-9, 4-11, 4-17
315125-0153 ..	WASHER HIGH, TBRSB 6,4X22X4 A4	1-81, 2-5, 2-7, 5-7, 5-9, 5-53, 5-137, 7-7, 7-9, 7-11, 7-17
		8-5, 8-7
315125-0165 ..	WASHER HIGH, TBRSB 8,4X26X5 A4	1-29, 1-31, 2-15, 3-23, 4-5, 5-11, 5-13, 5-23, 5-25, 5-75, 5-119
315125-0173 ..	WASHER HIGH, TBRSB 10,5X28X6 A4	1-47, 1-55, 7-17
315202-0204 ..	"O-RING 5,3X2,4 MM"	12-11
315202-0602 ..	O-RING 44,04X3,53 MM	1-43, 1-53
315202-0702 ..	O-RING 12,42X1,78 MM	2-17
315202-0705 ..	O-RING 17,17X1,78 MM	1-29, 1-31, 1-81
315202-0710 ..	O-RING 25,12X1,78 MM	2-15
315202-0713 ..	O-RING 29,87X1,78 MM	1-29, 1-31
315202-0716 ..	O-RING 34,65X1,78 MM	6-13, 7-7, 7-9, 7-17
315202-0717 ..	O-RING 20,29X2,62 MM	1-11, 1-19
315202-0732 ..	O-RING 44,12X2,62 MM	1-45, 1-51
315202-0733 ..	O-RING 45,69X2,62 MM	1-29, 1-31
315202-0741 ..	O-RING 58,42X2,62 MM	1-11, 1-19
315206-0716 ..	O-RING 34,65X1,78 MM	3-9
315221-0156 ..	RADIAL SEAL 25X35X7 MM	3-9
315221-0169 ..	RADIAL SEAL 30X47X7 MM	2-15
315221-0175 ..	RADIAL SEAL 35X47X7 MM	2-15
315221-0192 ..	RADIAL SEAL 45X62X8 MM	1-29, 1-31
315221-0196 ..	RADIAL SEAL 48X62X8 MM	1-29, 1-31
315221-0198 ..	RADIAL SEAL 50X65X8 MM	1-11, 1-19
315230-0193 ..	BEARING SEAL G15X23X3 MM	7-25, 7-27
315230-0274 ..	BEARING SEAL G22X30X4 MM	7-25, 7-27
315230-0330 ..	SEAL RING G 28X37X4	7-7, 7-9, 7-17
315230-0353 ..	BEARING SEAL G30X40X4 MM	1-81
315239-0110 ..	NYLON WASHER G1/4, 1/4RRP	5-57
315400-0001 ..	6-4E PUN-H-6X1-BL	1-35, 1-65, 1-67, 5-63, 5-65, 5-75
315400-0004 ..	TUBE PUN-H-8X1,25-BL	4-19, 5-61, 5-63, 5-65, 5-71, 5-73, 7-29, 10-19, 10-25, 10-27
315400-0009 ..	TUBE PUN-H-10X1,5-SW	5-57
315400-0010 ..	TUBE PUN-H-12X2-BL	4-19, 5-63, 5-65
315400-0013 ..	TUBE PUN-H-16-2,5-BL	5-73
315400-0016 ..	TUBE PUN-H-4X0,75-BL	4-19, 5-63, 5-65, 7-29, 10-19, 10-25, 10-27
315402-0156 ..	LOCK WASHER, DIN127B 6,5 A4, 1/4	6-43
315701-0198 ..	PARALLEL KEY W. ROUND ENDS, 5X5X14 MM	1-81
315701-0208 ..	PARALLEL KEY W. ROUND ENDS, 5X5X40 MM	1-81
315701-0209 ..	PARALLEL KEY W. ROUND ENDS, 5X5X45 MM	8-5, 8-7
315701-0238 ..	PARALLEL KEY W. ROUND ENDS, 6X6X36 MM	8-5, 8-7
315701-0241 ..	PARALLEL KEY W. ROUND ENDS, 6X6X50 MM	4-29, 4-31
315701-0267 ..	PARALLEL KEY W. ROUND ENDS, 8X7X30 MM	4-9, 4-11
315701-0371 ..	PARALLEL KEY W. ROUND ENDS, 14X9X90 MM	1-47, 1-55
315705-0202 ..	PARALLEL KEY W. ROUND ENDS, 5X5X25MM	1-37
315705-0232 ..	PARALLEL KEY W. ROUND ENDS, 6X6X20 MM	1-29, 1-31, 5-19
315705-0234 ..	PARALLEL KEY W. ROUND ENDS, 6X6X25 MM	1-37, 7-9
315705-0237 ..	PARALLEL KEY W. ROUND ENDS, 6X6X32 MM	4-5
315705-0239 ..	PARALLEL KEY W. ROUND ENDS, 6X6X40 MM	1-23, 1-45, 1-51, 1-61
315705-0267 ..	PARALLEL KEY W. ROUND ENDS, 8X7X30 MM	1-59
315705-0296 ..	PARALLEL KEY W. ROUND ENDS, 10X8X25 MM	1-11, 1-19
315705-0303 ..	PARALLEL KEY W. ROUND ENDS, 10X8X50 MM	1-13
315705-0307 ..	PARALLEL KEY W. ROUND ENDS, 10X8X70 MM	1-43, 1-53, 2-13
315741-0102 ..	RETAINING RING, DIN 705 A2 6	12-11
315741-0216 ..	RETAINING RING, DIN 705 A4 20	1-61, 5-19
315743-0008 ..	OLFLEX CONTROL TM 3G1,5, 281603	5-89

Machine Type Group Description Page No

Part No	Description	Page No
315743-0009 ..	OLFLEX CONTROL TM 4G1,5, 281604	4-29, 4-31, 5-89, 8-5, 8-7
315743-0024 ..	OLFLEX CONTROL TM 5G6, 281005	5-89
315744-0040 ..	MINIATURE CIRCUIT BREAKER, FAZ-C4/1-NA	9-21, 9-23
315744-0060 ..	MINIATURE CIRCUIT BREAKER, FAZ-C6/1-NA	9-11, 9-13, 9-21, 9-23
315744-0100 ..	MINIATURE CIRCUIT BREAKER, FAZ-C10/1-NA	9-21, 9-23
315745-0100 ..	MINIATURE CIRCUIT BREAKER, FAZ-C10/2-NA	9-21, 9-23
315746-0060 ..	MINIATURE CIRCUIT BREAKER, FAZ-C6/3-NA	9-21, 9-23
315746-0200 ..	MINIATURE CIRCUIT BREAKER, FAZ-C20/3-NA	9-21, 9-23
315746-0250 ..	MINIATURE CIRCUIT BREAKER, FAZ-C25/3-NA	9-21, 9-23
315751-0116 ..	RETAINING RING FOR SHAFT DIN 471 20 SS	1-35, 1-37, 3-13
315751-0130 ..	RETAINING RING FOR SHAFT DIN 471 50 SS	1-43, 1-53
315752-0136 ..	RETAINING RING FOR BORE DIN 472 62	1-13, 1-47, 1-55
315753-0121 ..	RETAINING RING FOR BORE DIN 472 28 SS	7-25, 7-27
315753-0123 ..	RETAINING RING FOR BORE DIN 472 32 SS	4-29, 4-31
315753-0124 ..	RETAINING RING FOR BORE DIN 472 35 SS	3-9
315753-0130 ..	RETAINING RING FOR BORE DIN 472 47 SS	2-15, 4-33
315755-0106 ..	RETAINING RING SHAFT DIN 6799 4 SS	2-5, 2-7, 5-21
315755-0109 ..	RETAINING RING SHAFT DIN 6799 7 SS	6-13
315756-0007 ..	ÖLFLEX CONTROL TM CY 2G1,5, 281602CY	12-31
315756-0009 ..	OLFLEX CONTROL TM CY 4G1,5, 281604CY	4-9, 4-11, 5-89
318201-0043 ..	ROLLER CHAIN, SIMPLEX 3/8 -43	12-25
318201-0047 ..	ROLLER CHAIN, SIMPLEX 3/8 -47	12-23
318201-0048 ..	ROLLER CHAIN, SIMPLEX 3/8 -48	12-21
318201-0054 ..	ROLLER CHAIN, SIMPLEX 3/8 -54	12-29
318201-0118 ..	ROLLER CHAIN, SIMPLEX 3/8 -118	12-41
318871-0105 ..	KNOB CIRCULAR, EXT THREAD, NO. 8302-6150	5-51
321133-0260 ..	BUSHING IGLIDUR G 20X23X20	4-5
321133-0420 ..	BUSHING IGLIDUR G 40X44X40	4-5
321153-0058 ..	FLANGE BUSHING, IGLIDUR G 6X8X4	2-9, 2-11
321153-0102 ..	FLANGE BUSHING, IGLIDUR G 8X10X10	2-9, 2-11
321153-0180 ..	FLANGE BUSHING, IGLIDUR G 12X14X12	2-9, 2-11
321153-0500 ..	FLANGE BUSHING, IGLIDUR G 70X75X50	5-17
321154-0180 ..	FLANGE BUSHING, IGLIDUR W300 12X14X12	6-43
321155-0062 ..	FLANGE BUSHING, IGLIDUR X 6X8X8	6-47
321156-0188 ..	FLANGE BUSHING, IGLIDUR H370 12X14X15	5-51
321158-0060 ..	FLANGE BUSHING, IGLIDUR J 6X8X6	7-21, 7-25, 7-27
321158-0142 ..	FLANGE BUSHING, IGLIDUR J 10X12X12	7-21
321158-0180 ..	FLANGE BUSHING, IGLIDUR J 12X14X12	7-23
321158-0221 ..	FLANGE BUSHING, IGLIDUR J 16X18X17	1-29, 1-31
321306-0104 ..	BALL BEARING 20/42X12	1-29, 1-31
321306-0105 ..	BALL BEARING 25/47X12	2-15
321308-0101 ..	BALL BEARING 12/28X8	7-25, 7-27
321309-0102 ..	BALL BEARING 15/35X11	7-7, 7-9, 7-17
321309-0105 ..	BALL BEARING 25/52X15	1-13, 1-47, 1-55
321314-0105 ..	BALL BEARING 25/62X17	1-13, 1-47, 1-55
321330-0102 ..	ANG. BALL BEAR 15/35X15,9	3-9
321330-0105 ..	ANG. BALL BEAR 25/52X20,6	1-11, 1-19
342700-0109 ..	NIPPLE, EXT.THREAD, HEXAGON, G1/8-G1/8	4-19
342715-0102 ..	BLIND PLUG 6 MM	9-25
342923-0132 ..	STRAIGHT COUPL.,INT.THREADED 10/8-G1/4"	5-57
342946-0133 ..	T-COUPLING,UNION 10/8	5-57
342991-0108 ..	"HOSE CLIP,WORM DRIVE TYPE (38)-50"	5-53
344202-0003 ..	CABLE GLAND; MS-SC-M, 7-12,5MM, M20X1,5	1-37, 1-81, 4-9, 4-11
344224-0200 ..	BALL BEARING 10/26X8	8-5, 8-7
344224-0202 ..	BALL BEARING 15/32X9	4-29, 4-31
344224-0203 ..	BALL BEARING 17/35X10	6-13, 8-5, 8-7
344224-0204 ..	BALL BEARING 20/42X12	1-35, 4-29, 4-31
344224-0207 ..	BALL BEARING 35/62X14	4-9, 4-11
344253-0050 ..	SENSOR CABLE, EVT001	4-9, 4-11, 5-23, 5-25
344253-0100 ..	SENSOR CABLE, EVT002	1-31, 5-7, 5-9, 5-23, 5-25, 5-51, 5-81, 5-83, 12-31
344254-0020 ..	CORDSET, FEMALE EVT067	5-95, 5-97
344257-0006 ..	SENSOR CABLE, EVT143	4-9, 4-11
344257-0050 ..	SENSOR CABLE, EVT146	5-75
344261-0006 ..	SENSOR CABLE, EVT261	1-69, 4-9, 4-11, 12-43
344261-0010 ..	SENSOR CABLE, EVT262	8-5, 8-7
344261-0020 ..	SENSOR CABLE, EVT263	8-5, 8-7, 12-45, 12-47, 12-59
344261-0050 ..	SENSOR CABLE, EVT216	1-59, 4-29, 4-31, 5-23, 5-25, 12-45, 12-47, 12-57, 12-59, 12-65, 12-69
344262-0015 ..	SENSOR CABLE, EVT271	4-9, 4-11
344264-0006 ..	SENSOR CABLE, EVT243	8-5, 8-7
344266-0020 ..	SENSOR CABLE, EVT256	1-77
344267-0006 ..	SENSOR CABLE, EVT041	10-23, 12-27
344267-0010 ..	SENSOR CABLE, EVT042	3-29, 6-17, 7-21, 12-5, 12-59
344267-0050 ..	SENSOR CABLE, EVT044	5-23, 5-25, 12-65, 12-69
344268-0015 ..	SENSOR CABLE, EVT120	3-27
344288-0165 ..	CAM ROLLER, 12X30X40 MM	3-11
344293-0003 ..	DEVICEN CAB.SAC-5P-M12MS/0,3-927/M12FSVA	12-21, 12-23, 12-25, 12-29, 12-31, 12-41
344293-0010 ..	DEVICEN CAB.SAC-5P-M12MS/1,0-927/M12FSVA	12-21
344293-0020 ..	DEVICEN CAB.SAC-5P-M12MS/2,0-927/M12FSVA	12-23, 12-25, 12-29, 12-41
344293-0030 ..	DEVICEN CAB.SAC-5P-M12MS/3,0-927/M12FSVA	4-9, 4-11, 12-31
344295-0100 ..	DEVICENET CAB.,SAC-5P- 10,0-927/M12FS VA	5-7, 5-9
344319-0001 ..	HOT MELT UNIT ALTABLUE, 1501757 H1	5-95, 5-97
344342-0040 ..	TUBE 4 MM APA TRANSP	3-9, 3-11, 3-15
344351-0280 ..	PROTECTIVE PLUG PE, GPN 300/F28	5-63, 5-65
344353-0421 ..	FINNED PLUG PE, GPN 320 GL42 1-2	1-9, 1-17

Part No	Description	Page No
344366-1002 ..	CABLE DUCT PVC 40X40, 4040T1-E	5-101
344375-0004 ..	CABLE SHOE RING, 0,5-1,5MM2 M5 RED	5-53
344407-0000 ..	KLüBERSYNTH UH1 14-151, ONLY IN BOM	1-63, 3-9, 3-11, 3-15, 7-7, 7-9, 7-17, 7-25, 7-27
344414-0000 ..	KLüBEROIL 4 UH1-320N, ONLY IN BOM	1-11, 1-13, 1-19, 1-29, 1-31, 1-35, 1-43, 1-47, 1-53, 1-55, 2-15, 4-5
344430-0000 ..	THREADLOCKER LOCTITE 242, ONLY IN BOM	7-17
344431-0000 ..	THREADLOCKER LOCTITE 243, ONLY IN BOM	1-79, 7-33, 7-35
344433-0000 ..	THREADLOCKER LOCTITE 2701, ONLY IN BOM	7-9, 7-15
344447-0000 ..	THREAD SEALANT LOCTITE 542, ONLY IN BOM	1-11, 1-19, 1-29, 1-31, 1-43, 1-53
344502-0021 ..	GREASE NIPPLE STRAIGHT M6	3-9
350013-0001 ..	PLUG QSC-4H	5-63, 5-65
351150-0403 ..	CABLE OLFLEX 3X0,75 MM2 LIGHT/GREY 35	5-89
351150-0405 ..	CABLE OLFLEX 5X0,75 MM2 LIGHT/GREY	5-89
351150-0406 ..	CABLE OLFLEX 7X0,75 MM2 LIGHT/GREY	5-89, 12-7
351150-0407 ..	CABLE OLFLEX 12X0,75 MM2 LIGHT/GREY	5-89
351150-0416 ..	CABLE OLFLEX 12X1,5 MM2 LIGHT/GREY	12-33
351160-0102 ..	ECAB01011-6L, WIRE AWM 1X0,75 MM2 DARKBL	9-7, 9-9, 9-21, 9-23, 12-9, 12-61
351160-0105 ..	WIRE AWM 1X2,5 MM2 DARKBLUE	9-79
351160-0106 ..	WIRE AWM 1X4 MM2 DARKBLUE	9-79, 12-61, 12-81
351161-0104 ..	WIRE AWM 1X1,5 MM2 LIGHTBLUE	9-79
351161-0105 ..	WIRE AWM 1X2,5 MM2 LIGHTBLUE	9-79
351161-0106 ..	WIRE AWM 1X4 MM2 LIGHTBLUE	9-79
351161-0107 ..	WIRE AWM 1X6 MM2 LIGHTBLUE	9-79
351161-0109 ..	WIRE AWM 1X16 MM2 LIGHTBLUE	9-79
351162-0102 ..	WIRE AWM 1X0,75 MM2 YELLOW-GREEN	9-79
351162-0104 ..	WIRE AWM 1X1,5 MM2 YELLOW-GREEN	9-79
351162-0105 ..	WIRE AWM 1X2,5 MM2 YELLOW-GREEN	9-79, 12-61
351162-0106 ..	WIRE AWM 1X4 MM2 YELLOW-GREEN	4-29, 4-31, 9-79, 12-61
351162-0107 ..	WIRE AWM 1X6 MM2 YELLOW-GREEN	9-79
351162-0108 ..	WIRE AWM 1X10 MM2 YELLOW-GREEN	9-79
351162-0109 ..	WIRE AWM 1X16 MM2 YELLOW-GREEN	9-79
351164-0104 ..	WIRE AWM 1X1,5 MM2 BLACK	9-79
351164-0105 ..	WIRE AWM 1X2,5 MM2 BLACK	9-7, 9-9, 9-21, 9-23, 12-61
351164-0106 ..	WIRE AWM 1X4 MM2 BLACK	9-79
351164-0107 ..	WIRE AWM 1X6 MM2 BLACK	9-7, 9-9, 9-21, 9-23, 12-61
351164-0108 ..	WIRE AWM 1X10 MM2 BLACK	9-79
351164-0109 ..	WIRE AWM 1X16 MM2 BLACK	9-79
351416-0100 ..	MINIATURE CIRC. BREAK., FAZ -D10 1-POLE	12-37
351418-0060 ..	MINIATURE CIRC. BREAK., FAZ-D6/3 3-POLE	12-37
351423-0004 ..	CABLE UNITRONIC LICY 2X0,34	9-79
351423-0006 ..	CABLE UNITRONIC LICY 5X0,34	5-89, 9-7, 9-9, 9-21, 9-23
351424-0017 ..	CABLE #LFLEX HEAT 180 4G4 466343	5-89
351428-0009 ..	MOTOR FEEDBACK CABLE 2090-CFBM7DF-CEAA09	5-89, 12-77
351429-1609 ..	MOTOR POWER CABLE 2090-CPWM7DF-16AA09	5-89, 12-77
351436-0032 ..	CIRCUIT BREAKER, NZMB1-A32-NA	9-21, 9-23
351456-0102 ..	PUSH-IN FITTING NPQH-D-G18-Q6-P10	5-63, 5-65
351456-0103 ..	PUSH-IN FITTING NPQH-D-G18-Q8-P10	5-63, 5-65
351456-0105 ..	PUSH-IN FITTING NPQH-D-G14-Q12-P10	4-19, 5-63, 5-65
351456-0107 ..	PUSH-IN FITTING NPQH-D-G14-Q8-P10	4-19
351456-0113 ..	PUSH-IN FITTING NPQH-D-G12-Q12	5-7, 5-9
351456-0115 ..	PUSH-IN FITTING NPQH-D-M5-Q4-P10	10-19
351456-0506 ..	PUSH-IN FITTING NPQH-D-G14F-Q8-P10	5-73
351456-1109 ..	PUSH-IN FITTING NPQH-D-S12-Q8-P10	5-63, 5-65
351456-3001 ..	PUSH-IN L-FITTING NPQH-L-G18-Q4-P10	4-19, 5-63, 5-65, 7-29, 10-25
351456-3002 ..	PUSH-IN L-FITTING NPQH-L-G18-Q6-P10	1-35, 1-65, 1-67, 4-27
351456-3003 ..	PUSH-IN L-FITTING NPQH-L-G18-Q8-P10	5-61, 5-63, 5-65, 7-29, 10-25, 10-27
351456-3005 ..	PUSH-IN L-FITTING NPQH-L-G14-Q12-P10	4-19, 5-71
351456-3007 ..	PUSH-IN L-FITTING NPQH-L-G14-Q8-P10	5-63, 5-65, 5-71, 10-19
351456-3013 ..	PUSH-IN L-FITTING NPQH-L-G12-Q12	5-69
351456-3015 ..	PUSH-IN L-FITTING NPQH-L-M5-Q4-P10	7-29, 10-25, 10-27
351456-3016 ..	PUSH-IN L-FITTING NPQH-L-M5-Q6-P10	5-63, 5-65
351456-3105 ..	PUSH-IN L-FITTING NPQH-L-Q12-E-P10	5-63, 5-65
351456-5007 ..	PUSH-IN T-FITTING NPQH-T-G18-Q4-P10	4-19
351456-5103 ..	PUSH-IN T-FITTING NPQH-T-Q12-E-P10	5-63, 5-65
351456-5106 ..	PUSH-IN T-FITTING NPQH-T-Q4-E-P10	10-27
351456-5107 ..	PUSH-IN T-FITTING NPQH-T-Q6-E-P10	5-63, 5-65
351456-5109 ..	PUSH-IN T-FITTING NPQH-T-Q8-E-P10	5-63, 5-65, 5-73
351456-5110 ..	PUSH-IN T-FITTING NPQH-T-Q8-Q6-P10	5-63, 5-65
351456-6004 ..	PUSH-IN Y-CONNECTOR NPQH-Y-Q6-Q4-P10	7-29
351456-6005 ..	PUSH-IN Y-CONNECTOR NPQH-Y-Q8-E-P10	10-27
351501-0010 ..	ETHERNET PATCH CABLE, FL CAT5 PATCH 1,0	9-79
351501-0020 ..	ETHERNET PATCH CABLE, FL CAT5 PATCH 2,0	12-83
352113-0101 ..	CABLE TIE,BLACK 92X	5-57, 12-67
352113-0102 ..	CABLE TIE, BLACK 188X4,8 MM	4-5, 12-9
352113-0103 ..	CABLE TIE, BLACK 290X7,6 MM	12-9
352113-0104 ..	CABLE TIE, BLACK 300X4,8 MM	2-17, 3-23, 3-27, 3-29, 6-17, 6-33, 6-39, 7-13, 12-23
352113-0203 ..	ANCHOR PLATES FOR STRIPS, TM3S8-M0	2-17, 3-15, 3-23, 3-27, 3-29, 4-5, 6-17, 6-33, 6-39, 9-57, 12-23
352113-0204 ..	ANCHOR PLATES FOR STRIPS, TM3S25-M	5-11, 5-13, 5-143
352113-0205 ..	ANCHOR PLATES FOR STRIPS, TM2S8-C100	3-7, 5-57, 6-17, 7-13
352113-0206 ..	ANCHOR PLATES FOR STRIPS, ABM100-AT	5-101
353001-0113 ..	END SLEEVE 0,75MM2	12-9
353001-0116 ..	END SLEEVE H0.5/14 ORANGE	12-9
353001-0117 ..	END SLEEVE H4.0/20 GREY	12-81

Part No	Description	Page No
353021-0212 ..	FEED THROUGH TERMINAL, WDU 2,5	9-29, 9-71, 9-77, 12-7, 12-35
353021-0213 ..	FEED THROUGH TERMINAL, WDU 4	9-69, 12-37
353021-0214 ..	FEED THROUGH TERMINAL, WDU 6	9-29, 9-77
353021-0302 ..	TERMINAL, DLD 2,5/35	9-17
353022-0002 ..	TERMINAL WNT 4 10X3	9-75
353024-0204 ..	EARTH TERMINAL WPE 2,5	9-29, 9-73, 12-7, 12-35
353024-0205 ..	EARTH TERMINAL WPE 4	5-103, 5-105, 9-7, 9-9, 9-11, 9-13, 9-21, 9-23, 9-63, 9-73, 12-37
353024-0206 ..	EARTH TERMINAL WPE 6	9-29, 9-73
353024-0207 ..	EARTH TERMINAL WPE 10	9-27, 9-73
353024-0212 ..	EARTH TERMINAL WDK 2,5 PE	9-17
353031-0203 ..	END BRACKET, WEW 35/2	9-17, 9-29, 9-35, 9-39, 9-49, 9-69, 9-71, 9-73, 9-75, 9-77, 12-7, 12-35, 12-37
353032-0004 ..	END PLATE, WAP 2,5-10, BEIGE	9-29, 9-69, 9-71, 9-77, 12-7, 12-37
353032-0009 ..	END PLATE, WAP WDK 2,5	9-17, 9-39, 9-41, 9-43, 9-45, 9-47, 9-49
353032-0302 ..	END PLATE, AP DLD2,5 DB	9-17
353033-0104 ..	END PLATE, WHP2,5-35N/10X3 BL	9-75
353034-0030 ..	BRIDGE CONNECTOR WQV 2,5/10	5-103, 5-105, 9-17, 9-39, 9-41, 9-43, 9-45, 9-47, 9-49, 12-7
353034-0031 ..	BRIDGE CONNECTOR WQV 4/10	12-37
353034-0032 ..	BRIDGE CONNECTOR WQV 6/10	9-77
353034-0033 ..	BRIDGE CONNECTOR WQV 10/10	9-21, 9-23
353034-0042 ..	BRIDGE CONNECTOR WQV 2,5/3	9-77
353034-0404 ..	BRIDGE CONNECTOR Q 10 DLI	9-17
353041-0001 ..	BUS BAR RAIL 10X3MM SSCH	9-75
353041-0106 ..	HOLDER ZB35 K 5026.8	9-75
353249-0004 ..	INSERT, SINGLE HOLE, E152 13	4-9, 4-11, 8-5, 8-7
353249-0012 ..	INSERT, SINGLE HOLE, EK154 11	4-29, 4-31, 5-7, 5-9, 5-53, 5-101
353249-0015 ..	INSERT, SINGLE HOLE, EK155 16	5-63, 5-65, 5-101
353249-0041 ..	INSERT, SOLID, E151 G	4-9, 4-11
353249-0054 ..	INSERT, SINGLE HOLE, EK156 25	5-7, 5-9, 5-101
353250-0016 ..	GLAND LOCK NUT, M16X1,5	9-25
353250-0020 ..	GLAND LOCK NUT, M20X1,5	5-63, 5-65
353250-0032 ..	GLAND LOCK NUT, M32X1,5	9-25
354000-0040 ..	MINIATURE CIRCUIT BREAKER, FAZ-C4/1	9-7, 9-9
354000-0060 ..	MINIATURE CIRCUIT BREAKER, FAZ-C6/1	9-7, 9-9, 9-11, 9-13
354000-0100 ..	MINIATURE CIRCUIT BREAKER, FAZ-C10/1	9-7, 9-9
354001-0100 ..	MINIATURE CIRCUIT BREAKER, FAZ-C10/2	9-7, 9-9
354002-0060 ..	MINIATURE CIRCUIT BREAKER, FAZ-C6/3	9-7, 9-9
354002-0200 ..	MINIATURE CIRCUIT BREAKER, FAZ-C20/3	9-7, 9-9
354002-0250 ..	MINIATURE CIRCUIT BREAKER, FAZ-C25/3	9-7, 9-9
359000-0013 ..	WIRE MARKING, YELLOW, PA1/3"+"	12-81
359000-0023 ..	WIRE MARKING, YELLOW, PA1/3"-"	12-81
359000-0200 ..	WIRE MARKING, YELLOW, PA02/3"0"	12-9
359000-0201 ..	WIRE MARKING, YELLOW, PA02/3"1"	12-9
359000-0202 ..	WIRE MARKING, YELLOW, PA02/3"2"	12-9
359000-0203 ..	YELLOW, PWIRE MARKING, YELLOW, PA02/3"3"	12-9
359000-0204 ..	WIRE MARKING, YELLOW, PA02/3"4"	12-9
359000-0205 ..	WIRE MARKING, YELLOW, PA02/3"5"	12-9
359000-0206 ..	WIRE MARKING, YELLOW, PA02/3"6"	12-9
359000-0207 ..	WIRE MARKING, YELLOW, PA02/3"7"	12-9
359000-0208 ..	WIRE MARKING, YELLOW, PA02/3"8"	12-9
359000-0209 ..	WIRE MARKING, YELLOW, PA02/3"9"	12-9
359000-0300 ..	WIRE MARKING, YELLOW, PA1/3"0"	12-81
359000-0301 ..	WIRE MARKING, YELLOW, PA1/3"1"	12-81
359000-0302 ..	WIRE MARKING, YELLOW, PA1/3"2"	12-81
359000-0303 ..	WIRE MARKING, YELLOW, PA1/3"3"	12-81
359000-0304 ..	WIRE MARKING, YELLOW, PA1/3"4"	12-81
359000-0305 ..	WIRE MARKING, YELLOW, PA1/3"5"	12-81
359000-0306 ..	WIRE MARKING, YELLOW, PA1/3"6"	12-81
359000-0307 ..	WIRE MARKING, YELLOW, PA1/3"7"	12-81
359000-0308 ..	WIRE MARKING, YELLOW, PA1/3"8"	12-81
359000-0309 ..	WIRE MARKING, YELLOW, PA1/3"9"	12-81
359009-0100 ..	CABLE MARKING, YELLOW, PK2/4"0"	12-67
359009-0101 ..	CABLE MARKING, YELLOW, PK 2/4"1"	12-67
359009-0102 ..	CABLE MARKING, YELLOW, PK 2/4"2"	12-67
359009-0103 ..	CABLE MARKING, YELLOW, PK 2/4"3"	12-67
359009-0104 ..	CABLE MARKING, YELLOW, PK 2/4"4"	12-67
359009-0105 ..	CABLE MARKING, YELLOW, PK 2/4"5"	12-67
359009-0106 ..	CABLE MARKING, YELLOW, PK 2/4"6"	12-67
359009-0107 ..	CABLE MARKING, YELLOW, PK 2/4"7"	12-67
359009-0108 ..	CABLE MARKING, YELLOW, PK 2/4"8"	12-67
359009-0109 ..	CABLE MARKING, YELLOW, PK 2/4"9"	12-67
359009-0200 ..	CABLE MARKING, YELLOW, PK 2/4" A"	12-67
359009-0201 ..	CABLE MARKING, YELLOW, PK 2/4" B"	12-67
359009-0202 ..	CABLE MARKING, YELLOW, PK 2/4" C"	12-67
359009-0203 ..	CABLE MARKING, YELLOW, PK 2/4" D"	12-67
359009-0204 ..	CABLE MARKING, YELLOW, PK 2/4" E"	12-67
359009-0205 ..	CABLE MARKING, YELLOW, PK 2/4" F"	12-67
359009-0206 ..	CABLE MARKING, YELLOW, PK 2/4" G"	12-67
359009-0207 ..	CABLE MARKING, YELLOW, PK 2/4" H"	12-67
359009-0208 ..	CABLE MARKING, YELLOW, PK 2/4" I"	12-67
359009-0210 ..	CABLE MARKING, YELLOW, PK 2/4" K"	12-67
359009-0211 ..	CABLE MARKING, YELLOW, PK 2/4" L"	12-67
359009-0212 ..	CABLE MARKING, YELLOW, PK 2/4" M"	12-67
359009-0213 ..	CABLE MARKING, YELLOW, PK 2/4" N"	12-67

Part No	Description	Page No
359009-0214 ..	CABLE MARKING, YELLOW, PK2/4" O"	12-67
359009-0215 ..	CABLE MARKING, YELLOW, PK 2/4" P"	12-67
359009-0216 ..	CABLE MARKING, YELLOW, PK 2/4" Q"	12-67
359009-0217 ..	CABLE MARKING, YELLOW, PK 2/4" R"	12-67
359009-0218 ..	CABLE MARKING, YELLOW, PK 2/4" S"	12-67
359009-0219 ..	CABLE MARKING, YELLOW, PK 2/4" T"	12-67
359009-0220 ..	CABLE MARKING, YELLOW, PK 2/4" U"	12-67
359009-0221 ..	CABLE MARKING, YELLOW, PK 2/4" V"	12-67
359009-0222 ..	CABLE MARKING, YELLOW, PK 2/4" W"	12-67
359009-0223 ..	CABLE MARKING, YELLOW, PK 2/4" X"	12-67
359009-0224 ..	CABLE MARKING, YELLOW, PK 2/4" Y"	12-67
359009-0225 ..	CABLE MARKING, YELLOW, PK 2/4" Z"	12-67
359011-0806 ..	MARKING, DEK 5 FW 1-200	9-17
359011-0807 ..	MARKING, DEK 5 FW 1-50	9-17, 9-21, 9-23, 9-29, 9-39, 9-41, 9-43, 9-45, 9-47, 9-49, 9-71, 9-73, 9-77, 12-35, 12-37
359011-0808 ..	MARKING, DEK 5FW 51-100	9-39
359011-0809 ..	MARKING, DEK 5 FW 101-150	9-17, 12-7
359011-0811 ..	MARKING, DEK 5 FW 201-250	9-17
359011-0817 ..	MARKING, DEK 5GW (+)	9-17
359011-0818 ..	MARKING, DEK 5GW (-)	9-17
359011-0819 ..	MARKING, EARTH, DEK 5 GW ERDE I.KR.	9-27, 9-71, 12-7, 12-35, 12-37
359011-0821 ..	MARKING, DEK 6 FW 1-50	9-29, 9-69, 9-75, 9-77
359240-0001 ..	SIGN, NOT ENGRAVED	9-21, 9-23
359240-0100 ..	SIGN HOLDER FOR 359240-0001	9-25
359241-0803 ..	SIGN: "SUPPLY DISCONNECTING DEVICE"	9-25
359301-0001 ..	BUTTON SIGN, UP	5-101
359301-0005 ..	BUTTON SIGN, DOWN	5-101
359301-0090 ..	BUTTON SIGN, INCHING	5-101
359301-0504 ..	BUTTON SIGN, RESET	5-101
359705-0015 ..	WARNING SIGN ISO, RISK OF ELECTRIC SHOCK	5-107, 5-147, 9-7, 9-9, 12-7, 12-33
359705-0021 ..	WARNING SIGN ISO, PNEUMATIC ENERGY	1-87
359705-0033 ..	WARNING SIGN ISO, OPTICAL RADIATION	12-5
359710-0001 ..	WARNING SIGN ISO, HOT SURFACE	3-5, 5-147
359715-0100 ..	WARNING SIGN ANSI (H), ELECTRIC SHOCK	5-107, 5-147, 9-21, 9-23, 12-7
359725-0125 ..	WARNING SIGN ANSI (V), PNEUMATIC ENERGY	1-87
476221-0002 ..	PIPE	5-31, 5-35
476221-0003 ..	PIPE	5-31, 5-35
476221-0013 ..	PIPE	10-19
486826-0001 ..	SIGN "EMERGENCY STOP"	5-131, 9-25
531616-0000 ..	HOLDER	5-91, 5-93, 5-115
532412-0000 ..	SPRING	12-65
545897-0000 ..	BRACKET	12-65
575034-0000 ..	ROUND NUT	4-17, 5-81, 5-83
580923-0000 ..	MACHINE SIGN CE	6-39
1020637-0000 .	HOLDER	5-41, 5-43, 10-19, 12-65, 12-71
1030335-0000 .	FILTER HOLDER	5-47
1030338-0000 .	NET	5-47
1030874-0000 .	THROTTLE WASHER	5-47
1030878-0000 .	GASKET	5-47
1035792-0000 .	E-HINGE	5-21
1036329-0000 .	PIN	5-21
1038275-0012 .	SPACER	9-31
1129770-0000 .	BLOCKING PIECE	5-21
1188609-0000 .	FLANGE SEAL	5-53
1188610-0000 .	FLANGE SEAL	5-53
1359565-0000 .	NUT	5-33
1366727-0000 .	CLAMP	5-33
1497932-0000 .	SET OF SIGNS	12-67
1539391-0000 .	ROUND NUT	4-15, 4-17, 5-81, 5-83
1550595-2460 .	SLIDING STRIP	5-27, 5-29, 5-37, 5-39
1550595-4960 .	SLIDING STRIP	5-27, 5-29, 5-37, 5-39
1550595-9960 .	SLIDING STRIP	5-27, 5-29, 5-37, 5-39
1550743-0200 .	RAIL HOLDER	5-23, 5-25, 5-31, 5-35
1550772-0000 .	HOLDER	5-33
1556626-0000 .	WHEEL	6-47
1556630-0000 .	WHEEL	6-43
1606002-0000 .	TETRA PAK CAPFIX 500, ONLY IN BOM	10-13
2470301-0000 .	LEVER	7-25
2470302-0000 .	HUB	7-25, 7-27
2470373-0000 .	LEVER	7-27
2504290-0000 .	PLATE	5-43
2506940-0000 .	NOZZLE	5-57
2531417-0000 .	RAIL	12-35
2551030-0000 .	STRUT	5-121, 5-135
2557544-0000 .	PROTECTION	5-51
2561206-0000 .	SPACER	5-27, 5-29, 5-37, 5-39
2561274-0102 .	RAILING	5-23, 5-25
2561274-0103 .	RAILING	5-23, 5-25
2563891-0000 .	STRUT	5-133
2563892-0000 .	STRUT	5-133
2595618-0000 .	BRACKET	5-121, 5-135
2608177-0000 .	SIGN	9-25
2662760-0000 .	HEATING CHAMBER	5-55
2663999-0000 .	NIPPLE	5-47

Part No	Description	Page No
2684864-0000	.SHAFT	2-9, 2-11, 2-19
2695133-0000	.TOOTHED PULLEY	3-13
2695134-0000	.SHAFT	3-13
2695135-0200	.PULLEY	3-3
2699305-1996	.SLIDING STRIP	5-27, 5-29, 5-37, 5-39
2699436-0000	.SPACER	5-33
2699437-0000	.RAIL HOLDER	5-33
2699680-0000	.SCREW	6-11, 6-13
2699681-0000	.SPACER	6-11, 6-13
2699682-0000	.SPACER	6-13
2699683-0000	.WASHER	6-11
2703670-0100	.CAP HOLDERS GROUP	6-45
2703673-0000	.TOOTHED DISC	6-47
2703683-0000	.SHAFT	6-43
2703696-0000	.PROTECTIVE COVER	6-13
2703697-0000	.SIDE	6-11
2703700-0200	.GUIDE BRACKET	6-41
2703704-0000	.SPACER STRUT	6-17
2703708-0000	.SPRING	6-43
2703711-0000	.HOLDER	2-13
2703725-0000	.ROLLER	2-9, 2-11, 2-19
2703842-0000	.ADJUSTING SCREW	2-15, 2-17, 6-35, 6-37
2710819-0000	.LID	5-53
2712603-0000	.PLATE	1-61
2715669-0200	.TOOTHED PULLEY	7-5
2715695-0000	.SLEEVE	2-9, 2-11
2715699-0000	.HOLDER	6-43
2715701-0000	.AXLE PIN	6-43
2715704-0000	.SLEEVE	6-43
2715750-0100	.TEMPLATE	10-5
2715751-0000	.SHAFT	10-7
2715794-0000	.ARM	2-9, 2-11
2715797-0000	.BUSHING	2-9, 2-11
2715798-0000	.TURN SPRING	2-9, 2-11
2715804-0000	.SCREW	2-5, 2-7
2715807-0000	.SPACER	2-5, 2-7
2715826-0000	.DAMPER	6-43
2715827-0000	.HOLDER	6-47
2715837-0000	.KEY	2-13
2715885-0000	.TORSION SPRING	6-43
2715889-0000	.FINGER	7-35
2715975-0000	.FINGER	7-33
2715976-0200	.TOOTHED PULLEY	7-5
2715977-0000	.LOCKING HUB	7-9
2715978-0000	.SHAFT	7-7
2716015-0000	.BRACKET	7-13
2716019-0000	.SHAFT	7-17
2716021-0000	.SPRING	7-17
2716024-0000	.WASHER	7-17
2716041-0000	.BRACKET	2-13
2716046-0200	.CLAMP UNIT	7-19
2716047-0100	.HEIGHT ADJUSTMENT	7-19
2716049-0200	.CAP LINE	7-5
2716069-0200	.GUIDE RAIL	7-37
2716073-0000	.BELT HOLDER	3-15, 3-25
2716074-0000	.BRACKET	3-15
2716075-0000	.COUNTERWEIGHT	3-15, 3-25
2716085-0000	.COUNTERWEIGHT	3-15
2716090-0200	.MOTION CONTROL	3-3
2716092-0200	.TRANSMISSION RAIL	3-3
2716097-0200	.MOTION CONTROL	3-3
2716116-0000	.CAM	6-7
2716125-0100	.SETTING TOOL	10-5
2716127-0000	.SLIDER	6-43
2716149-0200	.STEERING DEVICE	7-13
2716152-0000	.PLATE	7-15
2716154-0000	.SETTING TEMPLATE	10-9
2716156-0000	.BRACKET	7-15
2716157-0000	.BRACKET	7-15
2727407-0200	.DRIVE PULLEY	7-5
2727408-0000	.MOTOR BRACKET	7-11
2727414-0000	.SHAFT	7-9
2727420-0000	.BRACKET	7-13
2727427-0000	.GEAR WHEEL	7-11
2727431-0000	.SLIDE PLATE	7-23
2727432-0000	.SHAFT	7-23
2727434-0000	.SLIDE PLATE	7-23
2727440-0000	.END SUPPORT	7-23
2730989-0000	.LEVER	7-21
2736446-0000	.SPACER	7-9
2736447-0000	.SPACER	7-7, 7-17
2736448-0000	.COVER	7-9
2736449-0000	.COVER	7-7, 7-17
2736458-0000	.TEMPLATE	10-5

Part No	Description	Page No
2740299-0200	.FINGER	7-19
2740300-0000	.FINGER	7-25
2740371-0200	.FINGER	7-19
2740372-0000	.FINGER	7-27
2740373-0000	.BRACKET	7-21
2740375-0000	.BRACKET	7-21
2746903-0000	.CABLE DUCT	5-7, 5-9
2746904-0000	.BOX	5-101
2746909-0000	.RAIL	5-103, 5-105
2746920-0000	.FOIL	5-99
2746922-0000	.SHAFT	6-47
2746928-0200	.CAP LINE	7-3
2746929-0100	.CARRIER BELT	7-3
2746932-0200	.PNEUMATIC UNIT	7-3
2746933-0200	.BASE UNIT	7-3
2746934-0200	.FEED UNIT	7-3
2746938-0200	.TRANSFER UNIT	6-3
2746939-0200	.CAP CARRIER GROUP	6-3
2746941-0200	.CAP HOLDERS GROUP	6-3
2746951-0000	.CAM	6-25
2746952-0000	.CAM	6-29
2746953-0000	.CAM	6-27
2746978-0000	.SHAFT	6-43
2751655-0100	.CAM	6-5
2751656-0100	.STAR WHEEL	6-5
2751657-0200	.SLIDER	6-5
2751658-0200	.FOLLOWER CAM	6-5
2751664-0300	.FRAME	6-3
2751667-0200	.PRESSURE FINGER	2-5, 2-7
2751686-0000	.WASHER	6-43
2751687-0000	.WASHER	6-43
2751690-0000	.SHIM	7-39
2751693-0000	.STEERING	2-15
2751695-0000	.STEERING	2-5, 2-7
2751699-0000	.WASHER	6-13
2751700-0000	.BOW CLAMP	2-13
2751702-0000	.STAR WHEEL	6-9
2751703-0000	.BRACKET	6-11
2751704-0000	.PIVOT BRACKET	6-13
2751705-0000	.SHAFT	6-13
2751706-0000	.FLAG	6-9
2751710-0000	.SUPPORT PLATE	2-13
2751712-0000	.TOOTHED PULLEY	2-15
2751714-0000	.SUPPORT PLATE	2-15
2751725-0000	.BOW CLAMP	2-15
2751739-0000	.BRACKET	6-11
2751741-0000	.BRACKET	6-17
2751747-0000	.SPACER	2-15
2751748-0000	.SLEEVE	2-15
2758505-0300	.MACHINE BODY	5-3
2758507-0300	.PACKAGE CONVEYOR	5-3
2758511-0200	.HOTMELT EQUIPMENT	5-3
2758512-0200	.BLOWING SYSTEM	5-59
2758513-0200	.AIR SUPPLY	5-3
2758514-0200	.WATER CONNECTION	5-3
2758515-0300	.CABLE DUCT	5-5
2763616-0101	.CONVEYOR BODY	5-23, 5-25
2763616-0102	.CONVEYOR BODY	5-23, 5-25
2763616-0103	.CONVEYOR BODY	5-23, 5-25
2763616-0104	.CONVEYOR BODY	5-23, 5-25
2763617-0001	.SIDE PLATE	5-27, 5-29, 5-37, 5-39
2763617-0002	.SIDE PLATE	5-27, 5-29, 5-37, 5-39
2763617-0003	.SIDE PLATE	5-27, 5-29, 5-37, 5-39
2763617-0004	.SIDE PLATE	5-27, 5-29, 5-37, 5-39
2766927-0000	.PILLAR	1-9, 1-17
2766939-0000	.SUPPORT	5-91, 5-93
2766944-0000	.BRACKET	1-59
2766950-0000	.SHAFT	1-61
2766953-0000	.PLATE	1-13
2766954-0200	.BELT TENSIONER	1-7, 1-15
2766958-0000	.SHAFT	1-13, 1-47, 1-55
2766959-0000	.SPACER	1-13, 1-47, 1-55
2766962-0000	.BLOCK	1-13
2766963-0000	.BRACKET	1-13
2766964-0000	.FLANGE	4-5, 5-17
2766968-0000	.SHAFT	5-17
2766972-0000	.SHAFT	5-19
2766973-0100	.TRANSMISSION	5-17
2766974-0000	.SLEEVE	1-45, 1-51
2766975-0000	.FRAME	5-11, 5-13
2766976-0000	.FLANGE	1-45, 1-51
2766980-0200	.BELT TENSIONER	1-49
2766981-0000	.TOOTHED PULLEY	1-13, 1-47, 1-55
2766989-0000	.BRACKET	1-47, 1-55

Machine Type Group Description Page No

Part No	Description	Page No
2766990-0200	.BRAKE UNIT	1-27
2766991-0200	.BRAKE UNIT	1-27
2766994-0400	.ACCELERATION PUSHER	1-27
2769686-0000	.COVER	1-29, 1-31
2769695-0000	.BRACKET	1-59
2769709-0000	.FRAME	5-17
2769713-0000	.CYLINDRICAL PIN	5-17
2769717-0000	.FLANGE	5-17
2769718-0200	.PNEUMATIC CYLINDER	1-57
2769726-0000	.BRACKET	1-23, 1-61, 5-19
2769729-0000	.SHAFT	1-23, 1-61
2769738-0100	.HEIGHT ADJUSTMENT	5-5
2769739-0000	.DISC	4-5, 5-17
2769741-0000	.SPACER	1-29, 1-31
2769743-0200	.BELT TENSIONER	1-41
2769746-0000	.FRAME	1-55
2769754-0300	.ELECTRIC EQUIPMENT	5-3
2769760-0200	.EMERGENCY STOP	5-109
2769761-0300	.MACHINE BODY	5-5
2769773-0000	.SPACER	1-33
2773600-0000	.SPACER	1-29, 1-31
2773601-0000	.SPACER	1-33
2773604-0000	.PLATE	1-35
2773615-0000	.ROLLER	1-35
2773622-0200	.LINE HEATER	5-3
2773623-0200	.FAN SYSTEM	5-45
2773627-0000	.HEAT GUARD	5-53
2773630-0000	.HEAT GUARD	5-53
2773632-0000	.SPACER	1-59
2773636-0200	.BELT TENSIONER	1-33
2773637-0000	.BRACKET	1-35
2773638-0000	.PLATE	1-35
2773639-0000	.SHAFT	1-35
2775398-0000	.PIN	1-35
2775403-0000	.PIPE	5-61
2775404-0000	.PIPE	5-61
2775412-0000	.PLATE	1-33
2775417-0000	.BRACKET	1-47, 1-55
2775418-0000	.SHAFT	1-29
2775420-0000	.SLIDE	1-55
2775421-0000	.SCREW	1-55
2775423-0000	.PLATE	1-55
2775427-0000	.BRACKET	1-29
2775437-0000	.TOOTHED PULLEY	1-43, 1-53
2775438-0000	.PLATE	1-43, 1-53
2775439-0000	.BUSHING	1-43, 1-53
2775442-0000	.TOOTHED PULLEY	1-11, 1-19
2775443-0000	.SPACER	1-11, 1-19
2775445-0000	.SPACER	1-11, 1-19
2775446-0000	.SHAFT	1-11, 1-19
2775447-0000	.BRACKET	5-11, 5-13
2778564-0000	.WASHER	1-29, 1-31
2778566-0000	.BELLOWS	1-11, 1-19
2778567-0000	.BEAM	5-11, 5-13
2778568-0000	.FRAME UPPER	5-11, 5-13
2778571-0000	.FRAME	1-47
2778576-0000	.BEAM	5-11, 5-13
2778580-0000	.BRACKET	5-43
2778584-0000	.BRACKET	5-43
2778585-0000	.PILLAR	1-23
2778586-0100	.SENSOR	5-23, 5-25, 12-69
2778587-0100	.SENSOR	5-23, 5-25
2778592-0000	.PLATE	1-45
2778594-0000	.PLATE	1-23, 1-61
2778595-0100	.ANGLE	5-11, 5-13
2779008-0000	.BRACKET	5-15
2779009-0000	.BEAM	5-11, 5-13
2779011-0000	.BEAM	5-11, 5-13
2779012-0000	.BEAM	5-11, 5-13
2779013-0000	.CAM	1-61
2779014-0000	.PLATE	1-61
2779057-0000	.PLATE	1-59
2779062-0000	.SPROCKET	1-23, 12-21
2779063-0000	.PLATE	1-23
2779070-0300	.OPERATOR INTERFACE	5-3
2779748-0100	.GLASS DOOR	5-109
2779756-0000	.SHAFT	1-23
2779759-0000	.PLATE	1-23
2779763-0000	.COVER	5-131
2779764-0300	.WARNING LAMP	5-77
2779765-0000	.BRACKET	5-79
2779768-0000	.DOOR	5-99
2779769-0000	.SPROCKET	5-19, 12-29
2779771-0000	.SPACER	5-131

Part No	Description	Page No
2779772-0000	.BRACKET	5-47
2779776-0000	.PLATE	5-11, 5-13
2779786-0000	.PLATE	5-11, 5-13
2779800-0000	.PLATE	5-7, 5-9
2779811-0000	.BEAM	5-11, 5-13
2779823-0000	.BRACKET	5-137
2779824-0000	.BRACKET	5-137
2779831-0000	.PIPE	5-23, 5-25
2779832-0100	.GLASS DOOR	5-109
2779834-0100	.GLASS DOOR	5-109
2779835-0200	.DOOR	5-109
2780337-0000	.CURVE	2-5, 2-7
2780338-0000	.BRACKET	2-5, 2-7
2780339-0000	.BRACKET	2-5, 2-7
2780342-0000	.CURVE	2-5, 2-7
2780343-0000	.CURVE	2-5, 2-7
2780344-0000	.BRACKET	2-5, 2-7
2780352-0000	.HOLDER	2-9, 2-11
2780353-0000	.BRACKET	2-9, 2-11
2780361-0000	.PIN	7-21
2780362-0000	.PIN	7-21
2780431-0000	.SHIM	6-43
2780452-0000	.TOOTHED PULLEY	7-7, 7-17
2780453-0000	.TOOTHED PULLEY	7-9
2780454-0000	.SLIDE RAIL	7-13
2780455-0000	.SLIDE RAIL	7-13
2780456-0000	.SLIDE RAIL	7-13
2780497-0100	.TIMING BELT	7-31
2780509-0100	.TIMING BELT	7-31
2780523-0000	.PLATE	6-33
2781283-0000	.BRACKET	5-81, 5-83
2781285-0000	.STRUT	5-121, 5-135
2781286-0000	.HAND WHEEL	1-25
2781292-0000	.SHAFT	1-35
2783462-0000	.AXLE PIN	6-43
2787230-0100	.TOP SECTION	5-109
2787232-0000	.PLATE	5-137
2788134-0000	.COVER	1-9, 1-17
2788144-0000	.SHAFT	1-25
2788155-0000	.ANGLE	5-11, 5-13
2788168-0000	.PLATE	1-63
2788169-0000	.PLATE	1-45, 1-51
2788174-0000	.LEVER	1-59
2788176-0000	.PIPE	5-61
2790710-0000	.BRACKET	9-57
2792664-0000	.BRACKET	5-51
2792848-0000	.SUPPORT	5-51
2792879-0000	.TUBE	5-51
2794721-0000	.BLOCK	5-51
2794790-0000	.CLAMP	5-51
2802386-0300	.OPERATOR INTERFACE	5-99
2802392-0000	.PILLAR	1-11, 1-19
2802404-0100	.HANDLE	1-23
2802405-0000	.STOP ARM	1-61
2802417-0000	.PLATE	5-7, 5-9
2802423-0000	.PLATE	5-7, 5-9
2802635-0000	.SUPPORT	2-15, 2-17
2802644-0000	.SPACER	2-17
2802645-0200	.BELT STRETCHER	2-3
2802646-0200	.FRAME SECTION	2-3
2802647-0200	.DRIVE UNIT	2-3
2802648-0200	.CAP HOLDERS GROUP	2-3
2805468-0000	.SCREW	1-29
2805686-0000	.BEAM	5-11, 5-13
2805687-0100	.GLASS DOOR	5-109
2805692-0000	.COVER	5-139
2805693-0100	.DOOR	5-109
2805694-0100	.GLASS DOOR	5-109
2805696-0000	.SUPPORT	5-11, 5-13
2805697-0000	.SUPPORT	5-11, 5-13
2805698-0000	.BEAM	5-11, 5-13
2805700-0300	.DOOR SAFETY SWITCH	5-77
2807095-0000	.BEAM	5-11, 5-13
2807104-0000	.BEAM	5-11, 5-13
2811989-0000	.GUIDE BRACKET	6-43
2812005-0400	.ELEVATOR	4-3
2815585-0000	.SPACER	10-21
2817573-0000	.SPACER	10-19
2817774-0000	.SUPPORT	5-81, 5-83
2817775-0000	.SUPPORT	5-81, 5-83
2817783-0200	.PLINTH	5-101
2817784-0000	.SCREW	1-13
2818738-0000	.RAILING	10-19
2826729-0000	.PULLEY	1-29, 1-31

Part No	Description	Page No
2826741-0300	.DOORS AND COVERS	5-3
2826742-0300	.COVER	5-109
2826743-0300	.COVER	5-109
2826744-0200	.COVER	5-125
2830220-0000	.BEAM	5-11, 5-13
2833404-0000	.MOUNTING PLATE	9-31
2833406-0300	.CABINET	9-3
2833407-0300	.CONTROL BOARD	9-3
2833408-0200	.COOLING UNIT	9-3
2833409-0200	.CABLE SET	9-3
2833410-0200	.BOX	9-25
2833412-0100	.CABLE DUCT	9-31
2834311-0000	.HUB	6-19
2835450-0000	.COVER	9-27
2835452-0000	.RAIL	9-51, 9-53, 9-55
2835453-0000	.RAIL	9-65
2835454-0000	.RAIL	9-61, 9-73, 9-75
2835455-0000	.RAIL	9-63
2835456-0000	.RAIL	9-27
2835457-0200	.POWER SUPPLY UNIT	9-31
2835458-0300	.PLC	9-31
2835459-0300	.FUSE BOARD 1	9-31
2835460-0200	.FUSE BOARD 2	9-31
2835461-0200	.FUSE BOARD 3	9-31
2835462-0300	.MOTOR DRIVE CONTROL	9-31
2835463-0200	.PLINTH	9-31
2835464-0300	.DISTRIBUTION TERMINAL	9-31
2835939-0000	.PLATE	6-17
2836263-0000	.HEAT GUARD	5-53
2836507-0200	.DRIVE MOTOR	6-15
2837072-0200	.DRIVE UNIT	6-3
2837073-0200	.PLATE	6-15
2837175-0000	.BEARING HALF	2-13
2837191-0000	.TOOTHED PULLEY	2-13
2837255-0000	.WASHER	2-13, 2-15
2837623-0000	.BRACKET	1-43, 1-53
2837624-0000	.SHAFT	1-43, 1-53
2837625-0000	.COVER	1-43
2837627-0000	.FLANGE	1-43, 1-53
2837628-0000	.SPACER	1-43, 1-53
2837630-0000	.COVER	1-53
2837631-0000	.SPACER	2-17
2837851-0000	.CD BOX	9-25
2838156-0000	.BRACKET	6-37
2838277-0000	.BRACKET	6-35
2838459-0000	.CABLE DUCT	9-25
2838460-0000	.CABLE DUCT	9-25
2838462-0000	.CABLE DUCT	9-33
2838463-0000	.CABLE DUCT	9-33
2838464-0000	.CABLE DUCT	9-33
2838465-0000	.CABLE DUCT	9-33
2838466-0000	.CABLE DUCT	9-33
2838467-0000	.CABLE DUCT	9-33
2838468-0000	.CABLE DUCT	9-33
2838469-0000	.CABLE DUCT	9-33
2838470-0000	.CABLE DUCT	9-33
2838471-0000	.CABLE DUCT	9-33
2838472-0000	.CABLE DUCT	9-33
2838473-0000	.CABLE DUCT	9-33
2838474-0000	.CABLE DUCT	9-33
2838475-0000	.CABLE DUCT	9-33
2838476-0000	.RAIL	9-67
2838478-0000	.RAIL	9-35, 9-37
2838647-0200	.SLIDING RACK	1-3
2838650-0200	.SLIDING RACK	1-39
2838653-0200	.GUIDE RAIL	1-57
2838654-0300	.BELT BRAKE	1-3
2838669-0200	.SETTING ARM	1-57
2838672-0200	.PNEUMATIC PANEL	5-59
2838673-0200	.SERVICE UNIT	5-63, 5-65
2838674-0200	.SERVICE UNIT	5-63, 5-65
2838676-0000	.BRACKET	5-63, 5-65
2838679-0000	.SHAFT	5-61
2838683-0000	.PLATE	1-59
2838686-0200	.AIR JET GUN	5-59
2838690-0000	.WHEEL	1-61
2838693-0200	.START-UP KIT	10-3
2838701-0000	.HOLDER	5-63, 5-65
2838710-0400	.WORM GEAR MOTOR	1-33
2838721-0000	.SHAFT	2-13
2838728-0000	.ADJUSTMENT BRACKET	2-5, 2-7
2838731-0000	.CABLE	6-39
2838732-0000	.CABLE	6-39
2838763-0000	.SHAFT	7-21

Part No	Description	Page No
2838764-0000	.BLOCK	7-23
2838765-0000	.PLATE	7-23
2838781-0000	.STEERING	2-5, 2-7
2838782-0000	.PLATE	12-75
2838783-0000	.PLATE	2-17
2838784-0000	.SLIDING STRIP	2-17
2839073-0000	.BRACKET	10-25, 10-27
2839074-0200	.PNEUMATIC UNIT	10-17
2839194-0200	.PNEUMATIC UNIT	10-17
2839195-0200	.DISTRIBUTOR	10-17
2839221-0200	.PLINTH	9-31
2839222-0200	.PLINTH	9-31
2839223-0200	.PLINTH	9-31
2839224-0200	.PLINTH	9-31
2839225-0000	.BRACKET	9-25
2839226-0000	.FLANGE	9-57
2839227-0000	.SUPPORT	9-65
2839229-0200	.DISTRIBUTION TERMINAL	9-31
2839230-0100	.PLINTH	9-37
2839315-0200	.CAMMODULE	6-3
2839382-0100	.MOUNTING PLATE	6-21
2839383-0100	.CAM	6-21
2839384-0100	.CAM	6-21
2839392-0000	.CAM	6-35
2839412-0000	.CAM	6-37
2840143-0200	.SERVO MOTOR	3-3
2840144-0200	.SERVO MOTOR	3-3
2840145-0100	.MOTOR BRACKET	3-3
2840147-0200	.FASTENING BRACKET	3-3
2840851-0000	.BLOCK	3-23
2840909-0100	.PLINTH	9-37
2840910-0100	.PLINTH	9-37
2840911-0100	.PLINTH	9-37
2840915-0100	.PLINTH	9-37
2840917-0100	.PLINTH	9-37
2840918-0200	.PLINTH	9-25
2841402-0000	.RAIL	9-29
2841403-0300	.PLINTH	9-7, 9-9, 9-21, 9-23
2841404-0300	.ELECTRICAL CONVERSION	9-3
2841405-0000	.DIVIDER	9-33
2841406-0000	.DIVIDER	9-33
2841501-0200	.FRAME	3-3
2842793-0300	.DOOR	5-125
2842794-0300	.COVER	5-111
2842795-0100	.COVER	5-111
2842799-0000	.COVER	5-113
2842800-0000	.SHELF	12-17
2842801-0000	.COVER	5-127
2842803-0000	.PLATE	12-17
2842804-0000	.BRACKET	12-17
2842805-0000	.SPACER	5-119, 12-17
2842806-0100	.SHELF	12-3
2842807-0200	.COVER	5-111
2842830-0100	.SUPPORT	4-3
2842831-0000	.ROD	4-5
2842832-0000	.BRACKET	4-5
2842834-0000	.FLANGE	4-5
2842835-0000	.COLUMN	4-5
2842837-0000	.PLATE	4-5
2842838-0000	.BLOCK	4-5
2843157-0100	.CLAMPING ELEMENT	2-3
2843158-0000	.FLANGE	2-21
2843159-0000	.SHAFT	2-21
2844501-0000	.PROFILE	5-115
2844525-0000	.CABLE DUCT	4-5
2844526-0000	.PLATE	4-5
2844527-0000	.PLATE	4-5
2845097-0000	.SPACER	4-5
2845127-0200	.SETTING ARM	1-57
2845320-0000	.PROTECTION	9-31
2846399-0300	.TUNNEL	5-111
2846403-0000	.ROLLER	5-19
2846405-0000	.PIVOT ARM	5-19
2846413-0300	.CONVEYOR BELT	8-3
2846416-0300	.FEEDER	4-3
2852912-0000	.CONNECTION PIPE	4-3
2852913-0000	.CONNECTION PIPE	4-3
2853706-0300	.SETTING TOOL	10-3
2861166-0300	.SOFTWARE	11-3
2873865-0000	.PRE-HEATER	5-53
2873866-0000	.SUPPORT	10-19
2873867-0000	.PLATE	5-53
2873871-0000	.BRACKET	2-5, 2-7
2873874-0200	.AUTOMATION CONVEYOR CONTROL	12-3

Part No	Description	Page No
2873876-0000	.PLATE	10-19
2873896-0000	.CABLE TRAY	3-29
2873914-0100	.CAMMODULE	6-21
2873915-0100	.CAMMODULE	6-21
2873916-0100	.CAMMODULE	6-21
2873917-0100	.CAMMODULE	6-21
2873922-0200	.CABLE	12-73
2873923-0200	.POSITION TEMPLATE	10-3
2873924-0300	.POSITIONING DEVICE	12-3
2873925-0200	.COMMUNICATION UNIT	12-3
2873928-0000	.CABLE DUCT	5-7, 5-9
2873935-0000	.TEMPLATE	10-5
2873941-0000	.SIGN	1-23, 5-11, 5-13
2873943-0000	.CLAMP	5-51
2873950-0200	.CABLE SET	5-77
2873952-0100	.COVER	1-71, 1-73
2873953-0200	.CAP	10-3
2873966-0000	.COVER	1-79
2874024-0000	.BRACKET	5-91, 5-93
2879015-0300	.ELECTRICAL DOCUMENT	11-3
2885916-0000	.PLATE	8-5, 8-7
2890013-0200	.COMMUNICATION UNIT	12-3
2890014-0300	.POSITIONING UNIT	12-73
2890015-0000	.RAIL	9-17
2890590-0000	.CABLE DUCT	9-7, 9-9, 9-21, 9-23
2890591-0200	.PLINTH	9-67
2895147-0200	.PACKAGE ALIGNER	9-7, 9-9, 9-21, 9-23
2901694-0000	.MOTOR	1-81
2901708-0100	.SUPPORT TUBE	3-3
2902652-0000	.BRACKET	2-9, 2-11
2902665-0000	.BRACKET	2-5, 2-7
2902666-0000	.CURVE	2-5, 2-7
2902668-0000	.CURVE	2-5, 2-7
2902669-0000	.CURVE	2-5, 2-7
2902675-0000	.BRACKET	7-39
2902676-0000	.STEERING RAIL	7-39
2902686-0000	.SHAFT	3-9
2902688-0000	.BRACKET	2-15
2902692-0000	.SPACER	3-9
2902695-0000	.WASHER	3-9
2902696-0000	.SEAL HOLDER	3-9
2902705-0000	.MOUNTING SHEET	2-17
2902706-0000	.ANGLE BRACKET	2-17
2902707-0000	.PLATE	2-17
2902708-0000	.BRACKET	2-15
2902709-0000	.SLIDING STRIP	2-17
2902711-0000	.BRACKET	2-15
2902718-0000	.FASTENING BRACKET	3-17
2902731-0000	.CAM	6-23
2902754-0000	.BRACKET	3-11
2902760-0000	.PULLER	6-47
2902761-0000	.CLAW	6-47
2902762-0000	.CLAW	6-47
2902766-0000	.FRAME	3-29
2902768-0000	.BRACKET	3-25
2902771-0000	.BRACKET	3-29
2902780-0100	.MOTOR BRACKET	3-3
2902809-0000	.CURVE	2-17
2902810-0000	.BRACKET	2-17
2902811-0000	.ANGLE BRACKET	2-17
2902812-0000	.CURVE	2-5, 2-7
2902813-0000	.CURVE	2-5, 2-7
2902814-0000	.CURVE	2-17
2902815-0000	.BRACKET	3-27
2902816-0000	.BRACKET	3-7
2902822-0000	.STOP BLOCK	3-29
2909473-0000	.PLATE	3-23
2913643-0000	.SPROCKET	12-21, 12-25
2913644-0000	.SPROCKET	12-21, 12-25
2913646-0000	.BRACKET	12-29
2913651-0000	.CANTILEVER	12-39
2913652-0000	.CHAIN GUARD	12-29
2913655-0000	.MOUNTING BLOCK	12-29
2913656-0000	.PROTECTION	12-29
2913657-0000	.MOUNTING SHEET	12-37
2913659-0000	.PROTECTION	12-29
2913661-0000	.PROTECTION	12-29
2913662-0000	.CLAMPING PLATE	12-29
2913685-0100	.NOZZLE BRACKET	12-19
2918904-0000	.PLATE	7-13
2918905-0000	.PLATE	7-13
2921902-0000	.DIVIDER	9-33
2930176-0200	.SENSOR GROUP	12-63
2930177-0200	.CABLE MARKING SET	12-63

Part No	Description	Page No
2930178-0200	.SENSOR GROUP	12-63
2930179-0200	.CONVEYOR CONTROL ACCESSORIES	12-3
2930182-0300	.POWER SUPPLY DEVICE	12-3
2930188-0000	.BRACKET	12-23
2930189-0000	.COVER	12-29
2930190-0100	.TOOL	12-49
2930191-0000	.BLOCK	12-51
2930192-0000	.BLOCK	12-51
2930193-0000	.PLATE	12-51
2930210-0000	.PLATE	5-23, 5-25
2930211-0000	.PLATE	5-23, 5-25
2930228-0000	.AIR NOZZLE	4-27
2930230-0000	.AIR NOZZLE	4-27
2931768-0000	.CABLE DUCT	5-7, 5-9
2931769-0000	.CABLE DUCT	5-7, 5-9
2931770-0000	.DIVIDER	5-7, 5-9
2931771-0000	.CABLE DUCT	5-7, 5-9
2931772-0000	.CABLE DUCT	5-7, 5-9
2931773-0000	.CABLE DUCT	5-7, 5-9
2931774-0000	.CABLE DUCT	5-7, 5-9
2931775-0000	.CABLE DUCT	5-7, 5-9
2931776-0000	.CABLE DUCT	5-7, 5-9
2931777-0000	.CABLE DUCT	5-7, 5-9
2931778-0000	.CABLE DUCT	5-7, 5-9
2931779-0000	.CABLE DUCT	5-7, 5-9
2931780-0000	.CABLE DUCT	5-7, 5-9
2931781-0000	.CABLE DUCT	5-7, 5-9
2931782-0000	.CABLE DUCT	5-7, 5-9
2931783-0000	.PLATE	5-7, 5-9
2931784-0000	.DIVIDER	5-7, 5-9
2931785-0000	.ANGLE	5-7, 5-9
2931786-0000	.ANGLE	5-7, 5-9
2931787-0000	.ANGLE	5-7, 5-9
2931788-0000	.DIVIDER	5-7, 5-9
2934904-0000	.RAIL BRACKET	5-7, 5-9
2934905-0000	.SUPPORT	5-55
2936120-0000	.BRACKET	1-29
2936506-0000	.BRACKET	1-31
2936740-0000	.BRACKET	1-29
2937337-0000	.SPACER	1-47, 1-55
2943597-0000	.PLATE	1-31
2944164-0000	.PLATE	1-31
2944175-0000	.PIN	6-39
2945854-0000	.PLATE	12-41
2945972-0000	.SPACER	12-41
2952734-0000	.PLATE	12-47
2955385-0000	.BRACKET	12-43
2955386-0000	.BAR	12-43
2964292-0000	.BEAM	5-11, 5-13
2964293-0000	.BEAM	5-11, 5-13
2965155-0000	.SUPPORT	5-23, 5-25
2970142-0000	.HOLDER	2-9, 2-11
2970144-0000	.ARM	2-9, 2-11
2973936-0000	.ARM	2-9, 2-11
2973942-0000	.BRACKET	7-21
2973943-0000	.PLATE	7-27
2974857-0000	.SCREW	7-17
2974858-0000	.NUT	7-17
2981406-0000	.AIR BLOW REGULATOR	4-27
2981418-0000	.AIR NOZZLE	4-27
2983290-0100	.SPACER	12-49
2983291-0000	.SUPPORT	12-53
2983293-0100	.SPACER	12-49
2983294-0000	.SUPPORT	12-55
2983297-0000	.FOLLOWER ARM	6-47
2985711-0000	.PLATE	12-45
2985768-0000	.COLUMN	5-51
2985770-0000	.FLANGE	3-23
2985773-0000	.BRACKET	5-43
2985781-0000	.PLATE	1-43, 1-53
2985804-0000	.TUNNEL	5-125
2985809-0000	.HOUSING	1-59
2985810-0000	.BRUSH	10-13, 10-15
2985842-0000	.TUNNEL	5-117
2985843-0000	.COVER	5-119
2985847-0000	.PLATE	1-33
2986247-0200	.CAP DETECTOR	10-3
2987967-0000	.SPRING HOLDER	6-47
2987971-0000	.SPRING HOLDER	6-47
3010622-0000	.CANTILEVER	1-29
3010624-0000	.CANTILEVER	1-31
3017287-0000	.PLATE	1-33
3018761-0000	.TOOTHED PULLEY	3-19
3018762-0000	.TOOTHED PULLEY	3-21

Part No	Description	Page No
3020132-0000	.SPRING	7-21
3021525-0000	.PLATE	1-59
3022021-0000	.HOUSING	1-59
3022022-0000	.SHAFT	1-59
3022023-0000	.SHAFT	1-59
3022488-0000	.CAM	1-59
3022796-0000	.BELLOWS	1-13, 1-47, 1-55
3024866-0000	.SUPPORT	7-17
3031442-0000	.SPACER	5-51
3032335-0000	.HANDLE	12-25
3033726-0000	.CLAMP	12-25
3034434-0000	.TENSION SPRING	6-47, 10-13, 10-15
3034438-0200	.TOOTHED PULLEY	7-5
3034443-0000	.GUIDE	7-39
3034444-0000	.GUIDE	7-39
3039024-0000	.FRAME	6-39
3039027-0000	.PLATE	5-11, 5-13
3039030-0000	.TOOTHED PULLEY	1-29, 1-31, 1-37
3039032-0000	.LINK ATTACHMENT	3-17
3044285-0000	.TEMPLATE	10-5
3046886-0200	.DISTRIBUTION TERMINAL	9-31
3047311-0000	.PROTECTION	9-31
3047341-0000	.ANGLE BRACKET	5-7, 5-9
3047348-0100	.GLASS DOOR	5-109
3047350-0100	.TOOL	10-31
3052393-0000	.GLASS COVER	5-51
3053471-0000	.PIN	5-51
3053477-0000	.BRACKET	5-51
3053478-0000	.PUSHER	5-51
3053485-0100	.TOOL	12-19
3054997-0000	.SUPPORT	5-81, 5-83
3056497-0000	.DOOR	5-127
3058564-0000	.ROLLER	4-29, 4-31
3058565-0000	.SHAFT	4-29, 4-31
3058858-0000	.DOOR	5-123
3058859-0000	.BEAM	5-11, 5-13
3062041-0000	.SUPPORT	9-25
3068593-0000	.SCREW	4-5
3068594-0000	.BLOCK	4-5
3068595-0000	.BLOCK	4-5
3068596-0000	.COVER	4-5
3068597-0000	.PLATE	4-5
3068598-0000	.FRAME	4-5
3086231-0000	.SCREW	1-59
3086233-0000	.BRACKET	1-59
3087821-0000	.TOOL	12-75
3087822-0000	.PLATE	12-75
3087823-0100	.TOOL	12-73
3088629-0100	.CAMMODULE	6-21
3088630-0000	.CAM	6-31
3088841-0000	.BRACKET	6-31
3094675-0000	.PLATE	3-7
3094676-0000	.PLATE	3-7
3094677-0000	.HOLDER	3-7
3094678-0000	.COLUMN	3-7
3094829-0000	.BAR	3-27
3095787-0000	.SLIDE	7-13
3095790-0000	.HOLDER	5-51
3095791-0000	.PLATE	5-51
3095795-0000	.SLIDING STRIP	2-17
3095796-0000	.HOLDER	5-51
3096014-0000	.BRACKET	12-11
3098043-0000	.TEMPLATE	10-33
3098044-0000	.TEMPLATE	10-33
3098053-0000	.CLAMP BRACKET	3-15
3098055-0000	.TEMPLATE	10-31
3103326-0000	.GUIDE	1-75
3103328-0000	.BRACKET	1-75
3103670-0000	.ECCENTRIC SHAFT	6-13
3106998-0000	.BRACKET	2-9, 2-11
3106999-0000	.ARM	2-9, 2-11
3108404-0000	.SHAFT	8-5, 8-7
3108405-0000	.ROLLER	8-5, 8-7
3108407-0000	.BRACKET	8-5, 8-7
3108408-0000	.SHAFT	8-5, 8-7
3108409-0000	.PLATE	8-5, 8-7
3108410-0000	.PLATE	8-5, 8-7
3108411-0000	.PLATE	8-5, 8-7
3108412-0000	.PLATE	8-5, 8-7
3108413-0200	.PULLER	4-9, 4-11
3108414-0000	.SHAFT	8-5, 8-7
3108415-0000	.IDLER ROLLER	8-5, 8-7
3108416-0000	.BRACKET	8-5, 8-7
3108417-0000	.ROLLER	8-5, 8-7

Part No	Description	Page No
3108418-0000	.COVER	8-5, 8-7
3108419-0000	.FLANGE	8-5, 8-7
3108420-0000	.SHAFT	8-5, 8-7
3108422-0000	.PLATE	8-5, 8-7
3108423-0000	.BRACKET	8-5, 8-7
3108424-0000	.BRACKET	8-5, 8-7
3108425-0000	.ANCHOR	8-5, 8-7
3108426-0000	.ANCHOR	8-5, 8-7
3108427-0000	.PLATE	8-5, 8-7
3108428-0000	.COVER	8-5, 8-7
3108429-0000	.CABLE CONDUIT	8-5, 8-7
3108430-0000	.PROFILE	8-5, 8-7
3108431-0000	.BRACKET	8-5, 8-7
3108432-0000	.BRACKET	8-5, 8-7
3108433-0100	.DISCHARGE DEVICE	8-5, 8-7
3108434-0000	.LOCKING LEVER	8-5, 8-7
3108436-0000	.CLAMP	8-5, 8-7
3108437-0000	.HANDLE	8-5, 8-7
3108438-0000	.CURVE	8-9
3108439-0000	.SUPPORT	8-9
3108440-0000	.TUBE	8-9
3108441-0000	.TIE	8-9
3108442-0200	.COVER	4-9, 4-11
3108444-0200	.BODY	4-9, 4-11
3108445-0200	.PNEUMATIC COMPONENT	4-9, 4-11
3108446-0200	.SENSOR	4-9, 4-11
3108447-0100	.HARD DISK	4-9, 4-11
3108448-0200	.PHOTOCELL UNIT	4-9, 4-11
3108450-0000	.WASHER	4-21, 4-25
3108451-0000	.WASHER	4-13, 4-19, 4-21, 4-27, 4-29, 4-31, 4-33
3108452-0000	.WASHER	4-9, 4-11, 4-13, 4-17, 4-19, 4-27, 4-29, 4-31
3108453-0000	.WASHER	4-9, 4-11, 4-17, 4-27, 4-29, 4-31
3108454-0000	.WASHER	4-9, 4-11, 4-27, 4-29, 4-31
3108455-0000	.WASHER	4-9, 4-11
3108456-0000	.SCREW	4-15
3108458-0000	.WASHER	4-15, 4-29, 4-31
3108460-0000	.WASHER	4-29, 4-31
3108461-0000	.KEY	4-29, 4-31
3108462-0000	.SCREW	4-17, 4-29, 4-31
3108463-0000	.TAPER PIN	4-27
3108464-0000	.STUD BOLT	4-23, 4-29, 4-31
3108465-0000	.SECTOR	4-23
3108466-0000	.RING	4-23
3108471-0000	.PROTECTION RING	4-9, 4-11, 4-17
3108472-0000	.SUPPORT	4-29, 4-31
3108473-0000	.COVER	4-29, 4-31
3108474-0000	.COVER	4-29, 4-31
3108475-0000	.PLATE	4-29, 4-31
3108476-0000	.CARRIER	4-29, 4-31
3108477-0000	.COVER	4-29, 4-31
3108478-0000	.COVER	4-29, 4-31
3108479-0000	.COVER	4-29, 4-31
3108480-0000	.PLATE	4-29, 4-31
3108481-0000	.BED	4-29, 4-31
3108482-0000	.UNIT CONVERGER	4-29, 4-31
3108483-0000	.COVER	4-29, 4-31
3108484-0000	.WASHER	4-29, 4-31
3108485-0000	.WASHER	4-29, 4-31
3108486-0000	.SPACER	4-29, 4-31
3108487-0000	.PIN	4-29, 4-31
3108488-0000	.GUIDE	4-29, 4-31
3108489-0000	.GUIDE	4-29, 4-31
3108490-0000	.COVER	4-29, 4-31
3108491-0000	.PLATE	4-29, 4-31
3108492-0000	.CABLE CONDUIT	4-29, 4-31
3108493-0000	.WASHER	4-29, 4-31
3108494-0000	.PLATE	4-29, 4-31
3108495-0000	.ROLLER	4-29, 4-31
3108496-0000	.PLATE	4-29, 4-31
3108497-0000	.GASKET	4-29, 4-31
3108498-0000	.GASKET	4-29, 4-31
3108499-0000	.ANCHOR	4-29, 4-31
3108500-0000	.SHAFT	4-29, 4-31
3108501-0000	.PLUG	4-29, 4-31
3108975-0000	.ARM	2-9, 2-11
3108977-0000	.SHAFT	2-9, 2-11
3108978-0000	.WASHER	2-9, 2-11
3108979-0000	.CAM	3-17
3108987-0000	.DRIVE SHAFT	1-29, 1-31
3114082-0000	.BRACKET	1-83
3114083-0000	.AXLE PIN	1-83, 1-85
3114084-0000	.ROLL	1-83, 1-85
3114692-0000	.PLATE	1-83
3114810-0100	.ROLLER	1-81

Part No	Description	Page No
3115079-0000	.DRIVE PULLEY	1-29, 1-31
3115080-0000	.FLANGE	1-29, 1-31
3115081-0000	.SPACER	1-29, 1-31
3115098-0000	.SHAFT	1-81
3115099-0200	.PACKAGE ALIGNER	1-71, 1-73
3115101-0000	.WASHER	1-81
3115103-0000	.SHAFT	1-81
3115224-0000	.FLANGE	4-29, 4-31
3115225-0000	.PLATE	4-29, 4-31
3115226-0000	.THREADED ROD	4-29, 4-31
3115227-0000	.BAR	4-29, 4-31
3115228-0000	.COUPLING	4-29, 4-31
3115229-0000	.WASHER	4-29, 4-31
3115230-0000	.FOOT	4-29, 4-31
3115231-0000	.HANDLE	4-29, 4-31
3115232-0000	.HINGE	4-15, 4-29, 4-31
3115233-0000	.CLAMP	4-9, 4-11, 4-29, 4-31
3115234-0000	.CAP	4-9, 4-11, 4-29, 4-31
3115235-0000	.MAGNET	4-29, 4-31
3115239-0000	.SHAFT	4-9, 4-11
3115240-0000	.REDUCER	4-9, 4-11
3115241-0000	.CAP	4-9, 4-11
3115242-0000	.BUSHING	4-9, 4-11
3115243-0000	.SCREW	4-9, 4-11
3115244-0000	.PROTECTIVE COVER	4-9, 4-11
3115245-0000	.SUPPORT	4-9, 4-11
3115247-0000	.ARM	4-9, 4-11
3115248-0000	.CENTERING	4-9, 4-11
3115249-0000	.CONNECTION BOX	4-9, 4-11
3115250-0000	.BLOCK	4-9, 4-11
3115251-0000	.BRACKET	4-9, 4-11
3115253-0000	.SUPPORT	4-9, 4-11
3115254-0000	.SUPPORT	4-9, 4-11
3115255-0000	.BASE	4-9, 4-11
3115257-0000	.CONNECTION	4-9, 4-11
3115258-0000	.CONNECTION	4-9, 4-11
3115259-0000	.COVER	4-9, 4-11
3115263-0000	.CLAMP	4-9, 4-11, 4-21
3115267-0000	.PHOTOCELL	4-25
3115268-0000	.BUSHING	4-13
3115269-0000	.WASHER	4-13
3115270-0000	.PIN	4-13
3115271-0000	.SPRING	4-13
3115272-0000	.PLATE	4-13
3115273-0000	.GUIDE	4-13
3115274-0000	.SCREW	4-13, 4-17
3115275-0000	.COVER	4-17
3115276-0000	.BRACKET	4-17
3115277-0000	.SUPPORT	4-17
3115278-0000	.PLATE	4-17
3115279-0000	.COVERING	4-17
3115281-0000	.LABEL TAPE	4-17
3115282-0000	.FOOT	4-17
3115283-0000	.CLAMP	4-17
3115287-0000	.PLATE	4-15
3115288-0000	.CLAMP	4-15
3115289-0000	.FUNNEL	4-15
3115290-0000	.DAMPING ELEMENT	4-15
3115292-0000	.PLATE	4-15
3115293-0000	.CROSS BAR	4-15
3115294-0000	.CROSS BAR	4-15
3115295-0000	.CROSS BAR	4-15
3115296-0000	.PANEL	4-15
3115297-0000	.PANEL	4-15
3115298-0000	.PANEL	4-15
3115299-0000	.PANEL	4-15
3115300-0000	.HANDLE	4-15, 4-27
3115301-0000	.SCREW	4-15
3115302-0000	.BRACKET	4-21
3115303-0000	.DIP STICK	4-21
3115304-0000	.PIPE	4-21
3115305-0000	.BRACKET	4-21
3115306-0000	.PIN	4-21
3115307-0000	.CLAMP	4-21
3115308-0000	.PLATE	4-21
3115309-0000	.BEARING	4-21
3115346-0000	.CARRIER	4-27
3115347-0000	.PLATE	4-27
3115348-0000	.WASHER	4-27
3115349-0000	.PIN	4-27
3115350-0000	.PIN	4-27
3115351-0000	.PIN	4-27
3115356-0000	.CENTERING	4-27
3115368-0000	.BASE	4-27

Part No	Description	Page No
3117136-0000	.WASHER	1-81
3117145-0000	.ANGLE	1-21
3117146-0000	.GUIDE	1-21
3117151-0000	.PLATE	1-81
3117152-0000	.PLATE	1-81
3117153-0000	.PLATE	1-81
3117416-0000	.SPACER	12-29
3117845-0000	.TIMING BELT	7-33, 7-35
3117856-0200	.AXIS Z HOTMELT GUN	9-7, 9-9, 9-21, 9-23
3117862-0000	.TIMING BELT	2-13
3120838-0000	.GUIDE	1-21
3120839-0000	.PLATE	1-69
3120840-0000	.PLATE	1-69
3120841-0000	.ANGLE	1-69
3120842-0000	.GUIDE	1-69
3123914-0000	.STUD	3-17
3123918-0000	.COVER	5-95, 5-97
3123924-0000	.COVER	1-79
3123928-0000	.BRACKET	1-83
3123929-0000	.BRACKET	1-83
3124360-0000	.REDUCTION SLEEVE	4-27
3124379-0000	.FITTING	8-11
3124420-0000	.BRACKET	4-19
3124423-0300	.CAP SORTER	4-7
3124424-0200	.VOLUME KIT	4-7
3124425-0000	.GUIDE	4-27
3124426-0000	.GUIDE	4-27
3124427-0000	.AIR NOZZLE	4-27
3124428-0000	.PULLER	4-27
3124429-0000	.GUIDE	4-27
3124430-0000	.GUIDE	4-27
3124431-0000	.GUIDE	4-27
3124432-0000	.AIR NOZZLE	4-27
3124433-0000	.PLATE	4-27
3124434-0000	.GUIDE	4-27
3124435-0000	.STRIP	4-17
3124436-0000	.BELT	4-29, 4-31
3124437-0100	.GUIDE RAIL	8-3
3124438-0000	.COVER	8-11
3124439-0000	.COVER	8-11
3124440-0000	.FLAP	8-11
3124441-0000	.AIR NOZZLE	8-11
3124444-0000	.AIR NOZZLE	4-27
3124472-0000	.SHIM	4-9, 4-11
3124474-0000	.FLANGE	4-33
3124475-0000	.SPACER	4-33
3124476-0000	.COVER	4-33
3124477-0000	.PLATE	4-27
3124525-0000	.SUPPORT	4-29, 4-31
3124526-0000	.SUPPORT	4-29, 4-31
3124527-0100	.SUPPORT	4-29, 4-31
3124528-0000	.GUIDE	4-9, 4-11
3124529-0000	.PIN	4-9, 4-11
3124530-0000	.PLATE	4-9, 4-11
3124534-0000	.LOCKING LEVER	4-9, 4-11
3124535-0000	.STOP SCREW	4-9, 4-11
3124536-0000	.BRACKET	4-9, 4-11
3124537-0000	.BASE	4-9, 4-11
3124539-0000	.STOP SCREW	8-5, 8-7
3124541-0000	.AIR NOZZLE	4-27
3132469-0200	.ELECTRICAL DOCUMENT	11-5
3132972-0000	.SHIM	6-31
3134551-0200	.BARCODE SCANNER	12-3
3137424-0000	.GUIDE	7-37
3137425-0000	.GUIDE	7-37
3139123-0100	.INFEED GUIDE	1-71, 1-73
3139124-0000	.BRACKET	1-75
3139125-0000	.BRACKET	1-75
3141453-0200	.LINK ARM	3-3
3141454-0000	.BRACKET	3-9
3141456-0200	.SERVO MOTOR	3-3
3141457-0000	.GUIDE CONSOLE	3-11
3141458-0000	.BEARING CONSOLE	3-11
3141464-0000	.STOPPER	3-29
3141465-0000	.PLATE	3-15
3141467-0000	.PLATE	3-27
3141468-0000	.BEARING BRACKET	3-9
3143893-0000	.BEARING BRACKET	3-9
3143894-0000	.COUNTERWEIGHT	3-25
3143896-0000	.BRACKET	3-25
3143897-0000	.PLATE	3-29
3143898-0000	.LINK ARM	3-9
3143899-0000	.LINK ARM	3-9
3143900-0000	.PLATE	3-9

Part No	Description	Page No
3143903-0000	.PLATE	3-9
3143905-0200	.HOTMELT GUN	3-3
3143906-0000	.BRACKET	3-5
3143907-0000	.PLATE	3-9
3143908-0000	.ASSEMBLY PLATE	3-27
3143909-0000	.BAR	3-27
3143910-0000	.PLATE	3-11
3143911-0000	.PLATE	3-5
3143912-0000	.BRACKET	3-5
3143913-0000	.PLATE	3-9
3143914-0000	.PLATE	3-5
3143915-0000	.GABLE PART	3-5
3143916-0000	.COVER	3-5
3147226-0000	.ADAPTER	1-11, 1-13, 1-19, 1-29, 1-31, 1-43, 1-47, 1-53, 1-55, 2-15
3149900-0000	.FLANGE	1-81
3149901-0000	.PLATE	1-81
3149902-0000	.SHAFT	1-81
3149906-0000	.PLATE	1-81
3149907-0000	.SPACER	1-81
3149908-0000	.GUIDE	1-81
3149910-0000	.COVER	1-81
3149911-0000	.SPACER	1-81
3149912-0000	.SHAFT	1-81
3152710-0000	.BRACKET	10-21
3152724-0000	.WHEEL	1-81
3156384-0000	.PROFILE	10-21
3156385-0000	.PROFILE	10-21
3156411-0000	.PLATE	10-21
3158206-0000	.ROLLER BRACKET	6-43
3159870-0000	.BRACKET	10-21
3159886-0000	.BRACKET	10-21
3159887-0000	.BRACKET	10-21
3159895-0000	.PLATE	10-21
3159896-0000	.PLATE	10-21, 12-27
3161464-0000	.BRACKET	1-11, 1-19, 1-43, 1-53
3161465-0000	.BRACKET	1-11, 1-19, 1-43, 1-53
3162977-0000	.GUIDE	1-71, 1-73
3163103-0000	.SEAL HOLDER	3-9
3163104-0000	.GUIDE	3-11
3163108-0000	.STOPPER	3-29
3163109-0000	.CURVE	3-11
3163112-0000	.SHAFT	2-19
3163113-0100	.CAM	2-17
3163122-0000	.DISTRIBUTOR BLOCK	3-15
3163123-0000	.DISTRIBUTOR BLOCK	3-9
3163193-0000	.PLATE	2-9, 2-11
3166547-0000	.BRACKET	1-77
3170032-0000	.SPACER	5-47
3170034-0000	.PLATE	5-47
3170035-0000	.BRACKET	5-47
3170036-0000	.PLATE	5-47
3170037-0000	.PLATE	5-137
3171833-0000	.DISTRIBUTOR BLOCK	3-11
3171838-0000	.PLATE	5-95, 5-97
3172144-0000	.PLATE	5-137
3177603-0000	.PLATE	1-81
3177654-0000	.BLOCK	5-11, 5-13
3180122-0000	.TOOL	10-5
3180130-0000	.TOOL	10-5
3186487-0000	.PROTECTION PLUG	1-11, 1-19, 1-43, 1-53
3190281-0000	.BOX	9-27
3190282-0000	.WELDED CABINET	9-25
3190285-0100	.ELECTRICAL CONVERSION	9-3
3193666-0000	.SUPPORT	1-69
3199131-0000	.FUSE PANEL LABEL	9-7, 9-9
3199182-0000	.FUSE PANEL LABEL	9-21, 9-23
3199707-0100	.COOLING UNIT	9-3
3199873-0100	.DRIVE	1-41
3199874-0100	.DRIVE	1-49
3199886-0100	.SIDE FRAME	1-39
3199887-0100	.SIDE FRAME	1-39
3199889-0100	.SIDE ADJUSTER	1-5
3199890-0100	.SIDE ADJUSTER	1-5
3199891-0100	.DRIVE	1-7
3199892-0100	.PACKAGE POSITIONER	1-3
3199893-0100	.PACKAGE POSITIONER	1-3
3199894-0100	.ADJUSTABLE GUIDE	1-39
3199895-0100	.PACKAGE HANDLING	1-3
3199896-0100	.PNEUMATIC CYLINDER	1-57
3199898-0100	.ROLLER	1-71, 1-73
3199899-0000	.SCREW	1-29, 1-31
3199900-0000	.BRACKET	1-9
3202908-0000	.SCREW	1-9, 1-17, 1-45, 1-51
3203258-0000	.GUIDE	1-9, 1-51

Part No	Description	Page No
3203260-0000	.GUIDE	1-17, 1-45
3203747-0000	.PLATE	1-11
3203752-0000	.BRACKET	5-51
3203757-0000	.SCREW PLUG	12-5
3203761-0100	.HEATER	5-45
3203763-0100	.VISION SYSTEM	5-49
3203764-0100	.HEATING ELEMENT	5-49
3203766-0100	.CONVERSION GROUP	5-49
3208104-0000	.SHAFT	2-15
3208122-0100	.PHOTOCELL BRACKET	1-71, 1-73
3208157-0100	.ADJUSTABLE GUIDE	1-5
3208664-0100	.CENTRAL LUBRICATION	5-3
3209472-0000	.SPACER	1-65, 1-67
3209473-0000	.SHIM	1-85
3209474-0000	.BRACKET	1-85
3209475-0000	.COVER	1-63
3209476-0000	.COVER	1-63
3209477-0000	.PLATE	1-85
3209478-0000	.BRACKET	1-85
3209479-0000	.BELLOWS	1-63
3209480-0100	.FRAME UPPER	1-7
3209481-0100	.FRAME UPPER	1-15
3209482-0100	.FRAME BOTTOM	1-49
3209483-0100	.FRAME BOTTOM	1-41
3210206-0100	.LAMP	5-77
3210207-0100	.LAMP	5-77
3210208-0000	.SPACER	5-85
3210209-0000	.COVER	5-85
3210219-0100	.EJECTOR	10-17
3210220-0000	.PROFILE	10-21
3210221-0000	.SPACER	10-21
3210222-0000	.SPACER	10-21
3210223-0000	.PROFILE	10-21
3210225-0000	.PLATE	10-21
3210226-0000	.PLATE	10-21
3210227-0000	.SPACER	10-21
3210228-0000	.BRACKET	10-19
3210229-0000	.SLIDE PLATE	10-19
3210230-0000	.SPACER	10-21
3210231-0000	.SPACER	10-21
3210232-0100	.PHOTOCELL BRACKET	10-17
3210234-0000	.COVER	10-19
3210235-0000	.PUSHER	10-19
3210236-0000	.SUPPORT	10-19
3210237-0000	.SHAFT	10-19
3211821-0000	.BRACKET	12-41
3211822-0000	.MOTOR BRACKET	12-21, 12-23, 12-29
3211823-0000	.FLANGE	12-25
3211824-0000	.BRACKET	12-21
3212197-0000	.COVER	5-129
3212199-0000	.COVER	5-115
3212201-0000	.TUBE HOLDER	5-129
3212465-0000	.COVER	12-21
3214100-0000	.BRACKET	5-75
3216180-0000	.PIPE	5-23, 5-25
3216184-0000	.TIGHTENING CLAMP	5-91, 5-93
3217276-0100	.DRIVE	1-15
3217277-0000	.PLATE	1-9
3217278-0100	.WARNING SIGN	1-3
3217280-0000	.SHAFT	1-29, 1-31
3217564-0000	.TIGHTENING CLAMP	5-91, 5-93
3217565-0100	.DOOR HINGE	5-5
3217567-0100	.WARNING SIGN	5-3
3217906-0000	.GUIDE	1-9
3217907-0000	.GUIDE	1-17
3217908-0000	.GUIDE	1-45
3217909-0000	.GUIDE	1-51
3217910-0000	.FRAME	1-51
3217911-0000	.FRAME	1-9
3217912-0000	.FRAME	1-45
3217913-0000	.FRAME	1-17
3217924-0000	.PLATE	1-19
3218060-0100	.WARNING SIGN	5-99
3220121-0100	.HOTMELT UNIT	5-91, 5-93
3220227-0100	.START-UP KIT	10-11
3223674-0000	.CABLE DUCT	9-33
3223764-0000	.BRACKET	3-31
3223765-0000	.PLATE	3-31
3225418-0000	.COVER	12-25
3225865-0000	.PULLEY	1-29, 1-31
3227371-0000	.SHAFT	1-29, 1-31
3227417-0100	.WARNING SIGN	10-17
3227546-0000	.SPROCKET	12-23, 12-29, 12-41
3227565-0000	.PNEUMATIC DIAGRAM	10-3

Part No	Description	Page No
3228191-0000	.WATER DIAGRAM	10-3
3228275-0000	.LUBRICATION DIAGRAM	10-3
3235825-0000	.PLATE	10-21
3235826-0000	.PLATE	10-21
3243907-0000	.BRACKET	12-5
3243908-0000	.SUPPORT	12-5
3243909-0000	.SPACER	12-5
3246646-0000	.BRACKET	5-75
3246705-0000	.COVER	10-21
3247207-0000	.COVER	12-5
3248864-0000	.BRACKET	12-5
3248865-0000	.SUPPORT	12-5
3249413-0000	.SPACER	10-19
3249881-0000	.COVER	10-21
3252696-0000	.BRACKET	5-41, 12-71
3257112-0000	.PUSH BUTTON BOX	5-131
3257421-0000	.PLATE	1-29, 1-31
3257422-0000	.PLATE	1-29, 1-31
3260287-0000	.CAP	12-5
3265768-0000	.PLATE	12-25
3265769-0000	.CLAMP	12-25
3265772-0000	.PLUG	12-5
3265919-0000	.PLATE	12-37
3265920-0000	.RAIL	12-37
3266068-0000	.BRACKET	12-31
3266321-0000	.CONNECTION BOX	12-33
3266431-0000	.SUPPORT	12-43
3266503-0000	.PLATE	12-37
3266607-0100	.POWER SUPPLY UNIT	12-19
3266683-0100	.JUNCTION BOX	12-33
3267568-0000	.PLATE	12-57
3267572-0000	.RAIL	12-7
3267662-0000	.BRACKET	12-59
3267663-0000	.BRACKET	12-59
3267696-0000	.BRACKET	12-59
3267762-0000	.CONNECTION BOX	12-7
3269560-0000	.BRACKET	12-27
3269873-0100	.MOTOR UNIT	12-19
3269874-0100	.MOTOR UNIT	12-19
3269875-0100	.MOTOR UNIT	12-19
3269876-0100	.MOTOR UNIT	12-19
3269877-0100	.MOTOR UNIT	12-19
3269878-0100	.FASTENING PLATE	12-19
3269879-0100	.SENSOR	12-19
3269880-0100	.SENSOR	12-19
3269881-0100	.SENSOR	12-19
3269882-0100	.SENSOR	12-19
3269883-0100	.SENSOR	12-19
3269884-0100	.JUNCTION BOX	12-31
3269989-0100	.PHOTOCELL BRACKET	12-19
3272544-0000	.SIGN	3-5
3272545-0000	.SIGN	3-5
3272547-0000	.BRACKET	5-95, 5-97
3273568-0000	.BRACKET	12-5
3275970-0100	.LIFTING DEVICE	12-3
3276593-0000	.PLATE	12-27
3276594-0000	.PLATE	12-27
3276595-0000	.BRACKET	12-27
3276599-0100	.ELECTRICAL MATERIALS	12-19
3289869-0000	.DRIVE SHAFT	1-37
3290004-0000	.FLANGE	1-37
3293084-0000	.THREADED CONNECTION	5-57, 5-73
3296408-0100	.HOTMELT UNIT	5-91, 5-93
3296413-0100	.START-UP KIT	10-11
3297666-0100	.JUNCTION BOX	12-5
3298642-0000	.COVER	1-33
3300287-0000	.WHEEL	1-81
3302583-0000	.BRACKET	2-17
3305706-0000	.CURVE	2-5, 2-7
3307591-0000	.CURVE	2-5, 2-7
3311368-0000	.SUPPORT	12-7
3311660-0000	.ROLLER	2-9, 2-11
3311661-0000	.SHAFT	2-9, 2-11
3311662-0000	.TOOTHED PULLEY	7-9
3315497-0000	.ARM	2-9, 2-11
3315733-0000	.BRACKET	10-23
3321588-0200	.ADHESIVE DETECTOR	12-3
3321595-0200	.ELECTRICAL MATERIALS	12-5
3324456-0000	.SHAFT	2-9, 2-11
3326691-0000	.PLATE	2-19
3326954-0000	.JUNCTION NIPPLE	1-29, 1-31
3326956-0000	.JUNCTION NIPPLE	1-11, 1-13, 1-19, 1-43, 1-47, 1-53, 1-55
3329210-0000	.GLASS DOOR	5-121
3329211-0000	.GLASS DOOR	5-133

Part No	Description	Page No
3329212-0000	.GLASS DOOR	5-109
3329213-0000	.GLASS DOOR	5-135
3329214-0000	.GLASS DOOR	5-141
3329215-0000	.GLASS DOOR	5-143
3329217-0000	.GLASS DOOR	5-145
3341018-0000	.SLIDE RAIL	1-75
3347678-0000	.CLAMPING PART	7-37
3348219-0000	.SPACER	7-37
3348220-0000	.SPACER	7-37
3349861-0000	.BRACKET	12-5
3349862-0000	.BRACKET	12-5
3350177-0000	.TEMPLATE	10-31
3353745-0000	.CANTILEVER	8-5, 8-7
3353746-0000	.BRACKET	8-5, 8-7
3356197-0000	.BRACKET	10-21
3356198-0000	.BRACKET	10-21
3357974-0000	.TOOL	12-5
3363225-0000	.CLAMPING PART	7-37
3363694-0100	.PLINTH	9-67
3365191-0000	.BUSHING	4-9, 4-11
3365192-0000	.WORM GEAR	4-9, 4-11
3365194-0000	.WORM GEAR	4-29, 4-31
3365197-0000	.LID	4-9, 4-11
3365221-0000	.DIVIDER	9-33
3381527-0000	.THREADED ROD	1-47, 1-55
3389610-0000	.SET OF SIGNS	12-9
3389611-0000	.CABLE MARKING	12-9

Part No	Description	Page No

Part No	Description	Page No	Part No	Description	Page No

Part No	Description	Page No	Part No	Description	Page No

Tetra Pak®

SPC
Spare Parts Catalogue

Pos	Part No	Description	Page No
A			
P01A4000	90604-3805	OPER. PANEL 15" , 2711P-T15C4D8TP, SER A	5-101
B			
A01B6000	90602-8807	LIMIT SW. SZ 2586.010	9-25
A01B6001	90602-8807	LIMIT SW. SZ 2586.010	9-25
A01B6010	90606-0465	THERMOSTAT, XSEKTS011	9-67
C50B0013	90459-5529	PHOTOCELL E3Z-T86A, SENDER+RECIEVER	4-29, 4-31
C50B1001	90458-2907	PROX.SWITCH IFS204	4-9, 4-11
C50B1002	90458-2907	PROX.SWITCH IFS204	4-9, 4-11
C50B2000	90459-7366	PHOTOCELL, WTB4-3P3161 F20	4-25
F09B2010	90459-6961	SAFETY SENSOR, ADAM E 0,5 M12	5-81, 5-83
F09B2011	90459-4089	SAFETY SENSOR, EVA E, 20-046-06	5-81, 5-83
F09B2012	90459-6961	SAFETY SENSOR, ADAM E 0,5 M12	5-81, 5-83
F09B2013	90459-4089	SAFETY SENSOR, EVA E, 20-046-06	5-81, 5-83
F09B2014	90459-6961	SAFETY SENSOR, ADAM E 0,5 M12	5-81, 5-83
F09B2015	90459-4089	SAFETY SENSOR, EVA E, 20-046-06	5-81, 5-83
F09B2016	90459-6961	SAFETY SENSOR, ADAM E 0,5 M12	5-81, 5-83
F09B2017	90459-4089	SAFETY SENSOR, EVA E, 20-046-06	5-81, 5-83
F09B2030	90459-6961	SAFETY SENSOR, ADAM E 0,5 M12	5-81, 5-83
F09B2031	90459-4089	SAFETY SENSOR, EVA E, 20-046-06	5-81, 5-83
F09B2032	90459-6961	SAFETY SENSOR, ADAM E 0,5 M12	5-81, 5-83
F09B2033	90459-4089	SAFETY SENSOR, EVA E, 20-046-06	5-81, 5-83
F09B2034	90459-6961	SAFETY SENSOR, ADAM E 0,5 M12	5-81, 5-83
F09B2035	90459-4089	SAFETY SENSOR, EVA E, 20-046-06	5-81, 5-83
F09B2036	90459-5627	CONNECTION, TINA 1-A	5-81, 5-83
F09B2041	90459-6913	MAGNETIC LOCK, JSD-ZH-EM1-K	5-81, 5-83
F09B2042	90459-6913	MAGNETIC LOCK, JSD-ZH-EM1-K	5-81, 5-83
F09B3010	90459-6961	SAFETY SENSOR, ADAM E 0,5 M12	4-17
F09B3011	90459-4089	SAFETY SENSOR, EVA E, 2TLA020046R0600	4-15
F09B3012	90459-6961	SAFETY SENSOR, ADAM E 0,5 M12	4-17
F09B3013	90459-4089	SAFETY SENSOR, EVA E, 2TLA020046R0600	4-15
F09B3014	90459-6961	SAFETY SENSOR, ADAM E 0,5 M12	4-17
F09B3015	90459-4089	SAFETY SENSOR, EVA E, 2TLA020046R0600	4-15
F09B3016	90459-6961	SAFETY SENSOR, ADAM E 0,5 M12	4-13
F09B3017	90459-4089	SAFETY SENSOR, EVA E, 2TLA020046R0600	4-13
G30B0023	90601-1027	LIMIT SWITCH, D4C-1G01 5M	12-45
G30B0025	90601-1027	LIMIT SWITCH, D4C-1G01 5M	12-47
G30B0027	90601-1027	LIMIT SWITCH, D4C-1G01 5M	12-45
G30B0028	90601-1027	LIMIT SWITCH, D4C-1G01 5M	12-57
G30B1001	90459-6947	PHOTOCELL, WF 225-B4150	1-77
G30B1002	90458-2907	PROX.SWITCH IFS204	6-17
G30B1022	90601-1027	LIMIT SWITCH, D4C-1G01 5M	12-47
G40B0010	90459-6948	INDUCTIVE SENSOR, IFS 206	3-29
G40B0011	90459-6948	INDUCTIVE SENSOR, IFS 206	3-29
G40B0012	90459-6948	INDUCTIVE SENSOR, IFS 206	3-27
G40B0013	90459-6948	INDUCTIVE SENSOR, IFS 206	3-27
G40B2000	90459-6948	INDUCTIVE SENSOR, IFS 206	7-21
G40B2002	90600-3272	PROX. SENSOR, SMT-8M-PS-24V-K-5,0-OE	7-21
G40B2025	90601-1027	LIMIT SWITCH, D4C-1G01 5M	12-59
G40B2026	90459-6948	INDUCTIVE SENSOR, IFS 206	12-59
G40B5001	90606-2469	FORK SENSOR, WFM80-60P321	8-5, 8-7
G40B5005	90606-2469	FORK SENSOR, WFM80-60P321	8-5, 8-7
G41B0000	90605-2649	IN-SIGHT 5600 CAMERA, IS5600-01	12-5
G41B0011	90601-1027	LIMIT SWITCH, D4C-1G01 5M	12-5
G41B0020	90606-2763	COLOUR SENSOR, CS81-P3612	12-5
G50B1005	90458-2907	PROX.SWITCH IFS204	4-21
G70B0000	90604-2784	IN-SIGHT 5100 CAMERA, IS5100-01	5-51
K01B8001	90459-6426	PRESSURE GUARD PEV-1/4-B-OD	5-71
V01B5001	90600-7888	INDUCTIVE SENSOR, IFT 203	5-95, 5-97
V01B9001	90603-0408	LUBRICATION UNIT, 10P-P4-H1 LM12	5-75
V01B9002	90603-1938	PRESSURE SWITCH, 1800 KPA, 28545-251-2	5-75
W20B0003	90606-4464	LASER SENSOR, WSE9L-3P2237	1-31
W21B0000	90458-2907	PROX.SWITCH IFS204	1-59
W21B1025	90601-1027	LIMIT SWITCH, D4C-1G01 5M	12-43
W21B2025	90601-1027	LIMIT SWITCH, D4C-1G01 5M	12-43
W21B3000	90606-4464	LASER SENSOR, WSE9L-3P2237	10-21
W21B3002	90606-4464	LASER SENSOR, WSE9L-3P2237	10-21
W21B3004	90606-4464	LASER SENSOR, WSE9L-3P2237	10-21
W21B3008	90606-4464	LASER SENSOR, WSE9L-3P2237	12-27
W21B3012	90606-4464	LASER SENSOR, WSE9L-3P2237	10-21
W21B4002	90459-5529	PHOTOCELL E3Z-T86A, SENDER+RECIEVER	5-23, 5-25
W21B4004	90459-5529	PHOTOCELL E3Z-T86A, SENDER+RECIEVER	5-23, 5-25
W21B4006	90459-5529	PHOTOCELL E3Z-T86A, SENDER+RECIEVER	5-23, 5-25
W21B4008	90459-5529	PHOTOCELL E3Z-T86A, SENDER+RECIEVER	5-23, 5-25
W21B4023	90459-5529	PHOTOCELL E3Z-T86A, SENDER+RECIEVER	1-69
W21B6002	90459-5529	PHOTOCELL E3Z-T86A, SENDER+RECIEVER	5-23, 5-25
W21B6004	90459-5529	PHOTOCELL E3Z-T86A, SENDER+RECIEVER	12-69
W21B6005	90458-2907	PROX.SWITCH IFS204	12-65
E			
A01E6000	90459-0813	COOLING UNIT, KB20A619.01	9-5
A01E6000	90600-5815	COOLING UNIT, KB20A21341.03	9-19
A01E7000	90602-1250	LIGHT FIXTURE, SLIM LED 112-544-001	9-25
A01E7001	90602-1250	LIGHT FIXTURE, SLIM LED 112-544-001	5-85, 5-87

Pos	Part No	Description	Page No
E			
A01E7002	90602-1250	LIGHT FIXTURE, SLIM LED 112-544-001	5-85
G41E0002	90605-9651	UV ILLUMINATION, LDR2-100UV365-IP	12-5
W21E8001	90606-1840	CARTRIDGE HEATER, 3KW 230V	5-53
F			
A01F1001	90600-7487	SURGE PROTECTION DEV., VAL-MS 230/3+1 FM	9-27
A01F1004	90459-5813	AUXILIARY CONTACT, FAZ-XHIN11	9-7, 9-9, 9-21, 9-23
A01F1004	315746-0250	MINIATURE CIRCUIT BREAKER, FAZ-C25/3-NA	9-21, 9-23
A01F1004	354002-0250	MINIATURE CIRCUIT BREAKER, FAZ-C25/3	9-7, 9-9
A01F1005	90458-2507	FUSE HOLDER, USBCC1	9-51
A01F1005	90458-2510	FUSE, ATDR6	9-51
A01F2000	315746-0060	MINIATURE CIRCUIT BREAKER, FAZ-C6/3-NA	9-21, 9-23
A01F2000	354002-0060	MINIATURE CIRCUIT BREAKER, FAZ-C6/3	9-7, 9-9
A01F2001	315744-0040	MINIATURE CIRCUIT BREAKER, FAZ-C4/1-NA	9-21, 9-23
A01F2001	354000-0040	MINIATURE CIRCUIT BREAKER, FAZ-C4/1	9-7, 9-9
A01F2002	315744-0040	MINIATURE CIRCUIT BREAKER, FAZ-C4/1-NA	9-21, 9-23
A01F2002	354000-0040	MINIATURE CIRCUIT BREAKER, FAZ-C4/1	9-7, 9-9
A01F2003	315744-0040	MINIATURE CIRCUIT BREAKER, FAZ-C4/1-NA	9-21, 9-23
A01F2003	354000-0040	MINIATURE CIRCUIT BREAKER, FAZ-C4/1	9-7, 9-9
A01F2004	315744-0040	MINIATURE CIRCUIT BREAKER, FAZ-C4/1-NA	9-21, 9-23
A01F2004	354000-0040	MINIATURE CIRCUIT BREAKER, FAZ-C4/1	9-7, 9-9
A01F2005	315744-0040	MINIATURE CIRCUIT BREAKER, FAZ-C4/1-NA	9-21, 9-23
A01F2005	354000-0040	MINIATURE CIRCUIT BREAKER, FAZ-C4/1	9-7, 9-9
A01F2020	351418-0060	MINIATURE CIRC. BREAK., FAZ-D6/3 3-POLE	12-37
A01F2021	351416-0100	MINIATURE CIRC. BREAK., FAZ -D10 1-POLE	12-37
A01F2022	351416-0100	MINIATURE CIRC. BREAK., FAZ -D10 1-POLE	12-37
A01F2023	351416-0100	MINIATURE CIRC. BREAK., FAZ -D10 1-POLE	12-37
A01F2024	351416-0100	MINIATURE CIRC. BREAK., FAZ -D10 1-POLE	12-37
A01F2025	351416-0100	MINIATURE CIRC. BREAK., FAZ -D10 1-POLE	12-37
A01F3000	315744-0040	MINIATURE CIRCUIT BREAKER, FAZ-C4/1-NA	9-21, 9-23
A01F3000	354000-0040	MINIATURE CIRCUIT BREAKER, FAZ-C4/1	9-7, 9-9
A01F6000	315744-0060	MINIATURE CIRCUIT BREAKER, FAZ-C6/1-NA	9-21, 9-23
A01F6000	354000-0060	MINIATURE CIRCUIT BREAKER, FAZ-C6/1	9-7, 9-9
A01F7000	315744-0040	MINIATURE CIRCUIT BREAKER, FAZ-C4/1-NA	9-21, 9-23
A01F7001	90459-5811	RESIDUAL CURRENT DEVICE, FI-25/2/003-A	9-7, 9-9
A01F7002	354000-0100	MINIATURE CIRCUIT BREAKER, FAZ-C10/1	9-7, 9-9
C50F0000	90259-0313	AUXILIARY SWITCH, NHI21-PKZ0	9-7, 9-9, 9-21, 9-23
C50F0000	90459-5323	OVERLOAD PROTECTION, PKZM0-1	9-7, 9-9, 9-21, 9-23
C50F1000	315744-0060	MINIATURE CIRCUIT BREAKER, FAZ-C6/1-NA	9-21, 9-23
C50F1000	354000-0060	MINIATURE CIRCUIT BREAKER, FAZ-C6/1	9-7, 9-9
G40F4000	90259-0313	AUXILIARY SWITCH, NHI21-PKZ0	9-7, 9-9, 9-21, 9-23
G40F4000	90459-5321	OVERLOAD PROTECTION, PKZM0-0,4	9-7, 9-9, 9-21, 9-23
V01F5000	90459-5813	AUXILIARY CONTACT, FAZ-XHIN11	9-7, 9-9, 9-21, 9-23
V01F5000	315746-0200	MINIATURE CIRCUIT BREAKER, FAZ-C20/3-NA	9-21, 9-23
V01F5000	354002-0200	MINIATURE CIRCUIT BREAKER, FAZ-C20/3	9-7, 9-9
W20F0000	315744-0060	MINIATURE CIRCUIT BREAKER, FAZ-C6/1-NA	9-21, 9-23
W20F0000	354000-0060	MINIATURE CIRCUIT BREAKER, FAZ-C6/1	9-7, 9-9
W21F4000	315744-0100	MINIATURE CIRCUIT BREAKER, FAZ-C10/1-NA	9-21, 9-23
W21F4000	354000-0100	MINIATURE CIRCUIT BREAKER, FAZ-C10/1	9-7, 9-9
W21F4010	315744-0060	MINIATURE CIRCUIT BREAKER, FAZ-C6/1-NA	9-11, 9-13
W21F4010	354000-0060	MINIATURE CIRCUIT BREAKER, FAZ-C6/1	9-11, 9-13
W21F6000	315744-0100	MINIATURE CIRCUIT BREAKER, FAZ-C10/1-NA	9-21, 9-23
W21F6000	354000-0100	MINIATURE CIRCUIT BREAKER, FAZ-C10/1	9-7, 9-9
W21F8000	90259-0313	AUXILIARY SWITCH, NHI21-PKZ0	9-53
W21F8000	90459-5326	OVERLOAD PROTECTION, PKZM0-4	9-53
W21F8001	90459-5813	AUXILIARY CONTACT, FAZ-XHIN11	9-7, 9-9, 9-21, 9-23
W21F8001	315745-0100	MINIATURE CIRCUIT BREAKER, FAZ-C10/2-NA	9-21, 9-23
W21F8001	354001-0100	MINIATURE CIRCUIT BREAKER, FAZ-C10/2	9-7, 9-9
G			
C50G1064	3124432-0000	AIR NOZZLE	4-27
C50G1065	2930228-0000	AIR NOZZLE	4-27
C50G1067	2930228-0000	AIR NOZZLE	4-27
C50G1068	3124427-0000	AIR NOZZLE	4-27
C50G1069	2930228-0000	AIR NOZZLE	4-27
C50G1070	3124541-0000	AIR NOZZLE	4-27
C50G1071	2930230-0000	AIR NOZZLE	4-27
C50G1072	3124444-0000	AIR NOZZLE	4-27
K			
A01K1000	90600-5262	LINE FILTER, B84144A36R120	9-27
A01K1001	90600-5266	FEED THROUGH FILTER, B85321A2502W160	9-27
A01K1002	90600-5266	FEED THROUGH FILTER, B85321A2502W160	9-27
A01K1004	90600-5258	LINE FILTER, B84143A35R106	9-31
A01K1005	90600-5253	LINE FILTER, B84113HB60	9-31
A01K1010	90119-0108	RELAY OMRON G2R-2-SNI-24DC	9-35
A01K1010	90129-0018	BASE, P2RF-08-E	9-35
A01K3001	90605-2744	PROCESSOR L72, SERIES B, 1756-L72/B	9-59
A01K3002	90459-2477	5008206, 1756-ENBT	12-15
A01K3003	90459-2477	5008206, 1756-ENBT	9-59
A01K3004	90605-2064	DEVICENET SCANNER MOD., 1756-DNB, SER. E	9-59
A01K3005	90459-2488	REMOVABLE TERMINAL BLOCK 36 POINTS	9-59
A01K3005	90459-6556	PLC DIGITAL INPUT 32PTS, 1756-IB32/B	9-59
A01K3006	90459-2413	PLC DIGITAL INPUT MODULE16 POINTS	9-59
A01K3006	90459-2487	REMOVABLE TERMINAL BLOCK 20 POINTS	9-59

Machine Type Group Description Page No

Pos	Part No	Description	Page No
K			
A01K3007	90459-2474	5008203, DIGIT. OUTPUT MODULE 16 PTS 10-	9-59
A01K3007	90459-2487	REMOVABLE TERMINAL BLOCK 20 POINTS	9-59
A01K3008	90459-2488	REMOVABLE TERMINAL BLOCK 36 POINTS	9-7, 9-9, 9-21, 9-23
A01K3008	90600-4033	DIGITAL OUTPUT MODULE, 1756-OB16IS	9-7, 9-9, 9-21, 9-23
A01K3010	90459-2480	8-AXIS SERCOS MOTION MODULE	9-7, 9-9, 9-21, 9-23
A01K3020	90459-2494	DEVICENET I/O ADAPTER MODULE, 1734-ADN	5-103, 5-105
A01K3021	90459-2503	DIGITAL INPUT 4 PTS SINK, 1734-IB4	5-103, 5-105
A01K3022	90459-2503	DIGITAL INPUT 4 PTS SINK, 1734-IB4	5-103, 5-105
A01K3023	90459-2503	DIGITAL INPUT 4 PTS SINK, 1734-IB4	5-103, 5-105
A01K3024	90459-2503	DIGITAL INPUT 4 PTS SINK, 1734-IB4	5-103, 5-105
A01K3025	90459-2503	DIGITAL INPUT 4 PTS SINK, 1734-IB4	5-103, 5-105
A01K3026	90459-2501	5006526, 1734-FPD	5-103, 5-105
A01K3027	90459-2505	DIGITAL OUTPUT 4 PTS, 1734-OB4E SERIES C	5-103, 5-105
A01K3028	90459-2505	DIGITAL OUTPUT 4 PTS, 1734-OB4E SERIES C	5-103, 5-105
A01K3029	90459-2505	DIGITAL OUTPUT 4 PTS, 1734-OB4E SERIES C	5-103, 5-105
A01K3030	90459-2501	5006526, 1734-FPD	5-103, 5-105
A01K3031	90459-2505	DIGITAL OUTPUT 4 PTS, 1734-OB4E SERIES C	5-103, 5-105
A01K3032	90459-2505	DIGITAL OUTPUT 4 PTS, 1734-OB4E SERIES C	5-103, 5-105
A01K3033	90459-2505	DIGITAL OUTPUT 4 PTS, 1734-OB4E SERIES C	5-103, 5-105
A01K3034	90119-0108	RELAY OMRON G2R-2-SNI-24DC	5-103, 5-105
A01K3035	90119-0108	RELAY OMRON G2R-2-SNI-24DC	5-103, 5-105
A01K3036	90119-0108	RELAY OMRON G2R-2-SNI-24DC	5-103, 5-105
A01K7000	90119-0108	RELAY OMRON G2R-2-SNI-24DC	9-35
A01K7000	90129-0018	BASE, P2RF-08-E	9-35
A81K4001	90600-5249	FERRITE, B64290L616X38	9-59
A81K4002	90600-5249	FERRITE, B64290L616X38	9-67
A81K4125	90459-6062	ARMORBLOCK DIGITAL CONFIGURABLE I/O	12-31
A81K5000	90604-5464	QUICKSERVER GATEWAY, FS-QS-1230-0705	12-83
C50K1000	90459-3460	FOOTPRINT FILTER 1 PHASE 10A	9-7, 9-9, 9-21, 9-23
C50K1001	90600-5249	FERRITE, B64290L616X38	9-7, 9-9, 9-21, 9-23
C50K1002	90600-5249	FERRITE, B64290L616X38	9-7, 9-9, 9-21, 9-23
C81K4130	90459-6062	ARMORBLOCK DIGITAL CONFIGURABLE I/O	4-9, 4-11
F09K0000	90459-6692	SAFETY PLC, PLUTO B20 20-070-06	9-65
F09K0001	90459-2291	SAFETY RELAY, E1T	9-65
F09K0002	90459-4891	IDENTIFIER, ID-FIX RW	9-65
F09K0003	90459-2291	SAFETY RELAY, E1T	9-7, 9-9, 9-21, 9-23
F09K3016	90604-0093	CONNECTION BLOCK, TINA4A 2TLJ020054R0300	4-9, 4-11
G40K1000	90604-3317	GUN,TP EASYC. SBLA2T 120 1A, 1099064H1	3-5
G40K2010	90458-1197	VALVE, 5/2 BISTABLE	7-29
G41K0011	90601-6656	RELAY, PR2-RSC3-LDP-24DC/4X21AU	12-7
G70K0000	90601-6652	OPTOCOUPLER, PLC-OSC-24DC/24DC/2	9-7, 9-9, 9-21, 9-23
G70K0001	90601-6652	OPTOCOUPLER, PLC-OSC-24DC/24DC/2	9-7, 9-9, 9-21, 9-23
K01K8000	90459-2243	VALVE, MS4-EE-1/4-10V24	5-71
K21K0000	90458-1202	VALVES 2X3/2, CLOSED	5-63, 5-65
K40K2003	90458-1202	VALVES 2X3/2, CLOSED	5-63, 5-65
W20K0000	90459-3454	FOOTPRINT FILTER 1 PHASE 18A	9-7, 9-9, 9-21, 9-23
W20K0002	90119-0108	RELAY OMRON G2R-2-SNI-24DC	9-7, 9-9, 9-21, 9-23
W20K0002	90129-0018	BASE, P2RF-08-E	9-7, 9-9, 9-21, 9-23
W20K0004	90601-6650	RELAY, PLC-RSC-24DC/21	9-7, 9-9, 9-21, 9-23
W21K1000	90600-5249	FERRITE, B64290L616X38	9-7, 9-9, 9-21, 9-23
W21K2000	90600-5249	FERRITE, B64290L616X38	9-7, 9-9, 9-21, 9-23
W21K3010	90458-1197	VALVE, 5/2 BISTABLE	10-25
W21K4000	90459-3460	FOOTPRINT FILTER 1 PHASE 10A	9-31
W21K4001	90600-5249	FERRITE, B64290L616X38	9-31
W21K4002	90600-5249	FERRITE, B64290L616X38	9-31
W21K4010	90459-3460	FOOTPRINT FILTER 1 PHASE 10A	9-11, 9-13
W21K4011	90600-5249	FERRITE, B64290L616X38	9-11, 9-13
W21K4012	90600-5249	FERRITE, B64290L616X38	9-11, 9-13
W21K5000	90458-1203	VALVE 2X3/2 1X OPEN 1X CLOSED	10-27
W21K6000	90459-3460	FOOTPRINT FILTER 1 PHASE 10A	12-13
W21K6001	90600-5249	FERRITE, B64290L616X38	12-13
W21K6002	90600-5249	FERRITE, B64290L616X38	12-13
W21K8000	90600-4731	CURRENT CONTROL RELAY, K8AB-AS2 200-230	9-35
W21K8001	90600-4731	CURRENT CONTROL RELAY, K8AB-AS2 200-230	9-35
W81K4120	90459-6062	ARMORBLOCK DIGITAL CONFIGURABLE I/O	5-7, 5-9
M			
C50M0000	90603-9718	MOTOR 3GAA 062 002-BSC	4-29, 4-31
C50M1000	90603-9718	MOTOR 3GAA 062 002-BSC	4-9, 4-11
C50M1020	90605-6742	SERVO MOTOR, MTR-ECI-52R-MG25-R3DN-FG-SA	12-29
G30M0000	90601-1926	SERVO MOTOR, MPL-B430P-MK72AA SERIES A	6-19
G30M0020	90605-6742	SERVO MOTOR, MTR-ECI-52R-MG25-R3DN-FG-SA	12-23
G30M0021	90605-6742	SERVO MOTOR, MTR-ECI-52R-MG25-R3DN-FG-SA	12-41
G30M4000	90601-0668	SERVO MOTOR, MPL-B420P-MK72AA SERIES A	2-13
G40M0000	90601-1926	SERVO MOTOR, MPL-B430P-MK72AA SERIES A	3-19
G40M0002	90601-1926	SERVO MOTOR, MPL-B430P-MK72AA SERIES A	3-21
G40M0004	90604-9664	SERVO MOTOR, MPL-B230P-VJ72AA, SERIE A	3-11
G40M2060	90604-3142	CYLINDER, GRIPPER DHPS-16-A-H1-SA	7-21
G40M3000	90601-4430	SERVO MOTOR, MPL-B320P-MJ72AA, SERIES A	7-11
G40M4000	90110-0053	FEMALE INSERT, HAN 6 E 09 33 006 2701	5-7, 5-9
G40M4000	90603-2676	MOTOR 3GAA052002-CSA	8-5, 8-7
W20M0000	90606-5324	GEARS, WORM MOTOR SK1SMI31AZ-IEC63-63L/4	1-37
W20M0050	90604-3137	DOUBLE ACTING, MINI-ISO, CYL. 32-80	1-35

Pos	Part No	Description	Page No
M			
W20M0060	90604-3143	DOUBLE ACTING, ROUND, CYL 32-150	1-65
W20M0063	90604-3143	DOUBLE ACTING, ROUND, CYL 32-150	1-67
W21M1000	90601-0668	SERVO MOTOR, MPL-B420P-MK72AA SERIES A	1-53
W21M1020	90605-6742	SERVO MOTOR, MTR-ECI-52R-MG25-R3DN-FG-SA	12-25
W21M2000	90601-0668	SERVO MOTOR, MPL-B420P-MK72AA SERIES A	1-43
W21M2020	90605-6742	SERVO MOTOR, MTR-ECI-52R-MG25-R3DN-FG-SA	12-21
W21M3060	90604-3129	DOUBLE ACTING, MINI-ISO, CYL. 16-25	10-19
W21M4010	2901694-0000	MOTOR	1-81
W21M8000	90604-3589	FAN 2BH1300-7AV15-K41	5-47
P			
A01P5000	90053-0029	COUNTER, F524.800FA3C 24VDC	9-65
A01P5001	90053-0031	HOUR COUNTER, B 609.10 10-50VDC	9-65
A01P5011	90602-4062	LIGHT ELEMENT, RED, PSD-S OE LED RD	5-79
A01P5012	90602-4063	LIGHT ELEMENT, YELLOW, PSD-S OE LED YE	5-79
A01P5013	90602-4631	SIREN 100DB, PSD-S AE SM8-5 100DB/1	5-79
A01P5014	90602-4060	LIGHT ELEMENT, BLUE, PSD-S OE LED BU	5-79
A01P5015	90602-4061	LIGHT ELEMENT, GREEN, PSD-S OE LED GN	5-79
C50P1050	90600-1420	REGULATOR, MS4-LRB-1/4-D6-AS	4-19
C50P1053	90600-1420	REGULATOR, MS4-LRB-1/4-D6-AS	4-19
C50P1054	90600-1420	REGULATOR, MS4-LRB-1/4-D6-AS	4-19
K01P5000	90459-3603	PRESSURE GAUGE, MAP-40-6-1/8-EN	5-63, 5-65
K40P1050	90459-7344	PRESSURE GAUGE, MA-40-6-R1/4-EN	5-63, 5-65
Q			
A01Q1000	90600-5543	CIRCUIT BREAKER, NZMB1-4-A32	9-7, 9-9
A01Q1000	351436-0032	CIRCUIT BREAKER, NZMB1-A32-NA	9-21, 9-23
A01Q1004	90600-1759	CONTACTOR22KW24VDCDILM50-22+DILM65-XIP2X	9-55
A01Q1005	90600-1759	CONTACTOR22KW24VDCDILM50-22+DILM65-XIP2X	9-51
A01Q2020	90459-5440	CONTACTOR 4KW 24VDC, DILM9-01	12-37
A01Q6000	90459-5308	CONTACTOR 4KW 24VDC, DILM9-10	9-55
C50Q0000	90459-5308	CONTACTOR 4KW 24VDC, DILM9-10	9-7, 9-9, 9-21, 9-23
C50Q0000	90459-6852	AUXILIARY CONTACT, DILA-XHI22	9-7, 9-9, 9-21, 9-23
C50Q1000	90459-5308	CONTACTOR 4KW 24VDC, DILM9-10	9-7, 9-9, 9-21, 9-23
C50Q1000	90459-6852	AUXILIARY CONTACT, DILA-XHI22	9-7, 9-9, 9-21, 9-23
G40Q4000	90459-5308	CONTACTOR 4KW 24VDC, DILM9-10	9-7, 9-9, 9-21, 9-23
G40Q4000	90459-6852	AUXILIARY CONTACT, DILA-XHI22	9-7, 9-9, 9-21, 9-23
K01Q8050	90459-2337	SHUT OFF VALVE, MS4-EM1-1/4	5-71
K20Q0051	90459-0290	NON-RETURN VALVE, H-QS-6	5-63, 5-65
K20Q0052	90187-0191	BALL VALVE, R1/8 - HOSE 6 MM	5-63, 5-65
U01Q0051	90605-6942	BALL VALVE G1/4, 772117	5-57
V01Q5000	90459-5311	CONTACTOR 15KW 24VDC, DILM32-10	9-55
W20Q0000	90459-5308	CONTACTOR 4KW 24VDC, DILM9-10	9-7, 9-9, 9-21, 9-23
W20Q0000	90459-6852	AUXILIARY CONTACT, DILA-XHI22	9-7, 9-9, 9-21, 9-23
W20Q0004	90600-0943	SOLID STATE RELAY, 3RF2320-1AA04	9-7, 9-9, 9-21, 9-23
W21Q3000	90459-2777	FLOW CONTROL VALVE, GR-QS-8	10-19
W21Q4000	90459-5308	CONTACTOR 4KW 24VDC, DILM9-10	9-63
W21Q4000	90459-6852	AUXILIARY CONTACT, DILA-XHI22	9-63
W21Q4010	90459-5308	CONTACTOR 4KW 24VDC, DILM9-10	9-11, 9-13
W21Q4010	90459-6852	AUXILIARY CONTACT, DILA-XHI22	9-11, 9-13
W21Q6000	90459-5308	CONTACTOR 4KW 24VDC, DILM9-10	9-7, 9-9, 9-21, 9-23
W21Q6000	90459-6852	AUXILIARY CONTACT, DILA-XHI22	9-7, 9-9, 9-21, 9-23
W21Q8000	90459-5308	CONTACTOR 4KW 24VDC, DILM9-10	9-55
W21Q8001	90459-5309	CONTACTOR 7,5KW 24VDC, DILM17-10	9-55
R			
A81R4000	90459-2523	TERMINATOR, OPEN STYLE, 1485A-C2	9-67
A81R5020	90459-2523	TERMINATOR, OPEN STYLE, 1485A-C2	12-83
C50R1000	90328-0026	SILENCER, G1/4"	4-19
C81R4130	90603-9676	TERMINATION M12,SAC	4-9, 4-11
G40R2060	90328-0029	SILENCER, M5	7-29
G40R2061	90328-0029	SILENCER, M5	7-29
G40R2063	90328-0047	SILENCER, G1/8"	7-29
G40R2065	90328-0047	SILENCER, G1/8"	7-29
G41R0002	90602-3851	RESISTANCE FIXED, 3,6 KOHM, 1/2 W	12-7
K01R5000	90459-5817	REGULATOR, MS4-LR-1/4-D6-A8-AS	5-63, 5-65
K01R8052	90328-0026	SILENCER, G1/4"	5-71
K01R8053	90328-0026	SILENCER, G1/4"	5-71
K01R9051	90328-0047	SILENCER, G1/8"	5-63, 5-65
K01R9053	90328-0047	SILENCER, G1/8"	5-63, 5-65
K01R9054	90328-0029	SILENCER, M5	5-63, 5-65
K01R9055	90328-0029	SILENCER, M5	5-63, 5-65
K20R3052	90328-0047	SILENCER, G1/8"	5-63, 5-65
K20R3053	90328-0047	SILENCER, G1/8"	5-63, 5-65
K20R3054	90328-0029	SILENCER, M5	5-63, 5-65
K20R3055	90328-0029	SILENCER, M5	5-63, 5-65
K21R0054	90459-3604	FLOW CONTROL VALVE, GR-QS-6	5-63, 5-65
K21R3054	90235-0748	THROTTLE CHECK VALVE, GRA-1/4-B	5-63, 5-65
K40R1050	90459-5817	REGULATOR, MS4-LR-1/4-D6-A8-AS	5-63, 5-65
W20R0051	90328-0017	SILENCER, D=6 MM74122000	1-35
W20R0061	90328-0047	SILENCER, G1/8"	1-65
W20R0064	90328-0047	SILENCER, G1/8"	1-67
W21R3063	90328-0047	SILENCER, G1/8"	10-25
W21R3065	90328-0047	SILENCER, G1/8"	10-25
W21R3066	90328-0029	SILENCER, M5	10-25

Pos	Part No	Description	Page No
R			
W21R3067	90328-0029	SILENCER, M5	10-25
W21R5053	90328-0047	SILENCER, G1/8"	10-27
W21R5055	90328-0047	SILENCER, G1/8"	10-27
W21R5056	90328-0029	SILENCER, M5	10-27
W21R5057	90328-0029	SILENCER, M5	10-27
S			
A81S2010	90603-5602	BAR CODE READER, D8330 SR-902151265+CAB-	12-11
F09S1001	90605-9819	EMERG. STOP SWITCH, 704.064.2+704.910.4	9-25
F09S1002	90605-9819	EMERG. STOP SWITCH, 704.064.2+704.910.4	5-101
F09S1003	90605-9819	EMERG. STOP SWITCH, 704.064.2+704.910.4	5-131
P01S4000	90064-0093	PUSH BUTTON, GREEN	5-101
P01S4001	90064-0098	PUSH BUTTON, WHITE	5-101
P01S4002	90064-0093	PUSH BUTTON, GREEN	5-101
P01S4004	90064-0098	PUSH BUTTON, WHITE	5-101
T			
A01T2000	90602-8988	POWER SUPPLY, QUINT-PS/ 3AC/24DC/20	9-67
A01T2001	90602-8707	BUFFER UNIT, QUINT-BUFFER/24DC/20	12-81
A01T2020	90602-8988	POWER SUPPLY, QUINT-PS/ 3AC/24DC/20	12-37
A01T3000	90459-7267	POWER SUPPLY 24VDC, 1756-PB75/B	9-59
A01T7000	90603-1115	POWER SUPPLY, STEP-PS/1AC/24DC/3,8/C2LPS	9-21, 9-23
A81T4000	90459-5886	POWER SUPPLY UNIT 115-230 VAC/24VDC100W	9-67
C50T1000	90459-3449	FREQ. CONV., 22A-A2P3N104	9-7, 9-9, 9-21, 9-23
G30T0000	90606-2001	AXIS MOD. W. PS,2094-BC02-M02-S SERIES C	9-57
G30T4000	90606-2004	AXIS MOD. KINETIX 6000,2094-BM01-S SER.C	9-57
G40T0000	90606-2005	AXIS MOD. KINETIX 6000,2094-BM02-S SER C	9-7, 9-9, 9-21, 9-23
G40T0002	90606-2005	AXIS MOD. KINETIX 6000,2094-BM02-S SER C	9-7, 9-9, 9-21, 9-23
G40T0004	90606-2004	AXIS MOD. KINETIX 6000,2094-BM01-S SER.C	9-15
G40T3000	90606-2004	AXIS MOD. KINETIX 6000,2094-BM01-S SER.C	9-7, 9-9, 9-21, 9-23
G41T0002	90605-2645	POWER SUPPLY, LC400 LED LIGHTING CO	12-7
G70T1000	90606-2004	AXIS MOD. KINETIX 6000,2094-BM01-S SER.C	12-79
W20T0000	90459-3441	FREQ. CONV., 22B-A2P3N104	9-7, 9-9, 9-21, 9-23
W21T1000	90606-2005	AXIS MOD. KINETIX 6000,2094-BM02-S SER C	9-7, 9-9, 9-21, 9-23
W21T2000	90606-2005	AXIS MOD. KINETIX 6000,2094-BM02-S SER C	9-7, 9-9, 9-21, 9-23
W21T4000	90459-3450	FREQ. CONV., 22A-A4P5N104	9-31
W21T4010	90459-3449	FREQ. CONV., 22A-A2P3N104	9-11, 9-13
W21T6000	90459-3450	FREQ. CONV., 22A-A4P5N104	12-13
U			
C50U1003	90600-5813	SOLENOID VALVE, CPE18-M1H-3GL-1/4	4-19
G40U2060	90459-2591	SINGLE VALVE SUB-BASE CDSV5.0-AS-1/8	7-29
K01U9050	90459-2591	SINGLE VALVE SUB-BASE CDSV5.0-AS-1/8	5-63, 5-65
K20U3050	90459-2591	SINGLE VALVE SUB-BASE CDSV5.0-AS-1/8	5-63, 5-65
V01U9058	90032-0039	BLOCK 4 WAYS	5-75
W21U3060	90459-2591	SINGLE VALVE SUB-BASE CDSV5.0-AS-1/8	10-25
W21U5050	90459-2591	SINGLE VALVE SUB-BASE CDSV5.0-AS-1/8	10-27
V			
K01V8050	90459-2339	FILTER REGULATOR, MS4-LFR-1/4-D7-ERV-AS	5-71
K01V8052	90603-4699	FILTER, MS6-LFM-1/2-B-R-V-DA	5-69
K01V8053	90603-4698	FILTER, MS6-LFM-1/2-ARV-DA	5-69
K01V8054	90459-2771	FILTER, MS6-LFX-1/2-R	5-69
V01V5000	344319-0001	HOT MELT UNIT ALTABLUE, 1501757 H1	5-95, 5-97
V01V9002	90415-0030	OIL FILTER PN 100 ORD.NO 2.77 10 70.1	5-75
W			
A01W2021	351150-0416	CABLE OLFLEX 12X1,5 MM2 LIGHT/GREY	12-33
A01W3025	351423-0006	CABLE UNITRONIC LICY 5X0,34	9-7, 9-9, 9-21, 9-23
A01W3026	351423-0006	CABLE UNITRONIC LICY 5X0,34	9-7, 9-9, 9-21, 9-23
A01W3027	351423-0006	CABLE UNITRONIC LICY 5X0,34	9-7, 9-9, 9-21, 9-23
A01W5001	351150-0406	CABLE OLFLEX 7X0,75 MM2 LIGHT/GREY	5-89
A01W5010	351150-0406	CABLE OLFLEX 7X0,75 MM2 LIGHT/GREY	5-89
A01W7001	351150-0403	CABLE OLFLEX 3X0,75 MM2 LIGHT/GREY 35	5-89
A01W7002	351150-0403	CABLE OLFLEX 3X0,75 MM2 LIGHT/GREY 35	5-89
A81W0203	90600-2103	ETHERNET CABLE, CCB-84901-1004-10	5-51
A81W2000	351501-0010	ETHERNET PATCH CABLE, FL CAT5 PATCH 1,0	9-79
A81W2001	90459-6395	CABLE, ETHERNET RJ 45 STRAIGHT.10M	9-79
A81W2004	90600-2103	ETHERNET CABLE, CCB-84901-1004-10	12-5
A81W2010	90601-6430	USB CABLE, 90601-6430	12-11
A81W2020	90600-4778	USB CABLE SET, 5A9000.54	12-11
A81W4000	90459-2530	DEVICENET CABLE THIN	9-79
A81W4001	90459-2530	DEVICENET CABLE THIN	9-79
A81W4002	90459-2530	DEVICENET CABLE THIN	9-79
A81W4003	90459-2530	DEVICENET CABLE THIN	9-79
A81W4004	344295-0100	DEVICENET CAB.,SAC-5P- 10,0-927/M12FS VA	5-7, 5-9
A81W4005	90459-2530	DEVICENET CABLE THIN	9-79
A81W4006	90459-2530	DEVICENET CABLE THIN	9-79
A81W4007	90459-2530	DEVICENET CABLE THIN	9-79
A81W4120	344253-0100	SENSOR CABLE, EVT002	5-7, 5-9
A81W4121	344293-0030	DEVICEN CAB.SAC-5P-M12MS/3,0-927/M12FSVA	4-9, 4-11
A81W4123	344293-0020	DEVICEN CAB.SAC-5P-M12MS/2,0-927/M12FSVA	12-23
A81W4124	344293-0020	DEVICEN CAB.SAC-5P-M12MS/2,0-927/M12FSVA	12-41
A81W4125	344293-0020	DEVICEN CAB.SAC-5P-M12MS/2,0-927/M12FSVA	12-25
A81W4126	344293-0010	DEVICEN CAB.SAC-5P-M12MS/1,0-927/M12FSVA	12-21
A81W4127	344293-0030	DEVICEN CAB.SAC-5P-M12MS/3,0-927/M12FSVA	12-31
A81W4128	344293-0003	DEVICEN CAB.SAC-5P-M12MS/0,3-927/M12FSVA	12-31

Pos	Part No	Description	Page No
W			
A81W4129	344293-0020	DEVICEN CAB.SAC-5P-M12MS/2,0-927/M12FSVA	12-29
A81W4130	344253-0050	SENSOR CABLE, EVT001	4-9, 4-11
A81W4130	344253-0100	SENSOR CABLE, EVT002	12-31
A81W5000	351501-0020	ETHERNET PATCH CABLE, FL CAT5 PATCH 2,0	12-83
A81W5123	344293-0003	DEVICEN CAB.SAC-5P-M12MS/0,3-927/M12FSVA	12-23
A81W5124	344293-0003	DEVICEN CAB.SAC-5P-M12MS/0,3-927/M12FSVA	12-41
A81W5125	344293-0003	DEVICEN CAB.SAC-5P-M12MS/0,3-927/M12FSVA	12-25
A81W5126	344293-0003	DEVICEN CAB.SAC-5P-M12MS/0,3-927/M12FSVA	12-21
A81W5129	344293-0003	DEVICEN CAB.SAC-5P-M12MS/0,3-927/M12FSVA	12-29
A81W7000	351423-0004	CABLE UNITRONIC LICY 2X0,34	9-79
A81W7001	351423-0004	CABLE UNITRONIC LICY 2X0,34	9-79
A81W7002	351423-0004	CABLE UNITRONIC LICY 2X0,34	9-79
C01W1053	315400-0004	TUBE PUN-H-8X1,25-BL	4-19
C01W1054	315400-0010	TUBE PUN-H-12X2-BL	4-19
C01W8062	315400-0010	TUBE PUN-H-12X2-BL	4-19
C50W0000	315743-0009	OLFLEX CONTROL TM 4G1,5, 281604	4-29, 4-31
C50W0004	351150-0405	CABLE OLFLEX 5X0,75 MM2 LIGHT/GREY	5-89
C50W0010	315743-0009	OLFLEX CONTROL TM 4G1,5, 281604	5-89
C50W0012	344261-0050	SENSOR CABLE, EVT216	4-29, 4-31
C50W0013	90603-3979	SENSOR Y-CABLE, EVT339	4-29, 4-31
C50W1000	315756-0009	OLFLEX CONTROL TM CY 4G1,5, 281604CY	4-9, 4-11
C50W1001	344261-0006	SENSOR CABLE, EVT261	4-9, 4-11
C50W1002	344261-0006	SENSOR CABLE, EVT261	4-9, 4-11
C50W1004	90600-3573	SOCKET CONN. CABLE, KMEB-2-24-M12-0,5-LE	4-19
C50W1004	344253-0050	SENSOR CABLE, EVT001	4-9, 4-11
C50W1005	344262-0015	SENSOR CABLE, EVT271	4-9, 4-11
C50W1010	315756-0009	OLFLEX CONTROL TM CY 4G1,5, 281604CY	5-89
C50W1019	315756-0007	ÖLFLEX CONTROL TM CY 2G1,5, 281602CY	12-31
C50W1020	90605-6768	CABLE, KPWR-MC-1-M16-3B-6	12-29
C50W1064	315400-0016	TUBE PUN-H-4X0,75-BL	4-19
C50W1065	315400-0016	TUBE PUN-H-4X0,75-BL	4-19
C50W1066	315400-0016	TUBE PUN-H-4X0,75-BL	4-19
C50W1067	315400-0016	TUBE PUN-H-4X0,75-BL	4-19
C50W1068	315400-0016	TUBE PUN-H-4X0,75-BL	4-19
C50W1069	315400-0016	TUBE PUN-H-4X0,75-BL	4-19
C50W2000	344257-0006	SENSOR CABLE, EVT143	4-9, 4-11
F09W1003	351150-0405	CABLE OLFLEX 5X0,75 MM2 LIGHT/GREY	5-89
F09W2001	351423-0006	CABLE UNITRONIC LICY 5X0,34	5-89
F09W2002	351423-0006	CABLE UNITRONIC LICY 5X0,34	5-89
F09W2003	90600-0934	CABLE M12-C62 5 POLE MALE, 20-056-02	4-9, 4-11
F09W2014	90459-4876	FOCUS JUMPER CABLE M12 5P 3M, 20-056-21	5-81, 5-83
F09W2016	90459-4876	FOCUS JUMPER CABLE M12 5P 3M, 20-056-21	5-81, 5-83
F09W2030	90459-4252	CABLE M12-C101, 20-056-10	5-89
F09W2030	90459-4876	FOCUS JUMPER CABLE M12 5P 3M, 20-056-21	5-81, 5-83
F09W2032	90459-4876	FOCUS JUMPER CABLE M12 5P 3M, 20-056-21	5-81, 5-83
F09W2034	90459-4876	FOCUS JUMPER CABLE M12 5P 3M, 20-056-21	5-81, 5-83
F09W2041	344253-0100	SENSOR CABLE, EVT002	5-81, 5-83
F09W2042	344253-0100	SENSOR CABLE, EVT002	5-81, 5-83
F09W3012	90459-7095	FOCUS JUMPER CABLE M12 5P 1M, 20-056-20	4-9, 4-11
F09W3014	90459-7095	FOCUS JUMPER CABLE M12 5P 1M, 20-056-20	4-9, 4-11
F09W3016	90459-7095	FOCUS JUMPER CABLE M12 5P 1M, 20-056-20	4-9, 4-11
G30W0001	351428-0009	MOTOR FEEDBACK CABLE 2090-CFBM7DF-CEAA09	5-89
G30W0020	90605-6768	CABLE, KPWR-MC-1-M16-3B-6	12-23
G30W0021	90605-6768	CABLE, KPWR-MC-1-M16-3B-6	12-41
G30W0035	344261-0050	SENSOR CABLE, EVT216	12-47
G30W0037	344261-0050	SENSOR CABLE, EVT216	12-45
G30W0038	344261-0050	SENSOR CABLE, EVT216	12-57
G30W1001	344266-0020	SENSOR CABLE, EVT256	1-77
G30W1002	344267-0010	SENSOR CABLE, EVT042	6-17
G30W1031	344261-0020	SENSOR CABLE, EVT263	12-45
G30W1032	344261-0020	SENSOR CABLE, EVT263	12-47
G30W3000	351429-1609	MOTOR POWER CABLE 2090-CPWM7DF-16AA09	5-89
G30W4000	351429-1609	MOTOR POWER CABLE 2090-CPWM7DF-16AA09	5-89
G30W4001	351428-0009	MOTOR FEEDBACK CABLE 2090-CFBM7DF-CEAA09	5-89
G40W0000	351429-1609	MOTOR POWER CABLE 2090-CPWM7DF-16AA09	5-89
G40W0001	351428-0009	MOTOR FEEDBACK CABLE 2090-CFBM7DF-CEAA09	5-89
G40W0002	351429-1609	MOTOR POWER CABLE 2090-CPWM7DF-16AA09	5-89
G40W0003	351428-0009	MOTOR FEEDBACK CABLE 2090-CFBM7DF-CEAA09	5-89
G40W0010	344267-0010	SENSOR CABLE, EVT042	3-29
G40W0011	344267-0010	SENSOR CABLE, EVT042	3-29
G40W0012	344268-0015	SENSOR CABLE, EVT120	3-27
G40W0013	344268-0015	SENSOR CABLE, EVT120	3-27
G40W2000	344267-0010	SENSOR CABLE, EVT042	7-21
G40W2026	344267-0010	SENSOR CABLE, EVT042	12-59
G40W2035	344261-0020	SENSOR CABLE, EVT263	12-59
G40W2036	344261-0050	SENSOR CABLE, EVT216	12-59
G40W2061	315400-0004	TUBE PUN-H-8X1,25-BL	7-29
G40W2062	315400-0016	TUBE PUN-H-4X0,75-BL	7-29
G40W2063	315400-0016	TUBE PUN-H-4X0,75-BL	7-29
G40W2064	315400-0016	TUBE PUN-H-4X0,75-BL	7-29
G40W2066	90459-7428	TUBE PUN-H-3X0,5-BL	7-21
G40W2067	90459-7428	TUBE PUN-H-3X0,5-BL	7-21

W

Pos	Part No	Description	Page No
G40W3000	351429-1609	MOTOR POWER CABLE 2090-CPWM7DF-16AA09	5-89
G40W3001	351428-0009	MOTOR FEEDBACK CABLE 2090-CFBM7DF-CEAA09	5-89
G40W4000	315743-0009	OLFLEX CONTROL TM 4G1,5, 281604	8-5, 8-7
G40W4010	315743-0009	OLFLEX CONTROL TM 4G1,5, 281604	5-89
G40W5001	344264-0006	SENSOR CABLE, EVT243	8-5, 8-7
G40W5002	344261-0020	SENSOR CABLE, EVT263	8-5, 8-7
G40W5005	344264-0006	SENSOR CABLE, EVT243	8-5, 8-7
G40W5006	344261-0010	SENSOR CABLE, EVT262	8-5, 8-7
G41W0000	90600-2102	POWER I/O CABLE, CCB-84901-0103-10	12-5
G41W0020	344267-0010	SENSOR CABLE, EVT042	12-5
G70W0000	90600-2102	POWER I/O CABLE, CCB-84901-0103-10	5-51
G70W0001	344253-0100	SENSOR CABLE, EVT002	5-51
G70W1000	351429-1609	MOTOR POWER CABLE 2090-CPWM7DF-16AA09	12-77
G70W1001	351428-0009	MOTOR FEEDBACK CABLE 2090-CFBM7DF-CEAA09	12-77
K01W8000	351150-0403	CABLE OLFLEX 3X0,75 MM2 LIGHT/GREY 35	5-89
K01W8001	351150-0403	CABLE OLFLEX 3X0,75 MM2 LIGHT/GREY 35	5-89
K01W8051	315400-0010	TUBE PUN-H-12X2-BL	5-63, 5-65
K01W8052	315400-0004	TUBE PUN-H-8X1,25-BL	5-71
K01W8053	315400-0001	6-4E PUN-H-6X1-BL	5-63, 5-65
K01W8054	315400-0010	TUBE PUN-H-12X2-BL	5-63, 5-65
K01W8055	315400-0010	TUBE PUN-H-12X2-BL	5-63, 5-65
K01W8056	315400-0010	TUBE PUN-H-12X2-BL	5-63, 5-65
K01W8057	315400-0004	TUBE PUN-H-8X1,25-BL	5-63, 5-65
K01W8058	315400-0010	TUBE PUN-H-12X2-BL	5-63, 5-65
K01W8059	315400-0001	6-4E PUN-H-6X1-BL	5-63, 5-65
K01W8061	315400-0004	TUBE PUN-H-8X1,25-BL	5-63, 5-65
K01W8062	315400-0010	TUBE PUN-H-12X2-BL	5-63, 5-65
K01W8063	315400-0010	TUBE PUN-H-12X2-BL	5-63, 5-65
K01W8064	315400-0010	TUBE PUN-H-12X2-BL	5-63, 5-65
K01W8065	315400-0010	TUBE PUN-H-12X2-BL	5-63, 5-65
K01W8067	315400-0016	TUBE PUN-H-4X0,75-BL	5-63, 5-65
K01W8068	315400-0001	6-4E PUN-H-6X1-BL	5-63, 5-65
K01W8071	315400-0004	TUBE PUN-H-8X1,25-BL	5-63, 5-65
K01W9054	315400-0001	6-4E PUN-H-6X1-BL	5-63, 5-65
K01W9056	315400-0001	6-4E PUN-H-6X1-BL	5-63, 5-65, 5-75
K20W0050	315400-0001	6-4E PUN-H-6X1-BL	5-63, 5-65
K20W0052	315400-0001	6-4E PUN-H-6X1-BL	5-63, 5-65
K20W0053	315400-0001	6-4E PUN-H-6X1-BL	5-63, 5-65
K20W3051	315400-0004	TUBE PUN-H-8X1,25-BL	5-63, 5-65
K20W3054	315400-0004	TUBE PUN-H-8X1,25-BL	5-63, 5-65
K20W3055	315400-0004	TUBE PUN-H-8X1,25-BL	5-63, 5-65
K20W3056	315400-0001	6-4E PUN-H-6X1-BL	5-63, 5-65
K21W0051	315400-0004	TUBE PUN-H-8X1,25-BL	5-63, 5-65
K21W0054	315400-0001	6-4E PUN-H-6X1-BL	5-63, 5-65
K21W0055	315400-0001	6-4E PUN-H-6X1-BL	5-63, 5-65
K40W1050	315400-0010	TUBE PUN-H-12X2-BL	5-63, 5-65
K40W1051	315400-0016	TUBE PUN-H-4X0,75-BL	5-63, 5-65
K40W2054	315400-0016	TUBE PUN-H-4X0,75-BL	5-63, 5-65
P01W4000	351150-0403	CABLE OLFLEX 3X0,75 MM2 LIGHT/GREY 35	5-89
P01W4001	351150-0407	CABLE OLFLEX 12X0,75 MM2 LIGHT/GREY	5-89
U01W0051	315400-0009	TUBE PUN-H-10X1,5-SW	5-57
U01W0052	315400-0009	TUBE PUN-H-10X1,5-SW	5-57
U01W0053	315400-0009	TUBE PUN-H-10X1,5-SW	5-57
U01W8053	315400-0004	TUBE PUN-H-8X1,25-BL	5-73
U01W8060	315400-0013	TUBE PUN-H-16-2,5-BL	5-73
U01W8061	315400-0013	TUBE PUN-H-16-2,5-BL	5-73
U01W8062	315400-0013	TUBE PUN-H-16-2,5-BL	5-73
U01W8063	315400-0013	TUBE PUN-H-16-2,5-BL	5-73
U01W8064	315400-0004	TUBE PUN-H-8X1,25-BL	5-73
U01W8075	315400-0004	TUBE PUN-H-8X1,25-BL	5-73
V01W5000	315743-0024	OLFLEX CONTROL TM 5G6, 281005	5-89
V01W5002	344254-0020	CORDSET, FEMALE EVT067	5-95, 5-97
V01W9001	344257-0050	SENSOR CABLE, EVT146	5-75
V01W9002	344257-0050	SENSOR CABLE, EVT146	5-75
V01W9052	90166-0108	TUBE 6 MM PA TRANSP.	5-75
V01W9053	90166-0108	TUBE 6 MM PA TRANSP.	5-75
V01W9055	90166-0108	TUBE 6 MM PA TRANSP.	5-75
V01W9056	90166-0108	TUBE 6 MM PA TRANSP.	5-75
V01W9080	90166-0143	TUBE 2,5 MM PA TRANSP.	5-75
V01W9081	90166-0143	TUBE 2,5 MM PA TRANSP.	5-75
V01W9082	90166-0143	TUBE 2,5 MM PA TRANSP.	5-75
W20W0000	315756-0009	OLFLEX CONTROL TM CY 4G1,5, 281604CY	5-89
W20W0003	90603-3979	SENSOR Y-CABLE, EVT339	1-31
W20W0004	351150-0405	CABLE OLFLEX 5X0,75 MM2 LIGHT/GREY	5-89
W20W0030	344253-0100	SENSOR CABLE, EVT002	1-31
W20W0051	315400-0001	6-4E PUN-H-6X1-BL	1-35
W20W0062	315400-0001	6-4E PUN-H-6X1-BL	1-65
W20W0065	315400-0001	6-4E PUN-H-6X1-BL	1-67
W20W3055	315400-0004	TUBE PUN-H-8X1,25-BL	5-61
W21W0000	344261-0050	SENSOR CABLE, EVT216	1-59
W21W1000	351429-1609	MOTOR POWER CABLE 2090-CPWM7DF-16AA09	5-89
W21W1001	351428-0009	MOTOR FEEDBACK CABLE 2090-CFBM7DF-CEAA09	5-89

Pos	Part No	Description	Page No
W			
W21W1020	90605-6768	CABLE, KPWR-MC-1-M16-3B-6	12-25
W21W1035	344261-0006	SENSOR CABLE, EVT261	12-43
W21W2000	351429-1609	MOTOR POWER CABLE 2090-CPWM7DF-16AA09	5-89
W21W2001	351428-0009	MOTOR FEEDBACK CABLE 2090-CFBM7DF-CEAA09	5-89
W21W2020	90605-6768	CABLE, KPWR-MC-1-M16-3B-6	12-21
W21W2035	344261-0006	SENSOR CABLE, EVT261	12-43
W21W3000	90603-3979	SENSOR Y-CABLE, EVT339	10-23
W21W3000	344267-0006	SENSOR CABLE, EVT041	10-23
W21W3002	90603-3979	SENSOR Y-CABLE, EVT339	10-23
W21W3004	90603-3979	SENSOR Y-CABLE, EVT339	10-23
W21W3008	90603-3979	SENSOR Y-CABLE, EVT339	12-27
W21W3010	90603-5568	CONNECTOR, SACC-M12MS-4QO-0,34-VA	10-23
W21W3012	90603-3979	SENSOR Y-CABLE, EVT339	10-23
W21W3038	344267-0006	SENSOR CABLE, EVT041	12-27
W21W3061	315400-0004	TUBE PUN-H-8X1,25-BL	10-25
W21W3062	315400-0016	TUBE PUN-H-4X0,75-BL	10-19, 10-25
W21W3064	315400-0016	TUBE PUN-H-4X0,75-BL	10-19, 10-25
W21W3065	315400-0016	TUBE PUN-H-4X0,75-BL	10-25
W21W4000	315756-0009	OLFLEX CONTROL TM CY 4G1,5, 281604CY	5-89
W21W4002	90603-3979	SENSOR Y-CABLE, EVT339	5-23, 5-25
W21W4004	90603-3979	SENSOR Y-CABLE, EVT339	5-23, 5-25
W21W4006	90603-3979	SENSOR Y-CABLE, EVT339	5-23, 5-25
W21W4008	90603-3979	SENSOR Y-CABLE, EVT339	5-23, 5-25
W21W4010	315756-0009	OLFLEX CONTROL TM CY 4G1,5, 281604CY	5-89
W21W4012	344253-0050	SENSOR CABLE, EVT001	5-23, 5-25
W21W4014	344253-0050	SENSOR CABLE, EVT001	5-23, 5-25
W21W4016	344253-0050	SENSOR CABLE, EVT001	5-23, 5-25
W21W4018	344253-0100	SENSOR CABLE, EVT002	5-23, 5-25
W21W4022	344261-0006	SENSOR CABLE, EVT261	1-69
W21W4023	90603-3979	SENSOR Y-CABLE, EVT339	1-69
W21W5000	90603-5568	CONNECTOR, SACC-M12MS-4QO-0,34-VA	10-23
W21W5050	315400-0004	TUBE PUN-H-8X1,25-BL	10-27
W21W5054	315400-0004	TUBE PUN-H-8X1,25-BL	10-27
W21W5056	315400-0016	TUBE PUN-H-4X0,75-BL	10-27
W21W5058	315400-0004	TUBE PUN-H-8X1,25-BL	10-19
W21W6002	90603-3979	SENSOR Y-CABLE, EVT339	5-23, 5-25
W21W6004	90603-3979	SENSOR Y-CABLE, EVT339	12-69
W21W6005	344261-0050	SENSOR CABLE, EVT216	12-65
W21W6012	344261-0050	SENSOR CABLE, EVT216	5-23, 5-25
W21W6014	344261-0050	SENSOR CABLE, EVT216	12-69
W21W8000	315743-0008	OLFLEX CONTROL TM 3G1,5, 281603	5-89
W21W8001	351424-0017	CABLE #LFLEX HEAT 180 4G4 466343	5-89
X			
A01X0002	2839223-0200	PLINTH	9-31
A01X0003	2839224-0200	PLINTH	9-31
A01X0004	2840918-0200	PLINTH	9-25
A01X0006	2841403-0300	PLINTH	9-7, 9-9, 9-21, 9-23
A01X0007	90459-0959	DISTRIBUTOR BLOCK 1492-PD3163	9-31
A01X0008	3046886-0200	DISTRIBUTION TERMINAL	9-31
A01X0010	2839230-0100	PLINTH	9-37
A01X0011	2840909-0100	PLINTH	9-37
A01X0012	2840910-0100	PLINTH	9-37
A01X0013	2840911-0100	PLINTH	9-37
A01X0022	2840911-0100	PLINTH	9-37
A01X0032	2840911-0100	PLINTH	9-37
A01X0042	2840911-0100	PLINTH	9-37
A01X0043	2840915-0100	PLINTH	9-37
A01X0044	2840915-0100	PLINTH	9-37
A01X0072	2840917-0100	PLINTH	9-37
A01X2001	3363694-0100	PLINTH	9-67
A01X2022	3266683-0100	JUNCTION BOX	12-33
A01X6000	2890591-0200	PLINTH	9-67
A01X7000	90459-3845	WALL SOCKET, Z-SD230	9-7, 9-9
A01X7001	90606-1698	SPLITTER BOX, EBC026	5-85
A81X2000	90600-1848	ETHERNET SW, FL SWITCH SFN 8TX	9-67
A81X4001	90459-2519	TAP, OPEN STYLE	9-67
A81X4002	90459-2519	TAP, OPEN STYLE	9-67
A81X4003	90459-2519	TAP, OPEN STYLE	9-67
A81X4004	90459-2519	TAP, OPEN STYLE	9-67
A81X5123	90603-9674	Y-CONNECTOR, SAC-5P-M12YF/M12FS-M12MS VP	12-23
A81X5124	90603-9674	Y-CONNECTOR, SAC-5P-M12YF/M12FS-M12MS VP	12-41
A81X5125	90603-9674	Y-CONNECTOR, SAC-5P-M12YF/M12FS-M12MS VP	12-25
A81X5126	90603-9674	Y-CONNECTOR, SAC-5P-M12YF/M12FS-M12MS VP	12-21
A81X5129	90603-9674	Y-CONNECTOR, SAC-5P-M12YF/M12FS-M12MS VP	12-29
A81X7004	90459-6470	CONNECTOR RJ45 TER. BL., AK-U0-RJ45-TB2P	9-11, 9-13
C50X0000	90110-0052	MALE INSERT, HAN E06, 0933 0062 601	4-29, 4-31
C50X0000	90110-0053	FEMALE INSERT, HAN 6 E 09 33 006 2701	5-7, 5-9
C50X0001	90459-6821	MALE INSERT HAN 4A, 0920 0042 611	4-9, 4-11
C50X1000	90110-0053	FEMALE INSERT, HAN 6 E 09 33 006 2701	5-7, 5-9
C50X1004	90459-6820	FEMALE INSERT, HAN 4 A, 09 20 004 2711	5-7, 5-9
C50X1010	90110-0052	MALE INSERT, HAN E06, 0933 0062 601	4-9, 4-11
C50X1019	90459-6820	FEMALE INSERT, HAN 4 A, 09 20 004 2711	12-31

Pos	Part No	Description	Page No
X			
C50X1020	90459-6821	MALE INSERT HAN 4A, 0920 0042 611	12-29
F09X2001	90604-0093	CONNECTION BLOCK, TINA4A 2TLJ020054R0300	5-81, 5-83
F09X2002	90604-0093	CONNECTION BLOCK, TINA4A 2TLJ020054R0300	5-81, 5-83
G30X0001	90604-8704	CONNECTOR, 2090-K6CK-D15M, SERIE B	5-89
G30X0023	90603-5561	CONNECTOR, SACC-M12MS-5CON-PG 9-VA	12-45
G30X0025	90603-5561	CONNECTOR, SACC-M12MS-5CON-PG 9-VA	12-47
G30X0027	90603-5561	CONNECTOR, SACC-M12MS-5CON-PG 9-VA	12-45
G30X0028	90603-5561	CONNECTOR, SACC-M12MS-5CON-PG 9-VA	12-57
G30X1020	90606-1697	SPLITTER BOX, EBC034	6-39
G30X1022	90603-5561	CONNECTOR, SACC-M12MS-5CON-PG 9-VA	12-47
G30X1030	90606-1697	SPLITTER BOX, EBC034	6-39
G30X4001	90604-8704	CONNECTOR, 2090-K6CK-D15M, SERIE B	5-89
G40X0001	90604-8704	CONNECTOR, 2090-K6CK-D15M, SERIE B	5-89
G40X0003	90604-8704	CONNECTOR, 2090-K6CK-D15M, SERIE B	5-89
G40X2025	90603-5561	CONNECTOR, SACC-M12MS-5CON-PG 9-VA	12-59
G40X2026	90603-5561	CONNECTOR, SACC-M12MS-5CON-PG 9-VA	12-59
G40X3001	90604-8704	CONNECTOR, 2090-K6CK-D15M, SERIE B	5-89
G40X4000	90110-0052	MALE INSERT, HAN E06, 0933 0062 601	8-5, 8-7
G41X0011	90603-4478	RECEPTACLE M12, SACC-E-M12FS-4CON-M16/..	12-7
G70X1001	90604-8704	CONNECTOR, 2090-K6CK-D15M, SERIE B	12-77
V01X5002	90195-0017	TERMINAL BLOCK, BK6 CRN, 6252 2200 00	5-95, 5-97
W21X1000	90459-2550	I/O CONNECTOR 26 PIN MALE, 2090-K6CK-D26	9-7, 9-9, 9-21, 9-23
W21X1001	90604-8704	CONNECTOR, 2090-K6CK-D15M, SERIE B	5-89
W21X1025	90603-5561	CONNECTOR, SACC-M12MS-5CON-PG 9-VA	12-43
W21X2000	90459-2550	I/O CONNECTOR 26 PIN MALE, 2090-K6CK-D26	9-7, 9-9, 9-21, 9-23
W21X2001	90604-8704	CONNECTOR, 2090-K6CK-D15M, SERIE B	5-89
W21X2025	90603-5561	CONNECTOR, SACC-M12MS-5CON-PG 9-VA	12-43
W21X3020	90606-1697	SPLITTER BOX, EBC034	10-23

Pos	Part No	Description	Page No	Pos	Part No	Description	Page No

Tetra Pak®

Label for 80 mm binder **Note!** *This page is generated* **automatically.**

CAP 30/Flex DreamCap 030V
662950-0300 Issue 2015-02
Doc No. SPC-3202371-0113

CAP 30/Flex DreamCap 030V
662950-0300 Issue 2015-02
Doc No. SPC-3202371-0113

CAP 30/Flex DreamCap 030V
662950-0300 Issue 2015-02
Doc No. SPC-3202371-0113

CAP 30/Flex DreamCap 030V 1(3)
662950-0300 Issue 2015-02
Doc No. SPC-3202371-0113

CAP 30/Flex DreamCap 030V 1(2)
662950-0300 Issue 2015-02
Doc No. SPC-3202371-0113

CAP 30/Flex DreamCap 030V 2(3)
662950-0300 Issue 2015-02
Doc No. SPC-3202371-0113

CAP 30/Flex DreamCap 030V 2(2)
662950-0300 Issue 2015-02
Doc No. SPC-3202371-0113

CAP 30/Flex DreamCap 030V 3(3)
662950-0300 Issue 2015-02
Doc No. SPC-3202371-0113

Label for 55 mm binder **Note!** *This page is generated* **automatically.**

CAP 30/Flex DreamCap 030V
662950-0300 Issue 2015-02
Doc No. SPC-3202371-0113

CAP 30/Flex DreamCap 030V 1(2)
662950-0300 Issue 2015-02
Doc No. SPC-3202371-0113

CAP 30/Flex DreamCap 030V
662950-0300 Issue 2015-02
Doc No. SPC-3202371-0113

CAP 30/Flex DreamCap 030V 2(2)
662950-0300 Issue 2015-02
Doc No. SPC-3202371-0113

CAP 30/Flex DreamCap 030V
662950-0300 Issue 2015-02
Doc No. SPC-3202371-0113

CAP 30/Flex DreamCap 030V 1(3)
662950-0300 Issue 2015-02
Doc No. SPC-3202371-0113

CAP 30/Flex DreamCap 030V
662950-0300 Issue 2015-02
Doc No. SPC-3202371-0113

CAP 30/Flex DreamCap 030V 2(3)
662950-0300 Issue 2015-02
Doc No. SPC-3202371-0113

CAP 30/Flex DreamCap 030V
662950-0300 Issue 2015-02
Doc No. SPC-3202371-0113

CAP 30/Flex DreamCap 030V 3(3)
662950-0300 Issue 2015-02
Doc No. SPC-3202371-0113

CAP 30/Flex DreamCap 030V
662950-0300 Issue 2015-02
Doc No. SPC-3202371-0113

CAP 30/Flex DreamCap 030V 3(3)
662950-0300 Issue 2015-02
Doc No. SPC-3202371-0113

Label for 40 mm binder **Note!** *This page is generated* **automatically.**

CAP 30/Flex DreamCap 030V
662950-0300 Issue 2015-02
Doc No. SPC-3202371-0113

CAP 30/Flex DreamCap 030V 1(2)
662950-0300 Issue 2015-02
Doc No. SPC-3202371-0113

CAP 30/Flex DreamCap 030V
662950-0300 Issue 2015-02
Doc No. SPC-3202371-0113

CAP 30/Flex DreamCap 030V 2(2)
662950-0300 Issue 2015-02
Doc No. SPC-3202371-0113

CAP 30/Flex DreamCap 030V
662950-0300 Issue 2015-02
Doc No. SPC-3202371-0113

CAP 30/Flex DreamCap 030V 1(2)
662950-0300 Issue 2015-02
Doc No. SPC-3202371-0113

CAP 30/Flex DreamCap 030V
662950-0300 Issue 2015-02
Doc No. SPC-3202371-0113

CAP 30/Flex DreamCap 030V 2(2)
662950-0300 Issue 2015-02
Doc No. SPC-3202371-0113

CAP 30/Flex DreamCap 030V
662950-0300 Issue 2015-02
Doc No. SPC-3202371-0113

CAP 30/Flex DreamCap 030V 1(3)
662950-0300 Issue 2015-02
Doc No. SPC-3202371-0113

CAP 30/Flex DreamCap 030V
662950-0300 Issue 2015-02
Doc No. SPC-3202371-0113

CAP 30/Flex DreamCap 030V 2(3)
662950-0300 Issue 2015-02
Doc No. SPC-3202371-0113

CAP 30/Flex DreamCap 030V
662950-0300 Issue 2015-02
Doc No. SPC-3202371-0113

CAP 30/Flex DreamCap 030V 3(3)
662950-0300 Issue 2015-02
Doc No. SPC-3202371-0113

CAP 30/Flex DreamCap 030V
662950-0300 Issue 2015-02
Doc No. SPC-3202371-0113

CAP 30/Flex DreamCap 030V 3(3)
662950-0300 Issue 2015-02
Doc No. SPC-3202371-0113